A Report Prepared for:

AECOM
300 South Grand Avenue
Second Floor
Los Angeles, CA 90071

PHASE II HAZARDOUS WASTE INVESTIGATION
SCRRA EMPIRE AVENUE - BUENA VISTA STREET GRADE SEPARATION
E737B-08, CTO NO. 001
BURBANK, CALIFORNIA

Project No. 2009-010.01

by

S.

for Sittampalam Sathiskumar
Civil Engineer 76195

Gary Gilbert
Civil Engineer 62781

REGISTERED PROFESSIONAL ENGINEER
GARY K. GILBERT
No. C 62781
Exp. 06-30-10
CIVIL
STATE OF CALIFORNIA

Diaz•Yourman & Associates
1616 East 17th Street
Santa Ana, CA 92705-8509
(714) 245-2920

June 30, 2010

TABLE OF CONTENTS

EXECUTIVE SUMMARY iv

LIST OF ACRONYMS IV

1.0 INTRODUCTION 1

2.0 PROJECT BACKGROUND 3
- 2.1 DATA REVIEW 3
- 2.2 HISTORICAL SITE USE 3
- 2.3 SITE VISIT 3
- 2.4 CHEMICALS OF CONCERN 3
  - 2.4.1 Aerially Deposited Lead 3
  - 2.4.2 Railroad Weed Control 4
  - 2.4.3 Metals 4
- 2.5 GEOLOGY AND GROUNDWATER 4

3.0 OBJECTIVE 5

4.0 SCOPE OF WORK 6

5.0 SAMPLING METHODOLOGY 7

6.0 LABORATORY ANALYSIS 8
  - 6.1.1 LEAD AND ARSENIC 8
  - 6.1.2 HERBICIDE, AND PESTICIDE TESTING 8
  - 6.1.3 Metals 12

7.0 QUALITY ASSURANCE/QUALITY CONTROL 14
- 7.1 DECONTAMINATION 14
- 7.2 CHAIN OF CUSTODY 14
- 7.3 QUALITY ASSURANCE/QUALITY CONTROL SAMPLES 15
  - 7.3.1 Field QUALITY ASSURANCE/QUALITY CONTROL 15
  - 7.3.2 Laboratory QUALITY ASSURANCE/QUALITY CONTROL 15

8.0 INVESTIGATIVE RESULTS AND FIELD OBSERVATIONS 16
- 8.1 SUBSURFACE 16
- 8.2 LABORATORY RESULTS 16
  - 8.2.1 Comparative Guidelines 16
  - 8.2.2 Lead 16
  - 8.2.3 pH 17
  - 8.2.4 Title 22 Metals 17

9.0 ADL DATA EVALUATION AND DISCUSSION 18
- 9.1 DATA ANALYSIS 18
- 9.2 ADL CRITERIA 18
- 9.3 ADL STATISTICAL EVALUATION 18

10.0 CONCLUSIONS AND RECOMMENDATIONS 19
- 10.1 USE OF SOIL ONSITE 19
- 10.2 WASTE 19
  - 10.2.1 Classification of Waste 19
  - 10.2.2 Disposal Volume 20

11.0 LIMITATIONS 21

12.0 BIBLIOGRAPHY 22

APPENDIX A - SITE PHOTOGRAPHS A-1
APPENDIX B - BORING LOGS B-1
APPENDIX C - LABORATORY ANALYSES REPORTS C-1
APPENDIX D - STATISTICAL CALCULATIONS D-1

LIST OF TABLES

Table 1 - LEAD, ARSENIC, PESTICIDE, AND HERBICIDE LABORATORY TEST RESULTS 11
Table 2 - METALS LABORATORY TEST RESULTS 13
Table 3 - SUMMARY OF LABORATORY RESULTS (Lead and pH) 17

LIST OF FIGURES

Figure 1 - VICINITY MAP 1
Figure 2 - SITE PLAN 2
Figure 3 - CROSS SECTION A-A' 9
Figure 4 - CROSS SECTION B-B' 10

LIST OF ACRONYMS

ADL - Aerially Deposited Lead

ASTM - American Society for Testing and Materials

bgs - below ground surface

CALTRANS - California Department of Transportation

PE - Civil Engineer

CCR - California Code of Regulations

CGS - California Geological Survey

CHHSL - California Human Health Screening Levels

DHS - California Department of Health & Safety

DYA - Diaz•Yourman & Associates

DTSC - California Department of Toxic Substances Control

EPA - U.S. Environmental Protection Agency

ESA - Environmental Site Assessment

GPS - Global Positioning System

HOV - High Occupancy Vehicle

HSC - California Health and Safety Code

IS/EA - Caltrans Initial Study/Environmental Assessment

mg/kg - milligrams per kilogram

mg/l - milligrams per liter

MSL - mean sea level

NA - Not applicable

ND - Not Detected

PG - Professional Geologist

Phase II - Phase II environmental site assessment

PID - Photo Ionization Detector

QA - Quality Assurance

QC - Quality Control

ROW - Right-Of-Way

SCRRA - Southern California Regional Rail Authority

SI - Caltrans Site Investigation

STLC - Soluble Threshold Limit Concentration

TCLP - Toxicity Characterization Leaching Procedure

TPH - Total Petroleum Hydrocarbons

TTLC - Total Threshold Limit Concentration

UCL - Upper Confidence Limit

ug/kg - micrograms per kilogram

USCS - Unified Soil Classification System

USGS - US Geological Survey

Valley - San Fernando Valley

WET - California waste extraction test

EXECUTIVE SUMMARY

This Phase II environmental site assessment (Phase II) was prepared by Diaz•Yourman & Associates (DYA) for the Southern California Regional Rail Authority (SCRRA) for the proposed Empire Avenue - Buena Vista Grade Separation (Project) in Burbank, California.

The objective of the Phase II investigation was to evaluate whether soil contamination in the right-of-way (ROW) may impact construction activities, and to provide a hazard assessment for the mitigation of impacts during earthwork. The Phase II investigation was also performed so that soil excavation and disposal can be managed properly, and to inform the contractor of potential contamination so that proper mitigation measures can be implemented. Excavated soils are required by State and Federal regulations to be classified as nonhazardous or hazardous prior to reuse as fill or disposal offsite. A remediation plan is beyond the scope of our services.

Forty-eight soil samples were collected from 12 boring locations; see Figure 2. Samples were typically tested for more than one type of contamination as follows:

- Forty-eight soil samples were tested for aerially deposited lead (ADL) and arsenic. Twelve surface samples were tested for the remaining Title 22 metals and pH.
- Four shallow soil locations for pesticides, and herbicides at approximately 3,000-foot intervals along the project ROW. (Performed concurrently with ADL sampling.)

Based on review of analytical test results, DYA recommends the following restrictions for use of the soils within the areas tested for this Project:

- The existing undisturbed soils are not considered potentially hazardous waste until the soils are excavated.
- The composite soil will have a total threshold limit concentration (TTLC) less than 100 milligrams per kilogram (mg/kg), and soluble threshold limit concentration (STLC) less than 5 milligrams per liter (mg/l). Therefore, it is our opinion that the soils will have nonhazardous levels of lead or arsenic.

1.0 INTRODUCTION

This Phase II environmental site assessment (Phase II) was prepared by Diaz•Yourman & Associates (DYA) for the Southern California Regional Rail Authority (SCRRA) for the proposed Empire Avenue - Buena Vista Grade Separation (Project) in Burbank, California.

The project consisted of evaluating the site for the proposed grade separations at Empire Avenue (underpass) and Buena Vista Street (underpass) located within the SCRRA right-of-way (ROW), as shown on the Vicinity Map, Figure 1. A Site Plan is provided on Figure 2.

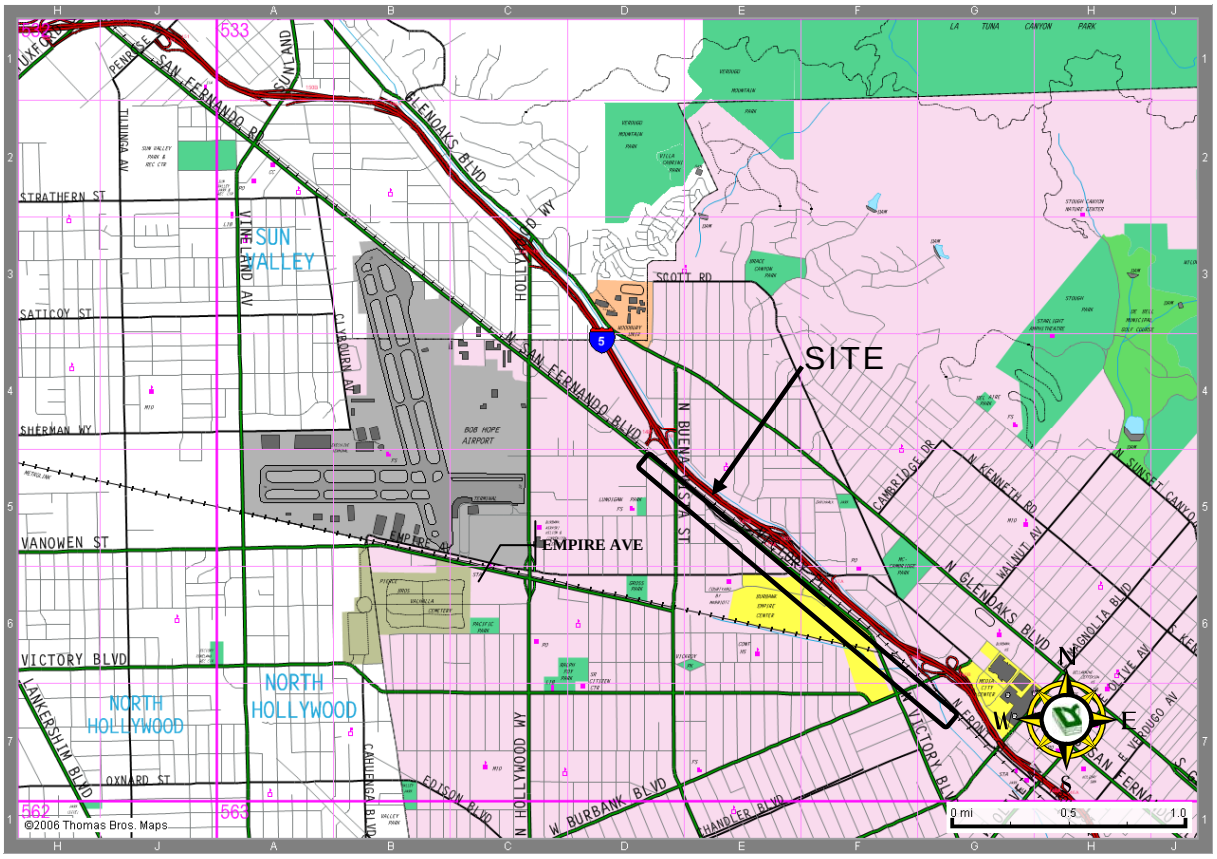

Figure 1 - VICINITY MAP

K:\datafls\PROJECTS\2009\2009-010.01\GIS\Environmental\Site Plan 5-29-2010.mxd

Reference: Aerial Photo - Microsoft 2010.mxd

Figure 2 - SITE PLAN

2.0 PROJECT BACKGROUND

2.1 DATA REVIEW

DYA reviewed an Initial Study/Environmental Assessment (IS/EA) prepared by the California Department of Transportation (Caltrans) for the Interstate (I)-5/Empire Avenue Interchange in the City of Burbank (Caltrans, 2002a) and two Caltrans Site Investigation (SI) reports prepared by Ninyo & Moore (2006a and 2006b) for the Caltrans I-5/high occupancy vehicle (HOV) widening project. Based on review of the IS/EA and two SI reports, DYA recommended performing a Phase II screening for known potential hazards in the SCRRA and Caltrans ROW for aerially deposited lead (ADL), arsenic, pesticides, and herbicides.

2.2 HISTORICAL SITE USE

The railroad tracks in the Project alignment have existed at the site since at least 1902 (US Geological Survey [USGS], 1902).

2.3 SITE VISIT

DYA performed a site visit during the Phase II investigation on May 30, 2010; photographs taken during the field investigation are presented in Appendix A.

2.4 CHEMICALS OF CONCERN

The following descriptions of chemicals of concern are based on the historical land use of the Project vicinity.

2.4.1 Aerially Deposited Lead

In soils adjacent to highways, lead has accumulated above natural levels primarily due to historic use of lead antiknock compounds in gasoline. Previous studies show that lead concentrations in near-highway surface soil were commonly highest within the upper 2 feet and decrease with depth (Caltrans, 1998). When soil with elevated lead levels is excavated, the soil becomes a regulated waste. The U.S. Environmental Protection Agency (EPA) and California Department of Toxic Substances (DTSC) have established limit concentrations of lead in waste

soil based on specified testing methods that trigger classification of waste soil as a hazardous waste, with guidelines for appropriate disposition (EPA, 2001).

2.4.2 Railroad Weed Control

Railroad operations have historically been known to use various substances for weed control within the railroad ROW. Surface soils within the railroad ROW may contain hazardous materials from the use of weed control, including herbicides containing arsenic.

2.4.3 Metals

Based on previous Phase II investigations performed in Caltrans' ROW, there is potential for elevated levels of other California Code of Regulations (CCR) Title 22 metals from multiple sources.

2.5 GEOLOGY AND GROUNDWATER

The Project is located in the San Fernando Valley (Valley), which is an east-trending structural depression filled with alluvial sedimentary units derived from the adjacent uplands that form the eastern Transverse Ranges provinces. The Valley is of low topographic relief and slopes gently downward toward the Los Angeles River. An alluvial fan blankets most of the Burbank Quadrangle. The natural sediments along the Project corridor are primarily composed of sand and silty sand with some gravel (California Geological Survey [CGS], 1998). The topography has been modified by urbanization and fill, underlies many buildings, streets and highways throughout the area. The thickness of Holocene alluvial sediments at the Project site is estimated to be approximately 900 feet, below which Tertiary-age bedrock units of consolidated sedimentary rocks are likely to occur (California Department of Water Resources [DWR], 2004).

Groundwater was not encountered in the Caltrans borings that ranged from 26 to 181 feet deep. Historical groundwater levels ranged from 80 feet below the ground surface (bgs; elevation 615 feet mean sea level [MSL]) at the northwestern edge of the Project site to 20 feet bgs (elevation 555 feet MSL) at the southeastern edge of the Project site (CGS, 1998). A Caltrans foundation report for the Victory Place Separation (Caltrans, 2006) identified site-specific groundwater measurements taken near the proposed Project that indicate groundwater levels historically below 100 feet bgs (elevation 525 feet MSL).

3.0 OBJECTIVE

The objective of the Phase II investigation was to evaluate whether soil contamination in the ROW may impact construction activities, and to provide a hazard assessment for mitigating impacts during earthwork. The Phase II investigation was also performed so that soil excavation and disposal can be managed properly and to inform the contractor of potential contamination so that proper mitigation measures can be implemented. Excavated soils are required by State and Federal regulations to be classified as nonhazardous or hazardous prior to reuse as fill or disposal offsite. A remediation plan was beyond the scope of our services.

4.0 SCOPE OF WORK

The scope of this Phase II investigation consisted of the following:

- Reviewing existing data.
- Preparing a site-specific health and safety plan.
- Notifying Underground Service Alert.
- Collecting soil samples in the field.
- Performing laboratory analyses.
- Developing preliminary conclusions regarding impact of soil contamination on proposed construction.
- Preparing this Phase II report.

5.0 SAMPLING METHODOLOGY

The approximate boring locations for environmental soil testing are shown on the Site Plan, Figure 2. The proposed borings were spaced as an average interval of approximately 800 linear feet. The soil samples collected were transported to the laboratory, and soil samples not tested were put on hold for a limited time for potential future testing.

Borings were performed using a direct push rig. One soil sample was collected at the surface from each boring with 2-inch-diameter, 6-inch-long stainless steel tube using a manually driven sampler with a slide hammer. Three soil samples were collected from each boring with 1-inch-diameter, 2-foot-long acetate liners using direct push methods. The soil collected in the stainless steel tubes or acetate liners were capped with Teflon sheets and end-caps. The soil samples were collected in acetate liners at the ground surface (0 to 0.5 foot), 1 foot (1 to 1.5 feet), 2 feet (2 to 2.5 feet), and 5 feet (5 to 5.5 feet) below existing grades. Surface debris and vegetation was cleared before the soil samples were collected. The soil samples were labeled to specify the sample location and depth. The soil samples were then placed in ziploc bags, placed on ice, and stored inside coolers. Borings were backfilled with bentonite chips and sand. No excess soils were generated during excavation of the borings. Photographs of the boring locations are provided in Appendix A.

The borings were logged by a licensed Civil Engineer (professional engineer [PE]). The boring logs document the sample location, sampling procedures, and other pertinent field activities. The boring locations were identified in the field using a hand-held differential global positioning system (GPS) unit with an estimated 6-foot horizontal accuracy. Boring logs are presented in Appendix B. The soil samples and boring logs were reviewed at DYA's office by a second engineer under the supervision of a PE or Professional Geologist (PG).

Soils encountered in the test borings were classified in general accordance with the American Society for Testing and Materials (ASTM) Soil Classification System (ASTM D2488) and are presented on the boring logs in Appendix B. Chain-of-custody procedures are described in Section 7.2.

6.0 LABORATORY ANALYSIS

Test America in Irvine, California, performed laboratory testing for the Project. Test America is certified by the State of California Department of Health Services (DHS) to perform the designated analyses. Laboratory reports are presented in Appendix C.

6.1.1 LEAD AND ARSENIC

Soil samples from each boring were analyzed for lead and arsenic total threshold limit concentration (TTLC) by EPA Method 6010B.

For lead, Caltrans guidelines (2001) for ADL were used. The guidelines recommend that soil samples with lead TTLC less than 1,000 milligrams per kilogram (mg/kg), but greater than or equal to 50 mg/kg, be tested for soluble threshold limit concentration (STLC) using EPA method 6010B. One soil sample with lead STLC greater than 5 milligrams per liter (mg/l) was tested for toxicity characterization leaching procedure (TCLP), using EPA method 6010B. A summary of the lead laboratory test results are presented on Cross Sections A-A' and B-B', Figure 3 and Figure 4, respectively. The locations of the cross sections are shown on Figure 2. A summary of the laboratory test results is presented in Table 1.

Soil samples tested for lead were also tested for arsenic, because historically the arsenic contamination also tends to occur in the surficial soils (upper 5 feet). Soil samples with arsenic TTLC greater than the background level of 11 mg/kg (Kearney, 1996) were tested for STLC using EPA method 6010B. A summary of the arsenic laboratory test results is presented in Table 1. Samples with concentrations greater than background levels are in bold face type.

6.1.2 HERBICIDE, AND PESTICIDE TESTING

Four surface samples from the borings were also analyzed for chlorinated pesticides (EPA method 8081A), organo-phosphoros pesticide (EPA method 8141A), and chlorinated acid herbicides (EPA method 8151A). The results of pesticide and herbicide laboratory testing above reporting limits are also summarized in Table 1.

Template: ENVIRONMENTAL CROSS-SECTIONS DEPTH

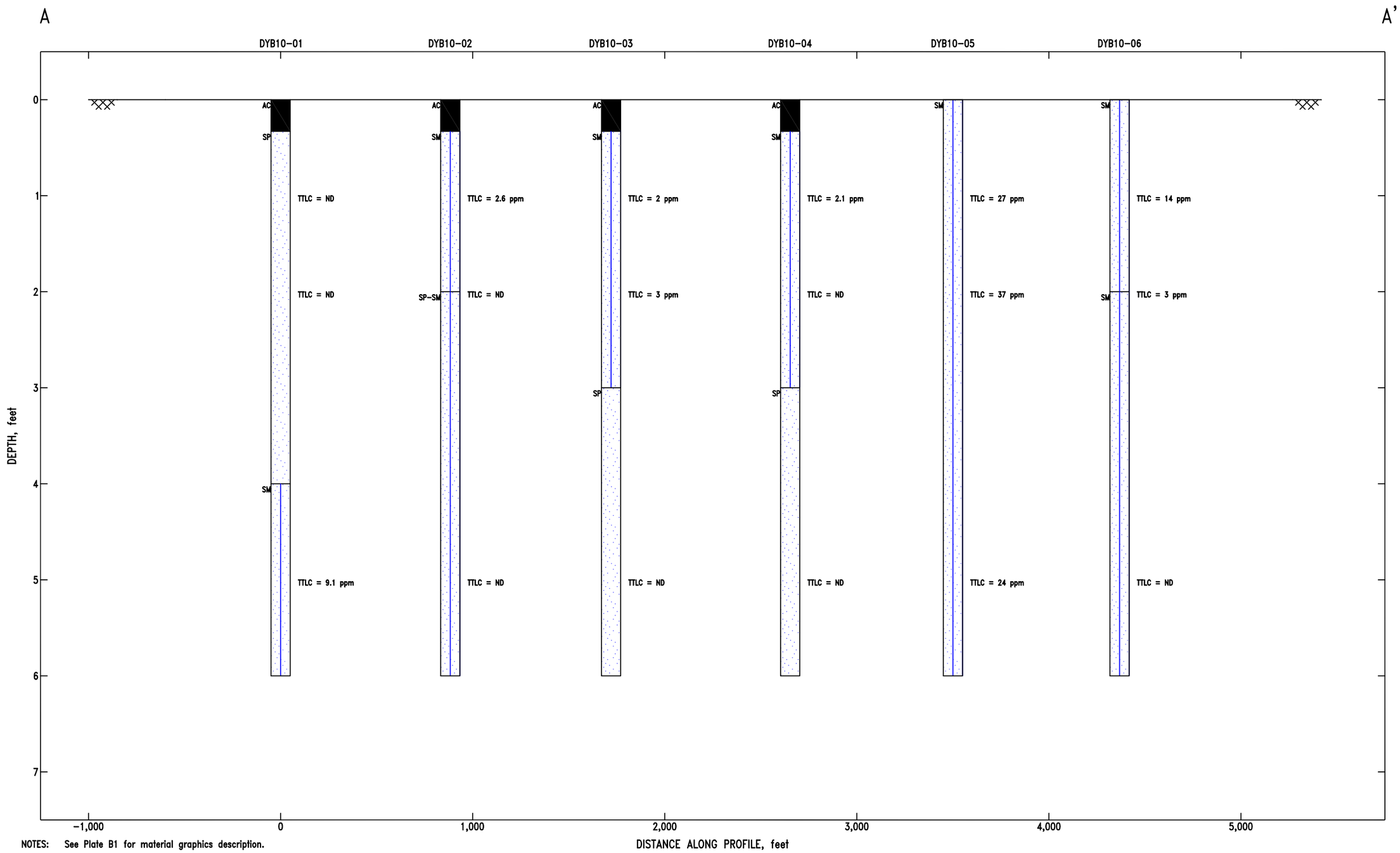

NOTES: See Plate B1 for material graphics description.
Symbol to left of graphic column is based on ASTM D2487 and D2488.
Lead concentrations.
ND – not detected.
ppm – parts per million.

Figure 3 - CROSS SECTION A-A'

Template: ENVIRONMENTAL CROSS-SECTIONS DEPTH

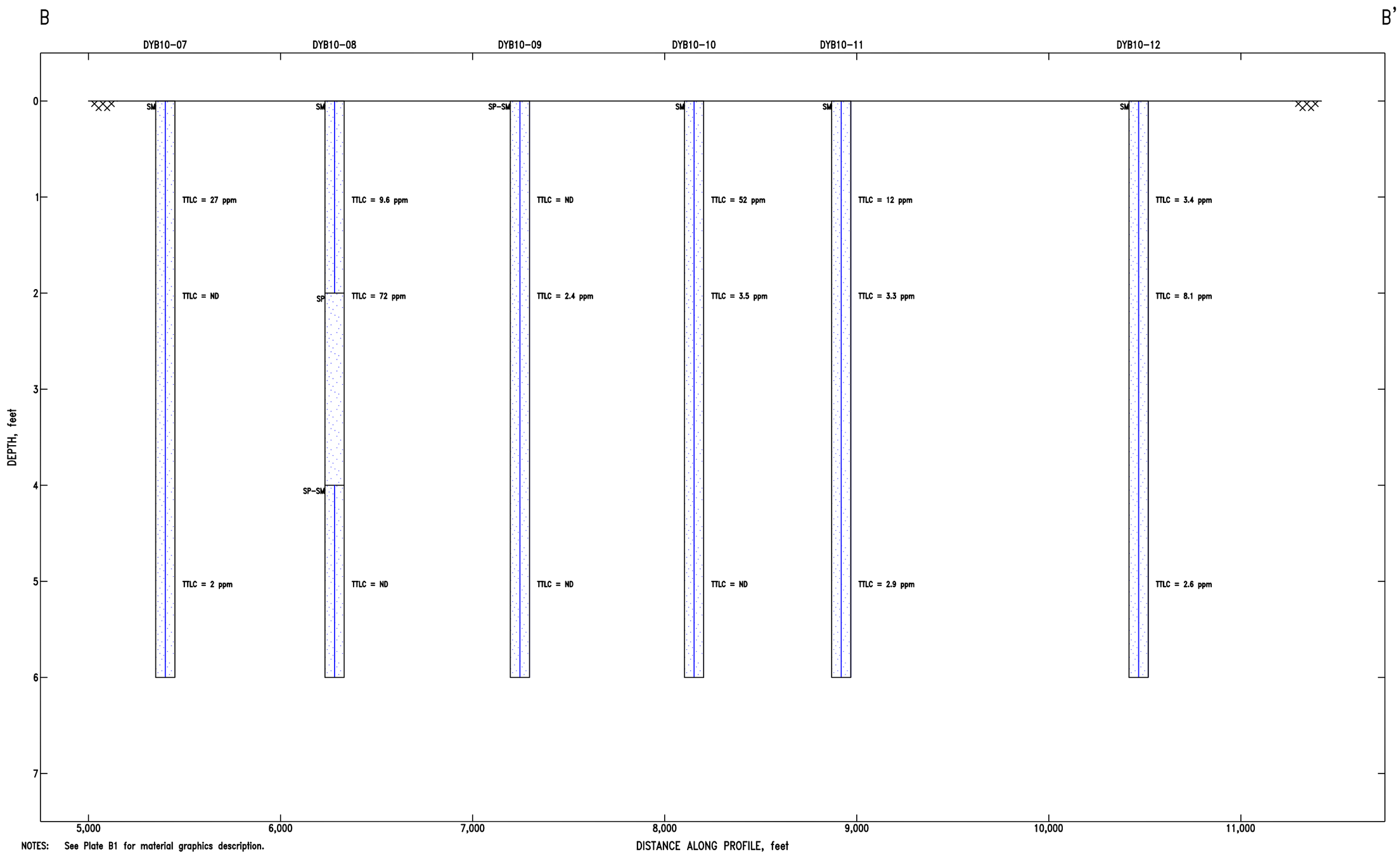

NOTES: See Plate B1 for material graphics description.
Symbol to left of graphic column is based on ASTM D2487 and D2488.
Lead concentrations.
ND – not detected.
ppm – parts per million.

Figure 4 - CROSS SECTION B-B'

Table 1 - LEAD, ARSENIC, PESTICIDE, AND HERBICIDE LABORATORY TEST RESULTS

SAMPLE ID	DEPTH (feet)	LEAD		ARSENIC		HERBICIDES (EPA 8151)		PESTICIDES (EPA 8081A/8141A)	
		TTLC (mg/kg)	STLC WET (mg/l)	TTLC (mg/kg)	STLC WET (mg/l)	Analyte	Test Result (μg/kg)	Analyte	Test Result (μg/kg)
DYB10-01	0	5.4	--	ND	--	ND	ND	ND	ND
	1	ND	--	ND	--	--	--	--	--
	2	ND	--	ND	--	--	--	--	--
	5	9.1	--	ND	--	--	--	--	--
DYB10-02	0	5.6	--	ND	--	--	--	--	--
	1	2.6	--	ND	--	--	--	--	--
	2	ND	--	ND	--	--	--	--	--
	5	ND	--	ND	--	--	--	--	--
DYB10-03	0	2.4	--	ND	--	--	--	--	--
	1	2.0	--	ND	--	--	--	--	--
	2	3.0	--	ND	--	--	--	--	--
	5	ND	--	ND	--	--	--	--	--
DYB10-04	0	25	--	ND	--	--	--	--	--
	1	2.1	--	ND	--	--	--	--	--
	2	ND	--	ND	--	--	--	--	--
	5	ND	--	ND	--	--	--	--	--
DYB10-05	0	34	--	2.1	--	ND	ND	ND	ND
	1	27	--	9.6	--	--	--	--	--
	2	37	--	5.2	--	--	--	--	--
	5	24	--	2.7	--	--	--	--	--
DYB10-06	0	**81**[†]	4.1[†]	4.4	--	--	--	--	--
	1	14	--	ND	--	--	--	--	--
	2	3.0	--	ND	--	--	--	--	--
	5	ND	--	ND	--	--	--	--	--
DYB10-07	0	7.4	--	2.2	--	--	--	--	--
	1	27	--	3.7	--	--	--	--	--
	2	ND	--	ND	--	--	--	--	--
	5	2.0	--	ND	--	--	--	--	--
DYB10-08	0	29	--	2.8	--	--	--	--	--
	1	9.6	--	2.2	--	--	--	--	--
	2	**70**[†]	4.8*,[†]	5.6	--	--	--	--	--
	5	ND	--	ND	--	--	--	--	--
DYB10-09	0	5.5	--	**27**	1.1	ND	ND	ND	ND
	1	ND	--	2.5	--	--	--	--	--
	2	2.4	--	ND	--	--	--	--	--
	5	ND	--	ND	--	--	--	--	--
DYB10-10	0	**75**[†]	3.1[†]	9.2	--	--	--	--	--
	1	52	--	**12**	0.4	--	--	--	--
	2	3.5	--	5.7	--	--	--	--	--
	5	ND	--	ND	--	--	--	--	--
DYB10-11	0	14	--	5.2	--	--	--	--	--
	1	12	--	**15**	0.37	--	--	--	--
	2	3.3	--	2.7	--	--	--	--	--
	5	2.9	--	ND	--	--	--	--	--

Table 1 - LEAD, ARSENIC, PESTICIDE, AND HERBICIDE LABORATORY TEST RESULTS

SAMPLE ID	DEPTH (feet)	LEAD		ARSENIC		HERBICIDES (EPA 8151)		PESTICIDES (EPA 8081A/8141A)	
		TTLC (mg/kg)	STLC WET (mg/l)	TTLC (mg/kg)	STLC WET (mg/l)	Analyte	Test Result (μg/kg)	Analyte	Test Result (μg/kg)
DYB10-12	0	13	--	3.9	--	ND	ND	**Chlordane**	76
	1	3.4	--	ND	--	ND	ND	**Toxaphene**	240
	2	8.1	--	ND	--	--	--	--	--
	5	2.6	--	2.9	--	--	--	--	--

Notes:

* Sample also tested for toxicity characterization leaching procedure (TCLP) and the result was nondetect.

† Sample retested. Retested results provided in a table.

- Samples with concentrations greater than background levels are in bold face type.
- -- = not tested.
- ND = nondetect.
- TTLC = Title 22 total threshold limit concentration.
- STLC = Title 22 soluble threshold limit concentration.
- mg/kg = milligrams per kilogram.
- mg/l = milligrams per liter.
- μg/kg = micrograms per kilogram.

6.1.3 Metals

Selected soil samples collected from surface samples were analyzed for the California Title 22 list of 17 hazardous waste metals. Results from these laboratory tests are summarized in Table 2.

Table 2 - METALS LABORATORY TEST RESULTS

		Sb	As	Ba	Be	Cd	Cr	Co	Cu	Pb	Hg	Mo	Ni	Se	Ag	Tl	V	Zn
TTLC (mg/kg)		500	500	10,000	75	100	2,500	8,000	2,500	1,000	20	3,500	2,000	100	500	700	2,400	5,000
CHHSL (mg/kg)		380	0.24	63,000	1,700	7.5	100,000	3,200	38,000	3,500	180	4,800	16,000	4,800	4,800	63	6,700	100,000
Background Range[1] (mg/kg)		0.15 to 1.95	0.6 to 11	133 to 1,400	0.25 to 2.7	0.05 to 1.7	23 to 1579	2.7 to 46.9	9.1 to 96.4	14.3 to 107.9	0.1 to 0.9	0.1 to 9.6	13 to 1210	0.015 to 0.43	0.1 to 8.3	0.17 to 1.1	39 to 288	88 to 236
Reporting Limits[2] (mg/kg)		3	5	1	1	2	2	2	1	3	0.1	1	2	5	2	2	5	1
SAMPLE ID.	**DEPTH (feet)**	**RESULTS**																
DYB10-01	0	ND	ND	56	ND	ND	6.8	3.5	11	5.4	0.020	ND	4.9	ND	ND	ND	22	30
DYB10-02	0	ND	ND	100	ND	0.51	15	5.9	20	5.6	0.028	ND	6.9	ND	ND	ND	32	47
DYB10-03	0	ND	ND	86	ND	ND	8.8	5.2	11	2.4	ND	ND	5.1	ND	ND	ND	28	34
DYB10-04	0	ND	ND	87	ND	ND	24	5.3	21	25	0.033	ND	14	ND	ND	ND	25	50
DYB10-05	0	ND	2.1	64	ND	ND	6.7	3.9	9.9	34	0.023	ND	4.8	ND	ND	ND	19	39
DYB10-06	0	ND	4.4	79	ND	0.82	9.8	5.0	18	**81**†	0.033	ND	8.3	ND	ND	ND	25	100
DYB10-07	0	ND	2.2	79	ND	ND	12	6.6	16	7.4	ND	ND	8.9	ND	ND	ND	27	35
DYB10-08	0	ND	2.8	80	ND	0.59	8.6	5.0	14	29	0.023	ND	5.6	ND	ND	ND	23	62
DYB10-09	0	ND	27	95	ND	0.58	12	6.4	13	5.5	ND	ND	7.2	ND	ND	ND	36	41
DYB10-10	0	ND	9.2	130	ND	1.0	18	7.9	27	**75**†	0.039	ND	12	ND	ND	ND	46	84
DYB10-11	0	ND	5.2	110	ND	0.61	14	6.9	18	14	0.057	ND	8.4	ND	ND	ND	34	74
DYB10-12	0	ND	3.9	110	ND	0.73	17	7.5	25	13	0.069	ND	12	ND	ND	ND	37	70

Notes:

†Sample retested. Retested results provided in the table.

1. Background Range - Kearny (1996)
2. Effective detection limits

- Samples with concentrations greater than background levels are in bold face type
- TTLC = Title 22 total threshold limit concentration
- CHHSL = California Human Health Screening Levels - Commercial/Industrial Land Use (California EPA, 2005)
- mg/kg = milligrams per kilogram
- ND = nondetect.
- Sb = Antimony
- As = Arsenic
- Ba = Barium
- Be = Beryllium
- Cd = Cadmium
- Cr = Chromium (III)
- Co = Cobolt
- Cu = Copper
- Pb = Lead
- Hg = Mercury
- Mo = Molybdenum
- Ni = Nickel
- Se = Selenium
- Ag = Silver
- Tl = Thallium
- V = Vanadium
- Zn = Zinc

7.0 QUALITY ASSURANCE/QUALITY CONTROL

7.1 DECONTAMINATION

The sampling equipment was decontaminated prior to collecting each soil sample. The decontamination consisted of washing the equipment and/or sampler in water mixed with a nonphosphate detergent, rinsing with water, rinsing with distilled water, and then drying using paper towels (paper towels were used once.) Brushes were used with the nonphosphate detergent to remove debris from the hand-augering equipment prior to rinsing. Decontamination water was disposed of in the landscaped area such that the water would not run off into a storm drain.

7.2 CHAIN OF CUSTODY

Soil samples were collected in stainless steel tubes and acetate liners, and stored in a cooler with ice. A chain-of-custody form was filled out to track the soil samples. The chain-of-custody form traveled with the cooler and documented that the samples were maintained in possession until relinquished to the laboratory. The chain-of-custody form remained with the soil samples at all times and was placed in the cooler with the samples. The completed chain-of-custody form was placed in a waterproof carrier (e.g., zip-lock bag), and taped to the inside lid of the cooler. Each person involved in the chain of possession signed the chain-of-custody form when sample custody was relinquished or received. Custody of a sample is defined as being in one's actual possession, being in one's view after being in his or her physical possession, was in one's physical possession and that person then secured the sample to prevent tampering, and/or in an identified and designated secure area. Copies of the chain-of-custody forms are provided with the results of the laboratory testing in Appendix C.

7.3 QUALITY ASSURANCE/QUALITY CONTROL SAMPLES

7.3.1 Field QUALITY ASSURANCE/QUALITY CONTROL

7.3.1.1 Equipment Blank

One equipment blank was collected by pouring deionized water through the sampling device and into a glass jar after decontamination was completed. The testing for the equipment blanks was consistent with the testing performed on samples collected using the equipment. The blank samples were tested for pesticides, herbicides, and Title 22 metals. The results for the testing of the equipment blank were below reporting limits.

7.3.2 Laboratory Quality Assurance/Quality Control

Laboratory Quality Assurance/Quality Control (QA/QC) was performed in accordance with the respective EPA protocols, and is described in the laboratory analysis reports presented in Appendix C.

8.0 INVESTIGATIVE RESULTS AND FIELD OBSERVATIONS

8.1 SUBSURFACE

Soils encountered in the borings were noted to be silty sands (SM, Unified Soil Classification System [USCS] Classification [ASTM D2487 and 2488]). Groundwater was not encountered during sampling excavations.

8.2 LABORATORY RESULTS

8.2.1 Comparative Guidelines

The following reference guidelines were used to evaluate the laboratory test results:

- Caltrans/DTSC for ADL, Proposed Soil Lead Management Criteria as Part of Caltrans Highway Construction Maintenance (Caltrans, 1998), and Lead Testing Recommendations for Districts with Aerially Deposited Lead Variance (Caltrans, 2001) were used for evaluation of ADL concentration.
- California Health and Safety Code (HSC), Division 20, Chapter 6.5, Hazardous Waste Control (HSC, 2010) was used for comparison to hazardous waste classification concentrations.
- California Environmental Protection Agency (2005), Use of California Human Health Screening Levels (CHHSL) for use in Evaluating Contaminated Properties, guidelines used to compare concentrations of certain hazardous chemical constituents in soil to thresholds of concern for risk to human health.
- Background Concentrations of Trace and Major Elements in California Soils (Kearny, 1996), used as a frame of reference to evaluate for elevated metals in soils.

8.2.2 Lead

A summary of the laboratory results for the discrete soil samples tested for lead is provided in Table 3. As shown in Table 3, none of the discrete soil samples tested had concentrations of lead that exceeded regulatory TTLC of 1,000 mg/kg, or the regulatory STLC of 5 milligrams per liter (mg/l).

Table 3 - SUMMARY OF LABORATORY RESULTS (Lead and pH)

NUMBER OF TESTS								pH (average)
TTLC (mg/kg)				STLC (mg/l)		TCLP (mg/l)		
<50	50 to 350	350 to 1,000	>1,000	≤5	>5	≤5	>5	
45	3	0	0	3	0	1	0	7

Notes:
- TTLC = Total threshold limit concentration = EPA Method 6010.
- STLC = soluble threshold limit concentration.
- mg/kg = milligrams per kilogram.
- mg/l = milligrams per liter.

One sample was tested for TCLP. The result of the TCLP test was below the federal regulatory limit of 5 mg/l.

8.2.3 pH

The tested values of pH varied from 5.9 to 8.4 with an average of 7 as summarized in Table 3. None of the discrete soil samples tested had pH levels less than 5.

8.2.4 Title 22 Metals

Except for lead and arsenic, none of the discrete soil samples tested for Title 22 metals had concentrations that exceeded the regulatory TTLC values for hazardous waste specified in the California Code of Regulations Title 22, see Table 2.

9.0 ADL DATA EVALUATION AND DISCUSSION

9.1 DATA ANALYSIS

Results of the lead laboratory tests were evaluated using statistical analysis methods prescribed by Caltrans guidelines for ADL. DYA analyzed the lead testing data using statistical methods noted in EPA SW-846. The mean, median, standard deviation, and 95 percent upper confidence limits were calculated for TTLC. A regression analysis of TTLC versus STLC was performed to determine the correlation between the total lead and soluble lead as a quality check to field and laboratory procedures.

The data sets were checked for the appropriate number of samples and in the datasets the number of samples tested for total lead exceeded the minimum number required for a statistical analysis according to EPA SW-846.

The 95 percent upper confidence limit (UCL) values were used to determine handling and disposal of excess soil in accordance with CCR Title 22 (HSC, 2010; 1,000 mg/kg regulation limit). The analysis was performed to obtain an efficient management of soil using a combined layer analysis.

9.2 ADL CRITERIA

Waste soil is classified as hazardous waste if the TTLC is greater than 1,000 mg/kg or greater than 5 mg/l STLC.

9.3 ADL STATISTICAL EVALUATION

Statistical analyses were performed on combined layers using an arcsine transformation in accordance with EPA SW-846, since the TTLC variance was higher than the TTLC mean. The calculated 95 percent UCL was then reverse transformed to obtain the concentration values. The combined layer did not exceed the threshold for nonhazardous waste of 1,000 mg/kg TTLC content or 5 mg/l STLC content. The results are provided in Section 10 and the analysis is provided in Appendix D.

10.0 CONCLUSIONS AND RECOMMENDATIONS

The soils excavated at the Project do not have hazardous levels of lead. In our opinion, there should be no restrictions on the use of the soil excavated at the Project site.

10.1 USE OF SOIL ONSITE

The statistical results indicated that lead levels in the waste soil generated by earthwork or excavation in the upper 5 feet will be 23 mg/kg TTLC that is below 1,000 mg/kg TTLC regulation limit. The test results from STLC were below 5 mg/l STLC.

If the soil is not used within the corridor as described above, the excavated soil stockpile should be tested to determine the appropriate waste disposal as discussed in Section 10.2.

10.2 WASTE

10.2.1 Classification of Waste

10.2.1.1 Lead

Waste with TTLC of lead greater than 1,000 mg/kg or STLC of lead greater than 5 mg/l are in excess of California hazardous waste criteria and must be disposed of in a Class I hazardous waste landfill. In addition, waste with TCLP levels greater than 5 mg/l are in excess of federal hazardous waste criteria and must be disposed of in a Class I hazardous waste landfill. The site soils had a statistical TTLC concentration of less than 23 mg/kg. There is no restriction on disposal of soil with TTLC of lead less than 1,000 mg/kg and STLC of lead less than 5 mg/l, but excavated soil stockpiles should be tested prior to disposal.

10.2.1.2 Arsenic

Waste with TTLC of arsenic greater than 500 mg/kg or STLC of lead greater than 5 mg/l are in excess of California hazardous waste criteria and must be disposed of in a Class I hazardous waste landfill. In addition, waste with TCLP levels greater than 5 mg/l are in excess of federal hazardous waste criteria and must be disposed of in a Class I hazardous waste landfill. The site soils had a TTLC values less than 500 mg/kg and STLC less than 5 mg/l. There is no

restriction on disposal of soil with TTLC of lead less than 500 mg/kg and STLC of lead less than 5 mg/l, but excavated soil stockpiles should be tested prior to disposal.

10.2.2 Disposal Volume

The volume of soil to be disposed will depend on actual grading activities. The actual limits of the excavation are unknown at this time.

11.0 LIMITATIONS

This report was prepared for this project in accordance with generally accepted geotechnical engineering practices common to the local area. No other warranty, expressed or implied, is made.

The analyses and recommendations contained in this report are based on the literature review, field investigation, and laboratory testing conducted in the area. The results of the field investigation indicate subsurface conditions only at the specific locations and times, and only to the depths penetrated. They do not necessarily reflect strata variations that may exist between such locations.

The validity of our recommendations is based in part on assumptions about the stratigraphy. Observations during construction can help confirm such assumptions. If subsurface conditions different from those described are noted during construction, recommendations in this report must be re-evaluated.

This report is intended for use only for the project described. In the event that any changes in the nature, design, or location of the facilities are planned, the conclusions and recommendations contained in this report should not be considered valid unless the changes are reviewed and conclusions of this report modified or verified in writing by DYA. We are not responsible for any claims, damages, or liability associated with the interpretation of subsurface data or reuse of the subsurface data or engineering analyses without our express written authorization.

12.0 BIBLIOGRAPHY

American Society for Testing and Materials, 2009, Annual Book of Standards.

California Department of Transportation, 1998, Proposed Soil Lead Management Criteria as Part of Caltrans Highway Construction Maintenance, June 5, 1998.

California Department of Transportation, 2001, Lead Testing Recommendations for Districts with Aerially Deposited Lead Variance, March 16, 2001.

California Department of Transportation, 2002a, Interstate 5/Empire Avenue Interchange, City of Burbank, Los Angeles County, June 21, 2002.

California Department of Transportation, 2002b, Quality Control and Assurance Guidance, July 15, 2002.

California Department of Transportation, 2006, I-5 Empire Interchange, Victory Place Separation (NEW), Bridge No. 53C-2171, May 25, 2006.

California Department of Water Resources, 2004, California's Groundwater: Bulletin 118, South Coast Hydrologic Region, San Fernando Valley Groundwater Basin, updated February 27, 2004.

California Environmental Protection Agency, 2005, Use of California Human Health Screening Levels (CHHSL) in Evaluating Contaminated Properties.

California Geological Survey, 1998, Open File Report 98-07, Seismic Hazard Evaluation for the Burbank 7.5-Minute Quadrangle, Los Angeles, California.

California Health and Safety Code, 2010, Division 20, Chapter 6.5, Hazardous Waste Control, Section 66261.1.

Kearny, 1996, Kearny Foundation of Soil Science Division of Agriculture and Natural Resources, University of California Riverside, Background Concentrations of Trace and Major Elements in California Soils.

Ninyo & Moore, 2006a, Revised Site Investigation Report, I-5 HOV/Empire Interchange Improvement, Empire Avenue in Burbank, Construct HOV Lanes and Modify Interchange (07-LA-5; PM 29.543/31.467), Burbank, California, April 28, 2006.

Ninyo & Moore, 2006b, Addendum to Site Investigation Report, I-5 HOV/Empire Interchange Improvement, Empire Avenue in Burbank, Construct HOV Lanes and Modify Interchange (07-LA-5; PM 29.543/31.467), Burbank, California, July 24, 2006.

U.S. Environmental Protection Agency, 2001, Guidance Document SW-846, Test Methods for Evaluating Solid Waste, Physical/Chemical Methods, Volume 1, Chapter 9, Sampling Plan, 3rd Edition, August 2001.

U.S. Geological Survey, 1902, Burbank, California Topographic Map.

APPENDIX A
SITE PHOTOGRAPHS

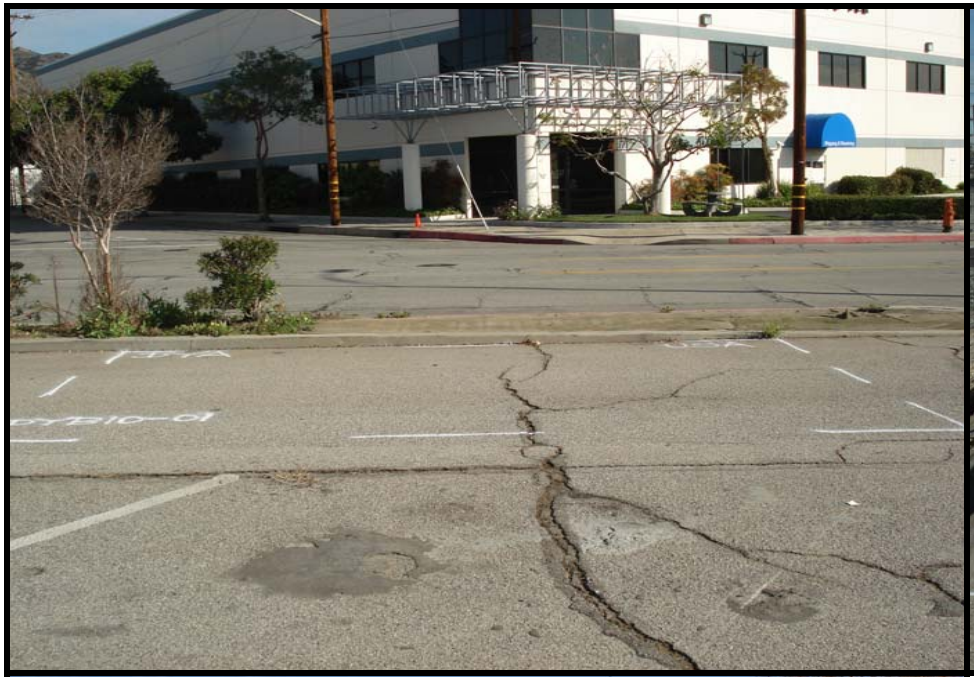

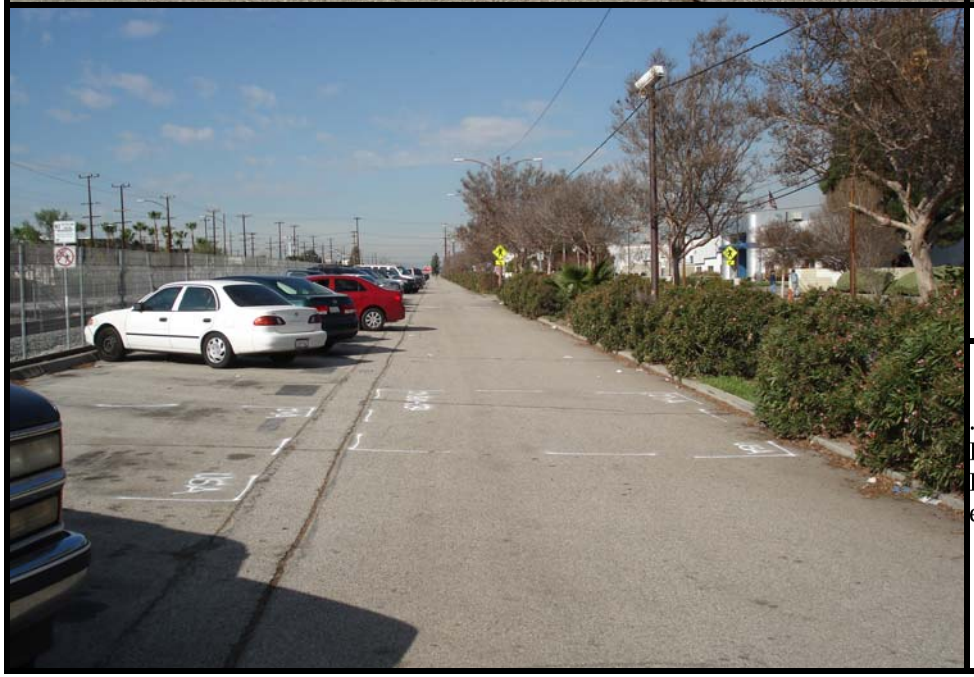

Photo 1:

DYB10-01 facing north east towards California Street. Location is on north east side of SCRRA ROW.

Photo 2:

DYB10-02 facing north west. SCRRA ROW visible at left of photo, San Fernando Road visible at right of photo. Site is south east of DYB10-01.

Photo 3:

.DYB10-03 facing north west. SCRRA ROW visible at left of photo, San Fernando Road visible at right of photo. Site is south east of DYB10-02.

Phase II Investigation
SCRRA EMPIRE STREET - BUENA VISTA STREET GRADE SEPARATION
Burbank, California

Diaz Yourman Associates No. 2009-010.01

Photo date: January 17, 2010

Photo 4:

DYB10-04 facing north west. SCRRA ROW visible at left of photo, San Fernando Road visible at right of photo. Site is south east of DYB10-03.

Photo 5:

DYB10-05 facing north west. SCRRA ROW visible at right of photo, San Fernando Road visible at left of photo. Intersection seen is Buena Vista Street.

Photo 6:

DYB10-06 facing north west. SCRRA ROW visible at right of photo, San Fernando Road visible at left of photo. Intersection seen is Brighton Street.

Phase II Investigation
SCRRA EMPIRE STREET - BUENA VISTA STREET GRADE SEPARATION
Burbank, California

Diaz Yourman Associates No. 2009-010.01

Photo date: January 17, 2010

Photo 7:

DYB10-07 facing north west. SCRRA ROW visible at right of photo, Victory Place visible at left of photo. In the distance is San Fernando Road undercrossing.

Photo 8:

DYB10-08 facing south east. SCRRA ROW visible at left of photo, Victory Place visible at right of photo. Intersection seen is Empire Avenue.

Photo 9:

DYB10-09 facing north west. SCRRA ROW visible at right of photo, Victory Place visible at left of photo. Intersection seen is Empire Avenue.

Phase II Investigation
SCRRA EMPIRE STREET - BUENA VISTA STREET GRADE SEPARATION
Burbank, California

Diaz Yourman Associates No. 2009-010.01

Photo date: January 17, 2010

Photo 10:

DYB10-10 facing south east. SCRRA ROW visible at left of photo, Victory Place visible at right of photo. Not visible in photo is Great Indoors store directly south of site.

Photo 11:

DYB10-11 facing south east. SCRRA ROW visible at left of photo. Visible to the right is Burbank Animal Shelter. Site is at area where SCRRA ROW and Victory Place no longer parallel.

Photo 12:

DYB10-06 facing north west. SCRRA ROW visible at left of photo, part of GEPCO building visible at right of photo. Overpass seen is Burbank Boulevard.

Phase II Investigation
SCRRA EMPIRE STREET - BUENA VISTA STREET GRADE SEPARATION
Burbank, California

Diaz Yourman Associates No. 2009-010.01

Photo date: January 17, 2010

APPENDIX B
BORING LOGS

SOIL CLASSIFICATION SYSTEM-ASTM D2487

MAJOR DIVISIONS			SYMBOLS GRAPH	SYMBOLS LETTER	TYPICAL DESCRIPTIONS
COARSE-GRAINED SOILS MORE THAN 50% OF MATERIAL IS LARGER THAN NO. 200 SIEVE SIZE	GRAVEL AND GRAVELLY SOILS MORE THAN 50% OF COARSE FRACTION RETAINED ON NO. 4 SIEVE	CLEAN GRAVELS (LITTLE OR NO FINES)		GW	WELL-GRADED GRAVELS, GRAVEL - SAND MIXTURES, LITTLE OR NO FINES
				GP	POORLY GRADED GRAVELS, GRAVEL - SAND MIXTURES, LITTLE OR NO FINES
		GRAVELS WITH FINES (APPRECIABLE AMOUNT OF FINES)		GM	SILTY GRAVELS, GRAVEL - SAND - SILT MIXTURES
				GC	CLAYEY GRAVELS, GRAVEL - SAND - CLAY MIXTURES
	SAND AND SANDY SOILS MORE THAN 50% OF COARSE FRACTION PASSING ON NO. 4 SIEVE	CLEAN SANDS (LITTLE OR NO FINES)		SW	WELL-GRADED SANDS, GRAVELLY SANDS, LITTLE OR NO FINES
				SP	POORLY GRADED SANDS, GRAVELLY SAND, LITTLE OR NO FINES
		SANDS WITH FINES (APPRECIABLE AMOUNT OF FINES)		SM	SILTY SANDS, SAND - SILT MIXTURES
				SC	CLAYEY SANDS, SAND - CLAY MIXTURES
FINE-GRAINED SOILS MORE THAN 50% OF MATERIAL IS SMALLER THAN NO. 200 SIEVE SIZE	SILTS AND CLAYS	LIQUID LIMIT LESS THAN 50		ML	INORGANIC SILTS AND VERY FINE SANDS, ROCK FLOUR, SILTY OR CLAYEY FINE SANDS OR CLAYEY SILTS WITH SLIGHT PLASTICITY
				CL	INORGANIC CLAYS OF LOW TO MEDIUM PLASTICITY, GRAVELLY CLAYS, SANDY CLAYS, SILTY CLAYS, LEAN CLAYS
				OL	ORGANIC SILTS AND ORGANIC SILTY CLAYS OF LOW PLASTICITY
	SILTS AND CLAYS	LIQUID LIMIT GREATER THAN 50		MH	INORGANIC SILTS, MICACEOUS OR DIATOMACEOUS FINE SAND OR SILTY SOILS
				CH	INORGANIC CLAYS OF HIGH PLASTICITY
				OH	ORGANIC CLAYS OF MEDIUM TO HIGH PLASTICITY, ORGANIC SILTS
HIGHLY ORGANIC SOILS				PT	PEAT, HUMUS, SWAMP SOILS WITH HIGH ORGANIC CONTENTS

NOTE: DUAL SYMBOLS ARE USED TO INDICATE BORDERLINE SOIL CLASSIFICATIONS

"Push" Sampler

Split Barrel "Drive" Sampler With Liner

Standard Penetration Test (SPT) Sampler

Bag Sample

Concrete/Rock Core

Groundwater Surface

SPT "N" = 0.65 x modified California blows per foot

NP = Nonplastic
EI = Expansion Index Test
SG = Specific Gravity
SE = Sand Equivalent
UC = Unconfined Comp.
CD = Consol. Drained Triaxial.
CU = Consol. Undrained Triaxial.
UU = Undrained, Unconsol. Triaxial.
RV = R-Value
CA = Chemical Analysis
DS = Direct Shear
CN = Consolidation
CP = Collapse Potential
SA = Grain size; HD = Hydrometer
MD = Compaction Test
HC = Hydraulic Conductivity Test
[PID] Reading in ppm above background

SCRRA Metrolink Empire/Buena Vista GS
Project No. 2009-010.01

PLATE
B1

Template: DYLG1-2006; Prj ID: 2009-010.01.GPJ

BORING LOCATION:	See Figure 2	**ELEVATION AND DATUM (feet):**	707 MSL
LATITUDE:	34° 12' 12.9" N	**LONGITUDE:**	118° 20' 44.1" W
DRILLING EQUIPMENT:	6600 Direct Push	**DRILLING METHOD:**	Direct Push
BORING DIAMETER (inches):	2	**BORING DEPTH (feet):**	6
DATE STARTED:	4/30/10	**DATE COMPLETED:**	4/30/10
SPT HAMMER DROP: 30 inches	**WT:** 140 lbs	**DRIVE HAMMER DROP:** inches	**WT:** lbs
LOGGED BY: SS	**CHECKED BY:** KMV	**DRIVE SAMPLER DIAMETER (inches)**	**ID:** 2.4 **OD:** 3

Elevation (feet)	Depth (feet)	Sampler	Symbol	Blows per 6 Inches	SPT N Blows per Foot	Field Unc. Comp. Str. (tsf)	DESCRIPTION	Dry Density (pcf)	Moisture Content (%)	Liquid Limit (%)	Plasticity Index (%)	Percent Passing #200 Sieve	Other Tests [PID]
							ASPHALT CONCRETE (AC): 4 inches						
							POORLY GRADED SAND (SP): dark olive brown, moist, fine- to medium-grained sand, few fine gravel, BASE: 5 inches						
705							trace fine to coarse gravel						
	5						SILTY SAND (SM): grayish brown, moist, fine- to coarse-grained sand, trace fine to coarse gravel						
700							Bottom of boring at 6 feet. Groundwater not encountered during pushing. Hole backfilled with sand. Surface patched with cold patch asphalt.						
	10												

LOG OF BORING DYB10-01

Page 1 of 1

SCRRA Metrolink Empire/Buena Vista GS

Project No. 2009-010.01

PLATE

B2

Template: DYLG1-2006; Prj ID: 2009-010.01.GPJ

BORING LOCATION:	See Figure 2	**ELEVATION AND DATUM (feet):**	696 MSL
LATITUDE:	34° 12' 7.3" N	**LONGITUDE:**	118° 20' 36.0" W
DRILLING EQUIPMENT:	6600 Direct Push	**DRILLING METHOD:**	Direct Push
BORING DIAMETER (inches):	2	**BORING DEPTH (feet):**	6
DATE STARTED:	4/30/10	**DATE COMPLETED:**	4/30/10
SPT HAMMER DROP: 30 inches	**WT:** 140 lbs	**DRIVE HAMMER DROP:** inches	**WT:** lbs
LOGGED BY: SS	**CHECKED BY:** KMV	**DRIVE SAMPLER DIAMETER (inches)**	**ID:** 2.4 **OD:** 3

Elevation (feet)	Depth (feet)	Sampler	Symbol	Blows per 6 Inches	SPT N Blows per Foot	Field Unc. Comp. Str. (tsf)	DESCRIPTION	Dry Density (pcf)	Moisture Content (%)	Liquid Limit (%)	Plasticity Index (%)	Percent Passing #200 Sieve	Other Tests [PID]
							ASPHALT CONCRETE (AC): 4 inches						
695							SILTY SAND (SM): dark olive brown, moist, fine- to medium-grained sand, few fine gravel, BASE: 5 inches						
							POORLY GRADED SAND with SILT (SP-SM): dark olive brown, moist, fine- to coarse-grained sand, trace fine gravel						
							olive brown, no gravel						
	5												
690							Bottom of boring at 6 feet. Groundwater not encountered during pushing. Hole backfilled with sand. Surface patched with cold patch asphalt.						
	10												
685													

LOG OF BORING DYB10-02

SCRRA Metrolink Empire/Buena Vista GS

Project No. 2009-010.01

PLATE

B3

Template: DYLG1-2006; Prj ID: 2009-010.01.GPJ

BORING LOCATION:	See Figure 2	**ELEVATION AND DATUM (feet):**	686 MSL
LATITUDE:	34° 12' 2.1" N	**LONGITUDE:**	118° 20' 28.3" W
DRILLING EQUIPMENT:	6600 Direct Push	**DRILLING METHOD:**	Direct Push
BORING DIAMETER (inches):	2	**BORING DEPTH (feet):**	6
DATE STARTED:	4/30/10	**DATE COMPLETED:**	4/30/10
SPT HAMMER DROP: 30 inches	**WT:** 140 lbs	**DRIVE HAMMER DROP:** inches	**WT:** lbs
LOGGED BY: SS	**CHECKED BY:** KMV	**DRIVE SAMPLER DIAMETER (inches)**	**ID:** 2.4 **OD:** 3

Elevation (feet)	Depth (feet)	Sampler	Symbol	Blows per 6 Inches	SPT N Blows per Foot	Field Unc. Comp. Str. (tsf)	DESCRIPTION	Dry Density (pcf)	Moisture Content (%)	Liquid Limit (%)	Plasticity Index (%)	Percent Passing #200 Sieve	Other Tests [PID]
							ASPHALT CONCRETE (AC): 4 inches						
							SILTY SAND (SM): dark brown, moist, fine-grained sand						
685													
							POORLY GRADED SAND (SP): dark olive brown, moist, fine- to medium-grained sand, trace fine gravel						
	5												
680							Bottom of boring at 6 feet. Groundwater not encountered during pushing. Hole backfilled with sand. Surface patched with cold patch asphalt.						
	10												
675													

LOG OF BORING DYB10-03

SCRRA Metrolink Empire/Buena Vista GS

Project No. 2009-010.01

PLATE

B4

Template: DYLG1-2006; Prj ID: 2009-010.01.GPJ

BORING LOCATION:	See Figure 2	**ELEVATION AND DATUM (feet):**	673 MSL
LATITUDE:	34° 11' 56.2" N	**LONGITUDE:**	118° 20' 19.7" W
DRILLING EQUIPMENT:	6600 Direct Push	**DRILLING METHOD:**	Direct Push
BORING DIAMETER (inches):	2	**BORING DEPTH (feet):**	6
DATE STARTED:	4/30/10	**DATE COMPLETED:**	4/30/10
SPT HAMMER DROP: 30 inches	**WT:** 140 lbs	**DRIVE HAMMER DROP:** inches	**WT:** lbs
LOGGED BY: SS	**CHECKED BY:** KMV	**DRIVE SAMPLER DIAMETER (inches)**	**ID:** 2.4 **OD:** 3

Elevation (feet)	Depth (feet)	Sampler	Symbol	Blows per 6 Inches	SPT N Blows per Foot	Field Unc. Comp. Str. (tsf)	DESCRIPTION	Dry Density (pcf)	Moisture Content (%)	Liquid Limit (%)	Plasticity Index (%)	Percent Passing #200 Sieve	Other Tests [PID]
							ASPHALT CONCRETE (AC): 4 inches						
							SILTY SAND (SM): dark brown, moist, fine-grained sand, trace fine gravel						
670							POORLY GRADED SAND (SP): light olive brown, moist, fine- to coarse-grained sand						
							trace fine gravel						
	5												
							Bottom of boring at 6 feet. Groundwater not encountered during pushing. Hole backfilled with sand. Surface patched with cold patch asphalt.						
665													
	10												

LOG OF BORING DYB10-04

SCRRA Metrolink Empire/Buena Vista GS

Project No. 2009-010.01

PLATE

B5

Template: DYLG1-2006; Prj ID: 2009-010.01.GPJ

BORING LOCATION:	See Figure 2	**ELEVATION AND DATUM (feet):**	660 MSL
LATITUDE:	34° 11' 50.4" N	**LONGITUDE:**	118° 20' 12.4" W
DRILLING EQUIPMENT:	6600 Direct Push	**DRILLING METHOD:**	Direct Push
BORING DIAMETER (inches):	2	**BORING DEPTH (feet):**	6
DATE STARTED:	4/30/10	**DATE COMPLETED:**	4/30/10
SPT HAMMER DROP: 30 inches	**WT:** 140 lbs	**DRIVE HAMMER DROP:** inches	**WT:** lbs
LOGGED BY: SS	**CHECKED BY:** KMV	**DRIVE SAMPLER DIAMETER (inches)**	**ID:** 2.4 **OD:** 3

Elevation (feet)	Depth (feet)	Sampler	Symbol	Blows per 6 Inches	SPT N Blows per Foot	Field Unc. Comp. Str. (tsf)	DESCRIPTION	Dry Density (pcf)	Moisture Content (%)	Liquid Limit (%)	Plasticity Index (%)	Percent Passing #200 Sieve	Other Tests [PID]
							SILTY SAND (SM): olive brown, moist, fine-grained sand						
							trace fine gravel						
655	5												
							Bottom of boring at 6 feet. Groundwater not encountered during pushing. Hole backfilled with sand. Surface patched with cold patch asphalt.						
650	10												

LOG OF BORING DYB10-05

Page 1 of 1

SCRRA Metrolink Empire/Buena Vista GS

Project No. 2009-010.01

PLATE

B6

Template: DYLG1-2006; Prj ID: 2009-010.01.GPJ

BORING LOCATION:	See Figure 2	**ELEVATION AND DATUM (feet):**	648 MSL
LATITUDE:	34° 11' 44.8" N	**LONGITUDE:**	118° 20' 4.5" W
DRILLING EQUIPMENT:	6600 Direct Push	**DRILLING METHOD:**	Direct Push
BORING DIAMETER (inches):	2	**BORING DEPTH (feet):**	6
DATE STARTED:	4/30/10	**DATE COMPLETED:**	4/30/10
SPT HAMMER DROP: 30 inches	**WT:** 140 lbs	**DRIVE HAMMER DROP:** inches	**WT:** lbs
LOGGED BY: SS	**CHECKED BY:** KMV	**DRIVE SAMPLER DIAMETER (inches)**	**ID:** 2.4 **OD:** 3

Elevation (feet)	Depth (feet)	Sampler	Symbol	Blows per 6 Inches	SPT N Blows per Foot	Field Unc. Comp. Str. (tsf)	DESCRIPTION	Dry Density (pcf)	Moisture Content (%)	Liquid Limit (%)	Plasticity Index (%)	Percent Passing #200 Sieve	Other Tests [PID]
							SILTY SAND (SM): olive brown, moist, fine-grained sand, trace fine gravel						
							SILTY SAND with GRAVEL (SM): light olive brown, moist, fine- to medium-grained sand, fine gravel, trace coarse grained sand						
645													
							fine to coarse gravel						
	5												
							Bottom of boring at 6 feet. Groundwater not encountered during pushing. Hole backfilled with sand. Surface patched with cold patch asphalt.						
640													
	10												

LOG OF BORING DYB10-06

SCRRA Metrolink Empire/Buena Vista GS

Project No. 2009-010.01

PLATE

B7

Template: DYLG1-2006; Prj ID: 2009-010.01.GPJ

BORING LOCATION:	See Figure 2	**ELEVATION AND DATUM (feet):**	641 MSL
LATITUDE:	34° 11' 38.5" N	**LONGITUDE:**	118° 19' 55.2" W
DRILLING EQUIPMENT:	6600 Direct Push	**DRILLING METHOD:**	Direct Push
BORING DIAMETER (inches):	2	**BORING DEPTH (feet):**	6
DATE STARTED:	4/30/10	**DATE COMPLETED:**	4/30/10
SPT HAMMER DROP: 30 inches	**WT:** 140 lbs	**DRIVE HAMMER DROP:** inches	**WT:** lbs
LOGGED BY: SS	**CHECKED BY:** KMV	**DRIVE SAMPLER DIAMETER (inches)**	**ID:** 2.4 **OD:** 3

Elevation (feet)	Depth (feet)	Sampler	Symbol	Blows per 6 Inches	SPT N Blows per Foot	Field Unc. Comp. Str. (tsf)	DESCRIPTION	Dry Density (pcf)	Moisture Content (%)	Liquid Limit (%)	Plasticity Index (%)	Percent Passing #200 Sieve	Other Tests [PID]
							SILTY SAND (SM): dark olive brown, moist, fine-grained sand, trace fine gravel						
640													
							olive brown, trace fine to coarse gravel						
	5												
635							Bottom of boring at 6 feet. Groundwater not encountered during pushing. Hole backfilled with sand. Surface patched with cold patch asphalt.						
	10												
630													

LOG OF BORING DYB10-07

SCRRA Metrolink Empire/Buena Vista GS

Project No. 2009-010.01

PLATE

B8

Template: DYLG1-2006; Prj ID: 2009-010.01.GPJ

BORING LOCATION:	See Figure 2	**ELEVATION AND DATUM (feet):**	632 MSL
LATITUDE:	34° 11' 33.0" N	**LONGITUDE:**	118° 19' 47.1" W
DRILLING EQUIPMENT:	6600 Direct Push	**DRILLING METHOD:**	Direct Push
BORING DIAMETER (inches):	2	**BORING DEPTH (feet):**	6
DATE STARTED:	4/30/10	**DATE COMPLETED:**	4/30/10
SPT HAMMER DROP: 30 inches	**WT:** 140 lbs	**DRIVE HAMMER DROP:** inches	**WT:** lbs
LOGGED BY: SS	**CHECKED BY:** KMV	**DRIVE SAMPLER DIAMETER (inches)**	**ID:** 2.4 **OD:** 3

Elevation (feet)	Depth (feet)	Sampler	Symbol	Blows per 6 Inches	SPT N Blows per Foot	Field Unc. Comp. Str. (tsf)	DESCRIPTION	Dry Density (pcf)	Moisture Content (%)	Liquid Limit (%)	Plasticity Index (%)	Percent Passing #200 Sieve	Other Tests [PID]
							SILTY SAND (SM): grayish brown, moist, fine-grained sand						
630							POORLY GRADED SAND (SP): light yellowish brown, moist, fine-grained sand, trace fine to coarse gravel						
	5						POORLY GRADED SAND with SILT (SP-SM): yellowish brown, moist, fine- to medium-grained sand, trace fine to coarse gravel						
625							Bottom of boring at 6 feet. Groundwater not encountered during pushing. Hole backfilled with sand. Surface patched with cold patch asphalt.						
	10												

LOG OF BORING DYB10-08

SCRRA Metrolink Empire/Buena Vista GS

Project No. 2009-010.01

PLATE

B9

Template: DYLG1-2006; Prj ID: 2009-010.01.GPJ

BORING LOCATION:	See Figure 2	**ELEVATION AND DATUM (feet):**	619 MSL
LATITUDE:	34° 11' 26.9" N	**LONGITUDE:**	118° 19' 38.2" W
DRILLING EQUIPMENT:	6600 Direct Push	**DRILLING METHOD:**	Direct Push
BORING DIAMETER (inches):	2	**BORING DEPTH (feet):**	6
DATE STARTED:	4/30/10	**DATE COMPLETED:**	4/30/10
SPT HAMMER DROP: 30 inches	**WT:** 140 lbs	**DRIVE HAMMER DROP:** inches	**WT:** lbs
LOGGED BY: SS	**CHECKED BY:** KMV	**DRIVE SAMPLER DIAMETER (inches)**	**ID:** 2.4 **OD:** 3

Elevation (feet)	Depth (feet)	Sampler	Symbol	Blows per 6 Inches	SPT N Blows per Foot	Field Unc. Comp. Str. (tsf)	DESCRIPTION	Dry Density (pcf)	Moisture Content (%)	Liquid Limit (%)	Plasticity Index (%)	Percent Passing #200 Sieve	Other Tests [PID]
							POORLY GRADED SAND with SILT (SP-SM): olive brown, moist, fine- to medium-grained sand, trace coarse grained sand						
615	5						fine-grained sand, trace fine gravel						
							Bottom of boring at 6 feet. Groundwater not encountered during pushing. Hole backfilled with sand. Surface patched with cold patch asphalt.						
610	10												

LOG OF BORING DYB10-09

SCRRA Metrolink Empire/Buena Vista GS

Project No. 2009-010.01

PLATE

B10

Template: DYLG1-2006; Prj ID: 2009-010.01.GPJ

BORING LOCATION:	See Figure 2	**ELEVATION AND DATUM (feet):**	609 MSL
LATITUDE:	34° 11' 21.2" N	**LONGITUDE:**	118° 19' 29.9" W
DRILLING EQUIPMENT:	6600 Direct Push	**DRILLING METHOD:**	Direct Push
BORING DIAMETER (inches):	2	**BORING DEPTH (feet):**	6
DATE STARTED:	4/30/10	**DATE COMPLETED:**	4/30/10
SPT HAMMER DROP: 30 inches	**WT:** 140 lbs	**DRIVE HAMMER DROP:** inches	**WT:** lbs
LOGGED BY: SS	**CHECKED BY:** KMV	**DRIVE SAMPLER DIAMETER (inches)**	**ID:** 2.4 **OD:** 3

Elevation (feet)	Depth (feet)	Sampler	Symbol	Blows per 6 Inches	SPT N Blows per Foot	Field Unc. Comp. Str. (tsf)	DESCRIPTION	Dry Density (pcf)	Moisture Content (%)	Liquid Limit (%)	Plasticity Index (%)	Percent Passing #200 Sieve	Other Tests [PID]
							SILTY SAND (SM): olive brown, moist, fine-grained sand						
							trace fine gravel						
605													
	5						light yellowish brown, decreased silt content, no gravel						
							Bottom of boring at 6 feet. Groundwater not encountered during pushing. Hole backfilled with sand. Surface patched with cold patch asphalt.						
600													
	10												

LOG OF BORING DYB10-10

SCRRA Metrolink Empire/Buena Vista GS

Project No. 2009-010.01

PLATE

B11

Template: DYLG1-2006; Prj ID: 2009-010.01.GPJ

BORING LOCATION:	See Figure 2	**ELEVATION AND DATUM (feet):**	600 MSL
LATITUDE:	34° 11' 16.0" N	**LONGITUDE:**	118° 19' 23.2" W
DRILLING EQUIPMENT:	6600 Direct Push	**DRILLING METHOD:**	Direct Push
BORING DIAMETER (inches):	2	**BORING DEPTH (feet):**	6
DATE STARTED:	4/30/10	**DATE COMPLETED:**	4/30/10
SPT HAMMER DROP: 30 inches	**WT:** 140 lbs	**DRIVE HAMMER DROP:** inches	**WT:** lbs
LOGGED BY: SS	**CHECKED BY:** KMV	**DRIVE SAMPLER DIAMETER (inches)**	**ID:** 2.4 **OD:** 3

Elevation (feet)	Depth (feet)	Sampler	Symbol	Blows per 6 Inches	SPT N Blows per Foot	Field Unc. Comp. Str. (tsf)	DESCRIPTION	Dry Density (pcf)	Moisture Content (%)	Liquid Limit (%)	Plasticity Index (%)	Percent Passing #200 Sieve	Other Tests [PID]
							SILTY SAND (SM): dark brown, moist, fine-grained sand						
							light brownish gray, increased silt content						
595	5												
							Bottom of boring at 6 feet. Groundwater not encountered during pushing. Hole backfilled with sand. Surface patched with cold patch asphalt.						
590	10												

LOG OF BORING DYB10-11

SCRRA Metrolink Empire/Buena Vista GS

Project No. 2009-010.01

PLATE

B12

Template: DYLG1-2006; Prj ID: 2009-010.01.GPJ

BORING LOCATION:	See Figure 2	**ELEVATION AND DATUM (feet):**	589 MSL
LATITUDE:	34° 11' 5.6" N	**LONGITUDE:**	118° 19' 9.7" W
DRILLING EQUIPMENT:	6600 Direct Push	**DRILLING METHOD:**	Direct Push
BORING DIAMETER (inches):	2	**BORING DEPTH (feet):**	6
DATE STARTED:	4/30/10	**DATE COMPLETED:**	4/30/10
SPT HAMMER DROP: 30 inches	**WT:** 140 lbs	**DRIVE HAMMER DROP:** inches	**WT:** lbs
LOGGED BY: SS	**CHECKED BY:** KMV	**DRIVE SAMPLER DIAMETER (inches)**	**ID:** 2.4 **OD:** 3

Elevation (feet)	Depth (feet)	Sampler	Symbol	Blows per 6 Inches	SPT N Blows per Foot	Field Unc. Comp. Str. (tsf)	DESCRIPTION	Dry Density (pcf)	Moisture Content (%)	Liquid Limit (%)	Plasticity Index (%)	Percent Passing #200 Sieve	Other Tests [PID]
							SILTY SAND (SM): dark brown, moist, fine-grained sand, trace fine gravel						
							fine- to medium-grained sand						
585	5												
							Bottom of boring at 6 feet. Groundwater not encountered during pushing. Hole backfilled with sand. Surface patched with cold patch asphalt.						
580	10												

LOG OF BORING DYB10-12

SCRRA Metrolink Empire/Buena Vista GS

Project No. 2009-010.01

PLATE

B13

APPENDIX C
LABORATORY ANALYSES REPORTS

TestAmerica
THE LEADER IN ENVIRONMENTAL TESTING

17461 Derian Avenue. Suite 100, Irvine, CA 92614 (949) 261-1022 Fax:(949) 260-3297

LABORATORY REPORT

Prepared For: Diaz Yourman
1616 East 17th Street
Santa Ana, CA 92705-8509
Attention: Gary Gilbert

Project: 2009-010.01
SCRRA Empire Grade Separation

Sampled: 04/30/10
Received: 05/01/10
Issued: 05/21/10 15:04

NELAP #01108CA California ELAP#2706 CSDLAC #10256 AZ #AZ0671 NV #CA01531

The results listed within this Laboratory Report pertain only to the samples tested in the laboratory. The analyses contained in this report were performed in accordance with the applicable certifications as noted. All soil samples are reported on a wet weight basis unless otherwise noted in the report. This Laboratory Report is confidential and is intended for the sole use of TestAmerica and its client. This report shall not be reproduced, except in full, without written permission from TestAmerica. The Chain(s) of Custody, 12 pages, are included and are an integral part of this report.
This entire report was reviewed and approved for release.

SAMPLE CROSS REFERENCE

SUBCONTRACTED: Refer to the last page for specific subcontract laboratory information included in this report.

LABORATORY ID	CLIENT ID	MATRIX
ITE0005-02	DYB10-01 @ 1'	Soil
ITE0005-03	DYB10-01 @ 2'	Soil
ITE0005-04	DYB10-01 @ 5'	Soil
ITE0005-05	DYB10-01 @ 0' (8:28)	Soil
ITE0005-07	DYB10-02 @ 1'	Soil
ITE0005-08	DYB10-02 @ 2'	Soil
ITE0005-09	DYB10-02 @ 5'	Soil
ITE0005-10	DYB10-02 @ 0' (9:20)	Soil
ITE0005-12	DYB10-03 @ 1'	Soil
ITE0005-13	DYB10-03 @ 2'	Soil
ITE0005-14	DYB10-03 @ 5'	Soil
ITE0005-15	DYB10-03 @ 0' (9:55)	Soil
ITE0005-17	DYB10-04 @ 1'	Soil
ITE0005-18	DYB10-04 @ 2'	Soil
ITE0005-19	DYB10-04 @ 5'	Soil
ITE0005-20	DYB10-04 @ 0' (11:00)	Soil
ITE0005-22	DYB10-05 @ 1'	Soil
ITE0005-23	DYB10-05 @ 2'	Soil
ITE0005-24	DYB10-05 @ 5'	Soil
ITE0005-25	DYB10-05 @ 0' (5:07)	Soil
ITE0005-26	DYB10-06 @ 0' (4:24)	Soil
ITE0005-27	DYB10-06 @ 1'	Soil

TestAmerica Irvine

Lena Davidkova
Project Manager

TestAmerica
THE LEADER IN ENVIRONMENTAL TESTING

17461 Derian Avenue. Suite 100, Irvine, CA 92614 (949) 261-1022 Fax:(949) 260-3297

Diaz Yourman
1616 East 17th Street
Santa Ana, CA 92705-8509
Attention: Gary Gilbert

Project ID: 2009-010.01
SCRRA Empire Grade Separation
Report Number: ITE0005

Sampled: 04/30/10
Received: 05/01/10

LABORATORY ID	CLIENT ID	MATRIX
ITE0005-28	DYB10-06 @ 2'	Soil
ITE0005-29	DYB10-06 @ 5'	Soil
ITE0005-30	DYB10-06 @ 0' (4:21)	Soil
ITE0005-32	DYB10-07 @ 1'	Soil
ITE0005-33	DYB10-07 @ 2'	Soil
ITE0005-34	DYB10-07 @ 5'	Soil
ITE0005-35	DYB10-07 @ 0' (3:47)	Soil
ITE0005-37	DYB10-08 @ 1'	Soil
ITE0005-38	DYB10-08 @ 2'	Soil
ITE0005-39	DYB10-08 @ 5'	Soil
ITE0005-40	DYB10-08 @ 0' (3:15)	Soil
ITE0005-41	DYB10-09 @ 0' (2:51)	Soil
ITE0005-42	DYB10-09 @ 1'	Soil
ITE0005-43	DYB10-09 @ 2'	Soil
ITE0005-44	DYB10-09 @ 5'	Soil
ITE0005-45	DYB10-09 @ 0' (2:48)	Soil
ITE0005-46	DYB10-10 @ 0' (12:58)	Soil
ITE0005-47	DYB10-10 @ 1'	Soil
ITE0005-48	DYB10-10 @ 2'	Soil
ITE0005-49	DYB10-10 @ 5'	Soil
ITE0005-50	DYB10-10 @ 0' (12:55)	Soil
ITE0005-52	DYB10-11 @ 1'	Soil
ITE0005-53	DYB10-11 @ 2'	Soil
ITE0005-54	DYB10-11 @ 5'	Soil
ITE0005-55	DYB10-11 @ 0' (12:30)	Soil
ITE0005-57	DYB10-12 @ 1'	Soil
ITE0005-58	DYB10-12 @ 2'	Soil
ITE0005-59	DYB10-12 @ 5'	Soil
ITE0005-60	DYB10-12 @ 0' (2:05)	Soil
ITE0005-62	Equipment Blank	Water

Reviewed By:

TestAmerica Irvine

Lena Davidkova
Project Manager

The results pertain only to the samples tested in the laboratory. This report shall not be reproduced, except in full, without written permission from TestAmerica.

TestAmerica
THE LEADER IN ENVIRONMENTAL TESTING

17461 Derian Avenue. Suite 100, Irvine, CA 92614 (949) 261-1022 Fax:(949) 260-3297

Diaz Yourman
1616 East 17th Street
Santa Ana, CA 92705-8509
Attention: Gary Gilbert

Project ID: 2009-010.01
SCRRA Empire Grade Separation
Report Number: ITE0005

Sampled: 04/30/10
Received: 05/01/10

ORGANOCHLORINE PESTICIDES (EPA 8081A)

Analyte	Method	Batch	Reporting Limit	Sample Result	Dilution Factor	Date Extracted	Date Analyzed	Data Qualifiers
Sample ID: ITE0005-05RE1 (DYB10-01 @ 0' (8:28) - Soil)								
Reporting Units: ug/kg								
4,4'-DDD	EPA 3545/8081A	10E1265	5.0	ND	1	5/11/2010	5/11/2010	C-1
4,4'-DDE	EPA 3545/8081A	10E1265	5.0	ND	1	5/11/2010	5/11/2010	
4,4'-DDT	EPA 3545/8081A	10E1265	5.0	ND	1	5/11/2010	5/11/2010	C-2
Aldrin	EPA 3545/8081A	10E1265	5.0	ND	1	5/11/2010	5/11/2010	
alpha-BHC	EPA 3545/8081A	10E1265	5.0	ND	1	5/11/2010	5/11/2010	
beta-BHC	EPA 3545/8081A	10E1265	5.0	ND	1	5/11/2010	5/11/2010	
delta-BHC	EPA 3545/8081A	10E1265	10	ND	1	5/11/2010	5/11/2010	
Dieldrin	EPA 3545/8081A	10E1265	5.0	ND	1	5/11/2010	5/11/2010	
Endosulfan I	EPA 3545/8081A	10E1265	5.0	ND	1	5/11/2010	5/11/2010	
Endosulfan II	EPA 3545/8081A	10E1265	5.0	ND	1	5/11/2010	5/11/2010	
Endosulfan sulfate	EPA 3545/8081A	10E1265	10	ND	1	5/11/2010	5/11/2010	
Endrin	EPA 3545/8081A	10E1265	5.0	ND	1	5/11/2010	5/11/2010	
Endrin aldehyde	EPA 3545/8081A	10E1265	5.0	ND	1	5/11/2010	5/11/2010	
Endrin ketone	EPA 3545/8081A	10E1265	5.0	ND	1	5/11/2010	5/11/2010	C-2
gamma-BHC (Lindane)	EPA 3545/8081A	10E1265	5.0	ND	1	5/11/2010	5/11/2010	
Heptachlor	EPA 3545/8081A	10E1265	5.0	ND	1	5/11/2010	5/11/2010	C-2
Heptachlor epoxide	EPA 3545/8081A	10E1265	5.0	ND	1	5/11/2010	5/11/2010	
Methoxychlor	EPA 3545/8081A	10E1265	5.0	ND	1	5/11/2010	5/11/2010	C-2
Chlordane	EPA 3545/8081A	10E1265	50	ND	1	5/11/2010	5/11/2010	
Toxaphene	EPA 3545/8081A	10E1265	200	ND	1	5/11/2010	5/11/2010	
Surrogate: Decachlorobiphenyl (45-120%)				*53 %*				
Surrogate: Tetrachloro-m-xylene (35-115%)				*56 %*				

TestAmerica Irvine

Lena Davidkova
Project Manager

The results pertain only to the samples tested in the laboratory. This report shall not be reproduced, except in full, without written permission from TestAmerica.

TestAmerica
THE LEADER IN ENVIRONMENTAL TESTING

17461 Derian Avenue. Suite 100, Irvine, CA 92614 (949) 261-1022 Fax:(949) 260-3297

Diaz Yourman
1616 East 17th Street
Santa Ana, CA 92705-8509
Attention: Gary Gilbert

Project ID: 2009-010.01
SCRRA Empire Grade Separation
Report Number: ITE0005

Sampled: 04/30/10
Received: 05/01/10

ORGANOCHLORINE PESTICIDES (EPA 8081A)

Analyte	Method	Batch	Reporting Limit	Sample Result	Dilution Factor	Date Extracted	Date Analyzed	Data Qualifiers
Sample ID: ITE0005-25RE1 (DYB10-05 @ 0' (5:07) - Soil)								
Reporting Units: ug/kg								
4,4'-DDD	EPA 3545/8081A	10E1265	5.0	ND	1	5/11/2010	5/11/2010	
4,4'-DDE	EPA 3545/8081A	10E1265	5.0	ND	1	5/11/2010	5/11/2010	
4,4'-DDT	EPA 3545/8081A	10E1265	5.0	ND	1	5/11/2010	5/11/2010	
Aldrin	EPA 3545/8081A	10E1265	5.0	ND	1	5/11/2010	5/11/2010	
alpha-BHC	EPA 3545/8081A	10E1265	5.0	ND	1	5/11/2010	5/11/2010	
beta-BHC	EPA 3545/8081A	10E1265	5.0	ND	1	5/11/2010	5/11/2010	
delta-BHC	EPA 3545/8081A	10E1265	10	ND	1	5/11/2010	5/11/2010	
Dieldrin	EPA 3545/8081A	10E1265	5.0	ND	1	5/11/2010	5/11/2010	
Endosulfan I	EPA 3545/8081A	10E1265	5.0	ND	1	5/11/2010	5/11/2010	
Endosulfan II	EPA 3545/8081A	10E1265	5.0	ND	1	5/11/2010	5/11/2010	
Endosulfan sulfate	EPA 3545/8081A	10E1265	10	ND	1	5/11/2010	5/11/2010	
Endrin	EPA 3545/8081A	10E1265	5.0	ND	1	5/11/2010	5/11/2010	
Endrin aldehyde	EPA 3545/8081A	10E1265	5.0	ND	1	5/11/2010	5/11/2010	
Endrin ketone	EPA 3545/8081A	10E1265	5.0	ND	1	5/11/2010	5/11/2010	C-2
gamma-BHC (Lindane)	EPA 3545/8081A	10E1265	5.0	ND	1	5/11/2010	5/11/2010	
Heptachlor	EPA 3545/8081A	10E1265	5.0	ND	1	5/11/2010	5/11/2010	
Heptachlor epoxide	EPA 3545/8081A	10E1265	5.0	ND	1	5/11/2010	5/11/2010	
Methoxychlor	EPA 3545/8081A	10E1265	5.0	ND	1	5/11/2010	5/11/2010	C-2
Chlordane	EPA 3545/8081A	10E1265	50	ND	1	5/11/2010	5/11/2010	
Toxaphene	EPA 3545/8081A	10E1265	200	ND	1	5/11/2010	5/11/2010	
Surrogate: Decachlorobiphenyl (45-120%)				*37 %*				*ZX*
Surrogate: Tetrachloro-m-xylene (35-115%)				*39 %*				

TestAmerica Irvine

Lena Davidkova
Project Manager

The results pertain only to the samples tested in the laboratory. This report shall not be reproduced, except in full, without written permission from TestAmerica.

TestAmerica
THE LEADER IN ENVIRONMENTAL TESTING

17461 Derian Avenue. Suite 100, Irvine, CA 92614 (949) 261-1022 Fax:(949) 260-3297

Diaz Yourman
1616 East 17th Street
Santa Ana, CA 92705-8509
Attention: Gary Gilbert

Project ID: 2009-010.01
SCRRA Empire Grade Separation
Report Number: ITE0005

Sampled: 04/30/10
Received: 05/01/10

ORGANOCHLORINE PESTICIDES (EPA 8081A)

Analyte	Method	Batch	Reporting Limit	Sample Result	Dilution Factor	Date Extracted	Date Analyzed	Data Qualifiers
Sample ID: ITE0005-45RE1 (DYB10-09 @ 0' (2:48) - Soil)								
Reporting Units: ug/kg								
4,4'-DDD	EPA 3545/8081A	10E1265	5.0	ND	1	5/11/2010	5/11/2010	
4,4'-DDE	EPA 3545/8081A	10E1265	5.0	ND	1	5/11/2010	5/11/2010	
4,4'-DDT	EPA 3545/8081A	10E1265	5.0	ND	1	5/11/2010	5/11/2010	
Aldrin	EPA 3545/8081A	10E1265	5.0	ND	1	5/11/2010	5/11/2010	
alpha-BHC	EPA 3545/8081A	10E1265	5.0	ND	1	5/11/2010	5/11/2010	
beta-BHC	EPA 3545/8081A	10E1265	5.0	ND	1	5/11/2010	5/11/2010	
delta-BHC	EPA 3545/8081A	10E1265	10	ND	1	5/11/2010	5/11/2010	
Dieldrin	EPA 3545/8081A	10E1265	5.0	ND	1	5/11/2010	5/11/2010	
Endosulfan I	EPA 3545/8081A	10E1265	5.0	ND	1	5/11/2010	5/11/2010	
Endosulfan II	EPA 3545/8081A	10E1265	5.0	ND	1	5/11/2010	5/11/2010	
Endosulfan sulfate	EPA 3545/8081A	10E1265	10	ND	1	5/11/2010	5/11/2010	
Endrin	EPA 3545/8081A	10E1265	5.0	ND	1	5/11/2010	5/11/2010	
Endrin aldehyde	EPA 3545/8081A	10E1265	5.0	ND	1	5/11/2010	5/11/2010	
Endrin ketone	EPA 3545/8081A	10E1265	5.0	ND	1	5/11/2010	5/11/2010	C-2
gamma-BHC (Lindane)	EPA 3545/8081A	10E1265	5.0	ND	1	5/11/2010	5/11/2010	
Heptachlor	EPA 3545/8081A	10E1265	5.0	ND	1	5/11/2010	5/11/2010	
Heptachlor epoxide	EPA 3545/8081A	10E1265	5.0	ND	1	5/11/2010	5/11/2010	
Methoxychlor	EPA 3545/8081A	10E1265	5.0	ND	1	5/11/2010	5/11/2010	C-2
Chlordane	EPA 3545/8081A	10E1265	50	ND	1	5/11/2010	5/11/2010	
Toxaphene	EPA 3545/8081A	10E1265	200	ND	1	5/11/2010	5/11/2010	
Surrogate: Decachlorobiphenyl (45-120%)				*75 %*				
Surrogate: Tetrachloro-m-xylene (35-115%)				*71 %*				

TestAmerica Irvine

Lena Davidkova
Project Manager

The results pertain only to the samples tested in the laboratory. This report shall not be reproduced, except in full, without written permission from TestAmerica.

TestAmerica
THE LEADER IN ENVIRONMENTAL TESTING

17461 Derian Avenue. Suite 100, Irvine, CA 92614 (949) 261-1022 Fax:(949) 260-3297

Diaz Yourman
1616 East 17th Street
Santa Ana, CA 92705-8509
Attention: Gary Gilbert

Project ID: 2009-010.01
SCRRA Empire Grade Separation
Report Number: ITE0005

Sampled: 04/30/10
Received: 05/01/10

ORGANOCHLORINE PESTICIDES (EPA 8081A)

Analyte	Method	Batch	Reporting Limit	Sample Result	Dilution Factor	Date Extracted	Date Analyzed	Data Qualifiers
Sample ID: ITE0005-60RE1 (DYB10-12 @ 0' (2:05) - Soil)								
Reporting Units: ug/kg								
4,4'-DDD	EPA 3545/8081A	10E1265	5.0	ND	1	5/11/2010	5/11/2010	
4,4'-DDE	EPA 3545/8081A	10E1265	5.0	ND	1	5/11/2010	5/11/2010	
4,4'-DDT	EPA 3545/8081A	10E1265	5.0	ND	1	5/11/2010	5/11/2010	
Aldrin	EPA 3545/8081A	10E1265	5.0	ND	1	5/11/2010	5/11/2010	
alpha-BHC	EPA 3545/8081A	10E1265	5.0	ND	1	5/11/2010	5/11/2010	
beta-BHC	EPA 3545/8081A	10E1265	5.0	ND	1	5/11/2010	5/11/2010	
delta-BHC	EPA 3545/8081A	10E1265	10	ND	1	5/11/2010	5/11/2010	
Dieldrin	EPA 3545/8081A	10E1265	5.0	ND	1	5/11/2010	5/11/2010	
Endosulfan I	EPA 3545/8081A	10E1265	5.0	ND	1	5/11/2010	5/11/2010	
Endosulfan II	EPA 3545/8081A	10E1265	5.0	ND	1	5/11/2010	5/11/2010	
Endosulfan sulfate	EPA 3545/8081A	10E1265	10	ND	1	5/11/2010	5/11/2010	
Endrin	EPA 3545/8081A	10E1265	5.0	ND	1	5/11/2010	5/11/2010	
Endrin aldehyde	EPA 3545/8081A	10E1265	5.0	ND	1	5/11/2010	5/11/2010	
Endrin ketone	EPA 3545/8081A	10E1265	5.0	ND	1	5/11/2010	5/11/2010	C-2
gamma-BHC (Lindane)	EPA 3545/8081A	10E1265	5.0	ND	1	5/11/2010	5/11/2010	
Heptachlor	EPA 3545/8081A	10E1265	5.0	ND	1	5/11/2010	5/11/2010	
Heptachlor epoxide	EPA 3545/8081A	10E1265	5.0	ND	1	5/11/2010	5/11/2010	
Methoxychlor	EPA 3545/8081A	10E1265	5.0	ND	1	5/11/2010	5/11/2010	C-2
Chlordane	EPA 3545/8081A	10E1265	50	**76**	1	5/11/2010	5/11/2010	
Toxaphene	EPA 3545/8081A	10E1265	200	**240**	1	5/11/2010	5/11/2010	C-7
Surrogate: Decachlorobiphenyl (45-120%)				*45 %*				
Surrogate: Tetrachloro-m-xylene (35-115%)				*45 %*				

TestAmerica Irvine

Lena Davidkova
Project Manager

The results pertain only to the samples tested in the laboratory. This report shall not be reproduced, except in full, without written permission from TestAmerica.

TestAmerica
THE LEADER IN ENVIRONMENTAL TESTING

17461 Derian Avenue. Suite 100, Irvine, CA 92614 (949) 261-1022 Fax:(949) 260-3297

Diaz Yourman
1616 East 17th Street
Santa Ana, CA 92705-8509
Attention: Gary Gilbert

Project ID: 2009-010.01
SCRRA Empire Grade Separation
Report Number: ITE0005

Sampled: 04/30/10
Received: 05/01/10

ORGANOCHLORINE PESTICIDES (EPA 3510C/8081A)

Analyte	Method	Batch	Reporting Limit	Sample Result	Dilution Factor	Date Extracted	Date Analyzed	Data Qualifiers
Sample ID: ITE0005-62 (Equipment Blank - Water)								
Reporting Units: ug/l								
4,4'-DDD	EPA 3510C/8081A	10E0457	0.099	ND	0.99	5/5/2010	5/7/2010	
4,4'-DDE	EPA 3510C/8081A	10E0457	0.099	ND	0.99	5/5/2010	5/7/2010	
4,4'-DDT	EPA 3510C/8081A	10E0457	0.099	ND	0.99	5/5/2010	5/7/2010	
Aldrin	EPA 3510C/8081A	10E0457	0.099	ND	0.99	5/5/2010	5/7/2010	
alpha-BHC	EPA 3510C/8081A	10E0457	0.099	ND	0.99	5/5/2010	5/7/2010	
beta-BHC	EPA 3510C/8081A	10E0457	0.099	ND	0.99	5/5/2010	5/7/2010	
delta-BHC	EPA 3510C/8081A	10E0457	0.20	ND	0.99	5/5/2010	5/7/2010	
Dieldrin	EPA 3510C/8081A	10E0457	0.099	ND	0.99	5/5/2010	5/7/2010	
Endosulfan I	EPA 3510C/8081A	10E0457	0.099	ND	0.99	5/5/2010	5/7/2010	
Endosulfan II	EPA 3510C/8081A	10E0457	0.099	ND	0.99	5/5/2010	5/7/2010	
Endosulfan sulfate	EPA 3510C/8081A	10E0457	0.20	ND	0.99	5/5/2010	5/7/2010	
Endrin	EPA 3510C/8081A	10E0457	0.099	ND	0.99	5/5/2010	5/7/2010	
Endrin aldehyde	EPA 3510C/8081A	10E0457	0.099	ND	0.99	5/5/2010	5/7/2010	
Endrin ketone	EPA 3510C/8081A	10E0457	0.099	ND	0.99	5/5/2010	5/7/2010	
gamma-BHC (Lindane)	EPA 3510C/8081A	10E0457	0.099	ND	0.99	5/5/2010	5/7/2010	
Heptachlor	EPA 3510C/8081A	10E0457	0.099	ND	0.99	5/5/2010	5/7/2010	
Heptachlor epoxide	EPA 3510C/8081A	10E0457	0.099	ND	0.99	5/5/2010	5/7/2010	
Methoxychlor	EPA 3510C/8081A	10E0457	0.099	ND	0.99	5/5/2010	5/7/2010	
Chlordane	EPA 3510C/8081A	10E0457	0.99	ND	0.99	5/5/2010	5/7/2010	
Toxaphene	EPA 3510C/8081A	10E0457	5.0	ND	0.99	5/5/2010	5/7/2010	
Surrogate: Decachlorobiphenyl (45-120%)				*80 %*				
Surrogate: Tetrachloro-m-xylene (35-115%)				*80 %*				

TestAmerica Irvine

Lena Davidkova
Project Manager

The results pertain only to the samples tested in the laboratory. This report shall not be reproduced, except in full, without written permission from TestAmerica.

TestAmerica
THE LEADER IN ENVIRONMENTAL TESTING

17461 Derian Avenue. Suite 100, Irvine, CA 92614 (949) 261-1022 Fax:(949) 260-3297

Diaz Yourman
1616 East 17th Street
Santa Ana, CA 92705-8509
Attention: Gary Gilbert

Project ID: 2009-010.01
SCRRA Empire Grade Separation
Report Number: ITE0005

Sampled: 04/30/10
Received: 05/01/10

METALS

Analyte	Method	Batch	Reporting Limit	Sample Result	Dilution Factor	Date Extracted	Date Analyzed	Data Qualifiers
Sample ID: ITE0005-02 (DYB10-01 @ 1' - Soil)								
Reporting Units: mg/kg								
Arsenic	EPA 6010B	10E1091	2.0	ND	0.98	5/10/2010	5/10/2010	
Lead	EPA 6010B	10E1091	2.0	ND	0.98	5/10/2010	5/10/2010	
Sample ID: ITE0005-03 (DYB10-01 @ 2' - Soil)								
Reporting Units: mg/kg								
Arsenic	EPA 6010B	10E1091	2.0	ND	0.985	5/10/2010	5/10/2010	
Lead	EPA 6010B	10E1091	2.0	ND	0.985	5/10/2010	5/10/2010	
Sample ID: ITE0005-04 (DYB10-01 @ 5' - Soil)								
Reporting Units: mg/kg								
Arsenic	EPA 6010B	10E1091	2.0	ND	0.995	5/10/2010	5/10/2010	
Lead	EPA 6010B	10E1091	2.0	**9.1**	0.995	5/10/2010	5/10/2010	
Sample ID: ITE0005-05 (DYB10-01 @ 0' (8:28) - Soil)								
Reporting Units: mg/kg								
Mercury	EPA 7471A	10E1302	0.020	**0.020**	1	5/11/2010	5/11/2010	
Antimony	EPA 6010B	10E1091	10	ND	0.995	5/10/2010	5/10/2010	
Arsenic	EPA 6010B	10E1091	2.0	ND	0.995	5/10/2010	5/10/2010	
Barium	EPA 6010B	10E1091	1.0	**56**	0.995	5/10/2010	5/10/2010	
Beryllium	EPA 6010B	10E1091	0.50	ND	0.995	5/10/2010	5/10/2010	
Cadmium	EPA 6010B	10E1091	0.50	ND	0.995	5/10/2010	5/10/2010	
Chromium	EPA 6010B	10E1491	0.99	**6.8**	0.985	5/12/2010	5/12/2010	
Cobalt	EPA 6010B	10E1091	1.0	**3.5**	0.995	5/10/2010	5/10/2010	
Copper	EPA 6010B	10E1091	2.0	**11**	0.995	5/10/2010	5/10/2010	
Lead	EPA 6010B	10E1091	2.0	**5.4**	0.995	5/10/2010	5/10/2010	
Molybdenum	EPA 6010B	10E1091	2.0	ND	0.995	5/10/2010	5/10/2010	
Nickel	EPA 6010B	10E1091	2.0	**4.9**	0.995	5/10/2010	5/10/2010	
Selenium	EPA 6010B	10E1091	2.0	ND	0.995	5/10/2010	5/10/2010	
Silver	EPA 6010B	10E1091	1.0	ND	0.995	5/10/2010	5/10/2010	
Thallium	EPA 6010B	10E1091	10	ND	0.995	5/10/2010	5/10/2010	
Vanadium	EPA 6010B	10E1091	1.0	**22**	0.995	5/10/2010	5/10/2010	
Zinc	EPA 6010B	10E1091	5.0	**30**	0.995	5/10/2010	5/10/2010	

TestAmerica Irvine

Lena Davidkova
Project Manager

The results pertain only to the samples tested in the laboratory. This report shall not be reproduced, except in full, without written permission from TestAmerica.

TestAmerica
THE LEADER IN ENVIRONMENTAL TESTING

17461 Derian Avenue. Suite 100, Irvine, CA 92614 (949) 261-1022 Fax:(949) 260-3297

Diaz Yourman
1616 East 17th Street
Santa Ana, CA 92705-8509
Attention: Gary Gilbert

Project ID: 2009-010.01
SCRRA Empire Grade Separation
Report Number: ITE0005

Sampled: 04/30/10
Received: 05/01/10

METALS

Analyte	Method	Batch	Reporting Limit	Sample Result	Dilution Factor	Date Extracted	Date Analyzed	Data Qualifiers
Sample ID: ITE0005-07 (DYB10-02 @ 1' - Soil)								
Reporting Units: mg/kg								
Arsenic	EPA 6010B	10E1091	2.0	ND	0.99	5/10/2010	5/10/2010	
Lead	EPA 6010B	10E1091	2.0	**2.6**	0.99	5/10/2010	5/10/2010	
Sample ID: ITE0005-08 (DYB10-02 @ 2' - Soil)								
Reporting Units: mg/kg								
Arsenic	EPA 6010B	10E1091	2.0	ND	0.99	5/10/2010	5/10/2010	
Lead	EPA 6010B	10E1091	2.0	ND	0.99	5/10/2010	5/10/2010	
Sample ID: ITE0005-09 (DYB10-02 @ 5' - Soil)								
Reporting Units: mg/kg								
Arsenic	EPA 6010B	10E1091	2.0	ND	1	5/10/2010	5/10/2010	
Lead	EPA 6010B	10E1091	2.0	ND	1	5/10/2010	5/10/2010	
Sample ID: ITE0005-10 (DYB10-02 @ 0' (9:20) - Soil)								
Reporting Units: mg/kg								
Mercury	EPA 7471A	10E1302	0.020	**0.028**	1	5/11/2010	5/11/2010	
Antimony	EPA 6010B	10E1091	10	ND	0.995	5/10/2010	5/10/2010	
Arsenic	EPA 6010B	10E1091	2.0	ND	0.995	5/10/2010	5/10/2010	
Barium	EPA 6010B	10E1091	1.0	**100**	0.995	5/10/2010	5/10/2010	
Beryllium	EPA 6010B	10E1091	0.50	ND	0.995	5/10/2010	5/10/2010	
Cadmium	EPA 6010B	10E1091	0.50	**0.51**	0.995	5/10/2010	5/10/2010	
Chromium	EPA 6010B	10E1491	1.0	**15**	0.995	5/12/2010	5/12/2010	
Cobalt	EPA 6010B	10E1091	1.0	**5.9**	0.995	5/10/2010	5/10/2010	
Copper	EPA 6010B	10E1091	2.0	**20**	0.995	5/10/2010	5/10/2010	
Lead	EPA 6010B	10E1091	2.0	**5.6**	0.995	5/10/2010	5/10/2010	
Molybdenum	EPA 6010B	10E1091	2.0	ND	0.995	5/10/2010	5/10/2010	
Nickel	EPA 6010B	10E1091	2.0	**6.9**	0.995	5/10/2010	5/10/2010	
Selenium	EPA 6010B	10E1091	2.0	ND	0.995	5/10/2010	5/10/2010	
Silver	EPA 6010B	10E1091	1.0	ND	0.995	5/10/2010	5/10/2010	
Thallium	EPA 6010B	10E1091	10	ND	0.995	5/10/2010	5/10/2010	
Vanadium	EPA 6010B	10E1091	1.0	**32**	0.995	5/10/2010	5/10/2010	
Zinc	EPA 6010B	10E1091	5.0	**47**	0.995	5/10/2010	5/10/2010	

TestAmerica Irvine

Lena Davidkova
Project Manager

The results pertain only to the samples tested in the laboratory. This report shall not be reproduced, except in full, without written permission from TestAmerica.

TestAmerica
THE LEADER IN ENVIRONMENTAL TESTING

17461 Derian Avenue. Suite 100, Irvine, CA 92614 (949) 261-1022 Fax:(949) 260-3297

Diaz Yourman
1616 East 17th Street
Santa Ana, CA 92705-8509
Attention: Gary Gilbert

Project ID: 2009-010.01
SCRRA Empire Grade Separation
Report Number: ITE0005

Sampled: 04/30/10
Received: 05/01/10

METALS

Analyte	Method	Batch	Reporting Limit	Sample Result	Dilution Factor	Date Extracted	Date Analyzed	Data Qualifiers
Sample ID: ITE0005-12 (DYB10-03 @ 1' - Soil)								
Reporting Units: mg/kg								
Arsenic	EPA 6010B	10E1091	2.0	ND	0.99	5/10/2010	5/10/2010	
Lead	EPA 6010B	10E1091	2.0	**2.0**	0.99	5/10/2010	5/10/2010	
Sample ID: ITE0005-13 (DYB10-03 @ 2' - Soil)								
Reporting Units: mg/kg								
Arsenic	EPA 6010B	10E1091	2.0	ND	0.995	5/10/2010	5/10/2010	
Lead	EPA 6010B	10E1091	2.0	**3.0**	0.995	5/10/2010	5/10/2010	
Sample ID: ITE0005-14 (DYB10-03 @ 5' - Soil)								
Reporting Units: mg/kg								
Arsenic	EPA 6010B	10E1091	2.0	ND	0.985	5/10/2010	5/10/2010	
Lead	EPA 6010B	10E1091	2.0	ND	0.985	5/10/2010	5/10/2010	
Sample ID: ITE0005-15 (DYB10-03 @ 0' (9:55) - Soil)								
Reporting Units: mg/kg								
Mercury	EPA 7471A	10E1302	0.020	ND	0.98	5/11/2010	5/11/2010	
Antimony	EPA 6010B	10E1091	9.8	ND	0.98	5/10/2010	5/10/2010	
Arsenic	EPA 6010B	10E1091	2.0	ND	0.98	5/10/2010	5/10/2010	
Barium	EPA 6010B	10E1091	0.98	**86**	0.98	5/10/2010	5/10/2010	
Beryllium	EPA 6010B	10E1091	0.49	ND	0.98	5/10/2010	5/10/2010	
Cadmium	EPA 6010B	10E1091	0.49	ND	0.98	5/10/2010	5/10/2010	
Chromium	EPA 6010B	10E1491	0.99	**8.8**	0.99	5/12/2010	5/12/2010	
Cobalt	EPA 6010B	10E1091	0.98	**5.2**	0.98	5/10/2010	5/10/2010	
Copper	EPA 6010B	10E1091	2.0	**11**	0.98	5/10/2010	5/10/2010	
Lead	EPA 6010B	10E1091	2.0	**2.4**	0.98	5/10/2010	5/10/2010	
Molybdenum	EPA 6010B	10E1091	2.0	ND	0.98	5/10/2010	5/10/2010	
Nickel	EPA 6010B	10E1091	2.0	**5.1**	0.98	5/10/2010	5/10/2010	
Selenium	EPA 6010B	10E1091	2.0	ND	0.98	5/10/2010	5/10/2010	
Silver	EPA 6010B	10E1091	0.98	ND	0.98	5/10/2010	5/10/2010	
Thallium	EPA 6010B	10E1091	9.8	ND	0.98	5/10/2010	5/10/2010	
Vanadium	EPA 6010B	10E1091	0.98	**28**	0.98	5/10/2010	5/10/2010	
Zinc	EPA 6010B	10E1091	4.9	**34**	0.98	5/10/2010	5/10/2010	

TestAmerica Irvine

Lena Davidkova
Project Manager

The results pertain only to the samples tested in the laboratory. This report shall not be reproduced, except in full, without written permission from TestAmerica.

TestAmerica
THE LEADER IN ENVIRONMENTAL TESTING

17461 Derian Avenue. Suite 100, Irvine, CA 92614 (949) 261-1022 Fax:(949) 260-3297

Diaz Yourman
1616 East 17th Street
Santa Ana, CA 92705-8509
Attention: Gary Gilbert

Project ID: 2009-010.01
SCRRA Empire Grade Separation
Report Number: ITE0005

Sampled: 04/30/10
Received: 05/01/10

METALS

Analyte	Method	Batch	Reporting Limit	Sample Result	Dilution Factor	Date Extracted	Date Analyzed	Data Qualifiers
Sample ID: ITE0005-17 (DYB10-04 @ 1' - Soil)								
Reporting Units: mg/kg								
Arsenic	EPA 6010B	10E1091	2.0	ND	0.995	5/10/2010	5/10/2010	
Lead	EPA 6010B	10E1091	2.0	**2.1**	0.995	5/10/2010	5/10/2010	
Sample ID: ITE0005-18 (DYB10-04 @ 2' - Soil)								
Reporting Units: mg/kg								
Arsenic	EPA 6010B	10E1091	2.0	ND	0.995	5/10/2010	5/10/2010	
Lead	EPA 6010B	10E1091	2.0	ND	0.995	5/10/2010	5/10/2010	
Sample ID: ITE0005-19 (DYB10-04 @ 5' - Soil)								
Reporting Units: mg/kg								
Arsenic	EPA 6010B	10E1103	2.0	ND	0.995	5/10/2010	5/11/2010	
Lead	EPA 6010B	10E1103	2.0	ND	0.995	5/10/2010	5/11/2010	
Sample ID: ITE0005-20 (DYB10-04 @ 0' (11:00) - Soil)								
Reporting Units: mg/kg								
Mercury	EPA 7471A	10E1302	0.020	**0.033**	1	5/11/2010	5/11/2010	
Antimony	EPA 6010B	10E1103	9.9	ND	0.99	5/10/2010	5/11/2010	
Arsenic	EPA 6010B	10E1103	2.0	ND	0.99	5/10/2010	5/11/2010	
Barium	EPA 6010B	10E1103	0.99	**87**	0.99	5/10/2010	5/11/2010	
Beryllium	EPA 6010B	10E1103	0.50	ND	0.99	5/10/2010	5/11/2010	
Cadmium	EPA 6010B	10E1103	0.50	ND	0.99	5/10/2010	5/11/2010	
Chromium	EPA 6010B	10E1103	0.99	**24**	0.99	5/10/2010	5/11/2010	
Cobalt	EPA 6010B	10E1103	0.99	**5.3**	0.99	5/10/2010	5/11/2010	
Copper	EPA 6010B	10E1103	2.0	**21**	0.99	5/10/2010	5/11/2010	
Lead	EPA 6010B	10E1103	2.0	**25**	0.99	5/10/2010	5/11/2010	
Molybdenum	EPA 6010B	10E1103	2.0	ND	0.99	5/10/2010	5/11/2010	
Nickel	EPA 6010B	10E1103	2.0	**14**	0.99	5/10/2010	5/11/2010	
Selenium	EPA 6010B	10E1103	2.0	ND	0.99	5/10/2010	5/11/2010	
Silver	EPA 6010B	10E1103	0.99	ND	0.99	5/10/2010	5/11/2010	
Thallium	EPA 6010B	10E1103	9.9	ND	0.99	5/10/2010	5/11/2010	
Vanadium	EPA 6010B	10E1103	0.99	**25**	0.99	5/10/2010	5/11/2010	
Zinc	EPA 6010B	10E1103	5.0	**50**	0.99	5/10/2010	5/11/2010	

TestAmerica Irvine

Lena Davidkova
Project Manager

The results pertain only to the samples tested in the laboratory. This report shall not be reproduced, except in full, without written permission from TestAmerica.

TestAmerica
THE LEADER IN ENVIRONMENTAL TESTING

17461 Derian Avenue. Suite 100, Irvine, CA 92614 (949) 261-1022 Fax:(949) 260-3297

Diaz Yourman
1616 East 17th Street
Santa Ana, CA 92705-8509
Attention: Gary Gilbert

Project ID: 2009-010.01
SCRRA Empire Grade Separation
Report Number: ITE0005

Sampled: 04/30/10
Received: 05/01/10

METALS

Analyte	Method	Batch	Reporting Limit	Sample Result	Dilution Factor	Date Extracted	Date Analyzed	Data Qualifiers
Sample ID: ITE0005-22 (DYB10-05 @ 1' - Soil)								
Reporting Units: mg/kg								
Arsenic	EPA 6010B	10E1103	2.0	**9.6**	0.995	5/10/2010	5/11/2010	
Lead	EPA 6010B	10E1103	2.0	**27**	0.995	5/10/2010	5/11/2010	
Sample ID: ITE0005-23 (DYB10-05 @ 2' - Soil)								
Reporting Units: mg/kg								
Arsenic	EPA 6010B	10E1103	2.0	**5.2**	0.985	5/10/2010	5/11/2010	
Lead	EPA 6010B	10E1103	2.0	**37**	0.985	5/10/2010	5/11/2010	
Sample ID: ITE0005-24 (DYB10-05 @ 5' - Soil)								
Reporting Units: mg/kg								
Arsenic	EPA 6010B	10E1103	2.0	**2.7**	0.985	5/10/2010	5/11/2010	
Lead	EPA 6010B	10E1103	2.0	**24**	0.985	5/10/2010	5/11/2010	
Sample ID: ITE0005-25 (DYB10-05 @ 0' (5:07) - Soil)								
Reporting Units: mg/kg								
Mercury	EPA 7471A	10E1302	0.020	**0.023**	1	5/11/2010	5/11/2010	
Antimony	EPA 6010B	10E1103	9.9	ND	0.985	5/10/2010	5/11/2010	
Arsenic	EPA 6010B	10E1103	2.0	**2.1**	0.985	5/10/2010	5/11/2010	
Barium	EPA 6010B	10E1103	0.99	**64**	0.985	5/10/2010	5/11/2010	
Beryllium	EPA 6010B	10E1103	0.49	ND	0.985	5/10/2010	5/11/2010	
Cadmium	EPA 6010B	10E1103	0.49	ND	0.985	5/10/2010	5/11/2010	
Chromium	EPA 6010B	10E1103	0.99	**6.7**	0.985	5/10/2010	5/11/2010	
Cobalt	EPA 6010B	10E1103	0.99	**3.9**	0.985	5/10/2010	5/11/2010	
Copper	EPA 6010B	10E1103	2.0	**9.9**	0.985	5/10/2010	5/11/2010	
Lead	EPA 6010B	10E1103	2.0	**34**	0.985	5/10/2010	5/11/2010	
Molybdenum	EPA 6010B	10E1103	2.0	ND	0.985	5/10/2010	5/11/2010	
Nickel	EPA 6010B	10E1103	2.0	**4.8**	0.985	5/10/2010	5/11/2010	
Selenium	EPA 6010B	10E1103	2.0	ND	0.985	5/10/2010	5/11/2010	
Silver	EPA 6010B	10E1103	0.99	ND	0.985	5/10/2010	5/11/2010	
Thallium	EPA 6010B	10E1103	9.9	ND	0.985	5/10/2010	5/11/2010	
Vanadium	EPA 6010B	10E1103	0.99	**19**	0.985	5/10/2010	5/11/2010	
Zinc	EPA 6010B	10E1103	4.9	**39**	0.985	5/10/2010	5/11/2010	

TestAmerica Irvine

Lena Davidkova
Project Manager

The results pertain only to the samples tested in the laboratory. This report shall not be reproduced, except in full, without written permission from TestAmerica.

TestAmerica
THE LEADER IN ENVIRONMENTAL TESTING

17461 Derian Avenue. Suite 100, Irvine, CA 92614 (949) 261-1022 Fax:(949) 260-3297

Diaz Yourman
1616 East 17th Street
Santa Ana, CA 92705-8509
Attention: Gary Gilbert

Project ID: 2009-010.01
SCRRA Empire Grade Separation
Report Number: ITE0005

Sampled: 04/30/10
Received: 05/01/10

METALS

Analyte	Method	Batch	Reporting Limit	Sample Result	Dilution Factor	Date Extracted	Date Analyzed	Data Qualifiers
Sample ID: ITE0005-27 (DYB10-06 @ 1' - Soil)								
Reporting Units: mg/kg								
Arsenic	EPA 6010B	10E1103	2.0	ND	0.99	5/10/2010	5/11/2010	
Lead	EPA 6010B	10E1103	2.0	**14**	0.99	5/10/2010	5/11/2010	
Sample ID: ITE0005-28 (DYB10-06 @ 2' - Soil)								
Reporting Units: mg/kg								
Arsenic	EPA 6010B	10E1103	2.0	ND	0.995	5/10/2010	5/11/2010	
Lead	EPA 6010B	10E1103	2.0	**3.0**	0.995	5/10/2010	5/11/2010	
Sample ID: ITE0005-29 (DYB10-06 @ 5' - Soil)								
Reporting Units: mg/kg								
Arsenic	EPA 6010B	10E1103	2.0	ND	0.99	5/10/2010	5/11/2010	
Lead	EPA 6010B	10E1103	2.0	ND	0.99	5/10/2010	5/11/2010	
Sample ID: ITE0005-30 (DYB10-06 @ 0' (4:21) - Soil)								
Reporting Units: mg/kg								
Mercury	EPA 7471A	10E1302	0.020	**0.033**	1.02	5/11/2010	5/11/2010	
Antimony	EPA 6010B	10E1103	9.8	ND	0.98	5/10/2010	5/11/2010	
Arsenic	EPA 6010B	10E1103	2.0	**4.4**	0.98	5/10/2010	5/11/2010	
Barium	EPA 6010B	10E1103	0.98	**79**	0.98	5/10/2010	5/11/2010	
Beryllium	EPA 6010B	10E1103	0.49	ND	0.98	5/10/2010	5/11/2010	
Cadmium	EPA 6010B	10E1103	0.49	**0.82**	0.98	5/10/2010	5/11/2010	
Chromium	EPA 6010B	10E1103	0.98	**9.8**	0.98	5/10/2010	5/11/2010	
Cobalt	EPA 6010B	10E1103	0.98	**5.0**	0.98	5/10/2010	5/11/2010	
Copper	EPA 6010B	10E1103	2.0	**18**	0.98	5/10/2010	5/11/2010	
Lead	EPA 6010B	10E1103	2.0	**92**	0.98	5/10/2010	5/11/2010	
Molybdenum	EPA 6010B	10E1103	2.0	ND	0.98	5/10/2010	5/11/2010	
Nickel	EPA 6010B	10E1103	2.0	**8.3**	0.98	5/10/2010	5/11/2010	
Selenium	EPA 6010B	10E1103	2.0	ND	0.98	5/10/2010	5/11/2010	
Silver	EPA 6010B	10E1103	0.98	ND	0.98	5/10/2010	5/11/2010	
Thallium	EPA 6010B	10E1103	9.8	ND	0.98	5/10/2010	5/11/2010	
Vanadium	EPA 6010B	10E1103	0.98	**25**	0.98	5/10/2010	5/11/2010	
Zinc	EPA 6010B	10E1103	4.9	**100**	0.98	5/10/2010	5/11/2010	

TestAmerica Irvine

Lena Davidkova
Project Manager

The results pertain only to the samples tested in the laboratory. This report shall not be reproduced, except in full, without written permission from TestAmerica.

TestAmerica
THE LEADER IN ENVIRONMENTAL TESTING

17461 Derian Avenue. Suite 100, Irvine, CA 92614 (949) 261-1022 Fax:(949) 260-3297

Diaz Yourman
1616 East 17th Street
Santa Ana, CA 92705-8509
Attention: Gary Gilbert

Project ID: 2009-010.01
SCRRA Empire Grade Separation
Report Number: ITE0005

Sampled: 04/30/10
Received: 05/01/10

METALS

Analyte	Method	Batch	Reporting Limit	Sample Result	Dilution Factor	Date Extracted	Date Analyzed	Data Qualifiers
Sample ID: ITE0005-32 (DYB10-07 @ 1' - Soil)								
Reporting Units: mg/kg								
Arsenic	EPA 6010B	10E1103	2.0	**3.7**	0.995	5/10/2010	5/11/2010	
Lead	EPA 6010B	10E1103	2.0	**27**	0.995	5/10/2010	5/11/2010	
Sample ID: ITE0005-33 (DYB10-07 @ 2' - Soil)								
Reporting Units: mg/kg								
Arsenic	EPA 6010B	10E1103	2.0	ND	0.99	5/10/2010	5/11/2010	
Lead	EPA 6010B	10E1103	2.0	ND	0.99	5/10/2010	5/11/2010	
Sample ID: ITE0005-34 (DYB10-07 @ 5' - Soil)								
Reporting Units: mg/kg								
Arsenic	EPA 6010B	10E1103	2.0	ND	0.995	5/10/2010	5/11/2010	
Lead	EPA 6010B	10E1103	2.0	**2.0**	0.995	5/10/2010	5/11/2010	
Sample ID: ITE0005-35 (DYB10-07 @ 0' (3:47) - Soil)								
Reporting Units: mg/kg								
Mercury	EPA 7471A	10E1302	0.020	ND	1	5/11/2010	5/11/2010	
Antimony	EPA 6010B	10E1103	9.9	ND	0.99	5/10/2010	5/11/2010	
Arsenic	EPA 6010B	10E1103	2.0	**2.2**	0.99	5/10/2010	5/11/2010	
Barium	EPA 6010B	10E1103	0.99	**79**	0.99	5/10/2010	5/11/2010	
Beryllium	EPA 6010B	10E1103	0.50	ND	0.99	5/10/2010	5/11/2010	
Cadmium	EPA 6010B	10E1103	0.50	ND	0.99	5/10/2010	5/11/2010	
Chromium	EPA 6010B	10E1103	0.99	**12**	0.99	5/10/2010	5/11/2010	
Cobalt	EPA 6010B	10E1103	0.99	**6.6**	0.99	5/10/2010	5/11/2010	
Copper	EPA 6010B	10E1103	2.0	**16**	0.99	5/10/2010	5/11/2010	
Lead	EPA 6010B	10E1103	2.0	**7.4**	0.99	5/10/2010	5/11/2010	
Molybdenum	EPA 6010B	10E1103	2.0	ND	0.99	5/10/2010	5/11/2010	
Nickel	EPA 6010B	10E1103	2.0	**8.9**	0.99	5/10/2010	5/11/2010	
Selenium	EPA 6010B	10E1103	2.0	ND	0.99	5/10/2010	5/11/2010	
Silver	EPA 6010B	10E1103	0.99	ND	0.99	5/10/2010	5/11/2010	
Thallium	EPA 6010B	10E1103	9.9	ND	0.99	5/10/2010	5/11/2010	
Vanadium	EPA 6010B	10E1103	0.99	**27**	0.99	5/10/2010	5/11/2010	
Zinc	EPA 6010B	10E1103	5.0	**35**	0.99	5/10/2010	5/11/2010	

TestAmerica Irvine

Lena Davidkova
Project Manager

The results pertain only to the samples tested in the laboratory. This report shall not be reproduced, except in full, without written permission from TestAmerica.

TestAmerica
THE LEADER IN ENVIRONMENTAL TESTING

17461 Derian Avenue. Suite 100, Irvine, CA 92614 (949) 261-1022 Fax:(949) 260-3297

Diaz Yourman
1616 East 17th Street
Santa Ana, CA 92705-8509
Attention: Gary Gilbert

Project ID: 2009-010.01
SCRRA Empire Grade Separation
Report Number: ITE0005

Sampled: 04/30/10
Received: 05/01/10

METALS

Analyte	Method	Batch	Reporting Limit	Sample Result	Dilution Factor	Date Extracted	Date Analyzed	Data Qualifiers
Sample ID: ITE0005-37 (DYB10-08 @ 1' - Soil)								
Reporting Units: mg/kg								
Arsenic	EPA 6010B	10E1103	2.0	**2.2**	0.99	5/10/2010	5/11/2010	
Lead	EPA 6010B	10E1103	2.0	**9.6**	0.99	5/10/2010	5/11/2010	
Sample ID: ITE0005-38 (DYB10-08 @ 2' - Soil)								
Reporting Units: mg/kg								
Arsenic	EPA 6010B	10E1103	2.0	**5.6**	0.98	5/10/2010	5/11/2010	
Lead	EPA 6010B	10E1103	2.0	**72**	0.98	5/10/2010	5/11/2010	
Sample ID: ITE0005-39 (DYB10-08 @ 5' - Soil)								
Reporting Units: mg/kg								
Arsenic	EPA 6010B	10E1103	2.0	ND	0.985	5/10/2010	5/11/2010	
Lead	EPA 6010B	10E1103	2.0	ND	0.985	5/10/2010	5/11/2010	
Sample ID: ITE0005-40 (DYB10-08 @ 0' (3:15) - Soil)								
Reporting Units: mg/kg								
Mercury	EPA 7471A	10E1302	0.020	**0.023**	1.02	5/11/2010	5/11/2010	
Antimony	EPA 6010B	10E1103	9.9	ND	0.99	5/10/2010	5/11/2010	
Arsenic	EPA 6010B	10E1103	2.0	**2.8**	0.99	5/10/2010	5/11/2010	
Barium	EPA 6010B	10E1103	0.99	**80**	0.99	5/10/2010	5/11/2010	
Beryllium	EPA 6010B	10E1103	0.50	ND	0.99	5/10/2010	5/11/2010	
Cadmium	EPA 6010B	10E1103	0.50	**0.59**	0.99	5/10/2010	5/11/2010	
Chromium	EPA 6010B	10E1103	0.99	**8.6**	0.99	5/10/2010	5/11/2010	
Cobalt	EPA 6010B	10E1103	0.99	**5.0**	0.99	5/10/2010	5/11/2010	
Copper	EPA 6010B	10E1103	2.0	**14**	0.99	5/10/2010	5/11/2010	
Lead	EPA 6010B	10E1103	2.0	**29**	0.99	5/10/2010	5/11/2010	
Molybdenum	EPA 6010B	10E1103	2.0	ND	0.99	5/10/2010	5/11/2010	
Nickel	EPA 6010B	10E1103	2.0	**5.6**	0.99	5/10/2010	5/11/2010	
Selenium	EPA 6010B	10E1103	2.0	ND	0.99	5/10/2010	5/11/2010	
Silver	EPA 6010B	10E1103	0.99	ND	0.99	5/10/2010	5/11/2010	
Thallium	EPA 6010B	10E1103	9.9	ND	0.99	5/10/2010	5/11/2010	
Vanadium	EPA 6010B	10E1103	0.99	**23**	0.99	5/10/2010	5/11/2010	
Zinc	EPA 6010B	10E1103	5.0	**62**	0.99	5/10/2010	5/11/2010	

TestAmerica Irvine

Lena Davidkova
Project Manager

The results pertain only to the samples tested in the laboratory. This report shall not be reproduced, except in full, without written permission from TestAmerica.

TestAmerica
THE LEADER IN ENVIRONMENTAL TESTING

17461 Derian Avenue. Suite 100, Irvine, CA 92614 (949) 261-1022 Fax:(949) 260-3297

Diaz Yourman
1616 East 17th Street
Santa Ana, CA 92705-8509
Attention: Gary Gilbert

Project ID: 2009-010.01
SCRRA Empire Grade Separation
Report Number: ITE0005

Sampled: 04/30/10
Received: 05/01/10

METALS

Analyte	Method	Batch	Reporting Limit	Sample Result	Dilution Factor	Date Extracted	Date Analyzed	Data Qualifiers
Sample ID: ITE0005-42 (DYB10-09 @ 1' - Soil)								
Reporting Units: mg/kg								
Arsenic	EPA 6010B	10E1103	2.0	**2.5**	0.995	5/10/2010	5/11/2010	
Lead	EPA 6010B	10E1103	2.0	ND	0.995	5/10/2010	5/11/2010	
Sample ID: ITE0005-43 (DYB10-09 @ 2' - Soil)								
Reporting Units: mg/kg								
Arsenic	EPA 6010B	10E1103	2.0	ND	0.99	5/10/2010	5/11/2010	
Lead	EPA 6010B	10E1103	2.0	**2.4**	0.99	5/10/2010	5/11/2010	
Sample ID: ITE0005-44 (DYB10-09 @ 5' - Soil)								
Reporting Units: mg/kg								
Arsenic	EPA 6010B	10E1171	2.0	ND	0.99	5/10/2010	5/11/2010	
Lead	EPA 6010B	10E1171	2.0	ND	0.99	5/10/2010	5/11/2010	
Sample ID: ITE0005-45 (DYB10-09 @ 0' (2:48) - Soil)								
Reporting Units: mg/kg								
Mercury	EPA 7471A	10E1302	0.020	ND	0.98	5/11/2010	5/11/2010	
Antimony	EPA 6010B	10E1171	9.9	ND	0.99	5/10/2010	5/11/2010	
Arsenic	EPA 6010B	10E1171	2.0	**27**	0.99	5/10/2010	5/11/2010	
Barium	EPA 6010B	10E1171	0.99	**95**	0.99	5/10/2010	5/11/2010	
Beryllium	EPA 6010B	10E1171	0.50	ND	0.99	5/10/2010	5/11/2010	
Cadmium	EPA 6010B	10E1171	0.50	**0.58**	0.99	5/10/2010	5/11/2010	
Chromium	EPA 6010B	10E1171	0.99	**12**	0.99	5/10/2010	5/11/2010	
Cobalt	EPA 6010B	10E1171	0.99	**6.4**	0.99	5/10/2010	5/11/2010	
Copper	EPA 6010B	10E1171	2.0	**13**	0.99	5/10/2010	5/11/2010	
Lead	EPA 6010B	10E1171	2.0	**5.5**	0.99	5/10/2010	5/11/2010	
Molybdenum	EPA 6010B	10E1171	2.0	ND	0.99	5/10/2010	5/11/2010	
Nickel	EPA 6010B	10E1171	2.0	**7.2**	0.99	5/10/2010	5/11/2010	
Selenium	EPA 6010B	10E1171	2.0	ND	0.99	5/10/2010	5/11/2010	
Silver	EPA 6010B	10E1171	0.99	ND	0.99	5/10/2010	5/11/2010	
Thallium	EPA 6010B	10E1171	9.9	ND	0.99	5/10/2010	5/11/2010	
Vanadium	EPA 6010B	10E1171	0.99	**36**	0.99	5/10/2010	5/11/2010	
Zinc	EPA 6010B	10E1171	5.0	**41**	0.99	5/10/2010	5/11/2010	

TestAmerica Irvine

Lena Davidkova
Project Manager

The results pertain only to the samples tested in the laboratory. This report shall not be reproduced, except in full, without written permission from TestAmerica.

TestAmerica
THE LEADER IN ENVIRONMENTAL TESTING

17461 Derian Avenue. Suite 100, Irvine, CA 92614 (949) 261-1022 Fax:(949) 260-3297

Diaz Yourman
1616 East 17th Street
Santa Ana, CA 92705-8509
Attention: Gary Gilbert

Project ID: 2009-010.01
SCRRA Empire Grade Separation
Report Number: ITE0005

Sampled: 04/30/10
Received: 05/01/10

METALS

Analyte	Method	Batch	Reporting Limit	Sample Result	Dilution Factor	Date Extracted	Date Analyzed	Data Qualifiers
Sample ID: ITE0005-47 (DYB10-10 @ 1' - Soil)								
Reporting Units: mg/kg								
Arsenic	EPA 6010B	10E1171	2.0	**12**	0.99	5/10/2010	5/11/2010	
Lead	EPA 6010B	10E1171	2.0	**52**	0.99	5/10/2010	5/11/2010	
Sample ID: ITE0005-48 (DYB10-10 @ 2' - Soil)								
Reporting Units: mg/kg								
Arsenic	EPA 6010B	10E1171	2.0	**5.7**	1	5/10/2010	5/11/2010	
Lead	EPA 6010B	10E1171	2.0	**3.5**	1	5/10/2010	5/11/2010	
Sample ID: ITE0005-49 (DYB10-10 @ 5' - Soil)								
Reporting Units: mg/kg								
Arsenic	EPA 6010B	10E1171	2.0	ND	1	5/10/2010	5/11/2010	
Lead	EPA 6010B	10E1171	2.0	ND	1	5/10/2010	5/11/2010	
Sample ID: ITE0005-50 (DYB10-10 @ 0' (12:55) - Soil)								
Reporting Units: mg/kg								
Mercury	EPA 7471A	10E1302	0.020	**0.039**	0.98	5/11/2010	5/11/2010	
Antimony	EPA 6010B	10E1171	9.9	ND	0.985	5/10/2010	5/11/2010	
Arsenic	EPA 6010B	10E1171	2.0	**9.2**	0.985	5/10/2010	5/11/2010	
Barium	EPA 6010B	10E1171	0.99	**130**	0.985	5/10/2010	5/11/2010	
Beryllium	EPA 6010B	10E1171	0.49	ND	0.985	5/10/2010	5/11/2010	
Cadmium	EPA 6010B	10E1171	0.49	**1.0**	0.985	5/10/2010	5/11/2010	
Chromium	EPA 6010B	10E1171	0.99	**18**	0.985	5/10/2010	5/11/2010	
Cobalt	EPA 6010B	10E1171	0.99	**7.9**	0.985	5/10/2010	5/11/2010	
Copper	EPA 6010B	10E1171	2.0	**27**	0.985	5/10/2010	5/11/2010	
Lead	EPA 6010B	10E1171	2.0	**94**	0.985	5/10/2010	5/11/2010	
Molybdenum	EPA 6010B	10E1171	2.0	ND	0.985	5/10/2010	5/11/2010	
Nickel	EPA 6010B	10E1171	2.0	**12**	0.985	5/10/2010	5/11/2010	
Selenium	EPA 6010B	10E1171	2.0	ND	0.985	5/10/2010	5/11/2010	
Silver	EPA 6010B	10E1171	0.99	ND	0.985	5/10/2010	5/11/2010	
Thallium	EPA 6010B	10E1171	9.9	ND	0.985	5/10/2010	5/11/2010	
Vanadium	EPA 6010B	10E1171	0.99	**46**	0.985	5/10/2010	5/11/2010	
Zinc	EPA 6010B	10E1171	4.9	**84**	0.985	5/10/2010	5/11/2010	

TestAmerica Irvine

Lena Davidkova
Project Manager

The results pertain only to the samples tested in the laboratory. This report shall not be reproduced, except in full, without written permission from TestAmerica.

TestAmerica
THE LEADER IN ENVIRONMENTAL TESTING

17461 Derian Avenue. Suite 100, Irvine, CA 92614 (949) 261-1022 Fax:(949) 260-3297

Diaz Yourman
1616 East 17th Street
Santa Ana, CA 92705-8509
Attention: Gary Gilbert

Project ID: 2009-010.01
SCRRA Empire Grade Separation
Report Number: ITE0005

Sampled: 04/30/10
Received: 05/01/10

METALS

Analyte	Method	Batch	Reporting Limit	Sample Result	Dilution Factor	Date Extracted	Date Analyzed	Data Qualifiers
Sample ID: ITE0005-52 (DYB10-11 @ 1' - Soil)								
Reporting Units: mg/kg								
Arsenic	EPA 6010B	10E1344	2.0	**15**	0.985	5/11/2010	5/12/2010	
Lead	EPA 6010B	10E1344	2.0	**12**	0.985	5/11/2010	5/12/2010	
Sample ID: ITE0005-53 (DYB10-11 @ 2' - Soil)								
Reporting Units: mg/kg								
Arsenic	EPA 6010B	10E1344	2.0	**2.7**	1	5/11/2010	5/12/2010	
Lead	EPA 6010B	10E1344	2.0	**3.3**	1	5/11/2010	5/12/2010	
Sample ID: ITE0005-54 (DYB10-11 @ 5' - Soil)								
Reporting Units: mg/kg								
Arsenic	EPA 6010B	10E1344	2.0	ND	0.99	5/11/2010	5/12/2010	
Lead	EPA 6010B	10E1344	2.0	**2.9**	0.99	5/11/2010	5/12/2010	
Sample ID: ITE0005-55 (DYB10-11 @ 0' (12:30) - Soil)								
Reporting Units: mg/kg								
Mercury	EPA 7471A	10E1302	0.020	**0.057**	1	5/11/2010	5/11/2010	
Antimony	EPA 6010B	10E1344	9.9	ND	0.985	5/11/2010	5/12/2010	
Arsenic	EPA 6010B	10E1344	2.0	**5.2**	0.985	5/11/2010	5/12/2010	
Barium	EPA 6010B	10E1344	0.99	**110**	0.985	5/11/2010	5/12/2010	
Beryllium	EPA 6010B	10E1344	0.49	ND	0.985	5/11/2010	5/12/2010	
Cadmium	EPA 6010B	10E1344	0.49	**0.61**	0.985	5/11/2010	5/12/2010	
Chromium	EPA 6010B	10E1344	0.99	**14**	0.985	5/11/2010	5/12/2010	
Cobalt	EPA 6010B	10E1344	0.99	**6.9**	0.985	5/11/2010	5/12/2010	
Copper	EPA 6010B	10E1344	2.0	**18**	0.985	5/11/2010	5/12/2010	
Lead	EPA 6010B	10E1344	2.0	**14**	0.985	5/11/2010	5/12/2010	
Molybdenum	EPA 6010B	10E1344	2.0	ND	0.985	5/11/2010	5/12/2010	
Nickel	EPA 6010B	10E1344	2.0	**8.4**	0.985	5/11/2010	5/12/2010	
Selenium	EPA 6010B	10E1344	2.0	ND	0.985	5/11/2010	5/12/2010	
Silver	EPA 6010B	10E1344	0.99	ND	0.985	5/11/2010	5/12/2010	
Thallium	EPA 6010B	10E1344	9.9	ND	0.985	5/11/2010	5/12/2010	
Vanadium	EPA 6010B	10E1344	0.99	**34**	0.985	5/11/2010	5/12/2010	
Zinc	EPA 6010B	10E1344	4.9	**74**	0.985	5/11/2010	5/12/2010	

TestAmerica Irvine

Lena Davidkova
Project Manager

The results pertain only to the samples tested in the laboratory. This report shall not be reproduced, except in full, without written permission from TestAmerica.

TestAmerica
THE LEADER IN ENVIRONMENTAL TESTING
17461 Derian Avenue. Suite 100, Irvine, CA 92614 (949) 261-1022 Fax:(949) 260-3297

Diaz Yourman
1616 East 17th Street
Santa Ana, CA 92705-8509
Attention: Gary Gilbert

Project ID: 2009-010.01
SCRRA Empire Grade Separation
Report Number: ITE0005

Sampled: 04/30/10
Received: 05/01/10

METALS

Analyte	Method	Batch	Reporting Limit	Sample Result	Dilution Factor	Date Extracted	Date Analyzed	Data Qualifiers
Sample ID: ITE0005-57 (DYB10-12 @ 1' - Soil)								
Reporting Units: mg/kg								
Arsenic	EPA 6010B	10E1344	2.0	ND	0.985	5/11/2010	5/12/2010	
Lead	EPA 6010B	10E1344	2.0	**3.4**	0.985	5/11/2010	5/12/2010	
Sample ID: ITE0005-58 (DYB10-12 @ 2' - Soil)								
Reporting Units: mg/kg								
Arsenic	EPA 6010B	10E1344	2.0	ND	0.995	5/11/2010	5/12/2010	
Lead	EPA 6010B	10E1344	2.0	**8.1**	0.995	5/11/2010	5/12/2010	
Sample ID: ITE0005-59 (DYB10-12 @ 5' - Soil)								
Reporting Units: mg/kg								
Arsenic	EPA 6010B	10E1344	2.0	**2.9**	1	5/11/2010	5/12/2010	
Lead	EPA 6010B	10E1344	2.0	**2.6**	1	5/11/2010	5/12/2010	
Sample ID: ITE0005-60 (DYB10-12 @ 0' (2:05) - Soil)								
Reporting Units: mg/kg								
Mercury	EPA 7471A	10E1302	0.020	**0.069**	0.98	5/11/2010	5/11/2010	
Antimony	EPA 6010B	10E1344	9.9	ND	0.985	5/11/2010	5/12/2010	
Arsenic	EPA 6010B	10E1344	2.0	**3.9**	0.985	5/11/2010	5/12/2010	
Barium	EPA 6010B	10E1344	0.99	**110**	0.985	5/11/2010	5/12/2010	
Beryllium	EPA 6010B	10E1344	0.49	ND	0.985	5/11/2010	5/12/2010	
Cadmium	EPA 6010B	10E1344	0.49	**0.73**	0.985	5/11/2010	5/12/2010	
Chromium	EPA 6010B	10E1344	0.99	**17**	0.985	5/11/2010	5/12/2010	
Cobalt	EPA 6010B	10E1344	0.99	**7.5**	0.985	5/11/2010	5/12/2010	
Copper	EPA 6010B	10E1344	2.0	**25**	0.985	5/11/2010	5/12/2010	
Lead	EPA 6010B	10E1344	2.0	**13**	0.985	5/11/2010	5/12/2010	
Molybdenum	EPA 6010B	10E1344	2.0	ND	0.985	5/11/2010	5/12/2010	
Nickel	EPA 6010B	10E1344	2.0	**12**	0.985	5/11/2010	5/12/2010	
Selenium	EPA 6010B	10E1344	2.0	ND	0.985	5/11/2010	5/12/2010	
Silver	EPA 6010B	10E1344	0.99	ND	0.985	5/11/2010	5/12/2010	
Thallium	EPA 6010B	10E1344	9.9	ND	0.985	5/11/2010	5/12/2010	
Vanadium	EPA 6010B	10E1344	0.99	**37**	0.985	5/11/2010	5/12/2010	
Zinc	EPA 6010B	10E1344	4.9	**70**	0.985	5/11/2010	5/12/2010	

TestAmerica Irvine

Lena Davidkova
Project Manager

The results pertain only to the samples tested in the laboratory. This report shall not be reproduced, except in full, without written permission from TestAmerica.

TestAmerica
THE LEADER IN ENVIRONMENTAL TESTING

17461 Derian Avenue. Suite 100, Irvine, CA 92614 (949) 261-1022 Fax:(949) 260-3297

Diaz Yourman
1616 East 17th Street
Santa Ana, CA 92705-8509
Attention: Gary Gilbert

Project ID: 2009-010.01
SCRRA Empire Grade Separation
Report Number: ITE0005

Sampled: 04/30/10
Received: 05/01/10

METALS

Analyte	Method	Batch	Reporting Limit	Sample Result	Dilution Factor	Date Extracted	Date Analyzed	Data Qualifiers
Sample ID: ITE0005-62 (Equipment Blank - Water)								
Reporting Units: mg/l								
Mercury	EPA 7470A	10E0513	0.00020	ND	1	5/5/2010	5/5/2010	
Antimony	EPA 6010B	10E0821	0.010	ND	1	5/7/2010	5/7/2010	
Arsenic	EPA 6010B	10E0821	0.010	ND	1	5/7/2010	5/7/2010	
Barium	EPA 6010B	10E0821	0.010	ND	1	5/7/2010	5/7/2010	
Beryllium	EPA 6010B	10E0821	0.0040	ND	1	5/7/2010	5/7/2010	
Cadmium	EPA 6010B	10E0821	0.0050	ND	1	5/7/2010	5/7/2010	
Chromium	EPA 6010B	10E0821	0.0050	ND	1	5/7/2010	5/7/2010	
Cobalt	EPA 6010B	10E0821	0.010	ND	1	5/7/2010	5/7/2010	
Copper	EPA 6010B	10E0821	0.010	ND	1	5/7/2010	5/7/2010	
Lead	EPA 6010B	10E0821	0.0050	ND	1	5/7/2010	5/7/2010	
Molybdenum	EPA 6010B	10E0821	0.020	ND	1	5/7/2010	5/7/2010	
Nickel	EPA 6010B	10E0821	0.010	ND	1	5/7/2010	5/7/2010	
Selenium	EPA 6010B	10E0821	0.010	ND	1	5/7/2010	5/7/2010	
Silver	EPA 6010B	10E0821	0.010	ND	1	5/7/2010	5/7/2010	
Thallium	EPA 6010B	10E0821	0.010	ND	1	5/7/2010	5/7/2010	
Vanadium	EPA 6010B	10E0821	0.010	ND	1	5/7/2010	5/7/2010	
Zinc	EPA 6010B	10E0821	0.020	ND	1	5/7/2010	5/7/2010	

TestAmerica Irvine

Lena Davidkova
Project Manager

The results pertain only to the samples tested in the laboratory. This report shall not be reproduced, except in full, without written permission from TestAmerica.

TestAmerica
THE LEADER IN ENVIRONMENTAL TESTING
17461 Derian Avenue. Suite 100, Irvine, CA 92614 (949) 261-1022 Fax:(949) 260-3297

Diaz Yourman
1616 East 17th Street
Santa Ana, CA 92705-8509
Attention: Gary Gilbert

Project ID: 2009-010.01
SCRRA Empire Grade Separation
Report Number: ITE0005

Sampled: 04/30/10
Received: 05/01/10

INORGANICS

Analyte	Method	Batch	Reporting Limit	Sample Result	Dilution Factor	Date Extracted	Date Analyzed	Data Qualifiers
Sample ID: ITE0005-05 (DYB10-01 @ 0' (8:28) - Soil)								
Reporting Units: pH Units								
pH	EPA 9045C	10E0528	0.100	**8.14**	1	5/5/2010	5/5/2010	
Sample ID: ITE0005-10 (DYB10-02 @ 0' (9:20) - Soil)								
Reporting Units: pH Units								
pH	EPA 9045C	10E0528	0.100	**7.50**	1	5/5/2010	5/5/2010	
Sample ID: ITE0005-15 (DYB10-03 @ 0' (9:55) - Soil)								
Reporting Units: pH Units								
pH	EPA 9045C	10E0528	0.100	**7.12**	1	5/5/2010	5/5/2010	
Sample ID: ITE0005-20 (DYB10-04 @ 0' (11:00) - Soil)								
Reporting Units: pH Units								
pH	EPA 9045C	10E0528	0.100	**6.41**	1	5/5/2010	5/5/2010	
Sample ID: ITE0005-25 (DYB10-05 @ 0' (5:07) - Soil)								
Reporting Units: pH Units								
pH	EPA 9045C	10E0528	0.100	**6.98**	1	5/5/2010	5/5/2010	
Sample ID: ITE0005-30 (DYB10-06 @ 0' (4:21) - Soil)								
Reporting Units: pH Units								
pH	EPA 9045C	10E0528	0.100	**5.92**	1	5/5/2010	5/5/2010	
Sample ID: ITE0005-35 (DYB10-07 @ 0' (3:47) - Soil)								
Reporting Units: pH Units								
pH	EPA 9045C	10E0528	0.100	**7.07**	1	5/5/2010	5/5/2010	
Sample ID: ITE0005-40 (DYB10-08 @ 0' (3:15) - Soil)								
Reporting Units: pH Units								
pH	EPA 9045C	10E0528	0.100	**6.93**	1	5/5/2010	5/5/2010	
Sample ID: ITE0005-45 (DYB10-09 @ 0' (2:48) - Soil)								
Reporting Units: pH Units								
pH	EPA 9045C	10E0528	0.100	**7.36**	1	5/5/2010	5/5/2010	
Sample ID: ITE0005-50 (DYB10-10 @ 0' (12:55) - Soil)								
Reporting Units: pH Units								
pH	EPA 9045C	10E0528	0.100	**6.19**	1	5/5/2010	5/5/2010	

TestAmerica Irvine

Lena Davidkova
Project Manager

The results pertain only to the samples tested in the laboratory. This report shall not be reproduced, except in full, without written permission from TestAmerica.

TestAmerica
THE LEADER IN ENVIRONMENTAL TESTING

17461 Derian Avenue. Suite 100, Irvine, CA 92614 (949) 261-1022 Fax:(949) 260-3297

Diaz Yourman
1616 East 17th Street
Santa Ana, CA 92705-8509
Attention: Gary Gilbert

Project ID: 2009-010.01
SCRRA Empire Grade Separation
Report Number: ITE0005

Sampled: 04/30/10
Received: 05/01/10

INORGANICS

Analyte	Method	Batch	Reporting Limit	Sample Result	Dilution Factor	Date Extracted	Date Analyzed	Data Qualifiers
Sample ID: ITE0005-55 (DYB10-11 @ 0' (12:30) - Soil)								
Reporting Units: pH Units								
pH	EPA 9045C	10E0528	0.100	**8.44**	1	5/5/2010	5/5/2010	
Sample ID: ITE0005-60 (DYB10-12 @ 0' (2:05) - Soil)								
Reporting Units: pH Units								
pH	EPA 9045C	10E0528	0.100	**6.43**	1	5/5/2010	5/5/2010	
Sample ID: ITE0005-62 (Equipment Blank - Water)								
Reporting Units: pH Units								
pH	EPA 9040B	10E0483	0.100	**6.64**	1	5/5/2010	5/5/2010	HFT

TestAmerica Irvine

Lena Davidkova
Project Manager

The results pertain only to the samples tested in the laboratory. This report shall not be reproduced, except in full, without written permission from TestAmerica.

TestAmerica
THE LEADER IN ENVIRONMENTAL TESTING
17461 Derian Avenue. Suite 100, Irvine, CA 92614 (949) 261-1022 Fax:(949) 260-3297

Diaz Yourman
1616 East 17th Street
Santa Ana, CA 92705-8509
Attention: Gary Gilbert

Project ID: 2009-010.01
SCRRA Empire Grade Separation
Report Number: ITE0005

Sampled: 04/30/10
Received: 05/01/10

2540G_0126259

Analyte	Method	Batch	Reporting Limit	MDL	Sample Result	Dilution Factor	Date Extracted	Date Analyzed	Data Qualifiers
Sample ID: ITE0005-05 (DYB10-01 @ 0' (8:28) - Soil)									
Reporting Units: %									
Percent Solids	2540G_0126259	126259	NA		**91.3**	1	5/6/2010	5/7/2010	
Sample ID: ITE0005-25 (DYB10-05 @ 0' (5:07) - Soil)									
Reporting Units: %									
Percent Solids	2540G_0126259	126259	NA		**99**	1	5/6/2010	5/7/2010	
Sample ID: ITE0005-45 (DYB10-09 @ 0' (2:48) - Soil)									
Reporting Units: %									
Percent Solids	2540G_0126259	126259	NA		**85.8**	1	5/6/2010	5/7/2010	

TestAmerica Irvine

Lena Davidkova
Project Manager

The results pertain only to the samples tested in the laboratory. This report shall not be reproduced, except in full, without written permission from TestAmerica.

TestAmerica
THE LEADER IN ENVIRONMENTAL TESTING

17461 Derian Avenue. Suite 100, Irvine, CA 92614 (949) 261-1022 Fax:(949) 260-3297

Diaz Yourman
1616 East 17th Street
Santa Ana, CA 92705-8509
Attention: Gary Gilbert

Project ID: 2009-010.01
SCRRA Empire Grade Separation
Report Number: ITE0005

Sampled: 04/30/10
Received: 05/01/10

SW846 8141A

Analyte	Method	Batch	Reporting Limit	MDL	Sample Result	Dilution Factor	Date Extracted	Date Analyzed	Data Qualifiers
Sample ID: ITE0005-05 (DYB10-01 @ 0' (8:28) - Soil)									
Reporting Units: ug/kg									
Azinphos-methyl	SW846 8141A	126012	330	31	ND	10	5/5/2010	5/11/2010	
Bolstar	SW846 8141A	126012	330	31	ND	10	5/5/2010	5/11/2010	
Chlorpyrifos	SW846 8141A	126012	330	32	ND	10	5/5/2010	5/11/2010	
Coumaphos	SW846 8141A	126012	330	32	ND	10	5/5/2010	5/11/2010	
Demeton (total)	SW846 8141A	126012	330	60	ND	10	5/5/2010	5/11/2010	
Demeton-O	SW846 8141A	126012	330	2.8	ND	10	5/5/2010	5/11/2010	
Demeton-S	SW846 8141A	126012	330	3.2	ND	10	5/5/2010	5/11/2010	
Diazinon	SW846 8141A	126012	330	32	ND	10	5/5/2010	5/11/2010	
Dichlorvos	SW846 8141A	126012	330	29	ND	10	5/5/2010	5/11/2010	
Dimethoate	SW846 8141A	126012	330	32	ND	10	5/5/2010	5/11/2010	
Disulfoton	SW846 8141A	126012	330	35	ND	10	5/5/2010	5/11/2010	
EPN	SW846 8141A	126012	330	29	ND	10	5/5/2010	5/11/2010	
Ethoprop	SW846 8141A	126012	330	32	ND	10	5/5/2010	5/11/2010	
Famphur	SW846 8141A	126012	330	32	ND	10	5/5/2010	5/11/2010	
Fensulfothion	SW846 8141A	126012	330	26	ND	10	5/5/2010	5/11/2010	
Fenthion	SW846 8141A	126012	330	31	ND	10	5/5/2010	5/11/2010	
Malathion	SW846 8141A	126012	330	31	ND	10	5/5/2010	5/11/2010	
Methyl parathion	SW846 8141A	126012	330	29	ND	10	5/5/2010	5/11/2010	
Mevinphos	SW846 8141A	126012	330	31	ND	10	5/5/2010	5/11/2010	
O,O,O-Triethyl phosphorothioate	SW846 8141A	126012	330	3.2	ND	10	5/5/2010	5/11/2010	
Parathion	SW846 8141A	126012	330	26	ND	10	5/5/2010	5/11/2010	
Phorate	SW846 8141A	126012	330	33	ND	10	5/5/2010	5/11/2010	
Ronnel	SW846 8141A	126012	330	31	ND	10	5/5/2010	5/11/2010	
Stirophos	SW846 8141A	126012	330	33	ND	10	5/5/2010	5/11/2010	
Sulfotepp	SW846 8141A	126012	330	32	ND	10	5/5/2010	5/11/2010	
Thionazin	SW846 8141A	126012	330	32	ND	10	5/5/2010	5/11/2010	
Tokuthion	SW846 8141A	126012	330	32	ND	10	5/5/2010	5/11/2010	
Trichloronate	SW846 8141A	126012	330	39	ND	10	5/5/2010	5/11/2010	
Surrogate: Tributyl phosphate (55-125%)					*				*NC, DIL*
Surrogate: Triphenyl phosphate (47-130%)					*				*NC, DIL*

TestAmerica Irvine

Lena Davidkova
Project Manager

The results pertain only to the samples tested in the laboratory. This report shall not be reproduced, except in full, without written permission from TestAmerica.

TestAmerica
THE LEADER IN ENVIRONMENTAL TESTING

17461 Derian Avenue. Suite 100, Irvine, CA 92614 (949) 261-1022 Fax:(949) 260-3297

Diaz Yourman
1616 East 17th Street
Santa Ana, CA 92705-8509
Attention: Gary Gilbert

Project ID: 2009-010.01
SCRRA Empire Grade Separation
Report Number: ITE0005

Sampled: 04/30/10
Received: 05/01/10

SW846 8141A

Analyte	Method	Batch	Reporting Limit	MDL	Sample Result	Dilution Factor	Date Extracted	Date Analyzed	Data Qualifiers
Sample ID: ITE0005-25 (DYB10-05 @ 0' (5:07) - Soil)									
Reporting Units: ug/kg									
Azinphos-methyl	SW846 8141A	126012	160	16	ND	5	5/5/2010	5/11/2010	
Bolstar	SW846 8141A	126012	160	16	ND	5	5/5/2010	5/11/2010	
Chlorpyrifos	SW846 8141A	126012	160	16	ND	5	5/5/2010	5/11/2010	
Coumaphos	SW846 8141A	126012	160	16	ND	5	5/5/2010	5/11/2010	
Demeton (total)	SW846 8141A	126012	160	30	ND	5	5/5/2010	5/11/2010	
Demeton-O	SW846 8141A	126012	160	2.8	ND	5	5/5/2010	5/11/2010	
Demeton-S	SW846 8141A	126012	160	3.2	ND	5	5/5/2010	5/11/2010	
Diazinon	SW846 8141A	126012	160	16	ND	5	5/5/2010	5/11/2010	
Dichlorvos	SW846 8141A	126012	160	15	ND	5	5/5/2010	5/11/2010	
Dimethoate	SW846 8141A	126012	160	16	ND	5	5/5/2010	5/11/2010	
Disulfoton	SW846 8141A	126012	160	18	ND	5	5/5/2010	5/11/2010	
EPN	SW846 8141A	126012	160	14	ND	5	5/5/2010	5/11/2010	
Ethoprop	SW846 8141A	126012	160	16	ND	5	5/5/2010	5/11/2010	
Famphur	SW846 8141A	126012	160	16	ND	5	5/5/2010	5/11/2010	
Fensulfothion	SW846 8141A	126012	160	13	ND	5	5/5/2010	5/11/2010	
Fenthion	SW846 8141A	126012	160	16	ND	5	5/5/2010	5/11/2010	
Malathion	SW846 8141A	126012	160	16	ND	5	5/5/2010	5/11/2010	
Methyl parathion	SW846 8141A	126012	160	14	ND	5	5/5/2010	5/11/2010	
Mevinphos	SW846 8141A	126012	160	16	ND	5	5/5/2010	5/11/2010	
O,O,O-Triethyl phosphorothioate	SW846 8141A	126012	160	3.2	ND	5	5/5/2010	5/11/2010	
Parathion	SW846 8141A	126012	160	13	ND	5	5/5/2010	5/11/2010	
Phorate	SW846 8141A	126012	160	17	ND	5	5/5/2010	5/11/2010	
Ronnel	SW846 8141A	126012	160	16	ND	5	5/5/2010	5/11/2010	
Stirophos	SW846 8141A	126012	160	17	ND	5	5/5/2010	5/11/2010	
Sulfotepp	SW846 8141A	126012	160	16	ND	5	5/5/2010	5/11/2010	
Thionazin	SW846 8141A	126012	160	16	ND	5	5/5/2010	5/11/2010	
Tokuthion	SW846 8141A	126012	160	16	ND	5	5/5/2010	5/11/2010	
Trichloronate	SW846 8141A	126012	160	19	ND	5	5/5/2010	5/11/2010	
Surrogate: Tributyl phosphate (55-125%)					*93 %*				
Surrogate: Triphenyl phosphate (47-130%)					*96 %*				

TestAmerica Irvine

Lena Davidkova
Project Manager

The results pertain only to the samples tested in the laboratory. This report shall not be reproduced, except in full, without written permission from TestAmerica.

TestAmerica
THE LEADER IN ENVIRONMENTAL TESTING
17461 Derian Avenue. Suite 100, Irvine, CA 92614 (949) 261-1022 Fax:(949) 260-3297

Diaz Yourman
1616 East 17th Street
Santa Ana, CA 92705-8509
Attention: Gary Gilbert

Project ID: 2009-010.01
SCRRA Empire Grade Separation
Report Number: ITE0005

Sampled: 04/30/10
Received: 05/01/10

SW846 8141A

Analyte	Method	Batch	Reporting Limit	MDL	Sample Result	Dilution Factor	Date Extracted	Date Analyzed	Data Qualifiers
Sample ID: ITE0005-45 (DYB10-09 @ 0' (2:48) - Soil)									
Reporting Units: ug/kg									
Azinphos-methyl	SW846 8141A	126012	160	16	ND	5	5/5/2010	5/11/2010	
Bolstar	SW846 8141A	126012	160	16	ND	5	5/5/2010	5/11/2010	
Chlorpyrifos	SW846 8141A	126012	160	16	ND	5	5/5/2010	5/11/2010	
Coumaphos	SW846 8141A	126012	160	16	ND	5	5/5/2010	5/11/2010	
Demeton (total)	SW846 8141A	126012	160	30	ND	5	5/5/2010	5/11/2010	
Demeton-O	SW846 8141A	126012	160	2.8	ND	5	5/5/2010	5/11/2010	
Demeton-S	SW846 8141A	126012	160	3.2	ND	5	5/5/2010	5/11/2010	
Diazinon	SW846 8141A	126012	160	16	ND	5	5/5/2010	5/11/2010	
Dichlorvos	SW846 8141A	126012	160	15	ND	5	5/5/2010	5/11/2010	
Dimethoate	SW846 8141A	126012	160	16	ND	5	5/5/2010	5/11/2010	
Disulfoton	SW846 8141A	126012	160	18	ND	5	5/5/2010	5/11/2010	
EPN	SW846 8141A	126012	160	14	ND	5	5/5/2010	5/11/2010	
Ethoprop	SW846 8141A	126012	160	16	ND	5	5/5/2010	5/11/2010	
Famphur	SW846 8141A	126012	160	16	ND	5	5/5/2010	5/11/2010	
Fensulfothion	SW846 8141A	126012	160	13	ND	5	5/5/2010	5/11/2010	
Fenthion	SW846 8141A	126012	160	16	ND	5	5/5/2010	5/11/2010	
Malathion	SW846 8141A	126012	160	16	ND	5	5/5/2010	5/11/2010	
Methyl parathion	SW846 8141A	126012	160	14	ND	5	5/5/2010	5/11/2010	
Mevinphos	SW846 8141A	126012	160	16	ND	5	5/5/2010	5/11/2010	
O,O,O-Triethyl phosphorothioate	SW846 8141A	126012	160	3.2	ND	5	5/5/2010	5/11/2010	
Parathion	SW846 8141A	126012	160	13	ND	5	5/5/2010	5/11/2010	
Phorate	SW846 8141A	126012	160	17	ND	5	5/5/2010	5/11/2010	
Ronnel	SW846 8141A	126012	160	16	ND	5	5/5/2010	5/11/2010	
Stirophos	SW846 8141A	126012	160	17	ND	5	5/5/2010	5/11/2010	
Sulfotepp	SW846 8141A	126012	160	16	ND	5	5/5/2010	5/11/2010	
Thionazin	SW846 8141A	126012	160	16	ND	5	5/5/2010	5/11/2010	
Tokuthion	SW846 8141A	126012	160	16	ND	5	5/5/2010	5/11/2010	
Trichloronate	SW846 8141A	126012	160	19	ND	5	5/5/2010	5/11/2010	
Surrogate: Tributyl phosphate (55-125%)					*88 %*				
Surrogate: Triphenyl phosphate (47-130%)					*86 %*				

TestAmerica Irvine

Lena Davidkova
Project Manager

The results pertain only to the samples tested in the laboratory. This report shall not be reproduced, except in full, without written permission from TestAmerica.

TestAmerica
THE LEADER IN ENVIRONMENTAL TESTING

17461 Derian Avenue. Suite 100, Irvine, CA 92614 (949) 261-1022 Fax:(949) 260-3297

Diaz Yourman
1616 East 17th Street
Santa Ana, CA 92705-8509
Attention: Gary Gilbert

Project ID: 2009-010.01
SCRRA Empire Grade Separation
Report Number: ITE0005

Sampled: 04/30/10
Received: 05/01/10

SW846 8141A

Analyte	Method	Batch	Reporting Limit	MDL	Sample Result	Dilution Factor	Date Extracted	Date Analyzed	Data Qualifiers
Sample ID: ITE0005-60 (DYB10-12 @ 0' (2:05) - Soil)									
Reporting Units: ug/kg									
Azinphos-methyl	SW846 8141A	126012	160	15	ND	4.93	5/5/2010	5/11/2010	
Bolstar	SW846 8141A	126012	160	15	ND	4.93	5/5/2010	5/11/2010	
Chlorpyrifos	SW846 8141A	126012	160	16	ND	4.93	5/5/2010	5/11/2010	
Coumaphos	SW846 8141A	126012	160	16	ND	4.93	5/5/2010	5/11/2010	
Demeton (total)	SW846 8141A	126012	160	30	ND	4.93	5/5/2010	5/11/2010	
Demeton-O	SW846 8141A	126012	160	14	ND	4.93	5/5/2010	5/11/2010	
Demeton-S	SW846 8141A	126012	160	16	ND	4.93	5/5/2010	5/11/2010	
Diazinon	SW846 8141A	126012	160	16	ND	4.93	5/5/2010	5/11/2010	
Dichlorvos	SW846 8141A	126012	160	14	ND	4.93	5/5/2010	5/11/2010	
Dimethoate	SW846 8141A	126012	160	16	ND	4.93	5/5/2010	5/11/2010	
Disulfoton	SW846 8141A	126012	160	17	ND	4.93	5/5/2010	5/11/2010	
EPN	SW846 8141A	126012	160	14	ND	4.93	5/5/2010	5/11/2010	
Ethoprop	SW846 8141A	126012	160	16	ND	4.93	5/5/2010	5/11/2010	
Famphur	SW846 8141A	126012	160	16	ND	4.93	5/5/2010	5/11/2010	
Fensulfothion	SW846 8141A	126012	160	13	ND	4.93	5/5/2010	5/11/2010	
Fenthion	SW846 8141A	126012	160	15	ND	4.93	5/5/2010	5/11/2010	
Malathion	SW846 8141A	126012	160	15	ND	4.93	5/5/2010	5/11/2010	
Methyl parathion	SW846 8141A	126012	160	14	ND	4.93	5/5/2010	5/11/2010	
Mevinphos	SW846 8141A	126012	160	15	ND	4.93	5/5/2010	5/11/2010	
O,O,O-Triethyl phosphorothioate	SW846 8141A	126012	160	16	ND	4.93	5/5/2010	5/11/2010	
Parathion	SW846 8141A	126012	160	13	ND	4.93	5/5/2010	5/11/2010	
Phorate	SW846 8141A	126012	160	16	ND	4.93	5/5/2010	5/11/2010	
Ronnel	SW846 8141A	126012	160	15	ND	4.93	5/5/2010	5/11/2010	
Stirophos	SW846 8141A	126012	160	16	ND	4.93	5/5/2010	5/11/2010	
Sulfotepp	SW846 8141A	126012	160	16	ND	4.93	5/5/2010	5/11/2010	
Thionazin	SW846 8141A	126012	160	16	ND	4.93	5/5/2010	5/11/2010	
Tokuthion	SW846 8141A	126012	160	16	ND	4.93	5/5/2010	5/11/2010	
Trichloronate	SW846 8141A	126012	160	19	ND	4.93	5/5/2010	5/11/2010	
Surrogate: Tributyl phosphate (55-125%)					*91 %*				
Surrogate: Triphenyl phosphate (47-130%)					*87 %*				

TestAmerica Irvine

Lena Davidkova
Project Manager

The results pertain only to the samples tested in the laboratory. This report shall not be reproduced, except in full, without written permission from TestAmerica.

TestAmerica
THE LEADER IN ENVIRONMENTAL TESTING
17461 Derian Avenue. Suite 100, Irvine, CA 92614 (949) 261-1022 Fax:(949) 260-3297

Diaz Yourman
1616 East 17th Street
Santa Ana, CA 92705-8509
Attention: Gary Gilbert

Project ID: 2009-010.01
SCRRA Empire Grade Separation
Report Number: ITE0005

Sampled: 04/30/10
Received: 05/01/10

SW846 8141A

Analyte	Method	Batch	Reporting Limit	MDL	Sample Result	Dilution Factor	Date Extracted	Date Analyzed	Data Qualifiers
Sample ID: ITE0005-62 (Equipment Blank - Water)									
Reporting Units: ug/L									
Azinphos-methyl	SW846 8141A	126407	0.98	0.11	ND	0.98	5/6/2010	5/11/2010	
Bolstar	SW846 8141A	126407	0.98	0.11	ND	0.98	5/6/2010	5/11/2010	
Chlorpyrifos	SW846 8141A	126407	0.98	0.1	ND	0.98	5/6/2010	5/11/2010	
Coumaphos	SW846 8141A	126407	0.98	0.15	ND	0.98	5/6/2010	5/11/2010	
Demeton (total)	SW846 8141A	126407	0.98	0.16	ND	0.98	5/6/2010	5/11/2010	
Demeton-O	SW846 8141A	126407	0.98	0.092	ND	0.98	5/6/2010	5/11/2010	
Demeton-S	SW846 8141A	126407	0.98	0.07	ND	0.98	5/6/2010	5/11/2010	
Diazinon	SW846 8141A	126407	0.98	0.092	ND	0.98	5/6/2010	5/11/2010	
Dichlorvos	SW846 8141A	126407	0.98	0.083	ND	0.98	5/6/2010	5/11/2010	
Dimethoate	SW846 8141A	126407	0.98	0.11	ND	0.98	5/6/2010	5/11/2010	
Disulfoton	SW846 8141A	126407	0.98	0.099	ND	0.98	5/6/2010	5/11/2010	
EPN	SW846 8141A	126407	0.98	0.11	ND	0.98	5/6/2010	5/11/2010	
Ethoprop	SW846 8141A	126407	0.98	0.099	ND	0.98	5/6/2010	5/11/2010	
Famphur	SW846 8141A	126407	0.98	0.12	ND	0.98	5/6/2010	5/11/2010	
Fensulfothion	SW846 8141A	126407	0.98	0.16	ND	0.98	5/6/2010	5/11/2010	
Fenthion	SW846 8141A	126407	0.98	0.083	ND	0.98	5/6/2010	5/11/2010	
Malathion	SW846 8141A	126407	0.98	0.11	ND	0.98	5/6/2010	5/11/2010	
Methyl parathion	SW846 8141A	126407	0.98	0.11	ND	0.98	5/6/2010	5/11/2010	
Mevinphos	SW846 8141A	126407	0.98	0.096	ND	0.98	5/6/2010	5/11/2010	
O,O,O-Triethyl phosphorothioate	SW846 8141A	126407	0.98	0.098	ND	0.98	5/6/2010	5/11/2010	
Parathion	SW846 8141A	126407	0.98	0.16	ND	0.98	5/6/2010	5/11/2010	
Phorate	SW846 8141A	126407	0.98	0.091	ND	0.98	5/6/2010	5/11/2010	
Ronnel	SW846 8141A	126407	0.98	0.1	ND	0.98	5/6/2010	5/11/2010	
Stirophos	SW846 8141A	126407	0.98	0.094	ND	0.98	5/6/2010	5/11/2010	
Sulfotepp	SW846 8141A	126407	0.98	0.093	ND	0.98	5/6/2010	5/11/2010	
Thionazin	SW846 8141A	126407	0.98	0.098	ND	0.98	5/6/2010	5/11/2010	
Tokuthion	SW846 8141A	126407	0.98	0.092	ND	0.98	5/6/2010	5/11/2010	
Trichloronate	SW846 8141A	126407	0.98	0.097	ND	0.98	5/6/2010	5/11/2010	
Surrogate: Tributyl phosphate (49-122%)					*99 %*				
Surrogate: Triphenyl phosphate (45-145%)					*97 %*				

TestAmerica Irvine

Lena Davidkova
Project Manager

The results pertain only to the samples tested in the laboratory. This report shall not be reproduced, except in full, without written permission from TestAmerica.

TestAmerica
THE LEADER IN ENVIRONMENTAL TESTING

17461 Derian Avenue. Suite 100, Irvine, CA 92614 (949) 261-1022 Fax:(949) 260-3297

Diaz Yourman
1616 East 17th Street
Santa Ana, CA 92705-8509
Attention: Gary Gilbert

Project ID: 2009-010.01
SCRRA Empire Grade Separation
Report Number: ITE0005

Sampled: 04/30/10
Received: 05/01/10

SW846 8151A

Analyte	Method	Batch	Reporting Limit	MDL	Sample Result	Dilution Factor	Date Extracted	Date Analyzed	Data Qualifiers
Sample ID: ITE0005-05 (DYB10-01 @ 0' (8:28) - Soil)									
Reporting Units: ug/kg									
2,4,5-T	SW846 8151A	126013	20	2.5	ND	1	5/6/2010	5/7/2010	
2,4,5-TP (Silvex)	SW846 8151A	126013	20	2.1	ND	1	5/6/2010	5/7/2010	
2,4-D	SW846 8151A	126013	80	5.5	ND	1	5/6/2010	5/7/2010	
2,4-DB	SW846 8151A	126013	80	6.1	ND	1	5/6/2010	5/7/2010	
Dalapon	SW846 8151A	126013	90	7.1	ND	1	5/6/2010	5/7/2010	
Dicamba	SW846 8151A	126013	40	4.8	ND	1	5/6/2010	5/7/2010	
Dichlorprop	SW846 8151A	126013	80	9.5	ND	1	5/6/2010	5/7/2010	
Dinoseb	SW846 8151A	126013	12	4.5	ND	1	5/6/2010	5/7/2010	
MCPA	SW846 8151A	126013	8000	1600	ND	1	5/6/2010	5/7/2010	
MCPP	SW846 8151A	126013	8000	1600	ND	1	5/6/2010	5/7/2010	
Pentachlorophenol	SW846 8151A	126013	11	1.1	ND	1	5/6/2010	5/7/2010	
Surrogate: DCAA (42-140%)					*60 %*				
Sample ID: ITE0005-05RE1 (DYB10-01 @ 0' (8:28) - Soil)									
Reporting Units: ug/kg									
2,4,5-T	SW846 8151A	138057	20	2.5	ND	1	5/18/2010	5/19/2010	
2,4,5-TP (Silvex)	SW846 8151A	138057	20	2.1	ND	1	5/18/2010	5/19/2010	
2,4-D	SW846 8151A	138057	80	5.5	ND	1	5/18/2010	5/19/2010	
2,4-DB	SW846 8151A	138057	80	6.1	ND	1	5/18/2010	5/19/2010	
Dalapon	SW846 8151A	138057	90	7.1	ND	1	5/18/2010	5/19/2010	
Dicamba	SW846 8151A	138057	40	4.8	ND	1	5/18/2010	5/19/2010	
Dichlorprop	SW846 8151A	138057	80	9.5	ND	1	5/18/2010	5/19/2010	
Dinoseb	SW846 8151A	138057	12	4.5	ND	1	5/18/2010	5/19/2010	
MCPA	SW846 8151A	138057	8000	1600	ND	1	5/18/2010	5/19/2010	
MCPP	SW846 8151A	138057	8000	1600	ND	1	5/18/2010	5/19/2010	
Pentachlorophenol	SW846 8151A	138057	11	1.1	ND	1	5/18/2010	5/19/2010	
Surrogate: DCAA (42-140%)					*61 %*				

TestAmerica Irvine

Lena Davidkova
Project Manager

The results pertain only to the samples tested in the laboratory. This report shall not be reproduced, except in full, without written permission from TestAmerica.

TestAmerica
THE LEADER IN ENVIRONMENTAL TESTING
17461 Derian Avenue. Suite 100, Irvine, CA 92614 (949) 261-1022 Fax:(949) 260-3297

Diaz Yourman
1616 East 17th Street
Santa Ana, CA 92705-8509
Attention: Gary Gilbert

Project ID: 2009-010.01
SCRRA Empire Grade Separation
Report Number: ITE0005

Sampled: 04/30/10
Received: 05/01/10

SW846 8151A

Analyte	Method	Batch	Reporting Limit	MDL	Sample Result	Dilution Factor	Date Extracted	Date Analyzed	Data Qualifiers
Sample ID: ITE0005-25 (DYB10-05 @ 0' (5:07) - Soil)									
Reporting Units: ug/kg									
2,4,5-T	SW846 8151A	126013	20	2.5	ND	1	5/6/2010	5/7/2010	
2,4,5-TP (Silvex)	SW846 8151A	126013	20	2.1	ND	1	5/6/2010	5/7/2010	
2,4-D	SW846 8151A	126013	80	5.5	ND	1	5/6/2010	5/7/2010	
2,4-DB	SW846 8151A	126013	80	6.1	ND	1	5/6/2010	5/7/2010	
Dalapon	SW846 8151A	126013	90	7.1	ND	1	5/6/2010	5/7/2010	
Dicamba	SW846 8151A	126013	40	4.8	ND	1	5/6/2010	5/7/2010	
Dichlorprop	SW846 8151A	126013	80	9.5	ND	1	5/6/2010	5/7/2010	
Dinoseb	SW846 8151A	126013	12	4.5	ND	1	5/6/2010	5/7/2010	
MCPA	SW846 8151A	126013	8000	1600	ND	1	5/6/2010	5/7/2010	
MCPP	SW846 8151A	126013	8000	1600	ND	1	5/6/2010	5/7/2010	
Pentachlorophenol	SW846 8151A	126013	11	1.1	ND	1	5/6/2010	5/7/2010	
Surrogate: DCAA (42-140%)					*70 %*				
Sample ID: ITE0005-25RE1 (DYB10-05 @ 0' (5:07) - Soil)									
Reporting Units: ug/kg									
2,4,5-T	SW846 8151A	138057	20	2.5	ND	0.99	5/18/2010	5/19/2010	
2,4,5-TP (Silvex)	SW846 8151A	138057	20	2.1	ND	0.99	5/18/2010	5/19/2010	
2,4-D	SW846 8151A	138057	79	5.4	ND	0.99	5/18/2010	5/19/2010	
2,4-DB	SW846 8151A	138057	79	6.1	ND	0.99	5/18/2010	5/19/2010	
Dalapon	SW846 8151A	138057	89		ND	0.99	5/18/2010	5/19/2010	
Dicamba	SW846 8151A	138057	40	4.7	ND	0.99	5/18/2010	5/19/2010	
Dichlorprop	SW846 8151A	138057	79	9.4	ND	0.99	5/18/2010	5/19/2010	
Dinoseb	SW846 8151A	138057	12	4.5	ND	0.99	5/18/2010	5/19/2010	
MCPA	SW846 8151A	138057	7900	1600	ND	0.99	5/18/2010	5/19/2010	
MCPP	SW846 8151A	138057	7900	1600	ND	0.99	5/18/2010	5/19/2010	
Pentachlorophenol	SW846 8151A	138057	11	1.1	ND	0.99	5/18/2010	5/19/2010	
Surrogate: DCAA (42-140%)					*71 %*				

TestAmerica Irvine

Lena Davidkova
Project Manager

The results pertain only to the samples tested in the laboratory. This report shall not be reproduced, except in full, without written permission from TestAmerica.

TestAmerica
THE LEADER IN ENVIRONMENTAL TESTING
17461 Derian Avenue. Suite 100, Irvine, CA 92614 (949) 261-1022 Fax:(949) 260-3297

Diaz Yourman
1616 East 17th Street
Santa Ana, CA 92705-8509
Attention: Gary Gilbert

Project ID: 2009-010.01
SCRRA Empire Grade Separation
Report Number: ITE0005

Sampled: 04/30/10
Received: 05/01/10

SW846 8151A

Analyte	Method	Batch	Reporting Limit	MDL	Sample Result	Dilution Factor	Date Extracted	Date Analyzed	Data Qualifiers
Sample ID: ITE0005-45 (DYB10-09 @ 0' (2:48) - Soil)									
Reporting Units: ug/kg									
2,4,5-T	SW846 8151A	126013	20	2.5	ND	1	5/6/2010	5/7/2010	
2,4,5-TP (Silvex)	SW846 8151A	126013	20	2.1	ND	1	5/6/2010	5/7/2010	
2,4-D	SW846 8151A	126013	80	5.5	ND	1	5/6/2010	5/7/2010	
2,4-DB	SW846 8151A	126013	80	6.1	ND	1	5/6/2010	5/7/2010	
Dalapon	SW846 8151A	126013	90	7.1	ND	1	5/6/2010	5/7/2010	
Dicamba	SW846 8151A	126013	40	4.8	ND	1	5/6/2010	5/7/2010	
Dichlorprop	SW846 8151A	126013	80	9.5	ND	1	5/6/2010	5/7/2010	
Dinoseb	SW846 8151A	126013	12	4.5	ND	1	5/6/2010	5/7/2010	
MCPA	SW846 8151A	126013	8000	1600	ND	1	5/6/2010	5/7/2010	
MCPP	SW846 8151A	126013	8000	1600	ND	1	5/6/2010	5/7/2010	
Pentachlorophenol	SW846 8151A	126013	11	1.1	ND	1	5/6/2010	5/7/2010	
Surrogate: DCAA (42-140%)					*61 %*				
Sample ID: ITE0005-45RE1 (DYB10-09 @ 0' (2:48) - Soil)									
Reporting Units: ug/kg									
2,4,5-T	SW846 8151A	138057	20	2.5	ND	1	5/18/2010	5/19/2010	
2,4,5-TP (Silvex)	SW846 8151A	138057	20	2.1	ND	1	5/18/2010	5/19/2010	
2,4-D	SW846 8151A	138057	80	5.5	ND	1	5/18/2010	5/19/2010	
2,4-DB	SW846 8151A	138057	80	6.1	ND	1	5/18/2010	5/19/2010	
Dalapon	SW846 8151A	138057	90	7.1	ND	1	5/18/2010	5/19/2010	
Dicamba	SW846 8151A	138057	40	4.8	ND	1	5/18/2010	5/19/2010	
Dichlorprop	SW846 8151A	138057	80	9.5	ND	1	5/18/2010	5/19/2010	
Dinoseb	SW846 8151A	138057	12	4.5	ND	1	5/18/2010	5/19/2010	
MCPA	SW846 8151A	138057	8000	1600	ND	1	5/18/2010	5/19/2010	
MCPP	SW846 8151A	138057	8000	1600	ND	1	5/18/2010	5/19/2010	
Pentachlorophenol	SW846 8151A	138057	11	1.1	ND	1	5/18/2010	5/19/2010	
Surrogate: DCAA (42-140%)					*61 %*				

TestAmerica Irvine

Lena Davidkova
Project Manager

The results pertain only to the samples tested in the laboratory. This report shall not be reproduced, except in full, without written permission from TestAmerica.

TestAmerica
THE LEADER IN ENVIRONMENTAL TESTING
17461 Derian Avenue. Suite 100, Irvine, CA 92614 (949) 261-1022 Fax:(949) 260-3297

Diaz Yourman
1616 East 17th Street
Santa Ana, CA 92705-8509
Attention: Gary Gilbert

Project ID: 2009-010.01
SCRRA Empire Grade Separation
Report Number: ITE0005

Sampled: 04/30/10
Received: 05/01/10

SW846 8151A

Analyte	Method	Batch	Reporting Limit	MDL	Sample Result	Dilution Factor	Date Extracted	Date Analyzed	Data Qualifiers
Sample ID: ITE0005-60 (DYB10-12 @ 0' (2:05) - Soil)									
Reporting Units: ug/kg									
2,4,5-T	SW846 8151A	126013	20	2.5	ND	1	5/6/2010	5/7/2010	
2,4,5-TP (Silvex)	SW846 8151A	126013	20	2.1	ND	1	5/6/2010	5/7/2010	
2,4-D	SW846 8151A	126013	80	5.5	ND	1	5/6/2010	5/7/2010	
2,4-DB	SW846 8151A	126013	80	6.1	ND	1	5/6/2010	5/7/2010	
Dalapon	SW846 8151A	126013	90	7.1	ND	1	5/6/2010	5/7/2010	
Dicamba	SW846 8151A	126013	40	4.8	ND	1	5/6/2010	5/7/2010	
Dichlorprop	SW846 8151A	126013	80	9.5	ND	1	5/6/2010	5/7/2010	
Dinoseb	SW846 8151A	126013	12	4.5	ND	1	5/6/2010	5/7/2010	
MCPA	SW846 8151A	126013	8000	1600	**13000**	1	5/6/2010	5/7/2010	
MCPP	SW846 8151A	126013	8000	1600	ND	1	5/6/2010	5/7/2010	
Pentachlorophenol	SW846 8151A	126013	11	1.1	ND	1	5/6/2010	5/7/2010	
Surrogate: DCAA (42-140%)					*60 %*				
Sample ID: ITE0005-60RE1 (DYB10-12 @ 0' (2:05) - Soil)									
Reporting Units: ug/kg									
2,4,5-T	SW846 8151A	138057	20	2.5	ND	1	5/18/2010	5/19/2010	
2,4,5-TP (Silvex)	SW846 8151A	138057	20	2.1	ND	1	5/18/2010	5/19/2010	
2,4-D	SW846 8151A	138057	80	5.5	ND	1	5/18/2010	5/19/2010	
2,4-DB	SW846 8151A	138057	80	6.1	ND	1	5/18/2010	5/19/2010	
Dalapon	SW846 8151A	138057	90	7.1	ND	1	5/18/2010	5/19/2010	
Dicamba	SW846 8151A	138057	40	4.8	ND	1	5/18/2010	5/19/2010	
Dichlorprop	SW846 8151A	138057	80	9.5	ND	1	5/18/2010	5/19/2010	
Dinoseb	SW846 8151A	138057	12	4.5	ND	1	5/18/2010	5/19/2010	
MCPA	SW846 8151A	138057	8000	1600	ND	1	5/18/2010	5/19/2010	
MCPP	SW846 8151A	138057	8000	1600	ND	1	5/18/2010	5/19/2010	
Pentachlorophenol	SW846 8151A	138057	11	1.1	ND	1	5/18/2010	5/19/2010	
Surrogate: DCAA (42-140%)					*73 %*				

TestAmerica Irvine

Lena Davidkova
Project Manager

The results pertain only to the samples tested in the laboratory. This report shall not be reproduced, except in full, without written permission from TestAmerica.

TestAmerica
THE LEADER IN ENVIRONMENTAL TESTING

17461 Derian Avenue. Suite 100, Irvine, CA 92614 (949) 261-1022 Fax:(949) 260-3297

Diaz Yourman
1616 East 17th Street
Santa Ana, CA 92705-8509
Attention: Gary Gilbert

Project ID: 2009-010.01
SCRRA Empire Grade Separation
Report Number: ITE0005

Sampled: 04/30/10
Received: 05/01/10

SW846 8151A

Analyte	Method	Batch	Reporting Limit	MDL	Sample Result	Dilution Factor	Date Extracted	Date Analyzed	Data Qualifiers
Sample ID: ITE0005-62 (Equipment Blank - Water)									
Reporting Units: ug/L									
2,4,5-T	SW846 8151A	126442	0.97	0.094	ND	0.97	5/6/2010	5/7/2010	
2,4,5-TP (Silvex)	SW846 8151A	126442	0.97	0.1	ND	0.97	5/6/2010	5/7/2010	
2,4-D	SW846 8151A	126442	3.9	0.44	ND	0.97	5/6/2010	5/7/2010	
2,4-DB	SW846 8151A	126442	3.9	0.45	ND	0.97	5/6/2010	5/7/2010	
Dalapon	SW846 8151A	126442	4.8	0.67	ND	0.97	5/6/2010	5/7/2010	
Dicamba	SW846 8151A	126442	1.9	0.25	ND	0.97	5/6/2010	5/7/2010	
Dichlorprop	SW846 8151A	126442	3.9	0.52	ND	0.97	5/6/2010	5/7/2010	
Dinoseb	SW846 8151A	126442	0.87	0.12	ND	0.97	5/6/2010	5/7/2010	
MCPA	SW846 8151A	126442	390	50	ND	0.97	5/6/2010	5/7/2010	
MCPP	SW846 8151A	126442	390	44	ND	0.97	5/6/2010	5/7/2010	
Pentachlorophenol	SW846 8151A	126442	0.48	0.075	ND	0.97	5/6/2010	5/7/2010	
Surrogate: DCAA (32-140%)					*71 %*				

TestAmerica Irvine

Lena Davidkova
Project Manager

The results pertain only to the samples tested in the laboratory. This report shall not be reproduced, except in full, without written permission from TestAmerica.

TestAmerica
THE LEADER IN ENVIRONMENTAL TESTING
17461 Derian Avenue. Suite 100, Irvine, CA 92614 (949) 261-1022 Fax:(949) 260-3297

Diaz Yourman
1616 East 17th Street
Santa Ana, CA 92705-8509
Attention: Gary Gilbert

Project ID: 2009-010.01
SCRRA Empire Grade Separation
Report Number: ITE0005

Sampled: 04/30/10
Received: 05/01/10

STLC METALS

Analyte	Method	Batch	Reporting Limit	Sample Result	Dilution Factor	STLC Limit	Date Extracted	Date Analyzed	Data Qualifiers
Sample ID: ITE0005-26 (DYB10-06 @ 0' (4:24) - Soil)									
Reporting Units: mg/l									
Lead	EPA 6010B	10E2447	0.10	**3.6**	1	5.0	5/19/2010	5/19/2010	
Sample ID: ITE0005-38 (DYB10-08 @ 2' - Soil)									
Reporting Units: mg/l									
Lead	EPA 6010B	10E2447	0.10	**5.9**	1	5.0	5/19/2010	5/19/2010	
Sample ID: ITE0005-41 (DYB10-09 @ 0' (2:51) - Soil)									
Reporting Units: mg/l									
Arsenic	EPA 6010B	10E2447	0.20	**1.1**	1	5.0	5/19/2010	5/19/2010	
Sample ID: ITE0005-46 (DYB10-10 @ 0' (12:58) - Soil)									
Reporting Units: mg/l									
Lead	EPA 6010B	10E2447	0.10	**2.8**	1	5.0	5/19/2010	5/19/2010	
Sample ID: ITE0005-47 (DYB10-10 @ 1' - Soil)									
Reporting Units: mg/l									
Arsenic	EPA 6010B	10E2447	0.20	**0.40**	1	5.0	5/19/2010	5/19/2010	
Sample ID: ITE0005-52 (DYB10-11 @ 1' - Soil)									
Reporting Units: mg/l									
Arsenic	EPA 6010B	10E2447	0.20	**0.37**	1	5.0	5/19/2010	5/19/2010	

TestAmerica Irvine

Lena Davidkova
Project Manager

The results pertain only to the samples tested in the laboratory. This report shall not be reproduced, except in full, without written permission from TestAmerica.

TestAmerica
THE LEADER IN ENVIRONMENTAL TESTING
17461 Derian Avenue. Suite 100, Irvine, CA 92614 (949) 261-1022 Fax:(949) 260-3297

Diaz Yourman
1616 East 17th Street
Santa Ana, CA 92705-8509
Attention: Gary Gilbert

Project ID: 2009-010.01
SCRRA Empire Grade Separation
Report Number: ITE0005

Sampled: 04/30/10
Received: 05/01/10

SHORT HOLD TIME DETAIL REPORT

	Hold Time (in days)	Date/Time Sampled	Date/Time Received	Date/Time Extracted	Date/Time Analyzed
Sample ID: Equipment Blank (ITE0005-62) - Water					
EPA 9040B	1	04/30/2010 06:00	05/01/2010 11:40	05/05/2010 09:20	05/05/2010 09:20

TestAmerica Irvine

Lena Davidkova
Project Manager

The results pertain only to the samples tested in the laboratory. This report shall not be reproduced, except in full, without written permission from TestAmerica.

TestAmerica
THE LEADER IN ENVIRONMENTAL TESTING

17461 Derian Avenue. Suite 100, Irvine, CA 92614 (949) 261-1022 Fax:(949) 260-3297

Diaz Yourman
1616 East 17th Street
Santa Ana, CA 92705-8509
Attention: Gary Gilbert

Project ID: 2009-010.01
SCRRA Empire Grade Separation
Report Number: ITE0005

Sampled: 04/30/10
Received: 05/01/10

WASTE EXTRACTION TEST (STLC) - Metals/Inorganics

Analyte	Method	Batch	Extraction Start Date	Extraction End Date	Data Qualifiers
Sample ID: ITE0005-26 (DYB10-06 @ 0' (4:24) - Soil)					
Extraction	STLC-Met	10E1973	5/15/2010	5/17/2010	
Sample ID: ITE0005-38 (DYB10-08 @ 2' - Soil)					
Extraction	STLC-Met	10E1973	5/15/2010	5/17/2010	
Sample ID: ITE0005-41 (DYB10-09 @ 0' (2:51) - Soil)					
Extraction	STLC-Met	10E1973	5/15/2010	5/17/2010	
Sample ID: ITE0005-46 (DYB10-10 @ 0' (12:58) - Soil)					
Extraction	STLC-Met	10E1973	5/15/2010	5/17/2010	
Sample ID: ITE0005-47 (DYB10-10 @ 1' - Soil)					
Extraction	STLC-Met	10E1973	5/15/2010	5/17/2010	
Sample ID: ITE0005-52 (DYB10-11 @ 1' - Soil)					
Extraction	STLC-Met	10E1973	5/15/2010	5/17/2010	

TestAmerica Irvine

Lena Davidkova
Project Manager

The results pertain only to the samples tested in the laboratory. This report shall not be reproduced, except in full, without written permission from TestAmerica.

TestAmerica
THE LEADER IN ENVIRONMENTAL TESTING
17461 Derian Avenue. Suite 100, Irvine, CA 92614 (949) 261-1022 Fax:(949) 260-3297

Diaz Yourman
1616 East 17th Street
Santa Ana, CA 92705-8509
Attention: Gary Gilbert

Project ID: 2009-010.01
SCRRA Empire Grade Separation
Report Number: ITE0005

Sampled: 04/30/10
Received: 05/01/10

POTENTIAL STLC / TCLP / TTLC LIMITS EXCEEDANCE

Analyte	Units	Sample Result	STLC Max. Limit mg/L (ppm)	TTLC Max. Limit mg/Kg (ppm)	TCLP Max. Limit mg/L (ppm)
ITE0005-02 (DYB10-01 @ 1' - Soil) EPA 6010B					
Arsenic	mg/kg	ND	5.0	500	5.0
Lead	mg/kg	ND	5.0	1000	5.0
ITE0005-03 (DYB10-01 @ 2' - Soil) EPA 6010B					
Arsenic	mg/kg	ND	5.0	500	5.0
Lead	mg/kg	ND	5.0	1000	5.0
ITE0005-04 (DYB10-01 @ 5' - Soil) EPA 6010B					
Arsenic	mg/kg	ND	5.0	500	5.0
Lead	mg/kg	9.1	5.0	1000	5.0
ITE0005-05 (DYB10-01 @ 0' (8:28) - Soil) EPA 7471A					
Mercury	mg/kg	0.020	0.20	20	0.20
Antimony	mg/kg	ND	15	500	
Arsenic	mg/kg	ND	5.0	500	5.0
Barium	mg/kg	56	100	10000	100
Beryllium	mg/kg	ND	0.75	75	
Cadmium	mg/kg	ND	1.0	100	1.0
Chromium	mg/kg	6.8	5.0	2500	5.0
Cobalt	mg/kg	3.5	80	8000	
Copper	mg/kg	11	25	2500	
Lead	mg/kg	5.4	5.0	1000	5.0
Molybdenum	mg/kg	ND	350	3500	
Nickel	mg/kg	4.9	20	2000	
Selenium	mg/kg	ND	1.0	100	1.0
Silver	mg/kg	ND	5.0	500	5.0
Thallium	mg/kg	ND	7.0	700	
Vanadium	mg/kg	22	24	2400	
Zinc	mg/kg	30	250	5000	
ITE0005-07 (DYB10-02 @ 1' - Soil) EPA 6010B					
Arsenic	mg/kg	ND	5.0	500	5.0
Lead	mg/kg	2.6	5.0	1000	5.0
ITE0005-08 (DYB10-02 @ 2' - Soil) EPA 6010B					
Arsenic	mg/kg	ND	5.0	500	5.0
Lead	mg/kg	ND	5.0	1000	5.0
ITE0005-09 (DYB10-02 @ 5' - Soil) EPA 6010B					
Arsenic	mg/kg	ND	5.0	500	5.0
Lead	mg/kg	ND	5.0	1000	5.0

TestAmerica Irvine

Lena Davidkova
Project Manager

The results pertain only to the samples tested in the laboratory. This report shall not be reproduced, except in full, without written permission from TestAmerica.

TestAmerica
THE LEADER IN ENVIRONMENTAL TESTING

17461 Derian Avenue. Suite 100, Irvine, CA 92614 (949) 261-1022 Fax:(949) 260-3297

Diaz Yourman
1616 East 17th Street
Santa Ana, CA 92705-8509
Attention: Gary Gilbert

Project ID: 2009-010.01
SCRRA Empire Grade Separation
Report Number: ITE0005

Sampled: 04/30/10
Received: 05/01/10

POTENTIAL STLC / TCLP / TTLC LIMITS EXCEEDANCE

Analyte	Units	Sample Result	STLC Max. Limit mg/L (ppm)	TTLC Max. Limit mg/Kg (ppm)	TCLP Max. Limit mg/L (ppm)
ITE0005-10 (DYB10-02 @ 0' (9:20) - Soil) EPA 7471A					
Mercury	mg/kg	0.028	0.20	20	0.20
Antimony	mg/kg	ND	15	500	
Arsenic	mg/kg	ND	5.0	500	5.0
Barium	mg/kg	100	100	10000	100
Beryllium	mg/kg	ND	0.75	75	
Cadmium	mg/kg	0.51	1.0	100	1.0
Chromium	mg/kg	15	5.0	2500	5.0
Cobalt	mg/kg	5.9	80	8000	
Copper	mg/kg	20	25	2500	
Lead	mg/kg	5.6	5.0	1000	5.0
Molybdenum	mg/kg	ND	350	3500	
Nickel	mg/kg	6.9	20	2000	
Selenium	mg/kg	ND	1.0	100	1.0
Silver	mg/kg	ND	5.0	500	5.0
Thallium	mg/kg	ND	7.0	700	
Vanadium	mg/kg	32	24	2400	
Zinc	mg/kg	47	250	5000	
ITE0005-12 (DYB10-03 @ 1' - Soil) EPA 6010B					
Arsenic	mg/kg	ND	5.0	500	5.0
Lead	mg/kg	2.0	5.0	1000	5.0
ITE0005-13 (DYB10-03 @ 2' - Soil) EPA 6010B					
Arsenic	mg/kg	ND	5.0	500	5.0
Lead	mg/kg	3.0	5.0	1000	5.0
ITE0005-14 (DYB10-03 @ 5' - Soil) EPA 6010B					
Arsenic	mg/kg	ND	5.0	500	5.0
Lead	mg/kg	ND	5.0	1000	5.0

TestAmerica Irvine

Lena Davidkova
Project Manager

The results pertain only to the samples tested in the laboratory. This report shall not be reproduced, except in full, without written permission from TestAmerica.

TestAmerica
THE LEADER IN ENVIRONMENTAL TESTING
17461 Derian Avenue. Suite 100, Irvine, CA 92614 (949) 261-1022 Fax:(949) 260-3297

Diaz Yourman
1616 East 17th Street
Santa Ana, CA 92705-8509
Attention: Gary Gilbert

Project ID: 2009-010.01
SCRRA Empire Grade Separation
Report Number: ITE0005

Sampled: 04/30/10
Received: 05/01/10

POTENTIAL STLC / TCLP / TTLC LIMITS EXCEEDANCE

Analyte	Units	Sample Result	STLC Max. Limit mg/L (ppm)	TTLC Max. Limit mg/Kg (ppm)	TCLP Max. Limit mg/L (ppm)
ITE0005-15 (DYB10-03 @ 0' (9:55) - Soil) EPA 7471A					
Mercury	mg/kg	ND	0.20	20	0.20
Antimony	mg/kg	ND	15	500	
Arsenic	mg/kg	ND	5.0	500	5.0
Barium	mg/kg	86	100	10000	100
Beryllium	mg/kg	ND	0.75	75	
Cadmium	mg/kg	ND	1.0	100	1.0
Chromium	mg/kg	8.8	5.0	2500	5.0
Cobalt	mg/kg	5.2	80	8000	
Copper	mg/kg	11	25	2500	
Lead	mg/kg	2.4	5.0	1000	5.0
Molybdenum	mg/kg	ND	350	3500	
Nickel	mg/kg	5.1	20	2000	
Selenium	mg/kg	ND	1.0	100	1.0
Silver	mg/kg	ND	5.0	500	5.0
Thallium	mg/kg	ND	7.0	700	
Vanadium	mg/kg	28	24	2400	
Zinc	mg/kg	34	250	5000	
ITE0005-17 (DYB10-04 @ 1' - Soil) EPA 6010B					
Arsenic	mg/kg	ND	5.0	500	5.0
Lead	mg/kg	2.1	5.0	1000	5.0
ITE0005-18 (DYB10-04 @ 2' - Soil) EPA 6010B					
Arsenic	mg/kg	ND	5.0	500	5.0
Lead	mg/kg	ND	5.0	1000	5.0
ITE0005-19 (DYB10-04 @ 5' - Soil) EPA 6010B					
Arsenic	mg/kg	ND	5.0	500	5.0
Lead	mg/kg	ND	5.0	1000	5.0

TestAmerica Irvine

Lena Davidkova
Project Manager

The results pertain only to the samples tested in the laboratory. This report shall not be reproduced, except in full, without written permission from TestAmerica.

TestAmerica
THE LEADER IN ENVIRONMENTAL TESTING

17461 Derian Avenue. Suite 100, Irvine, CA 92614 (949) 261-1022 Fax:(949) 260-3297

Diaz Yourman
1616 East 17th Street
Santa Ana, CA 92705-8509
Attention: Gary Gilbert

Project ID: 2009-010.01
SCRRA Empire Grade Separation
Report Number: ITE0005

Sampled: 04/30/10
Received: 05/01/10

POTENTIAL STLC / TCLP / TTLC LIMITS EXCEEDANCE

Analyte	Units	Sample Result	STLC Max. Limit mg/L (ppm)	TTLC Max. Limit mg/Kg (ppm)	TCLP Max. Limit mg/L (ppm)
ITE0005-20 (DYB10-04 @ 0' (11:00) - Soil) EPA 7471A					
Mercury	mg/kg	0.033	0.20	20	0.20
Antimony	mg/kg	ND	15	500	
Arsenic	mg/kg	ND	5.0	500	5.0
Barium	mg/kg	87	100	10000	100
Beryllium	mg/kg	ND	0.75	75	
Cadmium	mg/kg	ND	1.0	100	1.0
Chromium	mg/kg	24	5.0	2500	5.0
Cobalt	mg/kg	5.3	80	8000	
Copper	mg/kg	21	25	2500	
Lead	mg/kg	25	5.0	1000	5.0
Molybdenum	mg/kg	ND	350	3500	
Nickel	mg/kg	14	20	2000	
Selenium	mg/kg	ND	1.0	100	1.0
Silver	mg/kg	ND	5.0	500	5.0
Thallium	mg/kg	ND	7.0	700	
Vanadium	mg/kg	25	24	2400	
Zinc	mg/kg	50	250	5000	
ITE0005-22 (DYB10-05 @ 1' - Soil) EPA 6010B					
Arsenic	mg/kg	9.6	5.0	500	5.0
Lead	mg/kg	27	5.0	1000	5.0
ITE0005-23 (DYB10-05 @ 2' - Soil) EPA 6010B					
Arsenic	mg/kg	5.2	5.0	500	5.0
Lead	mg/kg	37	5.0	1000	5.0
ITE0005-24 (DYB10-05 @ 5' - Soil) EPA 6010B					
Arsenic	mg/kg	2.7	5.0	500	5.0
Lead	mg/kg	24	5.0	1000	5.0

TestAmerica Irvine

Lena Davidkova
Project Manager

The results pertain only to the samples tested in the laboratory. This report shall not be reproduced, except in full, without written permission from TestAmerica.

TestAmerica
THE LEADER IN ENVIRONMENTAL TESTING

17461 Derian Avenue. Suite 100, Irvine, CA 92614 (949) 261-1022 Fax:(949) 260-3297

Diaz Yourman
1616 East 17th Street
Santa Ana, CA 92705-8509
Attention: Gary Gilbert

Project ID: 2009-010.01
SCRRA Empire Grade Separation
Report Number: ITE0005

Sampled: 04/30/10
Received: 05/01/10

POTENTIAL STLC / TCLP / TTLC LIMITS EXCEEDANCE

Analyte	Units	Sample Result	STLC Max. Limit mg/L (ppm)	TTLC Max. Limit mg/Kg (ppm)	TCLP Max. Limit mg/L (ppm)
ITE0005-25 (DYB10-05 @ 0' (5:07) - Soil) EPA 7471A					
Mercury	mg/kg	0.023	0.20	20	0.20
Antimony	mg/kg	ND	15	500	
Arsenic	mg/kg	2.1	5.0	500	5.0
Barium	mg/kg	64	100	10000	100
Beryllium	mg/kg	ND	0.75	75	
Cadmium	mg/kg	ND	1.0	100	1.0
Chromium	mg/kg	6.7	5.0	2500	5.0
Cobalt	mg/kg	3.9	80	8000	
Copper	mg/kg	9.9	25	2500	
Lead	mg/kg	34	5.0	1000	5.0
Molybdenum	mg/kg	ND	350	3500	
Nickel	mg/kg	4.8	20	2000	
Selenium	mg/kg	ND	1.0	100	1.0
Silver	mg/kg	ND	5.0	500	5.0
Thallium	mg/kg	ND	7.0	700	
Vanadium	mg/kg	19	24	2400	
Zinc	mg/kg	39	250	5000	
ITE0005-27 (DYB10-06 @ 1' - Soil) EPA 6010B					
Arsenic	mg/kg	ND	5.0	500	5.0
Lead	mg/kg	14	5.0	1000	5.0
ITE0005-28 (DYB10-06 @ 2' - Soil) EPA 6010B					
Arsenic	mg/kg	ND	5.0	500	5.0
Lead	mg/kg	3.0	5.0	1000	5.0
ITE0005-29 (DYB10-06 @ 5' - Soil) EPA 6010B					
Arsenic	mg/kg	ND	5.0	500	5.0
Lead	mg/kg	ND	5.0	1000	5.0

TestAmerica Irvine

Lena Davidkova
Project Manager

The results pertain only to the samples tested in the laboratory. This report shall not be reproduced, except in full, without written permission from TestAmerica.

TestAmerica
THE LEADER IN ENVIRONMENTAL TESTING

17461 Derian Avenue. Suite 100, Irvine, CA 92614 (949) 261-1022 Fax:(949) 260-3297

Diaz Yourman
1616 East 17th Street
Santa Ana, CA 92705-8509
Attention: Gary Gilbert

Project ID: 2009-010.01
SCRRA Empire Grade Separation
Report Number: ITE0005

Sampled: 04/30/10
Received: 05/01/10

POTENTIAL STLC / TCLP / TTLC LIMITS EXCEEDANCE

Analyte	Units	Sample Result	STLC Max. Limit mg/L (ppm)	TTLC Max. Limit mg/Kg (ppm)	TCLP Max. Limit mg/L (ppm)
ITE0005-30 (DYB10-06 @ 0' (4:21) - Soil) EPA 7471A					
Mercury	mg/kg	0.033	0.20	20	0.20
Antimony	mg/kg	ND	15	500	
Arsenic	mg/kg	4.4	5.0	500	5.0
Barium	mg/kg	79	100	10000	100
Beryllium	mg/kg	ND	0.75	75	
Cadmium	mg/kg	0.82	1.0	100	1.0
Chromium	mg/kg	9.8	5.0	2500	5.0
Cobalt	mg/kg	5.0	80	8000	
Copper	mg/kg	18	25	2500	
Lead	**mg/kg**	**92**	**5.0**	1000	5.0
Molybdenum	mg/kg	ND	350	3500	
Nickel	mg/kg	8.3	20	2000	
Selenium	mg/kg	ND	1.0	100	1.0
Silver	mg/kg	ND	5.0	500	5.0
Thallium	mg/kg	ND	7.0	700	
Vanadium	mg/kg	25	24	2400	
Zinc	mg/kg	100	250	5000	

Note: STLC limits in bold signify the result exceeds 10 x STLC limit. TCLP limits in bold signify the result exceeds 20 x TCLP limit.

ITE0005-32 (DYB10-07 @ 1' - Soil) EPA 6010B					
Arsenic	mg/kg	3.7	5.0	500	5.0
Lead	mg/kg	27	5.0	1000	5.0
ITE0005-33 (DYB10-07 @ 2' - Soil) EPA 6010B					
Arsenic	mg/kg	ND	5.0	500	5.0
Lead	mg/kg	ND	5.0	1000	5.0
ITE0005-34 (DYB10-07 @ 5' - Soil) EPA 6010B					
Arsenic	mg/kg	ND	5.0	500	5.0
Lead	mg/kg	2.0	5.0	1000	5.0

TestAmerica Irvine

Lena Davidkova
Project Manager

The results pertain only to the samples tested in the laboratory. This report shall not be reproduced, except in full, without written permission from TestAmerica.

TestAmerica
THE LEADER IN ENVIRONMENTAL TESTING
17461 Derian Avenue. Suite 100, Irvine, CA 92614 (949) 261-1022 Fax:(949) 260-3297

Diaz Yourman
1616 East 17th Street
Santa Ana, CA 92705-8509
Attention: Gary Gilbert

Project ID: 2009-010.01
SCRRA Empire Grade Separation
Report Number: ITE0005

Sampled: 04/30/10
Received: 05/01/10

POTENTIAL STLC / TCLP / TTLC LIMITS EXCEEDANCE

Analyte	Units	Sample Result	STLC Max. Limit mg/L (ppm)	TTLC Max. Limit mg/Kg (ppm)	TCLP Max. Limit mg/L (ppm)
ITE0005-35 (DYB10-07 @ 0' (3:47) - Soil) EPA 7471A					
Mercury	mg/kg	ND	0.20	20	0.20
Antimony	mg/kg	ND	15	500	
Arsenic	mg/kg	2.2	5.0	500	5.0
Barium	mg/kg	79	100	10000	100
Beryllium	mg/kg	ND	0.75	75	
Cadmium	mg/kg	ND	1.0	100	1.0
Chromium	mg/kg	12	5.0	2500	5.0
Cobalt	mg/kg	6.6	80	8000	
Copper	mg/kg	16	25	2500	
Lead	mg/kg	7.4	5.0	1000	5.0
Molybdenum	mg/kg	ND	350	3500	
Nickel	mg/kg	8.9	20	2000	
Selenium	mg/kg	ND	1.0	100	1.0
Silver	mg/kg	ND	5.0	500	5.0
Thallium	mg/kg	ND	7.0	700	
Vanadium	mg/kg	27	24	2400	
Zinc	mg/kg	35	250	5000	
ITE0005-37 (DYB10-08 @ 1' - Soil) EPA 6010B					
Arsenic	mg/kg	2.2	5.0	500	5.0
Lead	mg/kg	9.6	5.0	1000	5.0
ITE0005-38 (DYB10-08 @ 2' - Soil) EPA 6010B					
Arsenic	mg/kg	5.6	5.0	500	5.0
Lead	**mg/kg**	**72**	**5.0**	1000	5.0

Note: STLC limits in bold signify the result exceeds 10 x STLC limit. TCLP limits in bold signify the result exceeds 20 x TCLP limit.

ITE0005-39 (DYB10-08 @ 5' - Soil) EPA 6010B					
Arsenic	mg/kg	ND	5.0	500	5.0
Lead	mg/kg	ND	5.0	1000	5.0

TestAmerica Irvine

Lena Davidkova
Project Manager

The results pertain only to the samples tested in the laboratory. This report shall not be reproduced, except in full, without written permission from TestAmerica.

TestAmerica
THE LEADER IN ENVIRONMENTAL TESTING

17461 Derian Avenue. Suite 100, Irvine, CA 92614 (949) 261-1022 Fax:(949) 260-3297

Diaz Yourman
1616 East 17th Street
Santa Ana, CA 92705-8509
Attention: Gary Gilbert

Project ID: 2009-010.01
SCRRA Empire Grade Separation
Report Number: ITE0005

Sampled: 04/30/10
Received: 05/01/10

POTENTIAL STLC / TCLP / TTLC LIMITS EXCEEDANCE

Analyte	Units	Sample Result	STLC Max. Limit mg/L (ppm)	TTLC Max. Limit mg/Kg (ppm)	TCLP Max. Limit mg/L (ppm)
ITE0005-40 (DYB10-08 @ 0' (3:15) - Soil) EPA 7471A					
Mercury	mg/kg	0.023	0.20	20	0.20
Antimony	mg/kg	ND	15	500	
Arsenic	mg/kg	2.8	5.0	500	5.0
Barium	mg/kg	80	100	10000	100
Beryllium	mg/kg	ND	0.75	75	
Cadmium	mg/kg	0.59	1.0	100	1.0
Chromium	mg/kg	8.6	5.0	2500	5.0
Cobalt	mg/kg	5.0	80	8000	
Copper	mg/kg	14	25	2500	
Lead	mg/kg	29	5.0	1000	5.0
Molybdenum	mg/kg	ND	350	3500	
Nickel	mg/kg	5.6	20	2000	
Selenium	mg/kg	ND	1.0	100	1.0
Silver	mg/kg	ND	5.0	500	5.0
Thallium	mg/kg	ND	7.0	700	
Vanadium	mg/kg	23	24	2400	
Zinc	mg/kg	62	250	5000	
ITE0005-42 (DYB10-09 @ 1' - Soil) EPA 6010B					
Arsenic	mg/kg	2.5	5.0	500	5.0
Lead	mg/kg	ND	5.0	1000	5.0
ITE0005-43 (DYB10-09 @ 2' - Soil) EPA 6010B					
Arsenic	mg/kg	ND	5.0	500	5.0
Lead	mg/kg	2.4	5.0	1000	5.0
ITE0005-44 (DYB10-09 @ 5' - Soil) EPA 6010B					
Arsenic	mg/kg	ND	5.0	500	5.0
Lead	mg/kg	ND	5.0	1000	5.0

TestAmerica Irvine

Lena Davidkova
Project Manager

The results pertain only to the samples tested in the laboratory. This report shall not be reproduced, except in full, without written permission from TestAmerica.

TestAmerica
THE LEADER IN ENVIRONMENTAL TESTING

17461 Derian Avenue. Suite 100, Irvine, CA 92614 (949) 261-1022 Fax:(949) 260-3297

Diaz Yourman
1616 East 17th Street
Santa Ana, CA 92705-8509
Attention: Gary Gilbert

Project ID: 2009-010.01
SCRRA Empire Grade Separation
Report Number: ITE0005

Sampled: 04/30/10
Received: 05/01/10

POTENTIAL STLC / TCLP / TTLC LIMITS EXCEEDANCE

Analyte	Units	Sample Result	STLC Max. Limit mg/L (ppm)	TTLC Max. Limit mg/Kg (ppm)	TCLP Max. Limit mg/L (ppm)
ITE0005-45 (DYB10-09 @ 0' (2:48) - Soil) EPA 7471A					
Mercury	mg/kg	ND	0.20	20	0.20
Antimony	mg/kg	ND	15	500	
Arsenic	mg/kg	27	5.0	500	5.0
Barium	mg/kg	95	100	10000	100
Beryllium	mg/kg	ND	0.75	75	
Cadmium	mg/kg	0.58	1.0	100	1.0
Chromium	mg/kg	12	5.0	2500	5.0
Cobalt	mg/kg	6.4	80	8000	
Copper	mg/kg	13	25	2500	
Lead	mg/kg	5.5	5.0	1000	5.0
Molybdenum	mg/kg	ND	350	3500	
Nickel	mg/kg	7.2	20	2000	
Selenium	mg/kg	ND	1.0	100	1.0
Silver	mg/kg	ND	5.0	500	5.0
Thallium	mg/kg	ND	7.0	700	
Vanadium	mg/kg	36	24	2400	
Zinc	mg/kg	41	250	5000	
ITE0005-47 (DYB10-10 @ 1' - Soil) EPA 6010B					
Arsenic	mg/kg	12	5.0	500	5.0
Lead	**mg/kg**	**52**	**5.0**	1000	5.0

Note: STLC limits in bold signify the result exceeds 10 x STLC limit. TCLP limits in bold signify the result exceeds 20 x TCLP limit.

ITE0005-48 (DYB10-10 @ 2' - Soil) EPA 6010B					
Arsenic	mg/kg	5.7	5.0	500	5.0
Lead	mg/kg	3.5	5.0	1000	5.0
ITE0005-49 (DYB10-10 @ 5' - Soil) EPA 6010B					
Arsenic	mg/kg	ND	5.0	500	5.0
Lead	mg/kg	ND	5.0	1000	5.0

TestAmerica Irvine

Lena Davidkova
Project Manager

The results pertain only to the samples tested in the laboratory. This report shall not be reproduced, except in full, without written permission from TestAmerica.

TestAmerica
THE LEADER IN ENVIRONMENTAL TESTING

17461 Derian Avenue. Suite 100, Irvine, CA 92614 (949) 261-1022 Fax:(949) 260-3297

Diaz Yourman
1616 East 17th Street
Santa Ana, CA 92705-8509
Attention: Gary Gilbert

Project ID: 2009-010.01
SCRRA Empire Grade Separation
Report Number: ITE0005

Sampled: 04/30/10
Received: 05/01/10

POTENTIAL STLC / TCLP / TTLC LIMITS EXCEEDANCE

Analyte	Units	Sample Result	STLC Max. Limit mg/L (ppm)	TTLC Max. Limit mg/Kg (ppm)	TCLP Max. Limit mg/L (ppm)
ITE0005-50 (DYB10-10 @ 0' (12:55) - Soil) EPA 7471A					
Mercury	mg/kg	0.039	0.20	20	0.20
Antimony	mg/kg	ND	15	500	
Arsenic	mg/kg	9.2	5.0	500	5.0
Barium	mg/kg	130	100	10000	100
Beryllium	mg/kg	ND	0.75	75	
Cadmium	mg/kg	1.0	1.0	100	1.0
Chromium	mg/kg	18	5.0	2500	5.0
Cobalt	mg/kg	7.9	80	8000	
Copper	mg/kg	27	25	2500	
Lead	**mg/kg**	**94**	**5.0**	1000	5.0
Molybdenum	mg/kg	ND	350	3500	
Nickel	mg/kg	12	20	2000	
Selenium	mg/kg	ND	1.0	100	1.0
Silver	mg/kg	ND	5.0	500	5.0
Thallium	mg/kg	ND	7.0	700	
Vanadium	mg/kg	46	24	2400	
Zinc	mg/kg	84	250	5000	

Note: STLC limits in bold signify the result exceeds 10 x STLC limit. TCLP limits in bold signify the result exceeds 20 x TCLP limit.

ITE0005-52 (DYB10-11 @ 1' - Soil) EPA 6010B					
Arsenic	mg/kg	15	5.0	500	5.0
Lead	mg/kg	12	5.0	1000	5.0
ITE0005-53 (DYB10-11 @ 2' - Soil) EPA 6010B					
Arsenic	mg/kg	2.7	5.0	500	5.0
Lead	mg/kg	3.3	5.0	1000	5.0
ITE0005-54 (DYB10-11 @ 5' - Soil) EPA 6010B					
Arsenic	mg/kg	ND	5.0	500	5.0
Lead	mg/kg	2.9	5.0	1000	5.0

TestAmerica Irvine

Lena Davidkova
Project Manager

The results pertain only to the samples tested in the laboratory. This report shall not be reproduced, except in full, without written permission from TestAmerica.

TestAmerica
THE LEADER IN ENVIRONMENTAL TESTING

17461 Derian Avenue. Suite 100, Irvine, CA 92614 (949) 261-1022 Fax:(949) 260-3297

Diaz Yourman
1616 East 17th Street
Santa Ana, CA 92705-8509
Attention: Gary Gilbert

Project ID: 2009-010.01
SCRRA Empire Grade Separation
Report Number: ITE0005

Sampled: 04/30/10
Received: 05/01/10

POTENTIAL STLC / TCLP / TTLC LIMITS EXCEEDANCE

Analyte	Units	Sample Result	STLC Max. Limit mg/L (ppm)	TTLC Max. Limit mg/Kg (ppm)	TCLP Max. Limit mg/L (ppm)
ITE0005-55 (DYB10-11 @ 0' (12:30) - Soil) EPA 7471A					
Mercury	mg/kg	0.057	0.20	20	0.20
Antimony	mg/kg	ND	15	500	
Arsenic	mg/kg	5.2	5.0	500	5.0
Barium	mg/kg	110	100	10000	100
Beryllium	mg/kg	ND	0.75	75	
Cadmium	mg/kg	0.61	1.0	100	1.0
Chromium	mg/kg	14	5.0	2500	5.0
Cobalt	mg/kg	6.9	80	8000	
Copper	mg/kg	18	25	2500	
Lead	mg/kg	14	5.0	1000	5.0
Molybdenum	mg/kg	ND	350	3500	
Nickel	mg/kg	8.4	20	2000	
Selenium	mg/kg	ND	1.0	100	1.0
Silver	mg/kg	ND	5.0	500	5.0
Thallium	mg/kg	ND	7.0	700	
Vanadium	mg/kg	34	24	2400	
Zinc	mg/kg	74	250	5000	
ITE0005-57 (DYB10-12 @ 1' - Soil) EPA 6010B					
Arsenic	mg/kg	ND	5.0	500	5.0
Lead	mg/kg	3.4	5.0	1000	5.0
ITE0005-58 (DYB10-12 @ 2' - Soil) EPA 6010B					
Arsenic	mg/kg	ND	5.0	500	5.0
Lead	mg/kg	8.1	5.0	1000	5.0
ITE0005-59 (DYB10-12 @ 5' - Soil) EPA 6010B					
Arsenic	mg/kg	2.9	5.0	500	5.0
Lead	mg/kg	2.6	5.0	1000	5.0

TestAmerica Irvine

Lena Davidkova
Project Manager

The results pertain only to the samples tested in the laboratory. This report shall not be reproduced, except in full, without written permission from TestAmerica.

TestAmerica
THE LEADER IN ENVIRONMENTAL TESTING

17461 Derian Avenue. Suite 100, Irvine, CA 92614 (949) 261-1022 Fax:(949) 260-3297

Diaz Yourman
1616 East 17th Street
Santa Ana, CA 92705-8509
Attention: Gary Gilbert

Project ID: 2009-010.01
SCRRA Empire Grade Separation
Report Number: ITE0005

Sampled: 04/30/10
Received: 05/01/10

POTENTIAL STLC / TCLP / TTLC LIMITS EXCEEDANCE

Analyte	Units	Sample Result	STLC Max. Limit mg/L (ppm)	TTLC Max. Limit mg/Kg (ppm)	TCLP Max. Limit mg/L (ppm)
ITE0005-60 (DYB10-12 @ 0' (2:05) - Soil) EPA 7471A					
Mercury	mg/kg	0.069	0.20	20	0.20
Antimony	mg/kg	ND	15	500	
Arsenic	mg/kg	3.9	5.0	500	5.0
Barium	mg/kg	110	100	10000	100
Beryllium	mg/kg	ND	0.75	75	
Cadmium	mg/kg	0.73	1.0	100	1.0
Chromium	mg/kg	17	5.0	2500	5.0
Cobalt	mg/kg	7.5	80	8000	
Copper	mg/kg	25	25	2500	
Lead	mg/kg	13	5.0	1000	5.0
Molybdenum	mg/kg	ND	350	3500	
Nickel	mg/kg	12	20	2000	
Selenium	mg/kg	ND	1.0	100	1.0
Silver	mg/kg	ND	5.0	500	5.0
Thallium	mg/kg	ND	7.0	700	
Vanadium	mg/kg	37	24	2400	
Zinc	mg/kg	70	250	5000	
ITE0005-62 (Equipment Blank - Water) EPA 7470A					
Mercury	mg/l	ND	0.20	20	0.20
Antimony	mg/l	ND	15	500	
Arsenic	mg/l	ND	5.0	500	5.0
Barium	mg/l	ND	100	10000	100
Beryllium	mg/l	ND	0.75	75	
Cadmium	mg/l	ND	1.0	100	1.0
Chromium	mg/l	ND	5.0	2500	5.0
Cobalt	mg/l	ND	80	8000	
Copper	mg/l	ND	25	2500	
Lead	mg/l	ND	5.0	1000	5.0
Molybdenum	mg/l	ND	350	3500	
Nickel	mg/l	ND	20	2000	
Selenium	mg/l	ND	1.0	100	1.0
Silver	mg/l	ND	5.0	500	5.0
Thallium	mg/l	ND	7.0	700	
Vanadium	mg/l	ND	24	2400	
Zinc	mg/l	ND	250	5000	

TestAmerica Irvine

Lena Davidkova
Project Manager

The results pertain only to the samples tested in the laboratory. This report shall not be reproduced, except in full, without written permission from TestAmerica.

TestAmerica
THE LEADER IN ENVIRONMENTAL TESTING
17461 Derian Avenue. Suite 100, Irvine, CA 92614 (949) 261-1022 Fax:(949) 260-3297

Diaz Yourman
1616 East 17th Street
Santa Ana, CA 92705-8509
Attention: Gary Gilbert

Project ID: 2009-010.01
SCRRA Empire Grade Separation
Report Number: ITE0005

Sampled: 04/30/10
Received: 05/01/10

METHOD BLANK/QC DATA

ORGANOCHLORINE PESTICIDES (EPA 8081A)

Analyte	Result	Reporting Limit	Units	Spike Level	Source Result	%REC	%REC Limits	RPD	RPD Limit	Data Qualifiers
Batch: 10E1265 Extracted: 05/11/10										
Blank Analyzed: 05/11/2010 (10E1265-BLK1)										
4,4'-DDD	ND	5.0	ug/kg							
4,4'-DDE	ND	5.0	ug/kg							
4,4'-DDT	ND	5.0	ug/kg							
Aldrin	ND	5.0	ug/kg							
alpha-BHC	ND	5.0	ug/kg							
beta-BHC	ND	5.0	ug/kg							
delta-BHC	ND	10	ug/kg							
Dieldrin	ND	5.0	ug/kg							
Endosulfan I	ND	5.0	ug/kg							
Endosulfan II	ND	5.0	ug/kg							
Endosulfan sulfate	ND	10	ug/kg							
Endrin	ND	5.0	ug/kg							
Endrin aldehyde	ND	5.0	ug/kg							
Endrin ketone	ND	5.0	ug/kg							
gamma-BHC (Lindane)	ND	5.0	ug/kg							
Heptachlor	ND	5.0	ug/kg							
Heptachlor epoxide	ND	5.0	ug/kg							
Methoxychlor	ND	5.0	ug/kg							
Chlordane	ND	50	ug/kg							
Toxaphene	ND	200	ug/kg							
Surrogate: Decachlorobiphenyl	*29.9*		*ug/kg*	*33.3*		*90*	*45-120*			
Surrogate: Tetrachloro-m-xylene	*24.2*		*ug/kg*	*33.3*		*73*	*35-115*			
LCS Analyzed: 05/11/2010 (10E1265-BS1)										
4,4'-DDD	31.2	5.0	ug/kg	33.3		94	60-120			
4,4'-DDE	30.4	5.0	ug/kg	33.3		91	60-120			
4,4'-DDT	34.0	5.0	ug/kg	33.3		102	65-120			
Aldrin	25.2	5.0	ug/kg	33.3		76	50-115			
alpha-BHC	25.0	5.0	ug/kg	33.3		75	60-115			
beta-BHC	29.8	5.0	ug/kg	33.3		89	60-115			
delta-BHC	30.8	10	ug/kg	33.3		92	60-115			
Dieldrin	29.4	5.0	ug/kg	33.3		88	65-115			
Endosulfan I	29.1	5.0	ug/kg	33.3		87	40-120			
Endosulfan II	29.7	5.0	ug/kg	33.3		89	55-120			
Endosulfan sulfate	30.1	10	ug/kg	33.3		90	65-115			
Endrin	31.3	5.0	ug/kg	33.3		94	55-120			

TestAmerica Irvine

Lena Davidkova
Project Manager

The results pertain only to the samples tested in the laboratory. This report shall not be reproduced, except in full, without written permission from TestAmerica.

TestAmerica
THE LEADER IN ENVIRONMENTAL TESTING

17461 Derian Avenue. Suite 100, Irvine, CA 92614 (949) 261-1022 Fax:(949) 260-3297

Diaz Yourman
1616 East 17th Street
Santa Ana, CA 92705-8509
Attention: Gary Gilbert

Project ID: 2009-010.01
SCRRA Empire Grade Separation
Report Number: ITE0005

Sampled: 04/30/10
Received: 05/01/10

METHOD BLANK/QC DATA

ORGANOCHLORINE PESTICIDES (EPA 8081A)

Analyte	Result	Reporting Limit	Units	Spike Level	Source Result	%REC	%REC Limits	RPD	RPD Limit	Data Qualifiers
Batch: 10E1265 Extracted: 05/11/10										
LCS Analyzed: 05/11/2010 (10E1265-BS1)										
Endrin aldehyde	25.9	5.0	ug/kg	33.3		78	55-115			
Endrin ketone	28.2	5.0	ug/kg	33.3		85	65-115			
gamma-BHC (Lindane)	28.4	5.0	ug/kg	33.3		85	55-115			
Heptachlor	28.0	5.0	ug/kg	33.3		84	55-115			
Heptachlor epoxide	28.8	5.0	ug/kg	33.3		86	55-115			
Methoxychlor	29.6	5.0	ug/kg	33.3		89	65-120			
Surrogate: Decachlorobiphenyl	*28.4*		*ug/kg*	*33.3*		*85*	*45-120*			
Surrogate: Tetrachloro-m-xylene	*22.6*		*ug/kg*	*33.3*		*68*	*35-115*			
Matrix Spike Analyzed: 05/11/2010 (10E1265-MS1)					**Source: ITE0005-45RE1**					
4,4'-DDD	29.8	15	ug/kg	33.3	ND	90	40-130			
4,4'-DDE	30.5	15	ug/kg	33.3	ND	92	35-130			
4,4'-DDT	34.2	15	ug/kg	33.3	ND	103	35-130			
Aldrin	29.8	15	ug/kg	33.3	ND	90	40-115			
alpha-BHC	28.8	15	ug/kg	33.3	ND	86	40-115			
beta-BHC	31.4	15	ug/kg	33.3	ND	94	40-120			
delta-BHC	31.4	30	ug/kg	33.3	ND	94	45-120			
Dieldrin	29.4	15	ug/kg	33.3	ND	88	40-125			
Endosulfan I	29.9	15	ug/kg	33.3	ND	90	40-120			
Endosulfan II	30.0	15	ug/kg	33.3	ND	90	40-125			
Endosulfan sulfate	29.8	30	ug/kg	33.3	ND	89	45-120			
Endrin	32.2	15	ug/kg	33.3	ND	96	45-125			
Endrin aldehyde	26.8	15	ug/kg	33.3	ND	80	30-120			
Endrin ketone	27.8	15	ug/kg	33.3	ND	83	40-120			
gamma-BHC (Lindane)	30.5	15	ug/kg	33.3	ND	92	40-120			
Heptachlor	31.2	15	ug/kg	33.3	ND	93	40-115			
Heptachlor epoxide	31.3	15	ug/kg	33.3	ND	94	45-115			
Methoxychlor	31.0	15	ug/kg	33.3	ND	93	40-135			
Surrogate: Decachlorobiphenyl	*28.4*		*ug/kg*	*33.3*		*85*	*45-120*			
Surrogate: Tetrachloro-m-xylene	*26.7*		*ug/kg*	*33.3*		*80*	*35-115*			

TestAmerica Irvine

Lena Davidkova
Project Manager

The results pertain only to the samples tested in the laboratory. This report shall not be reproduced, except in full, without written permission from TestAmerica.

TestAmerica
THE LEADER IN ENVIRONMENTAL TESTING

17461 Derian Avenue. Suite 100, Irvine, CA 92614 (949) 261-1022 Fax:(949) 260-3297

Diaz Yourman
1616 East 17th Street
Santa Ana, CA 92705-8509
Attention: Gary Gilbert

Project ID: 2009-010.01
SCRRA Empire Grade Separation
Report Number: ITE0005

Sampled: 04/30/10
Received: 05/01/10

METHOD BLANK/QC DATA

ORGANOCHLORINE PESTICIDES (EPA 8081A)

Analyte	Result	Reporting Limit	Units	Spike Level	Source Result	%REC	%REC Limits	RPD	RPD Limit	Data Qualifiers
Batch: 10E1265 Extracted: 05/11/10										
Matrix Spike Dup Analyzed: 05/11/2010 (10E1265-MSD1)					**Source: ITE0005-45RE1**					
4,4'-DDD	30.6	15	ug/kg	33.3	ND	92	40-130	3	30	
4,4'-DDE	30.9	15	ug/kg	33.3	ND	93	35-130	1	30	
4,4'-DDT	34.3	15	ug/kg	33.3	ND	103	35-130	0.2	30	
Aldrin	30.0	15	ug/kg	33.3	ND	90	40-115	0.6	30	
alpha-BHC	29.3	15	ug/kg	33.3	ND	88	40-115	2	30	
beta-BHC	31.9	15	ug/kg	33.3	ND	96	40-120	2	30	
delta-BHC	31.9	30	ug/kg	33.3	ND	96	45-120	2	30	
Dieldrin	30.1	15	ug/kg	33.3	ND	90	40-125	2	30	
Endosulfan I	30.2	15	ug/kg	33.3	ND	90	40-120	0.7	30	
Endosulfan II	30.5	15	ug/kg	33.3	ND	92	40-125	2	30	
Endosulfan sulfate	29.5	30	ug/kg	33.3	ND	89	45-120	0.9	30	
Endrin	33.0	15	ug/kg	33.3	ND	99	45-125	3	30	
Endrin aldehyde	26.9	15	ug/kg	33.3	ND	81	30-120	0.2	30	
Endrin ketone	27.3	15	ug/kg	33.3	ND	82	40-120	2	30	
gamma-BHC (Lindane)	31.1	15	ug/kg	33.3	ND	93	40-120	2	30	
Heptachlor	31.6	15	ug/kg	33.3	ND	95	40-115	1	30	
Heptachlor epoxide	31.5	15	ug/kg	33.3	ND	95	45-115	0.8	30	
Methoxychlor	30.6	15	ug/kg	33.3	ND	92	40-135	2	30	
Surrogate: Decachlorobiphenyl	*28.2*		*ug/kg*	*33.3*		*84*	*45-120*			
Surrogate: Tetrachloro-m-xylene	*27.3*		*ug/kg*	*33.3*		*82*	*35-115*			

TestAmerica Irvine

Lena Davidkova
Project Manager

The results pertain only to the samples tested in the laboratory. This report shall not be reproduced, except in full, without written permission from TestAmerica.

TestAmerica
THE LEADER IN ENVIRONMENTAL TESTING
17461 Derian Avenue. Suite 100, Irvine, CA 92614 (949) 261-1022 Fax:(949) 260-3297

Diaz Yourman
1616 East 17th Street
Santa Ana, CA 92705-8509
Attention: Gary Gilbert

Project ID: 2009-010.01
SCRRA Empire Grade Separation
Report Number: ITE0005

Sampled: 04/30/10
Received: 05/01/10

METHOD BLANK/QC DATA

ORGANOCHLORINE PESTICIDES (EPA 3510C/8081A)

Analyte	Result	Reporting Limit	Units	Spike Level	Source Result	%REC	%REC Limits	RPD	RPD Limit	Data Qualifiers
Batch: 10E0457 Extracted: 05/05/10										
Blank Analyzed: 05/06/2010 (10E0457-BLK1)										
4,4'-DDD	ND	0.10	ug/l							
4,4'-DDE	ND	0.10	ug/l							
4,4'-DDT	ND	0.10	ug/l							
Aldrin	ND	0.10	ug/l							
alpha-BHC	ND	0.10	ug/l							
beta-BHC	ND	0.10	ug/l							
delta-BHC	ND	0.20	ug/l							
Dieldrin	ND	0.10	ug/l							
Endosulfan I	ND	0.10	ug/l							
Endosulfan II	ND	0.10	ug/l							
Endosulfan sulfate	ND	0.20	ug/l							
Endrin	ND	0.10	ug/l							
Endrin aldehyde	ND	0.10	ug/l							
Endrin ketone	ND	0.10	ug/l							
gamma-BHC (Lindane)	ND	0.10	ug/l							
Heptachlor	ND	0.10	ug/l							
Heptachlor epoxide	ND	0.10	ug/l							
Methoxychlor	ND	0.10	ug/l							
Chlordane	ND	1.0	ug/l							
Toxaphene	ND	5.0	ug/l							
Surrogate: Decachlorobiphenyl	*0.394*		*ug/l*	*0.500*		*79*	*45-120*			
Surrogate: Tetrachloro-m-xylene	*0.391*		*ug/l*	*0.500*		*78*	*35-115*			
LCS Analyzed: 05/06/2010 (10E0457-BS1)										
4,4'-DDD	0.507	0.10	ug/l	0.500		101	55-120			
4,4'-DDE	0.445	0.10	ug/l	0.500		89	50-120			
4,4'-DDT	0.457	0.10	ug/l	0.500		91	55-120			
Aldrin	0.438	0.10	ug/l	0.500		88	40-115			
alpha-BHC	0.421	0.10	ug/l	0.500		84	45-115			
beta-BHC	0.446	0.10	ug/l	0.500		89	55-115			
delta-BHC	0.449	0.20	ug/l	0.500		90	55-115			
Dieldrin	0.475	0.10	ug/l	0.500		95	55-115			
Endosulfan I	0.456	0.10	ug/l	0.500		91	55-115			
Endosulfan II	0.446	0.10	ug/l	0.500		89	55-120			
Endosulfan sulfate	0.478	0.20	ug/l	0.500		96	60-120			
Endrin	0.496	0.10	ug/l	0.500		99	55-115			

TestAmerica Irvine

Lena Davidkova
Project Manager

The results pertain only to the samples tested in the laboratory. This report shall not be reproduced, except in full, without written permission from TestAmerica.

TestAmerica
THE LEADER IN ENVIRONMENTAL TESTING

17461 Derian Avenue. Suite 100, Irvine, CA 92614 (949) 261-1022 Fax:(949) 260-3297

Diaz Yourman
1616 East 17th Street
Santa Ana, CA 92705-8509
Attention: Gary Gilbert

Project ID: 2009-010.01
SCRRA Empire Grade Separation
Report Number: ITE0005

Sampled: 04/30/10
Received: 05/01/10

METHOD BLANK/QC DATA

ORGANOCHLORINE PESTICIDES (EPA 3510C/8081A)

Analyte	Result	Reporting Limit	Units	Spike Level	Source Result	%REC	%REC Limits	RPD	RPD Limit	Data Qualifiers
Batch: 10E0457 Extracted: 05/05/10										
LCS Analyzed: 05/06/2010 (10E0457-BS1)										
Endrin aldehyde	0.464	0.10	ug/l	0.500		93	50-120			
Endrin ketone	0.465	0.10	ug/l	0.500		93	55-120			
gamma-BHC (Lindane)	0.433	0.10	ug/l	0.500		87	45-115			
Heptachlor	0.448	0.10	ug/l	0.500		90	45-115			
Heptachlor epoxide	0.450	0.10	ug/l	0.500		90	55-115			
Methoxychlor	0.478	0.10	ug/l	0.500		96	60-120			
Surrogate: Decachlorobiphenyl	*0.416*		*ug/l*	*0.500*		*83*	*45-120*			
Surrogate: Tetrachloro-m-xylene	*0.415*		*ug/l*	*0.500*		*83*	*35-115*			
Matrix Spike Analyzed: 05/06/2010 (10E0457-MS1)					**Source: ITE0007-02**					
4,4'-DDD	0.476	0.094	ug/l	0.472	ND	101	50-125			
4,4'-DDE	0.416	0.094	ug/l	0.472	ND	88	45-125			
4,4'-DDT	0.425	0.094	ug/l	0.472	ND	90	50-125			
Aldrin	0.399	0.094	ug/l	0.472	ND	85	35-120			
alpha-BHC	0.383	0.094	ug/l	0.472	ND	81	40-120			
beta-BHC	0.414	0.094	ug/l	0.472	ND	88	50-120			
delta-BHC	0.417	0.19	ug/l	0.472	ND	88	50-120			
Dieldrin	0.440	0.094	ug/l	0.472	ND	93	50-120			
Endosulfan I	0.422	0.094	ug/l	0.472	ND	89	50-120			
Endosulfan II	0.412	0.094	ug/l	0.472	ND	87	50-125			
Endosulfan sulfate	0.446	0.19	ug/l	0.472	ND	95	55-125			
Endrin	0.461	0.094	ug/l	0.472	ND	98	50-120			
Endrin aldehyde	0.429	0.094	ug/l	0.472	ND	91	45-125			
Endrin ketone	0.434	0.094	ug/l	0.472	ND	92	50-125			
gamma-BHC (Lindane)	0.395	0.094	ug/l	0.472	ND	84	40-120			
Heptachlor	0.408	0.094	ug/l	0.472	ND	86	40-120			
Heptachlor epoxide	0.414	0.094	ug/l	0.472	ND	88	50-120			
Methoxychlor	0.452	0.094	ug/l	0.472	ND	96	55-125			
Surrogate: Decachlorobiphenyl	*0.386*		*ug/l*	*0.472*		*82*	*45-120*			
Surrogate: Tetrachloro-m-xylene	*0.374*		*ug/l*	*0.472*		*79*	*35-115*			

TestAmerica Irvine

Lena Davidkova
Project Manager

The results pertain only to the samples tested in the laboratory. This report shall not be reproduced, except in full, without written permission from TestAmerica.

TestAmerica
THE LEADER IN ENVIRONMENTAL TESTING

17461 Derian Avenue. Suite 100, Irvine, CA 92614 (949) 261-1022 Fax:(949) 260-3297

Diaz Yourman
1616 East 17th Street
Santa Ana, CA 92705-8509
Attention: Gary Gilbert

Project ID: 2009-010.01
SCRRA Empire Grade Separation
Report Number: ITE0005

Sampled: 04/30/10
Received: 05/01/10

METHOD BLANK/QC DATA

ORGANOCHLORINE PESTICIDES (EPA 3510C/8081A)

Analyte	Result	Reporting Limit	Units	Spike Level	Source Result	%REC	%REC Limits	RPD	RPD Limit	Data Qualifiers
Batch: 10E0457 Extracted: 05/05/10										
Matrix Spike Dup Analyzed: 05/06/2010 (10E0457-MSD1)					**Source: ITE0007-02**					
4,4'-DDD	0.471	0.094	ug/l	0.472	ND	100	50-125	0.9	30	
4,4'-DDE	0.411	0.094	ug/l	0.472	ND	87	45-125	1	30	
4,4'-DDT	0.424	0.094	ug/l	0.472	ND	90	50-125	0.2	30	
Aldrin	0.406	0.094	ug/l	0.472	ND	86	35-120	2	30	
alpha-BHC	0.391	0.094	ug/l	0.472	ND	83	40-120	2	30	
beta-BHC	0.411	0.094	ug/l	0.472	ND	87	50-120	0.7	30	
delta-BHC	0.414	0.19	ug/l	0.472	ND	88	50-120	0.8	30	
Dieldrin	0.437	0.094	ug/l	0.472	ND	93	50-120	0.5	30	
Endosulfan I	0.420	0.094	ug/l	0.472	ND	89	50-120	0.4	30	
Endosulfan II	0.411	0.094	ug/l	0.472	ND	87	50-125	0.4	30	
Endosulfan sulfate	0.441	0.19	ug/l	0.472	ND	93	55-125	1	30	
Endrin	0.462	0.094	ug/l	0.472	ND	98	50-120	0.2	30	
Endrin aldehyde	0.419	0.094	ug/l	0.472	ND	89	45-125	2	30	
Endrin ketone	0.428	0.094	ug/l	0.472	ND	91	50-125	1	30	
gamma-BHC (Lindane)	0.399	0.094	ug/l	0.472	ND	85	40-120	1	30	
Heptachlor	0.419	0.094	ug/l	0.472	ND	89	40-120	3	30	
Heptachlor epoxide	0.413	0.094	ug/l	0.472	ND	88	50-120	0.08	30	
Methoxychlor	0.445	0.094	ug/l	0.472	ND	94	55-125	2	30	
Surrogate: Decachlorobiphenyl	*0.383*		*ug/l*	*0.472*		*81*	*45-120*			
Surrogate: Tetrachloro-m-xylene	*0.387*		*ug/l*	*0.472*		*82*	*35-115*			

TestAmerica Irvine

Lena Davidkova
Project Manager

The results pertain only to the samples tested in the laboratory. This report shall not be reproduced, except in full, without written permission from TestAmerica.

TestAmerica
THE LEADER IN ENVIRONMENTAL TESTING
17461 Derian Avenue. Suite 100, Irvine, CA 92614 (949) 261-1022 Fax:(949) 260-3297

Diaz Yourman
1616 East 17th Street
Santa Ana, CA 92705-8509
Attention: Gary Gilbert

Project ID: 2009-010.01
SCRRA Empire Grade Separation
Report Number: ITE0005

Sampled: 04/30/10
Received: 05/01/10

METHOD BLANK/QC DATA

METALS

Analyte	Result	Reporting Limit	Units	Spike Level	Source Result	%REC	%REC Limits	RPD	RPD Limit	Data Qualifiers
Batch: 10E0513 Extracted: 05/05/10										
Blank Analyzed: 05/05/2010 (10E0513-BLK1)										
Mercury	ND	0.00020	mg/l							
LCS Analyzed: 05/05/2010 (10E0513-BS1)										
Mercury	0.00792	0.00020	mg/l	0.00800		99	80-120			
Matrix Spike Analyzed: 05/05/2010 (10E0513-MS1)					**Source: ITE0212-03**					
Mercury	0.00679	0.00020	mg/l	0.00800	ND	85	70-130			
Matrix Spike Dup Analyzed: 05/05/2010 (10E0513-MSD1)					**Source: ITE0212-03**					
Mercury	0.00682	0.00020	mg/l	0.00800	ND	85	70-130	0.5	20	
Batch: 10E0821 Extracted: 05/07/10										
Blank Analyzed: 05/07/2010 (10E0821-BLK1)										
Antimony	ND	0.010	mg/l							
Arsenic	ND	0.010	mg/l							
Barium	ND	0.010	mg/l							
Beryllium	ND	0.0040	mg/l							
Cadmium	ND	0.0050	mg/l							
Chromium	ND	0.0050	mg/l							
Cobalt	ND	0.010	mg/l							
Copper	ND	0.010	mg/l							
Lead	ND	0.0050	mg/l							
Molybdenum	ND	0.020	mg/l							
Nickel	ND	0.010	mg/l							
Selenium	ND	0.010	mg/l							
Silver	ND	0.010	mg/l							
Thallium	ND	0.010	mg/l							
Vanadium	ND	0.010	mg/l							
Zinc	ND	0.020	mg/l							

TestAmerica Irvine

Lena Davidkova
Project Manager

The results pertain only to the samples tested in the laboratory. This report shall not be reproduced, except in full, without written permission from TestAmerica.

TestAmerica
THE LEADER IN ENVIRONMENTAL TESTING

17461 Derian Avenue. Suite 100, Irvine, CA 92614 (949) 261-1022 Fax:(949) 260-3297

Diaz Yourman
1616 East 17th Street
Santa Ana, CA 92705-8509
Attention: Gary Gilbert

Project ID: 2009-010.01
SCRRA Empire Grade Separation
Report Number: ITE0005

Sampled: 04/30/10
Received: 05/01/10

METHOD BLANK/QC DATA

METALS

Analyte	Result	Reporting Limit	Units	Spike Level	Source Result	%REC	%REC Limits	RPD	RPD Limit	Data Qualifiers
Batch: 10E0821 Extracted: 05/07/10										
LCS Analyzed: 05/07/2010 (10E0821-BS1)										
Antimony	0.979	0.010	mg/l	1.00		98	80-120			
Arsenic	1.00	0.010	mg/l	1.00		100	80-120			
Barium	0.999	0.010	mg/l	1.00		100	80-120			
Beryllium	0.994	0.0040	mg/l	1.00		99	80-120			
Cadmium	0.952	0.0050	mg/l	1.00		95	80-120			
Chromium	0.945	0.0050	mg/l	1.00		94	80-120			
Cobalt	0.948	0.010	mg/l	1.00		95	80-120			
Copper	0.994	0.010	mg/l	1.00		99	80-120			
Lead	0.962	0.0050	mg/l	1.00		96	80-120			
Molybdenum	0.958	0.020	mg/l	1.00		96	80-120			
Nickel	0.979	0.010	mg/l	1.00		98	80-120			
Selenium	0.943	0.010	mg/l	1.00		94	80-120			
Silver	0.481	0.010	mg/l	0.500		96	80-120			
Thallium	0.987	0.010	mg/l	1.00		99	80-120			
Vanadium	0.987	0.010	mg/l	1.00		99	80-120			
Zinc	0.953	0.020	mg/l	1.00		95	80-120			
Matrix Spike Analyzed: 05/07/2010 (10E0821-MS1)					**Source: ITE0282-28**					
Antimony	0.990	0.010	mg/l	1.00	ND	99	75-125			
Arsenic	1.01	0.010	mg/l	1.00	ND	101	75-125			
Barium	0.954	0.010	mg/l	1.00	ND	95	75-125			
Beryllium	0.985	0.0040	mg/l	1.00	ND	99	75-125			
Cadmium	0.909	0.0050	mg/l	1.00	ND	91	75-125			
Chromium	0.909	0.0050	mg/l	1.00	ND	91	75-125			
Cobalt	0.909	0.010	mg/l	1.00	ND	91	75-125			
Copper	0.953	0.010	mg/l	1.00	ND	95	75-125			
Lead	0.972	0.0050	mg/l	1.00	ND	97	75-125			
Molybdenum	0.968	0.020	mg/l	1.00	ND	97	75-125			
Nickel	0.939	0.010	mg/l	1.00	ND	94	75-125			
Selenium	0.947	0.010	mg/l	1.00	ND	95	75-125			
Silver	0.461	0.010	mg/l	0.500	ND	92	75-125			
Thallium	0.993	0.010	mg/l	1.00	ND	99	75-125			
Vanadium	0.954	0.010	mg/l	1.00	ND	95	75-125			
Zinc	0.916	0.020	mg/l	1.00	ND	92	75-125			

TestAmerica Irvine

Lena Davidkova
Project Manager

The results pertain only to the samples tested in the laboratory. This report shall not be reproduced, except in full, without written permission from TestAmerica.

TestAmerica
THE LEADER IN ENVIRONMENTAL TESTING

17461 Derian Avenue. Suite 100, Irvine, CA 92614 (949) 261-1022 Fax:(949) 260-3297

Diaz Yourman
1616 East 17th Street
Santa Ana, CA 92705-8509
Attention: Gary Gilbert

Project ID: 2009-010.01
SCRRA Empire Grade Separation
Report Number: ITE0005

Sampled: 04/30/10
Received: 05/01/10

METHOD BLANK/QC DATA

METALS

Analyte	Result	Reporting Limit	Units	Spike Level	Source Result	%REC	%REC Limits	RPD	RPD Limit	Data Qualifiers
Batch: 10E0821 Extracted: 05/07/10										
Matrix Spike Dup Analyzed: 05/07/2010 (10E0821-MSD1)					**Source: ITE0282-28**					
Antimony	0.964	0.010	mg/l	1.00	ND	96	75-125	3	20	
Arsenic	0.989	0.010	mg/l	1.00	ND	99	75-125	2	20	
Barium	0.969	0.010	mg/l	1.00	ND	97	75-125	2	20	
Beryllium	0.986	0.0040	mg/l	1.00	ND	99	75-125	0.04	20	
Cadmium	0.921	0.0050	mg/l	1.00	ND	92	75-125	1	20	
Chromium	0.918	0.0050	mg/l	1.00	ND	92	75-125	1	20	
Cobalt	0.916	0.010	mg/l	1.00	ND	92	75-125	0.9	20	
Copper	0.961	0.010	mg/l	1.00	ND	96	75-125	0.8	20	
Lead	0.950	0.0050	mg/l	1.00	ND	95	75-125	2	20	
Molybdenum	0.943	0.020	mg/l	1.00	ND	94	75-125	3	20	
Nickel	0.949	0.010	mg/l	1.00	ND	95	75-125	1	20	
Selenium	0.925	0.010	mg/l	1.00	ND	93	75-125	2	20	
Silver	0.469	0.010	mg/l	0.500	ND	94	75-125	2	20	
Thallium	0.972	0.010	mg/l	1.00	ND	97	75-125	2	20	
Vanadium	0.960	0.010	mg/l	1.00	ND	96	75-125	0.6	20	
Zinc	0.922	0.020	mg/l	1.00	ND	92	75-125	0.7	20	
Batch: 10E1091 Extracted: 05/10/10										
Blank Analyzed: 05/11/2010 (10E1091-BLK1)										
Antimony	ND	9.9	mg/kg							
Arsenic	ND	2.0	mg/kg							
Barium	ND	0.99	mg/kg							
Beryllium	ND	0.49	mg/kg							
Cadmium	ND	0.49	mg/kg							
Cobalt	ND	0.99	mg/kg							
Copper	ND	2.0	mg/kg							
Lead	ND	2.0	mg/kg							
Molybdenum	ND	2.0	mg/kg							
Nickel	ND	2.0	mg/kg							
Selenium	ND	2.0	mg/kg							
Silver	ND	0.99	mg/kg							
Thallium	ND	9.9	mg/kg							
Vanadium	ND	0.99	mg/kg							
Zinc	ND	4.9	mg/kg							

TestAmerica Irvine

Lena Davidkova
Project Manager

The results pertain only to the samples tested in the laboratory. This report shall not be reproduced, except in full, without written permission from TestAmerica.

TestAmerica
THE LEADER IN ENVIRONMENTAL TESTING

17461 Derian Avenue. Suite 100, Irvine, CA 92614 (949) 261-1022 Fax:(949) 260-3297

Diaz Yourman
1616 East 17th Street
Santa Ana, CA 92705-8509
Attention: Gary Gilbert

Project ID: 2009-010.01
SCRRA Empire Grade Separation
Report Number: ITE0005

Sampled: 04/30/10
Received: 05/01/10

METHOD BLANK/QC DATA

METALS

Analyte	Result	Reporting Limit	Units	Spike Level	Source Result	%REC	%REC Limits	RPD	RPD Limit	Data Qualifiers
Batch: 10E1091 Extracted: 05/10/10										
LCS Analyzed: 05/11/2010 (10E1091-BS1)										
Antimony	45.4	9.9	mg/kg	49.5		92	80-120			
Arsenic	46.6	2.0	mg/kg	49.5		94	80-120			
Barium	47.3	0.99	mg/kg	49.5		96	80-120			*M-3*
Beryllium	45.8	0.50	mg/kg	49.5		93	80-120			
Cadmium	44.7	0.50	mg/kg	49.5		90	80-120			
Cobalt	45.1	0.99	mg/kg	49.5		91	80-120			
Copper	46.5	2.0	mg/kg	49.5		94	80-120			
Lead	45.2	2.0	mg/kg	49.5		91	80-120			
Molybdenum	44.8	2.0	mg/kg	49.5		91	80-120			
Nickel	46.3	2.0	mg/kg	49.5		94	80-120			
Selenium	42.2	2.0	mg/kg	49.5		85	80-120			
Silver	23.3	0.99	mg/kg	24.8		94	80-120			
Thallium	45.8	9.9	mg/kg	49.5		93	80-120			
Vanadium	46.7	0.99	mg/kg	49.5		94	80-120			
Zinc	44.2	5.0	mg/kg	49.5		89	80-120			
Matrix Spike Analyzed: 05/11/2010 (10E1091-MS1)					**Source: ITE0373-01**					
Antimony	33.1	9.9	mg/kg	49.5	ND	67	75-125			*M2*
Arsenic	78.2	2.0	mg/kg	49.5	32.6	92	75-125			
Beryllium	46.4	0.50	mg/kg	49.5	0.265	93	75-125			
Cadmium	42.0	0.50	mg/kg	49.5	0.486	84	75-125			
Cobalt	41.4	0.99	mg/kg	49.5	1.35	81	75-125			
Copper	100	2.0	mg/kg	49.5	54.0	94	75-125			
Lead	59.7	2.0	mg/kg	49.5	18.2	84	75-125			
Molybdenum	51.1	2.0	mg/kg	49.5	6.55	90	75-125			
Nickel	54.7	2.0	mg/kg	49.5	12.8	85	75-125			
Selenium	43.7	2.0	mg/kg	49.5	1.22	86	75-125			
Silver	24.3	0.99	mg/kg	24.8	ND	98	75-125			
Thallium	36.4	9.9	mg/kg	49.5	ND	74	75-125			*M2*
Vanadium	82.4	0.99	mg/kg	49.5	35.0	96	75-125			
Zinc	423	5.0	mg/kg	49.5	375	98	75-125			

TestAmerica Irvine

Lena Davidkova
Project Manager

The results pertain only to the samples tested in the laboratory. This report shall not be reproduced, except in full, without written permission from TestAmerica.

TestAmerica
THE LEADER IN ENVIRONMENTAL TESTING

17461 Derian Avenue. Suite 100, Irvine, CA 92614 (949) 261-1022 Fax:(949) 260-3297

Diaz Yourman
1616 East 17th Street
Santa Ana, CA 92705-8509
Attention: Gary Gilbert

Project ID: 2009-010.01
SCRRA Empire Grade Separation
Report Number: ITE0005

Sampled: 04/30/10
Received: 05/01/10

METHOD BLANK/QC DATA

METALS

Analyte	Result	Reporting Limit	Units	Spike Level	Source Result	%REC	%REC Limits	RPD	RPD Limit	Data Qualifiers
Batch: 10E1091 Extracted: 05/10/10										
Matrix Spike Dup Analyzed: 05/11/2010 (10E1091-MSD1)					**Source: ITE0373-01**					
Antimony	33.0	9.8	mg/kg	49.0	ND	67	75-125	0.2	20	*M2*
Arsenic	80.5	2.0	mg/kg	49.0	32.6	98	75-125	3	20	
Beryllium	47.4	0.49	mg/kg	49.0	0.265	96	75-125	2	20	
Cadmium	42.6	0.49	mg/kg	49.0	0.486	86	75-125	1	20	
Cobalt	42.2	0.98	mg/kg	49.0	1.35	83	75-125	2	20	
Copper	103	2.0	mg/kg	49.0	54.0	100	75-125	3	20	
Lead	61.8	2.0	mg/kg	49.0	18.2	89	75-125	3	20	
Molybdenum	51.8	2.0	mg/kg	49.0	6.55	92	75-125	1	20	
Nickel	55.2	2.0	mg/kg	49.0	12.8	87	75-125	1	20	
Selenium	44.0	2.0	mg/kg	49.0	1.22	87	75-125	0.5	20	
Silver	24.5	0.98	mg/kg	24.5	ND	100	75-125	0.9	20	
Thallium	37.5	9.8	mg/kg	49.0	ND	77	75-125	3	20	
Vanadium	84.7	0.98	mg/kg	49.0	35.0	101	75-125	3	20	
Zinc	430	4.9	mg/kg	49.0	375	112	75-125	2	20	
Batch: 10E1103 Extracted: 05/10/10										
Blank Analyzed: 05/11/2010 (10E1103-BLK1)										
Antimony	ND	9.8	mg/kg							
Arsenic	ND	2.0	mg/kg							
Barium	ND	0.98	mg/kg							
Beryllium	ND	0.49	mg/kg							
Cadmium	ND	0.49	mg/kg							
Chromium	ND	0.98	mg/kg							
Cobalt	ND	0.98	mg/kg							
Copper	ND	2.0	mg/kg							
Lead	ND	2.0	mg/kg							
Molybdenum	ND	2.0	mg/kg							
Nickel	ND	2.0	mg/kg							
Selenium	ND	2.0	mg/kg							
Silver	ND	0.98	mg/kg							
Thallium	ND	9.8	mg/kg							
Vanadium	ND	0.98	mg/kg							
Zinc	ND	4.9	mg/kg							

TestAmerica Irvine

Lena Davidkova
Project Manager

The results pertain only to the samples tested in the laboratory. This report shall not be reproduced, except in full, without written permission from TestAmerica.

TestAmerica
THE LEADER IN ENVIRONMENTAL TESTING

17461 Derian Avenue. Suite 100, Irvine, CA 92614 (949) 261-1022 Fax:(949) 260-3297

Diaz Yourman
1616 East 17th Street
Santa Ana, CA 92705-8509
Attention: Gary Gilbert

Project ID: 2009-010.01
SCRRA Empire Grade Separation
Report Number: ITE0005

Sampled: 04/30/10
Received: 05/01/10

METHOD BLANK/QC DATA

METALS

Analyte	Result	Reporting Limit	Units	Spike Level	Source Result	%REC	%REC Limits	RPD	RPD Limit	Data Qualifiers
Batch: 10E1103 Extracted: 05/10/10										
LCS Analyzed: 05/11/2010 (10E1103-BS1)										
Antimony	48.3	9.9	mg/kg	49.3		98	80-120			
Arsenic	49.7	2.0	mg/kg	49.3		101	80-120			
Barium	49.8	0.99	mg/kg	49.3		101	80-120			
Beryllium	48.4	0.49	mg/kg	49.3		98	80-120			
Cadmium	46.7	0.49	mg/kg	49.3		95	80-120			
Chromium	47.5	0.99	mg/kg	49.3		96	80-120			
Cobalt	47.0	0.99	mg/kg	49.3		95	80-120			
Copper	49.0	2.0	mg/kg	49.3		99	80-120			
Lead	47.2	2.0	mg/kg	49.3		96	80-120			
Molybdenum	47.6	2.0	mg/kg	49.3		97	80-120			
Nickel	48.8	2.0	mg/kg	49.3		99	80-120			
Selenium	44.1	2.0	mg/kg	49.3		90	80-120			
Silver	24.9	0.99	mg/kg	24.6		101	80-120			
Thallium	48.1	9.9	mg/kg	49.3		98	80-120			
Vanadium	49.2	0.99	mg/kg	49.3		100	80-120			
Zinc	46.3	4.9	mg/kg	49.3		94	80-120			
Matrix Spike Analyzed: 05/11/2010 (10E1103-MS1)					**Source: ITE0005-19**					
Antimony	33.8	10	mg/kg	49.8	ND	68	75-125			*M2*
Arsenic	47.1	2.0	mg/kg	49.8	1.14	92	75-125			
Barium	91.3	1.0	mg/kg	49.8	39.2	105	75-125			
Beryllium	46.2	0.50	mg/kg	49.8	ND	93	75-125			
Cadmium	43.7	0.50	mg/kg	49.8	ND	88	75-125			
Chromium	46.6	1.0	mg/kg	49.8	3.11	88	75-125			
Cobalt	45.3	1.0	mg/kg	49.8	2.15	87	75-125			
Copper	51.9	2.0	mg/kg	49.8	6.33	92	75-125			
Lead	44.4	2.0	mg/kg	49.8	1.10	87	75-125			
Molybdenum	43.4	2.0	mg/kg	49.8	ND	87	75-125			
Nickel	46.1	2.0	mg/kg	49.8	1.94	89	75-125			
Selenium	41.4	2.0	mg/kg	49.8	ND	83	75-125			
Silver	23.4	1.0	mg/kg	24.9	ND	94	75-125			
Thallium	44.2	10	mg/kg	49.8	ND	89	75-125			
Vanadium	56.2	1.0	mg/kg	49.8	10.3	92	75-125			
Zinc	56.3	5.0	mg/kg	49.8	29.7	54	75-125			*M2*

TestAmerica Irvine

Lena Davidkova
Project Manager

The results pertain only to the samples tested in the laboratory. This report shall not be reproduced, except in full, without written permission from TestAmerica.

TestAmerica
THE LEADER IN ENVIRONMENTAL TESTING

17461 Derian Avenue. Suite 100, Irvine, CA 92614 (949) 261-1022 Fax:(949) 260-3297

Diaz Yourman
1616 East 17th Street
Santa Ana, CA 92705-8509
Attention: Gary Gilbert

Project ID: 2009-010.01
SCRRA Empire Grade Separation
Report Number: ITE0005

Sampled: 04/30/10
Received: 05/01/10

METHOD BLANK/QC DATA

METALS

Analyte	Result	Reporting Limit	Units	Spike Level	Source Result	%REC	%REC Limits	RPD	RPD Limit	Data Qualifiers
Batch: 10E1103 Extracted: 05/10/10										
Matrix Spike Dup Analyzed: 05/11/2010 (10E1103-MSD1)					**Source: ITE0005-19**					
Antimony	32.6	10	mg/kg	49.8	ND	66	75-125	3	20	*M2*
Arsenic	45.7	2.0	mg/kg	49.8	1.14	89	75-125	3	20	
Barium	82.9	1.0	mg/kg	49.8	39.2	88	75-125	10	20	
Beryllium	44.8	0.50	mg/kg	49.8	ND	90	75-125	3	20	
Cadmium	41.3	0.50	mg/kg	49.8	ND	83	75-125	6	20	
Chromium	45.7	1.0	mg/kg	49.8	3.11	86	75-125	2	20	
Cobalt	43.0	1.0	mg/kg	49.8	2.15	82	75-125	5	20	
Copper	49.4	2.0	mg/kg	49.8	6.33	87	75-125	5	20	
Lead	42.8	2.0	mg/kg	49.8	1.10	84	75-125	4	20	
Molybdenum	41.9	2.0	mg/kg	49.8	ND	84	75-125	3	20	
Nickel	43.8	2.0	mg/kg	49.8	1.94	84	75-125	5	20	
Selenium	40.4	2.0	mg/kg	49.8	ND	81	75-125	2	20	
Silver	22.6	1.0	mg/kg	24.9	ND	91	75-125	3	20	
Thallium	42.8	10	mg/kg	49.8	ND	86	75-125	3	20	
Vanadium	54.6	1.0	mg/kg	49.8	10.3	89	75-125	3	20	
Zinc	53.6	5.0	mg/kg	49.8	29.7	48	75-125	5	20	*M2*
Batch: 10E1171 Extracted: 05/10/10										
Blank Analyzed: 05/11/2010 (10E1171-BLK1)										
Antimony	ND	10	mg/kg							
Arsenic	ND	2.0	mg/kg							
Barium	ND	1.0	mg/kg							
Beryllium	ND	0.50	mg/kg							
Cadmium	ND	0.50	mg/kg							
Chromium	ND	1.0	mg/kg							
Cobalt	ND	1.0	mg/kg							
Copper	ND	2.0	mg/kg							
Lead	ND	2.0	mg/kg							
Molybdenum	ND	2.0	mg/kg							
Nickel	ND	2.0	mg/kg							
Selenium	ND	2.0	mg/kg							
Silver	ND	1.0	mg/kg							
Thallium	ND	10	mg/kg							
Vanadium	ND	1.0	mg/kg							
Zinc	ND	5.0	mg/kg							

TestAmerica Irvine

Lena Davidkova
Project Manager

The results pertain only to the samples tested in the laboratory. This report shall not be reproduced, except in full, without written permission from TestAmerica.

TestAmerica
THE LEADER IN ENVIRONMENTAL TESTING

17461 Derian Avenue. Suite 100, Irvine, CA 92614 (949) 261-1022 Fax:(949) 260-3297

Diaz Yourman
1616 East 17th Street
Santa Ana, CA 92705-8509
Attention: Gary Gilbert

Project ID: 2009-010.01
SCRRA Empire Grade Separation
Report Number: ITE0005

Sampled: 04/30/10
Received: 05/01/10

METHOD BLANK/QC DATA

METALS

Analyte	Result	Reporting Limit	Units	Spike Level	Source Result	%REC	%REC Limits	RPD	RPD Limit	Data Qualifiers
Batch: 10E1171 Extracted: 05/10/10										
LCS Analyzed: 05/11/2010 (10E1171-BS1)										
Antimony	48.6	10	mg/kg	49.8		98	80-120			
Arsenic	50.7	2.0	mg/kg	49.8		102	80-120			
Barium	49.6	1.0	mg/kg	49.8		100	80-120			
Beryllium	48.4	0.50	mg/kg	49.8		97	80-120			
Cadmium	47.1	0.50	mg/kg	49.8		95	80-120			
Chromium	48.6	1.0	mg/kg	49.8		98	80-120			
Cobalt	47.2	1.0	mg/kg	49.8		95	80-120			
Copper	47.8	2.0	mg/kg	49.8		96	80-120			
Lead	48.2	2.0	mg/kg	49.8		97	80-120			
Molybdenum	47.4	2.0	mg/kg	49.8		95	80-120			
Nickel	48.5	2.0	mg/kg	49.8		98	80-120			
Selenium	45.6	2.0	mg/kg	49.8		92	80-120			
Silver	24.1	1.0	mg/kg	24.9		97	80-120			
Thallium	48.6	10	mg/kg	49.8		98	80-120			
Vanadium	48.2	1.0	mg/kg	49.8		97	80-120			
Zinc	45.8	5.0	mg/kg	49.8		92	80-120			
Matrix Spike Analyzed: 05/11/2010 (10E1171-MS1)					**Source: ITE0107-01**					
Antimony	18.1	10	mg/kg	50.0	ND	36	75-125			*M2*
Arsenic	51.3	2.0	mg/kg	50.0	1.92	99	75-125			
Barium	204	1.0	mg/kg	50.0	129	150	75-125			*MHA*
Beryllium	48.9	0.50	mg/kg	50.0	ND	98	75-125			
Cadmium	46.8	0.50	mg/kg	50.0	0.611	92	75-125			
Chromium	54.1	1.0	mg/kg	50.0	8.46	91	75-125			
Cobalt	52.0	1.0	mg/kg	50.0	5.39	93	75-125			
Copper	61.3	2.0	mg/kg	50.0	11.8	99	75-125			
Lead	48.5	2.0	mg/kg	50.0	3.92	89	75-125			
Molybdenum	44.7	2.0	mg/kg	50.0	ND	89	75-125			
Nickel	49.6	2.0	mg/kg	50.0	4.09	91	75-125			
Selenium	45.1	2.0	mg/kg	50.0	ND	90	75-125			
Silver	24.4	1.0	mg/kg	25.0	ND	97	75-125			
Thallium	46.0	10	mg/kg	50.0	ND	92	75-125			
Vanadium	92.6	1.0	mg/kg	50.0	34.5	116	75-125			
Zinc	90.1	5.0	mg/kg	50.0	42.2	96	75-125			

TestAmerica Irvine

Lena Davidkova
Project Manager

The results pertain only to the samples tested in the laboratory. This report shall not be reproduced, except in full, without written permission from TestAmerica.

TestAmerica
THE LEADER IN ENVIRONMENTAL TESTING

17461 Derian Avenue. Suite 100, Irvine, CA 92614 (949) 261-1022 Fax:(949) 260-3297

Diaz Yourman
1616 East 17th Street
Santa Ana, CA 92705-8509
Attention: Gary Gilbert

Project ID: 2009-010.01
SCRRA Empire Grade Separation
Report Number: ITE0005

Sampled: 04/30/10
Received: 05/01/10

METHOD BLANK/QC DATA

METALS

Analyte	Result	Reporting Limit	Units	Spike Level	Source Result	%REC	%REC Limits	RPD	RPD Limit	Data Qualifiers
Batch: 10E1171 Extracted: 05/10/10										
Matrix Spike Dup Analyzed: 05/11/2010 (10E1171-MSD1)					**Source: ITE0107-01**					
Antimony	17.3	10	mg/kg	50.0	ND	35	75-125	5	20	*M2*
Arsenic	52.4	2.0	mg/kg	50.0	1.92	101	75-125	2	20	
Barium	163	1.0	mg/kg	50.0	129	68	75-125	22	20	*MHA*
Beryllium	49.5	0.50	mg/kg	50.0	ND	99	75-125	1	20	
Cadmium	47.1	0.50	mg/kg	50.0	0.611	93	75-125	0.6	20	
Chromium	55.8	1.0	mg/kg	50.0	8.46	95	75-125	3	20	
Cobalt	51.8	1.0	mg/kg	50.0	5.39	93	75-125	0.4	20	
Copper	60.1	2.0	mg/kg	50.0	11.8	97	75-125	2	20	
Lead	50.0	2.0	mg/kg	50.0	3.92	92	75-125	3	20	
Molybdenum	45.5	2.0	mg/kg	50.0	ND	91	75-125	2	20	
Nickel	50.8	2.0	mg/kg	50.0	4.09	93	75-125	2	20	
Selenium	46.1	2.0	mg/kg	50.0	ND	92	75-125	2	20	
Silver	24.4	1.0	mg/kg	25.0	ND	98	75-125	0.2	20	
Thallium	47.1	10	mg/kg	50.0	ND	94	75-125	2	20	
Vanadium	86.3	1.0	mg/kg	50.0	34.5	103	75-125	7	20	
Zinc	88.9	5.0	mg/kg	50.0	42.2	93	75-125	1	20	
Batch: 10E1302 Extracted: 05/11/10										
Blank Analyzed: 05/11/2010 (10E1302-BLK1)										
Mercury	ND	0.020	mg/kg							
LCS Analyzed: 05/11/2010 (10E1302-BS1)										
Mercury	0.681	0.020	mg/kg	0.800		85	80-120			
Matrix Spike Analyzed: 05/11/2010 (10E1302-MS1)					**Source: ITE0005-05**					
Mercury	0.717	0.020	mg/kg	0.800	0.0195	87	70-130			

TestAmerica Irvine

Lena Davidkova
Project Manager

The results pertain only to the samples tested in the laboratory. This report shall not be reproduced, except in full, without written permission from TestAmerica.

TestAmerica
THE LEADER IN ENVIRONMENTAL TESTING

17461 Derian Avenue. Suite 100, Irvine, CA 92614 (949) 261-1022 Fax:(949) 260-3297

Diaz Yourman
1616 East 17th Street
Santa Ana, CA 92705-8509
Attention: Gary Gilbert

Project ID: 2009-010.01
SCRRA Empire Grade Separation
Report Number: ITE0005

Sampled: 04/30/10
Received: 05/01/10

METHOD BLANK/QC DATA

METALS

Analyte	Result	Reporting Limit	Units	Spike Level	Source Result	%REC	%REC Limits	RPD	RPD Limit	Data Qualifiers
Batch: 10E1302 Extracted: 05/11/10										
Matrix Spike Dup Analyzed: 05/11/2010 (10E1302-MSD1)					**Source: ITE0005-05**					
Mercury	0.715	0.020	mg/kg	0.800	0.0195	87	70-130	0.2	20	
Batch: 10E1344 Extracted: 05/11/10										
Blank Analyzed: 05/12/2010 (10E1344-BLK1)										
Antimony	ND	10	mg/kg							
Arsenic	ND	2.0	mg/kg							
Barium	ND	1.0	mg/kg							
Beryllium	ND	0.50	mg/kg							
Cadmium	ND	0.50	mg/kg							
Chromium	ND	1.0	mg/kg							
Cobalt	ND	1.0	mg/kg							
Copper	ND	2.0	mg/kg							
Lead	ND	2.0	mg/kg							
Molybdenum	ND	2.0	mg/kg							
Nickel	ND	2.0	mg/kg							
Selenium	ND	2.0	mg/kg							
Silver	ND	1.0	mg/kg							
Thallium	ND	10	mg/kg							
Vanadium	ND	1.0	mg/kg							
Zinc	ND	5.0	mg/kg							
LCS Analyzed: 05/12/2010 (10E1344-BS1)										
Antimony	49.6	10	mg/kg	49.8		100	80-120			
Arsenic	52.2	2.0	mg/kg	49.8		105	80-120			
Barium	51.7	1.0	mg/kg	49.8		104	80-120			
Beryllium	49.2	0.50	mg/kg	49.8		99	80-120			
Cadmium	49.1	0.50	mg/kg	49.8		99	80-120			
Chromium	48.6	1.0	mg/kg	49.8		98	80-120			
Cobalt	48.2	1.0	mg/kg	49.8		97	80-120			
Copper	48.9	2.0	mg/kg	49.8		98	80-120			
Lead	50.0	2.0	mg/kg	49.8		101	80-120			
Molybdenum	48.6	2.0	mg/kg	49.8		98	80-120			
Nickel	50.3	2.0	mg/kg	49.8		101	80-120			
Selenium	47.9	2.0	mg/kg	49.8		96	80-120			
Silver	25.0	1.0	mg/kg	24.9		101	80-120			
Thallium	50.3	10	mg/kg	49.8		101	80-120			

TestAmerica Irvine

Lena Davidkova
Project Manager

The results pertain only to the samples tested in the laboratory. This report shall not be reproduced, except in full, without written permission from TestAmerica.

TestAmerica
THE LEADER IN ENVIRONMENTAL TESTING
17461 Derian Avenue. Suite 100, Irvine, CA 92614 (949) 261-1022 Fax:(949) 260-3297

Diaz Yourman
1616 East 17th Street
Santa Ana, CA 92705-8509
Attention: Gary Gilbert

Project ID: 2009-010.01
SCRRA Empire Grade Separation
Report Number: ITE0005

Sampled: 04/30/10
Received: 05/01/10

METHOD BLANK/QC DATA

METALS

Analyte	Result	Reporting Limit	Units	Spike Level	Source Result	%REC	%REC Limits	RPD	RPD Limit	Data Qualifiers
Batch: 10E1344 Extracted: 05/11/10										
LCS Analyzed: 05/12/2010 (10E1344-BS1)										
Vanadium	50.0	1.0	mg/kg	49.8		100	80-120			
Zinc	46.9	5.0	mg/kg	49.8		94	80-120			
Matrix Spike Analyzed: 05/12/2010 (10E1344-MS1)					**Source: ITE0005-53**					
Antimony	13.5	10	mg/kg	50.0	ND	27	75-125			*M2*
Arsenic	47.4	2.0	mg/kg	50.0	2.70	89	75-125			
Barium	212	1.0	mg/kg	50.0	153	118	75-125			
Beryllium	43.9	0.50	mg/kg	50.0	0.327	87	75-125			
Cadmium	42.2	0.50	mg/kg	50.0	0.788	83	75-125			
Chromium	60.5	1.0	mg/kg	50.0	17.4	86	75-125			
Cobalt	49.8	1.0	mg/kg	50.0	9.27	81	75-125			
Copper	67.7	2.0	mg/kg	50.0	21.3	93	75-125			
Lead	44.6	2.0	mg/kg	50.0	3.30	83	75-125			
Molybdenum	38.8	2.0	mg/kg	50.0	ND	78	75-125			
Nickel	54.7	2.0	mg/kg	50.0	12.3	85	75-125			
Selenium	40.2	2.0	mg/kg	50.0	ND	80	75-125			
Silver	21.8	1.0	mg/kg	25.0	ND	87	75-125			
Thallium	40.8	10	mg/kg	50.0	1.08	79	75-125			
Vanadium	90.5	1.0	mg/kg	50.0	42.3	96	75-125			
Zinc	108	5.0	mg/kg	50.0	61.0	93	75-125			
Matrix Spike Dup Analyzed: 05/12/2010 (10E1344-MSD1)					**Source: ITE0005-53**					
Antimony	14.1	9.9	mg/kg	49.5	ND	28	75-125	4	20	*M2*
Arsenic	49.2	2.0	mg/kg	49.5	2.70	94	75-125	4	20	
Barium	209	0.99	mg/kg	49.5	153	112	75-125	2	20	
Beryllium	44.6	0.50	mg/kg	49.5	0.327	89	75-125	2	20	
Cadmium	42.9	0.50	mg/kg	49.5	0.788	85	75-125	2	20	
Chromium	62.3	0.99	mg/kg	49.5	17.4	91	75-125	3	20	
Cobalt	50.7	0.99	mg/kg	49.5	9.27	84	75-125	2	20	
Copper	68.4	2.0	mg/kg	49.5	21.3	95	75-125	1	20	
Lead	45.9	2.0	mg/kg	49.5	3.30	86	75-125	3	20	
Molybdenum	40.2	2.0	mg/kg	49.5	ND	81	75-125	3	20	
Nickel	55.7	2.0	mg/kg	49.5	12.3	88	75-125	2	20	
Selenium	41.8	2.0	mg/kg	49.5	ND	84	75-125	4	20	
Silver	22.3	0.99	mg/kg	24.8	ND	90	75-125	2	20	
Thallium	41.9	9.9	mg/kg	49.5	1.08	82	75-125	3	20	
Vanadium	93.2	0.99	mg/kg	49.5	42.3	103	75-125	3	20	

TestAmerica Irvine

Lena Davidkova
Project Manager

The results pertain only to the samples tested in the laboratory. This report shall not be reproduced, except in full, without written permission from TestAmerica.

TestAmerica
THE LEADER IN ENVIRONMENTAL TESTING

17461 Derian Avenue. Suite 100, Irvine, CA 92614 (949) 261-1022 Fax:(949) 260-3297

Diaz Yourman
1616 East 17th Street
Santa Ana, CA 92705-8509
Attention: Gary Gilbert

Project ID: 2009-010.01
SCRRA Empire Grade Separation
Report Number: ITE0005

Sampled: 04/30/10
Received: 05/01/10

METHOD BLANK/QC DATA

METALS

Analyte	Result	Reporting Limit	Units	Spike Level	Source Result	%REC	%REC Limits	RPD	RPD Limit	Data Qualifiers
Batch: 10E1344 Extracted: 05/11/10										
Matrix Spike Dup Analyzed: 05/12/2010 (10E1344-MSD1)					**Source: ITE0005-53**					
Zinc	109	5.0	mg/kg	49.5	61.0	96	75-125	0.7	20	
Batch: 10E1491 Extracted: 05/12/10										
Blank Analyzed: 05/12/2010 (10E1491-BLK1)										
Chromium	ND	1.0	mg/kg							
LCS Analyzed: 05/12/2010 (10E1491-BS1)										
Chromium	45.0	0.99	mg/kg	49.5		91	80-120			
Matrix Spike Analyzed: 05/12/2010 (10E1491-MS1)					**Source: ITE0569-28**					
Chromium	63.9	0.99	mg/kg	49.5	27.0	75	75-125			
Matrix Spike Dup Analyzed: 05/12/2010 (10E1491-MSD1)					**Source: ITE0569-28**					
Chromium	68.9	1.0	mg/kg	49.8	27.0	84	75-125	8	20	

TestAmerica Irvine

Lena Davidkova
Project Manager

The results pertain only to the samples tested in the laboratory. This report shall not be reproduced, except in full, without written permission from TestAmerica.

TestAmerica
THE LEADER IN ENVIRONMENTAL TESTING

17461 Derian Avenue. Suite 100, Irvine, CA 92614 (949) 261-1022 Fax:(949) 260-3297

Diaz Yourman 1616 East 17th Street Santa Ana, CA 92705-8509 Attention: Gary Gilbert	Project ID:	2009-010.01 SCRRA Empire Grade Separation	Sampled: 04/30/10
	Report Number:	ITE0005	Received: 05/01/10

METHOD BLANK/QC DATA

STLC METALS

Analyte	Result	Reporting Limit	Units	Spike Level	Source Result	%REC	%REC Limits	RPD	RPD Limit	Data Qualifiers
Batch: 10E2447 Extracted: 05/19/10										
Blank Analyzed: 05/19/2010 (10E2447-BLK1)										
Arsenic	ND	0.20	mg/l							
Lead	ND	0.10	mg/l							
LCS Analyzed: 05/19/2010 (10E2447-BS1)										
Arsenic	21.9	0.20	mg/l	20.0		110	80-120			
Lead	21.4	0.10	mg/l	20.0		107	80-120			
Matrix Spike Analyzed: 05/19/2010 (10E2447-MS1)					**Source: ITE0005-26**					
Arsenic	21.4	0.20	mg/l	20.0	0.212	106	75-125			
Lead	24.5	0.10	mg/l	20.0	3.60	104	75-125			
Matrix Spike Dup Analyzed: 05/19/2010 (10E2447-MSD1)					**Source: ITE0005-26**					
Arsenic	20.9	0.20	mg/l	20.0	0.212	104	75-125	2	20	
Lead	23.9	0.10	mg/l	20.0	3.60	102	75-125	2	20	

TestAmerica Irvine

Lena Davidkova
Project Manager

The results pertain only to the samples tested in the laboratory. This report shall not be reproduced, except in full, without written permission from TestAmerica.

TestAmerica
THE LEADER IN ENVIRONMENTAL TESTING
17461 Derian Avenue. Suite 100, Irvine, CA 92614 (949) 261-1022 Fax:(949) 260-3297

Diaz Yourman
1616 East 17th Street
Santa Ana, CA 92705-8509
Attention: Gary Gilbert

Project ID: 2009-010.01
SCRRA Empire Grade Separation
Report Number: ITE0005

Sampled: 04/30/10
Received: 05/01/10

METHOD BLANK/QC DATA

INORGANICS

Analyte	Result	Reporting Limit	Units	Spike Level	Source Result	%REC	%REC Limits	RPD	RPD Limit	Data Qualifiers
Batch: 10E0483 Extracted: 05/05/10										
Duplicate Analyzed: 05/05/2010 (10E0483-DUP1)					**Source: ITE0143-01**					
pH	7.96	0.100	pH Units		7.94			0.3	5	*HFT*
Duplicate Analyzed: 05/05/2010 (10E0483-DUP2)					**Source: ITE0204-02**					
pH	7.43	0.100	pH Units		7.38			0.7	5	*HFT*
Batch: 10E0528 Extracted: 05/05/10										
Duplicate Analyzed: 05/05/2010 (10E0528-DUP1)					**Source: ITE0005-10**					
pH	7.55	0.100	pH Units		7.50			0.7	5	
Duplicate Analyzed: 05/05/2010 (10E0528-DUP2)					**Source: ITE0107-01**					
pH	8.66	0.100	pH Units		8.75			1	5	

TestAmerica Irvine

Lena Davidkova
Project Manager

The results pertain only to the samples tested in the laboratory. This report shall not be reproduced, except in full, without written permission from TestAmerica.

TestAmerica
THE LEADER IN ENVIRONMENTAL TESTING

17461 Derian Avenue. Suite 100, Irvine, CA 92614 (949) 261-1022 Fax:(949) 260-3297

Diaz Yourman 1616 East 17th Street Santa Ana, CA 92705-8509 Attention: Gary Gilbert	Project ID:	2009-010.01 SCRRA Empire Grade Separation	Sampled: 04/30/10
	Report Number:	ITE0005	Received: 05/01/10

METHOD BLANK/QC DATA

2540G_0126259

Analyte	Result	Reporting Limit	Units	Spike Level	Source Result	%REC	%REC Limits	RPD	RPD Limit	Data Qualifiers
Batch: 126259 Extracted: 05/06/10										
Duplicate Analyzed: 05/07/2010 (C0E050553001X)					**Source: ITE0005-05**					
Percent Solids	88.5	1	%		91.3		-			

TestAmerica Irvine

Lena Davidkova
Project Manager

The results pertain only to the samples tested in the laboratory. This report shall not be reproduced, except in full, without written permission from TestAmerica.

TestAmerica
THE LEADER IN ENVIRONMENTAL TESTING

17461 Derian Avenue. Suite 100, Irvine, CA 92614 (949) 261-1022 Fax:(949) 260-3297

Diaz Yourman
1616 East 17th Street
Santa Ana, CA 92705-8509
Attention: Gary Gilbert

Project ID: 2009-010.01
SCRRA Empire Grade Separation
Report Number: ITE0005

Sampled: 04/30/10
Received: 05/01/10

METHOD BLANK/QC DATA

SW846 8141A

Analyte	Result	Reporting Limit	Units	Spike Level	Source Result	%REC	%REC Limits	RPD	RPD Limit	Data Qualifiers
Batch: 126012 Extracted: 05/05/10										
Blank Analyzed: 05/11/2010 (C0E060000012B)					**Source:**					
Azinphos-methyl	ND	33	ug/kg				-			
Bolstar	ND	33	ug/kg				-			
Chlorpyrifos	ND	33	ug/kg				-			
Coumaphos	ND	33	ug/kg				-			
Demeton (total)	ND	33	ug/kg				-			
Demeton-O	ND	33	ug/kg				-			
Demeton-S	ND	33	ug/kg				-			
Diazinon	ND	33	ug/kg				-			
Dichlorvos	ND	33	ug/kg				-			
Dimethoate	ND	33	ug/kg				-			
Disulfoton	ND	33	ug/kg				-			
EPN	ND	33	ug/kg				-			
Ethoprop	ND	33	ug/kg				-			
Famphur	ND	33	ug/kg				-			
Fensulfothion	ND	33	ug/kg				-			
Fenthion	ND	33	ug/kg				-			
Malathion	ND	33	ug/kg				-			
Methyl parathion	ND	33	ug/kg				-			
Mevinphos	ND	33	ug/kg				-			
O,O,O-Triethyl phosphorothioate	ND	33	ug/kg				-			
Parathion	ND	33	ug/kg				-			
Phorate	ND	33	ug/kg				-			
Ronnel	ND	33	ug/kg				-			
Stirophos	ND	33	ug/kg				-			
Sulfotepp	ND	33	ug/kg				-			
Thionazin	ND	33	ug/kg				-			
Tokuthion	ND	33	ug/kg				-			
Trichloronate	ND	33	ug/kg				-			
Surrogate: Tributyl phosphate	*280*		*ug/kg*	*333*		*85*	*55-125*			
Surrogate: Triphenyl phosphate	*310*		*ug/kg*	*333*		*92*	*47-130*			

TestAmerica Irvine

Lena Davidkova
Project Manager

The results pertain only to the samples tested in the laboratory. This report shall not be reproduced, except in full, without written permission from TestAmerica.

TestAmerica
THE LEADER IN ENVIRONMENTAL TESTING
17461 Derian Avenue. Suite 100, Irvine, CA 92614 (949) 261-1022 Fax:(949) 260-3297

Diaz Yourman
1616 East 17th Street
Santa Ana, CA 92705-8509
Attention: Gary Gilbert

Project ID: 2009-010.01
SCRRA Empire Grade Separation
Report Number: ITE0005

Sampled: 04/30/10
Received: 05/01/10

METHOD BLANK/QC DATA

SW846 8141A

Analyte	Result	Reporting Limit	Units	Spike Level	Source Result	%REC	%REC Limits	RPD	RPD Limit	Data Qualifiers
Batch: 126012 Extracted: 05/05/10										
LCS Analyzed: 05/11/2010 (C0E060000012C)					**Source:**					
Dimethoate	282	33	ug/kg	333		84	40-143			
Disulfoton	319	33	ug/kg	333		96	31-136			
Famphur	339	33	ug/kg	333		102	54-137			
Methyl parathion	335	33	ug/kg	333		101	43-146			
O,O,O-Triethyl phosphorothioate	259	33	ug/kg	333		78	45-130			
Parathion	358	33	ug/kg	333		108	52-133			
Phorate	291	33	ug/kg	333		87	41-143			
Sulfotepp	333	33	ug/kg	333		100	48-126			
Thionazin	323	33	ug/kg	333		97	48-126			
Surrogate: Tributyl phosphate	*303*		*ug/kg*	*333*		*91*	*55-125*			
Surrogate: Triphenyl phosphate	*300*		*ug/kg*	*333*		*90*	*47-130*			
LCS Dup Analyzed: 05/11/2010 (C0E060000012L)					**Source:**					
Dimethoate	318	33	ug/kg	333		95	40-143	12	30	
Disulfoton	334	33	ug/kg	333		100	31-136	4.6	30	
Famphur	364	33	ug/kg	333		109	54-137	7	30	
Methyl parathion	356	33	ug/kg	333		107	43-146	5.8	30	
O,O,O-Triethyl phosphorothioate	290	33	ug/kg	333		87	45-130	11	30	
Parathion	379	33	ug/kg	333		114	52-133	5.6	30	
Phorate	319	33	ug/kg	333		96	41-143	9.2	30	
Sulfotepp	353	33	ug/kg	333		106	48-126	5.9	28	
Thionazin	343	33	ug/kg	333		103	48-126	5.8	27	
Surrogate: Tributyl phosphate	*321*		*ug/kg*	*333*		*96*	*55-125*			
Surrogate: Triphenyl phosphate	*318*		*ug/kg*	*333*		*96*	*47-130*			
Batch: 126407 Extracted: 05/06/10										
Blank Analyzed: 05/11/2010 (C0E060000407B)					**Source:**					
Azinphos-methyl	ND	1	ug/L				-			
Bolstar	ND	1	ug/L				-			
Chlorpyrifos	ND	1	ug/L				-			
Coumaphos	ND	1	ug/L				-			
Demeton (total)	ND	1	ug/L				-			
Demeton-O	ND	1	ug/L				-			
Demeton-S	ND	1	ug/L				-			
Diazinon	ND	1	ug/L				-			
Dichlorvos	ND	1	ug/L				-			

TestAmerica Irvine

Lena Davidkova
Project Manager

The results pertain only to the samples tested in the laboratory. This report shall not be reproduced, except in full, without written permission from TestAmerica.

TestAmerica
THE LEADER IN ENVIRONMENTAL TESTING
17461 Derian Avenue. Suite 100, Irvine, CA 92614 (949) 261-1022 Fax:(949) 260-3297

Diaz Yourman
1616 East 17th Street
Santa Ana, CA 92705-8509
Attention: Gary Gilbert

Project ID: 2009-010.01
SCRRA Empire Grade Separation
Report Number: ITE0005

Sampled: 04/30/10
Received: 05/01/10

METHOD BLANK/QC DATA

SW846 8141A

Analyte	Result	Reporting Limit	Units	Spike Level	Source Result	%REC	%REC Limits	RPD	RPD Limit	Data Qualifiers
Batch: 126407 Extracted: 05/06/10										
Blank Analyzed: 05/11/2010 (C0E060000407B)					**Source:**					
Dimethoate	ND	1	ug/L				-			
Disulfoton	ND	1	ug/L				-			
EPN	ND	1	ug/L				-			
Ethoprop	ND	1	ug/L				-			
Famphur	ND	1	ug/L				-			
Fensulfothion	ND	1	ug/L				-			
Fenthion	ND	1	ug/L				-			
Malathion	ND	1	ug/L				-			
Methyl parathion	ND	1	ug/L				-			
Mevinphos	ND	1	ug/L				-			
O,O,O-Triethyl phosphorothioate	ND	1	ug/L				-			
Parathion	ND	1	ug/L				-			
Phorate	ND	1	ug/L				-			
Ronnel	ND	1	ug/L				-			
Stirophos	ND	1	ug/L				-			
Sulfotepp	ND	1	ug/L				-			
Thionazin	ND	1	ug/L				-			
Tokuthion	ND	1	ug/L				-			
Trichloronate	ND	1	ug/L				-			
Surrogate: Tributyl phosphate	*9.8*		*ug/L*	*10.0*		*98*	*49-122*			
Surrogate: Triphenyl phosphate	*9.3*		*ug/L*	*10.0*		*93*	*45-145*			
LCS Analyzed: 05/11/2010 (C0E060000407C)					**Source:**					
Dimethoate	11.6	1	ug/L	10.0		116	26-136			
Disulfoton	10.5	1	ug/L	10.0		105	45-124			
Famphur	11.4	1	ug/L	10.0		114	52-131			
Methyl parathion	10.6	1	ug/L	10.0		106	41-148			
O,O,O-Triethyl phosphorothioate	10.1	1	ug/L	10.0		101	31-131			
Parathion	11.3	1	ug/L	10.0		113	56-125			
Phorate	10.3	1	ug/L	10.0		103	41-135			
Sulfotepp	11.1	1	ug/L	10.0		111	56-128			
Thionazin	10.7	1	ug/L	10.0		107	44-128			
Surrogate: Tributyl phosphate	*10.8*		*ug/L*	*10.0*		*108*	*49-122*			
Surrogate: Triphenyl phosphate	*10.1*		*ug/L*	*10.0*		*101*	*45-145*			

TestAmerica Irvine

Lena Davidkova
Project Manager

The results pertain only to the samples tested in the laboratory. This report shall not be reproduced, except in full, without written permission from TestAmerica.

TestAmerica
THE LEADER IN ENVIRONMENTAL TESTING

17461 Derian Avenue. Suite 100, Irvine, CA 92614 (949) 261-1022 Fax:(949) 260-3297

Diaz Yourman
1616 East 17th Street
Santa Ana, CA 92705-8509
Attention: Gary Gilbert

Project ID: 2009-010.01
SCRRA Empire Grade Separation
Report Number: ITE0005

Sampled: 04/30/10
Received: 05/01/10

METHOD BLANK/QC DATA

SW846 8141A

Analyte	Result	Reporting Limit	Units	Spike Level	Source Result	%REC	%REC Limits	RPD	RPD Limit	Data Qualifiers
Batch: 126407 Extracted: 05/06/10										
LCS Dup Analyzed: 05/11/2010 (C0E060000407L)					**Source:**					
Dimethoate	11.9	1	ug/L	10.0		119	26-136	2.7	22	
Disulfoton	10.8	1	ug/L	10.0		108	45-124	3.5	30	
Famphur	11.8	1	ug/L	10.0		118	52-131	2.6	24	
Methyl parathion	11.1	1	ug/L	10.0		111	41-148	4.7	30	
O,O,O-Triethyl phosphorothioate	10.8	1	ug/L	10.0		108	31-131	7.3	30	
Parathion	11.9	1	ug/L	10.0		119	56-125	5.2	21	
Phorate	10.8	1	ug/L	10.0		108	41-135	4.8	24	
Sulfotepp	11.4	1	ug/L	10.0		114	56-128	2.8	23	
Thionazin	11.1	1	ug/L	10.0		111	44-128	3.9	21	
Surrogate: Tributyl phosphate	*11.2*		*ug/L*	*10.0*		*112*	*49-122*			
Surrogate: Triphenyl phosphate	*10.1*		*ug/L*	*10.0*		*101*	*45-145*			

TestAmerica Irvine

Lena Davidkova
Project Manager

The results pertain only to the samples tested in the laboratory. This report shall not be reproduced, except in full, without written permission from TestAmerica.

TestAmerica
THE LEADER IN ENVIRONMENTAL TESTING
17461 Derian Avenue. Suite 100, Irvine, CA 92614 (949) 261-1022 Fax:(949) 260-3297

Diaz Yourman
1616 East 17th Street
Santa Ana, CA 92705-8509
Attention: Gary Gilbert

Project ID: 2009-010.01
SCRRA Empire Grade Separation
Report Number: ITE0005

Sampled: 04/30/10
Received: 05/01/10

METHOD BLANK/QC DATA

SW846 8151A

Analyte	Result	Reporting Limit	Units	Spike Level	Source Result	%REC	%REC Limits	RPD	RPD Limit	Data Qualifiers
Batch: 126013 Extracted: 05/06/10										
Blank Analyzed: 05/07/2010 (C0E060000013B)					**Source:**					
2,4,5-T	ND	20	ug/kg				-			
2,4,5-TP (Silvex)	ND	20	ug/kg				-			
2,4-D	ND	80	ug/kg				-			
2,4-DB	ND	80	ug/kg				-			
Dalapon	ND	90	ug/kg				-			
Dicamba	ND	40	ug/kg				-			
Dichlorprop	ND	80	ug/kg				-			
Dinoseb	ND	12	ug/kg				-			
MCPA	ND	8000	ug/kg				-			
MCPP	ND	8000	ug/kg				-			
Pentachlorophenol	ND	11	ug/kg				-			
Surrogate: DCAA	*110*		*ug/kg*	*200*		*55*	*42-140*			
LCS Analyzed: 05/07/2010 (C0E060000013C)					**Source:**					
2,4,5-T	59	20	ug/kg	80.0		74	30-140			
2,4,5-TP (Silvex)	62.2	20	ug/kg	80.0		78	40-130			
2,4-D	204	80	ug/kg	320		64	30-140			
2,4-DB	234	80	ug/kg	320		73	34-140			
Dalapon	79.8	90	ug/kg	160		50	36-120			
Dicamba	131	40	ug/kg	160		82	50-140			
Dichlorprop	274	80	ug/kg	320		86	50-130			
Dinoseb	ND	12	ug/kg	48.0		3	10-140			*a*
MCPA	24200	8000	ug/kg	32000		76	50-120			
MCPP	27900	8000	ug/kg	32000		87	50-140			
Pentachlorophenol	15.3	11	ug/kg	40.0		38	60-140			*a*
Surrogate: DCAA	*179*		*ug/kg*	*200*		*90*	*42-140*			
LCS Dup Analyzed: 05/07/2010 (C0E060000013L)					**Source:**					
2,4,5-T	80.9	20	ug/kg	80.0		101	30-140	31	30	*p*
2,4,5-TP (Silvex)	75.4	20	ug/kg	80.0		94	40-130	19	30	
2,4-D	290	80	ug/kg	320		91	30-140	35	30	*p*
2,4-DB	306	80	ug/kg	320		96	34-140	27	30	
Dalapon	114	90	ug/kg	160		72	36-120	36	30	*p*
Dicamba	159	40	ug/kg	160		100	50-140	20	30	
Dichlorprop	334	80	ug/kg	320		104	50-130	20	30	
Dinoseb	ND	12	ug/kg	48.0		5	10-140	49	30	*a, p*
MCPA	32300	8000	ug/kg	32000		101	50-120	29	30	

TestAmerica Irvine

Lena Davidkova
Project Manager

The results pertain only to the samples tested in the laboratory. This report shall not be reproduced, except in full, without written permission from TestAmerica.

TestAmerica
THE LEADER IN ENVIRONMENTAL TESTING

17461 Derian Avenue. Suite 100, Irvine, CA 92614 (949) 261-1022 Fax:(949) 260-3297

Diaz Yourman
1616 East 17th Street
Santa Ana, CA 92705-8509
Attention: Gary Gilbert

Project ID: 2009-010.01
SCRRA Empire Grade Separation
Report Number: ITE0005

Sampled: 04/30/10
Received: 05/01/10

METHOD BLANK/QC DATA

SW846 8151A

Analyte	Result	Reporting Limit	Units	Spike Level	Source Result	%REC	%REC Limits	RPD	RPD Limit	Data Qualifiers
Batch: 126013 Extracted: 05/06/10										
LCS Dup Analyzed: 05/07/2010 (C0E060000013L)					**Source:**					
MCPP	34200	8000	ug/kg	32000		107	50-140	20	30	
Pentachlorophenol	17.6	11	ug/kg	40.0		44	60-140	14	30	*a*
Surrogate: DCAA	*211*		*ug/kg*	*200*		*106*	*42-140*			
Batch: 126442 Extracted: 05/06/10										
Blank Analyzed: 05/08/2010 (C0E060000442B)					**Source:**					
2,4,5-T	ND	1	ug/L				-			
2,4,5-TP (Silvex)	ND	1	ug/L				-			
2,4-D	ND	4	ug/L				-			
2,4-DB	ND	4	ug/L				-			
Dalapon	ND	5	ug/L				-			
Dicamba	ND	2	ug/L				-			
Dichlorprop	ND	4	ug/L				-			
Dinoseb	ND	0.9	ug/L				-			
MCPA	ND	400	ug/L				-			
MCPP	ND	400	ug/L				-			
Pentachlorophenol	ND	0.5	ug/L				-			
Surrogate: DCAA	*6.6*		*ug/L*	*10.0*		*66*	*32-140*			
LCS Analyzed: 05/08/2010 (C0E060000442C)					**Source:**					
2,4,5-T	2.86	1	ug/L	4.00		71	32-140			
2,4,5-TP (Silvex)	2.84	1	ug/L	4.00		71	32-140			
2,4-D	10.7	4	ug/L	16.0		67	32-140			
2,4-DB	11.5	4	ug/L	16.0		72	30-140			
Dalapon	4.81	5	ug/L	8.00		60	32-140			
Dicamba	4.98	2	ug/L	8.00		62	32-140			
Dichlorprop	11.6	4	ug/L	16.0		72	32-140			
Dinoseb	0.978	0.9	ug/L	2.40		41	10-140			
MCPA	1200	400	ug/L	1600		75	32-140			
MCPP	1210	400	ug/L	1600		75	32-140			
Pentachlorophenol	1.88	0.5	ug/L	2.00		94	40-140			
Surrogate: DCAA	*6.82*		*ug/L*	*10.0*		*68*	*32-140*			

TestAmerica Irvine

Lena Davidkova
Project Manager

The results pertain only to the samples tested in the laboratory. This report shall not be reproduced, except in full, without written permission from TestAmerica.

TestAmerica
THE LEADER IN ENVIRONMENTAL TESTING

17461 Derian Avenue. Suite 100, Irvine, CA 92614 (949) 261-1022 Fax:(949) 260-3297

Diaz Yourman
1616 East 17th Street
Santa Ana, CA 92705-8509
Attention: Gary Gilbert

Project ID: 2009-010.01
SCRRA Empire Grade Separation
Report Number: ITE0005

Sampled: 04/30/10
Received: 05/01/10

METHOD BLANK/QC DATA

SW846 8151A

Analyte	Result	Reporting Limit	Units	Spike Level	Source Result	%REC	%REC Limits	RPD	RPD Limit	Data Qualifiers
Batch: 126442 Extracted: 05/06/10										
LCS Dup Analyzed: 05/08/2010 (C0E060000442L)					**Source:**					
2,4,5-T	3.06	1	ug/L	4.00		77	32-140	6.9	30	
2,4,5-TP (Silvex)	2.89	1	ug/L	4.00		72	32-140	1.8	30	
2,4-D	11.2	4	ug/L	16.0		70	32-140	4.1	30	
2,4-DB	11.6	4	ug/L	16.0		72	30-140	1.1	30	
Dalapon	5.54	5	ug/L	8.00		69	32-140	14	30	
Dicamba	5.77	2	ug/L	8.00		72	32-140	15	30	
Dichlorprop	12.2	4	ug/L	16.0		76	32-140	5	30	
Dinoseb	1.47	0.9	ug/L	2.40		61	10-140	40	30	*p*
MCPA	1230	400	ug/L	1600		77	32-140	2.3	30	
MCPP	1260	400	ug/L	1600		79	32-140	4.1	30	
Pentachlorophenol	1.81	0.5	ug/L	2.00		90	40-140	3.7	30	
Surrogate: DCAA	*7.51*		*ug/L*	*10.0*		*75*	*32-140*			
Batch: 138057 Extracted: 05/18/10										
Matrix Spike Dup Analyzed: 05/19/2010 (C0E150433004D)					**Source: C0E150433004**					
2,4,5-T	66.6	23	ug/kg	92.1	ND	72	30-140	26	30	
2,4,5-TP (Silvex)	71.3	23	ug/kg	92.1	ND	77	40-130	20	30	
2,4-D	222	92	ug/kg	369	ND	60	30-140	27	30	
2,4-DB	211	92	ug/kg	369	ND	57	34-140	23	30	
Dalapon	170	100	ug/kg	184	ND	93	36-120	2.4	30	
Dicamba	146	46	ug/kg	184	ND	79	50-140	16	30	
Dichlorprop	298	92	ug/kg	369	ND	81	50-130	22	30	
Dinoseb	ND	14	ug/kg	55.3	ND	3	10-140	61	30	*a, p*
MCPA	25900	9200	ug/kg	36900	ND	70	50-120	22	30	
MCPP	31700	9200	ug/kg	36900	ND	86	50-140	21	30	
Pentachlorophenol	34	13	ug/kg	46.1	ND	74	60-140	30	30	
Surrogate: DCAA	*188*		*ug/kg*	*230*		*81*	*42-140*			

TestAmerica Irvine

Lena Davidkova
Project Manager

The results pertain only to the samples tested in the laboratory. This report shall not be reproduced, except in full, without written permission from TestAmerica.

TestAmerica
THE LEADER IN ENVIRONMENTAL TESTING
17461 Derian Avenue. Suite 100, Irvine, CA 92614 (949) 261-1022 Fax:(949) 260-3297

Diaz Yourman
1616 East 17th Street
Santa Ana, CA 92705-8509
Attention: Gary Gilbert

Project ID: 2009-010.01
SCRRA Empire Grade Separation
Report Number: ITE0005

Sampled: 04/30/10
Received: 05/01/10

METHOD BLANK/QC DATA

SW846 8151A

Analyte	Result	Reporting Limit	Units	Spike Level	Source Result	%REC	%REC Limits	RPD	RPD Limit	Data Qualifiers
Batch: 138057 Extracted: 05/18/10										
Matrix Spike Analyzed: 05/19/2010 (C0E150433004S)					**Source: C0E150433004**					
2,4,5-T	86.8	23	ug/kg	92.3	ND	94	30-140			
2,4,5-TP (Silvex)	87.5	23	ug/kg	92.3	ND	95	40-130			
2,4-D	291	93	ug/kg	369	ND	79	30-140			
2,4-DB	265	93	ug/kg	369	ND	72	34-140			
Dalapon	175	100	ug/kg	185	ND	94	36-120			
Dicamba	172	46	ug/kg	185	ND	93	50-140			
Dichlorprop	372	93	ug/kg	369	ND	101	50-130			
Dinoseb	ND	14	ug/kg	55.4	ND	5	10-140			*a*
MCPA	32200	9300	ug/kg	36900	ND	87	50-120			
MCPP	39000	9300	ug/kg	36900	ND	106	50-140			
Pentachlorophenol	46.2	13	ug/kg	46.2	ND	100	60-140			
Surrogate: DCAA	*230*		*ug/kg*	*231*		*100*	*42-140*			
Blank Analyzed: 05/19/2010 (C0E180000057B)					**Source:**					
2,4,5-T	ND	20	ug/kg				-			
2,4,5-TP (Silvex)	ND	20	ug/kg				-			
2,4-D	ND	80	ug/kg				-			
2,4-DB	ND	80	ug/kg				-			
Dalapon	ND	90	ug/kg				-			
Dicamba	ND	40	ug/kg				-			
Dichlorprop	ND	80	ug/kg				-			
Dinoseb	ND	12	ug/kg				-			
MCPA	ND	8000	ug/kg				-			
MCPP	ND	8000	ug/kg				-			
Pentachlorophenol	ND	11	ug/kg				-			
Surrogate: DCAA	*200*		*ug/kg*	*200*		*102*	*42-140*			
LCS Analyzed: 05/19/2010 (C0E180000057C)					**Source:**					
2,4,5-T	76.6	20	ug/kg	80.0		96	30-140			
2,4,5-TP (Silvex)	79.9	20	ug/kg	80.0		100	40-130			
2,4-D	282	80	ug/kg	320		88	30-140			
2,4-DB	313	80	ug/kg	320		98	34-140			
Dalapon	131	90	ug/kg	160		82	36-120			
Dicamba	172	40	ug/kg	160		108	50-140			
Dichlorprop	339	80	ug/kg	320		106	50-130			
Dinoseb	19.6	12	ug/kg	48.0		41	10-140			
MCPA	28800	8000	ug/kg	32000		90	50-120			

TestAmerica Irvine

Lena Davidkova
Project Manager

The results pertain only to the samples tested in the laboratory. This report shall not be reproduced, except in full, without written permission from TestAmerica.

TestAmerica
THE LEADER IN ENVIRONMENTAL TESTING
17461 Derian Avenue. Suite 100, Irvine, CA 92614 (949) 261-1022 Fax:(949) 260-3297

Diaz Yourman 1616 East 17th Street Santa Ana, CA 92705-8509 Attention: Gary Gilbert	Project ID:	2009-010.01 SCRRA Empire Grade Separation	Sampled: 04/30/10
	Report Number:	ITE0005	Received: 05/01/10

METHOD BLANK/QC DATA

SW846 8151A

Analyte	Result	Reporting Limit	Units	Spike Level	Source Result	%REC	%REC Limits	RPD	RPD Limit	Data Qualifiers
Batch: 138057 Extracted: 05/18/10										
LCS Analyzed: 05/19/2010 (C0E180000057C)					**Source:**					
MCPP	35700	8000	ug/kg	32000		111	50-140			
Pentachlorophenol	46.3	11	ug/kg	40.0		116	60-140			
Surrogate: DCAA	*231*		*ug/kg*	*200*		*116*	*42-140*			

TestAmerica Irvine

Lena Davidkova
Project Manager

The results pertain only to the samples tested in the laboratory. This report shall not be reproduced, except in full, without written permission from TestAmerica.

TestAmerica
THE LEADER IN ENVIRONMENTAL TESTING

17461 Derian Avenue. Suite 100, Irvine, CA 92614 (949) 261-1022 Fax:(949) 260-3297

Diaz Yourman
1616 East 17th Street
Santa Ana, CA 92705-8509
Attention: Gary Gilbert

Project ID: 2009-010.01
SCRRA Empire Grade Separation
Report Number: ITE0005

Sampled: 04/30/10
Received: 05/01/10

GC CALIBRATION CHECK CRITERIA

Per Method 8000B of SW-846, the percent recovery of the calibration checks for GC analyses must be within ± 15% from the true value for each individual compound or the average % recovery of all compounds in the calibration check solution must be within ± 15% recovery. Per Method 8000B, the end user is to be notified if the latter situation occurs.

The % recovery for the following individual compounds fell outside the ± 15% criteria, however the average % recovery of all compounds in the calibration check solution was within ± 15%, thus meeting the overall calibration check criteria.

Compound	Footnote	Calibration Check % Recovery	Lab Number	Batch
4,4'-DDD	1	144	ITE0005-05RE1	10E1265
4,4'-DDT	2	31	ITE0005-05RE1	10E1265
Endrin ketone	2	83, 77	ITE0005-05RE1	10E1265
Endrin ketone	2	83	ITE0005-25RE1	10E1265
Endrin ketone	2	83	ITE0005-45RE1	10E1265
Endrin ketone	2	83	ITE0005-60RE1	10E1265
Heptachlor	2	84	ITE0005-05RE1	10E1265
Methoxychlor	2	84, 39	ITE0005-05RE1	10E1265
Methoxychlor	2	84	ITE0005-25RE1	10E1265
Methoxychlor	2	84	ITE0005-45RE1	10E1265
Methoxychlor	2	84	ITE0005-60RE1	10E1265

Footnotes:

1 The calibration demonstrated a high bias for this compound. Samples were flagged to indicate a possible high bias in the result for this compound.

2 The calibration demonstrated a low bias for this compound. Samples were flagged to indicate a possible low bias in the result for this compound.

TestAmerica Irvine

Lena Davidkova
Project Manager

The results pertain only to the samples tested in the laboratory. This report shall not be reproduced, except in full, without written permission from TestAmerica.

TestAmerica
THE LEADER IN ENVIRONMENTAL TESTING

17461 Derian Avenue. Suite 100, Irvine, CA 92614 (949) 261-1022 Fax:(949) 260-3297

Diaz Yourman 1616 East 17th Street Santa Ana, CA 92705-8509 Attention: Gary Gilbert	Project ID: 2009-010.01 SCRRA Empire Grade Separation Report Number: ITE0005	Sampled: 04/30/10 Received: 05/01/10

DATA QUALIFIERS AND DEFINITIONS

a	Spiked analyte recovery is outside stated control limits.
C-1	Calibration Verification recovery was above the method control limit for this analyte, however the average % difference for all analytes met method criteria. See Calibration Summary form.
C-2	Calibration Verification recovery was below the method control limit for this analyte, however the average % difference for all analytes met method criteria. See Calibration Summary form.
C-7	Calibration Verification recovery was below the method control limit due to matrix interference carried over from analytical samples. The matrix interference was confirmed by reanalysis with the same result.
DIL	The concentration is estimated or not reported due to dilution or the presence of interfering analytes.
HFT	The holding time for this test is immediate. It was analyzed in the laboratory as soon as possible after receipt.
M2	The MS and/or MSD were below the acceptance limits due to sample matrix interference. See Blank Spike (LCS).
M-3	Results exceeded the linear range in the MS/MSD and therefore are not available for reporting. The batch was accepted based on acceptable recovery in the Blank Spike (LCS).
MHA	Due to high levels of analyte in the sample, the MS/MSD calculation does not provide useful spike recovery information. See Blank Spike (LCS).
NC	The recovery and/or RPD were not calculated.
p	Relative percent difference (RPD) is outside stated control limits.
ZX	Due to sample matrix effects, the surrogate recovery was outside the acceptance limits.
ND	Analyte NOT DETECTED at or above the reporting limit or MDL, if MDL is specified.
RPD	Relative Percent Difference

TestAmerica Irvine

Lena Davidkova
Project Manager

The results pertain only to the samples tested in the laboratory. This report shall not be reproduced, except in full, without written permission from TestAmerica.

TestAmerica
THE LEADER IN ENVIRONMENTAL TESTING
17461 Derian Avenue. Suite 100, Irvine, CA 92614 (949) 261-1022 Fax:(949) 260-3297

Diaz Yourman 1616 East 17th Street Santa Ana, CA 92705-8509 Attention: Gary Gilbert	Project ID: 2009-010.01 SCRRA Empire Grade Separation Report Number: ITE0005	Sampled: 04/30/10 Received: 05/01/10

Certification Summary

TestAmerica Irvine

Method	Matrix	Nelac	California
EPA 3510C/8081A	Water	X	X
EPA 3545/8081A	Soil	X	X
EPA 6010B	Soil	X	X
EPA 6010B	Water	X	X
EPA 7470A	Water	X	X
EPA 7471A	Soil	X	X
EPA 9040B	Water	X	X
EPA 9045C	Soil	X	X
STLC-Met	Soil	X	X

Nevada and NELAP provide analyte specific accreditations. Analyte specific information for TestAmerica may be obtained by contacting the laboratory or visiting our website at www.testamericainc.com

Subcontracted Laboratories

TestAmerica Pittsburgh

301 Alpha Drive - Pittsburgh, PA 15238

Method Performed: 2540G_0126259
Samples: ITE0005-05, ITE0005-25, ITE0005-45

Method Performed: SW846 8141A
Samples: ITE0005-05, ITE0005-25, ITE0005-45, ITE0005-60, ITE0005-62

Method Performed: SW846 8151A
Samples: ITE0005-05, ITE0005-05RE1, ITE0005-25, ITE0005-25RE1, ITE0005-45, ITE0005-45RE1, ITE0005-60, ITE0005-60RE1, ITE0005-62

TestAmerica Irvine

Lena Davidkova
Project Manager

The results pertain only to the samples tested in the laboratory. This report shall not be reproduced, except in full, without written permission from TestAmerica.

Irvine
17461 Derian Ave
Suite 100
Irvine, CA 92614
phone 949.261.1022 fax 949.260.3299

Revised

Chain of Custody Record

ITE0005

TestAmerica
THE LEADER IN ENVIRONMENTAL TESTING

TestAmerica Laboratories, Inc.

Client Contact	Project Manager: Gary Gilbert	Site Contact: Sathis	Date:	COC No:
Diaz Yourman & Associates	Tel/Fax: (714) 245-2920	Lab Contact:	Carrier:	1 of 10 COCs
1616 East Seventeenth Street	Analysis Turnaround Time			Job No. 2009-010.01
Santa Ana, CA 92705	Calendar (C) or Work Days (W) _____			
(714) 245-2920 Phone	TAT if different from Below _____			
(714) 245-2950 FAX	[X] 2 weeks			SDG No.
Project Name: SCRRA Empire Grade Separation	[ ] 1 week			
Site: Burbank	[ ] 2 days			
P O # 2009-010.01	[ ] 1 day			

Sample Identification	Sample Date	Sample Time	Sample Type	Matrix	# of Cont.	Filtered Sample	6010B / 7471A CAM Metals	6010 Arsenic & Lead	8141A Organo-phosphourous pesticide	8151A Chlorinated Herbicides	8081A Organo-chloro pesticide	Pb	Sample Specific Notes:
DYB10-01 @0'	4/30/10	8:35	Acetate	Soil	1								Hold
DYB10-01 @1'	4/30/10	8:45	Acetate	Soil	1			X					
DYB10-01 @2'	4/30/10	8:50	Acetate	Soil	1			X					
DYB10-01 @5'	4/30/10	8:55	Acetate	Soil	1			X					
DYB10-01A @0'	4/30/10	8:28	Tube	Soil	1		X		X	X	X	X	
DYB10-02 @0'	4/30/10	9:25	Acetate	Soil	1								Hold
DYB10-02 @1'	4/30/10	9:27	Acetate	Soil	1			X					
DYB10-02 @2'	4/30/10	9:34	Acetate	Soil	1			X					
DYB10-02 @5'	4/30/10	9:40	Acetate	Soil	1			X					
DYB10-02A @0'	4/30/10	9:20	Tube	Soil	1		X					X	

Preservation Used: 1= Ice, 2= HCl; 3= H2SO4; 4=HNO3; 5=NaOH; 6= Other

Possible Hazard Identification
[ ] *Non-Hazard* [ ] *Flammable* [ ] *Skin Irritant* [ ] *Poison B* [X] *Unknown*

Sample Disposal (A fee may be assessed if samples are retained longer than 1 month)
[ ] *Return To Client* [ ] *Disposal By Lab* [X] *Archive For* 3 *Months*

Special Instructions/QC Requirements & Comments:

4 | C

Relinquished by:	Company:	Date/Time:	Received by:	Company:	Date/Time:
Sathsekumar 05/01 11:40 am	Diaz Yourman	5/1/10	[signature]	TAI	5/1/10 1146
Relinquished by:	Company:	Date/Time:	Received by:	Company:	Date/Time:
Relinquished by:	Company:	Date/Time:	Received by:	Company:	Date/Time:

D001

Irvine
17461 Derian Ave
Suite 100
Irvine, CA 92614
phone 949.261.1022 fax 949.260.3299

Chain of Custody Record

Revised

ITE0005

TestAmerica
THE LEADER IN ENVIRONMENTAL TESTING

TestAmerica Laboratories, Inc.

Client Contact	Project Manager: Gary Gilbert	Site Contact: Sathis	Date:	COC No:
Diaz Yourman & Associates	Tel/Fax: (714) 245-2920	Lab Contact:	Carrier:	2 of 6 COCs
1616 East Seventeenth Street	Analysis Turnaround Time			Job No. 2009-010.01
Santa Ana, CA 92705	Calendar (C) or Work Days (W) _____			
(714) 245-2920 Phone	TAT if different from Below _____			
(714) 245-2950 FAX	[X] 2 weeks			SDG No.
Project Name: SCRRA Empire Grade Separation	[ ] 1 week			
Site: Burbank	[ ] 2 days			
P O # 2009-010.01	[ ] 1 day			

Sample Identification	Sample Date	Sample Time	Sample Type	Matrix	# of Cont.	Filtered Sample	6010B / 7471A CAM Metals	6010 Arsenic & Lead	8141A Organo-phosphourous pesticide	8151A Chlorinated Herbicides	8081A Organo-chloro pesticide	Ph	Sample Specific Notes:
DYB10-03 @0'	4/30/10	10:02	Acetate	Soil	1								Hold
DYB10-03 @1'	4/30/10	10:05	Acetate	Soil	1			X					
DYB10-03 @2'	4/30/10	10:06	Acetate	Soil	1			X					
DYB10-03 @5'	4/30/10	10:15	Acetate	Soil	1			X					
DYB10-03A @0'	4/30/10	9:55	Tube	Soil	1		X					X	
DYB10-04 @0'	4/30/10	11:05	Acetate	Soil	1								Hold
DYB10-04 @1'	4/30/10	11:10	Acetate	Soil	1			X					
DYB10-04 @2'	4/30/10	11:14	Acetate	Soil	1			X					
DYB10-04 @5'	4/30/10	11:20	Acetate	Soil	1			X					
DYB10-04A @0'	4/30/10	11:00	Tube	Soil	1		X					X	

Preservation Used: 1= Ice, 2= HCl; 3= H2SO4; 4=HNO3; 5=NaOH; 6= Other

Possible Hazard Identification
[ ] *Non-Hazard* [ ] *Flammable* [ ] *Skin Irritant* [ ] *Poison B* [X] *Unknown*

Sample Disposal (A fee may be assessed if samples are retained longer than 1 month)
[ ] *Return To Client* [ ] *Disposal By Lab* [X] *Archive For* 3 *Months*

Special Instructions/QC Requirements & Comments:

4°C

Relinquished by:	Company:	Date/Time:	Received by:	Company:	Date/Time:
Sathiokumar 05/01 11:45am	Diaz Yourman	5/1/10 1140		TAI	5/1/10 1140
Relinquished by:	Company:	Date/Time:	Received by:	Company:	Date/Time:
Relinquished by:	Company:	Date/Time:	Received by:	Company:	Date/Time:

Irvine
17461 Derian Ave
Suite 100
Irvine, CA 92614
phone 949.261.1022 fax 949.260.3299

Chain of Custody Record

TestAmerica
THE LEADER IN ENVIRONMENTAL TESTING

ITE 0005 Revised

TestAmerica Laboratories, Inc.

Client Contact	Project Manager: Gary Gilbert	Site Contact: Sathis	Date:	COC No:
Diaz Yourman & Associates	Tel/Fax: (714) 245-2920	Lab Contact:	Carrier:	3 of 10 COCs
1616 East Seventeenth Street	Analysis Turnaround Time			Job No. 2009-010.01
Santa Ana, CA 92705	Calendar (C) or Work Days (W) _____			
(714) 245-2920 Phone	TAT if different from Below _____			SDG No.
(714) 245-2950 FAX	[X] 2 weeks			
Project Name: SCRRA Empire Grade Separation	[ ] 1 week			
Site: Burbank	[ ] 2 days			
P O # 2009-010.01	[ ] 1 day			

Sample Identification	Sample Date	Sample Time	Sample Type	Matrix	# of Cont.	Filtered Sample	6010B / 7471A CAM Metals	6010 Arsenic & Lead	8141A Organo-phosphourous pesticide	8151A Chlorinated Herbicides	8081A Organo-chloro pesticide	Pb	Sample Specific Notes:
DYB10-05 @0'	4/30/10	5:11	Acetate	Soil	1								Hold
DYB10-05 @1'	4/30/10	5:14	Acetate	Soil	1			X					
DYB10-05 @2'	4/30/10	5:21	Acetate	Soil	1			X					
DYB10-05 @5'	4/30/10	5:27	Acetate	Soil	1			X					
DYB10-05A @0'	4/30/10	5:07	Tube	Soil	1		X		X	X	X	X	
DYB10-06 @0'	4/30/10	4:24	Acetate	Soil	1								Hold
DYB10-06 @1'	4/30/10	4:27	Acetate	Soil	1			X					
DYB10-06 @2'	4/30/10	4:31	Acetate	Soil	1			X					
DYB10-06 @5'	4/30/10	4:40	Acetate	Soil	1			X					
DYB10-06A @0'	4/30/10	4:21	Tube	Soil	1		X					X	

Preservation Used: (1= Ice,) 2= HCl; 3= H2SO4; 4=HNO3; 5=NaOH; 6= Other

Possible Hazard Identification
[ ] *Non-Hazard* [ ] *Flammable* [ ] *Skin Irritant* [ ] *Poison B* [X] *Unknown*

Sample Disposal (A fee may be assessed if samples are retained longer than 1 month)
[ ] *Return To Client* [ ] *Disposal By Lab* [X] *Archive For* 3 *Months*

Special Instructions/QC Requirements & Comments:

4.1°C

Relinquished by:	Company:	Date/Time:	Received by:	Company:	Date/Time:
Sathishkumar 05/01 11:45am	Diaz Yourman	5/1/10		TAL	5/1/10 1140
Relinquished by:	Company:	Date/Time:	Received by:	Company:	Date/Time:
Relinquished by:	Company:	Date/Time:	Received by:	Company:	Date/Time:

Irvine
17461 Derian Ave
Suite 100
Irvine, CA 92614
phone 949.261.1022 fax 949.260.3299

Chain of Custody Record

Revised
ITE0005

TestAmerica
THE LEADER IN ENVIRONMENTAL TESTING
TestAmerica Laboratories, Inc.

Client Contact	Project Manager: Gary Gilbert	Site Contact: Sathis	Date:	COC No:
Diaz Yourman & Associates	Tel/Fax: (714) 245-2920	Lab Contact:	Carrier:	4 of 6 COCs
1616 East Seventeenth Street	Analysis Turnaround Time			Job No: 2009-010.01
Santa Ana, CA 92705	Calendar (C) or Work Days (W) _____			
(714) 245-2920 Phone	TAT if different from Below _____			
(714) 245-2950 FAX	[X] 2 weeks			SDG No.
Project Name: SCRRA Empire Grade Separation	[ ] 1 week			
Site: Burbank	[ ] 2 days			
P O # 2009-010.01	[ ] 1 day			

Sample Identification	Sample Date	Sample Time	Sample Type	Matrix	# of Cont.	Filtered Sample	6010B / 7471A CAM Metals	6010 Arsenic & Lead	8141A Organo-phosphourous pesticide	8151A Chlorinated Herbicides	8081A Organo-chloro pesticide	Pb	Sample Specific Notes:
DYB10-07 @0'	4/30/10	3:52	Acetate	Soil	1								
DYB10-07 @1'	4/30/10	3:55	Acetate	Soil	1			X					Hold
DYB10-07 @2'	4/30/10	4:00	Acetate	Soil	1			X					
DYB10-07 @5'	4/30/10	4:06	Acetate	Soil	1			X					
DYB10-07A @0'	4/30/10	3:47	Tube	Soil	1		X					X	
DYB10-08 @0'	4/30/10	3:19	Acetate	Soil	1								
DYB10-08 @1'	4/30/10	3:22	Acetate	Soil	1			X					Hold
DYB10-08 @2'	4/30/10	3:26	Acetate	Soil	1			X					
DYB10-08 @5'	4/30/10	3:30	Acetate	Soil	1			X					
DYB10-08A @0'	4/30/10	3:15	Tube	Soil	1		X					X	

Preservation Used: (1= Ice, 2= HCl; 3= H2SO4; 4=HNO3; 5=NaOH; 6= Other)

Possible Hazard Identification
[ ] *Non-Hazard* [ ] *Flammable* [ ] *Skin Irritant* [ ] *Poison B* [X] *Unknown*

Sample Disposal (A fee may be assessed if samples are retained longer than 1 month)
[ ] *Return To Client* [ ] *Disposal By Lab* [X] *Archive For* 3 *Months*

Special Instructions/QC Requirements & Comments:

4.1 C

Relinquished by:	Company:	Date/Time:	Received by:	Company:	Date/Time:
Sathis Kumar 05/01 11:46 am	Diaz Yourman			ATL	5/1/10 1:40
Relinquished by:	Company:	Date/Time:	Received by:	Company:	Date/Time:
Relinquished by:	Company:	Date/Time:	Received by:	Company:	Date/Time:

Irvine
17461 Derian Ave
Suite 100
Irvine, CA 92614
phone 949.261.1022 fax 949.260.3299

Chain of Custody Record

Revised

ITE 0005

TestAmerica
THE LEADER IN ENVIRONMENTAL TESTING

TestAmerica Laboratories, Inc.

Client Contact	Project Manager: Gary Gilbert	Site Contact: Sathis	Date:	COC No:
Diaz Yourman & Associates	Tel/Fax: (714) 245-2920	Lab Contact:	Carrier:	5 of 10 COCs
1618 East Seventeenth Street	Analysis Turnaround Time			Job No. 2009-010.01
Santa Ana, CA 92705	Calendar (C) or Work Days (W) _____			
(714) 245-2920 Phone	TAT if different from Below _____			
(714) 245-2950 FAX	[X] 2 weeks			SDG No.
Project Name: SCRRA Empire Grade Separation	[ ] 1 week			
Site: Burbank	[ ] 2 days			
P O # 2009-010.01	[ ] 1 day			

Sample Identification	Sample Date	Sample Time	Sample Type	Matrix	# of Cont.	Filtered Sample	6010B / 7471A CAM Metals	6010 Arsenic & Lead	8141A Organo-phosphourous pesticide	8151A Chlorinated Herbicides	8081A Organo-chloro pesticide	Pb	Sample Specific Notes:
DYB10-09 @0'	4/30/10	2:51	Acetate	Soil	1								Hold
DYB10-09 @1'	4/30/10	2:53	Acetate	Soil	1			X					
DYB10-09 @2'	4/30/10	3:00	Acetate	Soil	1			X					
DYB10-09 @5'	4/30/10	3:03	Acetate	Soil	1			X					
DYB10-09X @0'	4/30/10	2:48	Tube	Soil	1		X		X	X	X	X	
DYB10-10 @0'	4/30/10	12:58	Acetate	Soil	1								Hold
DYB10-10 @1'	4/30/10	1:01	Acetate	Soil	1			X					
DYB10-10 @2'	4/30/10	1:07	Acetate	Soil	1			X					
DYB10-10 @5'	4/30/10	1:11	Acetate	Soil	1			X					
DYB10-10X @0'	4/30/10	12:55	Tube	Soil	1		X					X	

Preservation Used: (1= Ice, 2= HCl; 3= H2SO4; 4=HNO3; 5=NaOH; 6= Other)

Possible Hazard Identification
[ ] *Non-Hazard* [ ] *Flammable* [ ] *Skin Irritant* [ ] *Poison B* [X] *Known*

Sample Disposal (A fee may be assessed if samples are retained longer than 1 month)
[ ] *Return To Client* [ ] *Disposal By Lab* [X] *Archive For* 3 *Months*

Special Instructions/QC Requirements & Comments:

4/11

Relinquished by:	Company:	Date/Time:	Received by:	Company:	Date/Time:
Sathiskumar 05/01 11:46am	Diaz Yourman	5/1/10		TAL	5/1/10 1:40
Relinquished by:	Company:	Date/Time:	Received by:	Company:	Date/Time:
Relinquished by:	Company:	Date/Time:	Received by:	Company:	Date/Time:

Irvine
17461 Derian Ave
Suite 100
Irvine, CA 92614
phone 949.261.1022 fax 949.260.3299

Chain of Custody Record

Revised
ITE0005

TestAmerica
THE LEADER IN ENVIRONMENTAL TESTING

TestAmerica Laboratories, Inc.

Client Contact	Project Manager: Gary Gilbert	Site Contact: Sathis	Date:	COC No:
Diaz Yourman & Associates	Tel/Fax: (714) 245-2920	Lab Contact:	Carrier:	10 of 10 COCs
1616 East Seventeenth Street	Analysis Turnaround Time			Job No. 2009-010.01
Santa Ana, CA 92705	Calendar (C) or Work Days (W) _____			
(714) 245-2920 Phone	TAT If different from Below _____			
(714) 245-2950 FAX	[X] 2 weeks			SDG No.
Project Name: SCRRA Empire Grade Separation	[ ] 1 week			
Site: Burbank	[ ] 2 days			
P O # 2009-010.01	[ ] 1 day			

Sample Identification	Sample Date	Sample Time	Sample Type	Matrix	# of Cont.	Filtered Sample	6010B / 7471A CAM Metals	6010 Arsenic & Lead	8141A Organo-phosphourous pesticide	8151A Chlorinated Herbicides	8081A Organo-chloro pesticide	Pb	Sample Specific Notes:
DYB10-11 @0'	4/30/10	12:32	Acetate	Soil	1								Hold
DYB10-11 @1'	4/30/10	12:35	Acetate	Soil	1			X					
DYB10-11 @2'	4/30/10	12:40	Acetate	Soil	1			X					
DYB10-11 @5'	4/30/10	12:45	Acetate	Soil	1			X					
DYB10-11A @0'	4/30/10	12:30	Tube	Soil	1		X					X	
DYB10-12 @0'	4/30/10	2:10	Acetate	Soil	1								Hold
DYB10-12 @1'	4/30/10	2:13	Acetate	Soil	1			X					
DYB10-12 @2'	4/30/10	2:17	Acetate	Soil	1			X					
DYB10-12 @5'	4/30/10	2:21	Acetate	Soil	1			X					
DYB10-12A @0'	4/30/10	2:05	Tube	Soil	1		X		X	X	X	X	
TB	4/30/10	6:00											Hold on

Preservation Used: (1= Ice,) 2= HCl; 3= H2SO4; 4=HNO3; 5=NaOH; 6= Other

Possible Hazard Identification
[ ] *Non-Hazard* [ ] *Flammable* [ ] *Skin Irritant* [ ] *Poison B* [X] *Unknown*

Sample Disposal (A fee may be assessed if samples are retained longer than 1 month)
[ ] *Return To Client* [ ] *Disposal By Lab* [X] *Archive For* 3 *Months*

Special Instructions/QC Requirements & Comments:

4.11

Relinquished by:	Company:	Date/Time:	Received by:	Company:	Date/Time:
Sathiskumar 05/01 11:47am	Diaz Yourman			AI	5/1/10 1140
Relinquished by:	Company:	Date/Time:	Received by:	Company:	Date/Time:
Relinquished by:	Company:	Date/Time:	Received by:	Company:	Date/Time:

Irvine
17461 Derian Ave
Suite 100
Irvine, CA 92614
phone 949.261.1022 fax 949.260.3299

Chain of Custody Record

ITE0005

TestAmerica
THE LEADER IN ENVIRONMENTAL TESTING

TestAmerica Laboratories, Inc.

Client Contact	Project Manager: Gary Gilbert	Site Contact: Sathis	Date:	COC No:
Diaz Yourman & Associates	Tel/Fax: (714) 245-2920	Lab Contact:	Carrier:	1 of 6 COCs
1616 East Seventeenth Street	Analysis Turnaround Time			Job No. 2009-010.01
Santa Ana, CA 92705	Calendar (C) or Work Days (W) _____			
(714) 245-2920 Phone	TAT if different from Below _____			
(714) 245-2950 FAX	[X] 2 weeks			SDG No.
Project Name: SCRRA Empire Grade Separation	[ ] 1 week			
Site: Burbank	[ ] 2 days			
P O # 2009-010.01	[ ] 1 day			

Sample Identification	Sample Date	Sample Time	Sample Type	Matrix	# of Cont.	Filtered Sample	6010B / 7471A CAM Metals	6010 Arsenic & Lead	8141A Organo-phosphourous pesticide	8151A Chlorinated Herbicides	8081A Organo-chloro pesticide	Ph	Sample Specific Notes:
DYB10-01 @0'	4/30/10	8:35	Acetate	Soil	1								
DYB10-01 @1'	4/30/10	8:45	Acetate	Soil	1			X					
DYB10-01 @2'	4/30/10	8:50	Acetate	Soil	1			X					
DYB10-01 @5'	4/30/10	8:55	Acetate	Soil	1			X					
DYB10-01A @0'	4/30/10	8:28	Tube	Soil	1		X		X	X	X	X	
DYB10-02 @0'	4/30/10	9:25	Acetate	Soil	1								
DYB10-02 @1'	4/30/10	9:27	Acetate	Soil	1			X					
DYB10-02 @2'	4/30/10	9:34	Acetate	Soil	1			X					
DYB10-02 @5'	4/30/10	9:40	Acetate	Soil	1			X					
DYB10-02A @0'	4/30/10	9:20	Tube	Soil	1		X					X	

Preservation Used: (1= Ice,) 2= HCl; 3= H2SO4; 4=HNO3; 5=NaOH; 6= Other

Possible Hazard Identification
[ ] *Non-Hazard* [ ] *Flammable* [ ] *Skin Irritant* [ ] *Poison B* [X] *Unknown*

Sample Disposal (A fee may be assessed if samples are retained longer than 1 month)
[ ] *Return To Client* [ ] *Disposal By Lab* [X] *Archive For* 3 *Months*

Special Instructions/QC Requirements & Comments:

4 ± 1°C

Relinquished by:	Company:	Date/Time:	Received by:	Company:	Date/Time:
Sathisakumar 05/01 11:40 am	Diaz Yourman	5/1/10		TAI	5/1/10 1146
Relinquished by:	Company:	Date/Time:	Received by:	Company:	Date/Time:
Relinquished by:	Company:	Date/Time:	Received by:	Company:	Date/Time:

D001

Irvine
17461 Derian Ave
Suite 100
Irvine, CA 92614
phone 949.261.1022 fax 949.260.3299

Chain of Custody Record

TestAmerica
THE LEADER IN ENVIRONMENTAL TESTING

TestAmerica Laboratories, Inc.

Client Contact	Project Manager: Gary Gilbert	Site Contact: Sathis	Date:	COC No:
Diaz Yourman & Associates	Tel/Fax: (714) 245-2920	Lab Contact:	Carrier:	2 of 6 COCs
1616 East Seventeenth Street	Analysis Turnaround Time			Job No. 2009-010.01
Santa Ana, CA 92705	Calendar (C) or Work Days (W) _____			
(714) 245-2920 Phone	TAT if different from Below _____			
(714) 245-2950 FAX	[X] 2 weeks			SDG No.
Project Name: SCRRA Empire Grade Separation	[ ] 1 week			
Site: Burbank	[ ] 2 days			
P O # 2009-010.01	[ ] 1 day			

Sample Identification	Sample Date	Sample Time	Sample Type	Matrix	# of Cont.	Filtered Sample	6010B / 7471A CAM Metals	6010 Arsenic & Lead	8141A Organo-phosphourous pesticide	8151A Chlorinated Herbicides	8081A Organo-chloro pesticide	Ph	Sample Specific Notes:
DYB10-03 @0'	4/30/10	10:02	Acetate	Soil	1								
DYB10-03 @1'	4/30/10	10:05	Acetate	Soil	1			X					
DYB10-03 @2'	4/30/10	10:08	Acetate	Soil	1			X					
DYB10-03 @5'	4/30/10	10:15	Acetate	Soil	1			X					
DYB10-03A @0'	4/30/10	9:55	Tube	Soil	1		X					X	
DYB10-04 @0'	4/30/10	11:05	Acetate	Soil	1								
DYB10-04 @1'	4/30/10	11:10	Acetate	Soil	1			X					
DYB10-04 @2'	4/30/10	11:14	Acetate	Soil	1			X					
DYB10-04 @5'	4/30/10	11:20	Acetate	Soil	1			X					
DYB10-04A @0'	4/30/10	11:00	Tube	Soil	1		X					X	

Preservation Used: (1= Ice,) 2= HCl; 3= H2SO4; 4=HNO3; 5=NaOH; 6= Other

Possible Hazard Identification
[ ] *Non-Hazard* [ ] *Flammable* [ ] *Skin Irritant* [ ] *Poison B* [X] *Unknown*

Sample Disposal (A fee may be assessed if samples are retained longer than 1 month)
[ ] *Return To Client* [ ] *Disposal By Lab* [X] *Archive For* 3 *Months*

Special Instructions/QC Requirements & Comments:

4°C

Relinquished by:	Company:	Date/Time:	Received by:	Company:	Date/Time:
Sathiskumar 05/01 11:45am	Diaz Yourman	5/1/10	[signature]	TAI	5/1/10 1140
Relinquished by:	Company:	Date/Time: 1140	Received by:	Company:	Date/Time:
Relinquished by:	Company:	Date/Time:	Received by:	Company:	Date/Time:

Irvine
17461 Derian Ave
Suite 100
Irvine, CA 92614
phone 949.261.1022 fax 949.260.3299

Chain of Custody Record

TestAmerica
THE LEADER IN ENVIRONMENTAL TESTING

TestAmerica Laboratories, Inc.

Client Contact	Project Manager: Gary Gilbert	Site Contact: Sathis	Date:	COC No:
Diaz Yourman & Associates	Tel/Fax: (714) 245-2920	Lab Contact:	Carrier:	13 of 16 COCs
1616 East Seventeenth Street	Analysis Turnaround Time			Job No. 2009-010.01
Santa Ana, CA 92705	Calendar (C) or Work Days (W) _____			
(714) 245-2920 Phone	TAT if different from Below _____			
(714) 245-2950 FAX	[X] 2 weeks			SDG No.
Project Name: SCRRA Empire Grade Separation	[ ] 1 week			
Site: Burbank	[ ] 2 days			
P O # 2009-010.01	[ ] 1 day			

Sample Identification	Sample Date	Sample Time	Sample Type	Matrix	# of Cont.	Filtered Sample	6010B / 7471A CAM Metals	6010 Arsenic & Lead	8141A Organo-phosphourous pesticide	8151A Chlorinated Herbicides	8081A Organo-chloro pesticide	Ph	Sample Specific Notes:
DYB10-05 @0'	4/30/10	5:11	Acetate	Soil	1								
DYB10-05 @1'	4/30/10	5:14	Acetate	Soil	1			X					
DYB10-05 @2'	4/30/10	5:21	Acetate	Soil	1			X					
DYB10-05 @5'	4/30/10	5:27	Acetate	Soil	1			X					
DYB10-05A @0'	4/30/10	5:07	Tube	Soil	1		X		X	X	X	X	
DYB10-06 @0'	4/30/10	4:24	Acetate	Soil	1								
DYB10-06 @1'	4/30/10	4:27	Acetate	Soil	1			X					
DYB10-06 @2'	4/30/10	4:31	Acetate	Soil	1			X					
DYB10-06 @5'	4/30/10	4:40	Acetate	Soil	1			X					
DYB10-06A @0'	4/30/10	4:21	Tube	Soil	1		X					X	

Preservation Used: 1= Ice, 2= HCl; 3= H2SO4; 4=HNO3; 5=NaOH; 6= Other

Possible Hazard Identification
[ ] *Non-Hazard* [ ] *Flammable* [ ] *Skin Irritant* [ ] *Poison B* [X] *known*

Sample Disposal (A fee may be assessed if samples are retained longer than 1 month)
[ ] *Return To Client* [ ] *Disposal By Lab* [X] *Archive For* 3 *Months*

Special Instructions/QC Requirements & Comments:

4.1°C

Relinquished by:	Company:	Date/Time:	Received by:	Company:	Date/Time:
Sathiskumar 05/01 11:45am	Diaz Yourman	5/1/10		AL	5/1/10 1140
Relinquished by:	Company:	Date/Time:	Received by:	Company:	Date/Time:
Relinquished by:	Company:	Date/Time:	Received by:	Company:	Date/Time:

Irvine
17461 Derian Ave
Suite 100
Irvine, CA 92614
phone 949.261.1022 fax 949.260.3299

Chain of Custody Record

TestAmerica
THE LEADER IN ENVIRONMENTAL TESTING

TestAmerica Laboratories, Inc.

Client Contact	Project Manager: Gary Gilbert	Site Contact: Sathis	Date:	COC No:
Diaz Yourman & Associates	Tel/Fax: (714) 245-2920	Lab Contact:	Carrier:	1 of 6 COCs
1616 East Seventeenth Street	Analysis Turnaround Time			Job No: 2009-010.01
Santa Ana, CA 92705	Calendar (C) or Work Days (W) _____			
(714) 245-2920 Phone	TAT if different from Below _____			
(714) 245-2950 FAX	[X] 2 weeks			SDG No.
Project Name: SCRRA Empire Grade Separation	[ ] 1 week			
Site: Burbank	[ ] 2 days			
P O # 2009-010.01	[ ] 1 day			

Sample Identification	Sample Date	Sample Time	Sample Type	Matrix	# of Cont.	Filtered Sample	6010B / 7471A CAM Metals	6010 Arsenic & Lead	8141A Organo-phosphourous pesticide	8151A Chlorinated Herbicides	8081A Organo-chloro pesticide	Ph	Sample Specific Notes:
DYB10-07 @0'	4/30/10	3:52	Acetate	Soil	1								
DYB10-07 @1'	4/30/10	3:55	Acetate	Soil	1			X					
DYB10-07 @2'	4/30/10	4:00	Acetate	Soil	1			X					
DYB10-07 @5'	4/30/10	4:06	Acetate	Soil	1			X					
DYB10-07A @0'	4/30/10	3:47	Tube	Soil	1		X					X	
DYB10-08 @0'	4/30/10	3:19	Acetate	Soil	1								
DYB10-08 @1'	4/30/10	3:22	Acetate	Soil	1			X					
DYB10-08 @2'	4/30/10	3:26	Acetate	Soil	1			X					
DYB10-08 @5'	4/30/10	3:30	Acetate	Soil	1			X					
DYB10-08A @0'	4/30/10	3:15	Tube	Soil	1		X					X	

Preservation Used: 1= Ice, 2= HCl; 3= H2SO4; 4=HNO3; 5=NaOH; 6= Other

Possible Hazard Identification
[ ] *Non-Hazard* [ ] *Flammable* [ ] *Skin Irritant* [ ] *Poison B* [X] *Unknown*

Sample Disposal (A fee may be assessed if samples are retained longer than 1 month)
[ ] *Return To Client* [ ] *Disposal By Lab* [X] *Archive For* 3 *Months*

Special Instructions/QC Requirements & Comments:

4.1 C

Relinquished by:	Company:	Date/Time:	Received by:	Company:	Date/Time:
Sathiskumar 05/01 11:46 am	Diaz Yourman			TAL	5/1/10 1140
Relinquished by:	Company:	Date/Time:	Received by:	Company:	Date/Time:
Relinquished by:	Company:	Date/Time:	Received by:	Company:	Date/Time:

Irvine
17461 Derian Ave
Suite 100
Irvine, CA 92614
phone 949.261.1022 fax 949.260.3299

Chain of Custody Record

TestAmerica
THE LEADER IN ENVIRONMENTAL TESTING

TestAmerica Laboratories, Inc.

Client Contact	Project Manager: Gary Gilbert	Site Contact: Sathis	Date:	COC No:
Diaz Yourman & Associates	Tel/Fax: (714) 245-2920	Lab Contact:	Carrier:	5 of 10 COCs
1616 East Seventeenth Street	Analysis Turnaround Time			Job No. 2009-010.01
Santa Ana, CA 92705	Calendar (C) or Work Days (W) _____			
(714) 245-2920 Phone	TAT if different from Below _____			
(714) 245-2950 FAX	[X] 2 weeks			SDG No.
Project Name: SCRRA Empire Grade Separation	[ ] 1 week			
Site: Burbank	[ ] 2 days			
P O # 2009-010.01	[ ] 1 day			

Sample Identification	Sample Date	Sample Time	Sample Type	Matrix	# of Cont.	Filtered Sample	6010B / 7471A CAM Metals	6010 Arsenic & Lead	8141A Organo-phosphourous pesticide	8151A Chlorinated Herbicides	8081A Organo-chloro pesticide	Ph	Sample Specific Notes:
DYB10-09 @0'	4/30/10	2:51	Acetate	Soil	1								
DYB10-09 @1'	4/30/10	2:53	Acetate	Soil	1			X					
DYB10-09 @2'	4/30/10	3:00	Acetate	Soil	1			X					
DYB10-09 @5'	4/30/10	3:03	Acetate	Soil	1			X					
DYB10-09A @0'	4/30/10	2:48	Tube	Soil	1		X		X	X	X	X	
DYB10-10 @0'	4/30/10	12:58	Acetate	Soil	1								
DYB10-10 @1'	4/30/10	1:01	Acetate	Soil	1			X					
DYB10-10 @2'	4/30/10	1:07	Acetate	Soil	1			X					
DYB10-10 @5'	4/30/10	1:11	Acetate	Soil	1			X					
DYB10-10A @0'	4/30/10	12:55	Tube	Soil	1		X					X	

Preservation Used: (1= Ice,) 2= HCl; 3= H2SO4; 4=HNO3; 5=NaOH; 6= Other

Possible Hazard Identification
[ ] *Non-Hazard* [ ] *Flammable* [ ] *Skin Irritant* [ ] *Poison B* [X] *known*

Sample Disposal (A fee may be assessed if samples are retained longer than 1 month)
[ ] *Return To Client* [ ] *Disposal By Lab* [X] *Archive For* 3 *Months*

Special Instructions/QC Requirements & Comments:

4°C

Relinquished by:	Company:	Date/Time:	Received by:	Company:	Date/Time:
Sathishkumar 05/01 11:46am	Diaz Yourman	5/1/10		TAL	5/1/10 11:40
Relinquished by:	Company:	Date/Time:	Received by:	Company:	Date/Time:
Relinquished by:	Company:	Date/Time:	Received by:	Company:	Date/Time:

Irvine
17461 Derian Ave
Suite 100
Irvine, CA 92614
phone 949.261.1022 fax 949.260.3299

Chain of Custody Record

TestAmerica
THE LEADER IN ENVIRONMENTAL TESTING

TestAmerica Laboratories, Inc.

Client Contact	Project Manager: Gary Gilbert	Site Contact: Sathis	Date:	COC No:
Diaz Yourman & Associates	Tel/Fax: (714) 245-2920	Lab Contact:	Carrier:	10 of 10 COCs
1616 East Seventeenth Street	Analysis Turnaround Time			Job No. 2009-010.01
Santa Ana, CA 92705	Calendar (C) or Work Days (W) _____			
(714) 245-2920 Phone	TAT if different from Below _____			
(714) 245-2950 FAX	[X] 2 weeks			SDG No.
Project Name: SCRRA Empire Grade Separation	[ ] 1 week			
Site: Burbank	[ ] 2 days			
P O # 2009-010.01	[ ] 1 day			

Sample Identification	Sample Date	Sample Time	Sample Type	Matrix	# of Cont.	Filtered Sample	6010B / 7471A CAM Metals	6010 Arsenic & Lead	8141A Organo-phosphourous pesticide	8151A Chlorinated Herbicides	8081A Organo-chloro pesticide	Ph	Sample Specific Notes:
DYB10-11 @0'	4/30/10	12:32	Acetate	Soil	1								
DYB10-11 @1'	4/30/10	12:35	Acetate	Soil	1			X					
DYB10-11 @2'	4/30/10	12:40	Acetate	Soil	1			X					
DYB10-11 @5'	4/30/10	12:45	Acetate	Soil	1			X					
DYB10-11A @0'	4/30/10	12:30	Tube	Soil	1		X					X	
DYB10-12 @0'	4/30/10	2:10	Acetate	Soil	1								
DYB10-12 @1'	4/30/10	2:13	Acetate	Soil	1			X					
DYB10-12 @2'	4/30/10	2:17	Acetate	Soil	1			X					
DYB10-12 @5'	4/30/10	2:21	Acetate	Soil	1			X					
DYB10-12A @0'	4/30/10	2:05	Tube	Soil	1		X		X	X	X	X	
TB	4/30/10	6:00											Hold on

Preservation Used: (1= Ice,) 2= HCl; 3= H2SO4; 4=HNO3; 5=NaOH; 6= Other

Possible Hazard Identification
[ ] *Non-Hazard* [ ] *Flammable* [ ] *Skin Irritant* [ ] *Poison B* [X] *known*

Sample Disposal (A fee may be assessed if samples are retained longer than 1 month)
[ ] *Return To Client* [ ] *Disposal By Lab* [X] *Archive For* 3 *Months*

Special Instructions/QC Requirements & Comments:

4.11

Relinquished by:	Company:	Date/Time:	Received by:	Company:	Date/Time:
Sathiskumar 05/01 11:47am	Diaz Yourman			AI	5/1/10 1140
Relinquished by:	Company:	Date/Time:	Received by:	Company:	Date/Time:
Relinquished by:	Company:	Date/Time:	Received by:	Company:	Date/Time:

Irvine
17461 Derian Ave
Suite 100
Irvine, CA 92614
phone 949.261.1022 fax 949.260.3299

Chain of Custody Record

ITE0005

TestAmerica
THE LEADER IN ENVIRONMENTAL TESTING

TestAmerica Laboratories, Inc.

Client Contact	Project Manager: Gary Gilbert	Site Contact: Sathis	Date:	COC No:
Diaz Yourman & Associates	Tel/Fax: (714) 245-2920	Lab Contact:	Carrier:	1 of 6 COCs
1616 East Seventeenth Street	Analysis Turnaround Time			Job No. 2009-010.01
Santa Ana, CA 92705	Calendar (C) or Work Days (W) _____			
(714) 245-2920 Phone	TAT if different from Below _____			
(714) 245-2950 FAX	[X] 2 weeks			SDG No.
Project Name: SCRRA Empire Grade Separation	[ ] 1 week			
Site: Burbank	[ ] 2 days			
P O # 2009-010.01	[ ] 1 day			

Sample Identification	Sample Date	Sample Time	Sample Type	Matrix	# of Cont.	Filtered Sample	6010B / 7471A CAM Metals	6010 Arsenic & Lead	8141A Organo-phosphourous pesticide	8151A Chlorinated Herbicides	8081A Organo-chloro pesticide	Ph	Sample Specific Notes:
DYB10-01 @0'	4/30/10	8:35	Acetate	Soil	1								
DYB10-01 @1'	4/30/10	8:45	Acetate	Soil	1			X					
DYB10-01 @2'	4/30/10	8:50	Acetate	Soil	1			X					
DYB10-01 @5'	4/30/10	8:55	Acetate	Soil	1			X					
DYB10-01A @0'	4/30/10	8:28	Tube	Soil	1		X		X	X	X	X	
DYB10-02 @0'	4/30/10	9:25	Acetate	Soil	1								
DYB10-02 @1'	4/30/10	9:27	Acetate	Soil	1			X					
DYB10-02 @2'	4/30/10	9:34	Acetate	Soil	1			X					
DYB10-02 @5'	4/30/10	9:40	Acetate	Soil	1			X					
DYB10-02A @0'	4/30/10	9:20	Tube	Soil	1		X					X	

Preservation Used: 1= Ice, 2= HCl; 3= H2SO4; 4=HNO3; 5=NaOH; 6= Other

Possible Hazard Identification
[ ] *Non-Hazard* [ ] *Flammable* [ ] *Skin Irritant* [ ] *Poison B* [X] *known*

Sample Disposal (A fee may be assessed if samples are retained longer than 1 month)
[ ] *Return To Client* [ ] *Disposal By Lab* [X] *Archive For* 3 *Months*

Special Instructions/QC Requirements & Comments:

4±1°C

Relinquished by:	Company:	Date/Time:	Received by:	Company:	Date/Time:
Sathishkumar, 05/01 11:40 am	Diaz Yourman	5/1/10	[signature]	THI	5/1/10 1146
Relinquished by:	Company:	Date/Time:	Received by:	Company:	Date/Time:
Relinquished by:	Company:	Date/Time:	Received by:	Company:	Date/Time:

D001

Irvine
17461 Derian Ave
Suite 100
Irvine, CA 92614
phone 949.261.1022 fax 949.260.3299

Chain of Custody Record

TestAmerica
THE LEADER IN ENVIRONMENTAL TESTING

TestAmerica Laboratories, Inc.

Client Contact	Project Manager: Gary Gilbert	Site Contact: Sathis	Date:	COC No:
Diaz Yourman & Associates	Tel/Fax: (714) 245-2920	Lab Contact:	Carrier:	2 of 6 COCs
1616 East Seventeenth Street	Analysis Turnaround Time			Job No. 2009-010.01
Santa Ana, CA 92705	Calendar (C) or Work Days (W) _____			
(714) 245-2920 Phone	TAT if different from Below _____			
(714) 245-2950 FAX	[X] 2 weeks			SDG No.
Project Name: SCRRA Empire Grade Separation	[ ] 1 week			
Site: Burbank	[ ] 2 days			
P O # 2009-010.01	[ ] 1 day			

Sample Identification	Sample Date	Sample Time	Sample Type	Matrix	# of Cont.	Filtered Sample	6010B / 7471A CAM Metals	6010 Arsenic & Lead	8141A Organo-phosphourous pesticide	8151A Chlorinated Herbicides	8081A Organo-chloro pesticide	Ph	Sample Specific Notes:
DYB10-03 @0'	4/30/10	10:02	Acetate	Soil	1								
DYB10-03 @1'	4/30/10	10:05	Acetate	Soil	1			X					
DYB10-03 @2'	4/30/10	10:08	Acetate	Soil	1			X					
DYB10-03 @5'	4/30/10	10:15	Acetate	Soil	1			X					
DYB10-03A @0'	4/30/10	9:55	Tube	Soil	1		X					X	
DYB10-04 @0'	4/30/10	11:05	Acetate	Soil	1								
DYB10-04 @1'	4/30/10	11:10	Acetate	Soil	1			X					
DYB10-04 @2'	4/30/10	11:14	Acetate	Soil	1			X					
DYB10-04 @5'	4/30/10	11:20	Acetate	Soil	1			X					
DYB10-04A @0'	4/30/10	11:00	Tube	Soil	1		X					X	

Preservation Used: (1= Ice,) 2= HCl; 3= H2SO4; 4=HNO3; 5=NaOH; 6= Other

Possible Hazard Identification
[ ] *Non-Hazard* [ ] *Flammable* [ ] *Skin Irritant* [ ] *Poison B* [X] *Unknown*

Sample Disposal (A fee may be assessed if samples are retained longer than 1 month)
[ ] *Return To Client* [ ] *Disposal By Lab* [X] *Archive For* 3 *Months*

Special Instructions/QC Requirements & Comments:

4°C

Relinquished by:	Company:	Date/Time:	Received by:	Company:	Date/Time:
Sathiskumar 05/01 11:45am	Diaz Yourman	5/1/10	[signature]	TAI	5/1/10 1140
Relinquished by:	Company:	Date/Time: 1140	Received by:	Company:	Date/Time:
Relinquished by:	Company:	Date/Time:	Received by:	Company:	Date/Time:

Irvine
17461 Derian Ave
Suite 100
Irvine, CA 92614
phone 949.261.1022 fax 949.260.3299

Chain of Custody Record

TestAmerica
THE LEADER IN ENVIRONMENTAL TESTING

TestAmerica Laboratories, Inc.

Client Contact	Project Manager: Gary Gilbert	Site Contact: Sathis	Date:	COC No:
Diaz Yourman & Associates	Tel/Fax: (714) 245-2920	Lab Contact:	Carrier:	5 of 6 COCs
1616 East Seventeenth Street	Analysis Turnaround Time			Job No. 2009-010.01
Santa Ana, CA 92705	Calendar (C) or Work Days (W) _____			
(714) 245-2920 Phone	TAT if different from Below _____			
(714) 245-2950 FAX	[X] 2 weeks			SDG No.
Project Name: SCRRA Empire Grade Separation	[ ] 1 week			
Site: Burbank	[ ] 2 days			
P O # 2009-010.01	[ ] 1 day			

Sample Identification	Sample Date	Sample Time	Sample Type	Matrix	# of Cont.	Filtered Sample	6010B / 7471A CAM Metals	6010 Arsenic & Lead	8141A Organo-phosphourous pesticide	8151A Chlorinated Herbicides	8081A Organo-chloro pesticide	Ph	Sample Specific Notes:
DYB10-05 @0'	4/30/10	5:11	Acetate	Soil	1								
DYB10-05 @1'	4/30/10	5:14	Acetate	Soil	1			X					
DYB10-05 @2'	4/30/10	5:21	Acetate	Soil	1			X					
DYB10-05 @5'	4/30/10	5:27	Acetate	Soil	1			X					
DYB10-05A @0'	4/30/10	5:07	Tube	Soil	1		X		X	X	X	X	
DYB10-06 @0'	4/30/10	4:24	Acetate	Soil	1								
DYB10-06 @1'	4/30/10	4:27	Acetate	Soil	1			X					
DYB10-06 @2'	4/30/10	4:31	Acetate	Soil	1			X					
DYB10-06 @5'	4/30/10	4:40	Acetate	Soil	1			X					
DYB10-06A @0'	4/30/10	4:21	Tube	Soil	1		X					X	

Preservation Used: 1= Ice, 2= HCl; 3= H2SO4; 4=HNO3; 5=NaOH; 6= Other

Possible Hazard Identification
[ ] *Non-Hazard* [ ] *Flammable* [ ] *Skin Irritant* [ ] *Poison B* [X] *known*

Sample Disposal (A fee may be assessed if samples are retained longer than 1 month)
[ ] *Return To Client* [ ] *Disposal By Lab* [X] *Archive For* 3 *Months*

Special Instructions/QC Requirements & Comments:

4.1°C

Relinquished by:	Company:	Date/Time:	Received by:	Company:	Date/Time:
Sathishkumar 05/01 11:45am	Diaz Yourman	5/1/10			5/1/10 1140
Relinquished by:	Company:	Date/Time:	Received by:	Company:	Date/Time:
Relinquished by:	Company:	Date/Time:	Received by:	Company:	Date/Time:

Irvine
17461 Derian Ave
Suite 100
Irvine, CA 92614
phone 949.261.1022 fax 949.260.3299

Chain of Custody Record

TestAmerica
THE LEADER IN ENVIRONMENTAL TESTING

TestAmerica Laboratories, Inc.

Client Contact	Project Manager: Gary Gilbert	Site Contact: Sathis	Date:	COC No:
Diaz Yourman & Associates	Tel/Fax: (714) 245-2920	Lab Contact:	Carrier:	4 of 6 COCs
1616 East Seventeenth Street	Analysis Turnaround Time			Job No: 2009-010.01
Santa Ana, CA 92705	Calendar (C) or Work Days (W) _____			
(714) 245-2920 Phone	TAT if different from Below _____			
(714) 245-2950 FAX	[X] 2 weeks			SDG No.
Project Name: SCRRA Empire Grade Separation	[ ] 1 week			
Site: Burbank	[ ] 2 days			
P O # 2009-010.01	[ ] 1 day			

Sample Identification	Sample Date	Sample Time	Sample Type	Matrix	# of Cont.	Filtered Sample	6010B / 7471A CAM Metals	6010 Arsenic & Lead	8141A Organo-phosphourous pesticide	8151A Chlorinated Herbicides	8081A Organo-chloro pesticide	Ph	Sample Specific Notes:
DYB10-07 @0'	4/30/10	3:52	Acetate	Soil	1								
DYB10-07 @1'	4/30/10	3:55	Acetate	Soil	1			X					
DYB10-07 @2'	4/30/10	4:00	Acetate	Soil	1			X					
DYB10-07 @5'	4/30/10	4:06	Acetate	Soil	1			X					
DYB10-07A @0'	4/30/10	3:47	Tube	Soil	1		X					X	
DYB10-08 @0'	4/30/10	3:19	Acetate	Soil	1								
DYB10-08 @1'	4/30/10	3:22	Acetate	Soil	1			X					
DYB10-08 @2'	4/30/10	3:26	Acetate	Soil	1			X					
DYB10-08 @5'	4/30/10	3:30	Acetate	Soil	1			X					
DYB10-08A @0'	4/30/10	3:15	Tube	Soil	1		X					X	

Preservation Used: 1= Ice, 2= HCl; 3= H2SO4; 4=HNO3; 5=NaOH; 6= Other

Possible Hazard Identification
[ ] *Non-Hazard* [ ] *Flammable* [ ] *Skin Irritant* [ ] *Poison B* [X] *Unknown*

Sample Disposal (A fee may be assessed if samples are retained longer than 1 month)
[ ] *Return To Client* [ ] *Disposal By Lab* [X] *Archive For* 3 *Months*

Special Instructions/QC Requirements & Comments:

4.1 C

Relinquished by:	Company:	Date/Time:	Received by:	Company:	Date/Time:
Sathiskumar 05/01 11:46 am	Diaz Yourman			TAL	5/1/10 1140
Relinquished by:	Company:	Date/Time:	Received by:	Company:	Date/Time:
Relinquished by:	Company:	Date/Time:	Received by:	Company:	Date/Time:

Irvine
17461 Derian Ave
Suite 100
Irvine, CA 92614
phone 949.261.1022 fax 949.260.3299

Chain of Custody Record

TestAmerica
THE LEADER IN ENVIRONMENTAL TESTING

TestAmerica Laboratories, Inc.

Client Contact	Project Manager: Gary Gilbert	Site Contact: Sathis	Date:	COC No:
Diaz Yourman & Associates	Tel/Fax: (714) 245-2920	Lab Contact:	Carrier:	5 of 16 COCs
1616 East Seventeenth Street	Analysis Turnaround Time			Job No. 2009-010.01
Santa Ana, CA 92705	Calendar (C) or Work Days (W) _____			
(714) 245-2920 Phone	TAT if different from Below _____			
(714) 245-2950 FAX	[X] 2 weeks			SDG No.
Project Name: SCRRA Empire Grade Separation	[ ] 1 week			
Site: Burbank	[ ] 2 days			
P O # 2009-010.01	[ ] 1 day			

Sample Identification	Sample Date	Sample Time	Sample Type	Matrix	# of Cont.	Filtered Sample	6010B / 7471A CAM Metals	6010 Arsenic & Lead	8141A Organo-phosphourous pesticide	8151A Chlorinated Herbicides	8081A Organo-chloro pesticide	Ph	Sample Specific Notes:
DYB10-09 @0'	4/30/10	2:51	Acetate	Soil	1								
DYB10-09 @1'	4/30/10	2:53	Acetate	Soil	1			X					
DYB10-09 @2'	4/30/10	3:00	Acetate	Soil	1			X					
DYB10-09 @5'	4/30/10	3:03	Acetate	Soil	1			X					
DYB10-09A @0'	4/30/10	2:48	Tube	Soil	1		X		X	X	X	X	
DYB10-10 @0'	4/30/10	12:58	Acetate	Soil	1								
DYB10-10 @1'	4/30/10	1:01	Acetate	Soil	1			X					
DYB10-10 @2'	4/30/10	1:07	Acetate	Soil	1			X					
DYB10-10 @5'	4/30/10	1:11	Acetate	Soil	1			X					
DYB10-10A @0'	4/30/10	12:55	Tube	Soil	1		X					X	

Preservation Used: (1= Ice), 2= HCl; 3= H2SO4; 4=HNO3; 5=NaOH; 6= Other

Possible Hazard Identification
[ ] *Non-Hazard* [ ] *Flammable* [ ] *Skin Irritant* [ ] *Poison B* [X] *known*

Sample Disposal (A fee may be assessed if samples are retained longer than 1 month)
[ ] *Return To Client* [ ] *Disposal By Lab* [X] *Archive For* 3 *Months*

Special Instructions/QC Requirements & Comments:

4°C

Relinquished by:	Company:	Date/Time:	Received by:	Company:	Date/Time:
Sathiskumar 05/01 11:46am	Diaz Yourman	5/1/10		TAL	5/1/10 11:40
Relinquished by:	Company:	Date/Time:	Received by:	Company:	Date/Time:
Relinquished by:	Company:	Date/Time:	Received by:	Company:	Date/Time:

Irvine
17461 Derian Ave
Suite 100
Irvine, CA 92614
phone 949.261.1022 fax 949.260.3299

Chain of Custody Record

TestAmerica
THE LEADER IN ENVIRONMENTAL TESTING

TestAmerica Laboratories, Inc.

Client Contact	Project Manager: Gary Gilbert	Site Contact: Sathis	Date:	COC No:
Diaz Yourman & Associates	Tel/Fax: (714) 245-2920	Lab Contact:	Carrier:	10 of 10 COCs
1616 East Seventeenth Street	Analysis Turnaround Time			Job No. 2009-010.01
Santa Ana, CA 92705	Calendar (C) or Work Days (W) _____			
(714) 245-2920 Phone	TAT if different from Below _____			
(714) 245-2950 FAX	[X] 2 weeks			SDG No.
Project Name: SCRRA Empire Grade Separation	[ ] 1 week			
Site: Burbank	[ ] 2 days			
P O # 2009-010.01	[ ] 1 day			

Sample Identification	Sample Date	Sample Time	Sample Type	Matrix	# of Cont.	Filtered Sample	6010B / 7471A CAM Metals	6010 Arsenic & Lead	8141A Organo-phosphourous pesticide	8151A Chlorinated Herbicides	8081A Organo-chloro pesticide	Ph	Sample Specific Notes:
DYB10-11 @0'	4/30/10	12:32	Acetate	Soil	1								
DYB10-11 @1'	4/30/10	12:35	Acetate	Soil	1			X					
DYB10-11 @2'	4/30/10	12:40	Acetate	Soil	1			X					
DYB10-11 @5'	4/30/10	12:45	Acetate	Soil	1			X					
DYB10-11A @0'	4/30/10	12:30	Tube	Soil	1		X					X	
DYB10-12 @0'	4/30/10	2:10	Acetate	Soil	1								
DYB10-12 @1'	4/30/10	2:13	Acetate	Soil	1			X					
DYB10-12 @2'	4/30/10	2:17	Acetate	Soil	1			X					
DYB10-12 @5'	4/30/10	2:21	Acetate	Soil	1			X					
DYB10-12A @0'	4/30/10	2:05	Tube	Soil	1		X		X	X	X	X	
TB	4/30/10	6:00											Hold on

Preservation Used: (1= Ice,) 2= HCl; 3= H2SO4; 4=HNO3; 5=NaOH; 6= Other

Possible Hazard Identification
[ ] *Non-Hazard* [ ] *Flammable* [ ] *Skin Irritant* [ ] *Poison B* [X] *known*

Sample Disposal (A fee may be assessed if samples are retained longer than 1 month)
[ ] *Return To Client* [ ] *Disposal By Lab* [X] *Archive For* 3 *Months*

Special Instructions/QC Requirements & Comments:

4.11

Relinquished by:	Company:	Date/Time:	Received by:	Company:	Date/Time:
Sathiskumar 05/01 11:47am	Diaz Yourman			TAI	5/1/10 1140
Relinquished by:	Company:	Date/Time:	Received by:	Company:	Date/Time:
Relinquished by:	Company:	Date/Time:	Received by:	Company:	Date/Time:

TestAmerica
THE LEADER IN ENVIRONMENTAL TESTING

17461 Derian Avenue. Suite 100, Irvine, CA 92614 (949) 261-1022 Fax:(949) 260-3297

LABORATORY REPORT

Prepared For: Diaz Yourman
1616 East 17th Street
Santa Ana, CA 92705-8509
Attention: Gary Gilbert

Project: 2009-010.01
SCRRA Empire Grade Separation

Sampled: 04/30/10
Received: 05/01/10
Issued: 06/03/10 09:45

NELAP #01108CA California ELAP#2706 CSDLAC #10256 AZ #AZ0671 NV #CA01531

The results listed within this Laboratory Report pertain only to the samples tested in the laboratory. The analyses contained in this report were performed in accordance with the applicable certifications as noted. All soil samples are reported on a wet weight basis unless otherwise noted in the report. This Laboratory Report is confidential and is intended for the sole use of TestAmerica and its client. This report shall not be reproduced, except in full, without written permission from TestAmerica. The Chain(s) of Custody, 12 pages, are included and are an integral part of this report.
This entire report was reviewed and approved for release.

SAMPLE CROSS REFERENCE

SUBCONTRACTED: Refer to the last page for specific subcontract laboratory information included in this report.

ADDITIONAL INFORMATION: This is partial report. Only Lead (Total and STLC) results for samples ITE0005-26; ITE-0005-38 and ITE0005-46, re-runs requested on May 26, 2010 were reported under this cover.

LABORATORY ID	CLIENT ID	MATRIX
ITE0005-26	DYB10-06 @ 0' (4:24)	Soil
ITE0005-38	DYB10-08 @ 2'	Soil
ITE0005-46	DYB10-10 @ 0' (12:58)	Soil

Reviewed By:

TestAmerica Irvine

Lena Davidkova
Project Manager

TestAmerica
THE LEADER IN ENVIRONMENTAL TESTING

17461 Derian Avenue. Suite 100, Irvine, CA 92614 (949) 261-1022 Fax:(949) 260-3297

Diaz Yourman
1616 East 17th Street
Santa Ana, CA 92705-8509
Attention: Gary Gilbert

Project ID: 2009-010.01
SCRRA Empire Grade Separation
Report Number: ITE0005

Sampled: 04/30/10
Received: 05/01/10

METALS

Analyte	Method	Batch	Reporting Limit	Sample Result	Dilution Factor	Date Extracted	Date Analyzed	Data Qualifiers
Sample ID: ITE0005-26 (DYB10-06 @ 0' (4:24) - Soil)								
Reporting Units: mg/kg								
Lead	EPA 6010B	10E3320	2.0	**81**	0.995	5/25/2010	5/25/2010	
Sample ID: ITE0005-38 (DYB10-08 @ 2' - Soil)								
Reporting Units: mg/kg								
Lead	EPA 6010B	10E1103	2.0	**72**	0.98	5/10/2010	5/11/2010	
Sample ID: ITE0005-38RE1 (DYB10-08 @ 2' - Soil)								
Reporting Units: mg/kg								
Lead	EPA 6010B	10E3320	2.0	**70**	0.985	5/25/2010	5/25/2010	
Sample ID: ITE0005-46 (DYB10-10 @ 0' (12:58) - Soil)								
Reporting Units: mg/kg								
Lead	EPA 6010B	10E3320	2.0	**75**	0.985	5/25/2010	5/25/2010	

TestAmerica Irvine

Lena Davidkova
Project Manager

The results pertain only to the samples tested in the laboratory. This report shall not be reproduced, except in full, without written permission from TestAmerica.

TestAmerica
THE LEADER IN ENVIRONMENTAL TESTING

17461 Derian Avenue. Suite 100, Irvine, CA 92614 (949) 261-1022 Fax:(949) 260-3297

Diaz Yourman
1616 East 17th Street
Santa Ana, CA 92705-8509
Attention: Gary Gilbert

Project ID: 2009-010.01
SCRRA Empire Grade Separation
Report Number: ITE0005

Sampled: 04/30/10
Received: 05/01/10

STLC METALS

Analyte	Method	Batch	Reporting Limit	Sample Result	Dilution Factor	STLC Limit	Date Extracted	Date Analyzed	Data Qualifiers
Sample ID: ITE0005-26 (DYB10-06 @ 0' (4:24) - Soil)									
Reporting Units: mg/l									
Lead	EPA 6010B	10E2447	0.10	**3.6**	1	5.0	5/19/2010	5/19/2010	
Sample ID: ITE0005-26RE1 (DYB10-06 @ 0' (4:24) - Soil)									
Reporting Units: mg/l									
Lead	EPA 6010B	10E3737	0.10	**4.1**	1	5.0	5/28/2010	5/28/2010	
Sample ID: ITE0005-38 (DYB10-08 @ 2' - Soil)									
Reporting Units: mg/l									
Lead	EPA 6010B	10E2447	0.10	**5.9**	1	5.0	5/19/2010	5/19/2010	
Sample ID: ITE0005-38RE1 (DYB10-08 @ 2' - Soil)									
Reporting Units: mg/l									
Lead	EPA 6010B	10E3737	0.10	**4.8**	1	5.0	5/28/2010	5/28/2010	
Sample ID: ITE0005-46 (DYB10-10 @ 0' (12:58) - Soil)									
Reporting Units: mg/l									
Lead	EPA 6010B	10E2447	0.10	**2.8**	1	5.0	5/19/2010	5/19/2010	
Sample ID: ITE0005-46RE1 (DYB10-10 @ 0' (12:58) - Soil)									
Reporting Units: mg/l									
Lead	EPA 6010B	10E3737	0.10	**3.1**	1	5.0	5/28/2010	5/28/2010	

TestAmerica Irvine

Lena Davidkova
Project Manager

The results pertain only to the samples tested in the laboratory. This report shall not be reproduced, except in full, without written permission from TestAmerica.

TestAmerica
THE LEADER IN ENVIRONMENTAL TESTING

17461 Derian Avenue. Suite 100, Irvine, CA 92614 (949) 261-1022 Fax:(949) 260-3297

Diaz Yourman
1616 East 17th Street
Santa Ana, CA 92705-8509
Attention: Gary Gilbert

Project ID: 2009-010.01
SCRRA Empire Grade Separation
Report Number: ITE0005

Sampled: 04/30/10
Received: 05/01/10

WASTE EXTRACTION TEST (STLC) - Metals/Inorganics

Analyte	Method	Batch	Extraction Start Date	Extraction End Date	Data Qualifiers
Sample ID: ITE0005-26 (DYB10-06 @ 0' (4:24) - Soil)					
Extraction	STLC-Met	10E1973	5/15/2010	5/17/2010	
Sample ID: ITE0005-26RE1 (DYB10-06 @ 0' (4:24) - Soil)					
Extraction	STLC-Met	10E3339	5/25/2010	5/27/2010	
Sample ID: ITE0005-38 (DYB10-08 @ 2' - Soil)					
Extraction	STLC-Met	10E1973	5/15/2010	5/17/2010	
Sample ID: ITE0005-38RE1 (DYB10-08 @ 2' - Soil)					
Extraction	STLC-Met	10E3339	5/25/2010	5/27/2010	
Sample ID: ITE0005-46 (DYB10-10 @ 0' (12:58) - Soil)					
Extraction	STLC-Met	10E1973	5/15/2010	5/17/2010	
Sample ID: ITE0005-46RE1 (DYB10-10 @ 0' (12:58) - Soil)					
Extraction	STLC-Met	10E3339	5/25/2010	5/27/2010	

POTENTIAL STLC / TCLP / TTLC LIMITS EXCEEDANCE

Analyte	Units	Sample Result	STLC Max. Limit mg/L (ppm)	TTLC Max. Limit mg/Kg (ppm)	TCLP Max. Limit mg/L (ppm)
ITE0005-26 (DYB10-06 @ 0' (4:24) - Soil)					
Lead	**mg/kg**	**81**	**5.0**	1000	5.0
Note: STLC limits in bold signify the result exceeds 10 x STLC limit. TCLP limits in bold signify the result exceeds 20 x TCLP limit.					
ITE0005-38 (DYB10-08 @ 2' - Soil)					
Lead	**mg/kg**	**72**	**5.0**	1000	5.0
Note: STLC limits in bold signify the result exceeds 10 x STLC limit. TCLP limits in bold signify the result exceeds 20 x TCLP limit.					
ITE0005-38RE1 (DYB10-08 @ 2' - Soil)					
Lead	**mg/kg**	**70**	**5.0**	1000	5.0
Note: STLC limits in bold signify the result exceeds 10 x STLC limit. TCLP limits in bold signify the result exceeds 20 x TCLP limit.					
ITE0005-46 (DYB10-10 @ 0' (12:58) - Soil)					
Lead	**mg/kg**	**75**	**5.0**	1000	5.0
Note: STLC limits in bold signify the result exceeds 10 x STLC limit. TCLP limits in bold signify the result exceeds 20 x TCLP limit.					

TestAmerica Irvine

Lena Davidkova
Project Manager

The results pertain only to the samples tested in the laboratory. This report shall not be reproduced, except in full, without written permission from TestAmerica.

TestAmerica
THE LEADER IN ENVIRONMENTAL TESTING

17461 Derian Avenue. Suite 100, Irvine, CA 92614 (949) 261-1022 Fax:(949) 260-3297

Diaz Yourman
1616 East 17th Street
Santa Ana, CA 92705-8509
Attention: Gary Gilbert

Project ID: 2009-010.01
SCRRA Empire Grade Separation
Report Number: ITE0005

Sampled: 04/30/10
Received: 05/01/10

METHOD BLANK/QC DATA

METALS

Analyte	Result	Reporting Limit	Units	Spike Level	Source Result	%REC	%REC Limits	RPD	RPD Limit	Data Qualifiers
Batch: 10E1103 Extracted: 05/10/10										
Blank Analyzed: 05/11/2010 (10E1103-BLK1)										
Lead	ND	2.0	mg/kg							
LCS Analyzed: 05/11/2010 (10E1103-BS1)										
Lead	47.2	2.0	mg/kg	49.3		96	80-120			
Matrix Spike Analyzed: 05/11/2010 (10E1103-MS1)					**Source: ITE0005-19**					
Lead	44.4	2.0	mg/kg	49.8	1.10	87	75-125			
Matrix Spike Dup Analyzed: 05/11/2010 (10E1103-MSD1)					**Source: ITE0005-19**					
Lead	42.8	2.0	mg/kg	49.8	1.10	84	75-125	4	20	
Batch: 10E3320 Extracted: 05/25/10										
Blank Analyzed: 05/25/2010 (10E3320-BLK1)										
Lead	ND	2.0	mg/kg							
LCS Analyzed: 05/25/2010 (10E3320-BS1)										
Lead	47.9	2.0	mg/kg	50.0		96	80-120			
Matrix Spike Analyzed: 05/25/2010 (10E3320-MS1)					**Source: ITE1895-01**					
Lead	50.1	2.0	mg/kg	49.8	4.20	92	75-125			
Matrix Spike Dup Analyzed: 05/25/2010 (10E3320-MSD1)					**Source: ITE1895-01**					
Lead	49.8	2.0	mg/kg	49.5	4.20	92	75-125	0.5	20	

TestAmerica Irvine

Lena Davidkova
Project Manager

The results pertain only to the samples tested in the laboratory. This report shall not be reproduced, except in full, without written permission from TestAmerica.

TestAmerica
THE LEADER IN ENVIRONMENTAL TESTING

17461 Derian Avenue. Suite 100, Irvine, CA 92614 (949) 261-1022 Fax:(949) 260-3297

Diaz Yourman
1616 East 17th Street
Santa Ana, CA 92705-8509
Attention: Gary Gilbert

Project ID: 2009-010.01
SCRRA Empire Grade Separation
Report Number: ITE0005

Sampled: 04/30/10
Received: 05/01/10

METHOD BLANK/QC DATA

STLC METALS

Analyte	Result	Reporting Limit	Units	Spike Level	Source Result	%REC	%REC Limits	RPD	RPD Limit	Data Qualifiers
Batch: 10E2447 Extracted: 05/19/10										
Blank Analyzed: 05/19/2010 (10E2447-BLK1)										
Lead	ND	0.10	mg/l							
LCS Analyzed: 05/19/2010 (10E2447-BS1)										
Lead	21.4	0.10	mg/l	20.0		107	80-120			
Matrix Spike Analyzed: 05/19/2010 (10E2447-MS1)					**Source: ITE0005-26**					
Lead	24.5	0.10	mg/l	20.0	3.60	104	75-125			
Matrix Spike Dup Analyzed: 05/19/2010 (10E2447-MSD1)					**Source: ITE0005-26**					
Lead	23.9	0.10	mg/l	20.0	3.60	102	75-125	2	20	
Batch: 10E3737 Extracted: 05/28/10										
Blank Analyzed: 05/28/2010 (10E3737-BLK1)										
Lead	ND	0.10	mg/l							
LCS Analyzed: 05/28/2010 (10E3737-BS1)										
Lead	20.0	0.10	mg/l	20.0		100	80-120			
Matrix Spike Analyzed: 05/28/2010 (10E3737-MS1)					**Source: ITE2233-01**					
Lead	28.5	0.10	mg/l	20.0	8.72	99	75-125			
Matrix Spike Dup Analyzed: 05/28/2010 (10E3737-MSD1)					**Source: ITE2233-01**					
Lead	27.8	0.10	mg/l	20.0	8.72	95	75-125	2	20	

TestAmerica Irvine

Lena Davidkova
Project Manager

The results pertain only to the samples tested in the laboratory. This report shall not be reproduced, except in full, without written permission from TestAmerica.

TestAmerica
THE LEADER IN ENVIRONMENTAL TESTING

17461 Derian Avenue. Suite 100, Irvine, CA 92614 (949) 261-1022 Fax:(949) 260-3297

Diaz Yourman 1616 East 17th Street Santa Ana, CA 92705-8509 Attention: Gary Gilbert	Project ID: 2009-010.01 SCRRA Empire Grade Separation Report Number: ITE0005	Sampled: 04/30/10 Received: 05/01/10

DATA QUALIFIERS AND DEFINITIONS

ND Analyte NOT DETECTED at or above the reporting limit or MDL, if MDL is specified.

RPD Relative Percent Difference

TestAmerica Irvine

Lena Davidkova
Project Manager

The results pertain only to the samples tested in the laboratory. This report shall not be reproduced, except in full, without written permission from TestAmerica.

TestAmerica
THE LEADER IN ENVIRONMENTAL TESTING

17461 Derian Avenue. Suite 100, Irvine, CA 92614 (949) 261-1022 Fax:(949) 260-3297

Diaz Yourman 1616 East 17th Street Santa Ana, CA 92705-8509 Attention: Gary Gilbert	Project ID: 2009-010.01 SCRRA Empire Grade Separation Report Number: ITE0005	Sampled: 04/30/10 Received: 05/01/10

Certification Summary

TestAmerica Irvine

Method	Matrix	Nelac	California
EPA 6010B	Soil	X	X
STLC-Met	Soil	X	X

Nevada and NELAP provide analyte specific accreditations. Analyte specific information for TestAmerica may be obtained by contacting the laboratory or visiting our website at www.testamericainc.com

TestAmerica Irvine

Lena Davidkova
Project Manager

The results pertain only to the samples tested in the laboratory. This report shall not be reproduced, except in full, without written permission from TestAmerica.

Irvine
17461 Derian Ave
Suite 100
Irvine, CA 92614
phone 949.261.1022 fax 949.260.3299

Revised

Chain of Custody Record

ITE0005

TestAmerica
THE LEADER IN ENVIRONMENTAL TESTING

TestAmerica Laboratories, Inc.

Client Contact	Project Manager: Gary Gilbert	Site Contact: Sathis	Date:	COC No:
Diaz Yourman & Associates	Tel/Fax: (714) 245-2920	Lab Contact:	Carrier:	1 of 10 COCs
1616 East Seventeenth Street	Analysis Turnaround Time			Job No. 2009-010.01
Santa Ana, CA 92705	Calendar (C) or Work Days (W) _____			
(714) 245-2920 Phone	TAT if different from Below _____			
(714) 245-2950 FAX	[X] 2 weeks			SDG No.
Project Name: SCRRA Empire Grade Separation	[ ] 1 week			
Site: Burbank	[ ] 2 days			
P O # 2009-010.01	[ ] 1 day			

Sample Identification	Sample Date	Sample Time	Sample Type	Matrix	# of Cont.	Filtered Sample	6010B / 7471A CAM Metals	6010 Arsenic & Lead	8141A Organo-phosphourous pesticide	8151A Chlorinated Herbicides	8081A Organo-chloro pesticide	Pb	Sample Specific Notes:
DYB10-01 @0'	4/30/10	8:35	Acetate	Soil	1								Hold
DYB10-01 @1'	4/30/10	8:45	Acetate	Soil	1			X					
DYB10-01 @2'	4/30/10	8:50	Acetate	Soil	1			X					
DYB10-01 @5'	4/30/10	8:55	Acetate	Soil	1			X					
DYB10-01A @0'	4/30/10	8:28	Tube	Soil	1		X		X	X	X	X	
DYB10-02 @0'	4/30/10	9:25	Acetate	Soil	1								Hold
DYB10-02 @1'	4/30/10	9:27	Acetate	Soil	1			X					
DYB10-02 @2'	4/30/10	9:34	Acetate	Soil	1			X					
DYB10-02 @5'	4/30/10	9:40	Acetate	Soil	1			X					
DYB10-02A @0'	4/30/10	9:20	Tube	Soil	1		X					X	

Preservation Used: 1= Ice, 2= HCl; 3= H2SO4; 4=HNO3; 5=NaOH; 6= Other

Possible Hazard Identification
[ ] *Non-Hazard* [ ] *Flammable* [ ] *Skin Irritant* [ ] *Poison B* [X] *Unknown*

Sample Disposal (A fee may be assessed if samples are retained longer than 1 month)
[ ] *Return To Client* [ ] *Disposal By Lab* [X] *Archive For* 3 *Months*

Special Instructions/QC Requirements & Comments:

4 | C

Relinquished by:	Company:	Date/Time:	Received by:	Company:	Date/Time:
Sathsekumar 05/01 11:40 am	Diaz Yourman	5/1/10	[signature]	TAI	5/1/10 1146
Relinquished by:	Company:	Date/Time:	Received by:	Company:	Date/Time:
Relinquished by:	Company:	Date/Time:	Received by:	Company:	Date/Time:

D001

Irvine
17461 Derian Ave
Suite 100
Irvine, CA 92614
phone 949.261.1022 fax 949.260.3299

Chain of Custody Record

Revised

ITE0005

TestAmerica
THE LEADER IN ENVIRONMENTAL TESTING

TestAmerica Laboratories, Inc.

Client Contact	Project Manager: Gary Gilbert	Site Contact: Sathis	Date:	COC No:
Diaz Yourman & Associates	Tel/Fax: (714) 245-2920	Lab Contact:	Carrier:	2 of 6 COCs
1616 East Seventeenth Street	Analysis Turnaround Time			Job No. 2009-010.01
Santa Ana, CA 92705	Calendar (C) or Work Days (W) _____			
(714) 245-2920 Phone	TAT if different from Below _____			
(714) 245-2950 FAX	[X] 2 weeks			SDG No.
Project Name: SCRRA Empire Grade Separation	[ ] 1 week			
Site: Burbank	[ ] 2 days			
P O # 2009-010.01	[ ] 1 day			

Sample Identification	Sample Date	Sample Time	Sample Type	Matrix	# of Cont.	Filtered Sample	6010B / 7471A CAM Metals	6010 Arsenic & Lead	8141A Organo-phosphourous pesticide	8151A Chlorinated Herbicides	8081A Organo-chloro pesticide	Ph	Sample Specific Notes:
DYB10-03 @0'	4/30/10	10:02	Acetate	Soil	1								Hold
DYB10-03 @1'	4/30/10	10:05	Acetate	Soil	1			X					
DYB10-03 @2'	4/30/10	10:06	Acetate	Soil	1			X					
DYB10-03 @5'	4/30/10	10:15	Acetate	Soil	1			X					
DYB10-03A @0'	4/30/10	9:55	Tube	Soil	1		X					X	
DYB10-04 @0'	4/30/10	11:05	Acetate	Soil	1								Hold
DYB10-04 @1'	4/30/10	11:10	Acetate	Soil	1			X					
DYB10-04 @2'	4/30/10	11:14	Acetate	Soil	1			X					
DYB10-04 @5'	4/30/10	11:20	Acetate	Soil	1			X					
DYB10-04A @0'	4/30/10	11:00	Tube	Soil	1		X					X	

Preservation Used: 1= Ice, 2= HCl; 3= H2SO4; 4=HNO3; 5=NaOH; 6= Other

Possible Hazard Identification
[ ] *Non-Hazard* [ ] *Flammable* [ ] *Skin Irritant* [ ] *Poison B* [X] *Unknown*

Sample Disposal (A fee may be assessed if samples are retained longer than 1 month)
[ ] *Return To Client* [ ] *Disposal By Lab* [X] *Archive For* 3 *Months*

Special Instructions/QC Requirements & Comments:

4°C

Relinquished by:	Company:	Date/Time:	Received by:	Company:	Date/Time:
Sathiokumar 05/01 11:45am	Diaz Yourman	5/1/10 1140		TAI	5/1/10 1140
Relinquished by:	Company:	Date/Time:	Received by:	Company:	Date/Time:
Relinquished by:	Company:	Date/Time:	Received by:	Company:	Date/Time:

Irvine
17461 Derian Ave
Suite 100
Irvine, CA 92614
phone 949.261.1022 fax 949.260.3299

Chain of Custody Record

TestAmerica
THE LEADER IN ENVIRONMENTAL TESTING

ITE 0005 Revised

TestAmerica Laboratories, Inc.

Client Contact	Project Manager: Gary Gilbert	Site Contact: Sathis	Date:	COC No:
Diaz Yourman & Associates	Tel/Fax: (714) 245-2920	Lab Contact:	Carrier:	3 of 10 COCs
1616 East Seventeenth Street	Analysis Turnaround Time			Job No. 2009-010.01
Santa Ana, CA 92705	Calendar (C) or Work Days (W) _____			
(714) 245-2920 Phone	TAT if different from Below _____			SDG No.
(714) 245-2950 FAX	[X] 2 weeks			
Project Name: SCRRA Empire Grade Separation	[ ] 1 week			
Site: Burbank	[ ] 2 days			
P O # 2009-010.01	[ ] 1 day			

Sample Identification	Sample Date	Sample Time	Sample Type	Matrix	# of Cont.	Filtered Sample	6010B / 7471A CAM Metals	6010 Arsenic & Lead	8141A Organo-phosphourous pesticide	8151A Chlorinated Herbicides	8081A Organo-chloro pesticide	Pb	Sample Specific Notes:
DYB10-05 @0'	4/30/10	5:11	Acetate	Soil	1								Hold
DYB10-05 @1'	4/30/10	5:14	Acetate	Soil	1			X					
DYB10-05 @2'	4/30/10	5:21	Acetate	Soil	1			X					
DYB10-05 @5'	4/30/10	5:27	Acetate	Soil	1			X					
DYB10-05A @0'	4/30/10	5:07	Tube	Soil	1		X		X	X	X	X	
DYB10-06 @0'	4/30/10	4:24	Acetate	Soil	1								Hold
DYB10-06 @1'	4/30/10	4:27	Acetate	Soil	1			X					
DYB10-06 @2'	4/30/10	4:31	Acetate	Soil	1			X					
DYB10-06 @5'	4/30/10	4:40	Acetate	Soil	1			X					
DYB10-06A @0'	4/30/10	4:21	Tube	Soil	1		X					X	

Preservation Used: (1= Ice,) 2= HCl; 3= H2SO4; 4=HNO3; 5=NaOH; 6= Other

Possible Hazard Identification
[ ] *Non-Hazard* [ ] *Flammable* [ ] *Skin Irritant* [ ] *Poison B* [X] *Unknown*

Sample Disposal (A fee may be assessed if samples are retained longer than 1 month)
[ ] *Return To Client* [ ] *Disposal By Lab* [X] *Archive For* 3 *Months*

Special Instructions/QC Requirements & Comments:

4.1°C

Relinquished by:	Company:	Date/Time:	Received by:	Company:	Date/Time:
Sathishkumar 05/01 11:45am	Diaz Yourman	5/1/10		TAL	5/1/10 1140
Relinquished by:	Company:	Date/Time:	Received by:	Company:	Date/Time:
Relinquished by:	Company:	Date/Time:	Received by:	Company:	Date/Time:

Irvine
17461 Derian Ave
Suite 100
Irvine, CA 92614
phone 949.261.1022 fax 949.260.3299

Chain of Custody Record

Revised
ITE0005

TestAmerica
THE LEADER IN ENVIRONMENTAL TESTING
TestAmerica Laboratories, Inc.

Client Contact	Project Manager: Gary Gilbert	Site Contact: Sathis	Date:	COC No:
Diaz Yourman & Associates	Tel/Fax: (714) 245-2920	Lab Contact:	Carrier:	4 of 6 COCs
1616 East Seventeenth Street	Analysis Turnaround Time			Job No: 2009-010.01
Santa Ana, CA 92705	Calendar (C) or Work Days (W) _____			
(714) 245-2920 Phone	TAT if different from Below _____			
(714) 245-2950 FAX	[X] 2 weeks			SDG No.
Project Name: SCRRA Empire Grade Separation	[ ] 1 week			
Site: Burbank	[ ] 2 days			
P O # 2009-010.01	[ ] 1 day			

Sample Identification	Sample Date	Sample Time	Sample Type	Matrix	# of Cont.	Filtered Sample	6010B / 7471A CAM Metals	6010 Arsenic & Lead	8141A Organo-phosphourous pesticide	8151A Chlorinated Herbicides	8081A Organo-chloro pesticide	Pb	Sample Specific Notes:
DYB10-07 @0'	4/30/10	3:52	Acetate	Soil	1								
DYB10-07 @1'	4/30/10	3:55	Acetate	Soil	1			X					Hold
DYB10-07 @2'	4/30/10	4:00	Acetate	Soil	1			X					
DYB10-07 @5'	4/30/10	4:06	Acetate	Soil	1			X					
DYB10-07A @0'	4/30/10	3:47	Tube	Soil	1		X					X	
DYB10-08 @0'	4/30/10	3:19	Acetate	Soil	1								
DYB10-08 @1'	4/30/10	3:22	Acetate	Soil	1			X					Hold
DYB10-08 @2'	4/30/10	3:26	Acetate	Soil	1			X					
DYB10-08 @5'	4/30/10	3:30	Acetate	Soil	1			X					
DYB10-08A @0'	4/30/10	3:15	Tube	Soil	1		X					X	

Preservation Used: (1= Ice, 2= HCl; 3= H2SO4; 4=HNO3; 5=NaOH; 6= Other)

Possible Hazard Identification
[ ] *Non-Hazard* [ ] *Flammable* [ ] *Skin Irritant* [ ] *Poison B* [X] *Unknown*

Sample Disposal (A fee may be assessed if samples are retained longer than 1 month)
[ ] *Return To Client* [ ] *Disposal By Lab* [X] *Archive For* 3 *Months*

Special Instructions/QC Requirements & Comments:

4.1 C

Relinquished by:	Company:	Date/Time:	Received by:	Company:	Date/Time:
Sathis Kumar 05/01 11:46 am	Diaz Yourman			ATL	5/1/10 1:40
Relinquished by:	Company:	Date/Time:	Received by:	Company:	Date/Time:
Relinquished by:	Company:	Date/Time:	Received by:	Company:	Date/Time:

Irvine
17461 Derian Ave
Suite 100
Irvine, CA 92614
phone 949.261.1022 fax 949.260.3299

Chain of Custody Record

Revised

ITE 0005

TestAmerica
THE LEADER IN ENVIRONMENTAL TESTING

TestAmerica Laboratories, Inc.

Client Contact	Project Manager: Gary Gilbert	Site Contact: Sathis	Date:	COC No:
Diaz Yourman & Associates	Tel/Fax: (714) 245-2920	Lab Contact:	Carrier:	5 of 10 COCs
1618 East Seventeenth Street	Analysis Turnaround Time			Job No. 2009-010.01
Santa Ana, CA 92705	Calendar (C) or Work Days (W) _____			
(714) 245-2920 Phone	TAT if different from Below _____			
(714) 245-2950 FAX	[X] 2 weeks			SDG No.
Project Name: SCRRA Empire Grade Separation	[ ] 1 week			
Site: Burbank	[ ] 2 days			
P O # 2009-010.01	[ ] 1 day			

Sample Identification	Sample Date	Sample Time	Sample Type	Matrix	# of Cont.	Filtered Sample	6010B / 7471A CAM Metals	6010 Arsenic & Lead	8141A Organo-phosphourous pesticide	8151A Chlorinated Herbicides	8081A Organo-chloro pesticide	Pb	Sample Specific Notes:
DYB10-09 @0'	4/30/10	2:51	Acetate	Soil	1								Hold
DYB10-09 @1'	4/30/10	2:53	Acetate	Soil	1			X					
DYB10-09 @2'	4/30/10	3:00	Acetate	Soil	1			X					
DYB10-09 @5'	4/30/10	3:03	Acetate	Soil	1			X					
DYB10-09X @0'	4/30/10	2:48	Tube	Soil	1		X		X	X	X	X	
DYB10-10 @0'	4/30/10	12:58	Acetate	Soil	1								Hold
DYB10-10 @1'	4/30/10	1:01	Acetate	Soil	1			X					
DYB10-10 @2'	4/30/10	1:07	Acetate	Soil	1			X					
DYB10-10 @5'	4/30/10	1:11	Acetate	Soil	1			X					
DYB10-10X @0'	4/30/10	12:55	Tube	Soil	1		X					X	

Preservation Used: (1= Ice, 2= HCl; 3= H2SO4; 4=HNO3; 5=NaOH; 6= Other)

Possible Hazard Identification
[ ] *Non-Hazard* [ ] *Flammable* [ ] *Skin Irritant* [ ] *Poison B* [X] *Known*

Sample Disposal (A fee may be assessed if samples are retained longer than 1 month)
[ ] *Return To Client* [ ] *Disposal By Lab* [X] *Archive For* 3 *Months*

Special Instructions/QC Requirements & Comments:

4/11

Relinquished by:	Company:	Date/Time:	Received by:	Company:	Date/Time:
Sathiskumar 05/01 11:46am	Diaz Yourman	5/1/10		TAL	5/1/10 1:40
Relinquished by:	Company:	Date/Time:	Received by:	Company:	Date/Time:
Relinquished by:	Company:	Date/Time:	Received by:	Company:	Date/Time:

Irvine
17461 Derian Ave
Suite 100
Irvine, CA 92614
phone 949.261.1022 fax 949.260.3299

Chain of Custody Record

Revised
ITE0005

TestAmerica
THE LEADER IN ENVIRONMENTAL TESTING

TestAmerica Laboratories, Inc.

Client Contact	Project Manager: Gary Gilbert	Site Contact: Sathis	Date:	COC No:
Diaz Yourman & Associates	Tel/Fax: (714) 245-2920	Lab Contact:	Carrier:	10 of 10 COCs
1616 East Seventeenth Street	Analysis Turnaround Time			Job No. 2009-010.01
Santa Ana, CA 92705	Calendar (C) or Work Days (W) _____			
(714) 245-2920 Phone	TAT If different from Below _____			
(714) 245-2950 FAX	[X] 2 weeks			SDG No.
Project Name: SCRRA Empire Grade Separation	[ ] 1 week			
Site: Burbank	[ ] 2 days			
P O # 2009-010.01	[ ] 1 day			

Sample Identification	Sample Date	Sample Time	Sample Type	Matrix	# of Cont.	Filtered Sample	6010B / 7471A CAM Metals	6010 Arsenic & Lead	8141A Organo-phosphourous pesticide	8151A Chlorinated Herbicides	8081A Organo-chloro pesticide	Pb	Sample Specific Notes:
DYB10-11 @0'	4/30/10	12:32	Acetate	Soil	1								Hold
DYB10-11 @1'	4/30/10	12:35	Acetate	Soil	1			X					
DYB10-11 @2'	4/30/10	12:40	Acetate	Soil	1			X					
DYB10-11 @5'	4/30/10	12:45	Acetate	Soil	1			X					
DYB10-11A @0'	4/30/10	12:30	Tube	Soil	1		X					X	
DYB10-12 @0'	4/30/10	2:10	Acetate	Soil	1								Hold
DYB10-12 @1'	4/30/10	2:13	Acetate	Soil	1			X					
DYB10-12 @2'	4/30/10	2:17	Acetate	Soil	1			X					
DYB10-12 @5'	4/30/10	2:21	Acetate	Soil	1			X					
DYB10-12A @0'	4/30/10	2:05	Tube	Soil	1		X		X	X	X	X	
TB	4/30/10	6:00											Hold on

Preservation Used: (1= Ice,) 2= HCl; 3= H2SO4; 4=HNO3; 5=NaOH; 6= Other

Possible Hazard Identification
[ ] *Non-Hazard* [ ] *Flammable* [ ] *Skin Irritant* [ ] *Poison B* [X] *Unknown*

Sample Disposal (A fee may be assessed if samples are retained longer than 1 month)
[ ] *Return To Client* [ ] *Disposal By Lab* [X] *Archive For* 3 *Months*

Special Instructions/QC Requirements & Comments:

4.11

Relinquished by:	Company:	Date/Time:	Received by:	Company:	Date/Time:
Sathiskumar 05/01 11:47am	Diaz Yourman			AI	5/1/10 1140
Relinquished by:	Company:	Date/Time:	Received by:	Company:	Date/Time:
Relinquished by:	Company:	Date/Time:	Received by:	Company:	Date/Time:

Irvine
17461 Derian Ave
Suite 100
Irvine, CA 92614
phone 949.261.1022 fax 949.260.3299

Chain of Custody Record

ITE0005

TestAmerica
THE LEADER IN ENVIRONMENTAL TESTING

TestAmerica Laboratories, Inc.

Client Contact	Project Manager: Gary Gilbert	Site Contact: Sathis	Date:	COC No:
Diaz Yourman & Associates	Tel/Fax: (714) 245-2920	Lab Contact:	Carrier:	1 of 6 COCs
1616 East Seventeenth Street	Analysis Turnaround Time			Job No. 2009-010.01
Santa Ana, CA 92705	Calendar (C) or Work Days (W) _____			
(714) 245-2920 Phone	TAT if different from Below _____			
(714) 245-2950 FAX	[X] 2 weeks			SDG No.
Project Name: SCRRA Empire Grade Separation	[ ] 1 week			
Site: Burbank	[ ] 2 days			
P O # 2009-010.01	[ ] 1 day			

Sample Identification	Sample Date	Sample Time	Sample Type	Matrix	# of Cont.	Filtered Sample	6010B / 7471A CAM Metals	6010 Arsenic & Lead	8141A Organo-phosphourous pesticide	8151A Chlorinated Herbicides	8081A Organo-chloro pesticide	Ph	Sample Specific Notes:
DYB10-01 @0'	4/30/10	8:35	Acetate	Soil	1								
DYB10-01 @1'	4/30/10	8:45	Acetate	Soil	1			X					
DYB10-01 @2'	4/30/10	8:50	Acetate	Soil	1			X					
DYB10-01 @5'	4/30/10	8:55	Acetate	Soil	1			X					
DYB10-01A @0'	4/30/10	8:28	Tube	Soil	1		X		X	X	X	X	
DYB10-02 @0'	4/30/10	9:25	Acetate	Soil	1								
DYB10-02 @1'	4/30/10	9:27	Acetate	Soil	1			X					
DYB10-02 @2'	4/30/10	9:34	Acetate	Soil	1			X					
DYB10-02 @5'	4/30/10	9:40	Acetate	Soil	1			X					
DYB10-02A @0'	4/30/10	9:20	Tube	Soil	1		X					X	

Preservation Used: (1= Ice,) 2= HCl; 3= H2SO4; 4=HNO3; 5=NaOH; 6= Other

Possible Hazard Identification
[ ] *Non-Hazard* [ ] *Flammable* [ ] *Skin Irritant* [ ] *Poison B* [X] *Unknown*

Sample Disposal (A fee may be assessed if samples are retained longer than 1 month)
[ ] *Return To Client* [ ] *Disposal By Lab* [X] *Archive For* 3 *Months*

Special Instructions/QC Requirements & Comments:

4 ± 1°C

Relinquished by:	Company:	Date/Time:	Received by:	Company:	Date/Time:
Sathisakumar 05/01 11:40 am	Diaz Yourman	5/1/10		TAI	5/1/10 1146
Relinquished by:	Company:	Date/Time:	Received by:	Company:	Date/Time:
Relinquished by:	Company:	Date/Time:	Received by:	Company:	Date/Time:

D001

Irvine
17461 Derian Ave
Suite 100
Irvine, CA 92614
phone 949.261.1022 fax 949.260.3299

Chain of Custody Record

TestAmerica
THE LEADER IN ENVIRONMENTAL TESTING

TestAmerica Laboratories, Inc.

Client Contact	Project Manager: Gary Gilbert	Site Contact: Sathis	Date:	COC No:
Diaz Yourman & Associates	Tel/Fax: (714) 245-2920	Lab Contact:	Carrier:	2 of 6 COCs
1616 East Seventeenth Street	Analysis Turnaround Time			Job No. 2009-010.01
Santa Ana, CA 92705	Calendar (C) or Work Days (W) _____			
(714) 245-2920 Phone	TAT if different from Below _____			
(714) 245-2950 FAX	[X] 2 weeks			SDG No.
Project Name: SCRRA Empire Grade Separation	[ ] 1 week			
Site: Burbank	[ ] 2 days			
P O # 2009-010.01	[ ] 1 day			

Sample Identification	Sample Date	Sample Time	Sample Type	Matrix	# of Cont.	Filtered Sample	6010B / 7471A CAM Metals	6010 Arsenic & Lead	8141A Organo-phosphourous pesticide	8151A Chlorinated Herbicides	8081A Organo-chloro pesticide	Ph	Sample Specific Notes:
DYB10-03 @0'	4/30/10	10:02	Acetate	Soil	1								
DYB10-03 @1'	4/30/10	10:05	Acetate	Soil	1			X					
DYB10-03 @2'	4/30/10	10:08	Acetate	Soil	1			X					
DYB10-03 @5'	4/30/10	10:15	Acetate	Soil	1			X					
DYB10-03A @0'	4/30/10	9:55	Tube	Soil	1		X					X	
DYB10-04 @0'	4/30/10	11:05	Acetate	Soil	1								
DYB10-04 @1'	4/30/10	11:10	Acetate	Soil	1			X					
DYB10-04 @2'	4/30/10	11:14	Acetate	Soil	1			X					
DYB10-04 @5'	4/30/10	11:20	Acetate	Soil	1			X					
DYB10-04A @0'	4/30/10	11:00	Tube	Soil	1		X					X	

Preservation Used: (1= Ice,) 2= HCl; 3= H2SO4; 4=HNO3; 5=NaOH; 6= Other

Possible Hazard Identification
[ ] *Non-Hazard* [ ] *Flammable* [ ] *Skin Irritant* [ ] *Poison B* [X] *Unknown*

Sample Disposal (A fee may be assessed if samples are retained longer than 1 month)
[ ] *Return To Client* [ ] *Disposal By Lab* [X] *Archive For* 3 *Months*

Special Instructions/QC Requirements & Comments:

4°C

Relinquished by:	Company:	Date/Time:	Received by:	Company:	Date/Time:
Sathiskumar 05/01 11:45am	Diaz Yourman	5/1/10	[signature]	TAI	5/1/10 1140
Relinquished by:	Company:	Date/Time: 1140	Received by:	Company:	Date/Time:
Relinquished by:	Company:	Date/Time:	Received by:	Company:	Date/Time:

Irvine
17461 Derian Ave
Suite 100
Irvine, CA 92614
phone 949.261.1022 fax 949.260.3299

Chain of Custody Record

TestAmerica
THE LEADER IN ENVIRONMENTAL TESTING

TestAmerica Laboratories, Inc.

Client Contact	Project Manager: Gary Gilbert	Site Contact: Sathis	Date:	COC No:
Diaz Yourman & Associates	Tel/Fax: (714) 245-2920	Lab Contact:	Carrier:	13 of 16 COCs
1616 East Seventeenth Street	Analysis Turnaround Time			Job No. 2009-010.01
Santa Ana, CA 92705	Calendar (C) or Work Days (W) _____			
(714) 245-2920 Phone	TAT if different from Below _____			
(714) 245-2950 FAX	[X] 2 weeks			SDG No.
Project Name: SCRRA Empire Grade Separation	[ ] 1 week			
Site: Burbank	[ ] 2 days			
P O # 2009-010.01	[ ] 1 day			

Sample Identification	Sample Date	Sample Time	Sample Type	Matrix	# of Cont.	Filtered Sample	6010B / 7471A CAM Metals	6010 Arsenic & Lead	8141A Organo-phosphourous pesticide	8151A Chlorinated Herbicides	8081A Organo-chloro pesticide	Ph	Sample Specific Notes:
DYB10-05 @0'	4/30/10	5:11	Acetate	Soil	1								
DYB10-05 @1'	4/30/10	5:14	Acetate	Soil	1			X					
DYB10-05 @2'	4/30/10	5:21	Acetate	Soil	1			X					
DYB10-05 @5'	4/30/10	5:27	Acetate	Soil	1			X					
DYB10-05A @0'	4/30/10	5:07	Tube	Soil	1		X		X	X	X	X	
DYB10-06 @0'	4/30/10	4:24	Acetate	Soil	1								
DYB10-06 @1'	4/30/10	4:27	Acetate	Soil	1			X					
DYB10-06 @2'	4/30/10	4:31	Acetate	Soil	1			X					
DYB10-06 @5'	4/30/10	4:40	Acetate	Soil	1			X					
DYB10-06A @0'	4/30/10	4:21	Tube	Soil	1		X					X	

Preservation Used: 1= Ice, 2= HCl; 3= H2SO4; 4=HNO3; 5=NaOH; 6= Other

Possible Hazard Identification
[ ] *Non-Hazard* [ ] *Flammable* [ ] *Skin Irritant* [ ] *Poison B* [X] *known*

Sample Disposal (A fee may be assessed if samples are retained longer than 1 month)
[ ] *Return To Client* [ ] *Disposal By Lab* [X] *Archive For* 3 *Months*

Special Instructions/QC Requirements & Comments:

4.1°C

Relinquished by:	Company:	Date/Time:	Received by:	Company:	Date/Time:
Sathiskumar 05/01 11:45am	Diaz Yourman	5/1/10		AL	5/1/10 1140
Relinquished by:	Company:	Date/Time:	Received by:	Company:	Date/Time:
Relinquished by:	Company:	Date/Time:	Received by:	Company:	Date/Time:

Irvine
17461 Derian Ave
Suite 100
Irvine, CA 92614
phone 949.261.1022 fax 949.260.3299

Chain of Custody Record

TestAmerica
THE LEADER IN ENVIRONMENTAL TESTING

TestAmerica Laboratories, Inc.

Client Contact	Project Manager: Gary Gilbert	Site Contact: Sathis	Date:	COC No:
Diaz Yourman & Associates	Tel/Fax: (714) 245-2920	Lab Contact:	Carrier:	1 of 6 COCs
1616 East Seventeenth Street	Analysis Turnaround Time			Job No: 2009-010.01
Santa Ana, CA 92705	Calendar (C) or Work Days (W) _____			
(714) 245-2920 Phone	TAT if different from Below _____			
(714) 245-2950 FAX	[X] 2 weeks			SDG No.
Project Name: SCRRA Empire Grade Separation	[ ] 1 week			
Site: Burbank	[ ] 2 days			
P O # 2009-010.01	[ ] 1 day			

Sample Identification	Sample Date	Sample Time	Sample Type	Matrix	# of Cont.	Filtered Sample	6010B / 7471A CAM Metals	6010 Arsenic & Lead	8141A Organo-phosphourous pesticide	8151A Chlorinated Herbicides	8081A Organo-chloro pesticide	Ph	Sample Specific Notes:
DYB10-07 @0'	4/30/10	3:52	Acetate	Soil	1								
DYB10-07 @1'	4/30/10	3:55	Acetate	Soil	1			X					
DYB10-07 @2'	4/30/10	4:00	Acetate	Soil	1			X					
DYB10-07 @5'	4/30/10	4:06	Acetate	Soil	1			X					
DYB10-07A @0'	4/30/10	3:47	Tube	Soil	1		X					X	
DYB10-08 @0'	4/30/10	3:19	Acetate	Soil	1								
DYB10-08 @1'	4/30/10	3:22	Acetate	Soil	1			X					
DYB10-08 @2'	4/30/10	3:26	Acetate	Soil	1			X					
DYB10-08 @5'	4/30/10	3:30	Acetate	Soil	1			X					
DYB10-08A @0'	4/30/10	3:15	Tube	Soil	1		X					X	

Preservation Used: 1= Ice, 2= HCl; 3= H2SO4; 4=HNO3; 5=NaOH; 6= Other

Possible Hazard Identification
[ ] *Non-Hazard* [ ] *Flammable* [ ] *Skin Irritant* [ ] *Poison B* [X] *Unknown*

Sample Disposal (A fee may be assessed if samples are retained longer than 1 month)
[ ] *Return To Client* [ ] *Disposal By Lab* [X] *Archive For* 3 *Months*

Special Instructions/QC Requirements & Comments:

4.1 C

Relinquished by:	Company:	Date/Time:	Received by:	Company:	Date/Time:
Sathiskumar 05/01 11:46 am	Diaz Yourman			TAL	5/1/10 1140
Relinquished by:	Company:	Date/Time:	Received by:	Company:	Date/Time:
Relinquished by:	Company:	Date/Time:	Received by:	Company:	Date/Time:

Irvine
17461 Derian Ave
Suite 100
Irvine, CA 92614
phone 949.261.1022 fax 949.260.3299

Chain of Custody Record

TestAmerica
THE LEADER IN ENVIRONMENTAL TESTING

TestAmerica Laboratories, Inc.

Client Contact	Project Manager: Gary Gilbert	Site Contact: Sathis	Date:	COC No:
Diaz Yourman & Associates	Tel/Fax: (714) 245-2920	Lab Contact:	Carrier:	5 of 10 COCs
1616 East Seventeenth Street	Analysis Turnaround Time			Job No. 2009-010.01
Santa Ana, CA 92705	Calendar (C) or Work Days (W) _____			
(714) 245-2920 Phone	TAT if different from Below _____			
(714) 245-2950 FAX	[X] 2 weeks			SDG No.
Project Name: SCRRA Empire Grade Separation	[ ] 1 week			
Site: Burbank	[ ] 2 days			
P O # 2009-010.01	[ ] 1 day			

Sample Identification	Sample Date	Sample Time	Sample Type	Matrix	# of Cont.	Filtered Sample	6010B / 7471A CAM Metals	6010 Arsenic & Lead	8141A Organo-phosphourous pesticide	8151A Chlorinated Herbicides	8081A Organo-chloro pesticide	Ph	Sample Specific Notes:
DYB10-09 @0'	4/30/10	2:51	Acetate	Soil	1								
DYB10-09 @1'	4/30/10	2:53	Acetate	Soil	1			X					
DYB10-09 @2'	4/30/10	3:00	Acetate	Soil	1			X					
DYB10-09 @5'	4/30/10	3:03	Acetate	Soil	1			X					
DYB10-09A @0'	4/30/10	2:48	Tube	Soil	1		X		X	X	X	X	
DYB10-10 @0'	4/30/10	12:58	Acetate	Soil	1								
DYB10-10 @1'	4/30/10	1:01	Acetate	Soil	1			X					
DYB10-10 @2'	4/30/10	1:07	Acetate	Soil	1			X					
DYB10-10 @5'	4/30/10	1:11	Acetate	Soil	1			X					
DYB10-10A @0'	4/30/10	12:55	Tube	Soil	1		X					X	

Preservation Used: (1= Ice,) 2= HCl; 3= H2SO4; 4=HNO3; 5=NaOH; 6= Other

Possible Hazard Identification
[ ] *Non-Hazard* [ ] *Flammable* [ ] *Skin Irritant* [ ] *Poison B* [X] *known*

Sample Disposal (A fee may be assessed if samples are retained longer than 1 month)
[ ] *Return To Client* [ ] *Disposal By Lab* [X] *Archive For* 3 *Months*

Special Instructions/QC Requirements & Comments:

4°C

Relinquished by:	Company:	Date/Time:	Received by:	Company:	Date/Time:
Sathishkumar 05/01 11:46am	Diaz Yourman	5/1/10		TAL	5/1/10 11:40
Relinquished by:	Company:	Date/Time:	Received by:	Company:	Date/Time:
Relinquished by:	Company:	Date/Time:	Received by:	Company:	Date/Time:

Irvine
17461 Derian Ave
Suite 100
Irvine, CA 92614
phone 949.261.1022 fax 949.260.3299

Chain of Custody Record

TestAmerica
THE LEADER IN ENVIRONMENTAL TESTING

TestAmerica Laboratories, Inc.

Client Contact	Project Manager: Gary Gilbert	Site Contact: Sathis	Date:	COC No:
Diaz Yourman & Associates	Tel/Fax: (714) 245-2920	Lab Contact:	Carrier:	10 of 10 COCs
1616 East Seventeenth Street	Analysis Turnaround Time			Job No. 2009-010.01
Santa Ana, CA 92705	Calendar (C) or Work Days (W) _____			
(714) 245-2920 Phone	TAT if different from Below _____			
(714) 245-2950 FAX	[X] 2 weeks			SDG No.
Project Name: SCRRA Empire Grade Separation	[ ] 1 week			
Site: Burbank	[ ] 2 days			
P O # 2009-010.01	[ ] 1 day			

Sample Identification	Sample Date	Sample Time	Sample Type	Matrix	# of Cont.	Filtered Sample	6010B / 7471A CAM Metals	6010 Arsenic & Lead	8141A Organo-phosphourous pesticide	8151A Chlorinated Herbicides	8081A Organo-chloro pesticide	Ph	Sample Specific Notes:
DYB10-11 @0'	4/30/10	12:32	Acetate	Soil	1								
DYB10-11 @1'	4/30/10	12:35	Acetate	Soil	1			X					
DYB10-11 @2'	4/30/10	12:40	Acetate	Soil	1			X					
DYB10-11 @5'	4/30/10	12:45	Acetate	Soil	1			X					
DYB10-11A @0'	4/30/10	12:30	Tube	Soil	1		X					X	
DYB10-12 @0'	4/30/10	2:10	Acetate	Soil	1								
DYB10-12 @1'	4/30/10	2:13	Acetate	Soil	1			X					
DYB10-12 @2'	4/30/10	2:17	Acetate	Soil	1			X					
DYB10-12 @5'	4/30/10	2:21	Acetate	Soil	1			X					
DYB10-12A @0'	4/30/10	2:05	Tube	Soil	1		X		X	X	X	X	
TB	4/30/10	6:00											Hold on

Preservation Used: (1= Ice,) 2= HCl; 3= H2SO4; 4=HNO3; 5=NaOH; 6= Other

Possible Hazard Identification
[ ] *Non-Hazard* [ ] *Flammable* [ ] *Skin Irritant* [ ] *Poison B* [X] *known*

Sample Disposal (A fee may be assessed if samples are retained longer than 1 month)
[ ] *Return To Client* [ ] *Disposal By Lab* [X] *Archive For* 3 *Months*

Special Instructions/QC Requirements & Comments:

4.11

Relinquished by:	Company:	Date/Time:	Received by:	Company:	Date/Time:
Sathiskumar 05/01 11:47am	Diaz Yourman			AI	5/1/10 1140
Relinquished by:	Company:	Date/Time:	Received by:	Company:	Date/Time:
Relinquished by:	Company:	Date/Time:	Received by:	Company:	Date/Time:

Irvine
17461 Derian Ave
Suite 100
Irvine, CA 92614
phone 949.261.1022 fax 949.260.3299

Chain of Custody Record

ITE0005

TestAmerica
THE LEADER IN ENVIRONMENTAL TESTING

TestAmerica Laboratories, Inc.

Client Contact	Project Manager: Gary Gilbert	Site Contact: Sathis	Date:	COC No:
Diaz Yourman & Associates	Tel/Fax: (714) 245-2920	Lab Contact:	Carrier:	1 of 6 COCs
1616 East Seventeenth Street	Analysis Turnaround Time			Job No. 2009-010.01
Santa Ana, CA 92705	Calendar (C) or Work Days (W) _____			
(714) 245-2920 Phone	TAT if different from Below _____			
(714) 245-2950 FAX	[X] 2 weeks			SDG No.
Project Name: SCRRA Empire Grade Separation	[ ] 1 week			
Site: Burbank	[ ] 2 days			
P O # 2009-010.01	[ ] 1 day			

Sample Identification	Sample Date	Sample Time	Sample Type	Matrix	# of Cont.	Filtered Sample	6010B / 7471A CAM Metals	6010 Arsenic & Lead	8141A Organo-phosphourous pesticide	8151A Chlorinated Herbicides	8081A Organo-chloro pesticide	Ph	Sample Specific Notes:
DYB10-01 @0'	4/30/10	8:35	Acetate	Soil	1								
DYB10-01 @1'	4/30/10	8:45	Acetate	Soil	1			X					
DYB10-01 @2'	4/30/10	8:50	Acetate	Soil	1			X					
DYB10-01 @5'	4/30/10	8:55	Acetate	Soil	1			X					
DYB10-01A @0'	4/30/10	8:28	Tube	Soil	1		X		X	X	X	X	
DYB10-02 @0'	4/30/10	9:25	Acetate	Soil	1								
DYB10-02 @1'	4/30/10	9:27	Acetate	Soil	1			X					
DYB10-02 @2'	4/30/10	9:34	Acetate	Soil	1			X					
DYB10-02 @5'	4/30/10	9:40	Acetate	Soil	1			X					
DYB10-02A @0'	4/30/10	9:20	Tube	Soil	1		X					X	

Preservation Used: 1= Ice, 2= HCl; 3= H2SO4; 4=HNO3; 5=NaOH; 6= Other

Possible Hazard Identification
[ ] *Non-Hazard* [ ] *Flammable* [ ] *Skin Irritant* [ ] *Poison B* [X] *known*

Sample Disposal (A fee may be assessed if samples are retained longer than 1 month)
[ ] *Return To Client* [ ] *Disposal By Lab* [X] *Archive For* 3 *Months*

Special Instructions/QC Requirements & Comments:

4±1°C

Relinquished by:	Company:	Date/Time:	Received by:	Company:	Date/Time:
Sathishkumar, 05/01 11:40 am	Diaz Yourman	5/1/10	[signature]	THI	5/1/10 1146
Relinquished by:	Company:	Date/Time:	Received by:	Company:	Date/Time:
Relinquished by:	Company:	Date/Time:	Received by:	Company:	Date/Time:

D001

Irvine
17461 Derian Ave
Suite 100
Irvine, CA 92614
phone 949.261.1022 fax 949.260.3299

Chain of Custody Record

TestAmerica
THE LEADER IN ENVIRONMENTAL TESTING

TestAmerica Laboratories, Inc.

Client Contact	Project Manager: Gary Gilbert	Site Contact: Sathis	Date:	COC No:
Diaz Yourman & Associates	Tel/Fax: (714) 245-2920	Lab Contact:	Carrier:	2 of 6 COCs
1616 East Seventeenth Street	Analysis Turnaround Time			Job No. 2009-010.01
Santa Ana, CA 92705	Calendar (C) or Work Days (W) _____			
(714) 245-2920 Phone	TAT if different from Below _____			
(714) 245-2950 FAX	[X] 2 weeks			SDG No.
Project Name: SCRRA Empire Grade Separation	[ ] 1 week			
Site: Burbank	[ ] 2 days			
P O # 2009-010.01	[ ] 1 day			

Sample Identification	Sample Date	Sample Time	Sample Type	Matrix	# of Cont.	Filtered Sample	6010B / 7471A CAM Metals	6010 Arsenic & Lead	8141A Organo-phosphourous pesticide	8151A Chlorinated Herbicides	8081A Organo-chloro pesticide	Ph	Sample Specific Notes:
DYB10-03 @0'	4/30/10	10:02	Acetate	Soil	1								
DYB10-03 @1'	4/30/10	10:05	Acetate	Soil	1			X					
DYB10-03 @2'	4/30/10	10:08	Acetate	Soil	1			X					
DYB10-03 @5'	4/30/10	10:15	Acetate	Soil	1			X					
DYB10-03A @0'	4/30/10	9:55	Tube	Soil	1		X					X	
DYB10-04 @0'	4/30/10	11:05	Acetate	Soil	1								
DYB10-04 @1'	4/30/10	11:10	Acetate	Soil	1			X					
DYB10-04 @2'	4/30/10	11:14	Acetate	Soil	1			X					
DYB10-04 @5'	4/30/10	11:20	Acetate	Soil	1			X					
DYB10-04A @0'	4/30/10	11:00	Tube	Soil	1		X					X	

Preservation Used: (1= Ice,) 2= HCl; 3= H2SO4; 4=HNO3; 5=NaOH; 6= Other

Possible Hazard Identification
[ ] *Non-Hazard* [ ] *Flammable* [ ] *Skin Irritant* [ ] *Poison B* [X] *Unknown*

Sample Disposal (A fee may be assessed if samples are retained longer than 1 month)
[ ] *Return To Client* [ ] *Disposal By Lab* [X] *Archive For* 3 *Months*

Special Instructions/QC Requirements & Comments:

4°C

Relinquished by:	Company:	Date/Time:	Received by:	Company:	Date/Time:
Sathiskumar 05/01 11:45am	Diaz Yourman	5/1/10	[signature]	TAI	5/1/10 1140
Relinquished by:	Company:	Date/Time: 1140	Received by:	Company:	Date/Time:
Relinquished by:	Company:	Date/Time:	Received by:	Company:	Date/Time:

Irvine
17461 Derian Ave
Suite 100
Irvine, CA 92614
phone 949.261.1022 fax 949.260.3299

Chain of Custody Record

TestAmerica
THE LEADER IN ENVIRONMENTAL TESTING

TestAmerica Laboratories, Inc.

Client Contact	Project Manager: Gary Gilbert	Site Contact: Sathis	Date:	COC No:
Diaz Yourman & Associates	Tel/Fax: (714) 245-2920	Lab Contact:	Carrier:	5 of 6 COCs
1616 East Seventeenth Street	Analysis Turnaround Time			Job No. 2009-010.01
Santa Ana, CA 92705	Calendar (C) or Work Days (W) _____			
(714) 245-2920 Phone	TAT if different from Below _____			
(714) 245-2950 FAX	[X] 2 weeks			SDG No.
Project Name: SCRRA Empire Grade Separation	[ ] 1 week			
Site: Burbank	[ ] 2 days			
P O # 2009-010.01	[ ] 1 day			

Sample Identification	Sample Date	Sample Time	Sample Type	Matrix	# of Cont.	Filtered Sample	6010B / 7471A CAM Metals	6010 Arsenic & Lead	8141A Organo-phosphourous pesticide	8151A Chlorinated Herbicides	8081A Organo-chloro pesticide	Ph	Sample Specific Notes:
DYB10-05 @0'	4/30/10	5:11	Acetate	Soil	1								
DYB10-05 @1'	4/30/10	5:14	Acetate	Soil	1			X					
DYB10-05 @2'	4/30/10	5:21	Acetate	Soil	1			X					
DYB10-05 @5'	4/30/10	5:27	Acetate	Soil	1			X					
DYB10-05A @0'	4/30/10	5:07	Tube	Soil	1		X		X	X	X	X	
DYB10-06 @0'	4/30/10	4:24	Acetate	Soil	1								
DYB10-06 @1'	4/30/10	4:27	Acetate	Soil	1			X					
DYB10-06 @2'	4/30/10	4:31	Acetate	Soil	1			X					
DYB10-06 @5'	4/30/10	4:40	Acetate	Soil	1			X					
DYB10-06A @0'	4/30/10	4:21	Tube	Soil	1		X					X	

Preservation Used: 1= Ice, 2= HCl; 3= H2SO4; 4=HNO3; 5=NaOH; 6= Other

Possible Hazard Identification
[ ] *Non-Hazard* [ ] *Flammable* [ ] *Skin Irritant* [ ] *Poison B* [X] *known*

Sample Disposal (A fee may be assessed if samples are retained longer than 1 month)
[ ] *Return To Client* [ ] *Disposal By Lab* [X] *Archive For* 3 *Months*

Special Instructions/QC Requirements & Comments:

4.1°C

Relinquished by:	Company:	Date/Time:	Received by:	Company:	Date/Time:
Sathishkumar 05/01 11:45am	Diaz Yourman	5/1/10			5/1/10 1140
Relinquished by:	Company:	Date/Time:	Received by:	Company:	Date/Time:
Relinquished by:	Company:	Date/Time:	Received by:	Company:	Date/Time:

Irvine
17461 Derian Ave
Suite 100
Irvine, CA 92614
phone 949.261.1022 fax 949.260.3299

Chain of Custody Record

TestAmerica
THE LEADER IN ENVIRONMENTAL TESTING

TestAmerica Laboratories, Inc.

Client Contact	Project Manager: Gary Gilbert	Site Contact: Sathis	Date:	COC No:
Diaz Yourman & Associates	Tel/Fax: (714) 245-2920	Lab Contact:	Carrier:	4 of 6 COCs
1616 East Seventeenth Street	Analysis Turnaround Time			Job No: 2009-010.01
Santa Ana, CA 92705	Calendar (C) or Work Days (W) _____			
(714) 245-2920 Phone	TAT if different from Below _____			
(714) 245-2950 FAX	[X] 2 weeks			SDG No.
Project Name: SCRRA Empire Grade Separation	[ ] 1 week			
Site: Burbank	[ ] 2 days			
P O # 2009-010.01	[ ] 1 day			

Sample Identification	Sample Date	Sample Time	Sample Type	Matrix	# of Cont.	Filtered Sample	6010B / 7471A CAM Metals	6010 Arsenic & Lead	8141A Organo-phosphourous pesticide	8151A Chlorinated Herbicides	8081A Organo-chloro pesticide	Ph	Sample Specific Notes:
DYB10-07 @0'	4/30/10	3:52	Acetate	Soil	1								
DYB10-07 @1'	4/30/10	3:55	Acetate	Soil	1			X					
DYB10-07 @2'	4/30/10	4:00	Acetate	Soil	1			X					
DYB10-07 @5'	4/30/10	4:06	Acetate	Soil	1			X					
DYB10-07A @0'	4/30/10	3:47	Tube	Soil	1		X					X	
DYB10-08 @0'	4/30/10	3:19	Acetate	Soil	1								
DYB10-08 @1'	4/30/10	3:22	Acetate	Soil	1			X					
DYB10-08 @2'	4/30/10	3:26	Acetate	Soil	1			X					
DYB10-08 @5'	4/30/10	3:30	Acetate	Soil	1			X					
DYB10-08A @0'	4/30/10	3:15	Tube	Soil	1		X					X	

Preservation Used: 1= Ice, 2= HCl; 3= H2SO4; 4=HNO3; 5=NaOH; 6= Other

Possible Hazard Identification
[ ] *Non-Hazard* [ ] *Flammable* [ ] *Skin Irritant* [ ] *Poison B* [X] *Unknown*

Sample Disposal (A fee may be assessed if samples are retained longer than 1 month)
[ ] *Return To Client* [ ] *Disposal By Lab* [X] *Archive For* 3 *Months*

Special Instructions/QC Requirements & Comments:

4.1 C

Relinquished by:	Company:	Date/Time:	Received by:	Company:	Date/Time:
Sathiskumar 05/01 11:46 am	Diaz Yourman			TAL	5/1/10 1140
Relinquished by:	Company:	Date/Time:	Received by:	Company:	Date/Time:
Relinquished by:	Company:	Date/Time:	Received by:	Company:	Date/Time:

Irvine
17461 Derian Ave
Suite 100
Irvine, CA 92614
phone 949.261.1022 fax 949.260.3299

Chain of Custody Record

TestAmerica
THE LEADER IN ENVIRONMENTAL TESTING

TestAmerica Laboratories, Inc.

Client Contact	Project Manager: Gary Gilbert	Site Contact: Sathis	Date:	COC No:
Diaz Yourman & Associates	Tel/Fax: (714) 245-2920	Lab Contact:	Carrier:	5 of 16 COCs
1616 East Seventeenth Street	Analysis Turnaround Time			Job No. 2009-010.01
Santa Ana, CA 92705	Calendar (C) or Work Days (W) _____			
(714) 245-2920 Phone	TAT if different from Below _____			
(714) 245-2950 FAX	[X] 2 weeks			SDG No.
Project Name: SCRRA Empire Grade Separation	[ ] 1 week			
Site: Burbank	[ ] 2 days			
P O # 2009-010.01	[ ] 1 day			

Sample Identification	Sample Date	Sample Time	Sample Type	Matrix	# of Cont.	Filtered Sample	6010B / 7471A CAM Metals	6010 Arsenic & Lead	8141A Organo-phosphourous pesticide	8151A Chlorinated Herbicides	8081A Organo-chloro pesticide	Ph	Sample Specific Notes:
DYB10-09 @0'	4/30/10	2:51	Acetate	Soil	1								
DYB10-09 @1'	4/30/10	2:53	Acetate	Soil	1			X					
DYB10-09 @2'	4/30/10	3:00	Acetate	Soil	1			X					
DYB10-09 @5'	4/30/10	3:03	Acetate	Soil	1			X					
DYB10-09A @0'	4/30/10	2:48	Tube	Soil	1		X		X	X	X	X	
DYB10-10 @0'	4/30/10	12:58	Acetate	Soil	1								
DYB10-10 @1'	4/30/10	1:01	Acetate	Soil	1			X					
DYB10-10 @2'	4/30/10	1:07	Acetate	Soil	1			X					
DYB10-10 @5'	4/30/10	1:11	Acetate	Soil	1			X					
DYB10-10A @0'	4/30/10	12:55	Tube	Soil	1		X					X	

Preservation Used: (1= Ice), 2= HCl; 3= H2SO4; 4=HNO3; 5=NaOH; 6= Other

Possible Hazard Identification
[ ] *Non-Hazard* [ ] *Flammable* [ ] *Skin Irritant* [ ] *Poison B* [X] *known*

Sample Disposal (A fee may be assessed if samples are retained longer than 1 month)
[ ] *Return To Client* [ ] *Disposal By Lab* [X] *Archive For* 3 *Months*

Special Instructions/QC Requirements & Comments:

4°C

Relinquished by:	Company:	Date/Time:	Received by:	Company:	Date/Time:
Sathiskumar 05/01 11:46am	Diaz Yourman	5/1/10		TAL	5/1/10 11:40
Relinquished by:	Company:	Date/Time:	Received by:	Company:	Date/Time:
Relinquished by:	Company:	Date/Time:	Received by:	Company:	Date/Time:

Irvine
17461 Derian Ave
Suite 100
Irvine, CA 92614
phone 949.261.1022 fax 949.260.3299

Chain of Custody Record

TestAmerica
THE LEADER IN ENVIRONMENTAL TESTING

TestAmerica Laboratories, Inc.

Client Contact	Project Manager: Gary Gilbert	Site Contact: Sathis	Date:	COC No:
Diaz Yourman & Associates	Tel/Fax: (714) 245-2920	Lab Contact:	Carrier:	10 of 10 COCs
1616 East Seventeenth Street	Analysis Turnaround Time			Job No. 2009-010.01
Santa Ana, CA 92705	Calendar (C) or Work Days (W) _____			
(714) 245-2920 Phone	TAT if different from Below _____			
(714) 245-2950 FAX	[X] 2 weeks			SDG No.
Project Name: SCRRA Empire Grade Separation	[ ] 1 week			
Site: Burbank	[ ] 2 days			
P O # 2009-010.01	[ ] 1 day			

Sample Identification	Sample Date	Sample Time	Sample Type	Matrix	# of Cont.	Filtered Sample	6010B / 7471A CAM Metals	6010 Arsenic & Lead	8141A Organo-phosphourous pesticide	8151A Chlorinated Herbicides	8081A Organo-chloro pesticide	Ph	Sample Specific Notes:
DYB10-11 @0'	4/30/10	12:32	Acetate	Soil	1								
DYB10-11 @1'	4/30/10	12:35	Acetate	Soil	1			X					
DYB10-11 @2'	4/30/10	12:40	Acetate	Soil	1			X					
DYB10-11 @5'	4/30/10	12:45	Acetate	Soil	1			X					
DYB10-11A @0'	4/30/10	12:30	Tube	Soil	1		X					X	
DYB10-12 @0'	4/30/10	2:10	Acetate	Soil	1								
DYB10-12 @1'	4/30/10	2:13	Acetate	Soil	1			X					
DYB10-12 @2'	4/30/10	2:17	Acetate	Soil	1			X					
DYB10-12 @5'	4/30/10	2:21	Acetate	Soil	1			X					
DYB10-12A @0'	4/30/10	2:05	Tube	Soil	1		X		X	X	X	X	
TB	4/30/10	6:00											Hold on

Preservation Used: (1= Ice,) 2= HCl; 3= H2SO4; 4=HNO3; 5=NaOH; 6= Other

Possible Hazard Identification
[ ] *Non-Hazard* [ ] *Flammable* [ ] *Skin Irritant* [ ] *Poison B* [X] *known*

Sample Disposal (A fee may be assessed if samples are retained longer than 1 month)
[ ] *Return To Client* [ ] *Disposal By Lab* [X] *Archive For* 3 *Months*

Special Instructions/QC Requirements & Comments:

4.11

Relinquished by:	Company:	Date/Time:	Received by:	Company:	Date/Time:
Sathiskumar 05/01 11:47am	Diaz Yourman			TAI	5/1/10 1140
Relinquished by:	Company:	Date/Time:	Received by:	Company:	Date/Time:
Relinquished by:	Company:	Date/Time:	Received by:	Company:	Date/Time:

TestAmerica
THE LEADER IN ENVIRONMENTAL TESTING

17461 Derian Avenue. Suite 100, Irvine, CA 92614 (949) 261-1022 Fax:(949) 260-3297

LABORATORY REPORT

Prepared For: Diaz Yourman
1616 East 17th Street
Santa Ana, CA 92705-8509
Attention: Gary Gilbert

Project: 2009-010.01
SCRRA Empire Grade Separation

Sampled: 04/30/10
Received: 06/14/10
Issued: 06/17/10 12:30

NELAP #01108CA California ELAP#2706 CSDLAC #10256 AZ #AZ0671 NV #CA01531

The results listed within this Laboratory Report pertain only to the samples tested in the laboratory. The analyses contained in this report were performed in accordance with the applicable certifications as noted. All soil samples are reported on a wet weight basis unless otherwise noted in the report. This Laboratory Report is confidential and is intended for the sole use of TestAmerica and its client. This report shall not be reproduced, except in full, without written permission from TestAmerica. The Chain of Custody, 1 page, is included and is an integral part of this report.
This entire report was reviewed and approved for release.

SAMPLE CROSS REFERENCE

ADDITIONAL INFORMATION: This is partial report. Only Lead-TCLP result for the test requested on 6/14/10 was reported under this cover

LABORATORY ID	CLIENT ID	MATRIX
ITF1282-01	DYB10-08 @ 2'	Soil

Reviewed By:

TestAmerica Irvine

Lena Davidkova
Project Manager

TestAmerica
THE LEADER IN ENVIRONMENTAL TESTING

17461 Derian Avenue. Suite 100, Irvine, CA 92614 (949) 261-1022 Fax:(949) 260-3297

Diaz Yourman
1616 East 17th Street
Santa Ana, CA 92705-8509
Attention: Gary Gilbert

Project ID: 2009-010.01
SCRRA Empire Grade Separation
Report Number: ITF1282

Sampled: 04/30/10
Received: 06/14/10

TCLP METALS

Analyte	Method	Batch	Reporting Limit	Sample Result	Dilution Factor	TCLP Limit	Date Extracted	Date Analyzed	Data Qualifiers
Sample ID: ITF1282-01 (DYB10-08 @ 2' - Soil)									
Reporting Units: mg/l									
Lead	EPA 6010B	10F1894	0.10	ND	1	5.0	6/15/2010	6/16/2010	

TestAmerica Irvine

Lena Davidkova
Project Manager

The results pertain only to the samples tested in the laboratory. This report shall not be reproduced, except in full, without written permission from TestAmerica.

TestAmerica
THE LEADER IN ENVIRONMENTAL TESTING

17461 Derian Avenue. Suite 100, Irvine, CA 92614 (949) 261-1022 Fax:(949) 260-3297

Diaz Yourman 1616 East 17th Street Santa Ana, CA 92705-8509 Attention: Gary Gilbert	Project ID:	2009-010.01 SCRRA Empire Grade Separation	Sampled: 04/30/10
	Report Number:	ITF1282	Received: 06/14/10

TCLP EXTRACTION - Metals

Analyte	Method	Batch	Extraction Start Date	Extraction End Date	Data Qualifiers
Sample ID: ITF1282-01 (DYB10-08 @ 2' - Soil)					
Extraction	EPA 1311-Met	10F1807	6/14/2010	6/15/2010	

TestAmerica Irvine

Lena Davidkova
Project Manager

The results pertain only to the samples tested in the laboratory. This report shall not be reproduced, except in full, without written permission from TestAmerica.

TestAmerica
THE LEADER IN ENVIRONMENTAL TESTING

17461 Derian Avenue. Suite 100, Irvine, CA 92614 (949) 261-1022 Fax:(949) 260-3297

Diaz Yourman 1616 East 17th Street Santa Ana, CA 92705-8509 Attention: Gary Gilbert	Project ID:	2009-010.01 SCRRA Empire Grade Separation	Sampled: 04/30/10
	Report Number:	ITF1282	Received: 06/14/10

METHOD BLANK/QC DATA

TCLP METALS

Analyte	Result	Reporting Limit	Units	Spike Level	Source Result	%REC	%REC Limits	RPD	RPD Limit	Data Qualifiers
Batch: 10F1894 Extracted: 06/15/10										
Blank Analyzed: 06/16/2010 (10F1894-BLK1)										
Lead	ND	0.10	mg/l							
LCS Analyzed: 06/16/2010 (10F1894-BS1)										
Lead	1.98	0.10	mg/l	2.00		99	80-120			
Matrix Spike Analyzed: 06/16/2010 (10F1894-MS1)					**Source: ITF0031-01**					
Lead	1.93	0.10	mg/l	2.00	ND	96	75-125			

TestAmerica Irvine

Lena Davidkova
Project Manager

The results pertain only to the samples tested in the laboratory. This report shall not be reproduced, except in full, without written permission from TestAmerica.

TestAmerica
THE LEADER IN ENVIRONMENTAL TESTING

17461 Derian Avenue. Suite 100, Irvine, CA 92614 (949) 261-1022 Fax:(949) 260-3297

Diaz Yourman 1616 East 17th Street Santa Ana, CA 92705-8509 Attention: Gary Gilbert	Project ID: 2009-010.01 SCRRA Empire Grade Separation Report Number: ITF1282	Sampled: 04/30/10 Received: 06/14/10

DATA QUALIFIERS AND DEFINITIONS

ND Analyte NOT DETECTED at or above the reporting limit or MDL, if MDL is specified.

RPD Relative Percent Difference

TestAmerica Irvine

Lena Davidkova
Project Manager

The results pertain only to the samples tested in the laboratory. This report shall not be reproduced, except in full, without written permission from TestAmerica.

TestAmerica
THE LEADER IN ENVIRONMENTAL TESTING

17461 Derian Avenue. Suite 100, Irvine, CA 92614 (949) 261-1022 Fax:(949) 260-3297

Diaz Yourman 1616 East 17th Street Santa Ana, CA 92705-8509 Attention: Gary Gilbert	Project ID:	2009-010.01 SCRRA Empire Grade Separation	Sampled: 04/30/10 Received: 06/14/10
	Report Number:	ITF1282	

Certification Summary

TestAmerica Irvine

Method	Matrix	Nelac	California
EPA 1311-Met	Soil	X	X
EPA 6010B	Soil	X	X

Nevada and NELAP provide analyte specific accreditations. Analyte specific information for TestAmerica may be obtained by contacting the laboratory or visiting our website at www.testamericainc.com

TestAmerica Irvine

Lena Davidkova
Project Manager

The results pertain only to the samples tested in the laboratory. This report shall not be reproduced, except in full, without written permission from TestAmerica.

TestAmerica

THE LEADER IN ENVIRONMENTAL TESTING

17461 Derian Avenue, Ste. 100 Irvine, CA 92614 (949) 261-1022 FAX (949) 261-1228

ITF1282

ADDITIONAL ANALYSIS REQUEST FORM

Date: 6/14/10 Project Manager: Lenin Dav.

Client: Diaz Yorman Contact: Gary Gilbert

Project: 2009-010-01

Date Sampled: 4/30/10 Date Received:

Request Via:

☐ Telephone ☐ COC Form ☐ Fax ☑ E-mail ☐ Other

Status:

☐ In Progress ☑ Completed ☐ Received Today ☐ Received Yesterday

☐ On Hold ☐ Other

Turn Around Time:

☐ Same Day ☐ 24HR ☑ 48HR ☐ 3Day ☐ 5Day ☐ Standard ☐ No Rush Charge

Work Order Number	Sample Description	Analysis Requested	Special Requirements
ITE0005-38	DYB10-08@2'	Lead TCLP	
		TCLP Extraction	

Add. on ~~on~~ New WO

Due 6/17/10

Jm 6/14

APPENDIX D
STATISTICAL CALCULATIONS

Project No.	2009-010.01
Date	5/14/2010
Computed By	DD
Checked By	GG

Calculations (Total Lead)

		Transformed	Reverse Transformation
Maximum TTLC	94		
Number of samples (n)	48	48	
Mean	14	0.171	
Standard deviation (s)			
s^2 (Variance)	494	0.104	
s		0.322	
$s/(n)^{0.5}$		0.046	
Appropriate number of samples (n_i)			
Δ = RT-mean	986		
$n_i = t^2_{10}*s^2/\Delta^2$	0.001		
Confidence interval (CI)			
t for 95%		1.678	
Upper CI for 95%		0.249	23

Because the mean is less than the variance, use arcsine transformation per EPA SW-846 chapter 9.

Sample no.	x = Total Lead (mg/kg)	x^2	Total Lead Percent of Maximum	Arcsine Transformation x	Arcsine Transformation x^2
B10-1@0'	5.4	29.16	0.057	0.057	0.0033
B10-1@1'	1	1	0.011	0.011	0.0001
B10-1@2'	1	1	0.011	0.011	0.0001
B10-1@5'	9.1	82.81	0.097	0.097	0.0094
B10-2@0'	5.6	31.36	0.060	0.060	0.0036
B10-2@1'	2.6	6.76	0.028	0.028	0.0008
B10-2@2'	1	1	0.011	0.011	0.0001
B10-2@5'	1	1	0.011	0.011	0.0001
B10-3@0'	2.4	5.76	0.026	0.026	0.0007
B10-3@1'	2	4	0.021	0.021	0.0005
B10-3@2'	3	9	0.032	0.032	0.0010
B10-3@5'	1	1	0.011	0.011	0.0001
B10-4@0'	25	625	0.266	0.269	0.0725
B10-4@1'	2.1	4.41	0.022	0.022	0.0005
B10-4@2'	1	1	0.011	0.011	0.0001
B10-4@5'	1	1	0.011	0.011	0.0001
B10-5@0'	34	1156	0.362	0.370	0.1370
B10-5@1'	27	729	0.287	0.291	0.0849
B10-5@2'	37	1369	0.394	0.405	0.1637
B10-5@5'	24	576	0.255	0.258	0.0667
B10-6@0'	92	8464	0.979	1.364	1.8609
B10-6@1'	14	196	0.149	0.149	0.0223
B10-6@2'	3	9	0.032	0.032	0.0010
B10-6@5'	1	1	0.011	0.011	0.0001
B10-7@0'	7.4	54.76	0.079	0.079	0.0062
B10-7@1'	27	729	0.287	0.291	0.0849
B10-7@2'	1	1	0.011	0.011	0.0001
B10-7@5'	2	4	0.021	0.021	0.0005
B10-8@0'	29	841	0.309	0.314	0.0984
B10-8@1'	9.6	92.16	0.102	0.102	0.0105
B10-8@2'	72	5184	0.766	0.873	0.7613
B10-8@5'	1	1	0.011	0.011	0.0001
B10-9@0'	5.5	30.25	0.059	0.059	0.0034
B10-9@1'	1	1	0.011	0.011	0.0001
B10-9@2'	2.4	5.76	0.026	0.026	0.0007
B10-9@5'	1	1	0.011	0.011	0.0001
B10-10@0'	94	8836	1.000	1.571	2.4674
B10-10@1'	52	2704	0.553	0.586	0.3436
B10-10@2'	3.5	12.25	0.037	0.037	0.0014
B10-10@5'	1	1	0.011	0.011	0.0001
B10-11@0'	14	196	0.149	0.149	0.0223
B10-11@1'	12	144	0.128	0.128	0.0164
B10-11@2'	3.3	10.89	0.035	0.035	0.0012
B10-11@5'	2.9	8.41	0.031	0.031	0.0010
B10-12@0'	13	169	0.138	0.139	0.0192
B10-12@1'	3.4	11.56	0.036	0.036	0.0013
B10-12@2'	8.1	65.61	0.086	0.086	0.0074
B10-12@5'	2.6	6.76	0.028	0.028	0.0008
	664.9	32415.67		8.211	6.2779

Project No.	2009-010.01
Date	June 4, 2010
Computed By	DMD
Checked By	GG

Calculations (Total Lead)

	STLC	TTLC
Number of samples (n)	3	
Mean	4	75
Standard deviation (s)		
s^2 (Variance)	1	30
s	1	6
Correlation Coefficient		
r	0.91	

Sample no.	X = Soluble Lead (mg/L)	X^2	Y = Total Lead (mg/kg)	Y^2	X*Y
B-6 @ 0'	4.1	16.81	81	6561.00	332
B-8 @ 2'	4.9	24.01	70	4900	343
B-10 @ 0'	3.1	9.61	75	5625	233
0	0	0	0	0	0
0	0	0	0	0	0
0	0	0	0	0	0
0	0	0	0	0	0
0	0	0	0	0	0
0	0	0	0	0	0
0	0	0	0	0	0
0	0	0	0	0	0
0	0	0	0	0	0
0	0	0	0	0	0
0	0	0	0	0	0
0	0	0	0	0	0
0	0	0	0	0	0
0	0	0	0	0	0
0	0	0	0	0	0
0	0	0	0	0	0
0	0	0	0	0	0
0	0	0	0	0	0
0	0	0	0	0	0
0	0	0	0	0	0
0	0	0	0	0	0
0	0	0	0	0	0
0	0	0	0	0	0
0	0	0	0	0	0
Total	12.1	50.43	226	17086	907.6
Average	4.0		75.000		303

PLATE
B2

DISTRIBUTION

1 copy: Mr. Patrick Nicholson
AECOM
300 South Grand Avenue
Second Floor
Los Angeles, CA 90071

QUALITY CONTROL REVIEWER

Allen M. Yourman, Jr., P.E., G.E.
Principal

SS/GKG:cfp

A Report Prepared for:

AECOM
300 South Grand Avenue
Second Floor
Los Angeles, CA 90071

GEOTECHNICAL INVESTIGATION
SCRRA EMPIRE AVENUE AND BUENA VISTA STREET GRADE SEPARATION
E737B-08, CTO NO. 001
BURBANK, CALIFORNIA

Project No. 2009-010.01

by

Salih Tileylioglu, Ph.D.
Project Engineer

Gary Gilbert
Civil Engineer 62781

REGISTERED PROFESSIONAL ENGINEER
GARY K. GILBERT
No. C 62781
Exp. 06-30-12
CIVIL
STATE OF CALIFORNIA

Diaz•Yourman & Associates
1616 East 17th Street
Santa Ana, CA 92705-8509
(714) 245-2920

June 23, 2010

TABLE OF CONTENTS

1.0 INTRODUCTION 1
1.1 PROJECT DESCRIPTION 1
1.1.1 Background 1
1.1.2 Existing Facilities 1
1.1.3 Proposed Improvements 2
1.2 PURPOSE AND SCOPE 6

2.0 DATA REVIEW, FIELD INVESTIGATION, AND LABORATORY TESTING 7
2.1 DATA REVIEW 7
2.2 FIELD INVESTIGATION 7

3.0 SITE CONDITIONS 9
3.1 GEOLOGY AND FAULTING 9
3.2 SUBSURFACE CONDITIONS 10
3.3 GROUNDWATER 21

4.0 CONCLUSIONS AND RECOMMENDATIONS 22
4.1 SEISMIC HAZARDS 22
4.1.1 Surface Rupture 22
4.1.2 Design Earthquake and Ground Acceleration 22
4.1.3 Design Acceleration Spectra 23
4.1.4 Seismic Settlement 27
4.1.5 Miscellaneous Structures 29
4.2 SCOUR POTENTIAL 29
4.3 SOIL CORROSION POTENTIAL 29
4.4 FOUNDATION DESIGN 30
4.4.1 Pile Foundations 30
4.4.2 Shallow Foundations 32
4.5 SETTLEMENT 35
4.5.1 Approach Embankment Fill (MSE Wall) 35
4.5.2 Deep Foundations 35
4.5.3 Shallow Foundations 35
4.6 LATERAL EARTH PRESSURES AND RESISTANCE TO LATERAL LOADS 35
4.6.1 Temporary Structures 35
4.6.2 Lateral Pressures 40
4.6.3 Resistance to Lateral Loads 41
4.7 MSE EARTH RETAINING SYSTEM 45
4.8 EARTHWORK 45
4.8.1 Site Preparation 45
4.8.2 MSE Wall Backfill 46
4.8.3 Overexcavation 47
4.9 PAVEMENT THICKNESS DESIGN FOR BUENA VISTA 48
4.10 CONSTRUCTION CONSIDERATIONS 50
4.10.1 Pile Installation 50
4.10.2 Driven Pile Installation 51
4.10.3 Indicator Pile Test Program 52

5.0 PLAN REVIEW, CONSTRUCTION OBSERVATION, AND TESTING 53

6.0 LIMITATIONS 54

7.0 BIBLIOGRAPHY 55

APPENDIX A - FIELD INVESTIGATION A-1
APPENDIX B - LIQUEFACTION AND SEISMIC SETTLEMENT ANALYSIS B-1
APPENDIX C - AXIAL PILE CAPACITY C-1
APPENDIX D - PILE LATERAL LOAD CAPACITY D-1
APPENDIX E - MSE WALL EXTERNAL STABILITY ANALYSIS E-1

LIST OF TABLES

Table 1 - MAJOR FAULT CHARACTERIZATION IN THE PROJECT VICINITY 10
Table 2 - IDEALIZED PROFILE FOR EMPIRE AVENUE GRADE SEPARATION 20
Table 3 - IDEALIZED PROFILE FOR SAN FERNANDO BOULEVARD TEMPORARY STRUCTURE 20
Table 4 - IDEALIZED PROFILE FOR BUENA VISTA STREET UNDERPASS 20
Table 5 - IDEALIZED PROFILE FOR RAILROAD WALLS 20
Table 6 - AREMA SEISMIC RESPONSE COEFFICIENT 25
Table 7 - SUMMARY OF SEISMIC SETTLEMENT 27
Table 8 - SEISMIC/GEOLOGIC DESIGN CRITERIA 29
Table 9 - SUMMARY OF CORROSION RESULTS 30
Table 10 - PILE DATA TABLE EMPIRE 31
Table 11 - PILE DATA TABLE BUENA VISTA 31
Table 12 - SUMMARY OF PILE LATERAL LOAD ANALYSES EMPIRE AVENUE 43
Table 13 - SUMMARY OF PILE LATERAL LOAD ANALYSES AT BUENA VISTA STREET UNDERCROSSING 44
Table 14 - SUMMARY OF FS VALUES FOR EXTERNAL STABILITY WITH RECOMMENDED MINIMUM REINFORCEMENT LENGTH 45
Table 15 - STRUCTURAL BACKFILL CRITERIA 46
Table 16 - PROPERTY REQUIREMENTS OF MSE WALL BACKFILL 47

LIST OF FIGURES

Figure 1 - VICINITY MAP 2
Figure 2 - SITE PLAN A 3
Figure 3 - SITE PLAN B 4
Figure 4 - SITE PLAN C 5
Figure 5 - CROSS SECTION A-A' 12
Figure 6 - CROSS SECTION B-B' 13
Figure 7 - CROSS SECTION C-C' 14
Figure 8 - CROSS SECTION D-D' 15
Figure 9 - CROSS SECTION E-E' 16
Figure 10 - CROSS SECTION F-F' 17
Figure 11 - CROSS SECTION G-G' 18
Figure 12 - CROSS SECTION H-H' 19
Figure 13 - ACCELERATION COEFFICIENT vs. EARTHQUAKE RETURN PERIOD 24
Figure 14 - HORIZONTAL ACCELERATION RESPONSE SPECTRA 26
Figure 15 - SEISMIC HAZARDS 28
Figure 16 - GRADING/FOUNDATION DETAILS 33
Figure 17 - MSE GRADING/FOUNDATION DETAILS 34
Figure 18 - LATERAL EARTH PRESSURE - TEMPORARY SHORING 37
Figure 19 - LATERAL EARTH PRESSURES ON RETAINING WALLS FROM TRAIN SURCHARGE 38

Figure 20 - LATERAL EARTH PRESSURES ON ABUTMENT FROM TRAIN SURCHARGE.....39
Figure 21 - LATERAL EARTH PRESSURES-PERMANENT.....41
Figure 22 - p-y MULTIPLIERS FOR LATERAL LOAD RESISTANCE OF PILES IN GROUPS 42
Figure 23 - PAVEMENT THICKNESS 48

1.0 INTRODUCTION

This report presents the results of the geotechnical investigation performed by Diaz•Yourman & Associates (DYA) for the proposed Southern California Regional Rail Authority (SCRRA) Empire Avenue and Buena Vista Grade Separation (Project) in Burbank, California. This work was authorized by AECOM with a contract agreement dated March 17, 2009.

1.1 PROJECT DESCRIPTION

1.1.1 Background

The proposed Project will consist of two grade separation structures (Empire Avenue and Buena Vista Street) and retaining walls to relocate the existing Metrolink service west of its current location to accommodate the proposed widening of Interstate (I) 5 by Caltrans. The restrained embankment will be approximately 25 feet high. The current San Fernando Road undercrossing will be filled and abandoned. A temporary structure will be built at the San Fernando Road intersection with the SCRRA railroad tracks to accommodate a temporary railroad shoofly track during construction of the Project. An excavation approximately 25 feet deep will be performed at Empire Avenue for the proposed extension under I-5. The proposed structures will be located in the SCRRA right-of-way (ROW) on the west side of I-5 between Burbank Boulevard and California Street as shown on the Vicinity Map, Figure 1, and the Site Plans, Figure 2 through Figure 4.

1.1.2 Existing Facilities

The current SCRRA railroad has two tracks between Burbank Boulevard and Buena Vista Street and narrows to one track near the intersection with Buena Vista Street, and continues as a single track to the northern limits of the Project. Two streets (San Fernando Boulevard and Buena Vista Street) cross the SCRRA railroad tracks within the Project limits. The SCRRA railroad crosses over San Fernando Boulevard on a structure and crosses Buena Vista Street at grade. The ground surface slopes gently to the north. The ground surface elevation in the Project area ranges from 590 to 700 feet above mean sea level (MSL).

I-5 was located east of the Project. Commercial and industrial facilities were located west of the Project including a sound studio located near the proposed Empire Avenue bridge.

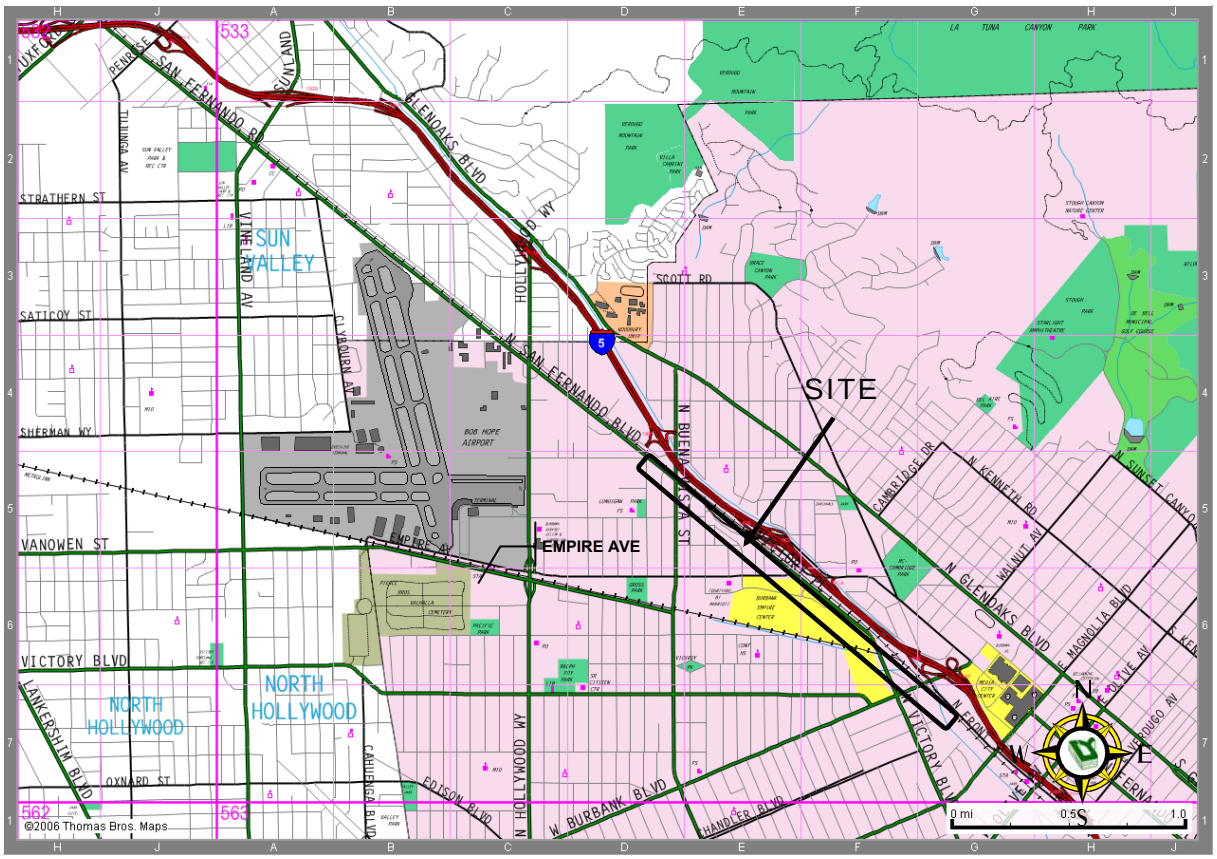

Figure 1 - VICINITY MAP

1.1.3 Proposed Improvements

The proposed grade separations at Empire Avenue (underpass) and Buena Vista Street (underpass) will consist of two-span bridges approximately 240 and 160 feet long, respectively. Empire Avenue will be constructed below the existing grade as part of the Caltrans I-5 widening project, and the proposed SCRRA bridge will be approximately 10 feet above the existing grade. Buena Vista Street will remain at the existing grade and the proposed SCRRA overhead bridge will be approximately 20 feet above.

The proposed railroad retaining wall structures will be approximately 16,000 feet long and up to 25 feet high. The retaining walls will be interrupted by the two proposed bridge structures at Empire Avenue and Buena Vista Street. The retaining walls will consist of mechanically stabilized earth (MSE), Caltrans Type 1 and Caltrans Type 6 walls.

The existing crossing at San Fernando Road will be abandoned and filled as part of this Project.

Map Document: (K:\datafls\PROJECTS\2009\2009-010.01\GIS\Soil Boring Locations.mxd)
4/8/2009 -- 1:28:42 PM

Reference: Aerial photo from ESRI, 2007

Figure 2 - SITE PLAN A

Legend

- Soil Borings and CPT's performed by Caltrans and URS
- CPT by DYA
- Subsurface Section

Map Document: (K:\datafls\PROJECTS\2009\2009-010.01\GIS\Soil Boring Locations.mxd)
4/8/2009 -- 1:28:42 PM

Reference: Aerial photo from ESRI, 2007

Figure 3 - SITE PLAN B

Legend

- Soil Borings and CPT's performed by Caltrans and URS
- CPT by DYA
- Subsurface Section

Map Document: (K:\datafls\PROJECTS\2009\2009-010.01\GIS\Soil Boring Locations.mxd)
4/8/2009 -- 1:28:42 PM

Reference: Aerial photo from ESRI, 2007

Figure 4 - SITE PLAN C

Legend

- Soil Borings and CPT's performed by Caltrans and URS
- CPT by DYA
- Subsurface Section

1.2 PURPOSE AND SCOPE

The purpose of DYA's investigation was to provide geotechnical input for the design of the proposed Project. The scope of our services consisted of the following tasks:

- Reviewing data.
- Conducting a limited field investigation.
- Performing engineering analyses to develop conclusions and recommendations regarding the following:
  - American Railroad Engineering Maintenance-of-Way Association (AREMA) seismic design criteria
  - Site preparation and grading
  - Foundation type and allowable bearing capacity
  - Estimated total and differential foundation settlements
  - Retaining wall type
  - Resistance to lateral loads
  - Vertical and lateral earth pressures
  - Corrosion potential
- Preparing this report.

2.0 DATA REVIEW, FIELD INVESTIGATION, AND LABORATORY TESTING

2.1 DATA REVIEW

The following information was provided by Caltrans and AECOM:

- Conceptual plans for the subject project prepared by JL Patterson dated May 10, 2008.
- Draft plans prepared by Caltrans for the proposed widening of the I-5 dated December 14, 2004, and November 5, 2007.
- Field logs for 62 borings and cone penetration tests (CPT) performed by Caltrans or URS for the proposed widening of I-5 adjacent to the existing SCRRA ROW. The boring and CPT locations are shown on Figure 2 through Figure 4.
- Caltrans Foundation Recommendations for Victory Place Grade Separation (Caltrans, 2006a), Buena Vista-Winona Undercrossing Widening (Caltrans, 2006b), Buena Vista UP New Bridge (Caltrans, 2006c), and Empire Avenue Undercrossing (Caltrans, 2008).

A list of the documents reviewed is presented in the bibliography (Section 7). DYA prepared a Technical Memo on May 15, 2009, summarizing the review of data provided; relevant available subsurface information is included in DYA's Technical Memo.

2.2 FIELD INVESTIGATION

DYA's investigation was planned to supplement the existing data. A geologic reconnaissance was performed on July 22, 2009; a geophysical survey was performed by our specialty subcontractor Southwest Geophysics, Inc. on July 13, 2009, to evaluate potential conflicts with utilities at DYA's field investigation locations.

The supplemental subsurface investigation, conducted on July 22, 2009, consisted of advancing four CPTs. The CPTs were located near the proposed location of each grade separation (Empire Avenue, San Fernando Road, and Buena Vista Street) to provide data for the foundation design; the CPT locations are shown on the Site Plans, Figure 2 through Figure 4. The CPTs had a planned depth of 120 feet. All four CPTs encountered refusal at depths between 35 and 73 feet. The purpose of the CPTs was to confirm that the soil encountered in

the Caltrans borings was consistent with the soils within the SCRRA ROW. Details of the field investigation are presented in Appendix A.

3.0 SITE CONDITIONS

3.1 GEOLOGY AND FAULTING

The Project is located in the San Fernando Valley (Valley), which is an east-trending structural depression filled with alluvial sedimentary units derived from the adjacent uplands that form the eastern Transverse Ranges provinces. The Valley is of low topographic relief and slopes gently downward toward the Los Angeles River. An alluvial fan blankets most of the Burbank Quadrangle. The natural sediments along the Project corridor are primarily composed of sand and silty sand with some gravel (California Geological Survey [CGS], 1998). The topography has been modified by urbanization; fill underlies many buildings, streets, and highways throughout the area. The thickness of Holocene alluvial sediments at the Project site is estimated to be approximately 900 feet, below which Tertiary-age bedrock units of consolidated sedimentary rocks are likely to occur (California Department of Water Resources [DWR], 2004).

The Project site is located in the northern Peninsular Ranges Province of Southern California, which is a seismically active area (CGS, 1998). Major active and potentially active faults in the vicinity of the Project site include the Verdugo, Hollywood, and Sierra Madre faults. Other active faults within the region include the Raymond fault and the Elysian Park and Santa Monica thrust faults. The nearest known potentially active or active fault is the Verdugo fault, which is located approximately 1 mile northeast of the Project site. The characteristics of nearby faults are summarized in Table 1.

Table 1 - MAJOR FAULT CHARACTERIZATION IN THE PROJECT VICINITY

FAULT	APPROXIMATE DISTANCE[1] (km)	TYPE OF FAULT	MAXIMUM EARTQUAKE MAGNITUDE (Mw)
Verdugo	1.8	Reverse	6.9
Hollywood	8.6	Strike Slip	6.8
Sierra Madre	8.7	Reverse	7.3
Sierra Madre-San Fernando	9.2	Reverse	6.7
Upper Elysian Park	9.8	Reverse	6.8
Raymond	12	Strike Slip	6.9
Northridge	13	Reverse	7.1
Puente Hills blind thrust	14	Reverse	7.2
San Gabriel	15	Strike Slip	7.2
Santa Monica	16	Strike Slip	6.7
Newport-Inglewood	17	Strike Slip	7.2
Santa Susana	21	Reverse	6.8
Malibu Coast	26	Strike Slip	6.8
Clamshell-Sawpit	27	Reverse	6.9
Holser	31	Reverse	6.9
Simi-Santa Rosa	35	Strike Slip	7
Palos Verdes	35	Strike Slip	7.4
Whittier	37	Strike Slip	7.2
Anacapa-Dume	40	Reverse	7.6
Oak Ridge-onshore	42	Reverse	7.1
San Jose	44	Strike Slip	6.8
San Andreas - 1857 (model 1)	45	Strike Slip	8.1
San Andreas - 1857 (model 2)	45	Strike Slip	8.1
San Andreas - Mojave (model 1)	45	Strike Slip	7.6
San Andreas - Mojave (model 2)	45	Strike Slip	7.7
San Andreas - All southern segments (model 1)	45	Strike Slip	8.4
San Cayetano	48	Reverse	7

Notes:

1. Fault characterization based on CGS database (Cao et al., 2003) compiled by the computer program EZFRISK (Risk Engineering Inc., 2009). Distance, which is defined as the closest distance to rupture surface, was computed using the EZFRISK program with the next generation attenuation relationships by Abrahmson and Silva (2008), Boore and Atkinson (2008), Campbell and Bozorgnia (2008), Chiou and Youngs (2008).

- km = kilometers.

3.2 SUBSURFACE CONDITIONS

The subsurface sections along the proposed Project alignment are presented on Figure 5 through Figure 12 and are based on the information provided in DYA's Technical Memo (DYA, 2009). The locations of the subsurface sections are shown on Figure 2 through Figure 4. The Project site subsurface conditions were characterized by an idealized profile that consisted of silty sands, interbedded with sands and gravels (Unified Soil Classification System [USCS]: SM, SP-SM, SW, GP and GW). At isolated locations, layers of silt and clay (USCS: ML and CL)

ranging in thickness from 4 to 24 feet were encountered in the Caltrans borings. The geotechnical parameters of the idealized soil profile at the three major structures (Empire Avenue Grade Separation, San Fernando Boulevard Temporary Structure, Buena Vista Street Underpass) and the MSE walls are presented in Table 2 through Table 5, respectively.

Template: BL17EL1CPT

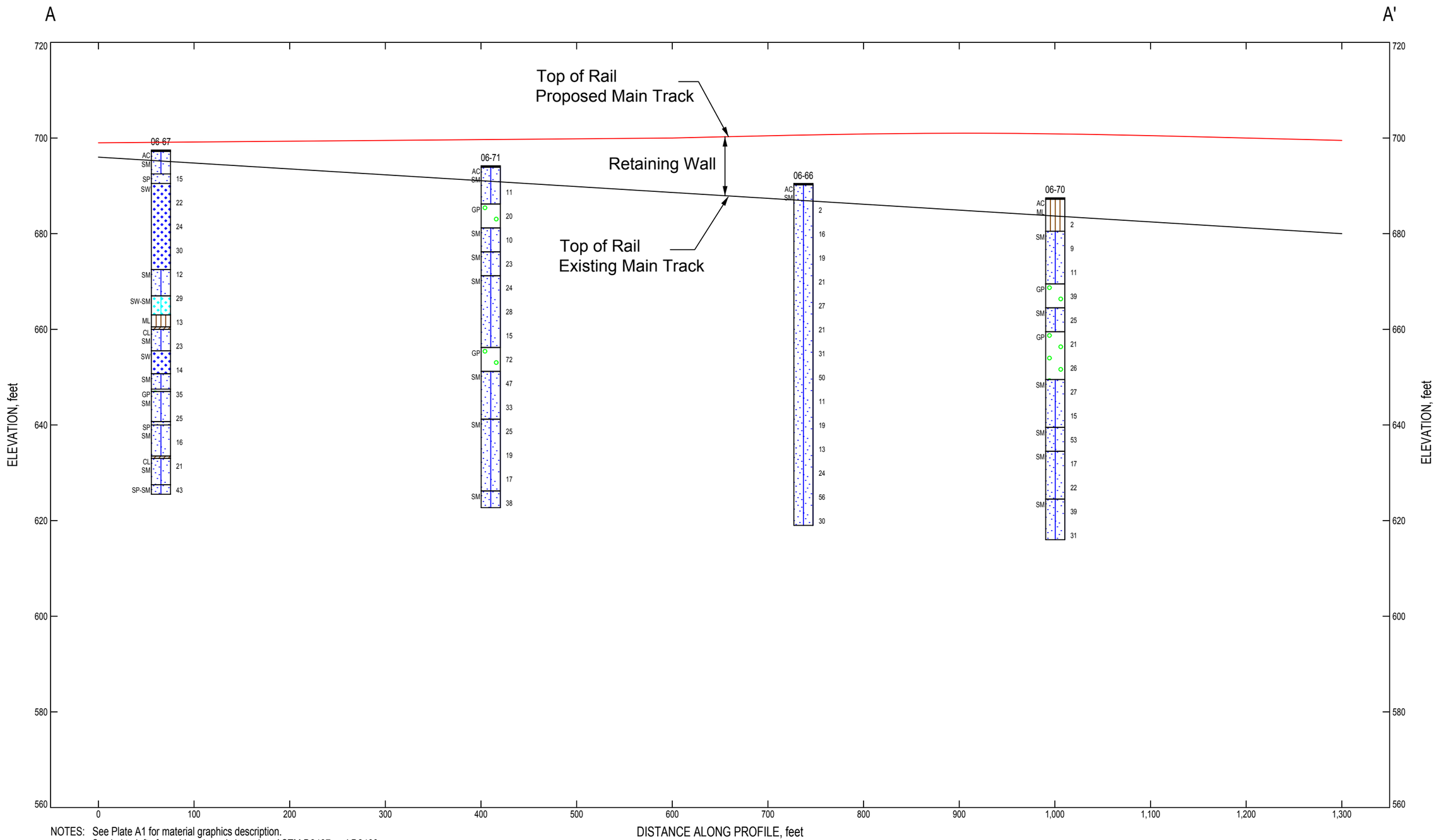

NOTES: See Plate A1 for material graphics description.
Symbol to left of graphic column is based on ASTM D2487 and D2488.
Number to right of graphic column is equivalent uncorrected SPT blow count per foot.
Subsurface strata are approximate and will vary from that shown.
TSF = Tons per square foot

Figure 5 - CROSS SECTION A-A'

Template: BL17EL1CPT

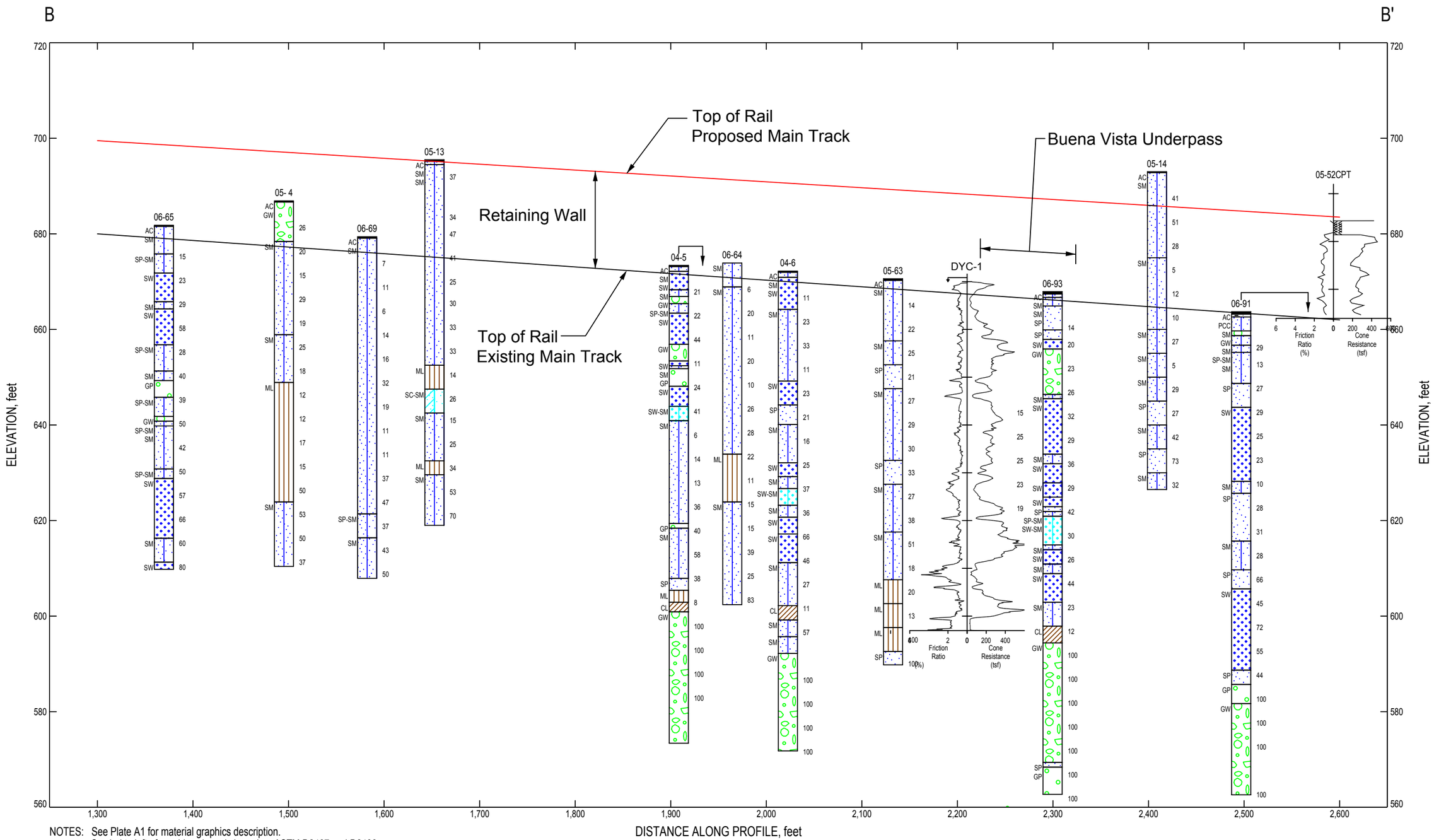

NOTES: See Plate A1 for material graphics description.
Symbol to left of graphic column is based on ASTM D2487 and D2488.
Number to right of graphic column is equivalent uncorrected SPT blow count per foot.
Subsurface strata are approximate and will vary from that shown.
TSF = Tons per square foot

Figure 6 - CROSS SECTION B-B'

Template: BL17EL1CPT

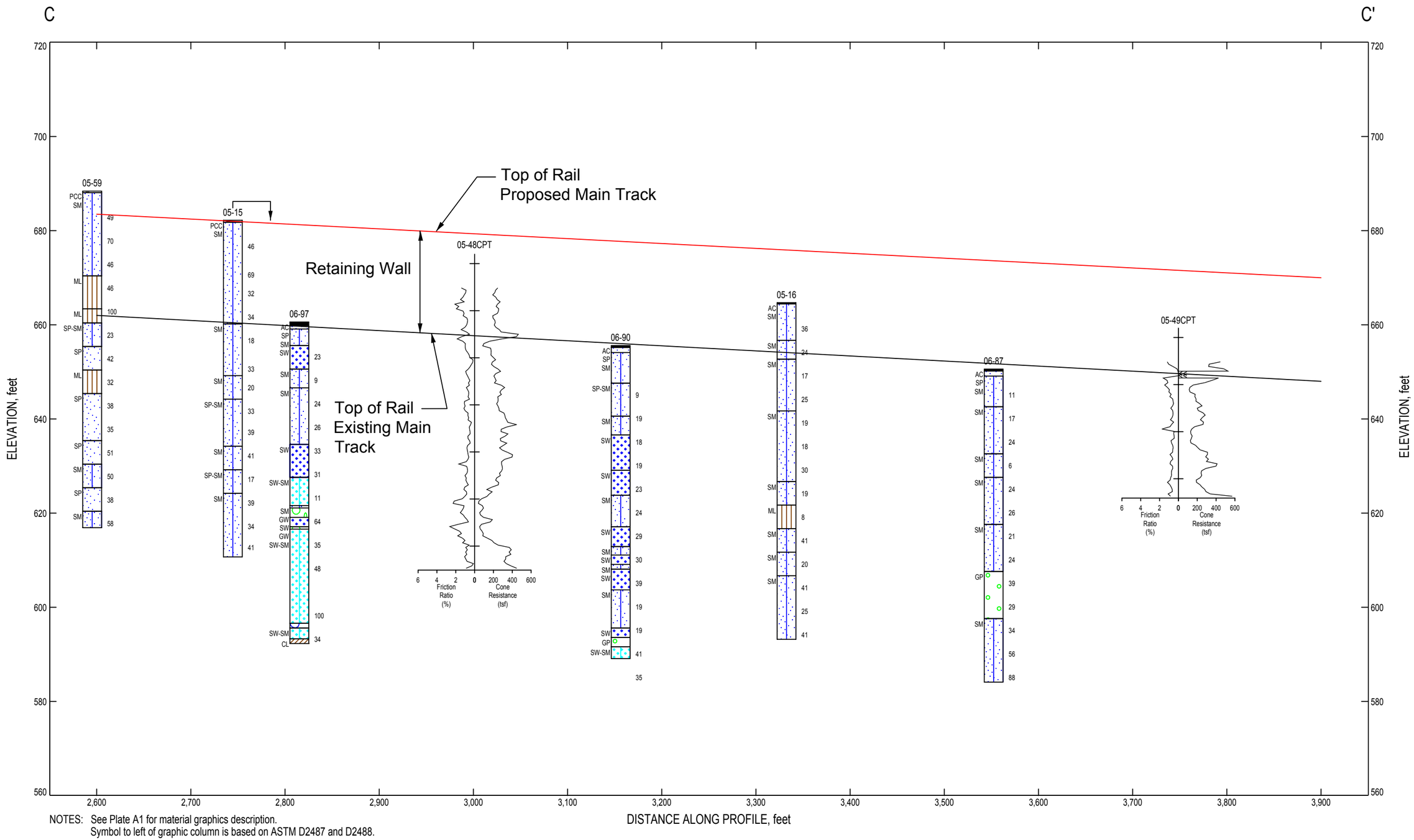

NOTES: See Plate A1 for material graphics description.
Symbol to left of graphic column is based on ASTM D2487 and D2488.
Number to right of graphic column is equivalent uncorrected SPT blow count per foot.
Subsurface strata are approximate and will vary from that shown.
TSF = Tons per square foot

Figure 7 - CROSS SECTION C-C'

Template: BL17EL1CPT

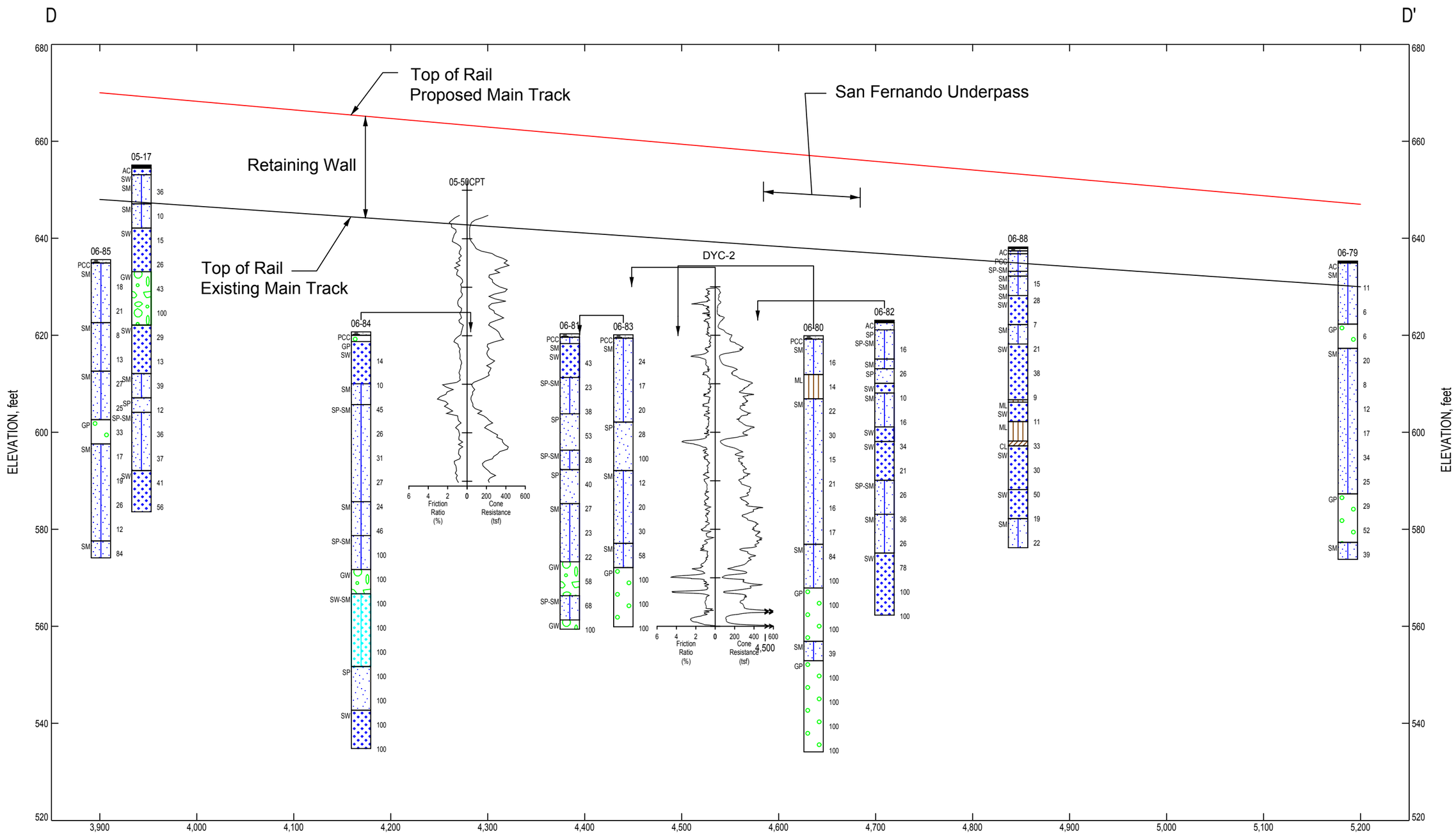

NOTES: See Plate A1 for material graphics description.
Symbol to left of graphic column is based on ASTM D2487 and D2488.
Number to right of graphic column is equivalent uncorrected SPT blow count per foot.
Subsurface strata are approximate and will vary from that shown.
TSF = Tons per square foot

Figure 8 - CROSS SECTION D-D'

Template: BL17EL1CPT

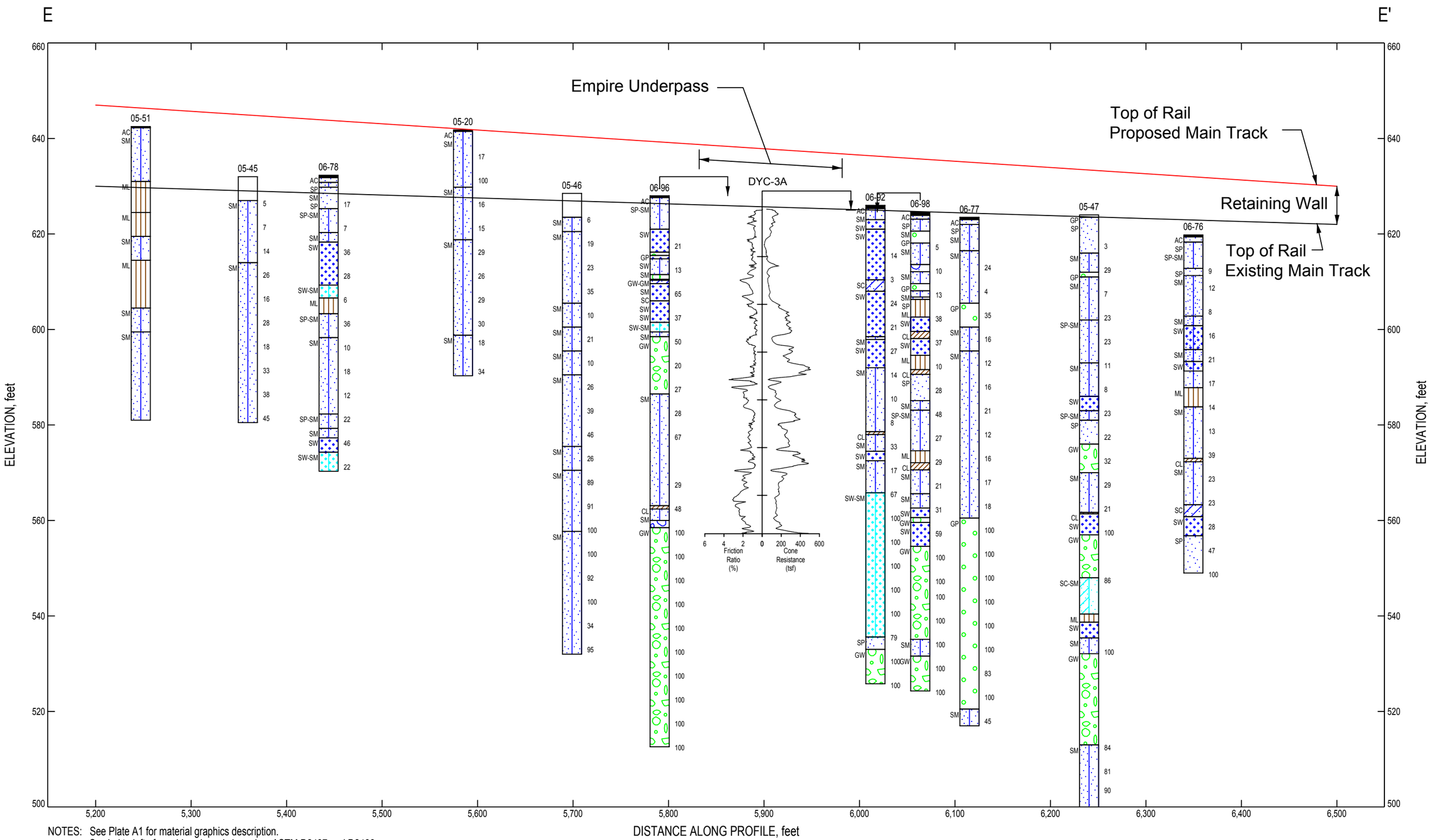

NOTES: See Plate A1 for material graphics description.
Symbol to left of graphic column is based on ASTM D2487 and D2488.
Number to right of graphic column is equivalent uncorrected SPT blow count per foot.
Subsurface strata are approximate and will vary from that shown.
TSF = Tons per square foot

Figure 9 - CROSS SECTION E-E'

Template: BL17EL1CPT

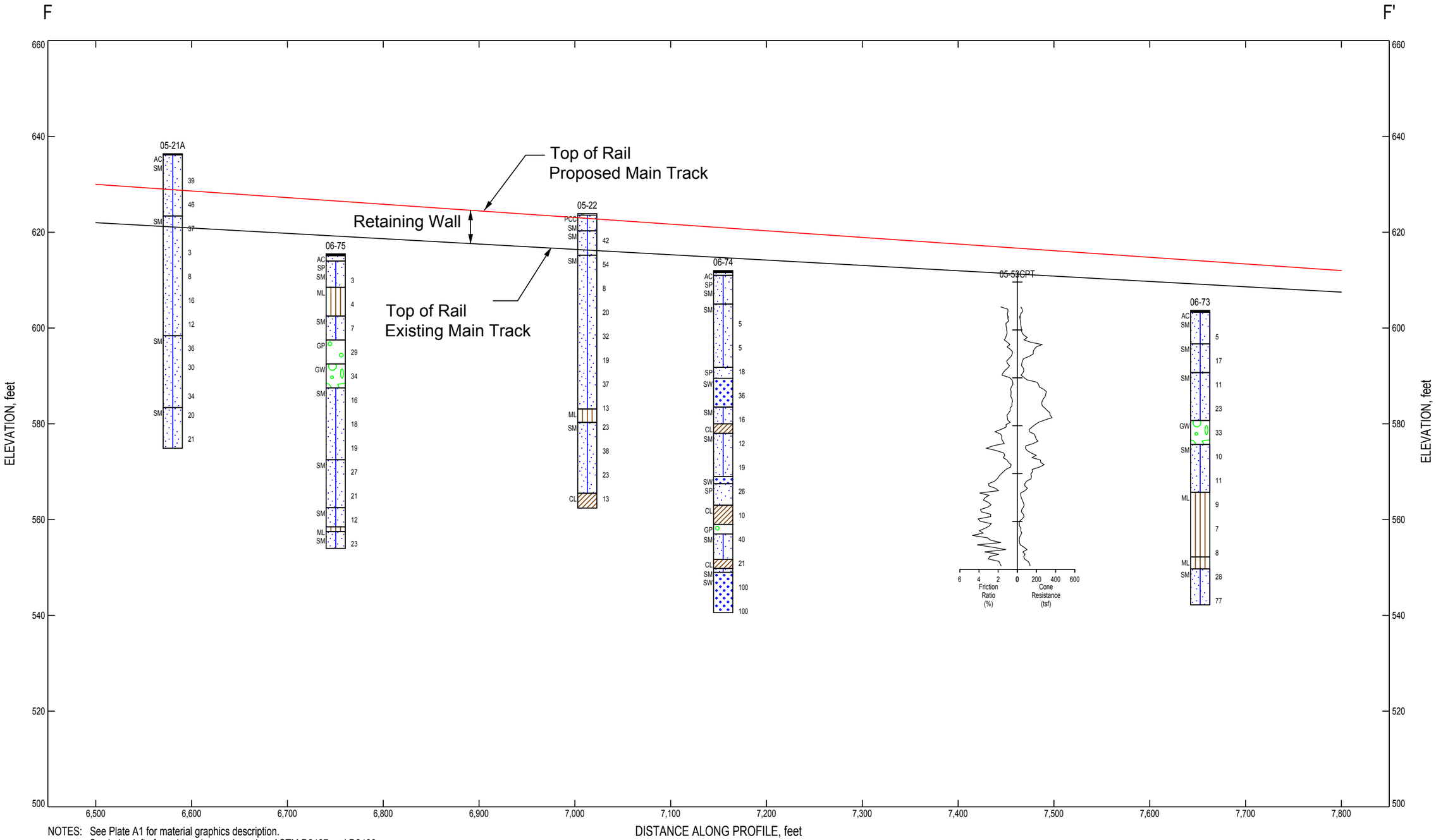

NOTES: See Plate A1 for material graphics description.
Symbol to left of graphic column is based on ASTM D2487 and D2488.
Number to right of graphic column is equivalent uncorrected SPT blow count per foot.
Subsurface strata are approximate and will vary from that shown.
TSF = Tons per square foot

Figure 10 - CROSS SECTION F-F'

Template: BL17EL1CPT

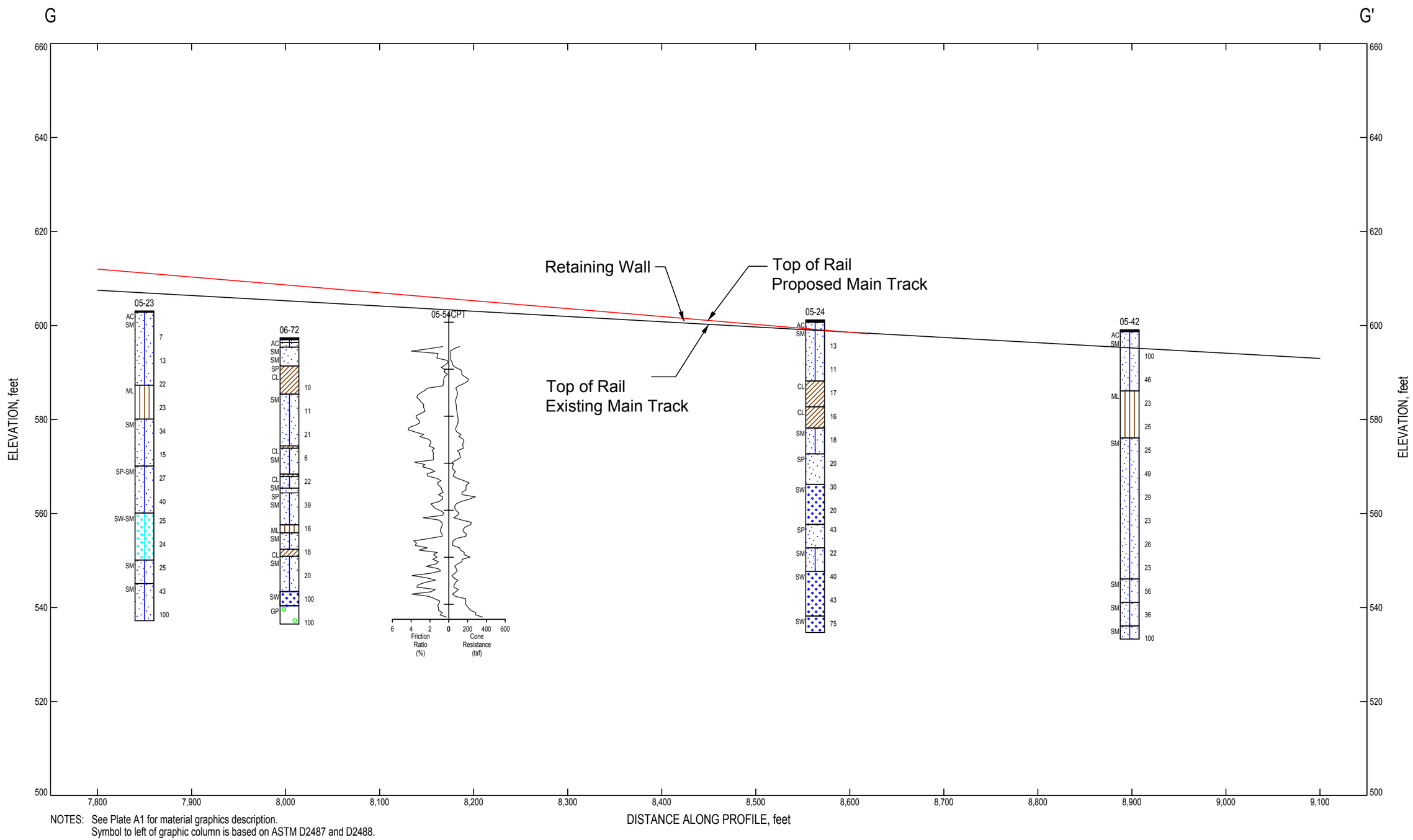

NOTES: See Plate A1 for material graphics description.
Symbol to left of graphic column is based on ASTM D2487 and D2488.
Number to right of graphic column is equivalent uncorrected SPT blow count per foot.
Subsurface strata are approximate and will vary from that shown.
TSF = Tons per square foot

Figure 11 - CROSS SECTION G-G'

Template: BL17EL1CPT

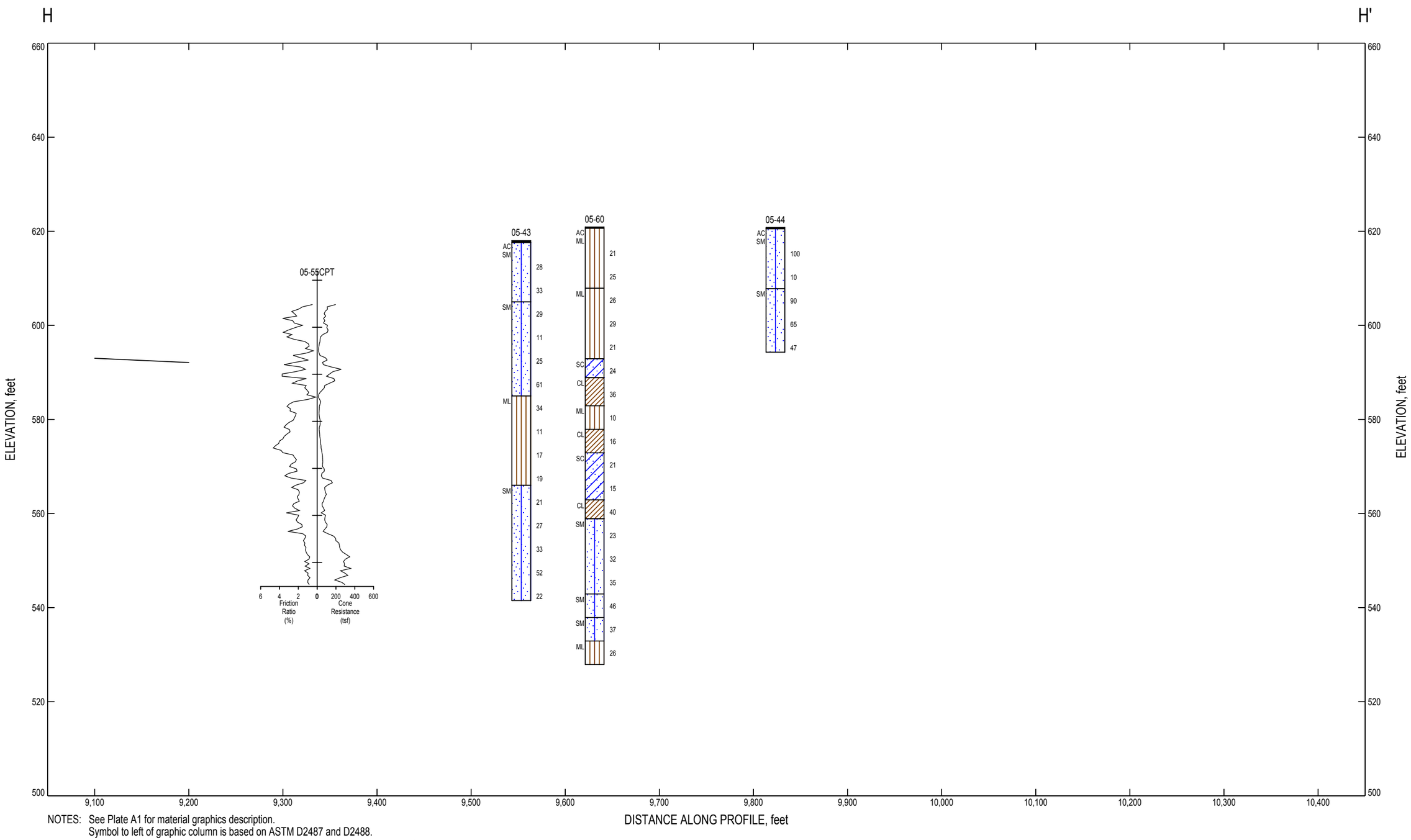

NOTES: See Plate A1 for material graphics description.
Symbol to left of graphic column is based on ASTM D2487 and D2488.
Number to right of graphic column is equivalent uncorrected SPT blow count per foot.
Subsurface strata are approximate and will vary from that shown.
TSF = Tons per square foot

Figure 12 - CROSS SECTION H-H'

Table 2 - IDEALIZED PROFILE FOR EMPIRE AVENUE GRADE SEPARATION

SOIL TYPE	ELEVATION (feet, MSL)	DEPTH (feet)	AVERAGE SPT N-VALUE	TOTAL UNIT WEIGHT (pcf)	Friction Angle (degrees)
SM/SP-SM	630 to 620	0 to 10	6	105	30
SM/GW /SP	620 to 570	10 to 60	24	110	33
SM/GW /SP	570 to 515	60 to 115	80	130	38

Notes:

1. Field uncorrected standard penetration test (SPT) blow counts.
- Simplified soil types.
- MSL = mean sea level.
- pcf = pounds per cubic foot.
- psf = pounds per square foot.

Table 3 - IDEALIZED PROFILE FOR SAN FERNANDO BOULEVARD TEMPORARY STRUCTURE

SOIL TYPE	ELEVATION (feet, MSL)	DEPTH (feet)	AVERAGE SPT N-VALUE	TOTAL UNIT WEIGHT (pcf)	Friction Angle (degrees)
SM-SW/SP-SM	635 to 610	0 to 25	23	105	32
SP-SM	610 to 590	25 to 45	33	120	35
SP-SM/GW-GP	590 to 570	45 to 65	50	130	38

Notes:

1. Field uncorrected standard penetration test (SPT) blow counts.
- Simplified soil types.
- MSL = mean sea level.
- pcf = pounds per cubic foot.
- psf = pounds per square foot.

Table 4 - IDEALIZED PROFILE FOR BUENA VISTA STREET UNDERPASS

SOIL TYPE	ELEVATION (feet, MSL)	DEPTH (feet)	AVERAGE SPT N-VALUE	TOTAL UNIT WEIGHT (pcf)	Friction Angle (degrees)
SP-SM-SW	665 to 610	0 to 55	28	115	34
GW-ML	610 to 570	55 to 110	77	130	38

Notes:

1. Field uncorrected standard penetration test (SPT) blow counts.
- Simplified soil types.
- MSL = mean sea level.
- pcf = pounds per cubic foot.
- psf = pounds per square foot.

Table 5 - IDEALIZED PROFILE FOR RAILROAD WALLS

SOIL TYPE	DEPTH (feet)	N-VALUE AVERAGE SPT	TOTAL UNIT WEIGHT (pcf)	Friction Angle (degrees)
SM	0 to 40	18	115	32
SM	40 to 60	35	120	36
SM/GW/SP-SM	60 to 110	48	130	38

Notes:

1. Field uncorrected standard penetration test (SPT) blow counts.
- Simplified soil types.
- pcf = pounds per cubic foot.
- psf = pounds per square foot.
- Elevations not provided because they vary along the wall alignment.

3.3 GROUNDWATER

Groundwater was not encountered in the Caltrans borings that ranged from 26 to 181 feet deep. Historical groundwater levels ranged from 80 feet below the ground surface (bgs; elevation 615 feet MSL) at the northwestern edge of the Project site to 20 feet bgs (elevation 555 feet MSL) at the southeastern edge of the Project site (CGS, 1998). A Caltrans foundation report for the Victory Place Separation (Caltrans, 2006) identified site-specific groundwater measurements taken near the proposed Project that indicate groundwater levels historically below 100 feet bgs (elevation 525 feet MSL). Therefore, the design groundwater elevation was assumed to range from elevation 620 feet MSL (80 feet bgs) at the northern end of the Project site to approximately elevation 500 feet MSL (100 feet bgs) at the southern end of the Project site.

4.0 CONCLUSIONS AND RECOMMENDATIONS

The proposed permanent bridges at Empire Avenue and Buena Vista Street can be founded on piles. There is a sound studio located near the proposed bridge at Empire Avenue. Using driven piles could cause noise and vibrations and this could have an impact on the studio. Therefore, driven piles are not allowed by SCRRA at the proposed Empire Avenue grade separation; cast-in-drilled-hole (CIDH) piles are planned for this location. The structural design team decided to evaluate both driven and CIDH piles for the proposed Buena Vista Street Underpass. The temporary bridge at San Fernando Boulevard, MSE retaining walls, and Caltrans Type 6 retaining walls can be supported on shallow foundations. Retaining walls similar to Caltrans Type 1 retaining walls will be constructed as part of the Empire Avenue Grade Separation and will be supported on CIDH piles. The proposed Buena Vista Street bridge was originally designed with CIDH piles, but based on discussions with the project team, driven piles were chosen as the preferred foundation for this structure. The primary geotechnical considerations for proposed foundations include the potential of caving of the CIDH pile holes and excavations during construction.

4.1 SEISMIC HAZARDS

4.1.1 Surface Rupture

The potential for ground surface rupture was considered low because no known active faults were mapped on the site. However, ground rupture or cracking can occur due to earthquakes at locations where faults have not been mapped.

4.1.2 Design Earthquake and Ground Acceleration

The proposed railroad bridge structures should be designed using a probabilistic approach in accordance with AREMA guidelines that specify three ground motion levels (serviceability, ultimate, and survivability). The return periods of the ground motions corresponding to the three levels are determined based on structure importance classification factors (e.g., structure type, importance, replacement value) as evaluated by the structural engineer. A probabilistic seismic hazard evaluation was performed for the proposed site using the computer program EZFRISK, Version 7.30 (Risk Engineering, 2009). The relationship between the horizontal acceleration

coefficient and return period for the proposed site is presented on Figure 13. For design of structures using AREMA guidelines, the peak ground accelerations for 95-, 373-, and 1,980-year return periods are 0.19g, 0.38g, and 0.68g, respectively.

4.1.3 Design Acceleration Spectra

The return periods for the three-level ground motion design should be established by the structural engineer in consultation with SCRRA. The base acceleration coefficient for the three ground motion levels can be estimated based on Figure 13. The design acceleration response spectra (ARS) curves can then be calculated using a site coefficient (S) of 1.2 corresponding to Soil Type 2 and other structural parameters as appropriate. Horizontal acceleration response spectra for 95-, 373-, and 1,980-year return periods corresponding to the serviceability, ultimate, and survivability design events, respectively, are provided in Table 6 and on Figure 14.

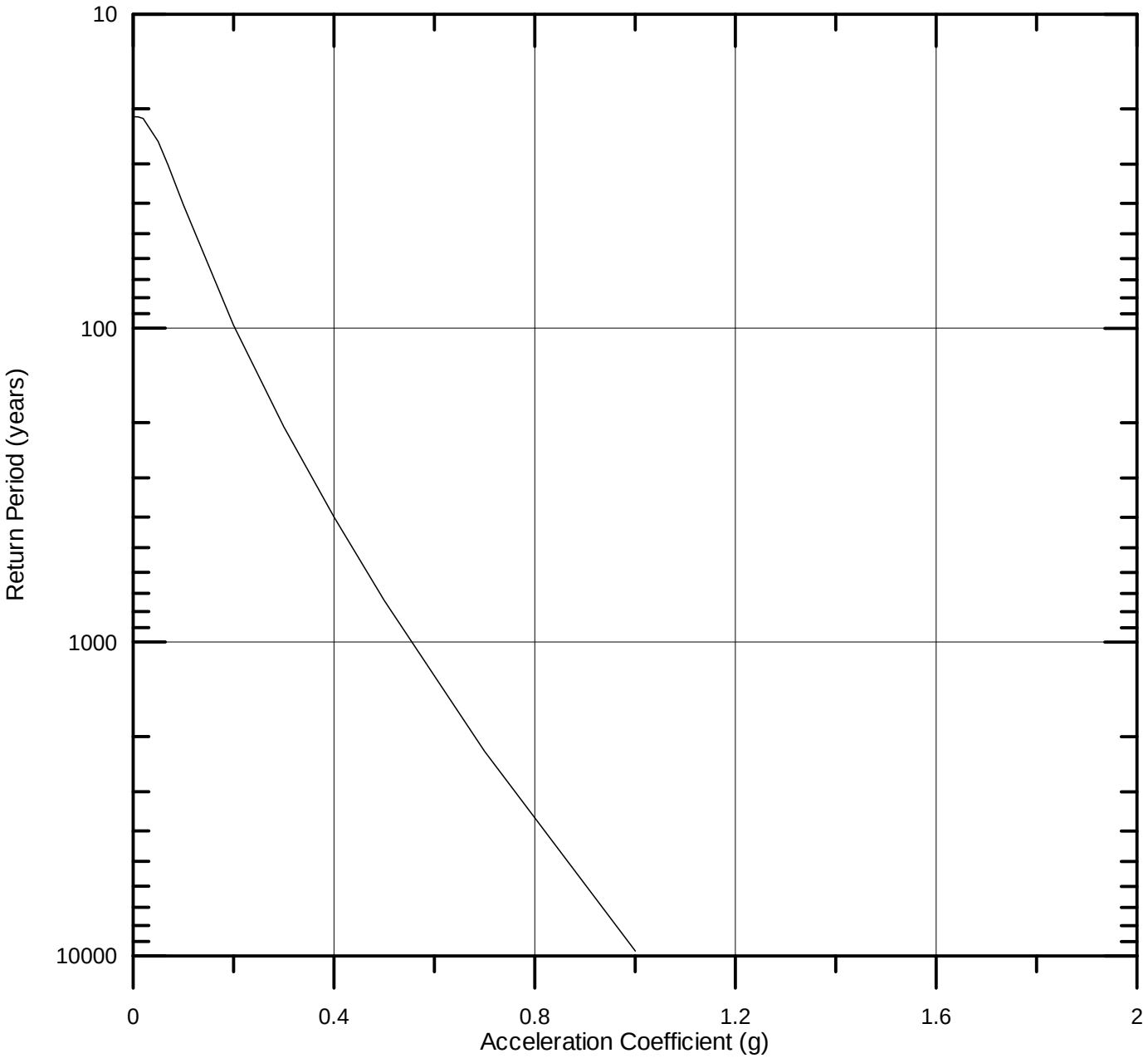

Figure 13 - ACCELERATION COEFFICIENT VERSUS EARTHQUAKE RETURN PERIOD

Table 6 - AREMA SEISMIC RESPONSE COEFFICIENT

AREMA SEISMIC RESPONSE COEFFICIENT (C_m)[1,2,3]			
Period (seconds)	95-Year Return Period[4]	373-Year Return Period[5]	1,980-Year Return Period[6]
	Cm (g)	Cm (g)	Cm (g)
0.01	0.475	0.950	1.700
0.05	0.475	0.950	1.700
0.1	0.475	0.950	1.700
0.2	0.475	0.950	1.700
0.3	0.475	0.950	1.700
0.4	0.475	0.950	1.700
0.5	0.435	0.871	1.558
0.6	0.385	0.771	1.379
0.7	0.347	0.695	1.244
0.8	0.318	0.635	1.137
0.9	0.294	0.587	1.051
1	0.274	0.547	0.979
1.1	0.257	0.513	0.919
1.2	0.242	0.484	0.867
1.3	0.229	0.459	0.821
1.4	0.218	0.437	0.782
1.5	0.209	0.417	0.746
2	0.172	0.344	0.615
2.5	0.148	0.296	0.530
3	0.131	0.262	0.469
3.5	0.118	0.236	0.423
4	0.108	0.216	0.387

Notes:

1. AREMA, 2009.
2. Seismic response coefficient: C_m = seismic response coefficient for the mth mode; $C_m = 1.2*A*S*D/(T_m)^{2/3} \leq 2.5\ A*D$; A = acceleration coefficient; S = 1.2; D = damping adjustment factor; $D = 1.5/(0.4*\xi+1) + 0.5$, ξ = percent critical damping (%); T_m = period of vibration of the mth mode in seconds.
3. Low period reduced response may be calculated in accordance with AREMA (2009), Chapter 9, Paragraph 1.4.4.4; seismic response coefficient above does not include this adjustment.
4. Earthquake return period of 95 years, soil type 2; 5 percent critical damping typical serviceability state design.
5. Earthquake return period of 373 years; soil type 2; 5 percent critical damping, typical ultimate state design.
6. Earthquake return period of 1,980 years; soil type 2; 5 percent critical damping, typical survivability state range.

2009-10.01\Calcs\AREMA\aremaplot.grf

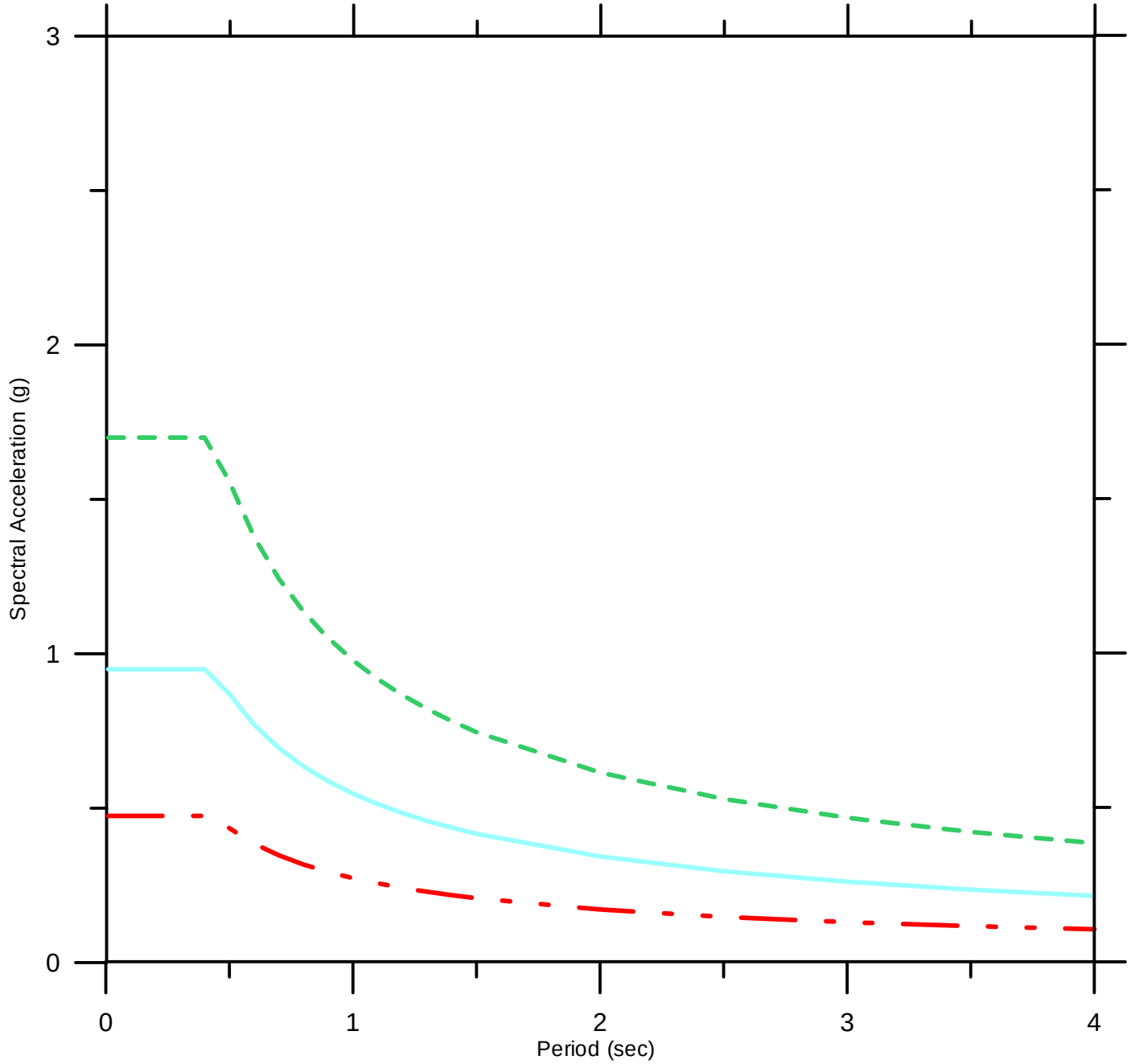

Notes;

95-year return period with 5% damping

373-year return period with 5% damping

1980-year return period with 5% damping

Figure 14 - HORIZONTAL ACCELERATION RESPONSE SPECTRA

4.1.4 Seismic Settlement

A portion of the Project site is located within a State of California potential liquefaction seismic hazard zone, as shown on Figure 15. However, the historical groundwater measurements are greater than 80 feet bgs. Therefore, liquefaction potential was not evaluated. The potential for seismic settlement of the sandy soils above the groundwater (dry sand settlement) was evaluated based on procedures presented by Tokimatsu and Seed (1987); the results are summarized in Table 7. A description of the settlement calculations methodology is presented in Appendix B.

Table 7 - SUMMARY OF SEISMIC SETTLEMENT

FOUNDATION LOCATION	CALCULATED TOTAL SEISMIC SETTLEMENT (inches)		
	PGA = 0.19	PGA = 0.38	PGA = 0.68
Empire Avenue Grade Separation	<1	1	<1 to 3
Buena Vista Street Underpass	<1	<1	<1 to 2
MSE Walls	<1	1	<1 to 5

Notes:
- PGA = peak ground acceleration.
- Empire Avenue Grade Separation calculations using Caltrans borings 05-46, 06-77, 06-92, and 06-96.
- Buena Vista underpass calculations using Caltrans borings 06-68, 06-91, 06-93.
- MSE wall settlement calculated using numerous borings.
- San Fernando Boulevard site was not evaluated, because the structure is temporary.

Map Document: (K:\datafls\PROJECTS\2009\2009-010.01\GIS\SEISMIC HAZARDS.MXD

Reference: Aerial photo from ESRI, 2007

Figure 15 - SEISMIC HAZARDS

Legend

- Alquist-Priolo Earthquake Fault Zone
- CGS Landslide Hazard Zone
- CGS Liquefaction Hazard Zone

4.1.5 Miscellaneous Structures

For miscellaneous structures with a period less than 0.5 second, the seismic design can be performed in accordance with the criteria listed in Table 8.

Table 8 - SEISMIC/GEOLOGIC DESIGN CRITERIA

CHARACTERISTIC	CRITERIA
Site Class[1]	D
S_s - mapped maximum considered earthquake spectral acceleration at short periods (g)[2,3]	2.2
S_1 - mapped maximum considered earthquake spectral acceleration at 1-second period (g) [2,3]	0.77
F_a - site coefficient[3]	1
F_v - site coefficient[3]	1.5
S_{MS} - adjusted maximum considered earthquake spectral acceleration at short periods (g) [3]	2.2
S_{M1} - adjusted maximum considered earthquake spectral acceleration at 1-second period (g) [3]	1.15
S_{DS} - design spectral response accelerations at short periods (g) [3]	1.48
S_{D1} - design spectral response accelerations at 1-second period (g) [3]	0.77
Peak Ground Acceleration, g[4]	0.6
Alquist-Priolo Special Study Zone Act[5]	Site outside special study zone
California Seismic Hazards Mapping Act, Liquefaction Zone[6]	See Figure 15
California Seismic Hazards Mapping Act, Landslide Zone[6]	Site outside landslide zone

Notes:
1. California Building Code (ICBO, 2007) Section 1613.
2. ASCE 7-05 mapped values.
3. Earthquake Ground Motion Parameters (U.S. Geological Survey [USGS], 2009).
4. CBC (ICBO, 2007) Section 1802.2.7 (S_{DS} /2.5).
5. California Division of Mines and Geology, (CDMG, 1994).
6. California Geologic Survey (CGS; 1999).

4.2 SCOUR POTENTIAL

Because of the relatively level site topography and the absence of existing stream beds, scour will not be expected to have an impact on the proposed Project.

4.3 SOIL CORROSION POTENTIAL

Corrosion test results are summarized in Table 9 and were presented in DYA's Technical Memo (DYA, 2009). Based on laboratory testing and Caltrans criteria, a corrosive environment was not present (Caltrans, 2003). Therefore, Type II concrete can be used for piling and concrete substructures.

Table 9 - SUMMARY OF CORROSION RESULTS

	CRITERIA FOR CORROSIVE ENVIRONMENT[1]	RANGE OF VALUES
Depth (feet)	--	0 to 143
pH	< 5.5	6.7 to 10
Water-Soluble Sulfate Content (ppm)	> 2,000	0 to 563
Water-Soluble Chloride Content (ppm)	> 500	30 to 345
Minimum Electrical Resistivity (ohms-cm)	< 1,000	1,000[2] to 17,000

Notes:
1. Caltrans, 2003.
2. One value in Caltrans Boring 05-24 at a depth of 5 to 10 feet.

4.4 FOUNDATION DESIGN

4.4.1 Pile Foundations

Driven piles and/or CIDH piles can be used to support the proposed bridge structures. The axial driven pile capacities were based on the computer program APILE (Ensoft, 2007a) that uses the American Petroleum Institute (API; 1993) guidelines. For driven piles, skin friction as well as end bearing was taken into account to provide resistance. The axial CIDH pile capacities were based on the computer program SHAFT (Ensoft, 2007b) that uses the Federal Highway Administration (FHWA; 1999) procedures using the frictional theory method. For CIDH piles, the vertical supporting capacity was based on side friction only; static end-bearing was neglected. The diameter of piles was based on discussions with AECOM and the proposed adjacent foundation system for the Caltrans I-5 widening. The minimum center-to-center spacing between the piles should not be less than three pile diameters. The methods used to calculate axial pile capacities are described in Appendix C. The pile data tables for the current proposed loads are also provided in Appendix C.

4.4.1.1 Empire Avenue Grade Separation

We recommend that proposed grade separation structure and Caltrans Type 1 retaining walls at Empire Avenue be supported on CIDH piles. The idealized soil profile used to design the pile foundations at Empire Avenue is summarized in Table 2. The pile data tables for the current proposed loads are also provided in Table 10.

Table 10 - PILE DATA TABLE EMPIRE

LOCATION	DESIGN LOADING SERVICE (kips)	NOMINAL RESISTANCE		BOTTOM OF FOOTING ELEVATION[1] (feet)	DESIGN TIP ELEVATION (feet)	SPECIFIED TIP ELEVATION (feet)
		Compression (kips)	Tension (kips)			
Abutment 1	370	740	--	599.50	544.5[2] 569.5[4]	544.5
Bent 2	200	400	120	600.75	562.75[2] 582.75[3] 570.75[4]	562.75
Abutment 3	370	740	--	599.50	544.5[2] 569.5[4]	544.5

Notes:
1. Design cut off elevations were provided by AECOM.
2. Design tip elevation based on compression demand.
3. Design tip elevation based on the tension demand.
4. Design tip elevation based on the lateral demand.

- Pile Type is 24 inch diameter cast-in-drilled-hole (CIDH).
- Axial capacities are for piles spaced three diameters or more.

4.4.1.2 Buena Vista Street Undercrossing

We recommend that proposed grade separation at Buena Vista Street be supported on driven piles. The idealized soil profiles used to design the pile foundations at Buena Vista Street are summarized in Table 4. The pile data tables for the current proposed loads are also provided in Table 11.

Table 11 - PILE DATA TABLE BUENA VISTA

LOCATION	DESIGN LOADING SERVICE (kips)	NOMINAL RESISTANCE		BOTTOM OF FOOTING ELEVATION[1] (feet)	DESIGN TIP ELEVATION (feet)	SPECIFIED TIP ELEVATION (feet)
		Compression (kips)	Tension (kips)			
Abutment 1	200	400	--	661.00	614[2] 631[4]	614
Bent 2	200	400	150	660.50	613.5[2] 622.5[3] 630.5[4]	613.5
Abutment 3	200	400	--	662.25	615.25[2] 632.25[4]	615.25

Notes:
1. Design cut off elevations were provided by AECOM.
2. Design tip elevation based on compression demand.
3. Design tip elevation based on the tension demand.
4. Design tip elevation based on the lateral demand.

- Pile type is 14-inch square concrete Class 200 Alternative X.
- Axial capacities are for piles spaced three diameters or more.

4.4.2 Shallow Foundations

The proposed temporary bridge structure at San Fernando Boulevard, Type 6 retaining wall at the Empire Avenue Grade Separation and miscellaneous structures can be supported on shallow foundations located on a layer of compacted fill as shown on Figure 16. The static and temporary allowable bearing capacities include factors of safety (FS) of at least 3 and 2, respectively, against shear failure.

For the MSE retaining walls, the subgrade soil should be excavated and replaced with compacted fill as shown on Figure 17. The static and temporary allowable shallow bearing capacities include FS of at least 3 and 2, respectively, against shear failure.

A subgrade modulus of 200 pounds per cubic inch for a 1-square-foot slab (K_{v1}) may be used for the approach slab design at Buena Vista. This value is based on the MSE backfill material. The coefficient of subgrade reaction for a slab of width b (K_b) may be calculated through the following equation (NAVFAC DM 7.02, 1986):

$$K_b = K_{v1}\left(\frac{b+1}{2b}\right)^2$$

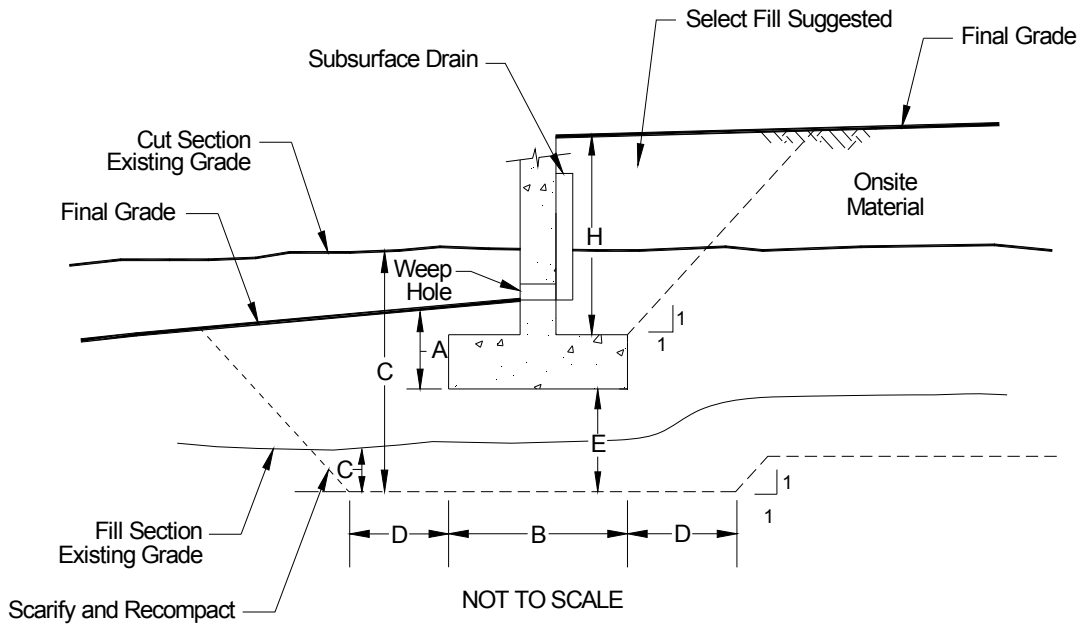

LOCATION	MINIMUM DIMENSIONS (feet)		
	San Fernando Boulevard Temporary Bridge	**Miscellaneous Minor Structures[1]**	**Caltrans Type 6 Retaining Wall for Empire Avenue**
A. Footing Embedment Below Subgrade	1.5	1	1.5
B. Footing Width	3	2	4 (H=6)[3]
C. Excavation Below Existing Grade (Footing)	2.5	1	1
D. Excavation Beyond Footing	5[2]	1	2.5
E. Compacted Soil/Fill Below Footing	1	0.5B	1
	PRESSURE (psf)		
Static (net) Allowable Bearing Capacity (FS≥3)	3,000	2,500	3,000
Increase per Foot of Depth	800	800	900
Increase per Foot of Width	500	500	500
Maximum Static Bearing Capacity (FS≥3)	8,000	7,000	8,000
Maximum Transient Bearing Capacity (FS≥2)	10,500	9,000	10,500

Notes:
1. For mechanically stabilized earth retaining walls, see Figure 20.
2. This value can be reduced if precluded by adjacent existing improvements.
3. See Caltrans Standard Plans (2006).

- psf - pounds per square foot.
- H - wall height.
- Increase static bearing capacity by 33 percent to estimate transient bearing capacity.

Figure 16 - GRADING/FOUNDATION DETAILS

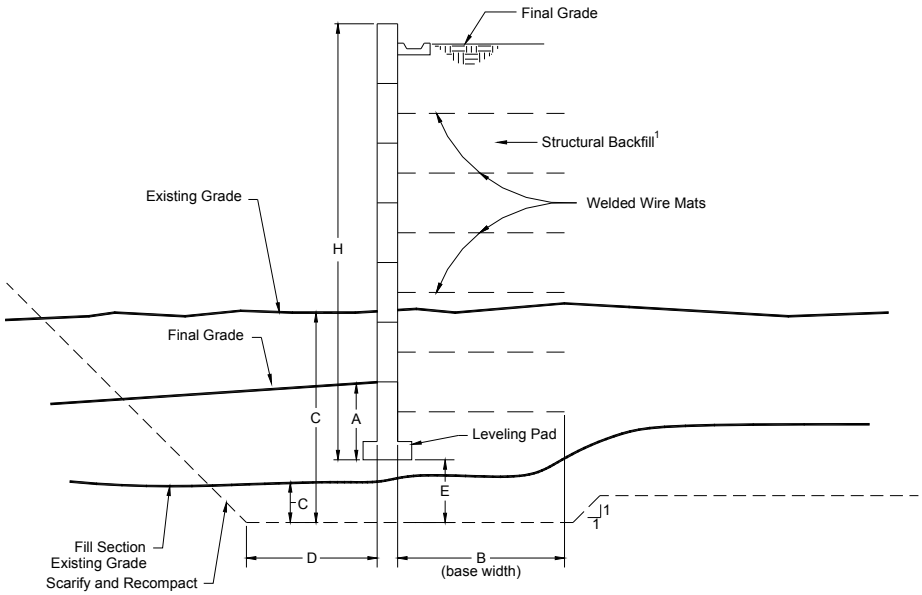

NOT TO SCALE

LOCATION	MINIMUM DIMENSIONS (feet)
A. Footing Embedment Below Subgrade	2 or 0.1H, whichever is greater
B. Base Width	See Note 2
C. Excavation Below Existing Grade (Footing)	2[3]
D. Excavation Beyond Footing	1
E. Compacted Soil/Fill Below Footing	2[4]
	PRESSURE (psf)
Static (net) Allowable Bearing Capacity (FS[5]≥2.5)	2,000[6]
Increase per Foot of Depth	300
Increase per Foot of Width	300[7]
Maximum Static Bearing Capacity (FS[5]≥2.5)	4,500
Maximum Transient Bearing Capacity (FS[5]≥1.9)	5,500

Notes:

1. See Table 15 for structural backfill criteria.
2. Minimum 90 percent of the height of the wall based on external stability analyses.
3. May be deeper depending on the subgrade condition. Should be verified by a geotechnical engineer once the planned excavation is completed.
4. Fill material should be compacted to minimum of 95 relative compaction.
5. The Federal Highway Administration (FHWA) requires minimum static factors of safety (FS) of 2.5 and minimum seismic FS of 1.9.
6. Bearing capacity based on 2-foot embedment and 8-foot-long base width.
7. Use the base width for calculation of the allowable bearing capacity.

- External and internal stability of the MSE wall should be checked by the specialty design-build contractor.

Figure 17 - MSE GRADING/FOUNDATION DETAILS

4.5 SETTLEMENT

4.5.1 Approach Embankment Fill (MSE Wall)

The proposed approach embankment will be up to approximately 25 feet high. The static settlement due to the approach embankment was calculated to be less than 2 inches. Most of the settlements are expected to occur as the loads are applied or shortly thereafter. As discussed in Section 4.1, the seismically-induced settlement was calculated to range from less than 1 inch to approximately 5 inches.

4.5.2 Deep Foundations

The settlement of the deep foundations designed and constructed in accordance with the recommendations provided in Section 4.4.1 was estimated to be less than ½ inch for a load of approximately 370 kips for the 24-inch-diameter CIDH piles, 200 kips for the 14-inch-square driven piles. Most of this settlement should occur shortly after application of the structural loads. Differential settlement between the pile supports was estimated to be less than ½ inch.

4.5.3 Shallow Foundations

For properly constructed shallow foundations (non-MSE wall) supported on compacted fill, total settlement due to the proposed structural loads is estimated to be less than ½ inch. Differential settlements between similarly loaded footings are expected to be less than ½ inch. Most of the settlement is expected to occur as the loads are applied or shortly thereafter. As discussed in Section 4.1, the seismically-induced settlement can range from less than 1 inch to approximately 5 inches. Because an excavation is planned at the proposed Empire Avenue Grade Separation, the settlement can vary from less than 1 inch to approximately 3 inches.

4.6 LATERAL EARTH PRESSURES AND RESISTANCE TO LATERAL LOADS

4.6.1 Temporary Structures

A temporary excavation as deep as 25 feet may be required for construction. Temporary excavations should be sloped or will require shoring.

The stability of temporary excavations is a function of several factors, including the total time the excavation is exposed, moisture conditions, weather, soil type and consistency, and contractor's operations. The contractor is responsible for excavation safety. The sandy soils encountered are highly susceptible to caving.

The support of temporary excavations is the responsibility of the contractor. Shoring is usually designed as either cantilever (unbraced) or braced. Typically, cantilever shoring is not used for excavations deeper than approximately 15 feet. Cantilevered shoring is commonly constructed by using either soldier piles with lagging placed between piles or using sheet piles. If soldier piles and lagging are used, continuous lagging will be required. Difficulty in installing the lagging due to caving cohesionless soils should be anticipated.

Suggested lateral earth pressures for use in shoring design are presented on Figure 18, which also includes the effect of surcharge and traffic. The temporary shoring design should incorporate the expected construction procedures, sequence, and loads. In particular, the stockpiling of excavated materials should be considered in design, as well as steel plates for cross traffic and the presence of heavy construction equipment or spoil piles next to the trenches. The shoring design is the responsibility of the Contractor and should be designed by a registered engineer retained by the Contractor. We recommend that the design of temporary shoring be performed using shoring pressures equal to or greater than those shown on Figure 18, and passive resistance equal to or less than that shown on Figure 18.

An allowable passive soil pressure as outlined on Figure 18 can resist lateral loads. The passive pressures on Figure 18 assume either undisturbed natural soils or compacted fill. The upper 1 foot of passive resistance should be neglected.

Shoring should be monitored for lateral and vertical movement. If large deflections (greater than 0.5 percent of the shoring height) are noted, the bracing systems should be checked and strengthened as needed. If tension cracks appear in the ground surface adjacent to the shoring, the cracks should be monitored and sealed to prevent infiltration of water, and the significance of the cracks should be immediately evaluated.

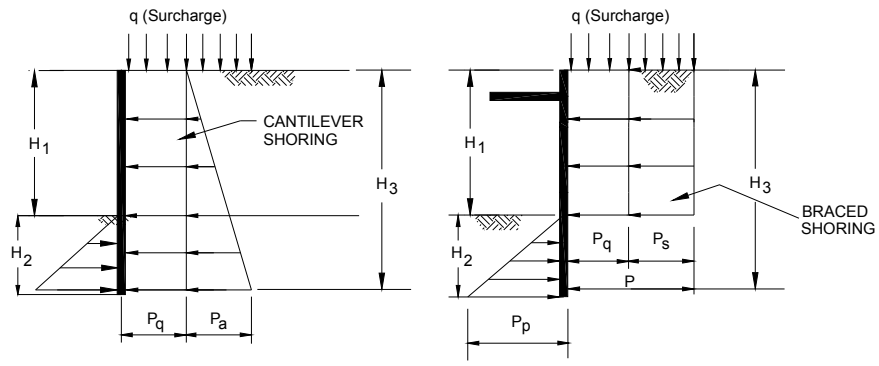

	Cantilever Shoring	Braced Shoring
Pp = 300 $H_2 \leq$4,000 psf μ = 0.4	P = Pa + Pq = 35 H_3 + 0.3q (300 psf maximum)	P = Ps + Pq = 23H_3 + 0.5q (300 psf maximum)

Notes:

- All values of height (H) in feet, and pressure (P) and surcharge (q) in pounds per square foot (psf).
- Values for temporary excavations using flexible walls and based on existing soils.
- For vehicle traffic surcharge, assume no less than a 100 psf uniform horizontal pressure along the top 10 feet.
- Earth pressure assumes no hydrostatic pressures. If hydrostatic pressures are allowed to build up, the incremental earth pressures below groundwater level should be reduced by 50 percent and added to hydrostatic pressure for total lateral pressure.

Figure 18 - LATERAL EARTH PRESSURE - TEMPORARY SHORING

In addition, the contractor should strictly adhere to any requirements of applicable Federal and State health and safety regulations such as those of the Occupational Safety and Health Administration (OSHA). In accordance with OSHA regulations, the near-surface onsite soils are classified as Type C.

The railroad will impose lateral pressures on the temporary shoring during construction and on permanent retaining and basement walls. Recommendations for estimating the railroad-induced lateral earth pressures are provided on Figure 19 and Figure 20 for abutment and retaining walls, respectively. These lateral pressures were estimated assuming an infinitely long strip load 9 feet wide and an intensity of 1,778 pounds per square foot (psf; AREMA, 2009). The lateral earth pressures shown on Figure 19 and Figure 20 are in addition to those shown on Figure 18.

An equivalent surcharge of 16 feet with a unit weight of 120 pounds per cubic foot (pcf) may be used to design the abutments as an alternative to the recommendations provided on Figure 20.

k:\datafls\project\2009\2009-010.01\calc\Earthpressure\E80loading 1 6 2010.grf

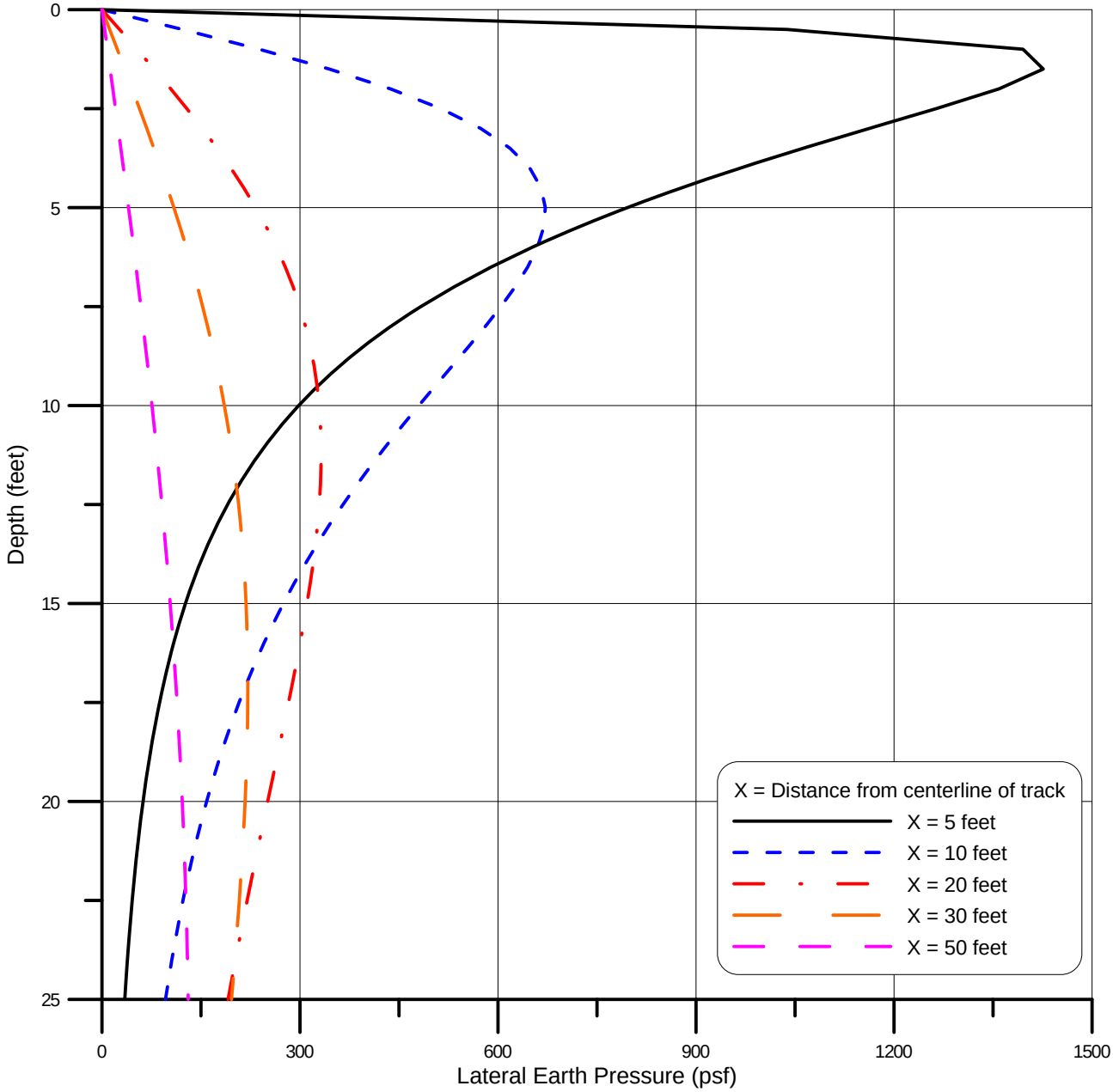

Note: Single-track train load with 8 feet 3 inches tie length (AREMA, 2009).

Figure 19 - LATERAL EARTH PRESSURES ON RETAINING WALLS FROM TRAIN SURCHARGE

k:\datafls\project\2009\2009-010.01\calc\Earthpressure\E80loading 2 2 2010.grf

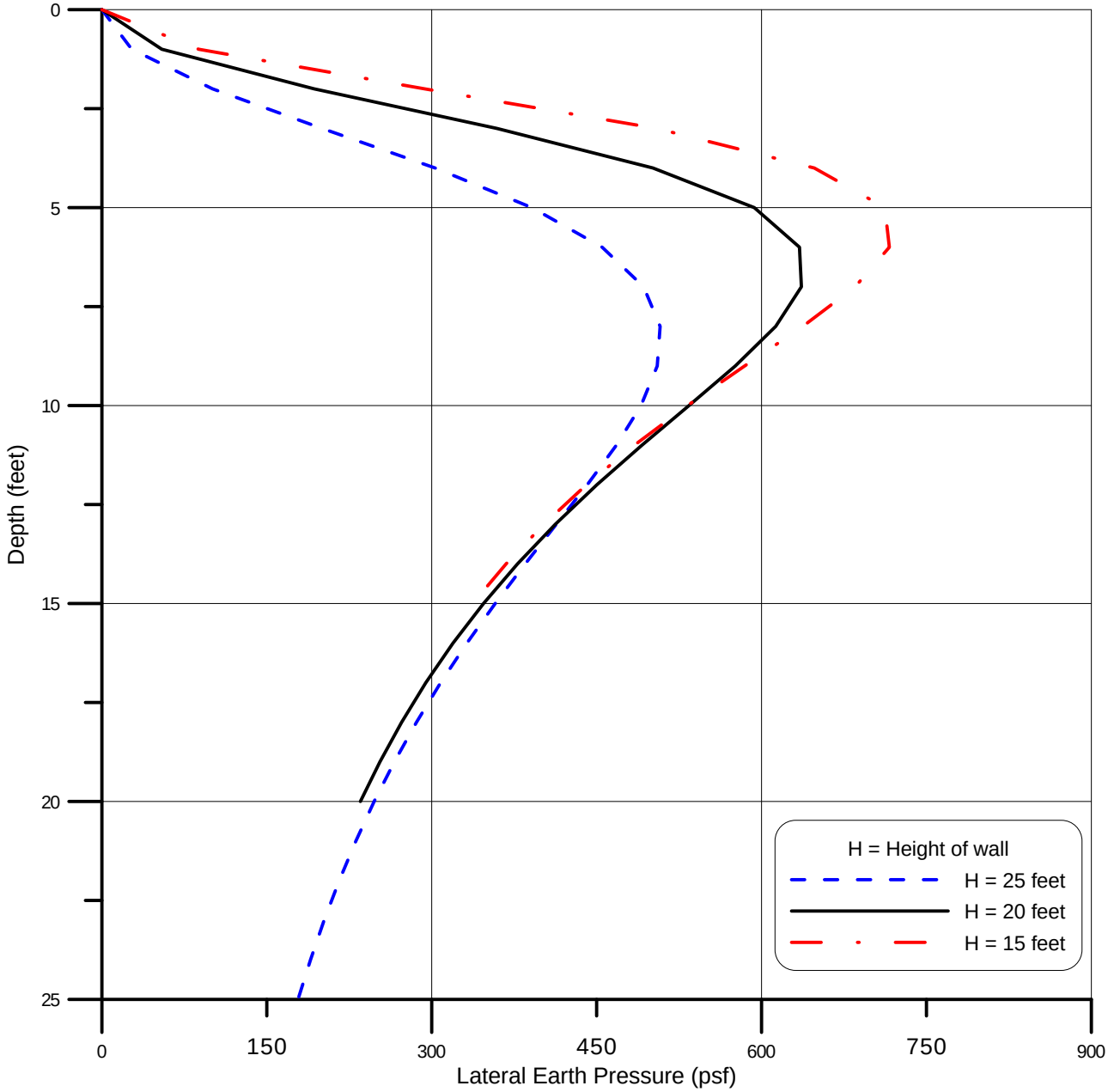

Note: Train loading based on Cooper E-80 (AREMA, 2009).

Figure 20 - LATERAL EARTH PRESSURES ON ABUTMENT FROM TRAIN SURCHARGE

4.6.2 Lateral Pressures

The abutment and retaining walls may be designed for lateral earth pressures shown on Figure 21 for walls free to rotate (cantilever) and restrained walls. Restrained wall conditions should be assumed when the wall is restrained at the top and wall movement is limited. If the wall is allowed to deflect at the top by at least ¼ inch for every 10 feet of vertical wall height, the free-to-rotate conditions may be assumed. The earth pressures provided on Figure 21 assume a level surface behind the wall for a distance greater than the wall height and a positive drainage system behind the wall. For sloping surface behind the wall, the pressures should be modified in accordance with Figure 21. The estimated seismic wall force is also presented on Figure 21. Recommendations for estimating the railroad-induced lateral earth pressures provided on Figure 19 and Figure 20, are in addition to the pressures noted on Figure 21.

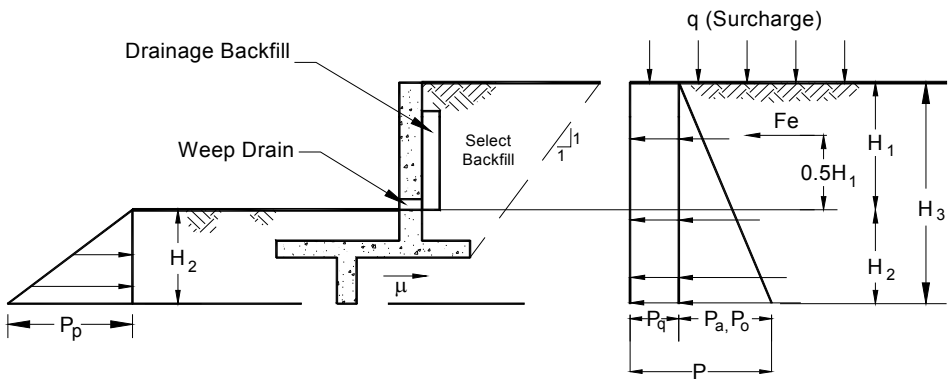

COMPACTED FILL		
P_p = 350 $H_2 \leq$3,000 psf μ = 0.4	Cantilever Walls $P = P_a + P_q = 31\ H_3 + 0.3\ q$ $Fe = 7\ H_1^2$	Restrained Walls $P = P_o + P_q = 48\ H_3 + 0.4\ q$ $Fe = 11\ H_1^2$
EXISTING CONDITIONS		
P_p= 300 $H_2 \leq$3,000 psf	Cantilever Walls	Restrained Walls
μ= 0.4	$P = P_a + P_q = 35\ H_3 + 0.3\ q$	$P = P_o + P_q = 53\ H_3 + 0.5\ q$
	$Fe = 7\ H_1^2$	$Fe = 12\ H_1^2$

Notes:

- All values of height (H) in feet, pressure (P), and surcharge (q) in pounds per square foot (psf) and force (F) in pounds.
- P_p, P_a, and P_o are the passive, active, and at-rest earth pressures, respectively; Fe is the incremental seismic force.
- P_q is the incremental surcharge pressure, and μ is the allowable friction coefficient applied to dead normal (buoyant) loads. Fe is in addition to the active and at-rest pressures. Below groundwater, active and at-rest pressure should be reduced by 50 percent and hydrostatic pressure should be added to active and at-rest pressures. P_p should be reduced by 50 percent below the groundwater.
- For 2H:1V slopes above the wall, increase the active and at-rest pressures by 50 percent; for 1.5H:1V slope, increase the active and at-rest pressures by 100 percent.
- Neglect the upper 1 foot for passive pressure unless the surface is contained by a pavement or slab.
- A peak ground acceleration (PGA) of 0.38g was used to calculate Fe. Fifty percent of the PGA for cantilever walls and 75 percent of PGA for restrained walls was used.

Figure 21 - LATERAL EARTH PRESSURES-PERMANENT

4.6.3 Resistance to Lateral Loads

4.6.3.1 Piles

The behavior of piles subjected to lateral loads was evaluated using the p-y non-linear (load-deflection) curve approach as described in Appendix D. A tabular summary of lateral pile analysis results is provided in Table 12 for Empire Avenue. p-y multipliers for group effects are provided on Figure 22. Graphical summaries presenting the deflection, moment, and shear along the pile length for the various loading conditions are included in Appendix D.

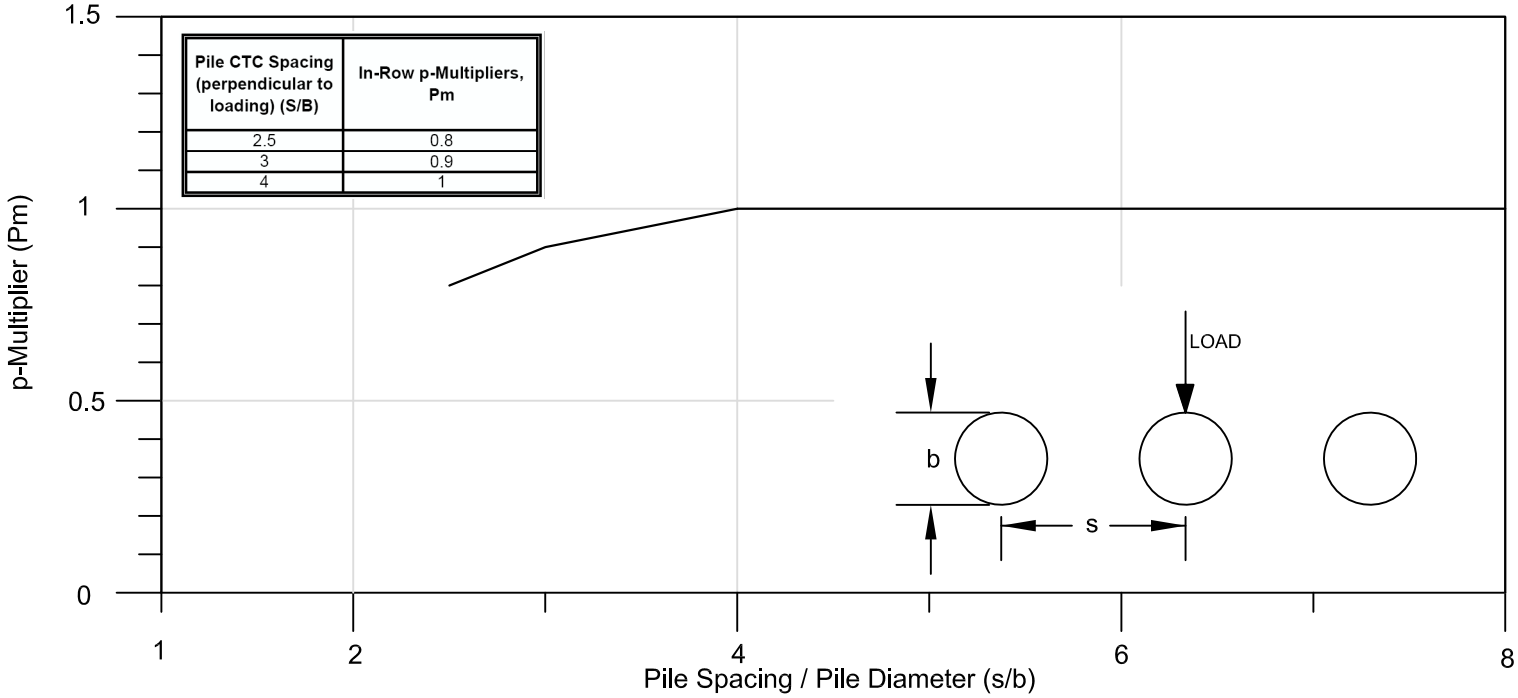

Pile CTC Spacing (perpendicular to loading) (S/B)	In-Row p-Multipliers, Pm
2.5	0.8
3	0.9
4	1

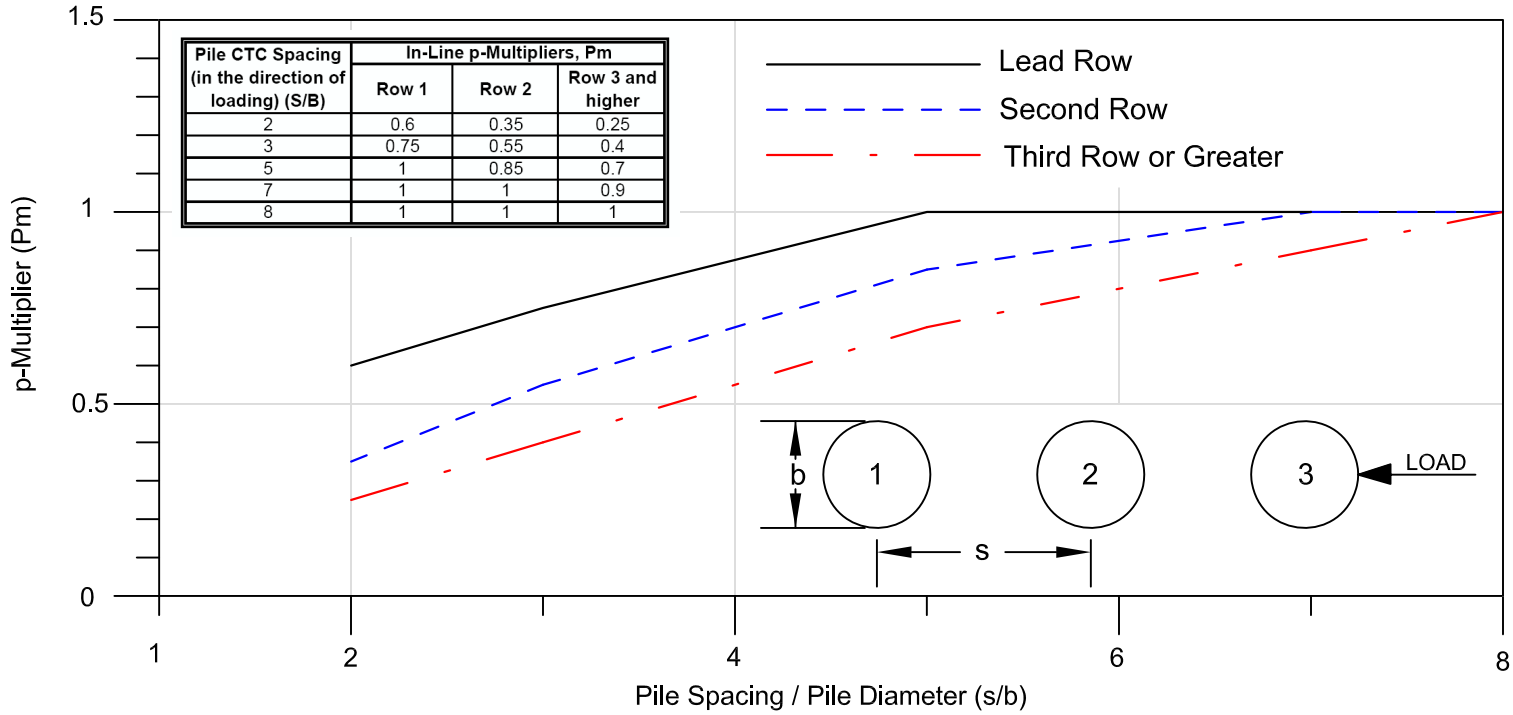

Pile CTC Spacing (in the direction of loading) (S/B)	In-Line p-Multipliers, Pm		
	Row 1	Row 2	Row 3 and higher
2	0.6	0.35	0.25
3	0.75	0.55	0.4
5	1	0.85	0.7
7	1	1	0.9
8	1	1	1

Reference: California Amendments to AASHTO LRFD Bridge Design Specifications - Fourth Edition, Section 10

Figure 22 - p-MULTIPLIERS FOR LATERAL LOAD RESISTANCE OF PILES IN GROUPS

Table 12 - SUMMARY OF PILE LATERAL LOAD ANALYSES EMPIRE AVENUE

LOCATION	PILE HEAD BOUNDARY CONDITION	PILE HEAD DEFECTION (inch)	MAX. MOMENT (kip-inches)/ Depth (feet)	MAX. SHEAR (kips)
Abutment	Pinned	0.25	1,400 (4.5)	50
Abutment	Fixed	0.25	4,000 (0)	110
Abutment	Pinned	0.5	2,500 (5)	85
Abutment	Fixed	0.5	7,200 (0)	180
Abutment	Pinned	1	4,500 (5.5)	140
Abutment	Fixed	1	13,000 (0)	310
Bent	Pinned	0.25	1,200 (5)	40
Bent	Fixed	0.25	3,500 (0)	90
Bent	Pinned	0.5	2,200 (5.5)	65
Bent	Fixed	0.5	6,200 (0)	143
Bent	Pinned	1	3,900 (6)	107
Bent	Fixed	1	11,200 (0)	240

Notes:

- Results are for a single 24-inch-diameter cast-in-drilled-hole (CIDH) pile.
- Loading at pile head.
- Moment and shear values are applicable for pile lengths greater than 30 feet.
- Young's Modulus = 3,600 kips per square inch.

CIDH piles and driven piles were considered for the foundation of the Buena Vista Street Underpass. Based on the discussions with the design team 14-inch square driven piles were preferred and the results are summarized in Table 13.

Table 13 - SUMMARY OF PILE LATERAL LOAD ANALYSES AT BUENA VISTA STREET UNDERCROSSING

LOCATION	PILE HEAD BOUNDARY CONDITION	PILE HEAD DEFECTION (inch)	MAX. MOMENT (kip-inches)/ Depth (feet)	MAX. SHEAR (kips)
Abutment	Pinned	0.25	960 (3)	50
Abutment	Fixed	0.25	2800 (0)	105
Abutment	Pinned	0.5	1,800 (3.5)	85
Abutment	Fixed	0.5	5,190 (0)	185
Abutment	Pinned	1	3,200 (3.5)	130
Abutment	Fixed	1	8,980 (0)	275
Bent	Pinned	0.25	860 (3)	40
Bent	Fixed	0.25	2,550 (0)	90
Bent	Pinned	0.5	1,600 (4)	70
Bent	Fixed	0.5	4,650 (0)	150
Bent	Pinned	1	2,890 (4)	105
Bent	Fixed	1	8,000 (0)	230

Notes:
- Results are for a single 14-inch square driven pile.
- Loading at pile head.
- Moment and shear values are applicable for pile lengths greater than 30 feet.
- Young's Modulus = 3,600 kips per square inch.

4.6.3.2 Shallow Foundation

The lateral resistance may be calculated using 50 percent of passive resistance plus 50 percent of base friction, 100 percent passive resistance only, or 100 percent base friction only in accordance with Caltrans practice. Recommendations to estimate the passive resistance and the base friction are provided on Figure 21. The coefficient of friction should be applied to net dead normal loads for non-pile-supported structures only.

4.6.3.3 Ultimate Lateral Capacity of Abutment Walls

The maximum passive pressure for a wall height of 5.5 feet can be taken as 5 kips per square foot (ksf). For wall heights different than 5.5 feet, we recommend that the maximum passive pressure be obtained by multiplying the 5 ksf value with the ratio H/5.5, where H is the backwall/ diaphragm height in feet. Maximum passive pressures are mobilized when the deflection of the wall reaches 0.02 x H. For intermediate deflection, the passive pressure mobilized may be estimated using linear interpolation. The initial embankment fill stiffness may be assumed to be 20 kips/inch/foot for a wall height of 55 feet. The initial stiffness for wall heights different from 5.5 feet may be obtained proportionally as for maximum passive pressures.

4.7 MSE EARTH RETAINING SYSTEM

External stability of proposed MSE walls was performed. The computer program MSEW (ADAMA, 2009) was used to calculate the FS for bearing capacity, siding along its base and overturning about its toe. The deep seated global stability was evaluated using the computer program SLOPEW (GEOSLOPE, 2007). The results of the above analyses are summarized in Table 14. Detailed information of the analyses is presented in Appendix E. The final MSE wall design should satisfy the minimum required safety factors for internal and external stability (FHWA, 2001) and should be designed by a specialty design-build contractor. The MSE wall foundation details and backfill material recommendations are provided in Sections 4.4.2 and 4.8.2, respectively.

Table 14 - SUMMARY OF FS VALUES FOR EXTERNAL STABILITY WITH RECOMMENDED MINIMUM REINFORCEMENT LENGTH

POTENTIAL FAILURE MECHANISM	RECOMMENDED MINIMUM FS[1] (Static)	CALCULATED FS (Static)	RECOMMENDED MINIMUM FS[1] (Seismic)	CALCULATED FS (Seismic)
Sliding on the base	1.5	2.3	1.1	1.2
Overturning	2	3.9	1.5	1.8
Bearing capacity	2.5	>2.5	1.9	>1.9
Deep seated stability	1.3	>1.3	1.1	>1.2

Notes:
1. FHWA, 2001.
- Results are for a reinforcement length equal to 0.9XH, where H is the height of the wall.
- FS = factor of safety.

4.8 EARTHWORK

4.8.1 Site Preparation

Prior to the start of construction, the following should be performed:

- Portland cement concrete (PCC) from existing structures to be demolished should be separated for recycling (potentially used as fill if the steel is removed from the PCC and it is crushed to meet the criteria for import fill noted below).
- All utilities should be located in the field and either rerouted, removed, abandoned, or protected.

- Areas to be graded should be stripped of vegetation and debris, and the material removed from the site.
- Topsoil materials should be stockpiled for later use in landscaped areas.

4.8.2 MSE Wall Backfill

The selection criteria of the MSE backfill should consider long-term performance of the completed structure, construction phase stability and degradation environment created for the reinforcement. Granular soils are ideally suited to MSE backfill. Suppliers of proprietary MSE systems have their own criteria for reinforced backfills. Detailed project backfill specifications should be provided by the specialty design-build contractor. MSE wall backfill material should be reasonably free from organic or other deleterious materials and should conform to the following gradation limits as summarized in Table 15 (FHWA, 2001).

Table 15 - STRUCTURAL BACKFILL CRITERIA

SIEVE SIZE	PERCENTAGE PASSING
4-inch	100
No. 40	0 - 60
No. 200	0 - 15

Note:
- Mechanically Stabilized Earth Walls and Reinforced Soils Slopes, Design and Construction Guidelines (FHWA, 2001).

In addition, the MSE backfills should conform to the properties summarized in Table 16. We recommend that a specialty MSE wall design-build contractor be contacted to design the MSE Wall.

Table 16 - PROPERTY REQUIREMENTS OF MSE WALL BACKFILL

PROPERTY[1]	REQUIREMENT
Plasticity Index	<6
Minimum Resistivity	>3,000 ohm-cm
Maximum percent passing No. 200 sieve	<15
Chlorides	< 100 ppm
Sulfates	<200 ppm
Maximum magnesium sulfate soundness loss	30 percent
pH	5 to 10
Friction Angle at 95 percent relative compaction (degrees)	>34
Organic Content	<1 percent

Notes:
1. Mechanically Stabilized Earth Walls and Reinforced Soils Slopes, Design and Construction Guidelines, (FHWA, 2001)
2. ppm = parts per million
3. cm = centimeter

We do not anticipate the onsite soils being used for MSE wall backfill material, because import material is required for the project.

4.8.3 Overexcavation

Field and laboratory tests provided in DYA's Technical Memo (DYA, 2009) indicate that the near-surface soils are near 90 percent relative compaction[1] with average moistures near optimum moisture content. We understand that some portions of the subgrade will be excavated to accommodate the MSE leveling pad, and retaining wall footings. The bottom of excavation should be proofrolled to check or any loose or soft soils. Loose or soft soils should be removed and replaced as compacted fill. Fill and backfill should be compacted by:

- Placing in loose layers less than 8 inches thick.
- Moisture-conditioning to above-optimum moisture content.
- Compacting to at least 95 percent relative compaction.

The compacted subgrade soils should be firm, hard, and unyielding.

[1] Relative compaction refers to the in-place dry density of soil expressed as a percentage of the maximum dry density of the same material, as determined by the American Society for Testing Materials (ASTM) D1557-91 test method. Optimum moisture content is the moisture content corresponding to the maximum dry density, as determined by the ASTM D1557-91 test method.

4.9 PAVEMENT THICKNESS DESIGN FOR BUENA VISTA

Recommended minimum dense graded hot mix asphalt (HMA) and PCC pavement sections are presented on Figure 23. The recommended minimum pavement sections are based on the following:

- R-value of 50.
- Caltrans design method.
- Traffic indices (TI) of 11 provided by the City of Burbank for Buena Vista Street.

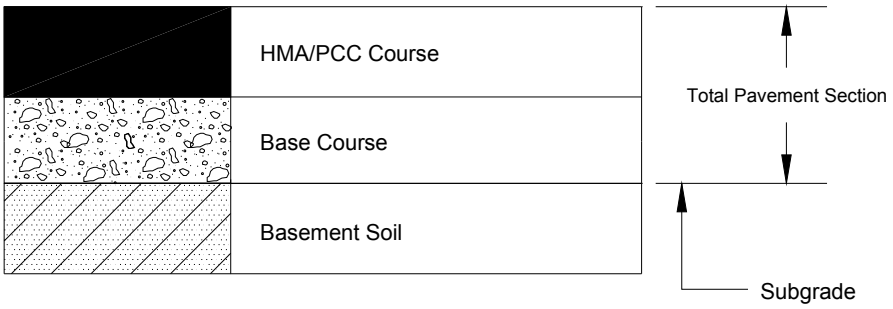

COURSE	MINIMUM THICKNESS (inches)		
	HMA Over Base	Full Depth HMA	PCC Over Base
HMA/PCC[1]	5	11	12
Base[2]	12	0	8
Basement Soil[3]	6	6	6

Notes:

1. Dense graded hot mix asphalt (HMA) and Portland cement concrete (PCC) should satisfy the requirements of Caltrans Standard Specifications Sections 39 and 40, respectively; or Greenbook Sections 203, and 201 and 302, respectively.
2. Base course = Class 2 aggregate base in accordance with Caltrans Standard Specifications Section 26 or crushed aggregate base (CAB) or crushed miscellaneous base (CMB) in accordance with Greenbook Sections 200-2.2 and 200-2.4 respectively. The minimum relative compaction is 95 percent.
3. Compacted in-place natural soil or fill; the minimum is 95 percent relative compaction.

- Above recommendations are not valid for fully permeable pavements.

Figure 23 - PAVEMENT THICKNESS

Generally, rigid PCC pavement costs more for initial construction but requires less maintenance than that for flexible HMA pavements. For heavy wheel loads along limited alignments, queuing areas, turning areas, dolly pads, bus stops, and refuse pickup areas, PCC pavement is preferred. For PCC pavements, the following should be considered:

- Construct pavements in a 15-foot square grid or smaller (20-foot rectangular areas if a square is not practical).
- Expansion joints should extend the full depth of the pavement.
- Potential joints depth of ¼ of the pavement thickness.
- Cure for a minimum of 7 days.
- No traffic until the compressive strength exceeds 2,000 pounds per square inch (psi).
- Minimum compressive strength of 3,000 psi.
- Dowels to strengthen joints.
- Minimum slope of 1 percent.

Structural section requirements are outlined on Figure 23. The subgrade soils should be firm, hard, and unyielding and not "pumping" under the loads of the construction and paving equipment. The basement soil (subgrade) and aggregate base should be compacted to at least 95 percent relative compaction. If the basement soil cannot be compacted to at least 95 percent relative compaction, the subgrade should be overexcavated as noted in Section 4.2.1.

The dense graded HMA and PCC layers should not be replaced with open graded asphalt concrete (OGAC) and fully pervious PCC, respectively, to provide a fully permeable pavement. A separate design is recommended for fully permeable pavements.

4.10 CONSTRUCTION CONSIDERATIONS

4.10.1 Pile Installation

The proposed CIDH piles will extend through cohesionless sands and gravels. The cohesionless soils have significant potential to slough and cave during CIDH pile installation or when subject to vibration load from the adjacent railroad. The “wet” construction method or temporary casing should be considered for ease of construction and to reduce the potential for CIDH pile anomalies. Difficult drilling conditions also should be anticipated to penetrate the very dense sandy soils and gravels present at the site.

Construction methods will have significant effects on load-carrying capacity of the installed pile. The piles are designed as friction piles. Significant quality control and care must be exercised during construction to ensure that the construction methods do not compromise the development of side friction capacity. We recommend to perform bottom clean out prior to the installation of the CIDH piles. Selection of the CIDH pile construction contractor should be based on a proven performance record on similar projects.

Caving (such as that caused by dry method of drilling) or overbreak (such as that caused by slurry method of construction) should be avoided near settlement-sensitive facilities.

When “wet” construction methods are used, the integrity of concrete should be checked using downhole gamma-gamma and/or cross-hole sonic testing; PVC inspection pipes should be installed within the CIDH piles to facilitate the testing. The bottom of the drilled hole should be cleaned out to prevent any soil inclusion into concrete. The depth of the hole should be measured carefully to ensure that the clear, unobstructed depth of the pile will be no less than the design length required. There should be at least one inspection tube for every foot of diameter of the CIDH piles.

The contractor should be required to submit proposed construction methods prior to construction for the engineer’s review.

The concrete for piles should be placed through downhole funnels and pipes or similar provisions (referred to as “tremie” herein) and in such a manner that the concrete does not strike the side of the pile shaft or the reinforcing steel bar cage. The bottom of the tremie should

be maintained at least 10 feet below the concrete level as the concrete rises and displaces the drilling slurry.

The concrete should have good flow characteristics. If the workability of the concrete is too low, arching of the concrete will occur and the concrete will move up with the casing, creating a void into which slurry can flow. The rebar cage will also tend to move up in this case. Similar problems will occur if concrete is allowed to set inside the casing.

Concrete should be onsite upon completion of drill hole clean out and placed immediately after approval by the engineer. The drill hole should be cleaned out as soon as possible after completion of drilling. A pile excavation should not be allowed to stand open for a long time.

In general, a minimum of 24 hours should be allowed between placing concrete in one pile shaft and drilling any nearby shafts or performing any other excavations within three pile diameters.

4.10.2 Driven Pile Installation

Selection of a suitable hammer depends on the overall pile driving system (e.g., soil, pile, hammer, cushion). The driving criteria, indicated by the number of blows per inch required to achieve the design capacity, depend on the pile, hammer/cushion combination, and the assumed load distribution along the pile. Criteria for production pile driving should be established based on results of the field investigation, the indicator pile driving program (including the dynamic pile driving analysis using a Pile Driving Analyzer [PDA]), and Wave Equation Analyses Program (WEAP) analysis. The WEAP analysis should be performed prior to indicator pile driving and after the contractor's pile hammer/cushion system is known. The recommended indicator pile program is discussed in Section 4.9.3. To drive the piles, we recommend that a hammer with a rated energy greater than 60,000-foot-pounds be used.

Jetting of piles should not be permitted. Predrilling may be required to reduce installation noise, vibration, and damage to existing facilities. The need for predrilling can be evaluated in the indicator pile program. The predrill auger diameter should not be greater than the pile width. In addition, the predrilling should be terminated a minimum of 5 feet above the specified pile tip elevation.

4.10.3 Indicator Pile Test Program

Before the production piles are manufactured, an indicator pile test program should be performed. Indicator piles should be driven to test driving techniques and affects on adjacent facilities, confirm hammer selection and anticipated soil conditions, establish driving and refusal criteria, and select final pile length for casting. We recommend that three to four indicator piles be driven at production pile locations (used to support the structure) at each structure location. The indicator piles should be located to provide areal coverage of the Project site both across the width and along the length of the site. In addition, indicator piles should be located as close as practical to boring or CPT locations.

Equipment used to install the indicator piles should be the same as that intended for production pile driving. The indicator piles should be similar to the production piles in all respects, except that they should be approximately 5 to 10 feet longer than the design lengths in case unusual conditions are encountered. The steel reinforcing should be designed to accommodate the required cutoff.

We recommend the use of a PDA for the indicator pile program to optimize the pile capacity and installation criteria. Additional measurements such as noise and vibration should be measured to check the pile installation effects on the adjacent environment and facilities. The production installation methods should be developed based on the indicator pile test results.

5.0 PLAN REVIEW, CONSTRUCTION OBSERVATION, AND TESTING

DYA should be retained to review the project plans and specifications to check them for conformance with the intent of our recommendations.

During construction, we should be retained to provide the following services:

1. Observation of site preparation, foundation excavation, and pile installation.
2. Observation and testing of fill, backfill quality, placement, moisture content, and compaction.
3. Consultation on geotechnical matters.

These services would enable DYA to observe field conditions as they are exposed to check them for conformance with the assumptions we have made in developing conclusions and recommendations. They would also allow us to provide compatible recommendations regarding conditions found during construction. The field and laboratory tests would allow us to confirm that material quality, compaction, moisture content, and strength are consistent with the parameters upon which our recommendations were based.

6.0 LIMITATIONS

This report was prepared for this Project in accordance with generally accepted geotechnical engineering practice common to the local area. No other warranty, expressed or implied, is made.

The analyses and recommendations contained in this report are based on the literature review, field investigation, and laboratory testing conducted in the area. The results of the field investigation indicate subsurface conditions only at the specific locations and times, and only to the depths penetrated. They do not necessarily reflect strata variations that may exist between such locations. Although subsurface conditions have been explored as part of the investigation, we have not conducted chemical laboratory testing on samples collected or evaluated the site with respect to the presence or potential presence of contaminated soil or groundwater conditions.

The validity of our recommendations is based in part on assumptions about the stratigraphy. Observations during construction can help confirm such assumptions. If subsurface conditions different from those described are noted during construction, recommendations in this report must be re-evaluated. We should be retained to observe earthwork construction in order to help confirm that our assumptions and recommendations are valid or to modify them accordingly. DYA cannot assume responsibility or liability for the adequacy of recommendations if we do not observe construction.

This report is intended for use only for the project described. In the event that any changes in the nature, design, or location of the facilities are planned, the conclusions and recommendations contained in this report should not be considered valid unless the changes are reviewed and conclusions of this report modified or verified in writing by DYA. We are not responsible for any claims, damages, or liability associated with the interpretation of subsurface data or reuse of the subsurface data or engineering analyses without our express written authorization.

7.0 BIBLIOGRAPHY

Abrahamson N., Silva W., 2008, Summary of the Abrahamson & Silva NGA Ground-motion Relations, Earthquake Spectra Volume 24,1, pp. 67-97.

ADAMA Engineering, 2009, MSEW 3.0.

American Petroleum Institute, 1993, "API Recommended Practice for Planning, Designing, and Constructing Fixed Offshore Platforms," Report RP-2A, 1993.

American Railway Engineering and Maintenance-of-Way Association, 2009, Manual for Railway Engineering.

American Society for Testing and Materials, 1999, Annual Book of Standards, Volumes 4.08 and 4.09, Soil and Rock.

American Society of Civil Engineers/Structural Engineers Institute (ASCE/SEI 7-05), 2007, Minimum Design Loads for Buildings and Other Structures.

American Society of Civil Engineers, Settlement Analyses, Army Corps of Engineers Technical Engineering and Design Guides as adapted from the U.S. Army Corps of Engineers, No. 9.

American Society of Civil Engineers, Design of Pile Foundations, U.S. Army Corps of Engineers, No. 1.

Applied Technology Council, 1996, ATC-32, Improved Seismic Design Criteria for California Bridge: Provisional Recommendations.

Applied Technology Council and Multidisciplinary Center for Earthquake Engineering Research, 2003, MCEER/ATC-49, Recommended LRFD Guidelines for the Seismic Design of Highway Bridges.

Blake et al., 2002, Recommended Procedures for Implementation of CGS Special Publication 117-Guidelines for Analyzing and Mitigating Landslide Hazards in California.

Boore, D.M., Joyner, W., and Fumal, T.E., 1997, Equations for Estimating Horizontal Response Spectra and Peak Acceleration from Western North American Earthquakes: A Summary of Recent Work, Seismological Research Letters, Volume 68, No. 1.

Boore, D. M. and G. M. Atkinson, 2008, Ground-motion prediction equations for the average horizontal component of PGA, PGV, and 5%-damped PSA at spectral periods between 0.01 s and 10.0 s, Earthquake Spectra 24.

California Building Standards Commission, 2007, California Building Code, 2007, California Code of Regulations, Title 24, Part 2, Effective January 1, 2008.

California Department of Transportation, 2003, Corrosion Guidelines, Materials Engineering and Testing Service, Corrosion Technology Branch, September 2003.

California Department of Transportation, 2004, Project Plans for Construction on State Highway, in Los Angeles County, in Burbank, From Burbank Boulevard to 0.6km North of Buena Vista Street, December 14, 2004.

California Department of Transportation, 2006a, I-5 Empire Interchange, Victory Place Separation (NEW), Bridge No. 53C-2171, May 25, 2006.

California Department of Transportation, 2006b, Buena Vista - Winona UC (Widen), Bridge No. 53-1110, Foundation Recommendations (95% Submittal), May 17, 2006.

California Department of Transportation, 2006c, Buena Vista Street UP (New), Bridge No. 53C-1992, Foundation Recommendations (95% Submittal), May 22, 2006.

California Department of Transportation, 2006d, Highway Design Manual, Sixth Edition.

California Department of Transportation, 2007a, Project Plans for Construction on State Highway, in Los Angeles County, in Burbank, From Burbank Boulevard to 0.6km North of Buena Vista Street, November 5, 2007.

California Department of Transportation, 2008, Pile/Soil Lateral Resistances and Pile Data Table for Empire Avenue Undercrossing (Replace), (98% Submittal), July 7, 2008.

California Department of Water Resources, 2004, California's Groundwater: Bulletin 118, South Coast Hydrologic Region, San Fernando Valley Groundwater Basin, updated February 27, 2004.

California Geological Survey, 1994a, Division of Mines and Geology, Fault Rupture Hazard Zones in California, Special Publication No. 42.

California Geological Survey, 1994b, Fault Activity Map of California and Adjacent Areas, Scale 1:750,000, Geologic Data Map No. 6.

California Geological Survey, 1998, Open File Report 98-07, Seismic Hazard Evaluation for the Burbank 7.5-Minute Quadrangle, Los Angeles, California.

California Geological Survey, 1999 Seismic Hazard Zones, Burbank Quadrangle.

California Geological Survey, 2001, Alquist-Priolo Earthquake Fault Zone (APEFZ) maps, Geographic Information System (GIS) data files.

California Geological Survey, 2008, Special Publication 117A, Guidelines for Evaluating and Mitigating Seismic Hazards in California, March 2009.

Campbell, K.W., and Bozorgnia, Y., 2003, Updated Near-Source Ground-Motion (Attenuation) Relations for the Horizontal and Vertical Components of Peak Ground Acceleration and Acceleration Response Spectra, Bulletin of Seismological Society of America, Volume 93, No. 1.

Campbell W. Kenneth and Bozorgnia Y., 2008, NGA Ground Motion Model for the Geometric Mean Horizontal Component of PGA, PGV, PGD and 5% Damped Linear Elastic Response Spectra for Periods Ranging from 0.01 to 10 s, Earthquake Spectra Volume 24,1, pp.139-171.

Cao, T., Bryant, W.A., Rowshandel, B., Branum, D., and Willis, C.J., 2003, Revised 2002 California Probabilistic Seismic Hazard Maps, June 2003.

Caterpillar Performance Handbook, 2008, Caterpillar, Inc., Edition 29.

Chiou, B.J.S, Youngs, R.R., 2008, "An NGA Model for the Average Horizontal Component of Peak Ground Motion and Response Spectra" Earthquake Spectra Volume 24,1, pp. 173-215.

Diaz•Yourman & Associates, 2009, Technical Memorandum, Data Review, SCRRA Empire Avenue-Buena Vista Grade Separations, E737B-08, CTO No. 001, Burbank, California, May 15, 2009.

Earthquake Engineering Research Institute, 2008, Soil Liquefaction During Earthquakes, MNO-12.

Ensoft, 2007a, APile Computer Program.

Ensoft, 2007b, Shaft Computer Program.

Ensoft, 2007c, LPile Computer Program.

FHWA, 2001, Mechanically Stabilized Earth Walls and Reinforced Soil Slopes Design and Construction Guidelines, 2001, FHWA NHI-00-043.

FHWA, 1999, Drilled Shaft Construction Procedures and Design Method, Publication No. FHWA-IF-99-025.

GEOSLOPE, 2007, SLOPE with computer program.

Gregory Geotechnical Software, 2003, GSTABL7 Computer Program.

International Conference of Building Officials and California Building Standard Commission, 2007, California Building Code.

Ishibashi, I., and Zhang, X., 1993, Unified Dynamic Shear Moduli and Damping Ratios of Sand and Clay, Soils and Foundations, Volume 33, No. 1.

Isihara, K., 1985, Stability of Natural Deposits During Earthquakes, Proceedings of 11th International Conference S.M. & F.E., Volume 1, pp. 321-376.

Islam, M., 2005, Personal Communication regarding Caltrans seismic design practice.

JL Patterson, 2008, Metrolink Communter Rail System, Empire Avenue-Buena Vista Street, Grade Separation, Alternative 2, May 10, 2008

Kulhawy, F.H. and Mayne, P.W., 1990, Manual on Estimating Soil Properties for Foundation Design.

NAVFAC DM 7.02, 1986, Foundations & Earth Structures Design Manual 7.02, Naval Facilities Engineering Command 200 Stovall Street, Alexendria, Virginia.

Ohta, Y. and Goto, N., 1976, Estimation of S-wave Velocity in Terms of Characteristic Indices of Soil, Butsuri-Tanko, Volume 29, No. 4.

Risk Engineering, Inc., 2009, EZ-FRISK computer program.

Sadigh, K., Chang, C.Y., Egan, J.A., Makdisi, F., and Youngs, R.R., 1997, Attenuation Relationships for Shallow Crustal Earthquakes Based on California Strong Motion Data, Seismological Research Letters, Volume 68, No. 1.

Seed, H.B., Witman, R., 1970, Design of Retaining Earth Structures for Dynamic Loads, ASCE, 1970 Specialty Conference, Lateral Stress in the Ground and the Design of Earth Retaining Structures, June 22-24, 1970.

Seed, R.B., Cetin, K.O., Moss, R.E.S., Kammerer, A.M., Wu, J., Pestana, J.M., Riemer, M.F., Sancio, R.B., Bray, J.D., Kayen, R.E., and Faris, A., 2003, Recent Advances in Soil Liquefaction Engineering: A Unified and Consistent Framework, 26th Annual ASCE Los Angeles Geotechnical Spring Seminar, Keynote Presentation, H.M.S. Queen Mary, Long Beach, California.

Silver, M.L. and Seed, H.B., 1971, Deformation Characteristics of Sounds Under Cyclic Loading.

Somerville, P.G., Smith, N.F., Graves, R.W., and Abrahamson, N.A., 1997, Modification of Empirical Strong Ground Motion Attenuation Relationships to Include the Amplitude and Duration Effects of Rupture Directivity, Seismological Research Letters, Volume 68, No. 1.

Southern California Earthquake Center, 1999, Recommended Procedures for Implementation of DMG Special Publication 117, Guidelines for Analyzing and Mitigating Liquefaction in California, March 1999.

Tokimatsu, K., and Seed, H.B., 1987, Evaluation of Settlements in Sands Due to Earthquake Shaking, Journal of Geotechnical Engineering Division, ASCE, Volume 113, No. GT8.

U.S. Geologic Survey, 2009, Earthquake Ground Motion Parameters, version 5.0.9a, October 21, 2009.

Western Regional Center Climate Center, Web Page, http://www.wrcc.dri.edu/.

Yoshmine, M., Robertson, P.K and Wride, C.E., 1999, Undrained Shear Strength of Clean Sands to Trigger Flow Liquefaction, Canadian Geotechnical J. 36, 891-906.

Youd, T.L., Idriss, I.M., Andrus, R.D., Arango, I., Castro, G., Christian, J.T., Dobry, R., Liam Finn, W.D., Harder, L.F., Hynes, M.E., Ishihara, K., Koester, J.P., Liao, S., Marcuson, W.F. Martin, G.R., Mitchell, J.K., Power, M.S., Robertson, P.K., Seed, R.B., Stokoe, K.H., 2001, Liquefaction Resistnace of Soils: Summary Report from the 1996 NCEER and 1998 NCEER/NSF Workshops on Evaluation of Liquefaction Resistance of Soils, Journal of Geotechnical and Geoenvironmental Engineering, ASCE, Volume 127, No. 10, April 2001.

APPENDIX A

FIELD INVESTIGATION

APPENDIX A - FIELD INVESTIGATION

The field investigation for the proposed project consisted of advancing four cone penetration tests (CPT; DYC-1, DYC-2, DYC-3, and DYC-3A) to depths ranging from 35 to 73 feet. Refusal was encountered in all four CPTs above the desired penetration depth of 100 feet. The approximate CPT locations are shown on the Site Plans, Figure 2 through Figure 4.

The CPT probes were advanced by Kehoe Testing & Engineering, Inc. on July 22, 2009, using an electronic cone mounted on a truck in general accordance with ASTM D5778. CPT logs are presented in this appendix.

Groundwater was not encountered during the field investigation. CPTs were backfilled with bentonite chips.

CPTs were located in the field using a measuring wheel from known locations using a measuring wheel and a hand-held differential global positioning system (GPS), unit with a 6- to 15-foot horizontal accuracy. Coordinates of CPT locations are provided in Table A1.

Table A1 - CPT LOCATION COORDINATES

CPT NUMBER	LATITUDE (degrees)	LONGITUDE (degrees)
DYC-1	34.198522	-118.3381329
DYC-2	34.1944014	-118.3325457
DYC-3 and DYC-3A	34.1918995	-118.3284114

SUMMARY

OF

CONE PENETRATION TEST DATA

Project:

N. Buena Vista Street & N. San Fernando Blvd.
Burbank, CA
July 22, 2009

Prepared for:

Mr. Clay Stevens
Diaz, Yourman & Associates
1616 E. 17th Street
Santa Ana, CA 92705-8059
Office (714) 245-2920 / Fax (714) 245-2950

Prepared by:

KEHOE TESTING & ENGINEERING
5415 Industrial Drive
Huntington Beach, CA 92649-1518
Office (714) 901-7270 / Fax (714) 901-7289
www.kehoetesting.com

TABLE OF CONTENTS

1. **INTRODUCTION**

2. **SUMMARY OF FIELD WORK**

3. **FIELD EQUIPMENT & PROCEDURES**

4. **CONE PENETRATION TEST DATA & INTERPRETATION**

APPENDIX

- CPT Plots
- CPT Classification/Soil Behavior Chart
- Interpretation Output (CPTINT)
- CPTINT Correlation Table

SUMMARY
OF
CONE PENETRATION TEST DATA

1. INTRODUCTION

This report presents the results of a Cone Penetration Test (CPT) program carried out for the project located at N. Buena Vista Street & N. San Fernando Blvd. in Burbank, California. The work was performed by Kehoe Testing & Engineering (KTE) on July 22, 2009. The scope of work was performed as directed by Diaz, Yourman & Associates personnel.

2. SUMMARY OF FIELD WORK

The fieldwork consisted of performing CPT soundings at four locations to determine the soil lithology. The groundwater measurements were taken in the open CPT hole approximately 10 minutes after completion of CPT. The following **TABLE 2.1** summarizes the CPT soundings performed:

LOCATION	DEPTH OF CPT (ft)	COMMENTS/NOTES:
DYC-01	74	Refusal, hole open to 73 ft (dry)
DYC-02	70	Refusal, hole open to 70 ft (dry)
DYC-03	35	Refusal, hole open to 34 ft (dry)
DYC-03A	69	Refusal, hole open to 68 ft (dry)

TABLE 2.1 - Summary of CPT Soundings

3. FIELD EQUIPMENT & PROCEDURES

The CPT soundings were carried out by **KTE** using an integrated electronic cone system manufactured by Vertek. The CPT soundings were performed in accordance with ASTM standards (D5778). The cone penetrometers were pushed using a 30-ton CPT rig. The cone used during the program was a 15 cm^2 cone and recorded the following parameters at approximately 2.5 cm depth intervals:

- Cone Resistance (qc)
- Sleeve Friction (fs)
- Dynamic Pore Pressure (u)
- Inclination
- Penetration Speed
- Pore Pressure Dissipation (at selected depths)

The above parameters were recorded and viewed in real time using a portable computer and stored on a diskette for future analysis and reference. A complete set of baseline readings was taken prior to each sounding to determine temperature shifts and any zero load offsets. Monitoring base line readings ensures that the cone electronics are operating properly.

4. CONE PENETRATION TEST DATA & INTERPRETATION

The Cone Penetration Test data is presented in graphical form in the attached Appendix. Penetration depths are referenced to ground surface. The soil classification on the CPT plots is derived from the CPT Classification Chart (Robertson, 1986) and presents major soil lithologic changes. The stratigraphic interpretation is based on relationships between cone resistance (qc), sleeve friction (fs), and penetration pore pressure (u). The friction ratio (Rf), which is sleeve friction divided by cone resistance, is a calculated parameter that is used to infer soil behavior type. Generally, cohesive soils (clays) have high friction ratios, low cone resistance and generate excess pore water pressures. Cohesionless soils (sands) have lower friction ratios, high cone bearing and generate little (or negative) excess pore water pressures.

Output from the interpretation program CPTINT provides averaged CPT data over one-foot intervals. The CPTINT output includes Soil Classification Zones, SPT N Values and Undrained Shear Strength (Su). A summary of the equations used for the tabulated parameters is provided in the CPTINT Correlation Table in the Appendix.

The interpretation of soils encountered on this project was carried out using correlations developed by Robertson et al, 1986. It should be noted that it is not always possible to clearly identify a soil type based on qc, fs and u. In these situations, experience, judgment and an assessment of the pore pressure data should be used to infer the soil behavior type.

If you have any questions regarding this information, please do not hesitate to call our office at (714) 901-7270.

Sincerely,

KEHOE TESTING & ENGINEERING

Richard W. Koester, Jr.
General Manager

07/24/09-jk-35-9810

APPENDIX

Kehoe Testing & Engineering Office: (714) 901-7270 Fax: (714) 901-7289 rich@kehoetesting.com skehoe@msn.com	CPT Data 30 ton rig	Date: 22/Jul/2009 Test ID: DYC-01 Project: Burbank
	Customer: Diaz, Yourman & Associates Job Site: 2009-010-01	

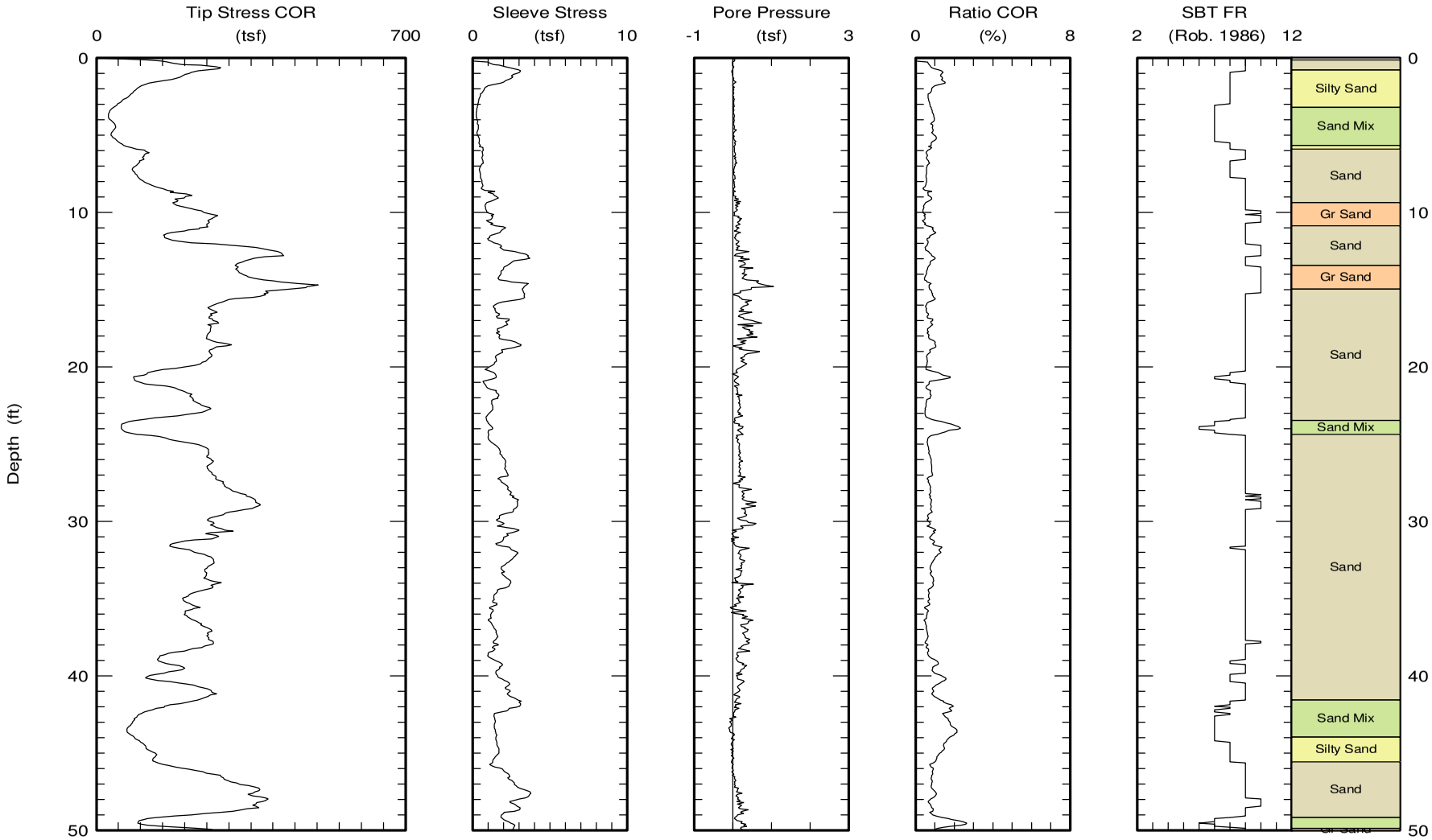

Maximum depth: 73.50 (ft)

Kehoe Testing & Engineering Office: (714) 901-7270 Fax: (714) 901-7289 rich@kehoetesting.com skehoe@msn.com	CPT Data 30 ton rig	Date: 22/Jul/2009 Test ID: DYC-01 Project: Burbank
	Customer: Diaz, Yourman & Associates Job Site: 2009-010-01	

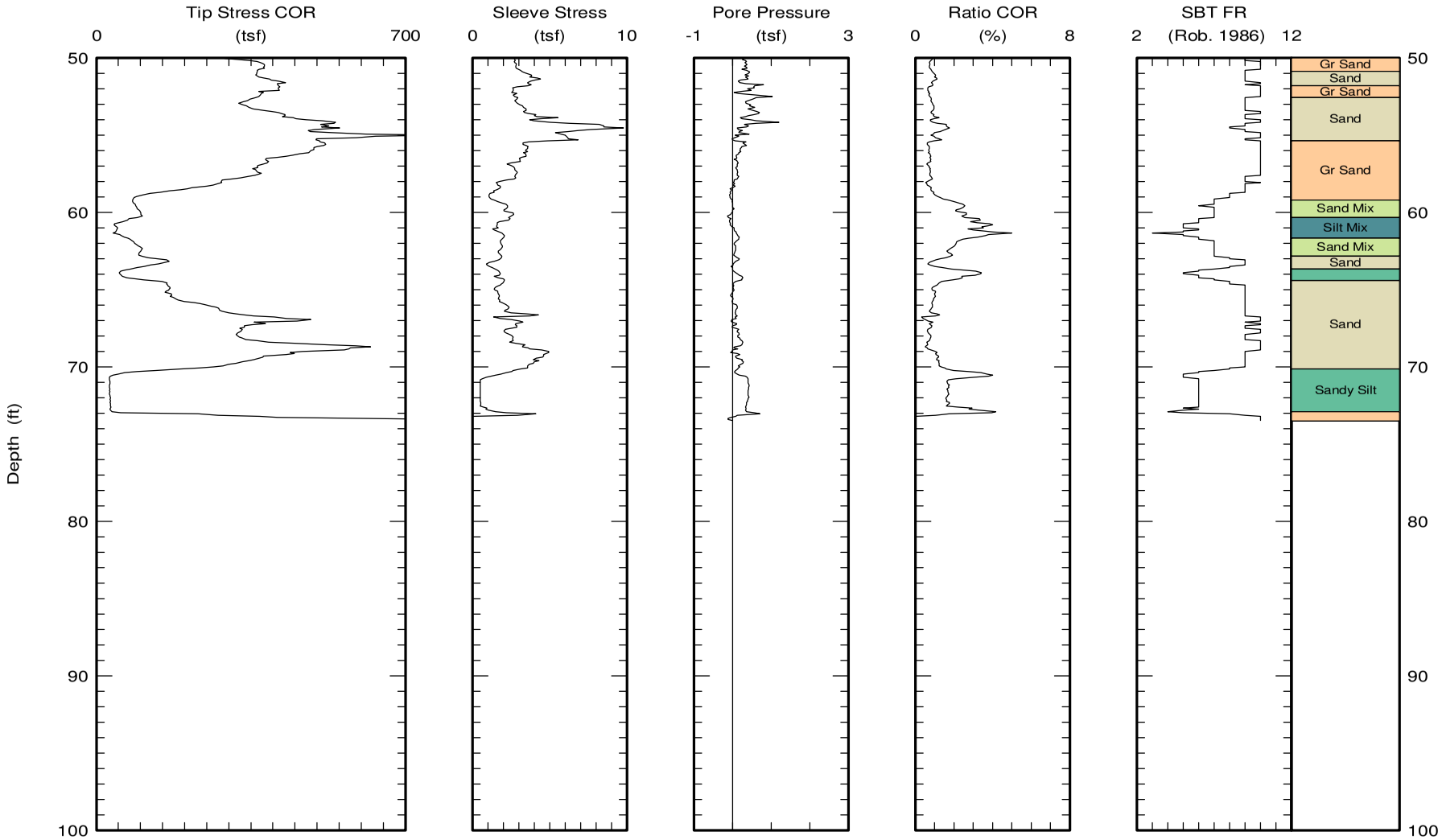

Maximum depth: 73.50 (ft)

Kehoe Testing & Engineering Office: (714) 901-7270 Fax: (714) 901-7289 rich@kehoetesting.com skehoe@msn.com	CPT Data 30 ton rig	Date: 22/Jul/2009 Test ID: DYC-02 Project: Burbank
	Customer: Diaz, Yourman & Associates Job Site: 2009-010-01	

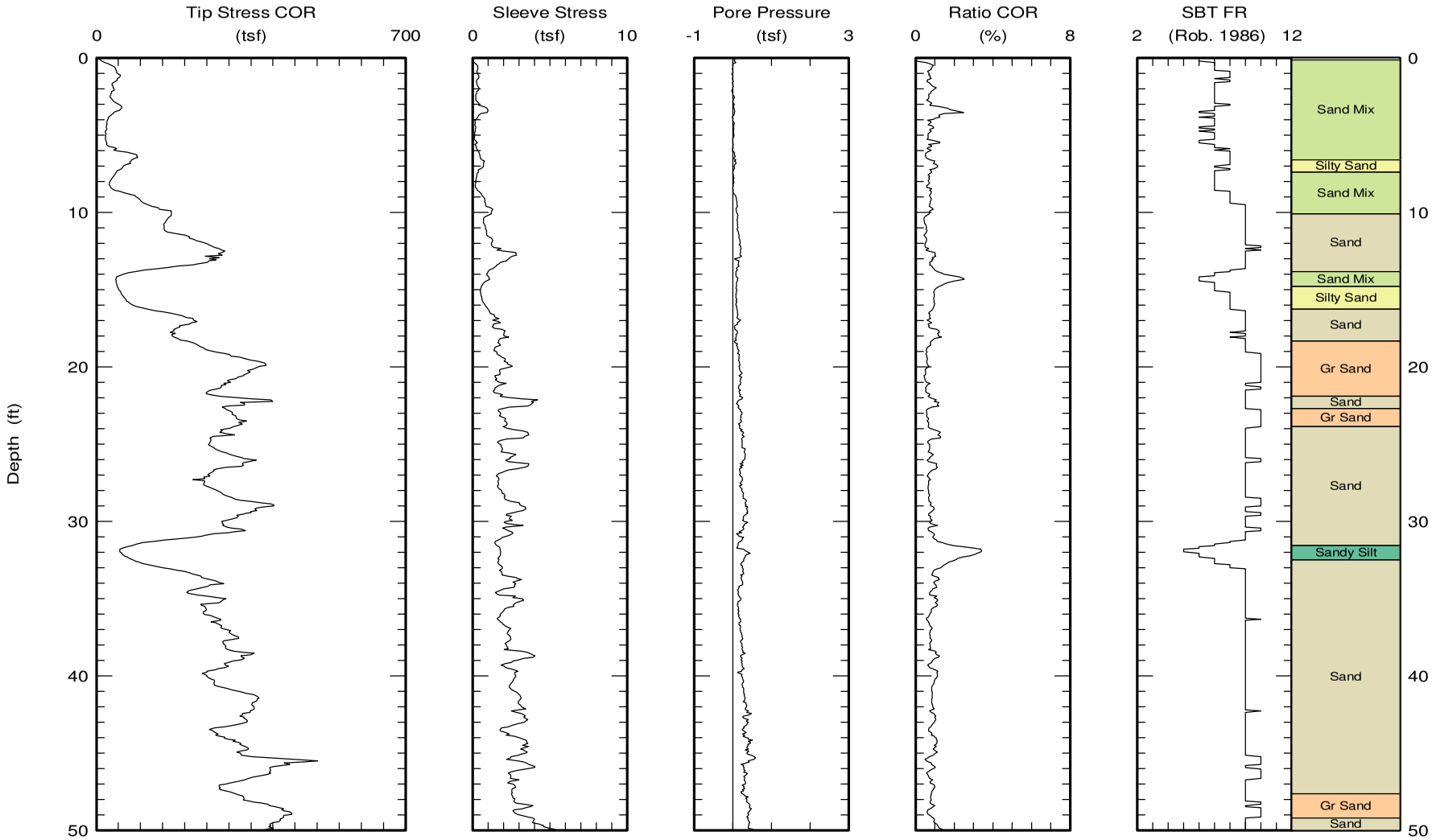

Maximum depth: 70.22 (ft)

Kehoe Testing & Engineering
Office: (714) 901-7270
Fax: (714) 901-7289
rich@kehoetesting.com
skehoe@msn.com

CPT Data
30 ton rig

Date: 22/Jul/2009
Test ID: DYC-02
Project: Burbank

Customer: Diaz, Yourman & Associates
Job Site: 2009-010-01

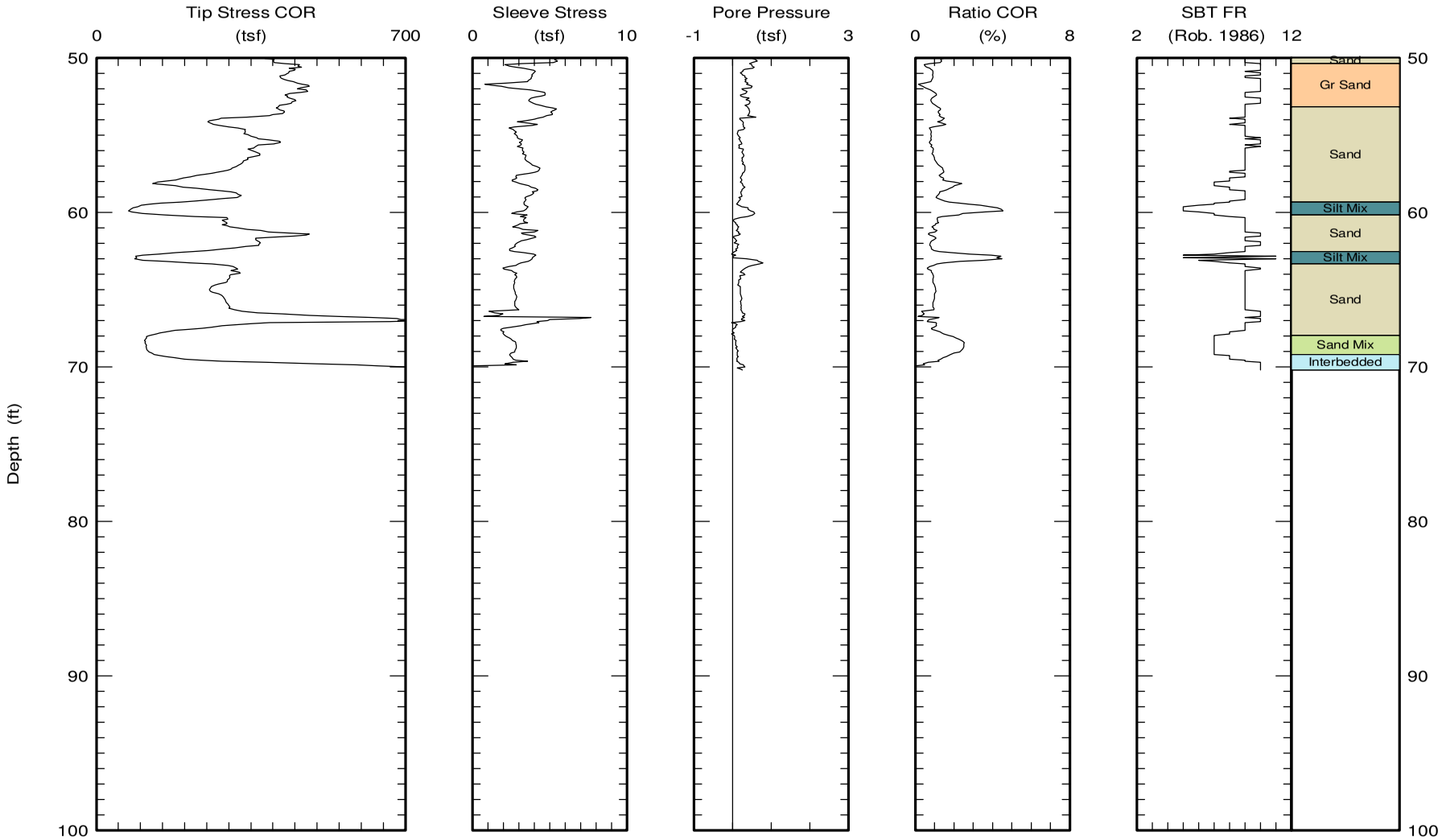

Maximum depth: 70.22 (ft)

Kehoe Testing & Engineering Office: (714) 901-7270 Fax: (714) 901-7289 rich@kehoetesting.com skehoe@msn.com	CPT Data 30 ton rig	Date: 22/Jul/2009 Test ID: DYC-03 Project: Burbank
	Customer: Diaz, Yourman & Associates Job Site: 2009-010-01	

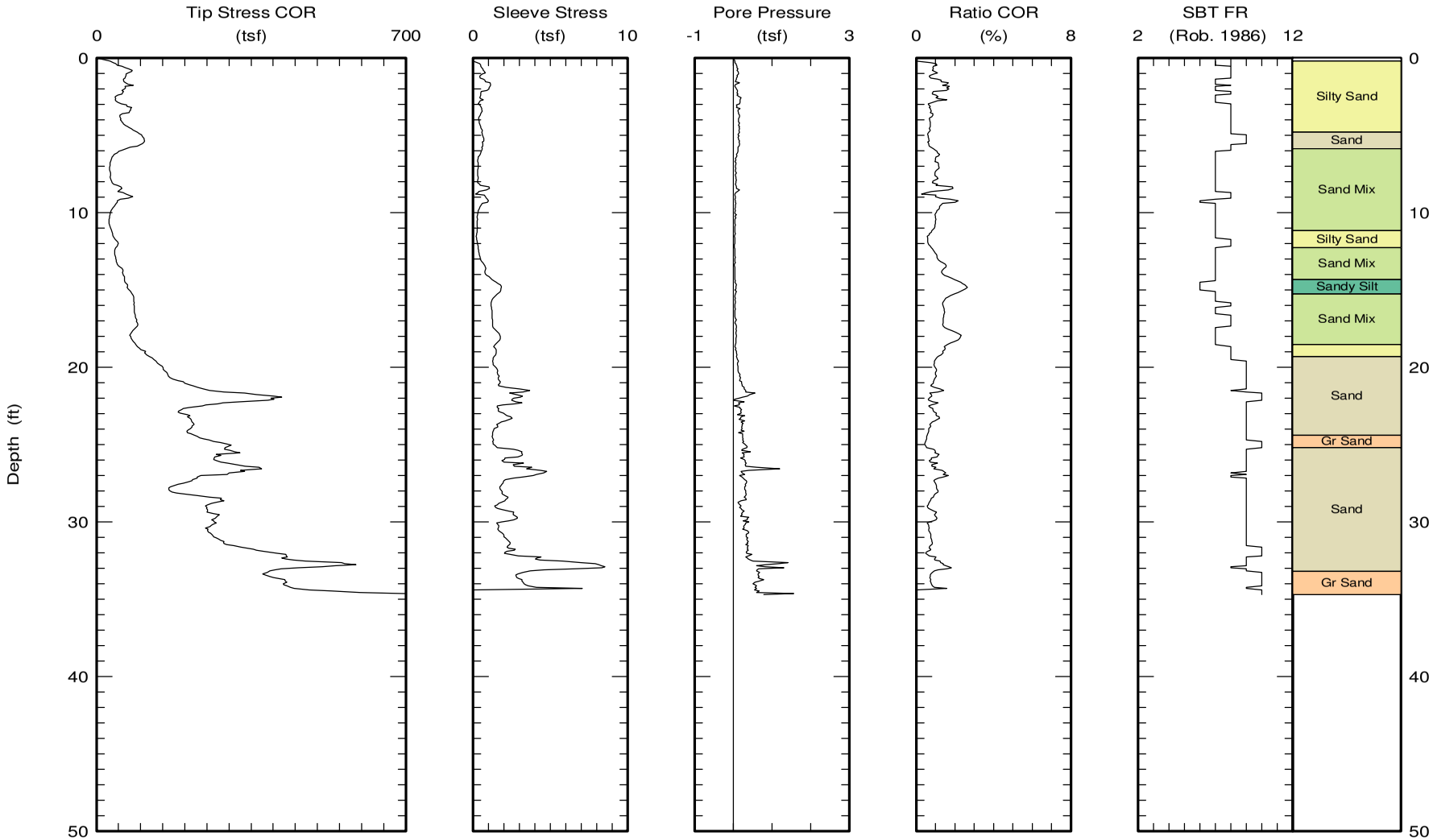

Maximum depth: 34.72 (ft)

Test ID: DYC-03
File: Z22L0903C.ecp

Kehoe Testing & Engineering Office: (714) 901-7270 Fax: (714) 901-7289 rich@kehoetesting.com skehoe@msn.com	CPT Data 30 ton rig	Date: 22/Jul/2009 Test ID: DYC-03A Project: Burbank
	Customer: Diaz, Yourman & Associates Job Site: 2009-010-01	

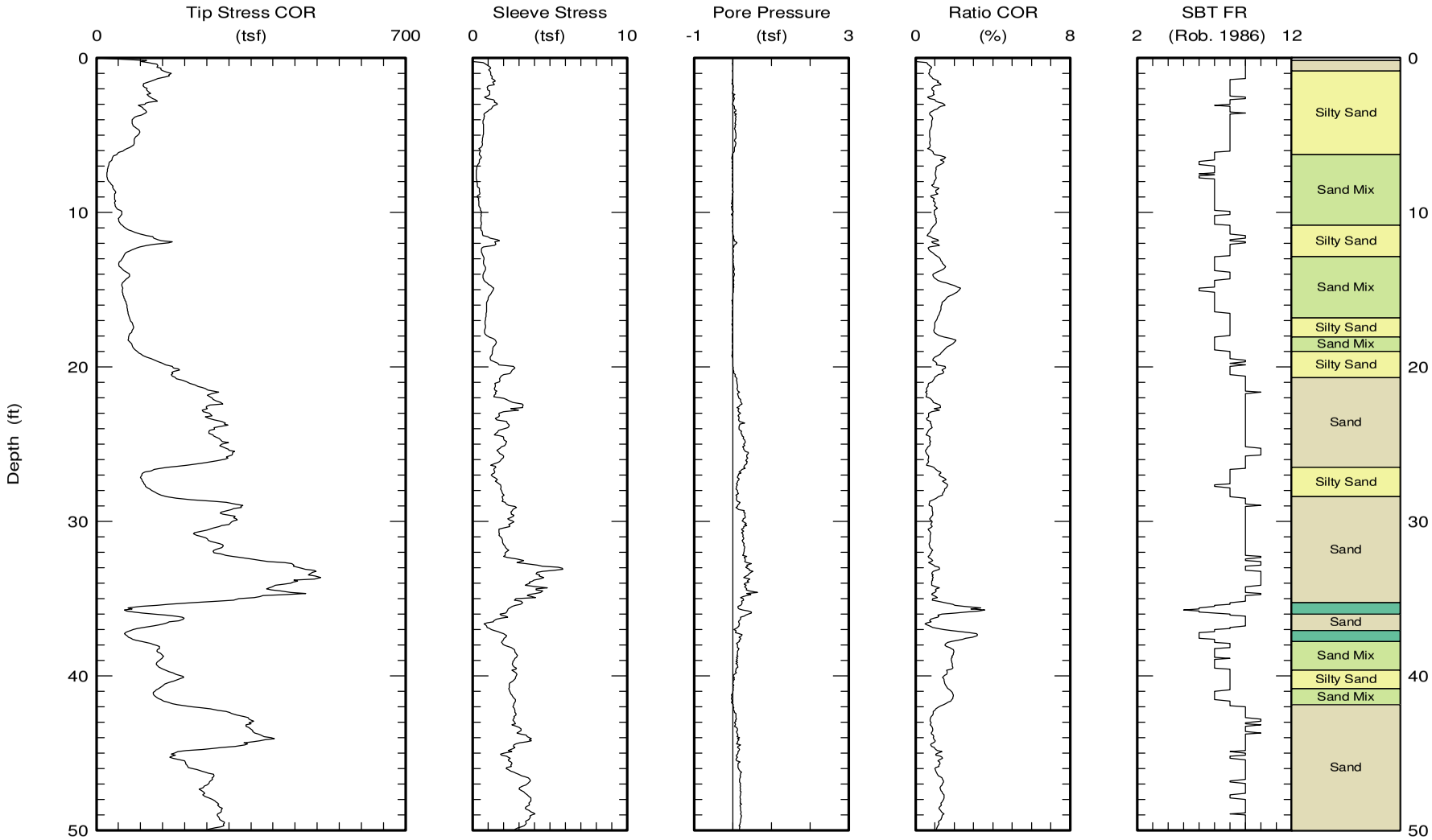

Maximum depth: 68.86 (ft)

Kehoe Testing & Engineering Office: (714) 901-7270 Fax: (714) 901-7289 rich@kehoetesting.com skehoe@msn.com	CPT Data 30 ton rig	Date: 22/Jul/2009 Test ID: DYC-03A Project: Burbank
	Customer: Diaz, Yourman & Associates Job Site: 2009-010-01	

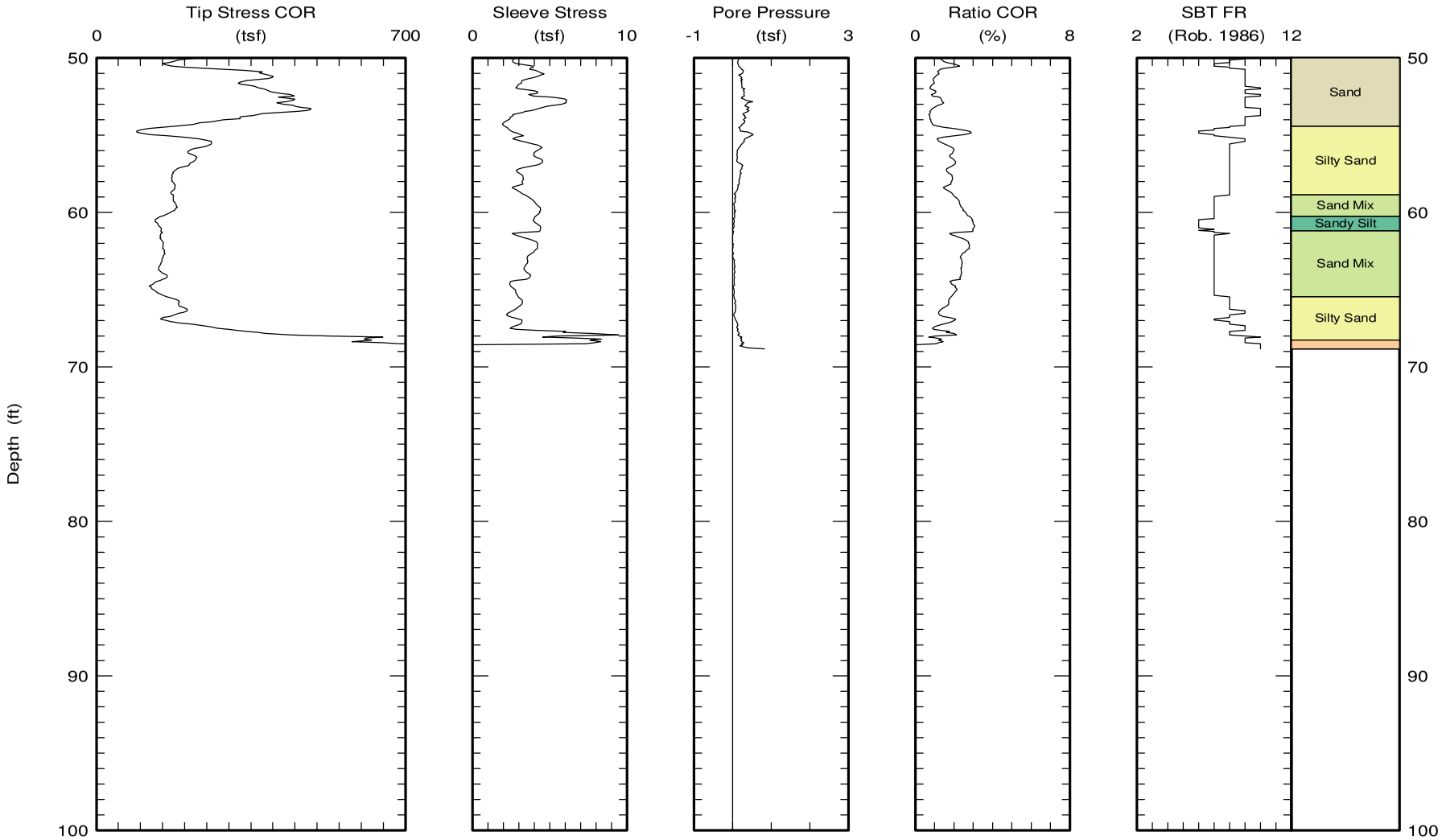

Maximum depth: 68.86 (ft)

KEHOE TESTING & ENGINEERING

CPT Classification Chart

(after Robertson and Campanella, 1988)

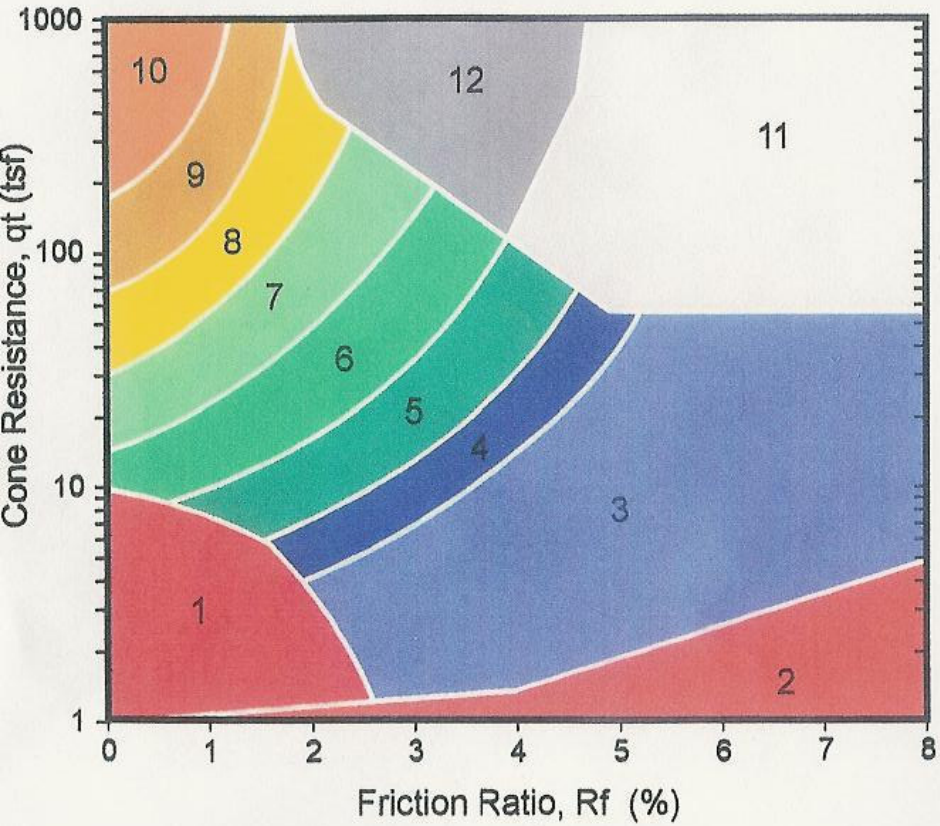

Zone	q_t / N	Soil Behavior Type	UCSCS
1	2	sensitive fine grained	OL-OH
2	1	organic material	Pt-OH
3	1	clay	CH
4	1.5	silty clay to clay	CL-CH
5	2	clayey silt to silty clay	ML-CL
6	2.5	sandy silt to clayey silt	MH-ML
7	3	silty sand to sandy silt	SM-ML
8	4	sand to silty sand	SP-SM
9	5	sand	SP
10	6	gravelly sand to sand	SW-SP
11	1	very stiff fine grained *	CL-MH
12	2	sand to clayey sand *	SP-SC

* overconsolidated or cemented

INPUT FILE: C:\temp\DYC-01.CSV

Depth (feet)	Qc(avg) (TSF)	Fs(avg) (TSF)	Rf (%)	Rf Zone (zone #)	Spt N (blow/ft)	Spt N1 (blow/ft)	Phi (degree)
0.500	199.767	1.687	0.844	9	38	57	50
1.500	148.233	1.935	1.306	8	35	53	50
2.500	72.100	0.525	0.727	8	17	26	47
3.500	33.267	0.283	0.852	7	11	17	43
4.500	38.369	0.340	0.886	7	12	18	43
5.500	58.327	0.496	0.850	8	14	21	43
6.500	104.847	0.648	0.618	8	25	38	45
7.500	89.987	0.511	0.568	8	22	33	43
8.500	155.919	0.921	0.591	9	30	45	45
9.500	198.047	1.059	0.535	9	38	57	47
10.500	257.727	1.291	0.501	9	49	68	47
11.500	182.353	1.477	0.810	9	35	45	45
12.500	365.919	2.579	0.705	10	58	70	47
13.500	325.373	2.274	0.699	10	52	59	47
14.500	413.233	2.557	0.619	10	66	71	47
15.500	344.173	2.920	0.848	9	66	67	47
16.500	262.056	1.657	0.632	9	50	49	45
17.500	260.853	1.901	0.728	9	50	47	45
18.500	269.587	2.414	0.895	9	52	46	45
19.500	249.233	1.565	0.628	9	48	41	45
20.500	120.694	1.191	0.986	8	29	24	41
21.500	180.820	1.277	0.706	9	35	28	43
22.500	238.233	1.305	0.548	9	46	35	43
23.500	111.580	1.040	0.932	8	27	20	39
24.500	130.863	1.126	0.860	9	25	18	41
25.500	251.680	1.809	0.719	9	48	33	43
26.500	258.707	2.173	0.840	9	50	34	43
27.500	284.840	2.078	0.729	9	55	36	43
28.500	346.367	2.711	0.783	10	55	35	43
29.500	303.156	2.252	0.743	9	58	36	43
30.500	272.640	2.298	0.843	9	52	32	43
31.500	205.540	2.097	1.020	9	39	23	41
32.500	256.160	2.519	0.983	9	49	28	41
33.500	253.137	2.136	0.844	9	49	28	41
34.500	236.287	1.797	0.760	9	45	25	41
35.500	210.700	1.350	0.641	9	40	22	41
36.500	225.873	1.227	0.543	9	43	23	41
37.500	258.094	1.541	0.597	9	49	25	41
38.500	183.840	1.242	0.675	9	35	18	39
39.500	168.160	1.707	1.015	9	32	16	39
40.500	185.320	2.137	1.153	9	36	18	39
41.499	227.119	2.764	1.217	9	44	22	41
42.499	105.287	1.775	1.685	7	34	17	37
43.499	76.233	1.493	1.959	7	24	12	35
44.499	107.773	1.622	1.505	8	26	13	37
45.499	145.606	1.446	0.993	9	28	14	37
46.499	273.553	2.356	0.861	9	52	26	41
47.499	360.607	3.358	0.931	9	69	35	41
48.499	340.607	2.678	0.786	10	54	27	41
49.499	153.256	2.336	1.524	8	37	19	37

INPUT FILE: C:\temp\DYC-01.CSV

Depth (feet)	Qc(avg) (TSF)	Fs(avg) (TSF)	Rf (%)	Rf Zone (zone #)	Spt N (blow/ft)	Spt N1 (blow/ft)	Phi (degree)
50.499	364.027	2.923	0.803	10	58	29	41
51.499	395.880	3.691	0.932	9	76	38	41
52.499	365.200	2.769	0.758	10	58	29	41
53.499	389.707	3.733	0.958	9	75	38	41
54.499	529.925	6.541	1.234	9	102	51	9E9
55.499	528.287	4.538	0.859	10	84	42	9E9
56.499	418.667	3.101	0.741	10	67	34	41
57.499	348.500	2.730	0.783	10	56	28	41
58.499	196.813	1.491	0.757	9	38	19	37
59.499	89.120	1.889	2.120	7	28	14	33
60.499	71.447	2.118	2.965	6	27	14	9E9
61.499	59.280	1.815	3.061	6	23	12	9E9
62.499	101.137	1.836	1.815	7	32	16	33
63.499	106.307	1.413	1.330	8	25	13	33
64.499	123.120	1.771	1.438	8	29	15	35
65.499	182.380	1.739	0.953	9	35	18	37
66.499	330.844	2.517	0.761	10	53	27	41
67.499	344.173	2.589	0.752	10	55	28	41
68.499	460.100	3.134	0.681	10	73	37	41
69.499	368.867	4.281	1.161	9	71	36	41
70.499	89.094	1.815	2.036	7	28	14	31
71.499	30.607	0.520	1.695	6	12	6	9E9
72.499	33.620	0.812	2.410	6	13	7	9E9
73.499	178.800	3.300	1.845	8	43	22	37

INPUT FILE: C:\temp\DYC-02.CSV

Depth (feet)	Qc(avg) (TSF)	Fs(avg) (TSF)	Rf (%)	Rf Zone (zone #)	Spt N (blow/ft)	Spt N1 (blow/ft)	Phi (degree)
0.500	30.907	0.217	0.703	7	10	15	50
1.500	44.227	0.337	0.763	7	14	21	47
2.500	36.913	0.281	0.760	7	12	18	45
3.500	43.893	0.654	1.490	7	14	21	45
4.500	22.819	0.178	0.777	7	7	11	41
5.500	26.947	0.210	0.779	7	9	14	41
6.500	78.207	0.564	0.721	8	19	29	45
7.500	45.340	0.383	0.844	7	14	21	41
8.500	47.931	0.351	0.731	7	15	23	41
9.500	122.953	0.960	0.781	9	24	36	45
10.500	160.480	0.855	0.533	9	31	44	45
11.500	191.867	1.048	0.546	9	37	49	45
12.500	270.331	2.029	0.751	9	52	64	47
13.500	174.340	1.514	0.868	9	33	38	45
14.500	47.340	0.827	1.747	7	15	16	37
15.500	62.760	0.601	0.958	8	15	16	39
16.500	155.612	1.196	0.769	9	30	30	43
17.500	188.867	1.734	0.918	9	36	34	43
18.500	216.993	1.697	0.782	9	42	38	43
19.500	335.333	1.991	0.594	10	54	47	45
20.500	332.919	1.744	0.524	10	53	44	45
21.500	273.933	1.703	0.621	9	52	42	45
22.500	327.240	2.971	0.908	9	63	49	45
23.500	319.087	2.041	0.640	10	51	38	45
24.500	274.587	2.760	1.005	9	53	38	43
25.500	291.167	2.191	0.752	9	56	39	43
26.500	302.333	2.661	0.880	9	58	40	43
27.500	247.980	1.667	0.672	9	48	32	43
28.500	319.460	2.286	0.715	10	51	33	43
29.500	339.863	2.766	0.814	9	65	41	43
30.500	291.680	2.391	0.820	9	56	34	43
31.500	108.773	1.694	1.556	8	26	16	39
32.500	85.340	1.743	2.041	7	27	16	37
33.500	223.369	2.304	1.032	9	43	24	41
34.500	238.620	2.225	0.932	9	46	26	41
35.500	257.267	2.540	0.987	9	49	27	41
36.500	272.067	1.907	0.701	9	52	28	41
37.500	302.044	2.338	0.774	9	58	30	43
38.500	320.067	3.113	0.973	9	61	31	43
39.500	276.733	2.477	0.895	9	53	27	41
40.500	272.167	2.564	0.942	9	52	26	41
41.499	353.425	3.022	0.855	9	68	34	43
42.499	341.800	3.239	0.948	9	65	33	43
43.499	285.320	2.355	0.825	9	55	28	41
44.499	322.567	3.377	1.047	9	62	31	41
45.499	401.294	3.179	0.792	10	64	32	43
46.499	358.720	2.579	0.719	10	57	29	41
47.499	302.727	2.617	0.864	9	58	29	41
48.499	396.993	3.003	0.756	10	63	32	43
49.499	405.619	4.218	1.040	9	78	39	43

INPUT FILE: C:\temp\DYC-02.CSV

Depth (feet)	Qc(avg) (TSF)	Fs(avg) (TSF)	Rf (%)	Rf Zone (zone #)	Spt N (blow/ft)	Spt N1 (blow/ft)	Phi (degree)
50.499	430.900	3.918	0.909	9	83	42	43
51.499	443.767	2.933	0.661	10	71	36	43
52.499	447.307	4.073	0.910	9	86	43	43
53.499	395.940	4.861	1.228	9	76	38	41
54.499	300.500	3.100	1.031	9	58	29	41
55.499	373.547	3.084	0.826	10	60	30	41
56.499	346.033	3.485	1.007	9	66	33	41
57.499	254.387	3.549	1.395	8	61	31	39
58.499	236.319	3.646	1.542	8	57	29	39
59.499	152.573	3.389	2.221	7	49	25	37
60.499	247.220	3.127	1.265	9	47	24	39
61.499	391.460	3.535	0.903	9	75	38	41
62.499	230.900	3.138	1.359	8	55	28	39
63.499	259.987	2.821	1.085	9	50	25	39
64.499	284.933	2.737	0.960	9	55	28	39
65.499	280.733	2.774	0.988	9	54	27	39
66.499	437.238	3.066	0.701	10	70	35	41
67.499	273.473	2.728	0.998	9	52	26	39
68.499	112.267	2.667	2.376	7	36	18	33
69.499	277.113	2.285	0.824	9	53	27	39
70.499	696.600	0.000	0.000	10	9E9	9E9	9E9

INPUT FILE: C:\temp\DYC-03.CSV

Depth (feet)	Qc(avg) (TSF)	Fs(avg) (TSF)	Rf (%)	Rf Zone (zone #)	Spt N (blow/ft)	Spt N1 (blow/ft)	Phi (degree)
0.500	51.880	0.435	0.837	7	17	26	50
1.500	66.773	0.819	1.227	7	21	32	50
2.500	51.220	0.559	1.091	7	16	24	47
3.500	66.513	0.498	0.748	8	16	24	45
4.500	74.887	0.511	0.682	8	18	27	45
5.500	94.500	0.648	0.686	8	23	35	45
6.500	37.093	0.401	1.082	7	12	18	41
7.500	31.160	0.329	1.054	7	10	15	39
8.500	54.444	0.594	1.091	7	17	26	41
9.500	44.527	0.639	1.434	7	14	21	39
10.500	29.587	0.293	0.991	7	9	13	37
11.500	38.967	0.268	0.688	7	12	16	39
12.500	43.706	0.389	0.891	7	14	17	39
13.500	52.827	0.733	1.386	7	17	20	39
14.500	66.340	1.455	2.193	7	21	23	39
15.500	82.373	1.429	1.735	7	26	27	41
16.500	87.025	1.240	1.425	7	28	28	41
17.500	85.800	1.455	1.696	7	27	26	41
18.500	89.513	1.571	1.755	7	29	27	41
19.500	128.067	1.369	1.069	8	31	27	41
20.500	165.956	1.638	0.987	9	32	27	43
21.500	288.940	2.607	0.902	9	55	45	45
22.500	262.053	2.123	0.810	9	50	39	43
23.500	213.213	1.973	0.925	9	41	31	43
24.500	237.344	1.301	0.548	9	45	33	43
25.500	289.300	2.494	0.862	9	55	39	43
26.500	316.653	3.452	1.090	9	61	42	43
27.500	197.507	2.198	1.113	9	38	25	41
28.500	240.127	1.957	0.815	9	46	30	43
29.500	260.613	2.322	0.891	9	50	32	43
30.500	258.633	1.758	0.680	9	50	31	43
31.500	314.153	2.339	0.744	9	60	36	43
32.500	474.913	5.367	1.130	9	91	54	45
33.500	407.325	3.711	0.911	9	78	45	45
34.500	423.400	3.370	0.796	10	68	38	45

INPUT FILE: C:\temp\DYC-03A.CSV

Depth (feet)	Qc(avg) (TSF)	Fs(avg) (TSF)	Rf (%)	Rf Zone (zone #)	Spt N (blow/ft)	Spt N1 (blow/ft)	Phi (degree)
0.500	128.653	0.763	0.593	9	25	38	50
1.500	130.867	1.249	0.954	8	31	47	50
2.500	121.173	1.147	0.947	8	29	44	50
3.500	102.500	1.034	1.009	8	25	38	47
4.500	88.569	0.704	0.795	8	21	32	45
5.500	82.193	0.609	0.741	8	20	30	45
6.500	39.033	0.472	1.209	7	12	18	41
7.500	25.107	0.263	1.049	6	10	15	9E9
8.500	38.119	0.380	0.997	7	12	18	39
9.500	45.333	0.452	0.997	7	14	21	39
10.500	54.920	0.555	1.011	7	18	25	41
11.500	110.853	0.951	0.858	8	27	35	43
12.500	86.644	0.825	0.952	8	21	26	41
13.500	57.780	0.767	1.328	7	18	21	39
14.500	64.533	0.931	1.442	7	21	23	39
15.500	62.640	1.093	1.746	7	20	21	39
16.500	72.206	0.889	1.232	8	17	17	39
17.500	80.467	0.819	1.018	8	19	18	39
18.500	79.067	1.377	1.742	7	25	23	39
19.500	125.340	1.411	1.126	8	30	26	41
20.500	181.144	2.193	1.211	8	43	36	43
21.500	246.760	1.479	0.599	9	47	38	43
22.500	259.813	2.673	1.029	9	50	39	43
23.500	271.113	1.956	0.721	9	52	39	43
24.500	271.869	1.885	0.693	9	52	38	43
25.500	297.427	1.871	0.629	10	47	33	43
26.500	177.320	1.477	0.833	9	34	23	41
27.500	108.007	1.633	1.511	8	26	17	39
28.500	201.407	2.001	0.994	9	39	25	41
29.500	307.337	2.563	0.834	9	59	37	43
30.500	260.140	2.033	0.781	9	50	31	43
31.500	268.467	2.056	0.766	9	51	30	43
32.500	360.740	2.935	0.813	10	58	34	43
33.500	477.412	4.532	0.949	9	91	52	45
34.500	404.133	3.997	0.989	9	77	43	43
35.500	156.440	2.624	1.677	8	37	20	39
36.500	157.420	1.399	0.889	9	30	16	39
37.500	86.069	1.881	2.185	7	27	14	37
38.500	143.313	2.666	1.860	7	46	24	39
39.500	152.300	2.697	1.771	8	36	18	39
40.500	164.253	2.525	1.537	8	39	20	39
41.499	151.362	2.617	1.729	8	36	18	39
42.499	308.613	2.709	0.878	9	59	30	41
43.499	354.313	3.031	0.856	9	68	34	43
44.499	309.553	2.991	0.966	9	59	30	41
45.499	190.575	2.281	1.197	9	37	19	39
46.499	253.727	3.174	1.251	9	49	25	41
47.499	243.773	3.371	1.383	8	58	29	41
48.499	276.007	3.679	1.333	9	53	27	41
49.499	275.431	3.391	1.231	9	53	27	41

INPUT FILE: C:\temp\DYC-03A.CSV

Depth (feet)	Qc(avg) (TSF)	Fs(avg) (TSF)	Rf (%)	Rf Zone (zone #)	Spt N (blow/ft)	Spt N1 (blow/ft)	Phi (degree)
50.499	231.287	3.435	1.485	8	55	28	39
51.499	361.540	3.483	0.963	9	69	35	41
52.499	418.500	4.779	1.142	9	80	40	43
53.499	412.973	3.643	0.882	9	79	40	41
54.499	171.381	2.366	1.380	8	41	21	37
55.499	229.860	3.627	1.578	8	55	28	39
56.499	216.187	4.213	1.948	8	52	26	39
57.499	176.987	3.179	1.796	8	42	21	37
58.499	173.463	3.072	1.771	8	42	21	37
59.499	176.200	4.130	2.344	7	56	28	37
60.499	143.300	4.137	2.887	6	55	28	9E9
61.499	145.873	3.635	2.492	7	47	24	37
62.499	151.081	3.940	2.608	7	48	24	37
63.499	144.800	3.475	2.400	7	46	23	37
64.499	138.853	2.949	2.124	7	44	22	35
65.499	160.587	2.995	1.865	7	51	26	37
66.499	180.181	2.682	1.488	8	43	22	37
67.499	291.467	4.391	1.506	8	70	35	39
68.499	584.300	4.690	0.803	10	93	47	9E9

Program: CPTINT - CPT Cone Interpretation Program
Version: 5.2
Table File by: Dr. R. G. (DICK) Campanella, P.Eng.
Rev. Dated: April 3, 2002

Parameter	Methods	Refer. Number	Valid Soil Type	Valid Zone
Depth average see NOTE #1	Depth averaged over specified range (see menu)		All	All
Parameter Averaging	Averaged over range specified for depth. If no values exist, your choice is zero's or no value		All	All
Qc, Tip Stress	measured tip force/area	#6,#8	All	All
Qt corrtd for U2 see NOTE #2	Qt = Qc + (1 - a) x U2 and a = tip area ratio Defaults to U2 if given or uses U1 or U3 times Const.	#6,#8	All	All
[Note: Input value from input file is used if defined, not calculated]				
Q (Qt Normalized)	$Q = \frac{Qt - sv}{sv'}$	#9 & 13	All	All
Fs	measured sleeve force/area	#6,#8	All	All
Rf Friction Ratio (if Rf>8, Rf=8)	$Rf = \frac{Fs}{Qt} \times 100\%$	#6,#8	All	All
F (Rf Normalized)	$F = \frac{Fs}{(Qt - sv)} \times 100\%$	#9 & 13	All	All
Gamma Total Unit Weight (Soil + Water) see NOTE #3	Based on Rf or Bq Classif. Zone Zone # Gamma = kN/m^3 1 Qt<4bar 15.70 1 Qt=4bar 17.30 2 Rf<5% 13.36 2 Rf=5% 11.80 2 Bq Zone 12.58 3 Qt<10bar 18.86 3 Qt=10bar 19.65 4, 5 & 6 Qt<20bar 18.86 4, 5 & 6 Qt=20bar 19.65 7 18.86 8 & 9 19.65 10 20.44 11 & 12 21.22		All	All

Parameter	Methods	Refer. Number	Valid Soil Type	Valid Zone
U Penetration Pore Pressure see NOTE #4	U1,measured on Face of tip U2,measured Behind Tip at shoulder (std location) U3,measured Behind Friction Sleeve		All	All
Water Table	Depth below ground surface to where pore pressure = 0 Make negative if water level is above ground		All	All
Uo Hydrostatic Pore Pressure see NOTE #4	Uo = water depth,Hw x unit weight water, Gamma or Uo=Hw=depth-depth to water table if depth<water table,Uo = 0		All	All
dU Excess Pore Pressure	dU = U2 - Uo Defaults to U2 if given or uses U1 or U3 x const.		All	All
DPPR (Differential Pore Pressure Ratio)	$DPPR = \frac{dU}{Qt} = \frac{U - Uo}{Qt}$ Defaults to U2 if given or uses U1 or U3 x const.	#6,#8	All	All
Bq	$Bq = \frac{dU}{Qt - sv}$	# 4 # 8 # 13	All	All
OS (Overburden Stress)	OS = sv = S (Gamma x Depth)		All	All
EOS (Effective Overburden Stress)	EOS = sv' = OS - Uo = sv - Uo		All	All
Rf Zone Soil Behavior Type see NOTE #5	Classification chart for Qc and Rf Zone # = Soil Behavior Type 1=sensitive fine grained 2=organic material 3=clay 4=silty clay 5=clayey silt 6=sandy silt 7=silty sand 8=fine sand 9=sand 10=gravelly sand 11=very stiff fine grained ¥ 12=sand to clayey sand ¥ ¥ overconsolidated or cemented	#6 #8, Fig4.3	All	1<Qt<1000bar 0<Rf<8%

Parameter	Methods	Refer. Number	Valid Soil Type	Valid Zone
Bq Zone Soil Behavior Type	Classification chart for Qc and Bq (same zone #'s as Rf above)	#8 Fig 4.3	All	0<Qt<1000bar -0.1<Bq<1.4
Spt N(60) Standard Penetration Test (Blows/foot) at 60% Energy After R&C(1983) see NOTE #6	Qt/N ratio per zone Zone # Qt/N Zone # Qt/N 1 2 7 3 2 1 8 4 3 1 9 5 4 1.5 10 6 5 2 11 1 6 2.5 12 2	# 7 # 8 Fig 4.2	All	All
Spt N1(60) Normalized for Overburden str	Spt N1(60) = Cn x Spt N(60) where Cn = (sv')^(-0.77)	# 8	All	0.5<Cn<1.5
Dr Relative Density see NOTE #7 Compressibility	Specific Sands: $Dr = \frac{100}{C2} * \ln \left(\frac{Qc}{C1 + C0\ sv'} \right)$ where: All are NC & UNAGED Sand | C0 | C1 | C2 Ticino | 17.37 | .558 | 2.58 Schmertmann | 15.32 | .520 | 2.75	# 8 # 1 # 1	Sand	7 to 10 0<Qt<500bar 0<sv'<5bar
moderate high				
all	ALL SANDS: NC, OC, ALL TESTS $Dr = C3 + C4 \log_{10} \left(\frac{Qc + C1}{sv' + C2} \right)$ where: C0 | C1 | C2 | C3 | C4 0.100 | 0.0981 | 0.5 | -98 | 66	# 5	Sand	7 to 10 (6 possible)
Phi Friction Angle	Methods: 1) Robertson & Campanella 2) Durgunoglu & Mitchell 3) Janbu beta = +15 degree 4) Janbu beta = 0 degree 5) Janbu beta = -15 degree	#6, #8 # 2 #6, #8 #6, #8 #6, #8	Sand	7 to 10 & 6 0<Qt<500bar 0<sv'<4bar 29<phi<49

Parameter	Methods	Refer. Number	Valid Soil Type	Valid Zone
Gmax Maximum Shear Modulus at very small strains	Clay: Gmax = alpha x Qt	# 8 Fig4.18	Clay	1 to 6
	Sand: Digitized figure of Qc vs Gmax with interpolation between sv'curves,R&C method	# 6 # 8 Fig4.13	Sand	(6 possible) 7 to 10 .25<sv'<8bar
CSR(Qc), t/s LEVEL ground + Liquefaction SAND Resistance see NOTE #8	Seed's CSR vs N1(60) graph for specified equake Magnitude.Can include silty sand corr. for Zone 7. N1(60) from CPT correlations.	# 11 # 12	Sand	7 to 10 (6 possible)
CSR(Eq), t/s Cyclic Stress Ratio applied by design quake	$CSR(Eq) = 0.65 \frac{Amax}{g} \frac{sv}{svo'} rd$ Amax=max surface acceleratn including Amplification	# 12 # 3	Sand	7 to 10 (6 possible)
[Note: Input value from input file is used if defined, & not calculated]				
rd Reduction Factor to find CSR(Eq)	Digitized graph to use for depth vs rd: 1) Seed's mean 2) Fraser Delta	# 12 # 3	Sand	(6 possible) 7 to 10 0<depth<30m
FL,Safety Factor against Liquefaction	FL = CSR(Qc)/CSR(Eq)	# 3	Sand	7 to 10 (6 possible)
Qcr Critical Bearng required to resist Liquefctn	Qcr backcalculated from CSR(Eq) for a specified FL. Qcr is only for the given GWT,EOS,OS,Amax/g & Eq.Mag	# 12	Sand	7 to 10 (6 possible)
Su, Undrained Shear Strength of CLAY METHODS:	Nk: $Su = \frac{Qc - st}{Nk}$	# 8	Clay	1 to 6
	Nke: $Su = \frac{Qt - U2}{Nke}$		Clay	1 to 6
	Nkt: $Su = \frac{Qt - sv}{Nkt}$		Clay	1 to 6
	Nc: $Su = \frac{Qt}{Nc}$		Clay	1 to 6
see NOTE #9	NdU: $Su = \frac{dU2 \text{ (dU1 or dU3)}}{NdU}$		Clay	1 to 6

Parameter	Methods	Refer. Number	Valid Soil Type	Valid Zone
Su/EOS	$Su/EOS = \frac{Su}{sv'}$	# 8	Clay	1 to 6
Ko (NC) Normally Consolidated	$(Ko)NC = 1 - Sin(f)$ see NOTE #10	# 8	Sand	7 to 10 (6 possible)
Ko (OC) Over Consolidated	$(Ko)OC = (Ko)NC \times OCR^{0.42}$	# 8	Sand	7 to 10 (6 possible)
E25 Youngs Modulus	E25 = alpha x Qt where user input alpha	# 8 4.11&12	Sand	(6) 7 to 10 0<Qt<500bar
M Constrained Modulus	CLAY: M = alpha x Qt where user input alpha	# 8 Tabl4.3	Clay	1 to 6
	SAND: Methods: Qt: M = alpha x Qt		Sand	7 to 10 (6 possible)
	Baldi: $\frac{M}{Qt} = C0 \times pa \left(\frac{sv' + C1}{pa}\right) \times OCR^{C2} \times \exp(C3\ Dr)$	# 8 Fig4.10	Sand	7 to 10
OCR (Clay) Over-Consolidation Ratio see NOTE #11	$OCR = \left(\frac{Su}{svo'}\right) \Big/ \left(1.25 + \left(\frac{Su}{svo'}\right) + NC\right)$	# 6		
		# 8 Fig4.19	Clay	1 to 6
Ic Material Index After J&D(1993) see NOTE #18	$Ic = \left(3 - \log_{10}(Q(1-Bq))\right)^2$	# 13	All	All
	$+ \left(1.5 + 1.3 \log_{10} F\right)^{2+0.5}$	# 17		
Spt N(60) Standard Penetration Test (Blows/foot) at 60% Energy After J&D(1993) see NOTE #16	$Qc/N = 8.5(1-(Ic/4.75))$ where Qc in bars	# 13	All	All

Parameter	Methods	Refer. Number	Valid Soil Type	Valid Zone
State Parameter State,(e-units) Current Void Void Ratio minus Critical Void Ratio	$\text{State} = \ln\left[\dfrac{3M + 8.5M/F}{Q(1-Bq)}\right] \Big/ \left(11.9 - 1.33F\right)$ $M = \dfrac{6 \sin fcv}{3 - \sin fcv}$ fcv = const. vol. Phi angle	# 14	All	All
Fines Content FC(%) Percent less than #200 Sieve After Davies,99	FC(%) = 42.4179(Ic) - 54.8574 FC(%) = 0% if Ic < 1.2933 FC(%) = 100% if Ic > 3.6508	# 15	All	All
OCR (Clay) Overcons. Ratio by Pore Press. U1 & U2 or U1 & U3 see NOTE #17	OCR = 0.5 + 1.50(PPD) PPD = (U1 - U2)/Uo or PPD = (U1 - U3)/Uo and default 0.5 & 1.5 are settable	# 16	Clay	1 to 6

1. Depth averaging may be in 0.5, 1, 2.5 or 5 ft. intervals or 0.1, 0.25, 0.5 or 1.0 m intervals, or no depth averaging if zero is selected. The average is the mean value of the readings in the interval. The depth value is the mid-depth of the averaged interval. It is convenient to start at half the depth averaging interval. For example, if you want "even" depths and the depth averaging is set at 0.50 m then start at 0.25 to get values of depth of 0.5, 1.0, 1.5, etc.

2. Basic input CPTU data columns are for Depth, Qc, Fs, U1, U2, U3, INC and TEMP may be selected. In addition the following parameters may also be specified as an INPUT data column: Qt, Gamma, Uo, Spt N, Rf Zone, Bq Zone and CSR(EQ). These values will be used where required to obtain other interpreted parameters. If they are not specified the program will estimate them when they are required. For example, you can create an OUTPUT data file of any of the above parameters and then edit some or all of the values to suite your measurements or your desires to specify their values. You can do that with "Gamma" values to input your measurements of unit weight, or with "Uo" if you want to input values of pore water pressure other than hydrostatic, or with any of the other input parameters. You would use your edited file of adjusted data as your new INPUT data file. Thus, you can specify these parameters if you want to override the Program's values.

You can also use the designated value of "9E9" to denote an unknown value.

You can use the "OTHER" designation to input other data that exists on your input file and identify its units. This allows you to output it, without operating on it, if you choose.

It is best NOT to use depth averaging when using input data that is not continuous at regular depth intervals. Always use DEPTH AVERAGING with extreme caution since the program averages ALL INPUT parameters over the interval chosen irregardless of soil type. Careful use of start and end depth choises can make depth averaging very effective.

3. Since there is no data in the file within the initial depth interval, a default Gamma (unit weight) must be specified from the surface to the starting depth. This is done in the "Param" Menu in units of kN/m^3 (1kN/m^3=6.36pcf). Also, you can specify the values of Gamma to be used by the program as in NOTE #2 above.

4. If pore pressures are not measured by the cone then the program will take Qc as being equal to Qt for all interpretations requiring Qt. Also, Uo may be specified in the input file as a column of Uo vs depth values, if the water pressures are not hydrostatic. See NOTE #2 for more info on customizing input data.

5. You can choose to use either the Rf classif. Zone or the Bq classif. Zone to divide soil into Undrained Parameters (Zones 1 to 6) and Drained Parameters (Zones 7 to 10) in the "Param" Menu. (However, in order to use the Bq Zone you must have Pore Pressure, U2, data.) Also, you may choose to switch Zone 6 to a Drained Zone from its Undrained Zone status. This is done if you feel that the soil identified as Zone 6 (sandy silt) is really coaser (using other sources of information) and/or you want it analyzed as a Drained rather than Undrained soil. Finally, the soil behavior names in each zone were shortened in version 5.0 for simplicity. For example, Zone 6 was named "sandy silt to clayey silt" but was shortened to "sandy silt".

6. Spt N is the same as Spt N(60) for 60% transferred energy. This value is calculated from the Qt/N ratios given for each Soil Zone (you can specify either Rf or Bq Zone) and these values are used in the Level Ground Liquefaction analysis. Values of Spt N may be specified in the Input File, if indepedently measured values are to be used. We suggest that you not use depth averaging if you only have selected Spt N values at a few depths. You may use "9E9" for missing data.

7. If Dr values are negative then soil is very loose or likely more of an undrained soil like a silty sand rather than a drained soil for which the Dr correlations were developed. Use Dr interpretations very cautiously since they also assume the soil is free draining, uncemented, unaged and has the same compressibility of grains as the soil used for the correlations in chamber calibration tests.

8. The simplified sand liquefaction analysis for level ground according to Seed et al requires Spt N1(60) and earthquake magnitude to obtain the cyclic stress ratio to cause liquefaction, CSR(Qc). The design maximum ground acceleration, the depth-reduction factor, Rd, and overburden total and effective stresses are required to calculate the cyclic stress ratio applied by the design earthquake, CSR(EQ). The program estimates the N1(60) values from the cone stresses, the operator identifies the earthquake magnitude and Seed et al chart is used to get CSR(Qc). The program also calculates CSR(EQ) from the user specified maximum ground acceleration including any amplification factors, the calculated overburden stresses and either Seed's mean or the Fraser Delta Rd factor. The Fraser Delta is used only when amplification factors of the order of 2 or more are used. See Reference Nos. 3, 6, 11 and 12 for more information. The user can INPUT specific values for Spt N, CSR(EQ), Soil Zones, Gamma's, etc. in order to customize the analysis for the existing data base of information. It is recommended that you do not use depth averaging when using specific input data but make calculations at specific depths where external input data exists. The calculated value of Qcr is the minimum value of cone bearing stress required at a given depth such that the factor of safety against liquefaction, or the ratio FL = CSR(Qc)/CSR(EQ) have the specified value for a given earthquake magnitude, max. ground acceleration, depth reduction factor, and calculated overburden stresses. This value of Qcr is useful to identify the required minimum level of soil improvement for a given design condition.

9. The NdU method to calculate undrained shear strength has been extended to allow the user to choose either dU1, or dU2 or dU3 provided such pore pressure measurements exist.

10. The Overconsolidation Ratio, OCR, for the sand must be estimated by the user in the "Param" menu if you want to estimate Ko in the sand layers. For the typical normally consolidated sand, OCR = 1.0.

11. It is currently only possible to estimate the OCR for a clay, which makes use of the correlations obtained from extensive laboratory tests.

12. An improved calculation and print routine was added to version 5.0 which uses swap routines to reduce memory requirements, but slows down the calculations.

13. The classification charts for Rf has been extended at all boundaries such that values of Rf>8 and values of Qc<1.00 are possible. The Bq classification chart which requires dU2 and can now accept values of Bq>1.2 and Qt<1. Unfortunately, this feature does not work.

14. Version 5.1ppd added several enhancements to the program. You may input an average vertical flow gradient, which is applied over the entire profile depth to be analysed so adjust the depth of interest accordingly. Zero gives hydrostatic and no flow, a negative gradient is upward flow which increases pore pressure and reduces vertical effective stress. A positive gradient gives downward flow.

15. A State Parameter or current void ratio minus critical void ratio is calculated according to the paper by Ref. 14, Plewes, Davies and Jefferies, 1994.

16. An alternate method to estimate SPT from CPT is provided according to Ref. 13, Jefferies and Davies, 1993 in ASTM.

17. An alternate method to estimate OCR in clays is provided which uses the measured pore pressure difference, ppd, so both U1 and U2 or U1 and U3 must be measured at the same time. (see Ref. 16)

18. Version 5.2 added the value Ic (Material Index) according to Jefferies & Davies, 1993, 1991 (Ref. 13 & 17) which combines all Normalized parameters Q, F and Bq.
(Note: QtN was changed to Q and RfN to F.)

18A. In Version 5.2, if at any depth the value of Bq>1 (in very sensitive saturated soil)then Bq is made equal to 0.99. Also, if Rf>8 it is made 7.99. These changes have a negligable effect on the results.

19. FC(%) or percent of dry weight less than #200 sieve (.074mm) was also added according to Davies, 1999 Ref.#15)

REFERENCES:

1) Bellotti, R., Crippa, V., Pedroni, S., Baldi, G., Fretti, C., Ostricati, D., Ghionna, V., Jamiolkowski, M., Pasqalini, E., 1985, "Laboratory Validation Of In-Situ Tests", Italian Geotechnical Society Jubilee Volume for the XI ICSMFE, S.F., Cal.

2) Durgunoglu, H.T. and Mitchell, J.K., 1975, "Static Penetration Resistance of Soils: I-Analysis", Proceedings of the ASCE Specialty Conference on In-Situ Measurement of Soil Properties, Raleigh, NC

3) "Earthquake Design in the Fraser Delta - Geotechnical Aspects" Task Force Report, May 1991 - Co-chair: Dr. P. M. Byrne, Univ. of British Columbia, Dept. of Civil Engineering, Vancouver, B.C., V6T 1Z4.

4) Janbu, N. and Senneset, K., 1974,. "Effective Stress Interpretation of In Situ Static Penetratuion Tests", Proceedings of the European Symposium on Penetration Testing,Stockholm Sweden, Vol. 2.2

5) Jamiolkowski, M., Ladd, C.C., Germaine, J.T., Lancellotta, R., 1985, "New Developments in Field and Laboratory Testing of Soils", State of the Art Address for XIth ICSMFE, San Francisco.

6) Robertson, P.K. and Campanella, R.G., 1983, "Interpretation of Cone Penetration Tests - PART I (SAND) and PART II (CLAY)", Canadian Geotechnical Journal, Vol. 20, No. 4.

7) Robertson, P.K., Campanella, R.G., and Wightman, A., 1983, "SPT - CPT Correlations", Journal of the Geotechnical Division, ASCE, Vol. 109, Nov.

8) Robertson, P.K. and Campanella, R.G., 1989 "Guidelines for Geotechnical Design using CPT and CPTU", Soil Mechanics Series N0. 120, Civil Eng. Dept., Univ. of B.C., Vancouver, B.C., V6T 1Z4, Sept 1989.

9) Robertson, P.K., 1990, Soil Classification using the CPT, Canadian Geot. Journal, V.27,No.1, Feb, p151-158.

10) Schmertmann, J.H., 1976, "An updated Correlation between Relative Density, Dr and Fugro-type Electric Cone Bearing, qc" Department of Civil Engineering Report, University of Florida, July.

11) Seed, H.B., Idriss, I.M. and Arango, I., 1983, "Evaluation of Liquefaction Potential Using Field Performance Data", Journal of Geot. Engrg. Div., ASCE, Vol. 109, No. 3, March 1983, pp. 458-482.

12) Seed, H.B. and Idriss, I.M., 1971, "Simplified procedure for Evaluation Soil Liquefaction Potential", Journal of Soil Mechanics and Foundations, ASCE, SM9, Vol. 97, Sept.

13) Jefferies, M.G. and Davies, M.P., 1993, "Use of CPTu to Estimate Equivalent SPT N60", ASTM, Geotechnical Testing Journal, V.16:4, 458-468.

14) Plewes, H.D., Davies, M.P. and Jefferies, M.G., 1994, "CPT based Screening Procedure for Evaluating Liquefaction Susceptibility", Proc. Canadian Geot. Conference, Halifax

15) Davies, M.P., 1999, "Piezocone Technology for the Geoenvironmental Characterization of Mine Tailings", PhD Thesis, Univ. of British Columbia, Civil Eng. Dept, Vancouver, BC, V6T 1Z4, Canada.

16) Sully, J.P., Campanella, R.G. and Robertson, P.K., 1988, "Overconsolidation Ratio of Clays from Penetration Pore Pressures", ASCE Journal of Geotechnical Engineering, Vol. 114, No. 2, February, pp. 209-216.

17) Jefferies, M.G. and Davies, M.P.,1991,"Soil Classification by the CPT":Discussion.Canadian Geot. Jour.,V28(1),173-6

APPENDIX B

LIQUEFACTION AND SEISMIC SETTLEMENT ANALYSIS

APPENDIX B - SEISMIC SETTLEMENT ANALYSES

Settlement of level ground due to three levels of earthquake shaking induced by liquefaction were estimated based on procedures presented in the Earthquake Engineering Research Institute monograph (2008) for standard penetration test (SPT)-based analysis. For the cone penetration test (CPT)-based analysis, the Youd et al. (2001) approach was used. The results are summarized in Table 7 of the text and Table B1 in this appendix.

The seismic settlement of sandy soils located above the groundwater levels was calculated using procedures outlined by Tokimatsu and Seed (1987). The results of these calculations are presented in Table 7 of the text and Table B1 in this appendix.

Table B1 - SUMMARY OF EVALUATION OF SEISMIC SETTLEMENT POTENTIAL

ID	CALCULATED DRY SAND SETTLEMENT (inches)			BOTTOM DEPTH (ELEVATION) OF LOWEST SOIL WITH SETTLEMENT (feet)		
	PGA (g)			PGA (g)		
	0.19	0.38	0.68	0.19	0.38	0.68
05-16	<1	<1	1.5	45 (618)	45 (618)	45 (618)
05-23	<1	<1	4.5	50 (554)	50 (554)	50 (554)
05-24	<1	<1	2	50 (550)	50 (550)	50 (550)
05-46	<1	<1	1.5	20 (588)	35 (573)	35 (573)
06-64	<1	1.5	3.5	50 (624)	50 (624)	50 (624)
06-67	<1	<1	1.5	50 (648)	50 (648)	50 (648)
06-68	<1	<1	1.5	50 (620)	50 (620)	50 (620)
06-69	<1	1.5	3.5	45 (634)	45 (634)	45 (634)
06-70	<1	<1	2.5	45 (642)	45 (642)	45 (642)
06-72	<1	1.5	4	45 (553)	45 (553)	45 (553)
06-73	<1	1	3	35 (569)	35 (569)	35 (569)
06-74	<1	1.5	5	50 (562)	50 (562)	50 (562)
06-75	<1	<1	2.5	50 (566)	50 (566)	50 (566)
06-76	<1	1.0	3.0	50 (570)	50 (570)	50 (570)
06-77	<1	1	3	40 (563)	40 (563)	40 (563)
06-78	<1	<1	2.5	45 (587)	45 (587)	45 (587)
06-79	<1	1.5	4.5	50 (585)	50 (585)	50 (585)
06-83	<1	<1	1.5	40 (580)	40 (580)	40 (580)
06-85	<1	<1	2	50 (586)	50 (586)	50 (586)
06-87	<1	<1	2	50 (600)	50 (600)	50 (600)
06-88	<1	<1	2	50 (588)	50 (588)	50 (588)
06-89	<1	<1	1	45 (597)	45 (597)	45 (597)
06-90	<1	<1	2	45 (611)	45 (611)	45 (611)
06-91	<1	<1	2	50 (614)	50 (614)	50 (614)
06-92	<1	1	3.0	35 (570)	35 (570)	35 (570)
06-93	<1	<1	<1	50 (617)	50 (617)	50 (617)
06-96	<1	<1	<1	40 (570)	40 (570)	40 (570)
06-97	<1	<1	1.5	50 (610)	50 (610)	50 (610)

Notes:
- Settlement values set to zero when (N1)60 > 30 for a layer.
- PGA = peak ground acceleration.

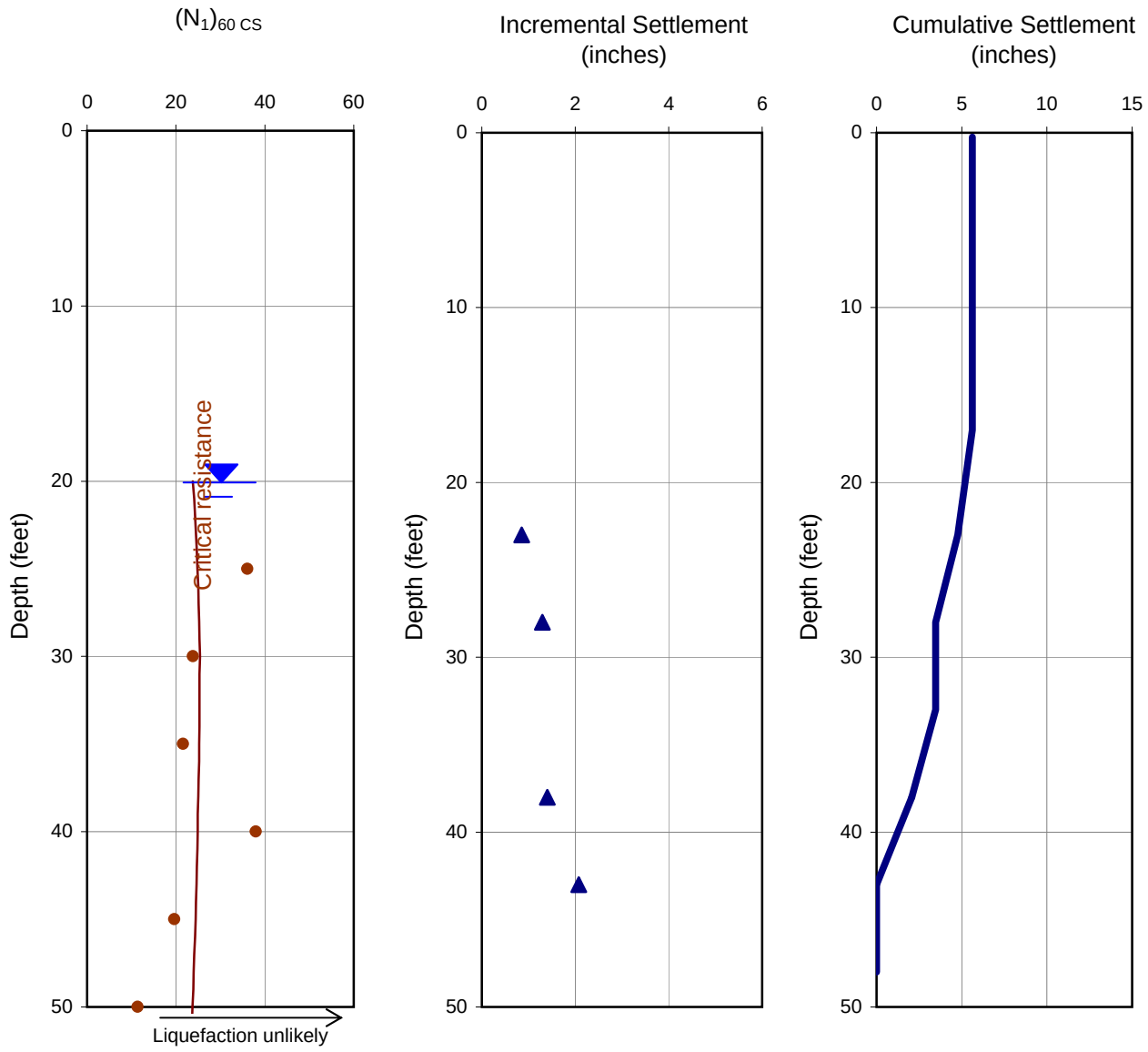

Notes: OLE event; design groundwater depth: 20 feet
Potentially liquefiable soil types only; nonliquefiable soil types

LIQUEFACTION ANALYSES USING SPT

05-16

PLATE

B1

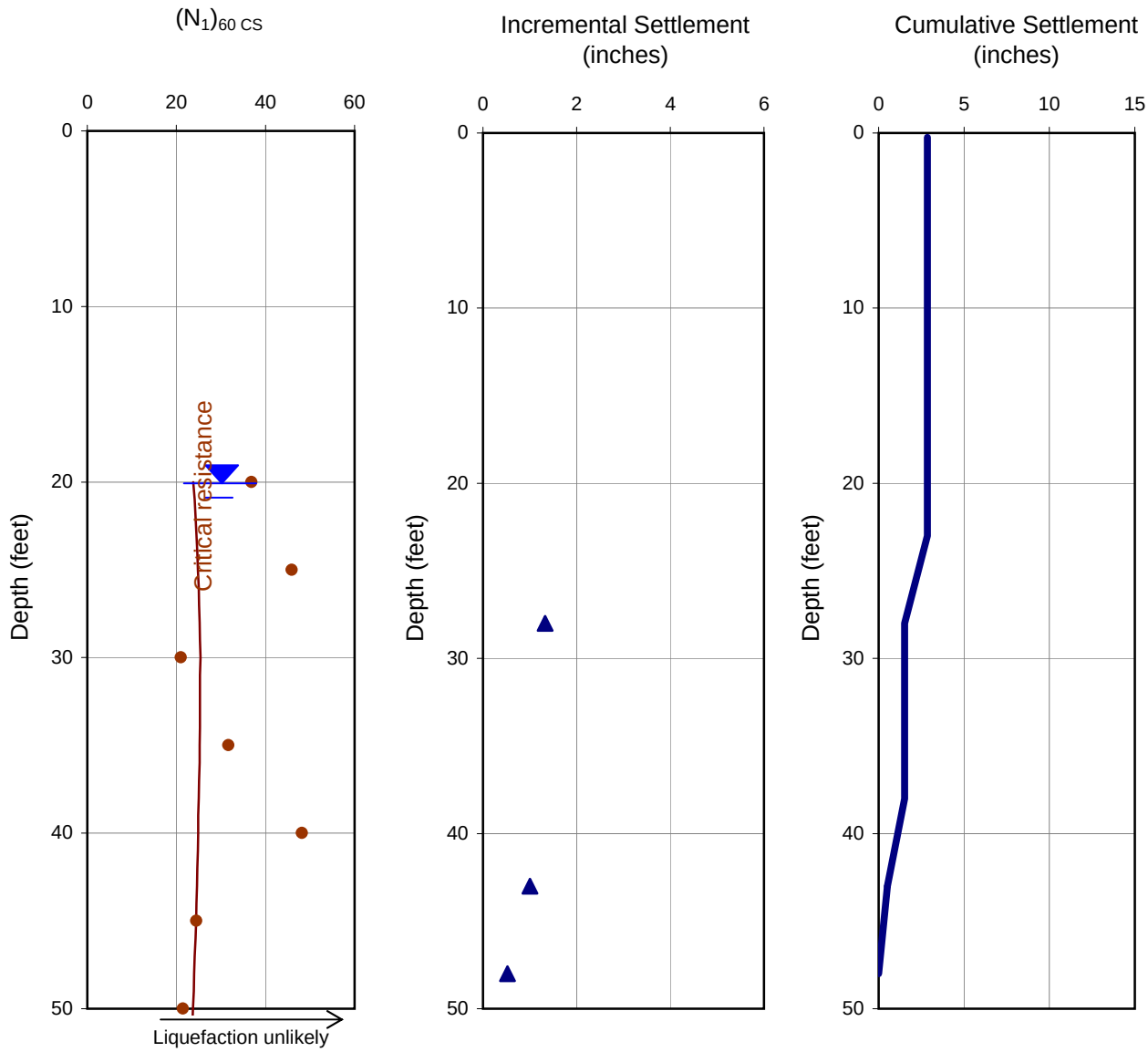

Notes: OLE event; design groundwater depth: 20 feet
Potentially liquefiable soil types only; nonliquefiable soil types

LIQUEFACTION ANALYSES USING SPT

05-23

PLATE

B2

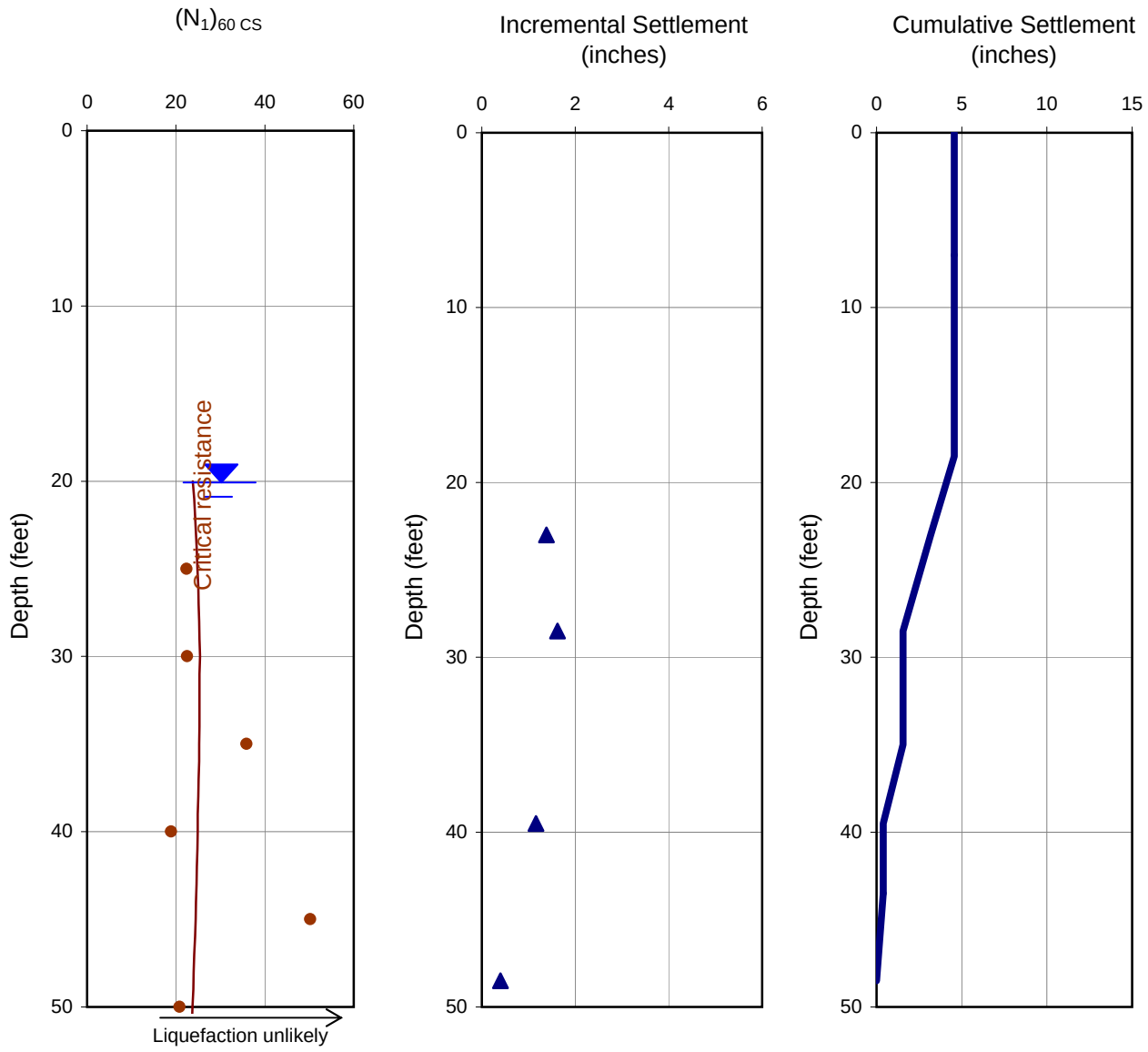

Notes: OLE event; design groundwater depth: 20 feet
Potentially liquefiable soil types only; nonliquefiable soil types

LIQUEFACTION ANALYSES USING SPT

05-24

PLATE

B3

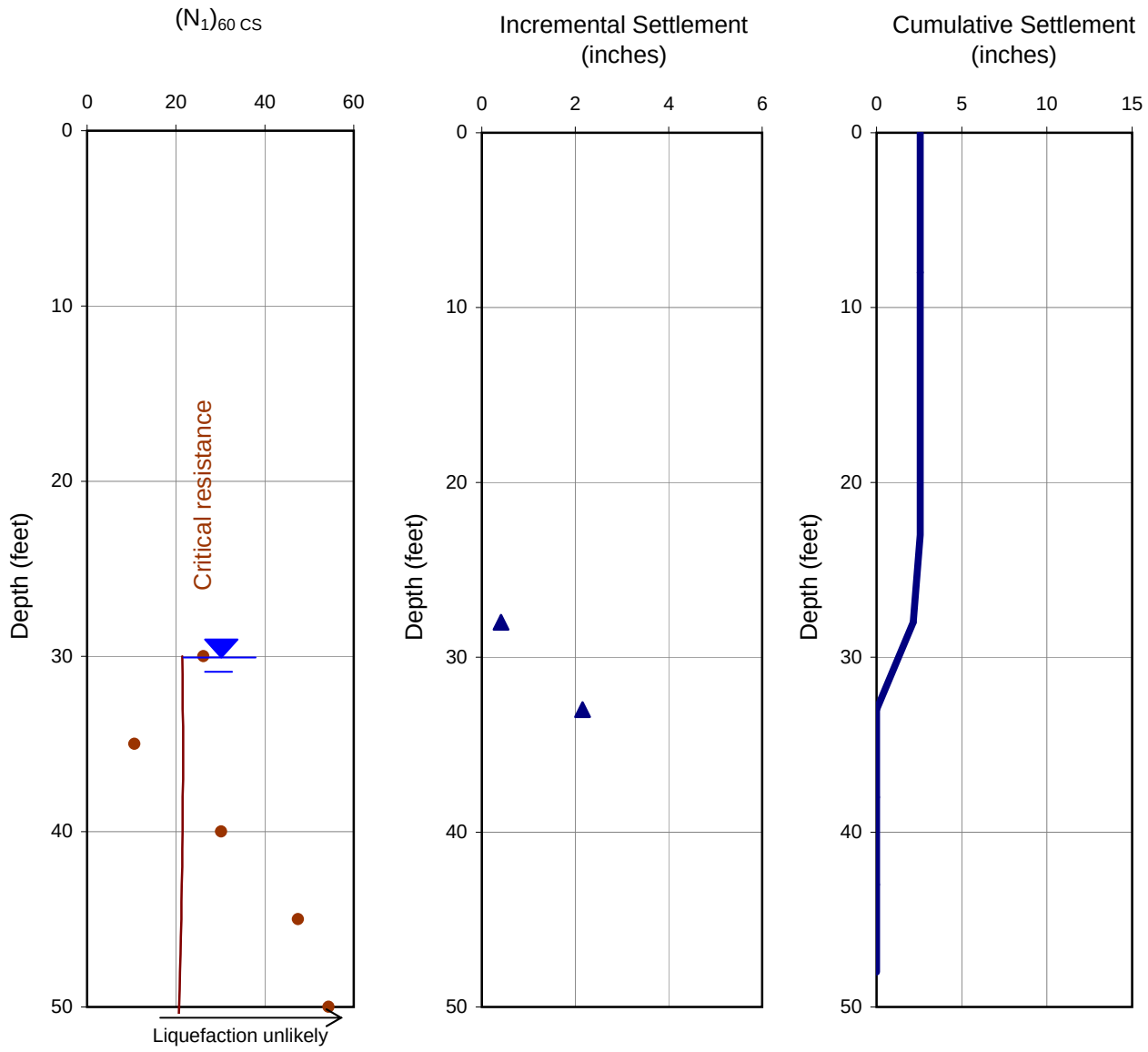

Notes: OLE event; design groundwater depth: 30 feet
Potentially liquefiable soil types only; nonliquefiable soil types

LIQUEFACTION ANALYSES USING SPT

05-46

PLATE

B4

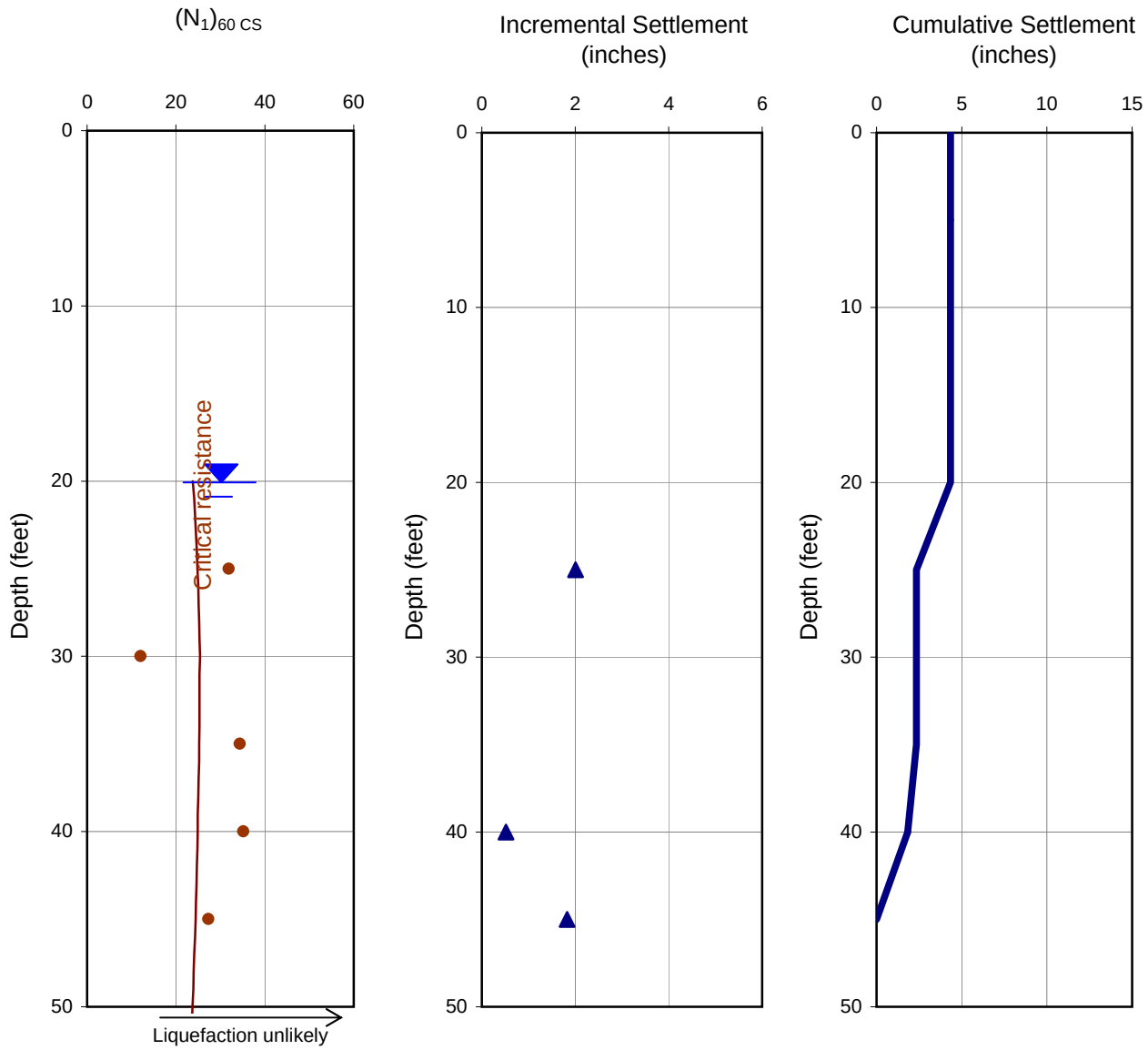

Notes: OLE event; design groundwater depth: 20 feet
Potentially liquefiable soil types only; nonliquefiable soil types

LIQUEFACTION ANALYSES USING SPT

06-64

PLATE

B5

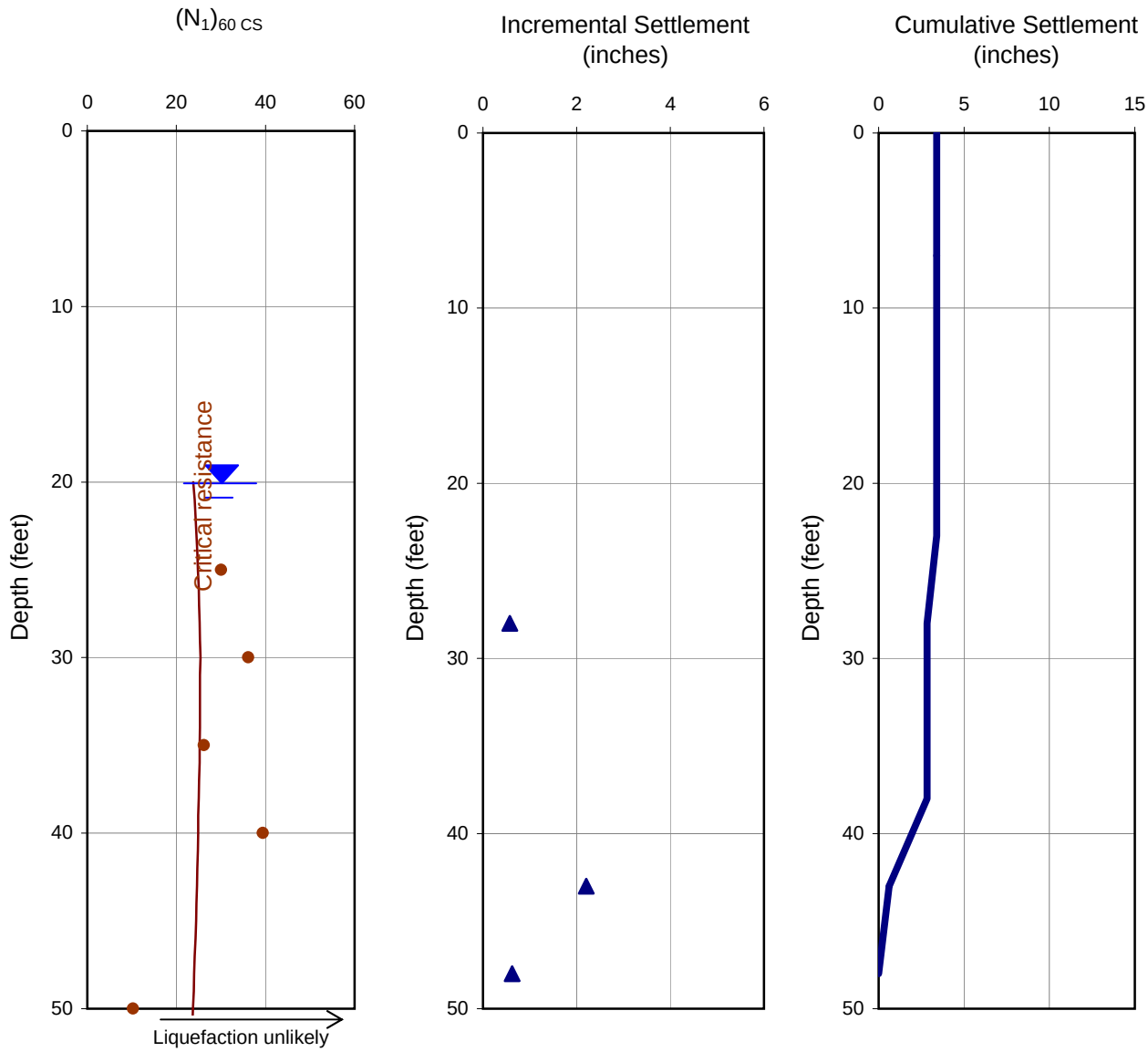

Notes: OLE event; design groundwater depth: 20 feet
Potentially liquefiable soil types only; nonliquefiable soil types

LIQUEFACTION ANALYSES USING SPT

06-66

PLATE

B6

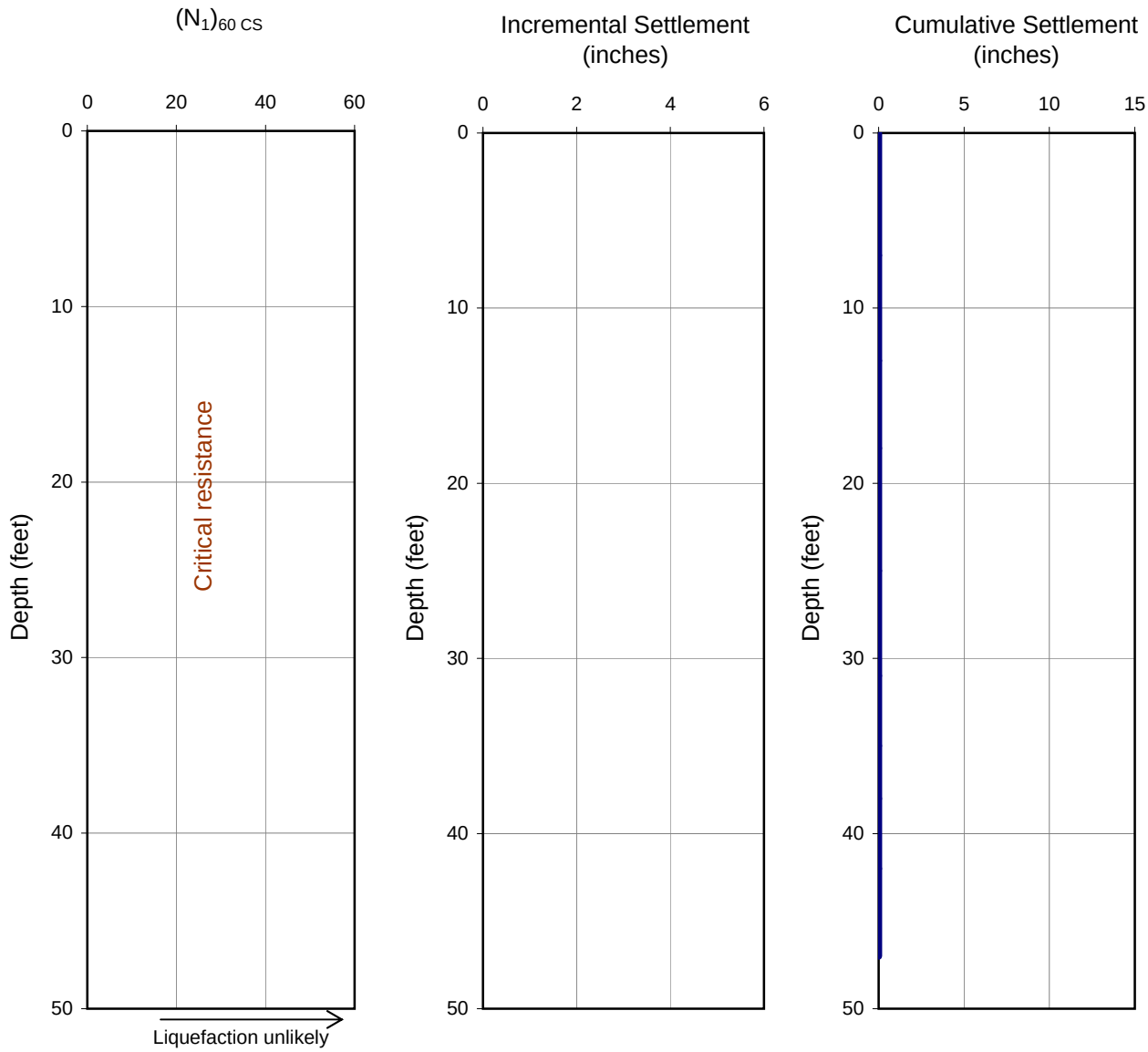

Notes: OLE event; design groundwater depth: 70 feet
Potentially liquefiable soil types only; nonliquefiable soil types

LIQUEFACTION ANALYSES USING SPT

06-67

PLATE

B7

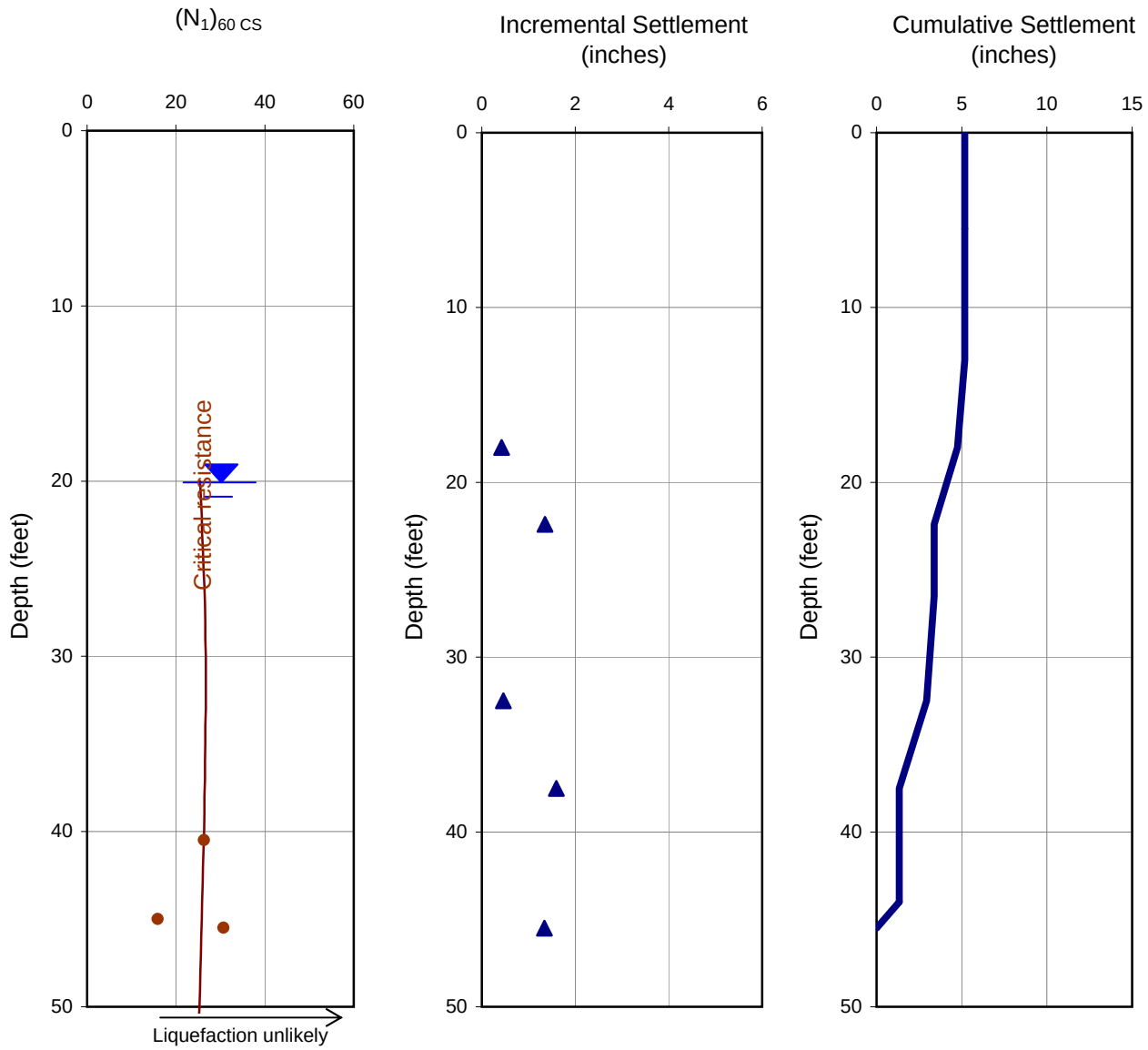

Notes: OLE event; design groundwater depth: 20 feet
Potentially liquefiable soil types only; nonliquefiable soil types

LIQUEFACTION ANALYSES USING SPT

06-68

PLATE

B8

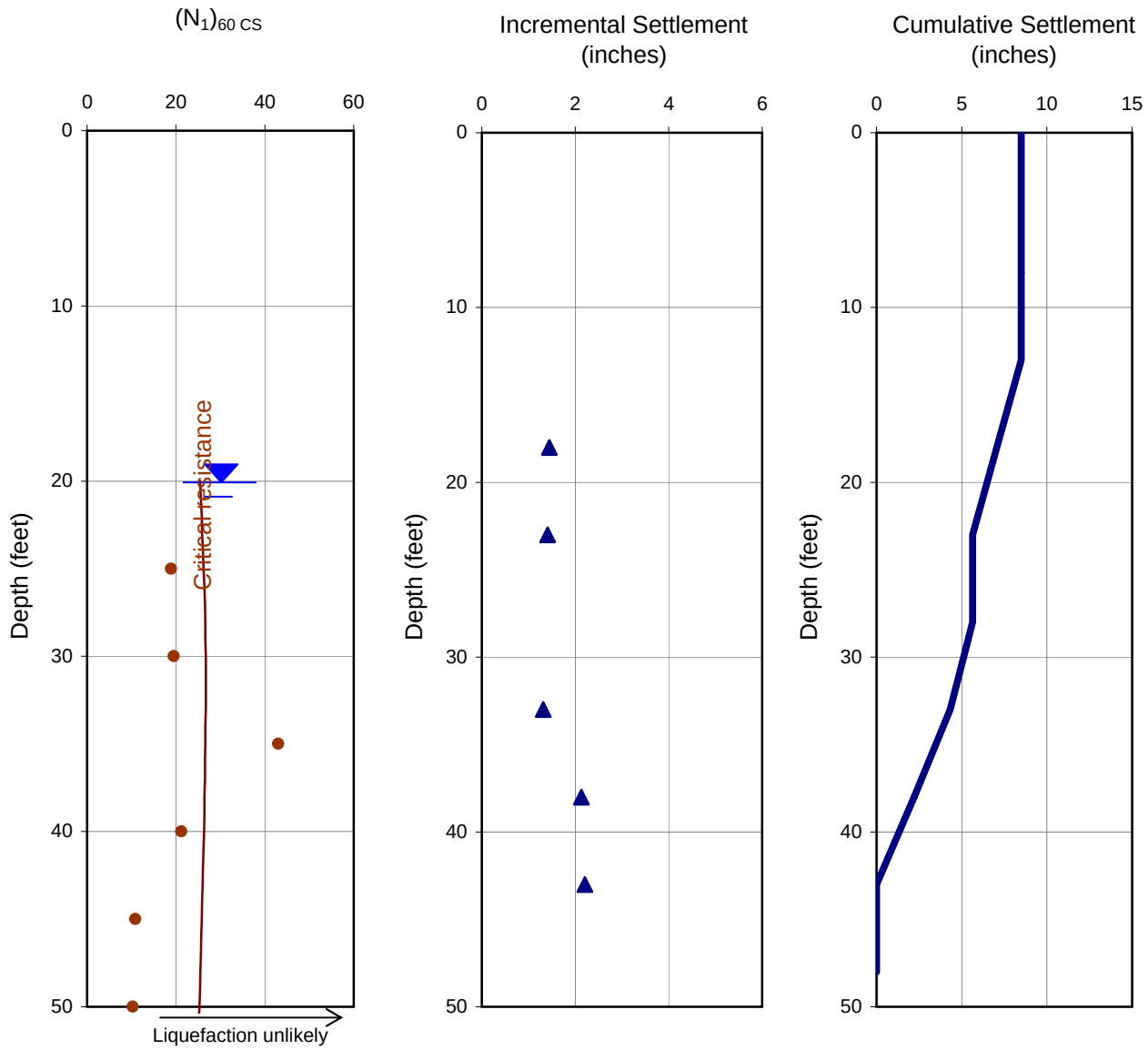

Notes: OLE event; design groundwater depth: 20 feet
Potentially liquefiable soil types only; nonliquefiable soil types

LIQUEFACTION ANALYSES USING SPT

06-69

PLATE

B9

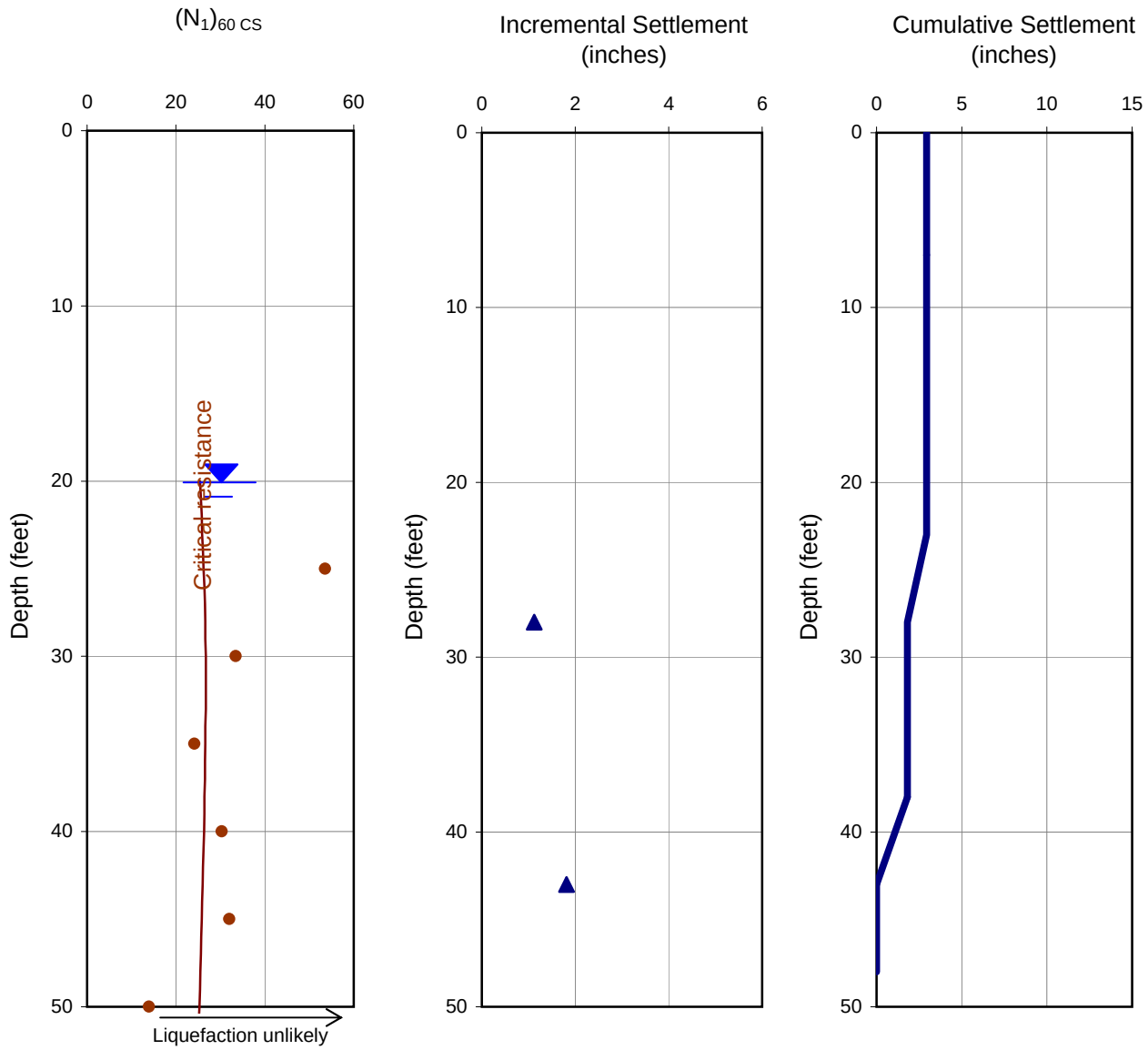

Notes: OLE event; design groundwater depth: 20 feet
Potentially liquefiable soil types only; nonliquefiable soil types

LIQUEFACTION ANALYSES USING SPT

06-70

PLATE

B10

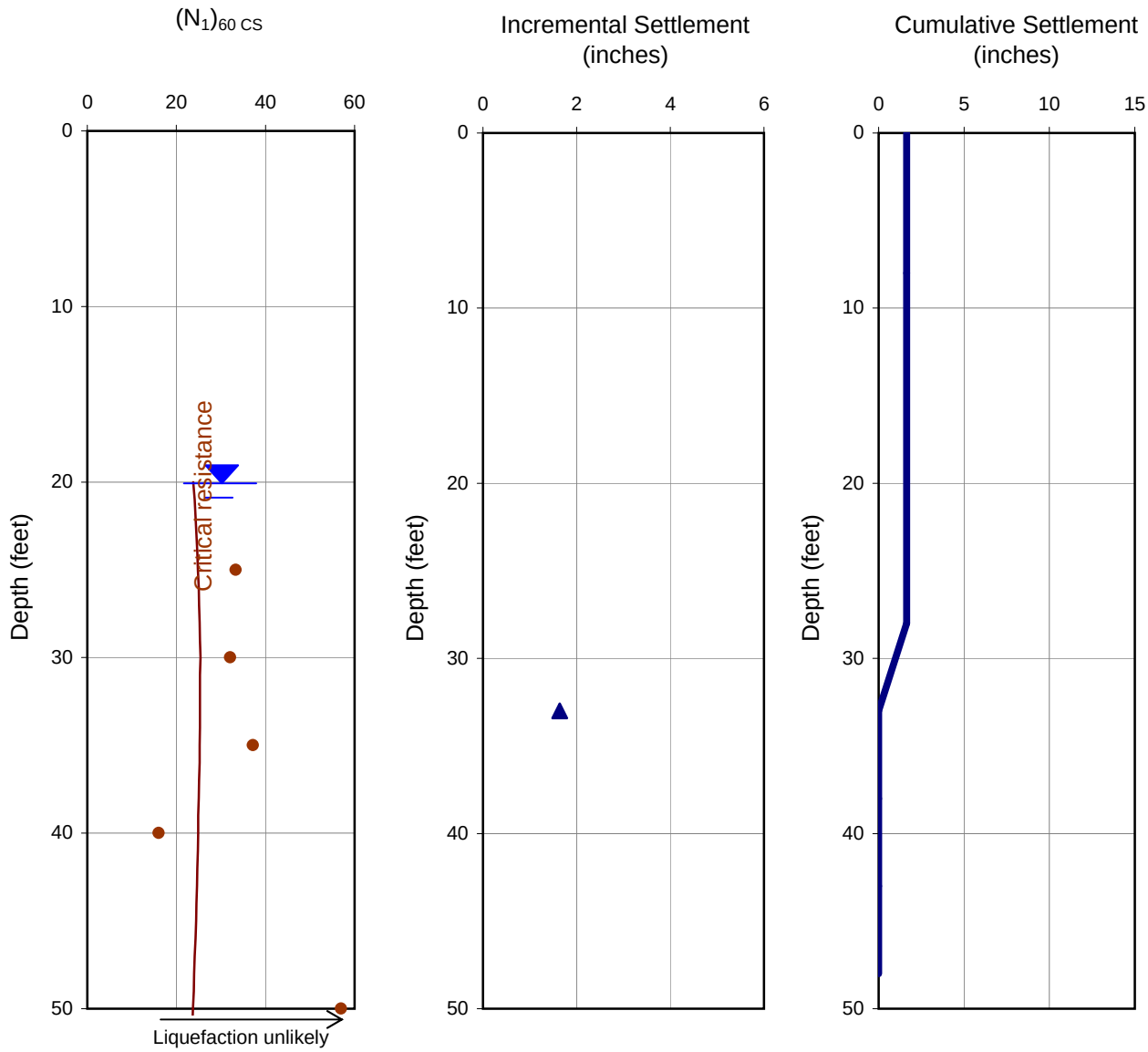

Notes: OLE event; design groundwater depth: 20 feet
Potentially liquefiable soil types only; nonliquefiable soil types

LIQUEFACTION ANALYSES USING SPT

06-71

PLATE

B11

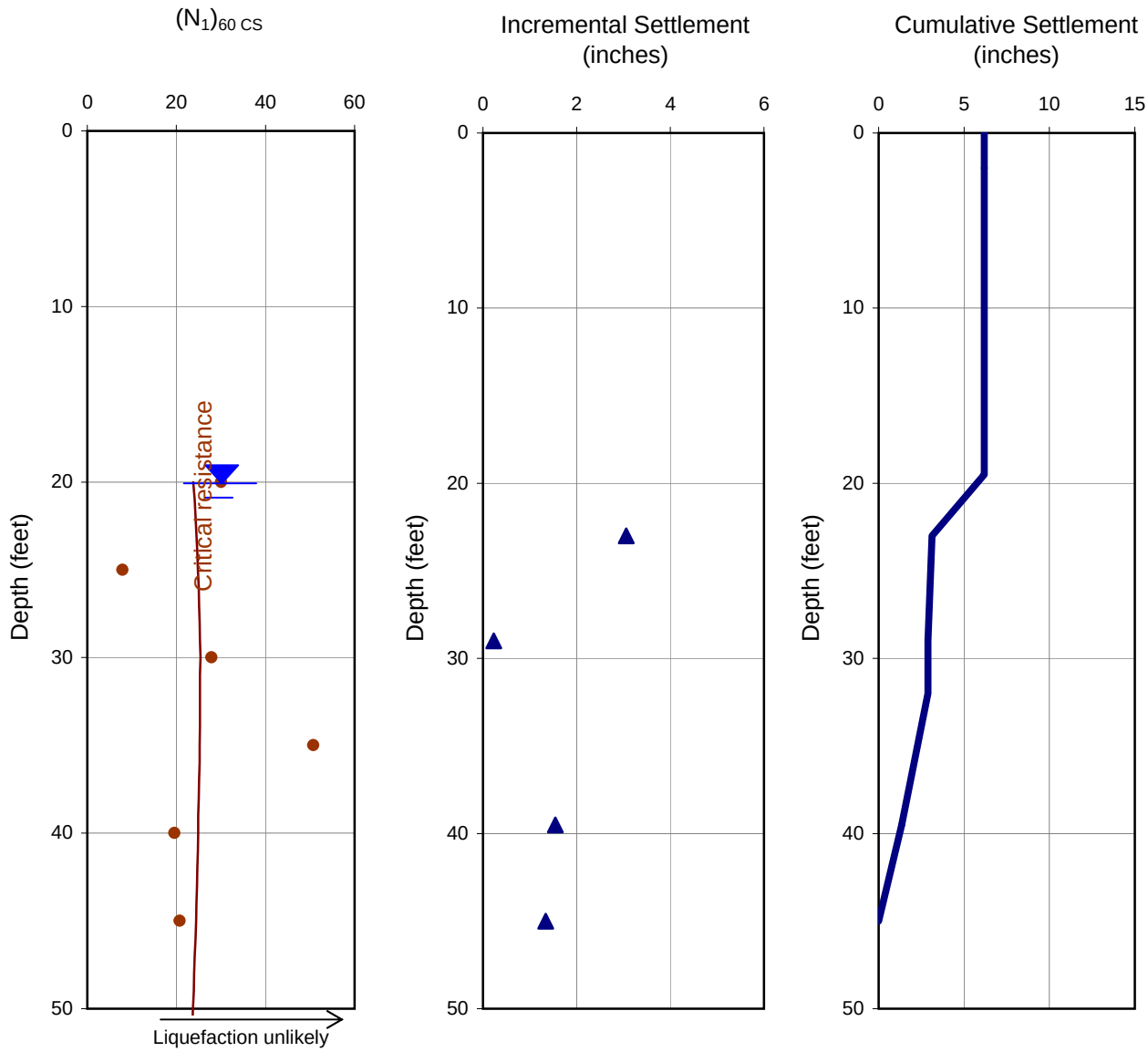

Notes: OLE event; design groundwater depth: 20 feet
Potentially liquefiable soil types only; nonliquefiable soil types

LIQUEFACTION ANALYSES USING SPT

06-72

PLATE

B12

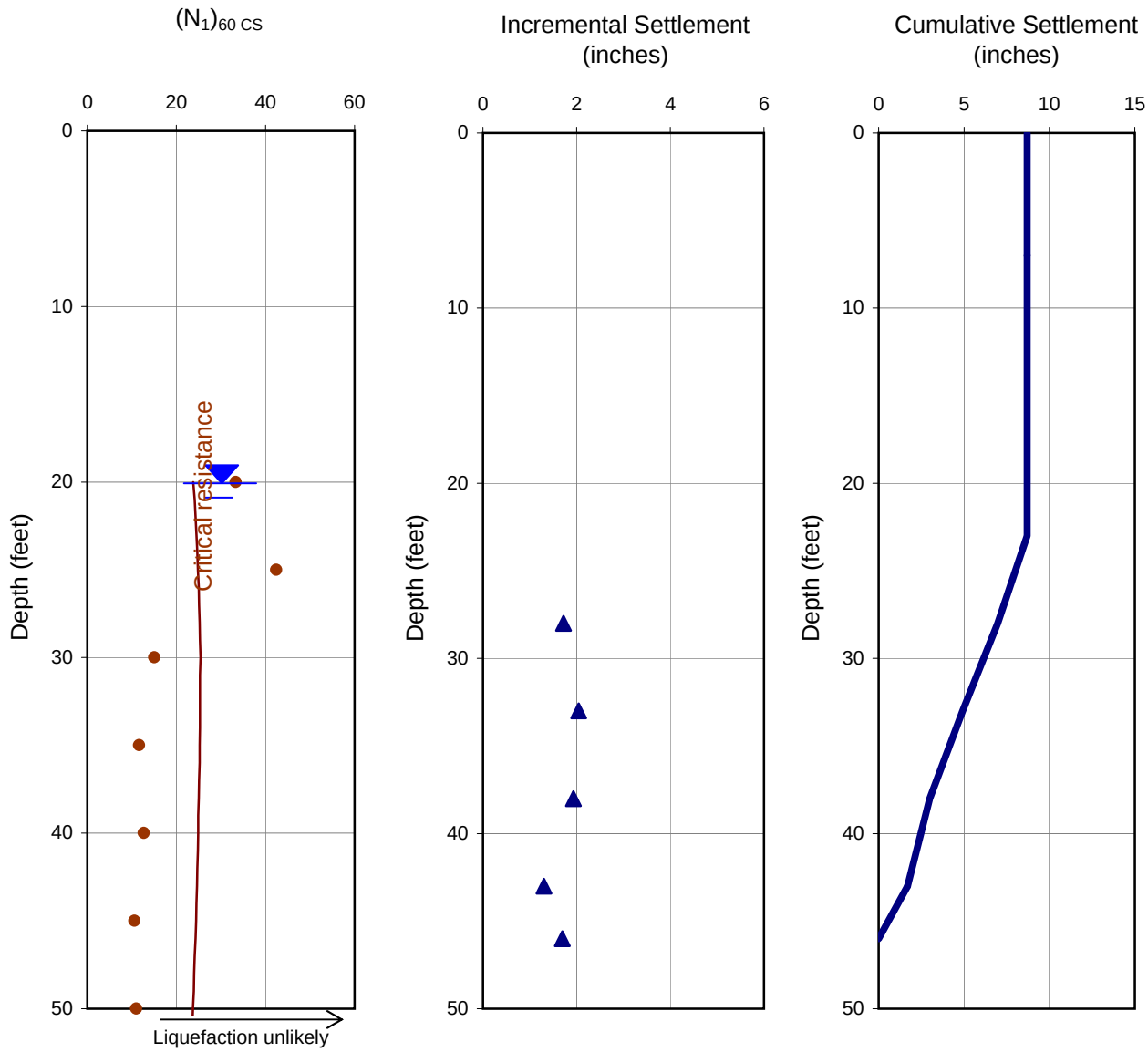

Notes: OLE event; design groundwater depth: 20 feet
Potentially liquefiable soil types only; nonliquefiable soil types

LIQUEFACTION ANALYSES USING SPT

06-73

PLATE

B13

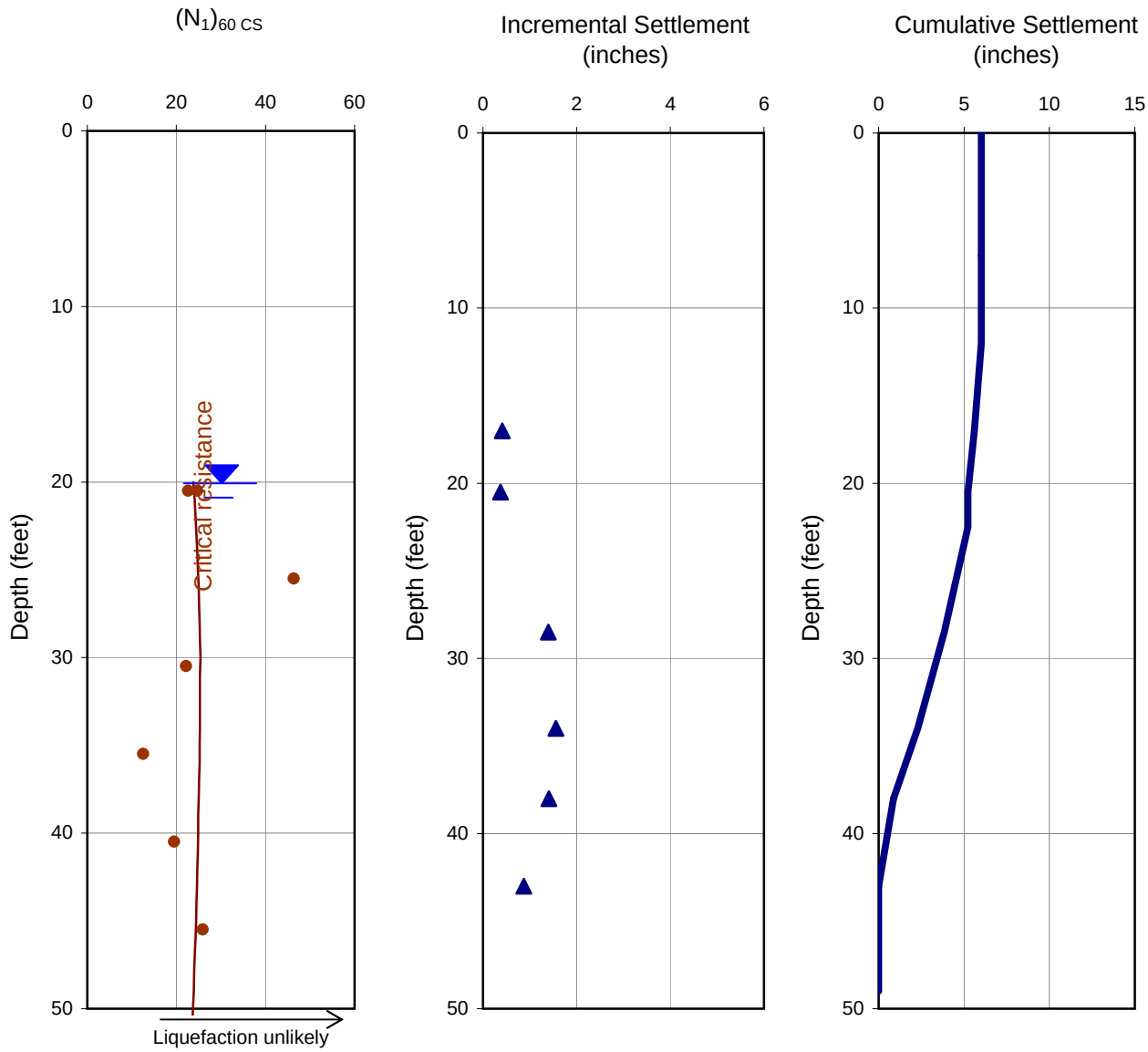

Notes: OLE event; design groundwater depth: 20 feet
Potentially liquefiable soil types only; nonliquefiable soil types

LIQUEFACTION ANALYSES USING SPT

06-74

PLATE

B14

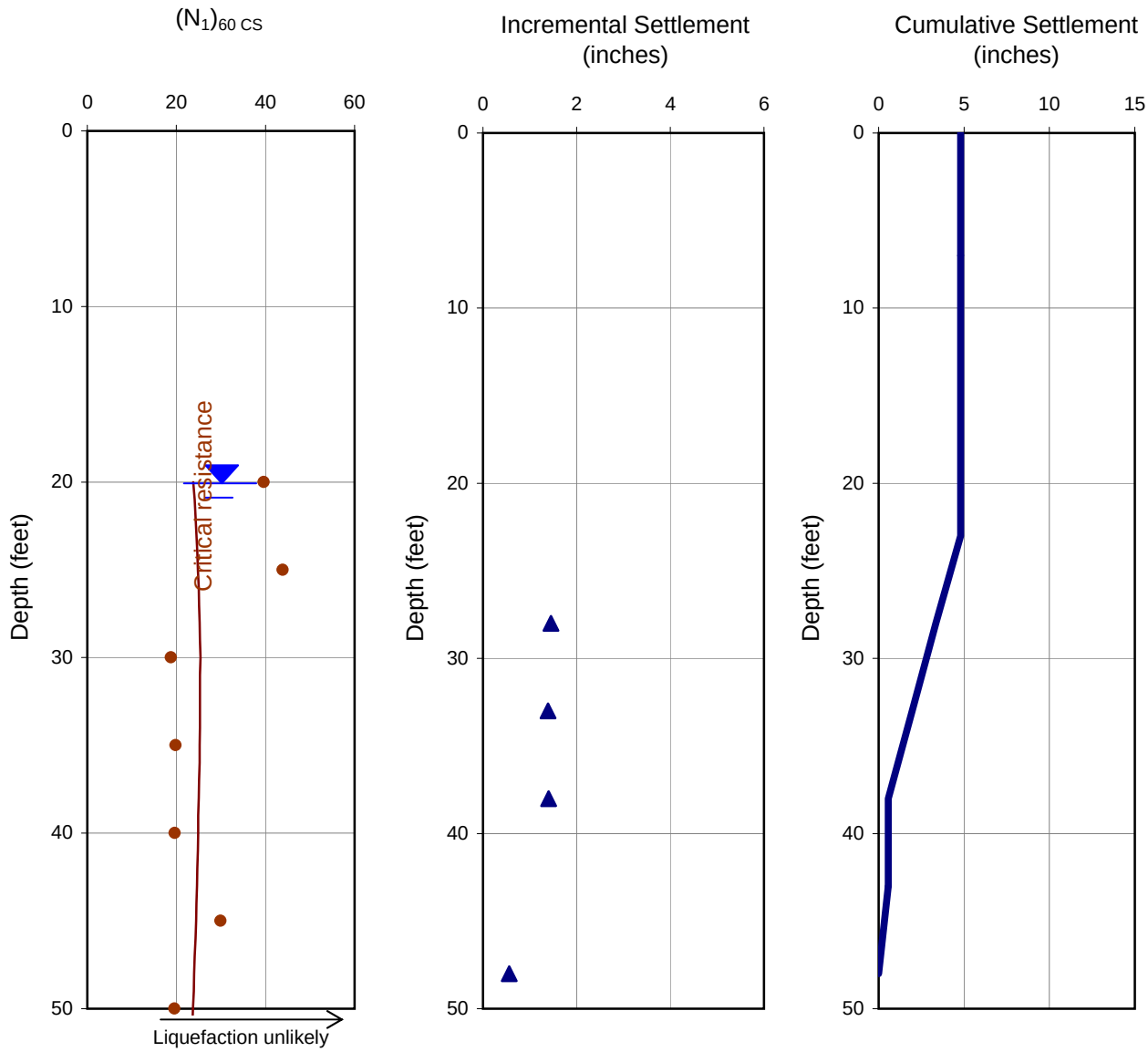

Notes: OLE event; design groundwater depth: 20 feet
Potentially liquefiable soil types only; nonliquefiable soil types

LIQUEFACTION ANALYSES USING SPT

06-75

PLATE

B15

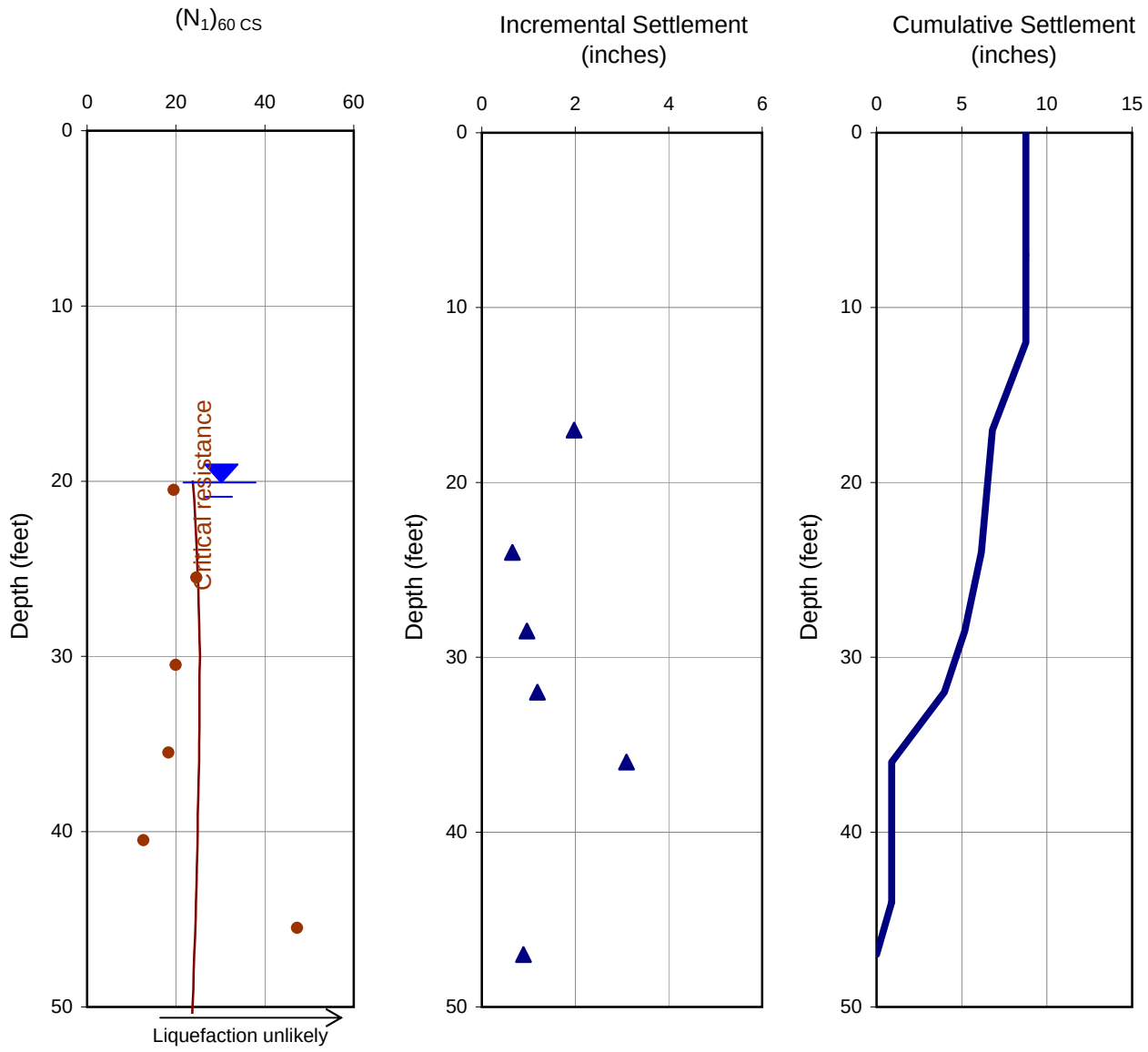

Notes: OLE event; design groundwater depth: 20 feet
Potentially liquefiable soil types only; nonliquefiable soil types

LIQUEFACTION ANALYSES USING SPT

06-76

PLATE

B16

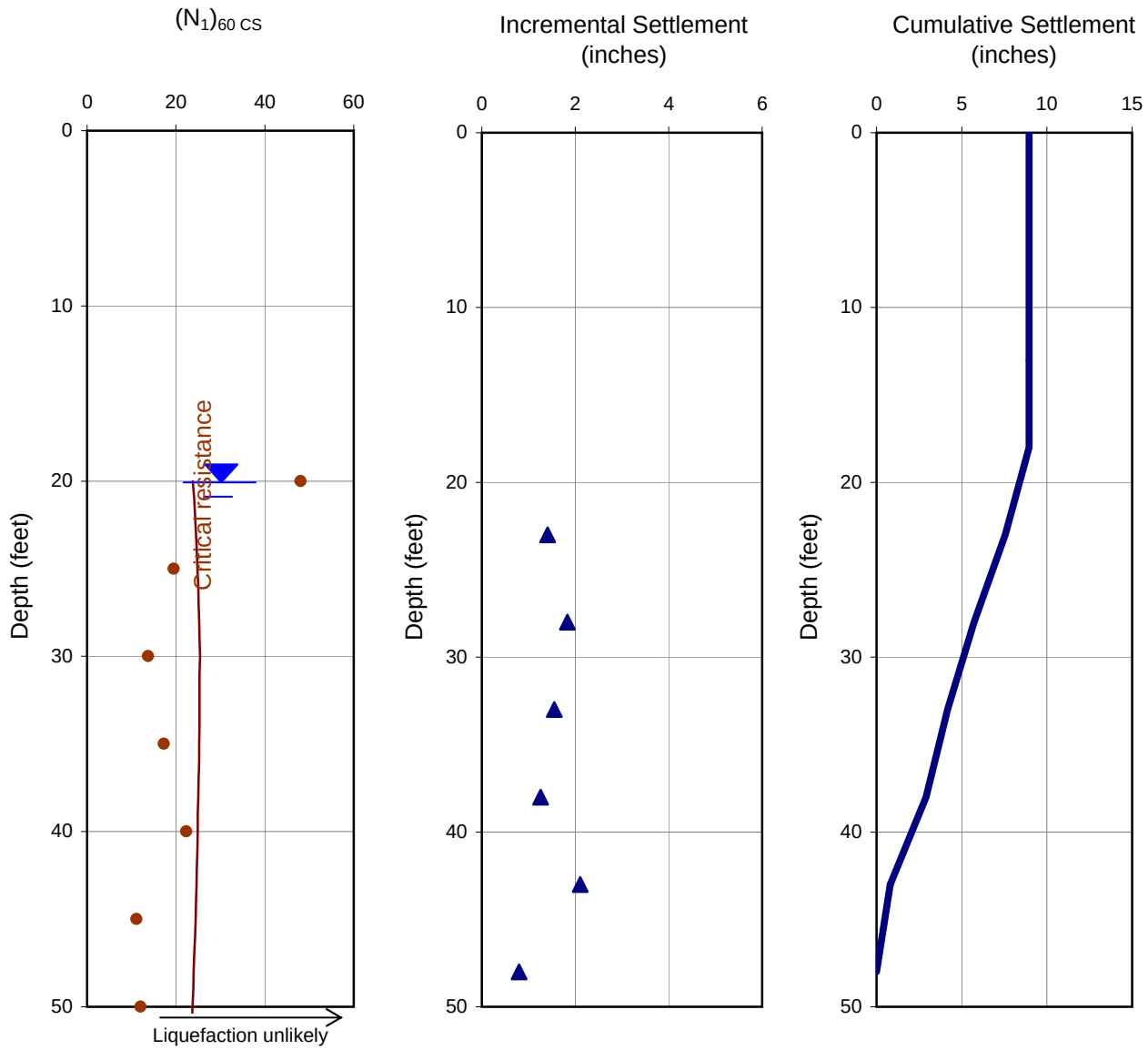

Notes: OLE event; design groundwater depth: 20 feet
Potentially liquefiable soil types only; nonliquefiable soil types

LIQUEFACTION ANALYSES USING SPT

06-77

PLATE

B17

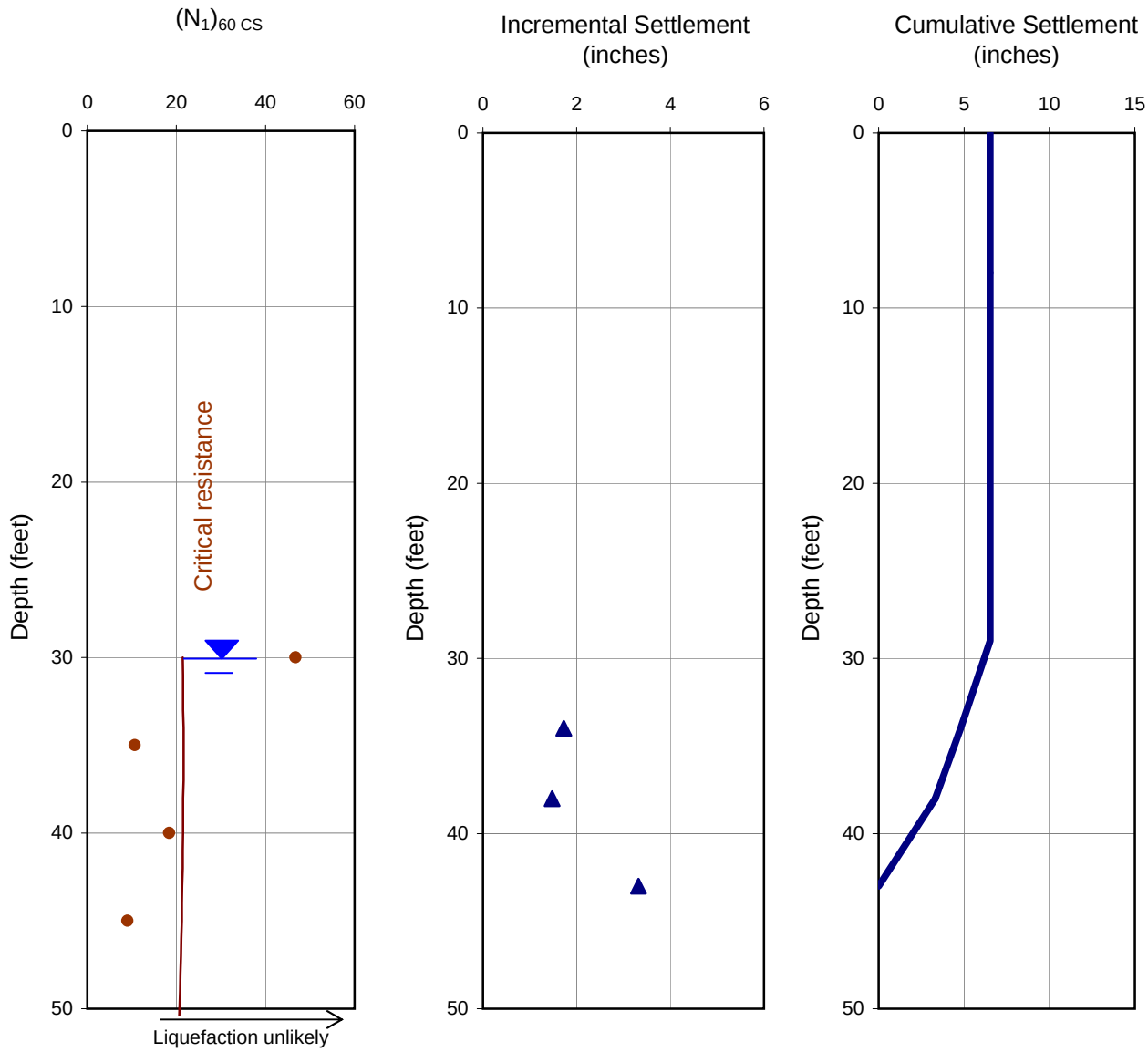

Notes: OLE event; design groundwater depth: 30 feet
Potentially liquefiable soil types only; nonliquefiable soil types

LIQUEFACTION ANALYSES USING SPT

06-78

PLATE

B18

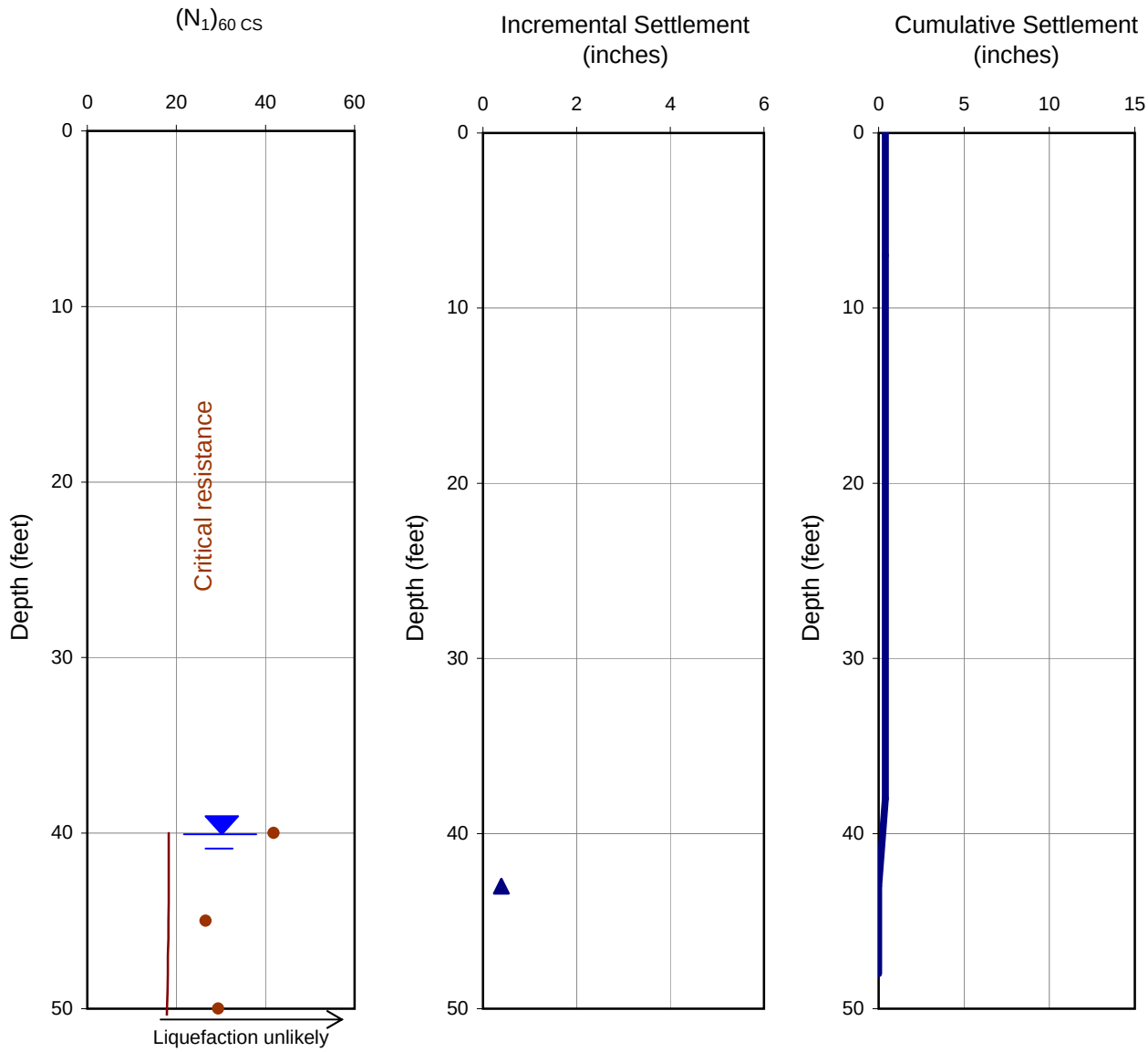

Notes: OLE event; design groundwater depth: 40 feet
Potentially liquefiable soil types only; nonliquefiable soil types

LIQUEFACTION ANALYSES USING SPT

06-79

PLATE

B19

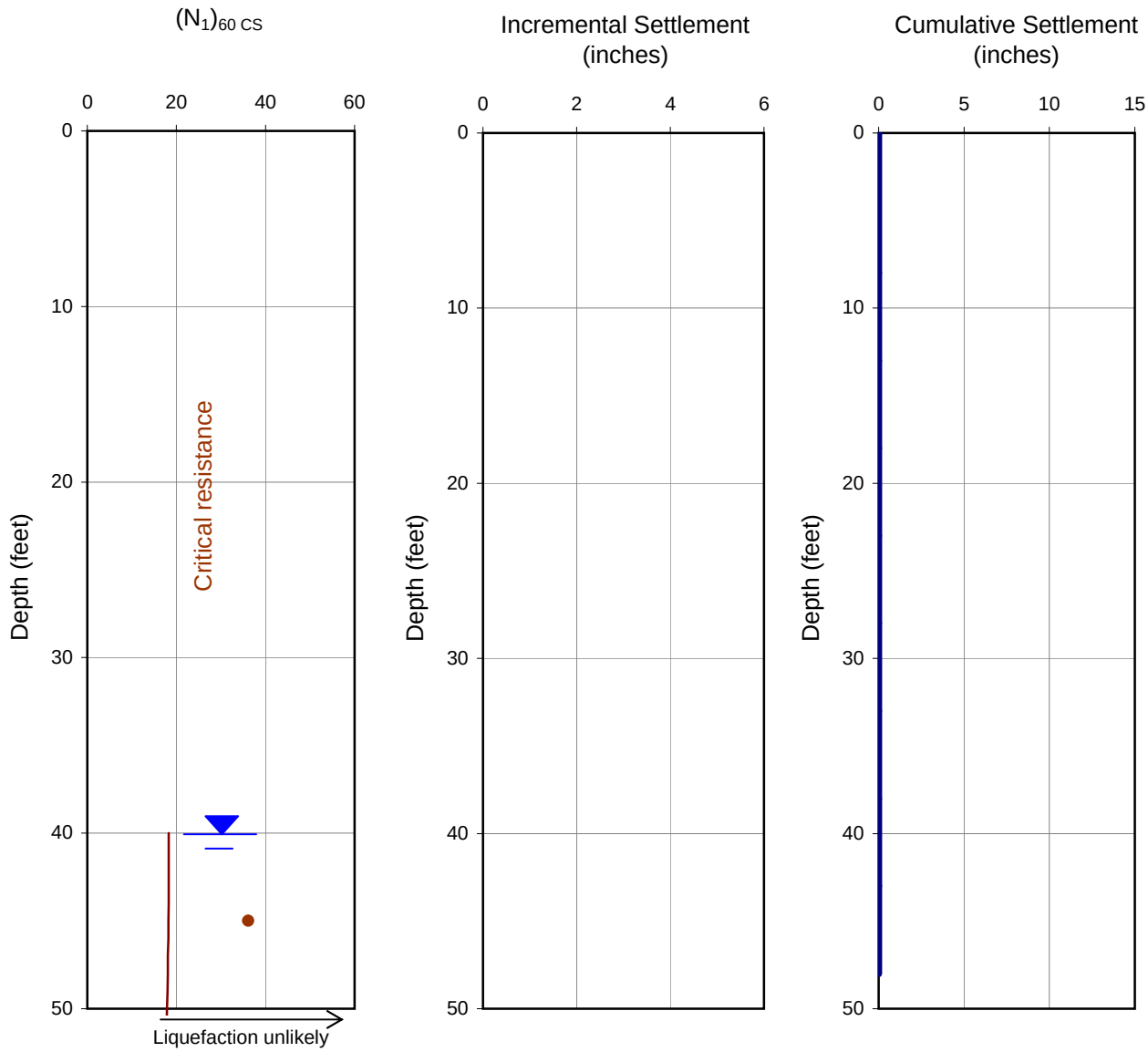

Notes: OLE event; design groundwater depth: 40 feet
Potentially liquefiable soil types only; nonliquefiable soil types

LIQUEFACTION ANALYSES USING SPT

06-83

PLATE

B20

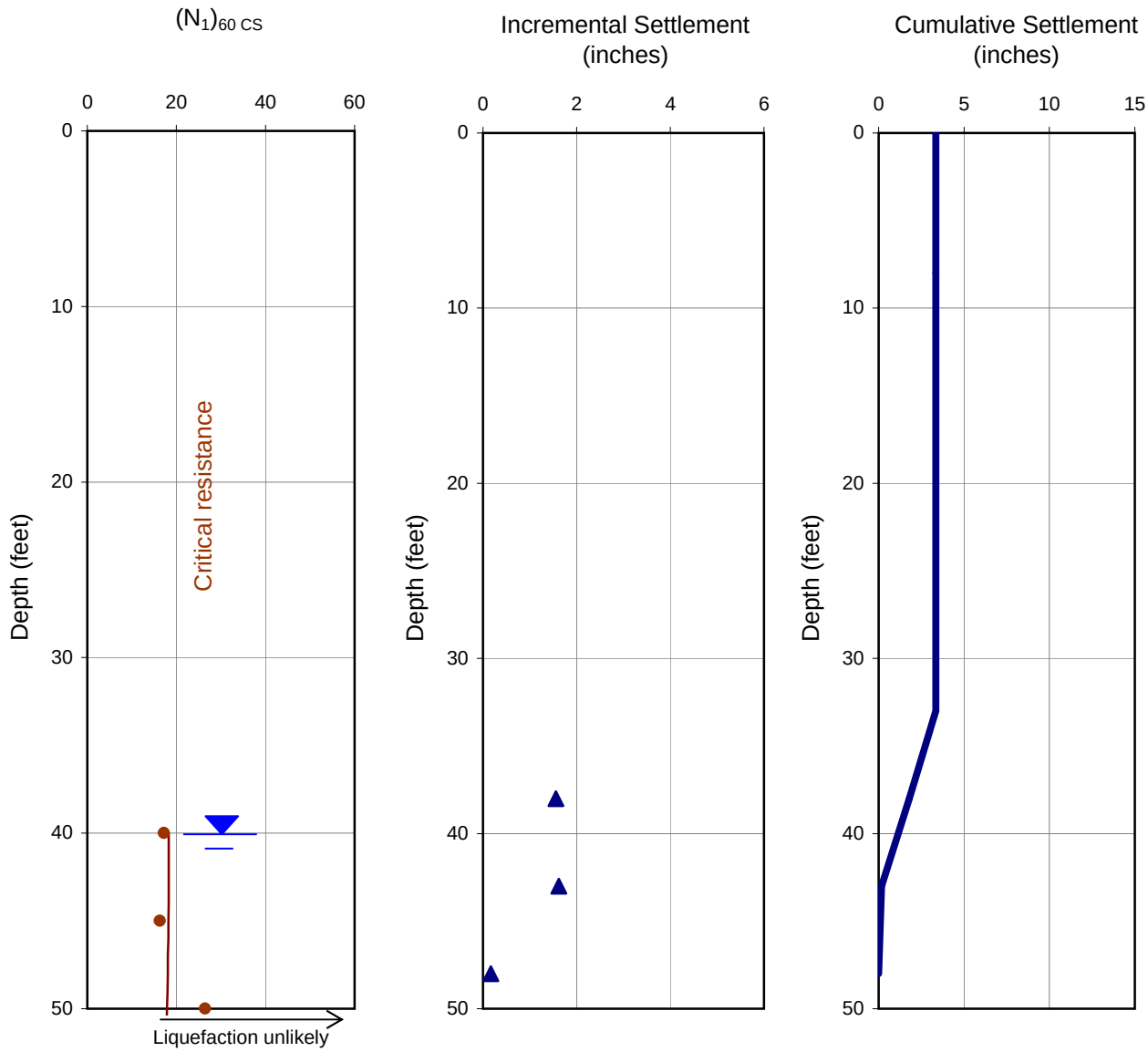

Notes: OLE event; design groundwater depth: 40 feet
Potentially liquefiable soil types only; nonliquefiable soil types

LIQUEFACTION ANALYSES USING SPT

06-85

PLATE

B21

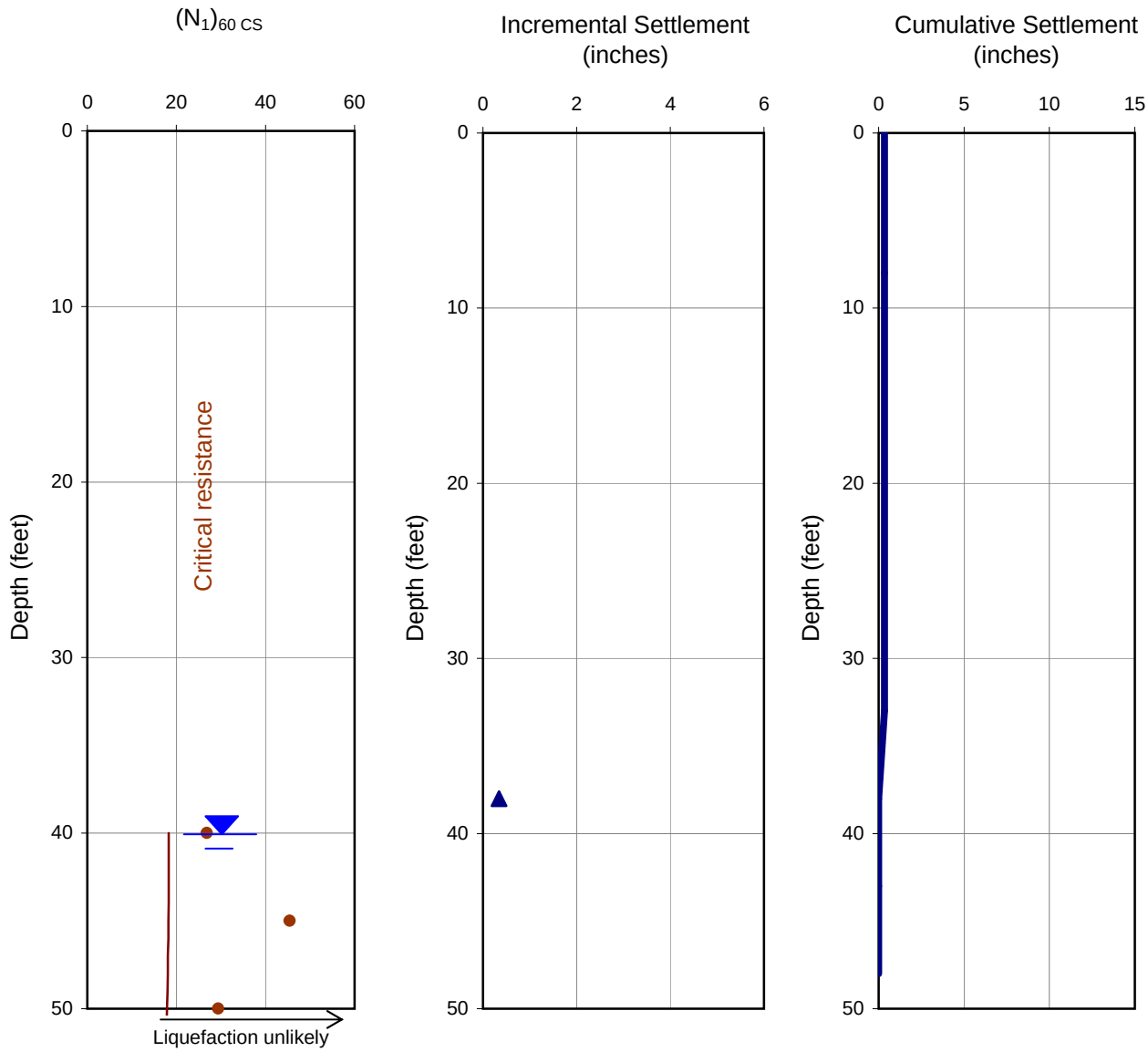

Notes: OLE event; design groundwater depth: 40 feet
Potentially liquefiable soil types only; nonliquefiable soil types

LIQUEFACTION ANALYSES USING SPT

06-87

PLATE

B22

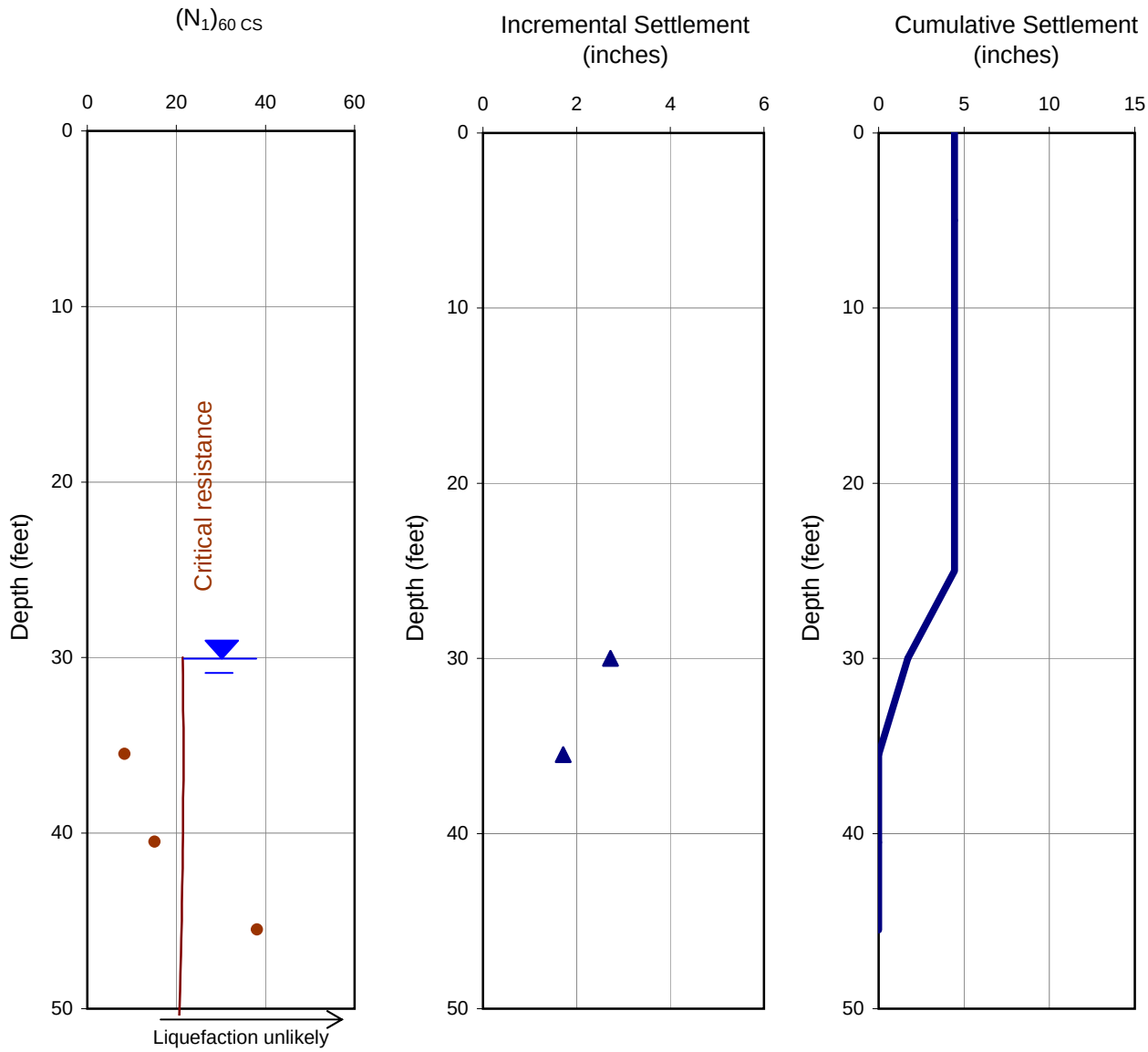

Notes: OLE event; design groundwater depth: 30 feet
Potentially liquefiable soil types only; nonliquefiable soil types

LIQUEFACTION ANALYSES USING SPT

06-88

PLATE

B23

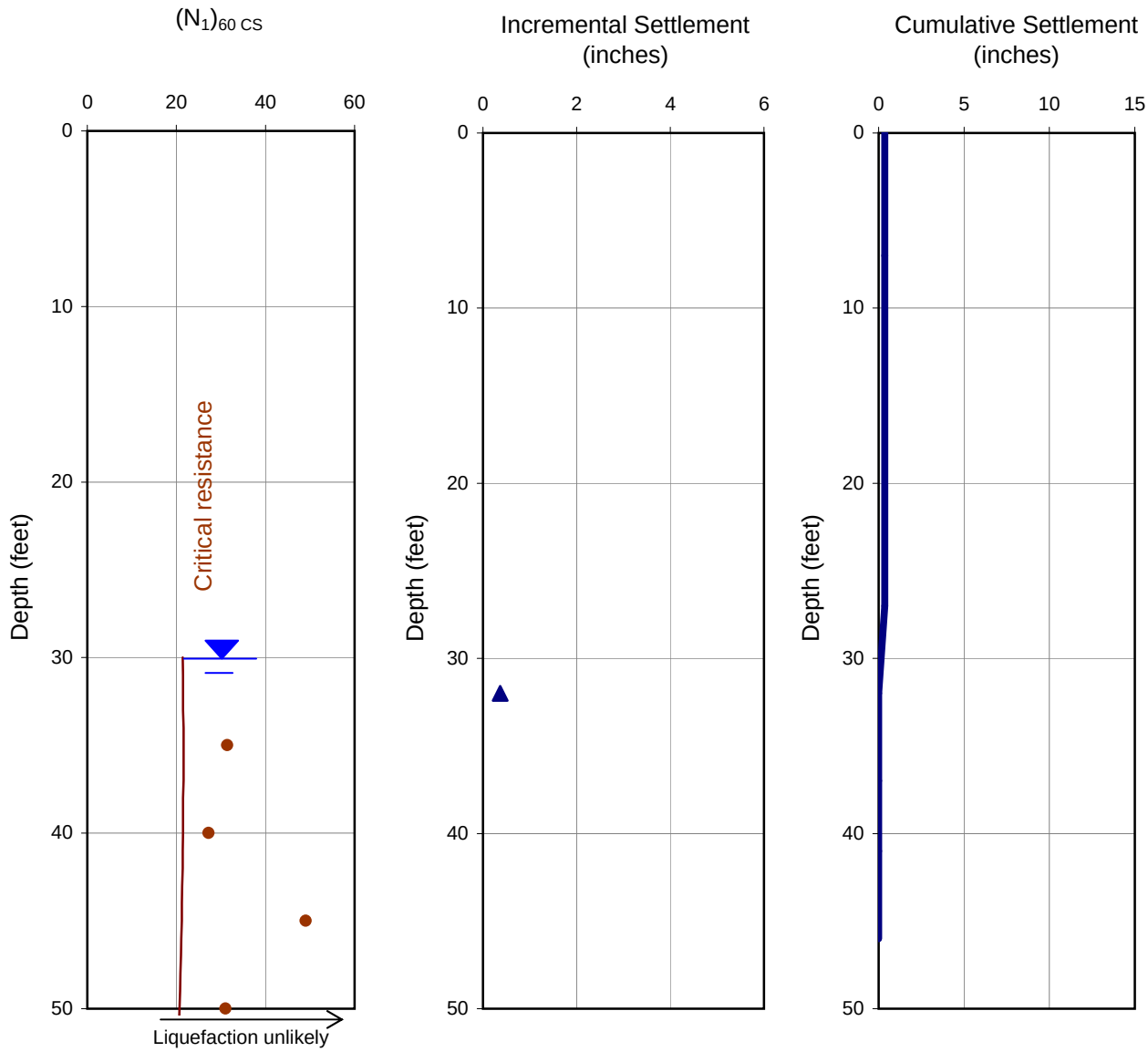

Notes: OLE event; design groundwater depth: 30 feet
Potentially liquefiable soil types only; nonliquefiable soil types

LIQUEFACTION ANALYSES USING SPT

06-89

PLATE

B24

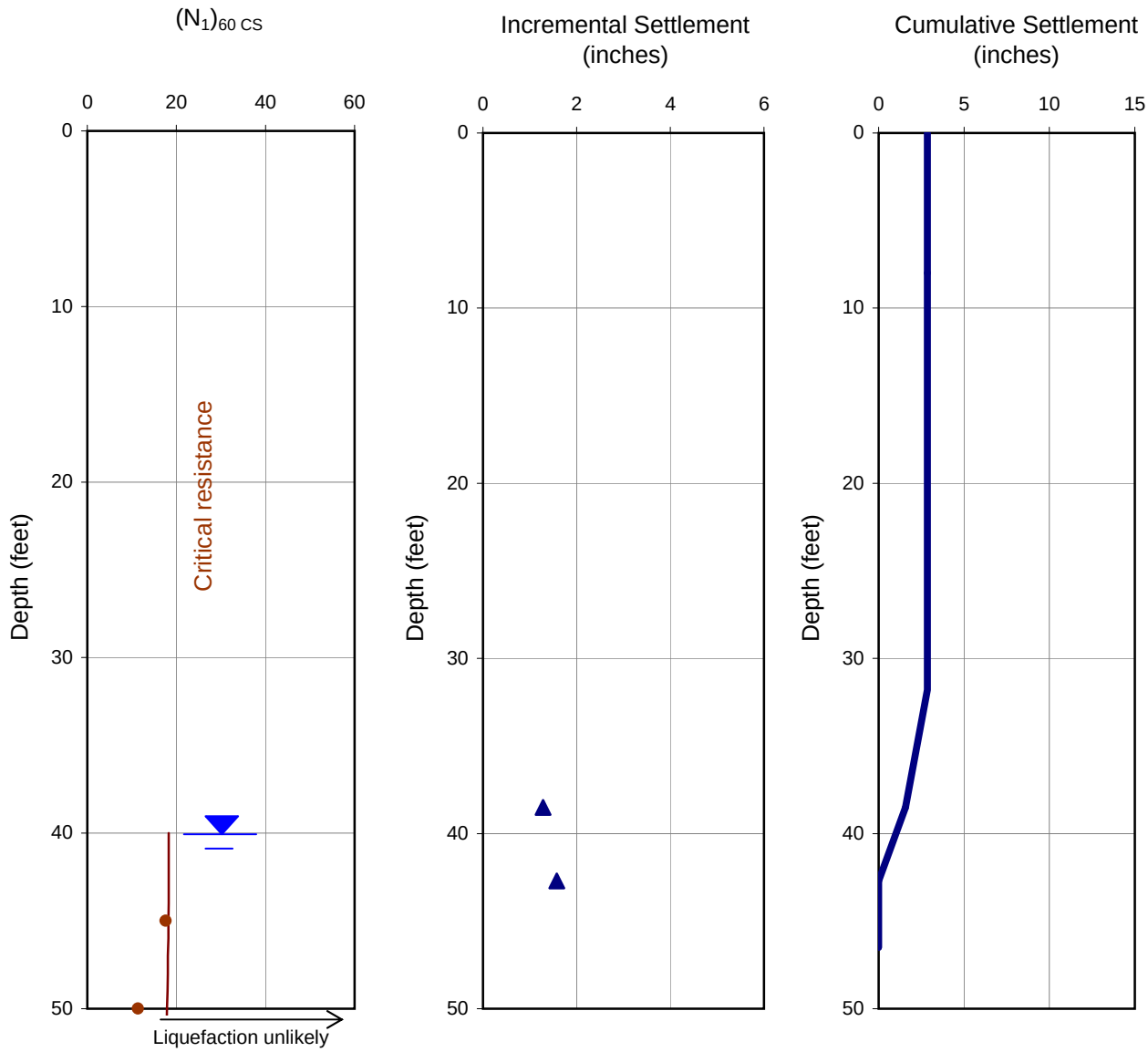

Notes: OLE event; design groundwater depth: 40 feet
Potentially liquefiable soil types only; nonliquefiable soil types

LIQUEFACTION ANALYSES USING SPT

06-90

PLATE

B25

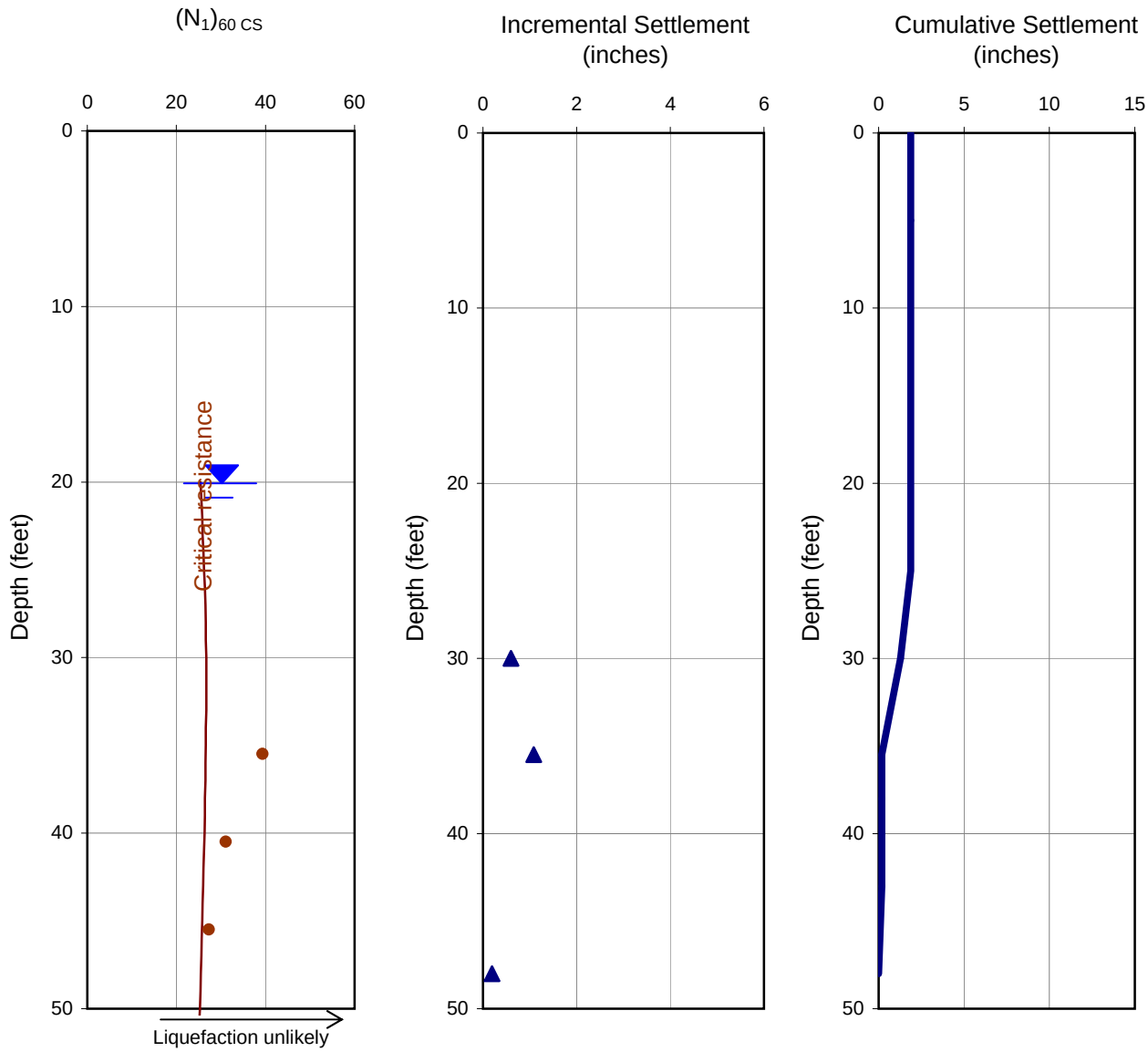

Notes: OLE event; design groundwater depth: 20 feet
Potentially liquefiable soil types only; nonliquefiable soil types

LIQUEFACTION ANALYSES USING SPT

06-91

PLATE

B26

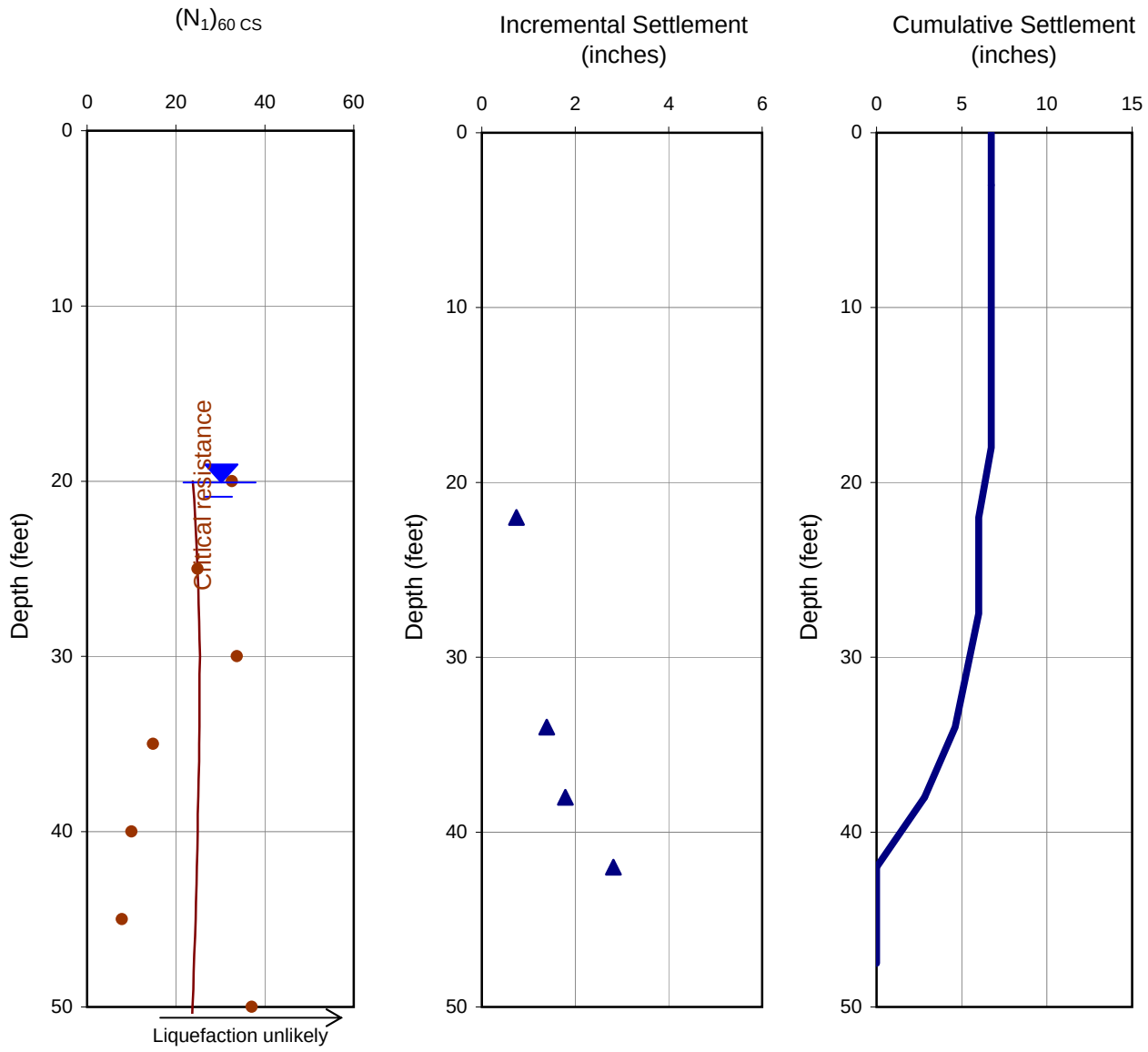

Notes: OLE event; design groundwater depth: 20 feet
Potentially liquefiable soil types only; nonliquefiable soil types

LIQUEFACTION ANALYSES USING SPT

06-92

PLATE

B27

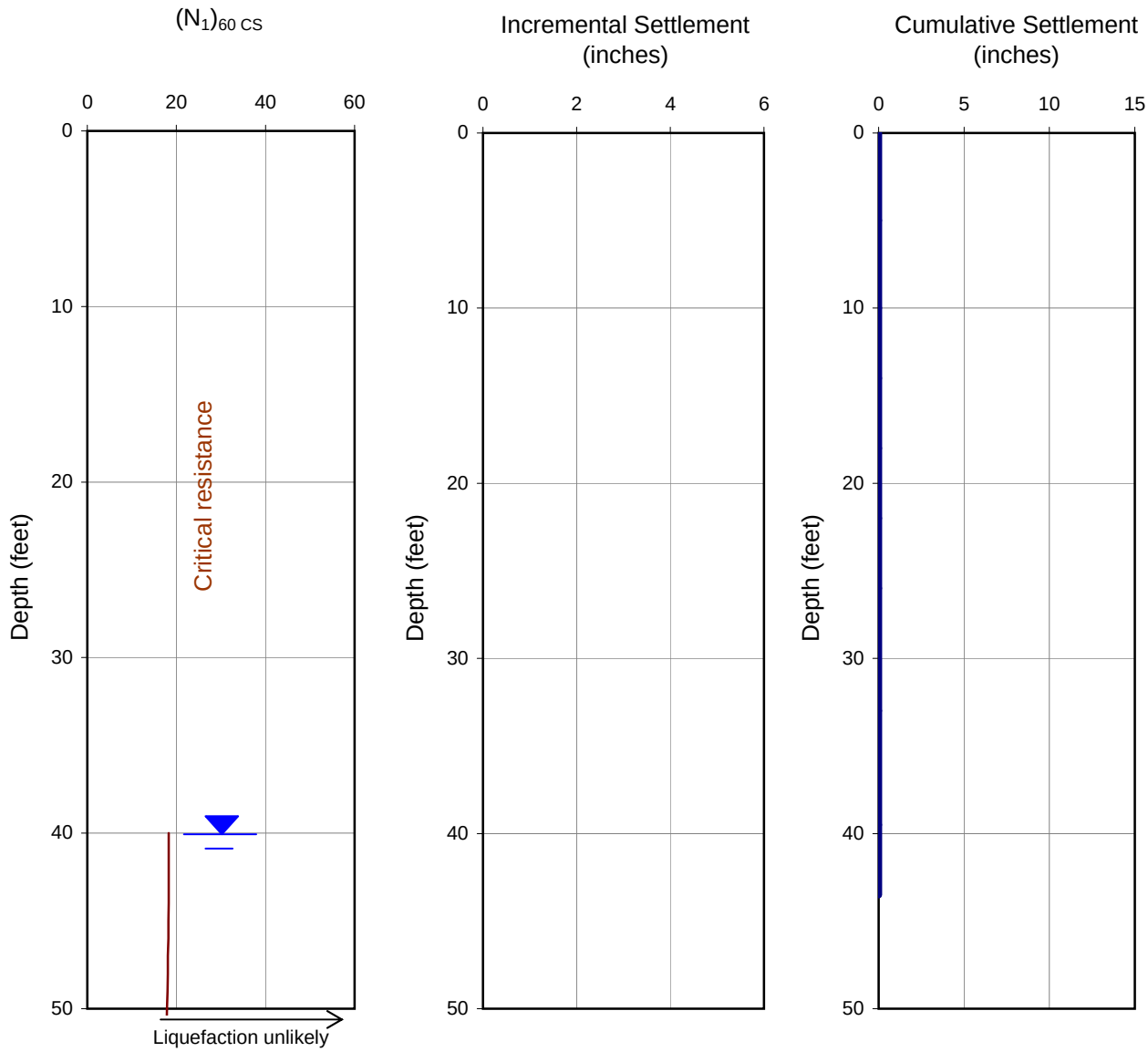

Notes: OLE event; design groundwater depth: 40 feet
Potentially liquefiable soil types only; nonliquefiable soil types

LIQUEFACTION ANALYSES USING SPT

06-97

PLATE

B28

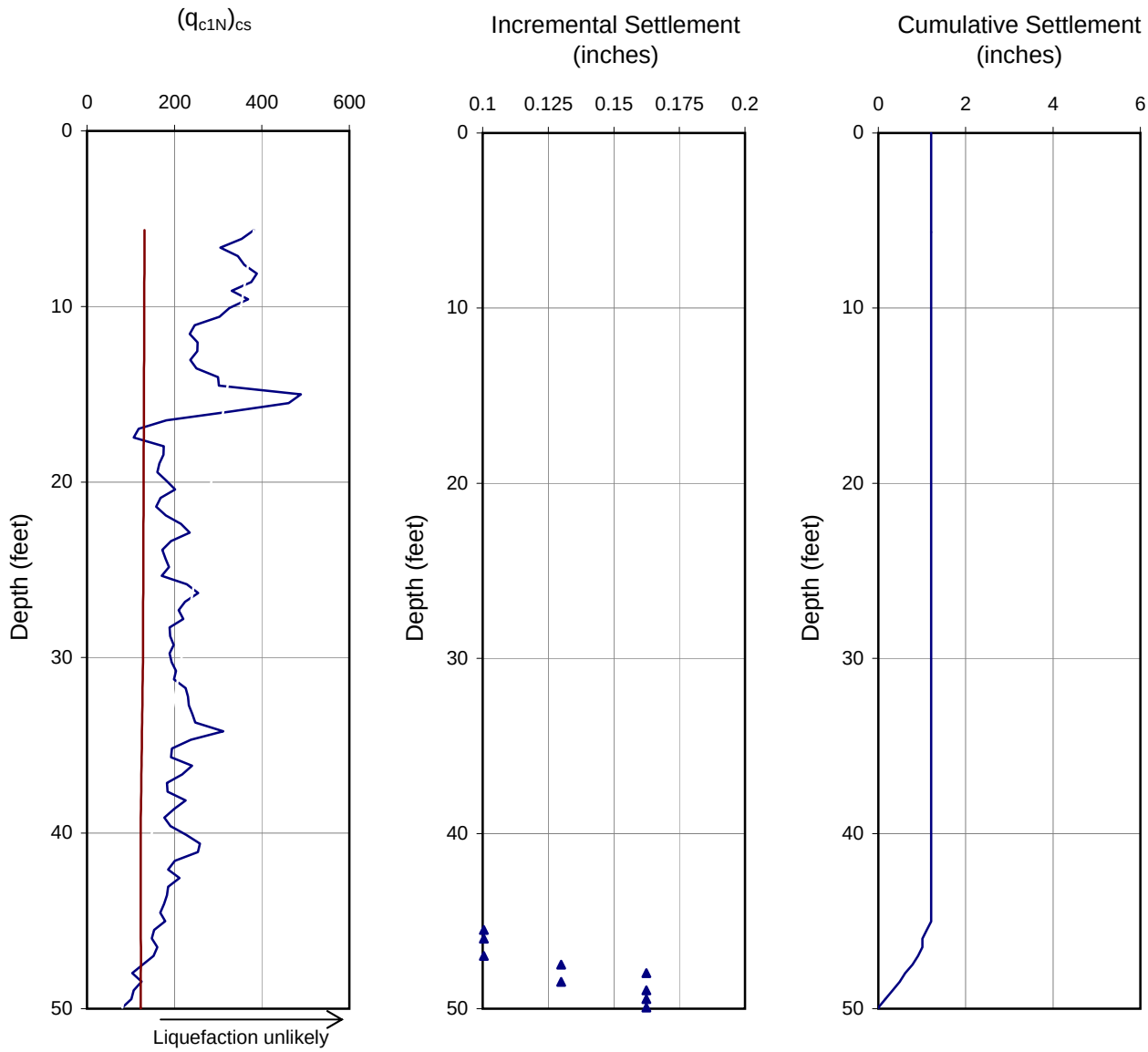

Notes: OLE event; design groundwater depth: 40 feet
Potentially liquefiable soil types only; nonliquefiable soil types not shown

LIQUEFACTION ANALYSES USING CPT

05-48CPT

PLATE

B29

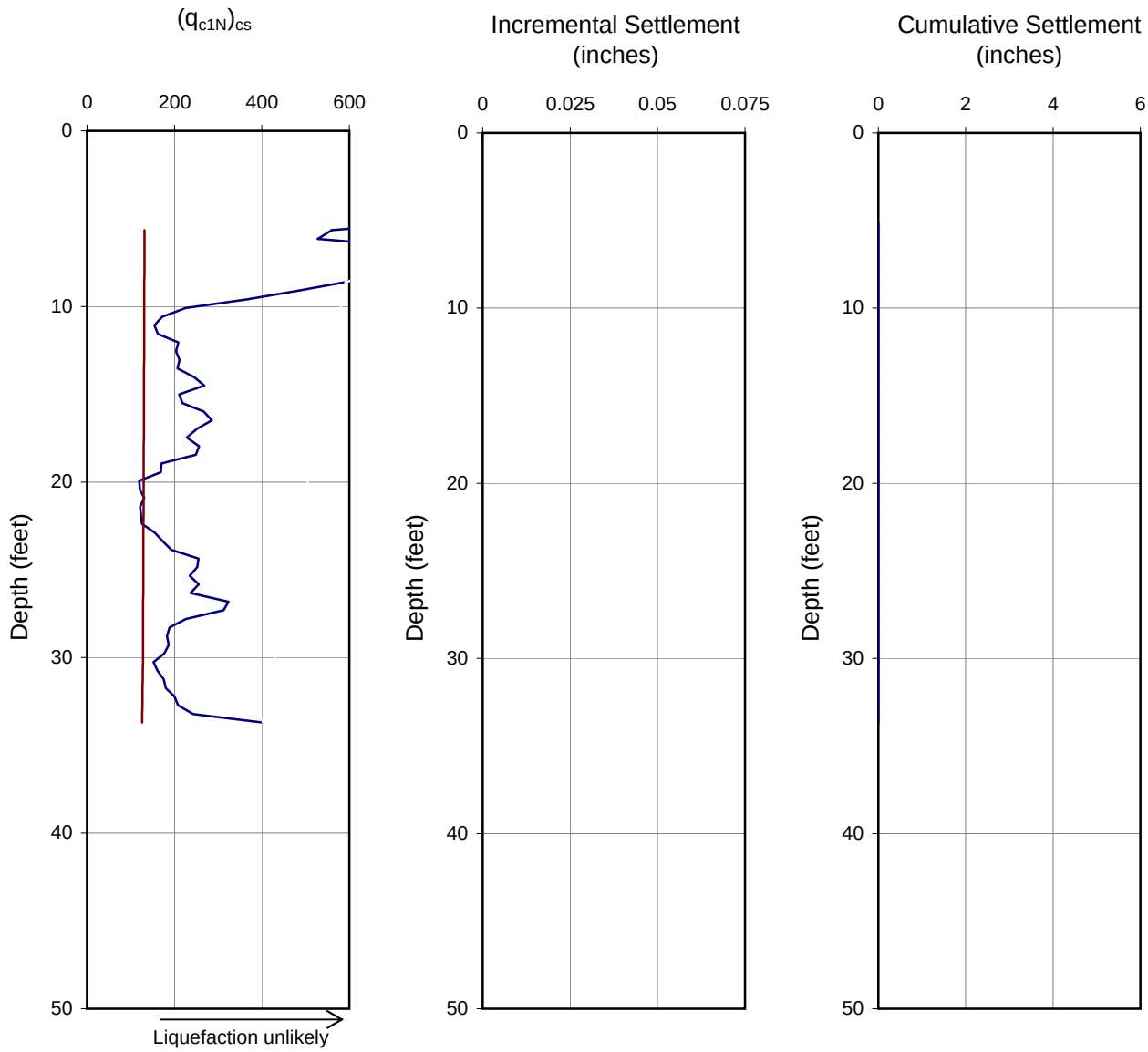

Notes: OLE event; design groundwater depth: 40 feet
Potentially liquefiable soil types only; nonliquefiable soil types

LIQUEFACTION ANALYSES USING CPT

05-49CPT

PLATE

B30

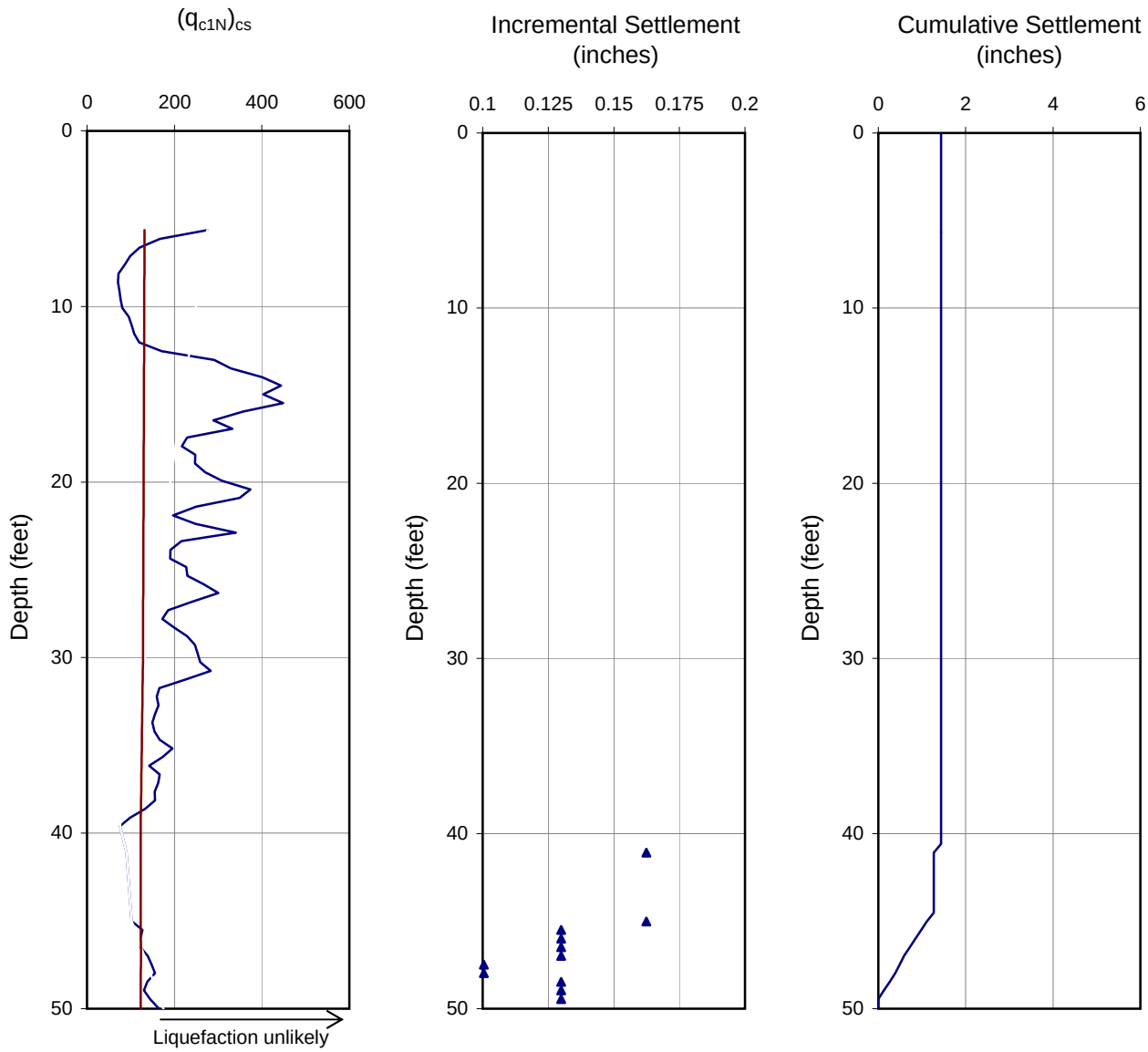

Notes: OLE event; design groundwater depth: 40 feet
Potentially liquefiable soil types only; nonliquefiable soil types not shown

LIQUEFACTION ANALYSES USING CPT

05-50CPT

PLATE

B31

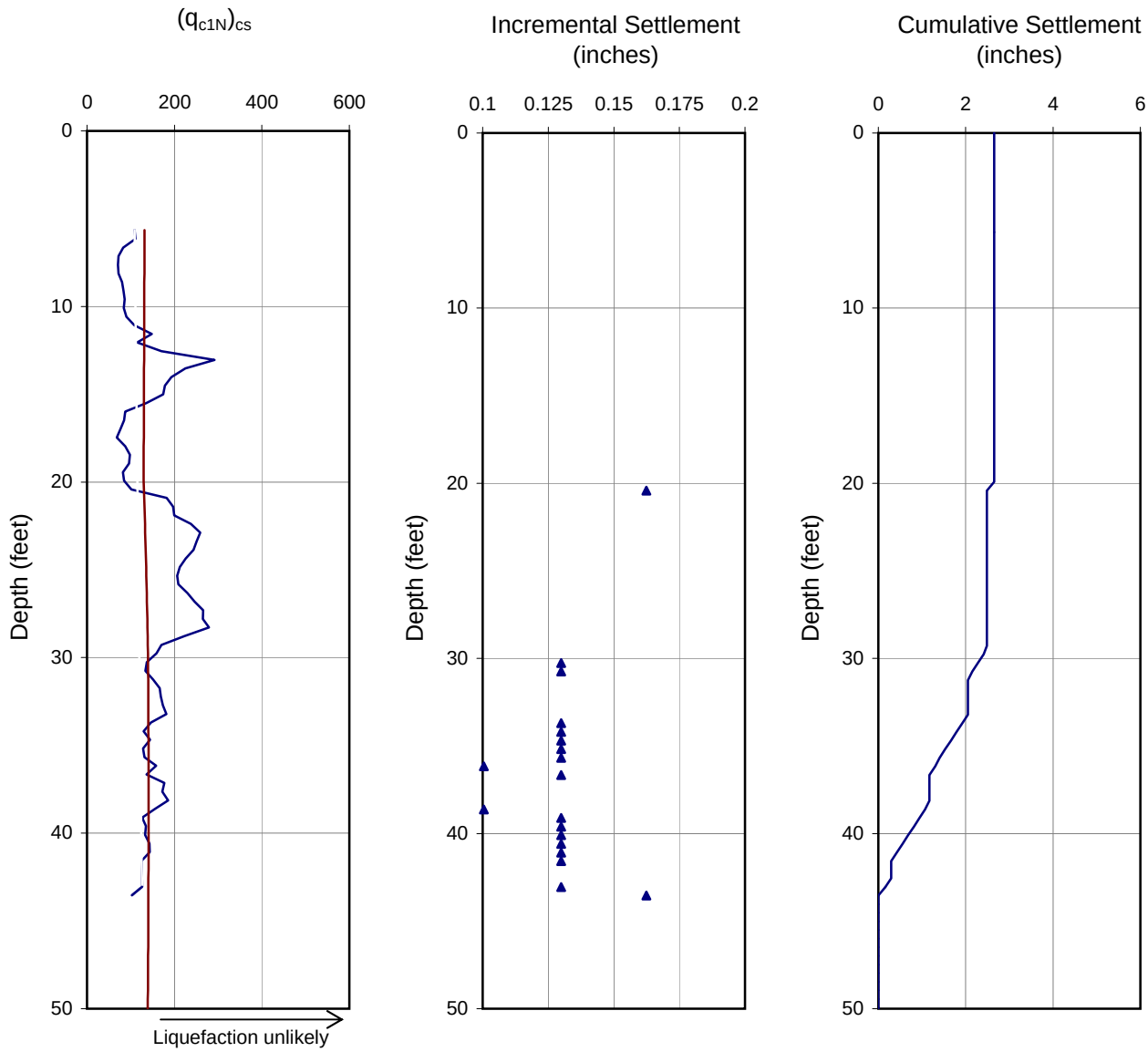

Notes: OLE event; design groundwater depth: 20 feet
Potentially liquefiable soil types only; nonliquefiable soil types not shown

LIQUEFACTION ANALYSES USING CPT

05-53CPT

PLATE

B32

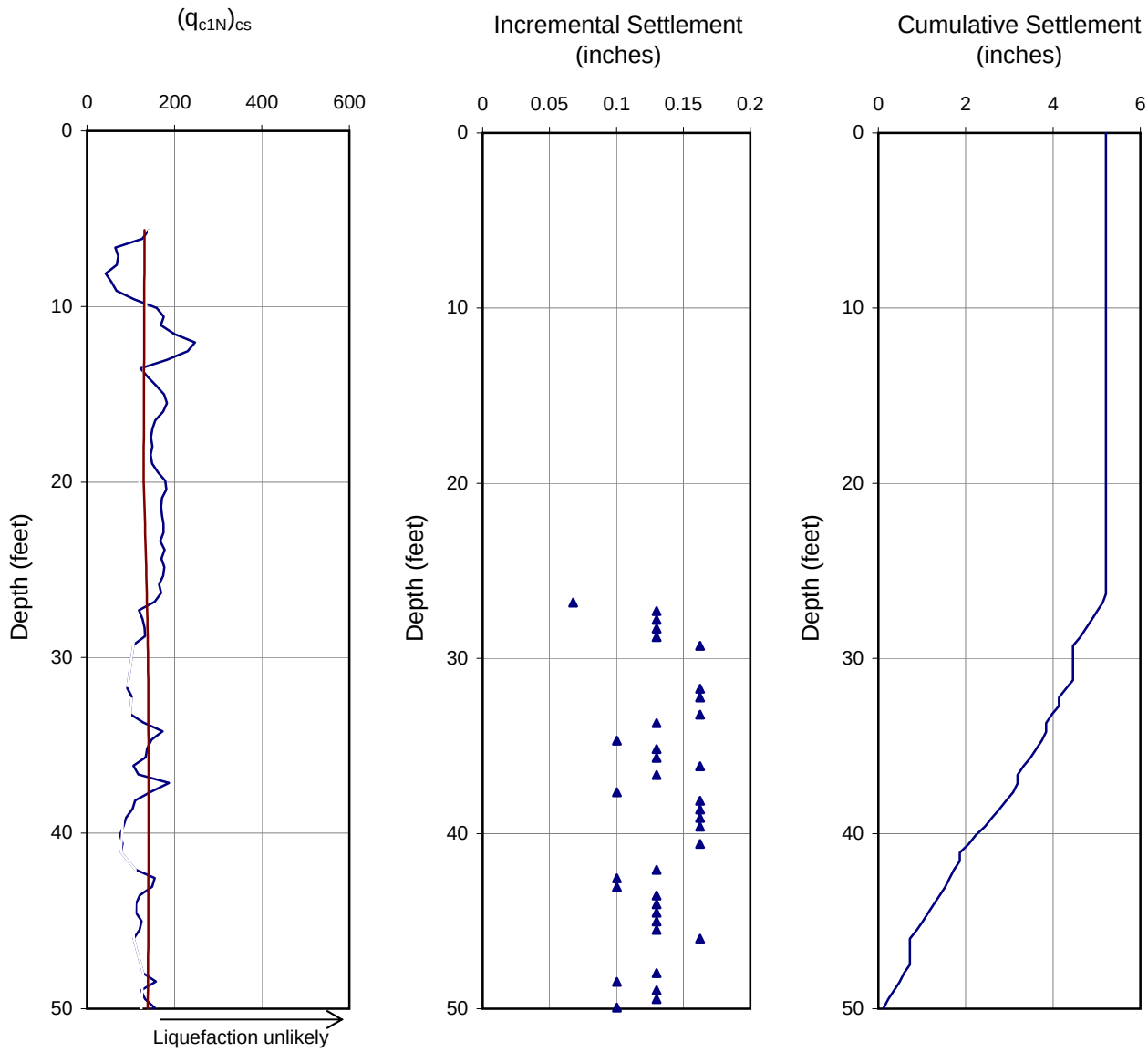

Notes: OLE event; design groundwater depth: 20 feet
Potentially liquefiable soil types only; nonliquefiable soil types not shown

LIQUEFACTION ANALYSES USING CPT

05-54CPT

PLATE

B33

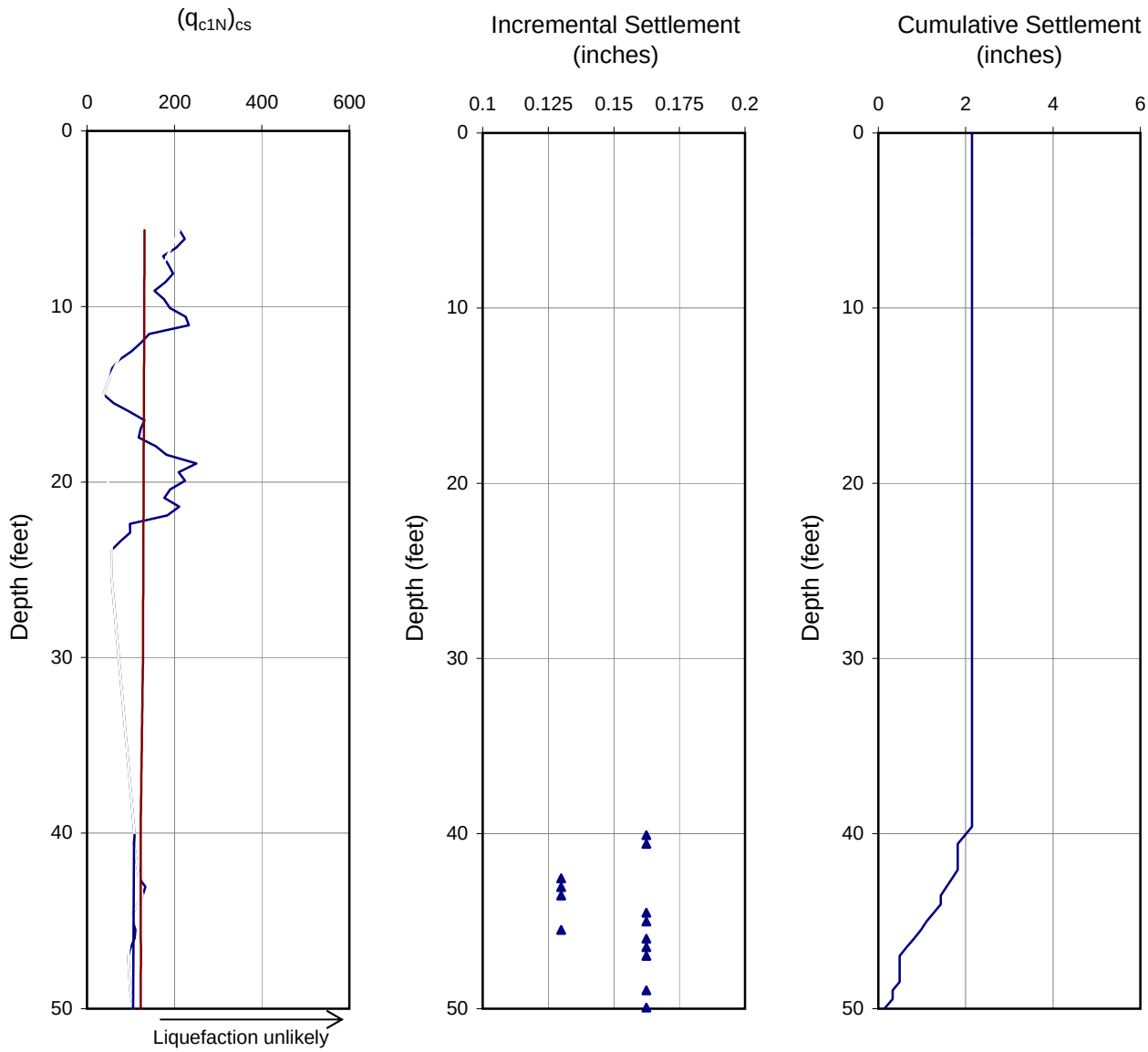

Notes: OLE event; design groundwater depth: 40 feet
Potentially liquefiable soil types only; nonliquefiable soil types not shown

LIQUEFACTION ANALYSES USING CPT

05-55CPT

PLATE

B34

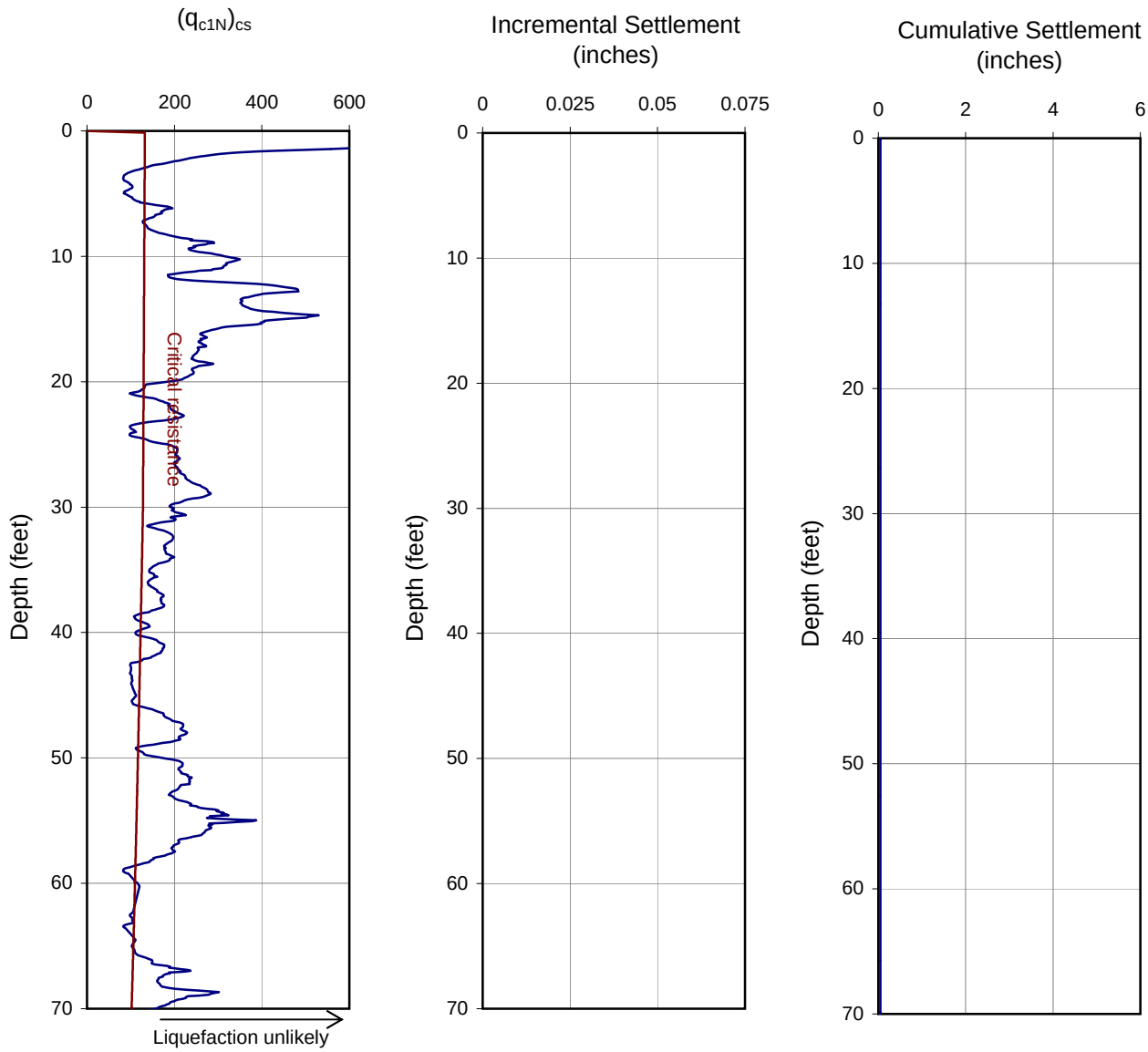

Notes: OLE event; design groundwater depth: 70 feet
Potentially liquefiable soil types only; nonliquefiable soil types

LIQUEFACTION ANALYSES USING CPT

DYC-01

PLATE

B35

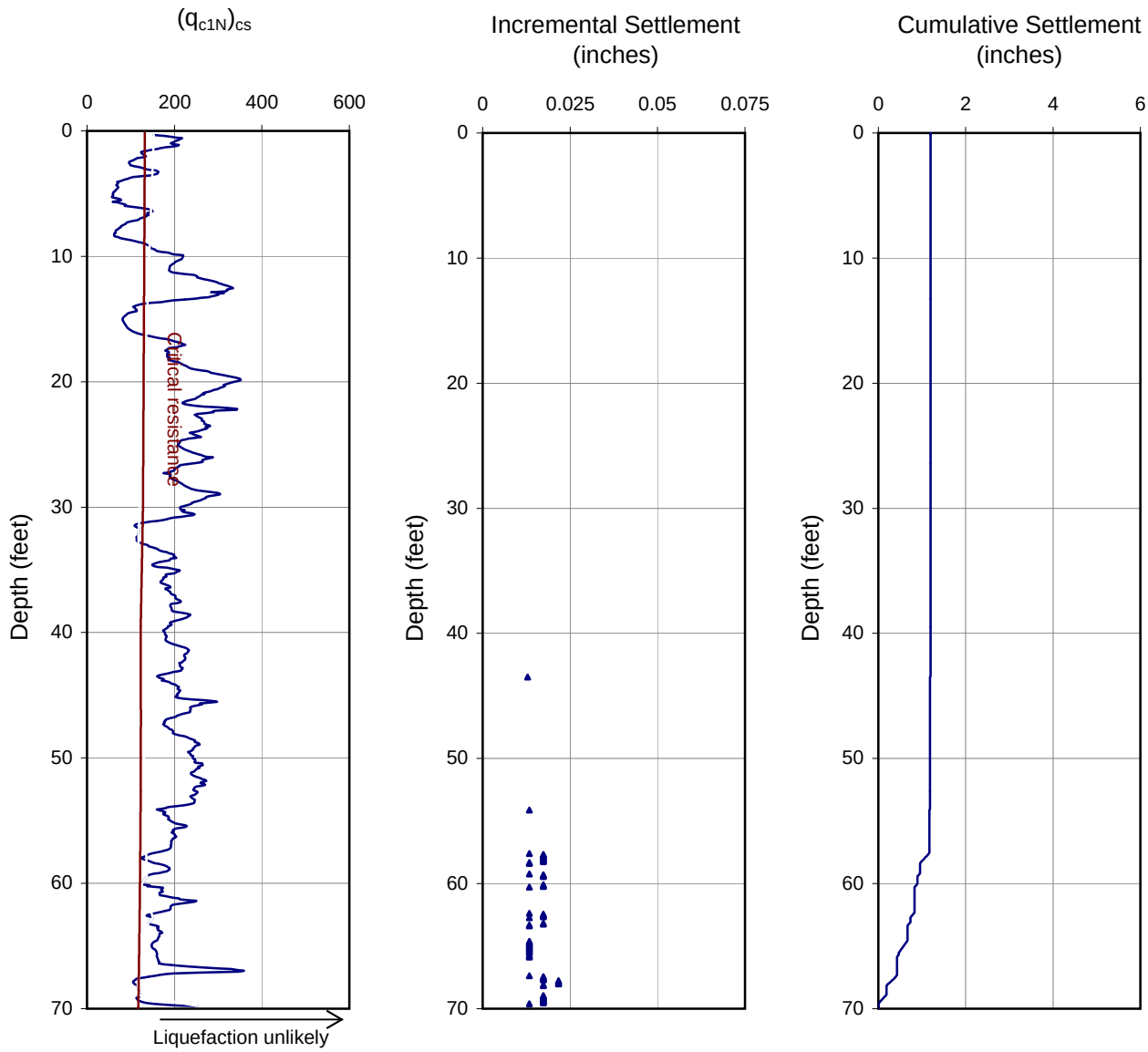

Notes: OLE event; design groundwater depth: 40 feet
Potentially liquefiable soil types only; nonliquefiable soil types

LIQUEFACTION ANALYSES USING CPT

DYC-02

PLATE

B36

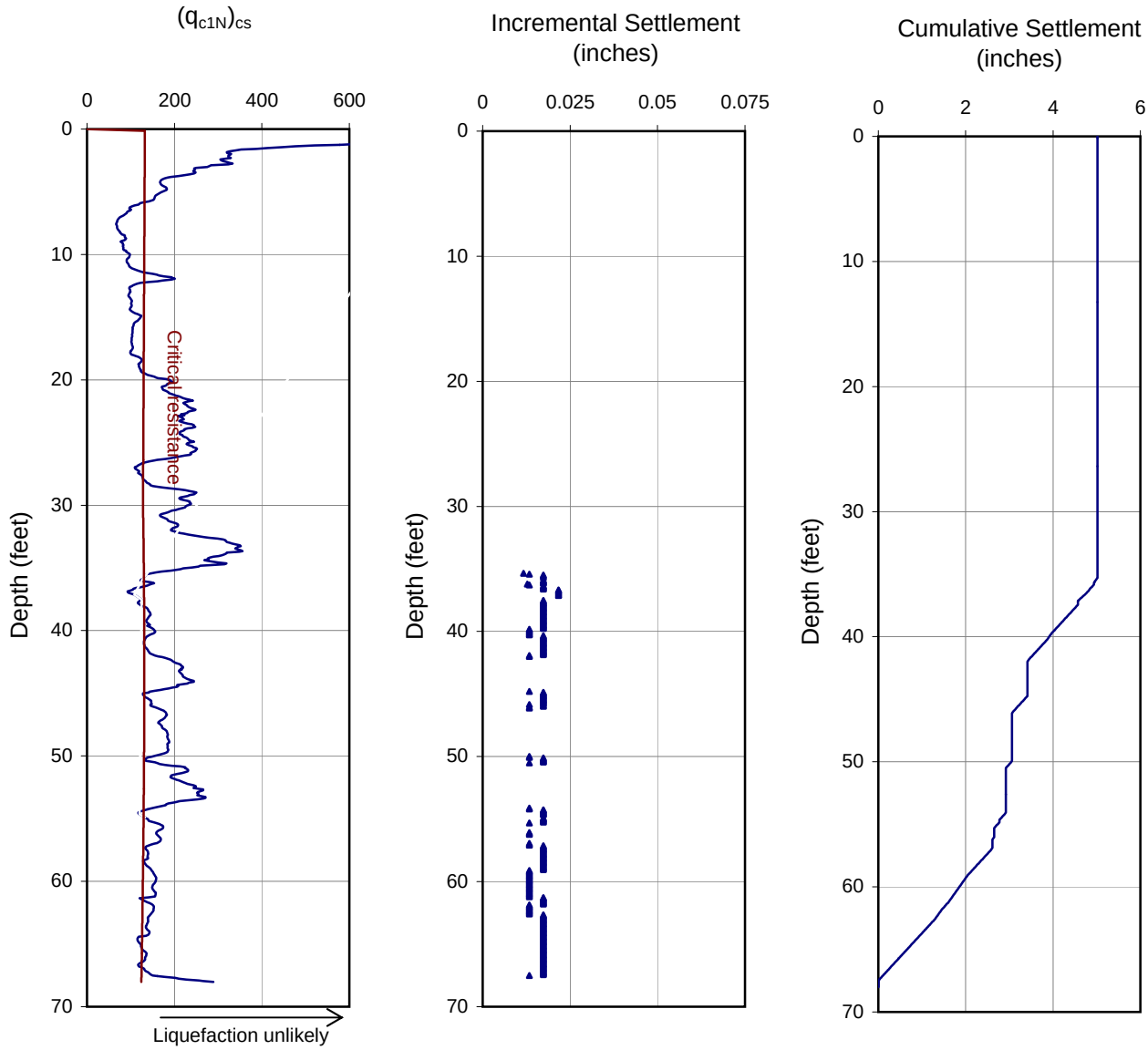

Notes: OLE event; design groundwater depth: 30 feet
Potentially liquefiable soil types only; nonliquefiable soil types

LIQUEFACTION ANALYSES USING CPT

DYC-03A

PLATE

B37

APPENDIX C
PILE AXIAL CAPACITY

APPENDIX C - AXIAL PILE CAPACITY

CIDH Piles

Pile axial capacities were evaluated using the computer program SHAFT 6.0 (Ensoft, 2007b) following the principles proposed in "Drilled Shafts: Construction Procedures and Design Methods" by the U.S. Federal Highway Administration (FHWA, 1999), in which the ultimate capacity is obtained by using the formula:

Ultimate axial pile capacity = $\sum$ incremental side friction +end-bearing

Using conventional notation used by FHWA:

$R_T = \pi B \sum \Delta z_i f_{max,i} + \pi B^2 q_{max}/4$

$R_A = R_T/F$ (allowable stress design [ASD]), and

$\eta \Sigma \gamma_i Q_i \leq \Sigma \phi_i R_i$ (load and resistance factor design [LRFD])

R_T	=	nominal ultimate axial resistance of the drilled shaft
R_A	=	allowable resistance (ASD)
F	=	global factor of safety (ASD)
B	=	diameter of the drilled shaft
Δz_i	=	layer thickness in layer i
$f_{max,i}$	=	unit side resistance for compression in layer i
q_{max}	=	unit base resistance for compression loading
η	=	ductility/redundancy/operational importance factor (LRFD)
γ_i	=	load factor for load component i
Q_i	=	nominal load value for load component i
ϕ_i	=	resistance factor for resistance component I
R_i	=	nominal value of resistance component i

The subsurface conditions are classified into four types: cohesive, granular, intermediate geomaterials (IGM), and rock. Recommendations are provided in the design manual to estimate the unit side resistances for different types of material. The manual provides recommendations for estimating unit resistance as a function of shear strength for cohesive

material and based on overburden pressures and standard penetration test (SPT) blow count for sands and IGM. For settlement analysis, recommendations for t-z and q-z curves were provided in the design manual. Care should be taken to limit the base resistance in large-diameter drilled shaft if the settlement estimates are not performed because the factor of safety (FS) normally used in drilled shaft design might result in excessive settlements for large-diameter drilled shafts.

Piles were assumed to develop resistance to axial loads from side friction only for normal loading conditions. Pile end-bearing was neglected. Generalized soil profiles provided in Section 3.2 were used for pile capacity analyses. Skin friction of cohesive soils from the near surface (5 feet from finished grade) and from the bottom one pile diameter was not considered. Idealized soil input parameters are summarized for the Empire Avenue Street grade separations in Table C1.

Table C1 - SOIL INPUT PARAMETERS FOR EMPIRE AVENUE

SOIL TYPE	DEPTH (feet)	SHAFT MODEL	TOTAL UNIT WEIGHT (lb/foot^3)	INTERNAL FRICTION ANGLE (deg)	COHESION (lb/foot^2)
Sand	0-30	Sand	110	33	--
Sand	30-85	Sand	130	38	--

Note:
- Groundwater depth at approximately 100 feet below the ground surface.

Where ASD methods were used, a minimum global FS of 2 should be applied to the estimated ultimate pile capacities and the resulting value was checked against the service load demand.

Settlement analyses can also be performed using the same computer program as for capacity analysis. The program uses recommendations based on FHWA (1999) for computing the axial capacity of single pile and employs t-z and q-z curves to compute the load versus pile vertical movement of the drilled shaft. Since the pile demands were not known, further settlement analyses were not performed. According to the current Caltrans design practice, pile head downward movement should not exceed ½ inch if loading equal to pile nominal resistance is applied.

Driven Piles

Driven pile axial capacities were evaluated using the computer program APILE^{Plus}5.0 for Windows (Ensoft, 2007). This computer program has the capability to estimate the vertical pile performance using four different approaches including American Petroleum Institute (API) recommended practice 2A (RP2A), the U.S. Federal Highway Administration (FHWA), the U.S. Army Corps of Engineers (USACE), and the Lambda method. Regardless of which method was used, the ultimate axial capacity can generally be obtained by summing the components from incremental side friction and end-bearing.

For the proposed foundation type, the RP2A method recommended by API was used in the analyses. For the RP2A method, the ultimate axial pile capacity can be expressed as:

$$P_u = \int\int (\alpha_x c_x + K p_x \tan \delta_x)\, dA_s\, dL + A_p\,(9c + p_o N_q)$$

where

P_u = ultimate axial pile capacity,

α_x = coefficient depending on effective overburden pressure and undrained shear strength at depth x for cohesive soil (ignored for cohesionless soil),

c_x = undrained soil shear strength at depth x,

K = coefficient of lateral earth pressure for cohesionless soil ignored for cohesive soil),

p_x = effective overburden pressure at depth x,

δ_x = angle of friction between pile wall and soil at depth x,

A_s = side surface area of pile,

L = penetration of pile below the ground surface,

A_p = cross-sectional area of the pile tip,

c = undrained soil shear strength at pile tip, taken as the average over a distance of 2 diameters below the tip of the pile (ignored for cohesionless soil),

p_o = effective overburden pressure at pile tip, and

N_q = bearing capacity factor for cohesionless soil (ignored for cohesive soil).

Settlement of axially loaded piles was evaluated using elastic settlement analyses and load-transfer function analyses. The load-transfer functions considered the shaft-load transfer function (t-z curves) and the base-load transfer function (q-z curves). The built-in load-transfer function curves within the APILE program were used in the analyses.

The lateral coefficients, bearing capacity factor, and external friction angles were obtained based on site-specific data gathered for this investigation and on correlations/recommendations provided in the APILE^{Plus}5.0 manual. Limiting side friction and end-bearing pressures were also assigned according to the manual recommendations and local experience.

Axial pile capacities of 14-inch square precast prestressed concrete piles were evaluated for Buena Vista Street Undercrossing. The design parameters are summarized in Table C2. The analysis results are included in Section 4 of the report.

Table C2 - SOIL INPUT PARAMETERS FOR BUENA VISTA DRIVEN PILE ANALYSIS

SOIL TYPE	DEPTH (feet)	A-PILE MODEL	EFFECTIVE UNIT WEIGHT (lb/foot^3)	INTERNAL FRICTION ANGLE (deg)	COHESION (lb/foot^2)	BEARING CAPACITY FACTOR, N_q	MAXIMUM SIDE FRICTION (lbs/ft^2)	MAXIMUM END BEARING VALUES (lbs/ft^2)
Sand	0 - 51	Sand	115	34	--	30	1,700	100,000
Sand	51 - 95	Sand	120	38	--	60	1,800	200,000

Note:
- Groundwater at 60 feet deep.

APPENDIX D
PILE LATERAL LOAD CAPACITY

APPENDIX D - PILE LATERAL LOAD CAPACITY

Pile lateral capacities were estimated using the (lateral load-deflection) p-y curve approach.

BACKGROUND

Pile lateral load analyses were performed using the computer program LPILE PLUS 5.0 for Windows (Ensoft, 2007). The program computes deflection, shear, and bending moments of laterally loaded piles. The program uses nonlinear p-y (lateral load-deflection) curves to model the soil behavior. These p-y curves can be either input or generated by the program. For sloping ground surfaces, a reduction factor is applied to the resisting soil force (p) based on the ratio of the difference between the passive and active earth pressures for a sloping ground surface to the difference between the passive and active earth pressure for a level surface. A movement module was also used in the analyses to evaluate the pile reaction against the moving soil. By using this technique, shear forces from piles to resist the movement can be obtained in order to model the pile pinning effect in other analyses.

Input parameters for the program include applied moments, lateral forces, axial load, head condition (free or fixed), pile geometry and stiffness, initial soil movement along the pile, and soil geometry and strength parameters. The soil parameters include soil type for internal p-y curve generation, unit weight, friction angle, shear strength, initial stiffness, and soil strain at 50 percent of maximum strength.

For piles in group, the capacities of single piles should be reduced using a group reduction factor (GRF) as noted in Figure 22 the report.

ANALYSES

Lateral pile analyses were performed for free and fixed head conditions for cast-in-drilled-hole (CIDH) and driven piles. Soil profiles and analyses parameters are provided in Table D1 and Table D2 for Buena Vista Street and Empire Avenue, respectively. The analyses cases and summary results are included in the report. The deflection, shear and moment figures for each condition are provided in Plates D1 through D12. The lateral pile analyses considered a single pile.

Table D1 - L PILE SOIL PROPERTIES FOR BUENA VISTA STREET

SOIL TYPE	DEPTH (inches)	L PILE MODEL	EFFECTIVE UNIT WEIGHT (pci)	K_{STATIC} (pci)	$K_{SEISMIC}$ (pci)	INTERNAL FRICTION ANGLE (deg)	S_U (psi)	e_{50}	NOTE
SAND (compacted fill)	-100-0.1	SAND	0.069	--	--	34	--	--	
SAND	0.1-660	SAND	0.067	90	--	34	--	--	
SAND	660-720	SAND	0.075	225	--	38	--	--	
SAND	720-1320	SAND	0.039	125	--	38	--	--	

Notes:

- The pile top at the abutment is assumed to be 25 feet below the ground surface (bgs). One-third of this embedment was used as overburden. For the bents, 7 feet of compacted fill as added for overburden.
- Groundwater table at 100 feet bgs.
- pci = pounds per cubic inch.
- psi=pounds per square inch.

Table D2 - L PILE SOIL PROPERTIES FOR EMPIRE AVENUE

SOIL TYPE	DEPTH (inches)	L PILE MODEL	EFFECTIVE UNIT WEIGHT (pci)	K_{STATIC} (pci)	$K_{SEISMIC}$ (pci)	INTERNAL FRICTION ANGLE (deg)	S_U (psi)	e_{50}	NOTE
SAND (compacted fill)	-100-0.1	SAND	0.069	--	--	34	--	--	
SAND	0.1-360	SAND	0.064	90	--	33	--	--	
SAND	360-840	SAND	0.075	225	--	38	--	--	
SAND	840-1020	SAND	0.039	125	--	38	--	--	

Notes:

- The pile top at the abutment is assumed to be 25 feet below the ground surface (bgs). One-third of this embedment was used as overburden. For the bents, 7 feet of compacted fill as added for overburden.
- Groundwater table at 100 feet bgs.
- pci = pounds per cubic inch.
- psi=pounds per square inch.

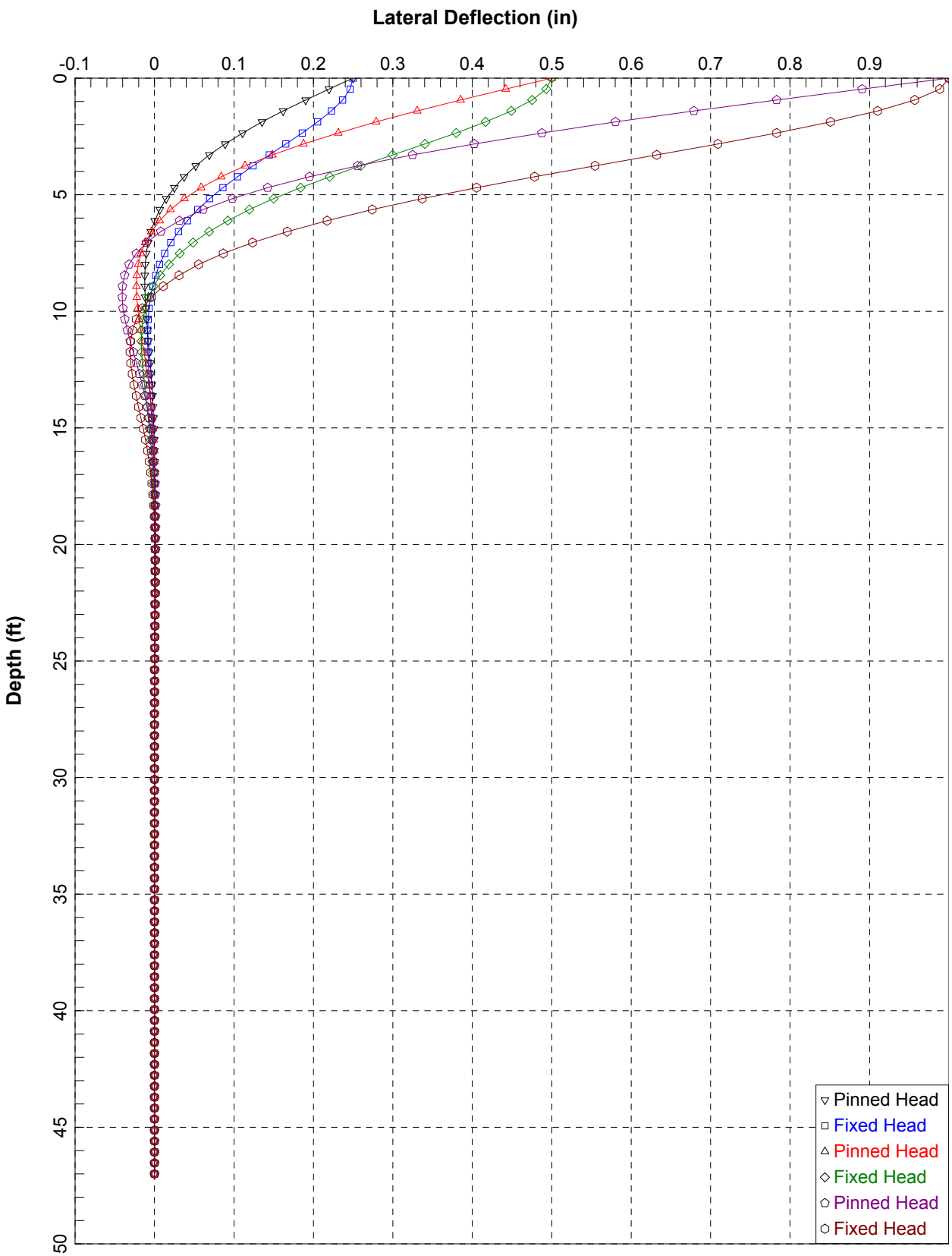

ABUTMENTS 1 AND 3-14 INCH SQUARE PILE

PLATE

D1

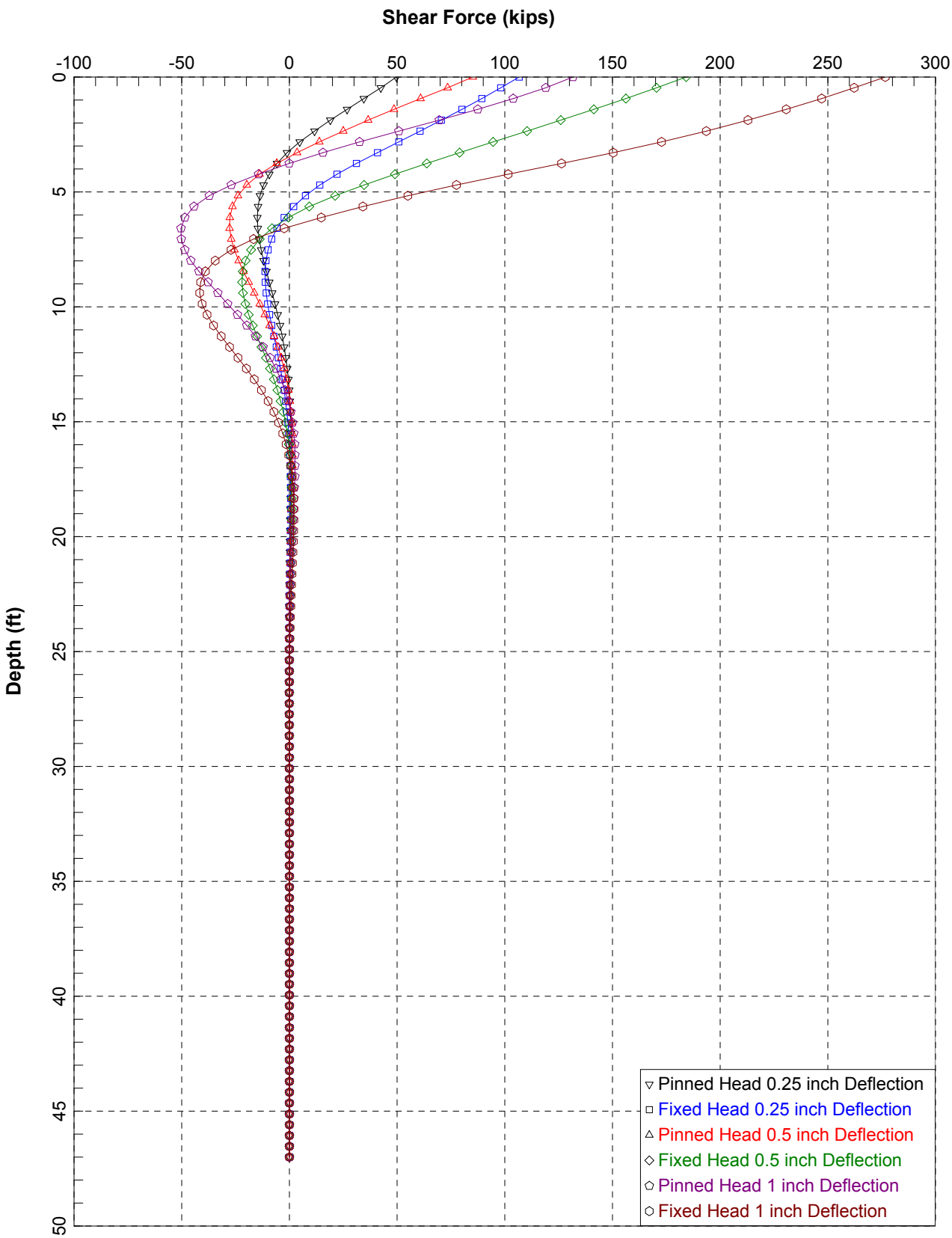

ABUTMENTS 1 AND 3-14 INCH SQUARE PILE

PLATE
D2

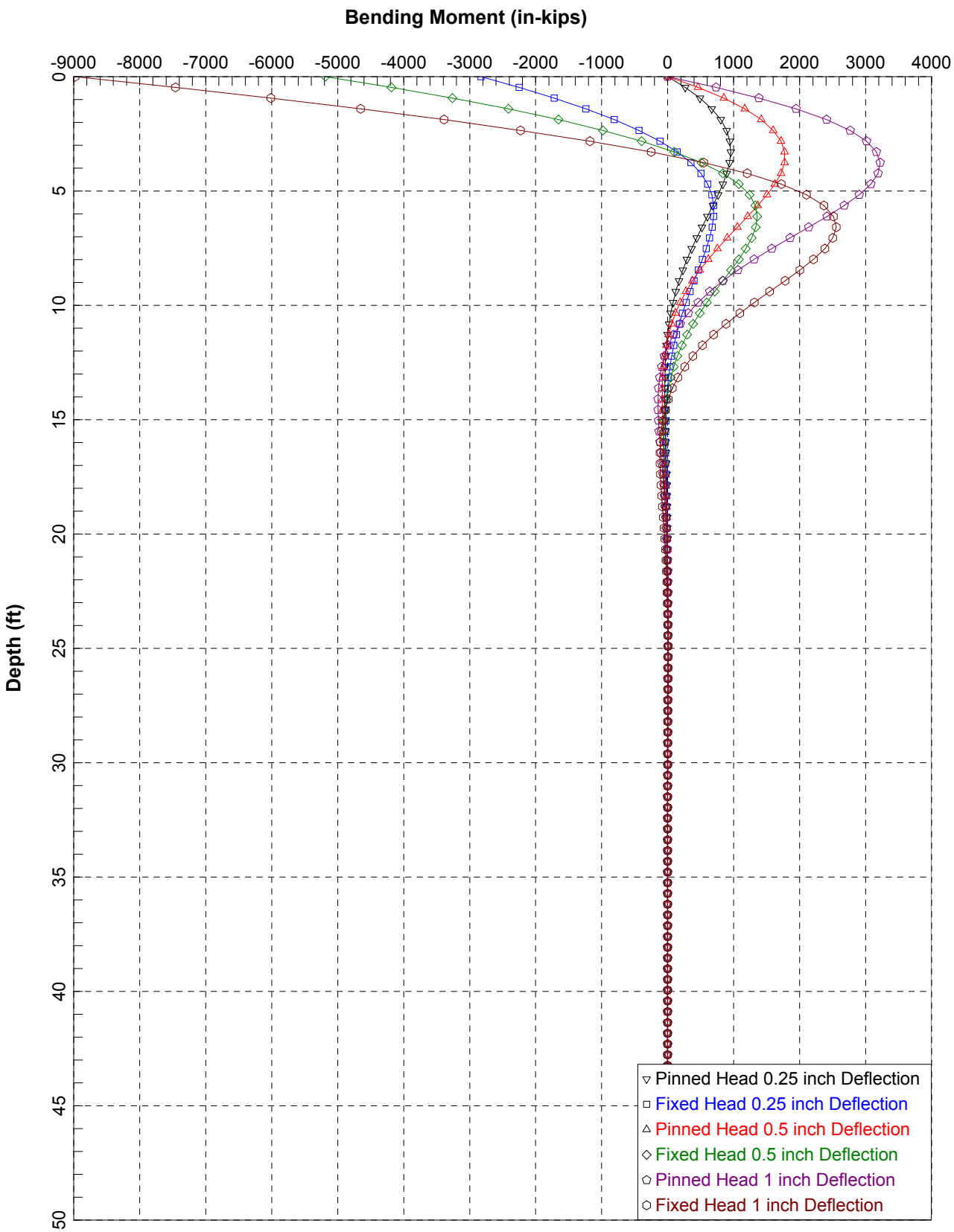

ABUTMENTS 1 AND 3-14 INCH SQUARE PILE

PLATE

D3

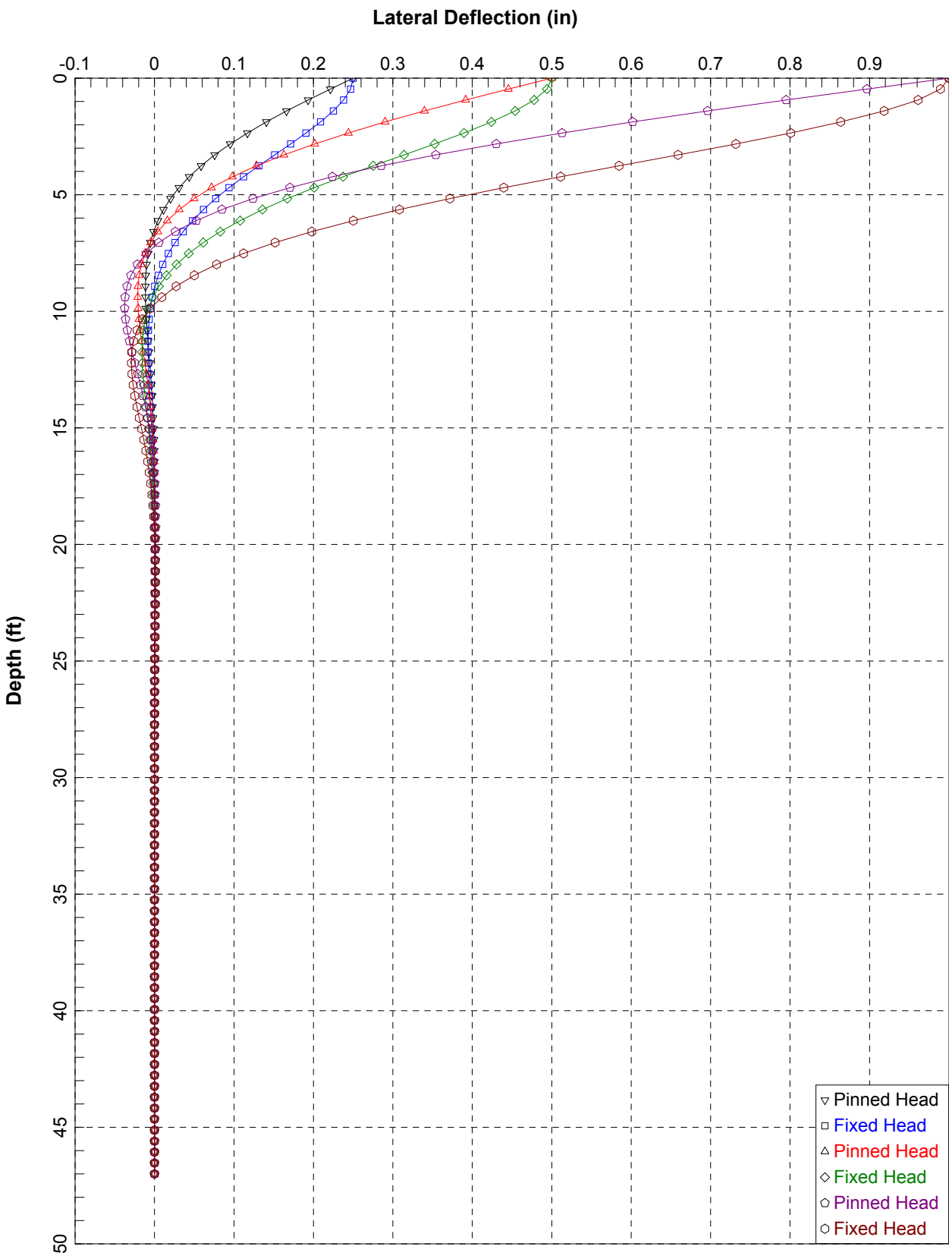

BENT 2 14 INCH SQUARE PILE

PLATE

D4

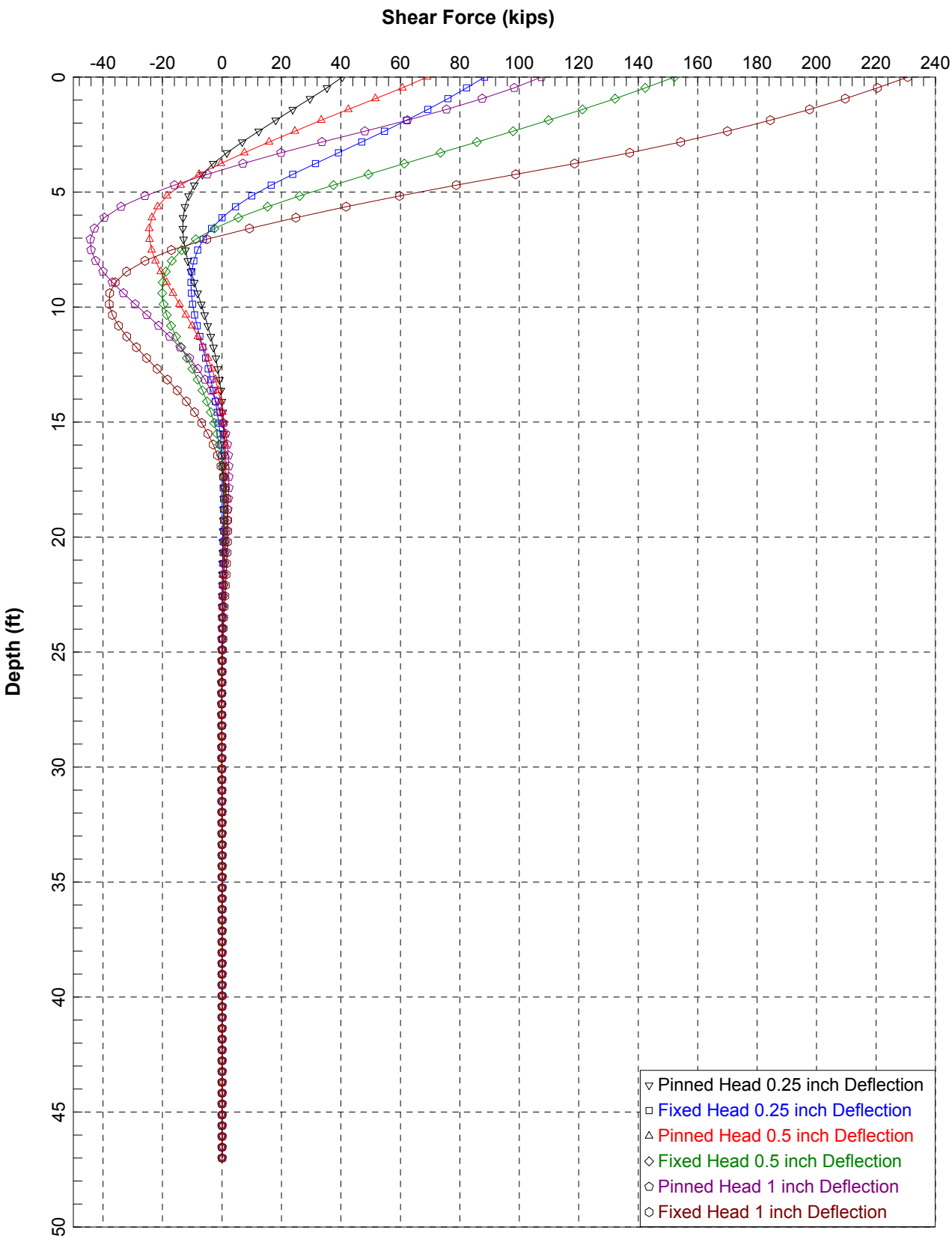

BENT 2 14 INCH SQUARE PILE

PLATE

D5

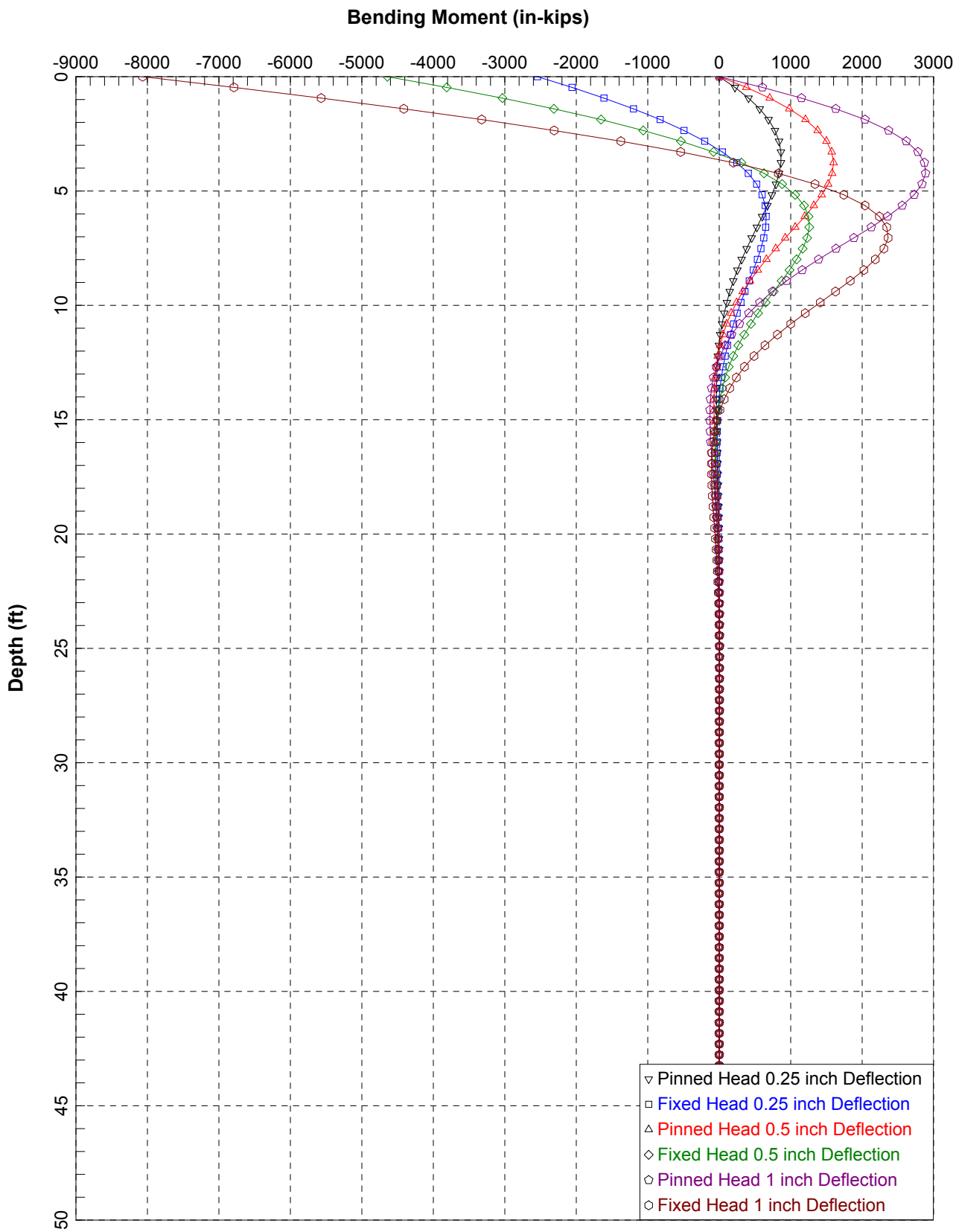

BENT 2 14 INCH SQUARE PILE

PLATE

D6

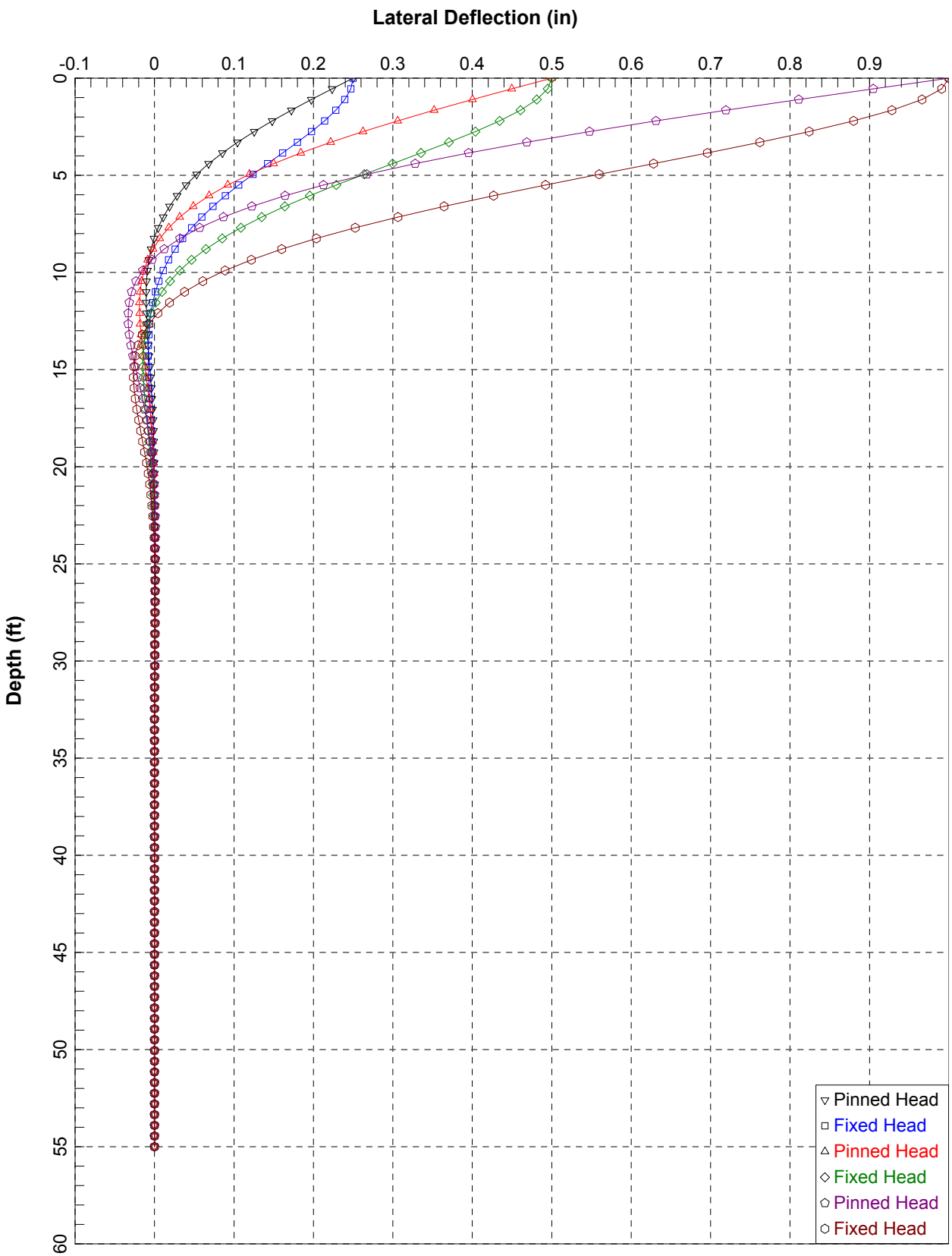

ABUTMENTS 1 AND 3 - 24 INCH CIDH PILE

PLATE
D7

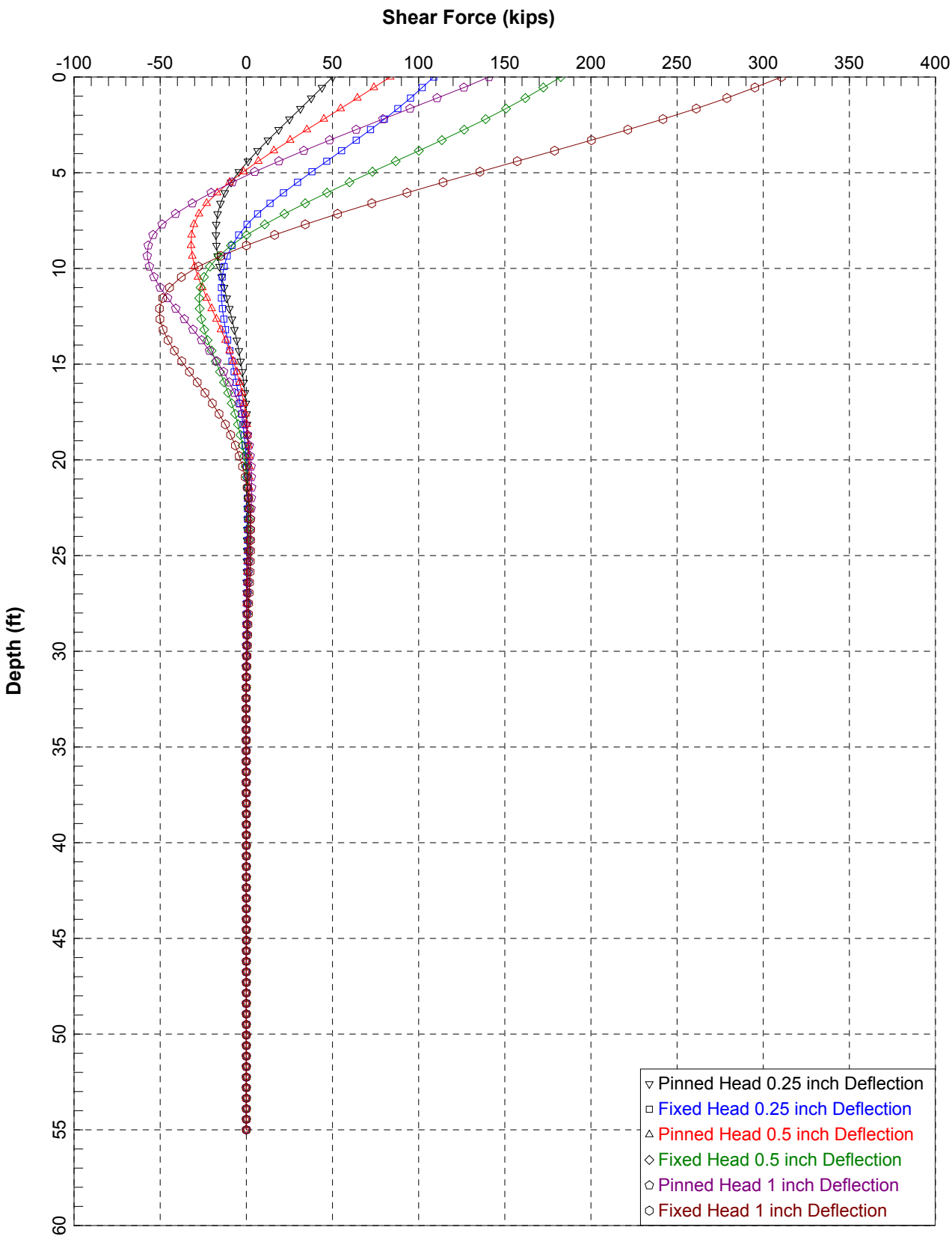

ABUTMENTS 1 AND 3 - 24 INCH CIDH PILE

PLATE

D8

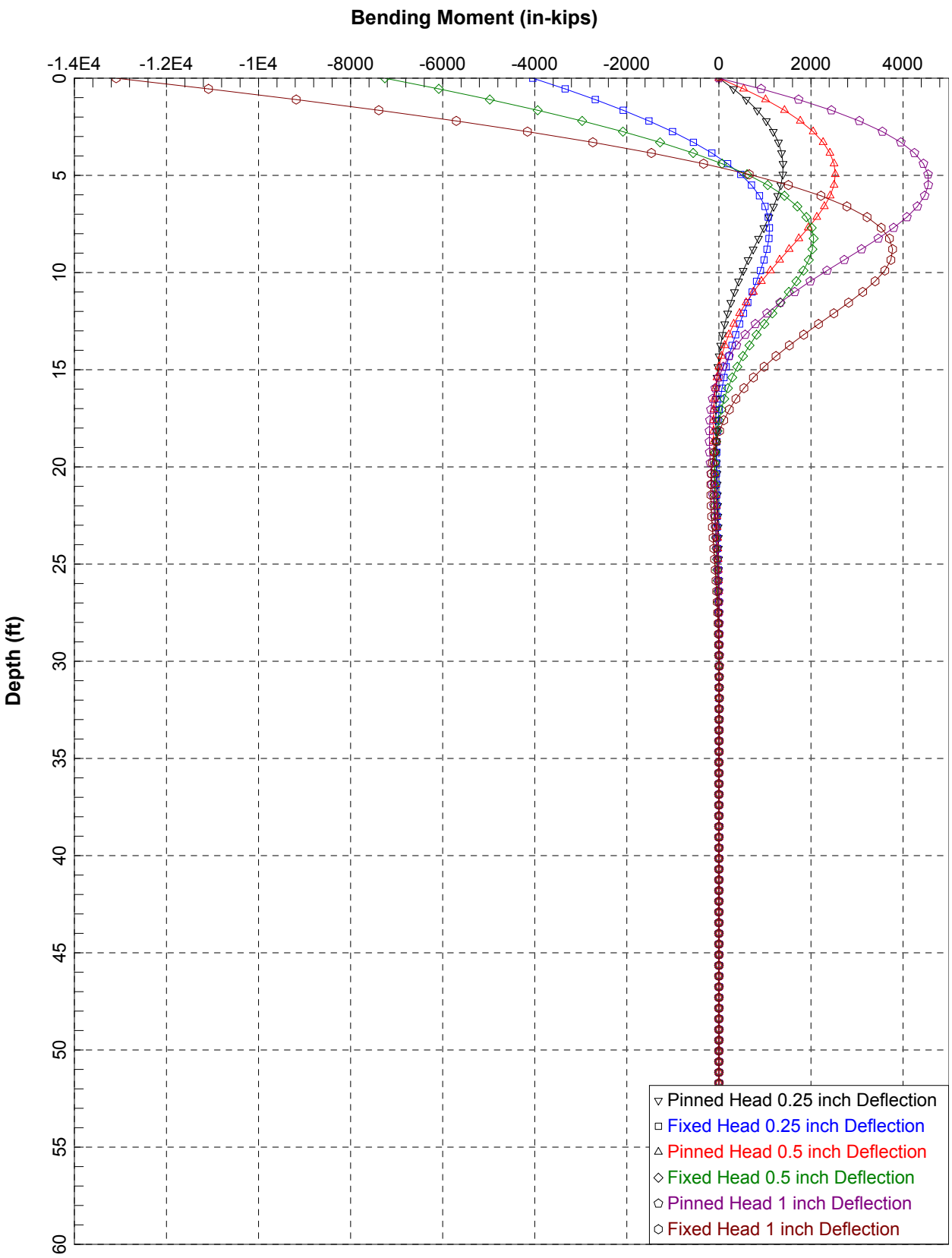

ABUTMENTS 1 AND 3- 24 INCH CIDH PILE

PLATE

D9

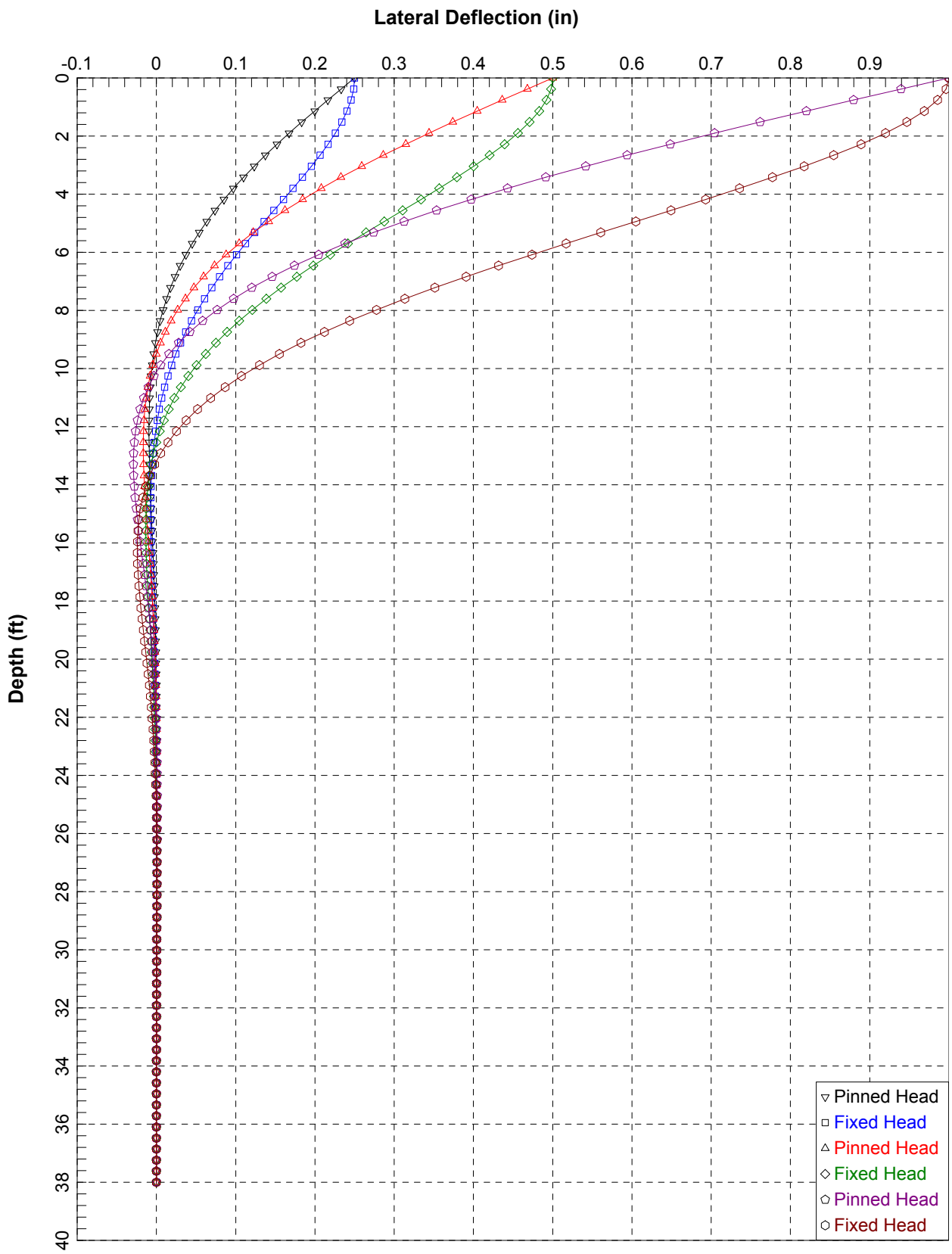

BENT 2 - 24 INCH DIAMETER CIDH PILE

PLATE

D10

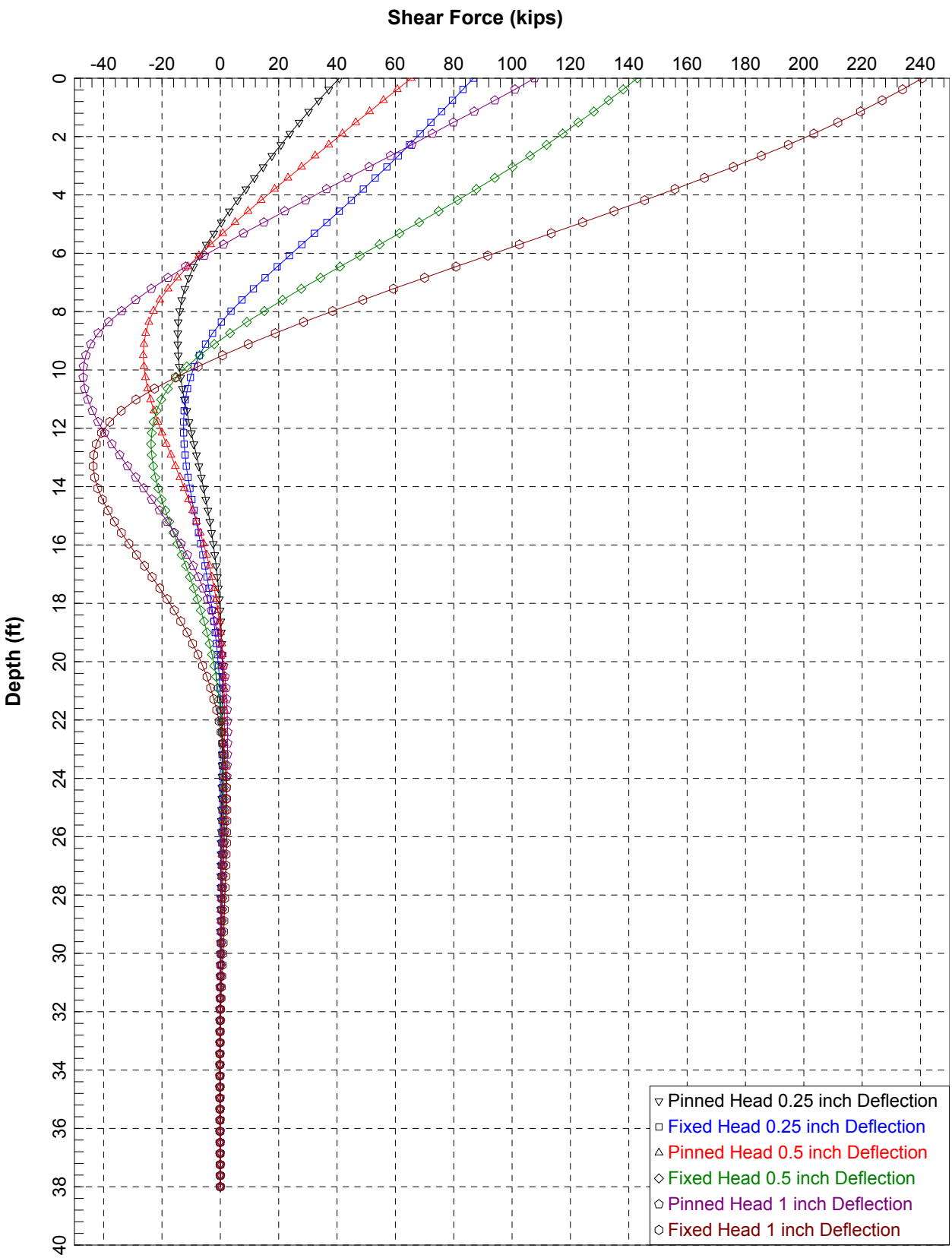

BENT 2 - 24 INCH DIAMETER CIDH PILE

PLATE

D11

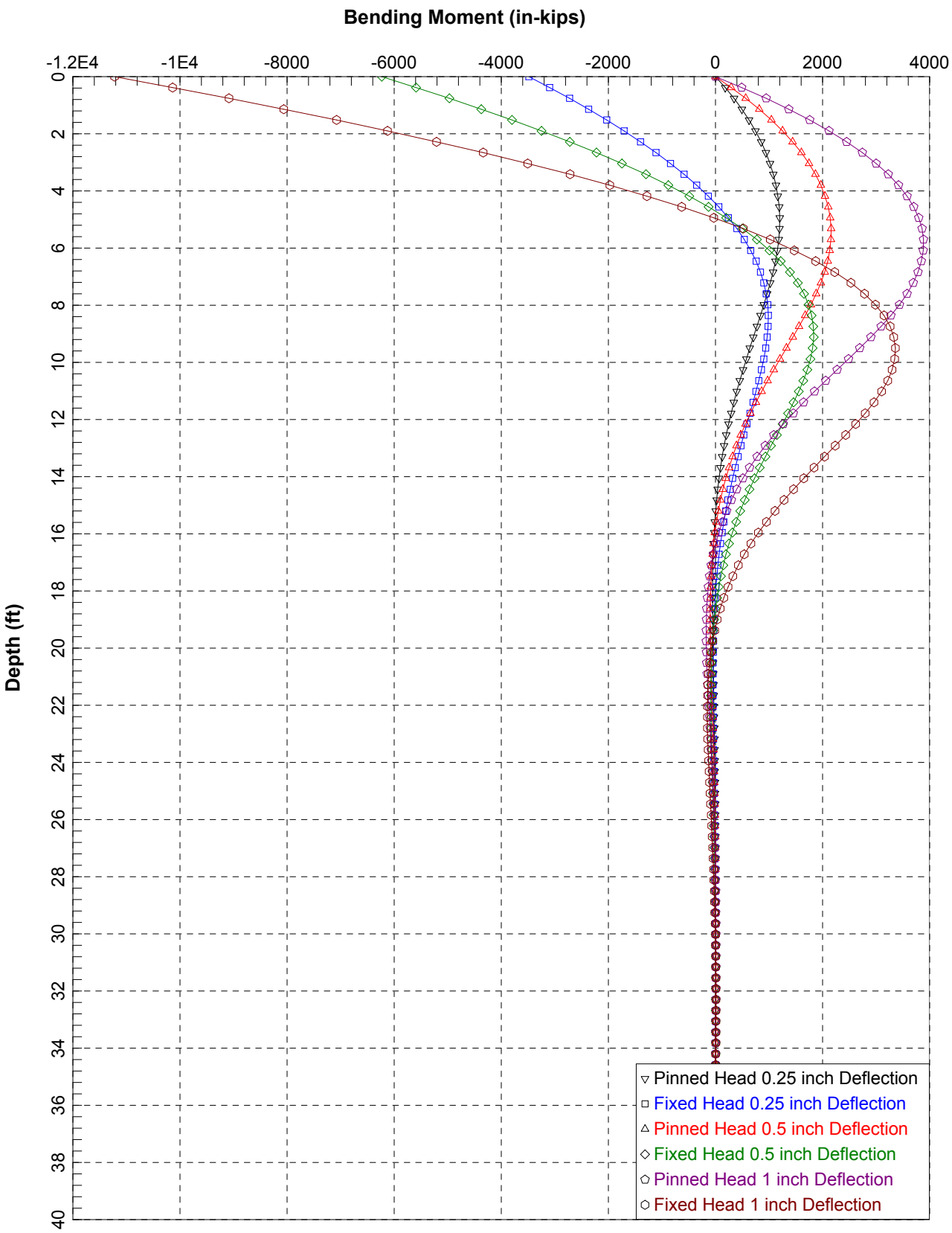

BENT 2 - 24 INCH DIAMETER CIDH PILE

PLATE

D12

APPENDIX E

MSE WALL EXTERNAL STABILITY ANALYSIS

APPENDIX E - MSE WALL EXTERNAL STABILITY ANALYSIS

The computer programs MSEW (ADAMA, 2009) and Slope/W (GEOSLOPE, 2007) were used to evaluate the external stability of the mechanically stabilized earth (MSE) retaining wall. MSEW (ADAMA, 2009) adopted the design guidelines in demonstration Project No. 82: Publication No. Federal Highway Administration (FHWA) – SA-96-07 and FHWA National Highway Institute (NHI)-00-0043, both of which had evolved from American Association of State Highway and Transportation Officials (AASHTO) and FHWA. The objective of the analyses was to provide a minimum reinforcement length that would satisfy the required factor of safety (FS) values for external static and seismic cases as recommended in FHWA NHI-00-0043 (FHWA, 2001). The analyses performed included the following steps:

1. Assumption of a uniform reinforcement length from the face of the MSE wall that would satisfy the FS values with respect to sliding, overturning, and bearing capacity as recommended in FHWA NHI-00-0043 (FHWA, 2001). This analysis was performed using the computer program MSEW (ADAMA, 2009).
2. Input the reinforcement length that satisfies the FS values in step 1 into the computer program Slope/W (GEOSLOPE, 2007) and calculate the global FS value with respect to deep seated slope failure.
3. Iteration until the assumed reinforcement length satisfied the external stability recommendations in FHWA NHI-00-0043 (FHWA, 2001).

As stated earlier, the recommendations provided within this report cover the external stability of the MSE wall. The required reinforcement length may be governed by the internal stability which is a function of reinforcement type, strength, and reinforcement distribution through the height of the wall. The internal stability should be checked by the design-build contractor prior to the construction. Furthermore, as stated in the FHWA-NHI-00-43 (FHWA, 2001), in some cases, the critical slip surface may be partially inside and partially outside the reinforced soil mass. Therefore, a combined external/internal stability analysis should be performed prior to construction.

BACKGROUND

The MSEW (ADAMA, 2009) computer program includes a design mode and an analysis mode. The results presented here are based using the analysis mode. This mode calculates the FS values with respect to an assigned soil reinforcement layout.

Input parameters for the program include wall height, wall batter, soil surcharges, dead and/or live load surcharges, seismic loads, groundwater conditions, type of reinforcement, engineering properties of the foundation, and the reinforced and retained soils.

The program is capable of performing static and seismic analyses. During an earthquake, in addition to the static horizontal pressure, the retained fill exerts a dynamic horizontal pressure on the MSE wall. MSEW (ADAMA, 2009) calculates the dynamic horizontal pressure using the Mononobe-Okabe procedure.

The stability of the MSE wall with respect to deep seated slope failure was evaluated for static, seismic (pseudostatic) conditions using the computer program SLOPE/W (GEO-SLOPE, 2007). The program is capable of performing general slope stability calculations using several two-dimensional, limit equilibrium analysis methods, including simplified Janbu, Bishop, and Spencer methods of slices for both circular and randomly shaped failure surfaces. User-defined input parameters for the SLOPE/W (GEO-SLOPE, 2007) computer program included soil unit weight, soil shear strength, and slope geometry.

ANALYSES

The input parameters for loads, soil properties and seismic parameters are summarized in Table E1 and Table E2, respectively. The retained soil was modeled as a rigid block (using a high cohesion value) when evaluating the MSE wall for deep seated slope stability. Hence, no failure surfaces within the reinforced zone were taken into account in the analysis. The analysis was based on methods by Janbu and Bishop for circular failure surfaces.

Table E1 - SUMMARY OF LOADS

Strip Load 1 (lb/ft)	16,000
Strip Load 2 (lb/ft)	16,000

Notes:
- Distances of the strip loads from the walls are 10 feet and 25 feet for loads 1 and 2, respectively.
- Width of loads is 8.25 feet.

Table E2 - SUMMARY OF INPUT SOIL PROPERTIES

SOIL REGION	UNIT WEIGHT (pcf)	FRICTION ANGLE (degrees)	COHESION (psf)
Reinforced Soil[1]	130	35	5,000
Retained Soil	120	34	--
Foundation Soil	115	32	--

Notes:
1. The soil properties were assumed so that the reinforced soil mass is modeled as a rigid body.
- psf = pounds per square foot.
- pcf = pounds per cubic foot.
- The groundwater level was assumed to not affect bearing capacity.

In addition to a static analysis, a pseudostatic analysis was performed to check the stability of the MSE wall under seismic conditions. The horizontal acceleration coefficient used in the analyses was based on CGS SP117A (2008) guidelines, and corresponds to the product of the peak ground acceleration at the site and a factor, f_{eq} (SP117A Figure 1). f_{eq} is determined for a site based on the distance from the site to the design fault, the maximum magnitude capable of being generated at the site by the design fault, the associated peak ground acceleration, and the threshold displacement value (5 centimeters). A value of 0.5 was estimated for f_{eq} at the site. The horizontal acceleration coefficient used in the analysis was 0.3.

The analyses resulted in a minimum reinforcement length of 0.9xH, where H is the total height of the MSE wall. The FS values obtained for external stability for the specified reinforcement length are summarized in Table 14 of the text.

DISTRIBUTION

1 copy: Mr. Patrick Nicholson
AECOM
300 South Grand Avenue
Second Floor
Los Angeles, CA 90071

QUALITY CONTROL REVIEWER

Allen M. Yourman, Jr., P.E., G.E.
Principal

ST/GKG:cfp

DIAZ • YOURMAN
& ASSOCIATES
Geotechnical Services

December 15, 2010

Project No. 2009-010.01

Mr. Patrick Nicholson
AECOM
300 South Grand Avenue
Second Floor
Los Angeles, CA 90071

Subject: Addendum Number 1
Geotechnical Investigation
SCRRA Empire Avenue and Buena Vista Street Grade Separation
E737b-08, CTO No. 001
Burbank, California

Dear Mr. Nicholson:

Introduction

This addendum summarizes the results of Diaz•Yourman & Associates' (DYA) geotechnical input to the design of the proposed temporary retaining walls and mechanically stabilized earth (MSE) slopes for the subject project. This addendum provides conclusions and recommendations for the global slope stability, and lateral earth pressure loading for the proposed temporary walls based on the Southern California Regional Railway Authority (SCCRA) guidelines. In addition, this addendum provides a summary of DYA's consultation with suppliers and evaluation of the various MSE products for temporary walls and the proposed 1H:1V (horizontal to vertical) slope for the shoofly.

Previously DYA performed a geotechnical investigation at the project site and summarized the results of that investigation in our report entitled *Geotechnical Investigation, SCRRA Empire Avenue and Buena Vista Grade Separation, E737B-08, CTO No. 001, Burbank, California* dated June 23, 2010 (Report). The conclusions and recommendations in the Report remain applicable unless modified herein. The project plans are provided in Attachment 1, together with SCCRA excavation support guidelines (SCRRA, 2009). A summary of the proposed retaining walls and slopes is summarized in Table 1.

1616 EAST 17th STREET SANTA ANA, CA 92705-8509 TEL. (714) 245-2920 FAX (714) 245-2950

Table 1 - PROPOSED TEMPORARY RETAINING WALLS AND SLOPES

WALL TYPE/SLOPE	WALL NO.	WALL STATION[1]	LOCATION	LENGTH (feet)	HEIGHT (feet)
Temporary Shoring	1	STA. 636+00.00 to STA. 642+00.00	Adjacent to existing San Fernando Road	200	25
	2	STA. 636+00.00 to STA. 639+00.00 (Along North of the	Adjacent to existing SCRRA[2] railroad tracks	135	30
	4	STA. 636+00.00 to STA. 639+00.00 (Along South of the shoofly)	Adjacent to Victory Place construction	120	26
Temporary MSE[3] Retaining Walls	3a	STA. 648+00.00 to STA. 651+00.00	Adjacent to Caltrans Interstate (I)-5 southbound ramp	120	20
	3b	STA. 654+00.00 to STA. 657+00.00	Adjacent to Caltrans I-5 southbound offramp	130	20
1H:1V[4] Slope	--	STA 616+00 to STA 619+00 and	Back of curb along Victory Place	145	--

1. Stationing based on reference plans, see Attachment 1 for project plans.
2. Southern California Regional Rail Authority.
3. Mechanically stabilized earth.
4. H:V = horizontal to vertical.

Lateral Loading

The static lateral earth pressure criteria provided in Section 4.6 of the Report for temporary structures remains applicable for the proposed temporary shoring, and comply with the SCRRA Guidelines. However, the temporary retaining walls should also be designed for seismic loading if the temporary shoring will remain in place more than three months in accordance with SCRRA guidelines (SCRRA, 2009). Both the static and seismic lateral earth pressures for the proposed temporary walls are provided on Figure 1 for completeness. The proposed temporary shoring should be evaluated for potential railroad surcharge (Cooper E-80 loading) as identified in the SCRRA guidelines (SCRRA, 2009).

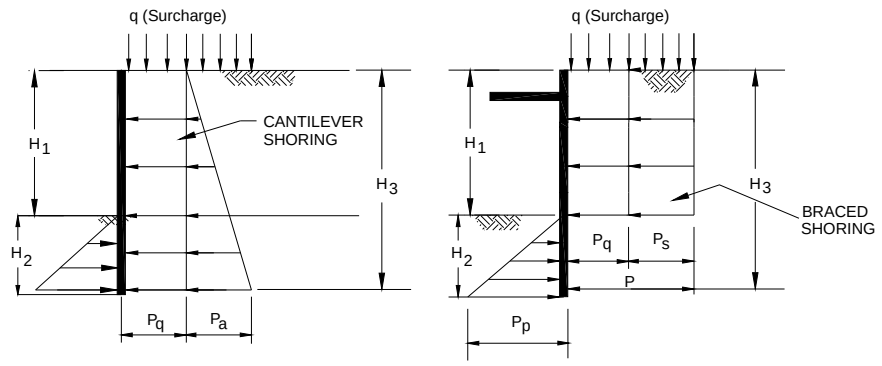

$Pp = 300\ H_2 \leq 4{,}000$ psf $\mu = 0.4$	Cantilever Shoring $P = Pa + Pq = 35\ H_3 + 0.3q$ (300 psf minimum) $Fe = 7\ H_1^2$	Braced Shoring $P = Ps + Pq = 23H_3 + 0.5q$ (300 psf minimum) $Fe = 12\ H_1^2$

Notes:

- All values of height (H) in feet, and pressure (P) and surcharge (q) in pounds per square foot (psf).
- Values for temporary excavations using flexible walls and based on existing soils.
- For vehicle traffic surcharge, assume no less than a 100 psf uniform horizontal pressure along the top 10 feet.
- Earth pressure assumes no hydrostatic pressures. If hydrostatic pressures are allowed to build up, the incremental earth pressures below groundwater level should be reduced by 50 percent and added to hydrostatic pressure for total lateral pressure.
- A peak ground acceleration (PGA) of 0.19g corresponding to a serviceability level ground motion was used to calculate Fe. Fifty percent of the PGA for cantilever walls and 75 percent of PGA for restrained walls was used.

Figure 1 - LATERAL EARTH PRESSURE - TEMPORARY SHORING

Global Stability Analysis

External global stability of proposed temporary retaining walls 1, 2, 3A, 3B, and 4 were analyzed using the computer program SLOPEW (GEOSLOPE, 2007) as summarized in Attachment 2. The results of the global stability analyses are summarized in Table 2. The final temporary MSE wall design should satisfy the minimum required safety factors for internal and external stability (FHWA, 2001) and should be designed by a specialty design-build contractor.

Table 2 - SUMMARY OF FS VALUES FOR EXTERNAL STABILITY WITH RECOMMENDED MINIMUM REINFORCEMENT LENGTH

WALL NUMBERS[1]	FAILURE SURFACE	CALCULATED STATIC FS	CALCULATED SEISMIC FS
1, 2, and 4[2]	Circular	1.7	1.5
3A and 3B[3,4]	Circular	1.7	1.4
	Block	1.6	1.4

Notes:
1. Wall summary provided in Table 1.
2. Shoring wall should satisfy the minimum required safety factors (CGS, 2008).
3. Mechanically stabilized earth (MSE) wall should satisfy the minimum required safety factors (FHWA, 2001).
4. Effect of geogrids ignored in soil strength analysis.

- The serviceability peak ground acceleration of 0.19 g was used to calculate the horizontal coefficient of 0.09 used in the seismic analysis
- Results are for a reinforcement length equal to 0.9xH, where H is the height of the wall.
- FS = factor of safety.

MSE Product Evaluation

DYA contacted and reviewed possible MSE design-build suppliers and evaluated various MSE products as summarized below for possible use to construct walls 3a and 3b:

- Tensar Earth Technologies, Inc. has Temporary Wall and SierraScape MSE retaining wall systems that use a Tensar uniaxial structural geogrid as reinforcing and a welded wire form facing unit, as shown in Attachment 3.
- Hilfiker has the Welded Wire Wall MSE retaining wall system that uses welded metal wire straps as reinforcing and a welded wire form facing unit, as shown in the detail provided in Attachment 3.
- Reinforced Earth Company has the Terratrel and the Geotrel MSE Wire Faced retaining wall systems. The Terratrel system uses galvanized steel reinforcing strips as reinforcing a welded wire mesh base with a wire mesh facing connected by a connector rod and hairpin connectors. The Geotrel MSE Wire Faced retaining wall system uses geosynthetic straps as reinforcing and a welded wire form facing unit. Details of both systems are provided in Attachment 3.

Geogrid Reinforced Slope Product Evaluation

DYA contacted and reviewed MSE design-build suppliers and evaluate the various products to reinforce the proposed temporary 1H:1V slope from Station 616+00 to Station 619+00 for the shoofly as summarized below:

- Tensar has a Sierra slope retaining system consisting of a combination of uniaxial and biaxial geogrids to allow slopes to be constructed as steep as 0.375H:1V. Details provided in Attachment 4.
- Mirafi has Miragrid 3XT that can be used to reinforce slopes so they can be constructed at a 1H:1V slope. Details provided in Attachment 4.
- SSL has Synteen SF-110 that can be used to reinforce slopes so they can be constructed at a 1H:1V slope. Details provided in Attachment 4.

Sincerely,

DIAZ•YOURMAN & ASSOCIATES

Andrew Atry
Junior Engineer

Gary Gilbert
Civil Engineer 62781

REGISTERED PROFESSIONAL ENGINEER
GARY K. GILBERT
No. C 62781
Exp. 6-30-12
CIVIL
STATE OF CALIFORNIA

GKG/AMY: gkg

Attachment 1 - Project Plans
Attachment 2 - Global Stability Analysis
Attachment 3 - MSE Wall Information
Attachment 4 - MSE Slope Reinforcement Information

BIBLIOGRAPHY

California Geological Survey, 2008, Special Publication 117A, Guidelines for Evaluating and Mitigating Seismic Hazards in California, March 2009.

Diaz•Yourman & Associates, 2010, Geotechnical Investigation, SCRRA Empire Avenue and Buena Vista Street Grade Separation, E737B-08, CTO No. 001, Burbank California, June 23, 2010.

FHWA, 2001, Mechanically Stabilized Earth Walls and Reinforced Soil Slopes Design and Construction Guidelines, 2001, FHWA NHI-00-043.

GEOSLOPE, 2007, SLOPE with computer program.

Southern California Regional Rail Authority, 2009, Excavation Support Guidelines, July 2009.

ATTACHMENT 1

PROJECT PLANS

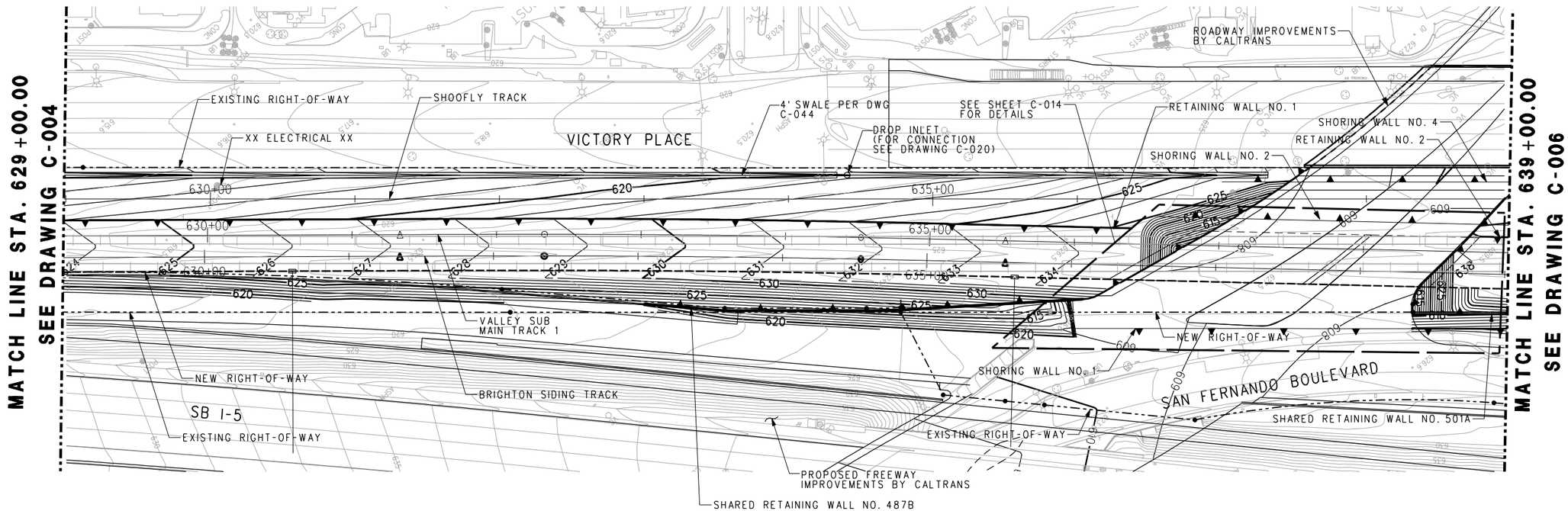

40 30 20 10 0 40 80

1" = 40'-0"

NOTE:
WITHIN TRACK AREA CONTOURS REPRESENT SUBGRADE

60% SUBMITTAL

REV.	DATE	DESCRIPTION	BY	SUB.	APP.

INFORMATION CONFIDENTIAL:

Information confidential all plans, drawings, specifications, and/or information furnished herewith shall remain the property of the Southern California Regional Rail Authority and shall be held confidential and shall not be used for any purpose not provided for in agreements with the Southern California Regional Rail Authority

DESIGNED BY B. BALDERRAMA
DRAWN BY P. LAUGHLIN
CHECKED BY S. TEORA
APPROVED BY P. NICHOLSON
DATE 5/11/2010

METROLINK®
SOUTHERN CALIFORNIA REGIONAL RAIL AUTHORITY
700 SOUTH FLOWER STREET, 26TH FLOOR
LOS ANGELES, CALIFORNIA 90017

TRANSPORTATION

AECOM

AECOM USA, Inc.
300 S. Grand Ave 2nd Floor
Los Angeles, CA. 90071
T 213.330.7200 F 213.330.7201
www.aecom.com

METROLINK COMMUTER RAIL SYSTEM
EMPIRE AVENUE AND BUENA VISTA STREET GRADE SEPARATIONS
GRADING PLAN
SHEET 4 OF 12

CONTRACT NO.	E737B-08
DRAWING NO.	C-005
REVISION	0
SHEET NO.	79 OF 328
SCALE	HORIZ 1"=40'

..\SUPPORT\PLOTDRV\... SCRRA_pdfBW.plt
..\SUPPORT\PEN\..... PlotStamp.tbl
W:\60094240_Metrolink\CTO_001\CADD\Civil\Sheet\E737B-C-005.sht 6/24/2010 11:41:18 AM USER = Laughlinp

W:\60094240_Metrolink\CTO_001\CADD\Civil\Sheet\E737B-C-005.sht

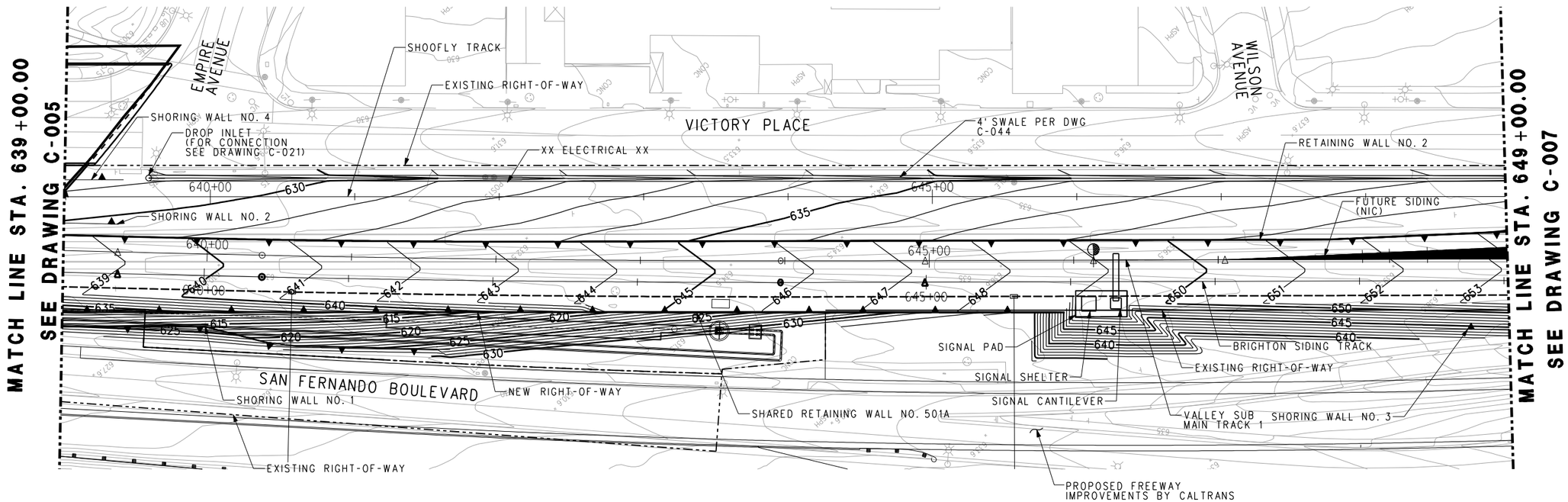

NOTE:
WITHIN TRACK AREA CONTOURS REPRESENT SUBGRADE

60% SUBMITTAL

REV.	DATE	DESCRIPTION	BY / SUB.	APP.

INFORMATION CONFIDENTIAL:

Information confidential: all plans, drawings, specifications, and/or information furnished herewith shall remain the property of the Southern California Regional Rail Authority and shall be held confidential and shall not be used for any purpose not provided for in agreements with the Southern California Regional Rail Authority

DESIGNED BY B. BALDERRAMA
DRAWN BY P. LAUGHLIN
CHECKED BY S. TEORA
APPROVED BY P. NICHOLSON
DATE 5/11/2010

METROLINK®
SOUTHERN CALIFORNIA REGIONAL RAIL AUTHORITY
700 SOUTH FLOWER STREET, 26TH FLOOR
LOS ANGELES, CALIFORNIA 90017

TRANSPORTATION
AECOM
AECOM USA, Inc.
300 S. Grand Ave 2nd Floor
Los Angeles, CA. 90071
T 213.330.7200 F 213.330.7201
www.aecom.com

METROLINK COMMUTER RAIL SYSTEM
EMPIRE AVENUE AND BUENA VISTA STREET GRADE SEPARATIONS
GRADING PLAN
SHEET 5 OF 12

CONTRACT NO. E737B-08
DRAWING NO. C-006
REVISION 0
SHEET NO. 80 OF 328
SCALE HORIZ 1"=40'

...\SUPPORT\PLOTDRV\... SCRRA_pdfBW.plt
...\SUPPORT\PEN\..... PlotStamp.tbl
W:\60094240_Metrolink\CTO_001\CADD\Civil\Sheet\E737B-C-006.sht 6/24/2010 11:41:43 AM USER = Laughlinp
W:\60094240_Metrolink\CTO_001\CADD\Civil\Sheet\E737B-C-006.sht

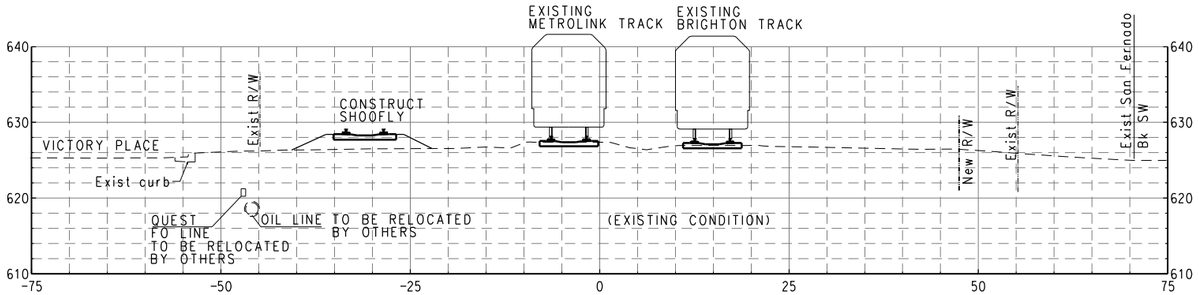

SEQUENCE 1

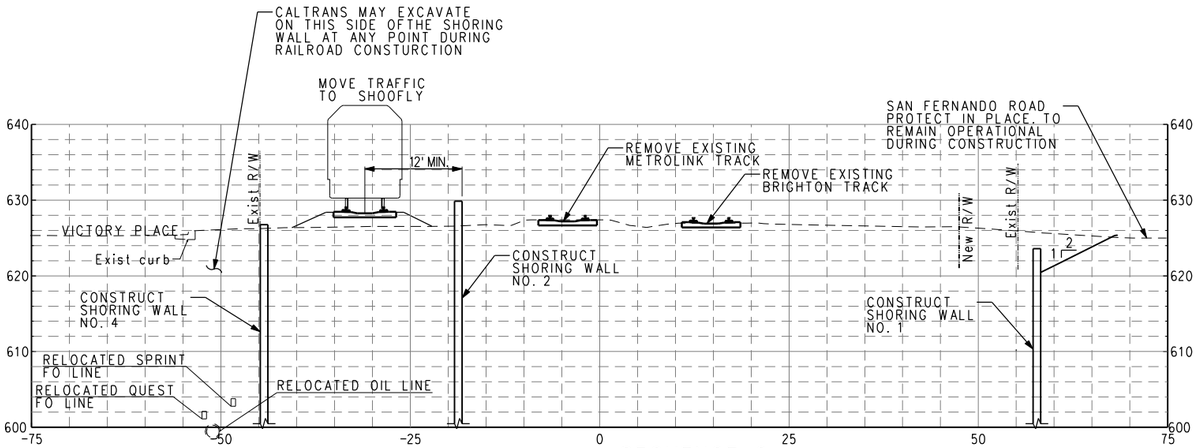

SEQUENCE 2

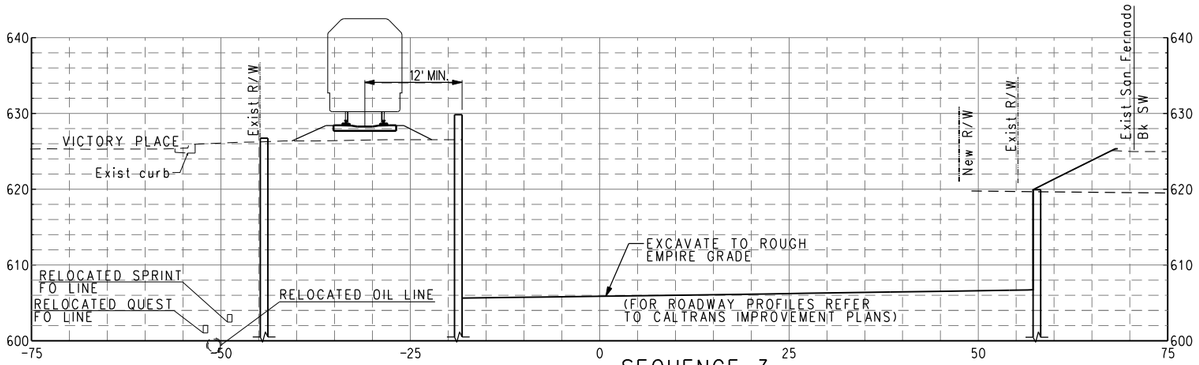

SEQUENCE 3

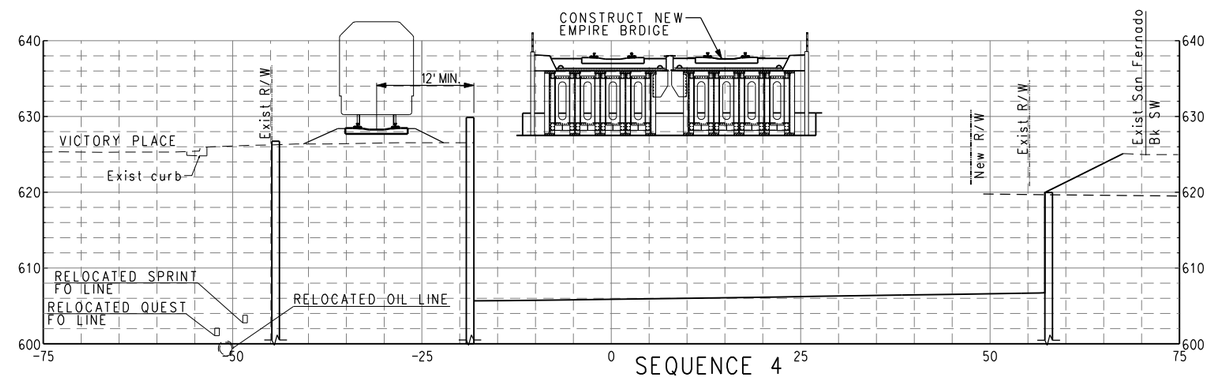

SEQUENCE 4

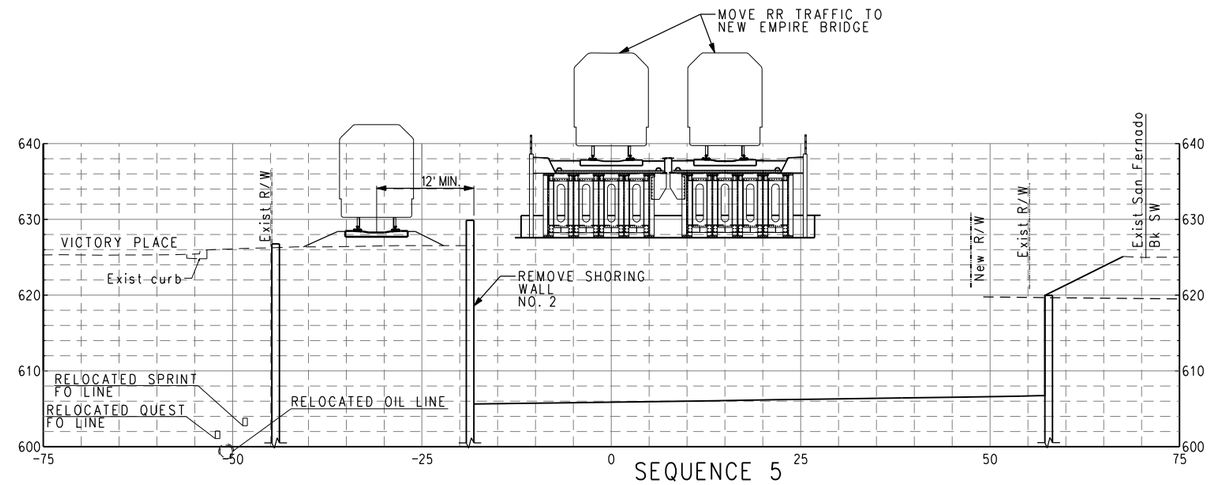

SEQUENCE 5

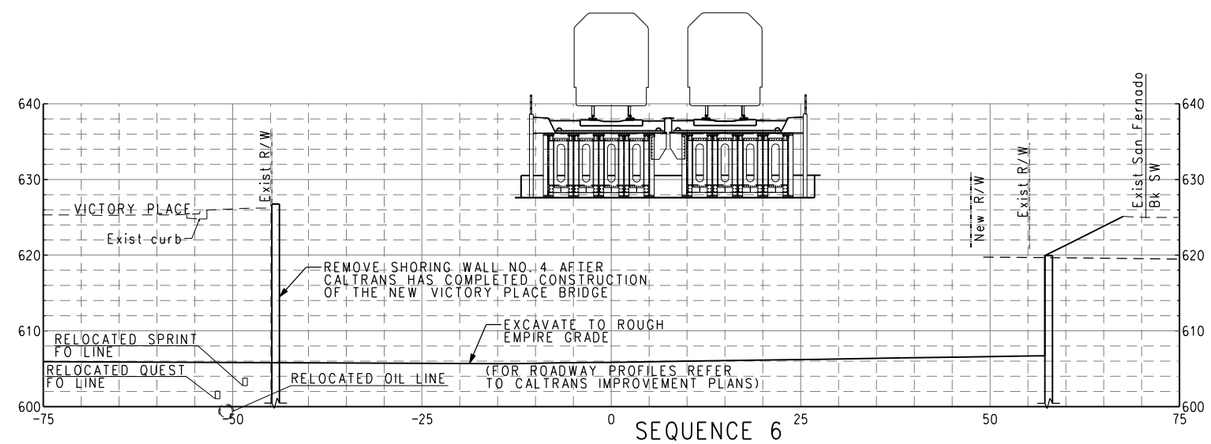

SEQUENCE 6

60% SUBMITTAL

REV.	DATE	DESCRIPTION	BY	SUB.	APP.

INFORMATION CONFIDENTIAL:

Information confidential all plans, drawings, specifications, and/or information furnished herewith shall remain the property of the Southern California Regional Rail Authority and shall be held confidential and shall not be used for any purpose not provided for in agreements with the Southern California Regional Rail Authority

DESIGNED BY K. BARTELLE
DRAWN BY P. LAUGHLIN
CHECKED BY P. NICHOLSON
APPROVED BY P. NICHOLSON
DATE 5/11/2010

METROLINK®
SOUTHERN CALIFORNIA REGIONAL RAIL AUTHORITY
700 SOUTH FLOWER STREET, 26TH FLOOR
LOS ANGELES, CALIFORNIA 90017

TRANSPORTATION

AECOM

AECOM USA, Inc.
300 S. Grand Ave 2nd Floor
Los Angeles, CA. 90071
T 213.330.7200 F 213.330.7201
www.aecom.com

METROLINK COMMUTER RAIL SYSTEM
EMPIRE AVENUE AND BUENA VISTA STREET GRADE SEPARATIONS
EMPIRE SHORING SECTIONS
STAGE 2

CONTRACT NO. E737B-08
DRAWING NO. C-014
REVISION 0
SHEET NO. 88 OF 328
SCALE NONE

..\SUPPORT\PLOTDRV\... SCRRA_pdfBW.plt
..\SUPPORT\PEN\..... PlotStamp.tbl
W:\60094240_Metrolink\CTO_001\CADD\Civil\Sheet\E737B-C-014.sht
6/24/2010 11:42:03 AM USER = Laughlinp
W:\60094240_Metrolink\CTO_001\CADD\Civil\Sheet\E737B-C-014.sht

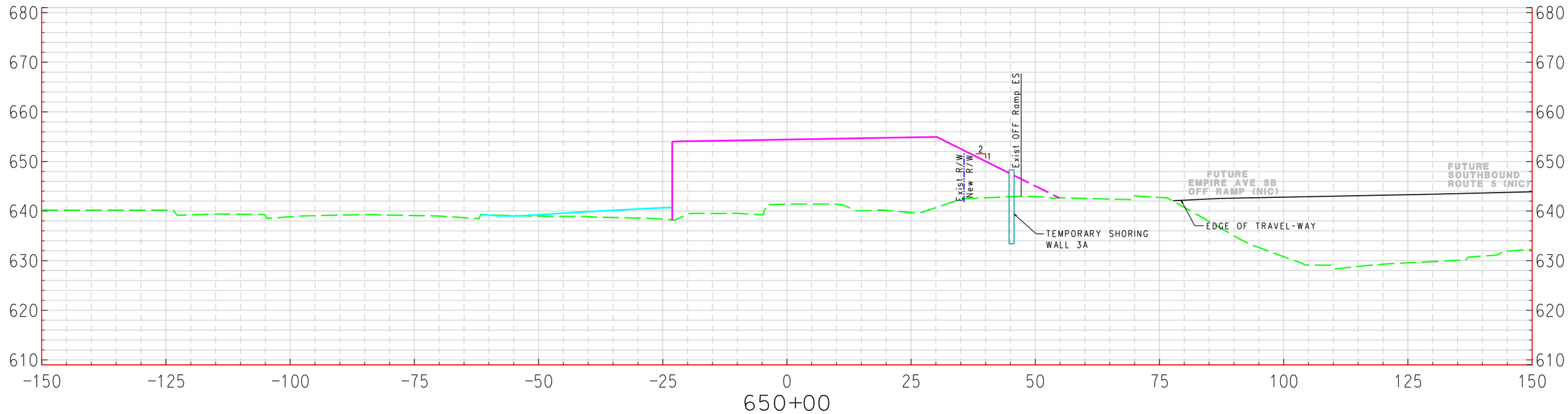

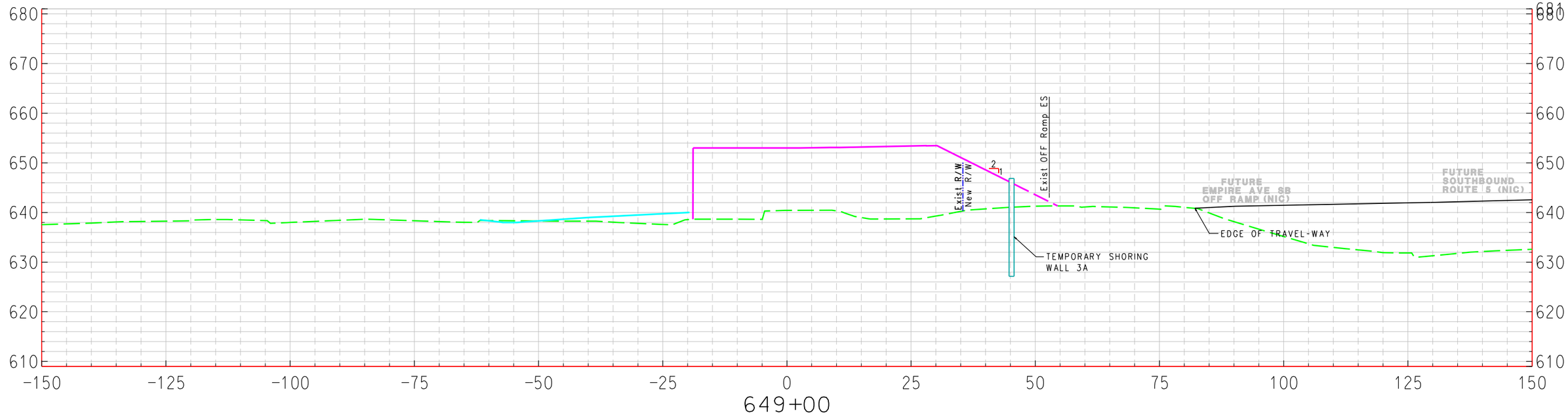

STATION 649+00 TO STATION 650+00

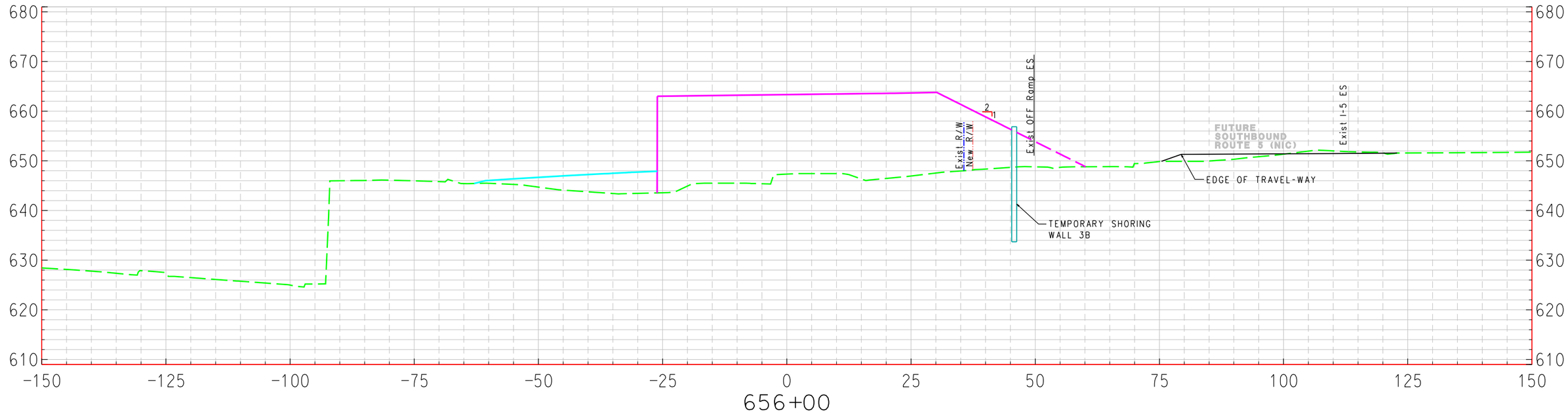

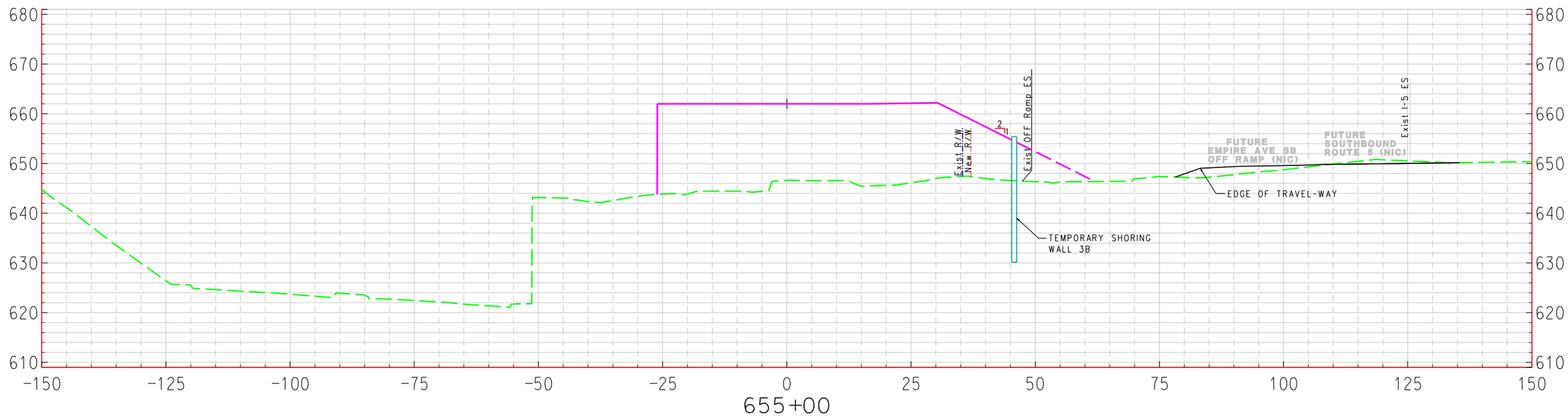

STATION 655+00 TO STATION 656+00

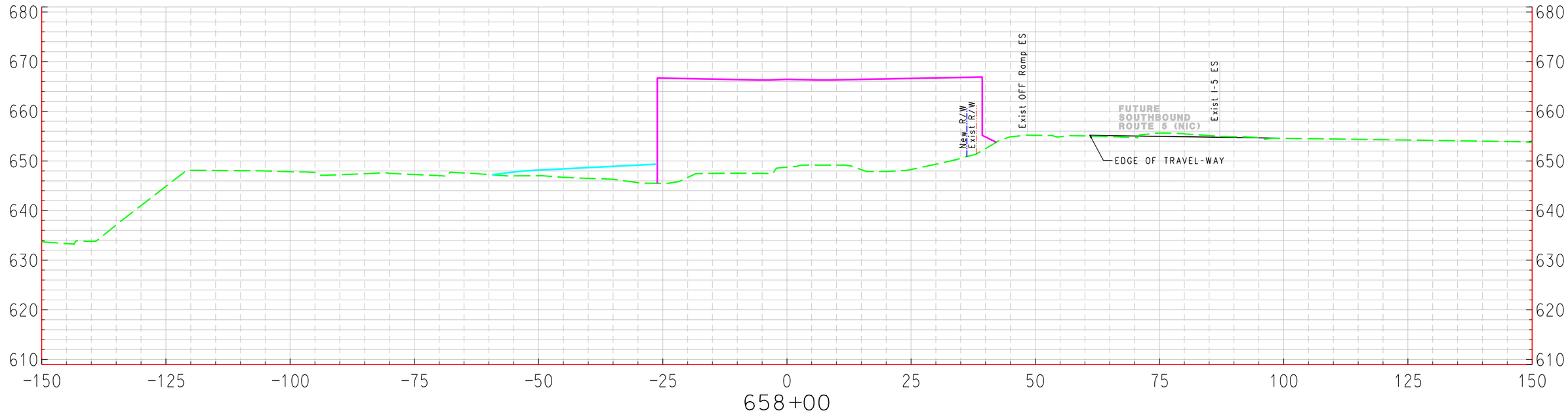

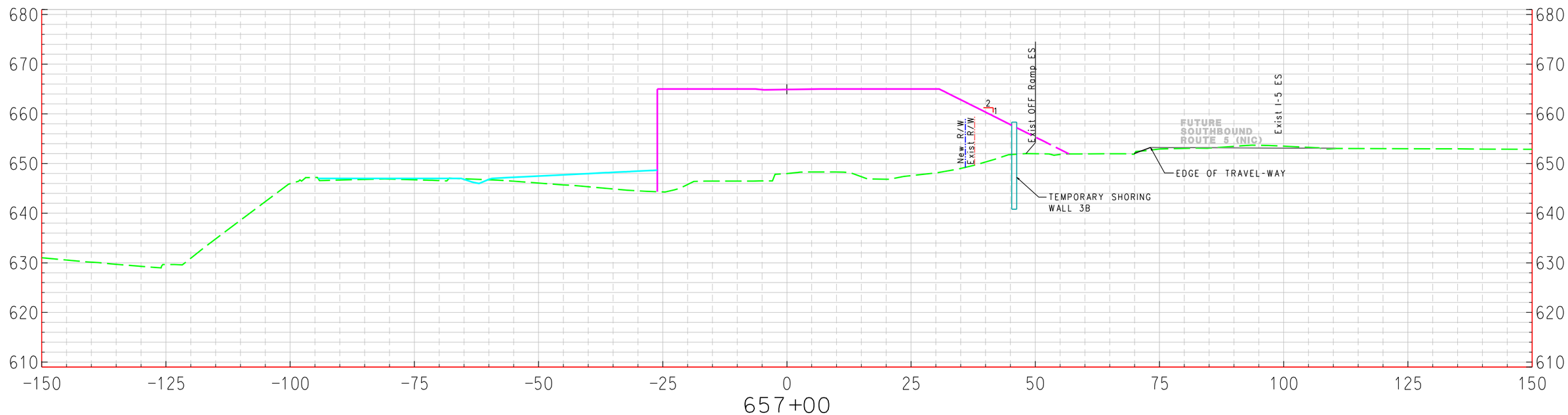

STATION 657+00 TO STATION 658+00

NOTE:
CROSS SECTION REPRESENTS FINAL CONFIGURATION OF EMPIRE GRADE SEPERATION PROJECT.
TEMPORARY SHOOFLY IS SHOWN FOR REFERENCE.
CALTRANS FREEWAY WIDENING IS SHOWN FOR REFERENCE BUT IS NOT PART OF THIS CONTRACT. CONTRACTOR TO COORDINATE WITH CALTRANS FOR GRADING ALONG THE FREEWAY EDGE OF THE PROJECT.

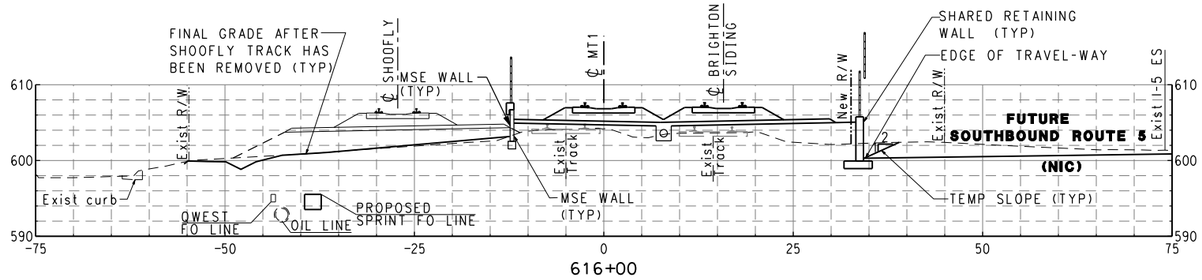

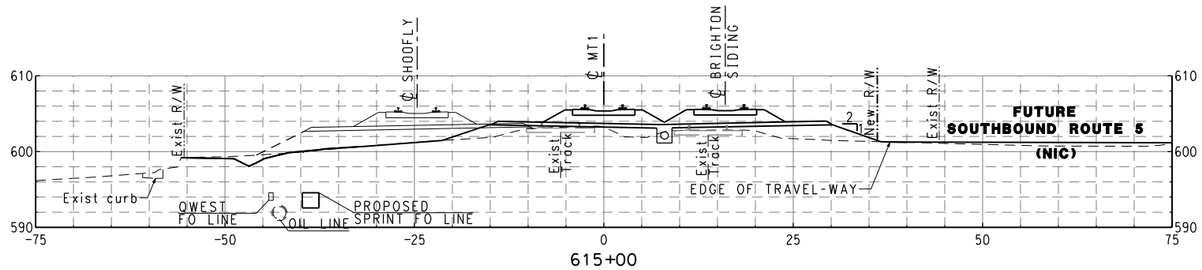

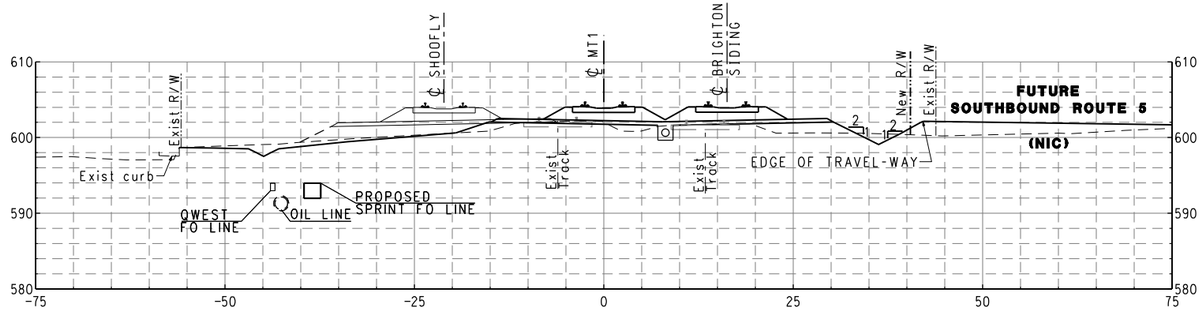

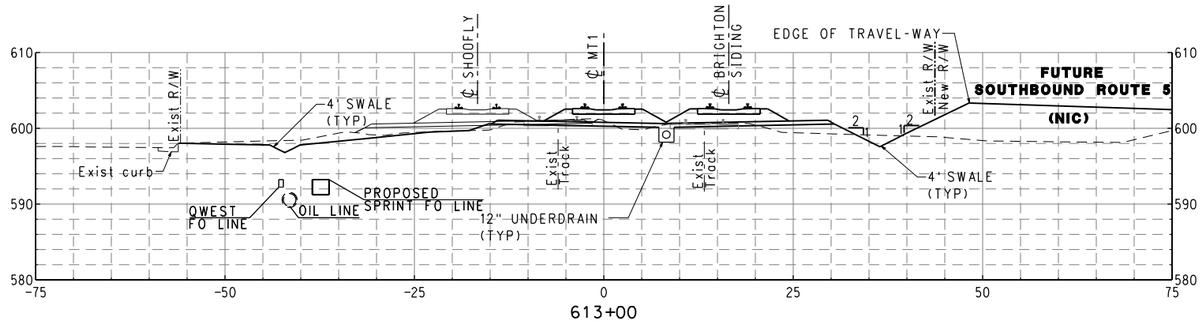

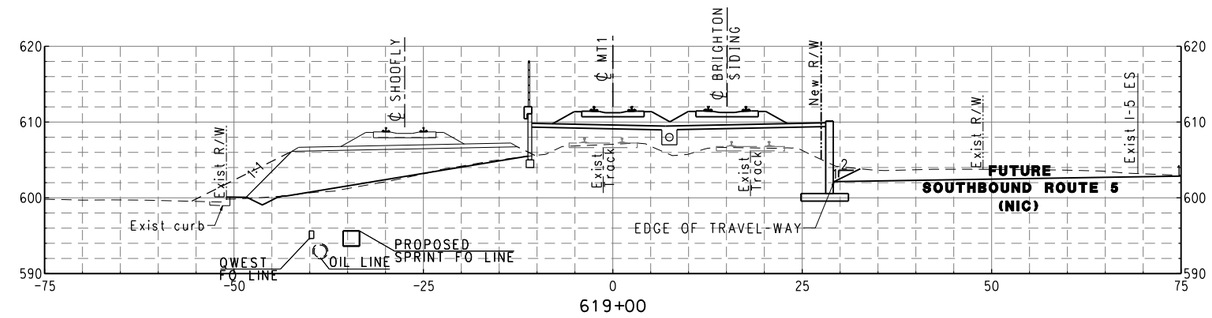

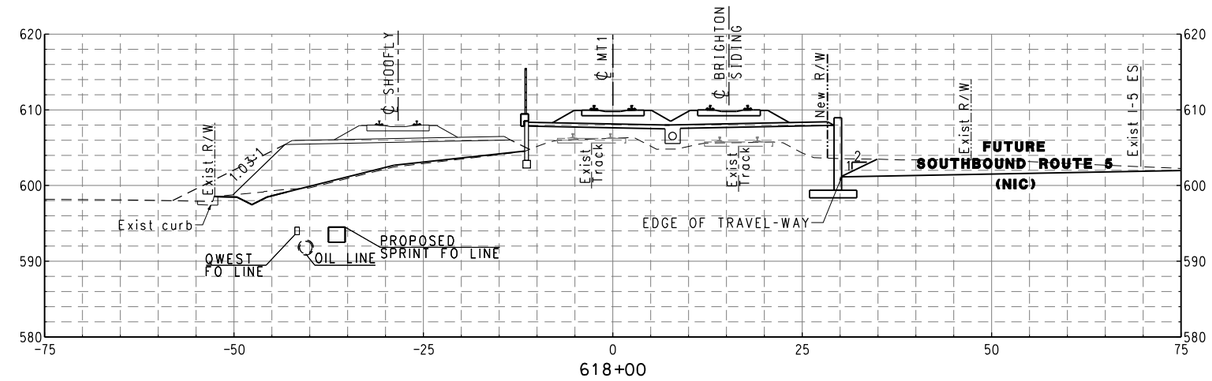

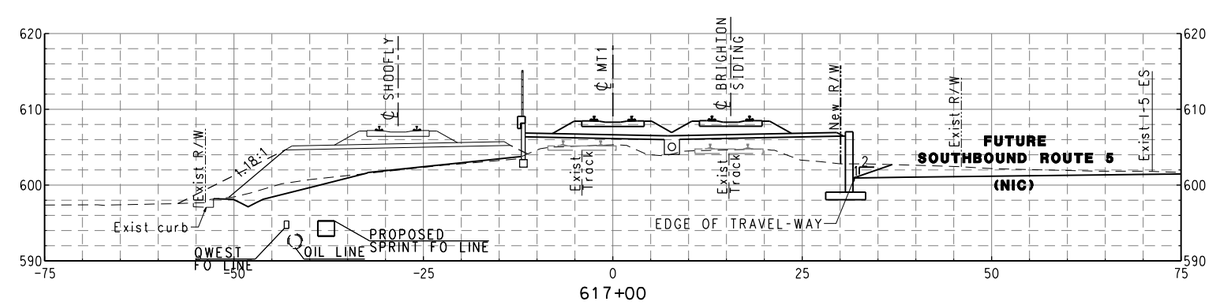

STATION 613+00 TO STATION 619+00

60% SUBMITTAL

REV.	DATE	DESCRIPTION	BY / SUB.	APP.

INFORMATION CONFIDENTIAL:
Information confidential: all plans, drawings, specifications, and/or information furnished herewith shall remain the property of the Southern California Regional Rail Authority and shall be held confidential and shall not be used for any purpose not provided for in agreements with the Southern California Regional Rail Authority

DESIGNED BY A. GRANDOV
DRAWN BY P. LAUGHLIN
CHECKED BY V. KOZITSKY
APPROVED BY P. NICHOLSON
DATE 5/11/2010

METROLINK®
SOUTHERN CALIFORNIA REGIONAL RAIL AUTHORITY
700 SOUTH FLOWER STREET, 26TH FLOOR
LOS ANGELES, CALIFORNIA 90017

TRANSPORTATION
AECOM
AECOM USA, Inc.
300 S. Grand Ave 2nd Floor
Los Angeles, CA. 90071
T 213.330.7200 F 213.330.7201
www.aecom.com

METROLINK COMMUTER RAIL SYSTEM
EMPIRE AVENUE AND BUENA VISTA STREET GRADE SEPARATIONS
CROSS SECTIONS – SHEET 2 OF 27

CONTRACT NO. E737B-08
DRAWING NO. SC-002
REVISION
SHEET NO. 115 OF 328
SCALE HORIZ 1"=10' VERT 1"=10'

...\SUPPORT\PLOTDRV\... SCRRA_pdfBW.plt
...\SUPPORT\PEN\..... PlotStamp.tbl
W:\60094240_Metrolink\CTO_001\CADD\Civil\Sheet\E737B-SC-002.sht 6/4/2010 11:22:23 AM USER = Laughlinp
W:\60094240_Metrolink\CTO_001\CADD\Civil\Sheet\E737B-SC-002.sht

ATTACHMENT 2

GLOBAL STABILITY ANALYSIS

ATTACHMENT 2 - GLOBAL STABILITY ANALYSIS

This attachment summarizes the slope stability analyses for the proposed temporary retaining walls 1, 2, 3A, 3B, and 4, as summarized in Table 1. The subsurface conditions for the slope stability analyses were based on field and laboratory investigations performed for this project and previous nearby investigations.

Slope stability analyses were performed for the static and pseudostatic conditions for circular and block failure surfaces. The Slope/W (GEOSLOPE, 2007) computer program calculates the factor of safety against instability of a slope by the method of slices using a two-dimensional, limit-equilibrium method. The program is capable of handling general slope stability problems by the simplified Janbu, simplified Bishop, and Spencer methods of slices for both circular and randomly shaped failure surfaces. The Spencer method was used in these analyses. Both circular and randomly shaped (simulating a wedge) failure surfaces were used in these analyses. User-defined input parameters for the SLOPE/W (GEO-SLOPE, 2007) computer program included soil unit weight, soil shear strength, and slope geometry.

The input parameters for loads, soil properties, and seismic parameters are summarized in Table 3. The analysis was based on methods by Spencer for circular failure surfaces. Walls 3A and 3B were also analyzed by Spencer for block failure surfaces. The results of the analyses are summarized in Table 2.

Table 3 - SUMMARY OF INPUT SOIL PROPERTIES

SOIL REGION	UNIT WEIGHT (pcf)	FRICTION ANGLE (degrees)	COHESION (psf)
Fill[1]	120	34	0
Retained Soil	130	35	5000
0 to 40 feet	115	32	0
40 to 60 feet	120	36	0
60 to 110 feet	130	38	0

Notes:
1. Effect of geogrids ignored in soil strength estimate.
- psf = pounds per square foot.
- pcf = pounds per cubic foot.
- The groundwater level was assumed to not affect bearing capacity.

In addition to a static analysis, a pseudostatic analysis was performed to check the stability of the MSE and shoring walls under seismic conditions. The horizontal acceleration coefficient used in the analyses was based on CGS SP117A (2008) guidelines, and corresponds to the product of the peak ground acceleration at the site and a factor, f_{eq} (SP117A Figure 1). f_{eq} is

determined for a site based on the distance from the site to the design fault, the maximum magnitude capable of being generated at the site by the design fault, the associated peak ground acceleration, and the threshold displacement value (15 centimeters). A value of 0.4 was estimated for f_{eq} at the site. The horizontal acceleration coefficient used in the analysis was 0.09.

2009-010.01 Empire Buena Vista
9/3/2010
Static
Kh=0
Spencer

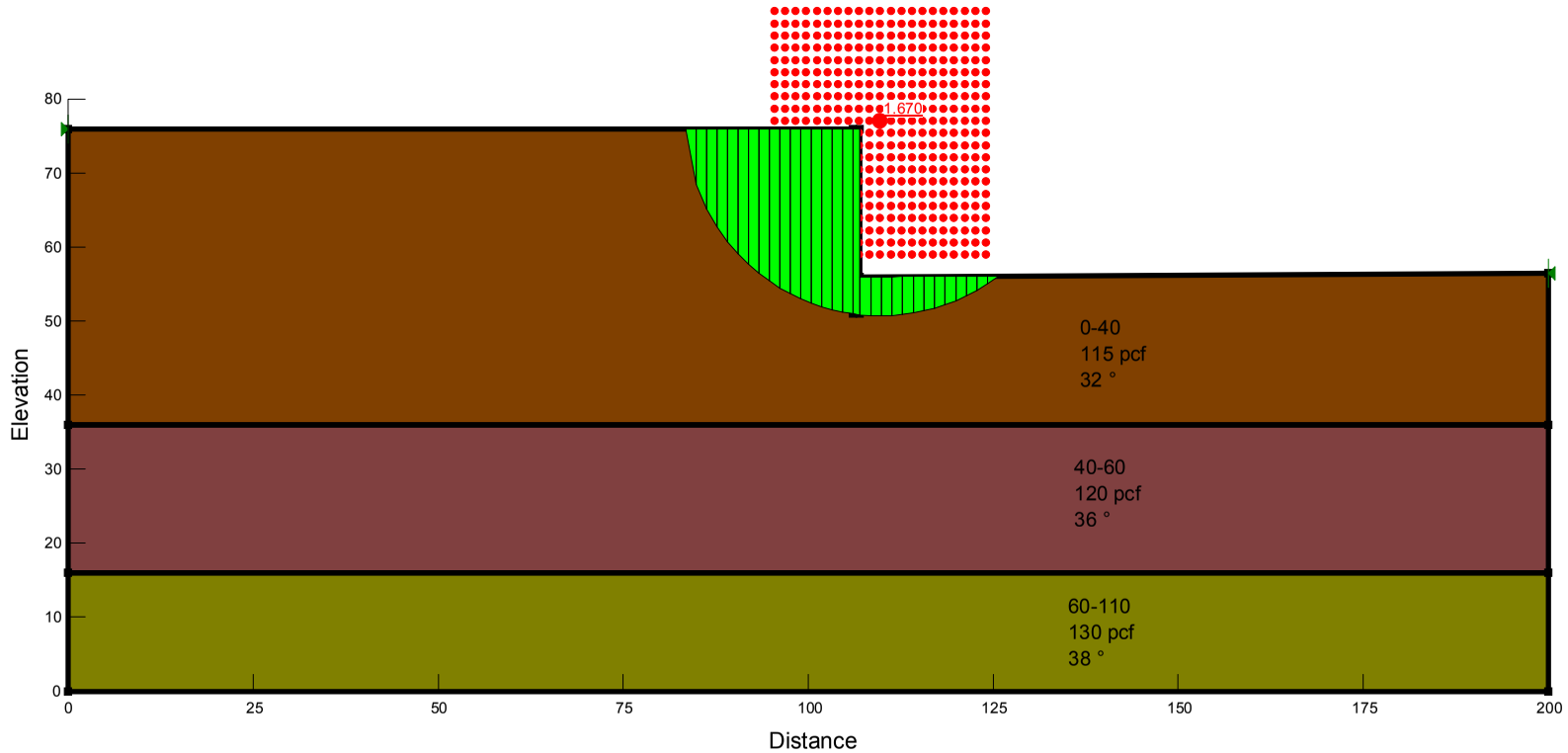

Shoring Wall No 2 (Static)

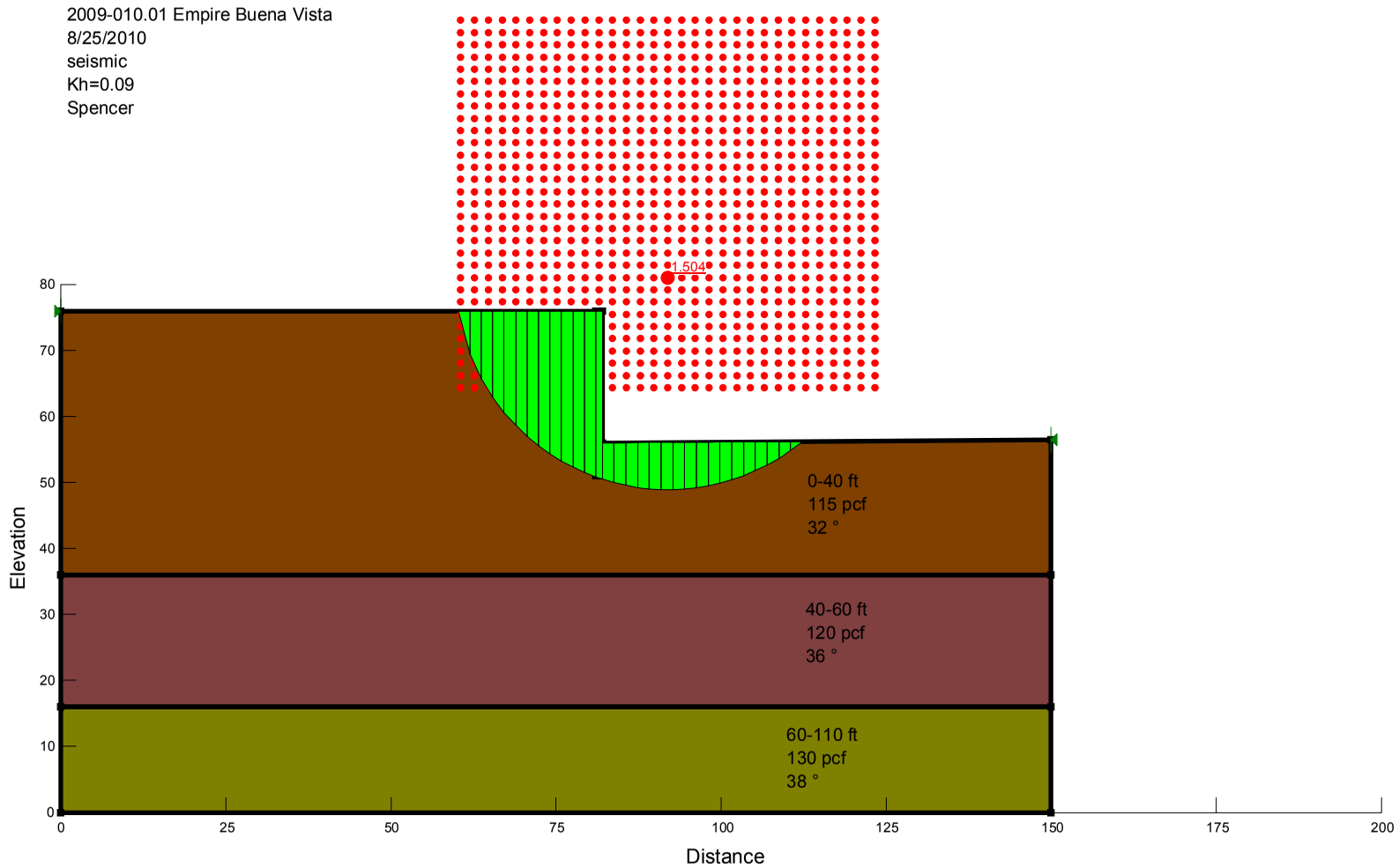

Shoring Wall No 2 (Seismic)

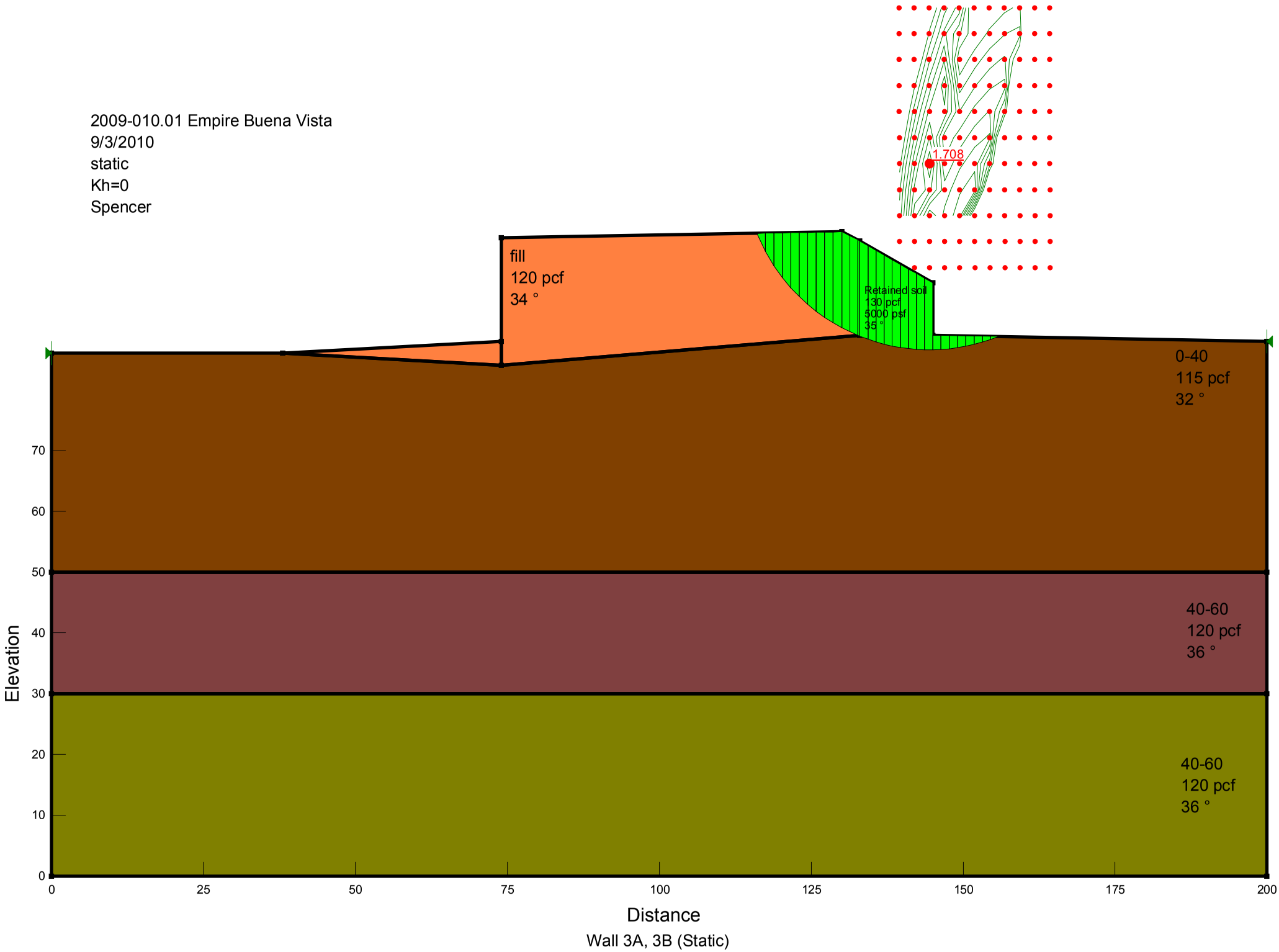
2009-010.01 Empire Buena Vista
9/3/2010
static
Kh=0
Spencer
1.708
fill
120 pcf
34 °
Retained soil
130 pcf
5000 psf
35 °
0-40
115 pcf
32 °
40-60
120 pcf
36 °
40-60
120 pcf
36 °
Elevation
0
10
20
30
40
50
60
70
0
25
50
75
100
125
150
175
200
Distance
Wall 3A, 3B (Static)

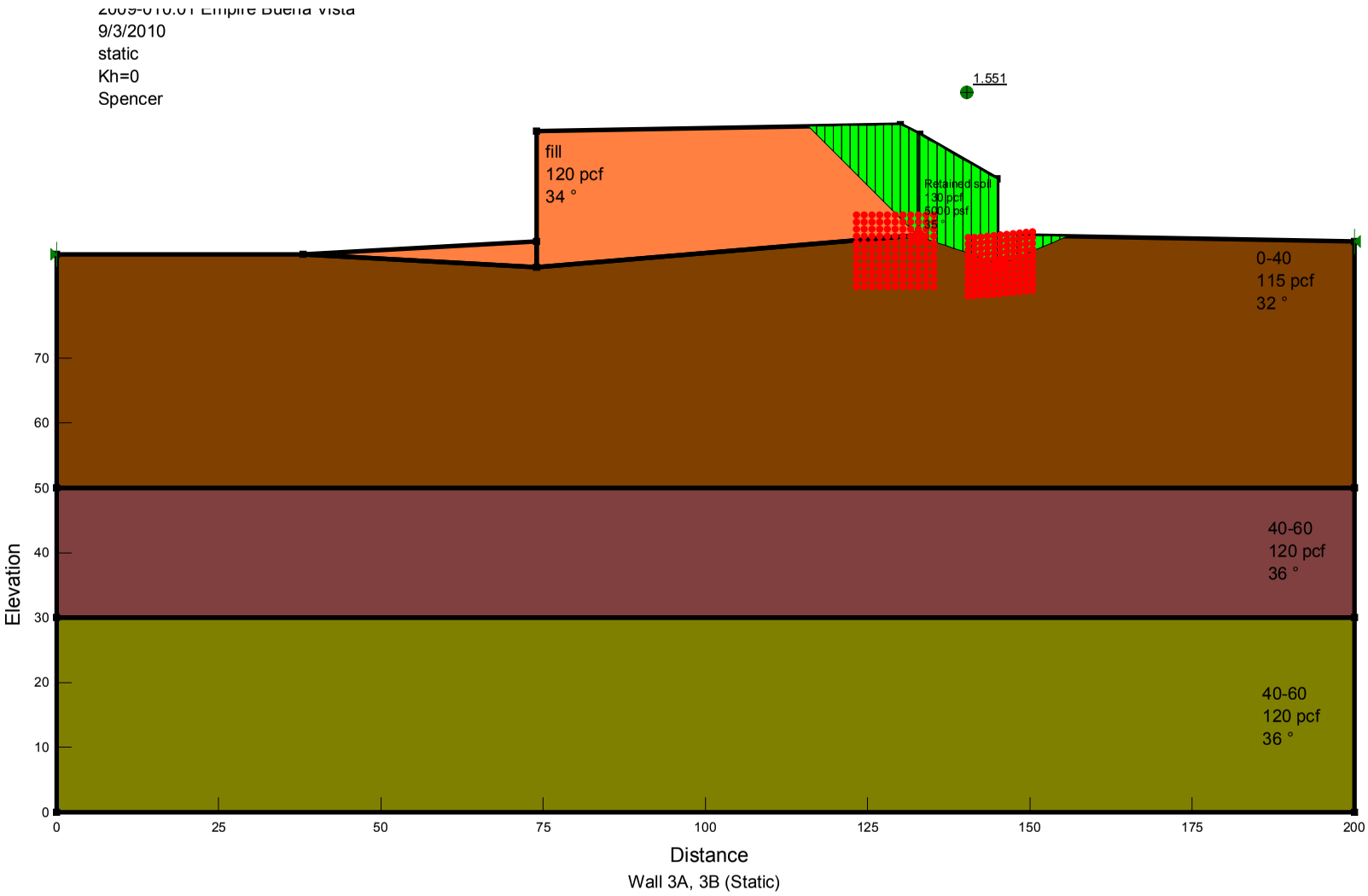
2009-010.01 Empire Buena Vista
9/3/2010
static
Kh=0
Spencer
1.551
fill
120 pcf
34 °
Retained soil
120 pcf
5000 psf
35 °
0-40
115 pcf
32 °
40-60
120 pcf
36 °
40-60
120 pcf
36 °
Elevation
0
10
20
30
40
50
60
70
0
25
50
75
100
125
150
175
200
Distance
Wall 3A, 3B (Static)

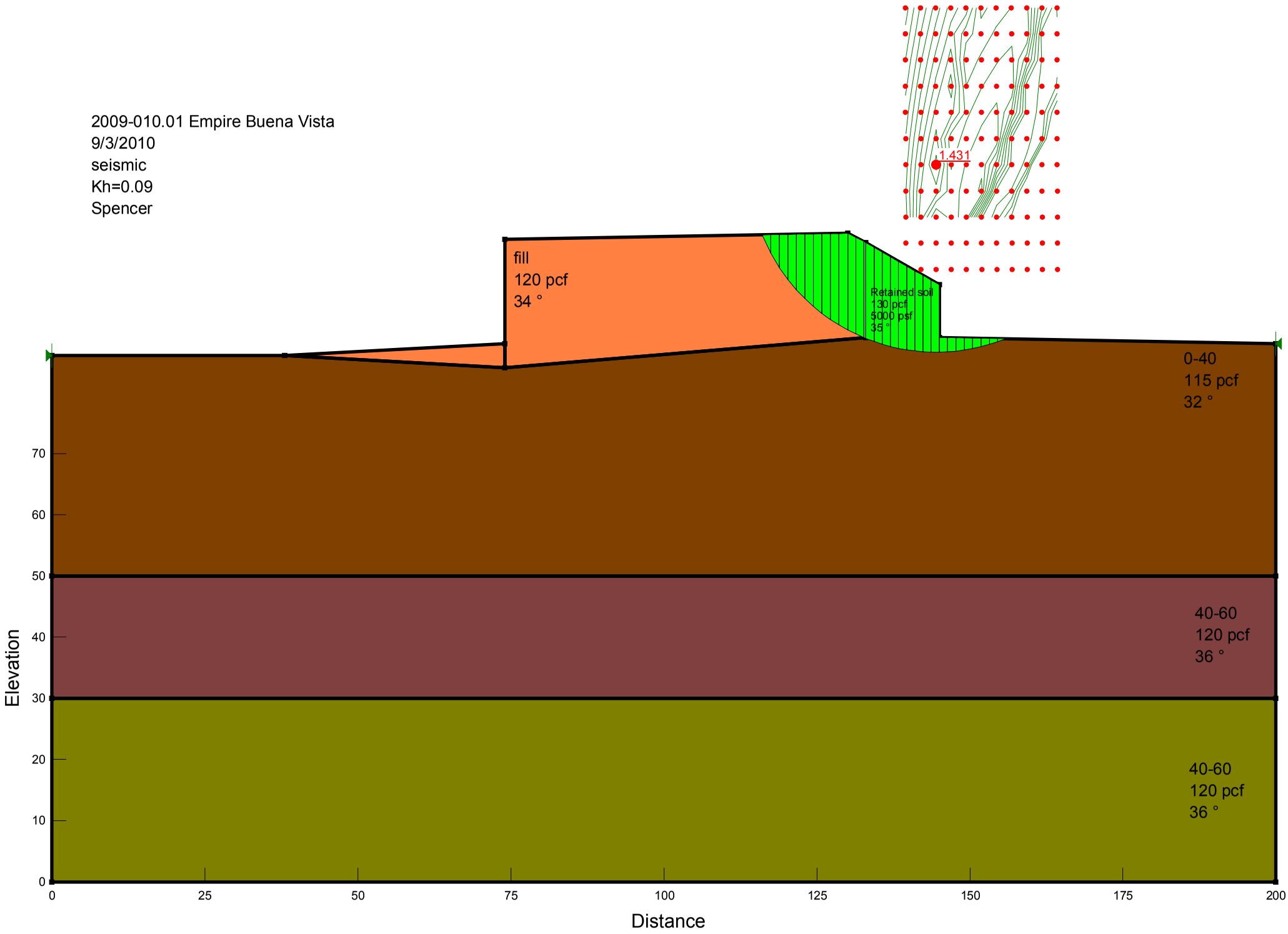

Wall 3A, 3B (Seismic)

2009-010.01 Empire Buena Vista
9/3/2010
seismic
Kh=0.09
Spencer

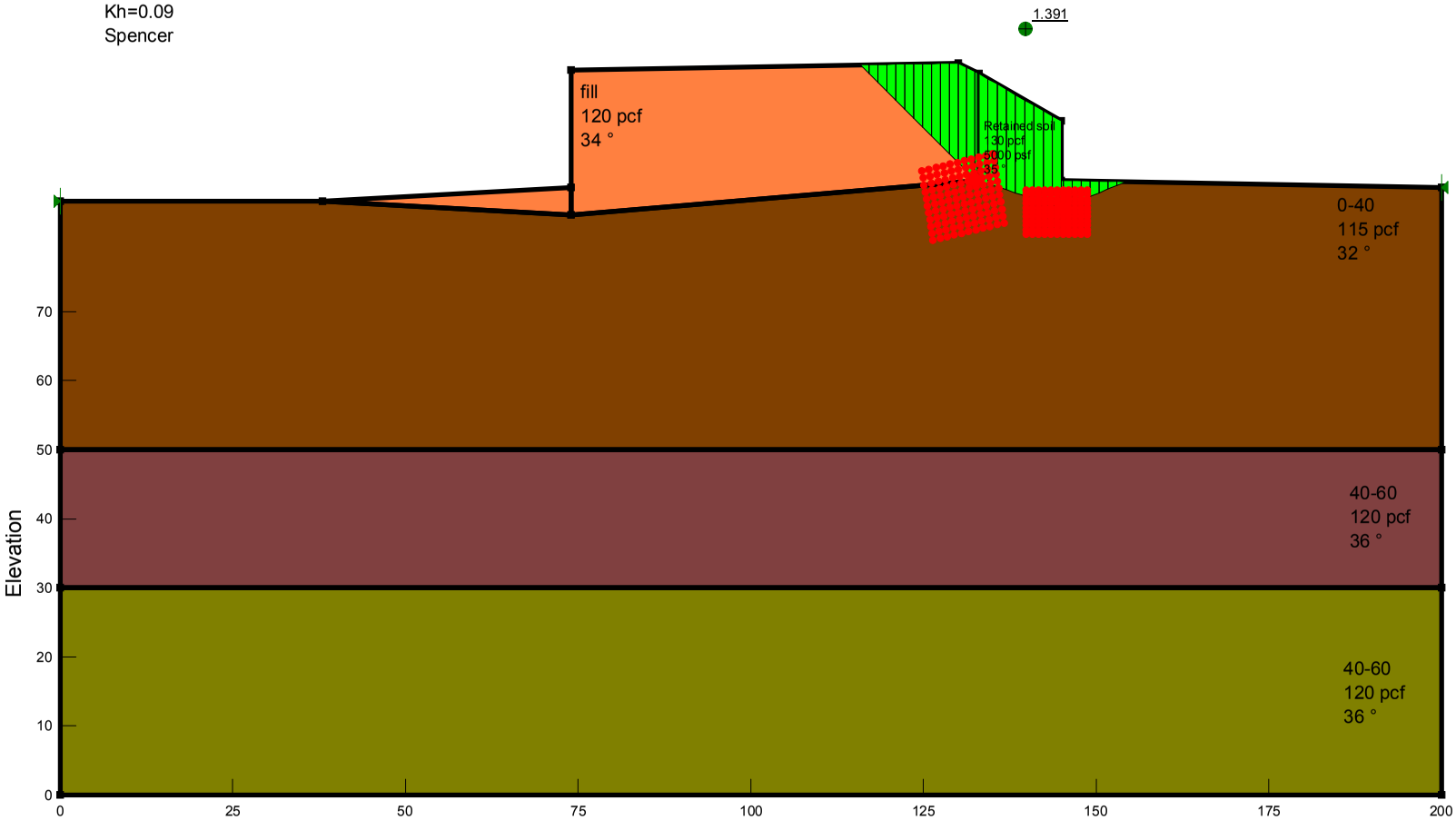

Wall 3A, 3B (Seismic)

ATTACHMENT 3
MSE WALL INFORMATION

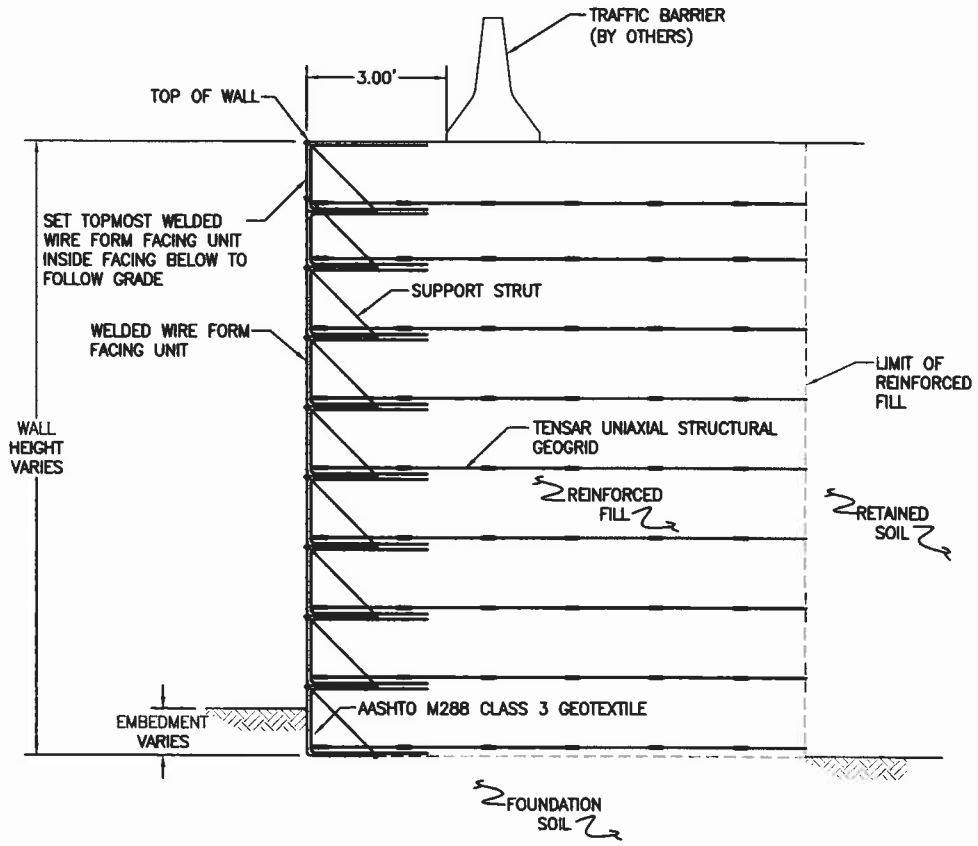

TEMPORARY WALL TYPICAL CROSS-SECTION

Tensar INTERNATIONAL

DESCRIPTION:
TEMPORARY WALL TYPICAL
CROSS SECTION

FILE NAME: WW-TE-CS-0011.DWG

EFFECTIVE DATE: 1/14/2008

TENSAR® TEMPORARY WALL

THIS DRAWING IS BASED UPON SPECIFIC PROPERTIES OF TENSAR PRODUCTS (GEOGRIDS, DRAINAGE COMPOSITES AND EROSION MEDIA), WHICH ARE PROPRIETARY TO THE TENSAR CORPORATION 1210 CITIZENS PARKWAY, MORROW, GA, 30260 AND ARE PROTECTED BY US AND INTERNATIONAL PATENTS, AND LICENSING AGREEMENTS. YOUR USE OF THE INFORMATION CONSTITUTES YOUR ACKNOWLEDGMENT OF THE PROPRIETARY NATURE OF THESE DRAWINGS AND THE TECHNOLOGY.

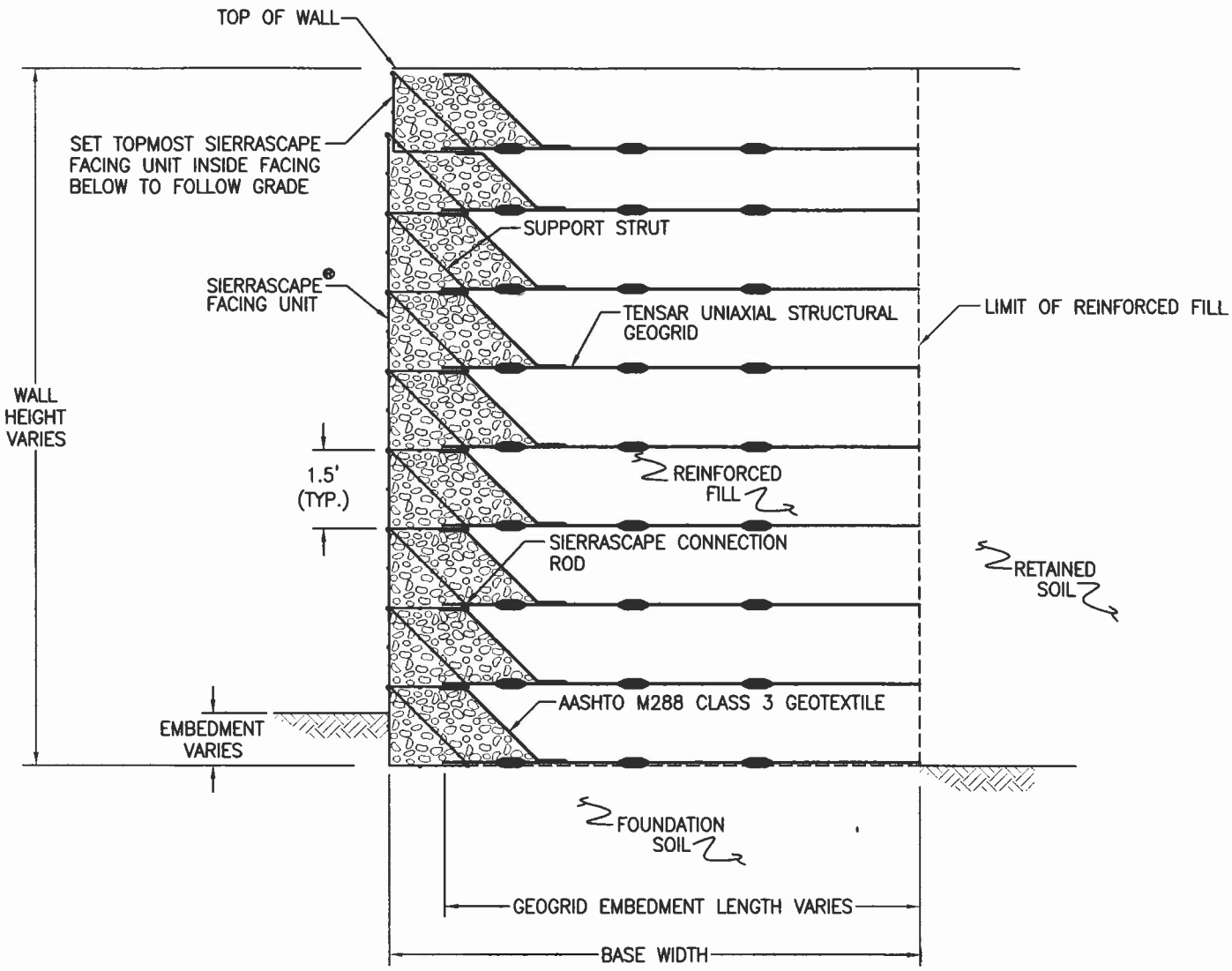

TYPICAL CROSS-SECTION

DESCRIPTION:	TYPICAL CROSS-SECTION
FILE NAME:	SS-SF-CS-01.DWG

Tensar

SIERRASCAPE®
RETAINING WALL SYSTEMS

STEP 1

PLACE THE FIRST COURSE OF SOIL REINFORCEMENT MATS ON PREPARED FOUNDATION

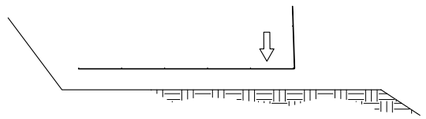

STEP 2

PLACE THE BACKING MAT AGAINST THE INSIDE FACE OF THE SOIL REINFORCEMENT MAT. CLIP THE SECOND–TO–TOP TRANSVERSE WIRE ON THE BACKING MAT TO THE TOP TRANSVERSE WIRE ON THE SOIL REINFORCEMENT MAT.

INSTALL FILTER FABRIC OR CONTINUOUS HARDWARE CLOTH, HOG–RING TO THE TOP WIRE ON THE BACKING MAT.

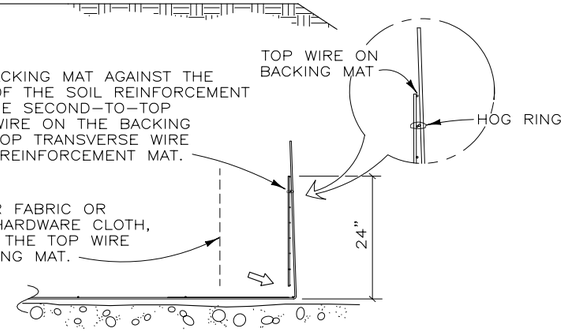

STEP 3

PLACE AND COMPACT THE BACKFILL IN LAYERS AND DENSITIES AS SPECIFIED IN THE PROJECT PLANS. LEAVE A VOID AT THE FACE AS SHOWN.

PLACE THE SECOND COURSE OF SOIL REINFORCEMENT MATS WITH THE BASE LONGITUDINAL WIRES RESTING ON THE TOP TRANSVERSE WIRE OF THE BACKING MAT BELOW. SLIDE THE SOIL REINFORCEMENT MAT INTO ALIGNMENT.

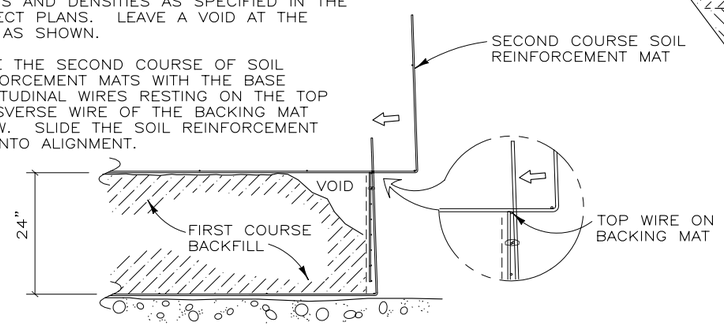

STEP 4

HOOK THE BOTTOM TRANSVERSE WIRE OF THE BACKING MAT OVER THE VERTICAL PRONGS ON THE LOWER MAT. ROTATE THE BACKING MAT TO VERTICAL AND CLIP THE SECOND–TO–TOP TRANSVERSE WIRE ON THE BACKING MAT TO THE TOP WIRE ON THE SOIL REINFORCEMENT MAT.

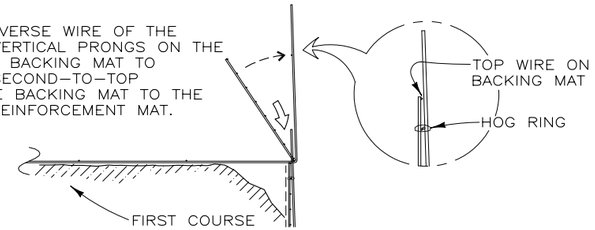

STEP 5

INSTALL THE FILTER FABRIC OR CONTINUOUS HARDWARE CLOTH. PLACE AND COMPACT THE BACKFILL TO THE BASE ELEVATION OF THE NEXT MAT. REPEAT STEPS 3 THROUGH 5 TO THE TOP LIFT.

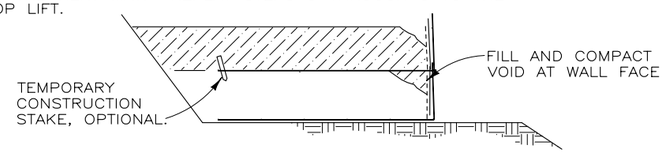

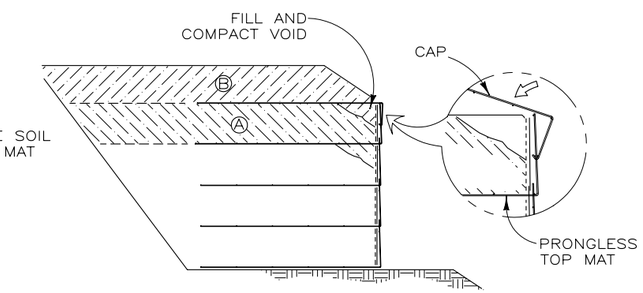

STEP 6: TOP LIFT

PLACE THE TOP LIFT PRONGLESS MAT, BACKING MAT AND FILTER FABRIC OR CONTINUOUS HARDWARE CLOTH. PLACE AND COMPACT BACKFILL IN AREA "A". HOOK THE CAP OVER THE MIDDLE TRANSVERSE WIRE ON THE PRONGLESS MAT, AND ROTATE INTO PLACE. BACKFILL "B" TO 1'–6" MIN. COVER OVER THE CAP.

CONSTRUCTION SEQUENCE

NOT TO SCALE

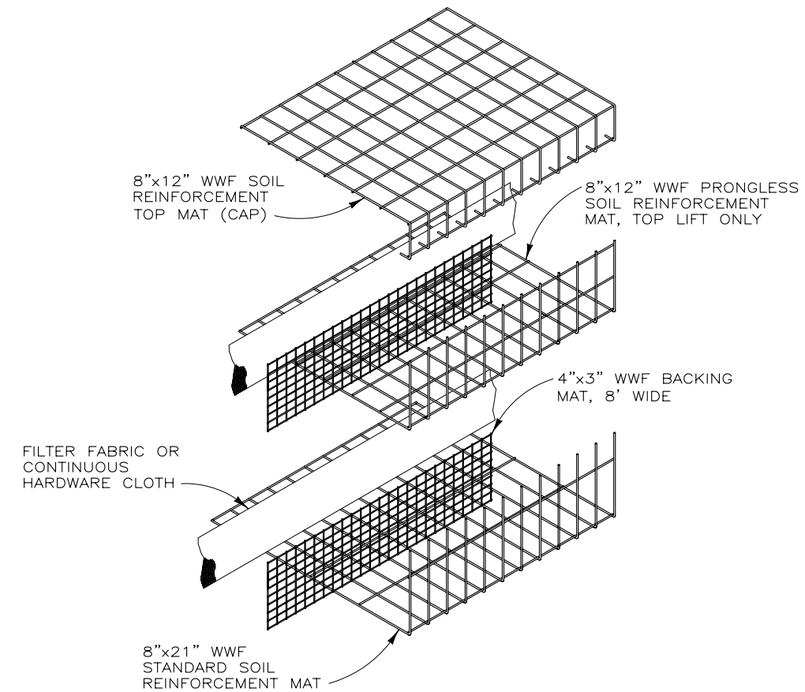

WALL COMPONENTS

NOT TO SCALE

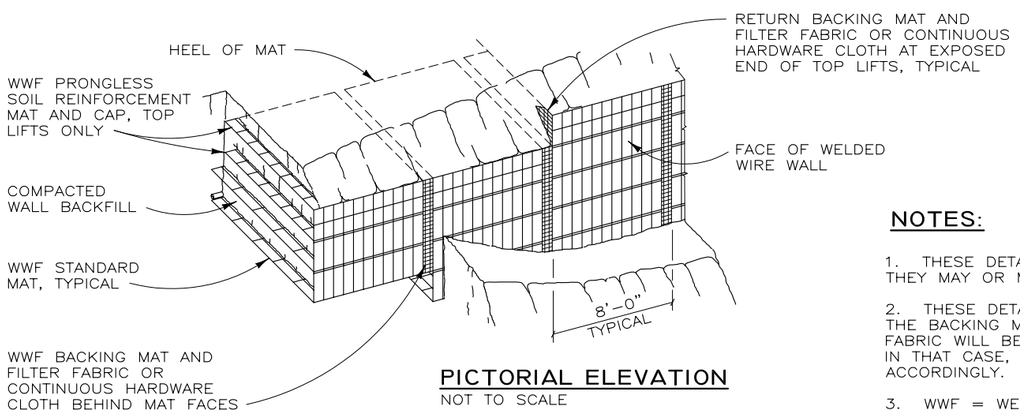

PICTORIAL ELEVATION

NOT TO SCALE

NOTES:

1. THESE DETAILS ARE INTENDED FOR INFORMATION ONLY. THEY MAY OR MAY NOT APPLY TO SPECIFIC PROJECTS.

2. THESE DETAILS SHOW HARDWARE CLOTH USED BEHIND THE BACKING MATS. IN SOME APPLICATIONS, FILTER FABRIC WILL BE REQUIRED INSTEAD OF HARDWARE CLOTH. IN THAT CASE, THESE DETAILS SHOULD BE REVISED ACCORDINGLY.

3. WWF = WELDED WIRE FABRIC

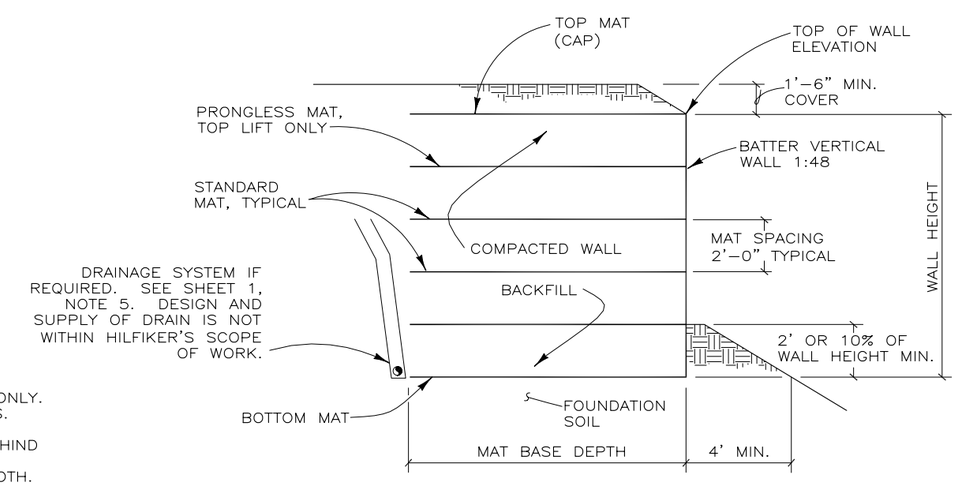

TYPICAL SECTION

NOT TO SCALE

WELDED WIRE WALL STANDARD DETAILS

THIS DRAWING IS FURNISHED SOLELY FOR THE USE OF OR IN CONNECTION WITH THIS PROJECT, AND THE PROPRIETARY INFORMATION SHOWN HEREON IS NOT TO BE TRANSMITTED TO ANY OTHER ORGANIZATION WITHOUT SPECIFIC AUTHORIZATION BY THE HILFIKER COMPANY. HILFIKER RETAINING WALLS ARE PROTECTED BY ONE OR MORE OF THE FOLLOWING PATENTS: 243,613, 243,697, 288,616, 4,117,686, 4,329,089, 4,324,508, 4,391,557, 4,505,621, 4,643,618, 4,661,023, 4,856,939, 5,076,735, 5,647,695, 5,722,799, 6,357,970 AND OTHERS. OTHER PATENTS PENDING (2004)

REV.NO.	DATE	BY	DESCRIPTION
1	6 JAN 03	DR	MINOR REVISIONS
2	25 SEP 06	AMJ	MINOR REVISIONS
3	12 SEP 07	AMJ	MINOR REVISIONS, UPDATED BORDER
4	17 SEP 07	JTE	CHANGED LOGO, FIXED LEADERS

GRAPHIC SCALE
LINE IS 20 UNITS LONG ON ORIGINAL DRAWING
0 10 20

PROJ.MGR.
ENGINEER
CADD BY DR/AMJ

HILFIKER RETAINING WALLS
1902 Hilfiker Lane
Eureka, CA 95503-5711
TOLL-FREE 800.762.8962
PH 707.443.5093 FAX 707.443.2891
WEB SITE www.hilfiker.com E-MAIL info@hilfiker.com

DWG DATE NOV 98
REVISION DATE 1 NOV 07
SCALE NOTED

STANDARD DRAWING
WELDED WIRE RETAINING WALL
24" LIFTS
STANDARD DETAILS

PROJECT NO.
SHEET 1 OF 3

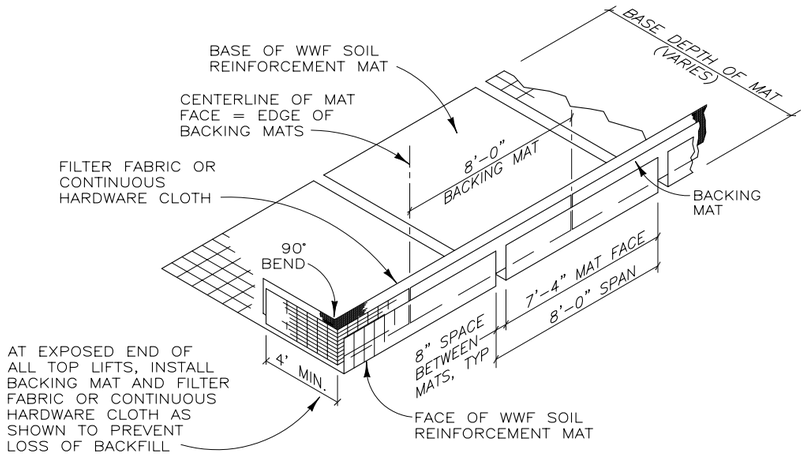

ISOMETRIC VIEW

WELDED WIRE WALL COMPONENTS WITH RETURN MAT

NOT TO SCALE

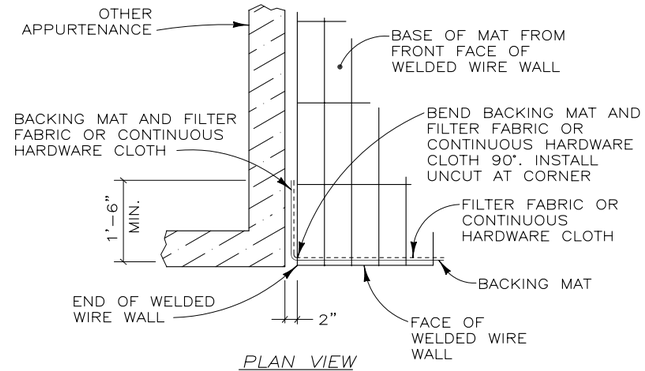

PLAN VIEW

WELDED WIRE WALL END AT OTHER APPURTENANCE

NOT TO SCALE

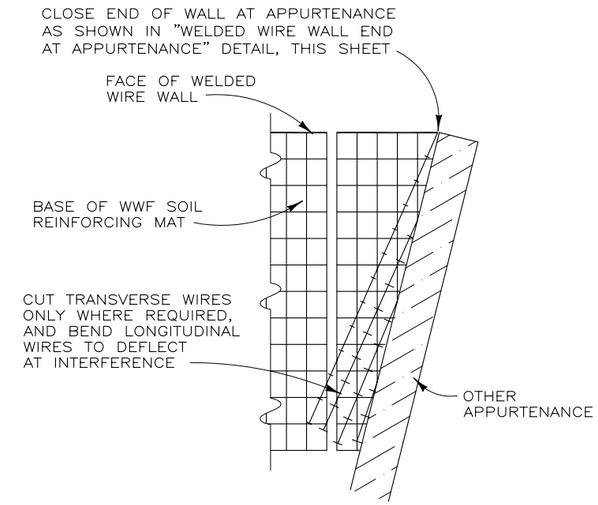

PLAN VIEW

DEFLECTED LONGITUDINAL WIRES

NOT TO SCALE

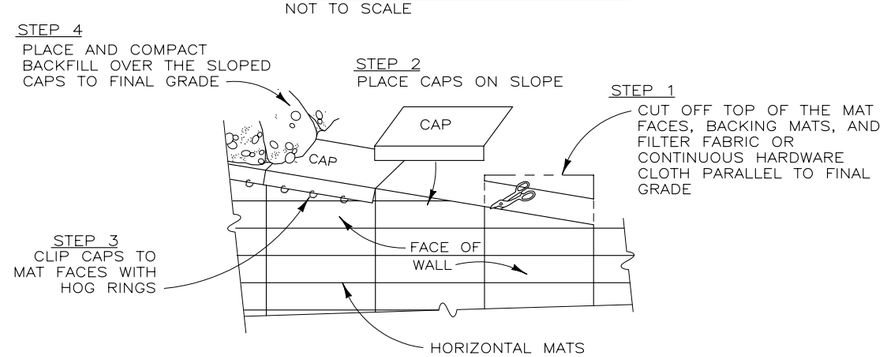

PICTORIAL ELEVATION

SLOPED CAP MAT DETAIL

NOT TO SCALE

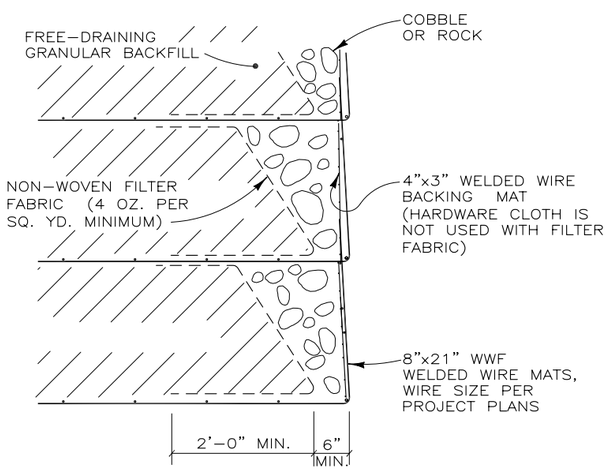

SECTION

ROCK FACING DETAIL

NOT TO SCALE

LEGEND

(THIS DETAIL ONLY)

P	8"x12" WWF PRONGLESS MAT
S	8"X12" WWF STANDARD MAT
	8"X21" WWF STANDARD MAT

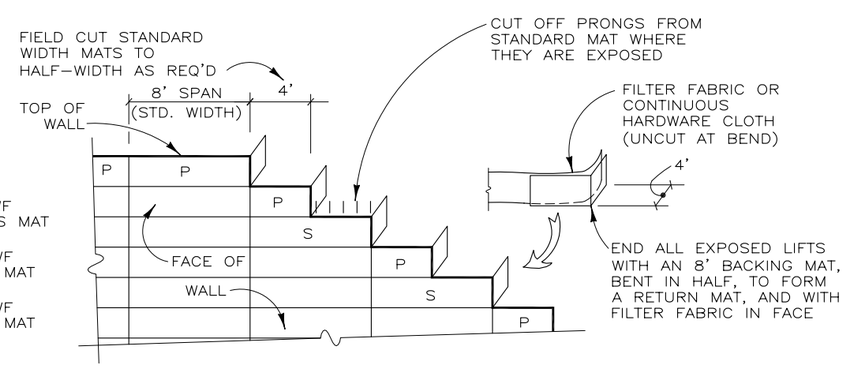

RETURN MATS AND TOP OF WALL DETAIL

NOT TO SCALE

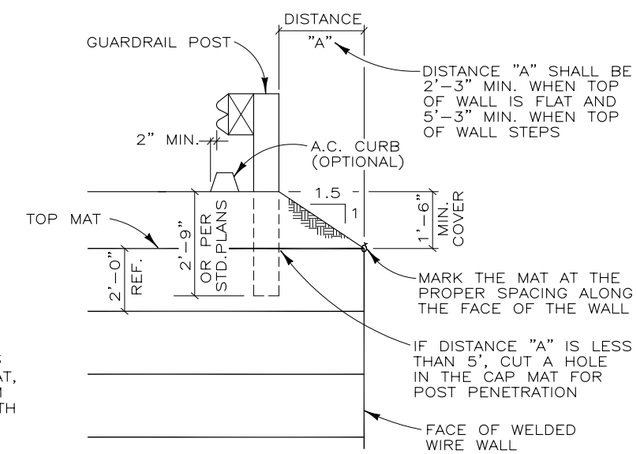

SECTION

GUARDRAIL DETAIL

NOT TO SCALE
(FENCE DETAIL SIMILAR)

WELDED WIRE WALL STANDARD DETAILS

THIS DRAWING IS FURNISHED SOLELY FOR THE USE OF OR IN CONNECTION WITH THIS PROJECT, AND THE PROPRIETARY INFORMATION SHOWN HEREON IS NOT TO BE TRANSMITTED TO ANY OTHER ORGANIZATION WITHOUT SPECIFIC AUTHORIZATION BY THE HILFIKER COMPANY. HILFIKER RETAINING WALLS ARE PROTECTED BY ONE OR MORE OF THE FOLLOWING PATENTS: 243,613, 243,697, 288,616, 4,117,686, 4,329,089, 4,324,508, 4,391,557, 4,505,621, 4,643,618, 4,661,023, 4,856,939, 5,076,735, 5,647,695, 5,722,799, 6,357,970 AND OTHERS. OTHER PATENTS PENDING (2004)

REV.NO.	DATE	BY	DESCRIPTION
1	6 JAN 03	DR	MINOR REVISIONS
2	25 SEP 06	AMJ	MINOR REVISIONS
3	12 SEP 07	AMJ	MINOR REVISIONS, UPDATED BORDER
4	1 NOV 07	JTE	CHANGED LOGO, FIXED LEADERS

GRAPHIC SCALE
LINE IS 20 UNITS LONG ON ORIGINAL DRAWING
0 10 20

PROJ.MGR.
ENGINEER
CADD BY DR/AMJ

HILFIKER RETAINING WALLS
1902 Hilfiker Lane
Eureka, CA 95503-5711
TOLL-FREE 800.762.8962
PH 707.443.5093 FAX 707.443.2891
WEB SITE www.hilfiker.com E-MAIL info@hilfiker.com

DWG DATE NOV 98
REVISION DATE 1 NOV 07
SCALE NOTED

STANDARD DRAWING

WELDED WIRE RETAINING WALL
24" LIFTS

STANDARD DETAILS

PROJECT NO.

SHEET 2 OF 3

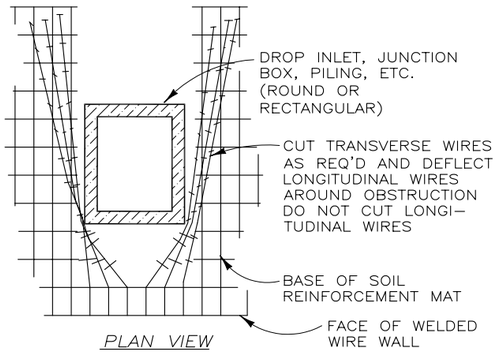

PLAN VIEW

MAT PENETRATION DETAIL

NOT TO SCALE

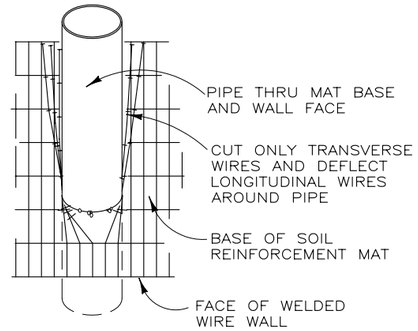

PLAN VIEW

ANGLED PIPE PENETRATION

NOT TO SCALE

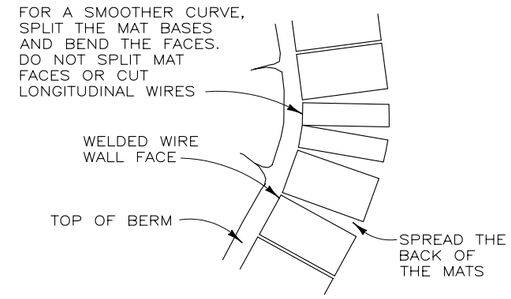

PLAN VIEW

CONCAVE CURVE

NOT TO SCALE

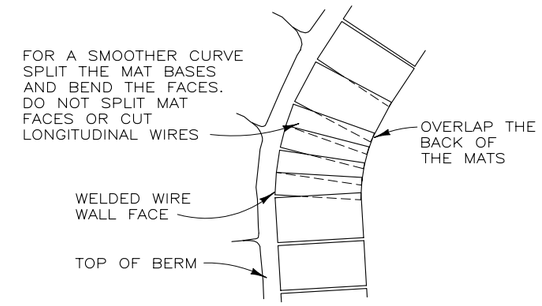

PLAN VIEW

CONVEX CURVE

NOT TO SCALE

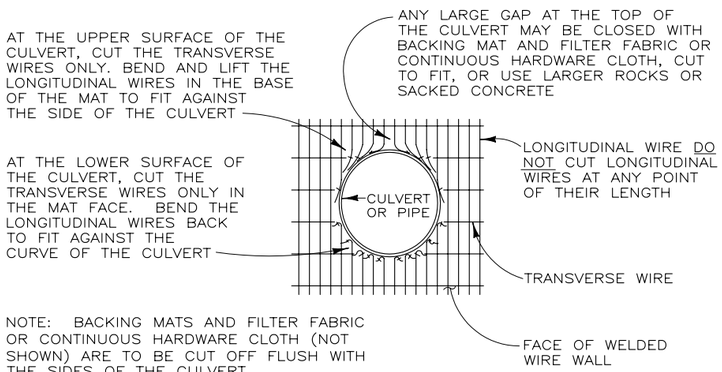

NOTE: BACKING MATS AND FILTER FABRIC OR CONTINUOUS HARDWARE CLOTH (NOT SHOWN) ARE TO BE CUT OFF FLUSH WITH THE SIDES OF THE CULVERT

ELEVATION

CULVERT THRU WALL FACE

NOT TO SCALE

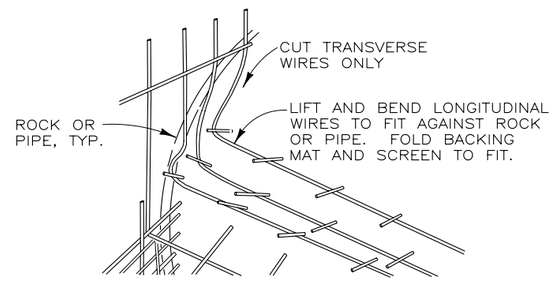

PICTORIAL

FITTING MATS TO OBSTRUCTION

NOT TO SCALE

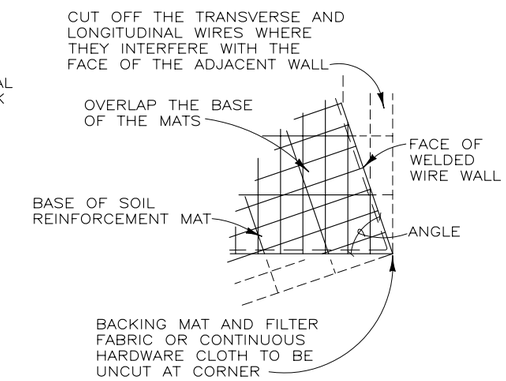

ACUTE CONVEX ANGLE

NOT TO SCALE

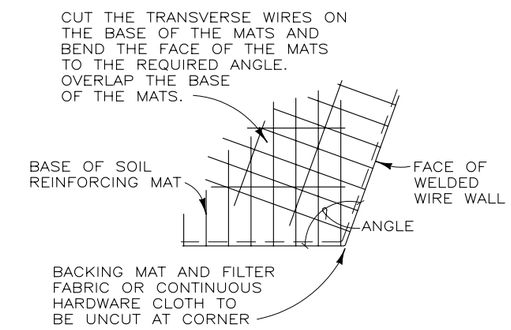

PLAN VIEW

OBTUSE CONVEX ANGLE

NOT TO SCALE

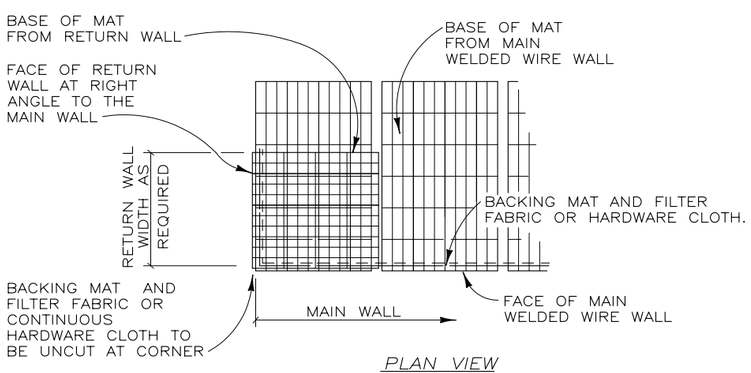

PLAN VIEW

RETURN WALL DETAIL

NOT TO SCALE

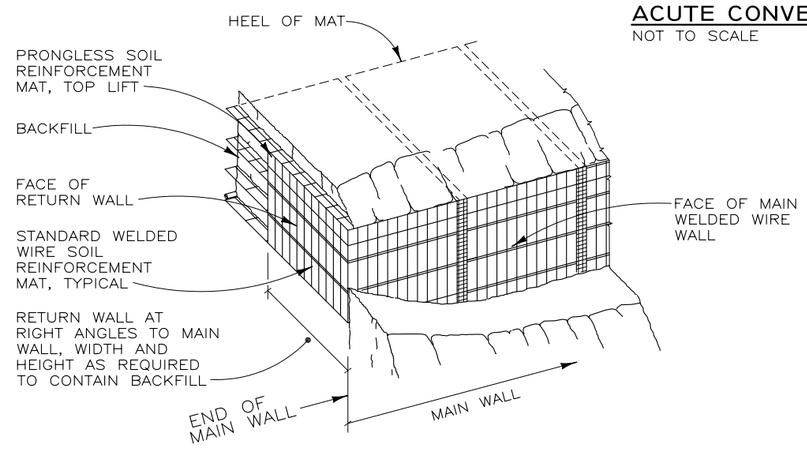

PICTORIAL

RETURN WALL DETAIL

NOT TO SCALE

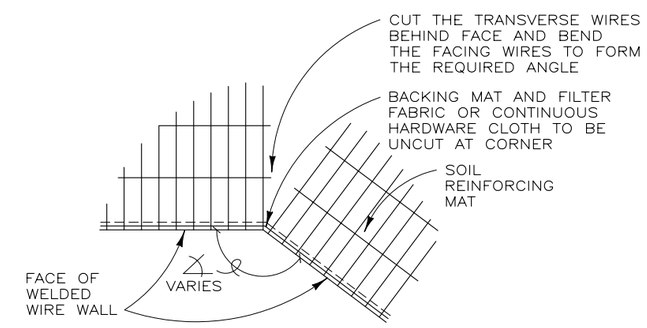

PLAN VIEW

CONCAVE ANGLE DETAIL

NOT TO SCALE

WELDED WIRE WALL STANDARD DETAILS

THIS DRAWING IS FURNISHED SOLELY FOR THE USE OF OR IN CONNECTION WITH THIS PROJECT, AND THE PROPRIETARY INFORMATION SHOWN HEREON IS NOT TO BE TRANSMITTED TO ANY OTHER ORGANIZATION WITHOUT SPECIFIC AUTHORIZATION BY THE HILFIKER COMPANY. HILFIKER RETAINING WALLS ARE PROTECTED BY ONE OR MORE OF THE FOLLOWING PATENTS: 243,613, 243,697, 288,616, 4,117,686, 4,329,089, 4,324,508, 4,391,557, 4,505,621, 4,643,618, 4,661,023, 4,856,939, 5,076,735, 5,647,695, 5,722,799, 6,357,970 AND OTHERS. OTHER PATENTS PENDING (2004)

REV.NO.	DATE	BY	DESCRIPTION
1	6 JAN 03	DR	MINOR REVISIONS
2	25 SEP 06	AMJ	MINOR REVISIONS
3	12 SEP 07	AMJ	MINOR REVISIONS, UPDATED BORDER
4	1 NOV 07	JTE	CHANGED LOGO, FIXED LEADERS

GRAPHIC SCALE

LINE IS 20 UNITS LONG ON ORIGINAL DRAWING

0 10 20

PROJ.MGR.

ENGINEER

CADD BY DR/AMJ

HILFIKER RETAINING WALLS

1902 Hilfiker Lane
Eureka, CA 95503-5711
TOLL-FREE 800.762.8962
PH 707.443.5093 FAX 707.443.2891
WEB SITE www.hilfiker.com E-MAIL info@hilfiker.com

DWG DATE NOV 98

REVISION DATE 1 NOV 07

SCALE NOTED

STANDARD DRAWING

WELDED WIRE RETAINING WALL

24" LIFTS

STANDARD DETAILS

PROJECT NO.

SHEET 3 OF 3

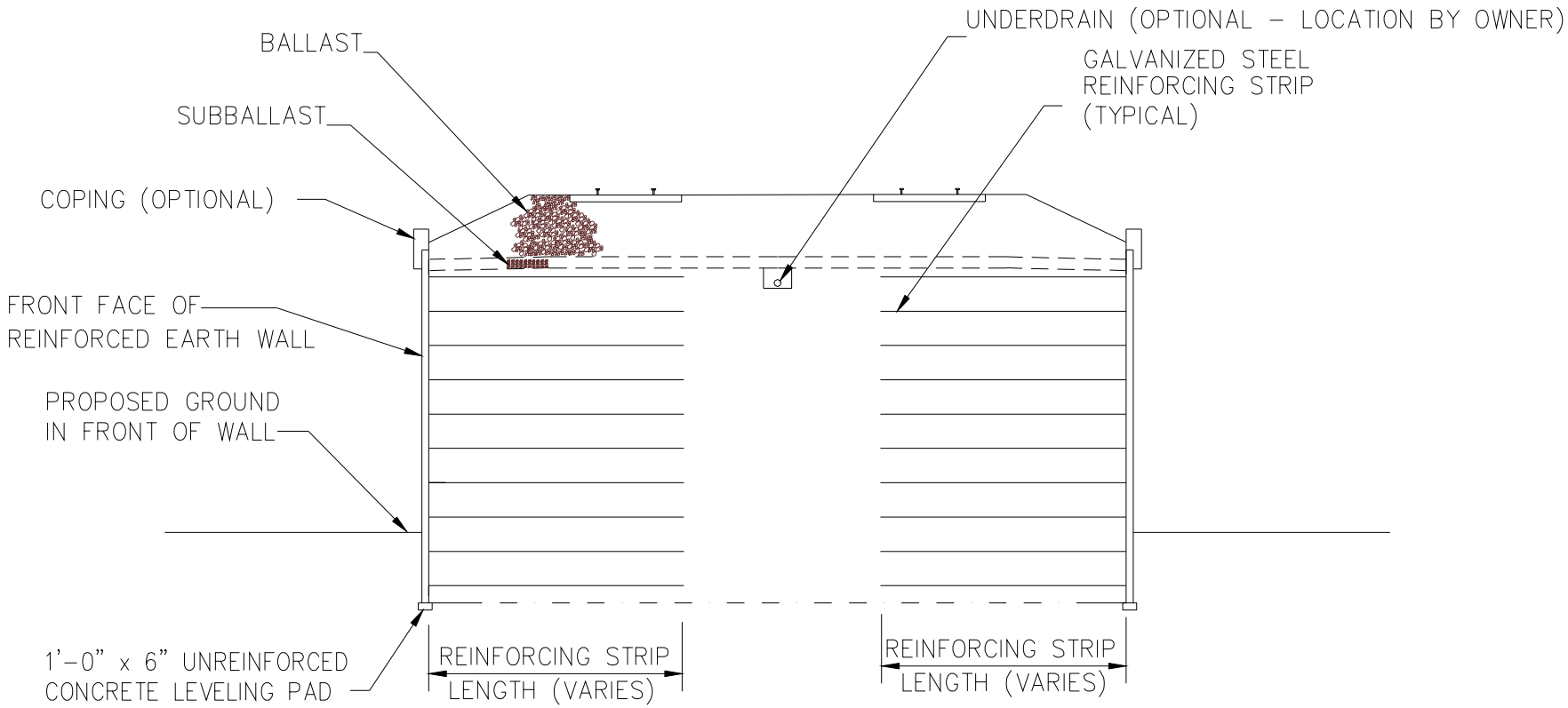

TYPICAL SECTION

REINFORCED EARTH WALLS SUPPORTING RAILROAD

(FIGURE 1)

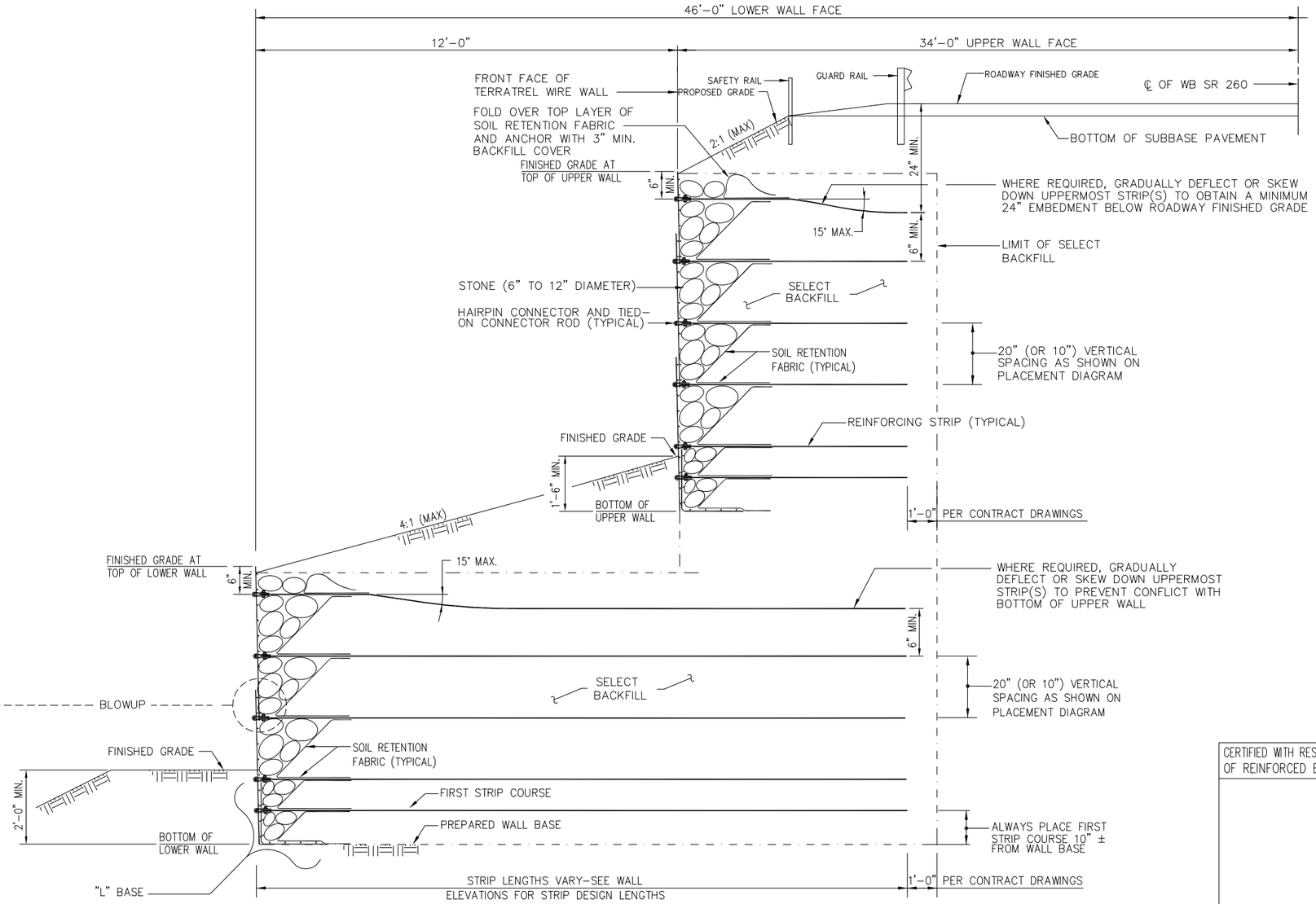

TYPICAL PERMANENT WIRE WALL SECTION

SCALE: N.T.S.

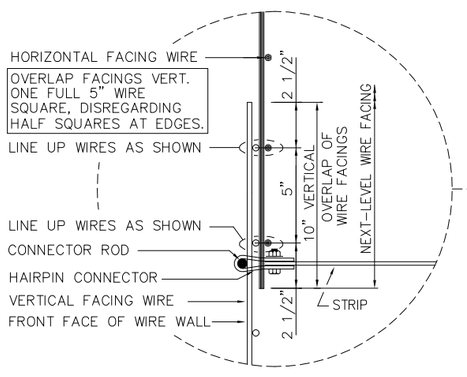

VERTICAL OVERLAP SECTION-DETAIL

SCALE: N.T.S.

CERTIFIED WITH RESPECT TO INTERNAL STABILITY OF REINFORCED EARTH STRUCTURES ONLY.

This drawing contains information proprietary to The Reinforced Earth Company, and is being furnished for the use of _____ only in connection with this project, and the information contained herein is not to be transmitted to any other organization unless specifically authorized in writing by The Reinforced Earth Company. The Reinforced Earth Company is exclusive licensee in the United States under patents issued to Henri Vidal, and the furnishing of this drawing does not constitute an expressed or implied license under the Vidal patents.

The design contained on these drawings is based on information provided by the owner. On the basis of this information, The Reinforced Earth Company has designed, and is responsible for the internal stability of the structure only. External stability, including foundation and slope stability, is the responsibility of the owner.

The Reinforced Earth Company
1660 Hotel Circle North, Suite 304, San Diego, California 92108 (619) 688-2400

"REINFORCED EARTH" is the registered trademark of The Reinforced Earth Company.

DESIGNED BY:				PROJECT NAME		DATE
PROJECT ENGR:				LOCATION		CONTRACT NO.
CHECKED BY:				OWNER		DRAWING NO.
ENG. MANAGER	REV.	DATE	DESCRIPTION	DRAWING COVERS	TYPICAL SECTION	SCALE

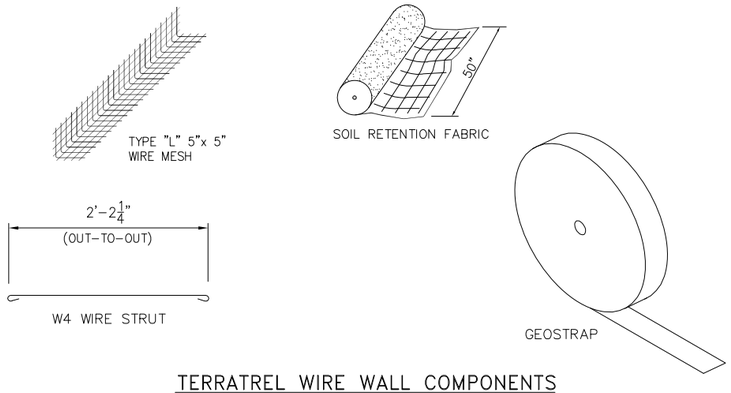

TERRATREL WIRE WALL COMPONENTS

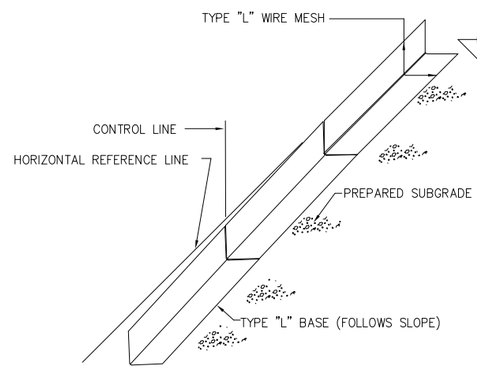

- SET TYPE "L" BASES DIRECTLY ON SUBGRADE (FOLLOW SLOPE OR BOTTOM OF WALL ELEVATION SHOWN ON WALL ELEV. SHEETS). OVERLAP EACH BASE 2" HORIZ. (OR ALONG SLOPE).

"ATTENTION"

- NOTE FACING DESIGNATION ON WALL ELEVATION AND THEN REFER TO FACING DIAGRAMS TO FIND ARRANGEMENT OF THE GEOSTRAP ATTACHMENTS.
- PLACE THE NUMBER OF REQUIRED GEOSTRAPS ON THE BASE CROSS WIRE OF EACH "L" BASKET.

STEP 1: INSTALLATION OF 1st. WIRE MESH FACINGS

- FIRMLY PULL AND ANCHOR EACH GEOSTRAP (SEE SEPARATE PACKAGE FOR STRIP ANCHORING)
- PLACE DOUBLED OVER 25"-WIDE RETENTION FABRIC AS SHOWN.
- INSTALL WIRE STRUT TO FACING AND BOTTOM LEG OF "L" BASKET (FACING TO BE TAUT AND PLUMB)

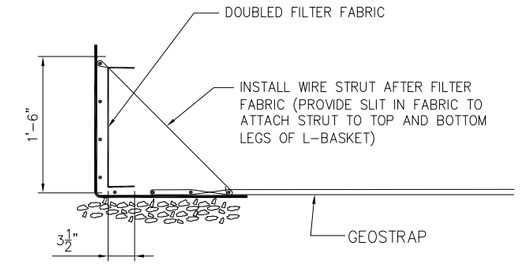

STEP 2: INSTALLATION OF 1st. GEOSTRAP COURSE

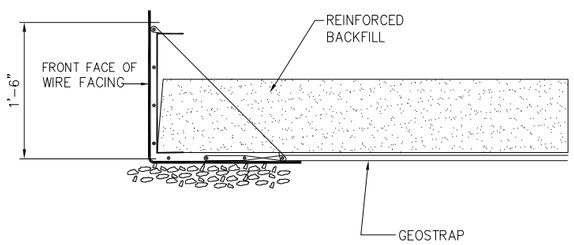

- PLACE AND COMPACT FIRST REINFORCED BACKFILL LIFT TO LEVEL OF 10" ABOVE BASE OF "L" BASKET
- SUCCEEDING FILL LIFTS SHALL BE NO GREATER THAN 10".

STEP 3: 1st. BACKFILL LIFT

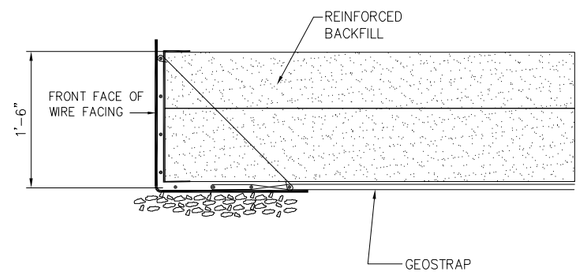

- BACKFILL LIFT SHALL BE NO GREATER THAN 10".

STEP 4: 2nd. BACKFILL LIFT

- PLACE AND SECURE 2nd PANEL COURSE WITH TIE WIRES (OVERLAP LOWER FACING BY 2")
- FIRMLY PULL AND ANCHOR EACH GEOSTRAP
- PLACE DOUBLED OVER 25"-WIDE RETENTION FABRIC AS SHOWN.
- INSTALL WIRE STRUT TO FACING AND BOTTOM LEG OF "L" BASKET (FACING TO BE TAUT AND PLUMB)

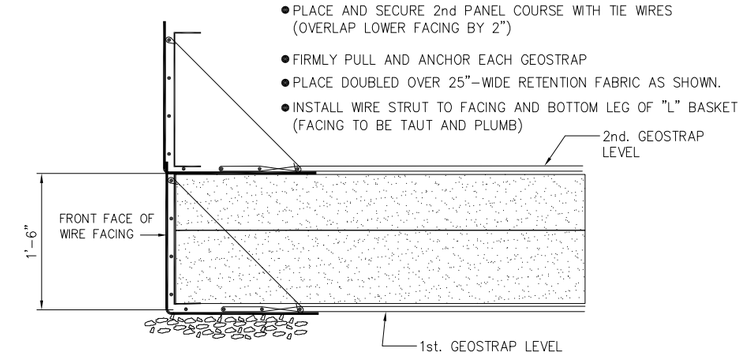

STEP 5: INSTALLATION OF 2nd. FACING UNITS

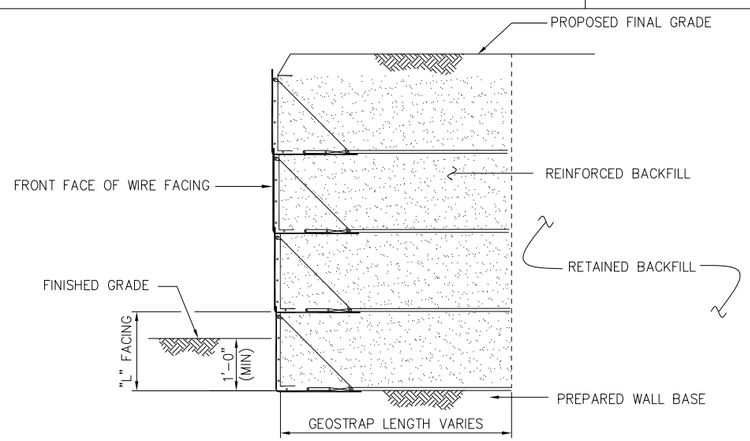

COMPLETED WIRE WALL SECTION

- REPEAT "STEP 5" UNTIL WALL WALL CONSTRUCTION IS COMPLETED AS SHOWN.

CERTIFIED WITH RESPECT TO INTERNAL STABILITY OF REINFORCED EARTH STRUCTURES ONLY.

This drawing contains information proprietary to The Reinforced Earth Company, and is being furnished for the use of _____ only in connection with this project, and the information contained herein is not to be transmitted to any other organization unless specifically authorized in writing by The Reinforced Earth Company. The Reinforced Earth Company is exclusive licensee in the United States under patents issued to Henri Vidal, and the furnishing of this drawing does not constitute an expressed or implied license under the Vidal patents.

The design contained on these drawings is based on information provided by the owner. On the basis of this information, The Reinforced Earth Company has designed, and is responsible for the internal stability of the structure only. External stability, including foundation and slope stability, is the responsibility of the owner.

REINFORCED EARTH®
1660 Hotel Circle North, Suite 304, San Diego, California 92108
Ph. (619) 688-2400 Fax (619) 688-2499

"REINFORCED EARTH" is the registered trademark of The Reinforced Earth Company.

DESIGNED BY:				PROJECT NAME		DATE
PROJECT ENGR:				LOCATION		RECO CONTRACT NO.
CHECKED BY:				OWNER		DRAWING NO. 3 OF
ENG. MANAGER	REV.	DATE	DESCRIPTION	DRAWING COVERS	GEOTREL CONSTRUCTION SEQUENCE	SCALE NO SCALE

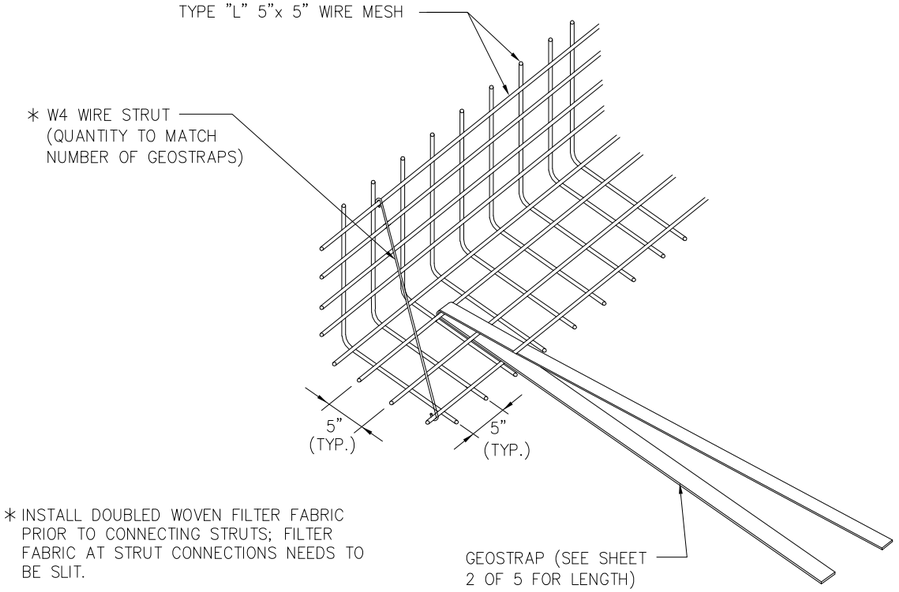

CONNECTION OF STRIP TO WIRE FACING IN PERSPECTIVE

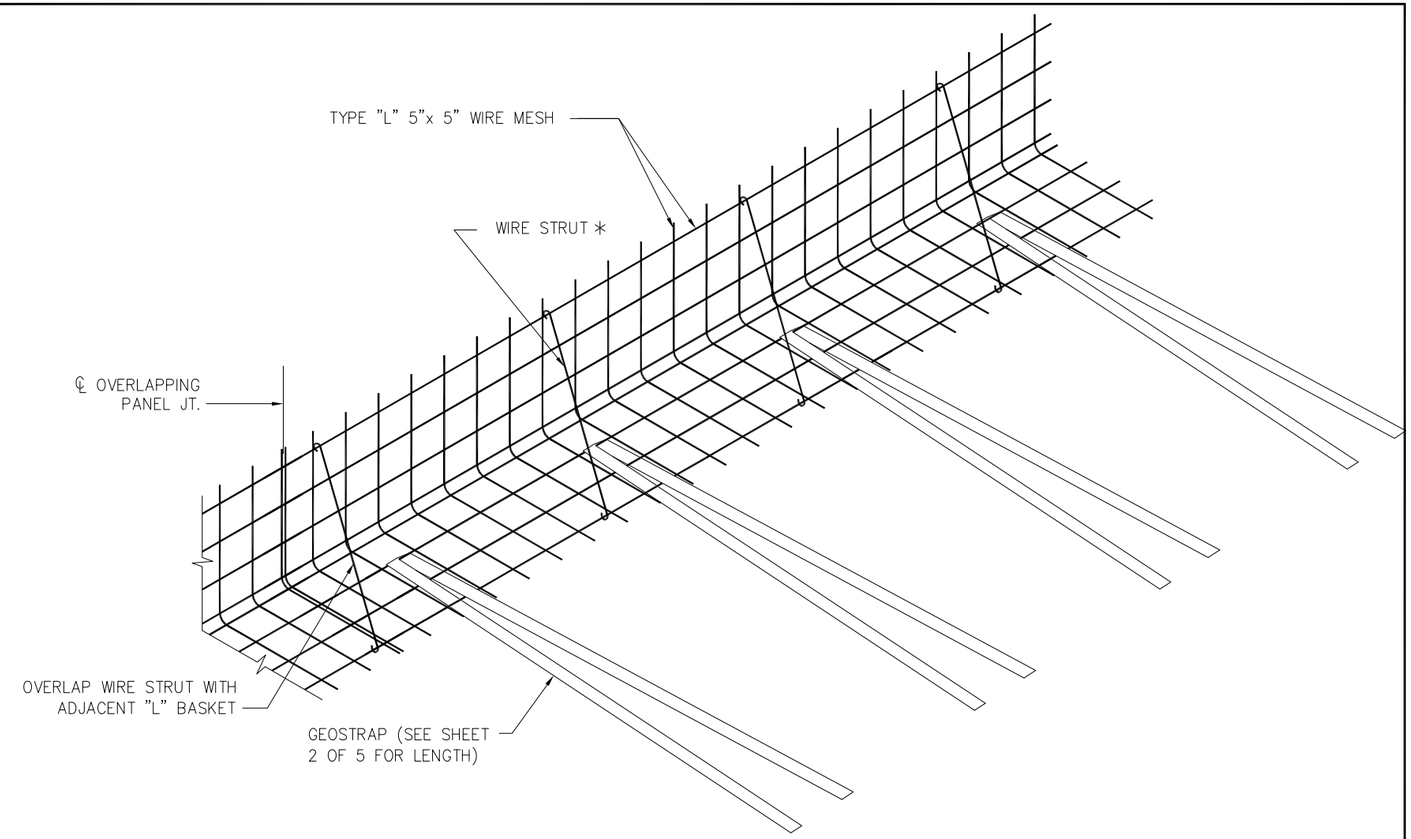

WIRE FACING IN PERSPECTIVE

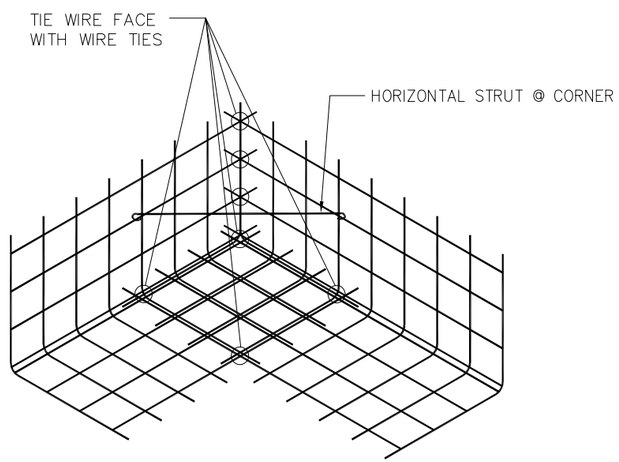

OUTSIDE CORNER DETAIL

NOTE:
BEND OR CUT BASKETS TO SUIT FIELD CONDTIONS AND ENSURE THAT GEOTEXTILE FILTER FABRIC OVERLAPS 1" MIN.

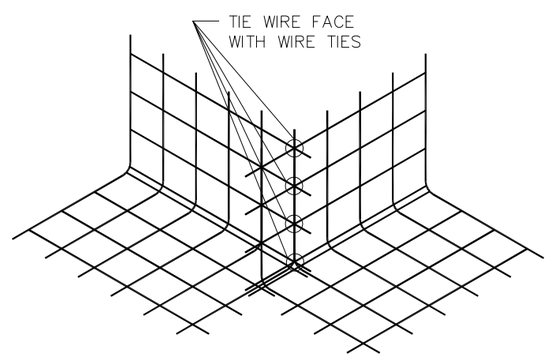

INSIDE CORNER DETAIL

NOTE:
BEND, BUTT OR CUT BASKETS TO SUIT FIELD CONDTIONS

CERTIFIED WITH RESPECT TO INTERNAL STABILITY OF REINFORCED EARTH STRUCTURES ONLY.

This drawing contains information proprietary to The Reinforced Earth Company, and is being furnished for the use of _____ only in connection with this project, and the information contained herein is not to be transmitted to any other organization unless specifically authorized in writing by The Reinforced Earth Company. The Reinforced Earth Company is exclusive licensee in the United States under patents issued to Henri Vidal, and the furnishing of this drawing does not constitute an expressed or implied license under the Vidal patents.

The design contained on these drawings is based on information provided by the owner. On the basis of this information, The Reinforced Earth Company has designed, and is responsible for the internal stability of the structure only. External stability, including foundation and slope stability, is the responsibility of the owner.

REINFORCED EARTH®
1660 Hotel Circle North, Suite 304, San Diego, California 92108
Ph. (619) 688-2400 Fax (619) 688-2499

"REINFORCED EARTH" is the registered trademark of The Reinforced Earth Company.

DESIGNED BY:				PROJECT NAME		DATE
PROJECT ENGR:				LOCATION		RECO CONTRACT NO.
CHECKED BY:				OWNER		DRAWING NO. 2 OF
ENG. MANAGER	REV.	DATE	DESCRIPTION	DRAWING COVERS	GEOTREL STANDARD INSTALLATION DETAILS	SCALE NO SCALE

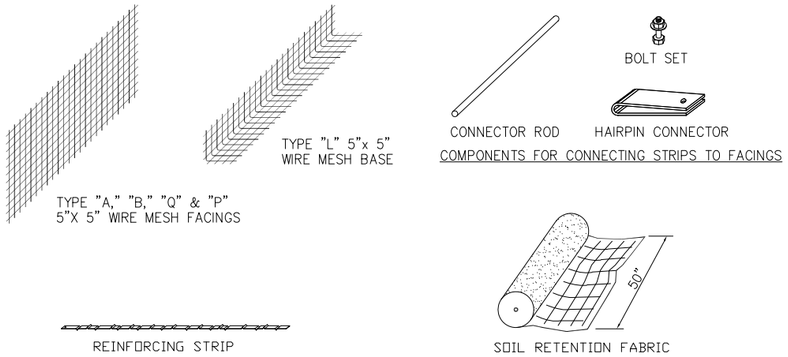

TERRATREL WIRE WALL COMPONENTS

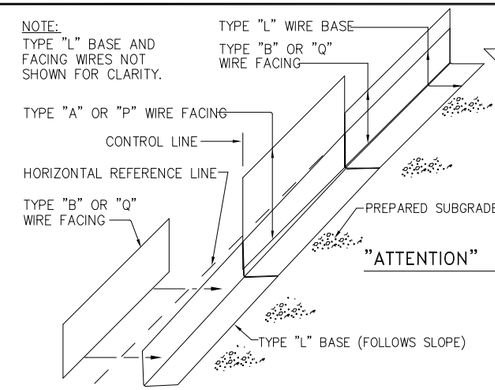

- SET TYPE "L" BASES DIRECTLY ON SUBGRADE (FOLLOW SLOPE OR BOTTOM OF WALL ELEVATION SHOWN ON WALL ELEV. SHEETS). OVERLAP EACH BASE 2" HORIZ. (OR ALONG SLOPE) AS SHOWN ON THE "EXAMPLE WALL" SHEET OF THESE PLANS.

"ATTENTION"

- NOTE FACING DESIGNATION ("A_6" FOR EXAMPLE) ON WALL ELEVATION AND THEN REFER TO STRIP ORIENTATION DETAILS SHEET TO FIND ARRANGEMENT OF THE HAIRPIN CONNECTORS FOR THE REINFORCEMENT STRIPS.
- PLACE THE NUMBER OF REQUIRED HAIRPIN CONNECTORS ON TO CONNECTOR ROD, AND TIE-WIRE THE ROD TO THE FACING WHERE SHOWN IN FACING DIAGRAM AND PER THE "EXAMPLE WALL" SHEET.

"ATTENTION"

- TIE-WIRE BOTTOM FACINGS SECURELY TO TYPE "L" BASES, OVERLAPPING EACH FACING 2" HORIZONTALLY, SETTING THEM HORIZONTALLY TO THE PROPER DESIGN ELEVATION PER THE WALL ELEVATION SHEETS (EXCEPT WHEN NOTE ON ELEVATION SHEETS REQUIRE FACINGS TO FOLLOW SLOPE), AND MAKING SURE HORIZONTAL WIRES OF FACINGS ARE LOCATED ON THE FILL SIDE OF THE WALL.

STEP 1: INSTALLATION OF BASES & 1st. FACINGS

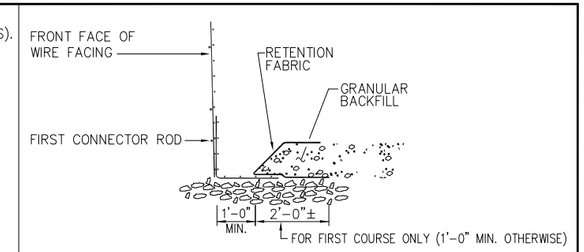

- PLACE 50"-WIDE RETENTION FABRIC AS SHOWN.
- PLACE AND COMPACT FIRST GRANULAR BACKFILL LIFT TO LEVEL OF FIRST CONNECTOR ROD LOCATION.

CAUTION ► FILL MUST BE SLOPED DOWN AS SHOWN TO PREVENT HORIZONTAL DISPLACEMENT OF FACING PRIOR TO CONNECTION OF STRIPS, AND TO PROVIDE SPACE FOR STONES AT FACING.

STEP 2: 1st. BACKFILL LIFT

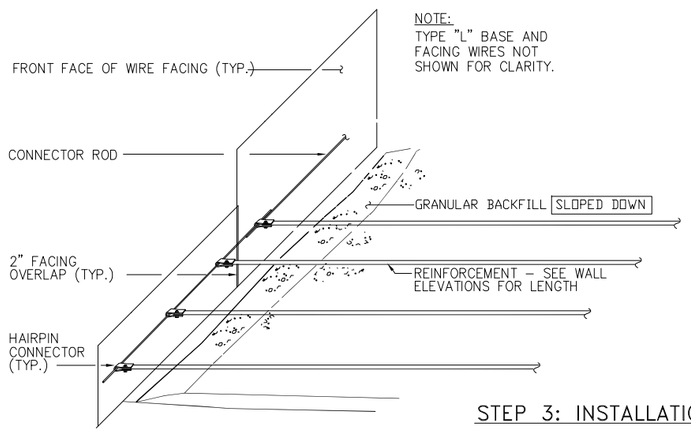

BOLT REINFORCING STRIPS TO HAIRPIN CONNECTORS.

FIRMLY PULL ON EACH REINFORCING STRIP STRIP UNTIL ASSEMBLY IS TIGHT.

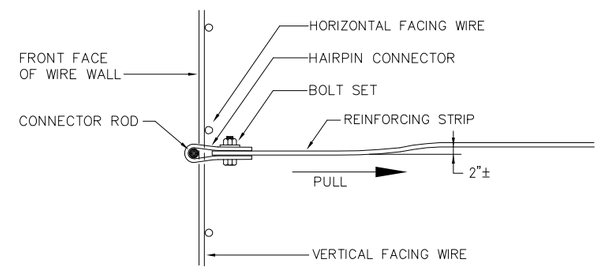

SECTION DETAIL

STEP 3: INSTALLATION OF 1st. REINFORCING STRIPS

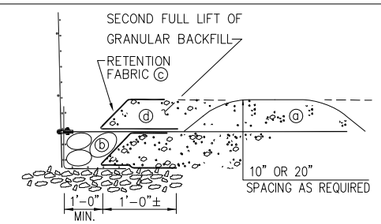

ⓐ PLACE ENOUGH BACKFILL OVER REINFORCING STRIPS TO SECURE POSITION AS SHOWN.

ⓑ IN SPACE UNDER STRIPS NEAR FACING, HAND PLACE 6" TO 12" DIAMETER STONES.

ⓒ PLACE 50"-WIDE RETENTION FABRIC AS SHOWN.

ⓓ THEN PLACE AND COMPACT SECOND GRANULAR BACKFILL LIFT TO (10" MAX.) LEVEL OF NEXT CONNECTOR ROD LOCATION.

CAUTION ► FILL MUST BE SLOPED DOWN AS SHOWN TO PREVENT HORIZONTAL DISPLACEMENT OF FACING PRIOR TO CONNECTION OF STRIPS, AND TO PROVIDE SPACE FOR STONES AT FACING.

STEP 4: 2nd. BACKFILL LIFT

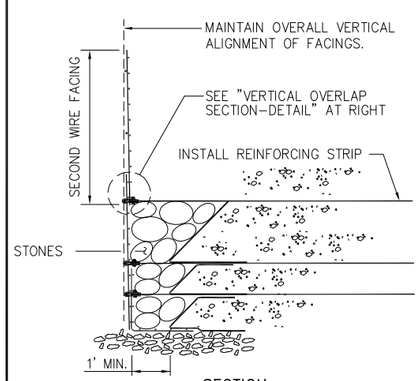

SECTION

- POSITION SECOND FACING DIRECTLY BEHIND AND OVERLAP LOWER FACING AS SHOWN IN DETAIL (RIGHT). TIE-WIRE THE LOWER PORTION OF SECOND FACING TO ADJACENT FACINGS.
- PLACE STRIPS AS PER "STEP 3."
- BACKFILL AND PLACE RETENTION FABRIC AS PER "STEP 4."

NOTES

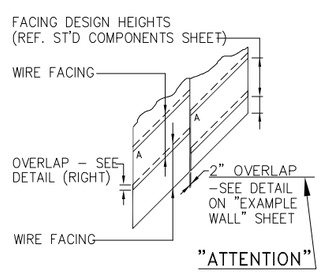

FACING OVERLAP DETAIL

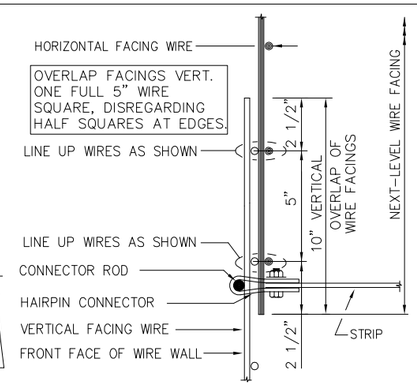

VERTICAL OVERLAP SECTION-DETAIL

STEP 5: INSTALLATION OF 2nd. FACING UNITS

NOTE:
SEE "TYPICAL WALL SECTION" IN
THESE PLANS AND IN CONTRACT PLANS FOR
TREATMENT AT TOP AND BOTTOM OF WALL.

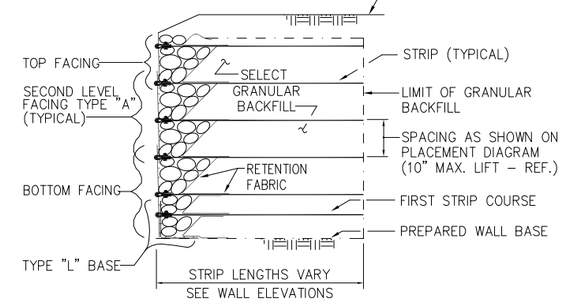

- REPEAT "STEP 5" UNTIL WALL IS TOPPED OUT AS SHOWN ABOVE.

COMPLETED TERRATREL WALL SECTION

CERTIFIED WITH RESPECT TO INTERNAL STABILITY OF REINFORCED EARTH STRUCTURES ONLY.

This drawing contains information proprietary to The Reinforced Earth Company, and is being furnished for the use of _____ only in connection with this project, and the information contained herein is not to be transmitted to any other organization unless specifically authorized in writing by The Reinforced Earth Company. The Reinforced Earth Company is exclusive licensee in the United States under patents issued to Henri Vidal, and the furnishing of this drawing does not constitute an expressed or implied license under the Vidal patents.

The design contained on these drawings is based on information provided by the owner. On the basis of this information, The Reinforced Earth Company has designed, and is responsible for the internal stability of the structure only. External stability, including foundation and slope stability, is the responsibility of the owner.

The Reinforced Earth Company
1660 Hotel Circle North, Suite 304, San Diego, California 92108 (619) 688-2400

"REINFORCED EARTH" is the registered trademark of The Reinforced Earth Company.

DESIGNED BY: JKI				PROJECT NAME		DATE
PROJECT ENGR: JLC				LOCATION		CONTRACT NO.
CHECKED BY: ML	1	01/20/10	REVISED PER MICHAEL BAXTER JR., INC. DESIGN REVIEW COMMENTS DATED 12/23/09	OWNER		DRAWING NO.
ENG. MANAGER FSH	REV.	DATE	DESCRIPTION	DRAWING COVERS	WIRE WALL CONSTRUCTION PROCEDURE	SCALE

ATTACHMENT 4

MSE SLOPE REINFORCEMENT INFORMATION

The Spanish Hills Golf and Country Club – Camarillo, CA

This site was considered economically undevelopable until the Sierra System was proposed. The value and appearance of the land has been enhanced dramatically with Sierra Slopes.

Optimal Solutions Based on Site Constraints

Site Specific Solutions

The Tensar® Sierra® Slope System was developed to provide a designer with countless layout and slope angle options. The flexibility of the Sierra Slope System makes it a common choice when solving grade separation challenges.

Designers and owners are continually faced with different property and site constraints that create grade separation challenges. Some projects may require a very steep grade change in which a green, vegetative solution is the right solution, such as this residence in Pittsburgh, PA. Other projects may utilize complementary grade separation solutions, such as the Mesa® Retaining Wall Systems, combined with the Sierra Slope System to create a dramatic and cost-effective solution. The examples on this and the following page demonstrate some of the system's design flexibility.

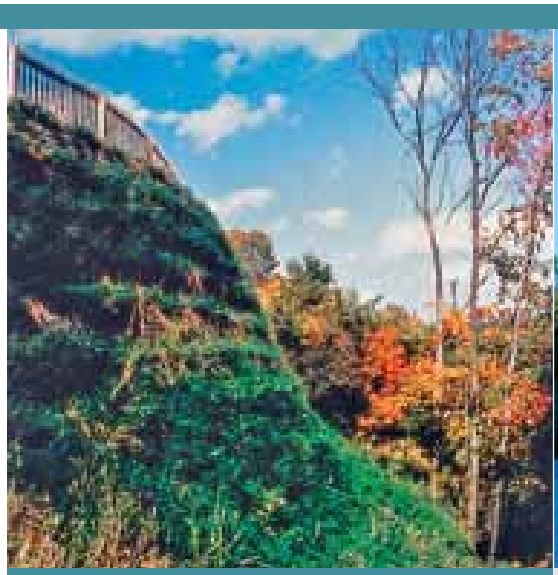

Private Residence – Pittsburgh, PA

This project combines steep and flatter Sierra Slopes to accommodate limited property constraints.

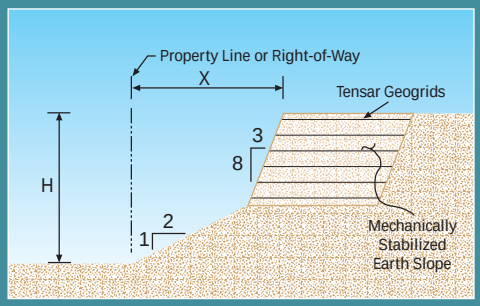

Marriott Riverchase – Hoover, AL

The Sierra System easily adapts to a wide range of slope and slope/wall combinations, but the 1H:1V, as used for the Marriott in Hoover, AL, remains the most commonly specified Sierra Slope.

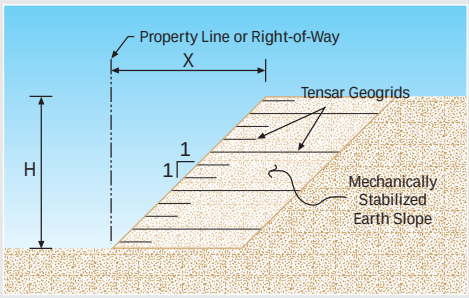

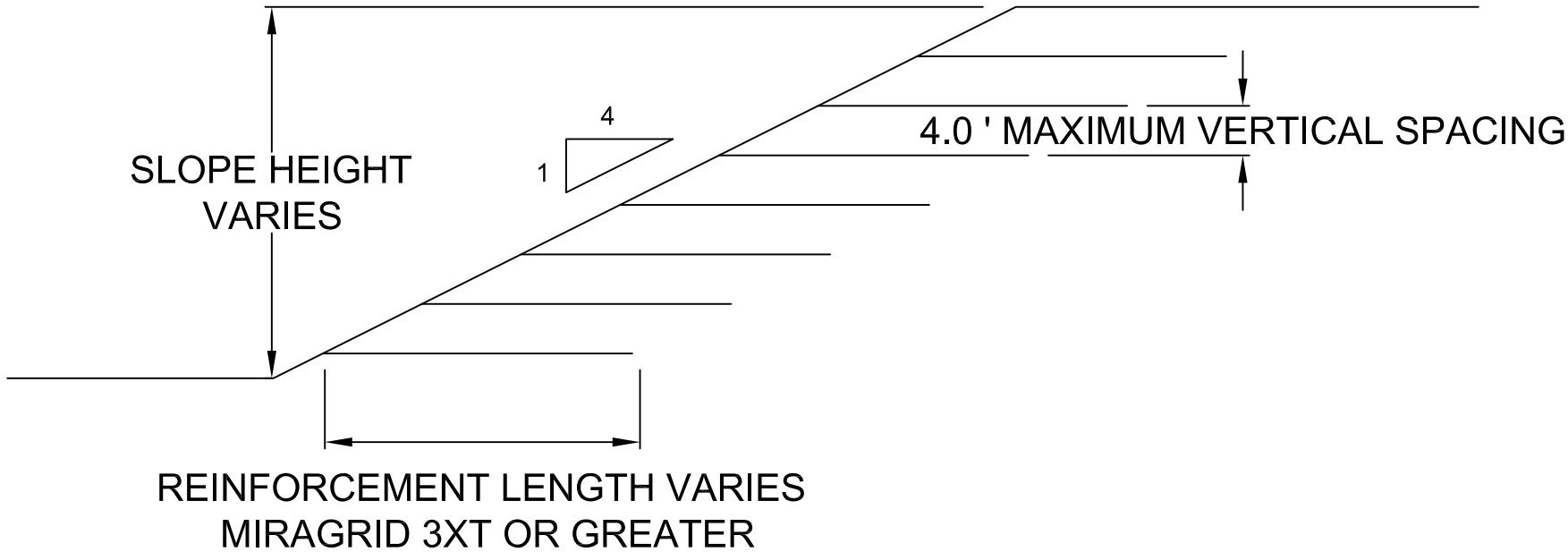

TYPICAL SLOPE CROSS SECTION DETAIL

N. T. S.

CONSTRUCTION DETAIL

TYPICAL MSE SLOPE
NO STEEPER THAN 2:1

TENCATE
365 SOUTH HOLLAND DRIVE
PENDERGRASS, GA 30567

CONSTRUCTION SEQUENCE

- EXCAVATE FOR LEVEL BASE TO A LENGTH ADEQUATE FOR GRID EMBEDMENT. ADDITIONAL EXCAVATION MAY BE REQUIRED FOR DRAINAGE BOARD BEHIND THE REINFORCED MASS.

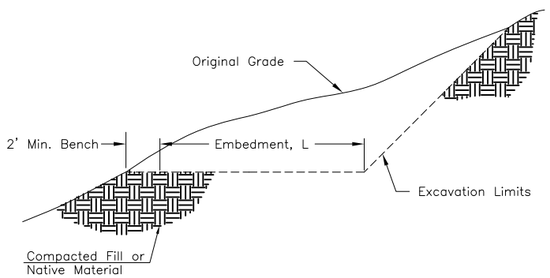

STEP 1

- CHECK LEVEL OF BASE.
- CHECK ALL LINE, GRADE, AND CURVES.
- INSTALL FIRST LAYER OF MIRAGRID WITH ROLL DIRECTION PERPENDICULAR TO SLOPE FACE UNLESS OTHERWISE SPECIFIED BY THE DESIGN ENGINEER.
- PULL MIRAGRID TIGHT, KEEP TENSION APPLIED UNTIL BACKFILL IS PLACED, STAPLES OR STAKES MAY BE USED TO MAINTAIN TENSION.
- PLACE BACKFILL IN MAXIMUM LIFTS OF 12 INCHES, OR AS SPECIFIED BY THE PROJECT ENGINEER AND COMPACT TO 95% OF RELATIVE DENSITY UNTIL NEXT LAYER OF REINFORCEMENT IS NEEDED.

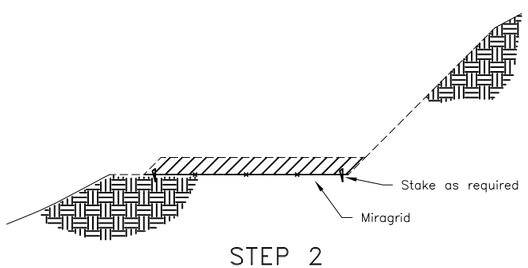

STEP 2

- INSTALL SECONDARY REINFORCEMENT PARALLEL TO THE SLOPE FACE AS REQUIRED ON THE PROJECT PLANS.
- REPEAT ABOVE STEPS UNTIL ADDTITIONAL PRIMARY REINFORCEMENT IS REQUIRED.
- INSTALL NEXT LIFT OF BACKFILL AND COMPACT TO 95% OF RELATIVE DENSITY.

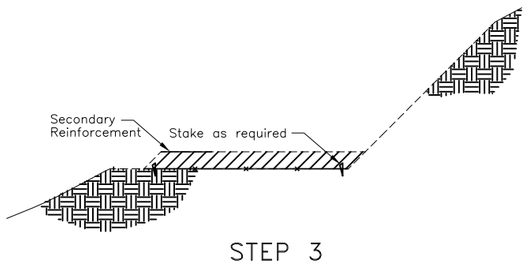

STEP 3

- PLACE NEXT LAYER OF MIRAGRID, TENSIONING AND STAKING AS NEEDED.
- CONTINUE SLOPE CONSTRUCTION UNTIL FULL HEIGHT IS REACHED.
- PLACE ADDITIONAL GRID BY REPEATING STEPS 2 AND 3. (SEE PROJECT PLANS FOR GRID ELEVATIONS AND EMBEDMENT LENGTHS.)

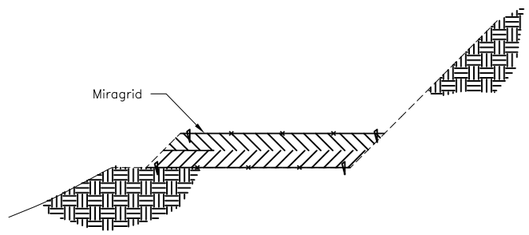

STEP 4

- PLACE FINAL COMPACTED BACKFILL LIFT AND TOPSOIL.
- CONSTRUCT ANCHORAGE TRENCH FOR EROSION CONTROL MATTING, AS SPECIFIED BY THE DESIGN ENGINEER.
- PLACE EROSION CONTROL MATTING AND COMPACT TRENCH.

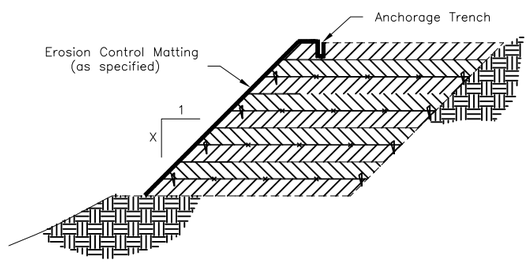

STEP 5

- CONSTRUCT ROADWAY OR DRAINAGE SWALE ETC. AS SPECIFIED ON THE PROJECT PLANS.

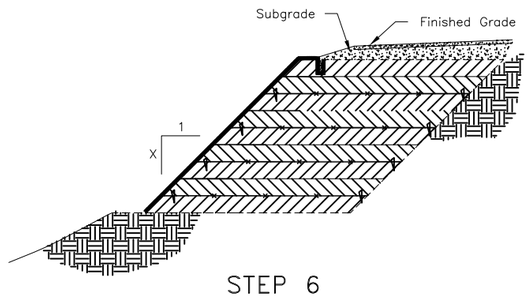

STEP 6

CONSTRUCTION NOTES FOR MIRAGRID AND BACKFILL SOILS PLACEMENT FOR MECHANICALLY STABLIZED EARTH (MSE) STRUCTURES

STATE PROJ. NO.	SHT.

1.0 DESIGN PARAMETERS

1.1 DESIGN OF THE REINFORCED SOIL STRUCTURES ARE BASED UPON THE FOLLOWING PARAMETERS:

REINFORCED FILL SOIL	
FRICTION ANGLE	= 26°
COHESION	= 0 psf
MOIST UNIT WEIGHT	= 120 pcf
RANDOM BACKFILL	
FRICTION ANGLE	= 26°
COHESION	= 0 psf
MOIST UNIT WEIGHT	= 120 pcf
FOUNDATION	
FRICTION ANGLE	= 37°
COHESION	= 0 psf
MOIST UNIT WEIGHT	= 137 pcf
1.2 MINIMUM FACTOR OF SAFETY	
GLOBAL STABILITY	= 1.30
1.3 UNIFORM SURCHARGE	= 250 psf
1.4 HYDROSTATIC FORCES	NO
1.5 SEISMIC FORCES	NO

2.0 REINFORCEMENT SHALL BE MIRAFI GEOGRID AND GEOTEXTILE: MANUFACTURED BY THE NICOLON MIRAFI GROUP: ATLANTA, GEORGIA.

3.0 TECHNICAL REQUIREMENTS

3.1 THE FOUNDATION FOR THE THE STRUCTURE SHALL BE GRADED LEVEL FOR A WIDTH EQUAL TO OR EXCEEDING THE APPROVED LENGTH OF THE REINFORCEMENT OR AS SHOWN IN THESE CONSTRUCTION PLANS. PRIOR TO MSE SLOPE CONSTRUCTION, THE FOUNDATION SHALL BE COMPACTED TO 95% STANDARD PROCTOR DENSITY AS DETERMINED BY ASTM D698 AT 1% DRY TO 3% WET OF OPTIMUM MOISTURE CONTENT OR AS DIRECTED BY THE ENGINEER. ANY FOUNDATION SOILS FOUND TO BE UNSUITABLE SHALL BE REMOVED AND REPLACED.

3.2 AT EACH REINFORCEMENT ELEVATION, BACKFILL AREA SHALL BE LEVEL BEFORE PLACING THE REINFORCEMENT. THE REINFORCEMENT SHALL BE PLACED NORMAL TO THE FACE OF THE SLOPE. EACH LAYER OF REINFORCEMENT SHALL BE PRE-TENSIONED TO REMOVE SLACK BEFORE PLACEMENT OF BACKFILL. BEFORE STARTING WORK, THE CONTRACTOR SHALL DEMONSTRATE TO THE ENGINEER THE METHOD PROPOSED FOR PRETENSIONING THE REINFORCEMENT.

3.3 AT THE END OF EACH DAY'S OPERATIONS, THE CONTRACTOR SHALL SHAPE THE LAST LIFT OF BACKFILL TO MAINTAIN ADEQUATE DRAINAGE AND PREVENT PONDING.

3.4 TESTING METHODS, FREQUENCY AND VERIFICATION OF MATERIAL SPECIFICATIONS AND COMPACTION SHALL BE THE RESPONSIBILITY OF THE OWNER.

4.0 TC MIRAFI REINFORCEMENT PLACEMENT

4.1 MIRAFI REINFORCEMENT PLACEMENT SHALL BE PLACED AT THE LOCATIONS AND ELEVATIONS SHOWN ON THE DRAWINGS.

4.2 MIRAFI REINFORCEMENT LENGTH SHALL BE AS SHOWN ON THE CONSTRUCTION DRAWINGS.

4.3 PRIOR TO PLACING FILL, THE REINFORCEMENT MATERIALS SHALL BE PLACED TO LAY FLAT AND PULLED TAUT TO REMOVE ANY SLACK IN THE GEOGRID.

4.4 TRACKED CONSTRUCTION EQUIPMENT SHALL NOT BE OPERATED DIRECTLY ON THE REINFORCEMENT. A MINIMUM FILL THICKNESS OF 6" IS REQUIRED FOR THE OPERATION OF TRACKED VEHICLES OVER THE REINFORCEMENT. TURNING OF TRACKED VEHICLES SHOULD BE AVOIDED TO PREVENT TRACKS FROM DISPLACING THE FILL AND THE REINFORCEMENT.

4.5 RUBBER TIRED VEHICLES MAY PASS OVER THE REINFORCEMENT AT SLOW SPEEDS, LESS THAN 10 MPH. SUDDEN BRAKING AND SHARP TURNING SHALL BE AVOIDED.

5.0 REINFORCEMENT LAYOUT OR PLACEMENT CHANGES

5.1 NO CHANGES TO THE REINFORCEMENT LAYOUT; INCLUDING, BUT NOT LIMITED TO, LENGTH, REINFORCEMENT STRENGTH (TYPE), OR ELEVATION, SHALL BE MADE WITHOUT THE EXPLICIT WRITTEN CONSENT OF THE ENGINEER.

6.0 SURFACE DRAINAGE

6.1 BACKFILL SHALL BE GRADED AWAY FROM THE SLOPE FACE AND ROLLED AT THE END OF EACH WORK DAY TO PREVENT PONDING OF WATER ON THE SURFACE OF THE REINFORCED SOIL MASS.

6.2 SURFACE DRAINAGE AND SITE GRADING SHALL BE THE RESPONSIBILITY OF OTHERS.

7.0 SPECIAL PROVISIONS

7.1 THE DESIGN PRESENTED HEREIN IS BASED ON SOIL PARAMETERS, FOUNDATION CONDITIONS, GROUNDWATER CONDITIONS, AND LOADINGS STATED IN SECTION 1.0 OF THESE SPECIFICATIONS. SHOULD ACTUAL CONDITIONS VARY FORM THOSE ASSUMED, THE ENGINEER SHOULD BE NOTIFIED PRIOR TO CONSTRUCTION TO DETERMINE IF REDESIGN OF THE PROPOSED STRUCTURE IS REQUIRED.

7.2 TC MIRAFI GROUP ASSUMES NO LIABILITY FOR INTERPRETATION OF SUBSURFACE CONDITIONS SUITABILITY OF SOIL DESIGN PARAMETERS, AND SUBSURFACE GROUNDWATER CONDITIONS.

7.3 THE OWNER OR OWNERS REPRESENTATIVE IS RESPONSIBLE FOR REVIEWING AND VERIFYING THAT THE ACTUAL SITE CONDITIONS ARE AS DESCRIBED IN SECTION 1.0 PRIOR TO AND DURING CONSTRUCTION.

7.4 ALL PLAN DIMENSIONS MUST BE VERIFIED BY THE CONTRACTOR. THE ENGINEER MUST BE NOTIFIED OF ANY DISCREPANCIES BEFORE THE CONTRACTOR BEGINS WITH WORK.

GENERAL NOTES:

1. EXCAVATION SURFACE SHALL BE CLEARED OF ALL CONSTRUCTION DEBRIS SHARP OBJECTS, LARGE STONES AND EXCESS FILL MATERIAL.
2. REINFORCEMENTS ARE TO BE PLACED WITHIN 3 INCHES OF ELEVATIONS SPECIFIED BY DESIGNER OR AS DIRECTED BY THE THE PROJECT ENGINEER.
3. CORRECT ORIENTATION OF THE REINFORCEMENT SHALL BE VERIFIED PRIOR TO BACKFILLING AND COMPACTION.
4. BACKFILL SHALL BE PLACED IN SUCH A MANNER AS TO MINIMIZE THE DEVELOPMENT OF WRINKLES AND OR DISPLACEMENT OF THE REINFORCEMENT. REINFORCEMENT SHALL BE PLACED AND TENSIONED BEFORE FILL IS PLACED.

REVISION

DATE	BY	DESCRIPTION	DATE	BY	DESCRIPTION	DATE	BY	DESCRIPTION	DATE	BY	DESCRIPTION

DRAWN BY	RICH SACK
CHK'D BY	
DATE	AUGUST 2008

TenCate MIRAFI
365 SOUTH HOLLAND DRIVE
PENDERGRASS, GA 30567

INSERT PROJECT NAME HERE
REINFORCED STEEPENED SLOPE
LOCALE, STATE

CHANGES SLOPE INCLINATION
as shown on McAdams Plans
BUT MAINTAINS SAME TOP & BOTTOM
of SLOPE, REDUCES FILL QUANTITY

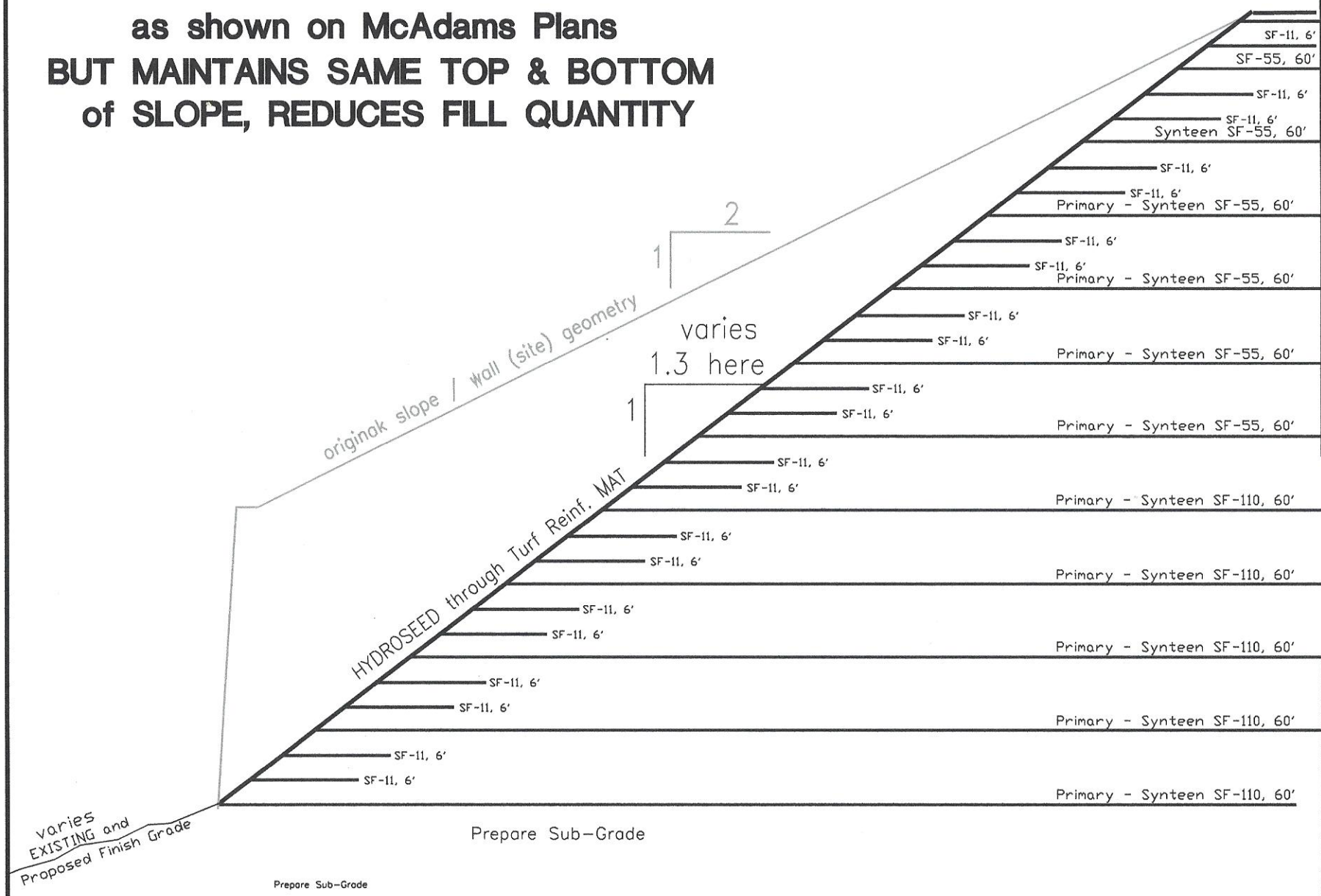

Plot: 1" = 10 du for 8.5"x11"- this dwg NOT to Scale

DRAWN BY: JAM
DESIGN BY: JAM/MRS
APPROVED BY: MRS
Int. DATE: 28-JUN-10
last REV: 20-AUG-10

RS-4

CHANGE IN GRADE CONST. OPTIONS
INSIDE WADE TOWNHOMES - Raleigh, NC

OWNER: Lennar Homes
Client / Contractor: HANES Geo Components & CSSI - Garner, NC

PLANTED "LIVING" REINFORCE SLOPE
TYPICAL CROSS-SECTION

Proj. No.: C09013

121 Lazenby Dr. (803)
P.O. Box 1346 548-8690
Fort Mill, SC Fax:
29716 548-8679

EARTH IMPROVEMENT TECHNOLOGIES

METROLINK

SCRRA Excavation Support Guidelines

July 2009

TABLE OF CONTENTS

1.0 FORWARD 1
1.1 PURPOSE 1
1.2 LIMITATIONS AND DISCLAIMERS 1
1.3 CHANGES, UPDATES, AND EFFECTIVE DATE 2
1.4 REFERENCES 2
1.5 DEFINITIONS 3
1.6 ACRONYMS 8

2.0 BASIC EXCAVATION REQUIREMENTS 9
2.1 RAILROAD ZONE OF INFLUENCE 9
2.2 VARIANCES 12
2.3 EXCEPTIONS FOR MINOR CONSTRUCTION 12
2.4 RIGHT-OF-ENTRY AGREEMENTS 13
2.5 RIGHT-OF-WAY 13
2.6 UTILITIES 14
2.7 SAFETY REGULATIONS 14
2.8 CONSTRUCTION 14
2.9 CONTRACTOR OPERATING RESTRICTIONS 15
2.10 PROTECTIVE DIVIDERS 16
2.11 HANDRAILS AND WALKWAYS 16
2.12 CLEARANCES 16
2.13 SHORING REMOVAL 177

3.0 TEMPORARY SHORING SYSTEMS 18
3.1 OWNER-DESIGNED TEMPORARY SHORING REQUIREMENT 18
3.2 PREFERRED SHORING TYPES AND ELEMENTS 18
3.3 PROHIBITED SHORING TYPES AND ELEMENTS 19

4.0 LOADING ON TEMPORARY SHORING SYSTEMS 20
4.1 GENERAL 20
4.2 SOIL LOADS 20
4.2.1 Soil Types and the Determination of Soil Properties 20
4.2.2 Loading from Retained Soil on Flexible Systems 20

4.2.3 Loading from Retained Soil on Restrained Systems....22
4.2.4 Passive Resistance....22
4.3 GROUNDWATER LOAD....23
4.4 SURCHARGE LOADS....23
4.5 EARTHQUAKE (SEISMIC) LOAD....23
4.6 COMBINATION OF LOADS AND LOADING CASES....23

5.0 RAILROAD LIVE LOAD SURCHARGE....25
5.1 GENERAL....25
5.2 SURCHARGE FROM MULTIPLE TRACKS....25
5.3 SIMPLIFIED SURCHARGE PRESSURE DISTRIBUTION....25
5.4 APPLICATION OF SURCHARGE PRESSURES....27
5.5 SURCHARGE FOR PERPENDICULAR SHORING WALLS....27
5.6 COMBINATION WITH SURCHARGE FROM OTHER SOURCES....27

6.0 SHORING ANALYSIS METHODOLOGIES....31
6.1 CONTINUOUS SHORING WALLS....31
6.2 SOLDIER PILE SHORING WALLS....31
6.3 ANALYSIS OF CANTILEVER WALLS....32
6.4 ANALYSIS OF WALLS WITH A SINGLE LEVEL OF BRACING....32
6.4.1 Free Earth Support Method....32
6.4.2 Fixed Earth Support Method....33
6.4.3 Factor of Safety for Shoring Wall Embedment Depth....33
6.5 ANALYSIS OF WALLS WITH MULTIPLE LEVELS OF BRACING....33
6.5.1 Embedment Depth....33
6.5.2 Analysis of Shoring Wall....34
6.5.3 Determination of Bracing Loads....34
6.6 ANALYSIS OF BRACING SYSTEMS....34
6.7 LAGGING ANALYSIS....35
6.8 GENERAL SHORING REQUIREMENTS....35
6.8.1 Minimum Embedment Depth....35
6.8.2 Secondary Bracing....35
6.8.3 Connections....35
6.8.4 Stiffeners....36
6.9 SHORING DEFLECTION AND SETTLEMENT....36

7.0 MATERIAL PROPERTIES AND ALLOWABLE STRESSES....37
7.1 STEEL....37
7.1.1 Structural Steel....37
7.1.2 Steel Sheet Piling....37

7.1.3 Prestress Strand or Rod 37
7.1.4 Wire Rope Cable 38
7.2 CONCRETE 38
7.3 WOOD 38
7.4 OTHER MATERIALS 38

8.0 SPECIAL CONDITIONS 39
8.1 SEALED SHORING 39
8.2 DEWATERING 39
8.3 BOTTOM STABILITY 40
8.3.1 Piping 40
8.3.2 Bottom Heave 40
8.4 GLOBAL STABILITY 41
8.5 TIEBACKS 41
8.6 DEADMEN 41

9.0 TRACK MONITORING 43
9.1 PURPOSE 43
9.2 LIMITATION ON TRACK MOVEMENT 43
9.3 MINIMUM MONITORING REQUIREMENTS 43
9.4 SUPPLEMENTAL MONITORING 44
9.5 SPECIAL MONITORING 47
9.6 ACCESS AND FLAGGING 47

10.0 SUBMITTAL REQUIREMENTS 48
10.1 GENERAL 48
10.2 EXCLUSIVE TRACK WINDOWS 48
10.3 EXCEPTIONS, WAIVERS, AND VARIANCES 49
10.4 DRAWINGS 50
10.5 DESIGN CALCULATIONS 51
10.6 DESIGN CHECKLIST 51
10.7 OTHER INFORMATION 51
10.8 SITE SPECIFIC WORK PLAN (SSWP) 51
10.9 CONSTRUCTION VERIFICATION 53

LIST OF FIGURES

Figure 2.1: Railroad Zone of Influence 11
Figure 4-1: Construction of an Apparent Pressure Diagram 21
Figure 5-1: Railroad (E-80) Live Load Surcharge Using the Boussinesq Equation 26
Figure 9-1: Minimum Monitoring Requirements 44
Figure 9-2: Method of Loaded Measurement 45
Figure 9-3: Reporting Static Top of Rail Survey Results 46
Figure 9-4: Reporting Loaded Measurement Results 46

LIST OF TABLES

Table 5.1: Railroad (E-80) Live Load Lateral Surcharges 28

LIST OF APPENDICES

APPENDIX A – SUBMITTAL CHECKLISTS 55

DESIGN CHECKLIST 56
REVIEW CHECKLIST 58

APPENDIX B – SAMPLE CALCULATIONS 60

EXAMPLE 4.1 – DEVELOP AN ACTIVE SOIL PRESSURE DIAGRAM 61
EXAMPLE 4.2 – DEVELOP AN APPARENT PRESSURE DIAGRAM 62
EXAMPLE 4.3 – DETERMINE PASSIVE RESISTANCE (COHESIONLESS SOIL) 63
EXAMPLE 4.4 – DETERMINE PASSIVE RESISTANCE (COHESIVE SOIL) 64
EXAMPLE 5.1 – RAILROAD LIVE LOAD SURCHARGE FROM TWO TRACKS 65
EXAMPLE 5.2 – RAILROAD LIVE LOAD SURCHARGE FROM THREE TRACKS 67
EXAMPLE 5.3 – "SIMPLIFIED" RAILROAD LIVE LOAD SURCHARGE 69
EXAMPLE 6.1 – CANTILEVER SOLDIER PILE AND LAGGING SHORING WALL 70
EXAMPLE 6.2 – SHEET PILE SHORING WALL WITH ONE LEVEL OF BRACING (FREE EARTH SUPPORT METHOD) 74
EXAMPLE 6.3 – SHEET PILE SHORING WALL WITH ONE LEVEL OF BRACING (FIXED EARTH SUPPORT METHOD) 78
EXAMPLE 6.4 – ANALYSIS OF A DIAPHRAGM SHORING WALL WITH THREE LEVELS OF BRACING 81
EXAMPLE 7.1 – WIDE FLANGE WALE DESIGN 87
EXAMPLE 7.2 – PIPE STRUT DESIGN 89
EXAMPLE 7.3 – SHORING WALL DESIGN 90
EXAMPLE 7.4 – WOOD LAGGING DESIGN 91

APPENDIX C – SCRRA DESIGN EXCEPTION FORM 93

1.0 FORWARD

1.1 PURPOSE

These Excavation Support Guidelines provide the minimum requirements for excavations and temporary excavation support adjacent to the Southern California Regional Rail Authority (SCRRA) railroad tracks. The design of permanent retaining walls and other systems of permanent earth retention adjacent to SCRRA tracks is addressed in the SCRRA Design Criteria Manual and other applicable guidelines.

SCRRA has developed the criteria and requirements specified herein for the protection of their rail facilities and operating system when construction and excavation activities occur adjacent to active railroad tracks. Given the risks associated with construction and excavation adjacent to an active railroad commuter/passenger and freight line, the design requirements and construction limitations specified herein are conservative and may be more restrictive than those commonly required by other agencies (for example, regarding excavations adjacent to a highway). Specialized requirements and recommended design practices for excavation and excavation support contained in these Guidelines are intended to improve safety of excavation adjacent to active railroad tracks for railroad operations, the traveling public, and Contractor personnel, and reduce delays and impacts to railroad operations.

The design, submittal, and review processes defined in these Guidelines shall be adhered to for all excavations on SCRRA Right-of-Way, and for excavation activities that might affect operations on SCRRA railroad tracks, signals, and other related facilities. Deviations or variances from the provisions of these Guidelines shall be presented to SCRRA for review following the process outlined in Section 10.3.

1.2 LIMITATIONS AND DISCLAIMERS

These Guidelines are not intended for use as a textbook, and shall not be used as a substitute for engineering knowledge, experience, or judgment. The criteria, information, and analysis methodologies presented in these Guidelines have been developed in accordance with recognized engineering principles and are in accordance with railroad industry practice. SCRRA does not warrant the accuracy or completeness of these Guidelines, nor that the Guidelines are free from errors and omissions. Users of these Guidelines shall independently validate and verify the information contained herein, and should promptly notify SCRRA of any discrepancies or inconsistencies discovered in the course of utilizing these Guidelines.

Design of temporary shoring systems for excavation support shall be prepared by a licensed California professional engineer who shall be solely responsible for verifying the accuracy, suitability, and applicability of the information contained in these Guidelines for any specific project.

Review and acceptance of submittals by SCRRA shall not relieve the Contractor and Engineer-of-Record of responsibility for the design and construction of the temporary shoring system, including responsibility for errors and omissions in submittals, and construction deviations from accepted design plans. Excavation safety shall be the responsibility of the Contractor performing the excavation and the Engineer-of-Record who designed the shoring for the excavation.

1.3 CHANGES, UPDATES, AND EFFECTIVE DATE

These Guidelines as well as the referenced SCRRA Documents listed in Section 1.4 are available on the SCRRA website: www.metrolinktrains.com. The most recent date shown in the lower right hand footer of each page is the effective date of the Guidelines. The most recent effective date shall supersede all previous versions. Revisions and updates to the Guidelines will be posted on the website. Users of these Guidelines shall be solely responsible for checking the website for updates and utilizing the latest version. Forward any proposed changes or updates to these Guidelines to the SCRRA Director of Engineering and Construction for consideration. **The current effective date of these Guidelines shall be July 2009.**

1.4 REFERENCES

The following documents are referenced in these Guidelines:

- Southern California Regional Rail Authority (SCRRA) Documents, latest edition:
    - Design Criteria Manual
    - Track Standards
    - SCRRA Standard Specifications
    - Track Maintenance, Right of Way and Structures, Engineering Instructions
    - Roadway Worker On-Track Safety Instructions
    - Form 4, Agreement for Moving Oversized Loads Over Highway-Rail Grade Crossings
    - Form 5, Indemnification and Assumption of Liability Agreement
    - Form 6, Temporary Right-of-Entry Agreement
    - Form 36, Right-of-Way Encroachment Approval Procedures
    - Form 37, Rules and Requirements for Construction on Railroad Property
    - General Safety Regulations for Third Party Construction and Utility Workers on SCRRA Property
    - General Code of Operating Rules

- American Railway Engineering and Maintenance-of-Way Association (AREMA), Manual for Railway Engineering, latest edition.

- State of California Department of Transportation (Caltrans), Trenching and Shoring Manual, latest edition.

- Federal Railroad Administration (FRA), Safety Regulations, 49 CFR Part 214, latest revision.

- California Occupational Safety and Health Administration (Cal/OSHA), California Code of Regulations, Title 8, Chapter 4, Division of Industrial Safety, Subchapter 4, Construction Safety Orders, latest revision.

- California Public Utilities Commission (CPUC), General Orders, latest revision.

- American Institute of Steel Construction (AISC), Steel Construction Manual - Allowable Stress Design (ASD), thirteenth edition, 2005.

- American Concrete Institute (ACI), Building Code Requirements for Structural Concrete (ACI 318), latest edition.
- American Welding Society (AWS), D1.1, Structural Welding Code – Steel, latest edition.
- Post-Tensioning Institute (PTI), Recommendations for Prestressed Rock and Soil Anchors, 2004.
- Federal Highway Administration (FHWA), Geotechnical Engineering Circular No. 4, Ground Anchors and Anchored Systems, FHWA-IF-99-015, June 1999.
- Federal Highway Administration (FHWA), Geotechnical Engineering Circular No. 7, Soil Nail Walls, FHWA-IF-03-017, March 2003.

1.5 DEFINITIONS

A. Railroad Terminology

Basic Safety Envelope	The area within 25 feet horizontally of the centerline of the nearest active track. The pair of imaginary lines, which define the outside boundaries of the Basic Safety Envelope, extend vertically up and down infinitely. For the purpose of these Guidelines, all construction activities within these boundaries will be considered to have the potential to foul the track and will be constrained as necessary by the SCRRA Employee-in-Charge/Flagman.
Contractor	The individual, firm, partnership, corporation, joint venture, or combination thereof that has entered into a construction contract with the legal entity for which the work is being performed. For purpose of these Guidelines, Contractor also includes any sub-contractor, supplier, agent, or other individual entering the SCRRA Right-of-Way during performance of the work.
Cross Level	The difference in elevation between the tops of both rails measured along a line perpendicular to the track centerline.

Engineer-of-Record	The licensed professional engineer in responsible charge of shoring system design, whose seal and signature shall be affixed to the drawings, specifications, calculations, and other documents used in the design and construction of excavation support. For the purpose of these Guidelines, the Engineer-of-Record also includes other people designated by the licensed professional engineer in responsible charge and working at his/her direction.
Guidelines	For the purpose of this document, Guidelines shall be considered this document (SCRRA Excavation Support Guidelines) in part or in its entirety. Other documents may be referred to as guidelines and shall not mean this document.
Member Agency	The county transportation agency whose property is directly affected by the project. The SCRRA Member Agencies include: the Los Angeles Metropolitan Transportation Authority (METRO), the Orange County Transportation Authority (OCTA), the Riverside County Transportation Commission (RCTC), the San Bernardino Associated Governments (SANBAG), and the Ventura County Transportation Commission (VCTC).
Operating System	Includes, but is not limited to the tracks on which trains and "on-track" equipment operate or may potentially operate, and any facilities closely related to the operation of the railroad system, including signal and communications masts, bridges, poles, cables and houses, tunnels, culverts, bridges, access roads, highway-rail grade crossings, and station platforms.
Public Agency	The federal government and any agencies, departments, or subdivisions thereof; the State of California; and any county, city, city and county district, public authority, joint powers agency, municipal corporation, or any other political subdivision or public corporation therein, responsible for sponsoring a project. This includes SCRRA Member Agencies.
Railroad Zone of Influence	The zone within which shored excavation is required and the shoring system is required to be designed for railroad live load surcharge. See Figure 2-1.
Right-of-Way	A strip of land, real estate, or property of interest, under the ownership or operating jurisdiction of SCRRA or Member Agency, on which railroad tracks, other structures and facilities are constructed.

SCRRA	Southern California Regional Rail Authority (aka Metrolink); a five-county joint powers authority, created pursuant to California Public Utilities Code Section 130255 and California Government Code Section 6500 et seq., to plan, design, construct, and then maintain and administer the operation of the regional passenger rail lines serving the counties of Los Angeles, Orange, Riverside, San Bernardino, and Ventura.
Shoofly	A temporary detour track to bypass an obstruction or construction site.
Site Specific Work Plan (SSWP)	A program, plan, and schedule prepared and submitted by the Contractor and accepted by SCRRA that accurately describes and illustrates the manner in which work within the Basic Safety Envelope will be accomplished; the potential impacts on elements of the Operating System; and the manner and methods by which these elements will be protected from any potential impact, and/or the manner in which work will be accomplished within SCRRA allotted Work Windows.
Third Party	An individual, firm, partnership, or corporation, or combination thereof, private or public, participating, sponsoring, or affected by a project. Government agencies and utilities may be considered a Third Party.
Work Window	A period of time with a specific beginning and ending time and duration, for which the track, signals, bridges, and other Operating System elements within the Basic Safety Envelope are temporarily removed from service or modified in some other manner, and train and other operations suspended or modified to allow construction or maintenance to occur. Written authority from SCRRA and an accepted Site Specific Work Plan (SSWP) are required before a Contractor is granted a Work Window. The Contractor's Work Window shall have specific geographic limits, which are defined in the accepted SSWP. Modifications or suspension of train and on-track equipment movements resulting from a Work Window involves written changes to SCRRA's Rules of Train and On-Track Equipment Operations, which are known as Track Bulletins.
Exclusive Track Window	An approved Work Window in which no train movements (except Contractor or SCRRA work trains or equipment under control of the Employee-in-Charge/Flagman, per the SSWP) will operate on any track within the window limits. The Contractor may dismantle, remove, reconstruct, or otherwise obstruct tracks within the limits of such a window. Tracks removed, reconstructed or

otherwise obstructed within the limits of such a window must be returned to the same condition as they were before the work started at the end of the time limits granted. This Work may be protected by track out of service, track and time limits, or by "Form B" Track Bulletin.

B. Shoring Terminology

Deadman	A buried or partially buried structure that is utilized as an anchorage for tension rods that restrain a shoring wall. Deadman anchorage may be provided by soldier piles, sheet piling, or concrete blocks or walls.
Deep Soil Mix Wall	An augered, cement grout soil improvement technique, incorporating soldier pile reinforcement, whereby in-situ soils are mixed in place with cement grout to form a row of overlapped soil-cement columns. These overlapped soil-cement columns are used for both groundwater cutoff and, with soldier piles, as a reinforced-soil diaphragm-type shoring wall.
Diaphragm Wall	A continuous shoring wall comprised of concrete or a mixture of cement and soil (usually with embedded vertical steel members) that is drilled or excavated in place prior to excavation in order to support lateral loads from retained soil and water. Examples of diaphragm walls include deep soil mix walls, secant walls, tangent walls, and slurry walls.
Grouting	Injection of fluid materials into the ground to improve the strength of ground, decrease permeability, and prevent water inflows, and/or compensate for ground settlements and movements. Types of grouting include permeation grouting (cement, micro-cement, chemical, etc.), jet grouting, and compaction grouting.
Lagging	Timber boards, planking or sheathing, reinforced concrete planks, or steel plate secured between adjacent soldier piles.
Packing	Steel, wood, concrete, or non-shrink grout used to fill gaps and transfer load between the shoring wall and bracing elements.
Preloading	Placement of initial loads in bracing members by jacking and shimming or wedging to assure adequate bearing of connected shoring elements and to reduce ground movements.

Secant Wall	A continuous shoring wall formed by a series of overlapped, concrete-filled drilled piers (otherwise commonly referred to as drilled shafts, or cast-in-drilled-hole [CIDH] piles). A minimum of every other pier is reinforced to span vertically.
Sheet Piling	Vertical steel shapes that are driven into the ground and interlocked with each other to form a continuous wall in order to support lateral loads from retained soil and water.
Slurry Wall	Continuous, reinforced concrete wall constructed by filling a series of discrete trenches with tremie concrete. Tremie concrete displaces bentonite or polymer slurry that is in the trench. The slurry is used to prevent collapse of the trench during excavation for slurry wall placement. The resulting concrete barrier wall retains soil and groundwater on the exterior side of the slurry wall, and permits excavation and removal of soil on the interior side of the wall. Walls may be reinforced or non-reinforced.
Soil Nailing	A system in which soil nails are typically grouted, untensioned rebars that are installed in drilled holes in order to form a reinforced soil mass. Reinforced shotcrete is applied to the face of the excavation. Shotcreting and nail installation proceed in a top down manner as excavation proceeds.
Soldier Piles	Vertical steel shapes (typically wide flange or HP) installed to support lateral loads from retained soil (and water, if part of a sealed shoring system).
Strut	A brace (compression member) that resists thrust in the direction of its own length.
Tangent Wall	A shoring wall formed by a series of concrete-filled drilled piers (otherwise commonly referred to as drilled shafts, or cast-in-drilled-hole [CIDH] piles) that are installed tangent to each other and do not overlap. A minimum of every other pier is reinforced to span vertically.
Tieback (Soil Anchor)	A tension element utilized to restrain a shoring wall. A tieback consists of a steel tendon (bar or strands) installed in a drilled hole. The tendon is bonded to the soil over its anchorage length with cement grout. The tendon is tensioned to provide positive restraint to the shoring wall and to reduce wall deflections.
Tremie Concrete	Concrete deposited under water or slurry by means of tremie equipment. The concrete displaces the water or slurry as the concrete is deposited.

Trench Shield or Trench Box	Pre-fabricated structure that is commonly installed to support lateral earth loads for utility installation, and whose walls commonly have no embedment into the soils below excavation subgrade. Trench shields are typically installed within pre-excavated slots and/or pushed into the ground as the excavation proceeds.
Wale	Horizontal beam used to brace vertical excavation shoring elements.

1.6 ACRONYMS

The following acronyms are used in this document:

AREMA	American Railway Engineering and Maintenance of Way Association
ASTM	American Society for Testing and Materials
BNSF	BNSF Railway Company
CADD	Computer-Aided Drafting and Design
Caltrans	California Department of Transportation
CFR	Code of Federal Regulations
CPUC	California Public Utilities Commission
FHWA	Federal Highway Administration
FRA	Federal Railroad Administration
METRO	Los Angeles County Metropolitan Transportation Authority
OCTA	Orange County Transportation Authority
OSHA	Occupational Safety and Health Administration
QA/QC	Quality Assurance / Quality Control
RCTC	Riverside County Transportation Commission
SANBAG	San Bernardino Associated Governments
SCRRA	Southern California Regional Rail Authority
SSWP	Site Specific Work Plan
UPRR	Union Pacific Railroad
VCTC	Ventura County Transportation Commission

2.0 BASIC EXCAVATION REQUIREMENTS

Any proposed excavation that may occur in SCRRA Right-of-Way or that may affect operations on SCRRA tracks must adhere to the design, submittal, and review requirements presented in these Guidelines and shall not proceed without acceptance by SCRRA.

2.1 RAILROAD ZONE OF INFLUENCE

The Railroad Zone of Influence is defined on Figure 2-1. The area below the Influence Line is divided into four zones. Requirements and limitations for excavation and temporary excavation support systems within each zone are described in detail below. Excavation requirements apply on or off of SCRRA Right-of-Way. Excavation beyond the Railroad Zone of Influence shall satisfy OSHA and other applicable requirements.

ZONE 1:

- **Excavation is prohibited.**
- Alternates to shored excavations shall be utilized. Potential alternates include temporary relocation of the tracks away from the area of excavation, or completion of excavation and backfilling work during an Exclusive Track Window that has been planned and approved in advance by SCRRA. Requirements for requesting an Exclusive Track Window are provided in Section 10.2. Minimum requirements for excavation and backfill work within Zone 1 are provided in Section 2.2. Prior to beginning any shoring, SCRRA will typically require that the track be removed and hot mix asphalt concrete (HMAC) sub-ballast layer be placed, eight (8) inches thick, 12 feet wide (centered on the track centerline), and extending 20 feet in each direction past the length of the shored excavation. SCRRA shoofly requirements are provided in the SCRRA Design Criteria Manual.

ZONE 2:

- **No excavation or temporary shoring installation will be allowed without the special written permission of SCRRA.** Requirements for requesting a variance are provided in Section 10.3. Additional requirements for excavation and shoring within Zone 2 are provided in Section 2.2.
- Alternates to shored excavations shall be utilized when practical.
- If SCRRA grants a variance to allow excavation, vertical excavation with continuous shoring walls is required. Shoring installation shall be complete prior to any excavation. Design of the shoring system shall include lateral surcharge due to railroad live load.
- Prior to beginning any shoring, SCRRA will typically require that the track be removed and hot mix asphalt concrete (HMAC) sub-ballast layer be placed, eight (8) inches thick, 12 feet wide (centered on the track centerline), and extending 20 feet in each direction past the length of the shored excavation.
- Examples of continuous shoring wall types include interlocked sheet piling or diaphragm walls. Diaphragm wall types include deep soil mix walls, secant pile walls, tangent pile walls, and slurry walls. Soldier piles and lagging are not allowed if excavation is necessary to install lagging.

ZONE 3:

- **Excavation requires temporary shoring.** Excavations shall be vertical. Continuous shoring walls installed prior to any excavation are preferred. Maximum excavation lifts shall be limited to five (5) feet for each stage of excavation for soldier pile and lagging walls or any other type of shoring that requires excavation of an open soil face prior to installing continuous support elements.
- If the shored excavation is 15 feet or less from the centerline of the track, prior to beginning any shoring, SCRRA may require that the track be removed and hot mix asphalt concrete (HMAC) sub-ballast layer be placed, eight (8) inches thick, 12 feet wide (centered on the track centerline), and extending 20 feet in each direction past the length of the shored excavation.
- **Design of the shoring system shall include lateral surcharge due to railroad live load.**

ZONE 4:

- Excavation requires temporary shoring.
- Lateral surcharge due to railroad live load need not be considered in the shoring design.
- The excavation shall be provided with a shoring system that actively supports the sides of the excavation and prevents the excavation faces from unraveling or moving. Sloped excavations are not permitted.
- Hydraulic and mechanical trench shores with sheeting, trench shields, and timber shoring may be utilized. However, installation of the shoring system must be completed before movement of trains is allowed on the adjacent track. Work Windows within which the shoring system installation must be completed shall be coordinated with SCRRA.

EXCAVATIONS BEYOND INFLUENCE LINE:

- Lateral surcharge due to railroad live load need not be considered in the shoring design.
- Shored vertical excavations are preferred. Sloped excavations are discouraged. SCRRA may require slope stability analysis for sloped excavations.
- Excavation and temporary shoring shall comply with Cal/OSHA and other applicable requirements.

Excavations shall also comply with the following:

- Finished excavation surfaces shall be in uniform planes, with no abrupt breaks.
- Positive drainage shall be maintained away from the tracks and track subgrade at all times.
- Backfilling materials, procedures, placement, and performance criteria shall meet the requirements of SCRRA Standard Specifications for Earthwork Section 02300 and other applicable specification, including hot mix asphalt concrete sub-ballast and aggregate base sub-ballast.

Jacking and receiving pits for installation of culverts or utility casings shall be a minimum of 25 feet from the centerline of the nearest active track. Construction activities on SCRRA Right-of-Way and excavations for jacking and/or boring operations shall comply with all other provisions of these Guidelines as applicable.

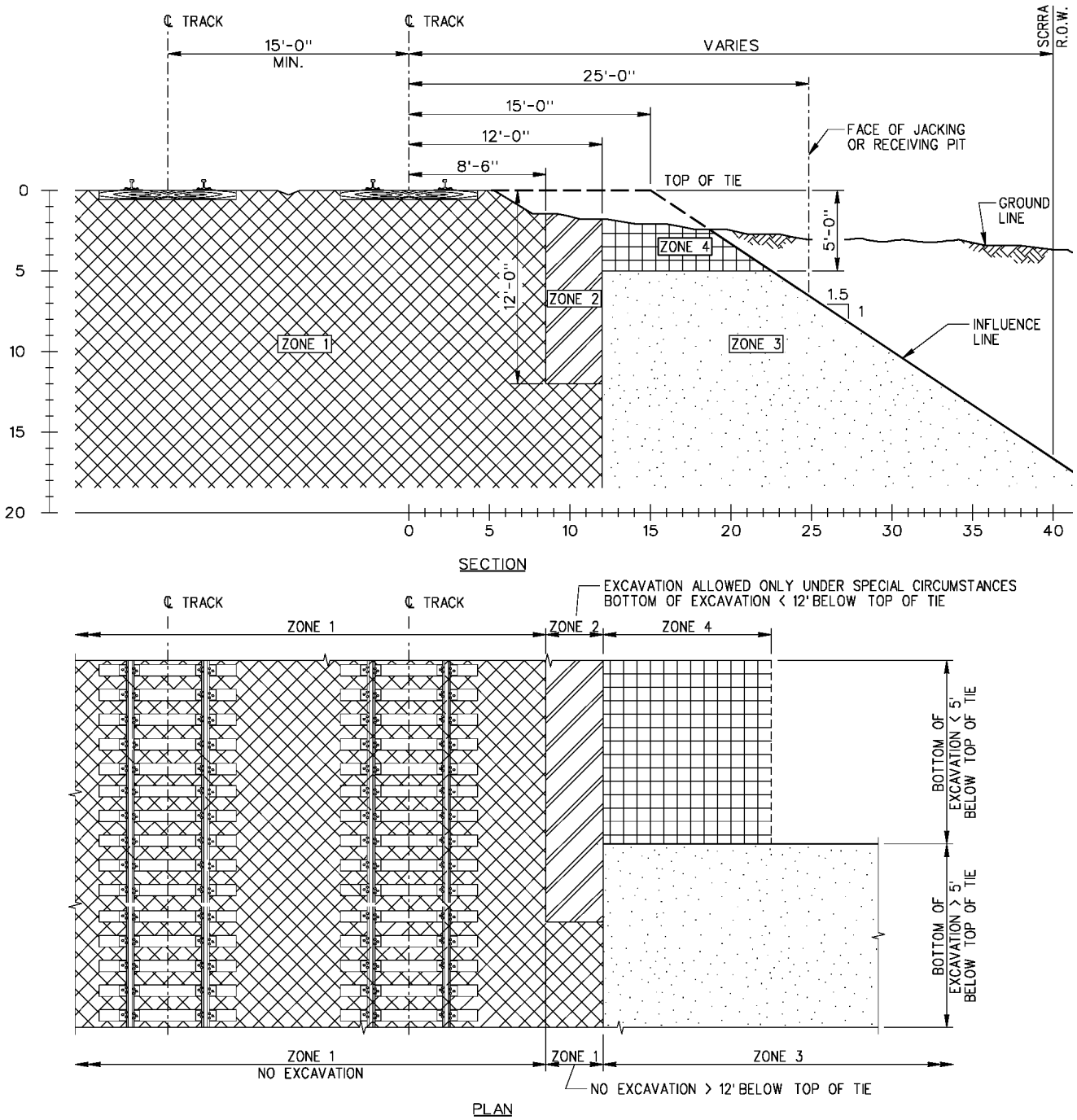

Figure 2-1: Railroad Zone of Influence

2.2 VARIANCES

SCRRA prohibits excavation in Zone 1 and does not allow excavation in Zone 2 without special written permission. Variances for allowing excavation within these prohibited areas may be granted on a case-by-case basis by SCRRA at its sole discretion. Planning, design, and bidding shall not be based on the assumption that a variance will be granted to allow shored excavation or that an Exclusive Track Window will be approved.

The following minimum requirements shall be met for excavation and backfilling in Zone 1 under an Exclusive Track Window requested in accordance with Section 10.2:

- Excavation and backfilling must be completed during a single, uninterrupted period of time during which no train movements will occur on the track(s).
- Typically, these activities will be restricted to nights and weekends and limited to 4-6 hours or less. Exclusive Track Window requests with durations of more than 12 hours will not be considered.
- Backfilling materials, procedures, placement, and performance criteria shall meet the requirements of SCRRA Standard Specifications for Earthwork Section 02300.
- The SCRRA will typically require that a hot mix asphalt concrete (HMAC) sub-ballast layer eight (8) inches thick, 12 feet wide centered on the track center line, and extending 20 feet in both directions past the length of the shored excavation, be installed. The nominal thickness of the ballast above the HMAC layer and below the bottom of the tie shall be six (6) inches.
- SCRRA shall be compensated for the full cost of removing and replacing track and ballast and any other work deemed necessary by SCRRA to provide safe and fully operational track. The Contractor will be required to install the HMAC sub-ballast layer.
- SCRRA shall be compensated for the full cost of having a qualified inspector on site throughout the duration of the work.

The following additional minimum requirements for shored excavations in Zone 2 above and beyond the other requirements of these Guidelines shall be met for variances requested in accordance with Section 10.3:

- Excavation shall have a length parallel to the track no greater than 100 feet.
- Vertical excavations with continuous shoring walls are required.
- A hot mix asphalt concrete (HMAC) sub-ballast with dimensions described above will typically be required.
- Shoring installation shall be complete prior to any excavation.
- Depth of excavation shall be limited to 12 feet below top of tie.
- Time that excavation remains open shall be limited to thirty (30) days.
- Supplemental monitoring of the track will be required.

2.3 EXCEPTIONS FOR MINOR CONSTRUCTION

SCRRA may permit unshored excavation within the Railroad Zone of Influence provided that the excavation has a limited plan area and is no greater than five (5) feet in depth. Further, excavation and backfilling must be completed during a single, uninterrupted period of time, during which no train movements will occur on the adjacent track. Planning and bidding shall

not be based on the assumption that an exception to the Railroad Zone of Influence shoring requirements will be granted.

Unshored excavation adjacent to a track will only be allowed in soil conditions that will permit the work to be performed without disturbing the adjacent track and/or the materials supporting the track.

Localized shallow trenching for utility installation and excavations for the installation of precast concrete foundations (such as signal foundations) are examples of cases where exceptions may be granted. Exceptions will be granted on a case-by-case basis by SCRRA at its sole discretion. Factors SCRRA will consider when assessing whether or not to grant an exception include: the length of time required to complete the excavation and backfilling; the available time between train movements on the adjacent track; and local soil conditions.

2.4 RIGHT-OF-ENTRY AGREEMENTS

In order to perform work on Right-of-Way that is operated and maintained by SCRRA, Right-of-Entry Agreements are required. For temporary or short-term uses of Right-of-Way, such as surveying activities and shallow geotechnical investigations, the Public Agency or Contractor is required to submit SCRRA Form 5 – Indemnification and Assumption of Liability Agreement. For projects involving construction on SCRRA Right-of-Way, the Public Agency or Contractor is required to enter into SCRRA Form 6 – Temporary Right-of-Entry Agreement. This agreement defines the nature of the work, the flagging requirements, and the appropriate safety measures that must be in place during the work. This includes all work within the Right-of-Way, from initial design through the completion of construction. Additionally, the movement of oversize vehicles over SCRRA maintained and operated crossings requires a fully executed SCRRA Form 4 – Agreement for Moving Oversized Loads Over Highway-rail grade Crossings. These agreements are available on the SCRRA website: www.metrolinktrains.com.

2.5 RIGHT-OF-WAY

In many cases, railroad Right-of-Way is maintained by SCRRA, and owned in fee by the Member Agencies. Public Agency or Third Party projects that affect the Right-of-Way must be coordinated with SCRRA Rail Corridor Crossings and Encroachment (C&E) Division. The procedures for applying for Right-of-Way encroachment, and the appropriate forms, are found in Form 36 – Right-of-Way Encroachment Approval Procedures, available on the SCRRA website: www.metrolinktrains.com.

Excavation work will often have an effect on the existing Right-of-Way. The Public Agency shall determine the status of the Right-of-Way within the limits of the project at the earliest stages of the project in order to properly identify the encumbrances and issues related to any proposed excavation. The application of these SCRRA Guidelines to proposed excavations may result in the need for additional Right-of-Way. In cases where additional Right-of-Way is required, the Engineer-of-Record shall develop the appropriate mapping and Right-of-Way definition in accordance with SCRRA standards for the proper definition of the Right-of-Way. The Public Agency shall take the lead for land acquisition. The Engineer-of-Record shall properly define the necessary Right-of-Way, provide legal descriptions, and work with SCRRA's Right-of-Way administrator and the Member Agency's real estate department, as needed, to advance the process of property acquisition, easement, or preparing a license agreement.

In some cases, SCRRA also shares Right-of-Way with BNSF Railway Company (BNSF) and Union Pacific Railroad (UPRR). In order to perform work on their Right-of-Way, approval shall also be obtained from BNSF or UPRR.

2.6 UTILITIES

The existing utilities shall be located prior to commencing any excavations. Approval of the project by SCRRA does not constitute a representation as to the accuracy or completeness of location or the existence or non-existence of any utilities or structures within the limits of this project. The appropriate regional notification center [Underground Service Alert (DIGALERT) at (800) 227-2600], railway companies, and utility companies shall be notified prior to performing any excavation close to any underground pipeline, conduit, duct, wire, or other structure. Refer to SCRRA's website www.metrolinktrains.com to ensure proper contracts and phone numbers.

SCRRA is not a member of DIGALERT; it is, therefore, necessary to call SCRRA's signal department phone number (refer to SCRRA's website) to mark, at highway agency's or contractor's expense, signal and communication cables and conduits. In case of signal emergencies or highway-rail grade crossing problems, the contractor shall call SCRRA's 24-hour signal emergency number. If utilities cannot be located, potholing shall be done to locate the utilities. SCRRA and appropriate utility owners shall be notified immediately when utility lines not known or indicated on the drawings are encountered. No service shall be disrupted until the utility owner and SCRRA have determined the required action on such lines.

2.7 SAFETY REGULATIONS

Specific safety regulations of SCRRA are provided in the Right-of-Entry Agreement and General Safety Regulations for Third Party Construction and Utility Workers on SCRRA Property. In addition to safety regulations specific to SCRRA, all construction shall conform to the applicable safety provisions of the latest U.S. Department of Transportation, Federal Railroad Administration (FRA) – Code of Federal Regulations (CFR), Title 49, Part 214, Railroad Workplace Safety, and Cal/OSHA Standards – California Code of Regulations, Title 8, Chapter 4, Division of Industrial Safety, Subchapter 4, Construction Safety Orders. Construction shall also conform to the applicable California Public Utilities Commission (CPUC) General Orders, as well as any other applicable government agency safety regulations.

2.8 CONSTRUCTION

Construction of excavations or temporary shoring systems within the Basic Safety Envelope, or with the potential of entering the Basic Safety Envelope, requires a Site Specific Work Plan (SSWP). See Section 10.8 for SSWP submittal requirements. Once the applicable Right-of-Entry requirements, safety training requirements, and an accepted SSWP are in-place, the Contractor may proceed with construction according to the design plans, specifications, and accepted SSWP. The Contractor or Public Agency shall notify SCRRA thirty (30) working days prior to beginning work on the Right-of-Way.

Any damage to rails, ties, structures, embankments, Third Party property, signal and communications equipment, or any other facilities during construction shall be repaired, at the expense of the Public Agency or Contractor, to a condition equal to or better than the condition

prior to entry and to a level accepted by SCRRA. The Public Agency or Contractor agrees to reimburse SCRRA and any affected operating railroads for any and all costs and expenses incurred as a result of their work, which may result in the following:

- Unscheduled delay to trains or interference in any manner with the operation of trains.
- Unscheduled disruption to normal railroad operations.
- Unreasonable inconvenience to the public or private users of the system.
- Loss of revenue.
- Alternative method of transportation for passengers.

The Public Agency and Contractor shall comply with the rules and regulations contained in the current editions of the SCRRA documents listed below during construction. The following documents are available on the SCRRA website: www.metrolinktrains.com:

- Temporary Right-of-Entry Agreement (Form 6)
- Rules and Requirements for Construction on Railroad Property (Form 37)
- General Safety Regulations for Third Party Construction and Utility Workers on SCRRA Property
- Applicable SCRRA Engineering Standards

2.9 CONTRACTOR OPERATING RESTRICTIONS

When operating near active tracks, whether on or off SCRRA Right-of-Way, the Contractor's operations will be constrained as necessary to protect the Operating System. In general terms, if the Contractor's operation has the potential to interfere with the safe passage of rail traffic or has the potential to foul the track, restrictions will be imposed on the Contractor's operations.

When working within the Basic Safety Envelope (i.e., within 25 feet of the centerline of the nearest active track), the Contractor is considered to have the potential to foul the track, regardless of the operation or equipment being used.

The Contractor will still be considered as having the potential to foul the track when working outside the Basic Safety Envelope, depending upon the operation. For example, if the Contractor operates a crane or backhoe with a boom sufficient in length to foul a track if the boom were in the horizontal position, or if the Contractor is handling long beams or piles that could fall across a track, such an operation would be restricted.

SCRRA shall have sole discretion to determine if the Contractor's operation has the potential to foul a track.

Unless otherwise approved by SCRRA, the Contractor will not be permitted to perform operations that have the potential to foul mainline tracks during weekday commute hours, and must work around the weeknight and weekend train traffic.

SCRRA may operate work trains along the corridor for the Contractor on various construction projects. The work trains transport a variety of equipment and materials for these projects. The time and number of work train traffic will vary.

The Contractor's activities that have the potential to foul the tracks (mainline or otherwise) will be suspended during all train movements within the construction limits.

The Contractor will generally be directed by SCRRA flagmen as to the need to suspend operations. The number of flagmen required will be determined by SCRRA per its review of the Contractor's SSWP.

All shoring work within the Basic Safety Envelope shall be performed in accordance with an accepted SSWP.

2.10 PROTECTIVE DIVIDERS

A protective divider shall be provided between the construction operations and the Operating System if approved by SCRRA. The divider shall be placed and secured a minimum of 10 feet clear from the centerline of the nearest active track.

Caltrans temporary railing Type K (K-rail) is an acceptable divider. SCRRA prefers that protective dividers have fencing installed to 10 feet above ground line.

2.11 HANDRAILS AND WALKWAYS

Adequate physical protection barrier shall be provided for all excavations in accordance with Cal/OSHA requirements.

In the event that there is insufficient space to place a protective divider as specified in Section 2.10, a handrail shall be provided along the side of the excavation adjacent to the track. The preferred clearance from the centerline of the nearest track is 10'-0".

In the event that there would be insufficient clearance to handrail placed along the side of the ex adjacent to the track, walkway and handrail shall be provided. Walkway shall consist of a slip resistant surface supported by and securely fastened to supports with fasteners that do not extend above the walkway surface. Walkway supports may be connected to and supported by shoring walls. The walkway surface shall be even with the top of shoring.

Handrails and walkways shall be designed in conformance with the requirements of Section 8.5 "Walkways and Handrails on Bridges" of the AREMA Manual for Railway Engineering.

2.12 CLEARANCES

All elements of the shoring system shall be placed such that they satisfy the clearance requirements specified in CPUC General Order 26-D.

The preferred clearance from centerline of track to fixed objects such as posts, poles, signs, and elements of shoring systems that extend above the top of rail is 10'-0".

2.13 SHORING REMOVAL

At the conclusion of construction, staged backfill and removal will often be necessary to safely remove bracing and connection elements of the shoring system. Removal of these elements shall be included as part of the shoring construction sequence and the Contractor shall comply with removal requirements as stated on the drawings. Contractor removals shall not proceed if safety of operations is jeopardized or if SCRRA determines that safety could be jeopardized.

Vertical shoring elements (sheet piles, soldier piles, and diaphragm walls) shall be left in place unless otherwise approved by SCRRA. Vertical shoring elements shall be cut off or demolished to five (5) feet below railroad subgrade if within 15 feet horizontally from centerline of track or otherwise to five (5) feet below finished ground surface. All other elements of the shoring system shall be completely removed if it is safe to do so and if the risks of track settlement or movement are low. If other elements of the shoring system cannot be completely removed, then at a minimum they shall be removed to five (5) feet below railroad subgrade if within 15 feet horizontally from centerline of track, or otherwise to five (5) feet below finished ground surface.

If the Contractor desires complete removal of vertical shoring elements for salvage or reuse, the Contractor shall submit the proposed removal procedure along with a completed Design Exception Form (see Appendix C) to SCRRA. The proposed removal procedure shall include provisions that will prevent movement or settlement of the track(s) and fill all voids that might remain after shoring removal. Complete removal of vertical shoring elements may be allowed by SCRRA at their sole discretion.

3.0 TEMPORARY SHORING SYSTEMS

3.1 OWNER-DESIGNED TEMPORARY SHORING REQUIREMENT

For construction projects that will require temporary shored excavation within the Railroad Zone of Influence, SCRRA requires that Contract Documents (plans, specifications, and estimates) include detailed design drawings and specifications for the temporary shoring system. In addition to clarifying the required construction sequence, defining the impacts to the Operating System, and having a temporary shoring system accepted by SCRRA prior to the onset of construction, uncertainty regarding the time and expense required for the Contractor to prepare a temporary shoring submittal that satisfies SCRRA requirements may be effectively eliminated. Specifications shall incorporate provisions of SCRRA Standard Specifications for Excavation and Excavation Support Systems Section 02160. These specifications allow for Contractor-designed alternates to be submitted to SCRRA for review and acceptance prior to construction.

3.2 PREFERRED SHORING TYPES AND ELEMENTS

The following types of shoring are preferred by SCRRA for use within the Railroad Zone of Influence:

- Continuous Shoring Walls versus Soldier Piles and Lagging: Because they are completed in place prior to any excavation, continuous shoring walls (such as sheet piling and diaphragm walls) are preferred over soldier piles and lagging. When soldier pile and lagging systems are utilized, lagging members are installed as excavation proceeds. During the excavation process, vertical cuts (of limited extent) are required to stand unsupported until the lagging has been installed. During the time the ground is unsupported, raveling or ground loss can result in ground settlements that negatively impact track profile and alignment. Additionally, if the lagging is not installed tight to the excavated ground, the ground will tend to move to fill the gaps, which can result in settlement behind the shoring wall that negatively impacts track profile and alignment. Consequently, the chance of ground loss that could undermine or settle the tracks is significantly reduced when continuous shoring walls are used.

- Deep Soil Mix Walls versus Sheet Piling: It has been SCRRA's experience that the soil mixing (drill) rig and other equipment utilized during a soil mixing operation typically pose a lesser risk to SCRRA than the pile driving equipment utilized to install sheet piling. Additionally, pre-drilling and vibration associated with sheet pile installation and extraction can cause track settlement. Consequently, the Contractor's operations may be somewhat less restricted if deep soil mix walls are used in lieu of sheet piling.

- Preloaded Bracing: Preloading of bracing elements can reduce shoring deflection and ground settlement during excavation and assure good bearing and a tight fit between shoring elements. Where feasible, struts shall be preloaded to about 50% of their design load to achieve adequate bearing between connected shoring elements and reduce the track settlement that can occur during excavation.

3.3 PROHIBITED SHORING TYPES AND ELEMENTS

The following types of shoring are prohibited from use within the Railroad Zone of Influence:

- Soil Nailing: Soil nailing shall not be utilized to shore excavations within the Railroad Zone of Influence. In addition, soil nails shall not extend into the Railroad Zone of Influence from walls supporting excavations outside of the Railroad Zone of Influence.

- Helical Screw Anchors: Helical Screw Anchors shall not be utilized to shore excavations within the Railroad Zone of Influence. In addition, helical screw anchors shall not extend into the Railroad Zone of Influence from walls supporting excavations outside of the Railroad Zone of Influence.

4.0 LOADING ON TEMPORARY SHORING SYSTEMS

4.1 GENERAL

Lateral loading from the following sources shall be considered in the design of the temporary shoring system:

- Retained Soil
- Retained Groundwater (hydrostatic pressure)
- Surcharge from all applicable sources, including, but not limited to: railroad live load, equipment and vehicles, material stockpiles, structures and improvements, etc.

Additionally, under certain conditions, earthquake (seismic) loading shall be considered. See Section 4.5.

Other sources of load, including centrifugal force from a train, impact loads, thermal loads, and wind loads are typically not required to be considered in the design of shoring. Such loads need only be considered in cases where they are significant. For example, centrifugal forces may need to be considered in the design of a shoring system constructed at a curve over which trains travel at high speeds.

4.2 SOIL LOADS

The following examples are located within Appendix B:

Example 4.1 Develop an Active Soil Pressure Diagram
Example 4.2 Develop an Apparent Pressure Diagram
Example 4.3 Determine Passive Resistance (Cohesionless Soil)
Example 4.4 Determine Passive Resistance (Cohesive Soil)

4.2.1 Soil Types and the Determination of Soil Properties

Soil types and applicable properties shall be ascertained by taking borings and performing appropriate field and laboratory tests. Sufficient geotechnical exploration shall be performed to establish an understanding of the soil profile for the subject site. In addition to establishing the soil profile, key soil parameters for the design of shoring to be ascertained during exploration include the unit weights and strengths for the soils [i.e., the cohesion (c) and angle of internal friction (Φ)].

The design soil properties shall be established by a Registered Geotechnical Engineer, or, alternatively, by a Registered Civil Engineer specializing in geotechnical engineering.

4.2.2 Loading from Retained Soil on Flexible Systems

The loading defined in this section applies to shoring systems that have some degree of flexibility. Shoring types that may be considered flexible include cantilever shoring walls and, in most cases, shoring walls supported by a single level of bracing. The active soil pressure distribution for a flexible shoring system shall be assumed to take the form of an equivalent fluid pressure (EFP); i.e., a triangularly shaped pressure distribution.

EFP values used for shoring design shall be ascertained by a Registered Geotechnical Engineer, or, alternatively, by a Registered Civil Engineer specializing in geotechnical engineering. In no case shall the design active EFP for soil above the groundwater table be less than 30 psf/ft for level retained earth when this approach is used (i.e., the active pressure at any depth shall not be less than 30(Y) psf where Y is a depth below the ground surface in feet). This minimum EFP value must be increased appropriately when the shoring system is retaining a sloped cut.

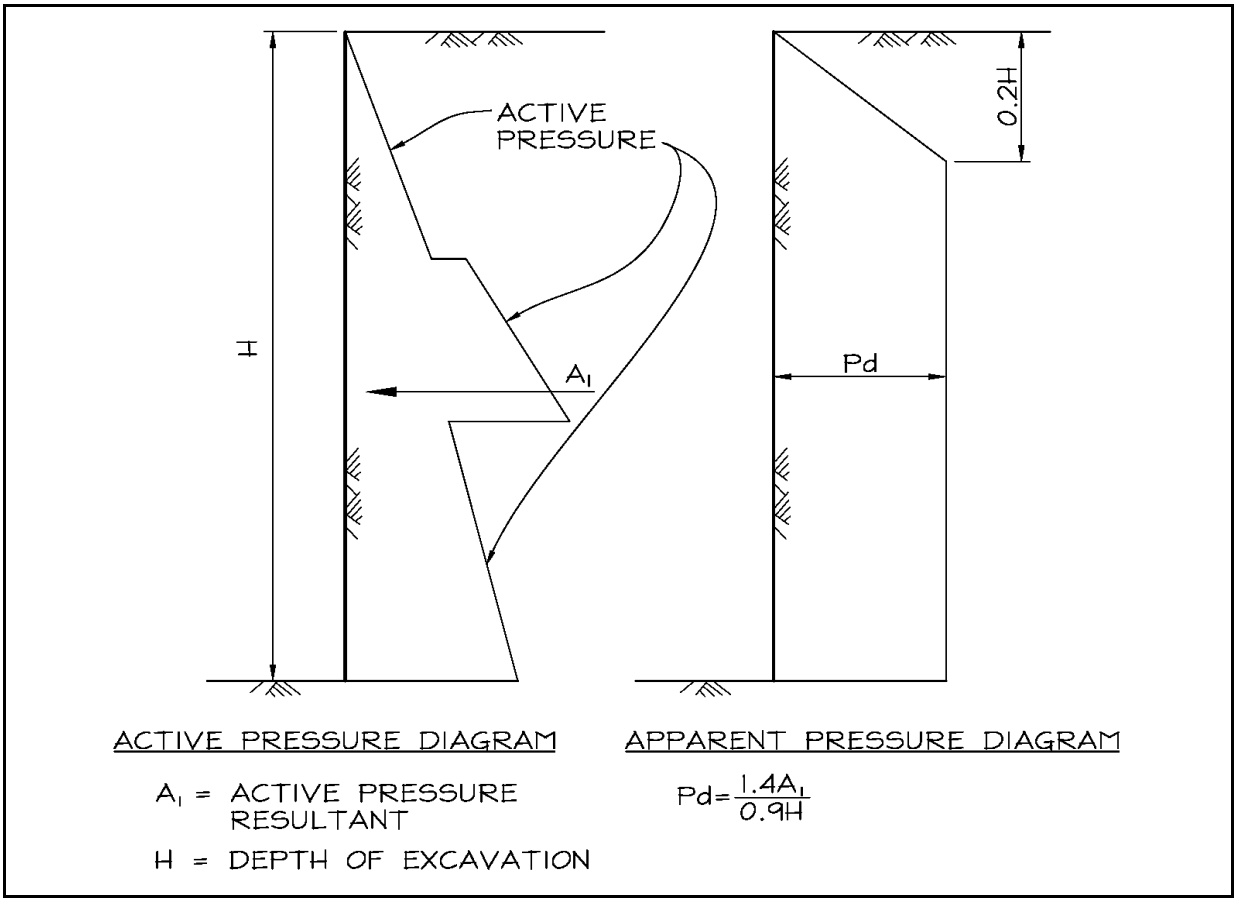

Figure 4-1: Construction of an Apparent Pressure Diagram

Alternatively, the retained soils may be classified as either Type 2, 3, 4, or 5 in accordance with the soil descriptions in Table 8-5-1 of the AREMA Manual for Railway Engineering. Representative soil properties for each classification are given in Table 8-5-2 of the AREMA Manual for Railway Engineering. The soil properties for the Type 1 classification given in Table 8-5-2 shall not be used. In no case shall the design EFP for soil above the groundwater table be less than 37 psf/ft for level retained earth when this approach is used (i.e., the active pressure at any depth shall not be less than 37(Y) psf where Y is a depth below the ground surface in feet). This EFP corresponds to Type 2 soil classification. This minimum value must be increased appropriately for cases of shoring retaining a sloped cut.

4.2.3 Loading from Retained Soil on Restrained Systems

Shoring walls with multiple levels of bracing tend to restrict movements of the soil behind the wall. This restraint alters the soil pressure distribution from that anticipated based on the theory of active loading. "Apparent pressure" diagrams for braced (restrained) shoring systems have been developed by numerous authors. Generalized apparent pressure diagrams suitable for use in both cohesionless and cohesive soils, as well as interlayered soil profiles, can be constructed from active pressure diagrams as shown in Figure 4-1.

Alternatively, a number of diagrams, applicable to either cohesionless or cohesive soils, are presented in Chapter 5 of the Caltrans Trenching and Shoring Manual. These diagrams may be utilized, provided that the resulting loading magnitudes are not significantly less conservative than those determined by the by procedure outlined in Figure 4-1.

When apparent pressure loading is utilized for design, active soil loading developed in accordance with Section 4.2.2 shall be assumed to act below excavation grade.

4.2.4 Passive Resistance

Cohesionless Soil

The passive resistance in cohesionless ($c = 0$) soils shall be determined based upon log-spiral theory (refer to Figure 8 in the Caltrans Trenching and Shoring Manual). Determination of the coefficient of passive pressure (K_p) is a function of Φ and the angle of wall friction (δ).

Previous railroad design criteria have required that δ be assumed to be 0° due to dynamic train loading. However, this assumption can produce overly conservative results. In lieu of requiring $\delta = 0°$, at the shoring designer's option, δ_{design} may be assumed to be a maximum of $\delta_{typ}/2$, where δ_{typ} is the wall friction value that would be utilized in the design of typical shoring away from railroad tracks. In no case shall δ exceed $\Phi/4$.

Cohesive Soil

In cohesive ($\Phi = 0°$) soil, $K_p = 1.0$, and the passive resistance is $\gamma_e z+2c$, where γ_e is the effective unit weight of the soil (i.e., the moist unit weight above the water level and the buoyant unit weight below the water level) and z is a depth below excavation grade.

Negative active pressures shall not be utilized to increase the available passive resistance under any circumstances. (Negative active pressures can be computed when 2c exceeds $\gamma_e H$, where H is the depth of excavation.)

c, Φ Soil

Passive pressure diagrams can be developed for c, Φ soils using more complex theoretical expressions. However, it is common to consider a soil stratum as either a purely cohesionless or cohesive soil depending on the soil's predominant physical properties and expected behavior.

Effect of Unbalanced Water Head

In cases where the shoring system will retain an unbalanced water head, available passive resistance may need to be reduced to account for upward seepage pressures.

4.3 GROUNDWATER LOAD

Groundwater loading acting on the shoring system shall be based upon the maximum groundwater level that can be reasonably anticipated during the life of the shored excavation.

The design groundwater table shall be established based upon available historical groundwater monitoring (well) data and/or boring data for the subject area. For projects where historical records are not available, the groundwater table utilized for design should be assessed conservatively.

4.4 SURCHARGE LOADS

Lateral pressure acting on the temporary shoring system resulting from the following sources of surcharge loading shall be considered in the design of the shoring as appropriate:

- Railroad live load (see Section 5)
- Track, ties, and ballast (where not included in soil loads)
- Equipment and vehicles
- Material stockpiles
- Existing structures
- Any other source of surcharge load

Lateral pressure resulting from vertical surcharge loads should be computed in accordance with the equations presented in Section 20.3.2 of the AREMA Manual for Railway Engineering.

4.5 EARTHQUAKE (SEISMIC) LOAD

In atypical situations, such as where a shored excavation of substantial length parallels the Operating System or where a shored excavation will remain open for more than three (3) months, SCRRA may require that lateral loading due to earthquake (seismic) shaking be considered. Subway construction parallel to the tracks is an example of a situation where the application of earthquake loading may be appropriate because an extensive length of open excavation may be present at one time.

This issue will be addressed on a project-specific basis by SCRRA.

4.6 COMBINATION OF LOADS AND LOADING CASES

All elements of the temporary shoring system shall be designed for a combination of lateral soil, groundwater, and surcharge loads acting in conjunction with vertical dead and live loads.

Loading conditions during all stages of excavation, support removal, and support relocation shall be analyzed. No reduction in loading from that present during the full depth excavation stage shall be assumed for the stages of support removal or relocation.

In situations where loading conditions on opposite sides of an internally braced excavation are not equal, the shoring design shall account for this unbalanced loading condition. The shoring system shall be designed for, and be compatible with, the more heavily loaded side of the excavation.

5.0 RAILROAD LIVE LOAD SURCHARGE

5.1 GENERAL

All temporary shoring systems supporting excavations within Zones 1, 2, and 3 of the Railroad Zone of Influence (see Section 2) shall be designed for lateral pressure due to railroad live load surcharge. Railroad live load surcharge shall be based on Cooper's E-80 live load. Lateral pressure resulting from railroad live load surcharge shall be computed using the Boussinesq equation (see Figure 5-1). No reduction in lateral surcharge pressure shall be allowed for "flexible" or "semi-rigid" wall behavior, typically 50% and 75% in non-railroad applications, respectively (i.e., 100% Boussinesq live load surcharge for "rigid" wall behavior is required for design of all shoring wall types).

Lateral surcharge pressure values for various depths below bottom of tie and distances to centerline of track computed using the Boussinesq equation are provided in Table 5.1.

The values in Table 5.1 were developed for the standard wood tie length (TL) of 9.0 feet. The values developed for the standard concrete tie length (8.25 feet) are not meaningfully different from those presented in Table 5.1. Note that the tabulated values apply only for situations where the top of shoring is at or above the elevation of the bottom of railroad ties.

The following examples are located in Appendix B:

Example 5.1 Railroad Live Load Surcharge from Two Tracks
Example 5.2 Railroad Live Load Surcharge from Three Tracks
Example 5.3 "Simplified" Railroad Live Load Surcharge

5.2 SURCHARGE FROM MULTIPLE TRACKS

Surcharge loading from multiple tracks shall be considered as follows:

- Two tracks – Full surcharge from both tracks.
- Three tracks – Full surcharge from two closest tracks combined with 50% surcharge from third track.
- Four or more tracks – Full surcharge from two closest tracks combined with 50% surcharge from third track and 25% surcharge from fourth track.

Only surcharge from those tracks for which the shored excavation is within the Railroad Zone of Influence need be considered.

5.3 SIMPLIFIED SURCHARGE PRESSURE DISTRIBUTION

In lieu of using the detailed Boussinesq pressure distribution, railroad live load surcharge pressures may be assumed to have a rectangular distribution with a magnitude equal to 80% of the maximum Boussinesq pressure.

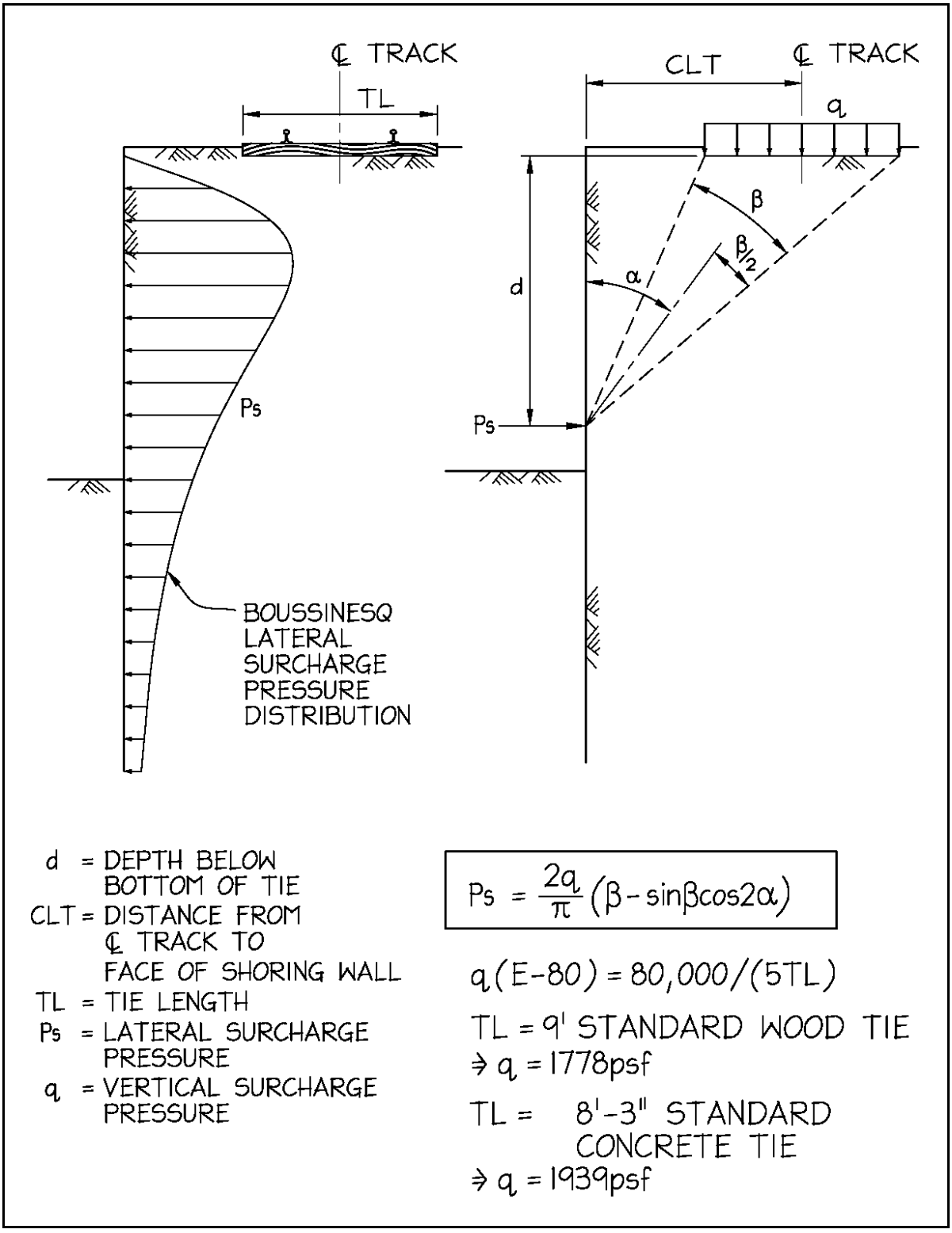

Figure 5-1: Railroad (E-80) Live Load Surcharge Using the Boussinesq Equation

5.4 APPLICATION OF SURCHARGE PRESSURES

Railroad live load surcharge pressures shall be assumed to act over the full height of the temporary shoring wall. Where the top of the shoring wall is at or above the bottom of railroad tie elevation, the vertical surcharge pressure (q) used in the Boussinesq distribution shall be the pressure under the ties and shall be applied starting at the bottom of tie elevation. Where the top of the shoring wall is below the bottom of railroad tie elevation, the vertical surcharge pressure used in the Boussinesq distribution shall be an equivalent pressure at the top of the shoring wall. The equivalent vertical surcharge pressure shall be distributed over a length equal to the tie length plus the vertical distance from bottom of tie to top of wall (1H:2V distribution outward from each end of the tie). The magnitude of the equivalent vertical surcharge (q) will be equal to the pressure under the tie multiplied by the ratio of the tie length to the equivalent distributed length.

5.5 SURCHARGE FOR PERPENDICULAR SHORING WALLS

When temporary shoring walls are to be installed perpendicular to the centerline of track or used as temporary bridge abutments, the design railroad live load surcharge acting on such walls shall be computed in accordance with Chapter 8, Section 5.3.1 of the AREMA Manual for Railway Engineering.

5.6 COMBINATION WITH SURCHARGE FROM OTHER SOURCES

Surcharge from other sources (e.g., heavy equipment, existing structures, etc.) shall be considered in the design of temporary shoring systems for excavation support as appropriate. Surcharges from other sources shall be added to the railroad live load surcharge if the surcharge loads can act concurrently. An example of combined surcharges may be Contractor cranes, trucks, or material stockpiles above an excavation concurrent with a passing train.

TABLE 5.1 - RAILROAD (E-80) LIVE LOAD LATERAL SURCHARGE

Based on the Boussinesq equation (see Figure 5-1)
d = depth below bottom of tie
surcharge values in psf

d	distance from centerline of track to face of shoring (feet)																
(feet)	5	6	7	8	8.5	9	10	11	12	13	14	15	16	17	18	19	20
1	1469	974	625	434	370	320	247	197	161	135	114	98	86	75	67	59	53
2	1304	1172	930	719	635	563	450	367	305	257	220	191	166	147	130	117	105
3	1103	1092	983	838	767	701	585	492	418	359	310	271	239	212	189	170	153
4	921	955	924	846	799	750	655	570	496	434	381	337	299	267	240	217	197
5	762	817	828	797	771	741	674	605	541	482	431	386	347	313	283	257	234
6	629	692	724	725	715	699	658	609	558	508	461	419	381	347	317	290	266
7	518	583	627	646	646	642	622	591	553	514	475	438	403	371	341	315	291
8	428	491	539	568	576	580	575	559	535	506	476	444	414	385	358	333	309
9	354	413	462	497	509	518	525	520	507	488	466	441	416	391	367	344	322
10	295	349	396	434	448	460	474	479	474	464	449	431	411	390	370	349	329
11	246	295	340	378	394	407	426	437	439	436	427	415	400	384	367	349	332
12	207	251	293	330	345	359	382	396	404	406	403	396	386	373	360	346	331
13	175	215	253	288	303	317	341	359	370	376	377	374	368	360	350	338	326
14	149	184	219	252	267	281	305	324	338	347	351	352	349	344	337	329	319
15	127	159	190	221	235	248	272	292	307	319	326	329	330	328	323	317	310
16	110	138	166	194	207	220	243	263	280	292	301	307	310	310	308	305	300
17	95	120	146	171	184	196	218	237	254	268	278	285	290	293	293	291	288
18	82	105	128	151	163	174	195	214	231	245	256	265	271	275	277	277	276
19	72	92	113	134	145	155	175	194	210	224	236	246	253	258	261	263	263
20	63	81	100	120	129	139	158	175	191	205	217	228	236	242	246	249	250
21	56	72	89	107	116	125	142	159	174	188	200	211	219	226	232	235	238
22	49	64	79	96	104	112	129	144	159	172	184	195	204	211	217	222	225
23	44	57	71	86	94	101	116	131	145	158	170	181	190	198	204	209	213
24	39	51	64	77	84	92	106	119	133	145	157	167	176	185	191	197	202
25	35	46	58	70	76	83	96	109	122	134	145	155	164	172	179	185	190
26	32	41	52	63	69	75	88	100	112	123	134	144	153	161	168	174	180
27	29	37	47	58	63	69	80	91	102	113	124	133	142	150	158	164	170
28	26	34	43	52	58	63	73	84	94	105	114	124	132	141	148	154	160
29	23	31	39	48	53	57	67	77	87	97	106	115	123	131	139	145	151
30	21	28	36	44	48	53	62	71	80	89	98	107	115	123	130	137	142
31	19	26	33	40	44	48	57	65	74	83	91	100	108	115	122	128	134
32	18	23	30	37	41	44	52	60	69	77	85	93	101	108	115	121	127
33	16	22	27	34	37	41	48	56	64	71	79	87	94	101	108	114	120
34	15	20	25	31	35	38	45	52	59	66	74	81	88	95	101	107	113
35	14	18	23	29	32	35	41	48	55	62	69	76	82	89	95	101	107
36	13	17	22	27	30	33	39	45	51	58	64	71	77	84	90	95	101
37	12	16	20	25	28	30	36	42	48	54	60	66	73	79	84	90	95
38	11	15	19	23	26	28	33	39	45	50	56	62	68	74	80	85	90
39	10	13	17	22	24	26	31	36	42	47	53	58	64	70	75	80	85
40	9	13	16	20	22	24	29	34	39	44	50	55	60	66	71	76	81
41	9	12	15	19	21	23	27	32	37	42	47	52	57	62	67	72	77
42	8	11	14	18	19	21	25	30	34	39	44	49	54	58	63	68	73
43	8	10	13	16	18	20	24	28	32	37	41	46	51	55	60	64	69
44	7	10	12	15	17	19	22	26	30	35	39	43	48	52	57	61	65
45	7	9	12	14	16	18	21	25	29	33	37	41	45	49	54	58	62
46	6	8	11	14	15	17	20	23	27	31	35	39	43	47	51	55	59
47	6	8	10	13	14	16	19	22	25	29	33	37	40	44	48	52	56
48	6	7	10	12	13	15	18	21	24	27	31	35	38	42	46	50	53
49	5	7	9	11	13	14	17	20	23	26	29	33	36	40	44	47	51
50	5	7	9	11	12	13	16	19	21	25	28	31	34	38	41	45	48

TABLE 5.1 - RAILROAD (E-80) LIVE LOAD LATERAL SURCHARGE (CONTINUED)

Based on the Boussinesq equation (see Figure 5-1)
d = depth below bottom of tie
surcharge values in psf

d	distance from centerline of track to face of shoring (feet)																
(feet)	21	22	23	24	25	26	27	28	29	30	31	32	33	34	35	36	37
1	48	44	40	37	34	31	29	27	25	23	22	20	19	18	17	16	15
2	95	86	79	72	66	61	57	53	49	46	43	40	38	36	34	32	30
3	139	127	116	106	98	91	84	78	73	68	64	60	56	53	50	47	45
4	179	164	150	138	128	118	110	102	95	89	84	79	74	70	66	62	59
5	214	197	181	167	155	144	134	125	117	109	103	96	91	86	81	77	73
6	244	225	208	193	179	167	156	146	136	128	120	113	107	101	96	91	86
7	269	249	231	215	201	187	175	164	154	145	137	129	122	115	109	104	98
8	288	268	250	234	219	205	192	181	170	160	151	143	135	128	122	116	110
9	302	283	265	249	234	220	207	195	184	174	165	156	148	140	133	127	121
10	311	293	276	260	246	232	219	207	196	186	176	167	159	151	144	137	131
11	315	299	283	269	254	241	229	217	206	196	186	177	168	161	153	146	140
12	316	302	287	274	261	248	236	225	214	204	194	185	177	169	161	154	147
13	314	301	289	276	264	252	241	230	220	210	201	192	184	176	168	161	154
14	309	298	287	276	265	255	244	234	224	215	206	198	189	182	174	167	161
15	302	293	284	274	265	255	246	236	227	218	210	202	194	186	179	172	166
16	293	286	279	271	262	254	245	237	228	220	212	205	197	190	183	176	170
17	284	278	272	265	258	251	244	236	228	221	214	206	199	192	186	179	173
18	273	269	265	259	253	247	241	234	227	220	214	207	201	194	188	182	176
19	262	259	256	252	247	242	237	231	225	219	213	207	201	195	189	183	178
20	250	249	247	244	241	237	232	227	222	217	211	206	200	195	189	184	179
21	239	239	238	236	233	230	227	223	218	214	209	204	199	194	189	184	179
22	227	228	228	227	226	223	221	217	214	210	206	201	197	193	188	183	179
23	216	218	219	219	218	216	214	212	209	206	202	198	195	191	186	182	178
24	205	207	209	210	210	209	208	206	204	201	198	195	192	188	184	181	177
25	194	197	200	201	202	201	201	200	198	196	194	191	188	185	182	179	175
26	184	188	190	192	193	194	194	193	192	191	189	187	184	182	179	176	173
27	174	178	181	184	185	186	187	187	186	185	184	182	180	178	176	173	171
28	165	169	173	175	177	179	180	180	180	180	179	178	176	174	173	170	168
29	156	161	164	167	170	172	173	174	174	174	174	173	172	170	169	167	165
30	148	152	156	160	162	165	166	167	168	168	168	168	167	166	165	164	162
31	140	144	149	152	155	158	160	161	162	163	163	163	163	162	161	160	159
32	132	137	141	145	148	151	153	155	156	157	158	158	158	158	157	156	155
33	125	130	134	138	141	144	147	149	150	152	153	153	153	153	153	152	152
34	118	123	127	131	135	138	141	143	145	146	147	148	149	149	149	149	148
35	112	117	121	125	129	132	135	137	139	141	142	143	144	145	145	145	144
36	106	111	115	119	123	126	129	132	134	136	137	139	139	140	141	141	141
37	100	105	109	114	117	121	124	126	129	131	132	134	135	136	136	137	137
38	95	100	104	108	112	115	118	121	124	126	128	129	131	132	132	133	133
39	90	95	99	103	107	110	113	116	119	121	123	125	126	127	128	129	130
40	85	90	94	98	102	105	109	111	114	116	119	120	122	123	124	125	126
41	81	85	90	94	97	101	104	107	110	112	114	116	118	119	120	121	122
42	77	81	85	89	93	96	100	102	105	108	110	112	114	115	117	118	119
43	73	77	81	85	89	92	95	98	101	104	106	108	110	111	113	114	115
44	69	74	77	81	85	88	91	94	97	100	102	104	106	108	109	111	112
45	66	70	74	77	81	84	87	90	93	96	98	100	102	104	106	107	108
46	63	67	70	74	77	81	84	87	90	92	94	97	99	101	102	104	105
47	60	64	67	71	74	77	80	83	86	89	91	93	95	97	99	100	102
48	57	61	64	67	71	74	77	80	83	85	88	90	92	94	96	97	99
49	54	58	61	65	68	71	74	77	79	82	84	87	89	91	92	94	96
50	52	55	58	62	65	68	71	74	76	79	81	84	86	88	89	91	93

TABLE 5.1 - RAILROAD (E-80) LIVE LOAD LATERAL SURCHARGE (CONTINUED)

Based on the Boussinesq equation (see Figure 5-1)
d = depth below bottom of tie
surcharge values in psf

d	distance from centerline of track to face of shoring (feet)												
(feet)	38	39	40	41	42	43	44	45	46	47	48	49	50
1	14	14	13	12	12	11	11	10	10	9	9	9	8
2	28	27	26	24	23	22	21	20	19	19	18	17	16
3	42	40	38	36	35	33	32	30	29	28	27	25	24
4	56	53	51	48	46	44	42	40	38	37	35	34	32
5	69	66	62	60	57	54	52	50	47	45	44	42	40
6	82	78	74	70	67	64	61	59	56	54	52	50	48
7	93	89	85	81	77	74	71	68	65	62	60	57	55
8	105	100	95	91	87	83	80	76	73	70	67	65	62
9	115	110	105	100	96	92	88	84	81	78	75	72	69
10	125	119	114	109	104	100	96	92	88	85	82	79	76
11	133	128	122	117	112	108	103	99	95	92	88	85	82
12	141	135	130	124	119	115	110	106	102	98	95	91	88
13	148	142	136	131	126	121	117	112	108	104	100	97	93
14	154	148	142	137	132	127	122	118	114	110	106	102	99
15	159	153	148	142	137	132	127	123	119	115	111	107	103
16	164	158	152	147	142	137	132	128	123	119	115	111	108
17	167	162	156	151	146	141	136	132	127	123	119	115	112
18	170	165	159	154	149	144	140	135	131	127	123	119	115
19	172	167	162	157	152	147	143	138	134	130	126	122	119
20	173	168	163	159	154	149	145	141	137	133	129	125	122
21	174	169	165	160	156	151	147	143	139	135	131	128	124
22	174	170	165	161	157	153	149	145	141	137	133	130	126
23	174	170	166	161	157	153	150	146	142	138	135	131	128
24	173	169	165	161	158	154	150	147	143	140	136	133	129
25	172	168	165	161	158	154	150	147	144	140	137	134	131
26	170	167	164	160	157	154	150	147	144	141	138	135	131
27	168	165	162	159	156	153	150	147	144	141	138	135	132
28	166	163	160	158	155	152	149	146	144	141	138	135	132
29	163	161	158	156	153	151	148	146	143	140	138	135	132
30	160	158	156	154	152	149	147	145	142	140	137	135	132
31	157	155	154	152	150	148	146	143	141	139	136	134	132
32	154	153	151	149	148	146	144	142	140	138	136	133	131
33	151	150	148	147	145	144	142	140	138	136	134	132	130
34	147	146	145	144	143	142	140	138	137	135	133	131	129
35	144	143	142	141	140	139	138	136	135	133	132	130	128
36	140	140	139	139	138	137	136	134	133	132	130	129	127
37	137	137	136	136	135	134	133	132	131	130	129	127	126
38	133	133	133	133	132	132	131	130	129	128	127	126	124
39	130	130	130	130	129	129	128	128	127	126	125	124	123
40	126	127	127	127	127	126	126	125	125	124	123	122	121
41	123	123	124	124	124	124	123	123	122	122	121	120	119
42	119	120	120	121	121	121	121	120	120	119	119	118	117
43	116	117	117	118	118	118	118	118	118	117	117	116	116
44	113	114	114	115	115	115	115	115	115	115	115	114	114
45	109	110	111	112	112	113	113	113	113	113	112	112	112
46	106	107	108	109	109	110	110	110	110	110	110	110	110
47	103	104	105	106	107	107	107	108	108	108	108	108	108
48	100	101	102	103	104	104	105	105	106	106	106	106	106
49	97	98	99	100	101	102	102	103	103	103	104	104	104
50	94	95	97	98	98	99	100	100	101	101	101	102	102

6.0 SHORING ANALYSIS METHODOLOGIES

Classic shoring analysis methodologies have been summarized in Section 6.0 and should be considered minimum analysis requirements for temporary shoring design. Computer programs and more advanced soil-structure interaction analyses may be utilized for design, but shall be accompanied by verified hand calculations showing significant agreement with the classic methodologies presented herein. The Engineer-of-Record shall be solely responsible for input and results of computer programs utilized for shoring analysis and design. See Section 10.0 for additional information on submittal of computer program output as part of the design calculations.

Typical temporary shoring applications may not require stability analysis beyond determining the minimum embedment. The factor of safety against sliding, overturning, and global slope stability shall be calculated as applicable to the particular temporary shoring system. The minimum factor of safety for stability, including sliding, overturning and global slope stability, shall be 1.5. See Section 8.4 for global stability analysis requirements.

The following examples are provided in Appendix B:

Example 6.1 Cantilever Soldier Pile and Lagging Shoring Wall
Example 6.2 Sheet Pile Shoring Wall, One Level of Bracing (Free Earth Support Method)
Example 6.3 Sheet Pile Shoring Wall, One Level of Bracing (Fixed Earth Support Method)
Example 6.4 Analysis of a Diaphragm Shoring Wall with Three Levels of Bracing

6.1 CONTINUOUS SHORING WALLS

Continuous shoring walls, such as steel sheet piling and diaphragm walls, are typically analyzed on a longitudinal per-foot-of-wall (unit) basis for the lateral pressures computed in accordance with Sections 4 and 5 of these Guidelines. The wall is designed for the unit bending moments and shears resulting from the lateral pressures acting on the wall. When the shoring wall is designed to support vertical loads, these loads must be considered in the design as well.

In the case of sheet piling, the structural strength of the wall is provided by sheets themselves. Wide flange sections installed in deep soil mix, secant, tangent, or slurry walls are the primary structural elements for these systems. Rebar reinforced slurry walls are designed as a continuous vertically reinforced concrete wall.

6.2 SOLDIER PILE SHORING WALLS

Soldier pile and lagging walls are analyzed in a somewhat different manner than continuous shoring walls. Soldier pile and lagging walls are not continuous below excavation grade, and the loading acting on the active and passive sides of the wall for the embedded portion of the wall must be constructed to reflect the discontinuous nature of the wall. The “effective width” of the embedded portion of the soldier pile (for both active and passive loading) shall be computed using the “Arching Capability” values given in Table 10-1 of the Caltrans Trenching and Shoring Manual. As for continuous walls, lateral pressures utilized to construct the loading diagrams shall be computed in accordance with Sections 4 and 5 of these Guidelines.

Soldier piles are designed as vertical beams to resist the bending moments and shears resulting from the lateral loads acting on the piles. Vertical loading (if any) shall be considered in the soldier pile design.

6.3 ANALYSIS OF CANTILEVER WALLS

Cantilever shoring walls shall be designed using the "Conventional Methods" of analysis illustrated in Figures 8-1 (cohesionless soil) and 8-2 (cohesive soil) of the Caltrans Trenching and Shoring Manual.

Alternatively, cantilever walls may be designed using the "Simplified" method illustrated in Figure 8-3 of the Caltrans Trenching and Shoring Manual. If this method is used, the computed embedment depth (referred to as D_0 in the above referenced figures) shall be increased by 20% to determine the minimum theoretical embedment depth.

"Design Curves" (e.g., Figure 8-4 in the Caltrans Trenching and Shoring Manual) shall not be used for the design of cantilever shoring walls within the Railroad Zone of Influence.

A factor of safety for the cantilever wall embedment shall be provided. When the theoretical embedment depth is computed based on the "unreduced" passive resistance (factor of safety equal to 1.0), this theoretical embedment depth shall be increased by a minimum of 40% to determine the design embedment depth (i.e. minimum factor of safety on theoretical embedment depth of 1.4). This 40% increase is provided in addition to the 20% increase required if the "Simplified" method of analysis has been utilized.

Embedment depths computed based on passive resistance that has been divided by a factor of safety of 2.0 will also be acceptable, provided that the resulting embedment depth is not significantly less than that computed using the nominal 40% increase in embedment depth discussed above.

Analysis utilizing "unreduced" passive resistance should be applied with caution when the shoring wall is embedded in stiff to hard clays, because the computed embedment may be unrealistically short. See Section 6.8.1 for minimum embedment depths.

6.4 ANALYSIS OF WALLS WITH A SINGLE LEVEL OF BRACING

Walls supported by a single level of bracing (or a single tier of tiebacks) may be analyzed using the Free Earth Support or Fixed Earth Support Method at the shoring designer's option. Each of these methods is outlined below.

6.4.1 Free Earth Support Method

This method is based on the assumption that the shoring wall is embedded far enough to assure stability, but that the available passive resistance is incapable of restraining the shoring wall sufficiently to induce negative moment in the wall (i.e., there is no reversal of moment below excavation subgrade). The theoretical embedment required for stability is determined by statics. The theoretical depth of embedment required is determined by summing moments due to all pressures acting on the shoring wall about the bracing level. The embedment depth is adjusted until the sum of the moments about the bracing level is zero. Moments and shears in

the shoring wall and the bracing reaction may be computed after the embedment depth is determined.

6.4.2 Fixed Earth Support Method

This method is based on the assumption that the shoring wall is embedded sufficiently to provide effective "fixity" at the bottom of the shoring wall (i.e., the deflected shape of the shoring wall is such that the wall reverses curvature over its embedded length and becomes vertical at its bottom). Unlike the Free Earth Support Method, moment reversal takes place over the embedded portion of the shoring wall. In comparison to the Free Earth Support Method, the embedment computed using the Fixed Earth Support Method would be longer; however, pile moment demand, pile deflection, and the bracing reaction will typically be reduced.

Hand calculating the required embedment depth for the Fixed Earth Support Method is not a trivial matter. However, through the use of commonly available structural analysis software, determining the depth of embedment required to produce the appropriate deflected shape of the shoring wall (i.e., effective fixity) is just a matter of iterating the depth of embedment. As for the Free Earth Support Method, moments and shears in the pile and the bracing reaction may be computed after the theoretical embedment depth is determined.

6.4.3 Factor of Safety for Shoring Wall Embedment Depth

A factor of safety for the shoring wall embedment depth must be provided when either the Free Earth Support Method or Fixed Earth Support Method is used. When the theoretical embedment depth is computed based on the "unreduced" passive resistance (factor of safety equal to 1.0), this theoretical embedment depth shall be increased by a minimum of 40% to determine the design embedment depth (i.e. minimum factor of safety on theoretical embedment depth of 1.4). (This method should be used with caution when stiff to hard clays provide passive resistance, because the computed embedment depth may be unrealistically short.)

Embedment depths computed based on passive resistance that has been divided by a factor of safety of 2.0 will also be acceptable, provided that the resulting embedment depth is not significantly less than that computed using the nominal 40% increase in embedment depth discussed above.

See Section 6.8.1 for minimum embedment depths.

In Appendix B, Example 6.2 illustrates the Free Earth Support Method and Example 6.3 illustrates the Fixed Earth Support Method for the same excavation geometry in the same soil conditions for comparison purposes.

6.5 ANALYSIS OF WALLS WITH MULTIPLE LEVELS OF BRACING

6.5.1 Embedment Depth

The required depth of penetration for a shoring wall supported by two or more levels of bracing shall be determined by one of the following methods (See Section 6.8.1 for minimum embedment depths.):

1. The theoretical embedment may be calculated by balancing moments due to all soil, hydrostatic, lateral surcharge, and “unreduced” passive pressures (factor of safety equal to 1.0) acting below the lowest bracing level about the lowest bracing level. The moment capacity of the shoring wall shall be conservatively neglected in this analysis. The depth of penetration is adjusted until the sum of the moments equals zero. The computed theoretical embedment depth shall be increased by a minimum of 40% to determine the design embedment depth. (This method should be used with caution when stiff to hard clays provide passive resistance, because the computed embedment depth may be unrealistically short.)

2. The embedment depth may be computed by summing moments as noted above, using passive resistance values that have been reduced by dividing them by a factor of safety of 2.0. No increase in embedment is required when this method is used. This method will be acceptable provided that the resulting embedment depth is not significantly less than that computed using the nominal 40% increase in embedment depth discussed above.

6.5.2 Analysis of Shoring Wall

Moments and shears in the shoring wall shall be computed using beam analysis, assuming that the shoring wall is hinged at all bracing levels except the uppermost. Moments may be reduced to 80% of their computed values for design to account for wall continuity over the bracing locations.

Analysis of the portion of the shoring wall below the lowest bracing level shall be based on statics, including a consideration of all loads acting on the embedded portion of the shoring wall. A fictitious support at or below subgrade shall not be assumed for analysis purposes.

No redistribution of loads or reduction in the demand on the shoring wall due to soil arching shall be assumed.

6.5.3 Determination of Bracing Loads

Bracing loads shall be determined by beam analysis assuming that the shoring wall is hinged at all the bracing levels except the uppermost.

The load on the lowest bracing level shall be determined by statics, including a consideration of all loads acting on the embedded portion of the shoring wall. A fictitious support at or below subgrade shall not be assumed for analysis purposes.

6.6 ANALYSIS OF BRACING SYSTEMS

Unit (per foot) reactions at each bracing level are determined during the analysis of the shoring wall. For shoring walls with soldier piles (e.g., soldier pile and lagging walls, deep soil mix walls, and secant walls) point loads from each pile are computed by multiplying the pile spacing by the unit bracing reactions. Bracing loads for sheet piling may be assumed as a horizontal uniform load equal to the unit reactions.

Internal (cross-lot) bracing systems consisting of wales and struts shall be designed to resist the computed bracing loads. Moments, shears, and axial loads in the bracing members shall be computed using standard methods of structural analysis.

Tieback or deadman systems that are used to restrain the shoring walls shall be designed to resist the computed bracing loads.

No redistribution of loads or reduction in the demand on bracing elements due to soil arching shall be assumed.

6.7 LAGGING ANALYSIS

Lagging may be designed for a load equal to 60% of the shoring design load (soil and surcharge pressures) to account for soil arching. The lagging members shall be designed as horizontal beams spanning between soldier piles.

In cases where soil arching cannot develop, reduced lagging loads shall not be considered.

Tabulated lagging thicknesses (such as those presented in Table 10-2 of the Caltrans Trenching and Shoring Manual) shall not be utilized.

6.8 GENERAL SHORING REQUIREMENTS

6.8.1 Minimum Embedment Depth

Computed embedment depths shall be compared with the following minimum values. In cases where the computed embedment depth is less than that specified below, the minimum embedment depth specified below shall be utilized:

- Cantilever walls: Embedment depth shall not be less than the height of the retained cut.
- Braced walls less than 20 feet high: Embedment depth shall not be less than six (6) feet.
- Braced walls 20 feet high or more: Embedment depth shall not be less than eight (8) feet.

6.8.2 Secondary Bracing

Primary elements of the shoring system shall be provided with secondary bracing as required for stability. The secondary bracing elements shall be designed for an axial load equal to 3% of the axial load in the braced member.

6.8.3 Connections

Connections between the various elements of the shoring system shall be designed for tension and shear loads equal to at least 10% of the design compression load transferred through the connection. If the actual shear or tension at a connection is larger than this 10% value, then the actual shear or tension load shall be utilized for design.

6.8.4 Stiffeners

Stiffeners shall be provided at shoring member connections when required by the provisions of Chapter K of the AISC, ASD.

6.9 SHORING DEFLECTION AND SETTLEMENT

All shoring designs within the Railroad Zone of Influence shall include an estimate of shoring deflection and retained earth settlement. Maximum permissible deflection shall enable the horizontal and vertical movement of the track to be limited to the requirements of Section 9.2. The amount of settlement that occurs will depend upon the soil type, the size of the excavation, the construction methods and quality of workmanship, and the design of the shoring system (including the stiffness of the shoring wall and bracing systems).

Elastic analyses of the shoring system should be performed for the various stages of support installation and removal in order to estimate lateral shoring deflection, which should then be used to make settlement estimates.

7.0 MATERIAL PROPERTIES AND ALLOWABLE STRESSES

The following examples are provided in Appendix B:

Example 7.1 Wide Flange Wale Design
Example 7.2 Pipe Strut Design
Example 7.3 Shoring Wall Design
Example 7.4 Wood Lagging Design

7.1 STEEL

Steel may be used material, provided that is free from any strength impairing defects.

7.1.1 Structural Steel

Allowable stresses for steel shall conform to the AISC, Steel Construction Manual - Allowable Stress Design (ASD), thirteenth edition, 2005, with the following additional constraints for struts:

- Slenderness ratio (L/r) shall not exceed 120.
- Axial stress shall not exceed 12 ksi.

No overstress shall be permitted.

Structural steel for which mill certificates are not available (unidentified steel) shall be designed for allowable stresses no greater than those allowed for ASTM A36 steel.

Bolted and welded connections shall be designed in accordance with the provisions of the AISC, ASD.

7.1.2 Steel Sheet Piling

The maximum allowable flexural stress in sheet piling shall not exceed 65% of the yield strength of the steel.

7.1.3 Prestress Strand or Rod

If prestress strands or rod are used as tieback tendons or as tie rods to a deadman, the allowable working stress shall not exceed 40% of the guaranteed ultimate tensile strength (GUTS).

If the strands or rod are used for purposes other than those specified above, the allowable working stress shall not exceed 60% of GUTS.

The shoring designer shall evaluate the potential effects of corrosion on strands and rods. Corrosion protection suitable for the installation environment and anticipated service life shall be provided.

7.1.4 Wire Rope Cable

The allowable working load for wire rope shall be no greater than 25% of the rated breaking strength.

If wire rope connectors with an efficiency less than 100% are used, the allowable working load shall be taken as no greater than 25% of the rated breaking strength multiplied by the efficiency of the connectors.

Wire rope used as a structural element for more than thirty (30) days shall be galvanized.

7.2 CONCRETE

Reinforced and plain (unreinforced) concrete shall be designed using the Strength Design Method in accordance with ACI 318. No stress increases or load factor reductions shall be allowed.

7.3 WOOD

All wood shoring elements shall be Douglas Fir, No. 2 or better.

All wood that will remain in place permanently shall be pressure treated for ground contact use.

Allowable stresses shall be as follows:

Compression perpendicular to the grain = 450 psi

Compression parallel to the grain = $480{,}000/(L/d)^2 \leq 1600$ psi, where
L = unbraced length of member
d = lesser cross-sectional dimension of member
(L and d to have consistent units)

Flexural stress = 1700 psi
[reduced to 1,500 psi for members with a nominal depth of eight (8) inches or less]

Horizontal shear = 140 psi

7.4 OTHER MATERIALS

Allowable stresses for materials other than steel, concrete, and wood will be reviewed by SCRRA on a case-by-case basis. Typically, industry-accepted allowable stresses or load factors (with no overstress allowances) will be acceptable.

8.0 SPECIAL CONDITIONS

8.1 SEALED SHORING

Under certain conditions, excavation below the groundwater table will require that a sealed shoring system be utilized. Examples of situations where sealed shoring is needed include, but are not limited to:

- Excavations in permeable soils where dewatering is infeasible or where the quantity of water to be handled and disposed of would be excessive.
- Locations where the groundwater is contaminated.
- Locations where dewatering would result in unacceptable settlement of the surrounding area.

Relatively watertight shoring is most commonly provided using interlocked sheet piling or diaphragm walls.

Where possible, groundwater flow around the bottom of the shoring wall should be prevented by extending the wall into an underlying low permeability soil layer (such as a clay layer). If a low permeability cut off layer is not present, or if it is at such a great depth that penetrating it is not feasible or cost effective, a tremie concrete or grouted seal slab should be considered for the base of the excavation.

In cases where a positive bottom seal is not provided, the potential for piping must be evaluated. See Section 8.3.

8.2 DEWATERING

Dewatering can be an effective means of reducing shoring loading and improving shoring stability and constructability. In some cases, it may also be required to allow construction of proposed project elements.

In cases where dewatering is not precluded by other factors (see Section 8.1), SCRRA will consider allowing dewatering, provided that it won't cause problematic track settlement. The potential for problematic track settlement to occur will be a function of the site soil profile and the depth to which the site needs to be dewatered. Track settlement in excess of that specified in Section 9.1 may be acceptable if it can be shown that differential track settlements resulting from dewatering will be minimal (i.e., settlements will occur over a broad area). Engineering calculations demonstrating that excessive differential settlement will not occur will be required.

In cases where the performance of the temporary shoring system depends upon the functionality of the dewatering system, the dewatering system shall be fail-safe. Elements such as an uninterrupted power supply, back-up pumps, and failure alarm signals will be required to guarantee that the dewatering system will never shut down for a period of time that could compromise the stability of the shored excavation.

Dewatering system design shall be performed by a Civil Engineer registered in the State of California with previous experience in the design of the specific type of dewatering system being proposed. Removed water shall not be drained along the tracks, but shall be drained off the Right-of-Way in accordance with environmental restrictions.

8.3 BOTTOM STABILITY

8.3.1 Piping

For excavations in previous materials, the possibility of piping must be evaluated. Piping occurs when an unbalanced hydrostatic head causes large upward seepage pressures in the soil at and below the bottom of the excavation. The upward seepage pressure reduces the effective weight of the soil below the bottom of the excavation. As a result, the ability of the soil to laterally support the embedded portion of the shoring wall (i.e., passive resistance) is reduced. In the extreme, a quick condition can develop at the bottom of the excavation and large quantities of soil can be transported rapidly from outside to inside the excavation, thereby causing large ground settlements, and possibly even shoring system collapse.

Piping can be controlled by dewatering outside the shoring walls (where allowed) or by making the shoring walls deeper in order to reduce the upward hydraulic gradient. Alternatively, a tremie or grouted slab can be used as a bottom seal.

The potential for piping may be evaluated using published procedures (see the Caltrans Trenching and Shoring Manual). The minimum acceptable factor of safety against piping shall be 1.5. Additionally, a reduction in the available passive resistance due to upward seepage pressures shall be taken as appropriate.

8.3.2 Bottom Heave

In cases where excavations are made in soft (and sometimes medium) clays the potential for bottom heave must be evaluated. Bottom heave occurs when the depth of excavation is sufficient to cause upward movement of material in the bottom of the excavation and corresponding downward displacement of material surrounding the excavation. Heave can result in excessive settlement of the ground retained by the shoring system, and distress or failure of the shoring.

The possibility for heave should be evaluated further in cases when the Stability Number (N_o) exceeds 4, where:

$N_o = (\gamma H+q)/c$, and
γ = unit weight of soil
H = depth of excavation
q = vertical surcharge pressure
c = cohesive strength of soil

When N_o exceeds 4, the factor of safety against bottom heave should be computed using procedures outlined in the Caltrans Trenching and Shoring Manual. The minimum acceptable factor of safety against bottom heave shall be 1.5.

8.4 GLOBAL STABILITY

Typical shoring applications may not require global slope stability analyses. The Engineer-of-Record shall determine if global stability calculations are warranted. However, SCRRA reserves the right to require global stability calculations at their sole discretion.

If applicable and/or required by SCRRA, temporary shoring systems and sloped excavations shall be demonstrated to be safe using limit equilibrium analyses with appropriate potential failure surfaces. Slope stability analyses shall consider the presence of Cooper's E-80 live loading on active tracks.

The minimum factor of safety against failure of the whole, or any portion of, shored or sloped cuts shall be 1.5.

8.5 TIEBACKS

Tiebacks will be allowed only where necessary and where Right-of-Way limits are sufficient. If tiebacks are permitted, they must be installed using a method in which the drilled holes for the tiebacks will be stable and open at all times. In some soil types, this will necessitate fully cased holes beneath active tracks. Tiebacks shall be located a minimum of five (5) feet below top of rail.

Tiebacks shall be designed in accordance with the procedures and criteria outlined in the Post-Tensioning Institute (PTI), Recommendations for Prestressed Rock and Soil Anchors, with the exception that the allowable stresses for the tieback tendons shall be limited to those values specified in Section 7.1 of these Guidelines. A minimum factor of safety of 2.0 shall be used.

All tiebacks shall be load tested. Procedures and acceptance criteria for performance and proof testing shall conform to those given in the Post-Tensioning Institute (PTI), Recommendations for Prestressed Rock and Soil Anchors. The first three (3) tiebacks installed and a minimum of 10% of the remaining tiebacks shall be performance tested. All remaining anchors shall be proof tested.

When tiebacks are bonded in fine-grained soils, creep testing shall be done in lieu of performance testing. Creep testing procedures and acceptance criteria shall conform to those given for temporary anchors in the Post-Tensioning Institute (PTI), Recommendations for Prestressed Rock and Soil Anchors.

In addition to the PTI Recommendations for Prestressed Rock and Soil Anchors, the designer may also reference FHWA Geotechnical Engineering Circular No. 4, Ground Anchors and Anchored Systems, FHWA-IF-99-015.

Tiebacks shall be locked-off at a minimum of 75% and a maximum of 100% of their design load.

8.6 DEADMEN

Under the appropriate conditions, SCRRA may allow temporary shoring walls to be supported using deadmen located on the opposite side of the tracks from the shored excavation. The proposed location(s) for deadman anchorage will require review and acceptance by SCRRA

and any Third Party property owners as appropriate. Tie rods to deadmen shall be a minimum of five (5) feet below top of rail.

Deadman anchorage may be provided by soldier piles, sheet piling, or concrete blocks or walls. Deadman anchors shall be designed in accordance with the procedures outlined in the Caltrans Trenching and Shoring Manual.

Deadman anchors shall be designed to provide a minimum factor of safety of 2.0 against failure.

In order to minimize the deflection of the shoring, deadman anchors shall be prestressed to remove the slack in the system and to mobilize the passive resistance. A portion of the final design load shall be locked off.

Tie rods that pass under the tracks must be electrically isolated from the track. Details of proposed system of electrical isolation shall be submitted for review.

9.0 TRACK MONITORING

9.1 PURPOSE

SCRRA requires monitoring of the excavation, temporary shoring system, and adjacent track(s) throughout the duration of shoring installation, excavation, construction, removal, and backfill. The monitoring procedures specified below are intended to confirm that shoring systems are performing in a satisfactory manner and to identify locations of excessive ground movement so that they can be controlled and corrected in a timely manner.

9.2 LIMITATION ON TRACK MOVEMENT

SCRRA requires that track settlement or track heave associated with all aspects of shoring and excavation shall not exceed ½ inch vertical change. Track movement shall not exceed ½ inch horizontal change due to temporary shoring and excavation. Track resurfacing or other remedial measures may be required if these limits are exceeded.

9.3 MINIMUM MONITORING REQUIREMENTS

The excavation and temporary shoring system shall be visually inspected at least daily by qualified Contractor personnel to check for obvious movements or changes that were unplanned or that may be detrimental to railroad operations or safety. Visual monitoring should be performed more often during the performance of critical activities, such as excavation or foundation installation immediately adjacent to shoring or after moderate to severe rain events.

SCRRA requires that tracks adjacent to excavations within the Railroad Zone of Influence be monitored for movement and settlement. At a minimum, track monitoring shall consist of the following:

- Survey points shall be established along all tracks for which the excavation is within the Railroad Zone of Influence. The maximum spacing and minimum extent of these points shall be as shown on Figure 9-1. A minimum of three (3) control points shall be established in areas that will not be subject to possible disturbance due to construction activities or railroad operations.

- The surveying method utilized for track monitoring shall be accurate to ±1/8 inch and shall comply with the railroad surveying requirements in the SCRRA Design Criteria Manual.

- The horizontal coordinates and elevation of both rails shall be measured at each survey point location in accordance with the following schedule:

    - A baseline reading of coordinates and elevations shall be taken prior to installation of any elements of the shoring system. In cases where track maintenance activities are performed to correct movements, a new baseline shall be established and its relationship to the previous baseline documented.

- Readings shall be taken twice weekly from the time at which shoring installation commences until shoring removal is completed. Supplemental readings may be required if excessive or unanticipated settlements are recorded.

- Readings shall continue on a once weekly basis for a minimum of four (4) weeks after shoring removal has been completed.

The monitoring requirements outlined above may be relaxed or waived on a project-specific basis at the sole discretion of SCRRA.

Survey readings and reduced survey data shall be provided to SCRRA immediately following each survey. Survey data and comparison to previous and baseline data should be provided on a form similar to that shown in Figure 9-3. SCRRA shall be specifically notified of any change in elevation of ¼ inch or greater. It is likely that SCRRA will require supplemental monitoring in the case of vertical movements in excess of ¼ inch.

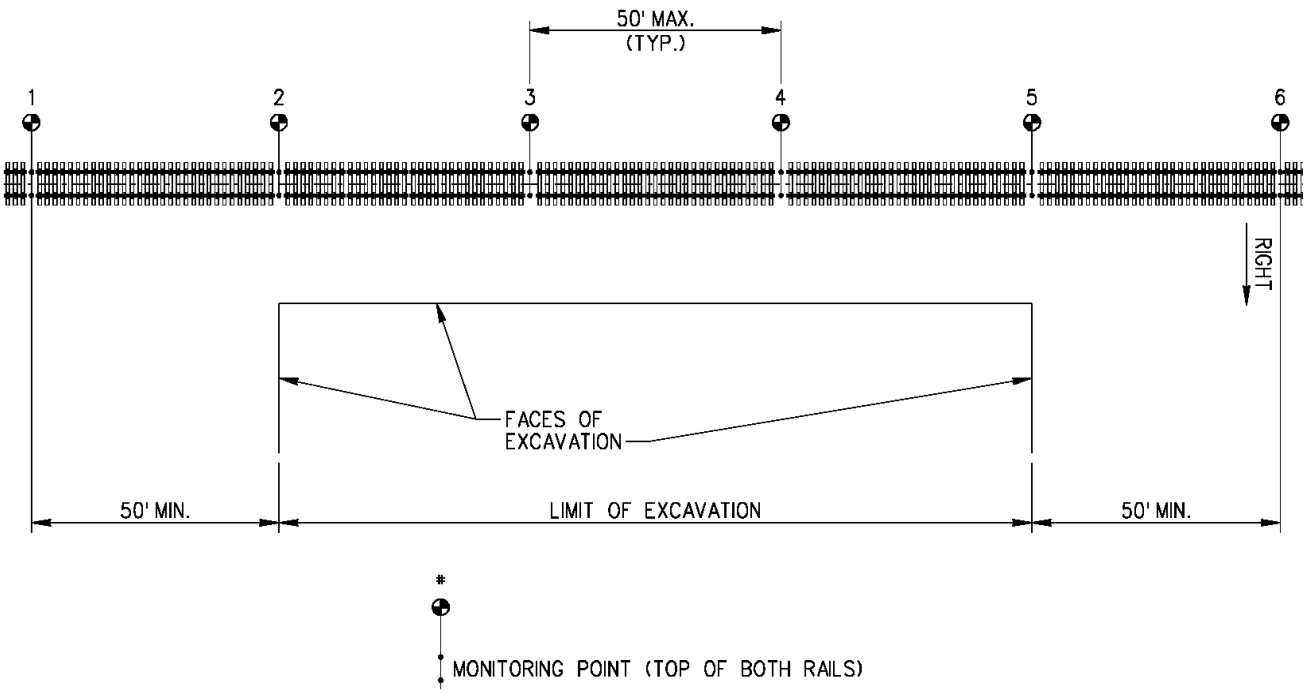

Figure 9-1: Minimum Monitoring Requirements

9.4 SUPPLEMENTAL MONITORING

Supplemental monitoring may be required by SCRRA. Typically, supplemental monitoring will be required when any vertical change of ¼ inch or greater is measured by survey readings of static track elevation. Supplemental monitoring consists of the following:

- More frequent survey measurements of static top of rail elevations and coordinates.
- Measurement of rail movements and cross-slope under load.

Figure 9-2 depicts a method of measuring rail movements under load. Loaded rail movement measurements may be performed as follows:

- At each survey point, place a 20d nail vertically into the ballast crib between ties with the head end directly under the base of each rail, taking care to place the nail head in direct contact with the rail.
- Allow a typical commuter or freight train to pass through the location at normal speed.
- Return to each survey point and measure and record the distance from the base of each rail down to the top of the nail head using a tape or gauge to the nearest 1/8 inch.

Provide SCRRA with survey readings, reduced survey data, loaded measurements, and reduced loaded measurement data immediately following the survey. Loaded measurement data and comparison to previous and baseline data should be provided on a form similar to that shown in Figure 9-4.

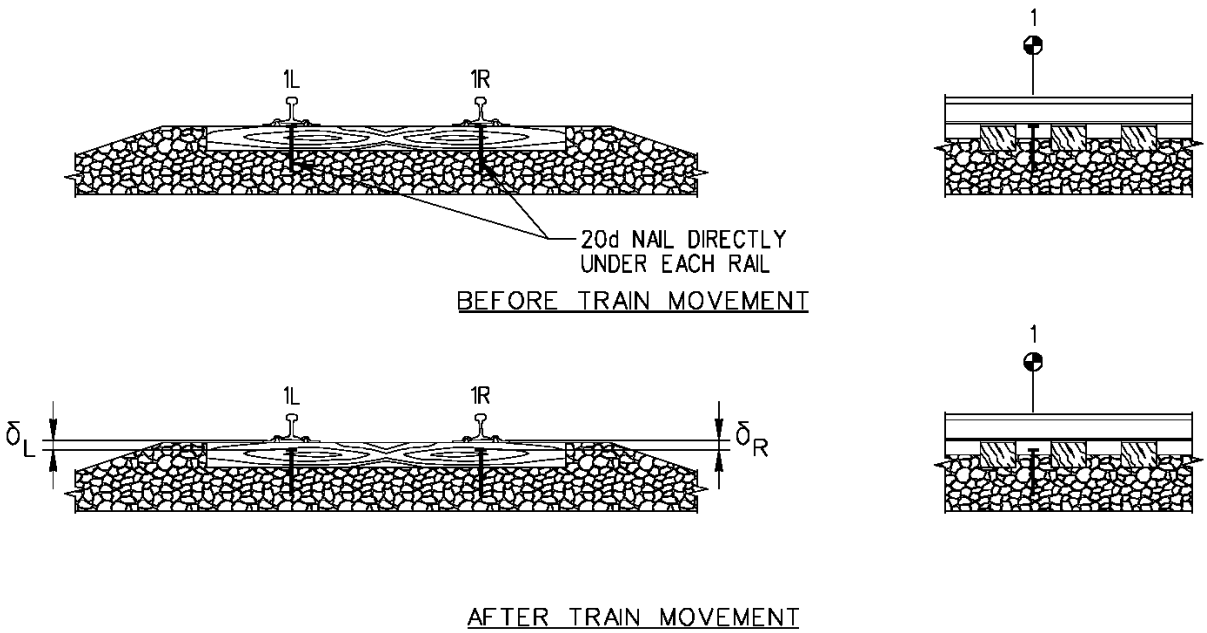

Figure 9-2: Method of Loaded Measurement

Point No.	Station	Surveyed Static T/Rail Elevations			Static T/Rail Change from Previous			Static T/Rail Change from Baseline		
		E_L	E_R	E_{avg}	ΔE_L	ΔE_R	ΔE_{avg}	ΔE_{Li}	ΔE_{Ri}	ΔE_{avgi}
1	100+00									
2	100+50									
3	101+00									
.	.									
.	.									
.	.									
n										

Figure 9-3: Reporting Static Top of Rail Survey Results

Point No.	Station	Measured Loaded Movements				Loaded Change from Previous				Loaded Change from Baseline			
		δ_L	Total δ_R	δ_{avg}	Cross-Slope $\delta_{CS} = \lvert\delta_L - \delta_R\rvert$	$\Delta\delta_L$	Total $\Delta\delta_R$	$\Delta\delta_{avg}$	Cross-Slope $\Delta\delta_{CS} = \lvert\Delta\delta_L - \Delta\delta_R\rvert$	$\Delta\delta_{Li}$	Total $\Delta\delta_{Ri}$	$\Delta\delta_{avgi}$	Cross-Slope $\Delta\delta_{CSi} = \lvert\Delta\delta_{Li} - \Delta\delta_{Ri}\rvert$
1	100+00												
2	100+50												
3	101+00												
.	.												
.	.												
.	.												
n													

Figure 9-4: Reporting Loaded Measurement Results

9.5 SPECIAL MONITORING

SCRRA reserves the right to require that special monitoring be done for large, atypical, or long-lived shoring projects. Special monitoring may include the use of inclinometers, piezometers, tiltmeters, or other types of monitoring instrumentation. SCRRA will address this issue on a project-specific basis.

9.6 ACCESS AND FLAGGING

Access and flagging for establishing and reading survey points and monitoring instrumentation shall be coordinated with SCRRA.

10.0 SUBMITTAL REQUIREMENTS

10.1 GENERAL

All drawings and calculations for temporary shoring shall be prepared, sealed, and signed by a Professional Engineer (civil or structural) currently licensed in the State of California who has previous experience in the design of temporary shoring systems of the type being submitted (preferably 10 years). Preferably, temporary shoring systems will be designed by a team composed of a railroad civil engineer who is experienced, knowledgeable, and competent in design, construction, operations, and maintenance parameters for commuter/passenger and freight railroad systems, and a licensed civil or structural engineer who is experienced, knowledgeable, and competent in the design and construction of shored excavations adjacent to railroad tracks.

The designer will be responsible for the accuracy of all controlling dimensions as well as the selection of soil design values that accurately reflect the actual field conditions. No shoring installation or excavation within the Railroad Zone of Influence will be allowed until the drawings and calculations are reviewed and accepted by SCRRA.

Submittal of forms, drawings, and calculations shall be provided to SCRRA for review in electronic format transmitted by email, ftp, or mail (with CD-R or DVD-R properly labeled). Files shall be Adobe PDF compatible with Version 6. Each separate document shall be a separate PDF file (drawings, specifications, calculations, forms, etc.). Files shall be named with a letter indicating the project phase (d – design, c – construction), abbreviated SCRRA subdivision and milepost, and a shortened name describing the contents of the file (e.g. – d_la34511_calcs.pdf).

All submittals, design calculations, specifications and drawings shall be prepared in accordance with a QA/QC process. The QA/QC process may follow the established program of SCRRA, Public Agency, Engineer-of-Record firm, or Contractor. At a minimum, the QA/QC process must consist of an independent check of design calculations and an independent QC review of the drawings and specifications prior to submittal to SCRRA by qualified individuals. Documentation of the QA/QC process, including names and contact information of independent reviewers, shall be made available to SCRRA at their request.

A minimum of thirty (30) calendar days should be allowed for SCRRA's review, provided that all required submittal materials are included and properly identified.

10.2 EXCLUSIVE TRACK WINDOWS

Exclusive Track Windows are rare and limited to specific work activities over a small defined area for a short time. Procedures for requesting an Exclusive Track Window are as follows:

Exclusive Track Window Request Procedure

1. Contact SCRRA Office of Rail Corridor Crossings and Encroachments a minimum of ninety (90) days prior to the proposed date of excavation for coordination.
2. Complete and submit the Design Exception Form provided in Appendix C a minimum of sixty (60) days prior to the proposed date of excavation. It is imperative that the following specific information be included on the form or as an attachment:

a. Exact location of the proposed work (attach maps and/or figures) which also includes the following:
    i. Railroad stationing and milepost (SCRRA will assist in providing this information)
    ii. North arrow
b. Complete description of the proposed work
c. Proposed date of work
d. Proposed duration of Exclusive Track Window required
e. Description of alternates not requiring an Exclusive Track Window and brief evaluation to show that any other alternate is not practical
f. SSWP

3. SCRRA will review the request and return a decision within thirty (30) days.
4. If the Exclusive Track Window request is approved by SCRRA, the applicant agrees to follow all conditions imposed by SCRRA, and provide compensation for all costs incurred by SCRRA associated with the Exclusive Track Window and work on SCRRA Right-of-Way. The SSWP must be accepted by SCRRA prior to proceeding with any work.
5. Special pre-construction meeting, contingency plan(s), extra equipment, and extra work crews may be required by SCRRA.

10.3 EXCEPTIONS, WAIVERS, AND VARIANCES

Procedures for requesting an exception, waiver, and/or variance to the requirements of these Guidelines are as follows:

Variance Request Procedure

1. For projects under design, variance requests shall be submitted at the Concept Design (30% Design) for consideration by SCRRA. Concept Design (30% Design) level variance requests are preferred. Design should not be advanced to the Interim Design (60% Design) level prior to receiving a decision on a variance request.
2. Complete the Design Exception Form provided in Appendix C. Submit the variance request to SCRRA Office of Rail Corridor Crossings and Encroachments. This shall be a separate submittal from any design review submittal. The request should be signed and sealed by the Engineer-of-Record. It is imperative that the following specific information be included on the form or as an attachment:

    a. Exact location of the proposed work (attach maps and/or figures) which also includes the following:
        i. Railroad stationing and milepost (SCRRA will assist in providing this information)
        ii. North arrow
    b. Identify the exact provision of the Guidelines for which the exception, waiver, or variance is requested
    c. Complete description of the proposed work
    d. Proposed limits of excavation, plan area, and depth
    e. Proposed type(s) of shoring, including hand railing or other means of protection for track workers and operations personnel working adjacent to track

f. Proof of concept drawings and calculations
g. Proposed duration of Work Windows required for installation and removal of shoring systems
h. Proposed duration of shoring system and means for ensuring track is not displaced while system is in place
i. Description of alternates that conform to these Guidelines and brief evaluation to show that any other alternate is not practical

3. SCRRA will review the request and return a decision within sixty (60) days.
4. If the variance request is accepted by SCRRA, the applicant agrees to follow all conditions imposed by SCRRA. For shoring within Zone 2, complete owner-designed shoring and details per Section 3.1 shall be included in the plans at the 90% level. Design conditions and requirements for any Contractor-designed alternate shoring system shall be included in the plans and specifications. SSWP shall be prepared and submitted by the Contractor a minimum of thirty (30) days prior to the proposed date of excavation.
5. For projects already under construction, contact SCRRA a minimum of one hundred and twenty (120) days prior to the proposed date of excavation for coordination. Variances will not be considered with advance notice less than ninety (90) days. The variance request shall be submitted along with the Design Exception Form to SCRRA Office of Rail Corridor Crossings and Encroachments.

10.4 DRAWINGS

The shoring drawings must be complete and shall accurately describe the nature of the work. Drawings shall be to-scale.

At a minimum the shoring drawings shall include the following:

- Plan view that includes the following information and meets the following criteria:
  - Railroad stationing and milepost (SCRRA will assist in providing this information)
  - North arrow
  - All pertinent topographic information
  - All Operating System elements and facilities
  - All overhead and underground utilities
  - All of the proposed excavations and distances from centerline of the track(s) to the face of the excavation and temporary shoring at relevant locations
  - Proposed types and locations of equipment used to install the temporary shoring
  - The drawing shall be in U.S. units with a scale no less than 1”=10’. Acceptable scales include 1”=10’, 1/8”=1’-0”, and 1/4”=1’-0”.

- Section view normal to the track(s) showing the temporary shoring system relative to the centerline of the track(s). The section shall show elevations of the track(s), the existing ground surface, excavation lines at each stage as applicable, and bracing elements. Protective dividers, fences, handrail, and walkway shall be shown as applicable. Minimum horizontal clearances from centerline of track to nearest obstruction at top of rail elevation and above shall be provided. The section shall also show shoring wall embedment depth and approximate groundwater depth.

- Arrangement and sizes of shoring elements and details of all connections.
- Specifications for materials and requirements for shoring fabrication and installation.
- Construction sequence(s) detailing all steps in the shoring installation, excavation, and shoring removal. Include and highlight those items requiring Work Windows.
- Track monitoring requirements (types, locations, reading schedule, etc.). See Section 9.0 for requirements.

10.5 DESIGN CALCULATIONS

Design calculations shall be provided for all elements of the shoring system.

The calculations shall consider each stage of excavation and support removal.

The calculations shall include estimates of shoring deflection, demonstrating that the proposed system will not cause excessive settlement of the tracks. See Section 9.2 for settlement limitations.

A summary of the soil parameters used in the design shall be included in the calculations, and the source reference for these parameters shall be identified and provided. Include a copy of the geotechnical report if available.

Input and output from computer programs used for analysis and design of temporary shoring shall be accompanied by hand calculations verifying the input and results. In cases where the analysis methods used by the program are not shown in the output, appropriate documentation of the program's calculations shall be provided.

10.6 DESIGN CHECKLIST

The shoring designer shall complete, seal, and sign a copy of the Submittal Checklist included in Appendix A of these Guidelines. The completed checklist shall accompany the shoring submittal.

10.7 OTHER INFORMATION

In the event that all or part of the proposed shoring system consists of commercially available, prefabricated elements (e.g., a trench shield), the shoring submittal shall include complete design data for these elements, including data to show that the system is compatible with the geotechnical characteristics at the site and provides capacity to handle all anticipated loads.

10.8 SITE SPECIFIC WORK PLAN (SSWP)

The construction of all shoring and excavation work within the Basic Safety Envelope will require the Contractor to submit a Site Specific Work Plan (SSWP).

The SSWP shall:

- Contain a description of any proposed temporary changes to the Operating System.
- Describe the activities necessary to perform specific shoring work within the Basic Safety Envelope.
- Contain a schedule of the work, including a detailed schedule that indicates the expected hourly progress of each activity that has a duration of one (1) hour or longer. The schedule shall include the time at which all activities planned under the SSWP will be completed.
- Show each activity and where and how it affects the normal operation on the Operating System. Activities that require Work Windows shall be specifically identified.
- Include all materials and equipment required to complete each activity in the SSWP within the allotted time period. Show anticipated locations where equipment may be placed, especially equipment that has the potential to foul the tracks.
- Include contingency plans for putting the Operating System back in operation in case of emergency or in case the Contractor fails to perform and complete the work on time. Contingency plans shall address the various stages of construction and may require redundant equipment and personnel.

The SSWP shall be submitted to SCRRA a minimum of thirty (30) days prior to the start of the work within the Basic Safety Envelope.

The Contractor's construction activities that impact the Operating System, including tracks, signals, bridges, stations, and related facilities in active service, shall be subject to the following requirements. These requirements shall be addressed in a SSWP:

- Contractor shall provide sufficient personnel, equipment, materials, and all other resources necessary to return the impacted facilities to full service upon the conclusion of the approved Work Window.
- Contractor shall perform the work expeditiously and continuously with no gaps or breaks in the work activities or substantive reductions in the labor force, equipment, and materials necessary to construct, reconstruct, or repair the impacted facility to the full service upon the conclusion of any Work Window.
- The size and scope of the impacted facilities within the Operating System (e.g., tracks or signal systems removed) shall not exceed the Contractor's capacity to conservatively return the impacted facility to the required level of service within the approved Work Window.
- The justification for removing both main tracks from service to the extent that Work Train, UPRR or BNSF freight, and rail bound construction equipment would be precluded from through moves for more than three (3) hours.

- Contractor shall take all appropriate and reasonable measures to perform work activities and tasks located outside the Operating System to effectively reduce the amount of time and effort required during any Work Window. These appropriate and reasonable measures shall include, but not be limited to, pre-construction and pre-assembly of shoring systems (e.g., trench shields) and pre-staging of shoring materials.

- Backup or Emergency Plan: Contractor shall include in the SSWP backup and/or contingency plan(s) and the necessary resources (labor, equipment, materials, etc.) to assure SCRRA that all appropriate and reasonable measures are available for the return of the impacted facility to full service upon conclusion of any Work Window.

- When not in use, materials and equipment shall not be piled, stored, or parked closer than 25 feet horizontally from the centerline of the nearest operating track.

10.9 CONSTRUCTION VERIFICATION

The temporary shoring Engineer-of-Record (or his/her authorized designee) shall inspect the as-built shoring system to verify that the system is constructed in accordance with the shoring plans that have been reviewed and accepted by SCRRA. The Engineer-of-Record shall prepare a letter that shall be submitted to SCRRA confirming that the shoring system has been inspected and verified. Any field changes shall be listed in the letter, and the effect of those changes shall be evaluated by the Engineer-of-Record. Any deficiencies noted by the Engineer-of-Record shall be corrected by the Contractor. Deficiencies and corrections shall be noted in the letter with verification of adequate correction by the Engineer-of-Record.

The number of site visits, and the stage or stages of construction at which they shall be performed, will be specified by SCRRA as a condition of acceptance of the temporary shoring design. The intent will be to have the temporary shoring installation verified by the Engineer-of-Record at critical construction stages.

Appendices

Appendix A Submittal Checklists
Appendix B Sample Calculations
Appendix C SCRRA Design Exception Form

Appendix A – SUBMITTAL CHECKLISTS

DESIGN CHECKLIST

The shoring designer shall complete, seal, sign, and submit the enclosed Shoring Submittal Design Checklist with the shoring design submittal.

REVIEW CHECKLIST

The enclosed Shoring Submittal Review Checklist shall be utilized by SCRRA staff or consultants to aid the review of shoring design submittals.

SCRRA SHORING SUBMITTAL DESIGN CHECKLIST

Project Name/Location: _____
Submittal Date: _____
Shoring Design Firm: _____
Contractor: _____

Item	Yes/No/NA	Explain if No or NA
Drawings – Checked, Signed & Sealed?		
1. Drawings to-scale?		
2. Plan view is oriented correctly and shows relative position of shoring/excavation and tracks, railroad stationing and mileposts, and all pertinent Operating System facilities (surface and underground)?		
3. Section normal to track(s) shows elevations of track(s), ground surface, excavation subgrade, bracing elements, and horizontal clearances?		
4. Dimensions defining the arrangement of all elements of shoring system provided?		
5. Sizes of all shoring elements provided?		
6. All connections detailed?		
7. Specifications for all materials provided?		
8. Specifications and requirements for fabrication and installation provided?		
9. Construction sequence(s) detailing all steps in the shoring installation, excavation, planned installation equipment location, and shoring removal provided?		
10. Track monitoring requirements specified?		
11. Impacts to existing drainage addressed?		
Design Calculations – Checked, Signed & Sealed?		
General:		
1. Design calculations provided for all elements of the shoring system?		
2. Calculations for all stages of excavation and support removal?		
3. Shoring designer has verified the accuracy, suitability, and applicability of the information and criteria outlined in the Excavation Support Guidelines for the specific application being designed?		
Loading:		
4. Soil loading (active and passive) developed in accordance with Section 4.2 of the Excavation Support Guidelines?		
5. Groundwater loading developed in accordance with Section 4.3 of the Excavation Support Guidelines?		
6. Surcharge loading (other than railroad surcharge) developed in accordance with Section 4.4 of the Excavation Support Guidelines?		
7. Seismic loading considered?		
8. Railroad live load surcharge developed in accordance with Section 5 of the Excavation Support Guidelines?		
9. All required loads considered in shoring analysis?		

Page 1 of 2

SCRRA SHORING SUBMITTAL DESIGN CHECKLIST (CONTINUED)

Item	Yes/No/NA	Explain if No or NA
Analysis:		
10. Shoring wall analyzed in accordance with Section 6 of the Excavation Support Guidelines?		
11. Bracing loads determined in accordance with Section 6 of the Excavation Support Guidelines?		
12. Embedment depth of wall determined in accordance with Section 6 of the Excavation Support Guidelines?		
13. Bracing system analyzed in accordance with Section 6.6 of the Excavation Support Guidelines?		
14. Lagging analyzed in accordance with Section 6.7 of the Excavation Support Guidelines?		
15. Secondary bracing, connections, and stiffeners analyzed and provided in accordance with Section 6.8 of the Excavation Support Guidelines?		
16. Shoring deflection and settlement estimated in accordance with Section 6.9 of the Excavation Support Guidelines?		
Material Properties and Allowable Stresses:		
17. Material properties and allowable stresses in accordance with Section 7 of the Excavation Support Guidelines?		
Special Conditions:		
18. Is external dewatering proposed?		
a. If yes, has dewatering been accepted by SCRRA?		
b. If yes, has a settlement analysis (due to dewatering) been provided?		
19. Has the potential for piping been evaluated?		
20. Has potential for heave been evaluated?		
21. Has global stability of the shoring system been evaluated?		
22. Are tiebacks proposed?		
a. If yes, has SCRRA accepted their usage?		
b. If yes, are they designed and will they be tested in accordance with Section 8.5 of the Excavation Support Guidelines?		
23. Are deadmen proposed?		
a. If yes, has SCRRA accepted their usage?		
b. If yes, has third party approval been granted?		
c. If yes, are they designed in accordance with Section 8.6 of the Excavation Support Guidelines?		

_____
Shoring Designer Signature

_____
Print Name

Page 2 of 2

_____
Place Engineering Seal Above

SCRRA SHORING SUBMITTAL REVIEW CHECKLIST

Project Name/Location:_____
Date:_____
Name of Reviewer:_____

Item	Yes/No/NA	Explain if No or NA
Drawings – Signed & Sealed?		
1. Drawings to-scale?		
2. Plan view is oriented correctly and shows relative position of shoring/excavation and tracks, railroad stationing and mileposts, and all pertinent Operating System facilities (surface and underground)?		
3. Section normal to track(s) shows elevations of track(s), ground surface, excavation subgrade, bracing elements, and horizontal clearances?		
4. Dimensions defining the arrangement of all elements of shoring system provided?		
5. Sizes of all shoring elements provided?		
6. All connections detailed?		
7. Specifications for all materials provided?		
8. Specifications and requirements for fabrication and installation provided?		
9. Construction sequence(s) detailing all steps in the shoring installation, excavation, planned installation equipment location, and shoring removal provided?		
10. Track monitoring requirements specified?		
11. Impacts to existing drainage addressed?		
Design Calculations – Signed & Sealed?		
General:		
1. Design calculations provided for all elements of the shoring system?		
2. Calculations for all stages of excavation and support removal?		
3. Shoring designer has verified the accuracy, suitability, and applicability of the information and criteria outlined in the Excavation Support Guidelines for the specific application being designed?		
Loading:		
4. Soil loading (active and passive) developed in accordance with Section 4.2 of the Excavation Support Guidelines?		
5. Groundwater loading developed in accordance with Section 4.3 of the Excavation Support Guidelines?		
6. Surcharge loading (other than railroad surcharge) developed in accordance with Section 4.4 of the Excavation Support Guidelines?		
7. Seismic loading considered?		
8. Railroad live load surcharge developed in accordance with Section 5 of the Excavation Support Guidelines?		
9. All required loads considered in shoring analysis?		

Page 1 of 2

SCRRA SHORING SUBMITTAL REVIEW CHECKLIST (CONTINUED)

Item	Yes/No/NA	Explain if No or NA
Analysis:		
10. Shoring wall analyzed in accordance with Section 6 of the Shoring Guidelines?		
11. Bracing loads determined in accordance with Section 6 of the Shoring Guidelines?		
12. Embedment depth of wall determined in accordance with Section 6 of the Shoring Guidelines?		
13. Bracing system analyzed in accordance with Section 6.6 of the Shoring Guidelines?		
14. Lagging analyzed in accordance with Section 6.7 of the Shoring Guidelines?		
15. Secondary bracing, connections, and stiffeners analyzed and provided in accordance with Section 6.8 of the Shoring Guidelines?		
16. Shoring deflection and settlement estimated in accordance with Section 6.9 of the Shoring Guidelines?		
Material Properties and Allowable Stresses:		
17. Material properties and allowable stresses in accordance with Section 7 of the Shoring Guidelines?		
Special Conditions:		
18. Is external dewatering proposed?		
a. If yes, has dewatering been accepted by SCRRA?		
b. If yes, has a settlement analysis (due to dewatering) been provided?		
19. Has the potential for piping been evaluated?		
20. Has potential for heave been evaluated?		
21. Has global stability of the shoring system been evaluated?		
22. Are tiebacks proposed?		
a. If yes, has SCRRA accepted their usage?		
b. If yes, are they designed and will they be tested in accordance with Section 8.5 of the Shoring Guidelines?		
23. Are deadmen proposed?		
a. If yes, has SCRRA accepted their usage?		
b. If yes, has third party approval been granted?		
c. If yes, are they designed in accordance with Section 8.6 of the Shoring Guidelines?		

_____
Reviewer's Signature

_____
Print Name

Page 2 of 2

Finding:
- ☐ No Exceptions Taken
- ☐ Make Corrections Noted
- ☐ Amend and Resubmit

Appendix B – SAMPLE CALCULATIONS

Section 4 – Loading On Shoring Systems

Example 4.1 Develop an Active Soil Pressure Diagram
Example 4.2 Develop an Apparent Pressure Diagram
Example 4.3 Determine Passive Resistance (Cohesionless Soil)
Example 4.4 Determine Passive Resistance (Cohesive Soil)

Section 5 – Railroad Live Load Surcharge

Example 5.1 Railroad Live Load Surcharge from Two Tracks
Example 5.2 Railroad Live Load Surcharge from Three Tracks
Example 5.3 “Simplified” Railroad Live Load Surcharge

Section 6 – Shoring Analysis Methodologies

Example 6.1 Cantilever Soldier Pile and Lagging Shoring Wall
Example 6.2 Sheet Pile Shoring Wall, One Level of Bracing (Free Earth Support Method)
Example 6.3 Sheet Pile Shoring Wall, One Level of Bracing (Fixed Earth Support Method)
Example 6.4 Analysis of a Diaphragm Shoring Wall with Three Levels of Bracing

Section 7 – Material Properties and Allowable Stresses

Example 7.1 Wide Flange Wale Design
Example 7.2 Pipe Strut Design
Example 7.3 Shoring Wall Design
Example 7.4 Wood Lagging Design

EXAMPLE 4.1 – DEVELOP AN ACTIVE SOIL PRESSURE DIAGRAM

PROBLEM:

DEVELOP ACTIVE SOIL PRESSURES FOR THE FOLLOWING SOIL PROFILE.

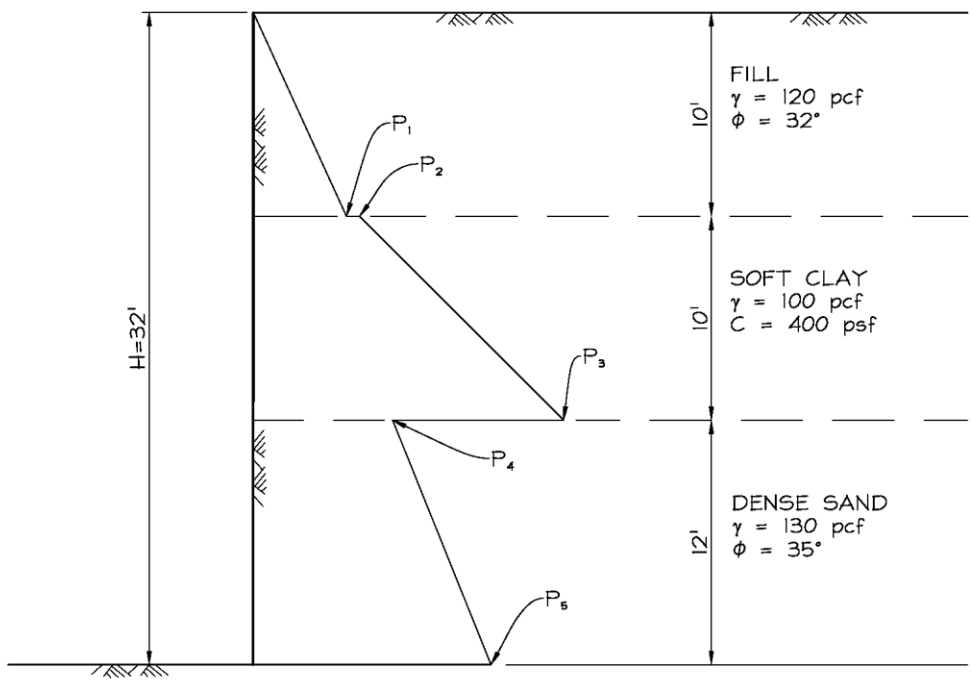

SOLUTION:

USING RANKINE THEORY -

$K_{A,FILL} = \tan^2(45°-Ø_{FILL}/2) = \tan^2(45°-32°/2) = \underline{0.31}$

$K_{A,DENSE\ SAND} = \tan^2(45°-Ø_{DENSE\ SAND}/2) = \tan^2(45°-35°/2) = \underline{0.27}$

COMPUTE ACTIVE PRESSURES -

$P_1 = K_{A,FILL}(\gamma_{FILL})(10') = 0.31(120)(10) = \underline{372\ psf}$

$P_2 = \gamma_{FILL}(10') - 2c = 120(10) - 2(400) = \underline{400\ psf}$

$P_3 = P_2 + \gamma_{SOFT\ CLAY}(10') = 400 + 100(10) = \underline{1400\ psf}$

$P_4 = K_{A,DENSE\ SAND}[(\gamma_{FILL})(10')+(\gamma_{SOFT\ CLAY})(10')] = 0.27[(120)(10)+(100)(10)]$

$= \underline{594\ psf}$

$P_5 = P_4 + K_{A,DENSE\ SAND}[(\gamma_{DENSE\ SAND})(12')] = 594 + 0.27(130)(12)$

$= \underline{1015\ psf}$

EXAMPLE 4.2 – DEVELOP AN APPARENT PRESSURE DIAGRAM

PROBLEM:

DEVELOP AN APPARENT PRESSURE DIAGRAM FOR THE SOIL PROFILE GIVEN IN EXAMPLE 4.1.

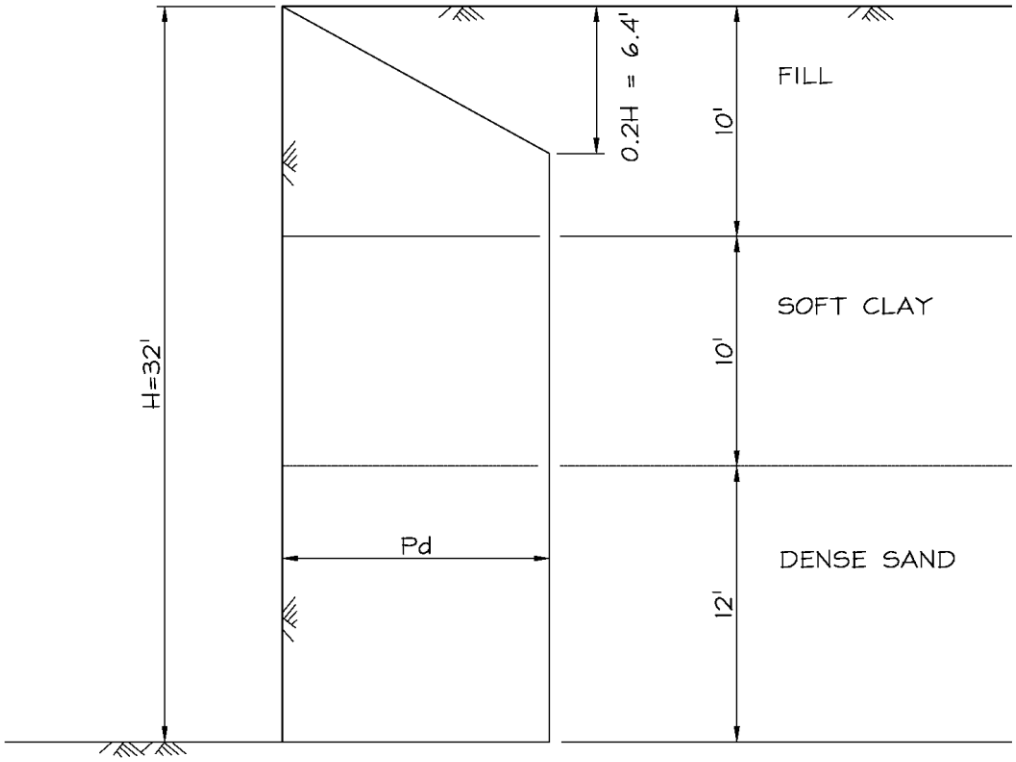

SOLUTION:

COMPUTE TOTAL ACTIVE PRESSURE RESULTANT (A_1) -

$$A_1 = (372)(10)/2+(400+1400)(10)/2+(594+1015)(12)/2$$
$$= \underline{20{,}514 \text{ lbs/ft}}$$

COMPUTE P_d -

$$P_d = \frac{1.4A_1}{0.9H} = \frac{1.4(20{,}514)}{0.9(32)} = \underline{997 \text{ psf}}$$

EXAMPLE 4.3 – DETERMINE PASSIVE RESISTANCE (COHESIONLESS SOIL)

PROBLEM:

DETERMINE THE PASSIVE RESISTANCE ACTING ON THE BOTTOM OF A STEEL SHEET PILE WALL EMBEDDED IN MEDIUM DENSE CLEAN SAND WITH THE FOLLOWING PROPERTIES.

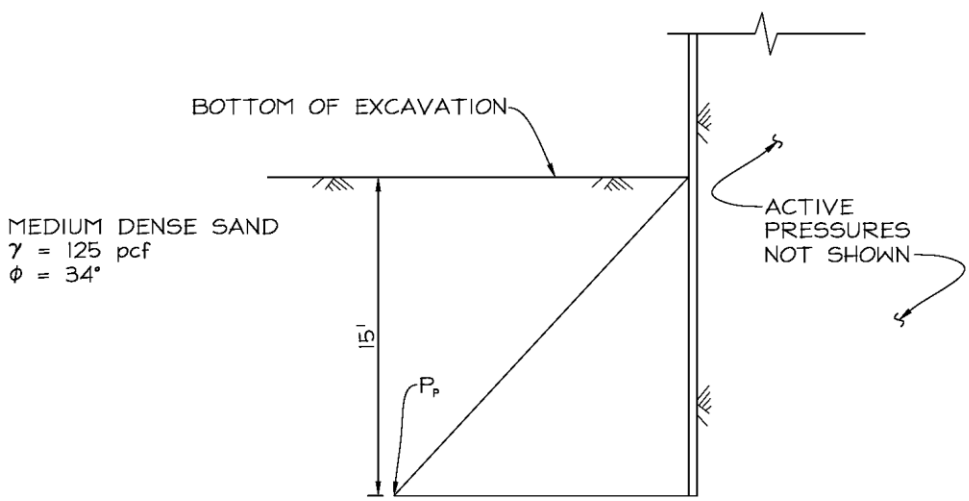

SOLUTION:

DETERMINE δ_{DESIGN} -

δ_{TYP} = 17° FOR STEEL SHEET PILES AGAINST CLEAN SAND

$\delta_{TYP}/2$ = 8.5° (≤0.25ø = 8.5°)

USE δ_{DESIGN} = 8.5°

USE LOG-SPIRAL THEORY TO COMPUTE K_P (REFER TO FIGURE 8, PAGE 4-10 OF THE CALTRANS *TRENCHING AND SHORING MANUAL*) -

$K_{P,\delta/ø=-1.0}$ = 9.5 (FOR ø=34° & β/ø=0)

δ/ø = -8.5/34 = -0.25

REDUCTION FACTOR (R) ≈ 0.52

$K_P = RK_{P,\delta/ø=-1.0}$ = 0.52(9.5) = <u>4.9</u>

COMPUTE P_P –

$P_P = K_P(\gamma)(15')$ = 4.9(125)(15) = <u>9188 psf</u>

EXAMPLE 4.4 – DETERMINE PASSIVE RESISTANCE (COHESIVE SOIL)

PROBLEM:

DETERMINE THE PASSIVE RESISTANCE ACTING ON THE BOTTOM OF A SHORING WALL EMBEDDED IN MEDIUM CLAY WITH THE FOLLOWING PROPERTIES.

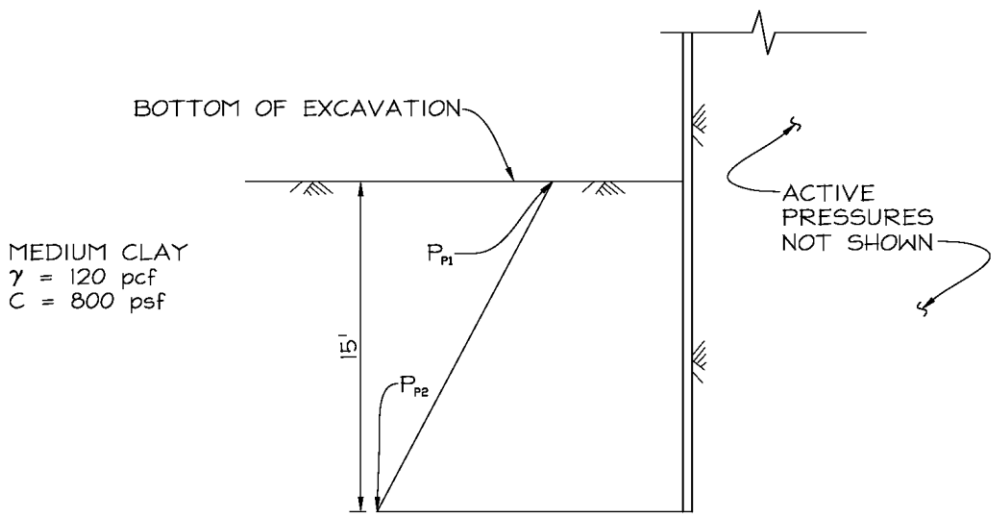

SOLUTION:

COMPUTE P_{P1} & P_{P2} -

$P_{P1} = 2c = 2(800) =$ <u>1600 psf</u>

$P_{P2} = P_{P1}+\gamma(15') = 1600+120(15) =$ <u>3400 psf</u>

EXAMPLE 5.1 – RAILROAD LIVE LOAD SURCHARGE FROM TWO TRACKS

PROBLEM:

COMPUTE THE LATERAL SURCHARGE PRESSURES ACTING ON THE SHORING WALL BASED ON THE FOLLOWING TRACK GEOMETRY.

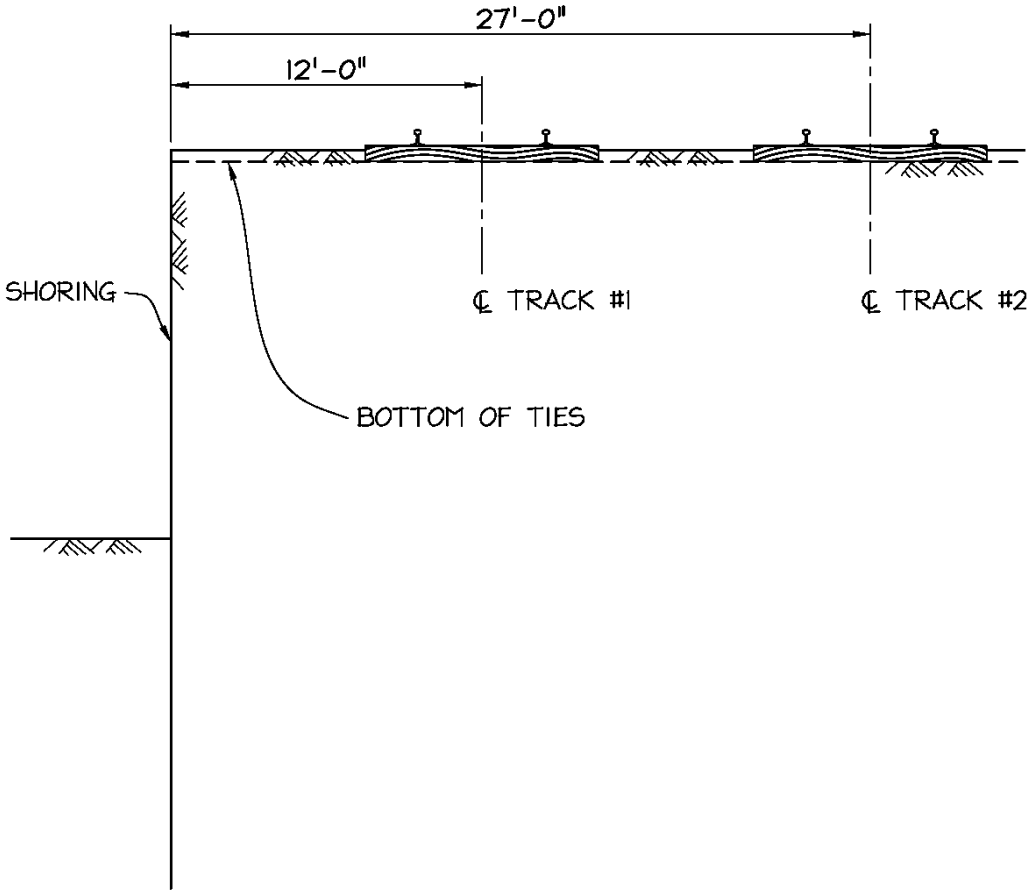

SOLUTION:

Centerline of Track #1 is 12 feet from face of shoring
Centerline of Track #2 is 27 feet from face of shoring

d (feet)	$P_{s,1}$ (psf)	$P_{s,2}$ (psf)	$P_{s,total}$ (psf)
1	161	29	**190**
2	305	57	**362**
3	418	84	**502**
4	496	110	**606**
5	541	134	**674**
6	558	156	**713**
7	553	175	**729**
8	535	192	**727**
9	507	207	**714**
10	474	219	**693**
11	439	229	**668**
12	404	236	**640**
13	370	241	**611**
14	338	244	**582**
15	307	246	**553**
16	280	245	**525**
17	254	244	**498**
18	231	241	**472**
19	210	237	**447**
20	191	232	**423**
21	174	227	**401**
22	159	221	**379**
23	145	214	**359**
24	133	208	**340**
25	122	201	**322**
26	112	194	**305**
27	102	187	**289**
28	94	180	**274**
29	87	173	**260**
30	80	166	**246**
31	74	160	**234**
32	69	153	**222**
33	64	147	**211**
34	59	141	**200**
35	55	135	**190**
36	51	129	**180**
37	48	124	**171**
38	45	118	**163**
39	42	113	**155**
40	39	109	**148**
41	37	104	**141**
42	34	100	**134**
43	32	95	**128**
44	30	91	**122**
45	29	87	**116**
46	27	84	**111**
47	25	80	**106**
48	24	77	**101**
49	23	74	**97**
50	21	71	**92**

d = depth below bottom of tie
$P_{s,1}$ = lateral surcharge from Track #1
$P_{s,2}$ = lateral surcharge from Track #2
$P_{s,total}$ = combined lateral surcharge from Tracks #1 and #2 = $P_{s,1} + P_{s,2}$

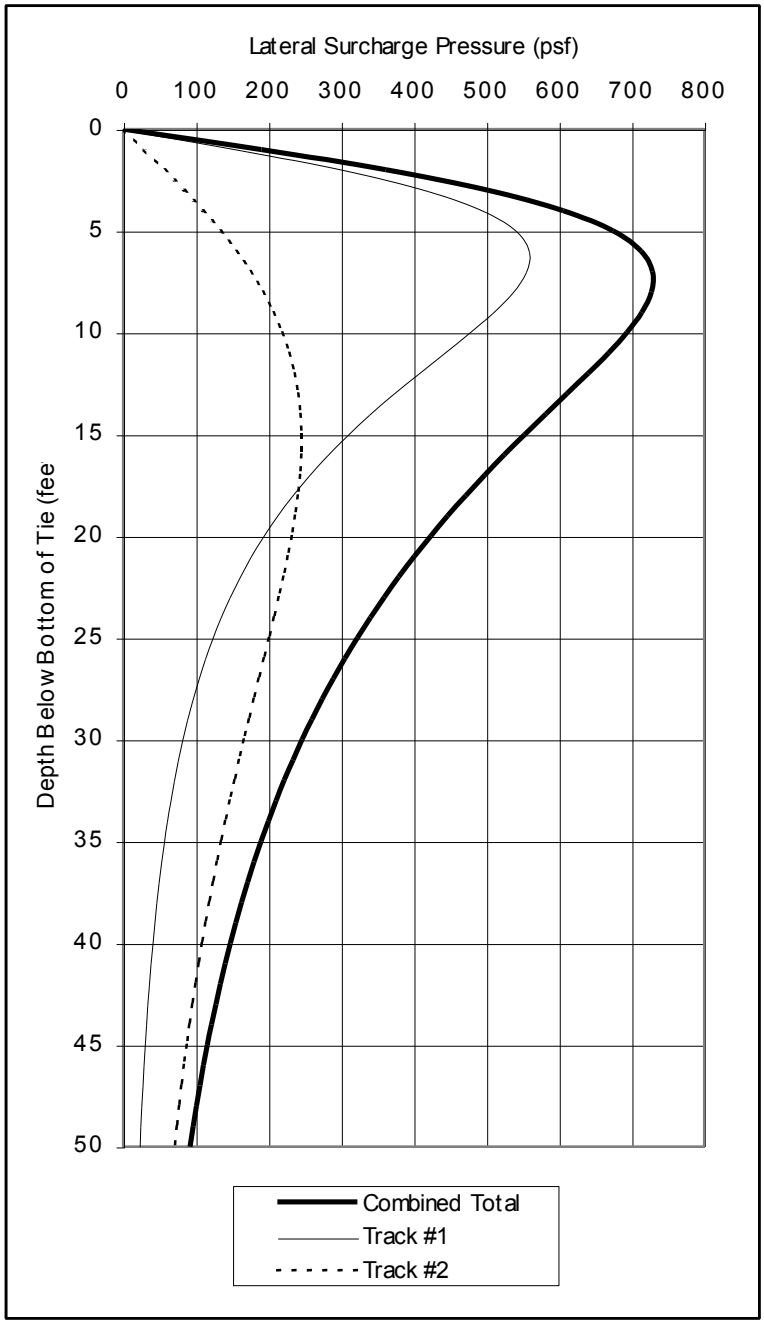

EXAMPLE 5.2 – RAILROAD LIVE LOAD SURCHARGE FROM THREE TRACKS

PROBLEM:

COMPUTE THE LATERAL SURCHARGE PRESSURES ACTING ON THE SHORING WALL BASED ON THE FOLLOWING TRACK GEOMETRY.

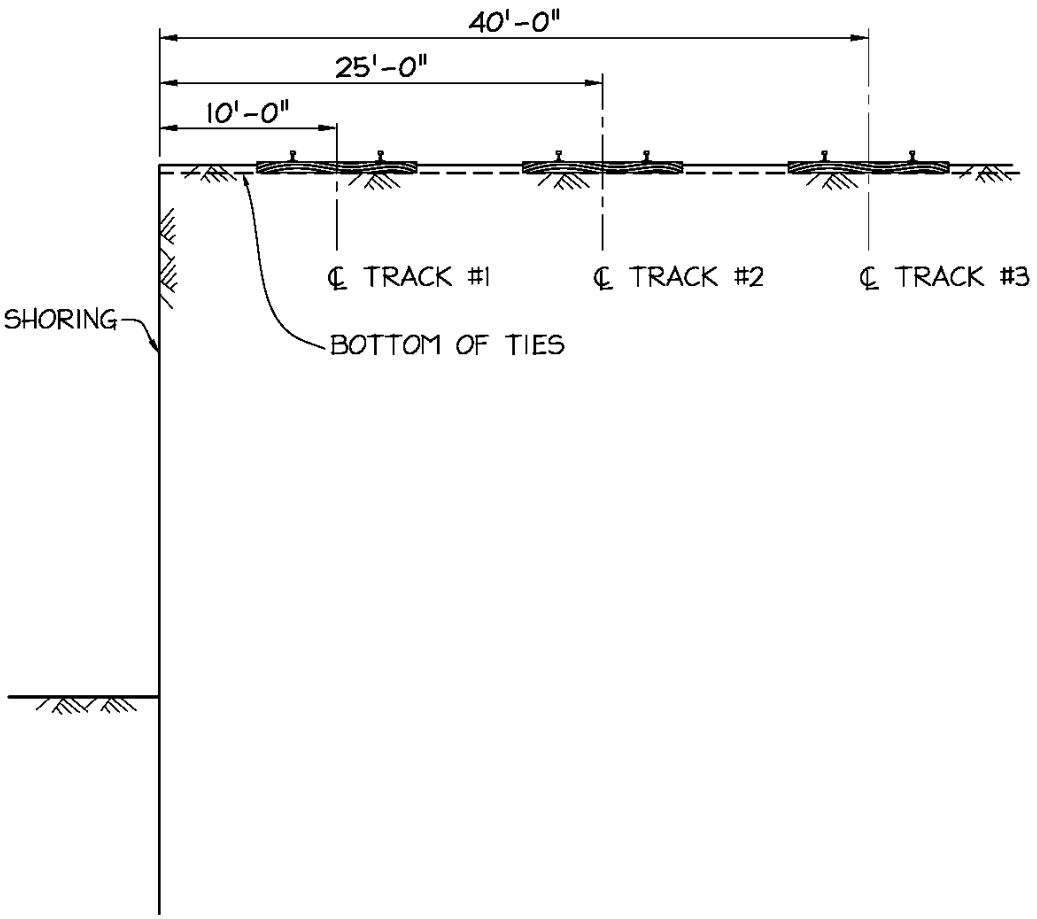

SOLUTION:

Centerline of Track #1 is 10 feet from face of shoring
Centerline of Track #2 is 25 feet from face of shoring
Centerline of Track #3 is 40 feet from face of shoring

d (feet)	$P_{s,1}$ (psf)	$P_{s,2}$ (psf)	$P_{s,3}$ (psf)	$0.5P_{s,3}$ (psf)	**$P_{s,total}$ (psf)**
1	247	34	13	6	**287**
2	450	66	26	13	**529**
3	585	98	38	19	**703**
4	655	128	51	25	**808**
5	674	155	62	31	**860**
6	658	179	74	37	**874**
7	622	201	85	42	**865**
8	575	219	95	48	**842**
9	525	234	105	52	**811**
10	474	246	114	57	**777**
11	426	254	122	61	**742**
12	382	261	130	65	**707**
13	341	264	136	68	**673**
14	305	265	142	71	**641**
15	272	265	148	74	**611**
16	243	262	152	76	**582**
17	218	258	156	78	**554**
18	195	253	159	80	**528**
19	175	247	162	81	**504**
20	158	241	163	82	**480**
21	142	233	165	82	**458**
22	129	226	165	83	**437**
23	116	218	166	83	**417**
24	106	210	165	83	**398**
25	96	202	165	82	**380**
26	88	193	164	82	**363**
27	80	185	162	81	**346**
28	73	177	160	80	**331**
29	67	170	158	79	**316**
30	62	162	156	78	**302**
31	57	155	154	77	**289**
32	52	148	151	76	**276**
33	48	141	148	74	**264**
34	45	135	145	73	**252**
35	41	129	142	71	**242**
36	39	123	139	70	**231**
37	36	117	136	68	**221**
38	33	112	133	67	**212**
39	31	107	130	65	**203**
40	29	102	127	63	**194**
41	27	97	124	62	**186**
42	25	93	120	60	**179**
43	24	89	117	59	**171**
44	22	85	114	57	**164**
45	21	81	111	56	**158**
46	20	77	108	54	**151**
47	19	74	105	53	**145**
48	18	71	102	51	**139**
49	17	68	99	50	**134**
50	16	65	97	48	**129**

d = depth below bottom of tie
$P_{s,1}$ = lateral surcharge from Track #1
$P_{s,2}$ = lateral surcharge from Track #2
$P_{s,3}$ = lateral surcharge from Track #3
$P_{s,total}$ = combined lateral surcharge from Tracks #1, #2 & #3 = $P_{s,1} + P_{s,2} + 0.5P_{s,3}$

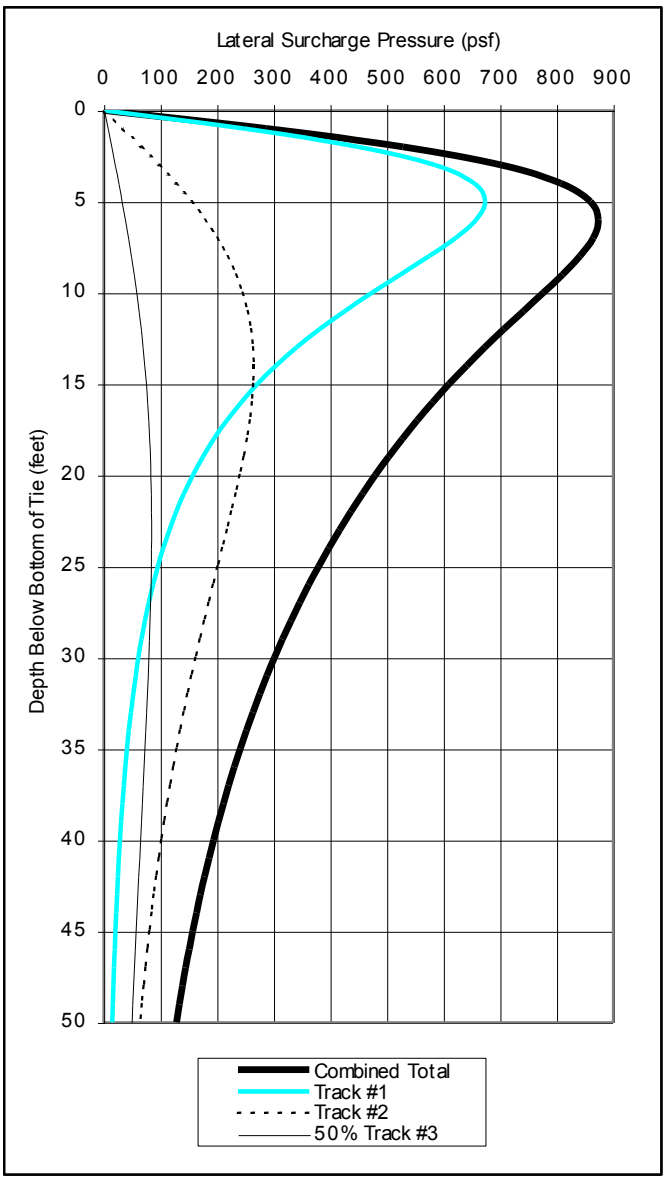

EXAMPLE 5.3 – "SIMPLIFIED" RAILROAD LIVE LOAD SURCHARGE

PROBLEM:

DEVELOP THE "SIMPLIFIED" LATERAL SURCHARGE PRESSURE DIAGRAM FOR A SINGLE TRACK WHOSE CENTERLINE IS LOCATED 15 FEET FROM THE FACE OF A SHORING WALL.

SOLUTION:

Centerline of track is 15 feet from face of shoring

d = depth below bottom of tie
P_s = Boussinesq lateral surcharge
$P_{s,simple} = 0.8P_{s,max} = 0.8(444) = 355$ psf

d (feet)	P_s (psf)	
1	98	
2	191	
3	271	
4	337	
5	386	
6	419	
7	438	
8	**444**	$P_{s,max}$
9	441	
10	431	
11	415	
12	396	
13	374	
14	352	
15	329	
16	307	
17	285	
18	265	
19	246	
20	228	
21	211	
22	195	
23	181	
24	167	
25	155	
26	144	
27	133	
28	124	
29	115	
30	107	
31	100	
32	93	
33	87	
34	81	
35	76	
36	71	
37	66	
38	62	
39	58	
40	55	
41	52	
42	49	
43	46	
44	43	
45	41	
46	39	
47	37	
48	35	
49	33	
50	31	

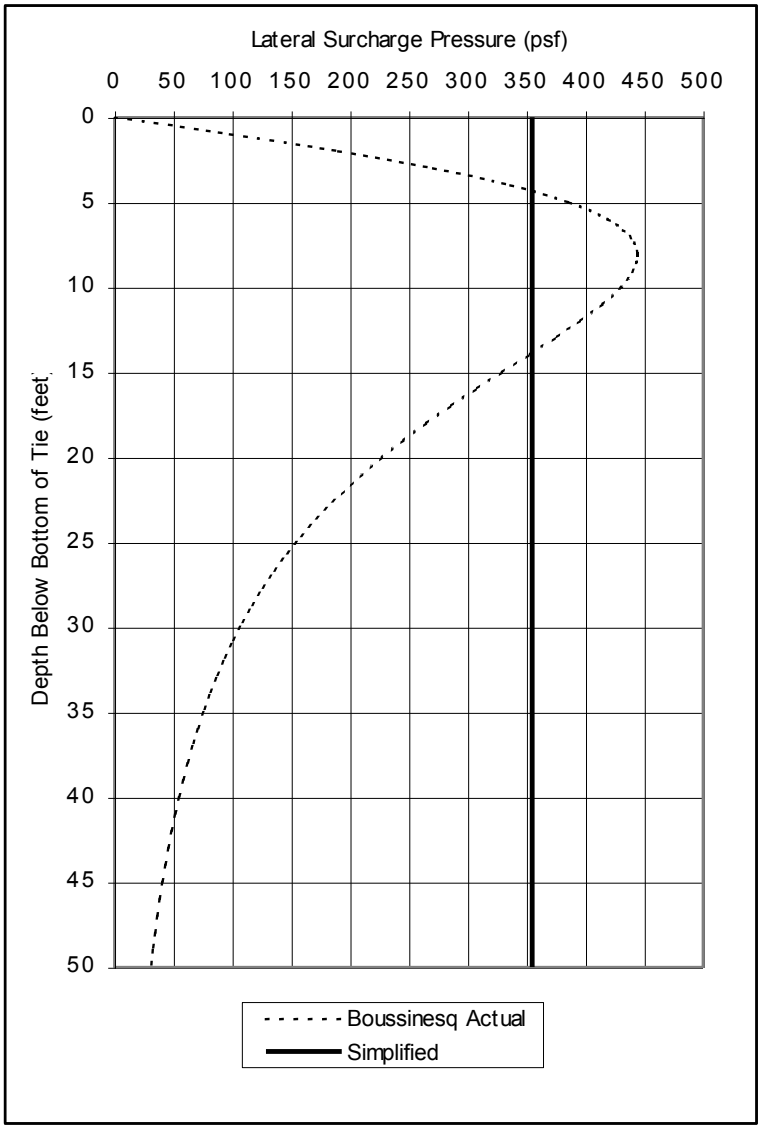

EXAMPLE 6.1 – CANTILEVER SOLDIER PILE AND LAGGING SHORING WALL

PROBLEM:

DETERMINE THE REQUIRED DEPTH OF PENETRATION AND THE DESIGN SHEAR AND MOMENT FOR A CANTILEVER SOLDIER PILE AND LAGGING WALL FOR THE SOIL CONDITIONS AND PILE SPACING INDICATED BELOW.

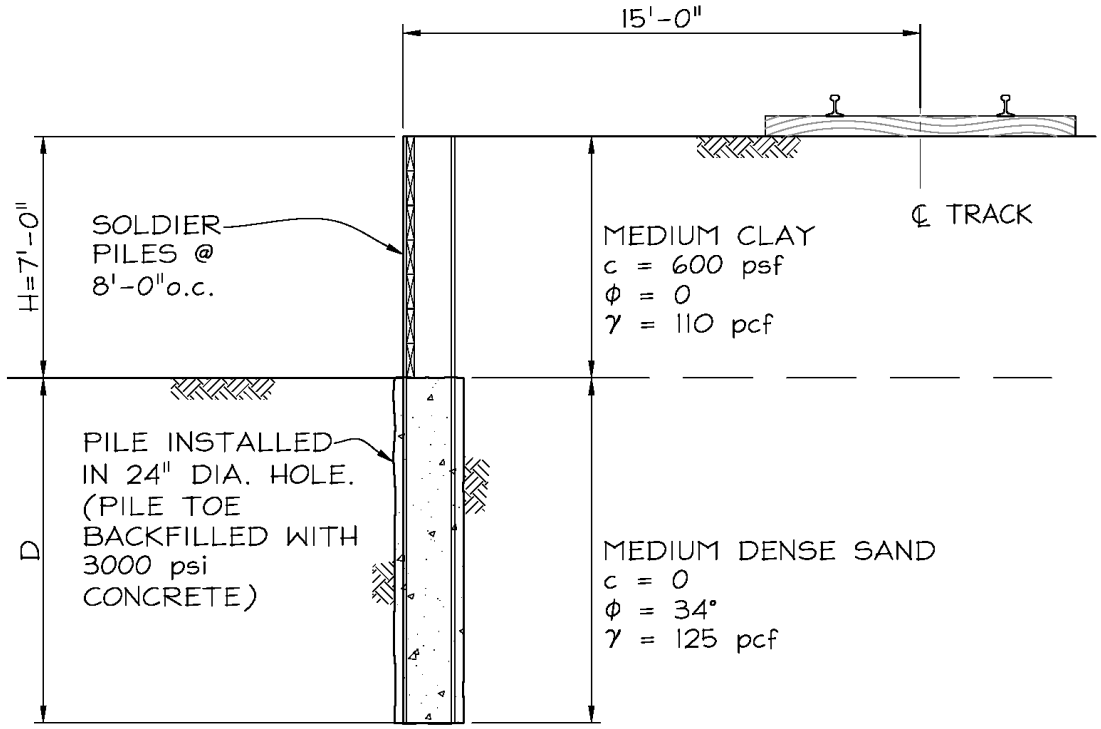

SOLUTION:

COMPUTE ACTIVE SOIL PRESSURES –

MEDIUM CLAY:

NO THEORETICAL NET ACTIVE PRESSURE BECAUSE

$\gamma_{CLAY}H-2c = 110(7)-2(600) = -430$ psf < 0.

THEREFORE, USE 30 psf/ft EFP MINIMUM ACTIVE PRESSURE

MEDIUM DENSE SAND:

$K_A = \tan^2(45°-ø/2) = \tan^2(45°-34°/2) = 0.28$

ACTIVE GRADIENT = $K_A\gamma_{SAND} = 0.28(125) = 35$ psf/ft

COMPUTE PASSIVE SOIL PRESSURE USING LOG-SPIRAL THEORY –

REFER TO EXAMPLE 4.3: $K_P = 4.9$

PASSIVE GRADIENT = $K_P\gamma_{SAND} = 4.9(125) = 613$ psf/ft

RAILROAD SURCHARGE –

USE "SIMPLIFIED" RAILROAD SURCHARGE (I.E., 80% OF MAXIMUM)

REFER TO EXAMPLE 5.3: $P_S = 355$ psf

EFFECTIVE WIDTH OF EMBEDDED PORTION OF SOLDIER PILE –

PER TABLE 10-1 IN THE CALTRANS *TRENCHING AND SHORING MANUAL*

EFFECTIVE WIDTH (w_{EFF}) = (0.08ø)d,

WHERE d = DIAMETER OF CONCRETE FILLED DRILLED HOLE

$w_{EFF} = 0.08(34)(2) = 5.4$ feet

USE "SIMPLIFIED" METHOD OF CANTILEVER PILE ANALYSIS

SHORING LOADING DIAGRAM -

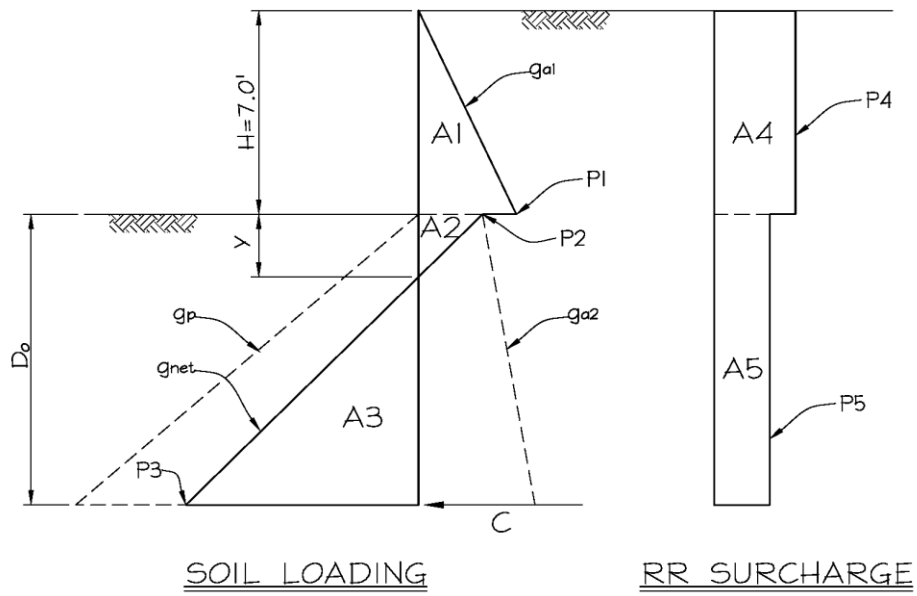

g_{a1} = 30(PILE SPACING) = 30(8) = 240 psf

$g_{a2} = 35w_{EFF} = 35(5.4) =$ 189 psf

$g_p = 613w_{EFF} = 613(5.4) =$ 3310 psf

$g_{net} = g_p - g_{a2} = 3310-189 =$ 3121 psf

$P_1 = 240H = 240(7) =$ 1680 lbs/ft

$P_2 = K_A\gamma_{clay}Hw_{EFF} = 0.28(110)(7)(5.4) =$ 1164 lbs/ft

$P_3 = g_{net}D_o - P_2 = 3121D_o-1164$ lbs/ft

P_4 = 355(PILE SPACING) = 355(8) = 2840 lbs/ft

$P_5 = 355w_{EFF} = 355(5.4) =$ 1917 lbs/ft

$Y = P_2/g_{net} = 1164/3121 =$ 0.37 feet

$A1 = P_1(H/2) = 1680(7/2) =$ 5880 lbs

$A2 = P_2(Y/2) = 1164(0.37/2) =$ 215.3 lbs

$A3 = P_3(D_o-Y)/2 = (3121D_o-1164)(D_o-0.37)/2$

$= 1560.5D_o^2-1159.4D_o+215.3$ lbs

$A4 = P_4H = 2840(7) =$ 19,880 lbs

$A5 = P_5D_o = 1917D_o$ lbs

COMPUTE REQUIRED EMBEDMENT DEPTH -

SUM MOMENTS ABOUT BOTTOM OF WALL TO DETERMINE D_o –

$A1(D_o+H/3) + A2(D_o-Y/3) - A3(D_o-Y)/3 + A4(D_o+H/2) + A5(D_o/2) = 0$

$5880(D_o+7/3) + 215.3(D_o-0.37/3) - (1560.5D_o^2-1159.4D_o+215.3)(D_o-0.37)/3 + 19,880(D_o+7/2) + 1917D_o(D_o/2) = 0$

$520.2D_o^3 - 1537.3D_o^2 - 25,761D_O - 83,300 = 0$

SOLVE FOR D_o:

D_o = <u>9.74 feet</u>

INCREASE EMBEDMENT DEPTH BY 20% TO ACCOUNT FOR "SIMPLIFIED" ANALYSIS AND THEN ADD AN ADDITIONAL 40% FOR SAFETY FACTOR.

D = 1.4(1.2(9.74)) = <u>16.4 feet</u> MINIMUM

PROVIDE <u>17 feet</u> OF EMBEDMENT

DETERMINE DESIGN SHEAR FORCE –

MAXIMUM SHEAR FORCE IS AT BOTTOM OF PILE

$V_{MAX} = A3-A1-A2-A4-A5$

$= (1560.5D_o^2-1159.4D_o+215.3)-5880-215.3-19,880-1917D_o$

$= [1560.5(9.74)^2-1159.4(9.74)+215.3-5880-215.3-19,880-1917(9.74)]/1000$

V_{MAX} = <u>92 kips</u>

DETERMINE DESIGN MOMENT -

FIND POINT OF ZERO SHEAR (depth of X below bottom of excavation)

$A1+A2+A4+P_5X-P_3(X-Y)/2 = 0$

$5880+215.3+19,880+1917X-(3121X-1164)(X-0.37)/2 = 0$

$1560.5X^2-3076.4X-25832 = 0$

SOLVE FOR X:

X = <u>5.17 feet</u>

$M_{MAX} = A1(X+H/3)+A2(X-Y/3)+A4(Y+H/2)+P_5X^2/2-P_3(X-Y)^2/6$

$= [5880(5.17+7/3) + 215.3(5.17-0.37/3) + 19,880(5.17+7/2) + 1917(5.17)^2/2 - (3121(5.17)-1164)(5.17-0.37)^2/6]/1000$

M_{MAX} = <u>186 kip-ft</u>

EXAMPLE 6.2 – SHEET PILE SHORING WALL WITH ONE LEVEL OF BRACING (FREE EARTH SUPPORT METHOD)

PROBLEM:

DETERMINE THE REQUIRED DEPTH OF PENETRATION, THE DESIGN SHEAR AND MOMENT, AND THE BRACING REACTION FOR A SHEET PILE SHORING WALL WITH A SINGLE LEVEL OF BRACING IN THE SOIL CONDITIONS INDICATED. USE THE FREE EARTH SUPPORT METHOD OF ANALYSIS.

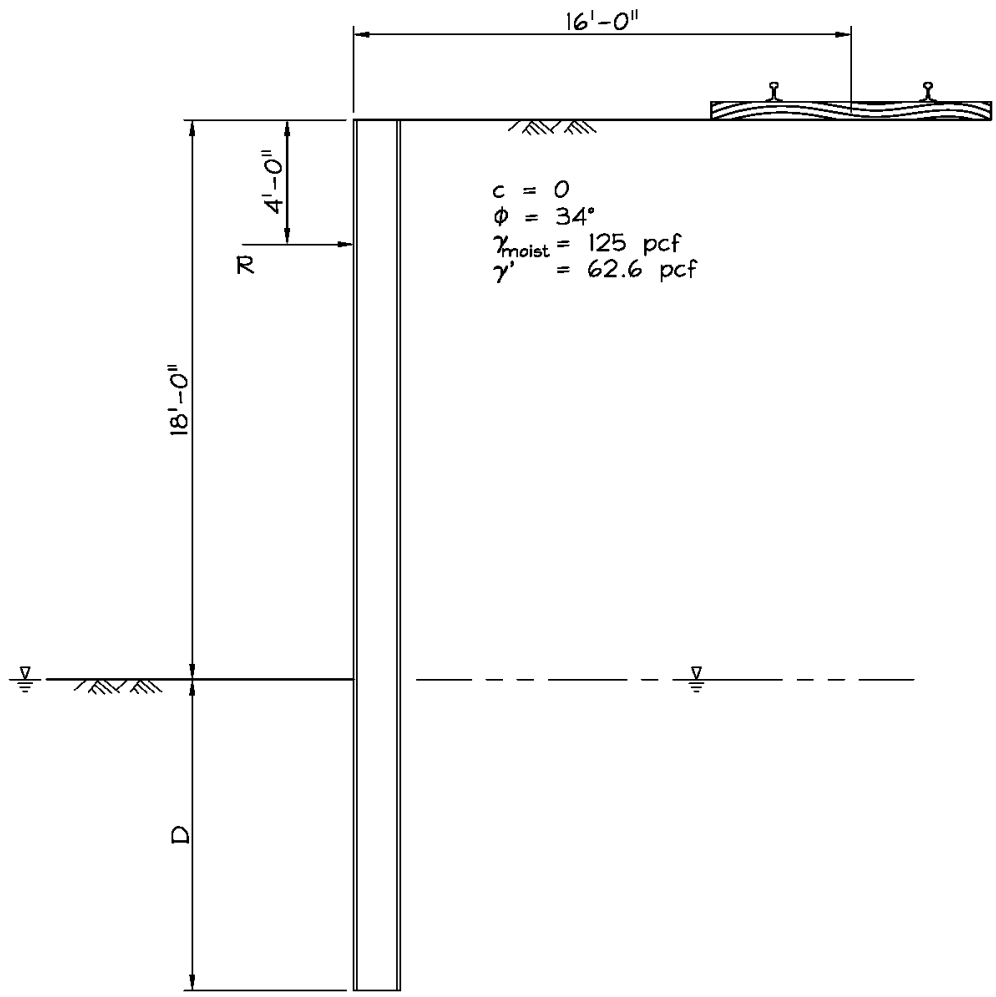

SOLUTION:

COMPUTE ACTIVE SOIL PRESSURES USING RANKINE THEORY –

$K_A = \tan^2(45°-ø/2) = \tan^2(45°-34°/2) =$ <u>0.28</u>

ACTIVE GRADIENT ABOVE GWT = $K_A\gamma_{MOIST}$ = 0.28(125) = <u>35 psf/ft</u>

ACTIVE GRADIENT BELOW GWT (INCLUDING WATER PRESSURE) = $K_A\gamma'+\gamma_W$

= 0.28(62.6)+62.4 = <u>80 psf/ft</u>

COMPUTE PASSIVE SOIL PRESSURE USING LOG-SPIRAL THEORY –

REFER TO EXAMPLE 4.3: K_P = 4.9

PASSIVE GRADIENT BELOW GWT (INCLUDING WATER PRESSURE) = $K_P\gamma'+\gamma_W$

= 4.9(62.6)+62.4 = <u>369 psf/ft</u>

SHORING LOADING DIAGRAM -

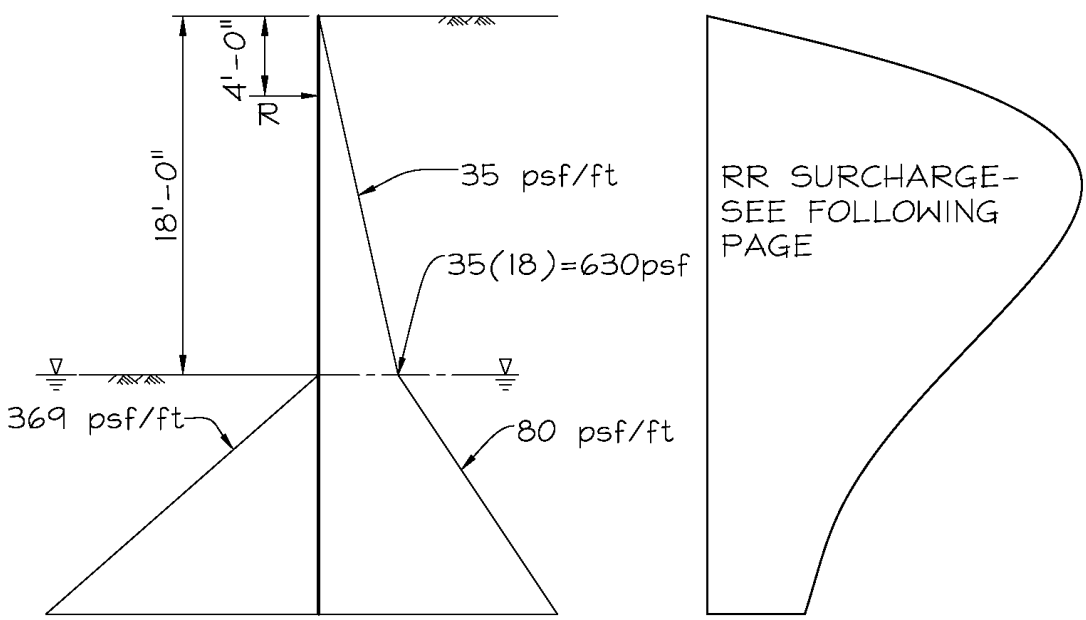

RAILROAD SURCHARGE PRESSURE DIAGRAM -

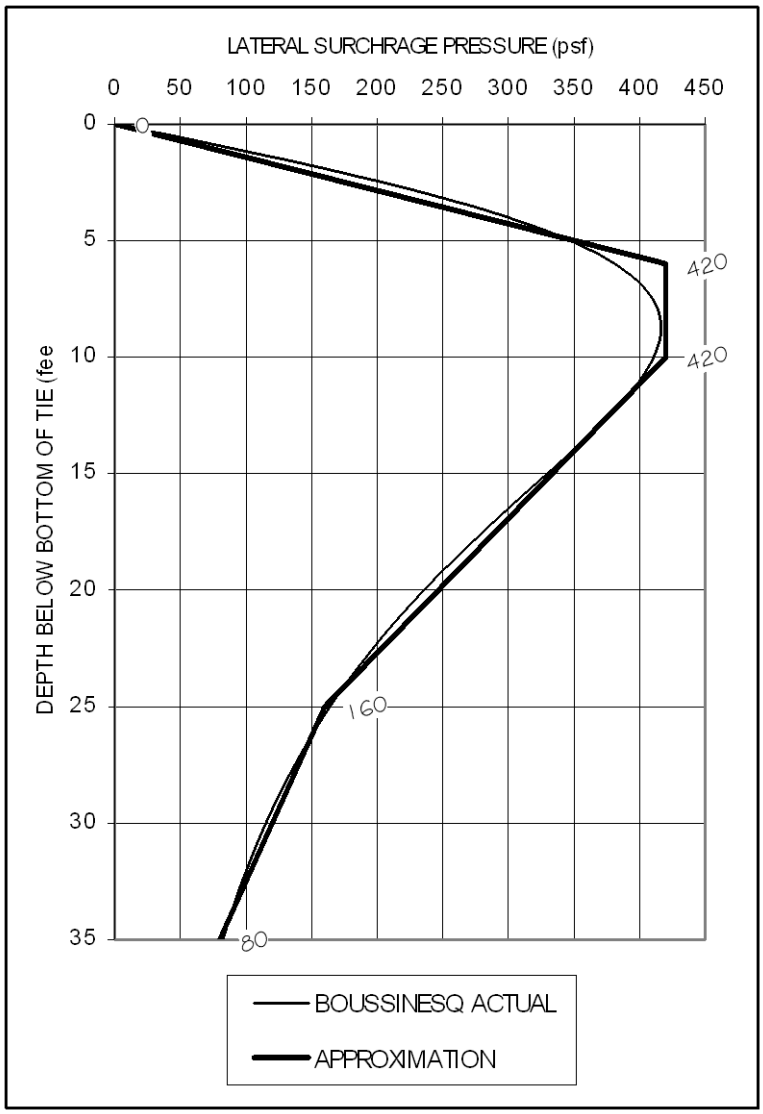

ANALYZE SHORING WALL USING BEAM ANALYSIS SOFTWARE TO DETERMINE DEPTH OF EMBEDMENT REQUIRED FOR STABILITY (I.E., SUM OF MOMENTS ABOUT BRACING LEVEL EQUAL TO ZERO).

THE COMPUTED BRACING REACTION, REQUIRED DEPTH OF EMBEDMENT, SHEAR AND MOMENT DIAGRAMS, AND ELASTIC WALL DEFLECTIONS ARE SHOWN ON THE FOLLOWING PAGE.

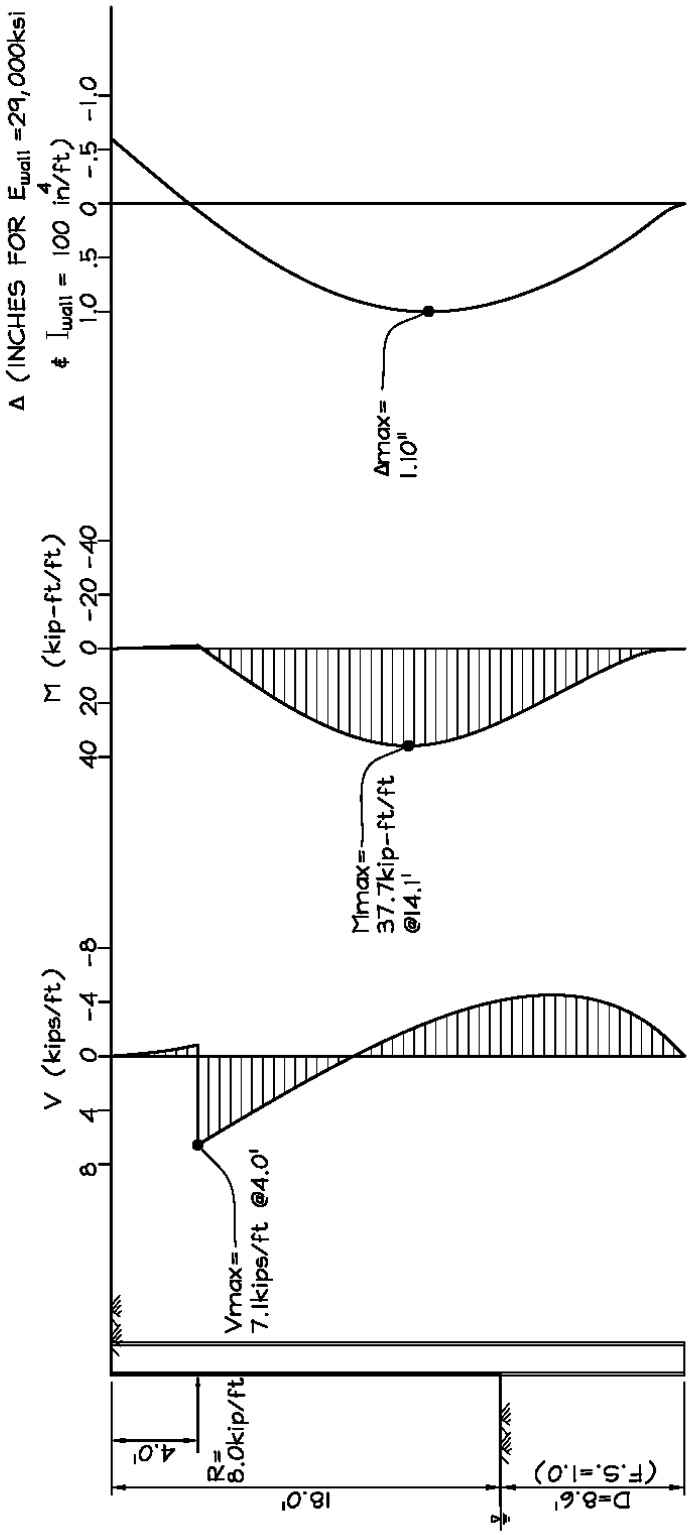

D=1.4(8.6) = 12.0'
USE 12' TOE EMBEDMENT

EXAMPLE 6.3 – SHEET PILE SHORING WALL WITH ONE LEVEL OF BRACING (FIXED EARTH SUPPORT METHOD)

PROBLEM:

REANALYZE THE SHORING WALL DESCRIBED IN EXAMPLE 6.2 USING THE FIXED EARTH SUPPORT METHOD OF ANALYSIS TO DETERMINE THE REQUIRED DEPTH OF PENETRATION, THE DESIGN SHEAR AND MOMENT, AND THE BRACING REACTION.

SOLUTION:

SOIL AND SURCHARGE PRESSURES ARE THE SAME AS THOSE USED IN EXAMPLE 6.2.

ANALYZE SHORING WALL USING BEAM ANALYSIS SOFTWARE TO DETERMINE DEPTH OF EMBEDMENT REQUIRED TO PROVIDE EFFECTIVE FIXITY.

THE COMPUTED BRACING REACTION, REQUIRED DEPTH OF EMBEDMENT, SHEAR AND MOMENT DIAGRAMS, AND ELASTIC WALL DEFLECTIONS ARE SHOWN ON THE FOLLOWING PAGE.

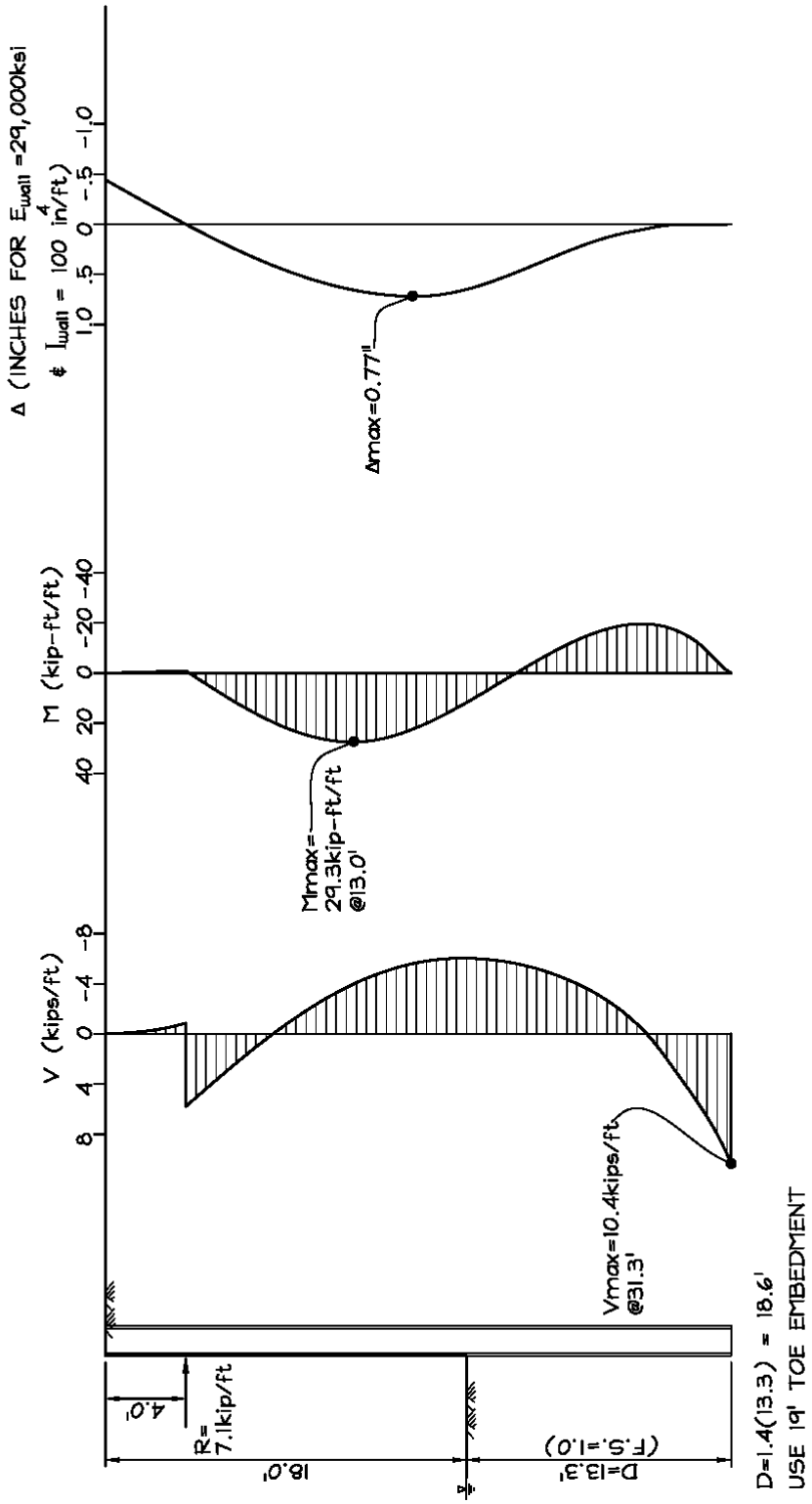
Δ (INCHES FOR E_{wall} =29,000ksi
& I_{wall} = 100 in^4/ft)
1.0 .5 0 -.5 -1.0
Δmax=0.77"
M (kip-ft/ft)
40 20 0 -20 -40
Mmax=
29.3kip-ft/ft
@13.0'
V (kips/ft)
8 4 0 -4 -8
Vmax=10.4kips/ft
@31.3'
4.0'
R=
7.1kip/ft
18.0'
D=13.3'
(F.S.=1.0)
D=1.4(13.3) = 18.6'
USE 19' TOE EMBEDMENT

COMPARISON OF RESULTS FROM FREE EARTH AND FIXED EARTH SUPPORT METHODS –

ITEM	**FREE EARTH** (EXAMPLE 6.2)	**FIXED EARTH** (EXAMPLE 6.3)
DEPTH OF EMBEDMENT	12 feet	19 feet
BRACING REACTION	8.0 kips/ft	7.1 kips/ft
M_{MAX}	37.7 kip-ft/ft	29.3 kip-ft/ft
V_{MAX}	7.1 kips/ft	10.6 kips/ft
MAX. ELASTIC WALL DEFLECTION*	1.10 inches	0.77 inches

*FOR I_{WALL}=100 in^4/ft & E_{WALL}=29,000 ksi

EXAMPLE 6.4 – ANALYSIS OF A DIAPHRAGM SHORING WALL WITH THREE LEVELS OF BRACING

PROBLEM:

DETERMINE THE REQUIRED DEPTH OF PENETRATION, THE DESIGN SHEAR AND MOMENT, AND THE BRACING REACTIONS FOR A SOIL-MIX SHORING WALL SUPPORTED WITH THREE LEVELS OF BRACING IN THE SOIL CONDITIONS INDICATED. ASSUME THE WIDE FLANGE PILE INSERTS ARE SPACED AT 4 FEET ON-CENTER. ANALYZE FULL DEPTH CONDITION ONLY.

SOIL-MIX WALL (UNRENIFORCED) IS EXTENDED TO STIFF CLAY LAYER FOR GROUNDWATER CUT-OFF.

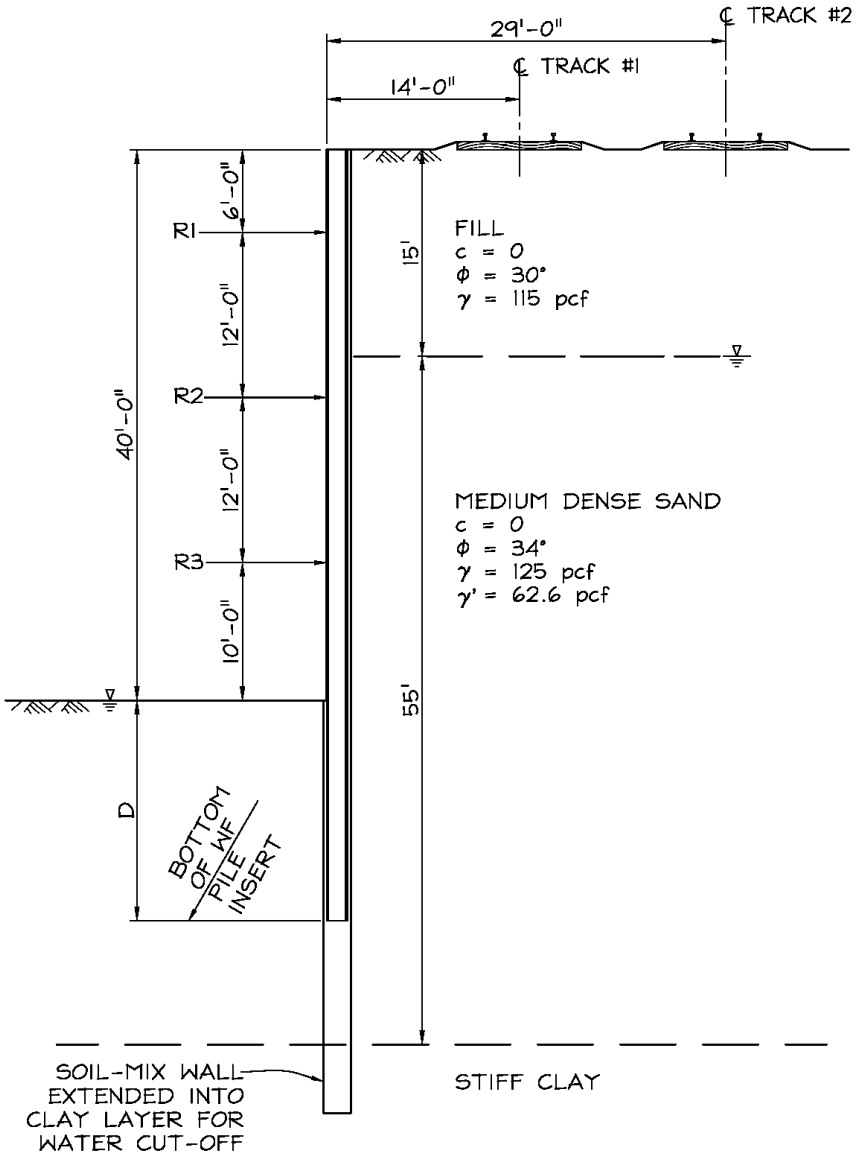

SOLUTION:

DEVELOP APPARENT SOIL PRESSURE DIAGRAM –

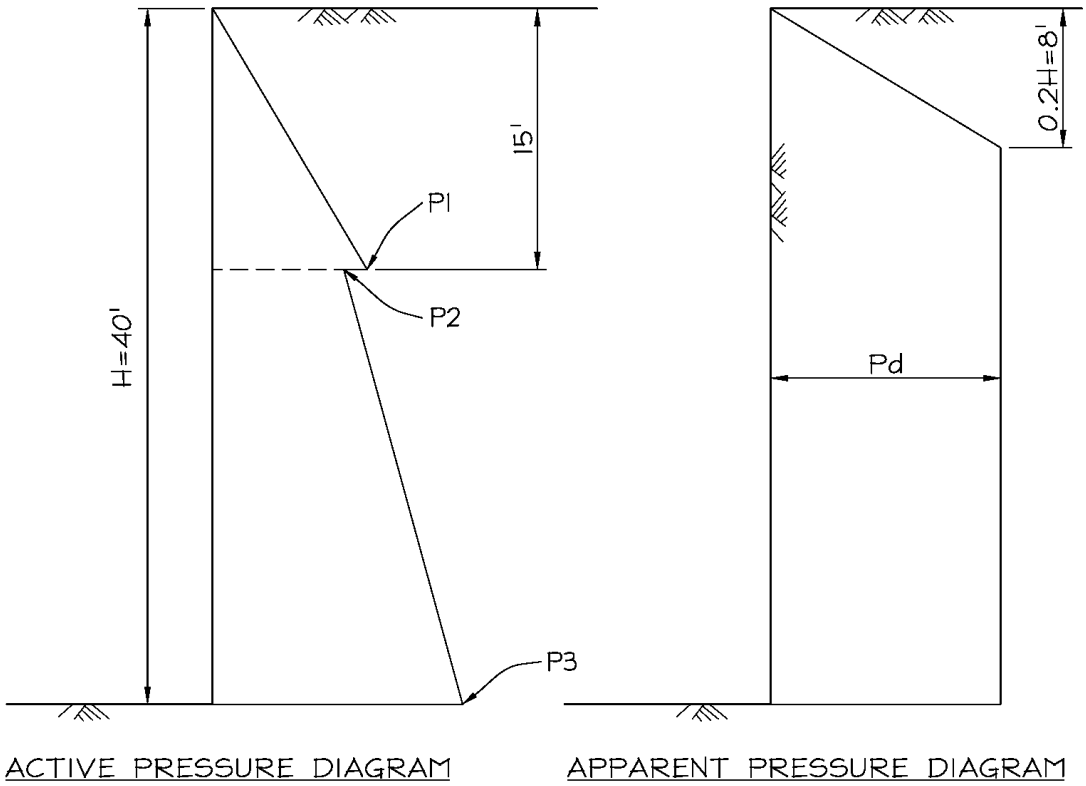

ACTIVE SOIL PRESSURES –

$K_{A,FILL} = \tan^2(45° - \varnothing_{FILL}/2) = \tan^2(45°-30°/2) = \underline{0.33}$

$K_{A,DENSE\ SAND} = \tan^2(45° - \varnothing_{DENSE\ SAND}/2) = \tan^2(45°-34°/2) = \underline{0.28}$

$P1 = K_{A,FILL}(\gamma_{FILL})(15') = 0.33(115)(15) = \underline{569\ psf}$

$P2 = K_{A,DENSE\ SAND}(\gamma_{FILL})(15') = 0.28(115)(15) = \underline{483\ psf}$

$P3 = P2 + K_{A,DENSE\ SAND}(\gamma')(25') = 483+0.28(62.6)(25) = \underline{921\ psf}$

CALCULATE APPARENT PRESSURE –

ACTIVE SOIL PRESSURE RESULTANT (A_1) = $P1(15'/2) + [(P2+P3)/2](25')$

$= 569(15/2)+[(483+921)/2](25) = \underline{21{,}818\ lbs/ft}$

$P_d = 1.4(A_1)/(0.9H) = 1.4(21{,}818)/[0.9(40)] = \underline{848\ psf}$

SHORING LOADING DIAGRAM –

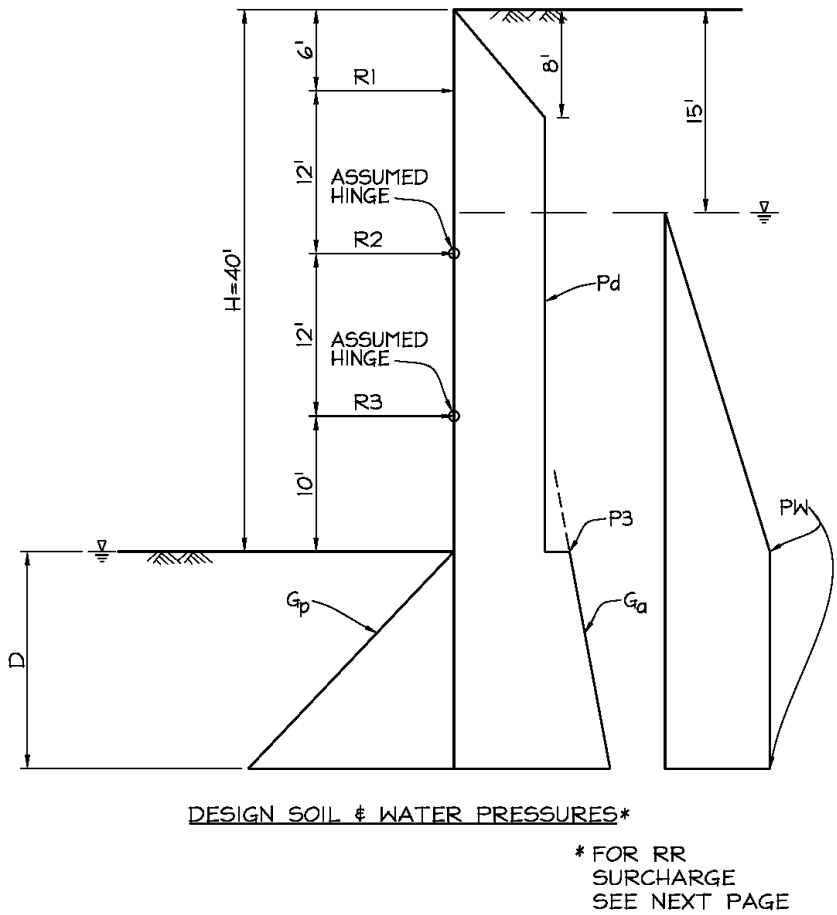

APPARENT SOIL PRESSURE

P_d = 848 psf (SEE PREVIOUS PAGE)

ACTIVE SOIL PRESSURES IN DENSE SAND BELOW EXCAVATION SUBGRADE

P3 = 921 psf (SEE PREVIOUS PAGE)

ACTIVE SOIL GRADIENT BELOW EXCAVATION SUBGRADE (G_a)

$= K_{A,DENSE\ SAND}(\gamma') = 0.28(62.6) =$ 17.5 psf/ft

PASSIVE SOIL PRESSURES IN DENSE SAND BELOW EXCAVATION SUBGRADE

$K_P = 4.9$ (REFER TO EXAMPLE 4.3)

PASSIVE SOIL GRADIENT BELOW EXCAVATION SUBGRADE (G_p)

$= K_P(\gamma') = 4.9(62.6) =$ 307 psf/ft

NET HYDROSTATIC PRESSURE

$PW = \gamma_W(25') = 62.4(25) =$ 1560 psf

RAILROAD SURCHARGE PRESSURE DIAGRAM –

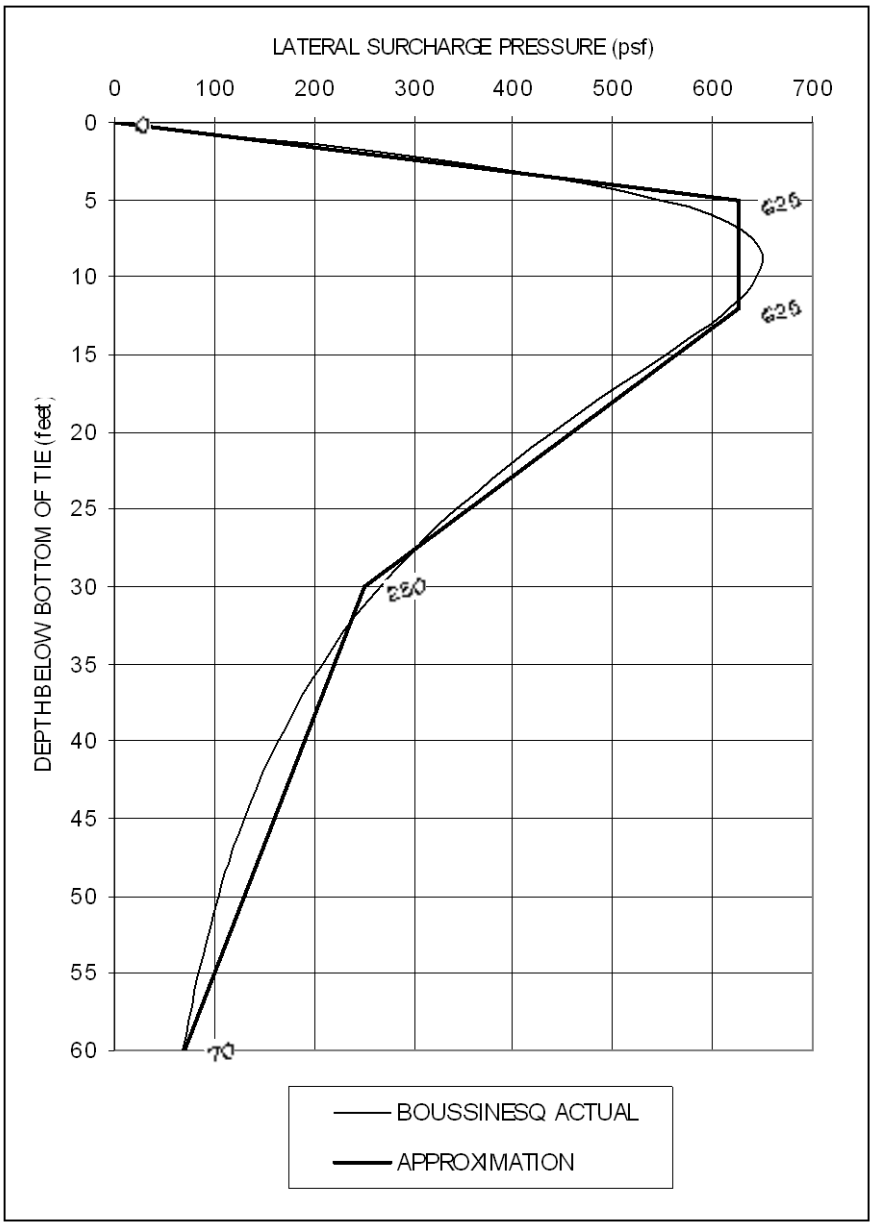

ANALYZE SHORING WALL USING BEAM ANALYSIS SOFTWARE TO DETERMINE DEPTH OF EMBEDMENT REQUIRED FOR STABILITY (I.E., BALANCE MOMENTS DUE TO LOADS ACTING BELOW THE LOWEST BRACING LEVEL).

THE COMPUTED BRACING REACTIONS, REQUIRED DEPTH OF EMBEDMENT, AND SHEAR AND MOMENT DIAGRAMS ARE SHOWN ON THE FOLLOWING PAGE.

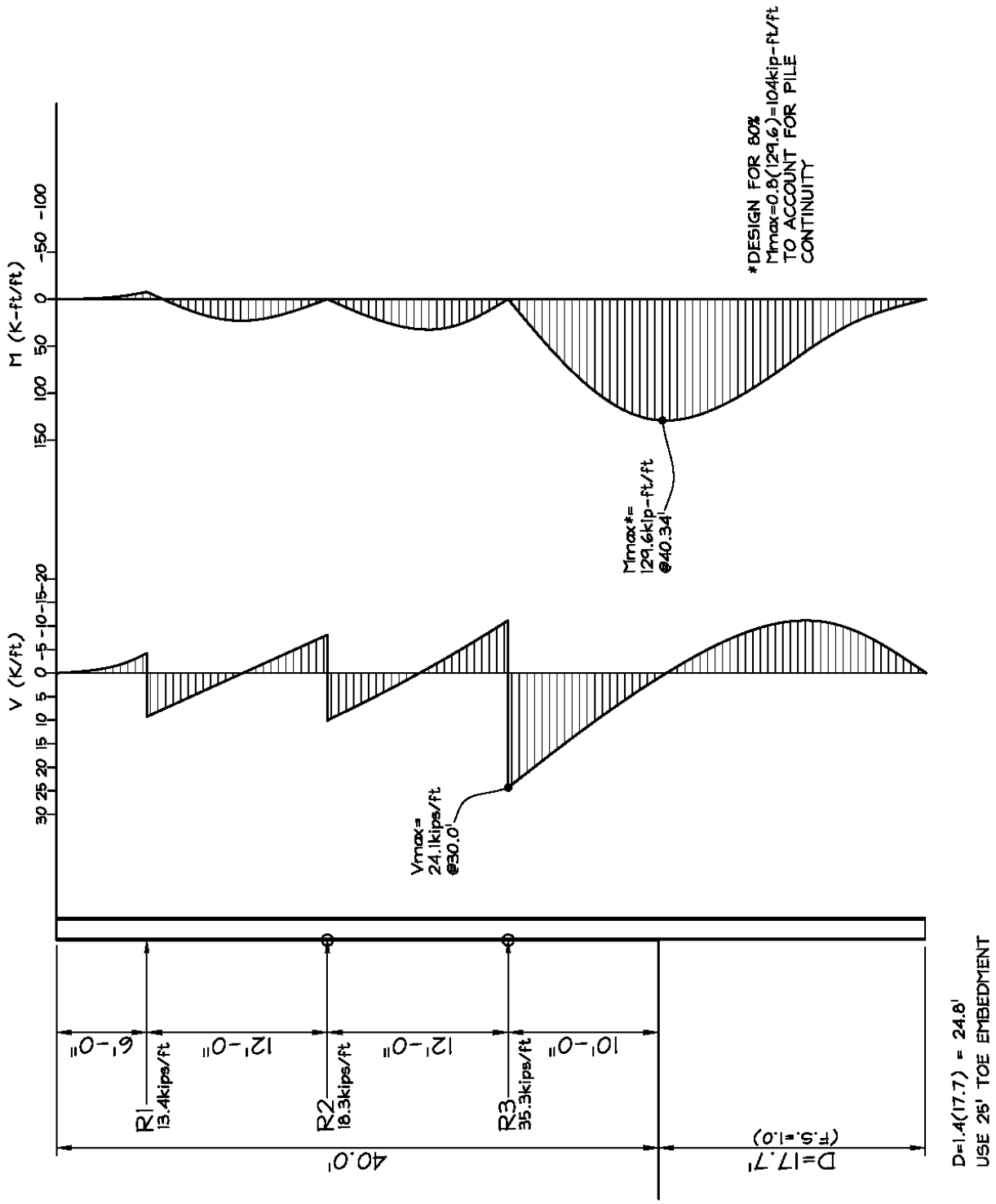
M (K-ft/ft)
150 100 50 0 -50 -100
V (K/ft)
30 25 20 15 10 5 0 -5 -10 -15 -20
*DESIGN FOR 80%
Mmax=0.8(129.6)=104kip-ft/ft
TO ACCOUNT FOR PILE
CONTINUITY
Mmax*=
129.6kip-ft/ft
@40.34'
Vmax=
24.1kips/ft
@30.0'
R1
13.4kips/ft
R2
18.3kips/ft
R3
35.3kips/ft
6'-0"
12'-0"
12'-0"
10'-0"
40.0'
D=17.7'
(F.S.=1.0)
D=1.4(17.7) = 24.8'
USE 25' TOE EMBEDMENT

SUMMARY OF RESULTS

BRACING REACTIONS

R1 = 13.4 kips/ft

R2 = 18.3 kips/ft

R3 = 35.3 kips/ft

REQUIRED EMBEDMENT DEPTH = 25 feet

DESIGN (MAXIMUM) SHEAR

V_{MAX} = 24.1 kips/ft

V_{MAX} = 24.1(4) = 96.4 kips/pile

DESIGN (MAXIMUM) MOMENT

M_{MAX} = 104 kip-ft/ft

M_{MAX} = 104(4) = 416 kip-ft/pile

EXAMPLE 7.1 – WIDE FLANGE WALE DESIGN

PROBLEM:

SIZE A WALE FOR THE FOLLOWING BRACING GEOMETRY AND LOADING.

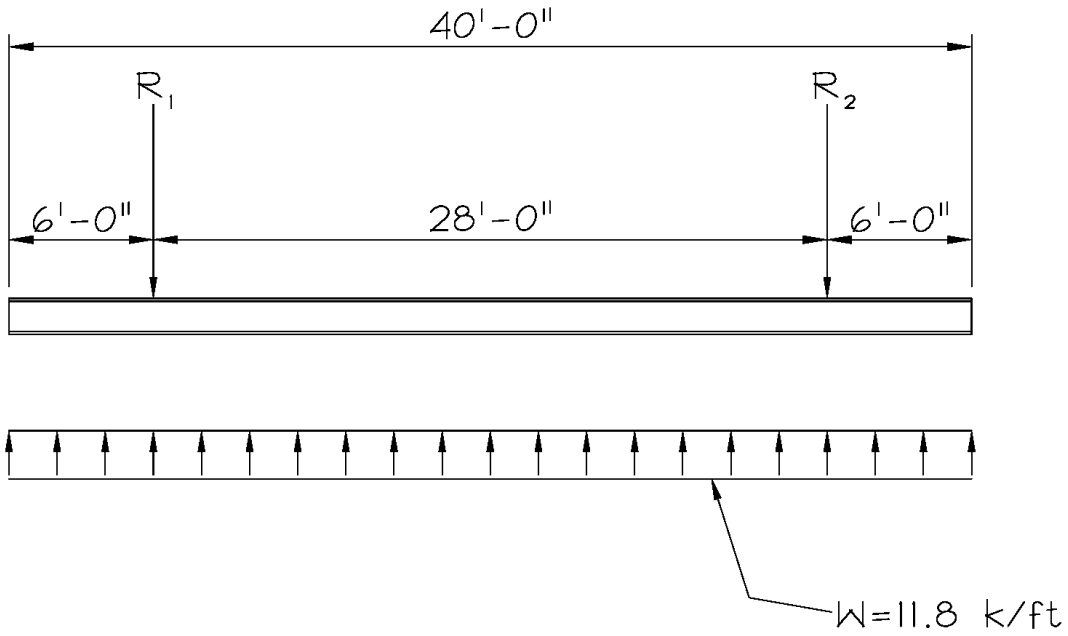

SOLUTION:

ANALYZE WALER TO DETERMINE DESIGN MOMENT AND SHEAR -

$$M_{MAX} = \frac{11.8(28)^2}{8} - \frac{11.8(6)^2}{2} = \underline{944 \text{ kip-ft}}$$

$$V_{MAX} = \frac{11.8(28)}{2} = \underline{165.2 \text{ kips}}$$

$$\text{STRUT LOADS} = R1 = R2 = \frac{11.8(40)}{2} = \underline{236 \text{ kips}}$$

ASSUMPTIONS -

USE GRADE 36 WIDE FLANGE BEAM FOR WALER

PROVIDE BRACING FOR WALER AT SPACING NO GREATER THAN $L_b \leq L_p$

$\rightarrow M_n = M_p = (F_Y)(Z)$ (EQ. F2-1) AND $M_{all} = M_n/\Omega_b$

$\rightarrow V_n = 0.6(F_Y)(A_w)(C_v)$ (EQ. G2-1), $C_v = 1.0$ (EQ. G2-2) AND $V_{all} = V_n/\Omega_v$

PROVIDE SUFFICIENT SUPPORT FOR WALER SO WEAK AXIS BENDING IS NEGLIGIBLE

COMPUTE REQUIRED SECTION PROPERTIES -

$Z_{REQD} = \Omega_b(M_{MAX})(12) / F_Y = 1.67(944)(12) / (36) = \underline{526 \text{ in}^3}$

$A_{WEB,REQD} = \Omega_v(V_{MAX}) / \{0.6(F_Y)\} = 1.50(165.2) / \{0.6(36)\} = \underline{11.5 \text{ in}^2}$

ACCEPTABLE SIZES*	Z (in^3)	A_{WEB} (in^2)
W24X192	559	20.6
W27X178	570	20.2
W30X173	607	19.9

OTHER ACCEPTABLE SIZES ARE AVAILABLE

*NOTE: NEED FOR STIFFENERS HAS NOT BEEN CONSIDERED IN THIS DESIGN EXAMPLE.

EXAMPLE 7.2 – PIPE STRUT DESIGN

PROBLEM:

DESIGN A PIPE STRUT FOR THE STRUT LOAD (236 kips) COMPUTED IN EXAMPLE 7.1. ASSUME STRUT LENGTH (UNBRACED) IS 38 feet.

SOLUTION:

DETERMINE MINIMUM CROSS-SECTIONAL AREA REQUIRED BASED ON THE 12 ksi MAXIMUM AXIAL STRESS CRITERION –

$$A_{REQD} = \frac{\text{STRUT LOAD}}{12} = \frac{236}{12} = \underline{19.7\ in^2}$$

TRY 18" DIA. X 3/8" WALL THICKNESS PIPE, ASTM A252, GRADE 2 (F_Y=35 ksi) -

PIPE PROPERTIES

$A = 19.4\ in^2$
$I = 754\ in^4$
$r = 6.24$ in
$S = 83.8\ in^3$
$Z = 109\ in^3$
$D/t = 51.6 < 0.45(E) / (F_Y) = 372.9$
WEIGHT (W) = 71 lbs/ft

$$M_{SELF\ WEIGHT} = \frac{WL^2}{8} = \frac{71(38)^2}{8} = 12{,}816 \text{ LB-FT} = \underline{12.82 \text{ kip-ft}}$$

DETERMINE FLEXURAL CAPACITY –

$M_n = M_p = (F_Y)(Z)$ (EQ. F8-1) AND $M_{all} = M_n/\Omega_b$
$M_{all} = (F_Y)(Z) / \{\Omega_b(12)\} = 35(109) / \{1.67(12)\} = \underline{190.4 \text{ kip-ft}}$

DETERMINE AXIAL CAPACITY –

$P_n = (F_{cr})(A_g)$ (EQ. E3-1) AND $P_{all} = P_n/\Omega_c$
$kL/r = 1.0(38)(12) / 6.24 = 73.08 < 120$
$F_{cr} = 0.658^{(FY)/(Fe)}(F_Y)$ (EQ. E3-2) FOR $F_e > 0.44(F_Y)$
$F_e = \pi^2E / (kL/r)^2$ (EQ. E3-4)
$F_e = \pi^2(29{,}000) / (73.08)^2 = 53.6$ ksi $> 0.44(35) = 15.4$ ksi
$F_{cr} = 0.658^{(35)/(53.6)}(35) = 26.6$ ksi
$P_{all} = (F_{cr})(A_g)/\Omega_c = 26.6(19.4) / 1.67 = \underline{309 \text{ kips}}$

CHECK COMBINED AXIAL LOAD AND BENDING –

$(P_r)/(P_c) + (8/9)(M_r)/(M_c) \leq 1.0$ (EQ. H1-1a) FOR $(P_r)/(P_c) > 0.2$
$(P_r)/(P_c) = (236/309) = 0.76 > 0.2$
$(236/309) + (8/9)(12.82/190.4) = 0.76 + 0.06 = \underline{0.82 < 1.0}$

<u>18" DIA. X 3/8" WALL THICKNESS (ASTM A252, GRADE 2) PIPE IS ACCEPTABLE</u>

EXAMPLE 7.3 – SHORING WALL DESIGN

PROBLEM:

THE DESIGN BENDING MOMENT (M_{DESIGN}) FOR A SHORING WALL IS 84 kip-ft per lineal foot. SIZE THE FOLLOWING SHORING WALL MEMBERS FOR THIS DESIGN MOMENT*:

(A) STEEL SHEET PILES
(B) SOIL-MIX WALL PILES INSTALLED @ 4'-0" ON-CENTER

*NOTE: OTHER FACTORS NOT CONSIDERED IN THIS EXAMPLE (e.g., SHORING WALL STIFFNESS REQUIRED TO LIMIT WALL DEFLECTION, AXIAL LOAD IN SHORING WALL PILES, ETC.) MAY AFFECT THE DESIGN OF THE SHORING WALL MEMBERS.

SOLUTION:

(A) STEEL SHEET PILES

ASSUME SHEET PILES CONFORM TO ASTM A328 (F_b=25 ksi)

$$S_{REQD} = \frac{12M_{DESIGN}}{F_b} = \frac{12(84)}{25} = \underline{40.3\ in^3/ft}$$

ACCEPTABLE SHEET PILE SECTIONS	S (in^3/ft)
ARBED AZ26	48.4
HOESCH H2500	46.1
CASTEEL CZ148	40.9

OTHER ACCEPTABLE SHEET PILE TYPES ARE AVAILABLE

(B) SOIL-MIX WALL PILES INSTALLED AT 4'-0" ON-CENTER

ASSUME PILE STEEL CONFORMS TO ASTM A572, GRADE 50 (F_b = 33 ksi)

$$S_{REQD} = \frac{12(\text{PILE SPACING})(M_{DESIGN})}{F_b} = \frac{12(4)(84)}{33} = \underline{122.2\ in^3/pile}$$

ACCEPTABLE PILE SIZES	S (in^3/pile)
W18X71	127
W21X62	127
W24X62	131

OTHER ACCEPTABLE PILE SIZES ARE AVAILABLE

EXAMPLE 7.4 – WOOD LAGGING DESIGN

PROBLEM:

DETERMINE THE WOOD LAGGING THICKNESS REQUIRED FOR THE SHORING GEOMETRY ILLUSTRATED BELOW. ASSUME P (SHORING DESIGN LOADING) IS 1200 psf.

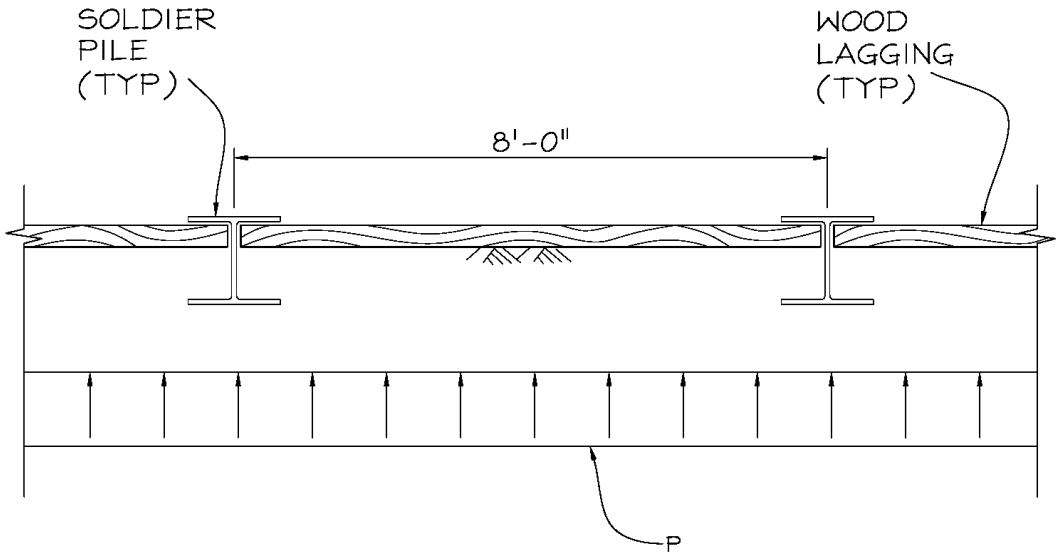

SOLUTION:

COMPUTE LAGGING DESIGN LOADING ($P_{LAGGING}$) –

$P_{LAGGING} = 0.6P = 0.6(1200) = \underline{720\ psf}$

COMPUTE M_{MAX} AND V_{MAX} -

$$M_{MAX} = \frac{P_{LAGGING}(\text{PILE SPACING})^2}{8} = \frac{720(8)^2}{8} = \underline{5760\ lb\text{-}ft/ft}$$

$$V_{MAX}^{*} < \frac{P_{LAGGING}(\text{PILE SPACING})}{2} = \frac{720(8)}{2} = \underline{2880\ lb/ft}$$

(*CONSERVATIVE, V_{MAX} CAN BE TAKEN H FROM SUPPORT)

TRY 6X, S4S (THICKNESS=5½"), DOUGLAS FIR NO.2 MATERIAL -

$A = 5.5(12) = 66\ in^2/ft$

$$S = \frac{12(5.5)^2}{6} = 60.5\ in^3/ft$$

CHECK BENDING AND SHEAR -

$$f_b = \frac{12M_{MAX}}{S} = \frac{12(5760)}{60.5} = \underline{1142\ psi < 1500\ psi\ OK}$$

$$f_v = \frac{3V_{MAX}}{2A} = \frac{3(2880)}{2(66)} = \underline{65\ psi < 140\ psi\ OK}$$

<u>6X, S4S, DOUGLAS FIR NO.2 MATERIAL IS ACCEPTABLE</u>

Appendix C – SCRRA DESIGN EXCEPTION FORM

SCRRA DESIGN EXCEPTION FORM

Project Name: _____ Location: _____

Project No.: _____ Contract No.: _____

Date: _____

Part 1: To be Completed by Originator

ORIGINATOR	Requested by: _____ Title: _____ Company: _____ Signature: _____ Print Name: _____	
IMPACTS	Does this Exception impact Safety and Operations?	☐ Yes ☐ No
	Does this Exception conflict with any CPUC/CA MUTCD regulations and requirements?	☐ Yes ☐No
	Does this Exception impact economic, social, or environmental issues?	☐ Yes ☐No
EXCEPTION INFORMATION	Does the exception affect the following? Engineering Standards ☐ Yes ☐ No Specifications ☐ Yes ☐ No Design Criteria ☐ Yes ☐ No Manual Section ☐ Yes ☐ No	
	Description of Exception/Waiver:	
	Rational for Exception/Waiver:	
	Mitigation Measures:	

REASON FOR REQUEST	Design Exception/Waiver must address the following: • Established Design Criteria versus proposed and existing criteria • Reason the appropriate design criteria cannot be met • Justification for the proposed Criteria • Any background information which documents, supports, or justifies the request • Any mitigation that will be provided to further support or justify the request • Safety implication of the request • The comparative cost of the full standard versus the lower design being proposed. Show what it would cost to meet the standard for which the Exception/Waiver is requested • Long term effect of the reduced design as compared to the full standard
ATTACHMENTS	The completed SCRRA Design Exception Form and all supporting documentation (drawings, reports, and calculations) shall be submitted with all requests for exceptions. This form (at the end of this page) and all documentation attached with the request must be stamped and sealed by a Registered California Engineer.

Part 2: SCRRA approval Signatures

SCRRA APPROVALS	**Name**	**Date**
	Ron Mathieu, Manager, Rail Corridor C&E	
	Naresh Patel, P.E., Manager, Civil Engineering	
	Dan Guerrero, Manager, C&S Engineering	
	Fred Jackson, Manager, System Safety	
	Darrell Maxey, P.E., Director, E&C	

DISCLAIMER

SCRRA Engineering Standards are intended for SCRRA approved uses only. FOR NON-SCRRA APPROVED USES: SCRRA and its member agencies, directors, officers, employees and/or agents shall not be responsible for the accuracy or completeness of the data or information contained herein. The selection and use of these standards, while designed in accordance with generally accepted engineering principles and practices, is the sole responsibility of the user and should not be used without consulting a registered professional engineer. All warranties and representations of any kind are disclaimed. Anyone making use of this information agrees that it assumes all liability arising from such use. No part of these standards should be reproduced or distributed in any form or by any means without the prior written permission of SCRRA. All rights reserved.

Since revisions or additions to the engineering standards may occur at any time, the user agrees to indemnify, defend, by counsel satisfactory to SCRRA and Member Agency, and hold harmless SCRRA, Member Agencies, and Operating Railroad, and their respective officers, commissioners, employees, agents, successors and assigns. ("Indemnitees"), and each of them to the maximum extent allowed by law, from and against all loss, liability, claims, demands, suits, liens, claims of lien, damages (including incidental consequential damages), costs and expenses (including, without limitation, any fines, penalties, judgments, actual litigation expenses and experts' and actual attorneys' fees), that are incurred by or asserted against Indemnitees arising out of or connected in any manner with the user's use of outdated engineering standards.

Updating the contents of the manual is a continued process, and revisions/replacements are issued periodically. Questions, comments, and proposed recommendations for changes may be sent to SCRRA at 279 E. Arrow Highway, Suite A, San Dimas, CA 91773.

SCRRA ENGINEERING STANDARDS INDEX SUMMARY

ENGINEERING STANDARD NO.		DESCRIPTION	CURRENT REVISION
1000		**GENERAL**	
	1000	Drawing Index	
	1100	Abbreviations	
	1200	Symbols	
2000		**TRACK**	
	2000	Roadbed Sections	
	2100	Clearances	
	2200	Track Geometry	
	2300	Rail Sections	
	2350	Rail Fasteners	
	2400	Ties	
	2450	Tie Plates	
	2500	Joint Bars and Bolts	
	2600	Derails	
	2700	Switch Stands, Rollers and Rods	
	2800	Turnouts	
3000		**STATIONS**	
	3000	Station Configuration	
	3100	Mini High Platforms	
	3300	Station Signage	
	3400	Station Communication Equipment	
	3500	EPIS	
4000		**GRADE CROSSINGS**	
	4000	Pedestrian Facilities	
	4200	Precast Concrete Panels	
	4300	Temporary Traffic Control	
5000		**RIGHT-OF-WAY**	
	5000	Pipeline Standards	
	5100	Fence Standards	
	5200	Construction Project Signs	
	5300	Wayside Signs	

SCRRA ENGINEERING STANDARDS INDEX SUMMARY

ENGINEERING STANDARD NO.		DESCRIPTION	CURRENT REVISION
		STRUCTURES	
6000	6000	Bridges	
	6100	Signs for Structures	
	6300	Culverts	
7000		**MAINTENANCE AND LAYOVER FACILITIES**	
	7000	Walkway Clearances	
	7100	Facilities	
	7200	Compressed Air Facility	
	7300	Power System	
8000		**SIGNAL**	
	8000	Highway-Rail Grade Crossings	
	8100	General	
	8300	*Crossings*	
	8400	*Gate Arms*	
	8500	Signal Apparatus	
	8600	Switch Apparatus	
	8700	Detectors	
	8800	Signal Facility Retaining Wall	
9000		**COMMUNICATIONS**	
	9000	General	
	9100	Data Radio System	
	9200	Voice Radio System	
	9300	Base Stations	
	9400	Communications Shelter	
	9500	Fiber Optic - Inside Plant	
	9600	Fiber Optic - Outside Plant	
	9700	Microwave Radio	
	9800	Leased Telephone Circuits	
	9900	Products	

SCRRA ENGINEERING STANDARDS INDEX

ENGINEERING STANDARD NO.		DESCRIPTION	CURRENT REVISION
		GENERAL	
1000	1000	**ABBREVIATIONS**	
	1101	General Abbreviations Civil and Track	
	1102	Signal, Communications and Station Communications	
	1103	General Abbreviations Architectural and Engineering	
	1200	**SYMBOLS**	
	1201-01	Standard Abbreviations	
	1201-02	Standard Abbreviations	
	1201-03	Standard Symbols and Patterns	
	1201-04	Standard Linestyles	
	1211	Standard Title Blocks	
	1212	Lettering For Signs	
2000		**TRACK**	
	2000	**ROADBED SECTIONS**	
	2001	Roadbed Sections for Track Construction using Wood Ties	
	2002	Roadbed Sections for Track Construction using Concrete Ties	
	2003	Roadbed Sections for Exposure to Ocean Surf	
	2004	HMAC Underlayment for Select Critical Locations	
	2005	Turnout Construction Pads	
	2007-01	Grain Size Distribution for Subgrad Soils	
	2007-02	Ballast & Subballast Gradation Table	
	2100	**CLEARANCES**	
	2101	Standard Clearance of Structures	
	2102	Minimum Clearance of Structures	
	2103	Car (Equipment) Clearance Envelope	
	2104	Minimum Vertical Clearances for Wires	
	2105	Turnout Walkways and HMAC Underlayment	
	2106	Track Clearance Points at Grade Crossings	
	2107	Track No Ride Zone at Turnouts	
	2108	Switch Stand Placement	
	2109	CPUC Minimum Walkway Standards	
	2200	**TRACK GEOMETRY DATA TABLE**	
	2201	Vertical Curves Geometry	
	2202-01	Horizontal Curve Geometry	
	2202-02	Track Geometry Data Table	
	2203	Curve Speed, Superelevation and Spiral Length Notes	
	2204-01	Table P3.5 - 3.5 Inch Superelevation Underbalance Standard Spiral Length Table for Passenger Operations	
	2204-02	Table F2.0 - 2.0 Inch Superelevation Underbalance Standard Spiral Length Table for Freight Operations	
	2204-03	Table P3.5M - 3.5 Inch Superelevation Underbalance Minimum Spiral Length Table for Passenger Operations	
	2204-04	Table F2.0M - 2.0 Inch Superelevation Underbalance Minimum Spiral Length Table for Freight Operations	
	2204-05	Table PML - 4.0 Inch Superelevation Underbalance Maintenance Limit for Passenger Operations	
	2204-06	Table FML - 3.0 Inch Superelevation Underbalance Maintenance Limit for Freight Operations	
	2206	Superelevation Tags	
	2207	Track Center Spacing	
	2208	Speed Through Turnouts	
	2209	Facing Point Turnout Arrangement and Spacing	
	2300	**RAIL SECTIONS**	
	2301	Data for Standard Rail Sections	
	2302	Inside Guard Rail for Concrete Ties Details	
	2304	Inside Guard Rail for Wood Ties Details	
	2350	**RAIL FASTENERS**	
	2351-01	Rail Anchor Applications to Jointed Rail	
	2351-02	Rail Anchor Applications for Continuous Welded Rail With Wood Crossties	
	2351-03	Rail Anchor Applications for Continuous Welded Rail-Transition from Wood to Concrete Cross Ties	
	2351-04	Rail Anchor Patterns for CWR on Bridges	
	2352	Track Bolts, Nuts and Washer	
	2353	Switch Rod Clips and Bolts	
	2354	Switch Point Clamp	
	2355	6" Track Spikes, 15/16" Screw Fastener, Tie Plugs and Tight Spike Filler	
	2356	PIM 532 Screw, Insert and Helical Washer for Concrete Ties	
	2357	Square Head Frog Bolts, Square and Hex Nuts and Hardened Flat Washers	
	2358	Tapered Frog Bolt Assembly	
	2359	Spherical (Self Centering) Washer Set	
	2360-01	"Pandrol Fastclip" Concrete Tie Assemblies for Various Rail Combinations	
	2360-02	"Pandrol Fastclip" Concrete Tie Assemblies for Various Rail Combinations	
	2360-03	"Pandrol Fastclip" Concrete Tie Assemblies for Various Rail Combinations	
	2361	"Pandrol" Joint E-Clip Type E2063	
	2362	"Pandrol" Brand Rail Clip "e" Clip	
	2364	"Pandrol" Concrete Tie Pads for use with 5 1/2" & 6" Base Rail	

SCRRA ENGINEERING STANDARDS INDEX

ENGINEERING STANDARD NO.		DESCRIPTION	CURRENT REVISION
		TRACK	
2000	2350	**RAIL FASTENERS**	
	2365-01	"Pandrol Fastclip" Type Side Post Insulators	
	2365-02	Insulator Side Post for FC1600 Series "Pandrol Fastclip"	
	2366	"Pandrol" Type Fastclip 136LB FC1601 and 115LB - 119LB FC1603	
	2367	"Pandrol" Type Toe Insulator to Suit Fastclip 1600 Series Rail Clips	
	2368	"Pandrol" Type Toe Insulator to Suit "Pandrol" Fastclip 1600 Series Rail Clips For Standard Rail & Joint Applications	
	2369	Weld-On Shoulder for "Pandrol" E-Clips	
	2370	Poly-Insulated Joint 141-136-132 RE Rail	
	2371	Inside Guard Rail Plates for Concrete Ties	
	2372	Forged Transition Rails for New 141/136 LB to 115 LB New and 1/4" Head Loss Rail	
	2373	Transition Rails (Planed) for New 141 LB and 136 LB to 132 LB 1/4" Head Loss	
	2375	Evergrip Double Head Spike	
	2380	Typical Track Panels 115 LB and 136 LB Timber Ties	
	2400	**TIES**	
	2402	Concrete Tie and Fastclip Fastening Standard	
	2403	8'-3" Bottom Pad Tie Fastclip for Use on Bridge Decks	
	2406	Concrete Tie - Guard Rail	
	2407	Concrete Tie - Guard Rail With Neoprene Pad	
	2450	**TIE PLATES**	
	2451	Standard 13" Tie Plate for 5 1/2" Base Rail	
	2452	14" Tie Plate for 6" Base Rail	
	2453	Rolled Steel Tie Plate to Suit 5 1/2" Base AREMA Rail and Pandrol Rail Clips E2055	
	2454	Rolled Steel Tie Plate to Suit 132 LB RE - 141 LB RE Rail and Pandrol Rail Clips E2055	
	2455	Cast Shoulder to Suit Series FC1600 Fastclip	
	2460-01	Tie Plate Spiking Patterns	
	2460-02	Tie Plate Spiking Patterns For "SP" Plates	
	2463	Double Shoulder Tie Plates 5 1/2" and 6" Base Rail	
	2500	**JOINT BARS AND BOLTS**	
	2501-01	Rail and Joint Assembly for 115 LB. "RE" Rail	
	2501-02	Rail and Joint Assembly for 115 LB. "RE" Rail for Maint. Use W/ Former SP Punch 2 1/2" x 6 1/2" x 6 1/2"	
	2502	Rail and Joint Assembly 136 LB. "RE" Rail	
	2503	Compromise Joints for Various Weights of Rail	
	2504	Prefabricated Bonded Insulated Joint	
	2600	**DERAILS**	
	2601	Derail Use Requirements	
	2602	Connecting Rod Details for Derails	
	2604-01	16'-6" Double Point Derail (LH Shown)	
	2604-02	16'-6" Double Point Derail Bill of Material LH and RH	
	2610	Derailing Switch Target	
	2611	Type "B" Derail Sign	
	2612	Derail Switch Notice	
	2613	Bi-Directional Derail With Crowder	
	2614	Bi-Directional Derail With Crowder with 36E Switch Stand	
	2615	Rail Lubricator	
	2616	Steel Bumping Post Details	
	2700	**SWITCH STANDS, ROLLERS AND RODS**	
	2701	High Star Switch Stand Double Crank - Double Headblock	
	2702	Insulated Joint Placement and Derail Location	
	2703-01	Color Indicators of Targets on Switch Stands	
	2703-02	Color Indicators of Targets on Switch Stands	
	2704	Low Star Switch Stand Double Crank - Double Headblock	
	2706	Insulated Gauge Rod	
	2707	22E Switch Stand	
	2708-01	36E & 36EH Switch Stands	
	2708-02	36E & 36EH Switch Stands	
	2709	112E High Switch Stand	
	2710	Switch Stands Hand Throw Adjustments and Installation Instructions	
	2712	Connecting Rod Assembly	
	2800	**TURNOUTS**	
	2801	No. 8, RBM Frog, Tangential (Wood Tie)	
	2802	No. 10, RBM Frog, Tangential (Wood Tie)	
	2803	No. 10, WSM Frog, Schwihag Rollers, Pseudo Tangential (Wood Tie)	
	2805	No. 14, WSM Frog, Schwihag Rollers, Pseudo Tangential (Wood Tie)	
	2806	No. 20, WSM Frog, Schwihag Rollers, Pseudo Tangential (Wood Tie)	
	2807	No. 24, WSM Frog, Schwihag Rollers, Pseudo Tangential (Wood Tie)	
	2808	No. 10 Crossover (Tie Pattern & Panel Between Frogs) Wood Tie)	
	2809	No. 14 Crossover (Tie Pattern & Panel Between Frogs) Wood Tie)	
	2810	No. 20 Crossover (Tie Pattern & Panel Between Frogs) Wood Tie)	
	2811	No. 24 Crossover (Tie Pattern & Panel Between Frogs) Wood Tie)	

SCRRA ENGINEERING STANDARDS INDEX

ENGINEERING STANDARD NO.		DESCRIPTION	CURRENT REVISION
2000		**Track**	
	2800	**TURNOUTS**	
	2817	No. 10 Crossover (Tie Pattern & Panel Between Frogs) (Concrete Tie)	
	2818	No. 14 Crossover (Tie Pattern & Panel Between Frogs) (Concrete Tie)	
	2819	No. 20 Crossover (Tie Pattern & Panel Between Frogs) (Concrete Tie)	
	2820	No. 24 Crossover (Tie Pattern & Panel Between Frogs) (Concrete Tie)	
	2840	No. 8 Double Slip Switch Turnout (Wood Ties)	
	2841	No. 10 Double Slip Switch Turnout (Wood Ties)	
	2842	Double Switch Point Derail 16-6 Hand Throw	
	2843	Double Switch Point Derail 16-6 Switch Machine	
	2901 (1-14)	No. 8, 136 LB. Double Slip Crossing with Solid Manganese Frog	
	2902 (1-20)	No. 10, 136 LB. Double Slip Crossing with Moveable Point Frog	
	2911 (1-15)	No. 8, 136 LB. R.H. RBM Frog Turnout and Crossover	
	2921 (1-16)	No. 10, 136 LB. R.H. RBM Frog Turnout and Crossover	
	2922 (1-15)	No. 10, 136 LB. R.H. SR Frog Turnout and Crossover	
	2931 (1-16)	No. 14, 136 LB. R.H. RBM Frog Turnout and Crossover	
	2941 (1-15)	No. 20, 136 LB. R.H. RBM Frog Turnout and Crossover	
	2951 (1-16)	No. 24, 136 LB. R.H. RBM Frog Turnout and Crossover	
3000		**STATION**	
	3000	**STATION CONFIGURATION**	
	3001	Abbreviations, Legend and General Notes	
	3002	Side Platforms	
	3003	Center Platforms	
	3004	Locomotive and Car Elevations	
	3100	**MINI HIGH PLATFORMS**	
	3101-01	Mini-High Platform Details	
	3101-02	Mini-High Platform Details	
	3101-03	PreCast Mini High Platform	
	3101-04	PreCast Mini High Platform Details	
	3201	Side Platforms Typical Sections	
	3202	Center Platforms Typical Sections	
	3203	Detectable Warning Tile and Marking Details	
	3300	**STATION SIGNAGE**	
	3301-01	Sheet Index and General Notes	
	3301-02	Graphic Standards	
	3302-01	Station Sign Menu	
	3302-02	Station Sign Menu	
	3303-01	Station Site Typical Sign Location Plan	
	3303-02	Side Platform Typical Sign Location Plan	
	3303-03	Side Platform Typical Sign Location Plan	
	3305	Primary Identification Monument Sign - Sign Type I	
	3306	Vehicular Directional Freestanding Sign - Sign type 2	
	3307-01	Information / Restrictive Sign Copy Layouts - Sign Type 3	
	3307-02	Information / Restrictive Sign Details - Sign Type 3	
	3307-03	Information / Restrictive Sign Attachment Details - Sign Type 3	
	3307-04	Information / Restrictive Sign Exit Sign Installation Details - Sign Type 3	
	3308	Trailblazer Directional Sign - Sign Type 4	
	3309	Parking Restrictive Sign Pole Mounted - Sign Type 5	
	3310	Accessible Parking Identification Sign - Sign Type 6	
	3311	Accessible Parking Information Sign - Sign Type 7	
	3314	Track Directional Sign - Sign Type 11	
	3315	Elevator Directional Sign - Sign Type 12	
	3316	Elevator Identification Flag Mounted - Sign Type 13	
	3317	Pedestrian Warning Signs at Station Platforms - (Sign Type 14)	
	3318	Pedestrian Directional Sign Gate Mounted - Sign Type 15	
	3319	Pedestrian Directional Look Sign Post Mounted - Sign Type 16	
	3320	Station Identification Sign (Small) - Sign Type 20	
	3321	Station Identification Sign (Large) - Sign Type 21	

SCRRA ENGINEERING STANDARDS INDEX

ENGINEERING STANDARD NO.		DESCRIPTION	CURRENT REVISION
3000		**STATION**	
	3300	**STATION SIGNAGE**	
	3322	CPUC Railroad Crossing Sign Post Mounted - Sign Type 22	
	3323	Accessibility Sign - Sign Type 23	
	3324	Pedstrian Restrictive / Information Sign - Sign Type 24	
	3325	ADA Station Identification Sign (Braille) - Sign Type 25	
	3326	Map / Info Kiosk Freestanding - Sign Type 26	
	3327	ADA Station Identification at Track - Sign Type 27	
	3328-01	Display Case Wall or Post Mounted - Sign Type 28	
	3328-02	Display Case Post Mounted Single Sided - Sign Type 28	
	3330-01	Train Position Marker - Sign Type 30	
	3330-02	New Train Position Marker - Sign Type 30	
	3330-03	Side Platform Typical Sign Location Plan	
	3330-04	Side Platforms Locomotive Position Marker Plan	
	3330-05	Side Platforms Locomotive Position Marker Plan	
	3330-06	Center Platform Locomotive Position Marker Plan	
	3331	Ticket Validator Decal - Sign Type 31	
	3332	Passenger Information Telephone - Sign Type 41	
	3400	**STATION COMMUNICATION EQUIPMENT - EPIS**	
	3401-01	Metrolink Station Conduit Layout - Side Platform	
	3401-02	Metrolink Station Conduit Layout - Center Platform	
	3402-01	Metrolink Station Conduit Layout Details - Side Platform	
	3402-02	Metrolink Station Conduit Layout Details - Center Platform	
	3403	Single Tennant Communications Equipment Room Conduit Layout	
	3404	Shared Tennant Communications Equipment Room Conduit Layout	
	3405-01	Metrolink Station TVM Pad Details	
	3405-02	Metrolink Station TVM Pad Details	
	3502	EPIS Mounting Location Side Platform	
	3503	EPIS Mounting Location Center Platform	
	3505-01	Metrolink Station EPIS Block Diagram (Existing Station)	
	3505-02	Metrolink Station EPIS Block Diagram (New Station)	
	3506	Metrolink Station MTTV Blockout Plan	
	3507	Metrolink Station EPIS Power Distribution Block Diagram	
	3508	Changeable Message Sign Mounting Bracket Details	
	3509	Metrolink EPIS LED Mounting Details	
	3510	Metrolink EPIS LED Mounting Details	
	3512	EPIS Materials List	
4000		**GRADE CROSSINGS**	
	4000	**PEDESTRIAN FACILITIES**	
	4001	Highway Rail Grade Crossing - Typical Sections	
	4002-01	Pedestrian Swing Gate Details	
	4002-02	Pedestrian Swing Gate Details	
	4004	Pedestrian Crossing Design Consideration Table	
	4005	Pedestrian Barricade and Metal Hand Railing Details	
	4006	Grade Crossing Marking and Signage	
	4011	Pedestrian Facilities At Vehicle Crossing Entrance Gates Only	
	4012	Pedestrian Facilities At Vehicle Crossing Entrance / Exit Gates	
	4013	Pedestrian Facilities At Acute Angle Vehicle Crossing - Entrance Gates Only	
	4014	Pedestrian Facilities At Acute Angle Vehicle Crossing - Entrance / Exit Gates	
	4015	Pedestrian Facilities At Obtuse Angle Vehicle Crossing - Entrance / Exit Gates	
	4016	Pedestrian Facilities At Obtuse Angle Vehicle Crossing - Entrance Gates Only	
	4017	Typical Pedestrian Treatment Details	
	4018	Pedestrian Crossing Only	
	4020	Pedestrian / Vehicle Crossing Adjacent to Station	
	4021	Pedestrian Crossing Adjacent to Station	
	4200	**PRECAST CONCRETE PANELS**	
	4201-01	Precast Concrete Panels for Highway - Rail Grade Crossing	
	4201-02	Precast Concrete Panels for Highway - Rail Grade Crossing	
	4201-03	Precast Concrete Panels for Highway - Rail Grade Crossing	
	4300	**TEMPORARY TRAFFIC CONTROLS**	
	4301-01	Temporary Traffic Control At or Near Grade Crossings	
	4301-02	Temporary Traffic Control At or Near Grade Crossings	
	4302	Temporary Construction Crossing	
	4310	Highway - Railroad Crossing Crossbuck Sign	
	4311	Private, Pedestrian And Bicycle Railroad Grade Crossing Sign	

SCRRA ENGINEERING STANDARDS INDEX

ENGINEERING STANDARD NO.		DESCRIPTION	CURRENT REVISION
5000			
		RIGHT-OF-WAY	
	5000	**PIPELINE STANDARDS**	
	5001	Pipelines for Non-Flammable Substances Across or Along R.O.W.	
	5002	Pipelines for Flammable and Hazardous Substances Across or Along R.O.W.	
	5100	**FENCE STANDARDS**	
	5102	Station Fencing Platform Edge Fence and Inter-track Fence	
	5104	R.O.W. Fencing (Tube Steel)	
	5105	R.O.W. Fencing (Welded Wire Mesh)	
	5106	R.O.W. Fencing (Chain Link)	
	5107-01	Security Access Gate Details	
	5107-02	Security Access Gate Details	
	5200	**CONSTRUCTION PROJECT SIGNS**	
	5201	Construction Project Funding Identification Sign (Federal)	
		WAYSIDE SIGNS	
	5210	Details for Installing Signs at Grade	
	5211	Milepost	
	5212	Quarter Mile Increment Marker	
	5213	Permanent Speed Signs	
	5214	Warning Signs	
	5215	Stop, Slow and Resume Speed Flags and Signs	
	5216	Whistling Point / Quiet Zone Sign	
	5217	Yard Limit Sign for Terminal Tracks	
	5218	CP Limit Sign	
	5219	Flag Stanchion	
	5222	Station Signs for Other Than CTC Territory	
	5223	Mechanical Limit and No Ride Zone Signs	
	5225	Warning Paddle	
	5229	Underground Cable Sign	
	5230	Marking For Track Identification	
6000			
		STRUCTURES	
	6000	**BRIDGES**	
	6001 1-26	Precast / Prestressed Concrete Double Box Beam Bridges	
	6002 1-22	Precast / Prestressed Concrete Slab Beam Bridges	
	6003 1-4	General Details Precast Concrete Culverts (Single and Double Box)	
	6100	**SIGNS FOR STRUCTURES**	
	6101	Bridge Trestle & Culvert Numbers	
	6102	Tunnel Numbers	
	6103	Begin Channel Sign	
	6300	**CULVERTS**	
	6301	End Treatments for Pipe Culverts General Notes	
	6302-01	Gereral Arrangement for Type A Headwalls	
	6302-02	Culvert Pipe Lengths for Type A Headwalls	
	6304-01	Type A-1 Headwall Framing Details	
	6304-02	Type A-1 Headwall Reinforcing Details	
	6304-03	Type A-1 Headwall Reinforcing Schedule	
	6306-01	Type A-2 Headwall Framing Details	
	6306-02	Type A-2 Headwall Reinforcing Details	
	6306-03	Type A-2 Headwall Reinforcing Schedule	
	6308-01	Type A-3 Headwall Framing Details	
	6308-02	Type A-3 Headwall Reinforcing Details	
	6308-03	Type A-3 Headwall Construction Sequence	
	6308-04	Type A-3 Headwall Reinforcing Schedule	
	6310-01	Type A-M Headwall Framing Details	
	6310-02	Type A-M Headwall Reinforcing Details	
	6310-03	Type A-M Headwall Reinforcing Schedule	
	6330	Handrail Layout and Details	
	6340	Construction Notes & Table for Smooth & Corrugated Steel Pipe Culverts	

SCRRA ENGINEERING STANDARDS INDEX

ENGINEERING STANDARD NO.		DESCRIPTION	CURRENT REVISION
7000			
		MAINTENANCE AND LAYOVER FACILITIES	
	7000	**WALKWAY CLEARANCES**	
	7001-01	Walkway Clearance for Facilities With Under Track Pits	
	7001-02	Walkway Clearance for Facilities WithOut Under Track Pits	
	7100	**FACILITIES**	
	7101-01	Dump Station Layout	
	7101-02	Dump Station Vault Details	
	7101-03	Dump Station Vault Aluminum Lid Details	
	7102	Flushing Manhole Details	
	7103	Potable Water Station	
	7104-01	Typical Inspection Pit Plan	
	7104-02	Inspection Pit Section and Details	
	7104-03	Inspection Pit Partial Elevation	
	7104-04	Inspection Pit Stair Plan and Section	
	7104-05	Inspection Pit Stair Plan, Sections and Details	
	7105	Jacking Pad Plan, Sections and Details	
	7109	Oil Drip Collector Pans Plan, Elevation and Section	
	7110	Track Spacing at Maintenance Facilities	
	7111	Roadway Details at Maintenance Facilities	
	7112	Lighting at Maintenance Facilities Foundation and Fixture	
	7200	**COMPRESSED AIR FACILITY**	
	7201-01	Compressed Air Plumbing Schedule & Details	
	7201-02	Miscellaneous Equipment Foundations	
	7300	**POWER SYSTEM**	
	7301-01	Ground Power System - Typical 600A Panel Schematic	
	7301-02	Ground Power System - Panel Layouts	
	7302	480V Wayside Power - Cordset Details	

SCRRA ENGINEERING STANDARDS INDEX

	ENGINEERING STANDARD NO.	DESCRIPTION	CURRENT REVISION
8000			
		SIGNAL	
	8000	**HIGHWAY-RAIL GRADE CROSSING**	
	ES8000-01	Minimum Braking Distance Table for Freight Trains Ascending	
	ES8000-02	Minimum Braking Distance Table for Freight Trains Descending	
	ES8005-01	Freight Train Reducing Distances	
	ES8005-02	Freight Train Reducing Distances	
	ES8005-03	Freight Train Reducing Distances	
	ES8005-04	Freight Train Reducing Distances	
	ES8010	Passenger Train Braking and Reducing Distances	
	ES8020-01	Speed - Time - Distance Chart	
	ES8020-02	Speed - Time - Distance Chart	
	ES8030	Standard Bit Assignment	
	ES8100	**GENERAL SIGNAL**	
	ES8100	Circuit Plan Symbols	
	ES8105	Component Symbols	
	ES8110	Shelf and Vital Relay Symbols	
	ES8115	Relay Contact Symbols	
	ES8120	Plug-In Relay Base Coil & Jumper Wiring with Contact Arrangement	
	ES8125	Grade Crossing Symbols	
	ES8130	Wayside Signal Symbols	
	ES8135	Switch and Derail Symbols	
	ES8140	Circuit Controller Contact Symbols	
	ES8145	Ohms Law	
	ES8150	Wago and Board Wiring Details	
	ES8155	Cable Junction Case Wiring Details	
	ES8205	Typical Signal Terminal Box	
	ES8210-01	Cable Termination	
	ES8210-02	Cable Termination	
	ES8215-01	Placement of Instrument Enclosure	
	ES8215-02	Placement of Signal Foundation	
	ES8220	Placement of Insulated Joints	
	ES8223	Conduit Installation	
	ES8225-01	Placement of Pull Boxes and Conduit	
	ES8225-02	Typical Conduit Layout for Pullbox	
	ES8230	Track Wire Installation	
	ES8235	Termination Shunt Installation	
	ES8237	Tuned Joint Coupler and Wide Band Shunt Installation	
	ES8240	Rail and Frog Bonding Details	
	ES8245	Placement of Fouling Bridles	
	ES8250	Foundation For Ped Gate with Stubmast	
	ES8253	Foundation For Dwarf Gate with Stubmast	
	ES8255	Foundation for ground signal, gate, & flasher mast	
	ES8260	Automatic Train Stop Inductor Layout	
	ES8270-01	Typical Legend for Highway-Rail Grade Crossing Instrument Enclosure	
	ES8270-02	Typical Legend for Highway-Rail Grade Crossing Instrument Enclosure	
	ES8270-03	Typical Legend for Highway-Rail Grade Crossing Instrument Enclosure	
	ES8271	Typical Legend For Control Point Instrument Enclosure	
	ES8275	Typical Power Off Indication Light	
	ES8280	Grounding Details	
	ES8290	Standard Signs Begin Circuit, End Circuit	
	ES8291	Standard Signs Begin CTC, End CTC	
	ES8292	Standard Wayside Stop Sign	
	ES8300	**CROSSINGS**	
	ES8300	Flashing Light Signals With or Without Gate	
	ES8305	Flashing Light Signals Configurations	
	ES8306	Flashing Light Signals with Gate Configurations	
	ES8308	Pedestrian Gate Assembly With or Without Flashing Light	
	ES8320-01	Single Mast Crossing Cantilever 10' Thru 30' Arm Length	
	ES8320-02	Model W Walkout Cantilever Signal	
	ES8325-01	Double Mast Crossing Cantilever 30' Thru 40' Arm Length	
	ES8325-02	Model WNR Walkout Cantilever Signal	
	ES8330	Foundation For Cantilever Assemblies	
	ES8350-01	Location Plan Flashing Light Signals with Entrance Gates	
	ES8350-02	Location Plan Flashing Light Signals with Entrance Gates	
	ES8355	Location Plan Flashing Light Signals with Entrance Gates and Exit Gates	
	ES8360	Typical Location Plan Cantilever Flashers Entrance With Gates	
	ES8365	Typical Location Plan Cantilever Flashers Entrance With Gates and Exit Gates	
	ES8370	Typical Location Plan Flashing Light Signals With Gates and Median	

SCRRA ENGINEERING STANDARDS INDEX

	ENGINEERING STANDARD NO.	DESCRIPTION	CURRENT REVISION
8000			
	SIGNAL		
	ES8300	**CROSSINGS**	
	ES8375	Typical Location Plan Flashing Light Signals With Entrance and Exit Gates And Median	
	ES8380	Typical Location Plan Cantilever Flashers with Entrance Gates and Median	
	ES8385	Typical Location Plan Cantilever Flashers with Entrance and Exit Gates and Median	
	ES8390	Location Plan Pedestrian Flashing Light Signals With Gates Crossing Configuration	
	ES8395	Location Plan - Pedestrian with Gate	
	ES8400	**GATE ARMS**	
	ES8400	Typical Light Unit Alignment For Flashing Lights Signals	
	ES8405	Vital Placement for Inductive Loops Used With Exit Gates	
	ES8450-01	Typical LED Gate Arm Lamp Complete With Hardware	
	ES8450-02	Typical LED Gate Arm Lamp Specifications	
	ES8450-03	Typical 4" Gate Arm Lamp Complete With Hardware	
	ES8460-01	Typical Fiber Reinforced Polyglass Gate Arm Tip Section with Diagonal Striping	
	ES8460-02	Typical Fiber Reinforced Polyglass Gate Arm Tip Section with Diagonal Striping	
	ES8461-01	Typical Fiber Reinforced Polyglass Gate Arm Mid Section with Vertical Striping	
	ES8461-02	Typical Fiber Reinforced Polyglass Gate Arm Mid Section with Diagonal Striping	
	ES8462-01	Typical Gate Arm Aluminum Base Section with Vertical Striping	
	ES8462-02	Typical Gate Arm Aluminum Base Section with Diagonal Striping	
	ES8465-01	Typical 26' High Wind Gate Arm Kit with Vertical Striping	
	ES8465-02	Typical 26' High Wind Gate Arm Kit with Diagonal Striping	
	ES8466-01	Typical 32' High Wind Gate Arm Kit with Vertical Striping	
	ES8466-02	Typical 32' High Wind Gate Arm Kit with Diagonal Striping	
	ES8470-01	Typical Wind Support	
	ES8470-02	Typical Wind Support	
	ES8500-01	Typical Ground Signals with One Platform Ladder Assembly	
	ES8500-02	Typical Ground Signals with One Platform Ladder Assembly (17'-0" Mast; Single Unit ColorLight)	
	ES8500-03	Typical Ground Signals with One Platform Ladder Assembly (22'-6" Mast; Single Unit ColorLight)	
	ES8500-04	Typical Ground Signals with One Platform Ladder Assembly (17'-0" Mast; Bi-directional ColorLight)	
	ES8500-05	Typical Ground Signals with One Platform Ladder Assembly (22'-6" Mast; Bi-Directional ColorLight)	
	ES8505-01	Typical Ground Signals with Two Platform Ladder Assembly	
	ES8505-02	Typical Ground Signals with Two Platform Ladder Assembly (22'-6" Mast; Double Unit ColorLight)	
	ES8505-03	Typical Ground Signals with Two Platform Ladder Assembly (22'-6" Mast; Bi-Directional ColorLight With Second Unit)	
	8500	**SIGNAL APPARATUS**	
	ES8510	Wayside Signal Cantilever Structure	
	ES8515	Wayside Signal Bridge Structure	
	ES8520	Typical Dwarf Signal Assembly	
	ES8525-01	Typical LED Color Light Signal Unit	
	ES8525-02	Incandescent Colorlight With Second Unit	
	ES8530	Typical Ground Signal Junction Box	
	ES8540	Typical Signal Number Plate For Use At Intermediate	
	ES8545	Typical "P" Sign for Use At Protective Signal Locations	
	ES8570	Typical Galvanized Signal Ladder	
		Standard Signs Begin Circuit, End Circuit	
		Standards Signs Begin CTC, End CTC	
		Standard Wayside Stop Signal	
	8600	**SWITCH APPARATUS**	
	ES8600	M23A-E Power Switch Machine	
	ES8605-01	M23A-E Dual Control Switch Layout for No. 8, No. 10, & No. 14 Right Hand Turnouts	
	ES8605-02	M23A Dual Control Switch Layout for No. 8, No. 10, & No. 14 Right Hand Turnouts	
	ES8610-01	M23A-E Dual Control Switch Layout for No. 8, No. 10, & No. 14 Left Hand Turnouts	
	ES8610-02	M23A-A Dual Control Switch Layout for No. 8, No. 10, & No. 14 Left Hand Turnouts	
	ES8615-01	M23A-E Dual Control Switch Layout for No. 20 & No. 24 Right Hand Turnouts	
	ES8615-02	M23A-A Dual Control Switch Layout for No. 20 & No. 24 Right Hand Turnouts	
	ES8620-01	M23A-E Dual Control Switch Layout for No. 20 & No. 24 Left Hand Turnouts	
	ES8620-02	M23A-A Dual Control Switch Layout for No. 20 & No. 24 Left Hand Turnouts	
	ES8625	Helper Rod Assembly for No. 20 Right and Left Hand Turnouts	
	ES8630	Helper Rod Assembly for No. 24 Right and Left Hand Turnouts	
	ES8635-01	Push-Pull Helper Rod Assembly Details "T" Crank & Pipe Guide Aux Connection	
	ES8635-02	Push-Pull Helper Rod Assembly Details Screw Jaw, Solid Jaw, & Adjustable Link	
	ES8650	Typical Left or Right Hand Racor Type "MF" Insulated "Front" Rod for Use on No. 8, No. 10, & No. 14 Turnouts	
	ES8655	Typical Left or Right Hand Racor Type "MF" Insulated "Front" Rod for Use on No.20 & no. 24 Turnouts	
	ES8660	Typical Racor Type "SMJ" No. Insulated "Basket" Rod for Use on No. 8, No. 10, & No. 14 Turnouts	
	ES8665	Typical Racor Type "SMJ" No. Insulated "Basket" Rod for Use on No.20 & no. 24 Turnouts	

SCRRA ENGINEERING STANDARDS INDEX

ENGINEERING STANDARD NO.		DESCRIPTION	CURRENT REVISION
8000			
		SIGNAL	
	8700	**DETECTORS**	
	ES8700	Internal Point Detector Bar For M23-A Power Switch Machine	
	ES8705	Point Detector Connecting Rod for Dual Control Switch Applications	
	ES8710	Internal Lock Rod Assembly	
	ES8715	Lock Rod Drop Lug	
	ES8720	Lock Rod Connecting Rod	
	ES8725	Switch Operating Lug (Bear Claw)	
	ES8730	Switch Operating Rod for Dual Control Switch Applications	
	ES8735	Universal Extension Plate for 14'-0" Dapped Headblock tie	
	ES8740	14'-0" or 16'-0" Dapped Headblock Tie	
	ES8750	Various Tie Straps For Dual Control Switch Layout Applications	
	ES8755	Typical Pedestal Junction Box	
	ES8760	Circuit Controller Placement At Hand Throw Switches	
	ES8765	Electric Switch Lock Model 10A	
	ES8800	**SIGNAL FACILITY RETAINING WALL**	
	ES8801	Typical Embankment or Signal Facility with Instrument Enclosure	
	ES8800	Hot Bearing Detector Layout	
	ES8802	Typical Embankment or Signal Facility Signal Foundation Only	
	ES8803	Typical Retaining Wall for Signal Facility Instrument Enclosure with Post and Cable Fall Protection	
	ES8804	Typical Retaining Wall for Signal Facility Instrument Enclosure with Chain Link Fence Fall Protection	
	ES8805	Retaining Wall Block Details	
	ES8810	Dragging Equipment Detector Layout	
	ES8820	High Water Detector Layout Line Connection	
	ES8830	High -Wide Load Detector Layout Valley Subdivision	
	ES8831	High -Wide Load Detector Layout Ventura Subdivision	
9000			
		COMMUNICATIONS	
	9000	**GENERAL**	
	ES9000	List of Acronyms	
	ES9001	Index of Symbols	
	ES9002-01	Notes and Symbols	
	ES9002-02	Notes and Symbols	
	ES9005	Metrolink Subdivisions	
	ES9010-01	Valley Subdivision	
	ES9010-02	Valley Subdivision	
	ES9015-01	Ventura Subdivision	
	ES9015-02	Ventura Subdivision	
	ES9020-01	River Subdivision	
	ES9020-02	River Subdivision	
	ES9025-01	San Gabriel Subdivision	
	ES9025-02	San Gabriel Subdivision	
	ES9030-01	Orange Subdivision	
	ES9030-02	Orange Subdivision	
	ES9040-01	Olive Subdivision	
	ES9040-02	Olive Subdivision	
	ES9045	Pasadena Subdivision	
	ES9080-01	Voice and ATCS Radio Interface at MOC	
	ES9080-02	Voice and ATCS Radio Interface at MOC	
	ES9100	**DATA RADIO SYSTEM**	
	ES9100	Metrolink ATCS Data Radio Network Block Diagram	
	ES9102	ATCS Base Station Block Diagram	
	ES9105	ATCS Data Radio Base Station Directional Antenna	
	ES9110	ATCS Data Radio Base Station Directional Antenna Array	
	ES9115	Control Points ATCS Data Radio Block Diagram	
	ES9120-01	Control Points ATCS 40 Foot Radio Tower & Foundation Plan	
	ES9120-02	Control Points ATCS 40 Foot Radio Tower & Foundation Plan	
	ES9122-01	Control Points ATCS 60 Foot Radio Tower & Foundation Plan	
	ES9122-02	Control Points ATCS 60 Foot Radio Tower & Foundation Plan	
	ES9125	Control Points ATCS Radio Antenna & Tower	
	ES9130	Voice Radio Base Station Omni Directional Antenna	

SCRRA ENGINEERING STANDARDS INDEX

ENGINEERING STANDARD NO.		DESCRIPTION	CURRENT REVISION
9000			
	COMMUN		
	ES9100	**DATA RADIO SYSTEM**	
	ES9140-01	Control Points ATCS Data Radio Wiring Details	
	ES9140-02	Control Points ATCS Data Radio Wiring Details	
	ES9140-03	Control Points ATCS Data Radio Wiring Details	
	ES9140-04	Control Points ATCS Data Radio Wiring Details	
	ES9150	Metrolink Map of Subdivisions CP and ATCS Base Stations	
	ES9155	Metrolink Map of Subdivisions Orange Subdivision	
	ES9160	Metrolink Map of Subdivisions River Subdivision	
	ES9165	Metrolink Map of Subdivisions San Gabriel Subdivision	
	ES9170	Metrolink Map of Subdivisions Valley Subdivision	
	ES9175	Metrolink Map of Subdivisions Ventura Subdivision	
	9200	**VOICE RADIO SYSTEM**	
	ES9200	Block Diagram Metrolink Voice Radio System	
	ES9210	Metrolink VHF Voice Radio Subscriber System Overview	
	ES9215	Voice Radio Base Station Block Diagram	
	ES9230	VHF Radio For Dragging Equipment Detector Interface	
	ES9250	Metrolink Map of Subdivisions All Major Base Radio Stations	
	ES9255	Metrolink VHF Voice Radio Coverage to Trains	
	ES9260	Metrolink VHF Voice Radio Coverage to Portables	
	9300	**BASE STATIONS**	
	ES9300	Base Staion Sites Mountain - Top Site Details	
	ES9310	Base Station Sites ROW Site Details (1 of 2)	
	ES9315	Base Station Sites ROW Site Details (2 of 2)	
	ES9320	Base Station Sites Grounding Plan	
	ES9325	Grounding Configuration CP Antenna Towers	
	ES9330	Grounding Configuration ROW Base Station Sites	
	ES9335	Equipment Housing / Racks For Base Station And Microwave Radio Sites	
	9400	**COMMUNICATIONS SHELTER**	
	ES9400	Shelter Floor and Roof Plan	
	ES9405	Shelter Ceiling Plan And Panel Connections	
	ES9410	Shelter Panel Connection Locations	
	ES9415	Type 1A Shelter Exterior Elevation Views	
	ES9420	Shelter Foundation And Entrance Conduit Details	
	ES9425	Shelter Inside Elevation Views With Conduits	
	ES9430	Type 1A Shelter AC Panel And Device Details	
	ES9435	Type 1B Shelter AC Panel And Device Details	
	ES9440	Shelter Grounding Scheme	
	9500	**FIBER OPTIC - INSIDE PLANT**	
	ES9500	Ethernet Cabling Standards	
	ES9505	Typical Node Floor Plan	
	ES9510-01	Typical Main Distribution Frame	
	ES9510-02	Typical Node AC Power Riser	
	ES9515-01	Typical Cable Ladder Attachments	
	ES9515-02	Cable Label Scheme	
	ES9520-01	Typical Node Rack Space Planning	
	ES9520-02	Typical Node Main Equipment Rack	
	ES9520-03	Typical Node DC Power Rack	
	ES9525-01	Fiber Distribution Panel Details	
	ES9525-02	Node Connectivity Details	
	ES9530-01	Connector Wiring Details	
	ES9530-02	Node DC Power Riser	
	ES9535	T1 Distribution Wiring for Fujitsu 4100	
	ES9540-01	TM100 T1 Multiplexer	
	ES9540-02	Master Clock Connectivity	
	ES9540-03	Node Fiber Multiplexer Details	
	ES9540-04	CP Fiber Multiplexer Details	
	ES9550-01	Cable Run List	
	ES9550-02	Node CCTV Connectivity	
	ES9550-03	Node CCTV Network Equipment	
	ES9550-04	CCTV Fiber Optic Multiplex Equipment	
	ES9550-05	Video/Audio Data Encoder	

SCRRA ENGINEERING STANDARDS INDEX

ENGINEERING STANDARD NO.		DESCRIPTION	CURRENT REVISION
9000			
		COMMUNICATIONS	
	9500	**FIBER OPTIC - INSIDE PLANT**	
	ES9560-01	Equipment Rack Details	
	ES9560-02	Fiber Distribution Panel, 72 Port	
	ES9560-03	Fiber Distribution Panel, 24 Port	
	ES9560-04	SC Fiber Panel Details	
	ES9560-05	Fiber Splice Enclosure Details	
	ES9565-01	100 Base T Patch Panel Details	
	ES9565-02	Category 6 Patch Panel Details	
	ES9570-01	SC to SC Fiber Patch Cord Details	
	ES9570-02	SC to ST Fiber Patch Cord Details	
	ES9570-03	SC to LC Fiber Patch Cord Details	
	ES9570-04	RJ45 to RJ45 Data Patch Cord Details	
	ES9570-05	RJ45 Data Connector Details	
	ES9570-06	Single Mode Fiber Pigtail Details	
	ES9570-07	Vertical AC Power Strip Details	
	ES9570-08	Patch Panel Cable Manager	
	ES9575-01	Horizontal Cable Manager Details	
	ES9575-02	ADC Fiber Duct Details	
	ES9575-03	Cable Ladder Build Details	
	ES9575-04	Grounding Details	
	ES9575-05	Ladde Rack Panning	
	ES9580	Equipment Alignment and Floor Planning	
	ES9585	Fujitsu 4100 Shelf Details	
	ES9590	Fujitsu 4100 Cable Assemblies	
	ES9595	External (Housekeeping) Alarms	
	9600	**FIBER OPTIC - OUTSIDE PLANT**	
	ES9600	Typical OSP Route Diagram	
	ES9605	OSP Cable Assignments	
	ES9610	OSP Cable Labeling	
	ES9615-01	Hand-Hole Butterfly Diagrams	
	ES9615-02	Hand-Hole Layouts	
	ES9615-03	Hand-Hole Placement and Service Loop	
	ES9620-01	Fiber Splice Enclosure Placement Details	
	ES9620-02	Rack Mount Fiber Splicing Details	
	ES9625-01	Fiber Termination Details	
	ES9625-02	Fiber Termination Details	
	ES9630-01	B/B FOC Splice and Termination - Single FDP	
	ES9630-02	B/B FOC Splice and Termination - Dual FDP	
	ES9635-01	72-Strand Fiber Optic Splice and Termination	
	ES9635-02	Backbone-to-Lateral Fiber Splicing	
	ES9635-03	Backbone-to-Lateral Fiber Splicing 72-Strand	
	ES9635-04	FOC Splicing, 96-, 72-, 24- Strand	
	ES9635-05	Multiple Lateral FOC Splicing	
	ES9640	Fiber Optic Cable (FOC) System Schematic	
	ES9645	Communications Shelter Placement	
	ES9650-01	Cable Depths Around Culverts and Ditches	
	ES9650-02	Cable Excavation Locations Near Rails	
	ES9655	COTT Mark Installation	
	ES9660-01	Hand-Hole and Conduit Planning	
	ES9660-02	Conduit Depth and Construction Details	
	ES9660-03	Tyical Hand-Hole Duct System	
	ES9665	Trace Wire Details	
	ES9670-01	Quazite Hand-Hole Specifications	
	ES9670-02	Fiber Splice Enclosure Details	

SCRRA ENGINEERING STANDARDS INDEX

ENGINEERING STANDARD NO.		DESCRIPTION	CURRENT REVISION
9000			
	COMMUN		
	9700	**MICROWAVE RADIO**	
	ES9700	Required Microwave Network Architecture Simplest 2-Site loop Architecture	
	ES9710	Required Microwave Network Architecture Complex 2-Site loop Architecture	
	ES9720	Microwave Radio Site Design	
	ES9750	Simple Line-Of-Site Microwave Radio Link	
	9800	**LEASED TELEPHONE CIRCUITS**	
	ES9800	leased Telephone Circuits Required For Voice And Data Radio Support	
	9900	**PRODUCTS**	
	ES9900	Voice Radio Base Station/Repeater VHF Quantar	
	ES9905	VHF Base Station Omni Directional Antenna	
	ES9910	VHF Base Station Directional Antenna	
	ES9915	Radio Coaxial Transmission Line FOAM Dielectric	
	ES9920	Harris 5200 Microwave Radio	
	ES9925	Signal Processing Unit	
	ES9930	Controller Board (CPU)	
	ES9935-01	Truepoint 5200 Radio Specifications (1 of 2)	
	ES9935-02	Truepoint 5200 Radio Specifications (2 of 2)	
	ES9940	Lightning Arrestor For ATCS Data Radio Antenna Sites 890 to 970 MHZ	
	ES9945	Lightning Arrestor For VHF Voice Radio Antenna Sites	
	ES9950	Tilt Down Tower	
	ES9960-01	ATCS Data Radio Base Station Radio Equipment	
	ES9960-02	ATCS Data Radio Base Station Radio Equipment	
	ES9970-01	ATCS Data Radio Base Station Radio Equipment	
	ES9970-02	ATCS Data Radio Base Station Radio Equipment	

SOUTHERN CALIFORNIA REGIONAL RAIL AUTHORITY (SCAX)
DRAWING INDEX - SIGNALS STANDARDS

CHARTS (ES8000 THRU ES8030)

ES8000-01	MINIMUM BRAKING DISTANCE FOR FREIGHT TRAINS ASCENDING
ES8000-02	MINIMUM BRAKING DISTANCE FOR FREIGHT TRAINS DESCENDING
ES8005-01	FREIGHT TRAIN REDUCING DISTANCES
ES8005-02	FREIGHT TRAIN REDUCING DISTANCES
ES8005-03	FREIGHT TRAIN REDUCING DISTANCES
ES8005-04	FREIGHT TRAIN REDUCING DISTANCES
ES8010	PASSENGER TRAIN BRAKING AND REDUCING DISTANCES USING EQUIVALENT LEVEL TRACK METHOD
ES8020-01	SPEED - TIME - DISTANCE CHART
ES8020-02	SPEED - TIME - DISTANCE CHART
ES8030	STANDARD BIT ASSIGNMENTS

GENERAL SIGNAL (ES8100 THRU ES8292)

ES8100	CIRCUIT PLAN SYMBOLS
ES8105	COMPONENT SYMBOLS
ES8110	SHELF AND VITAL RELAY SYMBOLS
ES8115	RELAY CONTACT SYMBOLS
ES8120	PLUG-IN RELAY BASE COIL & JUMPER WIRING
ES8125	GRADE CROSSING SYMBOLS
ES8130	WAYSIDE SIGNAL SYMBOLS
ES8135	SWITCH AND DERAIL SYMBOLS
ES8140	CIRCUIT CONTROLLER CONTACT SYMBOLS
ES8145	OHMS LAW
ES8150	WAGO AND BOARD WIRING DETAILS
ES8155	CABLE JUNCTION CASE WIRING DETAILS
ES8205	TYPICAL SIGNAL TERMINAL BOX
ES8210-01	CABLE TERMINATION
ES8210-02	CABLE TERMINATION
ES8215-01	PLACEMENT OF INSTRUMENT ENCLOSURE
ES8215-02	PLACEMENT OF SIGNAL FOUNDATION
ES8220	PLACEMENT OF INSULATED JOINTS
ES8223	CONDUIT INSTALLATION
ES8225-01	PLACEMENT OF PULL BOXES & CONDUIT (INFLUENCE STD)
ES8225-02	TYPICAL CONDUIT LAYOUT FOR PULL BOX
ES8230	TRACK WIRE INSTALLATION
ES8235	TERMINATION SHUNT INSTALLATION
ES8237	TJC & WBS INSTALLATION
ES8240	RAIL AND FROG BONDING DETAILS
ES8245	PLACEMENT OF FOULING BRIDLES
ES8250	FOUNDATION FOR PEDESTRIAN GATE WITH STUBMAST
ES8253	FOUNDATION FOR DWARF SIGNAL
ES8255	FOUNDATION FOR GROUND SIGNAL, GATE, & FLASHER MAST
ES8260-01	AUTOMATIC TRAIN STOP (ATS) INDUCTOR LAYOUT
ES8260-02	AUTOMATIC TRAIN STOP (ATS) PLACEMENT REQUIREMENTS
ES8260-03	STANDARD AUTOMATIC TRAIN STOP SIGN FOR USE AT INERT ATS LOCATIONS
ES8270-01	TYPICAL LEGEND FOR HIGHWAY-RAIL GRADE CROSSING INSTRUMENT ENCLOSURE
ES8270-02	TYPICAL LEGEND FOR HIGHWAY-RAIL GRADE CROSSING INSTRUMENT ENCLOSURE
ES8270-03	TYPICAL LEGEND FOR HIGHWAY-RAIL GRADE CROSSING INSTRUMENT ENCLOSURE
ES8271	TYPICAL LEGEND FOR CONTROL POINT INSTRUMENT ENCLOSURE
ES8275	TYPICAL POWER OFF INDICATION LIGHT
ES8280	GROUNDING DETAILS
ES8290	STANDARD SIGNS - BEGIN CIRCUITS, END CIRCUITS
ES8291	STANDARD SIGNS - BEGIN CTC, END CTC
ES8292	STANDARD WAYSIDE STOP SIGN

CROSSING (ES8300 THRU ES8470)

ES8300	FLASHING LIGHT SIGNAL ASSEMBLY WITH OR WITHOUT GATE
ES8305	FLASHING LIGHT SIGNALS CONFIGURATIONS (CPUC #8)
ES8306	FLASHING LIGHT SIGNALS W/ GATE CONFIG. (CPUC #9, #9A, & #9-E)
ES8308	TYPICAL GATE ASSEMBLIES FOR PED. TREATMENTS AT VEHICLE CROSSINGS
ES8309	TYPICAL GATE ASSEMBLY FOR PEDESTRIAN AND BICYCLE ONLY CROSSINGS
ES8320-01	SINGLE MASK CROSSING CANTILEVER ASSEMBLY- 10' THRU 30' ARM LENGTH
ES8320-02	MODEL W WALKOUT CANTILEVER SIGNAL
ES8325-01	DOUBLE MASK CROSSING CANTILEVER ASSEMBLY-30' THRU 40' ARM LENGTH
ES8325-02	MODEL WNR WALKOUT CANTILEVER SIGNAL
ES8330	FOUNDATION FOR CANTILEVER ASSEMBLIES
ES8350-01	LOCATION PLAN - FLASHING LIGHT SIGNALS W/ ENTRANCE GATES
ES8350-02	LOCATION PLAN - FLASHING LIGHT SIGNALS W/ ENTRANCE GATES, GATES, EXIT GATES, PED GATES (INSTRUMENT ENCLOSURE, PULL BOX, AND CONDUIT LAYOUT)
ES8355	TYPICAL LOCATION PLAN - FLASHING LIGHT SIGNALS WITH ENTRANCE & EXIT GATES
ES8360	TYPICAL LOCATION PLAN - CANTILEVER FLASHERS WITH ENTRANCE GATES
ES8365	TYPICAL LOCATION PLAN - CANTILEVER FLASHERS WITH ENTRANCE & EXIT GATES
ES8370	TYPICAL LOCATION - FLASHING LIGHT SIGNALS WITH ENTRANCE GATES & MEDIAN
ES8375	TYPICAL LOCATION PLAN - FLASHING LIGHT SIGNALS WITH ENTRANCE & EXIT GATES & MEDIAN
ES8380	TYPICAL LOCATION PLAN - CANTILEVER FLASHERS WITH ENTRANCE GATES & MEDIAN
ES8385	TYPICAL LOCATION PLAN - CANTILEVER FLASHERS WITH ENTRANCE & EXIT GATES & MEDIAN
ES8390	TYPICAL LOCATION PLAN - PEDESTRIAN FLASHING LIGHT SIGNALS WITH GATES CROSSING CONFIGURATION
ES8395	PEDESTRIAN GATE ASSEMBLY FOR PEDESTRIANS ONLY CROSSINGS
ES8400	TYPICAL LIGHT UNIT ALIGNMENT FOR FLASHING LIGHT SIGNALS AT GRADE CROSSING
ES8405	VITAL PLACEMENT FOR INDUCTIVE LOOPS USED WITH EXIT GATES
ES8450-01	TYPICAL L.E.D. GATE ARM LAMP COMPLETE WITH HARDWARE
ES8450-02	TYPICAL L.E.D. GATE ARM LAMP SPECIFICATIONS
ES8450-03	TYPICAL 4" GATE ARM LAMP COMPLETE WITH HARDWARE
ES8460-01	TYPICAL FIBER REINFORCED POLYGLASS GATE ARM TIP SECTION WITH VERTICAL STRIPING
ES8460-02	TYPICAL FIBER REINFORCED POLYGLASS GATE ARM TIP SECTION WITH 45° DIAGONAL STRIPING
ES8461-01	TYPICAL FIBER REINFORCED POLYGLASS GATE ARM MID SECTION WITH VERTICAL STRIPING
ES8461-02	TYPICAL FIBER REINFORCED POLYGLASS GATE ARM MID SECTION WITH 45° DIAGONAL STRIPING
ES8462-01	TYPICAL GATE ARM ALUMINUM BASE SECTION WITH VERTICAL STRIPING
ES8462-02	TYPICAL GATE ARM ALUMINUM BASE SECTION WITH 45° DIAGONAL STRIPING
ES8465-01	TYPICAL 26'-0" HIGH WIND GATE ARM KIT WITH VERTICAL STRIPING
ES8465-02	TYPICAL 26'-0" HIGH WIND GATE ARM KIT WITH 45° DIAGONAL STRIPING
ES8466-01	TYPICAL 32'-0" HIGH WIND GATE ARM KIT WITH VERTICAL STRIPING
ES8466-02	TYPICAL 32'-0" HIGH WIND GATE ARM KIT WITH 45° DIAGONAL STRIPING
ES8470-01	WIND SUPPORT
ES8470-02	WIND BRACKET

SIGNAL (ES8500 THRU ES8570)

ES8500-01	TYPICAL GROUND SIGNAL WITH ONE PLATFORM LADDER ASSEMBLY
ES8500-02	TYPICAL GROUND SIGNAL WITH ONE PLATFORM LADDER ASSEMBLY (17'-0" MAST; SINGLE UNIT COLORLIGHT)
ES8500-03	TYPICAL GROUND SIGNAL WITH ONE PLATFORM LADDER ASSEMBLY (22'-6" MAST; SINGLE UNIT COLORLIGHT)
ES8500-04	TYPICAL GROUND SIGNAL WITH ONE PLATFORM LADDER ASSEMBLY (17'-0" MAST; BI-DIRECTIONAL COLORLIGHT)
ES8500-05	TYPICAL GROUND SIGNAL WITH ONE PLATFORM LADDER ASSEMBLY (22'-6" MAST; BI-DIRECTIONAL COLORLIGHT)
ES8505-01	TYPICAL GROUND SIGNAL WITH TWO PLATFORM LADDER ASSEMBLY
ES8505-02	TYPICAL GROUND SIGNAL WITH TWO PLATFORM LADDER ASSEMBLY (22'-6" MAST; DOUBLE UNIT COLORLIGHT)
ES8505-03	TYPICAL GROUND SIGNAL WITH TWO PLATFORM LADDER ASSEMBLY (22'-6" MAST; BI-DIRECTIONAL COLORLIGHT WITH SECOND UNIT)

SIGNAL (Continued)

ES8510	WAYSIDE SIGNAL CANTILEVER STRUCTURE
ES8515	WAYSIDE SIGNAL BRIDGE STRUCTURE
ES8520	DWARF SIGNAL ASSEMBLY
ES8525-01	TYPICAL L.E.D. COLORLIGHT SIGNAL UNIT DETAILS
ES8525-02	TYPICAL INCANDESCENT COLORLIGHT SIGNAL UNIT DETAILS
ES8530	TYPICAL GROUND SIGNAL JUNCTION BOX
ES8540	TYPICAL SIGNAL NUMBER PLATE FOR USE AT INTERMEDIATE SIGNAL LOCATIONS
ES8545	TYPICAL "P" SIGN FOR USE AT PROTECTIVE SIGNAL LOCATIONS
ES8570	TYPICAL GALVANIZED SIGNAL LADDER (M.O.)

SWITCH (ES8600 THRU ES8765)

ES8600	M23-E POWER SWITCH MACHINE
ES8605-01	M23A-E DUAL CONTROL SWITCH LAYOUT FOR #8, #10, & #14 RIGHT HAND TURNOUTS
ES8605-02	M23A DUAL CONTROL SWITCH LAYOUT FOR #8, #10, & #14 RIGHT HAND TURNOUTS
ES8610-01	M23A-E DUAL CONTROL SWITCH LAYOUT FOR #8, #10, & #14 LEFT HAND TURNOUTS
ES8610-02	M23-A DUAL CONTROL SWITCH LAYOUT FOR #8, #10, & #14 LEFT HAND TURNOUTS
ES8615-01	M23A-E DUAL CONTROL SWITCH LAYOUT FOR #20 & #24 RIGHT HAND TURNOUTS
ES8615-02	M23-A DUAL CONTROL SWITCH LAYOUT FOR #20 & #24 RIGHT HAND TURNOUTS
ES8620-01	M23A-E DUAL CONTROL SWITCH LAYOUT FOR #20 & #24 LEFT HAND TURNOUTS
ES8620-02	M23-A DUAL CONTROL SWITCH LAYOUT FOR #20 & #24 LEFT HAND TURNOUTS
ES8625	PUSH-PULL HELPER ROD ASSEMBLY FOR #20 RIGHT OR LEFT HAND TURNOUTS
ES8630	PUSH-PULL HELPER ROD ASSEMBLY FOR #24 RIGHT OR LEFT HAND TURNOUTS
ES8635-01	PUSH-PULL HELPER ROD ASSEMBLY DETAILS "T" CRANK & PIPE GUIDE AUX CONNECTION
ES8635-02	PUSH-PULL HELPER ROD ASSEMBLY DETAILS SCREW JAW, SOLID JAW, & ADJUSTABLE LINK
ES8650	TYPICAL LEFT OR RIGHT HAND RACOR TYPE "MF" INSULATED FRONT ROD FOR #8, #10 & #14 TURNOUTS
ES8655	TYPICAL LEFT OR RIGHT HAND RACOR TYPE "MF" INSULATED FRONT ROD FOR #20 & #24 TURNOUTS
ES8660	TYPICAL RACOR TYPE "SMJ" #1 INSULATED BASKET ROD FOR #8, #10 & #14 TURNOUTS
ES8665	TYPICAL RACOR TYPE "SMJ" #1 INSULATED BASKET ROD FOR #20 & #24 TURNOUTS
ES8700	INTERNAL POINT DETECTOR BAR FOR M23-A SWITCH MACHINE (M.O.)
ES8705	POINT DETECTOR CONNECTING ROD FOR POWER SWITCH
ES8710	INTERNAL LOCK ROD ASSEMBLY
ES8715	LOCK ROD DROP LUG
ES8720	LOCK ROD CONNECTING ROD
ES8725	SWITCH OPERATING LUG (BEAR CLAW)
ES8730	SWITCH OPERATING ROD FOR DUAL CONTROL SWITCH APPLICATIONS
ES8735	UNIVERSAL EXTENSION PLATE FOR 14'-0" DAPPED HEADBLOCK TIE
ES8740	14'-0" OR 16'-0" DAPPED HEADBLOCK TIE
ES8750	VARIOUS TIE STRAPS FOR DUAL CONTROL SWITCH LAYOUT APPLICATIONS
ES8755	TYPICAL PEDESTAL JUNCTION BOX
ES8760	CIRCUIT CONTROLLER PLACEMENT AT HAND THROW SWITCHES
ES8765	ELECTRIC SWITCH LOCK MODEL 10A

DEFECT DETECTOR (ES8800 THRU ES8831)

ES8800	HOT BEARING DETECTOR LAYOUT
ES8810	DRAGGING EQUIPMENT DETECTOR LAYOUT
ES8820	HIGH WATER DETECTOR LAYOUT - LINE CONNECTION
ES8830	HIGH-WIDE LOAD DETECTOR LAYOUT - VALLEY SUBDIVISION
ES8831	HIGH-WIDE LOAD DETECTOR LAYOUT - VENTURA SUBDIVISION

REVISIONS

REV.	DATE	DESCRIPTION	DES.	ENG.
-	08/12/08	FINAL REVIEW	-	-

FINAL REVIEW BY: C&SDRC DATE: 11/21/08

APPROVED BY

Dan C. Guerrero
MANAGER, COMMUNICATIONS AND SIGNALS ENGINEERING

Darrell V. Maxey
DIRECTOR, ENGINEERING AND CONSTRUCTION

THE SOUTHERN CALIFORNIA REGIONAL RAIL AUTHORITY OR IT'S OFFICERS OR AGENTS SHALL NOT BE RESPONSIBLE FOR THE ACCURACY OR COMPLETENESS OF THIS PLAN SHEET

METROLINK
SOUTHERN CALIFORNIA REGIONAL RAIL AUTHORITY
700 SOUTH FLOWER STREET
LOS ANGELES, CALIFORNIA 90017

ENGINEERING STANDARDS

SIGNAL ENGINEERING STANDARDS
DRAWING INDEX

STANDARD
SCALE:
REVISION | SHEET
CADD FILE:

DISCLAIMER

SCRRA Engineering Standards are intended for SCRRA approved uses only. FOR NON-SCRRA APPROVED USES: SCRRA and its member agencies, directors, officers, employees and/or agents shall not be responsible for the accuracy or completeness of the data or information contained herein. The selection and use of these standards, while designed in accordance with generally accepted engineering principles and practices, is the sole responsibility of the user and should not be used without consulting a registered professional engineer. All warranties and representations of any kind are disclaimed. Anyone making use of this information agrees that it assumes all liability arising from such use. No part of these standards should be reproduced or distributed in any form or by any means without the prior written permission of SCRRA. All rights reserved.

Since revisions or additions to the engineering standards may occur at any time, the user agrees to indemnify, defend, by counsel satisfactory to SCRRA and Member Agency, and hold harmless SCRRA, Member Agencies, and Operating Railroad, and their respective officers, commissioners, employees, agents, successors and assigns. ("Indemnitees"), and each of them to the maximum extent allowed by law, from and against all loss, liability, claims, demands, suits, liens, claims of lien, damages (including incidental consequential damages), costs and expenses (including, without limitation, any fines, penalties, judgments, actual litigation expenses and experts' and actual attorneys' fees), that are incurred by or asserted against Indemnitees arising out of or connected in any manner with the user's use of outdated engineering standards.

Updating the contents of the manual is a continued process, and revisions/replacements are issued periodically. Questions, comments, and proposed recommendations for changes may be sent to SCRRA at 279 E. Arrow Highway, Suite A, San Dimas, CA 91773.

TRACK GEOMETRY - HORIZONTAL

CC	COMPOUND CURVATURE
CS	POINT OF CHANGE FROM CIRCULAR CURVE TO SPIRAL
k1	TANGENT DISTANCE OF SHIFTED PC REFERRED TO THE TS
k2	TANGENT DISTANCE OF SHIFTED PT REFERRED TO THE ST
Lc	TOTAL LENGTH OF CIRCULAR CURVE FROM PC TO PT OR SC TO CS
Lsc	LENGTH OF COMPOUND SPIRAL FROM CS TO SC
Ls1	LENGTH OF SPIRAL FROM TS TO SC
Ls2	LENGTH OF SPIRAL FROM CS TO ST
p1	OFFSET FROM INITIAL TANGENT TO PC OF THE SHIFTED CIRCLE OF SPIRALIZED CURVE
p2	OFFSET FROM INITIAL TANGENT TO PT OF THE SHIFTED CIRCLE OF SPIRALIZED CURVE
PC	POINT OF CURVATURE/POINT OF CHANGE FROM TANGENT TO CIRCULAR CURVE
PCC	POINT OF COMPOUND CURVE
PI	POINT OF INTERSECTION
POC	POINT ON CIRCULAR CURVE
POS	POINT ON SPIRAL
POT	POINT ON TANGENT
PRC	POINT OF REVERSE CURVATURE
PS	POINT OF SWITCH
PT	POINT OF TANGENCY/POINT OF CHANGE FROM CIRCULAR CURVE TO TANGENT
SC	POINT OF CHANGE FROM SPIRAL TO CIRCULAR CURVE
SS	POINT OF CHANGE FROM ONE SPIRAL
ST	POINT OF CHANGE FROM SPIRAL TO TANGENT
SPO	POINT ON ORIGIN OF COMPOUND SPIRAL
Ts1	TANGENT DISTANCE FROM TS TO PI
Ts2	TANGENT DISTANCE FROM ST TO PI
TS	POINT OF CHANGE FROM TANGENT TO SPIRAL
Xs1	TANGENT OFFSET AT THE SC
Xs2	TANGENT OFFSET AT THE CS
Ys1	TANGENT DISTANCE AT THE SC
Ys2	TANGENT DISTANCE AT THE CS
Δ	TOTAL CENTRAL ANGLE OF THE SPIRALIZED CURVE
Δ	CENTRAL ANGLE OF CIRCULAR CURVE (Lc) FROM SC TO CS
Δ_{c1}	CENTRAL ANGLE OF FIRST CIRCULAR CURVE OF COMPOUND CURVATURE
Δ_{c2}	CENTRAL ANGLE OF SECOND CIRCULAR CURVE OF COMPOUND CURVATURE
θ_{s1}	CENTRAL ANGLE OF SPIRAL LENGTH Ls1 OR SPIRAL ANGLE OF FIRST SPIRAL IN SPIRALIZED CURVE
θ_{s2}	CENTRAL ANGLE OF SPIRAL LENGTH Ls2 OR SPIRAL ANGLE OF SECOND SPIRAL IN SPIRALIZED CURVE
θ_{sc}	CENTRAL ANGLE OF COMPOUND SPIRAL OR COMPOUND SPIRAL ANGLE FROM CS TO SC

TRACK GEOMETRY - VERTICAL

BVC	BEGIN VERTICAL CURVE
Ea	SUPERELEVATION IN INCHES
EVC	END VERTICAL CURVE
PCVC	POINT OF COMPOUND VERTICAL CURVE
PIVC	POINT OF INTERSECTION OF TWO PROFILE TANGENTS
POVC	POINT ON VERTICAL CURVE
POVT	POINT ON VERTICAL TANGENT
U	UNBALANCED SUPERELEVATION IN INCHES
VC	VERTICAL CURVE

GENERAL, CIVIL AND TRACK

AB	AGGREGATE BASE
ABM	AIR-BLOWN MORTAR
ABN	ABANDON
ABUT	ABUTMENT
AC	ASPHALTIC CONCRETE
AD	AREA DRAIN
ADJ	ADJUSTABLE
AHD	AHEAD
ALIGN	ALIGNMENT
ALT	ALTERNATE
APPROX	APPROXIMATE
ARCH	ARCHITECTURAL
AS	AGGREGATE SUBBASE
ASPH	ASPHALT
AVE	AVENUE
AVM	ADD VALUE MACHINE
BAA	BOARDING ASSISTANCE AREA
BBR	BEGINNING OF BRIDGE
BCR	BEGIN CURB RETURN
BEG	BEGIN
BK	BACK
BKF	BACKFILL
BLDG	BUILDING
BLST	BALLAST
BLVD	BOULEVARD
BM	BENCHMARK
BOC	BOTTOM OF CURB
BOT	BOTTOM
BOW	BOTTOM OF WALL
BR	BRIDGE
BS	BOTTOM OF SLOPE
CAB	CABINET
CALP	CORRUGATED ALUMINUM PIPE
CAP	CAPACITY
CB	CATCH BASIN
CEM	CEMENT
CF	CUBIC FEET
CG	CENTER OF GRAVITY
CIP	CAST IN PLACE
CJ	CONSTRUCTION JOINT
CL	CENTER LINE
CLK	CHAIN LINK
CLR	CLEAR
CMP	CORRUGATED METAL PIPE
CMU	CONCRETE MASONRY UNIT
CND	CONDUIT
CNTR	COUNTER
CO	CLEANOUT
COC	CENTER ON CENTER
COL	COLUMN
COMM	COMMUNICATIONS
CONC	CONCRETE
CONN	CONNECTION
CONST	CONSTRUCTION
CONT	CONTINUOUS
COORD	COORDINATE
CP	CONTROL POINT
CRV	CURVE
CSP	CORRUGATED STEEL PIPE
CT	COURT
CTR	CENTER
CULV	CULVERT
CVR	COVER
CWR	CONTINUOUS WELDED RAIL
CY	CUBIC YARDS
DEL	DELINEATORS
DEP	DEPTH
DET	DETAIL
DFX	DIRECT FIXATION
DGAC	DENSE GRADED ASPHALT CONCRETE
DI	DRAINAGE INLET
DIA	DIAMETER
DIAG	DIAGONAL
DIM	DIMENSION
DIR	DIRECTION
DIST	DISTRIBUTION
DN	DOWN
DR	DRIVE
DRWY	DRIVEWAY
DTR	DETOUR
DWG	DRAWING
(E)	EXISTING
E	EAST
EA	EACH
EB	EASTBOUND
EBR	END OF BRIDGE
ECR	END CURB RETURN
EE	EACH END
EF	EACH FACE
EIC	EMPLOYEE IN CHARGE
EJ	EXPANSION JOINT
ELEC	ELECTRICAL
EL	ELEVATION
ELEV	ELEVATOR
EMB	EMBANKMENT
EMER	EMERGENCY
ENGR	ENGINEERING
EP	EDGE OF PAVEMENT
EQ	EQUATION
EQUIP	EQUIPMENT
ES	EDGE OF SHOULDER
ESMT	EASEMENT
ETW	EDGE OF TRAVELED WAY
EW	END WALL
EXC	EXCAVATION
EXP	EXPANSION
EXT	EXTERIOR
(F)	FUTURE
FC	FACE OF CONCRETE
FDN	FOUNDATION
FF	FILTER FABRIC
FG	FINISHED GRADE
FH	FIRE HYDRANT
FIN	FINISH
FL	FLOW LINE
FLR	FLOOR
FOC	FIBER OPTIC CABLE
FR	FRAME
FT	FEET
FTG	FOOTING
FWY	FREEWAY
GA	GAUGE
GALV	GALVANIZED
GCL	GRADING CONTROL LINE
GM	GUIDE MARKER
GND	GROUND
GP	GRADING PLANE
GR	GUARDRAIL
GSP	GALVANIZED STEEL PIPE
HB	HOSE BIBB
HC	HANDICAP
HD	HEAVY DUTY
HEX	HEXAGONAL
HH	HANDHOLE
HI	HIGH
HMAC	HOT MIX ASPHALT CONCRETE
HOR	HORIZONTAL
HP	HIGH POINT
HR	HANDRAIL
HS	HIGH STRENGTH
HT	HEIGHT
HW	HEADWALL
HWY	HIGHWAY
ID	INSIDE DIAMETER
IE	INVERT ELEVATION
IN	INCHES
INSUL	INSULATION
INT	INTERIOR
INV	INVERT
IR	INSIDE RADIUS
JB	JUNCTION BOX
JT	JOINT
LB	POUNDS
LF	LINEAL FEET
LG	LONG
LGT	LIGHT
LGTH	LENGTH
LH	LEFT-HAND
LN	LANE
LOC	LOCATION
LOL	LAYOUT LINE
LP	LOW POINT
LPL	LIGHT POLE
LT	LEFT
LTG	LIGHTING
LVL	LEVEL
MAX	MAXIMUM
MECH	MECHANICAL
MED	MEDIAN
MEM	MEMBRANE
MET	METAL
MH	MANHOLE
MIC	MICROPHONE
MIN	MINIMUM
MISC	MISCELLANEOUS
MOD	MODIFIED
MON	MONUMENT
MOW	MAINTENANCE OF WAY
MP	MILEPOST
MPH	MILES PER HOUR
MSL	MEAN SEA LEVEL
MTL	MATERIAL
(N)	NEW
N	NORTH
N/A	NOT APPLICABLE
NB	NORTHBOUND
NEG	NEGATIVE
NEUT	NEUTRAL
NIC	NOT IN CONTRACT
NO	NUMBER
NOM	NOMINAL
NTS	NOT TO SCALE
OA	OVERALL
OC	ON CENTER
OD	OUTSIDE DIAMETER
OHD	OVERHEAD
OP	OVERPASS
OPNG	OPENING
OPP	OPPOSITE
PB	PULL BOX
PED	PEDESTRIAN
PERM	PERMEABLE
PERF	PERFORATED
PG	PAGE
PGL	PROFILE GRADE LINE
PH	POTHOLE
PL	PLATE
P/L	PROPERTY LINE
PNA	PASSENGER NEEDING ASSISTANCE
PNL	PANEL
PP	POWER POLE
PPL	PREFORMED PERMEABLE LINE
PPP	PERFORATED PLASTIC PIPE
PR	PAIR
PSI	POUNDS PER SQUARE INCH
PSM	PARK BY SPACE MACHINE
PT	POINT
PTM	PARKING TICKET MACHINE
PVC	POLYVINYL CHLORIDE
PVMT	PAVEMENT
(R)	RELOCATED
R	RADIUS
RC	REINFORCED CONCRETE
RCP	REINFORCED CONCRETE PIPE
RD	ROAD
RDWY	ROADWAY
RECT	RECTANGULAR
REF	REFERENCE
REINF	REINFORCED
REL	RELOCATE
REQD	REQUIRED
REV	REVISION
RH	RIGHT-HAND
RO	ROUGH OPENING
RP	REFERENCE POINT
RR	RAILROAD
RT	RIGHT
RTE	ROUTE
RW	RETAINING WALL
ROW	RIGHT-OF-WAY
S	SOUTH
SAV	STAND ALONE VALIDATOR
SB	SOUTH BOUND
SCHD	SCHEDULE
SD	STORM DRAIN
SDMH	STORM DRAIN MANHOLE
SECT	SECTION
SERV	SERVICE
SF	SQUARE FEET
SG	SUBGRADE
SHLDR	SHOULDER
SHT	SHEET
SIM	SIMILAR
SL	SLOPE
SLPA	SIGNAGE/LIGHTING/ PUBLIC ADDRESS
SPEC	SPECIFICATION
SQ	SQUARE
SS	SANITARY SEWER
SST	STAINLESS STEEL
ST	STREET
STA	STATION, ALIGNMENT
STD	STANDARD
STIFF	STIFFENER
STL	STEEL
STRL	STRUCTURAL
STRUCT	STRUCTURE
SW	SWITCH
SWL	SOUNDWALL
SWK	SIDEWALK
SY	SQUARE YARDS
SYMM	SYMMETRICAL
T&B	TOP AND BOTTOM
TAN	TANGENT
TBD	TO BE DETERMINED
TC	TOP OF CONCRETE
TD	TRENCH DRAIN
TDS	TRAIN DESTINATION SIGN
TEL	TELEPHONE
TF	TRACK FEET
TO	TURNOUT
TOC	TOP OF CURB
TOG	TOP OF GRATE
TOL	TOLERANCE
TOP	TOP OF PAVEMENT
TOR	TOP OF RAIL
TOS	TOP OF SLOPE
TOT	TOP OF TIE
TOW	TOP OF WALL
TRANS	TRANSITION
TTB	TELEPHONE TERMINAL BOARD
TVM	TICKET VENDING MACHINE
TYP	TYPICAL
UB	UTILITY BOX
UD	UNDERDRAIN
UG	UNDERGROUND
UON	UNLESS OTHERWISE NOTED
UP	UNDERPASS
UTIL	UTILITY
VAR	VARIES
VERT	VERTICAL
VMB	VISUAL MESSAGE BOARD
VMS	VISUAL MESSAGE SIGN
W	WEST
W/	WITH
W/O	WITHOUT
WB	WESTBOUND
WP	WORK POINT
WPF	WATERPROOF
WRT	WITH RESPECT TO
WT	WEIGHT
WWF	WELDED WIRE FABRIC
WWM	WELDED WIRE MESH
XING	CROSSING
YD	YARDS

REV.	DATE	DESCRIPTION	DES.	ENG.
X	XX-XX-XX	REVISION	XX	XX

DRAWN BY: A. CARLOS DATE: 03/31/2011

ASSISTANT DIRECTOR: STANDARDS & DESIGN

DIRECTOR OF ENGINEERING AND CONSTRUCTION

SCRRA ENGINEERING STANDARDS ARE INTENDED FOR SCRRA APPROVED USES ONLY. FOR NON-SCRRA APPROVED USES: SCRRA SHALL NOT BE RESPONSIBLE FOR THE ACCURACY OR COMPLETENESS OF THE DATA OR INFORMATION CONTAINED HEREIN. THE SELECTION AND USE OF THESE STANDARDS IS THE SOLE RESPONSIBILITY OF THE USER AND SHOULD NOT BE USED WITHOUT CONSULTING A REGISTERED PROFESSIONAL ENGINEER. ALL WARRANTIES AND REPRESENTATIONS OF ANY KIND ARE DISCLAIMED. ANYONE MAKING USE OF THIS INFORMATION AGREES THAT IT ASSUMES ALL LIABILITY ARISING FROM SUCH USE. NO PART OF THESE STANDARDS SHOULD BE REPRODUCED OR DISTRIBUTED IN ANY FORM OR BY ANY MEANS WITHOUT THE PRIOR WRITTEN PERMISSION OF SCRRA. ALL RIGHTS RESERVED.

METROLINK®

SOUTHERN CALIFORNIA REGIONAL RAIL AUTHORITY
ONE GATEWAY PLAZA, 12TH FLOOR, L. A., CA. 90012

ENGINEERING STANDARDS

GENERAL ABBREVIATIONS
CIVIL & TRACK

STANDARD 1101
SCALE: NTS
REVISION –
SHEET 1 OF 1
CADD FILE: ES1101

STATION COMMUNICATIONS

ACS	ADVANCED COMMUNICATION SYSTEM
BER	BIT-ERROR RATE
CC	COMMUNICATIONS CABINET
CCF	CENTRAL CONTROL FACILITY
CCTV	CLOSED CIRCUIT TELEVISION-VIDEO SECURITY
CER	COMMUNICATIONS EQUIPMENT ROOM
CIC	COMMUNICATIONS INTERFACE CABINETS
CID	CARD INTERFACE DEVICE
CSMH	COMMUNICATIONS SYSTEM MANHOLE
CST	COMBINED SYSTEM TRUNK
DC	DISTRIBUTION CABINET
DDS	DEDICATED DIGITAL SERVICE
DSO	SINGLE DATA CHANNEL OF 56-65 Kbps
E&M	EAR AND MOUTH
E-LAN	ETHERNET LAN
EOS	ETHERNET OVER SONET
EPL	ETHERNET PRIVATE LINE
EVC	ETHERNET VIRTUAL CIRCUIT
EVPL	ETHERNET VIRTUAL PRIVATE LINE
EVPLAN	ETHERNET VIRTUAL PRIVATE LAN
FDP	FIBER DISTRIBUTION PANEL
FO	FIBER OPTIC
FOC	FIBER OPTIC CABLE
FPS	FRAME PER SECOND
FSE	FIBER SLACK ENCLOSURE
GBIC	GIGABIT INTERFACE CONVERTER
GBPS	GIGABITS PER SECOND
GRP	GLASS REINFORCED PLASTIC ROD
GRS	GALVANIZED RIGID STEEL
GUI	GRAPHICAL USER INTERFACE
IP	INTERNET PROTOCOL
Kbps	KILO BITS PER SECOND
LAN	LOCAL AREA NETWORK
LCD	LIQUID CRYSTAL DISPLAY
LDF	LOCAL DISTRIBUTION FRAME
LID	LOCAL INJECTION AND DETECTION (FUSION SPLICING)
LPM	LOCAL PAGING MICROPHONE
Mbps	MEGA BITS PER SECOND
MDF	MAIN DISTRIBUTION FRAME
MDPE	MEDIUM DENSITY POLYETHYLENE (CABLE SHEATH)
MEF	METRO ETHERNET FORUM
MM	MULTI-MODE
MMFOC	MULTI-MODE FIBER OPTIC CABLE
MOPE	MAIN POINT OF ENTERY
MS	MILLISECOND
MSPP	MULTI-SERVICE PROVISIONING PLATFORM
NID	NETWORK INTERFACE DEVICE
NMS	NETWORK MANAGEMENT SYSTEM
NTP	NETWORK TIME PROTOCOL
NVR	NETWORK VIDEO RECORDER
OCC	OPERATION CONTROL CENTER
OSP	OUTSIDE PLANT
PA	PUBLIC ADDRESS
PAS	PUBLIC ADDRESS SYSTEM
PDA	PERSONAL DIGITAL ASSISTANT
PDU	POWER DISTRIBUTION UNIT
PLC	PROGRAMMABLE LOGIC CONTROLLER
PSTN	PUBLIC SWITCHING TELEPHONE NETWORK
PTB	PROTECTED TERMINAL BLOCKS
PTT	PUSH TO TALK
PVC	PRIVATE VIRTUAL CIRCUIT
QOS	QUALITY OF SERVICE
RPR	RESILIENT PACKET RING
RTU	REMOTE TERMINAL UNIT (COMMUNICATIONS)
SCC	STATION COMMUNICATION CABINET
SFX	SMALL FORM (PLUGGABLE) CROSS-CONNECT
SLA	SERVICE LEVEL AGREEMENT
SM	SINGLE MODE
SMFOC	SINGLE-MODE FIBER OPTIC CABLE
SNMP	SIMPLE NETWORK MANAGEMENT PROTOCOL
SONET	SYNCHRONOUS OPTICAL NETWORK
SPDU	SWITCHED POWER DISTRIBUTION UNIT
T1C	SINGLE DATA CHANNEL OF 1.544 Mbps
T1MUX	A MULTIPLEXING DEVICE BY WHICH A SINGLE T1 CHANNEL IS UTILIZED TO PROVIDE DSO CHANNELS
TDM	TIME DIVISION MULTIPLEXING
UP-LINK	1000 MBPS SWITCH EXPANSION PORTS
UPS	UNINTERRUPTIBLE POWER SUPPLY
UPSR	UNIDIRECTIONAL PATH SWITCH RING
UTP	UNSHIELDED TWISTED PAIR
VCAT	VIRTUAL CONCATENATION
VLAN	VIRTUAL LOCAL AREA NETWORK
VPN	VIRTUAL PRIVATE NETWORK
WA	WORK AREA
WAN	WIDE AREA NETWORK
WAP	WIRELESS APPLICATION PROTOCOL
WCM	WAYSIDE COMMUNICATIONS MANAGER

SIGNALS

AK	APPROACH TRACK INDICATION
DAX	DOWNSTREAM ADJACENT CROSSING
EMS	EMERGENCY ALARM CONTROL CIRCUITS
FLT	SIGNAL FLEETING
FR	FLASHER RELAY
GCR	GATE CONTROL RELAY
GD	GATE DOWN
GE	GREEN SIGNAL LAMP
GPR	GATE REPEATER RELAY (GATE IN UP POSITION)
LOS	LOSS OF SHUNT
NGHS	NORTHWARD SIGNAL REQUEST
NGK	NORTHWARD SIGNAL CLEAR INDICATION
NJSP	DUAL SELECTOR LEVER
NWK	NORMAL SWITCH INDICATION
NWP	NORMAL SWITCH POINT POSITION
NWR	NORMAL SWITCH CONTROL RELAY
NWS	NORMAL SWITCH REQUEST
RE	RED SIGNAL LAMP
RWK	REVERSE SWITCH INDICATION
RWP	REVERSE SWITCH POINT POSTION
RWR	REVERSE SWITCH CONTROL RELAY
RWS	REVERSE SWITCH REQUEST
SGHS	SOUTHWARD SIGNAL REQUEST
SGK	SOUTHWARD SIGNAL CLEAR INDICATION
TEK	SIGNAL IN TIME INDICATION
TK	OS TRACK INDICATION
TOB	TON PER OPERATIVE BRAKE
UAX	UPSTREAM ADJACENT CROSSING
WBC	SWITCH CONTROL RELAY BACK CHECK
XR	CROSSING CONTROL RELAY
YE	YELLOW SIGNAL LAMP

TRAIN CONTROL COMMUNICATION

AMPL	AMPLIFIER
ATCS	ADVANCE TRAIN CONTROL SYSTEM
BER	BIT ERROR RATE
BPF	BAND PASS FILTER
BS	BASE STATION
CCF	CENTRAL CONTROL FACILITY
CRC	CYCLIC REDUNDANCY CHECKS
CSU	CHANNEL SERVICE UNIT
CTC	CENTRALIZED TRAIN CONTROL
CTCSS	CONTINUOS-TONE-CODED SQUELCH SYSTEM
dB	DECIBEL
dBm	DECIBEL REFERENCED TO A MILLIWATT
dBW	DECIBEL REFERENCED TO A WATT
DBU	DIAL BACKUP
DED	DRAGGING EQUIPMENT DETECTOR
DSU	DATA SERVICE UNIT
ERP	EFFECTIVE RADIATED POWER
FAT	FACTORY ACCEPTANCE TEST
FDP	FIBER DISTRIBUTION PANEL
FEC	FORWARD ERROR CONNECTION
FM	FREQUENCY MODULATION
FO	FIBER OPTIC
FPP	FIBER PATCH PANEL
FR	FRAME RELAY
GMSK	GAUSSIAN MINIMUM SHIFT KEYING
GPS	GLOBAL POSITIONING SYSTEM
ISDN	INTERGRATED SERVICES DIGITAL NETWORK
KO	KEYBOARD OPERATOR
KVM	KEYBOARD VIDEO MOUSE
MAS	MULTIPLE ADDRESSING SCHEME
MC	MEDIA CONVERTER
MDF	MAIN DISTRIBUTION FRAME
NIC	NETWORK INTERFACE CARD
NMS	NETWORK MANAGEMENT SYSTEM
RF	RADIO FREQUENCY
RX	RECEIVE
SPKR	SPEAKER
SINAD	SIGNAL TO NOISE AND DISTORTION
SVR	SERVER
TC/C	TRAIN CONTROLS AND COMMUNICATION
TCT	TRAIN CONTROL TRENCH
TX	TRANSMITTER
UHF	ULTRA HIGH FREQUENCY
VHF	VERY HIGH FREQUENCY
VHLC	VITAL HARMON LOGIC CONTROLLER

CITIES AND COUNTIES

CATH	CITY OF ATHERTON
CBEL	CITY OF BELMONT
CBUR	CITY OF BURLINGAME
CGIL	CITY OF GILROY
CMIL	CITY OF MILLBRAE
CMPK	CITY OF MENLO PARK
CMV	CITY OF MOUNTAIN VIEW
CPA	CITY OF PALO ALTO
CRWC	CITY OF REDWOOD CITY
CSB	CITY OF SAN BRUNO
CSC	CITY OF SAN CARLOS
CSJ	CITY OF SAN JOSE
CSM	CITY OF SAN MATEO
CSCL	CITY OF SANTA CLARA
CSSF	CITY OF SOUTH SAN FRANCISCO
CSV	CITY OF SUNNYVALE
CCSF	CITY AND COUNTY OF SAN FRANCISCO
COSM	COUNTY OF SAN MATEO
COSCL	COUNTY OF SANTA CLARA

AGENCIES, ORGANIZATIONS AND CODES

AASHTO	AMERICAN ASSOCIATION OF STATE HIGH-WAY AND TRANSPORTATION OFFICIALS
AAR	ASSOCIATION OF AMERICAN RAILRAODS
ACI	AMERICAN CONCRETE INSTITUTE
ADA	AMERICANS WITH DISABILITIES ACT
AMTRAK	NATIONAL RAILROAD PASSENGER CORPORATION
ANSI	AMERICAN NATIONAL STANDARDS INSTITUTE
APWA	AMERICAN PUBLIC WORKS ASSOCIATION
AREA	AMERICAN RAILWAY ENGINEERING ASSOCIATION
AREMA	AMERICAN RAILWAY ENGINEERING AND MAINTENANCE OF WAY ASSOCIATION
ASTM	AMERICAN SOCIETY FOR TESTING AND MATERIALS
ATT	ATLANTIC TELEPHONE AND TELEGRAPH COMPANY
AWG	AMERICAN WIRE GAUGE
AWS	AMERICAN WELDING SOCIETY
BART	BAY AREA RAPID TRANSIT (DISTRICT)
BNSF	BURLINGTON NORTHERN SANTA FE
CALCAS	CALIFORNIA ACCESS COMPLIANCE SOURCE
CALDAG	CALIFORNIA DISABLED ACCESSIBILITY GUIDEBOOK
CALTRANS	CALIFORNIA DEPARTMENT OF TRANSPORTATION
CCR	CALIFORNIA CODE OF REGULATIONS
CEC	CALIFORNIA ELECTRICAL CODE
CPUC	CALIFORNIA PUBLIC UTILITIES COMMISSION
EIA	ELECTRONICS INDUSTRIES ALLIANCE
FAA	FEDERAL AVIATION ADMINISTRATION
FCC	FEDERAL COMMUNICATIONS COMMISSION
FRA	FEDERAL RAILROAD ADMINISTRATION
JPB	(PENINSULA CORRIDOR) JOINT POWERS BOARD
MUTCD	MANUAL ON UNIFORM TRAFFIC CONTROL DEVICES
NEC	NATIONAL ELECTRICAL CODE
NEMA	NATIONAL ELECTRICAL MANUFACTURERS ASSOCIATION
NFPA	NATIONAL FIRE PROTECTION ASSOCIATION
PCJPB	PENINSULA CORRIDOR JOINT POWERS BOARD
PCMCIA	PERSONAL COMPUTER MEMORY CARD INTERNATIONAL ASSOCIATION
PG&E	PACIFIC GAS AND ELECTRIC
SAMTRANS	SAN MATEO COUNTY TRANSIT DISTRICT
SBC	SOUTHERN BELL COMPANY
SCRRA	SOUTH CALIFORNIA REGIONAL RAIL AUTHORITY (METROLINK)
SCVTA	SANTA CLARA VALLEY TRANSPORTATION AUTHORITY
SMCTA	SAN MATEO COUNTY TRANSPORTATION AUTHORITY
SPR	SPRINT NEXTEL
SPTC	SOUTHERN PACIFIC TRANSPORTATION COMPANY
SVP	SILICON VALLEY POWER
TIA	TELECOMMUNICATIONS INDUSTRY ASSOC
UBC	UNIFORM BUILDING CODE
UL	UNDERWRITERS LABORATORIES
UPC	UNIFORM PLUMBING CODE
UPRR	UNION PACIFIC RAILROAD

REV.	DATE	DESCRIPTION	DES.	ENG.
X	XX-XX-XX	REVISION	XX	XX

DRAWN BY: A. CARLOS DATE: 03/31/2011

ASSISTANT DIRECTOR: STANDARDS & DESIGN

DIRECTOR OF ENGINEERING AND CONSTRUCTION

SCRRA ENGINEERING STANDARDS ARE INTENDED FOR SCRRA APPROVED USES ONLY. FOR NON-SCRRA APPROVED USES:
SCRRA SHALL NOT BE RESPONSIBLE FOR THE ACCURACY OR COMPLETENESS OF THE DATA OR INFORMATION CONTAINED HEREIN. THE SELECTION AND USE OF THESE STANDARDS IS THE SOLE RESPONSIBILITY OF THE USER AND SHOULD NOT BE USED WITHOUT CONSULTING A REGISTERED PROFESSIONAL ENGINEER. ALL WARRANTIES AND REPRESENTATIONS OF ANY KIND ARE DISCLAIMED. ANYONE MAKING USE OF THIS INFORMATION AGREES THAT IT ASSUMES ALL LIABILITY ARISING FROM SUCH USE. NO PART OF THESE STANDARDS SHOULD BE REPRODUCED OR DISTRIBUTED IN ANY FORM OR BY ANY MEANS WITHOUT THE PRIOR WRITTEN PERMISSION OF SCRRA. ALL RIGHTS RESERVED.

METROLINK®

SOUTHERN CALIFORNIA REGIONAL RAIL AUTHORITY
ONE GATEWAY PLAZA, 12TH FLOOR, L. A., CA. 90012

ENGINEERING STANDARDS

GENERAL ABBREVIATIONS
SIGNAL, COMMUNICATIONS AND
STATION COMMUNICATIONS

STANDARD 1102
SCALE: NTS
REVISION –
SHEET 1 OF 1
CADD FILE: ES1102

ARCHITECTURAL

ACOUS	ACOUSTICAL
ALUM	ALUMINUM
AFF	ABOVE FINISHED FLOOR
BD	BOARD
BITUM	BITUMINOUS
BLKG	BLOCKING
BM	BEAM
CAB	CABINET
CER	CERAMIC
CI	CAST IRON
CIP	CAST IRON PIPE
CLG	CEILING
CLKG	CAULKING
CORR	CORRIDOR
CT	CERAMIC TILE
CTSK	COUNTERSUNK
DF	DRINKING FOUNTAIN
DISP	DISPENSER
DO	DOOR OPENING
DR	DOOR
DS	DOWNSPOUT
DSP	DRY STANDPIPE
ENCL	ENCLOSURE
ESCL	ESCALATOR
EXPD	EXPOSED
ESEW	EMERGENCY SHOWER/ EYE WASH
FA	FIRE ALARM
FACP	FIRE ALARM CONTROL PANEL
FCO	FLOOR CLEAN OUT
FD	FLOOR DRAIN
FDC	FIRE DEPARTMENT CONNECTION
FDP	FIRE DAMPER
FE	FIRE EXTINGUISHER
FH	FIRE HYDRANT
FHC	FIRE HOSE CABINET
FLR	FLOOR
FLUOR	FLUORESCENT
FOF	FACE OF FINISH
FOS	FACE OF STUDS
FPRF	FIREPROOF
FSK	FLOOR SINK
FUR	FURRING
GL	GLASS
GYP	GYPSUM
GYPBD	GYPSUM BOARD
HDWE	HARDWARE
HM	HOLLOW METAL
INCAND	INCANDESCENT
JAN	JANITOR
LAM	LAMINATE
LAV	LAVATORY
LKR	LOCKER
MO	MASONRY OPENING
MSK	MOP SINK
MTD	MOUNTED
MUL	MULLION
OFD	OVERFLOW DRAIN
PC	PRECAST CONCRETE
PCC	PORTLAND CEMENT CONCRETE
PLAM	PLASTIC LAMINATE
PLAS	PLASTER
PLYWD	PLYWOOD
PTD	PAPER TOWEL DISPENSER
RB	RESILIENT BASE
RD	ROOF DRAIN
RESIL	RESILIENT
RM	ROOM
RWL	RAIN WATER LEADER
SC	SOLID CORE
SCD	SEAT COVER DISPENSER
SD	SMOKE DETECTOR
SDT	STATIC DISSIPATE TILE FLOOR
SND	SANITARY NAPKIN DISPENSER
SNR	SANITARY NAPKIN RECEPTACLE
SPKR	SPEAKER
SSK	SERVICE SINK
STOR	STORAGE
SUSP	SUSPENDED
TPD	TOILET PAPER DISPENSER
UNF	UNFINISHED
UR	URINAL
VCT	VINYL COMPOSITION TILE
VEST	VESTIBULE
WC	WATER CLOSET
WD	WOOD
WSP	WET STAND PIPE

ELECTRICAL

AC	ALTERNATING CURRENT
AF	AMPERE FUSE
AFR	AMPERE FRAME
AGC	AUTOMATIC GAIN CONTROL
AMP	AMPERE
ANN	ANNUCIATOR
AS	AMPERE SENSOR
ASW	AMPERE SWITCH
AUX	AUXILIARY
ASSY	ASSEMBLY
AT	AMPERE TRIP
ATS	AUTOMATIC TRANSFER SWITCH
AVI	AUTOMATIC VEHICLE IDENTIFICATION
BC	BARE COPPER
BCW	BARE COPPER WIRE
BAT	BATTERY
BKR	BREAKER
CBKR	CIRCUIT BREAKER
CCD	CHARGE COUPLED DEVICE
CGB	CHASSIS GROUNDING BUS-BAR
CKT	CIRCUIT
CLF	CURRENT LIMITING FUSE
C/O	CONDUIT ONLY
COMM	COMMUNICATIONS
COND	CONDUCTOR
CNTL	CONTROL
CP	CONTROL PANEL
CPT	CONTROL POWER TRANSFER
C/R	CONTACT RAIL
CR	CONTROL RELAY
CRI	COLOR RENDENING INDEX
CRS	PVC COATED RIGID STEEL CONDUIT
CS	CONTROL STATION
CT	CURRENT TRANSFORMER
CTB	COMPUTER TERMINAL BOARD
CU	COPPER
DIM	DIMMER
DC	DIRECT CURRENT
DISC	DISCONNECT
DP	DISTRIBUTION PANEL
DSP	DIGITAL SIGNAL PROCESSING
EMI	ELECTROMAGNETIC INTERFACE
EMT	ELECTRICAL METALLIC TUBING
EPF	EXPLOSION PROOF
ETM	ELAPSED TIME METER
FC	FRAMMING CHANNEL
FDR	FEEDER
FS	FLOW SWITCH
FVNR	FULL VOLTAGE NON-REVERSING
GFI	GROUND FAULT INTERRUPTER
GRS	GALVANIZED RIGID STEEL
GTS	GROUND TEXT STATION
HID	HIGH INTENSITY DISCHARGE
HOA	HAND-OFF-AUTO SWITCH
HPS	HIGH PRESSURE SODIUM
HV	HIGH VOLTAGE
IC	INTERRUPTING CAPACITY
KVA	KILOVAR
KW	KILOWATT
LV	LOW VOLTAGE
LS	LIMIT SWITCH
MAG	MAGNETIC
MC	CONTACTOR COIL METALLIC CONDUIT
MDP	MAIN DISTRIBUTION PANEL
MGB	MAIN GROUNDING BUSS-BAR
MS	MOTOR STARTER
MT	EMPTY CONDUIT
NF	NON FUSED
NMC	NONMETALLIC CONDUIT
NP	NEMPLATE
PC	POWER CABLE
PCU	POWER CONDITIONING UNIT
PE	PHOTOELECTRIC
PEC	PHOTOELECTRIC CELL
PH	PHASE
POS	POSITIVE
PT	POTENTIAL TRANSFORMER
RES	RESISTOR
RGS	RIGID GALVANIZED STEEL
RPC	REMOTE POWER CENTER
RSC	RIGID STEEL CONDUIT
STC	SUPERVISORY TERMINATION CABINET
SV	SOLENOID VALVE
SWBD	SWITCHBOARD
SWGR	SWITCHGEAR
TCK	TIME CLOCK
TDR	TIME DELAY RELAY
TGB	TELECOMMUNICATIONS GROUNDING BUSS-BAR
TH	THERMOSTAT
TLK	TWISTLOCK
TMGB	TELCOMMUNICATIONS MAIN GROUNDING BUSS-BAR
TMS	THERMAL FIT MARKER SYSTEM
TS	TUBULAR SHEET
UH	UNIT HEATER
V	VOLT
VM	VOLT METER
VPF	VAPOR PROOF
VS	VOLTIMETER SWITCH
W	WATT
WHD	WATT-HOUR DEMAND METER
XFMR	TRANSFORMER

MECHANICAL

ASA	ACOUSTICAL SOUND ATTENUATOR
AC	AIR COMPRESSOR
ACD	ACCESS DOOR
ACU	AIR CONDITIONING UNIT
AF	AIR FILTER/AIR FOIL
AHU	AIR HANDLING UNIT
AP	ACCESS PANEL
APD	AIR PRESSURE DROP
ASR	AUTOMATIC SPRINKLER RISER
BD	BALANCING DAMPER
BDD	BACK DRAFT DAMPER
BFP	BACKFLOW PREVENTER
BFV	BUTTERFLY VALVE
CA	COMPRESSED AIR
CC	COOLING COIL
CEG	CEILING EXHAUST GRILLE
CG	CEILING GRILLE
COND	CONDENSATE
CU	CONDENSING UNIT
CV	CHECK VALVE
CW	COLD WATER
CWR	CHILLED WATER RETURN
CWS	CHILLED WATER SUPPLY
DB	DRY BULB
DEG	DUCT EXHAUST GRILLE
DX	DIRECT EXPANSION
EA	EXHAUST AIR
EAD	EXHAUST AIR DAMPER
EAT	ENTERING AIR TEMPERATURE
EF	EXHAUST FAN
EFF	EFFICIENCY
ESP	EXTERNAL STATIC PRESSURE
EUH	ELECTRIC UNIT HEATER
EXTR	EXTRACTER
FC	FORWARD CURVE
FCD	FLOW CONTROL DEVICE
FLA	FULL LOAD AMPERES
FLEX	FLEXIBLE
FMN	FORCE MAIN
GPM	GALLONS PER MINUTE
GR	GRILLE
GV	GATE VALVE
HC	HEATING COIL
HD	HEAD
HDN	HOPPER DRAIN
HP	HORSEPOWER/HEAT PUMP
HSC	HOSE STORAGE CABINET
HVA	HOSE VALVE, ANGLE GLOBE TYPE
HVS	HOSE VALVE, STRAIGHTWAY GATE TYPE
HWR	HOT WATER RETURN
HWS	HOT WATER SUPPLY
IPS	IRON PIPE SIZE
IW	INDUSTRIAL WASTE
LAT	LEAVING AIR TEMPERATURE
LCP	LOCAL CONTROL PANEL
LR	LONG RADIUS
MAV	MANUAL AIR VENT
MCC	MOTOR CONTROL CENTER
MCP	MOTOR CONTROL PANEL
MD	MOTOR OPERATED DAMPER
NC	NORMALLY CLOSED
NO	NORMALLY OPEN
OA	OUTSIDE AIR
OAD	OUTSIDE AIR DAMPER
PD	PUMP DISCHARGE
PDN	PLANTER DRAIN
PH	PHASE
PIV	POST INDICATOR VALVE
PRV	PRESSURE REDUCING VALVE
PS	POSITION SWITCH
RA	RETURN AIR
RAD	RETURN AIR DAMPER
RF	RETURN FAN
RH	RADIANT HEATER
RL	REFRIGERANT LIQUID
RS	REFRIGERANT SUCTION
RV	ROOF VENTILATOR
SA	SUPPLY AIR
SANT	SANITARY
SAR	SOUND ATTENUATOR
SCAC	SELF CONTAINED AIR CONDITIONER
SCHP	SELF CONTAINED HEAT PUMP
SDP	SPLITTER DAMPER
SF	SUPPLY FAN
SPWG	STATIC PRESSURE WATER GAUGE
SP	SUMP PUMP
T&P	TEMPERATURE AND PRESSURE RELIEF VALVE
TEMP	TEMPERATURE
TG	TRANSFER GRILLE
THR	TOTAL HEAT REJECTION
TSP	TOTAL STATIC PRESSURE
TV	TURNING VANE
UC	UNDER CUT
UH	UNIT HEATER
VB	VACUUM BREAKER
VD	VOLUME DAMPER
VEL	VELOCITY
VTR	VENT THROUGH ROOF
WST	WASTE
WB	WET BULB
WCO	WALL CLEAN OUT
WEG	WALL EXHAUST GRILLE
WG	WATER GAUGE
WH	WATER HEATER
WHA	WATER HAMMER ARRESTOR
WL	WALL LOUVER
WSP	WET STANDPIPE

REV.	DATE	DESCRIPTION	DES.	ENG.
X	XX-XX-XX	REVISION	XX	XX

DRAWN BY: A. CARLOS DATE: 03/31/2011

ASSISTANT DIRECTOR: STANDARDS & DESIGN

DIRECTOR OF ENGINEERING AND CONSTRUCTION

SCRRA ENGINEERING STANDARDS ARE INTENDED FOR SCRRA APPROVED USES ONLY. FOR NON-SCRRA APPROVED USES:
SCRRA SHALL NOT BE RESPONSIBLE FOR THE ACCURACY OR COMPLETENESS OF THE DATA OR INFORMATION CONTAINED HEREIN. THE SELECTION AND USE OF THESE STANDARDS IS THE SOLE RESPONSIBILITY OF THE USER AND SHOULD NOT BE USED WITHOUT CONSULTING A REGISTERED PROFESSIONAL ENGINEER. ALL WARRANTIES AND REPRESENTATIONS OF ANY KIND ARE DISCLAIMED. ANYONE MAKING USE OF THIS INFORMATION AGREES THAT IT ASSUMES ALL LIABILITY ARISING FROM SUCH USE. NO PART OF THESE STANDARDS SHOULD BE REPRODUCED OR DISTRIBUTED IN ANY FORM OR BY ANY MEANS WITHOUT THE PRIOR WRITTEN PERMISSION OF SCRRA. ALL RIGHTS RESERVED.

METROLINK®
SOUTHERN CALIFORNIA REGIONAL RAIL AUTHORITY
ONE GATEWAY PLAZA, 12TH FLOOR, L. A., CA. 90012

ENGINEERING STANDARDS

GENERAL ABBREVIATIONS
ARCHTECTURAL & ENGINEERING

STANDARD 1103
SCALE: NTS
REVISION –
SHEET 1 OF 1
CADD FILE: ES1103

ABBREVIATIONS

GENERAL

&	AND
@	AT
AB	AGGREGATE BASE
ABM	AIR-BLOWN MORTAR
ABN	ABANDON
ABUT	ABUTMENT
AC	ASPHALTIC CONCRETE
AD	AREA DRAIN
ADJ	ADJUSTABLE
AHD	AHEAD
ALIGN	ALIGNMENT
ALT	ALTERNATE
ANSI	AMERICAN NATIONAL STANDARDS INSTITUTE
AOBE	AS ORDERED BY ENGINEER
APPROX	APPROXIMATE, APPROXIMATELY
ARCH	ARCHITECTURAL
AREA	AMERICAN RAILWAY ENGINEERING ASSOCIATION
AREMA	AMERICAN RAILWAY ENGINEERING & MAINTENANCE OF WAY ASSOCIATION
A/R	AS REQUIRED
AS	AGGREGATE SUBBASE
ASCE	AMERICAN SOCIETY OF CIVIL ENGINEERS
ASPH	ASPHALT, ASPHALT CONCRETE PAVING
ASSY	ASSEMBLY
ASTM	AMERICAN SOCIETY FOR TESTING & MATERIALS
ATR	ABOVE TOP OF RAIL
AVE	AVENUE
AVM	ADD VALUE MACHINE
AWWA	AMERICAN WATER WORKS ASSOCIATION
BAA	BOARDING ASSISTANCE AREA
BB	BATTERY BOX
BBR	BEGINNING OF BRIDGE
BCR	BEGIN CURB RETURN
BEG	BEGIN, BEGINNING
BK	BACK
BKF	BACKFILL
BL	BASELINE
BLDG	BUILDING
BLLBRD	BILLBOARD
BLST	BALLAST
BLVD	BOULEVARD
BM	BENCHMARK
BNSF	BURLINGTON NORTHERN SANTA FE RAILWAY
BOC	BOTTOM OF CURB
BOS	BOTTOM OF SLOPE
BOT	BOTTOM
BOW	BOTTOM OF WALL
BR	BRIDGE, BLUE ROD
C/W	COMES WITH
CAB	CABINET
CALP	CORRUGATED ALUMINUM PIPE
CAP	CAPACITY
CB	CATCH BASIN
CEM	CEMENT
CF	CUBIC FEET
CG	CENTER OF GRAVITY
CI	CAST IRON
CIP	CAST IN PLACE
CJ	CONSTRUCTION JOINT
CL, ℄	CENTERLINE
CLK	CHAIN LINK
CLR	CLEAR, CLEARANCE
CMP	CORRUGATED METAL PIPE
CMPA	CORRUGATED METAL PIPE ARCH
CMU	CONCRETE MASONRY UNIT
COMPJT	COMPROMISE JOINT
CND	CONDUIT
CNTR	COUNTER
CNTRLR	CONTROLLER
CO	CLEANOUT
COC	CENTER ON CENTER
COL	COLUMN
COMM	COMMUNICATIONS
COMM R/W	COMMISSION RIGHT OF WAY
CONC	CONCRETE
CONN	CONNECTION
CONST	CONSTRUCTION
CONT	CONTINUOUS
CONTR	CONTRACTOR
COORD	COORDINATE
COS	COSINE
CP	CONTROL POINT, CLEARANCE POINT
CPUC	CALIFORNIA PUBLIC UTILITIES COMMISSION
CRV	CURVE
CSP	CORRUGATED STEEL PIPE
CT	COURT
CTC	CENTER TO CENTER, CENTRALIZED TRAFFIC CONTROL
CTR	CENTER
CULV	CULVERT
CVD	CURVED
CVR	COVER
CWR	CONTINUOUSLY WELDED RAIL
CY	CUBIC YARD
Dc	DEGREE OF CURVE
DEL	DELINEATORS
DEP	DEPTH
DET	DETAIL
DFX	DIRECT FIXATION
DGAC	DENSE GRADED ASPHALT CONCRETE
DI	DROP INLET, DRAINAGE INLET
DIA, Ø	DIAMETER
DIAG	DIAGONAL
DIM	DIMENSION
DIR	DIRECTION
DIST	DISTRIBUTION
DN	DOWN
DR	DRIVE
DRWY	DRIVEWAY
DTR	DETOUR
DWG	DRAWING
(E)	EXISTING
E	EAST
EA	EACH
EB	EASTBOUND
EBR	END OF BRIDGE
ECR	END CURB RETURN
EE	EACH END
EF	EACH FACE
EIC	EMPLOYEE IN CHARGE
EJ	EXPANSION JOINT
ELEC	ELECTRICAL
EL	ELEVATION
ELEV	ELEVATOR
EMB	EMBANKMENT
EMER	EMERGENCY
ENGR	ENGINEER, ENGINEERING
EP	EDGE OF PAVEMENT
EQ	EQUAL, EQUATION
EQUIP	EQUIPMENT
ES	EDGE OF SHOULDER, ENGINEERING STANDARD
ESMT	EASEMENT
ET	END OF TRACK
ETW	EDGE OF TRAVELLED WAY
EW	END WALL
EX	EXISTING
EXC	EXCAVATION
EXP	EXPANSION
EXT	EXTERIOR
(F)	FUTURE
FC	FACE OF CONCRETE
FDN	FOUNDATION
FF	FILTER FABRIC
FG	FINISHED GRADE
FH	FIRE HYDRANT
FIN	FINISH, FINISHED
FL	FLOW LINE
FLR	FLOOR
FOC	FIBER OPTIC CABLE
FR	FRAME
FT	FOOT, FEET
FTG	FOOTING
FW	FIELD WELD
FWY	FREEWAY
GA	GAUGE
GALV	GALVANIZED
GCL	GRADING CONTROL LINE
GM	GUIDE MARKER
GND	GROUND
GP	GRADING PLANE
GR	GUARDRAIL/GRADE
GSP	GALVANIZED STEEL PIPE
HB	HOSE BIBB
HC	HANDICAP, HANDICAPPED
HD	HEAVY DUTY
HEX	HEXAGONAL
HF	HEEL OF FROG, HEAD FREE RAIL
HH	HANDHOLE
HI	HIGH
HL	HEEL LENGTH
HMAC	HOT MIX ASPHALT CONCRETE
HORIZ	HORIZONTAL
HP	HEEL PLATE, HIGH POINT
HR	HANDRAIL
HS	HEEL OF FROG, HIGH STRENGTH
HST	HOLLOW STEEL TIE
HT	HEIGHT, HIGH TENSILE, HAND THROW
HW	HEADWALL
HWY	HIGHWAY
HZ	HERTZ
ID	INSIDE DIAMETER
I.D.	IDENTIFICATION
IE	INVERT ELEVATION
IJ	INSULATED JOINT
IN	INCH(ES)
INSUL	INSULATION
INT	INTERIOR
INV	INVERT
IR	INSIDE RADIUS
JB	JUNCTION BOX
JJ	JOINTED RAIL
JT	JOINT
LACFCD	LOS ANGELES COUNTY FLOOD CONTROL DISTRICT
LACMTA	LOS ANGELES COUNTY METROPOLITAN TRANSPORTATION AUTHORITY
LAUPT	LOS ANGELES UNION PASSENGER TERMINAL
LB, LBS	POUND, POUNDS
LF	LINEAL FEET
LG	LONG
LGT	LIGHT
LGTH	LENGTH
LH	LEFT HAND
LN	LANE
LOC	LOCATION
LOL	LAYOUT LINE
LP	LOW POINT
LPL	LIGHT POLE
LT	LEFT
LTG	LIGHTING
LVL	LEVEL
MAINT	MAINTENANCE
MANG	MANGANESE
MAX	MAXIMUM
M/C	MILL CUT
MECH	MECHANICAL
MED	MEDIAN, MEDIUM
MEM	MEMBRANE
MET	METAL
MFG	MANUFACTURER
MH	MANHOLE
MIC	MICROPHONE
MIN	MINIMUM
MISC	MISCELLANEOUS
ML	MAINLINE
MOD	MODIFIED
MON	MONUMENT
MOW	MAINTENANCE OF WAY
MP	MILE POST
MPH	MILES PER HOUR
MSL	MEAN SEA LEVEL
MTL	MATERIAL
(N)	NEW
N	NORTH
N/A	NOT APPLICABLE
NB	NORTHBOUND
NEG	NEGATIVE
NEUT	NEUTRAL
NIC	NOT IN CONTRACT
NO, #	NUMBER
NOM	NOMINAL
NTS	NOT TO SCALE
OA	OVERALL
OC	ON CENTER
OCTA	ORANGE COUNTY TRANSPORTATION AUTHORITY
OD	OUTSIDE DIAMETER
OHD	OVERHEAD
OP	OVERPASS
OPNG	OPENING
OPP	OPPOSITE
OTM	OTHER TRACK MATERIAL
OZ	OUNCE
PB	PULL BOX
PED	PEDESTRIAN
PERF	PERFORATED
PERM	PERMEABLE, PERMANENT
PF	POINT OF FROG
PG	PAGE
PGL	PROFILE GRADE LINE
PH	POTHOLE
PITO	POINT OF INTERSECTION OF TURNOUT
PL	PLATE
P/L	PROPERTY LINE
PNA	PASSENGER NEEDING ASSISTANCE
PNL	PANEL
PP	POWER POLE
PPL	PREFORMED PERMEABLE LINE
PPP	PERFORATED PLASTIC PIPE
PR	PAIR
PROP	PROPOSED
PS	POINT OF SWITCH
PSI	POUNDS PER SQUARE INCH
PSM	PARK BY SPACE MACHINE
PT	POINT
PTM	PARKING TICKET MACHINE
PVC	POLYVINYL CHLORIDE
PVMT	PAVEMENT

NOTES:

SEE SCRRA ES2201 AND ES2202-01 FOR HORIZONTAL AND VERTICAL ALIGNMENT ABBREVIATIONS.

REV.	DATE	DESCRIPTION	DES.	ENG.
X	XX-XX-XX	REVISION	XX	XX

DRAWN BY: HDR DATE: 03/31/2011

ASSISTANT DIRECTOR: STANDARDS & DESIGN

DIRECTOR OF ENGINEERING AND CONSTRUCTION

SCRRA ENGINEERING STANDARDS ARE INTENDED FOR SCRRA APPROVED USES ONLY. FOR NON-SCRRA APPROVED USES, SCRRA SHALL NOT BE RESPONSIBLE FOR THE ACCURACY OR COMPLETENESS OF THE DATA OR INFORMATION CONTAINED HEREIN. THE SELECTION AND USE OF THESE STANDARDS IS THE SOLE RESPONSIBILITY OF THE USER AND SHOULD NOT BE USED WITHOUT CONSULTING A REGISTERED PROFESSIONAL ENGINEER. ALL WARRANTIES AND REPRESENTATIONS OF ANY KIND ARE DISCLAIMED. ANYONE MAKING USE OF THIS INFORMATION AGREES THAT IT ASSUMES ALL LIABILITY ARISING FROM SUCH USE. NO PART OF THESE STANDARDS SHOULD BE REPRODUCED OR DISTRIBUTED IN ANY FORM OR BY ANY MEANS WITHOUT THE PRIOR WRITTEN PERMISSION OF SCRRA. ALL RIGHTS RESERVED.

METROLINK®
SOUTHERN CALIFORNIA REGIONAL RAIL AUTHORITY
ONE GATEWAY PLAZA, 12TH FLOOR, L. A., CA. 90012

ENGINEERING STANDARDS

STANDARD ABBREVIATIONS

STANDARD 1201
SCALE: NONE
REVISION –
SHEET 1 OF 4
CADD FILE: ES1201-01

ABBREVIATIONS

GENERAL

QTY	QUANTITY
(R)	RELOCATED
R	RADIUS
RBM	RAIL BOUND MANGANESE
RC	REINFORCED CONCRETE
RCP	REINFORCED CONCRETE PIPE
RCTC	RIVERSIDE COUNTY TRANSPORTATION COMMISSION
RD	ROAD
RDWY	ROADWAY
RECT	RECTANGULAR
REF	REFERENCE
REINF	REINFORCED
REL	RELOCATE(D)
REQ'D	REQUIRED
REV	REVISION, REVISED
RH	RIGHT HAND
RO	ROUGH OPENING
RP	REFERENCE POINT
RR	RAILROAD
RT	RIGHT
RTE	ROUTE
R/W	RIGHT OF WAY
S	SOUTH
SAE	SOCIETY OF AUTOMOBILE ENGINEER
SANBAG	SAN BERNARDINO ASSOCIATED GOVERNMENTS
SAV	STAND ALONE VALIDATOR
SB	SOUTHBOUND
SCHD	SCHEDULE
SCRRA	SOUTHERN CALIFORNIA REGIONAL RAIL AUTHORITY
SD	STORM DRAIN
SDMH	STORM DRAIN MANHOLE
SDNG	SIDING
SECT	SECTION
SERV	SERVICE
SF	SQUARE FEET
SG	SUBGRADE
SHLDR	SHOULDER
SHT	SHEET
SIM	SIMILAR
SIN	SINE
SL	SLOPE
SLPA	SIGNAGE/LIGHTING/PUBLIC ADDRESS
SMC	SWIVEL MOVEABLE JOINT
S/N	SERIAL NUMBER
SPEC	SPECIFICATION
SQ	SQUARE
SS	SANITARY SEWER
SST	STAINLESS STEEL
ST	STREET
STA	STATION
STD	STANDARD
STIFF	STIFFENER
STL	STEEL
STR	STRAIGHT
STRL	STRUCTURAL
STRUCT	STRUCTURE
SW	SWITCH
SWK	SIDEWALK
SWL	SOUNDWALL
SY	SQUARE YARD(S)
SYMM	SYMMETRICAL
T&B	TOP AND BOTTOM
TAN	TANGENT
TBD	TO BE DETERMINED
TBR	TO BE REMOVED
TC	TRACK CENTER
TD	TRENCH DRAIN
TDS	TRAIN DESTINATION SIGN
TEL	TELEPHONE
TF	TRACK FEET
THDS	THREADS
THK	THICKNESS
TK	TRACK
TL	TOE LENGTH
TO	TURNOUT
TOC	TOP OF CURB
TOG	TOP OF GRATE
TOL	TOLERANCE
TOP	TOP OF PAVEMENT
TOS	TOP OF SLOPE
TOT	TOP OF TIE
TOW	TOP OF WALL
T/R	TOP OF RAIL
TRANS	TRANSITION
TTB	TELEPHONE TERMINAL BOARD
TVM	TICKET VENDING MACHINE
(TYP)	TYPICAL
UB	UTILITY BOX
UD	UNDERDRAIN
UG	UNDERGROUND
UON	UNLESS OTHERWISE NOTED
UP	UNDERPASS
UPRR	UNION PACIFIC RAILROAD
UR	UNIFORM RISER
UTIL	UTILITY
VAR	VARIES
VCTC	VENTURA COUNTY TRANSPORTATION COMMISSION
VERT	VERTICAL
VMB	VISUAL MESSAGE BOARD
VMS	VISUAL MESSAGE SIGN
W	WEST
W/	WITH
W/O	WITHOUT
WB	WESTBOUND
WI	WROUGHT IRON
WP	WORK POINT
WPF	WATERPROOF
WRT	WITH RESPECT TO
WSM	WELDED SPRING MANGANESE
WT	WEIGHT
WWF	WELDED WIRE FABRIC
WWM	WELDED WIRE MESH
XING	CROSSING
XOVER	CROSSOVER
YD	YARD(S)
•20POTO RH	NUMBER 20 POWER OPERATED TURNOUT - RIGHT HAND
•10HOTO LH	NUMBER 10 HAND OPERATED TURNOUT - LEFT HAND
+/-, ±	PLUS OR MINUS, APPROXIMATELY

NOTES:

SEE SCRRA ES2201 AND ES2202-01 FOR HORIZONTAL AND VERTICAL ALIGNMENT ABBREVIATIONS.

REV.	DATE	DESCRIPTION	DES.	ENG.
X	XX-XX-XX	REVISION	XX	XX

DRAWN BY: HDR DATE: 03/31/2011

ASSISTANT DIRECTOR: STANDARDS & DESIGN

DIRECTOR OF ENGINEERING AND CONSTRUCTION

SCRRA ENGINEERING STANDARDS ARE INTENDED FOR SCRRA APPROVED USES ONLY. FOR NON-SCRRA APPROVED USES:
SCRRA SHALL NOT BE RESPONSIBLE FOR THE ACCURACY OR COMPLETENESS OF THE DATA OR INFORMATION CONTAINED HEREIN. THE SELECTION AND USE OF THESE STANDARDS IS THE SOLE RESPONSIBILITY OF THE USER AND SHOULD NOT BE USED WITHOUT CONSULTING A REGISTERED PROFESSIONAL ENGINEER. ALL WARRANTIES AND REPRESENTATIONS OF ANY KIND ARE DISCLAIMED. ANYONE MAKING USE OF THIS INFORMATION AGREES THAT IT ASSUMES ALL LIABILITY ARISING FROM SUCH USE. NO PART OF THESE STANDARDS SHOULD BE REPRODUCED OR DISTRIBUTED IN ANY FORM OR BY ANY MEANS WITHOUT THE PRIOR WRITTEN PERMISSION OF SCRRA. ALL RIGHTS RESERVED.

METROLINK®
SOUTHERN CALIFORNIA REGIONAL RAIL AUTHORITY
ONE GATEWAY PLAZA, 12TH FLOOR, L. A., CA. 90012

ENGINEERING STANDARDS

STANDARD ABBREVIATIONS

STANDARD 1201
SCALE: NONE
REVISION –
SHEET 2 OF 4
CADD FILE: ES1201-02

DESCRIPTION	EXISTING	PROPOSED
BILLBOARD		
BUILDING		
BUMPER		
CATCH BASIN	CB	CB
NORTH ARROW	N	
COORDINATE	N2,800,500	
*FLASHERS		
*CROSSING GATE & FLASHERS		
CURVE NUMBER	C12	C12
FLAG POLE		
FLOW		
GRID TICK		
GROUND CONTROL POINT (AERIAL)		
GUY WIRE		
HYDRANT		
HEADWALL		
FLARED END SECTION		
MANHOLE		
STORM DRAIN MANHOLE	SD	SD
POWER POLE		
SANITARY SEWER MANHOLE	SS	SS
STATION EQUALITY	EQ	EQ
TELEPHONE POLE		
TELEPHONE MANHOLE	T	T
SIGN		
TREE		
PALM TREE		
TREE LINE, SHRUBBERY		
POLE-MOUNTED LUMINAIRE		
ELECTROLIER WITH POLE		
ELECTROLIER WITHOUT POLE		
RAILROAD SIGNAL		
SIGNAL HOUSE		
RAILROAD MILEPOST	XX	XX
TRAFFIC SIGNAL		
TRAFFIC SIGNAL WITH ARM ONLY		
TRAFFIC SIGNAL WITH ARM AND POLE		
TIME CLOCK	TC	TC
PHOTOELECTRIC CELL	PC	PC

DESCRIPTION	EXISTING	PROPOSED
POINT OF SWITCH (HAND-THROW TURNOUT)		
POINT OF SWITCH (HAND THROW TURNOUT WITH ELECTRIC LOCK)	EL	EL
POINT OF SWITCH (POWER-OPERATED TURNOUT)		
SWITCH POINT DERAIL	SP	SP
BI-DIRECTIONAL DERAIL	BD	BD
HORIZONTAL CONTROL POINT	MON *	
HORIZONTAL AND VERTICAL CONTROL POINT	MON *	
VERTICAL CONTROL POINT	MON *	
BENCHMARK		
STAIRWAY OR RAMP FLOODLIGHT		
UTILITY METER	M	M
TRANSFORMER		
GROUNDING ROD		
GROUND		
CCTV CAMERA		
MICROPHONE		
SPEAKER		
DUAL SPEAKER		
HANDHOLE	H	H
CARD INTERFACE DEVICE	CID	CID
DISTRIBUTION CABINET (ATTRIBUTED)	D•••	D•••
STAND ALONE VALIDATOR	SAV	SAV
TICKET VENDING MACHINE	TVM	TVM
CHANGEABLE MESSAGE SIGN	CMS	CMS
PUBLIC TELEPHONE	TEL	TEL
COMMUNICATIONS EQUIPMENT ROOM	CER	CER
COMMUNICATIONS INTERFACE CABINET	CIC	CIC
FIBER DISTRIBUTION PANEL	FDP	FDP
NOISE SENSING MICROPHONE (SURFACE MOUNTED)	M	M
PULL BOX	PB	PB
EQUIPMENT ROOM	ER	ER
SUBSYSTEM DEVICE (TVM, VMS, OR CCTV)	D	D
DISTRIBUTION CABINET (INTERMEDIATE CROSS-CONNECT)	DC	DC
SINGLE MODE OR MULTIMODE FIBER OPTIC CABLE		
8 OHM EXTERIOR HORN SPEAKER	S	S
SM FIBER TO COPPER MEDIA CONVERTER/SWITCH DUAL TX/RX	C/S	C/S

DESCRIPTION	EXISTING	PROPOSED
BATTERY BOX	BB	BB
CCTV, SECURITY MANHOLE		
TELEVISION MANHOLE		
ELECTRIC MANHOLE		
WATER VALVE BOX		
TRAFFIC CONTROL BOX		

PATTERNS

STONE/BRICK PAVING	
BALLAST	
TIMBER	
SUBGRADE, EARTH	
SUBBALLAST	
AGGREGATE BASE	
CONCRETE	
PEDESTRIAN CROSSING PANEL	
TACTILE WARNING TILES	
GRADED/LANDSCAPED AREA	
GRADE CROSSING PANELS	
HOT MIX ASPHALT CONCRETE	

TYPICAL ILLUSTRATION OF TRACK AND TURNOUT

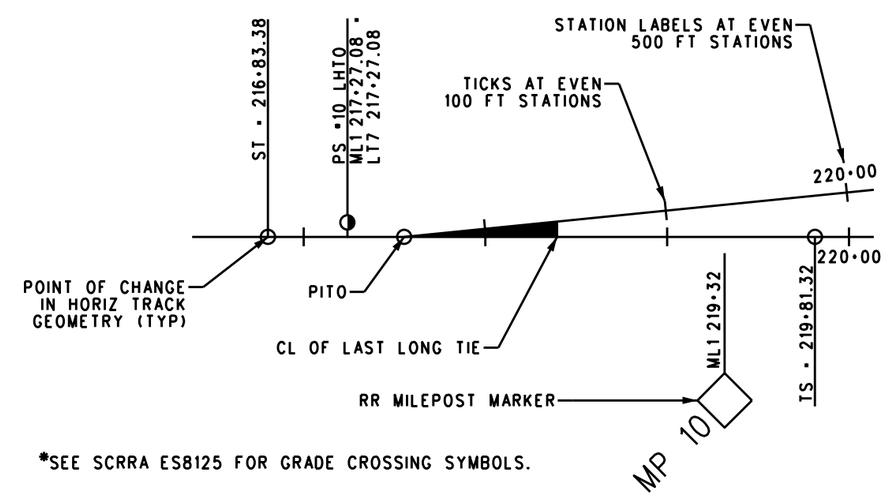

*SEE SCRRA ES8125 FOR GRADE CROSSING SYMBOLS.

X	XX-XX-XX	REVISION	XX	XX
REV.	DATE	DESCRIPTION	DES.	ENG.

DRAWN BY: HDR DATE: 03/31/2011

ASSISTANT DIRECTOR: STANDARDS & DESIGN

DIRECTOR OF ENGINEERING AND CONSTRUCTION

SCRRA ENGINEERING STANDARDS ARE INTENDED FOR SCRRA APPROVED USES ONLY. FOR NON-SCRRA APPROVED USES:
SCRRA SHALL NOT BE RESPONSIBLE FOR THE ACCURACY OR COMPLETENESS OF THE DATA OR INFORMATION CONTAINED HEREIN. THE SELECTION AND USE OF THESE STANDARDS IS THE SOLE RESPONSIBILITY OF THE USER AND SHOULD NOT BE USED WITHOUT CONSULTING A REGISTERED PROFESSIONAL ENGINEER. ALL WARRANTIES AND REPRESENTATIONS OF ANY KIND ARE DISCLAIMED. ANYONE MAKING USE OF THIS INFORMATION AGREES THAT IT ASSUMES ALL LIABILITY ARISING FROM SUCH USE. NO PART OF THESE STANDARDS SHOULD BE REPRODUCED OR DISTRIBUTED IN ANY FORM OR BY ANY MEANS WITHOUT THE PRIOR WRITTEN PERMISSION OF SCRRA. ALL RIGHTS RESERVED.

METROLINK®
SOUTHERN CALIFORNIA REGIONAL RAIL AUTHORITY
ONE GATEWAY PLAZA, 12TH FLOOR, L. A., CA. 90012

ENGINEERING STANDARDS

STANDARD SYMBOLS AND PATTERNS

STANDARD 1201
SCALE: NONE
REVISION –
SHEET 3 OF 4
CADD FILE: ES1201-03

UTILITY LINESTYLES

UTILITY	EXISTING OVERHEAD	OVERHEAD TO BE REMOVED	PROPOSED OVERHEAD	EXISTING UNDERGROUND	UNDERGROUND TO BE REMOVED	PROPOSED UNDERGROUND
ELECTRIC POWER	E E	E E	E E	E E	E E	E E
NATURAL GAS				G G	G G	G G
FUEL				FUEL FUEL	FUEL FUEL	FUEL FUEL
SANITARY SEWER				SS SS	SS SS	SS SS
STORM DRAIN				SD SD	SD SD	SD SD
SIGNAL				SIG SIG	SIG SIG	SIG SIG
TELEPHONE	TEL TEL	TEL TEL	TEL TEL	TEL TEL	TEL TEL	TEL TEL
CABLE TV	CATV CATV	CATV CATV	CATV CATV	CATV CATV	CATV CATV	CATV CATV
COMMUNICATIONS	Q Q	Q Q	Q Q	Q Q	Q Q	Q Q
FIBER OPTIC CABLE (NAME OF COMPANY)	FOC XXX FOC XXX	FOC XXX FOC XXX	FOC XXX FOC XXX	FOC XXX FOC XXX	FOC XXX FOC XXX	FOC XXX FOC XXX
WATER				W W	W W	W W
HOT WATER				HW HW	HW HW	HW HW
TRENCH DRAIN				TD TD	TD TD	TD TD
UNDER DRAIN				UD UD	UD UD	UD UD
COMPRESSED AIR				AIR AIR	AIR AIR	AIR AIR

TRACK

- EXISTING TRACK
- TRACK TO BE REMOVED
- TRACK TO BE REALIGNED
- TRACK TO BE SHIFTED
- NEW TRACK ALIGNMENT
- FUTURE TRACK ALIGNMENT

EXISTING TRACK RECONSTRUCTION

RECON-R	RAIL ONLY
RECON-TT	TIMBER TIES ONLY
RECON-CT	CONCRETE TIES ONLY
RECON-ST	SPOT TIE ONLY
RECON-F	FASTENERS ONLY
RECON-RP	RAIL AND PLATES
RECON-B	BALLAST ONLY
RECON-R/TT/B	RAIL/TIMBER TIE/ BALLAST
RECON-R/TC/B	RAIL/CONCRETE TIE/BALLAST
RECON-R/TC/B/HMAC	RAIL/CONCRETE TIE/BALLAST/HMAC

OTHER COMMON LINESTYLES

- EXISTING FENCE
- PROPOSED FENCE
- EXISTING SCRRA INTERTRACK FENCE/WWM
- PROPOSED SCRRA INTERTRACK FENCE/WWM
- CENTERLINE
- RIGHT OF WAY, EASEMENT, PROPERTY LINE
- MATCH LINE
- EXISTING GUARDRAIL
- PROPOSED GUARDRAIL
- EXISTING RETAINING WALL
- PROPOSED RETAINING WALL

REV.	DATE	DESCRIPTION	DES.	ENG.
X	XX-XX-XX	REVISION	XX	XX

DRAWN BY: HDR DATE: 03/31/2011

ASSISTANT DIRECTOR: STANDARDS & DESIGN

DIRECTOR OF ENGINEERING AND CONSTRUCTION

SCRRA ENGINEERING STANDARDS ARE INTENDED FOR SCRRA APPROVED USES ONLY. FOR NON-SCRRA APPROVED USES:
SCRRA SHALL NOT BE RESPONSIBLE FOR THE ACCURACY OR COMPLETENESS OF THE DATA OR INFORMATION CONTAINED HEREIN. THE SELECTION AND USE OF THESE STANDARDS IS THE SOLE RESPONSIBILITY OF THE USER AND SHOULD NOT BE USED WITHOUT CONSULTING A REGISTERED PROFESSIONAL ENGINEER. ALL WARRANTIES AND REPRESENTATIONS OF ANY KIND ARE DISCLAIMED. ANYONE MAKING USE OF THIS INFORMATION AGREES THAT IT ASSUMES ALL LIABILITY ARISING FROM SUCH USE. NO PART OF THESE STANDARDS SHOULD BE REPRODUCED OR DISTRIBUTED IN ANY FORM OR BY ANY MEANS WITHOUT THE PRIOR WRITTEN PERMISSION OF SCRRA. ALL RIGHTS RESERVED.

METROLINK®
SOUTHERN CALIFORNIA REGIONAL RAIL AUTHORITY
ONE GATEWAY PLAZA, 12TH FLOOR, L. A., CA. 90012

ENGINEERING STANDARDS

STANDARD LINESTYLES

STANDARD 1201
SCALE: NONE
REVISION –
SHEET 4 OF 4
CADD FILE: ES1201-04

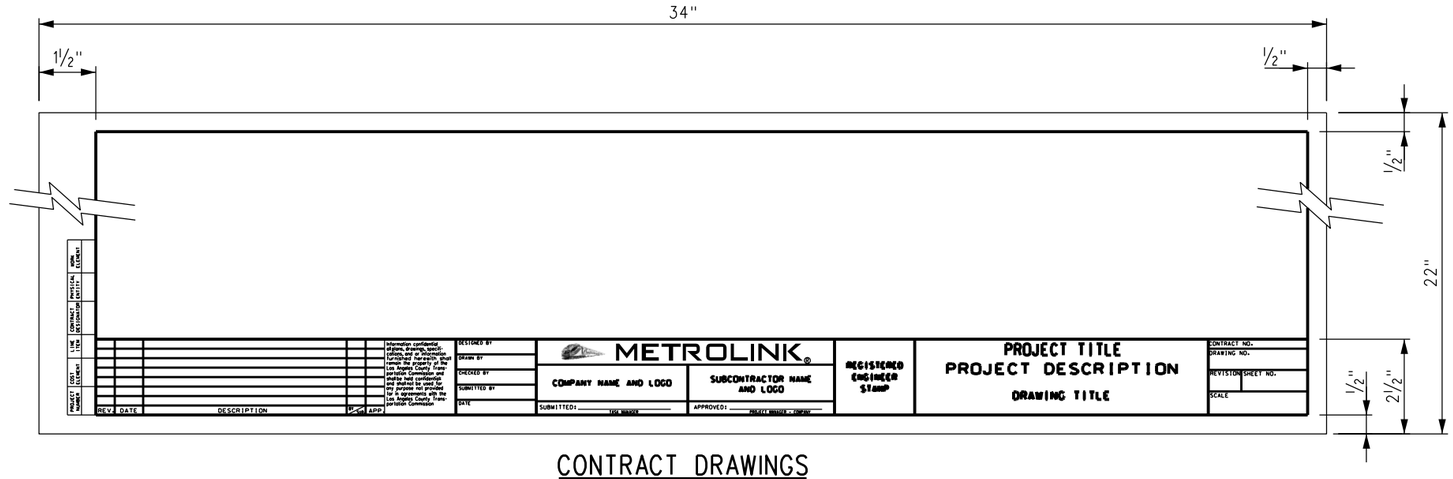

CONTRACT DRAWINGS

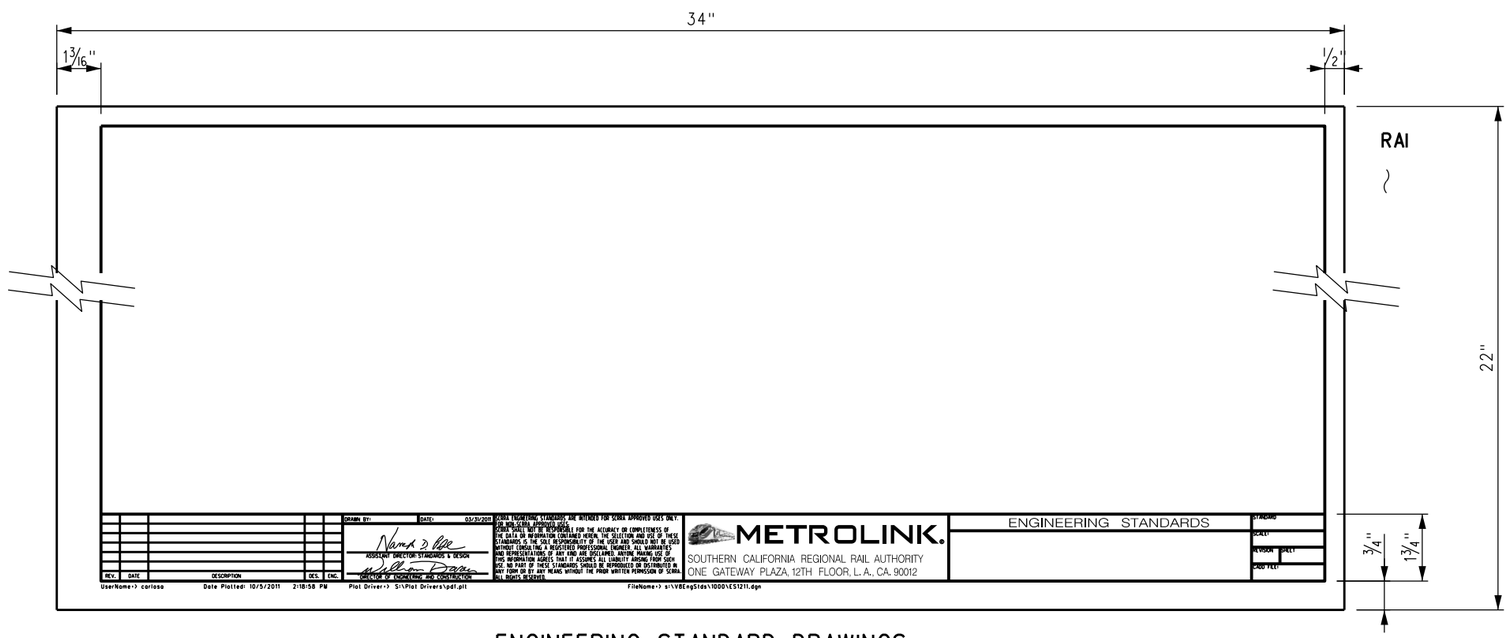

ENGINEERING STANDARD DRAWINGS

					DRAWN BY: A. CARLOS DATE: 03/31/2011
					ASSISTANT DIRECTOR: STANDARDS & DESIGN
X	XX-XX-XX	REVISION	XX	XX	DIRECTOR OF ENGINEERING AND CONSTRUCTION
REV.	DATE	DESCRIPTION	DES.	ENG.	

SCRRA ENGINEERING STANDARDS ARE INTENDED FOR SCRRA APPROVED USES ONLY. FOR NON-SCRRA APPROVED USES:
SCRRA SHALL NOT BE RESPONSIBLE FOR THE ACCURACY OR COMPLETENESS OF THE DATA OR INFORMATION CONTAINED HEREIN. THE SELECTION AND USE OF THESE STANDARDS IS THE SOLE RESPONSIBILITY OF THE USER AND SHOULD NOT BE USED WITHOUT CONSULTING A REGISTERED PROFESSIONAL ENGINEER. ALL WARRANTIES AND REPRESENTATIONS OF ANY KIND ARE DISCLAIMED. ANYONE MAKING USE OF THIS INFORMATION AGREES THAT IT ASSUMES ALL LIABILITY ARISING FROM SUCH USE. NO PART OF THESE STANDARDS SHOULD BE REPRODUCED OR DISTRIBUTED IN ANY FORM OR BY ANY MEANS WITHOUT THE PRIOR WRITTEN PERMISSION OF SCRRA. ALL RIGHTS RESERVED.

METROLINK
SOUTHERN CALIFORNIA REGIONAL RAIL AUTHORITY
ONE GATEWAY PLAZA, 12TH FLOOR, L. A., CA. 90012

ENGINEERING STANDARDS

STANDARD TITLE BLOCKS

STANDARD	1211
SCALE:	NONE
REVISION	SHEET 1 OF 1
CADD FILE:	ES1211

1 2 3 4 5 6 7 8 9 0

A B C D E F G H J K

L M N O P Q R S T U

V W X Y Z & @ - . →

TEXT HEIGHT	
TEXT HEIGHT X ½	
TEXT HEIGHT	
TEXT HEIGHT X 1.5	

TEXT SPACING

UNRELATED LINE

NOTES:

1. "ARIAL BOLD" LETTERS AND NUMERALS SHALL BE USED ON ALL SIGNS UNLESS OTHERWISE SPECIFIED ON SIGN STANDARD.
2. LETTERS AND NUMERALS MAY BE MADE PROPORTIONALLY NARROWER THAN ILLUSTRATED IF NEEDED TO FIT AVAILABLE SPACE ON THE SIGN. HEIGHT SHALL NOT BE ADJUSTED.
3. ALL LETTERS AND NUMERALS SHALL BE BLACK 3M 3650-12 "SCOTCH PLUS" NON-REFLECTIVE.
4. THE LETTER "I" AND THE NUMERAL "1" ARE IDENTICAL.
5. USE TEXT SPACING PATTERN ON THIS SHEET UNLESS OTHERWISE SPECIFIED ON SIGN STANDARD.

REV.	DATE	DESCRIPTION	DES.	ENG.
X	XX-XX-XX	REVISION	XX	XX

DRAWN BY: A. CARLOS DATE: 03/31/2011

ASSISTANT DIRECTOR: STANDARDS & DESIGN

DIRECTOR OF ENGINEERING AND CONSTRUCTION

SCRRA ENGINEERING STANDARDS ARE INTENDED FOR SCRRA APPROVED USES ONLY. FOR NON-SCRRA APPROVED USES:
SCRRA SHALL NOT BE RESPONSIBLE FOR THE ACCURACY OR COMPLETENESS OF THE DATA OR INFORMATION CONTAINED HEREIN. THE SELECTION AND USE OF THESE STANDARDS IS THE SOLE RESPONSIBILITY OF THE USER AND SHOULD NOT BE USED WITHOUT CONSULTING A REGISTERED PROFESSIONAL ENGINEER. ALL WARRANTIES AND REPRESENTATIONS OF ANY KIND ARE DISCLAIMED. ANYONE MAKING USE OF THIS INFORMATION AGREES THAT IT ASSUMES ALL LIABILITY ARISING FROM SUCH USE. NO PART OF THESE STANDARDS SHOULD BE REPRODUCED OR DISTRIBUTED IN ANY FORM OR BY ANY MEANS WITHOUT THE PRIOR WRITTEN PERMISSION OF SCRRA. ALL RIGHTS RESERVED.

METROLINK®
SOUTHERN CALIFORNIA REGIONAL RAIL AUTHORITY
ONE GATEWAY PLAZA, 12TH FLOOR, L. A., CA. 90012

ENGINEERING STANDARDS

LETTERING FOR SIGNS

STANDARD: 1212
SCALE: NONE
REVISION: –
SHEET: 1 OF 1
CADD FILE: ES1212

DISCLAIMER

SCRRA Engineering Standards are intended for SCRRA approved uses only. FOR NON-SCRRA APPROVED USES: SCRRA and its member agencies, directors, officers, employees and/or agents shall not be responsible for the accuracy or completeness of the data or information contained herein. The selection and use of these standards, while designed in accordance with generally accepted engineering principles and practices, is the sole responsibility of the user and should not be used without consulting a registered professional engineer. All warranties and representations of any kind are disclaimed. Anyone making use of this information agrees that it assumes all liability arising from such use. No part of these standards should be reproduced or distributed in any form or by any means without the prior written permission of SCRRA. All rights reserved.

Since revisions or additions to the engineering standards may occur at any time, the user agrees to indemnify, defend, by counsel satisfactory to SCRRA and Member Agency, and hold harmless SCRRA, Member Agencies, and Operating Railroad, and their respective officers, commissioners, employees, agents, successors and assigns. ("Indemnitees"), and each of them to the maximum extent allowed by law, from and against all loss, liability, claims, demands, suits, liens, claims of lien, damages (including incidental consequential damages), costs and expenses (including, without limitation, any fines, penalties, judgments, actual litigation expenses and experts' and actual attorneys' fees), that are incurred by or asserted against Indemnitees arising out of or connected in any manner with the user's use of outdated engineering standards.

Updating the contents of the manual is a continued process, and revisions/replacements are issued periodically. Questions, comments, and proposed recommendations for changes may be sent to SCRRA at 279 E. Arrow Highway, Suite A, San Dimas, CA 91773.

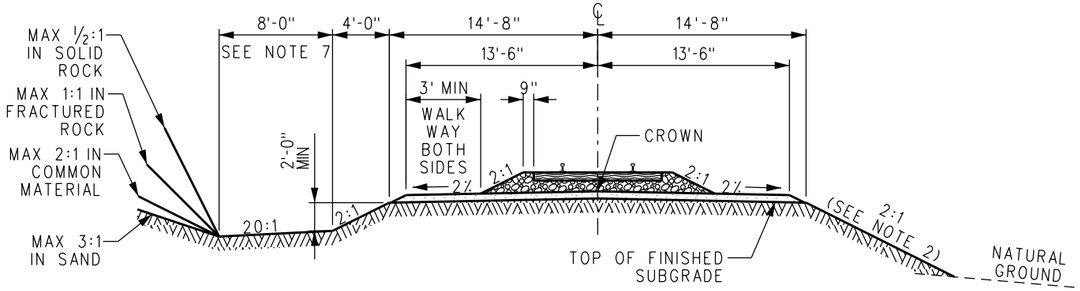

CUT SECTIONS MAINLINE ROADBED SECTION FILL SECTIONS

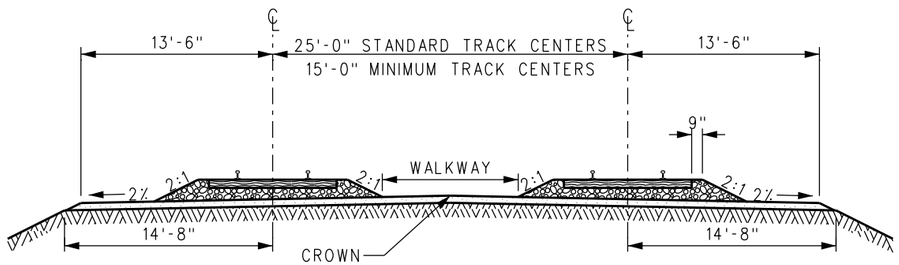

ROADBED SECTION FOR TWO MAINLINE TRACKS OR ADJACENT MAINLINE & SIDING

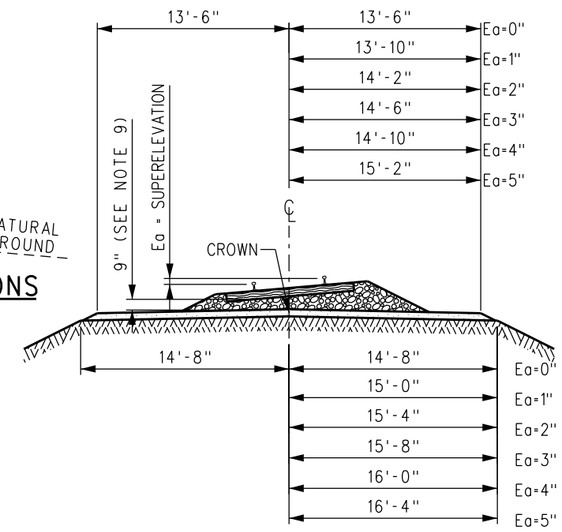

ROADBED SECTION AT CURVED TRACK

FOR DETAILS NOT SHOWN,
SEE CUT AND FILL SECTIONS ELSEWHERE ON THIS SHEET

NOTES:

1. THE DEPTH OF BALLAST AND DEPTH OF SELECT MATERIAL SHALL BE DECIDED ON THE BASIS OF VOLUME OF TRAFFIC AND ON THE QUALITY OF SELECTED MATERIAL AND SUBGRADE AS DETERMINED BY SCRRA.
2. SLOPES SHOWN FOR BANKS IN CUTS AND ON FILLS SHALL BE CONSIDERED STANDARD AND GENERALLY USED, BUT MAY BE MODIFIED BY THE SCRRA DIRECTOR OF ENGINEERING AND CONSTRUCTION AS REQUIRED BY LOCAL CONDITIONS AND CHARACTER OF MATERIAL.
3. BALLAST MUST BE REGULATED IN ADVANCE OF DRESSING SO THAT FINAL SECTION WILL CONFORM TO SLOPE REQUIREMENTS AND CHARACTER OF MATERIAL.
4. WHERE OFF-TRACK ROADWAY IS TO BE PROVIDED, EXTEND THE ROADBED SECTION BY 8'-0" AND MAINTAIN 2% SLOPE AWAY FROM TRACK.
5. ALL FILL SLOPES SHALL BE FACED WITH COVER OF MATERIAL SUITABLE FOR GROWING GRASS AND HAVING A THICKNESS OF APPROXIMATELY 6". THE OUTER SURFACE OF THIS COVER SHALL COINCIDE WITH THE DESIGN SLOPE OF THE EMBANKMENT. MATERIAL FOR THIS COVER MAY BE OBTAINED FROM STRIPPINGS.
6. DEPTH OF DITCHES WILL VARY IN ORDER TO PROVIDE FLOW LINE OF 0.2% MINIMUM GRADE IN DITCHES AND IN BENCHES.
7. SLOPED BOTTOM DITCHES ARE REQUIRED FOR MAIN LINES. A "V" DITCH IS ACCEPTABLE FOR INDUSTRY TRACKS WHEN RIGHT-OF-WAY IS LIMITED AND WHERE LOCAL CONDITIONS AND CHARACTER OF MATERIAL SO REQUIRE. WIDTH OF SLOPED BOTTOM DITCHES MAY EXCEED 8' DEPENDING ON LOCAL CONDITIONS AND HYDRAULIC REQUIREMENTS. SEE SCRRA DESIGN CRITERIA MANUAL CHAPTER 8 (DRAINAGE & GRADING), SECTION 8.5 (HYDRAULICS) FOR MINIMUM HYDRAULIC DITCH CAPACITY DESIGN REQUIREMENTS.
8. ALL MINIMUM DIMENSIONS SHALL BE MET UNLESS OTHERWISE APPROVED BY THE SCRRA DIRECTOR OF ENGINEERING AND CONSTRUCTION.
9. THE PROFILE GRADE LINE ON SUPERELEVATED TRACK APPLIES TO THE LOW RAIL. MAINTAIN DEPTH OF BALLAST EQUAL TO TANGENT TRACK UNDER THE LOW RAIL.
10. ALL SECTIONS ON THIS STANDARD APPLY TO NEW TRACK CONSTRUCTION, AND WHERE PRACTICAL, TRACK RECONSTRUCTION.
11. SEE SCRRA ES1201 FOR ABBREVIATIONS AND SYMBOLS.
12. WHEN TRANSITIONING FROM WOOD TO CONCRETE TIES, INCREASE BALLAST DEPTH LINEARLY TO 12" OVER A 50' SEGMENT ENDING AT THE CENTER OF THE LAST WOOD TIE.

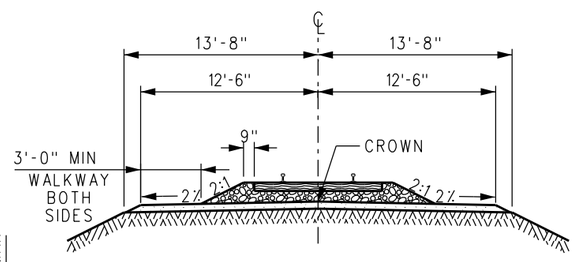

ROADBED SECTION FOR YARD TRACKS

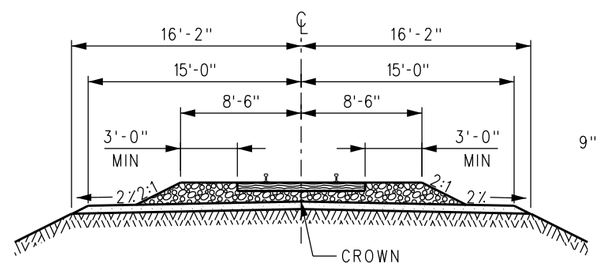

ROADBED SECTION FOR TURNOUTS AND CAR SPOTS IN YARDS

SEE SCRRA ES2105 FOR REQUIRED LIMITS

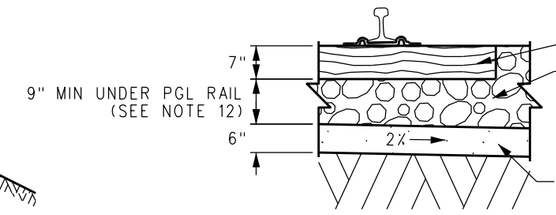

ROADBED SECTION DETAIL FOR MAINLINE & SIDING TRACKS

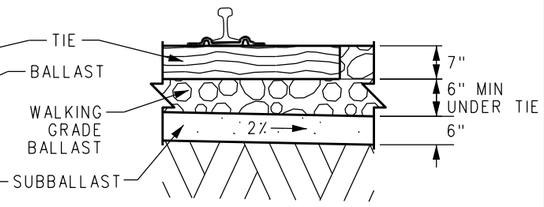

ROADBED SECTION DETAIL FOR YARD TRACKS

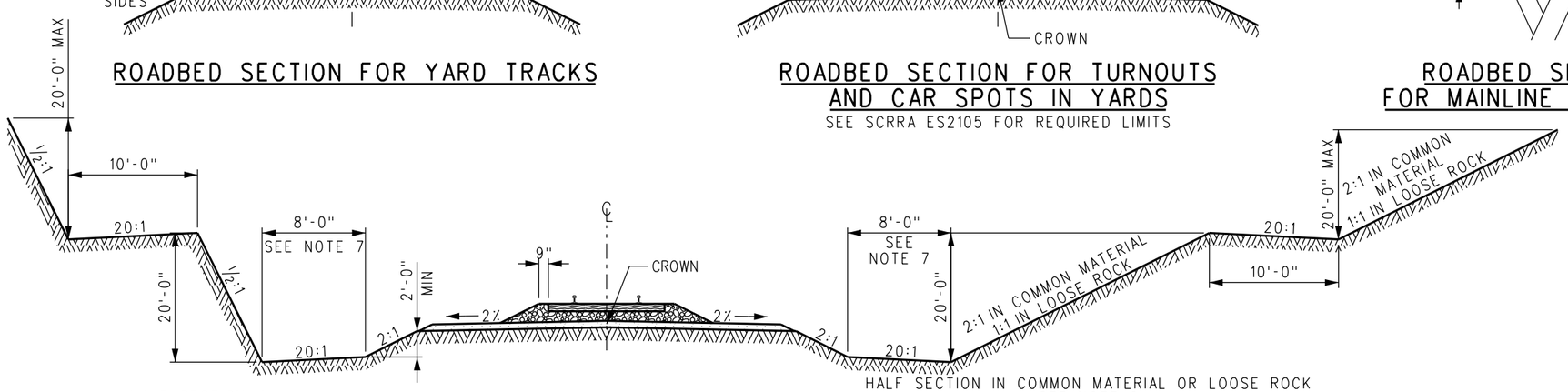

HALF SECTION IN SOLID ROCK

DEEP CUT SECTIONS

10' WIDE BENCH SECTION SHALL BE PROVIDED AT EACH
20' INCREMENT OF HEIGHT ABOVE DITCH BOTTOM
REPEAT BENCHING PATTERN UNTIL CUT LINE INTERCEPTS EXISTING GROUND

HALF SECTION IN COMMON MATERIAL OR LOOSE ROCK
SEE NOTE 2

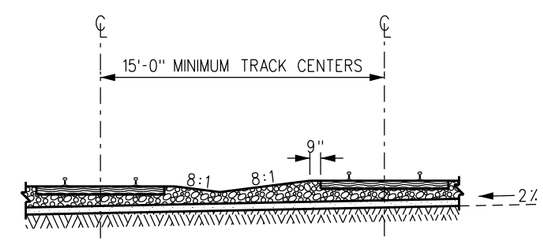

ROADBED SECTION FOR ADJACENT YARD TRACKS

REV.	DATE	DESCRIPTION	DES.	ENG.
X	XX-XX-XX	REVISION	XX	XX

DRAWN BY: A. CARLOS DATE: 03/31/2011

ASSISTANT DIRECTOR: STANDARDS & DESIGN

DIRECTOR OF ENGINEERING AND CONSTRUCTION

SCRRA ENGINEERING STANDARDS ARE INTENDED FOR SCRRA APPROVED USES ONLY. FOR NON-SCRRA APPROVED USES: SCRRA SHALL NOT BE RESPONSIBLE FOR THE ACCURACY OR COMPLETENESS OF THE DATA OR INFORMATION CONTAINED HEREIN. THE SELECTION AND USE OF THESE STANDARDS IS THE SOLE RESPONSIBILITY OF THE USER AND SHOULD NOT BE USED WITHOUT CONSULTING A REGISTERED PROFESSIONAL ENGINEER. ALL WARRANTIES AND REPRESENTATIONS OF ANY KIND ARE DISCLAIMED. ANYONE MAKING USE OF THIS INFORMATION AGREES THAT IT ASSUMES ALL LIABILITY ARISING FROM SUCH USE. NO PART OF THESE STANDARDS SHOULD BE REPRODUCED OR DISTRIBUTED IN ANY FORM OR BY ANY MEANS WITHOUT THE PRIOR WRITTEN PERMISSION OF SCRRA. ALL RIGHTS RESERVED.

METROLINK®
SOUTHERN CALIFORNIA REGIONAL RAIL AUTHORITY
ONE GATEWAY PLAZA, 12TH FLOOR, L. A., CA. 90012

ENGINEERING STANDARDS

ROADBED SECTIONS FOR TRACK CONSTRUCTED USING WOOD TIES

STANDARD 2001
SCALE: NTS
REVISION –
SHEET 1 OF 1
CADD FILE: ES2001

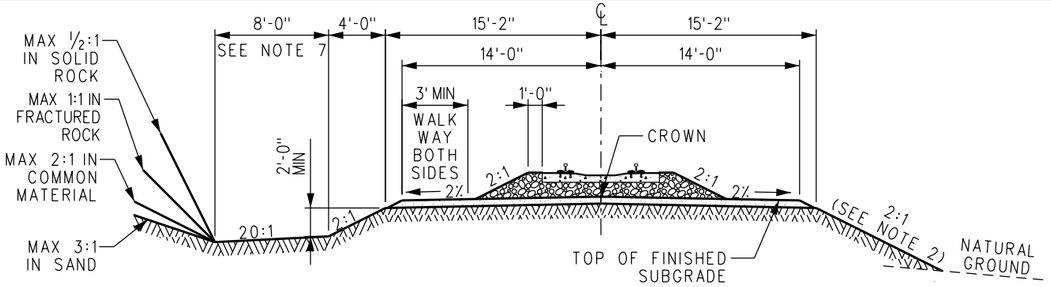

CUT SECTIONS MAINLINE ROADBED SECTION FILL SECTIONS

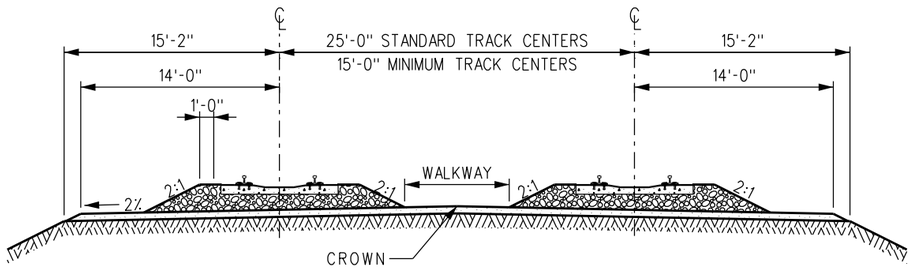

ROADBED SECTION FOR TWO MAINLINE TRACKS OR ADJACENT MAINLINE & SIDING

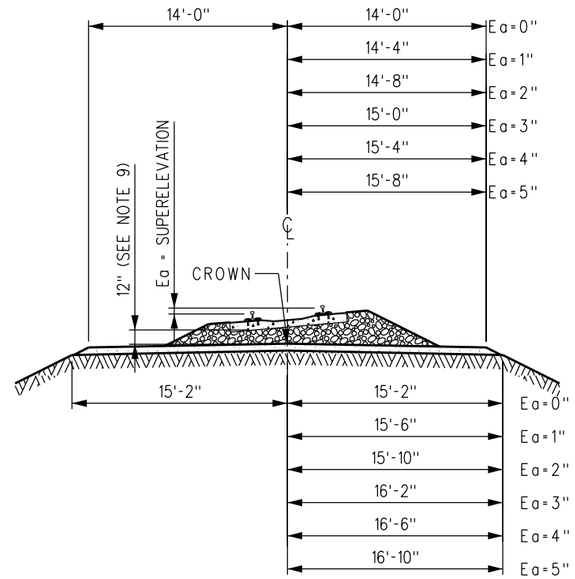

ROADBED SECTION AT CURVED TRACK

FOR DETAILS NOT SHOWN, SEE CUT AND FILL SECTIONS ELSEWHERE ON THIS SHEET

NOTES:

1. THE DEPTH OF BALLAST AND DEPTH OF SELECT MATERIAL SHALL BE DECIDED ON THE BASIS OF VOLUME OF TRAFFIC AND ON THE QUALITY OF SELECTED MATERIAL AND SUBGRADE AS DETERMINED BY SCRRA.
2. SLOPES SHOWN FOR BANKS IN CUTS AND ON FILLS SHALL BE CONSIDERED STANDARD AND GENERALLY USED, BUT MAY BE MODIFIED BY THE SCRRA DIRECTOR OF ENGINEERING AND CONSTRUCTION AS REQUIRED BY LOCAL CONDITIONS AND CHARACTER OF MATERIAL.
3. BALLAST MUST BE REGULATED IN ADVANCE OF DRESSING SO THAT FINAL SECTION WILL CONFORM TO SLOPE REQUIREMENTS AND CHARACTER OF MATERIAL.
4. WHERE OFF-TRACK ROADWAY IS TO BE PROVIDED, EXTEND THE ROADBED SECTION BY 8'-0" AND MAINTAIN 2% SLOPE AWAY FROM TRACK.
5. ALL FILL SLOPES SHALL BE FACED WITH COVER OF MATERIAL SUITABLE FOR GROWING GRASS AND HAVING A THICKNESS OF APPROXIMATELY 6". THE OUTER SURFACE OF THIS COVER SHALL COINCIDE WITH THE DESIGN SLOPE OF THE EMBANKMENT. MATERIAL FOR THIS COVER MAY BE OBTAINED FROM STRIPPINGS.
6. DEPTH OF DITCHES WILL VARY IN ORDER TO PROVIDE FLOW LINE OF 0.2% MINIMUM GRADE IN DITCHES AND IN BENCHES.
7. SLOPED BOTTOM DITCHES ARE REQUIRED FOR MAIN LINES. A "V" DITCH IS ACCEPTABLE FOR INDUSTRY TRACKS WHEN RIGHT-OF-WAY IS LIMITED AND WHERE LOCAL CONDITIONS AND CHARACTER OF MATERIAL SO REQUIRE. WIDTH OF SLOPED BOTTOM DITCHES MAY EXCEED 8' DEPENDING ON LOCAL CONDITIONS AND HYDRAULIC REQUIREMENTS. SEE SCRRA DESIGN CRITERIA MANUAL CHAPTER 8 (DRAINAGE & GRADING), SECTION 8.5 (HYDRAULICS) FOR MINIMUM HYDRAULIC DITCH CAPACITY DESIGN REQUIREMENTS.
8. ALL MINIMUM DIMENSIONS SHALL BE MET UNLESS OTHERWISE APPROVED BY THE SCRRA DIRECTOR OF ENGINEERING AND CONSTRUCTION.
9. THE PROFILE GRADE LINE ON SUPERELEVATED TRACK APPLIES TO THE LOW RAIL. MAINTAIN DEPTH OF BALLAST EQUAL TO TANGENT TRACK UNDER THE LOW RAIL.
10. ALL SECTIONS ON THIS STANDARD APPLY TO NEW TRACK CONSTRUCTION AND, WHERE PRACTICAL, TRACK RECONSTRUCTION.
11. SEE SCRRA ES1201 FOR ABBREVIATIONS AND SYMBOLS.

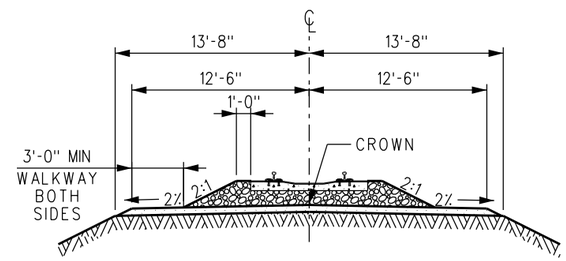

ROADBED SECTION FOR YARD TRACKS

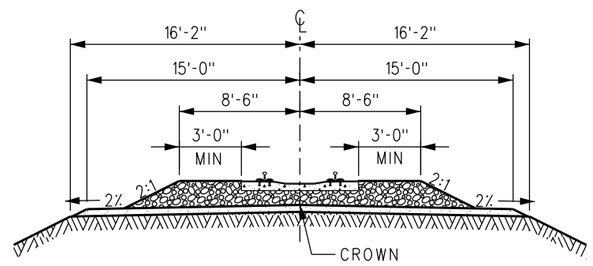

ROADBED SECTION FOR TURNOUTS AND CAR SPOTS IN YARDS

SEE SCRRA ES2105 FOR REQUIRED LIMITS

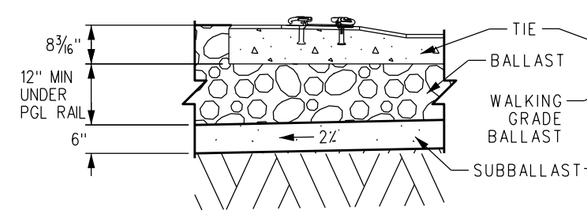

ROADBED SECTION DETAIL FOR MAINLINE & SIDING TRACKS

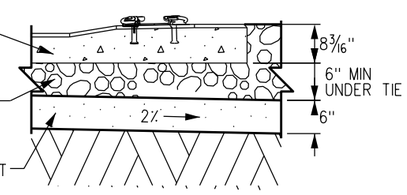

ROADBED SECTION DETAIL FOR YARD TRACKS

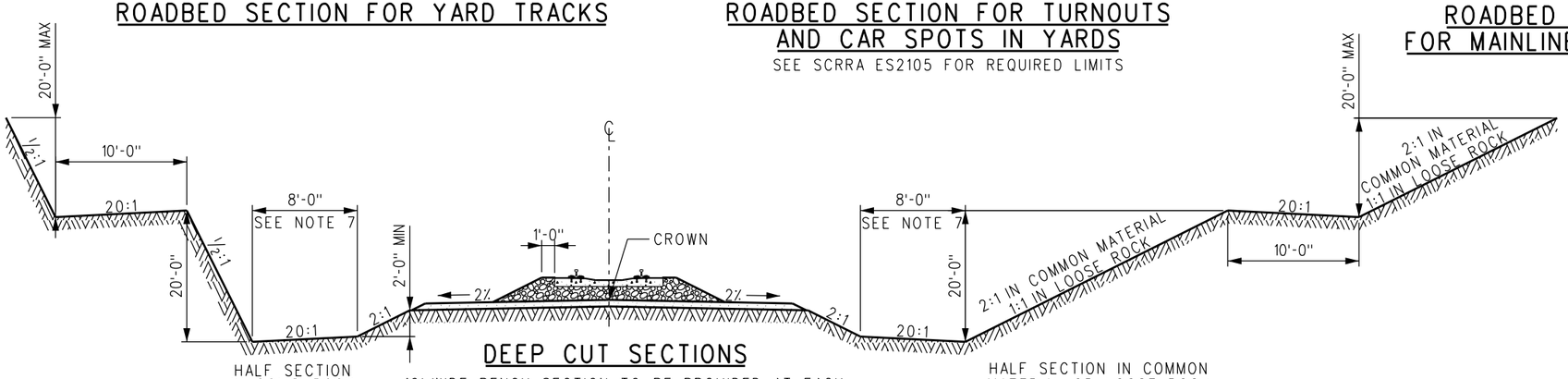

HALF SECTION IN SOLID ROCK

DEEP CUT SECTIONS

10' WIDE BENCH SECTION TO BE PROVIDED AT EACH 20' INCREMENT OF HEIGHT ABOVE DITCH BOTTOM
REPEAT BENCHING PATTERN UNTIL CUT LINE INTERCEPTS EXISTING GROUND

HALF SECTION IN COMMON MATERIAL OR LOOSE ROCK SEE NOTE 2

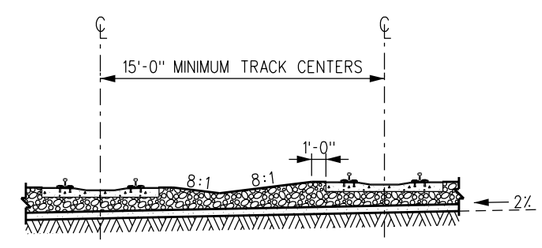

ROADBED SECTION FOR ADJACENT YARD TRACKS

REV.	DATE	DESCRIPTION	DES.	ENG.
X	XX-XX-XX	REVISION	XX	XX

DRAWN BY: A. CARLOS DATE: 03/31/2011

ASSISTANT DIRECTOR: STANDARDS & DESIGN

DIRECTOR OF ENGINEERING AND CONSTRUCTION

SCRRA ENGINEERING STANDARDS ARE INTENDED FOR SCRRA APPROVED USES ONLY. FOR NON-SCRRA APPROVED USES:
SCRRA SHALL NOT BE RESPONSIBLE FOR THE ACCURACY OR COMPLETENESS OF THE DATA OR INFORMATION CONTAINED HEREIN. THE SELECTION AND USE OF THESE STANDARDS IS THE SOLE RESPONSIBILITY OF THE USER AND SHOULD NOT BE USED WITHOUT CONSULTING A REGISTERED PROFESSIONAL ENGINEER. ALL WARRANTIES AND REPRESENTATIONS OF ANY KIND ARE DISCLAIMED. ANYONE MAKING USE OF THIS INFORMATION AGREES THAT IT ASSUMES ALL LIABILITY ARISING FROM SUCH USE. NO PART OF THESE STANDARDS SHOULD BE REPRODUCED OR DISTRIBUTED IN ANY FORM OR BY ANY MEANS WITHOUT THE PRIOR WRITTEN PERMISSION OF SCRRA. ALL RIGHTS RESERVED.

METROLINK®
SOUTHERN CALIFORNIA REGIONAL RAIL AUTHORITY
ONE GATEWAY PLAZA, 12TH FLOOR, L. A., CA. 90012

ENGINEERING STANDARDS

ROADBED SECTIONS FOR TRACK CONSTRUCTED USING CONCRETE TIES

STANDARD 2002
SCALE: NTS
REVISION –
SHEET 1 OF 1
CADD FILE: ES2002

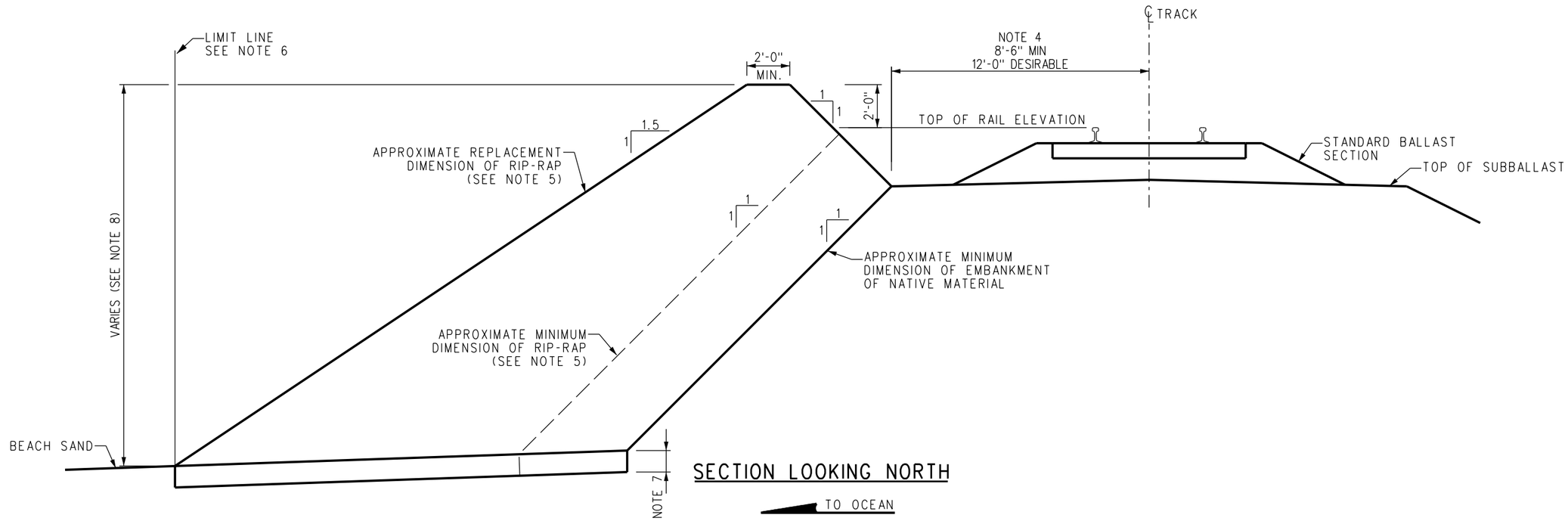

NOTES:

1. APPLICATION: THIS STANDARD SHALL BE USED FOR RAILROAD EMBANKMENTS EXPOSED TO OCEAN WAVES. THE RIP-RAP IS USED TO SECURE THE TRACK BALLAST FROM EROSION DUE TO WAVES, AS REQUIRED BY FEDERAL RAILROAD ADMINISTRATION TRACK SAFETY STANDARDS PART 213.103, PROTECTION OF THE BALLAST AND EMBANKMENT BEING FUNDAMENTAL IN SUPPORTING THE TRACK STRUCTURE.
2. DIMENSION LINES: DIMENSIONS FOR STONE RIP-RAP ARE THE AVERAGE OF THE EXPOSED SURFACE OF ROCK. DUE TO THE IRREGULAR SIZE AND SHAPE OF NATURALLY BROKEN ROCK, ANY SPECIFIC POINT MAY VARY TWO FEET FROM THE AVERAGE DIMENSION SHOWN.
3. RIP-RAP MATERIAL: GRANITE, BASALT OR SIMILAR IGNEOUS OR METAMORPHIC ROCK NATIVE TO ORANGE OR RIVERSIDE COUNTIES, BROKEN INTO SIZE DISTRIBUTION MEETING ASTM D5519 GRADATION WILL BE USED TO REPLACE ERODED RIP-RAP AREAS, HOWEVER EXISTING INVENTORIES OF LARGER ROCK MAY BE USED UNTIL EXHAUSTED. CONCRETE, ASPHALT, TIMBER OR METAL IS NOT PERMITTED IN THE RIP-RAP.
4. A WALKWAY GENERALLY CONFORMING TO SCRRA ES2001 AND ES2002 WILL BE PROVIDED ON THE OCEAN SIDE OF THE TRACKS. THE MINIMUM WIDTH OF THE WALKWAY IN SURF AREAS IS EIGHT FEET AND SIX INCHES (8'-6") FROM THE CENTERLINE OF THE TRACK, WITH TWELVE FEET (12'-0") TO BE PROVIDED WHERE FIELD CONDITIONS PERMIT. WALKWAY SURFACE SHALL BE SUBBALLAST.
5. MINIMUM AND MAXIMUM REPLACEMENT DIMENSIONS: THE GENERAL CRITERIA FOR INTIATING REPLACEMENT OF RIP-RAP IS WHEN EROSION OR SETTLEMENT HAS DEGRADED THE RIP-RAP SUCH THAT THE TOP OF THE RIP-RAP HAS BECOME LOWER THAN THE TOP OF RAIL ELEVATION (AND THEREFORE DOES NOT SHIELD THE TRACK FROM WAVES), WHEN THE THICKNESS OF THE RIP-RAP HAS DETERIORATED SUCH THAT THE NATURAL EMBANKMENT IS EXPOSED TO WAVE ACTION, OR WHEN THE LOWER PORTIONS OF THE RIP-RAP HAVE BECOME ERODED LEAVING AN UNSTABLE (STEEPER THAN 1:1) SLOPE RATIO. RIP-RAP WILL BE REPLENISHED TO THE "REPLACEMENT LINE" SHOWN, GENERALLY TO A 1.5:1 SLOPE RATIO. (AT LOCATIONS WITH WELL-ESTABLISHED LARGE DIMENSION RIP-RAP AT A STEEPER SLOPE, LOCALIZED SEGMENTS OF NEW RIP-RAP MAY BE INSTALLED AT 1:1 SLOPE RATIO). THE NORMAL STATE OF MAINTENANCE WILL BE GRADUALLY ERODING COVER OF RIP-RAP BETWEEN THE "MINIMUM" AND "REPLACEMENT" DIMENSION LINES.
6. THE SCRRA AND LOCAL AGENCIES HAVE ESTABLISHED A "LIMIT LINE" TO DEFINE THE MAXIMUM WIDTH OF THE RIP-RAP. THIS LINE IS LOCATED BY REFERENCE TO GPS MEASURED COORDINATES, TO OFFSETS FROM TRACK CENTERLINE, OR BOTH. PLACEMENT OF RIP-RAP SHALL CONFORM TO THE LIMIT LINE UNLESS UNPRECEDENTED EROSION OF THE BEACH LOWERS THE LEVEL OF THE SAND, IN WHICH CASE THE LIMIT LINE WILL BE ADJUSTED SEAWARD AT A 1.5:1 (OR 1:1 AT LOCALIZED SITES) SLOPE RATIO FOR THE ADDED HEIGHT OF THE EMBANKMENT. AFTER RIP-RAP REPLACEMENT OPERATIONS ARE COMPLETE SCRRA WILL MAKE A SURVEY OF THE LIMIT LINE TO DETECT ANY DEVIATIONS FROM THE LIMIT LINE.

NOTES: (continued)

7. THE BOTTOM OF THE RIP-RAP SHALL BE KEYED INTO THE BEACH SAND BY APPROXIMATELY THE SIZE OF THE RIP-RAP ROCK NOMINAL DIMENSION. EXISTING RIP-RAP OR NATIVE ROCK SHALL NOT BE EXCAVATED TO ESTABLISH A NEW KEY UNLESS REQUIRED TO ACHIEVE A STABLE STRUCTURE.
8. THE ELEVATION OF THE TRACK SHALL BE MAINTAINED TO WHAT EXISTED UPON PURCHASE OF THE TRACK, HOWEVER TRACK RAISE NOT EXCEEDING 3 INCHES AT TIME OF TIE REPLACEMENT MAY BE PERFORMED. THE ELEVATION OF THE RIP-RAP SHALL REMAIN AS DIMENSIONED ON THIS STANDARD. IF THE ELEVATION OF THE BEACH SAND RISES OR FALLS, THE EFFECTIVE HEIGHT OF THE RIP-RAP SHALL BE ADJUSTED AT THE 1.5:1 OR 1:1 SLOPE RATIO SHOWN.
9. RIP-RAP WILL BE PLACED BY GRAVITY DUMP FROM RAILROAD EQUIPMENT, FOLLOWED BY RE-STACKING WITH EQUIPMENT WORKING FROM THE BEACH THAT IS CAPABLE OF MOVING THE LARGEST ROCKS BEING USED. THE RE-STACKING IS TO PLACE ALL ROCKS IN A STABLE MATRIX, TO RECOVER ANY ROCKS BEYOND THE LIMIT LINE, AND TO FILL VOIDS BETWEEN LARGE ROCKS WITH SMALLER ROCK ELEMENTS. EXISTING RIP-RAP MAY BE MOVED PRIOR TO ADDITION OF REPLENISHMENT ROCK IN ORDER TO FACILITATE DUMPING.
10. FOR EMBANKMENT DETAILS NOT SHOWN, REFER TO SCRRA ES2001 AND ES2002.
11. AT LOCATIONS WHERE SAND MOVES TO COVER UP THE RIP-RAP, RIP-RAP SHALL BE LEFT IN PLACE.
12. SCRRA MAINTENANCE MANAGER WILL INFORM THE GOVERNING AGENCIES ONE MONTH IN ADVANCE OF PLANNED PLACEMENT OF REPLENISHMENT RIP-RAP. IF RAPID EROSION REQUIRES PLACEMENT IN LESS THAN THE FULL MONTH NOTIFICATION PERIOD, NOTICE WILL BE GIVEN AS PROMPTLY AS PRACTICABLE.
13. INSTALLATION AND RE-STACKING OF ROCK SHAILL CONFORM TO PERMIT GUIDELINES AND SHALL BE PERFORMED ONLY AFTER PROVIDING PROTECTION FOR MEMBERS OF THE PUBLIC WHO MAY BE USING THE BEACH.
14. ROUTINE REPLENISHMENT AND MAINTENANCE OF THE RIP-RAP SHALL BE SCHEDULED TO AVOID PEAK BEACH RECREATIONAL USE TIMES.
15. LOCALIZED EXCEPTIONS TO THIS STANDARD SHALL BE MADE IN ORDER TO FIT RIP-RAP TO CONFORM TO DRAINAGE STRUCTURES, PUBLIC CROSSINGS, SIGNAL FACILITIES AND OTHER STRUCTURES.

REV.	DATE	DESCRIPTION	DES.	ENG.
X	XX-XX-XX	REVISION	XX	XX

DRAWN BY: A. CARLOS DATE: 03/31/2011

ASSISTANT DIRECTOR: STANDARDS & DESIGN

DIRECTOR OF ENGINEERING AND CONSTRUCTION

SCRRA ENGINEERING STANDARDS ARE INTENDED FOR SCRRA APPROVED USES ONLY. FOR NON-SCRRA APPROVED USES, SCRRA SHALL NOT BE RESPONSIBLE FOR THE ACCURACY OR COMPLETENESS OF THE DATA OR INFORMATION CONTAINED HEREIN. THE SELECTION AND USE OF THESE STANDARDS IS THE SOLE RESPONSIBILITY OF THE USER AND SHOULD NOT BE USED WITHOUT CONSULTING A REGISTERED PROFESSIONAL ENGINEER. ALL WARRANTIES AND REPRESENTATIONS OF ANY KIND ARE DISCLAIMED. ANYONE MAKING USE OF THIS INFORMATION AGREES THAT IT ASSUMES ALL LIABILITY ARISING FROM SUCH USE. NO PART OF THESE STANDARDS SHOULD BE REPRODUCED OR DISTRIBUTED IN ANY FORM OR BY ANY MEANS WITHOUT THE PRIOR WRITTEN PERMISSION OF SCRRA. ALL RIGHTS RESERVED.

METROLINK®

SOUTHERN CALIFORNIA REGIONAL RAIL AUTHORITY
ONE GATEWAY PLAZA, 12TH FLOOR, L. A., CA. 90012

ENGINEERING STANDARDS

ROADBED SECTIONS FOR
EXPOSURE TO OCEAN SURF

STANDARD 2003
SCALE: NTS
REVISION –
SHEET 1 OF 1
CADD FILE: ES2003

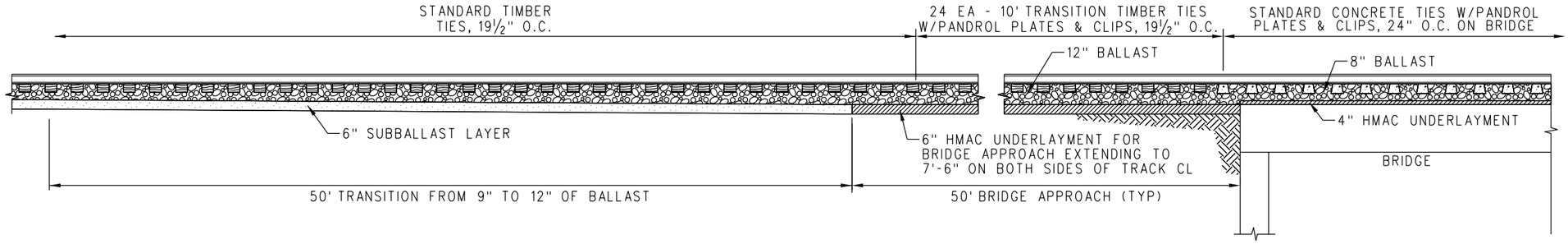

ON BRIDGES
(TYPICAL FOR BOTH ENDS)

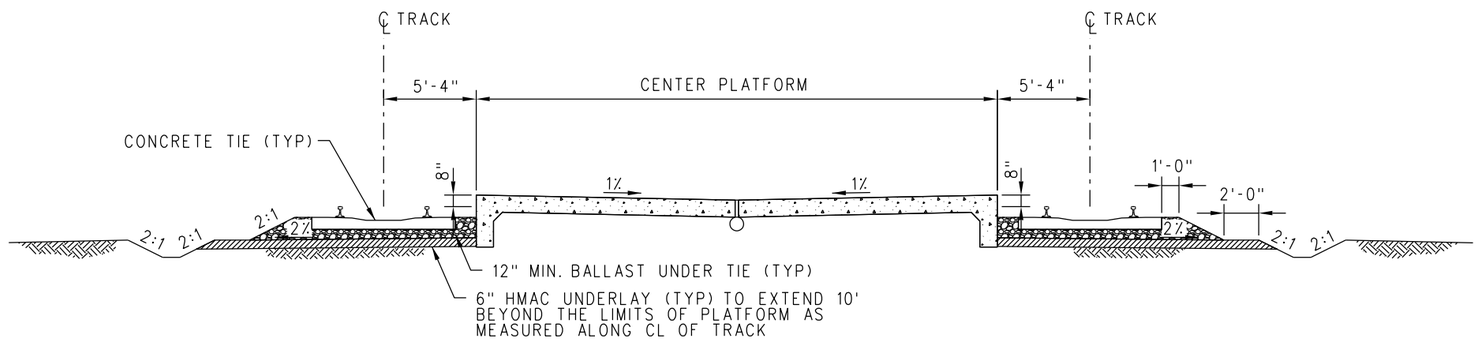

AT STATIONS
(CENTER ISLAND PLATFORM)

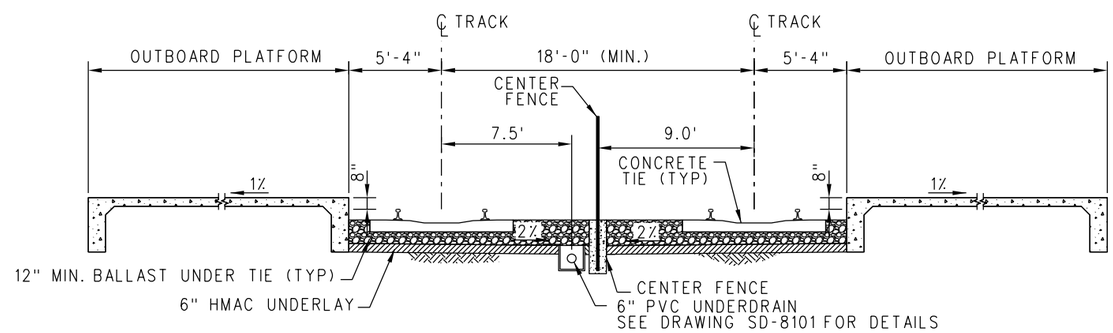

AT STATIONS
(OUTBOARD PLATFORMS)

REV.	DATE	DESCRIPTION	DES.	ENG.
X	XX-XX-XX	REVISION	XX	XX

DRAWN BY: HDR DATE: 03/31/2011

ASSISTANT DIRECTOR: STANDARDS & DESIGN

DIRECTOR OF ENGINEERING AND CONSTRUCTION

SCRRA ENGINEERING STANDARDS ARE INTENDED FOR SCRRA APPROVED USES ONLY. FOR NON-SCRRA APPROVED USES:
SCRRA SHALL NOT BE RESPONSIBLE FOR THE ACCURACY OR COMPLETENESS OF THE DATA OR INFORMATION CONTAINED HEREIN. THE SELECTION AND USE OF THESE STANDARDS IS THE SOLE RESPONSIBILITY OF THE USER AND SHOULD NOT BE USED WITHOUT CONSULTING A REGISTERED PROFESSIONAL ENGINEER. ALL WARRANTIES AND REPRESENTATIONS OF ANY KIND ARE DISCLAIMED. ANYONE MAKING USE OF THIS INFORMATION AGREES THAT IT ASSUMES ALL LIABILITY ARISING FROM SUCH USE. NO PART OF THESE STANDARDS SHOULD BE REPRODUCED OR DISTRIBUTED IN ANY FORM OR BY ANY MEANS WITHOUT THE PRIOR WRITTEN PERMISSION OF SCRRA. ALL RIGHTS RESERVED.

METROLINK®
SOUTHERN CALIFORNIA REGIONAL RAIL AUTHORITY
ONE GATEWAY PLAZA, 12TH FLOOR, L. A., CA. 90012

ENGINEERING STANDARDS

HMAC UNDERLAYMENT
FOR SELECT CRITICAL LOCATIONS
(NEW CONSTRUCTION ONLY)

STANDARD 2004
SCALE: NTS
REVISION –
SHEET 1 OF 1
CADD FILE: ES2004

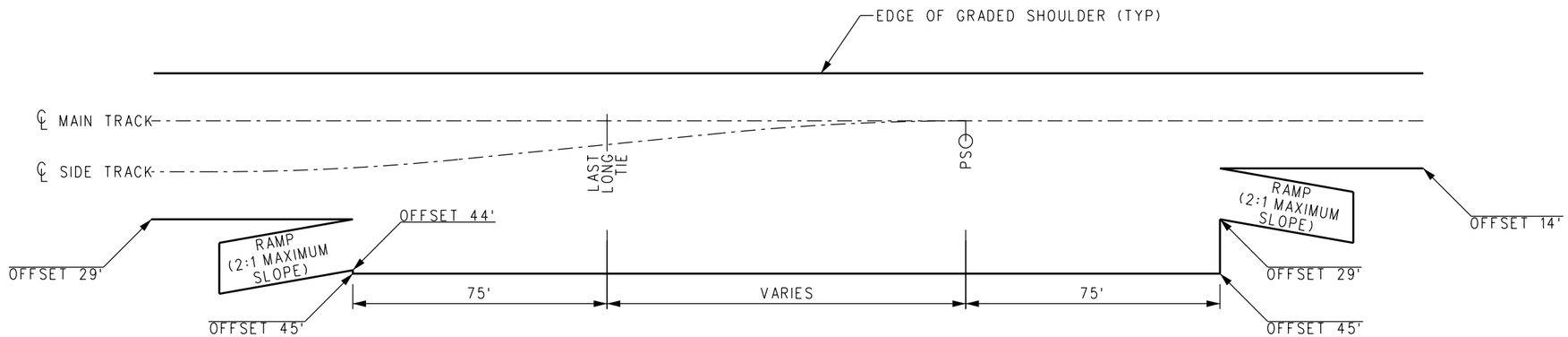

NOTE:
OFFSETS ARE MEASURED FROM
CENTERLINE OF MAIN TRACK.

REV.	DATE	DESCRIPTION	DES.	ENG.
X	XX-XX-XX	REVISION	XX	XX

DRAWN BY: HDR DATE: 03/31/2011

ASSISTANT DIRECTOR: STANDARDS & DESIGN

DIRECTOR OF ENGINEERING AND CONSTRUCTION

SCRRA ENGINEERING STANDARDS ARE INTENDED FOR SCRRA APPROVED USES ONLY. FOR NON-SCRRA APPROVED USES, SCRRA SHALL NOT BE RESPONSIBLE FOR THE ACCURACY OR COMPLETENESS OF THE DATA OR INFORMATION CONTAINED HEREIN. THE SELECTION AND USE OF THESE STANDARDS IS THE SOLE RESPONSIBILITY OF THE USER AND SHOULD NOT BE USED WITHOUT CONSULTING A REGISTERED PROFESSIONAL ENGINEER. ALL WARRANTIES AND REPRESENTATIONS OF ANY KIND ARE DISCLAIMED. ANYONE MAKING USE OF THIS INFORMATION AGREES THAT IT ASSUMES ALL LIABILITY ARISING FROM SUCH USE. NO PART OF THESE STANDARDS SHOULD BE REPRODUCED OR DISTRIBUTED IN ANY FORM OR BY ANY MEANS WITHOUT THE PRIOR WRITTEN PERMISSION OF SCRRA. ALL RIGHTS RESERVED.

METROLINK®
SOUTHERN CALIFORNIA REGIONAL RAIL AUTHORITY
ONE GATEWAY PLAZA, 12TH FLOOR, L. A., CA. 90012

ENGINEERING STANDARDS

TURNOUT CONSTRUCTION PADS

STANDARD: 2005
SCALE: NTS
REVISION: –
SHEET: 1 OF 1
CADD FILE: ES2005

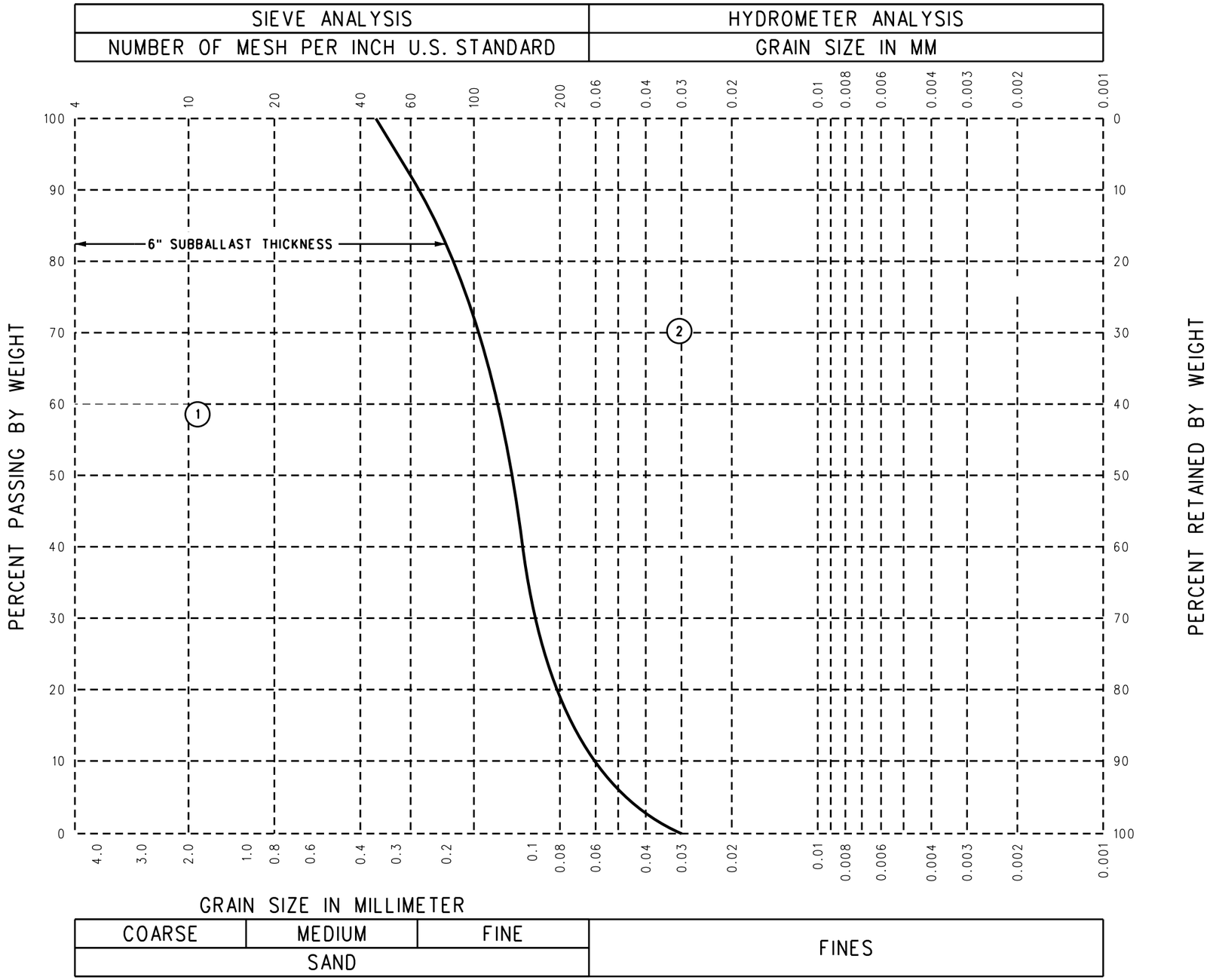

	GRADATION CURVE
SIEVE SIZE	6" LIMIT
NO 40	100
NO 60	92
NO 100	72
NO 200	19
0.015	-
0.006	-
0.004	-
0.001	-

PERCENT PASSING (BY WEIGHT)
[ALL AGGREGATE SAMPLING AND TESTING PER ASTM LATEST REVISION.]

NOTES:

1. SOILS ENGINEER WILL USE THESE REQUIREMENTS AS A MINIMUM. ADDITIONAL SUBGRADE SUPPORT MEASURES MAY BE NECESSARY AS DIRECTED BY SOIL ENGINEER'S ANALYSIS.

(1) ZONE OF SUBGRADE MATERIALS REQUIRING 6" OF SUBBALLAST.

(2) ADDITIONAL MEASURES MAY BE REQUIRED PER RECOMMENDATIONS OF AN ENGINEERING SOILS ANALYSIS.

REV.	DATE	DESCRIPTION	DES.	ENG.
X	XX-XX-XX	REVISION	XX	XX

DRAWN BY: HDR DATE: 03/31/2011

ASSISTANT DIRECTOR: STANDARDS & DESIGN

DIRECTOR OF ENGINEERING AND CONSTRUCTION

SCRRA ENGINEERING STANDARDS ARE INTENDED FOR SCRRA APPROVED USES ONLY. FOR NON-SCRRA APPROVED USES:
SCRRA SHALL NOT BE RESPONSIBLE FOR THE ACCURACY OR COMPLETENESS OF THE DATA OR INFORMATION CONTAINED HEREIN. THE SELECTION AND USE OF THESE STANDARDS IS THE SOLE RESPONSIBILITY OF THE USER AND SHOULD NOT BE USED WITHOUT CONSULTING A REGISTERED PROFESSIONAL ENGINEER. ALL WARRANTIES AND REPRESENTATIONS OF ANY KIND ARE DISCLAIMED. ANYONE MAKING USE OF THIS INFORMATION AGREES THAT IT ASSUMES ALL LIABILITY ARISING FROM SUCH USE. NO PART OF THESE STANDARDS SHOULD BE REPRODUCED OR DISTRIBUTED IN ANY FORM OR BY ANY MEANS WITHOUT THE PRIOR WRITTEN PERMISSION OF SCRRA. ALL RIGHTS RESERVED.

METROLINK®
SOUTHERN CALIFORNIA REGIONAL RAIL AUTHORITY
ONE GATEWAY PLAZA, 12TH FLOOR, L. A., CA. 90012

ENGINEERING STANDARDS

GRAIN SIZE DISTRIBUTION FOR SUBGRADE SOILS

STANDARD: 2007
SCALE: NTS
REVISION: –
SHEET: 1 OF 2
CADD FILE: ES2007-01

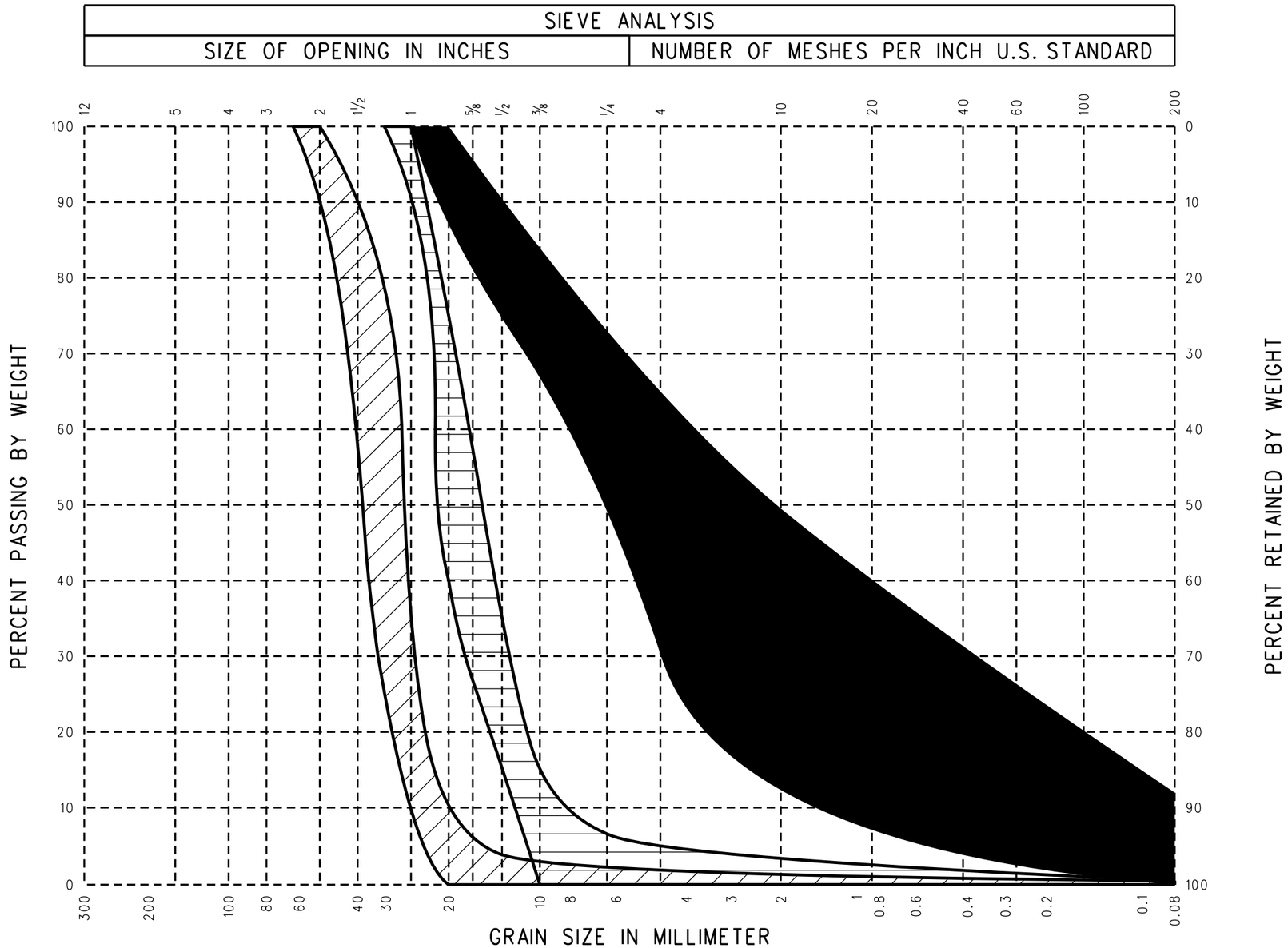

	•4A	•5	SUBBALLAST
SQUARE OPENING	2"-3/4"	1"-3/8"	¾"-0"
2½"	100	-	-
2"	90-100	-	-
1¾"	-	-	-
1½"	60-90	-	-
1¼"	-	100	-
1"	10-35	90-100	100
¾"	0-10	40-75	87-100
½"	-	15-35	-
⅜"	0-3	0-15	-
NO 4	-	0-5	30-65
NO 8	-	-	-
NO 10	-	-	-
NO 30	-	-	5-35
NO 200	0-0.5	0-0.5	0-12

PERCENT PASSING (BY WEIGHT)
[ALL AGGREGATE SAMPLING AND TESTING PER ASTM LATEST REVISION.]

NOTES:

1. FOR STANDARD CROSS SECTIONS, SEE SCRRA ES2001 & ES2002.

•4A BALLAST FOR MAIN TRACK

•5 BALLAST FOR WALKWAY AND YARD TRACK

SUBBALLAST CALTRANS 26-102A

REV.	DATE	DESCRIPTION	DES.	ENG.
X	XX-XX-XX	REVISION	XX	XX

DRAWN BY: HDR DATE: 03/31/2011

ASSISTANT DIRECTOR: STANDARDS & DESIGN

DIRECTOR OF ENGINEERING AND CONSTRUCTION

SCRRA ENGINEERING STANDARDS ARE INTENDED FOR SCRRA APPROVED USES ONLY. FOR NON-SCRRA APPROVED USES:
SCRRA SHALL NOT BE RESPONSIBLE FOR THE ACCURACY OR COMPLETENESS OF THE DATA OR INFORMATION CONTAINED HEREIN. THE SELECTION AND USE OF THESE STANDARDS IS THE SOLE RESPONSIBILITY OF THE USER AND SHOULD NOT BE USED WITHOUT CONSULTING A REGISTERED PROFESSIONAL ENGINEER. ALL WARRANTIES AND REPRESENTATIONS OF ANY KIND ARE DISCLAIMED. ANYONE MAKING USE OF THIS INFORMATION AGREES THAT IT ASSUMES ALL LIABILITY ARISING FROM SUCH USE. NO PART OF THESE STANDARDS SHOULD BE REPRODUCED OR DISTRIBUTED IN ANY FORM OR BY ANY MEANS WITHOUT THE PRIOR WRITTEN PERMISSION OF SCRRA. ALL RIGHTS RESERVED.

METROLINK®
SOUTHERN CALIFORNIA REGIONAL RAIL AUTHORITY
ONE GATEWAY PLAZA, 12TH FLOOR, L. A., CA. 90012

ENGINEERING STANDARDS

BALLAST & SUBBALLAST GRADATION TABLE

STANDARD 2007
SCALE: NTS
REVISION –
SHEET 2 OF 2
CADD FILE: ES2007-02

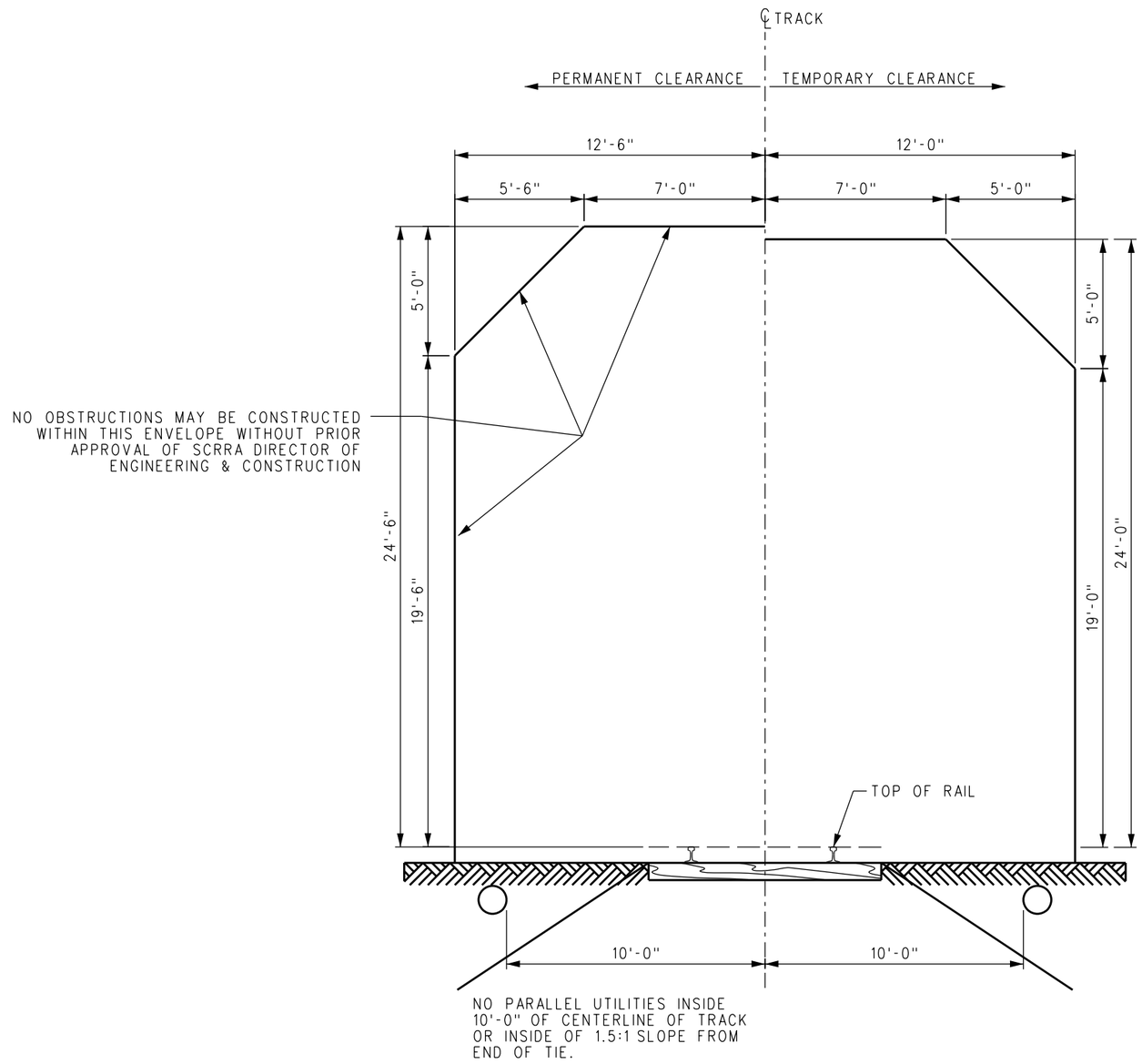

NOTES:

1. STANDARD PERMANENT AND TEMPORARY CLEARANCES SHOWN ON THIS SHEET SHALL BE USED FOR NEW DESIGN AND CONSTRUCTION WHEREVER PRACTICAL. ANY PERMANENT OR TEMPORARY CONSTRUCTION PROPOSED WITHIN THE DIMENSIONS SHOWN SHALL REQUIRE THE PRIOR APPROVAL OF THE SCRRA DIRECTOR OF ENGINEERING AND CONSTRUCTION.
2. STANDARD PERMANENT CLEARANCE SHALL BE 14'-0" FROM CL OF TRACK FOR CANOPIES, STAIRWAYS AND SUPPORT COLUMNS. PROPOSED CLEARANCES LESS THAN THIS DISTANCE SHALL CONFORM TO THOSE SHOWN ON SCRRA ES2102 AND WILL REQUIRE THE PRIOR APPROVAL OF THE SCRRA DIRECTOR OF ENGINEERING AND CONSTRUCTION.
3. SEE SCRRA ES2104 FOR MINIMUM VERTICAL CLEARANCES FOR OVERHEAD WIRES.
4. SEE SCRRA ES3101, ES3201 AND ES3202 FOR REQUIRED PASSENGER PLATFORM CLEARANCES.
5. RAIL/HIGHWAY GRADE SEPARATIONS MAY REQUIRE PROVISIONS FOR A MAINTENANCE ROAD AND/OR FUTURE ADDITIONAL TRACK(S).
6. WIDER CLEARANCES MAY BE REQUIRED TO PROVIDE VISIBILITY FOR WAYSIDE SIGNALS.
7. IN A CURVE ON SUPERELEVATED TRACK THE HORIZONTAL CLEARANCES SHALL BE MEASURED PERPENDICULAR TO THE PLANE ACROSS THE TOP OF BOTH RAILS AND THE VERTICAL CLEARANCE SHALL BE MEASURED FROM THE HIGH RAIL.

CLEARANCE REQUIREMENTS FOR NEW CONSTRUCTION OR DESIGN

REV.	DATE	DESCRIPTION	DES.	ENG.
X	XX-XX-XX	REVISION	XX	XX

DRAWN BY: A. CARLOS DATE: 03/31/2011

ASSISTANT DIRECTOR: STANDARDS & DESIGN

DIRECTOR OF ENGINEERING AND CONSTRUCTION

SCRRA ENGINEERING STANDARDS ARE INTENDED FOR SCRRA APPROVED USES ONLY. FOR NON-SCRRA APPROVED USES:
SCRRA SHALL NOT BE RESPONSIBLE FOR THE ACCURACY OR COMPLETENESS OF THE DATA OR INFORMATION CONTAINED HEREIN. THE SELECTION AND USE OF THESE STANDARDS IS THE SOLE RESPONSIBILITY OF THE USER AND SHOULD NOT BE USED WITHOUT CONSULTING A REGISTERED PROFESSIONAL ENGINEER. ALL WARRANTIES AND REPRESENTATIONS OF ANY KIND ARE DISCLAIMED. ANYONE MAKING USE OF THIS INFORMATION AGREES THAT IT ASSUMES ALL LIABILITY ARISING FROM SUCH USE. NO PART OF THESE STANDARDS SHOULD BE REPRODUCED OR DISTRIBUTED IN ANY FORM OR BY ANY MEANS WITHOUT THE PRIOR WRITTEN PERMISSION OF SCRRA. ALL RIGHTS RESERVED.

METROLINK®
SOUTHERN CALIFORNIA REGIONAL RAIL AUTHORITY
ONE GATEWAY PLAZA, 12TH FLOOR, L. A., CA. 90012

ENGINEERING STANDARDS

STANDARD CLEARANCE OF STRUCTURES

STANDARD: 2101
SCALE: NTS
REVISION: –
SHEET: 1 OF 1
CADD FILE: ES2101

NOTES:

A. CLEARANCE LINE SHOWN BELOW IS FOR SIGNALS OR SWITCH STANDS 3'-0" OR LESS ABOVE TOP OF RAIL AND LOCATED BETWEEN TRACKS WHERE NOT PRACTICABLE TO MAINTAIN CLEARANCES OTHERWISE PRESCRIBED.
B. CLEARANCE LINE SHOWN BELOW IS FOR PORTIONS OF BLOCK SIGNALS 4'-0" OR LESS ABOVE TOP OF RAIL.
C. DECREASED CLEARANCES SHOWN BELOW ARE FOR:
   1) REFUGE PLATFORMS ON BRIDGES AND TRESTLES NOT PROVIDED WITH WALKWAYS
   2) HANDRAILS
   MINIMUM CLEARANCES FOR HANDRAILS ON BRIDGES WITH WALKWAYS SHALL BE 8'-6". DECREASED CLEARANCES, EXCEPT AS PROVIDED FOR HANDRAILS ARE NOT PERMITTED ON THROUGH BRIDGES WHERE WORK OF TRAINMEN OR YARDMEN REQUIRE THEM TO BE ON DECK OF BRIDGE FOR PURPOSE OF COUPLING OR UNCOUPLING CARS IN PERFORMING SWITCHING SERVICE ON A SWITCHING LEAD.

NOTES:

1. SEE SCRRA ES2104 FOR MINIMUM VERTICAL CLEARANCES FOR OVERHEAD WIRES.
2. ALL CLEARANCES LISTED ON THIS SHEET ARE MINIMUM REQUIREMENTS. USE STANDARD CLEARANCES SHOWN ON SCRRA ES2101 FOR NEW CONSTRUCTION.
3. POSTS, POLES, SIGNS AND SIMILAR FACILITIES MAY HAVE MINIMUM CLEARANCE OF 8'-6", BUT CLEARANCE OF 10'-0" IS RECOMMENDED WHERE PRACTICABLE
4. ALL SIDE CLEARANCE DIMENSIONS ARE FOR TANGENT TRACK. IN GENERAL, SIDE CLEARANCE FOR CURVED TRACK SHALL BE 1'-0" GREATER THAN THAT FOR TANGENT TRACK.
5. PLATFORMS 4'-0" OR LESS IN HEIGHT WITH MINIMUM CLEARANCE OF 7'-3" MAY BE EXTENDED AT EXISTING CLEARANCES IF SUCH EXTENSION IS NOT IN CONNECTION WITH RECONSTRUCTION OF ORIGINAL PLATFORM.

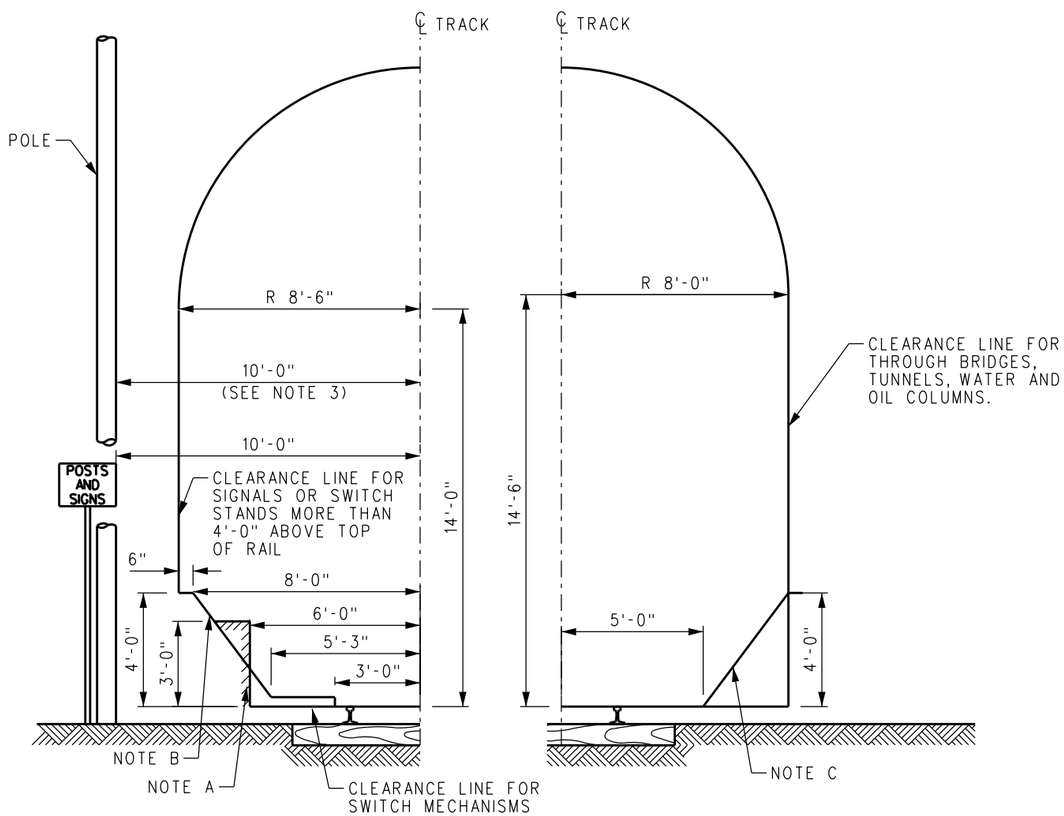

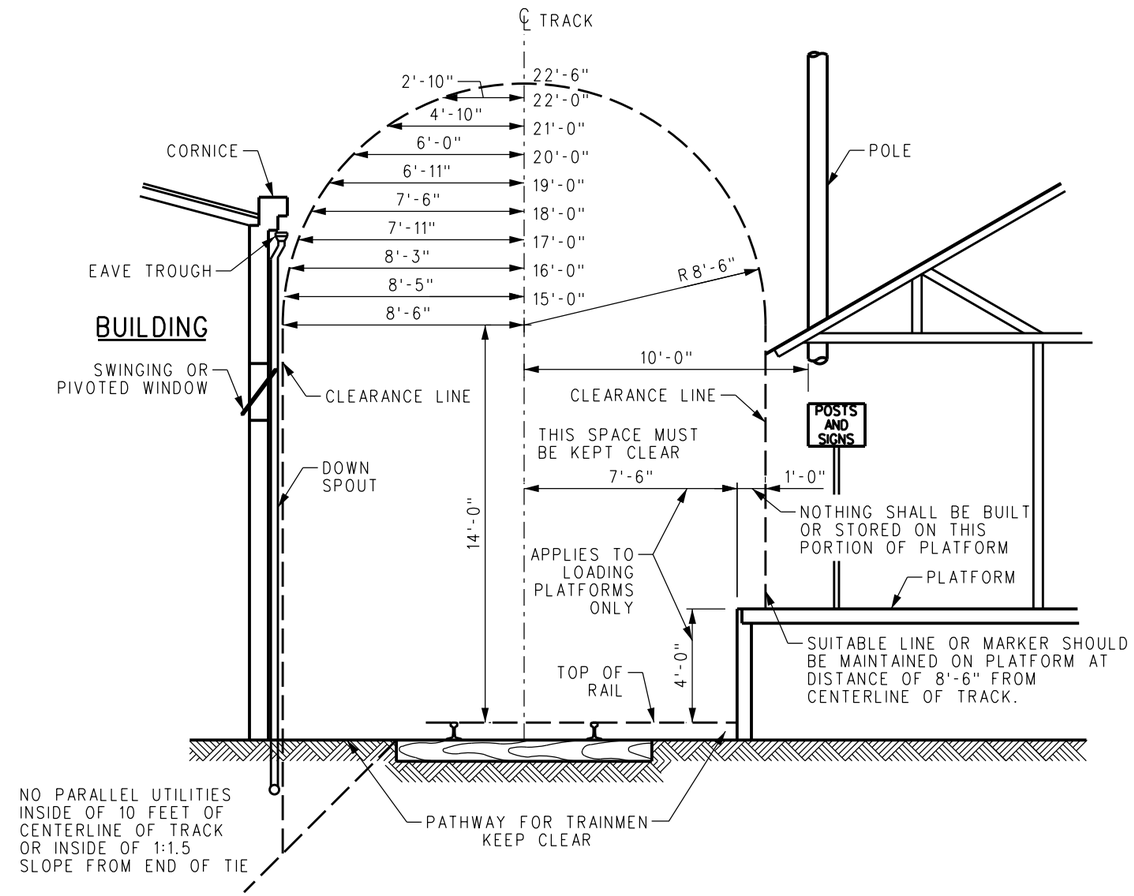

TYPICAL
CLEARANCE OF STRUCTURES FROM RAILROAD TRACKS AS GENERALLY PRESCRIBED BY PUBLIC UTILITIES COMMISSION - STATE OF CALIFORNIA GENERAL ORDER NO 26-D

(EFFECTIVE FEBRUARY 1, 1948)
FOR NEW WORK AND RECONSTRUCTION OF EXISTING FACILITIES ADJACENT TO STANDARD GUAGE RAILROAD TRACKS TRANSPORTING FREIGHT CARS.

REV.	DATE	DESCRIPTION	DES.	ENG.
X	XX-XX-XX	REVISION	XX	XX

DRAWN BY: A. CARLOS DATE: 03/31/2011

ASSISTANT DIRECTOR: STANDARDS & DESIGN

DIRECTOR OF ENGINEERING AND CONSTRUCTION

SCRRA ENGINEERING STANDARDS ARE INTENDED FOR SCRRA APPROVED USES ONLY. FOR NON-SCRRA APPROVED USES, SCRRA SHALL NOT BE RESPONSIBLE FOR THE ACCURACY OR COMPLETENESS OF THE DATA OR INFORMATION CONTAINED HEREIN. THE SELECTION AND USE OF THESE STANDARDS IS THE SOLE RESPONSIBILITY OF THE USER AND SHOULD NOT BE USED WITHOUT CONSULTING A REGISTERED PROFESSIONAL ENGINEER. ALL WARRANTIES AND REPRESENTATIONS OF ANY KIND ARE DISCLAIMED. ANYONE MAKING USE OF THIS INFORMATION AGREES THAT IT ASSUMES ALL LIABILITY ARISING FROM SUCH USE. NO PART OF THESE STANDARDS SHOULD BE REPRODUCED OR DISTRIBUTED IN ANY FORM OR BY ANY MEANS WITHOUT THE PRIOR WRITTEN PERMISSION OF SCRRA. ALL RIGHTS RESERVED.

METROLINK
SOUTHERN CALIFORNIA REGIONAL RAIL AUTHORITY
ONE GATEWAY PLAZA, 12TH FLOOR, L. A., CA. 90012

ENGINEERING STANDARDS

MINIMUM CLEARANCE OF STRUCTURES

STANDARD 2102
SCALE: NTS
REVISION –
SHEET 1 OF 1
CADD FILE: ES2102

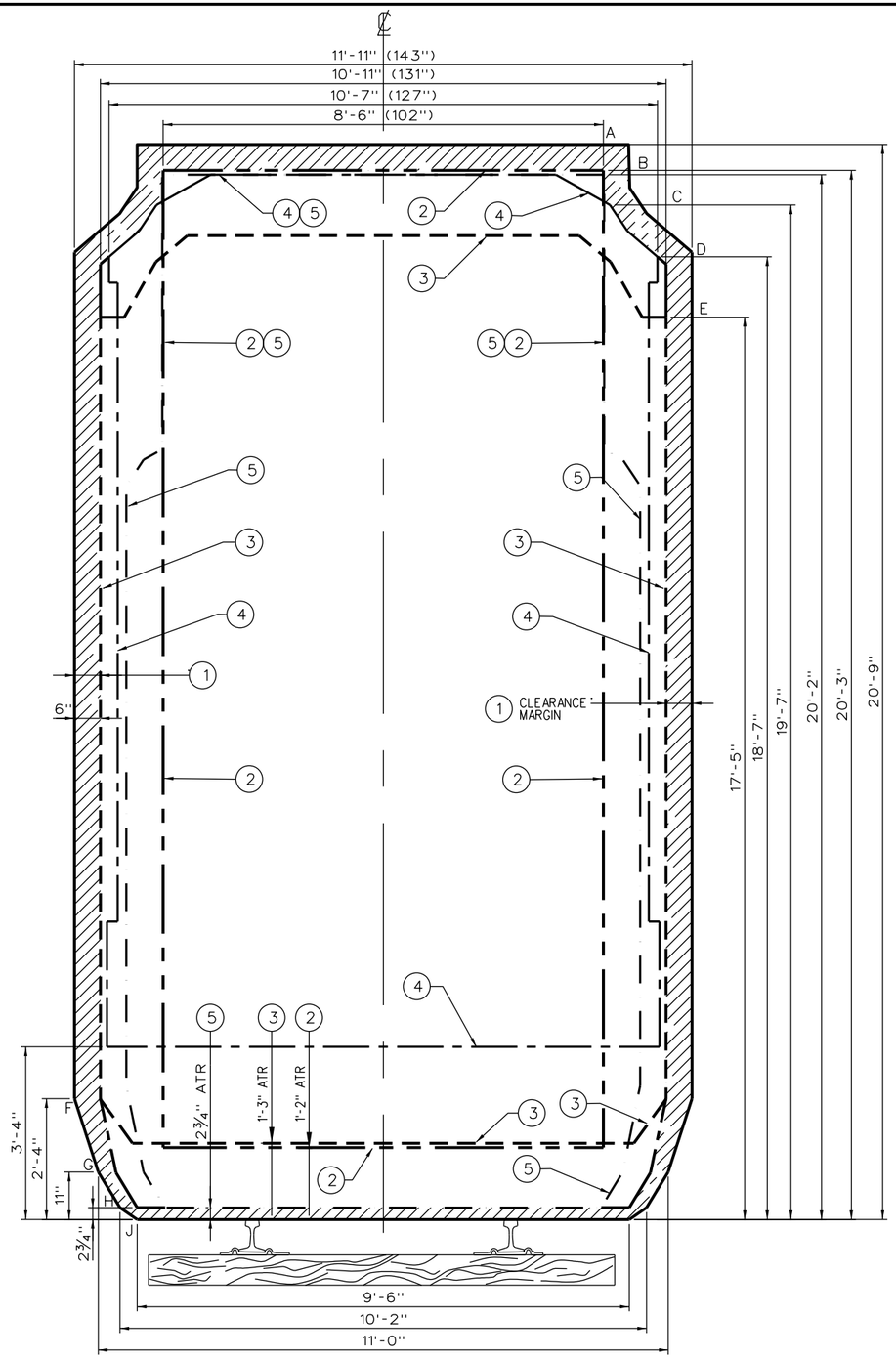

CLEARANCE ENVELOPE

LEGEND FOR CLEARANCE ENVELOPE

1. CLEARANCE MARGIN FOR MAXIMUM DOUBLESTACK CONTAINERS, BI-LEVEL AND TRI-LEVEL CARRIERS. THIS AREA TO BE KEPT FREE AND CLEAR OF ANY PLATFORMS, TUNNELS, BRIDGE OVERHEADS, PASSENGER PLATFORMS, POLES, UTILITY LINES, WAYSIDE SIGNAL DEVICES, AND ALL OTHER NATURAL OR MAN-MADE STRUCTURES AND OBJECTS.
2. MAXIMUM COMBINATION DOUBLESTACK CARS (8'-6" WIDE BY 9'-6½" HIGH CONTAINERS STACKED TWO HIGH, 1'-2" ATR).
3. ARTICULATED BI-LEVEL AUTO CARRIER CAR.
4. TRI-LEVEL AUTO CARRIER CAR (CHRYSLER TYPE).
5. AAR PLATE H CLEARANCE ENVELOPE (FOR DOUBLESTACK CARS WITHOUT CONTAINERS).

NOTES:

1. ALL NEW CONSTRUCTION, RECONSTRUCTION, ALTERATIONS AND MODIFICATIONS MUST BE IN COMPLIANCE WITH THE CLEARANCE ENVELOPE REQUIREMENTS FOR UNOBSTRUCTED TRANSPORT OF THIS RAIL EQUIPMENT.
2. HORIZONTAL CLEARANCE DISTANCES SHALL BE INCREASED ON CURVES AT RATE OF 1.07" ON INSIDE OF CURVES AND 1.05" ON OUTSIDE OF CURVES PER DEGREE OF CURVE.
3. WHEN TRACK SUPERELEVATION IS SET APPROPRIATELY FOR THE AUTHORIZED TRAIN SPEED, ALL CLEARANCE MEASUREMENTS ARE TO BE MADE PARALLEL TO THE PLANE OF THE TOP OF RAIL AND PERPENDICULAR TO THE CENTERLINE OF TRACK.
4. DIMENSIONS SHOWN ARE FOR INFORMATION ONLY AND NOT TO BE USED TO ESTABLISH LEGAL CLEARANCE REQUIREMENTS OR FOR HIGH-WIDE LOAD CLEARANCES.
5. IN MANY INSTANCES, STATE LAW MAY REQUIRE GREATER CLEARANCE THAN PROVIDED FOR IN THE COMBINED CLEARANCE ENVELOPE, IN WHICH CASE THE GREATER CLEARANCE SHALL GOVERN.
6. CLEARANCE DIMENSION REQUIREMENTS INDICATED EXCEED MOST STATES PERMISSIVE CLEARANCES FOR LOW PLATFORMS HOWEVER, THESE CLEARANCE STANDARDS SHALL GOVERN FOR 8 INCHES OR LOWER PLATFORMS.
7. THE PRESCRIBED CLEARANCE MARGIN ENVELOPE MAY BE MODIFIED WHEN APPROVED BY THE DIRECTOR OF ENGINEERING AND CONSTRUCTION.

REV.	DATE	DESCRIPTION	DES.	ENG.
X	XX-XX-XX	REVISION	XX	XX

DRAWN BY: A. CARLOS DATE: 03/31/2011

ASSISTANT DIRECTOR: STANDARDS & DESIGN

DIRECTOR OF ENGINEERING AND CONSTRUCTION

SCRRA ENGINEERING STANDARDS ARE INTENDED FOR SCRRA APPROVED USES ONLY. FOR NON-SCRRA APPROVED USES:
SCRRA SHALL NOT BE RESPONSIBLE FOR THE ACCURACY OR COMPLETENESS OF THE DATA OR INFORMATION CONTAINED HEREIN. THE SELECTION AND USE OF THESE STANDARDS IS THE SOLE RESPONSIBILITY OF THE USER AND SHOULD NOT BE USED WITHOUT CONSULTING A REGISTERED PROFESSIONAL ENGINEER. ALL WARRANTIES AND REPRESENTATIONS OF ANY KIND ARE DISCLAIMED. ANYONE MAKING USE OF THIS INFORMATION AGREES THAT IT ASSUMES ALL LIABILITY ARISING FROM SUCH USE. NO PART OF THESE STANDARDS SHOULD BE REPRODUCED OR DISTRIBUTED IN ANY FORM OR BY ANY MEANS WITHOUT THE PRIOR WRITTEN PERMISSION OF SCRRA. ALL RIGHTS RESERVED.

METROLINK®
SOUTHERN CALIFORNIA REGIONAL RAIL AUTHORITY
ONE GATEWAY PLAZA, 12TH FLOOR, L. A., CA. 90012

ENGINEERING STANDARDS

CAR (EQUIPMENT)
CLEARANCE ENVELOPE

STANDARD 2103
SCALE: NONE
REVISION –
SHEET 1 OF 1
CADD FILE: ES2103

TABLE 1: CPUC GENERAL ORDER 95 BASIC MINIMUM ALLOWABLE VERTICAL CLEARANCE OF WIRES ABOVE RAILROADS, ROADWAYS, POLES, BUILDINGS, STRUCTURES OR OTHER OBJECTS

CASE NO	NATURE OF CLEARANCE	A SPAN WIRES (OTHER THAN TROLLEY SPAN WIRES) OVERHEAD GUYS AND MESSENGERS	B COMMUNICATION CONDUCTORS (INCLUDING OPEN WIRE, CABLES & SERVICE DROPS)	C TROLLEY CONTACT, FEEDER AND SPAN WIRES, UNDER 5 KV	D SUPPLY CONDUCTORS & SUPPLY CABLES UNDER 22.5 KV, SIGNAL WIRES	E SUPPLY CONDUCTORS & SUPPLY CABLES, 22.5 KV TO UNDER 300 KV	F SUPPLY CONDUCTORS & SUPPLY CABLES, 300 KV AND GREATER
1	CROSSING ABOVE TRACKS OF RAILROADS WHICH TRANSPORT OR PROPOSE TO TRANSPORT FREIGHT CARS (MAXIMUM HEIGHT 20'-9" WHERE NOT OPERATED BY OVERHEAD CONTACT WIRES.	25-FT	28-FT*	22.5-FT	28-FT	34-FT	34-FT
2	CROSSING OR PARALLELING ABOVE TRACKS OF RAILROAD OPERATED BY OVERHEAD TROLLEYS.	26-FT	26-FT	22.5-FT	30-FT*	34-FT*	34-FT*
3	CROSSING OR ALONG ROADWAYS IN URBAN DISTRICTS OR CROSSING ROADWAYS IN RURAL DISTRICTS.	18-FT	18-FT	19-FT	25-FT	30-FT	30-FT
4	ABOVE GROUND ALONG ROADWAYS IN RURAL DISTRICTS OR ACROSS OTHER AREAS CAPABLE OF BEING TRAVERSED BY VEHICLES OR AGRICULTURAL EQUIPMENT.	18-FT*	18-FT*	19-FT	25-FT	30-FT	30-FT
5	ABOVE GROUND IN AREAS ACCESSIBLE TO PEDESTRIANS ONLY.	8-FT	10-FT	19-FT	17-FT	25-FT	25-FT
6	VERTICAL CLEARANCE ABOVE WALKABLE SURFACES ON BUILDINGS, (EXCEPT GENERATING PLANTS OR SUBSTATIONS) BRIDGES OR OTHER STRUCTURES WHICH DO NOT ORDINARILY SUPPORT CONDUCTORS, WHETHER ATTACHED OR UNATTACHED.	8-FT	8-FT	8-FT	12-FT	12-FT	20-FT
6A	VERTICAL CLEARANCE ABOVE NON-WALKABLE SURFACES ON BUILDINGS, (EXCEPT GENERATING PLANTS OR SUBSTATIONS) BRIDGES OR OTHER STRUCTURES, WHICH DO NOT ORDINARILY SUPPORT CONDUCTORS, WHETHER ATTACHED OR UNATTACHED.	2-FT	8-FT	8-FT	8-FT	8-FT	20-FT
7	HORIZONTAL CLEARANCE OF CONDUCTOR AT REST FROM BUILDINGS (EXCEPT GENERATING PLANTS AND SUBSTATIONS), BRIDGES OR OTHER STRUCTURES (UPON WHICH MEN MAY WORK) WHERE SUCH CONDUCTOR IS NOT ATTACHED THERETO.	-	3-FT	3-FT	6-FT	6-FT	15-FT
8	DISTANCE OF CONDUCTOR FROM CENTER LINE OF POLE, WHETHER ATTACHED OR UNATTACHED.	-	15-IN	15-IN	18-IN	18-IN	NOT APPLICABLE
9	DISTANCE OF CONDUCTOR FROM SURFACE OF POLE CROSS ARM OR OTHER OVERHEAD LINE STRUCTURE UPON WHICH IT IS SUPPORTED, PROVIDING IT COMPLIES WITH CASE 8 ABOVE.	-	3-IN	3-IN	3-IN	3-IN	NOT APPLICABLE

*EXCEEDS CPUC GENERAL ORDER 95 BASIC MINIMUM ALLOWABLE VERTICAL CLEARANCE.

MINIMUM CLEARANCES OF WIRES ABOVE RAILROADS, ROADWAYS, ETC.

1. CLEARANCES BETWEEN OVERHEAD CONDUCTORS, GUYS, MESSENGERS OR TROLLEY SPAN WIRES AND TOPS OF RAILS, SURFACES OF ROADWAYS OR OTHER GENERALLY ACCESSIBLE AREAS ACROSS, ALONG OR ABOVE WHICH ANY OF THE FORMER PASS; ALSO THE CLEARANCES BETWEEN CONDUCTORS, GUYS, MESSENGERS OR TROLLEY SPAN WIRES AND BUILDINGS, POLES, STRUCTURES, OR OTHER OBJECTS, SHALL NOT BE LESS THAN THOSE SET FORTH IN TABLE 1, AT A TEMPERATURE OF 60°F AND NO WIND.
2. THE CLEARANCES SPECIFIED IN TABLE 1, CASE 1, COLUMNS A, B, D, E AND F, SHALL IN NO CASE BE REDUCED MORE THAN 5% BELOW THE TABULAR VALUES BECAUSE OF TEMPERATURE AND LOADING AS SPECIFIED IN CPUC G.O. 95 RULE 43. THE CLEARANCES SPECIFIED IN TABLE 1, CASES 2 TO 6 INCLUSIVE, SHALL IN NO CASE BE REDUCED MORE THAN 10% BELOW THE TABULAR VALUES BECAUSE OF TEMPERATURE AND LOADING AS SPECIFIED IN CPUC G.O. 95 RULE 43.
3. THE CLEARANCE SPECIFIED IN TABLE 1, CASE 1, COLUMN C (22.5 FEET), SHALL IN NO CASE BE REDUCED BELOW THE TABULAR VALUE BECAUSE OF TEMPERATURE AND LOADING AS SPECIFIED IN RULE 43.
4. WHERE SUPPLY CONDUCTORS ARE SUPPORTED BY SUSPENSION INSULATORS AT CROSSINGS OVER RAILROADS WHICH TRANSPORT FREIGHT CARS, THE INITIAL CLEARANCES SHALL BE SUFFICIENT TO PREVENT REDUCTION TO CLEARANCES LESS THAN 95% OF THE CLEARANCES SPECIFIED IN TABLE 1, CASE 1, THROUGH THE BREAKING OF A CONDUCTOR IN EITHER OF THE ADJOINING SPANS.

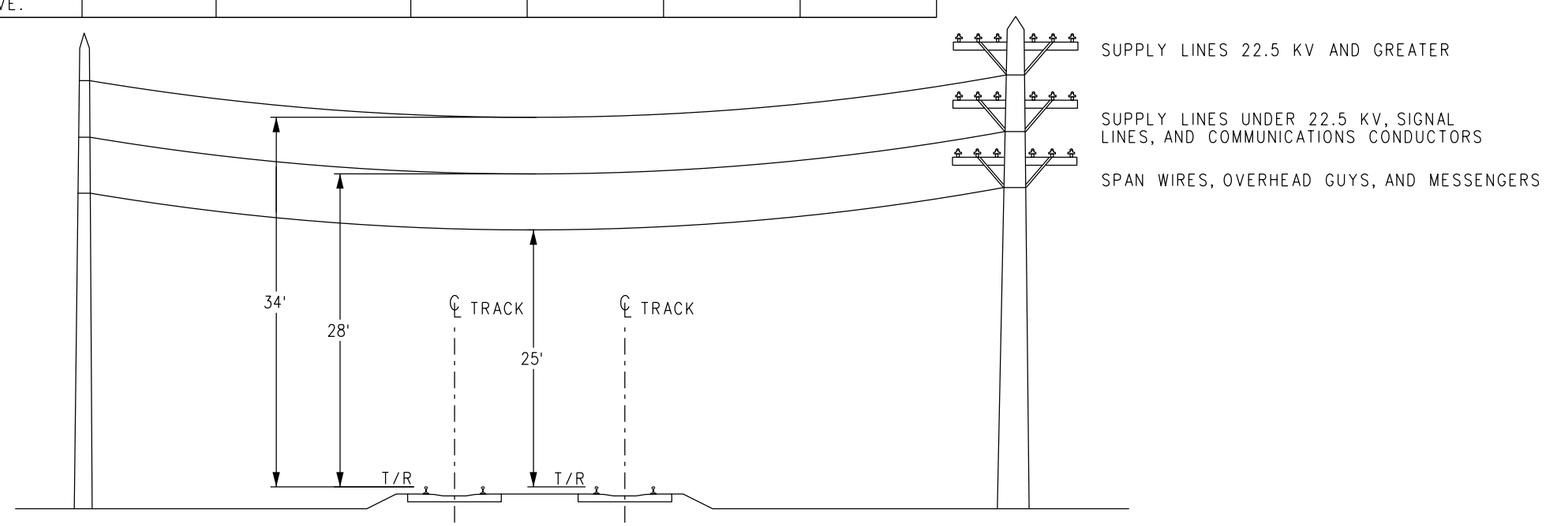

MINIMUM CLEARANCES OF WIRES ABOVE RAILROADS - CASE 1

REV.	DATE	DESCRIPTION	DES.	ENG.
X	XX-XX-XX	REVISION	XX	XX

DRAWN BY: A. CARLOS DATE: 03/31/2011

ASSISTANT DIRECTOR: STANDARDS & DESIGN

DIRECTOR OF ENGINEERING AND CONSTRUCTION

SCRRA ENGINEERING STANDARDS ARE INTENDED FOR SCRRA APPROVED USES ONLY. FOR NON-SCRRA APPROVED USES:
SCRRA SHALL NOT BE RESPONSIBLE FOR THE ACCURACY OR COMPLETENESS OF THE DATA OR INFORMATION CONTAINED HEREIN. THE SELECTION AND USE OF THESE STANDARDS IS THE SOLE RESPONSIBILITY OF THE USER AND SHOULD NOT BE USED WITHOUT CONSULTING A REGISTERED PROFESSIONAL ENGINEER. ALL WARRANTIES AND REPRESENTATIONS OF ANY KIND ARE DISCLAIMED. ANYONE MAKING USE OF THIS INFORMATION AGREES THAT IT ASSUMES ALL LIABILITY ARISING FROM SUCH USE. NO PART OF THESE STANDARDS SHOULD BE REPRODUCED OR DISTRIBUTED IN ANY FORM OR BY ANY MEANS WITHOUT THE PRIOR WRITTEN PERMISSION OF SCRRA. ALL RIGHTS RESERVED.

METROLINK®
SOUTHERN CALIFORNIA REGIONAL RAIL AUTHORITY
ONE GATEWAY PLAZA, 12TH FLOOR, L. A., CA. 90012

ENGINEERING STANDARDS

MINIMUM VERTICAL CLEARANCE FOR WIRES

STANDARD 2104
SCALE: NTS
REVISION –
SHEET 1 OF 1
CADD FILE: ES2104

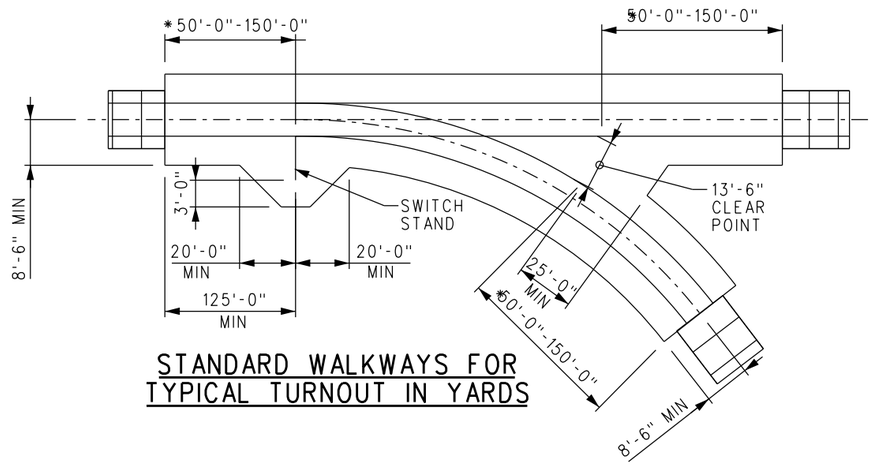

STANDARD WALKWAYS FOR TYPICAL TURNOUT IN YARDS

*SEE SCRRA ES2001 AND ES2002 FOR ROADBED SECTIONS. WALKWAYS AT TURNOUTS AND AT CAR SPOTS WILL EXTEND BEYOND THE POINT OF SWITCH AND ITS CLEAR POINT AND ON EACH SIDE OF THE CAR SPOT, WHERE APPLICABLE, A DISTANCE EQUAL:
1 CAR SPOT - 50'-0" MINIMUM
2 CAR SPOT - 100'-0" MINIMUM
3 OR MORE CAR SPOTS - 150'-0"

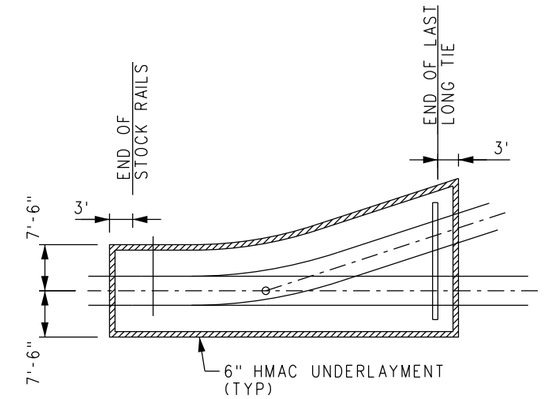

TYPICAL HMAC UNDERLAYMENT AT TURNOUTS

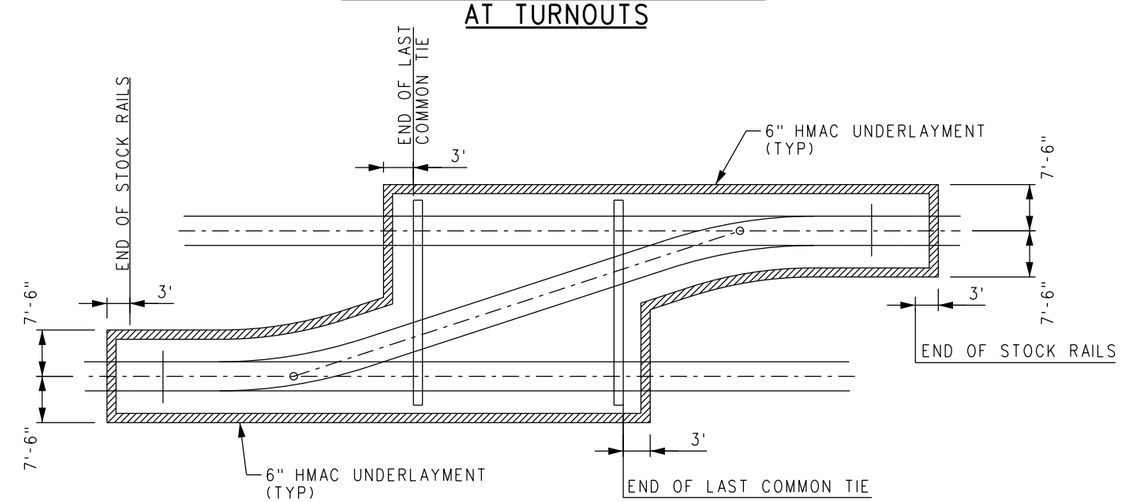

TYPICAL HMAC UNDERLAYMENT AT CROSSOVERS

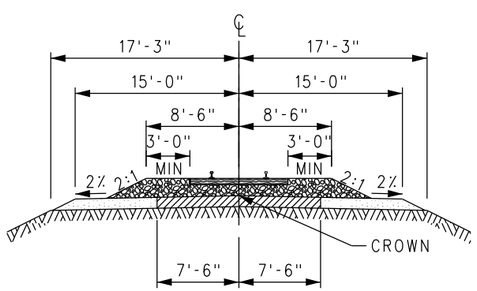

TYPICAL HMAC UNDERLAYMENT SECTION IN YARDS

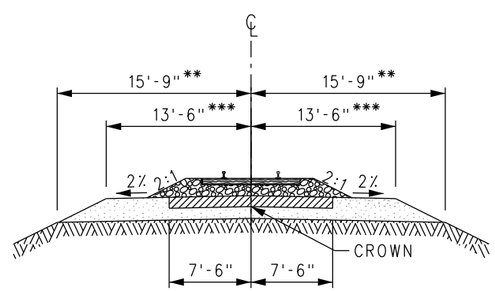

TYPICAL HMAC UNDERLAYMANT SECTION ON MAINLINES

**16'-3" IN CONCRETE TIE TERRITORY
***14'-0" IN CONCRETE TIE TERRITORY

LEGEND

- BALLAST
- HOT MIX ASPHALT CONCRETE
- SUBBALLAST
- SUBGRADE

HMAC VOLUME QUANTITIES

TURNOUT NO	AREA OF HMAC (SF)	VOLUME OF 6" HMAC (CY)	*WEIGHT OF HMAC (TONS)
10	2400	45	78
14	3340	62	109
20	4640	86	151

CROSSOVER NO	TRACK CENTER DISTANCE (FT)	AREA OF HMAC (SF)	VOLUME OF 6" HMAC (CY)	*WEIGHT OF HMAC (TONS)
10	15	4490	84	146
14	15	6210	115	202
20	15	8760	163	285

*CALCULATIONS FOR THEORETICAL WEIGHT OF HMAC BASED ON UNIT WEIGHT OF 130 LBS PER CUBIC FEET.

REV.	DATE	DESCRIPTION	DES.	ENG.
X	XX-XX-XX	REVISION	XX	XX

DRAWN BY: A. CARLOS DATE: 03/31/2011

ASSISTANT DIRECTOR: STANDARDS & DESIGN

DIRECTOR OF ENGINEERING AND CONSTRUCTION

SCRRA ENGINEERING STANDARDS ARE INTENDED FOR SCRRA APPROVED USES ONLY. FOR NON-SCRRA APPROVED USES, SCRRA SHALL NOT BE RESPONSIBLE FOR THE ACCURACY OR COMPLETENESS OF THE DATA OR INFORMATION CONTAINED HEREIN. THE SELECTION AND USE OF THESE STANDARDS IS THE SOLE RESPONSIBILITY OF THE USER AND SHOULD NOT BE USED WITHOUT CONSULTING A REGISTERED PROFESSIONAL ENGINEER. ALL WARRANTIES AND REPRESENTATIONS OF ANY KIND ARE DISCLAIMED. ANYONE MAKING USE OF THIS INFORMATION AGREES THAT IT ASSUMES ALL LIABILITY ARISING FROM SUCH USE. NO PART OF THESE STANDARDS SHOULD BE REPRODUCED OR DISTRIBUTED IN ANY FORM OR BY ANY MEANS WITHOUT THE PRIOR WRITTEN PERMISSION OF SCRRA. ALL RIGHTS RESERVED.

METROLINK®
SOUTHERN CALIFORNIA REGIONAL RAIL AUTHORITY
ONE GATEWAY PLAZA, 12TH FLOOR, L. A., CA. 90012

ENGINEERING STANDARDS

TURNOUT WALKWAYS AND HMAC UNDERLAYMENT

STANDARD 2105
SCALE: NTS
REVISION –
SHEET 1 OF 1
CADD FILE: ES2105

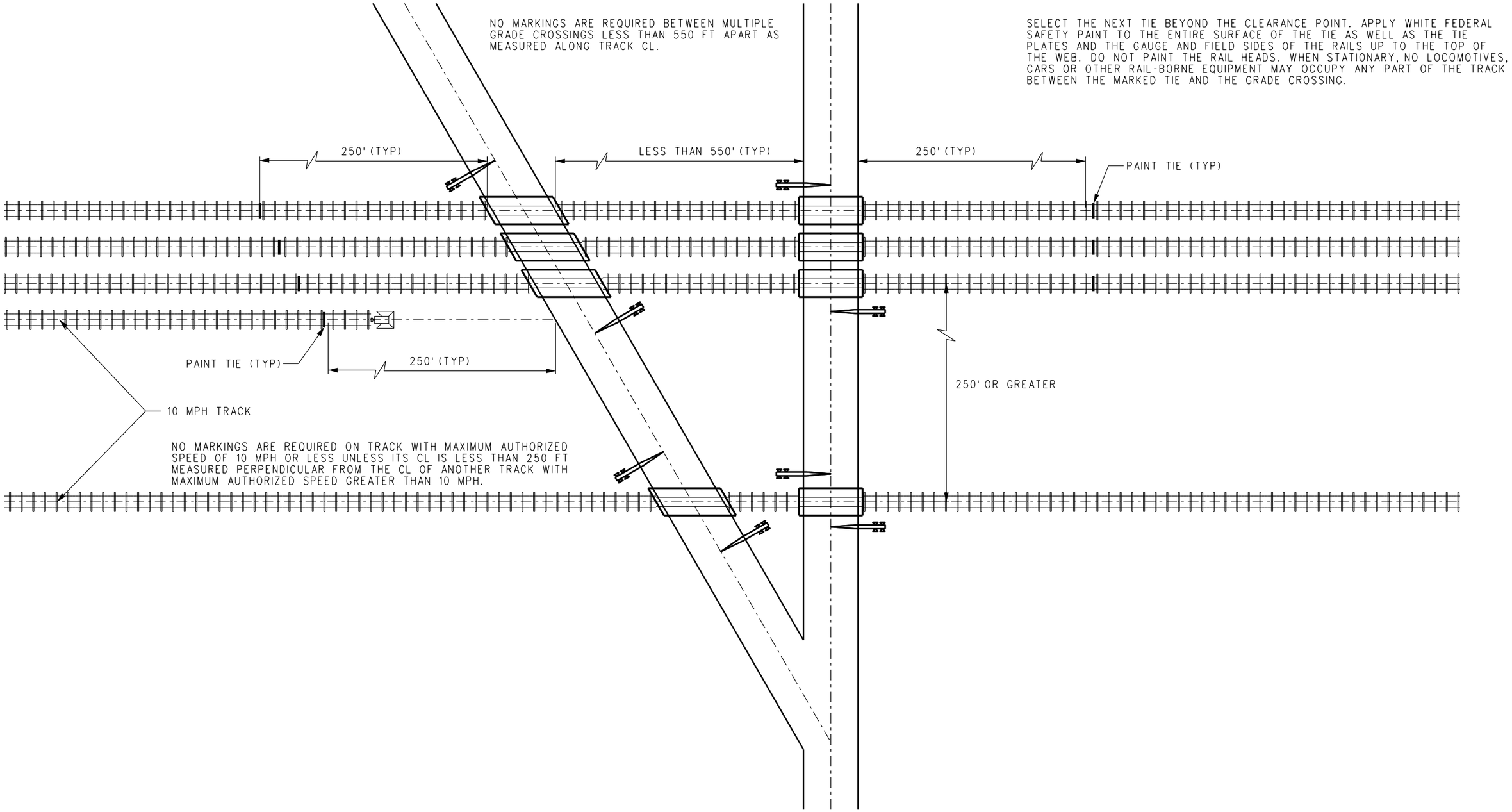

REV.	DATE	DESCRIPTION	DES.	ENG.
X	XX-XX-XX	REVISION	XX	XX

DRAWN BY: HDR DATE: 03/31/2011

ASSISTANT DIRECTOR: STANDARDS & DESIGN

DIRECTOR OF ENGINEERING AND CONSTRUCTION

SCRRA ENGINEERING STANDARDS ARE INTENDED FOR SCRRA APPROVED USES ONLY. FOR NON-SCRRA APPROVED USES:
SCRRA SHALL NOT BE RESPONSIBLE FOR THE ACCURACY OR COMPLETENESS OF THE DATA OR INFORMATION CONTAINED HEREIN. THE SELECTION AND USE OF THESE STANDARDS IS THE SOLE RESPONSIBILITY OF THE USER AND SHOULD NOT BE USED WITHOUT CONSULTING A REGISTERED PROFESSIONAL ENGINEER. ALL WARRANTIES AND REPRESENTATIONS OF ANY KIND ARE DISCLAIMED. ANYONE MAKING USE OF THIS INFORMATION AGREES THAT IT ASSUMES ALL LIABILITY ARISING FROM SUCH USE. NO PART OF THESE STANDARDS SHOULD BE REPRODUCED OR DISTRIBUTED IN ANY FORM OR BY ANY MEANS WITHOUT THE PRIOR WRITTEN PERMISSION OF SCRRA. ALL RIGHTS RESERVED.

METROLINK®
SOUTHERN CALIFORNIA REGIONAL RAIL AUTHORITY
ONE GATEWAY PLAZA, 12TH FLOOR, L. A., CA. 90012

ENGINEERING STANDARDS

TRACK CLEARANCE POINTS AT GRADE CROSSINGS

STANDARD 2106
SCALE: NTS
REVISION –
SHEET 1 OF 1
CADD FILE: ES2106

INSTRUCTIONS FOR MARKING NO RIDE ZONE FOR SIDE AND SECONDARY TRACKS (BASED ON 13'-6" CLEARANCE POINT)

CASE 1 DIVERGING TRACKS

WHERE A TRACK TURNS OUT AND CONTINUES TO DIVERGE FROM THE PARENT TRACK, THE 13'-6" CLEARANCE POINT SHALL BE WHERE THE DISTANCE BETWEEN THE FIELD SIDES OF THE TWO CLOSEST RAILHEADS IS 8'-4" MEASURED PERPENDICULAR TO THE CL OF THE PARENT TRACK.

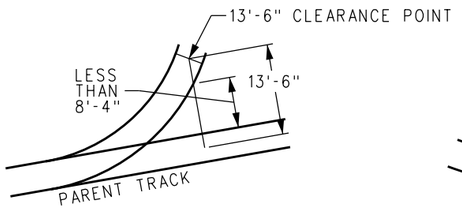

FIGURE 1A

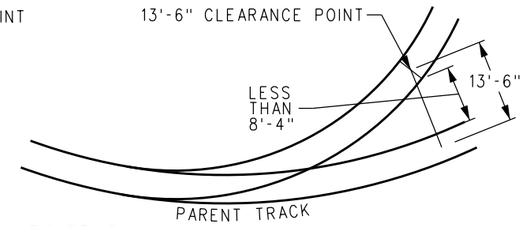

FIGURE 1B

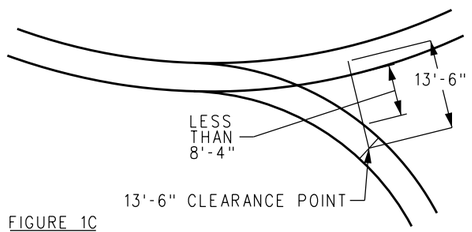

FIGURE 1C

CASE 2 PARALLEL TRACKS - TANGENT OR CURVED

WHERE A TRACK TURNS OUT AND BECOMES PARALLEL TO THE PARENT TRACK, THE 13'-6" CLEARANCE POINT SHALL BE WHERE THE DISTANCE BETWEEN THE FIELD SIDES OF THE TWO CLOSEST RAILHEADS IS 8'-4" MEASURED PERPENDICULAR TO THE CL OF THE PARENT TRACK. SEE FIGURES 2A AND 2C.

WHERE TRACKS ARE PARALLEL, BUT THE FIELD SIDES OF THE TWO CLOSEST RAILS ARE LESS THAN 8'-4" APART, THE CLEARANCE POINT SHALL BE WHERE THE TRACKS BECOME PARALLEL. SEE FIGURES 2B AND 2D.

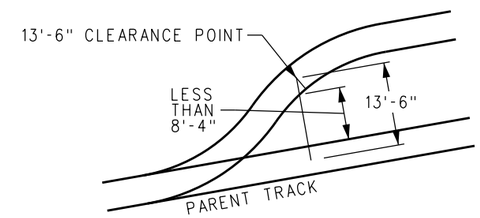

FIGURE 2A

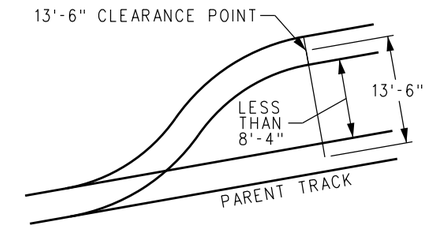

FIGURE 2B

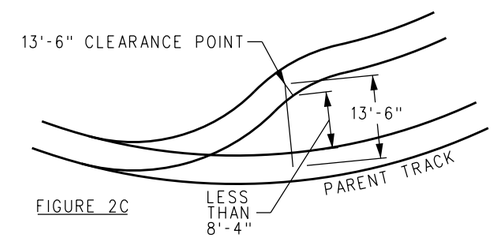

FIGURE 2C

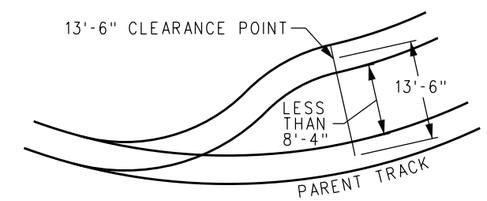

FIGURE 2D

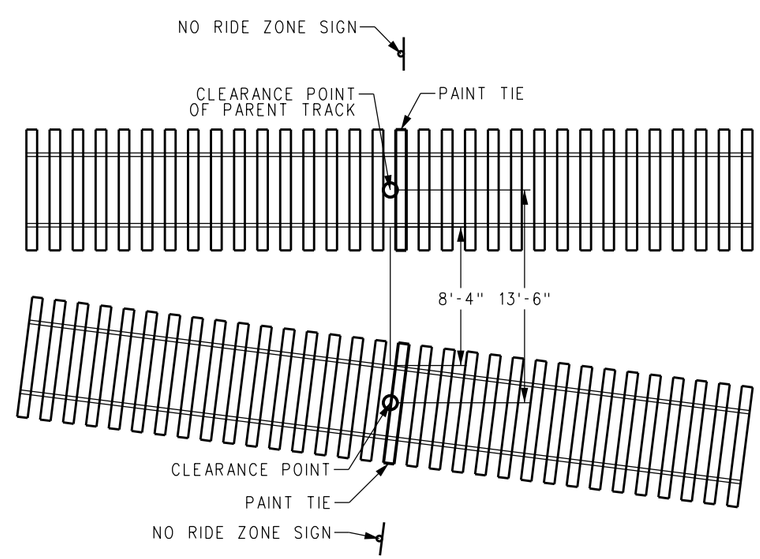

SELECTING AND MARKING NO RIDE ZONE

SELECT THE NEXT TIES BEYOND THE NO RIDE POINT AS DETERMINED BY CASE 1 OR 2. APPLY WHITE PAINT TO THE ENTIRE TOP SURFACE OF THE TIES AS WELL AS THE TIE PLATES AND THE GAUGE AND FIELD SIDES OF THE RAILS UP TO THE TOP OF THE WEB. DO NOT PAINT THE RAIL HEADS.

REV.	DATE	DESCRIPTION	DES.	ENG.
X	XX-XX-XX	REVISION	XX	XX

DRAWN BY: HDR DATE: 03/31/2011

ASSISTANT DIRECTOR: STANDARDS & DESIGN

DIRECTOR OF ENGINEERING AND CONSTRUCTION

SCRRA ENGINEERING STANDARDS ARE INTENDED FOR SCRRA APPROVED USES ONLY. FOR NON-SCRRA APPROVED USES, SCRRA SHALL NOT BE RESPONSIBLE FOR THE ACCURACY OR COMPLETENESS OF THE DATA OR INFORMATION CONTAINED HEREIN. THE SELECTION AND USE OF THESE STANDARDS IS THE SOLE RESPONSIBILITY OF THE USER AND SHOULD NOT BE USED WITHOUT CONSULTING A REGISTERED PROFESSIONAL ENGINEER. ALL WARRANTIES AND REPRESENTATIONS OF ANY KIND ARE DISCLAIMED. ANYONE MAKING USE OF THIS INFORMATION AGREES THAT IT ASSUMES ALL LIABILITY ARISING FROM SUCH USE. NO PART OF THESE STANDARDS SHOULD BE REPRODUCED OR DISTRIBUTED IN ANY FORM OR BY ANY MEANS WITHOUT THE PRIOR WRITTEN PERMISSION OF SCRRA. ALL RIGHTS RESERVED.

METROLINK®

SOUTHERN CALIFORNIA REGIONAL RAIL AUTHORITY
ONE GATEWAY PLAZA, 12TH FLOOR, L. A., CA. 90012

ENGINEERING STANDARDS

TRACK NO RIDE ZONE AT TURNOUTS

STANDARD 2107
SCALE: NTS
REVISION –
SHEET 1 OF 1
CADD FILE: ES2107

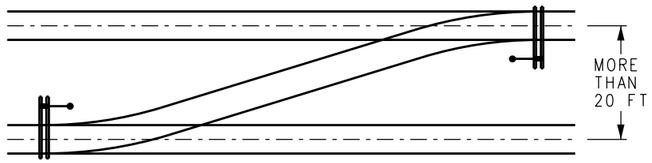

TRACKS MORE THAN 20 FT ON CENTER (INSIDE PLACEMENT)

	SWITCH STANDS	ROD LENGTH	HEADBLOCK TIE LENGTH
MAIN LINE	112E, 36EH	7'-0"	17'-0"
YARD	22E, 36E	5'-0"	15'-0"

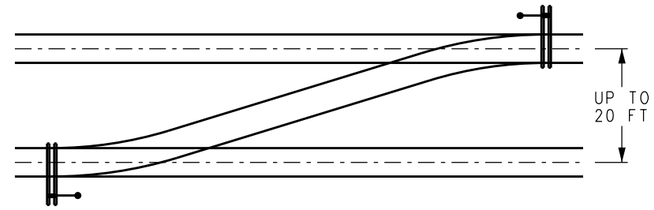

TRACKS 13 FT TO 20 FT ON CENTER (OUTSIDE PLACEMENT)

	SWITCH STANDS	ROD LENGTH	HEADBLOCK TIE LENGTH
MAIN LINE	112E, 36EH	7'-0"	17'-0"
YARD	22E, 36E	5'-0"	15'-0"

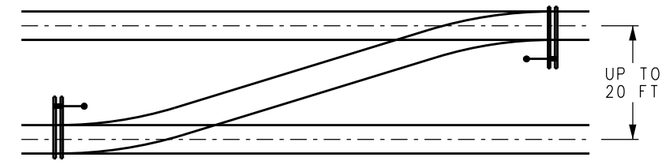

TRACKS 13 FT TO 20 FT ON CENTER (INSIDE PLACEMENT)

	SWITCH STANDS	ROD LENGTH	HEADBLOCK TIE LENGTH
MAIN LINE	36E WITH SWITCH HANDLE	3'-4"	14'-0"
YARD	22E, 36E WITH SWITCH HANDLE	3'-4"	14'-0"

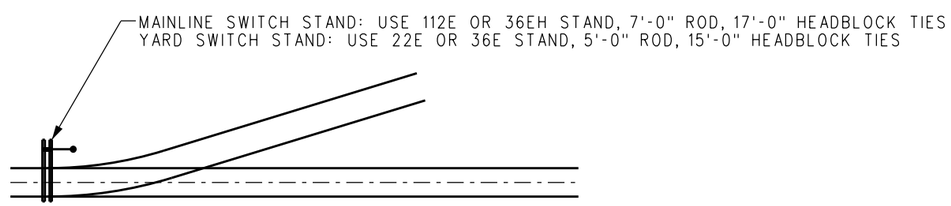

TYPICAL ALIGNMENT WITH NO CLEARANCE RESTRICTIONS

NOTES:

1. SWITCH STANDS SHALL BE:
   A. WHERE SPACE PERMITS, MOUNTED ON THE CLOSED POINT SIDE OF THE SWITCH WHEN LINED FOR THE MAIN TRACK.
   B. NO LESS THAN 8'-6" (HIGH STANDS) OR 6'-0" (LOW STANDS) FROM THE CENTER OF ANY TRACK TO ANY PART OF THE STAND OR TARGET IN ITS MOST RESTRICTIVE POSITION.
   C. POSITIONED WITH THE HANDLE POINTING TOWARD THE FROG WHEN THE SWITCH IS LINED FOR THE MAIN TRACK.
   D. FIRMLY ATTACHED TO THE HEADBLOCK TIES.
2. WHERE TRACKS ARE 20 FT OR LESS ON CENTER, OUTSIDE PLACEMENT OF SWITCH STANDS IS PREFERRED. INSIDE PLACEMENT SHALL BE USED ONLY WHERE FIELD CONDITIONS MAKE OUTSIDE PLACEMENT IMPRACTICAL.

REV.	DATE	DESCRIPTION	DES.	ENG.
X	XX-XX-XX	REVISION	XX	XX

DRAWN BY: HDR DATE: 03/31/2011

ASSISTANT DIRECTOR: STANDARDS & DESIGN

DIRECTOR OF ENGINEERING AND CONSTRUCTION

SCRRA ENGINEERING STANDARDS ARE INTENDED FOR SCRRA APPROVED USES ONLY. FOR NON-SCRRA APPROVED USES:
SCRRA SHALL NOT BE RESPONSIBLE FOR THE ACCURACY OR COMPLETENESS OF THE DATA OR INFORMATION CONTAINED HEREIN. THE SELECTION AND USE OF THESE STANDARDS IS THE SOLE RESPONSIBILITY OF THE USER AND SHOULD NOT BE USED WITHOUT CONSULTING A REGISTERED PROFESSIONAL ENGINEER. ALL WARRANTIES AND REPRESENTATIONS OF ANY KIND ARE DISCLAIMED. ANYONE MAKING USE OF THIS INFORMATION AGREES THAT IT ASSUMES ALL LIABILITY ARISING FROM SUCH USE. NO PART OF THESE STANDARDS SHOULD BE REPRODUCED OR DISTRIBUTED IN ANY FORM OR BY ANY MEANS WITHOUT THE PRIOR WRITTEN PERMISSION OF SCRRA. ALL RIGHTS RESERVED.

METROLINK®
SOUTHERN CALIFORNIA REGIONAL RAIL AUTHORITY
ONE GATEWAY PLAZA, 12TH FLOOR, L. A., CA. 90012

ENGINEERING STANDARDS

SWITCH STAND PLACEMENT

STANDARD 2108
SCALE: NTS
REVISION –
SHEET 1 OF 1
CADD FILE: ES2108

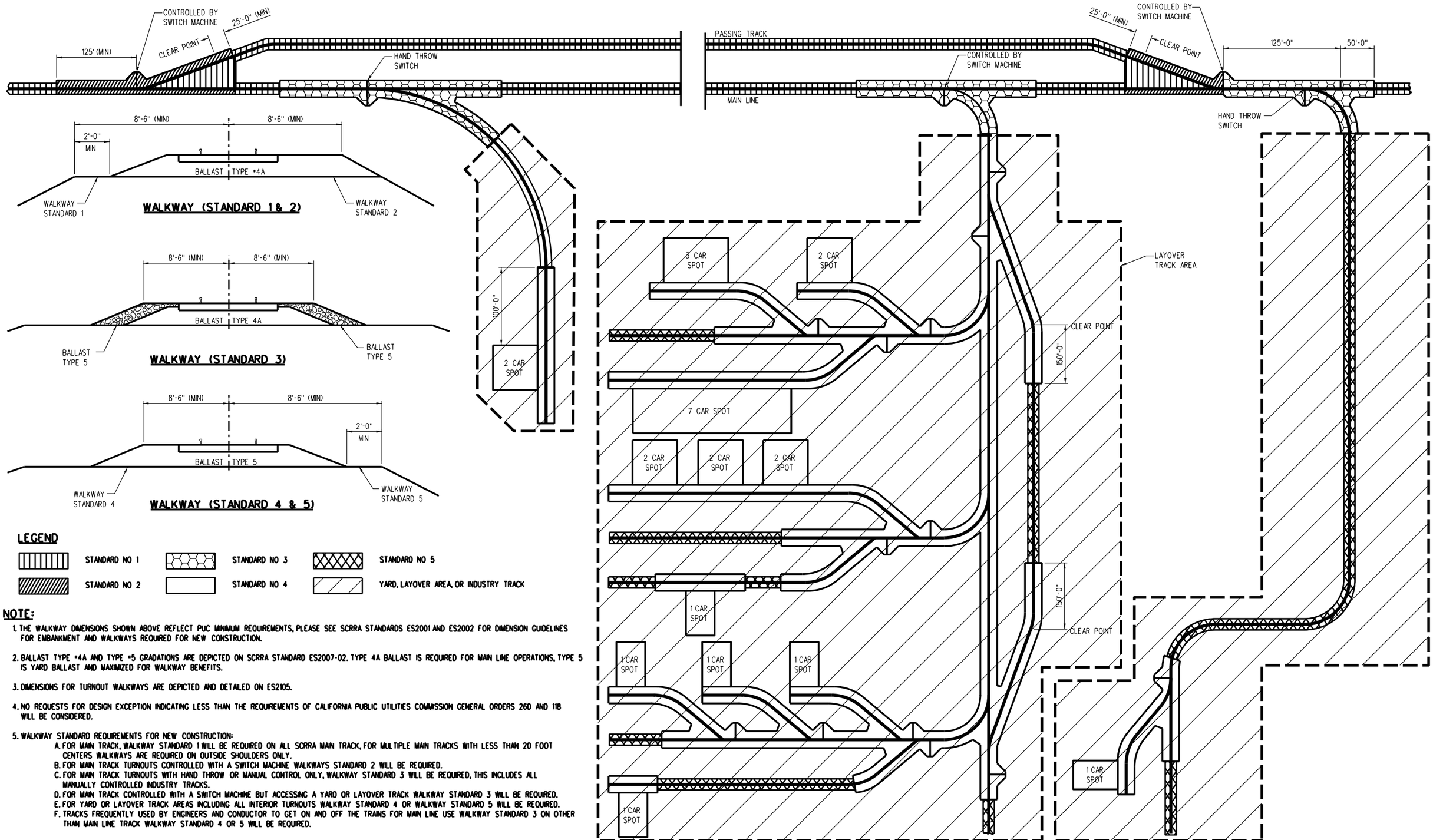

LEGEND

STANDARD NO 1	STANDARD NO 3	STANDARD NO 5
STANDARD NO 2	STANDARD NO 4	YARD, LAYOVER AREA, OR INDUSTRY TRACK

NOTE:

1. THE WALKWAY DIMENSIONS SHOWN ABOVE REFLECT PUC MINIMUM REQUIREMENTS, PLEASE SEE SCRRA STANDARDS ES2001 AND ES2002 FOR DIMENSION GUIDELINES FOR EMBANKMENT AND WALKWAYS REQUIRED FOR NEW CONSTRUCTION.
2. BALLAST TYPE #4A AND TYPE #5 GRADATIONS ARE DEPICTED ON SCRRA STANDARD ES2007-02. TYPE 4A BALLAST IS REQUIRED FOR MAIN LINE OPERATIONS, TYPE 5 IS YARD BALLAST AND MAXIMIZED FOR WALKWAY BENEFITS.
3. DIMENSIONS FOR TURNOUT WALKWAYS ARE DEPICTED AND DETAILED ON ES2105.
4. NO REQUESTS FOR DESIGN EXCEPTION INDICATING LESS THAN THE REQUIREMENTS OF CALIFORNIA PUBLIC UTILITIES COMMISSION GENERAL ORDERS 26D AND 118 WILL BE CONSIDERED.
5. WALKWAY STANDARD REQUIREMENTS FOR NEW CONSTRUCTION:
   - A. FOR MAIN TRACK, WALKWAY STANDARD 1 WILL BE REQUIRED ON ALL SCRRA MAIN TRACK, FOR MULTIPLE MAIN TRACKS WITH LESS THAN 20 FOOT CENTERS WALKWAYS ARE REQUIRED ON OUTSIDE SHOULDERS ONLY.
   - B. FOR MAIN TRACK TURNOUTS CONTROLLED WITH A SWITCH MACHINE WALKWAYS STANDARD 2 WILL BE REQUIRED.
   - C. FOR MAIN TRACK TURNOUTS WITH HAND THROW OR MANUAL CONTROL ONLY, WALKWAY STANDARD 3 WILL BE REQUIRED, THIS INCLUDES ALL MANUALLY CONTROLLED INDUSTRY TRACKS.
   - D. FOR MAIN TRACK CONTROLLED WITH A SWITCH MACHINE BUT ACCESSING A YARD OR LAYOVER TRACK WALKWAY STANDARD 3 WILL BE REQUIRED.
   - E. FOR YARD OR LAYOVER TRACK AREAS INCLUDING ALL INTERIOR TURNOUTS WALKWAY STANDARD 4 OR WALKWAY STANDARD 5 WILL BE REQUIRED.
   - F. TRACKS FREQUENTLY USED BY ENGINEERS AND CONDUCTOR TO GET ON AND OFF THE TRAINS FOR MAIN LINE USE WALKWAY STANDARD 3 ON OTHER THAN MAIN LINE TRACK WALKWAY STANDARD 4 OR 5 WILL BE REQUIRED.

REV.	DATE	DESCRIPTION	DES.	ENG.
X	XX-XX-XX	REVISION	XX	XX

DRAWN BY: A. CARLOS DATE: 03/31/2011

ASSISTANT DIRECTOR: STANDARDS & DESIGN

DIRECTOR OF ENGINEERING AND CONSTRUCTION

SCRRA ENGINEERING STANDARDS ARE INTENDED FOR SCRRA APPROVED USES ONLY. FOR NON-SCRRA APPROVED USES, SCRRA SHALL NOT BE RESPONSIBLE FOR THE ACCURACY OR COMPLETENESS OF THE DATA OR INFORMATION CONTAINED HEREIN. THE SELECTION AND USE OF THESE STANDARDS IS THE SOLE RESPONSIBILITY OF THE USER AND SHOULD NOT BE USED WITHOUT CONSULTING A REGISTERED PROFESSIONAL ENGINEER. ALL WARRANTIES AND REPRESENTATIONS OF ANY KIND ARE DISCLAIMED. ANYONE MAKING USE OF THIS INFORMATION AGREES THAT IT ASSUMES ALL LIABILITY ARISING FROM SUCH USE. NO PART OF THESE STANDARDS SHOULD BE REPRODUCED OR DISTRIBUTED IN ANY FORM OR BY ANY MEANS WITHOUT THE PRIOR WRITTEN PERMISSION OF SCRRA. ALL RIGHTS RESERVED.

METROLINK®

SOUTHERN CALIFORNIA REGIONAL RAIL AUTHORITY
ONE GATEWAY PLAZA, 12TH FLOOR, L. A., CA. 90012

ENGINEERING STANDARDS

CPUC MINIMUM WALKWAY STANDARDS

STANDARD 2109
SCALE: NTS
REVISION -
SHEET 1 OF 1
CADD FILE: ES2109

STANDARD VERTICAL CURVES (AREMA SECTION 3.6)

1. VERTICAL CURVES AS CALCULATED IN ITEM 6 BELOW SHALL BE USED TO CONNECT ALL CHANGES IN GRADIENTS.
2. THE LENGTH OF VERTICAL CURVES IS DETERMINED BY CHANGES IN GRADIENT, VERTICAL ACCELERATION AND THE SPEED OF THE TRAIN.
3. THE PURPOSE OF VERTICAL CURVES IS TO EASE THE CHANGE OF THE GRADIENTS IN ORDER TO REDUCE COUPLER AND DIAPHRAGM BINDING AND ELIMINATE THE DANGER OF BREAKING THE TRAIN IN TWO AS A DIRECT RESULT OF TRAIN ACTION. PROPERLY DESIGNED VERTICAL CURVES WILL PROVIDE FOR PASSENGER COMFORT. VERTICAL CURVES SHALL BE DESIGNED LONG ENOUGH TO MATCH THE HIGHEST SPEEDS CONTEMPLATED FOR THE LINES.
4. A VERTICAL CURVE WHICH IS CONCAVE UPWARD SHALL BE DENOTED AS A SAG. A VERTICAL CURVE WHICH IS CONCAVE DOWNWARD SHALL BE DENOTED AS A SUMMIT (SEE DIAGRAMS BELOW).
5. VERTICAL CURVES SHALL BE PARABOLIC.
6. THE MINIMUM LENGTH OF VERTICAL CURVES FOR BOTH SAGS AND SUMMITS IS DETERMINED BY THE FOLLOWING FORMULA:

$$LVC = \frac{D \times V^2 \times K}{A}$$

WHERE: A = VERTICAL ACCELERATION IN FEET/SEC/SEC (FT/SEC^2)
D = ABSOLUTE VALUE OF THE DIFFERENCE IN RATES OF GRADES EXPRESSED AS A DECIMAL
K = 2.15 CONVERSION FACTOR TO GIVE LVC IN FEET
V = DESIGN SPEED IN MILES PER HOUR

IT IS RECOMMENDED PRACTICE TO ROUND THE CALCULATED MINIMUM LVC UP TO A CONVENIENT WHOLE NUMBER. ON TRACKS WITH DESIGN SPEEDS GREATER THAN OR EQUAL TO 25 MPH, ANY CALCULATED MINIMUM LVC OF LESS THAN 100 FT SHALL BE ROUNDED UP TO AT LEAST 100 FT.

7. THE RECOMMENDED VERTICAL ACCELERATION (A) SHALL BE SELECTED BASED ON THE TYPE OF OPERATIONS AND IS THE SAME FOR BOTH SAGS AND SUMMITS. DEVIATIONS FROM THESE ACCELERATION CRITERIA MAY BE AUTHORIZED BY THE SCRRA DIRECTOR OF ENGINEERING AND CONSTRUCTION. THE LONGEST VERTICAL CURVE COMPUTED BY THESE METHODS WITH EACH CRITERIA WILL GOVERN.

FREIGHT OPERATIONS:
A=0.10 FEET/SEC/SEC

PASSENGER OPERATIONS:
A=0.60 FEET/SEC/SEC

MIXED PASSENGER WITH FREIGHT TRAFFIC NOT EXCEEDING 4000 TON TRAINS OR 8 MILLION GROSS TONS ANNUAL FREIGHT TRAFFIC
A=0.30 FEET/SEC/SEC FREIGHT SPEED
A=0.60 FEET/SEC/SEC PASSENGER SPEED

WHEN DESIGNING VERTICAL CURVES ON MIXED USE FREIGHT AND PASSENGER OPERATIONS, THE DESIGNER SHALL CALCULATE MINIMUM LVC'S USING THE APPLICABLE VALUES OF "A" AND "V" AND SELECT THE LONGEST VALUE YIELDED.

8. THE MINIMUM DISTANCE BETWEEN VERTICAL CURVES SHALL BE 3V OR 100 FT, WHICHEVER IS GREATER. (V=DESIGN SPEED IN MPH.)
9. TURNOUTS SHALL NOT BE PLACED WITHIN THE LIMITS OF ANY VERTICAL CURVE.
10. THE DESIRABLE LENGTH OF VERTICAL CURVES IN YARD TRACKS SHALL BE NOT LESS THAN 100 FT. THE MINIMUM LENGTH OF VERTICAL CURVES IN YARD TRACKS SHALL BE 30 FT.
11. THE GOAL OF DESIGN OF THE VERTICAL ALIGNMENT IS TO REDUCE THE NUMBER OF VERTICAL CURVES, CONSISTENT WITH ENGINEERING ECONOMY AND SITE CONSTRAINTS.
12. VERTICAL CURVES SHALL BE DESIGNED USING THE FUTURE MAXIMUM DESIGN SPEED FOR PASSENGER AND FREIGHT TRAINS EXPECTED ON A GIVEN SUBDIVISION. FUTURE MAXIMUM SPEEDS FOR PASSENGER TRAINS MAY EXCEED SPEEDS CURRENTLY IN EFFECT. DESIGNERS SHALL CONSULT WITH THE SCRRA DIRECTOR OF ENGINEERING AND CONSTRUCTION FOR THE FUTURE MAXIMUM PASSENGER SPEED AT EACH LOCATION.
13. SPEED RESTRICTIONS DUE TO SIGNAL/STOPPING DISTANCE WILL NOT BE CONSIDERED.
14. PLANS FOR NEW CONSTRUCTION, REHABILITATION, AND TEMPORARY TRACK SHALL CLEARLY SHOW THE PERCENT GRADE CHANGE, DESIGN SPEED, BEGINNING AND ENDS, AND LENGTH OF EACH VERTICAL CURVE, AND MUST SHOW CONSTRAINTS TO VERTICAL PROFILE SUCH AS EXISTING OR FUTURE BRIDGES, TURNOUTS OR STATION PLATFORMS.
15. VERTICAL CURVES WITHIN 100 FEET OF A STATION PLATFORM SHALL BE AVOIDED.

EXAMPLE CALCULATION FOR FREIGHT OPERATIONS

CREST CURVE WITH +0.50% APPROACHING GRADE MEETING A -0.50% DEPARTING GRADE. MAXIMUM DESIGN SPEED IS 50 MPH.

A=0.10 FEET/SEC/SEC VERTICAL ACCELERATION (FREIGHT)
D=ABSOLUTE VALUE OF ((+0.005)-(-0.005))=0.01
K=2.15 CONVERSION FACTOR TO GIVE LVC IN FEET
V=50 MPH DESIGN SPEED

$$LVC = \frac{D \times V^2 \times K}{A} = \text{MINIMUM LENGTH OF VERTICAL CURVE IN FEET}$$

$$LVC = \frac{(0.01) \times (50MPH)^2 \times 2.15}{0.10\ FEET/SEC/SEC} = 537.50 \text{ FEET SAY } 540 \text{ FEET}$$

EXAMPLE CALCULATION FOR PASSENGER OPERATIONS

CREST CURVE WITH +0.50% APPROACHING GRADE MEETING A -0.50% DEPARTING GRADE. MAXIMUM DESIGN SPEED IS 75 MPH.

A=0.60 FEET/SEC/SEC VERTICAL ACCELERATION (PASSENGER)
D=ABSOLUTE VALUE OF ((+0.005)-(-0.005))=0.01
K=2.15 CONVERSION FACTOR TO GIVE LVC IN FEET
V=75 MPH DESIGN SPEED

$$LVC = \frac{D \times V^2 \times K}{A} = \text{MINIMUM LENGTH OF VERTICAL CURVE IN FEET}$$

$$LVC = \frac{(0.01) \times (75MPH)^2 \times 2.15}{0.60\ FEET/SEC/SEC} = 201.56 \text{ FEET SAY } 205 \text{ FEET}$$

SUMMIT CURVES

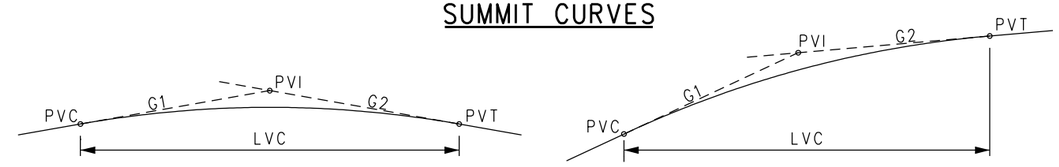

SAG CURVES

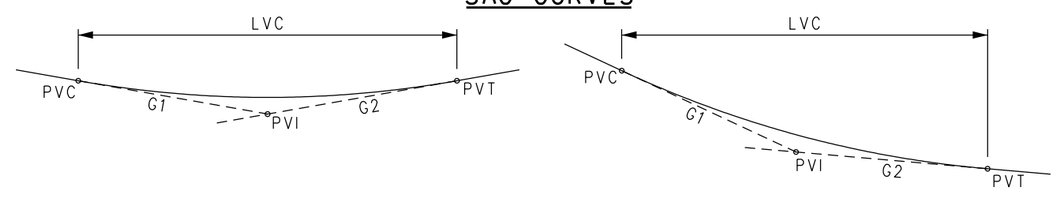

ABBREVIATIONS

G1	APPROACHING GRADE
G2	DEPARTING GRADE
LVC	LENGTH OF VERTICAL CURVE
PVC	POINT OF VERTICAL CURVATURE
PVI	POINT OF VERTICAL INTERSECTION
PVT	POINT OF VERTICAL TANGENCY
VC	VERTICAL CURVE

REV.	DATE	DESCRIPTION	DES.	ENG.
X	XX-XX-XX	REVISION	XX	XX

DRAWN BY: A. CARLOS DATE: 03/31/2011

ASSISTANT DIRECTOR: STANDARDS & DESIGN

DIRECTOR OF ENGINEERING AND CONSTRUCTION

SCRRA ENGINEERING STANDARDS ARE INTENDED FOR SCRRA APPROVED USES ONLY. FOR NON-SCRRA APPROVED USES:
SCRRA SHALL NOT BE RESPONSIBLE FOR THE ACCURACY OR COMPLETENESS OF THE DATA OR INFORMATION CONTAINED HEREIN. THE SELECTION AND USE OF THESE STANDARDS IS THE SOLE RESPONSIBILITY OF THE USER AND SHOULD NOT BE USED WITHOUT CONSULTING A REGISTERED PROFESSIONAL ENGINEER. ALL WARRANTIES AND REPRESENTATIONS OF ANY KIND ARE DISCLAIMED. ANYONE MAKING USE OF THIS INFORMATION AGREES THAT IT ASSUMES ALL LIABILITY ARISING FROM SUCH USE. NO PART OF THESE STANDARDS SHOULD BE REPRODUCED OR DISTRIBUTED IN ANY FORM OR BY ANY MEANS WITHOUT THE PRIOR WRITTEN PERMISSION OF SCRRA. ALL RIGHTS RESERVED.

METROLINK®
SOUTHERN CALIFORNIA REGIONAL RAIL AUTHORITY
ONE GATEWAY PLAZA, 12TH FLOOR, L. A., CA. 90012

ENGINEERING STANDARDS

VERTICAL CURVE GEOMETRY

STANDARD 2201
SCALE: NTS
REVISION –
SHEET 1 OF 1
CADD FILE: ES2201

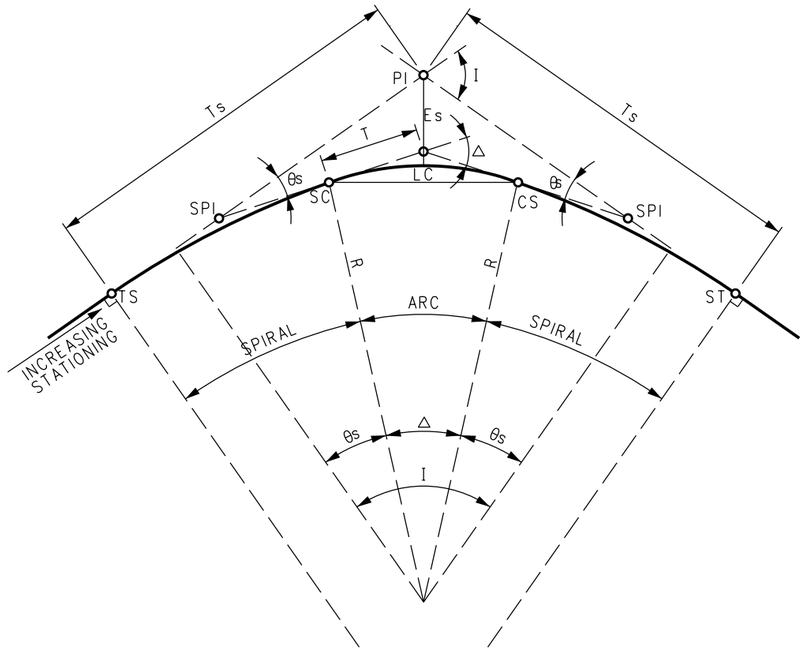

FIGURE A
CIRCULAR CURVE
WITH SPIRAL TRANSITIONS

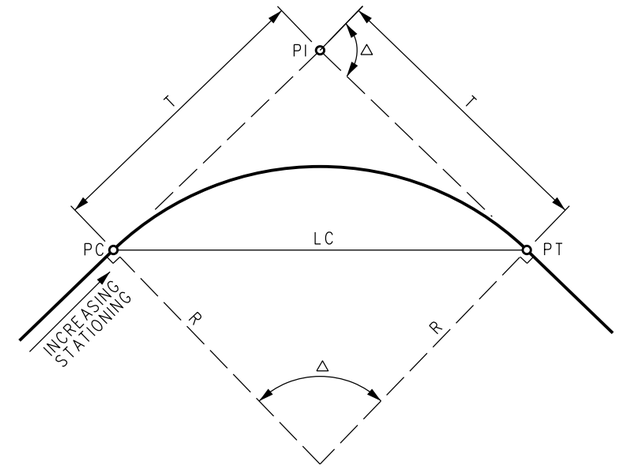

FIGURE B
SIMPLE CIRCULAR CURVE

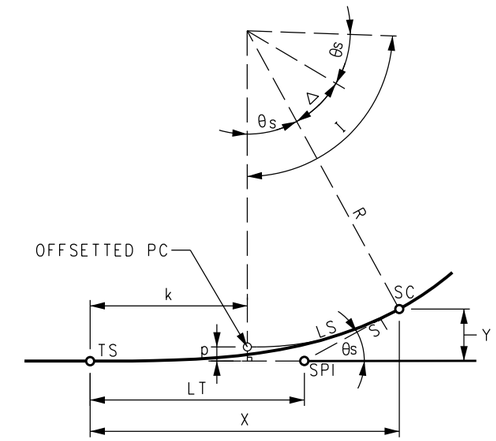

FIGURE C
SPIRAL TRANSITION CURVE

NOTES:

1. CIRCULAR CURVES ARE DEFINED BY THE CHORD DEFINITION (CENTRAL ANGLE SUBTENDED BY A CHORD OF 100 FEET) OF CURVATURE AND SPECIFIED BY DEGREE.
2. SPIRALS ARE DEFINED BY THE CLOTHOID DEFINITION. AUTHORIZATION FROM SCRRA SHALL BE OBTAINED IF ANY DIFFERENT METHOD OR PARAMETERS ARE UTILIZED FOR SPIRAL TRANSITION CURVES. THE REQUEST SHALL BE FULLY DOCUMENTED WITH DESIGN DATA, CALCULATIONS AND OTHER PERTINENT INFORMATION.
3. THE TRACK GEOMETRY DATA TABLE, SHOWN IN ES2202-2, SHALL BE COMPLETED AND SUBMITTED TO SCRRA FOR REVIEW, COMMENT AND APPROVAL FOR ALL CURVES.
4. ALL ANGLES ARE IN DEGREES, DISTANCES AND LENGTHS ARE IN FEET, EXCEPT SUPERELEVATIONS ARE IN INCHES AND SPEEDS ARE IN MILES PER HOUR (MPH).

ABBREVIATIONS AND SYMBOLS

CC	COMPOUND CURVE
CS	CURVE TO SPIRAL
Δ	CENTRAL ANGLE OF CIRCULAR CURVE
Dc	DEGREE OF CURVATURE (CHORD DEFINITION)
E	EQUILIBRIUM ELEVATION (Ea + Eu)
Ea	ACTUAL ELEVATION
Es	EXTERNAL DISTANCE FROM PI TO CIRCULAR CURVE
Eu	UNBALANCED ELEVATION (CANT DEFICIENCY)
I	TOTAL INTERSECTION ANGLE (DEFLECTION ANGLE AT THE PI)
K	INCREASE IN DEGREES OF CURVATURE PER 100 FT STATIONS ALONG SPIRAL
k	TANGENT DISTANCE FROM THE TS TO THE OFFSETTED PC
L	CHORDED LENGTH OF CIRCULAR CURVE
LC	LONG CHORD
LS	LENGTH OF SPIRAL
LT	LONG TANGENT (DISTANCE FROM THE TS TO THE SPI)
p	ORDINATE OF THE OFFSETTED PC
PC	POINT OF CURVATURE
PCC	POINT OF COMPOUND CURVATURE
PI	POINT OF INTERSECTION
PRC	POINT OF REVERSE CURVATURE
PT	POINT OF TANGENCY
R	RADIUS
S	LENGTH OF SPIRAL (LS) IN 100 FT STATIONS
SC	SPIRAL TO CURVE
SPI	POINT OF INTERSECTION BETWEEN TS AND SC
SS	SPIRAL TO SPIRAL
ST	SPIRAL TO TANGENT
ST	SHORT TANGENT (DISTANCE FROM SPI TO SC)
T	TANGENT LENGTH OF CIRCULAR CURVE
TS	TANGENT TO SPIRAL
Ts	TOTAL TANGENT DISTANCE OF A SPIRALED CURVE
θs	SPIRAL ANGLE
X	TANGENT DISTANCE FROM TS TO SC
Y	TANGENT OFFSET TO THE SC

KEY FORMULAE

$R = \frac{50'}{SIN(\frac{Dc}{2})}$

$\Delta = I - 2\theta s$

$L = \frac{\Delta}{Dc} X\ 100$

$T = R\ TAN(\frac{\Delta}{2})$

$LC = 2R\ SIN(\frac{\Delta}{2})$

$LS = \frac{200\theta s}{Dc}$

$S = \frac{LS}{100}$

$\theta s = \frac{LS\ Dc}{200}$

$K = \frac{100\ Dc}{LS}$

$LT = X - \frac{Y}{TAN\theta s}$

$ST = \frac{Y}{SIN\theta s}$

$Ts = (R+p)TAN(\frac{I}{2})+k$

$Es = (R+p)EX\ SEC(\frac{I}{2})+p$

$X = 1 - 0.003048\theta s^2 S$

$Y = 0.582\theta s S - 0.00001264\theta s^3 S$

$k = \frac{LS}{2} - 0.000508\Delta^2 S$

$p = 0.1454\Delta S$

REV.	DATE	DESCRIPTION	DES.	ENG.
X	XX-XX-XX	REVISION	XX	XX

DRAWN BY: A. CARLOS DATE: 03/31/2011

ASSISTANT DIRECTOR: STANDARDS & DESIGN

DIRECTOR OF ENGINEERING AND CONSTRUCTION

SCRRA ENGINEERING STANDARDS ARE INTENDED FOR SCRRA APPROVED USES ONLY. FOR NON-SCRRA APPROVED USES:
SCRRA SHALL NOT BE RESPONSIBLE FOR THE ACCURACY OR COMPLETENESS OF THE DATA OR INFORMATION CONTAINED HEREIN. THE SELECTION AND USE OF THESE STANDARDS IS THE SOLE RESPONSIBILITY OF THE USER AND SHOULD NOT BE USED WITHOUT CONSULTING A REGISTERED PROFESSIONAL ENGINEER. ALL WARRANTIES AND REPRESENTATIONS OF ANY KIND ARE DISCLAIMED. ANYONE MAKING USE OF THIS INFORMATION AGREES THAT IT ASSUMES ALL LIABILITY ARISING FROM SUCH USE. NO PART OF THESE STANDARDS SHOULD BE REPRODUCED OR DISTRIBUTED IN ANY FORM OR BY ANY MEANS WITHOUT THE PRIOR WRITTEN PERMISSION OF SCRRA. ALL RIGHTS RESERVED.

METROLINK
SOUTHERN CALIFORNIA REGIONAL RAIL AUTHORITY
ONE GATEWAY PLAZA, 12TH FLOOR, L. A., CA. 90012

ENGINEERING STANDARDS

HORIZONTAL CURVE GEOMETRY

STANDARD 2202
SCALE: NTS
REVISION –
SHEET 1 OF 2
CADD FILE: ES2202-01

TRACK GEOMETRY DATA TABLE

	STATIONING DATA							INPUT DATA							CURVE DATA				SPIRAL DATA							
	CURVE OR TURNOUT NO	DESC	BEARING	DISTANCE	STATION	NORTHING	EASTING	Dc	Ea	Eu	V (PAS)	V (FRT)	LS	I	R	Δ	L	T	θs	X	Y	k	p	LT	ST	Ts
								DEGREES	INCHES	INCHES	MPH	MPH	FEET	DEGREES	FEET	DEGREES	FEET	FEET	FEET	FEET	FEET	FEET	FEET	FEET	FEET	FEET
		POB			X	X	X																			
			X	X																						
		TS			X	X	X																			
CIRCULAR CURVE WITH SPIRAL TRANSITIONS													X						X	X	X	X	X	X	X	X
		SC			X	X	X																			
	M1																									
		PI			X	X	X	X	X	X	X	X		X	X	X	X	X								
		CS			X	X	X																			
													X						X	X	X	X	X	X	X	X
		ST			X	X	X																			
			X	X																						
TURNOUT	C33	PITO			X	X	X																			
			X	X																						
		PS			X	X	X																			
			X	X																						
		TS			X	X	X																			
													X						X	X	X	X	X	X	X	X
		SC			X	X	X																			
		PI			X	X	X	X	X	X	X	X		X	X	X	X	X								
COMPOUND CIRCULAR CURVE WITH SPIRAL TRANSITIONS																										
		CS			X	X	X																			
	M2																									
													X						X	X	X	X	X	X	X	X
		SC			X	X	X																			
		PI			X	X	X	X	X	X	X	X		X	X	X	X	X								
		CS			X	X	X																			
													X						X	X	X	X	X	X	X	X
		ST			X	X	X																			
			X	X																						
		PC			X	X	X																			
SIMPLE CIRCULAR CURVE	M3																									
		PI			X	X	X	X	X	X	X	X		X	X	X	X	X								
		PT			X	X	X																			
			X	X																						
		PC			X	X	X																			
		PI			X	X	X	X	X	X	X	X		X	X	X	X	X								
COMPOUND CIRCULAR CURVE	M4																									
		PCC			X	X	X																			
		PI			X	X	X	X	X	X	X	X		X	X	X	X	X								
		PT			X	X	X																			
			X	X																						
		POE			X	X	X																			

NOTES:

1. TRACK GEOMETRY DATA TABLES SHALL BE COMPLETED AND INCLUDED WITH DESIGN DRAWINGS SUBMITTED TO SCRRA FOR REVIEW, COMMENT, AND APPROVAL. EACH PROPOSED OR REALIGNED TRACK SHALL REQUIRE A SEPARATE TABLE.
2. CELLS MARKED WITH AN "X" WILL NORMALLY CONTAIN DATA.
3. IN PRACTICE, COMPOUND CURVES WITH MORE THAN TWO CIRCULAR ARCS ARE RARE. IN THEORY, A COMPOUND CURVE CAN HAVE AN INFINITE NUMBER OF CIRCULAR ARCS.
4. FOR FREIGHT-ONLY OPERATIONS, COLUMN "V (PAS)" WILL REMAIN BLANK. FOR PASSENGER-ONLY OPERATIONS, COLUMN "V (FRT)" WILL REMAIN BLANK.
5. IN THE EVENT A DESIGNER MUST PROPOSED A CURVE THAT DOES NOT MEET DESIGN REQUIREMENTS PER SCRRA ES2203 AND ES2204, THE DESIGNER SHALL CLEARLY INDICATE IT ON THE GEOMETRY TABLE. THE DESIGNER SHALL, FOR EACH PROPOSED SUBSTANDARD CURVE, SUBMIT TO SCRRA A WRITTEN REQUEST AND JUSTIFICATION FOR A DESIGN WAIVER.

REV.	DATE	DESCRIPTION	DES.	ENG.
X	XX-XX-XX	REVISION	XX	XX

DRAWN BY: A. CARLOS DATE: 03/31/2011

ASSISTANT DIRECTOR: STANDARDS & DESIGN

DIRECTOR OF ENGINEERING AND CONSTRUCTION

SCRRA ENGINEERING STANDARDS ARE INTENDED FOR SCRRA APPROVED USES ONLY. FOR NON-SCRRA APPROVED USES:
SCRRA SHALL NOT BE RESPONSIBLE FOR THE ACCURACY OR COMPLETENESS OF THE DATA OR INFORMATION CONTAINED HEREIN. THE SELECTION AND USE OF THESE STANDARDS IS THE SOLE RESPONSIBILITY OF THE USER AND SHOULD NOT BE USED WITHOUT CONSULTING A REGISTERED PROFESSIONAL ENGINEER. ALL WARRANTIES AND REPRESENTATIONS OF ANY KIND ARE DISCLAIMED. ANYONE MAKING USE OF THIS INFORMATION AGREES THAT IT ASSUMES ALL LIABILITY ARISING FROM SUCH USE. NO PART OF THESE STANDARDS SHOULD BE REPRODUCED OR DISTRIBUTED IN ANY FORM OR BY ANY MEANS WITHOUT THE PRIOR WRITTEN PERMISSION OF SCRRA. ALL RIGHTS RESERVED.

METROLINK®
SOUTHERN CALIFORNIA REGIONAL RAIL AUTHORITY
ONE GATEWAY PLAZA, 12TH FLOOR, L. A., CA. 90012

ENGINEERING STANDARDS

TRACK GEOMETRY DATA TABLE

STANDARD: 2202
SCALE: NTS
REVISION: –
SHEET: 2 OF 2
CADD FILE: ES2202-02

GENERAL

1. THERE ARE SIX TABLES OF DESIGN AND MAINTENANCE STANDARDS FOR SCRRA TRACK ALIGNMENT:
   TABLE P3.5: 3.5 - INCH UNBALANCED ELEVATION - STANDARD SPIRAL LENGTH TABLE FOR PASSENGER OPERATIONS
   TABLE F2.0: 2.0 - INCH UNBALANCED ELEVATION - STANDARD SPIRAL LENGTH TABLE FOR FREIGHT OPERATIONS
   TABLE P3.5M: 3.5 - INCH UNBALANCED ELEVATION - MINIMUM SPIRAL LENGTH TABLE FOR PASSENGER OPERATIONS
   TABLE F2.0M: 2.0 - INCH UNBALANCED ELEVATION - MINIMUM SPIRAL LENGTH TABLE FOR FREIGHT OPERATIONS
   TABLE PML: 4.0 - INCH UNBALANCED ELEVATION - MAINTENANCE LIMIT FOR PASSENGER OPERATIONS
   TABLE FML: 3.0 - INCH UNBALANCED ELEVATION - MAINTENANCE LIMIT FOR FREIGHT OPERATIONS

2. FOR THE OPERATION OF PASSENGER EQUIPMENT NORMALLY USED IN SCRRA AND AMTRAK TRAINS;

   THE DESIGN AND MAINTENANCE OF CURVE GEOMETRY IS CONTROLLED BY FRA TRACK SAFETY STANDARDS (49CFR213.57), WHICH ESTABLISHES THE MAXIMUM SPEED FOR ANY COMBINATION OF CURVATURE AND SUPERELEVATION FOR PASSENGER TRAINS AS RESULTING IN 4 INCHES OF UNDERBALANCE. TO ASSURE THAT NORMAL MAINTENANCE VARIATIONS DO NOT INADVERTENTLY RESULT IN CURVE GEOMETRY THAT CAUSES MORE THAN 4 INCHES OF UNBALANCED ELEVATION, THE DESIGN UNDERBALANCE IS SET AT 3.5 INCHES FOR TABLES P3.5 AND P3.5M. THE FRA TABLES AND FORMULAS DEFINE 4 INCHES OF UNBALANCED ELEVATION AS THE THRESHOLD OF FAILURE; THESE SCRRA TABLES DESIGNATE DESIGN PRACTICE THAT FITS WITHIN THE FRA LIMITS. DESIGNERS AND MAINTENANCE PERSONNEL WILL CONSTRUCT AND MAINTAIN TRACK TO THOSE VALUES EXCEPT AS AUTHORIZED BY THE SCRRA DIRECTOR OF ENGINEERING AND CONSTRUCTION, OR AS EXCEPTED BELOW.

   SCRRA PASSENGER EQUIPMENT IS SUBJECT TO LESSENED STABILITY IN WINDS EXCEEDING 45 MPH AND ARE LIMITED TO AN UNDERBALANCE OF 3 INCHES UNDER THOSE CONDITIONS. INSTRUCTION TO TRAIN CREWS ARE TO REDUCE SPEED BY 5 MPH UNDER STRONG WIND CONDITIONS.

   FREIGHT TRAIN SPEEDS ARE GOVERNED BY 49CFR213.57 TO NOT RESULT IN MORE THAN 3 INCHES OF UNDERBALANCE. FREIGHT TRAIN SPEEDS FOR NEW CURVES WILL BE DESIGNED PER TABLES F2.0 AND F2.0M, WHICH HAVE 2 INCHES UNDERBALANCE; EXISTING CURVES MAY BE MAINTAINED WITH UP TO 3 INCHES OF UNDERBALANCE AND REMEDIAL ACTION MUST BE TAKEN FOR ANY CURVE FOUND TO EXCEED 3 INCHES OF UNDERBALANCE FOR FREIGHT TRAIN SPEED.

   SPIRAL EASEMENT CURVES WILL BE USED TO CONNECT CURVES TO TANGENT TRACK WHENEVER THERE IS SUPERELEVATION IN THE CURVE. THE SUPERELEVATION IS TO BE UNIFORMLY INCREASED FROM THE TANGENT TO THE CURVE THROUGHOUT THE LENGTH OF THE SPIRAL. THE SPIRAL IS ALSO A HORIZONTAL ALIGNMENT ELEMENT OF GRADUALLY DECREASING RADIUS, WHICH MATCHES THE RADIUS OF THE CIRCULAR CURVE ELEMENT AT THE POINT IT MEETS THE CURVE.

   THE LENGTH OF THE SPIRALS IN THE TABLES HAS BEEN CALCULATED BASED UPON THE SPEED OF THE TRAIN AND ON THE MAXIMUM TWIST THAT ROLLING STOCK CAN SAFELY NEGOTIATE. LONG CARS THAT TRAVERSE SPIRALS THAT HAVE MORE THAN 1 INCH OF ELEVATION CHANGE IN 62 FEET BEGIN TO UNLOAD SOME OF THE VERTICAL LOAD ON WHEELS IF THEIR SIDE BEARING CLEARANCE IS AT MINIMUMS. THEREFORE STANDARD LENGTH SPIRALS DO NOT EXCEED THIS RATE OF CHANGE. A MAXIMUM CHANGE OF 1 INCH PER 50 FEET IS PERMITTED UNDER THE "MINIMUM" TABLES, BECAUSE SPIRALS WITH THESE PARAMETERS ARE FOUND ON SOME LINES AND CANNOT BE CHANGED DUE TO GEOGRAPHIC LIMITATIONS. THE MINIMUM SPIRAL LENGTHS FOUND IN TABLES P3.5M AND F2.0M MAY ONLY BE USED ON THE VENTURA AND ANTELOPE VALLEY SUBDIVISION. AT SPEEDS IN EXCESS OF 50 MPH, THE LENGTH OF SPIRALS IS INCREASED TO MINIMIZE TRANSIENT DYNAMIC LOADS AND PASSENGER DISCOMFORT.

   SPIRALS MAY BE LONGER THAN THE STANDARD LENGTHS SHOWN. LONGER SPIRALS THAT EXIST FROM ORIGINAL CONSTRUCTION WILL NOT BE SHORTENED UNLESS NECESSARY TO OBTAIN REVERSING TANGENT LENGTH. SPIRALS FOR CURVES, WHICH MAY BE DESIGNED FOR HIGHER SPEED IN THE FUTURE (E.G. NEAR PRESENT SPEED RESTRICTIONS SUCH AS TUNNELS) SHOULD BE DESIGNED WITH SPIRAL LENGTHS FOR FUTURE HIGHER SPEED AND SUPERELEVATION; AND PRESENTLY NEEDED SUPERELEVATION RUNOFF OVER THE LENGTH OF THE SPIRAL.

   NEW CONSTRUCTION WILL BE DESIGNED WITH STANDARD LENGTH SPIRALS PER THE EXAMPLE SHOWN ON THIS SHEET FOR THE MAXIMUM FUTURE DESIGN SPEED FOR THE LOCATION.

CURVE DESIGN PROCEDURE

1. REFER TO AREMA CHAPTER 5.3 FOR A COMPLETE DISCUSSION OF CURVE DESIGN.

2. IN ORDER TO SELECT THE SUPERELEVATION AND SPIRAL LENGTHS FOR CURVES, THE DESIGN SPEEDS FOR FREIGHT AND PASSENGER TRAINS MUST BE DEVELOPED. A SERIES OF TRIAL SOLUTIONS IS USUALLY NECESSARY. EVERY CURVE MUST MEET THE STANDARDS OF SPIRAL LENGTH AND SUPERELEVATION FOR THE SPEED CHOSEN. THE GOAL IS TO OBTAIN THE MAXIMUM SPEED FOR PASSENGER TRAINS CONSISTENT WITH GOOD TRAIN HANDLING, SIGNAL SPACING AND PRACTICAL LIMITS OF EQUIPMENT PERFORMANCE AND TO HAVE THE RESULTING DESIGN PROVIDE AN ACCEPTABLE FREIGHT TRAIN OPERATION AND MAINTENANCE ENVIRONMENT.

3. HORIZONTAL CURVES SHALL BE DESIGNED USING THE FUTURE MAXIMUM DESIGN SPEED FOR PASSENGER AND FREIGHT TRAINS EXPECTED ON A GIVEN SUBDIVISION. FUTURE MAXIMUM SPEEDS FOR PASSENGER TRAINS MAY EXCEED SPEEDS CURRENTLY IN EFFECT. THIS MAY RESULT IN SPIRAL LENGTHS THAT ARE LONGER THAN REQUIRED TO PROVIDE FOR PROPOSED SUPERELEVATION RUNOFF FOR NEW CONSTRUCTION. DESIGNERS WILL CONSULT WITH THE SCRRA DIRECTOR OF ENGINEERING AND CONSTRUCTION FOR THE FUTURE PASSENGER SPEED AT EACH LOCATION. THE SPIRAL LENGTH DESIGN SHALL BE SUFFICIENT TO ALLOW SUPERELEVATION RUNOFF FOR THE FUTURE MAXIMUM DESIGN SPEED EVEN IF THE ACTUAL DESIGN OPERATING SPEED IS LESS THAN THE FUTURE MAXIMUM DESIGN SPEED.

4. THE MAXIMUM SPEED FOR FREIGHT TRAINS IS 60 MILES PER HOUR.

5. ALL NEW WORK SHOULD USE TABLES P3.5 AND F2.0 TO SPECIFY STANDARD LENGTH SPIRALS. TABLES WITH SUFFIX "M" ARE TO BE USED ONLY ON THE VENTURA AND ANTELOPE VALLEY SUBDIVISIONS AND ONLY AT LOCATIONS CONSTRAINED BY EXISTING TRACK GEOMETRY. CURVES WHICH DO NOT MEET THE STANDARDS OF TABLES P3.5, F2.0, P3.5M AND F2.0M MUST BE CORRECTED THROUGH REDUCTION OF TRAIN SPEED AND ALTERATION TO THE TRACK CHARACTERISTICS.

6. FOR MAXIMUM DESIGN SPEEDS UP TO 35 MPH, CURVES IN OPPOSITE DIRECTIONS SHALL BE SEPARATED BY A REVERSING TANGENT WITH A MINIMUM LENGTH OF 100'. FOR DESIGN SPEEDS GREATER THAN 35 MPH, CURVES IN OPPOSITE DIRECTIONS SHALL BE SEPARATED BY A REVERSING TANGENT WITH A MINUMUM LENGTH EQUAL TO 3 TIMES THE MAXIMUM DESIGN SPEED AS STATED IN MILES PER HOUR. FOR EXAMPLE, A DESIGN SPEED OF 50 MPH WILL REQUIRE A REVERSING TANGENT WITH A MINIMUM LENGTH OF 150' (3 TIMES 50). EXCEPTIONS WILL REQUIRE THE APPROVAL OF THE SCRRA DIRECTOR OF ENGINEERING AND CONSTRUCTION.

7. REVERSING TANGENTS MAY BE REDUCED TO HALF OF THE ABOVE WHERE THERE IS LESS THAN 1 INCH OF SUPERELEVATION IN BOTH CURVES.

8. ALL DESIGN SPEEDS MUST BE APPROVED BY BOTH THE SCRRA DIRECTOR OF ENGINEERING AND CONSTRUCTION AND THE SCRRA MANAGER OF SIGNAL AND COMMUNICATIONS.

9. SPEEDS SHOULD BE ESTABLISHED IN CONSIDERATION OF PLACEMENT OF SPEED SIGNS PER SCRRA ES5213, SUCH THAT THERE IS NO OVERLAP BETWEEN SIGNS FOR REDUCTION AND INCREASE OF SPEED IN THE SAME DIRECTION.

10. SPEED AND SUPERELEVATION WILL BE CONSISTENT THROUGH CURVES UNLESS AUTHORIZED BY THE SCRRA DIRECTOR OF ENGINEERING AND CONSTRUCTION. ALL COMPOUND CURVES WILL BE SEPARATED WITH A SPIRAL OF AT LEAST 31 FEET. IN COMPOUND CURVES WHERE SUPERELEVATION DIFFERS IN EACH CURVE, A SPIRAL OF APPROPRIATE LENGTH WILL BE REQUIRED AT THE POINT OF COMPOUND CURVATURE. THE SPIRAL LENGTH WILL BE DESIGNED TO ACCOMMODATE THE DIFFERENCE OF THE COMPOUND CURVE'S SUPERELEVATIONS. A COMPOUND SPIRAL IS NOT REQUIRED WHERE THE SPIRAL OFFSET IS LESS THAN 0.25".

11. ACTUAL ELEVATION GREATER THAN 5 INCHES IS NOT PERMITTED WITHOUT PRIOR APPROVAL OF THE SCRRA DIRECTOR OF ENGINEERING AND CONSTRUCTION.

12. SUPERELEVATION THROUGH GRADE CROSSINGS WILL BE DESIGNED WITH CONSIDERATION OF THE STREET PROFILE, WHICH MAY CONSTRAIN THE SUPERELEVATION AND THEREFORE THE CURVE SPEED. THE STREET PROFILE SHOULD BE CONSIDERED TO BE CHANGED IF PRACTICAL TO ACCOMODATE SUPERELEVATION FOR THE PROPOSED MAXIMUM SPEED.

13. SPEEDS FOR FREIGHT TRAINS SHOULD BE AS UNIFORM AS PRACTICABLE. FREIGHT TRAINS GENERALLY CANNOT UTILIZE HIGHER SPEEDS THAT ARE LESS THAN 2 MILES IN LENGTH. DUE TO BRAKING DISTANCES AND SIGNAL SPACING, FREIGHT TRAIN SPEEDS MAY BE SET WHICH ARE SUBSTANTIALLY LESS THAN PASSENGER TRAIN SPEEDS. OPERATION OF FREIGHT TRAINS AT

CURVE DESIGN PROCEDURE (CONT)

SPEEDS LESS THAN EQUILIBRIUM (NO UNDERBALANCE) RESULTS IN HEAVY WEAR ON THE LOW RAIL AND LOW VERTICAL LOADS TO THE HIGH WHEELS.

14. DESIGNERS SHOULD AVOID SUPERELEVATIONS IN EXCESS OF 4 INCHES WHERE GRADES OR OTHER RESTRICTIONS CAUSE TRAINS TO RUN A SPEED LESS THAN 25 MILES PER HOUR.

15. FREIGHT TRAIN MAXIMUM AUTHORIZED SPEED SHALL BE BASED ON A STANDARD UNBALANCED ELEVATION BETWEEN 1 AND 2 INCHES. SCRRA DIRECTOR OF ENGINEERING AND CONSTRUCTION MUST APPROVE ANY COMBINATION OF FREIGHT SPEED AND CURVE SUPERELEVATION OUTSIDE THESE LIMITS.

16. THE PRIORITIES FOR DESIGNERS ARE:
    - SET MAXIMUM DESIGN SPEED AND DEGREE OF CURVATURE FOR PASSENGER AND FREIGHT TRAINS ON A GIVEN SUBDIVISION AFTER CONSULTATION WITH SCRRA.
    - ASSURE ADEQUATE REVERSING TANGENTS AND SPIRAL LENGTHS.
    - ASSURE ACTUAL ELEVATIONS AND STANDARD SPIRAL LENGTHS FOR HIGHEST PASSENGER AND FREIGHT TRAIN SPEEDS.
    - ASSURE UNIFORM FREIGHT TRAIN SPEED THAT CAN BE SUSTAINED FOR AT LEAST TWO (2) MILES.
    - ASSURE MAXIMUM FREIGHT TRAIN SPEED IS 60 MPH.
    - SET ACTUAL ELEVATION AND SPIRAL LENGTHS FOR FASTEST PRACTICABLE PASSENGER TRAIN OPERATION CONSISTENT WITH SCRRA AND FRA STANDARDS.

17. THESE DESIGN STANDARDS DO NOT REPLACE FRA TRACK SAFETY STANDARDS PART 49CFR213.57. IN ADDITION TO COMPLYING WITH THE OVERALL PARAMETERS OF SUPERELEVATION AND SPIRAL LENGTH, CURVES MUST ALSO COMPLY WITH ALL PARTS OF 213.5 THRU 213.63. IN PRACTICE, DESIGNERS SET THE OVERALL PARAMETERS AND MAINTENANCE PERSONNEL PREVENT ANY IRREGULARITIES WHICH COULD BECOME EXCEPTIONS TO THE FRA STANDARDS.

18. THE HORIZONTAL ALIGNMENT OF SPIRAL CURVES MAY BE DESIGNED BY:
    - TEN CHORD SPIRAL
    - AREMA CHAPTER 5.3.1.2
    - CLOTHOID SPIRAL GENERATED UNDER CADD DESIGN, WHICH MEETS AREMA CRITERIA

19. WHEN THE CURVE CHARACTERISTICS ARE CHANGED AND APPROVED, THE NEW DATA SHOULD BE ENTERED ONTO THE TRACK CHARTS AND THE FIELD MARKING WILL BE UPDATED.

20. RUNOFF OF SUPERELEVATION ON TANGENT TRACK IS NOT PERMITTED.

SAMPLE CURVE DESIGN PROBLEM

A CURRENT RAIL LINE OPERATES PASSENGER SERVICE AT 70 MPH AND FREIGHT AT 50 MPH. A 2°-0'-0" HORIZONTAL CURVE HAS BEEN PROPOSED. WHAT SUPERELEVATION AND SPIRAL LENGTHS DO YOU USE? WILL PASSENGER AND FREIGHT BE ABLE TO MAINTAIN THEIR CURRENT SPEEDS?

1. LOOK UP THE Ea AND Ls FOR A 2°-0'-0" CURVE AT 70 MPH IN THE STANDARD SPIRAL LENGTH TABLE FOR PASSENGER OPERATIONS, TABLE P3.5.

   Ea = 3.50", Ls = 300'

2. NOW CHECK CURVE FREIGHT SPEED AND ACTUAL ELEVATION FOR A 2°-0'-0" CURVE IN THE STANDARD SPIRAL LENGTH TABLE FOR FREIGHT OPERATIONS, TABLE F2.0.

   FOR 65 MPH: Ea = 4.00" AND Ls = 320'
   FOR 60 MPH: Ea = 3.25" AND Ls = 240'
   FOR 50 MPH: Ea = 1.50" AND Ls = 100'

3. THE CURVE WILL NEED TO HAVE 3.50 INCHES OF SUPERELEVATION AND THE SPIRALS WILL NEED TO BE 300 FEET BECAUSE THE PASSENGER REQUIREMENTS GOVERN IN THIS SITUATION. FREIGHT CAN CONTINUE TO OPERATE AT 50 MPH OR MAY BE INCREASED TO 60 MPH IF THIS SPEED CAN BE SUSTAINED FOR AT LEAST 2 MILES (CURVE DESIGN PROCEDURE NO. 13).

REV.	DATE	DESCRIPTION	DES.	ENG.
X	XX-XX-XX	REVISION	XX	XX

DRAWN BY: A. CARLOS DATE: 03/31/2011

ASSISTANT DIRECTOR: STANDARDS & DESIGN

DIRECTOR OF ENGINEERING AND CONSTRUCTION

SCRRA ENGINEERING STANDARDS ARE INTENDED FOR SCRRA APPROVED USES ONLY. FOR NON-SCRRA APPROVED USES.
SCRRA SHALL NOT BE RESPONSIBLE FOR THE ACCURACY OR COMPLETENESS OF THE DATA OR INFORMATION CONTAINED HEREIN. THE SELECTION AND USE OF THESE STANDARDS IS THE SOLE RESPONSIBILITY OF THE USER AND SHOULD NOT BE USED WITHOUT CONSULTING A REGISTERED PROFESSIONAL ENGINEER. ALL WARRANTIES AND REPRESENTATIONS OF ANY KIND ARE DISCLAIMED. ANYONE MAKING USE OF THIS INFORMATION AGREES THAT IT ASSUMES ALL LIABILITY ARISING FROM SUCH USE. NO PART OF THESE STANDARDS SHOULD BE REPRODUCED OR DISTRIBUTED IN ANY FORM OR BY ANY MEANS WITHOUT THE PRIOR WRITTEN PERMISSION OF SCRRA. ALL RIGHTS RESERVED.

METROLINK®
SOUTHERN CALIFORNIA REGIONAL RAIL AUTHORITY
ONE GATEWAY PLAZA, 12TH FLOOR, L. A., CA. 90012

ENGINEERING STANDARDS

CURVE SPEED, SUPERELEVATION AND SPIRAL LENGTH NOTES

STANDARD 2203
SCALE: NTS
REVISION –
SHEET 1 OF 1
CADD FILE: ES2203

TABLE P3.5 - 3.5 INCH UNBALANCED ELEVATION FOR PASSENGER OPERATIONS - STANDARD SPIRAL LENGTHS

ABBREVIATIONS

E = EQUILIBRIUM ELEVATION OF OUTSIDE RAIL (IN)	Vmax = MAXIMUM ALLOWABLE OPERATING SPEED (MPH)
Eu = UNBALANCED ELEVATION OF OUTSIDE RAIL (IN)	Ls = SPIRAL LENGTH (FT)
Ea = ACTUAL ELEVATION OF OUTSIDE RAIL (IN)	D = DEGREE OF CURVATURE (DECIMAL DEGREES)

FORMULAS

$E = 0.0007DVmax^2$	SPIRAL LENGTH; THE LONGEST OF:	Ls = 1.2VmaxEa
Ea = E - Eu		Ls = 62Ea
		Ls_{MIN} = 40'

CURVATURE - DEGREES AND MINUTES	MAXIMUM ALLOWABLE PASSENGER OPERATING SPEED - MILES PER HOUR																									
	20		25		30		35		40		45		50		60		70		80		90		100		110	
	Ea	Ls	Ea	Ls	Ea	Ls	Ea	Ls	Ea	Ls	Ea	Ls	Ea	Ls	Ea	Ls	Ea	Ls	Ea	Ls	Ea	Ls	Ea	Ls	Ea	Ls
0° 15'	0.00"	40'	0.00"	40'	0.00"	40'	0.00"	40'	0.00"	40'	0.00"	40'	0.00"	40'	0.00"	40'	0.00"	50'	0.00"	50'	0.00"	60'	0.00"	60'	0.00"	70'
0° 30'	0.00"	40'	0.00"	40'	0.00"	40'	0.00"	40'	0.00"	40'	0.00"	40'	0.00"	40'	0.00"	40'	0.00"	50'	0.00"	50'	0.00"	60'	0.00"	60'	0.75"	100'
0° 45'	0.00"	40'	0.00"	40'	0.00"	40'	0.00"	40'	0.00"	40'	0.00"	40'	0.00"	40'	0.00"	40'	0.00"	50'	0.00"	50'	1.00"	110'	1.75"	210'	3.00"	400'
1° 00'	0.00"	40'	0.00"	40'	0.00"	40'	0.00"	40'	0.00"	40'	0.00"	40'	0.00"	40'	0.00"	40'	0.00"	50'	1.00"	100'	2.25"	250'	3.50"	420'	5.00"	660'
1° 15'	0.00"	40'	0.00"	40'	0.00"	40'	0.00"	40'	0.00"	40'	0.00"	40'	0.00"	40'	0.00"	40'	1.00"	90'	2.25"	220'	3.75"	410'	5.25"	630'		
1° 30'	0.00"	40'	0.00"	40'	0.00"	40'	0.00"	40'	0.00"	40'	0.00"	40'	0.00"	40'	0.50"	40'	1.75"	150'	3.25"	320'	5.25"	570'				
1° 45'	0.00"	40'	0.00"	40'	0.00"	40'	0.00"	40'	0.00"	40'	0.00"	40'	0.00"	40'	1.00"	80'	2.75"	240'	4.50"	440'						
2° 00'	0.00"	40'	0.00"	40'	0.00"	40'	0.00"	40'	0.00"	40'	0.00"	40'	0.00"	40'	1.75"	130'	3.50"	300'	5.50"	530'						
2° 15'	0.00"	40'	0.00"	40'	0.00"	40'	0.00"	40'	0.00"	40'	0.00"	40'	0.50"	40'	2.25"	170'	4.25"	360'								
2° 30'	0.00"	40'	0.00"	40'	0.00"	40'	0.00"	40'	0.00"	40'	0.25"	40'	1.00"	70'	3.00"	220'	5.25"	450'								
2° 45'	0.00"	40'	0.00"	40'	0.00"	40'	0.00"	40'	0.00"	40'	0.50"	40'	1.50"	100'	3.50"	260'	6.00"	510'								
3° 00'	0.00"	40'	0.00"	40'	0.00"	40'	0.00"	40'	0.00"	40'	1.00"	70'	1.75"	110'	4.25"	310'										
3° 15'	0.00"	40'	0.00"	40'	0.00"	40'	0.00"	40'	0.25"	40'	1.25"	80'	2.25"	140'	4.75"	350'										
3° 30'	0.00"	40'	0.00"	40'	0.00"	40'	0.00"	40'	0.50"	40'	1.50"	100'	2.75"	180'	5.50"	400'										
3° 45'	0.00"	40'	0.00"	40'	0.00"	40'	0.00"	40'	0.75"	50'	2.00"	130'	3.25"	210'	6.00"	440'										
4° 00'	0.00"	40'	0.00"	40'	0.00"	40'	0.00"	40'	1.00"	70'	2.25"	140'	3.50"	220'												
4° 15'	0.00"	40'	0.00"	40'	0.00"	40'	0.25"	40'	1.50"	100'	2.75"	180'	4.00"	250'												
4° 30'	0.00"	40'	0.00"	40'	0.00"	40'	0.50"	40'	1.75"	110'	3.00"	190'	4.50"	280'												
4° 45'	0.00"	40'	0.00"	40'	0.00"	40'	0.75"	50'	2.00"	130'	3.25"	210'	5.00"	310'												
5° 00'	0.00"	40'	0.00"	40'	0.00"	40'	1.00"	70'	2.25"	140'	3.75"	240'	5.25"	330'												
5° 15'	0.00"	40'	0.00"	40'	0.00"	40'	1.25"	80'	2.50"	160'	4.00"	250'	5.75"	360'												
5° 30'	0.00"	40'	0.00"	40'	0.00"	40'	1.25"	80'	2.75"	180'	4.50"	280'														
5° 45'	0.00"	40'	0.00"	40'	0.25"	40'	1.50"	100'	3.00"	190'	4.75"	300'														
6° 00'	0.00"	40'	0.00"	40'	0.50"	40'	1.75"	110'	3.25"	210'	5.25"	330'														
6° 15'	0.00"	40'	0.00"	40'	0.50"	40'	2.00"	130'	3.50"	220'	5.50"	350'														
6° 30'	0.00"	40'	0.00"	40'	0.75"	50'	2.25"	140'	4.00"	250'	5.75"	360'														
6° 45'	0.00"	40'	0.00"	40'	1.00"	70'	2.50"	160'	4.25"	270'																
7° 00'	0.00"	40'	0.00"	40'	1.00"	70'	2.75"	180'	4.50"	280'																
7° 15'	0.00"	40'	0.00"	40'	1.25"	80'	2.75"	180'	4.75"	300'																
7° 30'	0.00"	40'	0.00"	40'	1.25"	80'	3.00"	190'	5.00"	310'																
7° 45'	0.00"	40'	0.00"	40'	1.50"	100'	3.25"	210'	5.25"	330'																
8° 00'	0.00"	40'	0.00"	40'	1.75"	110'	3.50"	220'	5.50"	350'																
8° 15'	0.00"	40'	0.25"	40'	1.75"	110'	3.75"	240'	5.75"	360'																
8° 30'	0.00"	40'	0.25"	40'	2.00"	130'	4.00"	250'																		
8° 45'	0.00"	40'	0.50"	40'	2.25"	140'	4.25"	270'																		
9° 00'	0.00"	40'	0.50"	40'	2.25"	140'	4.25"	270'																		
9° 15'	0.00"	40'	0.75"	50'	2.50"	160'	4.50"	280'																		
9° 30'	0.00"	40'	0.75"	50'	2.50"	160'	4.75"	300'																		
9° 45'	0.00"	40'	1.00"	70'	2.75"	180'	5.00"	310'																		
10° 00'	0.00"	40'	1.00"	70'	3.00"	190'	5.25"	330'																		
10° 15'	0.00"	40'	1.00"	70'	3.00"	190'	5.50"	350'																		
10° 30'	0.00"	40'	1.25"	80'	3.25"	210'	5.75"	360'																		
10° 45'	0.00"	40'	1.25"	80'	3.50"	220'	5.75"	360'																		
11° 00'	0.00"	40'	1.50"	100'	3.50"	220'	6.00"	380'																		
11° 15'	0.00"	40'	1.50"	100'	3.75"	240'																				
11° 30'	0.00"	40'	1.75"	110'	3.75"	240'																				
11° 45'	0.00"	40'	1.75"	110'	4.00"	250'																				
12° 00'	0.00"	40'	1.75"	110'	4.25"	270'																				

NOTES:

1. NO SPIRALS OR SUPERELEVATIONS WILL BE PERMITTED TO THE RIGHT OF HEAVY LINE WITHOUT PRIOR APPROVAL FROM THE SCRRA DIRECTOR OF ENGINEERING AND CONSTRUCTION.
2. WHERE CURVATURE IS MORE THAN 5 MINUTES MORE THAN A LISTED FIGURE, THE NEXT HIGHER ELEVATION AND RESULTING SPIRAL LENGTH WILL BE USED.

REV.	DATE	DESCRIPTION	DES.	ENG.
X	XX-XX-XX	REVISION	XX	XX

DRAWN BY: A. CARLOS DATE: 03/31/2011

ASSISTANT DIRECTOR: STANDARDS & DESIGN

DIRECTOR OF ENGINEERING AND CONSTRUCTION

SCRRA ENGINEERING STANDARDS ARE INTENDED FOR SCRRA APPROVED USES ONLY. FOR NON-SCRRA APPROVED USES:
SCRRA SHALL NOT BE RESPONSIBLE FOR THE ACCURACY OR COMPLETENESS OF THE DATA OR INFORMATION CONTAINED HEREIN. THE SELECTION AND USE OF THESE STANDARDS IS THE SOLE RESPONSIBILITY OF THE USER AND SHOULD NOT BE USED WITHOUT CONSULTING A REGISTERED PROFESSIONAL ENGINEER. ALL WARRANTIES AND REPRESENTATIONS OF ANY KIND ARE DISCLAIMED. ANYONE MAKING USE OF THIS INFORMATION AGREES THAT IT ASSUMES ALL LIABILITY ARISING FROM SUCH USE. NO PART OF THESE STANDARDS SHOULD BE REPRODUCED OR DISTRIBUTED IN ANY FORM OR BY ANY MEANS WITHOUT THE PRIOR WRITTEN PERMISSION OF SCRRA. ALL RIGHTS RESERVED.

METROLINK®
SOUTHERN CALIFORNIA REGIONAL RAIL AUTHORITY
ONE GATEWAY PLAZA, 12TH FLOOR, L. A., CA. 90012

ENGINEERING STANDARDS

TABLE P3.5 – 3.5 INCH UNBALANCED ELEVATION STANDARD SPIRAL LENGTH TABLE FOR PASSENGER OPERATIONS

STANDARD 2204
SCALE: NTS
REVISION –
SHEET 1 OF 6
CADD FILE: ES2204-01

TABLE F2.0 - 2.0 INCH UNBALANCED ELEVATION FOR FREIGHT OPERATIONS - STANDARD SPIRAL LENGTHS

ABBREVIATIONS

E = EQUILIBRIUM ELEVATION OF OUTSIDE RAIL (IN)	Vmax = MAXIMUM ALLOWABLE OPERATING SPEED (MPH)
Eu = UNBALANCED ELEVATION OF OUTSIDE RAIL (IN)	Ls = SPIRAL LENGTH (FT)
Ea = ACTUAL ELEVATION OF OUTSIDE RAIL (IN)	D = DEGREE OF CURVATURE (DECIMAL DEGREES)

FORMULAS

$E = 0.0007DV_{max}^2$

$E_a = E - E_u$

SPIRAL LENGTH; THE LONGEST OF:

$L_s = 1.2V_{max}E_a$

$L_s = 62E_a$

$L_{s_{MIN}} = 40'$

CURVATURE - DEGREES AND MINUTES	MAXIMUM ALLOWABLE FREIGHT OPERATING SPEED - MILES PER HOUR																									
	20		25		30		35		40		45		50		55		60		65		70		75		80	
	Ea	Ls	Ea	Ls	Ea	Ls	Ea	Ls	Ea	Ls	Ea	Ls	Ea	Ls	Ea	Ls	Ea	Ls	Ea	Ls	Ea	Ls	Ea	Ls	Ea	Ls
0° 15'	0.00"	40'	0.00"	40'	0.00"	40'	0.00"	40'	0.00"	40'	0.00"	40'	0.00"	40'	0.00"	40'	0.00"	40'	0.00"	40'	0.00"	50'	0.00"	50'	0.00"	50'
0° 30'	0.00"	40'	0.00"	40'	0.00"	40'	0.00"	40'	0.00"	40'	0.00"	40'	0.00"	40'	0.00"	40'	0.00"	40'	0.00"	40'	0.00"	50'	0.00"	50'	0.25"	50'
0° 45'	0.00"	40'	0.00"	40'	0.00"	40'	0.00"	40'	0.00"	40'	0.00"	40'	0.00"	40'	0.00"	40'	0.00"	40'	0.25"	40'	0.75"	70'	1.00"	90'	1.50"	150'
1° 00'	0.00"	40'	0.00"	40'	0.00"	40'	0.00"	40'	0.00"	40'	0.00"	40'	0.00"	40'	0.25"	40'	0.75"	60'	1.00"	80'	1.50"	130'	2.00"	180'	2.50"	240'
1° 15'	0.00"	40'	0.00"	40'	0.00"	40'	0.00"	40'	0.00"	40'	0.00"	40'	0.25"	40'	0.75"	50'	1.25"	90'	1.75"	140'	2.50"	210'	3.00"	270'	3.75"	360'
1° 30'	0.00"	40'	0.00"	40'	0.00"	40'	0.00"	40'	0.00"	40'	0.25"	40'	0.75"	50'	1.25"	90'	2.00"	150'	2.50"	200'	3.25"	280'	4.00"	360'	4.75"	460'
1° 45'	0.00"	40'	0.00"	40'	0.00"	40'	0.00"	40'	0.00"	40'	0.50"	40'	1.25"	80'	1.75"	120'	2.50"	180'	3.25"	260'	4.25"	360'	5.00"	450'	6.00"	580'
2° 00'	0.00"	40'	0.00"	40'	0.00"	40'	0.00"	40'	0.25"	40'	1.00"	70'	1.50"	100'	2.25"	150'	3.25"	240'	4.00"	320'	5.00"	420'	6.00"	540'		
2° 15'	0.00"	40'	0.00"	40'	0.00"	40'	0.00"	40'	0.75"	50'	1.25"	80'	2.00"	130'	3.00"	200'	3.75"	270'	4.75"	380'	5.75"	490'				
2° 30'	0.00"	40'	0.00"	40'	0.00"	40'	0.25"	40'	1.00"	70'	1.75"	110'	2.50"	160'	3.50"	240'	4.50"	330'	5.50"	430'						
2° 45'	0.00"	40'	0.00"	40'	0.00"	40'	0.50"	40'	1.25"	80'	2.00"	130'	3.00"	190'	4.00"	270'	5.00"	360'								
3° 00'	0.00"	40'	0.00"	40'	0.00"	40'	0.75"	50'	1.50"	100'	2.50"	160'	3.25"	210'	4.50"	300'	5.75"	420'								
3° 15'	0.00"	40'	0.00"	40'	0.25"	40'	1.00"	70'	1.75"	110'	2.75"	180'	3.75"	240'	5.00"	330'										
3° 30'	0.00"	40'	0.00"	40'	0.25"	40'	1.25"	80'	2.00"	130'	3.00"	190'	4.25"	270'	5.50"	370'										
3° 45'	0.00"	40'	0.00"	40'	0.50"	40'	1.25"	80'	2.25"	140'	3.50"	220'	4.75"	300'	6.00"	400'										
4° 00'	0.00"	40'	0.00"	40'	0.75"	50'	1.50"	100'	2.50"	160'	3.75"	240'	5.00"	310'												
4° 15'	0.00"	40'	0.00"	40'	0.75"	50'	1.75"	110'	3.00"	190'	4.25"	270'	5.50"	350'												
4° 30'	0.00"	40'	0.00"	40'	1.00"	70'	2.00"	130'	3.25"	210'	4.50"	280'	6.00"	380'												
4° 45'	0.00"	40'	0.25"	40'	1.00"	70'	2.25"	140'	3.50"	220'	4.75"	300'														
5° 00'	0.00"	40'	0.25"	40'	1.25"	80'	2.50"	160'	3.75"	240'	5.25"	330'														
5° 15'	0.00"	40'	0.50"	40'	1.50"	100'	2.75"	180'	4.00"	250'	5.50"	350'														
5° 30'	0.00"	40'	0.50"	40'	1.50"	100'	2.75"	180'	4.25"	270'	6.00"	380'														
5° 45'	0.00"	40'	0.75"	50'	1.75"	110'	3.00"	190'	4.50"	280'																
6° 00'	0.00"	40'	0.75"	50'	2.00"	130'	3.25"	210'	4.75"	300'																
6° 15'	0.00"	40'	0.75"	50'	2.00"	130'	3.50"	220'	5.00"	310'																
6° 30'	0.00"	40'	1.00"	70'	2.25"	140'	3.75"	240'	5.50"	350'																
6° 45'	0.00"	40'	1.00"	70'	2.50"	160'	4.00"	250'	5.75"	360'																
7° 00'	0.00"	40'	1.25"	80'	2.50"	160'	4.25"	270'	6.00"	380'																
7° 15'	0.25"	40'	1.25"	80'	2.75"	180'	4.25"	270'																		
7° 30'	0.25"	40'	1.50"	100'	2.75"	180'	4.50"	280'																		
7° 45'	0.25"	40'	1.50"	100'	3.00"	190'	4.75"	300'																		
8° 00'	0.25"	40'	1.50"	100'	3.25"	210'	5.00"	310'																		
8° 15'	0.50"	40'	1.75"	110'	3.25"	210'	5.25"	330'																		
8° 30'	0.50"	40'	1.75"	110'	3.50"	220'	5.50"	350'																		
8° 45'	0.50"	40'	2.00"	130'	3.75"	240'	5.75"	360'																		
9° 00'	0.75"	50'	2.00"	130'	3.75"	240'	5.75"	360'																		
9° 15'	0.75"	50'	2.25"	140'	4.00"	250'	6.00"	380'																		
9° 30'	0.75"	50'	2.25"	140'	4.00"	250'																				
9° 45'	0.75"	50'	2.50"	160'	4.25"	270'																				
10° 00'	1.00"	70'	2.50"	160'	4.50"	280'																				
10° 15'	1.00"	70'	2.50"	160'	4.50"	280'																				
10° 30'	1.00"	70'	2.75"	180'	4.75"	300'																				
10° 45'	1.25"	80'	2.75"	180'	5.00"	310'																				
11° 00'	1.25"	80'	3.00"	190'	5.00"	310'																				
11° 15'	1.25"	80'	3.00"	190'	5.25"	330'																				
11° 30'	1.25"	80'	3.25"	210'	5.25"	330'																				
11° 45'	1.50"	100'	3.25"	210'	5.50"	350'																				
12° 00'	1.50"	100'	3.25"	210'	5.75"	360'																				

NOTES:

1. NO SPIRALS OR SUPERELEVATIONS WILL BE PERMITTED TO THE RIGHT OF HEAVY LINE WITHOUT PRIOR APPROVAL FROM THE SCRRA DIRECTOR OF ENGINEERING AND CONSTRUCTION.
2. WHERE CURVATURE IS MORE THAN 5 MINUTES MORE THAN A LISTED FIGURE, THE NEXT HIGHER ELEVATION AND RESULTING SPIRAL LENGTH WILL BE USED.

REV.	DATE	DESCRIPTION	DES.	ENG.
X	XX-XX-XX	REVISION	XX	XX

DRAWN BY: A. CARLOS DATE: 03/31/2011

ASSISTANT DIRECTOR: STANDARDS & DESIGN

DIRECTOR OF ENGINEERING AND CONSTRUCTION

SCRRA ENGINEERING STANDARDS ARE INTENDED FOR SCRRA APPROVED USES ONLY. FOR NON-SCRRA APPROVED USES:
SCRRA SHALL NOT BE RESPONSIBLE FOR THE ACCURACY OR COMPLETENESS OF THE DATA OR INFORMATION CONTAINED HEREIN. THE SELECTION AND USE OF THESE STANDARDS IS THE SOLE RESPONSIBILITY OF THE USER AND SHOULD NOT BE USED WITHOUT CONSULTING A REGISTERED PROFESSIONAL ENGINEER. ALL WARRANTIES AND REPRESENTATIONS OF ANY KIND ARE DISCLAIMED. ANYONE MAKING USE OF THIS INFORMATION AGREES THAT IT ASSUMES ALL LIABILITY ARISING FROM SUCH USE. NO PART OF THESE STANDARDS SHOULD BE REPRODUCED OR DISTRIBUTED IN ANY FORM OR BY ANY MEANS WITHOUT THE PRIOR WRITTEN PERMISSION OF SCRRA. ALL RIGHTS RESERVED.

METROLINK®
SOUTHERN CALIFORNIA REGIONAL RAIL AUTHORITY
ONE GATEWAY PLAZA, 12TH FLOOR, L. A., CA. 90012

ENGINEERING STANDARDS

TABLE F2.0 – 2.0 INCH UNBALANCED ELEVATION
STANDARD SPIRAL LENGTH TABLE
FOR FREIGHT OPERATIONS

STANDARD 2204
SCALE: NTS
REVISION –
SHEET 2 OF 6
CADD FILE: ES2204-02

TABLE P3.5M - 3.5 INCH UNBALANCED ELEVATION FOR PASSENGER OPERATIONS - MINIMUM SPIRAL LENGTHS

ABBREVIATIONS

E = EQUILIBRIUM ELEVATION OF OUTSIDE RAIL (IN)
Eu = UNBALANCED ELEVATION OF OUTSIDE RAIL (IN)
Ea = ACTUAL ELEVATION OF OUTSIDE RAIL (IN)
Vmax = MAXIMUM ALLOWABLE OPERATING SPEED (MPH)
Ls = SPIRAL LENGTH (FT)
D = DEGREE OF CURVATURE (DECIMAL DEGREES)

FORMULAS

$E = 0.0007DV_{max}^2$
$Ea = E - Eu$
SPIRAL LENGTH; THE LONGEST OF:
$Ls = 1.0V_{max}Ea$
$Ls = 50Ea$
$Ls_{MIN} = 30'$

CURVATURE - DEGREES AND MINUTES	MAXIMUM ALLOWABLE PASSENGER OPERATING SPEED - MILES PER HOUR																									
	20		25		30		35		40		45		50		60		70		80		90		100		110	
	Ea	Ls	Ea	Ls	Ea	Ls	Ea	Ls	Ea	Ls	Ea	Ls	Ea	Ls	Ea	Ls	Ea	Ls	Ea	Ls	Ea	Ls	Ea	Ls	Ea	Ls
0° 15'	0.00"	30'	0.00"	30'	0.00"	30'	0.00"	30'	0.00"	30'	0.00"	30'	0.00"	30'	0.00"	30'	0.00"	40'	0.00"	40'	0.00"	50'	0.00"	50'	0.00"	60'
0° 30'	0.00"	30'	0.00"	30'	0.00"	30'	0.00"	30'	0.00"	30'	0.00"	30'	0.00"	30'	0.00"	30'	0.00"	40'	0.00"	40'	0.00"	50'	0.00"	50'	0.75"	90'
0° 45'	0.00"	30'	0.00"	30'	0.00"	30'	0.00"	30'	0.00"	30'	0.00"	30'	0.00"	30'	0.00"	30'	0.00"	40'	0.00"	40'	1.00"	90'	1.75"	180'	3.00"	330'
1° 00'	0.00"	30'	0.00"	30'	0.00"	30'	0.00"	30'	0.00"	30'	0.00"	30'	0.00"	30'	0.00"	30'	0.00"	40'	1.00"	80'	2.25"	210'	3.50"	350'	5.00"	550'
1° 15'	0.00"	30'	0.00"	30'	0.00"	30'	0.00"	30'	0.00"	30'	0.00"	30'	0.00"	30'	0.00"	30'	1.00"	70'	2.25"	180'	3.75"	340'	5.25"	530'		
1° 30'	0.00"	30'	0.00"	30'	0.00"	30'	0.00"	30'	0.00"	30'	0.00"	30'	0.00"	30'	0.50"	30'	1.75"	130'	3.25"	260'	5.25"	480'				
1° 45'	0.00"	30'	0.00"	30'	0.00"	30'	0.00"	30'	0.00"	30'	0.00"	30'	0.00"	30'	1.00"	60'	2.75"	200'	4.50"	360'						
2° 00'	0.00"	30'	0.00"	30'	0.00"	30'	0.00"	30'	0.00"	30'	0.00"	30'	0.00"	30'	1.75"	110'	3.50"	250'	5.50"	440'						
2° 15'	0.00"	30'	0.00"	30'	0.00"	30'	0.00"	30'	0.00"	30'	0.00"	30'	0.50"	30'	2.25"	140'	4.25"	300'								
2° 30'	0.00"	30'	0.00"	30'	0.00"	30'	0.00"	30'	0.00"	30'	0.25"	30'	1.00"	50'	3.00"	180'	5.25"	370'								
2° 45'	0.00"	30'	0.00"	30'	0.00"	30'	0.00"	30'	0.00"	30'	0.50"	30'	1.50"	80'	3.50"	210'	6.00"	420'								
3° 00'	0.00"	30'	0.00"	30'	0.00"	30'	0.00"	30'	0.00"	30'	1.00"	50'	1.75"	90'	4.25"	260'										
3° 15'	0.00"	30'	0.00"	30'	0.00"	30'	0.00"	30'	0.25"	30'	1.25"	70'	2.25"	120'	4.75"	290'										
3° 30'	0.00"	30'	0.00"	30'	0.00"	30'	0.00"	30'	0.50"	30'	1.50"	80'	2.75"	140'	5.50"	330'										
3° 45'	0.00"	30'	0.00"	30'	0.00"	30'	0.00"	30'	0.75"	40'	2.00"	100'	3.25"	170'	6.00"	360'										
4° 00'	0.00"	30'	0.00"	30'	0.00"	30'	0.00"	30'	1.00"	50'	2.25"	120'	3.50"	180'												
4° 15'	0.00"	30'	0.00"	30'	0.00"	30'	0.25"	30'	1.50"	80'	2.75"	140'	4.00"	200'												
4° 30'	0.00"	30'	0.00"	30'	0.00"	30'	0.50"	30'	1.75"	90'	3.00"	150'	4.50"	230'												
4° 45'	0.00"	30'	0.00"	30'	0.00"	30'	0.75"	40'	2.00"	100'	3.25"	170'	5.00"	250'												
5° 00'	0.00"	30'	0.00"	30'	0.00"	30'	1.00"	50'	2.25"	120'	3.75"	190'	5.25"	270'												
5° 15'	0.00"	30'	0.00"	30'	0.00"	30'	1.25"	70'	2.50"	130'	4.00"	200'	5.75"	290'												
5° 30'	0.00"	30'	0.00"	30'	0.00"	30'	1.25"	70'	2.75"	140'	4.50"	230'														
5° 45'	0.00"	30'	0.00"	30'	0.25"	30'	1.50"	80'	3.00"	150'	4.75"	240'														
6° 00'	0.00"	30'	0.00"	30'	0.50"	30'	1.75"	90'	3.25"	170'	5.25"	270'														
6° 15'	0.00"	30'	0.00"	30'	0.50"	30'	2.00"	100'	3.50"	180'	5.50"	280'														
6° 30'	0.00"	30'	0.00"	30'	0.75"	40'	2.25"	120'	4.00"	200'	5.75"	290'														
6° 45'	0.00"	30'	0.00"	30'	1.00"	50'	2.50"	130'	4.25"	220'																
7° 00'	0.00"	30'	0.00"	30'	1.00"	50'	2.75"	140'	4.50"	230'																
7° 15'	0.00"	30'	0.00"	30'	1.25"	70'	2.75"	140'	4.75"	240'																
7° 30'	0.00"	30'	0.00"	30'	1.25"	70'	3.00"	150'	5.00"	250'																
7° 45'	0.00"	30'	0.00"	30'	1.50"	80'	3.25"	170'	5.25"	270'																
8° 00'	0.00"	30'	0.00"	30'	1.75"	90'	3.50"	180'	5.50"	280'																
8° 15'	0.00"	30'	0.25"	30'	1.75"	90'	3.75"	190'	5.75"	290'																
8° 30'	0.00"	30'	0.25"	30'	2.00"	100'	4.00"	200'																		
8° 45'	0.00"	30'	0.50"	30'	2.25"	120'	4.25"	220'																		
9° 00'	0.00"	30'	0.50"	30'	2.25"	120'	4.25"	220'																		
9° 15'	0.00"	30'	0.75"	40'	2.50"	130'	4.50"	230'																		
9° 30'	0.00"	30'	0.75"	40'	2.50"	130'	4.75"	240'																		
9° 45'	0.00"	30'	1.00"	50'	2.75"	140'	5.00"	250'																		
10° 00'	0.00"	30'	1.00"	50'	3.00"	150'	5.25"	270'																		
10° 15'	0.00"	30'	1.00"	50'	3.00"	150'	5.50"	280'																		
10° 30'	0.00"	30'	1.25"	70'	3.25"	170'	5.75"	290'																		
10° 45'	0.00"	30'	1.25"	70'	3.50"	180'	5.75"	290'																		
11° 00'	0.00"	30'	1.50"	80'	3.50"	180'	6.00"	300'																		
11° 15'	0.00"	30'	1.50"	80'	3.75"	190'																				
11° 30'	0.00"	30'	1.75"	90'	3.75"	190'																				
11° 45'	0.00"	30'	1.75"	90'	4.00"	200'																				
12° 00'	0.00"	30'	1.75"	90'	4.25"	220'																				

NOTES:

1. NO SPIRALS OR SUPERELEVATIONS WILL BE PERMITTED TO THE RIGHT OF HEAVY LINE WITHOUT PRIOR APPROVAL FROM THE SCRRA DIRECTOR OF ENGINEERING AND CONSTRUCTION.
2. THIS TABLE MAY ONLY BE USED ON THE VENTURA AND ANTELOPE VALLEY SUBDIVISIONS AT LOCATIONS WHERE STANDARD SPIRAL LENGTHS CAN NOT BE OBTAINED DUE TO EXISTING FIELD CONDITIONS.
3. WHERE CURVATURE IS MORE THAN 5 MINUTES MORE THAN A LISTED FIGURE, THE NEXT HIGHER ELEVATION AND RESULTING SPIRAL LENGTH WILL BE USED.

REV.	DATE	DESCRIPTION	DES.	ENG.
X	XX-XX-XX	REVISION	XX	XX

DRAWN BY: A. CARLOS DATE: 03/31/2011

ASSISTANT DIRECTOR: STANDARDS & DESIGN

DIRECTOR OF ENGINEERING AND CONSTRUCTION

SCRRA ENGINEERING STANDARDS ARE INTENDED FOR SCRRA APPROVED USES ONLY. FOR NON-SCRRA APPROVED USES:
SCRRA SHALL NOT BE RESPONSIBLE FOR THE ACCURACY OR COMPLETENESS OF THE DATA OR INFORMATION CONTAINED HEREIN. THE SELECTION AND USE OF THESE STANDARDS IS THE SOLE RESPONSIBILITY OF THE USER AND SHOULD NOT BE USED WITHOUT CONSULTING A REGISTERED PROFESSIONAL ENGINEER. ALL WARRANTIES AND REPRESENTATIONS OF ANY KIND ARE DISCLAIMED. ANYONE MAKING USE OF THIS INFORMATION AGREES THAT IT ASSUMES ALL LIABILITY ARISING FROM SUCH USE. NO PART OF THESE STANDARDS SHOULD BE REPRODUCED OR DISTRIBUTED IN ANY FORM OR BY ANY MEANS WITHOUT THE PRIOR WRITTEN PERMISSION OF SCRRA. ALL RIGHTS RESERVED.

METROLINK®
SOUTHERN CALIFORNIA REGIONAL RAIL AUTHORITY
ONE GATEWAY PLAZA, 12TH FLOOR, L. A., CA. 90012

ENGINEERING STANDARDS

TABLE P3.5M – 3.5 INCH UNBALANCED ELEVATION MINIMUM SPIRAL LENGTH TABLE FOR PASSENGER OPERATIONS

STANDARD 2204
SCALE: NTS
REVISION –
SHEET 3 OF 6
CADD FILE: ES2204-03

TABLE F2.0M - 2.0 INCH UNBALANCED ELEVATION FOR FREIGHT OPERATIONS - MINIMUM SPIRAL LENGTHS

ABBREVIATIONS

E = EQUILIBRIUM ELEVATION OF OUTSIDE RAIL (IN)
Eu = UNBALANCED ELEVATION OF OUTSIDE RAIL (IN)
Ea = ACTUAL ELEVATION OF OUTSIDE RAIL (IN)
Vmax = MAXIMUM ALLOWABLE OPERATING SPEED (MPH)
Ls = SPIRAL LENGTH (FT)
D = DEGREE OF CURVATURE (DECIMAL DEGREES)

FORMULAS

$E = 0.0007DV_{max}^2$
$Ea = E - Eu$
SPIRAL LENGTH; THE LONGEST OF:
$Ls = 1.0V_{max}Ea$
$Ls = 50Ea$
$Ls_{MIN} = 30'$

CURVATURE - DEGREES AND MINUTES	MAXIMUM ALLOWABLE FREIGHT OPERATING SPEED - MILES PER HOUR																									
	20		25		30		35		40		45		50		55		60		65		70		75		80	
	Ea	Ls	Ea	Ls	Ea	Ls	Ea	Ls	Ea	Ls	Ea	Ls	Ea	Ls	Ea	Ls	Ea	Ls	Ea	Ls	Ea	Ls	Ea	Ls	Ea	Ls
0° 15'	0.00"	30'	0.00"	30'	0.00"	30'	0.00"	30'	0.00"	30'	0.00"	30'	0.00"	30'	0.00"	30'	0.00"	30'	0.00"	40'	0.00"	40'	0.00"	40'	0.00"	40'
0° 30'	0.00"	30'	0.00"	30'	0.00"	30'	0.00"	30'	0.00"	30'	0.00"	30'	0.00"	30'	0.00"	30'	0.00"	30'	0.00"	40'	0.00"	40'	0.00"	40'	0.25"	40'
0° 45'	0.00"	30'	0.00"	30'	0.00"	30'	0.00"	30'	0.00"	30'	0.00"	30'	0.00"	30'	0.00"	30'	0.00"	30'	0.25"	40'	0.75"	60'	1.00"	80'	1.50"	120'
1° 00'	0.00"	30'	0.00"	30'	0.00"	30'	0.00"	30'	0.00"	30'	0.00"	30'	0.00"	30'	0.25"	30'	0.75"	50'	1.00"	70'	1.50"	110'	2.00"	150'	2.50"	200'
1° 15'	0.00"	30'	0.00"	30'	0.00"	30'	0.00"	30'	0.00"	30'	0.00"	30'	0.25"	30'	0.75"	50'	1.25"	80'	1.75"	120'	2.50"	180'	3.00"	230'	3.75"	300'
1° 30'	0.00"	30'	0.00"	30'	0.00"	30'	0.00"	30'	0.00"	30'	0.25"	30'	0.75"	40'	1.25"	70'	2.00"	120'	2.50"	170'	3.25"	230'	4.00"	300'	4.75"	380'
1° 45'	0.00"	30'	0.00"	30'	0.00"	30'	0.00"	30'	0.00"	30'	0.50"	30'	1.25"	70'	1.75"	100'	2.50"	150'	3.25"	220'	4.25"	300'	5.00"	380'	6.00"	480'
2° 00'	0.00"	30'	0.00"	30'	0.00"	30'	0.00"	30'	0.25"	30'	1.00"	50'	1.50"	80'	2.25"	130'	3.25"	200'	4.00"	260'	5.00"	350'	6.00"	450'		
2° 15'	0.00"	30'	0.00"	30'	0.00"	30'	0.00"	30'	0.75"	40'	1.25"	70'	2.00"	100'	3.00"	170'	3.75"	230'	4.75"	310'	5.75"	410'				
2° 30'	0.00"	30'	0.00"	30'	0.00"	30'	0.25"	30'	1.00"	50'	1.75"	90'	2.50"	130'	3.50"	200'	4.50"	270'	5.50"	360'						
2° 45'	0.00"	30'	0.00"	30'	0.00"	30'	0.50"	30'	1.25"	70'	2.00"	100'	3.00"	150'	4.00"	220'	5.00"	300'								
3° 00'	0.00"	30'	0.00"	30'	0.00"	30'	0.75"	40'	1.50"	80'	2.50"	130'	3.25"	170'	4.50"	250'	5.75"	350'								
3° 15'	0.00"	30'	0.00"	30'	0.25"	30'	1.00"	50'	1.75"	90'	2.75"	140'	3.75"	190'	5.00"	280'										
3° 30'	0.00"	30'	0.00"	30'	0.25"	30'	1.25"	70'	2.00"	100'	3.00"	150'	4.25"	220'	5.50"	310'										
3° 45'	0.00"	30'	0.00"	30'	0.50"	30'	1.25"	70'	2.25"	120'	3.50"	180'	4.75"	240'	6.00"	330'										
4° 00'	0.00"	30'	0.00"	30'	0.75"	40'	1.50"	80'	2.50"	130'	3.75"	190'	5.00"	250'												
4° 15'	0.00"	30'	0.00"	30'	0.75"	40'	1.75"	90'	3.00"	150'	4.25"	220'	5.50"	280'												
4° 30'	0.00"	30'	0.00"	30'	1.00"	50'	2.00"	100'	3.25"	170'	4.50"	230'	6.00"	300'												
4° 45'	0.00"	30'	0.25"	30'	1.00"	50'	2.25"	120'	3.50"	180'	4.75"	240'														
5° 00'	0.00"	30'	0.25"	30'	1.25"	70'	2.50"	130'	3.75"	190'	5.25"	270'														
5° 15'	0.00"	30'	0.50"	30'	1.50"	80'	2.75"	140'	4.00"	200'	5.50"	280'														
5° 30'	0.00"	30'	0.50"	30'	1.50"	80'	2.75"	140'	4.25"	220'	6.00"	300'														
5° 45'	0.00"	30'	0.75"	40'	1.75"	90'	3.00"	150'	4.50"	230'																
6° 00'	0.00"	30'	0.75"	40'	2.00"	100'	3.25"	170'	4.75"	240'																
6° 15'	0.00"	30'	0.75"	40'	2.00"	100'	3.50"	180'	5.00"	250'																
6° 30'	0.00"	30'	1.00"	50'	2.25"	120'	3.75"	190'	5.50"	280'																
6° 45'	0.00"	30'	1.00"	50'	2.50"	130'	4.00"	200'	5.75"	290'																
7° 00'	0.00"	30'	1.25"	70'	2.50"	130'	4.25"	220'	6.00"	300'																
7° 15'	0.25"	30'	1.25"	70'	2.75"	140'	4.25"	220'																		
7° 30'	0.25"	30'	1.50"	80'	2.75"	140'	4.50"	230'																		
7° 45'	0.25"	30'	1.50"	80'	3.00"	150'	4.75"	240'																		
8° 00'	0.25"	30'	1.50"	80'	3.25"	170'	5.00"	250'																		
8° 15'	0.50"	30'	1.75"	90'	3.25"	170'	5.25"	270'																		
8° 30'	0.50"	30'	1.75"	90'	3.50"	180'	5.50"	280'																		
8° 45'	0.50"	30'	2.00"	100'	3.75"	190'	5.75"	290'																		
9° 00'	0.75"	40'	2.00"	100'	3.75"	190'	5.75"	290'																		
9° 15'	0.75"	40'	2.25"	120'	4.00"	200'	6.00"	300'																		
9° 30'	0.75"	40'	2.25"	120'	4.00"	200'																				
9° 45'	0.75"	40'	2.50"	130'	4.25"	220'																				
10° 00'	1.00"	50'	2.50"	130'	4.50"	230'																				
10° 15'	1.00"	50'	2.50"	130'	4.50"	230'																				
10° 30'	1.00"	50'	2.75"	140'	4.75"	240'																				
10° 45'	1.25"	70'	2.75"	140'	5.00"	250'																				
11° 00'	1.25"	70'	3.00"	150'	5.00"	250'																				
11° 15'	1.25"	70'	3.00"	150'	5.25"	270'																				
11° 30'	1.25"	70'	3.25"	170'	5.25"	270'																				
11° 45'	1.50"	80'	3.25"	170'	5.50"	280'																				
12° 00'	1.50"	80'	3.25"	170'	5.75"	290'																				

NOTES:

1. NO SPIRALS OR SUPERELEVATIONS WILL BE PERMITTED TO THE RIGHT OF HEAVY LINE WITHOUT PRIOR APPROVAL FROM THE SCRRA DIRECTOR OF ENGINEERING AND CONSTRUCTION.
2. THIS TABLE MAY ONLY BE USED ON THE VENTURA AND ANTELOPE VALLEY SUBDIVISIONS AT LOCATIONS WHERE STANDARD SPIRAL LENGTHS CAN NOT BE OBTAINED DUE TO EXISTING FIELD CONDITIONS.
3. WHERE CURVATURE IS MORE THAN 5 MINUTES MORE THAN A LISTED FIGURE, THE NEXT HIGHER ELEVATION AND RESULTING SPIRAL LENGTH WILL BE USED.

REV.	DATE	DESCRIPTION	DES.	ENG.
X	XX-XX-XX	REVISION	XX	XX

DRAWN BY: A. CARLOS DATE: 03/31/2011

ASSISTANT DIRECTOR: STANDARDS & DESIGN

DIRECTOR OF ENGINEERING AND CONSTRUCTION

SCRRA ENGINEERING STANDARDS ARE INTENDED FOR SCRRA APPROVED USES ONLY. FOR NON-SCRRA APPROVED USES:
SCRRA SHALL NOT BE RESPONSIBLE FOR THE ACCURACY OR COMPLETENESS OF THE DATA OR INFORMATION CONTAINED HEREIN. THE SELECTION AND USE OF THESE STANDARDS IS THE SOLE RESPONSIBILITY OF THE USER AND SHOULD NOT BE USED WITHOUT CONSULTING A REGISTERED PROFESSIONAL ENGINEER. ALL WARRANTIES AND REPRESENTATIONS OF ANY KIND ARE DISCLAIMED. ANYONE MAKING USE OF THIS INFORMATION AGREES THAT IT ASSUMES ALL LIABILITY ARISING FROM SUCH USE. NO PART OF THESE STANDARDS SHOULD BE REPRODUCED OR DISTRIBUTED IN ANY FORM OR BY ANY MEANS WITHOUT THE PRIOR WRITTEN PERMISSION OF SCRRA. ALL RIGHTS RESERVED.

METROLINK®
SOUTHERN CALIFORNIA REGIONAL RAIL AUTHORITY
ONE GATEWAY PLAZA, 12TH FLOOR, L. A., CA. 90012

ENGINEERING STANDARDS

TABLE F2.0M – 2.0 INCH UNBALANCED ELEVATION MINIMUM SPIRAL LENGTH TABLE FOR FREIGHT OPERATIONS

STANDARD 2204
SCALE: NTS
REVISION –
SHEET 4 OF 6
CADD FILE: ES2204-04

TABLE PML - 4.0 INCH UNBALANCED ELEVATION FOR PASSENGER OPERATIONS - MAINTENANCE LIMIT

ABBREVIATIONS	
E = EQUILIBRIUM ELEVATION OF OUTSIDE RAIL (IN)	Vmax = MAXIMUM ALLOWABLE OPERATING SPEED (MPH)
Eu = UNBALANCED ELEVATION OF OUTSIDE RAIL (IN)	Ls = SPIRAL LENGTH (FT)
Ea = ACTUAL ELEVATION OF OUTSIDE RAIL (IN)	D = DEGREE OF CURVATURE (DECIMAL DEGREES)

FORMULAS
$E = 0.0007DVmax^2$
Ea = E - Eu

CURVATURE - DEGREES AND MINUTES	MAXIMUM ALLOWABLE PASSENGER OPERATING SPEED - MILES PER HOUR																		
	20	25	30	35	40	45	50	55	60	65	70	75	80	85	90	95	100	105	110
0° 15'	0.00"	0.00"	0.00"	0.00"	0.00"	0.00"	0.00"	0.00"	0.00"	0.00"	0.00"	0.00"	0.00"	0.00"	0.00"	0.00"	0.00"	0.00"	0.00"
0° 30'	0.00"	0.00"	0.00"	0.00"	0.00"	0.00"	0.00"	0.00"	0.00"	0.00"	0.00"	0.00"	0.00"	0.00"	0.00"	0.00"	0.00"	0.00"	0.25"
0° 45'	0.00"	0.00"	0.00"	0.00"	0.00"	0.00"	0.00"	0.00"	0.00"	0.00"	0.00"	0.00"	0.00"	0.00"	0.50"	0.75"	1.25"	2.00"	2.50"
1° 00'	0.00"	0.00"	0.00"	0.00"	0.00"	0.00"	0.00"	0.00"	0.00"	0.00"	0.00"	0.00"	0.50"	1.25"	1.75"	2.50"	3.00"	3.75"	4.50"
1° 15'	0.00"	0.00"	0.00"	0.00"	0.00"	0.00"	0.00"	0.00"	0.00"	0.00"	0.50"	1.00"	1.75"	2.50"	3.25"	4.00"	4.75"	5.75"	
1° 30'	0.00"	0.00"	0.00"	0.00"	0.00"	0.00"	0.00"	0.00"	0.00"	0.50"	1.25"	2.00"	2.75"	3.75"	4.75"	5.50"			
1° 45'	0.00"	0.00"	0.00"	0.00"	0.00"	0.00"	0.00"	0.00"	0.50"	1.25"	2.25"	3.00"	4.00"	5.00"	6.00"				
2° 00'	0.00"	0.00"	0.00"	0.00"	0.00"	0.00"	0.00"	0.25"	1.25"	2.00"	3.00"	4.00"	5.00"						
2° 15'	0.00"	0.00"	0.00"	0.00"	0.00"	0.00"	0.00"	1.00"	1.75"	2.75"	3.75"	5.00"							
2° 30'	0.00"	0.00"	0.00"	0.00"	0.00"	0.00"	0.50"	1.50"	2.50"	3.50"	4.75"	6.00"							
2° 45'	0.00"	0.00"	0.00"	0.00"	0.00"	0.00"	1.00"	2.00"	3.00"	4.25"	5.50"								
3° 00'	0.00"	0.00"	0.00"	0.00"	0.00"	0.50"	1.25"	2.50"	3.75"	5.00"									
3° 15'	0.00"	0.00"	0.00"	0.00"	0.00"	0.75"	1.75"	3.00"	4.25"	5.75"									
3° 30'	0.00"	0.00"	0.00"	0.00"	0.00"	1.00"	2.25"	3.50"	5.00"										
3° 45'	0.00"	0.00"	0.00"	0.00"	0.25"	1.50"	2.75"	4.00"	5.50"										
4° 00'	0.00"	0.00"	0.00"	0.00"	0.50"	1.75"	3.00"	4.50"											
4° 15'	0.00"	0.00"	0.00"	0.00"	1.00"	2.25"	3.50"	5.00"											
4° 30'	0.00"	0.00"	0.00"	0.00"	1.25"	2.50"	4.00"	5.75"											
4° 45'	0.00"	0.00"	0.00"	0.25"	1.50"	2.75"	4.50"												
5° 00'	0.00"	0.00"	0.00"	0.50"	1.75"	3.25"	4.75"												
5° 15'	0.00"	0.00"	0.00"	0.75"	2.00"	3.50"	5.25"												
5° 30'	0.00"	0.00"	0.00"	0.75"	2.25"	4.00"	5.75"												
5° 45'	0.00"	0.00"	0.00"	1.00"	2.50"	4.25"													
6° 00'	0.00"	0.00"	0.00"	1.25"	2.75"	4.75"													
6° 15'	0.00"	0.00"	0.00"	1.50"	3.00"	5.00"													
6° 30'	0.00"	0.00"	0.25"	1.75"	3.50"	5.25"													
6° 45'	0.00"	0.00"	0.50"	2.00"	3.75"	5.75"													
7° 00'	0.00"	0.00"	0.50"	2.25"	4.00"	6.00"													
7° 15'	0.00"	0.00"	0.75"	2.25"	4.25"														
7° 30'	0.00"	0.00"	0.75"	2.50"	4.50"														
7° 45'	0.00"	0.00"	1.00"	2.75"	4.75"														
8° 00'	0.00"	0.00"	1.25"	3.00"	5.00"														
8° 15'	0.00"	0.00"	1.25"	3.25"	5.25"														
8° 30'	0.00"	0.00"	1.50"	3.50"	5.75"														
8° 45'	0.00"	0.00"	1.75"	3.75"	6.00"														
9° 00'	0.00"	0.00"	1.75"	3.75"															
9° 15'	0.00"	0.25"	2.00"	4.00"															
9° 30'	0.00"	0.25"	2.00"	4.25"															
9° 45'	0.00"	0.50"	2.25"	4.50"															
10° 00'	0.00"	0.50"	2.50"	4.75"															
10° 15'	0.00"	0.50"	2.50"	5.00"															
10° 30'	0.00"	0.75"	2.75"	5.25"															
10° 45'	0.00"	0.75"	3.00"	5.25"															
11° 00'	0.00"	1.00"	3.00"	5.50"															
11° 15'	0.00"	1.00"	3.25"	5.75"															
11° 30'	0.00"	1.25"	3.25"	6.00"															
11° 45'	0.00"	1.25"	3.50"																
12° 00'	0.00"	1.25"	3.75"																

NOTES:

1. AT ALL TIMES THE TRACK MUST BE IN CONFORMANCE WITH 49CFR213. TABLES P3.5 AND P3.5M DEFINE THE LIMITING DESIGN SPEED FOR PASSENGER TRAINS. TABLES F2.0 AND F2.0M DEFINE THE LIMITING DESIGN SPEED FOR FREIGHT TRAINS. OPERATION AT SPEEDS RESULTING IN 4 INCHES UNDERBALANCE IS PERMITTED FOR SCRRA AND AMTRAK PASSENGER TRAINS EXCEPT WHEN ADVISED THAT SEVERE WIND CONDITIONS EXIST. 3 INCHES UNDERBALANCE IS THE LIMITING CONDITION FOR ALL FREIGHT TRAINS AND FOR PASSENGER TRAINS UNDER SEVERE WIND CONDITIONS. ANY COMBINATION OF CURVATURE OR ACTUAL ELEVATION THAT IS DISCOVERED OR CREATED THAT RESULTS IN THE OPERATING SPEED TO EXCEED THE SPEED PERMITTED BY THESE TABLES REQUIRES IMMEDIATE REMEDIAL ACTION.
2. SOME CURVES WERE CONSTRUCTED AND SPEEDS ESTABLISHED WITH UNDERBALANCE FOR PASSENGER SPEEDS BETWEEN THE 3.5 INCH DESIGN VALUE OF TABLES P3.5 AND P3.5M AND THE 4 INCH LIMITING VALUE PER THE FRA. CURVES WITH THESE CHARACTERISTICS WILL BE MAINTAINED AS DESIGNED.
3. SUPERELEVATION AND SPIRAL LENGTHS WILL BE MAINTAINED TO THE VALUES RECORDED IN THE SCRRA TRACK CHARTS. SOME OF THESE DO NOT MEET THE LENGTH REQUIREMENTS FOR THE TABLES FOR NEW DESIGN, P3.5 AND F2.0. HOWEVER, THEY DO MEET THE REQUIREMENTS FOR THE P3.5M AND P2.0M TABLES.
4. SPIRAL LENGTHS MUST NOT BE INCREASED EXCEPT AS PART OF AN ENGINEERED REALIGNMENT OF A CURVE. THE SHARPNESS OF THE CURVE IN THE CENTRAL BODY WILL BE INCREASED IF THE SPIRALS ARE EXTENDED INTO THE BODY OF THE CURVE.
5. CONTRACT TRACK INSPECTORS WILL FIELD VERIFY THE CHARACTERISTICS OF AT LEAST TWO CURVES EACH MONTH, USING TRACK LEVEL AND STRING LINE, REPORTING THE OBSERVED 62-FOOT CHORD MID-ORDINATE AND SUPERELEVATION AT 15.5-FOOT INTERVALS FOR THE LENGTH OF THE CURVE. THE MANAGERS OF TRACK MAINTENANCE AND THE CONTRACT PROJECT MANAGER WILL REVIEW AND COMPARE THE PRECEDING TWO YEARS OF TRACK GEOMETRY DATA TO THE TRACK CHART DATA, AND WILL ARRANGE FOR FIELD VERIFICATION OF ALIGNMENT BASED UPON THESE REVIEWS.
6. MANAGERS OF TRACK MAINTENANCE MUST RIDE WITH EACH OPERATION OF TRACK GEOMETRY CARS. THEY MUST MONITOR AND ENSURE THAT THE MAINTENANCE CONTRACTOR INVESTIGATES ANY NOTED REPORTS OF WARP OR UNDERBALANCE EXCEPTIONS AND TAKES THE REQUIRED REMEDIAL ACTIONS (SPOT REPAIRS OR REDUCTION IN SPEED). THEY MUST ALSO PROMPTLY REVIEW THE CURVE DATA GENERATED BY THE TRACK GEOMETRY CAR AND COMPARE THE AVERAGE CURVATURE, AVERAGE ELEVATION, LIMITING CURVATURE AND LIMITING ELEVATION FOR EACH CURVE TO THE RECORDS IN THE TRACK CHARTS WHETHER AN EXCEPTION IS NOTED OR NOT.
7. COMPOUND CURVES DESCRIBED IN THE TRACK CHARTS THAT HAVE DIFFERING TRAIN SPEED, SUPERELEVATION, AND/OR CURVATURE NOTED FOR TWO OR MORE SEGMENTS OF ONE CURVE HAVE BEEN APPROVED BY THE SCRRA DIRECTOR OF ENGINEERING AND CONSTRUCTION.
8. IF THE ACTUAL SUPERELEVATION AND CURVATURE MEASURED IN THE FIELD BY GEOMETRY CARS OR BY MANUAL INSPECTION PER NOTE 5 ABOVE ARE FOUND TO RESULT IN AN ALLOWABLE SPEED LESS THAN PERMITTED BY TABLES PML AND FML, A TEMPORARY SPEED REDUCTION MUST BE IMPOSED TO THE NEXT LOWER SPEED THAT WILL ACCOMMODATE THE ACTUAL MEASURED SUPERELEVATION. THE TEMPORARY SPEED REDUCTION MUST REMAIN UNTIL THE SUPERELEVATION LIMITS ARE RAISED TO THE VALUES SHOWN IN TABLES P3.5, F2.0, P3.5M AND F2.0M FOR THE DESIGN SPEED.

REV.	DATE	DESCRIPTION	DES.	ENG.
X	XX-XX-XX	REVISION	XX	XX

DRAWN BY: A. CARLOS DATE: 03/31/2011

ASSISTANT DIRECTOR: STANDARDS & DESIGN

DIRECTOR OF ENGINEERING AND CONSTRUCTION

SCRRA ENGINEERING STANDARDS ARE INTENDED FOR SCRRA APPROVED USES ONLY. FOR NON-SCRRA APPROVED USES:
SCRRA SHALL NOT BE RESPONSIBLE FOR THE ACCURACY OR COMPLETENESS OF THE DATA OR INFORMATION CONTAINED HEREIN. THE SELECTION AND USE OF THESE STANDARDS IS THE SOLE RESPONSIBILITY OF THE USER AND SHOULD NOT BE USED WITHOUT CONSULTING A REGISTERED PROFESSIONAL ENGINEER. ALL WARRANTIES AND REPRESENTATIONS OF ANY KIND ARE DISCLAIMED. ANYONE MAKING USE OF THIS INFORMATION AGREES THAT IT ASSUMES ALL LIABILITY ARISING FROM SUCH USE. NO PART OF THESE STANDARDS SHOULD BE REPRODUCED OR DISTRIBUTED IN ANY FORM OR BY ANY MEANS WITHOUT THE PRIOR WRITTEN PERMISSION OF SCRRA. ALL RIGHTS RESERVED.

METROLINK®
SOUTHERN CALIFORNIA REGIONAL RAIL AUTHORITY
ONE GATEWAY PLAZA, 12TH FLOOR, L. A., CA. 90012

ENGINEERING STANDARDS

TABLE PML – 4.0 INCH UNBALANCED ELEVATION MAINTENANCE LIMIT FOR PASSENGER OPERATIONS

STANDARD 2204
SCALE: NTS
REVISION –
SHEET 5 OF 6
CADD FILE: ES2204–05

TABLE FML - 3.0 INCH UNBALANCED ELEVATION FOR FREIGHT OPERATIONS - MAINTENANCE LIMIT

ABBREVIATIONS	
E = EQUILIBRIUM ELEVATION OF OUTSIDE RAIL (IN)	Vmax = MAXIMUM ALLOWABLE OPERATING SPEED (MPH)
Eu = UNBALANCED ELEVATION OF OUTSIDE RAIL (IN)	Ls = SPIRAL LENGTH (FT)
Ea = ACTUAL ELEVATION OF OUTSIDE RAIL (IN)	D = DEGREE OF CURVATURE (DECIMAL DEGREES)

FORMULAS
$E = 0.0007DVmax^2$
$Ea = E - Eu$

CURVATURE - DEGREES AND MINUTES	MAXIMUM ALLOWABLE FREIGHT OPERATING SPEED - MILES PER HOUR												
	20	25	30	35	40	45	50	55	60	65	70	75	80
0° 15'	0.00"	0.00"	0.00"	0.00"	0.00"	0.00"	0.00"	0.00"	0.00"	0.00"	0.00"	0.00"	0.00"
0° 30'	0.00"	0.00"	0.00"	0.00"	0.00"	0.00"	0.00"	0.00"	0.00"	0.00"	0.00"	0.00"	0.00"
0° 45'	0.00"	0.00"	0.00"	0.00"	0.00"	0.00"	0.00"	0.00"	0.00"	0.00"	0.00"	0.00"	0.50"
1° 00'	0.00"	0.00"	0.00"	0.00"	0.00"	0.00"	0.00"	0.00"	0.00"	0.00"	0.50"	1.00"	1.50"
1° 15'	0.00"	0.00"	0.00"	0.00"	0.00"	0.00"	0.00"	0.00"	0.25"	0.75"	1.50"	2.00"	2.75"
1° 30'	0.00"	0.00"	0.00"	0.00"	0.00"	0.00"	0.00"	0.25"	1.00"	1.50"	2.25"	3.00"	3.75"
1° 45'	0.00"	0.00"	0.00"	0.00"	0.00"	0.00"	0.25"	0.75"	1.50"	2.25"	3.25"	4.00"	5.00"
2° 00'	0.00"	0.00"	0.00"	0.00"	0.00"	0.00"	0.50"	1.25"	2.25"	3.00"	4.00"	5.00"	6.00"
2° 15'	0.00"	0.00"	0.00"	0.00"	0.00"	0.25"	1.00"	2.00"	2.75"	3.75"	4.75"	6.00"	
2° 30'	0.00"	0.00"	0.00"	0.00"	0.00"	0.75"	1.50"	2.50"	3.50"	4.50"	5.75"		
2° 45'	0.00"	0.00"	0.00"	0.00"	0.25"	1.00"	2.00"	3.00"	4.00"	5.25"			
3° 00'	0.00"	0.00"	0.00"	0.00"	0.50"	1.50"	2.25"	3.50"	4.75"	6.00"			
3° 15'	0.00"	0.00"	0.00"	0.00"	0.75"	1.75"	2.75"	4.00"	5.25"				
3° 30'	0.00"	0.00"	0.00"	0.25"	1.00"	2.00"	3.25"	4.50"	6.00"				
3° 45'	0.00"	0.00"	0.00"	0.25"	1.25"	2.50"	3.75"	5.00"					
4° 00'	0.00"	0.00"	0.00"	0.50"	1.50"	2.75"	4.00"	5.50"					
4° 15'	0.00"	0.00"	0.00"	0.75"	2.00"	3.25"	4.50"	6.00"					
4° 30'	0.00"	0.00"	0.00"	1.00"	2.25"	3.50"	5.00"						
4° 45'	0.00"	0.00"	0.00"	1.25"	2.50"	3.75"	5.50"						
5° 00'	0.00"	0.00"	0.25"	1.50"	2.75"	4.25"	5.75"						
5° 15'	0.00"	0.00"	0.50"	1.75"	3.00"	4.50"							
5° 30'	0.00"	0.00"	0.50"	1.75"	3.25"	5.00"							
5° 45'	0.00"	0.00"	0.75"	2.00"	3.50"	5.25"							
6° 00'	0.00"	0.00"	1.00"	2.25"	3.75"	5.75"							
6° 15'	0.00"	0.00"	1.00"	2.50"	4.00"	6.00"							
6° 30'	0.00"	0.00"	1.25"	2.75"	4.50"								
6° 45'	0.00"	0.00"	1.50"	3.00"	4.75"								
7° 00'	0.00"	0.25"	1.50"	3.25"	5.00"								
7° 15'	0.00"	0.25"	1.75"	3.25"	5.25"								
7° 30'	0.00"	0.50"	1.75"	3.50"	5.50"								
7° 45'	0.00"	0.50"	2.00"	3.75"	5.75"								
8° 00'	0.00"	0.50"	2.25"	4.00"	6.00"								
8° 15'	0.00"	0.75"	2.25"	4.25"									
8° 30'	0.00"	0.75"	2.50"	4.50"									
8° 45'	0.00"	1.00"	2.75"	4.75"									
9° 00'	0.00"	1.00"	2.75"	4.75"									
9° 15'	0.00"	1.25"	3.00"	5.00"									
9° 30'	0.00"	1.25"	3.00"	5.25"									
9° 45'	0.00"	1.50"	3.25"	5.50"									
10° 00'	0.00"	1.50"	3.50"	5.75"									
10° 15'	0.00"	1.50"	3.50"	6.00"									
10° 30'	0.00"	1.75"	3.75"										
10° 45'	0.25"	1.75"	4.00"										
11° 00'	0.25"	2.00"	4.00"										
11° 15'	0.25"	2.00"	4.25"										
11° 30'	0.25"	2.25"	4.25"										
11° 45'	0.50"	2.25"	4.50"										
12° 00'	0.50"	2.25"	4.75"										

NOTES:

1. AT ALL TIMES THE TRACK MUST BE IN CONFORMANCE WITH 49CFR213. TABLES P3.5 AND P3.5M DEFINE THE LIMITING DESIGN SPEED FOR PASSENGER TRAINS. TABLES F2.0 AND F2.0M DEFINE THE LIMITING DESIGN SPEED FOR FREIGHT TRAINS. OPERATION AT SPEEDS RESULTING IN 4 INCHES UNDERBALANCE IS PERMITTED FOR SCRRA AND AMTRAK PASSENGER TRAINS EXCEPT WHEN ADVISED THAT SEVERE WIND CONDITIONS EXIST. 3 INCHES UNDERBALANCE IS THE LIMITING CONDITION FOR ALL FREIGHT TRAINS AND FOR PASSENGER TRAINS UNDER SEVERE WIND CONDITIONS. ANY COMBINATION OF CURVATURE OR ACTUAL ELEVATION THAT IS DISCOVERED OR CREATED THAT RESULTS IN THE OPERATING SPEED TO EXCEED THE SPEED PERMITTED BY THESE TABLES REQUIRES IMMEDIATE REMEDIAL ACTION.
2. SOME CURVES WERE CONSTRUCTED AND SPEEDS ESTABLISHED WITH UNDERBALANCE FOR PASSENGER SPEEDS BETWEEN THE 3.5 INCH DESIGN VALUE OF TABLES P3.5 AND P3.5M AND THE 4 INCH LIMITING VALUE PER THE FRA. CURVES WITH THESE CHARACTERISTICS WILL BE MAINTAINED AS DESIGNED.
3. SUPERELEVATION AND SPIRAL LENGTHS WILL BE MAINTAINED TO THE VALUES RECORDED IN THE SCRRA TRACK CHARTS. SOME OF THESE DO NOT MEET THE LENGTH REQUIREMENTS FOR THE TABLES FOR NEW DESIGN, P3.5 AND F2.0. HOWEVER, THEY DO MEET THE REQUIREMENTS FOR THE P3.5M AND P2.0M TABLES.
4. SPIRAL LENGTHS MUST NOT BE INCREASED EXCEPT AS PART OF AN ENGINEERED REALIGNMENT OF A CURVE. THE SHARPNESS OF THE CURVE IN THE CENTRAL BODY WILL BE INCREASED IF THE SPIRALS ARE EXTENDED INTO THE BODY OF THE CURVE.
5. CONTRACT TRACK INSPECTORS WILL FIELD VERIFY THE CHARACTERISTICS OF AT LEAST TWO CURVES EACH MONTH, USING TRACK LEVEL AND STRING LINE, REPORTING THE OBSERVED 62-FOOT CHORD MID-ORDINATE AND SUPERELEVATION AT 15.5-FOOT INTERVALS FOR THE LENGTH OF THE CURVE. THE MANAGERS OF TRACK MAINTENANCE AND THE CONTRACT PROJECT MANAGER WILL REVIEW AND COMPARE THE PRECEDING TWO YEARS OF TRACK GEOMETRY DATA TO THE TRACK CHART DATA, AND WILL ARRANGE FOR FIELD VERIFICATION OF ALIGNMENT BASED UPON THESE REVIEWS.
6. MANAGERS OF TRACK MAINTENANCE MUST RIDE WITH EACH OPERATION OF TRACK GEOMETRY CARS. THEY MUST MONITOR AND ENSURE THAT THE MAINTENANCE CONTRACTOR INVESTIGATES ANY NOTED REPORTS OF WARP OR UNDERBALANCE EXCEPTIONS AND TAKES THE REQUIRED REMEDIAL ACTIONS (SPOT REPAIRS OR REDUCTION IN SPEED). THEY MUST ALSO PROMPTLY REVIEW THE CURVE DATA GENERATED BY THE TRACK GEOMETRY CAR AND COMPARE THE AVERAGE CURVATURE, AVERAGE ELEVATION, LIMITING CURVATURE AND LIMITING ELEVATION FOR EACH CURVE TO THE RECORDS IN THE TRACK CHARTS WHETHER AN EXCEPTION IS NOTED OR NOT.
7. COMPOUND CURVES DESCRIBED IN THE TRACK CHARTS THAT HAVE DIFFERING TRAIN SPEED, SUPERELEVATION, AND/OR CURVATURE NOTED FOR TWO OR MORE SEGMENTS OF ONE CURVE HAVE BEEN APPROVED BY THE SCRRA DIRECTOR OF ENGINEERING AND CONSTRUCTION.
8. IF THE ACTUAL SUPERELEVATION AND CURVATURE MEASURED IN THE FIELD BY GEOMETRY CARS OR BY MANUAL INSPECTION PER NOTE 5 ABOVE ARE FOUND TO RESULT IN AN ALLOWABLE SPEED LESS THAN PERMITTED BY TABLES PML AND FML, A TEMPORARY SPEED REDUCTION MUST BE IMPOSED TO THE NEXT LOWER SPEED THAT WILL ACCOMMODATE THE ACTUAL MEASURED SUPERELEVATION. THE TEMPORARY SPEED REDUCTION MUST REMAIN UNTIL THE SUPERELEVATION LIMITS ARE RAISED TO THE VALUES SHOWN IN TABLES P3.5, F2.0, P3.5M AND F2.0M FOR THE DESIGN SPEED.

REV.	DATE	DESCRIPTION	DES.	ENG.
X	XX-XX-XX	REVISION	XX	XX

DRAWN BY: A. CARLOS DATE: 03/31/2011

ASSISTANT DIRECTOR: STANDARDS & DESIGN

DIRECTOR OF ENGINEERING AND CONSTRUCTION

SCRRA ENGINEERING STANDARDS ARE INTENDED FOR SCRRA APPROVED USES ONLY. FOR NON-SCRRA APPROVED USES:
SCRRA SHALL NOT BE RESPONSIBLE FOR THE ACCURACY OR COMPLETENESS OF THE DATA OR INFORMATION CONTAINED HEREIN. THE SELECTION AND USE OF THESE STANDARDS IS THE SOLE RESPONSIBILITY OF THE USER AND SHOULD NOT BE USED WITHOUT CONSULTING A REGISTERED PROFESSIONAL ENGINEER. ALL WARRANTIES AND REPRESENTATIONS OF ANY KIND ARE DISCLAIMED. ANYONE MAKING USE OF THIS INFORMATION AGREES THAT IT ASSUMES ALL LIABILITY ARISING FROM SUCH USE. NO PART OF THESE STANDARDS SHOULD BE REPRODUCED OR DISTRIBUTED IN ANY FORM OR BY ANY MEANS WITHOUT THE PRIOR WRITTEN PERMISSION OF SCRRA. ALL RIGHTS RESERVED.

METROLINK®
SOUTHERN CALIFORNIA REGIONAL RAIL AUTHORITY
ONE GATEWAY PLAZA, 12TH FLOOR, L. A., CA. 90012

ENGINEERING STANDARDS

TABLE FML – 3.0 INCH UNBALANCED ELEVATION MAINTENANCE LIMIT FOR FREIGHT OPERATIONS

STANDARD 2204
SCALE: NTS
REVISION –
SHEET 6 OF 6
CADD FILE: ES2204-06

NOTES: (RH CURVE AS SHOWN, LH OPPOSITE)

1. TAGS SHALL BE CLEAR ANODIZED ALUMINUM, 16 GAUGE, WITH EMBOSSED LETTERING, AS SHOWN.
2. TAGS SHALL INDICATE NO SUPERELEVATION OF OUTSIDE RAIL AT THE TS AND THE ST AND FULL SUPERELEVATION OF OUTSIDE RAIL IN INCHES AT ALL SC AND CS POINTS.
3. ORIENT TAGS TO BE READ WHILE WALKING IN THE DIRECTION OF INCREASING MILE POSTS.
4. ATTACH TAGS TO CONCRETE TIES WITH MANUS-PRENE 65-A ADHESIVE; TO WOOD TIES WITH GALVANIZED 10 PENNY NAILS OR APPROVED EQUAL.
5. TAGS ATTACHED TO ANY TIE BEING REPLACED SHALL BE REMOVED AND ATTACHED TO THE REPLACEMENT TIE BY THE CONTRACTOR.
6. CURVE INFORMATION WRITTEN ON RAIL BEING REPLACED SHALL BE WRITTEN IN THE SAME LOCATION ON THE REPLACEMENT RAIL BY THE CONTRACTOR.
7. SUPERELEVATED CURVES MUST INCLUDE SPIRALS. CURVES WITHOUT SPIRALS SHALL NOT BE SUPERELEVATED.
8. OFFSET PINS SHALL BE #5 REBAR, AT LEAST 24 IN LONG, DRIVEN VERTICALLY INTO GROUND WITH 1-2 IN REMAINING EXPOSED. PIN SHALL BE MADE HIGHLY VISIBLE WITH BRIGHT ORANGE PAINT AND ORANGE SURVEYOR TAPE. WITH APPROVAL OF SCRRA, THE DESIRED 10 FT OFFSET MAY VARY BASED ON FIELD CONDITIONS OR TO AVOID HAVING THE PIN BE A TRIPPING OR TIRE-PUNCTURE HAZARD.

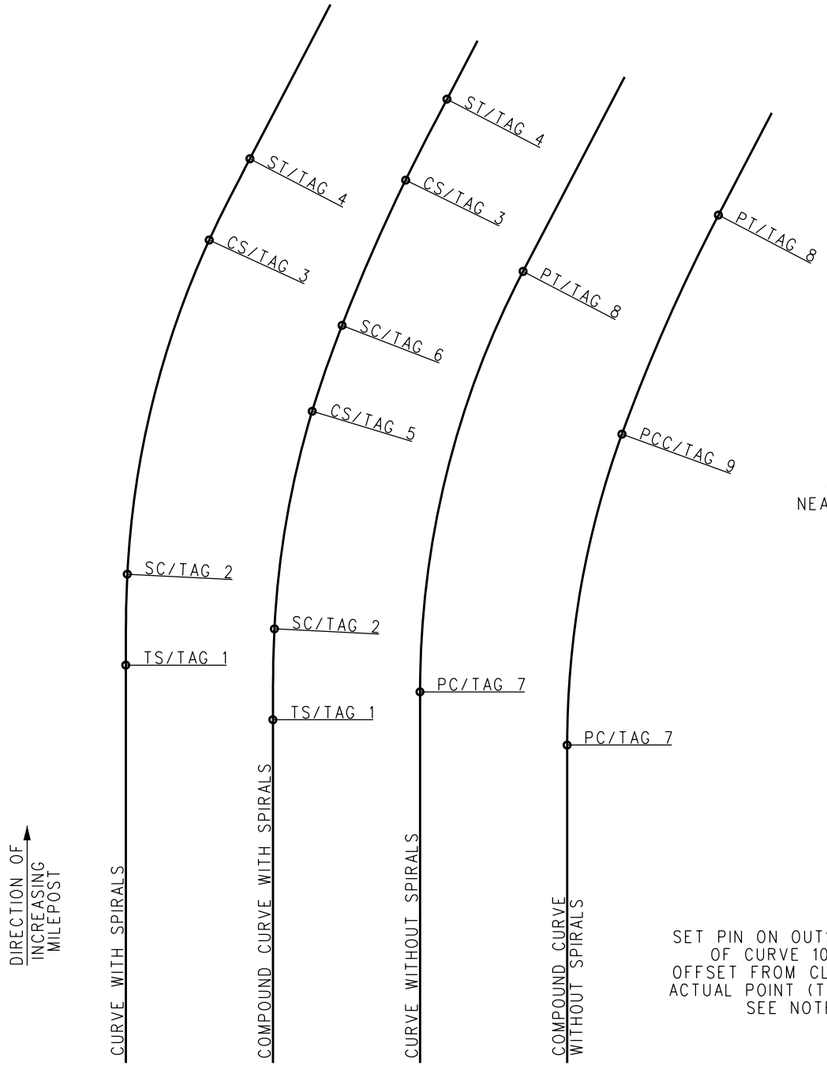

PLAN - LOCATIONS TO BE TAGGED

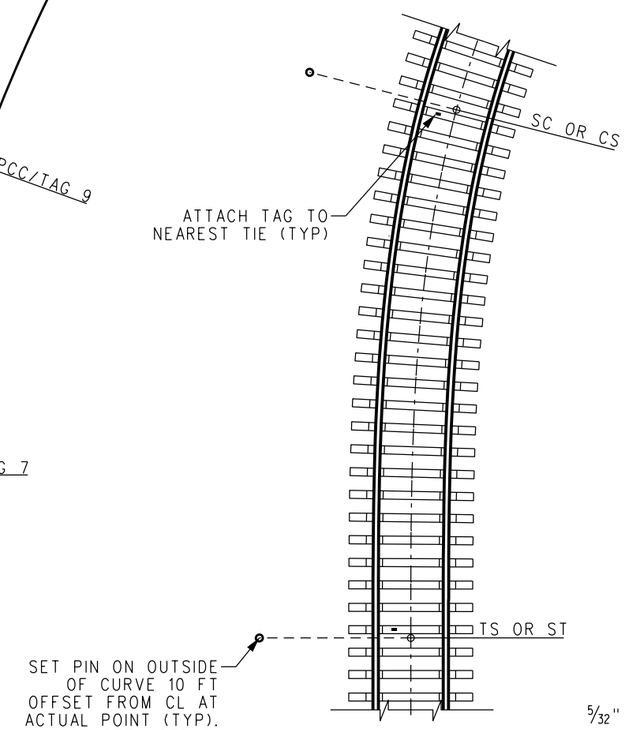

PLAN - TAG AND PIN LOCATIONS

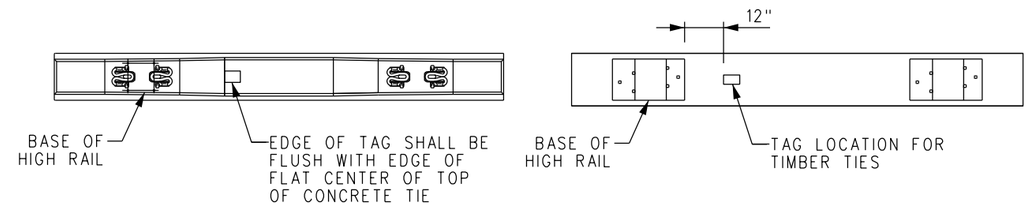

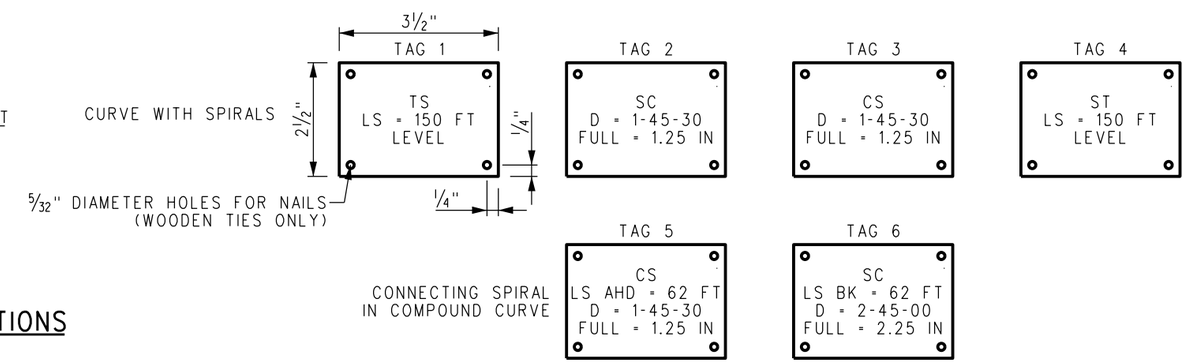

	TS	SC	CS	ST
HIGH RAIL	LEVEL	FULL = 1.50 IN	FULL = 1.50 IN	LEVEL
LOW RAIL	TS LS = 150 FT	SC D = 1-45-30	D = 1-45-30 CS	LS = 150 FT ST

INFORMATION TO BE PLACED IN WRITING ON GAUGE SIDE WEB OF RAIL WITH PERMANENT METAL MARKER OR PAINT STICK

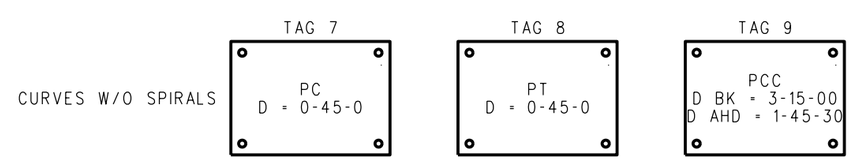

TAG DETAIL

REV.	DATE	DESCRIPTION	DES.	ENG.
X	XX-XX-XX	REVISION	XX	XX

DRAWN BY: A. CARLOS DATE: 03/31/2011

ASSISTANT DIRECTOR: STANDARDS & DESIGN

DIRECTOR OF ENGINEERING AND CONSTRUCTION

SCRRA ENGINEERING STANDARDS ARE INTENDED FOR SCRRA APPROVED USES ONLY. FOR NON-SCRRA APPROVED USES:
SCRRA SHALL NOT BE RESPONSIBLE FOR THE ACCURACY OR COMPLETENESS OF THE DATA OR INFORMATION CONTAINED HEREIN. THE SELECTION AND USE OF THESE STANDARDS IS THE SOLE RESPONSIBILITY OF THE USER AND SHOULD NOT BE USED WITHOUT CONSULTING A REGISTERED PROFESSIONAL ENGINEER. ALL WARRANTIES AND REPRESENTATIONS OF ANY KIND ARE DISCLAIMED. ANYONE MAKING USE OF THIS INFORMATION AGREES THAT IT ASSUMES ALL LIABILITY ARISING FROM SUCH USE. NO PART OF THESE STANDARDS SHOULD BE REPRODUCED OR DISTRIBUTED IN ANY FORM OR BY ANY MEANS WITHOUT THE PRIOR WRITTEN PERMISSION OF SCRRA. ALL RIGHTS RESERVED.

METROLINK®
SOUTHERN CALIFORNIA REGIONAL RAIL AUTHORITY
ONE GATEWAY PLAZA, 12TH FLOOR, L. A., CA. 90012

ENGINEERING STANDARDS

SUPERELEVATION TAGS

STANDARD 2206
SCALE: NTS
REVISION –
SHEET 1 OF 1
CADD FILE: ES2206

SPACING OF TRACKS ON CURVES			
DEGREE OF CURVE	DISTANCE BETWEEN TRACK CENTERS- SUPERELEVATION SAME ON EACH TRACK- SEE NOTE 2		
	MAIN OR RUNNING AND ADJACENT TRACKS		INDUSTRY AND YARD TRACKS
TANGENT	15'-0"	16'-0"	15'-0"
1°	15'-2"	16'-2"	15'-0"
2°	15'-4"	16'-4"	15'-0"
3°	15'-6"	16'-6"	15'-0"
4°	15'-8"	16'-8"	15'-0"
5°	15'-10"	16'-10"	15'-0"
6°	16'-0"	17'-0"	15'-0"
7°	16'-2"	17'-2"	15'-2"
8°	16'-4"	17'-4"	15'-4"
9°	16'-6"	17'-6"	15'-6"
10°	16'-8"	17'-8"	15'-8"
11°	16'-10"	17'-10"	15'-10"
12°	17'-0"	18'-0"	16'-0"
13°	17'-2"	18'-2"	16'-2"
14°	17'-4"	18'-4"	16'-4"
15°	17'-6"	18'-6"	16'-6"
OVER 15°	INCREASE BY ½ INCH PER 15 MINUTES OF CURVE		

NOTES:

1. MINIMUM DISTANCE BETWEEN CENTER LINES OF ADJACENT TRACKS ON ALL NEW CONSTRUCTION SHALL BE AS FOLLOWS: (THIS MINIMUM DISTANCE WILL ALSO APPLY TO EXISTING TRACKS WHEN RESPACING IS AUTHORIZED BY THE SCRRA DIRECTOR OF ENGINEERING AND CONSTRUCTION.)
   A. MAIN TRACKS ——— 15'-0" MINIMUM, 25'-0" WHERE SPACE PERMITS
   B. MAIN SIDING, RUNNING AND DRILL TRACKS AND ADJACENT TRACK (EXCEPT YARD TRACK) ——— 15'-0"
   C. LADDER TRACK AND ADJACENT TRACK ——— 20'-0"
   D. INDUSTRY, YARD AND HOUSE TRACKS ——— 15'-0"
   E. YARD TRACK AND ADJACENT MAIN OR RUNNING TRACK ——— 25'-0"
   F. ON CURVES, TRACK CENTERS AS SHOWN ABOVE SHALL BE INCREASED AS FOLLOWS (ALSO SEE TABLE ON THIS SHEET):
      a. TRACKS PER NOTES A, B AND E - INCREASE BY ½ INCH PER EACH 15 MINUTES OF CURVE.
      b. TRACKS PER NOTE D (YARD TRACKS) - INCREASE BY ½ INCH PER EACH 15 MINUTES OF CURVE IN EXCESS OF 6 DEGREES.
2. INCREASED DISTANCES BETWEEN TRACK CENTERS SHALL BE APPLIED IN ½ INCH INCREMENTS. DEGREES OF CURVATURE THAT ARE NOT EXACT 15 MINUTE INCREMENTS SHALL BE ROUNDED UP TO THE NEXT GREATER 15 MINUTE INCREMENT. FOR EXAMPLE, IF TWO CURVED TRACKS ARE TO BE PARALLEL AND THE INNER TRACK IS D=8°15'10", THEY SHALL BE SEPARATED BASED ON THE ASSUMPTION THAT ITS CURVATURE IS D=8°30'.
3. WHERE ADJACENT TRACK IS ON THE OUTSIDE OF A CURVE AND ITS SUPERELEVATION IS MORE THAN ON THE INSIDE TRACK, DISTANCE BETWEEN THE TRACKS SHALL BE INCREASED THREE INCHES FOR EACH INCH DIFFERENCE IN SUPERELEVATION. THE INCREASE SHALL BE ADDED TO THE AMOUNT SHOWN IN TABLE AT LEFT. WHERE SUCH TRACK HAS THE SAME OR LESS AMOUNT OF SUPERELEVATION, USE SPACING AS SHOWN IN THE TABLE.

REV.	DATE	DESCRIPTION	DES.	ENG.
X	XX-XX-XX	REVISION	XX	XX

DRAWN BY: A. CARLOS DATE: 03/31/2011

ASSISTANT DIRECTOR: STANDARDS & DESIGN

DIRECTOR OF ENGINEERING AND CONSTRUCTION

SCRRA ENGINEERING STANDARDS ARE INTENDED FOR SCRRA APPROVED USES ONLY. FOR NON-SCRRA APPROVED USES:
SCRRA SHALL NOT BE RESPONSIBLE FOR THE ACCURACY OR COMPLETENESS OF THE DATA OR INFORMATION CONTAINED HEREIN. THE SELECTION AND USE OF THESE STANDARDS IS THE SOLE RESPONSIBILITY OF THE USER AND SHOULD NOT BE USED WITHOUT CONSULTING A REGISTERED PROFESSIONAL ENGINEER. ALL WARRANTIES AND REPRESENTATIONS OF ANY KIND ARE DISCLAIMED. ANYONE MAKING USE OF THIS INFORMATION AGREES THAT IT ASSUMES ALL LIABILITY ARISING FROM SUCH USE. NO PART OF THESE STANDARDS SHOULD BE REPRODUCED OR DISTRIBUTED IN ANY FORM OR BY ANY MEANS WITHOUT THE PRIOR WRITTEN PERMISSION OF SCRRA. ALL RIGHTS RESERVED.

METROLINK®
SOUTHERN CALIFORNIA REGIONAL RAIL AUTHORITY
ONE GATEWAY PLAZA, 12TH FLOOR, L. A., CA. 90012

ENGINEERING STANDARDS

TRACK CENTER SPACING

STANDARD 2207
SCALE: NTS
REVISION –
SHEET 1 OF 1
CADD FILE: ES2207

MAXIMUM SPEEDS THROUGH TURNOUTS, SPRING SWITCHES AND SLIP SWITCHES

SUBJECT TO SPEED RESTRICTIONS IMPOSED BY LOCAL CONDITIONS, OTHER THAN THE NUMBER OF THE TURNOUT OR TYPE OF SWITCH, THE FOLLOWING WILL GOVERN THE MAXIMUM SPEEDS PERMITTED THROUGH TURNOUTS AND OVER SPRING SWITCHES AND SLIP SWITCHES:

FREIGHT						
TURNOUT NO	TANGENTIAL		STANDARD		EQUILATERAL (MPH)	DOUBLE SLIP (MPH)
-	SWITCH LENGTH (POINTS)	MPH	SWITCH LENGTH (POINTS)	MPH	-	-
8	-	-	16'-6"	10	N/A	10
9	-	-	16'-6"	10	N/A	N/A
10	21'-6"	15	19'-6"	15	N/A	10
11	-	-	19'-6"	15	N/A	N/A
14	29'-0"	25	26'-0"	20	N/A	N/A
15	-	-	26'-0"	20	N/A	N/A
20	47'-0"	40	39'-0"	35	50	N/A
24	61'-6"	50	39'-0"	40	60	N/A
30	82'-0"	60	-	N/A	80	N/A

PASSENGER						
TURNOUT NO	TANGENTIAL		STANDARD		EQUILATERAL (MPH)	DOUBLE SLIP (MPH)
-	SWITCH LENGTH (POINTS)	MPH	SWITCH LENGTH (POINTS)	MPH	-	-
8	-	-	16'-6"	12	N/A	12
9	-	-	16'-6"	12	N/A	N/A
10	21'-6"	25	16'-6"	20	N/A	15
11	-	-	19'-6"	20	N/A	N/A
14	29'-0"	35	26'-0"	30	N/A	N/A
15	-	-	26'-0"	30	N/A	N/A
20	47'-0"	50	39'-0"	45	70	N/A
24	61'-6"	60	39'-0"	55	85	N/A
30	82'-0"	75	-	N/A	110	N/A

NOTE:

1. MAXIMUM SPEEDS WERE CALCULATED BASED ON TURNOUT GEOMETRY WITH Ea = 0" AND ASSUMED Eu = 3.5" FOR PASSENGER TRAINS AND Eu = 2.0" FOR FREIGHT TRAINS.

REV.	DATE	DESCRIPTION	DES.	ENG.
X	XX-XX-XX	REVISION	XX	XX

DRAWN BY: A. CARLOS DATE: 03/31/2011

ASSISTANT DIRECTOR: STANDARDS & DESIGN

DIRECTOR OF ENGINEERING AND CONSTRUCTION

SCRRA ENGINEERING STANDARDS ARE INTENDED FOR SCRRA APPROVED USES ONLY. FOR NON-SCRRA APPROVED USES: SCRRA SHALL NOT BE RESPONSIBLE FOR THE ACCURACY OR COMPLETENESS OF THE DATA OR INFORMATION CONTAINED HEREIN. THE SELECTION AND USE OF THESE STANDARDS IS THE SOLE RESPONSIBILITY OF THE USER AND SHOULD NOT BE USED WITHOUT CONSULTING A REGISTERED PROFESSIONAL ENGINEER. ALL WARRANTIES AND REPRESENTATIONS OF ANY KIND ARE DISCLAIMED. ANYONE MAKING USE OF THIS INFORMATION AGREES THAT IT ASSUMES ALL LIABILITY ARISING FROM SUCH USE. NO PART OF THESE STANDARDS SHOULD BE REPRODUCED OR DISTRIBUTED IN ANY FORM OR BY ANY MEANS WITHOUT THE PRIOR WRITTEN PERMISSION OF SCRRA. ALL RIGHTS RESERVED.

METROLINK®

SOUTHERN CALIFORNIA REGIONAL RAIL AUTHORITY
ONE GATEWAY PLAZA, 12TH FLOOR, L. A., CA. 90012

ENGINEERING STANDARDS

SPEED THROUGH TURNOUTS

STANDARD 2208
SCALE: NTS
REVISION –
SHEET 1 OF 1
CADD FILE: ES2208

FACING TURNOUTS OF OPPOSITE HAND

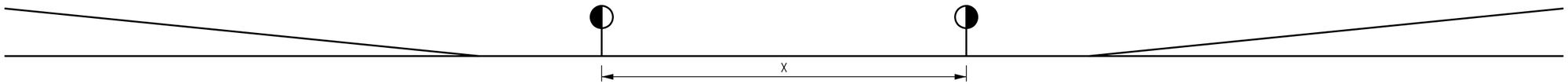

FROG NO	DESIRABLE X (FT)	MINIMUM X (FT)
8, 10	82	46
14	122	86
20	N/A	118
24	N/A	150

FACING TURNOUTS OF LIKE HAND

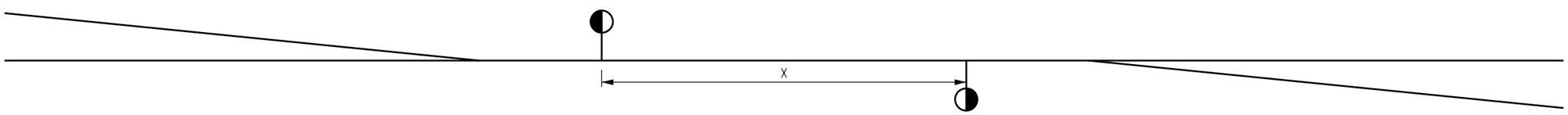

FROG NO	DESIRABLE X (FT)	MINIMUM X (FT)
8, 10	82	52
14	125	90
20	N/A	122
24	N/A	150

NOTES:

1. DESIGN SPEED, SIGNAL SPACING AND CIRCUITS WILL GOVERN AT LOCATIONS WHERE INSULATED JOINTS ARE REQUIRED.
2. ANY DISTANCE BETWEEN FACING POINTS OF SWITCH LESS THAN THE MINIMUMS GIVEN SHALL REQUIRE THE APPROVAL OF THE SCRRA DIRECTOR OF ENGINEERING AND CONSTRUCTION.

REV.	DATE	DESCRIPTION	DES.	ENG.
X	XX-XX-XX	REVISION	XX	XX

DRAWN BY: HDR DATE: 03/31/2011

ASSISTANT DIRECTOR: STANDARDS & DESIGN

DIRECTOR OF ENGINEERING AND CONSTRUCTION

SCRRA ENGINEERING STANDARDS ARE INTENDED FOR SCRRA APPROVED USES ONLY. FOR NON-SCRRA APPROVED USES:
SCRRA SHALL NOT BE RESPONSIBLE FOR THE ACCURACY OR COMPLETENESS OF THE DATA OR INFORMATION CONTAINED HEREIN. THE SELECTION AND USE OF THESE STANDARDS IS THE SOLE RESPONSIBILITY OF THE USER AND SHOULD NOT BE USED WITHOUT CONSULTING A REGISTERED PROFESSIONAL ENGINEER. ALL WARRANTIES AND REPRESENTATIONS OF ANY KIND ARE DISCLAIMED. ANYONE MAKING USE OF THIS INFORMATION AGREES THAT IT ASSUMES ALL LIABILITY ARISING FROM SUCH USE. NO PART OF THESE STANDARDS SHOULD BE REPRODUCED OR DISTRIBUTED IN ANY FORM OR BY ANY MEANS WITHOUT THE PRIOR WRITTEN PERMISSION OF SCRRA. ALL RIGHTS RESERVED.

METROLINK®
SOUTHERN CALIFORNIA REGIONAL RAIL AUTHORITY
ONE GATEWAY PLAZA, 12TH FLOOR, L. A., CA. 90012

ENGINEERING STANDARDS

FACING POINT TURNOUT ARRANGEMENT AND SPACING

STANDARD 2209
SCALE: NTS
REVISION –
SHEET 1 OF 1
CADD FILE: ES2209

DIMENSIONS	RAIL SECTION	HEIGHT OF RAIL	WIDTH OF BASE	WIDTH OF HEAD	WEB THICK-NESS	DEPTH OF HEAD AT CENTER	DEPTH OF HEAD AT CORNER	FISHING DEPTH	DEPTH OF BASE	THICKNESS AT EDGE OF BASE	HEAD ANGLE	BASE ANGLE	SLOPE OF HEAD	HEAD RADIUS	CHORD OF HEAD RADIUS	HEAD CORNER RADIUS R	HEAD CORNER RADIUS R'	HEAD & WEB FILLET	WEB & BASE FILLET	WEB RADIUS	BOTTOM OF RAIL TO ℄ OF WEB RADIUS	BOTTOM OF RAIL TO NEUT. AXIS	BOTTOM OF RAIL TO ℄ OF BOLT HOLES	DIAM. OF BOLT HOLES
		INCHES H	INCHES B	INCHES HD	INCHES W	INCHES D	INCHES D'	INCHES F	INCHES E	INCHES T	INCHES A'	INCHES A²	INCHES S	INCHES R"	INCHES CH	INCHES R	INCHES R'	INCHES R²	INCHES R³	INCHES R"	INCHES L	INCHES N	INCHES C	INCHES K
	132-LB. HEAD FREE	7 5/16	6	2 31/32	21/32	1 15/16	25/32	4 3/16	1 3/16	7/16	60 1/2°	1:4	1:40	14	1 13/16	1	3/8	1/2	3/4	10-TOP 23-BOT.	4 1/4	3.30	3 31/32	1 5/16
	136-LB. RE	7 5/16	6	2 15/16	11/16	1 15/16	1 9/16	4 3/16	1 3/16	7/16	1:4	1:4	1:40	14	1 13/32	1 1/4	9/16	5/16 & 3/4	3/4	8-TOP 20-BOT.	3 7/8	3.35	3 31/32	1 5/16

PROPERTIES	RAIL SECTION	WEIGHT PER YARD	NET TONS PER MILE OF TRACK	TRACK MILES PER 1000 NET TONS	AREA OF SECTION	AREA OF HEAD	AREA OF WEB	AREA OF BASE	MOMENT OF INERTIA	SECTION MODULUS HEAD	SECTION MODULUS BASE	RATIOS MOM. OF INERTIA TO AREA	RATIOS SEC. MOD. OF HEAD TO AREA
		POUNDS			SQ. IN.	%	%	%	INCHES⁴	INCHES³	INCHES³		
	132-LB. HEAD FREE	132.40	233.02	4.29	12.98	35.8	26.7	37.5	93.80	23.38	28.42	7.23	1.80
	136-LB. RE	136.17	239.66	4.17	13.35	36.4	27.1	36.5	94.90	23.93	28.35	7.11	1.79

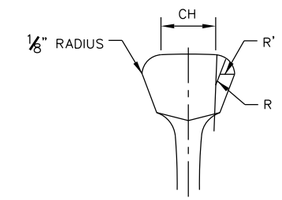

HEAD FREE SECTION

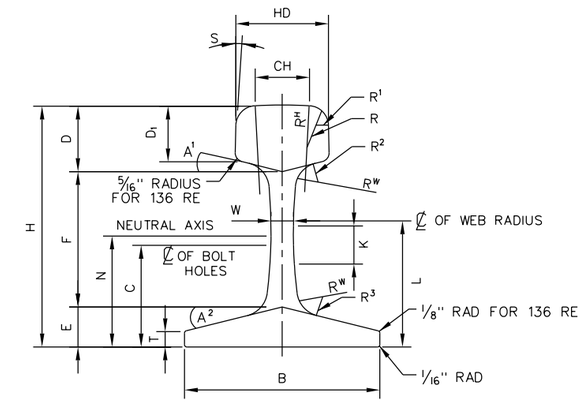

RAIL SECTION

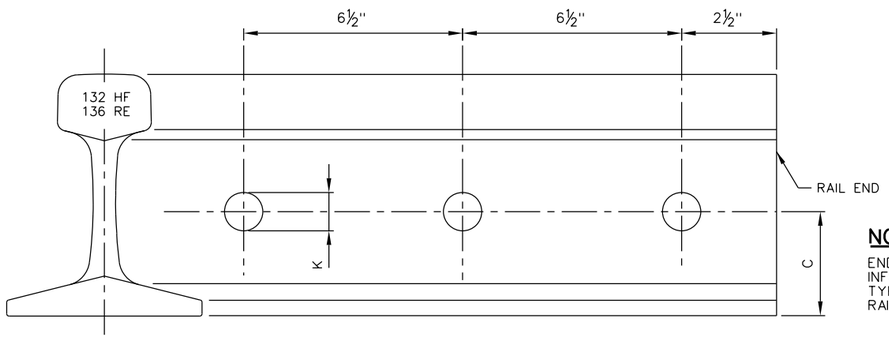

RAIL DRILLING FOR JOINTS

NOTE:

END OF RAIL DRILLING SHOWN FOR INFORMATION ONLY. END HOLE IS NOT TYPICALLY DRILLED TO FACILITATE RAIL WELDING.

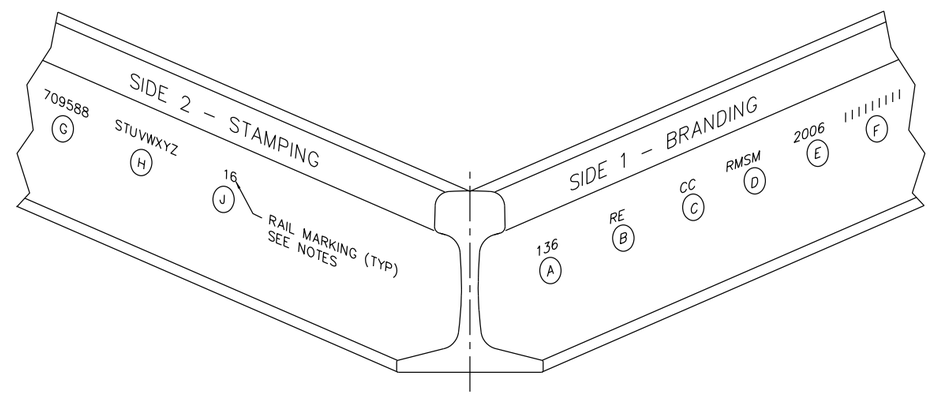

RAIL MARKINGS

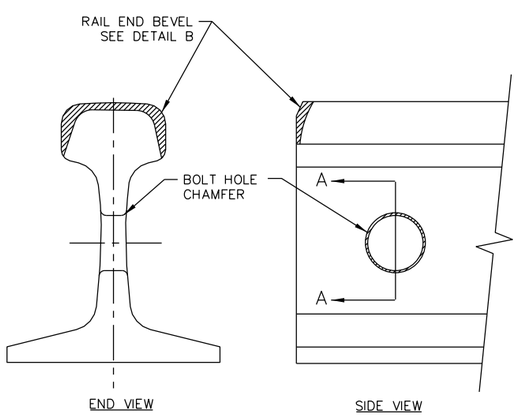

RAIL CHAMFERING AND BEVELING

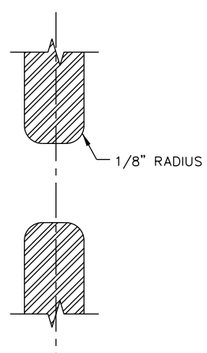

BOLT HOLE CHAMFER SECTION A-A

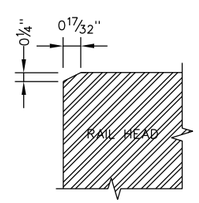

RAIL END BEVEL DETAIL B

RAIL MARKING NOTES

SIDE 1: BRANDING SHALL BE ROLLED IN RAISED CHARACTERS ON THE SIDE OF THE WEB OF EACH RAIL IN ACCORDANCE TO AREMA.

A - WEIGHT OF RAIL
B - SECTION
C - HYDROGEN REDUCTION METHOD (CC - CONTROL COOLED, VT - VACUUM TREATED)
D - MANUFACTURER (EG, RMSM - ROCKY MOUNTAIN STEEL MILLS)
E - YEAR ROLLED
F - MONTH ROLLED

SIDE 2: THE WEB OF OPPOSITE SIDE OF THE RAIL SHALL BE HOT STAMPED IN ACCORDANCE TO AREMA.

G - HEAT NUMBER
H - RAIL LETTER
J - INGOT NUMBER OR STRAND AND BLOOM NUMBER (IF APPLICABLE)

REV.	DATE	DESCRIPTION	DES.	ENG.
X	XX-XX-XX	REVISION	XX	XX

DRAWN BY: A. CARLOS DATE: 03/31/2011

ASSISTANT DIRECTOR: STANDARDS & DESIGN

DIRECTOR OF ENGINEERING AND CONSTRUCTION

SCRRA ENGINEERING STANDARDS ARE INTENDED FOR SCRRA APPROVED USES ONLY. FOR NON-SCRRA APPROVED USES:
SCRRA SHALL NOT BE RESPONSIBLE FOR THE ACCURACY OR COMPLETENESS OF THE DATA OR INFORMATION CONTAINED HEREIN. THE SELECTION AND USE OF THESE STANDARDS IS THE SOLE RESPONSIBILITY OF THE USER AND SHOULD NOT BE USED WITHOUT CONSULTING A REGISTERED PROFESSIONAL ENGINEER. ALL WARRANTIES AND REPRESENTATIONS OF ANY KIND ARE DISCLAIMED. ANYONE MAKING USE OF THIS INFORMATION AGREES THAT IT ASSUMES ALL LIABILITY ARISING FROM SUCH USE. NO PART OF THESE STANDARDS SHOULD BE REPRODUCED OR DISTRIBUTED IN ANY FORM OR BY ANY MEANS WITHOUT THE PRIOR WRITTEN PERMISSION OF SCRRA. ALL RIGHTS RESERVED.

METROLINK®
SOUTHERN CALIFORNIA REGIONAL RAIL AUTHORITY
ONE GATEWAY PLAZA, 12TH FLOOR, L. A., CA. 90012

ENGINEERING STANDARDS

DATA FOR STANDARD RAIL SECTIONS

STANDARD 2301
SCALE: NTS
REVISION –
SHEET 1 OF 1
CADD FILE: ES2301

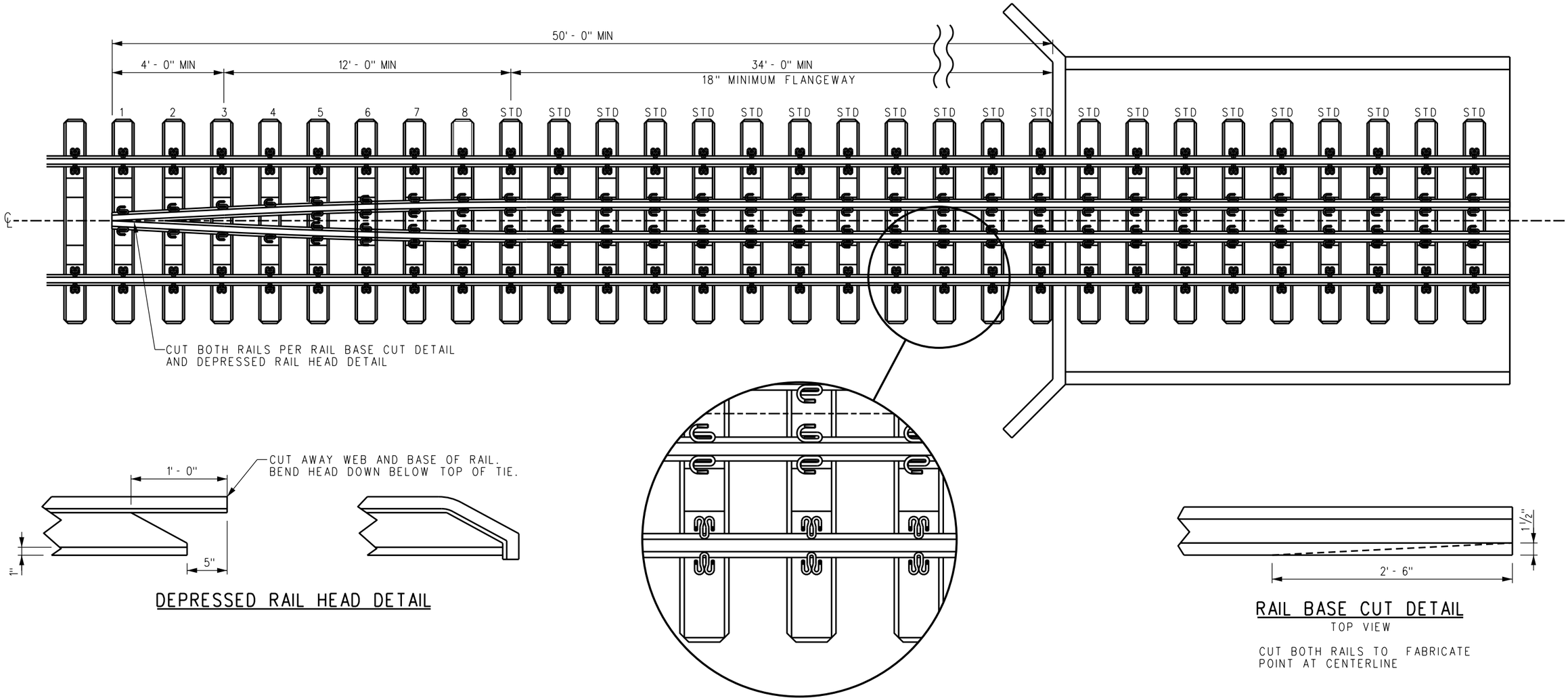

DEPRESSED RAIL HEAD DETAIL

RAIL BASE CUT DETAIL

TOP VIEW

CUT BOTH RAILS TO FABRICATE POINT AT CENTERLINE

NOTES:

1. INNER GUARD RAILS ON BRIDGES SHALL BE REQUIRED FOR ALL SPANS WHERE EXPOSED STRUCTURAL STEEL IS PRESENT ABOVE T/R AND IS SUBJECTED TO STRUCTURAL DAMAGE BY DERAILED EQUIPMENT. INNER GUARD RAILS SHALL BE INSTALLED ON BRIDGES WHERE INDIVIDUAL SPANS ARE OVER 100 FEET IN LENGTH OR WHERE THE ENTIRE STRUCTURE IS OVER 800 FEET IN LENGTH AND AT LEAST ONE SPAN CROSSES OVER A WATERWAY THAT NORMALLY CONTAINS WATER AT LEAST 15 FEET DEEP. INNER GUARD RAILS SHALL EXTEND 50 FEET BEYOND THE SPAN OR SPANS TO BE PROTECTED.
2. INNER GUARD RAILS SHALL BE INSTALLED ON ANY OTHER BRIDGE AS DIRECTED BY THE SCRRA DIRECTOR OF ENGINEERING AND CONSTRUCTION.
3. INSIDE GUARDRAILS ARE NOT REQUIRED ON BRIDGES UNTIL BRIDGE OR BRIDGE DECK IS REPLACED OR RUNNING RAIL IS REPLACED ACROSS BRIDGE UNLESS DIRECTED BY SCRRA DIRECTOR OF ENGINEERING.
4. INSIDE GUARD RAILS MAY BE CONSTRUCTED USING SECOND HAND RAIL NOT LESS THAN 23 LBS LIGHTER OR NO LARGER THAN RUNNING RAILS. IF GUARD RAIL HAS 5½" BASE, USE MODIFIED PLATES FOR 5½" BASE SCRRA ES2371.
5. ON CONCRETE TIES, GUARD RAILS SHALL BE FASTENED TO EACH TIE.
6. GUARD RAIL JOINTS, IF PRESENT, SHALL BE FULLY BOLTED USING SECOND-HAND JOINT BARS.
7. THE QUANTITY OF STD PLATES ON CONCRETE TIES WILL VARY DEPENDING ON THE NUMBER OF TIES. THEY ARE TO BE ORDERED AS NEEDED. PLATES 1 THROUGH 8 COME AS TWO SETS AND ARE TO BE ROTATED 180° ON OPPOSITE ENDS.

REFERENCE DRAWINGS:
FOR PLATES SEE SCRRA ES2371
FOR CONCRETE TIE SEE SCRRA ES2406 OR ES2407
FOR SCREW AND WASHER SEE SCRRA ES2356

REV.	DATE	DESCRIPTION	DES.	ENG.
X	XX-XX-XX	REVISION	XX	XX

DRAWN BY: A. CARLOS DATE: 03/31/2011

ASSISTANT DIRECTOR: STANDARDS & DESIGN

DIRECTOR OF ENGINEERING AND CONSTRUCTION

SCRRA ENGINEERING STANDARDS ARE INTENDED FOR SCRRA APPROVED USES ONLY. FOR NON-SCRRA APPROVED USES:
SCRRA SHALL NOT BE RESPONSIBLE FOR THE ACCURACY OR COMPLETENESS OF THE DATA OR INFORMATION CONTAINED HEREIN. THE SELECTION AND USE OF THESE STANDARDS IS THE SOLE RESPONSIBILITY OF THE USER AND SHOULD NOT BE USED WITHOUT CONSULTING A REGISTERED PROFESSIONAL ENGINEER. ALL WARRANTIES AND REPRESENTATIONS OF ANY KIND ARE DISCLAIMED. ANYONE MAKING USE OF THIS INFORMATION AGREES THAT IT ASSUMES ALL LIABILITY ARISING FROM SUCH USE. NO PART OF THESE STANDARDS SHOULD BE REPRODUCED OR DISTRIBUTED IN ANY FORM OR BY ANY MEANS WITHOUT THE PRIOR WRITTEN PERMISSION OF SCRRA. ALL RIGHTS RESERVED.

METROLINK®
SOUTHERN CALIFORNIA REGIONAL RAIL AUTHORITY
ONE GATEWAY PLAZA, 12TH FLOOR, L. A., CA. 90012

ENGINEERING STANDARDS

INSIDE GUARD RAILS FOR CONCRETE TIES

STANDARD 2302
SCALE: NTS
REVISION –
SHEET 1 OF 1
CADD FILE: ES2302

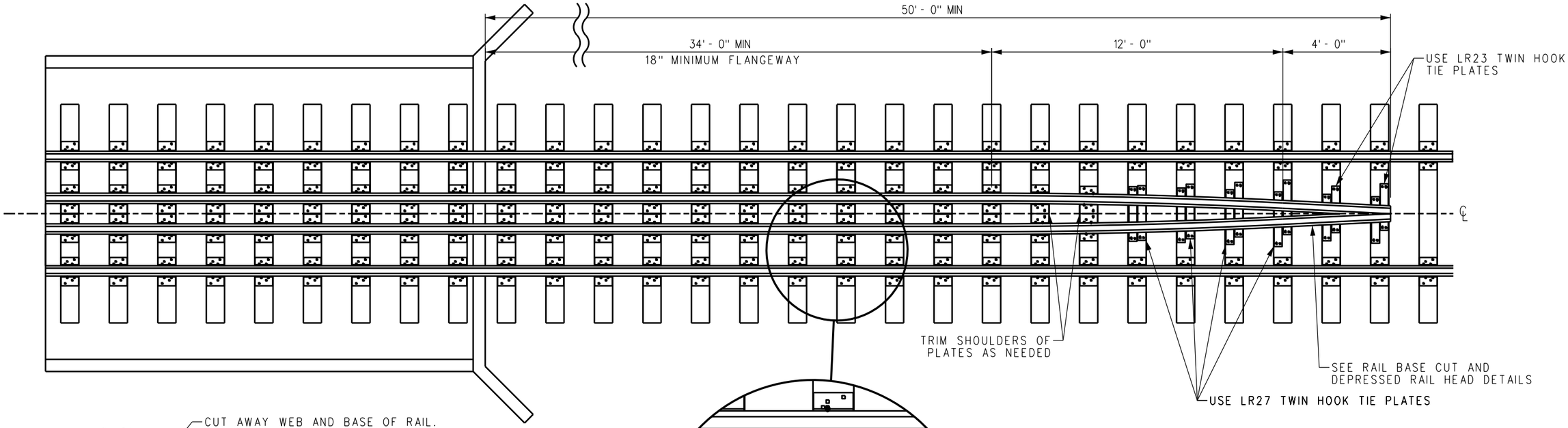

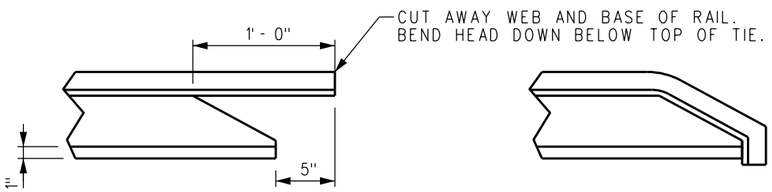

DEPRESSED RAIL HEAD DETAIL

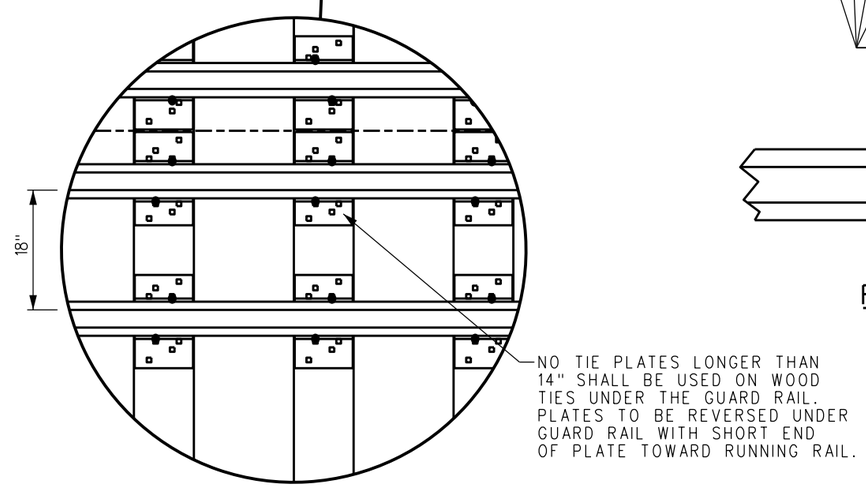

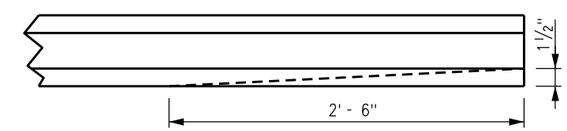

RAIL BASE CUT DETAIL

TOP VIEW

NOTES:

1. INNER GUARD RAILS ON BRIDGES SHALL BE REQUIRED FOR ALL SPANS WHERE EXPOSED STRUCTURAL STEEL IS PRESENT ABOVE T/R AND IS SUBJECTED TO STRUCTURAL DAMAGE BY DERAILED EQUIPMENT. INNER GUARD RAILS SHALL BE INSTALLED ON BRIDGES WHERE INDIVIDUAL SPANS ARE OVER 100 FEET IN LENGTH OR WHERE THE ENTIRE STRUCTURE IS OVER 800 FEET IN LENGTH AND AT LEAST ONE SPAN CROSSES OVER A WATERWAY THAT NORMALLY CONTAINS WATER AT LEAST 15 FEET DEEP. INNER GUARD RAILS SHALL EXTEND 50 FEET BEYOND THE SPAN OR SPANS TO BE PROTECTED.
2. INNER GUARD RAILS SHALL BE INSTALLED ON ANY OTHER BRIDGE AS DIRECTED BY THE SCRRA DIRECTOR OF ENGINEERING AND CONSTRUCTION.
3. INSIDE GUARDRAILS ARE NOT REQUIRED ON BRIDGES UNTIL BRIDGE OR BRIDGE DECK IS REPLACED OR RUNNING RAIL IS REPLACED ACROSS BRIDGE
4. INSIDE GUARD RAILS MAY BE CONSTRUCTED USING SECOND HAND RAIL NOT LESS THAN 23 LBS LIGHTER OR NO LARGER THAN RUNNING RAILS. IF GUARD RAIL HAS 5½" BASE, USE MODIFIED PLATES FOR 5½" BASE SCRRA ES2371.
5. ON WOOD TIES, GUARD RAILS SHALL BE FULLY PLATED AND SPIKED.
6. GUARD RAIL JOINTS, IF PRESENTS, SHALL BE FULLY BOLTED USING SECOND-HAND JOINT BARS.
7. ON TANGENT TRACK, SPIKE THE INSIDE GUARD RAIL WITH TWO SPIKES PER PLATE ON EACH RAIL OF THE TANGENT PORTION AND THREE SPIKES ON EACH RAIL OF THE CURVED PORTION. ON CURVED TRACK, SPIKE THE ENTIRE GUARD RAIL WITH THREE SPIKES PER PLATE ON EACH RAIL.
8. ON WOOD TIES, BOX ANCHOR TWO TIES NEAR THE CENTER OF BRIDGE TO RESTRICT LONGITUDINAL MOVEMENT OF GUARD RAIL.

REFERENCE DRAWINGS:
FOR PLATES SEE SCRRA ES2371
FOR SCREW SPIKE SEE SCRRA ES2355

REV.	DATE	DESCRIPTION	DES.	ENG.
X	XX-XX-XX	REVISION	XX	XX

DRAWN BY: A. CARLOS DATE: 03/31/2011

ASSISTANT DIRECTOR: STANDARDS & DESIGN

DIRECTOR OF ENGINEERING AND CONSTRUCTION

SCRRA ENGINEERING STANDARDS ARE INTENDED FOR SCRRA APPROVED USES ONLY. FOR NON-SCRRA APPROVED USES:
SCRRA SHALL NOT BE RESPONSIBLE FOR THE ACCURACY OR COMPLETENESS OF THE DATA OR INFORMATION CONTAINED HEREIN. THE SELECTION AND USE OF THESE STANDARDS IS THE SOLE RESPONSIBILITY OF THE USER AND SHOULD NOT BE USED WITHOUT CONSULTING A REGISTERED PROFESSIONAL ENGINEER. ALL WARRANTIES AND REPRESENTATIONS OF ANY KIND ARE DISCLAIMED. ANYONE MAKING USE OF THIS INFORMATION AGREES THAT IT ASSUMES ALL LIABILITY ARISING FROM SUCH USE. NO PART OF THESE STANDARDS SHOULD BE REPRODUCED OR DISTRIBUTED IN ANY FORM OR BY ANY MEANS WITHOUT THE PRIOR WRITTEN PERMISSION OF SCRRA. ALL RIGHTS RESERVED.

METROLINK®
SOUTHERN CALIFORNIA REGIONAL RAIL AUTHORITY
ONE GATEWAY PLAZA, 12TH FLOOR, L. A., CA. 90012

ENGINEERING STANDARDS

INSIDE GUARD RAIL FOR WOOD TIES

STANDARD 2304
SCALE: NTS
REVISION –
SHEET 1 OF 1
CADD FILE: ES2304

NOTES:

1. RAIL ANCHORS SHALL NOT BE PLACED AGAINST JOINT TIES, INCLUDING INSULATED JOINTS.
2. WHILE THE NUMBER OF ANCHORS REQUIRED MAY VARY WITH LOCAL CONDITIONS, STANDARD IS 16 ANCHORS PER RAIL LENGTH OF 39 FT OR 24 TIES.
3. AT LOCATIONS WHERE ADDITIONAL ANCHORS ARE REQUIRED, SCRRA ENGINEER WILL DETERMINE THE NUMBER OF ANCHORS REQUIRED.
4. RAIL ANCHOR SHALL BE DRIVEN ON BASE OF RAIL UNTIL LOCKING NOTCH ENGAGES EDGE OF OPPOSITE FLANGE. ANCHORS MUST NOT BE DRIVEN ALONG THE RAIL. IF ADJUSTMENTS ARE NECESSARY, REMOVE AND RE-APPLY.
5. FOR CONTINUOUS WELDED RAIL, APPLICATION OF ANCHORS SHALL BE IN ACCORDANCE WITH SCRRA ES2351-02.
6. TURNOUTS THAT ARE NOT FASTENED WITH ELASTIC CLIPS ARE TO BE FULLY BOX ANCHORED EXCEPT AT JOINTS OR LOCATIONS WHERE ANCHOR WILL INTERFERE WITH SWITCH OPERATION.
7. ELASTIC FASTENERS WILL SATISFY RAIL ANCHORAGE NEEDS. USE OF ANCHORS IN COMBINATION WITH ELASTIC FASTENERS SHALL BE DONE ONLY AS DIRECTED BY SCRRA ENGINEER.
8. FOR JOINTED RAIL IN LENGTHS IN EXCESS OF 39 FT, CONTINUE THE PATTERN OF BOX ANCHORS APPLIED TO EACH RAIL ON EVERY THIRD TIE, SKIPPING AND ADJUSTING FOR JOINT TIES.
9. ANCHOR PATTERN IS EVERY THIRD TIE TO BE BOX ANCHORED SKIPPING TIES WHERE JOINT BAR IS PRESENT. TIES NUMBER 2, 11, 14, AND 23 MAY BE IMPACTED BY JOINT BAR. IF THIS OCCURS, ANCHOR ADJACENT TIE INSTEAD TO MAINTAIN 8 BOX ANCHORED TIES PER 39 FT.
10. EPOXY BONDED INSULATED JOINTS ARE TO BE CONSIDERED AS CONTINUOUS LENGTHS OF RAIL AND NOT AS "JOINTS" FOR THE PURPOSES OF SELECTING ANCHOR PATTERNS.

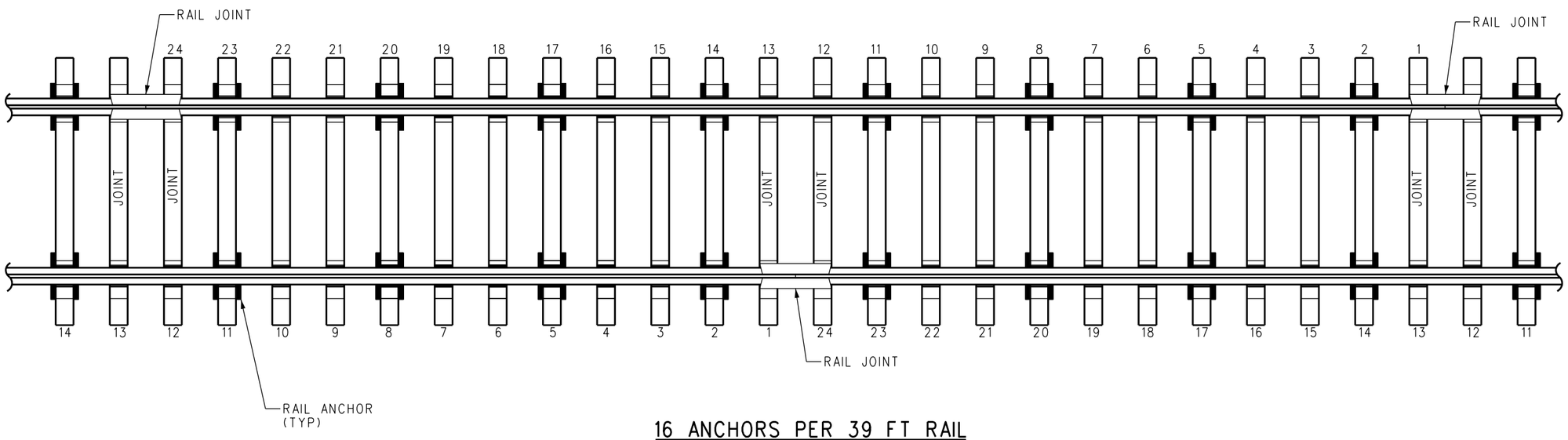

16 ANCHORS PER 39 FT RAIL

REV.	DATE	DESCRIPTION	DES.	ENG.
X	XX-XX-XX	REVISION	XX	XX

DRAWN BY: A. CARLOS DATE: 03/31/2011

ASSISTANT DIRECTOR: STANDARDS & DESIGN

DIRECTOR OF ENGINEERING AND CONSTRUCTION

SCRRA ENGINEERING STANDARDS ARE INTENDED FOR SCRRA APPROVED USES ONLY. FOR NON-SCRRA APPROVED USES:
SCRRA SHALL NOT BE RESPONSIBLE FOR THE ACCURACY OR COMPLETENESS OF THE DATA OR INFORMATION CONTAINED HEREIN. THE SELECTION AND USE OF THESE STANDARDS IS THE SOLE RESPONSIBILITY OF THE USER AND SHOULD NOT BE USED WITHOUT CONSULTING A REGISTERED PROFESSIONAL ENGINEER. ALL WARRANTIES AND REPRESENTATIONS OF ANY KIND ARE DISCLAIMED. ANYONE MAKING USE OF THIS INFORMATION AGREES THAT IT ASSUMES ALL LIABILITY ARISING FROM SUCH USE. NO PART OF THESE STANDARDS SHOULD BE REPRODUCED OR DISTRIBUTED IN ANY FORM OR BY ANY MEANS WITHOUT THE PRIOR WRITTEN PERMISSION OF SCRRA. ALL RIGHTS RESERVED.

METROLINK®
SOUTHERN CALIFORNIA REGIONAL RAIL AUTHORITY
ONE GATEWAY PLAZA, 12TH FLOOR, L. A., CA. 90012

ENGINEERING STANDARDS

RAIL ANCHOR APPLICATIONS TO JOINTED RAIL

STANDARD: 2351
SCALE: NTS
REVISION: –
SHEET: 1 OF 4
CADD FILE: ES2351-01

NOTES:

1. END PATTERN IS TO BE APPLIED TO BOTH RAILS WHEN JOINT IS ON ONLY ONE RAIL.
2. FOR JOINTED RAIL, APPLICATION OF ANCHORS SHALL BE IN ACCORDANCE WITH DRAWING ES2351-01.
3. BOX ANCHOR EVERY TIE FOR A DISTANCE OF 200 FT AHEAD OF AND BEHIND TURNOUTS ON MAIN TRACK AND TO THE CLEARANCE POINT ON SIDE TRACK OF TURNOUT FOR ALL SWITCHES IN CWR TERRITORY. ALSO BOX ANCHOR EVERY TIE AS ABOVE FOR RAILROAD DIAMOND CROSSINGS.
4. FULLY BOX ANCHOR HOT BOX OR DRAGGING EQUIPMENT DETECTORS FOR 200 FT IN EACH DIRECTION.
5. EPOXY BONDED INSULATED JOINTS DO NOT REQUIRE END PATTERNS.
6. RAIL ANCHORS MUST NOT BE PLACED AGAINST JOINT TIES, INCLUDING INSULATED JOINTS.
7. AT LOCATIONS WHERE ADDITIONAL ANCHORS ARE REQUIRED, SCRRA ENGINEER WILL DETERMINE THE NUMBER OF ANCHORS REQUIRED.
8. RAIL ANCHOR SHALL BE DRIVEN ON BASE OF RAIL UNTIL LOCKING NOTCH ENGAGES EDGE OF OPPOSITE FLANGE, ANCHORS MUST NOT BE DRIVEN ALONG THE RAIL. IF ADJUSTMENTS ARE NECESSARY, REMOVE AND RE-APPLY.
9. ELASTIC FASTENERS WILL SATISFY RAIL ANCHORAGE NEEDS. USE OF ANCHORS IN COMBINATION WITH ELASTIC FASTENERS SHALL BE DONE ONLY AS DIRECTED BY SCRRA ENGINEER.
10. IF FIELD WELD INTERFERES WITH TYPICAL END PATTERN, ANCHOR MAY BE OMMITTED. DO NOT APPLY ANCHOR TO SAME SIDE OF TIE ON OPPOSITE RAIL, AS ANCHOR PATTERN MUST BE A MIRROR PATTERN TO AVOID SKEWING TIES.
11. APPLIES TO ALL TRACKS-ML, SIDING, AND YARD WITH CONTINUOUS WELDED RAIL.

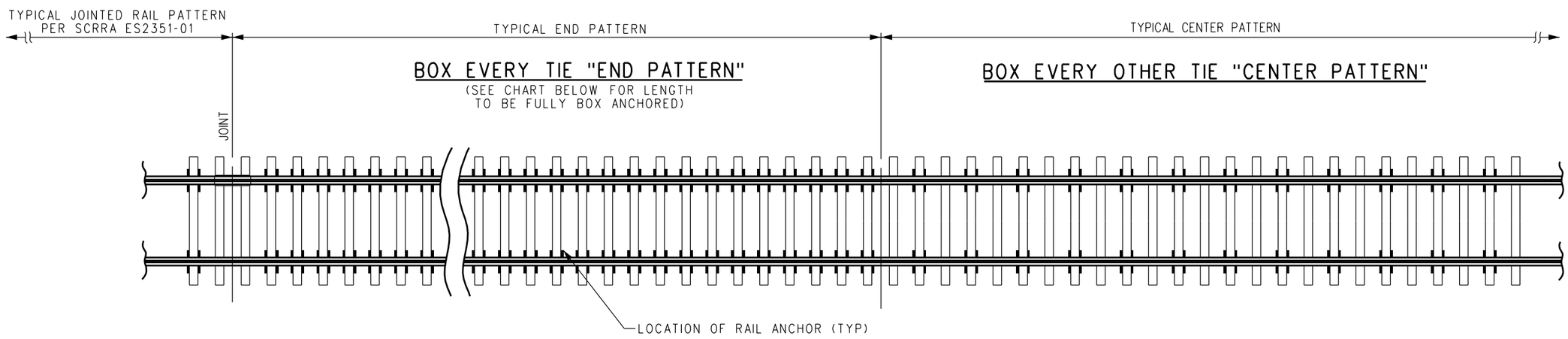

	END PATTERN ANCHORING REQUIRED AT EACH END OF CWR	
LENGTH OF CWR	MIN DISTANCE OF END PATTERN (FT)	EQUIVALENT NUMBER OF TIES
1000' OR MORE	200	120
800' TO 1000'	150	96
550' TO 800'	120	72
400' TO 800'	80	48
200' TO 400'	40	24

REV.	DATE	DESCRIPTION	DES.	ENG.
X	XX-XX-XX	REVISION	XX	XX

DRAWN BY: A. CARLOS DATE: 03/31/2011

ASSISTANT DIRECTOR: STANDARDS & DESIGN

DIRECTOR OF ENGINEERING AND CONSTRUCTION

SCRRA ENGINEERING STANDARDS ARE INTENDED FOR SCRRA APPROVED USES ONLY. FOR NON-SCRRA APPROVED USES, SCRRA SHALL NOT BE RESPONSIBLE FOR THE ACCURACY OR COMPLETENESS OF THE DATA OR INFORMATION CONTAINED HEREIN. THE SELECTION AND USE OF THESE STANDARDS IS THE SOLE RESPONSIBILITY OF THE USER AND SHOULD NOT BE USED WITHOUT CONSULTING A REGISTERED PROFESSIONAL ENGINEER. ALL WARRANTIES AND REPRESENTATIONS OF ANY KIND ARE DISCLAIMED. ANYONE MAKING USE OF THIS INFORMATION AGREES THAT IT ASSUMES ALL LIABILITY ARISING FROM SUCH USE. NO PART OF THESE STANDARDS SHOULD BE REPRODUCED OR DISTRIBUTED IN ANY FORM OR BY ANY MEANS WITHOUT THE PRIOR WRITTEN PERMISSION OF SCRRA. ALL RIGHTS RESERVED.

METROLINK®

SOUTHERN CALIFORNIA REGIONAL RAIL AUTHORITY
ONE GATEWAY PLAZA, 12TH FLOOR, L. A., CA. 90012

ENGINEERING STANDARDS

RAIL ANCHOR APPLICATIONS FOR CONTINUOUS WELDED RAIL WITH WOOD CROSS TIES

STANDARD: 2351
SCALE: NTS
REVISION: –
SHEET: 2 OF 4
CADD FILE: ES2351-02

NOTES:

1. TRANSITION TIES TO CONSIST OF 24, 10'-0" LONG, WOOD TIES WITH PANDROL TYPE, GALVANIZED CLIPS OR EQUAL.
2. BOX ANCHORS ARE REQUIRED FOR 200 FT IN THE WOOD TIES AFTER TRANSITION TIES. ANCHORS ON BOTH RAILS MAY BE OMITTED IF RAIL JOINTS ARE PRESENT.
3. RAIL ANCHORS MUST NOT BE PLACED AGAINST JOINT TIES, INCLUDING INSULATED JOINTS. GLUE LAMINATED INSULATED JOINTS ARE NOT CONSIDERED AS JOINTS AND WILL BE FULLY ANCHORED.
4. AT LOCATIONS WHERE ADDITIONAL ANCHORS ARE REQUIRED, SCRRA ENGINEER WILL DETERMINE THE NUMBER OF ANCHORS REQUIRED.
5. RAIL ANCHOR SHALL BE DRIVEN ON BASE OF RAIL UNTIL LOCKING NOTCH ENGAGES EDGE OF OPPOSITE FLANGE. ANCHORS MUST NOT BE DRIVEN ALONG THE RAIL. IF ADJUSTMENTS ARE NECESSARY, REMOVE AND RE-APPLY.
6. ELASTIC FASTENERS IN WOOD TIE ZONE WILL SATISFY RAIL ANCHORAGE NEEDS. USE OF ANCHORS IN COMBINATION WITH ELASTIC FASTENERS SHALL BE DONE ONLY AS DIRECTED BY SCRRA ENGINEER.
7. APPLIES TO ALL CONCRETE TIE TRACKS-ML, SIDING, AND YARD.

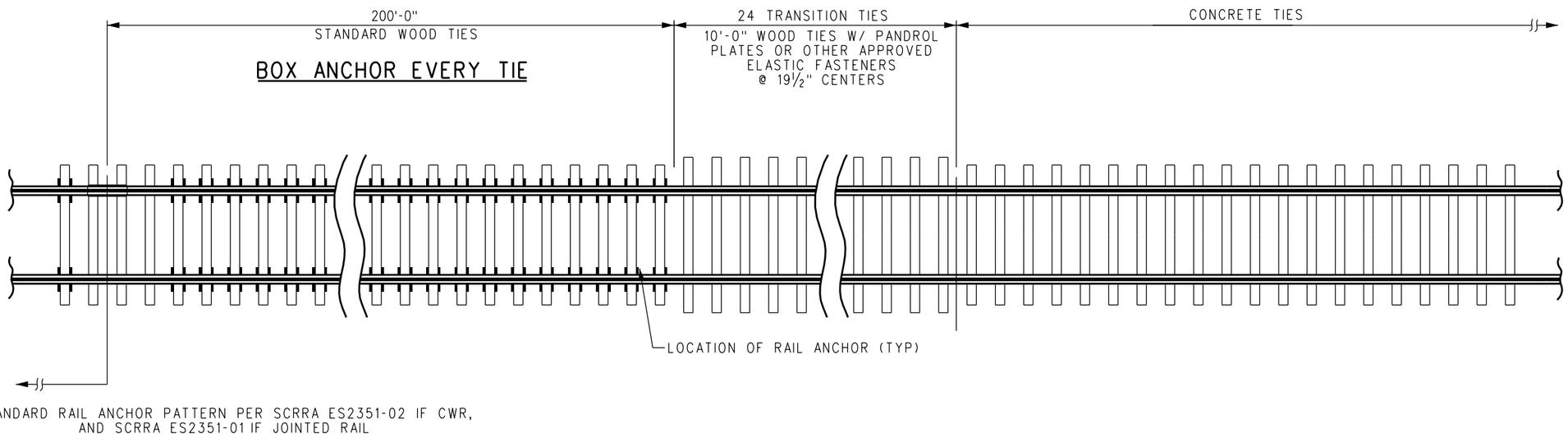

REV.	DATE	DESCRIPTION	DES.	ENG.
X	XX-XX-XX	REVISION	XX	XX

DRAWN BY: A. CARLOS DATE: 03/31/2011

ASSISTANT DIRECTOR: STANDARDS & DESIGN

DIRECTOR OF ENGINEERING AND CONSTRUCTION

SCRRA ENGINEERING STANDARDS ARE INTENDED FOR SCRRA APPROVED USES ONLY. FOR NON-SCRRA APPROVED USES:
SCRRA SHALL NOT BE RESPONSIBLE FOR THE ACCURACY OR COMPLETENESS OF THE DATA OR INFORMATION CONTAINED HEREIN. THE SELECTION AND USE OF THESE STANDARDS IS THE SOLE RESPONSIBILITY OF THE USER AND SHOULD NOT BE USED WITHOUT CONSULTING A REGISTERED PROFESSIONAL ENGINEER. ALL WARRANTIES AND REPRESENTATIONS OF ANY KIND ARE DISCLAIMED. ANYONE MAKING USE OF THIS INFORMATION AGREES THAT IT ASSUMES ALL LIABILITY ARISING FROM SUCH USE. NO PART OF THESE STANDARDS SHOULD BE REPRODUCED OR DISTRIBUTED IN ANY FORM OR BY ANY MEANS WITHOUT THE PRIOR WRITTEN PERMISSION OF SCRRA. ALL RIGHTS RESERVED.

METROLINK®
SOUTHERN CALIFORNIA REGIONAL RAIL AUTHORITY
ONE GATEWAY PLAZA, 12TH FLOOR, L. A., CA. 90012

ENGINEERING STANDARDS

RAIL ANCHOR APPLICATIONS
FOR CONTINUOUS WELDED RAIL – TRANSITION
FROM WOOD TO CONCRETE CROSS TIES

STANDARD: 2351
SCALE: NTS
REVISION: –
SHEET: 3 OF 4
CADD FILE: ES2351-03

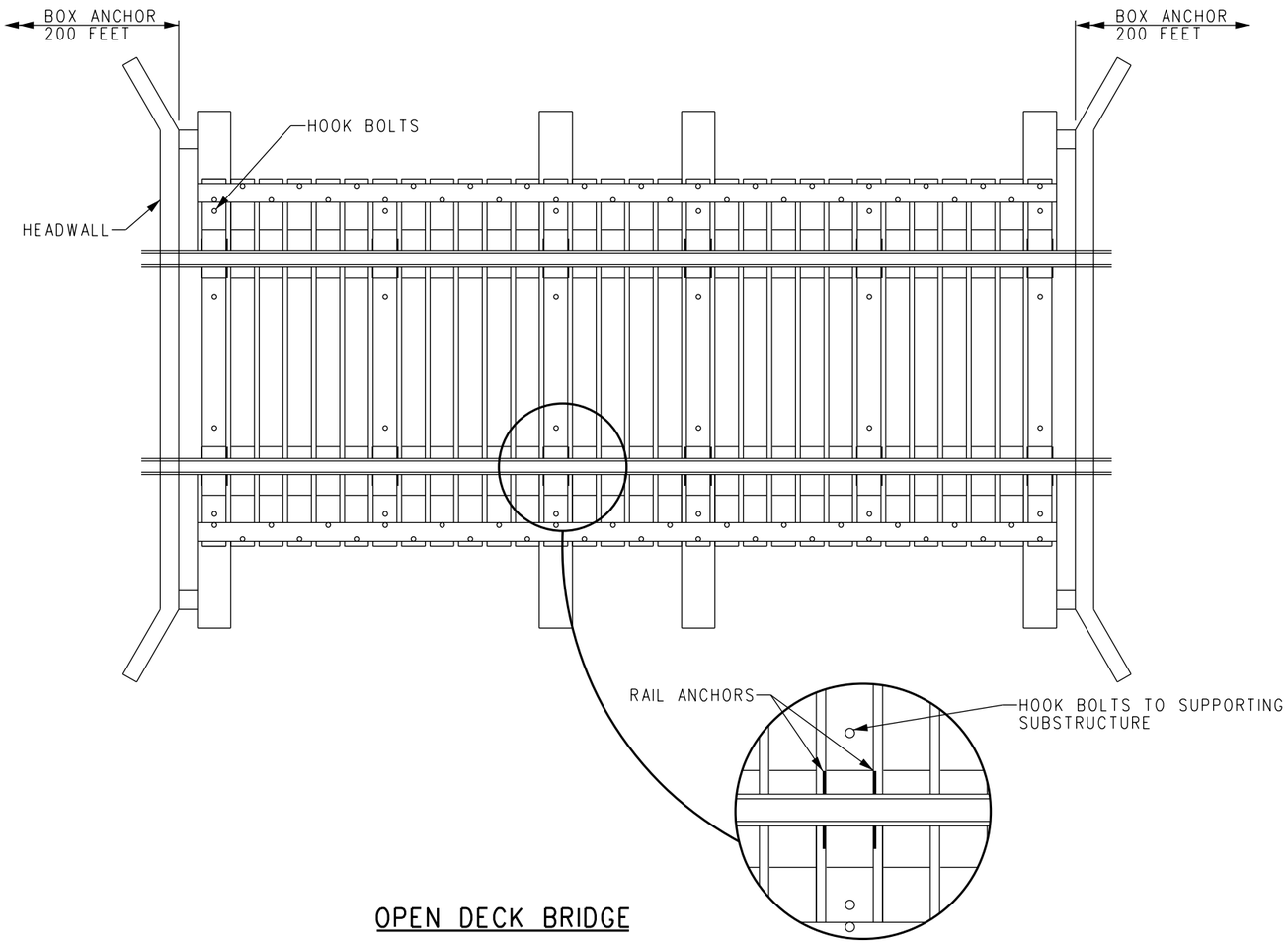

OPEN DECK BRIDGE

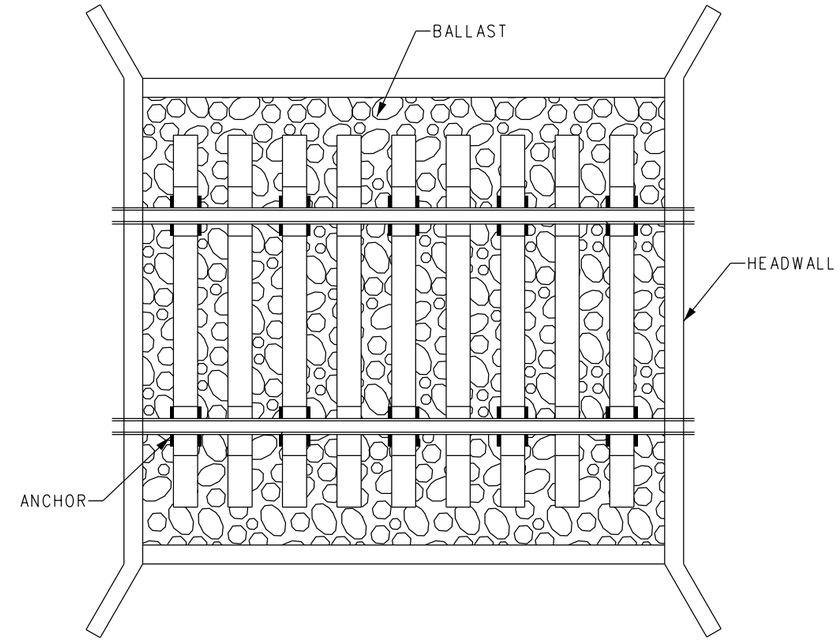

BALLAST DECK BRIDGE

FOR ANCHORING RAIL ON BALLAST DECK BRIDGES, BRIDGE HAS NO IMPACT ON PATTERN, USE PATTERN REVISIONS IN ES2351-02.

OPEN DECK BRIDGES:

1. BOX ANCHOR EVERY TIE FOR 200 FEET AWAY FROM HEADWALL ON ALL OPEN DECK BRIDGE APPROACHES. USE ANCHOR PATTERN ON SCRRA ES2351-02.
2. ALL TIES ACROSS OPEN DECK BRIDGES WHICH ARE ANCHORED TO SUBSTRUCTURE WILL BE BOX ANCHORED.
3. ONLY APPLIES TO BRIDGE 200' OR LONGER.

NOTES:

1. EXISTING ANCHOR PATTERNS MAY REMAIN UNTIL RAIL RELAY IS COMPLETE.
2. SECOND HAND ANCHORS MAY BE USED ON ALL INDUSTRY AND YARD TRACKS.
3. AS A GENERAL RULE, TRACK WITH ELASTIC FASTENERS DOES NOT REQUIRE ANCHORING. HOWEVER, IF THE SCRRA ENGINEER DEEMS IT NECESSARY TO PROPERLY RESTRAIN THE RAIL FROM MOVING LONGITUDINALLY, RAIL ANCHORS SHALL BE INSTALLED.

REV.	DATE	DESCRIPTION	DES.	ENG.
X	XX-XX-XX	REVISION	XX	XX

DRAWN BY: HDR DATE: 03/31/2011

ASSISTANT DIRECTOR: STANDARDS & DESIGN

DIRECTOR OF ENGINEERING AND CONSTRUCTION

SCRRA ENGINEERING STANDARDS ARE INTENDED FOR SCRRA APPROVED USES ONLY. FOR NON-SCRRA APPROVED USES:
SCRRA SHALL NOT BE RESPONSIBLE FOR THE ACCURACY OR COMPLETENESS OF THE DATA OR INFORMATION CONTAINED HEREIN. THE SELECTION AND USE OF THESE STANDARDS IS THE SOLE RESPONSIBILITY OF THE USER AND SHOULD NOT BE USED WITHOUT CONSULTING A REGISTERED PROFESSIONAL ENGINEER. ALL WARRANTIES AND REPRESENTATIONS OF ANY KIND ARE DISCLAIMED. ANYONE MAKING USE OF THIS INFORMATION AGREES THAT IT ASSUMES ALL LIABILITY ARISING FROM SUCH USE. NO PART OF THESE STANDARDS SHOULD BE REPRODUCED OR DISTRIBUTED IN ANY FORM OR BY ANY MEANS WITHOUT THE PRIOR WRITTEN PERMISSION OF SCRRA. ALL RIGHTS RESERVED.

METROLINK®
SOUTHERN CALIFORNIA REGIONAL RAIL AUTHORITY
ONE GATEWAY PLAZA, 12TH FLOOR, L. A., CA. 90012

ENGINEERING STANDARDS

RAIL ANCHOR PATTERNS FOR CWR ON BRIDGES

STANDARD 2351
SCALE: NTS
REVISION –
SHEET 4 OF 4
CADD FILE: ES2351-04

NOTES:

1. BOLTS AND NUTS TO BE MADE OF CLASS B STEEL.
2. NOMINAL SIZE OF BOLT IS THE THREAD DIAMETER (d).
3. WASHERS TO CONFORM TO AREMA SPECIFICATIONS.

DIMENSION TABLE (INCHES)

WEIGHT AND SECTION OF RAIL	BOLT												NUT		WEIGHT EACH (BOLT AND NUT)	NUMBER OF BOLTS PER 200 LB KEG	SPRING WASHER		
	THREADS			BODY		HEAD				NECK									
	OUTSIDE DIAMETER	LENGTH	NUMBER PER INCH	SHANK DIAMETER	LENGTH UNDER HEAD	DIAMETER	THICKNESS	LONG RADIUS	SHORT RADIUS	MAXIMUM WIDTH	MINIMUM WIDTH	DEPTH	THICKNESS	WIDTH			INSIDE DIAMETER	OUTSIDE DIAMETER	THICKNESS
	d	L2	n	D	L	A	N	R1	R2	O	R	P	U	W	LBS		ID	OD	T
80 LB ASCE	13/16	1 1/2	10	3/4	4 3/8	1 7/16	9/16			1 1/16	1 1/32	7/16	3/4	1 3/8	1.09	184	7/8	1 3/4	7/16
75 LB CS & CS REV 80 LB ASCE	15/16	1 7/8	9	7/8	4 3/4	1 9/16	11/16			1 7/32	1 3/16	1/2	1 1/8	1 1/2	1.56	128	1 1/16	2 1/16	9/16
90 LB AREA	"	"	"	7/8	5 1/8	"	"			"	"	"	"	"	1.62	123	1 1/16	2 1/16	9/16
110 LB RE	1 1/16	2 1/8	8	1	5 3/8	1 11/16	3/4			1 11/32	1 5/16	5/8	1 1/4	1 5/8	2.22	90	1 1/8	2 1/8	9/16
130 LB PS, 130 LB RE	"	"	"	1	6 3/8	"	"			"	"	"	"	"	2.45	82	1 1/8	2 1/8	9/16
112 LB, 115 LB, 131 LB RE 113 LB HF, 132 LB HF 119 LB CF&I, 136 LB RE 141 LB RE	1 1/8	2 1/2	7	1 1/16	6 1/2	1 57/64	45/64	1 55/64	43/64	1 17/32	1 1/2	5/8	1 1/8	1 11/16	2.62	76	1 3/16	2 7/32	9/16

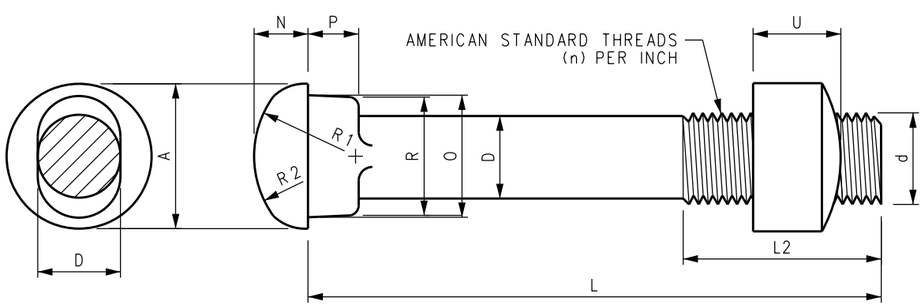

TRACK BOLT AND NUT

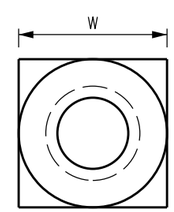

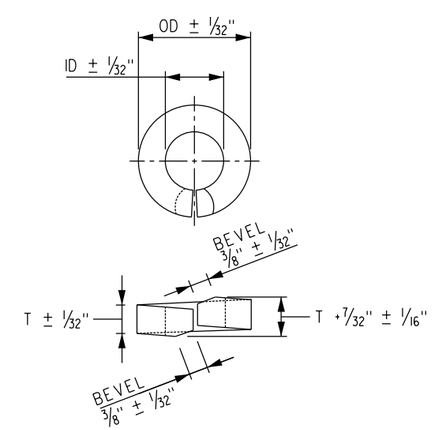

SPRING WASHER
(NO TENSION)

REV.	DATE	DESCRIPTION	DES.	ENG.
X	XX-XX-XX	REVISION	XX	XX

DRAWN BY: A. CARLOS DATE: 03/31/2011

ASSISTANT DIRECTOR: STANDARDS & DESIGN

DIRECTOR OF ENGINEERING AND CONSTRUCTION

SCRRA ENGINEERING STANDARDS ARE INTENDED FOR SCRRA APPROVED USES ONLY. FOR NON-SCRRA APPROVED USES:
SCRRA SHALL NOT BE RESPONSIBLE FOR THE ACCURACY OR COMPLETENESS OF THE DATA OR INFORMATION CONTAINED HEREIN. THE SELECTION AND USE OF THESE STANDARDS IS THE SOLE RESPONSIBILITY OF THE USER AND SHOULD NOT BE USED WITHOUT CONSULTING A REGISTERED PROFESSIONAL ENGINEER. ALL WARRANTIES AND REPRESENTATIONS OF ANY KIND ARE DISCLAIMED. ANYONE MAKING USE OF THIS INFORMATION AGREES THAT IT ASSUMES ALL LIABILITY ARISING FROM SUCH USE. NO PART OF THESE STANDARDS SHOULD BE REPRODUCED OR DISTRIBUTED IN ANY FORM OR BY ANY MEANS WITHOUT THE PRIOR WRITTEN PERMISSION OF SCRRA. ALL RIGHTS RESERVED.

METROLINK®
SOUTHERN CALIFORNIA REGIONAL RAIL AUTHORITY
ONE GATEWAY PLAZA, 12TH FLOOR, L. A., CA. 90012

ENGINEERING STANDARDS

TRACK BOLTS, NUTS AND WASHER

STANDARD 2352
SCALE: NTS
REVISION –
SHEET 1 OF 1
CADD FILE: ES2352

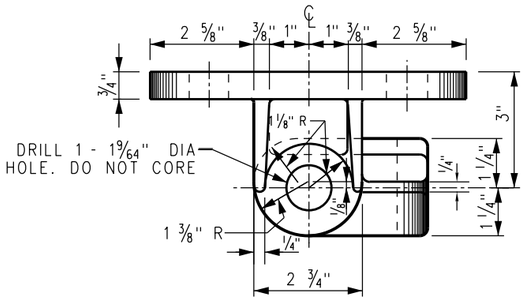

"X" HEIGHT ABOVE BASE		
WEIGHT OF RAIL	1/2" REINFORCING	1 1/4" REINFORCING
110 LB TO 119 LB	2 7/8"	2 11/16"
130 LB TO 136 LB	2 15/16"	2 3/4"

SPECIFICATIONS:

CAST STEEL CLIPS
RIGHT AND LEFT HAND
RIGHT HAND SHOWN

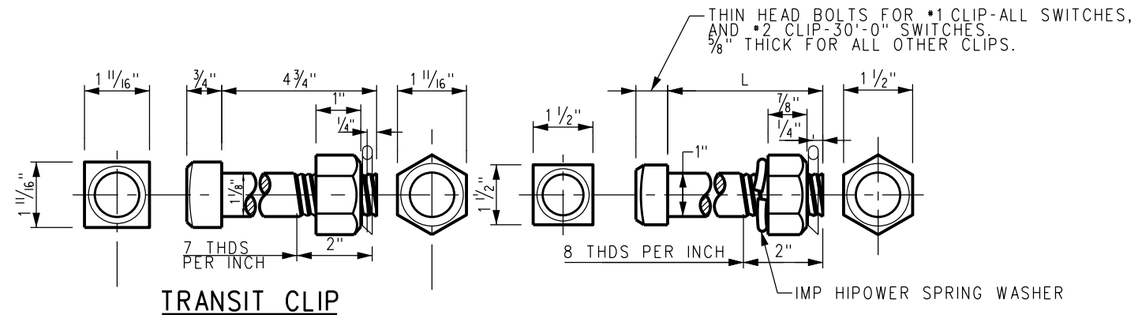

TRANSIT CLIP

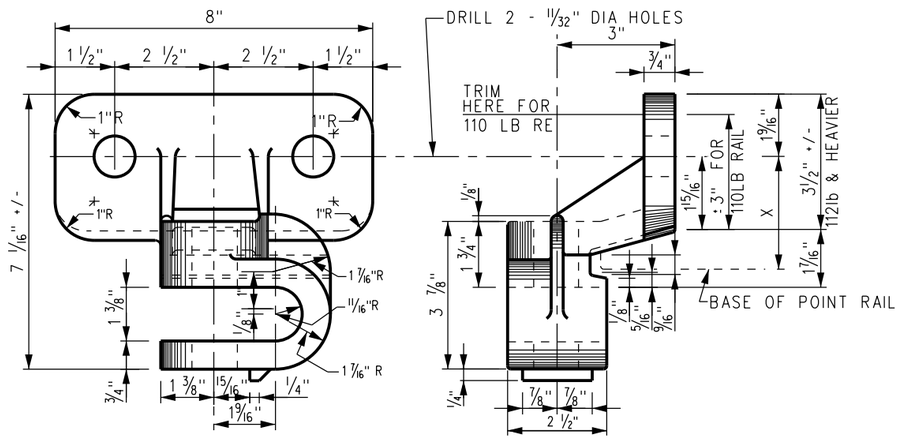

OPEN SIDE JAW CLIP

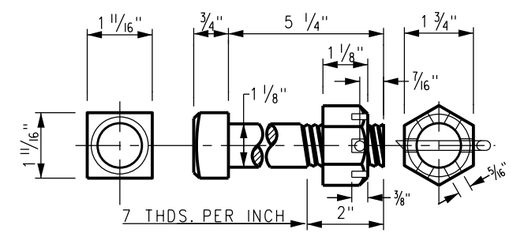

SWITCH LENGTH	ROD NO.	TYPE CLIP	LENGTH OF BOLTS "L"	
			SPLIT SWT	SPRING SWT
16'-6"	1	TRANSIT	4"	
		OSJ	*4"	4"
	2	TRANSIT	4"	4 1/2"
	3	OSJ		+4 3/4"
24'-0" AND 30'-0"	1	TRANSIT	4 1/2"	
		OSJ	*4"	4 3/4"
	2-5IN	TRANSIT	4 1/2"	5 1/4"
	4	OSJ		+5 1/2"

*FOR MACHINE OPERATED SWITCHES
+FOR FACING POINT LOCK OPERATION

OPEN SIDE JAW CLIP

BOLTS FOR SWITCH RODS AND CLIPS BOLTS FOR SWITCH POINTS AND CLIPS
OPEN SIDE JAW & TRANSIT CLIP

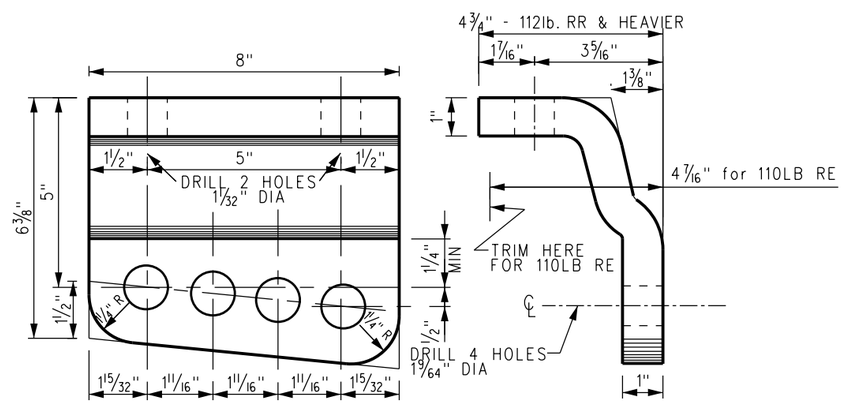

TRANSIT CLIP

RIGHT AND LEFT HAND REQUIRED
RIGHT HAND SHOWN

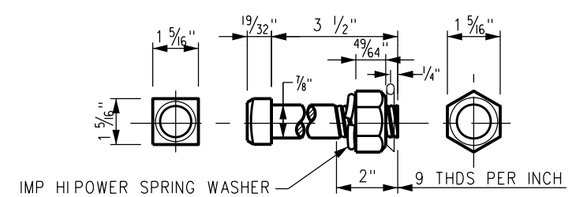

BOLT FOR REPLACING LOOSE RIVETS

NOTES:

1. ALL BOLTS TO BE TURNED BOLTS WITH CUT THREADS.
2. DRILL 9/32" DIA HOLE FOR 1/4" SPRING COTTERS AS SHOWN.
3. SLOTTED NUT SHOWN TO BE AMERICAN STANDARD HEAVY SEMI-FINISHED.

NOTE:

THIS BOLT TO BE USED FOR REPLACING LOOSE RIVETS ON SWITCHES FORMERLY FURNISHED WITH TRANSIT CLIPS RIVETED TO SWITCH POINTS.

REV.	DATE	DESCRIPTION	DES.	ENG.
X	XX-XX-XX	REVISION	XX	XX

DRAWN BY: A. CARLOS DATE: 03/31/2011

ASSISTANT DIRECTOR: STANDARDS & DESIGN

DIRECTOR OF ENGINEERING AND CONSTRUCTION

SCRRA ENGINEERING STANDARDS ARE INTENDED FOR SCRRA APPROVED USES ONLY. FOR NON-SCRRA APPROVED USES:
SCRRA SHALL NOT BE RESPONSIBLE FOR THE ACCURACY OR COMPLETENESS OF THE DATA OR INFORMATION CONTAINED HEREIN. THE SELECTION AND USE OF THESE STANDARDS IS THE SOLE RESPONSIBILITY OF THE USER AND SHOULD NOT BE USED WITHOUT CONSULTING A REGISTERED PROFESSIONAL ENGINEER. ALL WARRANTIES AND REPRESENTATIONS OF ANY KIND ARE DISCLAIMED. ANYONE MAKING USE OF THIS INFORMATION AGREES THAT IT ASSUMES ALL LIABILITY ARISING FROM SUCH USE. NO PART OF THESE STANDARDS SHOULD BE REPRODUCED OR DISTRIBUTED IN ANY FORM OR BY ANY MEANS WITHOUT THE PRIOR WRITTEN PERMISSION OF SCRRA. ALL RIGHTS RESERVED.

METROLINK®
SOUTHERN CALIFORNIA REGIONAL RAIL AUTHORITY
ONE GATEWAY PLAZA, 12TH FLOOR, L. A., CA. 90012

ENGINEERING STANDARDS

SWITCH ROD CLIPS AND BOLTS

STANDARD 2353
SCALE: NTS
REVISION –
SHEET 1 OF 1
CADD FILE: ES2353

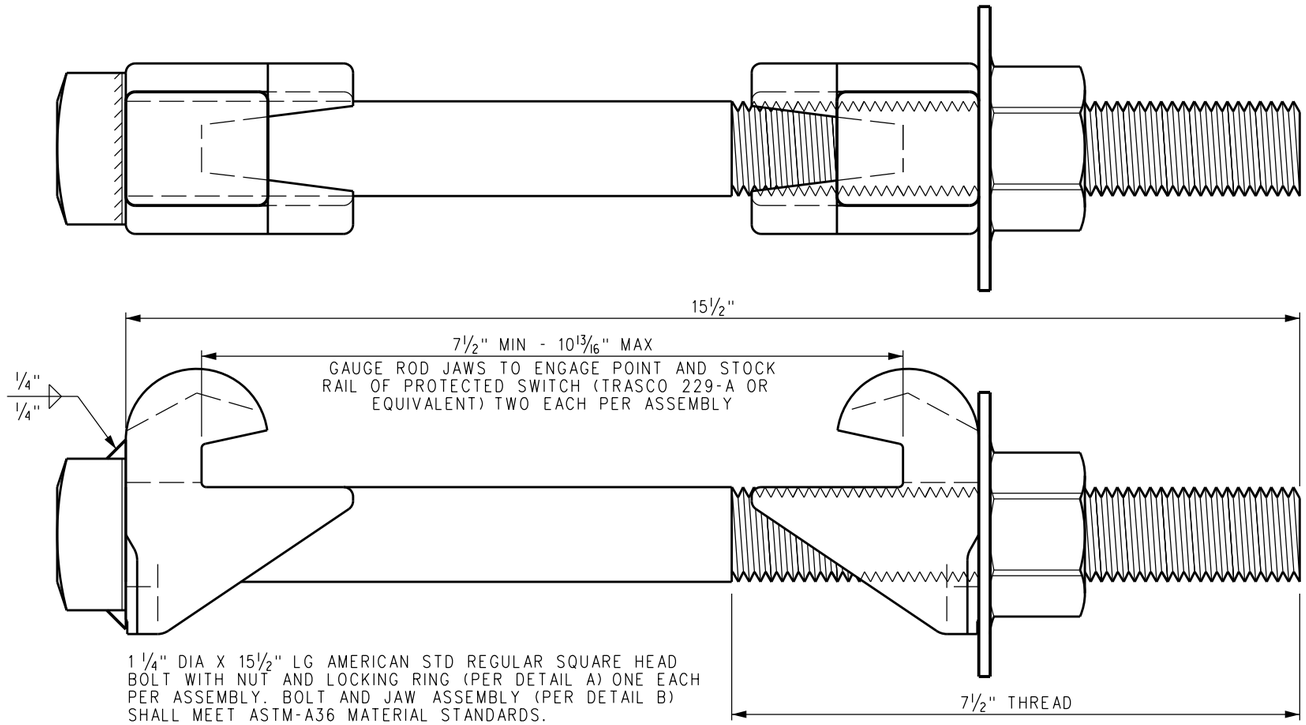

SWITCH POINT CLAMP

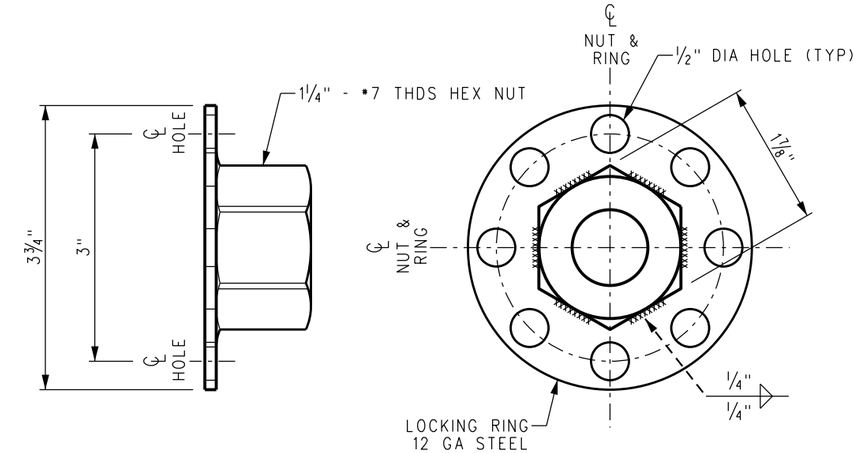

DETAIL A - NUT AND LOCKING RING

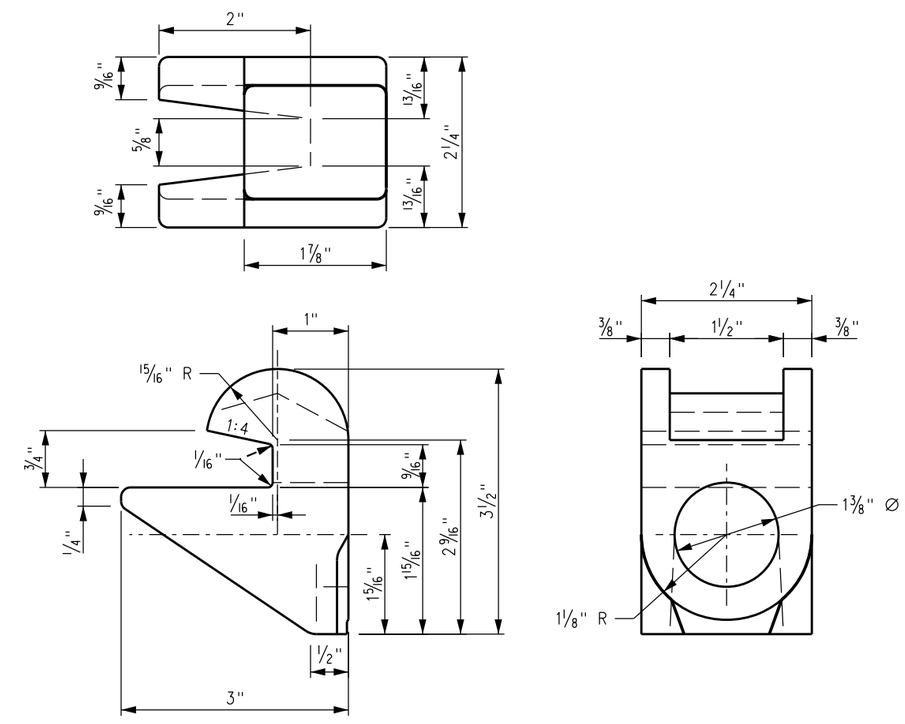

DETAIL B - CLAMP CASTING

NOTES:

1. TO BE INSTALLED ALONG SWITCH POINT BETWEEN POINT OF SWITCH AND NO 2 ROD.
2. PAINT ASSEMBLY DARK BLUE-EXCEPT THREADS. USE SCRRA MAINTENANCE PADLOCK.
3. WHEN CLAMP IS APPLIED ON SWITCH WITH HAND THROW SWITCH STAND, STANDARD SWITCH LOCK WILL BE REPLACED WITH SCRRA MAINTENANCE PADLOCK, AND TAGGED "OUT OF SERVICE".

REV.	DATE	DESCRIPTION	DES.	ENG.
X	XX-XX-XX	REVISION	XX	XX

DRAWN BY: HDR DATE: 03/31/2011

ASSISTANT DIRECTOR: STANDARDS & DESIGN

DIRECTOR OF ENGINEERING AND CONSTRUCTION

SCRRA ENGINEERING STANDARDS ARE INTENDED FOR SCRRA APPROVED USES ONLY. FOR NON-SCRRA APPROVED USES: SCRRA SHALL NOT BE RESPONSIBLE FOR THE ACCURACY OR COMPLETENESS OF THE DATA OR INFORMATION CONTAINED HEREIN. THE SELECTION AND USE OF THESE STANDARDS IS THE SOLE RESPONSIBILITY OF THE USER AND SHOULD NOT BE USED WITHOUT CONSULTING A REGISTERED PROFESSIONAL ENGINEER. ALL WARRANTIES AND REPRESENTATIONS OF ANY KIND ARE DISCLAIMED. ANYONE MAKING USE OF THIS INFORMATION AGREES THAT IT ASSUMES ALL LIABILITY ARISING FROM SUCH USE. NO PART OF THESE STANDARDS SHOULD BE REPRODUCED OR DISTRIBUTED IN ANY FORM OR BY ANY MEANS WITHOUT THE PRIOR WRITTEN PERMISSION OF SCRRA. ALL RIGHTS RESERVED.

METROLINK®
SOUTHERN CALIFORNIA REGIONAL RAIL AUTHORITY
ONE GATEWAY PLAZA, 12TH FLOOR, L. A., CA. 90012

ENGINEERING STANDARDS

SWITCH POINT CLAMP

STANDARD 2354
SCALE: NTS
REVISION –
SHEET 1 OF 1
CADD FILE: ES2354

TIGHT SPIKE

OR APPROVED EQUAL, SPIKE HOLE FINISHING COMPOUND

NOTES:

1. CONSISTS OF A 2-PART FILLER MATERIAL-PART A (ISOCYANATE) AND PART B (POLYOL).
2. OPERATORS MUST BE PROPERLY TRAINED AND USE APPROPRIATE EQUIPMENT FOR INSTALLATION OF MATERIAL.
3. MATERIAL IS SUPPLIED IN SEVERAL SIZES INCLUDING SMALL CAULK GUN TUBES FOR MINOR INSTALLATION REQUIREMENTS.
4. MUST ADHERE TO REQUIREMENTS OF MATERIAL SAFETY DATA SHEET WHEN HANDLING MATERIAL.

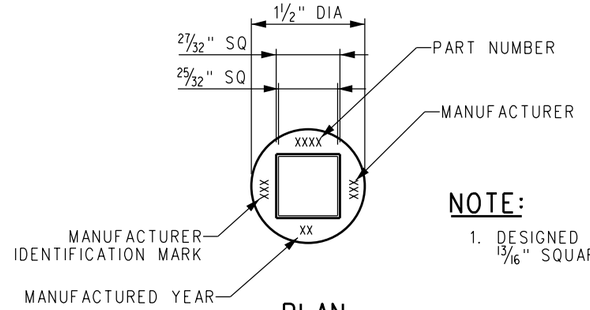

NOTE:

1. DESIGNED FOR USE WITH 13/16" SQUARE SOCKET

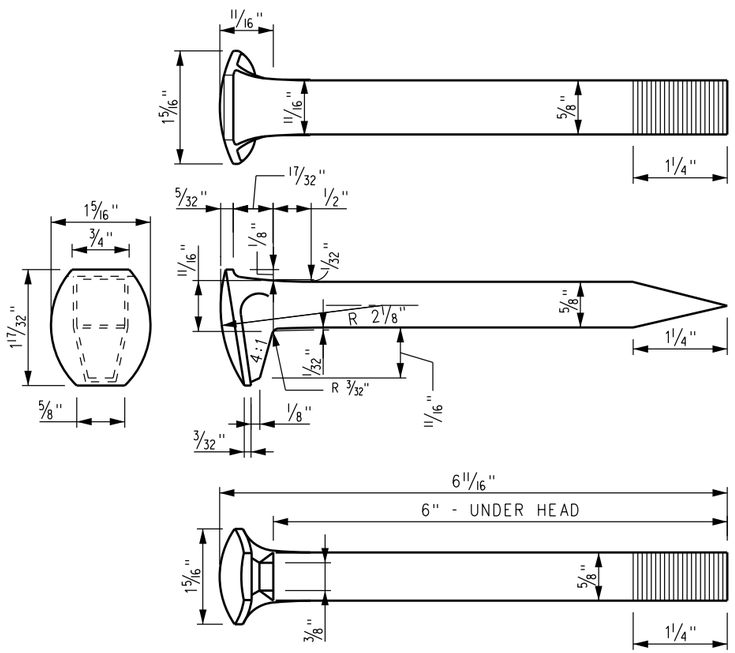

TRACK SPIKE

NOTES:

1. TRACK SPIKES MUST CONFORM TO AREMA SPECIFICATIONS.
2. WEIGHT = 0.85 LBS.
3. PACKAGE IN 50# BOX OR 100# KG.

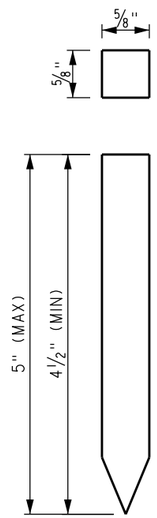

TIE PLUG

NOTES:

1. TIE PLUG TO CONFORM TO AREMA STANDARDS.
2. TIE PLUG TO BE FABRICATED FROM HARDWOOD TREATED WITH CREOSOTE, CCA, OR BORATE.
3. MAY BE BUNDLED OR BAGGED.
4. PLUG MUST BE FULLY INSERTED INTO EMPTY SPIKE HOLE AND TAMPED INTO PLACE. REMOVE EXCESS PLUG WITH ADZE.

PLAN

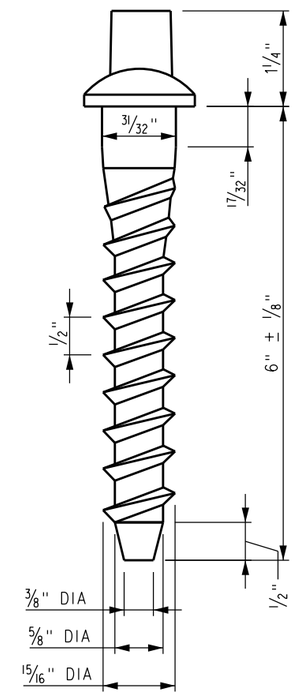

ELEVATION
SCREW SPIKE

MATERIAL SPECIFICATIONS:

1. ALL SCREW SPIKES TO BE HOT FORGED.
2. SCREW SPIKES TO BE MADE FROM MEDIUM CARBON STEEL TO MEET ASTM A-66 SPECIFICATIONS.
3. SCREW SPIKES TO BE COATED TO RESIST CORROSION.
4. APPROXIMATE SHIPPING WEIGHT OF EACH SCREW SPIKE: 1.1 LBS.
5. SCREW SPIKES TO BE PACKED 100 TO A BAG.

INSTALLATION INSTRUCTIONS:

1. PRE-DRILL WOOD TIES WITH 11/16" DIA DRILL BIT TO DEPTH OF 5 1/2".
2. PRE-DRILLED HOLES MUST BE PERPENDICULAR WITH BASE PLATE.
3. USING A 3/4" SQUARE DRIVE SOCKET AND AN IMPACT WRENCH, SCREW IN UNTIL SNUG.

REV.	DATE	DESCRIPTION	DES.	ENG.
X	XX-XX-XX	REVISION	XX	XX

DRAWN BY: A. CARLOS DATE: 03/31/2011

ASSISTANT DIRECTOR: STANDARDS & DESIGN

DIRECTOR OF ENGINEERING AND CONSTRUCTION

SCRRA ENGINEERING STANDARDS ARE INTENDED FOR SCRRA APPROVED USES ONLY. FOR NON-SCRRA APPROVED USES:
SCRRA SHALL NOT BE RESPONSIBLE FOR THE ACCURACY OR COMPLETENESS OF THE DATA OR INFORMATION CONTAINED HEREIN. THE SELECTION AND USE OF THESE STANDARDS IS THE SOLE RESPONSIBILITY OF THE USER AND SHOULD NOT BE USED WITHOUT CONSULTING A REGISTERED PROFESSIONAL ENGINEER. ALL WARRANTIES AND REPRESENTATIONS OF ANY KIND ARE DISCLAIMED. ANYONE MAKING USE OF THIS INFORMATION AGREES THAT IT ASSUMES ALL LIABILITY ARISING FROM SUCH USE. NO PART OF THESE STANDARDS SHOULD BE REPRODUCED OR DISTRIBUTED IN ANY FORM OR BY ANY MEANS WITHOUT THE PRIOR WRITTEN PERMISSION OF SCRRA. ALL RIGHTS RESERVED.

METROLINK®
SOUTHERN CALIFORNIA REGIONAL RAIL AUTHORITY
ONE GATEWAY PLAZA, 12TH FLOOR, L. A., CA. 90012

ENGINEERING STANDARDS

6" TRACK SPIKES, 15/16" SCREW FASTENER, TIE PLUGS AND TIGHT SPIKE FILLER

STANDARD 2355
SCALE: NTS
REVISION –
SHEET 1 OF 1
CADD FILE: ES2355

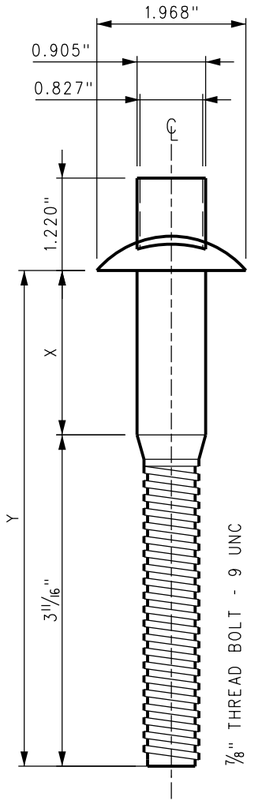

VAPE BOLT

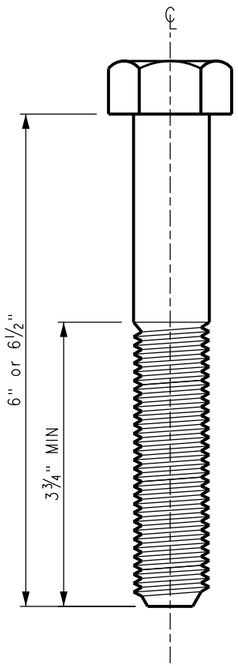

6" OR 6-1/2" LONG
7/8" UNC BOLT
GR A-325
YELLOW ZINC BICHROMATE

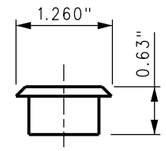

DEBRIS CAP LUG
(CCF 1-14.20)

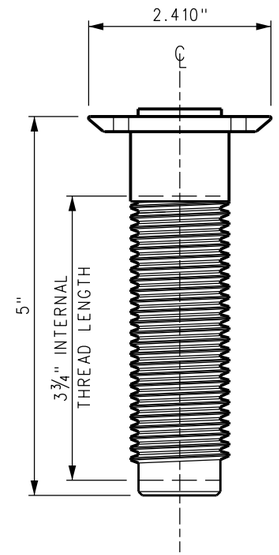

NYLON 66
THREAD INSERT
COLOR-WHITE
REMOVABLE/REPLACEABLE

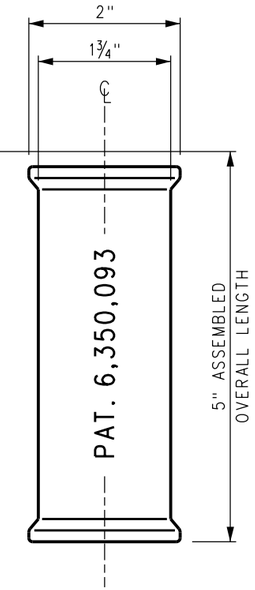

DUCTILE IRON HOUSING
INTERNALLY THREADED

VAPE BOLT DIMENSIONS

X GRIP LENGTH	Y SHANK LENGTH	FOR USE THROUGH
2 3/16"	5 7/8"	3/4" PLATING
2 5/8"	6 3/8"	1" PLATING

NOTES:

1. 6" OR 6-1/2" LONG 7/8" UNC BOLT GR A-325 YELLOW ZINC BICHROMATE.
2. TO AVOID DAMAGE TO THE TIE, ENSURE THAT PROPER SCREW SIZE IS USED FOR VARIOUS PLATE THICKNESSES. (SEE TABLE)
3. VAPE SCREW TO BE TORQUED TO 150 FT-LBS. THIS TORQUE CORRESPONDS TO A 1mm CLEARANCE BETWEEN COILS ON THE SPRING WASHER.
4. FOR CONCRETE GUARD RAIL TIE SEE SCRRA ES2406 OR ES2407. FOR CONCRETE SWITCH TIE SEE CORRESPONDING TIE PLAN.
5. SPRING WASHERS SHALL CONFORM TO UIC CODE 864-3. DIMENSIONS AS DELIVERED (UNLOADED). STAMPING IS TO BE DONE IN AREA INDICATED ON CURRENT YEAR AND SUPPLIER'S LOGO.

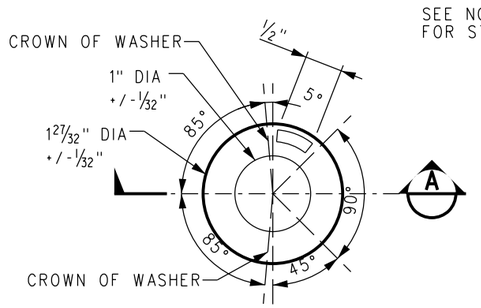

SEE NOTE
FOR STAMPING

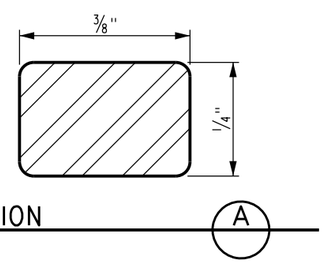

SECTION A

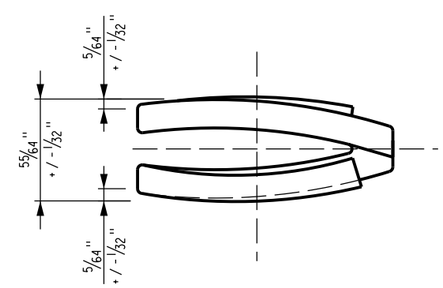

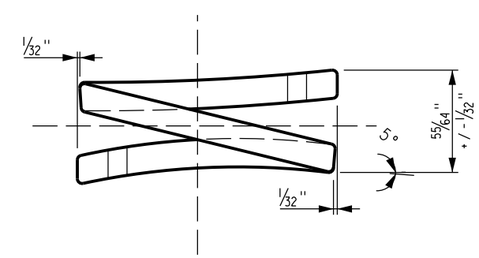

HELICAL SPRING WASHER

REV.	DATE	DESCRIPTION	DES.	ENG.
X	XX-XX-XX	REVISION	XX	XX

DRAWN BY: HDR DATE: 03/31/2011

ASSISTANT DIRECTOR: STANDARDS & DESIGN

DIRECTOR OF ENGINEERING AND CONSTRUCTION

SCRRA ENGINEERING STANDARDS ARE INTENDED FOR SCRRA APPROVED USES ONLY. FOR NON-SCRRA APPROVED USES:
SCRRA SHALL NOT BE RESPONSIBLE FOR THE ACCURACY OR COMPLETENESS OF THE DATA OR INFORMATION CONTAINED HEREIN. THE SELECTION AND USE OF THESE STANDARDS IS THE SOLE RESPONSIBILITY OF THE USER AND SHOULD NOT BE USED WITHOUT CONSULTING A REGISTERED PROFESSIONAL ENGINEER. ALL WARRANTIES AND REPRESENTATIONS OF ANY KIND ARE DISCLAIMED. ANYONE MAKING USE OF THIS INFORMATION AGREES THAT IT ASSUMES ALL LIABILITY ARISING FROM SUCH USE. NO PART OF THESE STANDARDS SHOULD BE REPRODUCED OR DISTRIBUTED IN ANY FORM OR BY ANY MEANS WITHOUT THE PRIOR WRITTEN PERMISSION OF SCRRA. ALL RIGHTS RESERVED.

METROLINK®
SOUTHERN CALIFORNIA REGIONAL RAIL AUTHORITY
ONE GATEWAY PLAZA, 12TH FLOOR, L. A., CA. 90012

ENGINEERING STANDARDS

PIM 532 SCREW, INSERT AND
HELICAL WASHER FOR CONCRETE TIES

STANDARD 2356
SCALE: NTS
REVISION –
SHEET 1 OF 1
CADD FILE: ES2356

FROG BOLTS, NUTS, AND WASHERS TABLE OF DIMENSIONS								
D	L	A	H	I	J	K	M	N
1"	3 1/2"	1 1/2"	3/8"	2"	-	-	-	-
"	4"	"	"	"	-	-	-	-
"	4 1/2"	"	"	"	-	-	-	-
"	5"	"	"	2 1/2"	-	-	-	-
"	5 1/2"	"	"	"	-	-	-	-
"	6"	"	"	"	-	-	-	-
"	6 1/2"	"	"	"	-	-	-	-
"	7"	"	"	"	-	-	-	-
1"	3 1/2"	1 1/2"	21/32"	"	-	-	-	-
"	4"	"	"	"	-	-	-	-
"	4 1/2"	"	"	"	-	-	-	-
"	5"	"	"	"	-	-	-	-
"	5 1/2"	"	"	"	-	-	-	-
"	6"	"	"	"	-	-	-	-
"	6 1/2"	"	"	"	-	-	-	-
"	7"	"	"	"	-	-	-	-
WASHER							2"	1 1/8"
SQ NUT					1"	1 5/8"		
HEX NUT					1"	1 5/8"		
1 3/8"	4"	2 1/16"	29/32"	2 3/4"	-	-	-	-
"	4 1/2"	"	"	"	-	-	-	-
"	5"	"	"	"	-	-	-	-
"	5 1/2"	"	"	"	-	-	-	-
"	6"	"	"	3 1/4"	-	-	-	-
"	6 1/2"	"	"	"	-	-	-	-
"	7"	"	"	"	-	-	-	-
"	8"	"	"	"	-	-	-	-
"	9"	"	"	"	-	-	-	-
"	10"	"	"	"	-	-	-	-
"	11"	"	"	"	-	-	-	-
"	12"	"	"	"	-	-	-	-
"	13"	"	"	"	-	-	-	-
"	14"	"	"	"	-	-	-	-
"	15"	"	"	"	-	-	-	-
"	16"	"	"	"	-	-	-	-
"	17"	"	"	"	-	-	-	-
"	18"	"	"	"	-	-	-	-
"	19"	"	"	"	-	-	-	-
"	20"	"	"	"	-	-	-	-
"	21"	"	"	"	-	-	-	-
"	22"	"	"	"	-	-	-	-
"	23"	"	"	"	-	-	-	-
"	24"	"	"	"	-	-	-	-
WASHER							2 3/4"	1 1/2"
SQ NUT					1 3/8"	2 3/16"		
HEX NUT					1 3/8"	2 3/16"		

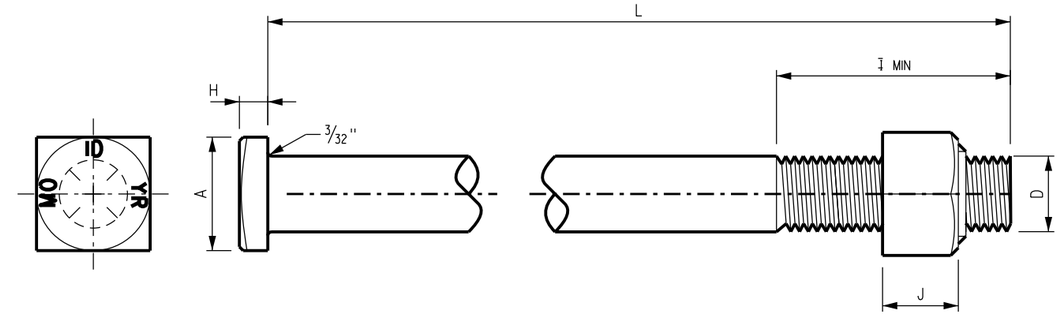

SQUARE HEAD FROG BOLTS

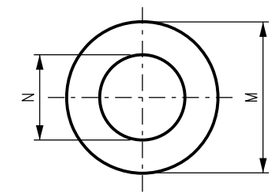

WASHER

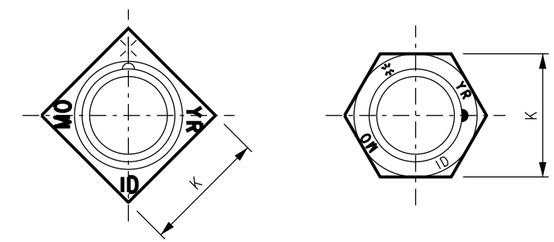

SQ NUT OR HEX NUT

NOTES:

1. BOLT SHALL CONFORM TO THE CURRENT VERSION OF SAE J429 GRADE 8. HEAT TREATED TO 150,000 PSI TENSILE STRENGTH, 130,000 PSI YIELD, OIL QUENCHED FROM 4140 STEEL. HEAD MARKINGS SHALL INCLUDE GRADE 8 GRADE MARKINGS, MANUFACTURER ID, MONTH AND YEAR OF MANUFACTURE. THREADS TO BE ROLLED AND CONFORM TO ANSI/ASME B1.1 UNC-2A THREAD FORM.
2. NUTS SHALL CONFORM TO HARDNESS AND MATERIAL REQUIREMENTS OF SAE J995 GRADE 8 OR ASTM A-563 GRADE 'DH', AND DIMENSIONAL REQUIREMENTS OF ANSI/ASME B18.2.2 HEAVY HEX OR SQUARE NUTS, PLAIN FINISH. HEAVY HEX OR SQUARE LOCK NUT THREADS SHALL CONFORM TO ANSI/ASME B1.1 UNC-2B THREAD FORM, FREE FIT.
3. FLAT WASHERS SHALL CONFORM TO HARDNESS REQUIREMENTS OF THE CURRENT VERSION OF ASTM F-436 AND BE 5/32" THICK.
4. WORKMANSHIP: BOLTS, NUTS, AND WASHERS SHALL BE FREE FROM BURRS, SEAMS, LAPS, AND SCALE.
5. BOLT TIGHTENING SEQUENCE SHALL START WITH THE BOLT NEAREST THE CENTER OF FROG. WORK IN A CIRCULAR PATTERN IN A CLOCKWISE DIRECTION, PROGRESSING OUTWARD TO THE NEXT NEAREST FROG BOLT UNTIL ALL BOLTS ARE TIGHTENED TO PROPER TORQUE, OR AS DIRECTED BY MANUFACTURER. ALL BOLTS AND NUTS WILL BE SUPPLIED WITH SELF-CENTERING WASHERS OR EQUIVALENT FOR PROPER LOAD DISTRIBUTION. SEE SCRRA ES2359.

REV.	DATE	DESCRIPTION	DES.	ENG.
X	XX-XX-XX	REVISION	XX	XX

DRAWN BY: HDR DATE: 03/31/2011

ASSISTANT DIRECTOR: STANDARDS & DESIGN

DIRECTOR OF ENGINEERING AND CONSTRUCTION

SCRRA ENGINEERING STANDARDS ARE INTENDED FOR SCRRA APPROVED USES ONLY. FOR NON-SCRRA APPROVED USES:
SCRRA SHALL NOT BE RESPONSIBLE FOR THE ACCURACY OR COMPLETENESS OF THE DATA OR INFORMATION CONTAINED HEREIN. THE SELECTION AND USE OF THESE STANDARDS IS THE SOLE RESPONSIBILITY OF THE USER AND SHOULD NOT BE USED WITHOUT CONSULTING A REGISTERED PROFESSIONAL ENGINEER. ALL WARRANTIES AND REPRESENTATIONS OF ANY KIND ARE DISCLAIMED. ANYONE MAKING USE OF THIS INFORMATION AGREES THAT IT ASSUMES ALL LIABILITY ARISING FROM SUCH USE. NO PART OF THESE STANDARDS SHOULD BE REPRODUCED OR DISTRIBUTED IN ANY FORM OR BY ANY MEANS WITHOUT THE PRIOR WRITTEN PERMISSION OF SCRRA. ALL RIGHTS RESERVED.

METROLINK®

SOUTHERN CALIFORNIA REGIONAL RAIL AUTHORITY
ONE GATEWAY PLAZA, 12TH FLOOR, L. A., CA. 90012

ENGINEERING STANDARDS

SQUARE HEAD FROG BOLTS, SQUARE AND HEX NUTS AND HARDENED FLAT WASHERS

STANDARD 2357
SCALE: NTS
REVISION –
SHEET 1 OF 1
CADD FILE: ES2357

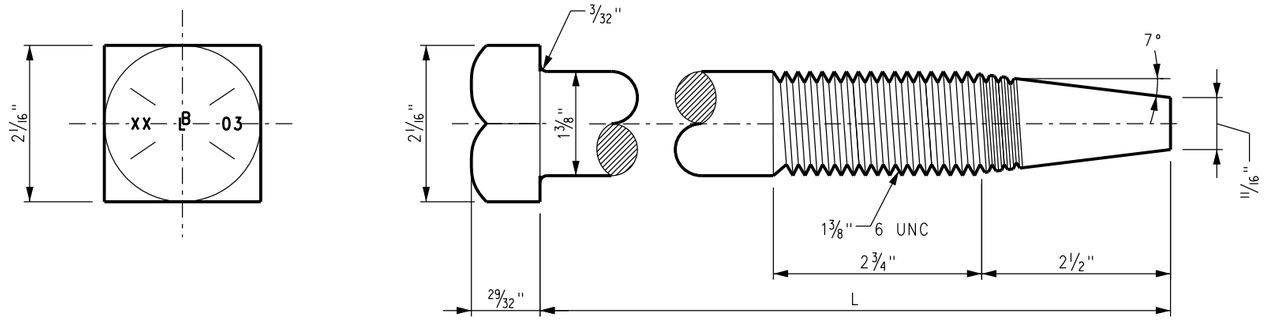

LENGTH = L
19 1/2"
20"
20 1/2"
21"
21 1/2"

TAPERED FROG BOLTS

NOTES:

1. WHEN USING/ORDERING TAPERED BOLTS, ADD 2½" TO OLD BOLT LENGTH.
2. BOLT SHALL CONFORM TO THE CURRENT VERSION OF SAE J429 GRADE 8. HEAT TREATED TO 150,000 PSI TENSILE STRENGTH, 130,000 PSI YIELD, OIL QUENCHED FROM 4140 STEEL. HEAD MARKINGS SHALL INCLUDE GRADE 8 GRADE MARKINGS, MANUFACTURER ID, MONTH AND YEAR OF MANUFACTURE. THREADS TO BE ROLLED AND CONFORM TO ANSI/ASME B1.1 UNC-2A THREAD FORM.
3. NUTS SHALL CONFORM TO HARDNESS AND MATERIAL REQUIREMENTS OF SAE J995 GRADE 8 OR ASTM A-563 GRADE 'DH' AND DIMENSIONAL REQUIREMENTS OF ANSI/ASME B18.2.2 HEAVY HEX OR SQUARE NUTS, PLAIN FINISH. HEAVY HEX OR SQUARE LOCK NUT THREADS SHALL CONFORM TO ANSI/ASME B1.1 UNC-2B THREAD FORM, FREE FIT.
4. FLAT WASHERS SHALL CONFORM TO HARDNESS REQUIREMENTS OF THE CURRENT VERSION OF ASTM F-436 AND BE 5/32" THICK.
5. WORKMANSHIP: BOLTS, NUTS, AND WASHERS SHALL BE FREE FROM BURRS, SEAMS, LAPS, AND SCALE.

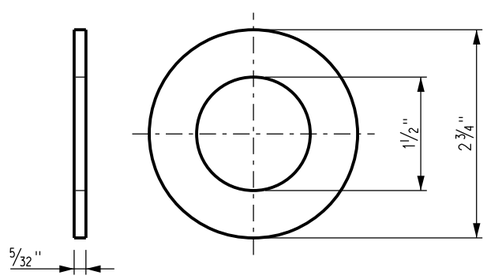

WASHER

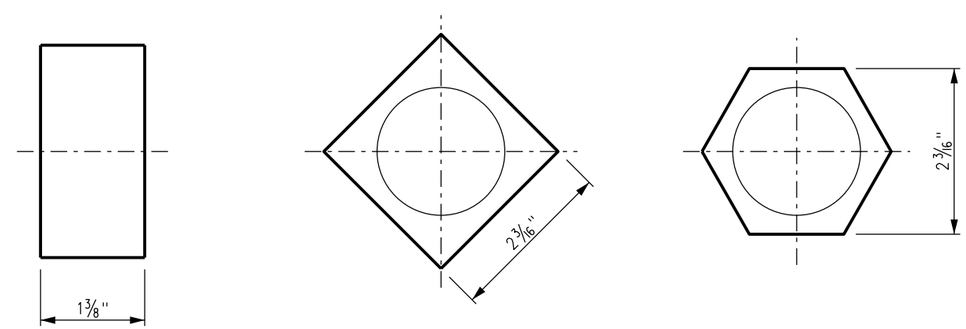

SQ NUT OR HEX NUT

REV.	DATE	DESCRIPTION	DES.	ENG.
X	XX-XX-XX	REVISION	XX	XX

DRAWN BY: HDR DATE: 03/31/2011

ASSISTANT DIRECTOR: STANDARDS & DESIGN

DIRECTOR OF ENGINEERING AND CONSTRUCTION

SCRRA ENGINEERING STANDARDS ARE INTENDED FOR SCRRA APPROVED USES ONLY. FOR NON-SCRRA APPROVED USES:
SCRRA SHALL NOT BE RESPONSIBLE FOR THE ACCURACY OR COMPLETENESS OF THE DATA OR INFORMATION CONTAINED HEREIN. THE SELECTION AND USE OF THESE STANDARDS IS THE SOLE RESPONSIBILITY OF THE USER AND SHOULD NOT BE USED WITHOUT CONSULTING A REGISTERED PROFESSIONAL ENGINEER. ALL WARRANTIES AND REPRESENTATIONS OF ANY KIND ARE DISCLAIMED. ANYONE MAKING USE OF THIS INFORMATION AGREES THAT IT ASSUMES ALL LIABILITY ARISING FROM SUCH USE. NO PART OF THESE STANDARDS SHOULD BE REPRODUCED OR DISTRIBUTED IN ANY FORM OR BY ANY MEANS WITHOUT THE PRIOR WRITTEN PERMISSION OF SCRRA. ALL RIGHTS RESERVED.

METROLINK®
SOUTHERN CALIFORNIA REGIONAL RAIL AUTHORITY
ONE GATEWAY PLAZA, 12TH FLOOR, L. A., CA. 90012

ENGINEERING STANDARDS

TAPERED FROG BOLT ASSEMBLY

STANDARD 2358
SCALE: NTS
REVISION –
SHEET 1 OF 1
CADD FILE: ES2358

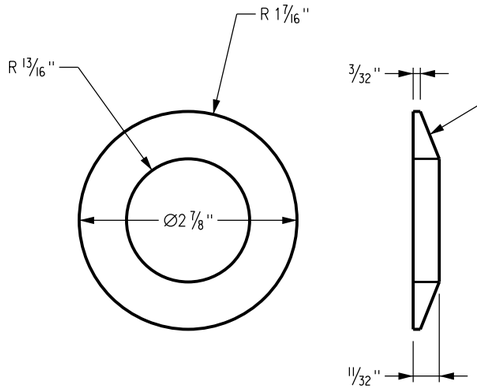

PLAN VIEW SECTION VIEW

TOP WASHER

INSTALL UNDER BOLT HEAD OR NUT

NO LUBRICATION REQUIRED

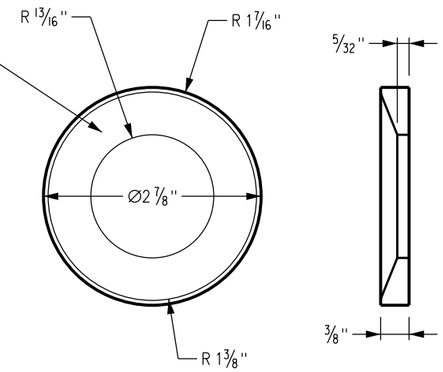

PLAN VIEW SECTION VIEW

BOTTOM WASHER

INSTALL AGAINST ITEM BEING BOLTED BELOW TOP WASHER

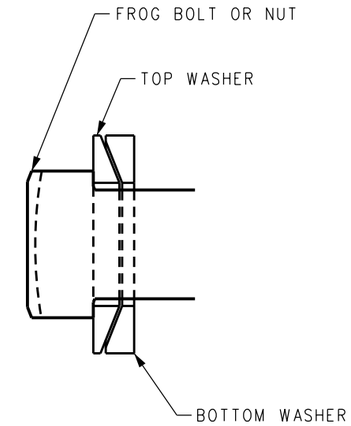

SECTION VIEW

ASSEMBLED WASHER SET

INSTALLATION NOTES:

1. INSTALL TOP WASHER UNDER BOLT HEAD OR NUT.
2. INSTALL BOTTOM WASHER BELOW TOP WASHER AND AGAINST FROG OR OBJECT BEING CLAMPED.
3. USE OF D-WASHER OR BEVELED WASHERS ARE REQUIRED WHEN INSTALLING SPHERICAL (SELF-ALIGNING) WASHERS ON RAIL AND ON FROGS, WHERE APPLICABLE.
4. BOLT HEAD LOCKS WILL NOT WORK WITH SPHERICAL WASHERS, AND NEED TO BE REPLACED WITH D-WASHERS, BEVELED WASHERS, OR REMOVED BY GRINDING.

MANUFACTURING SPECIFICATION:

1. SURFACE FINISH COEFFICIENT OF FRICTION SHALL BE 0.05-0.10.
2. FINISHED SURFACES MUST PROVIDE LONG-TERM (NOT TEMPORAL) LUBRICATION EFFECTS UNDER EXTREME PRESSURE: 150,000 PSI (10,500 KG/CM SQUARED).
3. FINISHED WASHERS MUST WITHSTAND 1000 HOURS OF ASTM B-117 SALT FOG TEST, WITH LESS THAN 15% RED RUST.
4. FINISHED WASHERS SHALL HAVE THE MINIMUM HARDNESS APPROPRIATE AND SUFFICIENT FOR USE WITH HIGH STRENGTH FASTENERS.
5. MINIMUM COMPENSATING ANGLE SHALL BE 10 DEGREES IN ALL DIRECTIONS.
6. PARTS SHALL BE MARKED WITH MANUFACTURERS IDENTIFYING CHARACTERISTICS.

REV.	DATE	DESCRIPTION	DES.	ENG.
X	XX-XX-XX	REVISION	XX	XX

DRAWN BY: HDR DATE: 03/31/2011

ASSISTANT DIRECTOR: STANDARDS & DESIGN

DIRECTOR OF ENGINEERING AND CONSTRUCTION

SCRRA ENGINEERING STANDARDS ARE INTENDED FOR SCRRA APPROVED USES ONLY. FOR NON-SCRRA APPROVED USES:
SCRRA SHALL NOT BE RESPONSIBLE FOR THE ACCURACY OR COMPLETENESS OF THE DATA OR INFORMATION CONTAINED HEREIN. THE SELECTION AND USE OF THESE STANDARDS IS THE SOLE RESPONSIBILITY OF THE USER AND SHOULD NOT BE USED WITHOUT CONSULTING A REGISTERED PROFESSIONAL ENGINEER. ALL WARRANTIES AND REPRESENTATIONS OF ANY KIND ARE DISCLAIMED. ANYONE MAKING USE OF THIS INFORMATION AGREES THAT IT ASSUMES ALL LIABILITY ARISING FROM SUCH USE. NO PART OF THESE STANDARDS SHOULD BE REPRODUCED OR DISTRIBUTED IN ANY FORM OR BY ANY MEANS WITHOUT THE PRIOR WRITTEN PERMISSION OF SCRRA. ALL RIGHTS RESERVED.

METROLINK®

SOUTHERN CALIFORNIA REGIONAL RAIL AUTHORITY
ONE GATEWAY PLAZA, 12TH FLOOR, L. A., CA. 90012

ENGINEERING STANDARDS

SPHERICAL (SELF – CENTERING) WASHER SET

STANDARD 2359
SCALE: NTS
REVISION –
SHEET 1 OF 1
CADD FILE: ES2359

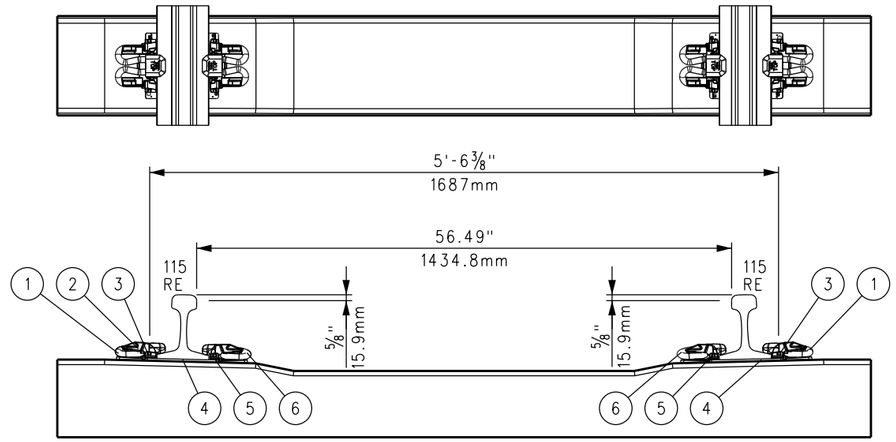

115 RE RAIL AND 136 LB RAIL CONCRETE TIE				
ITEM NO	PART NO	DESCRIPTION	COLOR	QTY
1	10218	RAIL CLIP ASSY - FC1603 CLIP / 7695 TOE INSULATOR	BLUE	2
2	9086	FASTCLIP TWIN-STEM SHOULDER		4
3	11458	SIDE POST INSULATOR - 0.726" THICK POST	BLUE	2
4	11549	RAIL PAD		2
5	11459	SIDE POST INSULATOR - 0.430" THICK POST	GREEN	2
6	10216	RAIL CLIP ASSY - FC1601 CLIP / 7695 TOE INSULATOR	NEUTRAL	2

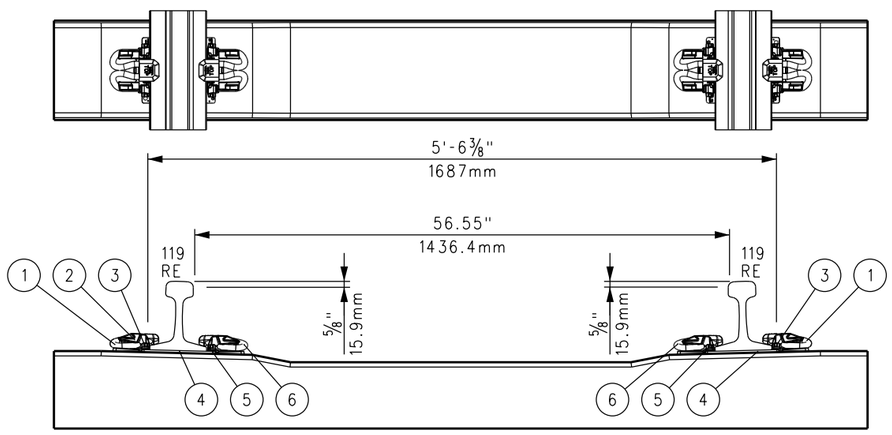

119 RE RAIL AND 136 LB RAIL CONCRETE TIE				
ITEM NO	PART NO	DESCRIPTION	COLOR	QTY
1	10218	RAIL CLIP ASSY - FC1603 CLIP / 7695 TOE INSULATOR	BLUE	2
2	9086	FASTCLIP TWIN-STEM SHOULDER		4
3	11458	SIDE POST INSULATOR - 0.726" THICK POST	BLUE	2
4	11549	RAIL PAD		2
5	11459	SIDE POST INSULATOR - 0.430" THICK POST	GREEN	2
6	10216	RAIL CLIP ASSY - FC1601 CLIP / 7695 TOE INSULATOR	NEUTRAL	2

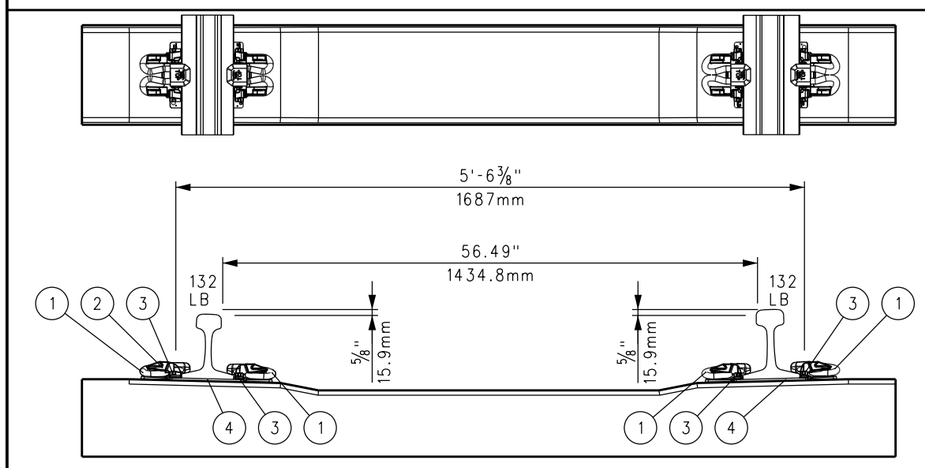

132 LB RAIL AND 136 LB RAIL CONCRETE TIE				
ITEM NO	PART NO	DESCRIPTION	COLOR	QTY
1	10216	RAIL CLIP ASSY - FC1601 CLIP / 7695 TOE INSULATOR	NEUTRAL	4
2	9086	FASTCLIP TWIN-STEM SHOULDER		4
3	7692	STANDARD SIDE POST INSULATOR - 0.326" THICK POST	NUETRAL	4
4	6751	RAIL PAD ASSEMBLY		2

NOTES:

1. FOR RAIL PAD DETAILS, SEE SCRRA ES2364.
2. FOR SIDE POST INSULATOR DETAILS, SEE SCRRA ES2365.
3. FOR RAIL CLIP DETAILS, SEE SCRRA ES2366.
4. FOR TOE INSULATORS DETAILS, SEE SCRRA ES2367.
5. ALL COMPONENTS FOR TIE ASSEMBLIES TO BE PANDROL TYPE OR EQUIVALENT AS APPROVED BY THE SCRRA DIRECTOR OF ENGINEERING AND CONSTRUCTION.
6. ALL PART NUMBERS LISTED ON THIS DRAWING CORRESPOND TO PANDROL BRAND COMPONENTS AND ARE SUBJECT TO CHANGE.
7. FOR CONCRETE TIE DETAILS AND FRICTION PATTERN, SEE SCRRA ES2402.

REV.	DATE	DESCRIPTION	DES.	ENG.
X	XX-XX-XX	REVISION	XX	XX

DRAWN BY: A. CARLOS DATE: 03/31/2011

ASSISTANT DIRECTOR: STANDARDS & DESIGN

DIRECTOR OF ENGINEERING AND CONSTRUCTION

SCRRA ENGINEERING STANDARDS ARE INTENDED FOR SCRRA APPROVED USES ONLY. FOR NON-SCRRA APPROVED USES:
SCRRA SHALL NOT BE RESPONSIBLE FOR THE ACCURACY OR COMPLETENESS OF THE DATA OR INFORMATION CONTAINED HEREIN. THE SELECTION AND USE OF THESE STANDARDS IS THE SOLE RESPONSIBILITY OF THE USER AND SHOULD NOT BE USED WITHOUT CONSULTING A REGISTERED PROFESSIONAL ENGINEER. ALL WARRANTIES AND REPRESENTATIONS OF ANY KIND ARE DISCLAIMED. ANYONE MAKING USE OF THIS INFORMATION AGREES THAT IT ASSUMES ALL LIABILITY ARISING FROM SUCH USE. NO PART OF THESE STANDARDS SHOULD BE REPRODUCED OR DISTRIBUTED IN ANY FORM OR BY ANY MEANS WITHOUT THE PRIOR WRITTEN PERMISSION OF SCRRA. ALL RIGHTS RESERVED.

METROLINK®
SOUTHERN CALIFORNIA REGIONAL RAIL AUTHORITY
ONE GATEWAY PLAZA, 12TH FLOOR, L. A., CA. 90012

ENGINEERING STANDARDS

PANDROL FASTCLIP CONCRETE TIE ASSEMBLIES FOR VARIOUS RAIL COMBINATIONS

STANDARD 2360
SCALE: NTS
REVISION –
SHEET 1 OF 3
CADD FILE: ES2360-01

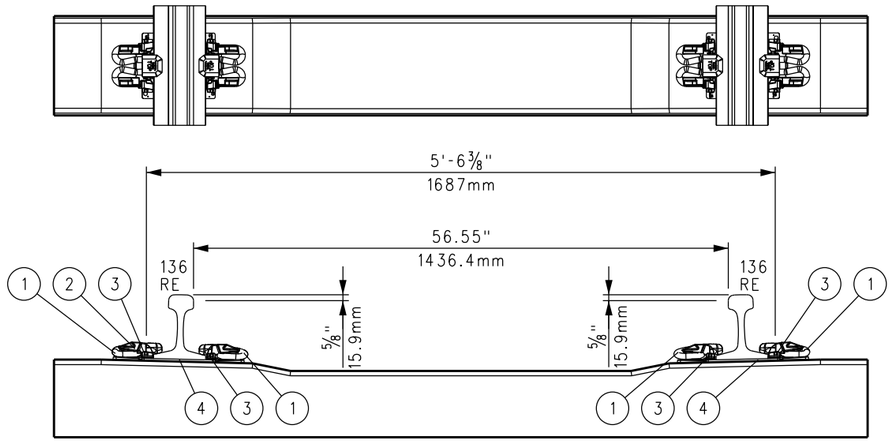

136 RE RAIL AND 136 LB RAIL CONCRETE TIE				
ITEM NO	PART NO	DESCRIPTION	COLOR	QTY
1	10216	RAIL CLIP ASSY - FC1601 CLIP / 7695 TOE INSULATOR	NUETRAL	4
2	9086	FASTCLIP TWIN-STEM SHOULDER		4
3	7692	STANDARD SIDE POST INSULATOR FOR TWIN-STEM SHOULDER	NUETRAL	4
4	6751	RAIL PAD ASSEMBLY		2

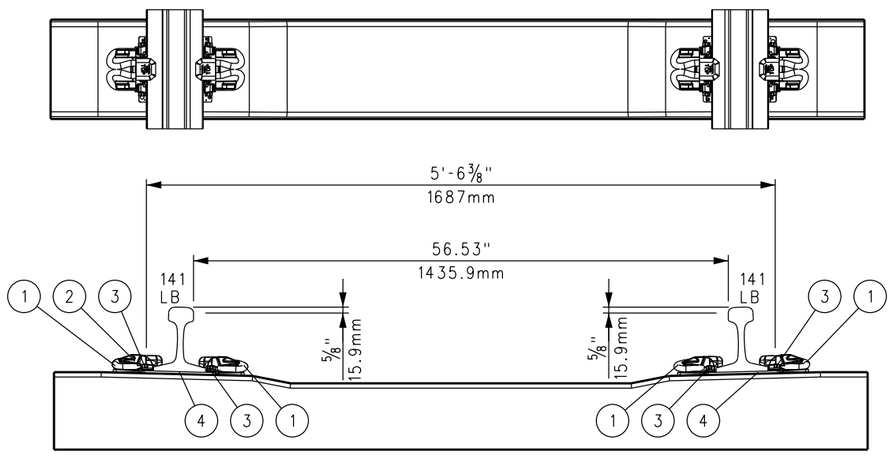

141 LB RAIL AND 136 LB RAIL CONCRETE TIE				
ITEM NO	PART NO	DESCRIPTION	COLOR	QTY
1	10216	RAIL CLIP ASSY - FC1601 CLIP / 7695 TOE INSULATOR	NUETRAL	4
2	9086	FASTCLIP TWIN-STEM SHOULDER		4
3	7692	STANDARD SIDE POST INSULATOR FOR TWIN-STEM SHOULDER	NUETRAL	4
4	6751	RAIL PAD ASSEMBLY		2

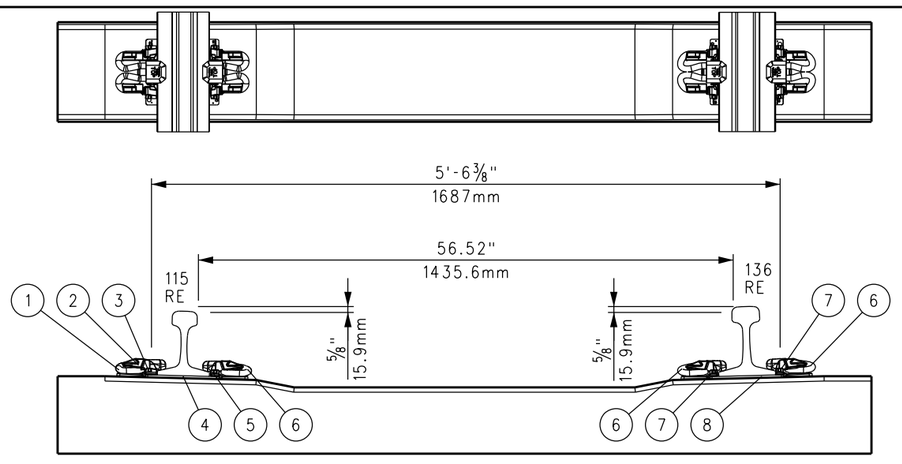

COMBINATION 115 RE RAIL AND 136 RE RAIL				
ITEM NO	PART NO	DESCRIPTION	COLOR	QTY
1	10218	RAIL CLIP ASSY - FC1603 CLIP / 7695 TOE INSULATOR	BLUE	1
2	9086	FASTCLIP TWIN-STEM SHOULDER		4
3	11458	SIDE POST INSULATOR - 0.726" THICK POST	BLUE	1
4	11549	RAIL PAD		1
5	11459	SIDE POST INSULATOR - 0.430" THICK POST	GREEN	1
6	10216	RAIL CLIP ASSY - FC1601 CLIP / 7695 TOE INSULATOR	NUETRAL	3
7	7692	STANDARD SIDE POST INSULATOR	NUETRAL	2
8	6751	RAIL PAD ASSEMBLY		1

NOTES:

1. FOR RAIL PAD DETAILS, SEE SCRRA ES2364.
2. FOR SIDE POST INSULATOR DETAILS, SEE SCRRA ES2365.
3. FOR RAIL CLIP DETAILS, SEE SCRRA ES2366.
4. FOR TOE INSULATORS DETAILS, SEE SCRRA ES2367.
5. ALL COMPONENTS FOR TIE ASSEMBLIES TO BE PANDROL TYPE OR EQUIVALENT AS APPROVED BY THE SCRRA DIRECTOR OF ENGINEERING AND CONSTRUCTION.
6. ALL PART NUMBERS LISTED ON THIS DRAWING CORRESPOND TO PANDROL BRAND COMPONENTS AND ARE SUBJECT TO CHANGE.
7. FOR CONCRETE TIE DETAILS AND FRICTION PATTERN, SEE SCRRA ES2402.

REV.	DATE	DESCRIPTION	DES.	ENG.
X	XX-XX-XX	REVISION	XX	XX

DRAWN BY: A. CARLOS DATE: 03/31/2011

ASSISTANT DIRECTOR: STANDARDS & DESIGN

DIRECTOR OF ENGINEERING AND CONSTRUCTION

SCRRA ENGINEERING STANDARDS ARE INTENDED FOR SCRRA APPROVED USES ONLY. FOR NON-SCRRA APPROVED USES: SCRRA SHALL NOT BE RESPONSIBLE FOR THE ACCURACY OR COMPLETENESS OF THE DATA OR INFORMATION CONTAINED HEREIN. THE SELECTION AND USE OF THESE STANDARDS IS THE SOLE RESPONSIBILITY OF THE USER AND SHOULD NOT BE USED WITHOUT CONSULTING A REGISTERED PROFESSIONAL ENGINEER. ALL WARRANTIES AND REPRESENTATIONS OF ANY KIND ARE DISCLAIMED. ANYONE MAKING USE OF THIS INFORMATION AGREES THAT IT ASSUMES ALL LIABILITY ARISING FROM SUCH USE. NO PART OF THESE STANDARDS SHOULD BE REPRODUCED OR DISTRIBUTED IN ANY FORM OR BY ANY MEANS WITHOUT THE PRIOR WRITTEN PERMISSION OF SCRRA. ALL RIGHTS RESERVED.

METROLINK®

SOUTHERN CALIFORNIA REGIONAL RAIL AUTHORITY
ONE GATEWAY PLAZA, 12TH FLOOR, L. A., CA. 90012

ENGINEERING STANDARDS

PANDROL FASTCLIP CONCRETE TIE ASSEMBLIES FOR VARIOUS RAIL COMBINATIONS

STANDARD 2360
SCALE: NTS
REVISION –
SHEET 2 OF 3
CADD FILE: ES2360-02

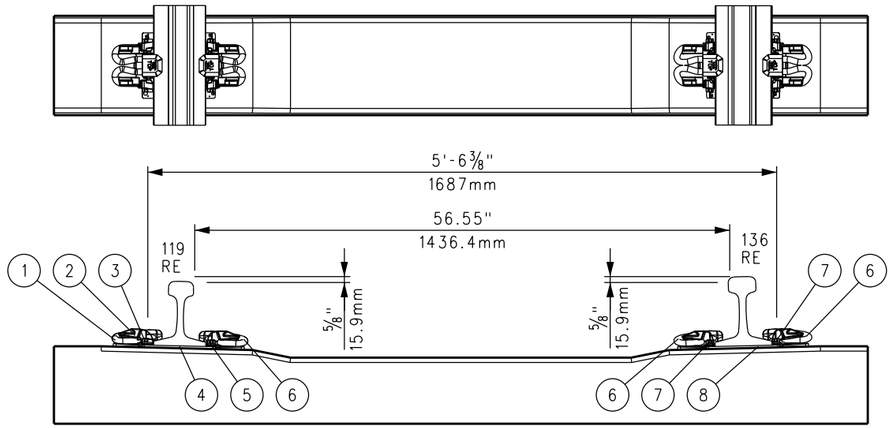

COMBINATION 119 RE RAIL AND 136 LB RAIL				
ITEM NO	PART NO	DESCRIPTION	COLOR	QTY
1	10218	RAIL CLIP ASSY - FC1603 CLIP / 7695 TOE INSULATOR	BLUE	1
2	9086	FASTCLIP TWIN-STEM SHOULDER		4
3	11458	SIDE POST INSULATOR - 0.726" THICK POST	BLUE	1
4	11549	RAIL PAD		1
5	11459	SIDE POST INSULATOR - 0.430" THICK POST	GREEN	1
6	10216	RAIL CLIP ASSY - FC1601 CLIP / 7695 TOE INSULATOR	NUETRAL	3
7	7692	STANDARD SIDE POST INSULATOR	NUETRAL	2
8	6751	RAIL PAD ASSEMBLY		1

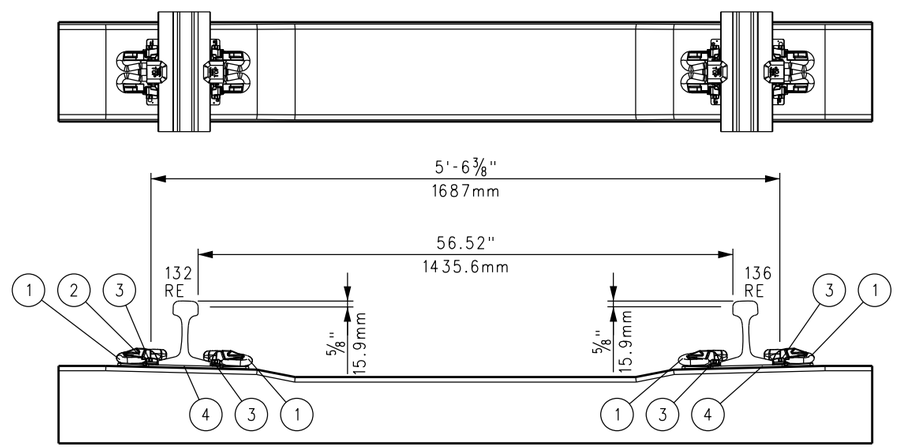

136 RE RAIL AND 136 LB RAIL CONCRETE TIE				
ITEM NO	PART NO	DESCRIPTION	COLOR	QTY
1	10216	RAIL CLIP ASSY - FC1601 CLIP / 7695 TOE INSULATOR	NUETRAL	4
2	9086	FASTCLIP TWIN-STEM SHOULDER		4
3	7692	STANDARD SIDE POST INSULATOR FOR TWIN-STEM SHOULDER	NUETRAL	4
4	6751	RAIL PAD ASSEMBLY		2

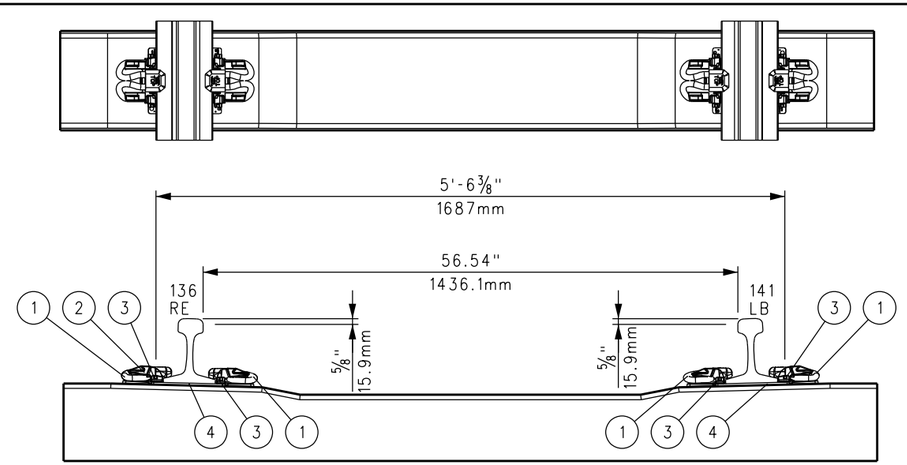

141 LB RAIL AND 136 LB RAIL CONCRETE TIE				
ITEM NO	PART NO	DESCRIPTION	COLOR	QTY
1	10216	RAIL CLIP ASSY - FC1601 CLIP / 7695 TOE INSULATOR	NUETRAL	4
2	9086	FASTCLIP TWIN-STEM SHOULDER		4
3	7692	STANDARD SIDE POST INSULATOR	NUETRAL	4
4	6751	RAIL PAD ASSEMBLY		2

NOTES:

1. FOR RAIL PAD DETAILS, SEE SCRRA ES2364.
2. FOR SIDE POST INSULATOR DETAILS, SEE SCRRA ES2365.
3. FOR RAIL CLIP DETAILS, SEE SCRRA ES2366.
4. FOR TOE INSULATORS DETAILS, SEE SCRRA ES2367.
5. ALL COMPONENTS FOR TIE ASSEMBLIES TO BE PANDROL TYPE OR EQUIVALENT AS APPROVED BY THE SCRRA DIRECTOR OF ENGINEERING AND CONSTRUCTION.
6. ALL PART NUMBERS LISTED ON THIS DRAWING CORRESPOND TO PANDROL BRAND COMPONENTS AND ARE SUBJECT TO CHANGE.
7. FOR CONCRETE TIE DETAILS AND FRICTION PATTERN, SEE SCRRA ES2402.

REV.	DATE	DESCRIPTION	DES.	ENG.
X	XX-XX-XX	REVISION	XX	XX

DRAWN BY: A. CARLOS DATE: 03/31/2011

ASSISTANT DIRECTOR: STANDARDS & DESIGN

DIRECTOR OF ENGINEERING AND CONSTRUCTION

SCRRA ENGINEERING STANDARDS ARE INTENDED FOR SCRRA APPROVED USES ONLY. FOR NON-SCRRA APPROVED USES:
SCRRA SHALL NOT BE RESPONSIBLE FOR THE ACCURACY OR COMPLETENESS OF THE DATA OR INFORMATION CONTAINED HEREIN. THE SELECTION AND USE OF THESE STANDARDS IS THE SOLE RESPONSIBILITY OF THE USER AND SHOULD NOT BE USED WITHOUT CONSULTING A REGISTERED PROFESSIONAL ENGINEER. ALL WARRANTIES AND REPRESENTATIONS OF ANY KIND ARE DISCLAIMED. ANYONE MAKING USE OF THIS INFORMATION AGREES THAT IT ASSUMES ALL LIABILITY ARISING FROM SUCH USE. NO PART OF THESE STANDARDS SHOULD BE REPRODUCED OR DISTRIBUTED IN ANY FORM OR BY ANY MEANS WITHOUT THE PRIOR WRITTEN PERMISSION OF SCRRA. ALL RIGHTS RESERVED.

METROLINK®
SOUTHERN CALIFORNIA REGIONAL RAIL AUTHORITY
ONE GATEWAY PLAZA, 12TH FLOOR, L. A., CA. 90012

ENGINEERING STANDARDS

PANDROL FASTCLIP CONCRETE TIE ASSEMBLIES FOR VARIOUS RAIL COMBINATIONS

STANDARD 2360
SCALE: NTS
REVISION –
SHEET 3 OF 3
CADD FILE: ES2360-03

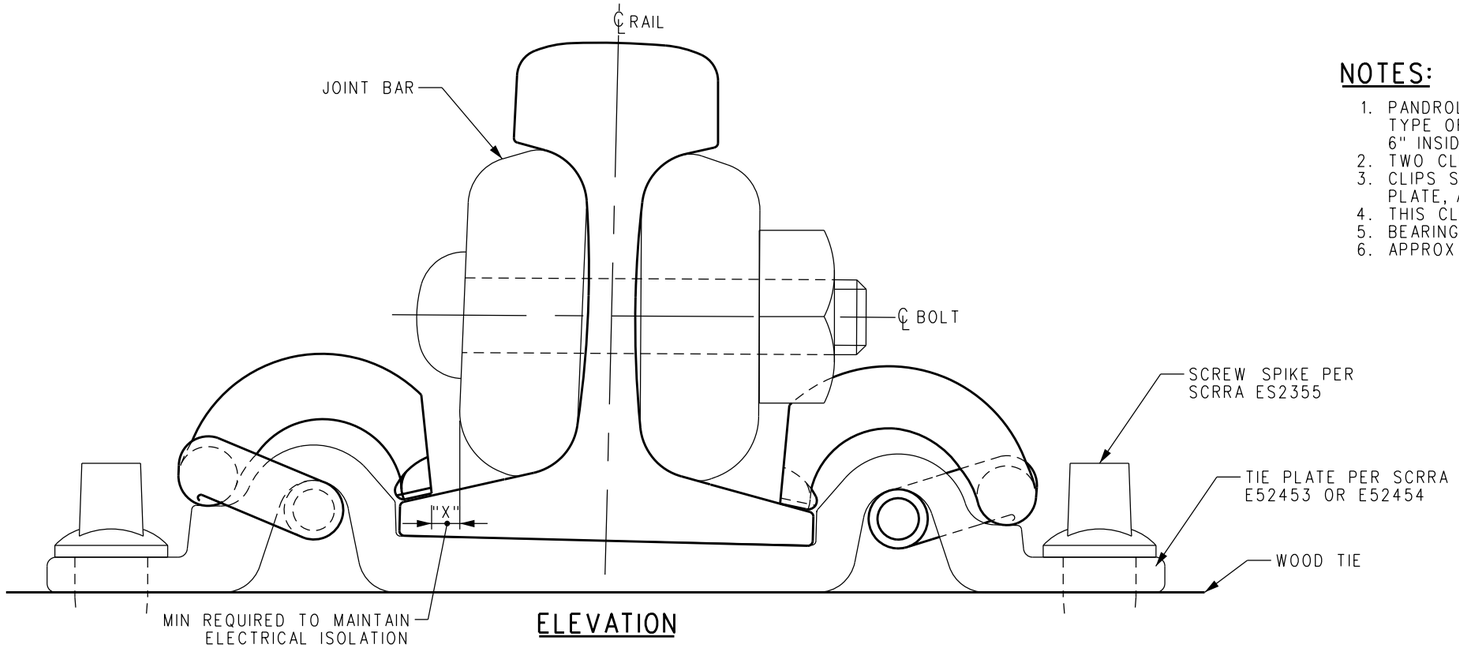

ELEVATION

NOTES:

1. PANDROL RAIL CLIP TYPE e2063, AS SHOWN, IS USED WITH PANDROL TYPE OR EQUIVALENT ROLLED STEEL BASE PLATES FOR RAIL WITH 5½" OR 6" INSIDE BASE.
2. TWO CLIPS REQUIRED FOR EACH BASE PLATE.
3. CLIPS SHALL BE DRIVEN TO FULLY INSERT STRAIGHT PART OF ANCHOR INTO PLATE, AND CURVED TO BE FULLY OUTSIDE PLATE.
4. THIS CLIP IS TO BE USED FOR BOLTED OR INSULATED JOINTS.
5. BEARING AREA OF TOE = 0.7 IN.
6. APPROX WEIGHT = 1.69 LBS.

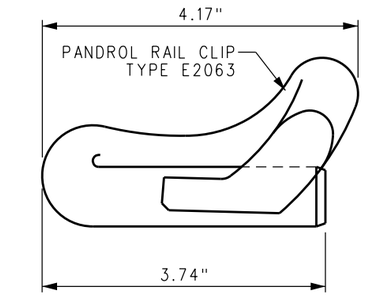

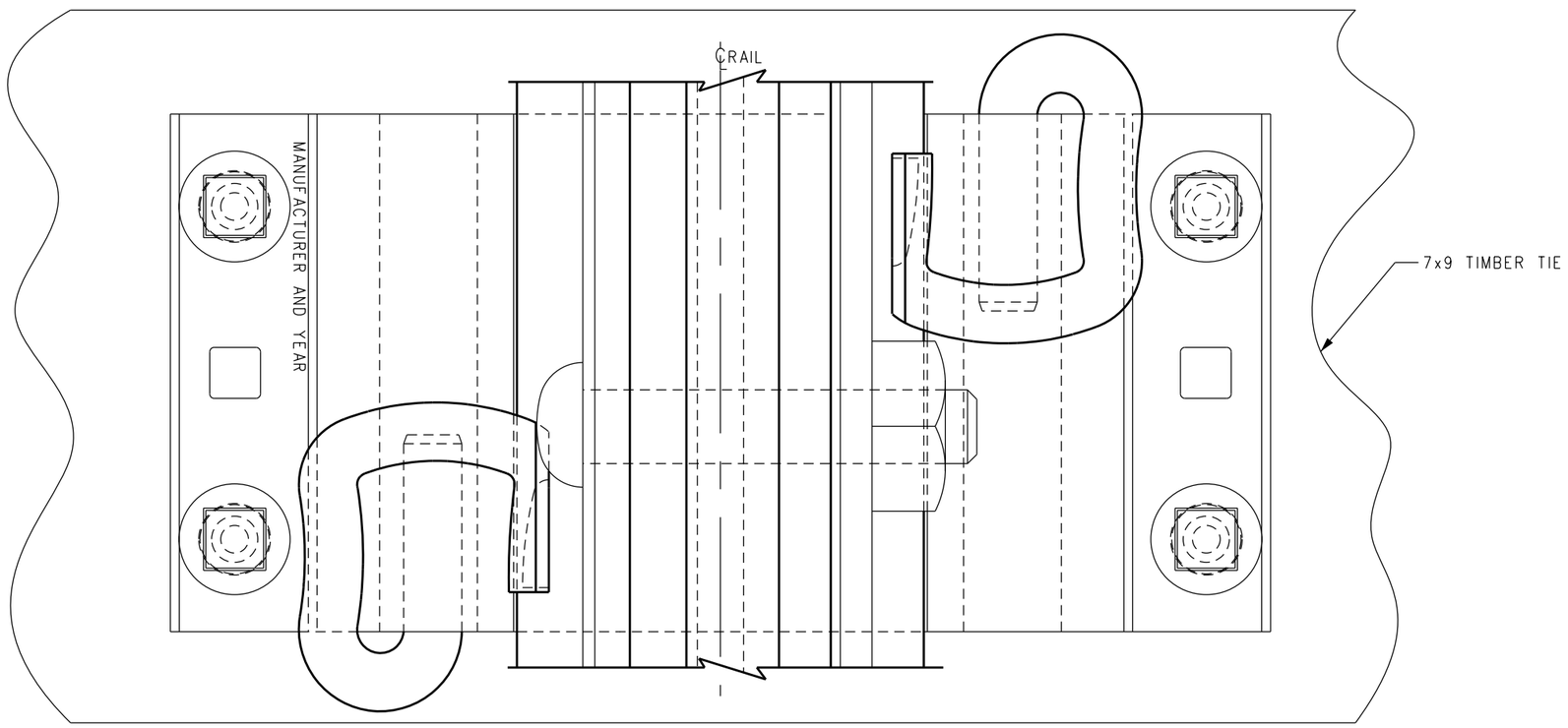

PLAN

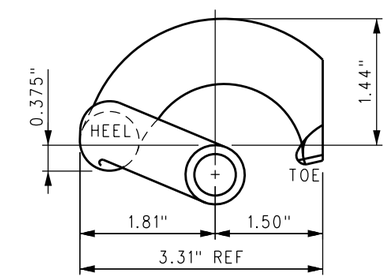

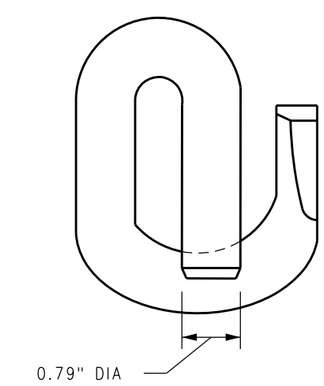

REV.	DATE	DESCRIPTION	DES.	ENG.
X	XX-XX-XX	REVISION	XX	XX

DRAWN BY: A. CARLOS DATE: 03/31/2011

ASSISTANT DIRECTOR: STANDARDS & DESIGN

DIRECTOR OF ENGINEERING AND CONSTRUCTION

SCRRA ENGINEERING STANDARDS ARE INTENDED FOR SCRRA APPROVED USES ONLY. FOR NON-SCRRA APPROVED USES:
SCRRA SHALL NOT BE RESPONSIBLE FOR THE ACCURACY OR COMPLETENESS OF THE DATA OR INFORMATION CONTAINED HEREIN. THE SELECTION AND USE OF THESE STANDARDS IS THE SOLE RESPONSIBILITY OF THE USER AND SHOULD NOT BE USED WITHOUT CONSULTING A REGISTERED PROFESSIONAL ENGINEER. ALL WARRANTIES AND REPRESENTATIONS OF ANY KIND ARE DISCLAIMED. ANYONE MAKING USE OF THIS INFORMATION AGREES THAT IT ASSUMES ALL LIABILITY ARISING FROM SUCH USE. NO PART OF THESE STANDARDS SHOULD BE REPRODUCED OR DISTRIBUTED IN ANY FORM OR BY ANY MEANS WITHOUT THE PRIOR WRITTEN PERMISSION OF SCRRA. ALL RIGHTS RESERVED.

METROLINK®

SOUTHERN CALIFORNIA REGIONAL RAIL AUTHORITY
ONE GATEWAY PLAZA, 12TH FLOOR, L. A., CA. 90012

ENGINEERING STANDARDS

PANDROL JOINT "E" – CLIP TYPE E2063

STANDARD: 2361
SCALE: NTS
REVISION: –
SHEET: 1 OF 1
CADD FILE: ES2361

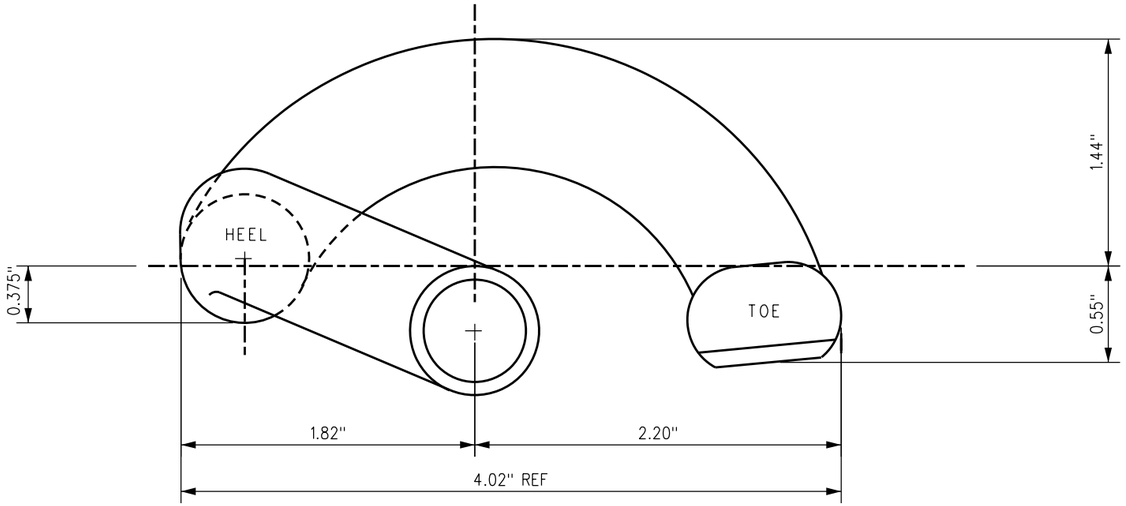

FRONT

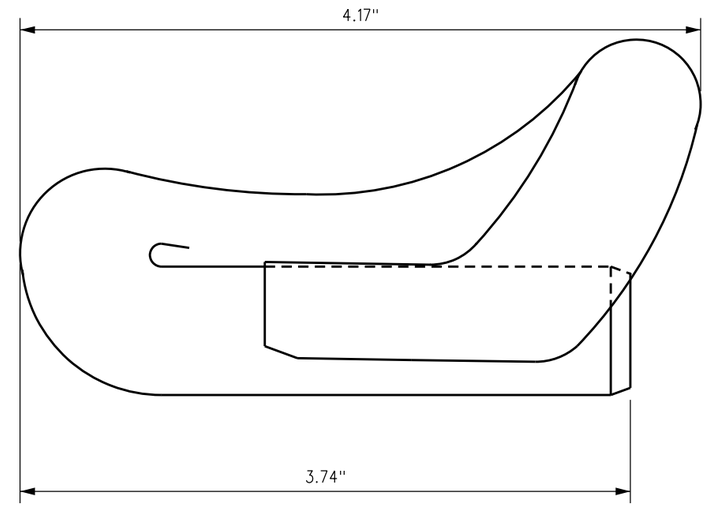

SIDE

(RH CLIP SHOWN, LH OPPOSITE)

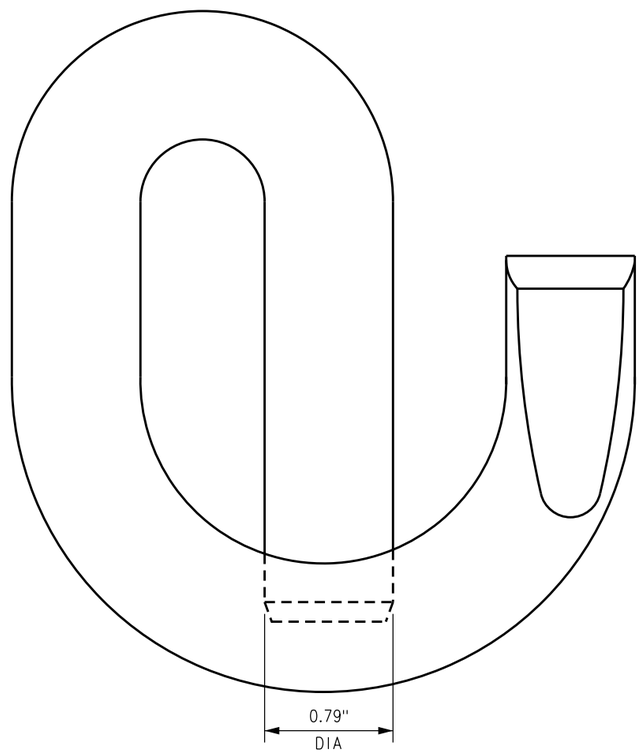

BOTTOM

NOTES:

1. PANDROL PART NO 2055
2. CLIP IS STANDARD TYPE. GALVANIZED CLIP IS NOT REQUIRED TO COMPLY WITH THIS STANDARD.

REV.	DATE	DESCRIPTION	DES.	ENG.
X	XX-XX-XX	REVISION	XX	XX

DRAWN BY: HDR DATE: 03/31/2011

ASSISTANT DIRECTOR: STANDARDS & DESIGN

DIRECTOR OF ENGINEERING AND CONSTRUCTION

SCRRA ENGINEERING STANDARDS ARE INTENDED FOR SCRRA APPROVED USES ONLY. FOR NON-SCRRA APPROVED USES:
SCRRA SHALL NOT BE RESPONSIBLE FOR THE ACCURACY OR COMPLETENESS OF THE DATA OR INFORMATION CONTAINED HEREIN. THE SELECTION AND USE OF THESE STANDARDS IS THE SOLE RESPONSIBILITY OF THE USER AND SHOULD NOT BE USED WITHOUT CONSULTING A REGISTERED PROFESSIONAL ENGINEER. ALL WARRANTIES AND REPRESENTATIONS OF ANY KIND ARE DISCLAIMED. ANYONE MAKING USE OF THIS INFORMATION AGREES THAT IT ASSUMES ALL LIABILITY ARISING FROM SUCH USE. NO PART OF THESE STANDARDS SHOULD BE REPRODUCED OR DISTRIBUTED IN ANY FORM OR BY ANY MEANS WITHOUT THE PRIOR WRITTEN PERMISSION OF SCRRA. ALL RIGHTS RESERVED.

METROLINK®

SOUTHERN CALIFORNIA REGIONAL RAIL AUTHORITY
ONE GATEWAY PLAZA, 12TH FLOOR, L. A., CA. 90012

ENGINEERING STANDARDS

PANDROL BRAND RAIL CLIP
"E" CLIP

STANDARD: 2362
SCALE: NTS
REVISION: –
SHEET: 1 OF 1
CADD FILE: ES2362

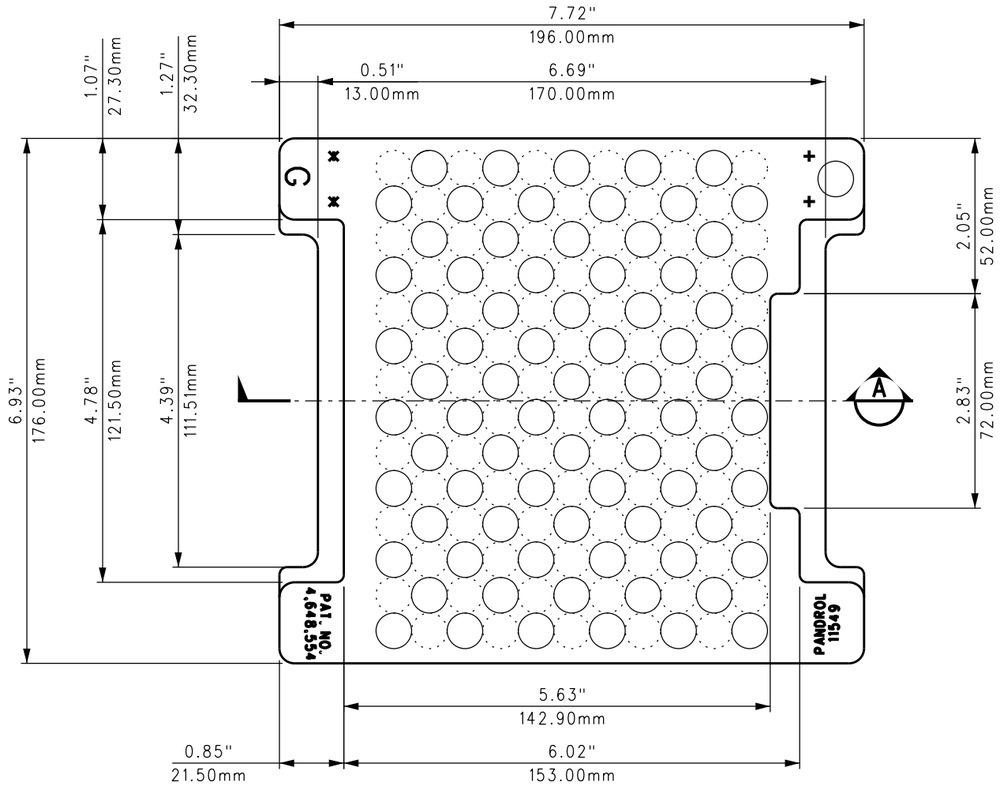

FASTCLIP TIE PAD FOR 5½" RAIL

USING SCRRA STANDARD
6" BASE CONCRETE TIE
(PART #11549)

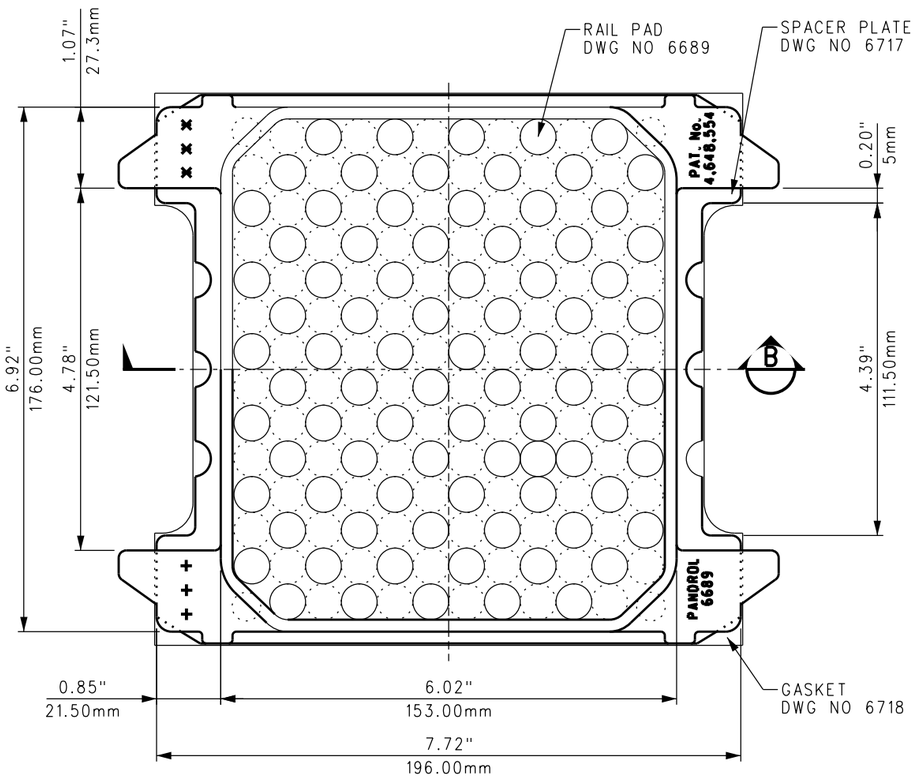

FASTCLIP TIE PAD FOR 6" RAIL

PANDROL RAIL PAD ASSEMBLY
(PART #6751)

NOTES:

1. ALL 3 ITEMS ARE TO BE CEMENTED TOGETHER IN THE POSITIONS SHOWN.
2. EFFECTIVE THICKNESS TO BE 6.5mm (0.265).

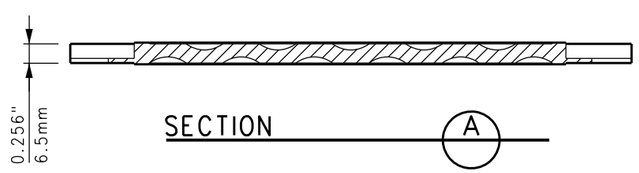

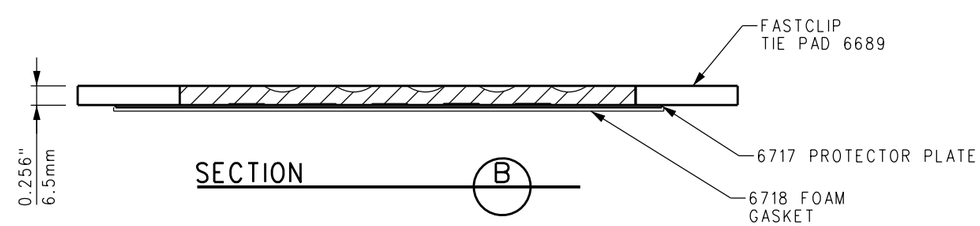

REV.	DATE	DESCRIPTION	DES.	ENG.
X	XX-XX-XX	REVISION	XX	XX

DRAWN BY: HDR DATE: 03/31/2011

ASSISTANT DIRECTOR: STANDARDS & DESIGN

DIRECTOR OF ENGINEERING AND CONSTRUCTION

SCRRA ENGINEERING STANDARDS ARE INTENDED FOR SCRRA APPROVED USES ONLY. FOR NON-SCRRA APPROVED USES:
SCRRA SHALL NOT BE RESPONSIBLE FOR THE ACCURACY OR COMPLETENESS OF THE DATA OR INFORMATION CONTAINED HEREIN. THE SELECTION AND USE OF THESE STANDARDS IS THE SOLE RESPONSIBILITY OF THE USER AND SHOULD NOT BE USED WITHOUT CONSULTING A REGISTERED PROFESSIONAL ENGINEER. ALL WARRANTIES AND REPRESENTATIONS OF ANY KIND ARE DISCLAIMED. ANYONE MAKING USE OF THIS INFORMATION AGREES THAT IT ASSUMES ALL LIABILITY ARISING FROM SUCH USE. NO PART OF THESE STANDARDS SHOULD BE REPRODUCED OR DISTRIBUTED IN ANY FORM OR BY ANY MEANS WITHOUT THE PRIOR WRITTEN PERMISSION OF SCRRA. ALL RIGHTS RESERVED.

METROLINK®
SOUTHERN CALIFORNIA REGIONAL RAIL AUTHORITY
ONE GATEWAY PLAZA, 12TH FLOOR, L. A., CA. 90012

ENGINEERING STANDARDS

PANDROL CONCRETE TIE PADS
FOR 5½" & 6" RAIL BASE

STANDARD 2364
SCALE: NTS
REVISION –
SHEET 1 OF 1
CADD FILE: ES2364

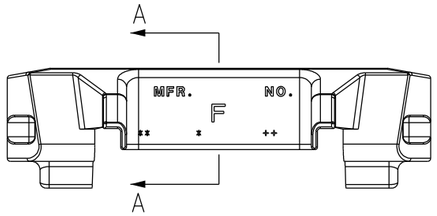

TOP VIEW

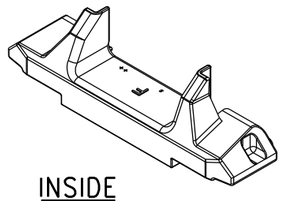

INSIDE ISOMETRIC

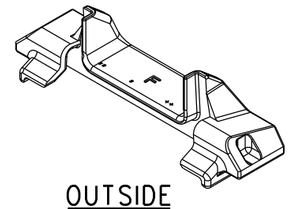

OUTSIDE ISOMETRIC

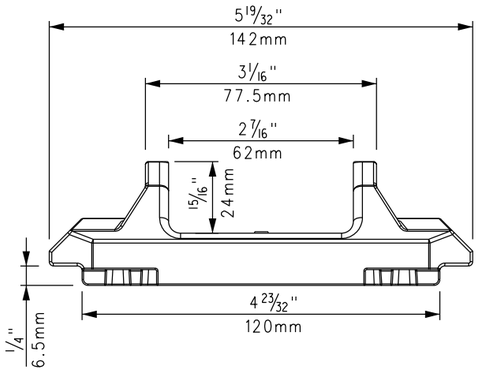

INSIDE VIEW

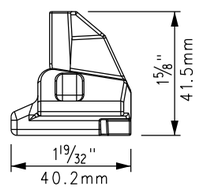

SIDE VIEW

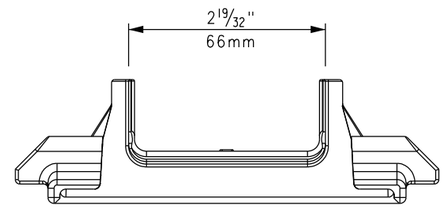

OUTSIDE VIEW

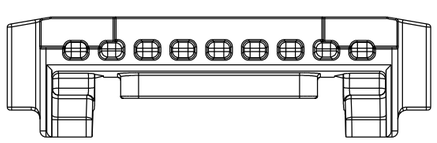

FIELD SIDE POST INSULATOR
(PART #11458)

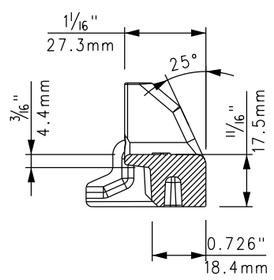

SECTION A - A

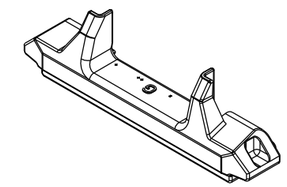

INSIDE ISOMETRIC

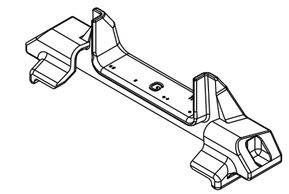

OUTSIDE ISOMETRIC

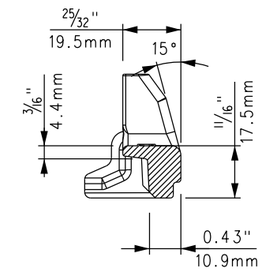

SECTION B - B

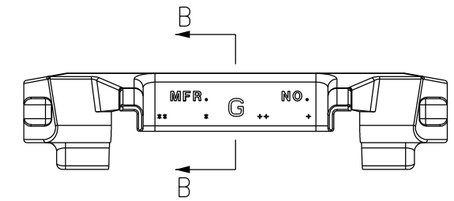

PLAN VIEW

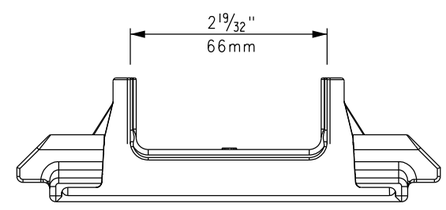

OUTSIDE VIEW

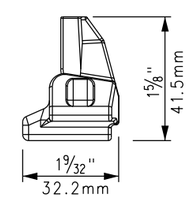

SIDE VIEW

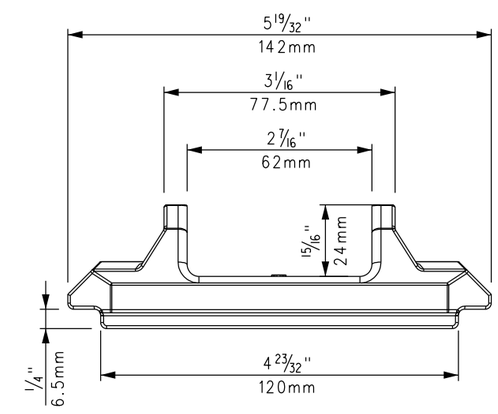

INSIDE VIEW

GAUGE SIDE POST INSULATOR
(PART #11459)

NOTES:

1. INSULATORS TO BE PANDROL TYPE OR EQUIVALENT.
2. APPROXIMATE WEIGHT OF GAUGE SIDE INSULATOR, 1.6 OZ COLOR, GREEN.
3. APPROXIMATE WEIGHT OF FIELD SIDE INSULATOR, 2.3 OZ COLOR, BLUE.
4. STANDARD SIDE POST INSULATOR (PART #7692) (SEE SCRRA ES2365-02).

REV.	DATE	DESCRIPTION	DES.	ENG.
X	XX-XX-XX	REVISION	XX	XX

DRAWN BY: A. CARLOS DATE: 03/31/2011

ASSISTANT DIRECTOR: STANDARDS & DESIGN

DIRECTOR OF ENGINEERING AND CONSTRUCTION

SCRRA ENGINEERING STANDARDS ARE INTENDED FOR SCRRA APPROVED USES ONLY. FOR NON-SCRRA APPROVED USES:
SCRRA SHALL NOT BE RESPONSIBLE FOR THE ACCURACY OR COMPLETENESS OF THE DATA OR INFORMATION CONTAINED HEREIN. THE SELECTION AND USE OF THESE STANDARDS IS THE SOLE RESPONSIBILITY OF THE USER AND SHOULD NOT BE USED WITHOUT CONSULTING A REGISTERED PROFESSIONAL ENGINEER. ALL WARRANTIES AND REPRESENTATIONS OF ANY KIND ARE DISCLAIMED. ANYONE MAKING USE OF THIS INFORMATION AGREES THAT IT ASSUMES ALL LIABILITY ARISING FROM SUCH USE. NO PART OF THESE STANDARDS SHOULD BE REPRODUCED OR DISTRIBUTED IN ANY FORM OR BY ANY MEANS WITHOUT THE PRIOR WRITTEN PERMISSION OF SCRRA. ALL RIGHTS RESERVED.

METROLINK®
SOUTHERN CALIFORNIA REGIONAL RAIL AUTHORITY
ONE GATEWAY PLAZA, 12TH FLOOR, L. A., CA. 90012

ENGINEERING STANDARDS

PANDROL FASTCLIP TYPE SIDE POST INSULATORS

STANDARD: 2365
SCALE: NTS
REVISION: –
SHEET: 1 OF 2
CADD FILE: ES2365-01

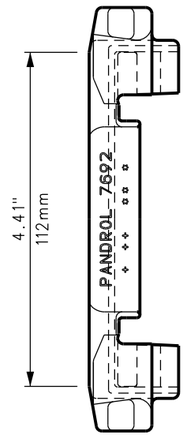

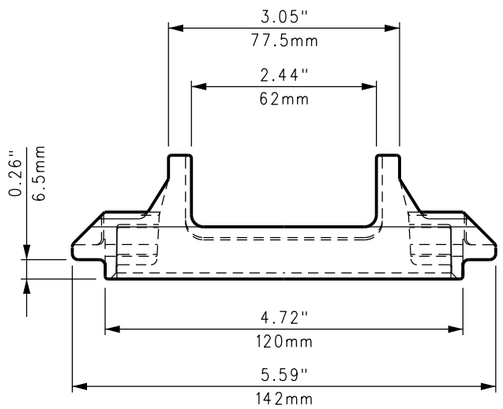

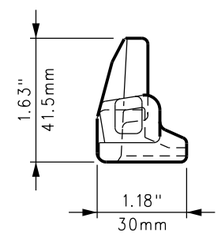

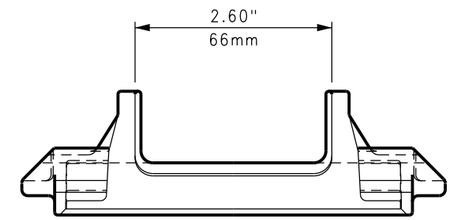

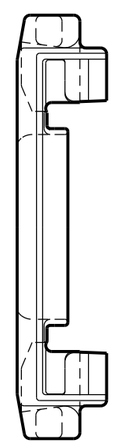

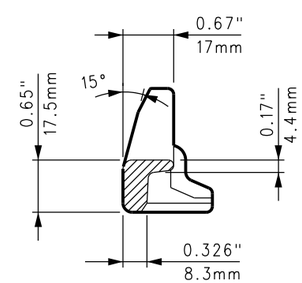

NOTE:

1. COLOR: NATURAL (OFF-WHITE) OR AS SPECIFIED ON PURCHASE ORDER.

STANDARD SIDE POST INSULATOR
(PART #7692)

REV.	DATE	DESCRIPTION	DES.	ENG.
X	XX-XX-XX	REVISION	XX	XX

DRAWN BY: HDR DATE: 03/31/2011

ASSISTANT DIRECTOR: STANDARDS & DESIGN

DIRECTOR OF ENGINEERING AND CONSTRUCTION

SCRRA ENGINEERING STANDARDS ARE INTENDED FOR SCRRA APPROVED USES ONLY. FOR NON-SCRRA APPROVED USES, SCRRA SHALL NOT BE RESPONSIBLE FOR THE ACCURACY OR COMPLETENESS OF THE DATA OR INFORMATION CONTAINED HEREIN. THE SELECTION AND USE OF THESE STANDARDS IS THE SOLE RESPONSIBILITY OF THE USER AND SHOULD NOT BE USED WITHOUT CONSULTING A REGISTERED PROFESSIONAL ENGINEER. ALL WARRANTIES AND REPRESENTATIONS OF ANY KIND ARE DISCLAIMED. ANYONE MAKING USE OF THIS INFORMATION AGREES THAT IT ASSUMES ALL LIABILITY ARISING FROM SUCH USE. NO PART OF THESE STANDARDS SHOULD BE REPRODUCED OR DISTRIBUTED IN ANY FORM OR BY ANY MEANS WITHOUT THE PRIOR WRITTEN PERMISSION OF SCRRA. ALL RIGHTS RESERVED.

METROLINK®
SOUTHERN CALIFORNIA REGIONAL RAIL AUTHORITY
ONE GATEWAY PLAZA, 12TH FLOOR, L. A., CA. 90012

ENGINEERING STANDARDS

INSULATOR SIDE POST
FOR FC1600 SERIES PANDROL FASTCLIP

STANDARD: 2365
SCALE: NTS
REVISION: –
SHEET: 2 OF 2
CADD FILE: ES2365-02

UserName=> carlosa Date Plotted: 10/5/2011 2:19:29 PM Plot Driver=> S:\Plot Drivers\pdf.plt FileName=> s:\V8EngStds\2000\ES2365-02.dgn

NOTES:

1. PANDROL RAIL CLIP TYPE FC1601 AND FC1603 AS SHOWN ARE USED WITH PANDROL TYPE OR EQUIVALENT FASTCLIP CONCRETE TIE ASSEMBLIES FOR 5½" BASE AND 6" BASE RAIL RESPECTIVELY.
2. TWO CLIPS ARE REQUIRED PER ASSEMBLY. SEE SCRRA ES2360-01 THROUGH ES2360-03.

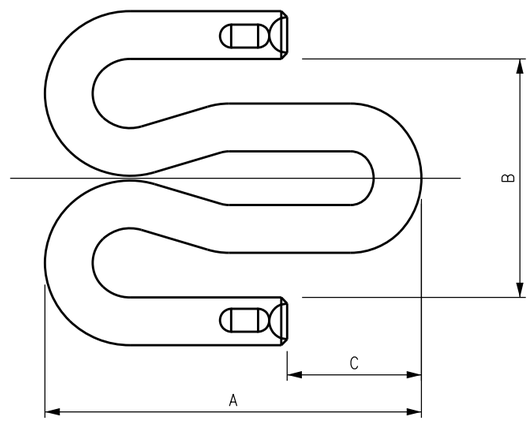

DIMENSION TABLE				
PANDROL FAST CLIP TYPE RAIL CLIPS (OR EQUAL)				
DIM	INCHES	mm	INCHES	mm
A	4 31/32"	126	5 5/32"	131
B	3 5/32"	80	3 5/32"	80
C	1 25/32"	45	2 3/32"	53
D	15/32"	12	15/32"	12
E	4 13/32"	112	4 13/32"	112
F	1 1/8"	29	1 1/16"	27
NO	FC1601 (136 LB)		FC1603 (115-119 LB)	

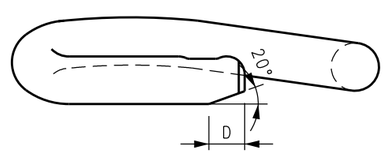

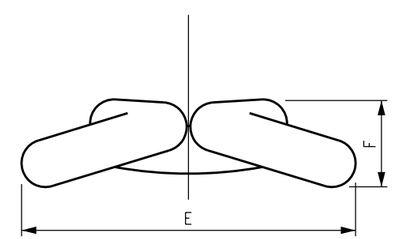

REV.	DATE	DESCRIPTION	DES.	ENG.
X	XX-XX-XX	REVISION	XX	XX

DRAWN BY: A. CARLOS DATE: 03/31/2011

ASSISTANT DIRECTOR: STANDARDS & DESIGN

DIRECTOR OF ENGINEERING AND CONSTRUCTION

SCRRA ENGINEERING STANDARDS ARE INTENDED FOR SCRRA APPROVED USES ONLY. FOR NON-SCRRA APPROVED USES: SCRRA SHALL NOT BE RESPONSIBLE FOR THE ACCURACY OR COMPLETENESS OF THE DATA OR INFORMATION CONTAINED HEREIN. THE SELECTION AND USE OF THESE STANDARDS IS THE SOLE RESPONSIBILITY OF THE USER AND SHOULD NOT BE USED WITHOUT CONSULTING A REGISTERED PROFESSIONAL ENGINEER. ALL WARRANTIES AND REPRESENTATIONS OF ANY KIND ARE DISCLAIMED. ANYONE MAKING USE OF THIS INFORMATION AGREES THAT IT ASSUMES ALL LIABILITY ARISING FROM SUCH USE. NO PART OF THESE STANDARDS SHOULD BE REPRODUCED OR DISTRIBUTED IN ANY FORM OR BY ANY MEANS WITHOUT THE PRIOR WRITTEN PERMISSION OF SCRRA. ALL RIGHTS RESERVED.

METROLINK®

SOUTHERN CALIFORNIA REGIONAL RAIL AUTHORITY
ONE GATEWAY PLAZA, 12TH FLOOR, L. A., CA. 90012

ENGINEERING STANDARDS

PANDROL TYPE FASTCLIP
136LB. FC1601 AND 115–119LB. FC1603

STANDARD 2366
SCALE: NTS
REVISION –
SHEET 1 OF 1
CADD FILE: ES2366

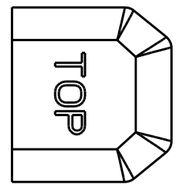

TOP VIEW

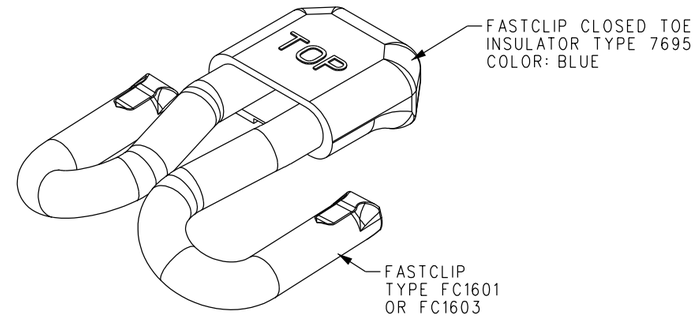

ISOMETRIC
(ASSEMBLED)

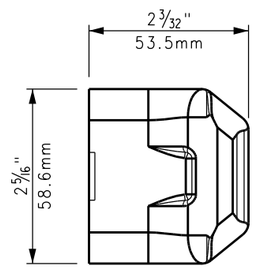

BOTTOM

ISOMETRIC

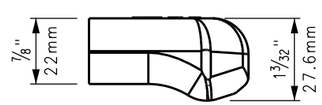

SIDE VIEW

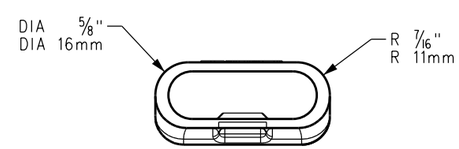

END VIEW

NOTE:

1. TOE INSULATOR TO BE PANDROL TYPE 7695 OR EQUIVALENT. INSULATOR COLOR: BLUE
2. FOR USE WITH PANDROL FASTCLIP TYPE FC1601, FC1603, OR EQUIVALENT.
3. TYPE 7695 TOE INSULATOR IS A HEAVY DUTY PART NUMBER.

REV.	DATE	DESCRIPTION	DES.	ENG.
X	XX-XX-XX	REVISION	XX	XX

DRAWN BY: A. CARLOS DATE: 03/31/2011

ASSISTANT DIRECTOR: STANDARDS & DESIGN

DIRECTOR OF ENGINEERING AND CONSTRUCTION

SCRRA ENGINEERING STANDARDS ARE INTENDED FOR SCRRA APPROVED USES ONLY. FOR NON-SCRRA APPROVED USES:
SCRRA SHALL NOT BE RESPONSIBLE FOR THE ACCURACY OR COMPLETENESS OF THE DATA OR INFORMATION CONTAINED HEREIN. THE SELECTION AND USE OF THESE STANDARDS IS THE SOLE RESPONSIBILITY OF THE USER AND SHOULD NOT BE USED WITHOUT CONSULTING A REGISTERED PROFESSIONAL ENGINEER. ALL WARRANTIES AND REPRESENTATIONS OF ANY KIND ARE DISCLAIMED. ANYONE MAKING USE OF THIS INFORMATION AGREES THAT IT ASSUMES ALL LIABILITY ARISING FROM SUCH USE. NO PART OF THESE STANDARDS SHOULD BE REPRODUCED OR DISTRIBUTED IN ANY FORM OR BY ANY MEANS WITHOUT THE PRIOR WRITTEN PERMISSION OF SCRRA. ALL RIGHTS RESERVED.

METROLINK®
SOUTHERN CALIFORNIA REGIONAL RAIL AUTHORITY
ONE GATEWAY PLAZA, 12TH FLOOR, L. A., CA. 90012

ENGINEERING STANDARDS

PANDROL TYPE TOE INSULATOR
TO SUIT PANDROL FASTCLIP
1600 SERIES RAIL CLIPS

STANDARD: 2367
SCALE: NTS
REVISION: –
SHEET: 1 OF 1
CADD FILE: ES2367

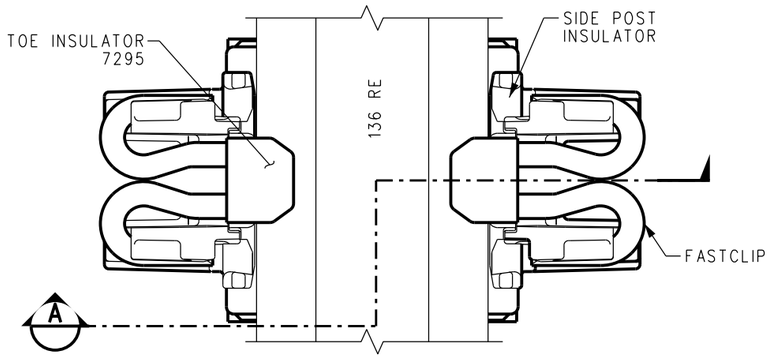

STANDARD FASTCLIP
ON CONRETE TIE

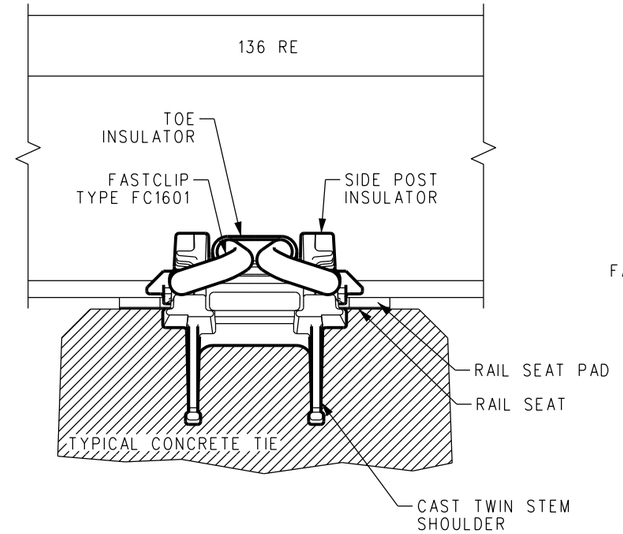

SECTION B

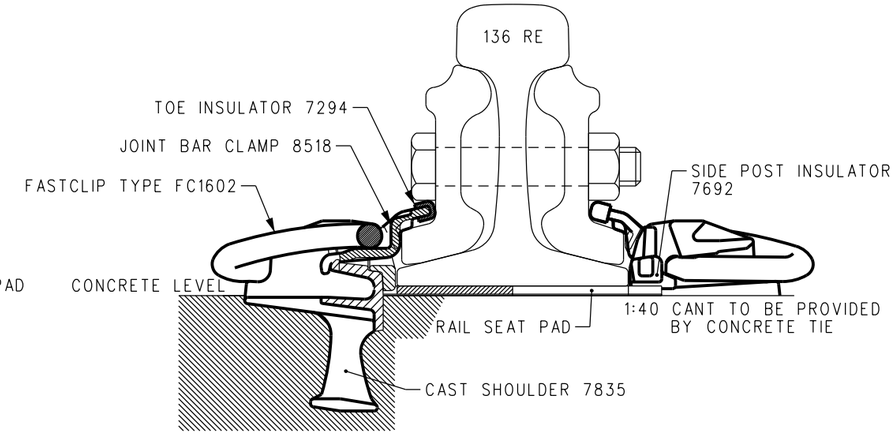

MODIFIED FASTCLIP
FOR STANDARD JOINTS
ON CONCRETE TIE

NOTES:

1. FASTCLIP FC1601 SHALL BE USED AT ALL LOCATIONS OTHER THAN JOINTS.
2. A MODIFIED FASTCLIP FC1602 SHALL BE USED ONLY AT JOINT BAR LOCATIONS.
3. FASTCLIP ASSEMBLIES FOR JOINTS (FC1602, FC8518, & FC7294) ARE PAINTED YELLOW FOR SIMPLE IDENTIFICATION.

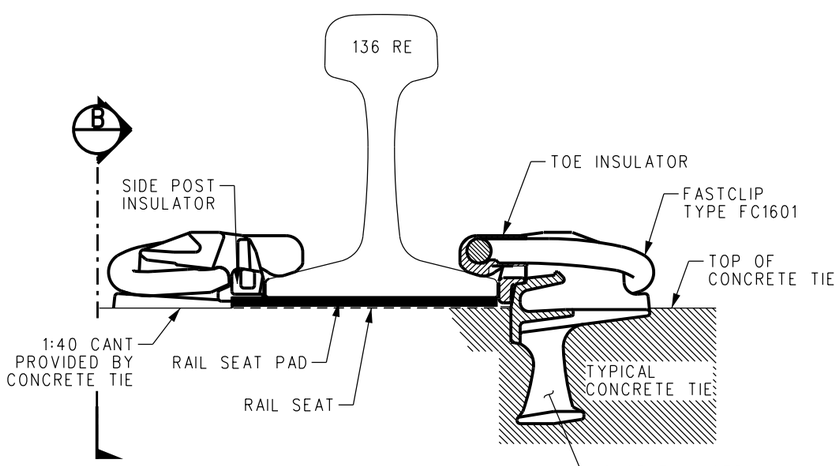

SECTION A

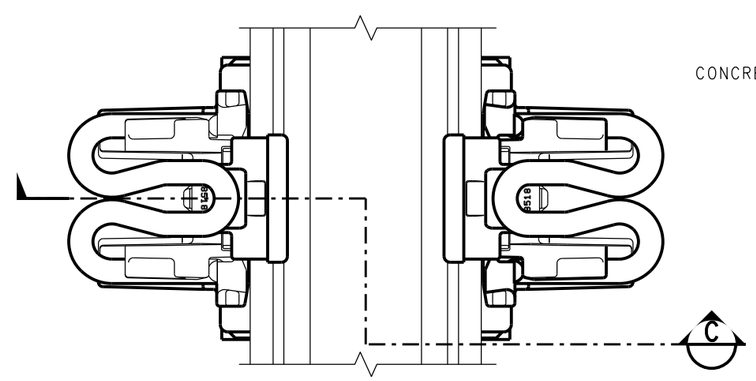

MODIFIED FASTCLIP FOR JOINTS

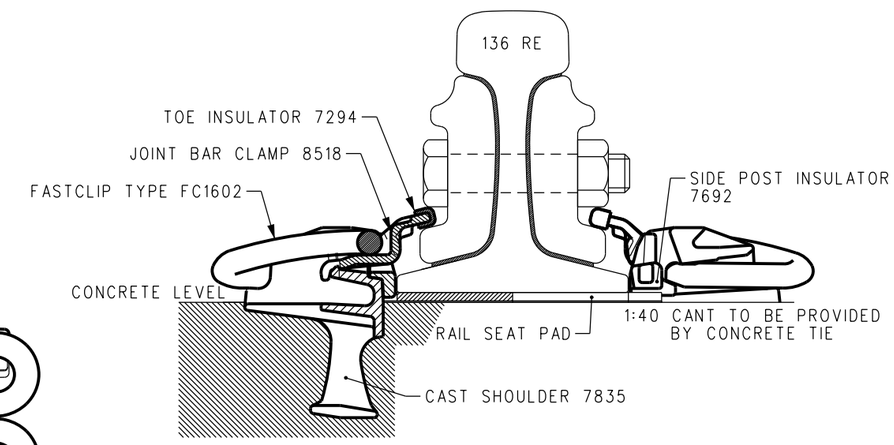

NOTE:

1. SECTION C PROVIDES A VIEW OF A MODIFIED FASTCLIP FOR EITHER A STANDARD JOINT OR AN INSULATED JOINT ON A CONCRETE TIE.

MODIFIED FASTCLIP
FOR INSULATEDJOINTS
ON CONCRETE TIE C

REV.	DATE	DESCRIPTION	DES.	ENG.
X	XX-XX-XX	REVISION	XX	XX

DRAWN BY: HDR DATE: 03/31/2011

ASSISTANT DIRECTOR: STANDARDS & DESIGN

DIRECTOR OF ENGINEERING AND CONSTRUCTION

SCRRA ENGINEERING STANDARDS ARE INTENDED FOR SCRRA APPROVED USES ONLY. FOR NON-SCRRA APPROVED USES, SCRRA SHALL NOT BE RESPONSIBLE FOR THE ACCURACY OR COMPLETENESS OF THE DATA OR INFORMATION CONTAINED HEREIN. THE SELECTION AND USE OF THESE STANDARDS IS THE SOLE RESPONSIBILITY OF THE USER AND SHOULD NOT BE USED WITHOUT CONSULTING A REGISTERED PROFESSIONAL ENGINEER. ALL WARRANTIES AND REPRESENTATIONS OF ANY KIND ARE DISCLAIMED. ANYONE MAKING USE OF THIS INFORMATION AGREES THAT IT ASSUMES ALL LIABILITY ARISING FROM SUCH USE. NO PART OF THESE STANDARDS SHOULD BE REPRODUCED OR DISTRIBUTED IN ANY FORM OR BY ANY MEANS WITHOUT THE PRIOR WRITTEN PERMISSION OF SCRRA. ALL RIGHTS RESERVED.

METROLINK®
SOUTHERN CALIFORNIA REGIONAL RAIL AUTHORITY
ONE GATEWAY PLAZA, 12TH FLOOR, L. A., CA. 90012

ENGINEERING STANDARDS

PANDROL TYPE TOE INSULATOR TO SUIT
PANDROL FASTCLIP 1600 SERIES RAIL CLIPS
FOR STANDARD RAIL & JOINT APPLICATIONS

STANDARD 2368
SCALE: NTS
REVISION –
SHEET 1 OF 1
CADD FILE: ES2368

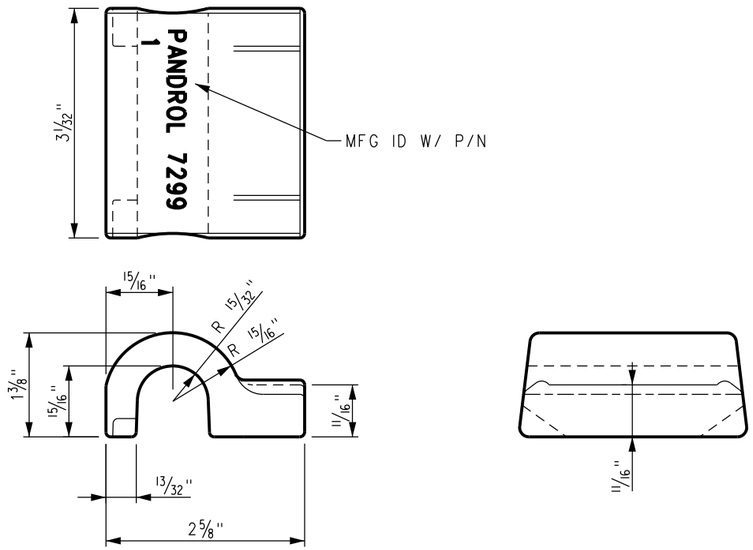

WELD-ON SHOULDER PANDROL P/N 7299-1

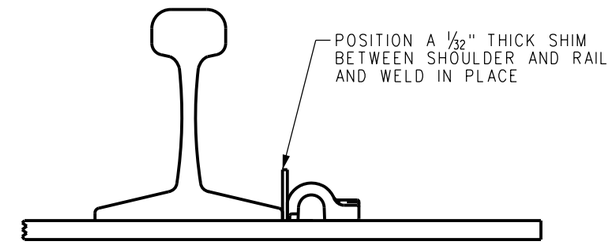

POSITIONING SHOULDER

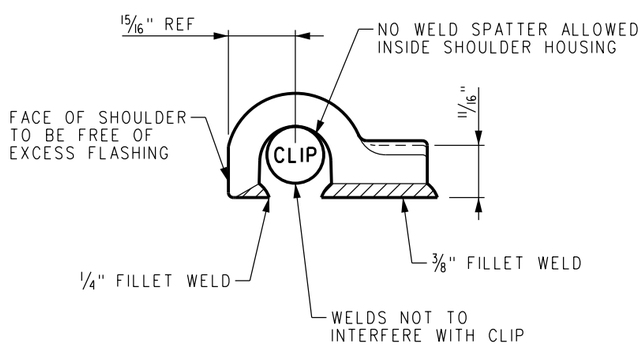

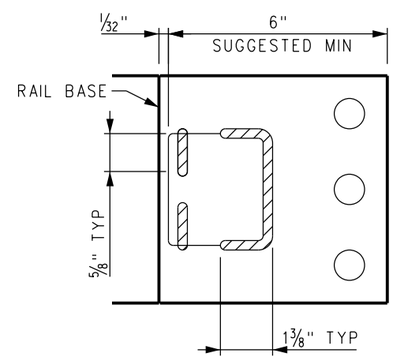

NOTES:

1. ALL WELDS TO BE IN ACCORDANCE WITH AREMA WELDING SPECIFICATIONS, 1/8" 7018 WELDING ROD, 3-PASSES.
2. ALL WELDS TO HAVE FULL PENETRATION TO BOTH PLATE AND SHOULDER.
3. WELD MUST NOT INTERFERE WITH EITHER THE RAIL OR THE CLIP.
4. RAIL SEATS AND INSIDE SHOULDER HOUSING TO BE FREE OF EXCESS WELD, SLAG, AND SPATTER.
5. SHOULDERS TO BE TACKED (OR CLAMPED) DOWN PRIOR TO FINAL WELDING, TO PREVENT THE CLIP FROM RISING DURING THE FINAL WELDS.
6. SHOULDER TO BE GENERALLY CENTERED ON THE PLATE, IF POSSIBLE.

WELDING DETAIL OF 7299-1 SHOULDER

REV.	DATE	DESCRIPTION	DES.	ENG.
X	XX-XX-XX	REVISION	XX	XX

DRAWN BY: HDR DATE: 03/31/2011

ASSISTANT DIRECTOR: STANDARDS & DESIGN

DIRECTOR OF ENGINEERING AND CONSTRUCTION

SCRRA ENGINEERING STANDARDS ARE INTENDED FOR SCRRA APPROVED USES ONLY. FOR NON-SCRRA APPROVED USES:
SCRRA SHALL NOT BE RESPONSIBLE FOR THE ACCURACY OR COMPLETENESS OF THE DATA OR INFORMATION CONTAINED HEREIN. THE SELECTION AND USE OF THESE STANDARDS IS THE SOLE RESPONSIBILITY OF THE USER AND SHOULD NOT BE USED WITHOUT CONSULTING A REGISTERED PROFESSIONAL ENGINEER. ALL WARRANTIES AND REPRESENTATIONS OF ANY KIND ARE DISCLAIMED. ANYONE MAKING USE OF THIS INFORMATION AGREES THAT IT ASSUMES ALL LIABILITY ARISING FROM SUCH USE. NO PART OF THESE STANDARDS SHOULD BE REPRODUCED OR DISTRIBUTED IN ANY FORM OR BY ANY MEANS WITHOUT THE PRIOR WRITTEN PERMISSION OF SCRRA. ALL RIGHTS RESERVED.

METROLINK®
SOUTHERN CALIFORNIA REGIONAL RAIL AUTHORITY
ONE GATEWAY PLAZA, 12TH FLOOR, L. A., CA. 90012

ENGINEERING STANDARDS

WELD–ON SHOULDER
FOR PANDROL "E" – CLIPS

STANDARD 2369
SCALE: NTS
REVISION –
SHEET 1 OF 1
CADD FILE: ES2369

ITEM	QTY	DESCRIPTION
1	2	POLY INSULATED JOINT BAR 36½" LONG
2	2	STEEL BACKUP PLATE ½" THICK X 15¼" LONG
3	2	STEEL BACKUP PLATE ½" THICK X 15¼" LONG
4	1	SCOTCHPLY END POST ⅜" THICK
5	6	OVAL NECK BOLT 1" X 7½" LONG
6	6	1" LOCKWASHER
7	6	1" SQUARE NUT

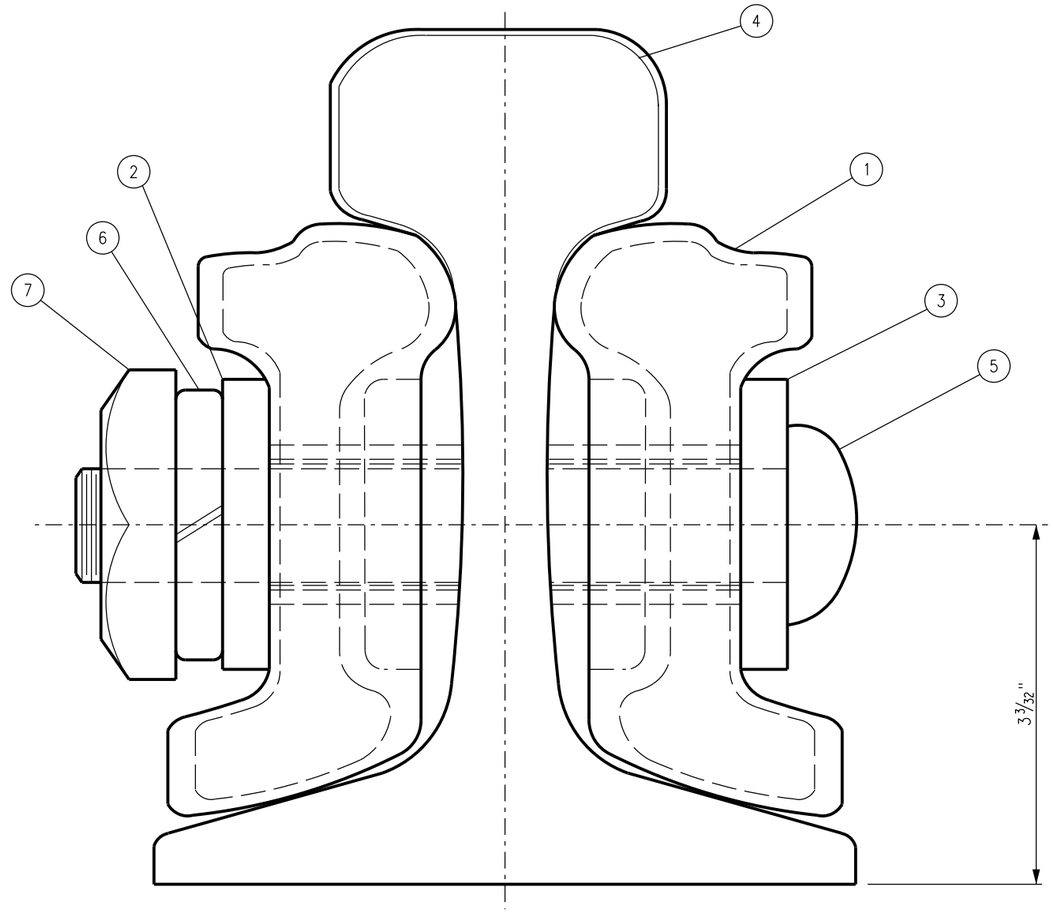

SECTION A

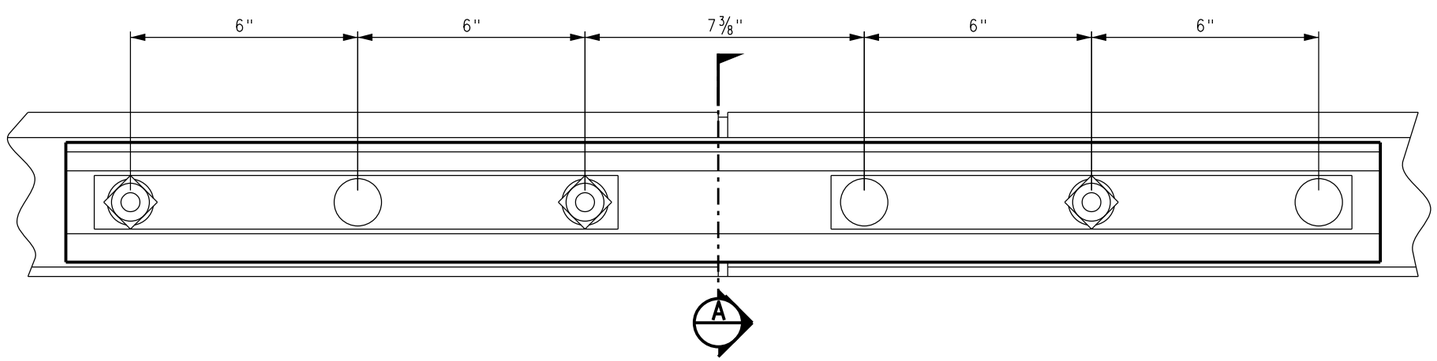

REV.	DATE	DESCRIPTION	DES.	ENG.
X	XX-XX-XX	REVISION	XX	XX

DRAWN BY: HDR DATE: 03/31/2011

ASSISTANT DIRECTOR: STANDARDS & DESIGN

DIRECTOR OF ENGINEERING AND CONSTRUCTION

SCRRA ENGINEERING STANDARDS ARE INTENDED FOR SCRRA APPROVED USES ONLY. FOR NON-SCRRA APPROVED USES:
SCRRA SHALL NOT BE RESPONSIBLE FOR THE ACCURACY OR COMPLETENESS OF THE DATA OR INFORMATION CONTAINED HEREIN. THE SELECTION AND USE OF THESE STANDARDS IS THE SOLE RESPONSIBILITY OF THE USER AND SHOULD NOT BE USED WITHOUT CONSULTING A REGISTERED PROFESSIONAL ENGINEER. ALL WARRANTIES AND REPRESENTATIONS OF ANY KIND ARE DISCLAIMED. ANYONE MAKING USE OF THIS INFORMATION AGREES THAT IT ASSUMES ALL LIABILITY ARISING FROM SUCH USE. NO PART OF THESE STANDARDS SHOULD BE REPRODUCED OR DISTRIBUTED IN ANY FORM OR BY ANY MEANS WITHOUT THE PRIOR WRITTEN PERMISSION OF SCRRA. ALL RIGHTS RESERVED.

METROLINK®

SOUTHERN CALIFORNIA REGIONAL RAIL AUTHORITY
ONE GATEWAY PLAZA, 12TH FLOOR, L. A., CA. 90012

ENGINEERING STANDARDS

POLY – INSULATED JOINT
141–136–132 LB. RE RAIL

STANDARD: 2370
SCALE: NTS
REVISION: –
SHEET: 1 OF 1
CADD FILE: ES2370

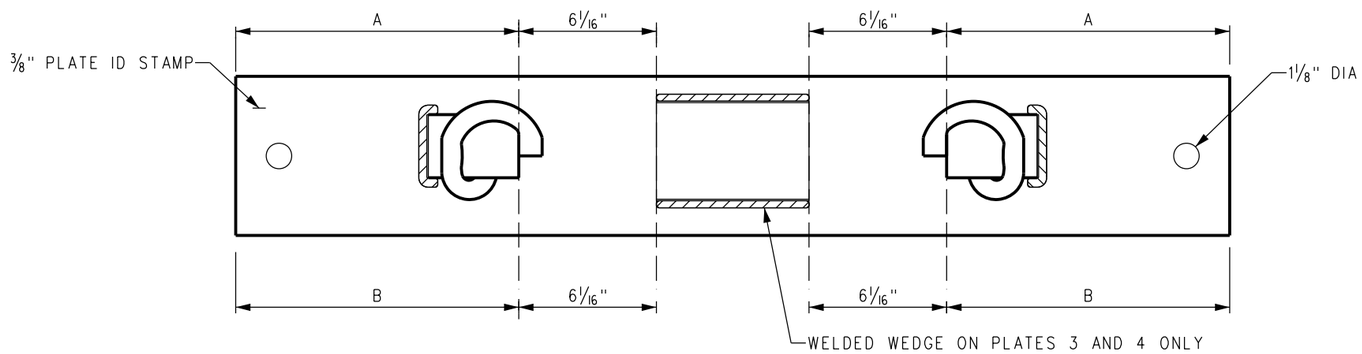

PLATES 1 - 4

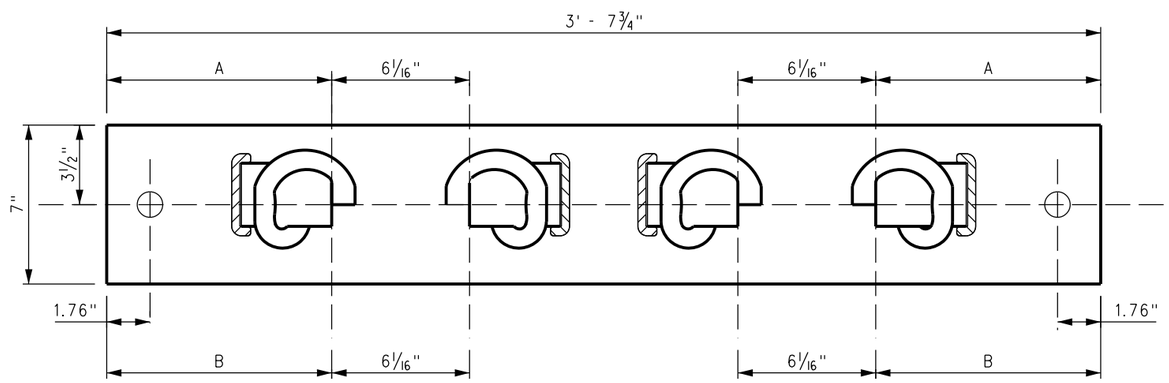

PLATES 5-8 AND STANDARD

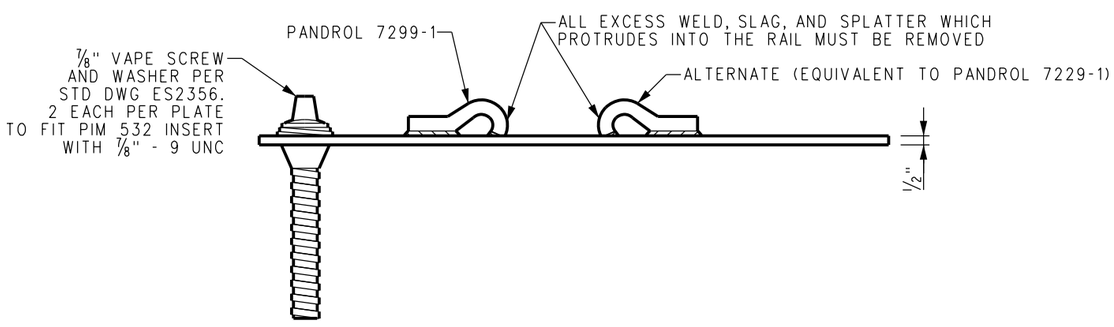

DOUBLE INSIDE GUARD RAIL PLATE DETAILS

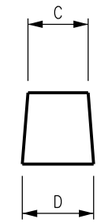

1/2" X 4" A36 STEEL BLOCK (WEDGE) FOR PLATES 3 & 4

PLATE ID	C (IN)	D (IN)
3	2.65	3.14
4	5.34	5.74

ENTRY PLATES

PLATE ID	A (IN)	B (IN)
1	17.12	16.75
2	15.85	15.69
3	14.59	14.15
4	13.21	12.87
5	12.11	11.83
6	11.24	11.03
7	10.60	10.47
8	10.21	10.14

STANDARD PLATE

PLATE ID	A (IN)	B (IN)
STD	10.05	10.05

DOUBLE INSIDE GUARD RAIL ITEM NUMBERS SET INCLUDES ALL ENTRY PLATES (2 OF EACH)	
STD PLATE (EACH)	ENTRY PLATES 1-8 (SET)

NOTES:

1. NO INSIDE CLIPS FOR PLATES 1, 2, 3, & 4. REQUIRES STEEL WEDGE ON PLATES 3 & 4.
2. IF 5 1/2" BASE RAIL WILL BE USED FOR GUARD RAIL, THEN DIMENSIONS A & B ARE TO BE INCREASED BY 0.50 (IN), AND THE RAIL SEAT DIMENSION WILL CHANGE FROM 6 1/16" TO 5 9/16".

REV.	DATE	DESCRIPTION	DES.	ENG.
X	XX-XX-XX	REVISION	XX	XX

DRAWN BY: HDR DATE: 03/31/2011

ASSISTANT DIRECTOR: STANDARDS & DESIGN

DIRECTOR OF ENGINEERING AND CONSTRUCTION

SCRRA ENGINEERING STANDARDS ARE INTENDED FOR SCRRA APPROVED USES ONLY. FOR NON-SCRRA APPROVED USES:
SCRRA SHALL NOT BE RESPONSIBLE FOR THE ACCURACY OR COMPLETENESS OF THE DATA OR INFORMATION CONTAINED HEREIN. THE SELECTION AND USE OF THESE STANDARDS IS THE SOLE RESPONSIBILITY OF THE USER AND SHOULD NOT BE USED WITHOUT CONSULTING A REGISTERED PROFESSIONAL ENGINEER. ALL WARRANTIES AND REPRESENTATIONS OF ANY KIND ARE DISCLAIMED. ANYONE MAKING USE OF THIS INFORMATION AGREES THAT IT ASSUMES ALL LIABILITY ARISING FROM SUCH USE. NO PART OF THESE STANDARDS SHOULD BE REPRODUCED OR DISTRIBUTED IN ANY FORM OR BY ANY MEANS WITHOUT THE PRIOR WRITTEN PERMISSION OF SCRRA. ALL RIGHTS RESERVED.

METROLINK®
SOUTHERN CALIFORNIA REGIONAL RAIL AUTHORITY
ONE GATEWAY PLAZA, 12TH FLOOR, L. A., CA. 90012

ENGINEERING STANDARDS

INSIDE GUARD RAIL PLATES FOR CONCRETE TIES

STANDARD 2371
SCALE: NTS
REVISION –
SHEET 1 OF 1
CADD FILE: ES2371

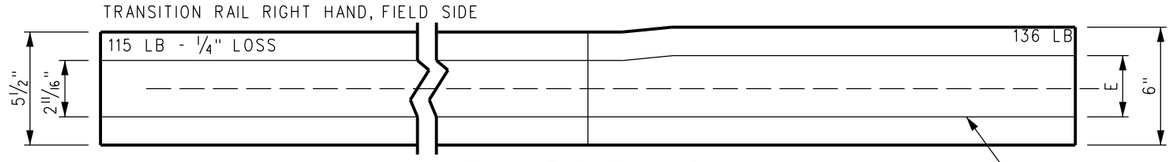

PLAN RIGHT HAND

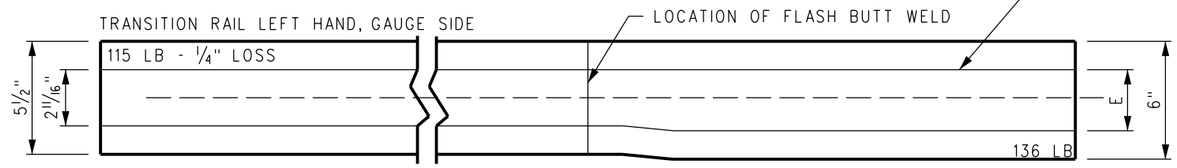

PLAN LEFT HAND

TRANSITION RAIL HAND IDENTIFICATION

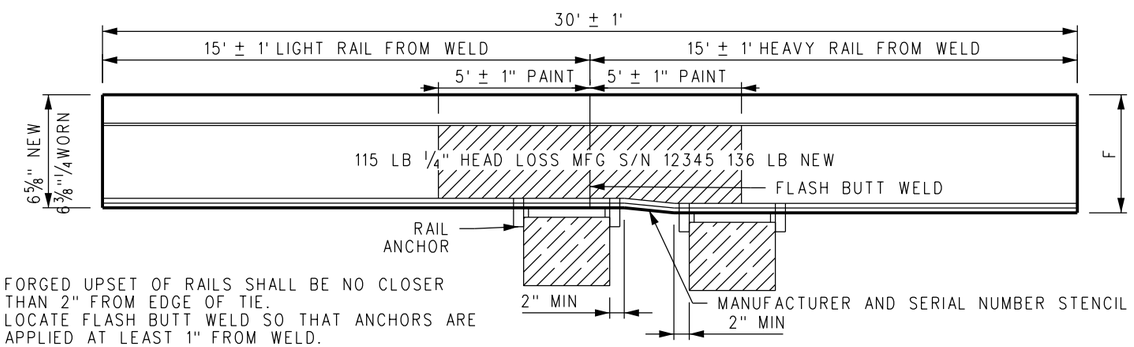

FORGED UPSET OF RAILS SHALL BE NO CLOSER THAN 2" FROM EDGE OF TIE.
LOCATE FLASH BUTT WELD SO THAT ANCHORS ARE APPLIED AT LEAST 1" FROM WELD.

ELEVATION

FACING GAUGE SIDE OF RAIL

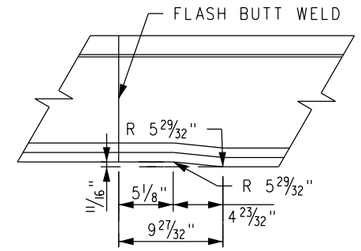

TRANSITION DETAIL

RAIL	E	F
132 LB 1/4" WORN	2 31/32"	6 7/8"
136 LB NEW	2 29/32"	7 5/16"
136 LB 1/4" WORN	2 29/32"	7 1/16"
141 LB NEW	2 29/32"	7 7/16"

BILL OF MATERIALS

TRANSITION RAIL ASSEMBLIES - LEFT HAND AND RIGHT HAND

141 LB NEW TO 115 LB NEW
141 LB NEW TO 115 LB 1/4" HEAD LOSS
136 LB NEW TO 115 LB NEW
136 LB NEW TO 115 LB 1/4" HEAD LOSS
136 LB 1/4" HEAD LOSS TO 115 LB 1/4" HEAD LOSS
132 LB 1/4" HEAD LOSS TO 115 LB 1/4" HEAD LOSS

NOTES:

1. TO DETERMINE HAND OF TRANSITION RAIL:
   A. FACE GAUGE SIDE OF TRANSITION RAIL. IF TRANSITION RAIL IS INSTALLED IN TRACK, STAND IN CENTER OF TRACK.
   B. MANUFACTURER'S TAG SHOULD BE VISIBLE IN WEB AREA, GAUGE SIDE.
   C. TAG SHOULD READ "GAUGE SIDE".
   D. WHEN HEAVY OR HIGH RAIL IS ON THE RIGHT, IT IS A RIGHT HAND TRANSITION RAIL. WHEN HEAVY OR HIGH RAIL IS ON THE LEFT, IT IS A LEFT HAND TRANSITION RAIL.
2. TRANSITION RAIL LENGTHS WERE CALCULATED USING 19 1/2" TIE SPACING FOR WOOD AND 24" TIE SPACING FOR CONCRETE.
3. ALWAYS MEASURE TRANSITION RAIL LENGTH BEFORE CUTTING OUT OLD RAIL.
4. BOX ANCHOR TIE EACH SIDE OF TRANSITION. BOX ANCHOR TIE EACH SIDE OF THERMITE WELDS, AS SHOWN. OTHERWISE, ANCHOR PER SCRRA ES2351-02.

NOTES FOR MANUFACTURERS:

1. TRANSITION RAILS ARE FURNISHED AS PAIRS AND ARE RIGHT OR LEFT HANDED.
2. MANUFACTURER TO PLACE ID TAG READING "GAUGE SIDE" ON WEB OF RAIL GAUGE SIDE AND OTHER APPROPRIATE INFORMATION AS SHOWN.
3. MACHINED SURFACES MUST BE FREE OF SEAMS AND RIDGES.
4. FLASH BUTT WELD TO BE GROUND FLUSH WITH PARENT RAILS ON BASE AND SIDES OF BASE, +0.000" TO -0.010".
5. TEMPLATES MUST BE USED TO CHECK FINISHED GAUGE CORNER AND TOP RADII.
6. HEAD HARDENED RAIL TO BE USED UNLESS OTHERWISE SPECIFIED.
7. MANUFACTURER TO MARK LIFT/BALANCE POINT FOR EACH RAIL LENGTH MANUFACTURED AND ACTUAL WEIGHT OF RAIL, STENCILED ON HEAD OF RAIL.
8. MANUFACTURER TO PAINT WEB OF RAIL, 10 FEET CENTERED ON WELD AND SOLID WHITE BOTH SIDES. USING 2 1/2" BLOCK STENCIL AND BLACK PAINT, MARK RAIL TRANSITIONS, I.E. 136 LB NEW AND 132 LB 1/4" HEAD LOSS AT APPROPRIATE END OF THE WHITE PAINTING. STENCIL IN BLACK THE MFG NAME AND S/N BETWEEN MARKING RAIL TRANSITIONS USING 2" BLOCK STENCIL.

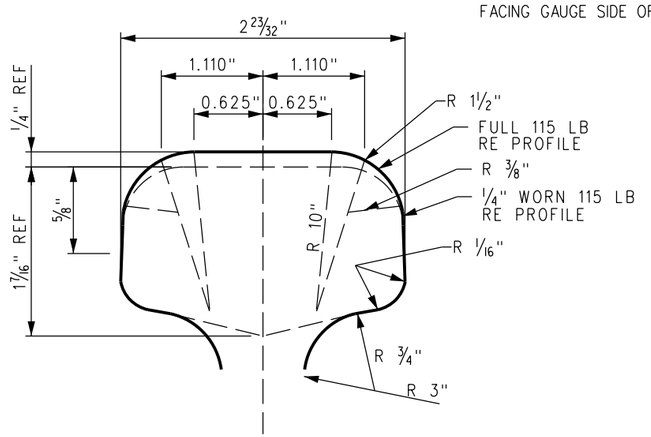

TOP RADII DETAIL

115 LB

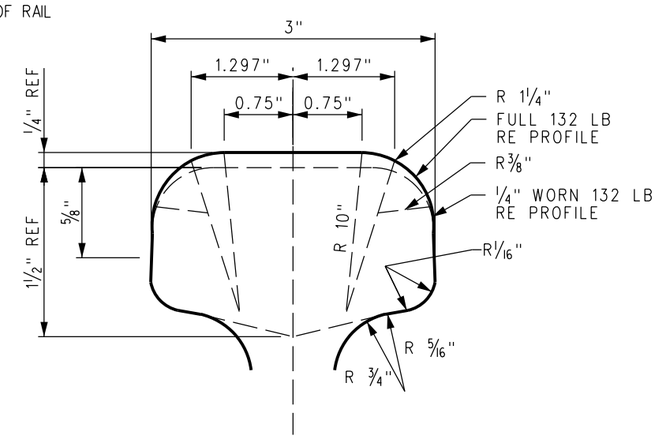

TOP RADII DETAIL

132 LB

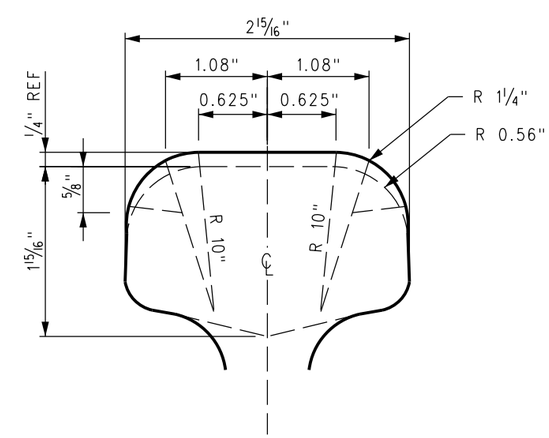

TOP RADII DETAIL

136 LB

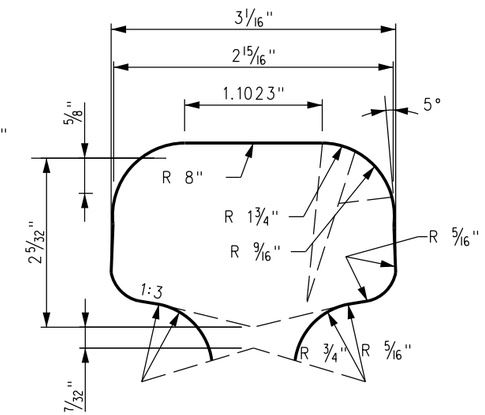

TOP RADII DETAIL

141 LB

X	XX-XX-XX	REVISION	XX	XX
REV.	DATE	DESCRIPTION	DES.	ENG.

DRAWN BY: HDR DATE: 03/31/2011

ASSISTANT DIRECTOR: STANDARDS & DESIGN

DIRECTOR OF ENGINEERING AND CONSTRUCTION

SCRRA ENGINEERING STANDARDS ARE INTENDED FOR SCRRA APPROVED USES ONLY. FOR NON-SCRRA APPROVED USES:
SCRRA SHALL NOT BE RESPONSIBLE FOR THE ACCURACY OR COMPLETENESS OF THE DATA OR INFORMATION CONTAINED HEREIN. THE SELECTION AND USE OF THESE STANDARDS IS THE SOLE RESPONSIBILITY OF THE USER AND SHOULD NOT BE USED WITHOUT CONSULTING A REGISTERED PROFESSIONAL ENGINEER. ALL WARRANTIES AND REPRESENTATIONS OF ANY KIND ARE DISCLAIMED. ANYONE MAKING USE OF THIS INFORMATION AGREES THAT IT ASSUMES ALL LIABILITY ARISING FROM SUCH USE. NO PART OF THESE STANDARDS SHOULD BE REPRODUCED OR DISTRIBUTED IN ANY FORM OR BY ANY MEANS WITHOUT THE PRIOR WRITTEN PERMISSION OF SCRRA. ALL RIGHTS RESERVED.

METROLINK®

SOUTHERN CALIFORNIA REGIONAL RAIL AUTHORITY
ONE GATEWAY PLAZA, 12TH FLOOR, L. A., CA. 90012

ENGINEERING STANDARDS

FORGED TRANSITION RAILS FOR NEW 141/136LB. TO 115LB. NEW AND 1/4" HEAD LOSS RAIL

STANDARD 2372
SCALE: NTS
REVISION –
SHEET 1 OF 1
CADD FILE: ES2372

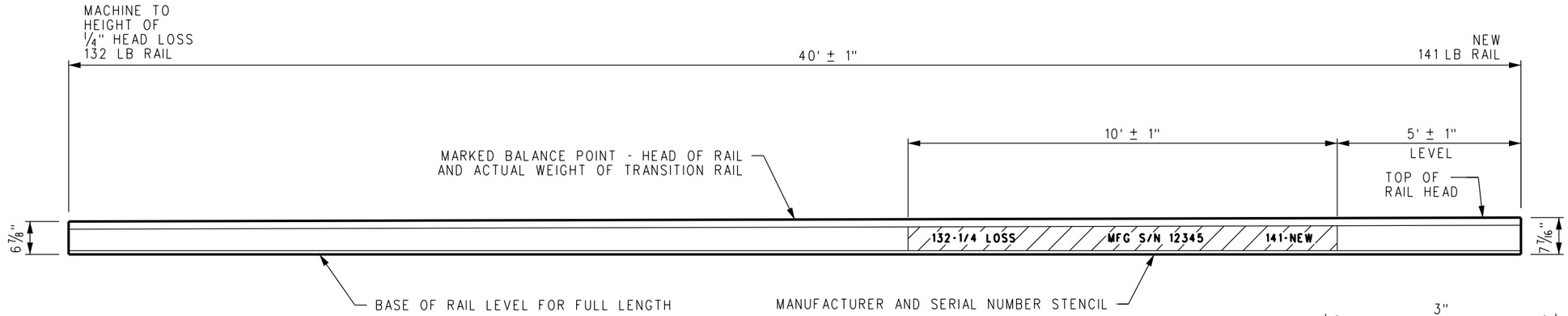

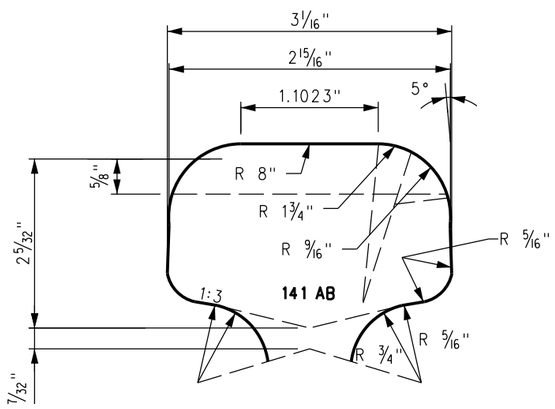

TOP RADII DETAIL
141 LB

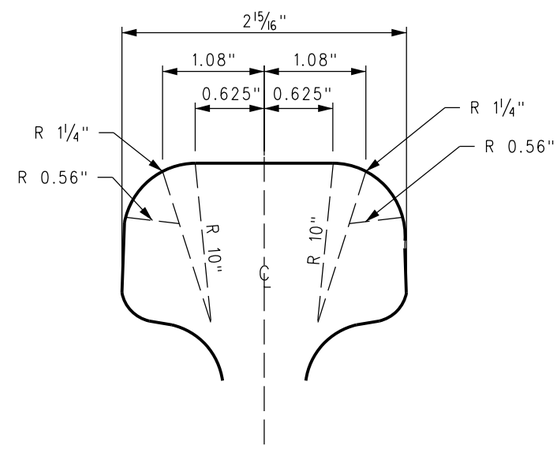

TOP RADII DETAIL
136 LB

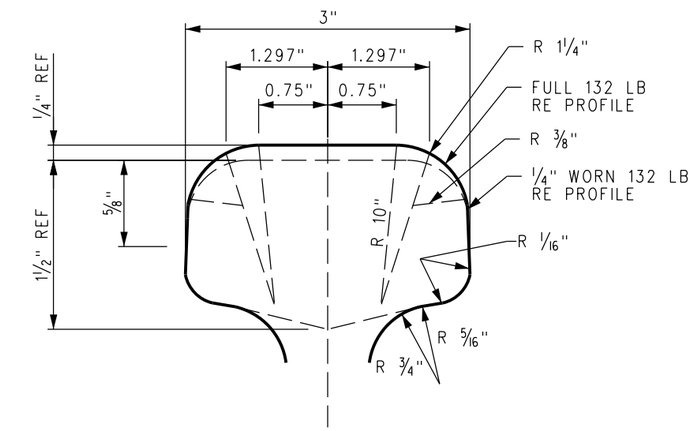

TOP RADII DETAIL
132 LB

RAIL HEIGHT		
SECTION	NEW	1/4" HEAD LOSS
141 LB	7 7/16"	-
136 LB	7 5/16"	-
132 LB	-	6 7/8"

BILL OF MATERIALS

QUANTITY TRANSITION RAIL
1 EA TRANSITION RAIL, 141 LB NEW TO 132 LB 1/4" HEAD LOSS
1 EA TRANSITION RAIL, 136 LB NEW TO 132 LB 1/4" HEAD LOSS

NOTES:

1. RAIL TO BE PURCHASED AND MANUFACTURED TO CURRENT "SCRRA SPECIFICATIONS FOR HEAD HARDENED RAIL".
2. TRANSITION RAIL TO BE MANUFACTURED FROM HEAD HARDENED RAIL.
3. MACHINED SURFACES MUST BE FREE OF SEAMS AND RIDGES.
4. TEMPLATES MUST BE USED TO CHECK FINISHED GAUGE CORNER AND TOP RADII.
5. MANUFACTURER TO MARK LIFT/BALANCE POINT FOR EACH RAIL LENGTH AND ACTUAL WEIGHT OF RAIL, STENCILED ON HEAD OF RAIL.
6. MANUFACTURER SHALL PAINT WEB OF RAIL, 10 FEET AS SHOWN ON RAIL, SOLID WHITE, BOTH SIDES. USING 2 1/2" BLOCK STENCIL AND BLACK PAINT, MARK RAIL TRANSITIONS, I.E. 141-NEW AND 132 1/4" LOSS AT EACH END OF THE WHITE PAINTING. STENCIL IN BLACK THE MFG NAME AND S/N BETWEEN MARKING RAIL TRANSITIONS USING 2" BLOCK STENCIL.
7. THE 141 LB TRANSITION RAIL CAN BE USED WITH 136 LB AND 132 LB RAIL SECTIONS NEW TO 1/4" HEAD LOSS.
8. TRANSITION RAIL IS UNIVERSAL AND CAN BE USED AS RIGHT HAND OR LEFT HAND RAIL.

REV.	DATE	DESCRIPTION	DES.	ENG.
X	XX-XX-XX	REVISION	XX	XX

DRAWN BY: HDR DATE: 03/31/2011

ASSISTANT DIRECTOR: STANDARDS & DESIGN

DIRECTOR OF ENGINEERING AND CONSTRUCTION

SCRRA ENGINEERING STANDARDS ARE INTENDED FOR SCRRA APPROVED USES ONLY. FOR NON-SCRRA APPROVED USES:
SCRRA SHALL NOT BE RESPONSIBLE FOR THE ACCURACY OR COMPLETENESS OF THE DATA OR INFORMATION CONTAINED HEREIN. THE SELECTION AND USE OF THESE STANDARDS IS THE SOLE RESPONSIBILITY OF THE USER AND SHOULD NOT BE USED WITHOUT CONSULTING A REGISTERED PROFESSIONAL ENGINEER. ALL WARRANTIES AND REPRESENTATIONS OF ANY KIND ARE DISCLAIMED. ANYONE MAKING USE OF THIS INFORMATION AGREES THAT IT ASSUMES ALL LIABILITY ARISING FROM SUCH USE. NO PART OF THESE STANDARDS SHOULD BE REPRODUCED OR DISTRIBUTED IN ANY FORM OR BY ANY MEANS WITHOUT THE PRIOR WRITTEN PERMISSION OF SCRRA. ALL RIGHTS RESERVED.

METROLINK®
SOUTHERN CALIFORNIA REGIONAL RAIL AUTHORITY
ONE GATEWAY PLAZA, 12TH FLOOR, L. A., CA. 90012

ENGINEERING STANDARDS

TRANSITION RAILS (PLANED)
FOR NEW 141LB. AND 136LB.
TO 132LB. 1/4" HEAD LOSS

STANDARD 2373
SCALE: NTS
REVISION –
SHEET 1 OF 1
CADD FILE: ES2373

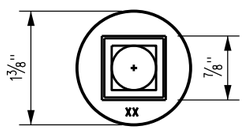

PLAN

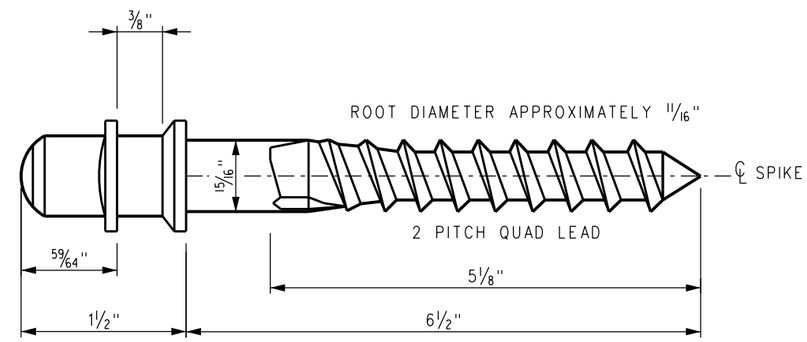

EVERGRIP SCREW SPIKE 15/16" X 6 1/2"
PART NUMBER SSEP2094-0650P

U.S. PATENT 6.471.140

ELEVATION

NOTES:

1. EASILY DRIVEN WITH CONVERTED AUTOMATIC SPIKE DRIVER, PORTABLE SPIKER OR MAUL.
2. FINS LOCK THE SPIKE INTO THE WOOD PREVENTING BACKWARD ROTATION.
3. CANNOT BE OVERDRIVEN.

REV.	DATE	DESCRIPTION	DES.	ENG.
X	XX-XX-XX	REVISION	XX	XX

DRAWN BY: HDR DATE: 03/31/2011

ASSISTANT DIRECTOR: STANDARDS & DESIGN

DIRECTOR OF ENGINEERING AND CONSTRUCTION

SCRRA ENGINEERING STANDARDS ARE INTENDED FOR SCRRA APPROVED USES ONLY. FOR NON-SCRRA APPROVED USES:
SCRRA SHALL NOT BE RESPONSIBLE FOR THE ACCURACY OR COMPLETENESS OF THE DATA OR INFORMATION CONTAINED HEREIN. THE SELECTION AND USE OF THESE STANDARDS IS THE SOLE RESPONSIBILITY OF THE USER AND SHOULD NOT BE USED WITHOUT CONSULTING A REGISTERED PROFESSIONAL ENGINEER. ALL WARRANTIES AND REPRESENTATIONS OF ANY KIND ARE DISCLAIMED. ANYONE MAKING USE OF THIS INFORMATION AGREES THAT IT ASSUMES ALL LIABILITY ARISING FROM SUCH USE. NO PART OF THESE STANDARDS SHOULD BE REPRODUCED OR DISTRIBUTED IN ANY FORM OR BY ANY MEANS WITHOUT THE PRIOR WRITTEN PERMISSION OF SCRRA. ALL RIGHTS RESERVED.

METROLINK®
SOUTHERN CALIFORNIA REGIONAL RAIL AUTHORITY
ONE GATEWAY PLAZA, 12TH FLOOR, L. A., CA. 90012

ENGINEERING STANDARDS

EVERGRIP DOUBLE HEAD SPIKE

STANDARD 2375
SCALE: NTS
REVISION –
SHEET 1 OF 1
CADD FILE: ES2375

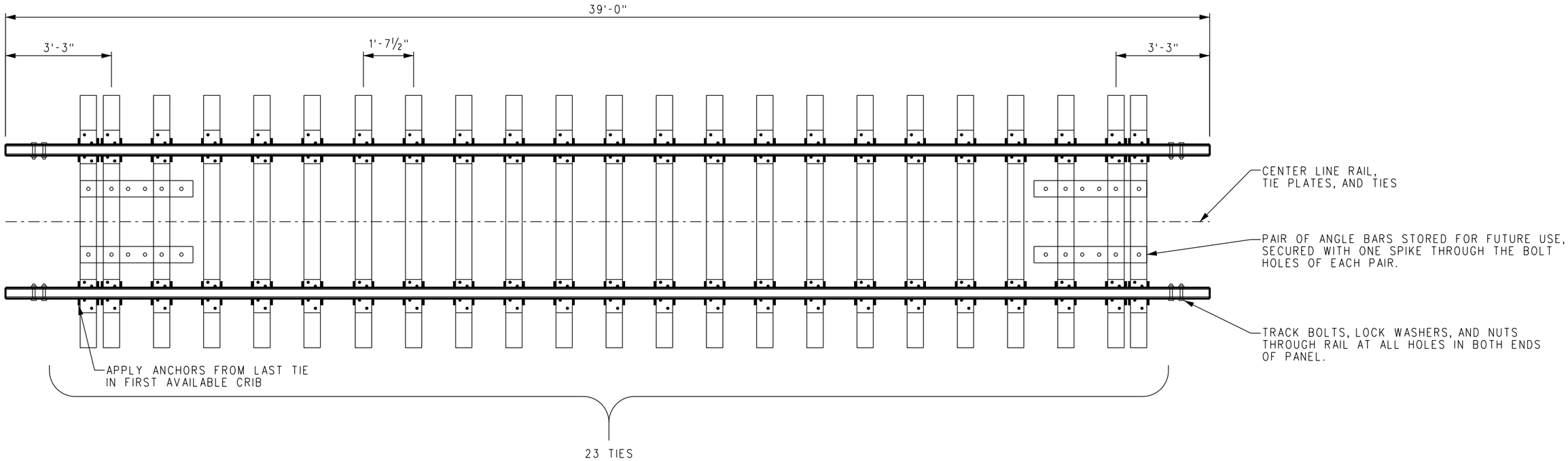

EMERGENCY TRACK PANEL

PANEL WEIGHTS

PANEL WEIGHTS IN LBS	
39' PANEL	
115 LB	136 LB
10,300±	10,800±

ALLOWABLE SECOND HAND RAIL WEAR

RAIL WEIGHT	ALLOWABLE WEAR	
	TOP	GAUGE
136 LB	⅜"	¼"
115 LB	⅛"	¼"

NOTES:

1. TRACK PANELS TO BE CONSTRUCTED AS ABOVE.
2. NEW OR SECOND HAND RAIL. NEW RAIL TO BE DRILLED SECOND AND THIRD HOLES ONLY (HOLE NEAREST END NOT DRILLED). RAIL TO COMPLY TO CURRENT SPECIFICATIONS. RAIL TRANSPOSED SO THAT WORN RAIL IS ON FIELD SIDE OF PANELS. THE HEAD LOSS AND GAUGE FACE LOSS BETWEEN ANY TWO PANELS ON A SHIPMENT, MEASURED ON BOTH ENDS, SHOULD NOT BE MORE THAN ±1/8". GAUGE IS TO BE WITHIN ±1/8" TO PROPER GAUGE OF 56½" AT ⅝" BELOW TOP OF BALL OF RAIL.
3. NEW OR SECOND HAND TIE PLATES TO MATCH NEW OR SECOND HAND RAIL.
4. USE NEW ANCHORS.
5. DERAILMENT PANELS TO BE BOX ANCHORED EVERY TIE.
6. ANCHOR PATTERN OF MAIN LINE PANELS ADJUSTED IN THE FIELD DURING INSTALLATION TO COMPLY WITH SCRRA ES2351-02.
7. USE NEW 7" X 9" X 8'-6" HARDWOOD TREATED TIES SPIKING PATTERN TO COMPLY WITH SCRRA ES2460-01, FIGURE A.
8. APPROPRIATE NUMBER OF TRACK BOLTS, LOCK WASHERS AND NUTS FASTENED IN ALL BOLT HOLES IN RAILS. WRAP BOLT ENDS WITH DUCT TAPE TO PREVENT BOLT LOOSENING.
9. ANGLE BARS ARE TO BE PLACED ON THE END TIES AS SHOWN ABOVE AND SPIKED TO THE TIE THROUGH THE BOLT HOLE WITH ONE SPIKE PER PAIR OF BARS.
10. TIES ARE PERPENDICULAR TO RAIL AND SPACING IS ±1". RAIL ENDS TO MATCH WITHIN ¼".
11. PANELS TO BE MARKED TO INDICATE WEIGHT WITH INDELIBLE MARKER ON TOP OF RAIL AT CENTER OF PANEL.
12. PANEL TO BE MARKED TO INDICATE NEW OR SECOND HAND RAIL WITH INDELIBLE MARKER ON SIDE OF RAIL NEAR CENTER OF PANEL.

REV.	DATE	DESCRIPTION	DES.	ENG.
X	XX-XX-XX	REVISION	XX	XX

DRAWN BY: HDR DATE: 03/31/2011

ASSISTANT DIRECTOR: STANDARDS & DESIGN

DIRECTOR OF ENGINEERING AND CONSTRUCTION

SCRRA ENGINEERING STANDARDS ARE INTENDED FOR SCRRA APPROVED USES ONLY. FOR NON-SCRRA APPROVED USES:
SCRRA SHALL NOT BE RESPONSIBLE FOR THE ACCURACY OR COMPLETENESS OF THE DATA OR INFORMATION CONTAINED HEREIN. THE SELECTION AND USE OF THESE STANDARDS IS THE SOLE RESPONSIBILITY OF THE USER AND SHOULD NOT BE USED WITHOUT CONSULTING A REGISTERED PROFESSIONAL ENGINEER. ALL WARRANTIES AND REPRESENTATIONS OF ANY KIND ARE DISCLAIMED. ANYONE MAKING USE OF THIS INFORMATION AGREES THAT IT ASSUMES ALL LIABILITY ARISING FROM SUCH USE. NO PART OF THESE STANDARDS SHOULD BE REPRODUCED OR DISTRIBUTED IN ANY FORM OR BY ANY MEANS WITHOUT THE PRIOR WRITTEN PERMISSION OF SCRRA. ALL RIGHTS RESERVED.

METROLINK®
SOUTHERN CALIFORNIA REGIONAL RAIL AUTHORITY
ONE GATEWAY PLAZA, 12TH FLOOR, L. A., CA. 90012

ENGINEERING STANDARDS

TYPICAL TRACK PANELS
115 LB. AND 136 LB. TIMBER TIES

STANDARD 2380
SCALE: NTS
REVISION –
SHEET 1 OF 1
CADD FILE: ES2380

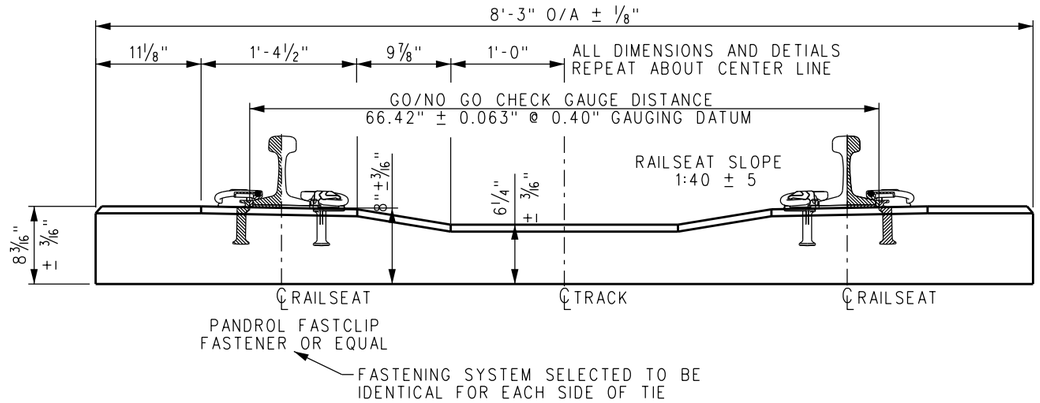

ELEVATION

(FRICTION PATTERN
NOT SHOWN FOR CLARITY)

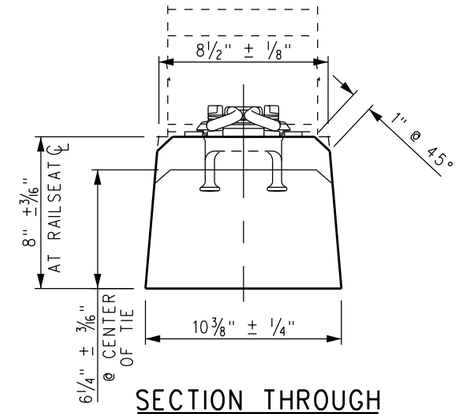

SECTION THROUGH RAILSEAT CENTERLINE

(PRESTRESSING WIRE NOT SHOWN)

NOTES:

1. CONCRETE COMPRESSIVE STRENGTH (USING ▫4" CYLINDER):
   28 DAY SPECIFIED = 7000 PSI [48.3 MPa]
   TRANSFER MINIMUM = 4500 PSI [31 MPa]
2. AIR ENTRAINED CONCRETE TO BE USED. AIR CONTENT TO BE A MINIMUM OF 3.5% IN THE HARDENED CONCRETE.
3. THE RAILSEAT SHALL BE A FLAT SMOOTH SURFACE ± 0.04" [1.0mm].
4. GAUGING POINTS FOR FLATNESS AND WIND. WIND BETWEEN RAILSEATS NOT TO EXCEED 1/16" [1.6mm] BETWEEN THESE POINTS.
5. ENDS OF PRESTRESSING WIRE TO BE CUT OFF TO WITHIN 1/8" [3.2mm] FROM SURROUNDING CONCRETE AT TIE ENDS.
6. TIES TO BE MANUFACTURED IN ACCORDANCE WITH SPECIFICATIONS AND ACCEPTED PCI PRACTICE FOR PRESTRESSED CONCRETE.
7. THIS TIE IS DESIGNED FOR USE WITH 136 RE, RAIL. THIS TIE WILL ALSO ACCOMMODATE 115 LB, 119 LB, 132 LB, AND 141 LB RAIL WITH MINOR CHANGE IN SIDE POST TO ACHIEVE CORRECT GAUGE. SEE SCRRA ES2360 FOR DETAILS CONCERNING SIDE POST AND RAIL SIZE.
8. FOR DIMENSIONAL ACCEPTANCE PURPOSES, THE GAUGING DIMENSION BETWEEN OUTER SHOULDERS IS CHECKED WITH GO/NO GO GAUGES TO BE WITHIN 1/16" OF CALCULATED DIMENSION, AT A HEIGHT OF 0.4" ABOVE THE RAIL SEAT SURFACE WHICH IS 66.42" ± 0.63".
9. PRESTRESSING WIRE IS 5.32mm DIAMETER CONFORMING WITH ASTM A-881 STEEL WIRE, DEFORMED, STRESS RELIEVED FOR PRESTRESSED CONCRETE RAILROAD TIES. ULTIMATE STRENGTH IS 9200 LB-FORCE MINIMUM.
10. WIRES ARE TENSIONED TO 7000 LB-FORCE/WIRE.
11. THE TOLERANCE ON WIRE SHALL BE ± 1/4". ANY SINGLE WIRE MAY BE OUT OF POSITION BY MORE THAN 1/4" SO LONG AS 3/4" MINIMUM COVER AND ELECTRICAL REQUIREMENTS ARE SATISFIED.
12. ○ = ALTERNATE WIRE LOCATION
13. FASTENING SYSTEM TO BE FASTCLIP OR AS APPROVED BY THE SCRRA DIRECTOR OF ENGINEERING AND CONSTRUCTION.
14. AN SCRRA APPROVED FRICTION PATTERN SHALL BE CAST INTO SIDES OF TIES AND EMBOSSED INTO BOTTOM OF TIES.
15. RAILSEAT CANT: 1:40 (0.144 @ 5 3/4" GAUGING POINT)
    MAX = 0.164" @ 5 3/4" GAUGING POINT
    MIN = 0.128" @ 5 3/4" GAUGING POINT
16. APPROXIMATE WEIGHT OF TIE = 610 LBS
    (USING AIR ENTRAINED CONCRETE)

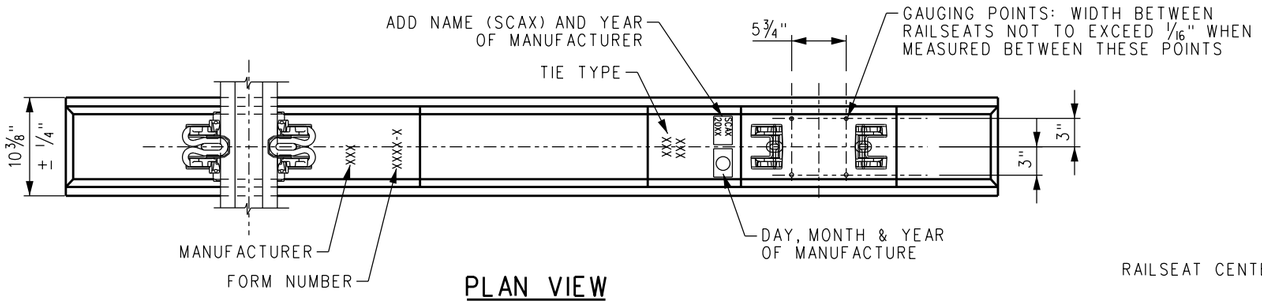

PLAN VIEW

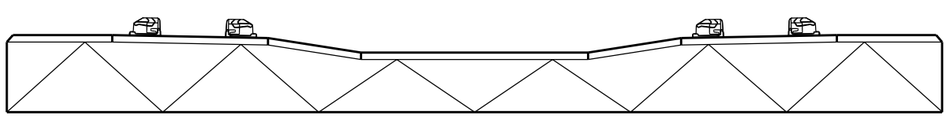

FRICTION PATTERN

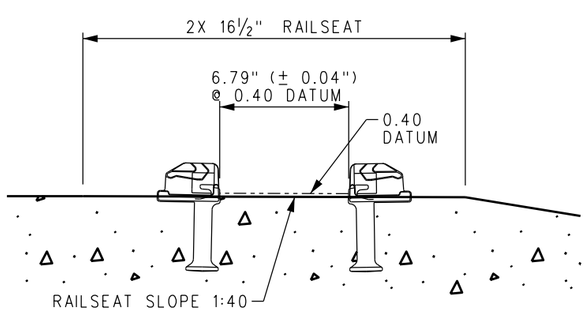

SHOULDER LOCATION DETAIL

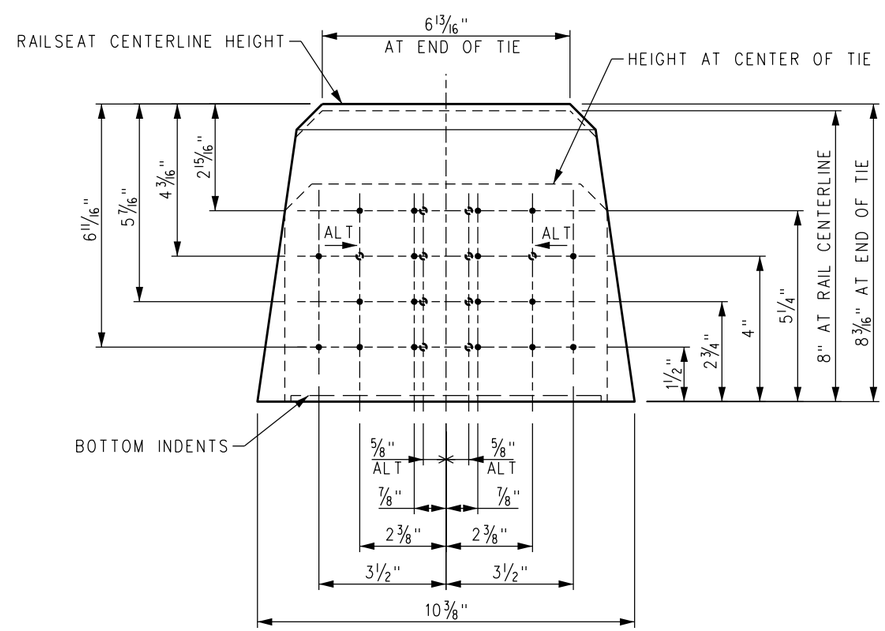

END VIEW

REV.	DATE	DESCRIPTION	DES.	ENG.
1	06/27/2011	REVISED NOTE AND STAMP, PLAN VIEW	AC	NDP

DRAWN BY: A. CARLOS DATE: 03/31/2011

ASSISTANT DIRECTOR: STANDARDS & DESIGN

DIRECTOR OF ENGINEERING AND CONSTRUCTION

SCRRA ENGINEERING STANDARDS ARE INTENDED FOR SCRRA APPROVED USES ONLY. FOR NON-SCRRA APPROVED USES:
SCRRA SHALL NOT BE RESPONSIBLE FOR THE ACCURACY OR COMPLETENESS OF THE DATA OR INFORMATION CONTAINED HEREIN. THE SELECTION AND USE OF THESE STANDARDS IS THE SOLE RESPONSIBILITY OF THE USER AND SHOULD NOT BE USED WITHOUT CONSULTING A REGISTERED PROFESSIONAL ENGINEER. ALL WARRANTIES AND REPRESENTATIONS OF ANY KIND ARE DISCLAIMED. ANYONE MAKING USE OF THIS INFORMATION AGREES THAT IT ASSUMES ALL LIABILITY ARISING FROM SUCH USE. NO PART OF THESE STANDARDS SHOULD BE REPRODUCED OR DISTRIBUTED IN ANY FORM OR BY ANY MEANS WITHOUT THE PRIOR WRITTEN PERMISSION OF SCRRA. ALL RIGHTS RESERVED.

METROLINK®
SOUTHERN CALIFORNIA REGIONAL RAIL AUTHORITY
ONE GATEWAY PLAZA, 12TH FLOOR, L. A., CA. 90012

ENGINEERING STANDARDS

CONCRETE TIE AND FASTCLIP FASTENING STANDARD

STANDARD 2402
SCALE: NTS
REVISION 1 SHEET 1 OF 1
CADD FILE: ES2402

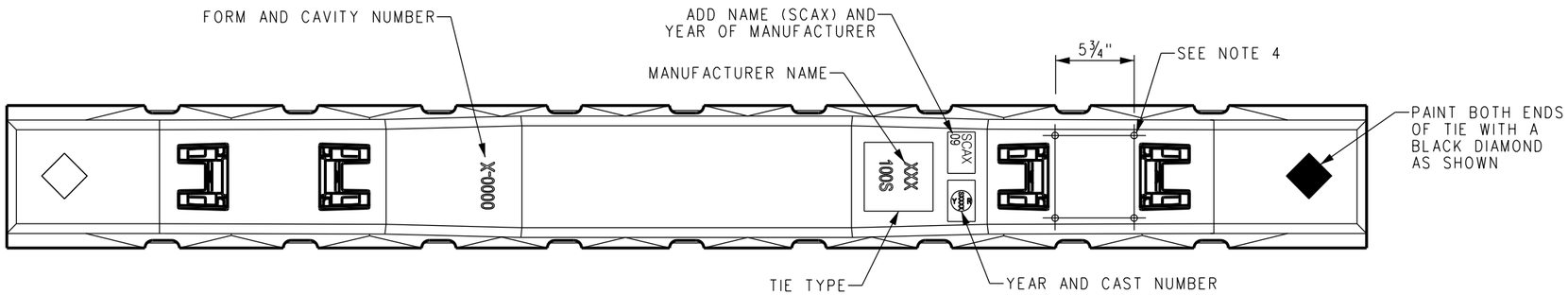

PLAN VIEW

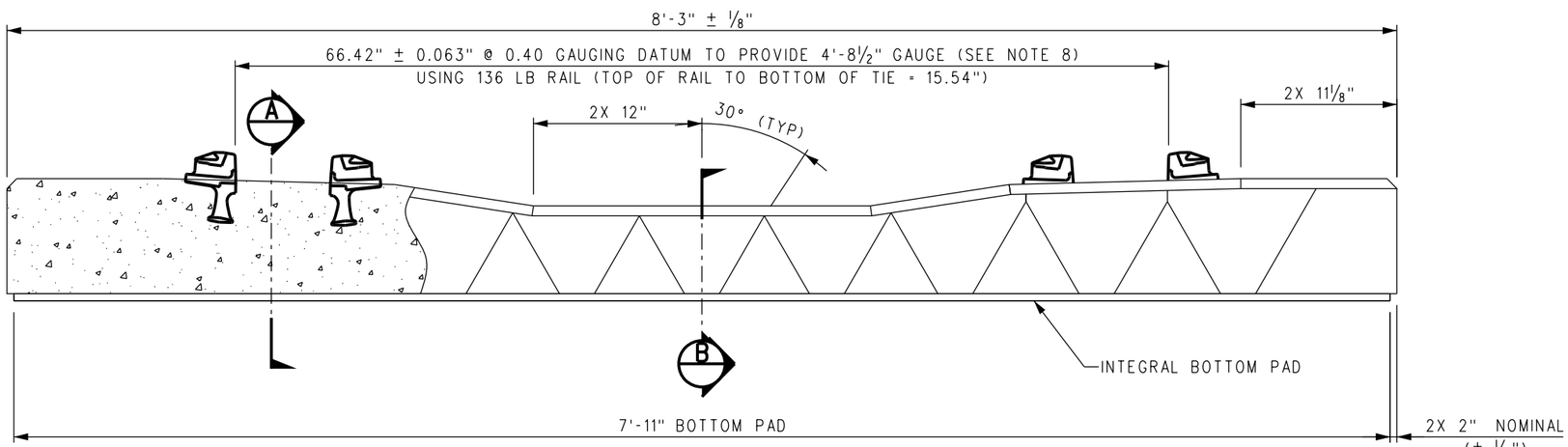

ELEVATION VIEW

NOTES:

1. CONCRETE COMPRESSIVE STRENGTH (USING x 4" CYLINDER):
   28 DAY SPECIFIED = 7000 PSI [48.3 MPA]
   TRANSFER MINIMUM = 4500 PSI [31 MPA]
2. AIR ENTRAINED CONCRETE TO BE USED. AIR CONTENT TO BE MINIMUM OF 3.5% IN THE HARDENED CONCRETE.
3. THE RAIL SEAT SHALL BE A FLAT SMOOTH SURFACE ± 0.04" [1.0mm].
4. GAUGING POINTS FOR FLATNESS AND WIND. WIND BETWEEN RAIL SEATS NOT TO EXCEED 1/16" [1.6mm] BETWEEN THESE POINTS.
5. SEE APPROPRIATE WIRE PATTERN DRAWING FOR WIRE AND STRESSING DETAILS. (SCRRA ES2402)
6. ENDS OF PRESTRESSING WIRE TO BE CUT OFF WITHIN ⅛" [3.2mm] FROM SURROUNDING CONCRETE AT TIE ENDS.
7. TIES TO BE MANUFACTURED IN ACCORDANCE WITH CUSTOMER SUPPLIED SPECIFICATIONS AND/OR ACCEPTED PCI PRACTICE FOR PRESTRESSED CONCRETE.
8. THIS TIE IS DESIGNED TO PROVIDE TRACK GAUGE USING RAIL AND THE FASTENING COMPONENTS LISTED HEREON. THE OUT-TO-OUT SHOULDER DIMENSION IS CALCULATED TO PROVIDE THE GAUGE INDICATED ASSUMING NOMINAL DIMENSIONS FOR RAIL PADS, INSULATORS, AND RAIL TOLERANCE ON SHOULDER POSITION AND RAIL SEAT INCLINATION ARE THOSE FOUND BY EXPERIENCE TO BE ACHIEVABLE AND SATISFACTORY IN PRACTICE. SEE SCRRA ES2360-01 THROUGH ES2360-03 FOR SIDE POSTS AND CLIPS FOR VARIOUS OTHER RAIL WEIGHTS.
9. RAIL FASTENING INFORMATION:
   CAST IN COMPONENTS:
   - DUCTILE IRON SHOULDER — PANDROL 9086
   - SHOULDER FACE ANGLE — 3'

   LOOSE COMPONENTS:
   - INSULATOR:
     - SIDE POST THICKNESS: — AS SPECIFIED
     - TOE INSULATOR THICKNESS: — AS SPECIFIED
   - CLIP: — AS SPECIFIED
   - PAD THICKNESS: — AS SPECIFIED
10. RAIL SEAT CANT: 1:40 (0.144" @ 5¾" GAUGING POINT)
    MAX = 0.164" @ 5¾" GAUGING POINT
    MIN = 0.128" @ 5¾" GAUGING POINT
11. APPROXIMATE WEIGHT OF TIE = 610 LBS. (USING AIR ENTRAINED CONCRETE).
12. THIS TIE TO ONLY BE USED ON BRIDGE DECKS WITH LESS THAN 12" OF BALLAST UNDER TIES OR AS DIRECTED BY SCRRA ENGINEER.

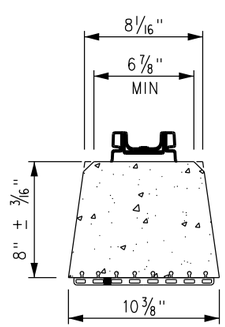

MIDWAY BETWEEN SHOULDERS (A)

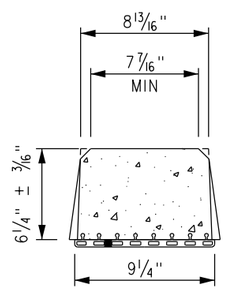

CENTER OF TIE (B)

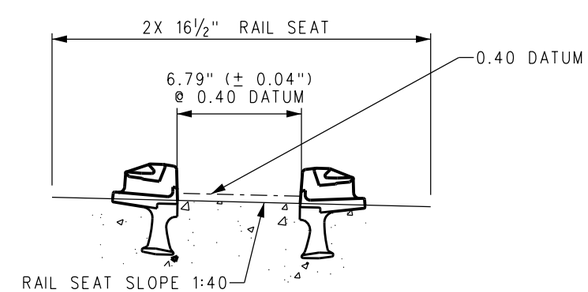

SHOULDER LOCATION DETAIL

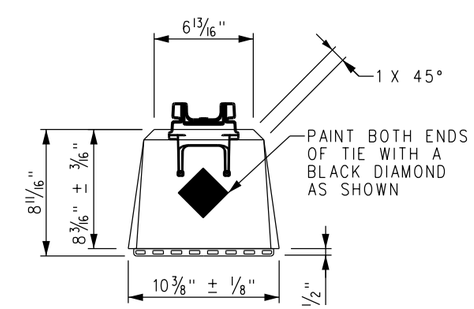

END VIEW

REV.	DATE	DESCRIPTION	DES.	ENG.
1	06/27/2011	REVISED NOTE AND STAMP, PLAN VIEW	AC	NDP

DRAWN BY: HDR DATE: 03/31/2011

ASSISTANT DIRECTOR: STANDARDS & DESIGN

DIRECTOR OF ENGINEERING AND CONSTRUCTION

SCRRA ENGINEERING STANDARDS ARE INTENDED FOR SCRRA APPROVED USES ONLY. FOR NON-SCRRA APPROVED USES: SCRRA SHALL NOT BE RESPONSIBLE FOR THE ACCURACY OR COMPLETENESS OF THE DATA OR INFORMATION CONTAINED HEREIN. THE SELECTION AND USE OF THESE STANDARDS IS THE SOLE RESPONSIBILITY OF THE USER AND SHOULD NOT BE USED WITHOUT CONSULTING A REGISTERED PROFESSIONAL ENGINEER. ALL WARRANTIES AND REPRESENTATIONS OF ANY KIND ARE DISCLAIMED. ANYONE MAKING USE OF THIS INFORMATION AGREES THAT IT ASSUMES ALL LIABILITY ARISING FROM SUCH USE. NO PART OF THESE STANDARDS SHOULD BE REPRODUCED OR DISTRIBUTED IN ANY FORM OR BY ANY MEANS WITHOUT THE PRIOR WRITTEN PERMISSION OF SCRRA. ALL RIGHTS RESERVED.

METROLINK®
SOUTHERN CALIFORNIA REGIONAL RAIL AUTHORITY
ONE GATEWAY PLAZA, 12TH FLOOR, L. A., CA. 90012

ENGINEERING STANDARDS

8'-3" BOTTOM PAD TIE (FASTCLIP) FOR USE ON BRIDGE DECKS

STANDARD: 2403
SCALE: NTS
REVISION: 1 SHEET: 1 OF 1
CADD FILE: ES2403

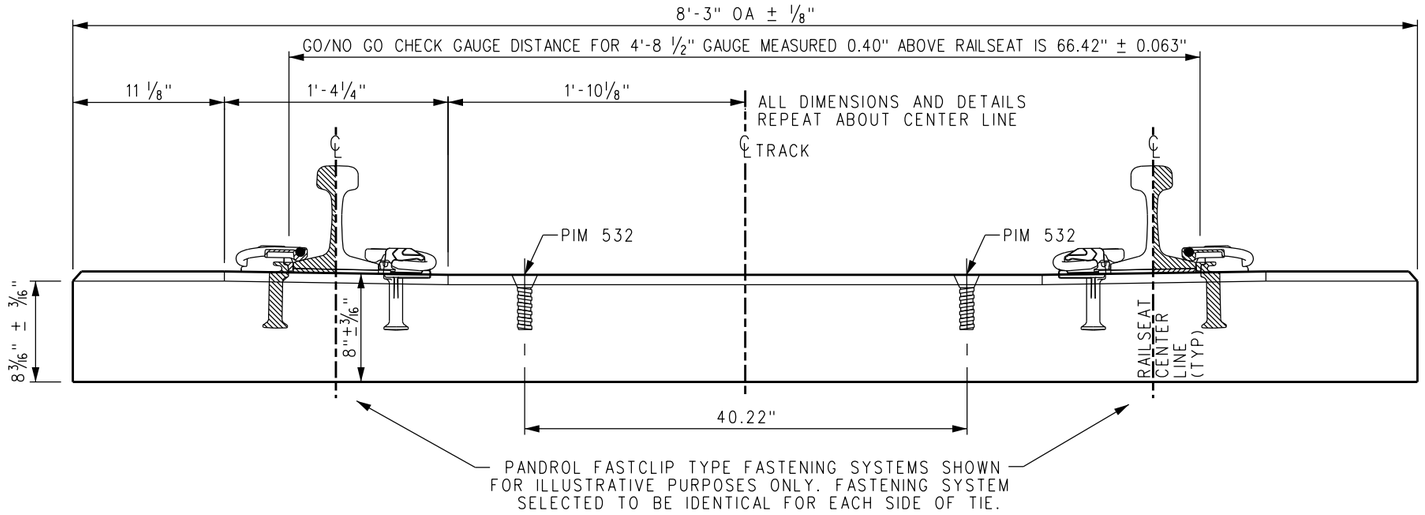

ELEVATION

(FRICTION PATTERN NOT SHOWN FOR CLARITY)

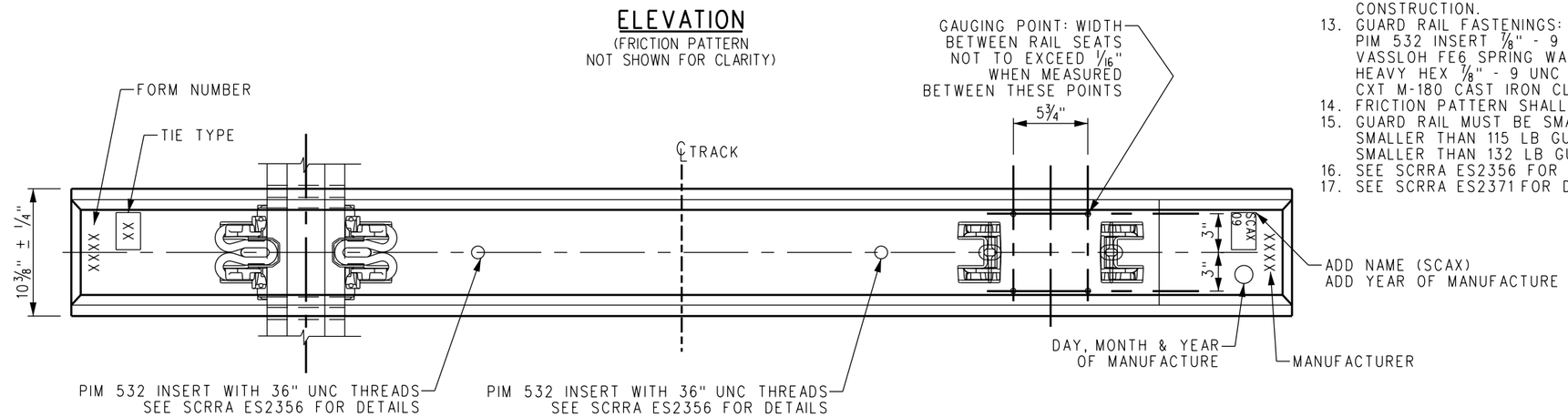

PLAN VIEW

NOTES:

1. CONCRETE STRENGTH (USING CYLINDER STRENGTHS), 28 DAY SPECIFIED = 7000 PSI TRANSFER MINIMUM = 4500 PSI.
2. RAILSEAT CANT = 1:40 ± 5.
3. THE RAILSEAT SHALL BE A FLAT, SMOOTH SURFACE ±0.04" (1.0mm).
4. APPROXIMATE WEIGHT OF TIE = 600 LBS (USING AIR ENTRAINED CONCRETE).
5. FOR DIMENSIONAL ACCEPTANCE PURPOSES, THE GAUGING DIMENSION BETWEEN OUTER SHOULDERS IS CHECKED WITH GO/NO GO GAUGES TO BE WITHIN 1/16" OF CALCULATED DIMENSION, AT A HEIGHT OF 0.4" ABOVE THE RAIL SEAT SURFACE. GO/NO GO DIMENSION IS 66.42" ± 0.063".
6. THIS TIE IS DESIGNED FOR USE WITH 136 LB RE RAIL. THIS TIE WILL ALSO ACCOMMODATE 115 LB, 119 LB, 132 LB, AND 141 LB RAIL WITH MINOR CHANGE IN SIDE POST TO ACHIEVE CORRECT GAUGE. SEE SCRRA ES2360 FOR DETAILS CONCERNING SIDE POST AND RAIL SIZE.
7. PRESTRESSING WIRE IS 5.32mm DIAMETER DEFORMED WIRE STRESS RELIEVED WITH A MINIMUM BREAKING LOAD OF 9200 LBS AND WITH OTHER REQUIREMENTS CONFORMING WITH ASTM A-881, "STEEL WIRE DEFORMED FOR PRESTRESSED CONCRETE RAILROAD TIES".
8. ENDS OF PRESTRESSING WIRE TO BE CUT OFF TO WITHIN 1/8" OF SURROUNDING CONCRETE AT TIE ENDS.
9. AIR ENTRAINED CONCRETE TO BE USED, AIR CONTENT TO BE 5 1/2% ± 1% IN PLASTIC CONCRETE.
10. THE OUT TO OUT SHOULDER SPACING DIMENSION FOR THIS TIE IS CALCULATED TO PROVIDE THE GAUGE INDICATED ASSUMING NOMINAL DIMENSIONS FOR RAIL PADS, INSULATORS AND RAIL. TOLERANCE ON SHOULDER POSITIONS AND RAILSEAT INCLINATION ARE THOSE FOUND BY EXPERIENCE TO BE ACHIEVABLE AND SATISFACTORY IN PRACTICE.
11. TIES TO BE MANUFACTURED IN ACCORDANCE WITH ACCEPTED PCI CONSTRUCTION PRACTICE FOR PRESTRESSED CONCRETE.
12. FASTENING SYSTEM TO BE APPROVED BY SCRRA DIRECTOR OF ENGINEERING AND CONSTRUCTION.
13. GUARD RAIL FASTENINGS:
    PIM 532 INSERT 7/8" - 9 UNC THREAD
    VASSLOH FE6 SPRING WASH
    HEAVY HEX 7/8" - 9 UNC BOLT
    CXT M-180 CAST IRON CLIP OR EQUIVALENT.
14. FRICTION PATTERN SHALL BE CAST INTO SIDES OF TIES AND EMBOSSED INTO BOTTOM OF TIES.
15. GUARD RAIL MUST BE SMALLER THAN OR EQUAL IN HEIGHT TO RUNNING RAIL. DO NOT USE SMALLER THAN 115 LB GUARD RAIL SECTION WITH 132 LB - 136 LB RUNNING RAIL. DO NOT USE SMALLER THAN 132 LB GUARD RAIL SECTION WITH 141 LB RUNNING RAIL.
16. SEE SCRRA ES2356 FOR DETAILS ON COACH SCREW, INSERT, AND WASHER.
17. SEE SCRRA ES2371 FOR DETAILS ON INSIDE GUARD RAIL PLATES FOR CONCRETE TIES.

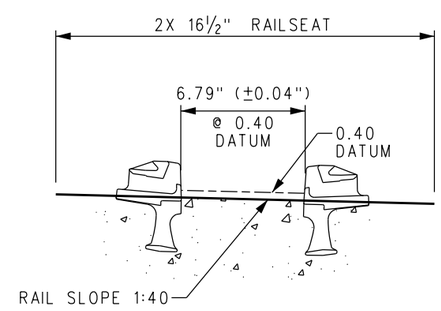

SHOULDER LOCATION DETAIL

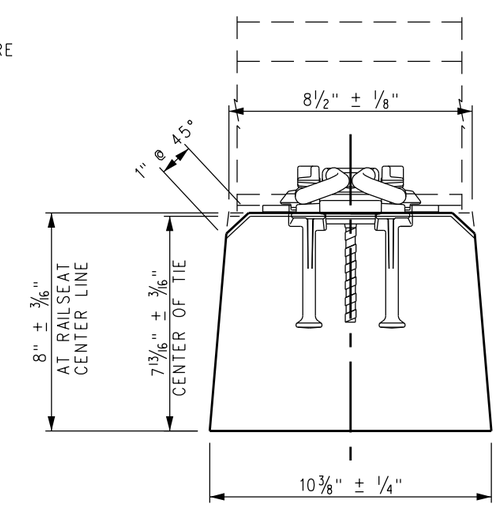

SECTION THROUGH RAILSEAT CENTERLINE

(PRESTRESSING WIRE NOT SHOWN)

REV.	DATE	DESCRIPTION	DES.	ENG.
1	06/27/2011	REVISED NOTE AND STAMP, PLAN VIEW	AC	NDP

DRAWN BY: A. CARLOS DATE: 03/31/2011

ASSISTANT DIRECTOR: STANDARDS & DESIGN

DIRECTOR OF ENGINEERING AND CONSTRUCTION

SCRRA ENGINEERING STANDARDS ARE INTENDED FOR SCRRA APPROVED USES ONLY. FOR NON-SCRRA APPROVED USES:
SCRRA SHALL NOT BE RESPONSIBLE FOR THE ACCURACY OR COMPLETENESS OF THE DATA OR INFORMATION CONTAINED HEREIN. THE SELECTION AND USE OF THESE STANDARDS IS THE SOLE RESPONSIBILITY OF THE USER AND SHOULD NOT BE USED WITHOUT CONSULTING A REGISTERED PROFESSIONAL ENGINEER. ALL WARRANTIES AND REPRESENTATIONS OF ANY KIND ARE DISCLAIMED. ANYONE MAKING USE OF THIS INFORMATION AGREES THAT IT ASSUMES ALL LIABILITY ARISING FROM SUCH USE. NO PART OF THESE STANDARDS SHOULD BE REPRODUCED OR DISTRIBUTED IN ANY FORM OR BY ANY MEANS WITHOUT THE PRIOR WRITTEN PERMISSION OF SCRRA. ALL RIGHTS RESERVED.

METROLINK®
SOUTHERN CALIFORNIA REGIONAL RAIL AUTHORITY
ONE GATEWAY PLAZA, 12TH FLOOR, L. A., CA. 90012

ENGINEERING STANDARDS

CONCRETE TIE – GUARD RAIL

STANDARD: 2406
SCALE: NTS
REVISION: 1
SHEET: 1 OF 1
CADD FILE: ES2406

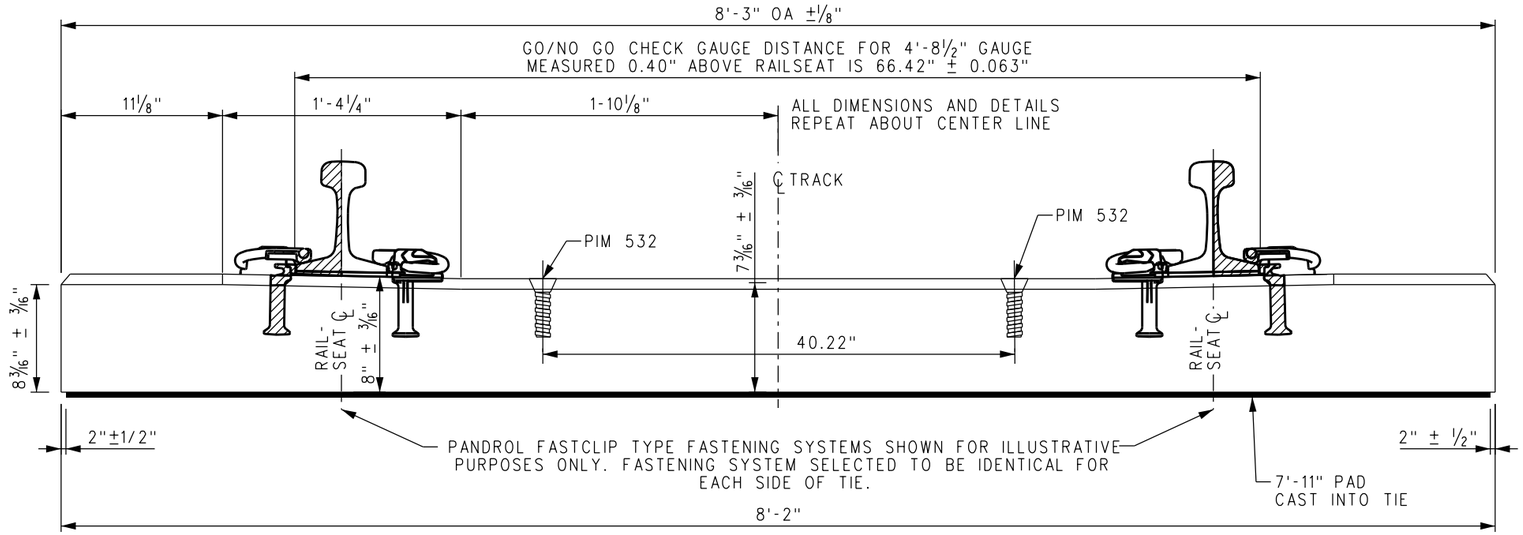

ELEVATION

(FRICTION PATTERN NOT SHOWN FOR CLARITY)

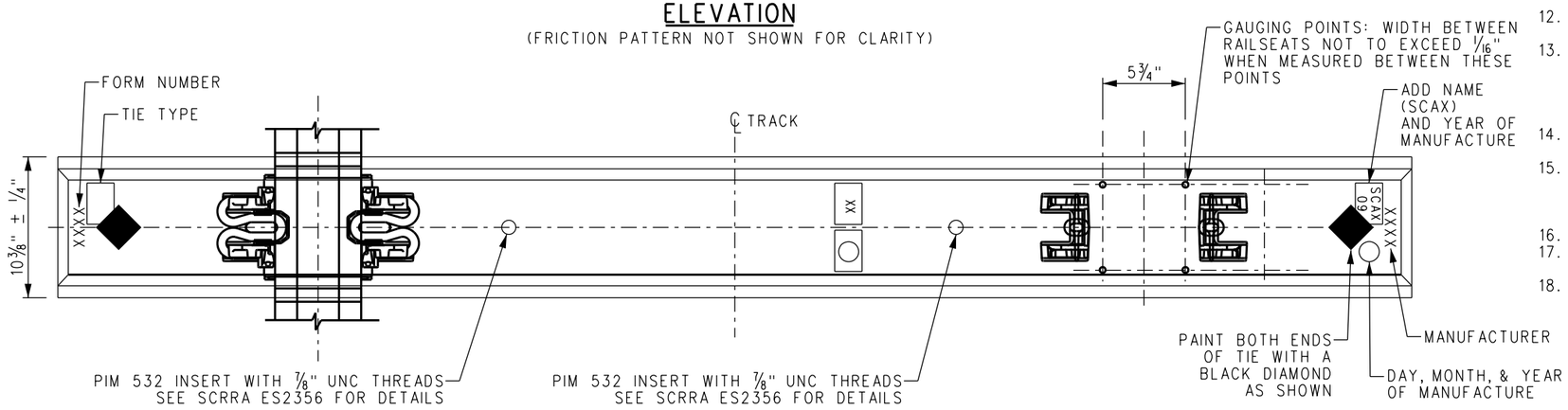

PLAN VIEW

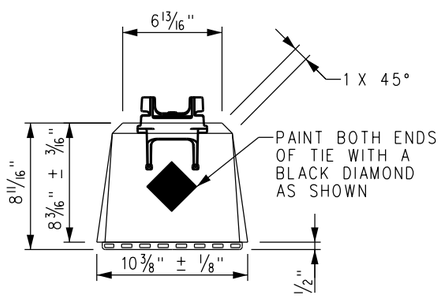

END VIEW

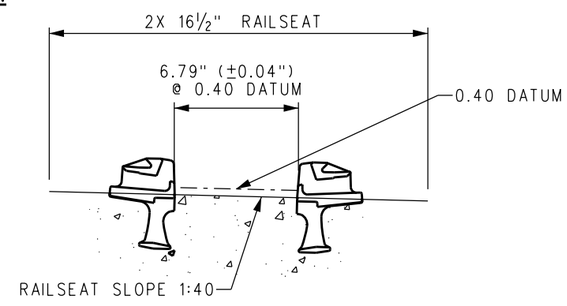

SHOULDER LOCATION DETAIL

NOTES:

1. CONCRETE STRENGTH (USING CYLINDER STRENGTHS),
   28 DAY SPECIFIED = 7000 PSI
   TRANSFER MINIMUM = 4500 PSI.
2. RAIL SEAT CANT = 1:40 ± 5.
3. THE RAIL SEAT SHALL BE A FLAT, SMOOTH SURFACE ±0.04" (1.0mm).
4. APPROXIMATE WEIGHT OF TIE = 600 LBS (USING AIR ENTRAINED CONCRETE).
5. FOR DIMENSIONAL ACCEPTANCE PURPOSES, THE GAUGING DIMENSION BETWEEN OUTER SHOULDERS IS CHECKED WITH GO/NO GO GAUGES TO BE WITHIN 1/16" OF CALCULATED DIMENSION, AT A HEIGHT OF 0.4" ABOVE THE RAIL SEAT SURFACE. GO/NO GO DIMENSION IS 66.42" ± 0.063".
6. THIS TIE IS DESIGNED FOR USE WITH 136 LB RE RAIL. THIS TIE WILL ALSO ACCOMMODATE 115, 119, 132, AND 141 LB RAIL WITH MINOR CHANGE IN SIDE POST TO ACHIEVE CORRECT GAUGE. SEE SCRRA ES2360 FOR DETAILS CONCERNING SIDE POST AND RAIL SIZE.
7. PRESTRESSING WIRE IS 5.32mm DIAMETER DEFORMED WIRE STRESS RELIEVED WITH A MINIMUM BREAKING LOAD OF 9200 LBS AND WITH OTHER REQUIREMENTS CONFORMING WITH ASTM A-881, "STEEL WIRE DEFORMED FOR PRESTRESSED CONCRETE RAILROAD TIES".
8. ENDS OF PRESTRESSING WIRE TO BE CUT OFF WITHIN ⅛" OF SURROUNDING CONCRETE AT TIE ENDS.
9. AIR ENTRAINED CONCRETE TO BE USED, AIR CONTENT TO BE 5½% ± 1% IN PLASTIC CONCRETE.
10. THE OUT TO OUT SHOULDER SPACING DIMENSION FOR THIS TIE IS CALCULATED TO PROVIDE THE GAUGE INDICATED ASSUMING NOMINAL DIMENSIONS FOR RAIL PADS, INSULATORS AND RAIL. TOLERANCE ON SHOULDER POSITIONS AND RAILSEAT INCLINATION ARE THOSE FOUND BY EXPERIENCE TO BE ACHIEVABLE AND SATISFACTORY IN PRACTICE.
11. TIES TO BE MANUFACTURED IN ACCORDANCE WITH ACCEPTED PCI CONSTRUCTION PRACTICE FOR PRESTRESSED CONCRETE.
12. FASTENING SYSTEM TO BE APPROVED BY SCRRA DIRECTOR OF ENGINEERING AND CONSTRUCTION.
13. GUARD RAIL FASTENINGS:
    PIM 532 INSERT ⅞" - 9 UNC THREAD
    VASSLOH FE6 SPRING WASHER
    HEAVY HEX ⅞" - 9 UNC BOLT
    CXT M180 CAST IRON CLIP OR EQUIVALANT
14. FRICTION PATTERN SHALL BE CAST INTO SIDES OF TIES AND EMBOSSED INTO BOTTOM OF TIES.
15. GUARD RAIL MUST BE SMALLER THAN OR EQUAL IN HEIGHT TO RUNNING RAIL. DO NOT USE SMALLER THAN 115 LB GUARD RAIL SECTION WITH 132 - 136 LB RUNNING RAIL. DO NOT USE SMALLER THAN 132 LB GUARD RAIL SECTION WITH 141 LB RUNNING RAIL.
16. SEE SCRRA ES2356 FOR DETAILS ON COACH SCREW, INSERT, AND WASHER.
17. SEE SCRRA ES2371 FOR DETAILS ON INSIDE GUARD RAIL PLATES FOR CONCRETE TIES.
18. THIS TIE TO ONLY BE USED ON BRIDGE DECKS WITH LESS THAN 12" OF BALLAST UNDER TIES OR AS DIRECTED BY SCRRA ENGINEER.

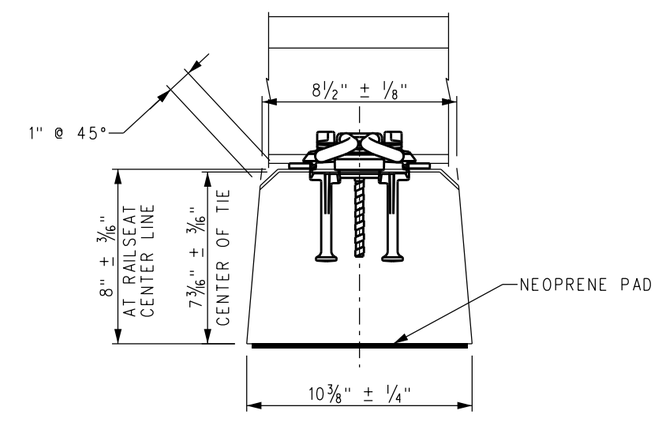

SECTION THROUGH RAILSEAT CENTERLINE

(PRESTRESSING WIRE NOT SHOWN)

REV.	DATE	DESCRIPTION	DES.	ENG.
1	06/27/2011	REVISED NOTE AND STAMP, PLAN VIEW	AC	NDP

DRAWN BY: HDR DATE: 03/31/2011

ASSISTANT DIRECTOR: STANDARDS & DESIGN

DIRECTOR OF ENGINEERING AND CONSTRUCTION

SCRRA ENGINEERING STANDARDS ARE INTENDED FOR SCRRA APPROVED USES ONLY. FOR NON-SCRRA APPROVED USES:
SCRRA SHALL NOT BE RESPONSIBLE FOR THE ACCURACY OR COMPLETENESS OF THE DATA OR INFORMATION CONTAINED HEREIN. THE SELECTION AND USE OF THESE STANDARDS IS THE SOLE RESPONSIBILITY OF THE USER AND SHOULD NOT BE USED WITHOUT CONSULTING A REGISTERED PROFESSIONAL ENGINEER. ALL WARRANTIES AND REPRESENTATIONS OF ANY KIND ARE DISCLAIMED. ANYONE MAKING USE OF THIS INFORMATION AGREES THAT IT ASSUMES ALL LIABILITY ARISING FROM SUCH USE. NO PART OF THESE STANDARDS SHOULD BE REPRODUCED OR DISTRIBUTED IN ANY FORM OR BY ANY MEANS WITHOUT THE PRIOR WRITTEN PERMISSION OF SCRRA. ALL RIGHTS RESERVED.

METROLINK®
SOUTHERN CALIFORNIA REGIONAL RAIL AUTHORITY
ONE GATEWAY PLAZA, 12TH FLOOR, L. A., CA. 90012

ENGINEERING STANDARDS

CONCRETE TIE – GUARD RAIL
WITH NEOPRENE PAD

STANDARD 2407
SCALE: NTS
REVISION 1 SHEET 1 OF 1
CADD FILE: ES2407

NOTES:

1. ALL SQUARE SPIKE HOLES SHALL HAVE 1/16" FILLETS IN CORNERS.
2. ESTIMATED WEIGHT: 19.60 LBS EACH.
3. MUST MEET AREMA SPECIFICATIONS.

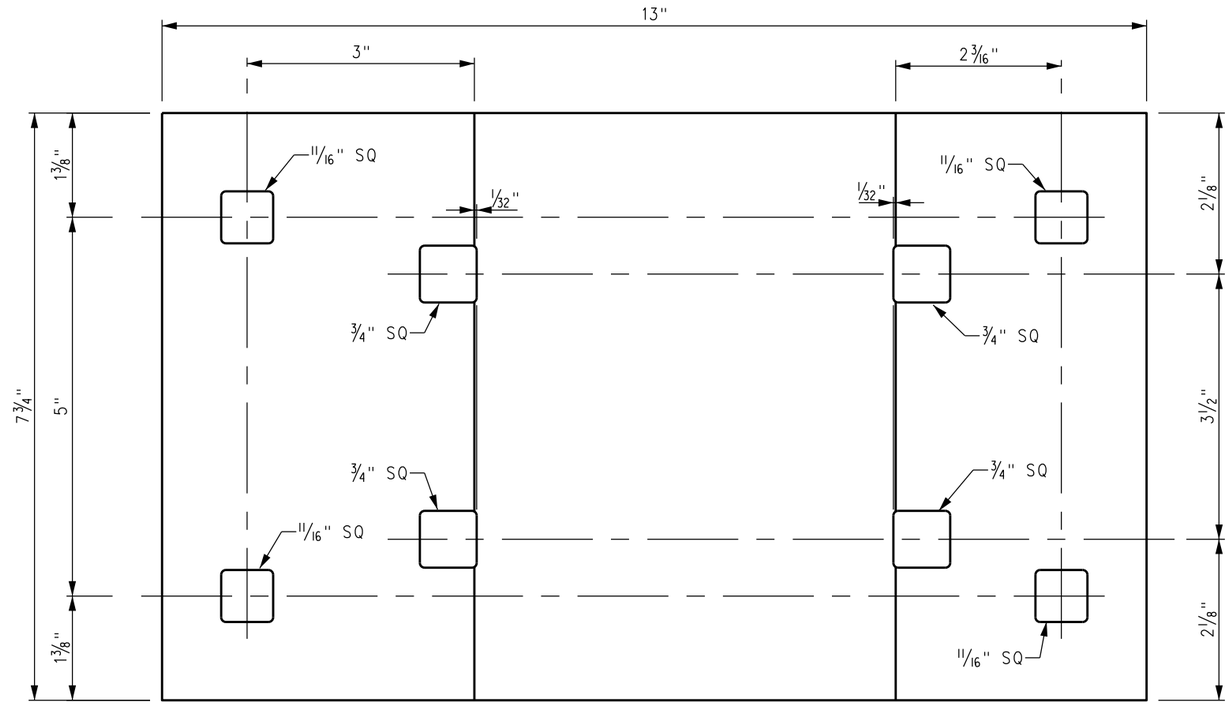

PLAN

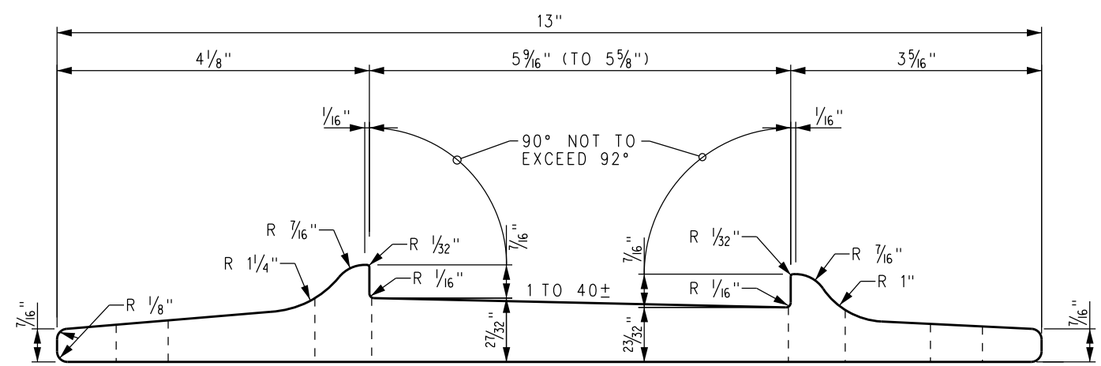

ELEVATION

REV.	DATE	DESCRIPTION	DES.	ENG.
X	XX-XX-XX	REVISION	XX	XX

DRAWN BY: A. CARLOS DATE: 03/31/2011

ASSISTANT DIRECTOR: STANDARDS & DESIGN

DIRECTOR OF ENGINEERING AND CONSTRUCTION

SCRRA ENGINEERING STANDARDS ARE INTENDED FOR SCRRA APPROVED USES ONLY. FOR NON-SCRRA APPROVED USES:
SCRRA SHALL NOT BE RESPONSIBLE FOR THE ACCURACY OR COMPLETENESS OF THE DATA OR INFORMATION CONTAINED HEREIN. THE SELECTION AND USE OF THESE STANDARDS IS THE SOLE RESPONSIBILITY OF THE USER AND SHOULD NOT BE USED WITHOUT CONSULTING A REGISTERED PROFESSIONAL ENGINEER. ALL WARRANTIES AND REPRESENTATIONS OF ANY KIND ARE DISCLAIMED. ANYONE MAKING USE OF THIS INFORMATION AGREES THAT IT ASSUMES ALL LIABILITY ARISING FROM SUCH USE. NO PART OF THESE STANDARDS SHOULD BE REPRODUCED OR DISTRIBUTED IN ANY FORM OR BY ANY MEANS WITHOUT THE PRIOR WRITTEN PERMISSION OF SCRRA. ALL RIGHTS RESERVED.

METROLINK®

SOUTHERN CALIFORNIA REGIONAL RAIL AUTHORITY
ONE GATEWAY PLAZA, 12TH FLOOR, L. A., CA. 90012

ENGINEERING STANDARDS

STANDARD 13" TIE PLATE FOR 5½" BASE RAIL

STANDARD: 2451
SCALE: NTS
REVISION: –
SHEET: 1 OF 1
CADD FILE: ES2451

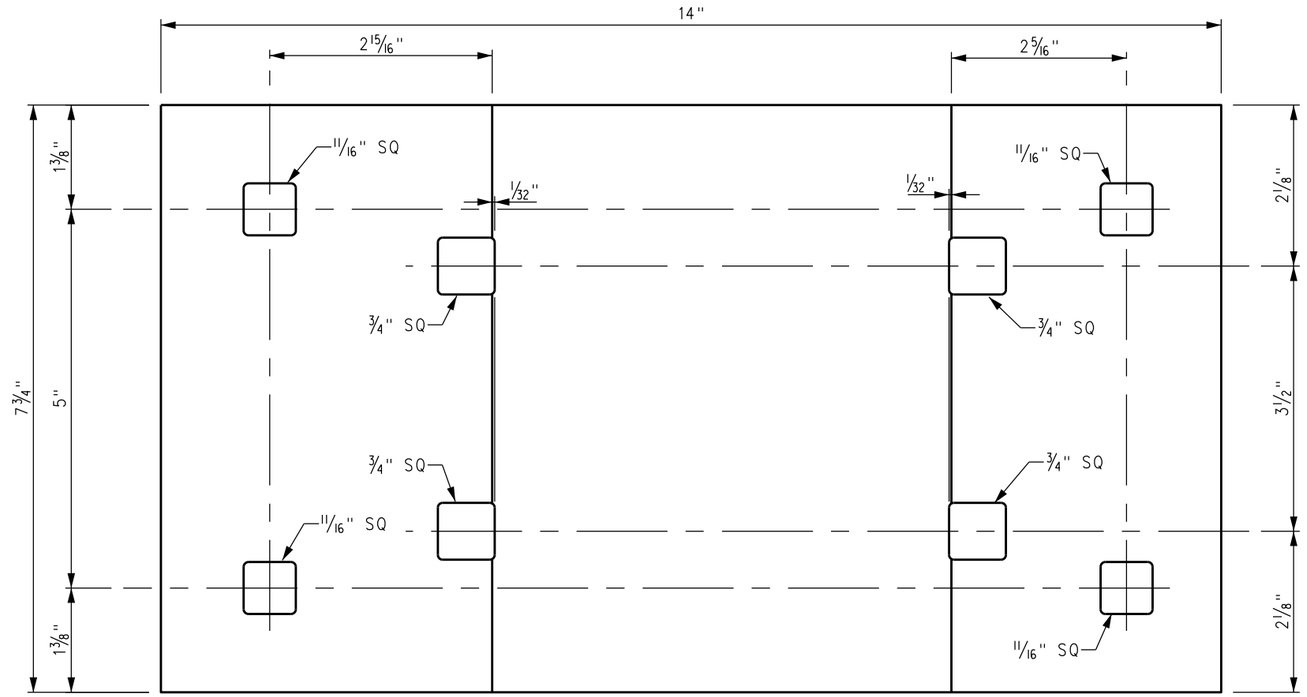

PLAN

NOTES:

1. ALL SQUARE SPIKE HOLES SHALL HAVE 1/16" FILLETS IN CORNERS.
2. ESTIMATED WEIGHT: 21.47 LBS EACH.
3. MUST MEET AREMA SPECIFICATIONS.

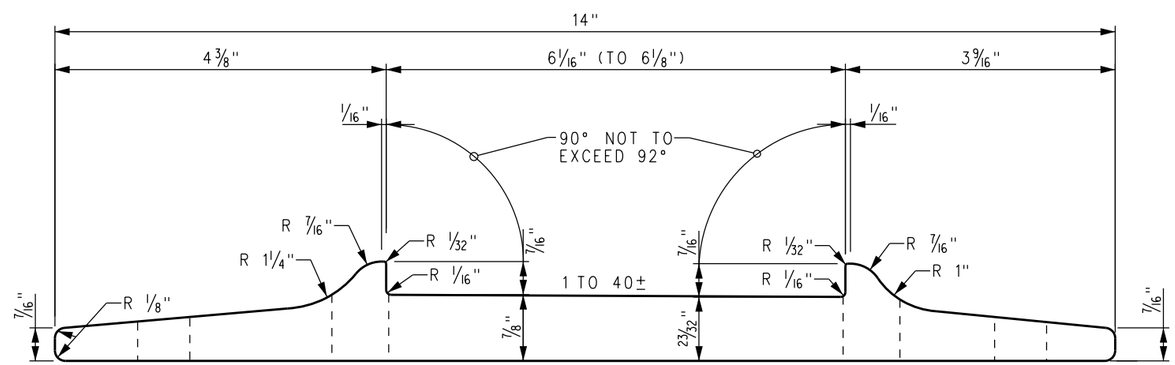

ELEVATION

REV.	DATE	DESCRIPTION	DES.	ENG.
X	XX-XX-XX	REVISION	XX	XX

DRAWN BY: A. CARLOS DATE: 03/31/2011

ASSISTANT DIRECTOR: STANDARDS & DESIGN

DIRECTOR OF ENGINEERING AND CONSTRUCTION

SCRRA ENGINEERING STANDARDS ARE INTENDED FOR SCRRA APPROVED USES ONLY. FOR NON-SCRRA APPROVED USES:
SCRRA SHALL NOT BE RESPONSIBLE FOR THE ACCURACY OR COMPLETENESS OF THE DATA OR INFORMATION CONTAINED HEREIN. THE SELECTION AND USE OF THESE STANDARDS IS THE SOLE RESPONSIBILITY OF THE USER AND SHOULD NOT BE USED WITHOUT CONSULTING A REGISTERED PROFESSIONAL ENGINEER. ALL WARRANTIES AND REPRESENTATIONS OF ANY KIND ARE DISCLAIMED. ANYONE MAKING USE OF THIS INFORMATION AGREES THAT IT ASSUMES ALL LIABILITY ARISING FROM SUCH USE. NO PART OF THESE STANDARDS SHOULD BE REPRODUCED OR DISTRIBUTED IN ANY FORM OR BY ANY MEANS WITHOUT THE PRIOR WRITTEN PERMISSION OF SCRRA. ALL RIGHTS RESERVED.

METROLINK®

SOUTHERN CALIFORNIA REGIONAL RAIL AUTHORITY
ONE GATEWAY PLAZA, 12TH FLOOR, L. A., CA. 90012

ENGINEERING STANDARDS

14" TIE PLATE FOR 6" BASE RAIL

STANDARD 2452
SCALE: NTS
REVISION –
SHEET 1 OF 1
CADD FILE: ES2452

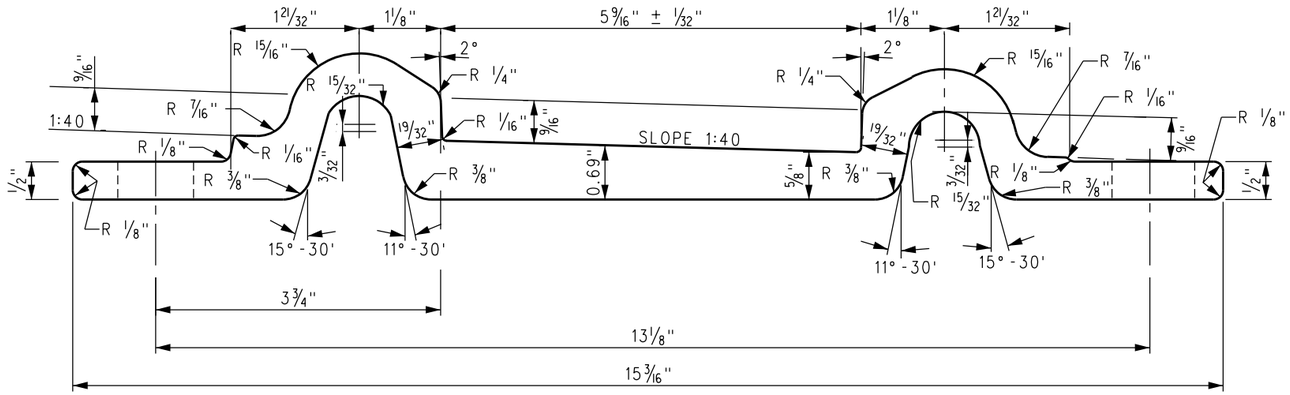

SECTION

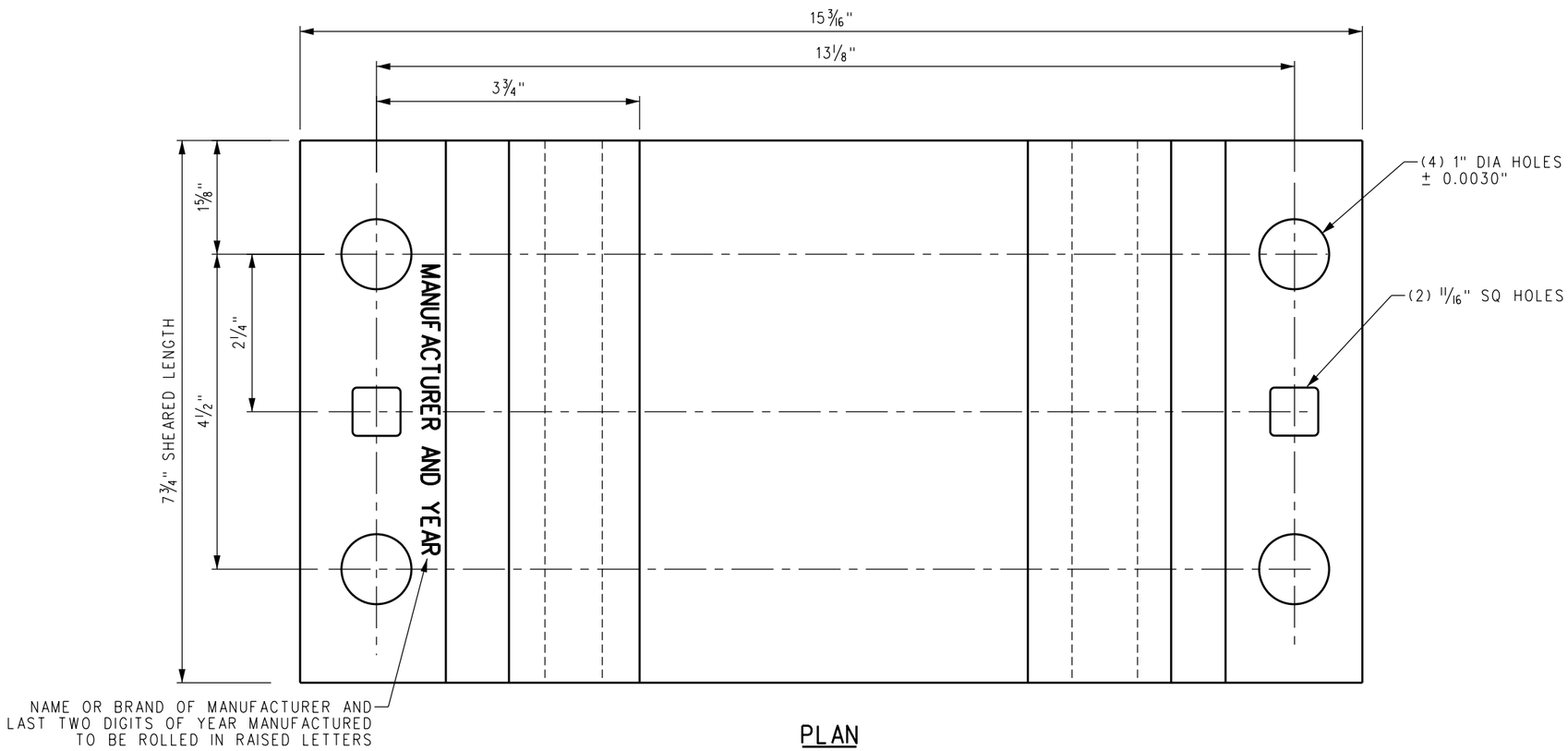

PLAN

NOTES:

1. ALL HOLE MEASUREMENTS TO BE TAKEN FROM BOTTOM OF PLATE.
2. PLATE TO BE STANDARD PANDROL TYPE OR APPROVED EQUAL TIE PLATE MODIFIED FOR 1" DIA HOLES.
3. PLATE TO BE INSTALLED WITH 2 EACH PANDROL RAIL FASTENING "e" CLIP PER SCRRA ES2362.
4. PLATE TO BE INSTALLED WITH 4 EACH SCREW SPIKES PER PLATE PER SCRRA ES2355.

REV.	DATE	DESCRIPTION	DES.	ENG.
X	XX-XX-XX	REVISION	XX	XX

DRAWN BY: A. CARLOS DATE: 03/31/2011

ASSISTANT DIRECTOR: STANDARDS & DESIGN

DIRECTOR OF ENGINEERING AND CONSTRUCTION

SCRRA ENGINEERING STANDARDS ARE INTENDED FOR SCRRA APPROVED USES ONLY. FOR NON-SCRRA APPROVED USES:
SCRRA SHALL NOT BE RESPONSIBLE FOR THE ACCURACY OR COMPLETENESS OF THE DATA OR INFORMATION CONTAINED HEREIN. THE SELECTION AND USE OF THESE STANDARDS IS THE SOLE RESPONSIBILITY OF THE USER AND SHOULD NOT BE USED WITHOUT CONSULTING A REGISTERED PROFESSIONAL ENGINEER. ALL WARRANTIES AND REPRESENTATIONS OF ANY KIND ARE DISCLAIMED. ANYONE MAKING USE OF THIS INFORMATION AGREES THAT IT ASSUMES ALL LIABILITY ARISING FROM SUCH USE. NO PART OF THESE STANDARDS SHOULD BE REPRODUCED OR DISTRIBUTED IN ANY FORM OR BY ANY MEANS WITHOUT THE PRIOR WRITTEN PERMISSION OF SCRRA. ALL RIGHTS RESERVED.

METROLINK®
SOUTHERN CALIFORNIA REGIONAL RAIL AUTHORITY
ONE GATEWAY PLAZA, 12TH FLOOR, L. A., CA. 90012

ENGINEERING STANDARDS

ROLLED STEEL TIE PLATE
TO SUIT 5½" BASE AREMA RAIL
AND PANDROL RAIL CLIPS E2055

STANDARD: 2453
SCALE: NTS
REVISION: –
SHEET: 1 OF 1
CADD FILE: ES2453

UserName=> carlosa Date Plotted: 10/5/2011 2:19:37 PM Plot Driver=> S:\Plot Drivers\pdf.plt FileName=> s:\V8EngStds\2000\ES2453.dgn

NOTES:

1. ALL HOLE MEASUREMENTS TO BE TAKEN FROM BOTTOM OF PLATE.
2. PLATE TO BE STANDARD PANDROL TYPE OR APPROVED EQUAL TIE PLATE MODIFIED FOR 1" DIA HOLES.
3. PLATE TO BE INSTALLED WITH 2 EACH PANDROL RAIL FASTENING "e" CLIP PER SCRRA ES2362.
4. PLATE TO BE INSTALLED WITH 4 EACH SCREW SPIKES PER SCRRA ES2355.

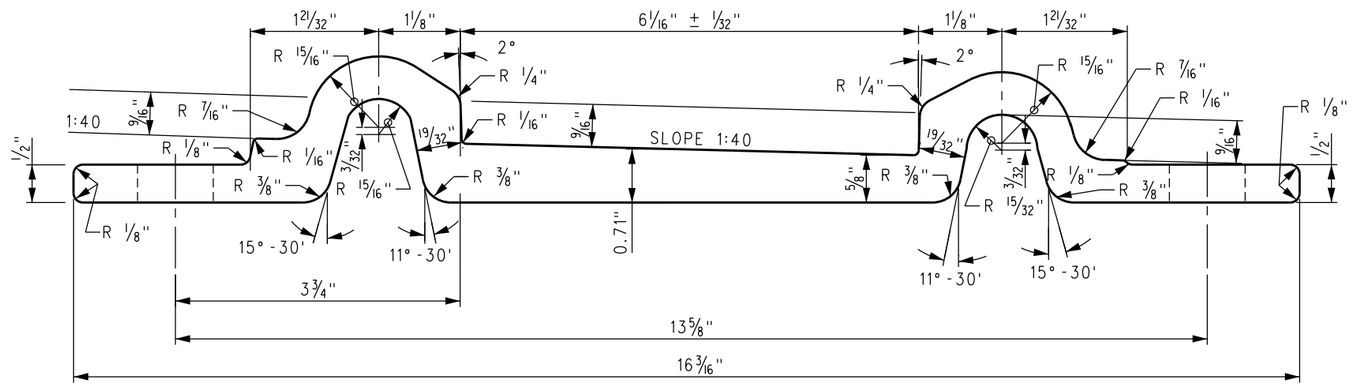

SECTION

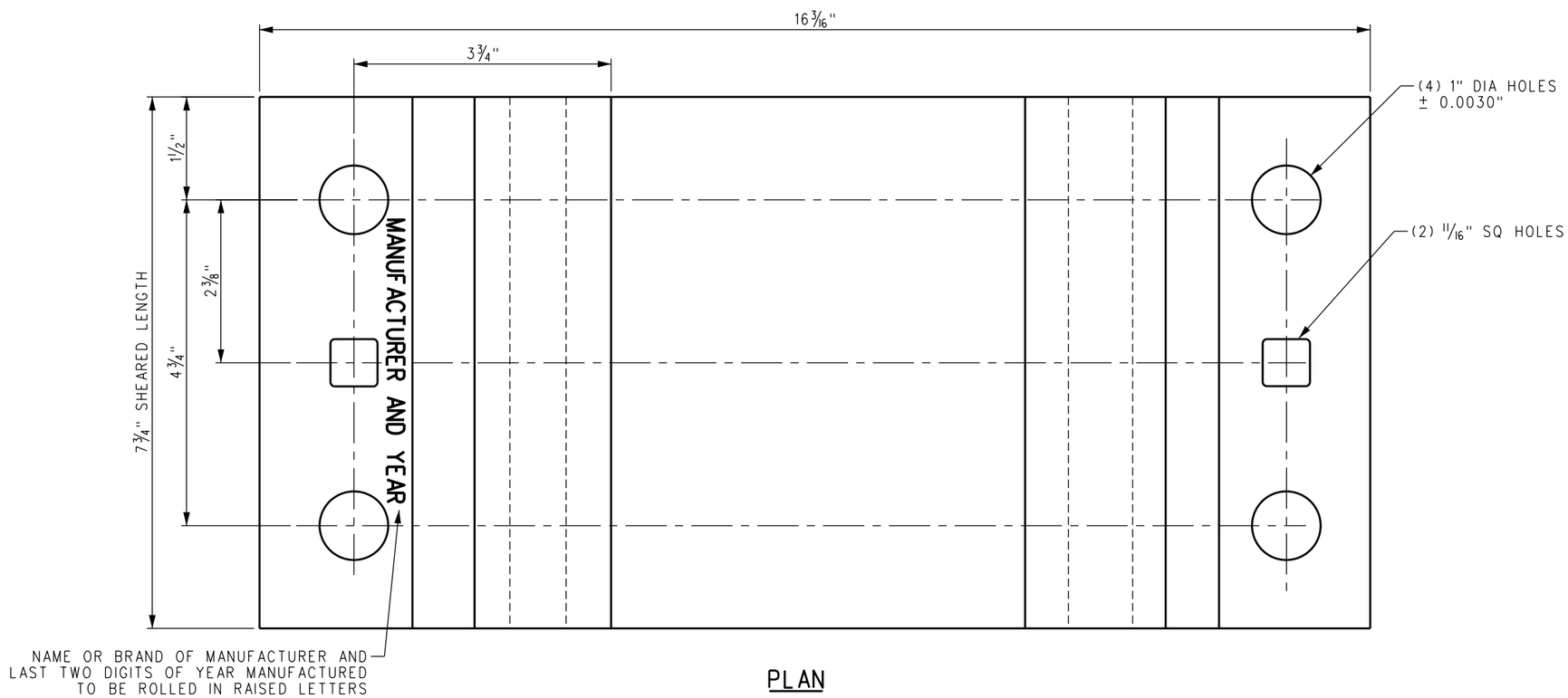

PLAN

REV.	DATE	DESCRIPTION	DES.	ENG.
X	XX-XX-XX	REVISION	XX	XX

DRAWN BY: A. CARLOS DATE: 03/31/2011

ASSISTANT DIRECTOR: STANDARDS & DESIGN

DIRECTOR OF ENGINEERING AND CONSTRUCTION

SCRRA ENGINEERING STANDARDS ARE INTENDED FOR SCRRA APPROVED USES ONLY. FOR NON-SCRRA APPROVED USES:
SCRRA SHALL NOT BE RESPONSIBLE FOR THE ACCURACY OR COMPLETENESS OF THE DATA OR INFORMATION CONTAINED HEREIN. THE SELECTION AND USE OF THESE STANDARDS IS THE SOLE RESPONSIBILITY OF THE USER AND SHOULD NOT BE USED WITHOUT CONSULTING A REGISTERED PROFESSIONAL ENGINEER. ALL WARRANTIES AND REPRESENTATIONS OF ANY KIND ARE DISCLAIMED. ANYONE MAKING USE OF THIS INFORMATION AGREES THAT IT ASSUMES ALL LIABILITY ARISING FROM SUCH USE. NO PART OF THESE STANDARDS SHOULD BE REPRODUCED OR DISTRIBUTED IN ANY FORM OR BY ANY MEANS WITHOUT THE PRIOR WRITTEN PERMISSION OF SCRRA. ALL RIGHTS RESERVED.

METROLINK®
SOUTHERN CALIFORNIA REGIONAL RAIL AUTHORITY
ONE GATEWAY PLAZA, 12TH FLOOR, L. A., CA. 90012

ENGINEERING STANDARDS

ROLLED STEEL TIE PLATE
TO SUIT 132 LB. RE – 141 LB. RE RAIL
AND PANDROL RAIL CLIPS E2055

STANDARD: 2454
SCALE: NTS
REVISION: –
SHEET: 1 OF 1
CADD FILE: ES2454

UserName=> carlosa Date Plotted: 10/5/2011 2:19:38 PM Plot Driver=> S:\Plot Drivers\pdf.plt FileName=> s:\V8EngStds\2000\ES2454.dgn

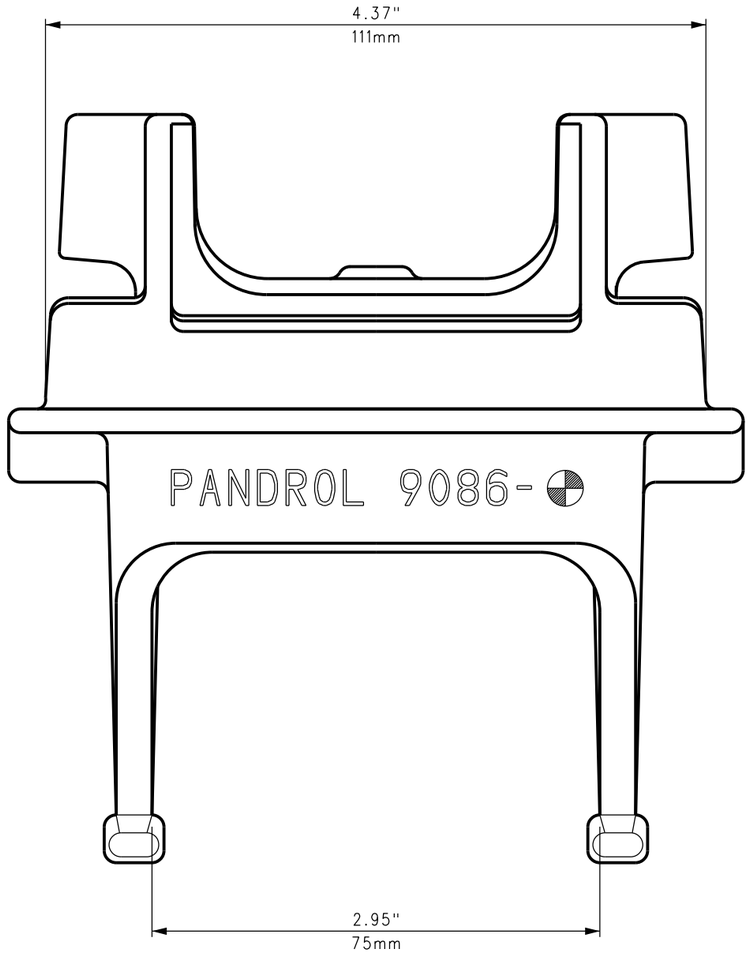

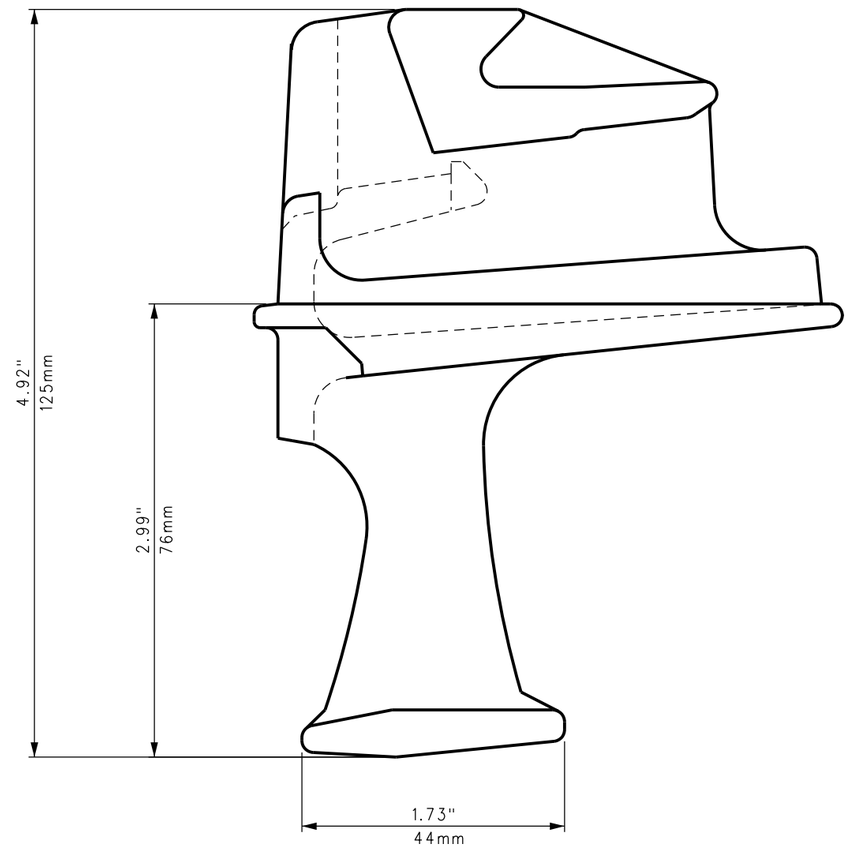

PART #9086

REV.	DATE	DESCRIPTION	DES.	ENG.
X	XX-XX-XX	REVISION	XX	XX

DRAWN BY: HDR DATE: 03/31/2011

ASSISTANT DIRECTOR: STANDARDS & DESIGN

DIRECTOR OF ENGINEERING AND CONSTRUCTION

SCRRA ENGINEERING STANDARDS ARE INTENDED FOR SCRRA APPROVED USES ONLY. FOR NON-SCRRA APPROVED USES, SCRRA SHALL NOT BE RESPONSIBLE FOR THE ACCURACY OR COMPLETENESS OF THE DATA OR INFORMATION CONTAINED HEREIN. THE SELECTION AND USE OF THESE STANDARDS IS THE SOLE RESPONSIBILITY OF THE USER AND SHOULD NOT BE USED WITHOUT CONSULTING A REGISTERED PROFESSIONAL ENGINEER. ALL WARRANTIES AND REPRESENTATIONS OF ANY KIND ARE DISCLAIMED. ANYONE MAKING USE OF THIS INFORMATION AGREES THAT IT ASSUMES ALL LIABILITY ARISING FROM SUCH USE. NO PART OF THESE STANDARDS SHOULD BE REPRODUCED OR DISTRIBUTED IN ANY FORM OR BY ANY MEANS WITHOUT THE PRIOR WRITTEN PERMISSION OF SCRRA. ALL RIGHTS RESERVED.

METROLINK®

SOUTHERN CALIFORNIA REGIONAL RAIL AUTHORITY
ONE GATEWAY PLAZA, 12TH FLOOR, L. A., CA. 90012

ENGINEERING STANDARDS

CAST SHOULDER TO SUIT
SERIES FC1600 FASTCLIP

STANDARD: 2455
SCALE: NTS
REVISION: –
SHEET: NTS
CADD FILE: ES2455

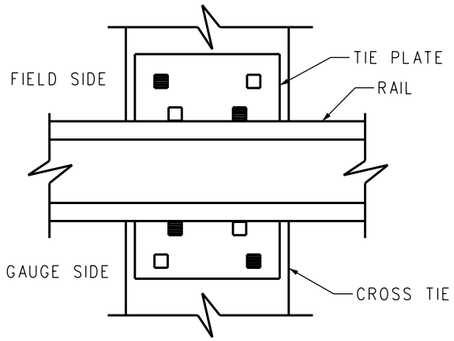

TANGENT AND CURVES 2° AND LESS

FIGURE A

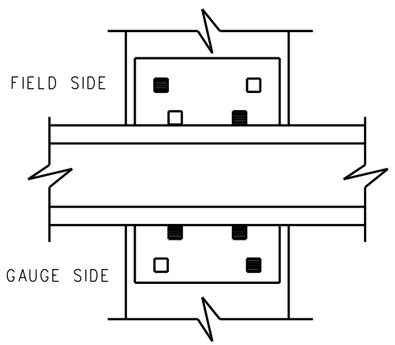

CURVES 2°01' TO 4°

FIGURE B

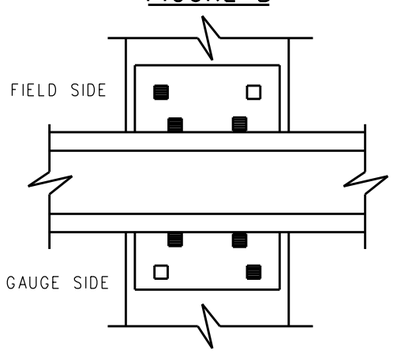

CURVES > 4°

FIGURE C

TIE PLATE WITH
HOLD-DOWN SPIKE HOLES
"NEW CONSTRUCTION"

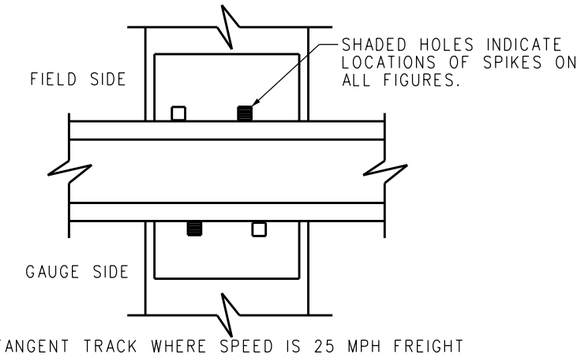

TANGENT TRACK WHERE SPEED IS 25 MPH FREIGHT
OR 30 MPH PASSENGER OR LESS
YARD AND INDUSTRY TRACK < 6° CURVES

FIGURE D

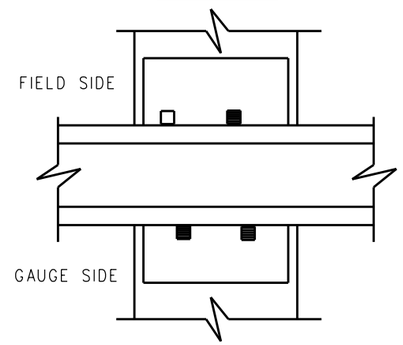

TANGENT AND CURVES TO 4°
YARD AND INDUSTRY TRACK > 6° CURVES

FIGURE E

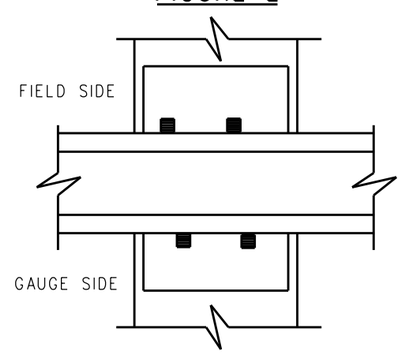

CURVES > 4°

FIGURE F

TIE PLATE WITHOUT
HOLD-DOWN SPIKE HOLES
"MAINTENANCE ONLY"

NOTES:

1. TIE PLATE SPIKING FOR PLATES WITH HOLD-DOWN SPIKE HOLES.
   - FIGURE A - TANGENT AND CURVES TO 2°00' - 4 SPIKES REQUIRED, 2 LINE AND 2 HOLD-DOWN.
   - FIGURE B - CURVES 2°01' TO 4°00' INCLUSIVE - 5 SPIKES REQUIRED, 3 LINE AND 2 HOLD-DOWN.
   - FIGURE C - CURVES OVER 4°00' - 6 SPIKES REQUIRED, 4 LINE AND 2 HOLD-DOWN.
2. TIE PLATE SPIKING FOR PLATES WITHOUT HOLD-DOWN SPIKE HOLES.
   - FIGURE D - TANGENT TRACK WHERE THE MAXIMUM OPERATING SPEED DOES NOT EXCEED 25 MPH FOR FREIGHT AND 30 MPH FOR PASSENGER TRAINS, 2 LINE SPIKES REQUIRED.
   - FIGURE E - TANGENT AND CURVES TO 4°00' INCLUSIVE, 3 LINE SPIKES REQUIRED.
   - FIGURE F - CURVES OVER 4°00' - 4 LINE SPIKES REQUIRED.
3. TIE PLATE SPIKING FOR PANDROL TYPE FASTENING SYSTEMS FIGURE G, 4 SCREW SPIKES REQUIRED.
4. ANY VARIATIONS IN THE SPIKING PATTERNS ILLUSTRATED IN FIGURES A THRU F MUST BE APPROVED BY THE SCRRA DIRECTOR OF ENGINEERING AND CONSTRUCTION.
5. YARD AND INDUSTRY TRACK TO BE SPIKED WITH NOT LESS THAN TWO SPIKES TO EACH TIE PLATE.
6. REFER TO SCRRA ES2460-02 FOR "SP" PLATES.
7. CUT SPIKES MAY BE USED ON PANDROL PLATE SQUARE HOLES FOR TEMPORARY ASSEMBLY OF TRACK. THEY WILL NOT BE REMOVED AFTER INSTALLATION OF SCREW SPIKES.

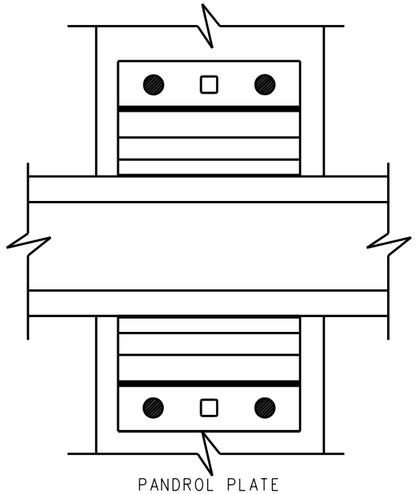

PANDROL PLATE
4- SCREW SPIKES REQUIRED
TANGENT AND CURVES

FIGURE G

REV.	DATE	DESCRIPTION	DES.	ENG.
X	XX-XX-XX	REVISION	XX	XX

DRAWN BY: A. CARLOS DATE: 03/31/2011

ASSISTANT DIRECTOR: STANDARDS & DESIGN

DIRECTOR OF ENGINEERING AND CONSTRUCTION

SCRRA ENGINEERING STANDARDS ARE INTENDED FOR SCRRA APPROVED USES ONLY. FOR NON-SCRRA APPROVED USES:
SCRRA SHALL NOT BE RESPONSIBLE FOR THE ACCURACY OR COMPLETENESS OF THE DATA OR INFORMATION CONTAINED HEREIN. THE SELECTION AND USE OF THESE STANDARDS IS THE SOLE RESPONSIBILITY OF THE USER AND SHOULD NOT BE USED WITHOUT CONSULTING A REGISTERED PROFESSIONAL ENGINEER. ALL WARRANTIES AND REPRESENTATIONS OF ANY KIND ARE DISCLAIMED. ANYONE MAKING USE OF THIS INFORMATION AGREES THAT IT ASSUMES ALL LIABILITY ARISING FROM SUCH USE. NO PART OF THESE STANDARDS SHOULD BE REPRODUCED OR DISTRIBUTED IN ANY FORM OR BY ANY MEANS WITHOUT THE PRIOR WRITTEN PERMISSION OF SCRRA. ALL RIGHTS RESERVED.

METROLINK®
SOUTHERN CALIFORNIA REGIONAL RAIL AUTHORITY
ONE GATEWAY PLAZA, 12TH FLOOR, L. A., CA. 90012

ENGINEERING STANDARDS

TIE PLATE SPIKING PATTERNS

STANDARD 2460
SCALE: NTS
REVISION –
SHEET 1 OF 2
CADD FILE: ES2460-01

NOTE:

1. TIE PLATE SPIKING FOR PLATES WITH HOLD-DOWN SPIKE HOLES.
2. FIGURE A - TANGENT TO 2°00' - 4 SPIKES REQUIRED, 2 LINES AND 2 HOLD-DOWN.
3. FIGURE B - CURVES OVER 2°00' TO 4°00' INCLUSIVE - 5 SPIKES REQUIRED, 3 LINE AND 2 HOLD-DOWN
4. FIGURE C - OVER 4°00' - 6 SPIKES REQUIRED, 4 LINE AND 2 HOLD-DOWN

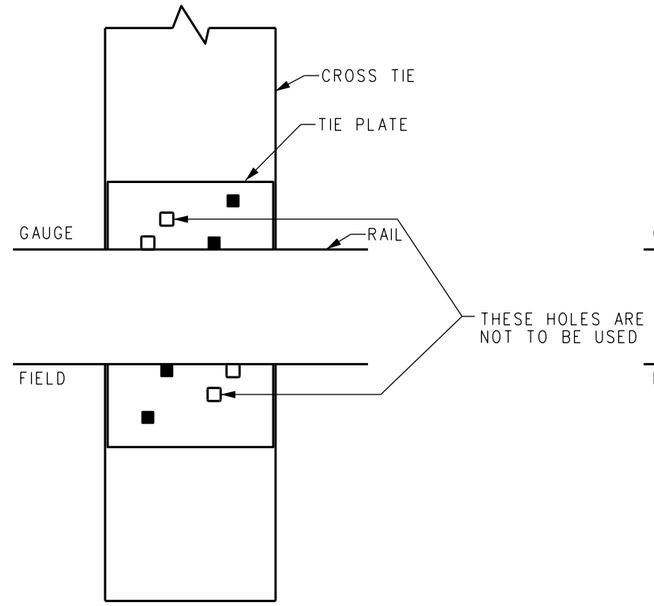

TANGENT AND CURVES TO 2°
(FIGURE A)

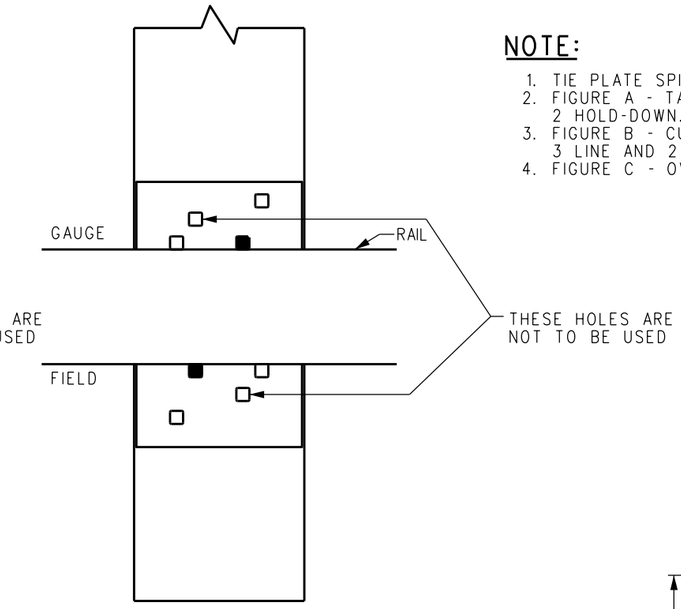

YARD AND INDUSTRY TRACK
MIN SPIKES PER PLATE

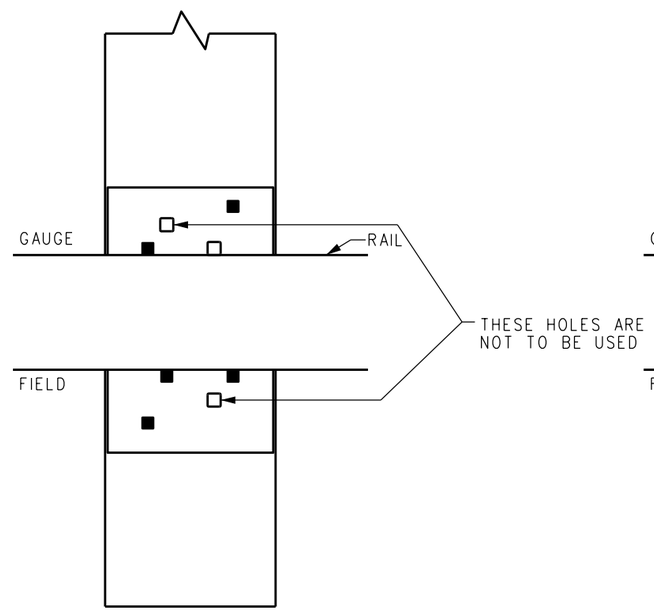

CURVES OVER 2° TO 4°
(FIGURE B)

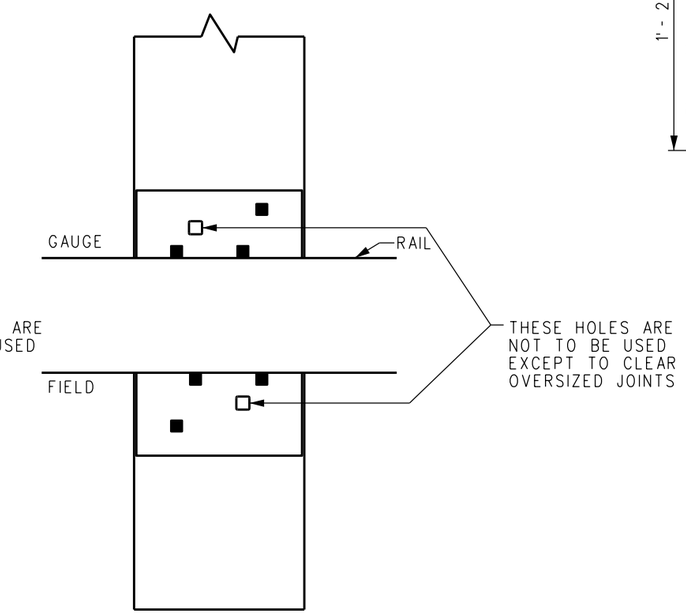

CURVES > 4°
(FIGURE C)

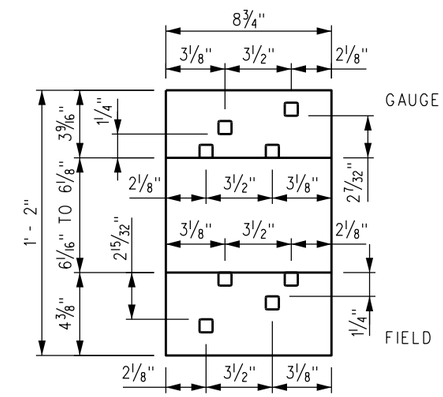

TIE PLATE

REV.	DATE	DESCRIPTION	DES.	ENG.
X	XX-XX-XX	REVISION	XX	XX

DRAWN BY: A. CARLOS DATE: 03/31/2011

ASSISTANT DIRECTOR: STANDARDS & DESIGN

DIRECTOR OF ENGINEERING AND CONSTRUCTION

SCRRA ENGINEERING STANDARDS ARE INTENDED FOR SCRRA APPROVED USES ONLY. FOR NON-SCRRA APPROVED USES:
SCRRA SHALL NOT BE RESPONSIBLE FOR THE ACCURACY OR COMPLETENESS OF THE DATA OR INFORMATION CONTAINED HEREIN. THE SELECTION AND USE OF THESE STANDARDS IS THE SOLE RESPONSIBILITY OF THE USER AND SHOULD NOT BE USED WITHOUT CONSULTING A REGISTERED PROFESSIONAL ENGINEER. ALL WARRANTIES AND REPRESENTATIONS OF ANY KIND ARE DISCLAIMED. ANYONE MAKING USE OF THIS INFORMATION AGREES THAT IT ASSUMES ALL LIABILITY ARISING FROM SUCH USE. NO PART OF THESE STANDARDS SHOULD BE REPRODUCED OR DISTRIBUTED IN ANY FORM OR BY ANY MEANS WITHOUT THE PRIOR WRITTEN PERMISSION OF SCRRA. ALL RIGHTS RESERVED.

METROLINK®
SOUTHERN CALIFORNIA REGIONAL RAIL AUTHORITY
ONE GATEWAY PLAZA, 12TH FLOOR, L. A., CA. 90012

ENGINEERING STANDARDS

TIE PLATE SPIKING PATTERNS
FOR "SP" PLATES

STANDARD 2460
SCALE: NTS
REVISION –
SHEET 2 OF 2
CADD FILE: ES2460-02

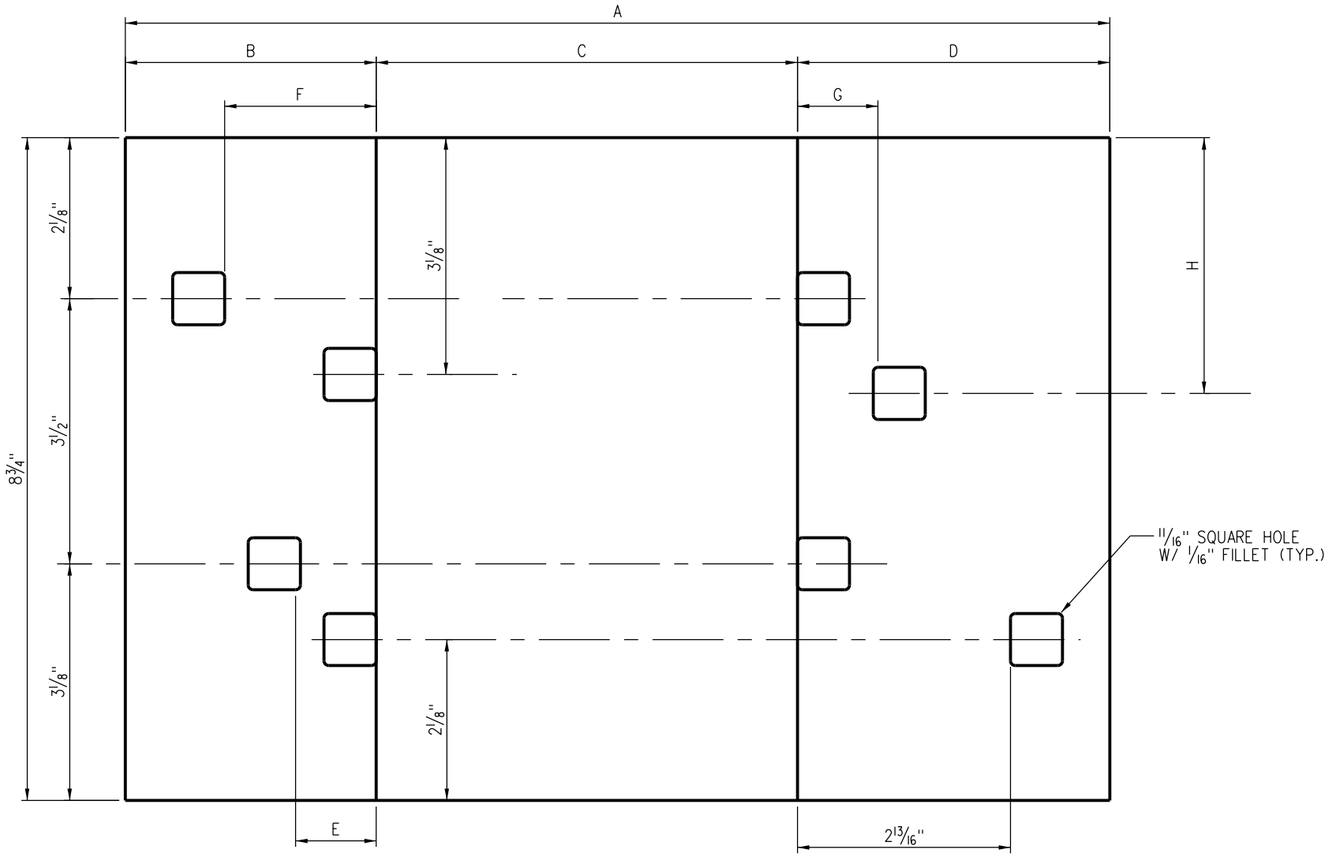

NOTES:

1. Manufacturer name, rail section, year and dimension base size to be rolled in raised letters and figures on the outside shoulder.
2. Specifications and workmanship to be in accordance with current AREMA Manual requirements for hot-worked, high carbon steel tie plates.

DIMENSION TABLE			
RAIL BASE	5 1/2"	6"	6"
ITEM NO.	554-9010	554-9015	554-9020
A	13"	14"	16"
B	3 5/16"	3 9/16"	3 11/16"
C	5 9/16"	6 1/16"	6 1/16"
D	4 1/8"	4 3/8"	6 1/4"
E	1"	1 1/4"	1 1/4"
F	2"	2 7/32"	2 7/32"
G	1"	1 1/4"	1 1/4"
H	3 3/8"	3 1/8"	3 1/8"
J	23/32"	23/32"	31/32"
K	27/32"	7/8"	1 1/8"
L	7/16"	7/16"	3/8"

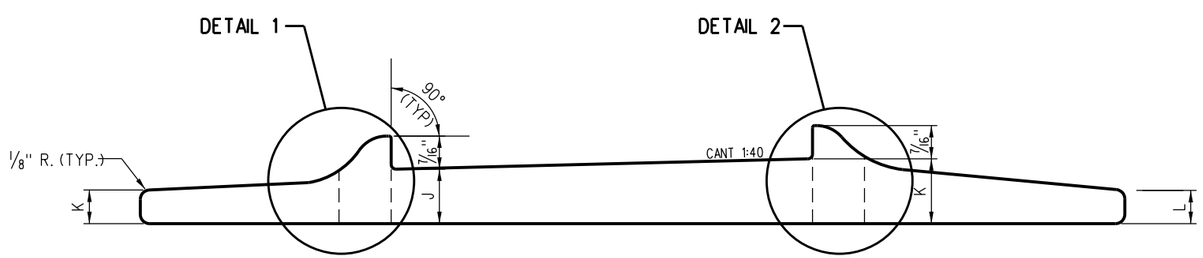

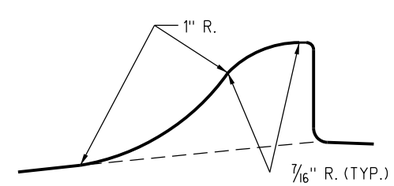

DETAIL 1

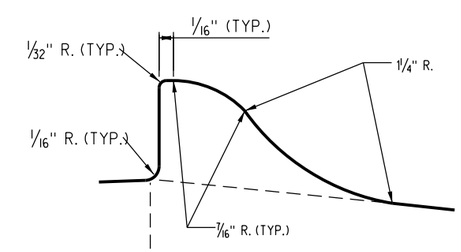

DETAIL 2

REV.	DATE	DESCRIPTION	DES.	ENG.
X	XX-XX-XX	REVISION	XX	XX

DRAWN BY: A. CARLOS DATE: 03/31/2011

ASSISTANT DIRECTOR: STANDARDS & DESIGN

DIRECTOR OF ENGINEERING AND CONSTRUCTION

SCRRA ENGINEERING STANDARDS ARE INTENDED FOR SCRRA APPROVED USES ONLY. FOR NON-SCRRA APPROVED USES:
SCRRA SHALL NOT BE RESPONSIBLE FOR THE ACCURACY OR COMPLETENESS OF THE DATA OR INFORMATION CONTAINED HEREIN. THE SELECTION AND USE OF THESE STANDARDS IS THE SOLE RESPONSIBILITY OF THE USER AND SHOULD NOT BE USED WITHOUT CONSULTING A REGISTERED PROFESSIONAL ENGINEER. ALL WARRANTIES AND REPRESENTATIONS OF ANY KIND ARE DISCLAIMED. ANYONE MAKING USE OF THIS INFORMATION AGREES THAT IT ASSUMES ALL LIABILITY ARISING FROM SUCH USE. NO PART OF THESE STANDARDS SHOULD BE REPRODUCED OR DISTRIBUTED IN ANY FORM OR BY ANY MEANS WITHOUT THE PRIOR WRITTEN PERMISSION OF SCRRA. ALL RIGHTS RESERVED.

METROLINK®
SOUTHERN CALIFORNIA REGIONAL RAIL AUTHORITY
ONE GATEWAY PLAZA, 12TH FLOOR, L. A., CA. 90012

ENGINEERING STANDARDS

DOUBLE SHOULDER TIE PLATES
5 1/2" AND 6" BASE RAIL

STANDARD 2463
SCALE: FULL
REVISION –
SHEET 1 OF 1
CADD FILE: ES2463

NOTES:

1. RAILS, JOINT BARS AND TRACK BOLTS SHALL CONFORM TO THE SCRRA CURRENT SPECIFICATION.
2. REQUISITIONS AND ORDERS FOR TRACK BOLTS SHALL DESIGNATE DIAMETER OF BOLT PER SCRRA ES2352.
3. LENGTH OF TRACK BOLT WILL PERMIT USE OF SPRING WASHER UP TO APPROXIMATELY 0.78" THICK.
4. ALL BOLT HOLES SHALL BE CHAMFERED.
5. THIS PLAN FOR USE IN NEW RAIL INSTALLATION (SEE SCRRA ES2501-02) FOR EXISTING 115 LB 5"X6½" (OLD SP PUNCH).

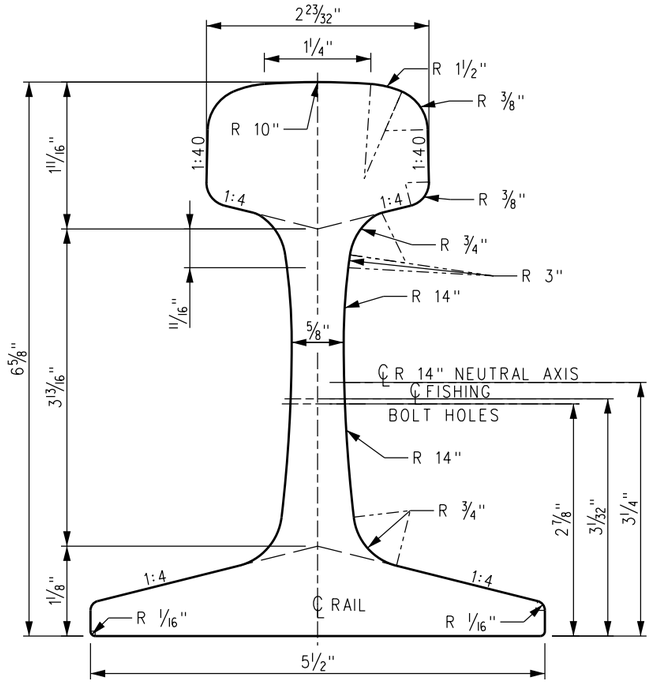

115 RE RAIL

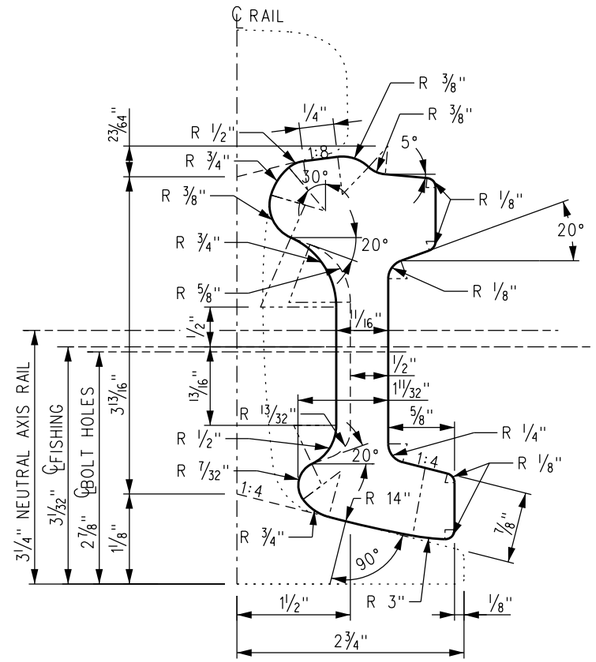

JOINT BAR

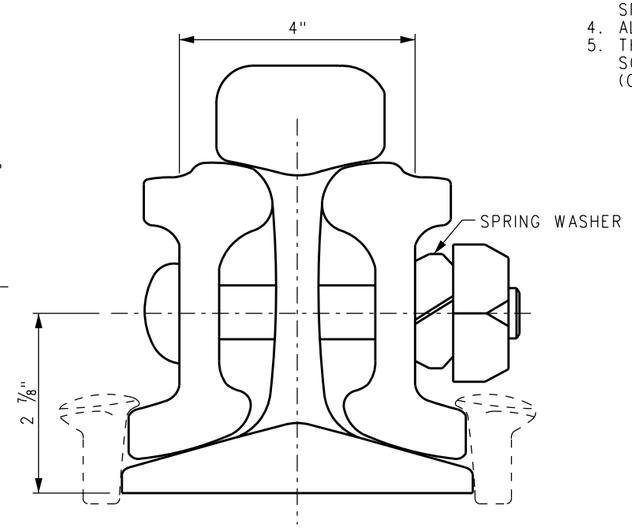

ASSEMBLY

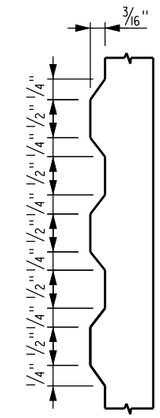

LONGITUDINAL SECTION OF JOINT BAR

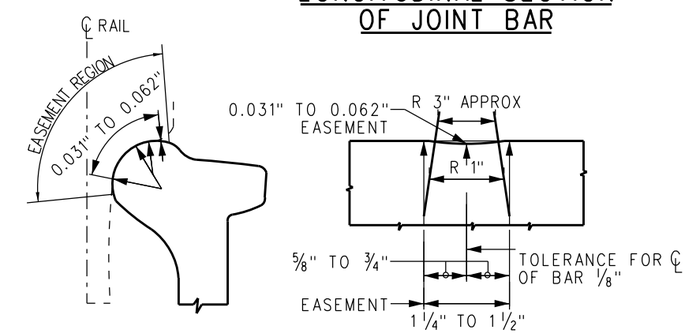

DETAIL OF HEAD EASEMENT

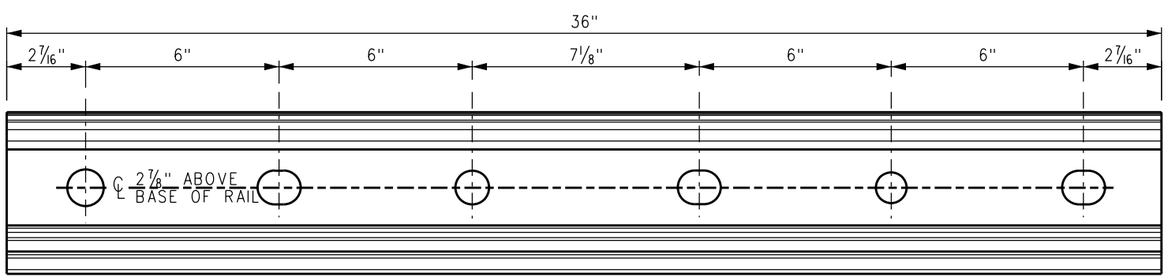

JOINT BAR PUNCHING

(FRONT VIEW)

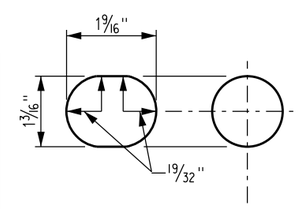

SIZE OF BOLT HOLES

(INJOINT BAR)

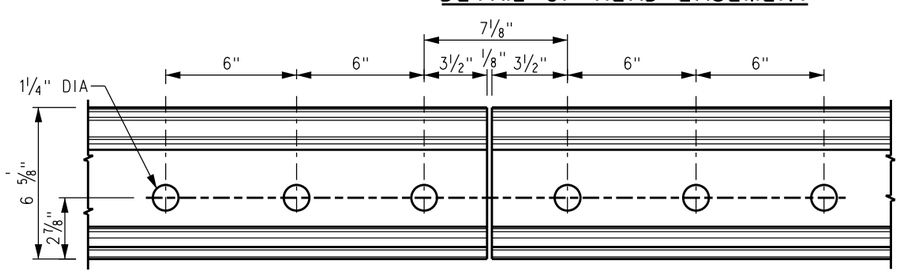

RAIL END DRILLING

X	XX-XX-XX	REVISION	XX	XX
REV.	DATE	DESCRIPTION	DES.	ENG.

DRAWN BY: A. CARLOS DATE: 03/31/2011

ASSISTANT DIRECTOR: STANDARDS & DESIGN

DIRECTOR OF ENGINEERING AND CONSTRUCTION

SCRRA ENGINEERING STANDARDS ARE INTENDED FOR SCRRA APPROVED USES ONLY. FOR NON-SCRRA APPROVED USES:
SCRRA SHALL NOT BE RESPONSIBLE FOR THE ACCURACY OR COMPLETENESS OF THE DATA OR INFORMATION CONTAINED HEREIN. THE SELECTION AND USE OF THESE STANDARDS IS THE SOLE RESPONSIBILITY OF THE USER AND SHOULD NOT BE USED WITHOUT CONSULTING A REGISTERED PROFESSIONAL ENGINEER. ALL WARRANTIES AND REPRESENTATIONS OF ANY KIND ARE DISCLAIMED. ANYONE MAKING USE OF THIS INFORMATION AGREES THAT IT ASSUMES ALL LIABILITY ARISING FROM SUCH USE. NO PART OF THESE STANDARDS SHOULD BE REPRODUCED OR DISTRIBUTED IN ANY FORM OR BY ANY MEANS WITHOUT THE PRIOR WRITTEN PERMISSION OF SCRRA. ALL RIGHTS RESERVED.

METROLINK®

SOUTHERN CALIFORNIA REGIONAL RAIL AUTHORITY
ONE GATEWAY PLAZA, 12TH FLOOR, L. A., CA. 90012

ENGINEERING STANDARDS

RAIL AND JOINT ASSEMBLY FOR 115 LB. RE RAIL

STANDARD: 2501
SCALE: NTS
REVISION: –
SHEET: 1 OF 2
CADD FILE: ES2501-01

NOTES:

1. RAILS, JOINT BARS AND TRACK BOLTS SHALL CONFORM TO THE SCRRA CURRENT SPECIFICATION.
2. REQUISITIONS AND ORDERS FOR TRACK BOLTS SHALL DESIGNATE DIAMETER OF BOLT PER SCRRA ES2352.
3. LENGTH OF TRACK BOLT WILL PERMIT USE OF SPRING WASHER UP TO APPROXIMATELY 0.78" THICK.
4. ALL BOLT HOLES SHALL BE CHAMFERED.

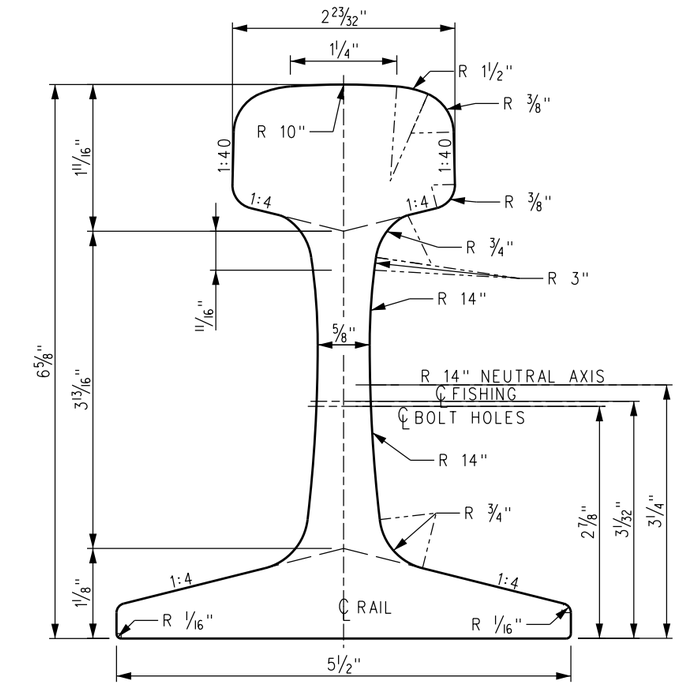

115 RE RAIL

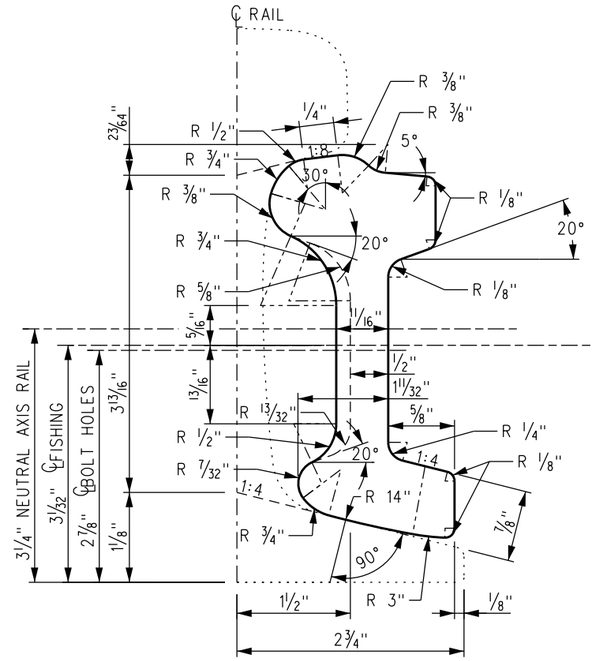

JOINT BAR

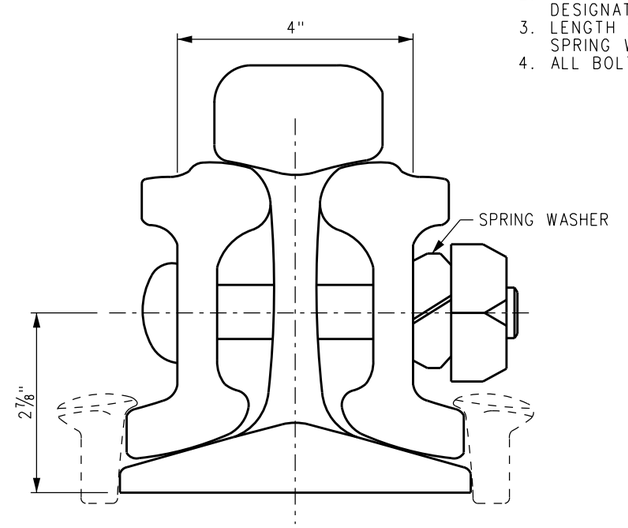

ASSEMBLY

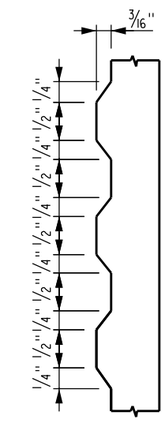

LONGITUDINAL SECTION OF JOINT BAR

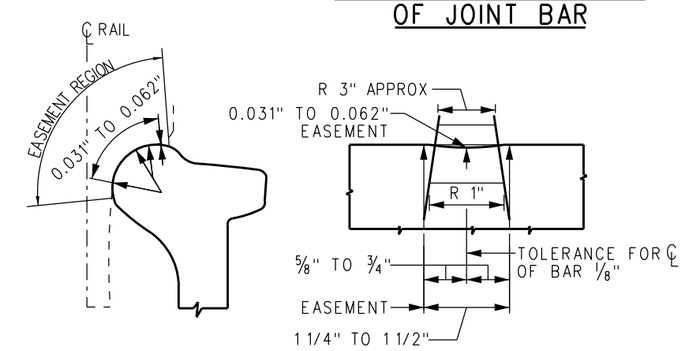

DETAIL OF HEAD EASEMENT

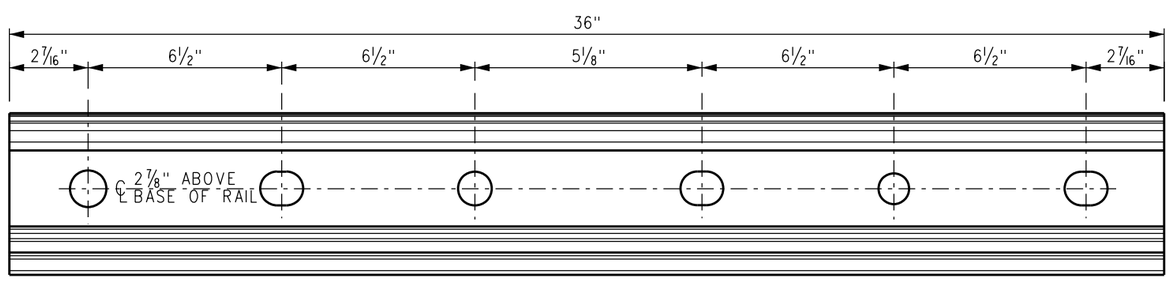

JOINT BAR PUNCHING
(FRONT VIEW)

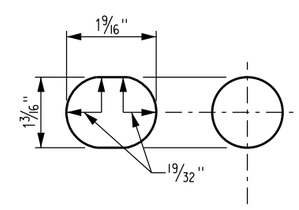

SIZE OF BOLT HOLES
(INJOINT BAR)

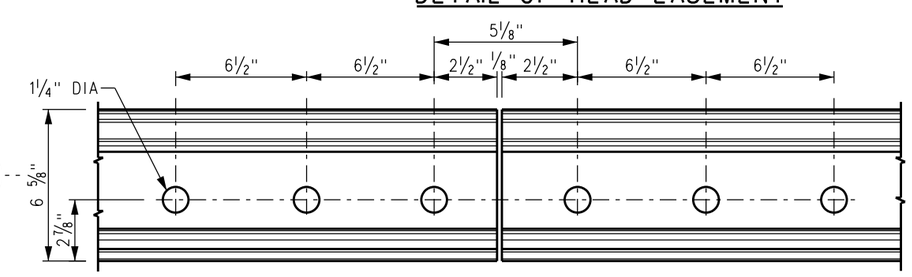

RAIL END DRILLING

REV.	DATE	DESCRIPTION	DES.	ENG.
X	XX-XX-XX	REVISION	XX	XX

DRAWN BY: A. CARLOS DATE: 03/31/2011

ASSISTANT DIRECTOR: STANDARDS & DESIGN

DIRECTOR OF ENGINEERING AND CONSTRUCTION

SCRRA ENGINEERING STANDARDS ARE INTENDED FOR SCRRA APPROVED USES ONLY. FOR NON-SCRRA APPROVED USES:
SCRRA SHALL NOT BE RESPONSIBLE FOR THE ACCURACY OR COMPLETENESS OF THE DATA OR INFORMATION CONTAINED HEREIN. THE SELECTION AND USE OF THESE STANDARDS IS THE SOLE RESPONSIBILITY OF THE USER AND SHOULD NOT BE USED WITHOUT CONSULTING A REGISTERED PROFESSIONAL ENGINEER. ALL WARRANTIES AND REPRESENTATIONS OF ANY KIND ARE DISCLAIMED. ANYONE MAKING USE OF THIS INFORMATION AGREES THAT IT ASSUMES ALL LIABILITY ARISING FROM SUCH USE. NO PART OF THESE STANDARDS SHOULD BE REPRODUCED OR DISTRIBUTED IN ANY FORM OR BY ANY MEANS WITHOUT THE PRIOR WRITTEN PERMISSION OF SCRRA. ALL RIGHTS RESERVED.

METROLINK®
SOUTHERN CALIFORNIA REGIONAL RAIL AUTHORITY
ONE GATEWAY PLAZA, 12TH FLOOR, L. A., CA. 90012

ENGINEERING STANDARDS

RAIL AND JOINT ASSEMBLY FOR 115 LB. RE RAIL
FOR MAINTENANCE USE WITH FORMER "SP"
PUNCH 2½" x 6½" x 6½"

STANDARD 2501
SCALE: NTS
REVISION –
SHEET 2 OF 2
CADD FILE: ES2501-02

NOTES:

1. RAILS, JOINT BARS AND TRACK BOLTS SHALL CONFORM TO THE SCRRA CURRENT SPECIFICATION.
2. REQUISITIONS AND ORDERS FOR TRACK BOLTS SHALL DESIGNATE DIAMETER OF BOLT PER SCRRA ES2352.
3. LENGTH OF TRACK BOLT WILL PERMIT USE OF SPRING WASHER UP TO APPROXIMATELY 0.76" THICK.
4. ALL BOLT HOLES SHALL BE CHAMFERED.

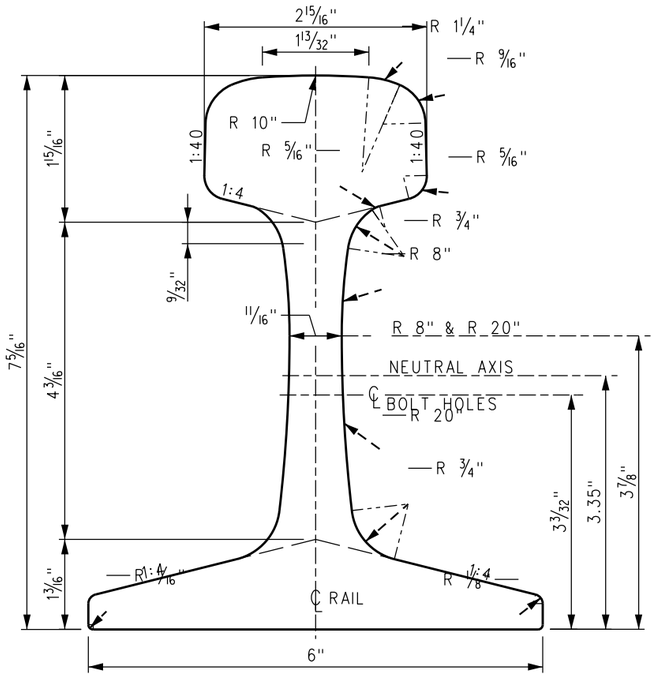

136 RE RAIL

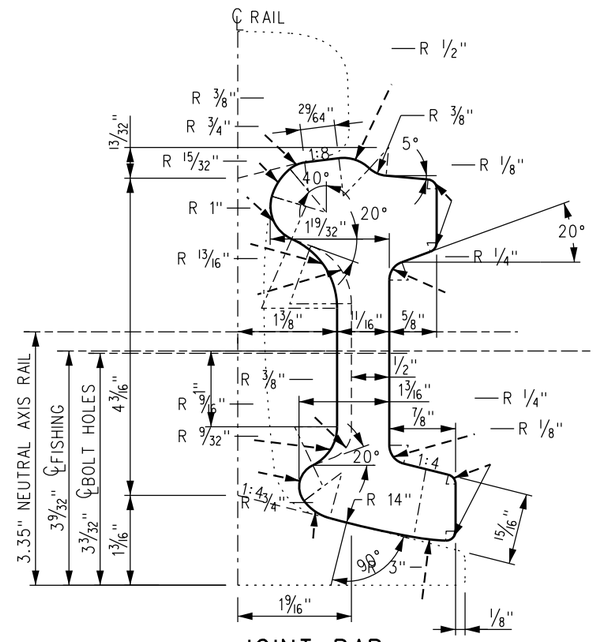

JOINT BAR

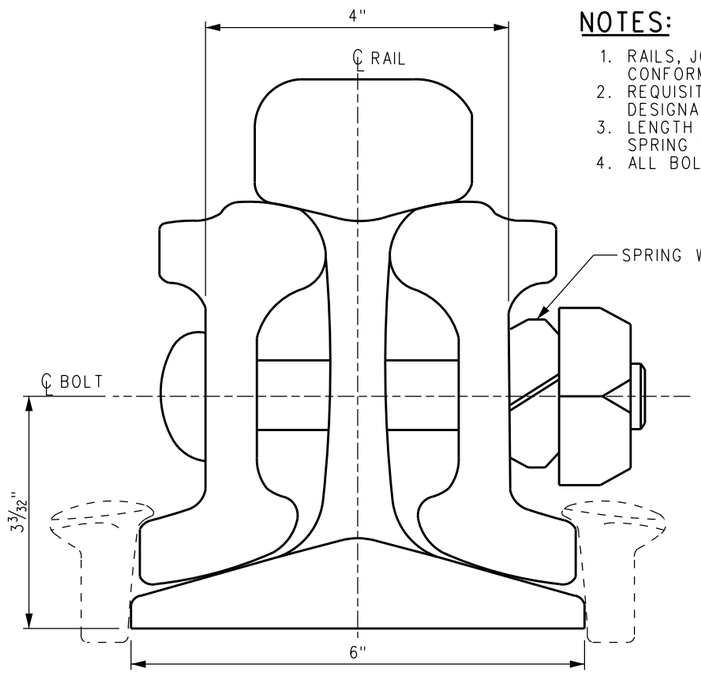

ASSEMBLY

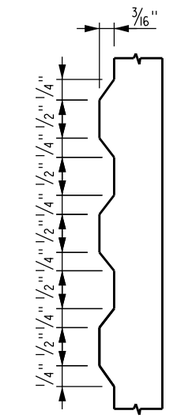

LONGITUDINAL SECTION OF JOINT BAR

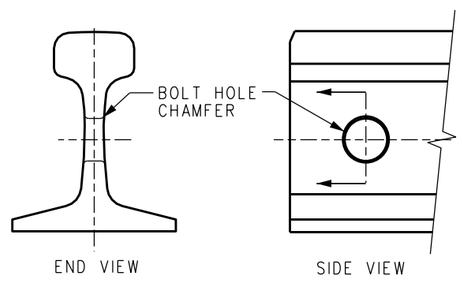

BOLT HOLE CHAMFERING

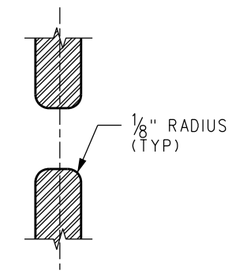

BOLT HOLE CHAMFER SECTION A-A

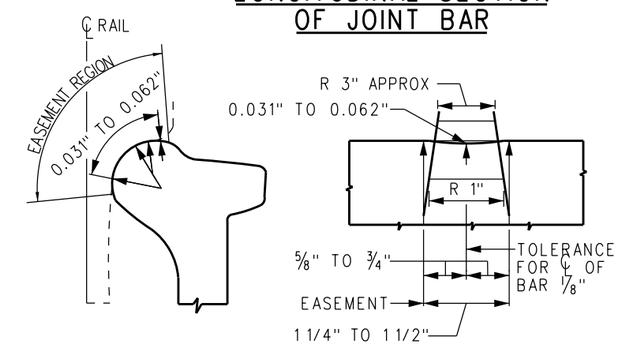

DETAIL OF HEAD EASEMENT

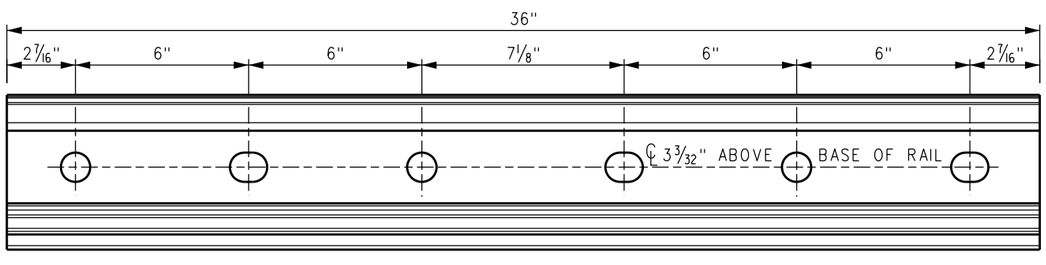

JOINT BAR PUNCHING
(FRONT VIEW)

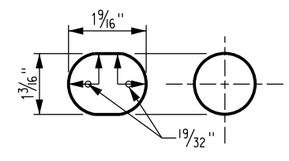

SIZE OF BOLT HOLES
(IN JOINT BAR)

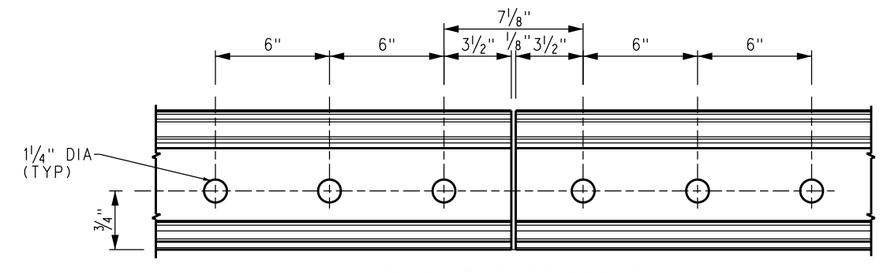

RAIL END DRILLING

REV.	DATE	DESCRIPTION	DES.	ENG.
X	XX-XX-XX	REVISION	XX	XX

DRAWN BY: A. CARLOS DATE: 03/31/2011

ASSISTANT DIRECTOR: STANDARDS & DESIGN

DIRECTOR OF ENGINEERING AND CONSTRUCTION

SCRRA ENGINEERING STANDARDS ARE INTENDED FOR SCRRA APPROVED USES ONLY. FOR NON-SCRRA APPROVED USES:
SCRRA SHALL NOT BE RESPONSIBLE FOR THE ACCURACY OR COMPLETENESS OF THE DATA OR INFORMATION CONTAINED HEREIN. THE SELECTION AND USE OF THESE STANDARDS IS THE SOLE RESPONSIBILITY OF THE USER AND SHOULD NOT BE USED WITHOUT CONSULTING A REGISTERED PROFESSIONAL ENGINEER. ALL WARRANTIES AND REPRESENTATIONS OF ANY KIND ARE DISCLAIMED. ANYONE MAKING USE OF THIS INFORMATION AGREES THAT IT ASSUMES ALL LIABILITY ARISING FROM SUCH USE. NO PART OF THESE STANDARDS SHOULD BE REPRODUCED OR DISTRIBUTED IN ANY FORM OR BY ANY MEANS WITHOUT THE PRIOR WRITTEN PERMISSION OF SCRRA. ALL RIGHTS RESERVED.

METROLINK®
SOUTHERN CALIFORNIA REGIONAL RAIL AUTHORITY
ONE GATEWAY PLAZA, 12TH FLOOR, L. A., CA. 90012

ENGINEERING STANDARDS

RAIL AND JOINT ASSEMBLY
FOR 136 LB. RE RAIL

STANDARD 2502
SCALE: NTS
REVISION –
SHEET 1 OF 1
CADD FILE: ES2502

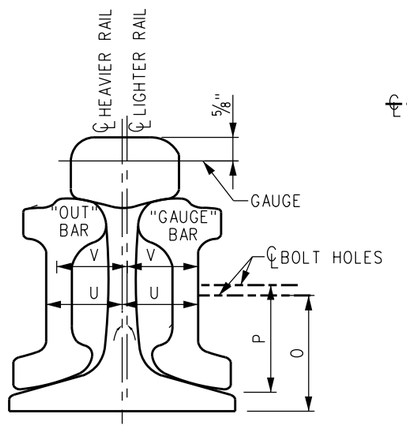

END ELEVATION

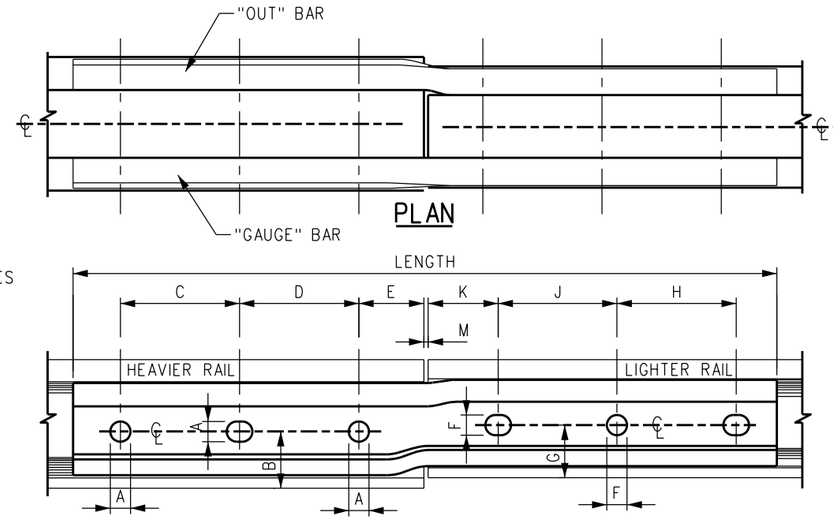

ELEVATION OF "GAUGE" BAR

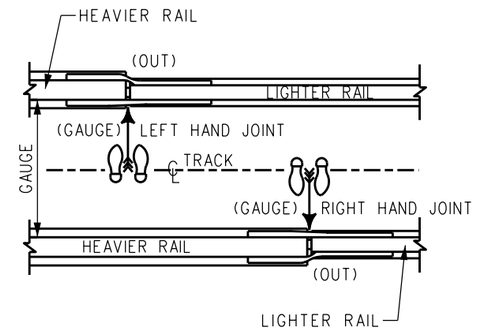

IDENTIFICATION SKETCH

NOTES

1. THIS PLAN SHOWS GENERAL INFORMATION FOR COMPROMISE JOINTS. SCRRA DIRECTOR OF ENGINEERING AND CONSTRUCTION WILL FURNISH DETAIL PLANS FOR THE MANUFACTURER.
2. TO DETERMINE RIGHT HAND OR LEFT HAND JOINT: STAND BETWEEN RAILS IN THE TRACK, FACING RAILS TO BE JOINED. WHEN HEAVIER RAIL IS ON THE RIGHT HAND SIDE, IT IS A RIGHT HAND JOINT AND WHEN HEAVIER RAIL IS ON THE LEFT HAND SIDE, IT IS A LEFT HAND JOINT. ONE RIGHT HAND AND ONE LEFT HAND JOINT FORM A SET (FOUR BARS).
3. EACH BAR TO BE MARKED WITH THE FOLLOWING STAMPED IN DATA:
   SECTION OF RAIL, AT EACH END,
   "RH" OR "LH", FOR RIGHT HAND OR LEFT HAND,
   "GAUGE" OR "OUT", FOR GAUGE SIDE OR OUTSIDE,
   PATTERN NUMBER,
   NAME OR TRADE MARK OF MANUFACTURER,
   YEAR MANUFACTURED.
4. ON ACCOUNT OF VARIOUS RAIL DRILLINGS FOR SECTIONS OTHER THAN SHOWN, REQUISITIONS AND ORDERS FOR COMPROMISE JOINTS FOR SUCH OTHER RAIL SHALL SHOW DIMENSIONS FOR B, F, J, K, AND O. FOR HEAVIER RAIL AND D, G, M AND P FOR THE LIGHTER RAIL.
5. BOLTS FOR COMPROMISE JOINTS ARE SAME AS FOR CORRESPONDING STANDARD JOINT BARS.
6. THE TYPE OF HOLES IN COMPROMISE BARS ARE AS SHOWN BELOW. "R" DENOTES ROUND HOLES AND "O" DENOTES OVAL HOLES.

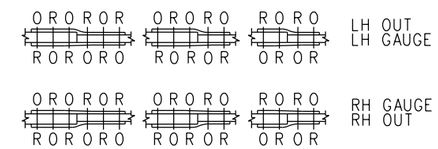

1. THIRD HOLE IN 110 LB RAIL TO BE DRILLED IN THE FIELD.
2. USE STANDARD JOINT BAR PER ES2501, MACHINED & LABELED TO INDICATE RAIL SIZE AND GAUGE AND FIELD SIDES.
3. USE STANDARD JOINT BAR PER ES2502, MACHINED & LABELED TO INDICATE RAIL SIZE AND GAUGE AND FIELD SIDES.

COMPROMISE JOINT DIMENSIONS AND LENGTHS:

		HEAVY		A	B	C	D	E	LIGHT		F	G	H	J	K		M
HEAVIER RAIL : LIGHTER RAIL	LENGTH	RAIL HEIGHT	BOLT DIA	DIAMETER OF HOLE IN BAR	BASE RAIL TO CL OF RAIL DRILLING	CTR 2nd TO CTR 3rd HOLE	CTR 1st TO CTR 2nd HOLE	RAIL END TO CTR 1st HOLE	RAIL HEIGHT	BOLT DIA	DIAMETER OF HOLE IN RAIL	BASE RAIL TO CL OF RAIL DRILLING	CTR 2nd TO CTR 3rd HOLE	CTR 1st TO CTR 2nd HOLE	RAIL END TO CTR 1st HOLE	AMOUNT OF WEAR	GAP BETWEEN RAIL ENDS
141 RE To 136 RE	36"	7 7/16"	1 1/8"	1 5/16"	3 3/32"	6"	6"	3 1/2"	7 5/16"	1 1/8"	1 5/16"	3 3/32"	6"	6"	3 1/2"	--	1/8"
141 RE To 132 RE	36"	7 7/16"	1 1/8"	1 5/16"	3 3/32"	6"	6"	3 1/2"	7 1/8"	1 1/8"	1 5/16"	3 3/32"	6"	6"	3 1/2"	1/4"	1/8"
141 RE To 119 CFI	36"	7 7/16"	1 1/8"	1 5/16"	3 3/32"	6"	6"	3 1/2"	6 13/16"	1 1/8"	1 5/16"	2 7/8"	6"	6"	3 1/2"	1/4"	1/8"
141 RE To 115 RE (MAINT ONLY)	36"	7 7/16"	1 1/8"	1 5/16"	3 3/32"	6"	6"	3 1/2"	6 5/8"	1 1/8"	1 5/16"	2 7/8"	6 1/2"	6 1/2"	2 1/2"	1/4"	1/8"
141 RE To 115 RE	36"	7 7/16"	1 1/8"	1 5/16"	3 3/32"	6"	6"	3 1/2"	6 5/8"	1 1/8"	1 5/16"	2 7/8"	6"	6"	3 1/2"	1/4"	1/8"
136 RE To 132 RE	36"	7 5/16"	1 1/8"	1 5/16"	3 3/32"	6"	6"	3 1/2"	7 1/8"	1 1/8"	1 5/16"	3 3/32"	6"	6"	3 1/2"	1/4"	1/8"
136 RE To 119 CFI	36"	7 5/16"	1 1/8"	1 5/16"	3 3/32"	6"	6"	3 1/2"	6 13/16"	1 1/8"	1 5/16"	2 7/8"	6"	6"	3 1/2"	1/4"	1/8"
136 RE To 115 RE (MAINT ONLY)	36"	7 5/16"	1 1/8"	1 5/16"	3 3/32"	6"	6"	3 1/2"	6 5/8"	1 1/8"	1 5/16"	2 7/8"	6 1/2"	6 1/2"	2 1/2"	1/4"	1/8"
136 RE To 115 RE	36"	7 5/16"	1 1/8"	1 5/16"	3 3/32"	6"	6"	3 1/2"	6 5/8"	1 1/8"	1 5/16"	2 7/8"	6"	6"	3 1/2"	1/4"	1/8"
132 RE To 119 CFI	36"	7 1/8"	1 1/8"	1 5/16"	3 3/32"	6 1/2"	6 1/2"	2 1/2"	6 13/16"	1 1/8"	1 5/16"	2 7/8"	6"	6"	3 1/2"	--	1/8"
132 RE To 115 RE	36"	7 1/8"	1 1/8"	1 5/16"	3 3/32"	6"	6"	3 1/2"	6 5/8"	1 1/8"	1 5/16"	2 7/8"	6"	6"	3 1/2"	--	1/8"
132 RE To 115 RE (MAINT ONLY)	36"	7 1/8"	1 1/8"	1 5/16"	3 3/32"	6 1/2"	6 1/2"	2 1/2"	6 5/8"	1 1/8"	1 5/16"	2 7/8"	6 1/2"	6 1/2"	2 1/2"	--	1/8"
119 RE To 115 RE	36"	6 13/16"	1 1/8"	1 5/16"	2 7/8"	6"	6"	3 1/2"	6 5/8"	1 1/8"	1 5/16"	2 7/8"	6 1/2"	6 1/2"	2 1/2"	--	1/8"
115 RE To 110 RE (MAINT ONLY)	30"	6 5/8"	1 1/8"	1 5/16"	2 7/8"	6 1/2"	6 1/2"	2 1/2"	6 1/4"	1"	1 3/16"	2 5/8"	--	5 1/2"	2 11/16"	--	1/8"
115 RE To 110 RE	30"	6 5/8"	1 1/8"	1 5/16"	2 7/8"	6"	6"	3 1/2"	6 1/4"	1"	1 3/16"	2 45/64"	--	5"	2 15/32"	--	1/8"
115 RE To 100 RA	30"	6 5/8"	1 1/8"	1 5/16"	2 7/8"	6"	6"	3 1/2"	6"	1"	1 3/16"	2 5/8"	--	5"	2 15/32"	--	1/8"
115 RE To 100 RE	30"	6 5/8"	1 1/8"	1 5/16"	2 7/8"	6"	6"	3 1/2"	6"	1"	1 3/16"	2 11/16"	--	5 1/2"	2 11/16"	--	1/8"
110 RE To 90 RA	24"	6 1/4"	1"	1 3/16"	2 5/8"	--	5 1/2"	2 11/16"	5 5/8"	1"	1 3/16"	2 31/64"	--	5"	2 13/32"	--	5/32"
110 RE To 85	24"	6 1/4"	1"	1 3/16"	2 5/8"	--	5 1/2"	2 11/16"	5 3/8"	1"	1 3/16"	2 29/64"	--	7"	2 7/16"	--	5/32"
90 RA To 85	24"	5 5/8"	1"	1 3/16"	2 13/16"	--	5"	2 13/32"	5 3/8"	1"	1 3/16"	2 29/64"	--	5"	2 15/32"	--	3/16"

REV.	DATE	DESCRIPTION	DES.	ENG.
X	XX-XX-XX	REVISION	XX	XX

DRAWN BY: A. CARLOS DATE: 03/31/2011

ASSISTANT DIRECTOR: STANDARDS & DESIGN

DIRECTOR OF ENGINEERING AND CONSTRUCTION

SCRRA ENGINEERING STANDARDS ARE INTENDED FOR SCRRA APPROVED USES ONLY. FOR NON-SCRRA APPROVED USES:
SCRRA SHALL NOT BE RESPONSIBLE FOR THE ACCURACY OR COMPLETENESS OF THE DATA OR INFORMATION CONTAINED HEREIN. THE SELECTION AND USE OF THESE STANDARDS IS THE SOLE RESPONSIBILITY OF THE USER AND SHOULD NOT BE USED WITHOUT CONSULTING A REGISTERED PROFESSIONAL ENGINEER. ALL WARRANTIES AND REPRESENTATIONS OF ANY KIND ARE DISCLAIMED. ANYONE MAKING USE OF THIS INFORMATION AGREES THAT IT ASSUMES ALL LIABILITY ARISING FROM SUCH USE. NO PART OF THESE STANDARDS SHOULD BE REPRODUCED OR DISTRIBUTED IN ANY FORM OR BY ANY MEANS WITHOUT THE PRIOR WRITTEN PERMISSION OF SCRRA. ALL RIGHTS RESERVED.

METROLINK®
SOUTHERN CALIFORNIA REGIONAL RAIL AUTHORITY
ONE GATEWAY PLAZA, 12TH FLOOR, L. A., CA. 90012

ENGINEERING STANDARDS

COMPROMISE JOINTS FOR VARIOUS WEIGHTS OF RAILS

STANDARD 2503
SCALE: NTS
REVISION –
SHEET 1 OF 1
CADD FILE: ES2503

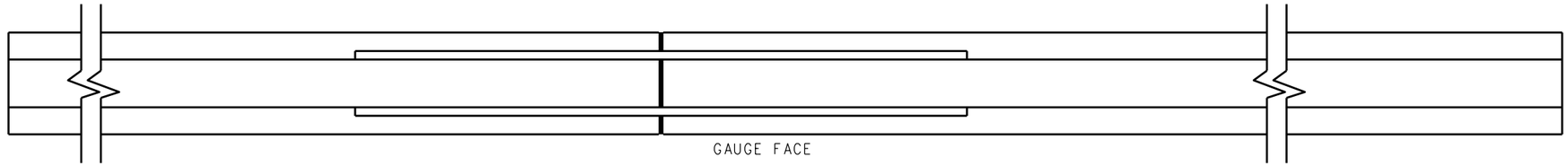

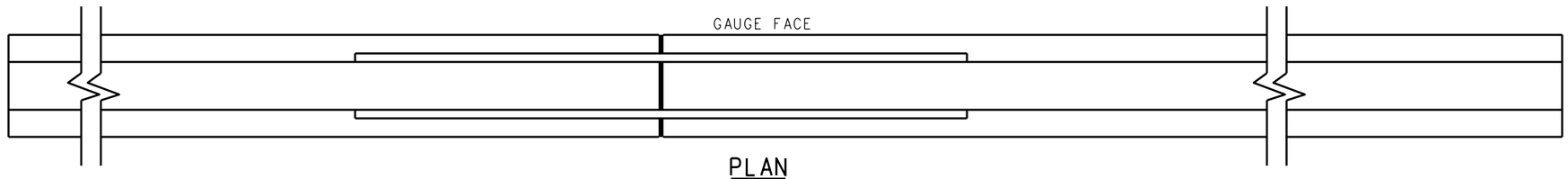

PLAN

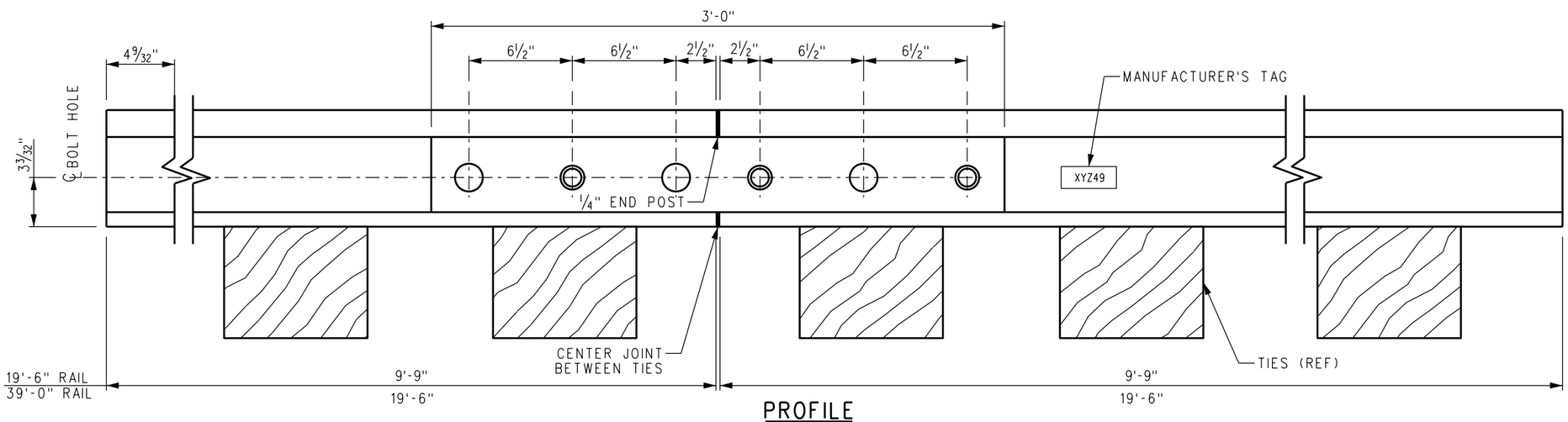

PROFILE

NOTES:

1. INSULATED JOINT PLUG SHALL MEET OR EXCEED CURRENT AREMA SPECIFICATION CHAPTER 4, PART 3. ONLY ALLEGHENY BONDED INSULATED JOINT OR APPROVED EQUAL WILL BE ACCEPTED.
2. INSULATED JOINT PLUGS SHALL BE MANUFACTURED FROM NEW HEAD HARDENED RAIL. INSULATED JOINTS SHALL BE INSTALLED AS SHOWN IN PLANS OR AS DIRECTED. GOOD USABLE SECOND HAND HEAD HARDENED RAIL WITH 1/4" HEADLOSS MAY BE USED FOR JOINTS MANUFACTURED FOR 1/4" HEADWEAR. INSULATED JOINTS FOR USE IN TURNOUTS, RAIL WILL BE BENT FOR CLOSURE OR TURNOUT SIDE.
3. ALL HOLES SHALL BE CHAMFERED.
4. 1" A490 HUCK BOLTS WITH STAGGERED PATTERN SHALL BE FURNISHED.
5. WHEN NECESSARY, 1 1/8" GRADE 8 BOLTS WITH SECURITY LOCKNUTS, LUBRICATED AND TORQUED TO 850 FT LBS, MAY BE SUBSTITUTED FOR HUCK BOLTS.
6. INSULATED JOINT PLUGS TO BE MANUFACTURED AND CURED IN A CONTROLLED ENVIRONMENT AT THE MANUFACTURER'S PLANT. NO FABRICATION OF INSULATED JOINT PLUGS IN THE FIELD WILL BE ACCEPTED. AFTER HUCKING OR BOLTING, MANUFACTURER SHALL REMOVE EXCESS EPOXY FROM RAIL AND JOINT BAR. MANUFACTURER SHALL ADHERE IDENTIFICATION TAG TO THE WEB OF RAIL DEPICTING MANUFACTURER'S NAME, CONTROL NUMBER, LOCATION, MONTH (01) AND YEAR (2XXX) WHERE JOINTS WERE FABRICATED.

NOTES: (CONT)

7. MANUFACTURER SHALL MARK A BALANCE POINT ON THE HEAD OF RAIL FOR HANDLING.
8. INSULATED JOINT PLUGS SHALL BE CENTERED BETWEEN TIE CRIBS WHEN INSTALLED.
9. SUPPLIERS OF MATERIAL SHOWN ON TRACK STANDARD DRAWINGS SHALL FORMALLY SUBMIT THEIR SHOP DRAWINGS TO SCRRA DIRECTOR OF ENGINEERING AND CONSTRUCTION FOR APPROVAL. MATERIAL SHIPPED WITHOUT WRITTEN APPROVAL FROM SCRRA DIRECTOR OF ENGINEERING AND CONSTRUCTION WILL NOT BE ACCEPTED.
10. PREFABRICATED JOINTS OF OTHER LENGTHS AS SPECIFIED MAY BE REQUIRED IN TURNOUTS.
11. ONLY TOELESS JOINT BARS ARE TO BE USED FASTENED WITH SHAVED E-CLIPS FOR INSULATED JOINTS. SEE SCRRA ES2361.

REV.	DATE	DESCRIPTION	DES.	ENG.
X	XX-XX-XX	REVISION	XX	XX

DRAWN BY: A. CARLOS DATE: 03/31/2011

ASSISTANT DIRECTOR: STANDARDS & DESIGN

DIRECTOR OF ENGINEERING AND CONSTRUCTION

SCRRA ENGINEERING STANDARDS ARE INTENDED FOR SCRRA APPROVED USES ONLY. FOR NON-SCRRA APPROVED USES:
SCRRA SHALL NOT BE RESPONSIBLE FOR THE ACCURACY OR COMPLETENESS OF THE DATA OR INFORMATION CONTAINED HEREIN. THE SELECTION AND USE OF THESE STANDARDS IS THE SOLE RESPONSIBILITY OF THE USER AND SHOULD NOT BE USED WITHOUT CONSULTING A REGISTERED PROFESSIONAL ENGINEER. ALL WARRANTIES AND REPRESENTATIONS OF ANY KIND ARE DISCLAIMED. ANYONE MAKING USE OF THIS INFORMATION AGREES THAT IT ASSUMES ALL LIABILITY ARISING FROM SUCH USE. NO PART OF THESE STANDARDS SHOULD BE REPRODUCED OR DISTRIBUTED IN ANY FORM OR BY ANY MEANS WITHOUT THE PRIOR WRITTEN PERMISSION OF SCRRA. ALL RIGHTS RESERVED.

METROLINK®
SOUTHERN CALIFORNIA REGIONAL RAIL AUTHORITY
ONE GATEWAY PLAZA, 12TH FLOOR, L. A., CA. 90012

ENGINEERING STANDARDS

PREFABRICATED BONDED INSULATED JOINT

STANDARD 2504
SCALE: NTS
REVISION –
SHEET 1 OF 1
CADD FILE: ES2504

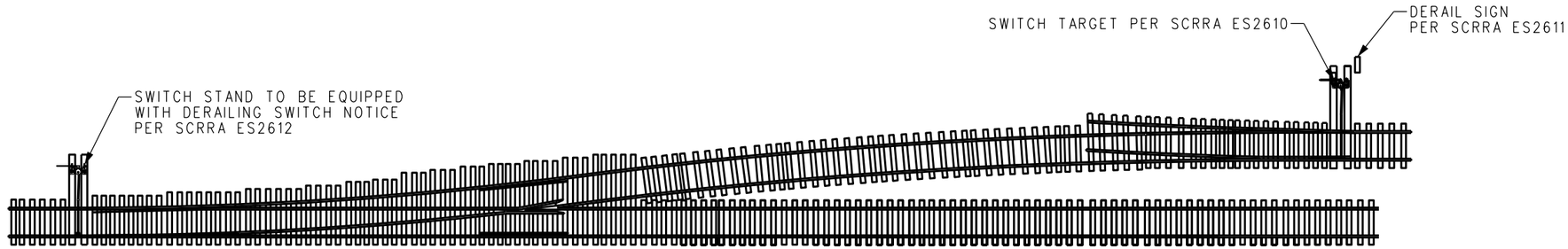

GENERAL DERAIL LAYOUT PLAN

NOTE:

SEE SCRRA ES2702 FOR DISTANCE FROM MAIN TRACK SWITCH TO POINT OF DERAIL AND INSULATED JOINT LOCATIONS.

REQUIRED DERAIL NOTES:

1. EXCEPT AT THE INTERLOCKINGS, DERAILS ARE REQUIRED AT THE FOLLOWING LOCATIONS UNLESS OTHERWISE AUTHORIZED.
   a. INTERCHANGE TRACKS, REGARDLESS OF GRADE CONDITIONS, WHERE THERE IS HAZARD OF FOREIGN LINE OPERATION CAUSING ENGINES OR CARS TO MOVE FOUL OF MAIN TRACK, SIDING OR OTHER TRACKS.
   b. INDUSTRY TRACKS, WHERE AN INDUSTRY CAN MOVE CARS TO CREATE A HAZARD BY FOULING THE MAIN TRACK, SIDING; OR ANY INDUSTRY TRACKS OR OTHER TRACKS WHERE CARS ARE LEFT UNATTENDED.
   c. SPURS AND OTHER TRACKS ON WHICH CARS ARE LEFT UNATTENDED AND THE UNAUTHORIZED MOVEMENT OF SUCH CARS MAY FOUL MAIN TRACK OR SIDING, EXCEPT WHERE TRACK GRADE ASCENDS TOWARD MAIN TRACK OR SIDING AT GREATER THAN OR EQUAL TO 1.50% GRADIENT.
   d. ANY TRACK, REGARDLESS OF GRADE. THAT IS USED FOR THE STORAGE OF LIVE ENGINES AND WHERE AN UNAUTHORIZED MOVEMENT OF THE ENGINES COULD FOUL MAIN TRACK.
   e. OTHER LOCATIONS, REGARDLESS OF GRADE, WHERE SPECIAL CONDITIONS REQUIRE DERAIL PROTECTION AND SUCH PROTECTION IS AUTHORIZED BY SCRRA.
   f. ANY TRACK, USED FOR LOADING, UNLOADING OR STORAGE OF CARS CONTAINING HAZARDOUS MATERIAL AS LISTED IN THE HAZARDOUS MATERIALS REGULATIONS OF THE DEPARTMENT OF TRANSPORTATION, CODE OF FEDERAL REGULATIONS. SUCH OPERATIONS SHALL BE PROTECTED AGAINST INBOUND MOVEMENTS BY DERAILS, SECURED WITH LOCKS AND LOCATED BEYOND THE CLEARANCE POINT AND NOT LESS THAN 50 FEET FROM NEAR END OF THE CAR(S).
2. ALL NEW INSTALLATIONS OF DERAILS AS OUTLINED ABOVE SHALL BE THE DOUBLE SWITCH POINT TYPE SCRRA ES2604. EXISTING SLIDING OR HINGED TYPE DERAILS CURRENYLY APPLIED ARE AUTHORIZED EXCEPT WHERE APPLIED:
   a. ON INSIDE OF CURVES OVER 5 DEGREES.
   b. ON TRACKS WHERE AN UNCONTROLLED CAR COULD REACH A SPEED IN EXCESS OF FOUR (4) MPH.
   c. AT LOCATIONS WHERE A DERAIL IS INSTALLED TO PROTECT AGAINST THE MOVEMENT OF ENGINES OR TRAINS. SLIDING OR HINGED DERAILS ARE AUTHORIZED FOR PROTECTION AT LOCOMOTIVE AND CAR REPAIR FACILITIES WHEN ALSO PROTECED BY BLUE FLAG RULES AND PROCEDURES.
   d. AT ANY OTHER LOCATION WHERE CONDITIONS ARE SUCH THAT THE SWITCH POINT DERAIL SHOULD BE INSTALLED TO ELIMINATE A POTENTIALLY HAZARDOUS SITUATION.
3. DOUBLE POINT DERAILS PER SCRRA ES2604 ARE REQUIRED AS NOTED BELOW. AT OTHER LOCATIONS REQUIRING A DERAIL, A SLIDING OR HINGED DERAIL, SCRRA ES2613 OR ES2614 WILL BE USED.
   a. LOCATIONS WHERE UNCONTROLLED MOVEMENTS CAN EXCEED 20 MPH.
   b. LOCATIONS PROTECTING TRACKS HOLDING 15 OR MORE CARS.
   c. DIVERGING TRACK ASCENDS TOWARDS MAIN TRACK AT GRADE LESS THAN 0.5% OR DESCENDS TOWARD THE MAIN TRACK AT ANY GRADIENT.
   d. AT OTHER LOCATIONS DESIGNATED BY SCRRA DIRECTOR OF ENGINEERING AND CONSTRUCTION.
4. FOR DETAILS OF CONNECTING RODS FOR SLIDING AND HINGED DERAILS SEE SCRRA ES2602.
5. SEE SCRRA ES2610, ES2611 AND ES2612 FOR DERAIL SIGNAGE WHERE REQUIRED.
6. EXPOSED ENDS OF STOCK RAIL AND DEFLECTING RAILS SHALL BE CUT AND BENT PER DEPRESSED RAIL HEAD DETAIL PER SCRRA ES2604.
7. HAND OPERATED DERAILS ARE ILLUSTRATED, HOWEVER POWER OPERATED DERAILS WILL BE INSTALLED AS DIRECTED BY SCRRA.

REV.	DATE	DESCRIPTION	DES.	ENG.
X	XX-XX-XX	REVISION	XX	XX

DRAWN BY: HDR DATE: 03/31/2011

ASSISTANT DIRECTOR: STANDARDS & DESIGN

DIRECTOR OF ENGINEERING AND CONSTRUCTION

SCRRA ENGINEERING STANDARDS ARE INTENDED FOR SCRRA APPROVED USES ONLY. FOR NON-SCRRA APPROVED USES:
SCRRA SHALL NOT BE RESPONSIBLE FOR THE ACCURACY OR COMPLETENESS OF THE DATA OR INFORMATION CONTAINED HEREIN. THE SELECTION AND USE OF THESE STANDARDS IS THE SOLE RESPONSIBILITY OF THE USER AND SHOULD NOT BE USED WITHOUT CONSULTING A REGISTERED PROFESSIONAL ENGINEER. ALL WARRANTIES AND REPRESENTATIONS OF ANY KIND ARE DISCLAIMED. ANYONE MAKING USE OF THIS INFORMATION AGREES THAT IT ASSUMES ALL LIABILITY ARISING FROM SUCH USE. NO PART OF THESE STANDARDS SHOULD BE REPRODUCED OR DISTRIBUTED IN ANY FORM OR BY ANY MEANS WITHOUT THE PRIOR WRITTEN PERMISSION OF SCRRA. ALL RIGHTS RESERVED.

METROLINK®
SOUTHERN CALIFORNIA REGIONAL RAIL AUTHORITY
ONE GATEWAY PLAZA, 12TH FLOOR, L. A., CA. 90012

ENGINEERING STANDARDS

DERAIL USE REQUIREMENTS

STANDARD: 2601
SCALE: NTS
REVISION: –
SHEET: 1 OF 1
CADD FILE: ES2601

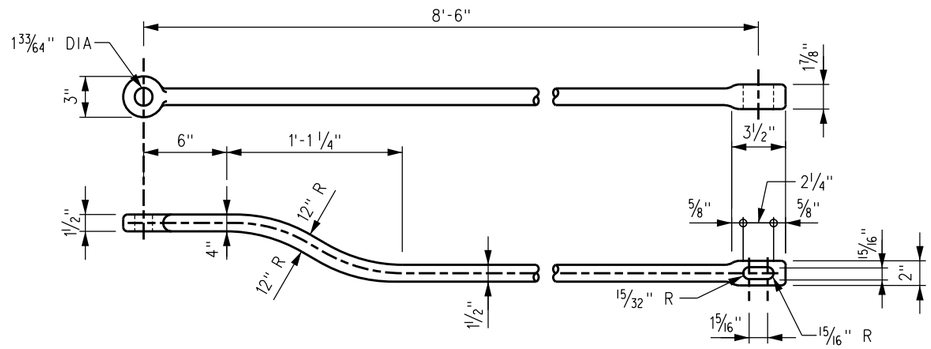

CONNECTING ROD FOR USE WITH HAYES DERAIL AND HIGH OR LOW SWITCH STANDS PER SCRRA ES2701 & ES2704

NOTE:

SINCE THE THROW OF SWITCH STAND IS ONLY 5", THE SLOTTED HOLE IN ROD IS PROVIDED TO PERMIT MOVEMENT OF 6 1/4" REQUIRED FOR PROPER FUNCTIONING OF HAYES SLIDING DERAIL.

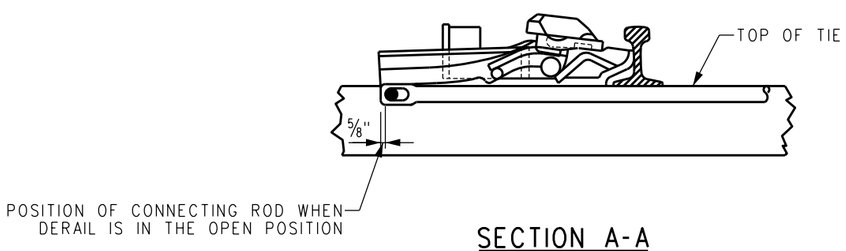

SECTION A-A (OPEN)

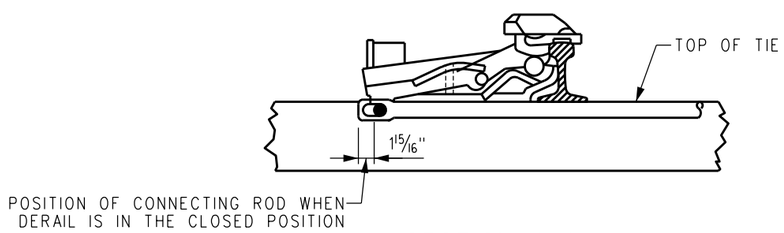

SECTION A-A (CLOSED)

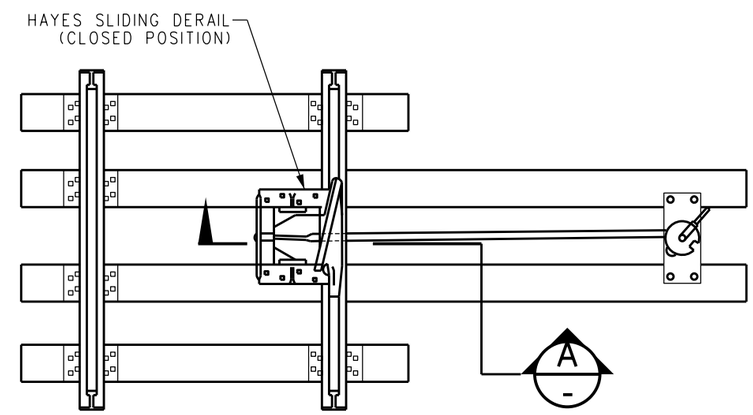

GENERAL PLAN FOR CONNECTING ROD WITH HAYES SLIDING DERAIL

X	XX-XX-XX	REVISION	XX	XX
REV.	DATE	DESCRIPTION	DES.	ENG.

DRAWN BY: A. CARLOS DATE: 03/31/2011

ASSISTANT DIRECTOR: STANDARDS & DESIGN

DIRECTOR OF ENGINEERING AND CONSTRUCTION

SCRRA ENGINEERING STANDARDS ARE INTENDED FOR SCRRA APPROVED USES ONLY. FOR NON-SCRRA APPROVED USES:
SCRRA SHALL NOT BE RESPONSIBLE FOR THE ACCURACY OR COMPLETENESS OF THE DATA OR INFORMATION CONTAINED HEREIN. THE SELECTION AND USE OF THESE STANDARDS IS THE SOLE RESPONSIBILITY OF THE USER AND SHOULD NOT BE USED WITHOUT CONSULTING A REGISTERED PROFESSIONAL ENGINEER. ALL WARRANTIES AND REPRESENTATIONS OF ANY KIND ARE DISCLAIMED. ANYONE MAKING USE OF THIS INFORMATION AGREES THAT IT ASSUMES ALL LIABILITY ARISING FROM SUCH USE. NO PART OF THESE STANDARDS SHOULD BE REPRODUCED OR DISTRIBUTED IN ANY FORM OR BY ANY MEANS WITHOUT THE PRIOR WRITTEN PERMISSION OF SCRRA. ALL RIGHTS RESERVED.

METROLINK®

SOUTHERN CALIFORNIA REGIONAL RAIL AUTHORITY
ONE GATEWAY PLAZA, 12TH FLOOR, L. A., CA. 90012

ENGINEERING STANDARDS

CONNECTING ROD DETAILS FOR DERAILS

STANDARD: 2602
SCALE: NTS
REVISION: –
SHEET: 1 OF 1
CADD FILE: ES2602

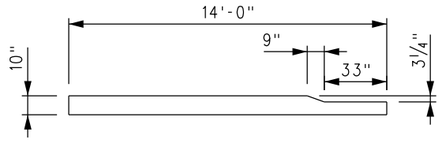

DAPPING DETAIL - HEADBLOCK TIES

(8"x10"x14'-0")

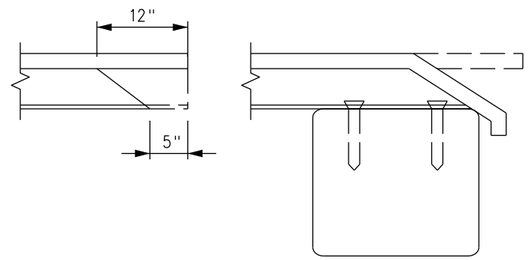

DEPRESSED RAIL HEAD DETAIL

TURNOUT DATA

SWITCH GEOMETRY:	16'-6"
VERTEX DISTANCE:	9 1/32"
SWITCH ANGLE:	1° 44'11"
SWITCH HEEL SPREAD:	6¼"
RADIUS OF CL CURVE:	736'-5 21/32"
DEGREE OF CL CURVE:	7° 46'58"
CENTRAL ANGLE OF TURNOUT CURVE:	3° 59'18"

LEGEND

WELDED JOINTS

NOTES:

1. SEE ES2604-02 FOR BILL OF MATERIALS. CIRCLED ITEM NUMBERS APPLY TO BILL OF MATERIAL ITEMS.
2. ALL RAIL SHALL HAVE IDENTIFICATION COLOR CODE PAINTED ON WEB CLEAR OF JOINT AREA.
3. LH AND RH SWITCH POINTS WITH MANGANESE TIP.
4. TIMBER TIES TO CONFORM TO SCRRA STANDARD SPECIFICATIONS 34 11 34.
5. RH SWITCH POINT DERAIL IS MIRROR IMAGE OF THIS LAYOUT. SEE BILL OF MATERIALS FOR REFERENCE TO SPECIFIC PARTS.

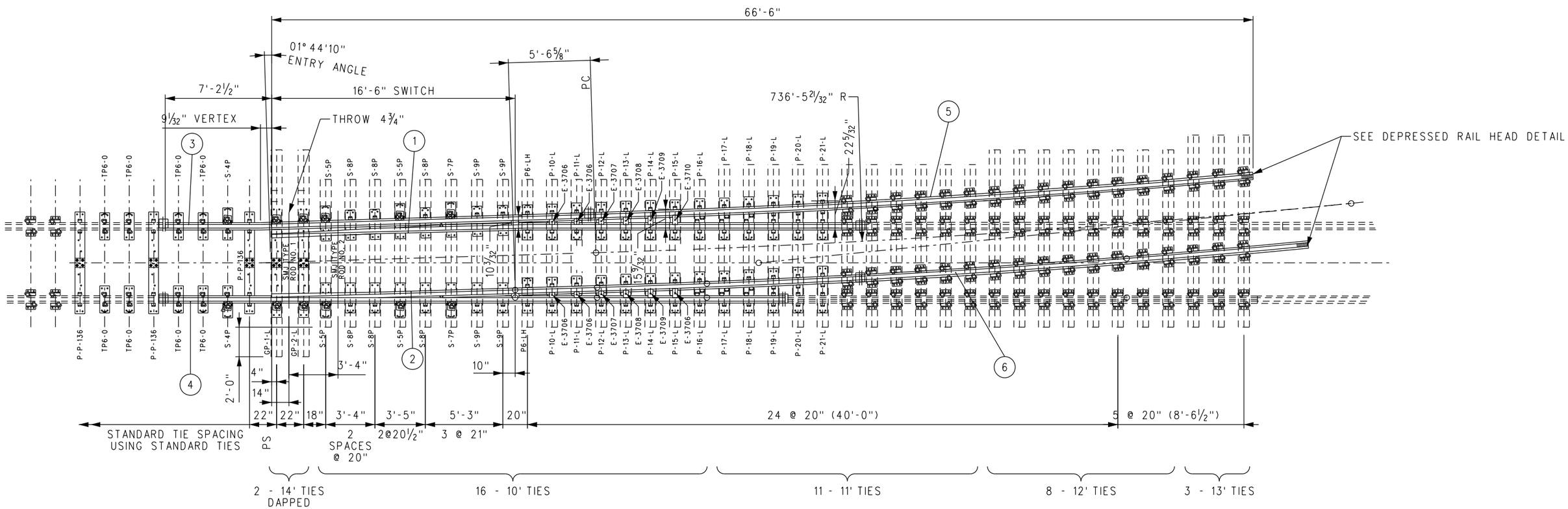

REV.	DATE	DESCRIPTION	DES.	ENG.
X	XX-XX-XX	REVISION	XX	XX

DRAWN BY: HDR DATE: 03/31/2011

ASSISTANT DIRECTOR: STANDARDS & DESIGN

DIRECTOR OF ENGINEERING AND CONSTRUCTION

SCRRA ENGINEERING STANDARDS ARE INTENDED FOR SCRRA APPROVED USES ONLY. FOR NON-SCRRA APPROVED USES:
SCRRA SHALL NOT BE RESPONSIBLE FOR THE ACCURACY OR COMPLETENESS OF THE DATA OR INFORMATION CONTAINED HEREIN. THE SELECTION AND USE OF THESE STANDARDS IS THE SOLE RESPONSIBILITY OF THE USER AND SHOULD NOT BE USED WITHOUT CONSULTING A REGISTERED PROFESSIONAL ENGINEER. ALL WARRANTIES AND REPRESENTATIONS OF ANY KIND ARE DISCLAIMED. ANYONE MAKING USE OF THIS INFORMATION AGREES THAT IT ASSUMES ALL LIABILITY ARISING FROM SUCH USE. NO PART OF THESE STANDARDS SHOULD BE REPRODUCED OR DISTRIBUTED IN ANY FORM OR BY ANY MEANS WITHOUT THE PRIOR WRITTEN PERMISSION OF SCRRA. ALL RIGHTS RESERVED.

METROLINK®
SOUTHERN CALIFORNIA REGIONAL RAIL AUTHORITY
ONE GATEWAY PLAZA, 12TH FLOOR, L. A., CA. 90012

ENGINEERING STANDARDS

16'-6" DOUBLE POINT DERAIL
(LEFT HAND SHOWN)

STANDARD: 2604
SCALE: NTS
REVISION: –
SHEET: 1 OF 1
CADD FILE: ES2604-01

BILL OF MATERIAL					
ITEM	LH QTY	RH QTY	DESCRIPTION	DWG NO	SCRRA PART NO
1	1	1	SAMSON POINT, 16'-6"/40'-0" LONG, FLOATING HEEL, MANGANESE TIP, LH	ES2921-08	
2	1	1	SAMSON POINT, 16'-6"/40'-0" LONG, FLOATING HEEL, MANGANESE TIP, RH	ES2921-08	
3	1	-	STOCK RAIL, SAMSON UNDERCUT, BENT & CURVED, 28'-10" LONG, LH/LHTO	ES2921-09	
3	-	1	STOCK RAIL, SAMSON UNDERCUT, BENT & CURVED, 28'-10" LONG, RH/RHTO	ES2921-09	
4	1	-	STOCK RAIL, SAMSON UNDERCUT, STRAIGHT, 42'-0" LONG, RH/LHTO	ES2921-09	
4	-	1	STOCK RAIL, SAMSON UNDERCUT, STRAIGHT, 42'-0" LONG, LH/RHTO	ES2921-09	
5	1	1	CURVED RAIL 44'-11 9/16" LONG	-	
6	1	1	CURVED RAIL 30'-4 1/8" LONG	-	
9	1	1	SWITCH ROD #1 ASSEMBLY, 'SMJ' VERTICAL C/W BASKET ASSEMBLY	-	
10	1	1	SWITCH ROD #2 ASSEMBLY, 'SMJ' VERTICAL	-	
11	3	3	GAUGE PLATE, INSULATED (P-P-136)	ES2802-80	
12	1	-	GAUGE PLATE, INS (GP-1-L)	ES2802-81	
13	-	1	GAUGE PLATE, INS (GP-1-R)	ES2802-81	
14	1	-	GAUGE PLATE, INS (GP-2-L)	ES2802-82	
15	-	1	GAUGE PLATE, INS (GP-2-R)	ES2802-82	
16	2	2	BRACE SLIDE PLATE (S-4P)	ES2802-88	
17	4	4	BRACE SLIDE PLATE (S-5P)	ES2802-85	
18	2	2	BRACE SLIDE PLATE (S-7P)	ES2802-85	
19	2	-	SWITCH HEEL PLATE (P6-LH)	ES2802-83	
20	-	2	SWITCH HEEL PLATE (P6-RH)	ES2802-84	
21	6	6	SLIDE PLATE (S-8P), 1/4" RISER	ES2802-86	
22	4	4	SLIDE PLATE (S-9P), 0" RISER	ES2802-86	
23	2	-	SWITCH PLATE (P-10-L)	ES2921-13	
24	-	2	SWITCH PLATE (P-10-R)	ES2921-13	
25	2	-	SWITCH PLATE (P-11-L)	ES2921-13	
26	-	2	SWITCH PLATE (P-11-R)	ES2921-13	
27	2	-	SWITCH PLATE (P-12-L)	ES2921-13	
28	-	2	SWITCH PLATE (P-12-R)	ES2921-13	
29	2	-	SWITCH PLATE (P-13-L)	ES2921-13	
30	-	2	SWITCH PLATE (P-13-R)	ES2921-13	
31	2	-	SWITCH PLATE (P-14-L)	ES2921-13	
32	-	2	SWITCH PLATE (P-14-R)	ES2921-13	

BILL OF MATERIAL					
ITEM	LH QTY	RH QTY	DESCRIPTION	DWG NO	SCRRA PART NO
33	2	-	SWITCH PLATE (P-15-L)	ES2921-13	
34	-	2	SWITCH PLATE (P-15-R)	ES2921-13	
35	2	-	SWITCH PLATE (P-16-L)	ES2921-13	
36	-	2	SWITCH PLATE (P-16-R)	ES2921-13	
37	2	-	SWITCH PLATE (P-17-L)	ES2921-13	
38	-	2	SWITCH PLATE (P-17-R)	ES2921-13	
39	2	-	SWITCH PLATE (P-18-L)	ES2921-13	
40	-	2	SWITCH PLATE (P-18-R)	ES2921-13	
41	2	-	SWITCH PLATE (P-19-L)	ES2921-13	
42	-	2	SWITCH PLATE (P-19-R)	ES2921-13	
43	2	-	SWITCH PLATE (P-20-L)	ES2921-13	
44	-	2	SWITCH PLATE (P-20-R)	ES2921-13	
45	2	-	SWITCH PLATE (P-21-L)	ES2921-13	
46	-	2	SWITCH PLATE (P-21-R)	ES2921-13	
47	72	72	TIE PLATE, ROLLED PANDROL, 6" RAIL BASE, CANTED, 1" DIA HOLES	ES2454	
48	4	4	HOLD-DOWN CLIP (E3706)	-	
49	2	2	HOLD-DOWN CLIP (E3707)	-	
50	2	2	HOLD-DOWN CLIP (E3708)	-	
51	2	2	HOLD-DOWN CLIP (E3709)	-	
52	2	2	HOLD-DOWN CLIP (E3710)	-	
53	264	264	PANDROL SPRING CLIP (E2055)	ES2362	
54	8	8	PANDROL SPRING CLIP, (E2063), FOR JOINT BARS	ES2361	
55	536	536	SCREW SPIKE, 15/16" DIA X 6" LONG	ES2355	
56	12	12	BOLTLESS BRACE, 136RE 'SURFIT'	-	
57	12	12	SERRATED WASHER FOR BOLTLESS BRACE	-	
58	16	16	TIE, HARDWOOD, TREATED, 7" X 9" X 10'-0" LONG	-	
59	11	11	TIE, HARDWOOD, TREATED, 7" X 9" X 11'-0" LONG	-	
60	8	8	TIE, HARDWOOD, TREATED, 7" X 9" X 12'-0" LONG	-	
61	3	3	TIE, HARDWOOD, TREATED, 7" X 9" X 13'-0" LONG	-	
62	2	2	TIE, HARDWOOD, TREATED, 10" X 8" X 14'-0" LONG, DAPPED	-	
63	8	8	TIE PLATE, TP6-0, NO CANT	-	

REV.	DATE	DESCRIPTION	DES.	ENG.
X	XX-XX-XX	REVISION	XX	XX

DRAWN BY: HDR DATE: 03/31/2011

ASSISTANT DIRECTOR: STANDARDS & DESIGN

DIRECTOR OF ENGINEERING AND CONSTRUCTION

SCRRA ENGINEERING STANDARDS ARE INTENDED FOR SCRRA APPROVED USES ONLY. FOR NON-SCRRA APPROVED USES: SCRRA SHALL NOT BE RESPONSIBLE FOR THE ACCURACY OR COMPLETENESS OF THE DATA OR INFORMATION CONTAINED HEREIN. THE SELECTION AND USE OF THESE STANDARDS IS THE SOLE RESPONSIBILITY OF THE USER AND SHOULD NOT BE USED WITHOUT CONSULTING A REGISTERED PROFESSIONAL ENGINEER. ALL WARRANTIES AND REPRESENTATIONS OF ANY KIND ARE DISCLAIMED. ANYONE MAKING USE OF THIS INFORMATION AGREES THAT IT ASSUMES ALL LIABILITY ARISING FROM SUCH USE. NO PART OF THESE STANDARDS SHOULD BE REPRODUCED OR DISTRIBUTED IN ANY FORM OR BY ANY MEANS WITHOUT THE PRIOR WRITTEN PERMISSION OF SCRRA. ALL RIGHTS RESERVED.

METROLINK®

SOUTHERN CALIFORNIA REGIONAL RAIL AUTHORITY
ONE GATEWAY PLAZA, 12TH FLOOR, L. A., CA. 90012

ENGINEERING STANDARDS

16'-6" DOUBLE POINT DERAIL
BILL OF MATERIAL LH AND RH

STANDARD 2604
SCALE: NTS
REVISION –
SHEET 2 OF 2
CADD FILE: ES2604-02

BILL OF MATERIAL	
NUMBER REQUIRED	ITEM
	DERAILING SWITCH TARGET ON TUBULAR ROD
1	1.00 SQ. FT. ALUMINUM PANEL
2	5/16" X 2 3/4" LONG BOLT WITH NUT, WASHERS, SPACERS AND COTTER PIN AS PER SECTION A-A ON THIS SHEET.
	DERAILING SWITCH TARGET ON SQUARE ROD
1	1.00 SQ. FT. ALUMINUM PANEL
2	5/16" X 2" LONG BOLT WITH NUT, WASHERS, SPACERS AND COTTER PIN AS PER SECTION B-B ON THIS SHEET.

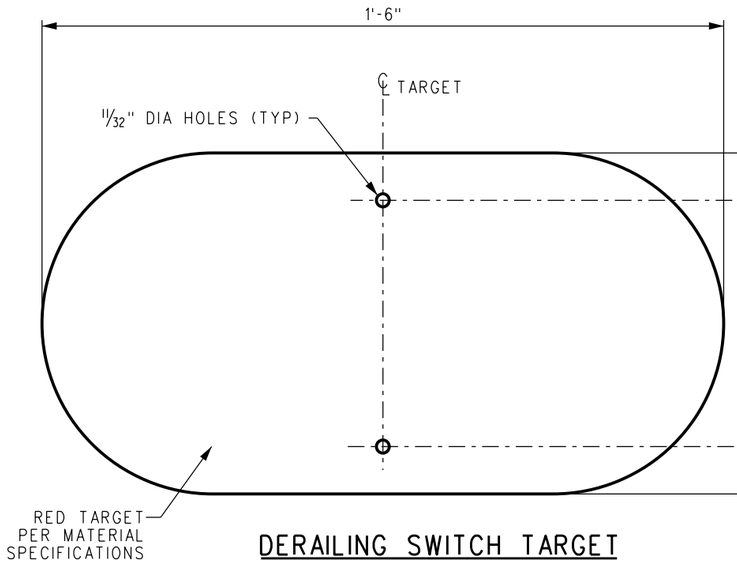

DERAILING SWITCH TARGET

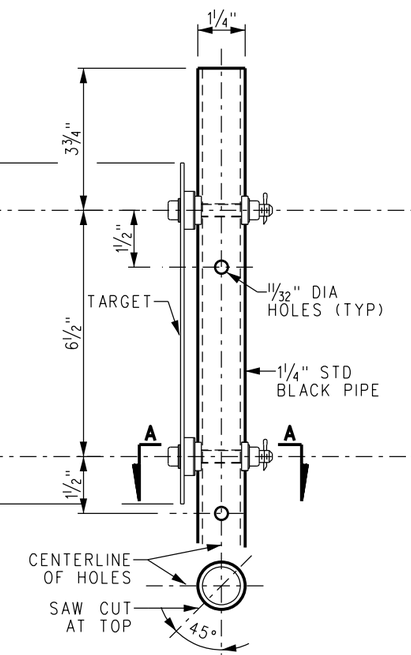

TUBULAR TARGET ROD

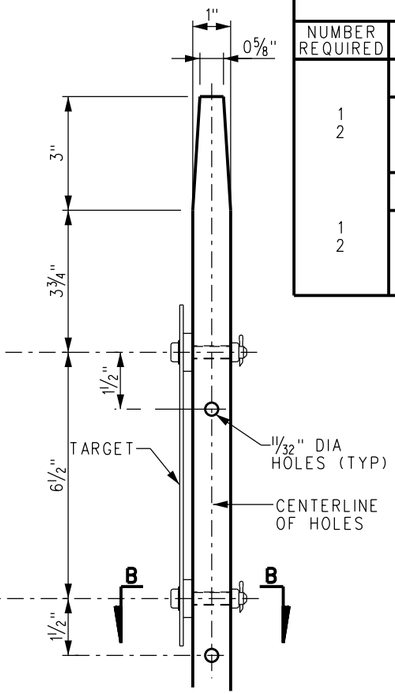

SQUARE TARGET ROD

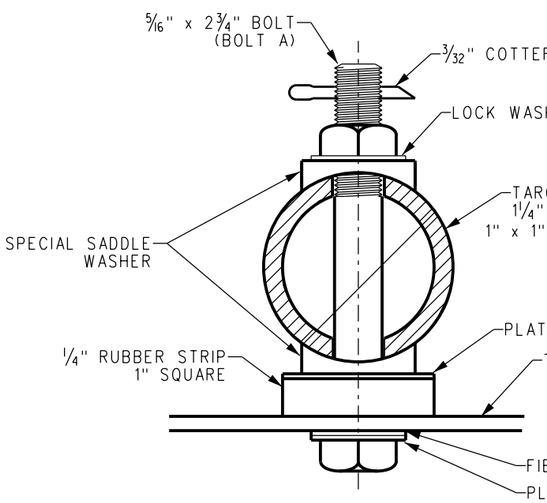

SECTION A-A

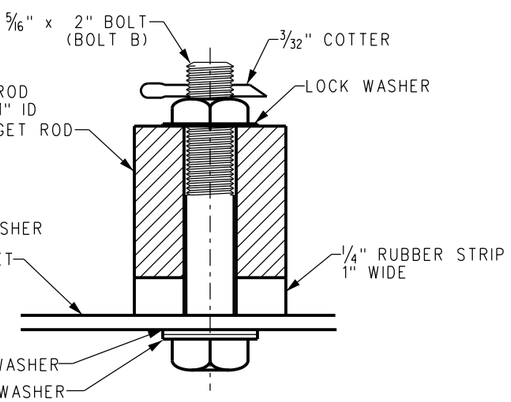

SECTION B-B

MATERIAL SPECIFICATIONS:

SIGNS:
1/8" THICK MILL FINISH ALUMINUM PANEL, ALCOA 6016-T6 OR EQUAL. PAINT ALL SIDES WITH LINEAR POLYURATHANE. COLOR FACE OF PANEL WITH ENGINEERING GRADE, PRESSURE SENSITIVE , RETRO-REFLECTIVE RED VINYL SHEETING. FINISH WITH EXTERIOR GRADE PRESSURE SENSITIVE CLEAR MYLAR, 3M-1150 OR EQUAL.

LOCATION:
TARGET SHALL BE USED ON ALL DERAILING SWITCH STANDS. SEE SCRRA ES2601.

HARDWARE:
ALL HARDWARE SHALL BE VANDAL RESISTANT.
BOLTS: 5/16" DIA CARRIAGE BOLTS, 2024-T4 ALLOY.
NUTS: TAMPER RESISTANT, ALCOA OR EQUAL.
WASHERS: ALUMINUM FLAT WASHERS.

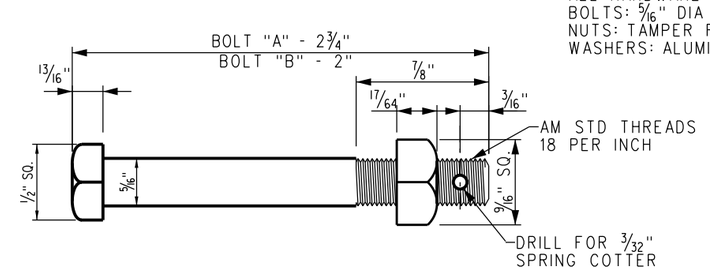

5/16" TARGET BOLT
(CLASS A STEEL, SEE SPEC 1003 - A)

REV.	DATE	DESCRIPTION	DES.	ENG.
X	XX-XX-XX	REVISION	XX	XX

DRAWN BY: A. CARLOS DATE: 03/31/2011

ASSISTANT DIRECTOR: STANDARDS & DESIGN

DIRECTOR OF ENGINEERING AND CONSTRUCTION

SCRRA ENGINEERING STANDARDS ARE INTENDED FOR SCRRA APPROVED USES ONLY. FOR NON-SCRRA APPROVED USES:
SCRRA SHALL NOT BE RESPONSIBLE FOR THE ACCURACY OR COMPLETENESS OF THE DATA OR INFORMATION CONTAINED HEREIN. THE SELECTION AND USE OF THESE STANDARDS IS THE SOLE RESPONSIBILITY OF THE USER AND SHOULD NOT BE USED WITHOUT CONSULTING A REGISTERED PROFESSIONAL ENGINEER. ALL WARRANTIES AND REPRESENTATIONS OF ANY KIND ARE DISCLAIMED. ANYONE MAKING USE OF THIS INFORMATION AGREES THAT IT ASSUMES ALL LIABILITY ARISING FROM SUCH USE. NO PART OF THESE STANDARDS SHOULD BE REPRODUCED OR DISTRIBUTED IN ANY FORM OR BY ANY MEANS WITHOUT THE PRIOR WRITTEN PERMISSION OF SCRRA. ALL RIGHTS RESERVED.

METROLINK®
SOUTHERN CALIFORNIA REGIONAL RAIL AUTHORITY
ONE GATEWAY PLAZA, 12TH FLOOR, L. A., CA. 90012

ENGINEERING STANDARDS

DERAILING SWITCH TARGET

STANDARD 2610
SCALE: NTS
REVISION –
SHEET 1 OF 1
CADD FILE: ES2610

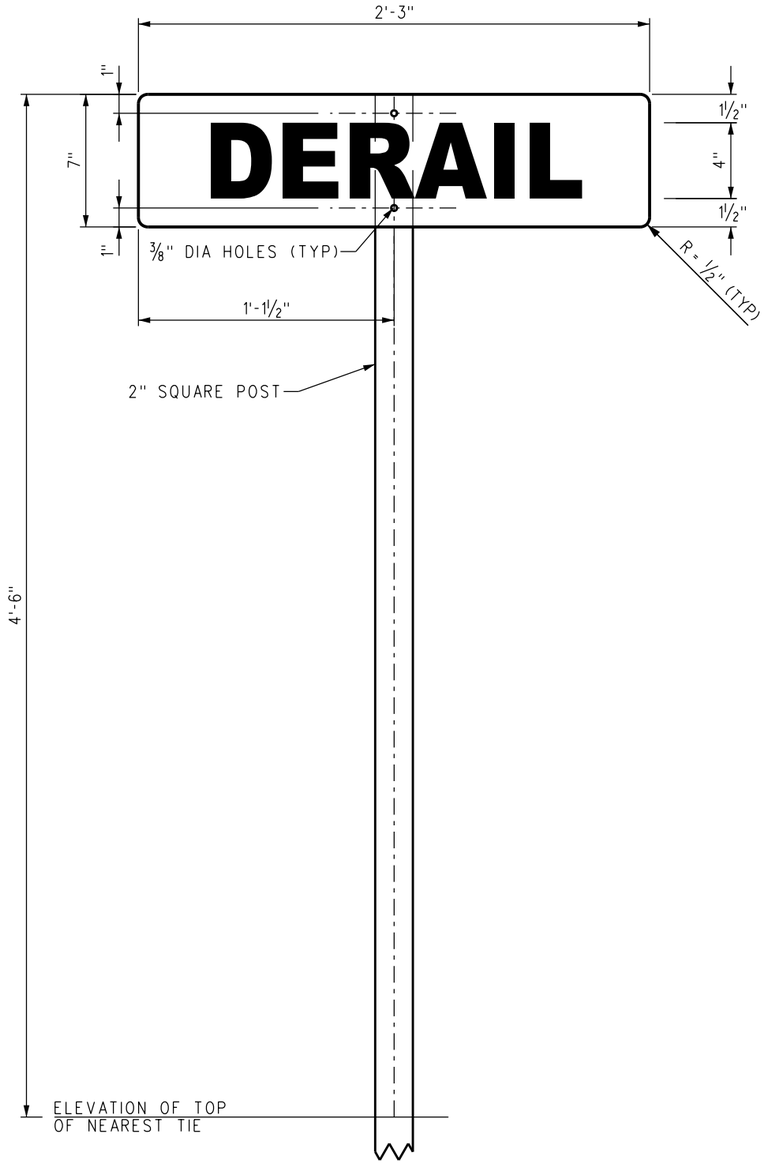

TYPE "B"

TYPE "B" SIGNS CONFORM
TO CALIFORNIA STATE LAW

BILL OF MATERIAL	
NUMBER REQUIRED	ITEM
	TYPE "B" DERAIL SIGN
1	1.31 SQ. FT. ALUMINUM PANEL
1	2" x 2" SQUARE POST (LENGTH VARIES WITH TERRAIN)
2	3" LONG BOLT WITH NUT AND WASHERS PER SCRRA ES5210
1	ANCHOR PER SCRRA ES5210

INSTALLATION NOTES

1. TYPE "B" DERAIL SIGN SHALL BE USED AT ALL DERAILS PER SCRRA ES2601. SIGN SHALL BE LOCATED AS PER LOCATION PLAN AND FACING SO AS TO BE READ FROM ENGINE PULLING OUT OF THE SIDE TRACK. SELECT OFFSET FROM FIELD SIDE OF NEAREST RAIL SUCH THAT UNDERGROUND UTILITIES SHALL NOT BE DAMAGED WHEN SETTING ANCHOR.

MATERIAL SPECIFICATIONS

SIGNS:
⅛" THICK MILL FINISH ALUMINUM PANEL, ALCOA 6016-T6 OR EQUAL. PAINT ALL SIDES WITH LINEAR POLYURATHANE. COLOR FACE OF PANEL WITH ENGINEERING GRADE, PRESSURE SENSITIVE, RETRO-REFLECTIVE WHITE VINYL SHEETING. SILK SCREEN LEGEND WITH BLACK INK. FINISH WITH EXTERIOR GRADE PRESSURE SENSITIVE CLEAR MYLAR, 3M-1150 OR EQUAL.

POST, ANCHOR AND HARDWARE:
PER SCRRA ES5210.

TEXT STYLE:
"ARIAL BOLD" PER SCRRA ES1212, SIZE AS INDICATED.

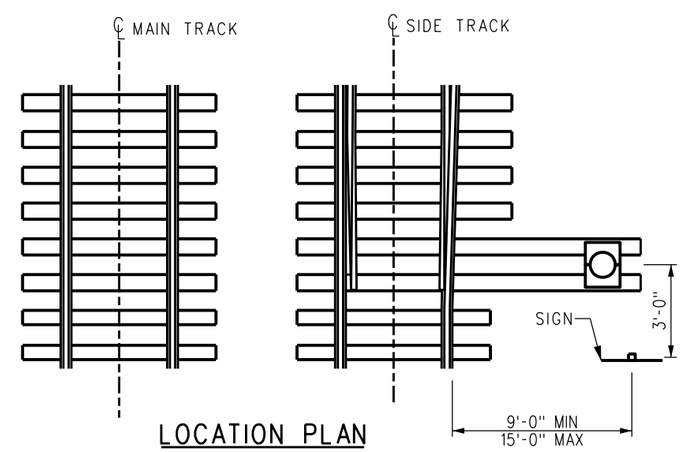

LOCATION PLAN

REV.	DATE	DESCRIPTION	DES.	ENG.
X	XX-XX-XX	REVISION	XX	XX

DRAWN BY: A. CARLOS DATE: 03/31/2011

ASSISTANT DIRECTOR: STANDARDS & DESIGN

DIRECTOR OF ENGINEERING AND CONSTRUCTION

SCRRA ENGINEERING STANDARDS ARE INTENDED FOR SCRRA APPROVED USES ONLY. FOR NON-SCRRA APPROVED USES:
SCRRA SHALL NOT BE RESPONSIBLE FOR THE ACCURACY OR COMPLETENESS OF THE DATA OR INFORMATION CONTAINED HEREIN. THE SELECTION AND USE OF THESE STANDARDS IS THE SOLE RESPONSIBILITY OF THE USER AND SHOULD NOT BE USED WITHOUT CONSULTING A REGISTERED PROFESSIONAL ENGINEER. ALL WARRANTIES AND REPRESENTATIONS OF ANY KIND ARE DISCLAIMED. ANYONE MAKING USE OF THIS INFORMATION AGREES THAT IT ASSUMES ALL LIABILITY ARISING FROM SUCH USE. NO PART OF THESE STANDARDS SHOULD BE REPRODUCED OR DISTRIBUTED IN ANY FORM OR BY ANY MEANS WITHOUT THE PRIOR WRITTEN PERMISSION OF SCRRA. ALL RIGHTS RESERVED.

METROLINK®
SOUTHERN CALIFORNIA REGIONAL RAIL AUTHORITY
ONE GATEWAY PLAZA, 12TH FLOOR, L. A., CA. 90012

ENGINEERING STANDARDS

TYPE "B" DERAIL SIGN

STANDARD 2611
SCALE: NTS
REVISION –
SHEET 1 OF 1
CADD FILE: ES2611

BILL OF MATERIAL	
NUMBER REQUIRED	ITEM
	DERAIL SWITCH NOTICE ON TUBULAR ROD
1	0.56 SQ. FT. ALUMINUM PANEL
2	5/16" X 2 3/4" LONG BOLT WITH NUT, WASHERS, SPACERS AND COTTER PIN AS PER SECTION A-A ON THIS SHEET.
	DERAIL SWITCH NOTICE TARGET ON SQUARE ROD
1	0.56 SQ. FT. ALUMINUM PANEL
2	5/16" X 2" LONG BOLT WITH NUT, WASHERS, SPACERS AND COTTER PIN AS PER SECTION B-B ON THIS SHEET.

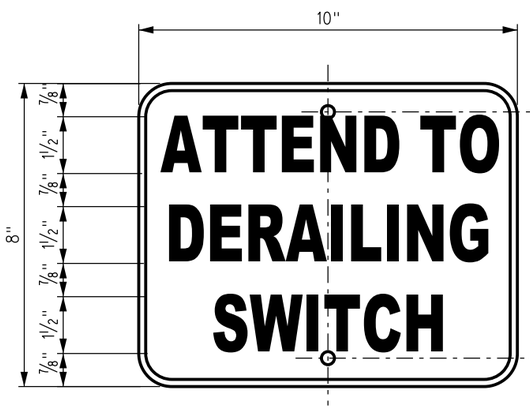

DERAILING SWITCH TARGET

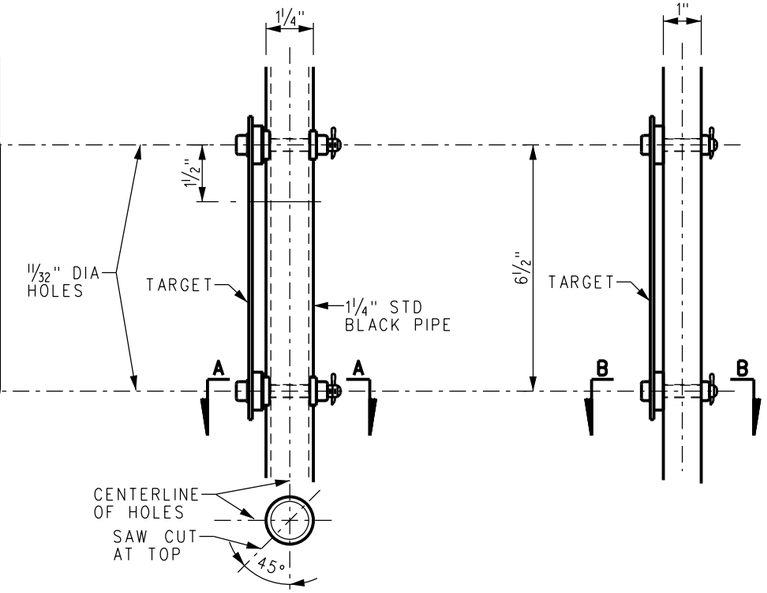

TUBULAR TARGET ROD

SQUARE TARGET ROD

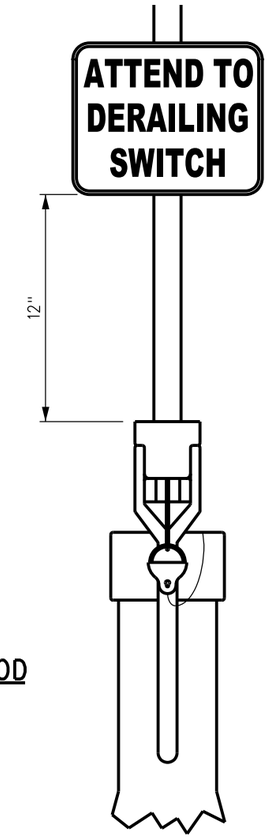

FULL VIEW

MATERIAL SPECIFICATIONS:

SIGNS:
1/8" THICK MILL FINISH ALUMINUM PANEL, ALCOA 6016-T6 OR EQUAL. PAINT ALL SIDES WITH LINEAR POLYURATHANE. COLOR FACE OF PANEL WITH ENGINEERING GRADE, PRESSURE SENSITIVE , RETRO-REFLECTIVE WHITE VINYL SHEETING. SILK SCREEN LEGEND WITH BLACK INK. FINISH WITH EXTERIOR GRADE PRESSURE SENSITIVE CLEAR MYLAR, 3M-1150 OR EQUAL.

LOCATION:
WHERE DERAIL IS PROVIDED TO PREVENT FOULING OF ANY TRACK, DERAILING SWITCH NOTICE SHALL BE PLACED ON STAND OF THAT PARTICULAR SWITCH THROUGH WHICH THE FOULING MOVEMENT WOULD BE MADE.

TEXT STYLE:
"ARIAL BOLD" PER SCRRA ES1212, SIZE AS INDICATED.

HARDWARE:
ALL HARDWARE SHALL BE VANDAL RESISTANT.
BOLTS: 5/16" DIA CARRIAGE BOLTS, 2024-T4 ALLOY.
NUTS: TAMPER RESISTANT, ALCOA OR EQUAL.
WASHERS: ALUMINUM FLAT WASHERS.

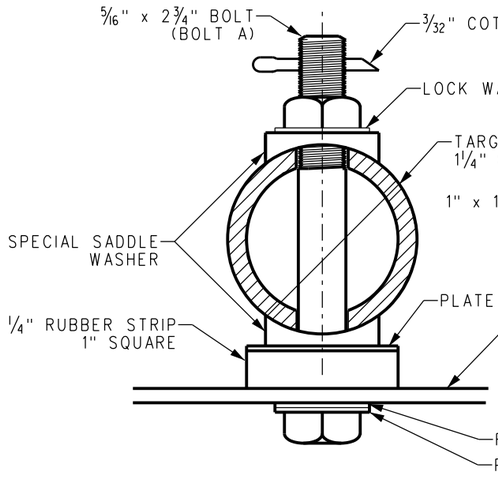

SECTION A-A

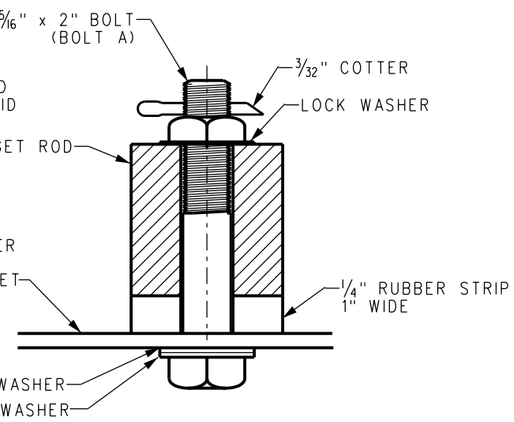

SECTION B-B

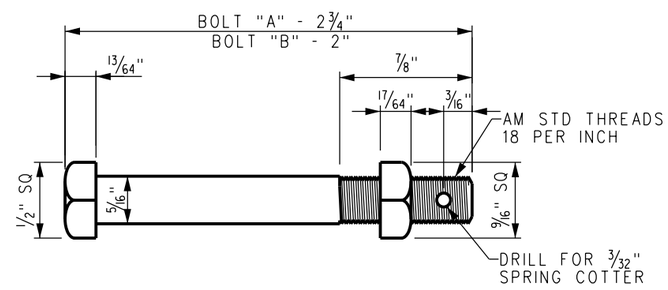

5/16" TARGET BOLT

REV.	DATE	DESCRIPTION	DES.	ENG.
X	XX-XX-XX	REVISION	XX	XX

DRAWN BY: A. CARLOS DATE: 03/31/2011

ASSISTANT DIRECTOR: STANDARDS & DESIGN

DIRECTOR OF ENGINEERING AND CONSTRUCTION

SCRRA ENGINEERING STANDARDS ARE INTENDED FOR SCRRA APPROVED USES ONLY. FOR NON-SCRRA APPROVED USES:
SCRRA SHALL NOT BE RESPONSIBLE FOR THE ACCURACY OR COMPLETENESS OF THE DATA OR INFORMATION CONTAINED HEREIN. THE SELECTION AND USE OF THESE STANDARDS IS THE SOLE RESPONSIBILITY OF THE USER AND SHOULD NOT BE USED WITHOUT CONSULTING A REGISTERED PROFESSIONAL ENGINEER. ALL WARRANTIES AND REPRESENTATIONS OF ANY KIND ARE DISCLAIMED. ANYONE MAKING USE OF THIS INFORMATION AGREES THAT IT ASSUMES ALL LIABILITY ARISING FROM SUCH USE. NO PART OF THESE STANDARDS SHOULD BE REPRODUCED OR DISTRIBUTED IN ANY FORM OR BY ANY MEANS WITHOUT THE PRIOR WRITTEN PERMISSION OF SCRRA. ALL RIGHTS RESERVED.

METROLINK®
SOUTHERN CALIFORNIA REGIONAL RAIL AUTHORITY
ONE GATEWAY PLAZA, 12TH FLOOR, L. A., CA. 90012

ENGINEERING STANDARDS

DERAIL SWITCH NOTICE

STANDARD 2612
SCALE: NTS
REVISION –
SHEET 1 OF 1
CADD FILE: ES2612

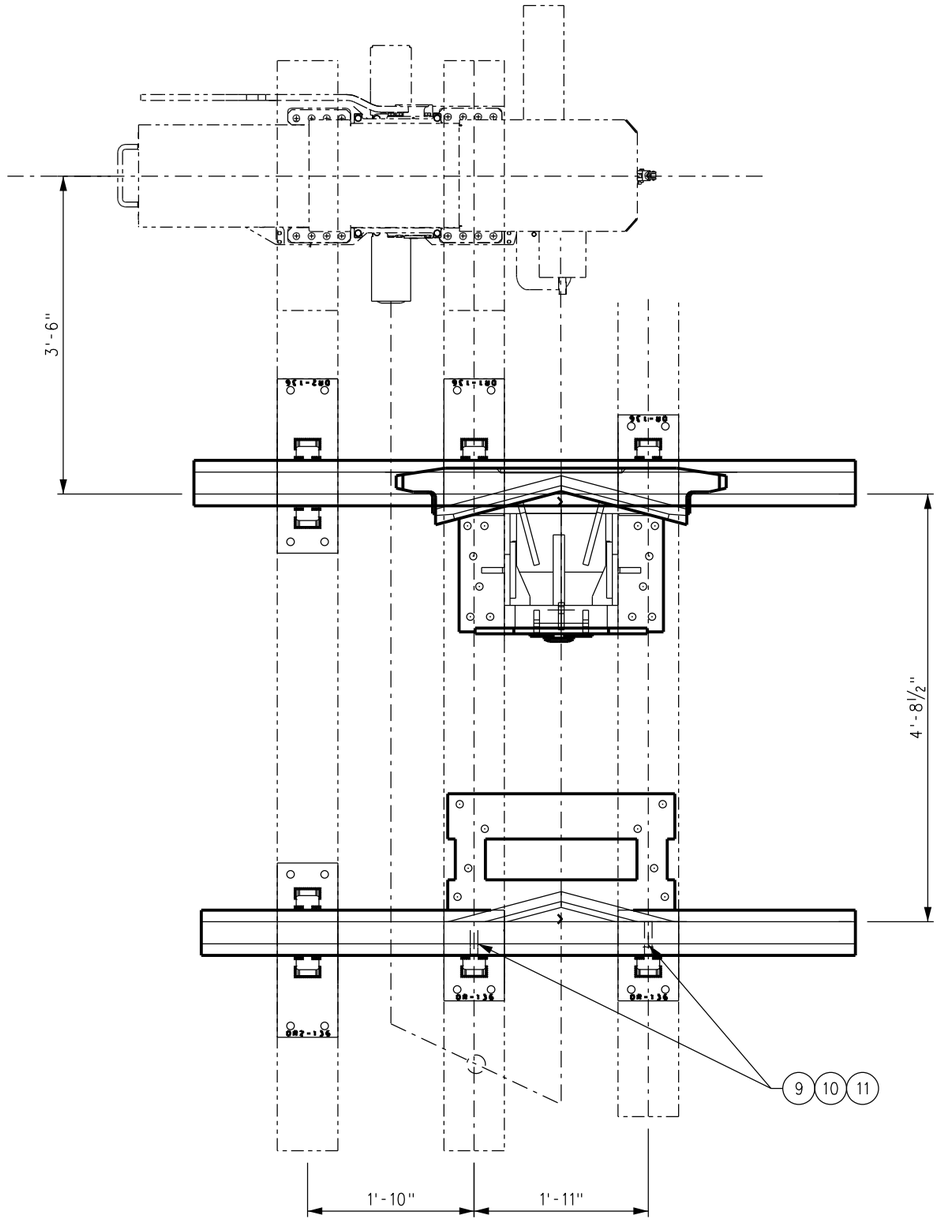

BILL OF MATERIAL

ITEM	QTY	DESCRIPTION	PRODUCT NO	SCRRA PART NO
1	1	HAYS DERAIL HBXS-8-SS C/W CROWDER	X99-02310	
2	1	RODDING KIT FOR WCH DERAIL FOR USE WITH US&S M23E SW/MACHINE	X99-02314	
3	3	TIE PLATE DR-136	G90-00630	
4	1	TIE PLATE DR1-136	G90-00631	
5	2	TIE PLATE DR2-136	G90-00632	
6	2	TIE HARDWOOD TREATED DAPPED 8" X 10" X 12'-0"	J15-00068	
7	1	TIE HARDWOOD TREATED 8" X 10" X 9'-0"	J15-00069	
8	46	SCREW SPIKE 15/16" X 6"	V50-00010	
9	2	BOLT HEX 1" X 4" GR5	V01-61010	
10	2	NUT HEVEY HEX 1" GR5	V30-60015	
11	2	WASHER SPRING HEAVY 1"	V35-60217	
12	8	CLIP PANDROL E2055G RH GALVANIZED	X25-00016	

INSTALLATION REQUIREMENT NOTES:

1. CROWDER WITH SLIDING DERAIL SHOWN.
   WHEEL CROWDER STROKE IS 5¼" WITH ⅞" DIAMETER PINS.
2. PAINT: SAFETY YELLOW.
3. FOR PROPER THROW OF SWITCH STAND TO DERAIL/CROWDER, ADJUST SWITCH STAND CRANK EYE FOR 5¼" THROW.
4. MAKE SURE THAT YOUR SWITCH STAND (HEAD BLOCK) TIES THAT HOLD THE DERAIL ARE HIGH QUALITY.
5. READ THE MANUFACTURER'S INSTRUCTIONS.
6. PLACE THE DERAIL TIGHTLY AGAINST THE RAIL.
7. SPIKE BOTH RAILS TO THE TIES AT THE PROPER GAUGE.
8. FASTEN THE DERAIL AND CROWDER THROUGH ALL THE SCREW SPIKE HOLES. PRE-DRILL HOLES TO PREVENT THE TIES FROM SPLITTING.
9. HAVE GOOD DRAINAGE AND BALLAST. THE AREA UNDER THE DERAIL MUST BE POCKETED TO PREVENT BINDING IN ADVERSE WEATHER CONDITIONS.

INSTALLATION OF CROWDER NOTES:

1. PLACE THE WHEEL CROWDER TIGHTLY AGAINST THE WEB OF THE RAIL.
2. RAIL CROWDER MOUNTING BOLT HOLE TO BE MATCH MARKED FROM THE RAIL CROWDER AND DRILLED IN THE FIELD.
3. USE THE WEB SET SCREWS TO ADJUST AND MAINTAIN PROPER WHEEL CROWDER POINT CONTACTS WITH THE RAIL.
4. WITH BOTH RAIL AND WHEEL CROWDER SECURED AND IN DERAILING POSITION, ATTACH THE CONNECTING ROD TO THE LEFT LUG ON THE DERAIL, THEN CONNECT THE OPPOSITE END OF THE CONNECTING ROD WITH THE TURNBUCKLE INTO THE REVERSING CRANK MECHANISM ON THE BASE OF THE WHEEL CROWDER.
5. ATTACH THE SWITCH STAND CONNECTING ROD OF THE MANUAL OR ELECTRIC SWITCH STAND TO THE TURNBUCKLE ON THE SWITCH STAND OR ELECTRIC SWITCH STAND. THE OPPOSITE END OF THE CONNECTING ROD CONNECTS TO THE RIGHT HAND LUG ON THE DERAIL. ADJUST THE THROW ON YOUR SWITCH STAND TO A 5¼" THROW. A SHORTER THROW WILL GIVE YOU PRESSURE ON THE CONNECTING ROD OR SWITCH STAND EYE. PRESSURE ON THE EYE AND CONNECTING ROD CAN RESULT IN A FAILURE OF THAT COMPONENT. ADJUST AS NECESSARY.
6. PLACE COTTER KEYS TO SECURE THE NUTS.
7. INSTALL A SWITCH LOCK.

REV.	DATE	DESCRIPTION	DES.	ENG.
X	XX-XX-XX	REVISION	XX	XX

DRAWN BY: HDR DATE: 03/31/2011

ASSISTANT DIRECTOR: STANDARDS & DESIGN

DIRECTOR OF ENGINEERING AND CONSTRUCTION

SCRRA ENGINEERING STANDARDS ARE INTENDED FOR SCRRA APPROVED USES ONLY. FOR NON-SCRRA APPROVED USES:
SCRRA SHALL NOT BE RESPONSIBLE FOR THE ACCURACY OR COMPLETENESS OF THE DATA OR INFORMATION CONTAINED HEREIN. THE SELECTION AND USE OF THESE STANDARDS IS THE SOLE RESPONSIBILITY OF THE USER AND SHOULD NOT BE USED WITHOUT CONSULTING A REGISTERED PROFESSIONAL ENGINEER. ALL WARRANTIES AND REPRESENTATIONS OF ANY KIND ARE DISCLAIMED. ANYONE MAKING USE OF THIS INFORMATION AGREES THAT IT ASSUMES ALL LIABILITY ARISING FROM SUCH USE. NO PART OF THESE STANDARDS SHOULD BE REPRODUCED OR DISTRIBUTED IN ANY FORM OR BY ANY MEANS WITHOUT THE PRIOR WRITTEN PERMISSION OF SCRRA. ALL RIGHTS RESERVED.

METROLINK®
SOUTHERN CALIFORNIA REGIONAL RAIL AUTHORITY
ONE GATEWAY PLAZA, 12TH FLOOR, L. A., CA. 90012

ENGINEERING STANDARDS

BI-DIRECTIONAL DERAIL WITH CROWDER

STANDARD 2613
SCALE: NTS
REVISION –
SHEET 1 OF 1
CADD FILE: ES2613

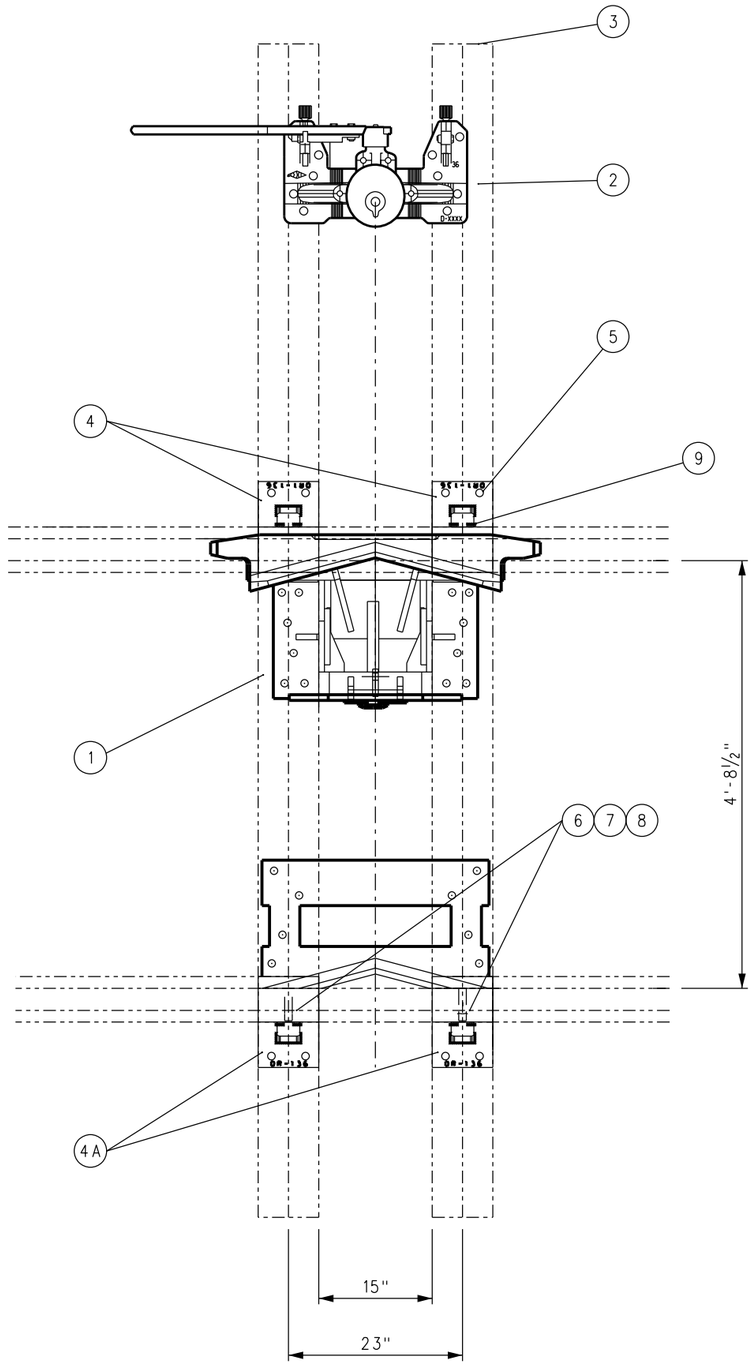

BILL OF MATERIAL

ITEM	QTY	DESCRIPTION	PRODUCT NO	SCRRA PART NO
1	1	HAYS DERAIL HBXS-8-SS C/W CROWDER	X99-02310	
2	1	36E SWITCH STAND WITH TARGET & BALL HANDLE SCRRA STANDARD TARGET	R36-36094	
3	2	TIE HARDWOOD TREATED, 8" X 12" X 14'-0"	J15-00067	
4	2	TIE PLATE DR1-136		
4A	2	TIE PLATE DR-136		
5	38	SCREW SPIKE 15/16" X 6"	V50-00010	
6	2	BOLT HEX 1" X 4" GR 5	V01-61010	
7	2	NUT HEAVY HEX 1" GR 5	V30-60015	
8	2	WASHER SPRING HEAVY 1"	V35-60217	
9	4	CLIP PANDROL E2055G RH GALVANIZED	X25-00016	

INSTALLATION REQUIREMENT NOTES:

1. CROWDER WITH SLIDING DERAIL SHOWN.
   WHEEL CROWDER STROKE IS 5¼" WITH ⅞" DIAMETER PINS.
2. PAINT: SAFETY YELLOW.
3. FOR PROPER THROW OF SWITCH STAND TO DERAIL/CROWDER, ADJUST SWITCH STAND CRANK EYE FOR 5¼" THROW.
4. MAKE SURE THAT YOUR SWITCH STAND (HEAD BLOCK) TIES THAT HOLD THE DERAIL ARE HIGH QUALITY.
5. READ THE MANUFACTURER'S INSTRUCTIONS.
6. PLACE THE DERAIL TIGHTLY AGAINST THE RAIL.
7. SPIKE BOTH RAILS TO THE TIES AT THE PROPER GAUGE.
8. FASTEN THE DERAIL AND CROWDER THROUGH ALL THE SCREW SPIKE HOLES. PRE-DRILL HOLES TO PREVENT THE TIES FROM SPLITTING.
9. HAVE GOOD DRAINAGE AND BALLAST. THE AREA UNDER THE DERAIL MUST BE POCKETED TO PREVENT BINDING IN ADVERSE WEATHER CONDITIONS.

INSTALLATION OF CROWDER NOTES:

1. PLACE THE WHEEL CROWDER TIGHTLY AGAINST THE WEB OF THE RAIL.
2. RAIL CROWDER MOUNTING BOLT HOLE TO BE MATCH MARKED FROM THE RAIL CROWDER AND DRILLED IN THE FIELD.
3. USE THE WEB SET SCREWS TO ADJUST AND MAINTAIN PROPER WHEEL CROWDER POINT CONTACTS WITH THE RAIL.
4. WITH BOTH RAIL AND WHEEL CROWDER SECURED AND IN DERAILING POSITION, ATTACH THE CONNECTING ROD TO THE LEFT LUG ON THE DERAIL, THEN CONNECT THE OPPOSITE END OF THE CONNECTING ROD WITH THE TURNBUCKLE INTO THE REVERSING CRANK MECHANISM ON THE BASE OF THE WHEEL CROWDER.
5. ATTACH THE SWITCH STAND CONNECTING ROD OF THE MANUAL OR ELECTRIC SWITCH STAND TO THE TURNBUCKLE ON THE SWITCH STAND OR ELECTRIC SWITCH STAND. THE OPPOSITE END OF THE CONNECTING ROD CONNECTS TO THE RIGHT HAND LUG ON THE DERAIL. ADJUST THE THROW ON YOUR SWITCH STAND TO A 5¼" THROW. A SHORTER THROW WILL GIVE YOU PRESSURE ON THE CONNECTING ROD OR SWITCH STAND EYE. PRESSURE ON THE EYE AND CONNECTING ROD CAN RESULT IN A FAILURE OF THAT COMPONENT. ADJUST AS NECESSARY.
6. PLACE COTTER KEYS TO SECURE THE NUTS.
7. INSTALL A SWITCH LOCK.

REV.	DATE	DESCRIPTION	DES.	ENG.
X	XX-XX-XX	REVISION	XX	XX

DRAWN BY: HDR DATE: 03/31/2011

ASSISTANT DIRECTOR: STANDARDS & DESIGN

DIRECTOR OF ENGINEERING AND CONSTRUCTION

SCRRA ENGINEERING STANDARDS ARE INTENDED FOR SCRRA APPROVED USES ONLY. FOR NON-SCRRA APPROVED USES:
SCRRA SHALL NOT BE RESPONSIBLE FOR THE ACCURACY OR COMPLETENESS OF THE DATA OR INFORMATION CONTAINED HEREIN. THE SELECTION AND USE OF THESE STANDARDS IS THE SOLE RESPONSIBILITY OF THE USER AND SHOULD NOT BE USED WITHOUT CONSULTING A REGISTERED PROFESSIONAL ENGINEER. ALL WARRANTIES AND REPRESENTATIONS OF ANY KIND ARE DISCLAIMED. ANYONE MAKING USE OF THIS INFORMATION AGREES THAT IT ASSUMES ALL LIABILITY ARISING FROM SUCH USE. NO PART OF THESE STANDARDS SHOULD BE REPRODUCED OR DISTRIBUTED IN ANY FORM OR BY ANY MEANS WITHOUT THE PRIOR WRITTEN PERMISSION OF SCRRA. ALL RIGHTS RESERVED.

METROLINK®
SOUTHERN CALIFORNIA REGIONAL RAIL AUTHORITY
ONE GATEWAY PLAZA, 12TH FLOOR, L. A., CA. 90012

ENGINEERING STANDARDS

BI-DIRECTIONAL DERAIL WITH CROWDER WITH 36E SWITCH STAND

STANDARD 2614
SCALE: NONE
REVISION –
SHEET NTS
CADD FILE: ES2614

NOTES:

1. FIELD LOCATION OF RAIL LUBRICATOR TO BE DETERMINED BY SCRRA. RAIL LUBRICATOR TO BE INSTALLED ON TANGENT TRACK.
2. FOLLOW MANUFACTURER RECOMMENDATIONS FOR INSTALLATION, MAINTENANCE OF HOSES AND EQUIPMENT, AND RECOMMENDED LUBRICANTS.
3. CATCH-ALL TRACK MAT TO BE INSTALLED PER MANUFACTURERS RECOMMENDATION.

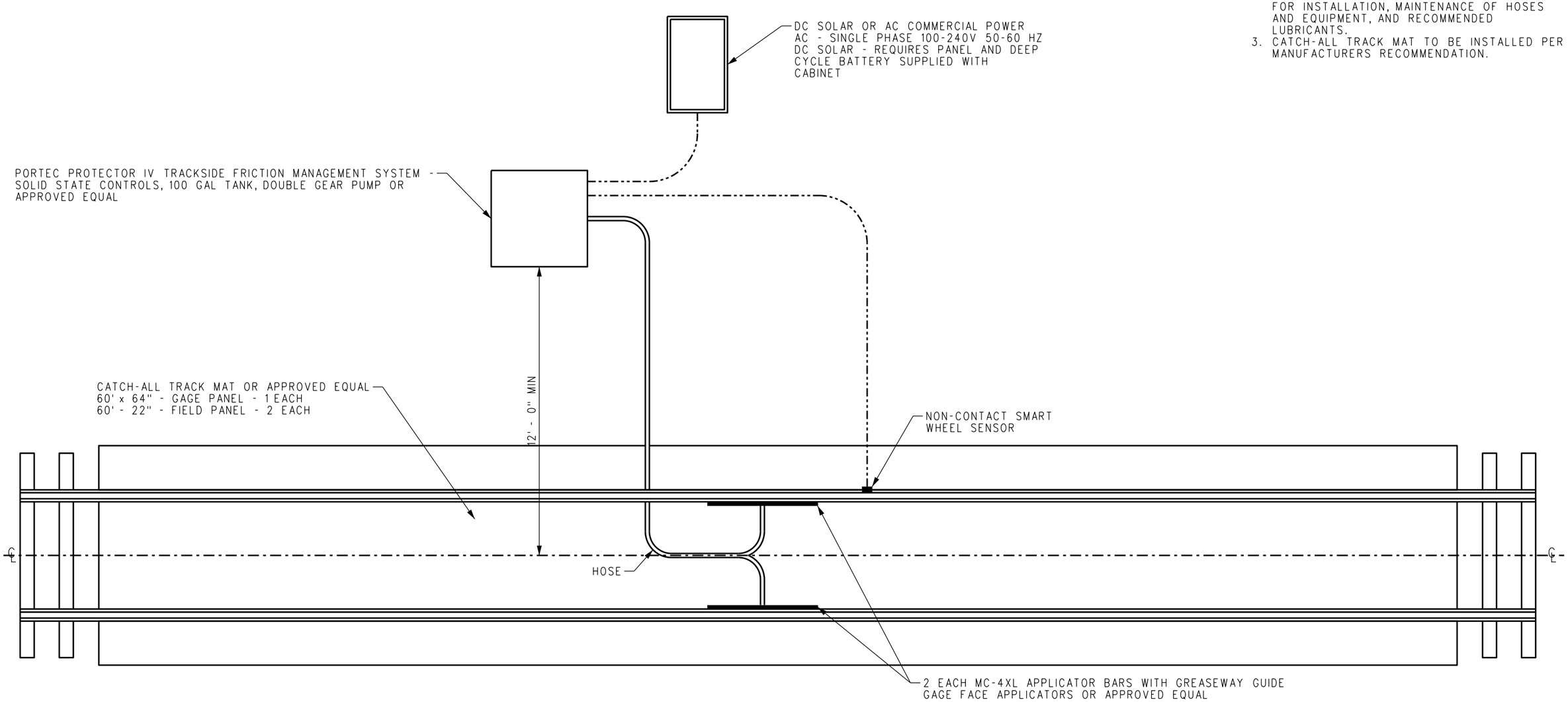

REV.	DATE	DESCRIPTION	DES.	ENG.
X	XX-XX-XX	REVISION	XX	XX

DRAWN BY: HDR DATE: 03/31/2011

ASSISTANT DIRECTOR: STANDARDS & DESIGN

DIRECTOR OF ENGINEERING AND CONSTRUCTION

SCRRA ENGINEERING STANDARDS ARE INTENDED FOR SCRRA APPROVED USES ONLY. FOR NON-SCRRA APPROVED USES, SCRRA SHALL NOT BE RESPONSIBLE FOR THE ACCURACY OR COMPLETENESS OF THE DATA OR INFORMATION CONTAINED HEREIN. THE SELECTION AND USE OF THESE STANDARDS IS THE SOLE RESPONSIBILITY OF THE USER AND SHOULD NOT BE USED WITHOUT CONSULTING A REGISTERED PROFESSIONAL ENGINEER. ALL WARRANTIES AND REPRESENTATIONS OF ANY KIND ARE DISCLAIMED. ANYONE MAKING USE OF THIS INFORMATION AGREES THAT IT ASSUMES ALL LIABILITY ARISING FROM SUCH USE. NO PART OF THESE STANDARDS SHOULD BE REPRODUCED OR DISTRIBUTED IN ANY FORM OR BY ANY MEANS WITHOUT THE PRIOR WRITTEN PERMISSION OF SCRRA. ALL RIGHTS RESERVED.

METROLINK®

SOUTHERN CALIFORNIA REGIONAL RAIL AUTHORITY
ONE GATEWAY PLAZA, 12TH FLOOR, L. A., CA. 90012

ENGINEERING STANDARDS

RAIL LUBRICATOR

STANDARD: 2615
SCALE: NTS
REVISION: –
SHEET: 1 OF 1
CADD FILE: ES2615

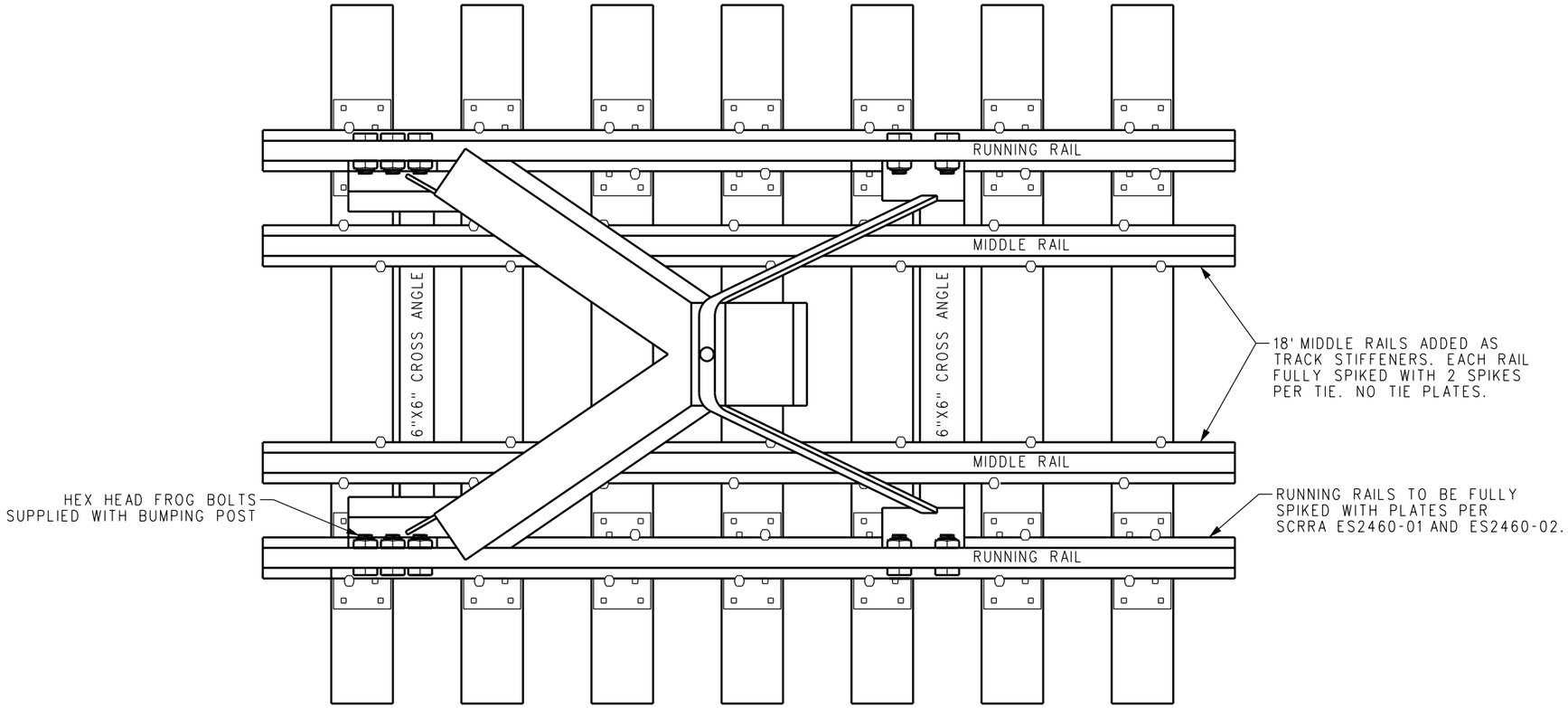

NOTES:

1. STEEL BUMPING POST TO BE WCH MODEL, WAC OR APPROVED EQUAL.
2. OPTIONAL SHOCK FREE HEAD TO BE INSTALLED IF DIRECTED BY SCRRA.

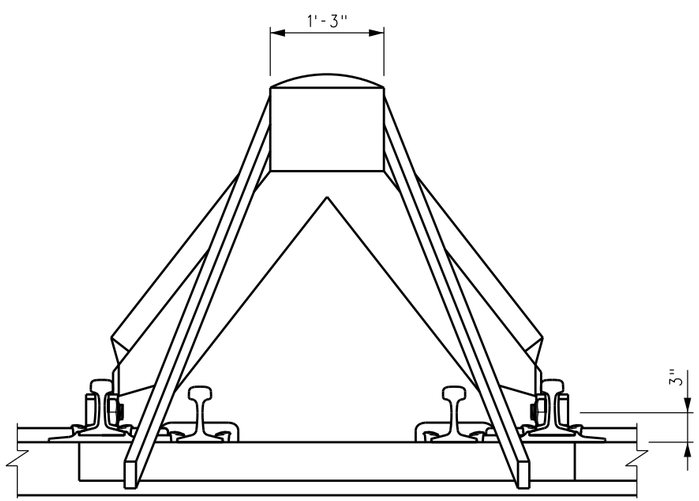

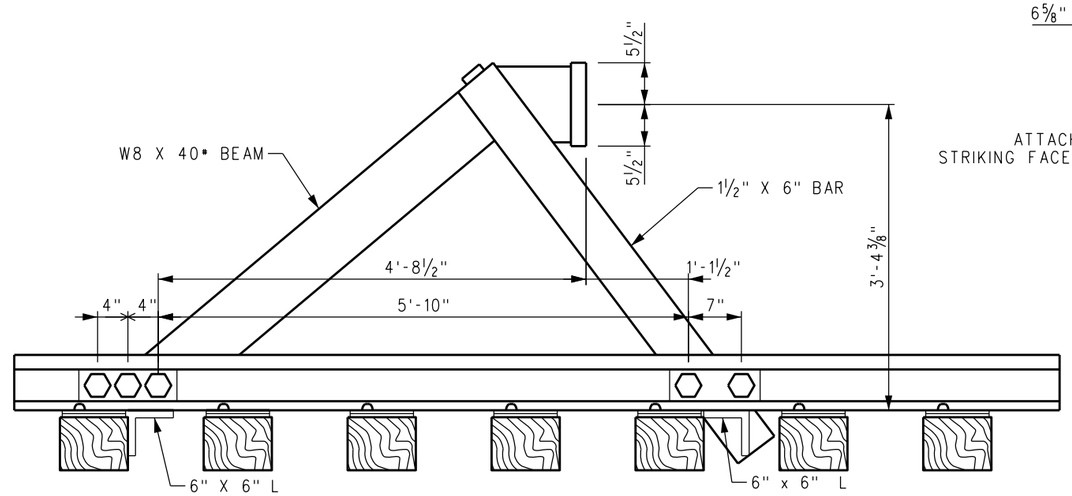

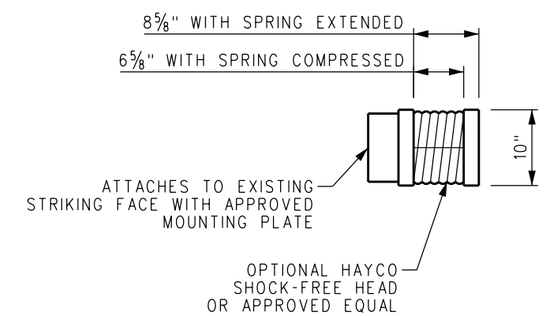

REV.	DATE	DESCRIPTION	DES.	ENG.
X	XX-XX-XX	REVISION	XX	XX

DRAWN BY: HDR DATE: 03/31/2011

ASSISTANT DIRECTOR: STANDARDS & DESIGN

DIRECTOR OF ENGINEERING AND CONSTRUCTION

SCRRA ENGINEERING STANDARDS ARE INTENDED FOR SCRRA APPROVED USES ONLY. FOR NON-SCRRA APPROVED USES:
SCRRA SHALL NOT BE RESPONSIBLE FOR THE ACCURACY OR COMPLETENESS OF THE DATA OR INFORMATION CONTAINED HEREIN. THE SELECTION AND USE OF THESE STANDARDS IS THE SOLE RESPONSIBILITY OF THE USER AND SHOULD NOT BE USED WITHOUT CONSULTING A REGISTERED PROFESSIONAL ENGINEER. ALL WARRANTIES AND REPRESENTATIONS OF ANY KIND ARE DISCLAIMED. ANYONE MAKING USE OF THIS INFORMATION AGREES THAT IT ASSUMES ALL LIABILITY ARISING FROM SUCH USE. NO PART OF THESE STANDARDS SHOULD BE REPRODUCED OR DISTRIBUTED IN ANY FORM OR BY ANY MEANS WITHOUT THE PRIOR WRITTEN PERMISSION OF SCRRA. ALL RIGHTS RESERVED.

METROLINK®
SOUTHERN CALIFORNIA REGIONAL RAIL AUTHORITY
ONE GATEWAY PLAZA, 12TH FLOOR, L. A., CA. 90012

ENGINEERING STANDARDS

STEEL BUMPING POST DETAILS

STANDARD 2616
SCALE: NTS
REVISION –
SHEET 1 OF 1
CADD FILE: ES2616

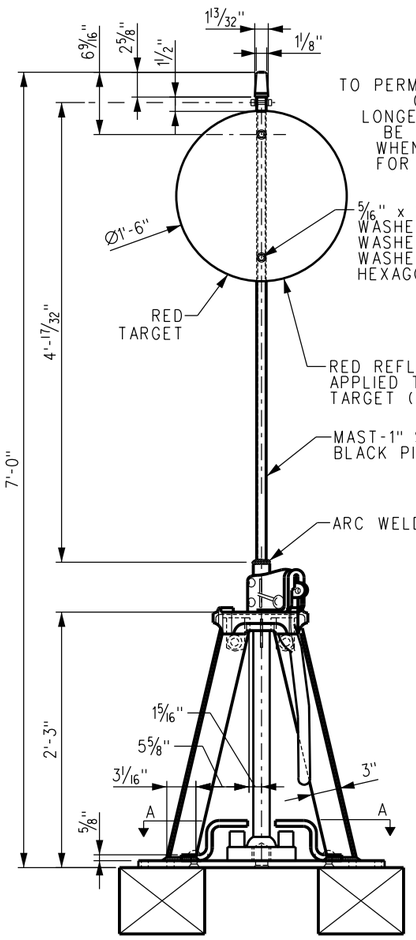

SWITCH STAND (FRONT VIEW)

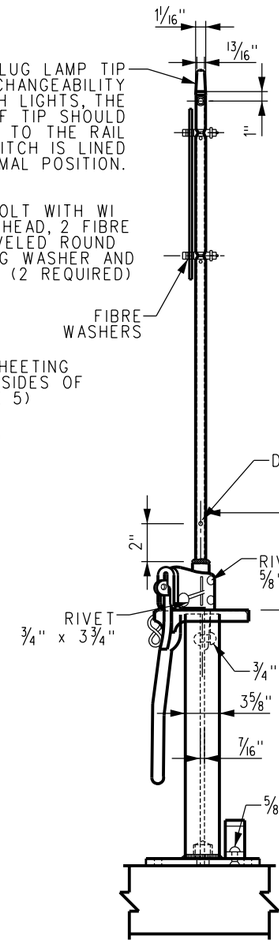

SWITCH STAND (SIDE VIEW)

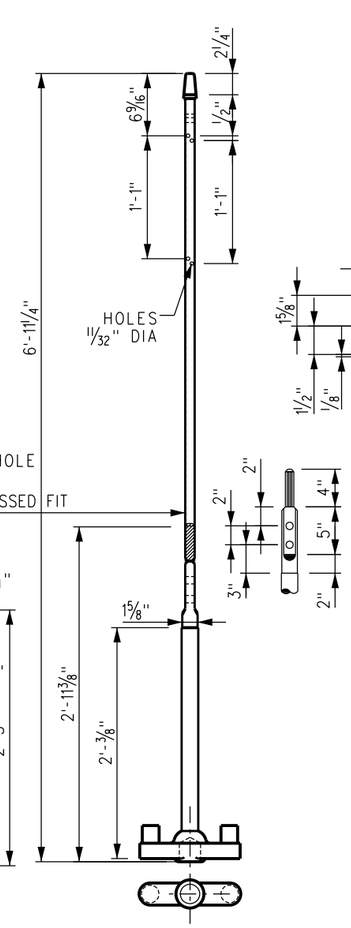

DOUBLE CRANK AND MAST

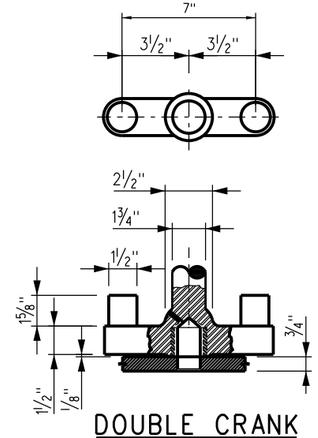

DOUBLE CRANK
STEEL-FORGED

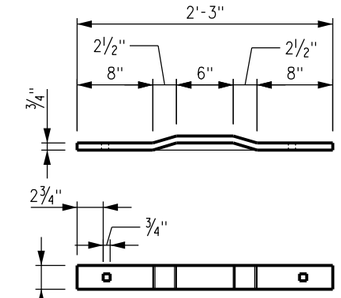

HOLD DOWN STRAP

NOTES:

1. USE 36E (SCRRA ES2708) STANDS FOR NEW INSTALLATION MAINLINE USE. THIS HIGH STAR SWITCH STAND IS TO BE USED ONLY UNTIL THIS STYLE STAND IS REPLACED IN THE NORMAL COURSE OF MAINTENANCE OR CAPITAL PROJECT RENEWALS.
2. MAIN TRACK SWITCH STANDS SHALL BE PLACED ON THE TURNOUT SIDE TO THE TRACK WHEREVER STRUCTURES OR OTHER TRACKS PERMIT.
3. SWITCH STANDS OF THE TYPE SHOWN ON THIS PLAN SHALL BE USED FOR SINGLE AND DOUBLE SWITCH POINT DERAILS.
4. WHERE TWO HIGH STANDS COME SO CLOSE TOGETHER AS TO BLANKET EACH OTHER, USE ONE HIGH STAND AND ONE LOW STAND.
5. MANUFACTURER WILL NOT FURNISH TARGET, CONNECTING ROD AND HOLD DOWN STRAP UNLESS SPECIFIED ON ORDER.

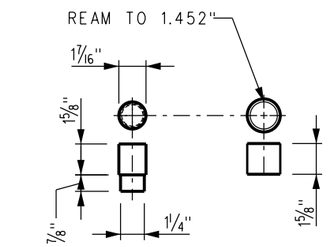

PIVOT PIN
COLD ROLLED STEEL

BUSHING
SEAMLESS STEEL TUBING
1 3/4" x 5/32" THICK

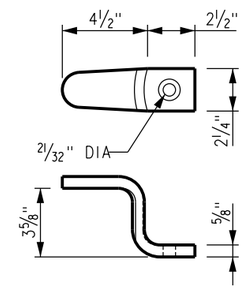

GUARD
STEEL - FORGED

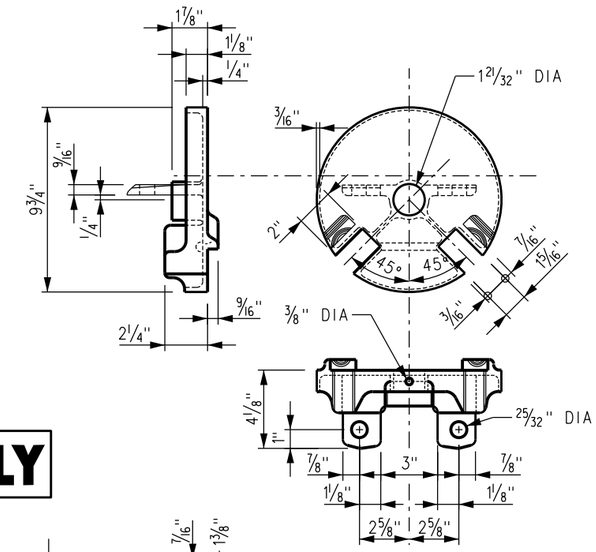

TABLE
CAST STEEL

FOR MAINTENANCE ONLY

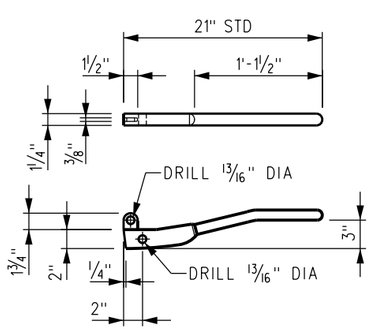

HANDLE
STEEL - FORGED

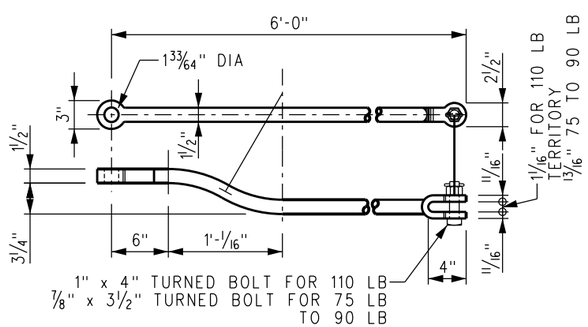

CONNECTING ROD

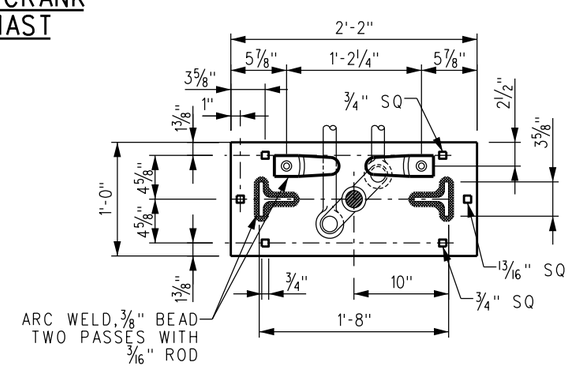

CONNECTING ROD
SECTION A-A

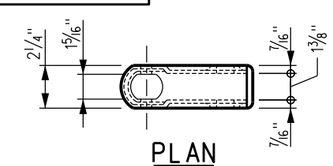

PLAN

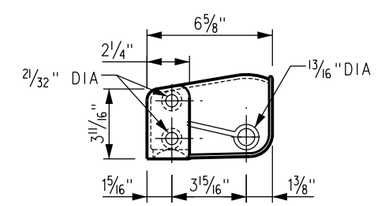

ELEVATION

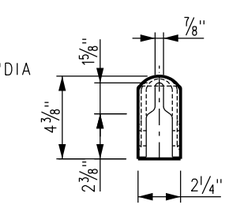

FRONT

YOKE
CAST STEEL

REV.	DATE	DESCRIPTION	DES.	ENG.
A	12/05/11	ADDED "FOR MAINTENANCE ONLY" STAMP	AC	NDP

DRAWN BY: A. CARLOS DATE: 03/31/2011

ASSISTANT DIRECTOR: STANDARDS & DESIGN

DIRECTOR OF ENGINEERING AND CONSTRUCTION

SCRRA ENGINEERING STANDARDS ARE INTENDED FOR SCRRA APPROVED USES ONLY. FOR NON-SCRRA APPROVED USES: SCRRA SHALL NOT BE RESPONSIBLE FOR THE ACCURACY OR COMPLETENESS OF THE DATA OR INFORMATION CONTAINED HEREIN. THE SELECTION AND USE OF THESE STANDARDS IS THE SOLE RESPONSIBILITY OF THE USER AND SHOULD NOT BE USED WITHOUT CONSULTING A REGISTERED PROFESSIONAL ENGINEER. ALL WARRANTIES AND REPRESENTATIONS OF ANY KIND ARE DISCLAIMED. ANYONE MAKING USE OF THIS INFORMATION AGREES THAT IT ASSUMES ALL LIABILITY ARISING FROM SUCH USE. NO PART OF THESE STANDARDS SHOULD BE REPRODUCED OR DISTRIBUTED IN ANY FORM OR BY ANY MEANS WITHOUT THE PRIOR WRITTEN PERMISSION OF SCRRA. ALL RIGHTS RESERVED.

METROLINK
SOUTHERN CALIFORNIA REGIONAL RAIL AUTHORITY
ONE GATEWAY PLAZA, 12TH FLOOR, L. A., CA. 90012

ENGINEERING STANDARDS

HIGH STAR SWITCH STAND
DOUBLE CRANK – DOUBLE HEADBLOCK

STANDARD 2701
SCALE: NTS
REVISION A
SHEET 1 OF 1
CADD FILE: ES2701

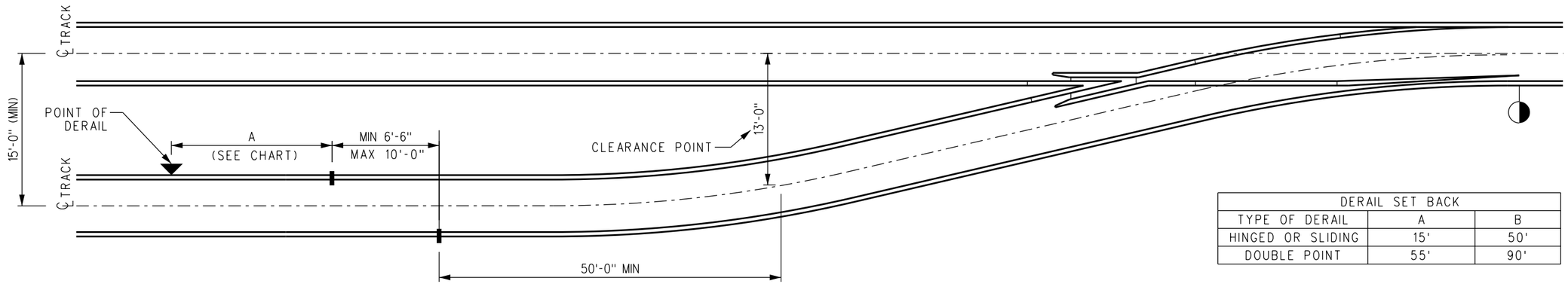

DERAIL SET BACK		
TYPE OF DERAIL	A	B
HINGED OR SLIDING	15'	50'
DOUBLE POINT	55'	90'

TURNOUT - DERAIL NOT CONNECTED TO SIGNAL SYSTEM - OUTSIDE INSULATED JOINTS

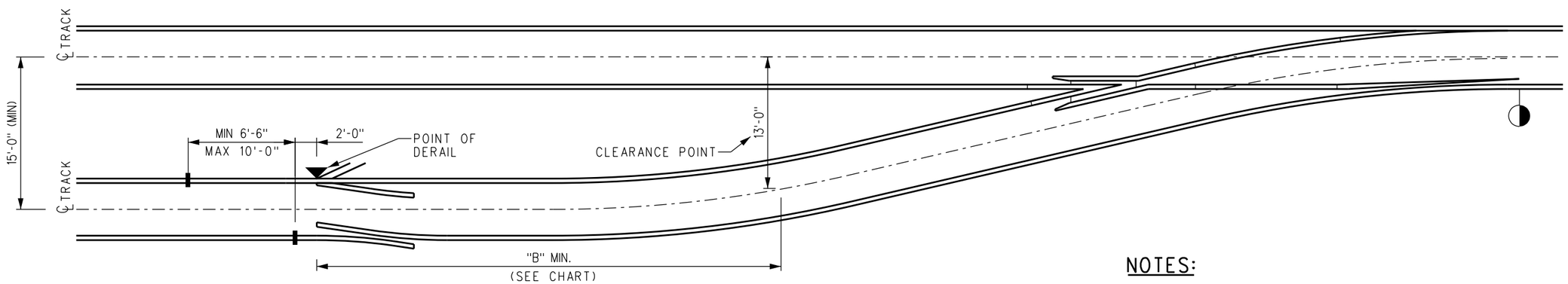

TURNOUT - DERAIL CONNECTED TO SIGNAL SYSTEM

NOTES:

1. THIS SHEET ONLY DEPICTS THE INSULATED JOINTS REQUIRED IN CONNECTION WITH THE PLACEMENT OF THE DERAIL.
2. SYMBOL" ▼ " DESIGNATES THE POINT OF DERAIL.
3. DISTANCE MEASURED BETWEEN END POSTS OF INSULATED JOINTS SHALL BE A MINIMUM OF 6'-6" AND A MAXIMUM OF 10'-0". (FRA REGULATIONS ALLOW 19'-6" STAGGER BUT ABOVE STANDARD SHALL BE APPLIED TO ALL NEW CONSTRUCTION).
4. DISTANCE FROM CLEARANCE POINT TO INSULATED JOINT SHALL BE A MINIMUM OF 50'-0".
5. SEE ES8220 FOR PLACEMENT OF ALL OTHER NECESSARY INSULATED JOINTS IN CONNECTION WITH TURNOUTS OR OTHER THAN MAIN TRACKS.
6. THE DOUBLE POINT DERAIL WILL BE PLACED ENTIRELY ON TANGENT TRACK (SEE ES2604-01 FOR DOUBLE SWITCH POINT DERAIL DIMENSIONS). CLOSURE CURVES MAY REQUIRE EXTENDING THE DIMENSION "B" LENGTH TO PROVIDE THE NECESSARY TANGENT TRACK LENGTH. THE DIMENSION DEPICTED IN THIS STANDARD IS THE MINIMUM PERMISSIBLE LENGTH.

REV.	DATE	DESCRIPTION	DES.	ENG.
X	XX-XX-XX	REVISION	XX	XX

DRAWN BY: A. CARLOS DATE: 03/31/2011

ASSISTANT DIRECTOR: STANDARDS & DESIGN

DIRECTOR OF ENGINEERING AND CONSTRUCTION

SCRRA ENGINEERING STANDARDS ARE INTENDED FOR SCRRA APPROVED USES ONLY. FOR NON-SCRRA APPROVED USES, SCRRA SHALL NOT BE RESPONSIBLE FOR THE ACCURACY OR COMPLETENESS OF THE DATA OR INFORMATION CONTAINED HEREIN. THE SELECTION AND USE OF THESE STANDARDS IS THE SOLE RESPONSIBILITY OF THE USER AND SHOULD NOT BE USED WITHOUT CONSULTING A REGISTERED PROFESSIONAL ENGINEER. ALL WARRANTIES AND REPRESENTATIONS OF ANY KIND ARE DISCLAIMED. ANYONE MAKING USE OF THIS INFORMATION AGREES THAT IT ASSUMES ALL LIABILITY ARISING FROM SUCH USE. NO PART OF THESE STANDARDS SHOULD BE REPRODUCED OR DISTRIBUTED IN ANY FORM OR BY ANY MEANS WITHOUT THE PRIOR WRITTEN PERMISSION OF SCRRA. ALL RIGHTS RESERVED.

METROLINK®

SOUTHERN CALIFORNIA REGIONAL RAIL AUTHORITY
ONE GATEWAY PLAZA, 12TH FLOOR, L. A., CA. 90012

ENGINEERING STANDARDS

INSULATED JOINT PLACEMENT AND DERAIL LOCATION

STANDARD: 2702
SCALE: NTS
REVISION: –
SHEET: 1 OF 1
CADD FILE: ES2702

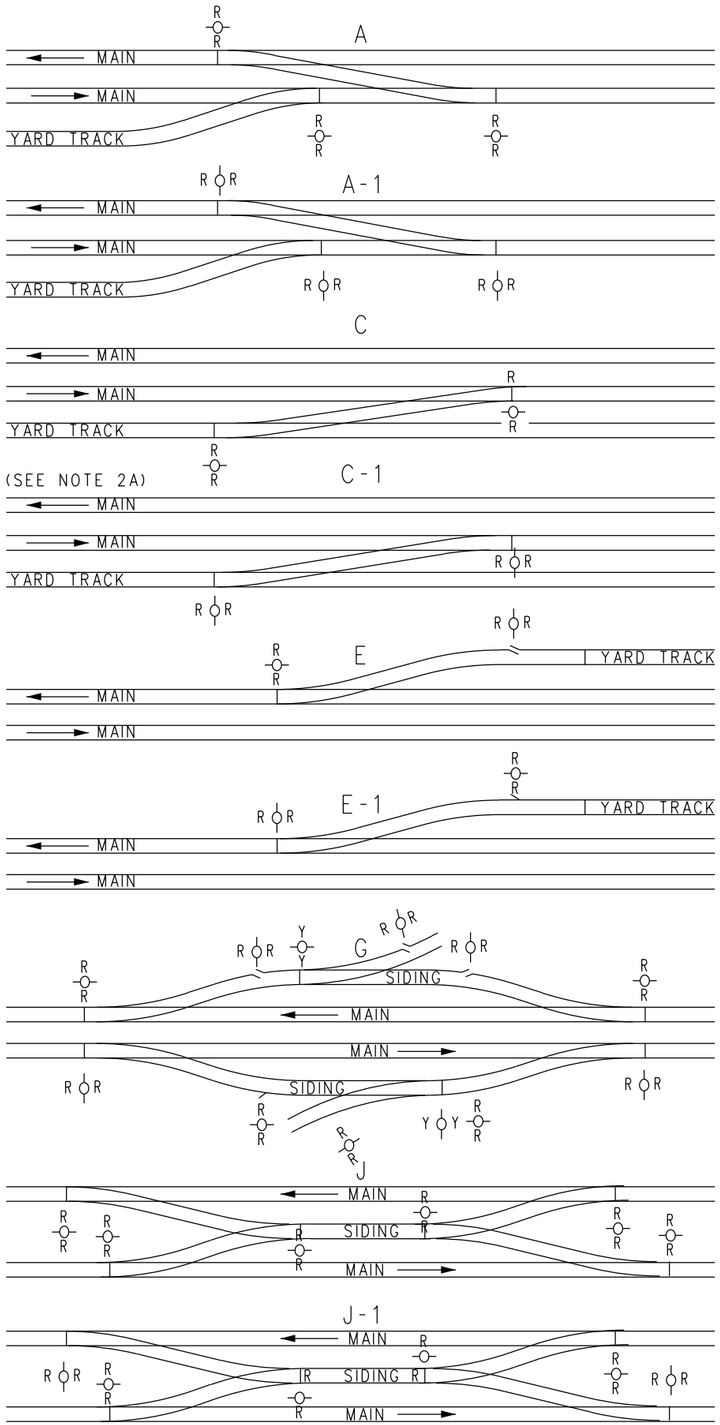

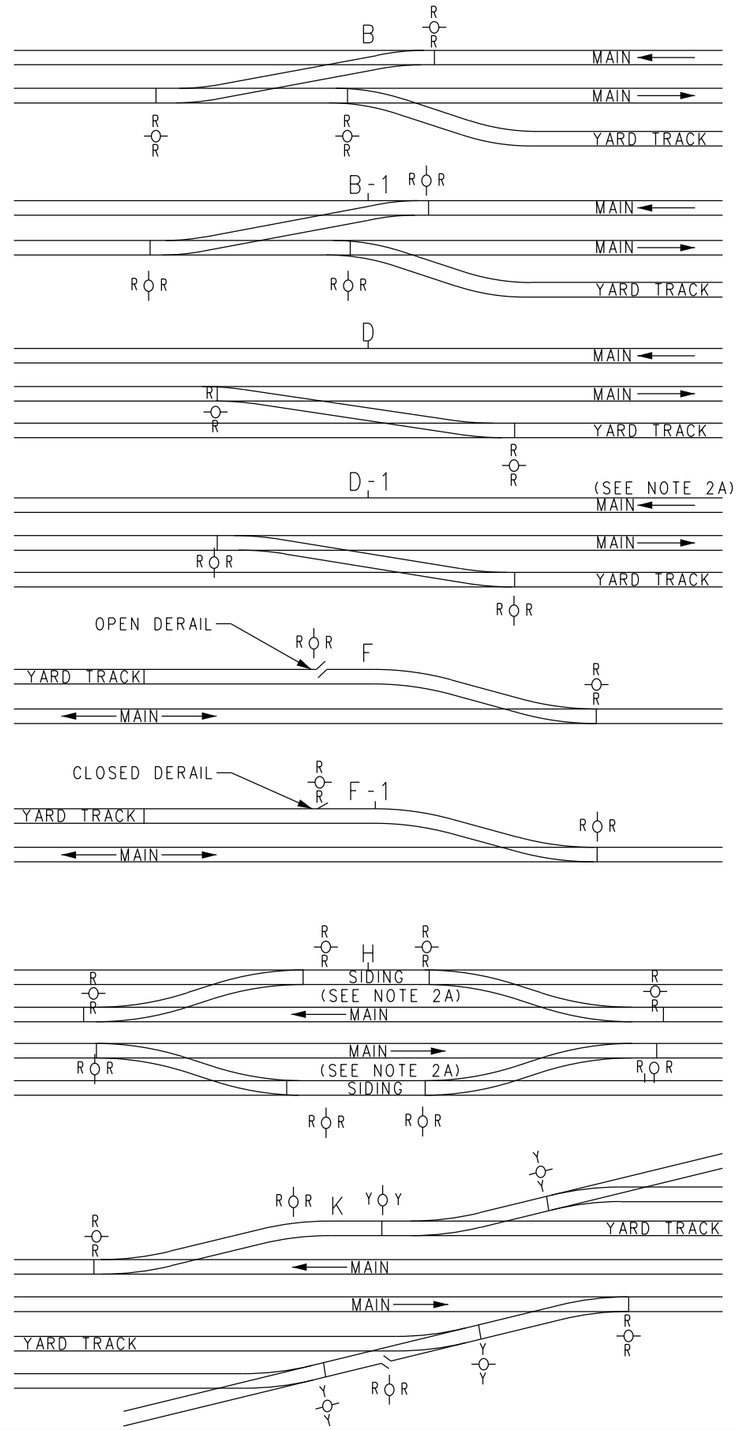

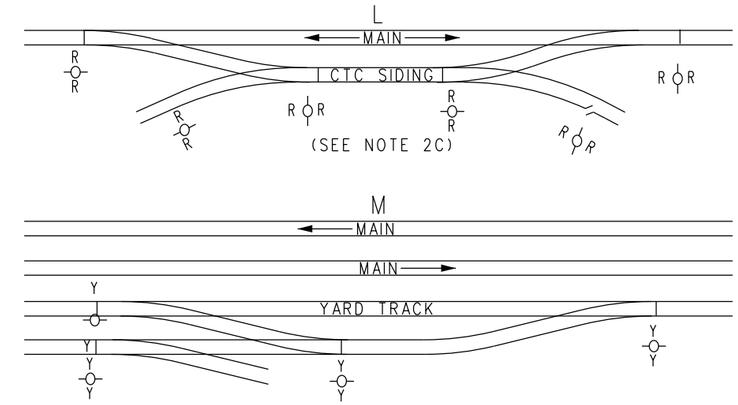

NOTES:

1. LETTERS R (RED) AND Y (YELLOW) DENOTE COLORS OF TARGETS.
2. THE FOLLOWING SWITCH STANDS WILL HAVE RED TARGETS ON BOTH SIDES, THE SAME AS FOR MAIN LINE SWITCH STANDS.
   (A) SIDING AND YARD TRACK SWITCH STANDS AT CROSSOVERS LEADING TO MAIN TRACK.
   (B) SIDING AND YARD TRACK SWITCH STANDS WHICH ACTUATE MAIN LINE SIGNALS.
   (C) YARD AND OTHER INSIDE TRACK SWITCH STANDS AT CONNECTIONS WITH CTC SIDINGS.
   (D) DERAIL SWITCH STANDS.
3. ALL OTHER SWITCH STANDS ON SIDE TRACKS IN YARDS AND ON OTHER INSIDE TRACKS WILL HAVE YELLOW TARGETS ON BOTH SIDES.

TARGET PARALLEL WITH TRACK
(NORMAL POSITION OF SWITCH)

TARGET AT RIGHT ANGLES TO TRACK
(OPEN POSITION OF SWITCH)

TARGET SYMBOLS

REV.	DATE	DESCRIPTION	DES.	ENG.
X	XX-XX-XX	REVISION	XX	XX

DRAWN BY: A. CARLOS DATE: 03/31/2011

ASSISTANT DIRECTOR: STANDARDS & DESIGN

DIRECTOR OF ENGINEERING AND CONSTRUCTION

SCRRA ENGINEERING STANDARDS ARE INTENDED FOR SCRRA APPROVED USES ONLY. FOR NON-SCRRA APPROVED USES:
SCRRA SHALL NOT BE RESPONSIBLE FOR THE ACCURACY OR COMPLETENESS OF THE DATA OR INFORMATION CONTAINED HEREIN. THE SELECTION AND USE OF THESE STANDARDS IS THE SOLE RESPONSIBILITY OF THE USER AND SHOULD NOT BE USED WITHOUT CONSULTING A REGISTERED PROFESSIONAL ENGINEER. ALL WARRANTIES AND REPRESENTATIONS OF ANY KIND ARE DISCLAIMED. ANYONE MAKING USE OF THIS INFORMATION AGREES THAT IT ASSUMES ALL LIABILITY ARISING FROM SUCH USE. NO PART OF THESE STANDARDS SHOULD BE REPRODUCED OR DISTRIBUTED IN ANY FORM OR BY ANY MEANS WITHOUT THE PRIOR WRITTEN PERMISSION OF SCRRA. ALL RIGHTS RESERVED.

METROLINK®
SOUTHERN CALIFORNIA REGIONAL RAIL AUTHORITY
ONE GATEWAY PLAZA, 12TH FLOOR, L. A., CA. 90012

ENGINEERING STANDARDS

COLOR INDICATORS OF TARGETS ON SWITCH STANDS

STANDARD 2703
SCALE: NTS
REVISION –
SHEET 1 OF 2
CADD FILE: ES2703-01

NOTES:

1. TRACK IDENTITY IS TO BE APPLIED TO SWITCH STAND TARGETS IN THE FIELD ONLY AND TARGETS MUST NOT BE ORDERED BEARING ANY TRACK I.D.

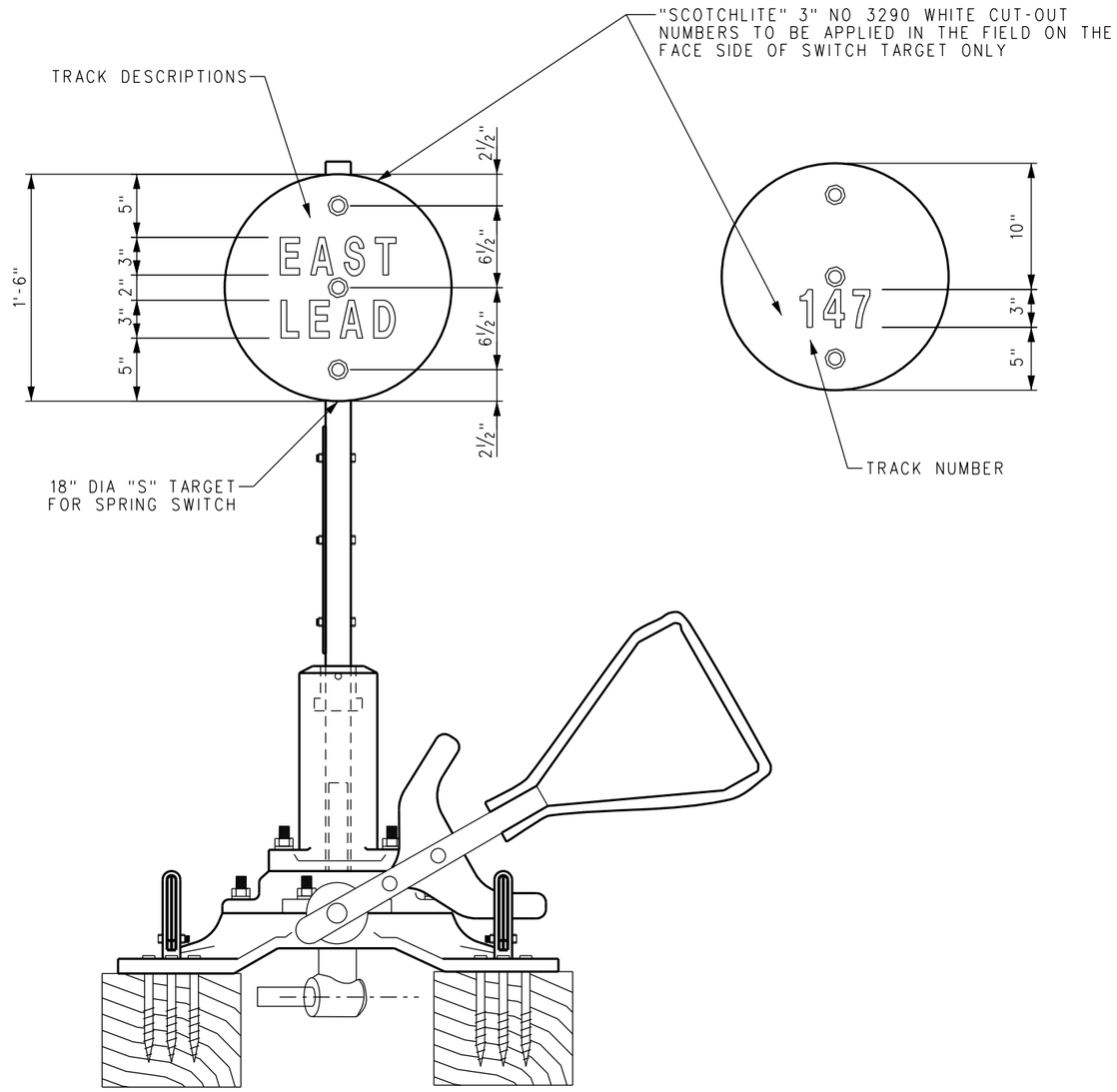

36E TARGET

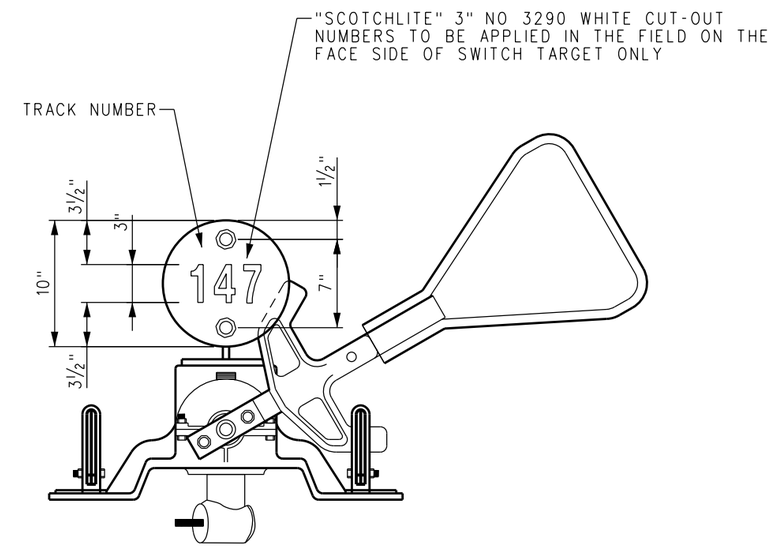

22E TARGET

REV.	DATE	DESCRIPTION	DES.	ENG.
X	XX-XX-XX	REVISION	XX	XX

DRAWN BY: HDR DATE: 03/31/2011

ASSISTANT DIRECTOR: STANDARDS & DESIGN

DIRECTOR OF ENGINEERING AND CONSTRUCTION

SCRRA ENGINEERING STANDARDS ARE INTENDED FOR SCRRA APPROVED USES ONLY. FOR NON-SCRRA APPROVED USES:
SCRRA SHALL NOT BE RESPONSIBLE FOR THE ACCURACY OR COMPLETENESS OF THE DATA OR INFORMATION CONTAINED HEREIN. THE SELECTION AND USE OF THESE STANDARDS IS THE SOLE RESPONSIBILITY OF THE USER AND SHOULD NOT BE USED WITHOUT CONSULTING A REGISTERED PROFESSIONAL ENGINEER. ALL WARRANTIES AND REPRESENTATIONS OF ANY KIND ARE DISCLAIMED. ANYONE MAKING USE OF THIS INFORMATION AGREES THAT IT ASSUMES ALL LIABILITY ARISING FROM SUCH USE. NO PART OF THESE STANDARDS SHOULD BE REPRODUCED OR DISTRIBUTED IN ANY FORM OR BY ANY MEANS WITHOUT THE PRIOR WRITTEN PERMISSION OF SCRRA. ALL RIGHTS RESERVED.

METROLINK®
SOUTHERN CALIFORNIA REGIONAL RAIL AUTHORITY
ONE GATEWAY PLAZA, 12TH FLOOR, L. A., CA. 90012

ENGINEERING STANDARDS

COLOR INDICATORS OF TARGETS ON SWITCH STANDS

STANDARD: 2703
SCALE: NTS
REVISION: –
SHEET: 2 OF 2
CADD FILE: ES2703-02

REFERENCE:

COLORS OF SWITCH TARGETS: ES2705

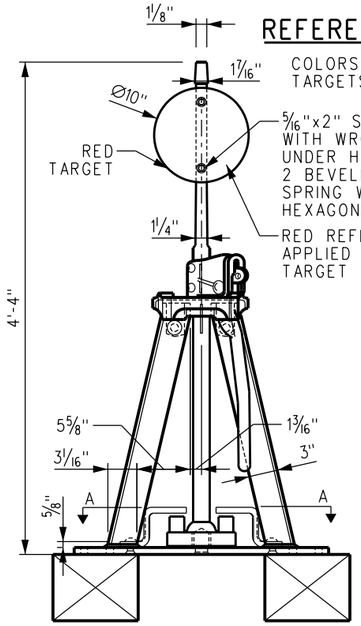

SWITCH STAND (FRONT VIEW)

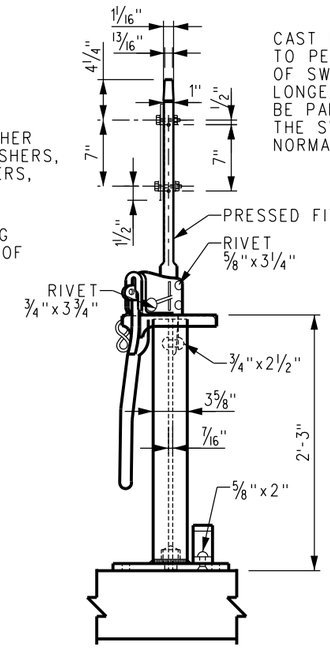

CAST IRON PLUG LAMP TIP TO PERMIT INTERCHANGEABILITY OF SWITCH LIGHTS, THE LONGER SIDE OF TIP SHOULD BE PARALLEL TO THE RAIL WHEN THE SWITCH IS LINED FOR THE NORMAL POSITION.

SWITCH STAND (SIDE VIEW)

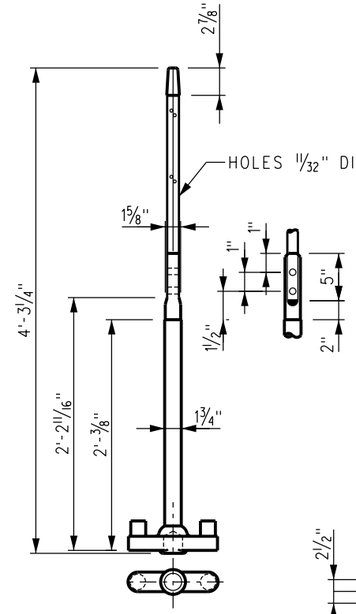

DOUBLE CRANK AND MAST

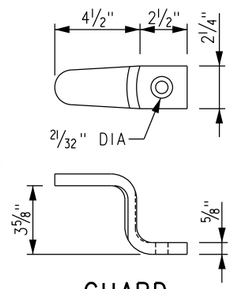

GUARD
STEEL-FORGED

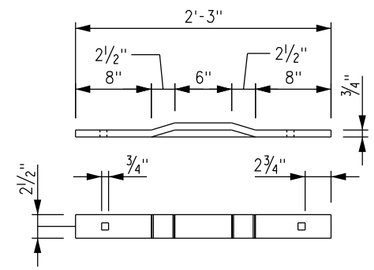

HOLD DOWN STRAP

NOTES:

1. USE 36E (ES2708) STANDS FOR NEW INSTALLATION MAINLINE USE. THIS LOW STAR SWITCH STAND IS TO BE USED ONLY UNTIL THIS STYLE STAND IS REPLACED IN THE NORMAL COURSE OF MAINTENANCE OR CAPITAL PROJECT RENEWALS.
2. MAIN TRACK SWITCH STANDS SHALL BE PLACED ON THE TURNOUT SIDE TO THE TRACK WHEREVER STRUCTURES OR OTHER TRACKS PERMIT.
3. SWITCH STANDS OF THE TYPE SHOWN ON THIS PLAN SHALL BE USED FOR SINGLE AND DOUBLE SWITCH POINT DERAILS.
4. WHERE TWO HIGH STANDS COME SO CLOSE TOGETHER AS TO BLANKET EACH OTHER, USE ONE HIGH STAND AND ONE LOW STAND.
5. MANUFACTURER WILL NOT FURNISH TARGET, CONNECTING ROD AND HOLD DOWN STRAP UNLESS SPECIFIED ON ORDER.

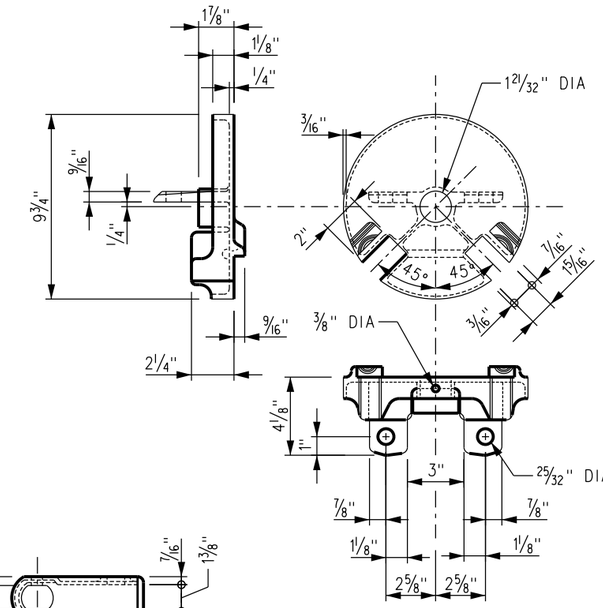

TABLE
CAST STEEL

FOR MAINTENANCE ONLY

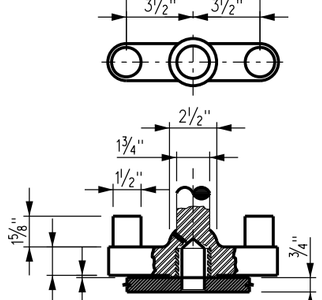

DOUBLE CRANK
STEEL-FORGED

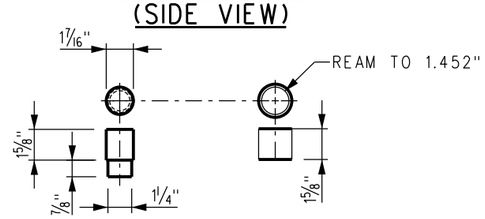

PIVOT PIN
COLD ROLLED STEEL

BUSHING
SEAMLESS STEEL TUBING 1 1/4"x 5/32" THICK

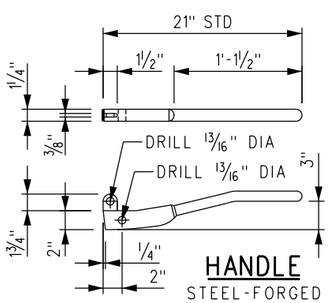

HANDLE
STEEL-FORGED

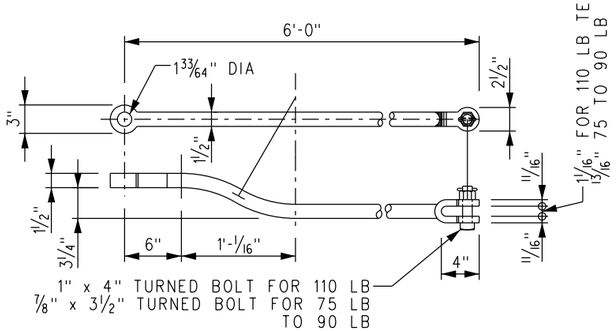

CONNECTING ROD

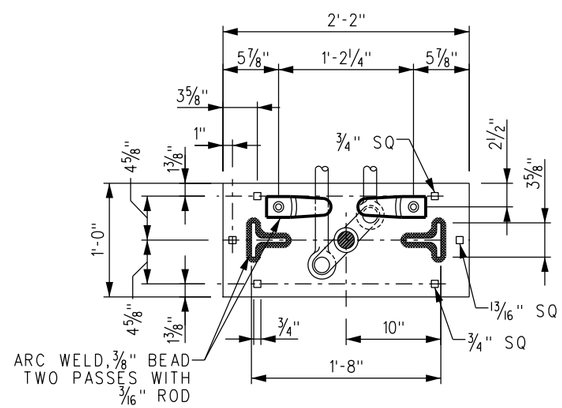

CONNECTING ROD
SECTION A-A

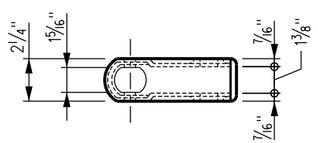

PLAN

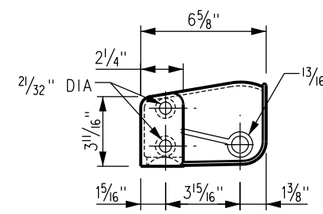

ELEVATION

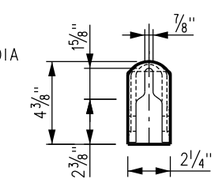

FRONT

YOKE
CAST STEEL

REV.	DATE	DESCRIPTION	DES.	ENG.
A	12/05/11	ADDED "FOR MAINTENANCE ONLY" STAMP	AC	NDP

DRAWN BY: A. CARLOS DATE: 03/31/2011

ASSISTANT DIRECTOR: STANDARDS & DESIGN

DIRECTOR OF ENGINEERING AND CONSTRUCTION

SCRRA ENGINEERING STANDARDS ARE INTENDED FOR SCRRA APPROVED USES ONLY. FOR NON-SCRRA APPROVED USES: SCRRA SHALL NOT BE RESPONSIBLE FOR THE ACCURACY OR COMPLETENESS OF THE DATA OR INFORMATION CONTAINED HEREIN. THE SELECTION AND USE OF THESE STANDARDS IS THE SOLE RESPONSIBILITY OF THE USER AND SHOULD NOT BE USED WITHOUT CONSULTING A REGISTERED PROFESSIONAL ENGINEER. ALL WARRANTIES AND REPRESENTATIONS OF ANY KIND ARE DISCLAIMED. ANYONE MAKING USE OF THIS INFORMATION AGREES THAT IT ASSUMES ALL LIABILITY ARISING FROM SUCH USE. NO PART OF THESE STANDARDS SHOULD BE REPRODUCED OR DISTRIBUTED IN ANY FORM OR BY ANY MEANS WITHOUT THE PRIOR WRITTEN PERMISSION OF SCRRA. ALL RIGHTS RESERVED.

METROLINK®
SOUTHERN CALIFORNIA REGIONAL RAIL AUTHORITY
ONE GATEWAY PLAZA, 12TH FLOOR, L. A., CA. 90012

ENGINEERING STANDARDS

LOW STAR SWITCH STAND
DOUBLE CRANK – DOUBLE HEADBLOCK

STANDARD 2704
SCALE: NTS
REVISION A
SHEET 1 OF 1
CADD FILE: ES2704

NOTES:

1. ROD SHALL BE SAE1045. THREADS SHALL BE 1¼" 7 UNC-2B.
2. RAIL ENGAGEMENT FITTINGS (SF-21) SHALL BE OF 60,000 PSI TENSILE, 45,000 PSI YIELD, AND 12% ELONGATION PROPERTIES WITH STANDARD MILL TOLERANCES.
3. AFTER ASSEMBLING THE RA125, BUFF SMOOTH ALL WRENCH MARKS.
4. PA-6 INSULATORS ARE POLYMIDE TYPE 6 NYLON. ALL RODS SHALL BE SHIPPED ASSEMBLED.
5. INCLUDE JAM NUT ON EACH OF ASSEMBLY.
6. CHAMFER ENDS OF ROD BEFORE THREADING.

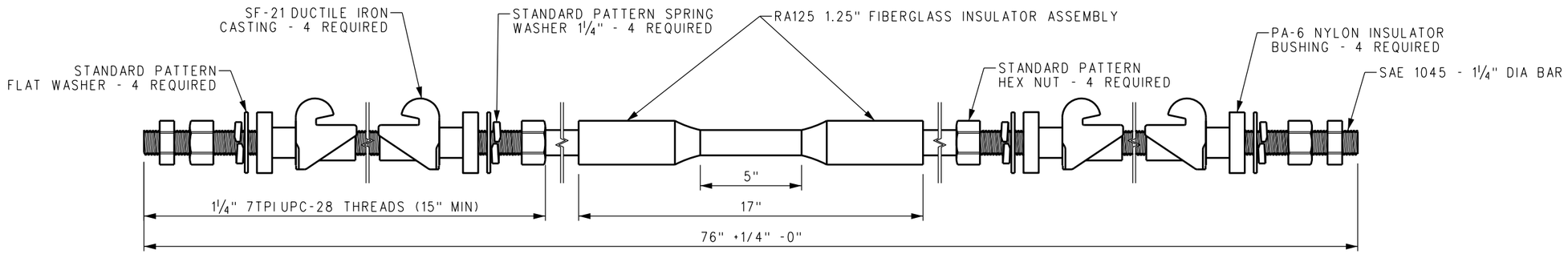

SPECIAL NOTE TO MANUFACTURER:
ALL THREADS TO BE COATED WITH BOSTIK "NEVER-SEIZE".

REV.	DATE	DESCRIPTION	DES.	ENG.
X	XX-XX-XX	REVISION	XX	XX

DRAWN BY: HDR DATE: 03/31/2011

ASSISTANT DIRECTOR: STANDARDS & DESIGN

DIRECTOR OF ENGINEERING AND CONSTRUCTION

SCRRA ENGINEERING STANDARDS ARE INTENDED FOR SCRRA APPROVED USES ONLY. FOR NON-SCRRA APPROVED USES:
SCRRA SHALL NOT BE RESPONSIBLE FOR THE ACCURACY OR COMPLETENESS OF THE DATA OR INFORMATION CONTAINED HEREIN. THE SELECTION AND USE OF THESE STANDARDS IS THE SOLE RESPONSIBILITY OF THE USER AND SHOULD NOT BE USED WITHOUT CONSULTING A REGISTERED PROFESSIONAL ENGINEER. ALL WARRANTIES AND REPRESENTATIONS OF ANY KIND ARE DISCLAIMED. ANYONE MAKING USE OF THIS INFORMATION AGREES THAT IT ASSUMES ALL LIABILITY ARISING FROM SUCH USE. NO PART OF THESE STANDARDS SHOULD BE REPRODUCED OR DISTRIBUTED IN ANY FORM OR BY ANY MEANS WITHOUT THE PRIOR WRITTEN PERMISSION OF SCRRA. ALL RIGHTS RESERVED.

METROLINK®
SOUTHERN CALIFORNIA REGIONAL RAIL AUTHORITY
ONE GATEWAY PLAZA, 12TH FLOOR, L. A., CA. 90012

ENGINEERING STANDARDS

INSULATED GAUGE ROD

STANDARD: 2706
SCALE: NTS
REVISION: –
SHEET: 1 OF 1
CADD FILE: ES2706

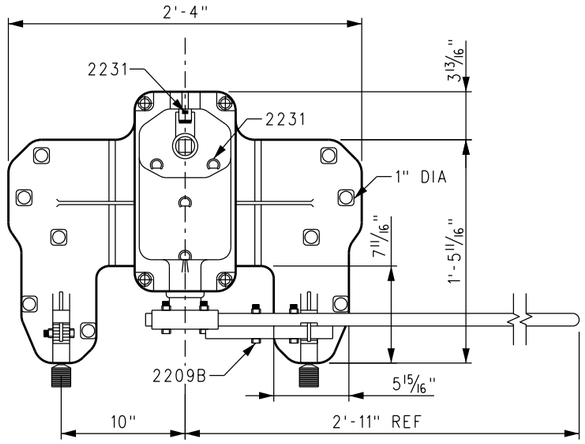

22E - TOP VIEW

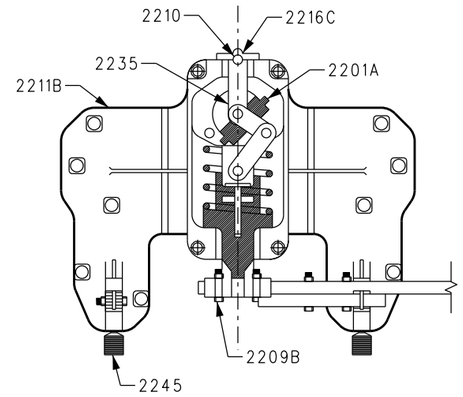

22E - DETAIL VIEW (A)

BILL OF MATERIAL			
CATALOG NO	QTY	DESCRIPTION	SCRRA PART NO
2235	1	LINKAGE AND SPRING CAGE ASSEMBLY (SEE ASSEMBLY DRAWING FOR PARTS DRAWINGS)	
2216C	1	THRUST BUSHING	
2210	1	THRUST BALL 1" DIA	
2212C	1	COVER (S-604-C)	
2252	1	BASE (D-34645)	
2201A	1	SPINDLE (GL-2762)	
2202	1	CRANK EYE (GL-1889)	
2250	1	TRI-HANDLE LEVER	
2213	4	SQUARE HEAD BOLT 5/8" X 3" LONG	
	4	HEX NUT 5/8" - 11	
	4	LOCK WASHER 5/8"	
2209B	4	SQUARE HEAD BOLT 3/4" X 2 3/4" LONG	
	4	SECURITY NUT 3/4" - 10	
2231	5	1608B GREASE FITTING - DRIVE TYPE	
2207	1	TARGET	
2208A	1	TARGET MAST	
	2	BOLT	
	2	NUT	
2251	1	YOKE (D-34637)	
2253	2	1/2" X 2 1/4" HEX CAP SCREW	
	2	HEX SECURITY NUT	
2254	2	FOOT LATCH	

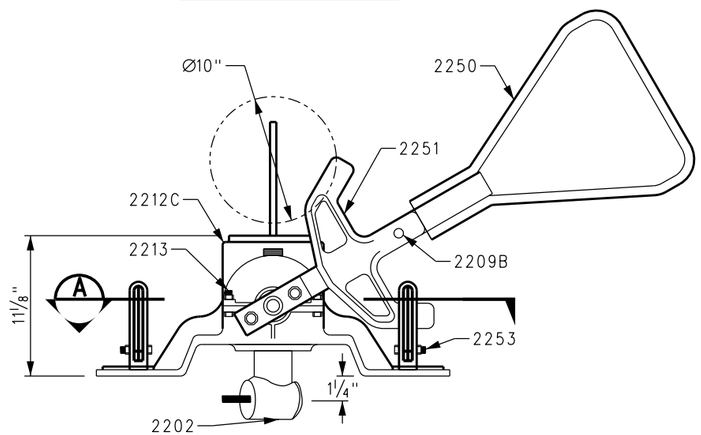

22E SWITCH STAND

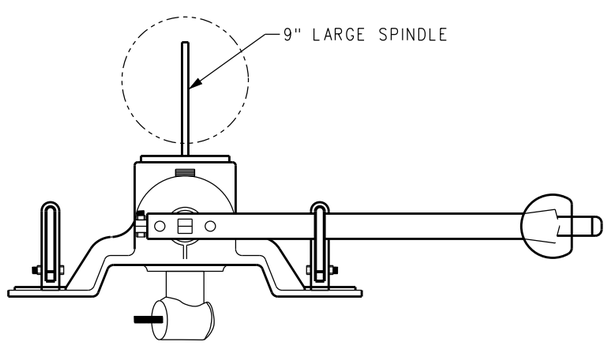

STAND WITH OPTIONAL 36" STRAIGHT HANDLE

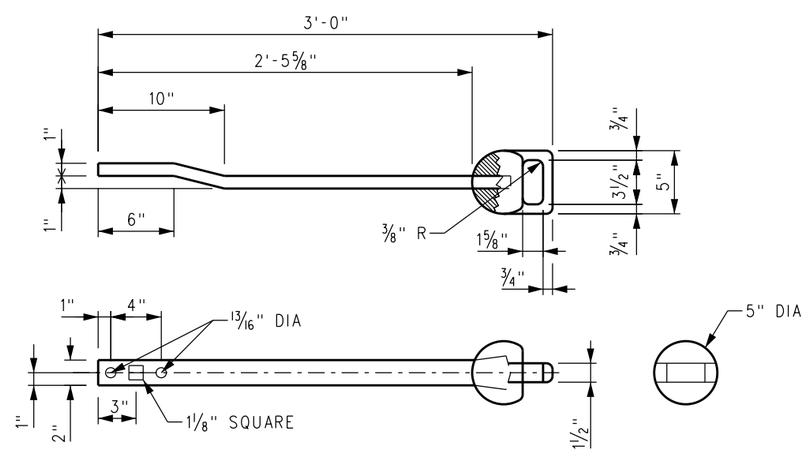

OPTIONAL 36" STRAIGHT HANDLE
(USE FOR TIGHT CLEARANCE ONLY)

NOTES:

1. 22-E RECOMMENDED USE: YARD AND OTHER THAN MAIN TRACK
2. IT IS RECOMMENDED THAT SWITCH STANDS BE INSPECTED AND LUBRICATED AT LEAST ONCE A YEAR. ADD OIL IN "OIL CUPS" WITH ANY GOOD GRADE ENGINE OIL. RECOMMEND OIL WITH GRAPHITE CONTENT SAE 60.
3. IF SWITCH STAND IS DISASSEMBLED, REGREASING OF ALL INTERNAL PARTS IS REQUIRED. APPLY GREASE LIBERALLY IN "THRUST BUSHING" CAVITY, BOTH ENDS "SPRING BASE", "SPINDLE" SLOT, AND ALL BEARING SURFACES (TEXACO NO 904 GREASE).
4. SWITCH STAND TO BE INSTALLED USING SCREW SPIKES (SCRRA ES2355)
5. FOR SCREW SPIKES SEE SCRRA ES2355
   FOR SWITCH TARGET DETAILS SEE SCRRA ES2703-01
   FOR TRACK IDENTIFICATION SEE SCRRA ES2703-02
   FOR CONNECTING ROD ASSEMBLY SEE SCRRA ES2108
6. STRAIGHT HANDLE TO BE PAINTED SAFETY YELLOW.

REV.	DATE	DESCRIPTION	DES.	ENG.
X	XX-XX-XX	REVISION	XX	XX

DRAWN BY: HDR DATE: 03/31/2011

ASSISTANT DIRECTOR: STANDARDS & DESIGN

DIRECTOR OF ENGINEERING AND CONSTRUCTION

SCRRA ENGINEERING STANDARDS ARE INTENDED FOR SCRRA APPROVED USES ONLY. FOR NON-SCRRA APPROVED USES:
SCRRA SHALL NOT BE RESPONSIBLE FOR THE ACCURACY OR COMPLETENESS OF THE DATA OR INFORMATION CONTAINED HEREIN. THE SELECTION AND USE OF THESE STANDARDS IS THE SOLE RESPONSIBILITY OF THE USER AND SHOULD NOT BE USED WITHOUT CONSULTING A REGISTERED PROFESSIONAL ENGINEER. ALL WARRANTIES AND REPRESENTATIONS OF ANY KIND ARE DISCLAIMED. ANYONE MAKING USE OF THIS INFORMATION AGREES THAT IT ASSUMES ALL LIABILITY ARISING FROM SUCH USE. NO PART OF THESE STANDARDS SHOULD BE REPRODUCED OR DISTRIBUTED IN ANY FORM OR BY ANY MEANS WITHOUT THE PRIOR WRITTEN PERMISSION OF SCRRA. ALL RIGHTS RESERVED.

METROLINK®
SOUTHERN CALIFORNIA REGIONAL RAIL AUTHORITY
ONE GATEWAY PLAZA, 12TH FLOOR, L. A., CA. 90012

ENGINEERING STANDARDS

22E SWITCH STAND

STANDARD 2707
SCALE: NTS
REVISION –
SHEET 1 OF 1
CADD FILE: ES2707

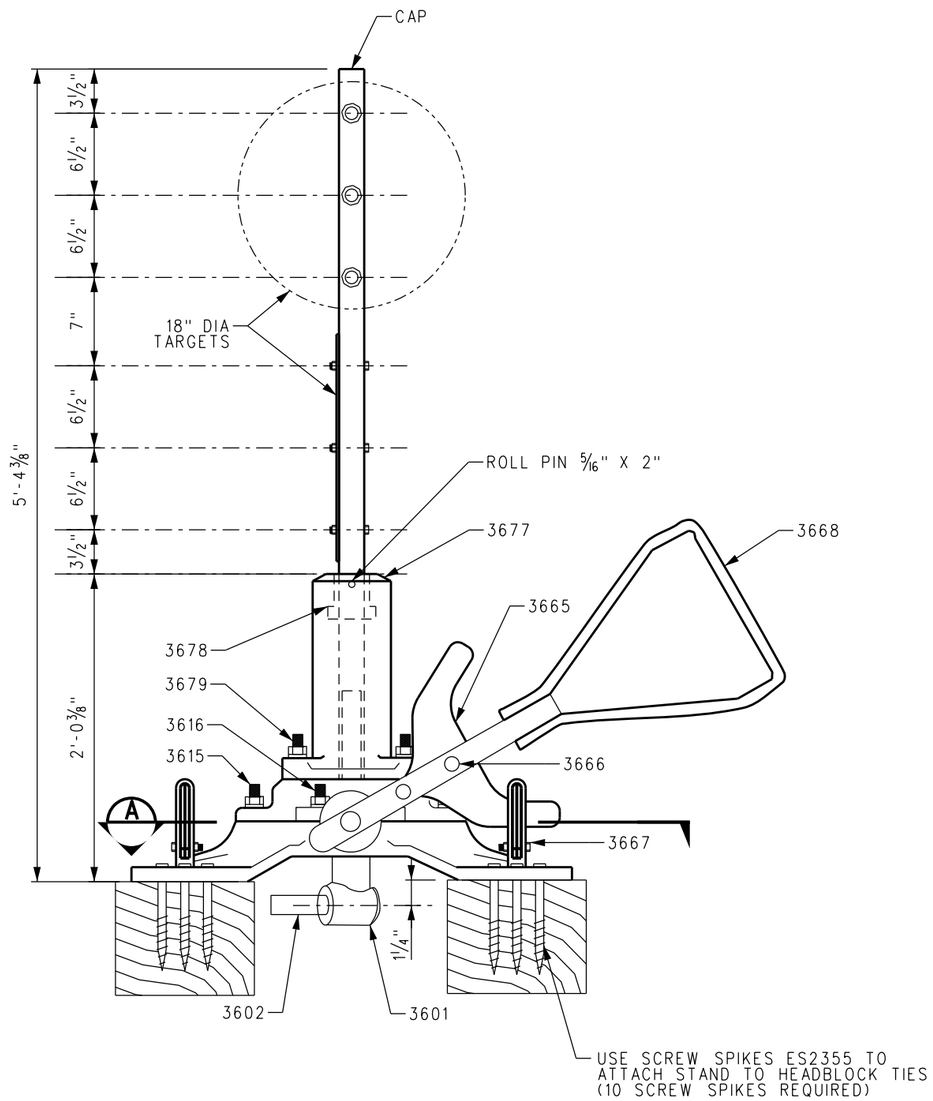

36-EH

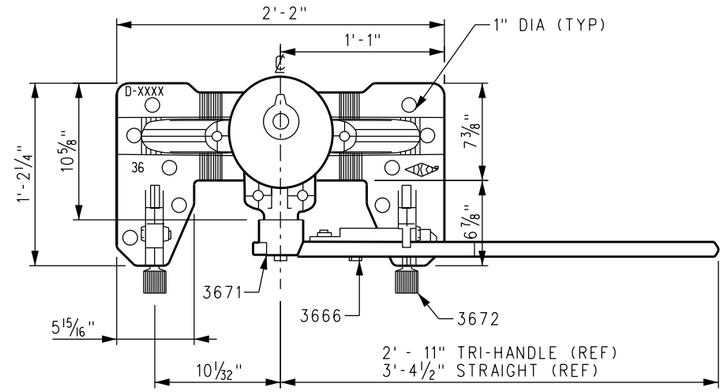

36-EH & 36-E (A)

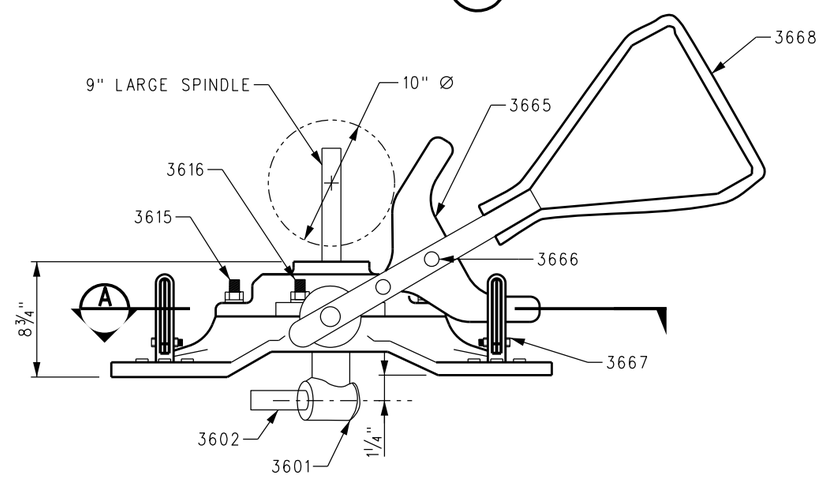

36-E

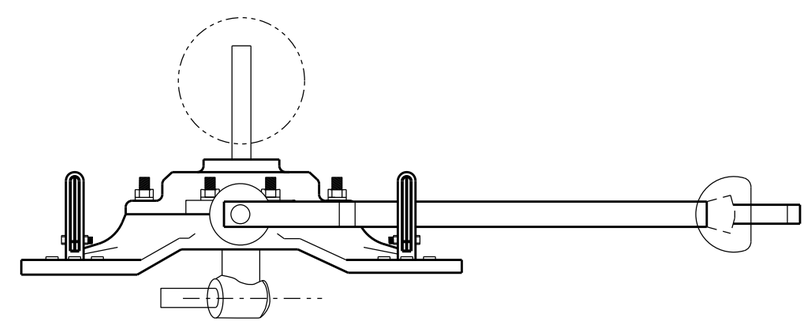

STAND WITH OPTIONAL STRAIGHT HANDLE

NOTES:

1. FOR BILL OF MATERIALS SEE SHEET ES2708, SHEET 2 OF 2

REV.	DATE	DESCRIPTION	DES.	ENG.
X	XX-XX-XX	REVISION	XX	XX

DRAWN BY: HDR DATE: 03/31/2011

ASSISTANT DIRECTOR: STANDARDS & DESIGN

DIRECTOR OF ENGINEERING AND CONSTRUCTION

SCRRA ENGINEERING STANDARDS ARE INTENDED FOR SCRRA APPROVED USES ONLY. FOR NON-SCRRA APPROVED USES: SCRRA SHALL NOT BE RESPONSIBLE FOR THE ACCURACY OR COMPLETENESS OF THE DATA OR INFORMATION CONTAINED HEREIN. THE SELECTION AND USE OF THESE STANDARDS IS THE SOLE RESPONSIBILITY OF THE USER AND SHOULD NOT BE USED WITHOUT CONSULTING A REGISTERED PROFESSIONAL ENGINEER. ALL WARRANTIES AND REPRESENTATIONS OF ANY KIND ARE DISCLAIMED. ANYONE MAKING USE OF THIS INFORMATION AGREES THAT IT ASSUMES ALL LIABILITY ARISING FROM SUCH USE. NO PART OF THESE STANDARDS SHOULD BE REPRODUCED OR DISTRIBUTED IN ANY FORM OR BY ANY MEANS WITHOUT THE PRIOR WRITTEN PERMISSION OF SCRRA. ALL RIGHTS RESERVED.

METROLINK®

SOUTHERN CALIFORNIA REGIONAL RAIL AUTHORITY
ONE GATEWAY PLAZA, 12TH FLOOR, L. A., CA. 90012

ENGINEERING STANDARDS

36E & 36EH SWITCH STANDS

STANDARD: 2708
SCALE: NTS
REVISION: –
SHEET: 1 OF 2
CADD FILE: ES2708–01

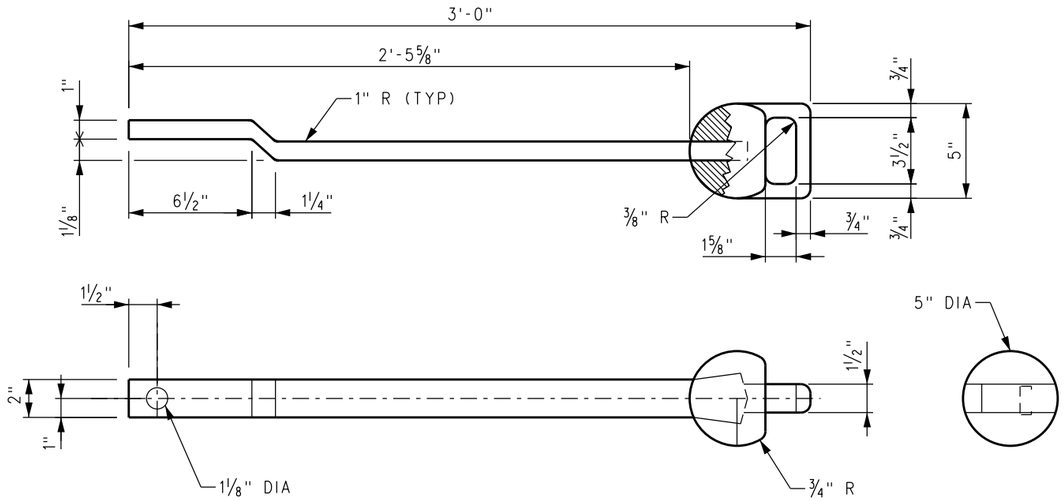

OPTIONAL 36" STRAIGHT HANDLE
(USE FOR TIGHT CLEARANCE ONLY)

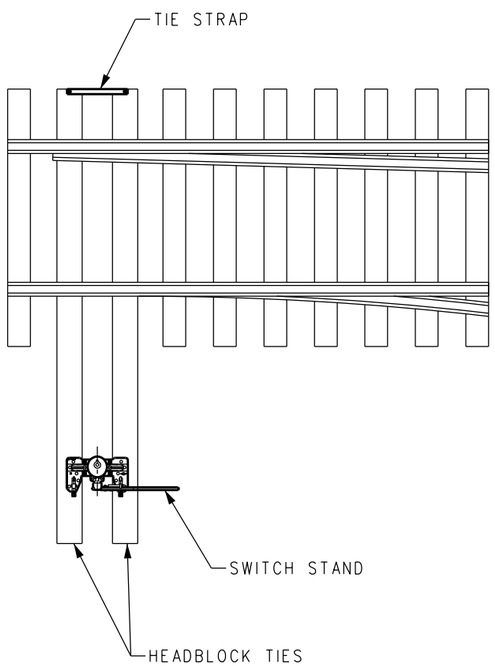

TIE STRAP LOCATION

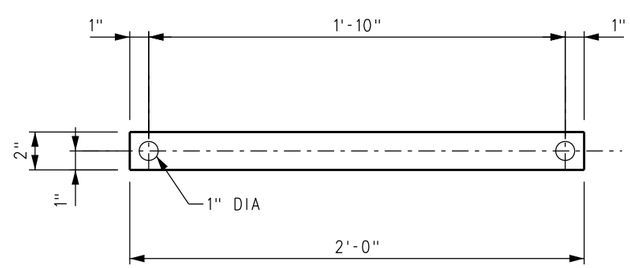

TIE STRAP
TIE MOUNTING KIT

(12) SCREW SPIKES ES2355
(10 FOR STAND AND 2 FOR STRAP)
(1) ½" X 2" X 2' STEEL STRAP

BILL OF MATERIAL

CATALOG NO	QTY	DESCRIPTION	SCRRA PART NO
3674	1	COVER (S-479)	
3669	1	BASE (D-34678)	
3601	1	SPINDLE	
3602	1	CRANKEYE (GL-1889)	
3668	1	TRI-HANDLE LEVER	
3616	2	SQ HD BOLT ¾" X 3¼" LONG	
3615	2	SQ HD BOLT ¾" X 4¾" LONG	
3671	1	HUB (D-34629)	
3665	1	YOKE (D-34679)	
3666	2	¾" BUTTON RIVETS	
3672	2	FOOT LATCH	
3653	1	CRANK BUSHING	
3654	1	CRANK WASHER	
3652	1	CRANK GL-1908	
3656	1	COTTER	
3667	2	½" X 2¼" HEX CAP SCREW	
3677	1	STIFFENER S-480	
3678	1	ADAPTER S-481	
	1	SPINDLE EXTENSION #66	
3679	2	SQ HEAD BOLT ½" X 2½" LONG 2" THDS	
	2	HEX NUT ½"	
	2	SPRING WASHER - ½"	
	2	ANCO HEX NUT - ½"	
	4	HEX SECURITY NUT ¾" - 10	
	4	SPRING WASHER ¾"	
3655	1	HEX NUT HEAVY WFI ⅛" - SLOTTED	
	2	HEX SECURITY NUT - ½"	
3673	1	FLAT WASHER 1⅛"	
	2	GREASE FITTING	
	2	GREASE FITTING	
	1	ROLL PIN 5/16" X 2"	

NOTES:

1. SEE ES2708-01 FOR REST OF THE DRAWING.
2. 36-E RECOMMENDED USE: MAIN TRACK CROSS-OVERS AND YARD TRACKS OR OTHER THEN MAIN LINE TRACKS.
3. 36-EH RECOMMENDED USE: MAIN TRACK.
4. FOR MAIN LINE INSTALLATION USE MOUNTING KIT. APPLY TIE STRAP ON HEADBLOCK TIES ON OPPOSITE SIDE OF TRACK FROM SWITCH STANDS.
5. LUBRICATE INTERNALLY AT LEAST ONCE A YEAR.
6. REFERENCE THE FOLLOWING DRAWINGS:
   - -SCREW SPIKES - ES2358
   - -SWITCH TARGET DETAILS - ES2703-01 & 02
   - -CONNECTING ROD ASSEMBLY - ES2108
7. STRAIGHT HANDLE TO BE PAINTED SAFETY YELLOW.

REV.	DATE	DESCRIPTION	DES.	ENG.
X	XX-XX-XX	REVISION	XX	XX

DRAWN BY: HDR DATE: 03/31/2011

ASSISTANT DIRECTOR: STANDARDS & DESIGN

DIRECTOR OF ENGINEERING AND CONSTRUCTION

SCRRA ENGINEERING STANDARDS ARE INTENDED FOR SCRRA APPROVED USES ONLY. FOR NON-SCRRA APPROVED USES:
SCRRA SHALL NOT BE RESPONSIBLE FOR THE ACCURACY OR COMPLETENESS OF THE DATA OR INFORMATION CONTAINED HEREIN. THE SELECTION AND USE OF THESE STANDARDS IS THE SOLE RESPONSIBILITY OF THE USER AND SHOULD NOT BE USED WITHOUT CONSULTING A REGISTERED PROFESSIONAL ENGINEER. ALL WARRANTIES AND REPRESENTATIONS OF ANY KIND ARE DISCLAIMED. ANYONE MAKING USE OF THIS INFORMATION AGREES THAT IT ASSUMES ALL LIABILITY ARISING FROM SUCH USE. NO PART OF THESE STANDARDS SHOULD BE REPRODUCED OR DISTRIBUTED IN ANY FORM OR BY ANY MEANS WITHOUT THE PRIOR WRITTEN PERMISSION OF SCRRA. ALL RIGHTS RESERVED.

METROLINK®
SOUTHERN CALIFORNIA REGIONAL RAIL AUTHORITY
ONE GATEWAY PLAZA, 12TH FLOOR, L. A., CA. 90012

ENGINEERING STANDARDS

36E & 36EH SWITCH STANDS

STANDARD: 2708
SCALE: NTS
REVISION: –
SHEET: 2 OF 2
CADD FILE: ES2708–02

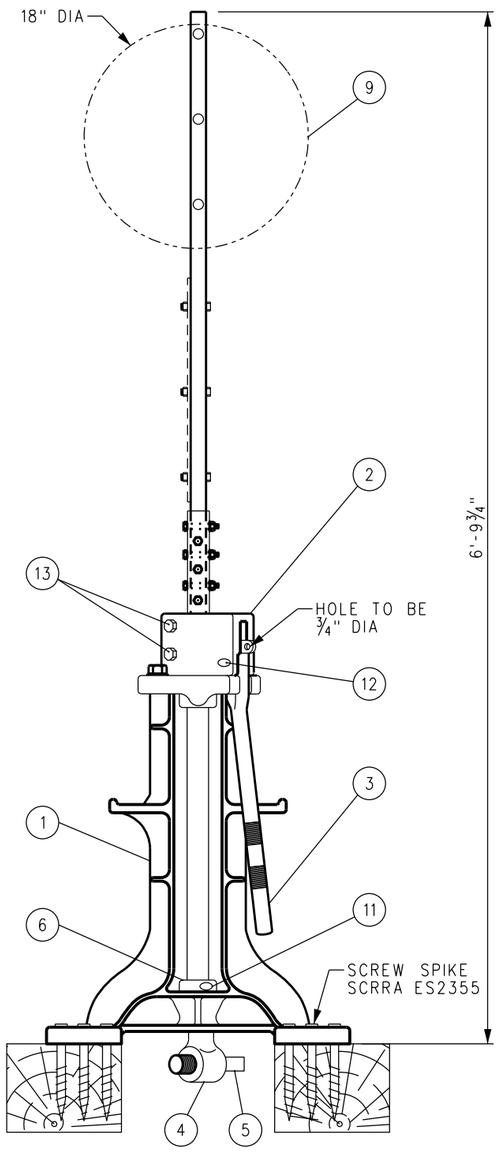

112E HIGH SWITCH STAND

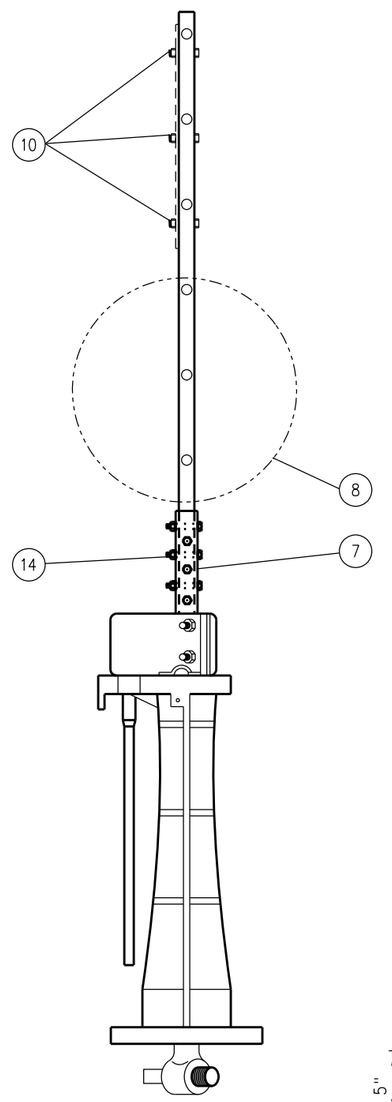

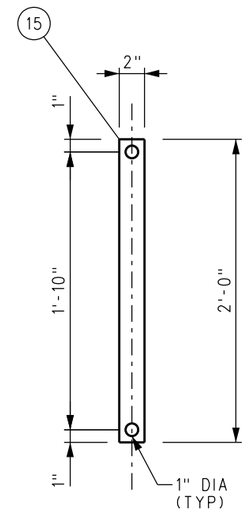

TIE STRAP MOUNTING KIT

(1) 1/2" X 2" X 2' STEEL STRAP

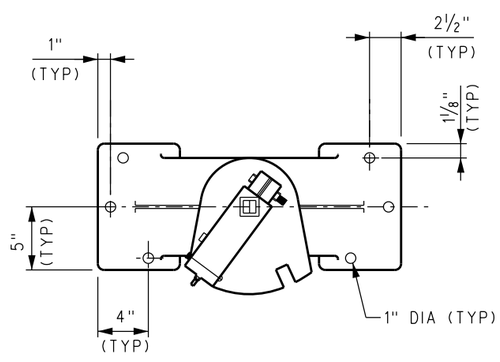

BASE

BILL OF MATERIALS

ITEM	QTY	DESCRIPTION	SCRRA PART NO	PART NO
1	1	MAIN CASTING (MODIFIED AS SHOWN)		11209E
2	1	LEVER BRACKET		11212E
3	1	HAND LEVER		11213E
4	1	SPINDLE		11201E
5	1	CRANK EYE		11202E
6	1	COLLAR		11210E
7	2	SPLICE BRACKET		11216E
8	1	SPINDLE EXTENSION		962023
9	1	TARGET		
10	3	3/8" X 2" BOLT SQUARE HD/HEX HD NUT 8 FLAT WASHER		
11	1	RIVET 1/2" X 3 3/4"		11211E
12	1	RIVET 5/8" X 3 1/4"		11214E
13	2	7/8" X 3 3/4" HT MACH BOLTS/ HEX SLOTTED NUTS 8 3/16" X 1 1/2" COTTER/SPRING WASHER		11215E
14	6	3/8" X 2 1/2" MACH BOLTS/SQUARE HD 8 HEX ANCO NUTS		11217E
15	1	TIE STRAP MOUNTING KIT		

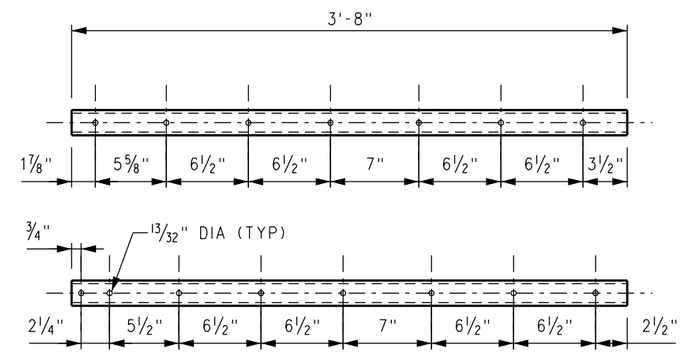

7/8" INSIDE, 1 3/16" OUTSIDE SQUARE TUBING

TARGET SPINDLE EXTENSION

NOTES:

1. RECOMMENDED USE, MAIN TRACK FOR SWITCH STAND MOUNTING KIT.
2. APPLY TIE STRAP ON HEADBLOCK TIES ON OPPOSITE SIDE OF TRACK FROM SWITCH STANDS.
3. MINIMUM CONNECTING ROD LENGTH IS 6'-0 3/4".
4. FOR SWITCH TARGET DETAILS: SCRRA ES2703-01
   FOR TRACK IDENTIFICATIONS: SCRRA ES2703-02
   FOR CONNECTING ROD ASSEMBLY: SCRRA ES2108

REV.	DATE	DESCRIPTION	DES.	ENG.
X	XX-XX-XX	REVISION	XX	XX

DRAWN BY: HDR DATE: 03/31/2011

ASSISTANT DIRECTOR: STANDARDS & DESIGN

DIRECTOR OF ENGINEERING AND CONSTRUCTION

SCRRA ENGINEERING STANDARDS ARE INTENDED FOR SCRRA APPROVED USES ONLY. FOR NON-SCRRA APPROVED USES: SCRRA SHALL NOT BE RESPONSIBLE FOR THE ACCURACY OR COMPLETENESS OF THE DATA OR INFORMATION CONTAINED HEREIN. THE SELECTION AND USE OF THESE STANDARDS IS THE SOLE RESPONSIBILITY OF THE USER AND SHOULD NOT BE USED WITHOUT CONSULTING A REGISTERED PROFESSIONAL ENGINEER. ALL WARRANTIES AND REPRESENTATIONS OF ANY KIND ARE DISCLAIMED. ANYONE MAKING USE OF THIS INFORMATION AGREES THAT IT ASSUMES ALL LIABILITY ARISING FROM SUCH USE. NO PART OF THESE STANDARDS SHOULD BE REPRODUCED OR DISTRIBUTED IN ANY FORM OR BY ANY MEANS WITHOUT THE PRIOR WRITTEN PERMISSION OF SCRRA. ALL RIGHTS RESERVED.

METROLINK®

SOUTHERN CALIFORNIA REGIONAL RAIL AUTHORITY
ONE GATEWAY PLAZA, 12TH FLOOR, L. A., CA. 90012

ENGINEERING STANDARDS

112E HIGH SWITCH STAND

STANDARD 2709
SCALE: NTS
REVISION –
SHEET 1 OF 1
CADD FILE: ES2709

1

CRANKEYE AND CONNECTING ROD CLEVIS SHOULD BE GREASED PRIOR TO INSTALLATION OR ADJUSTMENT. START WITH ABOUT 1" OF THREADS SHOWING ON CONNECTING ROD TURNBUCKLE (TIGHTEN JAM NUT)

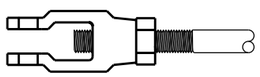

2

MEASURE THROW BETWEEN SWITCH POINT & STOCK RAIL AT FIRST ROD

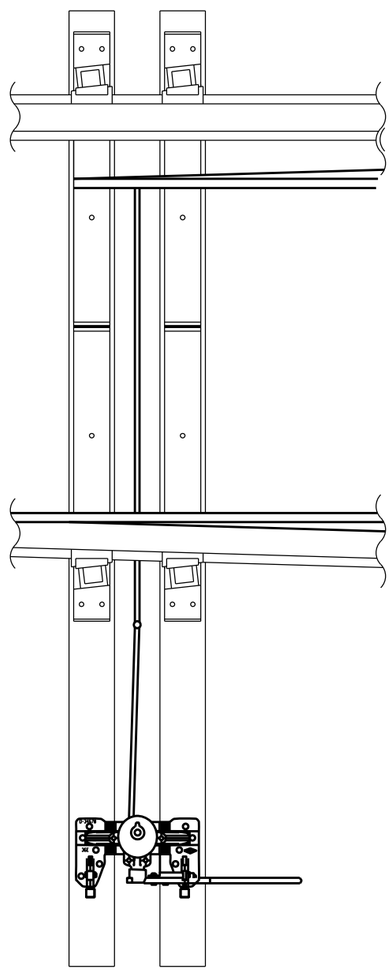

3

SET CRANKEYE SETTING AT DISTANCE "A" FOR MEASURED OPENING AND CORRECT STAND

THROW OF SWITCH	"A" RACOR 22E	"A" RACOR 36E
4 1/2"	2 1/16"	2 9/16"
4 5/8"	2 3/16"	2 11/16"
4 3/4"	2 1/4"	2 3/4"
4 7/8"	2 5/16"	2 13/16"
5"	2 7/16"	2 15/16"
5 1/8"	2 1/2"	3"
5 1/4"	2 5/8"	3 1/8"
5 3/8"	2 11/16"	3 3/16"
5 1/2"	2 13/16"	3 5/16"
5 5/8"	-	3 3/8"
5 3/4"	-	3 7/16"

"A" WORKS FOR ALL ROD LENGTHS

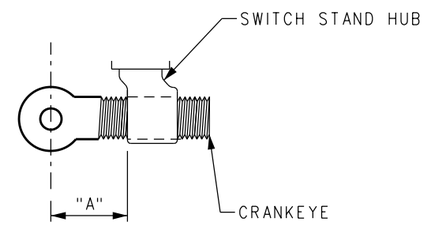

RACOR 22E & 36E

STANDARD SIDE FOR CRANKEYE

4

MOVE SWITCH POINTS TO HALF-THROWN POSITION (OPENING EQUAL ON BOTH SIDES), AND STAND LEVER IN VERTICAL POSITION. CENTER STAND ON HEADBLOCK TIES AND SPIKE OR LAG TO TIES.

5

HAND THROW SWITCH TO BOTH SIDES SEVERAL TIMES. WHEN POINT CONTACTS STOCK RAIL, LEVER SHOULD NOT BE MORE THAN 1 1/2" TO 2" ABOVE FINAL POSITIONS ON TOP OF LEVER REST FOR BOTH POSITIONS.

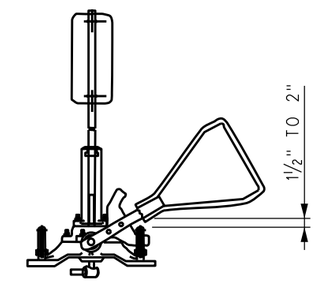

ELEVATION

IF NOT, ADJUST AS FOLLOWS:

WHEN NEAR POINT FITS PROPERLY AND FAR POINT IS TOO TIGHT:
SHORTEN CRANKEYE SETTING AND SHORTEN CONNECTING ROD CLEVIS.

WHEN NEAR POINT FITS PROPERLY AND FAR POINT IS LOOSE:
LENGTHEN CRANKEYE SETTING AND LENGTHEN CONNECTING ROD CLEVIS.

WHEN FAR POINT FITS PROPERLY AND NEAR POINT IS TOO TIGHT:
SHORTEN CRANKEYE SETTING AND LENGTHEN CONNECTING ROD CLEVIS.

WHEN FAR POINT FITS PROPERLY AND NEAR POINT IS LOOSE:
LENGTHEN CRANKEYE SETTING AND SHORTEN CONNECTING ROD CLEVIS.

WHEN BOTH POINTS ARE TIGHT:
SHORTEN CRANKEYE SETTING AND DO NOT CHANGE CONNECTING ROD CLEVIS.

WHEN BOTH POINTS ARE LOOSE:
LENGTHEN CRANKEYE SETTING AND DO NOT CHANGE CONNECTING ROD CLEVIS.

NOTES:

1. USE 15/16" SCREW SPIKES OR APPROPRIATE PIM SCREWS WHEN INSTALLING NEW SWITCH STANDS ON TIMBER OR CONCRETE TIES.
2. FIELD INSPECTION OF STAND IS RECOMMENDED AT LEAST ANNUALLY OR MORE WHERE STAND IS USED FREQUENTLY.
3. OIL CUPS: USE SAE 40, ADD OIL FREQUENTLY.
4. GREASE SHOULD BE LG312 LITHIUM GRADE 2. REGREASING OF ALL INTERNAL PARTS IS RECOMMENDED BEFORE REASSEMBLY AFTER INSPECTIONS.
5. DIFFERENCES BETWEEN CRANKEYE MEASUREMENTS ON THIS DRAWING AND FINAL ADJUSTMENTS ARE PROBABLY DUE TO TOLERANCES (LOST MOTION) IN CONNECTING ROD/HEAD ROD CONNECTIONS.

REV.	DATE	DESCRIPTION	DES.	ENG.
X	XX-XX-XX	REVISION	XX	XX

DRAWN BY: HDR DATE: 03/31/2011

ASSISTANT DIRECTOR: STANDARDS & DESIGN

DIRECTOR OF ENGINEERING AND CONSTRUCTION

SCRRA ENGINEERING STANDARDS ARE INTENDED FOR SCRRA APPROVED USES ONLY. FOR NON-SCRRA APPROVED USES:
SCRRA SHALL NOT BE RESPONSIBLE FOR THE ACCURACY OR COMPLETENESS OF THE DATA OR INFORMATION CONTAINED HEREIN. THE SELECTION AND USE OF THESE STANDARDS IS THE SOLE RESPONSIBILITY OF THE USER AND SHOULD NOT BE USED WITHOUT CONSULTING A REGISTERED PROFESSIONAL ENGINEER. ALL WARRANTIES AND REPRESENTATIONS OF ANY KIND ARE DISCLAIMED. ANYONE MAKING USE OF THIS INFORMATION AGREES THAT IT ASSUMES ALL LIABILITY ARISING FROM SUCH USE. NO PART OF THESE STANDARDS SHOULD BE REPRODUCED OR DISTRIBUTED IN ANY FORM OR BY ANY MEANS WITHOUT THE PRIOR WRITTEN PERMISSION OF SCRRA. ALL RIGHTS RESERVED.

METROLINK®

SOUTHERN CALIFORNIA REGIONAL RAIL AUTHORITY
ONE GATEWAY PLAZA, 12TH FLOOR, L. A., CA. 90012

ENGINEERING STANDARDS

SWITCH STANDS HAND THROW ADJUSTMENTS AND INSTALLATION INSTRUCTIONS

STANDARD 2710
SCALE: NTS
REVISION –
SHEET 1 OF 1
CADD FILE: ES2710

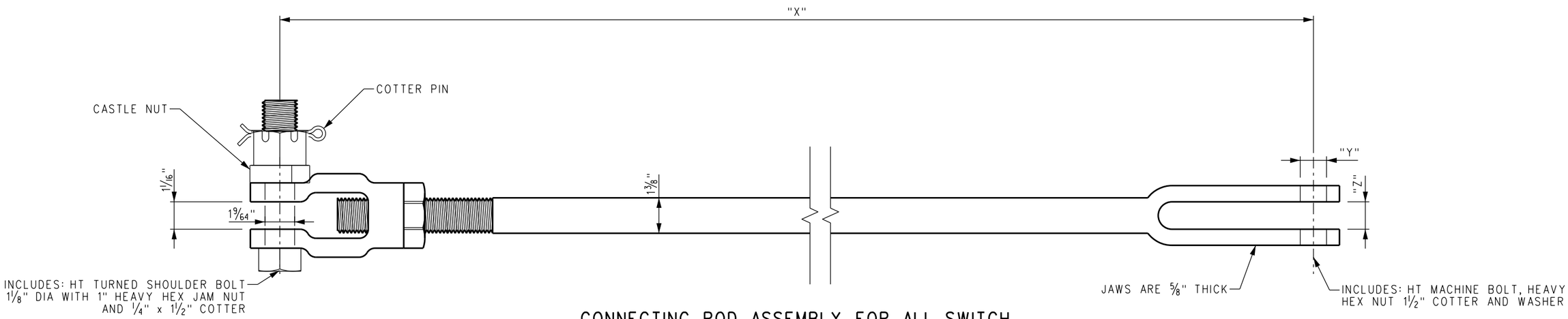

CONNECTING ROD ASSEMBLY FOR ALL SWITCH STANDS WITH ADJUSTABLE CRANK EYE (22E, 36E-EH, 112E, ETC)

"Y" - 1 1/64" FOR 3/4" AND 1" HEAD RODS
- 1 9/64" FOR 1 1/4" HEAD RODS

"Z" - 13/16" FOR 3/4" HEAD RODS
- 1 1/16" FOR 1" HEAD RODS
- 1 5/16" FOR 1 1/4" HEAD RODS

RAIL SIZE	"X"	HEAD ROD THICKNESS
90-115 LB	3'-4"	1"
132-136 LB	3'-4"	1 1/4"
90-115 LB	5'	1"
132-136 LB	5'	1 1/4"
90-115 LB	7'	1"
132-136 LB	13'-9"	1 1/4"
132-136 LB	7'	1 1/4"

REV.	DATE	DESCRIPTION	DES.	ENG.
X	XX-XX-XX	REVISION	XX	XX

DRAWN BY: HDR DATE: 03/31/2011

ASSISTANT DIRECTOR: STANDARDS & DESIGN

DIRECTOR OF ENGINEERING AND CONSTRUCTION

SCRRA ENGINEERING STANDARDS ARE INTENDED FOR SCRRA APPROVED USES ONLY. FOR NON-SCRRA APPROVED USES:
SCRRA SHALL NOT BE RESPONSIBLE FOR THE ACCURACY OR COMPLETENESS OF THE DATA OR INFORMATION CONTAINED HEREIN. THE SELECTION AND USE OF THESE STANDARDS IS THE SOLE RESPONSIBILITY OF THE USER AND SHOULD NOT BE USED WITHOUT CONSULTING A REGISTERED PROFESSIONAL ENGINEER. ALL WARRANTIES AND REPRESENTATIONS OF ANY KIND ARE DISCLAIMED. ANYONE MAKING USE OF THIS INFORMATION AGREES THAT IT ASSUMES ALL LIABILITY ARISING FROM SUCH USE. NO PART OF THESE STANDARDS SHOULD BE REPRODUCED OR DISTRIBUTED IN ANY FORM OR BY ANY MEANS WITHOUT THE PRIOR WRITTEN PERMISSION OF SCRRA. ALL RIGHTS RESERVED.

METROLINK®
SOUTHERN CALIFORNIA REGIONAL RAIL AUTHORITY
ONE GATEWAY PLAZA, 12TH FLOOR, L. A., CA. 90012

ENGINEERING STANDARDS

CONNECTING ROD ASSEMBLY

STANDARD 2712
SCALE: NTS
REVISION –
SHEET 1 OF 1
CADD FILE: ES2712

DISCLAIMER

SCRRA Engineering Standards are intended for SCRRA approved uses only. FOR NON-SCRRA APPROVED USES: SCRRA and its member agencies, directors, officers, employees and/or agents shall not be responsible for the accuracy or completeness of the data or information contained herein. The selection and use of these standards, while designed in accordance with generally accepted engineering principles and practices, is the sole responsibility of the user and should not be used without consulting a registered professional engineer. All warranties and representations of any kind are disclaimed. Anyone making use of this information agrees that it assumes all liability arising from such use. No part of these standards should be reproduced or distributed in any form or by any means without the prior written permission of SCRRA. All rights reserved.

Since revisions or additions to the engineering standards may occur at any time, the user agrees to indemnify, defend, by counsel satisfactory to SCRRA and Member Agency, and hold harmless SCRRA, Member Agencies, and Operating Railroad, and their respective officers, commissioners, employees, agents, successors and assigns. ("Indemnitees"), and each of them to the maximum extent allowed by law, from and against all loss, liability, claims, demands, suits, liens, claims of lien, damages (including incidental consequential damages), costs and expenses (including, without limitation, any fines, penalties, judgments, actual litigation expenses and experts' and actual attorneys' fees), that are incurred by or asserted against Indemnitees arising out of or connected in any manner with the user's use of outdated engineering standards.

Updating the contents of the manual is a continued process, and revisions/replacements are issued periodically. Questions, comments, and proposed recommendations for changes may be sent to SCRRA at 279 E. Arrow Highway, Suite A, San Dimas, CA 91773.

BILL OF MATERIAL				
ITEM	QTY	DESCRIPTION	DWG NO	SCRRA PART NO
1	1	GUARD BAR, UIC33 1200 SERIES x 26'-0" LONG	-	
2	13	GUARD RAIL PLATE ASSEMBLY, 136 LB RE RAISED 1", STRAIGHT	-	
3	13	H-CLAMP	-	
4	39	CLIP, PANDROL, E2055	-	
5	13	LOCKING BLOCK	-	
6	52	SHIM, 1/8" x 3" X 6"	-	

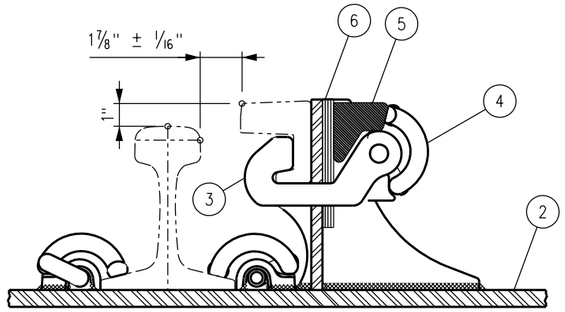

PARTIAL SECTION (A)
GUARD RAIL HARDWARE ASSEMBLY

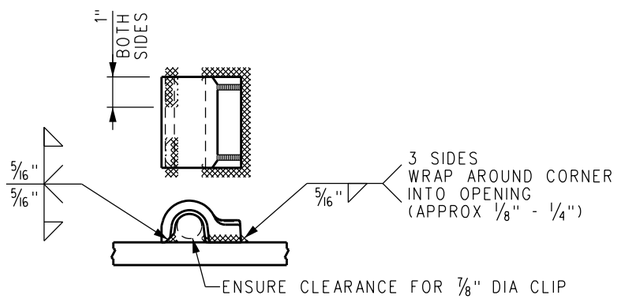

FORGED SHOULDER WELDING DETAIL

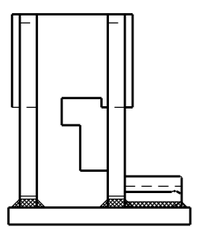

VIEW (B)

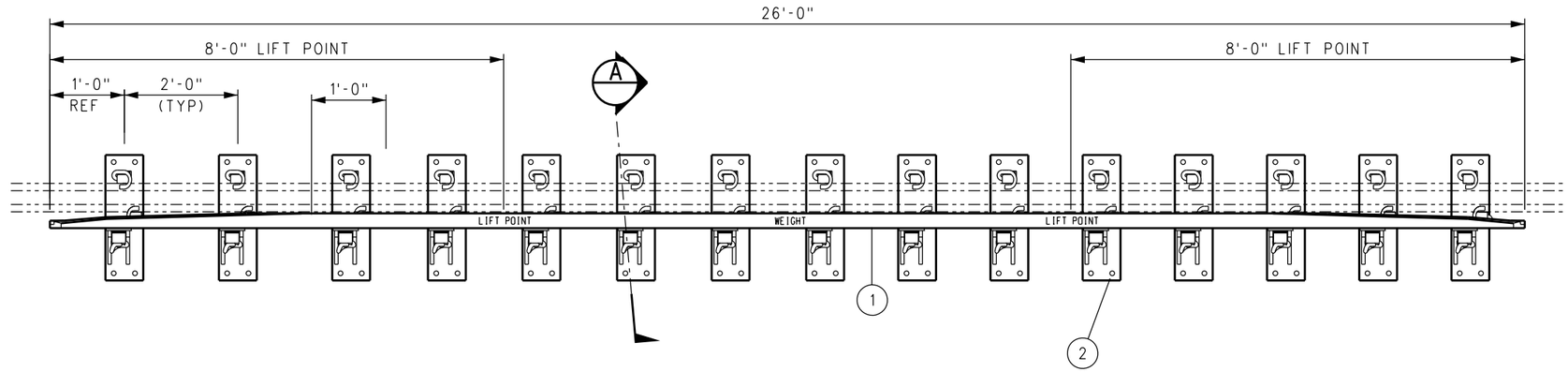

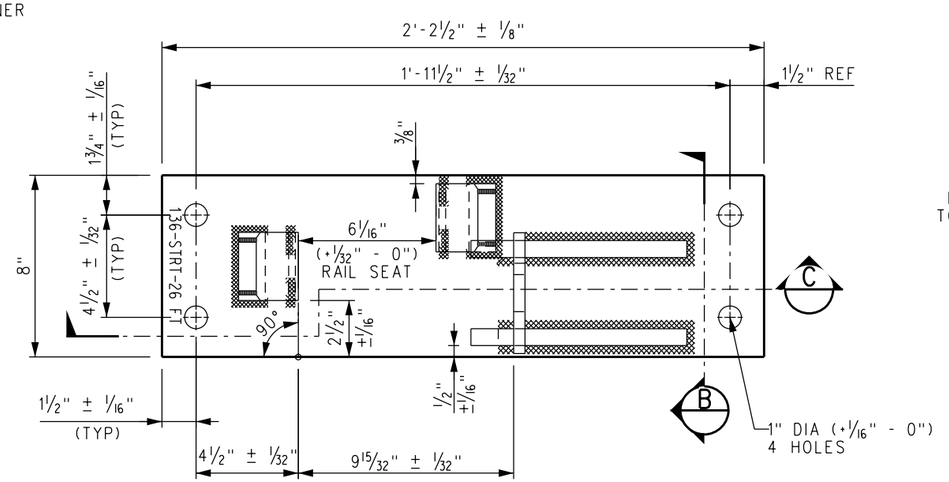

GUARD RAIL PLATE ASSEMBLY

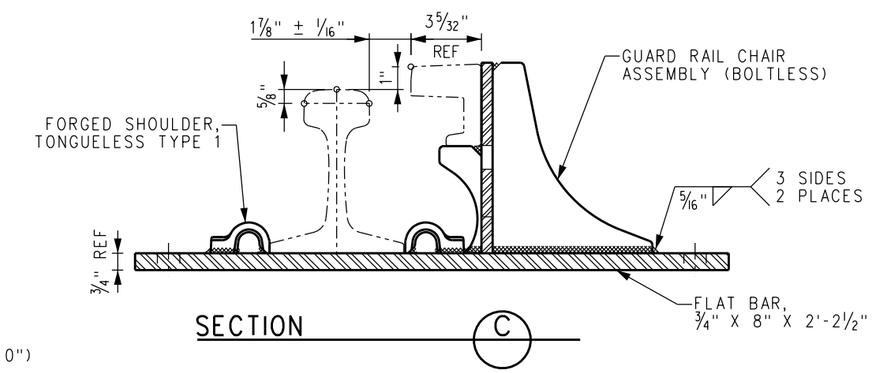

SECTION (C)

NOTES:

1. PLATE SPACING IS SET FOR SHIPPING ONLY. FINAL PLATE SPACING IS TO BE DETERMINED BY TIE SPACING AT TIME OF INSTALLATION.
2. PANDROL SPRING CLIPS (E2055) TO BE INCLUDED IN ASSEMBLY.
3. LIFT POINTS AND WEIGHT OF ASSEMBLY TO BE MARKED ON HEAD OF WEAR BAR WITH WHITE PAINT.
4. PLATE IS TO BE STAMPED WITH PLATE I.D. WITH 1/2" HIGH CHARACTERS AS SHOWN.
5. GRIND AWAY CORNER OF PANDROL SHOULDER TO CLEAR FOOT OF CHAIR ASSEMBLY.

REV.	DATE	DESCRIPTION	DES.	ENG.
X	XX-XX-XX	REVISION	XX	XX

DRAWN BY: HDR DATE: 03/31/2011

ASSISTANT DIRECTOR: STANDARDS & DESIGN

DIRECTOR OF ENGINEERING AND CONSTRUCTION

SCRRA ENGINEERING STANDARDS ARE INTENDED FOR SCRRA APPROVED USES ONLY. FOR NON-SCRRA APPROVED USES:
SCRRA SHALL NOT BE RESPONSIBLE FOR THE ACCURACY OR COMPLETENESS OF THE DATA OR INFORMATION CONTAINED HEREIN. THE SELECTION AND USE OF THESE STANDARDS IS THE SOLE RESPONSIBILITY OF THE USER AND SHOULD NOT BE USED WITHOUT CONSULTING A REGISTERED PROFESSIONAL ENGINEER. ALL WARRANTIES AND REPRESENTATIONS OF ANY KIND ARE DISCLAIMED. ANYONE MAKING USE OF THIS INFORMATION AGREES THAT IT ASSUMES ALL LIABILITY ARISING FROM SUCH USE. NO PART OF THESE STANDARDS SHOULD BE REPRODUCED OR DISTRIBUTED IN ANY FORM OR BY ANY MEANS WITHOUT THE PRIOR WRITTEN PERMISSION OF SCRRA. ALL RIGHTS RESERVED.

METROLINK®
SOUTHERN CALIFORNIA REGIONAL RAIL AUTHORITY
ONE GATEWAY PLAZA, 12TH FLOOR, L. A., CA. 90012

ENGINEERING STANDARDS

GUARD RAIL ASSEMBLY, STRAIGHT WITH PLATES
26'-0" LONG, BOLTLESS, RAISED 1"
CONCRETE TIES – 136 LB RE RAIL, 1 7/8" FLANGEWAY

STANDARD 2800
SCALE: NTS
REVISION –
SHEET 1 OF 1
CADD FILE: ES2800-50

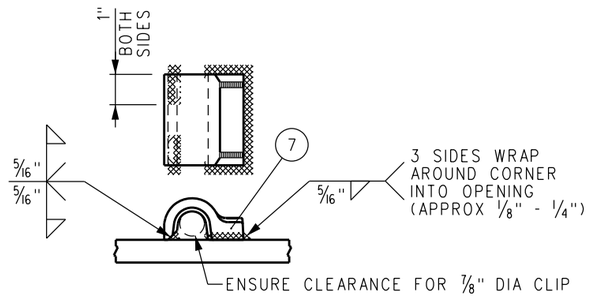

FORGED SHOULDER WELDING DETAIL

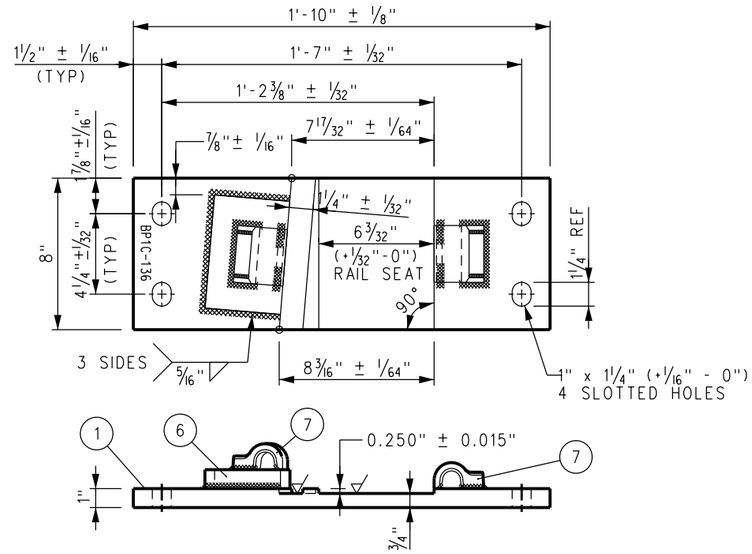

SWITCH PLATE BRACE BP1C-136

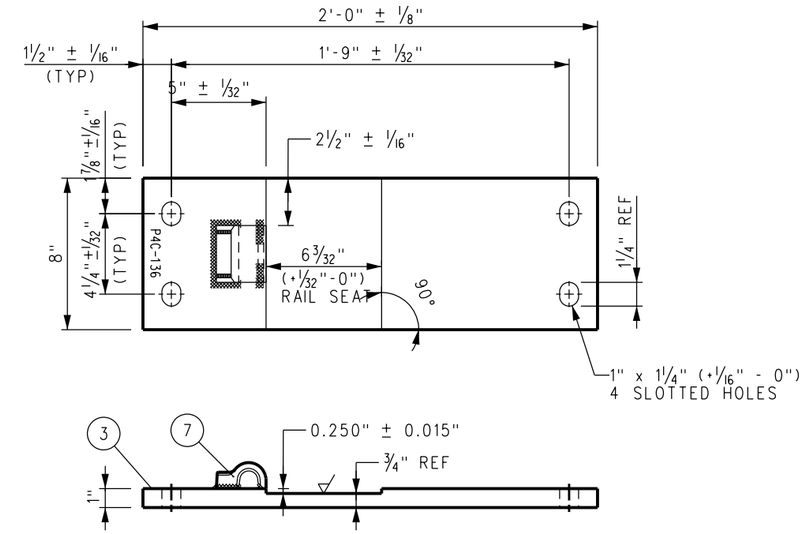

SWITCH PLATE P4C-136

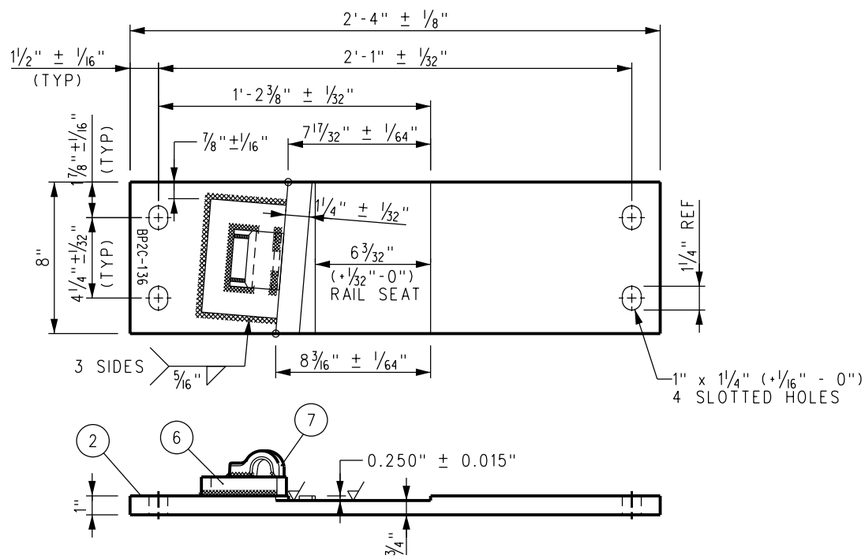

SWITCH PLATE BRACE BP2C-136

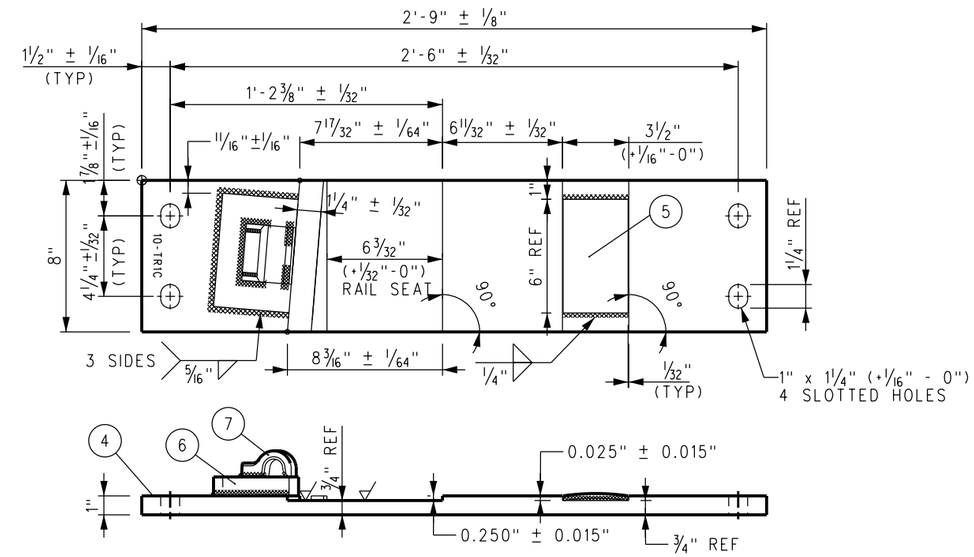

SWITCH ROLLER PLATE 10-TRIC

BILL OF MATERIALS	
ITEM	DESCRIPTION
1	FLAT BAR, ASTM A36, 1" x 8" x 1'-10"
2	FLAT BAR, ASTM A36, 1" x 8" x 2'-4"
3	FLAT BAR, ASTM A36, 1" x 8" x 2'-0"
4	FLAT BAR, ASTM A36, 1" x 8" x 2'-9"

BILL OF MATERIALS	
ITEM	DESCRIPTION
5	RISER FOR ROLLER PLATE, 1/4" THICK x 3 7/16" x 6"
6	STOP ASSEMBLY FOR BOLTLESS BRACE, 1" THICK, CONTINUOUSLY WELDED SHOULDER
7	SHOULDER, PANDROL, FORGED TONGUELESS, TYPE 5

NOTES:

1. I.D. CHARACTERS TO BE 1/2" MINIMUM HEIGHT CLEARLY STAMPED AS SHOWN.
2. WELDS TO BE DRESSED FLUSH WITH SHOULDER & NOT TO PROTRUDE INTO RAIL SEAT.
3. SLOTTED HOLE CENTERS ARE INDICATED ON DRAWING.

REV.	DATE	DESCRIPTION	DES.	ENG.
X	XX-XX-XX	REVISION	XX	XX

DRAWN BY: HDR DATE: 03/31/2011

ASSISTANT DIRECTOR: STANDARDS & DESIGN

DIRECTOR OF ENGINEERING AND CONSTRUCTION

SCRRA ENGINEERING STANDARDS ARE INTENDED FOR SCRRA APPROVED USES ONLY. FOR NON-SCRRA APPROVED USES:
SCRRA SHALL NOT BE RESPONSIBLE FOR THE ACCURACY OR COMPLETENESS OF THE DATA OR INFORMATION CONTAINED HEREIN. THE SELECTION AND USE OF THESE STANDARDS IS THE SOLE RESPONSIBILITY OF THE USER AND SHOULD NOT BE USED WITHOUT CONSULTING A REGISTERED PROFESSIONAL ENGINEER. ALL WARRANTIES AND REPRESENTATIONS OF ANY KIND ARE DISCLAIMED. ANYONE MAKING USE OF THIS INFORMATION AGREES THAT IT ASSUMES ALL LIABILITY ARISING FROM SUCH USE. NO PART OF THESE STANDARDS SHOULD BE REPRODUCED OR DISTRIBUTED IN ANY FORM OR BY ANY MEANS WITHOUT THE PRIOR WRITTEN PERMISSION OF SCRRA. ALL RIGHTS RESERVED.

METROLINK®
SOUTHERN CALIFORNIA REGIONAL RAIL AUTHORITY
ONE GATEWAY PLAZA, 12TH FLOOR, L. A., CA. 90012

ENGINEERING STANDARDS

SWITCH PLATES BRACES BP1C AND BP2C, PLATE P4C–136 AND ROLLER PLATE 10–TRLC FOR 136 LB RE CONCRETE TIE TURNOUT

STANDARD: 2800
SCALE: NTS
REVISION: –
SHEET: 1 OF 1
CADD FILE: ES2800–80

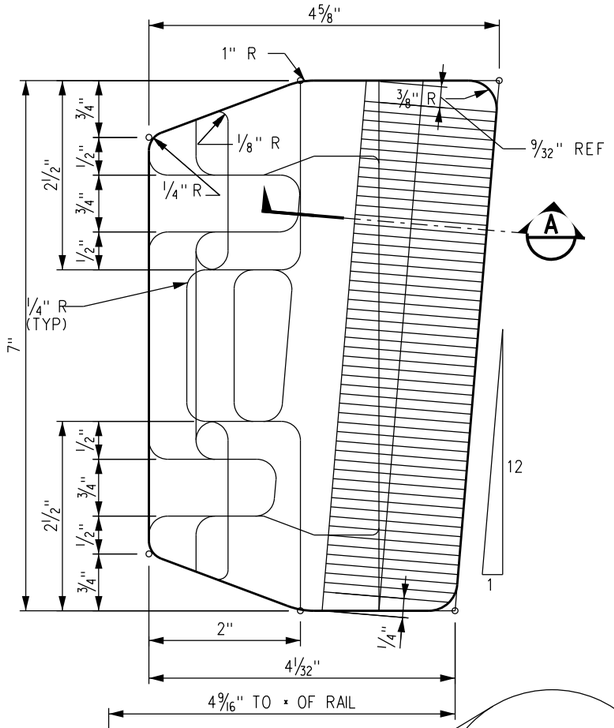

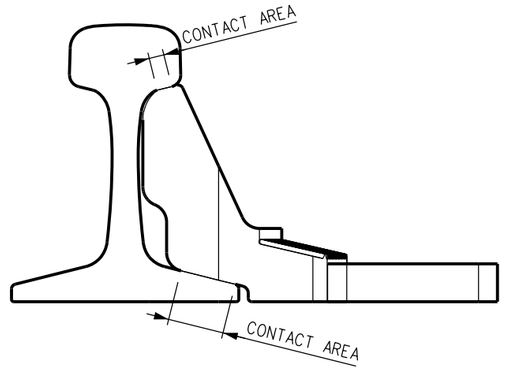

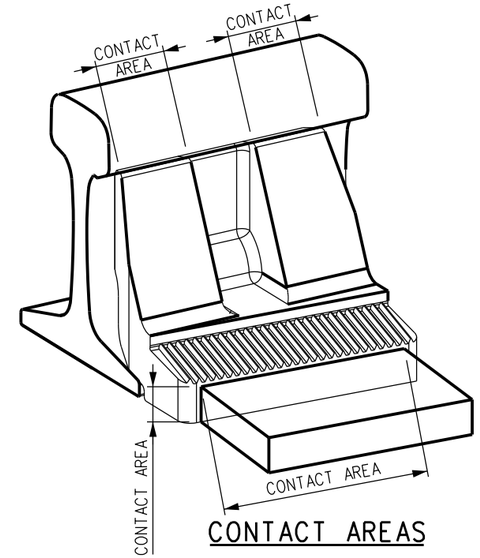

CONTACT AREAS

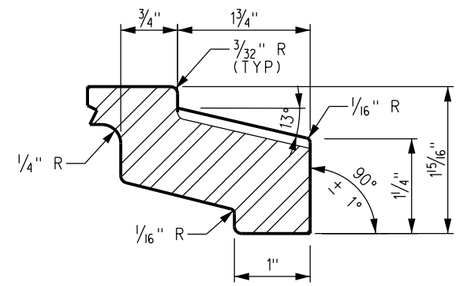

SECTION A

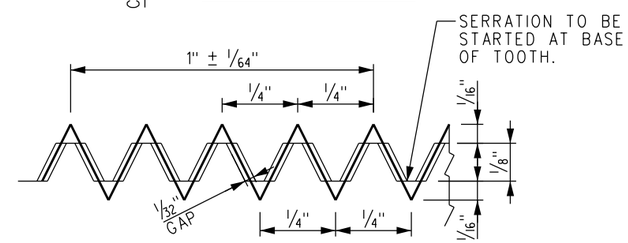

SEPARATION DETAIL

OF MATING PARTS

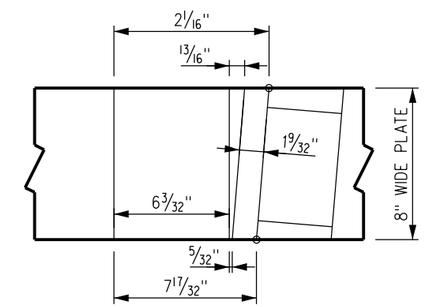

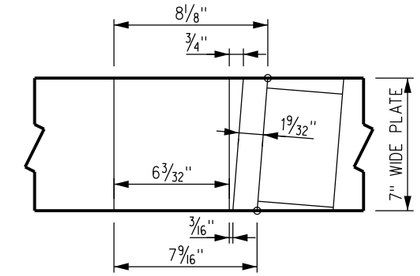

PLATE DESIGN REFERENCE DETAILS

NOTE: VALUES ONLY GOOD FOR 90° PLATES.

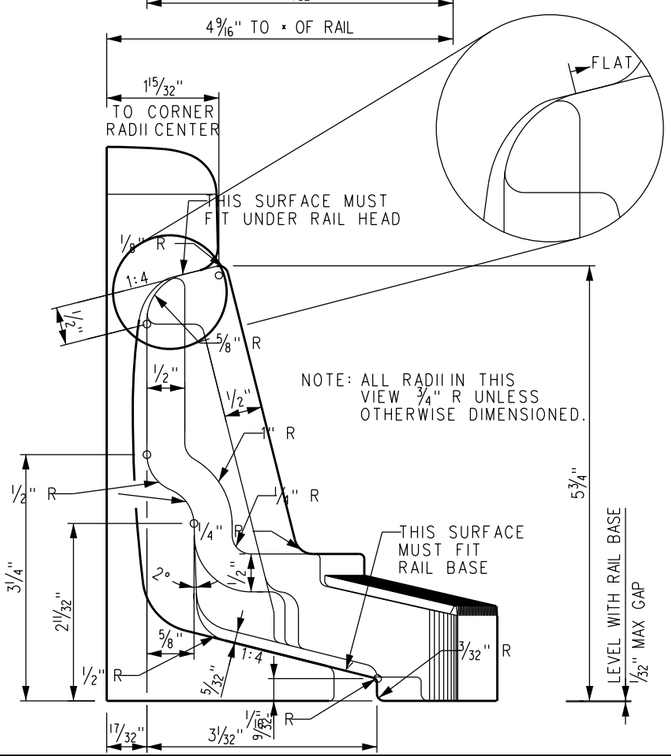

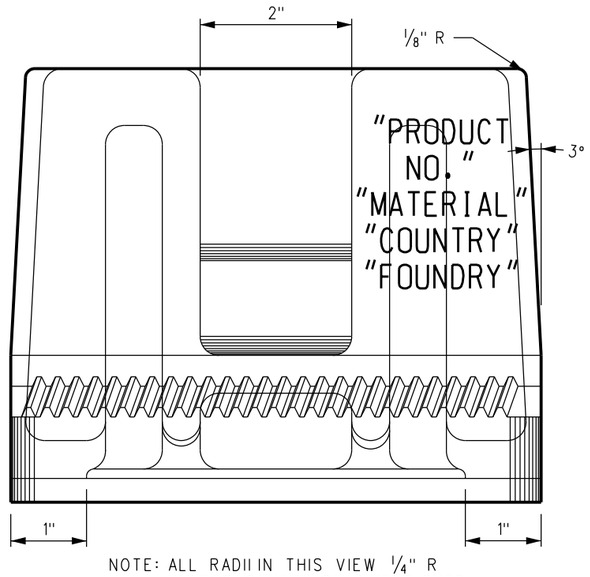

NOTE: ALL RADII IN THIS VIEW 1/4" R UNLESS OTHERWISE DIMENSIONED.

NOTES:

1. "PART ID" CHARACTERS TO BE CAST RAISED WITH TEXT AS FOLLOWS:

"PRODUCT NO.'	ES2800-81
"MATERIAL"	D.I.
"COUNTRY"	SEE "COUNTRY OF ORIGIN"
"FOUNDRY"	LOGO OR ID NOT TO BE GREATER THAN 3/4" x 3/4"

2. "COUNTRY OF ORIGIN": CANADA = "CA"; CHINA = "CH"; UNITED STATES = "US".
3. TEXT AND LOGOS ARE RAISED 0.030" TO 0.040". THE TEXT FONT IS BLOCK LETTERING AND TEXT SIZE OF 3/8".
4. FOR USE WITH 132 LB AND 136 LB RE RAIL ONLY.
5. MATERIAL: DUCTILE IRON, ASTM A536 GR 65-45-12
6. SEE ES2800-82 FOR SERRATED WASHER DRAWING.

REV.	DATE	DESCRIPTION	DES.	ENG.
X	XX-XX-XX	REVISION	XX	XX

DRAWN BY: HDR DATE: 03/31/2011

ASSISTANT DIRECTOR: STANDARDS & DESIGN

DIRECTOR OF ENGINEERING AND CONSTRUCTION

SCRRA ENGINEERING STANDARDS ARE INTENDED FOR SCRRA APPROVED USES ONLY. FOR NON-SCRRA APPROVED USES, SCRRA SHALL NOT BE RESPONSIBLE FOR THE ACCURACY OR COMPLETENESS OF THE DATA OR INFORMATION CONTAINED HEREIN. THE SELECTION AND USE OF THESE STANDARDS IS THE SOLE RESPONSIBILITY OF THE USER AND SHOULD NOT BE USED WITHOUT CONSULTING A REGISTERED PROFESSIONAL ENGINEER. ALL WARRANTIES AND REPRESENTATIONS OF ANY KIND ARE DISCLAIMED. ANYONE MAKING USE OF THIS INFORMATION AGREES THAT IT ASSUMES ALL LIABILITY ARISING FROM SUCH USE. NO PART OF THESE STANDARDS SHOULD BE REPRODUCED OR DISTRIBUTED IN ANY FORM OR BY ANY MEANS WITHOUT THE PRIOR WRITTEN PERMISSION OF SCRRA. ALL RIGHTS RESERVED.

METROLINK

SOUTHERN CALIFORNIA REGIONAL RAIL AUTHORITY
ONE GATEWAY PLAZA, 12TH FLOOR, L. A., CA. 90012

ENGINEERING STANDARDS

BOLTLESS BRACE (TYPE 2) FOR 136 LB RE RAIL

STANDARD 2800
SCALE: NTS
REVISION –
SHEET 1 OF 1
CADD FILE: ES2800-81

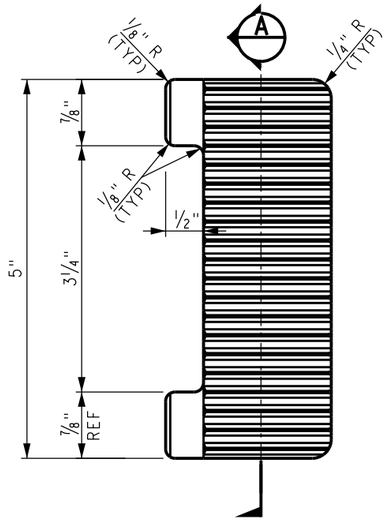

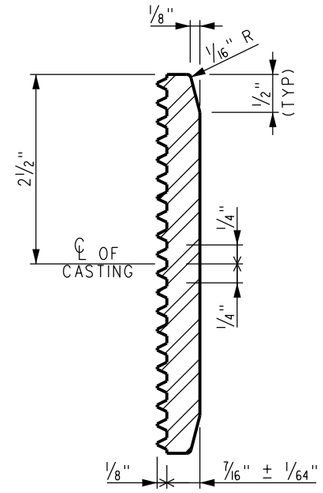

ELEVATION (A)

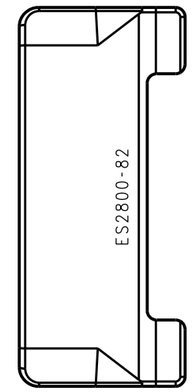

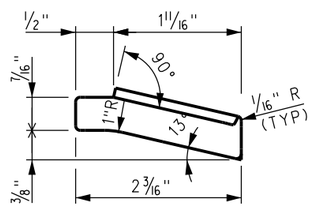

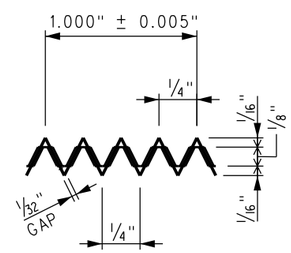

SERRATION DETAIL
OF MATING PARTS
(ALL DIMENSIONS ± 1/64")

NOTES:

1. MATERIAL - DUCTILE IRON ASTM Gr 536-G 65-45-12 OR ACCEPTABLE ALTERNATE AISI/SAE 1020
2. PARTS TO BE CAST INDENTED WITH TEXT ES2800-82.

REV.	DATE	DESCRIPTION	DES.	ENG.
X	XX-XX-XX	REVISION	XX	XX

DRAWN BY: HDR DATE: 03/31/2011

ASSISTANT DIRECTOR: STANDARDS & DESIGN

DIRECTOR OF ENGINEERING AND CONSTRUCTION

SCRRA ENGINEERING STANDARDS ARE INTENDED FOR SCRRA APPROVED USES ONLY. FOR NON-SCRRA APPROVED USES: SCRRA SHALL NOT BE RESPONSIBLE FOR THE ACCURACY OR COMPLETENESS OF THE DATA OR INFORMATION CONTAINED HEREIN. THE SELECTION AND USE OF THESE STANDARDS IS THE SOLE RESPONSIBILITY OF THE USER AND SHOULD NOT BE USED WITHOUT CONSULTING A REGISTERED PROFESSIONAL ENGINEER. ALL WARRANTIES AND REPRESENTATIONS OF ANY KIND ARE DISCLAIMED. ANYONE MAKING USE OF THIS INFORMATION AGREES THAT IT ASSUMES ALL LIABILITY ARISING FROM SUCH USE. NO PART OF THESE STANDARDS SHOULD BE REPRODUCED OR DISTRIBUTED IN ANY FORM OR BY ANY MEANS WITHOUT THE PRIOR WRITTEN PERMISSION OF SCRRA. ALL RIGHTS RESERVED.

METROLINK®
SOUTHERN CALIFORNIA REGIONAL RAIL AUTHORITY
ONE GATEWAY PLAZA, 12TH FLOOR, L. A., CA. 90012

ENGINEERING STANDARDS

SERRATED WASHER FOR BOLTLESS BRACE

STANDARD: 2800
SCALE: NTS
REVISION: –
SHEET: 1 OF 1
CADD FILE: ES2800-82

NOTE:

1. I.D. CHARACTERS TO BE 5/8" MINIMUM HEIGHT CLEARLY STAMPED AS SHOWN.
2. SLOTTED HOLE CENTERS ARE INDICATED ON DRAWING.

BILL OF MATERIAL

ITEM	QTY FOR HTP-206-STR	DESCRIPTION	DWG NO	SCRRA PART NO
1	1	BURNED SWITCH PLATE, 1 1/4" THICK	-	
2	1	SAFELOK SHOULDER	-	
3	1	LV BRACE RETENTION BLOCK	-	

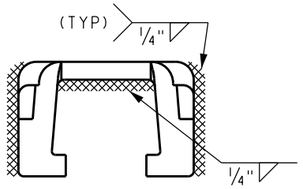

TYPICAL SAFELOK WELD-ON CAST SHOULDER WELDING DETAILS

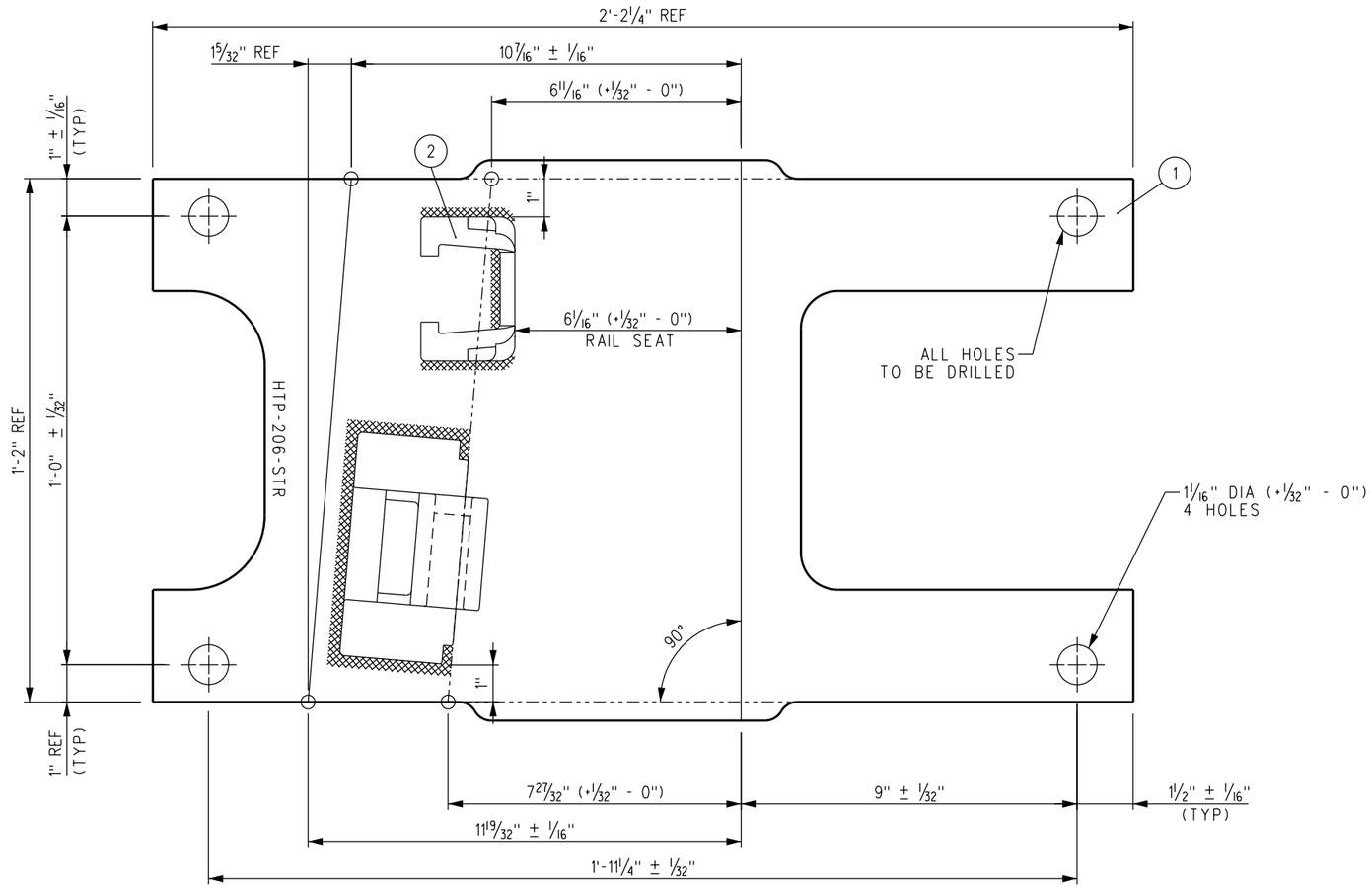

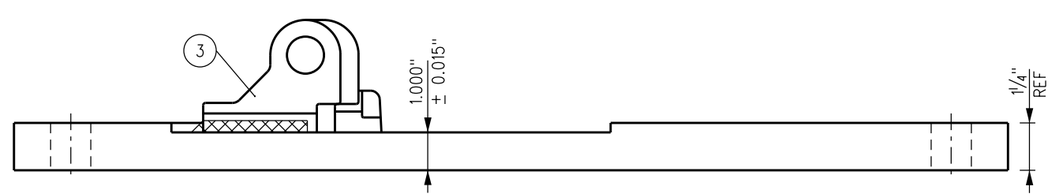

HTP-206-STR

REV.	DATE	DESCRIPTION	DES.	ENG.
X	XX-XX-XX	REVISION	XX	XX

DRAWN BY: HDR DATE: 03/31/2011

ASSISTANT DIRECTOR: STANDARDS & DESIGN

DIRECTOR OF ENGINEERING AND CONSTRUCTION

SCRRA ENGINEERING STANDARDS ARE INTENDED FOR SCRRA APPROVED USES ONLY. FOR NON-SCRRA APPROVED USES, SCRRA SHALL NOT BE RESPONSIBLE FOR THE ACCURACY OR COMPLETENESS OF THE DATA OR INFORMATION CONTAINED HEREIN. THE SELECTION AND USE OF THESE STANDARDS IS THE SOLE RESPONSIBILITY OF THE USER AND SHOULD NOT BE USED WITHOUT CONSULTING A REGISTERED PROFESSIONAL ENGINEER. ALL WARRANTIES AND REPRESENTATIONS OF ANY KIND ARE DISCLAIMED. ANYONE MAKING USE OF THIS INFORMATION AGREES THAT IT ASSUMES ALL LIABILITY ARISING FROM SUCH USE. NO PART OF THESE STANDARDS SHOULD BE REPRODUCED OR DISTRIBUTED IN ANY FORM OR BY ANY MEANS WITHOUT THE PRIOR WRITTEN PERMISSION OF SCRRA. ALL RIGHTS RESERVED.

METROLINK®
SOUTHERN CALIFORNIA REGIONAL RAIL AUTHORITY
ONE GATEWAY PLAZA, 12TH FLOOR, L. A., CA. 90012

ENGINEERING STANDARDS

SWITCH PLATES FOR HOLLOW STEEL TIES, 136 LB RE RAIL
PLATE HTP-206-STR NO SKEW LV BRACE

STANDARD 2800
SCALE: NTS
REVISION –
SHEET 1 OF 1
CADD FILE: ES2800-90

UserName-> carlosa Date Plotted: 10/5/2011 2:34:59 PM Plot Driver-> S:\Plot Drivers\pdf.plt FileName-> s:\V8EngStds\2000\Turnouts\Common Standards\ES2800-90.dgn

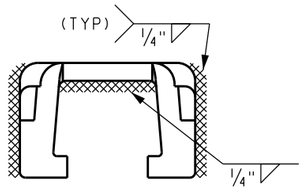

TYPICAL SAFELOK WELD-ON CAST SHOULDER WELDING DETAILS

BILL OF MATERIAL

ITEM	QTY FOR HTP-300-L	QTY FOR HTP-301-R	DESCRIPTION	DWG NO	SCRRA PART NO
1	1	1	BURNED SWITCH PLATE, 1 1/4" THICK	-	
2	1	1	SAFELOK SHOULDER	-	
3	1	1	LV BRACE RETENTION BLOCK	-	

NOTE:

1. I.D. CHARACTERS TO BE 5/8" MINIMUM HEIGHT CLEARLY STAMPED AS SHOWN.
2. SLOTTED HOLE CENTERS ARE INDICATED ON DRAWING.

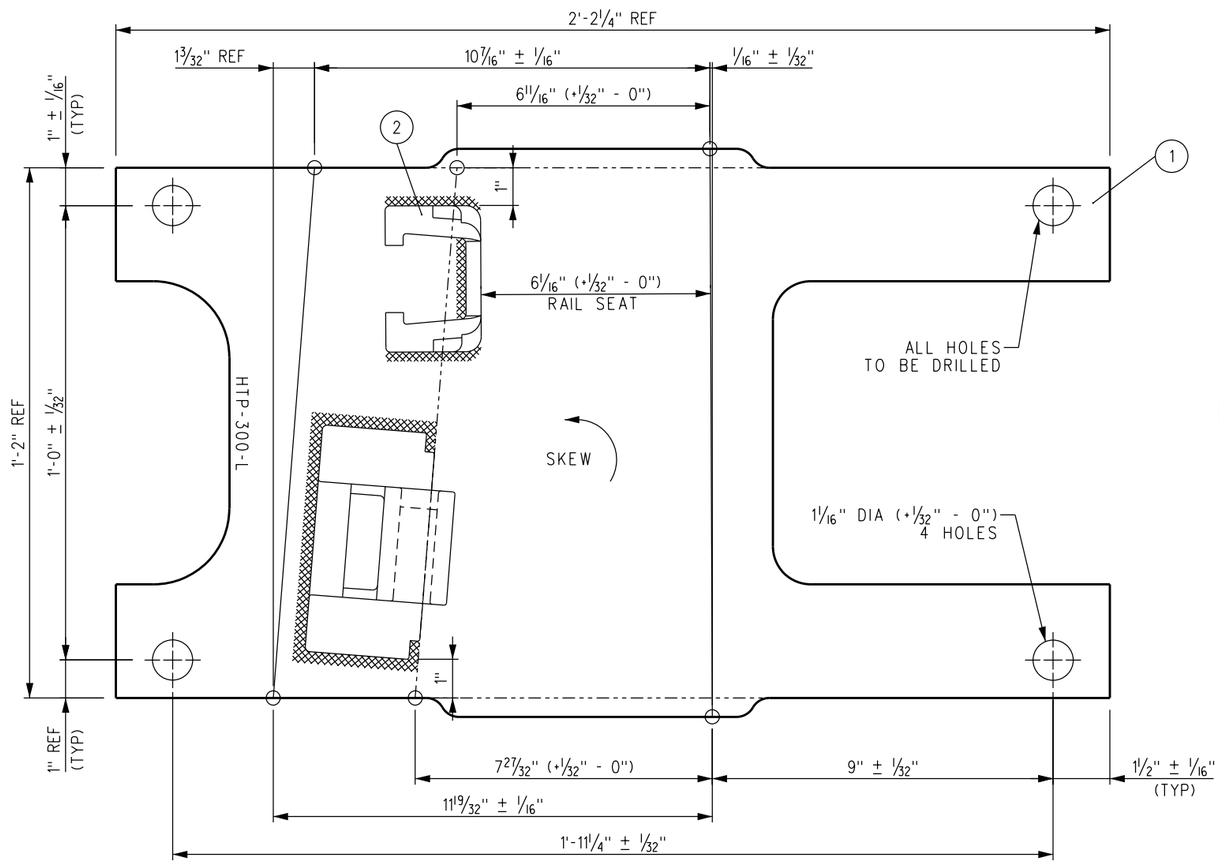

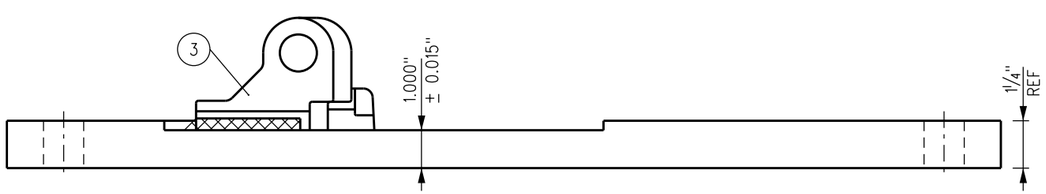

HTP-300-L

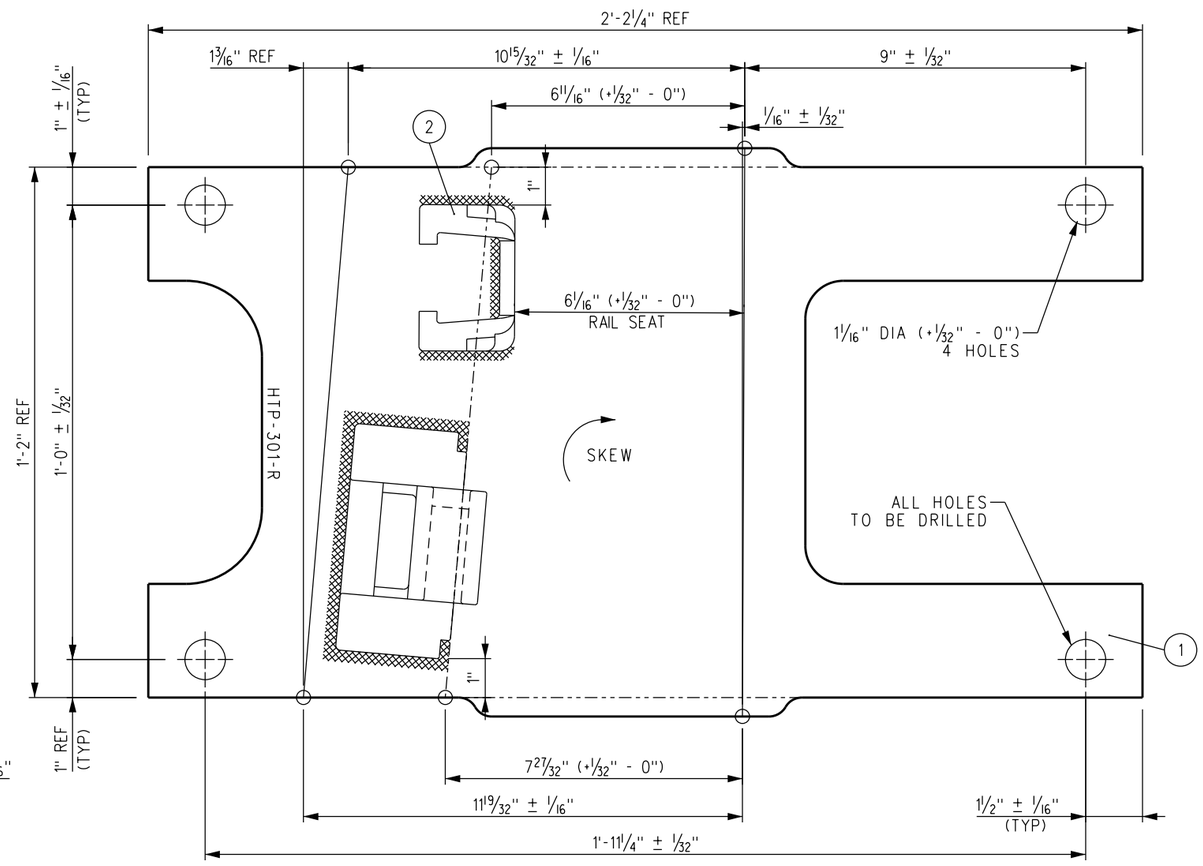

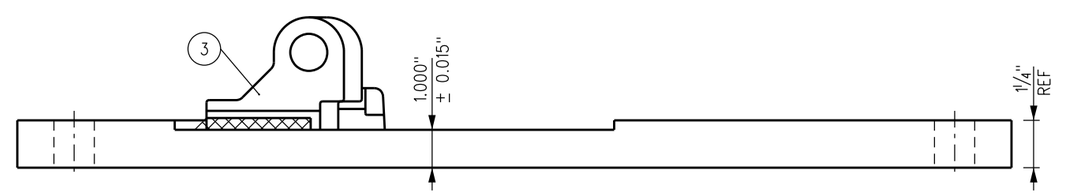

HTP-301-R

REV.	DATE	DESCRIPTION	DES.	ENG.
X	XX-XX-XX	REVISION	XX	XX

DRAWN BY: HDR DATE: 03/31/2011

ASSISTANT DIRECTOR: STANDARDS & DESIGN

DIRECTOR OF ENGINEERING AND CONSTRUCTION

SCRRA ENGINEERING STANDARDS ARE INTENDED FOR SCRRA APPROVED USES ONLY. FOR NON-SCRRA APPROVED USES, SCRRA SHALL NOT BE RESPONSIBLE FOR THE ACCURACY OR COMPLETENESS OF THE DATA OR INFORMATION CONTAINED HEREIN. THE SELECTION AND USE OF THESE STANDARDS IS THE SOLE RESPONSIBILITY OF THE USER AND SHOULD NOT BE USED WITHOUT CONSULTING A REGISTERED PROFESSIONAL ENGINEER. ALL WARRANTIES AND REPRESENTATIONS OF ANY KIND ARE DISCLAIMED. ANYONE MAKING USE OF THIS INFORMATION AGREES THAT IT ASSUMES ALL LIABILITY ARISING FROM SUCH USE. NO PART OF THESE STANDARDS SHOULD BE REPRODUCED OR DISTRIBUTED IN ANY FORM OR BY ANY MEANS WITHOUT THE PRIOR WRITTEN PERMISSION OF SCRRA. ALL RIGHTS RESERVED.

METROLINK®
SOUTHERN CALIFORNIA REGIONAL RAIL AUTHORITY
ONE GATEWAY PLAZA, 12TH FLOOR, L. A., CA. 90012

ENGINEERING STANDARDS
SWITCH PLATES FOR HOLLOW STEEL TIES, 136 LB RE RAIL
PLATES HTP-300-L & HTP-301-R
1/16" SKEW LV BRACE

STANDARD 2800
SCALE: NTS
REVISION –
SHEET 1 OF 1
CADD FILE: ES2800-91

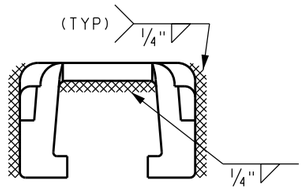

TYPICAL SAFELOK WELD-ON CAST SHOULDER WELDING DETAILS

BILL OF MATERIAL

ITEM	QTY FOR HTP-208-L	QTY FOR HTP-209-R	DESCRIPTION	DWG NO	SCRRA PART NO
1	1	1	BURNED SWITCH PLATE, 1 1/4" THICK	-	
2	1	1	SAFELOK SHOULDER	-	
3	1	1	LV BRACE RETENTION BLOCK	-	

NOTE:

1. I.D. CHARACTERS TO BE 5/8" MINIMUM HEIGHT CLEARLY STAMPED AS SHOWN.
2. SLOTTED HOLE CENTERS ARE INDICATED ON DRAWING.

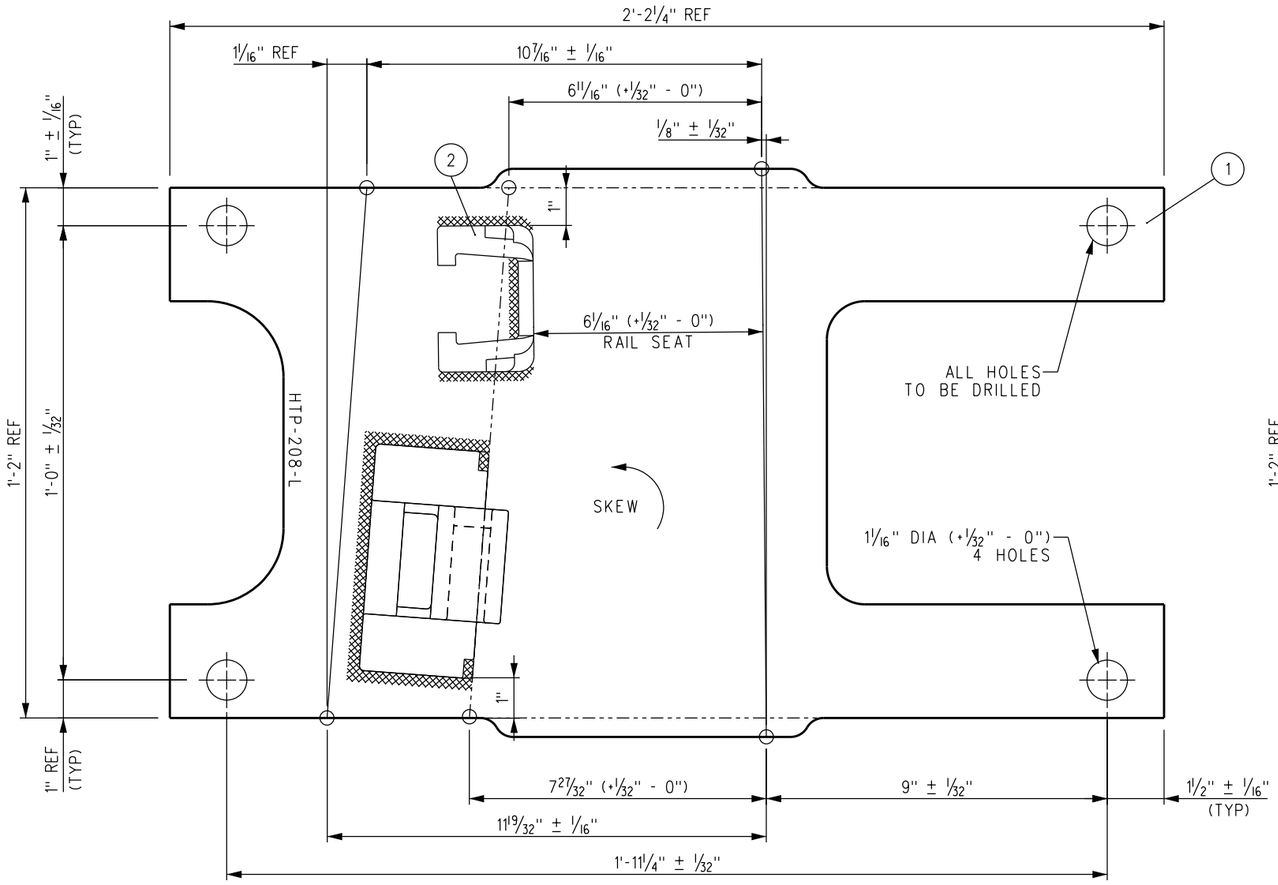

HTP-208-L

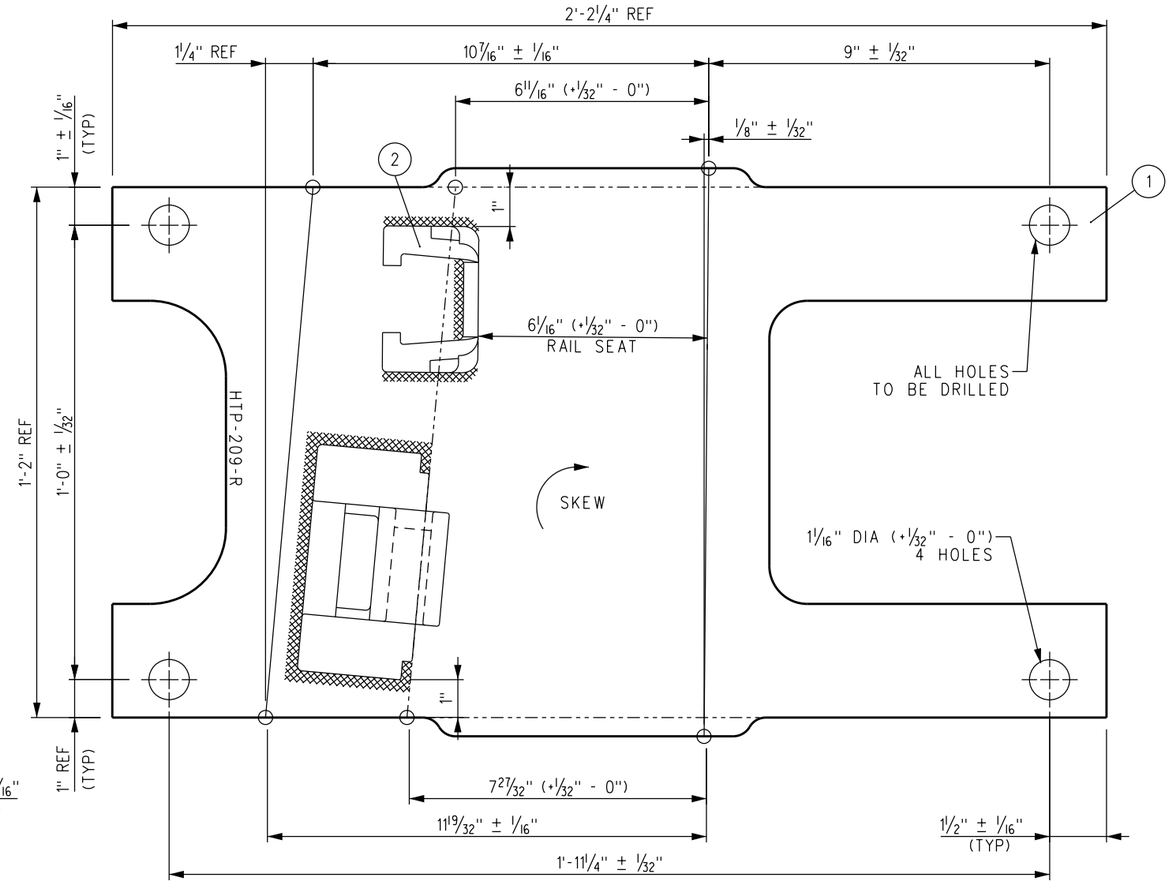

HTP-209-R

REV.	DATE	DESCRIPTION	DES.	ENG.
X	XX-XX-XX	REVISION	XX	XX

DRAWN BY: HDR DATE: 03/31/2011

ASSISTANT DIRECTOR: STANDARDS & DESIGN

DIRECTOR OF ENGINEERING AND CONSTRUCTION

SCRRA ENGINEERING STANDARDS ARE INTENDED FOR SCRRA APPROVED USES ONLY. FOR NON-SCRRA APPROVED USES, SCRRA SHALL NOT BE RESPONSIBLE FOR THE ACCURACY OR COMPLETENESS OF THE DATA OR INFORMATION CONTAINED HEREIN. THE SELECTION AND USE OF THESE STANDARDS IS THE SOLE RESPONSIBILITY OF THE USER AND SHOULD NOT BE USED WITHOUT CONSULTING A REGISTERED PROFESSIONAL ENGINEER. ALL WARRANTIES AND REPRESENTATIONS OF ANY KIND ARE DISCLAIMED. ANYONE MAKING USE OF THIS INFORMATION AGREES THAT IT ASSUMES ALL LIABILITY ARISING FROM SUCH USE. NO PART OF THESE STANDARDS SHOULD BE REPRODUCED OR DISTRIBUTED IN ANY FORM OR BY ANY MEANS WITHOUT THE PRIOR WRITTEN PERMISSION OF SCRRA. ALL RIGHTS RESERVED.

METROLINK®

SOUTHERN CALIFORNIA REGIONAL RAIL AUTHORITY
ONE GATEWAY PLAZA, 12TH FLOOR, L. A., CA. 90012

ENGINEERING STANDARDS

SWITCH PLATES FOR HOLLOW STEEL TIES,
136 LB RE RAIL
PLATES HTP-208-L AND HTP-209-R
1/8" SKEW LV BRACE

STANDARD: 2800
SCALE: NTS
REVISION: –
SHEET: 1 OF 1
CADD FILE: ES2800-92

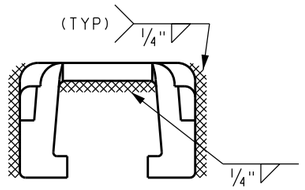

TYPICAL SAFELOK WELD-ON CAST SHOULDER WELDING DETAILS

BILL OF MATERIAL

ITEM	QTY FOR HTP-200-L	QTY FOR HTP-201-R	DESCRIPTION	DWG NO	SCRRA PART NO
1	1	1	BURNED SWITCH PLATE, 1 1/4" THICK	-	
2	1	1	SAFELOK SHOULDER	-	
3	1	1	LV BRACE RETENTION BLOCK	-	

NOTE:

1. I.D. CHARACTERS TO BE 5/8" MINIMUM HEIGHT CLEARLY STAMPED AS SHOWN.
2. SLOTTED HOLE CENTERS ARE INDICATED ON DRAWING.

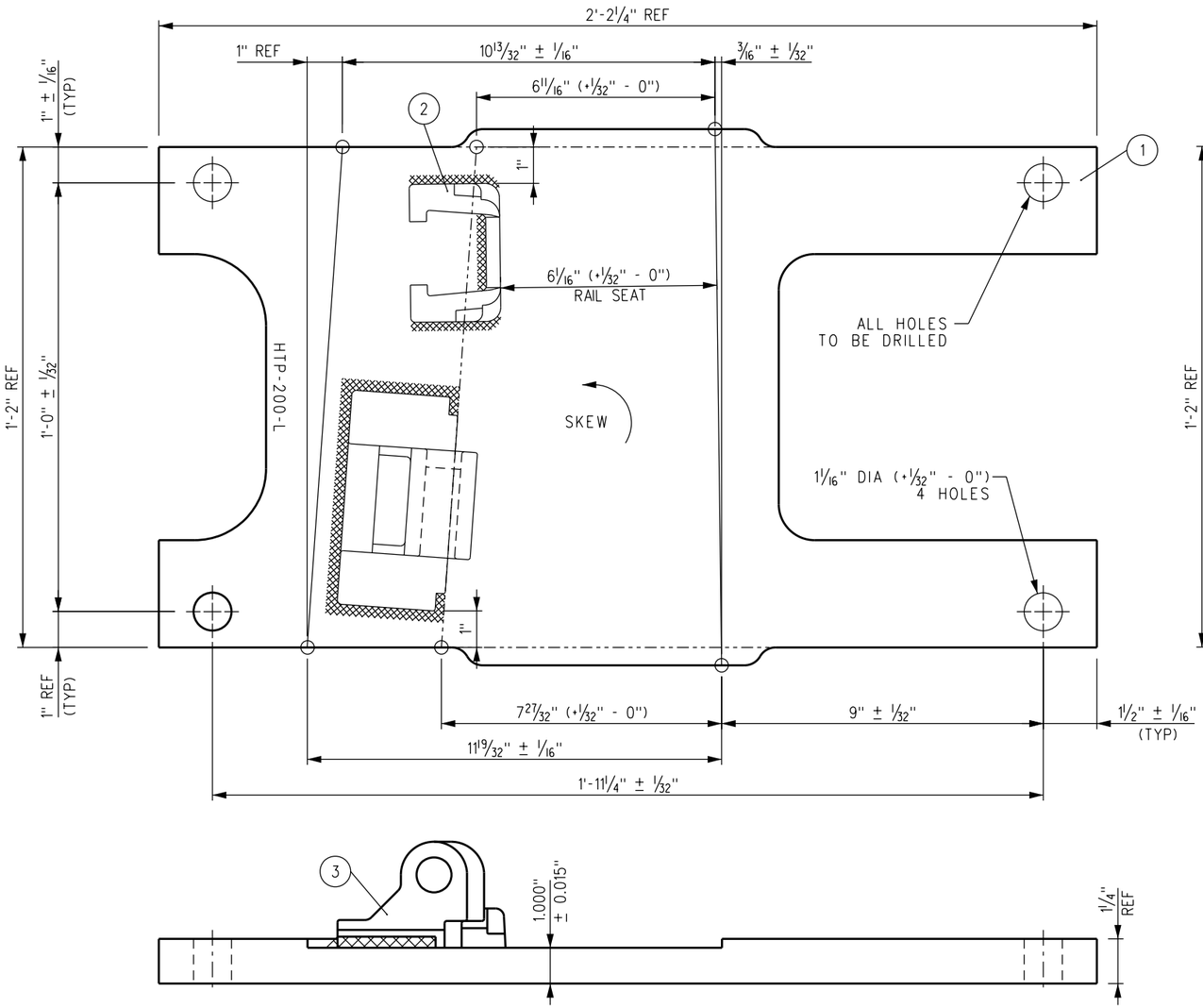

HTP-200-L

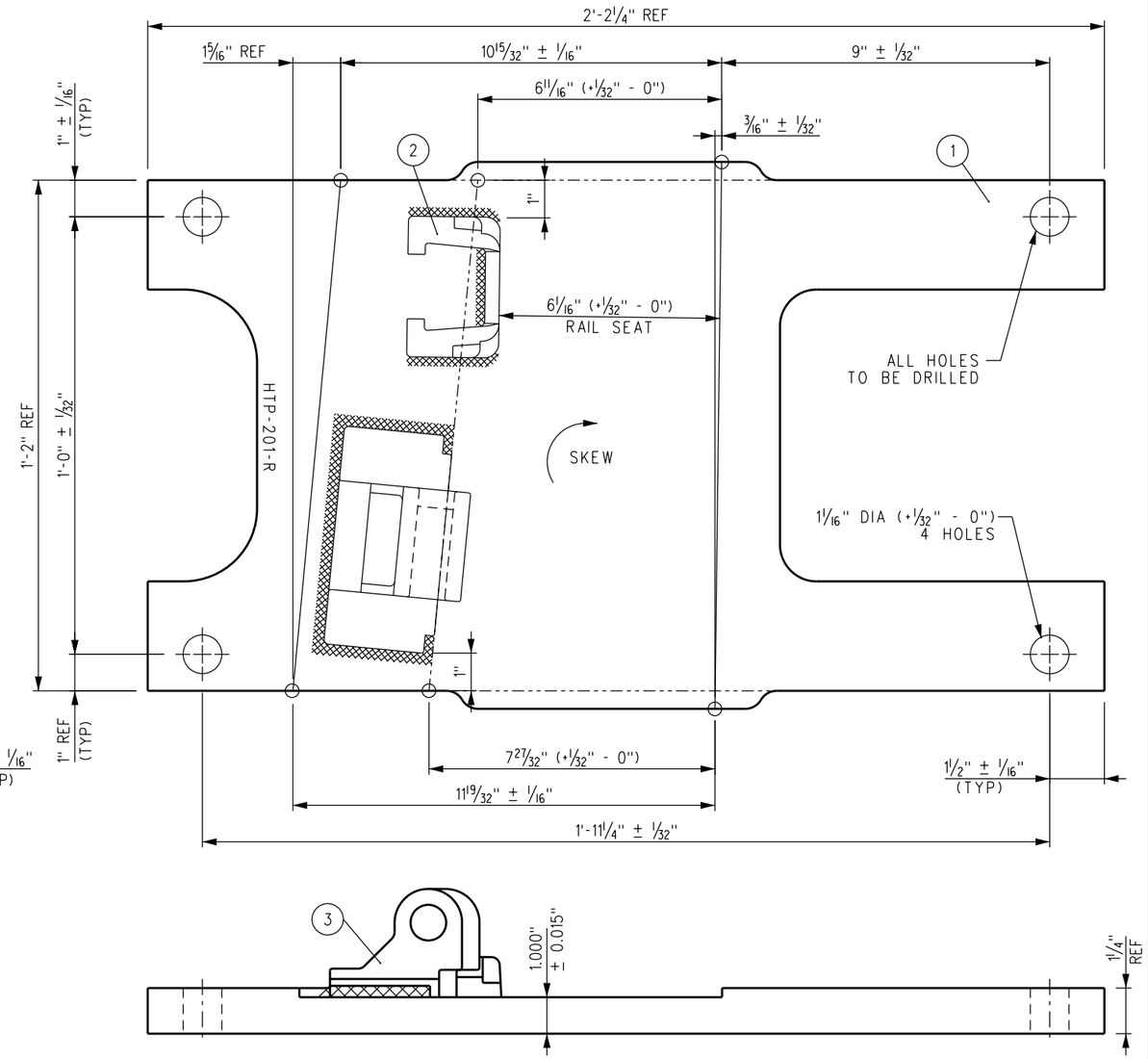

HTP-201-R

REV.	DATE	DESCRIPTION	DES.	ENG.
X	XX-XX-XX	REVISION	XX	XX

DRAWN BY: HDR DATE: 03/31/2011

ASSISTANT DIRECTOR: STANDARDS & DESIGN

DIRECTOR OF ENGINEERING AND CONSTRUCTION

SCRRA ENGINEERING STANDARDS ARE INTENDED FOR SCRRA APPROVED USES ONLY. FOR NON-SCRRA APPROVED USES:
SCRRA SHALL NOT BE RESPONSIBLE FOR THE ACCURACY OR COMPLETENESS OF THE DATA OR INFORMATION CONTAINED HEREIN. THE SELECTION AND USE OF THESE STANDARDS IS THE SOLE RESPONSIBILITY OF THE USER AND SHOULD NOT BE USED WITHOUT CONSULTING A REGISTERED PROFESSIONAL ENGINEER. ALL WARRANTIES AND REPRESENTATIONS OF ANY KIND ARE DISCLAIMED. ANYONE MAKING USE OF THIS INFORMATION AGREES THAT IT ASSUMES ALL LIABILITY ARISING FROM SUCH USE. NO PART OF THESE STANDARDS SHOULD BE REPRODUCED OR DISTRIBUTED IN ANY FORM OR BY ANY MEANS WITHOUT THE PRIOR WRITTEN PERMISSION OF SCRRA. ALL RIGHTS RESERVED.

METROLINK®
SOUTHERN CALIFORNIA REGIONAL RAIL AUTHORITY
ONE GATEWAY PLAZA, 12TH FLOOR, L. A., CA. 90012

ENGINEERING STANDARDS

SWITCH PLATES FOR HOLLOW STEEL TIES,
136 LB RE RAIL
PLATES HTP-200-L AND HTP-201-R
3/16" SKEW LV BRACE

STANDARD 2800
SCALE: NTS
REVISION –
SHEET 1 OF 1
CADD FILE: ES2800-93

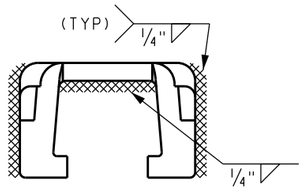

TYPICAL SAFELOK WELD-ON CAST SHOULDER WELDING DETAILS

BILL OF MATERIAL

ITEM	QTY FOR HTP-202-L	QTY FOR HTP-203-R	DESCRIPTION	DWG NO	SCRRA PART NO
1	1	1	BURNED SWITCH PLATE, 1 1/4" THICK	-	
2	1	1	SAFELOK SHOULDER	-	
3	1	1	LV BRACE RETENTION BLOCK	-	

NOTE:

1. I.D. CHARACTERS TO BE 5/8" MINIMUM HEIGHT CLEARLY STAMPED AS SHOWN.
2. SLOTTED HOLE CENTERS ARE INDICATED ON DRAWING.

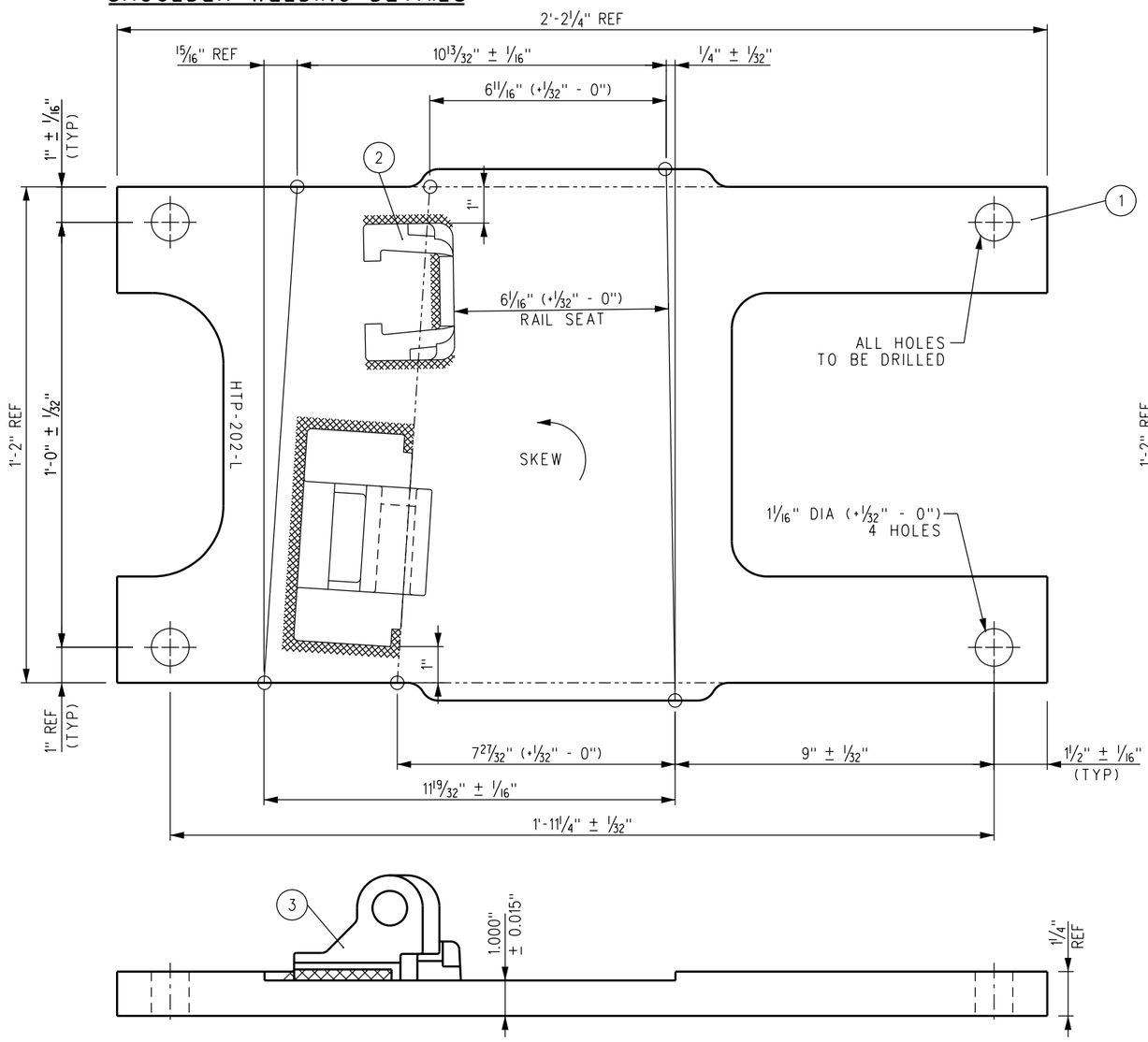

HTP-202-L

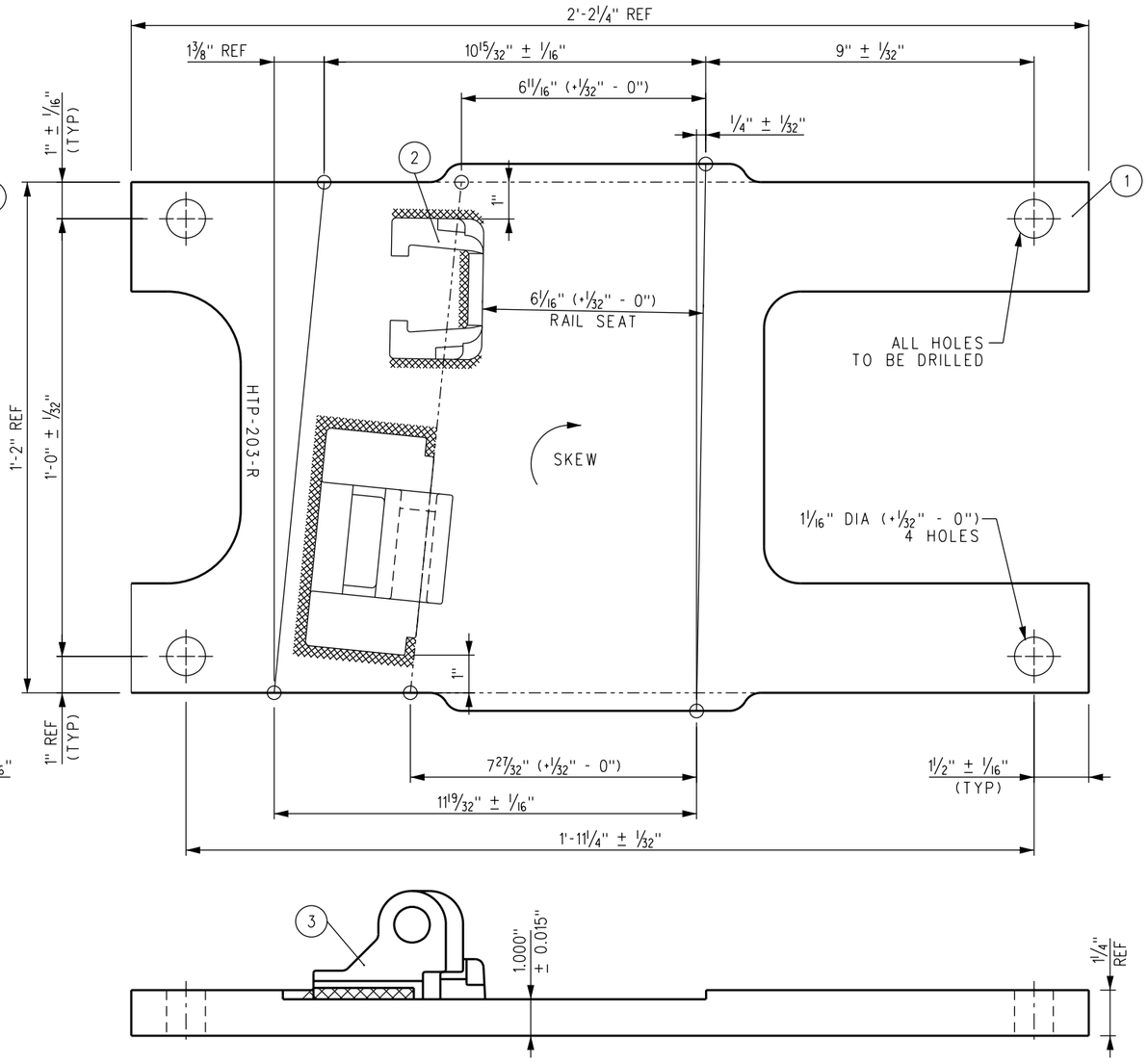

HTP-203-R

REV.	DATE	DESCRIPTION	DES.	ENG.
X	XX-XX-XX	REVISION	XX	XX

DRAWN BY: HDR DATE: 03/31/2011

ASSISTANT DIRECTOR: STANDARDS & DESIGN

DIRECTOR OF ENGINEERING AND CONSTRUCTION

SCRRA ENGINEERING STANDARDS ARE INTENDED FOR SCRRA APPROVED USES ONLY. FOR NON-SCRRA APPROVED USES:
SCRRA SHALL NOT BE RESPONSIBLE FOR THE ACCURACY OR COMPLETENESS OF THE DATA OR INFORMATION CONTAINED HEREIN. THE SELECTION AND USE OF THESE STANDARDS IS THE SOLE RESPONSIBILITY OF THE USER AND SHOULD NOT BE USED WITHOUT CONSULTING A REGISTERED PROFESSIONAL ENGINEER. ALL WARRANTIES AND REPRESENTATIONS OF ANY KIND ARE DISCLAIMED. ANYONE MAKING USE OF THIS INFORMATION AGREES THAT IT ASSUMES ALL LIABILITY ARISING FROM SUCH USE. NO PART OF THESE STANDARDS SHOULD BE REPRODUCED OR DISTRIBUTED IN ANY FORM OR BY ANY MEANS WITHOUT THE PRIOR WRITTEN PERMISSION OF SCRRA. ALL RIGHTS RESERVED.

METROLINK®
SOUTHERN CALIFORNIA REGIONAL RAIL AUTHORITY
ONE GATEWAY PLAZA, 12TH FLOOR, L. A., CA. 90012

ENGINEERING STANDARDS

SWITCH PLATES FOR HOLLOW STEEL TIES,
136 LB RE RAIL
PLATES HTP-202-L AND HTP-203-R
1/4" SKEW LV BRACE

STANDARD 2800
SCALE: NTS
REVISION –
SHEET 1 OF 1
CADD FILE: ES2800-94

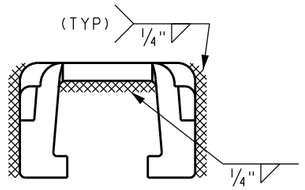

TYPICAL SAFELOK WELD-ON CAST SHOULDER WELDING DETAILS

BILL OF MATERIAL

ITEM	QTY FOR HTP-204-L	QTY FOR HTP-205-R	DESCRIPTION	DWG NO	SCRRA PART NO
1	1	1	BURNED SWITCH PLATE, 1 1/4" THICK	-	
2	1	1	SAFELOK SHOULDER	-	
3	1	1	LV BRACE RETENTION BLOCK	-	

NOTE:

1. I.D. CHARACTERS TO BE 5/8" MINIMUM HEIGHT CLEARLY STAMPED AS SHOWED.
2. SLOTTED HOLE CENTERS ARE INDICATED ON DRAWING.

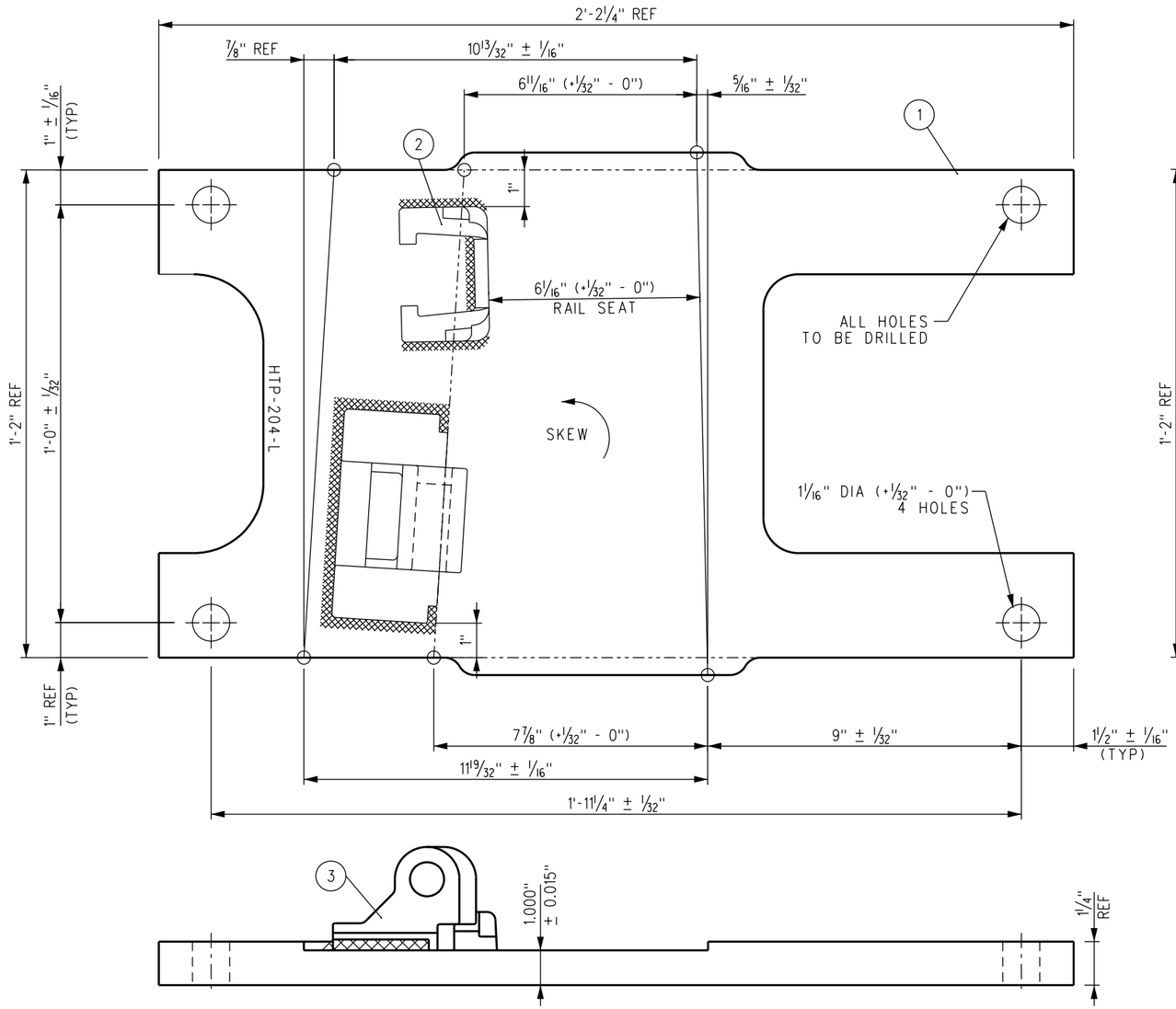

HTP-204-L

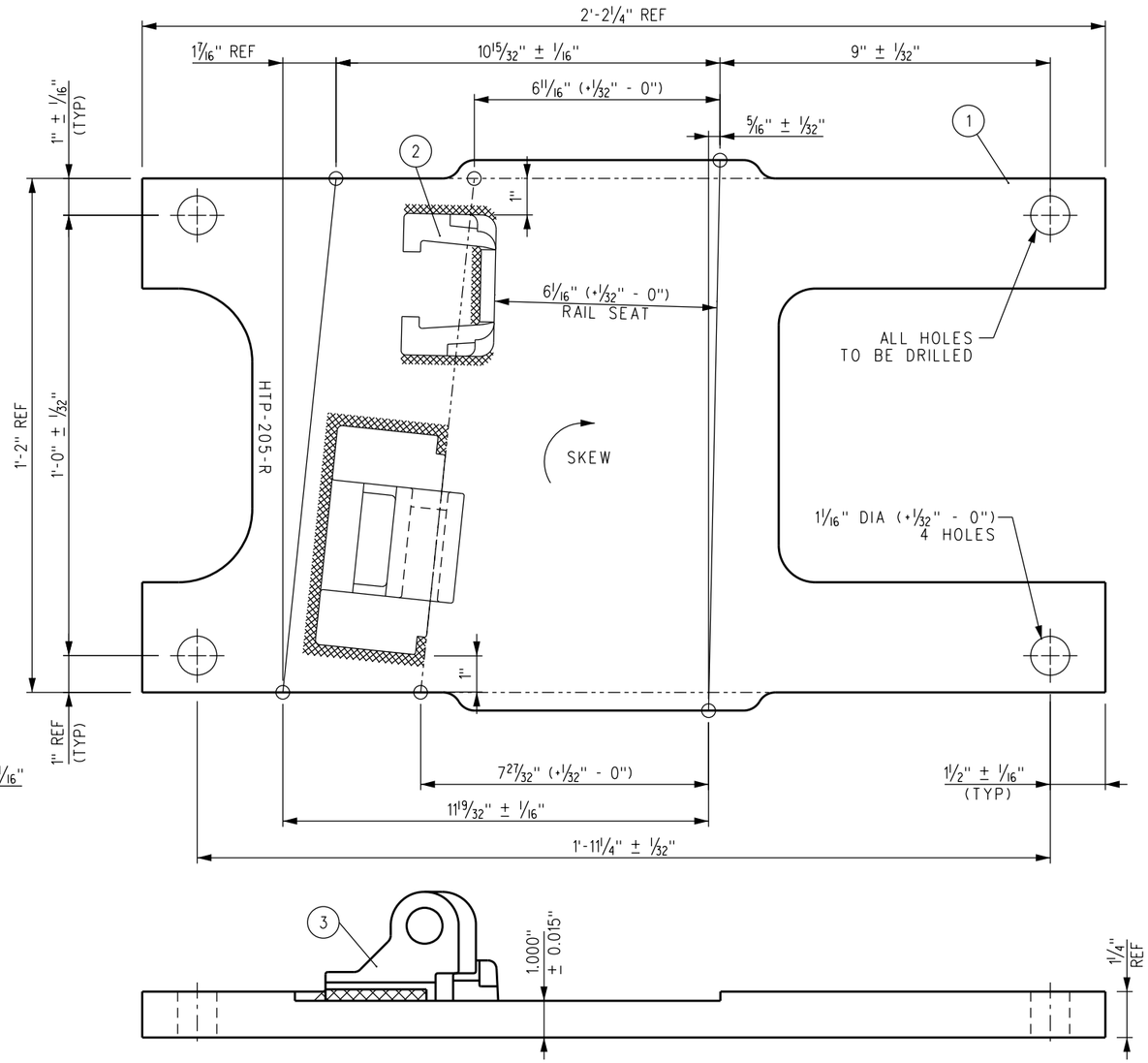

HTP-205-R

REV.	DATE	DESCRIPTION	DES.	ENG.
X	XX-XX-XX	REVISION	XX	XX

DRAWN BY: HDR DATE: 03/31/2011

ASSISTANT DIRECTOR: STANDARDS & DESIGN

DIRECTOR OF ENGINEERING AND CONSTRUCTION

SCRRA ENGINEERING STANDARDS ARE INTENDED FOR SCRRA APPROVED USES ONLY. FOR NON-SCRRA APPROVED USES:
SCRRA SHALL NOT BE RESPONSIBLE FOR THE ACCURACY OR COMPLETENESS OF THE DATA OR INFORMATION CONTAINED HEREIN. THE SELECTION AND USE OF THESE STANDARDS IS THE SOLE RESPONSIBILITY OF THE USER AND SHOULD NOT BE USED WITHOUT CONSULTING A REGISTERED PROFESSIONAL ENGINEER. ALL WARRANTIES AND REPRESENTATIONS OF ANY KIND ARE DISCLAIMED. ANYONE MAKING USE OF THIS INFORMATION AGREES THAT IT ASSUMES ALL LIABILITY ARISING FROM SUCH USE. NO PART OF THESE STANDARDS SHOULD BE REPRODUCED OR DISTRIBUTED IN ANY FORM OR BY ANY MEANS WITHOUT THE PRIOR WRITTEN PERMISSION OF SCRRA. ALL RIGHTS RESERVED.

METROLINK®
SOUTHERN CALIFORNIA REGIONAL RAIL AUTHORITY
ONE GATEWAY PLAZA, 12TH FLOOR, L. A., CA. 90012

ENGINEERING STANDARDS

SWITCH PLATES FOR HOLLOW STEEL TIES,
136 LB RE RAIL
PLATES HTP-204-L AND HTP-205-R
5/16" SKEW LV BRACE

STANDARD 2800
SCALE: NTS
REVISION –
SHEET 1 OF 1
CADD FILE: ES2800-95

BILL OF MATERIALS	
ITEM	DESCRIPTION
1	FLAT BAR, ASTM A36, 1" x 8" x 2'-0" LONG
2	BURNED SWITCH POINT RISER PLATE FOR RP-1-136
3	SHOULDER, FORGED, TYPE 5, ANTI-OVERDRIVE

NOTES:

1. I.D. CHARACTERS TO BE 1/2" MINIMUM HEIGHT, STAMPED CLEARLY AS SHOWN.
2. USE IMPERIAL DIMENSIONS WITH THE EXCEPTION OF TOLERANCED METRIC DIMENSIONS AND THREADED HOLES.
3. SURFACE ROUGHNESS 250 AND 63 MICROINCH ARE EQUIVALENT TO N9 AND N7 AND SHOULD TRAVERSE THE ENTIRE MACHINED SURFACE.
4. SLOTTED HOLE CENTERS ARE INDICATED ON DRAWING.
5. DEBUR ALL THREADED HOLES

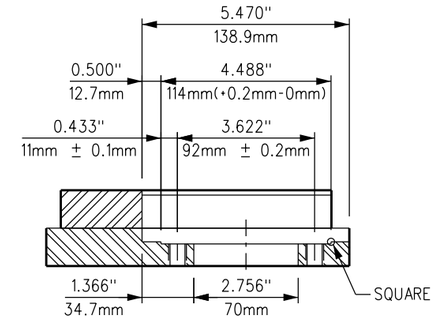

SECTION A

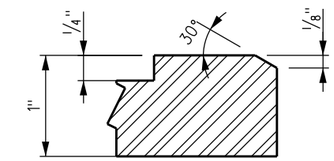

DETAIL A

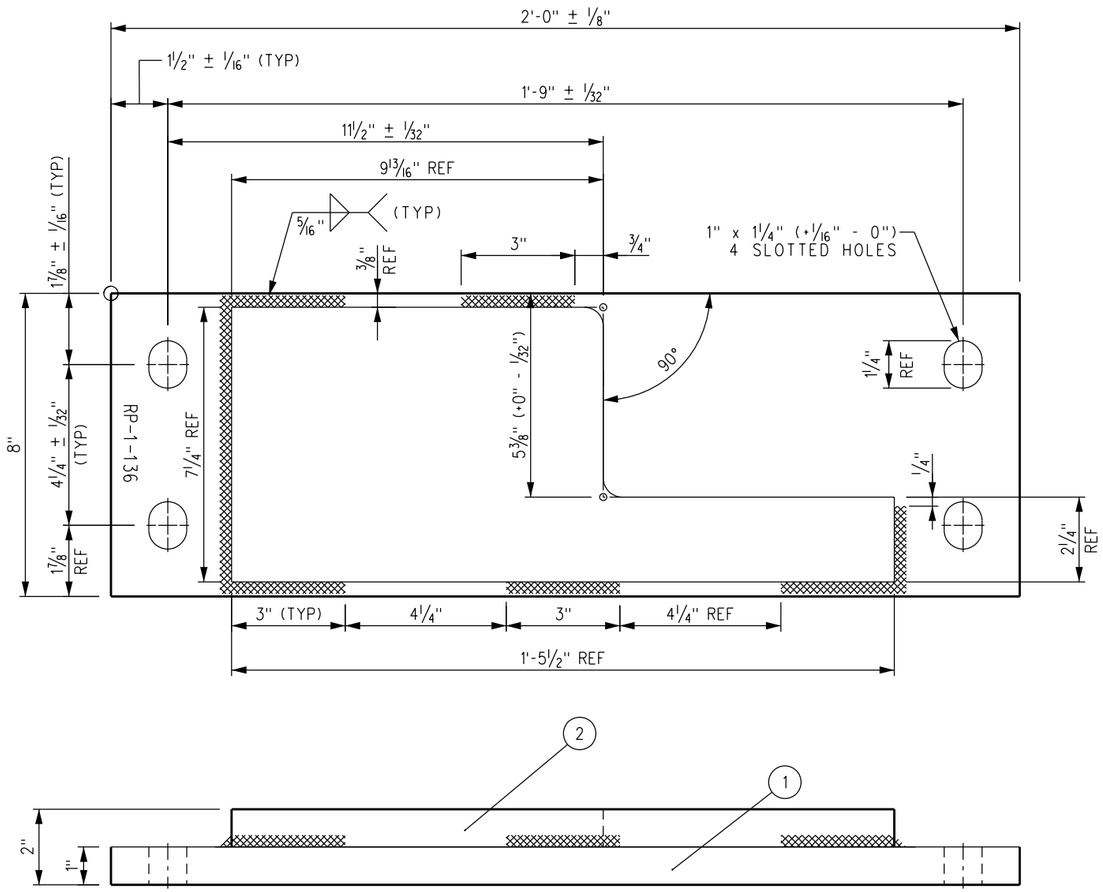

SWITCH ROLLER PLATE RP-1-136
W/O ROLLER WELDING & PUNCHING DETAILS

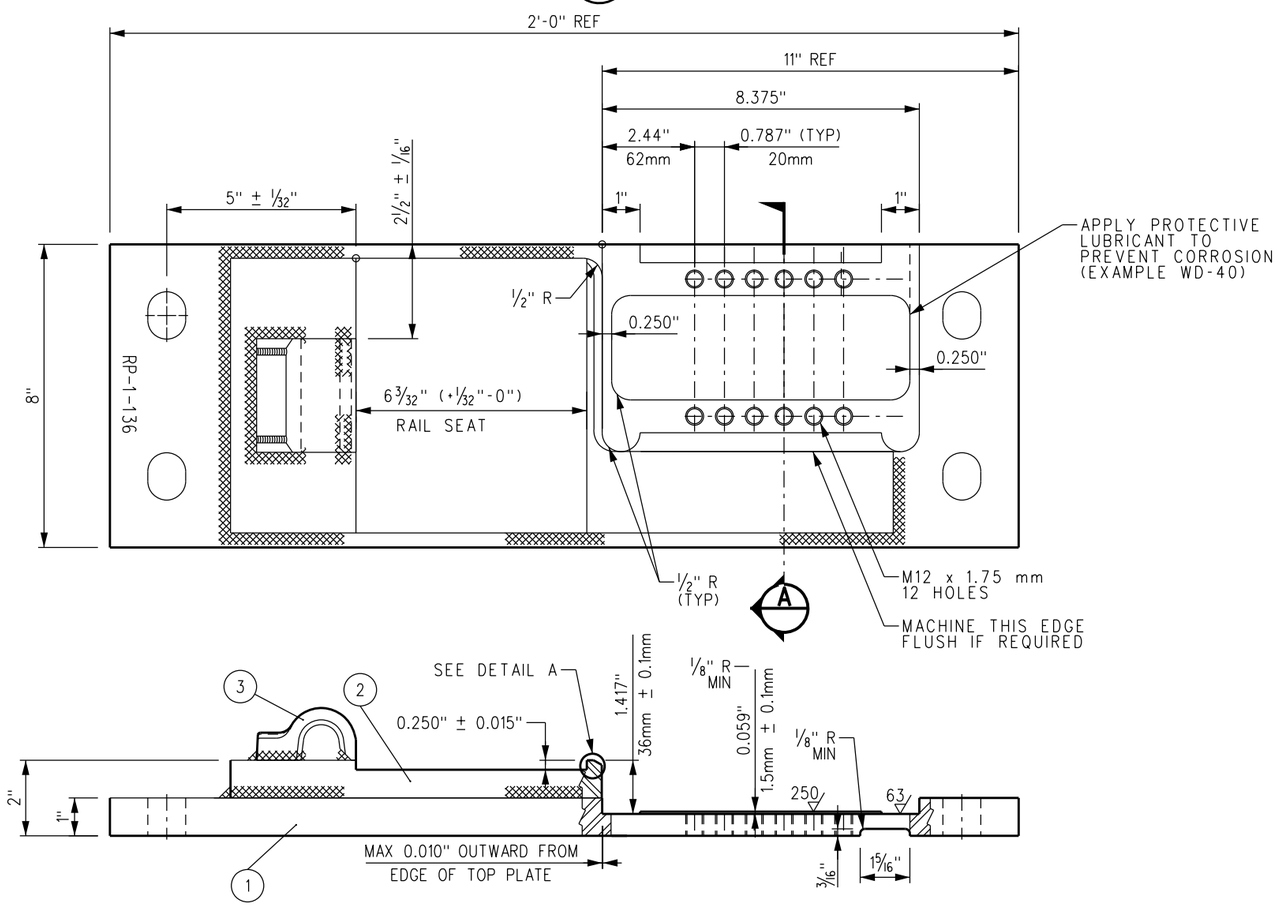

SWITCH ROLLER PLATE RP-1-136
W/O ROLLER MACHINING DETAILS

REV.	DATE	DESCRIPTION	DES.	ENG.
X	XX-XX-XX	REVISION	XX	XX

DRAWN BY: HDR DATE: 03/31/2011

ASSISTANT DIRECTOR: STANDARDS & DESIGN

DIRECTOR OF ENGINEERING AND CONSTRUCTION

SCRRA ENGINEERING STANDARDS ARE INTENDED FOR SCRRA APPROVED USES ONLY. FOR NON-SCRRA APPROVED USES:
SCRRA SHALL NOT BE RESPONSIBLE FOR THE ACCURACY OR COMPLETENESS OF THE DATA OR INFORMATION CONTAINED HEREIN. THE SELECTION AND USE OF THESE STANDARDS IS THE SOLE RESPONSIBILITY OF THE USER AND SHOULD NOT BE USED WITHOUT CONSULTING A REGISTERED PROFESSIONAL ENGINEER. ALL WARRANTIES AND REPRESENTATIONS OF ANY KIND ARE DISCLAIMED. ANYONE MAKING USE OF THIS INFORMATION AGREES THAT IT ASSUMES ALL LIABILITY ARISING FROM SUCH USE. NO PART OF THESE STANDARDS SHOULD BE REPRODUCED OR DISTRIBUTED IN ANY FORM OR BY ANY MEANS WITHOUT THE PRIOR WRITTEN PERMISSION OF SCRRA. ALL RIGHTS RESERVED.

METROLINK®
SOUTHERN CALIFORNIA REGIONAL RAIL AUTHORITY
ONE GATEWAY PLAZA, 12TH FLOOR, L. A., CA. 90012

ENGINEERING STANDARDS

SWITCH PLATE
ROLLER SCHWIHAG RP-1-136

STANDARD: 2800
SCALE: NTS
REVISION: –
SHEET: 1 OF 1
CADD FILE: ES2800-96

BILL OF MATERIALS	
ITEM	DESCRIPTION
1	FLAT BAR, ASTM A36, 1" x 8" x 2'-4" LONG
2	BURNED SWITCH POINT RISER PLATE FOR RP-2-136
3	SHOULDER, FORGED, TYPE 5, ANTI-OVERDRIVE

NOTES:

1. I.D. CHARACTERS TO BE 1/2" MINIMUM HEIGHT, STAMPED CLEARLY AS SHOWN.
2. USE IMPERIAL DIMENSIONS WITH THE EXCEPTION OF TOLERANCED METRIC DIMENSIONS AND THREADED HOLES.
3. SURFACE ROUGHNESS 250 AND 63 MICROINCH ARE EQUIVALENT TO N9 AND N7 AND SHOULD TRAVERSE THE ENTIRE MACHINED SURFACE.
4. SLOTTED HOLE CENTERS ARE INDICATED ON DRAWING.
5. DEBUR ALL THREADED HOLES

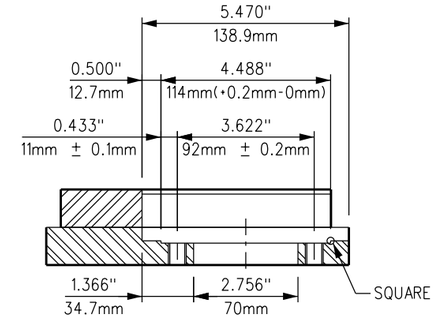

SECTION A

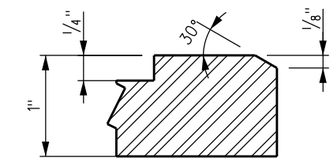

DETAIL A

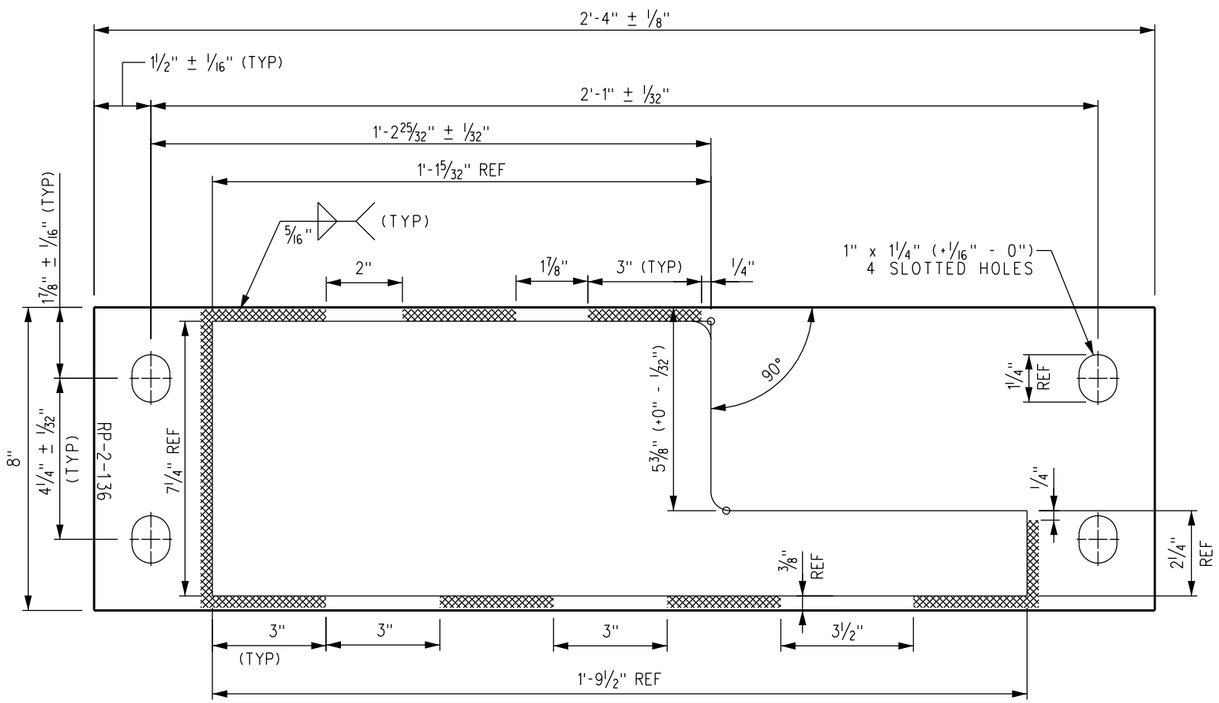

SWITCH ROLLER PLATE RP-2-136
W/O ROLLER WELDING & PUNCHING DETAILS

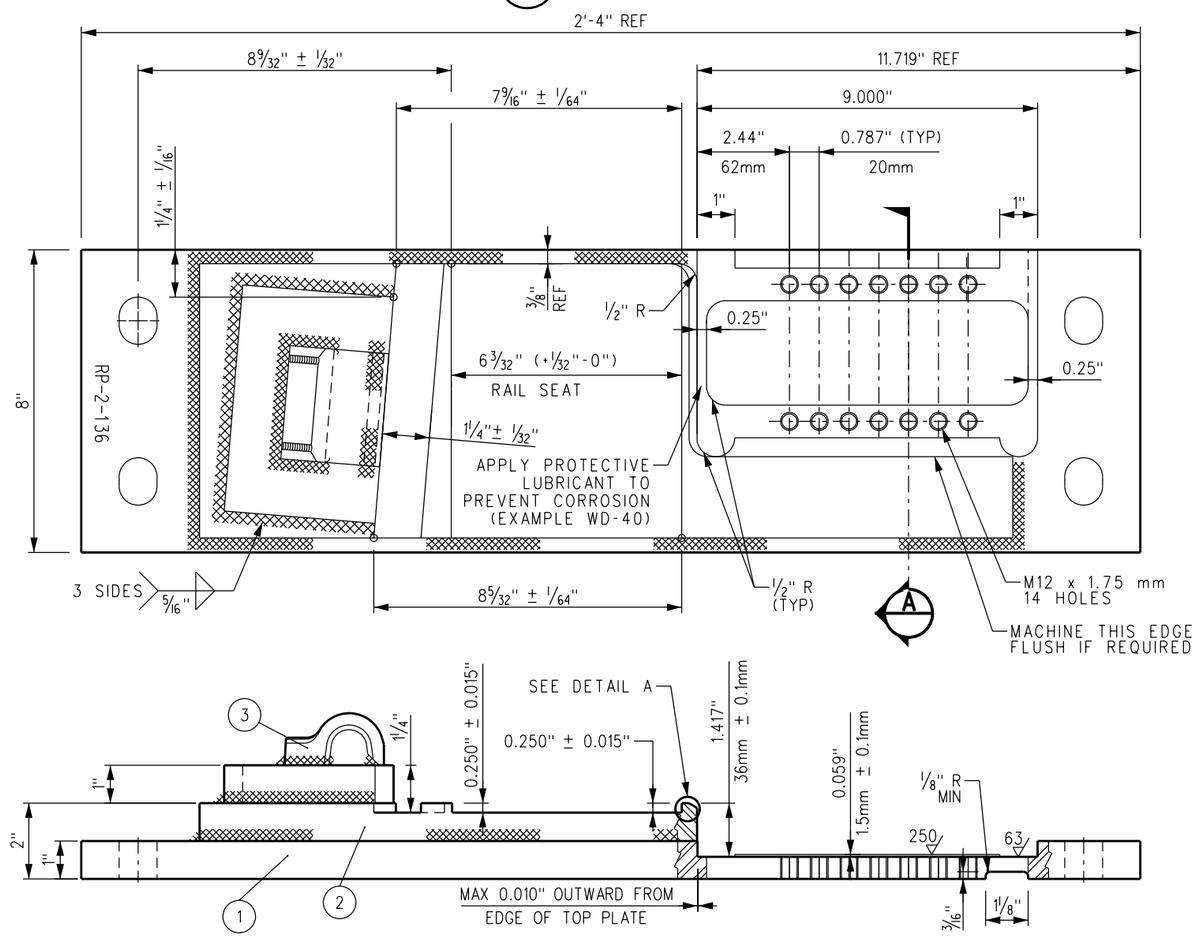

SWITCH ROLLER PLATE RP-2-136
W/O ROLLER MACHINING DETAILS

REV.	DATE	DESCRIPTION	DES.	ENG.
X	XX-XX-XX	REVISION	XX	XX

DRAWN BY: HDR DATE: 03/31/2011

ASSISTANT DIRECTOR: STANDARDS & DESIGN

DIRECTOR OF ENGINEERING AND CONSTRUCTION

SCRRA ENGINEERING STANDARDS ARE INTENDED FOR SCRRA APPROVED USES ONLY. FOR NON-SCRRA APPROVED USES:
SCRRA SHALL NOT BE RESPONSIBLE FOR THE ACCURACY OR COMPLETENESS OF THE DATA OR INFORMATION CONTAINED HEREIN. THE SELECTION AND USE OF THESE STANDARDS IS THE SOLE RESPONSIBILITY OF THE USER AND SHOULD NOT BE USED WITHOUT CONSULTING A REGISTERED PROFESSIONAL ENGINEER. ALL WARRANTIES AND REPRESENTATIONS OF ANY KIND ARE DISCLAIMED. ANYONE MAKING USE OF THIS INFORMATION AGREES THAT IT ASSUMES ALL LIABILITY ARISING FROM SUCH USE. NO PART OF THESE STANDARDS SHOULD BE REPRODUCED OR DISTRIBUTED IN ANY FORM OR BY ANY MEANS WITHOUT THE PRIOR WRITTEN PERMISSION OF SCRRA. ALL RIGHTS RESERVED.

METROLINK®
SOUTHERN CALIFORNIA REGIONAL RAIL AUTHORITY
ONE GATEWAY PLAZA, 12TH FLOOR, L. A., CA. 90012

ENGINEERING STANDARDS

SWITCH PLATE
ROLLER SCHWIHAG RP-2-136

STANDARD 2800
SCALE: NTS
REVISION –
SHEET 1 OF 1
CADD FILE: ES2800-97

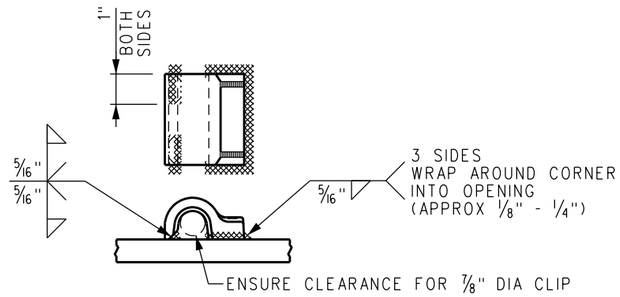

FORGED SHOULDER WELDING DETAIL

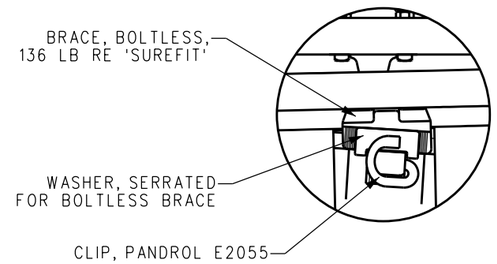

TYPICAL BOLTLESS BRACE ASSEMBLY

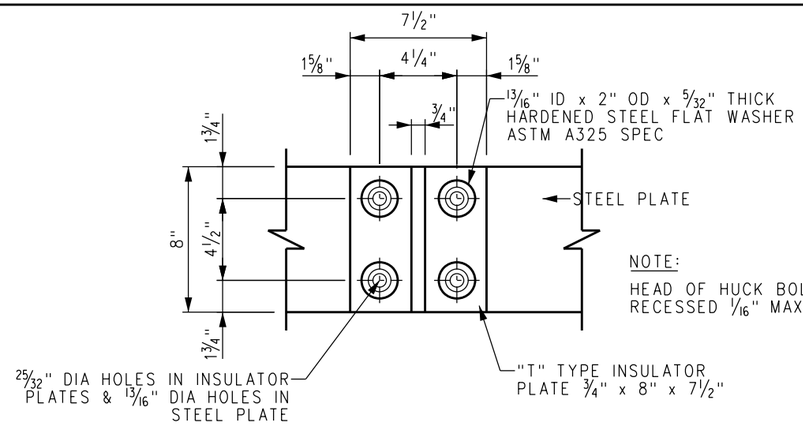

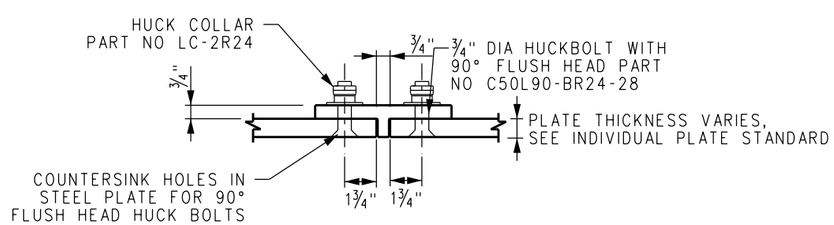

GAGE PLATE
INSULATED JOINT ASSEMBLY
GPI-77

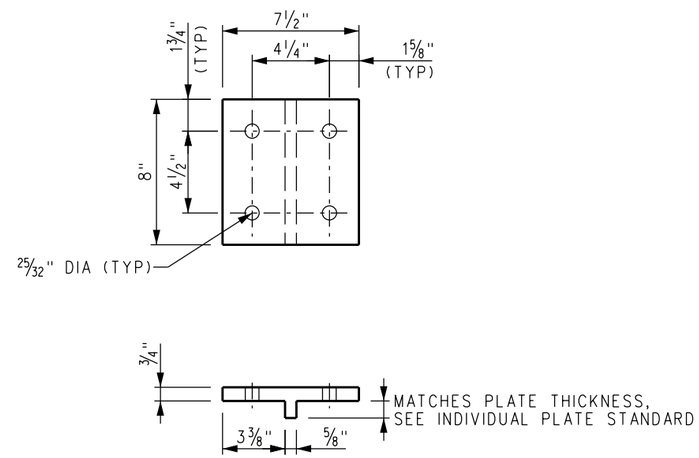

DETAIL OF INSULATION BLOCK

POLYESTER COATED STEEL CORE
WITH BUSHINGS, PORTEC NO 127-07547-01
OR FIBERGLASS REINFORCED THERMOSET RESIN.
PURCHASE PART NO GPI52P05

INSULATION AT GAGE PLATES

REV.	DATE	DESCRIPTION	DES.	ENG.
X	XX-XX-XX	REVISION	XX	XX

DRAWN BY: A. CARLOS DATE: 03/31/2011

ASSISTANT DIRECTOR: STANDARDS & DESIGN

DIRECTOR OF ENGINEERING AND CONSTRUCTION

SCRRA ENGINEERING STANDARDS ARE INTENDED FOR SCRRA APPROVED USES ONLY. FOR NON-SCRRA APPROVED USES:
SCRRA SHALL NOT BE RESPONSIBLE FOR THE ACCURACY OR COMPLETENESS OF THE DATA OR INFORMATION CONTAINED HEREIN. THE SELECTION AND USE OF THESE STANDARDS IS THE SOLE RESPONSIBILITY OF THE USER AND SHOULD NOT BE USED WITHOUT CONSULTING A REGISTERED PROFESSIONAL ENGINEER. ALL WARRANTIES AND REPRESENTATIONS OF ANY KIND ARE DISCLAIMED. ANYONE MAKING USE OF THIS INFORMATION AGREES THAT IT ASSUMES ALL LIABILITY ARISING FROM SUCH USE. NO PART OF THESE STANDARDS SHOULD BE REPRODUCED OR DISTRIBUTED IN ANY FORM OR BY ANY MEANS WITHOUT THE PRIOR WRITTEN PERMISSION OF SCRRA. ALL RIGHTS RESERVED.

METROLINK®
SOUTHERN CALIFORNIA REGIONAL RAIL AUTHORITY
ONE GATEWAY PLAZA, 12TH FLOOR, L. A., CA. 90012

ENGINEERING STANDARDS

MISCELLANEOUS DETAILS

STANDARD 2800
SCALE: NTS
REVISION –
SHEET 1 OF 1
CADD FILE: ES2800-99

DISCLAIMER

SCRRA Engineering Standards are intended for SCRRA approved uses only. FOR NON-SCRRA APPROVED USES: SCRRA and its member agencies, directors, officers, employees and/or agents shall not be responsible for the accuracy or completeness of the data or information contained herein. The selection and use of these standards, while designed in accordance with generally accepted engineering principles and practices, is the sole responsibility of the user and should not be used without consulting a registered professional engineer. All warranties and representations of any kind are disclaimed. Anyone making use of this information agrees that it assumes all liability arising from such use. No part of these standards should be reproduced or distributed in any form or by any means without the prior written permission of SCRRA. All rights reserved.

Since revisions or additions to the engineering standards may occur at any time, the user agrees to indemnify, defend, by counsel satisfactory to SCRRA and Member Agency, and hold harmless SCRRA, Member Agencies, and Operating Railroad, and their respective officers, commissioners, employees, agents, successors and assigns. ("Indemnitees"), and each of them to the maximum extent allowed by law, from and against all loss, liability, claims, demands, suits, liens, claims of lien, damages (including incidental consequential damages), costs and expenses (including, without limitation, any fines, penalties, judgments, actual litigation expenses and experts' and actual attorneys' fees), that are incurred by or asserted against Indemnitees arising out of or connected in any manner with the user's use of outdated engineering standards.

Updating the contents of the manual is a continued process, and revisions/replacements are issued periodically. Questions, comments, and proposed recommendations for changes may be sent to SCRRA at 279 E. Arrow Highway, Suite A, San Dimas, CA 91773.

BILL OF MATERIAL			
ITEM	QTY	DESCRIPTION	SCRRA PART NO
1	2	LH TURNOUT TIES (0-48)	
2	2	TIE NO 49 - LENGTH = 23'-5½"	
3	2	TIE NO 50 - LENGTH = 23'-5½"	
4	2	TIE NO 51 - LENGTH = 23'-5½"	
5	2	TIE NO 52 - LENGTH = 23'-5½"	
6	2	TIE NO 53 - LENGTH = 23'-5½"	
7	2	TIE NO 54 - LENGTH = 23'-5½"	
8	1	TIE NO 55 - LENGTH = 23'-5½"	
9	2	8'-3" 1:80 CANT CONCRETE TIE	

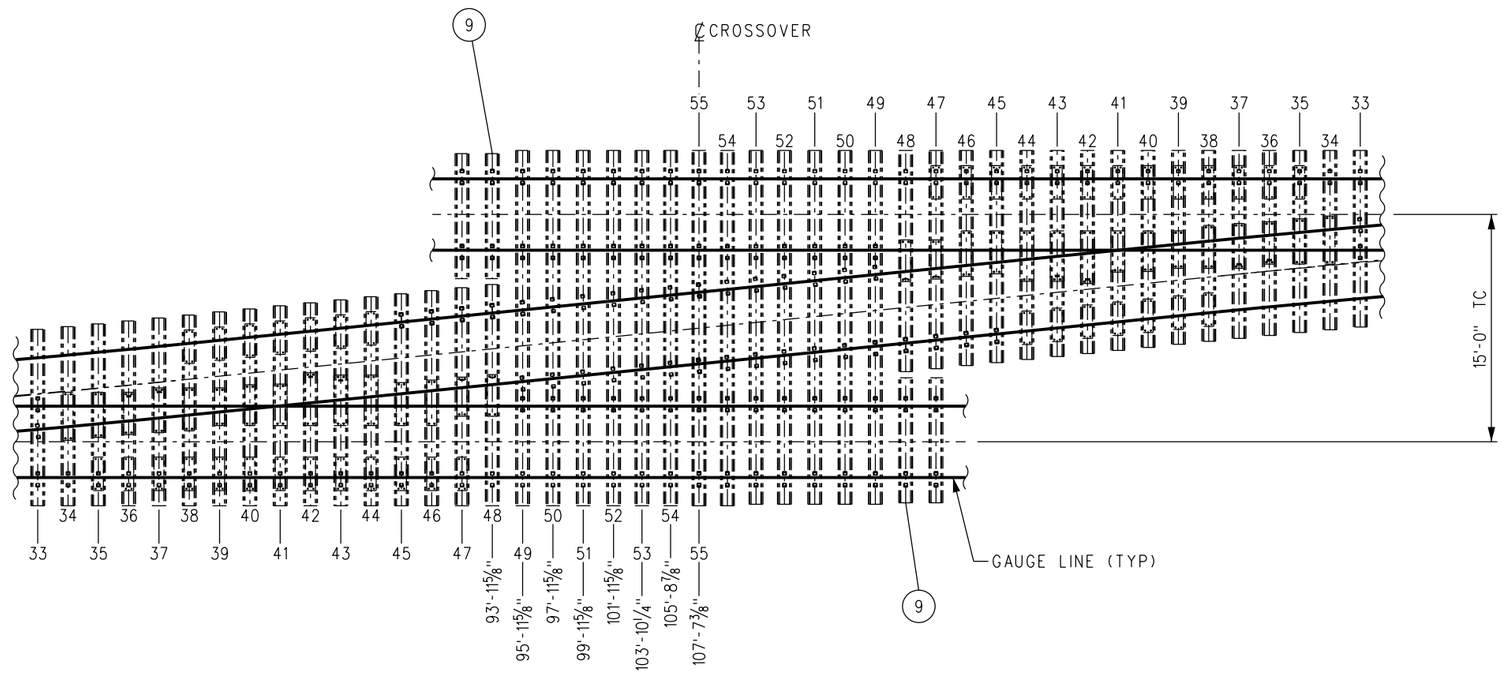

NOTES:

1. ALL SWITCH TIES ARE FLAT (NON-CANTED), EXCEPT 1:80 TRANSITION TIES AND STANDARD 8'-3" TIES CANTED 1:40. ALL LENGTHS SHALL INCLUDE 1'-9" FROM TIE ENDS TO RAIL CENTERLINE, EXCEPT AS NOTED. TRANSITION TIES AND STANDARD TIE PER SCRRA ENGINEERING STANDARDS.
2. DISTANCES INDICATED AT EACH TIE ARE MEASURED FROM THE POINT OF SWITCH.

REV.	DATE	DESCRIPTION	DES.	ENG.
X	XX-XX-XX	REVISION	XX	XX

DRAWN BY: HDR DATE: 03/31/2011

ASSISTANT DIRECTOR: STANDARDS & DESIGN

DIRECTOR OF ENGINEERING AND CONSTRUCTION

SCRRA ENGINEERING STANDARDS ARE INTENDED FOR SCRRA APPROVED USES ONLY. FOR NON-SCRRA APPROVED USES: SCRRA SHALL NOT BE RESPONSIBLE FOR THE ACCURACY OR COMPLETENESS OF THE DATA OR INFORMATION CONTAINED HEREIN. THE SELECTION AND USE OF THESE STANDARDS IS THE SOLE RESPONSIBILITY OF THE USER AND SHOULD NOT BE USED WITHOUT CONSULTING A REGISTERED PROFESSIONAL ENGINEER. ALL WARRANTIES AND REPRESENTATIONS OF ANY KIND ARE DISCLAIMED. ANYONE MAKING USE OF THIS INFORMATION AGREES THAT IT ASSUMES ALL LIABILITY ARISING FROM SUCH USE. NO PART OF THESE STANDARDS SHOULD BE REPRODUCED OR DISTRIBUTED IN ANY FORM OR BY ANY MEANS WITHOUT THE PRIOR WRITTEN PERMISSION OF SCRRA. ALL RIGHTS RESERVED.

METROLINK®
SOUTHERN CALIFORNIA REGIONAL RAIL AUTHORITY
ONE GATEWAY PLAZA, 12TH FLOOR, L. A., CA. 90012

ENGINEERING STANDARDS

TIE LAYOUT PLAN
NO 10 – LH CROSSOVER 15' TRACK CENTERS

STANDARD 2817
SCALE: NTS
REVISION –
SHEET 1 OF 1
CADD FILE: ES2817-01

BILL OF MATERIAL			
ITEM	QTY	DESCRIPTION	SCRRA PART NO
1	2	RH TURNOUT TIES (0-48)	
2	2	TIE NO 49 - LENGTH = 23'-5½"	
3	2	TIE NO 50 - LENGTH = 23'-5½"	
4	2	TIE NO 51 - LENGTH = 23'-5½"	
5	2	TIE NO 52 - LENGTH = 23'-5½"	
6	2	TIE NO 53 - LENGTH = 23'-5½"	
7	2	TIE NO 54 - LENGTH = 23'-5½"	
8	1	TIE NO 55 - LENGTH = 23'-5½"	
9	2	8'-3" 1:80 CANT CONCRETE TIE	

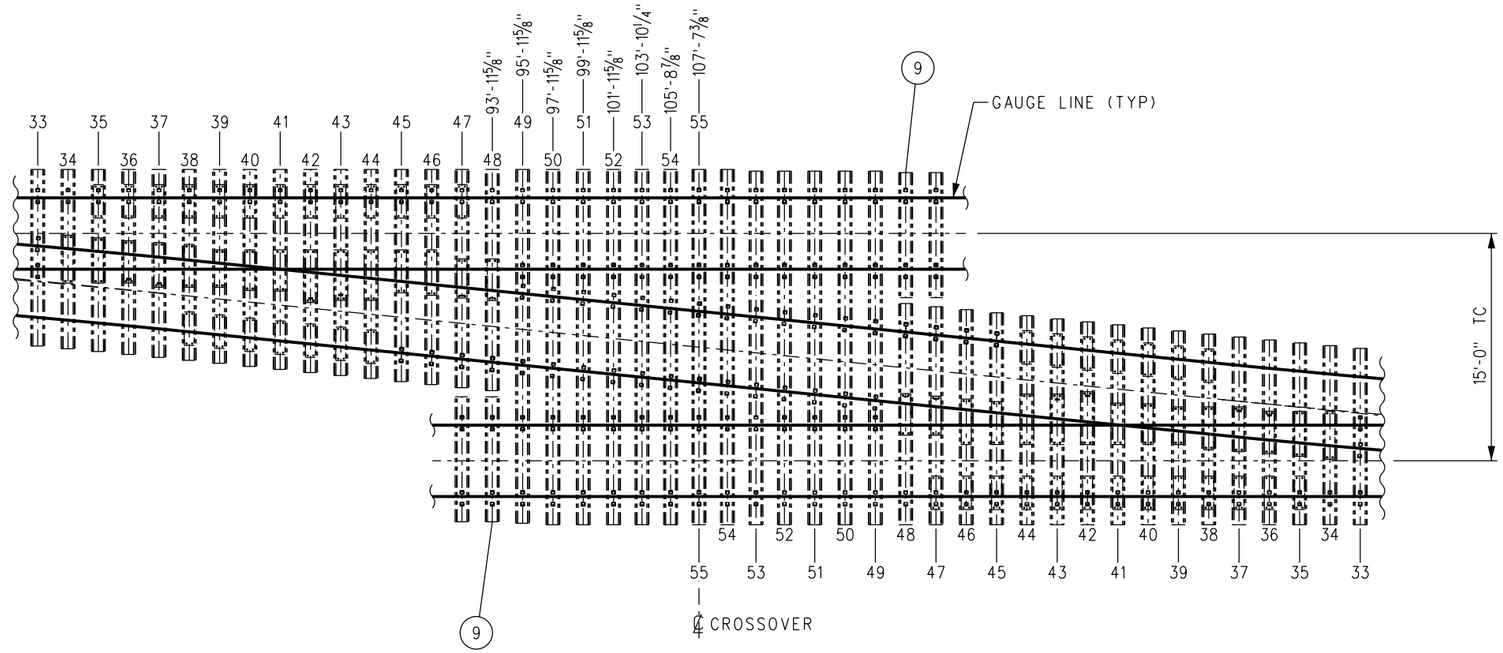

NOTES:

1. ALL SWITCH TIES ARE FLAT (NON-CANTED), EXCEPT 1:80 TRANSITION TIES AND STANDARD 8'-3" TIES CANTED 1:40. ALL LENGTHS SHALL INCLUDE 1'-9" FROM TIE ENDS TO RAIL CENTERLINE, EXCEPT AS NOTED. TRANSITION TIES AND STANDARD TIE PER SCRRA ENGINEERING STANDARDS.
2. DISTANCES INDICATED AT EACH TIE ARE MEASURED FROM THE POINT OF SWITCH.

REV.	DATE	DESCRIPTION	DES.	ENG.
X	XX-XX-XX	REVISION	XX	XX

DRAWN BY: HDR DATE: 03/31/2011

ASSISTANT DIRECTOR: STANDARDS & DESIGN

DIRECTOR OF ENGINEERING AND CONSTRUCTION

SCRRA ENGINEERING STANDARDS ARE INTENDED FOR SCRRA APPROVED USES ONLY. FOR NON-SCRRA APPROVED USES:
SCRRA SHALL NOT BE RESPONSIBLE FOR THE ACCURACY OR COMPLETENESS OF THE DATA OR INFORMATION CONTAINED HEREIN. THE SELECTION AND USE OF THESE STANDARDS IS THE SOLE RESPONSIBILITY OF THE USER AND SHOULD NOT BE USED WITHOUT CONSULTING A REGISTERED PROFESSIONAL ENGINEER. ALL WARRANTIES AND REPRESENTATIONS OF ANY KIND ARE DISCLAIMED. ANYONE MAKING USE OF THIS INFORMATION AGREES THAT IT ASSUMES ALL LIABILITY ARISING FROM SUCH USE. NO PART OF THESE STANDARDS SHOULD BE REPRODUCED OR DISTRIBUTED IN ANY FORM OR BY ANY MEANS WITHOUT THE PRIOR WRITTEN PERMISSION OF SCRRA. ALL RIGHTS RESERVED.

METROLINK®
SOUTHERN CALIFORNIA REGIONAL RAIL AUTHORITY
ONE GATEWAY PLAZA, 12TH FLOOR, L. A., CA. 90012

ENGINEERING STANDARDS

TIE LAYOUT PLAN
NO 10 – RH CROSSOVER 15' TRACK CENTERS

STANDARD 2817
SCALE: NTS
REVISION –
SHEET 1 OF 1
CADD FILE: ES2817-02

BILL OF MATERIAL			
ITEM	QTY	DESCRIPTION	SCRRA PART NO
1	2	LH TURNOUT TIES (0-53)	
2	2	TIE NO 54 - LENGTH = 24'-5½"	
3	2	TIE NO 55 - LENGTH = 24'-5½"	
4	2	TIE NO 56 - LENGTH = 24'-5½"	
5	2	TIE NO 57 - LENGTH = 24'-5½"	
6	2	8'-3" 1:80 CANT CONCRETE TIE	

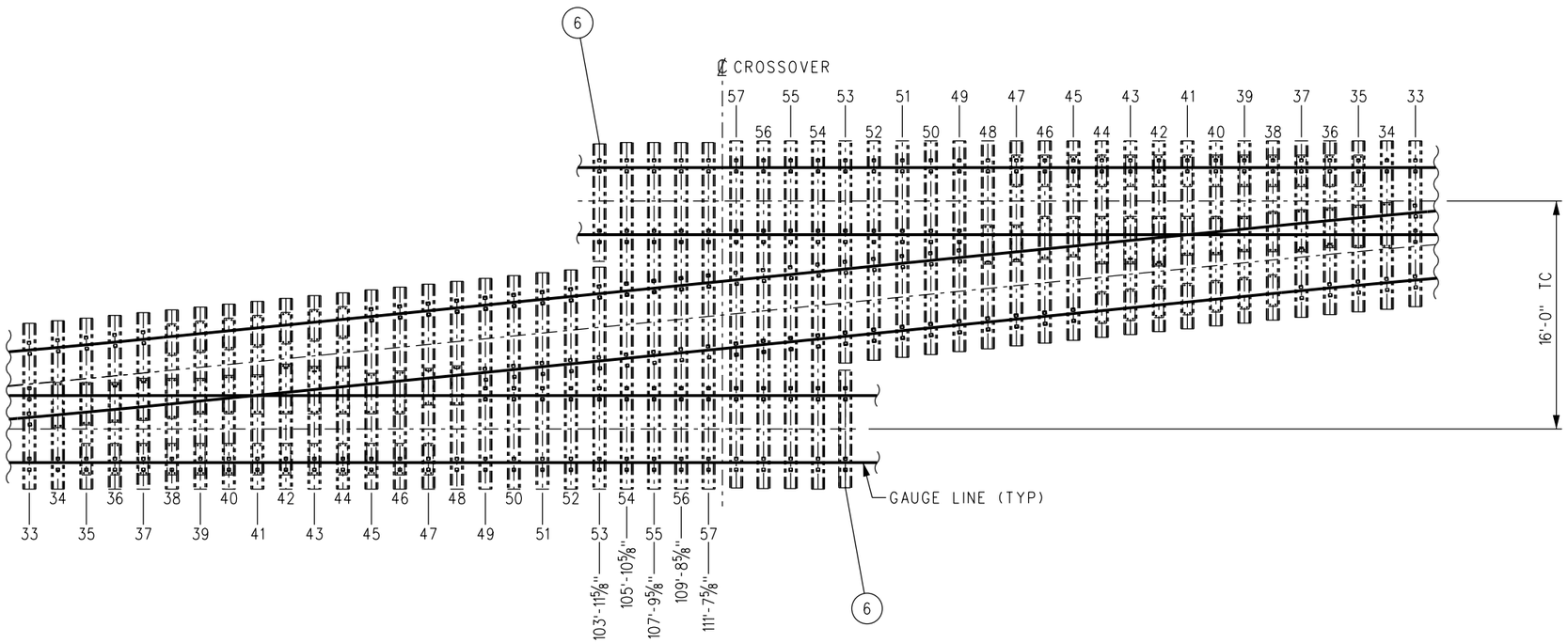

NOTES:

1. ALL SWITCH TIES ARE FLAT (NON-CANTED), EXCEPT 1:80 TRANSITION TIES AND STANDARD 8'-3" TIES CANTED 1:40. ALL LENGTHS SHALL INCLUDE 1'-9" FROM TIE ENDS TO RAIL CENTERLINE, EXCEPT AS NOTED. TRANSITION TIES AND STANDARD TIE PER SCRRA ENGINEERING STANDARDS.
2. DISTANCES INDICATED AT EACH TIE ARE MEASURED FROM THE POINT OF SWITCH.

REV.	DATE	DESCRIPTION	DES.	ENG.
X	XX-XX-XX	REVISION	XX	XX

DRAWN BY: HDR DATE: 03/31/2011

ASSISTANT DIRECTOR: STANDARDS & DESIGN

DIRECTOR OF ENGINEERING AND CONSTRUCTION

SCRRA ENGINEERING STANDARDS ARE INTENDED FOR SCRRA APPROVED USES ONLY. FOR NON-SCRRA APPROVED USES:
SCRRA SHALL NOT BE RESPONSIBLE FOR THE ACCURACY OR COMPLETENESS OF THE DATA OR INFORMATION CONTAINED HEREIN. THE SELECTION AND USE OF THESE STANDARDS IS THE SOLE RESPONSIBILITY OF THE USER AND SHOULD NOT BE USED WITHOUT CONSULTING A REGISTERED PROFESSIONAL ENGINEER. ALL WARRANTIES AND REPRESENTATIONS OF ANY KIND ARE DISCLAIMED. ANYONE MAKING USE OF THIS INFORMATION AGREES THAT IT ASSUMES ALL LIABILITY ARISING FROM SUCH USE. NO PART OF THESE STANDARDS SHOULD BE REPRODUCED OR DISTRIBUTED IN ANY FORM OR BY ANY MEANS WITHOUT THE PRIOR WRITTEN PERMISSION OF SCRRA. ALL RIGHTS RESERVED.

METROLINK®
SOUTHERN CALIFORNIA REGIONAL RAIL AUTHORITY
ONE GATEWAY PLAZA, 12TH FLOOR, L. A., CA. 90012

ENGINEERING STANDARDS

TIE LAYOUT PLAN
NO 10 – LH CROSSOVER 16' TRACK CENTERS

STANDARD 2817
SCALE: NTS
REVISION –
SHEET 1 OF 1
CADD FILE: ES2817–03

BILL OF MATERIAL			
ITEM	QTY	DESCRIPTION	SCRRA PART NO
1	2	RH TURNOUT TIES (0-53)	
2	2	TIE NO 54 - LENGTH = 24'-5½"	
3	2	TIE NO 55 - LENGTH = 24'-5½"	
4	2	TIE NO 56 - LENGTH = 24'-5½"	
5	2	TIE NO 57 - LENGTH = 24'-5½"	
6	2	8'-3" 1:80 CANT CONCRETE TIE	

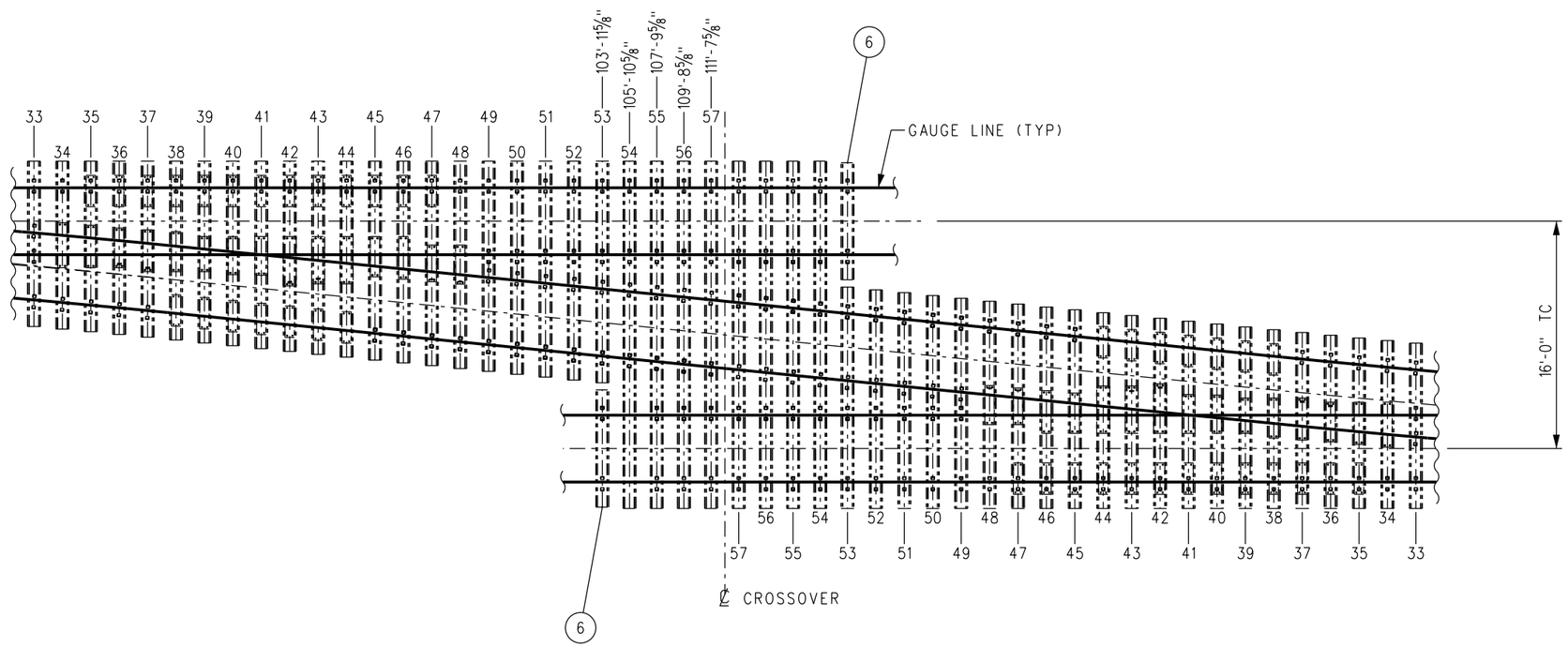

NOTES:

1. ALL SWITCH TIES ARE FLAT (NON-CANTED), EXCEPT 1:80 TRANSITION TIES AND STANDARD 8'-3" TIES CANTED 1:40. ALL LENGTHS SHALL INCLUDE 1'-9" FROM TIE ENDS TO RAIL CENTERLINE, EXCEPT AS NOTED. TRANSITION TIES AND STANDARD TIE PER SCRRA ENGINEERING STANDARDS.
2. DISTANCES INDICATED AT EACH TIE ARE MEASURED FROM THE POINT OF SWITCH.

REV.	DATE	DESCRIPTION	DES.	ENG.
X	XX-XX-XX	REVISION	XX	XX

DRAWN BY: HDR DATE: 03/31/2011

ASSISTANT DIRECTOR: STANDARDS & DESIGN

DIRECTOR OF ENGINEERING AND CONSTRUCTION

SCRRA ENGINEERING STANDARDS ARE INTENDED FOR SCRRA APPROVED USES ONLY. FOR NON-SCRRA APPROVED USES:
SCRRA SHALL NOT BE RESPONSIBLE FOR THE ACCURACY OR COMPLETENESS OF THE DATA OR INFORMATION CONTAINED HEREIN. THE SELECTION AND USE OF THESE STANDARDS IS THE SOLE RESPONSIBILITY OF THE USER AND SHOULD NOT BE USED WITHOUT CONSULTING A REGISTERED PROFESSIONAL ENGINEER. ALL WARRANTIES AND REPRESENTATIONS OF ANY KIND ARE DISCLAIMED. ANYONE MAKING USE OF THIS INFORMATION AGREES THAT IT ASSUMES ALL LIABILITY ARISING FROM SUCH USE. NO PART OF THESE STANDARDS SHOULD BE REPRODUCED OR DISTRIBUTED IN ANY FORM OR BY ANY MEANS WITHOUT THE PRIOR WRITTEN PERMISSION OF SCRRA. ALL RIGHTS RESERVED.

METROLINK®
SOUTHERN CALIFORNIA REGIONAL RAIL AUTHORITY
ONE GATEWAY PLAZA, 12TH FLOOR, L. A., CA. 90012

ENGINEERING STANDARDS

TIE LAYOUT PLAN
NO 10 – RH CROSSOVER 16' TRACK CENTERS

STANDARD 2817
SCALE: NTS
REVISION –
SHEET 1 OF 1
CADD FILE: ES2817-04

BILL OF MATERIAL			
ITEM	QTY	DESCRIPTION	SCRRA PART NO
1	2	LH TURNOUT TIES (0-59)	
2	4	8'-3" 1:80 CANT CONCRETE TIE	
3	14	8'-3" 1:40 CANT STANDARD TIE (FOR CROSSOVER CONNECTION)	

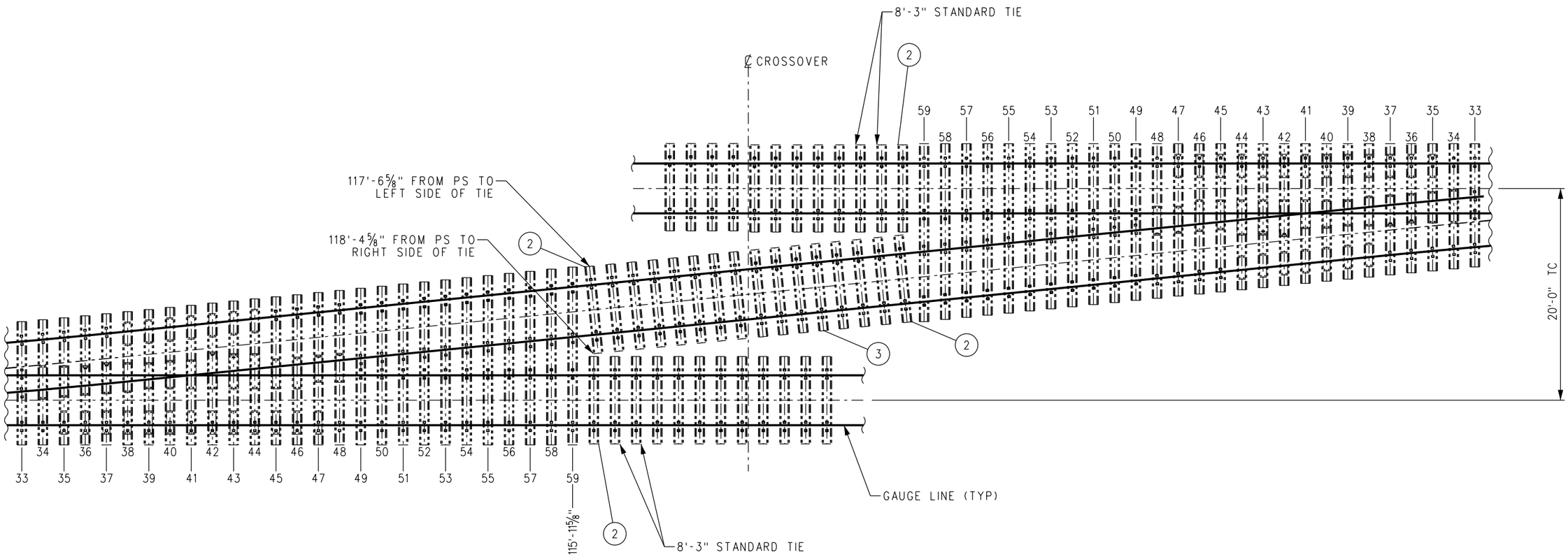

NOTES:

1. ALL SWITCH TIES ARE FLAT (NON-CANTED), EXCEPT 1:80 TRANSITION TIES AND STANDARD 8'-3" TIES CANTED 1:40. ALL LENGTHS SHALL INCLUDE 1'-9" FROM TIE ENDS TO RAIL CENTERLINE, EXCEPT AS NOTED. TRANSITION TIES AND STANDARD TIE PER SCRRA ENGINEERING STANDARDS.
2. 14 STANDARD TIES AT APPROXIMATELY 2'-0" TRACK CENTERS IN CROSSOVER CONNECTION.
3. DISTANCES INDICATED AT EACH TIE ARE MEASURED FROM THE POINT OF SWITCH.

REV.	DATE	DESCRIPTION	DES.	ENG.
X	XX-XX-XX	REVISION	XX	XX

DRAWN BY: HDR DATE: 03/31/2011

ASSISTANT DIRECTOR: STANDARDS & DESIGN

DIRECTOR OF ENGINEERING AND CONSTRUCTION

SCRRA ENGINEERING STANDARDS ARE INTENDED FOR SCRRA APPROVED USES ONLY. FOR NON-SCRRA APPROVED USES, SCRRA SHALL NOT BE RESPONSIBLE FOR THE ACCURACY OR COMPLETENESS OF THE DATA OR INFORMATION CONTAINED HEREIN. THE SELECTION AND USE OF THESE STANDARDS IS THE SOLE RESPONSIBILITY OF THE USER AND SHOULD NOT BE USED WITHOUT CONSULTING A REGISTERED PROFESSIONAL ENGINEER. ALL WARRANTIES AND REPRESENTATIONS OF ANY KIND ARE DISCLAIMED. ANYONE MAKING USE OF THIS INFORMATION AGREES THAT IT ASSUMES ALL LIABILITY ARISING FROM SUCH USE. NO PART OF THESE STANDARDS SHOULD BE REPRODUCED OR DISTRIBUTED IN ANY FORM OR BY ANY MEANS WITHOUT THE PRIOR WRITTEN PERMISSION OF SCRRA. ALL RIGHTS RESERVED.

METROLINK®
SOUTHERN CALIFORNIA REGIONAL RAIL AUTHORITY
ONE GATEWAY PLAZA, 12TH FLOOR, L. A., CA. 90012

ENGINEERING STANDARDS

TIE LAYOUT PLAN
NO 10 – LH CROSSOVER 20' TRACK CENTERS

STANDARD: 2817
SCALE: NTS
REVISION: –
SHEET: 1 OF 1
CADD FILE: ES2817-05

BILL OF MATERIAL			
ITEM	QTY	DESCRIPTION	SCRRA PART NO
1	2	RH TURNOUT TIES (0-59)	
2	4	8'-3" 1:80 CANT CONCRETE TIE	
3	14	8'-3" 1:40 CANT STANDARD TIE (FOR CROSSOVER CONNECTION)	

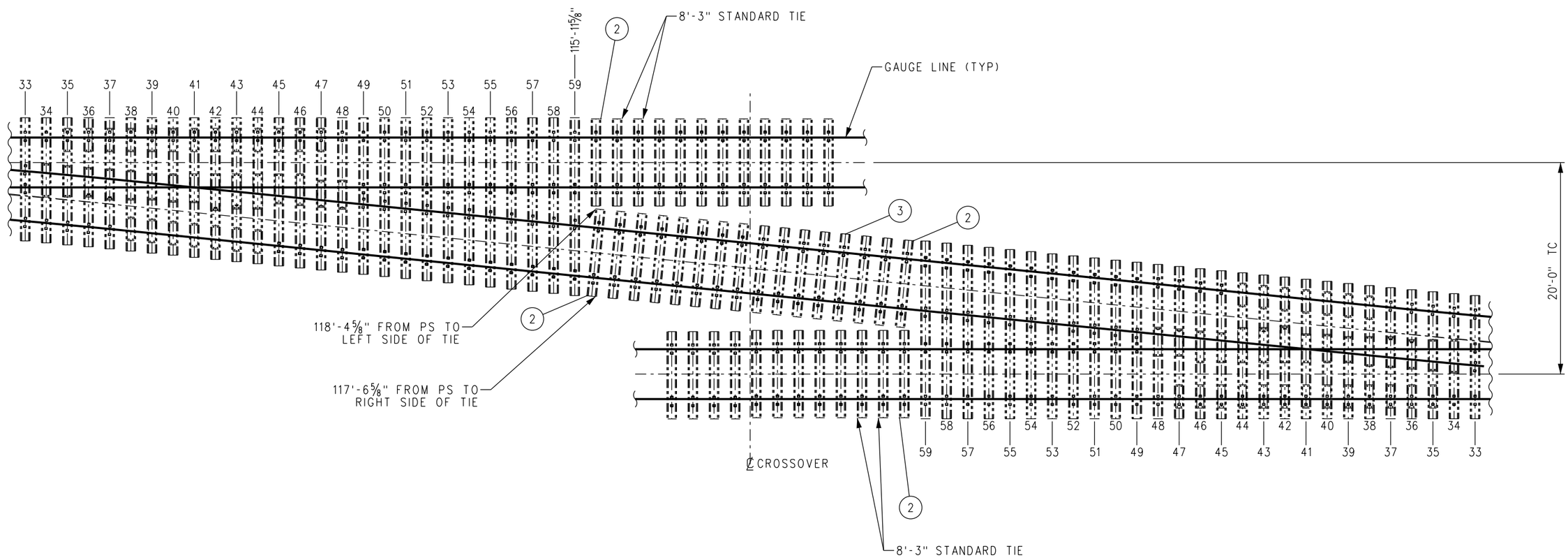

NOTES:

1. ALL SWITCH TIES ARE FLAT (NON-CANTED), EXCEPT 1:80 TRANSITION TIES AND STANDARD 8'-3" TIES CANTED 1:40. ALL LENGTHS SHALL INCLUDE 1'-9" FROM TIE ENDS TO RAIL CENTERLINE, EXCEPT AS NOTED. TRANSITION TIES AND STANDARD TIE PER SCRRA ENGINEERING STANDARDS.
2. 14 STANDARD TIES AT APPROXIMATELY 2'-0" TRACK CENTERS IN CROSSOVER CONNECTION.
3. DISTANCES INDICATED AT EACH TIE ARE MEASURED FROM THE POINT OF SWITCH.

REV.	DATE	DESCRIPTION	DES.	ENG.
X	XX-XX-XX	REVISION	XX	XX

DRAWN BY: HDR DATE: 03/31/2011

ASSISTANT DIRECTOR: STANDARDS & DESIGN

DIRECTOR OF ENGINEERING AND CONSTRUCTION

SCRRA ENGINEERING STANDARDS ARE INTENDED FOR SCRRA APPROVED USES ONLY. FOR NON-SCRRA APPROVED USES:
SCRRA SHALL NOT BE RESPONSIBLE FOR THE ACCURACY OR COMPLETENESS OF THE DATA OR INFORMATION CONTAINED HEREIN. THE SELECTION AND USE OF THESE STANDARDS IS THE SOLE RESPONSIBILITY OF THE USER AND SHOULD NOT BE USED WITHOUT CONSULTING A REGISTERED PROFESSIONAL ENGINEER. ALL WARRANTIES AND REPRESENTATIONS OF ANY KIND ARE DISCLAIMED. ANYONE MAKING USE OF THIS INFORMATION AGREES THAT IT ASSUMES ALL LIABILITY ARISING FROM SUCH USE. NO PART OF THESE STANDARDS SHOULD BE REPRODUCED OR DISTRIBUTED IN ANY FORM OR BY ANY MEANS WITHOUT THE PRIOR WRITTEN PERMISSION OF SCRRA. ALL RIGHTS RESERVED.

METROLINK®
SOUTHERN CALIFORNIA REGIONAL RAIL AUTHORITY
ONE GATEWAY PLAZA, 12TH FLOOR, L. A., CA. 90012

ENGINEERING STANDARDS

TIE LAYOUT PLAN
NO 10 – RH CROSSOVER 20' TRACK CENTERS

STANDARD 2817
SCALE: NTS
REVISION –
SHEET 1 OF 1
CADD FILE: ES2817–06

BILL OF MATERIAL			
ITEM	QTY	DESCRIPTION	SCRRA PART NO
1	2	LH TURNOUT TIES (0-71)	
2	2	TIE NO 72 - LENGTH = 23'-5½"	
3	2	TIE NO 73 - LENGTH = 23'-5½"	
4	2	TIE NO 74 - LENGTH = 23'-5½"	
5	2	TIE NO 75 - LENGTH = 23'-5½"	
6	1	TIE NO 76 - LENGTH = 23'-5½"	
7	2	8'-3" 1:80 CANT CONCRETE TIE	

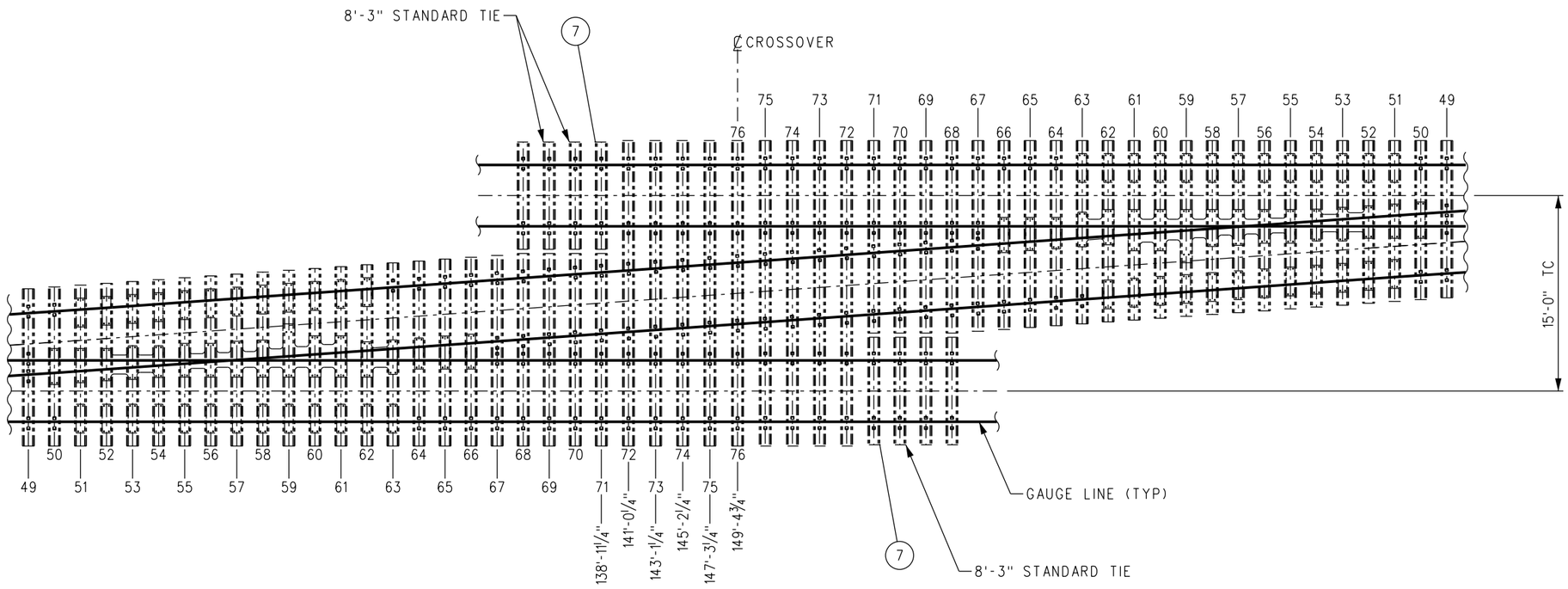

NOTES:

1. ALL SWITCH TIES ARE FLAT (NON-CANTED), EXCEPT 1:80 TRANSITION TIES AND STANDARD 8'-3" TIES CANTED 1:40. ALL LENGTHS SHALL INCLUDE 1'-9" FROM TIE ENDS TO RAIL CENTERLINE, EXCEPT AS NOTED. TRANSITION TIES AND STANDARD TIE PER SCRRA ENGINEERING STANDARDS.
2. DISTANCES INDICATED AT EACH TIE ARE MEASURED FROM THE POINT OF SWITCH.

REV.	DATE	DESCRIPTION	DES.	ENG.
X	XX-XX-XX	REVISION	XX	XX

DRAWN BY: HDR DATE: 03/31/2011

ASSISTANT DIRECTOR: STANDARDS & DESIGN

DIRECTOR OF ENGINEERING AND CONSTRUCTION

SCRRA ENGINEERING STANDARDS ARE INTENDED FOR SCRRA APPROVED USES ONLY. FOR NON-SCRRA APPROVED USES, SCRRA SHALL NOT BE RESPONSIBLE FOR THE ACCURACY OR COMPLETENESS OF THE DATA OR INFORMATION CONTAINED HEREIN. THE SELECTION AND USE OF THESE STANDARDS IS THE SOLE RESPONSIBILITY OF THE USER AND SHOULD NOT BE USED WITHOUT CONSULTING A REGISTERED PROFESSIONAL ENGINEER. ALL WARRANTIES AND REPRESENTATIONS OF ANY KIND ARE DISCLAIMED. ANYONE MAKING USE OF THIS INFORMATION AGREES THAT IT ASSUMES ALL LIABILITY ARISING FROM SUCH USE. NO PART OF THESE STANDARDS SHOULD BE REPRODUCED OR DISTRIBUTED IN ANY FORM OR BY ANY MEANS WITHOUT THE PRIOR WRITTEN PERMISSION OF SCRRA. ALL RIGHTS RESERVED.

METROLINK®

SOUTHERN CALIFORNIA REGIONAL RAIL AUTHORITY
ONE GATEWAY PLAZA, 12TH FLOOR, L. A., CA. 90012

ENGINEERING STANDARDS

TIE LAYOUT PLAN
NO 14 – LH CROSSOVER 15' TRACK CENTERS

STANDARD: 2818
SCALE: NTS
REVISION: –
SHEET: 1 OF 1
CADD FILE: ES2818–01

BILL OF MATERIAL			
ITEM	QTY	DESCRIPTION	SCRRA PART NO
1	2	RH TURNOUT TIES (0-71)	
2	2	TIE NO 72 - LENGTH = 23'-5½"	
3	2	TIE NO 73 - LENGTH = 23'-5½"	
4	2	TIE NO 74 - LENGTH = 23'-5½"	
5	2	TIE NO 75 - LENGTH = 23'-5½"	
6	1	TIE NO 76 - LENGTH = 23'-5½"	
7	2	8'-3" 1:80 CANT CONCRETE TIE	

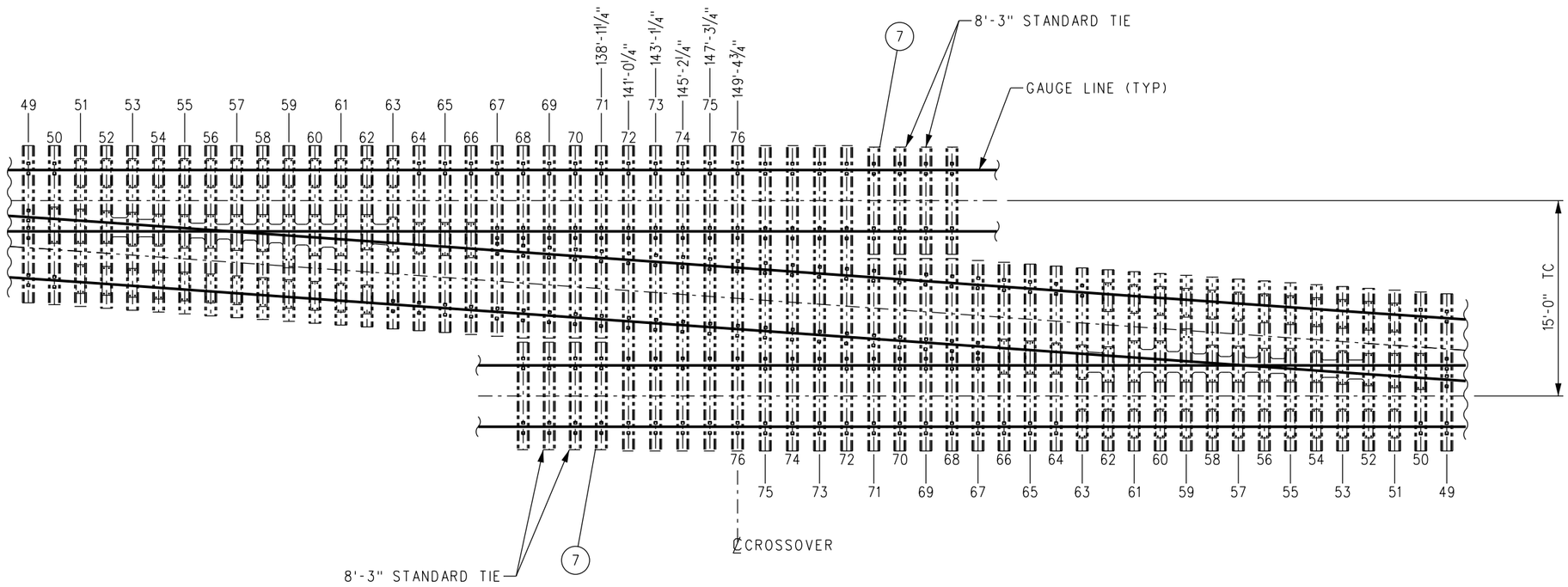

NOTES:

1. ALL SWITCH TIES ARE FLAT (NON-CANTED), EXCEPT 1:80 TRANSITION TIES AND STANDARD 8'-3" TIES CANTED 1:40. ALL LENGTHS SHALL INCLUDE 1'-9" FROM TIE ENDS TO RAIL CENTERLINE, EXCEPT AS NOTED. TRANSITION TIES AND STANDARD TIE PER SCRRA ENGINEERING STANDARDS.
2. DISTANCES INDICATED AT EACH TIE ARE MEASURED FROM THE POINT OF SWITCH.

REV.	DATE	DESCRIPTION	DES.	ENG.
X	XX-XX-XX	REVISION	XX	XX

DRAWN BY: HDR DATE: 03/31/2011

ASSISTANT DIRECTOR: STANDARDS & DESIGN

DIRECTOR OF ENGINEERING AND CONSTRUCTION

SCRRA ENGINEERING STANDARDS ARE INTENDED FOR SCRRA APPROVED USES ONLY. FOR NON-SCRRA APPROVED USES, SCRRA SHALL NOT BE RESPONSIBLE FOR THE ACCURACY OR COMPLETENESS OF THE DATA OR INFORMATION CONTAINED HEREIN. THE SELECTION AND USE OF THESE STANDARDS IS THE SOLE RESPONSIBILITY OF THE USER AND SHOULD NOT BE USED WITHOUT CONSULTING A REGISTERED PROFESSIONAL ENGINEER. ALL WARRANTIES AND REPRESENTATIONS OF ANY KIND ARE DISCLAIMED. ANYONE MAKING USE OF THIS INFORMATION AGREES THAT IT ASSUMES ALL LIABILITY ARISING FROM SUCH USE. NO PART OF THESE STANDARDS SHOULD BE REPRODUCED OR DISTRIBUTED IN ANY FORM OR BY ANY MEANS WITHOUT THE PRIOR WRITTEN PERMISSION OF SCRRA. ALL RIGHTS RESERVED.

METROLINK®
SOUTHERN CALIFORNIA REGIONAL RAIL AUTHORITY
ONE GATEWAY PLAZA, 12TH FLOOR, L. A., CA. 90012

ENGINEERING STANDARDS

TIE LAYOUT PLAN
NO 14 – RH CROSSOVER 15' TRACK CENTERS

STANDARD: 2818
SCALE: NTS
REVISION: –
SHEET: 1 OF 1
CADD FILE: ES2818-02

BILL OF MATERIAL			
ITEM	QTY	DESCRIPTION	SCRRA PART NO
1	2	LH TURNOUT TIES (0-73)	
2	2	TIE NO 74 - LENGTH = 24'-5½"	
3	2	TIE NO 75 - LENGTH = 24'-5½"	
4	2	TIE NO 76 - LENGTH = 24'-5½"	
5	2	TIE NO 77 - LENGTH = 24'-5½"	
6	2	TIE NO 78 - LENGTH = 24'-5½"	
7	2	TIE NO 79 - LENGTH = 24'-5½"	
8	2	8'-3" 1:80 CANT CONCRETE TIE	

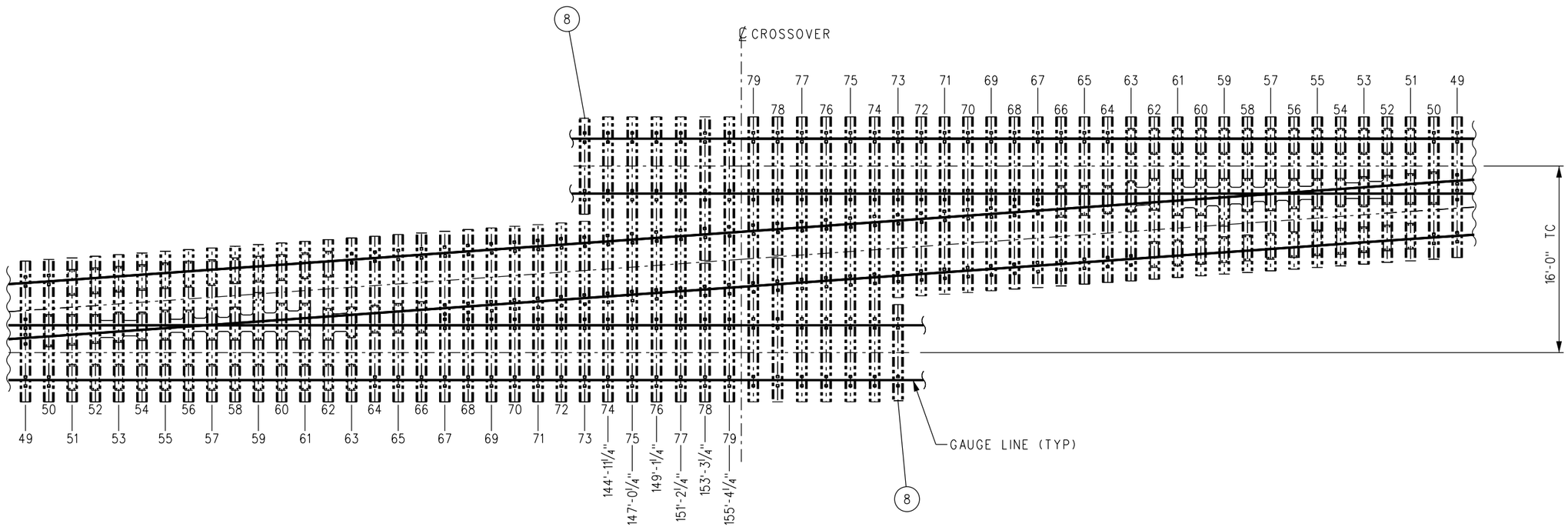

NOTES:

1. ALL SWITCH TIES ARE FLAT (NON-CANTED), EXCEPT 1:80 TRANSITION TIES AND STANDARD 8'-3" TIES CANTED 1:40. ALL LENGTHS SHALL INCLUDE 1'-9" FROM TIE ENDS TO RAIL CENTERLINE, EXCEPT AS NOTED. TRANSITION TIES AND STANDARD TIE PER SCRRA ENGINEERING STANDARDS.
2. DISTANCES INDICATED AT EACH TIE ARE MEASURED FROM THE POINT OF SWITCH.

REV.	DATE	DESCRIPTION	DES.	ENG.
X	XX-XX-XX	REVISION	XX	XX

DRAWN BY: HDR DATE: 03/31/2011

ASSISTANT DIRECTOR: STANDARDS & DESIGN

DIRECTOR OF ENGINEERING AND CONSTRUCTION

SCRRA ENGINEERING STANDARDS ARE INTENDED FOR SCRRA APPROVED USES ONLY. FOR NON-SCRRA APPROVED USES:
SCRRA SHALL NOT BE RESPONSIBLE FOR THE ACCURACY OR COMPLETENESS OF THE DATA OR INFORMATION CONTAINED HEREIN. THE SELECTION AND USE OF THESE STANDARDS IS THE SOLE RESPONSIBILITY OF THE USER AND SHOULD NOT BE USED WITHOUT CONSULTING A REGISTERED PROFESSIONAL ENGINEER. ALL WARRANTIES AND REPRESENTATIONS OF ANY KIND ARE DISCLAIMED. ANYONE MAKING USE OF THIS INFORMATION AGREES THAT IT ASSUMES ALL LIABILITY ARISING FROM SUCH USE. NO PART OF THESE STANDARDS SHOULD BE REPRODUCED OR DISTRIBUTED IN ANY FORM OR BY ANY MEANS WITHOUT THE PRIOR WRITTEN PERMISSION OF SCRRA. ALL RIGHTS RESERVED.

METROLINK®
SOUTHERN CALIFORNIA REGIONAL RAIL AUTHORITY
ONE GATEWAY PLAZA, 12TH FLOOR, L. A., CA. 90012

ENGINEERING STANDARDS

TIE LAYOUT PLAN
NO 14 – LH CROSSOVER 16' TRACK CENTERS

STANDARD: 2818
SCALE: NTS
REVISION: –
SHEET: 1 OF 1
CADD FILE: ES2818–03

BILL OF MATERIAL			
ITEM	QTY	DESCRIPTION	SCRRA PART NO
1	2	RH TURNOUT TIES (0-73)	
2	2	TIE NO 74 - LENGTH = 24'-5½"	
3	2	TIE NO 75 - LENGTH = 24'-5½"	
4	2	TIE NO 76 - LENGTH = 24'-5½"	
5	2	TIE NO 77 - LENGTH = 24'-5½"	
6	2	TIE NO 78 - LENGTH = 24'-5½"	
7	2	TIE NO 79 - LENGTH = 24'-5½"	
8	2	8'-3" 1:80 CANT CONCRETE TIE	

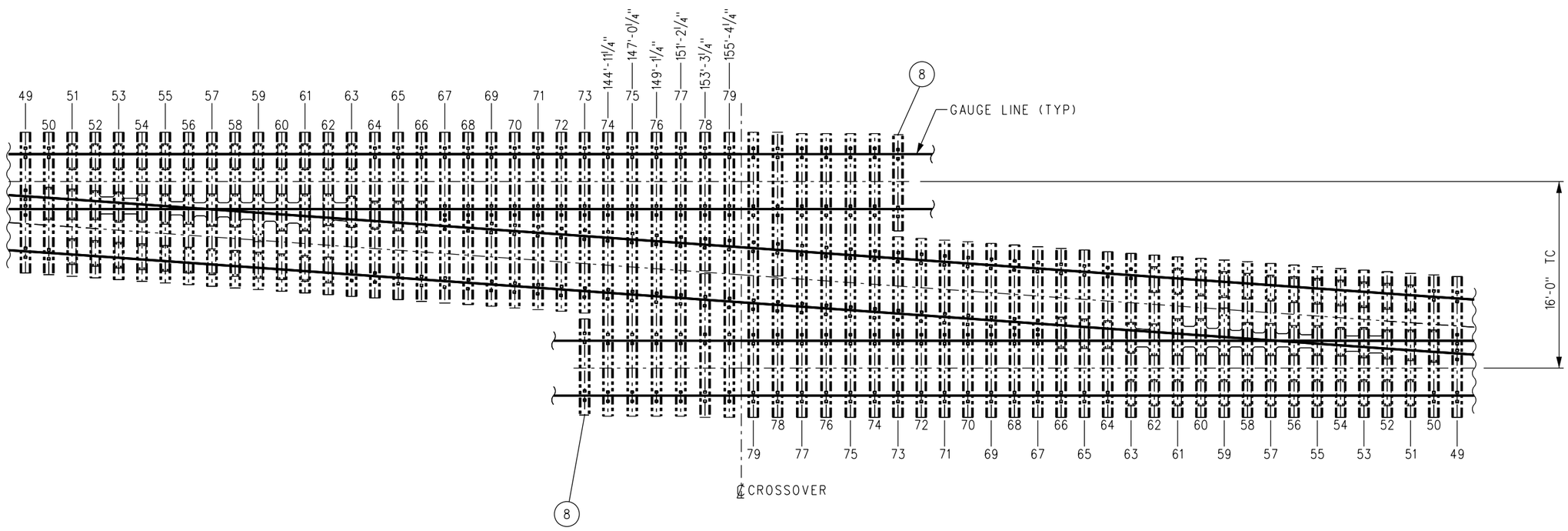

NOTES:

1. ALL SWITCH TIES ARE FLAT (NON-CANTED), EXCEPT 1:80 TRANSITION TIES AND STANDARD 8'-3" TIES CANTED 1:40. ALL LENGTHS SHALL INCLUDE 1'-9" FROM TIE ENDS TO RAIL CENTERLINE, EXCEPT AS NOTED. TRANSITION TIES AND STANDARD TIE PER SCRRA ENGINEERING STANDARDS.
2. DISTANCES INDICATED AT EACH TIE ARE MEASURED FROM THE POINT OF SWITCH.

REV.	DATE	DESCRIPTION	DES.	ENG.
X	XX-XX-XX	REVISION	XX	XX

DRAWN BY: HDR DATE: 03/31/2011

ASSISTANT DIRECTOR: STANDARDS & DESIGN

DIRECTOR OF ENGINEERING AND CONSTRUCTION

SCRRA ENGINEERING STANDARDS ARE INTENDED FOR SCRRA APPROVED USES ONLY. FOR NON-SCRRA APPROVED USES:
SCRRA SHALL NOT BE RESPONSIBLE FOR THE ACCURACY OR COMPLETENESS OF THE DATA OR INFORMATION CONTAINED HEREIN. THE SELECTION AND USE OF THESE STANDARDS IS THE SOLE RESPONSIBILITY OF THE USER AND SHOULD NOT BE USED WITHOUT CONSULTING A REGISTERED PROFESSIONAL ENGINEER. ALL WARRANTIES AND REPRESENTATIONS OF ANY KIND ARE DISCLAIMED. ANYONE MAKING USE OF THIS INFORMATION AGREES THAT IT ASSUMES ALL LIABILITY ARISING FROM SUCH USE. NO PART OF THESE STANDARDS SHOULD BE REPRODUCED OR DISTRIBUTED IN ANY FORM OR BY ANY MEANS WITHOUT THE PRIOR WRITTEN PERMISSION OF SCRRA. ALL RIGHTS RESERVED.

METROLINK®
SOUTHERN CALIFORNIA REGIONAL RAIL AUTHORITY
ONE GATEWAY PLAZA, 12TH FLOOR, L. A., CA. 90012

ENGINEERING STANDARDS

TIE LAYOUT PLAN
NO 14 – RH CROSSOVER 16' TRACK CENTERS

STANDARD 2818
SCALE: NTS
REVISION –
SHEET 1 OF 1
CADD FILE: ES2818-04

BILL OF MATERIAL			
ITEM	QTY	DESCRIPTION	SCRRA PART NO
1	2	LH TURNOUT TIES (0-83)	
2	4	8'-3" 1:80 CANT CONCRETE TIE	
3	18	8'-3" 1:40 CANT STANDARD TIE (FOR CROSSOVER CONNECTION)	

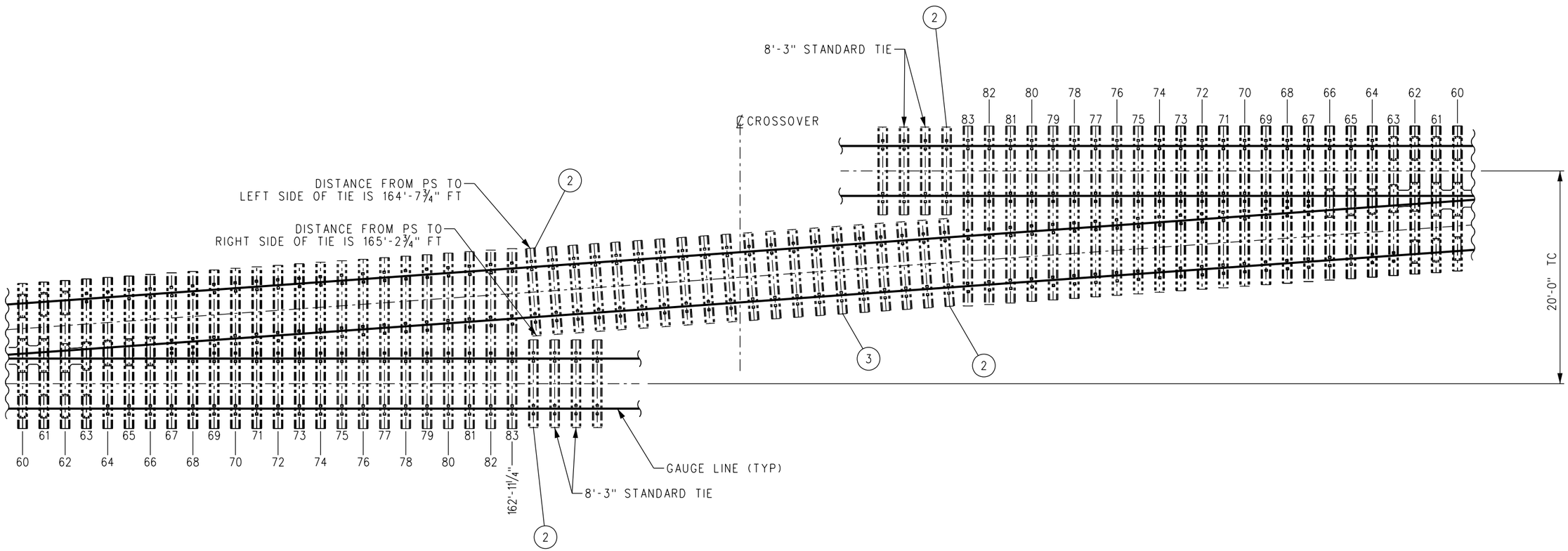

NOTES:

1. ALL SWITCH TIES ARE FLAT (NON-CANTED), EXCEPT 1:80 TRANSITION TIES AND STANDARD 8'-3" TIES CANTED 1:40. ALL LENGTHS SHALL INCLUDE 1'-9" FROM TIE ENDS TO RAIL CENTERLINE, EXCEPT AS NOTED. TRANSITION TIES AND STANDARD TIE PER SCRRA ENGINEERING STANDARDS.
2. 18 STANDARD TIES AT APPROXIMATELY 2'-0" TIE CENTERS ON CROSSOVER CONNECTION.
3. DISTANCES INDICATED AT EACH TIE ARE MEASURED FROM THE POINT OF SWITCH.

REV.	DATE	DESCRIPTION	DES.	ENG.
X	XX-XX-XX	REVISION	XX	XX

DRAWN BY: HDR DATE: 03/31/2011

ASSISTANT DIRECTOR: STANDARDS & DESIGN

DIRECTOR OF ENGINEERING AND CONSTRUCTION

SCRRA ENGINEERING STANDARDS ARE INTENDED FOR SCRRA APPROVED USES ONLY. FOR NON-SCRRA APPROVED USES, SCRRA SHALL NOT BE RESPONSIBLE FOR THE ACCURACY OR COMPLETENESS OF THE DATA OR INFORMATION CONTAINED HEREIN. THE SELECTION AND USE OF THESE STANDARDS IS THE SOLE RESPONSIBILITY OF THE USER AND SHOULD NOT BE USED WITHOUT CONSULTING A REGISTERED PROFESSIONAL ENGINEER. ALL WARRANTIES AND REPRESENTATIONS OF ANY KIND ARE DISCLAIMED. ANYONE MAKING USE OF THIS INFORMATION AGREES THAT IT ASSUMES ALL LIABILITY ARISING FROM SUCH USE. NO PART OF THESE STANDARDS SHOULD BE REPRODUCED OR DISTRIBUTED IN ANY FORM OR BY ANY MEANS WITHOUT THE PRIOR WRITTEN PERMISSION OF SCRRA. ALL RIGHTS RESERVED.

METROLINK®
SOUTHERN CALIFORNIA REGIONAL RAIL AUTHORITY
ONE GATEWAY PLAZA, 12TH FLOOR, L. A., CA. 90012

ENGINEERING STANDARDS

TIE LAYOUT PLAN
NO 14 – LH CROSSOVER 20' TRACK CENTERS

STANDARD: 2818
SCALE: NTS
REVISION: –
SHEET: 1 OF 1
CADD FILE: ES2818–05

BILL OF MATERIAL			
ITEM	QTY	DESCRIPTION	SCRRA PART NO
1	2	RH TURNOUT TIES (0-83)	
2	4	8'-3" 1:80 CANT CONCRETE TIE	
3	18	8'-3" 1:40 CANT STANDARD TIE (FOR CROSSOVER CONNECTION)	

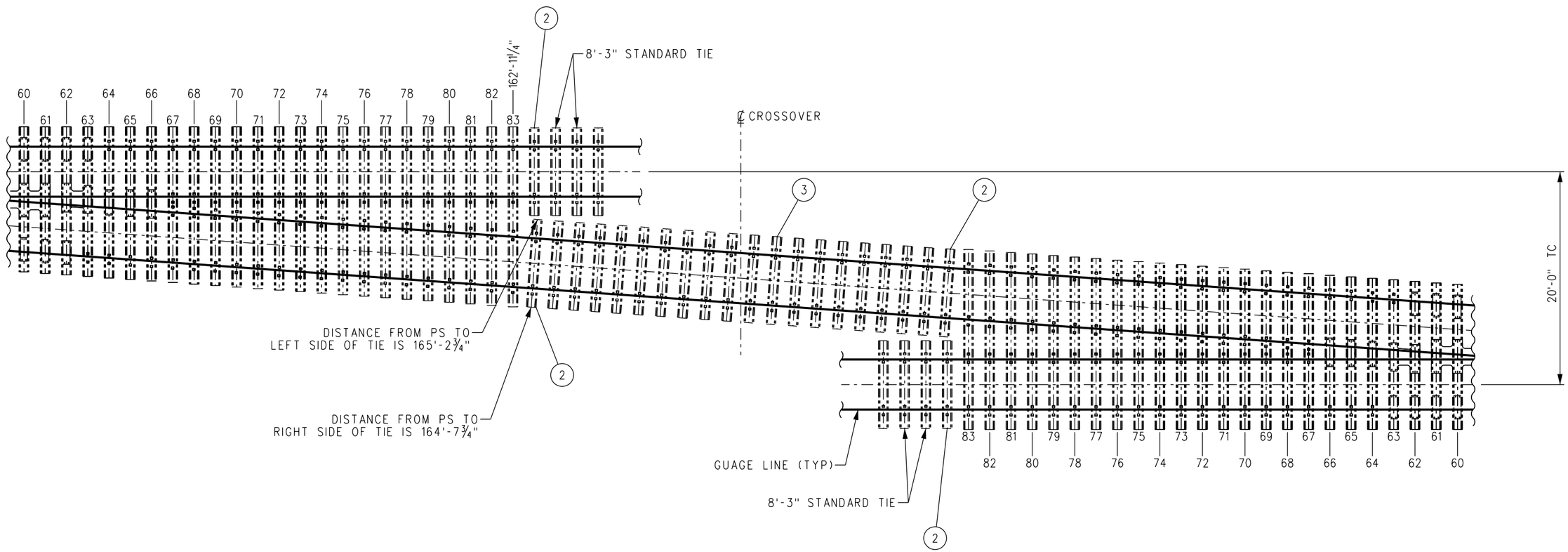

NOTES:

1. ALL SWITCH TIES ARE FLAT (NON-CANTED), EXCEPT 1:80 TRANSITION TIES AND STANDARD 8'-3" TIES CANTED 1:40. ALL LENGTHS SHALL INCLUDE 1'-9" FROM TIE ENDS TO RAIL CENTERLINE, EXCEPT AS NOTED. TRANSITION TIES AND STANDARD TIE PER SCRRA ENGINEERING STANDARDS.
2. 18 STANDARD TIES AT APPROXIMATELY 2'-0" TIE CENTERS ON CROSSOVER CONNECTION.
3. DISTANCES INDICATED AT EACH TIE ARE MEASURED FROM THE POINT OF SWITCH.

REV.	DATE	DESCRIPTION	DES.	ENG.
X	XX-XX-XX	REVISION	XX	XX

DRAWN BY: HDR DATE: 03/31/2011

ASSISTANT DIRECTOR: STANDARDS & DESIGN

DIRECTOR OF ENGINEERING AND CONSTRUCTION

SCRRA ENGINEERING STANDARDS ARE INTENDED FOR SCRRA APPROVED USES ONLY. FOR NON-SCRRA APPROVED USES:
SCRRA SHALL NOT BE RESPONSIBLE FOR THE ACCURACY OR COMPLETENESS OF THE DATA OR INFORMATION CONTAINED HEREIN. THE SELECTION AND USE OF THESE STANDARDS IS THE SOLE RESPONSIBILITY OF THE USER AND SHOULD NOT BE USED WITHOUT CONSULTING A REGISTERED PROFESSIONAL ENGINEER. ALL WARRANTIES AND REPRESENTATIONS OF ANY KIND ARE DISCLAIMED. ANYONE MAKING USE OF THIS INFORMATION AGREES THAT IT ASSUMES ALL LIABILITY ARISING FROM SUCH USE. NO PART OF THESE STANDARDS SHOULD BE REPRODUCED OR DISTRIBUTED IN ANY FORM OR BY ANY MEANS WITHOUT THE PRIOR WRITTEN PERMISSION OF SCRRA. ALL RIGHTS RESERVED.

METROLINK®
SOUTHERN CALIFORNIA REGIONAL RAIL AUTHORITY
ONE GATEWAY PLAZA, 12TH FLOOR, L. A., CA. 90012

ENGINEERING STANDARDS

TIE LAYOUT PLAN
NO 14 – RH CROSSOVER 20' TRACK CENTERS

STANDARD 2818
SCALE: NTS
REVISION –
SHEET 1 OF 1
CADD FILE: ES2818–06

BILL OF MATERIAL			
ITEM	QTY	DESCRIPTION	SCRRA PART NO
1	2	LH TURNOUT TIES (0-101)	
2	2	TIE NO 102 - LENGTH = 23'-5½"	
3	2	TIE NO 103 - LENGTH = 23'-5½"	
4	2	TIE NO 104 - LENGTH = 23'-5½"	
5	2	TIE NO 105 - LENGTH = 23'-5½"	
6	2	TIE NO 106 - LENGTH = 23'-5½"	
7	2	TIE NO 107 - LENGTH = 23'-5½"	
8	2	TIE NO 108 - LENGTH = 23'-5½"	
9	2	TIE NO 109 - LENGTH = 23'-5½"	
10	2	TIE NO 110 - LENGTH = 23'-5½"	
11	2	TIE NO 111 - LENGTH = 23'-5½"	
12	1	TIE NO 112 - LENGTH = 23'-5½"	
13	2	8'-3" 1:80 CANT CONCRETE TIE	

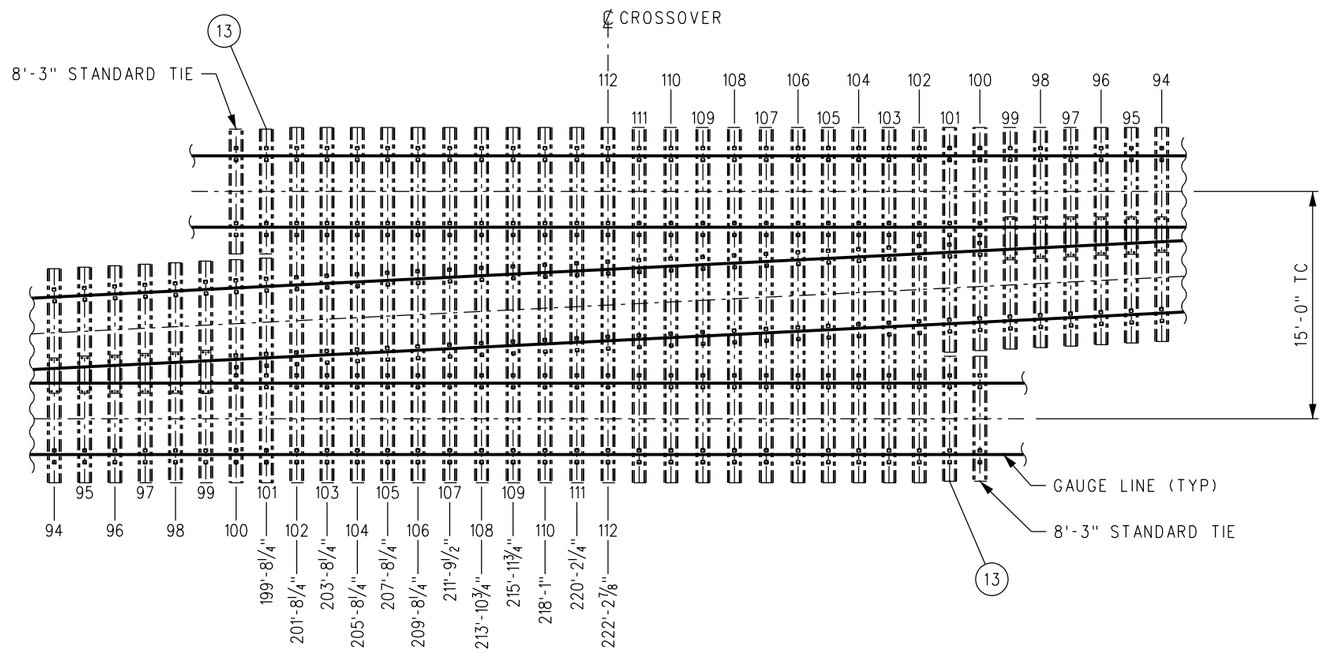

NOTES:

1. ALL SWITCH TIES ARE FLAT (NON-CANTED), EXCEPT 1:80 TRANSITION TIES AND STANDARD 8'-3" TIES CANTED 1:40. ALL LENGTHS SHALL INCLUDE 1'-9" FROM TIE ENDS TO RAIL CENTERLINE, EXCEPT AS NOTED. TRANSITION TIES AND STANDARD TIE PER SCRRA ENGINEERING STANDARDS.
2. DISTANCES INDICATED AT EACH TIE ARE MEASURED FROM THE POINT OF SWITCH.

REV.	DATE	DESCRIPTION	DES.	ENG.
X	XX-XX-XX	REVISION	XX	XX

DRAWN BY: HDR DATE: 03/31/2011

ASSISTANT DIRECTOR: STANDARDS & DESIGN

DIRECTOR OF ENGINEERING AND CONSTRUCTION

SCRRA ENGINEERING STANDARDS ARE INTENDED FOR SCRRA APPROVED USES ONLY. FOR NON-SCRRA APPROVED USES, SCRRA SHALL NOT BE RESPONSIBLE FOR THE ACCURACY OR COMPLETENESS OF THE DATA OR INFORMATION CONTAINED HEREIN. THE SELECTION AND USE OF THESE STANDARDS IS THE SOLE RESPONSIBILITY OF THE USER AND SHOULD NOT BE USED WITHOUT CONSULTING A REGISTERED PROFESSIONAL ENGINEER. ALL WARRANTIES AND REPRESENTATIONS OF ANY KIND ARE DISCLAIMED. ANYONE MAKING USE OF THIS INFORMATION AGREES THAT IT ASSUMES ALL LIABILITY ARISING FROM SUCH USE. NO PART OF THESE STANDARDS SHOULD BE REPRODUCED OR DISTRIBUTED IN ANY FORM OR BY ANY MEANS WITHOUT THE PRIOR WRITTEN PERMISSION OF SCRRA. ALL RIGHTS RESERVED.

METROLINK®

SOUTHERN CALIFORNIA REGIONAL RAIL AUTHORITY
ONE GATEWAY PLAZA, 12TH FLOOR, L. A., CA. 90012

ENGINEERING STANDARDS

TIE LAYOUT PLAN
NO 20 – LH CROSSOVER 15' TRACK CENTERS

STANDARD: 2819
SCALE: NTS
REVISION: –
SHEET: 1 OF 1
CADD FILE: ES2819–01

BILL OF MATERIAL			
ITEM	QTY	DESCRIPTION	SCRRA PART NO
1	2	RH TURNOUT TIES (0-101)	
2	2	TIE NO 102 - LENGTH = 23'-5½"	
3	2	TIE NO 103 - LENGTH = 23'-5½"	
4	2	TIE NO 104 - LENGTH = 23'-5½"	
5	2	TIE NO 105 - LENGTH = 23'-5½"	
6	2	TIE NO 106 - LENGTH = 23'-5½"	
7	2	TIE NO 107 - LENGTH = 23'-5½"	
8	2	TIE NO 108 - LENGTH = 23'-5½"	
9	2	TIE NO 109 - LENGTH = 23'-5½"	
10	2	TIE NO 110 - LENGTH = 23'-5½"	
11	2	TIE NO 111 - LENGTH = 23'-5½"	
12	1	TIE NO 112 - LENGTH = 23'-5½"	
13	2	8'-3" 1:80 CANT CONCRETE TIE	

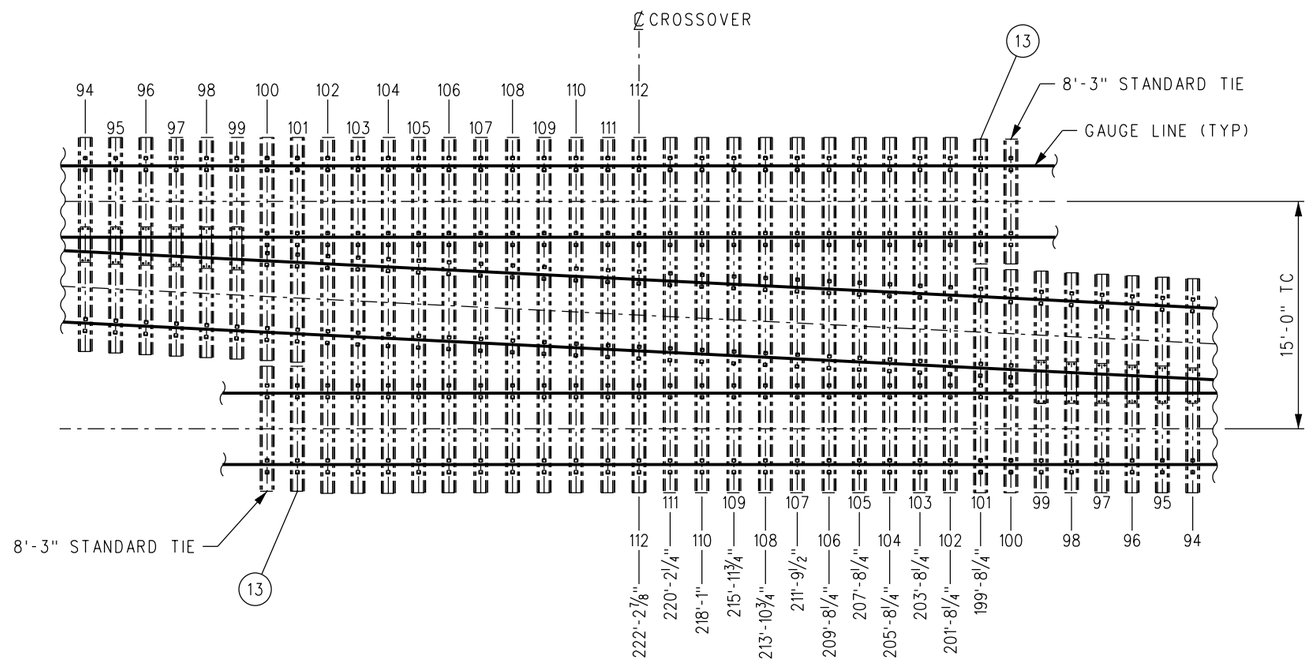

NOTES:

1. ALL SWITCH TIES ARE FLAT (NON-CANTED), EXCEPT 1:80 TRANSITION TIES AND STANDARD 8'-3" TIES CANTED 1:40. ALL LENGTHS SHALL INCLUDE 1'-9" FROM TIE ENDS TO RAIL CENTERLINE, EXCEPT AS NOTED. TRANSITION TIES AND STANDARD TIE PER SCRRA ENGINEERING STANDARDS.
2. DISTANCES INDICATED AT EACH TIE ARE MEASURED FROM THE POINT OF SWITCH.

REV.	DATE	DESCRIPTION	DES.	ENG.
X	XX-XX-XX	REVISION	XX	XX

DRAWN BY: HDR DATE: 03/31/2011

ASSISTANT DIRECTOR: STANDARDS & DESIGN

DIRECTOR OF ENGINEERING AND CONSTRUCTION

SCRRA ENGINEERING STANDARDS ARE INTENDED FOR SCRRA APPROVED USES ONLY. FOR NON-SCRRA APPROVED USES, SCRRA SHALL NOT BE RESPONSIBLE FOR THE ACCURACY OR COMPLETENESS OF THE DATA OR INFORMATION CONTAINED HEREIN. THE SELECTION AND USE OF THESE STANDARDS IS THE SOLE RESPONSIBILITY OF THE USER AND SHOULD NOT BE USED WITHOUT CONSULTING A REGISTERED PROFESSIONAL ENGINEER. ALL WARRANTIES AND REPRESENTATIONS OF ANY KIND ARE DISCLAIMED. ANYONE MAKING USE OF THIS INFORMATION AGREES THAT IT ASSUMES ALL LIABILITY ARISING FROM SUCH USE. NO PART OF THESE STANDARDS SHOULD BE REPRODUCED OR DISTRIBUTED IN ANY FORM OR BY ANY MEANS WITHOUT THE PRIOR WRITTEN PERMISSION OF SCRRA. ALL RIGHTS RESERVED.

METROLINK®
SOUTHERN CALIFORNIA REGIONAL RAIL AUTHORITY
ONE GATEWAY PLAZA, 12TH FLOOR, L. A., CA. 90012

ENGINEERING STANDARDS

TIE LAYOUT PLAN
NO 20 – RH CROSSOVER 15' TRACK CENTERS

STANDARD 2819
SCALE: NTS
REVISION –
SHEET 1 OF 1
CADD FILE: ES2819-02

BILL OF MATERIAL			
ITEM	QTY	DESCRIPTION	SCRRA PART NO
1	2	LH TURNOUT TIES (0-111)	
2	2	TIE NO 112 - LENGTH = 24'-5½"	
3	2	TIE NO 113 - LENGTH = 24'-5½"	
4	2	TIE NO 114 - LENGTH = 24'-5½"	
5	2	TIE NO 115 - LENGTH = 24'-5½"	
6	2	TIE NO 116 - LENGTH = 24'-5½"	
7	2	TIE NO 117 - LENGTH = 24'-5½"	
8	2	8'-3" 1:80 CANT CONCRETE TIE	

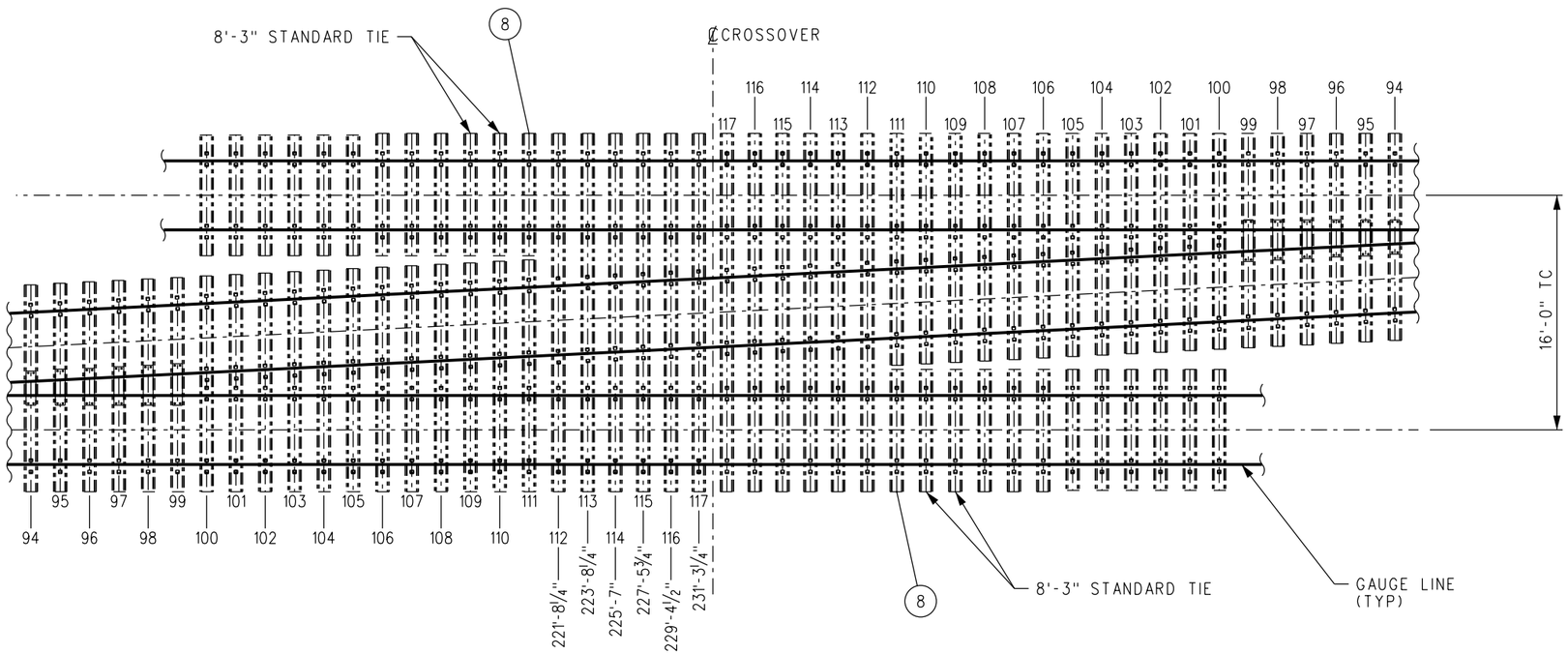

NOTES:

1. ALL SWITCH TIES ARE FLAT (NON-CANTED), EXCEPT 1:80 TRANSITION TIES AND STANDARD 8'-3" TIES CANTED 1:40. ALL LENGTHS SHALL INCLUDE 1'-9" FROM TIE ENDS TO RAIL CENTERLINE, EXCEPT AS NOTED. TRANSITION TIES AND STANDARD TIE PER SCRRA ENGINEERING STANDARDS.
2. DISTANCES INDICATED AT EACH TIE ARE MEASURED FROM THE POINT OF SWITCH.

REV.	DATE	DESCRIPTION	DES.	ENG.
X	XX-XX-XX	REVISION	XX	XX

DRAWN BY: HDR DATE: 03/31/2011

ASSISTANT DIRECTOR: STANDARDS & DESIGN

DIRECTOR OF ENGINEERING AND CONSTRUCTION

SCRRA ENGINEERING STANDARDS ARE INTENDED FOR SCRRA APPROVED USES ONLY. FOR NON-SCRRA APPROVED USES:
SCRRA SHALL NOT BE RESPONSIBLE FOR THE ACCURACY OR COMPLETENESS OF THE DATA OR INFORMATION CONTAINED HEREIN. THE SELECTION AND USE OF THESE STANDARDS IS THE SOLE RESPONSIBILITY OF THE USER AND SHOULD NOT BE USED WITHOUT CONSULTING A REGISTERED PROFESSIONAL ENGINEER. ALL WARRANTIES AND REPRESENTATIONS OF ANY KIND ARE DISCLAIMED. ANYONE MAKING USE OF THIS INFORMATION AGREES THAT IT ASSUMES ALL LIABILITY ARISING FROM SUCH USE. NO PART OF THESE STANDARDS SHOULD BE REPRODUCED OR DISTRIBUTED IN ANY FORM OR BY ANY MEANS WITHOUT THE PRIOR WRITTEN PERMISSION OF SCRRA. ALL RIGHTS RESERVED.

METROLINK®
SOUTHERN CALIFORNIA REGIONAL RAIL AUTHORITY
ONE GATEWAY PLAZA, 12TH FLOOR, L. A., CA. 90012

ENGINEERING STANDARDS

TIE LAYOUT PLAN
NO 20 – LH CROSSOVER 16' TRACK CENTERS

STANDARD: 2819
SCALE: NTS
REVISION: –
SHEET: 1 OF 1
CADD FILE: ES2819–03

BILL OF MATERIAL			
ITEM	QTY	DESCRIPTION	SCRRA PART NO
1	2	RH TURNOUT TIES (0-111)	
2	2	TIE NO 112 - LENGTH = 24'-5½"	
3	2	TIE NO 113 - LENGTH = 24'-5½"	
4	2	TIE NO 114 - LENGTH = 24'-5½"	
5	2	TIE NO 115 - LENGTH = 24'-5½"	
6	2	TIE NO 116 - LENGTH = 24'-5½"	
7	2	TIE NO 117 - LENGTH = 24'-5½"	
8	2	8'-3" 1:80 CANT CONCRETE TIE	

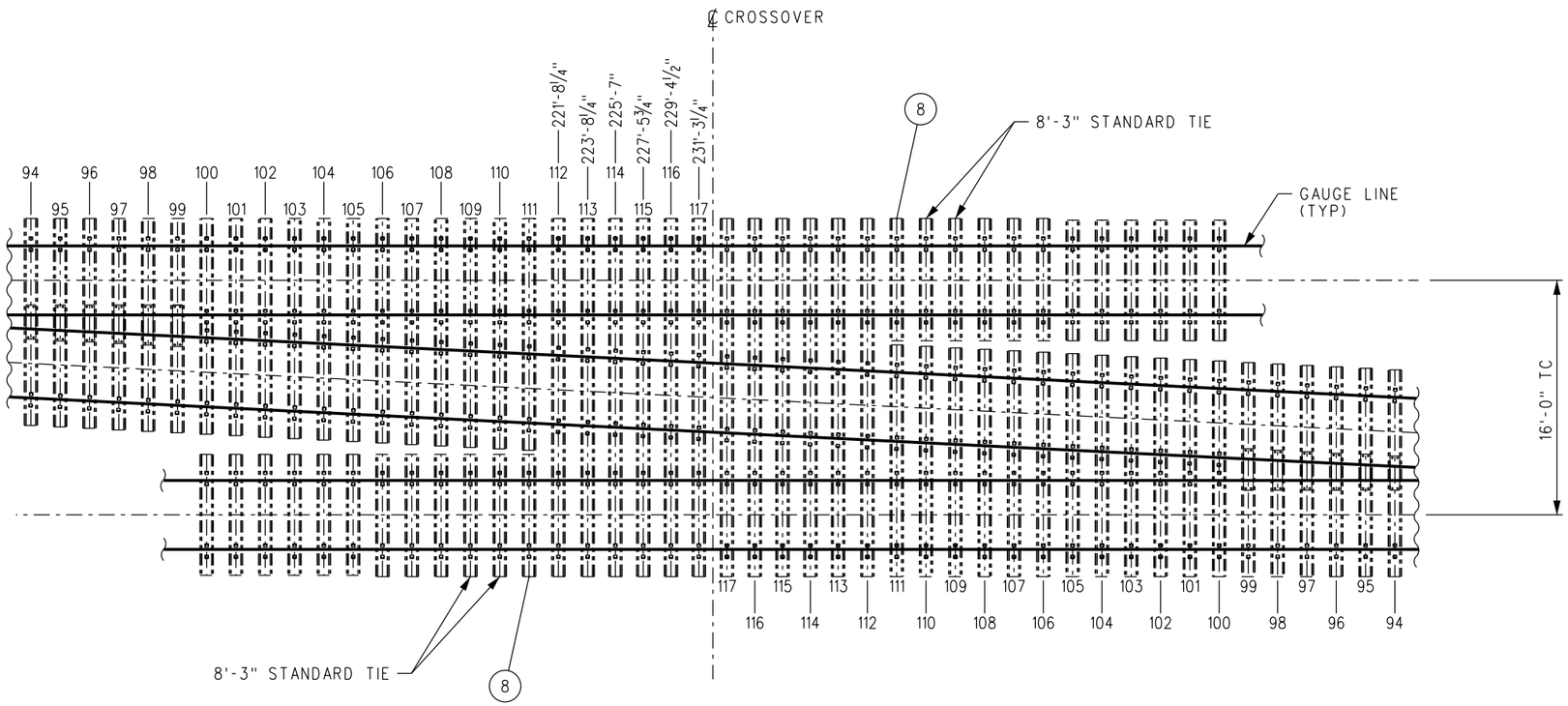

NOTES:

1. ALL SWITCH TIES ARE FLAT (NON-CANTED), EXCEPT 1:80 TRANSITION TIES AND STANDARD 8'-3" TIES CANTED 1:40. ALL LENGTHS SHALL INCLUDE 1'-9" FROM TIE ENDS TO RAIL CENTERLINE, EXCEPT AS NOTED. TRANSITION TIES AND STANDARD TIE PER SCRRA ENGINEERING STANDARDS.
2. DISTANCES INDICATED AT EACH TIE ARE MEASURED FROM THE POINT OF SWITCH.

REV.	DATE	DESCRIPTION	DES.	ENG.
X	XX-XX-XX	REVISION	XX	XX

DRAWN BY: HDR DATE: 03/31/2011

ASSISTANT DIRECTOR: STANDARDS & DESIGN

DIRECTOR OF ENGINEERING AND CONSTRUCTION

SCRRA ENGINEERING STANDARDS ARE INTENDED FOR SCRRA APPROVED USES ONLY. FOR NON-SCRRA APPROVED USES: SCRRA SHALL NOT BE RESPONSIBLE FOR THE ACCURACY OR COMPLETENESS OF THE DATA OR INFORMATION CONTAINED HEREIN. THE SELECTION AND USE OF THESE STANDARDS IS THE SOLE RESPONSIBILITY OF THE USER AND SHOULD NOT BE USED WITHOUT CONSULTING A REGISTERED PROFESSIONAL ENGINEER. ALL WARRANTIES AND REPRESENTATIONS OF ANY KIND ARE DISCLAIMED. ANYONE MAKING USE OF THIS INFORMATION AGREES THAT IT ASSUMES ALL LIABILITY ARISING FROM SUCH USE. NO PART OF THESE STANDARDS SHOULD BE REPRODUCED OR DISTRIBUTED IN ANY FORM OR BY ANY MEANS WITHOUT THE PRIOR WRITTEN PERMISSION OF SCRRA. ALL RIGHTS RESERVED.

METROLINK®
SOUTHERN CALIFORNIA REGIONAL RAIL AUTHORITY
ONE GATEWAY PLAZA, 12TH FLOOR, L. A., CA. 90012

ENGINEERING STANDARDS

TIE LAYOUT PLAN
NO 20 – RH CROSSOVER 16' TRACK CENTERS

STANDARD 2819
SCALE: NTS
REVISION –
SHEET 1 OF 1
CADD FILE: ES2819–04

BILL OF MATERIAL			
ITEM	QTY	DESCRIPTION	SCRRA PART NO
1	2	LH TURNOUT TIES (0-121)	
2	2	TIE NO 122 - LENGTH = 16'-10"	
3	4	8'-3" 1:80 CANT CONCRETE TIE	
4	28	8'-3" 1:40 CANT STANDARD TIE (FOR CROSSOVER CONNECTION)	

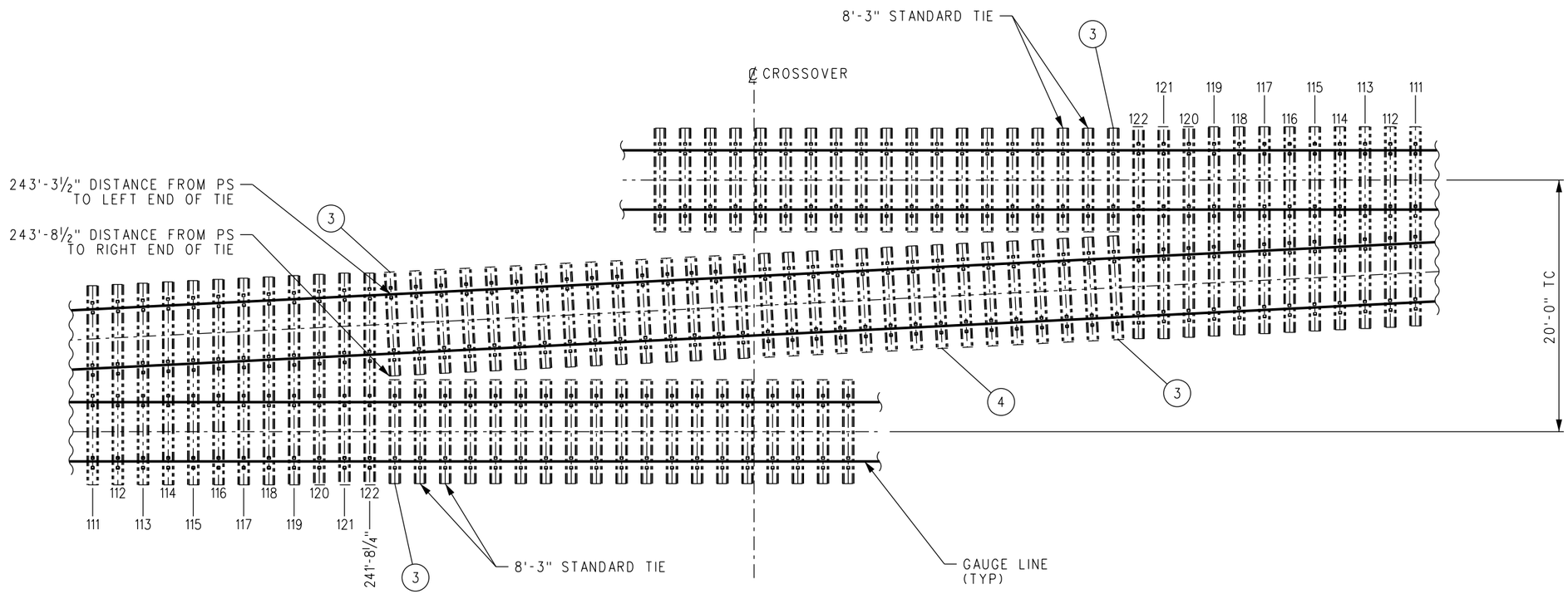

NOTES:

1. ALL SWITCH TIES ARE FLAT (NON-CANTED), EXCEPT 1:80 TRANSITION TIES AND STANDARD 8'-3" TIES CANTED 1:40. ALL LENGTHS SHALL INCLUDE 1'-9" FROM TIE ENDS TO RAIL CENTERLINE, EXCEPT AS NOTED. TRANSITION TIES AND STANDARD TIE PER SCRRA ENGINEERING STANDARDS.
2. 28 STANDARD TIES AT APPROXIMATELY 2'-0" TRACK CENTER IN CROSSOVER CONNECTION.
3. DISTANCES INDICATED AT EACH TIE ARE MEASURED FROM THE POINT OF SWITCH.

REV.	DATE	DESCRIPTION	DES.	ENG.
X	XX-XX-XX	REVISION	XX	XX

DRAWN BY: HDR DATE: 03/31/2011

ASSISTANT DIRECTOR: STANDARDS & DESIGN

DIRECTOR OF ENGINEERING AND CONSTRUCTION

SCRRA ENGINEERING STANDARDS ARE INTENDED FOR SCRRA APPROVED USES ONLY. FOR NON-SCRRA APPROVED USES: SCRRA SHALL NOT BE RESPONSIBLE FOR THE ACCURACY OR COMPLETENESS OF THE DATA OR INFORMATION CONTAINED HEREIN. THE SELECTION AND USE OF THESE STANDARDS IS THE SOLE RESPONSIBILITY OF THE USER AND SHOULD NOT BE USED WITHOUT CONSULTING A REGISTERED PROFESSIONAL ENGINEER. ALL WARRANTIES AND REPRESENTATIONS OF ANY KIND ARE DISCLAIMED. ANYONE MAKING USE OF THIS INFORMATION AGREES THAT IT ASSUMES ALL LIABILITY ARISING FROM SUCH USE. NO PART OF THESE STANDARDS SHOULD BE REPRODUCED OR DISTRIBUTED IN ANY FORM OR BY ANY MEANS WITHOUT THE PRIOR WRITTEN PERMISSION OF SCRRA. ALL RIGHTS RESERVED.

METROLINK®
SOUTHERN CALIFORNIA REGIONAL RAIL AUTHORITY
ONE GATEWAY PLAZA, 12TH FLOOR, L. A., CA. 90012

ENGINEERING STANDARDS

TIE LAYOUT PLAN
NO 20 – LH CROSSOVER 20' TRACK CENTERS

STANDARD: 2819
SCALE: NTS
REVISION: –
SHEET: 1 OF 1
CADD FILE: ES2819-05

BILL OF MATERIAL			
ITEM	QTY	DESCRIPTION	SCRRA PART NO
1	2	RH TURNOUT TIES (0-121)	
2	2	TIE NO 122 - LENGTH = 16'-10"	
3	4	8'-3" 1:80 CANT CONCRETE TIE	
4	28	8'-3" 1:40 CANT STANDARD TIE (FOR CROSSOVER CONNECTION)	

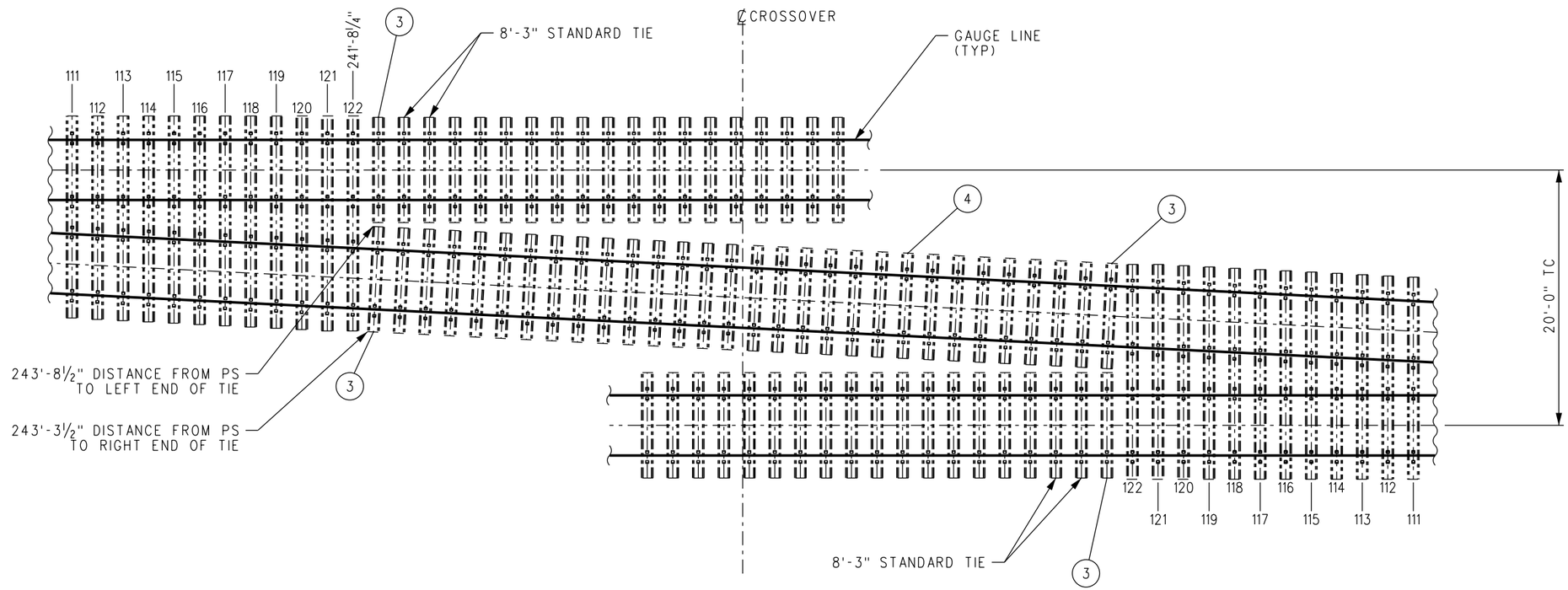

NOTES:

1. ALL SWITCH TIES ARE FLAT (NON-CANTED), EXCEPT 1:80 TRANSITION TIES AND STANDARD 8'-3" TIES CANTED 1:40. ALL LENGTHS SHALL INCLUDE 1'-9" FROM TIE ENDS TO RAIL CENTERLINE, EXCEPT AS NOTED. TRANSITION TIES AND STANDARD TIE PER SCRRA ENGINEERING STANDARDS.
2. 28 STANDARD TIES AT APPROXIMATELY 2'-0" TRACK CENTER IN CROSSOVER CONNECTION.
3. DISTANCES INDICATED AT EACH TIE ARE MEASURED FROM THE POINT OF SWITCH.

REV.	DATE	DESCRIPTION	DES.	ENG.
X	XX-XX-XX	REVISION	XX	XX

DRAWN BY: HDR DATE: 03/31/2011

ASSISTANT DIRECTOR: STANDARDS & DESIGN

DIRECTOR OF ENGINEERING AND CONSTRUCTION

SCRRA ENGINEERING STANDARDS ARE INTENDED FOR SCRRA APPROVED USES ONLY. FOR NON-SCRRA APPROVED USES:
SCRRA SHALL NOT BE RESPONSIBLE FOR THE ACCURACY OR COMPLETENESS OF THE DATA OR INFORMATION CONTAINED HEREIN. THE SELECTION AND USE OF THESE STANDARDS IS THE SOLE RESPONSIBILITY OF THE USER AND SHOULD NOT BE USED WITHOUT CONSULTING A REGISTERED PROFESSIONAL ENGINEER. ALL WARRANTIES AND REPRESENTATIONS OF ANY KIND ARE DISCLAIMED. ANYONE MAKING USE OF THIS INFORMATION AGREES THAT IT ASSUMES ALL LIABILITY ARISING FROM SUCH USE. NO PART OF THESE STANDARDS SHOULD BE REPRODUCED OR DISTRIBUTED IN ANY FORM OR BY ANY MEANS WITHOUT THE PRIOR WRITTEN PERMISSION OF SCRRA. ALL RIGHTS RESERVED.

METROLINK®
SOUTHERN CALIFORNIA REGIONAL RAIL AUTHORITY
ONE GATEWAY PLAZA, 12TH FLOOR, L. A., CA. 90012

ENGINEERING STANDARDS

TIE LAYOUT PLAN
NO 20 – RH CROSSOVER 20' TRACK CENTERS

STANDARD 2819
SCALE: NTS
REVISION –
SHEET 1 OF 1
CADD FILE: ES2819-06

UserName=> carlosa Date Plotted: 10/5/2011 2:36:21 PM Plot Driver=> S:\Plot Drivers\pdf.plt FileName=> s:\V8EngStds\2000\Turnouts\Concrete Crossovers\ES2819-06.dgn

BILL OF MATERIAL			
ITEM	QTY	DESCRIPTION	SCRRA PART NO
1	2	LH TURNOUT TIES (0-125)	
2	2	TIE NO 126 - LENGTH = 23'-5½"	
3	2	TIE NO 127 - LENGTH = 23'-5½"	
4	2	TIE NO 128 - LENGTH = 23'-5½"	
5	2	TIE NO 129 - LENGTH = 23'-5½"	
6	2	TIE NO 130 - LENGTH = 23'-5½"	
7	2	TIE NO 131 - LENGTH = 23'-5½"	
8	2	TIE NO 132 - LENGTH = 23'-5½"	
9	2	TIE NO 133 - LENGTH = 23'-5½"	
10	2	TIE NO 134 - LENGTH = 23'-5½"	
11	2	TIE NO 135 - LENGTH = 23'-5½"	
12	2	TIE NO 136 - LENGTH = 23'-5½"	
13	2	TIE NO 137 - LENGTH = 23'-5½"	
14	2	TIE NO 138 - LENGTH = 23'-5½"	
15	2	TIE NO 139 - LENGTH = 23'-5½"	
16	2	8'-3" 1:80 CANT CONCRETE TIE	

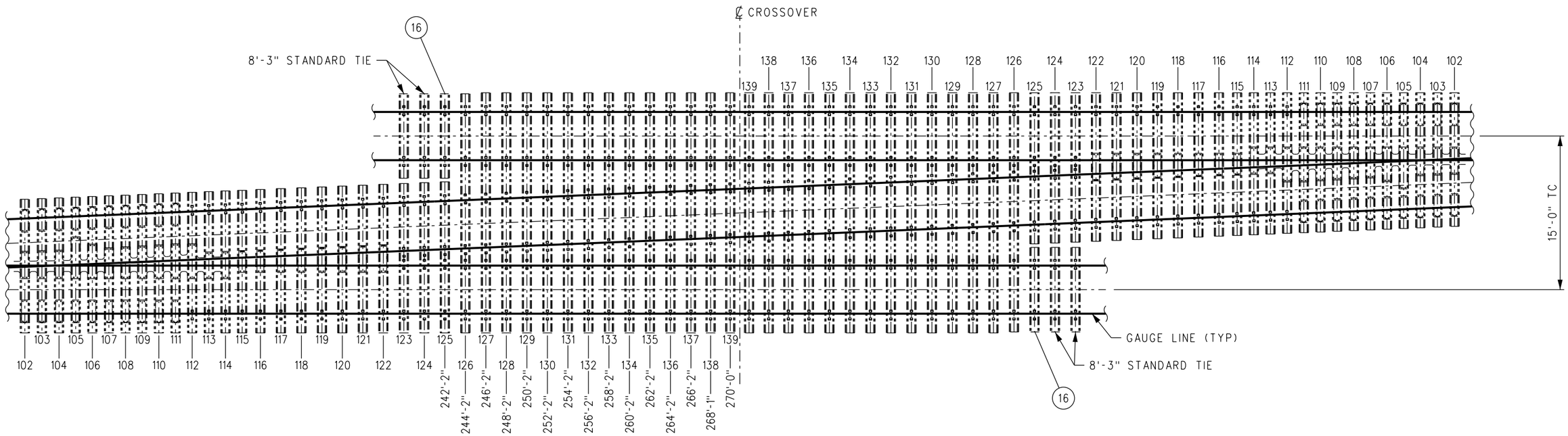

NOTES:

1. ALL SWITCH TIES ARE FLAT (NON-CANTED), EXCEPT 1:80 TRANSITION TIES AND STANDARD 8'-3" TIES CANTED 1:40. ALL LENGTHS SHALL INCLUDE 1'-9" FROM TIE ENDS TO RAIL CENTERLINE, EXCEPT AS NOTED. TRANSITION TIES AND STANDARD TIE PER SCRRA ENGINEERING STANDARDS.
2. DISTANCES INDICATED AT EACH TIE ARE MEASURED FROM THE POINT OF SWITCH.

REV.	DATE	DESCRIPTION	DES.	ENG.
X	XX-XX-XX	REVISION	XX	XX

DRAWN BY: HDR DATE: 03/31/2011

ASSISTANT DIRECTOR: STANDARDS & DESIGN

DIRECTOR OF ENGINEERING AND CONSTRUCTION

SCRRA ENGINEERING STANDARDS ARE INTENDED FOR SCRRA APPROVED USES ONLY. FOR NON-SCRRA APPROVED USES: SCRRA SHALL NOT BE RESPONSIBLE FOR THE ACCURACY OR COMPLETENESS OF THE DATA OR INFORMATION CONTAINED HEREIN. THE SELECTION AND USE OF THESE STANDARDS IS THE SOLE RESPONSIBILITY OF THE USER AND SHOULD NOT BE USED WITHOUT CONSULTING A REGISTERED PROFESSIONAL ENGINEER. ALL WARRANTIES AND REPRESENTATIONS OF ANY KIND ARE DISCLAIMED. ANYONE MAKING USE OF THIS INFORMATION AGREES THAT IT ASSUMES ALL LIABILITY ARISING FROM SUCH USE. NO PART OF THESE STANDARDS SHOULD BE REPRODUCED OR DISTRIBUTED IN ANY FORM OR BY ANY MEANS WITHOUT THE PRIOR WRITTEN PERMISSION OF SCRRA. ALL RIGHTS RESERVED.

METROLINK®
SOUTHERN CALIFORNIA REGIONAL RAIL AUTHORITY
ONE GATEWAY PLAZA, 12TH FLOOR, L. A., CA. 90012

ENGINEERING STANDARDS

TIE LAYOUT PLAN
NO 24 – LH CROSSOVER 15' TRACK CENTERS

STANDARD 2820
SCALE: NTS
REVISION –
SHEET 1 OF 1
CADD FILE: ES2820-01

BILL OF MATERIAL			
ITEM	QTY	DESCRIPTION	SCRRA PART NO
1	2	RH TURNOUT TIES (0-125)	
2	2	TIE NO 126 - LENGTH = 23'-5½"	
3	2	TIE NO 127 - LENGTH = 23'-5½"	
4	2	TIE NO 128 - LENGTH = 23'-5½"	
5	2	TIE NO 129 - LENGTH = 23'-5½"	
6	2	TIE NO 130 - LENGTH = 23'-5½"	
7	2	TIE NO 131 - LENGTH = 23'-5½"	
8	2	TIE NO 132 - LENGTH = 23'-5½"	
9	2	TIE NO 133 - LENGTH = 23'-5½"	
10	2	TIE NO 134 - LENGTH = 23'-5½"	
11	2	TIE NO 135 - LENGTH = 23'-5½"	
12	2	TIE NO 136 - LENGTH = 23'-5½"	
13	2	TIE NO 137 - LENGTH = 23'-5½"	
14	2	TIE NO 138 - LENGTH = 23'-5½"	
15	2	TIE NO 139 - LENGTH = 23'-5½"	
16	2	8'-3" 1:80 CANT CONCRETE TIE	

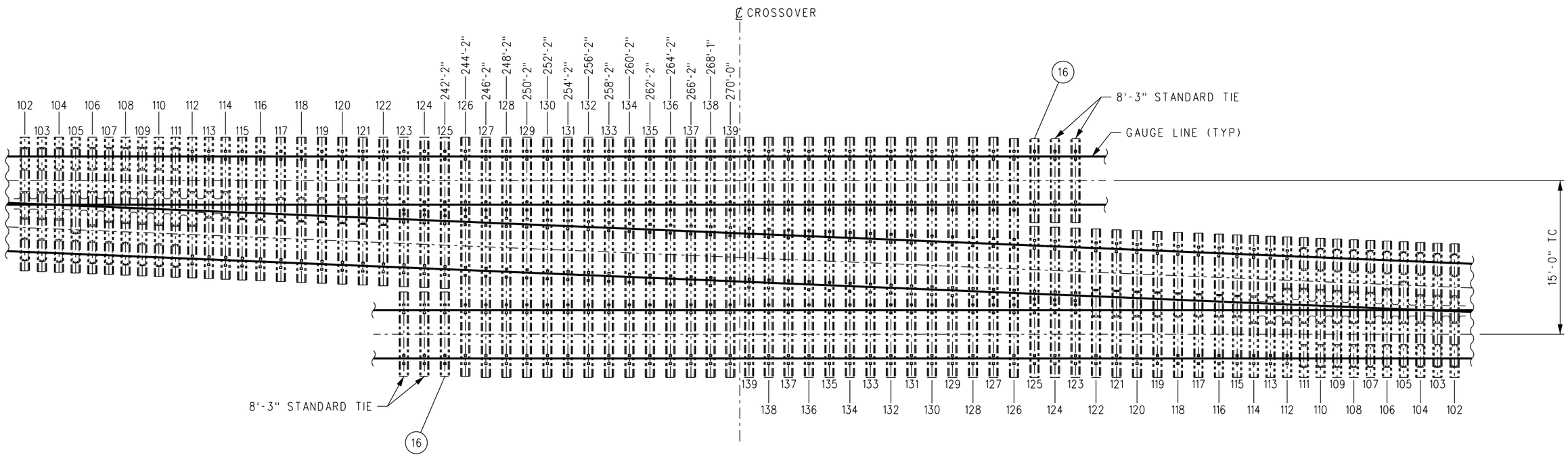

NOTES:

1. ALL SWITCH TIES ARE FLAT (NON-CANTED), EXCEPT 1:80 TRANSITION TIES AND STANDARD 8'-3" TIES CANTED 1:40. ALL LENGTHS SHALL INCLUDE 1'-9" FROM TIE ENDS TO RAIL CENTERLINE, EXCEPT AS NOTED. TRANSITION TIES AND STANDARD TIE PER SCRRA ENGINEERING STANDARDS.
2. DISTANCES INDICATED AT EACH TIE ARE MEASURED FROM THE POINT OF SWITCH.

REV.	DATE	DESCRIPTION	DES.	ENG.
X	XX-XX-XX	REVISION	XX	XX

DRAWN BY: HDR DATE: 03/31/2011

ASSISTANT DIRECTOR: STANDARDS & DESIGN

DIRECTOR OF ENGINEERING AND CONSTRUCTION

SCRRA ENGINEERING STANDARDS ARE INTENDED FOR SCRRA APPROVED USES ONLY. FOR NON-SCRRA APPROVED USES:
SCRRA SHALL NOT BE RESPONSIBLE FOR THE ACCURACY OR COMPLETENESS OF THE DATA OR INFORMATION CONTAINED HEREIN. THE SELECTION AND USE OF THESE STANDARDS IS THE SOLE RESPONSIBILITY OF THE USER AND SHOULD NOT BE USED WITHOUT CONSULTING A REGISTERED PROFESSIONAL ENGINEER. ALL WARRANTIES AND REPRESENTATIONS OF ANY KIND ARE DISCLAIMED. ANYONE MAKING USE OF THIS INFORMATION AGREES THAT IT ASSUMES ALL LIABILITY ARISING FROM SUCH USE. NO PART OF THESE STANDARDS SHOULD BE REPRODUCED OR DISTRIBUTED IN ANY FORM OR BY ANY MEANS WITHOUT THE PRIOR WRITTEN PERMISSION OF SCRRA. ALL RIGHTS RESERVED.

METROLINK®
SOUTHERN CALIFORNIA REGIONAL RAIL AUTHORITY
ONE GATEWAY PLAZA, 12TH FLOOR, L. A., CA. 90012

ENGINEERING STANDARDS

TIE LAYOUT PLAN
NO 24 – RH CROSSOVER 15' TRACK CENTERS

STANDARD 2820
SCALE: NTS
REVISION –
SHEET 1 OF 1
CADD FILE: ES2820-02

BILL OF MATERIAL			
ITEM	QTY	DESCRIPTION	SCRRA PART NO
1	2	LH TURNOUT TIES (0-138)	
2	2	TIE NO 139 - LENGTH = 24'-5½"	
3	2	TIE NO 140 - LENGTH = 24'-5½"	
4	2	TIE NO 141 - LENGTH = 24'-5½"	
5	2	TIE NO 142 - LENGTH = 24'-5½"	
6	2	TIE NO 143 - LENGTH = 24'-5½"	
7	2	TIE NO 144 - LENGTH = 24'-5½"	
8	2	TIE NO 145 - LENGTH = 24'-5½"	
9	2	8'-3" 1:80 CANT CONCRETE TIE	

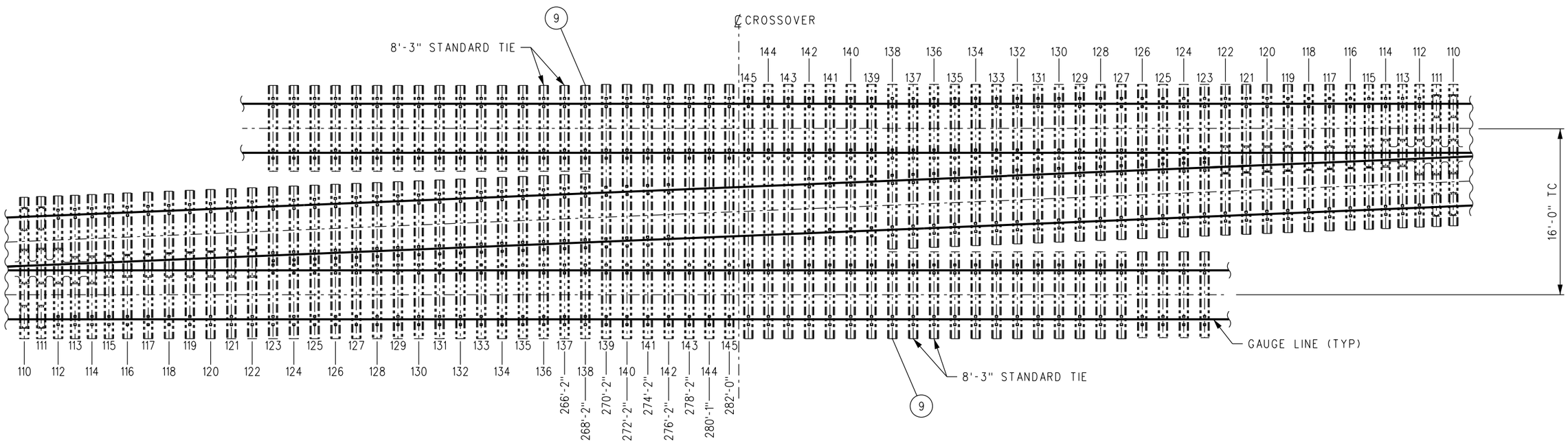

NOTES:

1. ALL SWITCH TIES ARE FLAT (NON-CANTED), EXCEPT 1:80 TRANSITION TIES AND STANDARD 8'-3" TIES CANTED 1:40. ALL LENGTHS SHALL INCLUDE 1'-9" FROM TIE ENDS TO RAIL CENTERLINE, EXCEPT AS NOTED. TRANSITION TIES AND STANDARD TIE PER SCRRA ENGINEERING STANDARDS.
2. DISTANCES INDICATED AT EACH TIE ARE MEASURED FROM THE POINT OF SWITCH.

REV.	DATE	DESCRIPTION	DES.	ENG.
X	XX-XX-XX	REVISION	XX	XX

DRAWN BY: HDR DATE: 03/31/2011

ASSISTANT DIRECTOR: STANDARDS & DESIGN

DIRECTOR OF ENGINEERING AND CONSTRUCTION

SCRRA ENGINEERING STANDARDS ARE INTENDED FOR SCRRA APPROVED USES ONLY. FOR NON-SCRRA APPROVED USES, SCRRA SHALL NOT BE RESPONSIBLE FOR THE ACCURACY OR COMPLETENESS OF THE DATA OR INFORMATION CONTAINED HEREIN. THE SELECTION AND USE OF THESE STANDARDS IS THE SOLE RESPONSIBILITY OF THE USER AND SHOULD NOT BE USED WITHOUT CONSULTING A REGISTERED PROFESSIONAL ENGINEER. ALL WARRANTIES AND REPRESENTATIONS OF ANY KIND ARE DISCLAIMED. ANYONE MAKING USE OF THIS INFORMATION AGREES THAT IT ASSUMES ALL LIABILITY ARISING FROM SUCH USE. NO PART OF THESE STANDARDS SHOULD BE REPRODUCED OR DISTRIBUTED IN ANY FORM OR BY ANY MEANS WITHOUT THE PRIOR WRITTEN PERMISSION OF SCRRA. ALL RIGHTS RESERVED.

METROLINK®
SOUTHERN CALIFORNIA REGIONAL RAIL AUTHORITY
ONE GATEWAY PLAZA, 12TH FLOOR, L. A., CA. 90012

ENGINEERING STANDARDS

TIE LAYOUT PLAN
NO 24 – LH CROSSOVER 16' TRACK CENTERS

STANDARD 2820
SCALE: NTS
REVISION –
SHEET 1 OF 1
CADD FILE: ES2820-03

BILL OF MATERIAL			
ITEM	QTY	DESCRIPTION	SCRRA PART NO
1	2	RH TURNOUT TIES (0-138)	
2	2	TIE NO 139 - LENGTH = 24'-5½"	
3	2	TIE NO 140 - LENGTH = 24'-5½"	
4	2	TIE NO 141 - LENGTH = 24'-5½"	
5	2	TIE NO 142 - LENGTH = 24'-5½"	
6	2	TIE NO 143 - LENGTH = 24'-5½"	
7	2	TIE NO 144 - LENGTH = 24'-5½"	
8	2	TIE NO 145 - LENGTH = 24'-5½"	
9	2	8'-3" 1:80 CANT CONCRETE TIE	

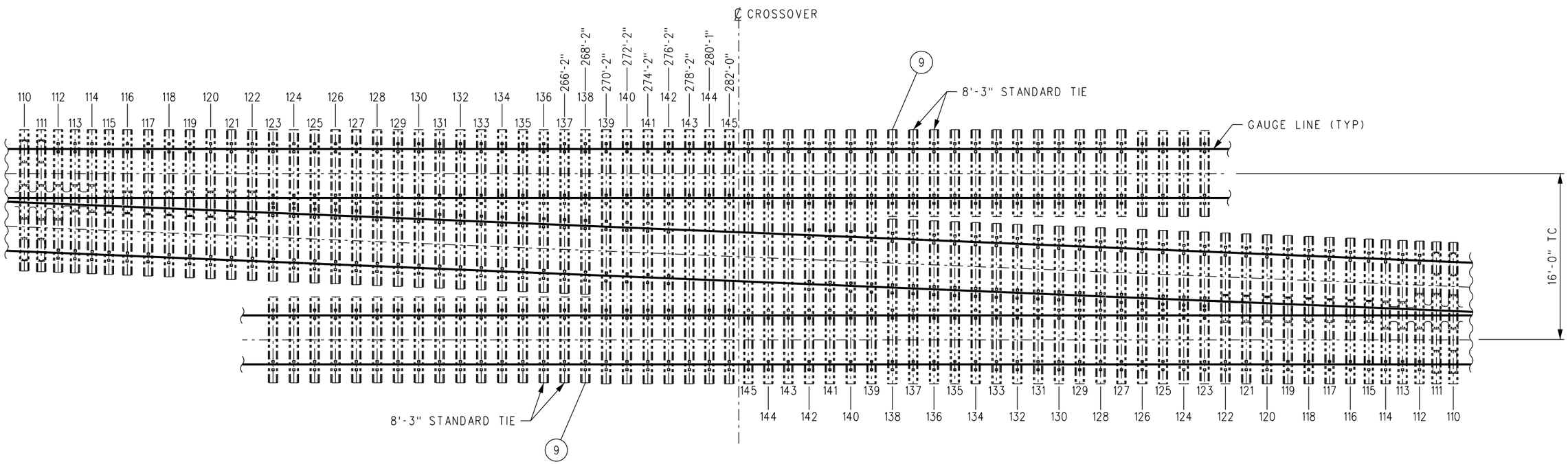

NOTES:

1. ALL SWITCH TIES ARE FLAT (NON-CANTED), EXCEPT 1:80 TRANSITION TIES AND STANDARD 8'-3" TIES CANTED 1:40. ALL LENGTHS SHALL INCLUDE 1'-9" FROM TIE ENDS TO RAIL CENTERLINE, EXCEPT AS NOTED. TRANSITION TIES AND STANDARD TIE PER SCRRA ENGINEERING STANDARDS.
2. DISTANCES INDICATED AT EACH TIE ARE MEASURED FROM THE POINT OF SWITCH.

REV.	DATE	DESCRIPTION	DES.	ENG.
X	XX-XX-XX	REVISION	XX	XX

DRAWN BY: HDR DATE: 03/31/2011

ASSISTANT DIRECTOR: STANDARDS & DESIGN

DIRECTOR OF ENGINEERING AND CONSTRUCTION

SCRRA ENGINEERING STANDARDS ARE INTENDED FOR SCRRA APPROVED USES ONLY. FOR NON-SCRRA APPROVED USES, SCRRA SHALL NOT BE RESPONSIBLE FOR THE ACCURACY OR COMPLETENESS OF THE DATA OR INFORMATION CONTAINED HEREIN. THE SELECTION AND USE OF THESE STANDARDS IS THE SOLE RESPONSIBILITY OF THE USER AND SHOULD NOT BE USED WITHOUT CONSULTING A REGISTERED PROFESSIONAL ENGINEER. ALL WARRANTIES AND REPRESENTATIONS OF ANY KIND ARE DISCLAIMED. ANYONE MAKING USE OF THIS INFORMATION AGREES THAT IT ASSUMES ALL LIABILITY ARISING FROM SUCH USE. NO PART OF THESE STANDARDS SHOULD BE REPRODUCED OR DISTRIBUTED IN ANY FORM OR BY ANY MEANS WITHOUT THE PRIOR WRITTEN PERMISSION OF SCRRA. ALL RIGHTS RESERVED.

METROLINK®

SOUTHERN CALIFORNIA REGIONAL RAIL AUTHORITY
ONE GATEWAY PLAZA, 12TH FLOOR, L. A., CA. 90012

ENGINEERING STANDARDS

TIE LAYOUT PLAN
NO 24 – RH CROSSOVER 16' TRACK CENTERS

STANDARD 2820
SCALE: NTS
REVISION –
SHEET 1 OF 1
CADD FILE: ES2820-04

BILL OF MATERIAL				BILL OF MATERIAL			
ITEM	QTY	DESCRIPTION	SCRRA PART NO	ITEM	QTY	DESCRIPTION	SCRRA PART NO
1	2	LH TURNOUT TIES (0-137)		10	2	TIE NO 146 - LENGTH = 16'-6"	
2	2	TIE NO 138 - LENGTH = 15'-10"		11	2	TIE NO 147 - LENGTH = 16'-7"	
3	2	TIE NO 139 - LENGTH = 15'-11"		12	2	TIE NO 148 - LENGTH = 16'-8"	
4	2	TIE NO 140 - LENGTH = 16'-0"		13	2	TIE NO 149 - LENGTH = 16'-9"	
5	2	TIE NO 141 - LENGTH = 16'-1"		14	2	TIE NO 150 - LENGTH = 16'-10"	
6	2	TIE NO 142 - LENGTH = 16'-2"		15	2	TIE NO 151 - LENGTH = 16'-11"	
7	2	TIE NO 143 - LENGTH = 16'-3"		16	2	TIE NO 152 - LENGTH = 17'-0"	
8	2	TIE NO 144 - LENGTH = 16'-4"		17	4	8'-3" 1:80 CANT CONCRETE TIE	
9	2	TIE NO 145 - LENGTH = 16'-5"		18	32	8'-3" 1:40 CANT STANDARD TIE (FOR CROSSOVER CONNECTION)	

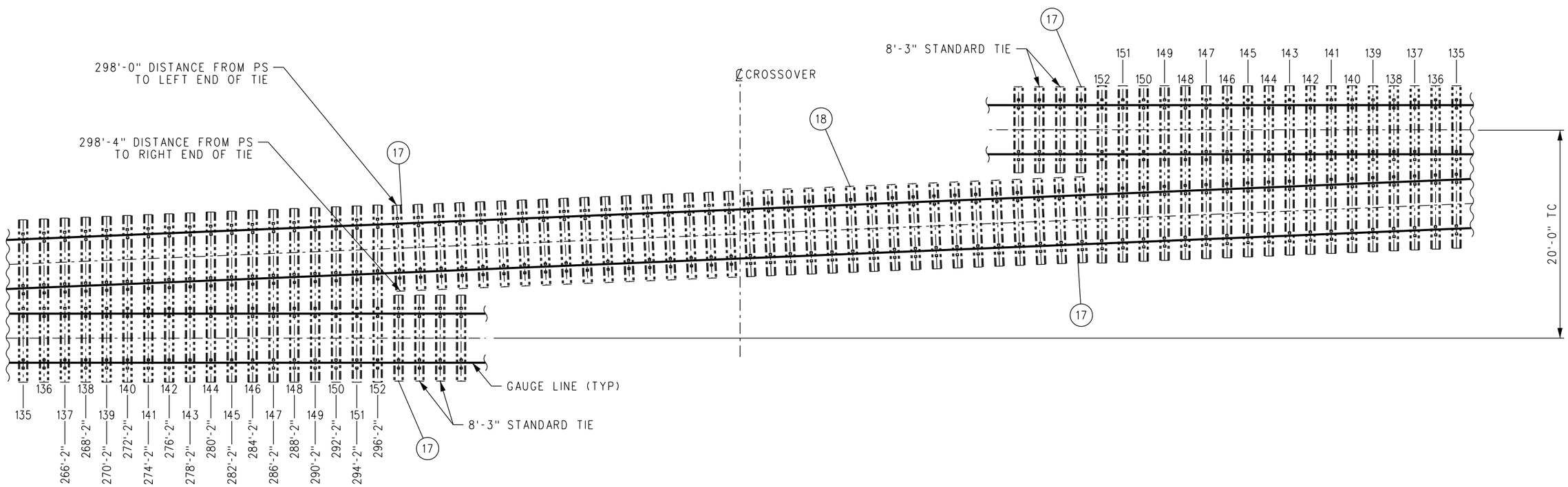

NOTES:

1. ALL SWITCH TIES ARE FLAT (NON-CANTED), EXCEPT 1:80 TRANSITION TIES AND STANDARD 8'-3" TIES CANTED 1:40. ALL LENGTHS SHALL INCLUDE 1'-9" FROM TIE ENDS TO RAIL CENTERLINE, EXCEPT AS NOTED. TRANSITION TIES AND STANDARD TIE PER SCRRA ENGINEERING STANDARDS.
2. 32 STANDARD TIES AT APPROXIMATELY 2'-0" TIE CENTERS ON CROSSOVER CONNECTION.
3. DISTANCES INDICATED AT EACH TIE ARE MEASURED FROM THE POINT OF SWITCH.

REV.	DATE	DESCRIPTION	DES.	ENG.
X	XX-XX-XX	REVISION	XX	XX

DRAWN BY: HDR DATE: 03/31/2011

ASSISTANT DIRECTOR: STANDARDS & DESIGN

DIRECTOR OF ENGINEERING AND CONSTRUCTION

SCRRA ENGINEERING STANDARDS ARE INTENDED FOR SCRRA APPROVED USES ONLY. FOR NON-SCRRA APPROVED USES:
SCRRA SHALL NOT BE RESPONSIBLE FOR THE ACCURACY OR COMPLETENESS OF THE DATA OR INFORMATION CONTAINED HEREIN. THE SELECTION AND USE OF THESE STANDARDS IS THE SOLE RESPONSIBILITY OF THE USER AND SHOULD NOT BE USED WITHOUT CONSULTING A REGISTERED PROFESSIONAL ENGINEER. ALL WARRANTIES AND REPRESENTATIONS OF ANY KIND ARE DISCLAIMED. ANYONE MAKING USE OF THIS INFORMATION AGREES THAT IT ASSUMES ALL LIABILITY ARISING FROM SUCH USE. NO PART OF THESE STANDARDS SHOULD BE REPRODUCED OR DISTRIBUTED IN ANY FORM OR BY ANY MEANS WITHOUT THE PRIOR WRITTEN PERMISSION OF SCRRA. ALL RIGHTS RESERVED.

METROLINK®
SOUTHERN CALIFORNIA REGIONAL RAIL AUTHORITY
ONE GATEWAY PLAZA, 12TH FLOOR, L. A., CA. 90012

ENGINEERING STANDARDS

TIE LAYOUT PLAN
NO 24 – LH CROSSOVER 20' TRACK CENTERS

STANDARD 2820
SCALE: NTS
REVISION –
SHEET 1 OF 1
CADD FILE: ES2820-05

BILL OF MATERIAL				BILL OF MATERIAL			
ITEM	QTY	DESCRIPTION	SCRRA PART NO	ITEM	QTY	DESCRIPTION	SCRRA PART NO
1	2	RH TURNOUT TIES (0-137)		10	2	TIE NO 146 - LENGTH = 16'-6"	
2	2	TIE NO 138 - LENGTH = 15'-10"		11	2	TIE NO 147 - LENGTH = 16'-7"	
3	2	TIE NO 139 - LENGTH = 15'-11"		12	2	TIE NO 148 - LENGTH = 16'-8"	
4	2	TIE NO 140 - LENGTH = 16'-0"		13	2	TIE NO 149 - LENGTH = 16'-9"	
5	2	TIE NO 141 - LENGTH = 16'-1"		14	2	TIE NO 150 - LENGTH = 16'-10"	
6	2	TIE NO 142 - LENGTH = 16'-2"		15	2	TIE NO 151 - LENGTH = 16'-11"	
7	2	TIE NO 143 - LENGTH = 16'-3"		16	2	TIE NO 152 - LENGTH = 17'-0"	
8	2	TIE NO 144 - LENGTH = 16'-4"		17	4	8'-3" 1:80 CANT CONCRETE TIE	
9	2	TIE NO 145 - LENGTH = 16'-5"		18	32	8'-3" 1:40 CANT STANDARD TIE (FOR CROSSOVER CONNECTION)	

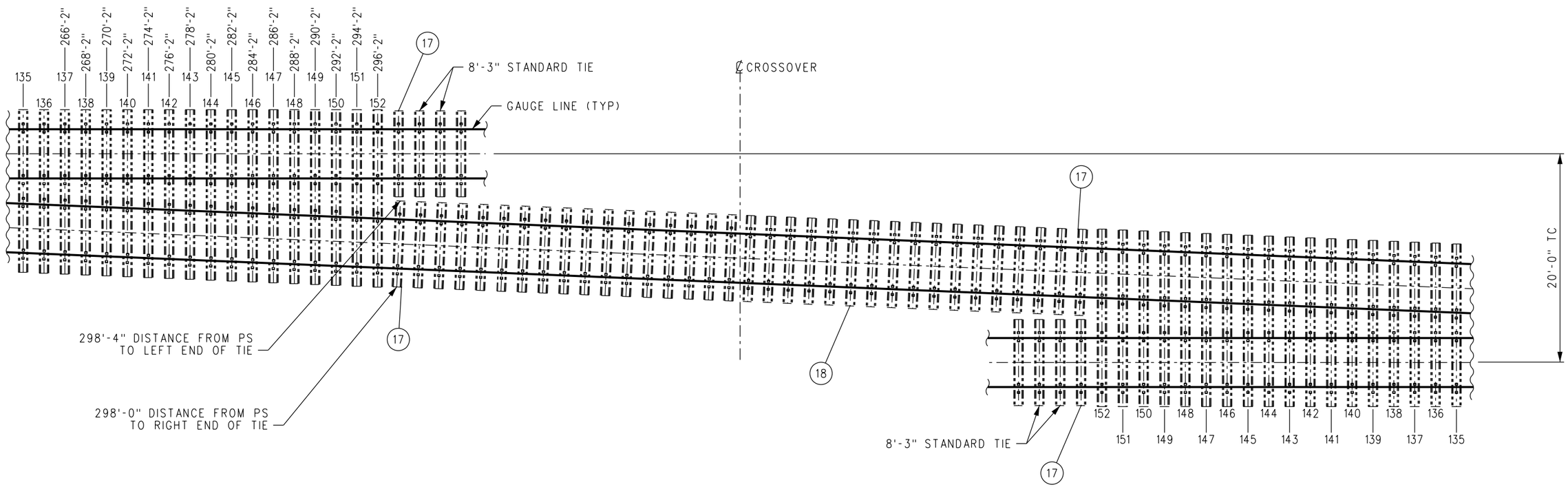

NOTES:

1. ALL SWITCH TIES ARE FLAT (NON-CANTED), EXCEPT 1:80 TRANSITION TIES AND STANDARD 8'-3" TIES CANTED 1:40. ALL LENGTHS SHALL INCLUDE 1'-9" FROM TIE ENDS TO RAIL CENTERLINE, EXCEPT AS NOTED. TRANSITION TIES AND STANDARD TIE PER SCRRA ENGINEERING STANDARDS.
2. 32 STANDARD TIES AT APPROXIMATELY 2'-0" TIE CENTERS ON CROSSOVER CONNECTION.
3. DISTANCES INDICATED AT EACH TIE ARE MEASURED FROM THE POINT OF SWITCH.

REV.	DATE	DESCRIPTION	DES.	ENG.
X	XX-XX-XX	REVISION	XX	XX

DRAWN BY: HDR DATE: 03/31/2011

ASSISTANT DIRECTOR: STANDARDS & DESIGN

DIRECTOR OF ENGINEERING AND CONSTRUCTION

SCRRA ENGINEERING STANDARDS ARE INTENDED FOR SCRRA APPROVED USES ONLY. FOR NON-SCRRA APPROVED USES:
SCRRA SHALL NOT BE RESPONSIBLE FOR THE ACCURACY OR COMPLETENESS OF THE DATA OR INFORMATION CONTAINED HEREIN. THE SELECTION AND USE OF THESE STANDARDS IS THE SOLE RESPONSIBILITY OF THE USER AND SHOULD NOT BE USED WITHOUT CONSULTING A REGISTERED PROFESSIONAL ENGINEER. ALL WARRANTIES AND REPRESENTATIONS OF ANY KIND ARE DISCLAIMED. ANYONE MAKING USE OF THIS INFORMATION AGREES THAT IT ASSUMES ALL LIABILITY ARISING FROM SUCH USE. NO PART OF THESE STANDARDS SHOULD BE REPRODUCED OR DISTRIBUTED IN ANY FORM OR BY ANY MEANS WITHOUT THE PRIOR WRITTEN PERMISSION OF SCRRA. ALL RIGHTS RESERVED.

METROLINK®
SOUTHERN CALIFORNIA REGIONAL RAIL AUTHORITY
ONE GATEWAY PLAZA, 12TH FLOOR, L. A., CA. 90012

ENGINEERING STANDARDS

TIE LAYOUT PLAN
NO 24 – RH CROSSOVER 20' TRACK CENTERS

STANDARD: 2820
SCALE: NTS
REVISION: –
SHEET: 1 OF 1
CADD FILE: ES2820–06

METROLINK (S.C.R.R.A.)
ENGINEERING STANDARDS
NO. 8 DOUBLE SLIP CROSSING

BILL OF MATERIAL

QTY.	DESCRIPTION
2 EACH	SOLID MANGANESE CENTER FROG
4 EACH	"D" STRAPS WITH BOLTS
4 EACH	27'-8 7/8" EXTENDED FIELD WELDED TYPE SWITCH POINTS
4 EACH	27'-2 3/8" STRAIGHT STOCK RAIL
4 EACH	31'-2 7/16" CURVED STOCK RAIL
4 EACH	23'-3 3/16" SWITCH POINTS
1 EACH	No. 1A SMJ TYPE SWITCH ROD W/BASKET (INSULATED)
1 EACH	No. 1B SMJ TYPE SWITCH ROD W/BASKET (INSULATED)
2 EACH	No. 2 SMJ TYPE SWITCH ROD W/BASKET (INSULATED)
2 EACH	No. 3 SMJ TYPE SWITCH ROD W/BASKET (INSULATED)
28 EACH	SLIDE PLATE S-5P
20 EACH	SLIDE PLATE S-8P
2 EACH	INSULATED GAGE PLATE No. DS-GP-1
1 EACH	GAGE PLATE No. DS-GP-2 AND DS-GP3
2 EACH	SWITCH PLATE DS-1R,DS-1L,DS-2R,DS-2L,DS-3R & DS-3L
4 EACH	SWITCH PLATE DS-4P
8 EACH	SWITCH PLATE DS-5P
2 EACH	SWITCH PLATES DS-6P THRU DS-15P
2 EACH	SWITCH PLATE DS-18P AND DS-19P
2 EACH	FROG PLATES F-1 THRU F-14
2 EACH	FROG GAGE PLATES DS-FGP-1 THRU DS-FGP-3
2 EACH	No.8 R.B.M. FROG ~ 18'-0"
1 EACH	FROG PLATES No. FP-23-R THRU FP-26-R
1 EACH	FROG PLATES No. FCP-1 THRU FCP-3
1 EACH	FROG GAGE PLATES FGP-1 THRU FGP-3
4 EACH	13'-0" U-69 ADJUSTABLE GUARD RAIL W/PLATES
2 EACH	D.I. RAIL HOLD DOWN CLIPS E-3706
6 EACH	D.I. RAIL HOLD DOWN CLIPS E-3708
8 EACH	D.I. RAIL HOLD DOWN CLIPS E-3709
2 EACH	D.I. RAIL HOLD DOWN CLIPS E-3710
12 PCS.	BOLTLESS ADJUSTABLE BRACE ASSEMBLY
20 PCS.	SCRRA ES1406 "PANDROL", OR EQUAL "E" - CLIP 6" TIE PLATE
224 PCS.	CLIP TYPE E-2055 (GALVANIZED)
24 PCS.	CLIP TYPE E-2063 (GALVANIZED)
720 PCS.	SCREW SPIKES 15/16" DIA. X 6" No. 5760
4 EA.	EPOXY BONDED PREFABRICATED INSULATED JOINT KITS

DRAWING INDEX

BILL OF MATERIAL & GENERAL NOTES — No. 2901-01
136 lb. - NO. 8 - DOUBLE SLIP CROSSING — No. 2901-02
136 lb. - NO. 8 - RAIL BOUND MANGANESE FROG WITH PLATES — No. 2901-03
136 lb. - GUARD RAIL WITH PLATES — No. 2901-04
NO. 8 DOUBLE SLIP CROSSING - CENTER SECTION LAYOUT — No. 2901-05
23'-3" SWITCH POINT DETAILS — No. 2901-06
27'-9" SWITCH POINT DETAILS — No. 2901-07
GAGE PLATE DETAILS — No. 2901-08
BRACE PLATE & SLIDE PLATE DETAILS — No. 2901-09
SWITCH SLIDE PLATE & HEEL PLATE DETAILS — No. 2901-10
INSULATED FROG GAGE PLATE DETAILS — No. 2901-11
FROG PLATE DETAILS — No. 2901-12
INSLATED HEAD ROD No. 1 FOR END POINTS — No. 2901-13
INSULATED SPREAD RODS No. 2 & 3 FOR END POINTS — No. 2901-14

BILL OF SWITCH TIES

PIECES	SIZE	LENGTH	BOARD FEET
10	7" x 9"	11'-0"	577.50
16	7" x 9"	12'-0"	1008.00
12	7" x 9"	13'-0"	819.00
16	7" x 9"	14'-0"	1176.00
0	7" x 9"	15'-0"	0
6	7" x 9"	16'-0"	504.00
TOTAL			TOTAL
60			4084.50

NOTES:

1. ENTIRE DOUBLE SLIP CROSSING TO BE FABRICATED FROM 136 LB. HEAD HARDENED RAIL.
2. LOCATIONS OF INSULATED JOINTS ARE AS SHOWN ON ES2901-02. IT WILL BE SATISFACTORY TO RELOCATE THE INSULATED JOINT IN THE FIELD UP TO 12" SO AS TO PROVIDE A SUITABLE SUSPENDED JOINT, PROVIDED THE STAGGER OF THE INSULATED JOINTS DOES NOT EXCEED 4'-6". SUSPENDED INSULATED JOINTS MUST BE LOCATED IN A CRIB AREA BETWEEN TIES, A MINIMUM DISTANCE OF 4" FROM EDGE OF NEAREST TIE PLATE.
3. ALL INSULATED JOINTS ARE TO BE ADHESIVE BONDED INSULATED JOINTS UNLESS OTHERWISE SPECIFIED.
4. ALL MATERIALS REQUIRED FOR HAND OR MACHINE OPERATED SWITCH OPERATION WILL BE FURNISHED PER REQUIREMENTS OF THE S.C.R.R.A. DIRECTOR OF ENGINEERING AND CONSTRUCTION.
5. MATERIALS AND WORKMANSHIP, ALSO ANY CONSTRUCTION DETAILS NOT SHOWN, SHALL BE PER CURRENT A.R.E.M.A. "TRACKWORK PLANS AND SPECIFICATIONS" UNLESS OTHERWISE SPECIFIED.
6. WHERE REQUIRED, ALL IDENTIFICATION SYMBOLS TO BE PLAINLY STAMPED.
7. GAGE PLATES WILL BE FURNISHED INSULATED. SWITCH RODS WILL BE FURNISHED INSULATED UNLESS OTHERWISE SPECIFIED.
8. MANUFACTURER SHALL SUBMIT TWO COPIES OF SHOP DRAWINGS TO THE S.C.R.R.A. DIRECTOR OF ENGINEERING AND CONSTRUCTION FOR APPROVAL PRIOR TO FABRICATION OF TURNOUT. SHOP DRAWINGS THAT CHANGE DETAILS OF THESE STANDARDS MUST CLEARLY SPECIFY SUCH PROPOSED CHANGES.
9. THE MATERIAL INCLUDED IN THE PURCHASE OF A "DOUBLE SLIP CROSSING COMPLETE" IS EVERYTHING LISTED IN THE BILL OF MATERIALS. TO CONSTRUCT A COMPLETE TURNOUT, SWITCH TIES (PER LIST ON THIS SHEET) AND INSULATED JOINTS, FIELD WELDS, RUNNING RAIL AND CLOSURE RAIL IDENTIFIED ON SUBSEQUENT SHEETS MUST ALSO BE SUPPLIED.
10. TIE PLATES SHALL CONFORM TO S.C.R.R.A STANDARD ES2454.
11. SCREW SPIKES (15/16 " X 6-2 TPI) SHALL CONFORM TO S.C.R.R.A. STANDARD ES2357. PLATE HOLES SHALL BE 1" DIAMETER. PILOT HOLES IN TIES SHALL BE 5/8 " DIAMETER. SCREW SPIKES SHALL BE SCREWED INTO WOOD (NOT DRIVEN).
12. MANUFACTURER SHALL BEVEL RAIL ENDS PER CURRENT A.R.E.M.A. PLAN NO. 1005.
13. THE 27'-8 7/8 " SWITCH POINT, MADE FROM 40'-0" RAIL PER ES2901-07 IS TO BE FURNISHED WITH SWITCH RODS NO. 1A AND 1B PER ES2901-13 AND ES2901-14.
14. FOR CROSSING DATA FOR A NO. 8 DOUBLE SLIP CROSSOVER 136 LB. R.E. RAIL SEE CHART ON SHEET 2.
15. GAGE PLATES FOR SWITCH AND FROG, SWITCH HEEL PLATE (FOR BOTH R.H. OR L.H. TURNOUTS) AND PLATES P-10 THRU P-24 ARE DESIGNED TO BE PERPENDICULAR TO THE MAIN LINE THRU RUN RAILS.
16. UPON COMPLETION OF TURNOUT INSTALLATION, RUNNING RAIL MUST BE ADJUSTED TO SCRRA NEUTRAL RAIL TEMPERATURE.
17. ENTIRE CROSSOVER TO BE FULLY FLOOR ASSEMBLED INCLUDING END FROGS AND HF GUARD RAILS.
18. ALL E-CLIPS TO BE GALVANIZED.

FOR MAINTENANCE ONLY

REV.	DATE	DESCRIPTION	DES.	ENG.
X	XX-XX-XX	REVISION	XX	XX

DRAWN BY: A. CARLOS DATE: 03/31/2011

ASSISTANT DIRECTOR: STANDARDS & DESIGN

DIRECTOR OF ENGINEERING AND CONSTRUCTION

SCRRA ENGINEERING STANDARDS ARE INTENDED FOR SCRRA APPROVED USES ONLY. FOR NON-SCRRA APPROVED USES, SCRRA SHALL NOT BE RESPONSIBLE FOR THE ACCURACY OR COMPLETENESS OF THE DATA OR INFORMATION CONTAINED HEREIN. THE SELECTION AND USE OF THESE STANDARDS IS THE SOLE RESPONSIBILITY OF THE USER AND SHOULD NOT BE USED WITHOUT CONSULTING A REGISTERED PROFESSIONAL ENGINEER. ALL WARRANTIES AND REPRESENTATIONS OF ANY KIND ARE DISCLAIMED. ANYONE MAKING USE OF THIS INFORMATION AGREES THAT IT ASSUMES ALL LIABILITY ARISING FROM SUCH USE. NO PART OF THESE STANDARDS SHOULD BE REPRODUCED OR DISTRIBUTED IN ANY FORM OR BY ANY MEANS WITHOUT THE PRIOR WRITTEN PERMISSION OF SCRRA. ALL RIGHTS RESERVED.

METROLINK®

SOUTHERN CALIFORNIA REGIONAL RAIL AUTHORITY
ONE GATEWAY PLAZA, 12TH FLOOR, L. A., CA. 90012

ENGINEERING STANDARDS

NO. 8, 136 LB. DOUBLE SLIP CROSSING
WITH SOLID MANGANESE FROG
BILL OF MATERIAL AND GENERAL NOTES

STANDARD 2901
SCALE: NONE
REVISION –
SHEET 1 OF 14
CADD FILE: ES2901-01

NOTE:

1. SEE COVER SHEET FOR NOTES, BILL OF MATERIAL AND DRAWING INDEX.

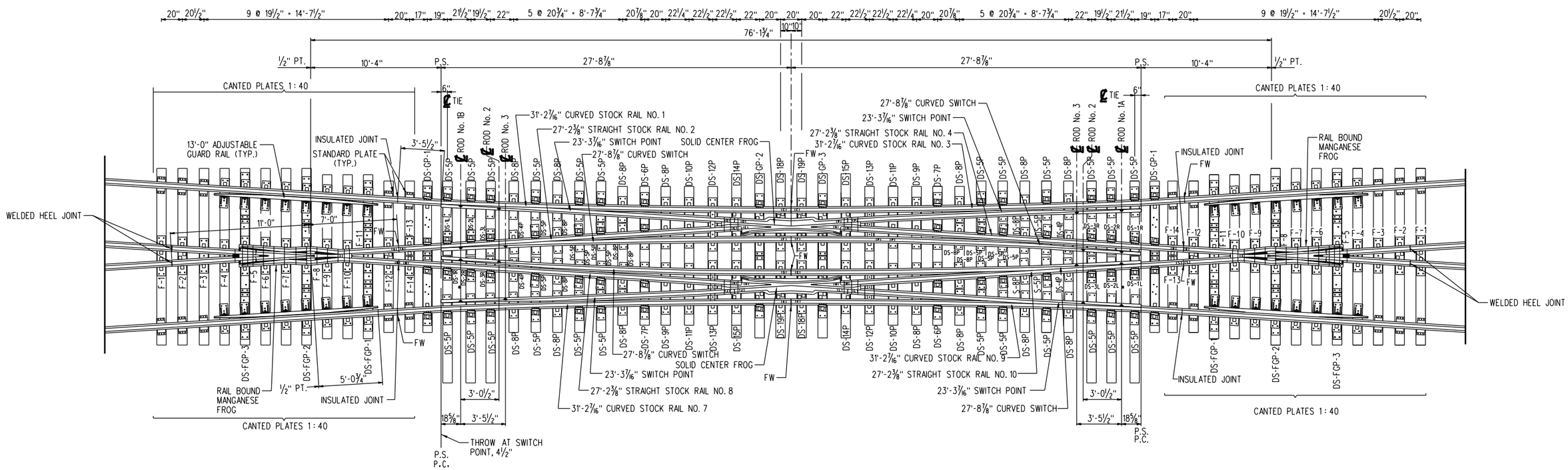

NO. 8 DOUBLE SLIP CROSSING

CROSSING DATA			
BETWEEN THEORETICAL POINTS OF END FROGS	75'-5¾"	ANGLE OF CROSSING	7°-09'-10"
BETWEEN THEORETICAL POINT OF END FROG & CENTER FROG	37'-9¾"	DEGREE OF CURVATURE	8°-26'-53"
FROM INSIDE SWITCH POINTS TO THEORETICAL POINT END FROG	10'-0¼"	GAGE LINE RADIUS	678.8314'
FROM THEORETICAL POINT OF CENTER FROG TO HEEL JOINT	7'-6⁷⁄₁₆"	THROW AT END PT.	4" MIN. 4½" MAX.
LENGTH OF INSIDE SAMSON STOCK RAILS	SEE ABOVE	GAGE ON STRAIGHT TRACK	4'-8½"
LENGTH OF OUTSIDE SAMSON STOCK RAILS	31'-2⁷⁄₁₆"	GAGE ON CURVED TRACK	4'-8⅝"
LENGTH OF FROG FROM THEORETICAL POINT TO TOE	6'-8"	GAGE ON SWITCH PT.	4'-8½"
LENGTH OF FROG FROM THEORETICAL POINT TO HEEL	11'-4"	SWITCH ANGLE	1°-14'-04"
LENGTH OF OUTSIDE SAMSON END SWITCH POINTS (0" SAMSON)	23'-3⁷⁄₁₆"	HEEL SPREAD OUTSIDE SWITCH POINTS 6¹⁄₃₂" B.C. 10¹³⁄₁₆" A.C.	
LENGTH OF INSIDE SAMSON END SWITCH POINTS (0" SAMSON)	27'-8⅞"	HEEL SPREAD INSIDE SWITCH POINTS 7³⁄₁₆" B.C. 14" A.C.	

FOR MAINTENANCE ONLY

REV.	DATE	DESCRIPTION	DES.	ENG.
X	XX-XX-XX	REVISION	XX	XX

DRAWN BY: A. CARLOS DATE: 03/31/2011

ASSISTANT DIRECTOR: STANDARDS & DESIGN

DIRECTOR OF ENGINEERING AND CONSTRUCTION

SCRRA ENGINEERING STANDARDS ARE INTENDED FOR SCRRA APPROVED USES ONLY. FOR NON-SCRRA APPROVED USES:
SCRRA SHALL NOT BE RESPONSIBLE FOR THE ACCURACY OR COMPLETENESS OF THE DATA OR INFORMATION CONTAINED HEREIN. THE SELECTION AND USE OF THESE STANDARDS IS THE SOLE RESPONSIBILITY OF THE USER AND SHOULD NOT BE USED WITHOUT CONSULTING A REGISTERED PROFESSIONAL ENGINEER. ALL WARRANTIES AND REPRESENTATIONS OF ANY KIND ARE DISCLAIMED. ANYONE MAKING USE OF THIS INFORMATION AGREES THAT IT ASSUMES ALL LIABILITY ARISING FROM SUCH USE. NO PART OF THESE STANDARDS SHOULD BE REPRODUCED OR DISTRIBUTED IN ANY FORM OR BY ANY MEANS WITHOUT THE PRIOR WRITTEN PERMISSION OF SCRRA. ALL RIGHTS RESERVED.

METROLINK®
SOUTHERN CALIFORNIA REGIONAL RAIL AUTHORITY
ONE GATEWAY PLAZA, 12TH FLOOR, L. A., CA. 90012

ENGINEERING STANDARDS

NO. 8, 136 LB. DOUBLE SLIP CROSSING
WITH SOLID MANGANESE FROG
LAYOUT AND CROSSING DATA

STANDARD: 2901
SCALE: 1/4" = 1'-0"
REVISION: –
SHEET: 2 OF 14
CADD FILE: ES2901-02

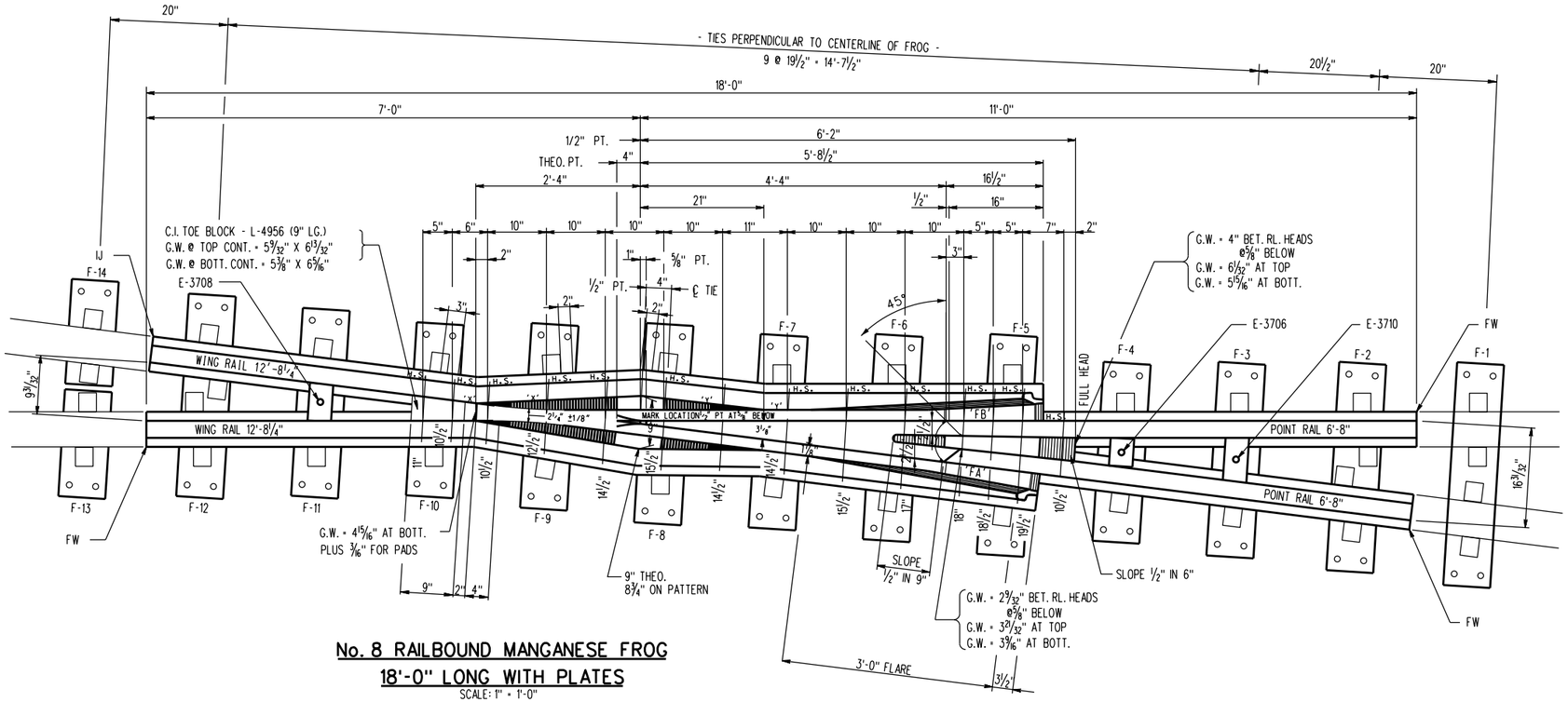

No. 8 RAILBOUND MANGANESE FROG
18'-0" LONG WITH PLATES

SCALE: 1" = 1'-0"

FOR MAINTENANCE ONLY

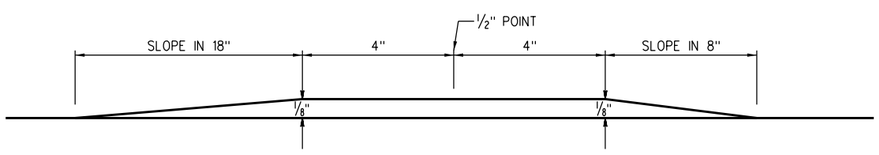

DETAIL OF WING WHEEL RISER
(NOT TO SCALE)

NOTES:

1. FROG ANGLE 7° -09'-10".
2. RAIL USED TO FABRICATE FROG IS TO BE 136 LB. HIGH STRENGTH.
3. RAIL BOUND MANGANESE FROG PER CURRENT A.R.E.M.A. PLAN NO. 775, 1012 AN M2.7 WITH EXPLOSIVE HARDENED MANGANESE HIGH INTEGRITY CASTING PER CURRENT A.R.E.M.A. SPECIFICATIONS AND MODIFIED FOR ARM LENGTHS AND PLATES WITH "PANDROL" FASTENERS.
4. ALL FROG PLATES SHALL BE STAMPED IN ½" CHARACTERS TO INDICATE MFG., FROG NO., R.H., RAIL SECTION AND PLATE NUMBER. MARK TO BE STAMPED ON SAME END OF ALL FROG PLATES.
5. FOR DETAILS OF FROG GAGE PLATES SEE SHEET ES2901-11. FOR DETAILS OF FROG PLATES F-1 THRU F-4 SEE SHEET ES2901-12.
6. WORKMANSHIP AND MATERIALS SHALL BE PER CURRENT A.R.E.M.A. "SPECIFICATIONS FOR SPECIAL TRACKWORK", EXCEPT AS OTHERWISE SPECIFIED.
7. ANY CONSTRUCTION DETAILS NOT SHOWN SHALL BE IN ACCORDANCE WITH CURRENT A.R.E.M.A. RECOMMENDED PRACTICE.
8. FROG PLATES ARE DESIGNED TO BE INSTALLED PERPENDICULAR TO MAIN TRACK.
9. BODY BOLTS, 1⅜" DIA., H.T.C.S. - PER A.R.E.M.A. SPECIFICATIONS.
10. TOE AND HEEL BLOCKS AND BOLTS PER A.R.E.M.A. SPECIFICATIONS.
11. PLATES TO BE MADE OF MILD ROLLED STEEL.
12. THE PLATES AS SHOWN ARE FOR A 136 LB., NO. 8, DOUBLE SLIP CROSSING.
13. THE "PANDROL" TYPE, OR APPROVED EQUAL, WELD - ON PRESSED STEEL SHOULDER, MADE OF MILD STEEL AND MEETING "PANDROL'S" DESIGN SPECIFICATIONS SHALL BE USED. THE PRESSED STEEL SHOULDER MUST BE CAREFULLY WELDED TO ALL PLATES WITH A MINIMUM 2 PASS ⅜" • FILLET WELD ALONG BEVELED GROOVES OF THE SHOULDER. ANY WELD PROJECTING BEYOND THE VERTICAL FACE OF THE SHOULDER IN THE AREA OF THE BASE OF RAIL SEAT MUST BE MACHINED OUT TO PROVIDE A CLEAR RAIL SEAT DIMENSION AS CALLED FOR.
14. MANUFACTURER OF FROG PLATES SHALL USE COMPLETED FROG TO VERIFY LOCATION OF ADJUSTABLE CLAMPS ON FROG PLATES F-1, F-2 AND F-3 TO INSURE PROPER FIT. FROG PLATES WILL BE WELDED TO THE GAGE PLATES IN THE FIELD WITH A 3 PASS ½" • FILLET WELD. PLATES WILL BE WELDED ONLY AFTER THE GAGE PLATES ARE SECURED IN THE PROPER LOCATION ON THE TIE WITH THE FROG IN PLACE AT PROPER ALIGNMENT.
15. GUARD RAIL PLATES ARE TO BE INSTALLED AND WELDED TO THE FROG GAGE PLATES IN THE FIELD WITH A 3 PASS ½" • FILLET WELD CONTINUOUS ON BOTH ENDS OF THE PLATE. PLATES ARE TO BE WELDED ONLY AFTER THE GAGE PLATE AND THE FROG IS SECURED IN THE PROPER LOCATION ON THE TIE WITH PROPER ALIGNMENT.
16. IDENTIFICATION TAG WITH RAISED METAL CHARACTERS TO BE APPLIED WHICH WILL STATE WEIGHT OF RAIL, FROG NO., MANUFACTURER AND YEAR MANUFACTURED.

WELDING OF GAGE PLATE & GUARD RAIL:

1. POSITION GAGE PLATES AT DESIGNATED TIE LOCATIONS AND ANCHOR IN PLACE.
2. CHECK TRACK FOR CORRECT GAGE.
3. STARTING WITH ONE GAGE PLATE, PLACE FROG PLATES WITH ADJUSTABLE BRACES AND SECURE TO FROG AND GUARD RAIL WITH "PANDROL" CLIPS.
4. RECHECK TRACK GAGE AND CORRECT IF NECESSARY.
5. CAREFULLY WELD FROG PLATE AND GUARD RAIL PLATE TO FROG GAGE PLATES WITH 3 PASS ½" • FILLET WELD. FOR WELDING USE THE FOLLOWING:
   A. ELECTRODE, 5/32 INCH, WELDING SPEC. 7018XLM.
   B. ELECTRODE, 5/16 INCH, WELDING SPEC. 7018XLM.
   C. WIRE, 3/32 INCH, NR203, 1% NICKEL FLUX CORE.
   OTHER WIRE OR ELECTRODES MEETING SPECIFICATIONS AS CALLED FOR AND APPROVED BY S.C.R.R.A. DIRECTOR OF ENGINEERING.

REFERENCE DWGS.

LAYOUT - No.8 DOUBLE SLIP CROSSING - 136 lb. ---------- No. 2901-02
U-69 GUARD RAIL - 136 lb. ---------- No. 2901-04

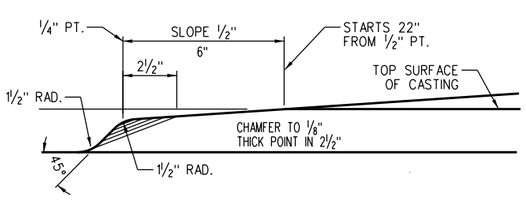

SLOPE ON MANGANESE @ SECTION "X" - "X"

SCALE: NONE

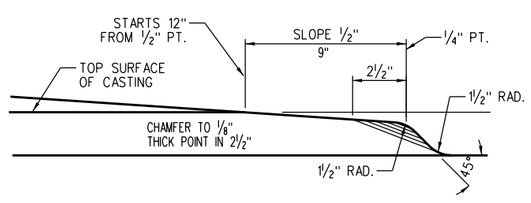

SLOPE ON MANGANESE @ SECTION "Y" - "Y"

SCALE: NONE

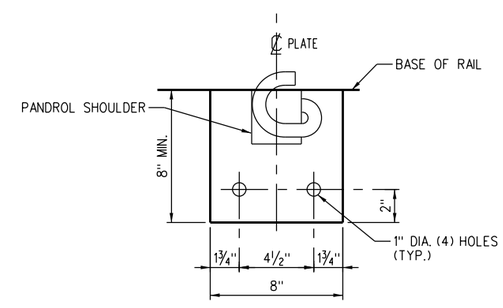

TYPICAL PLATE PUNCHING DETAIL

SCALE: NONE

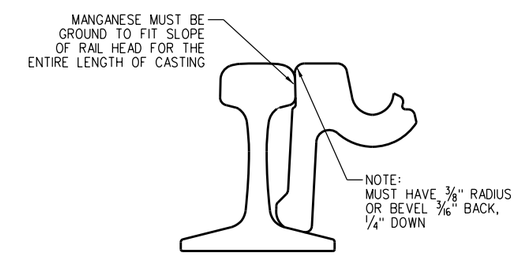

DETAIL OF FROG CASTING / RAIL FIT

SCALE: NONE

REV.	DATE	DESCRIPTION	DES.	ENG.
X	XX-XX-XX	REVISION	XX	XX

DRAWN BY: A. CARLOS DATE: 03/31/2011

ASSISTANT DIRECTOR: STANDARDS & DESIGN

DIRECTOR OF ENGINEERING AND CONSTRUCTION

SCRRA ENGINEERING STANDARDS ARE INTENDED FOR SCRRA APPROVED USES ONLY. FOR NON-SCRRA APPROVED USES:
SCRRA SHALL NOT BE RESPONSIBLE FOR THE ACCURACY OR COMPLETENESS OF THE DATA OR INFORMATION CONTAINED HEREIN. THE SELECTION AND USE OF THESE STANDARDS IS THE SOLE RESPONSIBILITY OF THE USER AND SHOULD NOT BE USED WITHOUT CONSULTING A REGISTERED PROFESSIONAL ENGINEER. ALL WARRANTIES AND REPRESENTATIONS OF ANY KIND ARE DISCLAIMED. ANYONE MAKING USE OF THIS INFORMATION AGREES THAT IT ASSUMES ALL LIABILITY ARISING FROM SUCH USE. NO PART OF THESE STANDARDS SHOULD BE REPRODUCED OR DISTRIBUTED IN ANY FORM OR BY ANY MEANS WITHOUT THE PRIOR WRITTEN PERMISSION OF SCRRA. ALL RIGHTS RESERVED.

METROLINK®
SOUTHERN CALIFORNIA REGIONAL RAIL AUTHORITY
ONE GATEWAY PLAZA, 12TH FLOOR, L. A., CA. 90012

ENGINEERING STANDARDS

NO. 8 RAILBOUND MANGANESE STEEL FROG
WITH PANDROLIZED PLATES FOR A
136 LB. DOUBLE SLIP CROSSING

STANDARD 2901
SCALE: AS NOTED
REVISION –
SHEET 3 OF 14
CADD FILE: ES2901-03

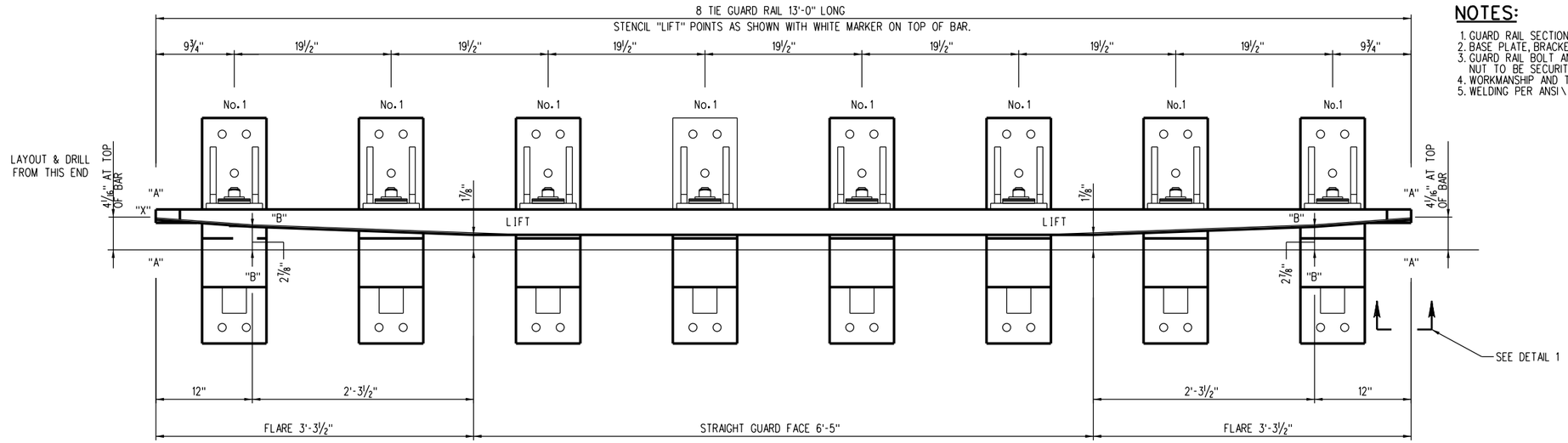

NOTES:

1. GUARD RAIL SECTION U.I.C. 33, (U69) UIC 860.0 GRADE 90A (GUARD FACE BRINELL 319 MIN.).
2. BASE PLATE, BRACKET AND SHIMS MADE FROM MILD STEEL PER A.R.E.M.A. SPECIFICATION M7.
3. GUARD RAIL BOLT AND NUT PER A.R.E.M.A. SPECIFICATION M11 EXCEPT BOLT TO BE GRADE 8 AND NUT TO BE SECURITY LOCKNUT.
4. WORKMANSHIP AND TOLERANCES PER A.R.E.M.A. "SPECIFICATIONS FOR SPECIAL TRACKWORK".
5. WELDING PER ANSI \ AWS D1.1-92 OR LATEST REVISION.

COLLECTIVE DRILLING FROM END OF GUARD BAR MARKED "X"

"X" 9¾"x 2'-5¼"x 4'-0¾"x 5'-8¼"x 7'-3¾"x 8'-11¼"x 10'-6¾"x 12'-2¼"

HOLES 1" DIA. - 1⅜" A.B.

ASSEMBLED 13'-0" GUARD RAIL

SCALE: 1½" = 1'-0"

FOR MAINTENANCE ONLY

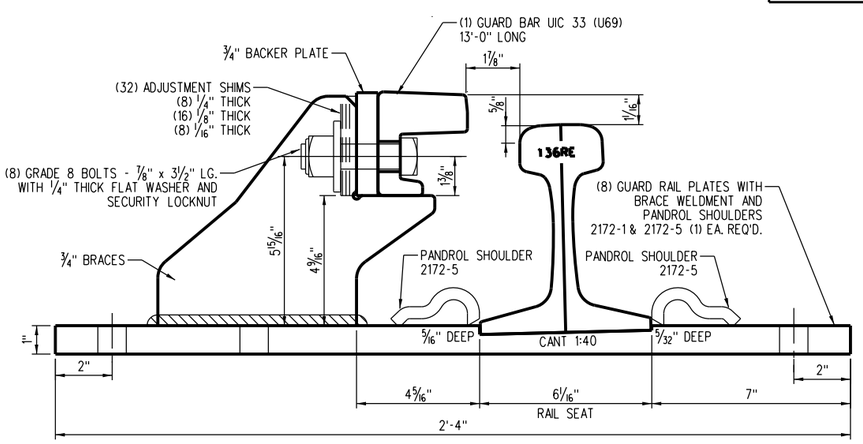

TYPICAL PLATE DETAIL

SCALE: NONE

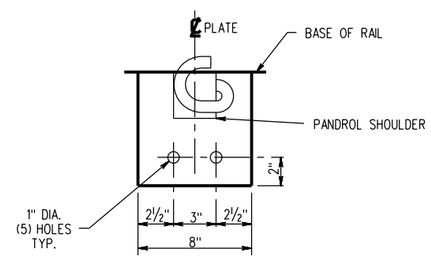

TYPICAL PLATE PUNCHING DETAIL

SCALE: NONE

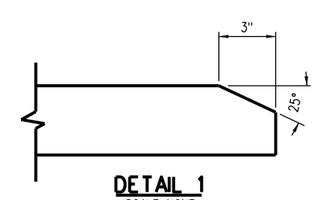

DETAIL 1

SCALE: NONE

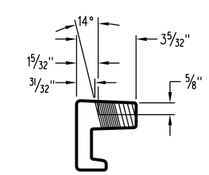

SECTION A - A

SCALE: NONE

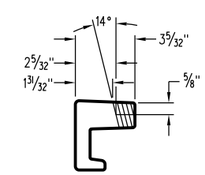

SECTION B - B

SCALE: NONE

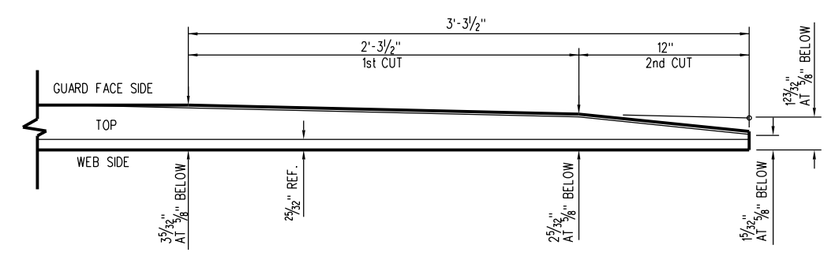

FLARE DETAIL

BREAK SHARP CORNERS OF ALL MACHINED SURFACES
SCALE: NONE

REV.	DATE	DESCRIPTION	DES.	ENG.
X	XX-XX-XX	REVISION	XX	XX

DRAWN BY: A. CARLOS DATE: 03/31/2011

ASSISTANT DIRECTOR: STANDARDS & DESIGN

DIRECTOR OF ENGINEERING AND CONSTRUCTION

SCRRA ENGINEERING STANDARDS ARE INTENDED FOR SCRRA APPROVED USES ONLY. FOR NON-SCRRA APPROVED USES:
SCRRA SHALL NOT BE RESPONSIBLE FOR THE ACCURACY OR COMPLETENESS OF THE DATA OR INFORMATION CONTAINED HEREIN. THE SELECTION AND USE OF THESE STANDARDS IS THE SOLE RESPONSIBILITY OF THE USER AND SHOULD NOT BE USED WITHOUT CONSULTING A REGISTERED PROFESSIONAL ENGINEER. ALL WARRANTIES AND REPRESENTATIONS OF ANY KIND ARE DISCLAIMED. ANYONE MAKING USE OF THIS INFORMATION AGREES THAT IT ASSUMES ALL LIABILITY ARISING FROM SUCH USE. NO PART OF THESE STANDARDS SHOULD BE REPRODUCED OR DISTRIBUTED IN ANY FORM OR BY ANY MEANS WITHOUT THE PRIOR WRITTEN PERMISSION OF SCRRA. ALL RIGHTS RESERVED.

METROLINK®
SOUTHERN CALIFORNIA REGIONAL RAIL AUTHORITY
ONE GATEWAY PLAZA, 12TH FLOOR, L. A., CA. 90012

ENGINEERING STANDARDS

GUARD RAIL DETAILS
13'-0" LONG

STANDARD 2901
SCALE: AS NOTED
REVISION –
SHEET 4 OF 14
CADD FILE: ES2901-04

NOTES:

1. D.I. HOLD DOWN CLIPS TO BE INSTALLED IN THE FIELD.
2. SOLID CAST MANGANESE STEEL CENTER FROGS PER CURRENT A.R.E.M.A. SPECIFICATIONS MODIFIED FOR USE WITH "PANDROL" TYPE FASTENERS AND IN ACCORDANCE WITH PLANS 775, 1012 AND M2.7.

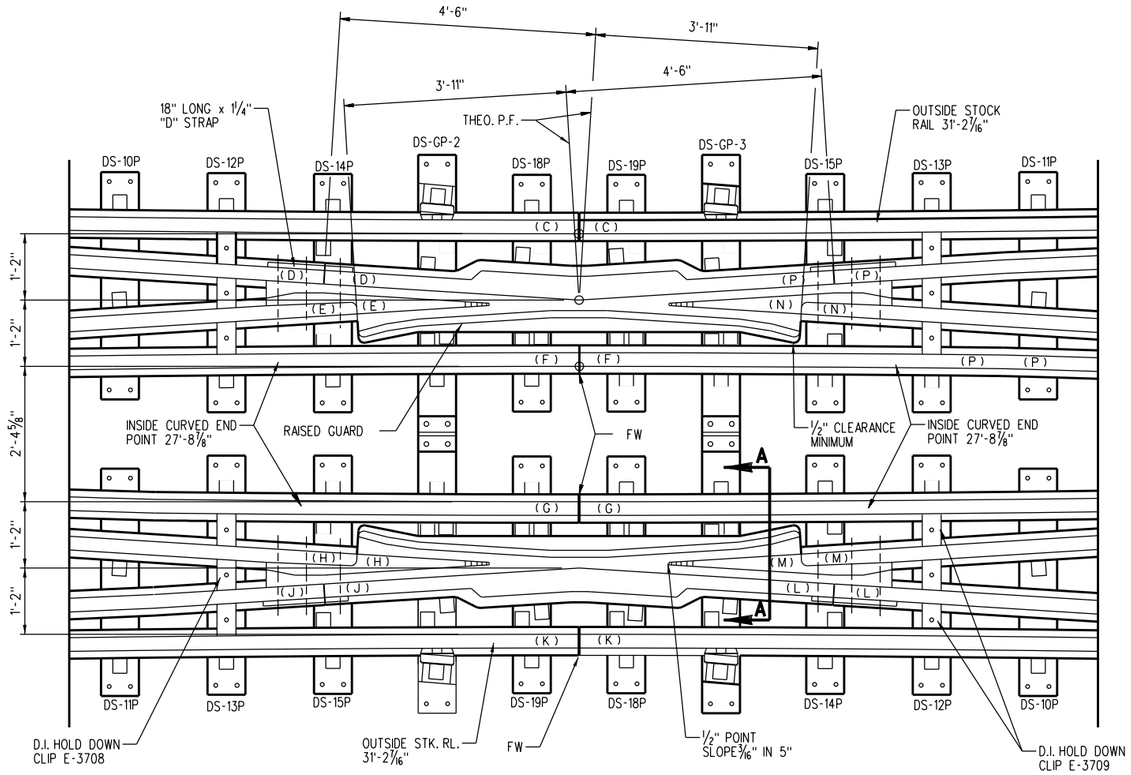

NO. 8 DOUBLE SLIP CROSSING CENTER SECTION LAYOUT

FROG ANGLE 7° - 09' - 10"
FLANGEWAY 1⅞" WIDE, 1⅞" DEEP

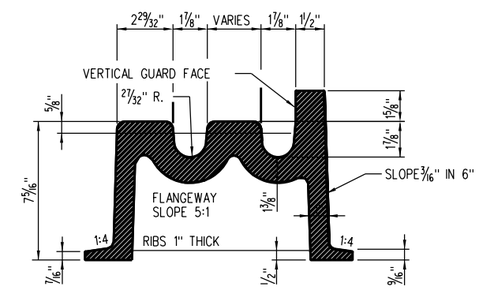

SECTION A-A

SCALE: 3" = 1'-0"

FOR MAINTENANCE ONLY

X	XX-XX-XX	REVISION	XX	XX
REV.	DATE	DESCRIPTION	DES.	ENG.

DRAWN BY: A. CARLOS DATE: 03/31/2011

ASSISTANT DIRECTOR: STANDARDS & DESIGN

DIRECTOR OF ENGINEERING AND CONSTRUCTION

SCRRA ENGINEERING STANDARDS ARE INTENDED FOR SCRRA APPROVED USES ONLY. FOR NON-SCRRA APPROVED USES:
SCRRA SHALL NOT BE RESPONSIBLE FOR THE ACCURACY OR COMPLETENESS OF THE DATA OR INFORMATION CONTAINED HEREIN. THE SELECTION AND USE OF THESE STANDARDS IS THE SOLE RESPONSIBILITY OF THE USER AND SHOULD NOT BE USED WITHOUT CONSULTING A REGISTERED PROFESSIONAL ENGINEER. ALL WARRANTIES AND REPRESENTATIONS OF ANY KIND ARE DISCLAIMED. ANYONE MAKING USE OF THIS INFORMATION AGREES THAT IT ASSUMES ALL LIABILITY ARISING FROM SUCH USE. NO PART OF THESE STANDARDS SHOULD BE REPRODUCED OR DISTRIBUTED IN ANY FORM OR BY ANY MEANS WITHOUT THE PRIOR WRITTEN PERMISSION OF SCRRA. ALL RIGHTS RESERVED.

METROLINK®
SOUTHERN CALIFORNIA REGIONAL RAIL AUTHORITY
ONE GATEWAY PLAZA, 12TH FLOOR, L. A., CA. 90012

ENGINEERING STANDARDS

NO. 8 DOUBLE SLIP CROSSING
CENTER SECTION LAYOUT
136 LB. R.E. RAIL

STANDARD 2901
SCALE: ¾" = 1'-0"
REVISION –
SHEET 5 OF 14
CADD FILE: ES2901-05

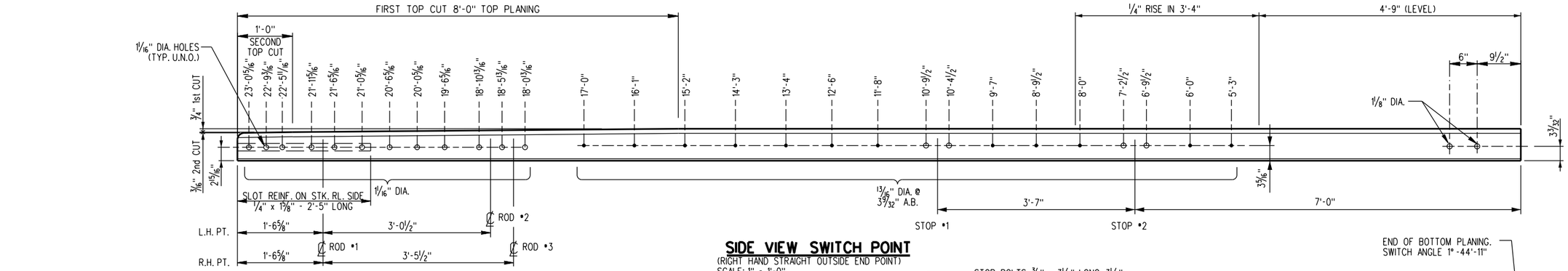

SIDE VIEW SWITCH POINT

(RIGHT HAND STRAIGHT OUTSIDE END POINT)
SCALE: 1" = 1'-0"

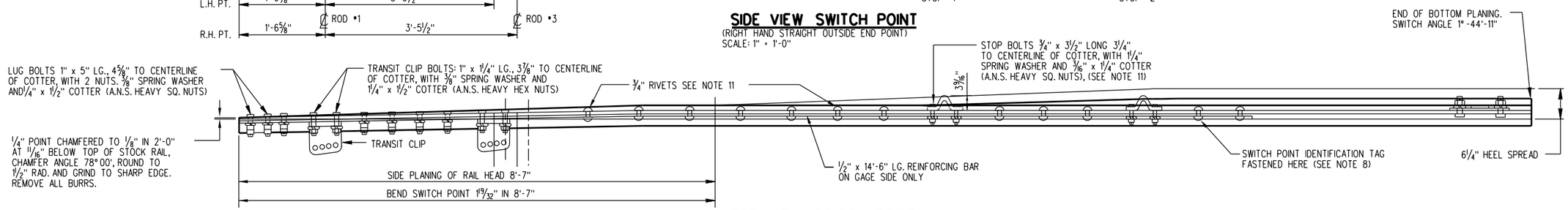

TOP VIEW SWITCH POINT

SCALE: 1" = 1'-0"

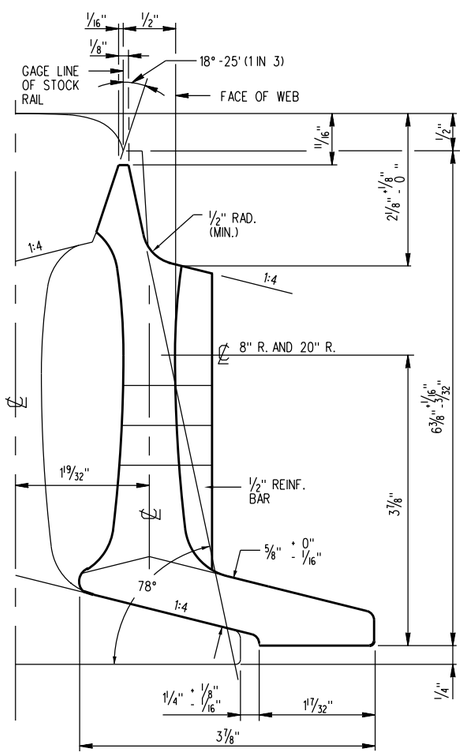

END VIEW OF POINT

SCALE: NONE

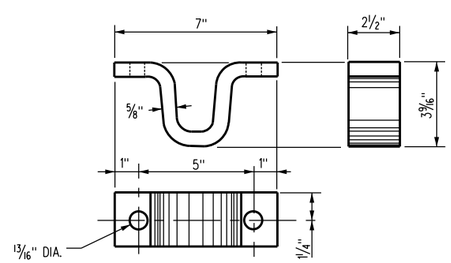

STOP

SCALE: NONE

NOTES:

1. SWITCH POINTS TO BE MADE FROM NEW HIGH STRENGTH RAIL.
2. METAL IDENTIFICATION TAG SHOWING HAND OF SWITCH POINT, WEIGHT OF RAIL, HS, MANUFACTURER AND WHEN MADE, TO BE FASTENED TO SWITCH POINT AT LOCATION SHOWN.
3. RIGHT HAND TURNOUT SHOWN. MAKE OPPOSITE HAND FOR LEFT HAND SWITCH POINTS.
4. SIDE PLANING FIGURED ON GAGE LINE 5/8" BELOW TOP OF RAIL.
5. MATERIAL AND WORKMANSHIP, ALSO ANY CONSTRUCTION DETAILS NOT SHOWN, SHALL BE PER CURRENT A.R.E.M.A. "MANUAL AND PORTFOLIO", UNLESS OTHERWISE SPECIFIED ON THIS PLAN.
6. IN ORDER TO ELIMINATE STRESS RAISERS, MANUFACTURER SHALL PEEN THE EDGES OF THE BOLT HOLES AS INDICATED AT THE HEEL OF THE SWITCH POINT AND AT THE HEEL END OF THE SWITCH POINT. USING AIR HAMMER WITH SUITABLE HEAD AND FINISHING WITH DRIFT PIN. BRAND ON RAIL AT EDGE OF BOLT HOLE TO BE CAREFULLY REMOVED BY GRINDING BEFORE PEENING.
7. THE CONTOUR PLANING SHALL BE ON THE GAGE SIDE BEGINNING AT A DISTANCE OF 36" FROM THE POINT OF SWITCH AND SHALL BE SHAPED TO THE CONTOUR OF A NEW 136 LB. AND SHALL RUN OUT AT THE END OF THE TOP PLANING, WHERE THE SWITCH POINT HAS FULL HEAD CONTOUR.
8. METAL IDENTIFICATION TAG SHOWING (1) DESIGN LENGTH OF SWITCH, (2) IN PARENTHESIS, THE ACTUAL LENGTH OF SWITCH POINT RAIL AND (3) THE TURNOUT NUMBER. MARK TAG THUS: 16'-6" 940'-0") NO. 8. TAG TO BE FASTENED TO SWITCH POINT, ON GAGE SIDE OF RAIL AT HEEL SPACER BLOCK IN LOCATION SHOWN.
9. AT HEEL END OF SWITCH POINT RAIL, BREAK SHARP CORNER AROUND THE ENTIRE PERIPHERY BY SLIGHTLY GRINDING. ALSO, "DO NOT" END HARDEN RAIL END.
10. NON - INTERLOCKED AND INTERLOCKED SWITCH POINTS ARE MADE THE SAME.
11. UNLESS SWITCH POINT ORDER SPECIFICALLY CALLS FOR USE OF 3/4" RIVETS AND 3/4" STOP BOLTS, MANUFACTURER CAN SUBSTITUTE 3/4 " HUCK FASTENERS, BOLT PART NO. C-50-LR-BR2416 AND COLLAR PART NO. L3-2-24G FOR 3/4" RIVETS. AND FOR 3/4" STOP BOLTS USE HUCK FASTENERS, BOLT PART NO. C-50-LR-BR2424 AND COLLAR PART NO. L3-2-R-24G.
12. TURNOUTS ARE TO BE FINISHED WITH MANGANESE STEEL INSERT ON THE REVERSE POINT (TURNOUT SIDE) AND A PLAIN SWITCH POINT ON THE NORMAL POINT (STRAIGHT SIDE). REPLACEMENT POINTS MUST SPECIFY WHETHER PLAIN POINT OR MANGANESE STEEL INSERT ARE TO BE FURNISHED.

FOR MAINTENANCE ONLY

REV.	DATE	DESCRIPTION	DES.	ENG.
X	XX-XX-XX	REVISION	XX	XX

DRAWN BY: A. CARLOS DATE: 03/31/2011

ASSISTANT DIRECTOR: STANDARDS & DESIGN

DIRECTOR OF ENGINEERING AND CONSTRUCTION

SCRRA ENGINEERING STANDARDS ARE INTENDED FOR SCRRA APPROVED USES ONLY. FOR NON-SCRRA APPROVED USES, SCRRA SHALL NOT BE RESPONSIBLE FOR THE ACCURACY OR COMPLETENESS OF THE DATA OR INFORMATION CONTAINED HEREIN. THE SELECTION AND USE OF THESE STANDARDS IS THE SOLE RESPONSIBILITY OF THE USER AND SHOULD NOT BE USED WITHOUT CONSULTING A REGISTERED PROFESSIONAL ENGINEER. ALL WARRANTIES AND REPRESENTATIONS OF ANY KIND ARE DISCLAIMED. ANYONE MAKING USE OF THIS INFORMATION AGREES THAT IT ASSUMES ALL LIABILITY ARISING FROM SUCH USE. NO PART OF THESE STANDARDS SHOULD BE REPRODUCED OR DISTRIBUTED IN ANY FORM OR BY ANY MEANS WITHOUT THE PRIOR WRITTEN PERMISSION OF SCRRA. ALL RIGHTS RESERVED.

METROLINK®
SOUTHERN CALIFORNIA REGIONAL RAIL AUTHORITY
ONE GATEWAY PLAZA, 12TH FLOOR, L. A., CA. 90012

ENGINEERING STANDARDS

136 LB. 23'-3 7/16" STRAIGHT SWITCH POINT
MADE FROM 40'-0" LONG RAIL
NO. 8 DOUBLE SLIP CROSSING

STANDARD 2901
SCALE: AS NOTED
REVISION –
SHEET 6 OF 14
CADD FILE: ES2901-06

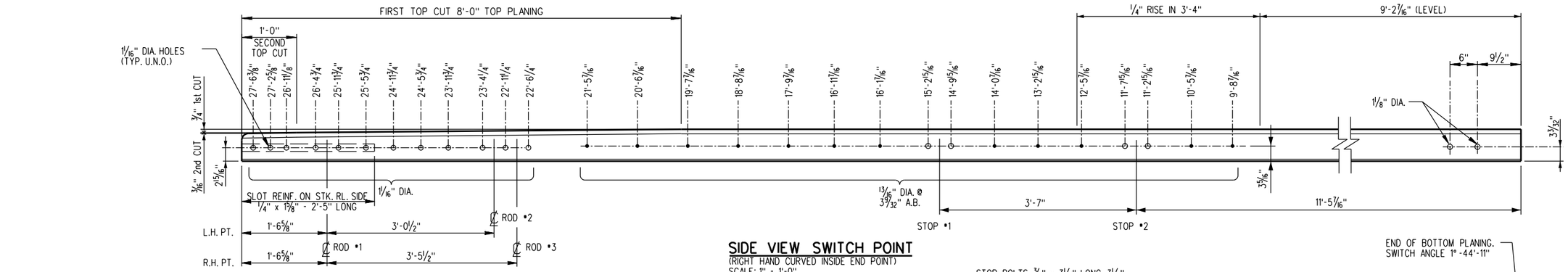

SIDE VIEW SWITCH POINT

(RIGHT HAND CURVED INSIDE END POINT)
SCALE: 1" = 1'-0"

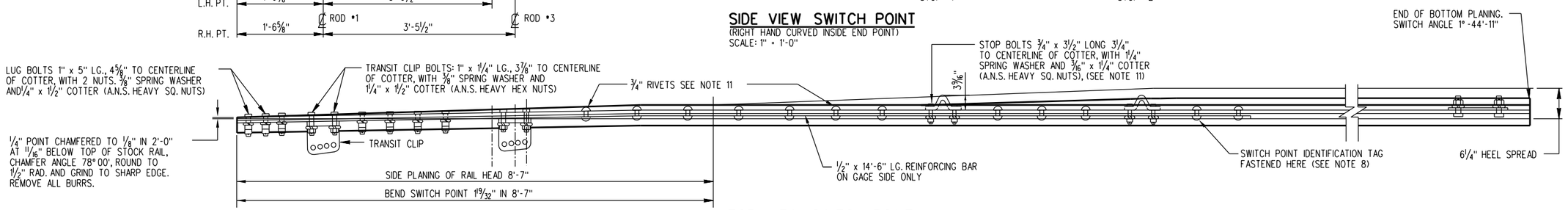

TOP VIEW SWITCH POINT

SCALE: 1" = 1'-0"

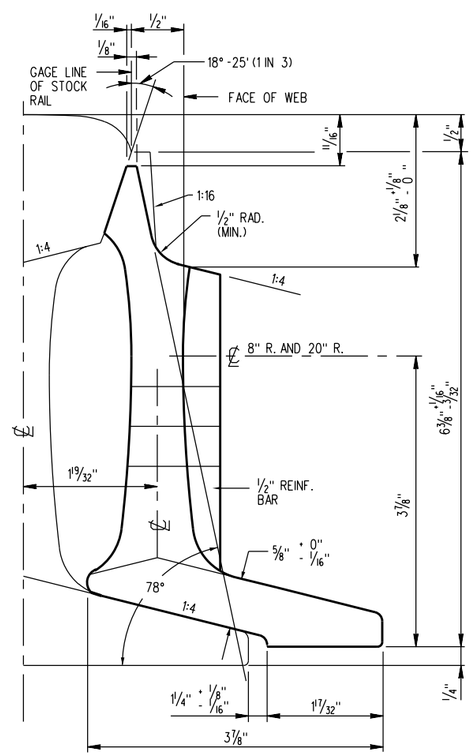

END VIEW OF POINT

SCALE: NONE

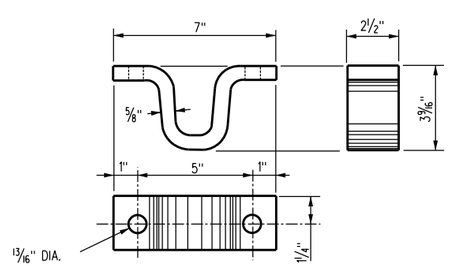

STOP

SCALE: NONE

NOTES:

1. SWITCH POINTS TO BE MADE FROM NEW HIGH STRENGTH RAIL.
2. METAL IDENTIFICATION TAG SHOWING HAND OF SWITCH POINT, WEIGHT OF RAIL, HS, MANUFACTURER AND WHEN MADE, TO BE FASTENED TO SWITCH POINT AT LOCATION SHOWN.
3. RIGHT HAND TURNOUT SHOWN. MAKE OPPOSITE HAND FOR LEFT HAND SWITCH POINTS.
4. SIDE PLANING FIGURED ON GAGE LINE 5/8 " BELOW TOP OF RAIL.
5. MATERIAL AND WORKMANSHIP, ALSO ANY CONSTRUCTION DETAILS NOT SHOWN, SHALL BE PER CURRENT A.R.E.M.A. "MANUAL AND PORTFOLIO", UNLESS OTHERWISE SPECIFIED ON THIS PLAN.
6. IN ORDER TO ELIMINATE STRESS RAISERS, MANUFACTURER SHALL PEEN THE EDGES OF THE BOLT HOLES AS INDICATED AT THE HEEL OF THE SWITCH POINT AND AT THE HEEL END OF THE SWITCH POINT. USING AIR HAMMER WITH SUITABLE HEAD AND FINISHING WITH DRIFT PIN. BRAND ON RAIL AT EDGE OF BOLT HOLE TO BE CAREFULLY REMOVED BY GRINDING BEFORE PEENING.
7. THE CONTOUR PLANING SHALL BE ON THE GAGE SIDE BEGINNING AT A DISTANCE OF 36" FROM THE POINT OF SWITCH AND SHALL BE SHAPED TO THE CONTOUR OF A NEW 136 LB. AND SHALL RUN OUT AT THE END OF THE TOP PLANING, WHERE THE SWITCH POINT HAS FULL HEAD CONTOUR.
8. METAL IDENTIFICATION TAG SHOWING (1) DESIGN LENGTH OF SWITCH, (2) IN PARENTHESIS, THE ACTUAL LENGTH OF SWITCH POINT RAIL AND (3) THE TURNOUT NUMBER. MARK TAG THUS: 16'-6" 940'-0") NO. 8. TAG TO BE FASTENED TO SWITCH POINT, ON GAGE SIDE OF RAIL AT HEEL SPACER BLOCK IN LOCATION SHOWN.
9. AT HEEL END OF SWITCH POINT RAIL, BREAK SHARP CORNER AROUND THE ENTIRE PERIPHERY BY SLIGHTLY GRINDING. ALSO, "DO NOT" END HARDEN RAIL END.
10. NON - INTERLOCKED AND INTERLOCKED SWITCH POINTS ARE MADE THE SAME.
11. UNLESS SWITCH POINT ORDER SPECIFICALLY CALLS FOR USE OF 3/4 " RIVETS AND 3/4 " STOP BOLTS, MANUFACTURER CAN SUBSTITUTE 3/4 " HUCK FASTENERS, BOLT PART NO. C-50-LR-BR2416 AND COLLAR PART NO. L3-2-24G FOR 3/4 " RIVETS. AND FOR 3/4 " STOP BOLTS USE HUCK FASTENERS, BOLT PART NO. C-50-LR-BR2424 AND COLLAR PART NO. L3-2-R-24G.
12. TURNOUTS ARE TO BE FINISHED WITH MANGANESE STEEL INSERT ON THE REVERSE POINT (TURNOUT SIDE) AND A PLAIN SWITCH POINT ON THE NORMAL POINT (STRAIGHT SIDE). REPLACEMENT POINTS MUST SPECIFY WHETHER PLAIN POINT OR MANGANESE STEEL INSERT ARE TO BE FURNISHED.

FOR MAINTENANCE ONLY

REV.	DATE	DESCRIPTION	DES.	ENG.
X	XX-XX-XX	REVISION	XX	XX

DRAWN BY: A. CARLOS DATE: 03/31/2011

ASSISTANT DIRECTOR: STANDARDS & DESIGN

DIRECTOR OF ENGINEERING AND CONSTRUCTION

SCRRA ENGINEERING STANDARDS ARE INTENDED FOR SCRRA APPROVED USES ONLY. FOR NON-SCRRA APPROVED USES:
SCRRA SHALL NOT BE RESPONSIBLE FOR THE ACCURACY OR COMPLETENESS OF THE DATA OR INFORMATION CONTAINED HEREIN. THE SELECTION AND USE OF THESE STANDARDS IS THE SOLE RESPONSIBILITY OF THE USER AND SHOULD NOT BE USED WITHOUT CONSULTING A REGISTERED PROFESSIONAL ENGINEER. ALL WARRANTIES AND REPRESENTATIONS OF ANY KIND ARE DISCLAIMED. ANYONE MAKING USE OF THIS INFORMATION AGREES THAT IT ASSUMES ALL LIABILITY ARISING FROM SUCH USE. NO PART OF THESE STANDARDS SHOULD BE REPRODUCED OR DISTRIBUTED IN ANY FORM OR BY ANY MEANS WITHOUT THE PRIOR WRITTEN PERMISSION OF SCRRA. ALL RIGHTS RESERVED.

METROLINK®
SOUTHERN CALIFORNIA REGIONAL RAIL AUTHORITY
ONE GATEWAY PLAZA, 12TH FLOOR, L. A., CA. 90012

ENGINEERING STANDARDS

136 LB. 27'-8 7/8" CURVED SWITCH POINT
MADE FROM 40'-0" LONG RAIL
NO. 8 DOUBLE SLIP CROSSING

STANDARD 2901
SCALE: AS NOTED
REVISION –
SHEET 7 OF 14
CADD FILE: ES2901-07

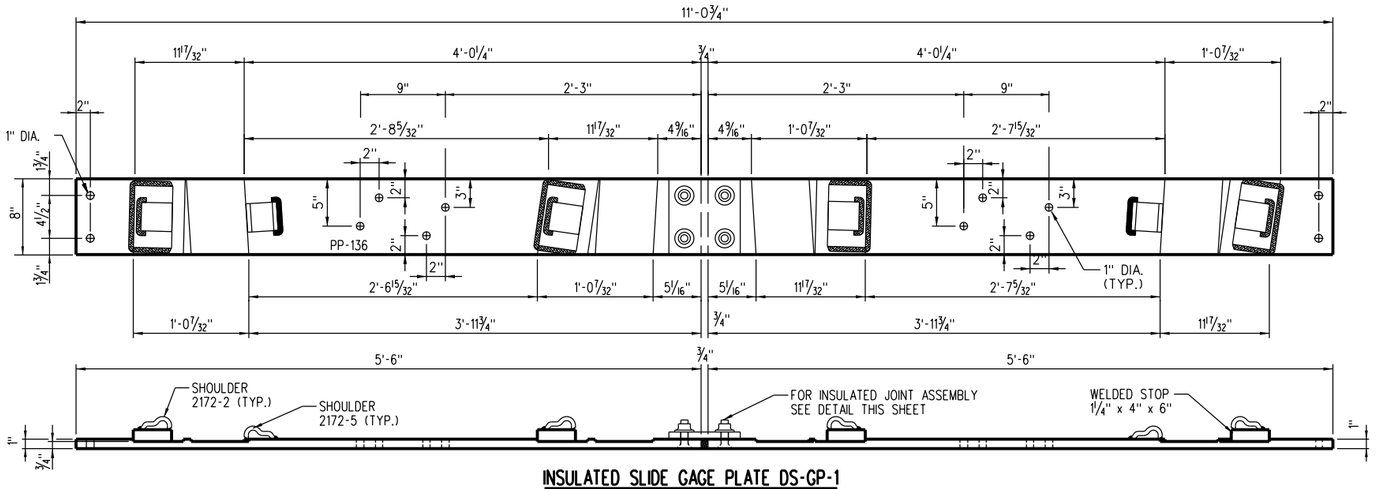

INSULATED SLIDE GAGE PLATE DS-GP-1

1" x 8" - MILLED - (1 PC. REQ'D AS SHOWN)

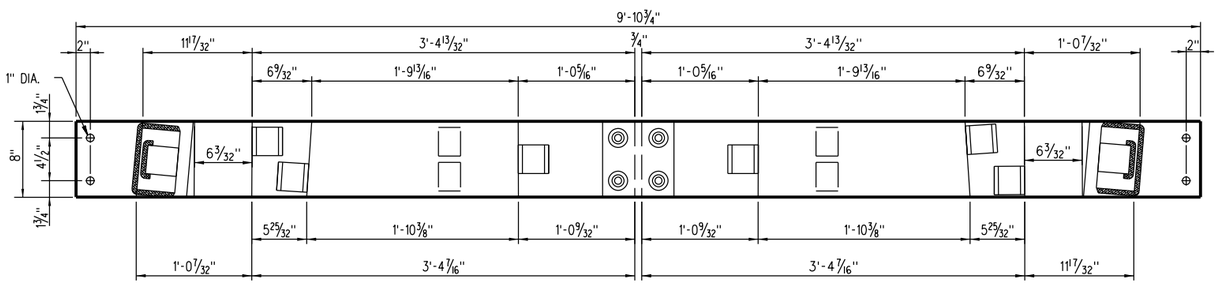

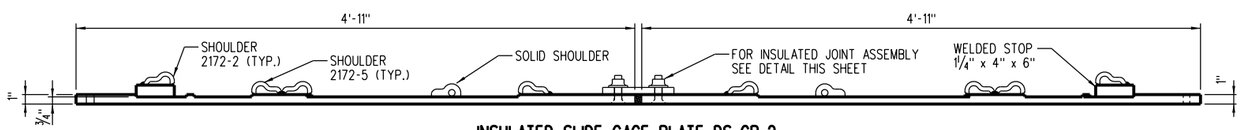

INSULATED SLIDE GAGE PLATE DS-GP-2

1" x 8" - MILLED - (1 PC. REQ'D AS SHOWN)

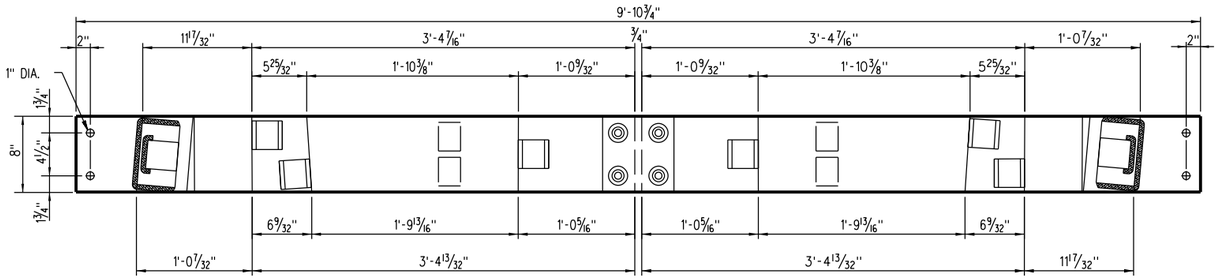

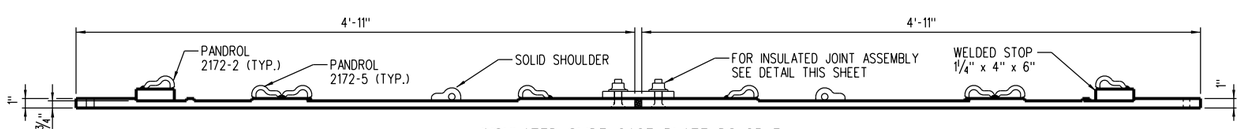

INSULATED SLIDE GAGE PLATE DS-GP-3

1" x 8" - MILLED - (1 PC. REQ'D AS SHOWN)

NOTES:

1. PLATES TO BE MADE OF MILD ROLLED STEEL.
2. THE PLATES AS SHOWN ARE FOR A 136 LB., NO. 8 DOUBLE SLIP CROSSING.
3. THE "PANDROL" TYPE, OR APPROVED EQUAL, WELD - ON PRESSED STEEL SHOULDER, MADE OF MILD ROLLED STEEL AND MEETING "PANDROL'S" DESIGN SPECIFICATIONS SHALL BE USED.
4. THE PRESSED STEEL SHOULDER MUST BE CAREFULLY WELDED TO GAGE PLATES. ANY WELD PROJECTING BEYOND THE VERTICAL FACE OF SHOULDER IN THE AREA OF THE RAIL SEAT MUST BE MACHINED OUT TO PROVIDE A CLEAR RAIL SEAT DIMENSION AS CALLED FOR.

FOR MAINTENANCE ONLY

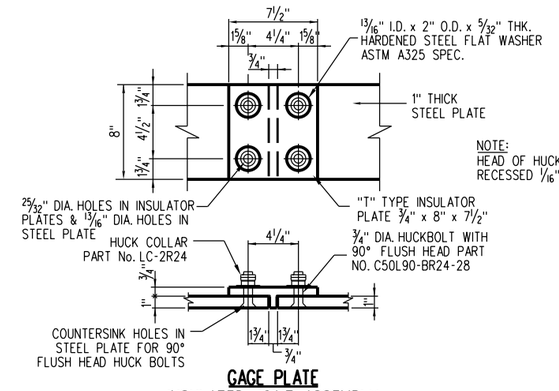

GAGE PLATE INSULATED JOINT ASSEMBLY GPI-77

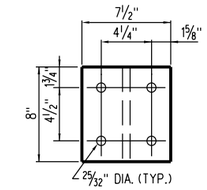

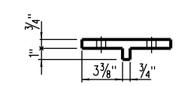

DETAIL OF INSULATION BLOCK

POLYESTER COATED STEEL CORE
W/ BUSHINGS, PORTEC •127-07547-01
OR FIBERGLASS REINFORCED THERMOSET RESIN.
PURCHASE PART NO. GPI52P05

DETAIL "A"
INSULATION AT GAGE PLATES

(SCALE: NONE)

REFERENCE DRAWINGS

LAYOUT - No.8, DOUBLE SLIP CROSSING - 136 lb. -------- SHEET No. 2901-02

REV.	DATE	DESCRIPTION	DES.	ENG.
X	XX-XX-XX	REVISION	XX	XX

DRAWN BY: A. CARLOS DATE: 03/31/2011

ASSISTANT DIRECTOR: STANDARDS & DESIGN

DIRECTOR OF ENGINEERING AND CONSTRUCTION

SCRRA ENGINEERING STANDARDS ARE INTENDED FOR SCRRA APPROVED USES ONLY. FOR NON-SCRRA APPROVED USES:
SCRRA SHALL NOT BE RESPONSIBLE FOR THE ACCURACY OR COMPLETENESS OF THE DATA OR INFORMATION CONTAINED HEREIN. THE SELECTION AND USE OF THESE STANDARDS IS THE SOLE RESPONSIBILITY OF THE USER AND SHOULD NOT BE USED WITHOUT CONSULTING A REGISTERED PROFESSIONAL ENGINEER. ALL WARRANTIES AND REPRESENTATIONS OF ANY KIND ARE DISCLAIMED. ANYONE MAKING USE OF THIS INFORMATION AGREES THAT IT ASSUMES ALL LIABILITY ARISING FROM SUCH USE. NO PART OF THESE STANDARDS SHOULD BE REPRODUCED OR DISTRIBUTED IN ANY FORM OR BY ANY MEANS WITHOUT THE PRIOR WRITTEN PERMISSION OF SCRRA. ALL RIGHTS RESERVED.

METROLINK®
SOUTHERN CALIFORNIA REGIONAL RAIL AUTHORITY
ONE GATEWAY PLAZA, 12TH FLOOR, L. A., CA. 90012

ENGINEERING STANDARDS

INSULATED GAGE PLATE DETAILS
DS–GP–1, DS–GP–2 AND DS–GP–3
136 LB. NO. 8 DOUBLE SLIP CROSSING

STANDARD 2901
SCALE: 1 1/2" = 1'-0"
REVISION –
SHEET 8 OF 14
CADD FILE: ES2901–08

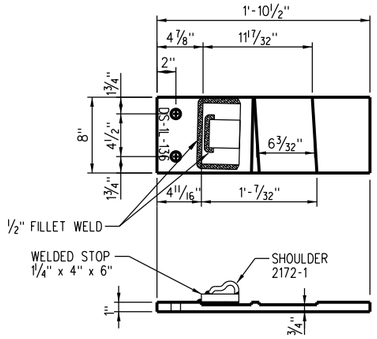

BRACE PLATE - DS-1L

1" x 8" x 1'-10½" LG. - MILLED - W/ADJ. RAIL BRACE

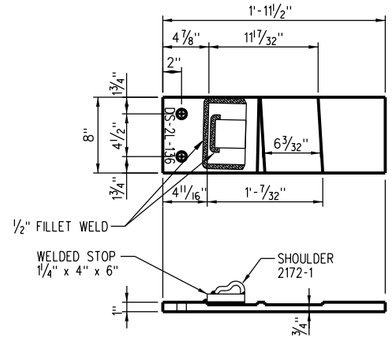

BRACE PLATE - DS-2L

1" x 8" x 1'-11½" LG. - MILLED - W/ADJ. RAIL BRACE

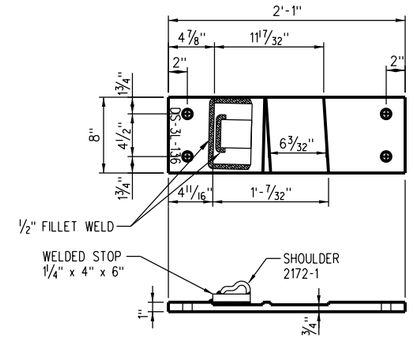

BRACE PLATE - DS-3L

1" x 8" x 2'-1" LG. - MILLED - W/ADJ. RAIL BRACE

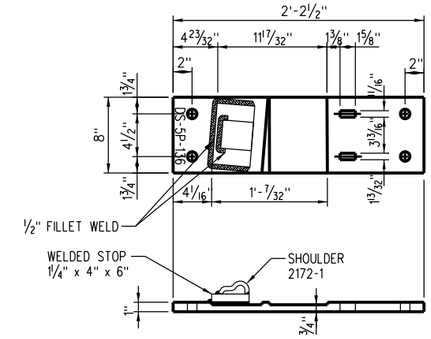

BRACE SLIDE PLATE - DS-5P

1" x 8" x 2'-2½" LG. - MILLED - W/ADJ. RAIL BRACE

NOTES:

1. PLATES TO BE MADE OF MILD ROLLED STEEL.
2. EACH PLATE TO BE PLAINLY STAMPED WITH PLATE NO. AND 136 (WEIGHT OF RAIL) & HAND OF TURNOUT (R.H. OR L.H.)
3. THE PANDROL TYPE, OR APPROVED EQUAL, WELD - ON PRESSED STEEL SHOULDER, MADE FROM MILD STEEL, AND MEETING PANDROL'S DESIGN SPECIFICATIONS, SHALL BE USED.
4. THE PRESSED STEEL SHOULDER MUST BE CAREFULLY WELDED TO THE PLATE. ANY WELD PROJECTING BEYOND THE VERTICAL FACE OF SHOULDER IN THE AREA OF THE RAIL SEAT MUST BE MACHINED OUT TO PROVIDE A CLEAR RAIL SEAT DIMENSION AS CALLED FOR.
5. THE PLATES AS SHOWN ARE FOR A 136 LB., NO. 8 DOUBLE SLIP CROSSING.

WELDING SPECIFICATIONS:

1. SET PRESSED STEEL SHOULDER FLUSH AGAINST LINE OF BASE OF RAIL OR SHOULDER OF MILLED PLATE AS SHOWN AND WELD WITH 2 - PASS ⅜" - WELD.
2. STOP PLATE FOR ADJUSTABLE RAIL BRACE TO BE SET FLUSH WITH SHOULDER OF MILLED PLATE AS SHOWN AND WELD WITH 3 - PASS ½" - FILLET WELD.
3. SHOULDERS AND STOPS ARE TO BE CAREFULLY WEDLED TO PLATE. NO WELD SHALL PROJECT BEYOND THE VERTICAL EDGE OF THE UNWELDED FOURTH SIDE OF THE STOP PLATE OR VERTICAL FACE OF SHOULDER IN THE AREA OF THE RAIL SEAT. ANY WELD PROJECTING BEYOND THE FACE OF THE STOP OR SHOULDER MUST BE MACHINED OFF TO PROVIDE CLEAR DIMENSION CALLED FOR.
4. FOR WELDING PRESSED STEEL SHOULDERS OR PLATE STOPS FOR ADJUSTABLE USE THE FOLLOWING:
   A. ELECTRODE 1 5/32", WELDING SPEC. 7018XLM.
   B. ELECTRODE 3/16", WELDING SPEC. 7018XLM.
   C. WIRE, WELDING 3/32", NR203, 1% NICKEL FLUX CORE.

   OTHER WIRE OR ELECTRODES MEETING SPECIFICATIONS AS CALLED FOR, APPROVED BY DIRECTOR OF ENGINEERING, MAY BE USED.

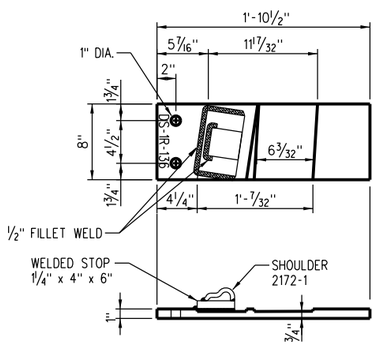

BRACE PLATE - DS-1R

1" x 8" x 1'-10½" LG. - MILLED - W/ADJ. RAIL BRACE

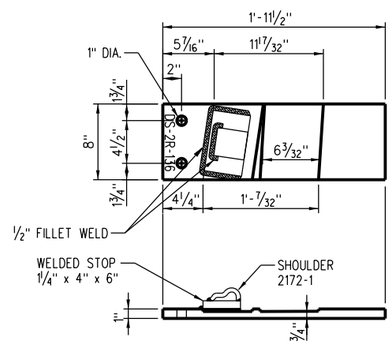

BRACE PLATE - DS-2R

1" x 8" x 1'-11½" LG. - MILLED - W/ADJ. RAIL BRACE

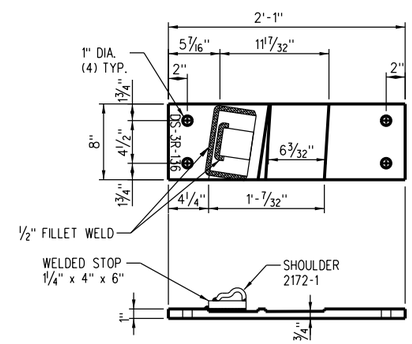

BRACE PLATE - DS-3R

1" x 8" x 2'-1" LG. - MILLED - W/ADJ. RAIL BRACE

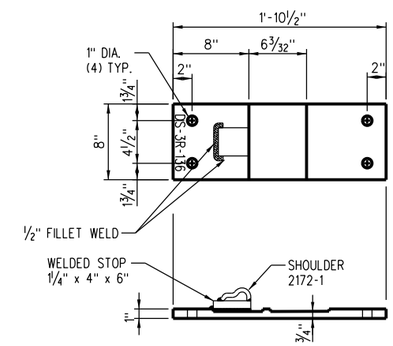

SLIDE PLATE - DS-4P

1" x 8" x 1'-10½" LG. - MILLED - W/ADJ. RAIL BRACE

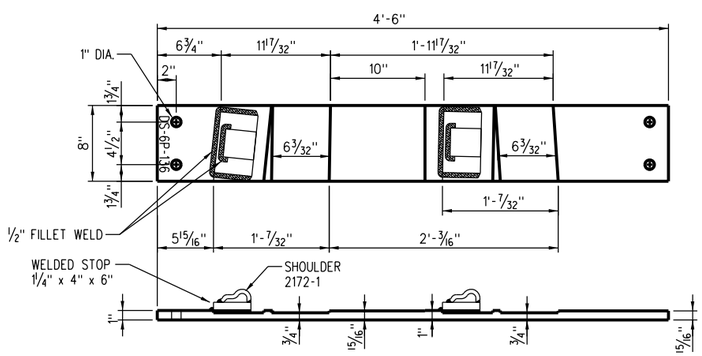

BRACE PLATE - DS-6P

1" x 8" x 4'-6" LG. - MILLED - W/ADJ. RAIL BRACE

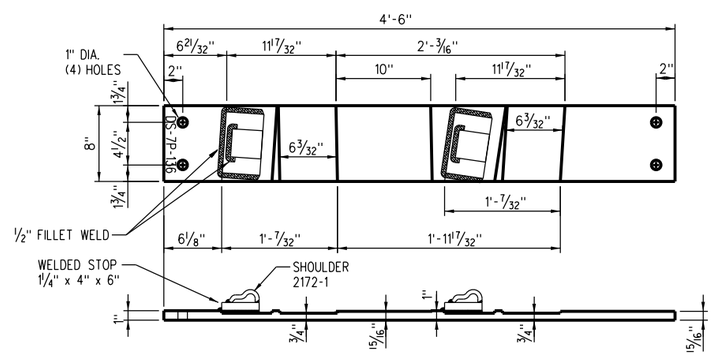

BRACE PLATE - DS-7P

1" x 8" x 4'-6" LG. - MILLED - W/ADJ. RAIL BRACE

FOR MAINTENANCE ONLY

REFERENCE DWGS.

LAYOUT - No.8, DOUBLE SLIP CROSSING - 136 lb. -------- SHEET No. 2901-02

REV.	DATE	DESCRIPTION	DES.	ENG.
X	XX-XX-XX	REVISION	XX	XX

DRAWN BY: A. CARLOS DATE: 03/31/2011

ASSISTANT DIRECTOR: STANDARDS & DESIGN

DIRECTOR OF ENGINEERING AND CONSTRUCTION

SCRRA ENGINEERING STANDARDS ARE INTENDED FOR SCRRA APPROVED USES ONLY. FOR NON-SCRRA APPROVED USES:
SCRRA SHALL NOT BE RESPONSIBLE FOR THE ACCURACY OR COMPLETENESS OF THE DATA OR INFORMATION CONTAINED HEREIN. THE SELECTION AND USE OF THESE STANDARDS IS THE SOLE RESPONSIBILITY OF THE USER AND SHOULD NOT BE USED WITHOUT CONSULTING A REGISTERED PROFESSIONAL ENGINEER. ALL WARRANTIES AND REPRESENTATIONS OF ANY KIND ARE DISCLAIMED. ANYONE MAKING USE OF THIS INFORMATION AGREES THAT IT ASSUMES ALL LIABILITY ARISING FROM SUCH USE. NO PART OF THESE STANDARDS SHOULD BE REPRODUCED OR DISTRIBUTED IN ANY FORM OR BY ANY MEANS WITHOUT THE PRIOR WRITTEN PERMISSION OF SCRRA. ALL RIGHTS RESERVED.

METROLINK®

SOUTHERN CALIFORNIA REGIONAL RAIL AUTHORITY
ONE GATEWAY PLAZA, 12TH FLOOR, L. A., CA. 90012

ENGINEERING STANDARDS

BRACE PLATE AND SLIDE PLATE DETAILS
NO. 8, 136 LB. DOUBLE SLIP CROSSING

STANDARD 2901
SCALE: 1½" = 1'-0"
REVISION –
SHEET 9 OF 14
CADD FILE: ES2901-09

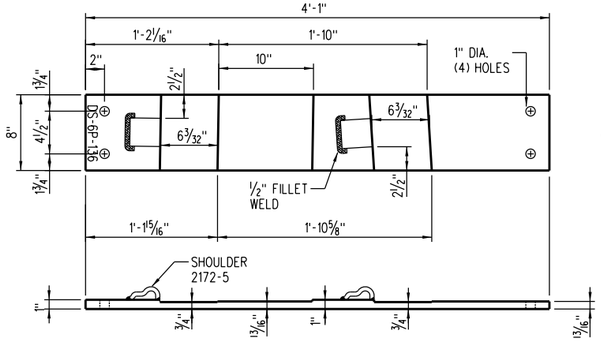

SWITCH SLIDE PLATE - DS-8P
1" x 8" x 4'-1" LG. - MILLED - W/ADJ. RAIL BRACE

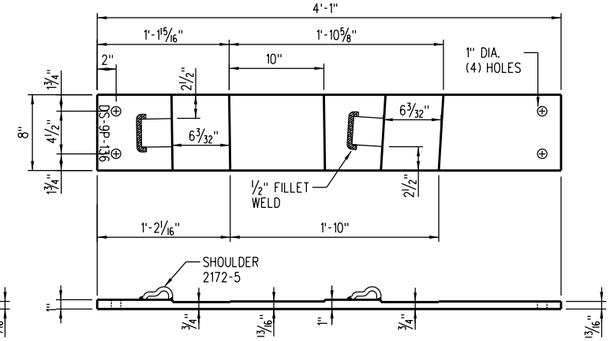

SWITCH SLIDE PLATE - DS-9P
1" x 8" x 4'-1" LG. - MILLED - W/ADJ. RAIL BRACE

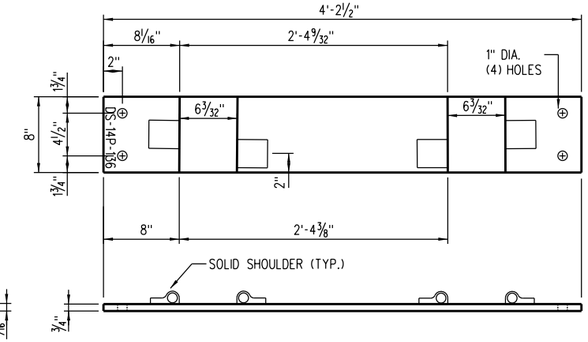

PLATE - DS-14P
1" x 8" x 4'-2 1/2" LG. - FLAT

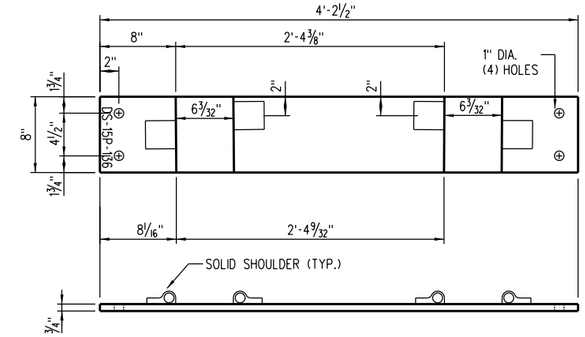

PLATE - DS-15P
1" x 8" x 4'-2 1/2" LG. - FLAT

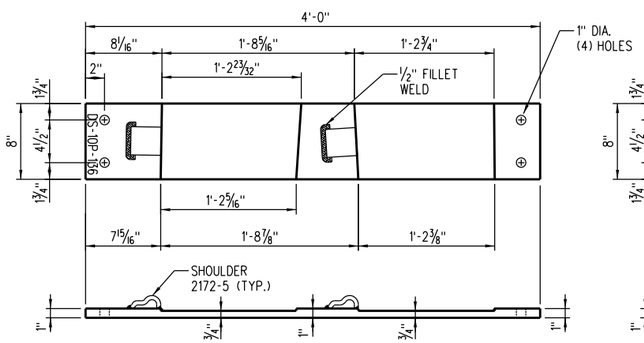

SWITCH SLIDE PLATE - DS-10P
1" x 8" x 4'-0" LG. - MILLED - W/ADJ. RAIL BRACE

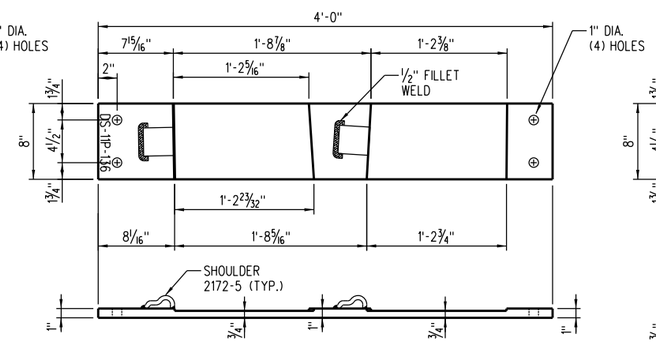

SWITCH SLIDE PLATE - DS-11P
1" x 8" x 4'-0" LG. - MILLED - W/ADJ. RAIL BRACE

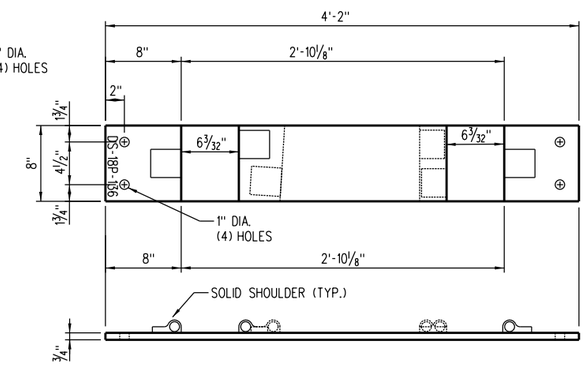

PLATE - DS-18P
3/4" x 8" x 4'-2" LG. - FLAT

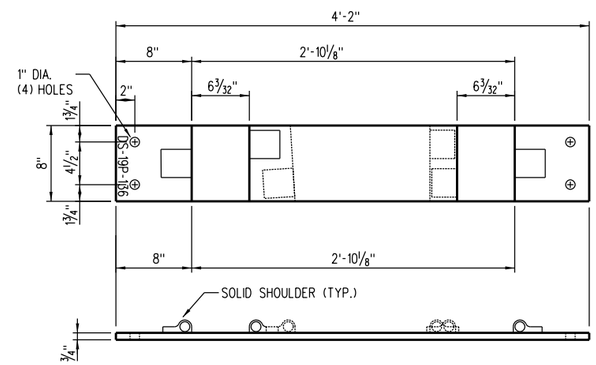

PLATE - DS-19P
3/4" x 8" x 4'-2" LG. - FLAT

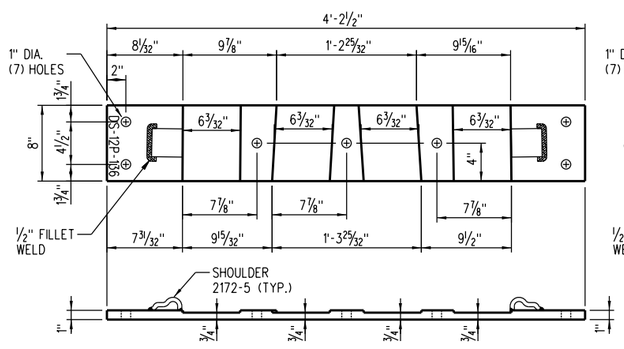

SWITCH HEEL PLATE - DS-12P
1" x 8" x 4'-2 1/2" LG. - MILLED - W/ADJ. RAIL BRACE

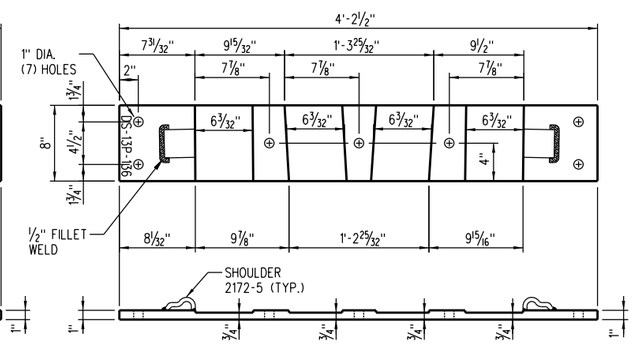

SWITCH HEEL PLATE - DS-13P
1" x 8" x 4'-2 1/2" LG. - MILLED - W/ADJ. RAIL BRACE

FOR MAINTENANCE ONLY

REFERENCE DWGS.

LAYOUT - No.8, DOUBLE SLIP CROSSING - 136 lb. -------- SHEET No. 5100-02

REV.	DATE	DESCRIPTION	DES.	ENG.
X	XX-XX-XX	REVISION	XX	XX

DRAWN BY: A. CARLOS DATE: 03/31/2011

ASSISTANT DIRECTOR: STANDARDS & DESIGN

DIRECTOR OF ENGINEERING AND CONSTRUCTION

SCRRA ENGINEERING STANDARDS ARE INTENDED FOR SCRRA APPROVED USES ONLY. FOR NON-SCRRA APPROVED USES:
SCRRA SHALL NOT BE RESPONSIBLE FOR THE ACCURACY OR COMPLETENESS OF THE DATA OR INFORMATION CONTAINED HEREIN. THE SELECTION AND USE OF THESE STANDARDS IS THE SOLE RESPONSIBILITY OF THE USER AND SHOULD NOT BE USED WITHOUT CONSULTING A REGISTERED PROFESSIONAL ENGINEER. ALL WARRANTIES AND REPRESENTATIONS OF ANY KIND ARE DISCLAIMED. ANYONE MAKING USE OF THIS INFORMATION AGREES THAT IT ASSUMES ALL LIABILITY ARISING FROM SUCH USE. NO PART OF THESE STANDARDS SHOULD BE REPRODUCED OR DISTRIBUTED IN ANY FORM OR BY ANY MEANS WITHOUT THE PRIOR WRITTEN PERMISSION OF SCRRA. ALL RIGHTS RESERVED.

METROLINK®
SOUTHERN CALIFORNIA REGIONAL RAIL AUTHORITY
ONE GATEWAY PLAZA, 12TH FLOOR, L. A., CA. 90012

ENGINEERING STANDARDS

SWITCH SLIDE PLATE AND
SWITCH HEEL PLATE DETAILS
NO. 8, 136 LB. DOUBLE SLIP CROSSING

STANDARD 2901
SCALE: 1 1/2" = 1'-0"
REVISION –
SHEET 10 OF 14
CADD FILE: ES2901-10

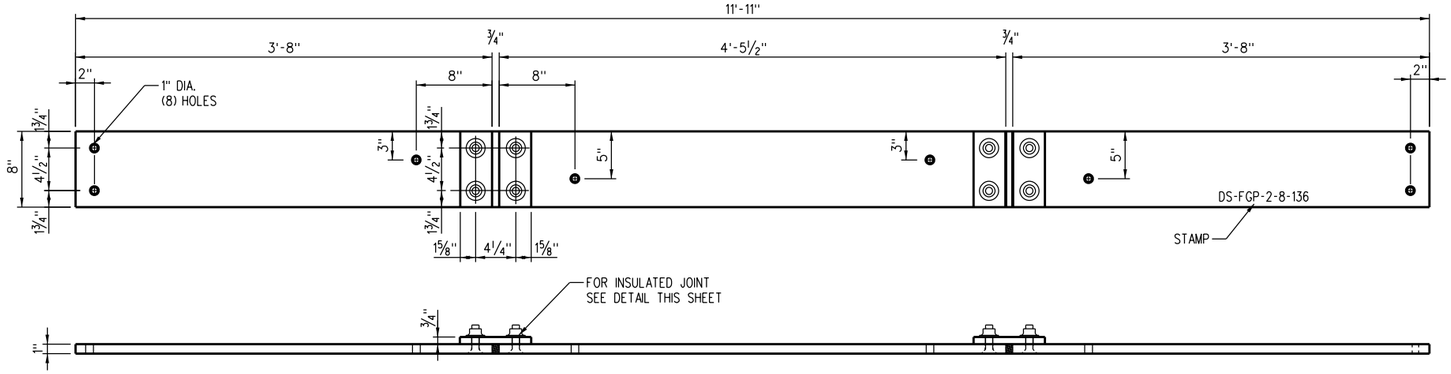

INSULATED FROG GAGE PLATE DS-FGP-1

1" x 8" - FLAT

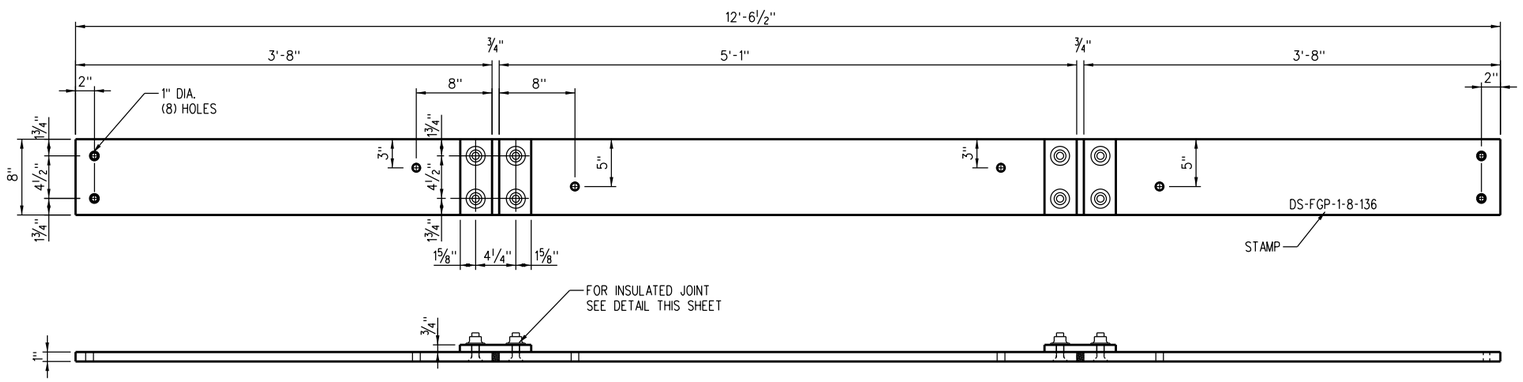

INSULATED FROG GAGE PLATE DS-FGP-2

1" x 8" - FLAT

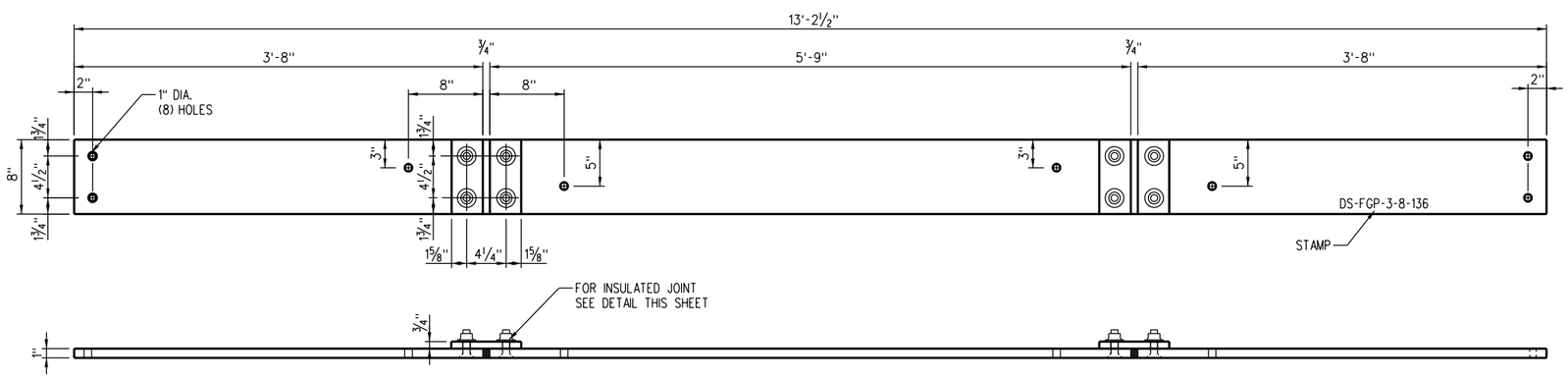

INSULATED FROG GAGE PLATE DS-FGP-3

1" x 8" - FLAT

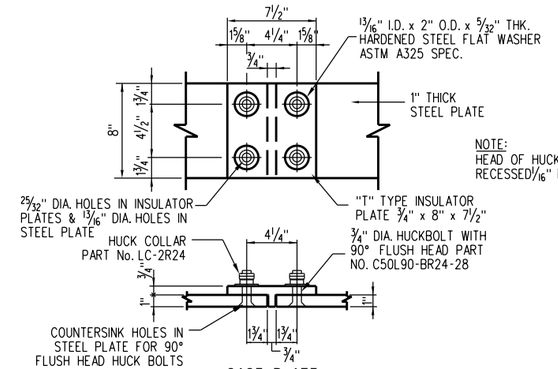

GAGE PLATE
INSULATED JOINT ASSEMBLY
GPI-77

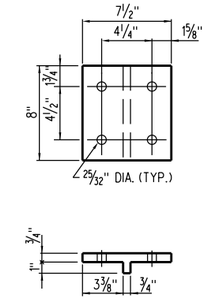

DETAIL OF INSULATION BLOCK

POLYESTER COATED STEEL CORE
W/ BUSHINGS, PORTEC #127-07547-01
OR FIBERGLASS REINFORCED THERMOSET RESIN.
PURCHASE PART NO. GPI52P05

DETAIL "A"
INSULATION AT GAGE PLATES

(SCALE: NONE)

FOR MAINTENANCE ONLY

REFERENCE DWGS.

LAYOUT - No.8, DOUBLE SLIP CROSSING - 136 lb. -------- SHEET No. 2901-02

REV.	DATE	DESCRIPTION	DES.	ENG.
X	XX-XX-XX	REVISION	XX	XX

DRAWN BY: A. CARLOS DATE: 03/31/2011

ASSISTANT DIRECTOR: STANDARDS & DESIGN

DIRECTOR OF ENGINEERING AND CONSTRUCTION

SCRRA ENGINEERING STANDARDS ARE INTENDED FOR SCRRA APPROVED USES ONLY. FOR NON-SCRRA APPROVED USES:
SCRRA SHALL NOT BE RESPONSIBLE FOR THE ACCURACY OR COMPLETENESS OF THE DATA OR INFORMATION CONTAINED HEREIN. THE SELECTION AND USE OF THESE STANDARDS IS THE SOLE RESPONSIBILITY OF THE USER AND SHOULD NOT BE USED WITHOUT CONSULTING A REGISTERED PROFESSIONAL ENGINEER. ALL WARRANTIES AND REPRESENTATIONS OF ANY KIND ARE DISCLAIMED. ANYONE MAKING USE OF THIS INFORMATION AGREES THAT IT ASSUMES ALL LIABILITY ARISING FROM SUCH USE. NO PART OF THESE STANDARDS SHOULD BE REPRODUCED OR DISTRIBUTED IN ANY FORM OR BY ANY MEANS WITHOUT THE PRIOR WRITTEN PERMISSION OF SCRRA. ALL RIGHTS RESERVED.

METROLINK®
SOUTHERN CALIFORNIA REGIONAL RAIL AUTHORITY
ONE GATEWAY PLAZA, 12TH FLOOR, L. A., CA. 90012

ENGINEERING STANDARDS

DETAILS
INSULATED FROG GAGE PLATES
NO. 8, 136 LB. DOUBLE SLIP CROSSING

STANDARD 2901
SCALE: 1½" = 1'-0"
REVISION –
SHEET 11 OF 14
CADD FILE: ES2901-11

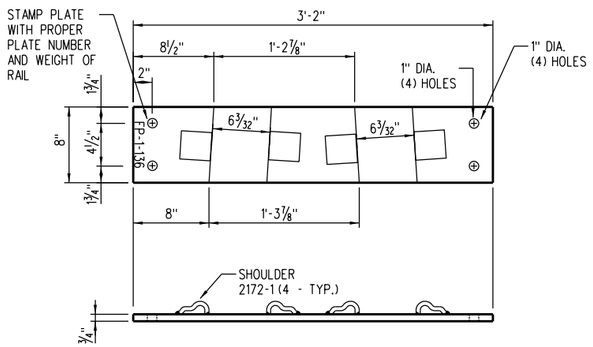

FROG PLATE - F-1
¾" x 8" x 3'-2" LG. - FLAT

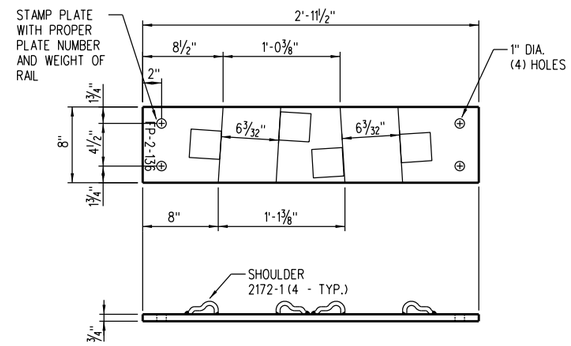

FROG PLATE - F-2
¾" x 8" x 2'-11½" LG. - FLAT

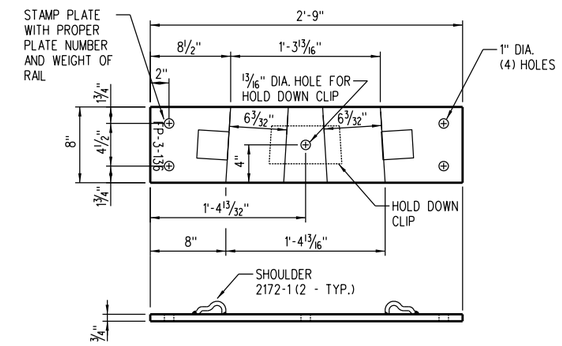

FROG PLATE - F-3
¾" x 8" x 2'-9" LG. - FLAT

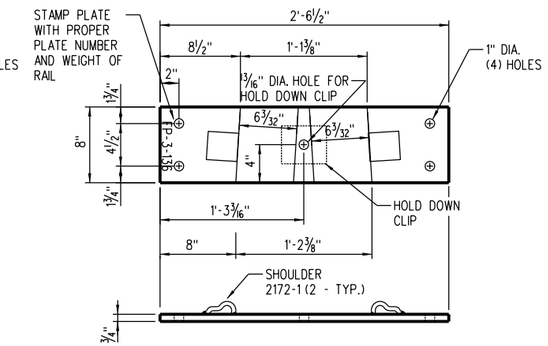

FROG PLATE - F-4
¾" x 8" x 2'-6 ½" LG. - FLAT

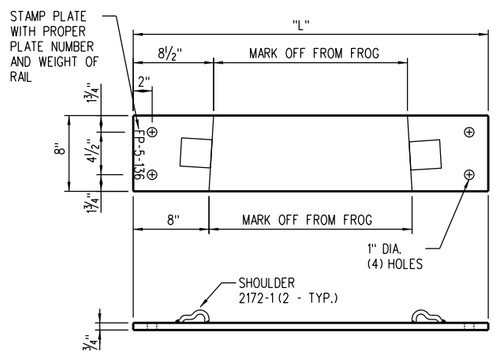

FROG PLATE - F-5, F-6 AND F-7
¾" x 8" - FLAT (SEE TABLE FOR LENGTHS)

DIMENSION TABLE		
PLATE	"L"	NO. REQ'D
F-5	3'-1½"	1
F-6	2'-11"	1
F-7	2'-9"	1

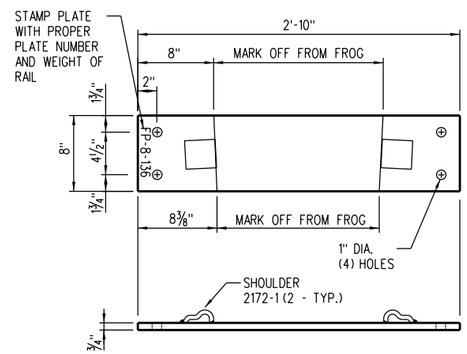

FROG PLATE - F-8
¾" x 8" x 2'-10" - FLAT

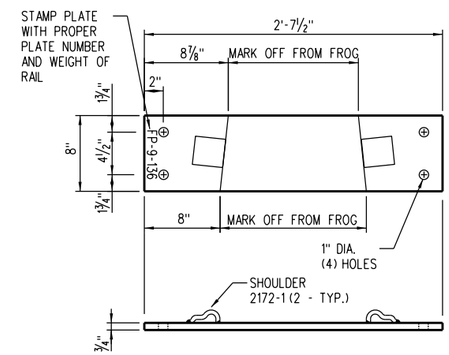

FROG PLATE - F-9
¾" x 8" x 2'-7½" - FLAT

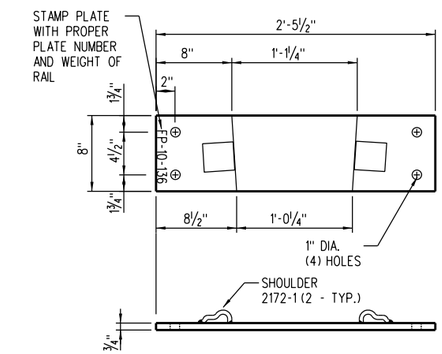

FROG PLATE - F-10
¾" x 8" x 2'-5½" - FLAT

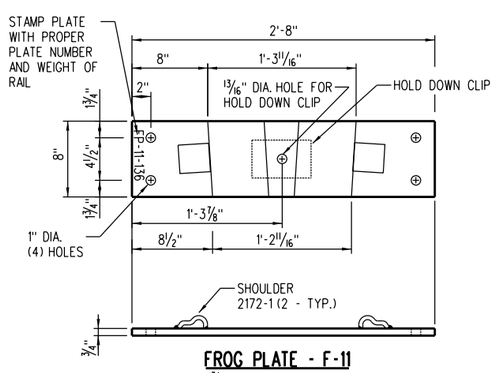

FROG PLATE - F-11
¾" x 8" x 2'-8" - FLAT

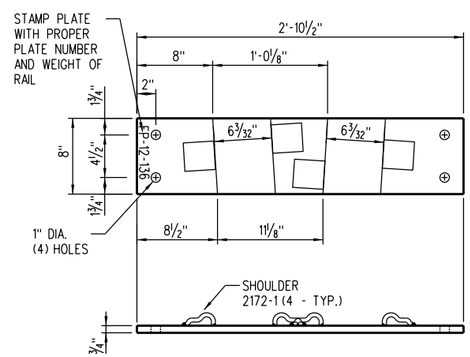

FROG PLATE - F-12
¾" x 8" x 2'-10½" LG. - FLAT

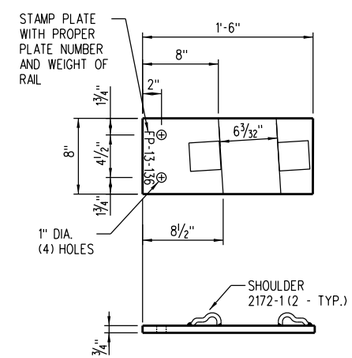

FROG PLATE - F-13
¾" x 8" x 1'-6" LG. - FLAT

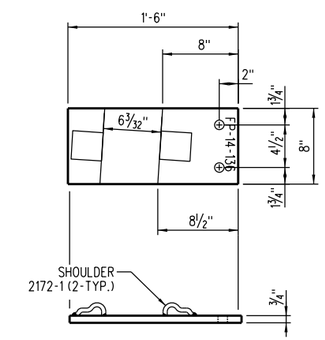

FROG PLATE - F-14
¾" x 8" x 1'-6" LG. - FLAT

FOR MAINTENANCE ONLY

REFERENCE DWGS.
LAYOUT - No.8, DOUBLE SLIP CROSSING - 136 lb. -------- SHEET No. 2901-02

REV.	DATE	DESCRIPTION	DES.	ENG.
X	XX-XX-XX	REVISION	XX	XX

DRAWN BY: A. CARLOS DATE: 03/31/2011

ASSISTANT DIRECTOR: STANDARDS & DESIGN

DIRECTOR OF ENGINEERING AND CONSTRUCTION

SCRRA ENGINEERING STANDARDS ARE INTENDED FOR SCRRA APPROVED USES ONLY. FOR NON-SCRRA APPROVED USES:
SCRRA SHALL NOT BE RESPONSIBLE FOR THE ACCURACY OR COMPLETENESS OF THE DATA OR INFORMATION CONTAINED HEREIN. THE SELECTION AND USE OF THESE STANDARDS IS THE SOLE RESPONSIBILITY OF THE USER AND SHOULD NOT BE USED WITHOUT CONSULTING A REGISTERED PROFESSIONAL ENGINEER. ALL WARRANTIES AND REPRESENTATIONS OF ANY KIND ARE DISCLAIMED. ANYONE MAKING USE OF THIS INFORMATION AGREES THAT IT ASSUMES ALL LIABILITY ARISING FROM SUCH USE. NO PART OF THESE STANDARDS SHOULD BE REPRODUCED OR DISTRIBUTED IN ANY FORM OR BY ANY MEANS WITHOUT THE PRIOR WRITTEN PERMISSION OF SCRRA. ALL RIGHTS RESERVED.

METROLINK®
SOUTHERN CALIFORNIA REGIONAL RAIL AUTHORITY
ONE GATEWAY PLAZA, 12TH FLOOR, L. A., CA. 90012

ENGINEERING STANDARDS

FROG PLATE DETAILS
NO. 8, 136 LB. DOUBLE SLIP CROSSING

STANDARD 2901
SCALE: 1½" = 1'-0"
REVISION –
SHEET 12 OF 14
CADD FILE: ES2901-12

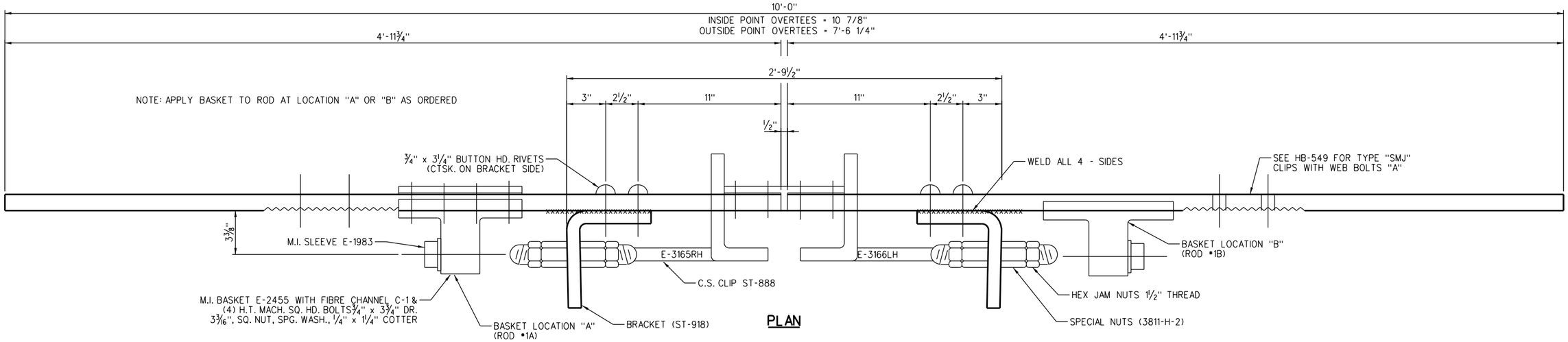

PLAN

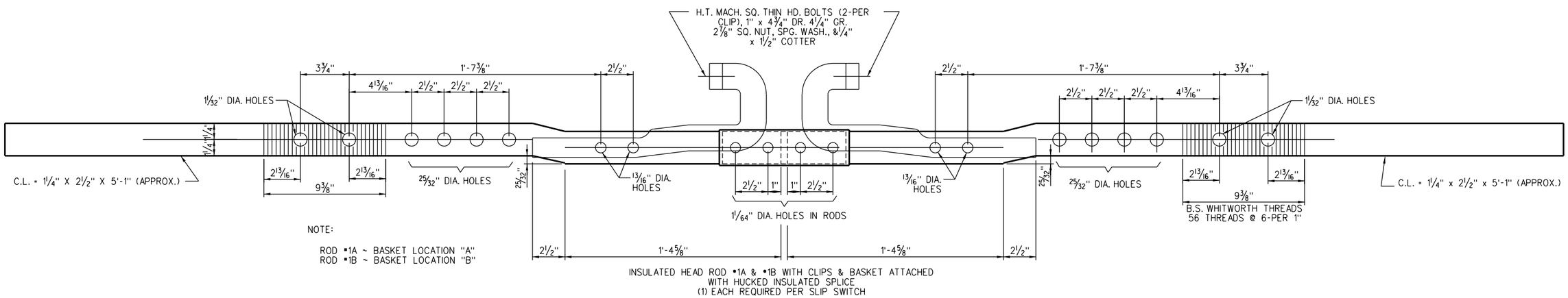

NOTE:

ROD #1A ~ BASKET LOCATION "A"
ROD #1B ~ BASKET LOCATION "B"

ELEVATION

INSULATION MATERIAL CONSISTS OF:

(1) FIBRE CHANNEL C-1
(2) FIBRE ANGLE PLATE AP-34
(4) FIBRE BUSHINGS B-11
(1) STEEL SPLICE PLATE ST-684
(1) STEEL CHANNEL ST-568
(4) ¾" HUCK BOLTS C50LR-BR24-36
(4) HUCK COLLARS LC2R-24G

SWITCH INFORMATION

GAGE = 4'-8⅝".
THROW AT POINT = 4" MIN. ~ 4½" MAX.
"E" DIST. = 1 19/32".
PT. = 0" SAMSON.
REINF. -½" "D" BOTH SIDES (SLOT ¼" STK. SIDE).
ROD SPACING = 18⅝".
BREAK ALL SHARP CORNERS.
DEBURR ALL HOLES.

FOR MAINTENANCE ONLY

STAMP RODS WITH "RESP. ROD. #, 136RE, #8 DSS"

REV.	DATE	DESCRIPTION	DES.	ENG.
X	XX-XX-XX	REVISION	XX	XX

DRAWN BY: A. CARLOS DATE: 03/31/2011

ASSISTANT DIRECTOR: STANDARDS & DESIGN

DIRECTOR OF ENGINEERING AND CONSTRUCTION

SCRRA ENGINEERING STANDARDS ARE INTENDED FOR SCRRA APPROVED USES ONLY. FOR NON-SCRRA APPROVED USES: SCRRA SHALL NOT BE RESPONSIBLE FOR THE ACCURACY OR COMPLETENESS OF THE DATA OR INFORMATION CONTAINED HEREIN. THE SELECTION AND USE OF THESE STANDARDS IS THE SOLE RESPONSIBILITY OF THE USER AND SHOULD NOT BE USED WITHOUT CONSULTING A REGISTERED PROFESSIONAL ENGINEER. ALL WARRANTIES AND REPRESENTATIONS OF ANY KIND ARE DISCLAIMED. ANYONE MAKING USE OF THIS INFORMATION AGREES THAT IT ASSUMES ALL LIABILITY ARISING FROM SUCH USE. NO PART OF THESE STANDARDS SHOULD BE REPRODUCED OR DISTRIBUTED IN ANY FORM OR BY ANY MEANS WITHOUT THE PRIOR WRITTEN PERMISSION OF SCRRA. ALL RIGHTS RESERVED.

METROLINK®
SOUTHERN CALIFORNIA REGIONAL RAIL AUTHORITY
ONE GATEWAY PLAZA, 12TH FLOOR, L. A., CA. 90012

ENGINEERING STANDARDS

INSULATED HEAD ROD NO. 1 FOR END POINTS
NO. 8, 136 LB. DOUBLE SLIP CROSSING

STANDARD 2901
SCALE: 3" = 1'-0"
REVISION –
SHEET 13 OF 14
CADD FILE: ES2901-13

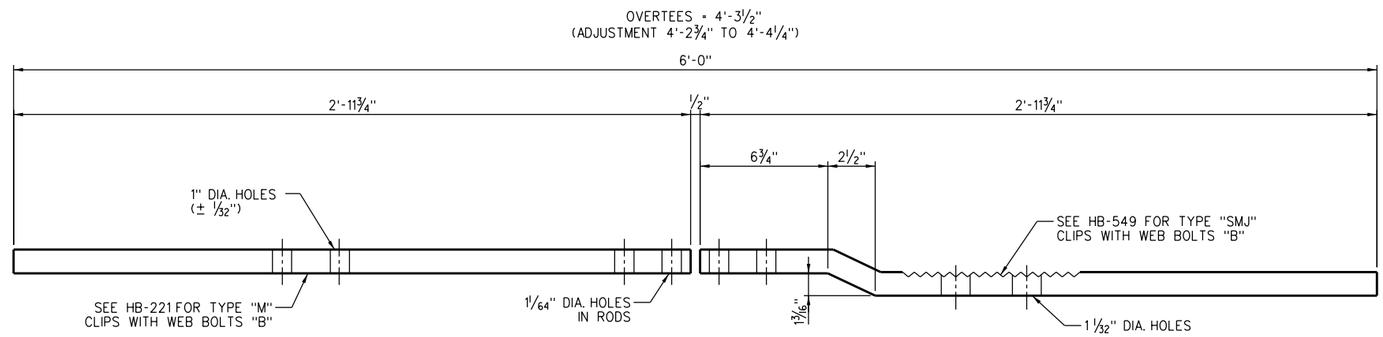

PLAN

NOTE: TYPE "M" CLIP MUST BE WELDED TO ROD
ALONG BOTH SIDES OF BOTTOM OF CLIPS

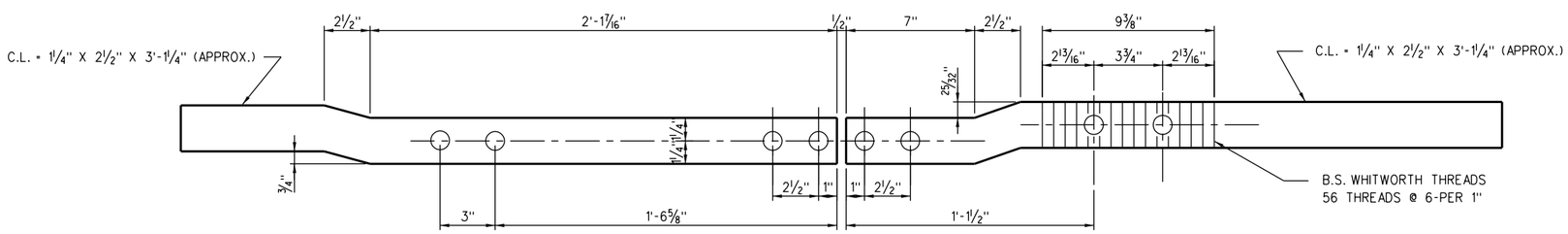

ELEVATION

INSULATED SPREAD RODS NO. 2 OR 3 WITH CLIPS AND BOLTS ATTACHED WITH HUCKED INSULATED SPLICE, (2) EACH REQUIRED PER SLIP SWITCH

STAMP ROD WITH "RESP. NO., 136RE, •8 DSS"

INSULATION MATERIAL CONSISTS OF:

(1) FIBRE CHANNEL C-1.
(2) FIBRE ANGLE PLATE AP-34.
(4) FIBRE BUSHINGS B-11.
(1) STEEL SPLICE PLATE ST-684.
(1) STEEL CHANNEL ST-568.
(4) ¾" HUCK BOLTS C50LR-BR24-36.
(4) HUCK COLLARS LC2R-24G.

SWITCH INFORMATION

GAGE = 4'-8⅝"
THROW AT POINT = 4" MIN. ~ 4½" MAX.
"E" DIST. = 1 9/32"
PT. = 0" SAMSON
REINF. = ½" "D" BOTH SIDES (SLOT ¼" STK. SIDE)
ROD SPACING = 18⅝" x 3'-0½" (•2 ROD)
ROD SPACING = 18⅝" x 3'-5½" (•3 ROD)

FOR MAINTENANCE ONLY

REV.	DATE	DESCRIPTION	DES.	ENG.
X	XX-XX-XX	REVISION	XX	XX

DRAWN BY: A. CARLOS DATE: 03/31/2011

ASSISTANT DIRECTOR: STANDARDS & DESIGN

DIRECTOR OF ENGINEERING AND CONSTRUCTION

SCRRA ENGINEERING STANDARDS ARE INTENDED FOR SCRRA APPROVED USES ONLY. FOR NON-SCRRA APPROVED USES:
SCRRA SHALL NOT BE RESPONSIBLE FOR THE ACCURACY OR COMPLETENESS OF THE DATA OR INFORMATION CONTAINED HEREIN. THE SELECTION AND USE OF THESE STANDARDS IS THE SOLE RESPONSIBILITY OF THE USER AND SHOULD NOT BE USED WITHOUT CONSULTING A REGISTERED PROFESSIONAL ENGINEER. ALL WARRANTIES AND REPRESENTATIONS OF ANY KIND ARE DISCLAIMED. ANYONE MAKING USE OF THIS INFORMATION AGREES THAT IT ASSUMES ALL LIABILITY ARISING FROM SUCH USE. NO PART OF THESE STANDARDS SHOULD BE REPRODUCED OR DISTRIBUTED IN ANY FORM OR BY ANY MEANS WITHOUT THE PRIOR WRITTEN PERMISSION OF SCRRA. ALL RIGHTS RESERVED.

METROLINK®
SOUTHERN CALIFORNIA REGIONAL RAIL AUTHORITY
ONE GATEWAY PLAZA, 12TH FLOOR, L. A., CA. 90012

ENGINEERING STANDARDS

INSULATED SPREAD RODS
NO. 2 & 3 FOR END POINTS
NO. 8, 136 LB. DOUBLE SLIP CROSSING

STANDARD 2901
SCALE: 3" = 1'-0"
REVISION –
SHEET 14 OF 14
CADD FILE: ES2901-14

METROLINK (S.C.R.R.A.)
ENGINEERING STANDARDS
NO. 10 DOUBLE SLIP CROSSING

BILL OF MATERIAL	
QTY.	DESCRIPTION
2 EACH	SOLID MANGANESE CENTER FROG
4 EACH	"D" STRAPS WITH BOLTS
4 PAIR	34'-7 11/16" EXTENDED FIELD WELDED TYPE SWITCH POINT
2 EACH	No. 1A & 1B HEAD ROD FOR END POINTS
2 EACH	No. 2 & 3 SPREAD RODS FOR END POINTS
2 EACH	No. 4 & 5 HEAD RODS FOR MOVEABLE CENTER POINTS
4 EACH	SLIDE PLATE S-5P
28 EACH	SLIDE PLATE S-8P
2 EACH	BRACE SLIDE PLATES 1A & 1B THRU 4A & 4B
2 EACH	BRACE SLIDE PLATES 5C
8 EACH	BRACE SLIDE PLATES 6A & 7A
2 EACH	GAGE PLATE No. GP-1 THRU GP-6
2 EACH	SWITCH PLATE 14-L & 14-R THRU 19-L &19-R
2 EACH	FROG PLATES F-1 THRU F-15A & 15B
2 EACH	INSULATED FROG GAGE PLATES FGP-1 THRU FGP-3
2 EACH	No.10 RAIL BOUND MANGANESE FROG ~ 21'-2 1/2"
4 EACH	16'-0" U-69 ADJUSTABLE GUARD RAIL W/PLATES
2 EACH	D.I. RAIL HOLD DOWN CLIPS E-3707
4 EACH	D.I. RAIL HOLD DOWN CLIPS E-3709
12 PCS.	BOLTLESS ADJUSTABLE BRACE ASSEMBLY
20 PCS.	SCRRA ES1406 "PANDROL", OR EQUAL "E" - CLIP 6" TIE PLATE
356 PCS.	E-CLIP TYPE E-2055 (GALVANIZED)
24 PCS.	E-CLIP TYPE E-2063 (GALVANIZED)
924 PCS.	SCREW SPIKES 15/16" DIA. X 6" No. 5760
2 EACH	STRAIGHT STOCK RAIL 25'-0 15/16" LONG
4 EACH	BRACE RAIL - 5'-11 1/4" LONG
4 EACH	MOVEABLE POINT RAIL - 13'-1 1/4" LONG
2 EACH	OUTER SLIP RAIL - 20'-7 7/8" LONG
4 EACH	SWITCH POINT RAIL - 22'-8 1/2" LONG
2 EACH	KNUCKLE RAIL - 23'-11" LONG
2 EACH	STRAIGHT STOCK RAIL - 25'-0 11/16" LONG
4 EACH	CURVED STOCK RAIL - 28'-2 3/4" LONG
4 EACH	CURVED SWITCH POINT RAIL - 34'-7 3/4" LONG
4 EA.	EPOXY BONDED PREFABRICATED INSULATED JOINT KITS

DRAWING INDEX

BILL OF MATERIAL & GENERAL NOTES — No. 2902-01
136 lb. - NO. 10 - DOUBLE SLIP CROSSING — No. 2902-02
CROSSING GEOMETRY NO. 10 DOUBLE SLIP CROSSING — No. 2902-03
136 LB. - NO. 10 - SOLID MANGANESE FROG WITH PLATES — No. 2902-04
136 lb. - U-69 GUARD RAIL WITH PLATES — No. 2902-05
NO. 10 DOUBLE SLIP CROSSING - CENTER SECTION LAYOUT — No. 2902-06
22'-8 1/2" SWITCH POINT DETAILS — No. 2902-07
34'-7 3/4" SWITCH POINT DETAILS — No. 2902-08
136 LB MOVEABLE CENTER POINT — No. 2902-09
136 LB UNDERCUT STOCK RAILS — No. 2902-10
INSULATED GAGE PLATE DETAILS — No. 2902-11
INSULATED GAGE PLATE & BRACE PLATE DETAILS — No. 2902-12
BRACE PLATE & SLIDE PLATE DETAILS — No. 2902-13
BRACE SLIDE PLATE & INSULATED SLIDE PLATE DETAILS — No. 2902-14
INSULATED FROG GAGE PLATE DETAILS — No. 2902-15
FROG PLATE DETAILS — No. 2902-16
INSULATED HEAD ROD NO. 1 FOR END POINTS — No. 2902-17
INSULATED SPREAD ROD NO. 2 & 3 FOR END POINTS — No. 2902-18
INSULATED HEAD ROD NO. 4 FOR MOVEABLE CENTER POINTS — No. 2902-19
INSULATED HEAD ROD NO. 5 FOR MOVEABLE CENTER POINTS — No. 2902-20

BILL OF SWITCH TIES			
PIECES	SIZE	LENGTH	BOARD FEET
24	7" x 9"	11'-0"	1386.00
18	7" x 9"	12'-0"	1134.00
12	7" x 9"	13'-0"	819.00
12	7" x 9"	14'-0"	882.00
4	7" x 9"	15'-0"	294.00
4	7" x 9"	16'-0"	336.00
TOTAL			TOTAL
74			4851.00

NOTES:

1. ENTIRE DOUBLE SLIP CROSSING TO BE FABRICATED FROM 136 LB. HEAD HARDENED RAIL.
2. LOCATIONS OF INSULATED JOINTS ARE AS SHOWN ON ES2902-02. IT WILL BE SATISFACTORY TO RELOCATE THE INSULATED JOINT IN THE FIELD UP TO 12" SO AS TO PROVIDE A SUITABLE SUSPENDED JOINT, PROVIDED THE STAGGER OF THE INSULATED JOINTS DOES NOT EXCEED 4'-6". SUSPENDED INSULATED JOINTS MUST BE LOCATED IN A CRIB AREA BETWEEN TIES, A MINIMUM DISTANCE OF 4" FROM EDGE OF NEAREST TIE PLATE.
3. ALL INSULATED JOINTS ARE TO BE ADHESIVE BONDED INSULATED JOINTS UNLESS OTHERWISE SPECIFIED.
4. ALL MATERIALS REQUIRED FOR HAND OR MACHINE OPERATED SWITCH OPERATION WILL BE FURNISHED PER REQUIREMENTS OF THE S.C.R.R.A. DIRECTOR OF ENGINEERING AND CONSTRUCTION.
5. MATERIALS AND WORKMANSHIP, ALSO ANY CONSTRUCTION DETAILS NOT SHOWN, SHALL BE PER CURRENT A.R.E.M.A. "TRACKWORK PLANS AND SPECIFICATIONS" UNLESS OTHERWISE SPECIFIED.
6. WHERE REQUIRED, ALL IDENTIFICATION SYMBOLS TO BE PLAINLY STAMPED.
7. GAGE PLATES WILL BE FURNISHED INSULATED. SWITCH RODS WILL BE FURNISHED INSULATED UNLESS OTHERWISE SPECIFIED.
8. MANUFACTURER SHALL SUBMIT TWO COPIES OF SHOP DRAWINGS TO THE S.C.R.R.A. DIRECTOR OF ENGINEERING AND CONSTRUCTION FOR APPROVAL PRIOR TO FABRICATION OF TURNOUT. SHOP DRAWINGS THAT CHANGE DETAILS OF THESE STANDARDS MUST CLEARLY SPECIFY SUCH PROPOSED CHANGES.
9. THE MATERIAL INCLUDED IN THE PURCHASE OF A "DOUBLE SLIP CROSSING COMPLETE" IS EVERYTHING LISTED IN THE BILL OF MATERIALS. TO CONSTRUCT A COMPLETE TURNOUT, SWITCH TIES (PER LIST ON THIS SHEET) AND INSULATED JOINTS, FIELD WELDS, RUNNING RAIL AND CLOSURE RAIL IDENTIFIED ON SUBSEQUENT SHEETS MUST ALSO BE SUPPLIED.
10. TIE PLATES SHALL CONFORM TO S.C.R.R.A STANDARD ES2454.
11. SCREW SPIKES (15/16" X 6-2 TPI) SHALL CONFORM TO S.C.R.R.A. STANDARD ES2357. PLATE HOLES SHALL BE 1" DIAMETER. PILOT HOLES IN TIES SHALL BE 5/8" DIAMETER. SCREW SPIKES SHALL BE SCREWED INTO WOOD (NOT DRIVEN).
12. MANUFACTURER SHALL BEVEL RAIL ENDS PER CURRENT A.R.E.M.A. PLAN NO. 1005.
13. THE 34'-7 3/4" SWITCH POINT, MADE FROM 40'-0" RAIL PER ES2902-08 IS TO BE FURNISHED WITH SWITCH RODS NO. 1A, 1B, AND 2 THRU 5 PER ES2902-17 THRU ES2902-20
14. FOR CROSSING DATA FOR A NO. 10 DOUBLE SLIP CROSSOVER 136 LB. R.E. RAIL SEE CHART ON SHEET 3.
15. GAGE PLATES FOR SWITCH AND FROG, SWITCH HEEL PLATE (FOR BOTH R.H. AND L.H. TURNOUTS) AND PLATES 14 THRU 19 ARE DESIGNED TO BE PERPENDICULAR TO THE CENTRAL AXIS OF THE SWITCH
16. UPON COMPLETION OF TURNOUT INSTALLATION, RUNNING RAIL MUST BE ADJUSTED TO S.C.R.R.A. NEUTRAL RAIL TEMPERATURE.
17. ENTIRE CROSSOVER TO BE FULLY FLOOR ASSEMBLED INCLUDING END FROGS AND HF GUARD RAILS.
18. ALL E-CLIPS TO BE GALVANIZED.

FOR MAINTENANCE ONLY

REV.	DATE	DESCRIPTION	DES.	ENG.
X	XX-XX-XX	REVISION	XX	XX

DRAWN BY: A. CARLOS DATE: 03/31/2011

ASSISTANT DIRECTOR: STANDARDS & DESIGN

DIRECTOR OF ENGINEERING AND CONSTRUCTION

SCRRA ENGINEERING STANDARDS ARE INTENDED FOR SCRRA APPROVED USES ONLY. FOR NON-SCRRA APPROVED USES:
SCRRA SHALL NOT BE RESPONSIBLE FOR THE ACCURACY OR COMPLETENESS OF THE DATA OR INFORMATION CONTAINED HEREIN. THE SELECTION AND USE OF THESE STANDARDS IS THE SOLE RESPONSIBILITY OF THE USER AND SHOULD NOT BE USED WITHOUT CONSULTING A REGISTERED PROFESSIONAL ENGINEER. ALL WARRANTIES AND REPRESENTATIONS OF ANY KIND ARE DISCLAIMED. ANYONE MAKING USE OF THIS INFORMATION AGREES THAT IT ASSUMES ALL LIABILITY ARISING FROM SUCH USE. NO PART OF THESE STANDARDS SHOULD BE REPRODUCED OR DISTRIBUTED IN ANY FORM OR BY ANY MEANS WITHOUT THE PRIOR WRITTEN PERMISSION OF SCRRA. ALL RIGHTS RESERVED.

METROLINK®
SOUTHERN CALIFORNIA REGIONAL RAIL AUTHORITY
ONE GATEWAY PLAZA, 12TH FLOOR, L. A., CA. 90012

ENGINEERING STANDARDS

NO. 10, 136 LB. DOUBLE SLIP CROSSING
WITH MOVEABLE POINT FROG
BILL OF MATERIAL AND GENERAL NOTES

STANDARD 2902
SCALE: NONE
REVISION –
SHEET 1 OF 20
CADD FILE: ES2902-01

NOTE:

See cover sheet for notes, bill of material and crossing data.

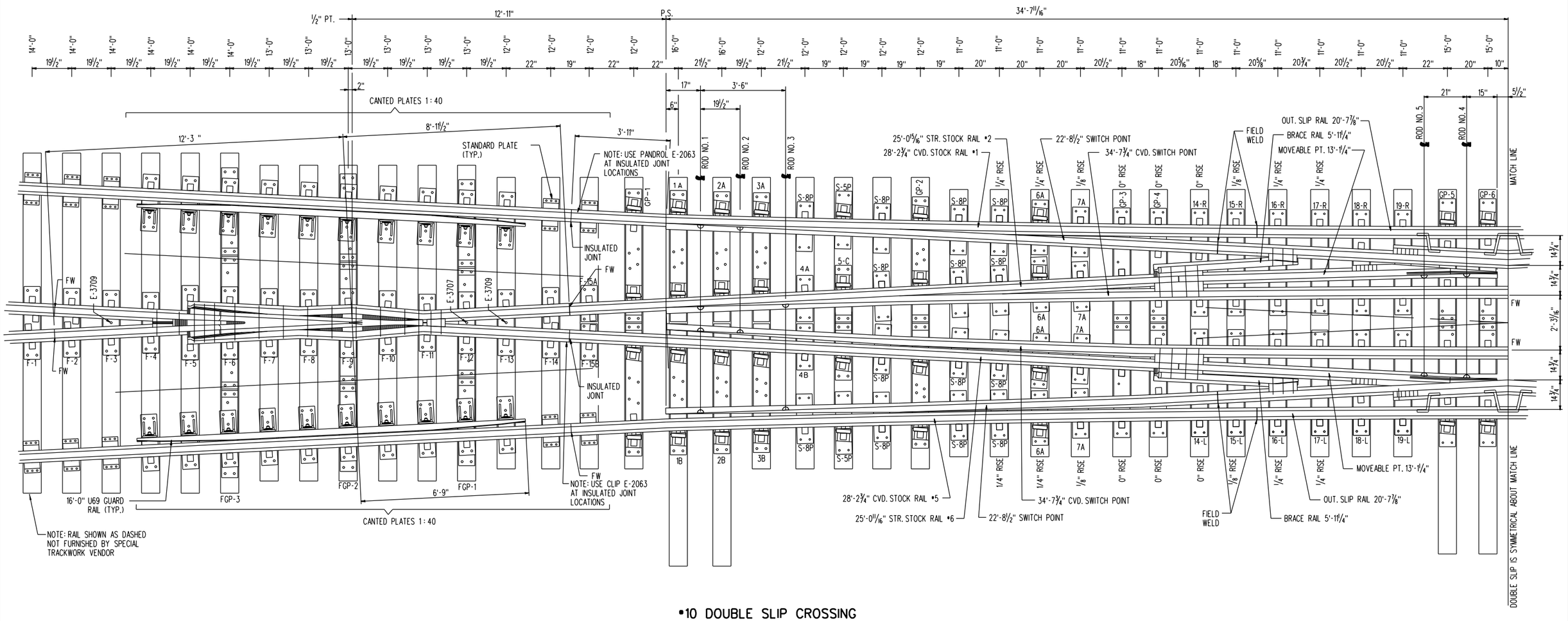

#10 DOUBLE SLIP CROSSING

FOR MAINTENANCE ONLY

X	XX-XX-XX	REVISION	XX	XX
REV.	DATE	DESCRIPTION	DES.	ENG.

DRAWN BY: A. CARLOS DATE: 03/31/2011

ASSISTANT DIRECTOR: STANDARDS & DESIGN

DIRECTOR OF ENGINEERING AND CONSTRUCTION

SCRRA ENGINEERING STANDARDS ARE INTENDED FOR SCRRA APPROVED USES ONLY. FOR NON-SCRRA APPROVED USES:
SCRRA SHALL NOT BE RESPONSIBLE FOR THE ACCURACY OR COMPLETENESS OF THE DATA OR INFORMATION CONTAINED HEREIN. THE SELECTION AND USE OF THESE STANDARDS IS THE SOLE RESPONSIBILITY OF THE USER AND SHOULD NOT BE USED WITHOUT CONSULTING A REGISTERED PROFESSIONAL ENGINEER. ALL WARRANTIES AND REPRESENTATIONS OF ANY KIND ARE DISCLAIMED. ANYONE MAKING USE OF THIS INFORMATION AGREES THAT IT ASSUMES ALL LIABILITY ARISING FROM SUCH USE. NO PART OF THESE STANDARDS SHOULD BE REPRODUCED OR DISTRIBUTED IN ANY FORM OR BY ANY MEANS WITHOUT THE PRIOR WRITTEN PERMISSION OF SCRRA. ALL RIGHTS RESERVED.

METROLINK®

SOUTHERN CALIFORNIA REGIONAL RAIL AUTHORITY
ONE GATEWAY PLAZA, 12TH FLOOR, L. A., CA. 90012

ENGINEERING STANDARDS

LAYOUT
NO. 10, 136 LB. DOUBLE SLIP CROSSING
WITH MOVEABLE POINT FROG

STANDARD 2902
SCALE: 1/2" = 1'-0"
REVISION –
SHEET 2 OF 20
CADD FILE: ES2902-02

NOTES:

1. ALL MEASUREMENTS GIVEN AT 5/8" BELOW TOP OF RAIL AND TO 1/2" POINT OF END OF FROG.
2. ALL RAILS TO BE FULLY HEAT TREATED - BRINELL 341-388.
3. JOINT GAPS: 1/8" STANDARD: 3/8" INSULATED.
4. JOINT DRILLING: ALL FIELD WELDED RAILS: 9 1/2" - 6" @ 3 3/32" A.B., 1 1/8" DIA. HOLES.
5. ALL INSULATED JOINT RAILS: 3 1/2" - 6" - 6" @ 3 3/32" A.B., 1 1/4" DIA. HOLES.
6. PROPER LOCATION OF EDGE OF PLATES TO BE MARKED WITH WHITE PAINT ON OUTER FLANGE OF RAIL.
7. MATCH MARK ALL RAIL ENDS AS SHOWN.
8. ENTIRE CROSSOVER TO BE FULLY FLOOR ASSEMBLED INCLUDING END FROGS AND HF GUARD RAILS.

SPECIFICATIONS:

1. CROSSING TYPE - #10 DOUBLE SLIP, GENERALLY PER A.R.E.M.A. PLAN NO. 814. RAIL: 136RE HEAT TREATED.
2. FROG - #10 RAIL BOUND MANGANESE FROG, 136RE, 22'-6" LONG WITH PANDROL PLATES - MANGANESE CASTING TO BE EXPLOSIVE HARDENED.
3. SWITCH POINTS - 22'-8 1/2" & 34'-7 3/4" LONG, CURVED AND STRAIGHT, SAMSON PLANING A.R.E.M.A. DETAIL 5100. CURVED POINTS TO BE EQUIPED WITH REPLACEABLE MANGANESE INSERTS.
4. CLIPS AND RODS - VERTICAL RODS WITH "SMJ" CLIPS.
5. ADJUSTABLE BRACES - BOLTLESS WITH SPRING CLIPS.
6. GUARD RAILS - U-69 SECTION 16'-0" RAISED GUARD RAIL WITH BRACES AND PLATES.
7. GAGE PLATES - TO BE FURNISHED INSTALLED.

CROSSING DATA

BETWEEN THEO. PTS. OF END FROGS	94'-3 3/8"	ANGLE OF CROSSING	5°-43'-29"
BETWEEN THEO. PT. OF END FROG & CENTER FROG	47'-2 7/16"	DEGREE OF CURVATURE	4°-48'-09"
FROM INSIDE SW. PTS. TO THEO. PT. END FROG	12'-6 3/16"	GAGE LINE RADIUS	1193.4206'
FROM THEO. PT. OF CTR. FROG TO HEEL JT.	10'-4 1/8"	THROW AT END PT.	4"
LENGTH OF INSIDE SAMSON STOCK RAIL	23'-9 7/16" 23'-9 3/16"	GAGE ON STRAIGHT TRACK	4'-8 1/2"
LENGTH OF OUTSIDE SAMSON STOCK RAIL	28'-2 3/4"	GAGE ON CURVED TRACK	4'-8 9/16"
LENGTH OF FROG FROM THEO. PT. TO TOE	8'-1 1/2"	SWITCH ANGLE @ END POINTS	1°-11'-56"
LENGTH OF FROG FROM THEO. PT. TO HEEL	12'-3"	HEEL SPREAD OUTSIDE SW. PTS. 5 11/16" B.C. 8 9/32" A.C.	
LENGTH OF OUTSIDE SAM. END SW. PTS. (0" SAMSON)	22'-8 1/2"	HEEL SPREAD INSIDE SW. PTS. 6 1/32" B.C. 14 3/4" A.C.	
LENGTH OF INSIDE SAM. END SW. PTS. (0" SAMSON)	34'-7 3/4"		

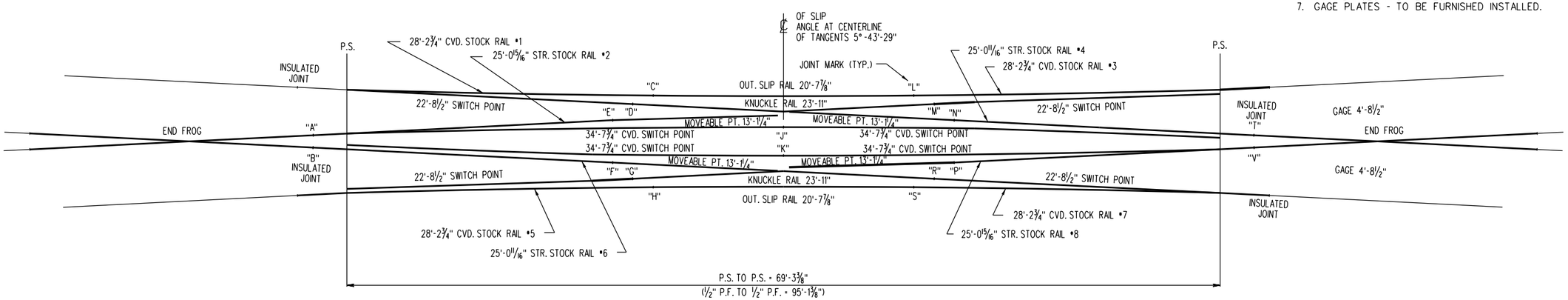

CROSSING DATA

REFERENCE DRAWING

136 lb. - NO. 10 - DOUBLE SLIP CROSSING ———————— SHEET No. 2902-02

FOR MAINTENANCE ONLY

REV.	DATE	DESCRIPTION	DES.	ENG.
X	XX-XX-XX	REVISION	XX	XX

DRAWN BY: A. CARLOS DATE: 03/31/2011

ASSISTANT DIRECTOR: STANDARDS & DESIGN

DIRECTOR OF ENGINEERING AND CONSTRUCTION

SCRRA ENGINEERING STANDARDS ARE INTENDED FOR SCRRA APPROVED USES ONLY. FOR NON-SCRRA APPROVED USES: SCRRA SHALL NOT BE RESPONSIBLE FOR THE ACCURACY OR COMPLETENESS OF THE DATA OR INFORMATION CONTAINED HEREIN. THE SELECTION AND USE OF THESE STANDARDS IS THE SOLE RESPONSIBILITY OF THE USER AND SHOULD NOT BE USED WITHOUT CONSULTING A REGISTERED PROFESSIONAL ENGINEER. ALL WARRANTIES AND REPRESENTATIONS OF ANY KIND ARE DISCLAIMED. ANYONE MAKING USE OF THIS INFORMATION AGREES THAT IT ASSUMES ALL LIABILITY ARISING FROM SUCH USE. NO PART OF THESE STANDARDS SHOULD BE REPRODUCED OR DISTRIBUTED IN ANY FORM OR BY ANY MEANS WITHOUT THE PRIOR WRITTEN PERMISSION OF SCRRA. ALL RIGHTS RESERVED.

METROLINK®
SOUTHERN CALIFORNIA REGIONAL RAIL AUTHORITY
ONE GATEWAY PLAZA, 12TH FLOOR, L. A., CA. 90012

ENGINEERING STANDARDS

CROSSING GEOMETRY AND CROSSING DATA
NO. 10, 136 LB. DOUBLE SLIP CROSSING

STANDARD 2902
SCALE: NONE
REVISION –
SHEET 3 OF 20
CADD FILE: ES2902-03

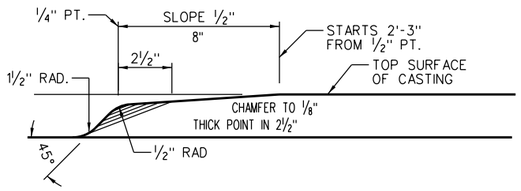

SLOPE ON MANGANESE @ SECTION "X" - "X"

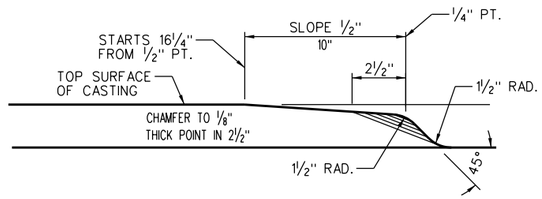

SLOPE ON MANGANESE @ SECTION "Y" - "Y"

SCALE: NONE

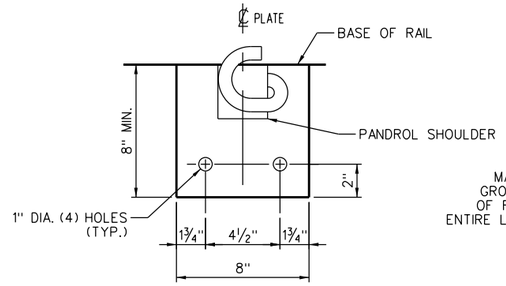

TYPICAL PLATE PUNCHING DETAIL

SCALE: NONE

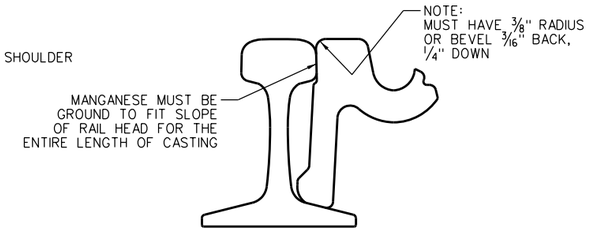

DETAIL OF FROG CASTING / RAIL FIT

SCALE: NONE

NOTES:

1. FROG ANGLE 5°-43'-29".
2. RAIL USED TO FABRICATE FROG IS TO BE 136 LB. HIGH STRENGTH.
3. RAIL BOUND MANGANESE STEEL FROG PER CURRENT A.R.E.M.A. PLAN NO. 621 & 625 WITH EXPLOSIVE HARDENED MANGANESE HIGH INTEGRITY CASTING PER CURRENT A.R.E.M.A. SPECIFICATIONS AND MODIFIED FOR ARM LENGTHS AND PLATES WITH "PANDROL" FASTENERS.
4. ALL FROG PLATES SHALL BE STAMPED IN 1/2" CHARACTERS TO INDICATE MFG., FROG NO., R.H., RAIL SECTION AND PLATE NUMBER. MARK TO BE STAMPED ON SAME END OF ALL FROG PLATES.
5. FOR DETAILS OF FROG PLATES FP-1 THRU FP-15, SEE SHEET ES2902-16.
6. WORKMANSHIP AND MATERIALS SHALL BE PER CURRENT A.R.E.M.A. SPECIFICATIONS FOR "SPECIAL TRACKWORK", EXCEPT AS OTHERWISE SPECIFIED.
7. ANY CONSTRUCTION DETAILS NOT SHOWN SHALL BE IN ACCORDANCE WITH CURRENT A.R.E.M.A. RECOMMENDED PRACTICE.
8. FROG PLATES ARE DESIGNED TO BE INSTALLED PERPENDICULAR TO MAIN TRACK.
9. BODY BOLTS 1 3/8" DIAMETER, H.T.C.S. - PER A.R.E.M.A. SPECIFICATIONS.
10. TOE AND HEEL BLOCKS AND BOLTS PER A.R.E.M.A. SPECIFICATIONS.
11. PLATES TO BE MADE OF MILD ROLLED STEEL.
12. THE PLATES AS SHOWN ARE FOR A 136 LB., NO. 10, DOUBLE SLIP CROSSING, MACHINE OPERATED TURNOUT.
13. THE "PANDROL" TYPE WELD - ON PRESSED STEEL SHOULDER, MADE OF MILD STEEL, TO BE PURCHASED FROM "PANDROL INTERNATIONAL", OR APPROVED ALTERNATE MEETING "PANDROL'S" DESIGN SPECIFICATIONS. THE PRESSED STEEL SHOULDER MUST BE CAEFULLY WELDED TO ALL PLATES WITH A MINIMUM 2 PASS 3/8" • FILLET WELD ALONG THE BEVELED GROOVES OF THE SHOULDER. ANY WELD PROJECTING BEYOND THE VERTICAL FACE OF SHOULDER IN THE AREA OF THE BASE OF RAIL SEAT MUST BE MACHINED OUT TO PROVIDE A CLEAR RAIL SEAT DIMENSION AS CALLED FOR.
14. MANUFACTURER OF FROG PLATES SHALL USE COMPLETED FROG TO VERIFY LOCATION OF ADJUSTABLE CLAMPS ON FROG PLATES FP-1, FP-2 AND FP-3 TO INSURE PROPER FIT. FROG PLATES WILL BE WELDED TO THE GAGE PLATES IN THE FIELD WITH A 3 PASS 1/2" • FILLET WELD. PLATES WILL BE WELDED ONLY AFTER THE GAGE PLATES ARE SECURED IN THE PROPER LOCATION ON THE TIE WITH THE FROG IN PLACE AT PROPER ALIGNMENT.
15. GUARD RAIL PLATES ARE TO BE INSTALLED AND WELDED TO THE FROG GAGE PLATES IN THE FIELD WITH A 3 PASS 1/2" • FILLET WELD CONTINUOUS ON BOTH ENDS OF THE PLATE. PLATES ARE TO BE WELDED ONLY AFTER THE GAGE PLATE AND THE FROG IS SECURED IN THE PROPER LOCATION ON THE TIE WITH THE FROG IN PLACE AT PROPER ALIGNMENT.
16. IDENTIFICATION TAG WITH RAISED METAL CHARACTERS TO BE APPLIED WHICH WILL STATE WEIGHT OF RAIL, FROG NO., MANUFACTURER AND YEAR MANUFACTURED.

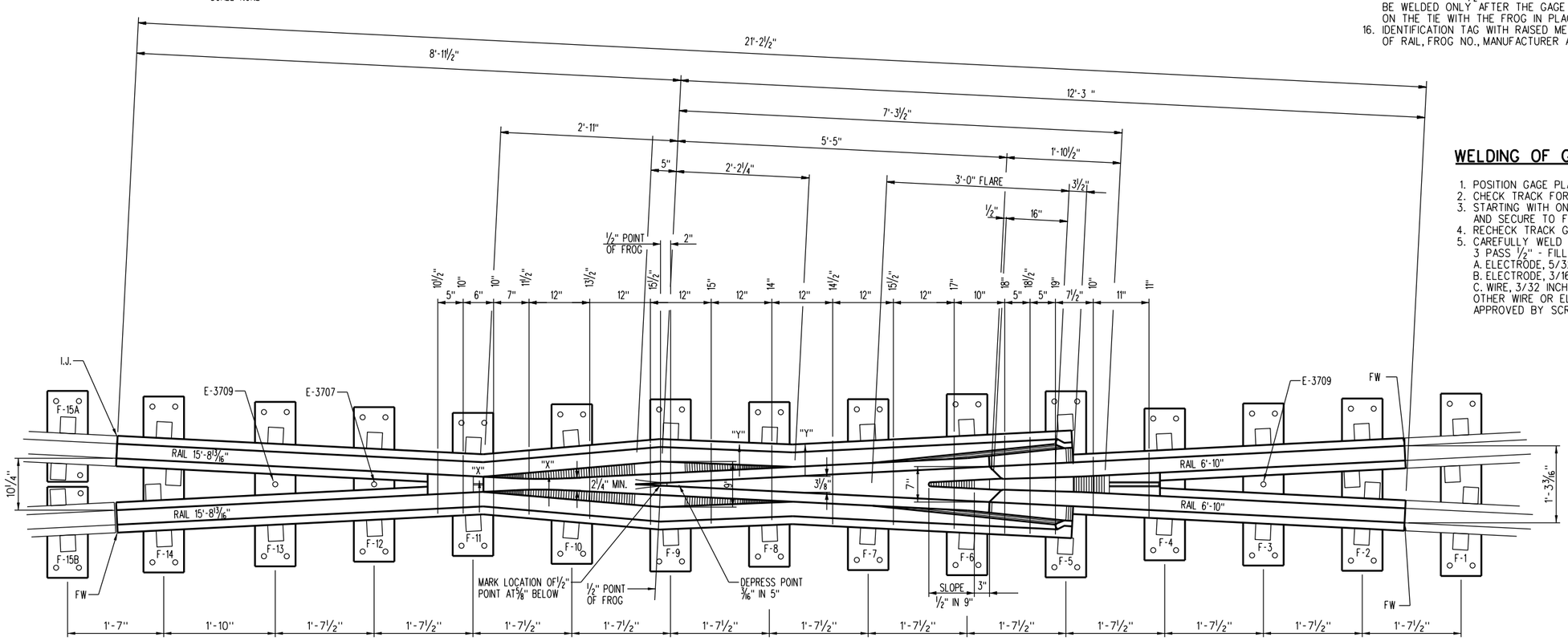

No. 10 RAILBOUND MANGANESE FROG
21'-2 1/2" LONG WITH PLATES

SCALE: 1" = 1'-0"

WELDING OF GAGE PLATE & GUARD RAIL:

1. POSITION GAGE PLATES AT DESIGNATED TIE LOCATIONS AND ANCHOR IN PLACE.
2. CHECK TRACK FOR CORRECT GAGE.
3. STARTING WITH ONE GAGE PLATE, PLACE FROG PLATES WITH ADJUSTABLE BRACES AND SECURE TO FROG AND GUARD RAIL WITH "PANDROL" CLIPS.
4. RECHECK TRACK GAGE AND CORRECT IF NECESSARY.
5. CAREFULLY WELD FROG PLATE AND GUARD RAIL PLATE TO FROG GAGE PLATES WITH 3 PASS 1/2" - FILLET WELD. FOR WELDING USE THE FOLLOWING:
   A. ELECTRODE, 5/32 INCH, WELDING SPEC. 7018XLM.
   B. ELECTRODE, 3/16 INCH, WELDING SPEC. 7018XLM.
   C. WIRE, 3/32 INCH, NR203, 1% NICKEL FLUX CORE.
   OTHER WIRE OR ELECTRODES MEETING SPECIFICATIONS AS CALLED FOR AND APPROVED BY SCRRA DIRECTOR OF ENGINEERING MAY BE USED.

FOR MAINTENANCE ONLY

REFERENCE DWGS.

LAYOUT - No.10 DOUBLE SLIP CROSSING - 136 lb. ---------- No. 2902-02

REV.	DATE	DESCRIPTION	DES.	ENG.
X	XX-XX-XX	REVISION	XX	XX

DRAWN BY: A. CARLOS DATE: 03/31/2011

ASSISTANT DIRECTOR: STANDARDS & DESIGN

DIRECTOR OF ENGINEERING AND CONSTRUCTION

SCRRA ENGINEERING STANDARDS ARE INTENDED FOR SCRRA APPROVED USES ONLY. FOR NON-SCRRA APPROVED USES:
SCRRA SHALL NOT BE RESPONSIBLE FOR THE ACCURACY OR COMPLETENESS OF THE DATA OR INFORMATION CONTAINED HEREIN. THE SELECTION AND USE OF THESE STANDARDS IS THE SOLE RESPONSIBILITY OF THE USER AND SHOULD NOT BE USED WITHOUT CONSULTING A REGISTERED PROFESSIONAL ENGINEER. ALL WARRANTIES AND REPRESENTATIONS OF ANY KIND ARE DISCLAIMED. ANYONE MAKING USE OF THIS INFORMATION AGREES THAT IT ASSUMES ALL LIABILITY ARISING FROM SUCH USE. NO PART OF THESE STANDARDS SHOULD BE REPRODUCED OR DISTRIBUTED IN ANY FORM OR BY ANY MEANS WITHOUT THE PRIOR WRITTEN PERMISSION OF SCRRA. ALL RIGHTS RESERVED.

METROLINK®
SOUTHERN CALIFORNIA REGIONAL RAIL AUTHORITY
ONE GATEWAY PLAZA, 12TH FLOOR, L. A., CA. 90012

ENGINEERING STANDARDS

NO. 10 RAILBOUND MANGANESE STEEL FROG WITH PANDROLIZED PLATES FOR A NO. 10, 136 LB. DOUBLE SLIP CROSSING

STANDARD 2902
SCALE: AS NOTED
REVISION –
SHEET 4 OF 20
CADD FILE: ES2902-04

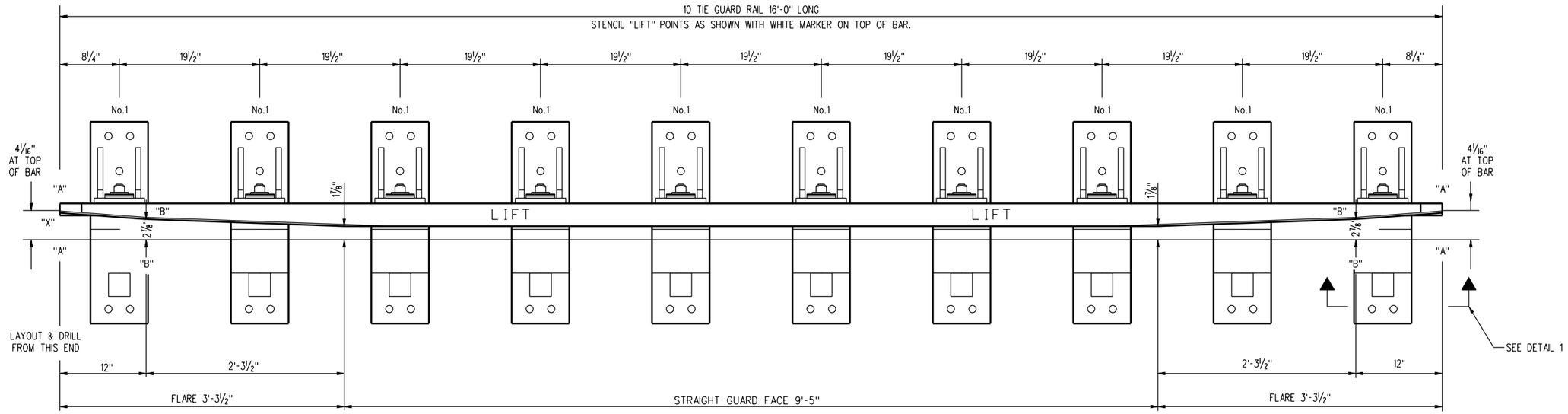

COLLECTIVE DRILLING FROM END OF GUARD BAR MARKED "X"

"X" 8¼"x 2'-3¾"x 3'-11¼"x 5'-6¾"x 7'-2¼"x 8'-9¾"x 10'-5¼"x 12'-0¾"x 13'-8¼"x 15'-3¾"

HOLES 1" DIA. - 1⅜" A.B.

ASSEMBLED 16'-0" GUARD RAIL

SCALE: 1½" = 1'-0"

FOR MAINTENANCE ONLY

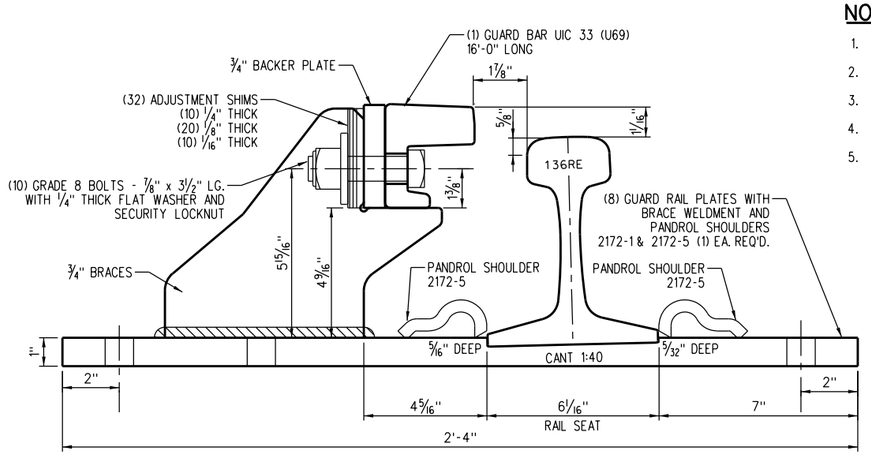

TYPICAL PLATE DETAIL

SCALE: NONE

NOTES:

1. GUARD RAIL SECTION U.I.C. 33: (U69) UIC 860.0 GRADE 90A (GUARD FACE BRINELL 319 MIN.)
2. BASE PLATE, BRACKET AND SHIMS MILD STEEL PER A.R.E.M.A. SPECIFICATION M7.
3. GUARD RAIL BOLT AND NUT PER A.R.E.M.A SPECIFICATION M11. EXCEPT BOLT TO GRADE 8 AND NUT TO BE SECURITY LOCKNUT.
4. WORKMANSHIP AND TOLERANCES PER A.R.E.M.A. SPECIFICATIONS FOR SPECIAL TRACKWORK.
5. WELDING PER ANSI•AWS D1.1-92 OR LATEST REVISION.

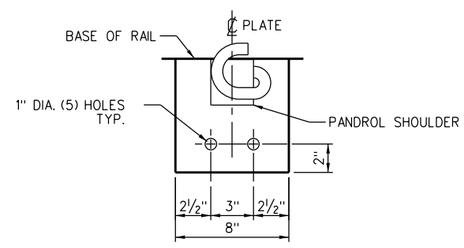

TYPICAL PLATE PUNCHING DETAIL

SCALE: NONE

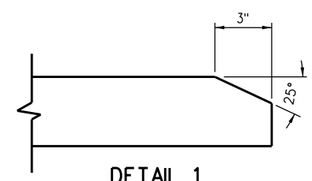

DETAIL 1

SCALE: NONE

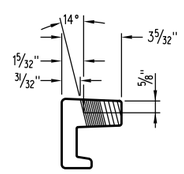

SECTION A - A

SCALE: NONE

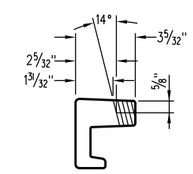

SECTION B - B

SCALE: NONE

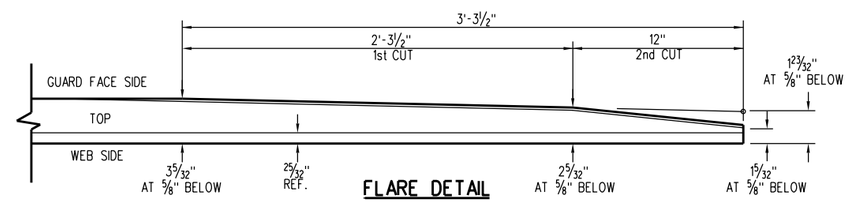

FLARE DETAIL

BREAK SHARP CORNERS OF ALL MACHINED SURFACES

SCALE: NONE

REV.	DATE	DESCRIPTION	DES.	ENG.
X	XX-XX-XX	REVISION	XX	XX

DRAWN BY: A. CARLOS DATE: 03/31/2011

ASSISTANT DIRECTOR: STANDARDS & DESIGN

DIRECTOR OF ENGINEERING AND CONSTRUCTION

SCRRA ENGINEERING STANDARDS ARE INTENDED FOR SCRRA APPROVED USES ONLY. FOR NON-SCRRA APPROVED USES:
SCRRA SHALL NOT BE RESPONSIBLE FOR THE ACCURACY OR COMPLETENESS OF THE DATA OR INFORMATION CONTAINED HEREIN. THE SELECTION AND USE OF THESE STANDARDS IS THE SOLE RESPONSIBILITY OF THE USER AND SHOULD NOT BE USED WITHOUT CONSULTING A REGISTERED PROFESSIONAL ENGINEER. ALL WARRANTIES AND REPRESENTATIONS OF ANY KIND ARE DISCLAIMED. ANYONE MAKING USE OF THIS INFORMATION AGREES THAT IT ASSUMES ALL LIABILITY ARISING FROM SUCH USE. NO PART OF THESE STANDARDS SHOULD BE REPRODUCED OR DISTRIBUTED IN ANY FORM OR BY ANY MEANS WITHOUT THE PRIOR WRITTEN PERMISSION OF SCRRA. ALL RIGHTS RESERVED.

METROLINK®
SOUTHERN CALIFORNIA REGIONAL RAIL AUTHORITY
ONE GATEWAY PLAZA, 12TH FLOOR, L. A., CA. 90012

ENGINEERING STANDARDS

GUARD RAIL DETAILS 16'-0" LONG FOR NO. 10, 136 LB. DOUBLE SLIP CROSSING

STANDARD 2902
SCALE: AS NOTED
REVISION –
SHEET 5 OF 20
CADD FILE: ES2902-05

NOTES:

1. D.I. HOLD DOWN CLIPS TO BE INTALLED IN THE FIELD.

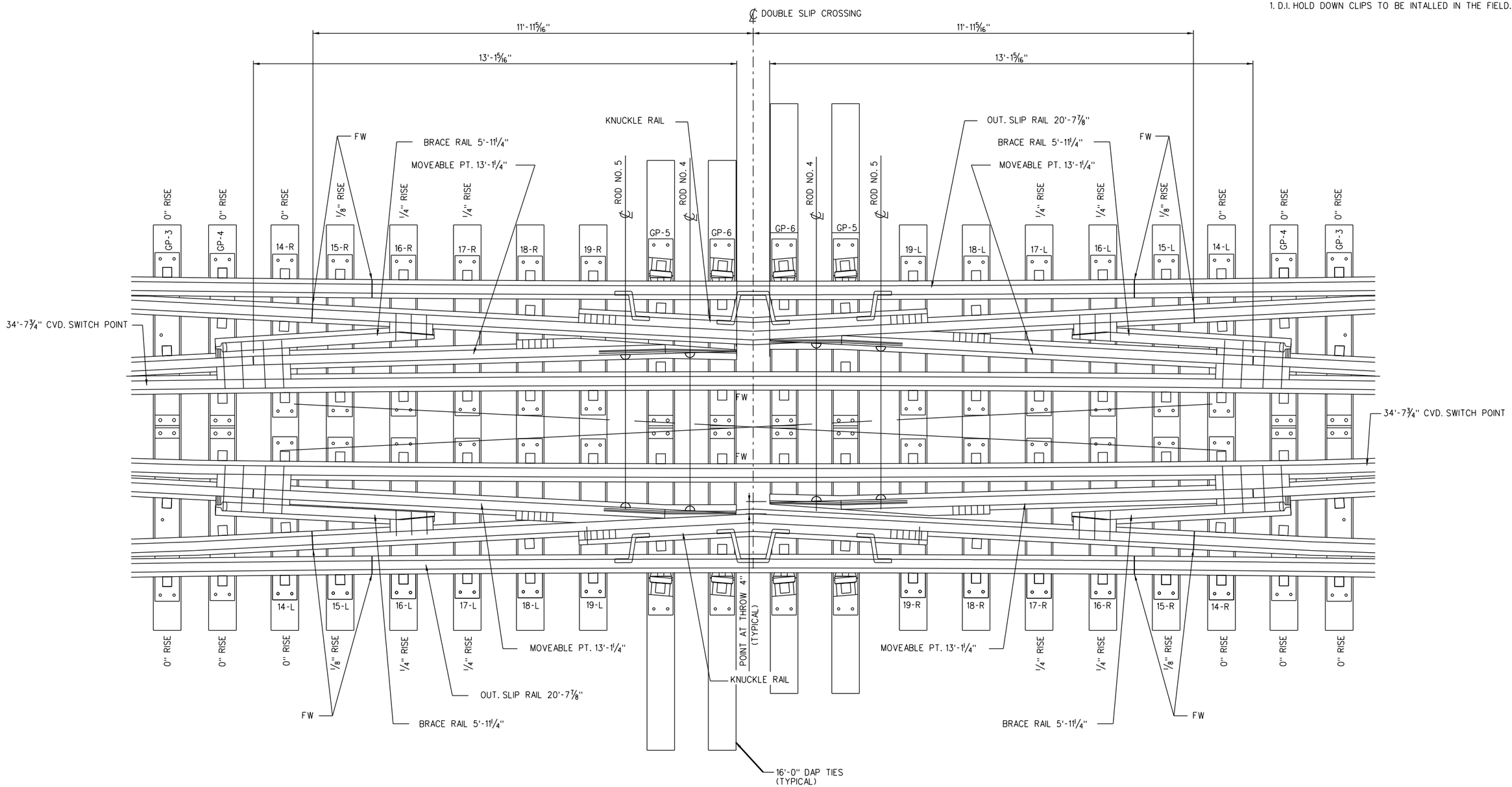

#10 DOUBLE SLIP CROSSING

FOR MAINTENANCE ONLY

REFERENCE DRAWING:

LAYOUT - NO. 10 DOUBLE SLIP CROSSING - 136 LB ——— ES2902-02

REV.	DATE	DESCRIPTION	DES.	ENG.
X	XX-XX-XX	REVISION	XX	XX

DRAWN BY: A. CARLOS DATE: 03/31/2011

ASSISTANT DIRECTOR: STANDARDS & DESIGN

DIRECTOR OF ENGINEERING AND CONSTRUCTION

SCRRA ENGINEERING STANDARDS ARE INTENDED FOR SCRRA APPROVED USES ONLY. FOR NON-SCRRA APPROVED USES:
SCRRA SHALL NOT BE RESPONSIBLE FOR THE ACCURACY OR COMPLETENESS OF THE DATA OR INFORMATION CONTAINED HEREIN. THE SELECTION AND USE OF THESE STANDARDS IS THE SOLE RESPONSIBILITY OF THE USER AND SHOULD NOT BE USED WITHOUT CONSULTING A REGISTERED PROFESSIONAL ENGINEER. ALL WARRANTIES AND REPRESENTATIONS OF ANY KIND ARE DISCLAIMED. ANYONE MAKING USE OF THIS INFORMATION AGREES THAT IT ASSUMES ALL LIABILITY ARISING FROM SUCH USE. NO PART OF THESE STANDARDS SHOULD BE REPRODUCED OR DISTRIBUTED IN ANY FORM OR BY ANY MEANS WITHOUT THE PRIOR WRITTEN PERMISSION OF SCRRA. ALL RIGHTS RESERVED.

METROLINK®
SOUTHERN CALIFORNIA REGIONAL RAIL AUTHORITY
ONE GATEWAY PLAZA, 12TH FLOOR, L. A., CA. 90012

ENGINEERING STANDARDS

CENTER SECTION LAYOUT
NO. 10, 136 LB. DOUBLE SLIP CROSSING

STANDARD 2902
SCALE: 3/4" = 1'-0"
REVISION –
SHEET 6 OF 20
CADD FILE: ES2902-06

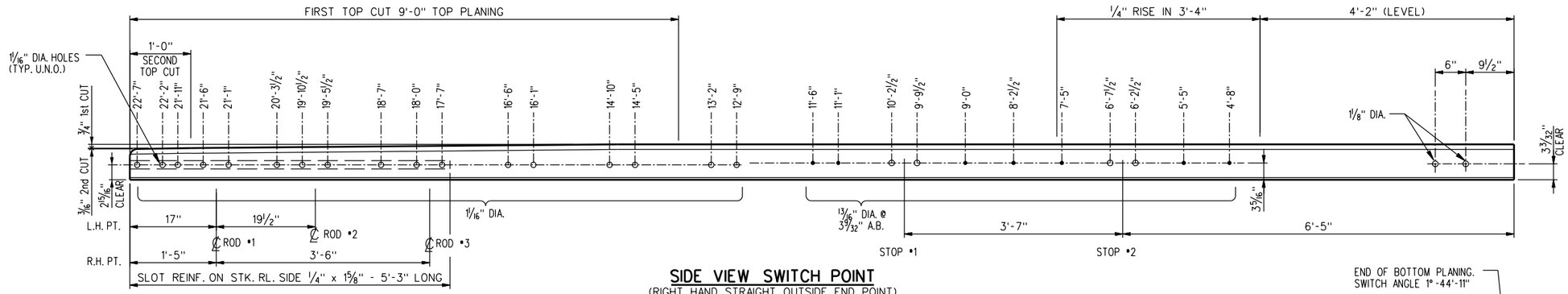

SIDE VIEW SWITCH POINT

(RIGHT HAND STRAIGHT OUTSIDE END POINT)
SCALE: 1" = 1'-0"

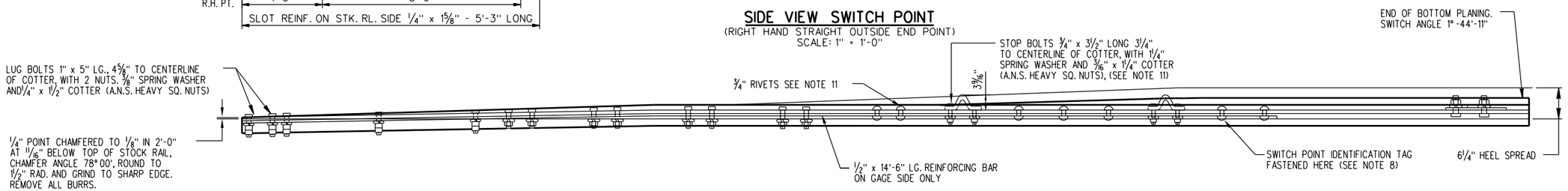

TOP VIEW SWITCH POINT

SCALE: 1" = 1'-0"

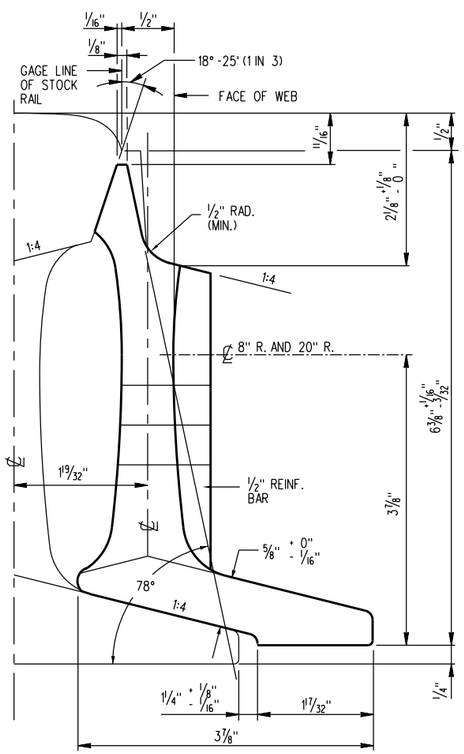

END VIEW OF POINT

SCALE: NONE

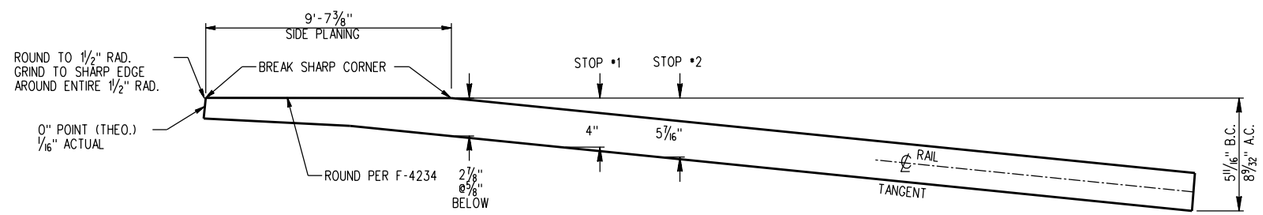

LEFT HAND STRAIGHT OUTSIDE END SWITCH POINT (RIGHT HAND OPPOSITE)

SCALE: NONE

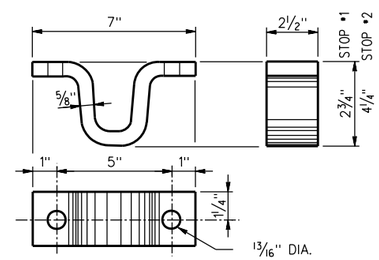

STOP

SCALE: NONE

NOTES:

1. SWITCH POINTS TO BE MADE FROM NEW HIGH STRENGTH RAIL.
2. METAL IDENTIFICATION TAG SHOWING HAND OF SWITCH POINT, WEIGHT OF RAIL, H.S., MANUFACTURER AND WHEN MADE, TO BE FASTENED TO SWITCH POINT AT LOCATION SHOWN.
3. LEFT HAND TURNOUT SHOWN. MAKE OPPOSITE HAND FOR RIGHT HAND SWITCH POINT.
4. SIDE PLANING FIGURED ON GAGE LINE 5/8" BELOW TO OF RAIL.
5. MATERIAL AND WORKMANSHIP, ALSO ANY CONSTRUCTION DETAILS NOT SHOWN, SHALL BE PER CURRENT A.R.E.M.A. "TRACKWORK PLANS AND SPECIFICATIONS", UNLESS OTHERWISE SPECIFIED ON THIS PLAN.
6. IN ORDER TO ELIMINATE STRESS RAISERS, MANUFACTURER SHALL PEEN THE EDGES OF THE BOLT HOLES AS INDICATED AT THE HEEL OF THE SWITCH POINT AND AT HEEL END OF THE SWITCH POINT RAIL. USING AIR HAMMER WITH SUITABLE HEAD AND FINISHING WITH DRIFT PIN. BRAND ON RAIL AT EDGE OF BOLT HOLE TO BE CAREFULLY REMOVED BY GRINDING BEFORE PEENING.
7. THE CONTOUR PLANING SHALL BE ON THE GAGE SIDE BEGINNING AT A DISTANCE OF 36" FROM THE POINT OF SWITCH AND SHALL BE SHAPED TO THE CONTOUR OF A NEW 136 LB. RAIL AND SHALL RUN OUT AT THE END OF THE TOP PLANING, WHERE THE SWITCH POINT HAS FULL HEAD CONTOUR.
8. METAL IDENTIFICATION TAG SHOWING (1) DESIGN LENGTH OF SWITCH, (2) IN PARENTHESIS, THE ACTUAL LENGTH OF SWITCH POINT RAIL AND (3) TEH TURNOUT NUMBER. MARK TAG THUS: 22'-8 1/2" NO. 10. TAG TO BE FASTENED TO SWITCH POINT, ON GAGE SIDE OF RAIL AT HEEL SPACER BLOCK IN LOCATION SHOWN.
9. AT HEEL END OF SWITCH POINT RAIL, BREAK SHARP CORNER AROUND THE ENTIRE PERIPHERY BY SLIGHTLY GRINDING. ALSO, "DO NOT" END HARDEN RAIL END.
10. NON - INTERLOCKED AND INTERLOCKED SWITCH POINTS ARE MADE THE SAME.
11. UNLESS SWITCH POINT ORDER SPECIFICALLY CALLS FOR USE OF 3/4" RIVETS AND 3/4" STOP BOLTS, MANUFACTURER CAN SUBSTITUTE 3/4" HACK FASTENERS, BOLT PART NO.C-50-LR-BR2416 AND COLLAR PART NO. L3-2-R-24G FOR 3/4" RIVETS. AND FOR 3/4" STOP BOLTS USE HUCK FASTENERS, BOLT PART NO. C-50-LR-BR2424 AND COLLAR PART NO. L3-2-R-24G.

FOR MAINTENANCE ONLY

REV.	DATE	DESCRIPTION	DES.	ENG.
X	XX-XX-XX	REVISION	XX	XX

DRAWN BY: A. CARLOS DATE: 03/31/2011

ASSISTANT DIRECTOR: STANDARDS & DESIGN

DIRECTOR OF ENGINEERING AND CONSTRUCTION

SCRRA ENGINEERING STANDARDS ARE INTENDED FOR SCRRA APPROVED USES ONLY. FOR NON-SCRRA APPROVED USES:
SCRRA SHALL NOT BE RESPONSIBLE FOR THE ACCURACY OR COMPLETENESS OF THE DATA OR INFORMATION CONTAINED HEREIN. THE SELECTION AND USE OF THESE STANDARDS IS THE SOLE RESPONSIBILITY OF THE USER AND SHOULD NOT BE USED WITHOUT CONSULTING A REGISTERED PROFESSIONAL ENGINEER. ALL WARRANTIES AND REPRESENTATIONS OF ANY KIND ARE DISCLAIMED. ANYONE MAKING USE OF THIS INFORMATION AGREES THAT IT ASSUMES ALL LIABILITY ARISING FROM SUCH USE. NO PART OF THESE STANDARDS SHOULD BE REPRODUCED OR DISTRIBUTED IN ANY FORM OR BY ANY MEANS WITHOUT THE PRIOR WRITTEN PERMISSION OF SCRRA. ALL RIGHTS RESERVED.

METROLINK®
SOUTHERN CALIFORNIA REGIONAL RAIL AUTHORITY
ONE GATEWAY PLAZA, 12TH FLOOR, L. A., CA. 90012

ENGINEERING STANDARDS

136 LB. 22'-8 1/2" STRAIGHT SWITCH POINT FOR NO. 10, 136 LB. DOUBLE SLIP CROSSING

STANDARD 2902
SCALE: AS NOTED
REVISION –
SHEET 7 OF 20
CADD FILE: ES2902-07

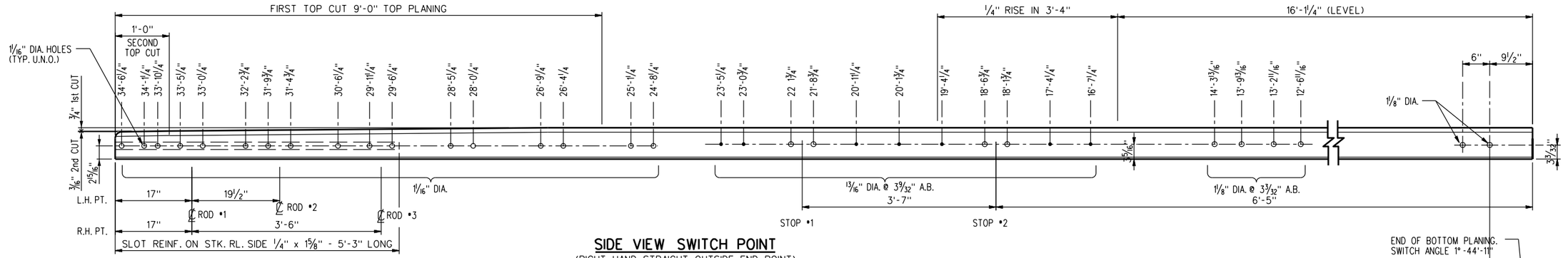

SIDE VIEW SWITCH POINT

(RIGHT HAND STRAIGHT OUTSIDE END POINT)
SCALE: 1" = 1'-0"

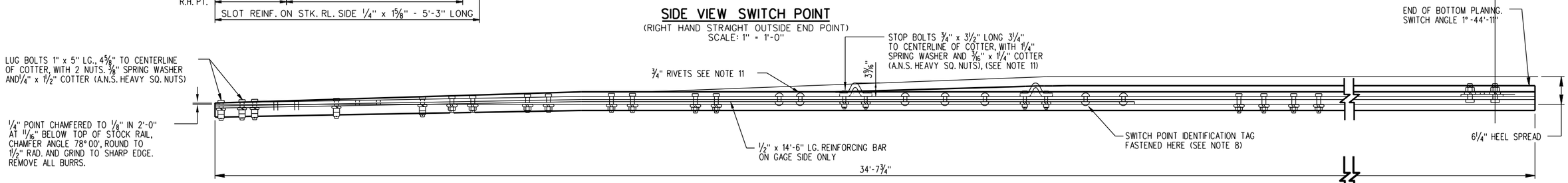

TOP VIEW SWITCH POINT

SCALE: 1" = 1'-0"

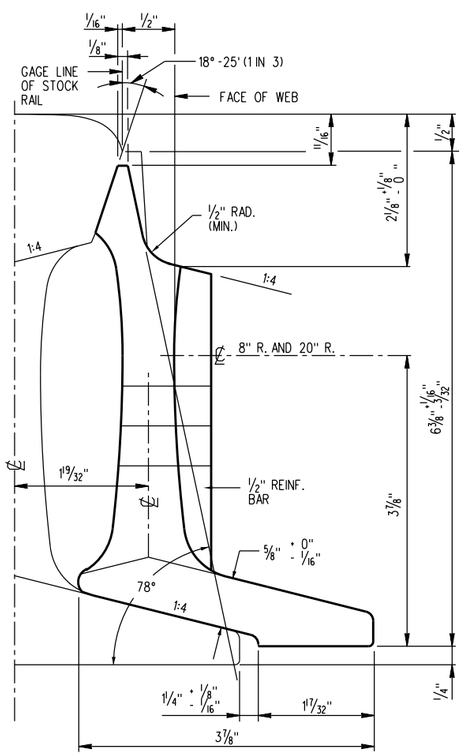

END VIEW OF POINT

SCALE: NONE

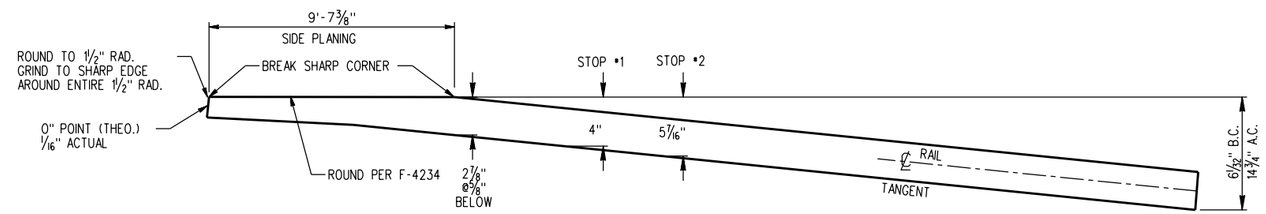

LEFT HAND CURVED INSIDE END SWITCH POINT (RIGHT HAND OPPOSITE)

SCALE: NONE

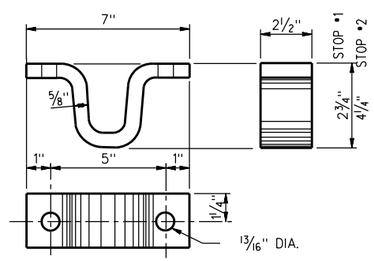

STOP

SCALE: NONE

NOTES:

1. SWITCH POINTS TO BE MADE FROM NEW HIGH STRENGTH RAIL.
2. METAL IDENTIFICATION TAG SHOWING HAND OF SWITCH POINT, WEIGHT OF RAIL, H.S., MANUFACTURER AND WHEN MADE, TO BE FASTENED TO SWITCH POINT AT LOCATION SHOWN.
3. LEFT HAND TURNOUT SHOWN. MAKE OPPOSITE HAND FOR RIGHT HAND SWITCH POINT.
4. SIDE PLANING FIGURED ON GAGE LINE 5/8" BELOW TO OF RAIL.
5. MATERIAL AND WORKMANSHIP, ALSO ANY CONSTRUCTION DETAILS NOT SHOWN, SHALL BE PER CURRENT A.R.E.M.A. "TRACKWORK PLANS AND SPECIFICATIONS", UNLESS OTHERWISE SPECIFIED ON THIS PLAN.
6. IN ORDER TO ELIMINATE STRESS RAISERS, MANUFACTURER SHALL PEEN THE EDGES OF THE BOLT HOLES AS INDICATED AT THE HEEL OF THE SWITCH POINT AND AT HEEL END OF THE SWITCH POINT RAIL. USING AIR HAMMER WITH SUITABLE HEAD AND FINISHING WITH DRIFT PIN. BRAND ON RAIL AT EDGE OF BOLT HOLE TO BE CAREFULLY REMOVED BY GRINDING BEFORE PEENING.
7. THE CONTOUR PLANING SHALL BE ON THE GAGE SIDE BEGINNING AT A DISTANCE OF 36" FROM THE POINT OF SWITCH AND SHALL BE SHAPED TO THE CONTOUR OF A NEW 136 LB. RAIL AND SHALL RUN OUT AT THE END OF THE TOP PLANING, WHERE THE SWITCH POINT HAS FULL HEAD CONTOUR.
8. METAL IDENTIFICATION TAG SHOWING (1) DESIGN LENGTH OF SWITCH, (2) IN PARENTHESIS, THE ACTUAL LENGTH OF SWITCH POINT RAIL AND (3) TEH TURNOUT NUMBER. MARK TAG THUS: 22'-8 1/2" NO. 10. TAG TO BE FASTENED TO SWITCH POINT, ON GAGE SIDE OF RAIL AT HEEL SPACER BLOCK IN LOCATION SHOWN.
9. AT HEEL END OF SWITCH POINT RAIL, BREAK SHARP CORNER AROUND THE ENTIRE PERIPHERY BY SLIGHTLY GRINDING. ALSO, "DO NOT" END HARDEN RAIL END.
10. NON - INTERLOCKED AND INTERLOCKED SWITCH POINTS ARE MADE THE SAME.
11. UNLESS SWITCH POINT ORDER SPECIFICALLY CALLS FOR USE OF 3/4" RIVETS AND 3/4" STOP BOLTS, MANUFACTURER CAN SUBSTITUTE 3/4" HACK FASTENERS, BOLT PART NO.C-50-LR-BR2416 AND COLLAR PART NO. L3-2-R-24G FOR 3/4" RIVETS. AND FOR 3/4" STOP BOLTS USE HUCK FASTENERS, BOLT PART NO. C-50-LR-BR2424 AND COLLAR PART NO. L3-2-R-24G.
12. SWITCH POINT MANUFACTURER MUST SUPPLY SHOP DRAWINGS OF MANGANESE STEEL INSERT FOR APPROVAL BY S.C.R.R.A. DIRECTOR OF ENGINEERING PRIOR TO MANUFACTURING OF INSERT.

FOR MAINTENANCE ONLY

REV.	DATE	DESCRIPTION	DES.	ENG.
X	XX-XX-XX	REVISION	XX	XX

DRAWN BY: A. CARLOS DATE: 03/31/2011

ASSISTANT DIRECTOR: STANDARDS & DESIGN

DIRECTOR OF ENGINEERING AND CONSTRUCTION

SCRRA ENGINEERING STANDARDS ARE INTENDED FOR SCRRA APPROVED USES ONLY. FOR NON-SCRRA APPROVED USES: SCRRA SHALL NOT BE RESPONSIBLE FOR THE ACCURACY OR COMPLETENESS OF THE DATA OR INFORMATION CONTAINED HEREIN. THE SELECTION AND USE OF THESE STANDARDS IS THE SOLE RESPONSIBILITY OF THE USER AND SHOULD NOT BE USED WITHOUT CONSULTING A REGISTERED PROFESSIONAL ENGINEER. ALL WARRANTIES AND REPRESENTATIONS OF ANY KIND ARE DISCLAIMED. ANYONE MAKING USE OF THIS INFORMATION AGREES THAT IT ASSUMES ALL LIABILITY ARISING FROM SUCH USE. NO PART OF THESE STANDARDS SHOULD BE REPRODUCED OR DISTRIBUTED IN ANY FORM OR BY ANY MEANS WITHOUT THE PRIOR WRITTEN PERMISSION OF SCRRA. ALL RIGHTS RESERVED.

METROLINK®
SOUTHERN CALIFORNIA REGIONAL RAIL AUTHORITY
ONE GATEWAY PLAZA, 12TH FLOOR, L. A., CA. 90012

ENGINEERING STANDARDS

136 LB. 34'-7 3/4" CURVED SWITCH POINT
NO. 10, 136 LB. DOUBLE SLIP CROSSING

STANDARD 2902
SCALE: AS NOTED
REVISION –
SHEET 8 OF 20
CADD FILE: ES2902-08

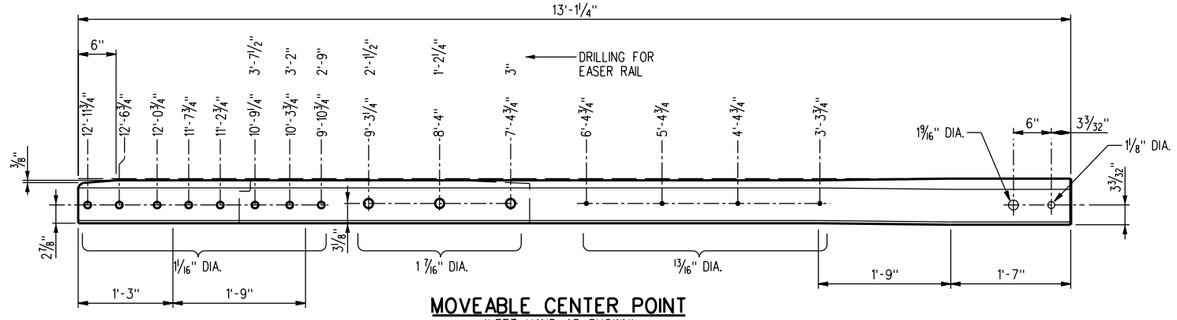

MOVEABLE CENTER POINT

(LEFT HAND AS SHOWN)
SCALE: 1" = 1'-0"

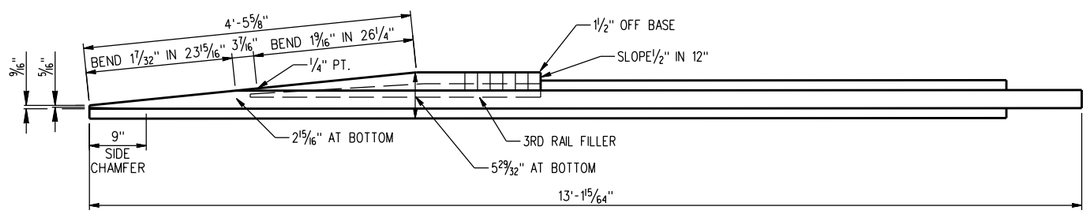

TOP VIEW MOVEABLE CENTER POINT

SCALE: 1" = 1'-0"

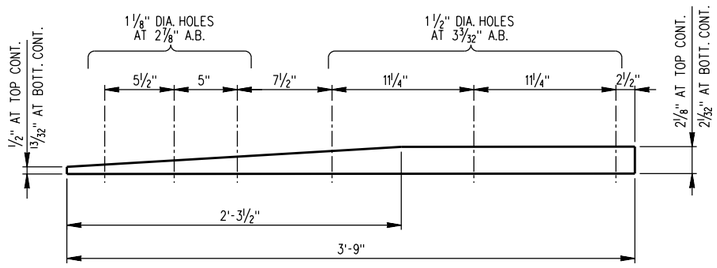

3RD RAIL FILLER - (1) PER MOVEABLE POINT (MATERIAL - 2¼" x 5" - MACHINE AS SHOWN)

SCALE: 2" = 1'-0"

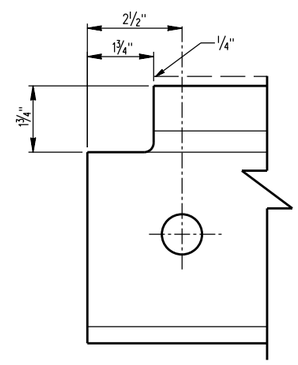

VIEW AT EASER RAIL POINT END

SCALE: 6" = 1'-0"

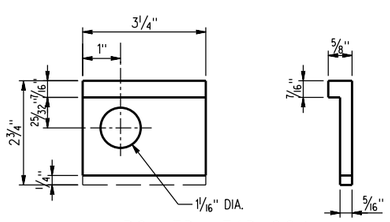

ROLLED HEADLOCK FOR 1, 2 AND 3

SCALE: 6" = 1'-0"

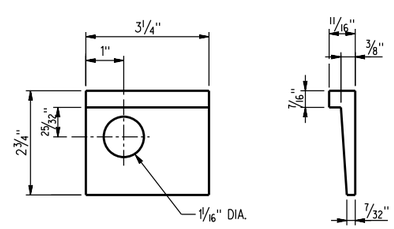

ROLLED HEADLOCK FOR 4

SCALE: 6" = 1'-0"

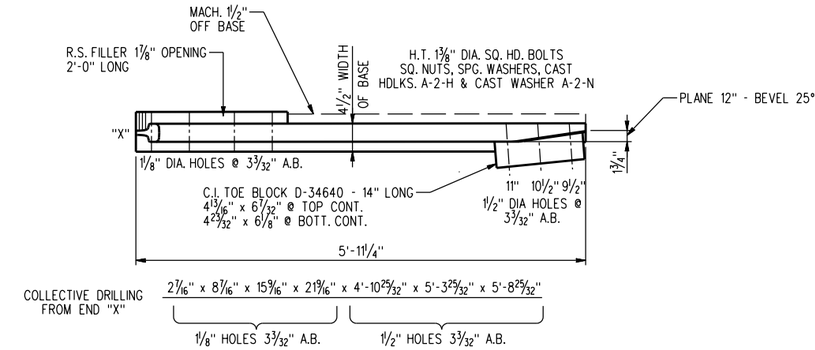

RIGHT HAND BRACE RAIL 5'-11¼" (STRAIGHT) (TWO REQUIRED)

SCALE: 1" = 1'-0"

FOR MAINTENANCE ONLY

NOTE:
FIRST CUT TO BE PARALLEL TO SIDE OF HEAD, THEN CHAMFER AT 78°.

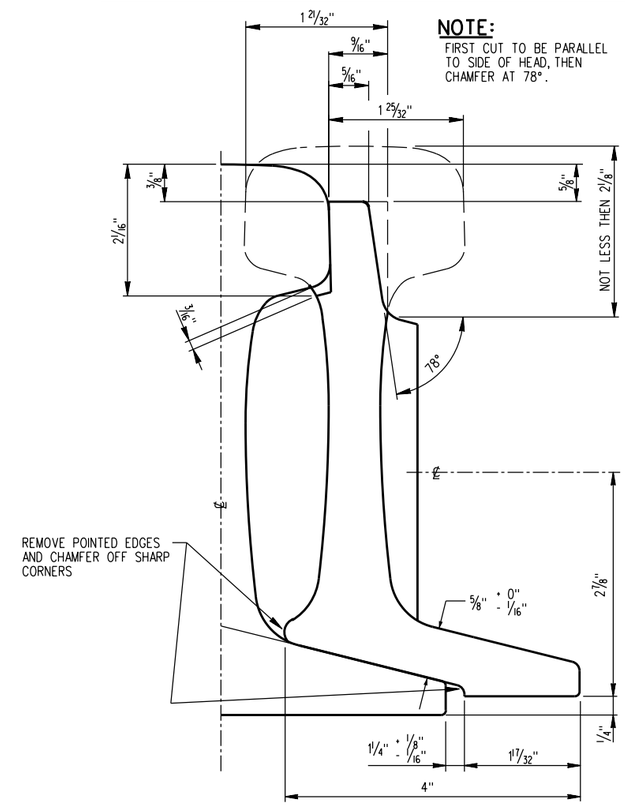

END VIEW OF POINT

SCALE: NONE

REV.	DATE	DESCRIPTION	DES.	ENG.
X	XX-XX-XX	REVISION	XX	XX

DRAWN BY: A. CARLOS DATE: 03/31/2011

ASSISTANT DIRECTOR: STANDARDS & DESIGN

DIRECTOR OF ENGINEERING AND CONSTRUCTION

SCRRA ENGINEERING STANDARDS ARE INTENDED FOR SCRRA APPROVED USES ONLY. FOR NON-SCRRA APPROVED USES:
SCRRA SHALL NOT BE RESPONSIBLE FOR THE ACCURACY OR COMPLETENESS OF THE DATA OR INFORMATION CONTAINED HEREIN. THE SELECTION AND USE OF THESE STANDARDS IS THE SOLE RESPONSIBILITY OF THE USER AND SHOULD NOT BE USED WITHOUT CONSULTING A REGISTERED PROFESSIONAL ENGINEER. ALL WARRANTIES AND REPRESENTATIONS OF ANY KIND ARE DISCLAIMED. ANYONE MAKING USE OF THIS INFORMATION AGREES THAT IT ASSUMES ALL LIABILITY ARISING FROM SUCH USE. NO PART OF THESE STANDARDS SHOULD BE REPRODUCED OR DISTRIBUTED IN ANY FORM OR BY ANY MEANS WITHOUT THE PRIOR WRITTEN PERMISSION OF SCRRA. ALL RIGHTS RESERVED.

METROLINK®
SOUTHERN CALIFORNIA REGIONAL RAIL AUTHORITY
ONE GATEWAY PLAZA, 12TH FLOOR, L. A., CA. 90012

ENGINEERING STANDARDS

136 LB. MOVEABLE CENTER POINT,
3RD RAIL FILLER AND BRACE RAIL DETAILS
NO. 10, 136 LB. DOUBLE SLIP CROSSING

STANDARD 2902
SCALE: AS NOTED
REVISION –
SHEET 9 OF 20
CADD FILE: ES2902-09

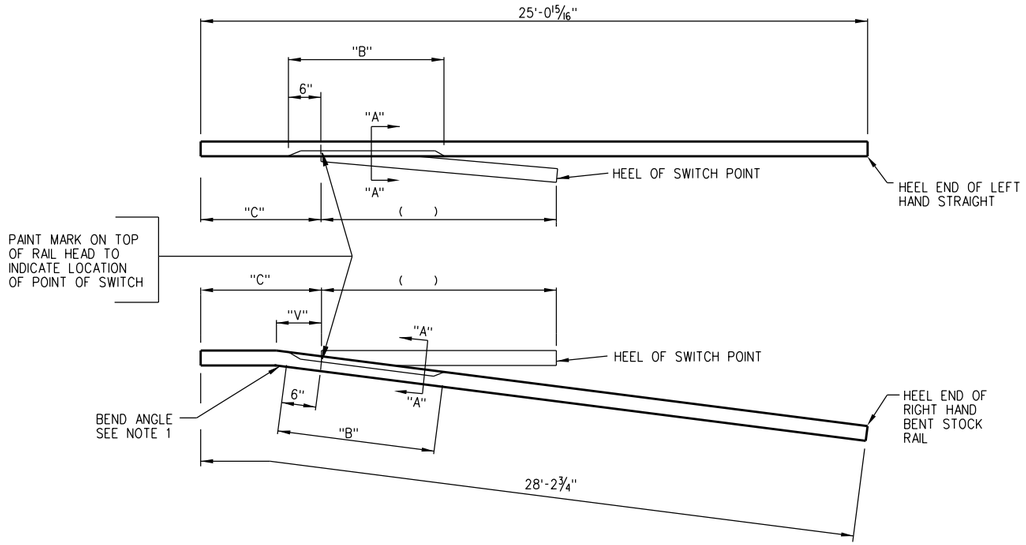

STOCK RAILS SHOWN ARE FOR "RIGHT HAND TURNOUT"

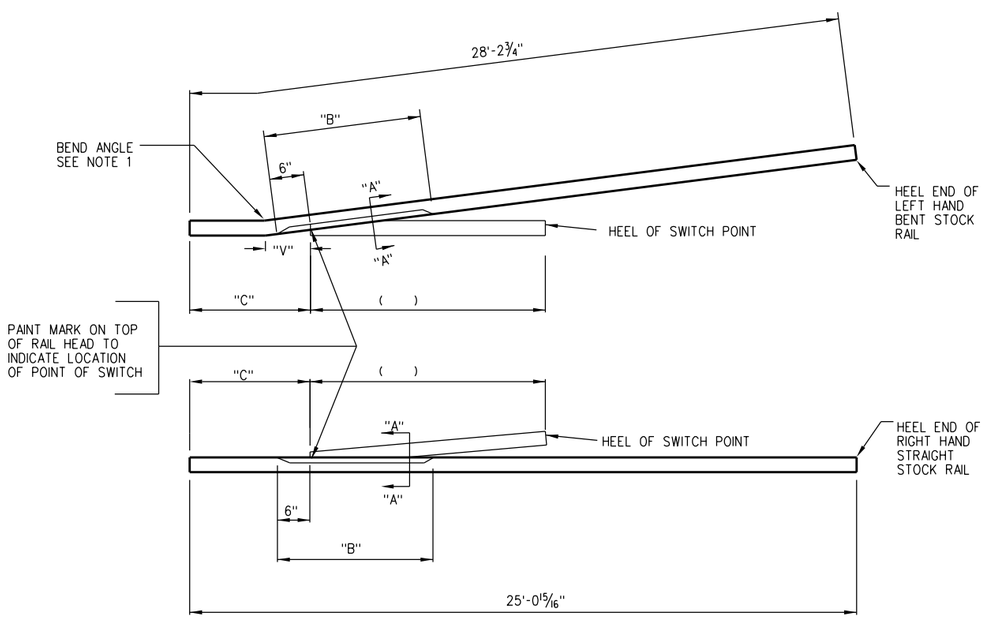

STOCK RAILS SHOWN ARE FOR "LEFT HAND TURNOUT"

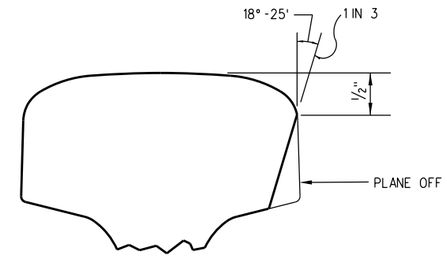

SECTION "A-A"

LENGTHS B, C, & D FOR 136 LB. RAIL						
Sw. Pt. LENGTH	T.O. No.	STOCK RAIL	B	FOR FIRST (NEW) INSTALL.		
				C	D	END DRILL. SEE NO. 10
22'-8 1/2"	10	STR.	11'-0"	3'-11"	25'-0 15/16"	NONE
22'-8 1/2"	10	BENT	11'-0"	3'-11"	28'-2 3/4"	HEEL END ONLY

NOTE:

1. Bend angle in bent stock rail to be as follows:

Sw. Length	BEND ANGLE	V (Vertex Dist.)
22'-8 1/2"	1° -44'-11" or 1" in 2'-9"	10 5/16"

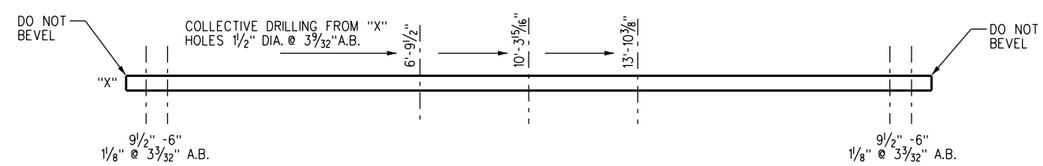

OUTSIDE SLIP RAIL - 20'-7 7/8" LONG

SCALE: NONE (TWO REQUIRED)

FOR MAINTENANCE ONLY

X	XX-XX-XX	REVISION	XX	XX
REV.	DATE	DESCRIPTION	DES.	ENG.

DRAWN BY: A. CARLOS DATE: 03/31/2011

ASSISTANT DIRECTOR: STANDARDS & DESIGN

DIRECTOR OF ENGINEERING AND CONSTRUCTION

SCRRA ENGINEERING STANDARDS ARE INTENDED FOR SCRRA APPROVED USES ONLY. FOR NON-SCRRA APPROVED USES:
SCRRA SHALL NOT BE RESPONSIBLE FOR THE ACCURACY OR COMPLETENESS OF THE DATA OR INFORMATION CONTAINED HEREIN. THE SELECTION AND USE OF THESE STANDARDS IS THE SOLE RESPONSIBILITY OF THE USER AND SHOULD NOT BE USED WITHOUT CONSULTING A REGISTERED PROFESSIONAL ENGINEER. ALL WARRANTIES AND REPRESENTATIONS OF ANY KIND ARE DISCLAIMED. ANYONE MAKING USE OF THIS INFORMATION AGREES THAT IT ASSUMES ALL LIABILITY ARISING FROM SUCH USE. NO PART OF THESE STANDARDS SHOULD BE REPRODUCED OR DISTRIBUTED IN ANY FORM OR BY ANY MEANS WITHOUT THE PRIOR WRITTEN PERMISSION OF SCRRA. ALL RIGHTS RESERVED.

METROLINK®

SOUTHERN CALIFORNIA REGIONAL RAIL AUTHORITY
ONE GATEWAY PLAZA, 12TH FLOOR, L. A., CA. 90012

ENGINEERING STANDARDS

UNDERCUT STOCK RAILS FOR 22'-8 1/2" SWITCH POINTS FOR NO. 10, 136 LB. DOUBLE SLIP CROSSING

STANDARD 2902
SCALE: AS NOTED
REVISION –
SHEET 10 OF 20
CADD FILE: ES2902-10

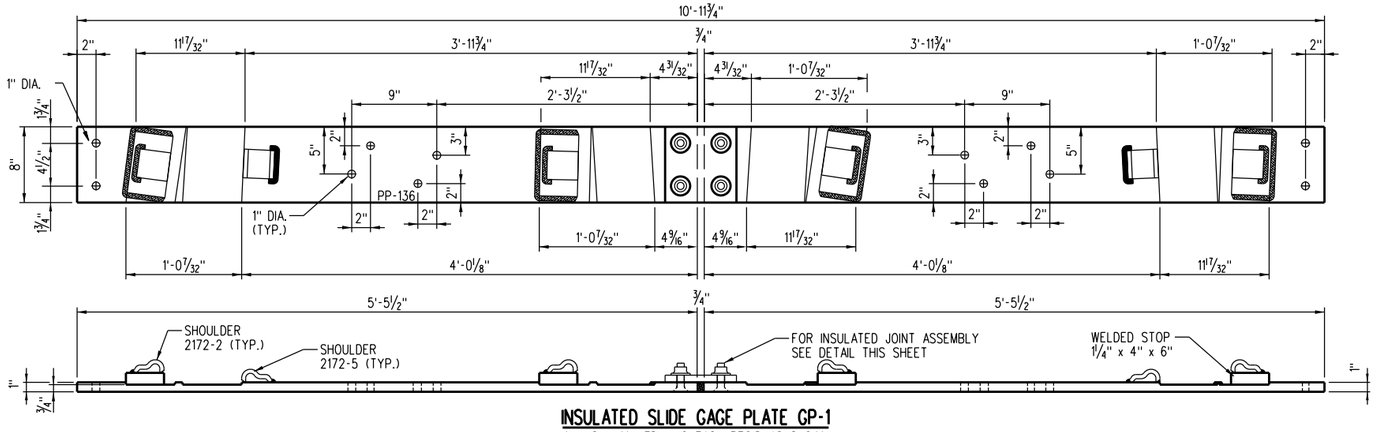

INSULATED SLIDE GAGE PLATE GP-1

1" x 8" - MILLED - (2 EACH REQ'D AS SHOWN)

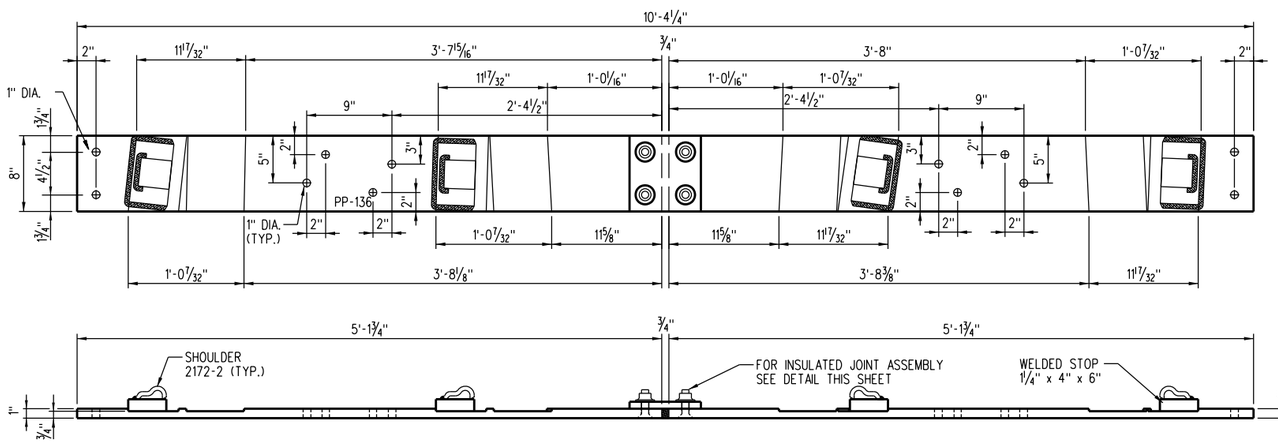

INSULATED SLIDE GAGE PLATE GP-2

1" x 8" - MILLED - (2 EACH REQ'D AS SHOWN)

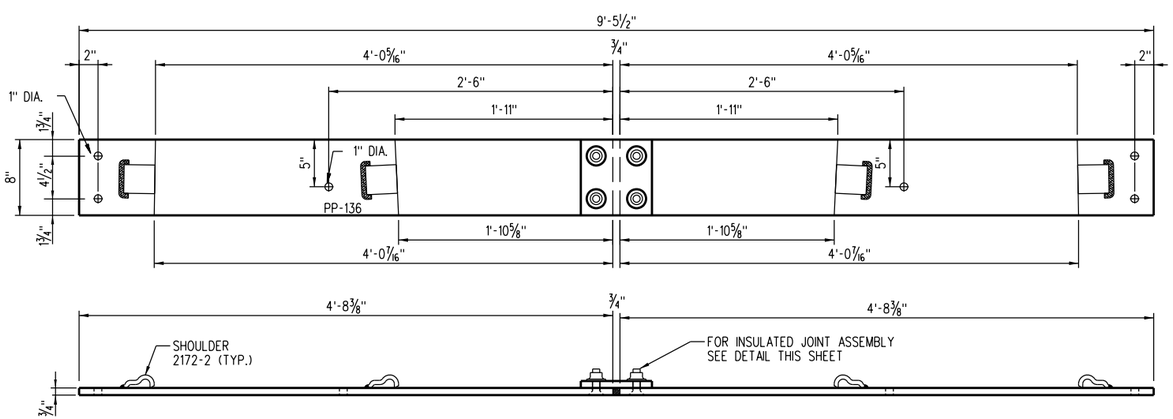

INSULATED SLIDE GAGE PLATE GP-3

¾" x 8" - FLAT - (2 EACH REQ'D AS SHOWN)

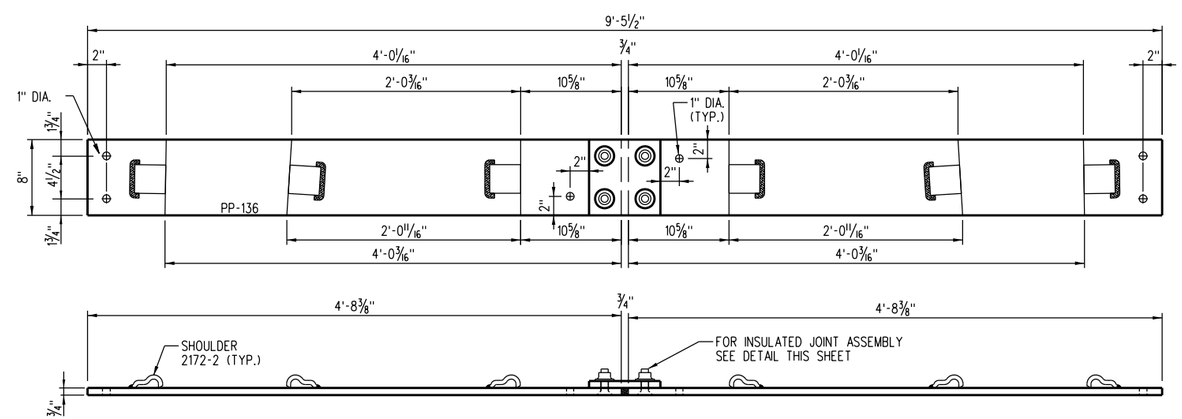

INSULATED SLIDE GAGE PLATE GP-4

¾" x 8" - FLAT - (2 EACH REQ'D AS SHOWN)

REFERENCE DRAWINGS

LAYOUT - No.10, DOUBLE SLIP CROSSING - 136 lb. -------- SHEET No. 2902-02

NOTES: (For Frog Gage Plates)

1. PLATES TO BE MADE OF MILD ROLLED STEEL.
2. THE PLATES AS SHOWN ARE FOR A 136 LB., NO. 10 DOUBLE SLIP CROSSING.
3. GUARD RAIL PLATES ARE TO BE INSTALLED AND WELDED TO THE FROG GAGE PLATES IN THE FIELD ON BOTH ENDS OF THE PLATE. PLATES ARE TO BE WELDED ONLY AFTER THE GAGE PLATE AND THE FROG IS SECURED IN THE PROPER LOCATION ON THE TIE WITH PROPER ALIGNMENT.
4. FROG BASE PLATES FP-1, FP-4 AND FP-7 ARE TO BE WELDED TO THE FROG GAGE PLATES IN THE FIELD WITH A PASS ½" • FILLET WELD CONTINUOUS ON BOTH ENDS OF THE PLATE. PLATES ARE TO BE WELDED ONLY AFTER THE GAGE PLATE AND THE FROG IS SECURED IN THE PROPER LOCATION ON THE TIE WITH PROPER ALIGNMENT.

NOTES: (For Switch Gage Plates)

1. PLATES TO BE MADE OF MILD ROLLED STEEL.
2. THE WELD - ON PRESSED STEEL SHOULDER, PURCHASED FROM "PANDROL INTERNATIONAL", TO BE MILD STEEL. OTHER APPROVED WELD - ON PRESSED STEEL SHOULDERS MEETING "PANDROL'S" DESIGN SPECIFICATIONS MAY BE USED.
3. THE PRESSED STEEL SHOULDER MUST BE CAREFULLY WELDED TO GAGE PLATES. ANY WELD PROJECTING BEYOND THE VERTICAL FACE OF SHOULDER IN THE AREA OF THE RAIL SEAT MUST BE MACHINED OUT TO PROVIDE A CLEAR RAILS SEAT DIMENSION AS CALLED FOR.
4. THE PLATES AS SHOWN ARE FOR A 136 LB., NO. 10 DOUBLE SLIP CROSSING.

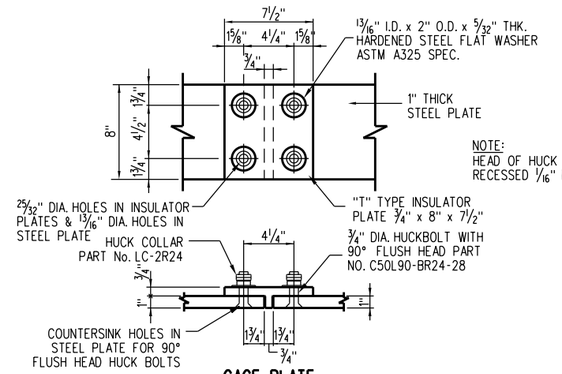

GAGE PLATE INSULATED JOINT ASSEMBLY GPI-77

DETAIL "A" INSULATION AT GAGE PLATES

(SCALE: NONE)

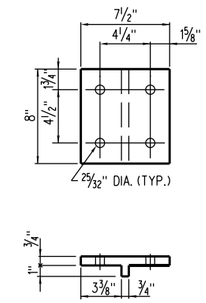

DETAIL OF INSULATION BLOCK

POLYESTER COATED STEEL CORE
W/ BUSHINGS, PORTEC •127-07547-01
OR FIBERGLASS REINFORCED THERMOSET RESIN.
PURCHASE PART NO. GPI52P05

FOR MAINTENANCE ONLY

REV.	DATE	DESCRIPTION	DES.	ENG.
X	XX-XX-XX	REVISION	XX	XX

DRAWN BY: A. CARLOS DATE: 03/31/2011

ASSISTANT DIRECTOR: STANDARDS & DESIGN

DIRECTOR OF ENGINEERING AND CONSTRUCTION

SCRRA ENGINEERING STANDARDS ARE INTENDED FOR SCRRA APPROVED USES ONLY. FOR NON-SCRRA APPROVED USES:
SCRRA SHALL NOT BE RESPONSIBLE FOR THE ACCURACY OR COMPLETENESS OF THE DATA OR INFORMATION CONTAINED HEREIN. THE SELECTION AND USE OF THESE STANDARDS IS THE SOLE RESPONSIBILITY OF THE USER AND SHOULD NOT BE USED WITHOUT CONSULTING A REGISTERED PROFESSIONAL ENGINEER. ALL WARRANTIES AND REPRESENTATIONS OF ANY KIND ARE DISCLAIMED. ANYONE MAKING USE OF THIS INFORMATION AGREES THAT IT ASSUMES ALL LIABILITY ARISING FROM SUCH USE. NO PART OF THESE STANDARDS SHOULD BE REPRODUCED OR DISTRIBUTED IN ANY FORM OR BY ANY MEANS WITHOUT THE PRIOR WRITTEN PERMISSION OF SCRRA. ALL RIGHTS RESERVED.

METROLINK®
SOUTHERN CALIFORNIA REGIONAL RAIL AUTHORITY
ONE GATEWAY PLAZA, 12TH FLOOR, L. A., CA. 90012

ENGINEERING STANDARDS

INSULATED GAGE PLATE DETAILS
DS–GP–1, DS–GP–2, DS–GP–3 AND DS–GP–4
NO. 10, 136 LB. DOUBLE SLIP CROSSING

STANDARD 2902
SCALE: 1½" = 1'-0"
REVISION –
SHEET 11 OF 20
CADD FILE: ES2902–11

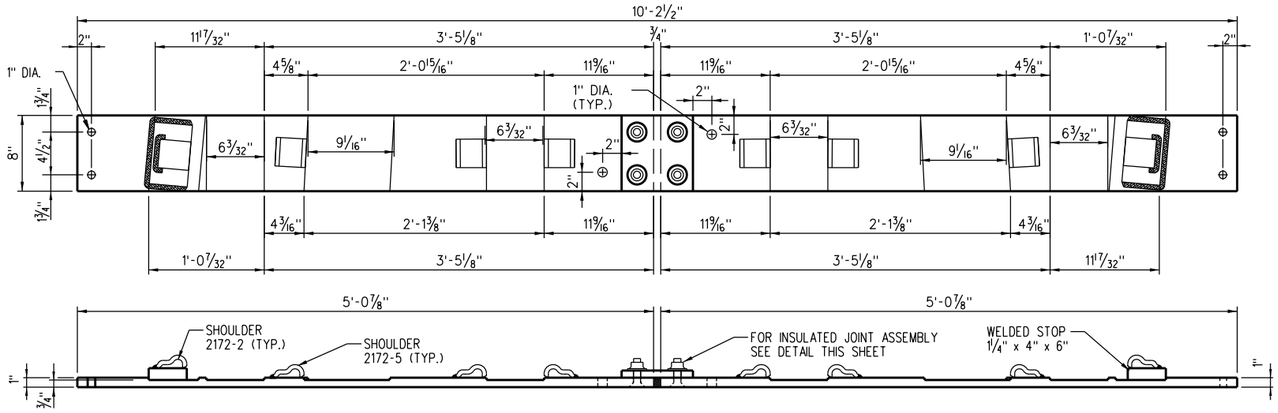

INSULATED SLIDE GAGE PLATE GP-5

1" x 8" - MILLED - (2 EACH REQ'D AS SHOWN)

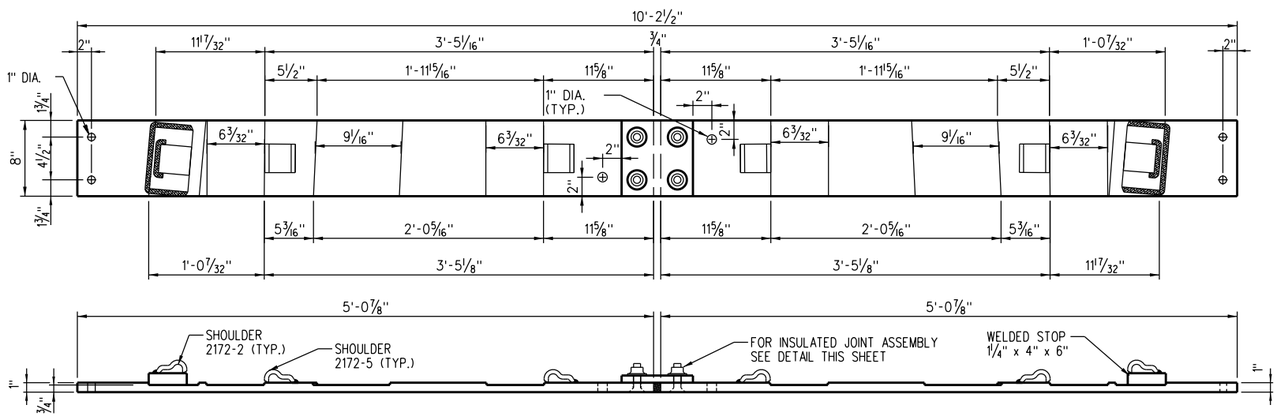

INSULATED SLIDE GAGE PLATE GP-6

1" x 8" - MILLED - (2 EACH REQ'D AS SHOWN)

REFERENCE DRAWINGS

LAYOUT - No.10, DOUBLE SLIP CROSSING - 136 lb. -------- SHEET No. 2902-02

NOTES:

1. PLATES TO BE MADE OF MILD ROLLED STEEL.
2. EACH PLATE TO BE PLAINLY STAMPED WITH PLATE NO. AND 136 (WEIGHT OF RAIL) & HAND OF TURNOUT (R.H. OR L.H.)
3. THE PANDROL TYPE WELD - ON PRESSED STEEL SHOULDER, MADE FROM MILD STEEL, TO BE PURCHASED FROM PANDROL INTERNATIONAL OR APPROVED ALTERNATE MEETING PANDROL'S DESIGN SPECIFICATIONS.
4. THE PRESSED STEEL SHOULDER MUST BE CAREFULLY WELDED TO THE PLATE. ANY WELD PROJECTING BEYOND THE VERTICAL FACE OF SHOULDER IN THE AREA OF THE RAIL SEAT MUST BE MACHINED OUT TO PROVIDE A CLEAR RAIL SEAT DIMENSION AS CALLED FOR.
5. THE PLATES AS SHOWN ARE FOR A 136 LB., NO. 10 DOUBLE SLIP SWITCH.

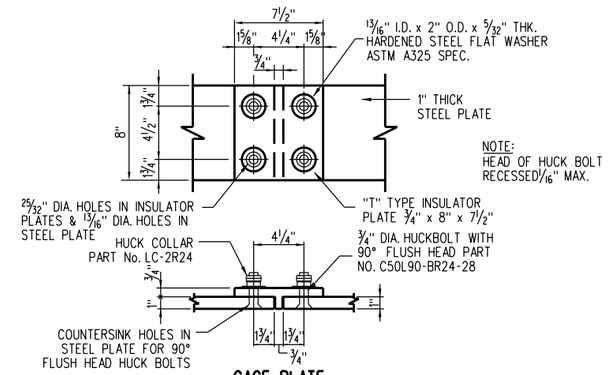

GAGE PLATE INSULATED JOINT ASSEMBLY GPI-77

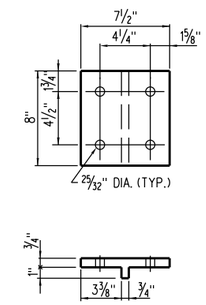

DETAIL "A" INSULATION AT GAGE PLATES

(SCALE: NONE)

DETAIL OF INSULATION BLOCK

POLYESTER COATED STEEL CORE
W/ BUSHINGS, PORTEC #127-07547-01
OR FIBERGLASS REINFORCED THERMOSET RESIN.
PURCHASE PART NO. GPI52P05

FOR MAINTENANCE ONLY

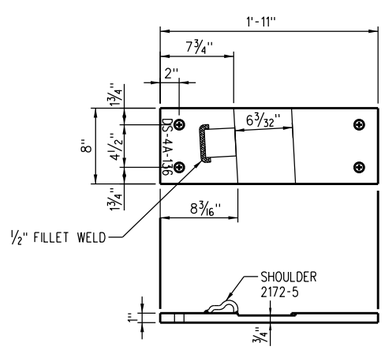

BRACE PLATE - 4A

1" x 8" x 1'-11" LG. - MILLED - W/ADJ. RAIL BRACE
(2 REQUIRED)

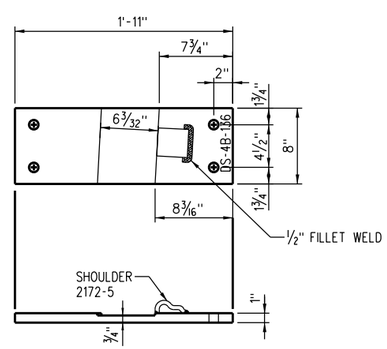

BRACE PLATE - 4B

1" x 8" x 1'-11" LG. - MILLED - W/ADJ. RAIL BRACE
(2 REQUIRED)

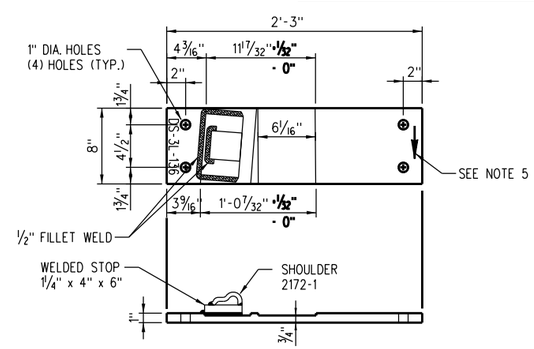

BRACE PLATE - 6A

1" x 8" x 2'-3" LG. - MILLED - W/ADJ. RAIL BRACE

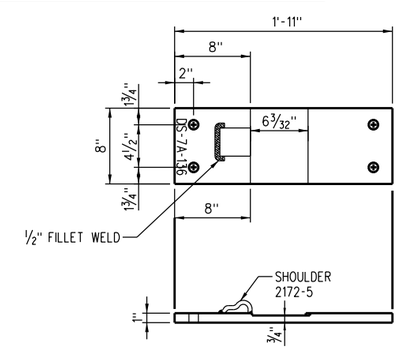

BRACE PLATE - 7A

1" x 8" x 1'-10½" LG. - MILLED - W/ADJ. RAIL BRACE
(8 REQUIRED)

REV.	DATE	DESCRIPTION	DES.	ENG.
X	XX-XX-XX	REVISION	XX	XX

DRAWN BY: A. CARLOS DATE: 03/31/2011

ASSISTANT DIRECTOR: STANDARDS & DESIGN

DIRECTOR OF ENGINEERING AND CONSTRUCTION

SCRRA ENGINEERING STANDARDS ARE INTENDED FOR SCRRA APPROVED USES ONLY. FOR NON-SCRRA APPROVED USES:
SCRRA SHALL NOT BE RESPONSIBLE FOR THE ACCURACY OR COMPLETENESS OF THE DATA OR INFORMATION CONTAINED HEREIN. THE SELECTION AND USE OF THESE STANDARDS IS THE SOLE RESPONSIBILITY OF THE USER AND SHOULD NOT BE USED WITHOUT CONSULTING A REGISTERED PROFESSIONAL ENGINEER. ALL WARRANTIES AND REPRESENTATIONS OF ANY KIND ARE DISCLAIMED. ANYONE MAKING USE OF THIS INFORMATION AGREES THAT IT ASSUMES ALL LIABILITY ARISING FROM SUCH USE. NO PART OF THESE STANDARDS SHOULD BE REPRODUCED OR DISTRIBUTED IN ANY FORM OR BY ANY MEANS WITHOUT THE PRIOR WRITTEN PERMISSION OF SCRRA. ALL RIGHTS RESERVED.

METROLINK®
SOUTHERN CALIFORNIA REGIONAL RAIL AUTHORITY
ONE GATEWAY PLAZA, 12TH FLOOR, L. A., CA. 90012

ENGINEERING STANDARDS

INSULATED GAGE PLATE DETAILS
DS-GP-5 AND DS-GP-6
NO. 10, 136 LB. DOUBLE SLIP CROSSING

STANDARD 2902
SCALE: 1½" = 1'-0"
REVISION –
SHEET 12 OF 20
CADD FILE: ES2902-12

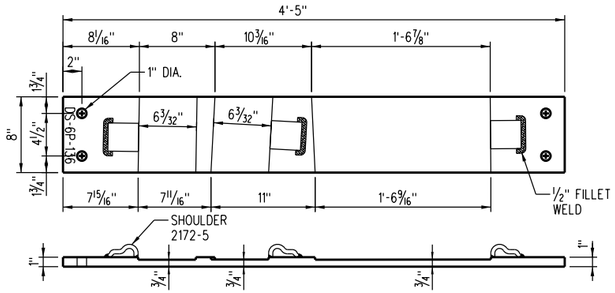

BRACE PLATE - 14R

1" x 8" x 4'-5" LG. - MILLED - W/ADJ. RAIL BRACE
(2 REQUIRED PER SLIP SWITCH)

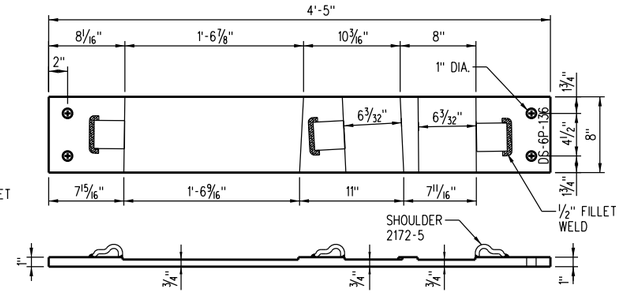

BRACE PLATE - 14L

1" x 8" x 4'-5" LG. - MILLED - W/ADJ. RAIL BRACE
(2 REQUIRED PER SLIP SWITCH)

REFERENCE DWGS.

LAYOUT - No.10, DOUBLE SLIP CROSSING - 136 lb. -------- SHEET No. 2902-02

NOTES:

1. PLATES TO BE MADE OF MILD ROLLED STEEL.
2. EACH PLATE TO BE PLAINLY STAMPED WITH PLATE NO. AND 136 (WEIGHT OF RAIL) & HAND OF TURNOUT (R.H. OR L.H.)
3. THE PANDROL TYPE WELD - ON PRESSED STEEL SHOULDER, MADE FROM MILD STEEL, TO BE PURCHASED FROM PANDROL INTERNATIONAL OR APPROVED ALTERNATE MEETING PANDROL'S DESIGN SPECIFICATIONS.
4. THE PRESSED STEEL SHOULDER MUST BE CAREFULLY WELDED TO THE PLATE. ANY WELD PROJECTING BEYOND THE VERTICAL FACE OF SHOULDER IN THE AREA OF THE RAIL SEAT MUST BE MACHINED OUT TO PROVIDE A CLEAR RAIL SEAT DIMENSION AS CALLED FOR.
5. THE PLATES AS SHOWN ARE FOR A 136 LB., NO. 10 DOUBLE SLIP CROSSING.

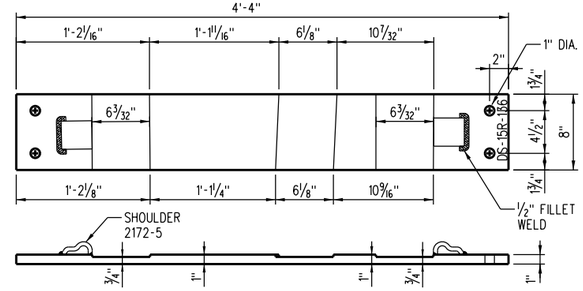

BRACE PLATE - 17R

1" x 8" x 4'-4" LG. - MILLED - W/ADJ. RAIL BRACE
(2 REQUIRED PER SLIP SWITCH)

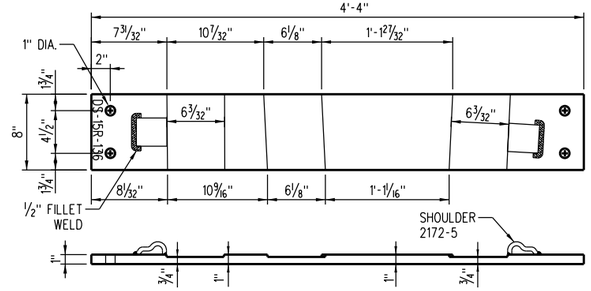

BRACE PLATE - 17L

1" x 8" x 4'-4" LG. - MILLED - W/ADJ. RAIL BRACE
(2 REQUIRED PER SLIP SWITCH)

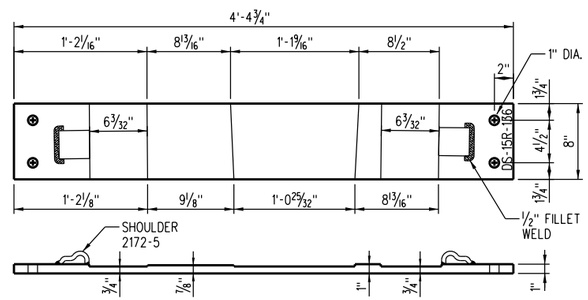

BRACE PLATE - 15R

1" x 8" x 4'-4 3/4" LG. - MILLED - W/ADJ. RAIL BRACE
(2 REQUIRED PER SLIP SWITCH)

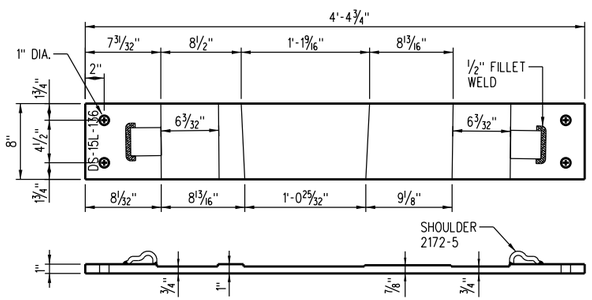

BRACE PLATE - 15L

1" x 8" x 4'-4 3/4" LG. - MILLED - W/ADJ. RAIL BRACE
(2 REQUIRED PER SLIP SWITCH)

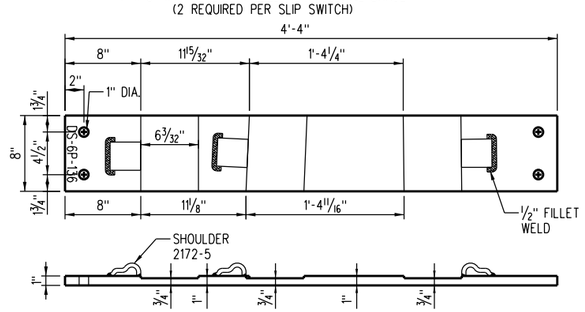

BRACE PLATE - 18R

1" x 8" x 4'-4" LG. - MILLED - W/ADJ. RAIL BRACE
(2 REQUIRED PER SLIP SWITCH)

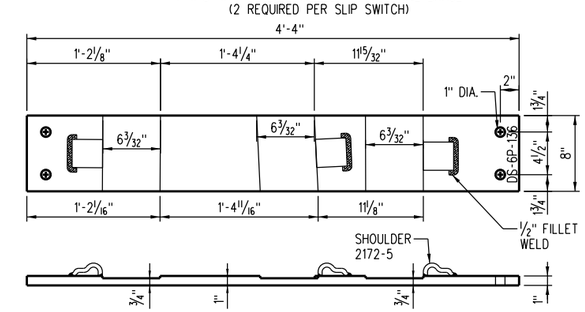

BRACE PLATE - 18L

1" x 8" x 4'-4" LG. - MILLED - W/ADJ. RAIL BRACE
(2 REQUIRED PER SLIP SWITCH)

FOR MAINTENANCE ONLY

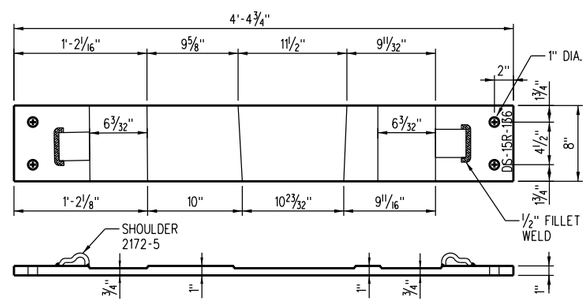

BRACE PLATE - 16R

1" x 8" x 4'-4 3/4" LG. - MILLED - W/ADJ. RAIL BRACE
(2 REQUIRED PER SLIP SWITCH)

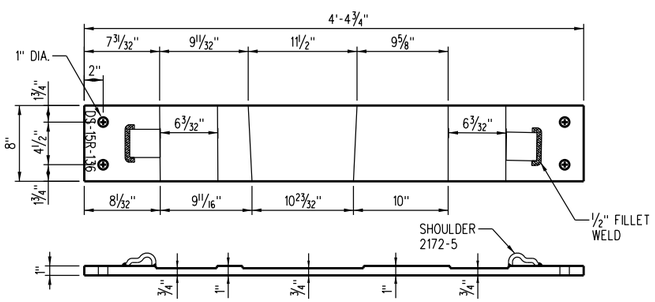

BRACE PLATE - 16L

1" x 8" x 4'-4 3/4" LG. - MILLED - W/ADJ. RAIL BRACE
(2 REQUIRED PER SLIP SWITCH)

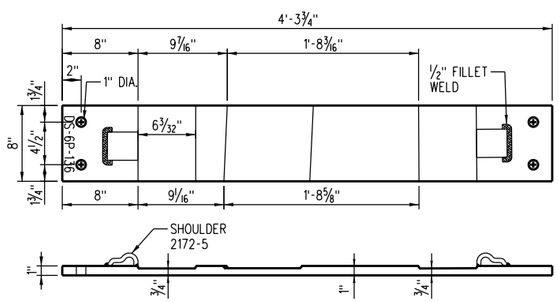

BRACE PLATE - 19R

1" x 8" x 4'-3 3/4" LG. - MILLED - W/ADJ. RAIL BRACE
(2 REQUIRED PER SLIP SWITCH)

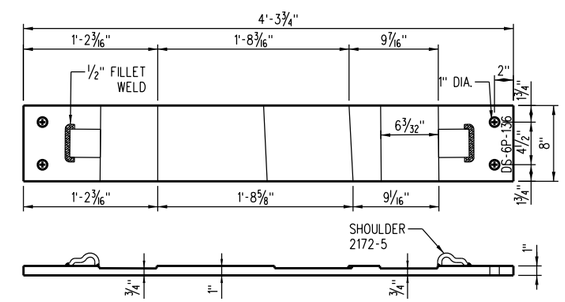

BRACE PLATE - 19L

1" x 8" x 4'-3 3/4" LG. - MILLED - W/ADJ. RAIL BRACE
(2 REQUIRED PER SLIP SWITCH)

X	XX-XX-XX	REVISION	XX	XX
REV.	DATE	DESCRIPTION	DES.	ENG.

DRAWN BY: A. CARLOS DATE: 03/31/2011

ASSISTANT DIRECTOR: STANDARDS & DESIGN

DIRECTOR OF ENGINEERING AND CONSTRUCTION

SCRRA ENGINEERING STANDARDS ARE INTENDED FOR SCRRA APPROVED USES ONLY. FOR NON-SCRRA APPROVED USES:
SCRRA SHALL NOT BE RESPONSIBLE FOR THE ACCURACY OR COMPLETENESS OF THE DATA OR INFORMATION CONTAINED HEREIN. THE SELECTION AND USE OF THESE STANDARDS IS THE SOLE RESPONSIBILITY OF THE USER AND SHOULD NOT BE USED WITHOUT CONSULTING A REGISTERED PROFESSIONAL ENGINEER. ALL WARRANTIES AND REPRESENTATIONS OF ANY KIND ARE DISCLAIMED. ANYONE MAKING USE OF THIS INFORMATION AGREES THAT IT ASSUMES ALL LIABILITY ARISING FROM SUCH USE. NO PART OF THESE STANDARDS SHOULD BE REPRODUCED OR DISTRIBUTED IN ANY FORM OR BY ANY MEANS WITHOUT THE PRIOR WRITTEN PERMISSION OF SCRRA. ALL RIGHTS RESERVED.

METROLINK®
SOUTHERN CALIFORNIA REGIONAL RAIL AUTHORITY
ONE GATEWAY PLAZA, 12TH FLOOR, L. A., CA. 90012

ENGINEERING STANDARDS

BRACE PLATE AND SLIDE PLATE DETAILS
NO. 10, 136 LB. DOUBLE SLIP CROSSING

STANDARD 2902
SCALE: 1 1/2" = 1'-0"
REVISION –
SHEET 13 OF 20
CADD FILE: ES2902-13

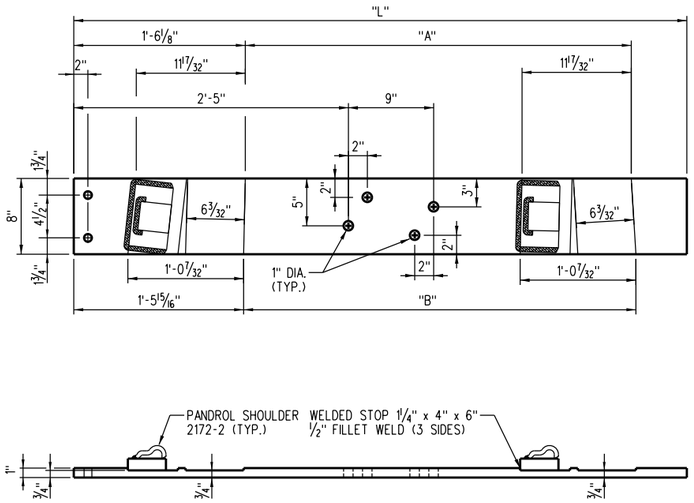

BRACE SLIDE PLATE

1" x 8" x "L" - (MILLED)

DIMENSION TABLE				
PLATE	"A"	"B"	"L"	NUMBER REQUIRED
1-A	3'-4 3/4"	3'-5 7/16"	5'-4 3/4"	2
2-A	3'-3 1/8"	3'-3 3/4"	5'-4 1/4"	2
3-A	3'-1 3/4"	3'-2 1/4"	5'-3 3/4"	2

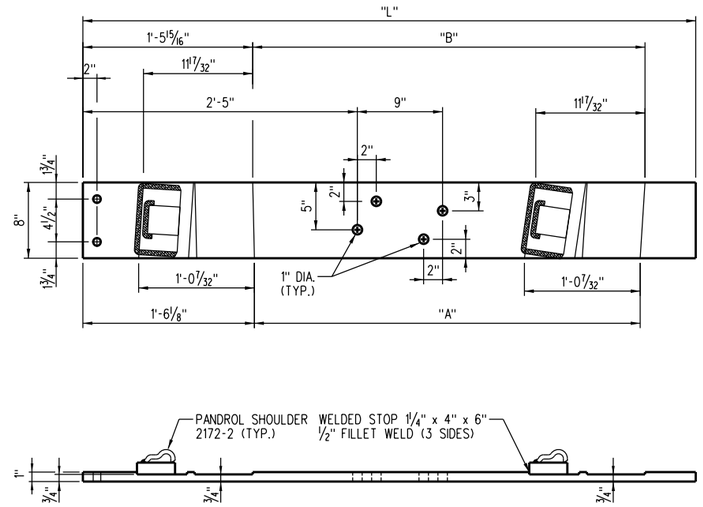

BRACE SLIDE PLATE

1" x 8" x "L" - (MILLED)

DIMENSION TABLE				
PLATE	"A"	"B"	"L"	NUMBER REQUIRED
1-B	3'-4 3/4"	3'-5 7/16"	5'-4 3/4"	2
2-B	3'-3 1/8"	3'-3 3/4"	5'-4 1/4"	2
3-B	3'-1 3/4"	3'-2 1/4"	5'-3 3/4"	2

NOTES:

1. PLATES TO BE MADE OF MILD ROLLED STEEL.
2. EACH PLATE TO BE PLAINLY STAMPED WITH PLATE NO. AND 136 (WEIGHT OF RAIL) & HAND OF TURNOUT (R.H. OR L.H.)
3. THE PANDROL TYPE WELD - ON PRESSED STEEL SHOULDER, MADE FROM MILD STEEL, TO BE PURCHASED FROM PANDROL INTERNATIONAL OR APPROVED ALTERNATE MEETING PANDROL'S DESIGN SPECIFICATIONS.
4. THE PRESSED STEEL SHOULDER MUST BE CAREFULLY WELDED TO THE PLATE. ANY WELD PROJECTING BEYOND THE VERTICAL FACE OF SHOULDER IN THE AREA OF THE RAIL SEAT MUST BE MACHINED OUT TO PROVIDE A CLEAR RAIL SEAT DIMENSION AS CALLED FOR.
5. THE PLATES AS SHOWN ARE FOR A 136 LB., NO. 10 DOUBLE SLIP CROSSING.

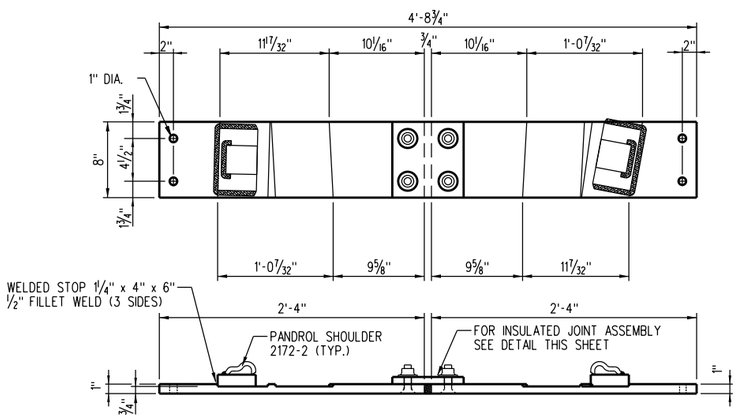

INSULATED SLIDE PLATE 5-C

1" x 8" - MILLED - (2 EACH REQ'D AS SHOWN)

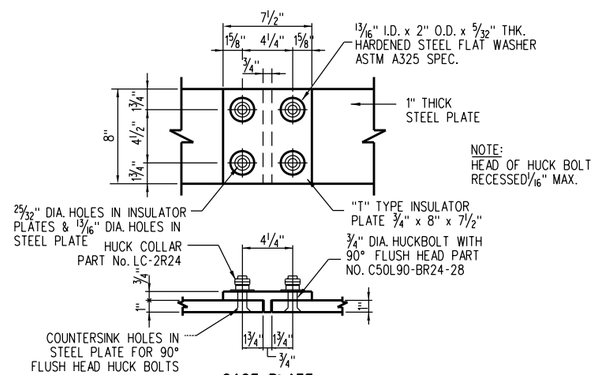

GAGE PLATE
INSULATED JOINT ASSEMBLY
GPI-77

DETAIL "A"
INSULATION AT GAGE PLATES

(SCALE: NONE)

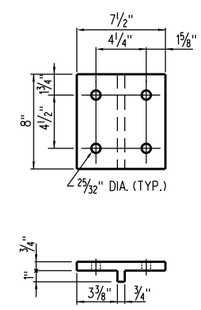

DETAIL OF INSULATION BLOCK

POLYESTER COATED STEEL CORE
W/ BUSHINGS, PORTEC #127-07547-01
OR FIBERGLASS REINFORCED THERMOSET RESIN.
PURCHASE PART NO. GPI52P05

FOR MAINTENANCE ONLY

REFERENCE DRAWINGS

LAYOUT - No.10, DOUBLE SLIP CROSSING - 136 lb. -------- SHEET No. 2902-02

REV.	DATE	DESCRIPTION	DES.	ENG.
X	XX-XX-XX	REVISION	XX	XX

DRAWN BY: A. CARLOS DATE: 03/31/2011

ASSISTANT DIRECTOR: STANDARDS & DESIGN

DIRECTOR OF ENGINEERING AND CONSTRUCTION

SCRRA ENGINEERING STANDARDS ARE INTENDED FOR SCRRA APPROVED USES ONLY. FOR NON-SCRRA APPROVED USES: SCRRA SHALL NOT BE RESPONSIBLE FOR THE ACCURACY OR COMPLETENESS OF THE DATA OR INFORMATION CONTAINED HEREIN. THE SELECTION AND USE OF THESE STANDARDS IS THE SOLE RESPONSIBILITY OF THE USER AND SHOULD NOT BE USED WITHOUT CONSULTING A REGISTERED PROFESSIONAL ENGINEER. ALL WARRANTIES AND REPRESENTATIONS OF ANY KIND ARE DISCLAIMED. ANYONE MAKING USE OF THIS INFORMATION AGREES THAT IT ASSUMES ALL LIABILITY ARISING FROM SUCH USE. NO PART OF THESE STANDARDS SHOULD BE REPRODUCED OR DISTRIBUTED IN ANY FORM OR BY ANY MEANS WITHOUT THE PRIOR WRITTEN PERMISSION OF SCRRA. ALL RIGHTS RESERVED.

METROLINK

SOUTHERN CALIFORNIA REGIONAL RAIL AUTHORITY
ONE GATEWAY PLAZA, 12TH FLOOR, L. A., CA. 90012

ENGINEERING STANDARDS

BRACE SLIDE PLATES
AND INSULATED SLIDE PLATE DETAILS
NO. 10, 136 LB. DOUBLE SLIP CROSSING

STANDARD 2902
SCALE: 1 1/2" = 1'-0"
REVISION –
SHEET 14 OF 20
CADD FILE: ES2902-14

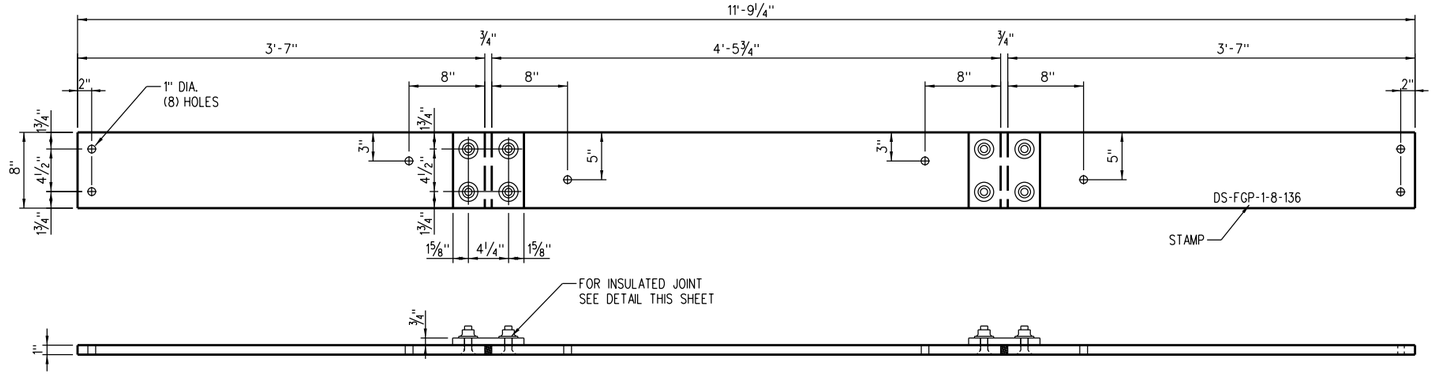

INSULATED FROG GAGE PLATE FGP-1

1" x 8" - FLAT

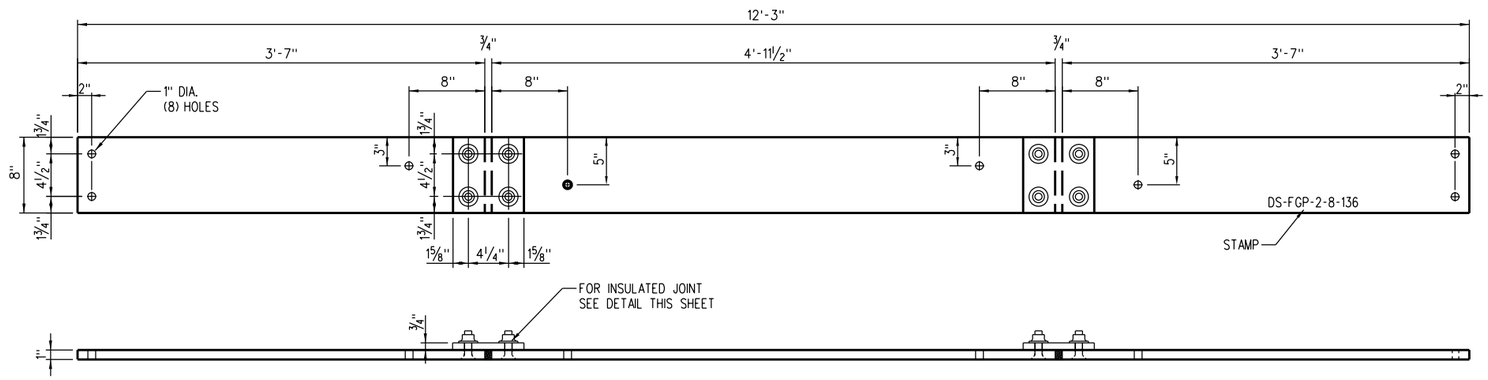

INSULATED FROG GAGE PLATE FGP-2

1" x 8" - FLAT

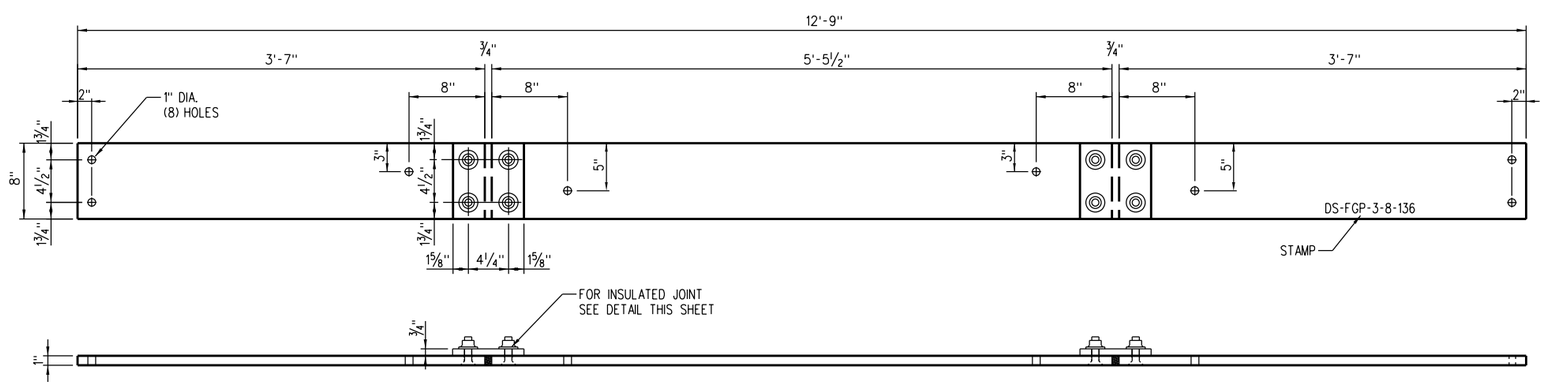

INSULATED FROG GAGE PLATE FGP-3

1" x 8" - FLAT

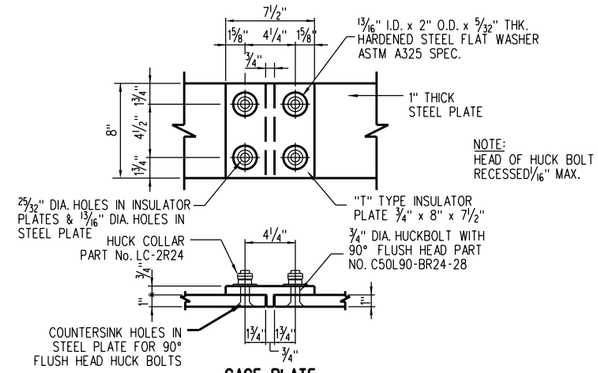

GAGE PLATE
INSULATED JOINT ASSEMBLY
GPI-77

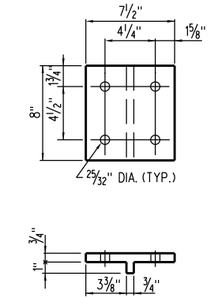

DETAIL OF INSULATION BLOCK

POLYESTER COATED STEEL CORE
W/ BUSHINGS, PORTEC #127-07547-01
OR FIBERGLASS REINFORCED THERMOSET RESIN.
PURCHASE PART NO. GPI52P05

DETAIL "A"
INSULATION AT GAGE PLATES

(SCALE: NONE)

FOR MAINTENANCE ONLY

REFERENCE DWGS.

LAYOUT - No.10, DOUBLE SLIP CROSSING - 136 lb. -------- SHEET No. 2902-02

REV.	DATE	DESCRIPTION	DES.	ENG.
X	XX-XX-XX	REVISION	XX	XX

DRAWN BY: A. CARLOS DATE: 03/31/2011

ASSISTANT DIRECTOR: STANDARDS & DESIGN

DIRECTOR OF ENGINEERING AND CONSTRUCTION

SCRRA ENGINEERING STANDARDS ARE INTENDED FOR SCRRA APPROVED USES ONLY. FOR NON-SCRRA APPROVED USES:
SCRRA SHALL NOT BE RESPONSIBLE FOR THE ACCURACY OR COMPLETENESS OF THE DATA OR INFORMATION CONTAINED HEREIN. THE SELECTION AND USE OF THESE STANDARDS IS THE SOLE RESPONSIBILITY OF THE USER AND SHOULD NOT BE USED WITHOUT CONSULTING A REGISTERED PROFESSIONAL ENGINEER. ALL WARRANTIES AND REPRESENTATIONS OF ANY KIND ARE DISCLAIMED. ANYONE MAKING USE OF THIS INFORMATION AGREES THAT IT ASSUMES ALL LIABILITY ARISING FROM SUCH USE. NO PART OF THESE STANDARDS SHOULD BE REPRODUCED OR DISTRIBUTED IN ANY FORM OR BY ANY MEANS WITHOUT THE PRIOR WRITTEN PERMISSION OF SCRRA. ALL RIGHTS RESERVED.

METROLINK®
SOUTHERN CALIFORNIA REGIONAL RAIL AUTHORITY
ONE GATEWAY PLAZA, 12TH FLOOR, L. A., CA. 90012

ENGINEERING STANDARDS

INSULATED FROG GAGE PLATE DETAILS
NO. 10, 136 LB. DOUBLE SLIP CROSSING

STANDARD 2902
SCALE: 1½" = 1'-0"
REVISION –
SHEET 15 OF 20
CADD FILE: ES2902-15

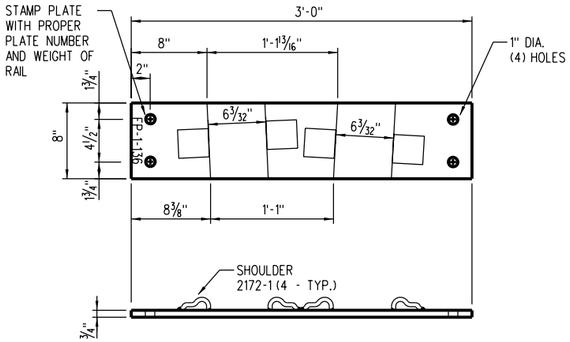

FROG PLATE - F-1
3/4" x 8" x 3'-0" LG. - FLAT
(2 REQUIRED)

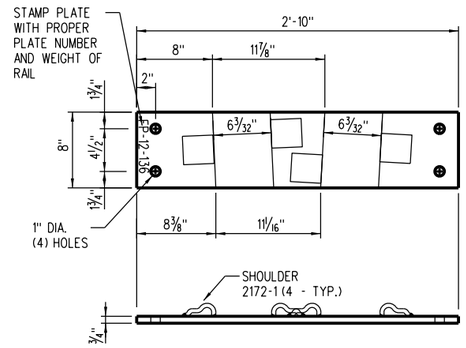

FROG PLATE - F-2
3/4" x 8" x 2'-10" LG. - FLAT
(2 REQUIRED)

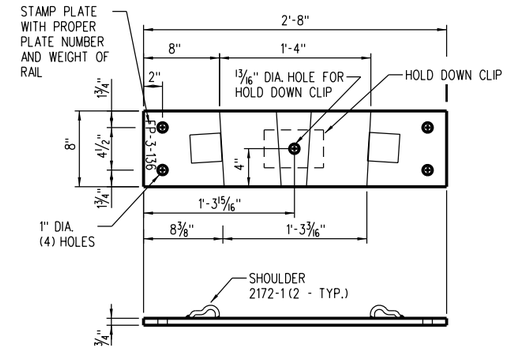

FROG PLATE - F-3
3/4" x 8" x 2'-8" LG. - FLAT
(2 REQUIRED)

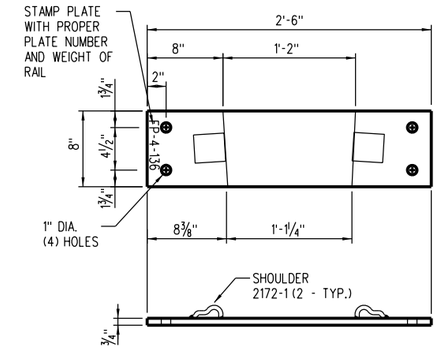

FROG PLATE - F-4
3/4" x 8" x 2'-6" LG. - FLAT
(2 REQUIRED)

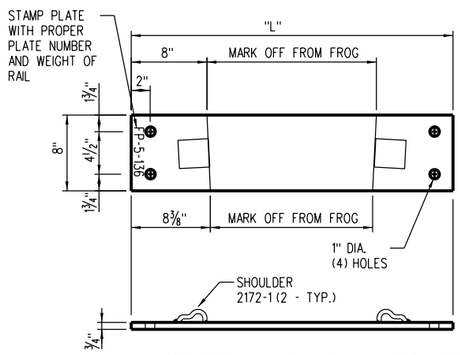

FROG PLATE - F-5 THRU F-7 AND F-10
3/4" x 8" - FLAT (SEE TABLE FOR LENGTHS)

DIMENSION TABLE		
PLATE	"L"	NO. REQ'D
F-5	3'-0 3/4"	2
F-6	2'-11 3/4"	2
F-7	2'-9 3/4"	2
F-10	2'-7 1/2"	2

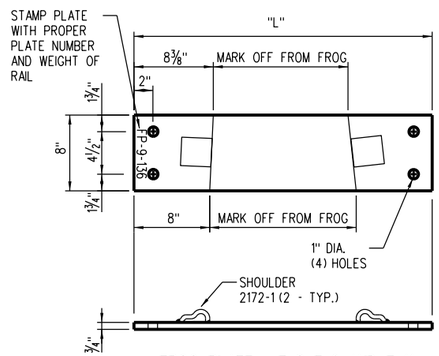

FROG PLATE - F-8, F-9 AND F-11
3/4" x 8" - FLAT (SEE TABLE FOR LENGTHS)

DIMENSION TABLE		
PLATE	"L"	NO. REQ'D
F-8	2'-8 1/2"	2
F-9	2'-10"	2
F-11	2'-4 1/4"	2

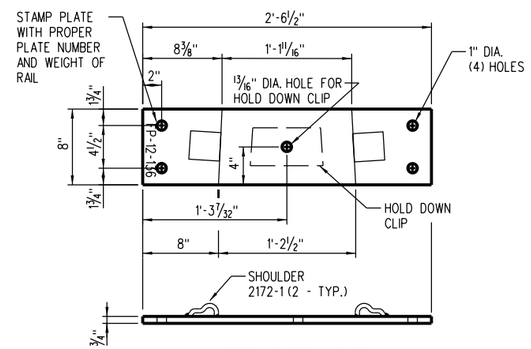

FROG PLATE - F-12
3/4" x 8" x 2'-6 1/2" - FLAT
(2 REQUIRED)

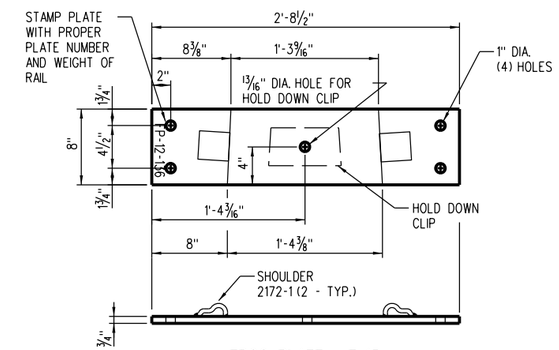

FROG PLATE - F-13
3/4" x 8" x 2'-8 1/2" - FLAT
(2 REQUIRED)

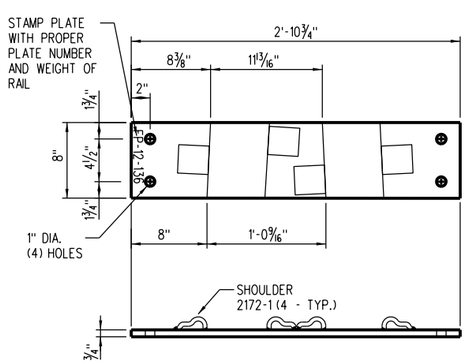

FROG PLATE - F-14
3/4" x 8" x 2'-10 3/4" LG. - FLAT
(2 REQUIRED)

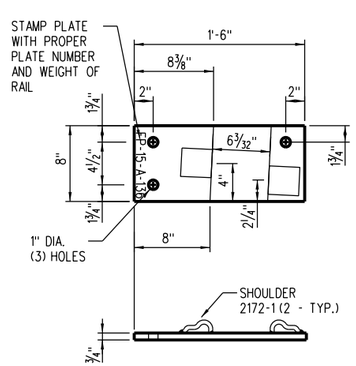

FROG PLATE - F-15-A
3/4" x 8" x 1'-6" LG. - FLAT
(2 REQUIRED)

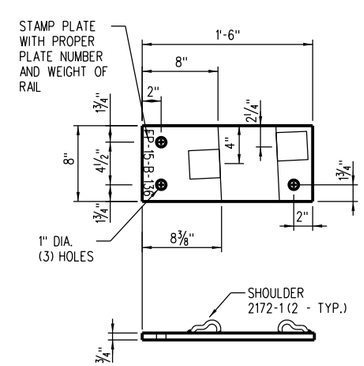

FROG PLATE - F-15-B
3/4" x 8" x 1'-6" LG. - FLAT
(2 REQUIRED)

FOR MAINTENANCE ONLY

REFERENCE DWGS.
LAYOUT - No.10, DOUBLE SLIP CROSSING - 136 lb. -------- SHEET No. 2902-02

REV.	DATE	DESCRIPTION	DES.	ENG.
X	XX-XX-XX	REVISION	XX	XX

DRAWN BY: A. CARLOS DATE: 03/31/2011

ASSISTANT DIRECTOR: STANDARDS & DESIGN

DIRECTOR OF ENGINEERING AND CONSTRUCTION

SCRRA ENGINEERING STANDARDS ARE INTENDED FOR SCRRA APPROVED USES ONLY. FOR NON-SCRRA APPROVED USES:
SCRRA SHALL NOT BE RESPONSIBLE FOR THE ACCURACY OR COMPLETENESS OF THE DATA OR INFORMATION CONTAINED HEREIN. THE SELECTION AND USE OF THESE STANDARDS IS THE SOLE RESPONSIBILITY OF THE USER AND SHOULD NOT BE USED WITHOUT CONSULTING A REGISTERED PROFESSIONAL ENGINEER. ALL WARRANTIES AND REPRESENTATIONS OF ANY KIND ARE DISCLAIMED. ANYONE MAKING USE OF THIS INFORMATION AGREES THAT IT ASSUMES ALL LIABILITY ARISING FROM SUCH USE. NO PART OF THESE STANDARDS SHOULD BE REPRODUCED OR DISTRIBUTED IN ANY FORM OR BY ANY MEANS WITHOUT THE PRIOR WRITTEN PERMISSION OF SCRRA. ALL RIGHTS RESERVED.

METROLINK®
SOUTHERN CALIFORNIA REGIONAL RAIL AUTHORITY
ONE GATEWAY PLAZA, 12TH FLOOR, L. A., CA. 90012

ENGINEERING STANDARDS

FROG PLATE DETAILS
NO. 10, 136 LB. DOUBLE SLIP CROSSING

STANDARD 2902
SCALE: 1 1/2" = 1'-0"
REVISION –
SHEET 16 OF 20
CADD FILE: ES2902-16

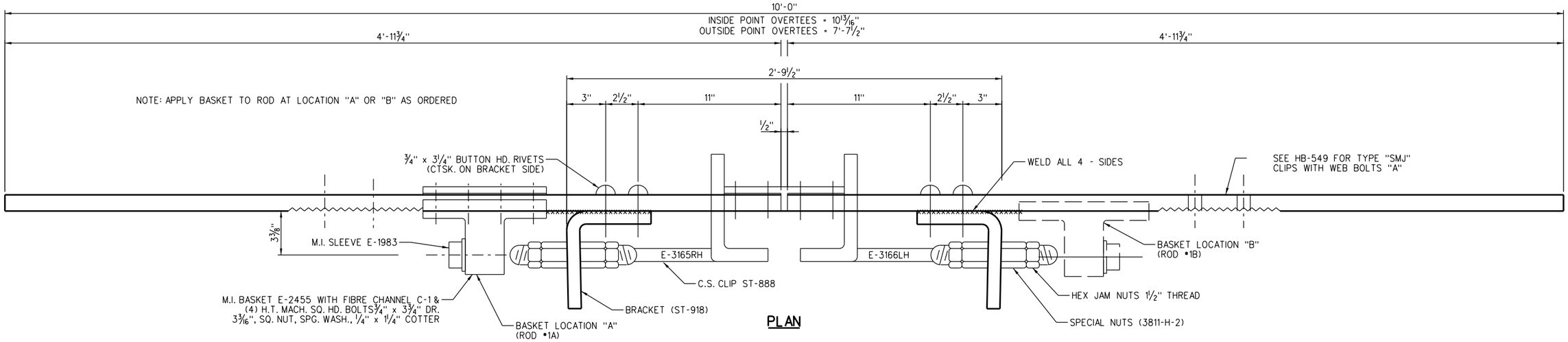

PLAN

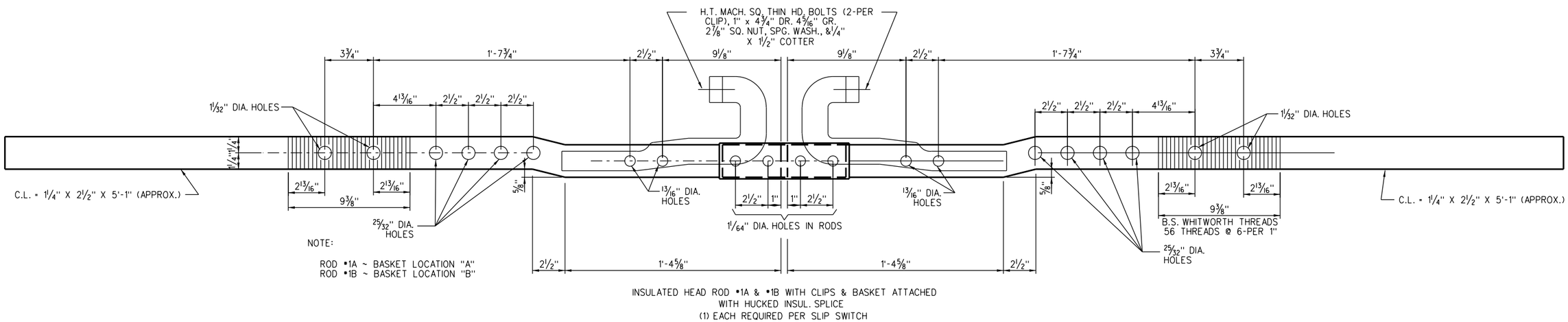

NOTE:

ROD #1A ~ BASKET LOCATION "A"
ROD #1B ~ BASKET LOCATION "B"

INSULATED HEAD ROD #1A & #1B WITH CLIPS & BASKET ATTACHED
WITH HUCKED INSUL. SPLICE
(1) EACH REQUIRED PER SLIP SWITCH

ELEVATION

INSULATION MATERIAL CONSISTS OF:

(1) FIBRE CHANNEL C-1
(2) FIBRE ANGLE PLATE AP-34
(4) FIBRE BUSHINGS B-11
(1) STEEL SPLICE PLATE ST-684
(1) STEEL CHANNEL ST-568
(4) 3/4" HUCK BOLTS C50LR-BR24-36
(4) HUCK COLLARS LC2R-24G

SWITCH INFORMATION

GAGE = 4'-8 5/8".
THROW AT POINT = 4" MIN. ~ 4 1/2" MAX.
"E" DIST. = 1 19/32".
PT. = 0" SAMSON.
REINF. = 1/2" "D" BOTH SIDES (SLOT 1/4" STK. SIDE).
ROD SPACING = 17".
BREAK ALL SHARP CORNERS.
DEBURR ALL HOLES.

FOR MAINTENANCE ONLY

STAMP RODS WITH "RESP. ROD. #, 136RE, #8 DSS"

REV.	DATE	DESCRIPTION	DES.	ENG.
X	XX-XX-XX	REVISION	XX	XX

DRAWN BY: A. CARLOS DATE: 03/31/2011

ASSISTANT DIRECTOR: STANDARDS & DESIGN

DIRECTOR OF ENGINEERING AND CONSTRUCTION

SCRRA ENGINEERING STANDARDS ARE INTENDED FOR SCRRA APPROVED USES ONLY. FOR NON-SCRRA APPROVED USES:
SCRRA SHALL NOT BE RESPONSIBLE FOR THE ACCURACY OR COMPLETENESS OF THE DATA OR INFORMATION CONTAINED HEREIN. THE SELECTION AND USE OF THESE STANDARDS IS THE SOLE RESPONSIBILITY OF THE USER AND SHOULD NOT BE USED WITHOUT CONSULTING A REGISTERED PROFESSIONAL ENGINEER. ALL WARRANTIES AND REPRESENTATIONS OF ANY KIND ARE DISCLAIMED. ANYONE MAKING USE OF THIS INFORMATION AGREES THAT IT ASSUMES ALL LIABILITY ARISING FROM SUCH USE. NO PART OF THESE STANDARDS SHOULD BE REPRODUCED OR DISTRIBUTED IN ANY FORM OR BY ANY MEANS WITHOUT THE PRIOR WRITTEN PERMISSION OF SCRRA. ALL RIGHTS RESERVED.

METROLINK®
SOUTHERN CALIFORNIA REGIONAL RAIL AUTHORITY
ONE GATEWAY PLAZA, 12TH FLOOR, L. A., CA. 90012

ENGINEERING STANDARDS

INSULATED HEAD ROD NO. 1 FOR END POINTS
NO. 10, 136 LB. DOUBLE SLIP CROSSING

STANDARD 2902
SCALE: 3" = 1'-0"
REVISION –
SHEET 17 OF 20
CADD FILE: ES2902-17

INSULATION MATERIAL CONSISTS OF:

(1) FIBRE CHANNEL C-1.
(2) FIBRE ANGLE PLATE AP-34.
(4) FIBRE BUSHINGS B-11.
(1) STEEL SPLICE PLATE ST-684.
(1) STEEL CHANNEL ST-568.
(4) 3/4" HUCK BOLTS C50LR-BR24-36.
(4) HUCK COLLARS LC2R-24G.

SWITCH INFORMATION

GAGE = 4'-8 5/8"
THROW AT POINT = 4" MIN. ~ 4 1/2" MAX.
"E" DIST. = 1 9/32"
PT. = 0" SAMSON
REINF. = 1/2" "D" BOTH SIDES (SLOT 1/4" STK. SIDE NO. 2 ROD ONLY)
ROD SPACING = 17" x 19 1/2" (#2 ROD ONLY)
ROD SPACING = 17" x 3'-6" (#3 ROD ONLY)

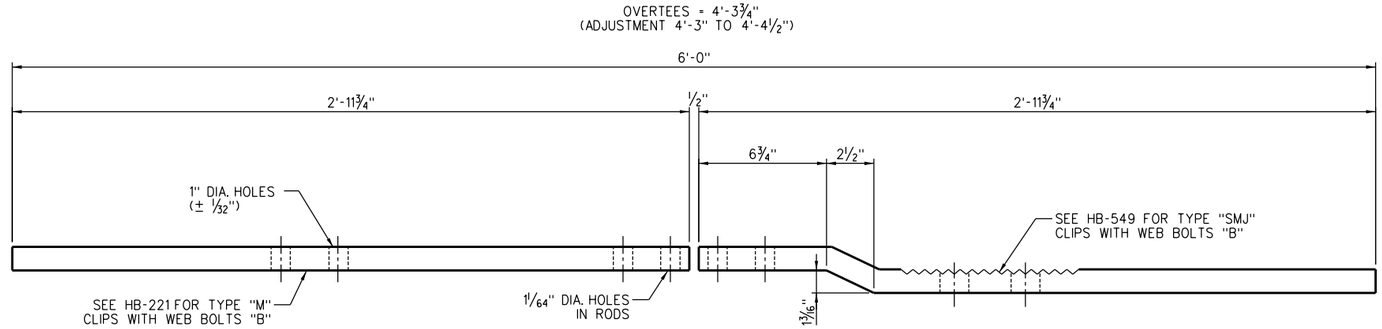

PLAN

NOTE:

TYPE "M" CLIP MUST BE WELDED TO ROD ALONG BOTH SIDES OF BOTTOM CLIPS

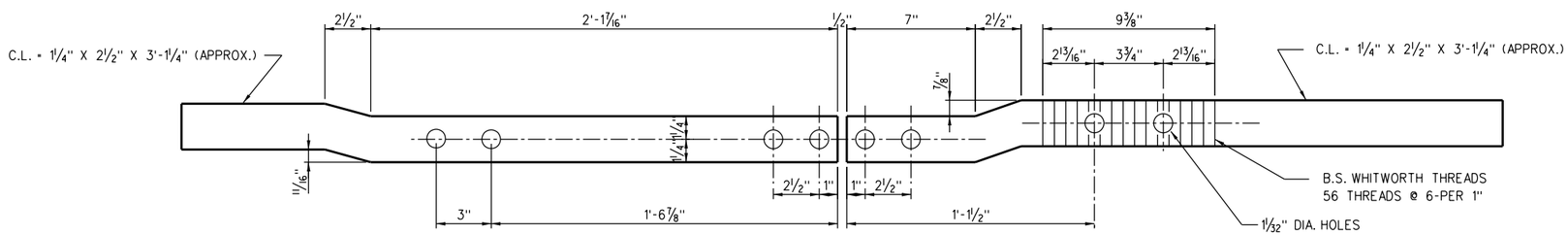

ELEVATION

INSULATED SPREA RODS NO. 2 OR 3 WITH CLIPS AND BOLTS ATTACHED WITH HUCKED INSULATED SPLICE, (2) EACH REQUIRED PER SLIP SWITCH

STAMP ROD WITH "RESP. NO., 136RE, #10 DSS"

FOR MAINTENANCE ONLY

REV.	DATE	DESCRIPTION	DES.	ENG.
X	XX-XX-XX	REVISION	XX	XX

DRAWN BY: A. CARLOS DATE: 03/31/2011

ASSISTANT DIRECTOR: STANDARDS & DESIGN

DIRECTOR OF ENGINEERING AND CONSTRUCTION

SCRRA ENGINEERING STANDARDS ARE INTENDED FOR SCRRA APPROVED USES ONLY. FOR NON-SCRRA APPROVED USES, SCRRA SHALL NOT BE RESPONSIBLE FOR THE ACCURACY OR COMPLETENESS OF THE DATA OR INFORMATION CONTAINED HEREIN. THE SELECTION AND USE OF THESE STANDARDS IS THE SOLE RESPONSIBILITY OF THE USER AND SHOULD NOT BE USED WITHOUT CONSULTING A REGISTERED PROFESSIONAL ENGINEER. ALL WARRANTIES AND REPRESENTATIONS OF ANY KIND ARE DISCLAIMED. ANYONE MAKING USE OF THIS INFORMATION AGREES THAT IT ASSUMES ALL LIABILITY ARISING FROM SUCH USE. NO PART OF THESE STANDARDS SHOULD BE REPRODUCED OR DISTRIBUTED IN ANY FORM OR BY ANY MEANS WITHOUT THE PRIOR WRITTEN PERMISSION OF SCRRA. ALL RIGHTS RESERVED.

METROLINK®
SOUTHERN CALIFORNIA REGIONAL RAIL AUTHORITY
ONE GATEWAY PLAZA, 12TH FLOOR, L. A., CA. 90012

ENGINEERING STANDARDS

INSULATED SPREAD RODS
NO. 2 & 3 FOR END POINTS
NO. 10, 136 LB. DOUBLE SLIP CROSSING

STANDARD 2902
SCALE: 3" = 1'-0"
REVISION –
SHEET 18 OF 20
CADD FILE: ES2902-18

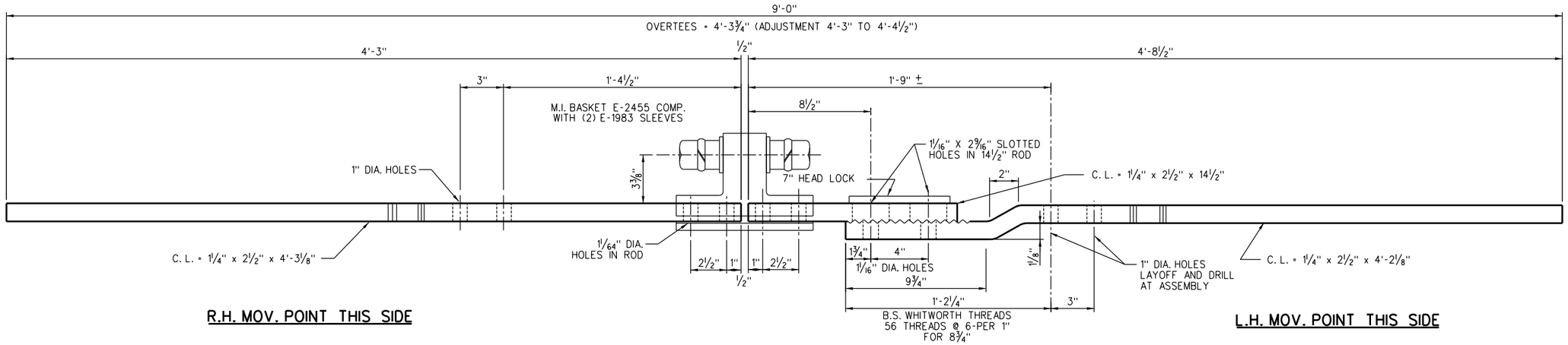

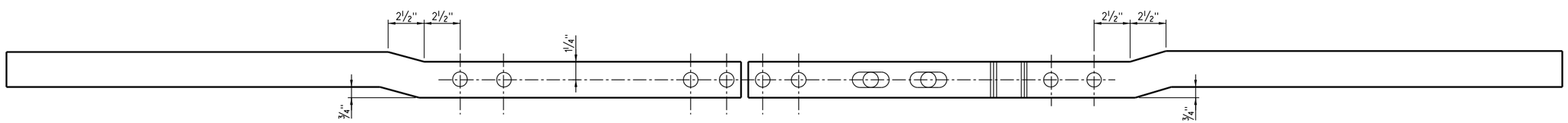

NO. 4 HEAD ROD

(TWO REQUIRED PER CROSSING)
(SCALE: 3" = 1'-0")

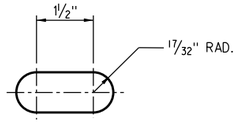

SLOTTED HOLE DETAIL

(1 1/16" x 2 9/16")
(SCALE: NONE)

FOR MAINTENANCE ONLY

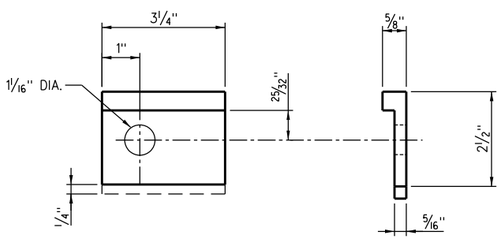

ROLLED HEADLOCK DETAIL

3¼" LG. (BETH. STL. PT. NO. 834-0306)
(2) PCS. AS SHOWN FOR CLIP, L.H. MOV. POINT
(2) PCS. OPP. HAND FOR CLIP, R.H. MOV. POINT
(SCALE: NONE)

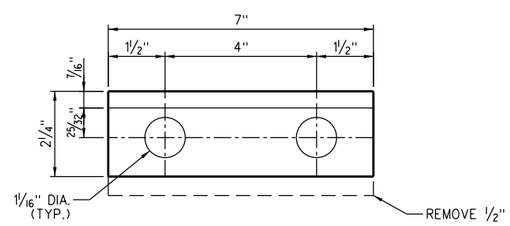

ROLLED HEADLOCK 7" LONG

(BETH. STEEL PT. NO. 834-0306)
(1) PIECE PER ROD.
(SCALE: NONE)

FURNISH: (2) H.T. MACH. SQ. HD. BOLTS, 1" X 4½"
DR. 4 1/16" GR. 2⅝", EA. WITH SLOTTED HEX NUT
PER BP-10003-BN, SPRING WASHER (N.C.G.)
& ¼" x 1¾" COTTER

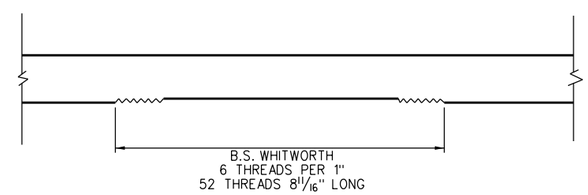

DETAIL OF SERRATIONS

(FOR 14½" LONG STRAIGHT &
4'-2⅛" LONG BENT PIECE)
(SCALE: NONE)

NOTE:

STAMP RODS WITH "RESP. ROD. •. 136RE. •10 DSS"

INSULATION MATERIAL

PER SRI-30 WITH COTTER, SLEEVE NUT
W/O 1¼" SPACING WASHERS & 1¼" HEX NUTS.
TYPE "M" CLIP MUST BE WELDED TO ROD ALONG
BOTH SIDES OF BOTTOM OF CLIPS.
DEBURR ALL HOLES.

SWITCH INFORMATION

GAGE = 4'-8 9/16"
THROW AT POINT = 4"
"E" DIST.: = 1 27/32"
POINT = 9/16"
REINF.: = ½" "D" GAGE SIDE
ROD SPACING = 15"
HEEL SPREAD = 7½"

REV.	DATE	DESCRIPTION	DES.	ENG.
X	XX-XX-XX	REVISION	XX	XX

DRAWN BY: A. CARLOS DATE: 03/31/2011

ASSISTANT DIRECTOR: STANDARDS & DESIGN

DIRECTOR OF ENGINEERING AND CONSTRUCTION

SCRRA ENGINEERING STANDARDS ARE INTENDED FOR SCRRA APPROVED USES ONLY. FOR NON-SCRRA APPROVED USES:
SCRRA SHALL NOT BE RESPONSIBLE FOR THE ACCURACY OR COMPLETENESS OF THE DATA OR INFORMATION CONTAINED HEREIN. THE SELECTION AND USE OF THESE STANDARDS IS THE SOLE RESPONSIBILITY OF THE USER AND SHOULD NOT BE USED WITHOUT CONSULTING A REGISTERED PROFESSIONAL ENGINEER. ALL WARRANTIES AND REPRESENTATIONS OF ANY KIND ARE DISCLAIMED. ANYONE MAKING USE OF THIS INFORMATION AGREES THAT IT ASSUMES ALL LIABILITY ARISING FROM SUCH USE. NO PART OF THESE STANDARDS SHOULD BE REPRODUCED OR DISTRIBUTED IN ANY FORM OR BY ANY MEANS WITHOUT THE PRIOR WRITTEN PERMISSION OF SCRRA. ALL RIGHTS RESERVED.

METROLINK®
SOUTHERN CALIFORNIA REGIONAL RAIL AUTHORITY
ONE GATEWAY PLAZA, 12TH FLOOR, L. A., CA. 90012

ENGINEERING STANDARDS

INSULATED HEAD ROD NO. 4
FOR MOVEABLE CENTER POINTS
NO. 10, 136 LB. DOUBLE SLIP CROSSING

STANDARD 2902
SCALE: AS NOTED
REVISION –
SHEET 19 OF 20
CADD FILE: ES2902-19

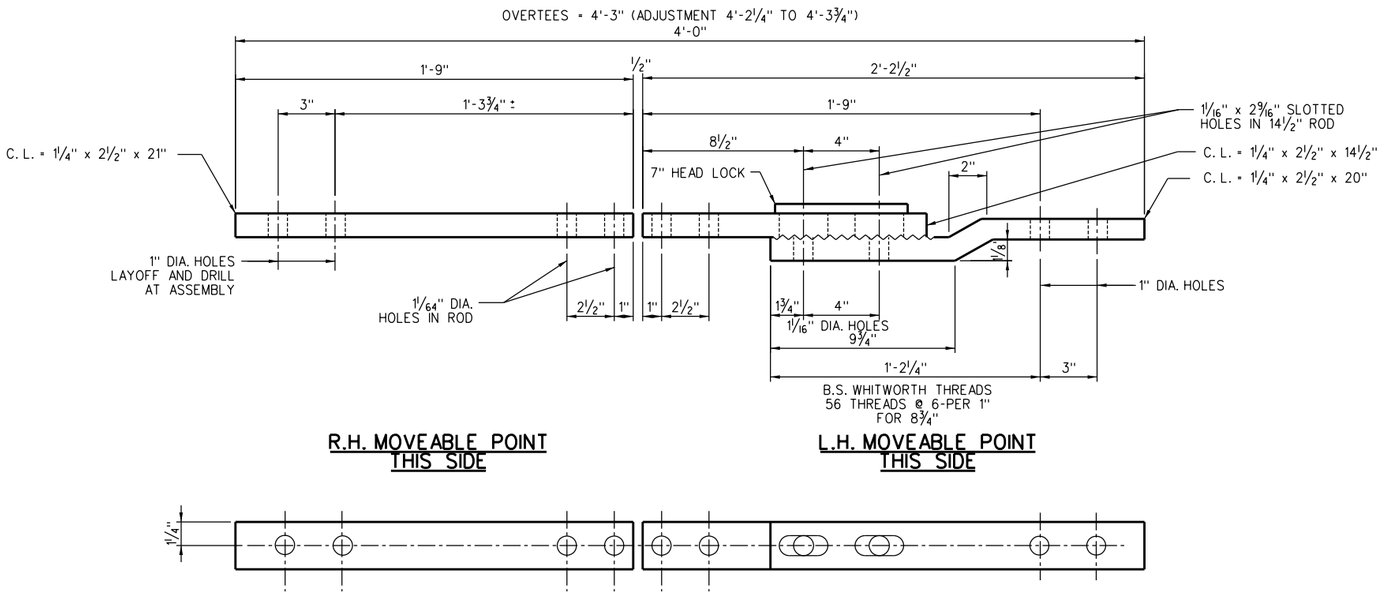

INSULATED SPREAD ROD NO. 5

(2) REQUIRED PER SLIP SWITCH
WITH HUCKED INSULATED SPLICE
(SCALE: 3" = 1'-0")

NOTE:

STAMP RODS WITH "RESP. ROD. •. 136RE. •10 DSS"

INSULATION MATERIAL

(1) FIBRE CHANNEL C-1.
(2) FIBRE ANGLE PLATE AP-34.
(4) FIBRE BUSHINGS B-11.
(1) STEEL SPLICE PLATE ST-684.
(1) STEEL CHANNEL ST-568.
(4) 3/4" HUCK BOLTS C50LR-BR24-36.
(4) HUCK COLLARS LC2R-24G.

SWITCH INFORMATION

GAGE = 4'-8 9/16"
THROW AT POINT = 4"
"E" DIST.: = 1 27/32"
POINT = 9/16"
REINF.: = 1/2" "D" GAGE SIDE
ROD SPACING = 15" x 21"
HEEL SPREAD = 7 1/2"

TYPE "M" CLIP MUST BE WELDED TO ROD ALONG BOTH SIDES OF BOTTOM OF CLIPS.
DEBURR ALL HOLES.

FOR MAINTENANCE ONLY

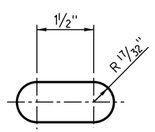

SLOTTED HOLE DETAIL

(1 1/16" x 2 9/16")
(SCALE: NONE)

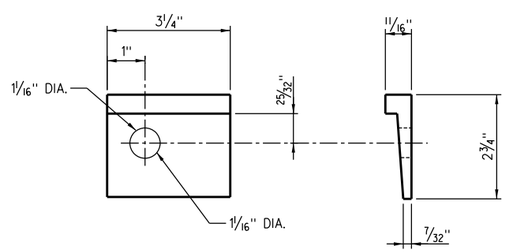

ROLLED HEADLOCK DETAIL

3 1/4" LG. (BETH. STL. PT. NO. 834-0305)
(2) PCS. AS SHOWN FOR CLIP, R.H. MOV. POINT
(2) PCS. OPP. HAND FOR CLIP, L.H. MOV. POINT
(SCALE: NONE)

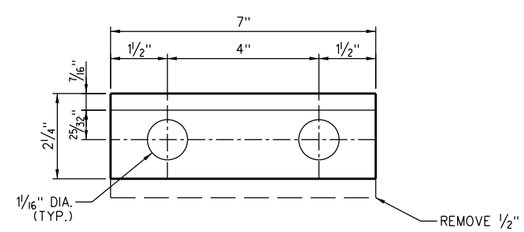

ROLLED HEADLOCK 7" LONG

(BETH. STEEL PT. NO. 834-0306)
(1) PC. PER ROD
(SCALE: NONE)

FURNISH: (2) H.T. MACH. SQ. HD. BOLTS, 1" x 4 1/2"
DR. 4 1/16" GR. 2 5/8", EA. WITH SLOTTED HEX NUT
PER BP-10003-BN, SPRING WASHER (N.C.G.)
&1/4" X 1 3/4" COTTER

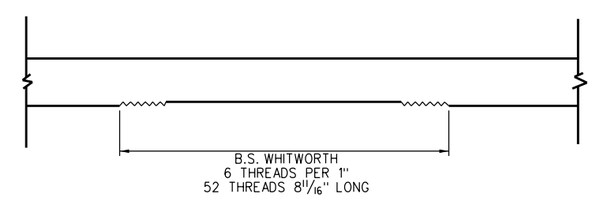

DETAIL OF SERRATIONS

(FOR 14 1/2" LONG STRAIGHT &
20" LONG BENT PIECE)
(SCALE: NONE)

REV.	DATE	DESCRIPTION	DES.	ENG.
X	XX-XX-XX	REVISION	XX	XX

DRAWN BY: A. CARLOS DATE: 03/31/2011

ASSISTANT DIRECTOR: STANDARDS & DESIGN

DIRECTOR OF ENGINEERING AND CONSTRUCTION

SCRRA ENGINEERING STANDARDS ARE INTENDED FOR SCRRA APPROVED USES ONLY. FOR NON-SCRRA APPROVED USES: SCRRA SHALL NOT BE RESPONSIBLE FOR THE ACCURACY OR COMPLETENESS OF THE DATA OR INFORMATION CONTAINED HEREIN. THE SELECTION AND USE OF THESE STANDARDS IS THE SOLE RESPONSIBILITY OF THE USER AND SHOULD NOT BE USED WITHOUT CONSULTING A REGISTERED PROFESSIONAL ENGINEER. ALL WARRANTIES AND REPRESENTATIONS OF ANY KIND ARE DISCLAIMED. ANYONE MAKING USE OF THIS INFORMATION AGREES THAT IT ASSUMES ALL LIABILITY ARISING FROM SUCH USE. NO PART OF THESE STANDARDS SHOULD BE REPRODUCED OR DISTRIBUTED IN ANY FORM OR BY ANY MEANS WITHOUT THE PRIOR WRITTEN PERMISSION OF SCRRA. ALL RIGHTS RESERVED.

METROLINK®
SOUTHERN CALIFORNIA REGIONAL RAIL AUTHORITY
ONE GATEWAY PLAZA, 12TH FLOOR, L. A., CA. 90012

ENGINEERING STANDARDS

INSULATED HEAD ROD NO. 5
FOR MOVEABLE CENTER POINTS
NO. 10, 136 LB. DOUBLE SLIP CROSSING

STANDARD 2902
SCALE: AS NOTED
REVISION –
SHEET 20 OF 20
CADD FILE: ES2902-20

EQUIVALENT CURVE DATA	
CURVE	9.5077'
RADIUS	602.62'
DELTA	7.152'
TANGENT (T)	37.66'
LENGTH (L)	75.22'
EXTERNAL	1.17'
CROSSOVER DATA	
LEAD	68.000'
PC TO PS	7.66'
PS TO PI	30.00'
PI TO ½" PF	38.00'
LENGTH OF TURNOUT	97.43'
PS TO PT	67.57'

FROG DATA	
FROG NUMBER	8
FROG ANGLE	7° -09'-10"
SWITCH DATA	
SWITCH LENGTH	16'-6"
HEEL SPREAD	6¼"
HEEL ANGLE	N/A
SWITCH ANGLE	1° -44'-11"
RADIUS OF CENTER LINE - SWITCH	N/A
TANGENT LENGTH SWITCH	N/A
CENTRAL ANGLE OF CLOSURE CURVE-SWITCH	N/A
DEGREE OF CURVE - SWITCH	N/A
TURNOUT DATA	
RADIUS OF CENTER LINE - TURNOUT	487.28'
TANGENT LENGTH - TURNOUT	23.0'
CENTRAL ANGLE OF CLOSURE CURVE - TURNOUT	5° -24'-46"
DEGREE OF CURVE - TURNOUT	11° -46'-44"

DRAWING INDEX

TURNOUT AND CROSSOVER GENERAL NOTES AND DATA — ES2911-01
TURNOUT AND CROSSOVER JOINT LOCATIONS — ES2911-02
TURNOUT LAYOUT — ES2911-03
TURNOUT BILL OF MATERIALS — ES2911-04
CROSSOVER LAYOUT AND BILL OF MATERIALS — ES2911-05
FROG LAYOUT — ES2911-06
FROG GAGE PLATE DETAILS — ES2911-07
FROG GUARD RAIL DETAILS — ES2911-08
SPLIT SWITCH POINT DETAILS — ES2911-09
STRAIGHT OR CURVED UNDERCUT STOCK RAILS — ES2911-10
SWITCH ROD DETAILS — ES2911-11
SWITCH ROD MISCELLANEOUS DETAILS — ES2911-12
EXTENSIONS PLATE AND DAP TIE DETAILS FOR M-23A SWITCH MACHINE — ES2911-13
TURNOUT AND SWITCH PLATE DETAILS — ES2911-14
SWITCH PLATE DETAILS — ES2911-15
INSULATED GAGE PLATE DETAILS — ES2911-16

FOR MAINTENANCE ONLY

NOTES:

1. TURNOUT TO BE FABRICATED FROM 136 LB. HEAD HARDENED RAIL, FROM POINT END TO LAST LONG SWITCH TIE.
2. LOCATION OF INSULATED JOINTS IS DETERMINED BY DRAWING NUMBER ES2911-02. IT WILL BE SATISFACTORY TO RELOCATE THE INSULATED JOINT IN THE FIELD UP TO 12" SO AS TO PROVIDE A SUITABLE SUSPENDED JOINT, PROVIDED THE STAGGER OF INSULATED JOINTS DOES NOT EXCEED 4'-6". SUSPENDED INSULATED JOINTS MUST BE LOCATED IN A CRIB AREA BETWEEN TIES, A MINIMUM DISTANCE OF 4" FROM EDGE OF NEAREST TIE PLATE.
3. ALL INSULATED JOINTS ARE TO BE ADHESIVE BONDED PREFABRICATED MITRE CUT INSULATED JOINTS PER ES2504 UNLESS OTHERWISE SPECIFIED.
4. ALL MATERIALS REQUIRED FOR HAND OR MACHINE OPERATED SWITCH OPERATION WILL BE FURNISHED PER REQUIREMENTS OF THE SCRRA DIRECTOR OF ENGINEERING AND CONSTRUCTION.
5. MATERIALS AND WORKMANSHIP, ALSO ANY CONSTRUCTION DETAILS NOT SHOWN, SHALL BE PER CURRENT AREMA "MANUAL AND PORTFOLIO" UNLESS OTHERWISE SPECIFIED.
6. WHERE REQUIRED, ALL IDENTIFICATION SYMBOLS TO BE PLAINLY STAMPED.
7. GAGE PLATES WILL BE FURNISHED INSULATED. SWITCH RODS WILL BE FURNISHED INSULATED UNLESS OTHERWISE SPECIFIED.
8. MANUFACTURER SHALL SUBMIT TWO COPIES OF SHOP DRAWINGS TO THE SCRRA DIRECTOR OF ENGINEERING AND CONSTRUCTION FOR APPROVAL PRIOR TO FABRICATION OF TURNOUT. SHOP DRAWINGS THAT CHANGE DETAILS OF THESE STANDARDS MUST CLEARLY SPECIFY SUCH PROPOSED CHANGES.
9. THE MATERIAL INCLUDED IN A "TURNOUT COMPLETE" IS EVERYTHING LISTED IN THE BILL OF MATERIALS. TO CONSTRUCT A COMPLETE TURNOUT, SWITCH TIES (PER LIST ON THIS SHEET) AND INSULATED JOINTS, FIELD WELDS, RUNNING RAIL, AND CLOSURE RAIL IDENTIFICATION ON SHEET ES2911-02 MUST ALSO BE SUPPLIED. THE MATERIAL FOR A "CROSSOVER COMPLETE" IS IDENTIFIED ON SHEET ES2911-05.
10. TIE PLATES SHALL CONFORM TO SCRRA ENGINEERING STANDARD ES2454.
11. SCREW SPIKES (15/16" X 6-2 TPI) SHALL CONFORM TO SCRRA ENGINEERING STANDARD ES2357. PLATE HOLES SHALL BE 1" DIAMETER. PILOT HOLES IN TIES SHALL BE 9/16" DIAMETER. SCREW SPIKES SHALL BE SCREWED INTO WOOD (NOT DRIVEN).
12. MANUFACTURER SHALL BEVEL RAIL ENDS PER CURRENT AREMA PLAN NO. 1005.
13. THE 16'-6" SWITCH POINT, MADE FROM 40'-0" RAIL PER ES2911-10 SHALL BE FURNISHED WITH SWITCH RODS NO. 1 AND 2 PER ES2911-11 AND ES2911-12.
14. FOR LOCATION OF INSULATED AND COMPROMISE JOINTS FOR NO. 8 TURNOUT AND CROSSOVER, SEE DRAWING NO. ES2911-02.
15. GAGE PLATES FOR SWITCH AND FROG, SWITCH HEEL PLATE (FOR BOTH R.H. AND L.H. TURNOUTS) AND PLATES P-10 THRU P-24 ARE DESIGNED TO BE PERPENDICULAR TO THE MAIN LINE THRU RUN RAILS.
16. UPON COMPLETION OF TURNOUT INSTALLATION, RUNNING RAIL MUST BE ADJUSTED TO SCRRA NEUTRAL RAIL TEMPERATURE.
17. ALL E-CLIPS SHALL BE GALVANIZED.
18. SWITCH POINTS SHALL BE FABRICATED PER AREMA SPECIFICATION NO. 9-28-92 AND DRAWING ES2911-09.
19. THE TOLERANCE FOR SPACING OF SWITCH TIES IS +/-½" RELATIVE TO ADJACENT TIES AND 1¼" RELATIVE TO CUMULATIVE DIMENSION FROM THE POINT OF SWITCH (PS).

CROSSOVER DATA TABLE

A	B	C	X	Y	2L+X	2L+X-2(PC-PS)	PS TO PS	U	V
13	104.42	103.60	29.10	178.92	179.54	164.23	163.61	27.61	28.42
14	112.45	111.57	37.13	186.89	187.57	172.26	171.58	35.58	36.45
15	120.48	119.54	45.16	194.86	195.61	180.29	179.55	43.55	44.48
16	128.51	127.51	53.19	202.83	203.64	188.32	187.52	51.52	52.51
17	136.54	135.48	61.22	210.80	211.67	196.35	195.49	59.49	60.54
18	144.58	143.45	69.26	218.77	219.70	204.39	203.46	67.46	63.58
19	152.61	151.42	77.29	226.74	227.73	212.42	211.43	75.43	76.61
20	160.64	159.39	85.32	234.71	235.77	220.45	219.40	83.40	84.64
21	168.67	167.36	93.35	242.68	243.80	228.48	227.36	91.36	92.67
22	176.70	175.33	101.38	250.65	251.83	236.51	235.33	99.33	100.70
23	184.74	183.30	109.41	258.62	259.86	244.55	243.30	107.30	108.74
24	192.77	191.27	117.45	266.59	267.93	252.58	251.27	115.27	116.77
25	200.80	199.24	125.48	274.56	275.93	260.61	259.24	123.24	124.80
26	208.83	207.21	133.51	282.53	283.96	268.64	267.21	131.21	132.83
27	216.86	215.18	141.54	290.50	291.99	276.67	275.18	139.18	140.86
28	224.90	223.15	149.57	298.47	300.02	284.71	283.15	147.15	148.90
29	232.93	231.12	157.61	306.44	308.05	292.74	291.12	155.12	156.93
30	240.96	239.09	165.64	314.41	316.09	300.77	299.09	163.09	164.96
31	248.99	247.05	173.67	322.38	324.12	308.80	307.06	171.06	172.99
32	257.02	255.02	181.70	330.35	332.15	316.83	315.03	179.03	181.02

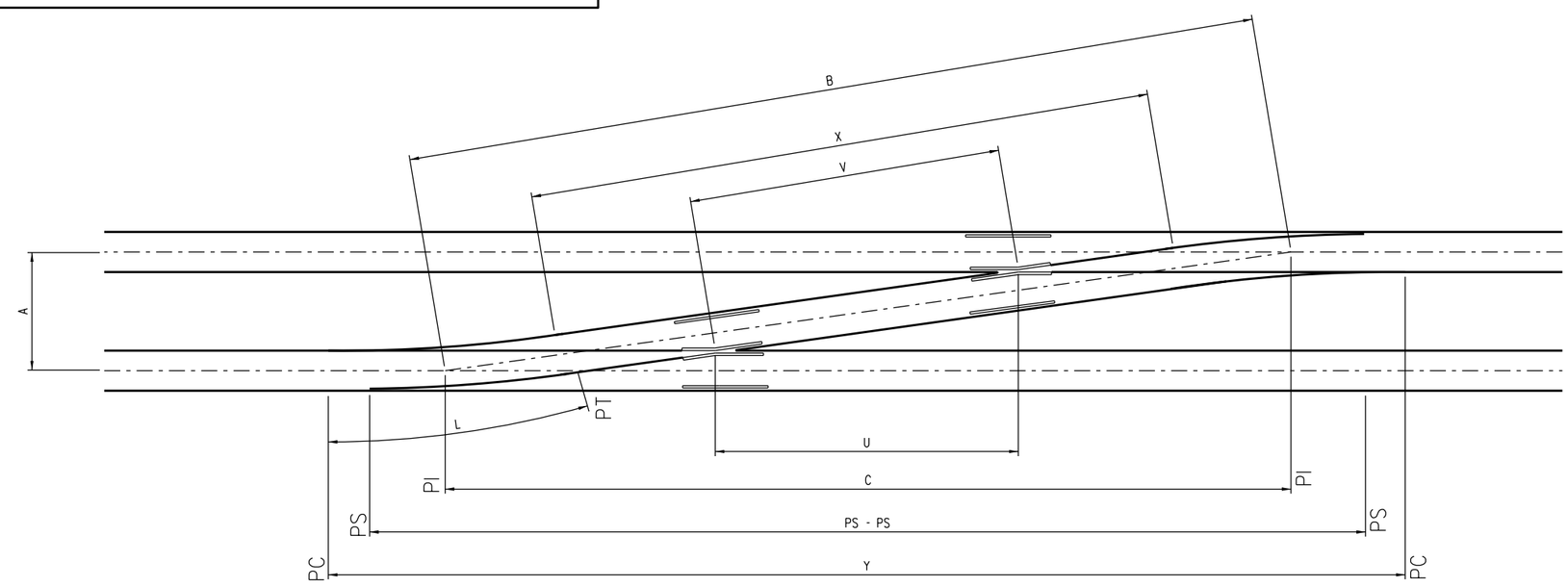

CROSSOVER LAYOUT

REV.	DATE	DESCRIPTION	DES.	ENG.
X	XX-XX-XX	REVISION	XX	XX

DRAWN BY: A. CARLOS DATE: 03/31/2011

ASSISTANT DIRECTOR: STANDARDS & DESIGN

DIRECTOR OF ENGINEERING AND CONSTRUCTION

SCRRA ENGINEERING STANDARDS ARE INTENDED FOR SCRRA APPROVED USES ONLY. FOR NON-SCRRA APPROVED USES:
SCRRA SHALL NOT BE RESPONSIBLE FOR THE ACCURACY OR COMPLETENESS OF THE DATA OR INFORMATION CONTAINED HEREIN. THE SELECTION AND USE OF THESE STANDARDS IS THE SOLE RESPONSIBILITY OF THE USER AND SHOULD NOT BE USED WITHOUT CONSULTING A REGISTERED PROFESSIONAL ENGINEER. ALL WARRANTIES AND REPRESENTATIONS OF ANY KIND ARE DISCLAIMED. ANYONE MAKING USE OF THIS INFORMATION AGREES THAT IT ASSUMES ALL LIABILITY ARISING FROM SUCH USE. NO PART OF THESE STANDARDS SHOULD BE REPRODUCED OR DISTRIBUTED IN ANY FORM OR BY ANY MEANS WITHOUT THE PRIOR WRITTEN PERMISSION OF SCRRA. ALL RIGHTS RESERVED.

METROLINK®
SOUTHERN CALIFORNIA REGIONAL RAIL AUTHORITY
ONE GATEWAY PLAZA, 12TH FLOOR, L. A., CA. 90012

ENGINEERING STANDARDS

NO. 8 136 LB. R.H. RBM FROG TURNOUT AND CROSSOVER GENERAL NOTES AND DATA

STANDARD 2911
SCALE: NONE
REVISION –
SHEET 1 OF 16
CADD FILE: ES2911-01

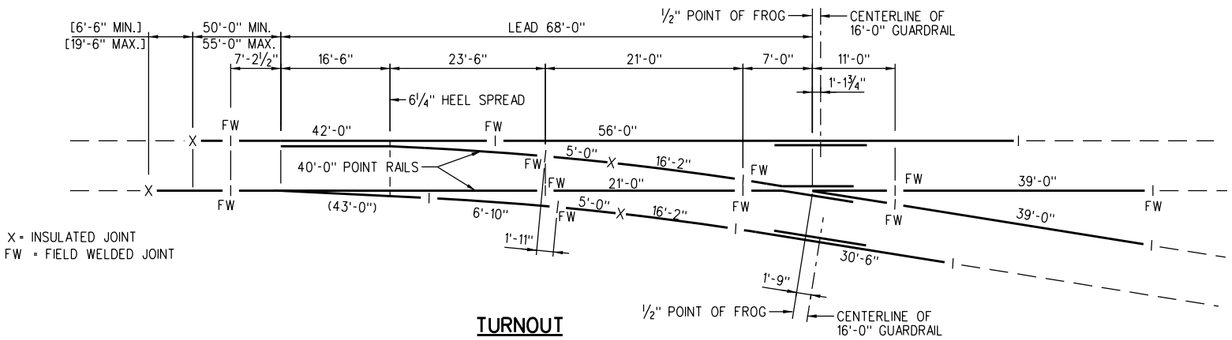

TURNOUT

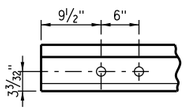

DETAIL "A"

SEE NOTE 4 (b)

(DRILLED HOLES NOT NECESSARY IF TEMPORARY BOLTED JOINTS ARE NOT REQUIRED)

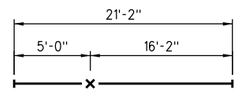

21'-2" LONG ADHESIVE BONDED PREFABRICATED MITRE CUT INSULATED RAIL JOINT ASSEMBLY

(SEE NOTE 5) BOTH ENDS SHALL BE LEFT BLANK FOR WELDING IN THE FIELD

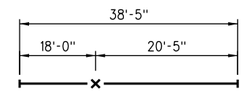

38'-5" LONG ADHESIVE BONDED PREFABRICATED MITRE CUT INSULATED RAIL JOINT ASSEMBLY

(SEE NOTE 5) BOTH ENDS SHALL BE LEFT BLANK FOR WELDING IN THE FIELD

NOTES:

1. THE PERMISSIBLE VARIATION IN STANDARD LENGTHS OF RAILS, FROGS AND SWITCH POINTS IS GREATER THAN THE NORMAL EXPANSION GAPS AT RAIL JOINTS AND THICKNESS OF FIBRE END POST IN INSULATED JOINTS, NO ALLOWANCE HAS BEEN MADE FOR EXPANSION GAPS AND FIBRE END POSTS IN COMPUTING LENGTHS OF RAILS SHOWN. DIMENSIONS OF TURNOUT AND ALL COMPONENTS IS FOR A THERMAL, STRESS - FREE CONDITION OF 110° F. ACTUAL EXACT LENGTHS OF RAILS TO BE INSTALLED IS TO BE FIELD - ADJUSTED TO FIT OVERALL TURNOUT DIMENSIONS, THERMAL ADJUSTMENTS, THICKNESS OF WELDS AND VARIATIONS IN COMPONENT RAIL LENGTH.
2. RAIL LAYOUT SHOWN FOR TURNOUT IS TO BE USED IN ALL CASES, EXCEPT WHERE COMPROMISE JOINTS ARE REQUIRED BETWEEN THE FROGS IN A CROSSOVER TRACK. WHEN COMPROMISE JOINTS ARE TO BE USED TO JOIN DIFFERENT RAIL WEIGHTS, THE INSULATED JOINTS IN THE CROSSOVER TRACK SHALL ALWAYS BE OF THE HEAVIER RAIL SECTION. THE DISCRIPTIONS OF THE CHANGES IN RAIL LAYOUT WHEN COMPROMISE JOINTS ARE REQUIRED IN THE CROSSOVER TRACK ARE BASED ON AN ASSUMPTION THAT TRACK "H" IS LAID WITH HEAVIER RAIL THAN TRACK "L". CROSSOVER ON 15'-0" TRACK CENTERS: AT LOCATION "A" THE 20'-5" RAIL SHALL BE REPLACED WITH 8'-0" OF THE HEAVIER RAIL AND 12'-5" OF THE LIGHTER RAIL. AT LOCATION "B" THE 18'-0" RAIL SHALL BE REPLACED WITH 7'-0" OF THE HEAVIER RAIL AND 11'-0" OF THE LIGHTER RAIL.
3. IN ADDITON TO NOTE 1. NO ALLOWANCE HAS BEEN MADE IN RAIL LENGTHS TO PROVIDE GAPS NEEDED TO MAKE FIELD WELDS. IN THE FIELD IT MAY BE NECESSARY TO CUT RAIL ENDS TO PROVIDE CORRECT GAPS FOR FIELD WELDS.
4. FURNISH ALL RAIL SHOWN IN SOLID LINES ON THIS DRAWING:
   (A.) RAILS LONGER THAN 39'-0" SHALL BE CONTINUOUS WELDED RAIL (CWR), TO BE FURNISHED WITH BOTH ENDS LEFT BLANK FOR WELDING IN THE FIELD.
   (B.) ALL OTHER RAILS SHALL BE 39'-0" AND SHORTER AS SPECIFIED ON THE DRAWING, WITH BOTH ENDS DRILLED PER DETAIL "A".
5. ALL RAIL FURNISHED FOR TURNOUT AND CROSSOVERS SHALL BE "HIGH STRENGTH" EXCEPT GUARD RAILS.
6. LOCATIONS OF INSULATED JOINTS ARE SHOWN ON TURNOUT AND CROSSOVER DIAGRAMS WITHOUT TOLERANCES, OR IF TOLERANCES ARE PERMISSABLE, WITH (+ OR -).
7. ALL INSULATED JOINTS ARE TO BE PROPERLY SUSPENDED IN CRIB AREA BETWEEN TWO TIES LOCATED 4" MINIMUM FROM EDGE OF NEAREST TIE TO EDGE OF INSULATED JOINT.
8. INSULATED JOINT MUST BE INTALLED TO BE CENTERED BETWEEN TWO (2) TIES.
9. FIELD WELDED JOINTS DESIGNATED "FW" SHOULD BE IN CRIB AREA BETWEEN TWO TIES LOCATED 4" MINIMUM FROM EDGE OF NEAREST TIE AND WELDED JOINT.
10. DIMENSIONS SHOWN IN PARENTHESIS (0'-0") ARE EXACT. RAILS FURNISHED FOR THESE LOCATIONS ARE LONGER AND MUST BE FIELD ADJUSTED (CUT) WITHIN TOLERANCES SHOWN IN BRACKETS [0'-0"].
11. WHEN INSULATED JOINTS WITH TOLERANCES AND FIELD WELDED JOINTS FALL SHORT OF MINIMUM CLEARANCE FROM TIE OR TIE PLATE THE JOINT MAY BE MOVED WITHIN TOLERANCE LIMITS. BONDED INSULATED JOINT ASSEMBLIES AND STOCK RAILS ARE FURNISHED LONGER THAN SHOWN IN PARENTHESIS ON LAYOUT. THESE OR THEIR ADJACENT CONNECTING RAILS MUST BE TRIMMED IN THE FIELD TO FIT.

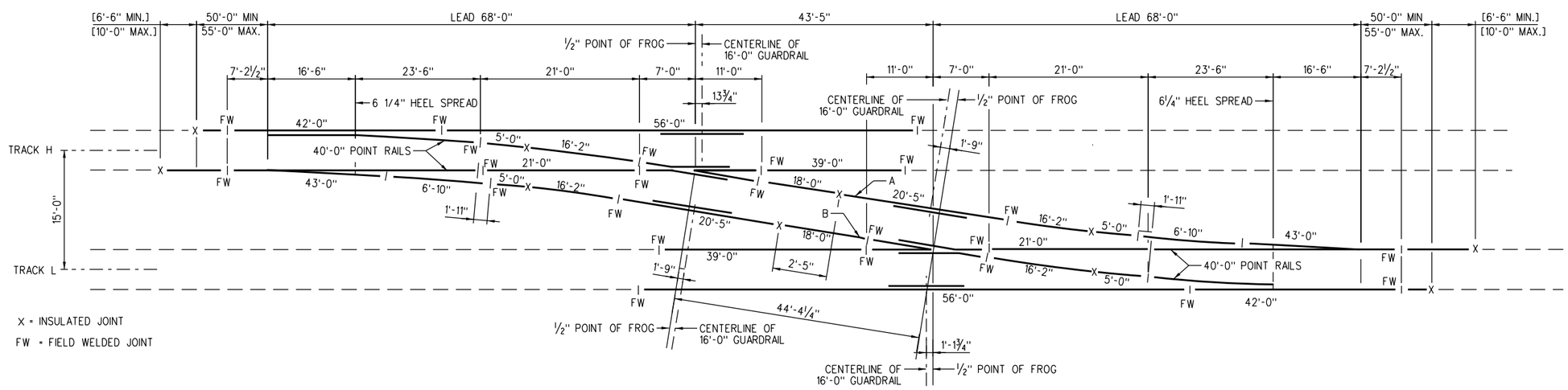

FOR MAINTENANCE ONLY

CROSSOVER

15'-0" TRACK CENTERS

X	XX-XX-XX	REVISION	XX	XX
REV.	DATE	DESCRIPTION	DES.	ENG.

DRAWN BY: A. CARLOS DATE: 08/30/2011

ASSISTANT DIRECTOR: STANDARDS & DESIGN

DIRECTOR OF ENGINEERING AND CONSTRUCTION

SCRRA ENGINEERING STANDARDS ARE INTENDED FOR SCRRA APPROVED USES ONLY. FOR NON-SCRRA APPROVED USES:
SCRRA SHALL NOT BE RESPONSIBLE FOR THE ACCURACY OR COMPLETENESS OF THE DATA OR INFORMATION CONTAINED HEREIN. THE SELECTION AND USE OF THESE STANDARDS IS THE SOLE RESPONSIBILITY OF THE USER AND SHOULD NOT BE USED WITHOUT CONSULTING A REGISTERED PROFESSIONAL ENGINEER. ALL WARRANTIES AND REPRESENTATIONS OF ANY KIND ARE DISCLAIMED. ANYONE MAKING USE OF THIS INFORMATION AGREES THAT IT ASSUMES ALL LIABILITY ARISING FROM SUCH USE. NO PART OF THESE STANDARDS SHOULD BE REPRODUCED OR DISTRIBUTED IN ANY FORM OR BY ANY MEANS WITHOUT THE PRIOR WRITTEN PERMISSION OF SCRRA. ALL RIGHTS RESERVED.

METROLINK®

SOUTHERN CALIFORNIA REGIONAL RAIL AUTHORITY
ONE GATEWAY PLAZA, 12TH FLOOR, L. A., CA. 90012

ENGINEERING STANDARDS

NO. 8 136 LB. R.H. RBM FROG
TURNOUT AND CROSSOVER
JOINTS LOCATIONS

STANDARD 2911
SCALE: NONE
REVISION –
SHEET 2 OF 16
CADD FILE: ES2911-02

NOTES:

1. SEE SHEET NO. 1 FOR NOTES AND TURNOUT DATA
2. SEE SHEET NO. 4 FOR BILL OF MATERIALS
3. SEE SHEET NO. 5 FOR CROSSOVER

NOTE:

IF CONCRETE TIES ARE INSTALLED AHEAD OF SWITCH POINT, TIE GAGE PLATE PP (3 EACH) AND S-4P (2 EACH) WILL NOT BE INSTALLED.

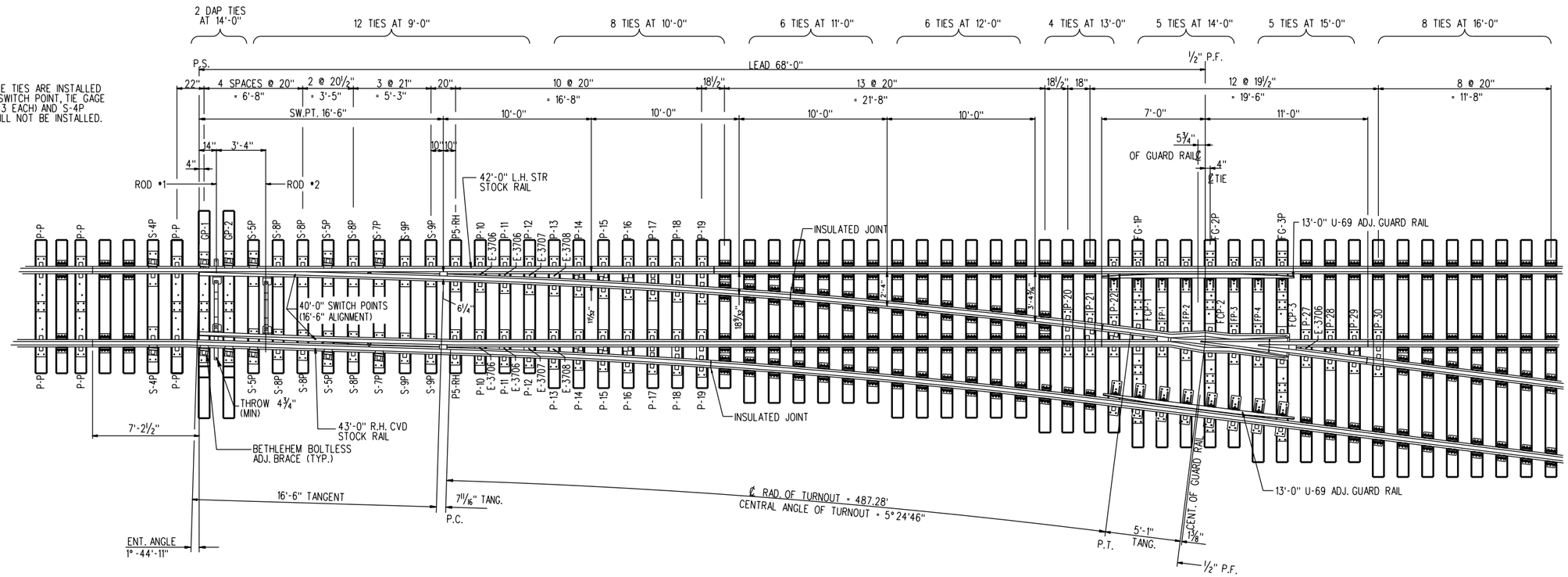

NO. 8 RIGHT HAND TURNOUT

GRAPHIC SCALE

FOR MAINTENANCE ONLY

REV.	DATE	DESCRIPTION	DES.	ENG.
X	XX-XX-XX	REVISION	XX	XX

DRAWN BY: A. CARLOS DATE: 03/31/2011

ASSISTANT DIRECTOR: STANDARDS & DESIGN

DIRECTOR OF ENGINEERING AND CONSTRUCTION

SCRRA ENGINEERING STANDARDS ARE INTENDED FOR SCRRA APPROVED USES ONLY. FOR NON-SCRRA APPROVED USES:
SCRRA SHALL NOT BE RESPONSIBLE FOR THE ACCURACY OR COMPLETENESS OF THE DATA OR INFORMATION CONTAINED HEREIN. THE SELECTION AND USE OF THESE STANDARDS IS THE SOLE RESPONSIBILITY OF THE USER AND SHOULD NOT BE USED WITHOUT CONSULTING A REGISTERED PROFESSIONAL ENGINEER. ALL WARRANTIES AND REPRESENTATIONS OF ANY KIND ARE DISCLAIMED. ANYONE MAKING USE OF THIS INFORMATION AGREES THAT IT ASSUMES ALL LIABILITY ARISING FROM SUCH USE. NO PART OF THESE STANDARDS SHOULD BE REPRODUCED OR DISTRIBUTED IN ANY FORM OR BY ANY MEANS WITHOUT THE PRIOR WRITTEN PERMISSION OF SCRRA. ALL RIGHTS RESERVED.

METROLINK®
SOUTHERN CALIFORNIA REGIONAL RAIL AUTHORITY
ONE GATEWAY PLAZA, 12TH FLOOR, L. A., CA. 90012

ENGINEERING STANDARDS

NO. 8 136 LB. R.H. RBM FROG TURNOUT LAYOUT

STANDARD: 2911
SCALE: 1/4" = 1'-0"
REVISION: –
SHEET: 3 OF 16
CADD FILE: ES2911-03

BILL OF MATERIAL FOR LATERAL TURNOUT

QTY.	DESCRIPTION
	16'-6" EXTENDED FIELD WELDED TYPE SWITCH POINTS (40'-0")
1 PAIR	R.H. CURVED SAMSON STOCK RAILS 43'-0"
1 EACH	L.H. STRAIGHT SAMSON STOCK RAILS 42'-0"
1 EACH	21'-0" RAIL (SRAIGHT)
1 EACH	56'-0" RAIL (STRAIGHT)
1 EACH	39'-0" RAIL
2 EACH	30'-6" RAIL (CURVED)
1 EACH	6'-10" RAIL (CURVED)
1 EACH	NO 1 SMJ TYPE SWITCH ROD W/BASKET
1 EACH	VERTICAL SWITCH ROD WITH SMJ CLIPS
1 EACH	GAGE PLATE No. P-P
3 EACH	GAGE PLATE No. G-1P-R AND G-2P-R
1 EACH	SLIDE PLATE S-8P
6 EACH	SLIDE PLATE S-8P
4 EACH	SLIDE PLATE S-9P
4 EACH	BRACE SLIDE PLATE S-5P
2 EACH	BRACE SLIDE PLATE S-7P
2 EACH	BRACE SLIDE PLATE S-4P
2 EACH	HEEL PLATE P5-RH
2 EACH	TURNOUT PLATES P-10-R THRU P-19-R
1 EACH	TURNOUT PLATES P-10-R THRU P-19-R
1 EACH	No.8 R.B.M. FROG ~ 18'-0"
1 EACH	FROG PLATES No. FP-23-R THRU FP-26-R
1 EACH	FROG PLATES No. FP-23-R THRU FP-26-R
1 EACH	FROG GAGE PLATES FGP-1 THRU FGP-3
2 EACH	13'-0" U-69 ADJUSTABLE GUARD RAIL W/PLATES
5 EACH	D.I. RAIL HOLD DOWN CLIPS E-3706
2 EACH	D.I. RAIL HOLD DOWN CLIPS E-3707
2 EACH	D.I. RAIL HOLD DOWN CLIPS E-3708
716 PCS.	"PANDROL", OR EQUAL, SCREW SPIKES 15/16" DIA. X 6" No. 5760
12 PCS.	BOLTLESS ADJUSTABLE BRACE ASSEMBLY
384 PCS.	"PANDROL", OR EQUAL, E-CLIP TYPE E-2055 (GALVANIZED)
8 PCS.	"PANDROL", OR EQUAL, E-CLIP TYPE E-2063 (GALVANIZED)
102 PCS.	SCRRA ES1406 "PANDROL", OR EQUAL, "E"-CLIP 6" TIE PLATE
2 EA	EPOXY BONDED PREFABRICATED MITRE CUT INSULATED JOINT 21'-2"

BILL OF SWITCH TIES FOR TURNOUT

PIECES	SIZE	LENGTH	BOARD FEET
12	7" x 9"	9'-0"	630.00
8	7" x 9"	10'-0"	420.00
6	7" x 9"	11'-0"	346.50
6	7" x 9"	12'-0"	378.00
4	7" x 9"	13'-0"	273.00
2	10" x 9"	14'-0" DAP TIES	147.00
5	7" x 9"	14'-0"	367.50
5	7" x 9"	15'-0"	393.75
8	7" x 9"	16'-0"	672.00
TOTAL			TOTAL
54			3470.25

FOR MAINTENANCE ONLY

REV.	DATE	DESCRIPTION	DES.	ENG.
X	XX-XX-XX	REVISION	XX	XX

DRAWN BY: A. CARLOS DATE: 03/31/2011

ASSISTANT DIRECTOR: STANDARDS & DESIGN

DIRECTOR OF ENGINEERING AND CONSTRUCTION

SCRRA ENGINEERING STANDARDS ARE INTENDED FOR SCRRA APPROVED USES ONLY. FOR NON-SCRRA APPROVED USES:
SCRRA SHALL NOT BE RESPONSIBLE FOR THE ACCURACY OR COMPLETENESS OF THE DATA OR INFORMATION CONTAINED HEREIN. THE SELECTION AND USE OF THESE STANDARDS IS THE SOLE RESPONSIBILITY OF THE USER AND SHOULD NOT BE USED WITHOUT CONSULTING A REGISTERED PROFESSIONAL ENGINEER. ALL WARRANTIES AND REPRESENTATIONS OF ANY KIND ARE DISCLAIMED. ANYONE MAKING USE OF THIS INFORMATION AGREES THAT IT ASSUMES ALL LIABILITY ARISING FROM SUCH USE. NO PART OF THESE STANDARDS SHOULD BE REPRODUCED OR DISTRIBUTED IN ANY FORM OR BY ANY MEANS WITHOUT THE PRIOR WRITTEN PERMISSION OF SCRRA. ALL RIGHTS RESERVED.

METROLINK®
SOUTHERN CALIFORNIA REGIONAL RAIL AUTHORITY
ONE GATEWAY PLAZA, 12TH FLOOR, L. A., CA. 90012

ENGINEERING STANDARDS

NO. 8 136 LB. R.H. RBM FROG TURNOUT
BILL OF MATERIALS

STANDARD 2911
SCALE: NONE
REVISION –
SHEET 4 OF 16
CADD FILE: ES2911-04

NOTES:

1. SEE SHEET 2911-01 FOR NOTES.
2. SEE SHEET 2911-03 FOR NO. 8 R. H. RAIL BOUND MANGANESE FROG TURNOUT.
3. CROSSOVER FOR 15'-0" TRACK CENTERS IS SHOWN. FOR 16'-0" OR GREATER TRACK CENTERS, USE TWO TURNOUTS PER ES2911-03. FOR OTHER TRACK CENTER SPACING, MANUFACTURER TO FURNISH SHOP DRAWINGS DETAILING RAIL AND TIE LAYOUT AND DIMENSIONS THAT FOLLOW THESE EXAMPLES.

BILL OF MATERIAL

QTY.	DESCRIPTION
2 PAIR	16'-6" EXTENDED FIELD WELDED TYPE SWITCH POINTS (40'-0" RAIL)
2 EACH	R.H. CURVED SAMSON STOCK RAILS 43'-0"
2 EACH	L.H. STRAIGHT SAMSON STOCK RAILS 42'-0"
2 EACH	21'-0" RAIL (STRAIGHT)
2 EACH	56'-0" RAIL (STRAIGHT)
2 EACH	6'-10" RAIL (CURVED)
2 EACH	39'-0" RAIL (STRAIGHT)
2 EACH	No. 1 SMJ TYPE SWITCH ROD W/BASKET
2 EACH	VERTICAL SWITCH ROD WITH SMJ CLIPS
6 EACH	GAGE PLATE No. P-P
2 EACH	GAGE PLATE No. GP-1 AND GP-2
12 EACH	SLIDE PLATE S-8P
8 EACH	SLIDE PLATE S-9P
8 EACH	BRACE SLIDE PLATE S-5P
4 EACH	BRACE SLIDE PLATE S-7P
4 EACH	BRACE SLIDE PLATE S-4P
4 EACH	HEEL PLATE P5-RH
4 EACH	TURNOUT PLATES P-10-R THRU P-19-R
2 EACH	PLATES P-20-R THRU P-22-R & P-27-R THRU P-30-R
2 EACH	No.8 R.B.M. FROG ~ 18'-0"
2 EACH	FROG PLATES No. FP-1-R THRU FP-4-R
2 EACH	FROG PLATES No. FCP-1 THRU FCP-3
2 EACH	FROG GAGE PLATES FGP-1 THRU FGP-3
4 EACH	13'-0" U-69 ADJUSTABLE GUARD RAIL W/PLATES
10 EACH	D.I. RAIL HOLD DOWN CLIPS E-3706
4 EACH	D.I. RAIL HOLD DOWN CLIPS E-3707
4 EACH	D.I. RAIL HOLD DOWN CLIPS E-3708
384 PCS.	PANDROL SCREW SPIKES 15/16" DIA. X 6" No. 5760
12 PCS.	BOLTLESS ADJUSTABLE BRACE ASSEMBLY
192 PCS.	"PANDROL", OR EQUAL, CLIP TYPE E-2055 (GALVANIZED)
24 PCS.	"PANDROL", OR EQUAL, CLIP TYPE E-2063 (GALVANIZED)
96 PCS.	SCRRA ES1406 "PANDROL", OR EQUAL, "E"- CLIP 6" TIE PLATE
4 EACH	EPOXY BONDED PREFABRICATED MITRE CUT INSULATED JOINT (21'-2")
2 EACH	EPOXY BONDED PREFABRICATED MITRE CUT INSULATED JOINT (38'-5")

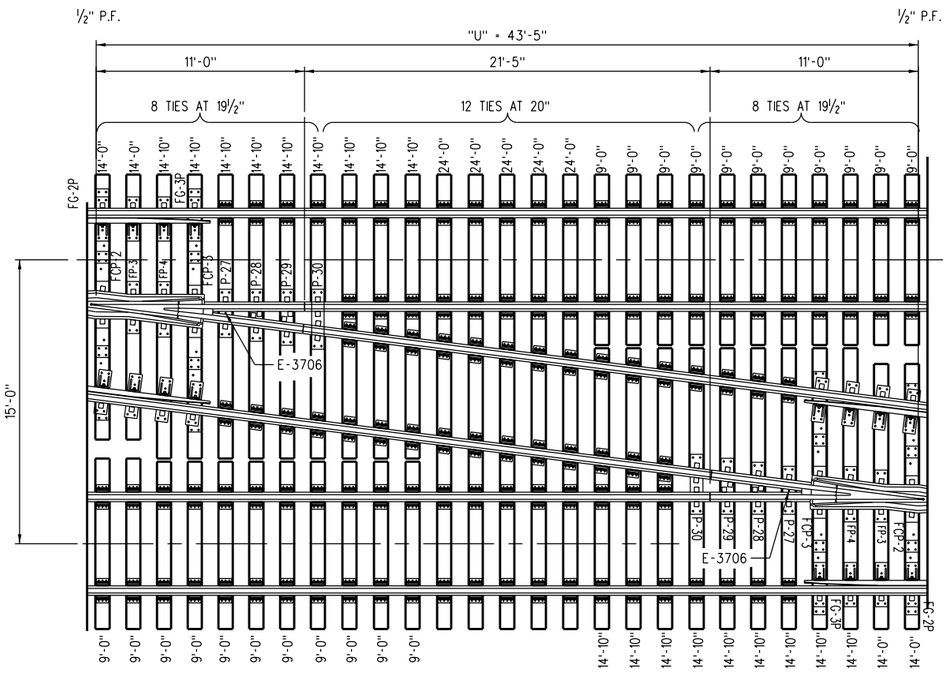

NO. 8 RIGHT HAND CROSSOVER

CROSSOVER DATA

FROG NUMBER	8
FROG ANGLE	7°-09'-10"
FROG LENGTH	18'-0"
FROG TOE LENGTH	7'-0"
FROG HEEL LENGTH	11'-0"
SWITCH POINT LENGTH 40'-0"	16'-6" AL.
HEEL SPREAD OF SWITCH	6 1/4"
SWITCH ANGLE	1°-44'-11"
LEAD	68'-0"
RADIUS OF TURNOUT CURVE C/L	487.28'
DEGREE OF TURNOUT CURVE C/L	11°-46'-44"
CENTRAL ANGLE OF TURNOUT CURVE	5°-24'-46"
STRAIGHT CLOSURE LENGTH	44'-6"
CURVED CLOSURE LENGTH	44'-8 1/8"

BILL OF SWITCH TIES

PIECES	SIZE	LENGTH	BOARD FEET
46	7" x 9"	9'-0"	2173.50
16	7" x 9"	10'-0"	840.00
12	7" x 9"	11'-0"	693.00
12	7" x 9"	12'-0"	756.00
8	7" x 9"	13'-0"	546.00
10	7" x 9"	14'-0"	735.00
4	10" x 9"	14'-0" DAP TIES	294.00
16	7" x 9"	14'-10"	1260.00
5	7" x 9"	24'-0"	630.00
TOTAL			TOTAL
129			7927.50

FOR MAINTENANCE ONLY

REV.	DATE	DESCRIPTION	DES.	ENG.
X	XX-XX-XX	REVISION	XX	XX

DRAWN BY: A. CARLOS DATE: 03/31/2011

ASSISTANT DIRECTOR: STANDARDS & DESIGN

DIRECTOR OF ENGINEERING AND CONSTRUCTION

SCRRA ENGINEERING STANDARDS ARE INTENDED FOR SCRRA APPROVED USES ONLY. FOR NON-SCRRA APPROVED USES:
SCRRA SHALL NOT BE RESPONSIBLE FOR THE ACCURACY OR COMPLETENESS OF THE DATA OR INFORMATION CONTAINED HEREIN. THE SELECTION AND USE OF THESE STANDARDS IS THE SOLE RESPONSIBILITY OF THE USER AND SHOULD NOT BE USED WITHOUT CONSULTING A REGISTERED PROFESSIONAL ENGINEER. ALL WARRANTIES AND REPRESENTATIONS OF ANY KIND ARE DISCLAIMED. ANYONE MAKING USE OF THIS INFORMATION AGREES THAT IT ASSUMES ALL LIABILITY ARISING FROM SUCH USE. NO PART OF THESE STANDARDS SHOULD BE REPRODUCED OR DISTRIBUTED IN ANY FORM OR BY ANY MEANS WITHOUT THE PRIOR WRITTEN PERMISSION OF SCRRA. ALL RIGHTS RESERVED.

METROLINK®
SOUTHERN CALIFORNIA REGIONAL RAIL AUTHORITY
ONE GATEWAY PLAZA, 12TH FLOOR, L. A., CA. 90012

ENGINEERING STANDARDS

NO. 8 136 LB. R.H. RBM FROG CROSSOVER
LAYOUT AND BILL OF MATERIALS

STANDARD 2911
SCALE: 1/4" = 1'-0"
REVISION –
SHEET 5 OF 15
CADD FILE: ES2911-05

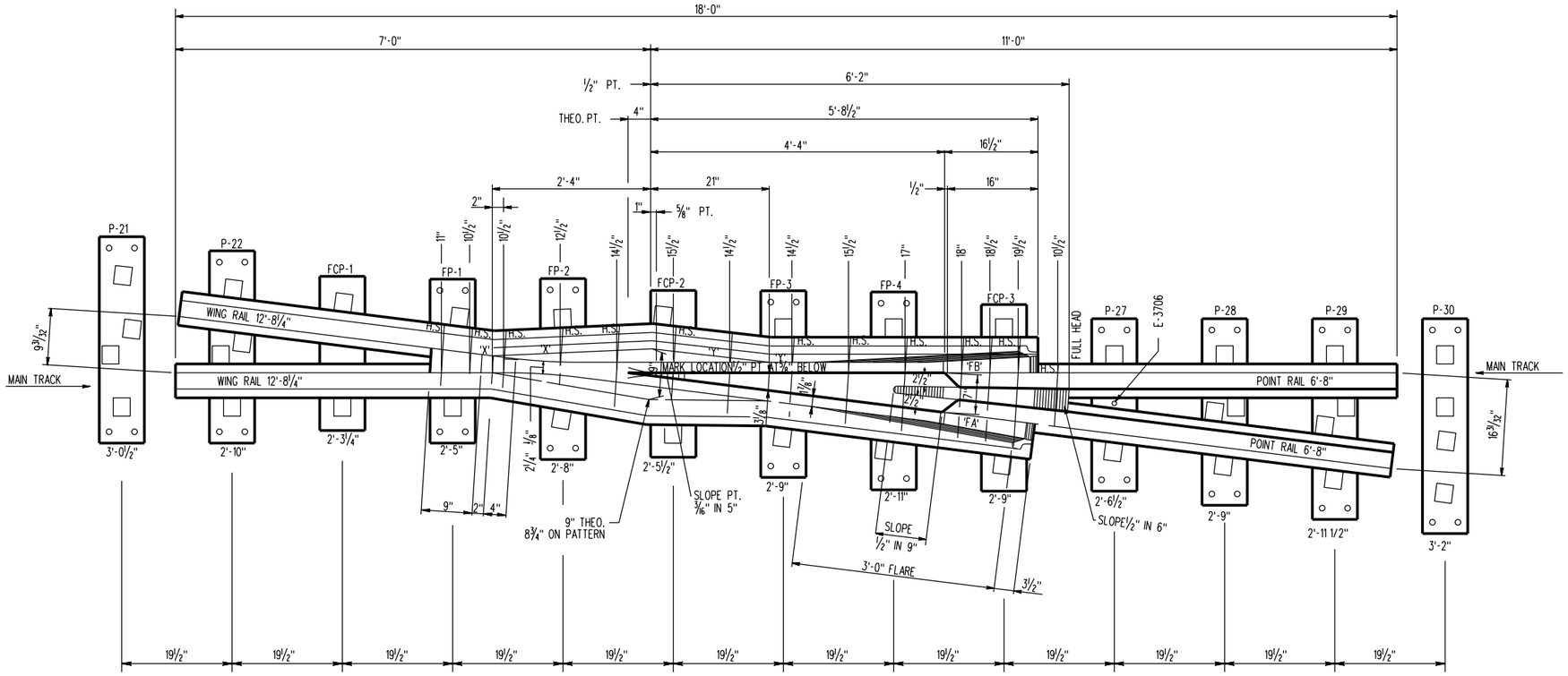

No. 8 RAILBOUND MANGANESE STEEL FROG
WITH PANDROLIZED PLATES
R.H. TURNOUT SHOWN - LH OPPOSITE PLATE ORIENTATION

NOTES:

1. .FROG ANGEL 7°-09'-10".
2. RAIL USED TO FABRICATE FROG IS TO BE 136 LB. HIGH STRENGTH.
3. RAIL BOUND MANGANESE STEEL FROG PER CURRENT AREMA PLAN NO. 621 & 625 WITH EXPLOSIVE HARDENED MANGANESE HIGH INTEGRITY CASTING PER CURRENT AREMA SPECIFICATIONS AND MODIFIED FOR ARM LENGTHS AND PLATES WITH "PANDROL" FASTENERS.
4. ALL FROG PLATES SHALL BE STAMPED IN ½" CHARACTERS TO INDICATE MFG., FROG NO., R.H., RAIL SECTION AND PLATE NUMBER. MARK TO BE STAMPED ON SAME END OF ALL FROG PLATES.
5. FOR DETAILS OF FROG PLATES FP-1 THRU FP-4 AND PCP-1 THRU FCP-3 SEE SHEET ES2911-07. FOR PLATES P-21, P-22 AND P-27 THRU P-30 SEE SHEET ES2911-16.
6. WORKMANSHIP AND MATERIALS SHALL BE PER CURRENT AREMA SPECIFICATIONS FOR SPECIAL TRACKWORK, EXCEPT AS OTHERWISE SPECIFIED.
7. ANY CONSTRUCTION DETAILS NOT SHOW SHALL BE IN ACCORDANCE WITH CURRENT AREMA RECOMMENDED PRACTICES.
8. FROG PLATES ARE DESIGNED TO BE INSTALLED PERPENDICULAR TO MAIN TRACK.
9. BODY BOLTS 1⅛" DIA., H.T.C.S. - PER AREMA SPECIFICATIONS.
10. TOE AND HEEL BLOCKS AND BOLTS PER AREMA SPECIFICATIONS.
11. PLATES TO BE MADE OF MILD ROLLED STEEL.
12. THE PLATES AS SHOWN ARE FOR A 136 LB. NO. 8, RIGHT HAND, HAND OPERATED TURNOUT. FOR A LEFT HAND TURNOUT, PLATES ARE TO BE OPPOSITE.
13. THE "PANDROL" TYPE WELD-ON PRESSED STEEL SHOULDER, MADE OF MILD ROLLED STEEL, TO BE PURCHASED FROM PANDROL INTERNATIONAL OR APPROVED ALTERNATE MEETING "PANDROL'S" DESIGN SPECIFICATIONS. THE PRESSED STEEL SHOULDER MUST BE CAREFULLY WELDED TO ALL PLATES WITH A MINIMUM 2 PASS ⅜" • FILLET WELD ALONG THE BEVELED GROOVES OF THE SHOULDER. ANY WELD PROJECTING BEYOND THE VERTICAL FACE OF SHOULDER IN THE AREA OF THE BASE OF RAIL SEAT MUST BE MACHINED OUT TO PROVIDE A CLEAR RAIL SEAT DIMENSION AS CALLED FOR.
14. MANUFACTURER OF FROG PLATES SHALL USE COMPLETED FROG TO VERIFY LOCATION OF ADJUSTABLE CLAMPS ON FROG PLATES FCP-1, FCP-2 AND FCP-3 TO INSURE PROPER FIT. FROG PLATES WILL BE WELDED TO THE GAGE PLATES IN THE FIELD WITH A 3 PASS ½" • FILLET WELD. PLATES WILL BE WELDED ONLY AFTER THE GAGE PLATES ARE SECURED IN THE PROPER LOCATION ON THE TIE WITH THE FROG IN PLACE AT PROPER ALIGNMENT.
15. GUARD RAIL PLATES ARE TO BE INSTALLED AND WELDED TO THE FROG GAGE PLATES IN THE FIELD WITH A 3 PASS ½" • FILLET WELD CONTINUOUS ON BOTH ENDS OF THE PLATE. PLATES ARE TO BE WELDED ONLY AFTER THE GAGE PLATE AND THE FROG IS SECURED IN THE PROPER LOCATION ON THE TIE WITH THE FROG IN PLACE AT PROPER ALIGNMENT.
16. IDENTIFICATION TAG WITH RAISED METAL CHARACTERS TO BE APPLIED WHICH WILL STATE WEIGHT OF RAIL, FROG NO., MANUFACTURER AND YEAR MANUFACTURED.
17. RAIL ENDS TO BE CUT AT 45 DEGREE ANGLE AT JOINT WITH FROG CASTING.

WELDING OF GAGE PLATE & GUARD RAIL:

1. POSITION GAGE PLATES AT DESIGNATED TIE LOCATIONS AND ANCHOR IN PLACE.
2. CHECK TRACK FOR CORRECT GAGE.
3. STARTING WITH ONE GAGE PLATE, PLACE FROG PLATES WITH ADJUSTABLE BRACES AND SECURE TO FROG AND GUARD RAIL WITH "PANDROL" CLIPS.
4. RECHECK TRACK GAGE AND CORRECT IF NECESSARY.
5. CAREFULLY WELD FROG PLATE AND GUARD RAIL PLATE TO FROG GAGE PLATES WITH 3 PASS ½" • FILLET WELD. FOR WELDING USE THE FOLLOWING:
   - A. ELECTRODE, 5/32 INCH, WELDING SPEC. 7018XLM.
   - B. ELECTRODE, 3/16 INCH, WELDING SPEC. 7018XLM.
   - C. WIRE, 3/32 INCH, NR203, 1% NICKEL FLUX CORE.

   OTHER WIRE OR ELECTRODES MEETING SPECIFICATIONS AS CALLED FOR AND APPROVED BY DIRECTOR OF ENGINEERING MAY BE USED.

FOR MAINTENANCE ONLY

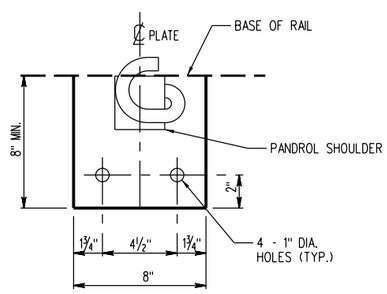

TYPICAL PLATE PUNCHING DETAIL

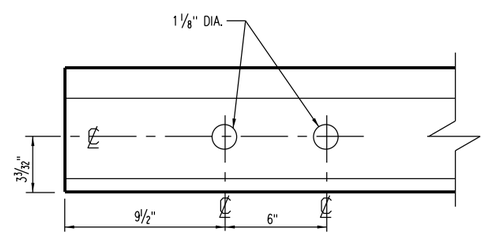

RAIL END DRILLING

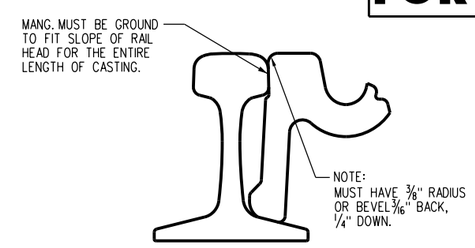

DETAIL OF FROG CASTING / RAIL FIT

SCALE: NONE

REV.	DATE	DESCRIPTION	DES.	ENG.
X	XX-XX-XX	REVISION	XX	XX

DRAWN BY: A. CARLOS DATE: 03/31/2011

ASSISTANT DIRECTOR: STANDARDS & DESIGN

DIRECTOR OF ENGINEERING AND CONSTRUCTION

SCRRA ENGINEERING STANDARDS ARE INTENDED FOR SCRRA APPROVED USES ONLY. FOR NON-SCRRA APPROVED USES:
SCRRA SHALL NOT BE RESPONSIBLE FOR THE ACCURACY OR COMPLETENESS OF THE DATA OR INFORMATION CONTAINED HEREIN. THE SELECTION AND USE OF THESE STANDARDS IS THE SOLE RESPONSIBILITY OF THE USER AND SHOULD NOT BE USED WITHOUT CONSULTING A REGISTERED PROFESSIONAL ENGINEER. ALL WARRANTIES AND REPRESENTATIONS OF ANY KIND ARE DISCLAIMED. ANYONE MAKING USE OF THIS INFORMATION AGREES THAT IT ASSUMES ALL LIABILITY ARISING FROM SUCH USE. NO PART OF THESE STANDARDS SHOULD BE REPRODUCED OR DISTRIBUTED IN ANY FORM OR BY ANY MEANS WITHOUT THE PRIOR WRITTEN PERMISSION OF SCRRA. ALL RIGHTS RESERVED.

METROLINK®
SOUTHERN CALIFORNIA REGIONAL RAIL AUTHORITY
ONE GATEWAY PLAZA, 12TH FLOOR, L. A., CA. 90012

ENGINEERING STANDARDS

NO. 8 136 LB. R.H. RBM FROG LAYOUT

STANDARD 2911
SCALE: 1" = 1'-0"
REVISION –
SHEET 6 OF 16
CADD FILE: ES2911-06

NOTE:
FOR NO. 8 FROG AND PLATE LOCTIONS SEE SHEET 6.

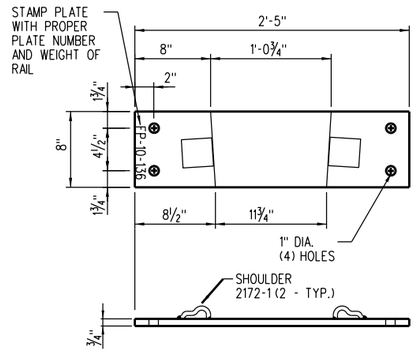

FROG PLATE - FP-1
¾" x 8" x 2'-5" - FLAT

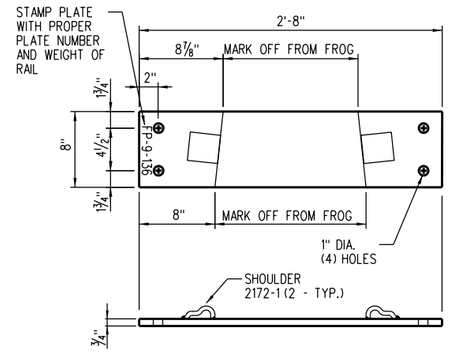

FROG PLATE - FP-2
¾" x 8" x 2'-8" - FLAT

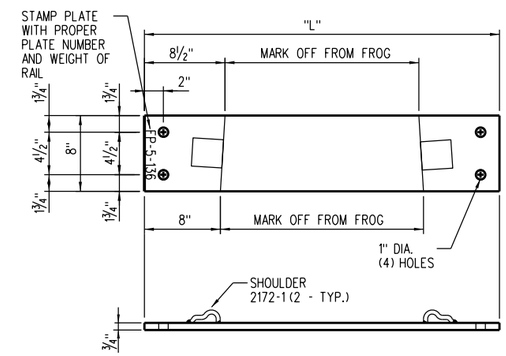

FROG PLATE - FCP-3, FP-3 AND FP-4
¾" x 8" - FLAT (SEE TABLE FOR LENGTHS)

DIMENSION TABLE		
PLATE	"L"	NO. REQ'D
FCP-3	2'-9"	1
FP-4	2'-11"	1
FP-3	2'-9"	1

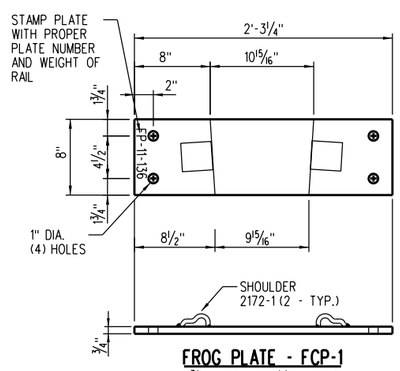

FROG PLATE - FCP-1
¾" x 8" x 2'-3¼" - FLAT

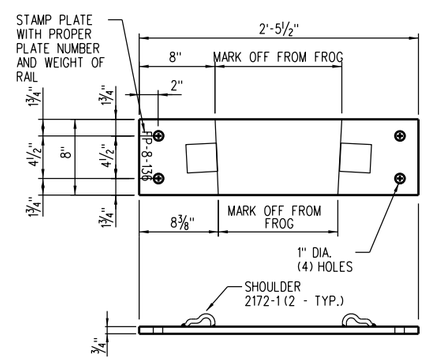

FROG PLATE - FCP-2
¾" x 8" x 2'-5½" - FLAT

FOR MAINTENANCE ONLY

X	XX-XX-XX	REVISION	XX	XX
REV.	DATE	DESCRIPTION	DES.	ENG.

DRAWN BY: A. CARLOS DATE: 03/31/2011

ASSISTANT DIRECTOR: STANDARDS & DESIGN

DIRECTOR OF ENGINEERING AND CONSTRUCTION

SCRRA ENGINEERING STANDARDS ARE INTENDED FOR SCRRA APPROVED USES ONLY. FOR NON-SCRRA APPROVED USES:
SCRRA SHALL NOT BE RESPONSIBLE FOR THE ACCURACY OR COMPLETENESS OF THE DATA OR INFORMATION CONTAINED HEREIN. THE SELECTION AND USE OF THESE STANDARDS IS THE SOLE RESPONSIBILITY OF THE USER AND SHOULD NOT BE USED WITHOUT CONSULTING A REGISTERED PROFESSIONAL ENGINEER. ALL WARRANTIES AND REPRESENTATIONS OF ANY KIND ARE DISCLAIMED. ANYONE MAKING USE OF THIS INFORMATION AGREES THAT IT ASSUMES ALL LIABILITY ARISING FROM SUCH USE. NO PART OF THESE STANDARDS SHOULD BE REPRODUCED OR DISTRIBUTED IN ANY FORM OR BY ANY MEANS WITHOUT THE PRIOR WRITTEN PERMISSION OF SCRRA. ALL RIGHTS RESERVED.

METROLINK®
SOUTHERN CALIFORNIA REGIONAL RAIL AUTHORITY
ONE GATEWAY PLAZA, 12TH FLOOR, L. A., CA. 90012

ENGINEERING STANDARDS

NO. 8 136 LB. R.H. RBM FROG PLATE DETAILS

STANDARD 2911
SCALE: 1½" = 1'-0"
REVISION –
SHEET 7 OF 16
CADD FILE: ES2911-07

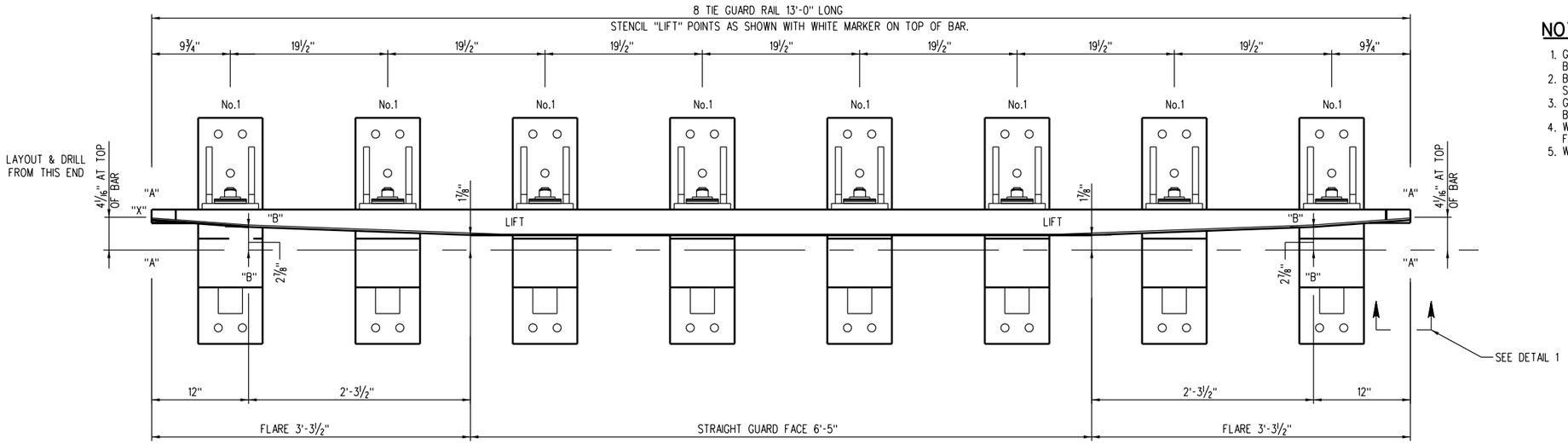

NOTES:

1. GUARD RAIL SECTION UIC 33, (U69) UIC 860.0 GRADE 90A (GUARD FACE BRINELL 319 MIN.)
2. BASE PLATE, BRACKET & SHIMS - MILD STEEL PER AREMA SPECIFICATION M7.
3. GUARD RAIL BOLT AND NUT PER AREMA SPECIFICATION M11. EXCEPT BOLT TO BE GRADE 8 AND NUT TO BE SECURITY LOCKNUT.
4. WORKMANSHIP AND TOLERANCES PER AREMA SPECIFICATIONS FOR "SPECIAL TRACKWORK".
5. WELDING PER ANSI\ AWS D1.1-92 OR LATEST REVISION.

COLLECTIVE DRILLING FROM END OF GUARD BAR MARKED "X"

"X" 9¾"x 2'-5¼"x 4'-0¾"x 5'-8¼"x 7'-3¾"x 8'-11¼"x 10'-6¾"x 12'-2¼"

HOLES 1" DIA. - 1⅜" A.B.

ASSEMBLED 13'-0" GUARD RAIL

FOR MAINTENANCE ONLY

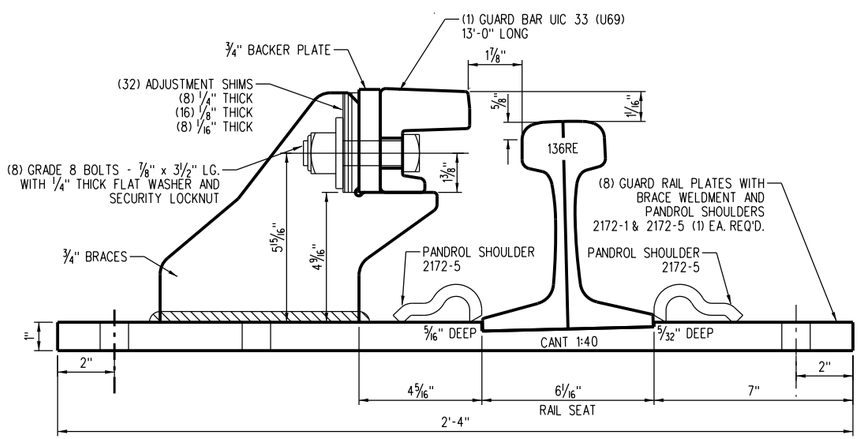

TYPICAL PLATE DETAIL

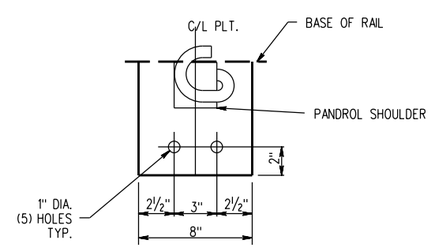

TYPICAL PLATE PUNCHING DETAIL

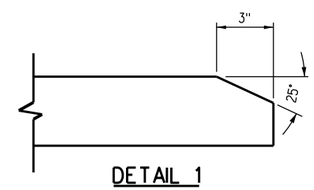

DETAIL 1

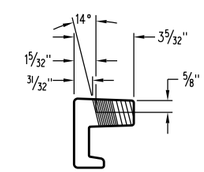

SECTION A - A

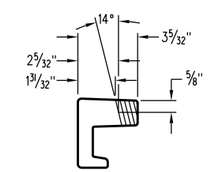

SECTION B - B

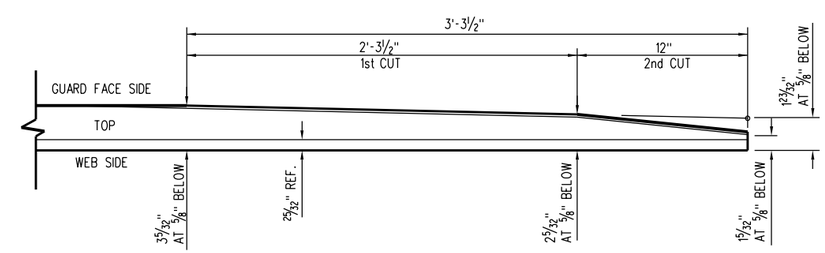

FLARE DETAIL

BREAK SHARP CORNERS OF ALL MACHINED SURFACES

REV.	DATE	DESCRIPTION	DES.	ENG.
X	XX-XX-XX	REVISION	XX	XX

DRAWN BY: A. CARLOS DATE: 03/31/2011

ASSISTANT DIRECTOR: STANDARDS & DESIGN

DIRECTOR OF ENGINEERING AND CONSTRUCTION

SCRRA ENGINEERING STANDARDS ARE INTENDED FOR SCRRA APPROVED USES ONLY. FOR NON-SCRRA APPROVED USES:
SCRRA SHALL NOT BE RESPONSIBLE FOR THE ACCURACY OR COMPLETENESS OF THE DATA OR INFORMATION CONTAINED HEREIN. THE SELECTION AND USE OF THESE STANDARDS IS THE SOLE RESPONSIBILITY OF THE USER AND SHOULD NOT BE USED WITHOUT CONSULTING A REGISTERED PROFESSIONAL ENGINEER. ALL WARRANTIES AND REPRESENTATIONS OF ANY KIND ARE DISCLAIMED. ANYONE MAKING USE OF THIS INFORMATION AGREES THAT IT ASSUMES ALL LIABILITY ARISING FROM SUCH USE. NO PART OF THESE STANDARDS SHOULD BE REPRODUCED OR DISTRIBUTED IN ANY FORM OR BY ANY MEANS WITHOUT THE PRIOR WRITTEN PERMISSION OF SCRRA. ALL RIGHTS RESERVED.

METROLINK®
SOUTHERN CALIFORNIA REGIONAL RAIL AUTHORITY
ONE GATEWAY PLAZA, 12TH FLOOR, L. A., CA. 90012

ENGINEERING STANDARDS

NO. 8 136 LB. R.H. RBM FROG GUARD RAIL DETAILS

STANDARD 2911
SCALE: 1½" = 1'-0"
REVISION –
SHEET 8 OF 16
CADD FILE: ES2911-08

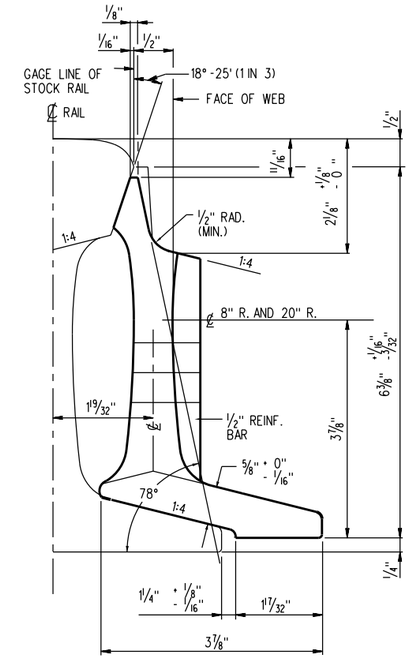

END VIEW OF POINT

SCALE: NONE

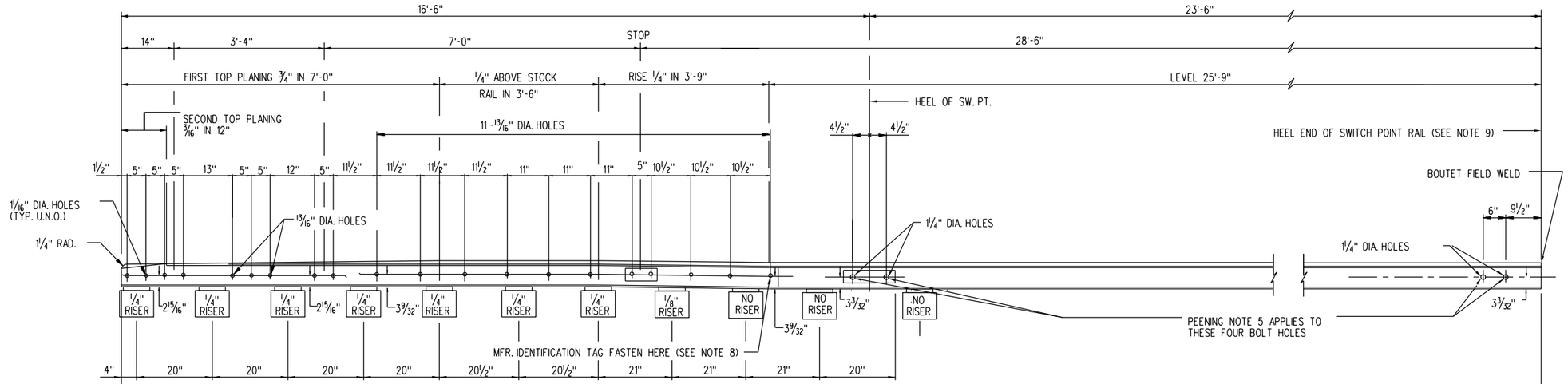

SIDE VIEW SWITCH POINT

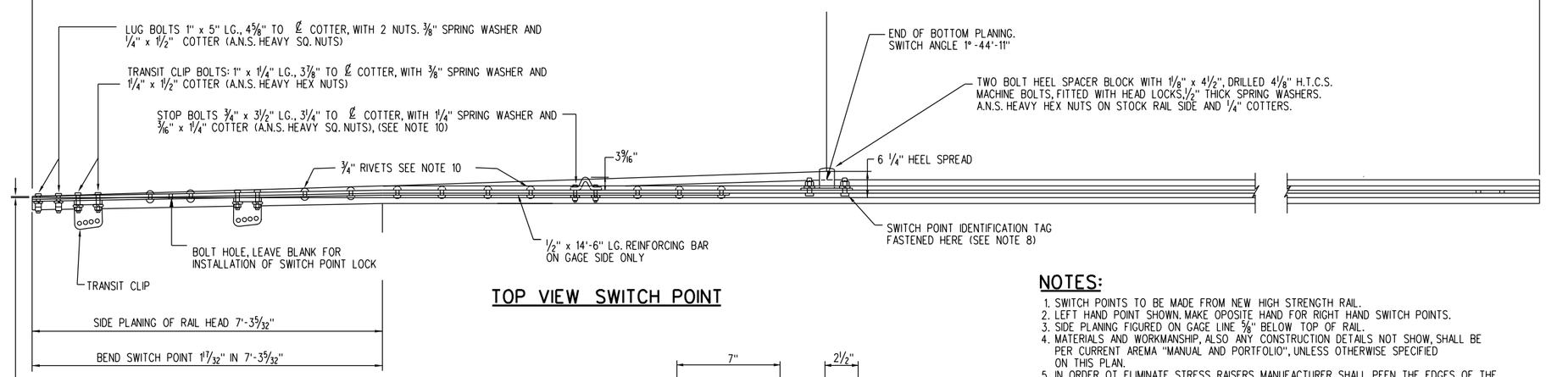

TOP VIEW SWITCH POINT

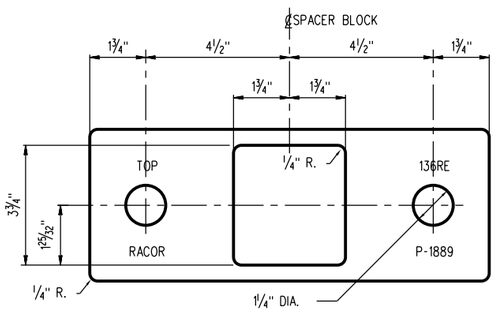

FOR MAINTENANCE ONLY

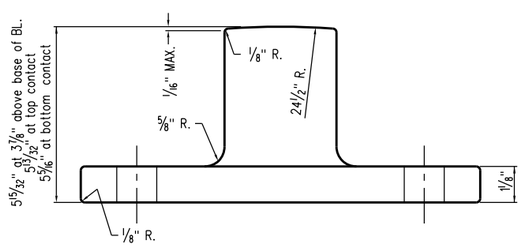

HEEL BLOCK DETAIL

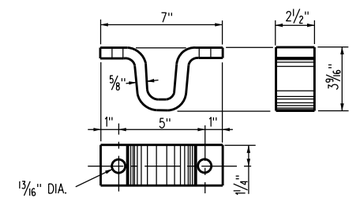

STOP

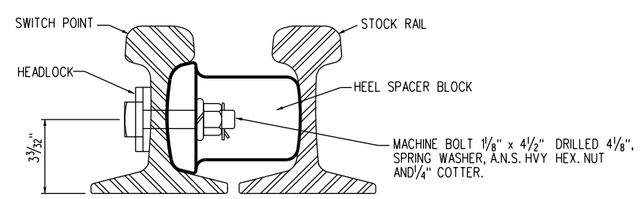

SECTION AT HEEL END OF 16'-6" SWITCH POINT MADE FROM 40'-0" LONG RAIL

NOTES:

1. SWITCH POINTS TO BE MADE FROM NEW HIGH STRENGTH RAIL.
2. LEFT HAND POINT SHOWN. MAKE OPOSITE HAND FOR RIGHT HAND SWITCH POINTS.
3. SIDE PLANING FIGURED ON GAGE LINE 5/8" BELOW TOP OF RAIL.
4. MATERIALS AND WORKMANSHIP, ALSO ANY CONSTRUCTION DETAILS NOT SHOW, SHALL BE PER CURRENT AREMA "MANUAL AND PORTFOLIO", UNLESS OTHERWISE SPECIFIED ON THIS PLAN.
5. IN ORDER OT ELIMINATE STRESS RAISERS, MANUFACTURER SHALL PEEN THE EDGES OF THE BOLT HOLES AS INDICATED AT THE HEEL OF THE SWITCH POINT AND AT THE HEEL END OF THE SWITCH POINT RAIL. USING AIR HAMMER WITH SUITABLE HEAD AND FINISHING WITH DRIFT PIN. BRAND ON RAIL AT EDGE OF BOLT HOLE TO BE CAREFULLY REMOVED BY GRINDING BEFORE PEENING.
6. THE FOLLOWING MATERIAL IS INCLUDED FOR THE TERMS SHOWN. IF ANY PART IS TO BE OMITTED, REQUISITIONS AND ORDERS SHALL STATE DEFINIELY WHAT IS WANTED. SWITCH POINT: ONE PAIR SWITCH POINTS WITH REINFORCING BARS, TRANSIT CLIPS, STOPS AND FLOATING HEEL SEPARATOR BLOCK FASTENED TO POINT. STATE "RIGHT HAND" OR "LEFT HAND".
7. THE CONTOUR PLANING SHALL BE ON THE GAGE SIDE BEGINNING AT A DISTANCE OF 36" FROM THE POINT OF SWITCH AND SHALL BE SHAPED TO THE CONTOUR OF A NEW 136 LB. RAIL AND SHALL RUN OUT AT THE END OF TOP PLANING, WHERE THE SWITCH POINT HAS FULL HEAD CONTOUR.
8. METAL IDENTIFICATION TAG SHOWING (1) DESIGN LENGTH OF SWITCH, (2) IN PARENTHESIS, THE ACTUAL LENGTH OF SWITCH POINT RAIL AND (3) THE TURNOUT NUMBER. MARK TAG THUS: 16'-6" (40'-0") NO. 8. TAG TO BE FASTENED TO SWITCH POINT, ON GAGE SIDE OF RAIL AT HEEL SPACER BLOCK IN LOCATION SHOWN.
9. AT HEEL END OF SWITCH POINT RAIL, BREAK SHARP CORNER AROUND THE ENTIRE PERIPHERY BY SLIGHTLY GRINDING. ALSO, "DO NOT" END HARDEN RAIL END.
10. UNLESS SWITCH POINT ORDER SPECIFICALLY CALLS FOR USE OF 3/4" RIVETS AND 3/4" STOP BOLTS, MANUFACTURER CAN SUBSTITUTE 3/4" HUCK FASTENERS, BOLT PART NO. C-50-LR-BR2416 AND COLLAR PART NO. L3-2-R-24G FOR 3/4" RIVETS. AND FOR 3/4" STOP BOLTS USE HUCK FASTENERS, BOLT PART NO. C-50-LR-BR2424 AND COLLAR PART NO. L3-2-R-24G.
11. TURNOUTS ARE TO BE FURNISHED WITH MANGANESE STEEL INSERT ON THE DIVERGING POINT (TURNOUT SIDE) AND A PLAIN SWITCH POINT ON THE NORMAL POINT (STRAIGHT SIDE). REPLACEMENT POINTS MUST SPECIFY WHETHER PLAIN POINT OR MANGANESE STEEL INSERT ARE TO BE FUNISHED.

REV.	DATE	DESCRIPTION	DES.	ENG.
X	XX-XX-XX	REVISION	XX	XX

DRAWN BY: A. CARLOS DATE: 03/31/2011

ASSISTANT DIRECTOR STANDARDS & DESIGN

DIRECTOR OF ENGINEERING AND CONSTRUCTION

SCRRA ENGINEERING STANDARDS ARE INTENDED FOR SCRRA APPROVED USES ONLY. FOR NON-SCRRA APPROVED USES:
SCRRA SHALL NOT BE RESPONSIBLE FOR THE ACCURACY OR COMPLETENESS OF THE DATA OR INFORMATION CONTAINED HEREIN. THE SELECTION AND USE OF THESE STANDARDS IS THE SOLE RESPONSIBILITY OF THE USER AND SHOULD NOT BE USED WITHOUT CONSULTING A REGISTERED PROFESSIONAL ENGINEER. ALL WARRANTIES AND REPRESENTATIONS OF ANY KIND ARE DISCLAIMED. ANYONE MAKING USE OF THIS INFORMATION AGREES THAT IT ASSUMES ALL LIABILITY ARISING FROM SUCH USE. NO PART OF THESE STANDARDS SHOULD BE REPRODUCED OR DISTRIBUTED IN ANY FORM OR BY ANY MEANS WITHOUT THE PRIOR WRITTEN PERMISSION OF SCRRA. ALL RIGHTS RESERVED.

METROLINK®

SOUTHERN CALIFORNIA REGIONAL RAIL AUTHORITY
ONE GATEWAY PLAZA, 12TH FLOOR, L. A., CA. 90012

ENGINEERING STANDARDS

NO. 8 SPLIT SWITCH POINT DETAILS

STANDARD 2911
SCALE: 3/4" = 1'-0"
REVISION –
SHEET 9 OF 16
CADD FILE: ES2911-09

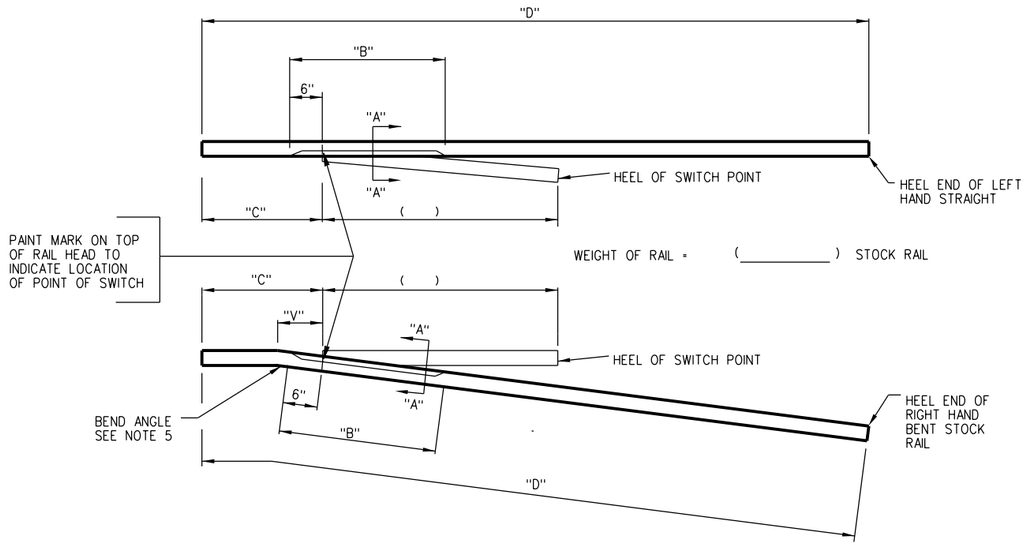

STOCK RAILS ARE SHOWN FOR "RIGHT HAND TURNOUT"

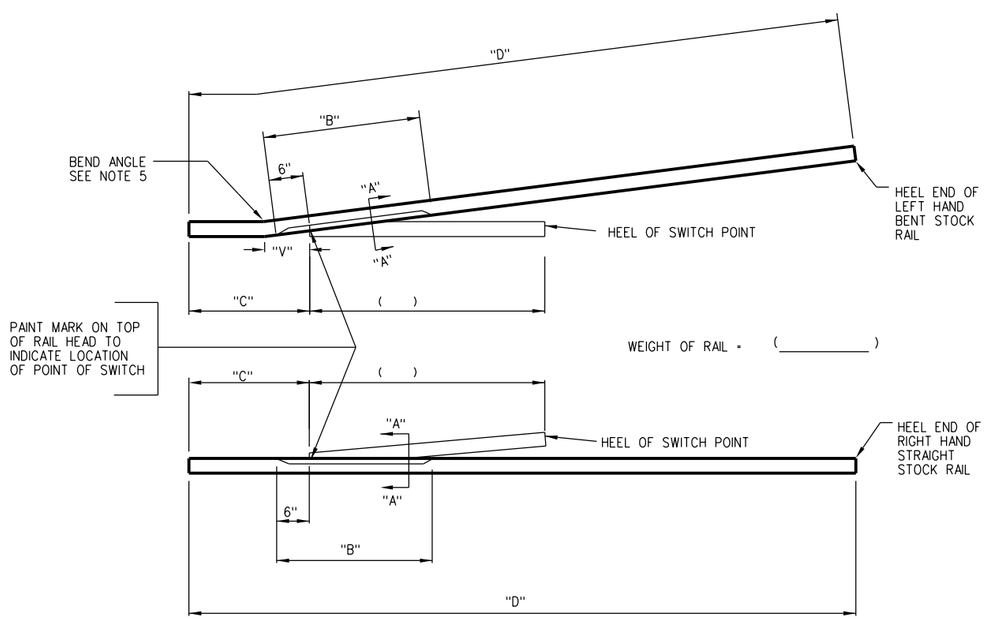

STOCK RAILS ARE SHOWN FOR "LEFT HAND TURNOUT"

NOTES:

1. INFORMATION OR DIMENSIONS NOTED THUS (___), TO BE FURNIDHED BY FIELD FORCES FOR CORRECT ORDERING OF REPLACEMENT STOCK RAILS.
2. LENGTH OF SWITCH POINT.
3. UNDERCUT STOCK RAILS TO BE MADE OF HIGH STRENGTH RAIL WITH ENDS BEVELED PER CURRENT A.REMA PLAN NO. 1005.
4. FOR STOCK RAIL UNDERCUT LENGTH "B", PER SECTION "A-A", LENGTH "C" AND LENGTH "D" FOR NEW SAMSON SWITCH INSTALLATOINS OR REPLACEMENT ORDERS SEE TABLE BELOW.

LENGTHS B,C & D FOR 136 LB. RAIL

Sw. Pt. LENGTH	T.O. No.	STOCK RAIL	B	FOR FIRST (NEW) INSTALL.			FOR REPLACE. ORDERS ONLY		
				C	D	END DRILL. SEE NO. 10	C	D	END DRILL. SEE NO. 10
16'-6"	8	STR.	9'-6"	7'-2½"	40'-0"	NONE	10'-0"	50'-0"	NONE
16'-6"	8	BENT	9'-6"	7'-2½"	40'-0"	HEEL END ONLY	9'-6"	46'-0"	HEEL END ONLY

5. BEND ANGLE IN BENT ANGLE IN BENT STOCK RAIL TO BE AS FOLLOW:

Sw. Length	BEND ANGLE	V (Vertex Dist.)
16'-6"	1° -44'-11" or 1" in 2'-9"	10 5/16"

FOR MAINTENANCE ONLY

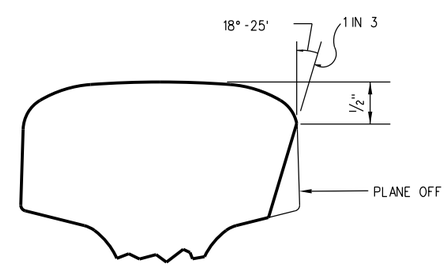

SECTION "A - A"

REV.	DATE	DESCRIPTION	DES.	ENG.
X	XX-XX-XX	REVISION	XX	XX

DRAWN BY: A. CARLOS DATE: 03/31/2011

ASSISTANT DIRECTOR: STANDARDS & DESIGN

DIRECTOR OF ENGINEERING AND CONSTRUCTION

SCRRA ENGINEERING STANDARDS ARE INTENDED FOR SCRRA APPROVED USES ONLY. FOR NON-SCRRA APPROVED USES:
SCRRA SHALL NOT BE RESPONSIBLE FOR THE ACCURACY OR COMPLETENESS OF THE DATA OR INFORMATION CONTAINED HEREIN. THE SELECTION AND USE OF THESE STANDARDS IS THE SOLE RESPONSIBILITY OF THE USER AND SHOULD NOT BE USED WITHOUT CONSULTING A REGISTERED PROFESSIONAL ENGINEER. ALL WARRANTIES AND REPRESENTATIONS OF ANY KIND ARE DISCLAIMED. ANYONE MAKING USE OF THIS INFORMATION AGREES THAT IT ASSUMES ALL LIABILITY ARISING FROM SUCH USE. NO PART OF THESE STANDARDS SHOULD BE REPRODUCED OR DISTRIBUTED IN ANY FORM OR BY ANY MEANS WITHOUT THE PRIOR WRITTEN PERMISSION OF SCRRA. ALL RIGHTS RESERVED.

METROLINK®
SOUTHERN CALIFORNIA REGIONAL RAIL AUTHORITY
ONE GATEWAY PLAZA, 12TH FLOOR, L. A., CA. 90012

ENGINEERING STANDARDS

NO. 8 STRAIGHT OR CURVED UNDERCUT STOCK RAILS

STANDARD 2911
SCALE: NONE
REVISION –
SHEET 10 OF 16
CADD FILE: ES2911-10

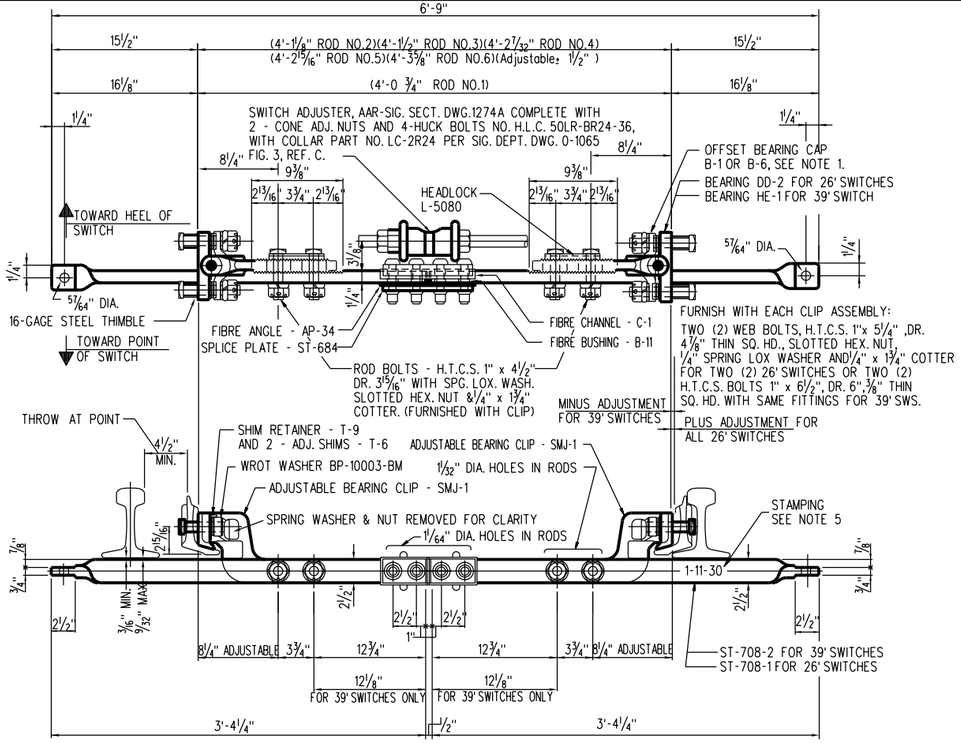

NO. 1 SWITCH ROD ASSEMBLY

(SHOWN FOR MACHINE ON RIGHT) SEE NOTE 2

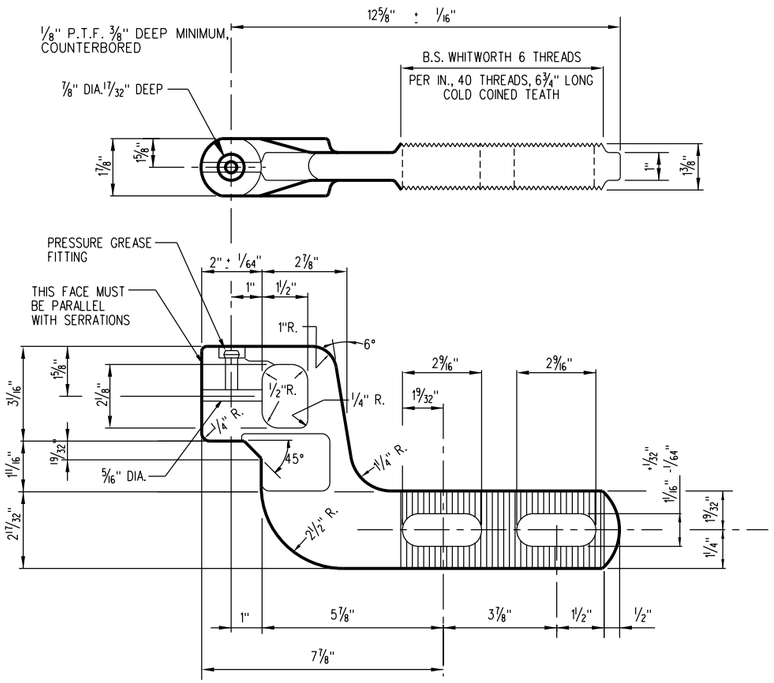

ADJUSTABLE BEARING CLIP - SMJ - 1

SCALE: 3" = 1'-0"

LENGTH OF SWITCH	QTY.	PART NUMBER	MATERIAL SPECIF.	DESCRIPTION	DETAIL REMARKS
BILL OF MATERIAL FOR 1 TYPE "SMJ" SWITCH ROD ASSEMBLY					
MATERIAL FOR CLIP ASSEMBLIES					
All	2	SMJ-1	S.A.E.1020-For.Stl.	Bearing Clip	MACHINED PER DETAIL
All	4		H.T.C.S.	Web Bolt	SEE NOTE
26'	2	DD-2	Malleable Iron	Bearing	PAT. NO. L-2910, MACHINED PER DETAIL
39'	2	HE-1	Malleable Iron	Bearing	PAT. NO. L-2915, MACHINED PER DETAIL
26'	2	B-1	S.A.E.1045-For.Stl.	Offset Bearing Cap	HEAT TREATED - BRINELL -.225 to .250
39'	2	B-6	S.A.E.1045-For.Stl.	Offset Bearing Cap	HEAT TREATED - BRINELL -.225 to .250
26'	2	B-6	S.A.E.1045-For.Stl.	Offset Bearing Cap	HEAT TREATED - BRINELL -.225 to .250
All	4	T-9	S.A.E.1020	Shim Retainer	⅛" x 1¾" x 2¼"
All	12	T-6	Stainless Steel	Adjustment Shim	1/16" x 2" x ⅛"
All	4	BP-10003-BM	Wrot Iron	Wrot Washer	1 1/16" I.D. x 2" O.D. x ⅛" THICK
All	4		H.T.C.S.	Rod Bolt	1"x4½" DR. 3 15/16" REC.SQ.HD.SLOTTED HEX NUT
All	4		Steel	Spg. Lox Washer	For 1" Rod Bolts
All	4		Steel	Cotter	¼" x 1¾" FOR ROD BOLTS
All	2		Steel	Grease Fitting	PRESSURE - FOR BEARING CLIP
All	2	L-5080	Malleable Iron	Headlock	FOR ROD BOLTS
26'	2		16-Gage Steel	Thimble	1½" LONG - FOR SHIPPING
39'	2		16-Gage Steel	Thimble	2½" LONG - FOR SHIPPING
Material for Vertical Rod					
16'-6"	1			Vertical Rod	Use one-ST-708-1
					Use one-ST-708-1 TWIST, MACHINE AND DRILL END HOLE
39'	1			Vertical Rod	Use one-ST-708-2
					Use one-ST-708-2 TWIST, MACHINE AND DRILL END HOLE
All	4		High Strength Steel	Conn.& Insul.Bolt	HIGH FASTENER NO. HLC-50LR- BR24-36
All	4		Low Carbon Steel	Collar	HUCK FASTENER NO. LC-2R24
All	1	ST-684	H.R. Mild Steel	Splice Plate	½" x 2½" x 9½" FOR INSULATION
All	2	AP-34	AAR-Sig.Sec.13-52	Angle	½" x 2½" x 4 15/16" HARD FIBRE - PARAFIN COATED
All	4	B-11	AAR-Sig.Sec.13-52	Bushing	1" O.D. HARD FIBRE - PARAFIN COATED
All	1	C-1	AAR-Sig.Sec.13-52	Channel	⅛" x 1" x 10" HARD FIBRE - PARAFIN COATED
All	1		Malleable Iron	Switch Adjuster	
All	2		Malleable Iron	Cone Adj. Nut	FOR 1¼" THROW RODS

FOR MAINTENANCE ONLY

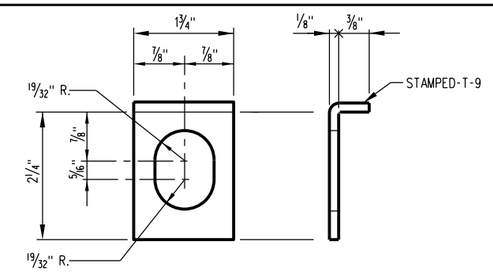

SHIM RETAINER - T - 9

SCALE: FULL

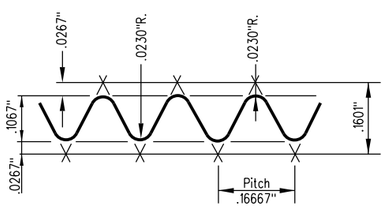

ENLARGED PROFILE OF SERRATIONS

SCALE: NONE

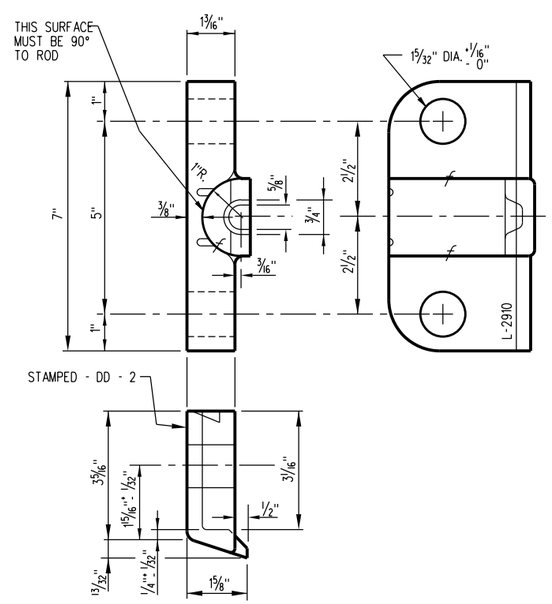

BEARING - DD - 2

SCALE: 6" = 1'-0"

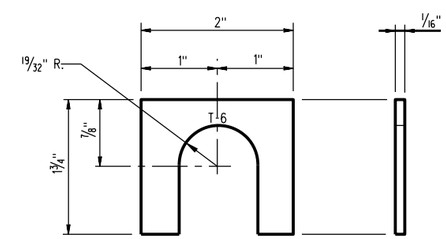

ADJUSTABLE SHIM - T - 6

SCALE: FULL

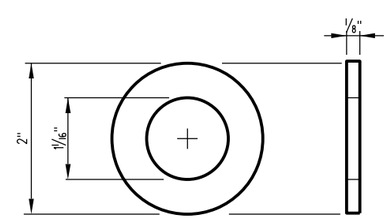

WROT WASHER - BP - 10003 - BM

SCALE: FULL

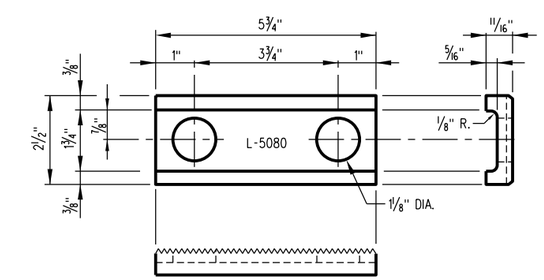

HEADLOCK L-5080

SCALE: 6" = 1'-0"

NOTES:

1. WHILE THIS PLAN SHOWS BEARING CLIPS ASSEMBLED TO SWITCH ROD, THIS CLIP ASSEMBLY MAY BE REQUISITIONED AND ORDERED SEPARATELY. WHEN A BEARING CLIP ASSEMBLY ONLY IS WANTED, REQUISITIONS AND ORDERS SHALL SPECIFY, RAIL SECTION AND LENGTH OF SWITCH. ALL PARTS SHOWN IN BILL OF MATERIAL SHALL BE FURNISHED WITH THESE CLIP ASSEMBLIES. WHEN AN INDIVIDUAL PART IS REQUIRED IT SHALL BE ORDERED BY PART NUMBER.
2. WHEN COMPLETED RODS ARE ORDERED THEY SHALL BE ASSEMBLED AND INCLUDE ALL PARTS SHOWN IN THE BILL OF MATERIAL. REQUISITIONS AND ORDERS SHALL SPECIFY RAIL SECTION AND LENGTH OF SWITCH. ON INTERLOCKED SWITCHES WITH AUXILIARY THROW ROD, MACHINE SIDE (RIGHT OR LEFT) SHOULD ALSO BE SPECIFIED.
3. TWO WEB BOLTS SHALL BE FURNISHED WITH EACH CLIP ASSEMBLY AS CALLED FOR BY NOTE IN TOP VIEW OF ROD ASSEMBLY. WHEN ROD IS USED ON 11'-0" AND 16'-6" SWITCHES THE ¼" THICK SPRING WASHER SHOULD BE REPLACED WITH A ⅜" THICK SPRING WASHER BY THE STOREKEEPER OR FIELD FORCES, TO BRING COTTER WITHIN THE LIMITS OF SLOT IN WEB BOLT NUTS.
4. MATERIALS AND WORKMANSHIP SHALL MEET CURRENT A.R.E.M.A. SPECIFICATIONS FOR "SPECIAL TRACKWORK" UNLESS OTHERWISE SPECIFIED.
5. VERTICAL SWITCH ROD SHALL BE PLAINLY STAMPED TO INDICATE SWITCH THAT ROD ASSEMBLY CAN BE USED UPON. IDENTIFICATION MARKING WILL BE AS FOLLOWS:
   1-39 FOR USE ON 39'-0" SWITCHES, 132 LB. AND 136 LB. RAIL SECTIONS.
   1-11-30 FOR USE ON 11'-0" TO 30'-0" SWITCHES, 115 LB., 119 LB., 131 LB., 132 LB., AND 136 LB. R.E. RAIL SECTIONS.

REV.	DATE	DESCRIPTION	DES.	ENG.
X	XX-XX-XX	REVISION	XX	XX

DRAWN BY: A. CARLOS DATE: 03/31/2011

ASSISTANT DIRECTOR: STANDARDS & DESIGN

DIRECTOR OF ENGINEERING AND CONSTRUCTION

SCRRA ENGINEERING STANDARDS ARE INTENDED FOR SCRRA APPROVED USES ONLY. FOR NON-SCRRA APPROVED USES:
SCRRA SHALL NOT BE RESPONSIBLE FOR THE ACCURACY OR COMPLETENESS OF THE DATA OR INFORMATION CONTAINED HEREIN. THE SELECTION AND USE OF THESE STANDARDS IS THE SOLE RESPONSIBILITY OF THE USER AND SHOULD NOT BE USED WITHOUT CONSULTING A REGISTERED PROFESSIONAL ENGINEER. ALL WARRANTIES AND REPRESENTATIONS OF ANY KIND ARE DISCLAIMED. ANYONE MAKING USE OF THIS INFORMATION AGREES THAT IT ASSUMES ALL LIABILITY ARISING FROM SUCH USE. NO PART OF THESE STANDARDS SHOULD BE REPRODUCED OR DISTRIBUTED IN ANY FORM OR BY ANY MEANS WITHOUT THE PRIOR WRITTEN PERMISSION OF SCRRA. ALL RIGHTS RESERVED.

METROLINK
SOUTHERN CALIFORNIA REGIONAL RAIL AUTHORITY
ONE GATEWAY PLAZA, 12TH FLOOR, L. A., CA. 90012

ENGINEERING STANDARDS

NO. 8 SWITCH ROD DETAILS

STANDARD 2911
SCALE: AS NOTED
REVISION –
SHEET 11 OF 16
CADD FILE: ES2911-11

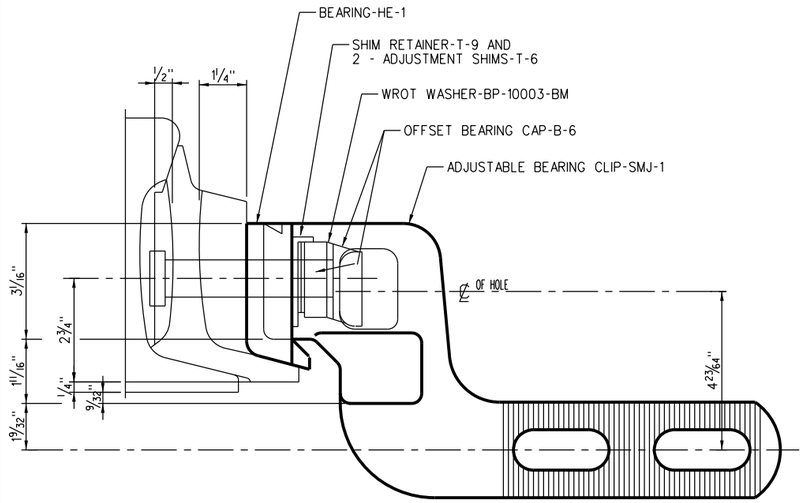

ELEVATION OF "SMJ"CLIP ASSEMBLY FOR 39' SWITCHES
(DRAWN FOR 136 LB. RAIL) SPRING WASHER AND NUT REMOVED

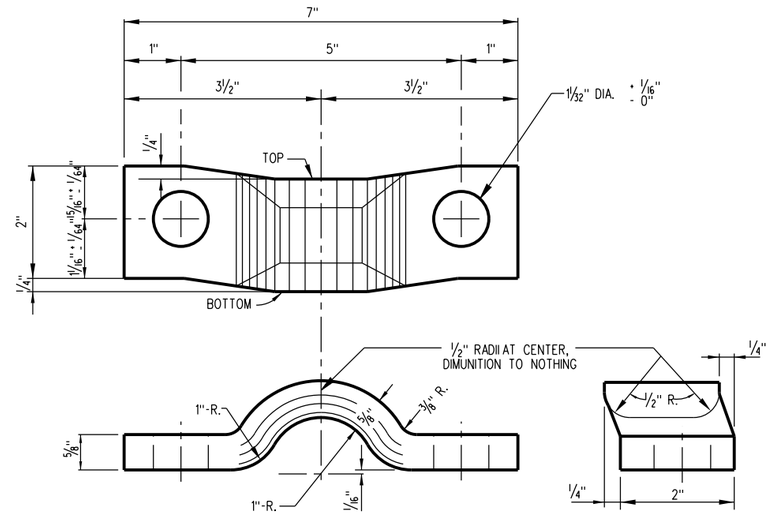

OFFSET BEARING CAP-B-1

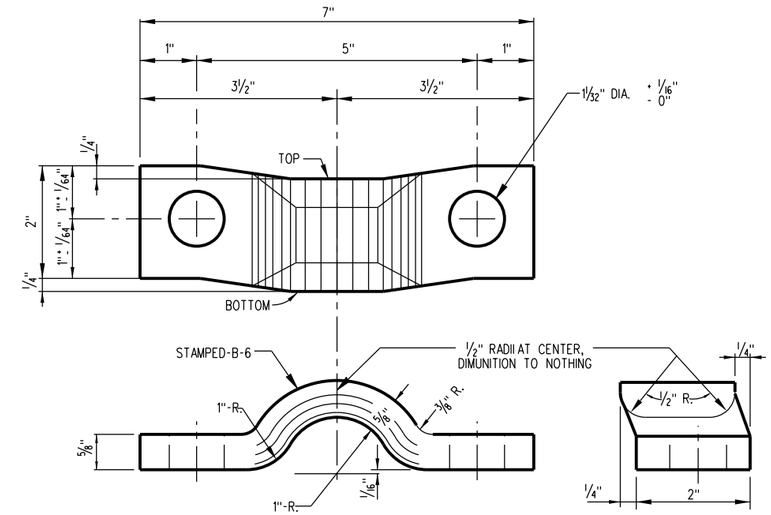

OFFSET BEARING CAP-B-6

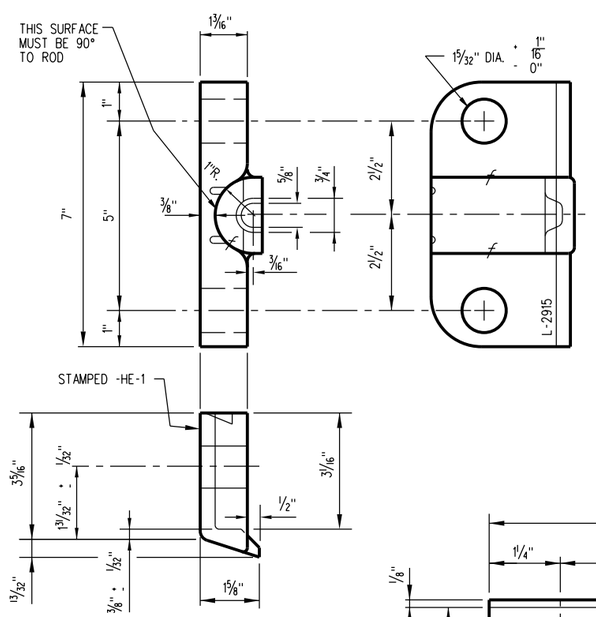

BEARING-HE-1

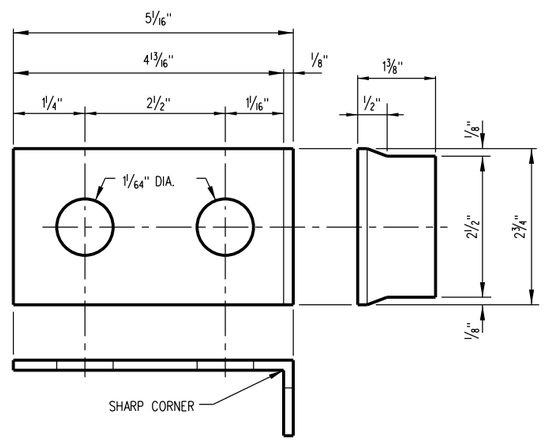

FIBRE ANGLE-AP-34

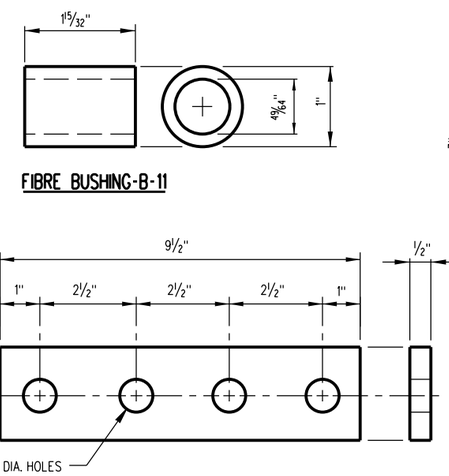

FIBRE BUSHING-B-11

SPLICE PLATE-ST-684

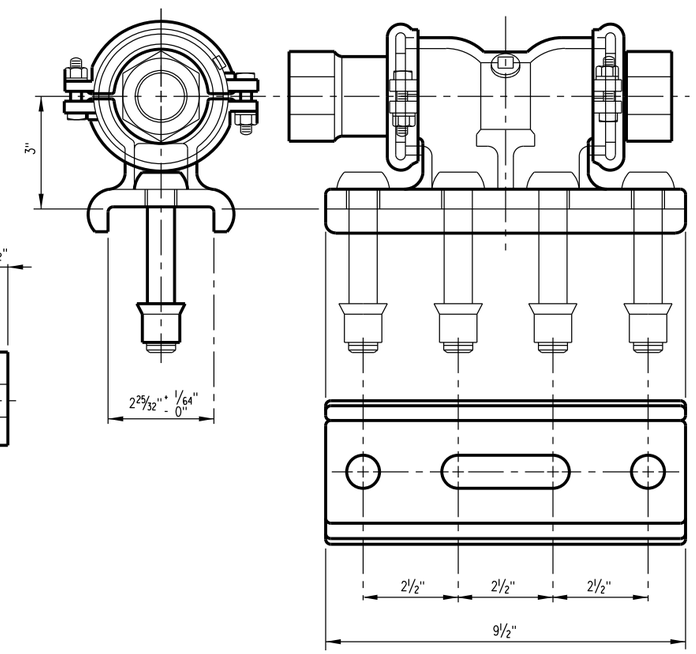

SWITCH ADJUSTER

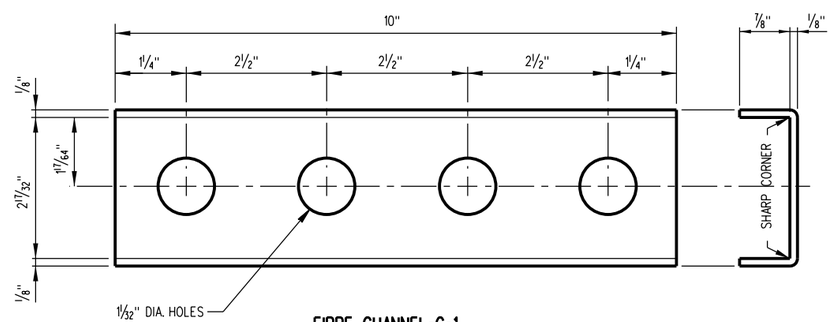

FIBRE CHANNEL-C-1

FOR MAINTENANCE ONLY

REV.	DATE	DESCRIPTION	DES.	ENG.
X	XX-XX-XX	REVISION	XX	XX

DRAWN BY: A. CARLOS DATE: 03/31/2011

ASSISTANT DIRECTOR: STANDARDS & DESIGN

DIRECTOR OF ENGINEERING AND CONSTRUCTION

SCRRA ENGINEERING STANDARDS ARE INTENDED FOR SCRRA APPROVED USES ONLY. FOR NON-SCRRA APPROVED USES:
SCRRA SHALL NOT BE RESPONSIBLE FOR THE ACCURACY OR COMPLETENESS OF THE DATA OR INFORMATION CONTAINED HEREIN. THE SELECTION AND USE OF THESE STANDARDS IS THE SOLE RESPONSIBILITY OF THE USER AND SHOULD NOT BE USED WITHOUT CONSULTING A REGISTERED PROFESSIONAL ENGINEER. ALL WARRANTIES AND REPRESENTATIONS OF ANY KIND ARE DISCLAIMED. ANYONE MAKING USE OF THIS INFORMATION AGREES THAT IT ASSUMES ALL LIABILITY ARISING FROM SUCH USE. NO PART OF THESE STANDARDS SHOULD BE REPRODUCED OR DISTRIBUTED IN ANY FORM OR BY ANY MEANS WITHOUT THE PRIOR WRITTEN PERMISSION OF SCRRA. ALL RIGHTS RESERVED.

METROLINK®
SOUTHERN CALIFORNIA REGIONAL RAIL AUTHORITY
ONE GATEWAY PLAZA, 12TH FLOOR, L. A., CA. 90012

ENGINEERING STANDARDS

NO. 8 SWITCH ROD MISCELLANEOUS DETAILS

STANDARD 2911
SCALE: 6" = 1'-0"
REVISION –
SHEET 12 OF 16
CADD FILE: ES2911-12

NOTE:
SEE SHEET NO. 15 FOR NOTES.

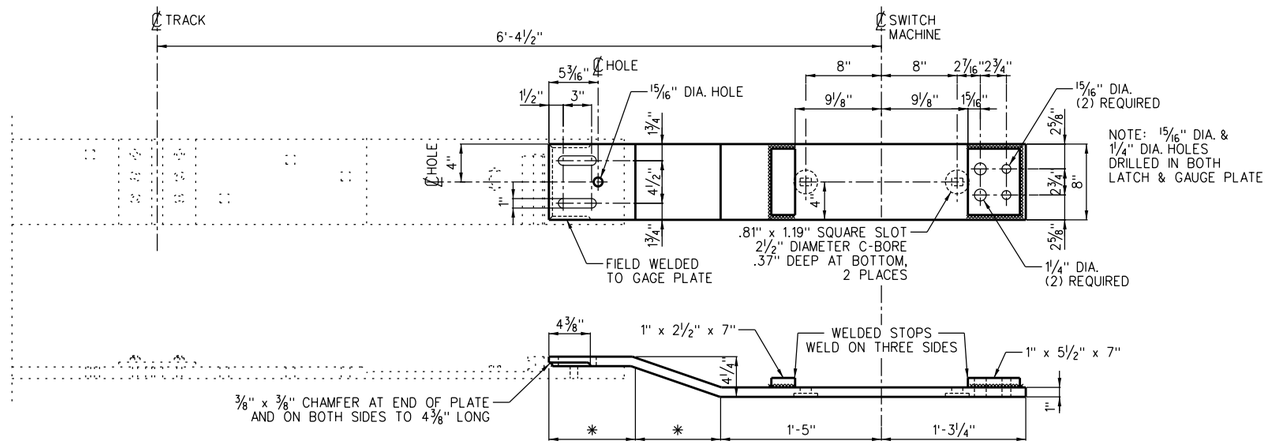

* MANUFACTURER TO CALCULATE AND PROVIDE ON DETAILED DRAWING.

EXTENSION PLATE
(2 PCS. REQ'D. AS SHOWN)

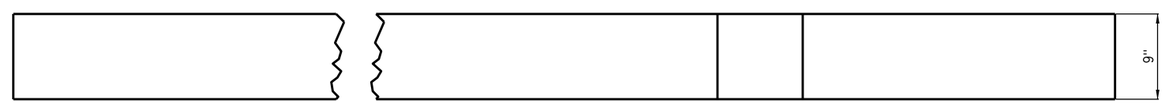

TOP VIEW

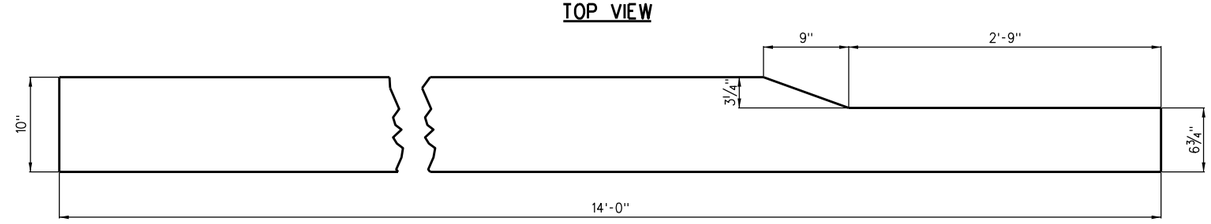

SIDE VIEW

TIES SHALL BE MADE OF DOUGLAS FIR OR GUM AND TREATED AFTER FRAMING.

DAP TIE
(2 PCS. REQ'D. AS SHOWN)

US&S M23-A SWITCH MACHINE MUST BE FURNISHED WITH FINISHED MOUNTING LUGS.

FOR MAINTENANCE ONLY

X	XX-XX-XX	REVISION	XX	XX
REV.	DATE	DESCRIPTION	DES.	ENG.

DRAWN BY: A. CARLOS DATE: 03/31/2011

ASSISTANT DIRECTOR: STANDARDS & DESIGN

DIRECTOR OF ENGINEERING AND CONSTRUCTION

SCRRA ENGINEERING STANDARDS ARE INTENDED FOR SCRRA APPROVED USES ONLY. FOR NON-SCRRA APPROVED USES:
SCRRA SHALL NOT BE RESPONSIBLE FOR THE ACCURACY OR COMPLETENESS OF THE DATA OR INFORMATION CONTAINED HEREIN. THE SELECTION AND USE OF THESE STANDARDS IS THE SOLE RESPONSIBILITY OF THE USER AND SHOULD NOT BE USED WITHOUT CONSULTING A REGISTERED PROFESSIONAL ENGINEER. ALL WARRANTIES AND REPRESENTATIONS OF ANY KIND ARE DISCLAIMED. ANYONE MAKING USE OF THIS INFORMATION AGREES THAT IT ASSUMES ALL LIABILITY ARISING FROM SUCH USE. NO PART OF THESE STANDARDS SHOULD BE REPRODUCED OR DISTRIBUTED IN ANY FORM OR BY ANY MEANS WITHOUT THE PRIOR WRITTEN PERMISSION OF SCRRA. ALL RIGHTS RESERVED.

METROLINK®
SOUTHERN CALIFORNIA REGIONAL RAIL AUTHORITY
ONE GATEWAY PLAZA, 12TH FLOOR, L. A., CA. 90012

ENGINEERING STANDARDS

NO. 8 EXTENSION PLATE AND DAP TIE DETAILS FOR M-23A SWITCH MACHINE

STANDARD	2911
SCALE:	1½" = 1'-0"
REVISION	SHEET
–	13 OF 16
CADD FILE:	ES2911-13

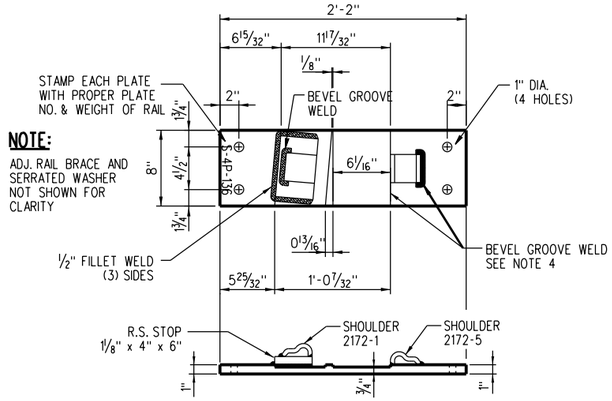

NOTE:
ADJ. RAIL BRACE AND SERRATED WASHER NOT SHOWN FOR CLARITY

BRACE PLATE ~ S-4P

1" x 8" x 2'-2" LG. ~ MILLED ~ W/ADJ. RAIL BRACE
2 - S-4P PLATES REQUIRED AS SHOWN

REFERENCE DWGS.
LAYOUT - No.8, R.H., H.O. TURNOUT - 136 lb. -------- SHEET No. 2911-02

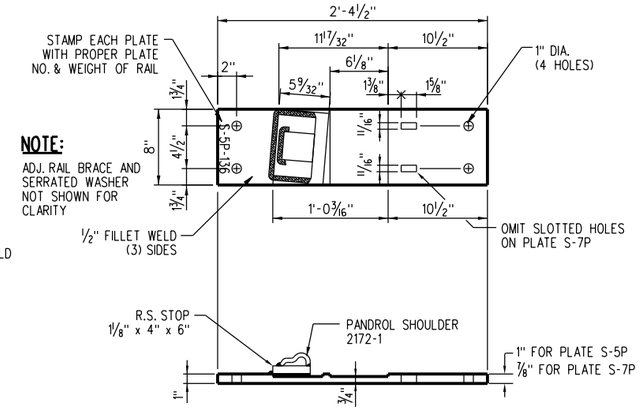

NOTE:
ADJ. RAIL BRACE AND SERRATED WASHER NOT SHOWN FOR CLARITY

BRACE SLIDE PLATE ~ S-5P & S-7P

1" X 8" X 2'-4 1/2" LG. - MILLED - W/ADJ. RAIL BRACE
4 - S-5P PLATES REQUIRED AS SHOWN
2 - S-7P PLATES REQUIRED AS SHOWN

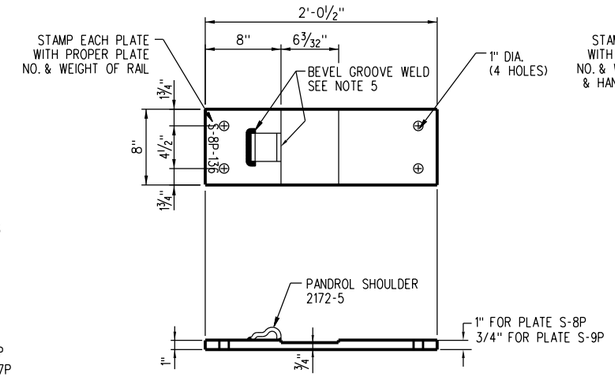

SLIDE PLATE - S-8P & S-9P

1" X 8" X 2'-0 1/2" LG. - MILLED - W/PANDROL CLIP
6 - S-8P PLATES REQUIRED AS SHOWN (1/4" RISER)
4 - S-9P PLATES REQUIRED AS SHOWN (0" RISER)

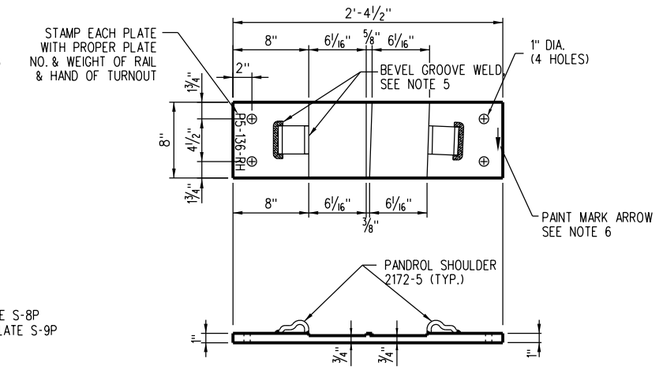

HEEL PLATE - P5 - RH

1" X 8" X 2'-4 1/2" LG. - MILLED - W/PANDROL CLIPS
2 - P5-RH PLATES REQUIRED AS SHOWN FOR R.H. T.O.

SWITCH PLATES

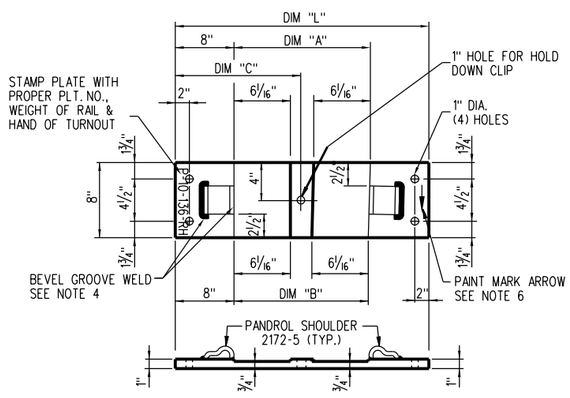

TURNOUT PLATES - P-10 THRU P-13 & P-27

1" x 8" x DIM "L" - MILLED - W/ PANDROLS

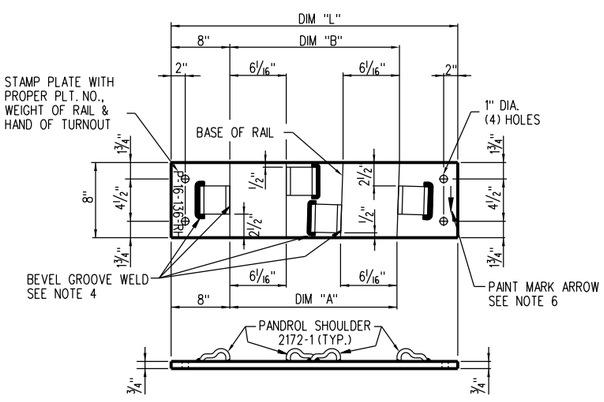

TURNOUT PLATES - P-14 THRU P-16 P-21, P-22, P-28 AND P-29

3/4" x 8" x DIM "L" - FLAT - W/ PANDROL CLIPS

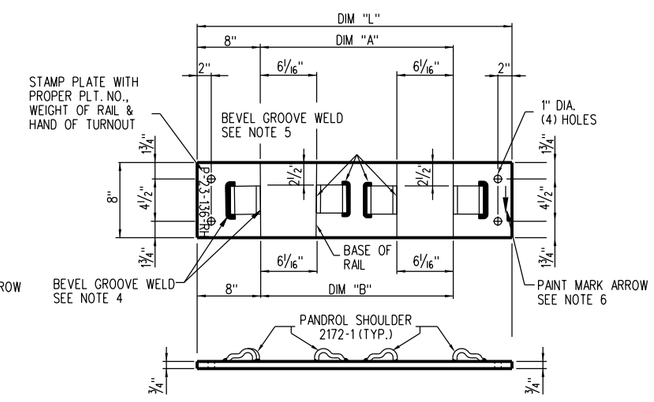

TURNOUT PLATES - P-17 THRU P-20 & P-30

3/4" x 8" x DIM "L" - FLAT - W/ PANDROL CLIPS

NOTES:

1. PLATES TO BE MADE OF MILD ROLLED STEEL.
2. EACH PLATE TO BE PLAINLY STAMPED WITH PLATE NO. AND 136 (WEIGHT OF RAIL) & HAND OF TURNOUT (R.H. OR L.H.)
3. THE PANDROL TYPE WELD - ON PRESSED STEEL SHOULDER, MADE FROM MILD STEEL, TO BE PURCHASED FROM PANDROL INTERNATIONAL OR APPROVED ALTERNATE MEETING PANDROL'S DESIGN SPECIFICATIONS.
4. THE PRESSED STEEL SHOULDER MUST BE CAREFULLY WELDED TO THE PLATE. ANY WELD PROJECTING BEYOND THE VERTICAL FACE OF SHOULDER IN THE AREA OF THE RAIL SEAT MUST BE MACHINED OUT TO PROVIDE A CLEAR RAIL SEAT DIMENSION AS CALLED FOR.
5. THE PLATES AS SHOWN ARE FOR A 136 LB., NO. 8 RIGHT HAND TURNOUT. FOR A LEFT HAND TURNOUT, PLATES P-10 THRU P-29 INCLUSIVE AND FROG PLATES AND GAGE PLATES FG-1P THRU FG-3P ARE TO BE OPPOSITE.
6. DIRECTION OF ARROW SHOWN IS AN EXAMPLE ONLY. USING SHEET NO. 2911-03 AS A GUIDE, PAINT MARK EACH PLATE WITH AN ARROW POINTING TOWARD SWITCH POINT.

WELDING SPECIFICATIONS:

1. SET PRESSED STEEL SHOULDER FLUSH AGAINST LINE OF BASE OF RAIL OR SHOULDER OF MILLED PLATE AS SHOWN AND WELD WITH 2 - PASS 3/8" • WELD.
   STOP PLATE FOR ADJUSTABLE RAIL BRACE TO BE SET FLUSH WITH
3. SHOULDER OF MILLED PLATE AS SHOWN AND WELD WITH 3 - PASS 1/2" • FILLET WELD.
   SHOULDERS AND STOPS ARE TO BE CAREFULLY WEDLED TO PLATE. NO WELD SHALL PROJECT BEYOND THE VERTICAL EDGE OF TH UNWELDED FOURTH SIDE OF THE STOP PLATE OR VERTICAL FACE OF SHOULDER IN
4. THE AREA OF THE RAIL SEAT. ANY WELD PROJECTING BEYOND THE FACE OF THE STOP OR SHOULDER MUST BE MACHINED OFF TO PROVIDE CLEAR DIMENSION CALLED FOR.
   FOR WELDING PRESSED STEEL SHOULDERS OR PLATE STOPS FOR ADJUSTABLE USE THE FOLLOWING:
   A. ELECTRODE 1 5/32 INCH, WELDING SPEC. 7018XLM.
   B. ELECTRODE 3/16 INCH, WELDING SPEC. 7018XLM.
   C. WIRE, WELDING 3/32 INCH, NR203, 1% NICKEL FLUX CORE.
   OTHER WIRE OR ELECTRODES MEETING SPECIFICATIONS AS CALLED FOR, APPROVED BY DIRECTOR OF ENGINEERING, MAY BE USED.

FOR MAINTENANCE ONLY

DIMENSION TABLE

PLATE	DIM "A"	DIM "B"	DIM "C"	DIM "L"	Plts REQ'D.	CLIPS REQ'D.
P-10	13 7/16"	13 5/32"	14 5/8"	2'-5"	2 EA.	2 EA.
P-11	14 3/16"	13 7/8"	15"	2'-6"	2 EA.	2 EA.
P-12	15"	14 11/16"	15 3/8"	2'-7"	2 EA.	2 EA.
P-13	15 29/32"	15 17/32"	15 13/16"	2'-8"	2 EA.	2 EA.
P-27	14 1/2"	13 1/4"	14 31/32"	2'-6 1/2"	1 EA.	1 EA.

DIMENSION TABLE

PLATE	DIM "A"	DIM "B"	DIM "L"	Plts REQ'D.	CLIPS REQ'D.
P-14	16 15/32"	16 27/32"	2'-9"	2 EA.	2 EA.
P-15	17 15/32"	17 7/8"	2'-10"	2 EA.	2 EA.
P-16	18 11/32"	18 31/32"	2'-11"	2 EA.	2 EA.
P-21	19 5/8"	20 19/32"	3'-0 1/2"	1 EA.	1 EA.
P-22	17 1/4"	18 1/4"	2'-10"	1 EA.	1 EA.
P-28	15 15/16"	16 15/16"	2'-9"	1 EA.	1 EA.
P-29	18 3/8"	19 3/8"	2'-11 1/2"	1 EA.	1 EA.

DIMENSION TABLE

PLATE	DIM "A"	DIM "B"	DIM "L"	Plts REQ'D.
P-17	20 1/8"	19 21/32"	3'-0"	2 EA.
P-18	21 3/8"	20 7/8"	3'-1"	2 EA.
P-19	22 27/32"	20 1/32"	3'-2 1/2"	2 EA.
P-20	22 11/16"	21 29/32"	3'-2 1/2"	1 EA.
P-30	21 27/32"	20 27/32"	3'-2"	1 EA.

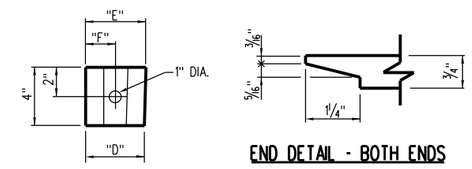

END DETAIL - BOTH ENDS

HOLD DOWN CLIP FOR PLATES P-10 THRU P-15
HOLD DOWN CLIP FOR PLATES P-24 THRU P-26

REV.	DATE	DESCRIPTION	DES.	ENG.
X	XX-XX-XX	REVISION	XX	XX

DRAWN BY: A. CARLOS DATE: 03/31/2011

ASSISTANT DIRECTOR: STANDARDS & DESIGN

DIRECTOR OF ENGINEERING AND CONSTRUCTION

SCRRA ENGINEERING STANDARDS ARE INTENDED FOR SCRRA APPROVED USES ONLY. FOR NON-SCRRA APPROVED USES:
SCRRA SHALL NOT BE RESPONSIBLE FOR THE ACCURACY OR COMPLETENESS OF THE DATA OR INFORMATION CONTAINED HEREIN. THE SELECTION AND USE OF THESE STANDARDS IS THE SOLE RESPONSIBILITY OF THE USER AND SHOULD NOT BE USED WITHOUT CONSULTING A REGISTERED PROFESSIONAL ENGINEER. ALL WARRANTIES AND REPRESENTATIONS OF ANY KIND ARE DISCLAIMED. ANYONE MAKING USE OF THIS INFORMATION AGREES THAT IT ASSUMES ALL LIABILITY ARISING FROM SUCH USE. NO PART OF THESE STANDARDS SHOULD BE REPRODUCED OR DISTRIBUTED IN ANY FORM OR BY ANY MEANS WITHOUT THE PRIOR WRITTEN PERMISSION OF SCRRA. ALL RIGHTS RESERVED.

METROLINK®
SOUTHERN CALIFORNIA REGIONAL RAIL AUTHORITY
ONE GATEWAY PLAZA, 12TH FLOOR, L. A., CA. 90012

ENGINEERING STANDARDS

NO. 8 TURNOUT AND SWITCH PLATE DETAILS

STANDARD 2911
SCALE: 1 1/2" = 1'-0"
REVISION –
SHEET 14 OF 16
CADD FILE: ES2911-14

NOTES:

1. PLATES TO BE MADE OF MILD ROLLED STEEL.
2. THE "PANDROL" TYPE, OR APPROVED EQUAL, WELD-ON PRESSED STEEL SHOULDER, MADE OF MILD STEEL AND MEETING "PANDROL'S" DESIGN SPECIFICATIONS SHALL BE USED. THE PRESSED STEEL SHOULDER MUST BE CAREFULLY WELDED TO ALL PLATES WITH A MINIMUM 2 PASS 3/8" • FILLET WELD ALONG THE BEVELED GROOVES OF THE SHOULDER. ANY WELD PROJECTING BEYOND THE VERTICAL FACE OF SHOULDER IN THE AREA OF THE RAIL SEAT MUST BE MACHINED OUT TO PROVIDE A CLEAR RAIL SEAT DIMENSION AS CALLED FOR.
3. THE PLATES AS SHOWN ARE FOR A 136 LB., NO. 8 RIGHT HAND, HAND OPERATED TURNOUT. FOR A LEFT HAND TURNOUT, PLATES ARE TO BE
4. OPPOSITE.
   FOR EXTENSION PLATE AND DAP TIE DETAILS SEE SHEET ES2911-13.

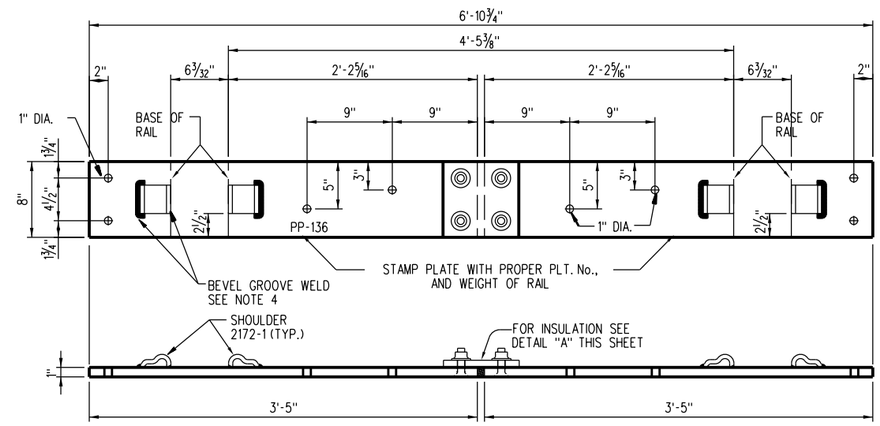

INSULATED GAGE PLATE P-P

1" x 8" - FLAT - W/ INSULATION
(3 PC. REQ'D AS SHOWN)

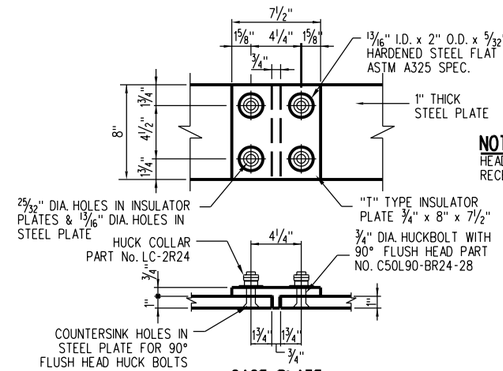

NOTES:
HEAD OF HUCK BOLT RECESSED 1/16" MAX.

GAGE PLATE INSULATED JOINT ASSEMBLY GPI-77

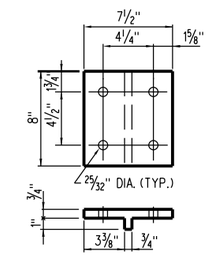

DETAIL OF INSULATION BLOCK

POLYESTER COATED STEEL CORE
W/ BUSHINGS, PORTEC •127-07547-01
OR FIBERGLASS REINFORCED THERMOSET RESIN.
PURCHASE PART NO. GPI52P05

DETAIL "A"
INSULATION AT GAGE PLATES
(SCALE: NONE)

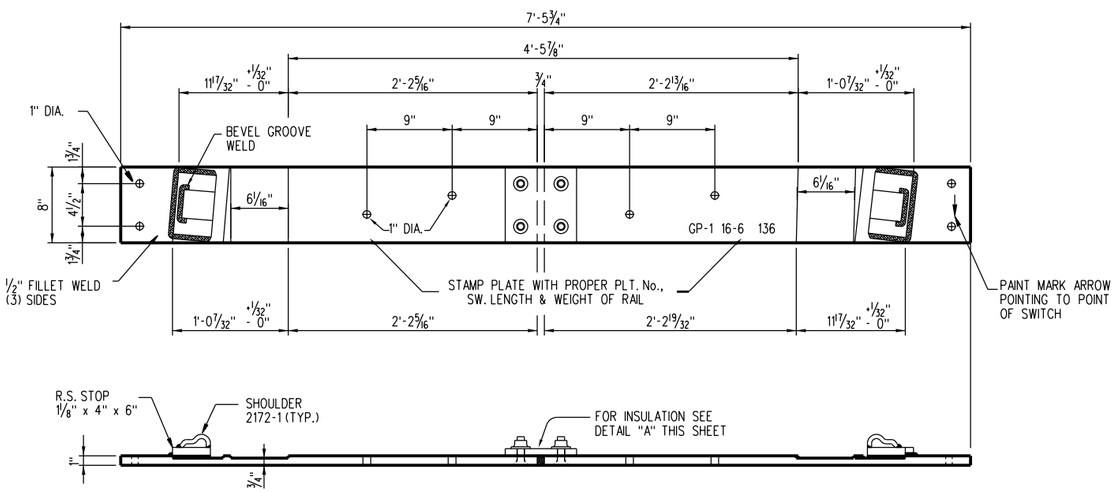

NOTE:
SERRATED WASHER AND BRACE PLATE NOT SHOWN FOR CLARITY.

INSULATED GAGE PLATE GP-1 - USED AT POINT OF SWITCH

1" x 8" - MILLED - W/ INSULATION & ADJ. RAIL BRACES
(1 PC. REQ'D AS SHOWN)

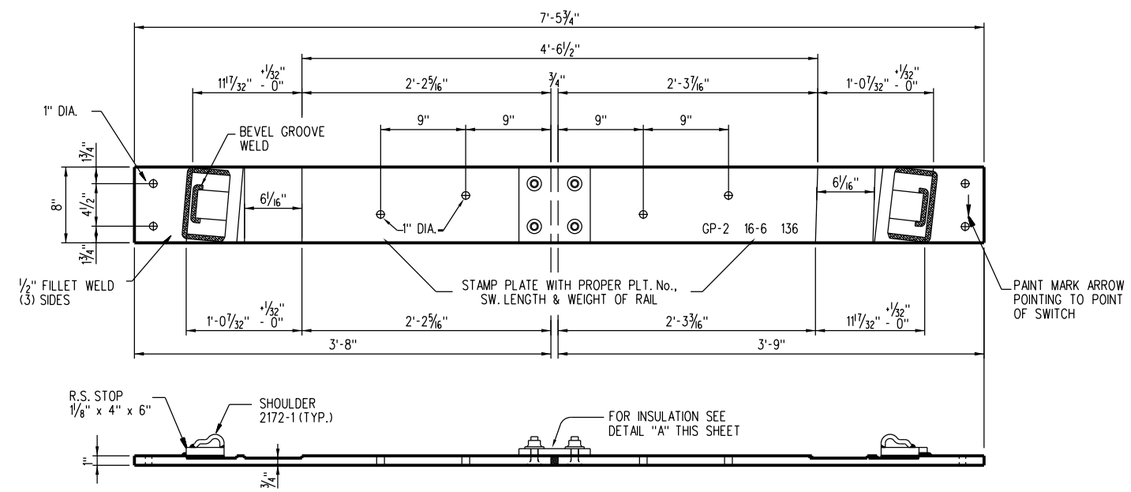

NOTE:
SERRATED WASHER AND BRACE PLATE NOT SHOWN FOR CLARITY.

INSULATED GAGE PLATE GP-2 - USED AT POINT OF SWITCH

1" x 8" - MILLED - W/ INSULATION & ADJ. RAIL BRACES
(1 PC. REQ'D AS SHOWN)

FOR MAINTENANCE ONLY

REV.	DATE	DESCRIPTION	DES.	ENG.
X	XX-XX-XX	REVISION	XX	XX

DRAWN BY: A. CARLOS DATE: 03/31/2011

ASSISTANT DIRECTOR: STANDARDS & DESIGN

DIRECTOR OF ENGINEERING AND CONSTRUCTION

SCRRA ENGINEERING STANDARDS ARE INTENDED FOR SCRRA APPROVED USES ONLY. FOR NON-SCRRA APPROVED USES:
SCRRA SHALL NOT BE RESPONSIBLE FOR THE ACCURACY OR COMPLETENESS OF THE DATA OR INFORMATION CONTAINED HEREIN. THE SELECTION AND USE OF THESE STANDARDS IS THE SOLE RESPONSIBILITY OF THE USER AND SHOULD NOT BE USED WITHOUT CONSULTING A REGISTERED PROFESSIONAL ENGINEER. ALL WARRANTIES AND REPRESENTATIONS OF ANY KIND ARE DISCLAIMED. ANYONE MAKING USE OF THIS INFORMATION AGREES THAT IT ASSUMES ALL LIABILITY ARISING FROM SUCH USE. NO PART OF THESE STANDARDS SHOULD BE REPRODUCED OR DISTRIBUTED IN ANY FORM OR BY ANY MEANS WITHOUT THE PRIOR WRITTEN PERMISSION OF SCRRA. ALL RIGHTS RESERVED.

METROLINK®
SOUTHERN CALIFORNIA REGIONAL RAIL AUTHORITY
ONE GATEWAY PLAZA, 12TH FLOOR, L. A., CA. 90012

ENGINEERING STANDARDS

NO. 8 SWITCH PLATE DETAILS

STANDARD 2911
SCALE: 1½" = 1'-0"
REVISION –
SHEET 15 OF 16
CADD FILE: ES2911-15

NOTES:

1. PLATES TO BE MADE OF MILD ROLLED STEEL.
2. THE PLATES AS SHOWN ARE FOR A 136 LB., NO. 8, RIGHT HAND, HAND OPERATED TURNOUT. FOR A LEFT HAND TURNOUT PLATES ARAE TO BE OPPOSITE.
3. GUARD RAIL PLATES SHALL BE INSTALLED AND WELDED TO THE FROG GAGE PLATES IN THE FIELD WITH A 3 PASS 1/2" • FILLET WELD CONTINUOUS ON BOTH ENDS OF THE PLATE. PLATES ARE TO BE WELDED ONLY AFTER THE GAGE PLATE AND THE FROG IS SECURED IN THE PROPER LOCATION ON THE TIE WITH PROPER ALIGNMENT.
4. FROG BASE PLATES FP-1, FP-4 AND FP-7 ARE TO BE WELDED TO THE FROG GAGE PLATES IN THE FIELD WITH A 3 PASS 1/2" • FILLET WELD CONTINUOUS ON BOTH ENDS OF THE PLATE. PLATES ARE TO BE WELDED ONLY AFTER THE GAGE PLATE AND THE FROG IS SECURED IN THE PROPER LOCATION ON THE TIE WITH PROPER ALIGNMENT.

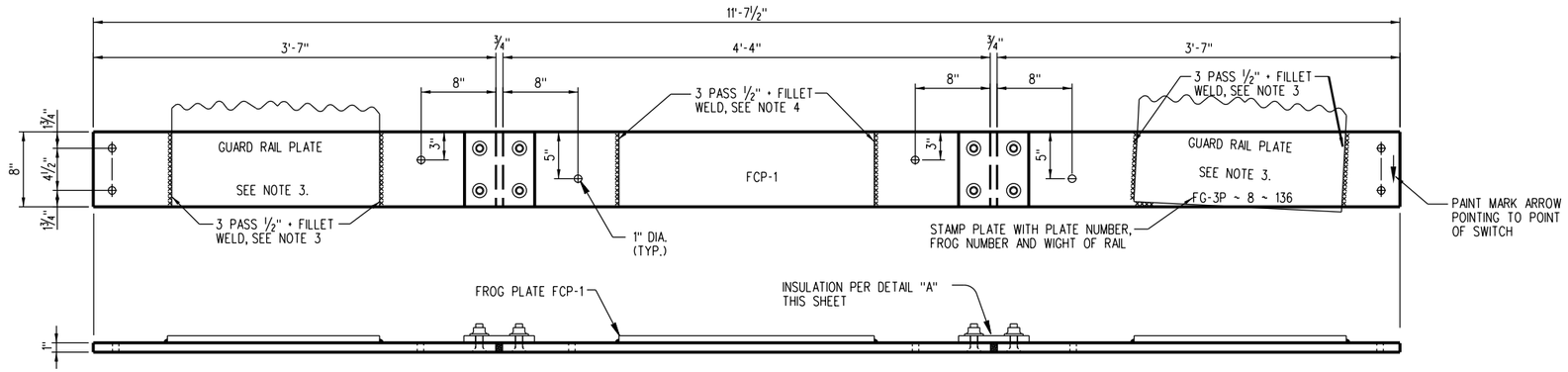

INSULATED FROG GAGE PLATE - FG-1P

3/4" x 8" - FLAT - W/ INSULATION (1 PC. REQ'D AS SHOWN)

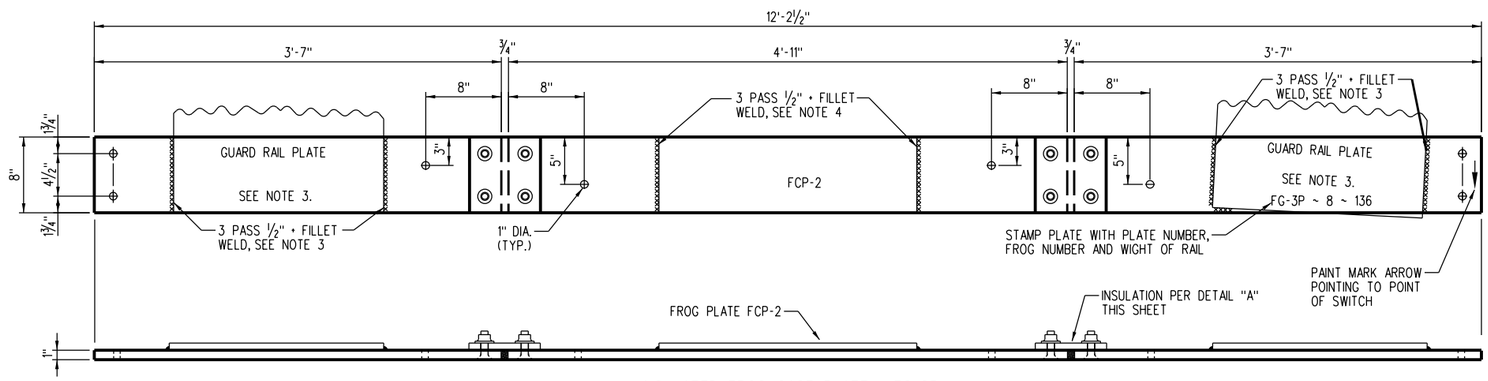

INSULATED FROG GAGE PLATE - FG-2P

3/4" x 8" - FLAT - W/ INSULATION (1 PC. REQ'D AS SHOWN)
(THIS DETAIL NOT TO SCALE)

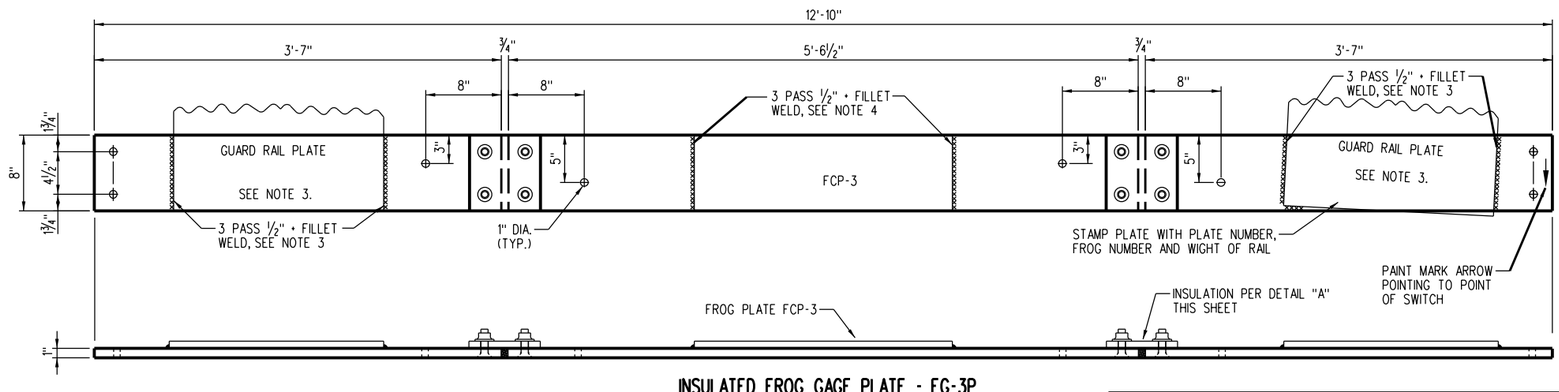

INSULATED FROG GAGE PLATE - FG-3P

3/4" x 8" - FLAT - W/ INSULATION (1 PC. REQ'D AS SHOWN)
(THIS DETAIL NOT TO SCALE)

NOTES:

HEAD OF HUCK BOLT RECESSED 1/16" MAX.

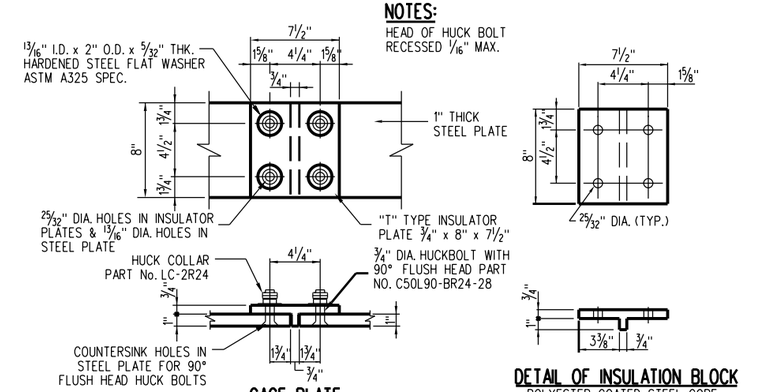

GAGE PLATE INSULATED JOINT ASSEMBLY GPI-77

DETAIL OF INSULATION BLOCK

POLYESTER COATED STEEL CORE W/ BUSHINGS, PORTEC •127-07547-01 OR FIBERGLASS REINFORCED THERMOSET RESIN. PURCHASE PART NO. GPI52P05

DETAIL "A"
INSULATION AT GAGE PLATES

(SCALE: NONE)

FOR MAINTENANCE ONLY

REV.	DATE	DESCRIPTION	DES.	ENG.
X	XX-XX-XX	REVISION	XX	XX

DRAWN BY: A. CARLOS DATE: 03/31/2011

ASSISTANT DIRECTOR: STANDARDS & DESIGN

DIRECTOR OF ENGINEERING AND CONSTRUCTION

SCRRA ENGINEERING STANDARDS ARE INTENDED FOR SCRRA APPROVED USES ONLY. FOR NON-SCRRA APPROVED USES:
SCRRA SHALL NOT BE RESPONSIBLE FOR THE ACCURACY OR COMPLETENESS OF THE DATA OR INFORMATION CONTAINED HEREIN. THE SELECTION AND USE OF THESE STANDARDS IS THE SOLE RESPONSIBILITY OF THE USER AND SHOULD NOT BE USED WITHOUT CONSULTING A REGISTERED PROFESSIONAL ENGINEER. ALL WARRANTIES AND REPRESENTATIONS OF ANY KIND ARE DISCLAIMED. ANYONE MAKING USE OF THIS INFORMATION AGREES THAT IT ASSUMES ALL LIABILITY ARISING FROM SUCH USE. NO PART OF THESE STANDARDS SHOULD BE REPRODUCED OR DISTRIBUTED IN ANY FORM OR BY ANY MEANS WITHOUT THE PRIOR WRITTEN PERMISSION OF SCRRA. ALL RIGHTS RESERVED.

METROLINK®
SOUTHERN CALIFORNIA REGIONAL RAIL AUTHORITY
ONE GATEWAY PLAZA, 12TH FLOOR, L. A., CA. 90012

ENGINEERING STANDARDS

NO. 8 INSULATED GAGE PLATE DETAILS

STANDARD 2911
SCALE: 1 1/2" = 1'-0"
REVISION –
SHEET 16 OF 16
CADD FILE: ES2911-16

EQUIVALENT CURVE DATA	
CURVE	6.0850'
RADIUS	941.60'
DELTA	5.724'
TANGENT (T)	47.07'
LENGTH (L)	94.07'
EXTERNAL	1.17'
CROSSOVER DATA	
LEAD	80.500'
PC TO PS	14.07'
PS TO PI	33.00'
PI TO ½" PF	47.50'
LENGTH OF TURNOUT	117.28'
PS TO PT	80.00'

FROG DATA	
FROG NUMBER	10
FROG ANGLE	5°-43'-29"
SWITCH DATA	
SWITCH LENGTH	16'-6"
HEEL SPREAD	6¼"
HEEL ANGLE	N/A
SWITCH ANGLE	1°-44'-11"
RADIUS OF CENTER LINE - SWITCH	N/A
TANGENT LENGTH SWITCH	N/A
CENTRAL ANGLE OF CLOSURE CURVE-SWITCH	N/A
DEGREE OF CURVE - SWITCH	N/A
TURNOUT DATA	
RADIUS OF CENTER LINE - TURNOUT	742.29'
TANGENT LENGTH - TURNOUT	25.84'
CENTRAL ANGLE OF CLOSURE CURVE - TURNOUT	3°-59'-18"
DEGREE OF CURVE - TURNOUT	7°-43'-29"

DRAWING INDEX

TURNOUT AND CROSSOVER GENERAL NOTES AND DATA — ES2921-01
TURNOUT AND CROSSOVER JOINTS LOCATIONS — ES2921-02
TURNOUT LAYOUT — ES2921-03
TURNOUT BILL OF MATERIALS — ES2921-04
CROSSOVER LAYOUT AND BILL OF MATERIALS — ES2921-05
FROG LAYOUT — ES2921-06
GAGE PLATE DETAILS AND DIMENSION TABLE — ES2921-07
GUARD RAIL DETAILS — ES2921-08
SPLIT SWITCH POINT DETAILS — ES2921-09
STRAIGHT UNDERCUT STOCK RAILS — ES2921-10
SWITCH ROD DETAILS — ES2921-11
SWITCH ROD MISCELLANIOUS DETAILS — ES2921-12
EXTENSION PLATE AND DAP TIE DETAILS FOR M-23A SWITCH MACHINE — ES2921-13
TURNOUT AND FROG PLATE DETAILS — ES2921-14
SWITCH PLATE DETAILS — ES2921-15
INSULATED GAGE PLATE DETAILS — ES2921-16

NOTES:

1. TURNOUT TO BE FABRICATED FROM 136 LB. HEAD HARDENED RAIL, FROM POINT END TO LAST LONG SWITCH TIE.
2. LOCATION OF INSULATED JOINTS IS DETERMINED BY DRAWING NUMBER ES2921-02. IT WILL BE SATISFACTORY TO RELOCATE THE INSULATED JOINT IN THE FIELD UP TO 12" SO AS TO PROVIDE A SUITABLE SUSPENDED JOINT, PROVIDED THE STAGGER OF INSULATED JOINTS DOES NOT EXCEED 4'-6". SUSPENDED INSULATED JOINTS MUST BE LOCATED IN A CRIB AREA BETWEEN TIES, A MINIMUM DISTANCE OF 4" FROM EDGE OF NEAREST TIE PLATE.
3. ALL INSULATED JOINTS ARE TO BE ADHESIVE BONDED PREFABRICATED MITRE CUT INSULATED JOINTS PER ES2504 UNLESS OTHERWISE SPECIFIED.
4. ALL MATERIALS REQUIRED FOR HAND OR MACHINE OPERATED SWITCH OPERATION WILL BE FURNISHED PER REQUIREMENTS OF THE SCRRA DIRECTOR OF ENGINEERING AND CONSTRUCTION.
5. MATERIALS AND WORKMANSHIP, ALSO ANY CONSTRUCTION DETAILS NOT SHOWN, SHALL BE PER CURRENT AREMA "MANUAL AND PORTFOLIO" UNLESS OTHERWISE SPECIFIED.
6. WHERE REQUIRED, ALL IDENTIFICATION SYMBOLS TO BE PLAINLY STAMPED.
7. GAGE PLATES WILL BE FURNISHED INSULATED. SWITCH RODS WILL BE FURNISHED INSULATED UNLESS OTHERWISE SPECIFIED.
8. MANUFACTURER SHALL SUBMIT TWO COPIES OF SHOP DRAWINGS TO THE SCRRA DIRECTOR OF ENGINEERING AND CONSTRUCTION FOR APPROVAL PRIOR TO FABRICATION OF TURNOUT. SHOP DRAWINGS THAT CHANGE DETAILS OF THESE STANDARDS MUST CLEARLY SPECIFY SUCH PROPOSED CHANGES.
9. THE MATERIAL INCLUDED IN A "TURNOUT COMPLETE" IS EVERYTHING LISTED IN THE BILL OF MATERIALS. TO CONSTRUCT A COMPLETE TURNOUT, SWITCH TIES (PER LIST ON THIS SHEET) AND INSULATED JOINTS, FIELD WELDS, RUNNING RAIL, AND CLOSURE RAIL IDENTIFICATION ON SHEET ES2921-02 MUST ALSO BE SUPPLIED. THE MATERIAL FOR A "CROSSOVER COMPLETE" IS IDENTIFIED ON SHEET ES2921-05.
10. TIE PLATES SHALL CONFORM TO SCRRA ENGINEERING STANDARD ES2454.
11. SCREW SPIKES (15/16" X 6-2 TPI) SHALL CONFORM TO SCRRA ENGINEERING STANDARD ES2357.
12. PLATE HOLES SHALL BE 1" DIAMETER. PILOT HOLES IN TIES SHALL BE 9/16" DIAMETER. SCREW SPIKES SHALL BE SCREWED INTO WOOD (NOT DRIVEN).
13. MANUFACTURER SHALL BEVEL RAIL ENDS PER CURRENT AREMA. PLAN NO. 1005.
14. THE 16'-6" SWITCH POINT, MADE FROM 40'-0" RAIL PER ES2921-10 SHALL BE FURNISHED WITH SWITCH RODS NO. 1 AND 2 PER ES2921-11 AND ES2921-12.
15. FOR LOCATION OF INSULATED AND COMPROMISE JOINTS FOR NO. 10 TURNOUT AND CROSSOVER, SEE DRAWING NO. ES2921-02.
16. GAGE PLATES FOR SWITCH AND FROG, SWITCH HEEL PLATE (FOR BOTH R.H. AND L.H. TURNOUTS) AND PLATES P-10 THRU P-24 ARE DESIGNED TO BE PERPENDICULAR TO THE MAIN LINE THRU RUN RAILS.
17. UPON COMPLETION OF TURNOUT INSTALLATION, RUNNING RAIL MUST BE ADJUSTED TO SCRRA NEUTRAL RAIL TEMPERATURE.
18. ALL E-CLIPS SHALL BE GALVANIZED.
19. SWITCH POINTS SHALL BE FABRICATED PER AREMA SPECIFICATION NO. 9-28-92 AND ES2921-09.
20. THE TOLERANCE FOR SPACING OF SWITCH TIES IS +/- ½" RELATIVE TO ADJACENT TIES AND 1¼" RELATIVE TO CUMULATIVE DIMENSION FROM THE POINT OF SWITCH (PS).

CROSSOVER DATA TABLE									
A	B	C	X	Y	2L+X	2L+X-2(PC-PS)	PS TO PS	U	V
13	130.34	129.69	36.20	223.84	224.33	196.19	195.70	34.70	35.35
14	140.37	139.67	46.22	233.82	234.36	206.22	205.68	44.68	45.37
15	150.40	149.65	56.25	243.79	244.39	216.25	215.65	54.65	55.40
16	160.42	159.62	66.28	253.77	254.41	226.27	225.63	64.63	65.43
17	170.45	169.60	76.30	263.75	264.44	236.60	235.61	74.61	75.45
18	180.48	179.58	86.33	273.72	274.47	246.33	245.58	84.58	85.48
19	190.50	189.55	96.36	283.70	284.49	256.65	255.56	94.56	95.50
20	200.53	199.53	106.38	293.68	294.52	266.38	265.54	104.54	105.53
21	210.55	209.50	116.41	303.65	304.54	276.40	275.51	114.51	115.56
22	220.58	219.48	126.43	313.63	314.57	286.43	285.49	124.49	125.58
23	230.61	229.46	136.46	323.60	324.60	296.46	295.46	134.46	135.61
24	240.63	239.43	146.49	333.58	334.62	306.48	305.44	144.44	145.64
25	250.66	249.41	156.51	343.56	344.65	316.51	315.42	154.42	155.66
26	260.69	259.39	166.54	353.53	354.68	326.54	325.39	164.39	165.69
27	270.71	269.36	176.57	363.51	364.70	336.56	335.37	174.37	175.72
28	280.77	279.34	186.59	373.49	374.73	346.59	345.35	184.35	185.74
29	290.77	289.32	196.62	383.46	384.76	356.62	355.32	194.32	195.77
30	300.79	299.29	206.65	393.44	394.78	366.64	365.30	204.30	205.79
31	310.82	309.27	216.67	403.42	404.81	376.67	375.28	214.28	215.82
32	320.85	319.25	226.70	413.39	414.84	386.70	385.25	224.25	225.85

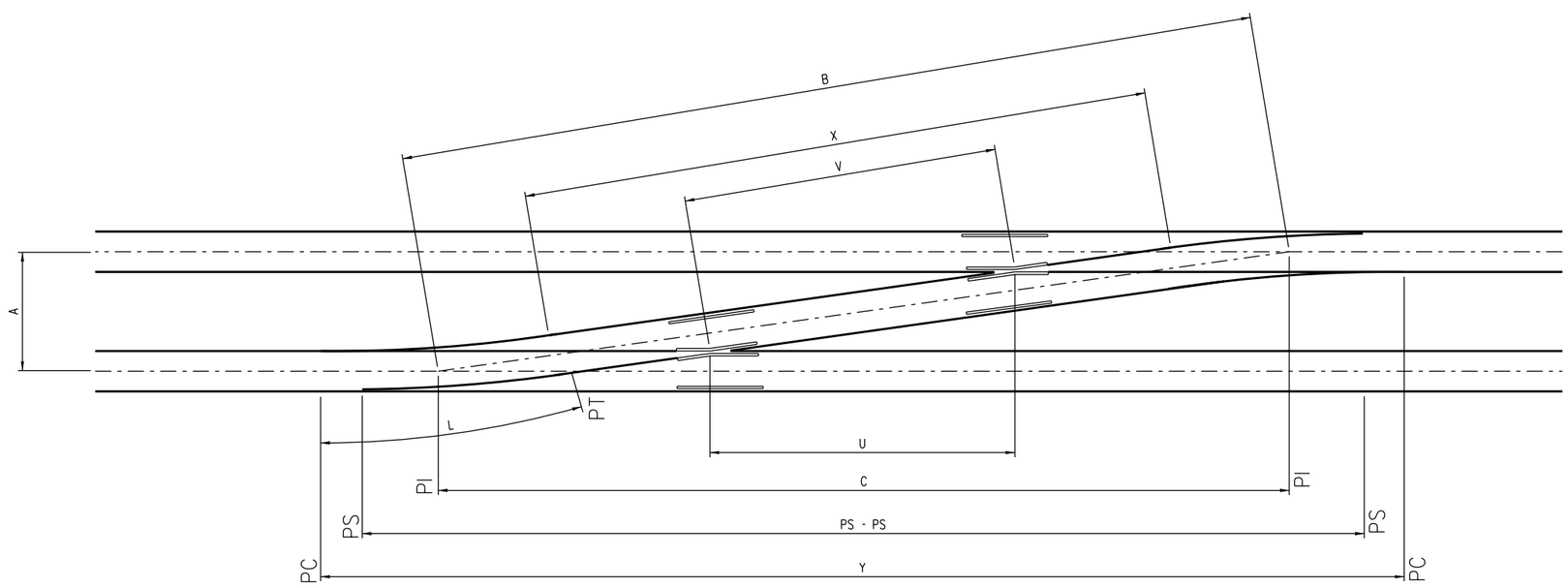

FOR MAINTENANCE ONLY

CROSSOVER LAYOUT

REV.	DATE	DESCRIPTION	DES.	ENG.
X	XX-XX-XX	REVISION	XX	XX

DRAWN BY: A. CARLOS DATE: 03/31/2011

ASSISTANT DIRECTOR: STANDARDS & DESIGN

DIRECTOR OF ENGINEERING AND CONSTRUCTION

SCRRA ENGINEERING STANDARDS ARE INTENDED FOR SCRRA APPROVED USES ONLY. FOR NON-SCRRA APPROVED USES:
SCRRA SHALL NOT BE RESPONSIBLE FOR THE ACCURACY OR COMPLETENESS OF THE DATA OR INFORMATION CONTAINED HEREIN. THE SELECTION AND USE OF THESE STANDARDS IS THE SOLE RESPONSIBILITY OF THE USER AND SHOULD NOT BE USED WITHOUT CONSULTING A REGISTERED PROFESSIONAL ENGINEER. ALL WARRANTIES AND REPRESENTATIONS OF ANY KIND ARE DISCLAIMED. ANYONE MAKING USE OF THIS INFORMATION AGREES THAT IT ASSUMES ALL LIABILITY ARISING FROM SUCH USE. NO PART OF THESE STANDARDS SHOULD BE REPRODUCED OR DISTRIBUTED IN ANY FORM OR BY ANY MEANS WITHOUT THE PRIOR WRITTEN PERMISSION OF SCRRA. ALL RIGHTS RESERVED.

METROLINK®
SOUTHERN CALIFORNIA REGIONAL RAIL AUTHORITY
ONE GATEWAY PLAZA, 12TH FLOOR, L. A., CA. 90012

ENGINEERING STANDARDS

NO. 10 136 LB. R.H. RBM FROG
TURNOUT AND CROSSOVER
GENERAL NOTES AND DATA

STANDARD: 2921
SCALE: NONE
REVISION: –
SHEET: 1 OF 15
CADD FILE: ES2921-01

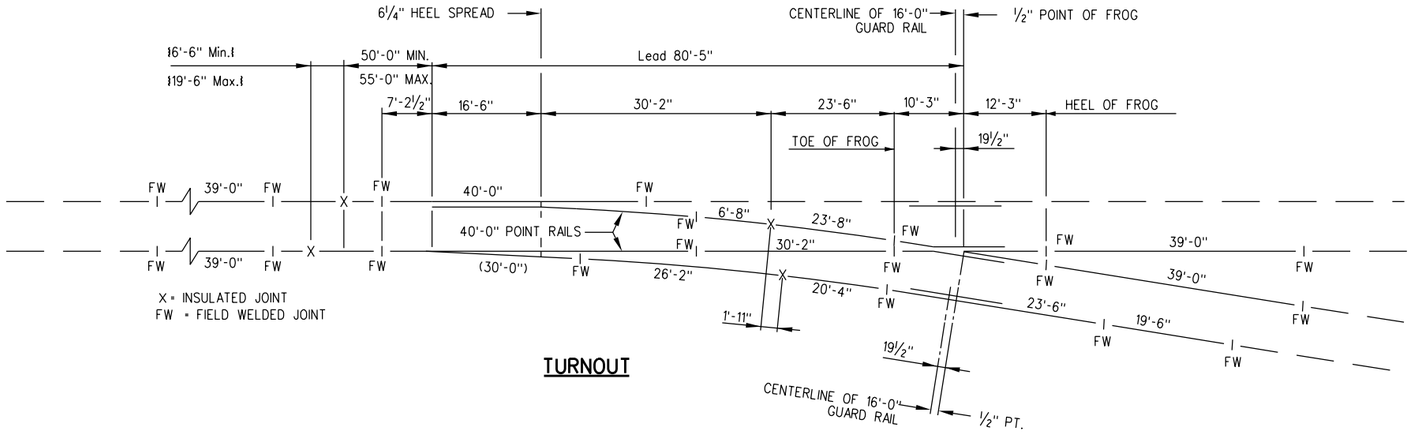

TURNOUT

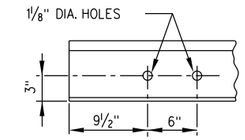

DETAIL "A"

SEE NOTE 4 (b)

(DRILLED HOLES NOT NECESSARY IF TEMPORARY BOLTED JOINTS ARE NOT REQUIRED)

NOTES:

1. THE PERMISSIBLE VARIATION IN STANDARD LENGTHS OF RAILS, FROGS AND SWITCH POINTS IS GREATER THAN THE NORMAL EXPANSION GAPS AT RAIL JOINTS AND THICKNESS OF FIBRE END POST IN INSULATED JOINTS, NO ALLOWANCE HAS BEEN MADE FOR EXPANSION GAPS AND FIBRE END POSTS IN COMPUTING LENGTHS OF RAILS SHOWN. DIMENSIONS OF TURNOUT AND ALL COMPONENTS IS FOR A THERMAL, STRESS - FREE CONDITION OF 110° F. ACTUAL EXACT LENGTHS OF RAILS TO BE INSTALLED IS TO BE FIELD - ADJUSTED TO FIT OVERALL TURNOUT DIMENSIONS, THERMAL ADJUSTMENTS, THICKNESS OF WELDS AND VARIATIONS IN COMPONENT RAIL LENGTH.
2. RAIL LAYOUT SHOWN FOR TURNOUT IS TO BE USED IN ALL CASES, EXCEPT WHERE COMPROMISE JOINTS ARE REQUIRED BETWEEN THE FROGS IN A CROSSOVER TRACK. WHEN COMPROMISE JOINTS ARE TO BE USED TO JOIN DIFFERENT RAIL WEIGHTS, THE INSULATED JOINTS IN THE CROSSOVER TRACK SHALL ALWAYS BE OF THE HEAVIER RAIL SECTION. THE DISCRIPTIONS OF THE CHANGES IN RAIL LAYOUT WHEN COMPROMISE JOINTS ARE REQUIRED IN THE CROSSOVER TRACK ARE BASED ON AN ASSUMPTION THAT TRACK "H" IS LAID WITH HEAVIER RAIL THAN TRACK "L". CROSSOVER ON 15'-0" TRACK CENTERS: AT LOCATION "A" THE 19'-6" RAIL SHALL BE REPLACED WITH 8'-0" OF THE HEAVIER RAIL AND 11'-6" OF THE LIGHTER RAIL. AT LOCATION "B" THE 21'-3" RAIL SHALL BE REPLACED WITH 7'-0" OF THE HEAVIER RAIL AND 14'-3" OF THE LIGHTER RAIL.
3. IN ADDITON TO NOTE 1. NO ALLOWANCE HAS BEEN MADE IN RAIL LENGTHS TO PROVIDE GAPS NEEDED TO MAKE FIELD WELDS. IN THE FIELD IT MAY BE NECESSARY TO CUT RAIL ENDS TO PROVIDE CORRECT GAPS FOR FIELD WELDS.
4. FURNISH ALL RAIL SHOWN IN SOLID LINES ON THIS DRAWING:
   (A.) RAILS LONGER THAN 39'-0" SHALL BE CONTINUOUS WELDED RAIL (CWR), TO BE FURNISHED WITH BOTH ENDS LEFT BLANK FOR WELDING IN THE FIELD.
   (B.) ALL OTHER RAILS SHALL BE 39'-0" OF SHORTER AS SPECIFIED ON THE DRAWING, WITH BOTH ENDS DRILLED PER DETAIL "A".
5. ALL RAIL FURNISHED FOR TURNOUT AND CROSSOVERS SHALL BE "HEAD HARDENED" EXCEPT GUARD RAILS.
6. LOCATIONS OF INSULATED JOINTS ARE SHOWN ON TURNOUT AND CROSSOVER DIAGRAMS WITHOUT TOLERANCES, OR IF TOLERANCES ARE PERMISSABLE, WITH (+ OR -). ALL INSULATED JOINTS ARE TO BE PROPERLY SUSPENDED IN CRIB AREA BETWEEN TWO TIES LOCATED 4" MINIMUM FROM EDGE OF NEAREST TIE TO EDGE OF INSULATED JOINT. INSULATED JOINT MUST BE INTALLED TO BE CENTERED BETWEEN TWO (2) TIES. FIELD WELDED JOINTS DESIGNATED "FW" SHOULD BE IN CRIB AREA BETWEEN TWO TIES LOCATED 4" MINIMUM FROM EDGE OF NEAREST TIE AND WELDED JOINT. DIMENSIONS SHOWN IN PARENTHESIS (0'-0") ARE EXACT. RAILS FURNISHED FOR THESE LOCATIONS ARE LONGER AND MUST BE FIELD ADJUSTED (CUT) WITHIN TOLERANCES SHOWN IN BRACKETS [0'-0"]. WHEN INSULATED JOINTS WITH TOLERANCES AND FIELD WELDED JOINTS FALL SHORT OF MINIMUM CLEARANCE FROM TIE OR TIE PLATE THE JOINT MAY BE MOVED WITHIN TOLERANCE LIMITS. BONDED INSULATED JOINT ASSEMBLIES AND STOCK RAILS ARE FURNISHED LONGER THAN SHOWN IN PARENTHESIS ON LAYOUT. THESE OR THEIR ADJACENT CONNECTING RAILS MUST BE TRIMMED IN THE FIELD TO FIT.

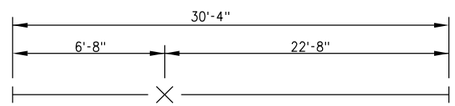

30'-4" LONG ADHESIVE BONDED PREFABRICATED MITRE CUT INSULATED RAIL JOINT ASSEMBLY

(SEE NOTE 6) BOTH ENDS SHALL BE LEFT BLANK FOR WELDING IN THE FIELD

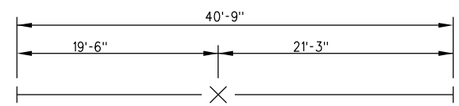

40'-9" LONG ADHESIVE BONDED PREFABRICATED MITRE CUT INSULATED RAIL JOINT ASSEMBLY

(SEE NOTE 6) BOTH ENDS SHALL BE LEFT BLANK FOR WELDING IN THE FIELD

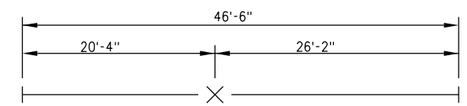

46'-6" LONG ADHESIVE BONDED PREFABRICATED MITRE CUT INSULATED RAIL JOINT ASSEMBLY

(SEE NOTE 6) BOTH ENDS SHALL BE LEFT BLANK FOR WELDING IN THE FIELD

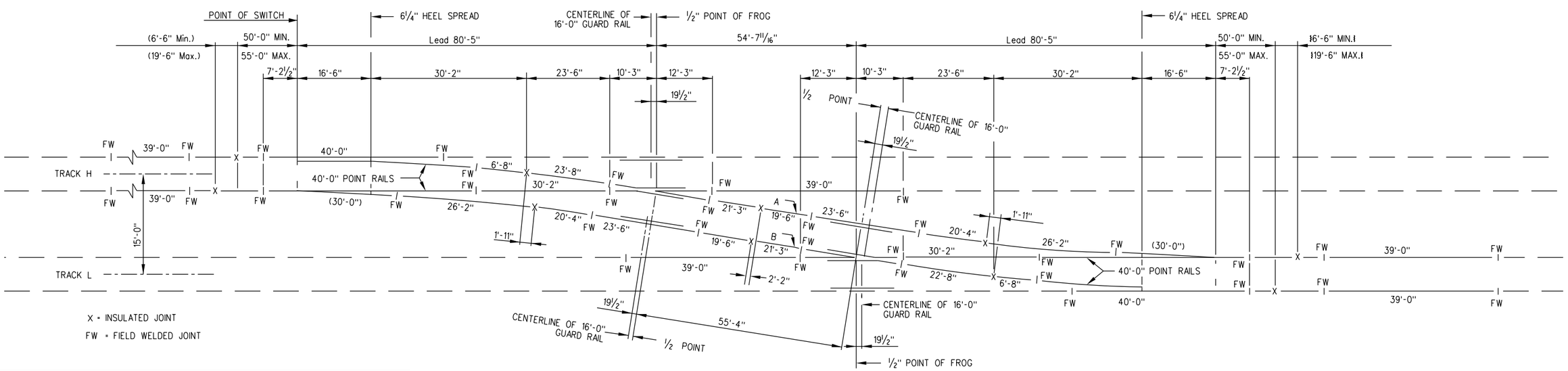

CROSSOVER

15'-0" TRACK CENTERS

FOR MAINTENANCE ONLY

X	XX-XX-XX	REVISION	XX	XX
REV.	DATE	DESCRIPTION	DES.	ENG.

DRAWN BY: A. CARLOS DATE: 03/31/2011

ASSISTANT DIRECTOR: STANDARDS & DESIGN

DIRECTOR OF ENGINEERING AND CONSTRUCTION

SCRRA ENGINEERING STANDARDS ARE INTENDED FOR SCRRA APPROVED USES ONLY. FOR NON-SCRRA APPROVED USES:
SCRRA SHALL NOT BE RESPONSIBLE FOR THE ACCURACY OR COMPLETENESS OF THE DATA OR INFORMATION CONTAINED HEREIN. THE SELECTION AND USE OF THESE STANDARDS IS THE SOLE RESPONSIBILITY OF THE USER AND SHOULD NOT BE USED WITHOUT CONSULTING A REGISTERED PROFESSIONAL ENGINEER. ALL WARRANTIES AND REPRESENTATIONS OF ANY KIND ARE DISCLAIMED. ANYONE MAKING USE OF THIS INFORMATION AGREES THAT IT ASSUMES ALL LIABILITY ARISING FROM SUCH USE. NO PART OF THESE STANDARDS SHOULD BE REPRODUCED OR DISTRIBUTED IN ANY FORM OR BY ANY MEANS WITHOUT THE PRIOR WRITTEN PERMISSION OF SCRRA. ALL RIGHTS RESERVED.

METROLINK®
SOUTHERN CALIFORNIA REGIONAL RAIL AUTHORITY
ONE GATEWAY PLAZA, 12TH FLOOR, L. A., CA. 90012

ENGINEERING STANDARDS

NO. 10 136 LB. R.H. RBM FROG TURNOUT AND CROSSOVER JOINTS LOCATIONS

STANDARD 2921
SCALE: NONE
REVISION –
SHEET 2 OF 15
CADD FILE: ES2921-02

NOTE:
IF CONCRETE TIES ARE INSTALLED AHEAD OF SWITCH POINT, HEAD BLOCK TIE GAGE PLATE PP WILL NOT BE INSTALLED.

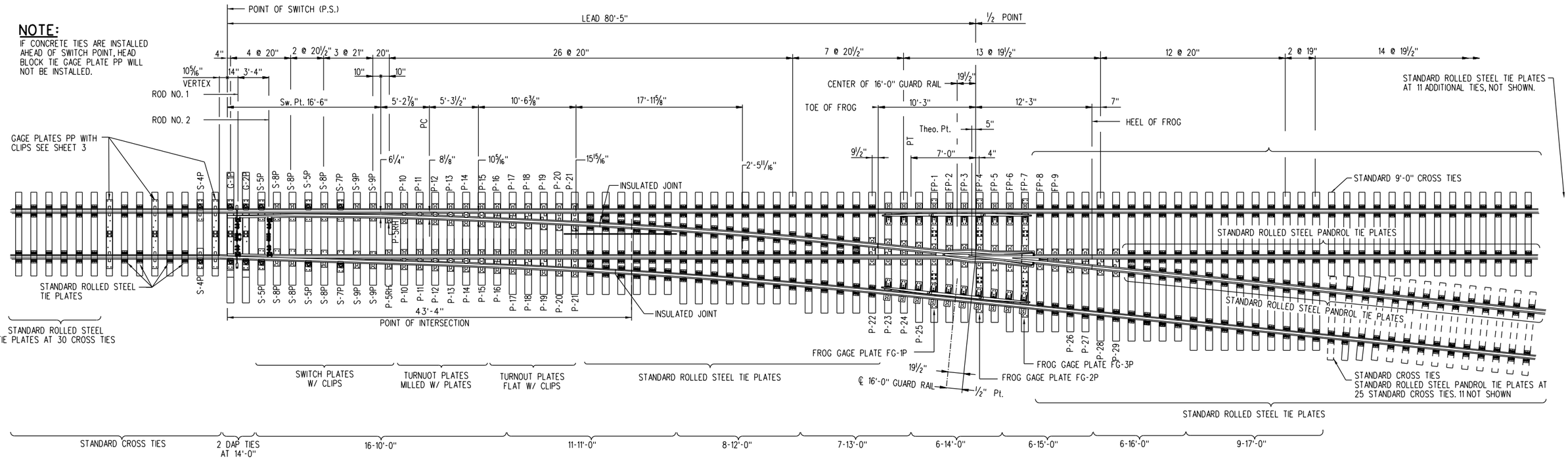

#10 RIGHT HAND TURNOUT

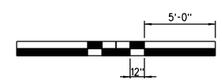

GRAPHIC SCALE

BILL OF MATERIAL FOR LATERAL TURNOUT	
QTY.	DESCRIPTION
1 PAIR	16'-6" EXTENDED FIELD WELDED TYPE SWITCH POINTS (40'-0" RAIL)
1 EACH	R.H. SAMSON STOCK RAILS (30'-0")
1 EACH	L.H. SAMSON STOCK RAILS (40'-0")
1 EACH	NO. 1 SMJ TYPE SWITCH ROD W/BASKET
1 EACH	VERTICAL SWITCH ROD WITH SMJ CLIPS
3 EACH	GAGE PLATE NO. P-P
1 EACH	GAGE PLATE NO. G-1P
1 EACH	GAGE PLATE NO. G-2P
6 EACH	SLIDE PLATE S-8P
4 EACH	SLIDE PLATE S-9P
4 EACH	BRACE SLIDE PLATE S-5P
2 EACH	BRACE SLIDE PLATE S-7P
2 EACH	BRACE SLIDE PLATE S-4P
2 EACH	HEEL PLATE P-5RH
2 EACH	TURNOUT PLATES P-10 THRU P-21
1 EACH	PLATES P-22 THRU P-29
1 EACH	NO.10 SPRING RAIL FROG - 22'-6"
1 EACH	FROG PLATES No. FP-1 THRU FP-9
1 EACH	FROG PLATES No. FCP-1 THRU FCP-3
1 EACH	FROG GAGE PLATES FG-1P THRU FG-3P
2 EACH	16'-0" U-69 ADJUSTABLE GUARD RAIL W/PLATES
5 EACH	D.I. RAIL HOLD DOWN CLIPS E-3706
2 EACH	D.I. RAIL HOLD DOWN CLIPS E-3707
2 EACH	D.I. RAIL HOLD DOWN CLIPS E-3708
138 PCS.	TIE PLATES
552 PCS.	"PANDROL", OR EQUAL, SCREW SPIKES 15•16" DIA. X 6" NO. 5760
276 PCS.	"PANDROL", OR EQUAL, "E"-CLIP TYPE E-2055 (GALVANIZED)
8 PCS	"PANDROL", OR EQUAL, "E"-CLIP TYPE E-2063 (GALVANIZED)
12 PCS.	BOLTLESS ADJUSTABLE BRACE ASSEMBLY
1 EACH	19'-6" RAIL
1 EACH	23'-6" RAIL
1 EACH	30'-2" RAIL
4 EACH	39'-0" RAIL
1 EACH	EPOXY BONDED PREFABRICATED MITRE CUT INSULATED JOINT (30'-4")
1 EACH	EPOXY BONDED PREFABRICATED MITRE CUT INSULATED JOINT (46'-6")

BILL OF SWITCH TIES			
PIECES	SIZE	LENGTH	BOARD FEET
16	7" x 9"	10'-0"	840.00
11	7" x 9"	11'-0"	635.25
8	7" x 9"	12'-0"	504.00
7	7" x 9"	13'-0"	477.75
6	7" x 9"	14'-0"	441.00
2	10" x 9"	14'-0" DAP TIES	147.00
6	7" x 9"	15'-0"	472.50
6	7" x 9"	16'-0"	504.00
9	7" x 9"	17'-0"	803.25
TOTAL			TOTAL
71			4824.75

FOR MAINTENANCE ONLY

REV.	DATE	DESCRIPTION	DES.	ENG.
X	XX-XX-XX	REVISION	XX	XX

DRAWN BY: A. CARLOS DATE: 03/31/2011

ASSISTANT DIRECTOR: STANDARDS & DESIGN

DIRECTOR OF ENGINEERING AND CONSTRUCTION

SCRRA ENGINEERING STANDARDS ARE INTENDED FOR SCRRA APPROVED USES ONLY. FOR NON-SCRRA APPROVED USES:
SCRRA SHALL NOT BE RESPONSIBLE FOR THE ACCURACY OR COMPLETENESS OF THE DATA OR INFORMATION CONTAINED HEREIN. THE SELECTION AND USE OF THESE STANDARDS IS THE SOLE RESPONSIBILITY OF THE USER AND SHOULD NOT BE USED WITHOUT CONSULTING A REGISTERED PROFESSIONAL ENGINEER. ALL WARRANTIES AND REPRESENTATIONS OF ANY KIND ARE DISCLAIMED. ANYONE MAKING USE OF THIS INFORMATION AGREES THAT IT ASSUMES ALL LIABILITY ARISING FROM SUCH USE. NO PART OF THESE STANDARDS SHOULD BE REPRODUCED OR DISTRIBUTED IN ANY FORM OR BY ANY MEANS WITHOUT THE PRIOR WRITTEN PERMISSION OF SCRRA. ALL RIGHTS RESERVED.

METROLINK®
SOUTHERN CALIFORNIA REGIONAL RAIL AUTHORITY
ONE GATEWAY PLAZA, 12TH FLOOR, L. A., CA. 90012

ENGINEERING STANDARDS

NO. 10 136 LB. R.H. RBM FROG TURNOUT LAYOUT

STANDARD 2921
SCALE: 3/16" = 1'-0"
REVISION –
SHEET 3 OF 15
CADD FILE: ES2921-03

NOTES:

1. SEE SHEET ES2921-01 FOR TURNOUT DATA AND NOTES
2. SEE SHEET ES2921-04 FOR BLL OF MATERIALS
3. SEE SHEET ES2921-03 FOR TURNOUT

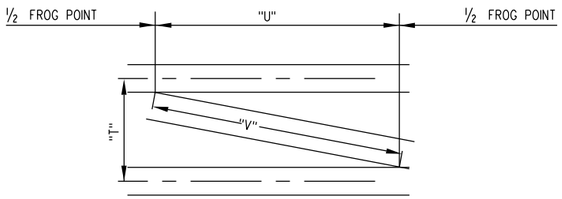

CROSSOVER DIAGRAM

CROSSOVER DATA		
MAIN TRACKS - TANGENT AND PARALLEL CROSSOVER - TANGENT BETWEEN FROGS		
TRACK CENTERS "T"	DISTANCE BETWEEN ½" FROG PTS.	
	ON MAIN TRACK "U"	ON CROSSOVER "V"
15'-0"	54'-7 11/16"	55'-4 11/16"
EACH 1"	0.831'	0.835'

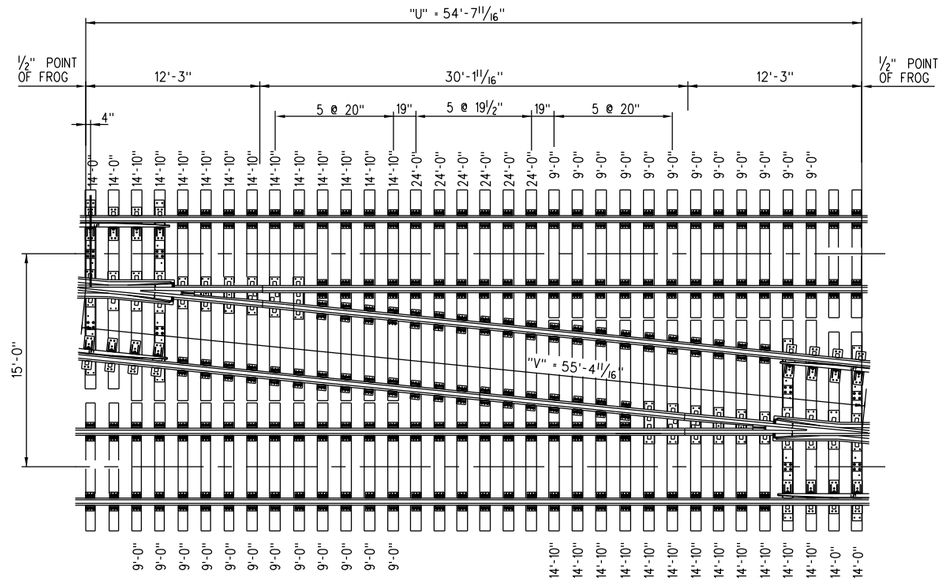

NO. 10 CROSSOVER

BILL OF MATERIAL	
QTY.	DESCRIPTION
2 PAIR	16'-6" EXTENDED FIELD WELDED TYPE SWITCH POINTS (40'-0" RAIL)
1 PAIR	R.H. SAMSON STOCK RAILS (30'-0")
1 PAIR	L.H. SAMSON STOCK RAILS (40'-0")
2 EACH	NO. 1 SMJ TYPE SWITCH ROD W/BASKET
2 EACH	VERTICAL SWITCH ROD WITH SMJ CLIPS
6 EACH	GAGE PLATE No. P-P
2 EACH	GAGE PLATE No. G-1P
2 EACH	GAGE PLATE No. G-2P
12 EACH	SLIDE PLATE S-8P
8 EACH	SLIDE PLATE S-9P
8 EACH	BRACE SLIDE PLATE S-5P
4 EACH	BRACE SLIDE PLATE S-7P
4 EACH	BRACE SLIDE PLATE S-4P
4 EACH	HEEL PLATE P-5RH
4 EACH	TURNOUT PLATES P-10 THRU P-21
2 EACH	PLATES P-22 THRU P-29
2 EACH	No.10 R.B.M. FROG - 22'-6"
2 EACH	FROG PLATES No. FP-1 THRU FP-9
2 EACH	FROG PLATES No. FCP-1 THRU FCP-3
2 EACH	FROG GAGE PLATES FG-1P THRU FG-3P
4 EACH	16'-0" U-69 ADJUSTABLE GUARD RAIL W/PLATES
10 EACH	D.I. RAIL HOLD DOWN CLIPS E-3706
4 EACH	D.I. RAIL HOLD DOWN CLIPS E-3707
4 EACH	D.I. RAIL HOLD DOWN CLIPS E-3708
228 PCS.	TIE PLATES
912 PCS.	"PANDROL", OR EQUAL, SCREW SPIKES 15/16 " DIA. X 6" No. 5760
456 PCS.	"PANDROL", OR EQUAL, "E"-CLIP TYPE E-2055 (GALVANIZED)
24 PCS.	"PANDROL", OR EQUAL, "E"-CLIP TYPE E-2063 (GALVANIZED)
12 PCS.	BOLTLESS ADJUSTABLE BRACE ASSEMBLY
2 EACH	23'-6" RAIL
2 EACH	30'-2" RAIL
6 EACH	39'-0" RAIL
2 EACH	EPOXY BONDED PREFABRICATED MITRE CUT INSULATED JOINT (30'-4")
2 EACH	EPOXY BONDED PREFABRICATED MITRE CUT INSULATED JOINT (40'-9")
2 EACH	EPOXY BONDED PREFABRICATED MITRE CUT INSULATED JOINT (46'-6")

BILL OF SWITCH TIES			
PIECES	SIZE	LENGTH	BOARD FEET
24	7" x 9"	9'-0"	1134.00
32	7" x 9"	10'-0"	1680.00
22	7" x 9"	11'-0"	1270.50
16	7" x 9"	12'-0"	1008.00
14	7" x 9"	13'-0"	955.50
16	7" x 9"	14'-0"	1176.00
4	10" x 9"	14'-0" DAP TIES	336.00
24	7" x 9"	14'-10"	1890.00
6	7" x 9"	24'-0"	756.00
TOTAL			TOTAL
158			10206.00

FOR MAINTENANCE ONLY

REV.	DATE	DESCRIPTION	DES.	ENG.
X	XX-XX-XX	REVISION	XX	XX

DRAWN BY: A. CARLOS DATE: 03/31/2011

ASSISTANT DIRECTOR: STANDARDS & DESIGN

DIRECTOR OF ENGINEERING AND CONSTRUCTION

SCRRA ENGINEERING STANDARDS ARE INTENDED FOR SCRRA APPROVED USES ONLY. FOR NON-SCRRA APPROVED USES:
SCRRA SHALL NOT BE RESPONSIBLE FOR THE ACCURACY OR COMPLETENESS OF THE DATA OR INFORMATION CONTAINED HEREIN. THE SELECTION AND USE OF THESE STANDARDS IS THE SOLE RESPONSIBILITY OF THE USER AND SHOULD NOT BE USED WITHOUT CONSULTING A REGISTERED PROFESSIONAL ENGINEER. ALL WARRANTIES AND REPRESENTATIONS OF ANY KIND ARE DISCLAIMED. ANYONE MAKING USE OF THIS INFORMATION AGREES THAT IT ASSUMES ALL LIABILITY ARISING FROM SUCH USE. NO PART OF THESE STANDARDS SHOULD BE REPRODUCED OR DISTRIBUTED IN ANY FORM OR BY ANY MEANS WITHOUT THE PRIOR WRITTEN PERMISSION OF SCRRA. ALL RIGHTS RESERVED.

METROLINK®
SOUTHERN CALIFORNIA REGIONAL RAIL AUTHORITY
ONE GATEWAY PLAZA, 12TH FLOOR, L. A., CA. 90012

ENGINEERING STANDARDS

NO. 10 136 LB. R.H. RBM FROG CROSSOVER
LAYOUT AND BILL OF MATERIALS

STANDARD 2921
SCALE: 3/16" = 1'-0"
REVISION –
SHEET 4 OF 15
CADD FILE: ES2921-04

NOTES:

1. FROG ANGLE 5°-43'-29".
2. RAIL USED IN FABRICATION OF FROG TO BE 136 LB. "HIGH STRENGTH".
3. RAILBOUND MANGANESE STEEL FROG PER CURRENT AREMA. PLAN NUMBERS 621 AND 623 WITH EXPLOSIVE HARDENED MANGANESE HIGH INTEGRITY CASTING PER CURRENT AREMA. SPECIFICATIONS AND MODIFIED FOR ARM LENGTHS AND PLATES WITH PANDROL TYPE FASTENERS.
4. ALL FROG PLATES SHALL BE STAMPED IN 1/2" CHARACTERS TO INDICATE MANUFACTURER, FROG NUMBER, HAND OF TURNOUT, RAIL SECTION AND PLATE NUMBER. MARK TO BE STAMPED ON SAME END OF ALL FROG PLATES.
5. FOR DETAILS OF FROG PLATES SEE ES2921-07.
6. WORKMANSHIP AND MATERIALS SHALL BE PER CURRENT AREMA. SPECIFICATIONS FOR "SPECIAL TRACKWORK", EXCEPT AS OTHERWISE SPECIFIED.
7. ANY CONSTRUCTION DETAILS NOT SHOWN SHALL BE IN ACCORDANCE WITH CURRENT AREMA. RECOMMENDED PRACTICE.
8. FROG PLATES ARE DESIGNED TO BE INSTALLED PERPENDICULAR TO MAIN TRACK.
9. BODY BOLTS TO BE 1 3/8" DIA. H.T.C.S. PER AREMA. SPECIFICATIONS.
10. TOE AND HEEL BLOCKS AND BOLTS PER AREMA. SPECIFICATIONS.
11. RAIL ENDS TO BE CUT AT 45 DEGREE ANGLE AT JOINT WITH FROG CASTING.

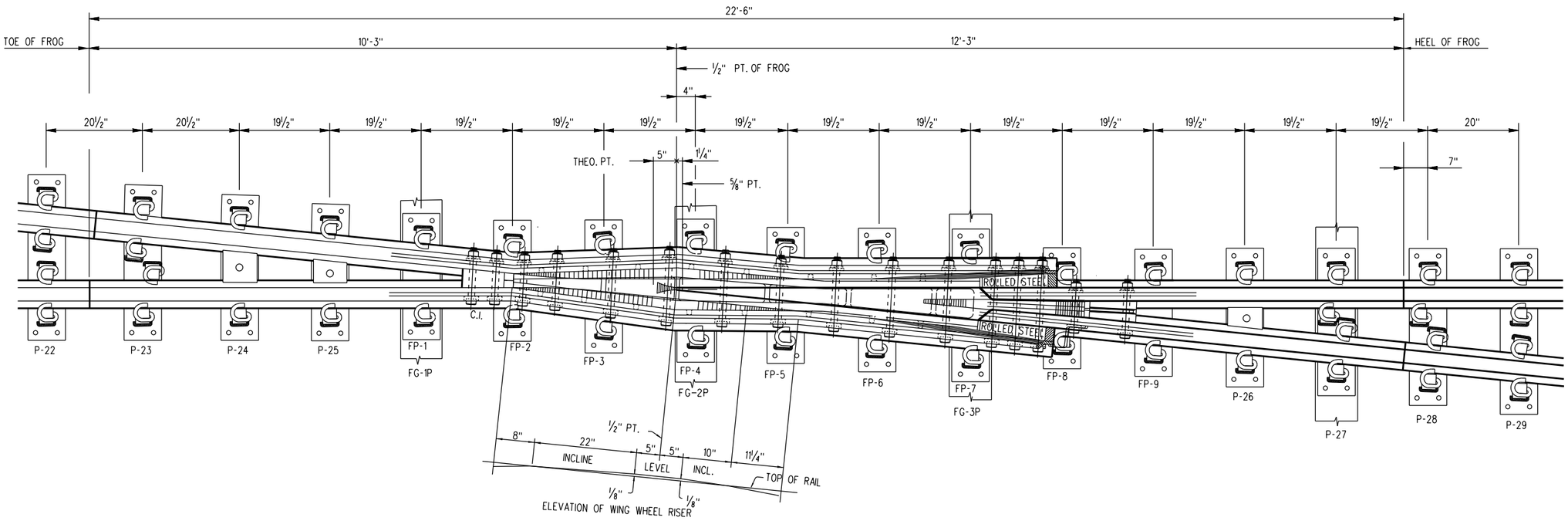

NO. 10 RAILBOUND MANGANESE STEEL FROG

ANGLE 5°-43'-29"

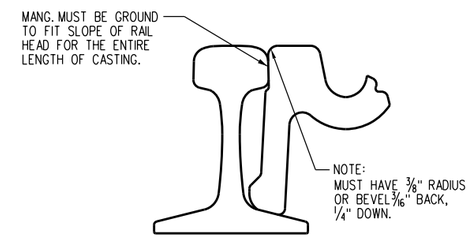

DETAIL OF FROG CASTING / RAIL FIT

SCALE: NONE

FOR MAINTENANCE ONLY

REV.	DATE	DESCRIPTION	DES.	ENG.
X	XX-XX-XX	REVISION	XX	XX

DRAWN BY: A. CARLOS DATE: 03/31/2011

ASSISTANT DIRECTOR: STANDARDS & DESIGN

DIRECTOR OF ENGINEERING AND CONSTRUCTION

SCRRA ENGINEERING STANDARDS ARE INTENDED FOR SCRRA APPROVED USES ONLY. FOR NON-SCRRA APPROVED USES:
SCRRA SHALL NOT BE RESPONSIBLE FOR THE ACCURACY OR COMPLETENESS OF THE DATA OR INFORMATION CONTAINED HEREIN. THE SELECTION AND USE OF THESE STANDARDS IS THE SOLE RESPONSIBILITY OF THE USER AND SHOULD NOT BE USED WITHOUT CONSULTING A REGISTERED PROFESSIONAL ENGINEER. ALL WARRANTIES AND REPRESENTATIONS OF ANY KIND ARE DISCLAIMED. ANYONE MAKING USE OF THIS INFORMATION AGREES THAT IT ASSUMES ALL LIABILITY ARISING FROM SUCH USE. NO PART OF THESE STANDARDS SHOULD BE REPRODUCED OR DISTRIBUTED IN ANY FORM OR BY ANY MEANS WITHOUT THE PRIOR WRITTEN PERMISSION OF SCRRA. ALL RIGHTS RESERVED.

METROLINK®
SOUTHERN CALIFORNIA REGIONAL RAIL AUTHORITY
ONE GATEWAY PLAZA, 12TH FLOOR, L. A., CA. 90012

ENGINEERING STANDARDS

NO. 10 136 LB. R.H. RBM FROG LAYOUT

STANDARD 2921
SCALE: 1" = 1'-0"
REVISION –
SHEET 5 OF 15
CADD FILE: ES2921-05

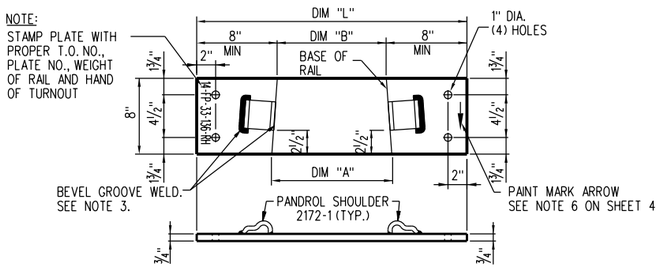

FROG PLATE - FP-1

¾" x 8" x DIM "L" - FLAT - W/PANDROL CLIPS

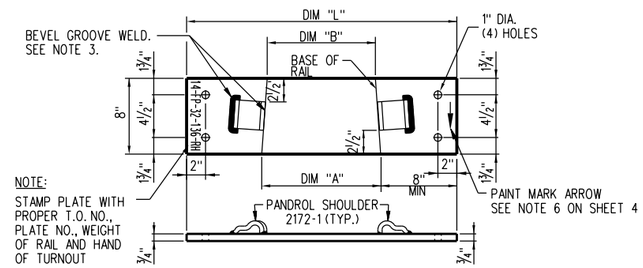

FROG PLATE - FP-4

¾" x 8" x DIM "L" - FLAT - W/PANDROL CLIPS

NOTE:

1. FOR FROG DETAILS AND NOTES SEE SHEET 8.

NOTE "A"

PLATES FP-1 THRU FP-9 ARE TO BE LAYED OUT AND PROPERLY SPACED AND MARKED OFF FROM UNDER FROG TO INSURE LOCATION OF PANDROL SHOULDERS

NOTE "B"

SPECIAL FROG PLATES FP-1, FP-4 AND FP-7 ARE DESIGNED TO BE WELDED TO FROG GAGE PLATES. FOR MANUFACTURERING DETAILS AND INSTALLATION PROCEDURES SEE DWG. NO. 2921-16

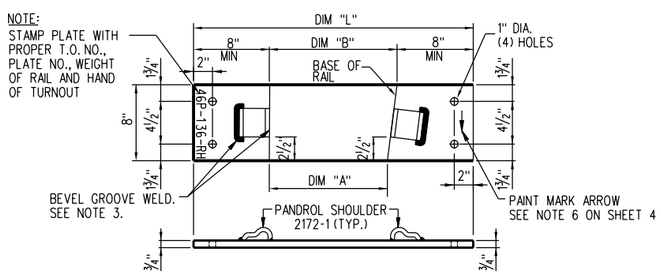

FROG PLATE - FP-2 & FP-3

¾" x 8" x DIM "L" - FLAT - W/PANDROL CLIPS

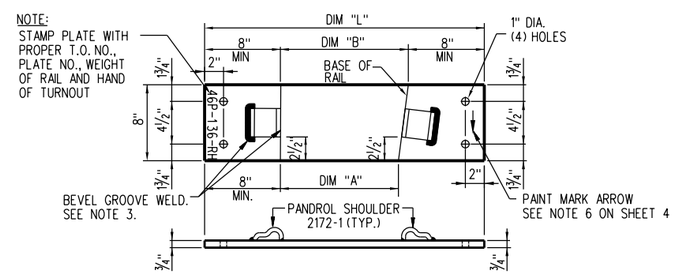

FROG PLATE - FP-5 THRU FP-9

¾" x 8" x DIM "L" - FLAT - W/PANDROL CLIPS

DIMENSION TABLE				
* PLATE	DIM "A"	DIM "B"	DIM "L"	Plts REQ'D.
* FP-1	SEE NOTE "A"		2'-6½"	1 EA.
* FP-2	SEE NOTE "A"		2'-4½"	1 EA.
* FP-3	SEE NOTE "A"		2'-8"	1 EA.
* FP-4	SEE NOTE "A"		2'-9½"	1 EA.
* FP-5	SEE NOTE "A"		2'-8"	1 EA.
* FP-6	SEE NOTE "A"		2'-10"	1 EA.
* FP-7	SEE NOTE "A"		3'-0"	1 EA.
* FP-8	SEE NOTE "A"		2'-4½"	1 EA.
* FP-9	SEE NOTE "A"		2'-6½"	1 EA.

*NOTES: DIMENSIONS FOR LOCATION OF PRESSED STEEL SHOULDERS TO BE VERIFIED USING FINISHED FROG AS A TEMPLATE BEFORE WELDING SHOULDERS IN PLACE.

FOR MAINTENANCE ONLY

REV.	DATE	DESCRIPTION	DES.	ENG.
X	XX-XX-XX	REVISION	XX	XX

DRAWN BY: A. CARLOS DATE: 03/31/2011

ASSISTANT DIRECTOR: STANDARDS & DESIGN

DIRECTOR OF ENGINEERING AND CONSTRUCTION

SCRRA ENGINEERING STANDARDS ARE INTENDED FOR SCRRA APPROVED USES ONLY. FOR NON-SCRRA APPROVED USES, SCRRA SHALL NOT BE RESPONSIBLE FOR THE ACCURACY OR COMPLETENESS OF THE DATA OR INFORMATION CONTAINED HEREIN. THE SELECTION AND USE OF THESE STANDARDS IS THE SOLE RESPONSIBILITY OF THE USER AND SHOULD NOT BE USED WITHOUT CONSULTING A REGISTERED PROFESSIONAL ENGINEER. ALL WARRANTIES AND REPRESENTATIONS OF ANY KIND ARE DISCLAIMED. ANYONE MAKING USE OF THIS INFORMATION AGREES THAT IT ASSUMES ALL LIABILITY ARISING FROM SUCH USE. NO PART OF THESE STANDARDS SHOULD BE REPRODUCED OR DISTRIBUTED IN ANY FORM OR BY ANY MEANS WITHOUT THE PRIOR WRITTEN PERMISSION OF SCRRA. ALL RIGHTS RESERVED.

METROLINK®

SOUTHERN CALIFORNIA REGIONAL RAIL AUTHORITY
ONE GATEWAY PLAZA, 12TH FLOOR, L. A., CA. 90012

ENGINEERING STANDARDS

NO. 10 136 LB. R.H. RBM FROG
GAGE PLATE DETAILS AND DIMENSION TABLE

STANDARD 2921
SCALE: 1½" = 1'-0"
REVISION –
SHEET 6 OF 15
CADD FILE: ES2921-06

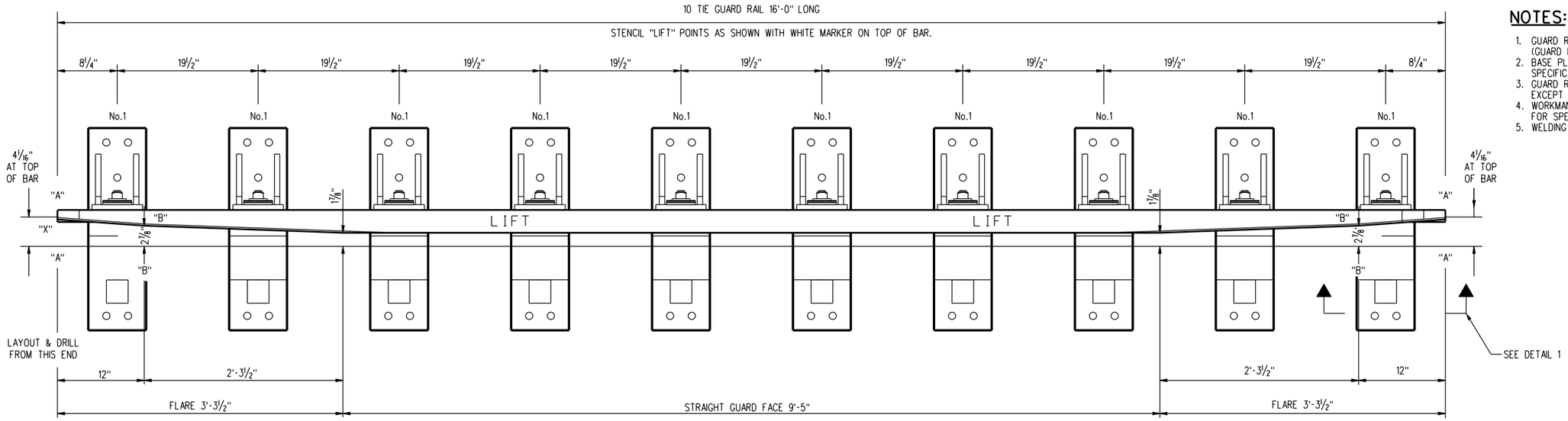

NOTES:

1. GUARD RAIL SECTION UIC 33: (U69) UIC 860.0 GRADE 90A (GUARD FACE BRINELL 319 MIN.)
2. BASE PLATE, BRACKET AND SHIMS MILD STEEL PER AREMA. SPECIFICATION M7.
3. GUARD RAIL BOLT AND NUT PER AREMA SPECIFICATION M11. EXCEPT BOLT TO GRADE 8 AND NUT TO BE SECURITY LOCKNUT.
4. WORKMANSHIP AND TOLERANCES PER AREMA. SPECIFICATIONS FOR SPECIAL TRACKWORK.
5. WELDING PER ANSI•AWS D1.1-92 OR LATEST REVISION.

ASSEMBLED 16'-0" GUARD RAIL

SCALE: 1½" = 1'-0"

COLLECTIVE DRILLING FROM END OF GUARD BAR MARKED "X"

"X" 8¼"x 2'-3¾"x 3'-11¼"x 5'-6¾"x 7'-2¼"x 8'-9¾"x 10'-5¼"x 12'-0¾"x 13'-8¼"x 15'-3¾"

HOLES 1" DIA. - 1⅜" A.B.

FOR MAINTENANCE ONLY

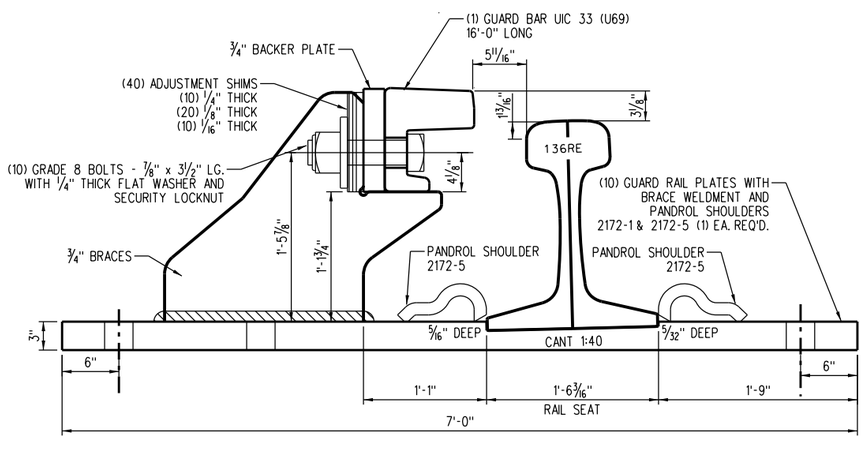

TYPICAL PLATE DETAIL

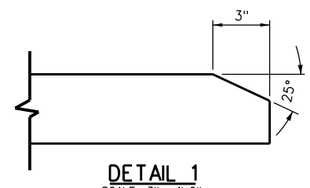

DETAIL 1

SCALE: 3" = 1'-0"

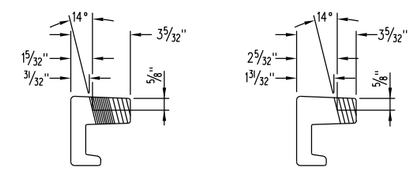

SECTION A - A

SCALE: NONE

SECTION B - B

SCALE: NONE

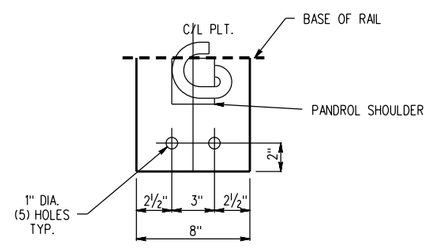

TYPICAL PLATE PUNCHING DETAIL

SCALE: NONE

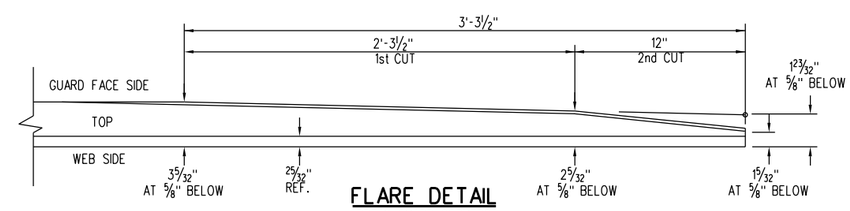

FLARE DETAIL

BREAK SHARP CORNERS OF ALL MACHINED SURFACES

SCALE: NONE

REV.	DATE	DESCRIPTION	DES.	ENG.
X	XX-XX-XX	REVISION	XX	XX

DRAWN BY: A. CARLOS DATE: 03/31/2011

ASSISTANT DIRECTOR: STANDARDS & DESIGN

DIRECTOR OF ENGINEERING AND CONSTRUCTION

SCRRA ENGINEERING STANDARDS ARE INTENDED FOR SCRRA APPROVED USES ONLY. FOR NON-SCRRA APPROVED USES:
SCRRA SHALL NOT BE RESPONSIBLE FOR THE ACCURACY OR COMPLETENESS OF THE DATA OR INFORMATION CONTAINED HEREIN. THE SELECTION AND USE OF THESE STANDARDS IS THE SOLE RESPONSIBILITY OF THE USER AND SHOULD NOT BE USED WITHOUT CONSULTING A REGISTERED PROFESSIONAL ENGINEER. ALL WARRANTIES AND REPRESENTATIONS OF ANY KIND ARE DISCLAIMED. ANYONE MAKING USE OF THIS INFORMATION AGREES THAT IT ASSUMES ALL LIABILITY ARISING FROM SUCH USE. NO PART OF THESE STANDARDS SHOULD BE REPRODUCED OR DISTRIBUTED IN ANY FORM OR BY ANY MEANS WITHOUT THE PRIOR WRITTEN PERMISSION OF SCRRA. ALL RIGHTS RESERVED.

METROLINK®
SOUTHERN CALIFORNIA REGIONAL RAIL AUTHORITY
ONE GATEWAY PLAZA, 12TH FLOOR, L. A., CA. 90012

ENGINEERING STANDARDS

NO. 10 136 LB. R.H. RBM FROG
GUARD RAIL DETAILS

STANDARD 2921
SCALE: 1½" = 1'-0"
REVISION –
SHEET 7 OF 15
CADD FILE: ES2921-07

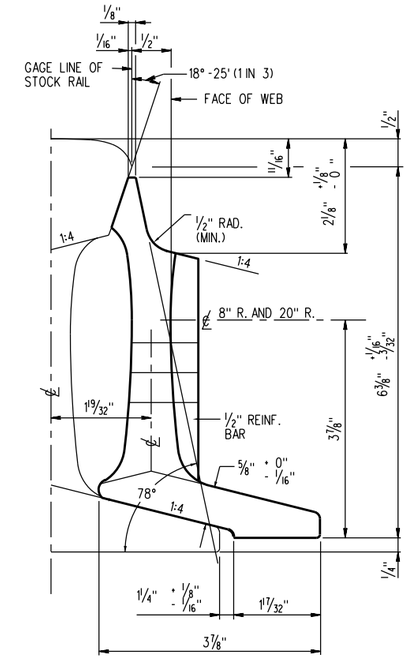

END VIEW OF POINT

SCALE: NONE

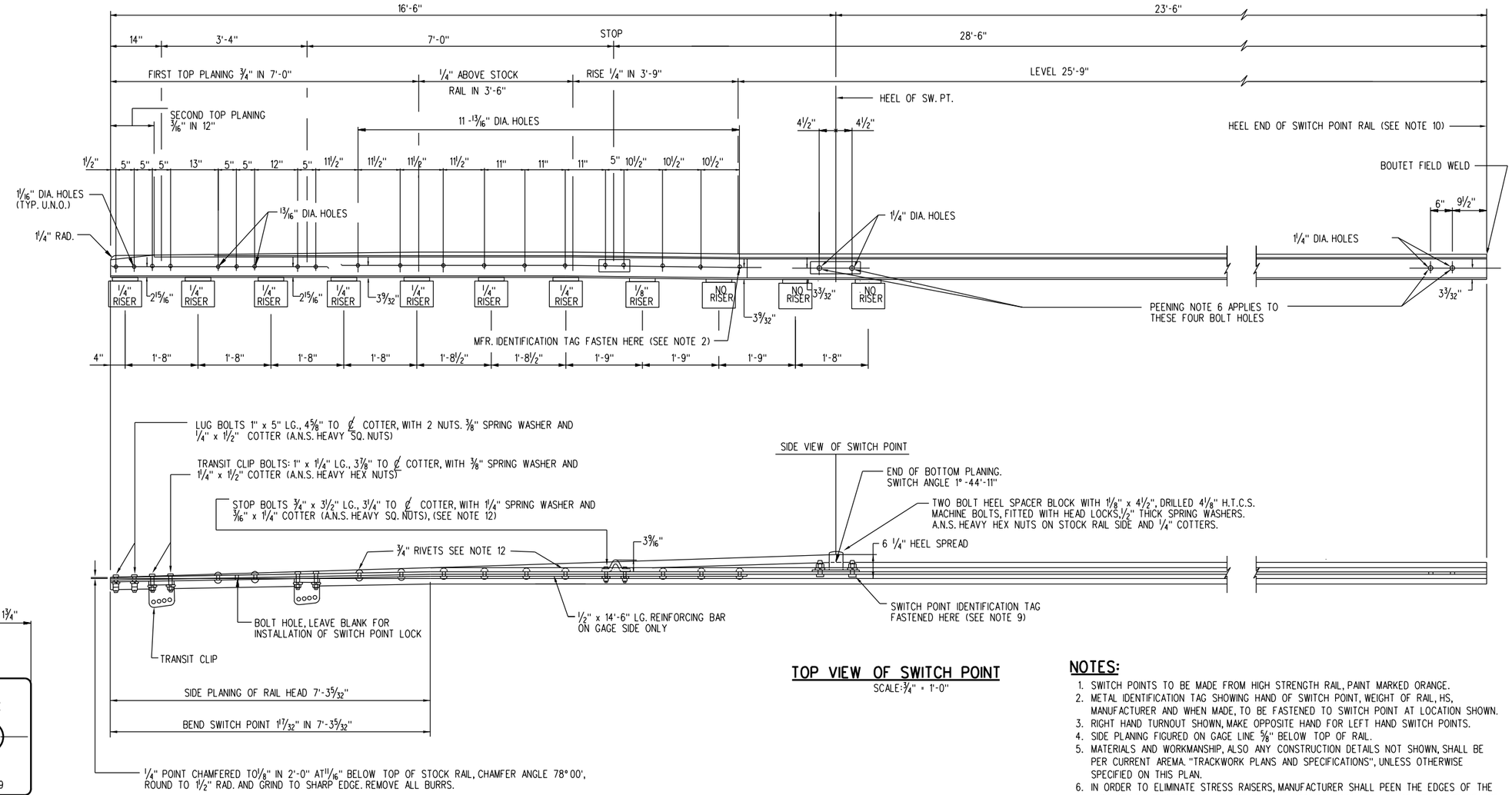

TOP VIEW OF SWITCH POINT

SCALE: 3/4" = 1'-0"

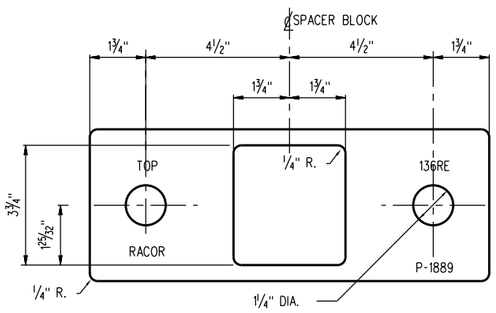

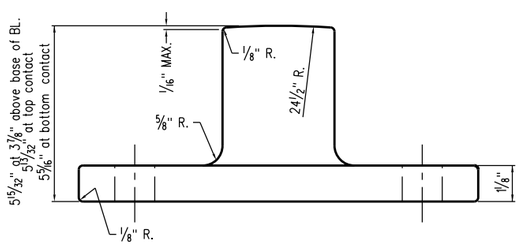

HEEL BLOCK DETAIL

SCALE: NONE

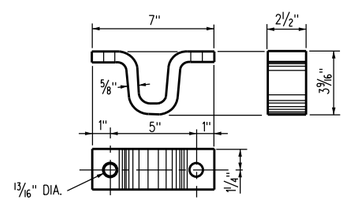

STOP

SCALE: NONE

FOR MAINTENANCE ONLY

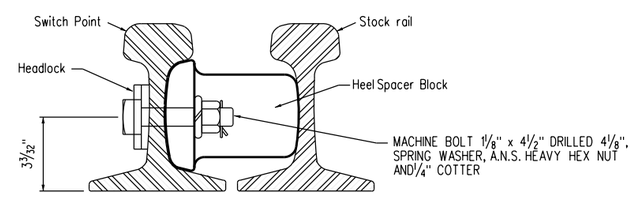

SECTION AT HEEL END OF 16'-6" SWITCH POINT MADE FROM 40'-0" LONG RAIL

SCALE: NONE

NOTES:

1. SWITCH POINTS TO BE MADE FROM HIGH STRENGTH RAIL, PAINT MARKED ORANGE.
2. METAL IDENTIFICATION TAG SHOWING HAND OF SWITCH POINT, WEIGHT OF RAIL, HS, MANUFACTURER AND WHEN MADE, TO BE FASTENED TO SWITCH POINT AT LOCATION SHOWN.
3. RIGHT HAND TURNOUT SHOWN, MAKE OPPOSITE HAND FOR LEFT HAND SWITCH POINTS.
4. SIDE PLANING FIGURED ON GAGE LINE 5/8" BELOW TOP OF RAIL.
5. MATERIALS AND WORKMANSHIP, ALSO ANY CONSTRUCTION DETAILS NOT SHOWN, SHALL BE PER CURRENT AREMA. "TRACKWORK PLANS AND SPECIFICATIONS", UNLESS OTHERWISE SPECIFIED ON THIS PLAN.
6. IN ORDER TO ELIMINATE STRESS RAISERS, MANUFACTURER SHALL PEEN THE EDGES OF THE BOLT HOLES AS INDICATED AT THE HEEL OF SWITCH POINT AND AT THE HEEL END OF THE SWITCH POINT RAIL, USING AIR HAMMER WITH SUITABLE HEAD AND FINISHING WITH DRIFT PIN. BRAND ON RAIL AT EDGE OF BOLT HOLE TO BE CAREFULLY REMOVED BY GRINDING BEFORE PEENING.
7. SWITCH POINTS FOR TURNOUT SIDE MAY BE ORDERED WITH MANGANESE STEEL TIP.
8. THE CONTOUR PLANING SHALL BE ON THE GAGE SIDE BEGINNING AT A DISTANCE OF 36" FROM THE POINT OF SWITCH AND SHALL BE SHAPED TO THE CONTOUR OF A NEW 136-LB. RAIL AND SHALL RUN OUT AT THE END OF TOP PLANING, WHERE THE SWITCH POINT HAS FULL HEAD CONTOUR.
9. METAL IDENTIFICATION TAG SHOWING (1) DESIGN LENGTH OF SWITCH, (2) IN PARENTHESIS, THE ACTUAL LENGTH OF SWITCH POINT RAIL AND (3) THE TURNOUT NUMBER. MARK TAG THUS: 16'-6" (40'-0") NO. 10. TAG TO BE FASTENED TO SWITCH POINT, ON GAGE SIDE OF RAIL AT HEEL SPACER BLOCK IN LOCATION SHOWN.
10. AT HEEL END OF SWITCH POINT RAIL, BREAK SHARP CORNER AROUND THE ENTIRE PERIPHERY BY SLIGHTLY GRINDING. ALSO, "DO NOT" END HARDEN RAIL END.
11. NON - INTERLOCKED AND INTERLOCKED SWITCH POINTS ARE MADE THE SAME.
12. UNLESS SWITCH POINT ORDER SPECIFICALLY CALLS FOR USE OF 3/4" RIVETS AND 3/4" STOP BOLTS, MANUFACTURER CAN SUBSTITUTE 3/4" HUCK FASTENERS, BOLT PART NO. C-50-LR-BR2416 AND COLLAR PART NO. L3-2-R-24G FOR 3/4" RIVETS, AND FOR 3/4" STOP BOLTS USE HUCK FASTENERS, BOLT PART NO. C-50-LR-BR2424 AND COLLAR PART NO. L3-2-R-24G.

REV.	DATE	DESCRIPTION	DES.	ENG.
X	XX-XX-XX	REVISION	XX	XX

DRAWN BY: A. CARLOS DATE: 03/31/2011

ASSISTANT DIRECTOR: STANDARDS & DESIGN

DIRECTOR OF ENGINEERING AND CONSTRUCTION

SCRRA ENGINEERING STANDARDS ARE INTENDED FOR SCRRA APPROVED USES ONLY. FOR NON-SCRRA APPROVED USES:
SCRRA SHALL NOT BE RESPONSIBLE FOR THE ACCURACY OR COMPLETENESS OF THE DATA OR INFORMATION CONTAINED HEREIN. THE SELECTION AND USE OF THESE STANDARDS IS THE SOLE RESPONSIBILITY OF THE USER AND SHOULD NOT BE USED WITHOUT CONSULTING A REGISTERED PROFESSIONAL ENGINEER. ALL WARRANTIES AND REPRESENTATIONS OF ANY KIND ARE DISCLAIMED. ANYONE MAKING USE OF THIS INFORMATION AGREES THAT IT ASSUMES ALL LIABILITY ARISING FROM SUCH USE. NO PART OF THESE STANDARDS SHOULD BE REPRODUCED OR DISTRIBUTED IN ANY FORM OR BY ANY MEANS WITHOUT THE PRIOR WRITTEN PERMISSION OF SCRRA. ALL RIGHTS RESERVED.

METROLINK®
SOUTHERN CALIFORNIA REGIONAL RAIL AUTHORITY
ONE GATEWAY PLAZA, 12TH FLOOR, L. A., CA. 90012

ENGINEERING STANDARDS

NO. 10 SPLIT SWITCH POINT DETAILS

STANDARD 2921
SCALE: AS NOTED
REVISION –
SHEET 8 OF 15
CADD FILE: ES2921-08

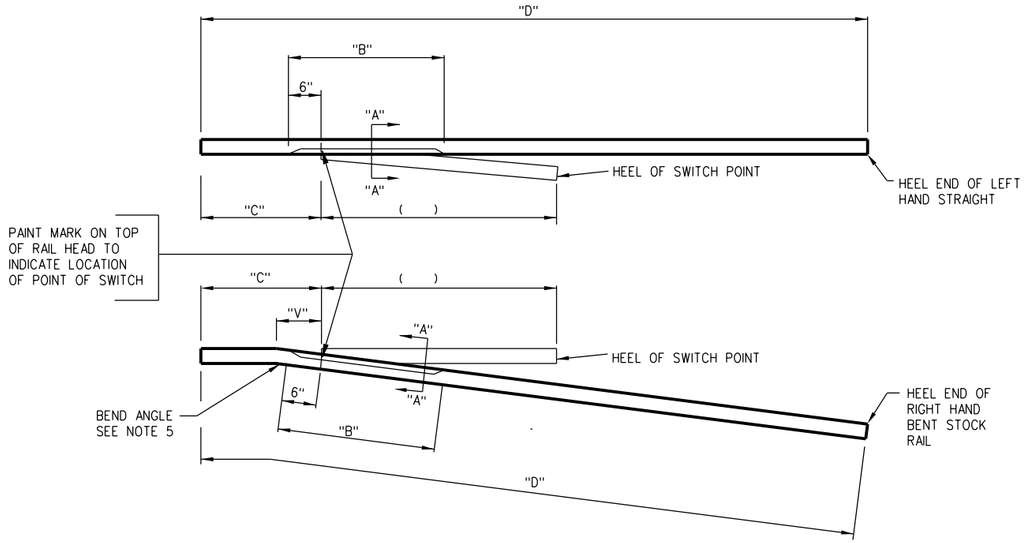

STOCK RAILS SHOWN ARE FOR "RIGHT HAND TURNOUT"

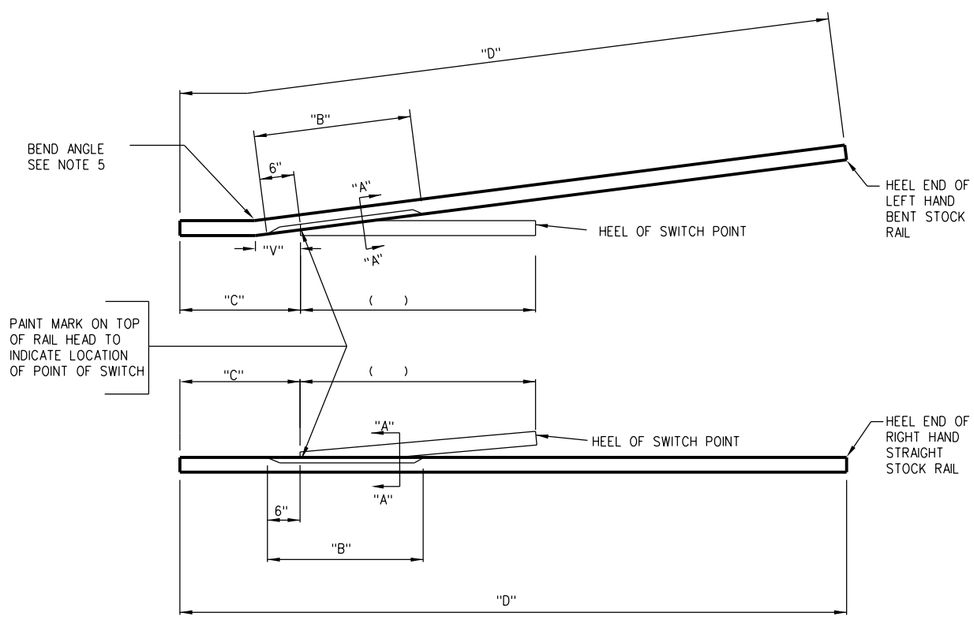

STOCK RAILS SHOWN ARE FOR "LEFT HAND TURNOUT"

NOTES:

1. INFORMATION OR DIMENSIONS NOTED THUS, (___) TO BE FURNISHED BY FIELD FORCES FOR CORRECT ORDERING OF REPLACEMENT STOCK RAILS.
2. UNDERCUT STOCK RAILS TO BE MADE OF HIGH STRENGTH RAIL WITH ENDS BEVELED PER CURRENT AREMA PLAN NO. 1005.
3. FOR STOCK RAIL UNDERCUT LENGTH "B", PER SECTION "A-A", LENGTH "C" AND LENGTH "D" FOR NEW SAMSON SWITCH INSTALLATIONS OR REPLACEMENT ORDERS SEE TABLE BELOW

LENGTHS B, C, & D FOR 136 LB. RAIL

Sw. Pt. LENGTH	T.O. No.	STOCK RAIL	B	FOR FIRST (NEW) INSTALL.			FOR REPLACE. ORDERS ONLY		
				C	D	END DRILL. SEE NO. 10	C	D	END DRILL. SEE NO. 10
16'-6"	10	STR.	9'-6"	10'-0"	40'-0"	NONE	10'-0"	52'-0"	NONE
16'-6"	10	BENT	9'-6"	10'-0"	40'-0"	HEEL END ONLY	10'-0"	52'-0"	HEEL END ONLY

4. BEND ANGLE IN BENT STOCK RAIL TO BE AS FOLLOWS:

Sw. Length	BEND ANGLE	V (Vertex Dist.)
16'-6"	1° -44'-11" or 1" in 2'-9"	10 5/16"

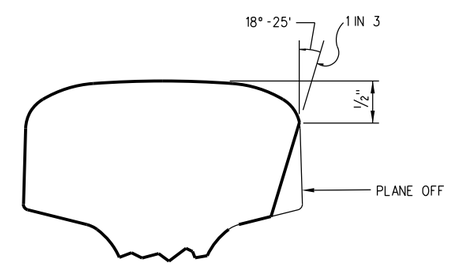

SECTION "A-A"

FOR MAINTENANCE ONLY

X	XX-XX-XX	REVISION	XX	XX
REV.	DATE	DESCRIPTION	DES.	ENG.

DRAWN BY: A. CARLOS DATE: 03/31/2011

ASSISTANT DIRECTOR: STANDARDS & DESIGN

DIRECTOR OF ENGINEERING AND CONSTRUCTION

SCRRA ENGINEERING STANDARDS ARE INTENDED FOR SCRRA APPROVED USES ONLY. FOR NON-SCRRA APPROVED USES:
SCRRA SHALL NOT BE RESPONSIBLE FOR THE ACCURACY OR COMPLETENESS OF THE DATA OR INFORMATION CONTAINED HEREIN. THE SELECTION AND USE OF THESE STANDARDS IS THE SOLE RESPONSIBILITY OF THE USER AND SHOULD NOT BE USED WITHOUT CONSULTING A REGISTERED PROFESSIONAL ENGINEER. ALL WARRANTIES AND REPRESENTATIONS OF ANY KIND ARE DISCLAIMED. ANYONE MAKING USE OF THIS INFORMATION AGREES THAT IT ASSUMES ALL LIABILITY ARISING FROM SUCH USE. NO PART OF THESE STANDARDS SHOULD BE REPRODUCED OR DISTRIBUTED IN ANY FORM OR BY ANY MEANS WITHOUT THE PRIOR WRITTEN PERMISSION OF SCRRA. ALL RIGHTS RESERVED.

METROLINK®
SOUTHERN CALIFORNIA REGIONAL RAIL AUTHORITY
ONE GATEWAY PLAZA, 12TH FLOOR, L. A., CA. 90012

ENGINEERING STANDARDS

NO. 10 STRAIGHT OR CURVED UNDERCUT STOCK RAILS

STANDARD 2921
SCALE: NONE
REVISION –
SHEET 9 OF 15
CADD FILE: ES2921-09

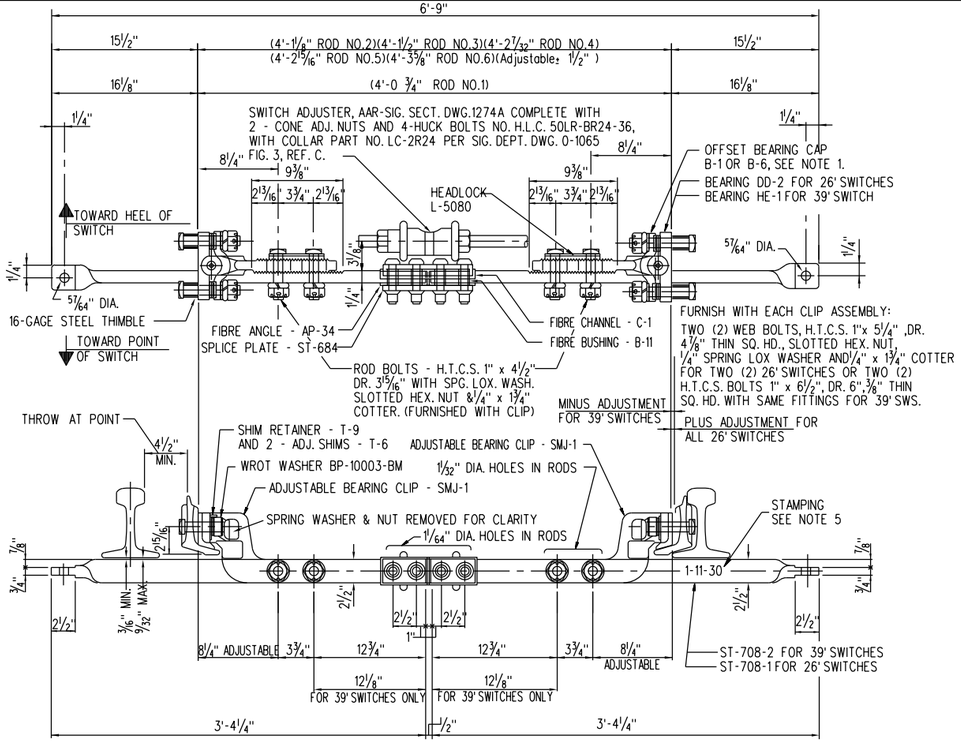

NO. 1 SWITCH ROD ASSEMBLY

(SHOWN FOR MACHINE ON RIGHT) SEE NOTE 2

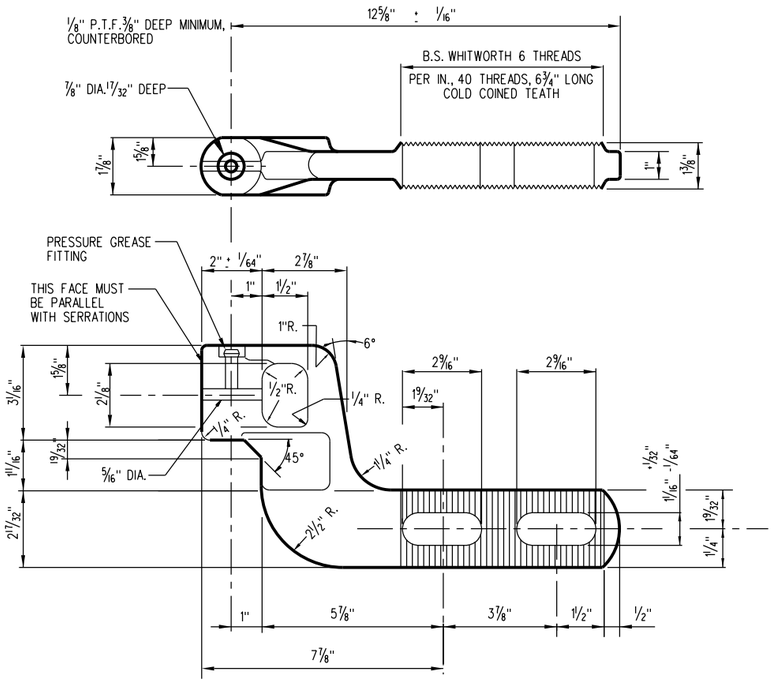

ADJUSTABLE BEARING CLIP - SMJ - 1

SCALE: 3" = 1'-0"

LENGTH OF SWITCH	QTY.	PART NUMBER	MATERIAL SPECIF.	DESCRIPTION	DETAIL REMARKS
BILL OF MATERIAL FOR 1 TYPE "SMJ" SWITCH ROD ASSEMBLY					
MATERIAL FOR CLIP ASSEMBLIES					
All	2	SMJ-1	S.A.E.1020-For.Stl.	Bearing Clip	MACHINED PER DETAIL
All	4		H.T.C.S.	Web Bolt	SEE NOTE
26'	2	DD-2	Malleable Iron	Bearing	PAT. NO. L-2910, MACHINED PER DETAIL
39'	2	HE-1	Malleable Iron	Bearing	PAT. NO. L-2915, MACHINED PER DETAIL
26'	2	B-1	S.A.E.1045-For.Stl.	Offset Bearing Cap	HEAT TREATED - BRINELL -.225 to .250
39'	2	B-6	S.A.E.1045-For.Stl.	Offset Bearing Cap	HEAT TREATED - BRINELL -.225 to .250
26'	2	B-6	S.A.E.1045-For.Stl.	Offset Bearing Cap	HEAT TREATED - BRINELL -.225 to .250
All	4	T-9	S.A.E.1020	Shim Retainer	1/8" x 1 3/4" x 2 1/4"
All	12	T-6	Stainless Steel	Adjustment Shim	1/16" x 2" x 1 1/8"
All	4	BP-10003-BM	Wrot Iron	Wrot Washer	1 1/16" I.D. x 2" O.D.x 1/8" THICK
All	4		H.T.C.S.	Rod Bolt	1"x4 1/2" DR.3 15/16" REC.SQ.HD.SLOTTED HEX NUT
All	4		Steel	Spg. Lox Washer	For 1" Rod Bolts
All	4		Steel	Cotter	1/4" x 1 3/4" FOR ROD BOLTS
All	2		Steel	Grease Fitting	PRESSURE - FOR BEARING CLIP
All	2	L-5080	Malleable Iron	Headlock	FOR ROD BOLTS
26'	2		16-Gage Steel	Thimble	1 1/2" LONG - FOR SHIPPING
39'	2		16-Gage Steel	Thimble	2 1/2" LONG - FOR SHIPPING
Material for Vertical Rod					
16'-6"	1			Vertical Rod	Use one-ST-708-1
					Use one-ST-708-1 TWIST, MACHINE AND DRILL END HOLE
39'	1			Vertical Rod	Use one-ST-708-2
					Use one-ST-708-2 TWIST, MACHINE AND DRILL END HOLE
All	4		High Strength Steel	Conn.& Insul.Bolt	HIGH FASTENER NO. HLC-50LR- BR24-36
All	4		Low Carbon Steel	Collar	HUCK FASTENER NO. LC-2R24
All	1	ST-684	H.R. Mild Steel	Splice Plate	1/2" x 2 1/2" x 9 1/2" FOR INSULATION
All	2	AP-34	AAR-Sig.Sec.13-52	Angle	1/2" x 2 1/2" x 4 15/16" HARD FIBRE - PARAFIN COATED
All	4	B-11	AAR-Sig.Sec.13-52	Bushing	1" O.D. HARD FIBRE - PARAFIN COATED
All	1	C-1	AAR-Sig.Sec.13-52	Channel	1/8" x 1" x 10" HARD FIBRE - PARAFIN COATED
All	1		Malleable Iron	Switch Adjuster	
All	2		Malleable Iron	Cone Adj. Nut	FOR 1 1/4" THROW RODS

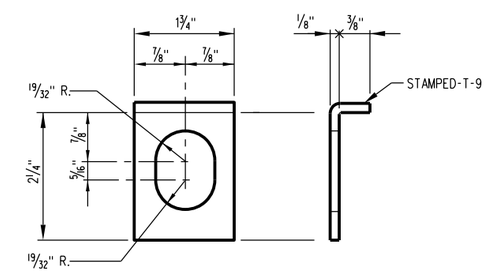

SHIM RETAINER - T - 9

SCALE: FULL

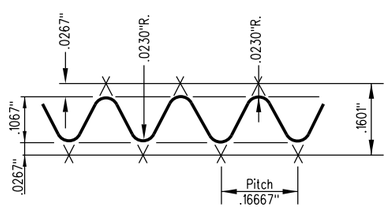

ENLARGED PROFILE OF SERRATIONS

SCALE: NONE

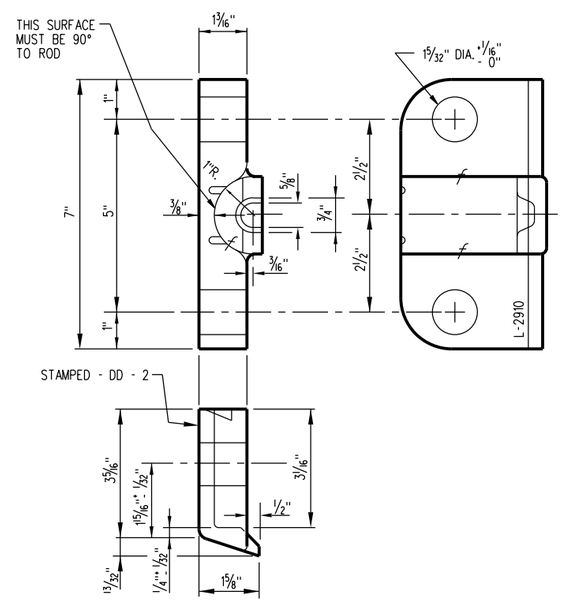

BEARING - DD - 2

SCALE: 6" = 1'-0"

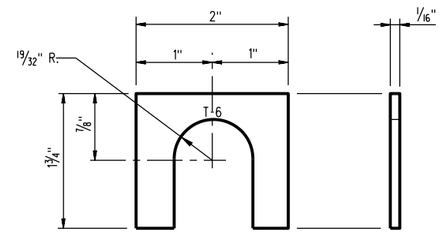

ADJUSTABLE SHIM - T - 6

SCALE: FULL

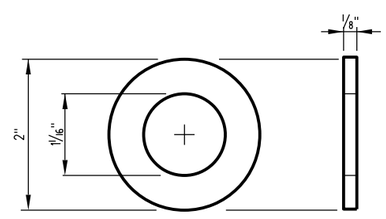

WROT WASHER - BP - 10003 - BM

SCALE: FULL

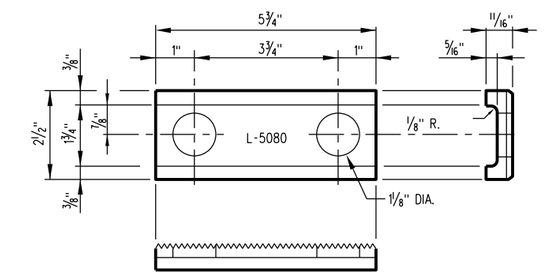

HEADLOCK L-5080

SCALE: 6" = 1'-0"

NOTES:

1. WHILE THIS PLAN SHOWS BEARING CLIPS ASSEMBLED TO SWITCH ROD, THIS CLIP ASSEMBLY MAY BE REQUISITIONED AND ORDERED SEPARATELY. WHEN A BEARING CLIP ASSEMBLY ONLY IS WANTED, REQUISITIONS AND ORDERS SHALL SPECIFY, RAIL SECTION AND LENGTH OF SWITCH. ALL PARTS SHOWN IN BILL OF MATERIAL SHALL BE FURNISHED WITH THESE CLIP ASSEMBLIES. WHEN AN INDIVIDUAL PART IS REQUIRED IT SHALL BE ORDERED BY PART NUMBER.
2. WHEN COMPLETED RODS ARE ORDERED THEY SHALL BE ASSEMBLED AND INCLUDE ALL PARTS SHOWN IN BILL OF MATERIAL. REQUISITIONS AND ORDERS SHALL SPECIFY RAIL SECTION AND LENGTH OF SWITCH. ON INTERLOCKED SWITCHES WITH AUXILIARY THROW ROD, MACHINE SIDE (RIGHT OF LEFT) SHOULD ALSO BE SPECIFIED.
3. TWO WEB BOLTS SHALL BE FURNISHED WITH EACH CLIP ASSEMBLY AS CALLED FOR BY NOTE IN TOP VIEW OF ROD ASSEMBLY. WHEN ROD IS USED ON 11'-0" AND 16'-6" SWITCHES THE 1/4" THICK SPRING WASHER SHOULD BE REPLACED WITH A 3/8" THICK SPRING WASHER BY THE STOREKEEPER OR FIELD FORCES, TO BRING COTTER WITHIN THE LIMITS OF SLOT IN WEB BOLT NUTS.
4. MATERIALS AND WORKMANSHIP SHALL MEET CURRENT AREMA. SPECIFICATIONS FOR SPECIAL TRACKWORK UNLESS OTHERWISE SPECIFIED.
5. VERTICAL SWITCH ROD SHALL BE PLAINLY STAMPED TO INDICATE SWITCH THAT ROD ASSEMBLY CAN BE USED UPON. IDENTIFICATIOIN MARKING WILL BE AS FOLLOWS:
   1-39 FOR USE ON 39'-0" SWITCHES, 132 LB. AND 136 LB. RE RAIL SECTIONS.
   1-11-30 FOR USE ON 11'-0" TO 30'-0" SWITCHES, 115 LB., 119 LB., 131 LB., 132 LB. AND 136 LB. RE RAIL SECTIONS.

FOR MAINTENANCE ONLY

REV.	DATE	DESCRIPTION	DES.	ENG.
X	XX-XX-XX	REVISION	XX	XX

DRAWN BY: A. CARLOS DATE: 03/31/2011

ASSISTANT DIRECTOR: STANDARDS & DESIGN

DIRECTOR OF ENGINEERING AND CONSTRUCTION

SCRRA ENGINEERING STANDARDS ARE INTENDED FOR SCRRA APPROVED USES ONLY. FOR NON-SCRRA APPROVED USES:
SCRRA SHALL NOT BE RESPONSIBLE FOR THE ACCURACY OR COMPLETENESS OF THE DATA OR INFORMATION CONTAINED HEREIN. THE SELECTION AND USE OF THESE STANDARDS IS THE SOLE RESPONSIBILITY OF THE USER AND SHOULD NOT BE USED WITHOUT CONSULTING A REGISTERED PROFESSIONAL ENGINEER. ALL WARRANTIES AND REPRESENTATIONS OF ANY KIND ARE DISCLAIMED. ANYONE MAKING USE OF THIS INFORMATION AGREES THAT IT ASSUMES ALL LIABILITY ARISING FROM SUCH USE. NO PART OF THESE STANDARDS SHOULD BE REPRODUCED OR DISTRIBUTED IN ANY FORM OR BY ANY MEANS WITHOUT THE PRIOR WRITTEN PERMISSION OF SCRRA. ALL RIGHTS RESERVED.

METROLINK®
SOUTHERN CALIFORNIA REGIONAL RAIL AUTHORITY
ONE GATEWAY PLAZA, 12TH FLOOR, L. A., CA. 90012

ENGINEERING STANDARDS

NO. 10 SWITCH ROD DETAILS

STANDARD 2921
SCALE: AS NOTED
REVISION –
SHEET 10 OF 15
CADD FILE: ES2921-10

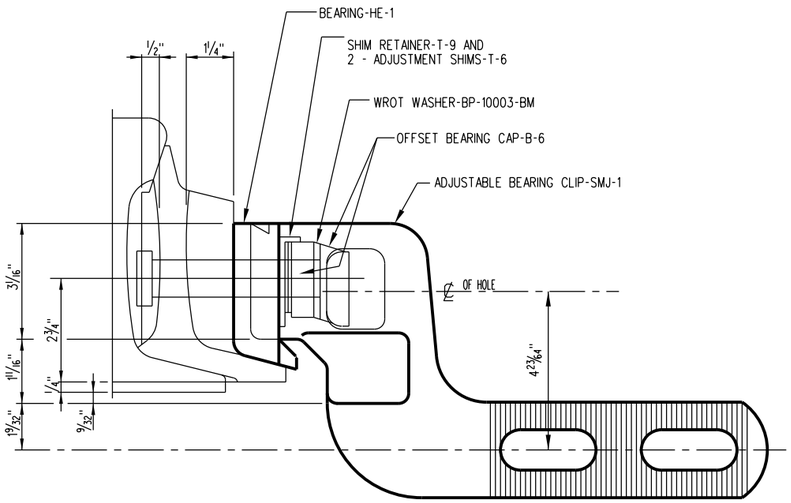

ELEVATION OF "SMJ"CLIP ASSEMBLY FOR 39' SWITCHES
(DRAWN FOR 136 LB. RAIL) SPRING WASHER AND NUT REMOVED

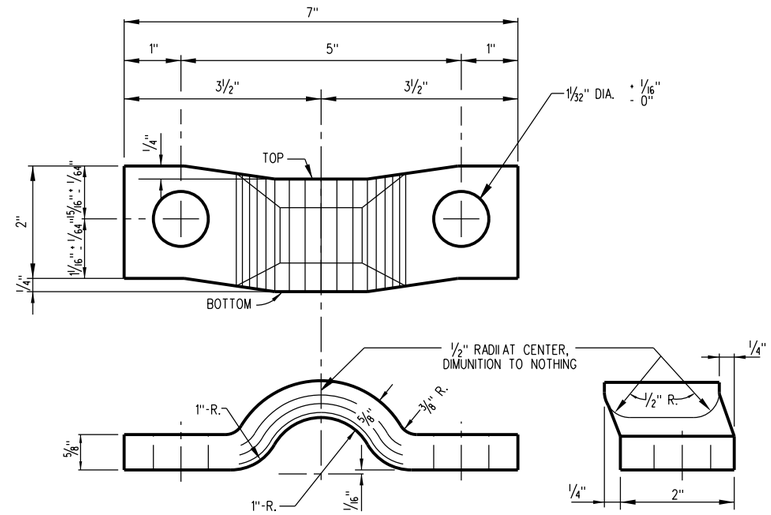

OFFSET BEARING CAP-B-1

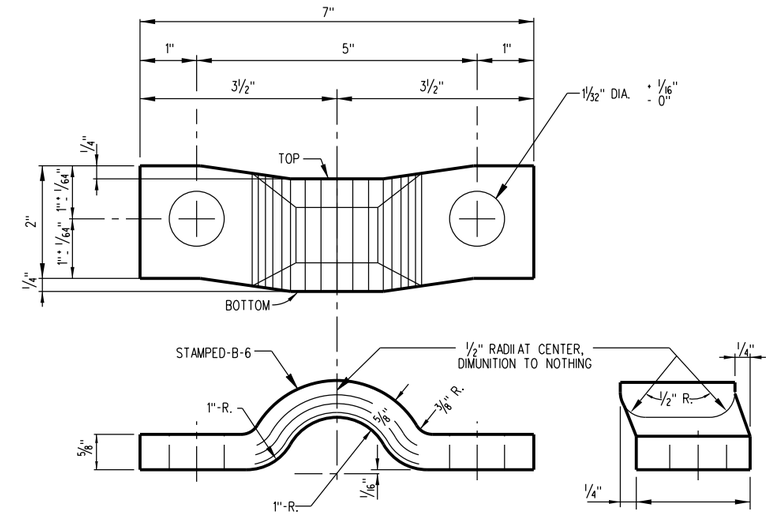

OFFSET BEARING CAP-B-6

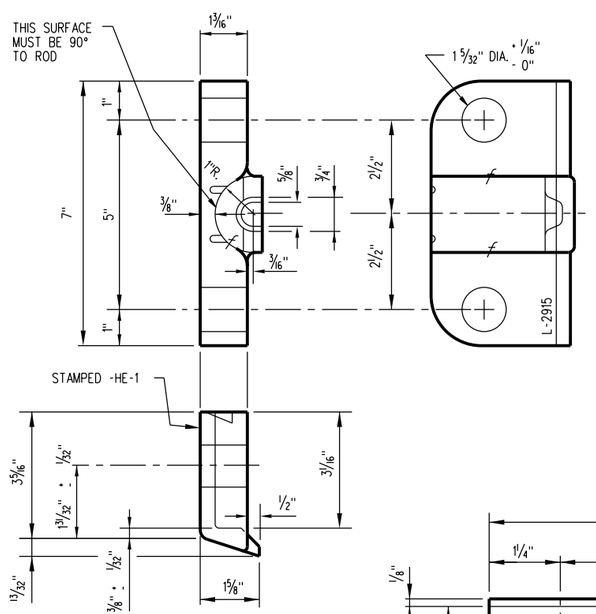

BEARING-HE-1

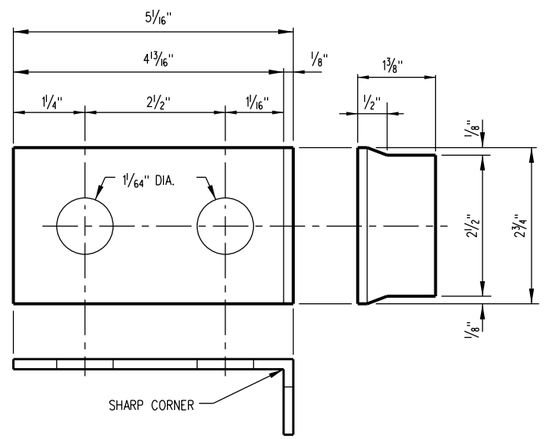

FIBRE ANGLE-AP-34

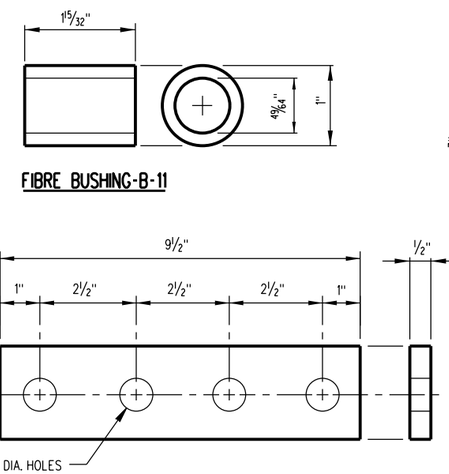

FIBRE BUSHING-B-11

SPLICE PLATE-ST-684

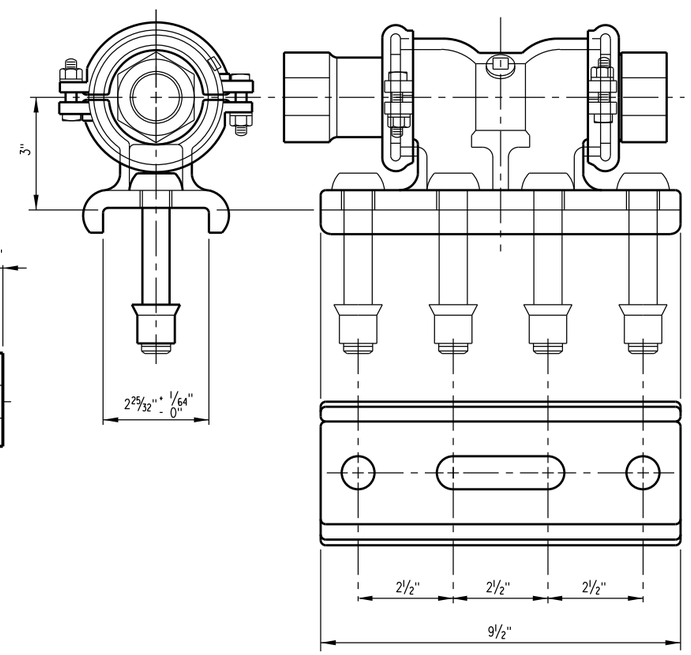

SWITCH ADJUSTER

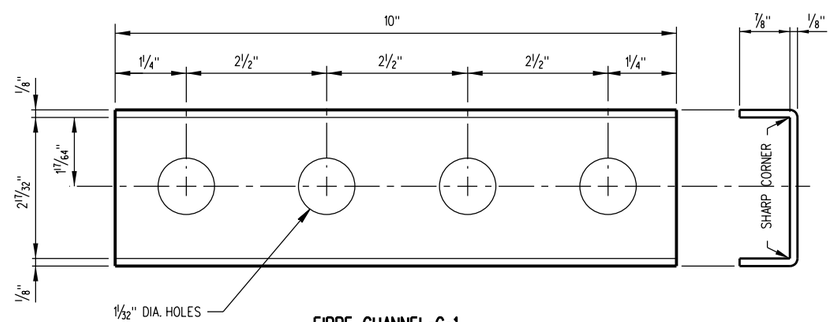

FIBRE CHANNEL-C-1

FOR MAINTENANCE ONLY

X	XX-XX-XX	REVISION	XX	XX
REV.	DATE	DESCRIPTION	DES.	ENG.

DRAWN BY: A. CARLOS DATE: 03/31/2011

ASSISTANT DIRECTOR: STANDARDS & DESIGN

DIRECTOR OF ENGINEERING AND CONSTRUCTION

SCRRA ENGINEERING STANDARDS ARE INTENDED FOR SCRRA APPROVED USES ONLY. FOR NON-SCRRA APPROVED USES:
SCRRA SHALL NOT BE RESPONSIBLE FOR THE ACCURACY OR COMPLETENESS OF THE DATA OR INFORMATION CONTAINED HEREIN. THE SELECTION AND USE OF THESE STANDARDS IS THE SOLE RESPONSIBILITY OF THE USER AND SHOULD NOT BE USED WITHOUT CONSULTING A REGISTERED PROFESSIONAL ENGINEER. ALL WARRANTIES AND REPRESENTATIONS OF ANY KIND ARE DISCLAIMED. ANYONE MAKING USE OF THIS INFORMATION AGREES THAT IT ASSUMES ALL LIABILITY ARISING FROM SUCH USE. NO PART OF THESE STANDARDS SHOULD BE REPRODUCED OR DISTRIBUTED IN ANY FORM OR BY ANY MEANS WITHOUT THE PRIOR WRITTEN PERMISSION OF SCRRA. ALL RIGHTS RESERVED.

METROLINK®
SOUTHERN CALIFORNIA REGIONAL RAIL AUTHORITY
ONE GATEWAY PLAZA, 12TH FLOOR, L. A., CA. 90012

ENGINEERING STANDARDS

NO. 10 SWITCH ROD MISCELLANEOUS DETAILS

STANDARD 2921
SCALE: 6" = 1'-0"
REVISION –
SHEET 11 OF 15
CADD FILE: ES2921-11

NOTE:
SEE SHEET 15 FOR NOTES.

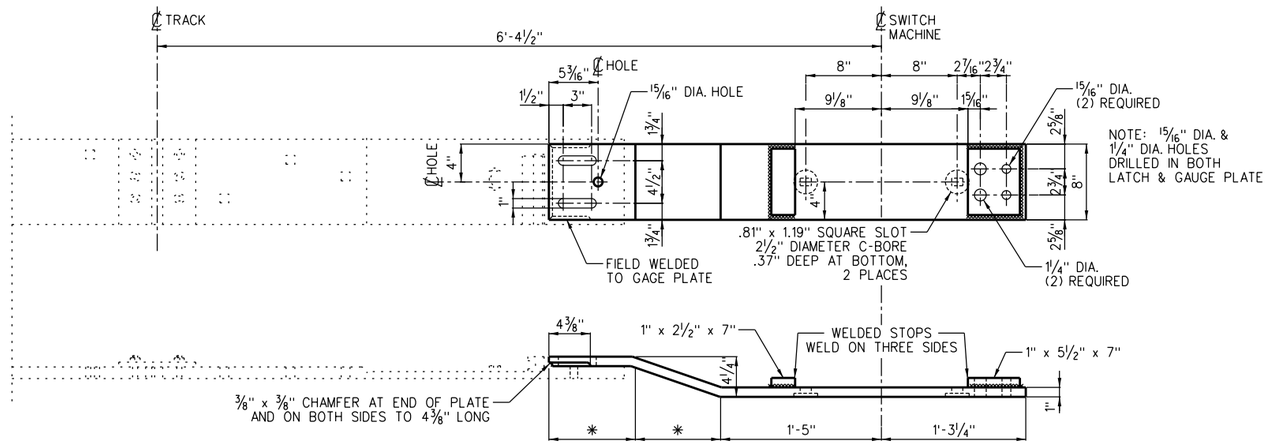

* MANUFACTURER TO CALCULATE AND PROVIDE ON DETAILED DRAWING.

EXTENSION PLATE
(2 PCS. REQ'D. AS SHOWN)

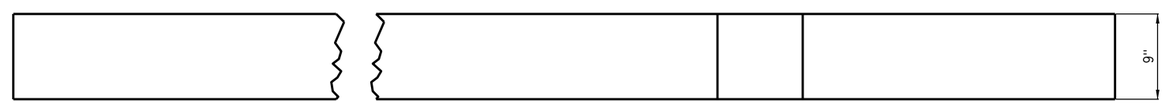

TOP VIEW

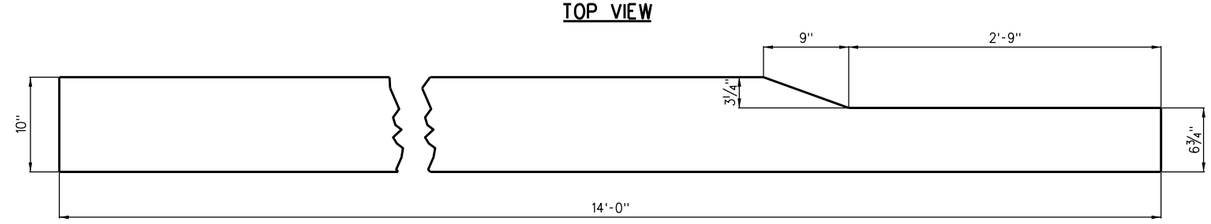

SIDE VIEW

TIES SHALL BE MADE OF DOUGLAS FIR OR GUM AND TREATED AFTER FRAMING.

DAP TIE
(2 PCS. REQ'D. AS SHOWN)

US&S M23-A SWITCH MACHINE MUST BE FURNISHED WITH FINISHED MOUNTING LUGS.

FOR MAINTENANCE ONLY

X	XX-XX-XX	REVISION	XX	XX
REV.	DATE	DESCRIPTION	DES.	ENG.

DRAWN BY: A. CARLOS DATE: 03/31/2011

ASSISTANT DIRECTOR: STANDARDS & DESIGN

DIRECTOR OF ENGINEERING AND CONSTRUCTION

SCRRA ENGINEERING STANDARDS ARE INTENDED FOR SCRRA APPROVED USES ONLY. FOR NON-SCRRA APPROVED USES:
SCRRA SHALL NOT BE RESPONSIBLE FOR THE ACCURACY OR COMPLETENESS OF THE DATA OR INFORMATION CONTAINED HEREIN. THE SELECTION AND USE OF THESE STANDARDS IS THE SOLE RESPONSIBILITY OF THE USER AND SHOULD NOT BE USED WITHOUT CONSULTING A REGISTERED PROFESSIONAL ENGINEER. ALL WARRANTIES AND REPRESENTATIONS OF ANY KIND ARE DISCLAIMED. ANYONE MAKING USE OF THIS INFORMATION AGREES THAT IT ASSUMES ALL LIABILITY ARISING FROM SUCH USE. NO PART OF THESE STANDARDS SHOULD BE REPRODUCED OR DISTRIBUTED IN ANY FORM OR BY ANY MEANS WITHOUT THE PRIOR WRITTEN PERMISSION OF SCRRA. ALL RIGHTS RESERVED.

METROLINK®
SOUTHERN CALIFORNIA REGIONAL RAIL AUTHORITY
ONE GATEWAY PLAZA, 12TH FLOOR, L. A., CA. 90012

ENGINEERING STANDARDS

NO. 10 EXTENSION PLATE AND DAP TIE DETAILS FOR M-23A SWITCH MACHINE

STANDARD	2921
SCALE:	1½" = 1'-0"
REVISION	–
SHEET	12 OF 15
CADD FILE:	ES2921-12

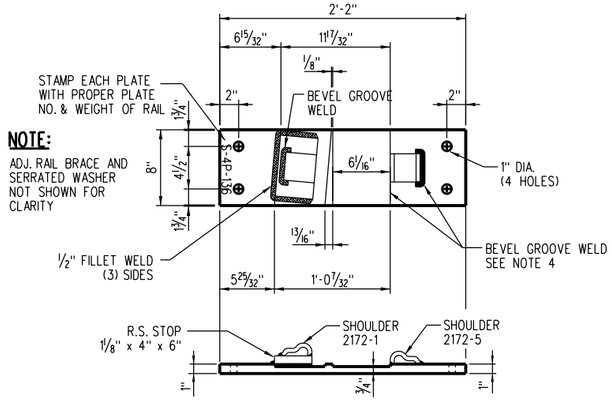

NOTE:
ADJ. RAIL BRACE AND SERRATED WASHER NOT SHOWN FOR CLARITY

BRACE PLATE ~ S-4P

1" x 8" x 2'-2" LG. ~ MILLED ~ W/ADJ. RAIL BRACE
2 - S-4P PLATES REQUIRED AS SHOWN

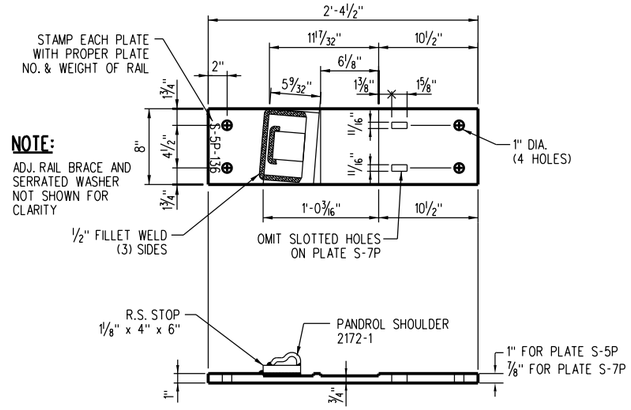

NOTE:
ADJ. RAIL BRACE AND SERRATED WASHER NOT SHOWN FOR CLARITY

BRACE SLIDE PLATE ~ S-5P & S-7P

1" X 8" X 2'-4 1/2" LG. - MILLED - W/ADJ. RAIL BRACE
4 - S-5P PLATES REQUIRED AS SHOWN
2 - S-7P PLATES REQUIRED AS SHOWN

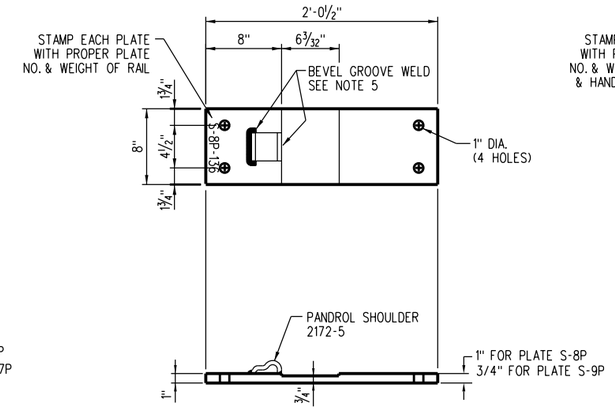

SLIDE PLATE - S-8P & S-9P

1" X 8" X 2'-0 1/2" LG. - MILLED - W/PANDROL CLIP
6 - S-8P PLATES REQUIRED AS SHOWN (1/4" RISER)
4 - S-9P PLATES REQUIRED AS SHOWN (0" RISER)

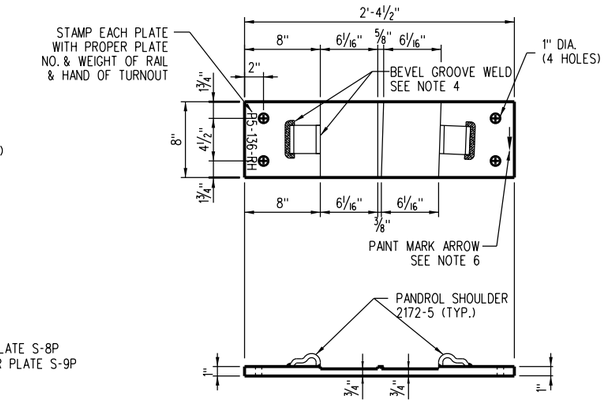

HEEL PLATE - P5 - RH

1" X 8" X 2'-4 1/2" LG. - MILLED - W/PANDROL CLIPS
2 - P5-RH PLATES REQUIRED AS SHOWN FOR R.H. T.O.

SWITCH PLATES

FOR MAINTENANCE ONLY

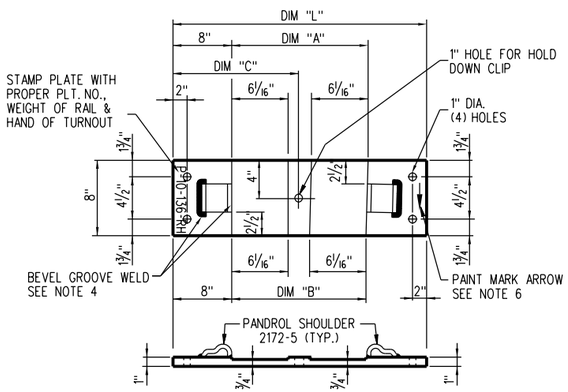

TURNOUT PLATES - P-10 THRU P-15, P-25 & P-26

1" x 8" x DIM "L" - MILLED - W/ PANDROLS

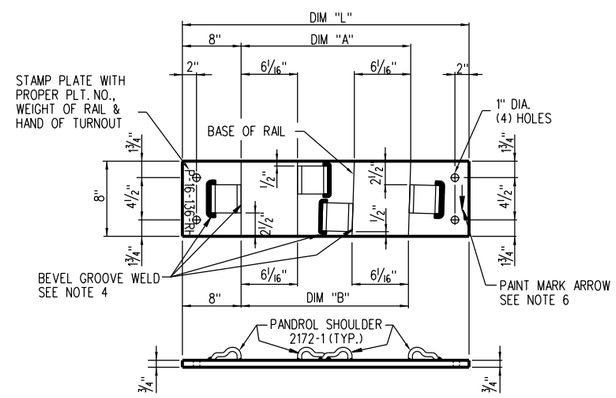

TURNOUT PLATES - P-16 THRU P-18, P-24, P-27 & P-28

3/4" x 8" x DIM "L" - FLAT - W/ PANDROL CLIPS

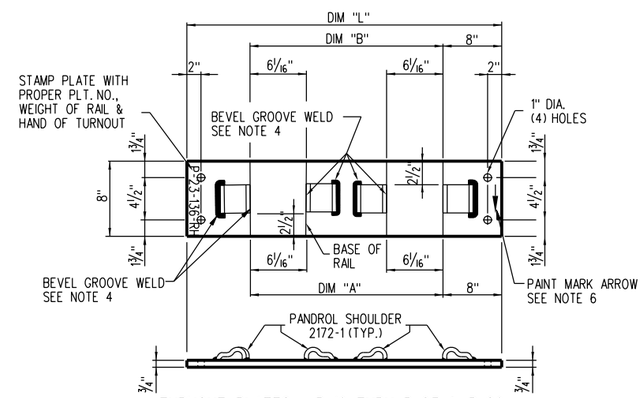

TURNOUT PLATES - P-19 THRU P-23 & P-29

3/4" x 8" x DIM "L" - FLAT - W/ PANDROL CLIPS

NOTES:

1. PLATES TO BE MADE OF MILD ROLLED STEEL.
2. EACH PLATE TO BE PLAINLY STAMPED WITH PLATE NO. AND 136 (WEIGHT OF RAIL) & HAND OF TURNOUT (R.H. OR L.H.)
3. THE PANDROL TYPE WELD - ON PRESSED STEEL SHOULDER, MADE FROM MILD STEEL, TO BE PURCHASED FROM PANDROL INTERNATIONAL OR APPROVED ALTERNATE MEETING PANDROL'S DESIGN SPECIFICATIONS.
4. THE PRESSED STEEL SHOULDER MUST BE CAREFULLY WELDED TO THE PLATE. ANY WELD PROJECTING BEYOND THE VERTICAL FACE OF SHOULDER IN THE AREA OF THE RAIL SEAT MUST BE MACHINED OUT TO PROVIDE A CLEAR RAIL SEAT DIMENSION AS CALLED FOR.
5. THE PLATES AS SHOWN ARE FOR A 136 LB., NO. 10 RIGHT HAND TURNOUT. FOR A LEFT HAND TURNOUT, PLATES P-10 THRU P-29 INCLUSIVE AND FROG PLATES AND GAGE PLATES FG-1P THRU FG-3P ARE TO BE OPPOSITE.
6. DIRECTION OF ARROW SHOWN IS AN EXAMPLE ONLY. USING SHEET NO. 2921-03 AS A GUIDE, PAINT MARK EACH PLATE WITH AN ARROW POINTING TOWARD SWITCH POINT.

WELDING SPECIFICATIONS

1. SET PRESSED STEEL SHOULDER FLUSH AGAINST LINE OF BASE OF RAIL OR SHOULDER OF MILLED PLATE AS SHOWN AND WELD WITH
2. 2 - PASS 3/8" + WELD.
   STOP PLATE FOR ADJUSTABLE RAIL BRACE TO BE SET FLUSH WITH
3. SHOULDER OF MILLED PLATE AS SHOWN AND WELD WITH 3 - PASS 1/2" + FILLET WELD.
   SHOULDERS AND STOPS ARE TO BE CAREFULLY WEDLED TO PLATE. NO WELD SHALL PROJECT BEYOND THE VERTICAL EDGE OF TH UNWELDED FOURTH SIDE OF THE STOP PLATE OR VERTICAL FACE
4. OF SHOULDER IN THE AREA OF THE RAIL SEAT. ANY WELD PROJECTING BEYOND THE FACE OF THE STOP OR SHOULDER MUST BE MACHINED OFF TO PROVIDE CLEAR DIMENSION CALLED FOR.
   FOR WELDING PRESSED STEEL SHOULDERS OR PLATE STOPS USE THE FOLLOWING:
   A. ELECTRODE 15/32 INCH, WELDING SPEC. 7018XLM.
   B. ELECTRODE 3/16 INCH, WELDING SPEC. 7018XLM.
   C. WIRE, WELDING 3/32 INCH, NR203, 1% NICKEL FLUX CORE.
   OTHER WIRE OR ELECTRODES MEETING SPECIFICATIONS AS CALLED FOR, APPROVED BY DIRECTOR OF ENGINEERING, MAY BE USED.

DIMENSION TABLE

PLATE	DIM "A"	DIM "B"	DIM "C"	DIM "L"	Plts REQ'D.	DIM "D"	DIM "E"	DIM "F"	CLIPS REQ'D.
P-10	13 1/8"	13 3/8"	14 19/32"	2'-5"	2 EA.	3 1/8"	3 3/8"	1 9/16"	2 EA.
P-11	13 23/32"	13 15/16"	14 7/8"	2'-6"	2 EA.	3 23/32"	3 31/32"	1 15/16"	2 EA.
P-12	14 11/32"	14 19/32"	15 3/16"	2'-6 1/2"	2 EA.	4 11/32"	4 9/16"	2 1/4"	2 EA.
P-13	15"	15 1/4"	15 1/2"	2'-7 1/2"	2 EA.	4 31/32"	5 7/32"	2 9/16"	2 EA.
P-14	15 11/16"	15 31/32"	15 27/32"	2'-8"	2 EA.	5 27/32"	5 15/16"	2 29/32"	2 EA.
P-15	16 13/32"	16 23/32"	16 1/32"	2'-8 1/2"	2 EA.	6 3/8"	6 11/16"	3 9/32"	2 EA.
P-25	15 15/32"	16 9/32"	15 29/32"	2'-8 1/2"	1 EA.	6 11/32"	5 17/32"	2 31/32"	1 EA.
P-26	15 1/16"	16 7/32"	15 7/8"	2'-8 1/2"	1 EA.	5 7/16"	6 1/4"	2 15/16"	1 EA.

DIMENSION TABLE

PLATE	DIM "A"	DIM "B"	DIM "L"	Plts REQ'D.
P-16	17 1/8"	17 7/16"	2'-9 1/2"	2 EA.
P-17	17 15/16"	18 1/4"	2'-10"	2 EA.
P-18	18 25/32"	19 5/32"	2'-11"	2 EA.
P-24	17 7/16"	18 1/4"	2'-10 1/2"	1 EA.
P-27	17 3/8"	18 3/16"	2'-10 1/2"	1 EA.
P-28	19 11/32"	20 1/8"	3'-0"	1 EA.

DIMENSION TABLE

PLATE	DIM "A"	DIM "B"	DIM "L"	Plts REQ'D.
P-19	20 5/32"	19 25/32"	3'-0"	2 EA.
P-20	21 1/8"	20 3/4"	3'-1"	2 EA.
P-21	22 3/32"	21 3/4"	3'-2"	2 EA.
P-22	22 3/16"	21 7/16"	3'-2 1/2"	1 EA.
P-23	20 7/16"	19 9/16"	3'-0 1/2"	1 EA.
P-29	22 3/32"	21 11/32"	3'-2"	1 EA.

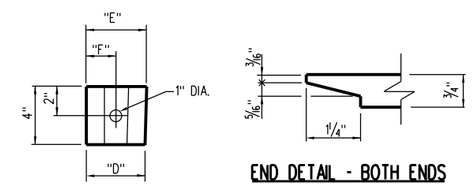

END DETAIL - BOTH ENDS

HOLD DOWN CLIP FOR PLATES P-10 THRU P-15
HOLD DOWN CLIP FOR PLATES P-24 THRU P-26

REV.	DATE	DESCRIPTION	DES.	ENG.
X	XX-XX-XX	REVISION	XX	XX

DRAWN BY: A. CARLOS DATE: 03/31/2011

ASSISTANT DIRECTOR: STANDARDS & DESIGN

DIRECTOR OF ENGINEERING AND CONSTRUCTION

SCRRA ENGINEERING STANDARDS ARE INTENDED FOR SCRRA APPROVED USES ONLY. FOR NON-SCRRA APPROVED USES:
SCRRA SHALL NOT BE RESPONSIBLE FOR THE ACCURACY OR COMPLETENESS OF THE DATA OR INFORMATION CONTAINED HEREIN. THE SELECTION AND USE OF THESE STANDARDS IS THE SOLE RESPONSIBILITY OF THE USER AND SHOULD NOT BE USED WITHOUT CONSULTING A REGISTERED PROFESSIONAL ENGINEER. ALL WARRANTIES AND REPRESENTATIONS OF ANY KIND ARE DISCLAIMED. ANYONE MAKING USE OF THIS INFORMATION AGREES THAT IT ASSUMES ALL LIABILITY ARISING FROM SUCH USE. NO PART OF THESE STANDARDS SHOULD BE REPRODUCED OR DISTRIBUTED IN ANY FORM OR BY ANY MEANS WITHOUT THE PRIOR WRITTEN PERMISSION OF SCRRA. ALL RIGHTS RESERVED.

METROLINK®
SOUTHERN CALIFORNIA REGIONAL RAIL AUTHORITY
ONE GATEWAY PLAZA, 12TH FLOOR, L. A., CA. 90012

ENGINEERING STANDARDS

NO. 10 TURNOUT AND SWITCH PLATE DETAILS

STANDARD 2921
SCALE: 1 1/2" = 1'-0"
REVISION –
SHEET 13 OF 15
CADD FILE: ES2921-13

NOTES:

1. PLATES TO BE MADE OF MILD ROLLED STEEL.
2. THE PANDROL TYPE WELD - ON, PRESSED STEEL SHOULDER, MADE OF MILD STEEL TO BE PURCHASED FROM APPROVED SUPPLIER MEETING DESIGN SPECIFICATIONS.
3. THE PRESSED STEEL SHOULDER MUST BE CAREFULLY WELDED TO GAGE PLATES. ANY WELD PROJECTING BEYOND THE VERTICAL FACE OF SHOULDER IN THE AREA OF THE RAIL SEAT MUST BE MACHINED OUT TO PROVIDE A CLEAR RAIL SEAT DIMENSION AS CALLED FOR.
4. THE PLATES AS SHOWN FOR A 136 LB., NO. 10 RIGHT HAND HAND OPERATED TURNOUT. FOR A LEFT HAND TURNOUT, PLATES ARE TO BE OPPOSITE.
5. FOR EXTENSION PLATE AND DAP TIE DETAILS SEE SHEET 2921-13.

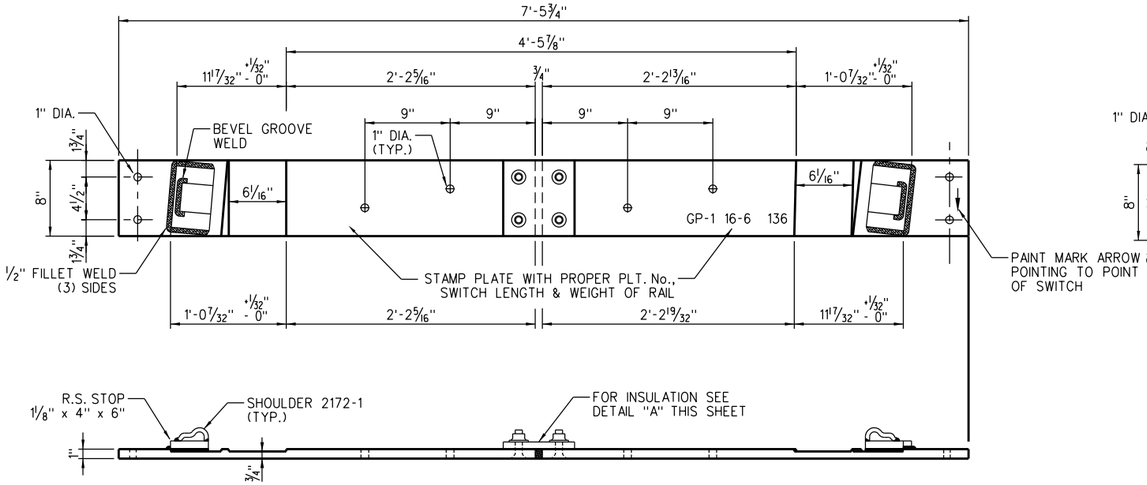

INSULATED GAGE PLATE GP-1 - USED AT POINT OF SWITCH

1" x 8" - MILLED - W/ INSULATION & ADJ. RAIL BRACES
(1 PC. REQ'D AS SHOWN) (SCALE: 1½" = 1'-0")

NOTE:
SERRATED WASHER AND BRACE PLATE NOT SHOWN FOR CLARITY.

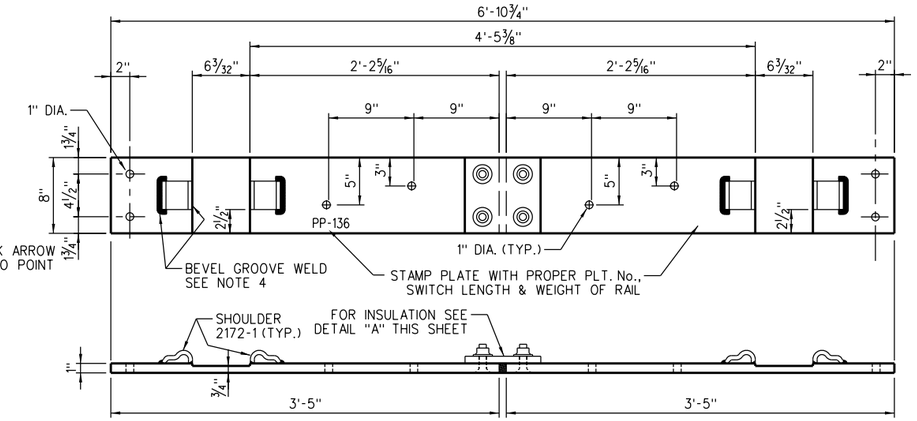

PANDROLIZED INSULATED GAGE PLATE PP

1" x 8" - FLAT - W/ INSULATION (3 PC. REQ'D AS SHOWN)
(SCALE: 1½" = 1'-0")

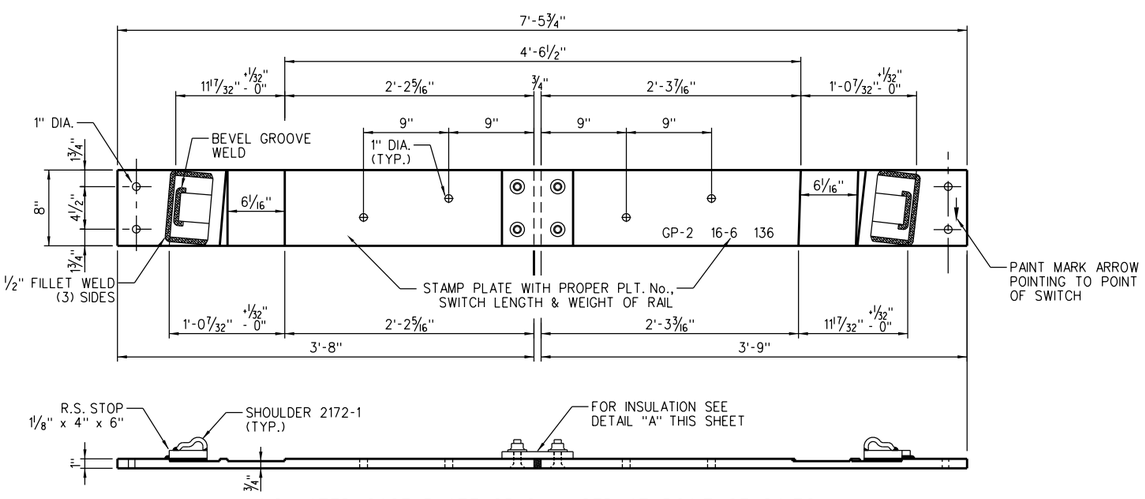

INSULATED GAGE PLATE GP-2 - USED AT POINT OF SWITCH

1" x 8" - MILLED - W/ INSULATION & ADJ. RAIL BRACES
(1 PC. REQ'D AS SHOWN) (SCALE: 1½" = 1'-0")

NOTE:
SERRATED WASHER AND BRACE PLATE NOT SHOWN FOR CLARITY.

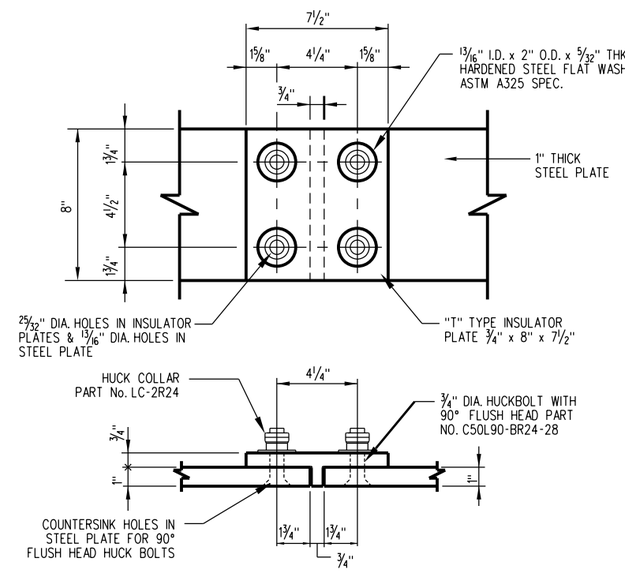

GAGE PLATE INSULATED JOINT ASSEMBLY GPI-77

NOTE:
HEAD OF HUCK BOLT RECESSED 1/16" MAX.

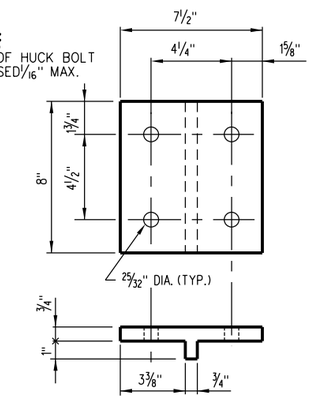

DETAIL OF INSULATION BLOCK

POLYESTER COATED STEEL CORE
W/ BUSHINGS, PORTEC #127-07547-01
OR FIBERGLASS REINFORCED THERMOSET RESIN.
PURCHASE PART NO. GPI52P05

DETAIL "A" INSULATION AT PLATES

(SCALE: 3" = 1'-0")

FOR MAINTENANCE ONLY

REV.	DATE	DESCRIPTION	DES.	ENG.
X	XX-XX-XX	REVISION	XX	XX

DRAWN BY: A. CARLOS DATE: 03/31/2011

ASSISTANT DIRECTOR: STANDARDS & DESIGN

DIRECTOR OF ENGINEERING AND CONSTRUCTION

SCRRA ENGINEERING STANDARDS ARE INTENDED FOR SCRRA APPROVED USES ONLY. FOR NON-SCRRA APPROVED USES: SCRRA SHALL NOT BE RESPONSIBLE FOR THE ACCURACY OR COMPLETENESS OF THE DATA OR INFORMATION CONTAINED HEREIN. THE SELECTION AND USE OF THESE STANDARDS IS THE SOLE RESPONSIBILITY OF THE USER AND SHOULD NOT BE USED WITHOUT CONSULTING A REGISTERED PROFESSIONAL ENGINEER. ALL WARRANTIES AND REPRESENTATIONS OF ANY KIND ARE DISCLAIMED. ANYONE MAKING USE OF THIS INFORMATION AGREES THAT IT ASSUMES ALL LIABILITY ARISING FROM SUCH USE. NO PART OF THESE STANDARDS SHOULD BE REPRODUCED OR DISTRIBUTED IN ANY FORM OR BY ANY MEANS WITHOUT THE PRIOR WRITTEN PERMISSION OF SCRRA. ALL RIGHTS RESERVED.

METROLINK®
SOUTHERN CALIFORNIA REGIONAL RAIL AUTHORITY
ONE GATEWAY PLAZA, 12TH FLOOR, L. A., CA. 90012

ENGINEERING STANDARDS

NO. 10 SWITCH PLATE DETAILS

STANDARD 2921
SCALE: AS NOTED
REVISION –
SHEET 14 OF 15
CADD FILE: ES2921-14

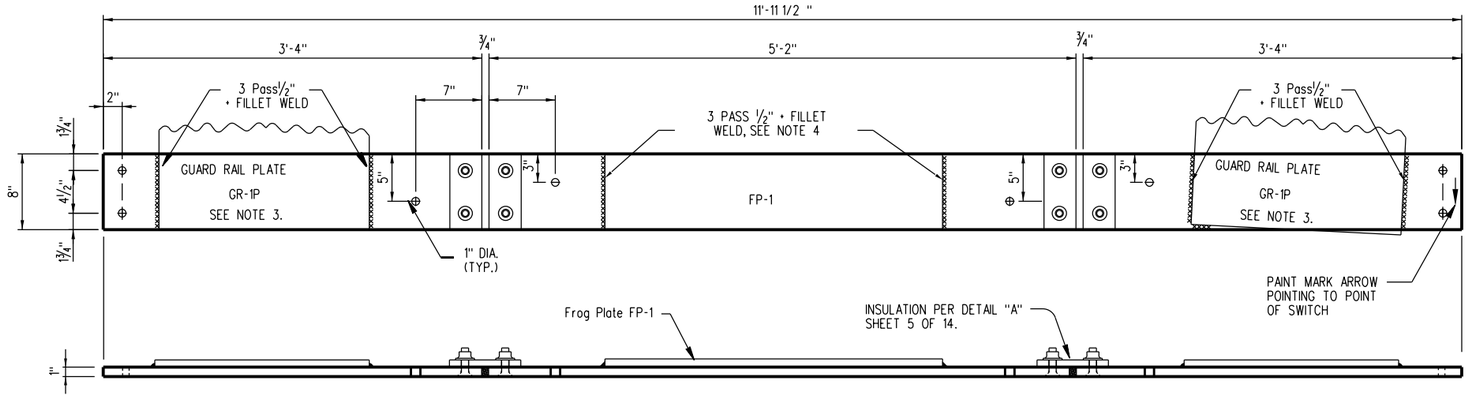

INSULATED FROG GAGE PLATE - FG-1P

3/4" x 8" - FLAT - W/ INSULATION (1 PC. REQ'D AS SHOWN)

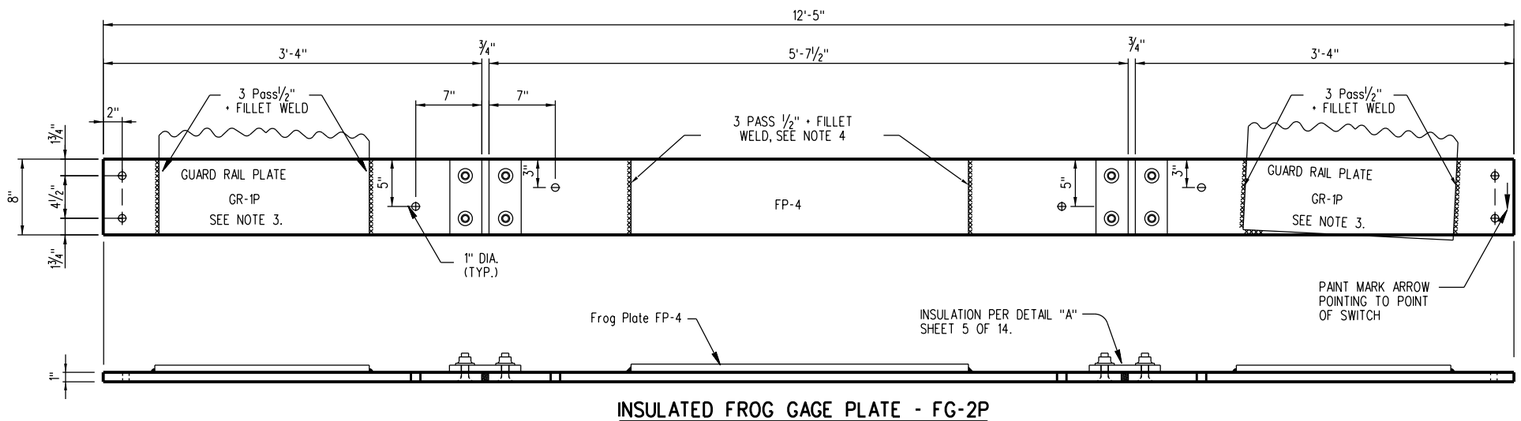

INSULATED FROG GAGE PLATE - FG-2P

3/4" x 8" - FLAT - W/ INSULATION (1 PC. REQ'D AS SHOWN)

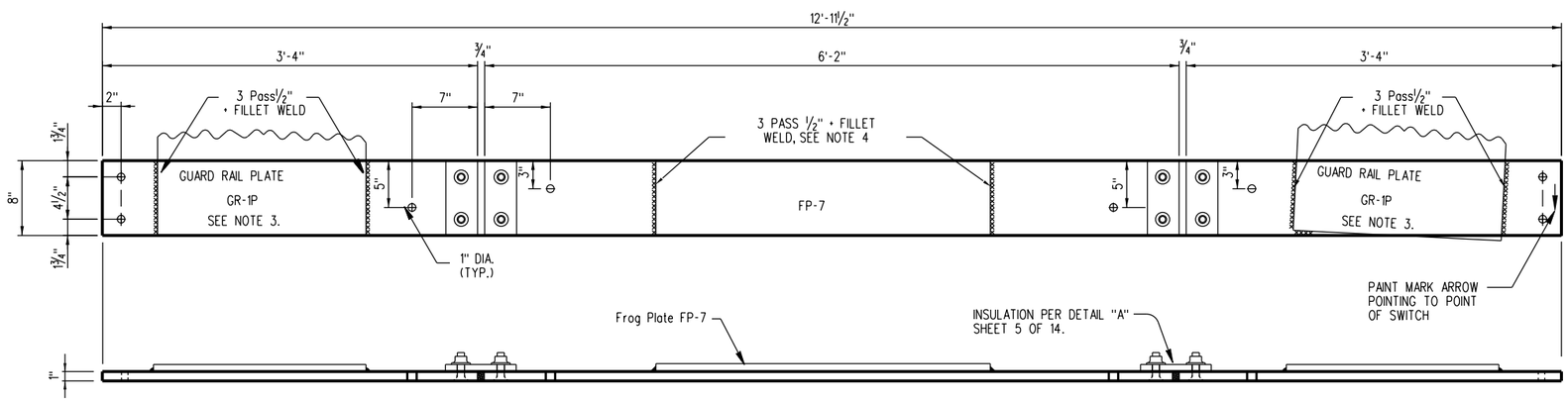

INSULATED FROG GAGE PLATE - FG-3P

3/4" x 8" - FLAT - W/ INSULATION (1 PC. REQ'D AS SHOWN)

NOTES:

1. PLATES TO BE MADE OF MILD ROLLED STEEL.
2. THE PLATES AS SHOWN ARE FOR A 136 LB., NO. 10, RIGHT HAND, HAND OPERATED TURNOUT. FOR A LEFT HAND TURNOUT, PLATES ARE TO BE OPPOSITE.
3. GUARD RAIL PLATES ARE TO BE INSTALLED AND WELDED TO THE FROG GAGE PLATES IN THE FIELD WITH A 3 PASS 1/2" FILLET WELD CONTINUOUS ON BOTH ENDS OF THE PLATE. PLATES ARE TO BE WELDED ONLY AFTER THE GAGE PLATE AND THE FROG IS SECURED IN THE PROPER LOCATION ON THE TIE WITH PROPER ALIGNMENT.
4. FROG BASE PLATES FP-1, FP-4 AND FP-7 ARE TO BE WELDED TO THE FROG GAGE PLATES IN THE FIELD WITH A 3 PASS 1/2" FILLET WELD CONTINUOUS ON BOTH ENDS OF THE PLATE. PLATES ARE TO BE WELDED ONLY AFTER THE GAGE PLATE AND THE FROG IS SECURED IN THE PROPER LOCATION ON THE TIE WITH PROPER ALIGNMENT.

FOR MAINTENANCE ONLY

REV.	DATE	DESCRIPTION	DES.	ENG.
X	XX-XX-XX	REVISION	XX	XX

DRAWN BY: A. CARLOS DATE: 03/31/2011

ASSISTANT DIRECTOR: STANDARDS & DESIGN

DIRECTOR OF ENGINEERING AND CONSTRUCTION

SCRRA ENGINEERING STANDARDS ARE INTENDED FOR SCRRA APPROVED USES ONLY. FOR NON-SCRRA APPROVED USES:
SCRRA SHALL NOT BE RESPONSIBLE FOR THE ACCURACY OR COMPLETENESS OF THE DATA OR INFORMATION CONTAINED HEREIN. THE SELECTION AND USE OF THESE STANDARDS IS THE SOLE RESPONSIBILITY OF THE USER AND SHOULD NOT BE USED WITHOUT CONSULTING A REGISTERED PROFESSIONAL ENGINEER. ALL WARRANTIES AND REPRESENTATIONS OF ANY KIND ARE DISCLAIMED. ANYONE MAKING USE OF THIS INFORMATION AGREES THAT IT ASSUMES ALL LIABILITY ARISING FROM SUCH USE. NO PART OF THESE STANDARDS SHOULD BE REPRODUCED OR DISTRIBUTED IN ANY FORM OR BY ANY MEANS WITHOUT THE PRIOR WRITTEN PERMISSION OF SCRRA. ALL RIGHTS RESERVED.

METROLINK®
SOUTHERN CALIFORNIA REGIONAL RAIL AUTHORITY
ONE GATEWAY PLAZA, 12TH FLOOR, L. A., CA. 90012

ENGINEERING STANDARDS

NO. 10 INSULATED GAGE PLATE DETAILS

STANDARD 2921
SCALE: 1 1/2" = 1'-0"
REVISION –
SHEET 15 OF 15
CADD FILE: ES2921-15

EQUIVALENT CURVE DATA	
CURVE	6.0850'
RADIUS	941.60'
DELTA	5.724'
TANGENT (T)	47.07'
LENGTH (L)	94.07'
EXTERNAL	1.17'
CROSSOVER DATA	
LEAD	80.500'
PC TO PS	14.07'
PS TO PI	33.00'
PI TO ½" PF	47.50'
LENGTH OF TURNOUT	117.28'
PS TO PT	80.00'

FROG DATA	
FROG NUMBER	10
FROG ANGLE	5°-43'-29"
SWITCH DATA	
SWITCH LENGTH	16'-6"
HEEL SPREAD	6¼"
HEEL ANGLE	N/A
SWITCH ANGLE	1°-44'-11"
RADIUS OF CENTER LINE - SWITCH	N/A
TANGENT LENGTH SWITCH	N/A
CENTRAL ANGLE OF CLOSURE CURVE-SWITCH	N/A
DEGREE OF CURVE - SWITCH	N/A
TURNOUT DATA	
RADIUS OF CENTER LINE - TURNOUT	736.76'
TANGENT LENGTH - TURNOUT	25.65'
CENTRAL ANGLE OF CLOSURE CURVE - TURNOUT	3°-59'-18"
DEGREE OF CURVE - TURNOUT	7°-46'-58"

DRAWING INDEX

TURNOUT AND CROSSOVER GENERAL NOTES AND DATA — ES2922-01
TURNOUT AND CROSSOVER JOINTS LOCATIONS — ES2922-02
TURNOUT LAYOUT — ES2922-03
TURNOUT BILL OF MATERIALS — ES2922-04
CROSSOVER LAYOUT AND BILL OF MATERIALS LAYOUT — ES2922-05
FROG LAYOUT — ES2922-06
FROG PLATE DETAILS — ES2922-07
GUARD RAIL DETAILS — ES2922-08
SPLIT SWITCH POINT DETAILS — ES2922-09
STRAIGHT OR CURVED UNDERCUT STOCK RAIL — ES2922-10
SWITCH ROD DETAILS — ES2922-11
SWITCH ROD MISCELLANIOUS DETAILS — ES2922-12
EXTENSION PLATE AND DAP TIE DETAILS FOR M-23A SWITCH MACHINE — ES2922-13
TURNOUT AND SWITCH PLATE DETAILS — ES2922-14
SWITCH PLATE DETAILS — ES2922-15
INSULATED GAGE PLATE DETAILS — ES2922-16

NOTES:

1. TURNOUT TO BE FABRICATED FROM 136 LB. HEAD HARDENED RAIL, FROM POINT END TO LAST LONG SWITCH TIE.
2. LOCATION OF INSULATED JOINTS IS DETERMINED BY DRAWING NUMBER ES2922-02. IT WILL BE SATISFACTORY TO RELOCATE THE INSULATED JOINT IN THE FIELD UP TO 12" SO AS TO PROVIDE A SUITABLE SUSPENDED JOINT, PROVIDED THE STAGGER OF INSULATED JOINTS DOES NOT EXCEED 4'-6". SUSPENDED INSULATED JOINTS MUST BE LOCATED IN A CRIB AREA BETWEEN TIES, A MINIMUM DISTANCE OF 4" FROM EDGE OF NEAREST TIE PLATE.
3. ALL INSULATED JOINTS ARE TO BE ADHESIVE BONDED PREFABRICATED MITRE CUT INSULATED JOINTS PER ES2504 UNLESS OTHERWISE SPECIFIED.
4. ALL MATERIALS REQUIRED FOR HAND OR MACHINE OPERATED SWITCH OPERATION WILL BE FURNISHED PER REQUIREMENTS OF THE SCRRA DIRECTOR OF ENGINEERING AND CONSTRUCTION.
5. MATERIALS AND WORKMANSHIP, ALSO ANY CONSTRUCTION DETAILS NOT SHOWN, SHALL BE PER CURRENT A.R.E.M.A. "MANUAL AND PORTFOLIO" UNLESS OTHERWISE SPECIFIED.
6. WHERE REQUIRED, ALL IDENTIFICATION SYMBOLS TO BE PLAINLY STAMPED.
7. GAGE PLATES WILL BE FURNISHED INSULATED. SWITCH RODS WILL BE FURNISHED INSULATED UNLESS OTHERWISE SPECIFIED.
8. MANUFACTURER SHALL SUBMIT TWO COPIES OF SHOP DRAWINGS TO THE SCRRA DIRECTOR OF ENGINEERING AND CONSTRUCTION FOR APPROVAL PRIOR TO FABRICATION OF TURNOUT. SHOP DRAWINGS THAT CHANGE DETAILS OF THESE STANDARDS MUST CLEARLY SPECIFY SUCH PROPOSED CHANGES.
9. THE MATERIAL INCLUDED IN A "TURNOUT COMPLETE" IS EVERYTHING LISTED IN THE BILL OF MATERIALS. TO CONSTRUCT A COMPLETE TURNOUT, SWITCH TIES (PER LIST ON THIS SHEET) AND INSULATED JOINTS, FIELD WELDS, RUNNING RAIL, AND CLOSURE RAIL IDENTIFICATION ON SHEET ES2922-02 MUST ALSO BE SUPPLIED. THE MATERIAL FOR A "CROSSOVER COMPLETE" IS IDENTIFIED ON SHEET ES2922-05.
10. TIE PLATES SHALL CONFORM TO SCRRA ENGINEERING STANDARD ES2454.
11. SCREW SPIKES (15/16" X 6-2 TPI) SHALL CONFORM TO SCRRA ENGINEERING STANDARD ES2357. PLATE HOLES SHALL BE 1" DIAMETER. PILOT HOLES IN TIES SHALL BE 9/16" DIAMETER. SCREW SPIKES SHALL BE SCREWED INTO WOOD (NOT DRIVEN).
12. MANUFACTURER SHALL BEVEL RAIL ENDS PER CURRENT AREMA. PLAN NO. 1005.
13. THE 16'-6" SWITCH POINT, MADE FROM 40'-0" RAIL PER ES2922-09 SHALL BE FURNISHED WITH SWITCH RODS NO. 1 AND 2 PER ES2922-11 AND ES2922-04.
14. FOR LOCATION OF INSULATED AND COMPROMISE JOINTS FOR NO. 8 TURNOUT AND CROSSOVER, SEE DRAWING NO. ES2922-02.
15. GAGE PLATES FOR SWITCH AND FROG, SWITCH HEEL PLATE (FOR BOTH R.H. AND L.H. TURNOUTS) AND PLATES P-10 THRU P-24 ARE DESIGNED TO BE PERPENDICULAR TO THE MAIN LINE THRU RUN RAILS.
16. UPON COMPLETION OF TURNOUT INSTALLATION, RUNNING RAIL MUST BE ADJUSTED TO SCRRA NEUTRAL RAIL TEMPERATURE.
17. ALL E-CLIPS SHALL BE GALVANIZED.
18. SWITCH POINTS SHALL BE FABRICATED PER AREMA SPECIFICATION NO. 9-28-92 AND PER ES2922-09.
19. THE TOLERANCE FOR SPACING OF SWITCH TIES IS +/-½" RELATIVE TO ADJACENT TIES AND 1¼" RELATIVE TO CUMULATIVE DIMENSION FROM THE POINT OF SWITCH (PS).

FOR MAINTENANCE ONLY

CROSSOVER DATA TABLE									
A	B	C	X	Y	2L+X	2L+X-2(PC-PS)	PS TO PS	U	V
13	130.34	129.69	36.20	223.84	224.33	196.19	195.70	34.70	35.35
14	140.37	139.67	46.22	233.82	234.36	206.22	205.68	44.68	45.37
15	150.40	149.65	56.25	243.79	244.39	216.25	215.65	54.65	55.40
16	160.42	159.62	66.28	253.77	254.41	226.27	225.63	64.63	65.43
17	170.45	169.60	76.30	263.75	264.44	236.60	235.61	74.61	75.45
18	180.48	179.58	86.33	273.72	274.47	246.33	245.58	84.58	85.48
19	190.50	189.55	96.36	283.70	284.49	256.65	255.56	94.56	95.50
20	200.53	199.53	106.38	293.68	294.52	266.38	265.54	104.54	105.53
21	210.55	209.50	116.41	303.65	304.54	276.40	275.51	114.51	115.56
22	220.58	219.48	126.43	313.63	314.57	286.43	285.49	124.49	125.58
23	230.61	229.46	136.46	323.60	324.60	296.46	295.46	134.46	135.61
24	240.63	239.43	146.49	333.58	334.62	306.48	305.44	144.44	145.64
25	250.66	249.41	156.51	343.56	344.65	316.51	315.42	154.42	155.66
26	260.69	259.39	166.54	353.53	354.68	326.54	325.39	164.39	165.69
27	270.71	269.36	176.57	363.51	364.70	336.56	335.37	174.37	175.72
28	280.77	279.34	186.59	373.49	374.73	346.59	345.35	184.35	185.74
29	290.77	289.32	196.62	383.46	384.76	356.62	355.32	194.32	195.77
30	300.79	299.29	206.65	393.44	394.78	366.64	365.30	204.30	205.79
31	310.82	309.27	216.67	403.42	404.81	376.67	375.28	214.28	215.82
32	320.85	319.25	226.70	413.39	414.84	386.70	385.25	224.25	225.85

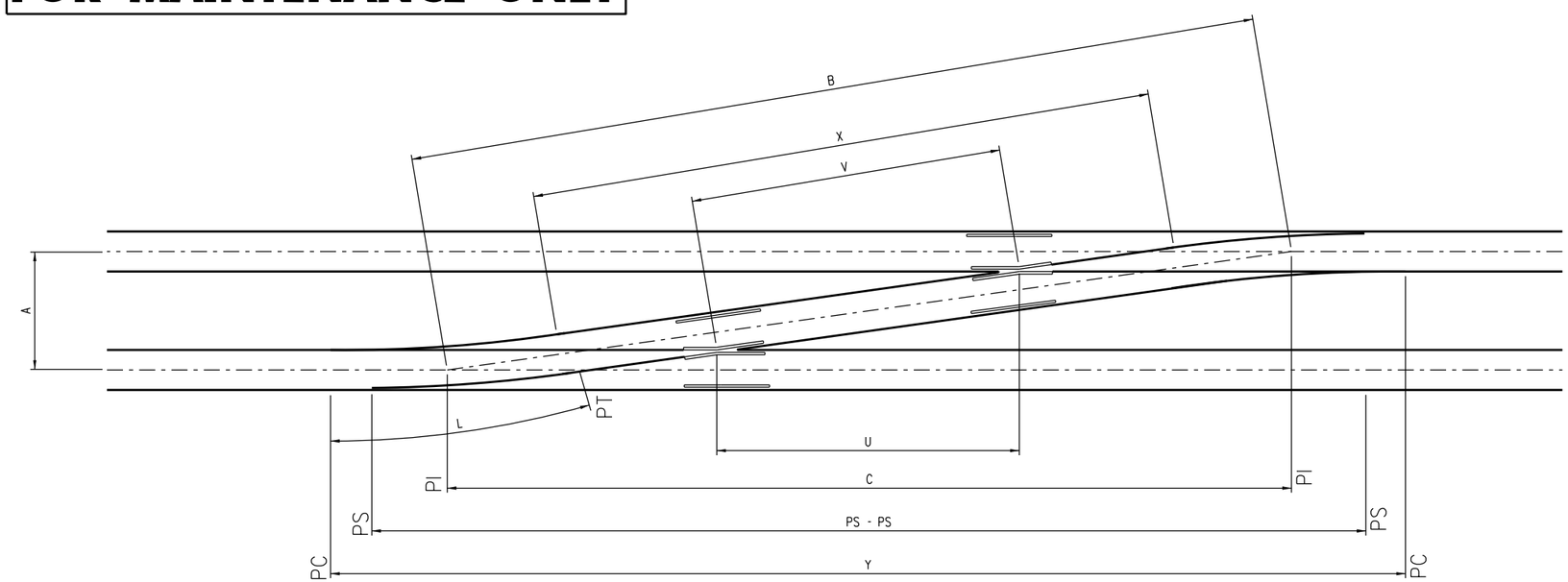

CROSSOVER LAYOUT

X	XX-XX-XX	REVISION	XX	XX
REV.	DATE	DESCRIPTION	DES.	ENG.

DRAWN BY: A. CARLOS DATE: 03/31/2011

ASSISTANT DIRECTOR: STANDARDS & DESIGN

DIRECTOR OF ENGINEERING AND CONSTRUCTION

SCRRA ENGINEERING STANDARDS ARE INTENDED FOR SCRRA APPROVED USES ONLY. FOR NON-SCRRA APPROVED USES, SCRRA SHALL NOT BE RESPONSIBLE FOR THE ACCURACY OR COMPLETENESS OF THE DATA OR INFORMATION CONTAINED HEREIN. THE SELECTION AND USE OF THESE STANDARDS IS THE SOLE RESPONSIBILITY OF THE USER AND SHOULD NOT BE USED WITHOUT CONSULTING A REGISTERED PROFESSIONAL ENGINEER. ALL WARRANTIES AND REPRESENTATIONS OF ANY KIND ARE DISCLAIMED. ANYONE MAKING USE OF THIS INFORMATION AGREES THAT IT ASSUMES ALL LIABILITY ARISING FROM SUCH USE. NO PART OF THESE STANDARDS SHOULD BE REPRODUCED OR DISTRIBUTED IN ANY FORM OR BY ANY MEANS WITHOUT THE PRIOR WRITTEN PERMISSION OF SCRRA. ALL RIGHTS RESERVED.

METROLINK®
SOUTHERN CALIFORNIA REGIONAL RAIL AUTHORITY
ONE GATEWAY PLAZA, 12TH FLOOR, L. A., CA. 90012

ENGINEERING STANDARDS

NO. 10 136 LB. R.H. SR FROG
TURNOUT AND CROSSOVER
GENERAL NOTES AND DATA

STANDARD 2922
SCALE: NONE
REVISION –
SHEET 1 OF 15
CADD FILE: ES2922-01

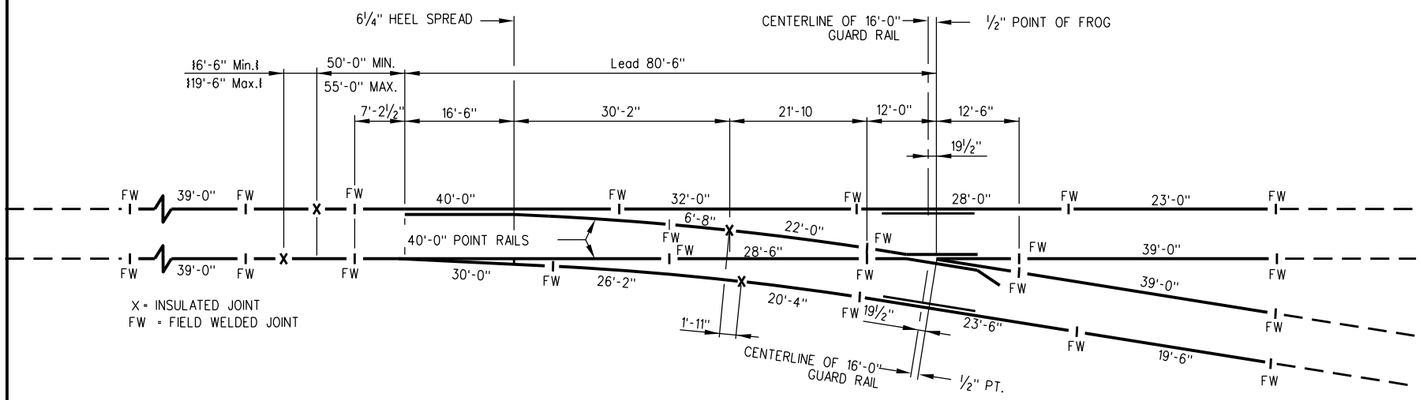

TURNOUT

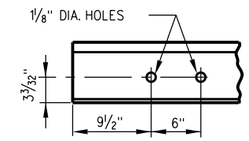

DETAIL "A"

SEE NOTE (b)
(DRILLED HOLES NOT NECESSARY IF TEMPORARY BOLTED JOINTS ARE NOT REQUIRED)

NOTES:

1. THE PERMISSIBLE VARIATION IN STANDARD LENGTHS OF RAILS, FROGS AND SWITCH POINTS IS GREATER THAN THE NORMAL EXPANSION GAPS AT RAIL JOINTS AND THICKNESS OF FIBRE END POST IN INSULATED JOINTS, NO ALLOWANCE HAS BEEN MADE FOR EXPANSION GAPS AND FIBRE END POSTS IN COMPUTING LENGTHS OF RAILS SHOWN. DIMENSIONS OF TURNOUT AND ALL COMPONENTS IS FOR A THERMAL, STRESS - FREE CONDITION OF 110° F. ACTUAL EXACT LENGTHS OF RAILS TO BE INSTALLED IS TO BE FIELD - ADJUSTED TO FIT OVERALL TURNOUT DIMENSIONS, THERMAL ADJUSTMENTS, THICKNESS OF WELDS AND VARIATIONS IN COMPONENT
2. RAIL LENGTH.
   RAIL LAYOUT SHOWN FOR TURNOUT IS TO BE USED IN ALL CASES, EXCEPT WHERE COMPROMISE JOINTS ARE REQUIRED BETWEEN THE FROGS IN A CROSSOVER TRACK. WHEN COMPROMISE JOINTS ARE TO BE USED TO JOIN DIFFERENT RAIL WEIGHTS, THE INSULATED JOINTS IN THE CROSSOVER TRACK SHALL ALWAYS BE OF THE HEAVIER RAIL SECTION. THE DESCRIPTIONS OF THE CHANGES IN RAIL LAYOUT WHEN COMPROMISE JOINTS ARE REQUIRED IN THE CROSSOVER TRACK ARE BASED ON AN ASSUMPTION THAT TRACK "H" IS LAID WITH HEAVIER RAIL THAN TRACK "L". CROSSOVER ON 15'-0" TRACK CENTERS: AT LOCATION "A" THE 19'-6" RAIL SHALL BE REPLACED WITH
3. 8'-0" OF THE HEAVIER RAIL AND 11'-6" OF THE LIGHTER RAIL. AT LOCATION "B" THE 21'-3" RAIL SHALL BE REPLACED WITH 7'-0" OF THE HEAVIER RAIL AND 14'-3" OF THE LIGHTER RAIL.
4. IN ADDITON TO NOTE 1. NO ALLOWANCE HAS BEEN MADE IN RAIL LENGTHS TO PROVIDE GAPS NEEDED TO MAKE FIELD WELDS. IN THE FIELD IT MAY BE NECESSARY TO CUT RAIL ENDS TO PROVIDE CORRECT GAPS FOR FIELD WELDS.
   FURNISH ALL RAIL SHOWN IN SOLID LINES ON THIS DRAWING:
   (A.) RAILS LONGER THAN 39'-0" SHALL BE CONTINUOUS WELDED RAIL (CWR), TO BE
5. FURNISHED WITH BOTH ENDS LEFT BLANK FOR WELDING IN THE FIELD.
   (B.) ALL OTHER RAILS SHALL BE 39'-0" OF SHORTER AS SPECIFIED ON THE DRAWING,
6. WITH BOTH ENDS DRILLED PER DETAIL "A".
   ALL RAIL FURNISHED FOR TURNOUT AND CROSSOVERS SHALL BE "HIGH STRENGTH" EXCEPT GUARD RAILS.
   LOCATIONS OF INSULATED JOINTS ARE SHOWN ON TURNOUT AND CROSSOVER DIAGRAMS WITHOUT TOLERANCES, OR IF TOLERANCES ARE PERMISSABLE, WITH (+ OR -).
   ALL INSULATED JOINTS ARE TO BE PROPERLY SUSPENDED IN CRIB AREA BETWEEN TWO TIES LOCATED 4" MINIMUM FROM EDGE OF NEAREST TIE TO EDGE OF INSULATED JOINT. INSULATED JOINT MUST BE INTALLED TO BE CENTERED BETWEEN TWO (2) TIES.
   FIELD WELDED JOINTS DESIGNATED "FW" SHOULD BE IN CRIB AREA BETWEEN TWO TIES LOCATED 4" MINIMUM FROM EDGE OF NEAREST TIE AND WELDED JOINT.
   DIMENSIONS SHOWN IN PARENTHESIS (0'-0") ARE EXACT. RAILS FURNISHED FOR THESE LOCATIONS ARE LONGER AND MUST BE FIELD ADJUSTED (CUT) WITHIN TOLERANCES SHOWN IN BRACKETS [0'-0"].
   WHEN INSULATED JOINTS WITH TOLERANCES AND FIELD WELDED JOINTS FALL SHORT OF MINIMUM CLEARANCE FROM TIE OR TIE PLATE THE JOINT MAY BE MOVED WITHIN
7. TOLERANCE LIMITS. BONDED INSULATED JOINT ASSEMBLIES AND STOCK RAILS ARE FURNISHED LONGER THAN SHOWN IN PARENTHESIS ON LAYOUT. THESE OR THEIR ADJACENT CONNECTING RAILS MUST BE TRIMMED IN THE FIELD TO FIT. ORDER POINT END AND HEEL END OF STOCK RAIL DRILLED AND PEENED.

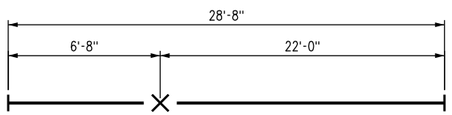

28'-8" LONG ADHESIVE BONDED PREFABRICATED MITRE CUT INSULATED RAIL JOINT ASSEMBLY

(SEE NOTE 5) BOTH ENDS SHALL BE LEFT BLANK FOR WELDING IN THE FIELD

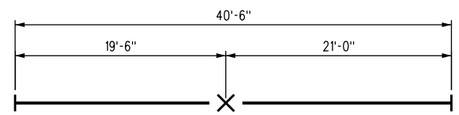

40'-6" LONG ADHESIVE BONDED PREFABRICATED MITRE CUT INSULATED RAIL JOINT ASSEMBLY

(SEE NOTE 5) BOTH ENDS SHALL BE LEFT BLANK FOR WELDING IN THE FIELD

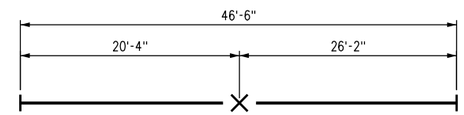

46'-6" LONG ADHESIVE BONDED PREFABRICATED MITRE CUT INSULATED RAIL JOINT ASSEMBLY

(SEE NOTE 5) BOTH ENDS SHALL BE LEFT BLANK FOR WELDING IN THE FIELD

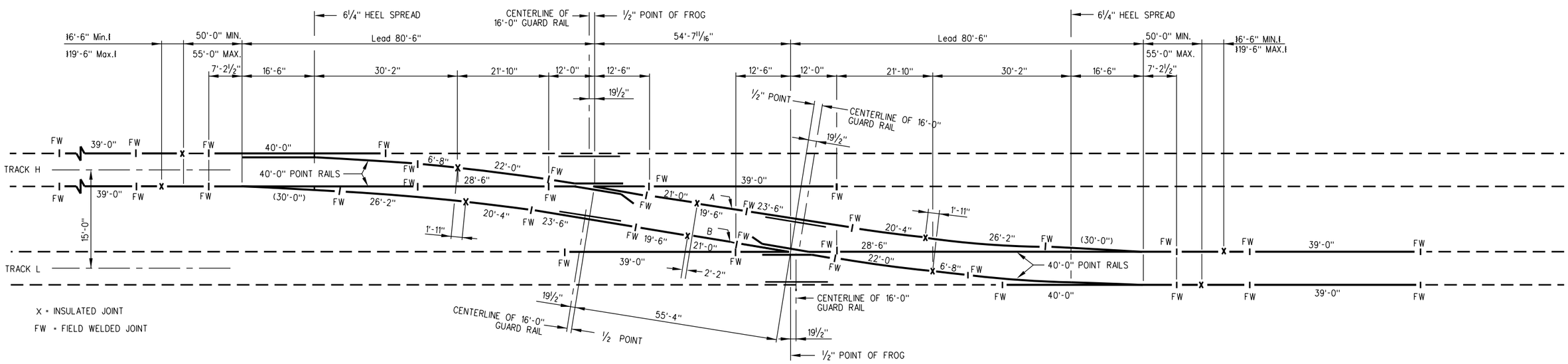

CROSSOVER

15'-0" TRACK CENTERS

FOR MAINTENANCE ONLY

X	XX-XX-XX	REVISION	XX	XX
REV.	DATE	DESCRIPTION	DES.	ENG.

DRAWN BY: A. CARLOS DATE: 03/31/2011

ASSISTANT DIRECTOR: STANDARDS & DESIGN

DIRECTOR OF ENGINEERING AND CONSTRUCTION

SCRRA ENGINEERING STANDARDS ARE INTENDED FOR SCRRA APPROVED USES ONLY. FOR NON-SCRRA APPROVED USES:
SCRRA SHALL NOT BE RESPONSIBLE FOR THE ACCURACY OR COMPLETENESS OF THE DATA OR INFORMATION CONTAINED HEREIN. THE SELECTION AND USE OF THESE STANDARDS IS THE SOLE RESPONSIBILITY OF THE USER AND SHOULD NOT BE USED WITHOUT CONSULTING A REGISTERED PROFESSIONAL ENGINEER. ALL WARRANTIES AND REPRESENTATIONS OF ANY KIND ARE DISCLAIMED. ANYONE MAKING USE OF THIS INFORMATION AGREES THAT IT ASSUMES ALL LIABILITY ARISING FROM SUCH USE. NO PART OF THESE STANDARDS SHOULD BE REPRODUCED OR DISTRIBUTED IN ANY FORM OR BY ANY MEANS WITHOUT THE PRIOR WRITTEN PERMISSION OF SCRRA. ALL RIGHTS RESERVED.

METROLINK®
SOUTHERN CALIFORNIA REGIONAL RAIL AUTHORITY
ONE GATEWAY PLAZA, 12TH FLOOR, L. A., CA. 90012

ENGINEERING STANDARDS

NO. 10 136 LB. R.H. SR FROG
TURNOUT AND CROSSOVER
JOINTS LOCATIONS

STANDARD 2922
SCALE: NONE
REVISION –
SHEET 2 OF 15
CADD FILE: ES2922-02

NOTE:
IF CONCRETE TIES ARE INSTALLED AHEAD OF SWITCH POINT, HEAD BLOCK TIE GAGE PLATE PP WILL NOT BE INSTALLED.

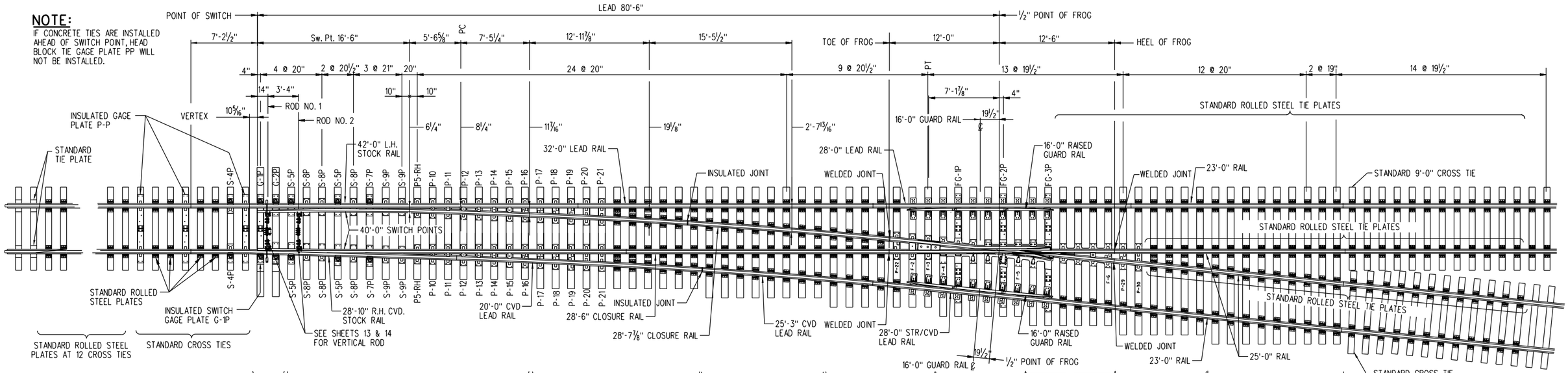

[IF TRACK IS CONSTRUCTED WITH CONCRETE TIES: GAGE PLATES PP OR 9'-0" WOOD CROSS TIES AND PANDROL PLATES AHEAD OF SWITCH WILL NOT BE NEEDED.]

BILL OF MATERIAL FOR LATERAL TURNOUT

QTY.	DESCRIPTION
1 PAIR	16'-6" EXTENDED FIELD WELDED TYPE SWITCH POINTS (40'-0" RAIL)
1 EACH	R.H. SAMSON STOCK RAILS 30'-0"
1 EACH	L.H. SAMSON STOCK RAILS 40'-0"
1 EACH	NO. 1 SMJ TYPE SWITCH ROD W/BASKET
1 EACH	VERTICAL SWITCH ROD WITH SMJ CLIPS
3 EACH	GAGE PLATE NO. P-P
1 EACH	GAGE PLATE NO. G-1P
1 EACH	GAGE PLATE NO. G-2P
6 EACH	SLIDE PLATE S-8P
4 EACH	SLIDE PLATE S-9P
4 EACH	BRACE SLIDE PLATE S-5P
2 EACH	BRACE SLIDE PLATE S-7P
2 EACH	BRACE SLIDE PLATE S-4P
2 EACH	HEEL PLATE P-5RH
2 EACH	TURNOUT PLATES P-10 THRU P-21
1 EACH	PLATES P-22 THRU P-29
1 EACH	NO.10 SPRING RAIL FROG - 22'-6"
1 EACH	FROG PLATES No. FP-1 THRU FP-9
1 EACH	FROG PLATES No. FCP-1 THRU FCP-3
1 EACH	FROG GAGE PLATES FG-1P THRU FG-3P
2 EACH	16'-0" U-69 ADJUSTABLE GUARD RAIL W/PLATES
5 EACH	D.I. RAIL HOLD DOWN CLIPS E-3706
2 EACH	D.I. RAIL HOLD DOWN CLIPS E-3707
2 EACH	D.I. RAIL HOLD DOWN CLIPS E-3708
138 PCS.	TIE PLATES
552 PCS.	"PANDROL", OR EQUAL, SCREW SPIKES 15/16" DIA. X 6" No. 5760
276 PCS.	"PANDROL", OR EQUAL, E-CLIP TYPE E-2055 (GALVANIZED)
8 PCS.	"PANDROL", OR EQUAL, E-CLIP TYPE E-2063 (GALVANIZED)
12 PCS.	BOLTLESS ADJUSTABLE BRACE ASSEMBLY
1 EACH	19'-6" RAIL
1 EACH	23'-6" RAIL
1 EACH	28'-6" RAIL
1 EACH	23'-0" RAIL
1 EACH	28'-0" RAIL
1 EACH	32'-0" RAIL
4 EACH	39'-0" RAIL
1 EACH	EPOXY BONDED PREFABRICATED MITRE CUT INSULATED JOINT (28'-8")
1 EACH	EPOXY BONDED PREFABRICATED MITRE CUT INSULATED JOINT (46'-6")

#10 RIGHT HAND TURNOUT

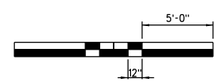

GRAPHIC SCALE

BILL OF SWITCH TIES

PIECES	SIZE	LENGTH	BOARD FEET
16	7" x 9"	10'-0"	840.00
11	7" x 9"	11'-0"	635.25
8	7" x 9"	12'-0"	504.00
7	7" x 9"	13'-0"	477.75
6	7" x 9"	14'-0"	441.00
2	10" x 9"	14'-0" DAP TIES	147.00
6	7" x 9"	15'-0"	472.50
6	7" x 9"	16'-0"	504.00
9	7" x 9"	17'-0"	803.25
TOTAL			TOTAL
71			4824.75

FOR MAINTENANCE ONLY

REV.	DATE	DESCRIPTION	DES.	ENG.
X	XX-XX-XX	REVISION	XX	XX

DRAWN BY: A. CARLOS DATE: 03/31/2011

ASSISTANT DIRECTOR: STANDARDS & DESIGN

DIRECTOR OF ENGINEERING AND CONSTRUCTION

SCRRA ENGINEERING STANDARDS ARE INTENDED FOR SCRRA APPROVED USES ONLY. FOR NON-SCRRA APPROVED USES, SCRRA SHALL NOT BE RESPONSIBLE FOR THE ACCURACY OR COMPLETENESS OF THE DATA OR INFORMATION CONTAINED HEREIN. THE SELECTION AND USE OF THESE STANDARDS IS THE SOLE RESPONSIBILITY OF THE USER AND SHOULD NOT BE USED WITHOUT CONSULTING A REGISTERED PROFESSIONAL ENGINEER. ALL WARRANTIES AND REPRESENTATIONS OF ANY KIND ARE DISCLAIMED. ANYONE MAKING USE OF THIS INFORMATION AGREES THAT IT ASSUMES ALL LIABILITY ARISING FROM SUCH USE. NO PART OF THESE STANDARDS SHOULD BE REPRODUCED OR DISTRIBUTED IN ANY FORM OR BY ANY MEANS WITHOUT THE PRIOR WRITTEN PERMISSION OF SCRRA. ALL RIGHTS RESERVED.

METROLINK®
SOUTHERN CALIFORNIA REGIONAL RAIL AUTHORITY
ONE GATEWAY PLAZA, 12TH FLOOR, L. A., CA. 90012

ENGINEERING STANDARDS

NO. 10 136 LB. R.H. SR FROG TURNOUT
LAYOUT & BILL OF MATERIALS

STANDARD 2922
SCALE: 3/16" = 1'-0"
REVISION –
SHEET 3 OF 15
CADD FILE: ES2922-03

BILL OF SWITCH TIES			
PIECES	SIZE	LENGTH	BOARD FEET
24	7" x 9"	9'-0"	1134.00
32	7" x 9"	10'-0"	1680.00
22	7" x 9"	11'-0"	1270.50
16	7" x 9"	12'-0"	1008.00
14	7" x 9"	13'-0"	955.50
16	7" x 9"	14'-0"	1176.00
4	10" x 9"	14'-0" DAP TIES	294.00
24	7" x 9"	14'-10"	1890.00
6	7" x 9"	24'-0"	756.00
TOTAL			TOTAL
158			10164.00

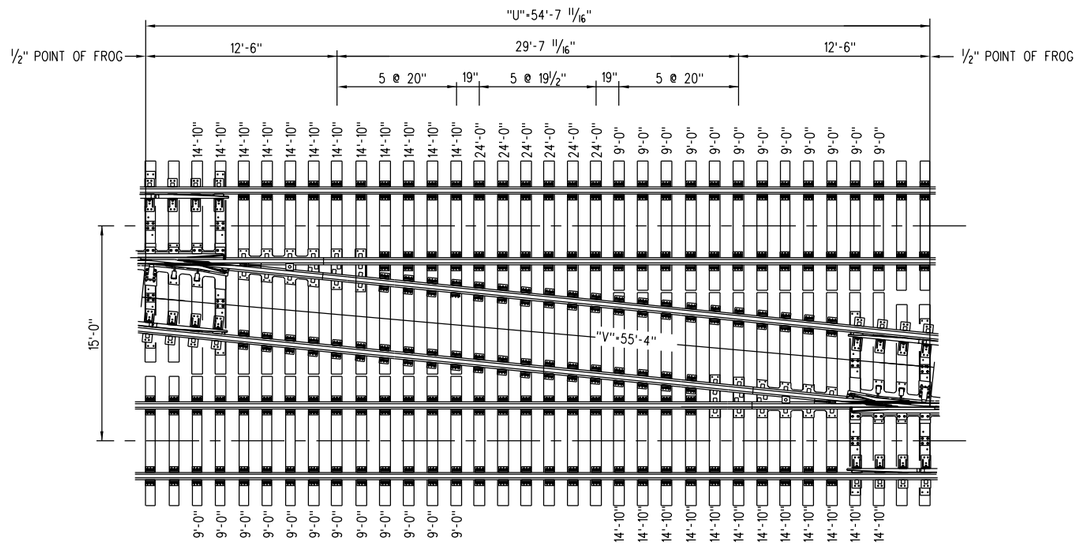

RIGHT HAND CROSSOVER

BILL OF MATERIAL	
QTY.	DESCRIPTION
2 PAIR	16'-6" EXTENDED FIELD WELDED TYPE SWITCH POINTS (40'-0" RAIL)
1 PAIR	R.H. SAMSON STOCK RAILS (30'-0")
1 PAIR	L.H. SAMSON STOCK RAILS (40'-0")
2 EACH	No. 1 SMJ TYPE SWITCH ROD W/BASKET
2 EACH	VERTICAL SWITCH ROD WITH SMJ CLIPS
6 EACH	GAGE PLATE No. P-P
2 EACH	GAGE PLATE No. G-1P
2 EACH	GAGE PLATE No. G-2P
12 EACH	SLIDE PLATE S-8P
8 EACH	SLIDE PLATE S-9P
8 EACH	BRACE SLIDE PLATE S-5P
4 EACH	BRACE SLIDE PLATE S-7P
4 EACH	BRACE SLIDE PLATE S-4P
4 EACH	HEEL PLATE P-5RH
4 EACH	TURNOUT PLATES P-10 THRU P-21
2 EACH	PLATES P-22 THRU P-29
2 EACH	No.10 SPRING RAIL FROG - 24'-6"
2 EACH	FROG PLATES No. FP-1 THRU FP-9
2 EACH	FROG PLATES No. FCP-1 THRU FCP-3
2 EACH	FROG GAGE PLATES FG-1P THRU FG-3P
4 EACH	16'-0" U-69 ADJUSTABLE GUARD RAIL W/PLATES
10 EACH	D.I. RAIL HOLD DOWN CLIPS E-3706
4 EACH	D.I. RAIL HOLD DOWN CLIPS E-3707
4 EACH	D.I. RAIL HOLD DOWN CLIPS E-3708
228 PCS.	TIE PLATES
912 PCS.	"PANDROL", OR EQUAL, SCREW SPIKES 15/16 " DIA. X 6" No. 5760
456 PCS.	"PANDROL", OR EQUAL, E-CLIPS TYPE E-2055 (GALVANIZED)
24 PCS.	"PANDROL", OR EQUAL, E-CLIPS TYPE E-2063 (GALVANIZED)
12 PCS.	BOLTLESS ADJUSTABLE BRACE ASSEMBLY
2 EACH	23'-6" RAIL
2 EACH	28'-6" RAIL
6 EACH	39'-0" RAIL
2 EACH	EPOXY BONDED PREFABRICATED MITRE CUT INSULATED JOINT (28'-6")
2 EACH	EPOXY BONDED PREFABRICATED MITRE CUT INSULATED JOINT (40'-6")
2 EACH	EPOXY BONDED PREFABRICATED MITRE CUT INSULATED JOINT (46'-6")

FOR MAINTENANCE ONLY

REV.	DATE	DESCRIPTION	DES.	ENG.
X	XX-XX-XX	REVISION	XX	XX

DRAWN BY: A. CARLOS DATE: 03/31/2011

ASSISTANT DIRECTOR: STANDARDS & DESIGN

DIRECTOR OF ENGINEERING AND CONSTRUCTION

SCRRA ENGINEERING STANDARDS ARE INTENDED FOR SCRRA APPROVED USES ONLY. FOR NON-SCRRA APPROVED USES:
SCRRA SHALL NOT BE RESPONSIBLE FOR THE ACCURACY OR COMPLETENESS OF THE DATA OR INFORMATION CONTAINED HEREIN. THE SELECTION AND USE OF THESE STANDARDS IS THE SOLE RESPONSIBILITY OF THE USER AND SHOULD NOT BE USED WITHOUT CONSULTING A REGISTERED PROFESSIONAL ENGINEER. ALL WARRANTIES AND REPRESENTATIONS OF ANY KIND ARE DISCLAIMED. ANYONE MAKING USE OF THIS INFORMATION AGREES THAT IT ASSUMES ALL LIABILITY ARISING FROM SUCH USE. NO PART OF THESE STANDARDS SHOULD BE REPRODUCED OR DISTRIBUTED IN ANY FORM OR BY ANY MEANS WITHOUT THE PRIOR WRITTEN PERMISSION OF SCRRA. ALL RIGHTS RESERVED.

METROLINK®
SOUTHERN CALIFORNIA REGIONAL RAIL AUTHORITY
ONE GATEWAY PLAZA, 12TH FLOOR, L. A., CA. 90012

ENGINEERING STANDARDS

NO. 10 136 LB. R.H. SR FROG CROSSOVER LAYOUT
BILL OF MATERIALS

STANDARD 2922
SCALE: 3/16" = 1'-0"
REVISION –
SHEET 4 OF 15
CADD FILE: ES2922-04

UserName=> carlosa Date Plotted: 10/5/2011 2:39:02 PM Plot Driver=> S:\Plot Drivers\pdf.plt FileName=> s:\V8EngStds\2000\Turnouts\Maintenance Only Standards\ES2922-04.dgn

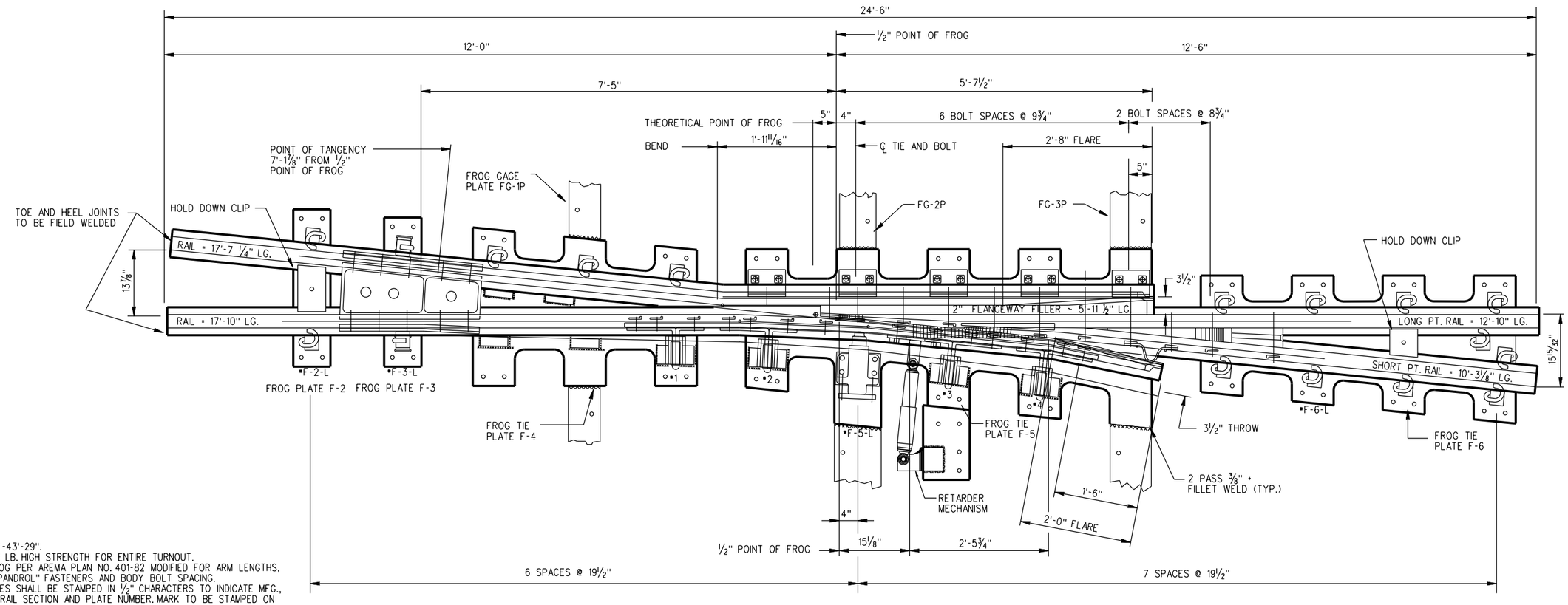

NO. 10 SPRING RAIL STEEL FROG

(SHOWN WITH RETARDER MECHANISM)

NOTES:

1. FROG ANGLE 5°-43'-29".
2. RAIL TO BE 136 LB. HIGH STRENGTH FOR ENTIRE TURNOUT.
3. SPRING RAIL FROG PER AREMA PLAN NO. 401-82 MODIFIED FOR ARM LENGTHS, PLATES WITH "PANDROL" FASTENERS AND BODY BOLT SPACING.
4. ALL FROG PLATES SHALL BE STAMPED IN ½" CHARACTERS TO INDICATE MFG., FROG NO., R.H., RAIL SECTION AND PLATE NUMBER. MARK TO BE STAMPED ON SAME END OF ALL FROG PLATES.
5. A MARKER PLATE SHALL BE PLACED ON THE RIGID WING RAIL NEAR THE ½POINT OF FROG IN RAISED OR DEEPLY CUT CHARACTERS TO INDICATE MFG., FROG NO. 10, R.H., SPRING, RAILS SECTION, DATE MADE AND MFG'S SERIAL NO. IF ANY.
6. WORKMANSHIP AND MATERIALS SHALL BE PER CURRENT AREMA SPECIFICATIONS FOR "SPECIAL TRACKWORK", EXCEPT AS OTHERWISE SPECIFIED.
7. ANY CONSTRUCTION DETAILS NOT SHOWN SHALL BE IN ACCORDANCE WITH CURRENT AREMA RECOMMENDED PRACTICE.
8. FROG PLATES ARE DESIGNED TO BE INSTALLED PERPENDICULAR TO MAIN TRACK.
9. SHOULDERS MUST MEET APPROVED DESIGN SPECIFICATIONS.
10. HOLES IN PLATES FOR SCREW SPIKES ARE DRILLED 1" DIA.
11. BODY BOLTS TO BE 1⅜" DIAMETER, HEAT TREATED CARBON STEEL, GRADE 8, WITH ⅜" SPRING WASHER AND BEVELED HEAD LOCK.
12. HORN AND CAST STEEL TOE BLOCK BOLTS TO BE 1" DIAMETER, HEAT TREATED CARBON STEEL, GRADE 8 WITH SQUARE NUTS, ⅜" SPRING WASHER AND BEVELED HEADLOCK.
13. SPRING BOX BOLTS TO BE ⅞" DIAMETER, HEAT TREATED CARBON STEEL, GRADE 8, COUNTERSUNK, SQUARE NECK WITH SPRING WASHERS.
14. DURING MANUFACTURING OF FROG PLATES, SET STOPS, HOLD DOWN HORNS AND SPRING BOX FOR SPRING WING RAIL TO OPEN 2" AT BEND. LOCATE ITEMS PERPENDICULAR TO FULLY OPENED SPRING WING RAIL. HOLD DOWN HOUSING TO BE CENTERED ON HORN WITH SPRING WING RAIL AT HALF OPEN POSITION. OTHER ITEMS TO BE APPROXIMATELY CENTERED ON CENTERLINE OF SWITCH TIE.
15. SPRING ASSEMBLY WITH BOLT THROUGH RIGID AND SPRING WING RAILS AT THEORETICAL POINT OF FROG MAY BE USED IN PLACE OF AREMA SPRING BOX. SUBSTITUTE HOLD DOWN HORN FOR SPRING BOX.
16. THE NUMBER OF BOLTS AND BOLT SPACING FOR HOLD DOWN HORNS TO BE ADJUSTED AS REQUIRED TO ALLOW CLEARANCE FOR BODY BOLTS AND OTHER FROG COMPONENTS DURING MOVEMENT OF SPRING WING RAIL.
17. THE TOE BLOCK TO BE CAST STEEL PER AREMA PLAN NO. 401-82. JOINT BAR NEXT TO SPRING WING RAIL TO BE BENT TO ALIGNMENT OF FULLY OPEN SPRING WING RAIL (2" OPENING). REGULAR BOLT WITH THIMBLE TO BE USED INSTEAD OF SHOULDER BOLT. MANUFACTURER MAY SUBMIT ALTERNATE DESIGN FOR TOE BLOCK FOR APPROVAL PRIOR TO MANUFACTURING.
18. FROG SHOWN IS PER NOTE 3 ABOVE, IF ANOTHER SPRING RAIL FROG IS USED, SHOP DRAWINGS MUST BE APPROVED BY SCRRA DIRECTOR OF ENGINEERING.
19. RAIL END TO BE DRILLED OUTSIDE TWO HOLES OF SCRRA RAIL JOINT PER ES2502.

NOTE:

ON SPRING RAIL FROGS, BONDS TO BE INSTALLED ON RIGID WING RAIL SIDE. DISTANCE BETWEEN TERMINALS IS SHOWN AS 1". THIS DIMENSION MAY DECREASE, WHEN NECESSARY, DUE TO LIMITED DISTANCE FROM BOLT TO END OF RAIL.
WHEN A PLATE CLIP ON SPRING RAIL FROGS INTERFERES WITH APPLICATION OF BONDS AS SHOWN HEREON, THE PLATE CLIP SHOULD BE ALTERED TO PERMIT PROPER INSTALLATION OF THE BONDS.
USE A 12" BOND OF WELDED OR PLUG - IN TYPE.

INSTALLATION OF FROG FIELD WELDS:

FROG TO BE INSTALLED WITH FIELD WELDS ON MAIN TRACK (STRAIGHT) SIDE IN ALL CASES.
FIELD WELDS ARE USED ON TURNOUT (CURVED) SIDE IF USED BY THROUGH TRAFFIC OR MORE THAN ONCE PER DAY.
BOLTED JOINTS PER ES1202 ARE TO BE USED ON TURNOUT SIDE IF TURNOUT USE DOES NOT EXCEED ABOVE LIMITS.

FOR MAINTENANCE ONLY

REV.	DATE	DESCRIPTION	DES.	ENG.
X	XX-XX-XX	REVISION	XX	XX

DRAWN BY: A. CARLOS DATE: 03/31/2011

ASSISTANT DIRECTOR: STANDARDS & DESIGN

DIRECTOR OF ENGINEERING AND CONSTRUCTION

SCRRA ENGINEERING STANDARDS ARE INTENDED FOR SCRRA APPROVED USES ONLY. FOR NON-SCRRA APPROVED USES, SCRRA SHALL NOT BE RESPONSIBLE FOR THE ACCURACY OR COMPLETENESS OF THE DATA OR INFORMATION CONTAINED HEREIN. THE SELECTION AND USE OF THESE STANDARDS IS THE SOLE RESPONSIBILITY OF THE USER AND SHOULD NOT BE USED WITHOUT CONSULTING A REGISTERED PROFESSIONAL ENGINEER. ALL WARRANTIES AND REPRESENTATIONS OF ANY KIND ARE DISCLAIMED. ANYONE MAKING USE OF THIS INFORMATION AGREES THAT IT ASSUMES ALL LIABILITY ARISING FROM SUCH USE. NO PART OF THESE STANDARDS SHOULD BE REPRODUCED OR DISTRIBUTED IN ANY FORM OR BY ANY MEANS WITHOUT THE PRIOR WRITTEN PERMISSION OF SCRRA. ALL RIGHTS RESERVED.

METROLINK®
SOUTHERN CALIFORNIA REGIONAL RAIL AUTHORITY
ONE GATEWAY PLAZA, 12TH FLOOR, L. A., CA. 90012

ENGINEERING STANDARDS

NO. 10 136 LB. R.H. SR FROG LAYOUT

STANDARD 2922
SCALE: 1" = 1'-0"
REVISION –
SHEET 5 OF 15
CADD FILE: ES2922-05

NOTE:
FOR NOTES AND FROG LAYOUT SEE DRAWING ES2922-06.

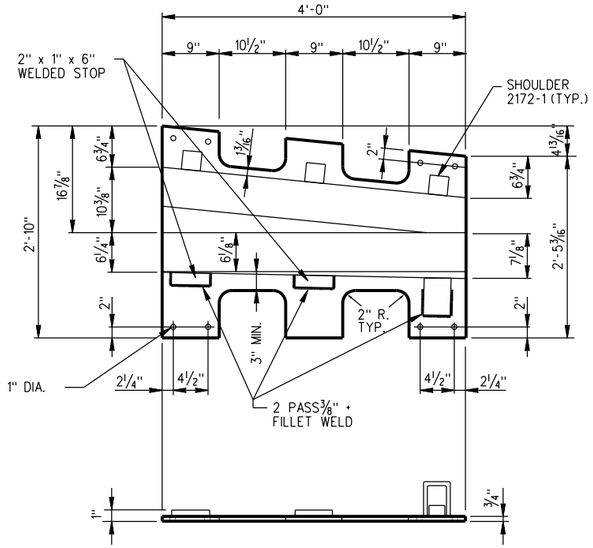

FROG PLATE - F-4

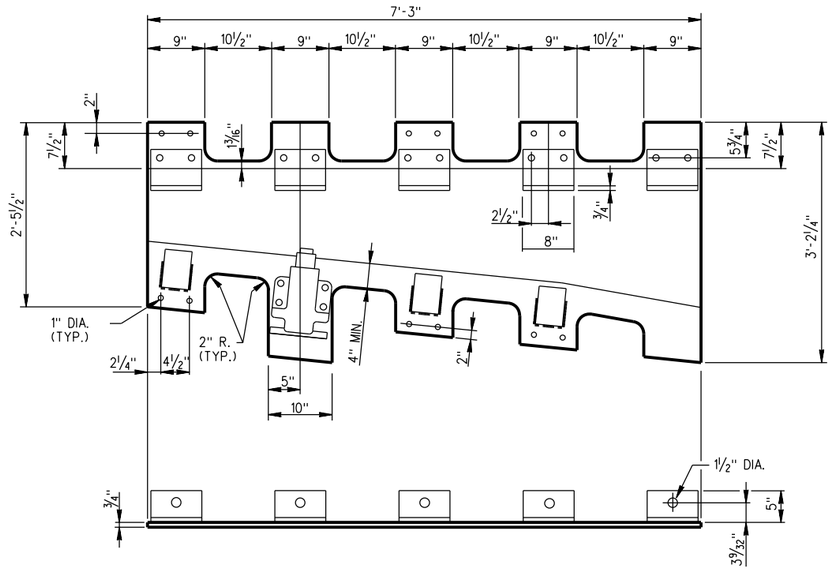

FROG PLATE - F-5

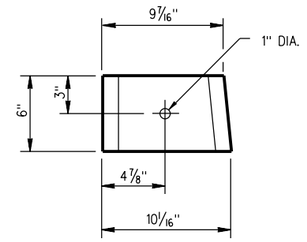

HOLD DOWN CLIP FOR PLATE - F-2
SCALE: NONE

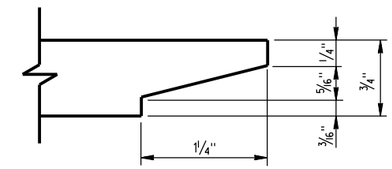

END DETAIL - BOTH ENDS
SCALE: NONE

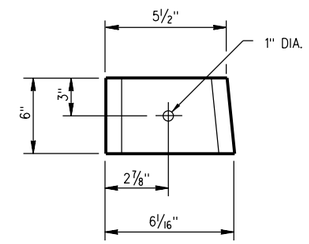

HOLD DOWN CLIP FOR PLATE - F-6
SCALE: NONE

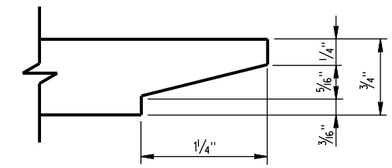

END DETAIL - BOTH ENDS
SCALE: NONE

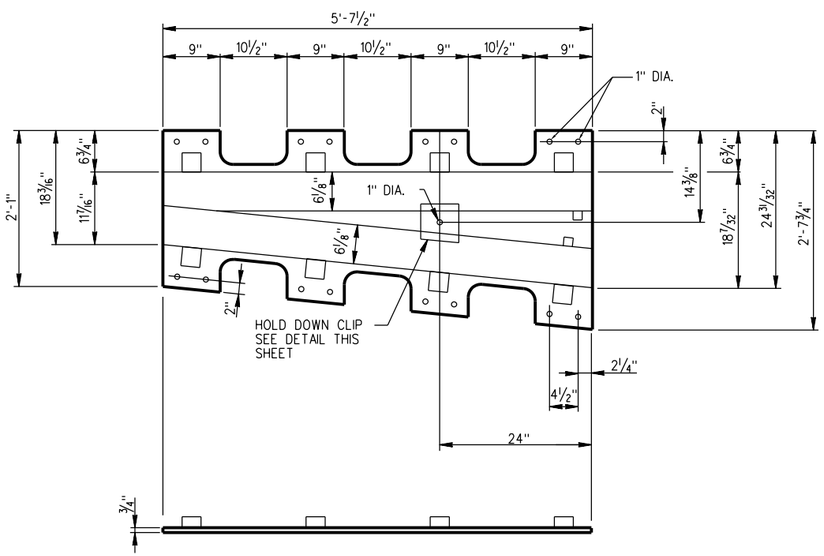

FROG PLATE - F-6

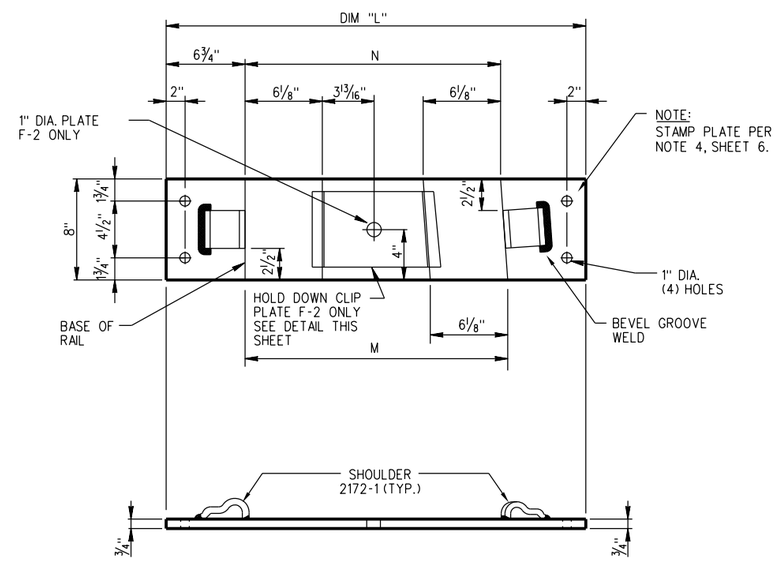

FROG PLATE - F-2 AND F-3
¾" x 8" x DIM "L" - FLAT - W/ CLIPS
(SCALE: NONE)

DIMENSION TABLE				
PLATE	DIM "L"	DIM "M"	DIM "N"	Plts REQ'D.
F-2	2'-9¾"	20¼"	19½"	1 EA.
F-3	2'-8"	18⅜"	17⅝"	1 EA.

FOR MAINTENANCE ONLY

REV.	DATE	DESCRIPTION	DES.	ENG.
X	XX-XX-XX	REVISION	XX	XX

DRAWN BY: A. CARLOS DATE: 03/31/2011

ASSISTANT DIRECTOR: STANDARDS & DESIGN

DIRECTOR OF ENGINEERING AND CONSTRUCTION

SCRRA ENGINEERING STANDARDS ARE INTENDED FOR SCRRA APPROVED USES ONLY. FOR NON-SCRRA APPROVED USES:
SCRRA SHALL NOT BE RESPONSIBLE FOR THE ACCURACY OR COMPLETENESS OF THE DATA OR INFORMATION CONTAINED HEREIN. THE SELECTION AND USE OF THESE STANDARDS IS THE SOLE RESPONSIBILITY OF THE USER AND SHOULD NOT BE USED WITHOUT CONSULTING A REGISTERED PROFESSIONAL ENGINEER. ALL WARRANTIES AND REPRESENTATIONS OF ANY KIND ARE DISCLAIMED. ANYONE MAKING USE OF THIS INFORMATION AGREES THAT IT ASSUMES ALL LIABILITY ARISING FROM SUCH USE. NO PART OF THESE STANDARDS SHOULD BE REPRODUCED OR DISTRIBUTED IN ANY FORM OR BY ANY MEANS WITHOUT THE PRIOR WRITTEN PERMISSION OF SCRRA. ALL RIGHTS RESERVED.

METROLINK®
SOUTHERN CALIFORNIA REGIONAL RAIL AUTHORITY
ONE GATEWAY PLAZA, 12TH FLOOR, L. A., CA. 90012

ENGINEERING STANDARDS

NO. 10 136 LB. R.H. SR FROG PLATE DETAILS AND DIMENSION TABLE

STANDARD 2922
SCALE: 1" = 1'-0"
REVISION –
SHEET 6 OF 15
CADD FILE: ES2922-06

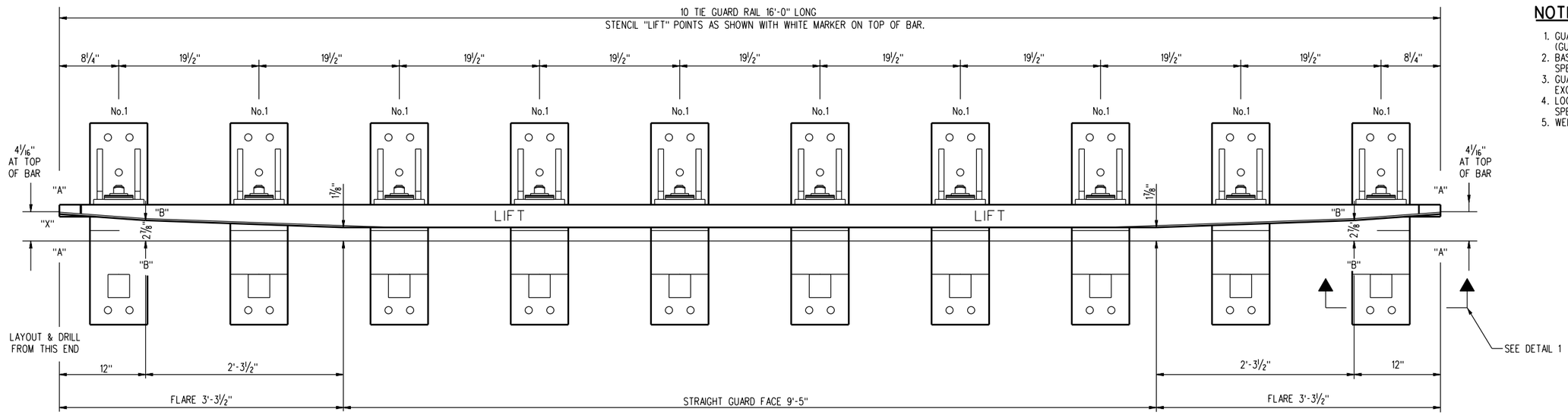

ASSEMBLED 16'-0" GUARD RAIL

NOTES:

1. GUARD RAIL SECTION UIC 33: (U69) UIC 860.0 GRADE 90A (GUARD FACE BRINELL 319 MIN.)
2. BASE PLATE, BRACKET AND SHIMS MILD STEEL PER AREMA SPECIFICATION M7.
3. GUARD RAIL BOLT AND NUT PER AREMA SPECIFICATION M11. EXCEPT BOLT TO GRADE 8 AND NUT TO BE SECURITY
4. LOCKNUT. WORKMANSHIP AND TOLERANCES PER AREMA SPECIFICATIONS FOR SPECIAL TRACKWORK.
5. WELDING PER ANSI•AWS D1.1-92 OR LATEST REVISION.

COLLECTIVE DRILLING FROM END OF GUARD BAR MARKED "X"

"X" 8¼"x 2'-3¾"x 3'-11¼"x 5'-6¾"x 7'-2¼"x 8'-9¾"x 10'-5¼"x 12'-0¾"x 13'-8¼"x 15'-3¾"

HOLES 1" DIA. - 1⅜" A.B.

FOR MAINTENANCE ONLY

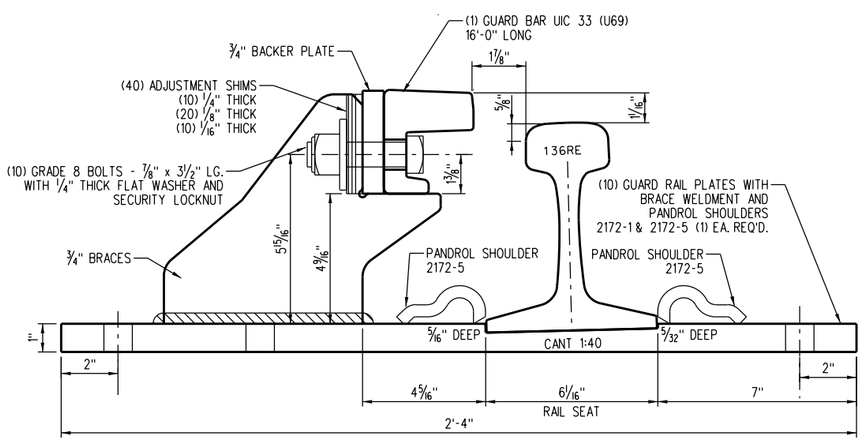

TYPICAL PLATE DETAIL

SCALE: NONE

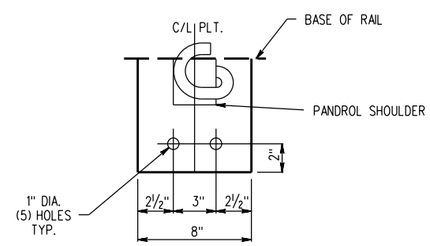

TYPICAL PLATE PUNCHING DETAIL

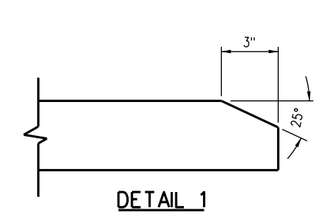

DETAIL 1

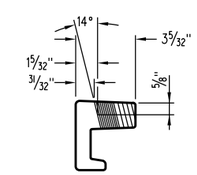

SECTION A - A

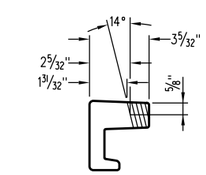

SECTION B - B

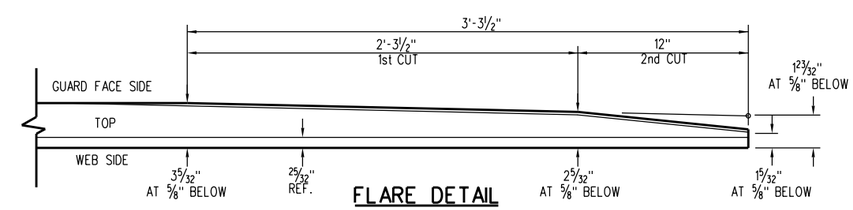

FLARE DETAIL

BREAK SHARP CORNERS OF ALL MACHINED SURFACES

REV.	DATE	DESCRIPTION	DES.	ENG.
X	XX-XX-XX	REVISION	XX	XX

DRAWN BY: DRAFTER DATE: 03/31/2011

ASSISTANT DIRECTOR: STANDARDS & DESIGN

DIRECTOR OF ENGINEERING AND CONSTRUCTION

SCRRA ENGINEERING STANDARDS ARE INTENDED FOR SCRRA APPROVED USES ONLY. FOR NON-SCRRA APPROVED USES:
SCRRA SHALL NOT BE RESPONSIBLE FOR THE ACCURACY OR COMPLETENESS OF THE DATA OR INFORMATION CONTAINED HEREIN. THE SELECTION AND USE OF THESE STANDARDS IS THE SOLE RESPONSIBILITY OF THE USER AND SHOULD NOT BE USED WITHOUT CONSULTING A REGISTERED PROFESSIONAL ENGINEER. ALL WARRANTIES AND REPRESENTATIONS OF ANY KIND ARE DISCLAIMED. ANYONE MAKING USE OF THIS INFORMATION AGREES THAT IT ASSUMES ALL LIABILITY ARISING FROM SUCH USE. NO PART OF THESE STANDARDS SHOULD BE REPRODUCED OR DISTRIBUTED IN ANY FORM OR BY ANY MEANS WITHOUT THE PRIOR WRITTEN PERMISSION OF SCRRA. ALL RIGHTS RESERVED.

METROLINK®
SOUTHERN CALIFORNIA REGIONAL RAIL AUTHORITY
ONE GATEWAY PLAZA, 12TH FLOOR, L. A., CA. 90012

ENGINEERING STANDARDS

NO. 10 136 LB. R.H. SR FROG
GUARD RAIL DETAILS

STANDARD 2922
SCALE: 1½" = 1'-0"
REVISION –
SHEET 7 OF 15
CADD FILE: ES2922-07

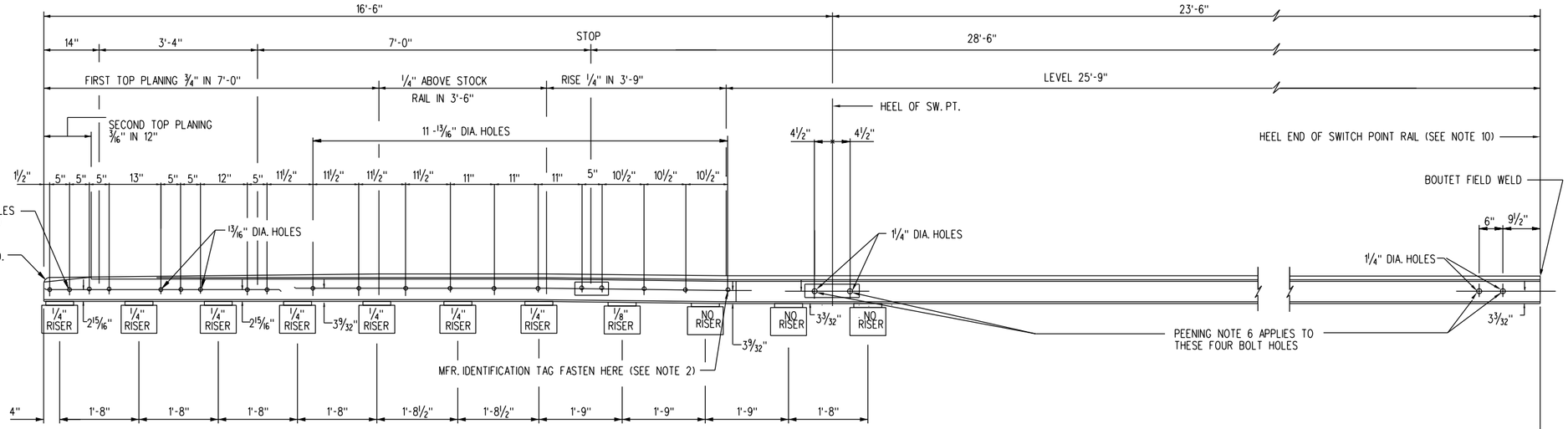

NOTES:

1. SWITCH POINTS TO BE MADE FROM HIGH STRENGTH RAIL, PAINT MARKED ORANGE.
2. METAL IDENTIFICATION TAG SHOWING HAND OF SWITCH POINT, WEIGHT OF RAIL, HS, MANUFACTURER AND WHEN MADE, TO BE FASTENED TO SWITCH POINT AT LOCATION SHOWN.
3. RIGHT HAND TURNOUT SHOWN, MAKE OPPOSITE HAND FOR LEFT HAND SWITCH POINTS.
4. SIDE PLANING FIGURED ON GAGE LINE 5/8" BELOW TOP OF RAIL.
5. MATERIALS AND WORKMANSHIP, ALSO ANY CONSTRUCTION DETAILS NOT SHOWN, SHALL BE PER CURRENT AREMA "TRACKWORK PLANS AND SPECIFICATIONS", UNLESS OTHERWISE SPECIFIED ON THIS PLAN.
6. IN ORDER TO ELIMINATE STRESS RAISERS, MANUFACTURER SHALL PEEN THE EDGES OF THE BOLT HOLES AS INDICATED AT THE HEEL OF SWITCH POINT AND AT THE HEEL END OF THE SWITCH POINT RAIL, USING AIR HAMMER WITH SUITABLE HEAD AND FINISHING WITH DRIFT PIN. BRAND ON RAIL AT EDGE OF BOLT HOLE TO BE CAREFULLY REMOVED BY GRINDING BEFORE PEENING.
7. ALL SWITCH POINTS WILL BE FURNISHED WITHOUT ALLOY STEEL TIP.
8. THE CONTOUR PLANING SHALL BE ON THE GAGE SIDE BEGINNING AT A DISTANCE OF 36" FROM THE POINT OF SWITCH AND SHALL BE SHAPED TO THE CONTOUR OF A NEW 136-LB. RAIL AND SHALL RUN OUT AT THE END OF TOP PLANING, WHERE THE SWITCH POINT HAS FULL HEAD CONTOUR.
9. METAL IDENTIFICATION TAG SHOWING (1) DESIGN LENGTH OF SWITCH, (2) IN PARENTHESIS, THE ACTUAL LENGTH OF SWITCH POINT RAIL AND (3) THE TURNOUT NUMBER. MARK TAG THUS: 16'-6" (40'-0") NO. 10. TAG TO BE FASTENED TO SWITCH POINT, ON GAGE SIDE OF RAIL AT HEEL SPACER BLOCK IN LOCATION SHOWN.
10. AT HEEL END OF SWITCH POINT RAIL, BREAK SHARP CORNER AROUND THE ENTIRE PERIPHERY BY SLIGHTLY GRINDING. ALSO, "DO NOT" END HARDEN RAIL END. NON - INTERLOCKED AND INTERLOCKED SWITCH POINTS ARE MADE THE SAME.
11. UNLESS SWITCH POINT ORDER SPECIFICALLY CALLS FOR USE OF 3/4" RIVETS AND 3/4" STOP BOLTS, MANUFACTURER CAN SUBSTITUTE 3/4" HUCK FASTENERS, BOLT PART NO. C-50-LR-BR2416 AND COLLAR PART NO. L3-2-R-24G FOR 3/4" RIVETS, AND FOR 3/4" STOP BOLTS USE HUCK FASTENERS, BOLT PART NO. C-50-LR-BR2424 AND COLLAR PART NO. L3-2-R-24G.
12.

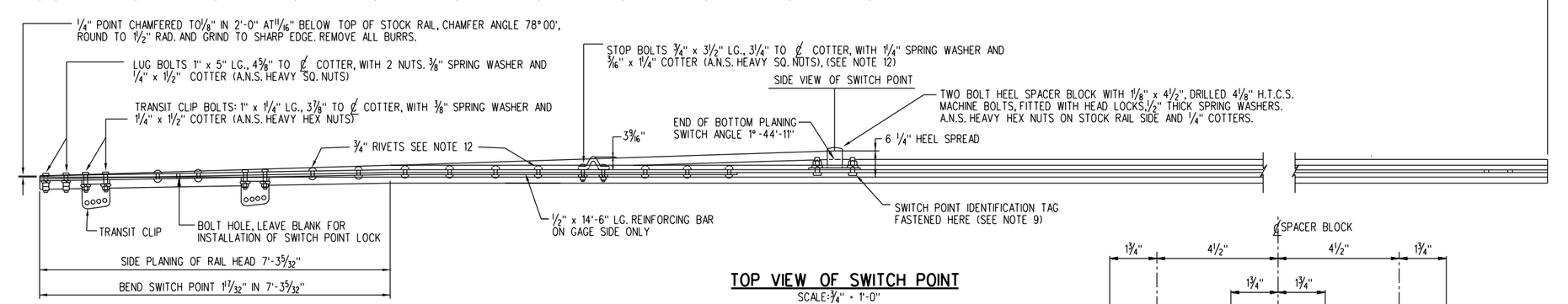

TOP VIEW OF SWITCH POINT

SCALE: 3/4" = 1'-0"

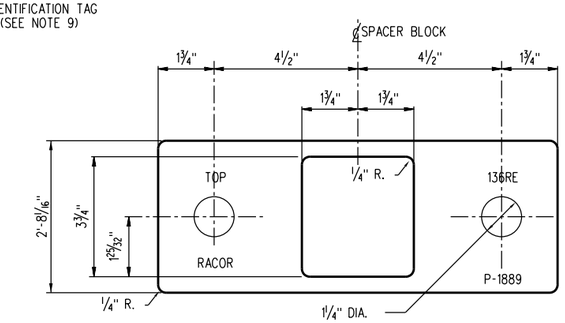

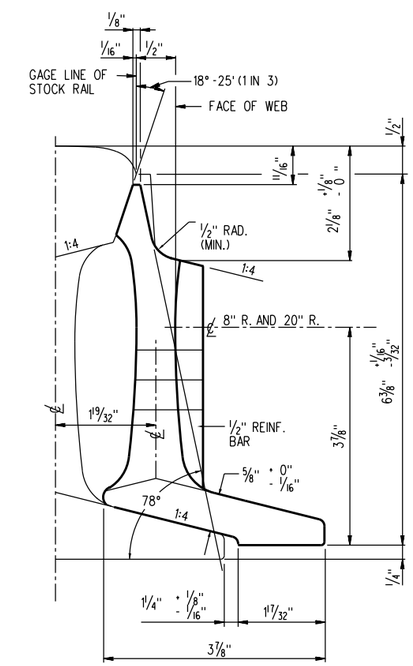

END VIEW OF POINT

SCALE: NONE

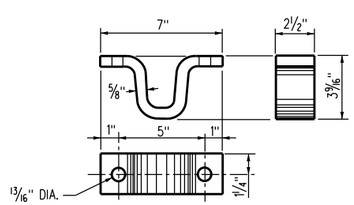

STOP

SCALE: NONE

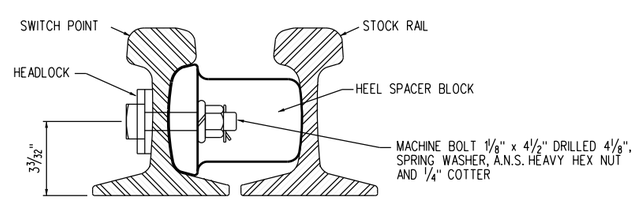

SECTION AT HEEL END OF 16'-6" SWITCH POINT MADE FROM 40'-0" LONG RAIL

SCALE: NONE

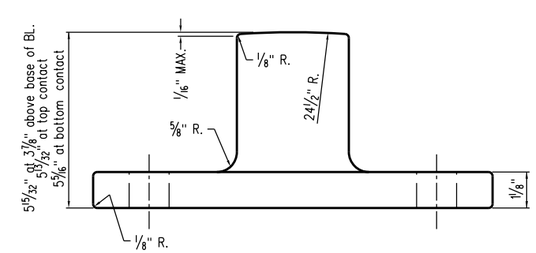

HEEL BLOCK DETAIL

SCALE: NONE

FOR MAINTENANCE ONLY

REV.	DATE	DESCRIPTION	DES.	ENG.
X	XX-XX-XX	REVISION	XX	XX

DRAWN BY: A. CARLOS DATE: 08-30-2011

ASSISTANT DIRECTOR: STANDARDS & DESIGN

DIRECTOR OF ENGINEERING AND CONSTRUCTION

SCRRA ENGINEERING STANDARDS ARE INTENDED FOR SCRRA APPROVED USES ONLY. FOR NON-SCRRA APPROVED USES, SCRRA SHALL NOT BE RESPONSIBLE FOR THE ACCURACY OR COMPLETENESS OF THE DATA OR INFORMATION CONTAINED HEREIN. THE SELECTION AND USE OF THESE STANDARDS IS THE SOLE RESPONSIBILITY OF THE USER AND SHOULD NOT BE USED WITHOUT CONSULTING A REGISTERED PROFESSIONAL ENGINEER. ALL WARRANTIES AND REPRESENTATIONS OF ANY KIND ARE DISCLAIMED. ANYONE MAKING USE OF THIS INFORMATION AGREES THAT IT ASSUMES ALL LIABILITY ARISING FROM SUCH USE. NO PART OF THESE STANDARDS SHOULD BE REPRODUCED OR DISTRIBUTED IN ANY FORM OR BY ANY MEANS WITHOUT THE PRIOR WRITTEN PERMISSION OF SCRRA. ALL RIGHTS RESERVED.

METROLINK

SOUTHERN CALIFORNIA REGIONAL RAIL AUTHORITY
ONE GATEWAY PLAZA, 12TH FLOOR, L. A., CA. 90012

ENGINEERING STANDARDS

NO. 10 SPLIT SWITCH POINT DETAILS

STANDARD 2922
SCALE: AS NOTED
REVISION –
SHEET 8 OF 15
CADD FILE: ES2922-08

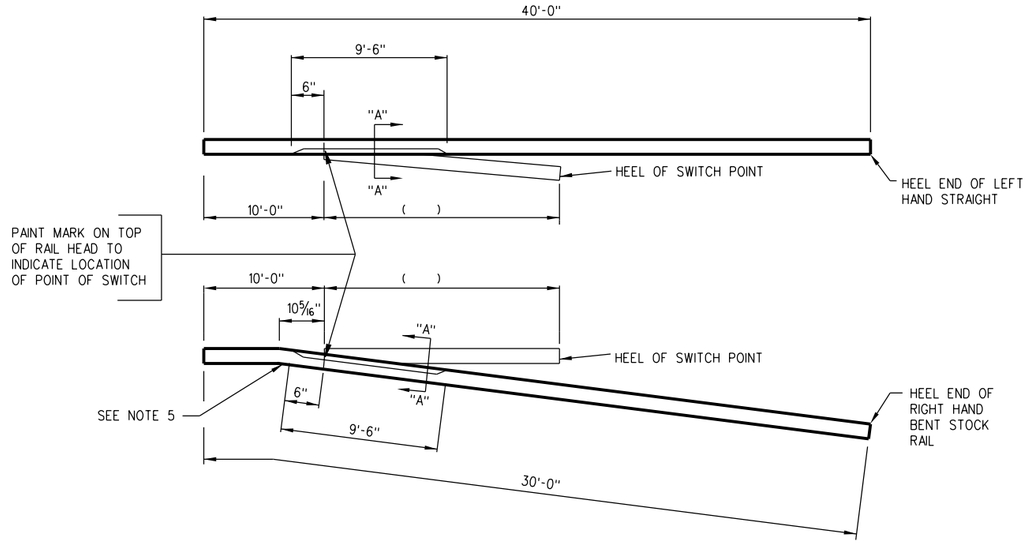

STOCK RAILS SHOWN ARE FOR "RIGHT HAND TURNOUT"

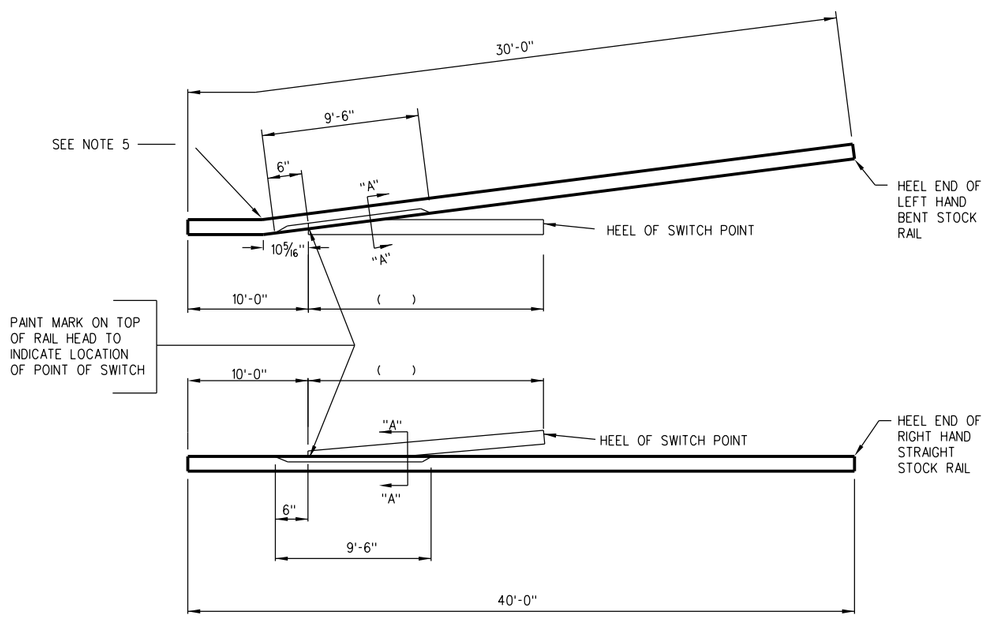

STOCK RAILS SHOWN ARE FOR "LEFT HAND TURNOUT"

NOTES:

1. INFORMATION OR DIMENSIONS NOTED THUS, (___) TO BE FURNISHED BY FIELD FORCES FOR CORRECT ORDERING OF REPLACEMENT STOCK RAILS.
2. UNDERCUT STOCK RAILS TO BE MADE OF HIGH STRENGTH RAIL WITH ENDS BEVELED PER CURRENT AREMA PLAN NO. 1005.
3. FOR STOCK RAIL UNDERCUT LENGTH "B", PER SECTION "A-A", LENGTH "C" AND "D" FOR NEW SAMSON SWITCH INSTALLATIONS OR REPLACEMENT ORDERS SEE TABLE BELOW.

LENGTHS B, C, & D FOR 136 LB. RAIL

Sw. Pt. LENGTH	T.O. No.	STOCK RAIL	B	FOR FIRST (NEW) INSTALL.			FOR REPLACE. ORDERS ONLY		
				C	D	END DRILL. SEE NO. 10	C	D	END DRILL. SEE NO. 10
16'-6"	10	STR.	9'-6"	10'-0"	40'-0"	NONE	10'-0"	52'-0"	NONE
16'-6"	10	BENT	9'-6"	10'-0"	30'-0"	HEEL END ONLY	10'-0"	52'-0"	HEEL END ONLY

4. BEND ANGLE IN BENT STOCK RAIL TO BE AS FOLLOWS:

Sw. Length	BEND ANGLE	V (Vertex Dist.)
16'-6"	1°-44'-11" or 1" in 2'-9"	10 5/16"

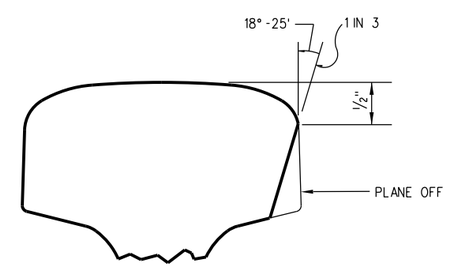

SECTION "A-A"

FOR MAINTENANCE ONLY

REV.	DATE	DESCRIPTION	DES.	ENG.
X	XX-XX-XX	REVISION	XX	XX

DRAWN BY: A. CARLOS DATE: 03/31/2011

ASSISTANT DIRECTOR: STANDARDS & DESIGN

DIRECTOR OF ENGINEERING AND CONSTRUCTION

SCRRA ENGINEERING STANDARDS ARE INTENDED FOR SCRRA APPROVED USES ONLY. FOR NON-SCRRA APPROVED USES:
SCRRA SHALL NOT BE RESPONSIBLE FOR THE ACCURACY OR COMPLETENESS OF THE DATA OR INFORMATION CONTAINED HEREIN. THE SELECTION AND USE OF THESE STANDARDS IS THE SOLE RESPONSIBILITY OF THE USER AND SHOULD NOT BE USED WITHOUT CONSULTING A REGISTERED PROFESSIONAL ENGINEER. ALL WARRANTIES AND REPRESENTATIONS OF ANY KIND ARE DISCLAIMED. ANYONE MAKING USE OF THIS INFORMATION AGREES THAT IT ASSUMES ALL LIABILITY ARISING FROM SUCH USE. NO PART OF THESE STANDARDS SHOULD BE REPRODUCED OR DISTRIBUTED IN ANY FORM OR BY ANY MEANS WITHOUT THE PRIOR WRITTEN PERMISSION OF SCRRA. ALL RIGHTS RESERVED.

METROLINK®
SOUTHERN CALIFORNIA REGIONAL RAIL AUTHORITY
ONE GATEWAY PLAZA, 12TH FLOOR, L. A., CA. 90012

ENGINEERING STANDARDS

NO. 10 STRAIGHT OR CURVED UNDERCUT STOCK RAILS

STANDARD 2922
SCALE: NONE
REVISION –
SHEET 9 OF 15
CADD FILE: ES2922-09

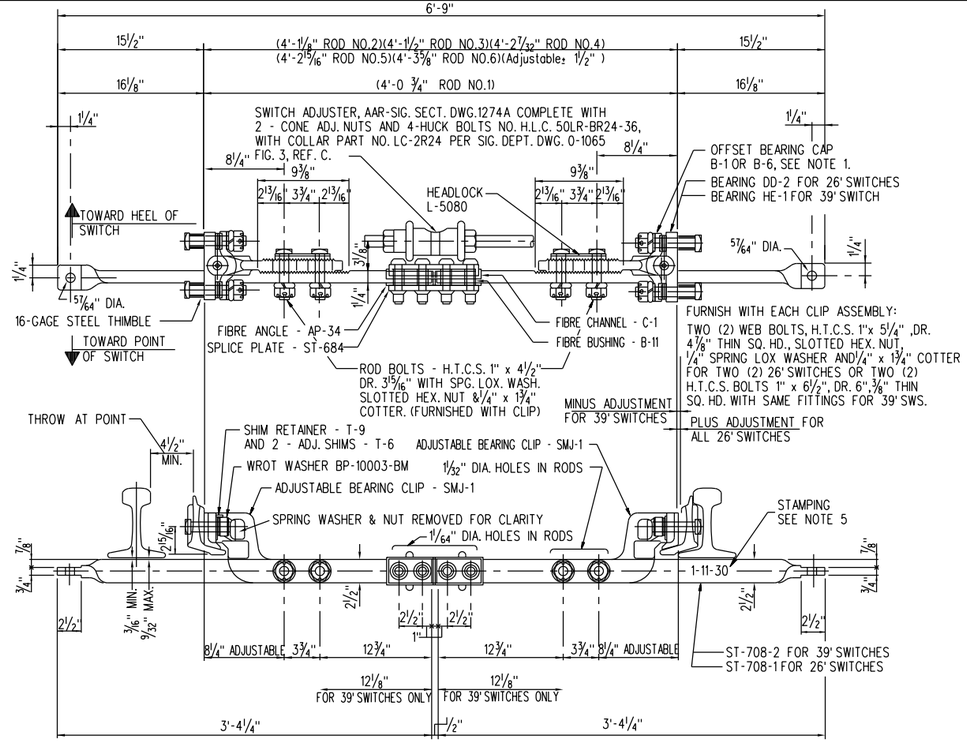

NO. 1 SWITCH ROD ASSEMBLY

(SHOWN FOR MACHINE ON RIGHT) SEE NOTE 2

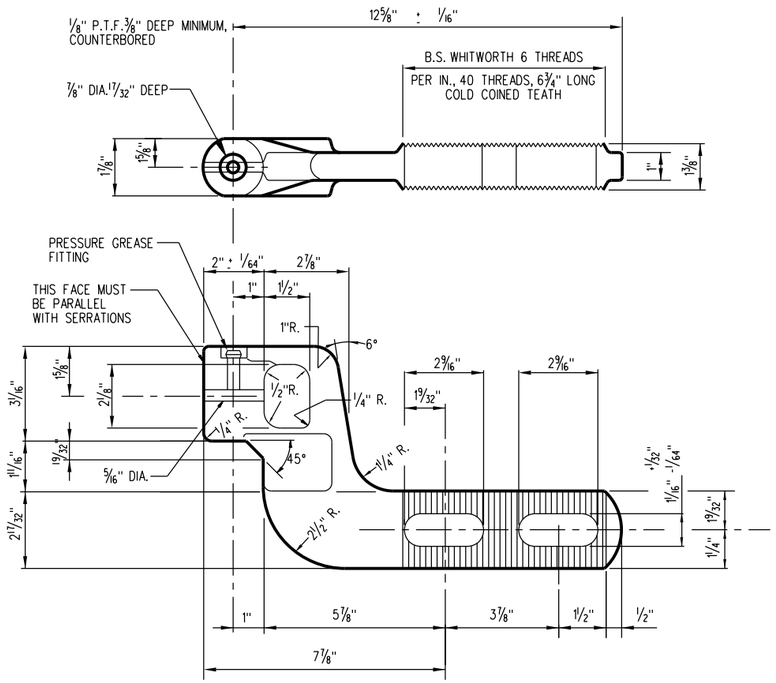

ADJUSTABLE BEARING CLIP - SMJ - 1

SCALE: 3" = 1'-0"

LENGTH OF SWITCH	QTY.	PART NUMBER	MATERIAL SPECIF.	DESCRIPTION	DETAIL REMARKS
BILL OF MATERIAL FOR 1 TYPE "SMJ" SWITCH ROD ASSEMBLY					
MATERIAL FOR CLIP ASSEMBLIES					
All	2	SMJ-1	S.A.E.1020-For.Stl.	Bearing Clip	MACHINED PER DETAIL
All	4		H.T.C.S.	Web Bolt	SEE NOTE
26'	2	DD-2	Malleable Iron	Bearing	PAT. NO. L-2910, MACHINED PER DETAIL
39'	2	HE-1	Malleable Iron	Bearing	PAT. NO. L-2915, MACHINED PER DETAIL
26'	2	B-1	S.A.E.1045-For.Stl.	Offset Bearing Cap	HEAT TREATED - BRINELL -.225 to .250
39'	2	B-6	S.A.E.1045-For.Stl.	Offset Bearing Cap	HEAT TREATED - BRINELL -.225 to .250
26'	2	B-6	S.A.E.1045-For.Stl.	Offset Bearing Cap	HEAT TREATED - BRINELL -.225 to .250
All	4	T-9	S.A.E.1020	Shim Retainer	⅛" x 1¾" x 2¼"
All	12	T-6	Stainless Steel	Adjustment Shim	1/16" x 2" x ⅛"
All	4	BP-10003-BM	Wrot Iron	Wrot Washer	1 1/16" I.D. x 2" O.D.x⅛" THICK
All	4		H.T.C.S.	Rod Bolt	1"x4½" DR.3 15/16" REC.SQ.HD.SLOTTED HEX NUT
All	4		Steel	Spg. Lox Washer	For 1" Rod Bolts
All	4		Steel	Cotter	¼" x 1¾" FOR ROD BOLTS
All	2		Steel	Grease Fitting	PRESSURE - FOR BEARING CLIP
All	2	L-5080	Malleable Iron	Headlock	FOR ROD BOLTS
26'	2		16-Gage Steel	Thimble	1½" LONG - FOR SHIPPING
39'	2		16-Gage Steel	Thimble	2½" LONG - FOR SHIPPING
Material for Vertical Rod					
16'-6"	1			Vertical Rod	Use one-ST-708-1
					Use one-ST-708-1 TWIST, MACHINE AND DRILL END HOLE
39'	1			Vertical Rod	Use one-ST-708-2
					Use one-ST-708-2 TWIST, MACHINE AND DRILL END HOLE
All	4		High Strength Steel	Conn.& Insul.Bolt	HIGH FASTENER NO. HLC-50LR- BR24-36
All	4		Low Carbon Steel	Collar	HUCK FASTENER NO. LC-2R24
All	1	ST-684	H.R. Mild Steel	Splice Plate	½" x 2½" x 9½" FOR INSULATION
All	2	AP-34	AAR-Sig.Sec.13-52	Angle	½" x 2½" x 4 15/16" HARD FIBRE - PARAFIN COATED
All	4	B-11	AAR-Sig.Sec.13-52	Bushing	1" O.D. HARD FIBRE - PARAFIN COATED
All	1	C-1	AAR-Sig.Sec.13-52	Channel	⅛" x 1" x 10" HARD FIBRE - PARAFIN COATED
All	1		Malleable Iron	Switch Adjuster	
All	2		Malleable Iron	Cone Adj. Nut	FOR 1¼" THROW RODS

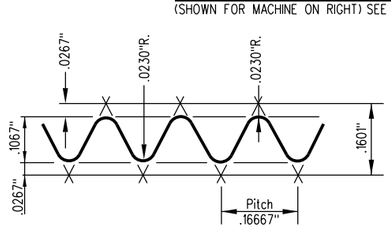

ENLARGED PROFILE OF SERRATIONS

SCALE: NONE

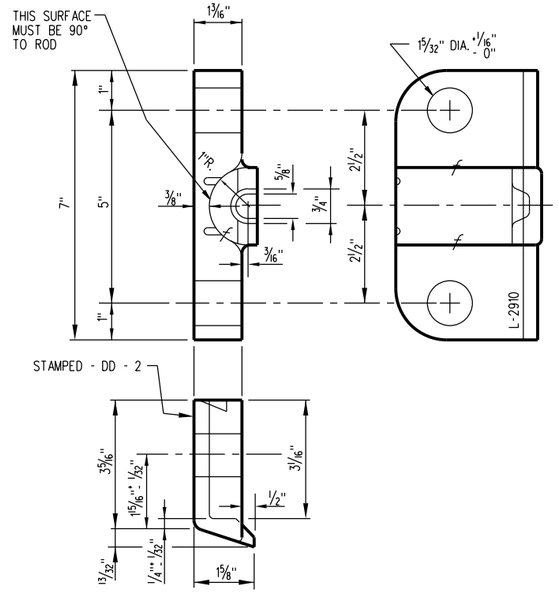

BEARING - DD - 2

SCALE: 6" = 1'-0"

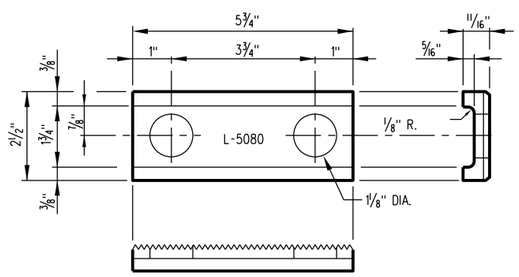

HEADLOCK L-5080

SCALE: 6" = 1'-0"

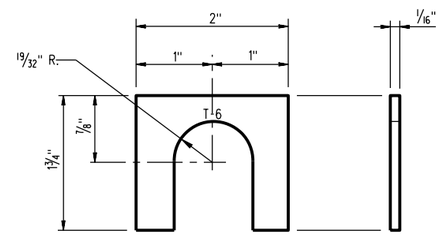

ADJUSTABLE SHIM - T - 6

SCALE: FULL

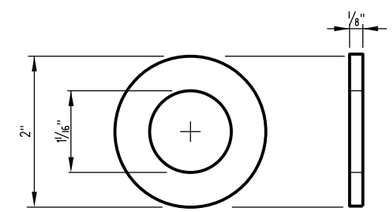

WROT WASHER - BP - 10003 - BM

SCALE: FULL

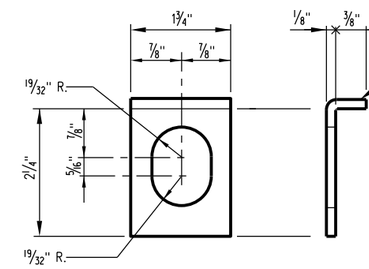

SHIM RETAINER - T - 9

SCALE: FULL

NOTES:

1. WHILE THIS PLAN SHOWS BEARING CLIPS ASSEMBLED TO SWITCH ROD, THIS CLIP ASSEMBLY MAY BE REQUISITIONED AND ORDERED SEPERATELY. WHEN A BEARING CLIP ASSEMBLY ONLY IS WANTED, REQUISITIONS AND ORDERS SHALL SPECIFY, RAIL SECTION AND LENGTH OF SWITCH. ALL PARTS SHOWN IN BILL OF MATERIAL SHALL BE FURNISHED WITH THESE CLIP ASSEMBLIES. WHEN AN INDIVIDUAL PART IS REQUIRED, IT SHALL BE ORDERED BY PART NUMBER.
2. WHEN COMPLETED RODS ARE ORDERED THEY SHALL BE ASSEMBLED AND INCLUDE ALL PARTS SHOWN IN BILL OF MATERIAL. REQUISITIONS AND ORDERS SHALL SPECIFY RAIL SECTION AND LENGTH OF SWITCH. ON INTERLOCKED SWITCHES WITH AUXILIARY THROW ROD, MACHINE SIDE (RIGHT OR LEFT) SHOULD ALSO BE SPECIFIED.
3. TWO WEB BOLTS SHALL BE FURNISHED WITH EACH CLIP ASSEMBLY AS CALLED FOR BY NOTE IN TOP VIEW OF ROD ASSEMBLY. WHEN ROD IS USED ON 11'-0" AND 16'-6" SWITCHES THE ¼" THICK SPRING WASHER SHOULD BE REPLACED WITH A ⅜" THICK SPRING WASHER BY THE STOREKEEPER OR FIELD FORCES, TO BRING COTTER WITHIN THE LIMITS OF SLOT IN WEB BOLT NUTS.
4. MATERIALS AND WORKMANSHIP SHALL MEET CURRENT A.R.E.M.A. SPECIFICATIONS FOR SPECIAL TRACKWORK UNLESS OTHERWISE SPECIFIED.
5. VERTICAL SWITCH ROD SHALL BE PLAINLY STAMPED TO INDICATE SWITCH THAT ROD ASSEMBLY CAN BE USED UPON. IDENTIFICATION MARKING WILL BE AS FOLLOWS:
   1-39 FOR USE ON 39'-0" SWITCHES, 132 LB., AND 136 LB. RE RAIL SECTIONS.
   1-11-30 FOR USE ON 11'-0" TO 30'-0" SWITCHES, 115 LB., 119 LB., 131 LB., 132 LB. AND 136 LB. RE RAIL SECTIONS.

FOR MAINTENANCE ONLY

REV.	DATE	DESCRIPTION	DES.	ENG.
X	XX-XX-XX	REVISION	XX	XX

DRAWN BY: A. CARLOS DATE: 03/31/2011

ASSISTANT DIRECTOR: STANDARDS & DESIGN

DIRECTOR OF ENGINEERING AND CONSTRUCTION

SCRRA ENGINEERING STANDARDS ARE INTENDED FOR SCRRA APPROVED USES ONLY. FOR NON-SCRRA APPROVED USES, SCRRA SHALL NOT BE RESPONSIBLE FOR THE ACCURACY OR COMPLETENESS OF THE DATA OR INFORMATION CONTAINED HEREIN. THE SELECTION AND USE OF THESE STANDARDS IS THE SOLE RESPONSIBILITY OF THE USER AND SHOULD NOT BE USED WITHOUT CONSULTING A REGISTERED PROFESSIONAL ENGINEER. ALL WARRANTIES AND REPRESENTATIONS OF ANY KIND ARE DISCLAIMED. ANYONE MAKING USE OF THIS INFORMATION AGREES THAT IT ASSUMES ALL LIABILITY ARISING FROM SUCH USE. NO PART OF THESE STANDARDS SHOULD BE REPRODUCED OR DISTRIBUTED IN ANY FORM OR BY ANY MEANS WITHOUT THE PRIOR WRITTEN PERMISSION OF SCRRA. ALL RIGHTS RESERVED.

METROLINK®

SOUTHERN CALIFORNIA REGIONAL RAIL AUTHORITY
ONE GATEWAY PLAZA, 12TH FLOOR, L. A., CA. 90012

ENGINEERING STANDARDS

NO. 10 SWITCH ROD DETAILS

STANDARD: 2922
SCALE: AS NOTED
REVISION: –
SHEET: 10 OF 15
CADD FILE: ES2922-10

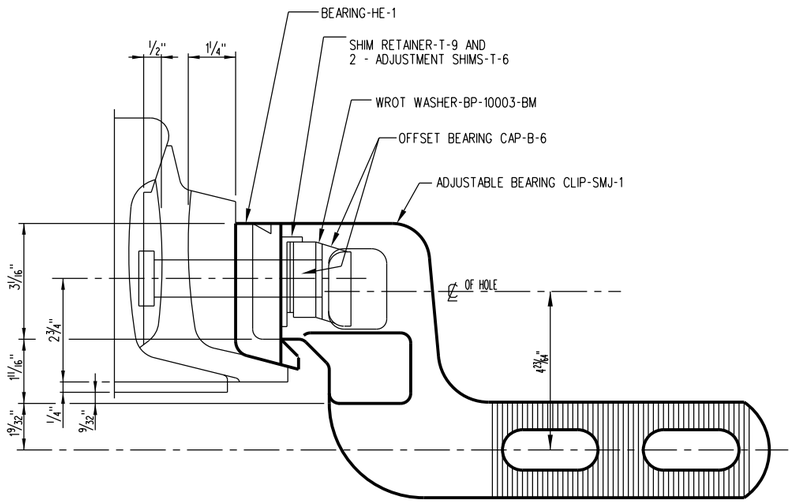

ELEVATION OF "SMJ"CLIP ASSEMBLY FOR 39' SWITCHES
(DRAWN FOR 136 LB. RAIL) SPRING WASHER AND NUT REMOVED

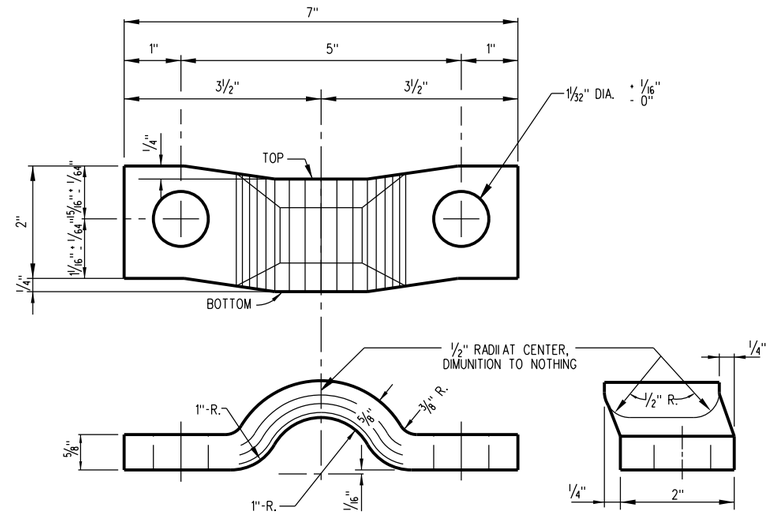

OFFSET BEARING CAP-B-1

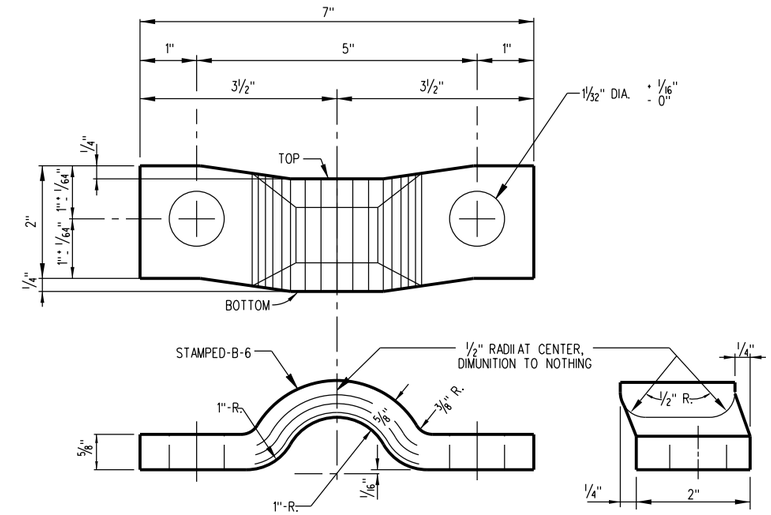

OFFSET BEARING CAP-B-6

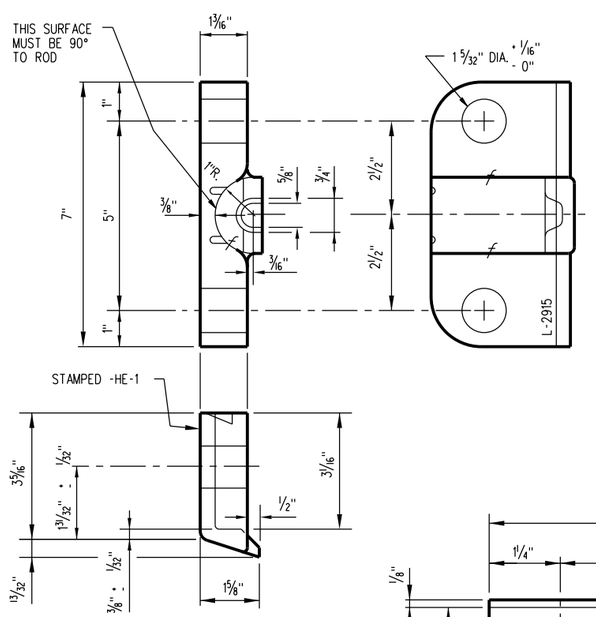

BEARING-HE-1

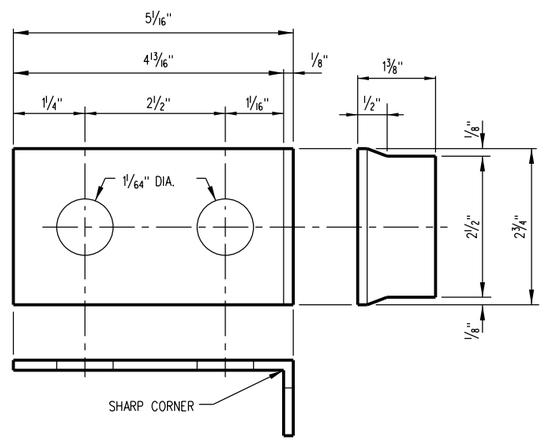

FIBRE ANGLE-AP-34

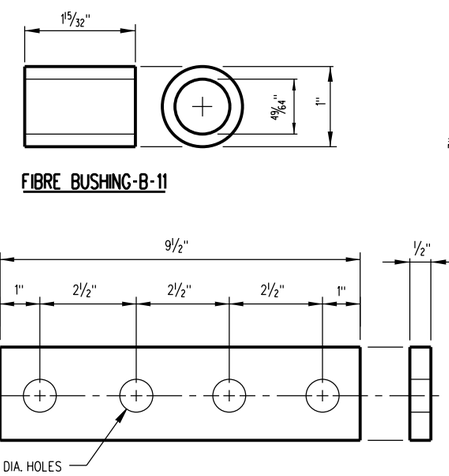

FIBRE BUSHING-B-11

SPLICE PLATE-ST-684

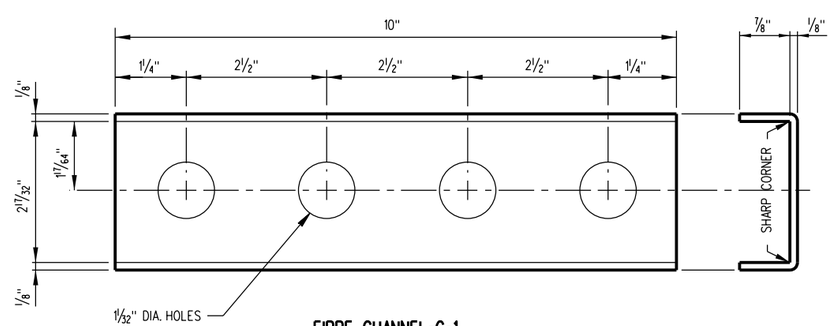

FIBRE CHANNEL-C-1

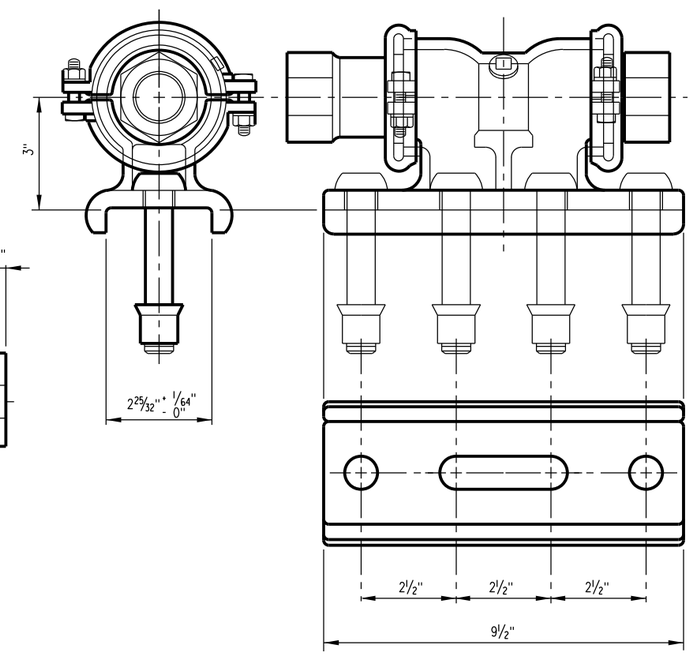

SWITCH ADJUSTER

FOR MAINTENANCE ONLY

X	XX-XX-XX	REVISION	XX	XX
REV.	DATE	DESCRIPTION	DES.	ENG.

DRAWN BY: A. CARLOS DATE: 03/31/2011

ASSISTANT DIRECTOR: STANDARDS & DESIGN

DIRECTOR OF ENGINEERING AND CONSTRUCTION

SCRRA ENGINEERING STANDARDS ARE INTENDED FOR SCRRA APPROVED USES ONLY. FOR NON-SCRRA APPROVED USES:
SCRRA SHALL NOT BE RESPONSIBLE FOR THE ACCURACY OR COMPLETENESS OF THE DATA OR INFORMATION CONTAINED HEREIN. THE SELECTION AND USE OF THESE STANDARDS IS THE SOLE RESPONSIBILITY OF THE USER AND SHOULD NOT BE USED WITHOUT CONSULTING A REGISTERED PROFESSIONAL ENGINEER. ALL WARRANTIES AND REPRESENTATIONS OF ANY KIND ARE DISCLAIMED. ANYONE MAKING USE OF THIS INFORMATION AGREES THAT IT ASSUMES ALL LIABILITY ARISING FROM SUCH USE. NO PART OF THESE STANDARDS SHOULD BE REPRODUCED OR DISTRIBUTED IN ANY FORM OR BY ANY MEANS WITHOUT THE PRIOR WRITTEN PERMISSION OF SCRRA. ALL RIGHTS RESERVED.

METROLINK®
SOUTHERN CALIFORNIA REGIONAL RAIL AUTHORITY
ONE GATEWAY PLAZA, 12TH FLOOR, L. A., CA. 90012

ENGINEERING STANDARDS

NO. 10 SWITCH ROD MISCELLANEOUS DETAILS

STANDARD 2922
SCALE: 6" = 1'-0"
REVISION –
SHEET 11 OF 15
CADD FILE: ES2922-11

NOTE:
SEE SHEET 15 FOR NOTES.

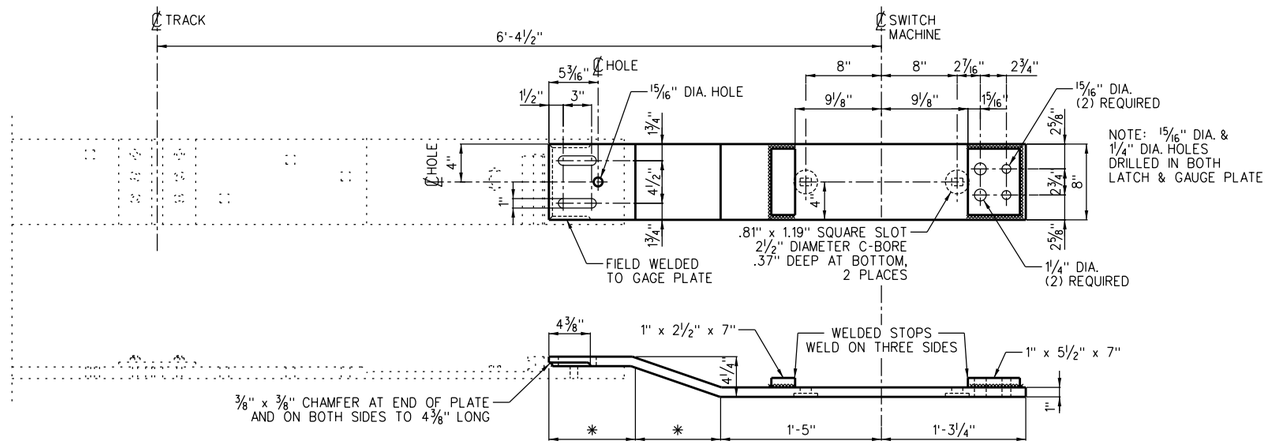

* MANUFACTURER TO CALCULATE AND PROVIDE ON DETAILED DRAWING.

EXTENSION PLATE
(2 PCS. REQ'D. AS SHOWN)

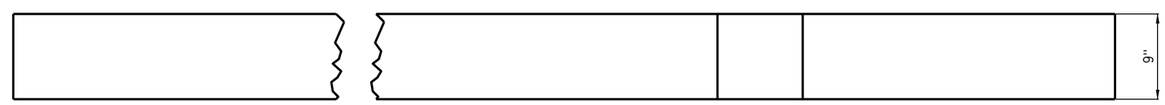

TOP VIEW

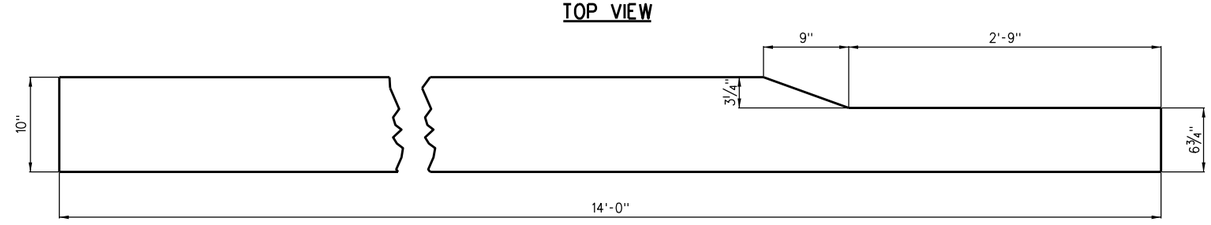

SIDE VIEW

TIES SHALL BE MADE OF DOUGLAS FIR OR GUM AND TREATED AFTER FRAMING.

DAP TIE
(2 PCS. REQ'D. AS SHOWN)

US&S M23-A SWITCH MACHINE MUST BE FURNISHED WITH FINISHED MOUNTING LUGS.

FOR MAINTENANCE ONLY

REV.	DATE	DESCRIPTION	DES.	ENG.
X	XX-XX-XX	REVISION	XX	XX

DRAWN BY: A. CARLOS DATE: 03/31/2011

ASSISTANT DIRECTOR: STANDARDS & DESIGN

DIRECTOR OF ENGINEERING AND CONSTRUCTION

SCRRA ENGINEERING STANDARDS ARE INTENDED FOR SCRRA APPROVED USES ONLY. FOR NON-SCRRA APPROVED USES:
SCRRA SHALL NOT BE RESPONSIBLE FOR THE ACCURACY OR COMPLETENESS OF THE DATA OR INFORMATION CONTAINED HEREIN. THE SELECTION AND USE OF THESE STANDARDS IS THE SOLE RESPONSIBILITY OF THE USER AND SHOULD NOT BE USED WITHOUT CONSULTING A REGISTERED PROFESSIONAL ENGINEER. ALL WARRANTIES AND REPRESENTATIONS OF ANY KIND ARE DISCLAIMED. ANYONE MAKING USE OF THIS INFORMATION AGREES THAT IT ASSUMES ALL LIABILITY ARISING FROM SUCH USE. NO PART OF THESE STANDARDS SHOULD BE REPRODUCED OR DISTRIBUTED IN ANY FORM OR BY ANY MEANS WITHOUT THE PRIOR WRITTEN PERMISSION OF SCRRA. ALL RIGHTS RESERVED.

METROLINK®
SOUTHERN CALIFORNIA REGIONAL RAIL AUTHORITY
ONE GATEWAY PLAZA, 12TH FLOOR, L. A., CA. 90012

ENGINEERING STANDARDS

NO. 10 EXTENSION PLATE DETAILS
AND DAP TIE DETAILS
FOR M-23A SWITCH MACHINE

STANDARD 2922
SCALE: 1½" = 1'-0"
REVISION –
SHEET 12 OF 15
CADD FILE: ES2922-12

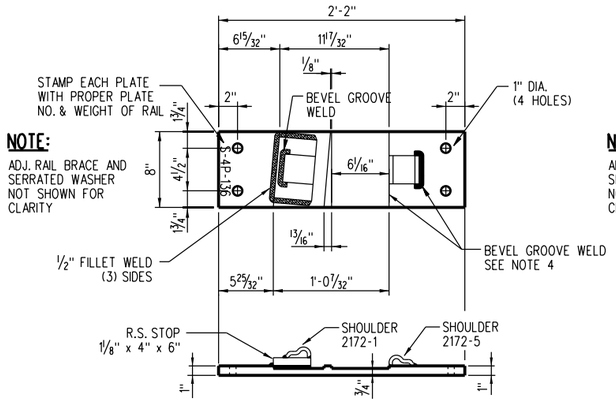

NOTE:
ADJ. RAIL BRACE AND SERRATED WASHER NOT SHOWN FOR CLARITY

BRACE PLATE ~ S-4P

1" x 8" x 2'-2" LG. ~ MILLED ~ W/ADJ. RAIL BRACE
2 - S-4P PLATES REQUIRED AS SHOWN

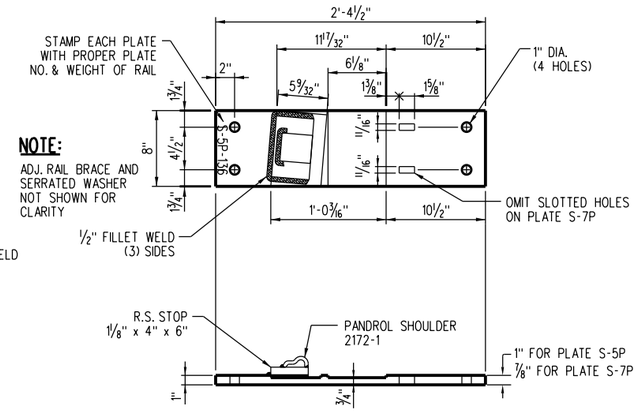

NOTE:
ADJ. RAIL BRACE AND SERRATED WASHER NOT SHOWN FOR CLARITY

BRACE SLIDE PLATE ~ S-5P & S-7P

1" X 8" X 2'-4 1/2" LG. - MILLED - W/ADJ. RAIL BRACE
4 - S-5P PLATES REQUIRED AS SHOWN
2 - S-7P PLATES REQUIRED AS SHOWN

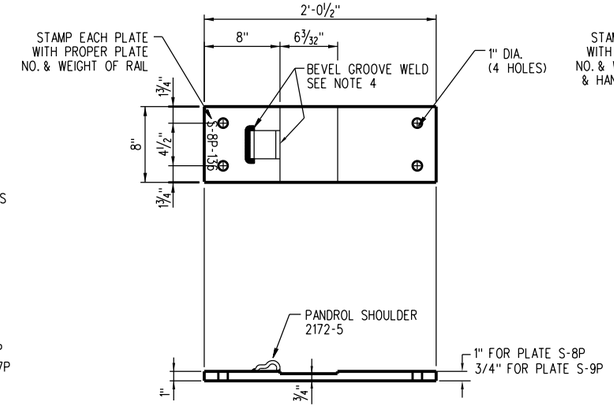

SLIDE PLATE - S-8P & S-9P

1" X 8" X 2'-0 1/2" LG. - MILLED - W/PANDROL CLIP
6 - S-8P PLATES REQUIRED AS SHOWN (1/4" RISER)
4 - S-9P PLATES REQUIRED AS SHOWN (0" RISER)

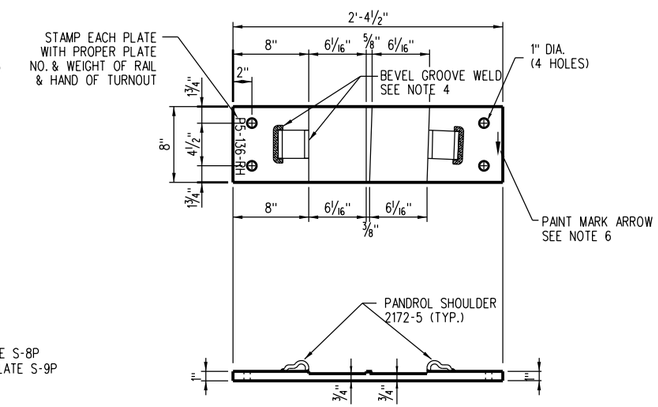

HEEL PLATE - P5 - RH

1" X 8" X 2'-4 1/2" LG. - MILLED - W/PANDROL CLIPS
2 - P5-RH PLATES REQUIRED AS SHOWN FOR R.H. T.O.

SWITCH PLATES

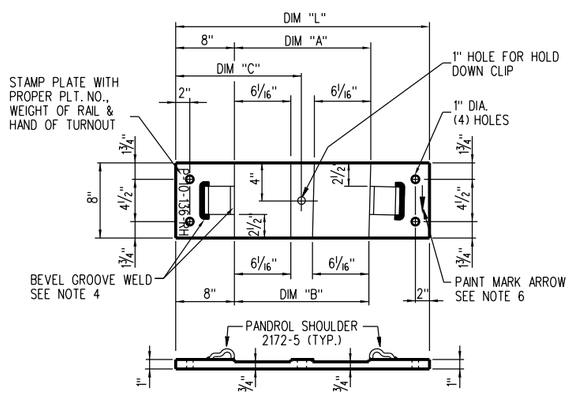

TURNOUT PLATES - P-10 THRU P-15

1" x 8" x DIM "L" - MILLED - W/ PANDROLS

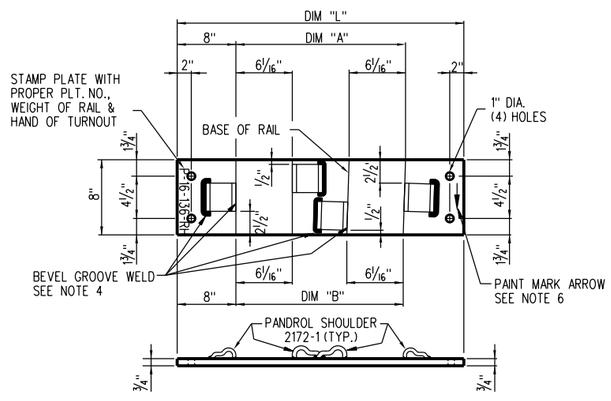

TURNOUT PLATES - P-16 THRU P-18 & P-29

3/4" x 8" x DIM "L" - FLAT - W/ PANDROL CLIPS

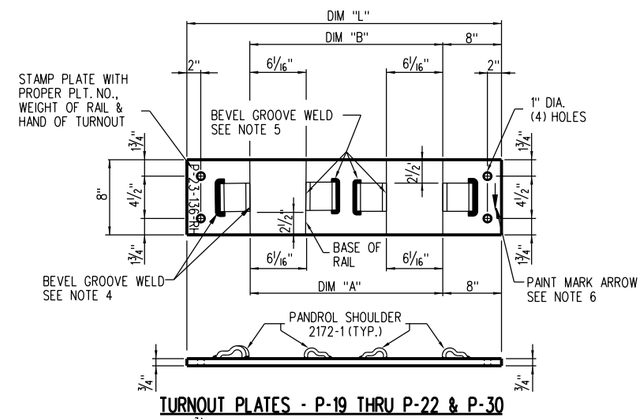

TURNOUT PLATES - P-19 THRU P-22 & P-30

3/4" x 8" x DIM "L" - FLAT - W/ PANDROL CLIPS

NOTES:

1. PLATES TO BE MADE OF MILD ROLLED STEEL.
2. EACH PLATE TO BE PLAINLY STAMPED WITH PLATE NO. AND 136 (WEIGHT OF RAIL) & HAND OF TURNOUT (R.H. OR L.H.)
3. THE PANDROL TYPE WELD - ON PRESSED STEEL SHOULDER, MADE FROM MILD STEEL, TO BE PURCHASED FROM PANDROL INTERNATIONAL OR APPROVED ALTERNATE MEETING PANDROL'S DESIGN SPECIFICATIONS.
4. THE PRESSED STEEL SHOULDER MUST BE CAREFULLY WELDED TO THE PLATE. ANY WELD PROJECTING BEYOND THE VERTICAL FACE OF SHOULDER IN THE AREA OF THE RAIL SEAT MUST BE MACHINED OUT TO PROVIDE A CLEAR RAIL SEAT DIMENSION AS CALLED FOR.
5. THE PLATES AS SHOWN ARE FOR A 136 LB., NO. 10 RIGHT HAND TURNOUT. FOR A LEFT HAND TURNOUT, PLATES P-10 THRU P-29 INCLUSIVE AND FROG PLATES AND GAGE PLATES FG-1P THRU FG-3P ARE TO BE OPPOSITE.
6. DIRECTION OF ARROW SHOWN IS AN EXAMPLE ONLY. USING SHEET NO. 2922-03 AS A GUIDE, PAINT MARK EACH PLATE WITH AN ARROW POINTING TOWARD SWITCH POINT.

WELDING SPECIFICATIONS

1. SET PRESSED STEEL SHOULDER FLUSH AGAINST LINE OF BASE OF RAIL OR SHOULDER OF MILLED PLATE AS SHOWN AND WELD WITH 2 - PASS 3/8" • WELD.
2. STOP PLATE FOR ADJUSTABLE RAIL BRACE TO BE SET FLUSH WITH SHOULDER OF MILLED PLATE AS SHOWN AND WELD WITH 3 - PASS 1/2" • FILLET WELD.
3. SHOULDERS AND STOPS ARE TO BE CAREFULLY WEDLED TO PLATE. NO WELD SHALL PROJECT BEYOND THE VERTICAL EDGE OF TH UNWELDED FOURTH SIDE OF THE STOP PLATE OR VERTICAL FACE OF SHOULDER IN THE AREA OF THE RAIL SEAT. ANY WELD PROJECTING BEYOND THE FACE OF THE STOP OR SHOULDER MUST BE MACHINED OFF TO PROVIDE CLEAR DIMENSION CALLED FOR.
4. FOR WELDING PRESSED STEEL SHOULDERS OR PLATE STOPS USE THE FOLLOWING:
   A. ELECTRODE 15/32 INCH, WELDING SPEC. 7018XLM.
   B. ELECTRODE 3/16 INCH, WELDING SPEC. 7018XLM.
   C. WIRE, WELDING 3/32 INCH, NR203, 1% NICKEL FLUX CORE.

   OTHER WIRE OR ELECTRODES MEETING SPECIFICATIONS AS CALLED FOR, APPROVED BY DIRECTOR OF ENGINEERING, MAY BE USED.

DIMENSION TABLE

PLATE	DIM "A"	DIM "B"	DIM "C"	DIM "L"	Plts REQ'D.	DIM "D"	DIM "E"	DIM "F"	CLIPS REQ'D.
P-10	13 1/8"	13 3/8"	14 19/32"	2'-5"	2 EA.	3 1/8"	3 3/8"	1 5/8"	2 EA.
P-11	13 23/32"	13 15/16"	14 7/8"	2'-6"	2 EA.	3 23/32"	3 31/32"	1 15/16"	2 EA.
P-12	14 11/32"	14 19/32"	15 3/16"	2'-6 1/2"	2 EA.	4 11/32"	4 9/16"	2 1/4"	2 EA.
P-13	15"	15 1/4"	15 1/2"	2'-7 1/2"	2 EA.	4 31/32"	5 7/32"	2 9/16"	2 EA.
P-14	15 11/16"	15 31/32"	15 27/32"	2'-8"	2 EA.	5 21/32"	5 15/16"	2 29/32"	2 EA.
P-15	16 13/32"	16 23/32"	16 7/32"	2'-8 1/2"	2 EA.	6 3/8"	6 11/16"	3 9/32"	2 EA.

DIMENSION TABLE

PLATE	DIM "A"	DIM "B"	DIM "L"	Plts REQ'D.
P-16	17 1/8"	17 7/16"	2'-9 1/2"	2 EA.
P-17	17 15/16"	18 1/4"	2'-10"	2 EA.
P-18	18 25/32"	19 5/32"	2'-11"	2 EA.
P-29	19 11/32"	20 1/8"	3'-0"	1 EA.

DIMENSION TABLE

PLATE	DIM "A"	DIM "B"	DIM "L"	Plts REQ'D.
P-19	20 5/32"	19 25/32"	3'-0"	2 EA.
P-20	21 1/8"	20 3/4"	3'-1"	2 EA.
P-21	22 5/32"	21 3/4"	3'-2"	2 EA.
P-22	22 7/16"	21 11/16"	3'-2 1/2"	1 EA.
P-30	22 5/32"	21 11/32"	3'-2"	1 EA.

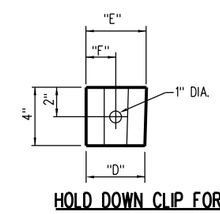

HOLD DOWN CLIP FOR PLATES P-10 THRU P-15

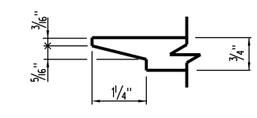

END DETAIL - BOTH ENDS

FOR MAINTENANCE ONLY

REV.	DATE	DESCRIPTION	DES.	ENG.
X	XX-XX-XX	REVISION	XX	XX

DRAWN BY: A. CARLOS DATE: 03/31/2011

ASSISTANT DIRECTOR: STANDARDS & DESIGN

DIRECTOR OF ENGINEERING AND CONSTRUCTION

SCRRA ENGINEERING STANDARDS ARE INTENDED FOR SCRRA APPROVED USES ONLY. FOR NON-SCRRA APPROVED USES, SCRRA SHALL NOT BE RESPONSIBLE FOR THE ACCURACY OR COMPLETENESS OF THE DATA OR INFORMATION CONTAINED HEREIN. THE SELECTION AND USE OF THESE STANDARDS IS THE SOLE RESPONSIBILITY OF THE USER AND SHOULD NOT BE USED WITHOUT CONSULTING A REGISTERED PROFESSIONAL ENGINEER. ALL WARRANTIES AND REPRESENTATIONS OF ANY KIND ARE DISCLAIMED. ANYONE MAKING USE OF THIS INFORMATION AGREES THAT IT ASSUMES ALL LIABILITY ARISING FROM SUCH USE. NO PART OF THESE STANDARDS SHOULD BE REPRODUCED OR DISTRIBUTED IN ANY FORM OR BY ANY MEANS WITHOUT THE PRIOR WRITTEN PERMISSION OF SCRRA. ALL RIGHTS RESERVED.

METROLINK®
SOUTHERN CALIFORNIA REGIONAL RAIL AUTHORITY
ONE GATEWAY PLAZA, 12TH FLOOR, L. A., CA. 90012

ENGINEERING STANDARDS

NO. 10 TURNOUT AND SWITCH PLATE DETAILS

STANDARD 2922
SCALE: 1 1/2" = 1'-0"
REVISION –
SHEET 13 OF 15
CADD FILE: ES2922-13

NOTES:

1. PLATES TO BE MADE OF MILD ROLLED STEEL.
2. THE PANDROL TYPE WELD - ON, PRESSED STEEL SHOULDER, MADE OF MILD STEEL TO BE PURCHASED FROM APPROVED SUPPLIER MEETING DESIGN
3. SPECIFICATIONS.
   THE PRESSED STEEL SHOULDER MUST BE CAREFULLY WELDED TO GAGE PLATES. ANY WELD PROJECTING BEYOND THE VERTICAL FACE OF SHOULDER IN THE AREA OF THE RAIL SEAT MUST BE MACHINED OUT
4. TO PROVIDE A CLEAR RAIL SEAT DIMENSION AS CALLED FOR.
   THE PLATES AS SHOWN FOR A 136 LB., NO. 10 RIGHT
5. HAND HAND OPERATED TURNOUT. FOR A LEFT HAND TURNOUT, PLATES ARE TO BE OPPOSITE.
   FOR EXTENSION PLATE AND DAP TIE DETAILS SEE SHEET 2922-13.

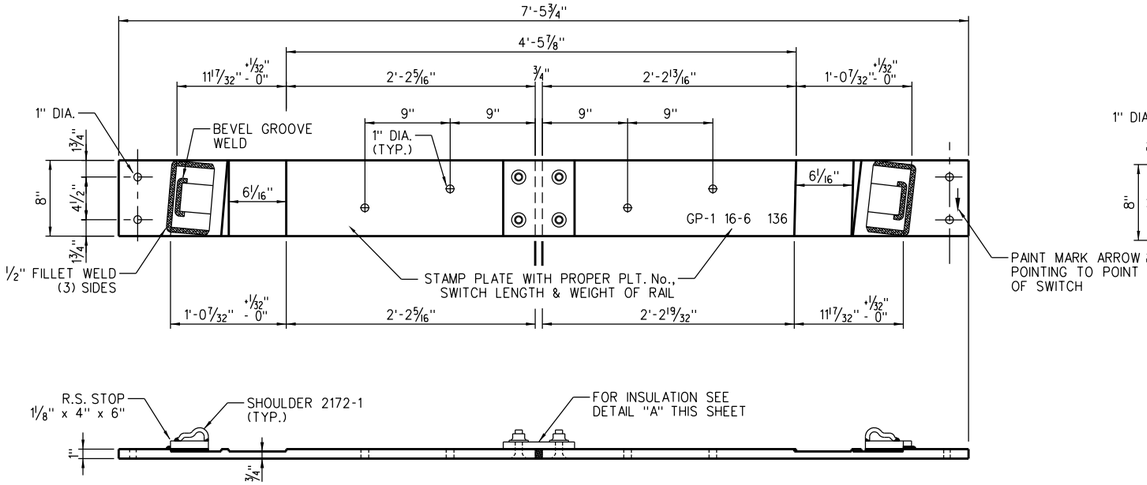

INSULATED GAGE PLATE GP-1 - USED AT POINT OF SWITCH

1" x 8" - MILLED - W/ INSULATION & ADJ. RAIL BRACES
(1 PC. REQ'D AS SHOWN) (SCALE: 1½" = 1'-0")

NOTE:
SERRATED WASHER AND BRACE PLATE NOT SHOWN FOR CLARITY.

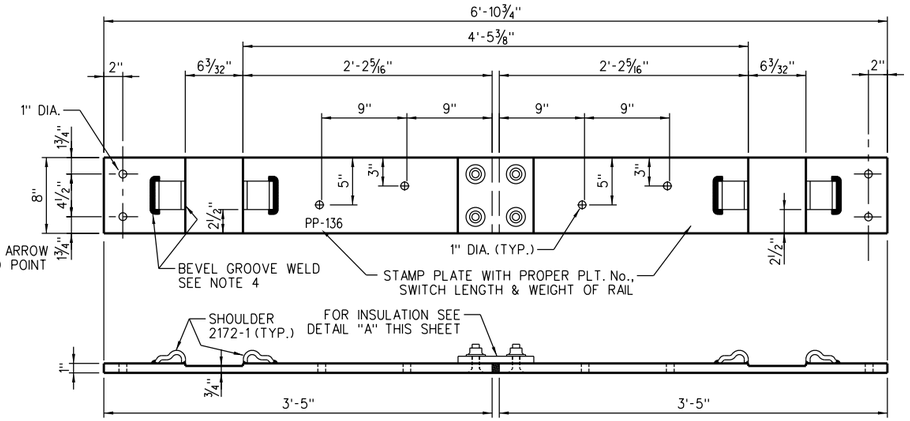

PANDROLIZED INSULATED GAGE PLATE PP

1" x 8" - FLAT - W/ INSULATION (3 PC. REQ'D AS SHOWN)
(SCALE: 1½" = 1'-0")

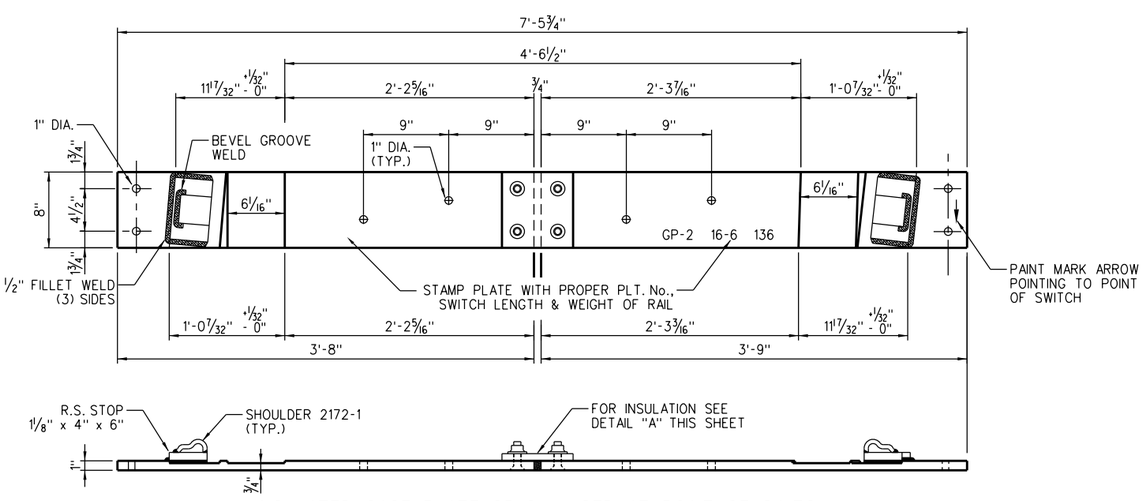

INSULATED GAGE PLATE GP-2 - USED AT POINT OF SWITCH

1" x 8" - MILLED - W/ INSULATION & ADJ. RAIL BRACES
(1 PC. REQ'D AS SHOWN) (SCALE: 1½" = 1'-0")

NOTE:
SERRATED WASHER AND BRACE PLATE NOT SHOWN FOR CLARITY.

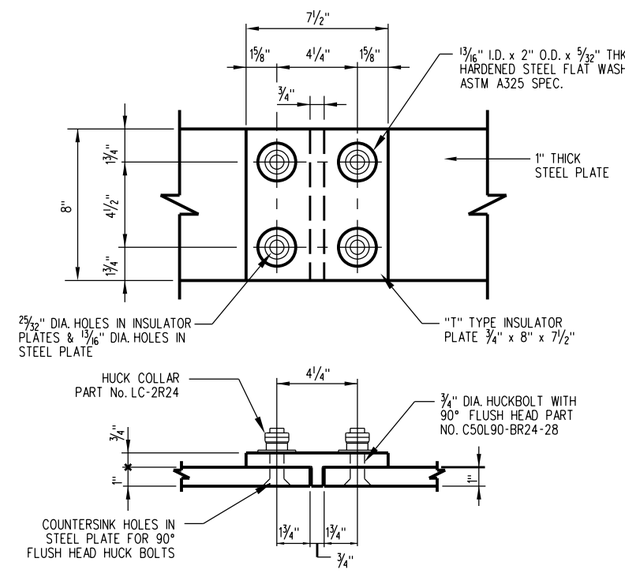

GAGE PLATE INSULATED JOINT ASSEMBLY GPI-77

NOTE:
HEAD OF HUCK BOLT RECESSED 1/16" MAX.

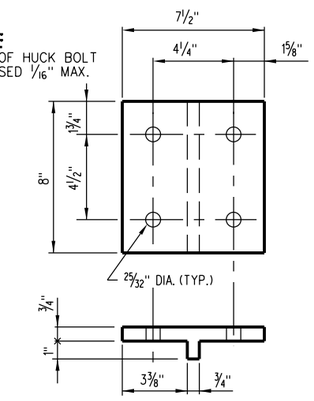

DETAIL OF INSULATION BLOCK

POLYESTER COATED STEEL CORE
W/ BUSHINGS, PORTEC #127-07547-01
OR FIBERGLASS REINFORCED THERMOSET RESIN.
PURCHASE PART NO. GPI52P05

DETAIL "A" INSULATION AT PLATES

(SCALE: 3" = 1'-0")

FOR MAINTENANCE ONLY

REV.	DATE	DESCRIPTION	DES.	ENG.
X	XX-XX-XX	REVISION	XX	XX

DRAWN BY: A. CARLOS DATE: 03/31/2011

ASSISTANT DIRECTOR: STANDARDS & DESIGN

DIRECTOR OF ENGINEERING AND CONSTRUCTION

SCRRA ENGINEERING STANDARDS ARE INTENDED FOR SCRRA APPROVED USES ONLY. FOR NON-SCRRA APPROVED USES:
SCRRA SHALL NOT BE RESPONSIBLE FOR THE ACCURACY OR COMPLETENESS OF THE DATA OR INFORMATION CONTAINED HEREIN. THE SELECTION AND USE OF THESE STANDARDS IS THE SOLE RESPONSIBILITY OF THE USER AND SHOULD NOT BE USED WITHOUT CONSULTING A REGISTERED PROFESSIONAL ENGINEER. ALL WARRANTIES AND REPRESENTATIONS OF ANY KIND ARE DISCLAIMED. ANYONE MAKING USE OF THIS INFORMATION AGREES THAT IT ASSUMES ALL LIABILITY ARISING FROM SUCH USE. NO PART OF THESE STANDARDS SHOULD BE REPRODUCED OR DISTRIBUTED IN ANY FORM OR BY ANY MEANS WITHOUT THE PRIOR WRITTEN PERMISSION OF SCRRA. ALL RIGHTS RESERVED.

METROLINK®
SOUTHERN CALIFORNIA REGIONAL RAIL AUTHORITY
ONE GATEWAY PLAZA, 12TH FLOOR, L. A., CA. 90012

ENGINEERING STANDARDS

NO. 10 SWITCH PLATE DETAILS

STANDARD 2922
SCALE: AS NOTED
REVISION –
SHEET 14 OF 15
CADD FILE: ES2922-14

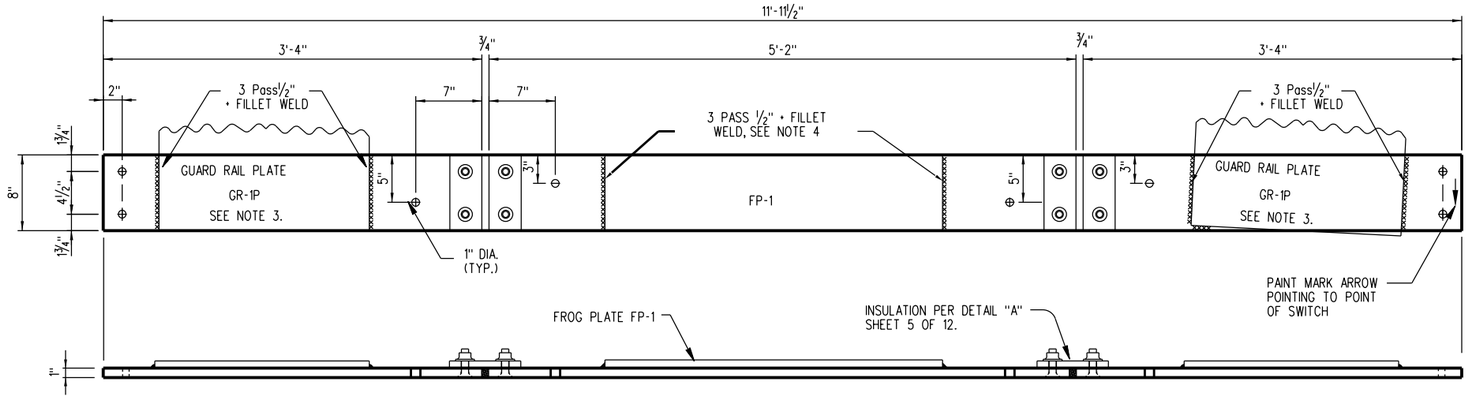

INSULATED FROG GAGE PLATE - FG-1P

¾" x 8" - FLAT - W/ INSULATION (1 PC. REQ'D AS SHOWN)

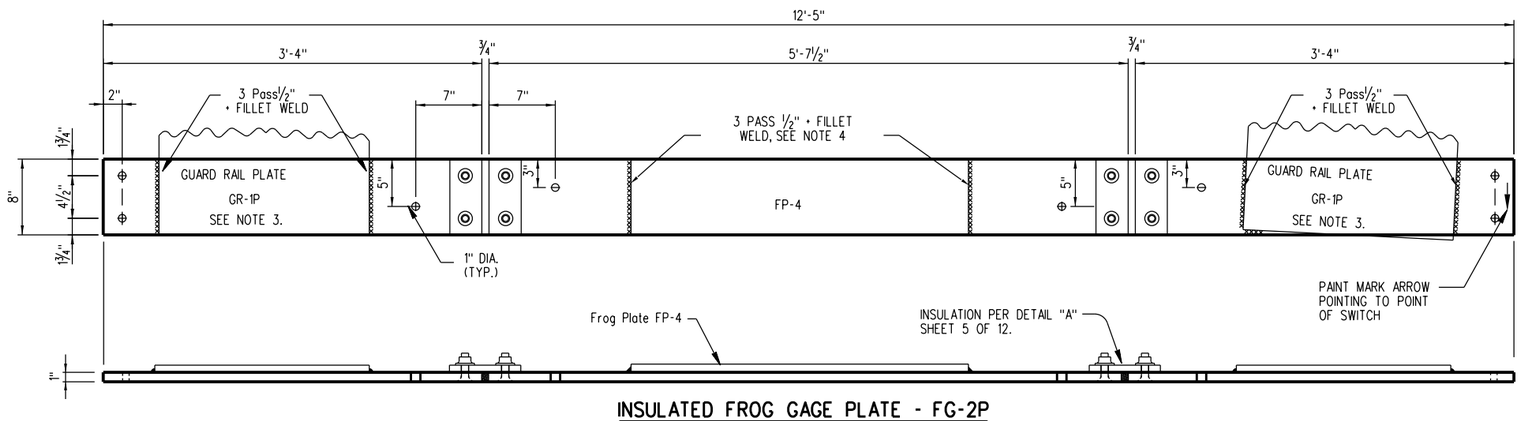

INSULATED FROG GAGE PLATE - FG-2P

¾" x 8" - FLAT - W/ INSULATION (1 PC. REQ'D AS SHOWN)

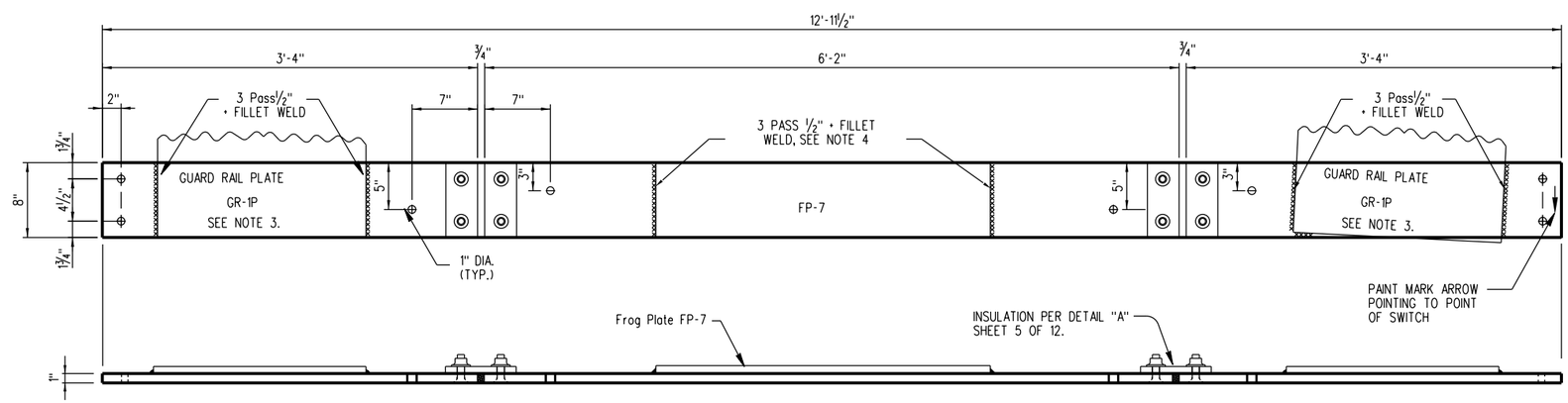

INSULATED FROG GAGE PLATE - FG-3P

¾" x 8" - FLAT - W/ INSULATION (1 PC. REQ'D AS SHOWN)

NOTES:

1. PLATES TO BE MADE OF MILD ROLLED STEEL.
2. THE PLATES AS SHOWN ARE FOR A 136 LB., NO. 10, RIGHT HAND, HAND OPERATED TURNOUT. FOR A LEFT HAND TURNOUT, PLATES ARE TO BE OPPOSITE.
3. GUARD RAIL PLATES ARE TO BE INSTALLED AND WELDED TO THE FROG GAGE PLATES IN THE FIELD WITH A 3 PASS ½" + FILLET WELD CONTINUOUS ON BOTH ENDS OF THE PLATE. PLATES ARE TO BE WELDED ONLY AFTER THE GAGE PLATE AND THE FROG PLATE IS SECURED IN THE PROPER LOCATION ON THE TIE WITH PROPER
4. ALIGNMENT.
   FROG BASE PLATES FP-1, FP-4 AND FP-7 ARE TO BE WELDED TO THE FROG GAGE PLATES IN THE FIELD WITH A 3 PASS ½" + FILLET WELD CONTINUOUS ON BOTH ENDS OF THE PLATE. PLATES ARE TO BE WELDED ONLY AFTER THE GAGE PLATE AND THE FROG IS SECURED IN THE PROPER LOCATION ON THE TIE WITH PROPER ALIGNMENT.

FOR MAINTENANCE ONLY

REV.	DATE	DESCRIPTION	DES.	ENG.
X	XX-XX-XX	REVISION	XX	XX

DRAWN BY: A. CARLOS DATE: 03/31/2011

ASSISTANT DIRECTOR: STANDARDS & DESIGN

DIRECTOR OF ENGINEERING AND CONSTRUCTION

SCRRA ENGINEERING STANDARDS ARE INTENDED FOR SCRRA APPROVED USES ONLY. FOR NON-SCRRA APPROVED USES:
SCRRA SHALL NOT BE RESPONSIBLE FOR THE ACCURACY OR COMPLETENESS OF THE DATA OR INFORMATION CONTAINED HEREIN. THE SELECTION AND USE OF THESE STANDARDS IS THE SOLE RESPONSIBILITY OF THE USER AND SHOULD NOT BE USED WITHOUT CONSULTING A REGISTERED PROFESSIONAL ENGINEER. ALL WARRANTIES AND REPRESENTATIONS OF ANY KIND ARE DISCLAIMED. ANYONE MAKING USE OF THIS INFORMATION AGREES THAT IT ASSUMES ALL LIABILITY ARISING FROM SUCH USE. NO PART OF THESE STANDARDS SHOULD BE REPRODUCED OR DISTRIBUTED IN ANY FORM OR BY ANY MEANS WITHOUT THE PRIOR WRITTEN PERMISSION OF SCRRA. ALL RIGHTS RESERVED.

METROLINK®
SOUTHERN CALIFORNIA REGIONAL RAIL AUTHORITY
ONE GATEWAY PLAZA, 12TH FLOOR, L. A., CA. 90012

ENGINEERING STANDARDS

NO. 10 INSULATED GAGE PLATE DETAILS

STANDARD 2922
SCALE: 1½" = 1'-0"
REVISION –
SHEET 15 OF 15
CADD FILE: ES2922-15

EQUIVALENT CURVE DATA	
CURVE	3.1046'
RADIUS	1845.54'
DELTA	4.091'
TANGENT (T)	65.91'
LENGTH (L)	131.77'
EXTERNAL	1.18'
CROSSOVER DATA	
LEAD	108.625'
PC TO PS	23.78'
PS TO PI	42.13'
PI TO ½" PF	66.50'
LENGTH OF TURNOUT	160.12'
PS TO PT	107.99'

FROG DATA	
FROG NUMBER	14
FROG ANGLE	4° -05'-27"
SWITCH DATA	
SWITCH LENGTH	26'-0"
HEEL SPREAD	6¼"
HEEL ANGLE	1° -27'-00"
SWITCH ANGLE	0° -50'-44"
RADIUS OF CENTER LINE - SWITCH	2,462.20'
TANGENT LENGTH SWITCH	12.98'
CENTRAL ANGLE OF CLOSURE CURVE-SWITCH	0° -36'-16"
DEGREE OF CURVE - SWITCH	2° -38'-45"
TURNOUT DATA	
RADIUS OF CENTER LINE - TURNOUT	1,576.40'
TANGENT LENGTH - TURNOUT	44.51'
CENTRAL ANGLE OF CLOSURE CURVE - TURNOUT	3° -14'-07"
DEGREE OF CURVE - TURNOUT	3° -38'-07"

DRAWING INDEX

TURNOUT AND CROSSOVER GENERAL NOTES AND DATA — ES2931-01
TURNOUT AND CROSSOVER JOINTS LOCATIONS — ES2931-02
TURNOUT LAYOUT — ES2931-03
TURNOUT BILL OF MATERIALS — ES2931-04
CROSSOVER LAYOUT AND BILL OF MATERIALS LAYOUT — ES2931-05
FROG LAYOUT — ES2931-06
GAGE PLATE DETAILS — ES2931-07
GUARD RAIL DETAILS — ES2931-08
SPLIT SWITCH POINT DETAILS — ES2931-09
STRAIGHT OR CURVED UNDERCUT STOCK RAILS — ES2931-10
SWITCH ROD DETAILS — ES2931-11
SWITCH ROD MISCELLANIOUS DETAILS — ES2931-12
EXTENSION PLATE AND DAP TIE DETAILS FOR M-23A SWITCH MACHINE — ES2931-13
TURNOUT AND FROG PLATE DETAILS — ES2931-14
FROG DIMENSION TABLE AND NOTES — ES2931-15
INSULATED GAGE PLATE DETAILS — ES2931-16

NOTES:

1. TURNOUT TO BE FABRICATED FROM 136 LB. HEAD HARDENED RAIL, FROM POINT END TO LAST LONG SWITCH TIE.
2. LOCATION OF INSULATED JOINTS IS DETERMINED BY DRAWING NUMBER ES2931-02. IT WILL BE SATISFACTORY TO RELOCATE THE INSULATED JOINT IN THE FIELD UP TO 12" SO AS TO PROVIDE A SUITABLE SUSPENDED JOINT, PROVIDED THE STAGGER OF INSULATED JOINTS DOES NOT EXCEED 4'-6". SUSPENDED INSULATED JOINTS MUST BE LOCATED IN A CRIB AREA BETWEEN TIES, A MINIMUM DISTANCE OF 4" FROM EDGE OF NEAREST TIE PLATE.
3. ALL INSULATED JOINTS ARE TO BE ADHESIVE BONDED PREFABRICATED MITRE CUT INSULATED JOINTS PER ES2504 UNLESS OTHERWISE SPECIFIED.
4. ALL MATERIALS REQUIRED FOR HAND OR MACHINE OPERATED SWITCH OPERATION WILL BE FURNISHED PER REQUIREMENTS OF THE SCRRA DIRECTOR OF ENGINEERING AND CONSTRUCTION.
5. MATERIALS AND WORKMANSHIP, ALSO ANY CONSTRUCTION DETAILS NOT SHOWN, SHALL BE PER CURRENT AREMA "MANUAL AND PORTFOLIO" UNLESS OTHERWISE SPECIFIED.
6. WHERE REQUIRED, ALL IDENTIFICATION SYMBOLS TO BE PLAINLY STAMPED.
7. GAGE PLATES WILL BE FURNISHED INSULATED. SWITCH RODS WILL BE FURNISHED INSULATED UNLESS OTHERWISE SPECIFIED.
8. MANUFACTURER SHALL SUBMIT TWO COPIES OF SHOP DRAWINGS TO THE SCRRA DIRECTOR OF ENGINEERING AND CONSTRUCTION FOR APPROVAL PRIOR TO FABRICATION OF TURNOUT. SHOP DRAWINGS THAT CHANGE DETAILS OF THESE STANDARDS MUST CLEARLY SPECIFY SUCH PROPOSED CHANGES.
9. THE MATERIAL INCLUDED IN A "TURNOUT COMPLETE" IS EVERYTHING LISTED IN THE BILL OF MATERIALS. TO CONSTRUCT A COMPLETE TURNOUT, SWITCH TIES (PER LIST ON THIS SHEET) AND INSULATED JOINTS, FIELD WELDS, RUNNING RAIL, AND CLOSURE RAIL IDENTIFICATION ON SHEET ES2931-02 MUST ALSO BE SUPPLIED. THE MATERIAL FOR A "CROSSOVER COMPLETE" IS IDENTIFIED ON SHEET ES2931-05.
10. TIE PLATES SHALL CONFORM TO SCRRA ENGINEERING STANDARD ES2454.
11. SCREW SPIKES (15/16" X 6-2 TPI) SHALL CONFORM TO SCRRA ENGINEERING STANDARD ES2357. PLATE HOLES SHALL BE 1" DIAMETER. PILOT HOLES IN TIES SHALL BE 9/16" DIAMETER. SCREW SPIKES SHALL BE SCREWED INTO WOOD (NOT DRIVEN).
12. MANUFACTURER SHALL BEVEL RAIL ENDS PER CURRENT AREMA PLAN NO. 1005.
13. THE 26'-0" SWITCH POINT, MADE FROM 40'-0" RAIL PER ES2931-09 SHALL BE FURNISHED WITH SWITCH RODS NO. 1 AND 2 PER ES2931-11 AND ES2931-12.
14. FOR LOCATION OF INSULATED AND COMPROMISE JOINTS FOR NO. 14 TURNOUT AND CROSSOVER, SEE DRAWING NO. ES2931-02.
15. GAGE PLATES FOR SWITCH AND FROG, SWITCH HEEL PLATE (FOR BOTH R.H. AND L.H. TURNOUTS) AND PLATES P-10 THRU P-45 ARE DESIGNED TO BE PERPENDICULAR TO THE MAIN LINE THRU RUN RAILS.
16. UPON COMPLETION OF TURNOUT INSTALLATION, RUNNING RAIL MUST BE ADJUSTED TO SCRRA NEUTRAL RAIL TEMPERATURE.
17. ALL E-CLIPS SHALL BE GALVANIZED.
18. SWICH POINTS SHALL BE FABRICATED PER AREMA SPECIFICATION NO. 9-28-92 AND ES2931-09.
19. THE TOLERANCE FOR SPACING OF SWITCH TIES IS +/- ½" RELATIVE TO ADJACENT TIES AND 1¼" RELATIVE TO CUMULATIVE DIMENSION FROM POINT OF SWITCH (PS).

FOR MAINTENANCE ONLY

CROSSOVER DATA TABLE									
A	B	C	X	Y	2L+X	2L+X-2(PC-PS)	PS TO PS	U	V
13	182.23	181.77	50.41	313.59	313.94	266.38	266.03	48.78	49.24
14	196.25	195.75	64.42	327.57	327.96	280.40	280.01	62.76	63.26
15	210.27	209.73	78.44	341.56	341.98	294.41	293.99	76.74	77.27
16	224.28	223.71	92.46	355.54	365.00	308.43	307.97	90.72	91.29
17	238.30	237.70	106.48	369.52	370.01	322.45	321.95	104.70	105.31
18	252.32	251.68	420.50	383.50	384.03	336.47	335.94	118.69	199.33
19	266.34	265.55	134.51	397.48	398.05	350.49	349.92	132.67	133.34
20	280.36	279.64	158.53	411.47	412.07	364.50	363.90	146.65	147.36
21	294.37	293.62	162.55	425.45	426.09	378.52	377.88	160.63	161.38
22	308.39	307.61	176.57	439.43	440.10	392.54	391.87	174.62	175.40
23	322.41	321.59	190.58	453.41	454.12	406.56	405.85	188.60	189.42
24	336.43	335.57	204.60	467.39	468.14	420.57	419.83	202.58	203.43
25	350.45	349.55	218.32	481.38	482.16	434.59	433.81	216.56	217.45
26	364.46	363.53	232.64	495.36	496.18	448.61	447.78	230.54	231.47
27	378.48	377.52	246.66	509.34	510.19	462.63	461.78	244.53	245.49
28	392.50	391.50	260.67	523.32	542.21	476.65	475.76	285.51	259.50
29	406.52	405.48	274.69	537.31	538.23	490.66	489.74	272.49	273.52
30	420.53	419.46	288.71	551.29	552.25	504.68	503.72	286.47	287.54
31	434.55	433.44	302.73	565.27	566.26	518.70	517.70	300.45	301.56
32	448.57	447.43	316.75	579.25	580.28	532.72	531.69	314.44	315.58

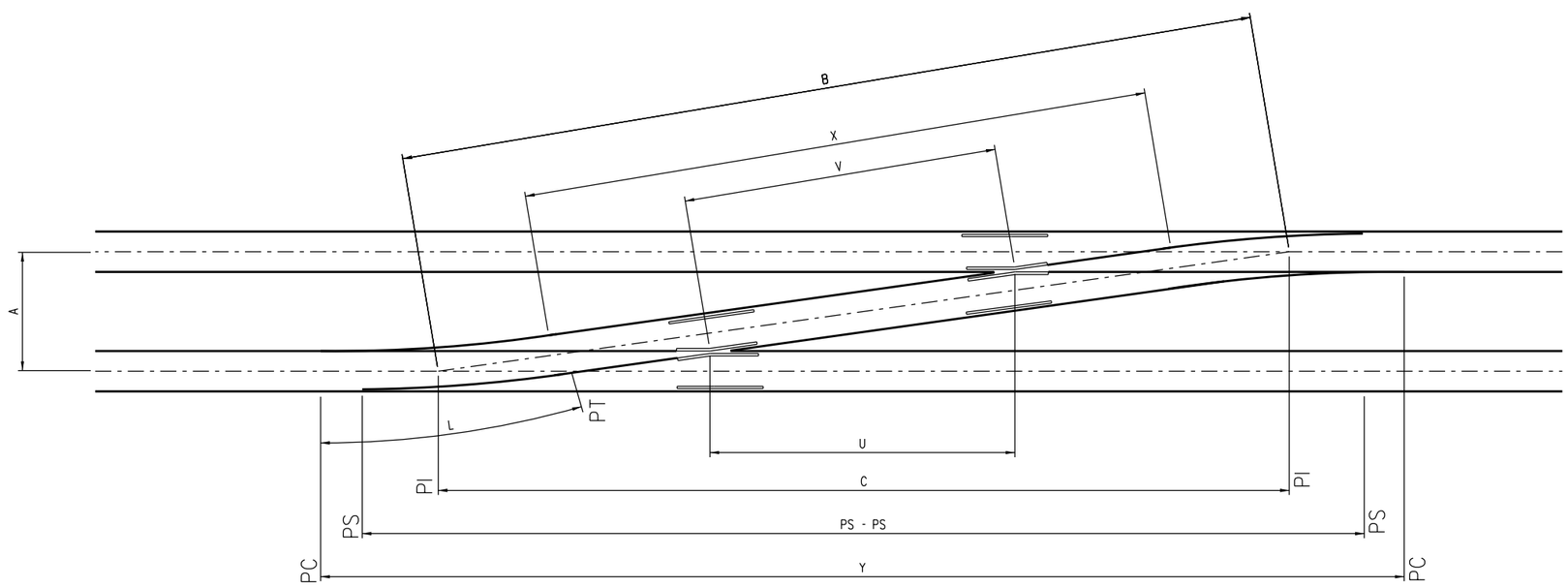

CROSSOVER LAYOUT

REV.	DATE	DESCRIPTION	DES.	ENG.
X	XX-XX-XX	REVISION	XX	XX

DRAWN BY: A. CARLOS DATE: 03/31/2011

ASSISTANT DIRECTOR: STANDARDS & DESIGN

DIRECTOR OF ENGINEERING AND CONSTRUCTION

SCRRA ENGINEERING STANDARDS ARE INTENDED FOR SCRRA APPROVED USES ONLY. FOR NON-SCRRA APPROVED USES:
SCRRA SHALL NOT BE RESPONSIBLE FOR THE ACCURACY OR COMPLETENESS OF THE DATA OR INFORMATION CONTAINED HEREIN. THE SELECTION AND USE OF THESE STANDARDS IS THE SOLE RESPONSIBILITY OF THE USER AND SHOULD NOT BE USED WITHOUT CONSULTING A REGISTERED PROFESSIONAL ENGINEER. ALL WARRANTIES AND REPRESENTATIONS OF ANY KIND ARE DISCLAIMED. ANYONE MAKING USE OF THIS INFORMATION AGREES THAT IT ASSUMES ALL LIABILITY ARISING FROM SUCH USE. NO PART OF THESE STANDARDS SHOULD BE REPRODUCED OR DISTRIBUTED IN ANY FORM OR BY ANY MEANS WITHOUT THE PRIOR WRITTEN PERMISSION OF SCRRA. ALL RIGHTS RESERVED.

METROLINK®
SOUTHERN CALIFORNIA REGIONAL RAIL AUTHORITY
ONE GATEWAY PLAZA, 12TH FLOOR, L. A., CA. 90012

ENGINEERING STANDARDS

NO. 14 136 LB. R.H. RBM FROG TURNOUT AND CROSSOVER GENERAL NOTES AND DATA

STANDARD: 2931
SCALE: NONE
REVISION: –
SHEET: 1 OF 16
CADD FILE: ES2931-01

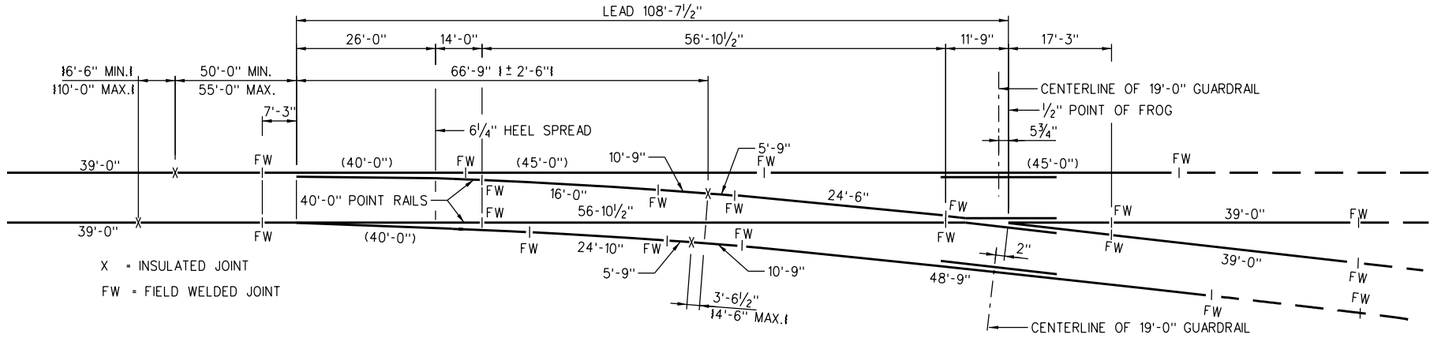

TURNOUT

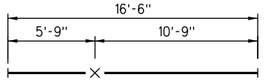

16'-6" LONG ADHESIVE BONDED PREFABRICATED MITRE CUT INSULATED RAIL JOINT ASSEMBLY

(SEE NOTE 6) BOTH ENDS SHALL BE LEFT BLANK FOR WELDING IN THE FIELD.

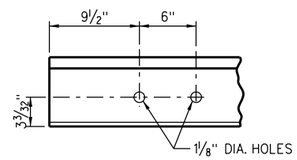

DETAIL "A"

SEE NOTE 4 (b)

NOTES:

1. SINCE THE PERMISSIBLE VARIATION IN STANDARD LENGTHS OF RAILS, FROGS AND SWITCH POINTS IS GREATER THAN THE NORMAL EXPANSION GAPS AT RAIL JOINTS AND THICKNESS OF FIBRE END POST IN INSULATED JOINTS, NO ALLOWANCE HAS BEEN MADE FOR EXPANSION GAPS AND FIBRE END POSTS IN COMPUTING LENGTHS OF RAILS SHOWN.
2. RAIL LAYOUT SHOWN FOR CROSSOVERS IS TO BE USED IN ALL CASES, EXCEPT WHERE COMPROMISE JOINTS ARE REQUIRED BETWEEN THE FROGS IN THE CROSSOVER TRACK. (COMPROMISE JOINTS CAN BE USED IN A TEMPORARY CONDITION.) WHEN COMPROMISE WELDS ARE REQUIRED, THE INSULATED JOINTS IN THE CROSSOVER TRACK SHALL ALWAYS BE OF THE HEAVIER SECTION AND THE RAIL LAYOUT SHALL BE CHANGED TO LOCATE COMPROMISE JOINTS AS DESCRIBED BELOW:
   THE DESCRIPTIONS OF THE CHANGES IN RAIL LAYOUT WHEN COMPROMISE JOINTS ARE REQUIRED IN THE CROSSOVER TRACK ARE BASED ON ASSUMPTION THAT TRACK H IS LAID WITH HEAVIER RAIL THAN TRACK L. CROSSOVER ON 15'-0" TRACK CENTERS: AT LOCATION A THE 65'-6" RAIL SHALL BE REPLACED WITH 5'-0" OF THE HEAVIER RAIL AND 60'-6" OF THE LIGHTER RAIL. AT LOCATION B THE 16'-11¾" RAIL SHALL BE REPLACED WITH 10'-0" OF THE HEAVIER RAIL AND 6'-11¾" OF THE LIGHTER RAIL.
3. IN ADDITION TO NOTE 1, NO ALLOWANCE HAS BEEN MADE IN RAIL LENGTHS TO PROVIDE GAPS NEEDED TO MAKE FIELD WELDS. IN THE FIELD IT WILL BE NECESSARY TO CUT RAIL ENDS TO PROVIDE CORRECT GAPS FOR FIELD WELDS.
4. FURNISH ALL RAIL SHOWN IN SOLID LINES ON THIS DRAWING:
   (A.) RAILS LONGER THAN 39'-0" SHALL BE CONTINUOUS WELDED RAIL (CWR), TO BE FURNISHED WITH BOTH ENDS LEFT BLANK FOR WELDING IN THE FIELD.
   (B.) ALL OTHER RAILS 39'-0" OR SHORTER AS SPECIFIED ON THE DRAWING, WITH BOTH END DRILLED PER DETAIL "A", IF SO REQUIRED.
5. ALL RAIL FURNISHED FOR TURNOUT AND CROSSOVER SHALL BE "HIGH STRENGTH" RAIL.
6. LOCATIONS OF INSULATED JOINTS ARE SHOWN ON TURNOUT AND CROSSOVER DIAGRAMS WITHOUT TOLERANCES, OR IF TOLERANCES ARE PERMISSIBLE, WITH (+ OR -). ALL INSULATED JOINTS ARE TO BE PROPERLY SUSPENDED IN CRIB AREA BETWEEN TWO TIES LOCATED 4" MINIMUM FROM EDGE OF NEAREST TIE TO EDGE OF INSULATED JOINT.
7. INSULATED JOINT MUST BE INSTALLED TO BE CENTERED BETWEEN TWO (2) TIES.
8. FIELD WELDED JOINTS DESIGNATED "FW" SHOULD BE IN CRIB AREA BETWEEN TWO TIES LOCATED 4" MINIMUM BETWEEN NEAREST TIE AND WELDED JOINT.
9. DIMENSIONS SHOWN IN PARENTHESIS (0'-0") ARE EXACT. RAILS FURNISHED FOR THESE LOCATIONS ARE LONGER AND MUST BE FIELD ADJUSTED (CUT) WITHIN TOLERANCES SHOWN IN BRACKETS {0'-0"}.
10. WHEN INSULATED JOINTS WITH TOLERANCES AND FIELD WELDED JOINTS FALL SHORT OF MINIMUM CLEARANCE FROM TIE OR TIE PLATE THE JOINT MAY BE MOVED WITHIN TOLERANCE LIMITS. BONDED INSULATED JOINT ASSEMBLIES AND STOCK RAILS ARE FURNISHED LONGER THAN SHOWN IN PARENTHESIS ON LAYOUT. THESE RAILS OR THEIR ADJACENT CONNECTING RAILS MUST BE TRIMMED IN THE FIELD TO FIT.

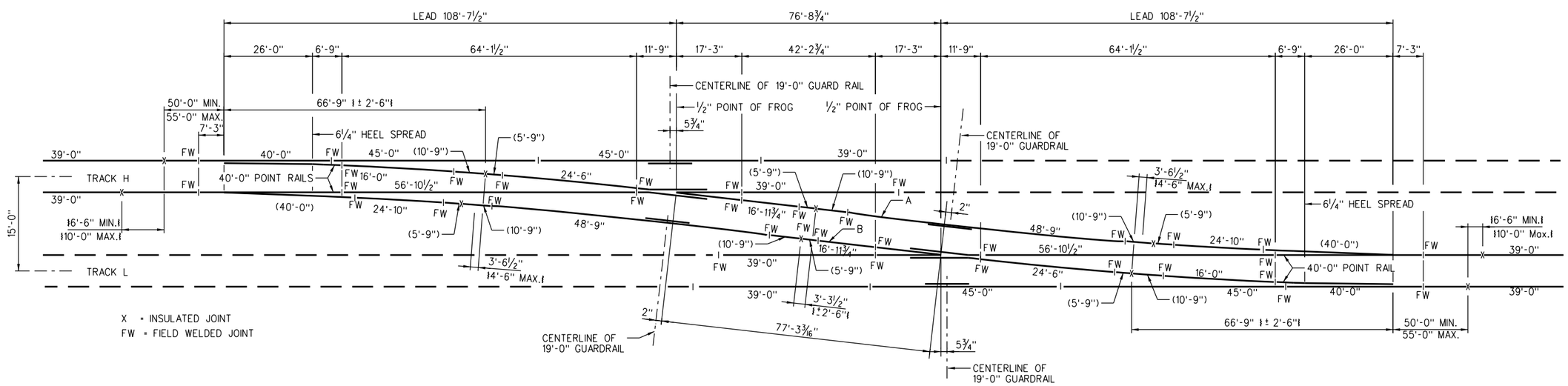

CROSSOVER

(15'-0" TRACK CENTERS)

FOR MAINTENANCE ONLY

X	XX-XX-XX	REVISION	XX	XX
REV.	DATE	DESCRIPTION	DES.	ENG.

DRAWN BY: A. CARLOS DATE: 03/31/2011

ASSISTANT DIRECTOR: STANDARDS & DESIGN

DIRECTOR OF ENGINEERING AND CONSTRUCTION

SCRRA ENGINEERING STANDARDS ARE INTENDED FOR SCRRA APPROVED USES ONLY. FOR NON-SCRRA APPROVED USES:
SCRRA SHALL NOT BE RESPONSIBLE FOR THE ACCURACY OR COMPLETENESS OF THE DATA OR INFORMATION CONTAINED HEREIN. THE SELECTION AND USE OF THESE STANDARDS IS THE SOLE RESPONSIBILITY OF THE USER AND SHOULD NOT BE USED WITHOUT CONSULTING A REGISTERED PROFESSIONAL ENGINEER. ALL WARRANTIES AND REPRESENTATIONS OF ANY KIND ARE DISCLAIMED. ANYONE MAKING USE OF THIS INFORMATION AGREES THAT IT ASSUMES ALL LIABILITY ARISING FROM SUCH USE. NO PART OF THESE STANDARDS SHOULD BE REPRODUCED OR DISTRIBUTED IN ANY FORM OR BY ANY MEANS WITHOUT THE PRIOR WRITTEN PERMISSION OF SCRRA. ALL RIGHTS RESERVED.

METROLINK®
SOUTHERN CALIFORNIA REGIONAL RAIL AUTHORITY
ONE GATEWAY PLAZA, 12TH FLOOR, L. A., CA. 90012

ENGINEERING STANDARDS

NO. 14 136 LB. R.H. RBM FROG
TURNOUT AND CROSSOVER
JOINTS LOCATIONS

STANDARD 2931
SCALE: NONE
REVISION –
SHEET 2 OF 16
CADD FILE: ES2931-02

NOTES:

1. SEE SHEET NO. ES2931-01 FOR NOTES AND TURNOUT DATA
2. SEE SHEET NO. ES2931-04 FOR TURNOUT BILL OF MATERIALS
3. SEE SHEET NO. ES2931-05 FOR CROSSOVER LAYOUT

NOTE:

GAGE PLATES PP NOT REQUIRED IF CONCRETE TIES INSTALLED OUT OF FACE AHEAD OF TIE G-OP.

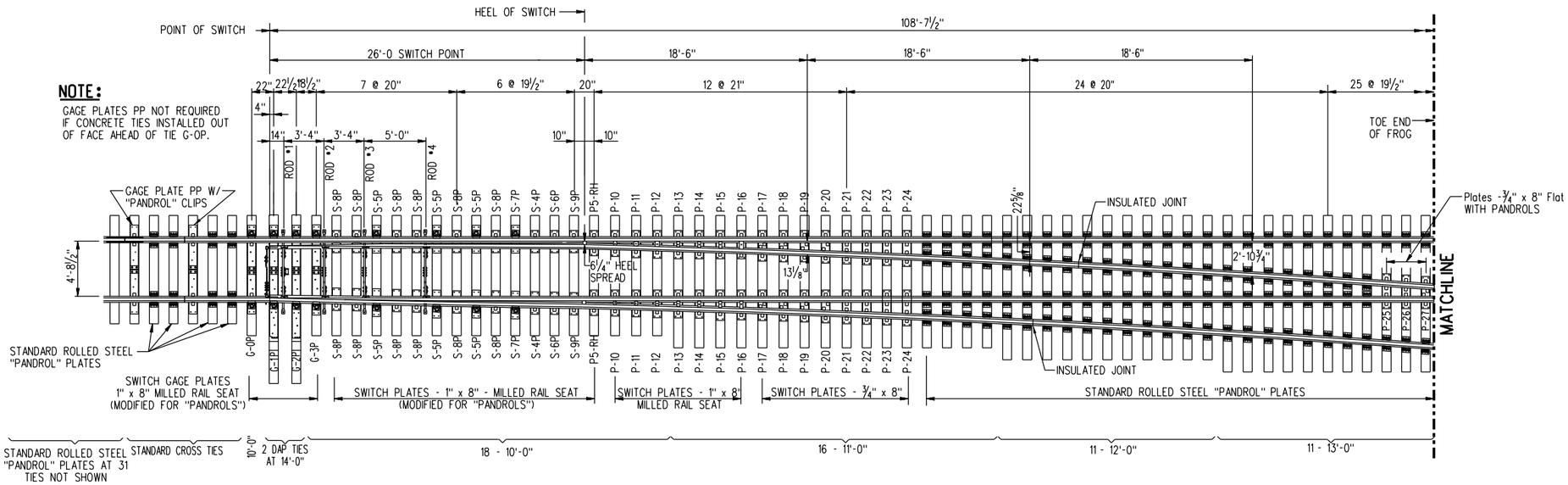

NO. 14 RIGHT HAND TURNOUT

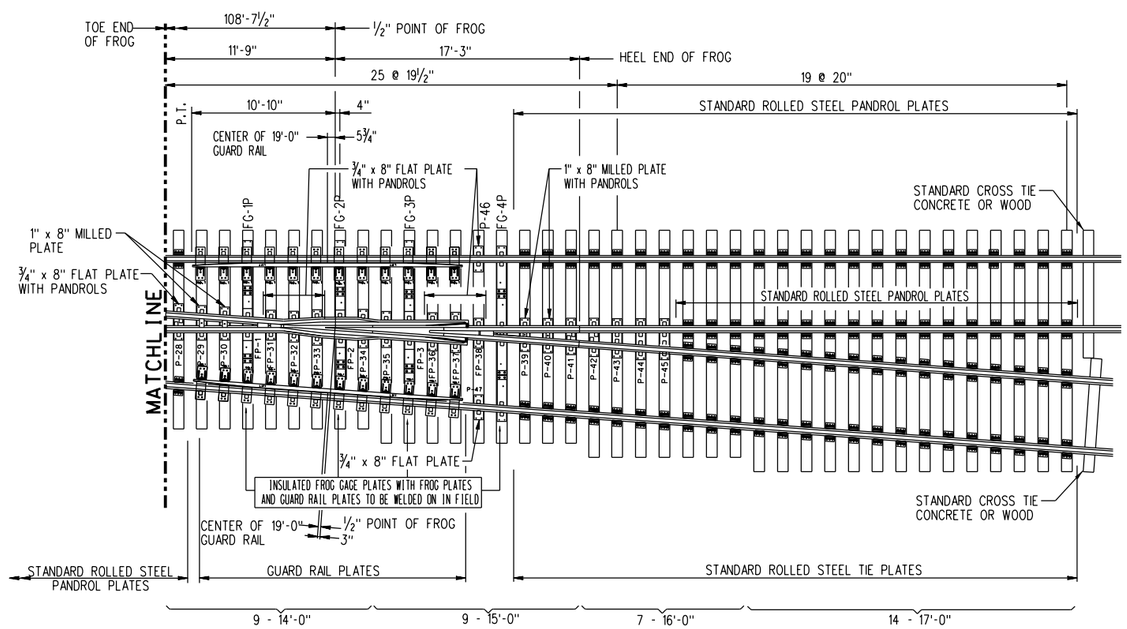

NO. 14 RIGHT HAND TURNOUT (CONT.)

FOR MAINTENANCE ONLY

REV.	DATE	DESCRIPTION	DES.	ENG.
X	XX-XX-XX	REVISION	XX	XX

DRAWN BY: A. CARLOS DATE: 03/31/2011

ASSISTANT DIRECTOR: STANDARDS & DESIGN

DIRECTOR OF ENGINEERING AND CONSTRUCTION

SCRRA ENGINEERING STANDARDS ARE INTENDED FOR SCRRA APPROVED USES ONLY. FOR NON-SCRRA APPROVED USES:
SCRRA SHALL NOT BE RESPONSIBLE FOR THE ACCURACY OR COMPLETENESS OF THE DATA OR INFORMATION CONTAINED HEREIN. THE SELECTION AND USE OF THESE STANDARDS IS THE SOLE RESPONSIBILITY OF THE USER AND SHOULD NOT BE USED WITHOUT CONSULTING A REGISTERED PROFESSIONAL ENGINEER. ALL WARRANTIES AND REPRESENTATIONS OF ANY KIND ARE DISCLAIMED. ANYONE MAKING USE OF THIS INFORMATION AGREES THAT IT ASSUMES ALL LIABILITY ARISING FROM SUCH USE. NO PART OF THESE STANDARDS SHOULD BE REPRODUCED OR DISTRIBUTED IN ANY FORM OR BY ANY MEANS WITHOUT THE PRIOR WRITTEN PERMISSION OF SCRRA. ALL RIGHTS RESERVED.

METROLINK®
SOUTHERN CALIFORNIA REGIONAL RAIL AUTHORITY
ONE GATEWAY PLAZA, 12TH FLOOR, L. A., CA. 90012

ENGINEERING STANDARDS

NO. 14 136 LB. R.H. RBM FROG TURNOUT LAYOUT

STANDARD 2931
SCALE: 3/16" = 1'-0"
REVISION –
SHEET 3 OF 16
CADD FILE: ES2931-03

BILL OF MATERIAL FOR LATERAL TURNOUT	
QTY.	DESCRIPTION
1	NO. 14 RAIL BOUND MANGANESE FROG
2	19'-0" "U-69" ADJUSTABLE GUARD RAIL W/ PLATES
1 PAIR	26'-0" EXTENDED FIELD WELDED TYPE SWITCH POINTS (40'-0" RAIL)
1 EACH	R.H. & L.H. SAMSON STOCK RAILS (40'-0")
1	"MF" TYPE FRONT ROD W/ "MF" CLIPS
1	NO. 1 SMJ TYPE SWITCH ROD W/ BASKET
1 EACH	NO. 2 THRU NO. 4 SMJ TYPE SWITCH ROD W/ BASKET
1	VERTICAL SWITCH ROD ASSEMBLY W/ SMJ CLIPS
2	SWITCH GAGE PLATE P-P
1 EACH	SWITCH GAGE PLATES G-OP THRU G-3P
2 EACH	TURNOUT PLATES P-10 THRU P-24
1 EACH	TURNOUT PLATES P-25 THRU P-30
1 EACH	TURNOUT PLATES P-39 THRU P-45
1 EACH	SINGLE RAIL PLATES P-46 AND P-47
1 EACH	FROG GAGE PLATES FG-1P THRU FG-4P
1 EACH	FROG PLATES FP-31 THRU FP-38
1 EACH	FROG CLAMP PLATES FCP-1 THRU FCP-3
2	SLIDE PLATE S-4P
6	SLIDE PLATE S-5P
2	SLIDE PLATE S-6P
2	SLIDE PLATE S-7P
12	SLIDE PLATE S-8P
2	SLIDE PLATES S-9P
2	HEEL PLATE P5-RH
4	D.I. RAIL HOLD DOWN CLIPS E-3706
6	D.I. RAIL HOLD DOWN CLIPS E-3708
2	D.I. RAIL HOLD DOWN CLIPS E-3709
4	D.I. RAIL HOLD DOWN CLIPS E-3710
16	BOLTLESS ADJUSTABLE BRACE ASSEMBLY
144	"PANDROL", OR EQUAL, TYPE PLATES
288	"PANDROL", OR EQUAL, CLIP TYPE E-2055
8	"PANDROL", OR EQUAL, CLIP TYPE E-2063
576	"PANDROL", OR EQUAL, 15/16" DIA. No. 5760 SCREW SPIKES
1 EACH	16'-0" RAIL
1 EACH	24'-6" RAIL
1 EACH	24'-10" RAIL
4 EACH	39'-0" RAIL
2 EACH	45'-0" RAIL
1 EACH	48'-9" RAIL
1 EACH	56'-10 1/2" RAIL
2 EA.	EPOXY BONDED PREFABRICATED MITRE CUT INSULATED JOINT 16'-6"

BILL OF SWITCH TIES FOR TURNOUT			
PIECES	SIZE	LENGTH	BOARD FEET
1	7" x 9"	10'-0"	52.50
2	7" x 9"	15'-0"	136.50
18	7" x 9"	10'-0"	945.00
16	7" x 9"	11'-0"	924.00
11	7" x 9"	12'-0"	693.00
11	7" x 9"	13'-0"	750.75
9	7" x 9"	14'-0"	661.50
2	10" x 9"	14'-0" DAP TIES	147.00
7	7" x 9"	15'-0"	551.25
7	7" x 9"	16'-0"	588.00
14	7" x 9"	17'-0"	1249.50
TOTAL			TOTAL
98			6699.00

FOR MAINTENANCE ONLY

REV.	DATE	DESCRIPTION	DES.	ENG.
X	XX-XX-XX	REVISION	XX	XX

DRAWN BY: A. CARLOS DATE: 03/31/2011

ASSISTANT DIRECTOR: STANDARDS & DESIGN

DIRECTOR OF ENGINEERING AND CONSTRUCTION

SCRRA ENGINEERING STANDARDS ARE INTENDED FOR SCRRA APPROVED USES ONLY. FOR NON-SCRRA APPROVED USES:
SCRRA SHALL NOT BE RESPONSIBLE FOR THE ACCURACY OR COMPLETENESS OF THE DATA OR INFORMATION CONTAINED HEREIN. THE SELECTION AND USE OF THESE STANDARDS IS THE SOLE RESPONSIBILITY OF THE USER AND SHOULD NOT BE USED WITHOUT CONSULTING A REGISTERED PROFESSIONAL ENGINEER. ALL WARRANTIES AND REPRESENTATIONS OF ANY KIND ARE DISCLAIMED. ANYONE MAKING USE OF THIS INFORMATION AGREES THAT IT ASSUMES ALL LIABILITY ARISING FROM SUCH USE. NO PART OF THESE STANDARDS SHOULD BE REPRODUCED OR DISTRIBUTED IN ANY FORM OR BY ANY MEANS WITHOUT THE PRIOR WRITTEN PERMISSION OF SCRRA. ALL RIGHTS RESERVED.

METROLINK®
SOUTHERN CALIFORNIA REGIONAL RAIL AUTHORITY
ONE GATEWAY PLAZA, 12TH FLOOR, L. A., CA. 90012

ENGINEERING STANDARDS

NO. 14 136 LB. R.H. RBM FROG TURNOUT
BILL OF MATERIALS

STANDARD 2931
SCALE: NONE
REVISION –
SHEET 4 OF 16
CADD FILE: ES2931-04

NOTES:

1. SEE SHEET NO. ES2931-01 FOR TURNOUT NOTES AND DATA
2. SEE SHEET NO. ES2931-04 FOR BILL OF MATERIALS
3. SEE SHEET NO. ES2931-03

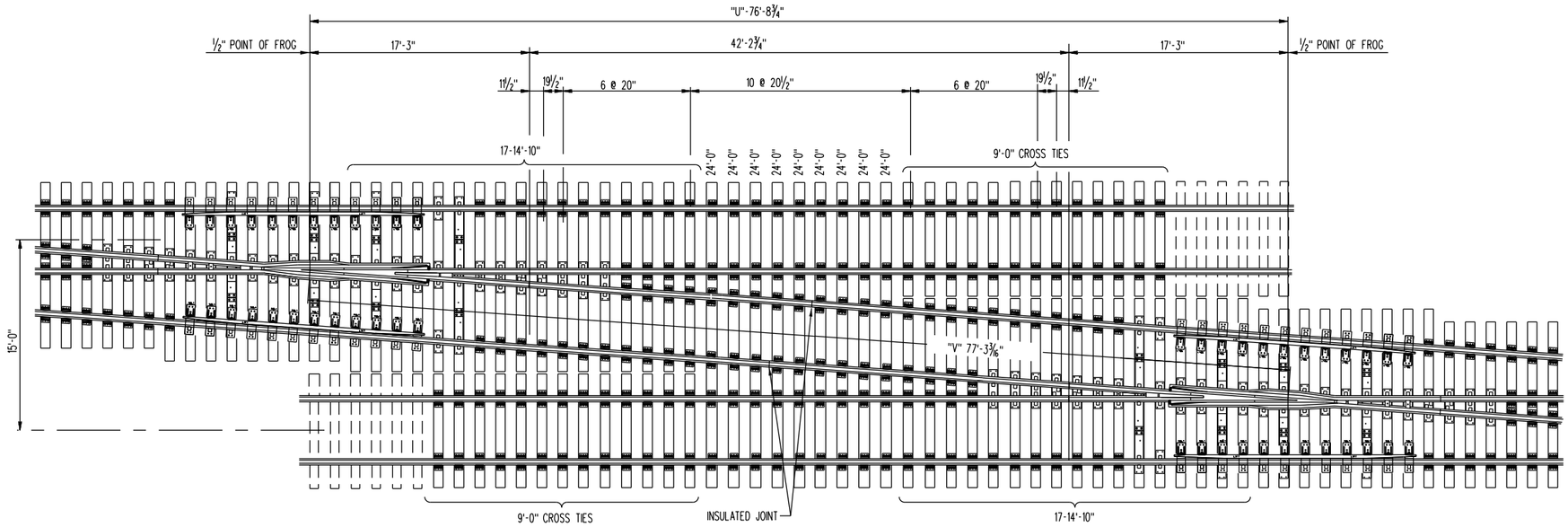

BILL OF MATERIAL

QTY.	DESCRIPTION
2	NO. 14 RAIL BOUND MANGANESE FROG
4	19'-0" "U-69" ADJUSTABLE GUARD RAIL W/ PLATES
2	"MF" TYPE FRONT ROD W/ "MF" CLIPS
2	NO. 1 SMJ TYPE SWITCH ROD W/ BASKET
2 EACH	NO. 2 THRU NO. 4 SMJ TYPE SWITCH ROD W/ BASKET
2	VERTICAL SWITCH ROD ASSEMBLY W/ SMJ CLIPS
4	SWITCH GAGE PLATE P-P
2 EACH	SWITCH GAGE PLATES G-OP THRU G-3P
4 EACH	TURNOUT PLATES P-10 THRU P-24
2 EACH	TURNOUT PLATES P-25 THRU P-30
2 EACH	TURNOUT PLATES P-39 THRU P-45
2 EACH	SINGLE RAIL PLATES P-46 AND P-47
2 EACH	FROG GAGE PLATES FG-1P THRU FG-4P
2 EACH	FROG PLATES FP-31 THRU FP-38
2 EACH	FROG CLAMP PLATES FCP-1 THRU FCP-3
4	SLIDE PLATE S-4P
12	SLIDE PLATE S-5P
4	SLIDE PLATE S-6P
4	SLIDE PLATE S-7P
24	SLIDE PLATE S-8P
4	SLIDE PLATES S-9P
4	HEEL PLATE P5-RH
8	D.I. RAIL HOLD DOWN CLIPS E-3706
12	D.I. RAIL HOLD DOWN CLIPS E-3708
4	D.I. RAIL HOLD DOWN CLIPS E-3709
8	D.I. RAIL HOLD DOWN CLIPS E-3710
32	BOLTLESS ADJUSTABLE BRACE ASSEMBLY
186	"PANDROL", OR EQUAL, TYPE PLATES
372	"PANDROL", OR EQUAL, CLIP TYPE E-2055
24	"PANDROL", OR EQUAL, CLIP TYPE E-2063
744	"PANDROL", OR EQUAL, 15/16" DIA. No. 5760 SCREW SPIKES

CROSSOVER

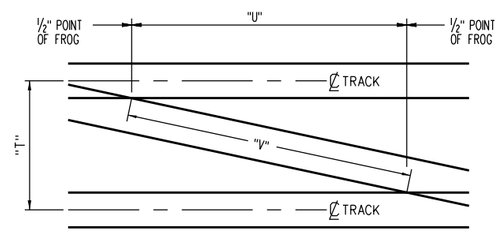

CROSSOVER DATA DETAIL

CROSSOVER DATA

MAIN TRACKS - TANGENT AND PARALLEL
CROSSOVER - TANGENT BETWEEN FROGS

Track Centers "T"	DISTANCE BETWEEN ½" FROG POINTS	
	ON MAIN TRACK "U"	ON CROSSOVER "V"
14'-0"	62'-9"	63'-3"
15'-0"	76'-8¾"	77'-3 3/16"
16'-0"	90'-8½"	91'-3⅜"
17'-0"	104'-8⅝"	105'-3½"
Each 1"	1.165'	1.168'

BILL OF MATERIAL (CONT.)

QTY.	DESCRIPTION
2 EACH	16'-0" RAIL
2 EACH	16'-11¾" RAIL
2 EACH	24'-6" RAIL
2 EACH	24'-10" RAIL
2 EACH	39'-0" RAIL
2 EACH	45'-0" RAIL
2 EACH	48'-9" RAIL
2 EACH	56'-10½" RAIL
6 EACH	EPOXY BONDED PREFABRICATED MITRE CUT INSULATED JOINTS (16'-6")
2 PAIR	26'-0" EXTENDED FIELD WELDED TYPE SWITCH POINTS (40'-0" RAIL)
2 PAIR	R.H. & L.H. SAMSON STOCK RAILS (40'-0" RAIL)

BILL OF SWITCH TIES

PIECES	SIZE	LENGTH	BOARD FEET
34	7" x 9"	9'-0"	1606.50
38	7" x 9"	10'-0"	1995.00
32	7" x 9"	11'-0"	1848.00
22	7" x 9"	12'-0"	1386.00
20	7" x 9"	13'-0"	1365.00
18	7" x 9"	14'-0"	1323.00
4	10" x 9"	14'-0" DAP TIES	294.00
34	7" x 9"	14'-10"	2677.50
9	7" x 9"	24'-0"	1134.00
TOTAL			TOTAL
207			13629.00

FOR MAINTENANCE ONLY

REV.	DATE	DESCRIPTION	DES.	ENG.
X	XX-XX-XX	REVISION	XX	XX

DRAWN BY: A. CARLOS DATE: 03/31/2011

ASSISTANT DIRECTOR: STANDARDS & DESIGN

DIRECTOR OF ENGINEERING AND CONSTRUCTION

SCRRA ENGINEERING STANDARDS ARE INTENDED FOR SCRRA APPROVED USES ONLY. FOR NON-SCRRA APPROVED USES:
SCRRA SHALL NOT BE RESPONSIBLE FOR THE ACCURACY OR COMPLETENESS OF THE DATA OR INFORMATION CONTAINED HEREIN. THE SELECTION AND USE OF THESE STANDARDS IS THE SOLE RESPONSIBILITY OF THE USER AND SHOULD NOT BE USED WITHOUT CONSULTING A REGISTERED PROFESSIONAL ENGINEER. ALL WARRANTIES AND REPRESENTATIONS OF ANY KIND ARE DISCLAIMED. ANYONE MAKING USE OF THIS INFORMATION AGREES THAT IT ASSUMES ALL LIABILITY ARISING FROM SUCH USE. NO PART OF THESE STANDARDS SHOULD BE REPRODUCED OR DISTRIBUTED IN ANY FORM OR BY ANY MEANS WITHOUT THE PRIOR WRITTEN PERMISSION OF SCRRA. ALL RIGHTS RESERVED.

METROLINK®
SOUTHERN CALIFORNIA REGIONAL RAIL AUTHORITY
ONE GATEWAY PLAZA, 12TH FLOOR, L. A., CA. 90012

ENGINEERING STANDARDS

NO. 14 136 LB. R.H. RBM FROG CROSSOVER
LAYOUT AND BILL OF MATERIALS

STANDARD 2931
SCALE: 3/16" = 1'-0"
REVISION –
SHEET 5 OF 16
CADD FILE: ES2931-05

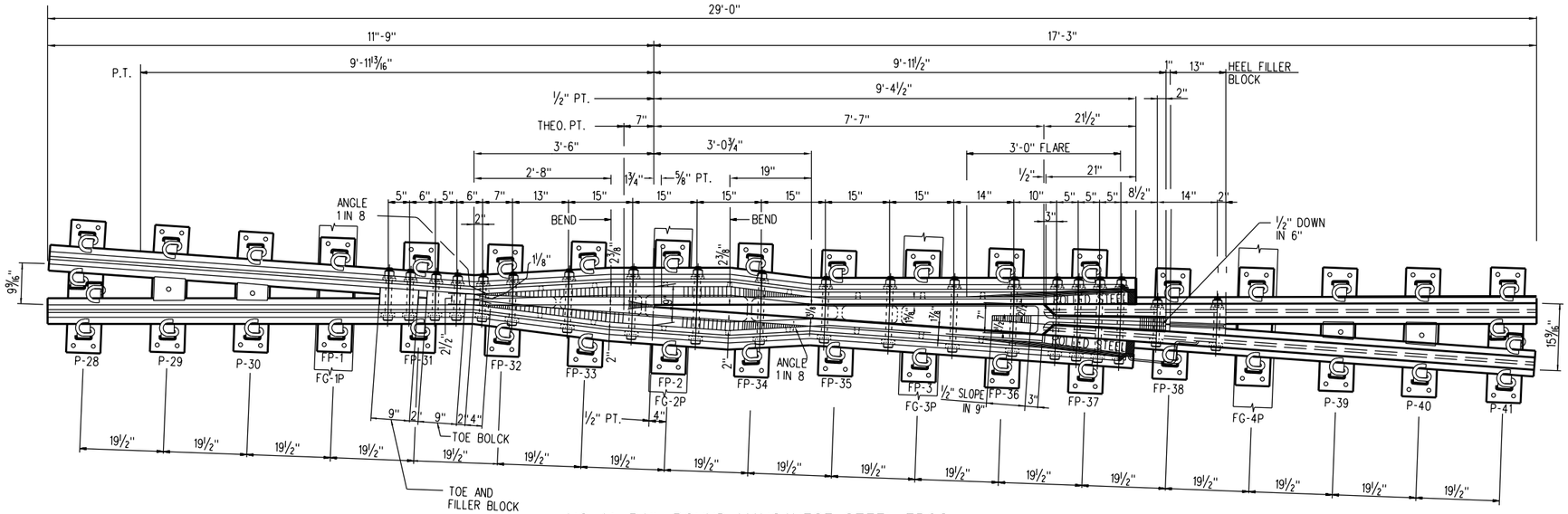

NO. 14 RAIL BOUND MANGANESE STEEL FROG

NOTES:

1. FROG ANGLE 4°-05'-27".
2. RAIL USED TO FABRICATE FROG IS TO BE 136 LB. HIGH STRENGTH.
3. RAIL BOUND MANGANESE STEEL FROG PER CURRENT AREMA PLAN NO. 621 & 625 WITH EXPLOSIVE HARDENED MANGANESE HIGH INTEGRITY CASTING PER CURRENT AREMA SPECIFICATIONS AND MODIFIED FOR ARM LENGTHS AND PLATES WITH FASTENERS.
4. ALL FROG PLATES SHALL BE STAMPED IN 1/2" CHARACTERS TO INDICATE MFG., FROG NO., R.H., RAIL SECTION AND PLATE NUMBER. MARK TO BE STAMPED ON SAME END OF ALL FROG PLATES.
5. WORKMANSHIP AND MATERIALS SHALL BE PER CURENT AREMA "MANUAL AND PORTFOLIO", EXCEPT AS OTHERWISE SPECIFIED.
6. ANY CONSTRUCTION DETAILS NOT SHOWN SHALL BE IN ACCORDANCE WITH CURRENT AREMA RECOMMENDED PRACTICE.
7. FROG PLATES ARE DESIGNED TO BE INSTALLED PERPENDICULAR TO MAIN TRACK.
8. BODY BOLTS 1 3/8" DIA. H.T.C.S. - PER AREMA SPECIFICATIONS.
9. TOE AND HEEL BLOCKS AND BOLTS PER AREMA SPECIFICATIONS.
10. PLATES TO BE MADE OF MILD ROLLED STEEL.
11. THE PLATES AS SHOWN ARE FOR A 136 LB., NO. 14, RIGHT HAND TURNOUT. FOR A LEFT HAND TURNOUT, PLATES TO BE OPPOSITE.
12. THE "PANDROL", OR APPROVED EQUAL, TYPE WELD-ON PRESSED STEEL SHOULDER, MADE OF MILD STEEL AND MEETING "PANDROL'S" DESIGN SPECIFICATIONS SHALL BE USED. THE PRESSED STEEL SHOULDER MUST BE CAREFULLY WELDED TO ALL PLATES WITH A MINIMUM 2 PASS 3/8" • FILLET WELD ALONG THE BEVELED GROOVES OF THE SHOULDER. ANY WELD PROJECTING BEYOND THE VERTICAL FACE OF SHOULDER IN THE AREA OF THE BASE OF RAIL SEAT MUST BE MACHINED OUT TO PROVIDE A CLEAR RAIL SEAT DIMENSION AS CALLED FOR.
13. MANUFACTURER OF FROG PLATES SHALL USE COMPLETED FROG TO VERIFY LOCATION OF ADJUSTABLE CLAMPS ON FROG PLATES FP-1, FP-2 AND FP-3 TO INSURE PROPER FIT. FROG PLATES WILL BE WELDED TO THE GAGE PLATES IN THE FIELD WITH A 3 PASS 1/2" • FILLET WELD. PLATES WILL BE WELDED ONLY AFTER THE GAGE PLATES ARE SECURED IN THE PROPER LOCATION ON THE TIE WITH THE FROG IN PLACE AT PROPER ALIGNMENT.
14. GUARD RAIL PLATES ARE TO BE INSTALLED AND WELDED TO THE FROG GAGE PLATES IN THE FIELD WITH A 3 PASS 1/2" • FILLET WELD CONTINUOUS ON BOTH ENDS OF THE PLATE. PLATES ARE TO BE WELDED ONLY AFTER THE GAGE PLATE AND THE FROG IS SECURED IN THE PROPER LOCATION ON THE TIE WITH PROPER ALIGNMENT.
15. IDENTIFICATION TAG WITH RAISED METAL CHARACTERS TO BE APPLIED WHICH WILL STATE WEIGHT OF RAIL, FROG NO., MANUFACTURER AND YEAR MANUFACTURED.
16. RAILS ENDS TO BE CUT AT 45 DEGREE ANGLE AT JOINT WITH FROG CASTING.

WELDING OF GAGE PLATE & GUARD RAIL PLATES:

1. POSITION GAGE PLATES AT DESIGNATED TIE LOCATIONS AND ANCHOR IN PLACE.
2. CHECK TRACK FOR CORRECT GAGE.
3. STARTING WITH ONE GAGE PLATE, PLACE FROG PLATES WITH ELASTIC CLIPS AND SECURE TO FROG AND GUARD RAIL WITH "PANDROL" CLIPS.
4. RECHECK TRACK GAGE IF NECESSARY.
5. CAREFULLY WELD FROG PLATE AND GUARD RAIL PLATE TO FROG GAGE PLATES WITH 3 PASS 1/2" • FILLET WELD. FOR WELDING USE THE FOLLOWING:
   A. ELECTRODE, 5/32 INCH, WELDING SPEC. 7018XLM.
   B. ELECTRODE, 3/16 INCH, WELDING SPEC. 7018XLM.
   C. WIRE, 3/32 INCH, NR203, 1% NICKEL FLUX CORE.
   OTHER WIRE OR ELECTRODES MEETING SPECIFICATIONS AS CALLED FOR AND APPROVED BY SCRRA DIRECTOR OF ENGINEERING MAY BE USED.

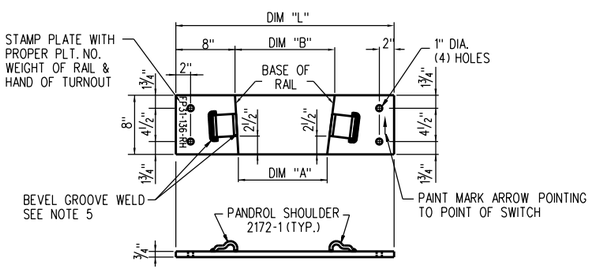

FROG PLATE - FP-31

3/4" x 8" x DIM "L" - FLAT - W/PANDROL CLIPS

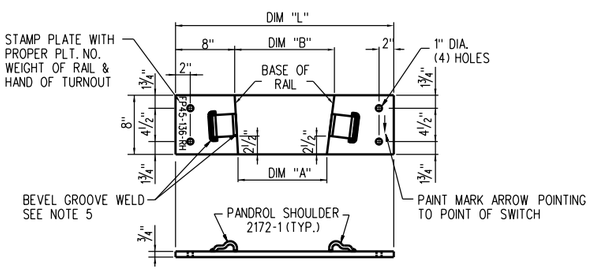

FROG PLATES - FP-32 & FP-33

3/4" x 8" x DIM "L" - FLAT - W/PANDROL CLIPS

DIMENSION TABLE				
PLATE	DIM "A"	DIM "B"	DIM "L"	Pits REQ'D.
FP-31	SEE NOTE "A"		2'-4 1/2"	1 EA.
FP-32	SEE NOTE "A"		2'-5 1/2"	1 EA.
FP-33	SEE NOTE "A"		2'-9"	1 EA.
FP-34	SEE NOTE "A"		2'-11"	1 EA.
FP-35	SEE NOTE "A"		2'-8 1/2"	1 EA.
FP-36	SEE NOTE "A"		2'-11 1/2"	1 EA.
FP-37	SEE NOTE "A"		3'-1"	1 EA.
FP-38	SEE NOTE "A"		2'-4 1/2"	1 EA.

NOTE "A"

PLATES FP-31 THRU FP-38 ARE TO BE LAYED OUT AND MARKED OFF FROM UNDER FROG TO INSURE PROPER LOCATION OF PANDROL SHOULDERS.

NOTE "B"

SPECIAL FROG PLATES FP-1, FP-2, AND FP-3 WITH STEEL SHOULDERS, SHOWN IN POSITION ON SHEET 7, ARE DESIGNED TO BE WELDED TO FROG GAGE PLATES. FOR MANUFACTURING DETAILS AND INSTALLATION PROCEEDURES SEE DWG. No. 2931-07.

FOR MAINTENANCE ONLY

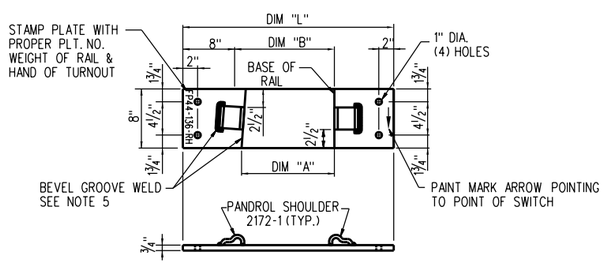

FROG PLATE - FP-34

3/4" x 8" x DIM "L" - FLAT - W/PANDROL CLIPS

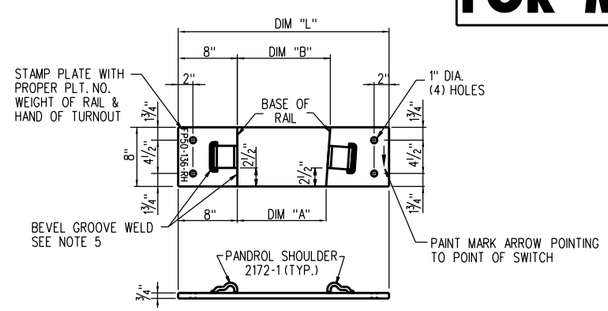

FROG PLATES - FP-35 THRU FP-38

3/4" x 8" x DIM "L" ~ FLAT ~ W/PANDROL CLIPS

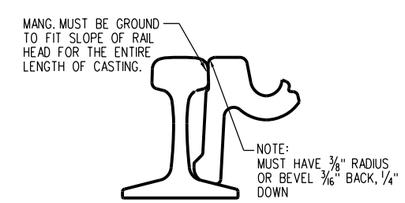

DETAIL OF FROG CASTING / RAIL FIT

SCALE: NONE

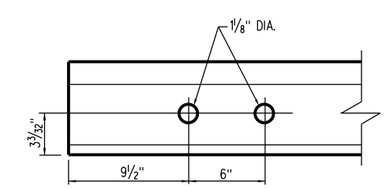

RAIL END DRILLING

NOTE: RAIL END DRILLING CAN BE ELIMINATED IF NO TEMPORARY BOLTED JOINTS ARE TO BE USED.

REV.	DATE	DESCRIPTION	DES.	ENG.
X	XX-XX-XX	REVISION	XX	XX

DRAWN BY: A. CARLOS DATE: 03/31/2011

ASSISTANT DIRECTOR: STANDARDS & DESIGN

DIRECTOR OF ENGINEERING AND CONSTRUCTION

SCRRA ENGINEERING STANDARDS ARE INTENDED FOR SCRRA APPROVED USES ONLY. FOR NON-SCRRA APPROVED USES: SCRRA SHALL NOT BE RESPONSIBLE FOR THE ACCURACY OR COMPLETENESS OF THE DATA OR INFORMATION CONTAINED HEREIN. THE SELECTION AND USE OF THESE STANDARDS IS THE SOLE RESPONSIBILITY OF THE USER AND SHOULD NOT BE USED WITHOUT CONSULTING A REGISTERED PROFESSIONAL ENGINEER. ALL WARRANTIES AND REPRESENTATIONS OF ANY KIND ARE DISCLAIMED. ANYONE MAKING USE OF THIS INFORMATION AGREES THAT IT ASSUMES ALL LIABILITY ARISING FROM SUCH USE. NO PART OF THESE STANDARDS SHOULD BE REPRODUCED OR DISTRIBUTED IN ANY FORM OR BY ANY MEANS WITHOUT THE PRIOR WRITTEN PERMISSION OF SCRRA. ALL RIGHTS RESERVED.

METROLINK

SOUTHERN CALIFORNIA REGIONAL RAIL AUTHORITY
ONE GATEWAY PLAZA, 12TH FLOOR, L. A., CA. 90012

ENGINEERING STANDARDS

NO. 14 136 LB. R.H. RBM FROG LAYOUT

STANDARD 2931
SCALE: 3/4" = 1'-0"
REVISION –
SHEET 6 OF 16
CADD FILE: ES2931-06

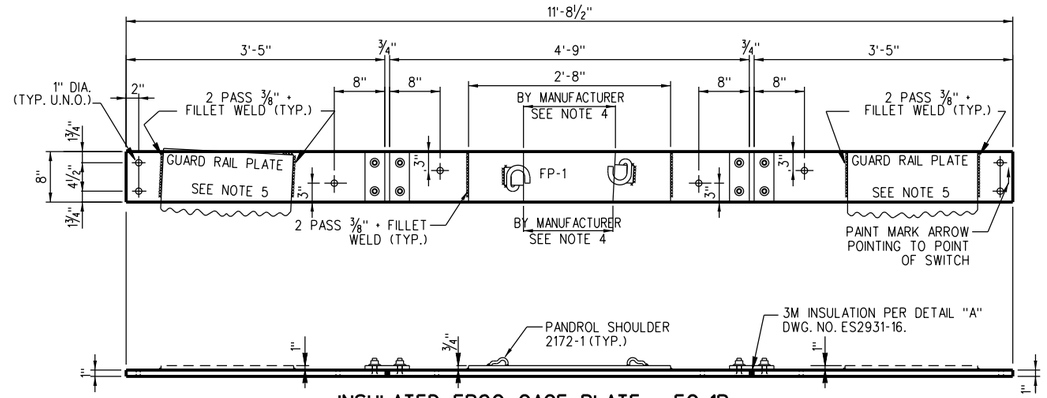

INSULATED FROG GAGE PLATE - FG-1P

1" x 8" - FLAT - W/3M INSULATION (1 PC. REQ'D. AS SHOWN)

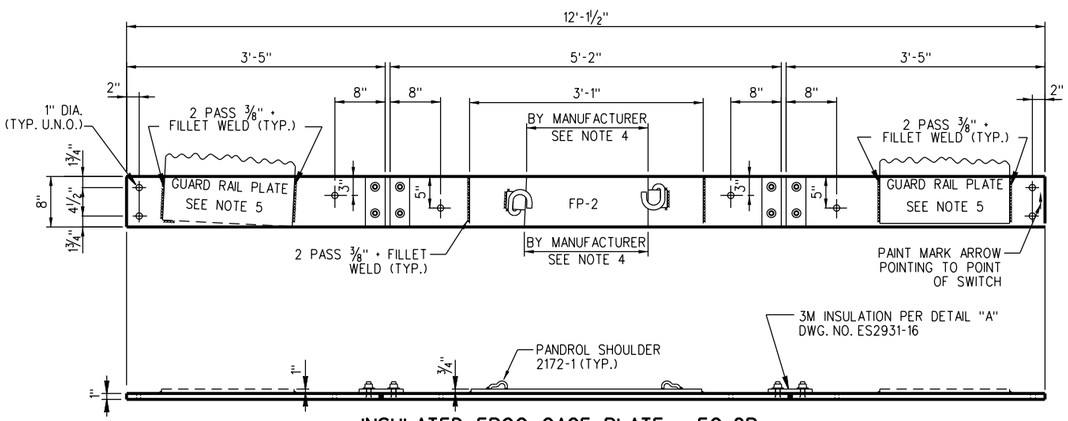

INSULATED FROG GAGE PLATE - FG-2P

1" x 8" - FLAT - W/3M INSULATION (1 PC. REQ'D. AS SHOWN)

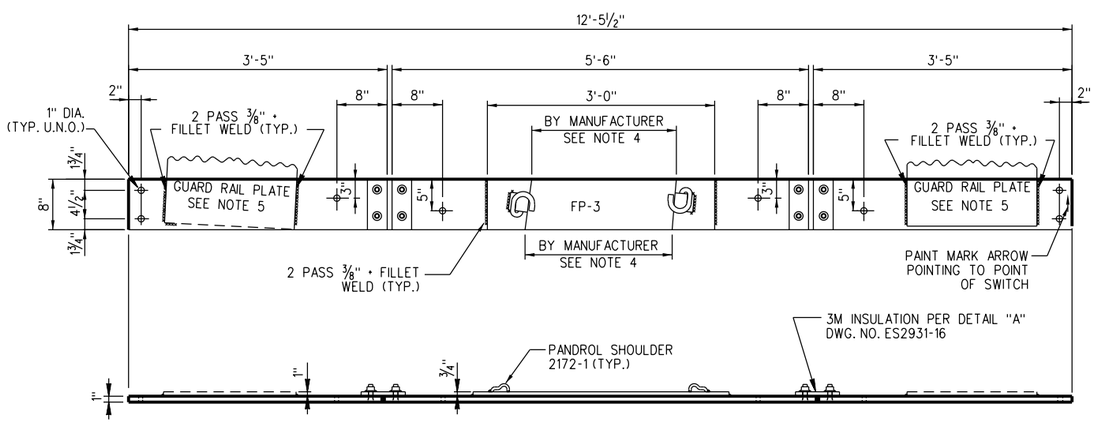

INSULATED FROG GAGE PLATE - FG-3P

1" x 8" - FLAT - W/3M INSULATION (1 PC. REQ'D. AS SHOWN)

NOTES:

1. PLATES TO BE MADE OF MILD ROLLED STEEL.
2. THE PLATES AS SHOWN ARE FOR A 136 LB., NO. 14, RIGHT HAND TURNOUT, FOR A LEFT HAND TURNOUT, PLATES ARE TO BE OPPOSITE.
3. THE "PANDROL" TYPE WELD-ON PRESSED STEEL SHOULDER, MADE OF MILD STEEL, TO BE PURCHASED FORM "PANDROL INTERNATIONAL" OR APPROVED ALTERNATE MEETING "PANDROL'S" DESIGN SPECIFICATIONS. THE PRESSED STEEL SHOULDER MUST BE CAREFULLY WELDED TO ALL PLATES WITH A MINIMUM 2 PASS ⅜" • FILLET WELD ALONG THE BEVELED GROOVES OF THE SHOULDER. ANY WELD PROJECTING BEYOND THE VERTICAL FACE OF THE SHOULDER IN THE AREA OF THE BASE OF RAIL SEAT MUST BE MACHINED OUT TO PROVIDE A CLEAR RAIL SEAT DIMENSION AS CALLED FOR.
4. MANUFACTURER OF FROG PLATES SHALL USE COMPLETED FROG TO VERIFY LOCATION OF SHOULDERS ON FROG PLATES FP-1, FP-2 AND FP-3 TO INSURE PROPER FIT. FROG PLATES WILL BE WELDED TO THE GAGE PLATES IN THE FIELD WITH A 3 PASS ½" • FILLET WELD. PLATES WILL BE WELDED ONLY AFTER THE GAGE PLATES ARE SECURED IN THE PROPER LOCATION ON THE TIE WITH THE FROG IN PLACE AT PROPER ALIGNMENT.
5. GUARD RAIL PLATES ARE TO BE INSTALLED AND WELDED TO THE FROG GAGE PLATES IN THE FIELD WITH A 3 PASS ½" • FILLET WELD CONTINUOUS ON BOTH ENDS OF THE PLATE. PLATES ARE TO BE WELDED ONLY AFTER THE GAGE PLATE AND THE FROG IS SECURED IN THE PROPER LOCATION ON THE TIE WITH PROPER ALIGNMENT.

INSTRUCTIONS FOR WELDING GUARD RAIL PLATES TO GAGE PLATES:

1. POSITION GAGE PLATES AT DESIGNATED TIE LOCATIONS AND ANCHOR IN PLACE.
2. CHECK TRACK FOR CORRECT GAGE.
3. STARTING WITH ONE GAGE PLATE, PLACE FROG PLATES WITH ADJUSTABLE BRACES AND SECURE TO FROG AND GUARD RAIL WITH "PANDROL" CLIPS.
4. RECHECK TRACK GAGE AND CORRECT IF NECESSARY.
5. CAREFULLY WELD FROG PLATE AND GUARD RAIL PLATE TO FROG GAGE PLATES WITH 3 PASS ½" • FILLET WELD. FOR WELDING USE THE FOLLOWING:
   A. ELECTRODE, 5/32 INCH, WELDING SPEC. 7018XLM.
   B. ELECTRODE, 3/16 INCH, WELDING SPEC. 7018XLM.
   C. WIRE, 5/32 INCH, NR203, 1% NICKEL FLUX CORE.

   OTHER WIRE OR ELECTRODES MEETING SPECIFICATIONS AS CALLED FOR AND APPROVED BY SCRRA DIRECTOR OF ENGINEERING MAY BE USED.

FOR MAINTENANCE ONLY

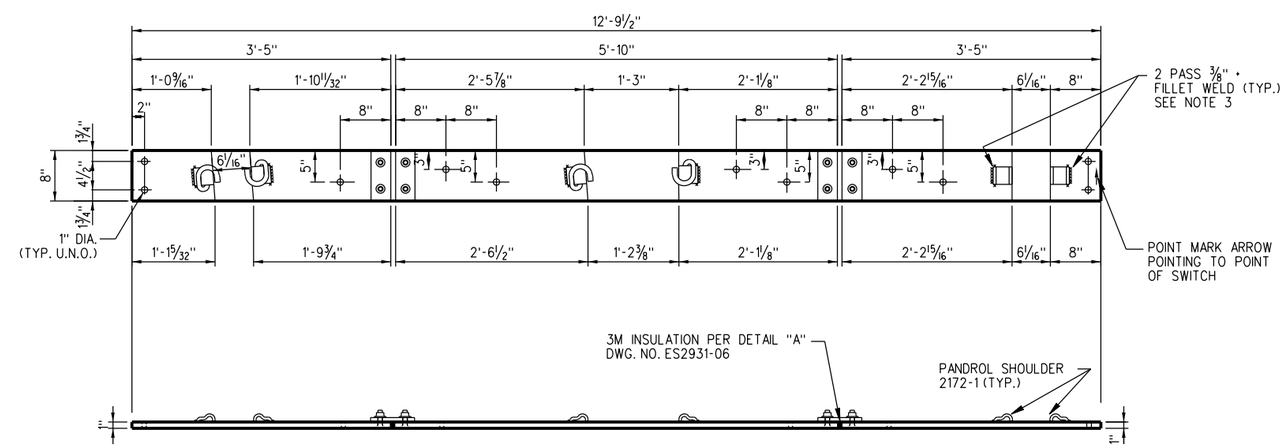

INSULATED FROG GAGE PLATE - FG-4P

1" x 8" - FLAT - W/3M INSULATION (1 PC. REQ'D. AS SHOWN)

REV.	DATE	DESCRIPTION	DES.	ENG.
X	XX-XX-XX	REVISION	XX	XX

DRAWN BY: A. CARLOS DATE: 03/31/2011

ASSISTANT DIRECTOR: STANDARDS & DESIGN

DIRECTOR OF ENGINEERING AND CONSTRUCTION

SCRRA ENGINEERING STANDARDS ARE INTENDED FOR SCRRA APPROVED USES ONLY. FOR NON-SCRRA APPROVED USES: SCRRA SHALL NOT BE RESPONSIBLE FOR THE ACCURACY OR COMPLETENESS OF THE DATA OR INFORMATION CONTAINED HEREIN. THE SELECTION AND USE OF THESE STANDARDS IS THE SOLE RESPONSIBILITY OF THE USER AND SHOULD NOT BE USED WITHOUT CONSULTING A REGISTERED PROFESSIONAL ENGINEER. ALL WARRANTIES AND REPRESENTATIONS OF ANY KIND ARE DISCLAIMED. ANYONE MAKING USE OF THIS INFORMATION AGREES THAT IT ASSUMES ALL LIABILITY ARISING FROM SUCH USE. NO PART OF THESE STANDARDS SHOULD BE REPRODUCED OR DISTRIBUTED IN ANY FORM OR BY ANY MEANS WITHOUT THE PRIOR WRITTEN PERMISSION OF SCRRA. ALL RIGHTS RESERVED.

METROLINK®

SOUTHERN CALIFORNIA REGIONAL RAIL AUTHORITY
ONE GATEWAY PLAZA, 12TH FLOOR, L. A., CA. 90012

ENGINEERING STANDARDS

NO. 14 136 LB. R.H. RBM FROG
GAGE PLATE DETAILS

STANDARD 2931
SCALE: 1" = 1'-0"
REVISION –
SHEET 7 OF 16
CADD FILE: ES2931-07

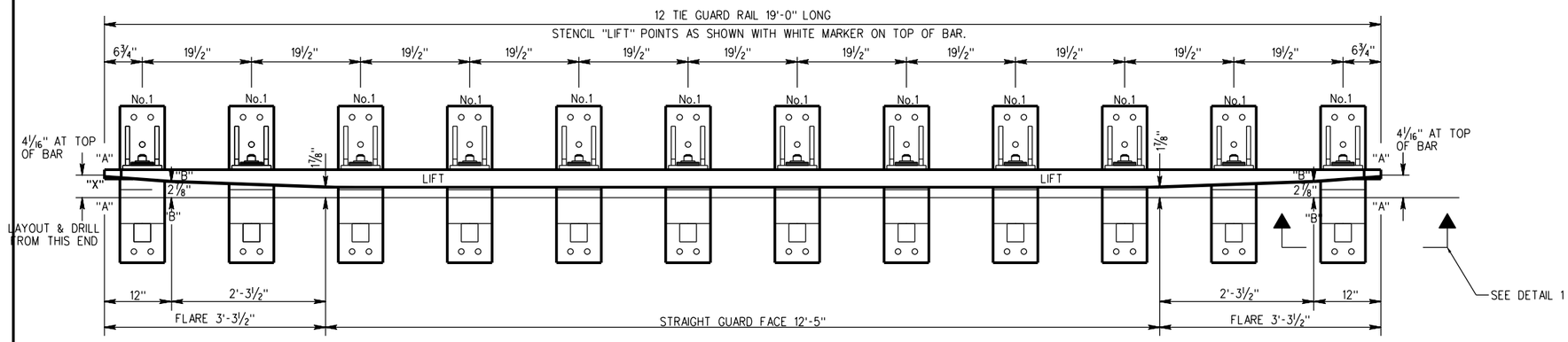

COLLECTIVE DRILLING FROM END OF GUARD BAR MARKED "X"

"X" 6¾"x 2'-2¼"x 3'-9¾"x 5'-5¼"x 7'-0¾"x 8'-8¼"x 10'-3¾"x 11'-11¼"x 13'-6¾"x 15'-2¼"x 16'-9¾"x 18'-5¼"

HOLES 1" DIA. - 1⅜" A.B.

ASSEMBLED 19'-0" GUARD RAIL

SCALE: 1" = 1'-0"

NOTES:

1. GUARD RAIL SECTION UIC 33: (U69) UIC 860.0 GRADE 90A (GUARD FACE BRINELL 319 MIN.)
2. BASE PLATE, BRACKET AND SHIMS MILD STEEL PER AREMA SPECIFICATION M7.
3. GUARD RAIL BOLT AND NUT PER A.REMA SPECIFICATION M11. EXCEPT BOLT TO GRADE 8 AND NUT TO BE SECURITY LOCKNUT.
4. WORKMANSHIP AND TOLERANCES PER AREMA SPECIFICATIONS FOR SPECIAL TRACKWORK.
5. WELDING PER ANSI•AWS D1.1-92 OR LATEST REVISION.

FOR MAINTENANCE ONLY

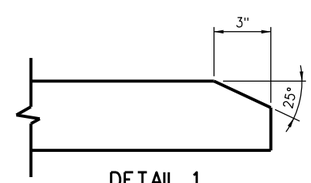

DETAIL 1

SCALE: NONE

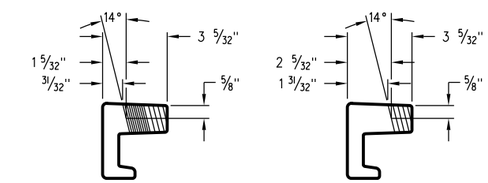

SECTION A-A

SCALE: NONE

SECTION B-B

SCALE: NONE

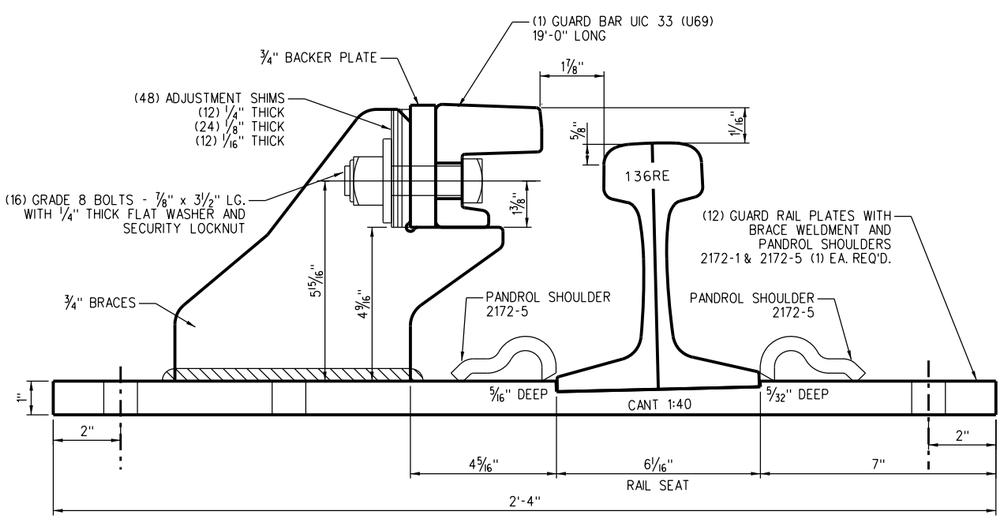

TYPICAL PLATE DETAIL

SCALE: NONE

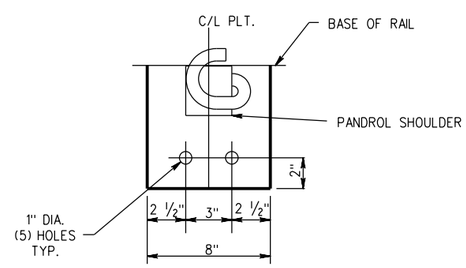

TYPICAL PLATE PUNCHING DETAIL

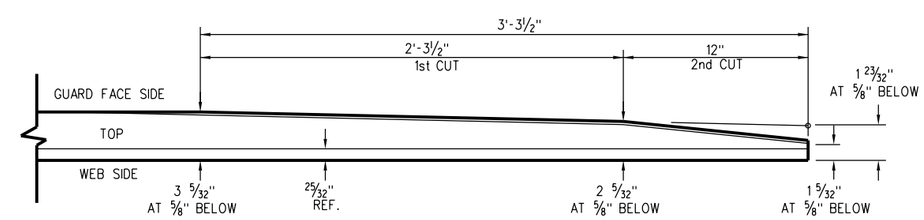

FLARE DETAIL

BREAK SHARP CORNERS OF ALL MACHINED SURFACES

SCALE: NONE

REV.	DATE	DESCRIPTION	DES.	ENG.
X	XX-XX-XX	REVISION	XX	XX

DRAWN BY: A. CARLOS DATE: 03/31/2011

ASSISTANT DIRECTOR: STANDARDS & DESIGN

DIRECTOR OF ENGINEERING AND CONSTRUCTION

SCRRA ENGINEERING STANDARDS ARE INTENDED FOR SCRRA APPROVED USES ONLY. FOR NON-SCRRA APPROVED USES:
SCRRA SHALL NOT BE RESPONSIBLE FOR THE ACCURACY OR COMPLETENESS OF THE DATA OR INFORMATION CONTAINED HEREIN. THE SELECTION AND USE OF THESE STANDARDS IS THE SOLE RESPONSIBILITY OF THE USER AND SHOULD NOT BE USED WITHOUT CONSULTING A REGISTERED PROFESSIONAL ENGINEER. ALL WARRANTIES AND REPRESENTATIONS OF ANY KIND ARE DISCLAIMED. ANYONE MAKING USE OF THIS INFORMATION AGREES THAT IT ASSUMES ALL LIABILITY ARISING FROM SUCH USE. NO PART OF THESE STANDARDS SHOULD BE REPRODUCED OR DISTRIBUTED IN ANY FORM OR BY ANY MEANS WITHOUT THE PRIOR WRITTEN PERMISSION OF SCRRA. ALL RIGHTS RESERVED.

METROLINK®
SOUTHERN CALIFORNIA REGIONAL RAIL AUTHORITY
ONE GATEWAY PLAZA, 12TH FLOOR, L. A., CA. 90012

ENGINEERING STANDARDS

NO. 14 136 LB. R.H. RBM FROG
GUARD RAIL DETAILS

STANDARD 2931
SCALE: 1" = 1'-0"
REVISION –
SHEET 8 OF 16
CADD FILE: ES2931-08

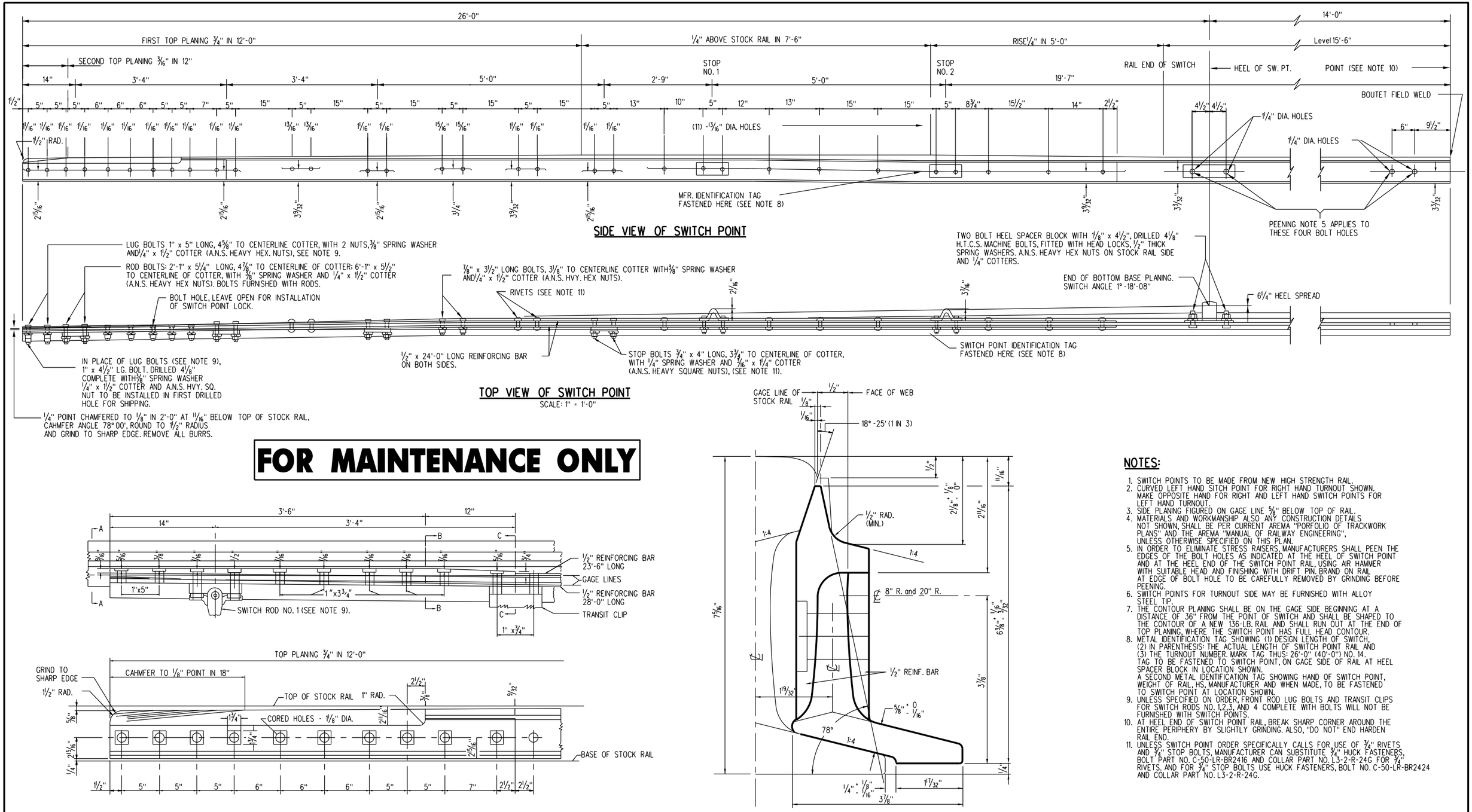

NOTES:

1. SWITCH POINTS TO BE MADE FROM NEW HIGH STRENGTH RAIL.
2. CURVED LEFT HAND SITCH POINT FOR RIGHT HAND TURNOUT SHOWN. MAKE OPPOSITE HAND FOR RIGHT AND LEFT HAND SWITCH POINTS FOR LEFT HAND TURNOUT.
3. SIDE PLANING FIGURED ON GAGE LINE 5/8" BELOW TOP OF RAIL.
4. MATERIALS AND WORKMANSHIP ALSO ANY CONSTRUCTION DETAILS NOT SHOWN, SHALL BE PER CURRENT AREMA "PORFOLIO OF TRACKWORK PLANS" AND THE AREMA "MANUAL OF RAILWAY ENGINEERING", UNLESS OTHERWISE SPECIFIED ON THIS PLAN.
5. IN ORDER TO ELIMINATE STRESS RAISERS, MANUFACTURERS SHALL PEEN THE EDGES OF THE BOLT HOLES AS INDICATED AT THE HEEL OF SWITCH POINT AND AT THE HEEL END OF THE SWITCH POINT RAIL, USING AIR HAMMER WITH SUITABLE HEAD AND FINISHING WITH DRIFT PIN. BRAND ON RAIL AT EDGE OF BOLT HOLE TO BE CAREFULLY REMOVED BY GRINDING BEFORE PEENING.
6. SWITCH POINTS FOR TURNOUT SIDE MAY BE FURNISHED WITH ALLOY STEEL TIP.
7. THE CONTOUR PLANING SHALL BE ON THE GAGE SIDE BEGINNING AT A DISTANCE OF 36" FROM THE POINT OF SWITCH AND SHALL BE SHAPED TO THE CONTOUR OF A NEW 136-LB. RAIL AND SHALL RUN OUT AT THE END OF TOP PLANING, WHERE THE SWITCH POINT HAS FULL HEAD CONTOUR.
8. METAL IDENTIFICATION TAG SHOWING (1) DESIGN LENGTH OF SWITCH, (2) IN PARENTHESIS: THE ACTUAL LENGTH OF SWITCH POINT RAIL AND (3) THE TURNOUT NUMBER. MARK TAG THUS: 26'-0" (40'-0") NO. 14. TAG TO BE FASTENED TO SWITCH POINT, ON GAGE SIDE OF RAIL AT HEEL SPACER BLOCK IN LOCATION SHOWN.
   A SECOND METAL IDENTIFICATION TAG SHOWING HAND OF SWITCH POINT, WEIGHT OF RAIL, HS, MANUFACTURER AND WHEN MADE, TO BE FASTENED TO SWITCH POINT AT LOCATION SHOWN.
9. UNLESS SPECIFIED ON ORDER, FRONT ROD LUG BOLTS AND TRANSIT CLIPS FOR SWITCH RODS NO. 1,2,3, AND 4 COMPLETE WITH BOLTS WILL NOT BE FURNISHED WITH SWITCH POINTS.
10. AT HEEL END OF SWITCH POINT RAIL, BREAK SHARP CORNER AROUND THE ENTIRE PERIPHERY BY SLIGHTLY GRINDING. ALSO, "DO NOT" END HARDEN RAIL END.
11. UNLESS SWITCH POINT ORDER SPECIFICALLY CALLS FOR USE OF 3/4" RIVETS AND 3/4" STOP BOLTS, MANUFACTURER CAN SUBSTITUTE 3/4" HUCK FASTENERS, BOLT PART NO. C-50-LR-BR2416 AND COLLAR PART NO. L3-2-R-24G FOR 3/4" RIVETS. AND FOR 3/4" STOP BOLTS USE HUCK FASTENERS, BOLT NO. C-50-LR-BR2424 AND COLLAR PART NO. L3-2-R-24G.

REV.	DATE	DESCRIPTION	DES.	ENG.
X	XX-XX-XX	REVISION	XX	XX

DRAWN BY: A. CARLOS DATE: 03/31/2011

ASSISTANT DIRECTOR: STANDARDS & DESIGN

DIRECTOR OF ENGINEERING AND CONSTRUCTION

SCRRA ENGINEERING STANDARDS ARE INTENDED FOR SCRRA APPROVED USES ONLY. FOR NON-SCRRA APPROVED USES:
SCRRA SHALL NOT BE RESPONSIBLE FOR THE ACCURACY OR COMPLETENESS OF THE DATA OR INFORMATION CONTAINED HEREIN. THE SELECTION AND USE OF THESE STANDARDS IS THE SOLE RESPONSIBILITY OF THE USER AND SHOULD NOT BE USED WITHOUT CONSULTING A REGISTERED PROFESSIONAL ENGINEER. ALL WARRANTIES AND REPRESENTATIONS OF ANY KIND ARE DISCLAIMED. ANYONE MAKING USE OF THIS INFORMATION AGREES THAT IT ASSUMES ALL LIABILITY ARISING FROM SUCH USE. NO PART OF THESE STANDARDS SHOULD BE REPRODUCED OR DISTRIBUTED IN ANY FORM OR BY ANY MEANS WITHOUT THE PRIOR WRITTEN PERMISSION OF SCRRA. ALL RIGHTS RESERVED.

METROLINK®
SOUTHERN CALIFORNIA REGIONAL RAIL AUTHORITY
ONE GATEWAY PLAZA, 12TH FLOOR, L. A., CA. 90012

ENGINEERING STANDARDS

NO. 14 SPLIT SWITCH POINT DETAILS

STANDARD 2931
SCALE: 1" = 1'-0"
REVISION –
SHEET 9 OF 16
CADD FILE: ES2931-09

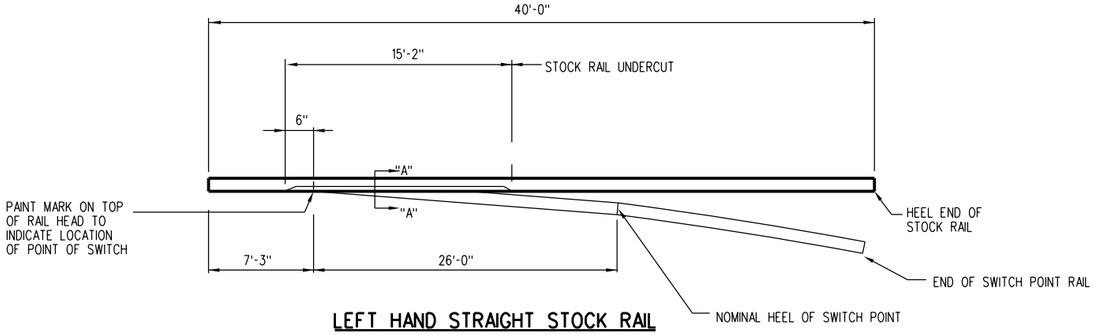

LEFT HAND STRAIGHT STOCK RAIL

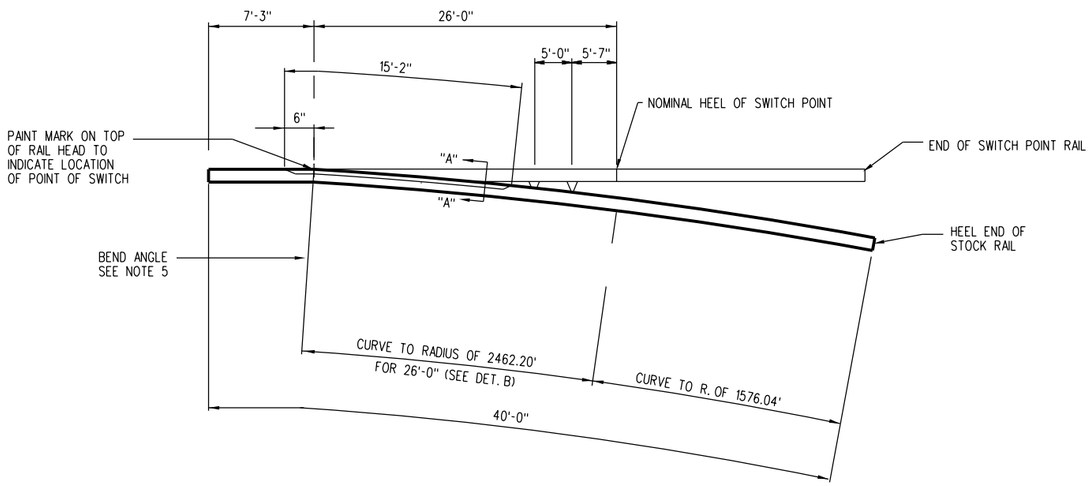

RIGHT HAND CURVED STOCK RAIL

STOCK RAILS SHOWN ARE FOR " RIGHT HAND TURNOUT".
FOR LEFT HAND TURNOUT, STOCK RAILS ARE OPPOSITE HAND,
BEING LEFT HAND CURVED STOCK RAIL AND
RIGHT HAND STRIAGHT STOCK RAIL

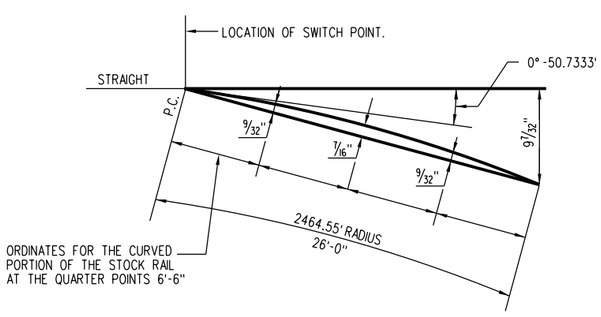

DETAIL "B"

NOTES:

1. INFORMATION OR DIMENSIONS NOTED THUS, (___) TO BE FURNISHED BY FIELD FORCES FOR CORRECT ORDERING OF REPLACEMENT STOCK RAILS.
2. LENGTH OF SWITCH POINT (26'-0").
3. UNDERCUT STOCK RAILS TO BE MADE OF HIGH STRENGTH RAIL WITH ENDS BEVELED PER CURRENT AREMA PLAN NO. 1005.
4. FOR STOCK RAIL UNDERCUT LENGTH "B", PER SECTION "A-A", LENGTH "C" AND LENGTH "D" FOR NEW SAMSON SWITCH INSTALLATIONS OR REPLACEMENT ORDERS SEE TABLE BELOW.
5. BEND ANGLE IN BENT STOCK RAIL TO BE AS FOLLOWS: 0°-50.7333' OR 1" IN 5'-7 3/4 ".
6. THE CURVED PORTION OF THE CURVED STOCK RAIL SHALL BE CURVED PER DETAIL "B".

LENGTHS B, C, & D FOR 136 LB. RAIL									
				FOR FIRST (NEW) INSTALL.			FOR FIRST (NEW) INSTALL.		
SW. PT. LENGTH	T.O. NO.	STOCK RAIL	B	C	D	END DRILL. SEE NO. 10	C	D	END DRILL. SEE NO. 10
26'-0'	14	STR.	15'-2"	7'-3"	40'-0"	NONE	10'-0"	43'-0"	NONE
26'-0"	14	CURVED	15'-2"	7'-3"	40'-0"	NONE	12'-0"	43'-0"	NONE

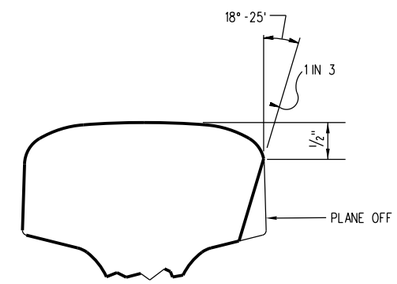

SECTION "A-A"

FOR MAINTENANCE ONLY

REV.	DATE	DESCRIPTION	DES.	ENG.
X	XX-XX-XX	REVISION	XX	XX

DRAWN BY: A. CARLOS DATE: 03/31/2011

ASSISTANT DIRECTOR: STANDARDS & DESIGN

DIRECTOR OF ENGINEERING AND CONSTRUCTION

SCRRA ENGINEERING STANDARDS ARE INTENDED FOR SCRRA APPROVED USES ONLY. FOR NON-SCRRA APPROVED USES, SCRRA SHALL NOT BE RESPONSIBLE FOR THE ACCURACY OR COMPLETENESS OF THE DATA OR INFORMATION CONTAINED HEREIN. THE SELECTION AND USE OF THESE STANDARDS IS THE SOLE RESPONSIBILITY OF THE USER AND SHOULD NOT BE USED WITHOUT CONSULTING A REGISTERED PROFESSIONAL ENGINEER. ALL WARRANTIES AND REPRESENTATIONS OF ANY KIND ARE DISCLAIMED. ANYONE MAKING USE OF THIS INFORMATION AGREES THAT IT ASSUMES ALL LIABILITY ARISING FROM SUCH USE. NO PART OF THESE STANDARDS SHOULD BE REPRODUCED OR DISTRIBUTED IN ANY FORM OR BY ANY MEANS WITHOUT THE PRIOR WRITTEN PERMISSION OF SCRRA. ALL RIGHTS RESERVED.

METROLINK®
SOUTHERN CALIFORNIA REGIONAL RAIL AUTHORITY
ONE GATEWAY PLAZA, 12TH FLOOR, L. A., CA. 90012

ENGINEERING STANDARDS

NO. 14 STRAIGHT OR CURVED UNDERCUT STOCK RAILS

STANDARD 2931
SCALE: NONE
REVISION –
SHEET 10 OF 16
CADD FILE: ES2931-10

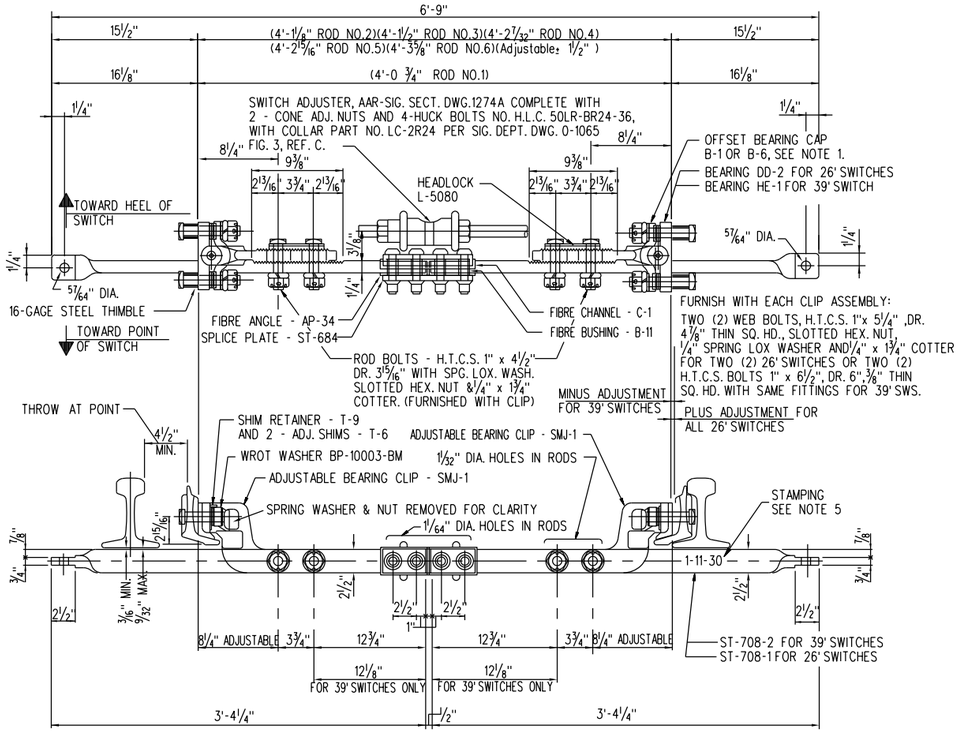

NO. 1 SWITCH ROD ASSEMBLY

(SHOWN FOR MACHINE ON RIGHT) SEE NOTE 2

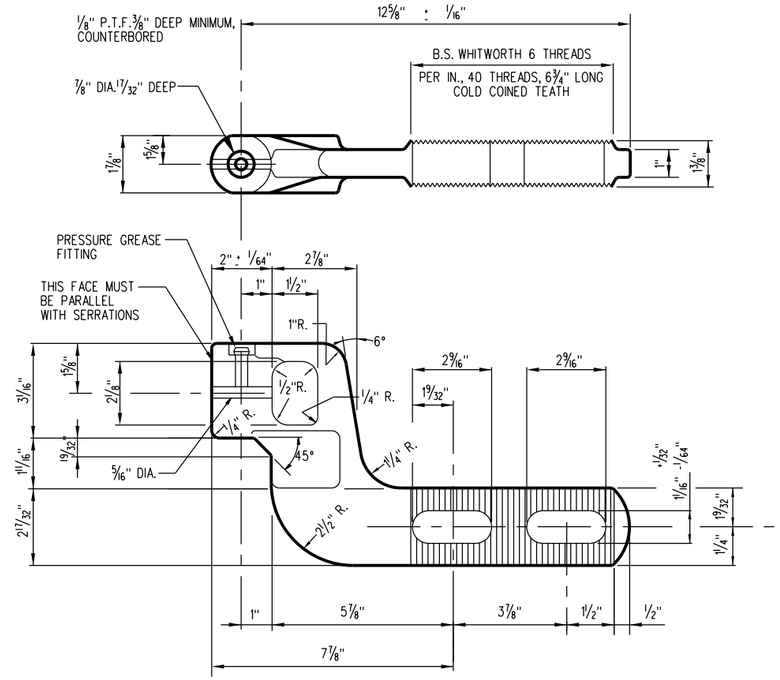

ADJUSTABLE BEARING CLIP - SMJ - 1

SCALE: 3" = 1'-0"

LENGTH OF SWITCH	QTY.	PART NUMBER	MATERIAL SPECIF.	DESCRIPTION	DETAIL REMARKS
BILL OF MATERIAL FOR 1 TYPE "SMJ" SWITCH ROD ASSEMBLY					
MATERIAL FOR CLIP ASSEMBLIES					
All	2	SMJ-1	S.A.E.1020-For.Stl.	Bearing Clip	MACHINED PER DETAIL
All	4		H.T.C.S.	Web Bolt	SEE NOTE
26'	2	DD-2	Malleable Iron	Bearing	PAT. NO. L-2910, MACHINED PER DETAIL
39'	2	HE-1	Malleable Iron	Bearing	PAT. NO. L-2915, MACHINED PER DETAIL
26'	2	B-1	S.A.E.1045-For.Stl.	Offset Bearing Cap	HEAT TREATED - BRINELL -.225 to .250
39'	2	B-6	S.A.E.1045-For.Stl.	Offset Bearing Cap	HEAT TREATED - BRINELL -.225 to .250
26'	2	B-6	S.A.E.1045-For.Stl.	Offset Bearing Cap	HEAT TREATED - BRINELL -.225 to .250
All	4	T-9	S.A.E.1020	Shim Retainer	⅛" x 1¾" x 2¼"
All	12	T-6	Stainless Steel	Adjustment Shim	1/16" x 2" x ⅛"
All	4	BP-10003-BM	Wrot Iron	Wrot Washer	1 1/16" I.D. x 2" O.D. x ⅛" THICK
All	4		H.T.C.S.	Rod Bolt	1"x4½" DR. 3 15/16" REC.SQ.HD.SLOTTED HEX NUT
All	4		Steel	Spg. Lox Washer	For 1" Rod Bolts
All	4		Steel	Cotter	¼" x 1¾" FOR ROD BOLTS
All	2		Steel	Grease Fitting	PRESSURE - FOR BEARING CLIP
All	2	L-5080	Malleable Iron	Headlock	FOR ROD BOLTS
26'	2		16-Gage Steel	Thimble	1½" LONG - FOR SHIPPING
39'	2		16-Gage Steel	Thimble	2½" LONG - FOR SHIPPING
Material for Vertical Rod					
16'-6"	1			Vertical Rod	Use one-ST-708-1
					Use one-ST-708-1 TWIST, MACHINE AND DRILL END HOLE
39'	1			Vertical Rod	Use one-ST-708-2
					Use one-ST-708-2 TWIST, MACHINE AND DRILL END HOLE
All	4		High Strength Steel	Conn.& Insul.Bolt	HIGH FASTENER NO. HLC-50LR- BR24-36
All	4		Low Carbon Steel	Collar	HUCK FASTENER NO. LC-2R24
All	1	ST-684	H.R. Mild Steel	Splice Plate	½" x 2½" x 9½" FOR INSULATION
All	2	AP-34	AAR-Sig.Sec.13-52	Angle	½" x 2½" x 4 15/16" HARD FIBRE - PARAFIN COATED
All	4	B-11	AAR-Sig.Sec.13-52	Bushing	1" O.D. HARD FIBRE - PARAFIN COATED
All	1	C-1	AAR-Sig.Sec.13-52	Channel	⅛" x 1" x 10" HARD FIBRE - PARAFIN COATED
All	1		Malleable Iron	Switch Adjuster	
All	2		Malleable Iron	Cone Adj. Nut	FOR 1¼" THROW RODS

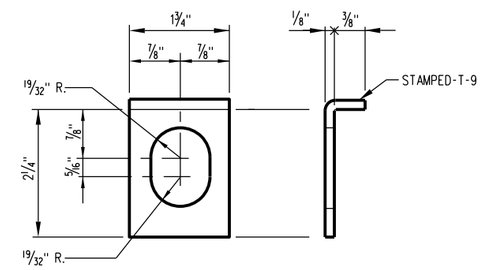

SHIM RETAINER - T - 9

SCALE: FULL

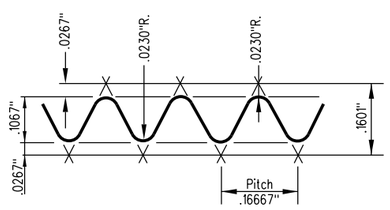

ENLARGED PROFILE OF SERRATIONS

SCALE: NONE

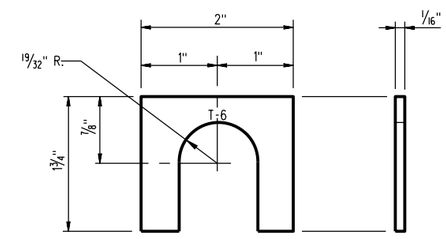

ADJUSTABLE SHIM - T - 6

SCALE: FULL

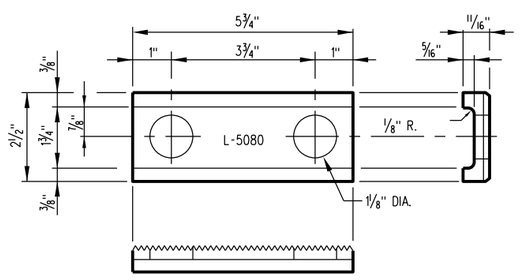

HEADLOCK L-5080

SCALE: 6" = 1'-0"

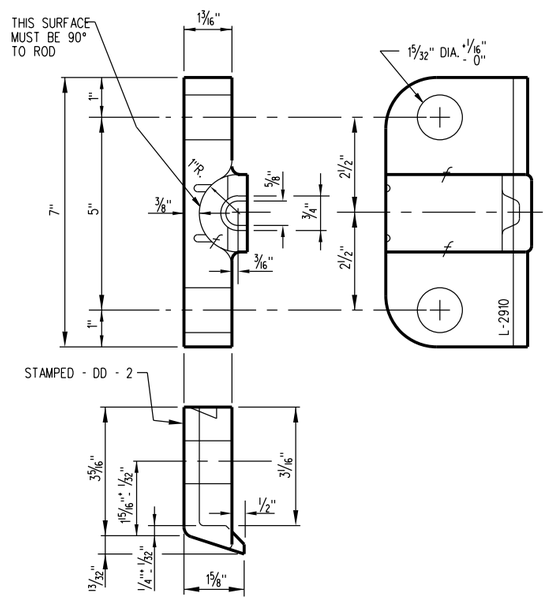

BEARING - DD - 2

SCALE: 6" = 1'-0"

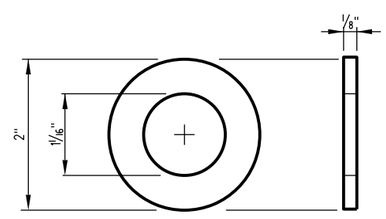

WROT WASHER - BP - 10003 - BM

SCALE: FULL

NOTES:

1. WHILE THIS PLAN SHOWS BEARING CLIPS ASSEMBLED TO SWITCH ROD THIS CLIP ASSEMBLY MAY BE REQUISITIONED AND ORDERED SEPARATELY. WHEN A BEARING CLIP ASSEMBLY ONLY IS WANTED, REQUISITIONS AND ORDERS SHALL SPECIFY, RAIL SECTION AND LENGTH OF SWITCH. ALL PARTS SHOWN IN BILL OF MATERIAL SHALL BE FURNISHED WITH THESE CLIP ASSEMBLIES. WHEN AN INDIVIDUAL PART IS REQUIRED IT SHALL BE ORDERED BY PART NUMBER.
2. WHEN COMPLETED RODS ARE ORDERED THEY SHALL BE ASSEMBLED AND INCLUDE ALL PARTS SHOWN IN BILL OF MATERIAL. REQUISITIONS AND ORDERS SHALL SPECIFY RAIL SECTION AND LENGTH OF SWITCH. ON INTERLOCKED SWITCHES WITH AUXILIARY THROW ROD, MACHINE SIDE (RIGHT OR LEFT) SHOULD ALSO BE SPECIFIED.
3. TWO WEB BOLTS SHALL BE FURNISHED WITH EACH CLIP ASSEMBLY AS CALLED FOR BY NOTE IN TOP VIEW OF ROD ASSEMBLY. WHEN ROD IS USED ON 11'-0" AND 16'-6" SWITCHES THE ¼" THICK SPRING WASHER SHOULD BE REPLACED WITH A ⅜" THICK SPRING WASHER BY THE STOREKEEPER OR FIELD FORCES, TO BRING COTTER WITHIN THE LIMITS OF SLOT IN WEB BOLT NUTS.
4. MATERIALS AND WORKMANSHIP SHALL MEET CURRENT AREMA SPECIFICATIONS FOR SPECIAL TRACKWORK UNLESS OTHERWISE SPECIFIED.
5. VERTICAL SWITCH ROD SHALL BE PLAINLY STAMPED TO INDICATE SWITCH THAT ROD ASSEMBLY CAN BE USED UPON. IDENTIFICATION MARKING WILL BE AS FOLLOWS:
   1-39 FOR USE ON 39'-0" SWITCHES, 132-LB. AND 136-LB. R.E. RAIL SECTIONS.
   1-11-30 FOR USE ON 11'-0" TO 30'-0" SWITCHES, 115-LB., 119-LB., 131-LB., 132-LB. AND 136-LB. R.E. RAIL SECTIONS

FOR MAINTENANCE ONLY

REV.	DATE	DESCRIPTION	DES.	ENG.
X	XX-XX-XX	REVISION	XX	XX

DRAWN BY: A. CARLOS DATE: 03/31/2011

ASSISTANT DIRECTOR: STANDARDS & DESIGN

DIRECTOR OF ENGINEERING AND CONSTRUCTION

SCRRA ENGINEERING STANDARDS ARE INTENDED FOR SCRRA APPROVED USES ONLY. FOR NON-SCRRA APPROVED USES:
SCRRA SHALL NOT BE RESPONSIBLE FOR THE ACCURACY OR COMPLETENESS OF THE DATA OR INFORMATION CONTAINED HEREIN. THE SELECTION AND USE OF THESE STANDARDS IS THE SOLE RESPONSIBILITY OF THE USER AND SHOULD NOT BE USED WITHOUT CONSULTING A REGISTERED PROFESSIONAL ENGINEER. ALL WARRANTIES AND REPRESENTATIONS OF ANY KIND ARE DISCLAIMED. ANYONE MAKING USE OF THIS INFORMATION AGREES THAT IT ASSUMES ALL LIABILITY ARISING FROM SUCH USE. NO PART OF THESE STANDARDS SHOULD BE REPRODUCED OR DISTRIBUTED IN ANY FORM OR BY ANY MEANS WITHOUT THE PRIOR WRITTEN PERMISSION OF SCRRA. ALL RIGHTS RESERVED.

METROLINK®
SOUTHERN CALIFORNIA REGIONAL RAIL AUTHORITY
ONE GATEWAY PLAZA, 12TH FLOOR, L. A., CA. 90012

ENGINEERING STANDARDS

NO. 14 SWITCH ROD DETAILS

STANDARD 2931
SCALE: AS NOTED
REVISION –
SHEET 11 OF 16
CADD FILE: ES2931-11

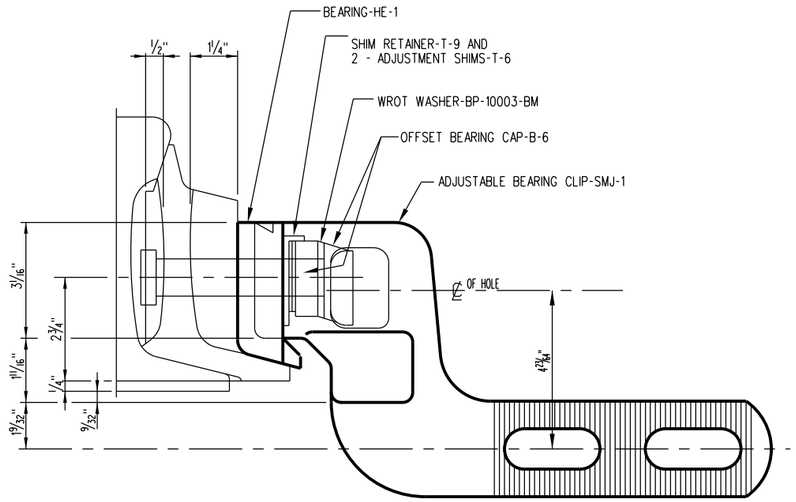

ELEVATION OF "SMJ" CLIP ASSEMBLY FOR 39' SWITCHES
(DRAWN FOR 136 LB. RAIL) SPRING WASHER AND NUT REMOVED

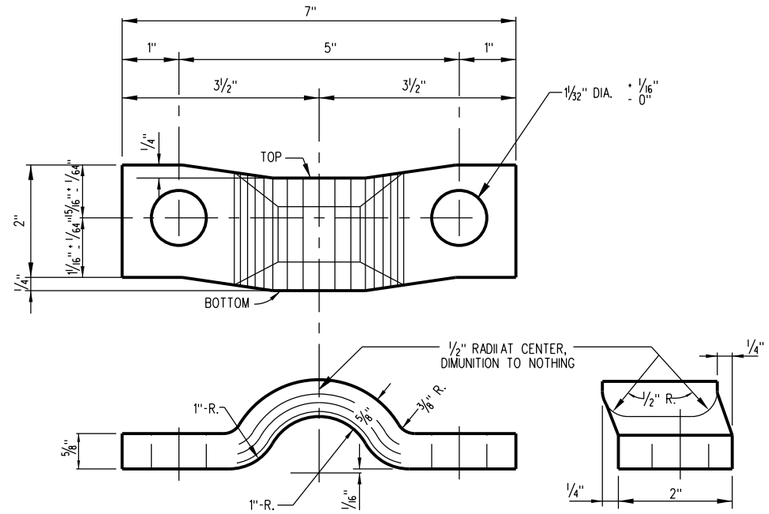

OFFSET BEARING CAP-B-1

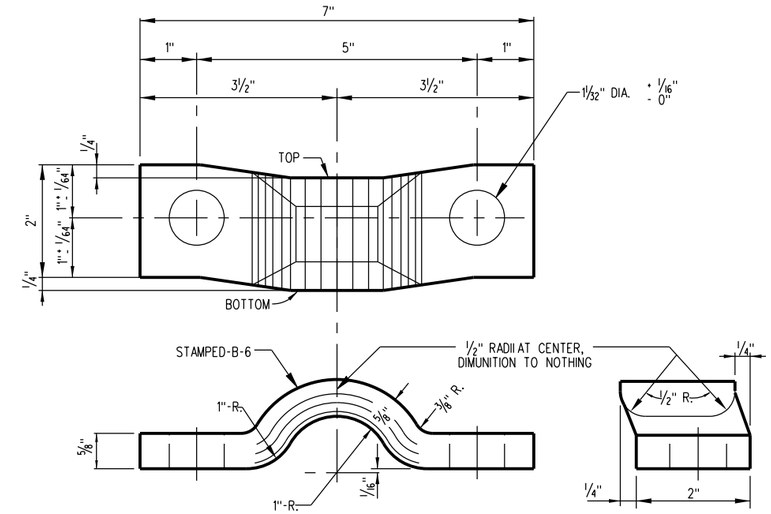

OFFSET BEARING CAP-B-6

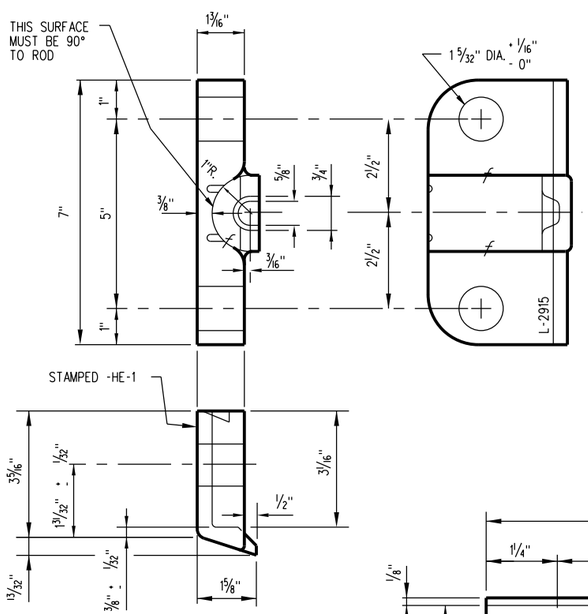

BEARING-HE-1

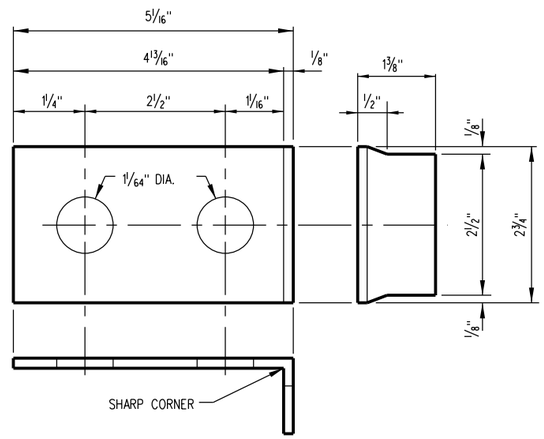

FIBRE ANGLE-AP-34

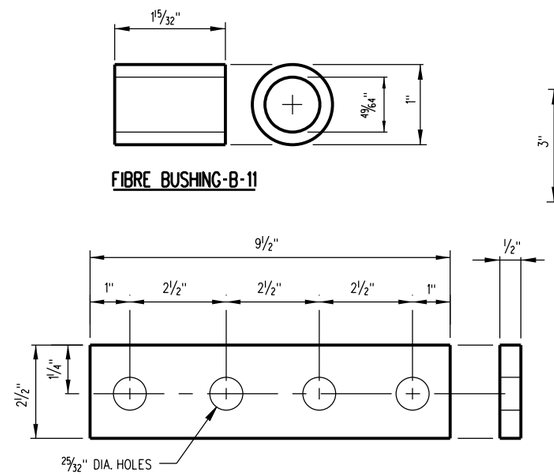

FIBRE BUSHING-B-11

SPLICE PLATE-ST-684

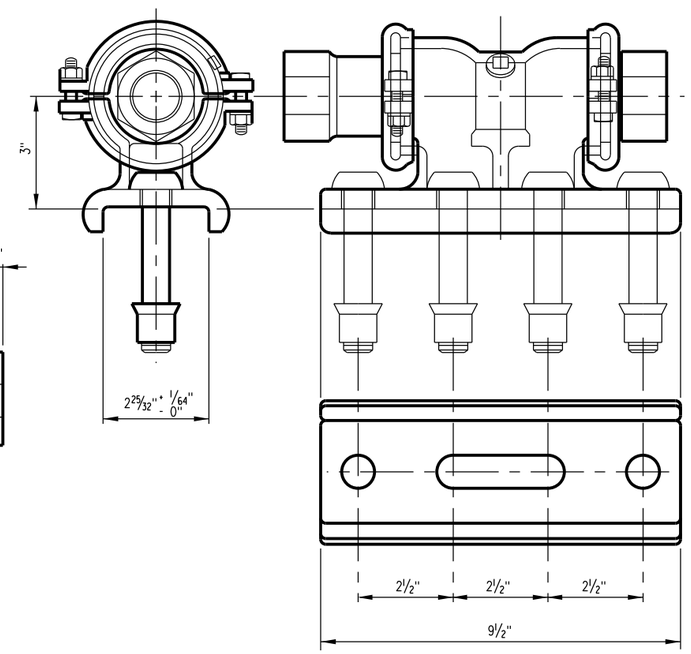

SWITCH ADJUSTER

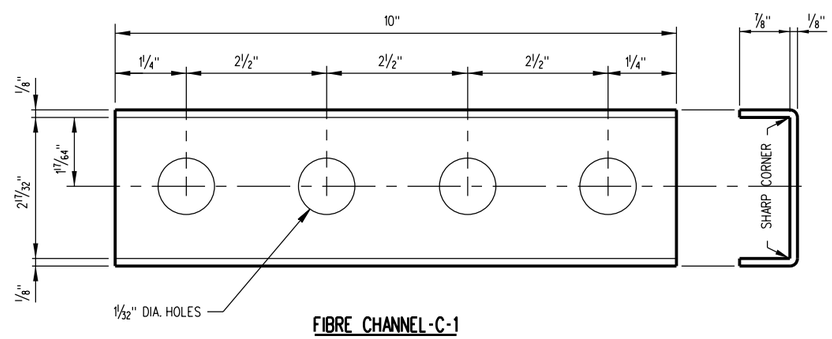

FIBRE CHANNEL-C-1

FOR MAINTENANCE ONLY

REV.	DATE	DESCRIPTION	DES.	ENG.
X	XX-XX-XX	REVISION	XX	XX

DRAWN BY: A. CARLOS DATE: 03/31/2011

ASSISTANT DIRECTOR: STANDARDS & DESIGN

DIRECTOR OF ENGINEERING AND CONSTRUCTION

SCRRA ENGINEERING STANDARDS ARE INTENDED FOR SCRRA APPROVED USES ONLY. FOR NON-SCRRA APPROVED USES:
SCRRA SHALL NOT BE RESPONSIBLE FOR THE ACCURACY OR COMPLETENESS OF THE DATA OR INFORMATION CONTAINED HEREIN. THE SELECTION AND USE OF THESE STANDARDS IS THE SOLE RESPONSIBILITY OF THE USER AND SHOULD NOT BE USED WITHOUT CONSULTING A REGISTERED PROFESSIONAL ENGINEER. ALL WARRANTIES AND REPRESENTATIONS OF ANY KIND ARE DISCLAIMED. ANYONE MAKING USE OF THIS INFORMATION AGREES THAT IT ASSUMES ALL LIABILITY ARISING FROM SUCH USE. NO PART OF THESE STANDARDS SHOULD BE REPRODUCED OR DISTRIBUTED IN ANY FORM OR BY ANY MEANS WITHOUT THE PRIOR WRITTEN PERMISSION OF SCRRA. ALL RIGHTS RESERVED.

METROLINK®
SOUTHERN CALIFORNIA REGIONAL RAIL AUTHORITY
ONE GATEWAY PLAZA, 12TH FLOOR, L. A., CA. 90012

ENGINEERING STANDARDS

NO. 14 SWITCH ROD MISCELLANEOUS DETAILS

STANDARD 2931
SCALE: 6" = 1'-0"
REVISION –
SHEET 12 OF 16
CADD FILE: ES2931-12

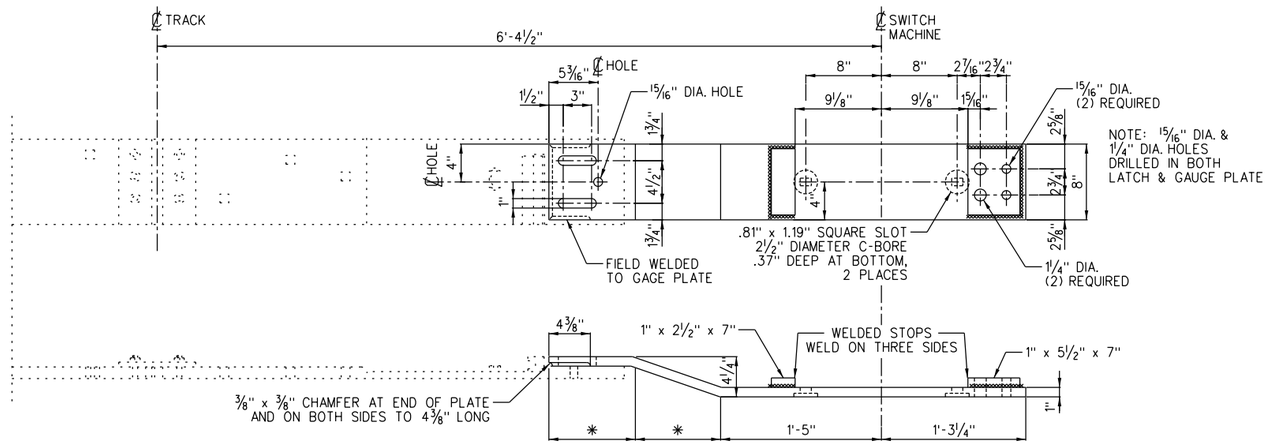

* MANUFACTURER TO CALCULATE AND PROVIDE ON DETAILED DRAWING.

EXTENSION PLATE
(2 PCS. REQ'D. AS SHOWN)

TOP VIEW

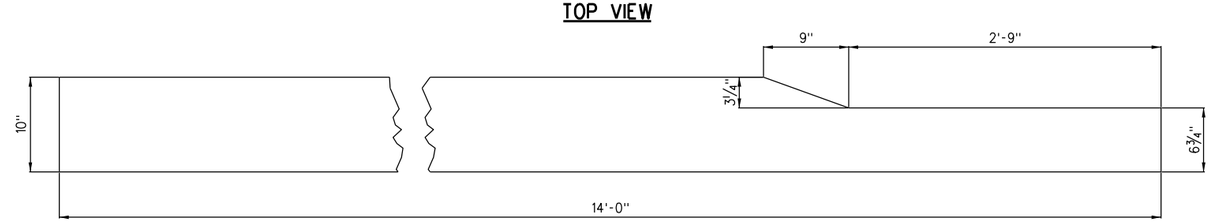

SIDE VIEW

TIES SHALL BE MADE OF DOUGLAS FIR OR GUM AND TREATED AFTER FRAMING.

DAP TIE
(2 PCS. REQ'D. AS SHOWN)

US&S M23-A SWITCH MACHINE MUST BE FURNISHED WITH FINISHED MOUNTING LUGS.

FOR MAINTENANCE ONLY

REV.	DATE	DESCRIPTION	DES.	ENG.
X	XX-XX-XX	REVISION	XX	XX

DRAWN BY: A. CARLOS DATE: 03/31/2011

ASSISTANT DIRECTOR: STANDARDS & DESIGN

DIRECTOR OF ENGINEERING AND CONSTRUCTION

SCRRA ENGINEERING STANDARDS ARE INTENDED FOR SCRRA APPROVED USES ONLY. FOR NON-SCRRA APPROVED USES:
SCRRA SHALL NOT BE RESPONSIBLE FOR THE ACCURACY OR COMPLETENESS OF THE DATA OR INFORMATION CONTAINED HEREIN. THE SELECTION AND USE OF THESE STANDARDS IS THE SOLE RESPONSIBILITY OF THE USER AND SHOULD NOT BE USED WITHOUT CONSULTING A REGISTERED PROFESSIONAL ENGINEER. ALL WARRANTIES AND REPRESENTATIONS OF ANY KIND ARE DISCLAIMED. ANYONE MAKING USE OF THIS INFORMATION AGREES THAT IT ASSUMES ALL LIABILITY ARISING FROM SUCH USE. NO PART OF THESE STANDARDS SHOULD BE REPRODUCED OR DISTRIBUTED IN ANY FORM OR BY ANY MEANS WITHOUT THE PRIOR WRITTEN PERMISSION OF SCRRA. ALL RIGHTS RESERVED.

METROLINK®
SOUTHERN CALIFORNIA REGIONAL RAIL AUTHORITY
ONE GATEWAY PLAZA, 12TH FLOOR, L. A., CA. 90012

ENGINEERING STANDARDS

NO. 14 EXTENSION PLATE AND DAP TIE DETAILS FOR M-23A SWITCH MACHINE

STANDARD 2931
SCALE: 1½" = 1'-0"
REVISION –
SHEET 13 OF 16
CADD FILE: ES2931-13

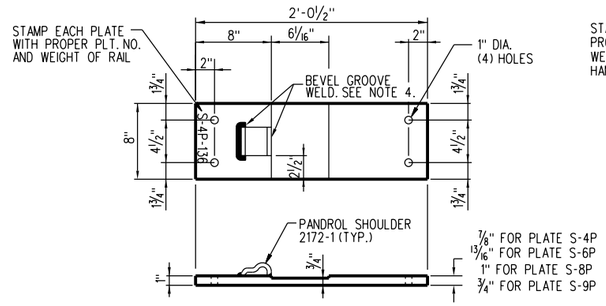

SLIDE PLATE - S-4P, S-6P, S-8P, S-9P

1" x 8" x 2'-0½" LG. - MILLED - W/PANDROL CLIP
2 - S-4P PLATES REQUIRED AS SHOWN
2 - S-6P PLATES REQUIRED AS SHOWN
2 - S-8P PLATES REQUIRED AS SHOWN
2 - S-9P PLATES REQUIRED AS SHOWN

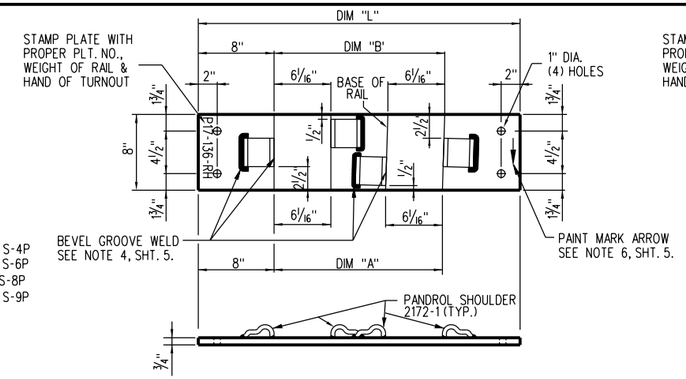

TURNOUT PLATES - P-17 THRU P-20 & TURNOUT PLATES - P-41 THRU P-42

¾" x 8" x DIM "L" - FLAT - W/PANDROL CLIPS

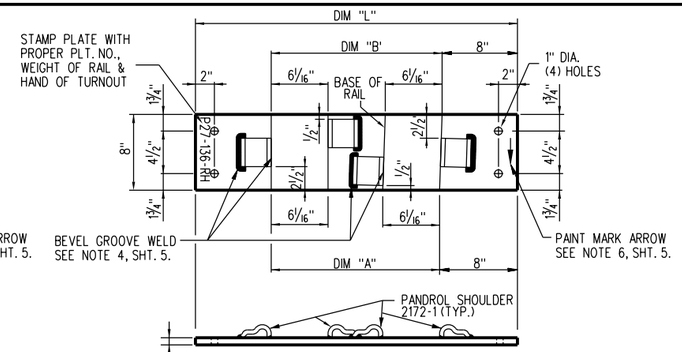

TURNOUT PLATES - P-27 AND P-28

¾" x 8" x DIM "L" - FLAT - W/PANDROL CLIPS

NOTES:

1. SEE SHEET NO. ES2931-15 FOR DIMENSION TABLE AND NOTES

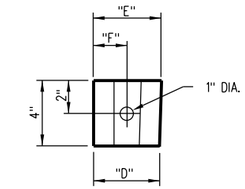

HOLD DOWN CLIP DETAIL

SCALE: NONE

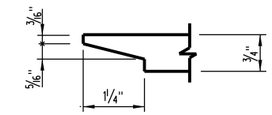

END DETAIL - BOTH ENDS

SCALE: NONE

FOR MAINTENANCE ONLY

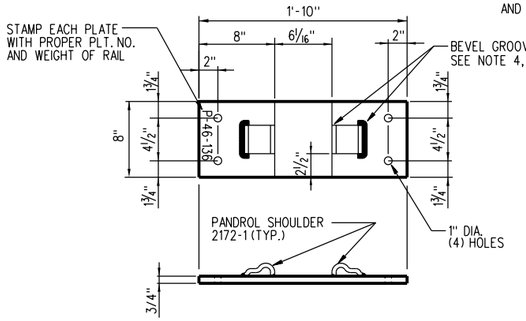

TURNOUT PLATES - P-46

1 EA. - ¾" x 8" x 22" LG. - FLAT - W/PANDROL CLIPS

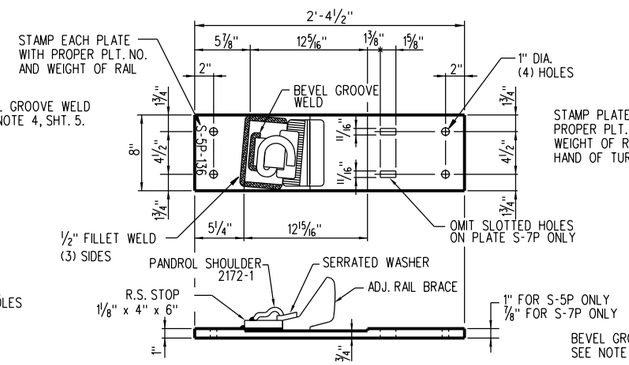

BRACE SLIDE PLATE - S-5P & S-7P

1" x 8" x 2'-4½" LG. - MILLED - W/ADJ. RAIL BRACE
12 - S-5P PLATES REQUIRED AS SHOWN
2 - S-7P PLATES REQUIRED AS SHOWN

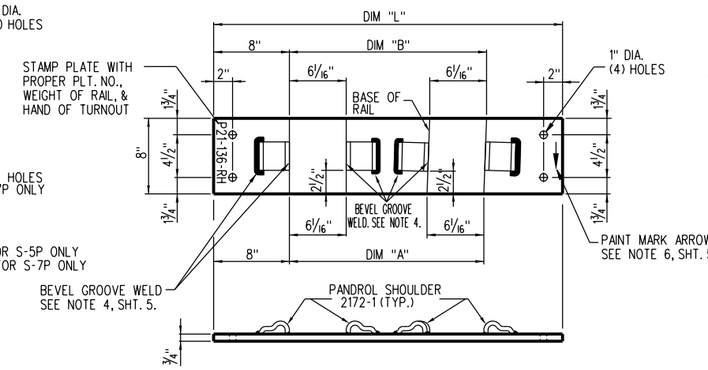

TURNOUT PLATES - P-21 THRU P-24, P-43 THRU P-45

¾" x 8" x DIM "L" - FLAT - W/PANDROL CLIPS

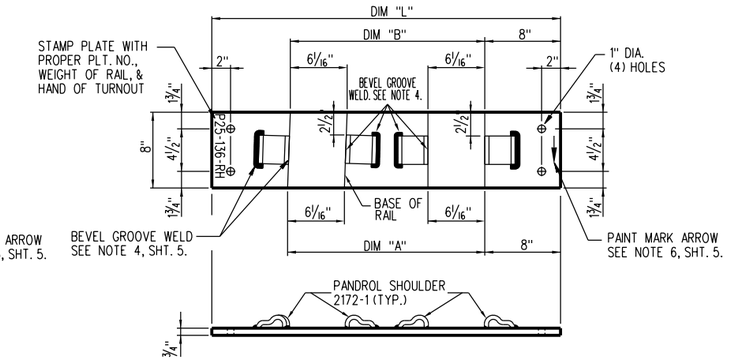

TURNOUT PLATES - P-25 AND P-26

¾" x 8" x DIM "L" ~ FLAT ~ W/PANDROL CLIPS

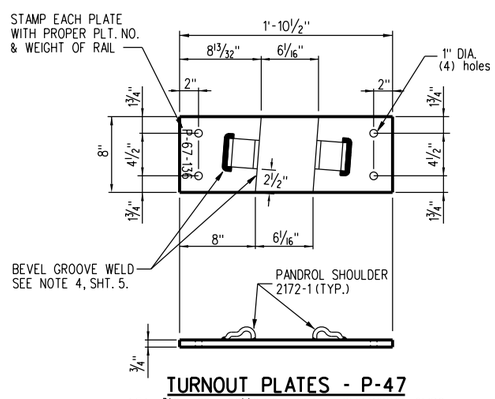

TURNOUT PLATES - P-47

1 EA. - ¾" x 8" x 22½" LG. - FLAT - W/PANDROL CLIPS

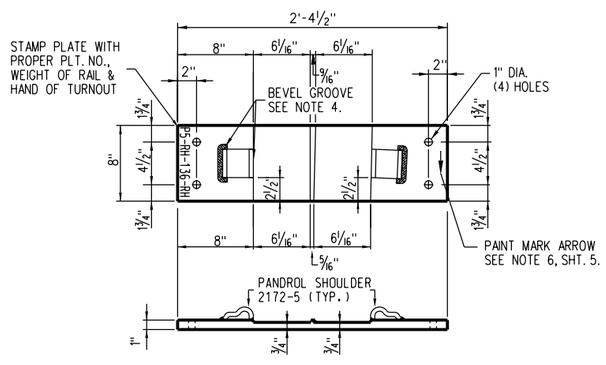

HEEL PLATE - P5-RH

1" x 8" x 2'-4½" LG. - MILLED - W/PANDROL CLIPS
2 - P5-RH PLATES REQUIRED AS SHOWN FOR R.H. T.O.

HEEL PLATE - P6-LH

1" x 8" x 2'-4½" LG. - MILLED - W/PANDROL CLIPS
2 - P6-RH PLATES REQUIRED AS SHOWN,
EXCEPT OPPOSITE FOR L.H. T.O.

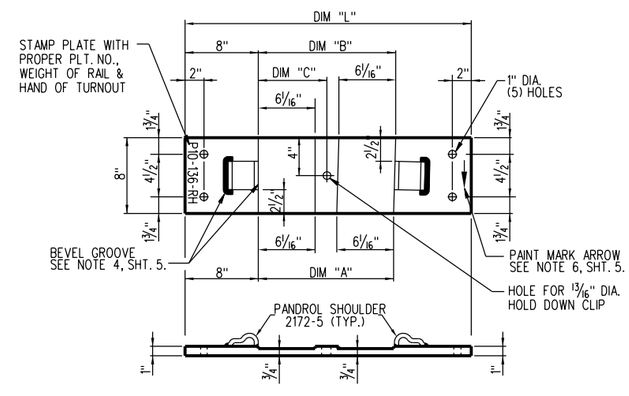

TURNOUT PLATES - P-10 THRU P-16 & P-40

1" x 8" x DIM "L" - MILLED - W/PANDROLS

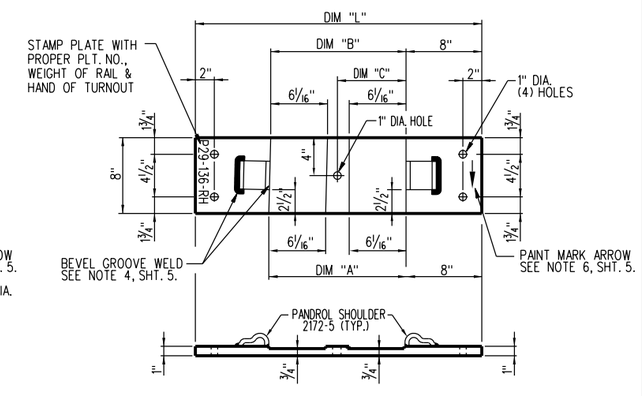

FROG PLATES - P-29, P-30 AND P-39

1" x 8" x DIM "L" - MILLED - W/PANDROLS

REV.	DATE	DESCRIPTION	DES.	ENG.
X	XX-XX-XX	REVISION	XX	XX

DRAWN BY: A. CARLOS DATE: 03/31/2011

ASSISTANT DIRECTOR: STANDARDS & DESIGN

DIRECTOR OF ENGINEERING AND CONSTRUCTION

SCRRA ENGINEERING STANDARDS ARE INTENDED FOR SCRRA APPROVED USES ONLY. FOR NON-SCRRA APPROVED USES:
SCRRA SHALL NOT BE RESPONSIBLE FOR THE ACCURACY OR COMPLETENESS OF THE DATA OR INFORMATION CONTAINED HEREIN. THE SELECTION AND USE OF THESE STANDARDS IS THE SOLE RESPONSIBILITY OF THE USER AND SHOULD NOT BE USED WITHOUT CONSULTING A REGISTERED PROFESSIONAL ENGINEER. ALL WARRANTIES AND REPRESENTATIONS OF ANY KIND ARE DISCLAIMED. ANYONE MAKING USE OF THIS INFORMATION AGREES THAT IT ASSUMES ALL LIABILITY ARISING FROM SUCH USE. NO PART OF THESE STANDARDS SHOULD BE REPRODUCED OR DISTRIBUTED IN ANY FORM OR BY ANY MEANS WITHOUT THE PRIOR WRITTEN PERMISSION OF SCRRA. ALL RIGHTS RESERVED.

METROLINK®
SOUTHERN CALIFORNIA REGIONAL RAIL AUTHORITY
ONE GATEWAY PLAZA, 12TH FLOOR, L. A., CA. 90012

ENGINEERING STANDARDS

NO. 14 TURNOUT AND FROG PLATE DETAILS

STANDARD 2931
SCALE: 1½" = 1'-0"
REVISION –
SHEET 14 OF 16
CADD FILE: ES2931-14

NOTES:

1. PLATES TO BE MADE OF MILD ROLLED STEEL.
2. EACH PLATE TO BE PLAINLY STAMPED WITH PLATE NO. AND 136 (WEIGHT OF RAIL) AND HAND OF TURNOUT (R.H. OR L.H.)
3. THE WELD-ON PRESSED STEEL SHOULDER, MADE OF MILD STEEL, TO BE PURCHASED FROM PANDROL INTERNATIONAL OR APPROVED ALTERNATE MEETING PANDROL'S DESIGN SPECIFICATIONS. MINIMUM 3/8" WELD ALONG BEVELED GROOVE OF THE SHOULDER. SEE WELD SPECIFICATIONS.
4. THE PRESSED STEEL SHOULDER MUST BE CAREFULLY WELDED TO THE PLATE. ANY WELD PROJECTING BEYOND THE VERTICAL FACE OF SHOULDER IN THE AREA OF THE RAIL SEAT MUST BE MACHINED OUT TO PROVIDE A CLEAR RAIL SEAT DIMENSION AS CALLED FOR.
5. THE PLATES AS SHOWN ARE FOR A 136 LB., NO. 14, RIGHT HAND, MACHINE OPERATED TURNOUT. FOR A LEFT HAND TURNOUT, PLATES P-13 THRU P-65 INCLUSIVE AND FROG GAGE PLATES FG-1P THRU FG-4P ARE TO BE OPPOSITE.
6. ARROW SHOWN ON DETAIL IS FOR EXAMPLE ONLY. USING DWG. NO. 2931-03 AS A GUIDE, PAINT MARK EACH PLATE WITH AN ARROW POINTING TOWARDS SWITCH POINT.

WELDING SPECIFICATIONS:

1. WHEN FIELD WELDING SHOULDERS OR STOPS TO GAGE PLATES, THE GAGE PLATES MUST BE PROPERLY POSITIONED AND SECURED IN PLACE BEFORE WELDING.
2. CHECK TRACK FOR CORRECT GAGE.
3. START WITH ONE GAGE PLATE. PLACE PANDROL SHOULDERS TIGHT AGAINST BASE OF RAIL AND WELD IN PLACE WHILE SIMULTANEOUSLY CONTROLLING CORRECT GAGE.
   A. THE PRESSED STEEL SHOULDERS MUST BE CAREFULLY WELDED TO THE PLATE WITH 2 PASS 3/8" • FILLET OR BEVEL GROOVE WELD. ANY WELD PROJECTING BEYOND THE VERTICAL FACE OF SHOULDER IN THE AREA OF THE RAIL SEAT MUST BE MACHINED OUT TO PROVIDE A CLEAR RAIL SEAT DIMENSION AS CALLED FOR.
   B. THE 1 1/8" X 6" STOPS MUST BE SET FLUSH AGAINST SHOULDER OF MILLED PALTE AND CENTERED FOR WELDING. THE PLATES SHALL BE WELDED ON THREE SIDES ONLY WITH 3 PASS 1/2 " • FILLET WELD AND NO WELD SHALL PROJECT BEYOND THE VERTICAL EDGE OF THE UNWELDED FOURTH SIDE.
4. WHEN WELDING PRESSED STEEL SHOULDERS, STOPS OR PLATES TO GAGE PLATES USE ONE OF THE FOLLOWING:
   A. ELECTRODES, 5/32 INCH, WELDING SPEC. 7018XLM.
   B. ELECTRODES, 3/16 INCH, WELDING SPEC. 7018XLM.
   C. WIRE, WELDING 3/32 INCH, NR-203, 1% NICKEL FLUX CORE.

   OTHER ELECTRODES OR WIRE MEETING SPECIFICATIONS CALLED FOR MAY BE USED UPON APPROVAL BY THE DIRECTOR OF ENGINEERING.

BILL OF FROG PLATES AND DIMENSION TABLE

PLATE	DIM "A"	DIM "B"		DIM "L"	Plts REQ'D.
P-17	17 17/32"	17 13/16"		2'-10"	2 EA.
P-18	18 9/32"	18 9/16"		2'-10 1/2"	1 EA.
P-19	19 1/32"	19 5/16"		2'-11 1/2"	1 EA.
P-20	19 27/32"	20 5/32"		3'-0"	1 EA.
P-21	20 21/32"	20 31/32"		3'-1"	2 EA.
P-22	20 7/16"	21 3/4"		3'-2"	2 EA.
P-23	22 1/4"	22 19/32"		3'-2 1/2"	2 EA.
P-24	23 3/32"	23 3/16"		3'-3 1/2"	2 EA.
P-25	22 19/32"	22 27/32"		3'-3"	2 EA.
P-26	20 27/32"	20 5/16"		3'-1"	2 EA.
P-27	19 9/16"	19 1/32"		2'-11 1/2"	1 EA.
P-28	18 1/4"	17 11/16"		2'-10 1/2"	1 EA.
P-41	17 19/32"	18 5/32"		2'-10 1/2"	1 EA.
P-42	18 31/32"	19 9/16"		2'-11 1/2"	1 EA.
P-43	20 3/8"	20 15/16"		3'-1"	1 EA.
P-44	21 13/16"	23 3/8"		3'-2 1/2"	1 EA.
P-45	23 1/4"	23 13/16"		3'-3 1/2"	1 EA.

BILL OF FROG PLATES AND DIMENSION TABLE

PLATE	DIM "A"	DIM "B"	DIM "C"	DIM "L"	Plts REQ'D.	DIM "D"	DIM "E"	DIM "F"	Clips REQ'D.
P-10	13 1/32"	13 1/4"	6 19/32"	2'-5 1/2"	2 EA.	3 1/32"	3 1/4"	1 9/16"	2
P-11	13 19/32"	13 27/32"	6 7/8"	2'-6"	2 EA.	3 19/32"	3 27/32"	1 3/8"	2
P-12	14 7/32"	14 7/16"	7 3/32"	2'-6 1/2"	2 EA.	4 3/32"	4 7/32"	2 3/32"	2
P-13	14 13/16"	15 1/16"	7 15/32"	2'-7"	2 EA.	4 13/16"	4 31/32"	2 15/32"	2
P-14	15 15/32"	15 23/32"	7 13/16"	2'-8"	2 EA.	5 15/32"	5 23/32"	2 13/16"	2
P-15	16 1/8"	16 5/16"	8 1/8"	2'-8 1/2"	2 EA.	6 1/8"	6 3/8"	3 1/8"	2
P-16	16 13/16"	17 3/32"	8 1/2"	2'-9"	2 EA.	6 13/16"	7 3/32"	3 1/2"	2
P-29	16 7/8"	16 5/16"	8 5/16"	2'-9"	1 EA.	6 27/32"	6 9/32"	3 9/32"	1
P-30	15 1/2"	14 29/32"	7 5/8"	2'-7 1/2"	1 EA.	5 15/32"	4 7/8"	2 19/32"	1
P-39	14 13/16"	15 3/8"	7 9/16"	2'-7 1/2"	1 EA.	4 27/32"	5 13/32"	2 9/16"	1
P-40	16 3/16"	16 3/4"	8 1/4"	2'-9"	1 EA.	6 3/32"	6 25/32"	3 1/4"	1

FOR MAINTENANCE ONLY

X	XX-XX-XX	REVISION	XX	XX
REV.	DATE	DESCRIPTION	DES.	ENG.

DRAWN BY: A. CARLOS DATE: 03/31/2011

ASSISTANT DIRECTOR: STANDARDS & DESIGN

DIRECTOR OF ENGINEERING AND CONSTRUCTION

SCRRA ENGINEERING STANDARDS ARE INTENDED FOR SCRRA APPROVED USES ONLY. FOR NON-SCRRA APPROVED USES:
SCRRA SHALL NOT BE RESPONSIBLE FOR THE ACCURACY OR COMPLETENESS OF THE DATA OR INFORMATION CONTAINED HEREIN. THE SELECTION AND USE OF THESE STANDARDS IS THE SOLE RESPONSIBILITY OF THE USER AND SHOULD NOT BE USED WITHOUT CONSULTING A REGISTERED PROFESSIONAL ENGINEER. ALL WARRANTIES AND REPRESENTATIONS OF ANY KIND ARE DISCLAIMED. ANYONE MAKING USE OF THIS INFORMATION AGREES THAT IT ASSUMES ALL LIABILITY ARISING FROM SUCH USE. NO PART OF THESE STANDARDS SHOULD BE REPRODUCED OR DISTRIBUTED IN ANY FORM OR BY ANY MEANS WITHOUT THE PRIOR WRITTEN PERMISSION OF SCRRA. ALL RIGHTS RESERVED.

METROLINK®
SOUTHERN CALIFORNIA REGIONAL RAIL AUTHORITY
ONE GATEWAY PLAZA, 12TH FLOOR, L. A., CA. 90012

ENGINEERING STANDARDS

NO. 14 136 LB. RBM FROG
DIMENSION TABLE AND NOTES

STANDARD 2931
SCALE: NONE
REVISION –
SHEET 15 OF 16
CADD FILE: ES2931-15

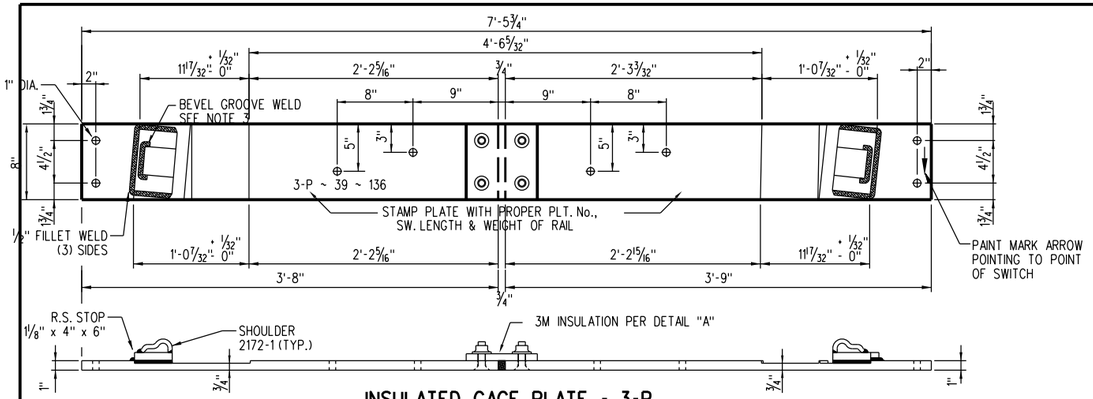

INSULATED GAGE PLATE - 3-P

1" x 8" "MILLED" W/3M INSULATION & ADJ. RAIL BRACES
(1 PC. REQ'D. AS SHOWN)

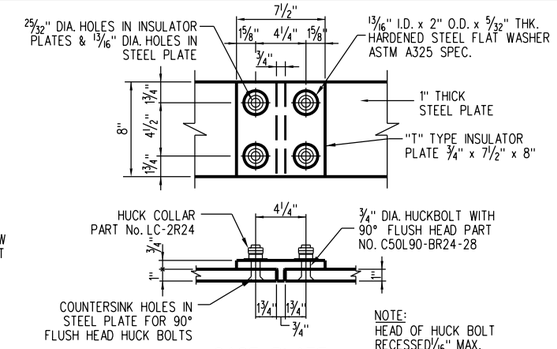

GAGE PLATE INSULATED JOINT ASSEMBLY GPI-77

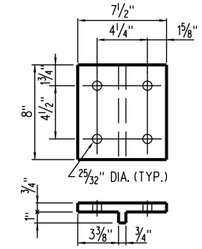

DETAIL OF INSULATION BLOCK

POLYESTER COATED STEEL CORE
W/ BUSHINGS, PORTEC #127-07547-01
OR FIBERGLASS REINFORCED THERMOSET RESIN.
PURCHASE PART NO. GPI52P05

NOTES:

1. PLATES TO BE MADE OF MILD ROLLED STEEL.
2. THE PANDROL TYPE WELD - ON PRESSED STEEL SHOULDER, MADE OF MILD STEEL, TO BE PURCHASED FROM PANDROL INTERNATIONAL OR APPROVED ALTERNATE MEETING PANDROL'S DESIGN SPECIFICATIONS.
3. THE PRESSED STEEL SHOULDER MUST BE CAREFULLY WELDED TO GAGE PLATES WITH A MINIMUM ⅜" WELD ALONG THE BEVELED GROOVES OF THE SHOULDER. ANY WELD PROJECTING BEYOND THE VERTICAL FACE OF SHOULDER IN THE AREA OF THE RAIL SEAT MUST BE MACHINED OUT TO PROVIDE A CLEAR RAIL SEAT DIMENSION AS CALLED FOR.
4. SWITCH GAGE PLATES FOR RIGHT HAND TURNOUT, MCHINE ON RIGHT, ELECTRICALLY INTERLOCKED FOR U.S. & S. CO'S STYLE M23A MACHINE. IF OTHER SWITCH MACHINE IS USED, SWITCH GAGE PLATES 1-P AND 2-P MAY VARY AND SHOULD BE MODIFIED AS REQUIRED BY SWITCH MANUFACTURER TO PROVIDE PROPER SEATING.
5. FOR EXTENSION PLATE AND DAP TIE DETAILS SEE SHEET 2931-13.

DETAIL "A" INSULATION AT GAGE PLATES

(SCALE: NONE)

FOR MAINTENANCE ONLY

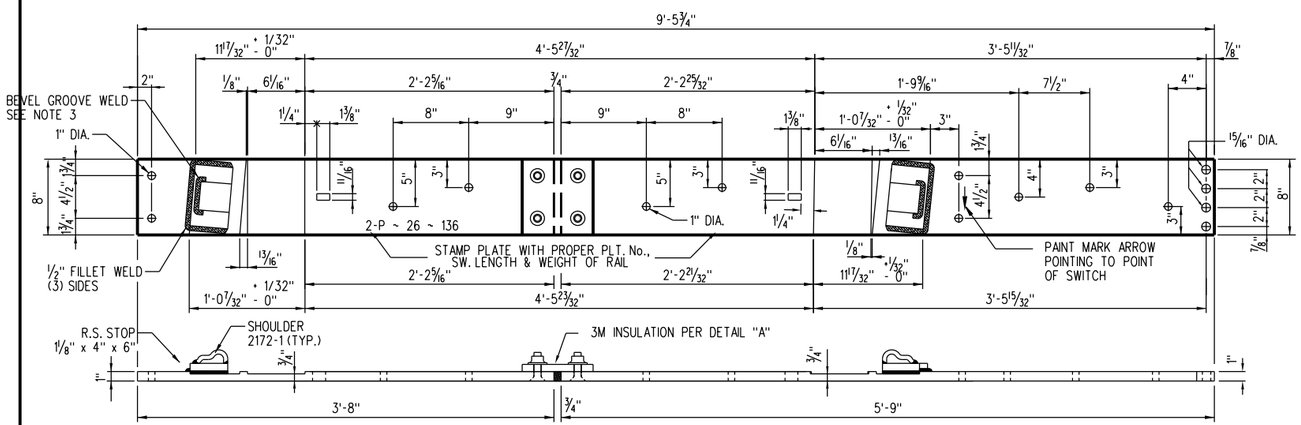

INSULATED GAGE PLATE - 2-P

1" x 8" "MILLED" W/3M INSULATION & ADJ. RAIL BRACES
(1 PC. REQ'D. AS SHOWN)

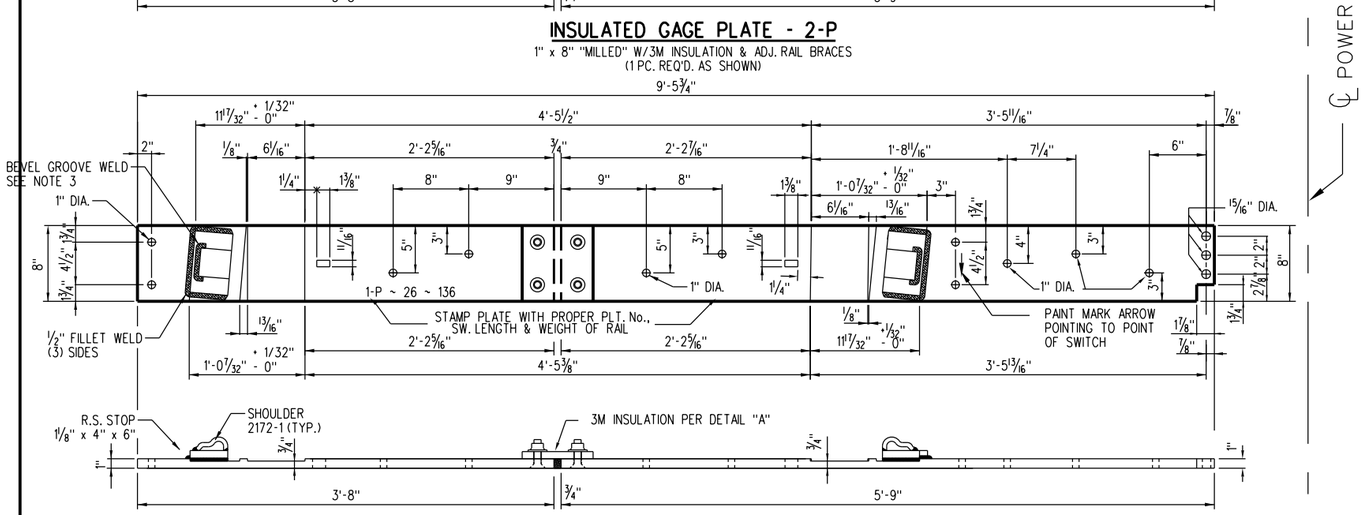

INSULATED GAGE PLATE - 1-P

1" x 8" "MILLED" W/3M INSULATION & ADJ. RAIL BRACES
(1 PC. REQ'D. AS SHOWN)

℄ POWER SWITCH MACHINE

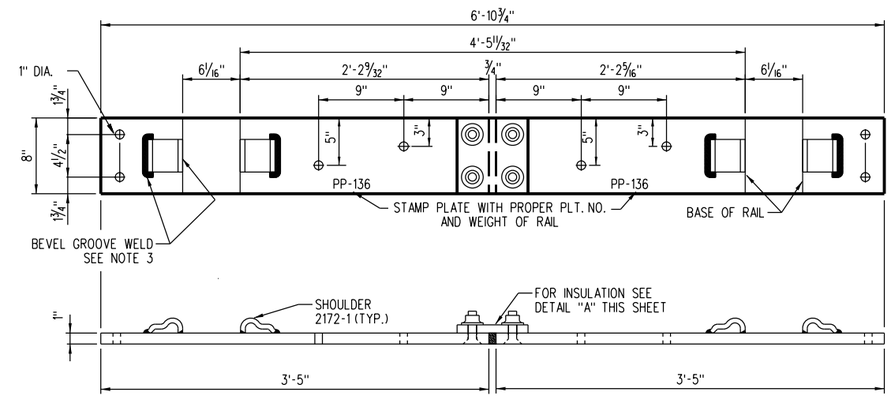

INSULATED GAGE PLATE PP WITH PANDROL CLIPS

1" x 8" "FLAT" W/3M INSULATION
(2 PC. REQ'D AS SHOWN)

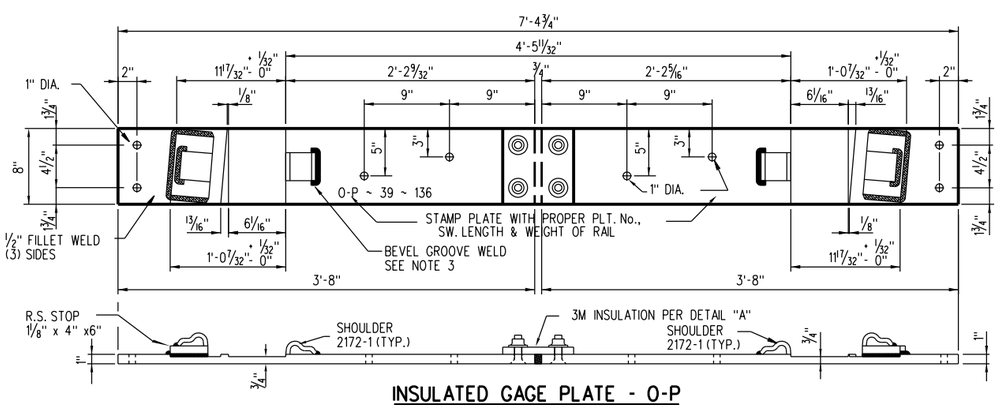

INSULATED GAGE PLATE - 0-P

1" x 8" "MILLED" W/3M INSULATION & ADJ. RAIL BRACES
(1 PC. REQ'D. AS SHOWN)

REV.	DATE	DESCRIPTION	DES.	ENG.
X	XX-XX-XX	REVISION	XX	XX

DRAWN BY: A. CARLOS DATE: 03/31/2011

ASSISTANT DIRECTOR: STANDARDS & DESIGN

DIRECTOR OF ENGINEERING AND CONSTRUCTION

SCRRA ENGINEERING STANDARDS ARE INTENDED FOR SCRRA APPROVED USES ONLY. FOR NON-SCRRA APPROVED USES:
SCRRA SHALL NOT BE RESPONSIBLE FOR THE ACCURACY OR COMPLETENESS OF THE DATA OR INFORMATION CONTAINED HEREIN. THE SELECTION AND USE OF THESE STANDARDS IS THE SOLE RESPONSIBILITY OF THE USER AND SHOULD NOT BE USED WITHOUT CONSULTING A REGISTERED PROFESSIONAL ENGINEER. ALL WARRANTIES AND REPRESENTATIONS OF ANY KIND ARE DISCLAIMED. ANYONE MAKING USE OF THIS INFORMATION AGREES THAT IT ASSUMES ALL LIABILITY ARISING FROM SUCH USE. NO PART OF THESE STANDARDS SHOULD BE REPRODUCED OR DISTRIBUTED IN ANY FORM OR BY ANY MEANS WITHOUT THE PRIOR WRITTEN PERMISSION OF SCRRA. ALL RIGHTS RESERVED.

METROLINK®
SOUTHERN CALIFORNIA REGIONAL RAIL AUTHORITY
ONE GATEWAY PLAZA, 12TH FLOOR, L. A., CA. 90012

ENGINEERING STANDARDS

NO. 14 INSULATED GAGE PLATE DETAILS

STANDARD 2931
SCALE: 1½" = 1'-0"
REVISION –
SHEET 16 OF 16
CADD FILE: ES2931-16

EQUIVALENT CURVE DATA	
CURVE	1.5213'
RADIUS	3766.40'
DELTA	2.864'
TANGENT (T)	94.16'
LENGTH (L)	188.27'
EXTERNAL	1.18'
CROSSOVER DATA	
LEAD	156.008'
PC TO PS	33.14'
PS TO PI	61.01'
PI TO ½" PF	94.99'
LENGTH OF TURNOUT	229.57'
PS TO PT	155.13'

FROG DATA	
FROG NUMBER	20
FROG ANGLE	2° 51' 51"
SWITCH DATA	
SWITCH LENGTH	39'-0"
HEEL SPREAD	6 1/4 "
HEEL ANGLE	1° -04'-30"
SWITCH ANGLE	0° -27'-19"
RADIUS OF CENTER LINE - SWITCH	3,605.70'
TANGENT LENGTH SWITCH	19.48'
CENTRAL ANGLE OF CLOSURE CURVE-SWITCH	0° -37'-11"
DEGREE OF CURVE - SWITCH	1° -35'-20"
TURNOUT DATA	
RADIUS OF CENTER LINE - TURNOUT	3,329.91'
TANGENT LENGTH - TURNOUT	69.98'
CENTRAL ANGLE OF CLOSURE CURVE - TURNOUT	2° -24'-32"
DEGREE OF CURVE - TURNOUT	1° -43'-15"

DRAWING INDEX

TURNOUT AND CROSSOVER GENERAL NOTES AND DATA — ES2941-01
TURNOUT AND CROSSOVER JOINT LOCATIONS — ES2941-02
TURNOUT LAYOUT — ES2941-03
TURNOUT BILL OF MATERIALS — ES2941-04
CROSSOVER LAYOUT AND BILL OF MATERIALS — ES2941-05
FROG LAYOUT — ES2941-06
FROG GAGE PLATE DETAILS — ES2941-07
FROG GUARD RAIL DETAILS — ES2941-08
SPLIT SWITCH POINT DETAILS — ES2941-09
STRAIGHT OR CURVED UNDERCUT STOCK RAILS — ES2941-10
SWITCH ROD DETAILS — ES2941-11
SWITCH ROD MISCELLANEOUS DETAILS — ES2941-12
EXTENSIONS PLATE AND DAP TIE DETAILS — ES2941-13
TURNOUT AND FROG PLATE DETAILS — ES2941-14
INSULATED GAGE PLATE DETAILS — ES2941-15

FOR MAINTENANCE ONLY

NOTES:

1. TURNOUT TO BE FABRICATED FROM 136 LB. HEAD HARDENED RAIL, FROM POINT END TO LAST LONG SWITCH TIE.
2. LOCATION OF INSULATED JOINTS IS DETERMINED BY DRAWING NUMBER ES2941-02. IT WILL BE SATISFACTORY TO RELOCATE THE INSULATED JOINT IN THE FIELD UP TO 12" SO AS TO PROVIDE A SUITABLE SUSPENDED JOINT, PROVIDED THE STAGGER OF INSULATED JOINTS DOES NOT EXCEED 4'-6". SUSPENDED INSULATED JOINTS MUST BE LOCATED IN A CRIB AREA BETWEEN TIES, A MINIMUM DISTANCE OF 4" FROM EDGE OF NEAREST TIE PLATE.
3. ALL INSULATED JOINTS ARE TO BE ADHESIVE BONDED PREFABRICATED MITRE CUT INSULATED JOINTS PER ES2504 UNLESS OTHERWISE SPECIFIED.
4. ALL MATERIALS REQUIRED FOR HAND OR MACHINE OPERATED SWITCH OPERATION WILL BE FURNISHED PER REQUIREMENTS OF THE SCRRA DIRECTOR OF ENGINEERING AND CONSTRUCTION.
5. MATERIALS AND WORKMANSHIP, ALSO ANY CONSTRUCTION DETAILS NOT SHOWN, SHALL BE PER CURRENT AREMA "MANUAL AND PORTFOLIO" UNLESS OTHERWISE SPECIFIED.
6. WHERE REQUIRED, ALL IDENTIFICATION SYMBOLS TO BE PLAINLY STAMPED.
7. GAGE PLATES WILL BE FURNISHED INSULATED. SWITCH RODS WILL BE FURNISHED INSULATED UNLESS OTHERWISE SPECIFIED.
8. MANUFACTURER SHALL SUBMIT TWO COPIES OF SHOP DRAWINGS TO THE SCRRA DIRECTOR OF ENGINEERING AND CONSTRUCTION FOR APPROVAL PRIOR TO FABRICATION OF TURNOUT. SHOP DRAWINGS THAT CHANGE DETAILS OF THESE STANDARDS MUST CLEARLY SPECIFY SUCH PROPOSED CHANGES.
9. THE MATERIAL INCLUDED IN A "TURNOUT COMPLETE" IS EVERYTHING LISTED IN THE BILL OF MATERIALS. TO CONSTRUCT A COMPLETE TURNOUT, SWITCH TIES (PER LIST ON THIS SHEET) AND INSULATED JOINTS, FIELD WELDS, RUNNING RAIL, AND CLOSURE RAIL IDENTIFICATION ON SHEET ES2941-02 MUST ALSO BE SUPPLIED. THE MATERIAL FOR A "CROSSOVER COMPLETE" IS IDENTIFIED ON SHEET ES2941-05.
10. TIE PLATES SHALL CONFORM TO SCRRA ENGINEERING STANDARD ES2454.
11. SCREW SPIKES (15/16" X 6-2 TPI) SHALL CONFORM TO SCRRA ENGINEERING STANDARD ES2357.
12. PLATE HOLES SHALL BE 1" DIAMETER. PILOT HOLES IN TIES SHALL BE 9/16" DIAMETER. SCREW SPIKES SHALL BE SCREWED INTO WOOD (NOT DRIVEN).
13. MANUFACTURER SHALL BEVEL RAIL ENDS PER CURRENT AREMA PLAN NO. 1005.
14. THE 39'-0" SWITCH POINT PER ES2941-09 IS TO BE FURNISHED WITH A "SMJ" NO. 1 & 5 SWITCH ROD PER DRAWINGS ES2941-11 AND ES2941-12. SWITCH RODS NO. 2,3,4 & 6 SHALL BE SIMILAR TO NO. 1 SWITCH ROD AND WILL BE FURNISHED WITHOUT BASKET ADJUSTMENT
15. FOR LOCATION OF INSULATED AND COMPROMISE JOINTS FOR NO. 20 TURNOUT AND CROSSOVER, SEE DRAWING NO. ES2941-02.
16. GAGE PLATES FOR SWITCH AND FROG, SWITCH HEEL PLATE (FOR BOTH R.H. AND L.H. TURNOUTS) AND PLATES P-13 THRU P-66 ARE DESIGNED TO BE PERPENDICULAR TO THE MAIN LINE THRU RUN RAILS, WITH THE EXCEPTION OF PLATE P-67 TO BE PERPENDICULAR TO TURNOUT SIDE OF TRACK.
17. UPON COMPLETION OF TURNOUT INSTALLATION, RUNNING RAIL MUST BE ADJUSTED TO SCRRA. NEUTRAL RAIL TEMPERATURE.
18. ALL E-CLIPS SHALL BE GALVANIZED.
19. SWITCH POINTS SHALL BE FABRICATED PER AREMA SPECIFICATION NO. 9-28-92 AND ES2941-09.
20. THE TOLERANCE FOR SPACING OF SWITCH TIES IS +/- ½" RELATIVE TO ADJACENT TIES AND 1¼" RELATIVE TO CUMULATIVE DIMENSION FROM THE POINT OF SWITCH (PS).
21. SWITCH POINT ROLLER BEARINGS AND SWITCH PLATES WITH POINT ROLLER RISERS SHALL BE AS APPROVED BY THE SCRRA DIRECTOR OF ENGINEERING AND CONSTRUCTION, SUBMITTED AS SHOP DRAWINGS PER NOTE 8 ABOVE. SWITCH POINT ROLLER BEARINGS WILL BE MOUNTED ABOVE PLATE AND WILL NOT BE LOCATED BETWEEN SWITCH TIES.
22. HELPER THROW ROD ASSEMBLIES SHALL CONFORM TO ES2941-11.

CROSSOVER DATA TABLE									
A	B	C	X	Y	2L+X	2L+X-2(PC-PS)	PS TO PS	U	V
13	260.17	259.85	71.86	448.16	448.41	382.12	381.88	69.86	70.18
14	280.18	279.83	91.87	468.15	468.42	402.14	401.86	89.85	90.20
15	300.20	299.82	111.88	488.14	488.43	422.15	421.85	109.84	110.21
16	320.21	319.81	131.90	508.12	508.45	442.16	441.84	129.82	130.22
17	340.22	339.80	151.91	528.11	528.46	462.17	461.83	149.81	150.23
18	360.24	359.79	171.92	548.10	548.47	482.19	481.82	169.80	170.25
19	380.24	379.77	191.94	568.09	568.48	502.20	501.80	189.79	190.26
20	400.26	399.76	211.95	599.08	588.50	522.21	521.79	209.78	210.27
21	420.28	419.75	231.96	608.06	608.51	542.23	541.78	229.76	230.29
22	440.29	439.74	251.98	628.05	628.52	562.24	561.77	249.75	250.30
23	460.30	459.76	271.99	648.04	648.54	582.25	581.76	269.74	270.31
24	480.32	479.72	292.00	668.03	668.55	602.27	601.75	289.73	290.33
25	500.33	499.70	312.03	688.02	688.56	622.28	621.73	309.72	310.34
26	520.34	519.69	332.03	708.01	708.58	642.29	641.72	329.71	330.35
27	540.35	539.68	352.04	727.99	728.59	662.31	661.71	349.69	350.37
28	560.37	559.67	372.05	747.98	748.60	682.32	681.70	369.68	370.38
29	580.38	579.66	392.07	767.97	768.62	702.33	701.69	389.67	390.39
30	600.39	599.64	412.08	787.96	788.63	722.35	721.67	409.66	410.41
31	620.41	619.63	432.09	807.95	808.64	742.36	741.66	429.65	430.42
32	640.42	639.62	452.11	827.93	828.66	762.37	761.65	449.63	450.43

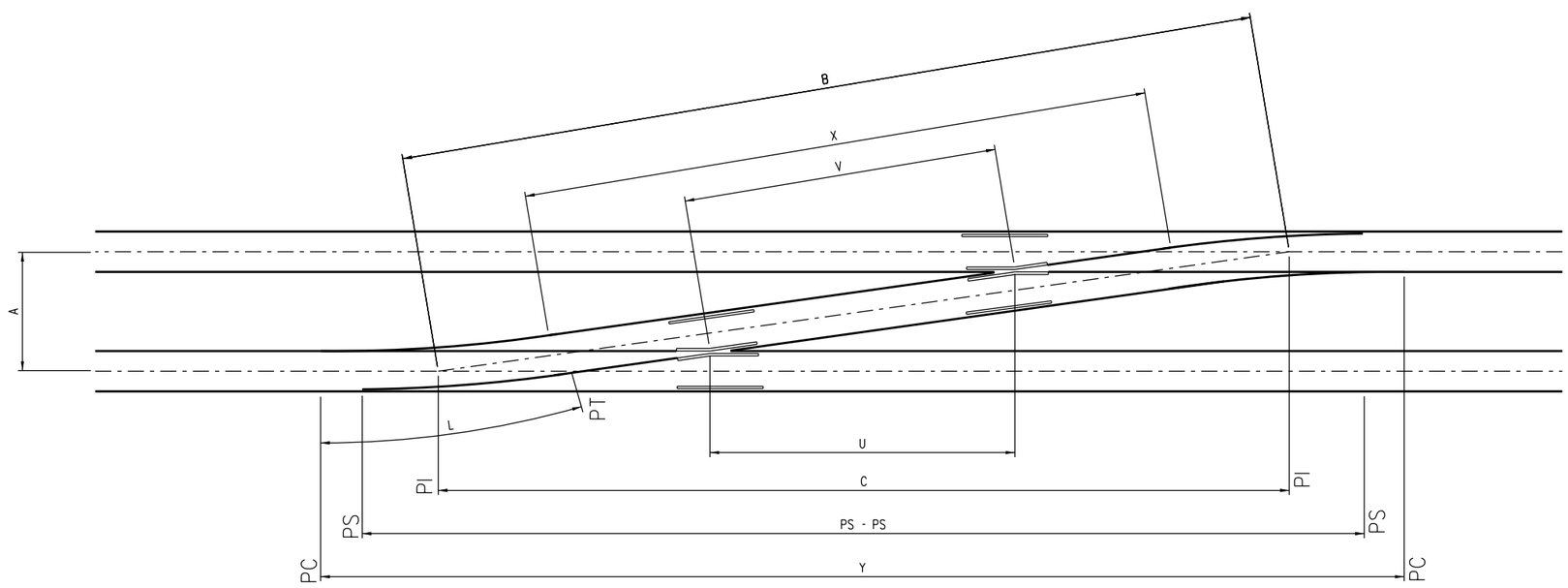

CROSSOVER LAYOUT

REV.	DATE	DESCRIPTION	DES.	ENG.
X	XX-XX-XX	REVISION	XX	XX

DRAWN BY: A. CARLOS DATE: 03/31/2011

ASSISTANT DIRECTOR: STANDARDS & DESIGN

DIRECTOR OF ENGINEERING AND CONSTRUCTION

SCRRA ENGINEERING STANDARDS ARE INTENDED FOR SCRRA APPROVED USES ONLY. FOR NON-SCRRA APPROVED USES:
SCRRA SHALL NOT BE RESPONSIBLE FOR THE ACCURACY OR COMPLETENESS OF THE DATA OR INFORMATION CONTAINED HEREIN. THE SELECTION AND USE OF THESE STANDARDS IS THE SOLE RESPONSIBILITY OF THE USER AND SHOULD NOT BE USED WITHOUT CONSULTING A REGISTERED PROFESSIONAL ENGINEER. ALL WARRANTIES AND REPRESENTATIONS OF ANY KIND ARE DISCLAIMED. ANYONE MAKING USE OF THIS INFORMATION AGREES THAT IT ASSUMES ALL LIABILITY ARISING FROM SUCH USE. NO PART OF THESE STANDARDS SHOULD BE REPRODUCED OR DISTRIBUTED IN ANY FORM OR BY ANY MEANS WITHOUT THE PRIOR WRITTEN PERMISSION OF SCRRA. ALL RIGHTS RESERVED.

METROLINK®
SOUTHERN CALIFORNIA REGIONAL RAIL AUTHORITY
ONE GATEWAY PLAZA, 12TH FLOOR, L. A., CA. 90012

ENGINEERING STANDARDS

NO. 20 136 LB. RH RBM FROG TURNOUT AND CROSSOVER GENERAL NOTES AND DATA

STANDARD: 2941
SCALE: NONE
REVISION: –
SHEET: 1 OF 15
CADD FILE: ES2941-01

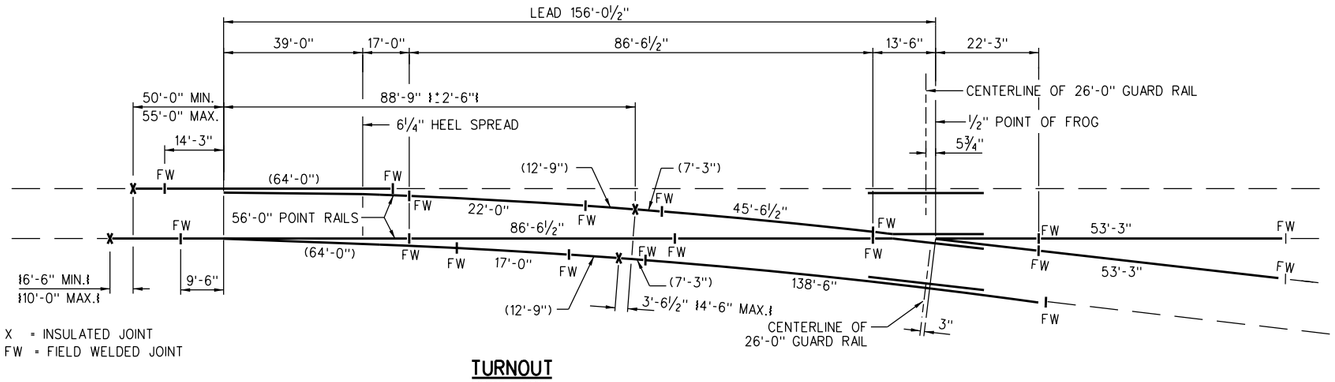

TURNOUT

SCALE: NONE

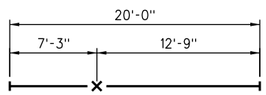

20'-0" LONG ADHESIVE BONDED PREFABRICATED MITRE CUT INSULATED RAIL JOINT ASSEMBLY

(SEE NOTE 6) BOTH ENDS SHALL BE LEFT BLANK FOR WELDING IN THE FIELD. (SCALE: NONE)

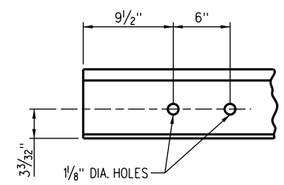

DETAIL "A"

SEE NOTE 4 (b)
SCALE: 1½" = 1'-0"

NOTES:

1. SINCE THE PERMISSIBLE VARIATION IN STANDARD LENGTHS OF RAILS, FROGS AND SWITCH POINTS IS GREATER THAN THE NORMAL EXPANSION GAPS AT RAIL JOINTS AND THICKNESS OF FIBRE END POST IN INSULATED JOINTS, NO ALLOWANCE HAS BEEN MADE FOR EXPANSION GAPS AND FIBRE END POSTS IN COMPUTING LENGTHS OF RAILS SHOWN.
2. RAIL LAYOUT SHOWN FOR CROSSOVERS IS TO BE USED IN ALL CASES, EXCEPT WHERE COMPROMISE JOINTS ARE REQUIRED BETWEEN THE FROGS IN THE CROSSOVER TRACK. (COMPROMISE JOINTS CAN BE USED IN A TEMPORARY CONDITION.) WHEN COMPROMISE WELDS ARE REQUIRED, THE INSULATED JOINTS IN THE CROSSOVER TRACK SHALL ALWAYS BE OF THE HEAVIER RAIL SECTION AND THE RAIL LAYOUT SHALL BE CHANGED TO LOCATE COMPROMISE JOINTS AS DESCRIBED BELOW:
   THE DESCRIPTIONS OF THE CHANGES IN RAIL LAYOUT WHEN COMPROMISE JOINTS ARE REQUIRED IN THE CROSSOVER TRACK ARE BASED ON ASSUMPTION THAT TRACK H IS LAID WITH THE HEAVIER RAIL THAN TRACK L.
   CROSSOVER ON 15'-0" TRACK CENTERS: AT LOCATION A THE 104'-6" RAIL SHALL BE REPLACED WITH 16'-6" OF THE HEAVIER RAIL AND 88'-6" OF THE LIGHTER RAIL. AT LOCATION B THE 29'-6" RAIL SHALL BE REPLACED WITH 10'-0" OF THE HEAVIER RAIL AND 19'-6" OF THE LIGHTER RAIL.
3. IN ADDITION TO NOTE 1, NO ALLOWANCE HAS BEEN MADE IN THE RAIL LENGTHS TO PROVIDE GAPS NEEDED TO MAKE FIELD WELDS. IN THE FIELD IT WILL BE NECESSARY TO CUT RAILS ENDS TO PROVIDE CORRECT GAPS FOR FIELD WELDS.
4. FURNISH ALL RAIL SHOWN IN SOLID LINES ON THIS DRAWING:
   (A.) RAILS LONGER THAN 39'-0" SHALL BE CONTINUOUS WELDED RAIL (CWR), TO BE FURNISHED WITH BOTH ENDS LEFT BLANK FOR WELDING IN THE FIELD.
   (B.) ALL OTHER RAILS 39'-0" OR SHORTER AS SPECIFIED ON THE DRAWING, WITH BOTH ENDS DRILLED PER DETAIL "A", IF SO REQUIRED.
5. ALL RAIL FURNISHED FOR TURNOUT AND CROSSOVER SHALL BE "HIGH STRENGTH" EXCEPT GUARD RAILS.
6. LOCATIONS OF INSULATED JOINTS ARE SHOWN ON TURNOUT AND CROSSOVER DIAGRAMS WITHOUT TOLERANCES, OR IF TOLERANCES ARE PERMISSABLE, WITH (+ OR -). ALL INSULATED JOINTS ARE TO BE PROPERLY SUSPENDED IN CRIB AREA BETWEEN TWO TIES LOCATED 4" MINIMUM FROM EDGE OF NEAREST TIE TO EDGE OF INSULATED JOINT.
7. INSULATED JOINT MUST BE INSTALLED TO BE CENTERED BETWEEN TWO (2) TIES.
8. FIELD WELDED JOINTS DESIGNATED "FW" SHOULD BE IN CRIB AREA BETWEEN TWO TIES LOCATED 4" MINIMUM BETWEEN NEAREST TIE AND WELDED JOINT. DIMENSIONS SHOWN IN PARENTHESIS (0'-0") ARE EXACT. RAILS FURNISHED FOR THESE LOCATIONS ARE LARGER AND MUST BE FIELD ADJUSTED (CUT) WITHIN TOLERANCES SHOWN IN BRACKETS (0'-0").
9. WHEN INSULATED JOINTS WITH TOLERANCES AND FIELD WELDED JOINTS FALL SHORT OF MINIMUM CLEARANCE FROM TIE OR TIE PLATE THE JOINT MAY BE MOVED WITHIN TOLERANCE LIMITS. BONDED INSULATED JOINT ASSEMBLIES AND STOCK RAILS ARE FURNISHED LONGER THATN SHOWN IN PARENTHESIS ON LAYOUT. THESE RAILS OR THEIR ADJACENT CONNECTING RAILS MUST BE TRIMMED IN THE FIELD TO FIT.
10. INSULATED JOINTS SHALL HAVE 45° MITRE CUT RAIL ENDS.

FOR MAINTENANCE ONLY

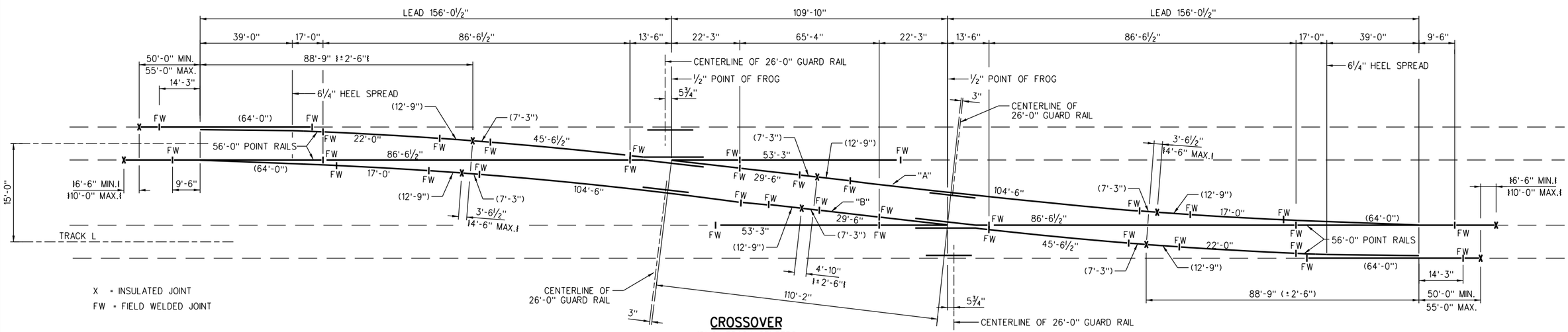

CROSSOVER

15'-0" TRACK CENTERS
(SCALE: NONE)

REV.	DATE	DESCRIPTION	DES.	ENG.
X	XX-XX-XX	REVISION	XX	XX

DRAWN BY: A. CARLOS DATE: 03/31/2011

ASSISTANT DIRECTOR: STANDARDS & DESIGN

DIRECTOR OF ENGINEERING AND CONSTRUCTION

SCRRA ENGINEERING STANDARDS ARE INTENDED FOR SCRRA APPROVED USES ONLY. FOR NON-SCRRA APPROVED USES:
SCRRA SHALL NOT BE RESPONSIBLE FOR THE ACCURACY OR COMPLETENESS OF THE DATA OR INFORMATION CONTAINED HEREIN. THE SELECTION AND USE OF THESE STANDARDS IS THE SOLE RESPONSIBILITY OF THE USER AND SHOULD NOT BE USED WITHOUT CONSULTING A REGISTERED PROFESSIONAL ENGINEER. ALL WARRANTIES AND REPRESENTATIONS OF ANY KIND ARE DISCLAIMED. ANYONE MAKING USE OF THIS INFORMATION AGREES THAT IT ASSUMES ALL LIABILITY ARISING FROM SUCH USE. NO PART OF THESE STANDARDS SHOULD BE REPRODUCED OR DISTRIBUTED IN ANY FORM OR BY ANY MEANS WITHOUT THE PRIOR WRITTEN PERMISSION OF SCRRA. ALL RIGHTS RESERVED.

METROLINK®
SOUTHERN CALIFORNIA REGIONAL RAIL AUTHORITY
ONE GATEWAY PLAZA, 12TH FLOOR, L. A., CA. 90012

ENGINEERING STANDARDS

NO. 20 136 LB. R.H. RBM FROG
TURNOUT AND CROSSOVER
JOINTS LOCATIONS

STANDARD 2941
SCALE: NONE
REVISION –
SHEET 2 OF 15
CADD FILE: ES2941-02

NOTE:

IF CONCRETE TIES ARE INSTALLED AHEAD OF SWITCH POINT, HEAD BLOCK TIE GAGE PLATE PP WILL NOT BE INSTALLED.

NOTES:

1. SEE SHEET NO. 1 FOR NOTES AND TURNOUT DATA
2. SEE SHEET NO. 4 FOR BILL OF MATERIAL
3. SEE SHEET NO. 5 FOR CROSSOVER

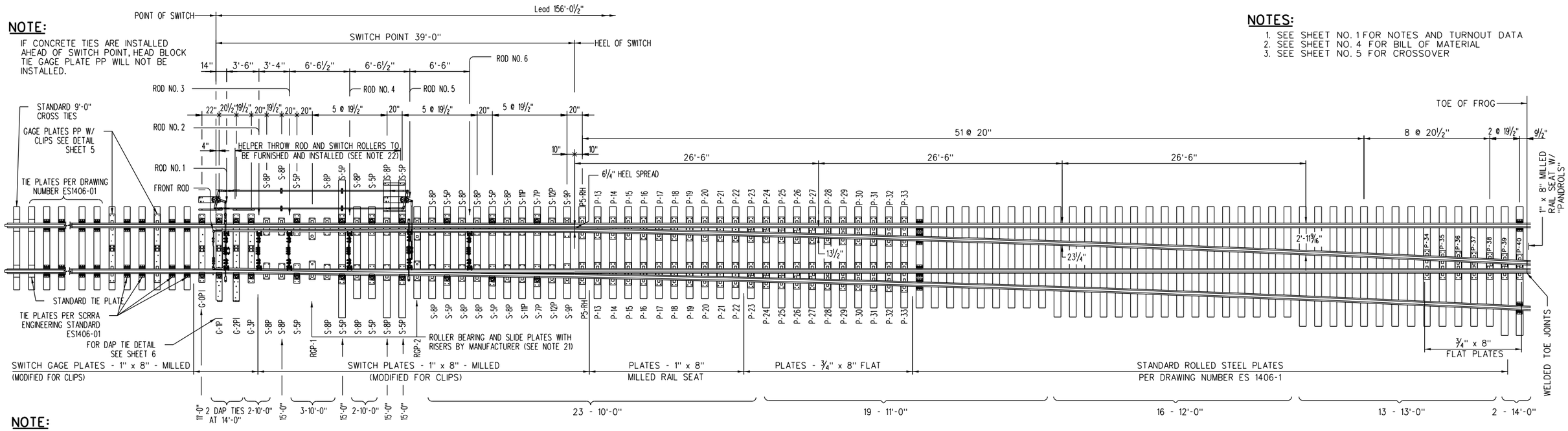

NOTE:

2 - 26'-0" LONG U-69 RAISED GUARD RAIL WITH BRACES AND PLATES PER SHEET 8.

NO. 20 RIGHT HAND TURNOUT

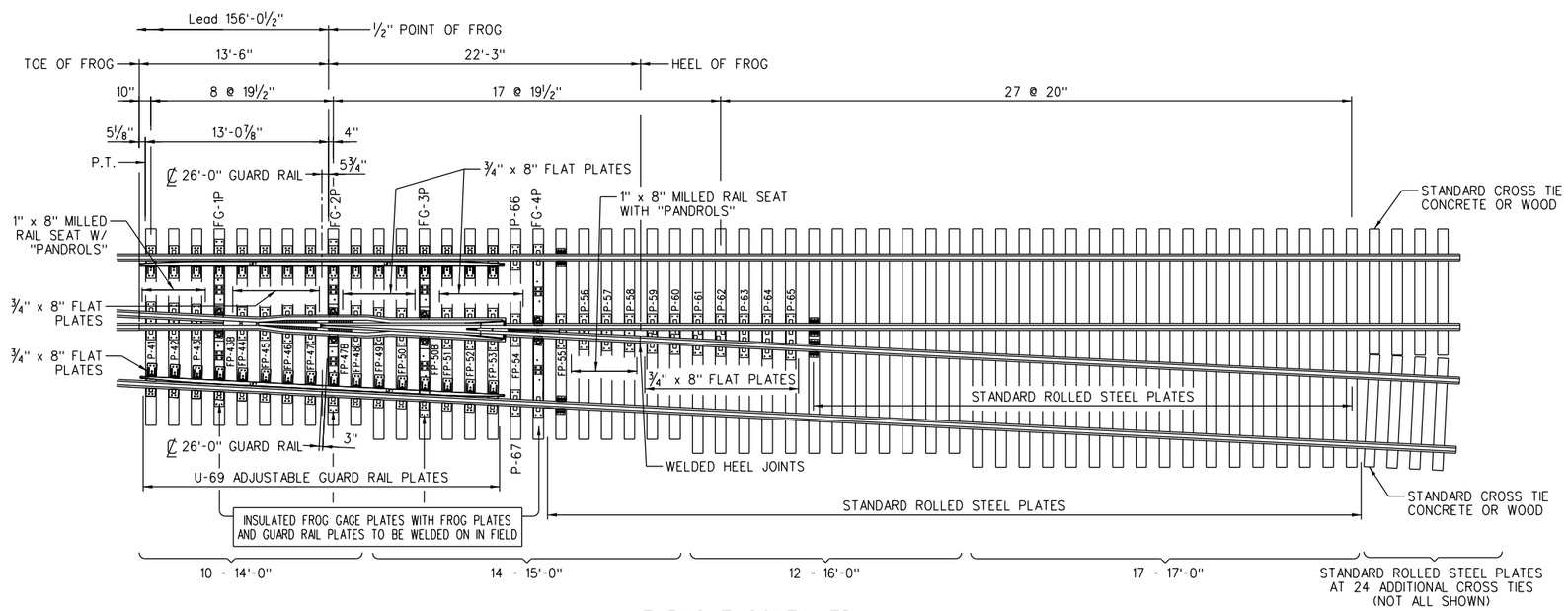

TURNOUT CONTINUED

FOR MAINTENANCE ONLY

REV.	DATE	DESCRIPTION	DES.	ENG.
X	XX-XX-XX	REVISION	XX	XX

DRAWN BY: A. CARLOS DATE: 03/31/2011

ASSISTANT DIRECTOR: STANDARDS & DESIGN

DIRECTOR OF ENGINEERING AND CONSTRUCTION

SCRRA ENGINEERING STANDARDS ARE INTENDED FOR SCRRA APPROVED USES ONLY. FOR NON-SCRRA APPROVED USES:
SCRRA SHALL NOT BE RESPONSIBLE FOR THE ACCURACY OR COMPLETENESS OF THE DATA OR INFORMATION CONTAINED HEREIN. THE SELECTION AND USE OF THESE STANDARDS IS THE SOLE RESPONSIBILITY OF THE USER AND SHOULD NOT BE USED WITHOUT CONSULTING A REGISTERED PROFESSIONAL ENGINEER. ALL WARRANTIES AND REPRESENTATIONS OF ANY KIND ARE DISCLAIMED. ANYONE MAKING USE OF THIS INFORMATION AGREES THAT IT ASSUMES ALL LIABILITY ARISING FROM SUCH USE. NO PART OF THESE STANDARDS SHOULD BE REPRODUCED OR DISTRIBUTED IN ANY FORM OR BY ANY MEANS WITHOUT THE PRIOR WRITTEN PERMISSION OF SCRRA. ALL RIGHTS RESERVED.

METROLINK®
SOUTHERN CALIFORNIA REGIONAL RAIL AUTHORITY
ONE GATEWAY PLAZA, 12TH FLOOR, L. A., CA. 90012

ENGINEERING STANDARDS

NO. 20 136 LB. R.H. RBM FROG TURNOUT LAYOUT

STANDARD 2941
SCALE: 3/16" = 1'-0"
REVISION –
SHEET 3 OF 15
CADD FILE: ES2941-03

BILL OF MATERIAL FOR LATERAL TURNOUT

QTY.	DESCRIPTION
1	NO. 20 RAIL BOUND MANGANESE FROG
2	26'-0" "U-69" ADJUSTABLE GUARD RAIL W/ PLATES
1 PAIR	39'-0" EXTENDED FIELD WELDED TYPE SWITCH POINTS (56'-0" RAIL)
1 EACH	R.H. & L.H. SAMSON STOCK RAILS (64'-0")
1 EACH	17'-0" RAIL
1 EACH	22'-0" RAIL
1 EACH	45'-6½" RAIL
1 EACH	53'-3" CURVED RAIL
1 EACH	53'-3" STRAIGHT RAIL
1 EACH	86'-6½" STRAIGHT RAIL
1 EACH	138'-6" CURVED RAIL
1	No. 1 & 5 SMJ TYPE SWITCH ROD W/ BASKET
1 EACH	No. 2, 3, 4 & 6 SMJ TYPE SWITCH ROD W/O BASKET
1	VERTICAL SWITCH ROD ASSEMBLY W/ SMJ CLIPS
2	SWITCH MACHINE EXTENSION PLATES
2 EACH	TURNOUT PLATES P-13 THRU P-33
1 EACH	TURNOUT PLATES P-56 THRU P-65
1 EACH	TURNOUT PLATES P-34 THRU P-43
1 EACH	SINGLE RAIL PLATES P-66 AND P-67
1	SWITCH GAGE PLATE P-P
1 EACH	SWITCH GAGE PLATES G-0P THRU G-3P
1 EACH	FROG GAGE PLATES FG-1P THRU FG-4P
1 EACH	FROG PLATES FP-44 THRU FP-55
12	SLIDE PLATE S-5P
2	SLIDE PLATE S-7P
18	SLIDE PLATE S-8P
2	SLIDE PLATES S-9P THRU S-12P
2	HEEL PLATE P5-RH
2	ROLLER RISER PLATES RBP-1 AND RBP-2
4 PIECES	SWITCH POINT ROLLER ASSEMBLIES
7	D.I. RAIL HOLD DOWN CLIPS E-3706
5	D.I. RAIL HOLD DOWN CLIPS E-3707
6	D.I. RAIL HOLD DOWN CLIPS E-3708
2	D.I. RAIL HOLD DOWN CLIPS E-3709
4	D.I. RAIL HOLD DOWN CLIPS E-3710
22	BOLTLESS ADJUSTABLE BRACE ASSEMBLY
144	"PANDROL", OR EQUAL, "E"-CLIP TYPE E-2055
255	"PANDROL", OR EQUAL, 15/16 " DIA. No. 5760 SCREW SPIKES
8	ROLLER BEARING BRACE PLATES RBP-1, RBP-2, & RBP-3
576	"PANDROL", OR EQUAL, 15/16 " DIA. No. 5760 SCREW SPIKES
2 EACH	EPOXY BONDED PREFABRICATED MITRE CUT INSULATED JOINT 20'-0"

BILL OF MATERIAL FOR HELPER ASSEMBLY

QTY.	DESCRIPTION
11	COTTER PIN, 3/16X 1¾ LG
4	PIPE COUPLER
1	JAW PIN
9	COTTER PIN, 3/16 x 1½
4	BOLT, ¾- 10 X 3" LG, HVY HEX
8	PIN, PIPE CARRIER ROLLER
11	FLAT WASHER, ¾, USS
11	LOCK WASHER, ¾, HVY
6	NUT, ¾- 10, HEAVY SQUARE
11	NUT, ¾- 10, HEAVY HEX
6	RETAINER, BOLT
6	STUD, ¾ x 14 W 3"¾- 10 THREAD BOTH ENDS
1	ROD OPERATING - No. 5 HELPER
2	ASSY - SWITCH POINT ADJUSTER
8	ROLLER, PIPE CARRIER
8	STAND, PIPE CARRIER
8	¾ x 5 LG LAG BOLT
16	½ x 4 LG LAG BOLT
7	RIVET, ¼" x 1½, ROUND, STEEL
2	CONE NUT, SWITCH POINT ADJUSTER
4	LOCK WASHER, 1¼" HEAVY
6	NUT, 1¼- 7, HEAVY HEX, JAMB
2	PIPE - SCHEDULE 80 x 212⅞ LG
1	CLEVIS
4	SCREW JAW ROD
2	SOLID JAW
9	JAW PIN
4	CRANK STAND PIN
2	SCREW JAW, 1¼- 7 X 6½LG
1	ADJUSTABLE LINK
1	CRANK,3 ARM, STAGE 3
1	CRANK, 3 ARM, STAGE 2
1	CRANK, 3 ARM, STAGE 1
2	CRANK STAND
1	CRANK PLATE, STAGE 2
1	CRANK PLATE, STAGE 1

BILL OF SWITCH TIES FOR TURNOUT

PIECES	SIZE	LENGTH	BOARD FEET
30	7" x 9"	10'-0"	157.00
20	7" x 9"	11'-0"	1155.00
16	7" x 9"	12'-0"	1008.00
13	7" x 9"	13'-0"	887.25
12	7" x 9"	14'-0"	882.00
2	10" x 9"	14'-0" DAP TIES	126.00
18	7" x 9"	15'-0"	1417.50
12	7" x 9"	16'-0"	1008.00
17	7" x 9"	17'-0"	1160.25
TOTAL			TOTAL
140			9576.00

FOR MAINTENANCE ONLY

REV.	DATE	DESCRIPTION	DES.	ENG.
X	XX-XX-XX	REVISION	XX	XX

DRAWN BY: A. CARLOS DATE: 03/31/2011

ASSISTANT DIRECTOR: STANDARDS & DESIGN

DIRECTOR OF ENGINEERING AND CONSTRUCTION

SCRRA ENGINEERING STANDARDS ARE INTENDED FOR SCRRA APPROVED USES ONLY. FOR NON-SCRRA APPROVED USES:
SCRRA SHALL NOT BE RESPONSIBLE FOR THE ACCURACY OR COMPLETENESS OF THE DATA OR INFORMATION CONTAINED HEREIN. THE SELECTION AND USE OF THESE STANDARDS IS THE SOLE RESPONSIBILITY OF THE USER AND SHOULD NOT BE USED WITHOUT CONSULTING A REGISTERED PROFESSIONAL ENGINEER. ALL WARRANTIES AND REPRESENTATIONS OF ANY KIND ARE DISCLAIMED. ANYONE MAKING USE OF THIS INFORMATION AGREES THAT IT ASSUMES ALL LIABILITY ARISING FROM SUCH USE. NO PART OF THESE STANDARDS SHOULD BE REPRODUCED OR DISTRIBUTED IN ANY FORM OR BY ANY MEANS WITHOUT THE PRIOR WRITTEN PERMISSION OF SCRRA. ALL RIGHTS RESERVED.

METROLINK®
SOUTHERN CALIFORNIA REGIONAL RAIL AUTHORITY
ONE GATEWAY PLAZA, 12TH FLOOR, L. A., CA. 90012

ENGINEERING STANDARDS

NO. 20 136 LB. R.H. RBM FROG TURNOUT
BILL OF MATERIALS

STANDARD 2941
SCALE: NONE
REVISION –
SHEET 4 OF 15
CADD FILE: ES2941-04

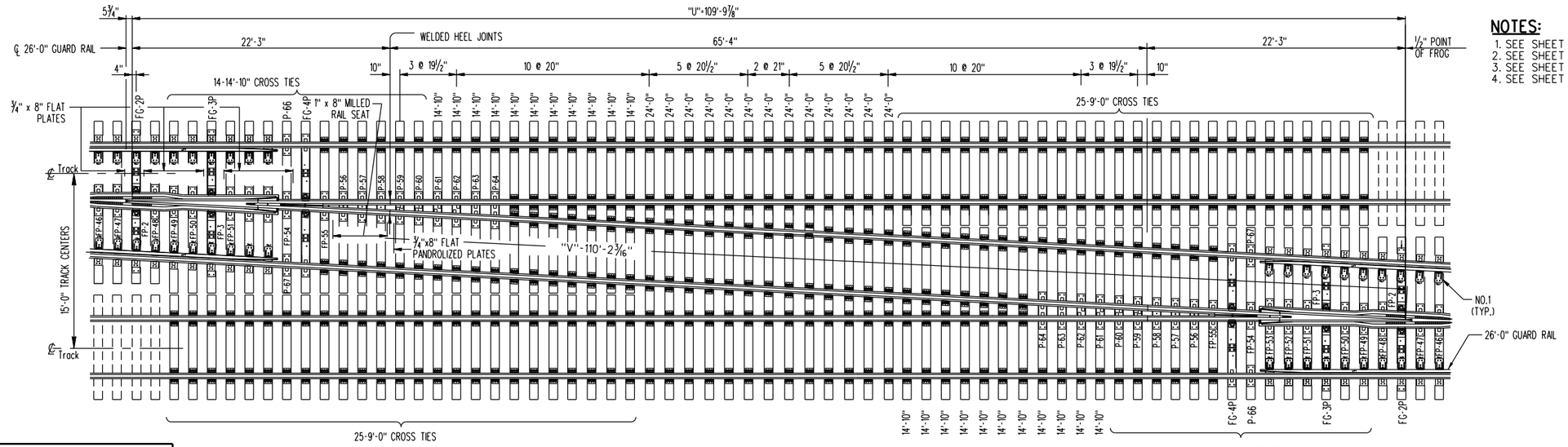

NOTES:

1. SEE SHEET 1 FOR NO. 20 TURNOUT DATA AND NOTES
2. SEE SHEET 4 FOR BILL OF MATERIALS
3. SEE SHEET 3 FOR LAYOUT OF NO. 20 TURNOUT
4. SEE SHEET 14 FOR SWITCH AND TURNOUT PLATES

CROSSOVER

(15'-0" TRACK CENTERS)

BILL OF MATERIAL FOR CROSSOVER

QTY.	DESCRIPTION
2	No. 20 RAIL BOUND MANGANESE FROG
4	26'-0" "U-69" ADJUSTABLE GUARD RAIL W/ PLATES
2 PAIR	39'-0" EXTENDED FIELD WELDED TYPE SWITCH POINTS (56'-0" RAIL)
2 EACH	R.H. & L.H. SAMSON STOCK RAILS (64'-0")
2 EACH	17'-0" RAILS
2 EACH	22'-0" RAILS
2 EACH	29'-6" RAILS
2 EACH	45'-6½" RAILS
2 EACH	53'-3" RAILS
2 EACH	86'-6½" RAILS
2 EACH	104'-6" RAILS
2	"MF" TYPE FRONT ROD W/ "MF" CLIPS
2	No. 1 SMJ TYPE SWITCH ROD W/ BASKET
2 EACH	No. 2 THRU No. 6 SMJ TYPE SWITCH ROD W/ BASKET
2	VERTICAL SWITCH ROD ASSEMBLY W/ SMJ CLIPS
4 EACH	TURNOUT PLATES P-13 THRU P-33
2 EACH	TURNOUT PLATES P-34 THRU P-43
2 EACH	TURNOUT PLATES P-56 THRU P-65
2 EACH	SINGLE RAIL PLATES P-66 AND P-67
2	SWITCH GAGE PLATE P-P
2 EACH	SWITCH GAGE PLATES G-OP THRU G-3P
2 EACH	FROG GAGE PLATES FG-1P THRU FG-4P
2 EACH	FROG PLATES FP-44 THRU FP-55
24	SLIDE PLATE S-5P
4	SLIDE PLATE S-7P
36	SLIDE PLATE S-8P
4	SLIDE PLATES S-9P THRU S-12P
4	HEEL PLATE P5-RH
4	ROLLER RISER PLATES RBP-1 AND RBP-2
8 PIECES	SWITCH POINT ROLLER ASSEMBLIES
14	D.I. RAIL HOLD DOWN CLIPS E-3706
10	D.I. RAIL HOLD DOWN CLIPS E-3707
12	D.I. RAIL HOLD DOWN CLIPS E-3708
4	D.I. RAIL HOLD DOWN CLIPS E-3709
8	D.I. RAIL HOLD DOWN CLIPS E-3710
44	BOLTLESS ADJUSTABLE BRACE ASSEMBLY
282	"PANDROL", OR EQUAL, TIE PLATES
564	"PANDROL", OR EQUAL, "E"-CLIP TYPE E-2055
24	"PANDROL", OR EQUAL, "E"-CLIP TYPE E-2063
1128	"PANDROL", OR EQUAL, 15/16" DIA. No. 5760 SCREW SPIKES
6 EA.	EPOXY BONDED PREFABRICATED MITRE CUT INSULATED JOINT 20'-0"

BILL OF MATERIAL FOR HELPER ASSEMBLY (TWO REQUIRED)

QTY.	DESCRIPTION
11	COTTER PIN, 3/16 X 1 3/4 LC
4	PIPE COUPLER
1	JAW PIN
9	COTTER PIN, 3/16 x 1 1/2
4	BOLT, 3/4-10 X 3" LG, HVY HEX
8	PIN, PIPE CARRIER ROLLER
11	FLAT WASHER, 3/4, USS
11	LOCK WASHER, 3/4, HVY
6	NUT, 3/4-10, HEAVY SQUARE
11	NUT, 3/4-10, HEAVY HEX
6	RETAINER, BOLT
6	STUD, 3/4 X 14 W 3" 3/4-10 THREAD BOTH ENDS
1	ROD OPERATING - #5 HELPER
2	ASSY - SWITCH POINT ADJUSTER
8	ROLLER, PIPE CARRIER
8	STAND, PIPE CARRIER
8	3/4 X 5 LG LAG BOLT
16	1/2 X 4 LG LAG BOLT
7	RIVET, 1/4" X 1 1/2, ROUND, STEEL
2	CONE NUT, SWITCH POINT ADJUSTER
4	LOCK WASHER, 1 1/4" HEAVY
6	NUT, 1 1/4-7, HEAVY HEX, JAMB
2	PIPE - SCHEDULE 80 X 212 7/8 LG
1	CLEVIS
4	SCREW JAW ROD
2	SOLID JAW
9	JAW PIN
4	SCREW JAW, 1 1/4-7 X 6 1/2 LG
2	CRANK STAND PIN
1	ADJUSTABLE LINK
1	CRANK, 3 ARM, STAGE 3
1	CRANK, 3 ARM, STAGE 2
1	CRANK, 3 ARM, STAGE 1
2	CRANK STAND
1	CRANK PLATE, STAGE 2
1	CRANK PLATE, STAGE 1

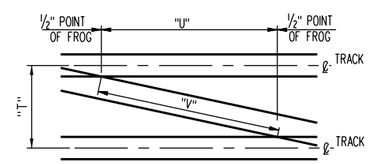

CROSSOVER DATA DETAIL

CROSSOVER DATA

MAIN TRACKS - TANGENT AND PARALLEL
CROSSOVER - TANGENT BETWEEN FROGS

TRACK CENTERS "T"	DISTANCE BETWEEN ½ FROG POINTS	
	ON MAIN TRACK "U"	ON CROSSOVER "V"
14'-0"	89'-9⅞"	90'-2⅛"
15'-0"	109'-9⅞"	110'-2 3/16"
16'-0"	129'-9 13/16"	130'-2⅜"
17'-0"	149'-9½"	150'-2½"
EACH 1"	1.666'	1.668'

BILL OF SWITCH TIES FOR CROSSOVER

PIECES	SIZE	LENGTH	BOARD FEET
50	7" x 9"	9'-0"	2362.50
60	7" x 9"	10'-0"	3150.00
40	7" x 9"	11'-0"	2310.00
32	7" x 9"	12'-0"	2016.00
26	7" x 9"	13'-0"	1774.50
24	7" x 9"	14'-0"	1764.00
4	10" x 9"	14'-0" DAP TIES	294.00
58	7" x 9"	14'-10"	4567.50
13	7" x 9"	24'-0"	1638.00
TOTAL			TOTAL
307			19876.50

BILL OF TURNOUT PLATES AND DIMENSION TABLE

PLATE	DIM "A"	DIM "B"	DIM "C"	DIM "L"	Plts REQ'D.	Clips REQ'D.
P-13	12 13/16"	12 3/32"	6 7/16"	2'-5"	2 EA.	2
P-14	13 7/32"	13 3/8"	6 21/32"	2'-5½"	2 EA.	2
P-15	13 5/8"	13 25/32"	6 1/8"	2'-6"	2 EA.	2
P-16	14 1/32"	14 7/32"	7 1/16"	2'-6"	2 EA.	2
P-17	14 15/32"	14 5/8"	7 3/32"	2'-6½"	2 EA.	2
P-18	14 29/32"	15 1/16"	7 1/2"	2'-7"	2 EA.	2
P-19	15 11/32"	15 17/32"	7 23/32"	2 -7½"	2 EA.	2
P-20	15 25/32"	15 31/32"	7 15/16"	2 -8"	2 EA.	2
P-21	16 1/4"	16 7/16"	8 3/16"	2'-8½"	2 EA.	2
P-22	16 23/32"	16 15/16"	8 7/16"	2'-9"	2 EA.	2
P-41	16 7/16"	15 29/32"	8 1/16"	2'-8½"	1 EA.	1
P-42	15 11/32"	14 15/16"	7 19/32"	2'-7½	1 EA.	1
P-43	14 3/8"	13 31/32"	7 3/32"	2'-6½"	1 EA.	1
P-56	14 13/32"	14 25/32"	7 5/16"	2'-7"	1 EA.	1
P-57	15 3/8"	15 25/32"	7 13/16"	2'-8"	1 EA.	1
P-58	16 11/32"	16 3/4"	8 3/32"	2'-9"	1 EA.	1

BILL OF TURNOUT PLATES AND DIMENSION TABLE

PLATE	DIM "A"	DIM "B"		DIM "L"	Plts REQ'D.
P-23	17 7/32"	17 13/32"		2'-9½"	2 EA.
P-24	17 11/16"	17 29/32"		2'-10"	2 EA.
P-25	18 7/32"	18 13/32"		2'-11"	2 EA.
P-26	18 23/32"	18 15/16"		2'-11"	2 EA.
P-27	19 1/4"	19 15/32"		2'-11⅛"	2 EA.
P-28	19 25/32"	20"		3'-0"	2 EA.
P-29	20 5/16"	20 17/32"		3'-0½"	2 EA.
P-30	20 27/32"	21 1/32"		3'-1"	2 EA.
P-31	21 7/16"	21 21/32"		3'-1½"	2 EA.
P-32	22"	22 1/8"		3'-2½"	2 EA.
P-33	22 19/32"	22 27/32"		3'-3"	2 EA.
P-34	23 3/32"	22 23/32"		3'-3"	1 EA.
P-35	22 5/32"	21 25/32"		3'-2"	1 EA.
P-36	21 3/16"	20 29/32"		3'-1"	1 EA.
P-37	20 3/16"	19 13/16"		3'-0"	1 EA.
P-38	19 7/32"	18 13/16"		2'-10"	1 EA.
P-39	18 1/4"	17 7/8"		2'-10"	1 EA.
P-40	17 9/32"	16 29/32"		2'-9"	1 EA.
P-59	17 11/32"	17 23/32"		2'-10"	1 EA.
P-60	18 5/16"	18 23/32"		2'-11"	1 EA.
P-61	19 9/32"	19 11/16"		3'-0"	1 EA.
P-62	20 1/4"	20 21/32"		3'-1"	1 EA.
P-63	21 1/4"	21 21/32"		3'-2"	1 EA.
P-64	22 1/4"	22 21/32"		3'-3"	1 EA.
P-65	23 1/4"	23 21/32"		3'-4"	1 EA.
P-66	SEE DRAWING 2941-04 FOR DETAILS				1 EA.
P-67	SEE DRAWING 2941-04 FOR DETAILS				1 EA.

FOR MAINTENANCE ONLY

REV.	DATE	DESCRIPTION	DES.	ENG.
X	XX-XX-XX	REVISION	XX	XX

DRAWN BY: A. CARLOS DATE: 03/31/2011

ASSISTANT DIRECTOR: STANDARDS & DESIGN

DIRECTOR OF ENGINEERING AND CONSTRUCTION

SCRRA ENGINEERING STANDARDS ARE INTENDED FOR SCRRA APPROVED USES ONLY. FOR NON-SCRRA APPROVED USES:
SCRRA SHALL NOT BE RESPONSIBLE FOR THE ACCURACY OR COMPLETENESS OF THE DATA OR INFORMATION CONTAINED HEREIN. THE SELECTION AND USE OF THESE STANDARDS IS THE SOLE RESPONSIBILITY OF THE USER AND SHOULD NOT BE USED WITHOUT CONSULTING A REGISTERED PROFESSIONAL ENGINEER. ALL WARRANTIES AND REPRESENTATIONS OF ANY KIND ARE DISCLAIMED. ANYONE MAKING USE OF THIS INFORMATION AGREES THAT IT ASSUMES ALL LIABILITY ARISING FROM SUCH USE. NO PART OF THESE STANDARDS SHOULD BE REPRODUCED OR DISTRIBUTED IN ANY FORM OR BY ANY MEANS WITHOUT THE PRIOR WRITTEN PERMISSION OF SCRRA. ALL RIGHTS RESERVED.

METROLINK®
SOUTHERN CALIFORNIA REGIONAL RAIL AUTHORITY
ONE GATEWAY PLAZA, 12TH FLOOR, L. A., CA. 90012

ENGINEERING STANDARDS

NO. 20 136 LB. R.H. RBM FROG CROSSOVER LAYOUT AND BILL OF MATERIALS

STANDARD 2941
SCALE: 3/16" = 1'-0"
REVISION –
SHEET 5 OF 15
CADD FILE: ES2941-05

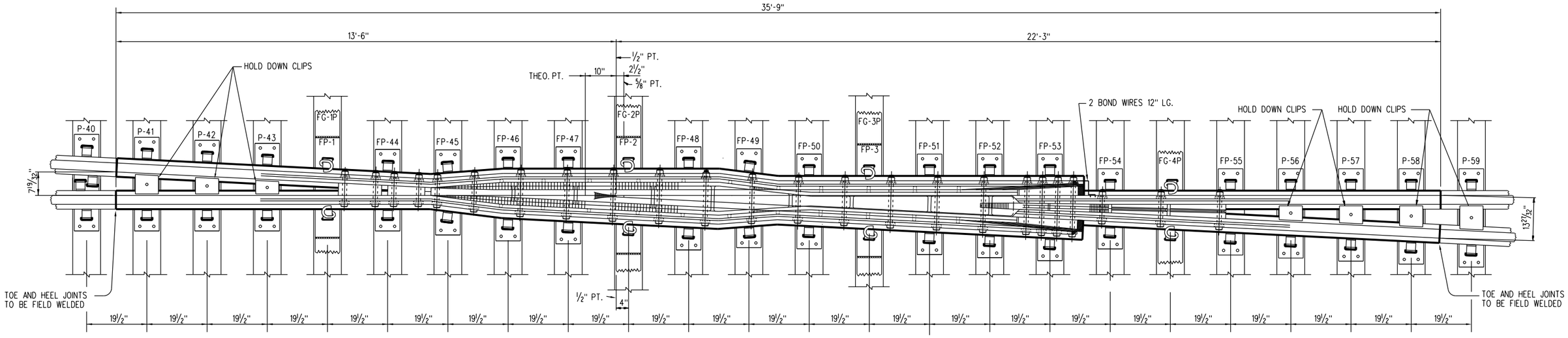

No.20 RAILBOUND MANGANESE STEEL FROG WITH PLATES

DIMENSION TABLE

PLATE	DIM "A"	DIM "B"	DIM "L"	Plts REQ'D.
FP-45	SEE NOTE "A"		2'-5 1/2"	1
FP-49	" " "		2'-10 1/2"	1

NOTE "A"

PLATES FP-44 THRU FP-55 ARE TO BE LAYED OUT AND MARKED OFF FROM UNDER FROG TO INSURE PROPER LOCATION OF SHOULDERS.

NOTE "B"

SPECIAL FROG PLATES FP-1, FP-2, AND FP-3 WITH ADJUSTABLE CLAMPS, SHOWN IN POSITION ON THIS SHEET, ARE DESIGNED TO BE WELDED TO FROG GAGE PLATES. FOR MANUFACTURING DETAILS AND INSTALLATION PROCEEDURES SEE DWG. No. 2941-07

DIMENSION TABLE

PLATE	DIM "A"	DIM "B"	DIM "L"	Plts REQ'D.
FP-46	SEE NOTE "A"		2'-8 1/2"	1 EA.
FP-47	" " "		2'-9 1/2"	1 EA.
FP-48	" " "		2'-11 1/2"	1 EA.
FP-50	" " "		2'-8 1/2"	1 EA.
FP-51	" " "		2'-10 1/2"	1 EA.
FP-52	" " "		2'-11 1/2"	1 EA.
FP-53	" " "		3'-0 1/2"	1 EA.
FP-54	" " "		2'-4"	1 EA.
FP-55	" " "		2'-6"	1 EA.
SPECIAL FROG PLATES WITH ADJUSTABLE CLAMPS				
FP-1	SEE NOTE "B"		2'-8"	1 EA.
FP-2	" " "		3'-1"	1 EA.
FP-3	" " "		3'-0"	1 EA.

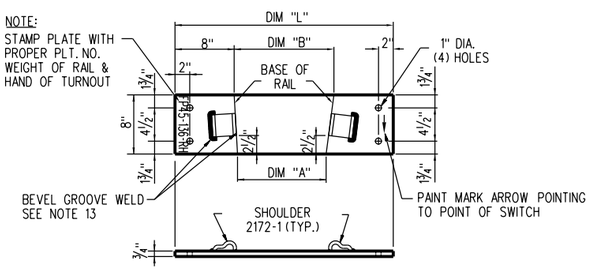

FROG PLATES - FP-45 & FP-49

3/4" x 8" x DIM "L" - FLAT - W/ CLIPS

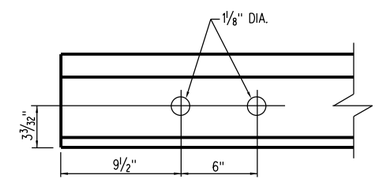

RAIL END DRILLING

NOTE: RAIL END DRILLING CAN BE ELIMINATED IF NO TEMPORARY BOLTED JOINTS ARE TO BE USED.

DIMENSION TABLE

PLATE	DIM "A"	DIM "B"	DIM "L"	Plts REQ'D.
FP-44	SEE NOTE "A"		2'-4 1/2"	1 EA.

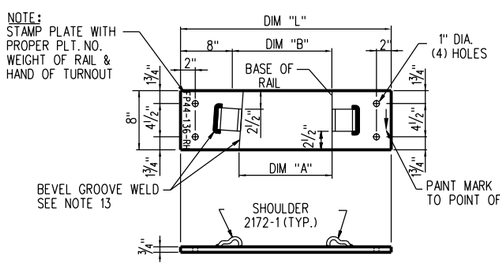

FROG PLATE - FP-44

3/4" x 8" x DIM "L" - FLAT - W/ CLIPS

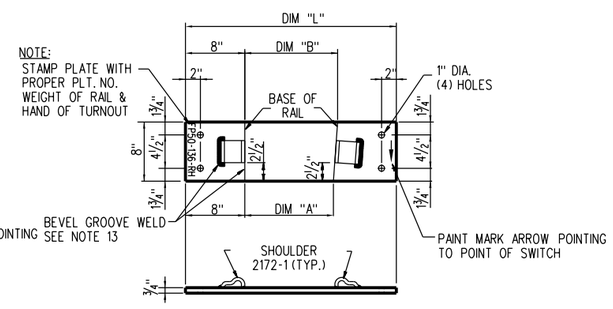

FROG PLATES ~ FP-46 THRU FP-48 & FP-50 THRU FP-55

3/4" x 8" x DIM "L" ~ FLAT ~ W/PANDROL CLIPS

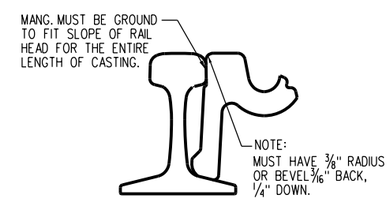

DETAIL OF FROG CASTING / RAIL FIT

SCALE: NONE

NOTES:

1. FROG ANGLE 2°-51'-51".
2. RAIL USED TO FABRICATE FROG IS TO BE 136 LB. HIGH STRENGTH.
3. RAIL BOUND MANGANESE STEEL FROG PER CURRENT AREMA PLAN NO. 621 & 625 WITH EXPLOSIVE HARDENED MANGANESE HIGH INTEGRITY CASTING PER CURRENT AREMA SPECIFICATIONS AND MODIFIED FOR ARM LENGTHS AND PLATES WITH PANDROL FASTENERS.
4. ALL FROG PLATES SHALL BE STAMPED IN 1/2" CHARACTERS TO INDICATE MFG., FROG NO., R.H., RAIL SECTION AND PLATE NUMBER. MARK TO BE STAMPED ON SAME END OF ALL FROG PLATES.
5. FOR DETAILS OF FROG PLATES FP-1 THRU FP-3, SEE SHEET 7 FOR DETAILS OF FROG PLATES FP-44 THRU FP-55 SEE THIS SHEET.
6. WORKMANSHIP AND MATERIALS SHALL BE PER CURRENT "AREMA SPECIFICATIONS FOR SPECIAL TRACKWORK", EXCEPT AS OTHERWISE SPECIFIED.
7. ANY CONSTRUCTION DETAILS NOT SHOWN SHALL BE IN ACCORDANCE WITH CURRENT AREMA RECOMMENDED PRACTICE.
8. FROG PLATES ARE DESIGNED TO BE INSTALLED PERPENDICULAR TO MAIN TRACK.
9. BODY BOLTS 1 3/8" DIA., H.T.C.S. - PER AREMA SPECIFICATIONS.
10. TOE AND HEEL BLOCKS AND BOLTS PER AREMA SPECIFICATIONS.
11. PLATES TO BE MADE OF MILD ROLLED STEEL.
12. THE PLATES AS SHOWN ARE FOR A 136 LB., NO. 20, RIGHT HAND, TURNOUT. FOR A LEFT HAND TURNOUT, PLATES ARE TO BE OPPOSITE.
13. THE PANDROL TYPE, OR APPROVED EQUAL, WELD-ON PRESSED STEEL SHOULDER, MADE OF MILD STEEL, AND MEETING PANDROL'S DESIGN SPECIFICATIONS SHALL BE USED. THE PRESSED STEEL SHOULDER MUST BE CAREFULLY WELDED TO ALL PLATES WITH A MINIMUM 2 PASS 3/8" • FILLET WELD ALONG THE BEVELED GROOVES OF THE SHOULDER. ANY WELD PROJECTING BEYOND THE VERTICAL FACE OF THE SHOULDER IN THE AREA OF THE BASE OF RAIL SEAT MUST BE MACHINED OUT TO PROVIDE A CLEAR RAIL SEAT DIMENSION AS CALLED FOR.
14. MANUFACTURER OF FROG PLATES SHALL USE COMPLETED FROG TO VERIFY LOCATION OF ADJUSTABLE CLAMPS ON FROG PLATES FP-1, FP-2, AND FP-3 TO INSURE PROPER FIT. FROG PLATES WILL BE WELDED TO THE GAGE PLATES IN THE FIELD WITH A 3 PASS 1/2"• FILLET WELD. PLATES WILL BE WELDED ONLY AFTER THE GAGE PLATES ARE SECURED IN THE PROPER LOCATION ON THE TIE WITH THE FROG IN PLACE AT PROPER ALIGNMENT
15. GUARD RAIL PLATES ARE TO BE INSTALLED AND WELDED TO THE FROG GAGE PLATES IN THE FIELD WITH A 3 PASS 1/2" FILLET WELD CONTINUOUS ON BOTH ENDS OF THE PLATE. PLATES ARE TO BE WELDED ONLY AFTER THE GAGE PLATE AND THE FROG IS SECURED IN THE PROPER LOCATION ON TH TIE WITH PROPER ALIGNMENT.
16. IDENTIFICATION TAG WITH RAISED METAL CHARACTERS TO BE APPLIED WHICH WILL STATE WEIGHT OF RAIL, FROG NO., MANUFACTURER AND YEAR MANUFACTURED.
17. RAIL ENDS TO BE CUT AT 45 DEGREE ANGLE AT JOINT WITH FROG CASTING.

FOR MAINTENANCE ONLY

REV.	DATE	DESCRIPTION	DES.	ENG.
X	XX-XX-XX	REVISION	XX	XX

DRAWN BY: A. CARLOS DATE: 03/31/2011

ASSISTANT DIRECTOR: STANDARDS & DESIGN

DIRECTOR OF ENGINEERING AND CONSTRUCTION

SCRRA ENGINEERING STANDARDS ARE INTENDED FOR SCRRA APPROVED USES ONLY. FOR NON-SCRRA APPROVED USES:
SCRRA SHALL NOT BE RESPONSIBLE FOR THE ACCURACY OR COMPLETENESS OF THE DATA OR INFORMATION CONTAINED HEREIN. THE SELECTION AND USE OF THESE STANDARDS IS THE SOLE RESPONSIBILITY OF THE USER AND SHOULD NOT BE USED WITHOUT CONSULTING A REGISTERED PROFESSIONAL ENGINEER. ALL WARRANTIES AND REPRESENTATIONS OF ANY KIND ARE DISCLAIMED. ANYONE MAKING USE OF THIS INFORMATION AGREES THAT IT ASSUMES ALL LIABILITY ARISING FROM SUCH USE. NO PART OF THESE STANDARDS SHOULD BE REPRODUCED OR DISTRIBUTED IN ANY FORM OR BY ANY MEANS WITHOUT THE PRIOR WRITTEN PERMISSION OF SCRRA. ALL RIGHTS RESERVED.

METROLINK®
SOUTHERN CALIFORNIA REGIONAL RAIL AUTHORITY
ONE GATEWAY PLAZA, 12TH FLOOR, L. A., CA. 90012

ENGINEERING STANDARDS

NO. 20 136 LB. R.H. RBM FROG
LAYOUT & PLATE DETAILS

STANDARD 2941
SCALE: 3/4" = 1'-0"
REVISION –
SHEET 6 OF 15
CADD FILE: ES2941-06

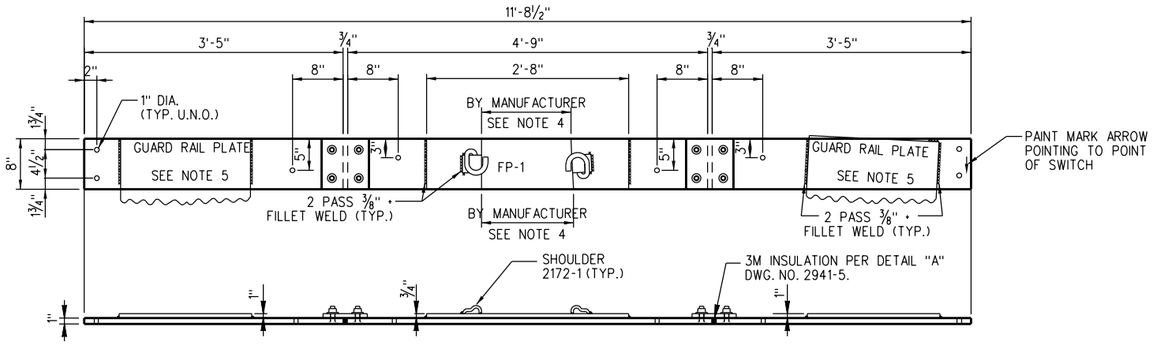

INSULATED FROG GAGE PLATE - FG-1P

1" x 8" - FLAT - W/3M INSULATION (1 PC. REQ'D. AS SHOWN)

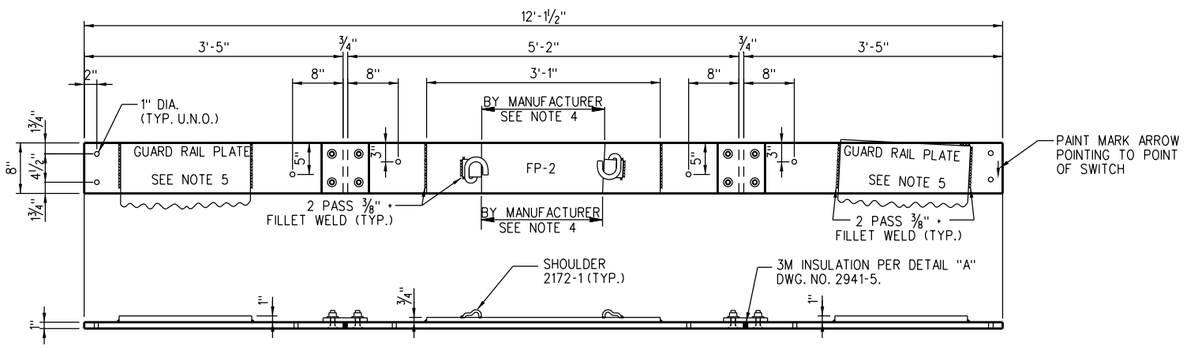

INSULATED FROG GAGE PLATE - FG-2P

1" x 8" - FLAT - W/3M INSULATION (1 PC. REQ'D. AS SHOWN)

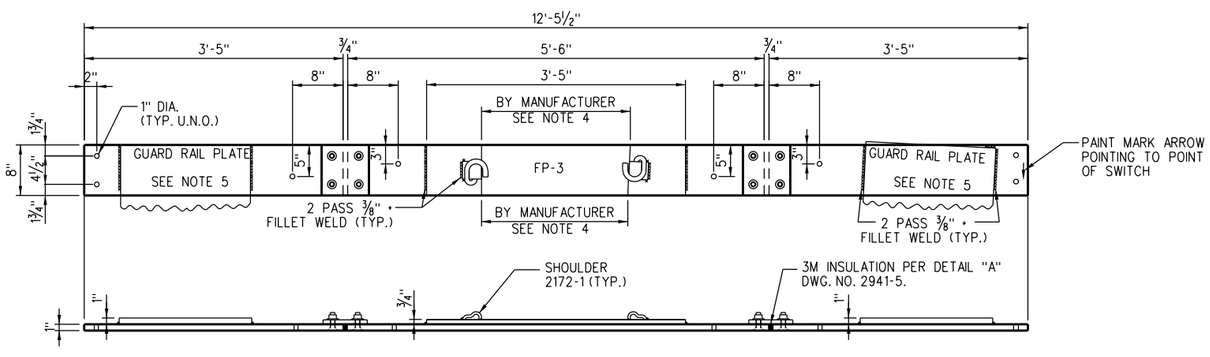

INSULATED FROG GAGE PLATE - FG-3P

1" x 8" - FLAT - W/3M INSULATION (1 PC. REQ'D. AS SHOWN)

NOTES:

1. PLATES TO BE MADE OF MILD ROLLED STEEL.
2. THE PLATES AS SHOWN ARE FOR A 136 LB., NO. 20, RIGHT HAND, MACHINE OPERATED TURNOUT. FOR A LEFT HAND TURNOUT, PLATES ARE TO BE OPPOSITE.
3. THE PANDROL TYPE OR APPROVED EQUAL WELD-ON PRESSED STEEL SHOULDER, MADE OF OF MILD STEEL, AND MEETING PANDROL'S DESIGN SPECIFICATIONS SHALL BE USED. THE PRESSED STEEL SHOULDER MUST BE MUST BE CAREFULLY WELDED TO ALL PLATES WITH A MINIMUM 2 PASS ⅜" • FILLET WELD ALONG THE BEVELED GROOVES OF THE SHOULDER. ANY WELD PROJECTING BEYOND THE VERTICAL FACE OF THE SHOULDER IN THE AREA OF THE BASE OF RAIL SEAT MUST BE MACHINED OUT TO PROVIDE A CLEAR RAIL SEAT DIMENSION AS CALLED FOR.
4. MANUFACTURER OF FROG PLATES SHALL USE COMPLETED FROG TO VERIFY LOCATION OF AJUSTABLE CLAMPS ON FROG PLATES FP-1, FP-2, AND FP-3 TO INSURE PROPER FIT. FROG PLATES WILL BE WELDED TO THE GAGE PLATES IN THE FIELD WITH A 3 PASS ½• FILLET WELD. PLATES WILL BE WELDED ONLY AFTER THE GAGE PLATES ARE SECURED IN THE PROPER LOCATION ON THE TIE WITH THE FROG IN PLACE AT PROPER ALIGNMENT.
5. GUARD RAIL PLATES ARE TO BE INSTALLED AND WELDED TO THE FROG GAGE PLATES IN THE FIELD WITH A 3 PASS ½• FILLET WELD CONTINUOUS ON BOTH ENDS OF THE PLATE. PLATES ARE ARE TO BE WELDED ONLY AFTER THE GAGE PLATE AND THE FROG IS SECURED IN THE PROPER LOCATION ON THE TIE WITH PROPER ALIGNMENT.

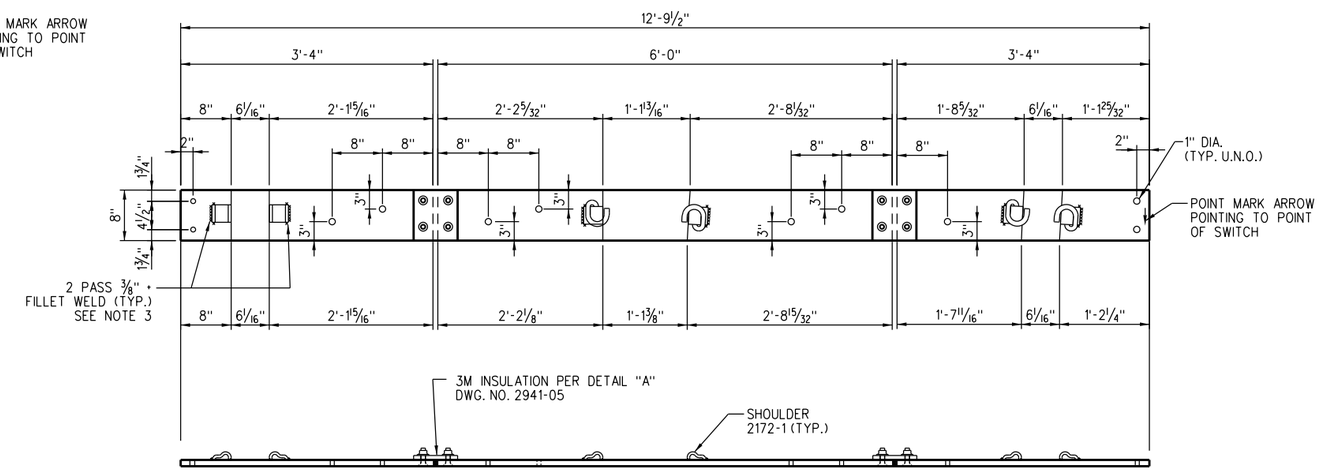

INSULATED FROG GAGE PLATE - FG-4P

1" x 8" - FLAT - W/3M INSULATION (1 PC. REQ'D. AS SHOWN)

FOR MAINTENANCE ONLY

REV.	DATE	DESCRIPTION	DES.	ENG.
X	XX-XX-XX	REVISION	XX	XX

DRAWN BY: A. CARLOS DATE: 03/31/2011

ASSISTANT DIRECTOR: STANDARDS & DESIGN

DIRECTOR OF ENGINEERING AND CONSTRUCTION

SCRRA ENGINEERING STANDARDS ARE INTENDED FOR SCRRA APPROVED USES ONLY. FOR NON-SCRRA APPROVED USES:
SCRRA SHALL NOT BE RESPONSIBLE FOR THE ACCURACY OR COMPLETENESS OF THE DATA OR INFORMATION CONTAINED HEREIN. THE SELECTION AND USE OF THESE STANDARDS IS THE SOLE RESPONSIBILITY OF THE USER AND SHOULD NOT BE USED WITHOUT CONSULTING A REGISTERED PROFESSIONAL ENGINEER. ALL WARRANTIES AND REPRESENTATIONS OF ANY KIND ARE DISCLAIMED. ANYONE MAKING USE OF THIS INFORMATION AGREES THAT IT ASSUMES ALL LIABILITY ARISING FROM SUCH USE. NO PART OF THESE STANDARDS SHOULD BE REPRODUCED OR DISTRIBUTED IN ANY FORM OR BY ANY MEANS WITHOUT THE PRIOR WRITTEN PERMISSION OF SCRRA. ALL RIGHTS RESERVED.

METROLINK®

SOUTHERN CALIFORNIA REGIONAL RAIL AUTHORITY
ONE GATEWAY PLAZA, 12TH FLOOR, L. A., CA. 90012

ENGINEERING STANDARDS

NO. 20 136 LB. R.H. RBM FROG
GAGE PLATE DETAILS

STANDARD 2941
SCALE: 1" = 1'-0"
REVISION –
SHEET 7 OF 15
CADD FILE: ES2941-07

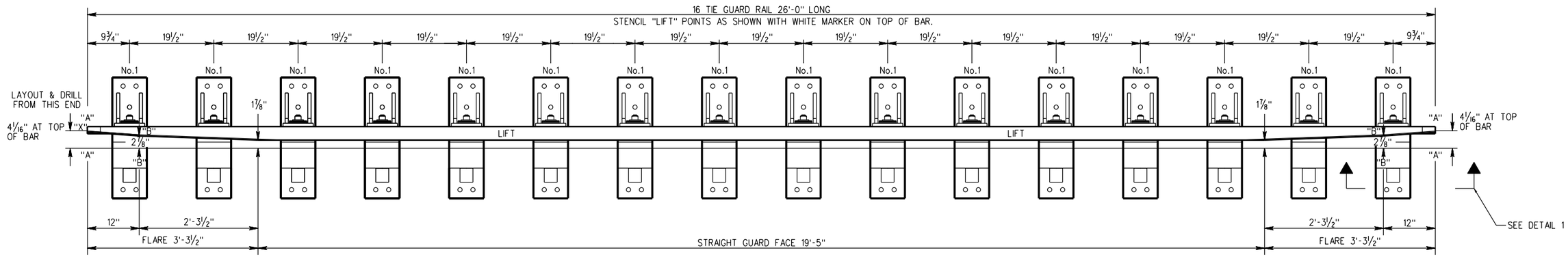

ASSEMBLED 26'-0" GUARD RAIL

SCALE: 1" = 1'-0"

COLLECTIVE DRILLING FROM END OF GUARD BAR MARKED "X"

"X" 9¾"x 2'-5¼"x 4'-0¾"x 5'-8¼"x 7'-3¾"x 8'-11¼"x 10'-6¾"x 12'-2¼"x 13'-9¾"x
15'-5¼"x 17'-0¾"x 18'-8¼"x 20'-3¾"x 21'-11¼"x 23'-6¾"x 25'-2¼"

HOLES 1" DIA. ~ 1⅜" A.B.

NOTES:

1. GUARD RAIL SECTION U.I.C. 33; (U69) UIC 860.0 GRADE 90A (GUARD FACE BRINELL 319 MIN.)
2. BASE PLATE, BRACKET AND SHIMS MILD STEEL PER AREMA SPECIFICATION M7.
3. GUARD RAIL BOLT AND NUT PER AREMA SPECIFICATION M11. EXCEPT BOLT TO GRADE 8 AND NUT TO BE SECURITY LOCKNUT.
4. WORKMANSHIP AND TOLERANCES PER AREMA SPECIFICATIONS FOR SPECIAL TRACKWORK.
5. WELDING PER ANSI•AWS D1.1-92 OR LATEST REVISION.

FOR MAINTENANCE ONLY

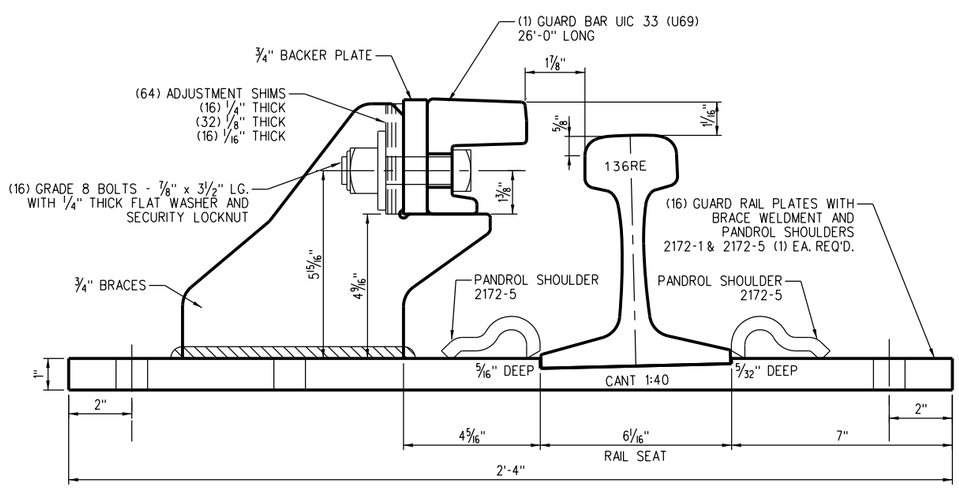

TYPICAL PLATE DETAIL

SCALE: NONE

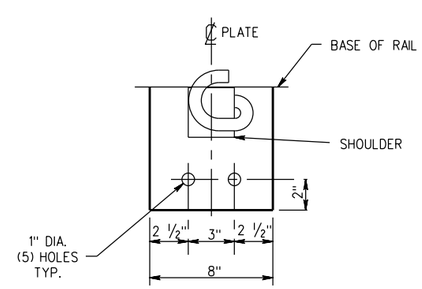

TYPICAL PLATE PUNCHING DETAIL

SCALE: NONE

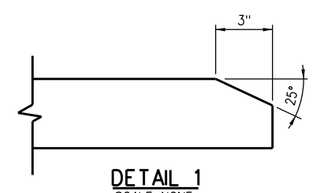

DETAIL 1

SCALE: NONE

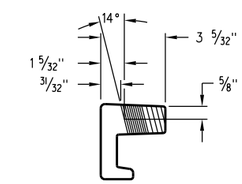

SECTION A-A

SCALE: NONE

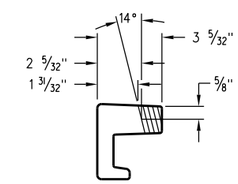

SECTION B-B

SCALE: NONE

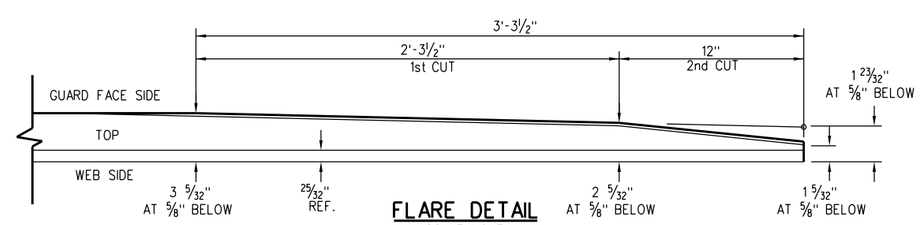

FLARE DETAIL

SCALE: NONE
BREAK SHARP CORNERS OF ALL MACHINED SURFACES

REV.	DATE	DESCRIPTION	DES.	ENG.
X	XX-XX-XX	REVISION	XX	XX

DRAWN BY: A. CARLOS DATE: 03/31/2011

ASSISTANT DIRECTOR: STANDARDS & DESIGN

DIRECTOR OF ENGINEERING AND CONSTRUCTION

SCRRA ENGINEERING STANDARDS ARE INTENDED FOR SCRRA APPROVED USES ONLY. FOR NON-SCRRA APPROVED USES, SCRRA SHALL NOT BE RESPONSIBLE FOR THE ACCURACY OR COMPLETENESS OF THE DATA OR INFORMATION CONTAINED HEREIN. THE SELECTION AND USE OF THESE STANDARDS IS THE SOLE RESPONSIBILITY OF THE USER AND SHOULD NOT BE USED WITHOUT CONSULTING A REGISTERED PROFESSIONAL ENGINEER. ALL WARRANTIES AND REPRESENTATIONS OF ANY KIND ARE DISCLAIMED. ANYONE MAKING USE OF THIS INFORMATION AGREES THAT IT ASSUMES ALL LIABILITY ARISING FROM SUCH USE. NO PART OF THESE STANDARDS SHOULD BE REPRODUCED OR DISTRIBUTED IN ANY FORM OR BY ANY MEANS WITHOUT THE PRIOR WRITTEN PERMISSION OF SCRRA. ALL RIGHTS RESERVED.

METROLINK®
SOUTHERN CALIFORNIA REGIONAL RAIL AUTHORITY
ONE GATEWAY PLAZA, 12TH FLOOR, L. A., CA. 90012

ENGINEERING STANDARDS

NO. 20 136 LB. R.H. RBM FROG
GUARD RAIL DETAILS

STANDARD 2941
SCALE: AS NOTED
REVISION –
SHEET 8 OF 15
CADD FILE: ES2941-08

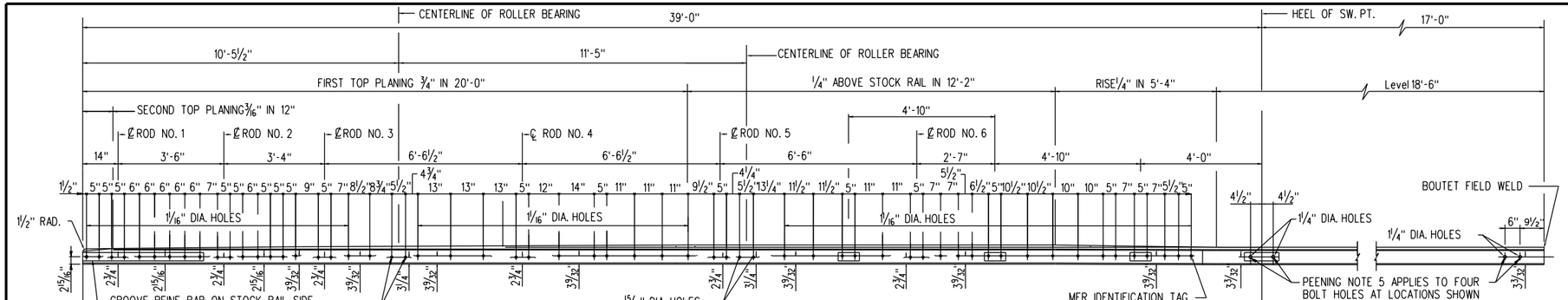

SIDE VIEW OF SWITCH POINT

SCALE: 1" = 1'-0"
SWITCH POINT SHOWN WITHOUT ALLOY STEEL TIP.
SEE DETAIL BELOW FOR ALLOY STEEL TIP.

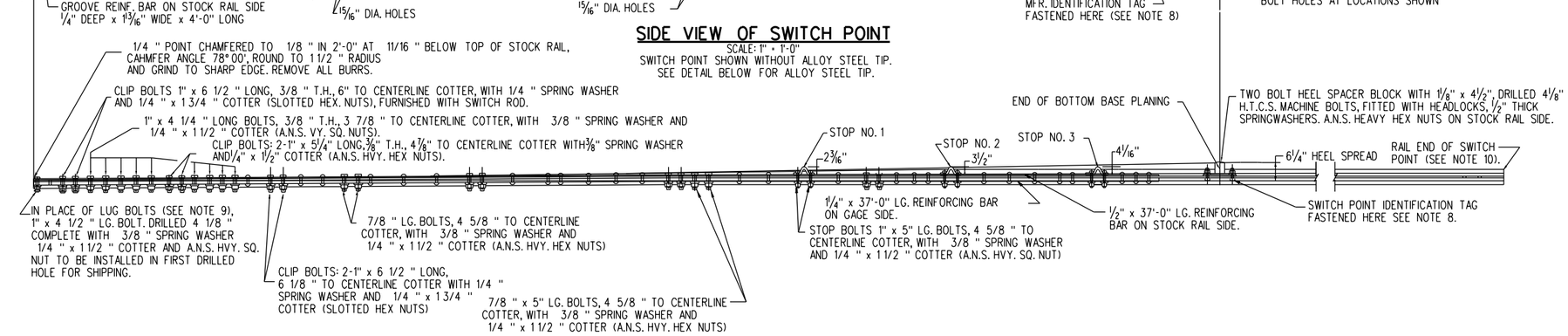

TOP VIEW OF SWITCH POINT

NOTES:

1. SWITCH POINTS TO BE MADE FROM HIGH STRENGTH RAIL.
2. CURVED LEFT HAND SWITCH POINT AND STRAIGHT HAND SWITCH POINT FOR RIGHT HAND TURNOUT SHOWN. MAKE OPPOSITE HAND FOR RIGHT AND LEFT HAND SWITCH POINTS FOR LEFT HAND TURNOUT.
3. SIDE PLANING FIGURED ON GAGE LINE ⅝" BELOW TOP OF RAIL.
4. MATERIALS AND WORKMANSHIP, ALSO ANY CONSTRUCTION DETAILS NOT SHOWN, SHALL BE PER CURRENT AREMA "MANUAL AND PORTFOLIO", UNLESS OTHERWISE SPECIFIED ON THIS PLAN.
5. IN ORDER TO ELIMINATE STRESS RAISERS, MANUFACTURER SHALL PEEN THE EDGES OF THE BOLT HOLES AS INDICATED AT THE HEEL OF SWITCH POINT AND AT THE HEEL END OF THE SWITCH POINT RAIL, USING AIR HAMMER WITH SUITABLE HEAD AND FINISHING WITH DRIFT PIN. BRAND ON RAIL AT EDGE OF BOLT HOLE TO BE CAREFULLY REMOVED BY GRINDING BEFORE PEENING.
6. THE TURNOUT SWITCH POINT (LEFT HAND POINT FOR RIGHT HAND TURNOUT) MAY BE FURNISHED WITH ALLOY STEEL TIP. THE MAIN LINE SWITCH POINT (RIGHT HAND POINT FOR RIGHT HAND TURNOUT) TO BE FURNISHED WITHOUT ALLOY STEEL TIP.
7. THE CONTOUR PLANING SHALL BE ON THE GAGE SIDE BEGINNING AT A DISTANCE OF 7'-6" FROM THE POINT OF SWITCH AND SHALL BE SHAPED TO THE CONTOUR OF A NEW 136 LB. RAIL AND SHALL RUN OUT AT THE END OF TOP PLANING, WHERE THE HEAD HAS FULL HEAD CONTOUR.
8. METAL IDENTIFICATION TAG SHOWING (1) DESIGN LENGTH OF SWITCH, (2) IN PERENTHESIS, THE ACTUAL LENGTH OF SWITCH POINT RAIL AND (3) THE TURNOUT NUMBER. MARK TAG THUS: 39'-0" (56'-0") NO. 20. TAG TO BE FASTENED TO SWITCH POINT, ON GAGE SIDE OF RAIL AT HEEL SPACER BLOCK IN LOCATION SHOWN.
   A SECOND METAL IDENTIFICATION TAG SHOWING HAND OF SWITCH POINT, WEIGHT OF RAIL, HS, MANUFACTURER AND WHEN MADE, TO BE FASTENED TO SWITCH POINT AT LOCATION SHOWN.
9. UNLESS SPECIFIED ON ORDER, FRONT ROD LUG BOLTS AND TRANSIT CLIPS FOR SWITCH RODS NO. 1, 2, 3, 4, 5 AND 6 COMPLETE WITH BOLTS WILL NOT BE FURNISHED WITH SWITCH POINTS.
10. AT HEEL END OF SWITCH POINT RAIL, BREAK SHARP CORNER AROUND THE ENTIRE PERIPHERY BY SLIGHTLY GRINDING. ALSO, "DO NOT" END HARDEN RAIL END.

FOR MAINTENANCE ONLY

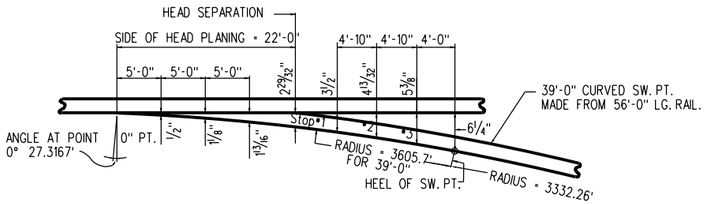

CURVED SWITCH POINT MAY BE EQUIPPED WITH MANGANESE OR ALLOY STEEL TIP

SCALE: NONE
GAGE AT 0" POINTS OF SWITCH IS 4'-8½"

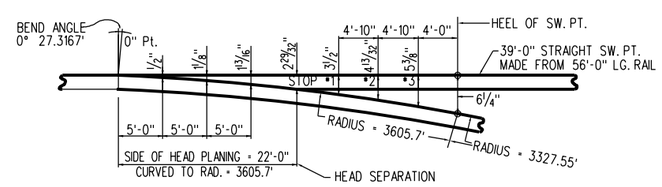

DIMENSIONS SHOWN ARE ON SWITCH POINTS ⅝" BELOW TOP OF RAIL.
RIGHT HAND SWITCH SHOWN.
LEFT HAND SWITCH OPPOSITE HAND.

STRAIGHT SWITCH POINT WITHOUT MANGANESE OR ALLOY STEEL TIP

SCALE: NONE

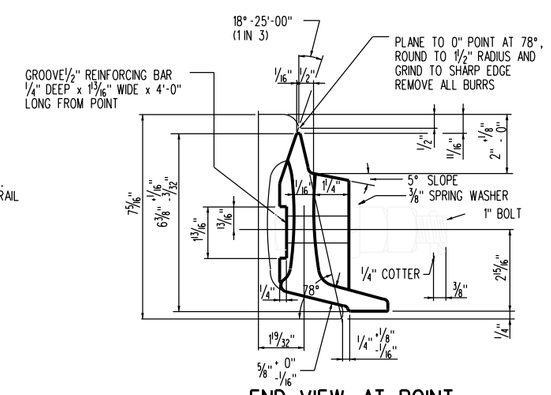

END VIEW AT POINT

SCALE: NONE
(WITHOUT MANG. OR ALLOY STEEL TIP)

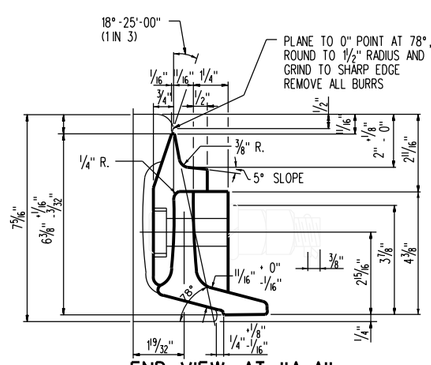

END VIEW AT "A-A"

SCALE: NONE

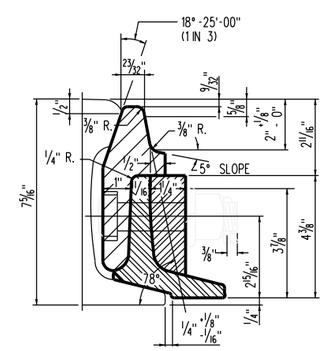

SECTION "B-B"

SCALE: NONE

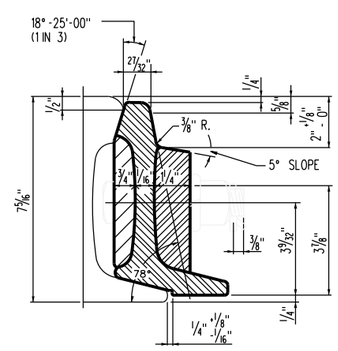

SECTION "C-C"

SCALE: NONE

REV.	DATE	DESCRIPTION	DES.	ENG.
X	XX-XX-XX	REVISION	XX	XX

DRAWN BY: DRAFTER DATE: 03/31/2011

ASSISTANT DIRECTOR STANDARDS & DESIGN

DIRECTOR OF ENGINEERING AND CONSTRUCTION

SCRRA ENGINEERING STANDARDS ARE INTENDED FOR SCRRA APPROVED USES ONLY. FOR NON-SCRRA APPROVED USES:
SCRRA SHALL NOT BE RESPONSIBLE FOR THE ACCURACY OR COMPLETENESS OF THE DATA OR INFORMATION CONTAINED HEREIN. THE SELECTION AND USE OF THESE STANDARDS IS THE SOLE RESPONSIBILITY OF THE USER AND SHOULD NOT BE USED WITHOUT CONSULTING A REGISTERED PROFESSIONAL ENGINEER. ALL WARRANTIES AND REPRESENTATIONS OF ANY KIND ARE DISCLAIMED. ANYONE MAKING USE OF THIS INFORMATION AGREES THAT IT ASSUMES ALL LIABILITY ARISING FROM SUCH USE. NO PART OF THESE STANDARDS SHOULD BE REPRODUCED OR DISTRIBUTED IN ANY FORM OR BY ANY MEANS WITHOUT THE PRIOR WRITTEN PERMISSION OF SCRRA. ALL RIGHTS RESERVED.

METROLINK®
SOUTHERN CALIFORNIA REGIONAL RAIL AUTHORITY
ONE GATEWAY PLAZA, 12TH FLOOR, L. A., CA. 90012

ENGINEERING STANDARDS

NO. 20 SPLIT SWITCH POINT DETAILS

STANDARD 2941
SCALE: AS NOTED
REVISION –
SHEET 9 OF 15
CADD FILE: ES2941-09

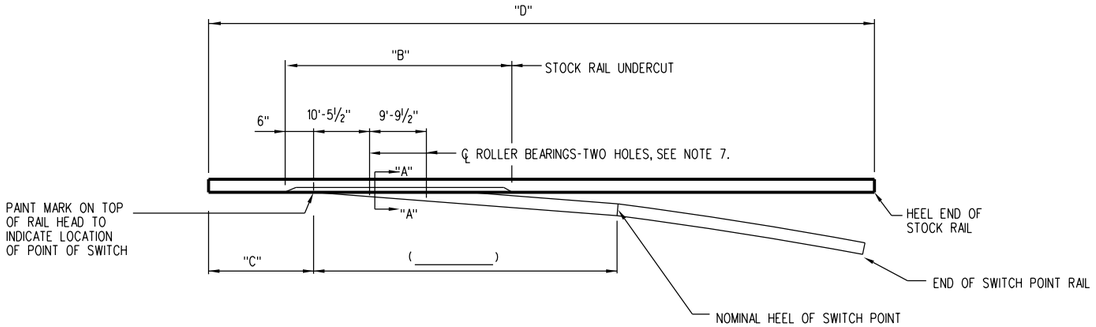

LEFT HAND STRAIGHT STOCK RAIL

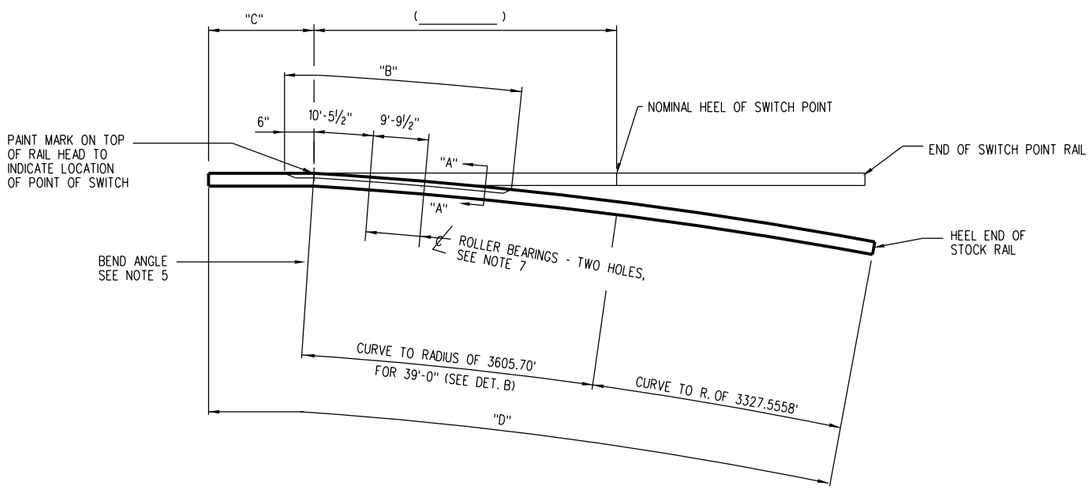

RIGHT HAND CURVED STOCK RAIL

STOCK RAILS SHOWN ARE FOR " RIGHT HAND TURNOUT".
FOR LEFT HAND TURNOUT, STOCK RAILS ARE OPPOSITE HAND,
BEING LEFT HAND CURVED STOCK RAIL AND
RIGHT HAND STRIAGHT STOCK RAIL

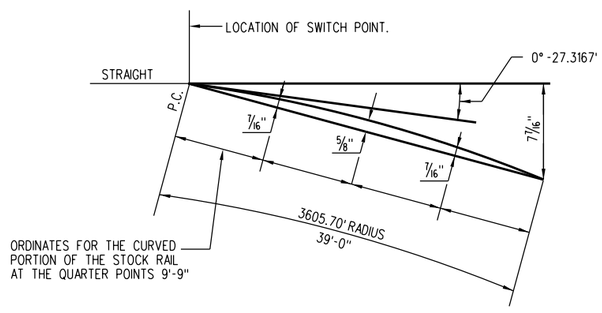

DETAIL "B"

NOTES:

1. INFORMATION OR DIMENSIONS SHOWN THUS (_____) TO BE FURNISHED BY FIELD FORCES FOR CORRECT ORDERING OF REPLACEMENT STOCK RAILS.
2. CROSS OUT ONE - FOR JOINTED RAIL TURNOUT.
3. UNDERCUT STOCK RAILS TO BE MADE OF HIGH STRENGTH RAIL WITH ENDS BEVELED PER CURRENT AREMA PLAN NO. 1005.
4. FOR STOCK RAIL UNDERCUT LENGTH "B", PER SECTION "A-A", LENGTH "C" AND LENGTH "D" FOR NEW SAMSON SWITCH INSTALLATIONS OR REPLACEMENT ORDERS SEE TABLE BELOW.
5. BEND ANGLE IN BENT STOCK RAIL TO BE AS FOLLOWS: 0° -27.3167' OR 1" IN 10'-5 27/32.
6. THE CURVED PORTION OF THE CURVED STOCK RAIL SHALL BE CURVED PER DETAIL "B".
7. FOR ROLLER BEARINGS: DRILL TWO HOLES, 15/16" DIA. 3¼" ABOVE BASE OF RAIL. PERMISSIBLE VARIATIONS: DIA. 0" UNDER, 3/32" OVER. LOCATION 3/32" OVER OR UNDER.

LENGTHS B, C, & D FOR 136 LB. RAIL									
Sw. Pt. LENGTH	T.O. NO.	STOCK RAIL	B	FOR FIRST (NEW) INSTALL.			FOR REPLACE. ORDERS ONLY		
				C	D	END DRILL SEE NO. 10	C	D	END DRILL SEE NO. 10
39'-0'	20	STR.	23'-6"	10'-0"	67'-0"	NONE	10'-0"	70'-0"	NONE
39'-0"	20	CURVED	23'-6"	12'-0"	67'-0"	NONE	12'-0"	70'-0"	NONE

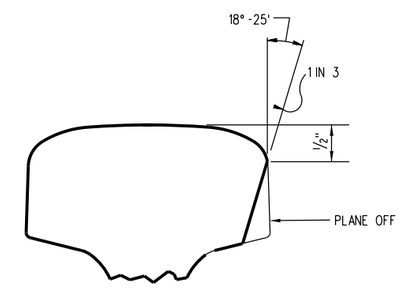

SECTION "A-A"

FOR MAINTENANCE ONLY

REV.	DATE	DESCRIPTION	DES.	ENG.
X	XX-XX-XX	REVISION	XX	XX

DRAWN BY: A. CARLOS DATE: 03/31/2011

ASSISTANT DIRECTOR: STANDARDS & DESIGN

DIRECTOR OF ENGINEERING AND CONSTRUCTION

SCRRA ENGINEERING STANDARDS ARE INTENDED FOR SCRRA APPROVED USES ONLY. FOR NON-SCRRA APPROVED USES:
SCRRA SHALL NOT BE RESPONSIBLE FOR THE ACCURACY OR COMPLETENESS OF THE DATA OR INFORMATION CONTAINED HEREIN. THE SELECTION AND USE OF THESE STANDARDS IS THE SOLE RESPONSIBILITY OF THE USER AND SHOULD NOT BE USED WITHOUT CONSULTING A REGISTERED PROFESSIONAL ENGINEER. ALL WARRANTIES AND REPRESENTATIONS OF ANY KIND ARE DISCLAIMED. ANYONE MAKING USE OF THIS INFORMATION AGREES THAT IT ASSUMES ALL LIABILITY ARISING FROM SUCH USE. NO PART OF THESE STANDARDS SHOULD BE REPRODUCED OR DISTRIBUTED IN ANY FORM OR BY ANY MEANS WITHOUT THE PRIOR WRITTEN PERMISSION OF SCRRA. ALL RIGHTS RESERVED.

METROLINK®
SOUTHERN CALIFORNIA REGIONAL RAIL AUTHORITY
ONE GATEWAY PLAZA, 12TH FLOOR, L. A., CA. 90012

ENGINEERING STANDARDS

NO. 20 STRAIGHT OR CURVED UNDERCUT STOCK RAILS

STANDARD 2941
SCALE: NONE
REVISION –
SHEET 10 OF 15
CADD FILE: ES2941-10

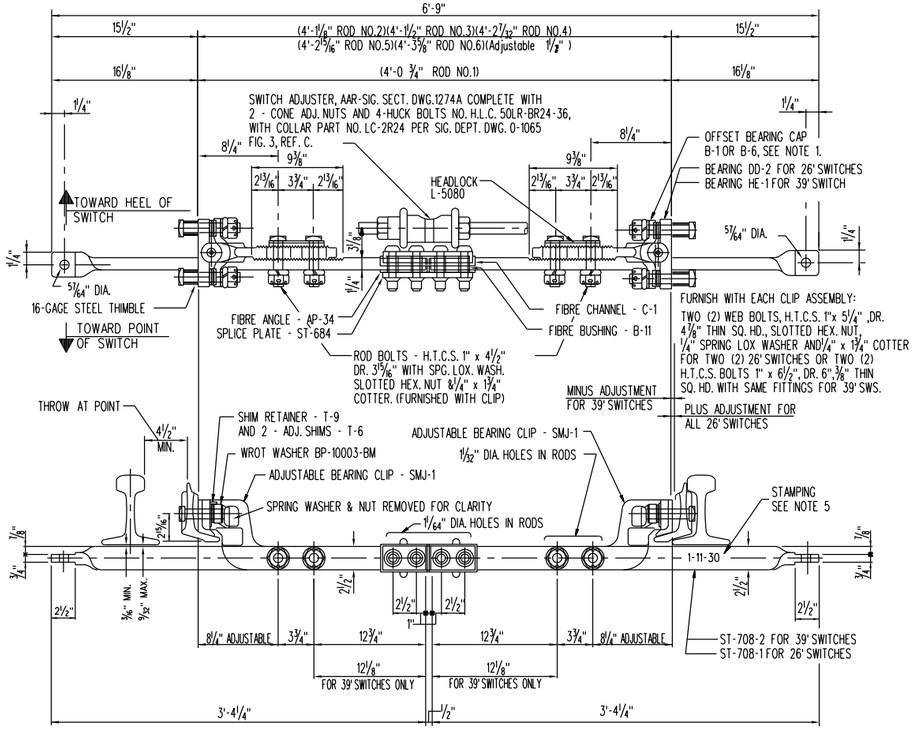

NO. 1 SWITCH ROD ASSEMBLY

(SHOWN FOR MACHINE ON RIGHT) SEE NOTE 2

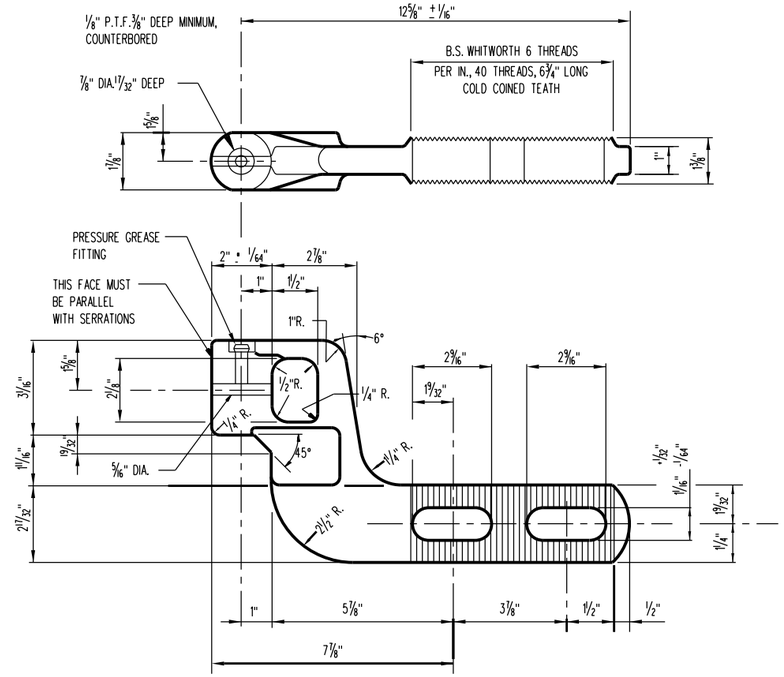

ADJUSTABLE BEARING CLIP - SMJ - 1

SCALE: 3" = 1'-0"

LENGTH OF SWITCH	QTY.	PART NUMBER	MATERIAL SPECIF.	DESCRIPTION	DETAIL REMARKS
			BILL OF MATERIAL FOR 1 TYPE "SMJ" SWITCH ROD ASSEMBLY		
			MATERIAL FOR CLIP ASSEMBLIES		
All	2	SMJ-1	S.A.E.1020-For.Stl.	Bearing Clip	MACHINED PER DETAIL
All	4		H.T.C.S.	Web Bolt	SEE NOTE
26'	2	DD-2	Malleable Iron	Bearing	PAT. NO. L-2910, MACHINED PER DETAIL
39'	2	HE-1	Malleable Iron	Bearing	PAT. NO. L-2915, MACHINED PER DETAIL
26'	2	B-1	S.A.E.1045-For.Stl.	Offset Bearing Cap	HEAT TREATED - BRINELL -.225 to .250
39'	2	B-6	S.A.E.1045-For.Stl.	Offset Bearing Cap	HEAT TREATED - BRINELL -.225 to .250
26'	2	B-6	S.A.E.1045-For.Stl.	Offset Bearing Cap	HEAT TREATED - BRINELL -.225 to .250
All	4	T-9	S.A.E.1020	Shim Retainer	⅛" x 1¾" x 2¼"
All	12	T-6	Stainless Steel	Adjustment Shim	1/16" x 2" x 1⅛"
All	4	BP-10003-BM	Wrot Iron	Wrot Washer	1 1/16" I.D. x 2" O.D. x ⅛" THICK
All	4		H.T.C.S.	Rod Bolt	1"x4½" DR. 3 15/16" REG.SQ.HD.SLOTTED HEX NUT
All	4		Steel	Spg. Lox Washer	For 1" Rod Bolts
All	4		Steel	Cotter	¼" x 1¾" FOR ROD BOLTS
All	2		Steel	Grease Fitting	PRESSURE - FOR BEARING CLIP
All	2	L-5080	Malleable Iron	Headlock	FOR ROD BOLTS
26'	2		16-Gage Steel	Thimble	1½" LONG - FOR SHIPPING
39'	2		16-Gage Steel	Thimble	2½" LONG - FOR SHIPPING
			Material for Vertical Rod		
16'-6"	1			Vertical Rod	Use one-ST-708-1
					Use one-ST-708-1 TWIST, MACHINE AND DRILL END HOLE
39'	1			Vertical Rod	Use one-ST-708-2
					Use one-ST-708-2 TWIST, MACHINE AND DRILL END HOLE
All	4		High Strength Steel	Conn.& Insul.Bolt	HIGH FASTENER NO. HLC-50LR- BR24-36
All	4		Low Carbon Steel	Collar	HUCK FASTENER NO. LC-2R24
All	1	ST-684	H.R. Mild Steel	Splice Plate	½" x 2½" x 9½" FOR INSULATION
All	2	AP-34	AAR-Sig.Sec.13-52	Angle	½" x 2½" x 4 13/16" HARD FIBRE - PARAFIN COATED
All	4	B-11	AAR-Sig.Sec.13-52	Bushing	1" O.D. HARD FIBRE - PARAFIN COATED
All	1	C-1	AAR-Sig.Sec.13-52	Channel	⅛" x 1" x 10" HARD FIBRE - PARAFIN COATED
All	1		Malleable Iron	Switch Adjuster	
All	2		Malleable Iron	Cone Adj. Nut	FOR 1¼" THROW RODS

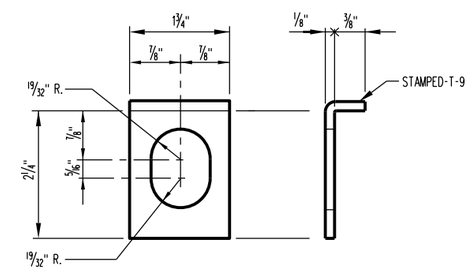

SHIM RETAINER - T - 9

SCALE: FULL

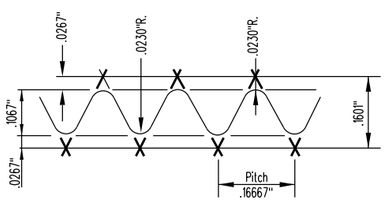

ENLARGED PROFILE OF SERRATIONS

SCALE: NONE

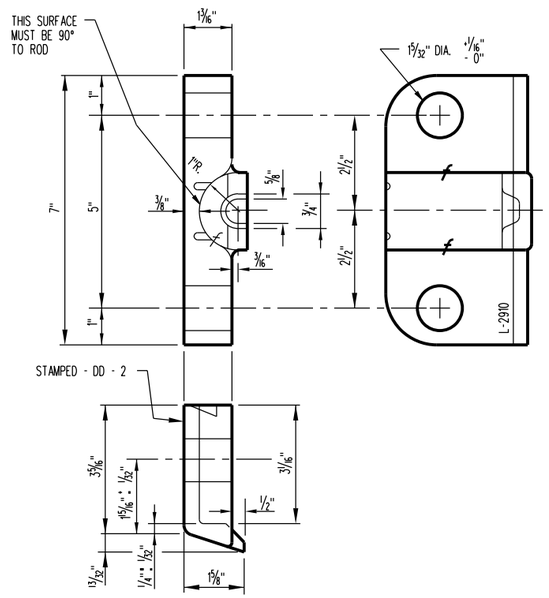

BEARING - DD - 2

SCALE: 6" = 1'-0"

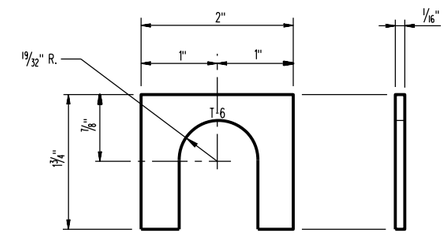

ADJUSTABLE SHIM - T - 6

SCALE: FULL

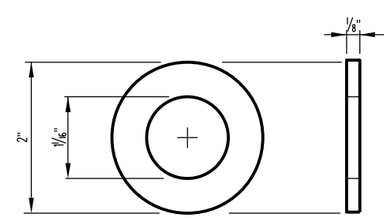

WROT WASHER - BP - 10003 - BM

SCALE: FULL

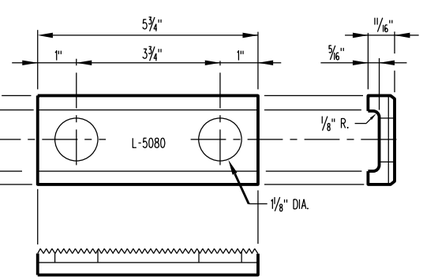

HEADLOCK L-5080

SCALE: 6" = 1'-0"

NOTES:

1. WHILE THIS PLAN SHOWS BEARING CLIPS ASSEMBLED TO SWITCH ROD THIS CLIP ASSEMBLY MAY BE REQUISITIONED AND ORDERED SEPARATELY. WHEN A BEARING CLIP ASSEMBLY ONLY IS WANTED, REQUISITIONS AND ORDERS SHALL SPECIFY, RAIL SECTION AND LENGTH OF SWITCH. ALL PARTS SHOWN IN BILL OF MATERIAL SHALL BE FURNISHED WITH THESE CLIP ASSEMBLIES. WHEN AN INDIVIDUAL PART IS REQUIRED IT SHALL BE ORDERED BY PART NUMBER.
2. WHEN COMPLETED RODS ARE ORDERED THEY SHALL BE ASSEMBLED AND INCLUDE ALL PARTS SHOWN IN BILL OF MATERIAL. REQUISITIONS AND ORDERS SHALL SPECIFY RAIL SECTION AND LENGTH OF SWITCH. ON INTERLOCKED SWITCHES WITH AUXILIARY THROW ROD, MACHINE SIDE (RIGHT OR LEFT) SHOULD ALSO BE SPECIFIED.
3. TWO WEB BOLTS SHALL BE FURNISHED WITH EACH CLIP ASSEMBLY AS CALLED FOR BY NOTE IN TOP VIEW OF ROD ASSEMBLY. WHEN ROD IS USED ON 11'-0" AND 16'-6" SWITCHES THE ¼" THICK SPRING WASHER SHOULD BE REPLACED WITH A ⅜" THICK SPRING WASHER BY THE STOREKEEPER OR FIELD FORCES, TO BRING COTTER WITHIN THE LIMITS OF SLOT IN WEB BOLT NUTS.
4. MATERIALS AND WORKMANSHIP SHALL MEET CURRENT AREMA SPECIFICATIONS FOR SPECIAL TRACKWORK UNLESS OTHERWISE SPECIFIED.
5. VERTICAL SWITCH ROD SHALL BE PLAINLY STAMPED TO INDICATE SWITCH THAT ROD ASSEMBLY CAN BE USED UPON. IDENTIFICATION MARKING WILL BE AS FOLLOWS:
   1-39 FOR USE ON 39'-0" SWITCHES, 132-LB. AND 136-LB. R.E. RAIL SECTIONS.
   1-11-30 FOR USE ON 11'-0" TO 30'-0" SWITCHES, 115-LB., 119-LB., 131-LB., 132-LB. AND 136-LB. R.E. RAIL SECTIONS

FOR MAINTENANCE ONLY

REV.	DATE	DESCRIPTION	DES.	ENG.
X	XX-XX-XX	REVISION	XX	XX

DRAWN BY: A. CARLOS DATE: 03/31/2011

ASSISTANT DIRECTOR: STANDARDS & DESIGN

DIRECTOR OF ENGINEERING AND CONSTRUCTION

SCRRA ENGINEERING STANDARDS ARE INTENDED FOR SCRRA APPROVED USES ONLY. FOR NON-SCRRA APPROVED USES:
SCRRA SHALL NOT BE RESPONSIBLE FOR THE ACCURACY OR COMPLETENESS OF THE DATA OR INFORMATION CONTAINED HEREIN. THE SELECTION AND USE OF THESE STANDARDS IS THE SOLE RESPONSIBILITY OF THE USER AND SHOULD NOT BE USED WITHOUT CONSULTING A REGISTERED PROFESSIONAL ENGINEER. ALL WARRANTIES AND REPRESENTATIONS OF ANY KIND ARE DISCLAIMED. ANYONE MAKING USE OF THIS INFORMATION AGREES THAT IT ASSUMES ALL LIABILITY ARISING FROM SUCH USE. NO PART OF THESE STANDARDS SHOULD BE REPRODUCED OR DISTRIBUTED IN ANY FORM OR BY ANY MEANS WITHOUT THE PRIOR WRITTEN PERMISSION OF SCRRA. ALL RIGHTS RESERVED.

METROLINK®
SOUTHERN CALIFORNIA REGIONAL RAIL AUTHORITY
ONE GATEWAY PLAZA, 12TH FLOOR, L. A., CA. 90012

ENGINEERING STANDARDS

NO. 20 SWITCH ROD DETAILS

STANDARD 2941
SCALE: AS NOTED
REVISION –
SHEET 11 OF 15
CADD FILE: ES2941-11

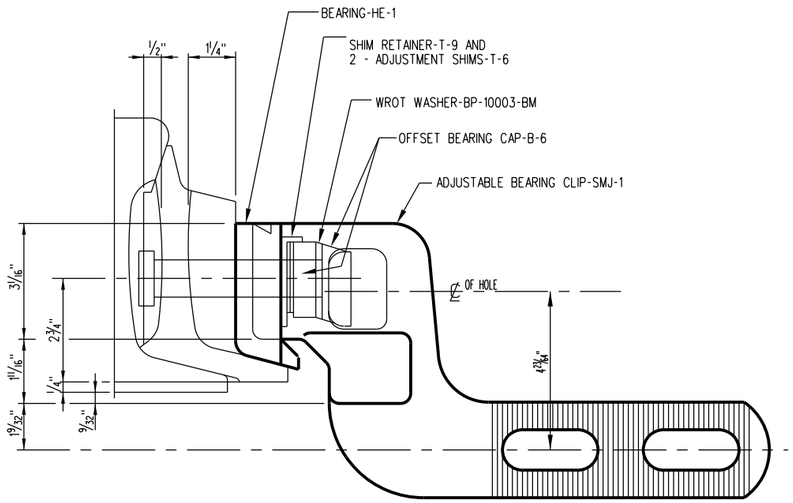

ELEVATION OF "SMJ"CLIP ASSEMBLY FOR 39' SWITCHES
(DRAWN FOR 136 LB. RAIL) SPRING WASHER AND NUT REMOVED

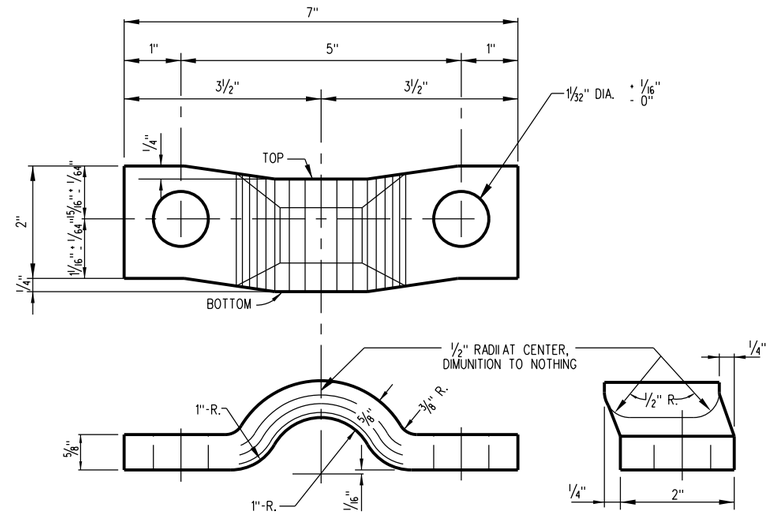

OFFSET BEARING CAP-B-1

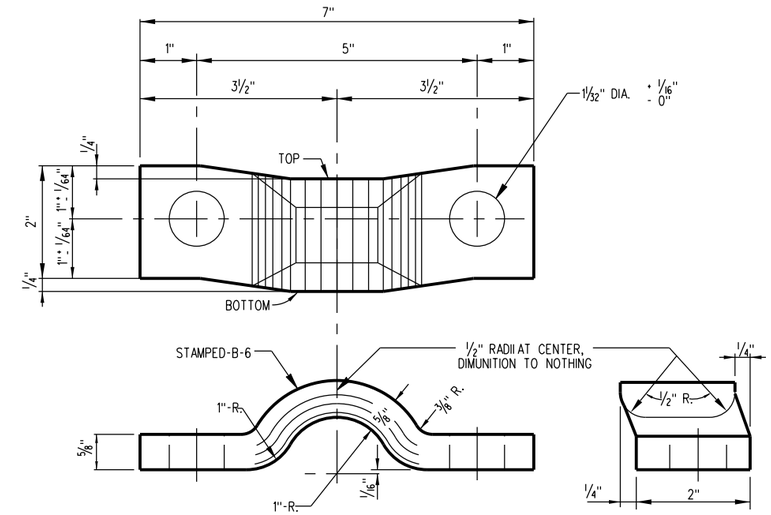

OFFSET BEARING CAP-B-6

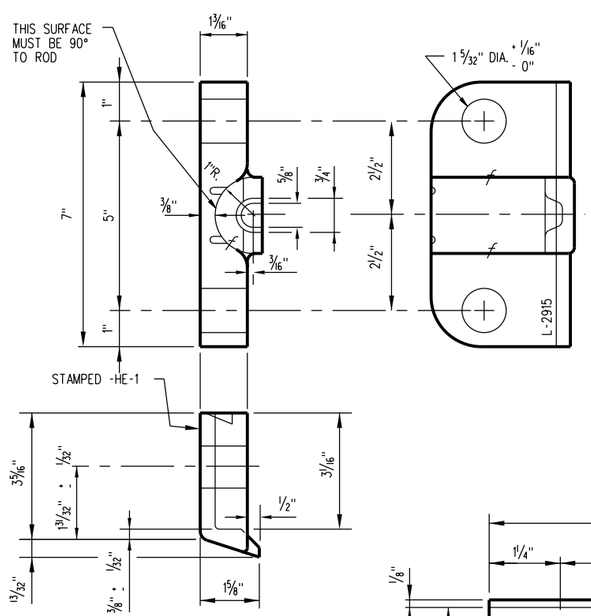

BEARING-HE-1

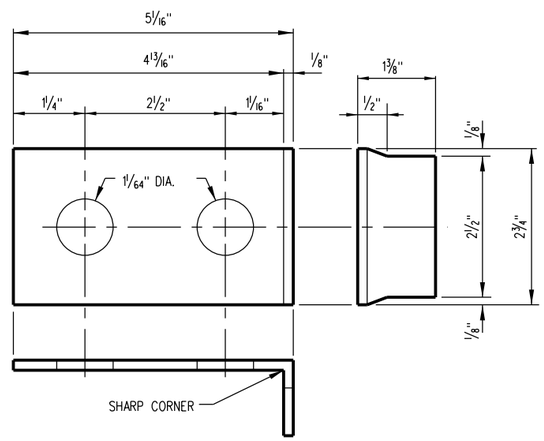

FIBRE ANGLE-AP-34

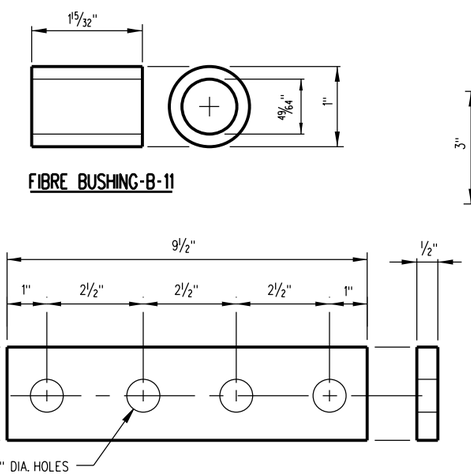

FIBRE BUSHING-B-11

SPLICE PLATE-ST-684

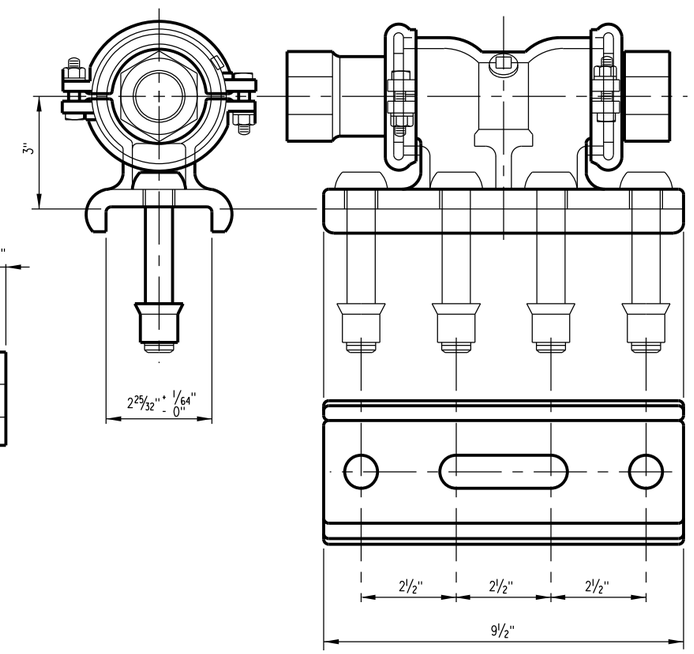

SWITCH ADJUSTER

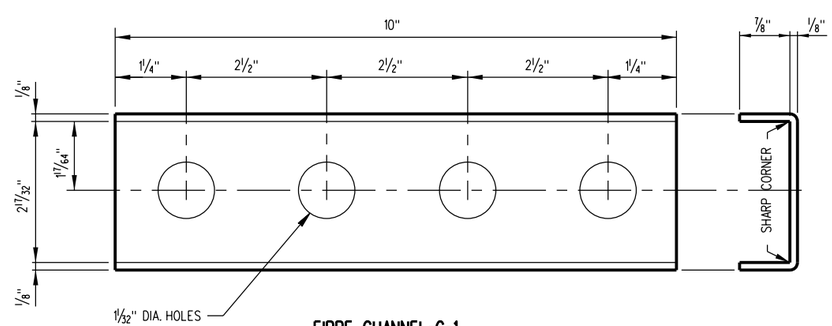

FIBRE CHANNEL-C-1

FOR MAINTENANCE ONLY

REV.	DATE	DESCRIPTION	DES.	ENG.
X	XX-XX-XX	REVISION	XX	XX

DRAWN BY: A. CARLOS DATE: 03/31/2011

ASSISTANT DIRECTOR: STANDARDS & DESIGN

DIRECTOR OF ENGINEERING AND CONSTRUCTION

SCRRA ENGINEERING STANDARDS ARE INTENDED FOR SCRRA APPROVED USES ONLY. FOR NON-SCRRA APPROVED USES:
SCRRA SHALL NOT BE RESPONSIBLE FOR THE ACCURACY OR COMPLETENESS OF THE DATA OR INFORMATION CONTAINED HEREIN. THE SELECTION AND USE OF THESE STANDARDS IS THE SOLE RESPONSIBILITY OF THE USER AND SHOULD NOT BE USED WITHOUT CONSULTING A REGISTERED PROFESSIONAL ENGINEER. ALL WARRANTIES AND REPRESENTATIONS OF ANY KIND ARE DISCLAIMED. ANYONE MAKING USE OF THIS INFORMATION AGREES THAT IT ASSUMES ALL LIABILITY ARISING FROM SUCH USE. NO PART OF THESE STANDARDS SHOULD BE REPRODUCED OR DISTRIBUTED IN ANY FORM OR BY ANY MEANS WITHOUT THE PRIOR WRITTEN PERMISSION OF SCRRA. ALL RIGHTS RESERVED.

METROLINK®
SOUTHERN CALIFORNIA REGIONAL RAIL AUTHORITY
ONE GATEWAY PLAZA, 12TH FLOOR, L. A., CA. 90012

ENGINEERING STANDARDS

NO. 20 SWITCH ROD MISCELLANEOUS DETAILS

STANDARD 2941
SCALE: AS NOTED
REVISION –
SHEET 12 OF 15
CADD FILE: ES2941-12

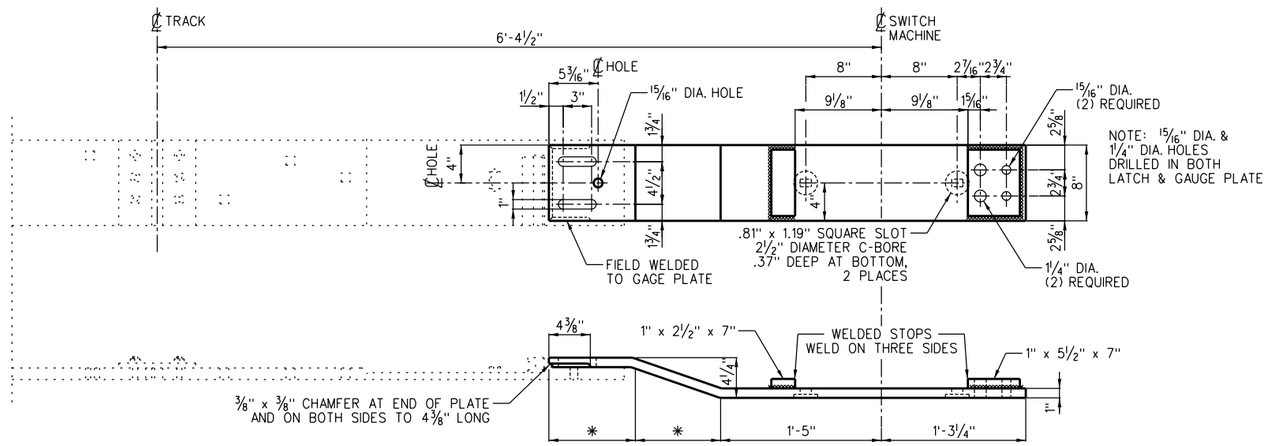

* MANUFACTURER TO CALCULATE AND PROVIDE ON DETAILED DRAWING.

EXTENSION PLATE
(2 PCS. REQ'D. AS SHOWN)

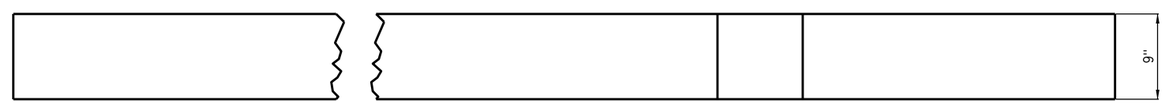

TOP VIEW

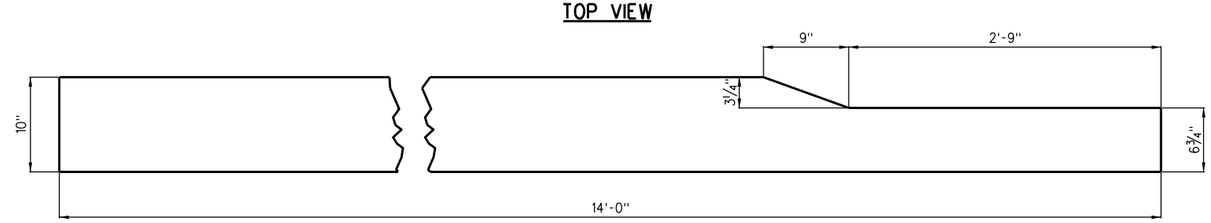

SIDE VIEW

TIES SHALL BE MADE OF DOUGLAS FIR OR GUM AND TREATED AFTER FRAMING.

DAP TIE
(2 PCS. REQ'D. AS SHOWN)

US&S M23-A SWITCH MACHINE MUST BE FURNISHED WITH FINISHED MOUNTING LUGS.

FOR MAINTENANCE ONLY

X	XX-XX-XX	REVISION	XX	XX
REV.	DATE	DESCRIPTION	DES.	ENG.

DRAWN BY: A. CARLOS DATE: 03/31/2011

ASSISTANT DIRECTOR: STANDARDS & DESIGN

DIRECTOR OF ENGINEERING AND CONSTRUCTION

SCRRA ENGINEERING STANDARDS ARE INTENDED FOR SCRRA APPROVED USES ONLY. FOR NON-SCRRA APPROVED USES:
SCRRA SHALL NOT BE RESPONSIBLE FOR THE ACCURACY OR COMPLETENESS OF THE DATA OR INFORMATION CONTAINED HEREIN. THE SELECTION AND USE OF THESE STANDARDS IS THE SOLE RESPONSIBILITY OF THE USER AND SHOULD NOT BE USED WITHOUT CONSULTING A REGISTERED PROFESSIONAL ENGINEER. ALL WARRANTIES AND REPRESENTATIONS OF ANY KIND ARE DISCLAIMED. ANYONE MAKING USE OF THIS INFORMATION AGREES THAT IT ASSUMES ALL LIABILITY ARISING FROM SUCH USE. NO PART OF THESE STANDARDS SHOULD BE REPRODUCED OR DISTRIBUTED IN ANY FORM OR BY ANY MEANS WITHOUT THE PRIOR WRITTEN PERMISSION OF SCRRA. ALL RIGHTS RESERVED.

METROLINK®
SOUTHERN CALIFORNIA REGIONAL RAIL AUTHORITY
ONE GATEWAY PLAZA, 12TH FLOOR, L. A., CA. 90012

ENGINEERING STANDARDS

NO. 20 EXTENSIONS PLATE AND DAP TIE DETAILS

STANDARD 2941
SCALE: 1½" = 1'-0"
REVISION –
SHEET 13 OF 15
CADD FILE: ES2941-13

NOTE:
STAMP EACH PLATE WITH PROPER PLT. NO. AND WEIGHT OF RAIL

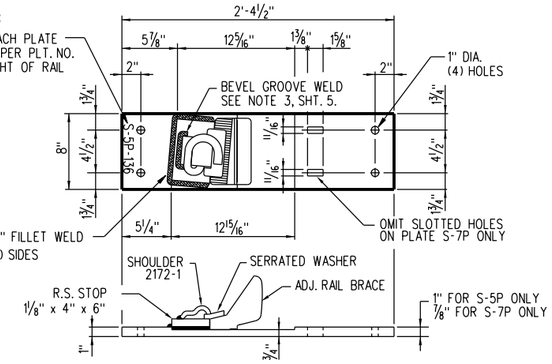

BRACE SLIDE PLATE - S-5P & S-7P

1" x 8" x 2'-4½" LG. - MILLED - W/ADJ. RAIL BRACE
12 - S-5P PLATES REQUIRED AS SHOWN
2 - S-7P PLATES REQUIRED AS SHOWN

NOTE:
STAMP EACH PLATE WITH PROPER PLT. NO. AND WEIGHT OF RAIL

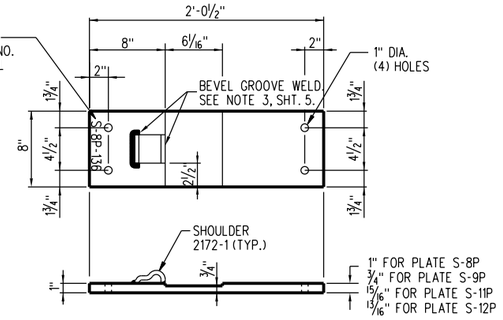

SLIDE PLATE - S-8P, S-9P, S-11P & S-12P

1" x 8" x 2'-0½" LG. - MILLED - W/ CLIP
22 - S-8P PLATES REQUIRED AS SHOWN
2 - S-9P PLATES REQUIRED AS SHOWN
2 - S-11P PLATES REQUIRED AS SHOWN
2 - S-12P PLATES REQUIRED AS SHOWN

NOTE:
STAMP PLATE WITH PROPER PLT. NO., WEIGHT OF RAIL & HAND OF TURNOUT

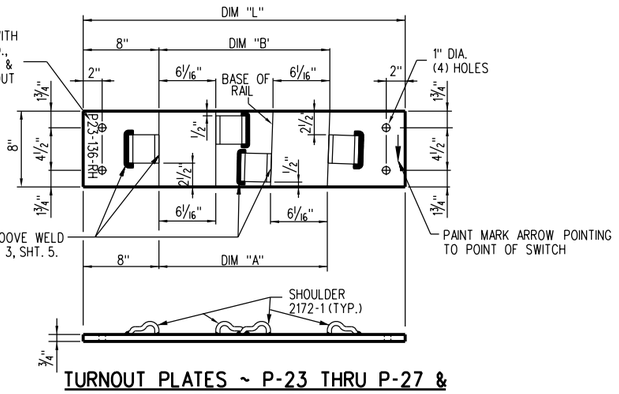

TURNOUT PLATES ~ P-23 THRU P-27 & TURNOUT PLATES ~ P-38 THRU P-40 & TURNOUT PLATES ~ P-59 THRU P-62

¾" x 8" x DIM "L" - FLAT - W/ CLIPS

NOTE:
FOR BILL OF TURNOUT PLATES AND DIMENSION TABLES SEE DRAWING 2941-05.

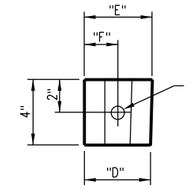

HOLD DOWN CLIP DETAIL

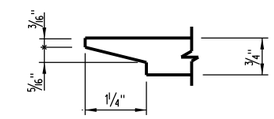

END DETAIL - BOTH ENDS

FOR MAINTENANCE ONLY

NOTE:
STAMP EACH PLATE WITH PROPER PLT. NO. AND WEIGHT OF RAIL

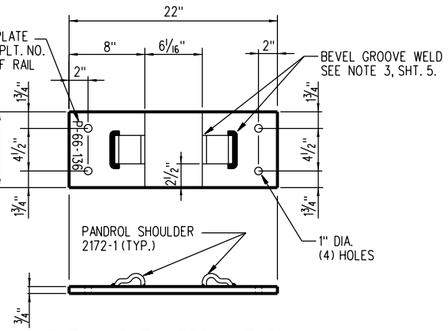

TURNOUT PLATES ~ P-66

1 EA. - ¾" x 8" x 22" LG. - FLAT - W/ CLIPS

NOTE:
STAMP EACH PLATE WITH PROPER PLT. No. & WEIGHT OF RAIL

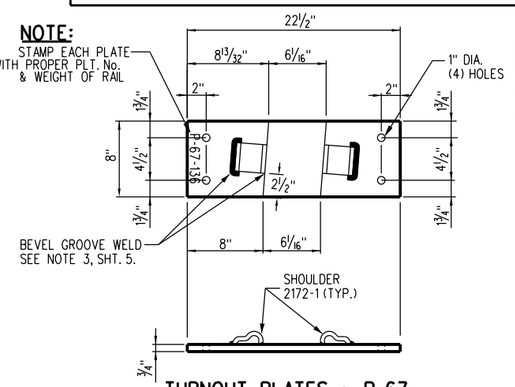

TURNOUT PLATES ~ P-67

1 EA. - ¾" x 8" x 22½" LG. - FLAT - W/ CLIPS

NOTE:
STAMP PLATE WITH PROPER PLT. NO., WEIGHT OF RAIL, & HAND OF TURNOUT

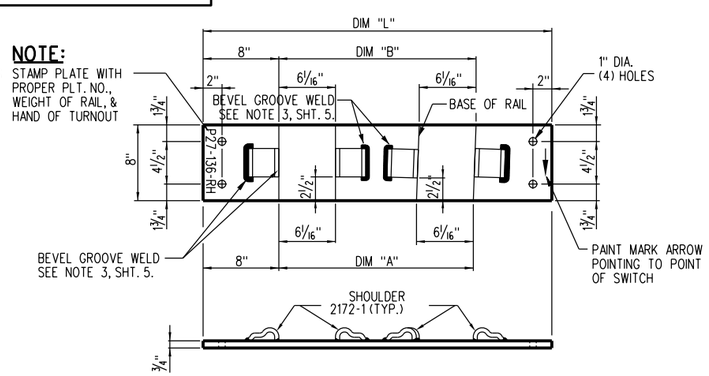

TURNOUT PLATES - P-28 THRU P-33, P-63, P-64, & P-65

¾" x 8" x DIM "L" - FLAT - W/ CLIPS

NOTE:
STAMP PLATE WITH PROPER PLT. NO., WEIGHT OF RAIL, & HAND OF TURNOUT

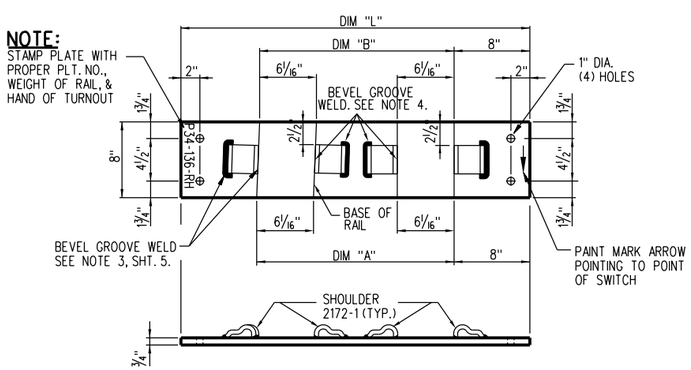

TURNOUT PLATES - P-34 THRU P-37

¾" x 8" x DIM "L" ~ FLAT ~ W/ CLIPS

NOTE:
STAMP PLATE WITH PROPER PLT. NO., WEIGHT OF RAIL & HAND OF TURNOUT

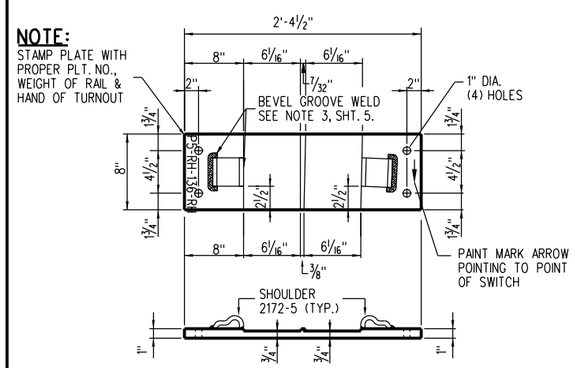

HEEL PLATE - P5-RH

1" x 8" x 2'-4½" LG. - MILLED - W/ CLIPS
2 - P5-RH PLATES REQUIRED AS SHOWN FOR R.H. T.O.

HEEL PLATE - P6-LH

1" x 8" x 2'-4½" LG. - MILLED - W/ CLIPS
2 - P6-RH PLATES REQUIRED AS SHOWN, EXCEPT OPPOSITE FOR L.H. T.O.

NOTE:
STAMP PLATE WITH PROPER PLT. NO., WEIGHT OF RAIL & HAND OF TURNOUT

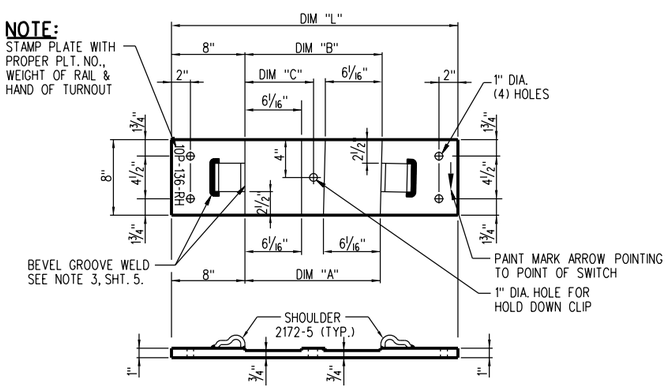

TURNOUT PLATES - P-13 THRU P-22 & P-56 THRU P-58

1" x 8" x DIM "L" - MILLED

NOTE:
STAMP PLATE WITH PROPER PLT. NO., WEIGHT OF RAIL & HAND OF TURNOUT

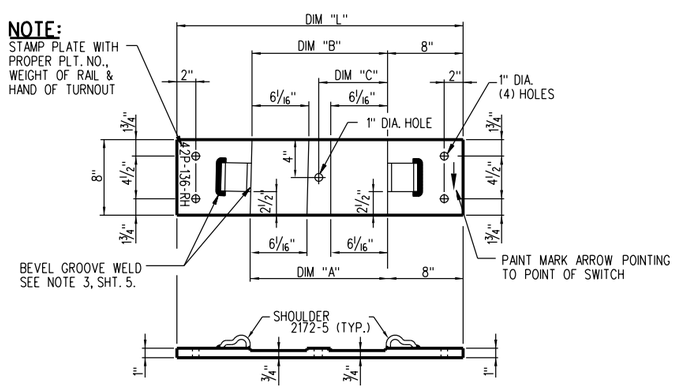

FROG PLATES - P-41, P-42 & P-43

1" x 8" x DIM "L" - MILLED

REV.	DATE	DESCRIPTION	DES.	ENG.
X	XX-XX-XX	REVISION	XX	XX

DRAWN BY: A. CARLOS DATE: 03/31/2011

ASSISTANT DIRECTOR: STANDARDS & DESIGN

DIRECTOR OF ENGINEERING AND CONSTRUCTION

SCRRA ENGINEERING STANDARDS ARE INTENDED FOR SCRRA APPROVED USES ONLY. FOR NON-SCRRA APPROVED USES, SCRRA SHALL NOT BE RESPONSIBLE FOR THE ACCURACY OR COMPLETENESS OF THE DATA OR INFORMATION CONTAINED HEREIN. THE SELECTION AND USE OF THESE STANDARDS IS THE SOLE RESPONSIBILITY OF THE USER AND SHOULD NOT BE USED WITHOUT CONSULTING A REGISTERED PROFESSIONAL ENGINEER. ALL WARRANTIES AND REPRESENTATIONS OF ANY KIND ARE DISCLAIMED. ANYONE MAKING USE OF THIS INFORMATION AGREES THAT IT ASSUMES ALL LIABILITY ARISING FROM SUCH USE. NO PART OF THESE STANDARDS SHOULD BE REPRODUCED OR DISTRIBUTED IN ANY FORM OR BY ANY MEANS WITHOUT THE PRIOR WRITTEN PERMISSION OF SCRRA. ALL RIGHTS RESERVED.

METROLINK®
SOUTHERN CALIFORNIA REGIONAL RAIL AUTHORITY
ONE GATEWAY PLAZA, 12TH FLOOR, L. A., CA. 90012

ENGINEERING STANDARDS

NO. 20 TURNOUT AND FROG PLATE DETAILS

STANDARD 2941
SCALE: 1½" = 1'-0"
REVISION –
SHEET 14 OF 15
CADD FILE: ES2941-14

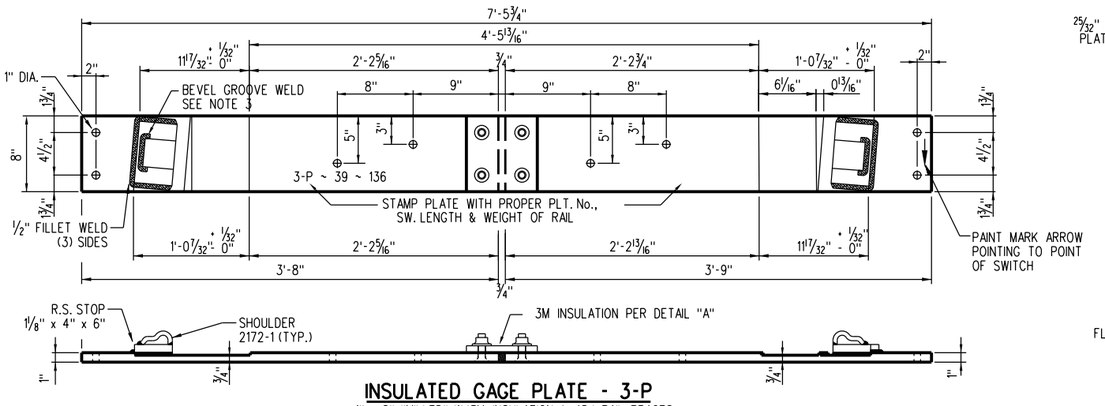

INSULATED GAGE PLATE - 3-P

1" x 8" "MILLED" W/3M INSULATION & ADJ. RAIL BRACES
(1 PC. REQ'D. AS SHOWN)

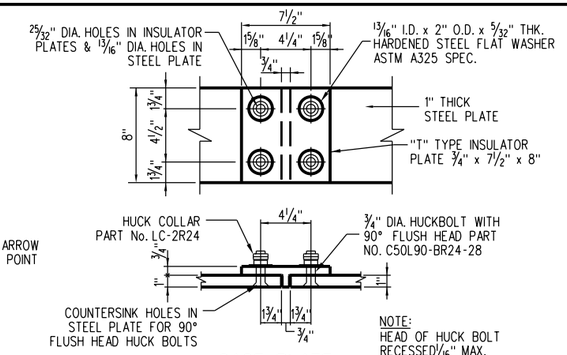

GAGE PLATE INSULATED JOINT ASSEMBLY GPI-77

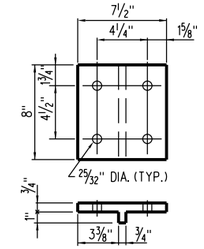

DETAIL OF INSULATION BLOCK

POLYESTER COATED STEEL CORE
W/ BUSHINGS, PORTEC #127-07547-01
OR FIBERGLASS REINFORCED THERMOSET RESIN.
PURCHASE PART NO. GPI52P05

NOTES:

1. PLATES TO BE MADE OF MILD ROLLED STEEL.
2. THE PANDROL TYPE WELD - ON PRESSED STEEL SHOULDER, MADE OF MILD STEEL, TO BE PURCHASED FROM PANDROL INTERNATIONAL OR APPROVED ALTERNATE MEETING PANDROL'S DESIGN SPECIFICATIONS.
3. THE PRESSED STEEL SHOULDER MUST BE CAREFULLY WELDED TO GAGE PLATES WITH A MINIMUM ⅜" WELD ALONG THE BEVELED GROOVES OF THE SHOULDER. ANY WELD PROJECTING BEYOND THE VERTICAL FACE OF SHOULDER IN THE AREA OF THE RAIL SEAT MUST BE MACHINED OUT TO PROVIDE A CLEAR RAIL SEAT DIMENSION AS CALLED FOR.
4. SWITCH GAGE PLATES FOR RIGHT HAND TURNOUT, MCHINE ON RIGHT, ELECTRICALLY INTERLOCKED FOR U.S. & S. CO'S STYLE M23A MACHINE. IF OTHER SWITCH MACHINE IS USED, SWITCH GAGE PLATES 1-P AND 2-P MAY VARY AND SHOULD BE MODIFIED AS REQUIRED BY SWITCH MANUFACTURER TO PROVIDE PROPER SEATING.

DETAIL "A" INSULATION AT GAGE PLATES

(SCALE: NONE)

FOR MAINTENANCE ONLY

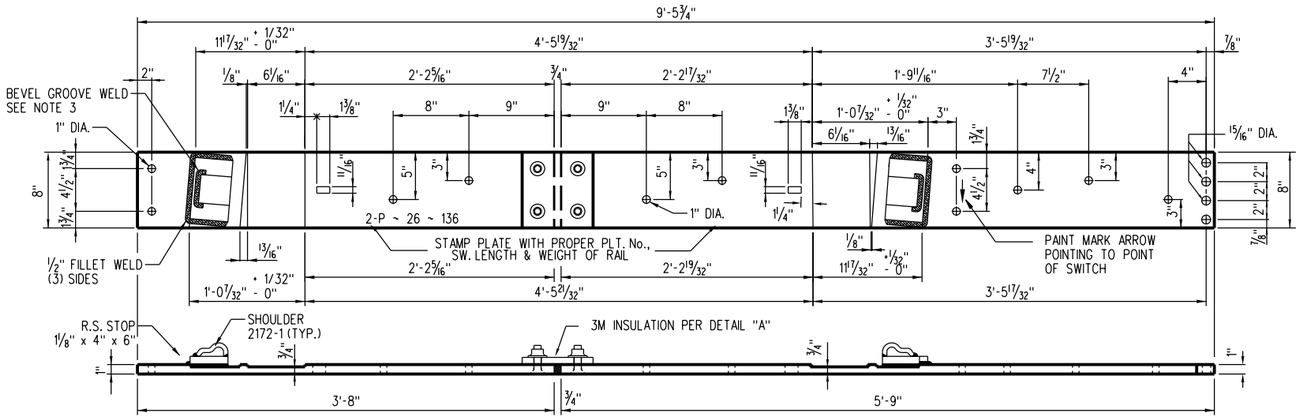

INSULATED GAGE PLATE - 2-P

1" x 8" "MILLED" W/3M INSULATION & ADJ. RAIL BRACES
(1 PC. REQ'D. AS SHOWN)

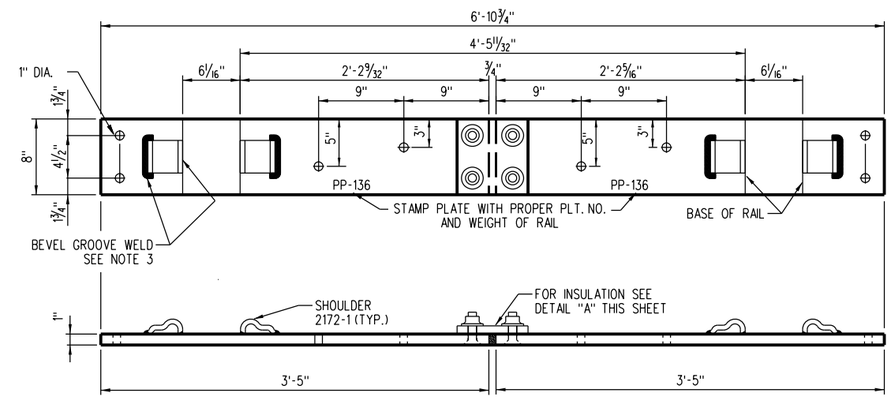

INSULATED GAGE PLATE PP WITH PANDROL CLIPS

1" x 8" "FLAT" W/3M INSULATION
(2 PC. REQ'D. AS SHOWN)

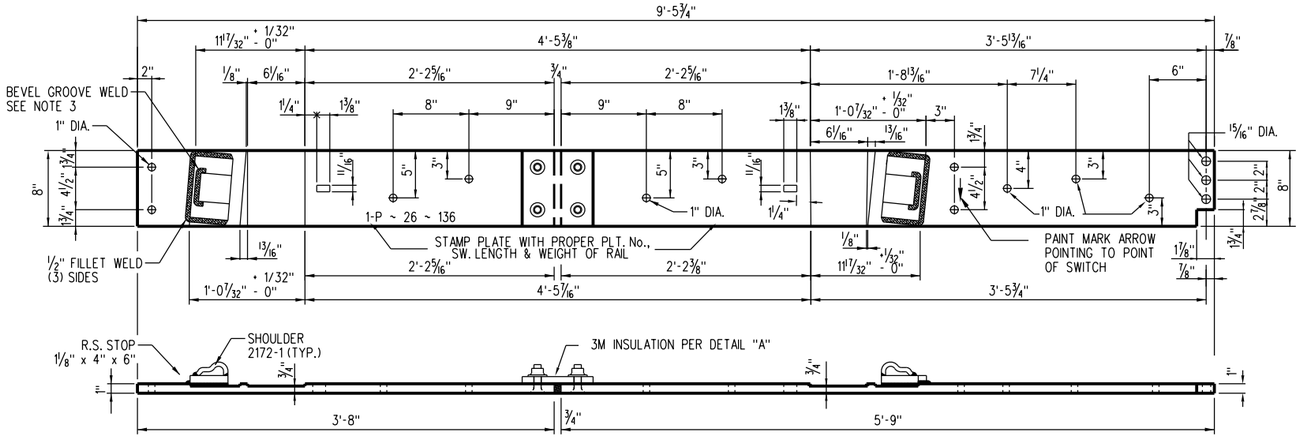

INSULATED GAGE PLATE - 1-P

1" x 8" "MILLED" W/3M INSULATION & ADJ. RAIL BRACES
(1 PC. REQ'D. AS SHOWN)

℄ POWER SWITCH MACHINE

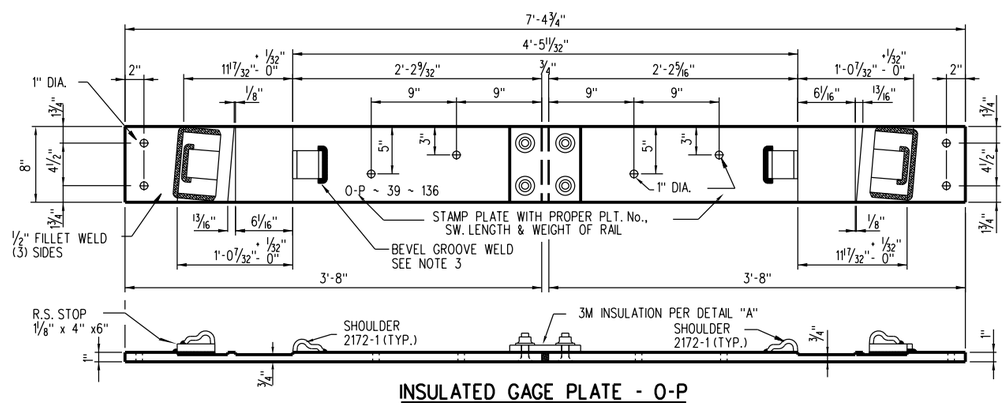

INSULATED GAGE PLATE - 0-P

1" x 8" "MILLED" W/3M INSULATION & ADJ. RAIL BRACES
(1 PC. REQ'D. AS SHOWN)

REV.	DATE	DESCRIPTION	DES.	ENG.
X	XX-XX-XX	REVISION	XX	XX

DRAWN BY: A. CARLOS DATE: 03/31/2011

ASSISTANT DIRECTOR: STANDARDS & DESIGN

DIRECTOR OF ENGINEERING AND CONSTRUCTION

SCRRA ENGINEERING STANDARDS ARE INTENDED FOR SCRRA APPROVED USES ONLY. FOR NON-SCRRA APPROVED USES:
SCRRA SHALL NOT BE RESPONSIBLE FOR THE ACCURACY OR COMPLETENESS OF THE DATA OR INFORMATION CONTAINED HEREIN. THE SELECTION AND USE OF THESE STANDARDS IS THE SOLE RESPONSIBILITY OF THE USER AND SHOULD NOT BE USED WITHOUT CONSULTING A REGISTERED PROFESSIONAL ENGINEER. ALL WARRANTIES AND REPRESENTATIONS OF ANY KIND ARE DISCLAIMED. ANYONE MAKING USE OF THIS INFORMATION AGREES THAT IT ASSUMES ALL LIABILITY ARISING FROM SUCH USE. NO PART OF THESE STANDARDS SHOULD BE REPRODUCED OR DISTRIBUTED IN ANY FORM OR BY ANY MEANS WITHOUT THE PRIOR WRITTEN PERMISSION OF SCRRA. ALL RIGHTS RESERVED.

METROLINK®
SOUTHERN CALIFORNIA REGIONAL RAIL AUTHORITY
ONE GATEWAY PLAZA, 12TH FLOOR, L. A., CA. 90012

ENGINEERING STANDARDS

NO. 20 INSULATED GAGE PLATE DETAILS

STANDARD 2941
SCALE: 1½" = 1'-0"
REVISION –
SHEET 15 OF 15
CADD FILE: ES2941-15

EQUIVALENT CURVE DATA	
CURVE	1.0564'
RADIUS	5423.62'
DELTA	2.386'
TANGENT (T)	112.95'
LENGTH (L)	225.86'
EXTERNAL	1.18'
CROSSOVER DATA	
LEAD	205.000'
PC TO PS	21.94'
PS TO PI	91.01'
PI TO ½" PF	113.99'
LENGTH OF TURNOUT	293.28'
PS TO PT	203.92'

FROG DATA	
FROG NUMBER	24
FROG ANGLE	2° -23'-13"
SWITCH DATA	
SWITCH LENGTH	61'-8"
HEEL SPREAD	6¼"
HEEL ANGLE	0° -59'-02"
SWITCH ANGLE	0° -08'-00"
RADIUS OF CENTER LINE - SWITCH	4817.35'
TANGENT LENGTH SWITCH	77.36'
CENTRAL ANGLE OF CLOSURE CURVE-SWITCH	1° -50'-27"
DEGREE OF CURVE - SWITCH	1° -11'-22"
TURNOUT DATA	
RADIUS OF CENTER LINE - TURNOUT	4815.00'
TANGENT LENGTH - TURNOUT	101.20'
CENTRAL ANGLE OF CLOSURE CURVE - TURNOUT	1° -50'-27"
DEGREE OF CURVE - TURNOUT	1° -11'-24"

DRAWING INDEX

TURNOUT AND CROSSOVER GENERAL NOTES AND DATA — ES2951-01
TURNOUT AND CROSSOVER JOINTS — ES2951-02
TURNOUT LAYOUT — ES2951-03
TURNOUT BILL OF MATERIALS — ES2951-04
CROSSOVER LAYOUT AND BILL OF MATERIALS LAYOUT — ES2951-05
FROG LAYOUT — ES2951-06
GAGE PLATE DETAILS — ES2951-07
GUARD RAIL DETAILS — ES2951-08
CURVED SPLIT SWITCH POINT DETAILS — ES2951-09
STRAIGHT SPLIT SWITCH POINT DETAILS — ES2951-10
SWITCH ROD DETAILS — ES2951-11
SWITCH ROD MISCELLANIOUS DETAILS — ES2951-12
EXTENSION PLATE AND DAP TIE DETAILS FOR M-23A SWITCH MACHINE — ES2951-13
TURNOUT AND FROG PLATE DETAILS — ES2951-14
SWITCH PLATE DETAILS — ES2951-15
INSULATED GAGE PLATE DETAILS — ES2951-16

FOR MAINTENANCE ONLY

NOTES:

1. TURNOUT TO BE FABRICATED FROM 136 LB. HEAD HARDENED RAIL, FROM POINT END TO LAST LONG SWITCH TIE.
2. LOCATION OF INSULATED JOINTS IS DETERMINED BY DRAWING NUMBER ES2951-02. IT WILL BE SATISFACTORY TO RELOCATE THE INSULATED JOINT IN THE FIELD UP TO 12" SO AS TO PROVIDE A SUITABLE SUSPENDED JOINT, PROVIDED THE STAGGER OF INSULATED JOINTS DOES NOT EXCEED 4'-6". SUSPENDED INSULATED JOINTS MUST BE LOCATED IN A CRIB AREA BETWEEN TIES, A MINIMUM DISTANCE OF 4" FROM EDGE OF NEAREST TIE PLATE.
3. ALL INSULATED JOINTS ARE TO BE ADHESIVE BONDED PREFABRICATED MITRE CUT INSULATED JOINTS PER ES2504 UNLESS OTHERWISE SPECIFIED.
4. ALL MATERIALS REQUIRED FOR HAND OR MACHINE OPERATED SWITCH OPERATION WILL BE FURNISHED PER REQUIREMENTS OF THE SCRRA DIRECTOR OF ENGINEERING AND CONSTRUCTION.
5. MATERIALS AND WORKMANSHIP, ALSO ANY CONSTRUCTION DETAILS NOT SHOWN, SHALL BE PER CURRENT AREMA "MANUAL AND PORTFOLIO" UNLESS OTHERWISE SPECIFIED.
6. WHERE REQUIRED, ALL IDENTIFICATION SYMBOLS TO BE PLAINLY STAMPED.
7. GAGE PLATES WILL BE FURNISHED INSULATED. SWITCH RODS WILL BE FURNISHED INSULATED UNLESS OTHERWISE SPECIFIED.
8. MANUFACTURER SHALL SUBMIT TWO COPIES OF SHOP DRAWINGS TO THE SCRRA DIRECTOR OF ENGINEERING AND CONSTRUCTION FOR APPROVAL PRIOR TO FABRICATION OF TURNOUT. SHOP DRAWINGS THAT CHANGE DETAILS OF THESE STANDARDS MUST CLEARLY SPECIFY SUCH PROPOSED CHANGES.
9. THE MATERIAL INCLUDED IN A "TURNOUT COMPLETE" IS EVERYTHING LISTED IN THE BILL OF MATERIALS. TO CONSTRUCT A COMPLETE TURNOUT, SWITCH TIES (PER LIST ON THIS SHEET) AND INSULATED JOINTS, FIELD WELDS, RUNNING RAIL, AND CLOSURE RAIL IDENTIFICATION ON SHEET ES2951-02 MUST ALSO BE SUPPLIED. THE MATERIAL FOR A "CROSSOVER COMPLETE" IS IDENTIFIED ON SHEET ES2951-05.
10. TIE PLATES SHALL CONFORM TO SCRRA ENGINEERING STANDARD ES2454.
11. SCREW SPIKES (15/16" X 6-2 TPI) SHALL CONFORM TO SCRRA ENGINEERING STANDARD ES2357.
12. PLATE HOLES SHALL BE 1" DIAMETER. PILOT HOLES IN TIES SHALL BE 9/16" DIAMETER. SCREW SPIKES SHALL BE SCREWED INTO WOOD (NOT DRIVEN).
13. MANUFACTURER SHALL BEVEL RAIL ENDS PER CURRENT AREMA PLAN NO. 1005.
14. THE 61'-8" SWITCH POINT, PER ES2951-09 & ES2951-10 SHALL BE FURNISHED WITH "MF" FRONT ROD PER SCRRA SIGNALS DEPARTMENT. "SMJ" NO. 1, 5 & 7 SWITCH RODS PER ES2951-11 & ES2951-12 AND SWITCH RODS NO. 2, 3, 4 AND 6 SHALL BE SIMILAR TO NO. 1 SWITCH ROD AND WILL BE FURNISHED WITHOUT BASKET ADJUSTMENT.
15. FOR LOCATION OF INSULATED AND COMPROMISE JOINTS FOR NO. 24 TURNOUT AND CROSSOVER, SEE DRAWING NO. ES2951-02.
16. GAGE PLATES FOR SWITCH AND FROG, SWITCH HEEL PLATE (FOR BOTH R.H. AND L.H. TURNOUTS) AND PLATES P-13 THRU P-37 ARE DESIGNED TO BE PERPENDICULAR TO THE MAIN LINE THRU RUN RAILS.
17. UPON COMPLETION OF TURNOUT INSTALLATION, RUNNING RAIL MUST BE ADJUSTED TO SCRRA NEUTRAL RAIL TEMPERATURE.
18. ALL E-CLIPS SHALL BE GALVANIZED.
19. SWITCH POINTS SHALL BE FABRICATED PER AREMA SPECIFICATION NO. 9-28-92 AND ES2951-09 & ES2951-10.
20. THE TOLERANCE FOR SPACING OF SWITCH TIES IS +/- ½" RELATIVE TO ADJACENT TIES AND 1¼" RELATIVE TO CUMULATIVE DIMENSION FROM THE POINT OF SWITCH (PS).
21. SWITCH POINT ROLLER BEARINGS AND SWITCH PLATES WITH POINT ROLLER RISERS SHALL BE AS APPROVED BY THE SCRRA DIRECTOR OF ENGINEERING AND CONSTRUCTION, SUBMITTED AS SHOP DRAWINGS PER NOTE 8 ABOVE. SWITCH POINT ROLLER BEARINGS WILL BE MOUNTED ABOVE PLATE AND WILL NOT BE LOCATED BETWEEN SWITCH TIES.
22. HELPER THROW ROD ASSEMBLIES SHALL CONFORM TO ES2951-11.

CROSSOVER DATA TABLE									
A	B	C	X	Y	2L+X	2L+X-2(PC-PS)	PS TO PS	U	V
13	312.26	311.99	86.37	537.88	538.09	494.21	494.01	84.01	84.28
14	336.28	335.99	110.39	561.88	562.11	518.23	518.01	108.01	108.30
15	360.30	359.99	134.41	585.88	586.13	542.25	542.01	132.01	132.32
16	384.32	383.99	158.43	609.88	610.15	566.27	566.01	156.01	156.34
17	408.34	407.99	182.45	633.88	634.17	590.29	590.01	180.01	180.36
18	432.36	431.99	206.47	657.88	658.19	614.32	614.01	204.01	204.38
19	456.38	455.99	230.49	681.88	682.21	638.34	638.01	228.01	228.40
20	480.41	479.99	254.51	705.88	706.23	662.36	662.00	252.00	252.42
21	504.43	503.99	278.53	729.88	730.25	686.38	686.00	276.00	276.44
22	528.45	527.99	302.55	753.88	754.27	710.40	710.00	300.00	300.46
23	552.47	551.99	326.57	777.88	778.29	734.42	734.00	324.00	324.48
24	576.49	575.99	350.59	801.88	802.31	758.44	758.00	348.00	348.50
25	600.51	599.99	374.62	825.88	826.33	782.46	782.00	372.00	372.52
26	624.53	623.99	398.64	849.88	850.35	806.48	806.00	396.00	396.54
27	648.55	647.98	422.66	873.88	874.37	830.50	830.00	420.00	420.56
28	672.57	671.98	446.68	897.88	898.39	854.52	854.00	444.00	444.58
29	696.59	695.98	470.70	921.87	922.41	878.54	878.00	468.00	468.60
30	720.61	719.98	494.72	945.87	946.43	902.56	902.00	492.00	492.62
31	744.63	743.98	518.74	969.87	970.45	926.58	926.00	516.00	516.64
32	768.65	767.98	542.76	993.87	994.47	950.60	950.00	540.00	540.66

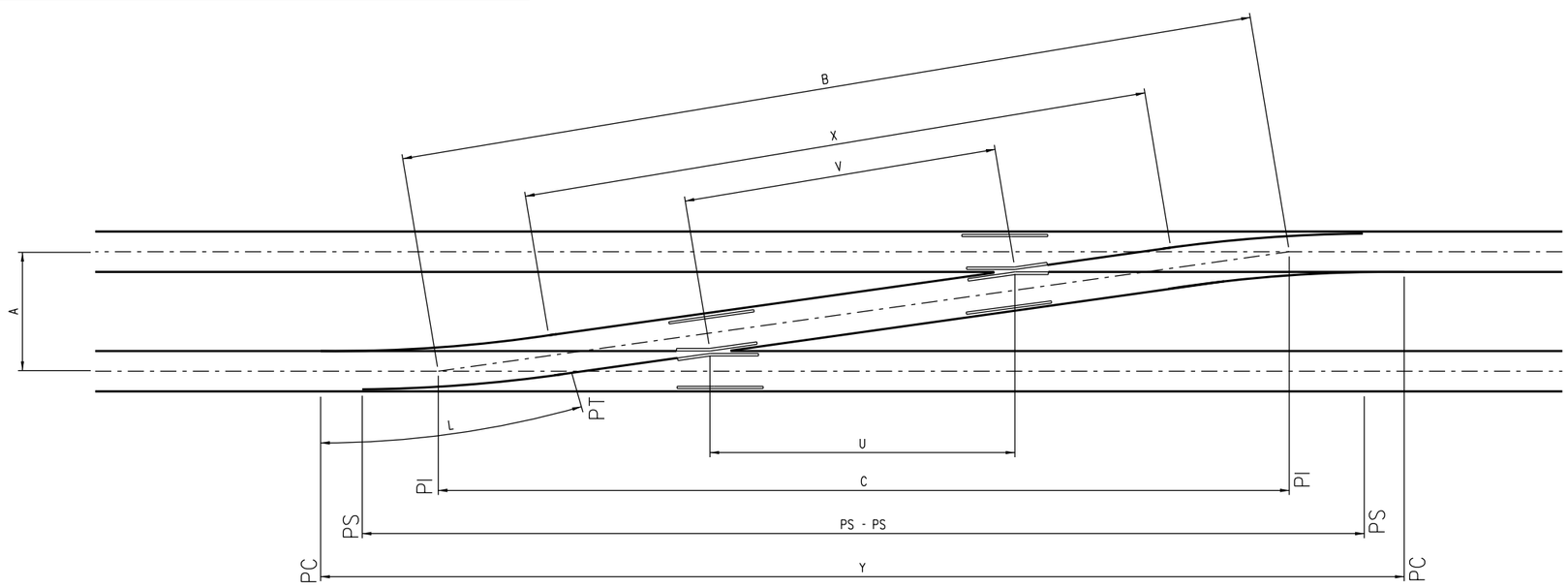

CROSSOVER LAYOUT

REV.	DATE	DESCRIPTION	DES.	ENG.
X	XX-XX-XX	REVISION	XX	XX

DRAWN BY: A. CARLOS DATE: 03/31/2011

ASSISTANT DIRECTOR: STANDARDS & DESIGN

DIRECTOR OF ENGINEERING AND CONSTRUCTION

SCRRA ENGINEERING STANDARDS ARE INTENDED FOR SCRRA APPROVED USES ONLY. FOR NON-SCRRA APPROVED USES:
SCRRA SHALL NOT BE RESPONSIBLE FOR THE ACCURACY OR COMPLETENESS OF THE DATA OR INFORMATION CONTAINED HEREIN. THE SELECTION AND USE OF THESE STANDARDS IS THE SOLE RESPONSIBILITY OF THE USER AND SHOULD NOT BE USED WITHOUT CONSULTING A REGISTERED PROFESSIONAL ENGINEER. ALL WARRANTIES AND REPRESENTATIONS OF ANY KIND ARE DISCLAIMED. ANYONE MAKING USE OF THIS INFORMATION AGREES THAT IT ASSUMES ALL LIABILITY ARISING FROM SUCH USE. NO PART OF THESE STANDARDS SHOULD BE REPRODUCED OR DISTRIBUTED IN ANY FORM OR BY ANY MEANS WITHOUT THE PRIOR WRITTEN PERMISSION OF SCRRA. ALL RIGHTS RESERVED.

METROLINK®
SOUTHERN CALIFORNIA REGIONAL RAIL AUTHORITY
ONE GATEWAY PLAZA, 12TH FLOOR, L. A., CA. 90012

ENGINEERING STANDARDS

NO. 24, 136 LB. R.H. RBM FROG
TURNOUT AND CROSSOVER
GENERAL NOTES AND DATA

STANDARD: 2951
SCALE: NONE
REVISION: –
SHEET: 1 OF 16
CADD FILE: ES2951-01

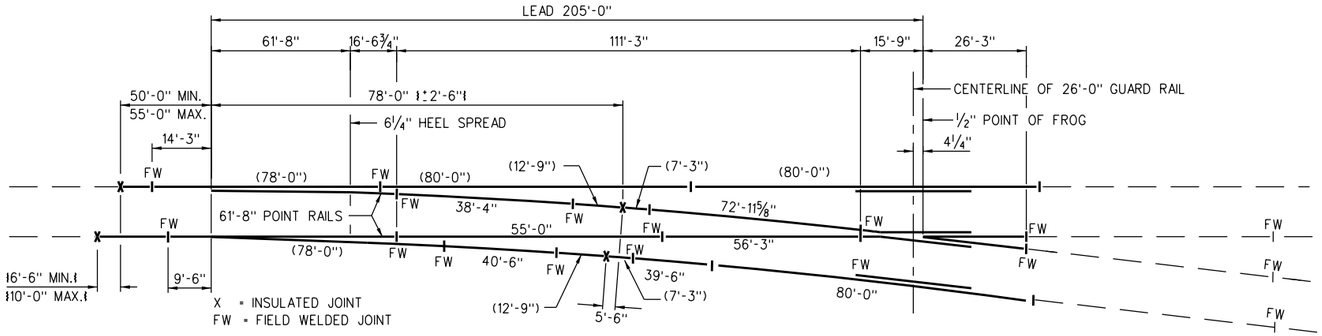

TURNOUT

SCALE: NONE

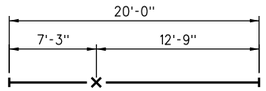

20'-0" LONG ADHESIVE BONDED PREFABRICATED MITRE CUT INSULATED RAIL JOINT ASSEMBLY

(SEE NOTE 6) BOTH ENDS SHALL BE LEFT BLANK FOR WELDING IN THE FIELD. (SCALE: NONE)

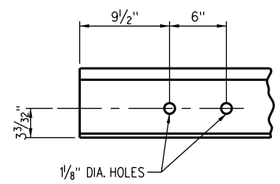

DETAIL "A"

SEE NOTE 4 (b)
SCALE: 1½" = 1'-0"

NOTES:

1. SINCE THE PERMISSIBLE VARIATION IN STANDARD LENGTHS OF RAILS, FROGS AND SWITCH POINTS IS GREATER THAN THE NORMAL EXPANSION GAPS AT RAIL JOINTS AND THICKNESS OF FIBRE END POST IN INSULATED JOINTS, NO ALLOWANCE HAS BEEN MADE FOR EXPANSION GAPS AND FIBRE END POSTS IN COMPUTING LENGTHS OF RAILS SHOWN.
2. RAIL LAYOUT SHOWN FOR CROSSOVERS IS TO BE USED IN ALL CASES, EXCEPT WHERE COMPROMISE JOINTS ARE REQUIRED BETWEEN THE FROGS IN THE CROSSOVER TRACK. (COMPROMISE JOINTS CAN BE USED IN A TEMPORARY CONDITION.) WHEN COMPROMISE WELDS ARE REQUIRED, THE INSULATED JOINTS IN THE CROSSOVER TRACK SHALL ALWAYS BE OF THE HEAVIER RAIL SECTION AND THE RAIL LAYOUT SHALL BE CHANGED TO LOCATE COMPROMISE JOINTS AS DESCRIBED BELOW:
   THE DESCRIPTIONS OF THE CHANGES IN RAIL LAYOUT WHEN COMPROMISE JOINTS ARE REQUIRED IN THE CROSSOVER TRACK ARE BASED ON ASSUMPTION THAT TRACK H IS LAID WITH THE HEAVIER RAIL THAN TRACK L.
   CROSSOVER ON 15'-0" TRACK CENTERS: AT LOCATION A THE 80'-0" RAIL SHALL BE REPLACED WITH 16'-6" OF THE HEAVIER RAIL AND 63'-6" OF THE LIGHTER RAIL. AT LOCATION B THE 78'-3⅛" RAIL SHALL BE REPLACED WITH 10'-0" OF THE HEAVIER RAIL AND 68'-3⅛" OF THE LIGHTER RAIL.
3. IN ADDITION TO NOTE 1, NO ALLOWANCE HAS BEEN MADE IN THE RAIL LENGTHS TO PROVIDE GAPS NEEDED TO MAKE FIELD WELDS. IN THE FIELD IT WILL BE NECESSARY TO CUT RAILS ENDS TO PROVIDE CORRECT GAPS FOR FIELD WELDS.
4. FURNISH ALL RAIL SHOWN IN SOLID LINES ON THIS DRAWING:
   (A.) RAILS LONGER THAN 39'-0" SHALL BE CONTINUOUS WELDED RAIL (CWR), TO BE FURNISHED WITH BOTH ENDS LEFT BLANK FOR WELDING IN THE FIELD.
   (B.) ALL OTHER RAILS 39'-0" OR SHORTER AS SPECIFIED ON THE DRAWING, WITH BOTH ENDS DRILLED PER DETAIL "A", IF SO REQUIRED.
5. ALL RAIL FURNISHED FOR TURNOUT AND CROSSOVER SHALL BE "HIGH STRENGTH" EXCEPT GUARD RAILS.
6. LOCATIONS OF INSULATED JOINTS ARE SHOWN ON TURNOUT AND CROSSOVER DIAGRAMS WITHOUT TOLERANCES, OR IF TOLERANCES ARE PERMISSABLE, WITH (+ OR -). ALL INSULATED JOINTS ARE TO BE PROPERLY SUSPENDED IN CRIB AREA BETWEEN TWO TIES LOCATED 4" MINIMUM FROM EDGE OF NEAREST TIE TO EDGE OF INSULATED JOINT.
7. INSULATED JOINT MUST BE INSTALLED TO BE CENTERED BETWEEN TWO (2) TIES.
8. FIELD WELDED JOINTS DESIGNATED "FW" SHOULD BE IN CRIB AREA BETWEEN TWO TIES LOCATED 4" MINIMUM BETWEEN NEAREST TIE AND WELDED JOINT. DIMENSIONS SHOWN IN PARENTHESIS (0'-0") ARE EXACT. RAILS FURNISHED FOR THESE LOCATIONS ARE LARGER AND MUST BE FIELD ADJUSTED (CUT) WITHIN TOLERANCES SHOWN IN BRACKETS [0'-0"].
9. WHEN INSULATED JOINTS WITH TOLERANCES AND FIELD WELDED JOINTS FALL SHORT OF MINIMUM CLEARANCE FROM TIE OR TIE PLATE THE JOINT MAY BE MOVED WITHIN TOLERANCE LIMITS. BONDED INSULATED JOINT ASSEMBLIES AND STOCK RAILS ARE FURNISHED LONGER THATN SHOWN IN PARENTHESIS ON LAYOUT. THESE RAILS OR THEIR ADJACENT CONNECTING RAILS MUST BE TRIMMED IN THE FIELD TO FIT.
10. INSULATED JOINTS SHALL HAVE 45° MITRE CUT RAIL ENDS.

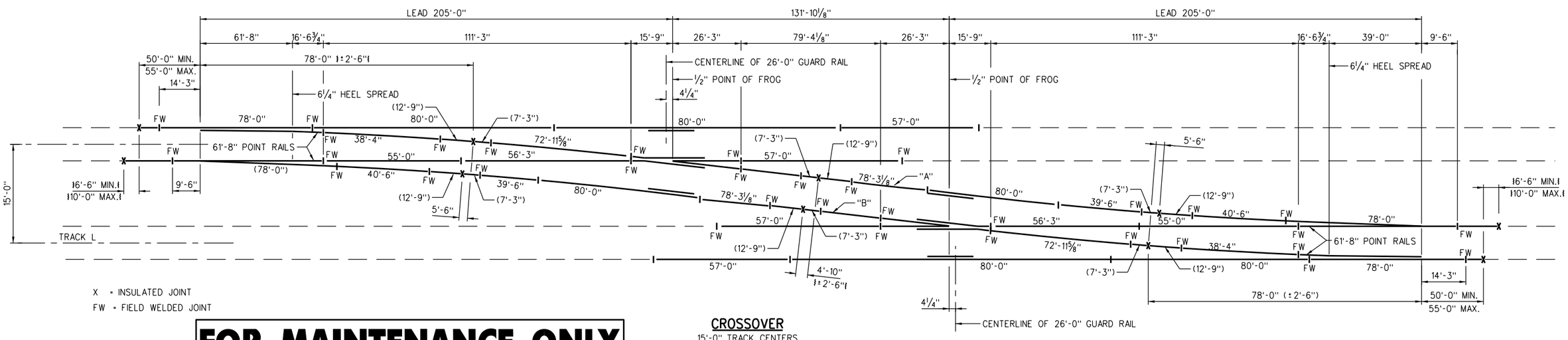

CROSSOVER

15'-0" TRACK CENTERS
(SCALE: NONE)

FOR MAINTENANCE ONLY

REV.	DATE	DESCRIPTION	DES.	ENG.
X	XX-XX-XX	REVISION	XX	XX

DRAWN BY: A. CARLOS DATE: 03/31/2011

ASSISTANT DIRECTOR: STANDARDS & DESIGN

DIRECTOR OF ENGINEERING AND CONSTRUCTION

SCRRA ENGINEERING STANDARDS ARE INTENDED FOR SCRRA APPROVED USES ONLY. FOR NON-SCRRA APPROVED USES:
SCRRA SHALL NOT BE RESPONSIBLE FOR THE ACCURACY OR COMPLETENESS OF THE DATA OR INFORMATION CONTAINED HEREIN. THE SELECTION AND USE OF THESE STANDARDS IS THE SOLE RESPONSIBILITY OF THE USER AND SHOULD NOT BE USED WITHOUT CONSULTING A REGISTERED PROFESSIONAL ENGINEER. ALL WARRANTIES AND REPRESENTATIONS OF ANY KIND ARE DISCLAIMED. ANYONE MAKING USE OF THIS INFORMATION AGREES THAT IT ASSUMES ALL LIABILITY ARISING FROM SUCH USE. NO PART OF THESE STANDARDS SHOULD BE REPRODUCED OR DISTRIBUTED IN ANY FORM OR BY ANY MEANS WITHOUT THE PRIOR WRITTEN PERMISSION OF SCRRA. ALL RIGHTS RESERVED.

METROLINK®
SOUTHERN CALIFORNIA REGIONAL RAIL AUTHORITY
ONE GATEWAY PLAZA, 12TH FLOOR, L. A., CA. 90012

ENGINEERING STANDARDS

NO. 24 136 LB. RH. RBM FROG
TURNOUT AND CROSSOVER
JOINTS LOCATIONS

STANDARD 2951
SCALE: AS NOTED
REVISION –
SHEET 2 OF 16
CADD FILE: ES2951-02

NOTE:

1. SEE COVER SHEET FOR NOTES, BILL OF MATERIAL AND TURNOUT DATA.
2. SEE SHEET 2951-05 FOR CROSSOVER AND CROSSOVER DATA.

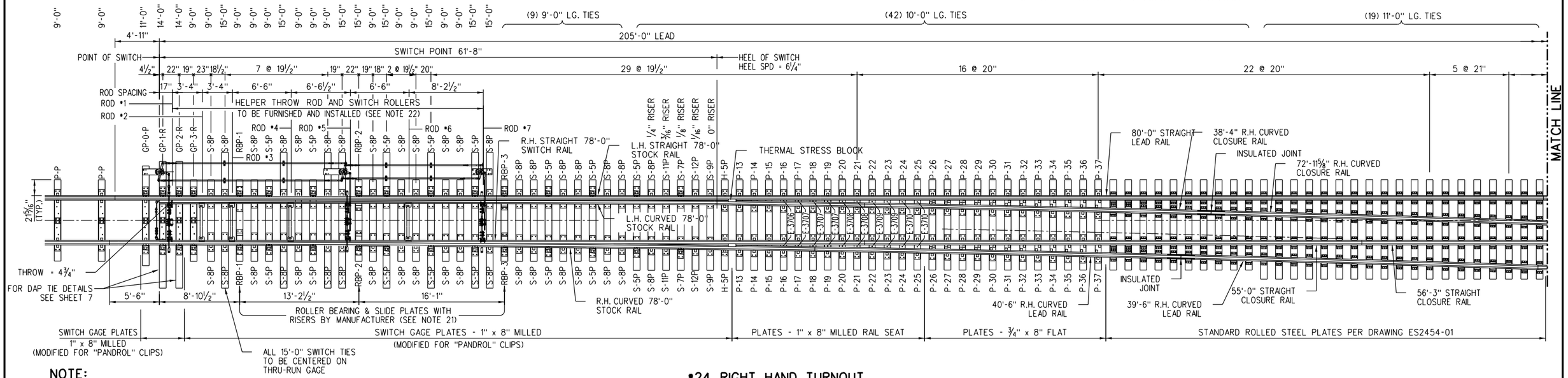

NOTE:

IF CONCRETE TIES ARE INSTALLED AHEAD OF SWITCH POINT, HEAD BLOCK TIE GAGE PLATE PP WILL NOT BE INSTALLED

•24 RIGHT HAND TURNOUT

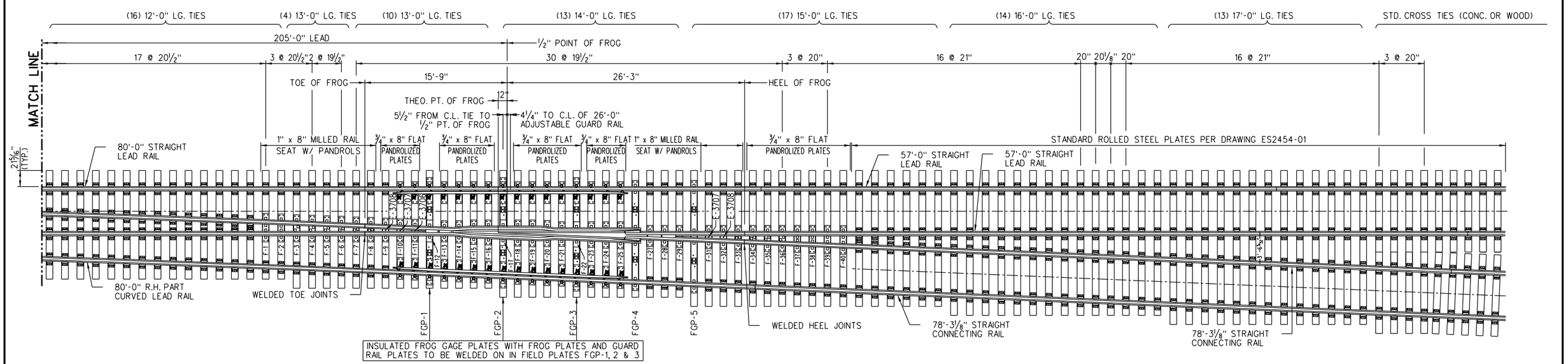

•24 RIGHT HAND TURNOUT (CONT.)
(LEFT HAND TURNOUT OPPOSITE HAND)

FOR MAINTENANCE ONLY

REV.	DATE	DESCRIPTION	DES.	ENG.
X	XX-XX-XX	REVISION	XX	XX

DRAWN BY: A. CARLOS DATE: 03/31/2011

ASSISTANT DIRECTOR: STANDARDS & DESIGN

DIRECTOR OF ENGINEERING AND CONSTRUCTION

SCRRA ENGINEERING STANDARDS ARE INTENDED FOR SCRRA APPROVED USES ONLY. FOR NON-SCRRA APPROVED USES:
SCRRA SHALL NOT BE RESPONSIBLE FOR THE ACCURACY OR COMPLETENESS OF THE DATA OR INFORMATION CONTAINED HEREIN. THE SELECTION AND USE OF THESE STANDARDS IS THE SOLE RESPONSIBILITY OF THE USER AND SHOULD NOT BE USED WITHOUT CONSULTING A REGISTERED PROFESSIONAL ENGINEER. ALL WARRANTIES AND REPRESENTATIONS OF ANY KIND ARE DISCLAIMED. ANYONE MAKING USE OF THIS INFORMATION AGREES THAT IT ASSUMES ALL LIABILITY ARISING FROM SUCH USE. NO PART OF THESE STANDARDS SHOULD BE REPRODUCED OR DISTRIBUTED IN ANY FORM OR BY ANY MEANS WITHOUT THE PRIOR WRITTEN PERMISSION OF SCRRA. ALL RIGHTS RESERVED.

METROLINK®
SOUTHERN CALIFORNIA REGIONAL RAIL AUTHORITY
ONE GATEWAY PLAZA, 12TH FLOOR, L. A., CA. 90012

ENGINEERING STANDARDS

NO. 24, 136 LB. R.H. RBM FROG TURNOUT LAYOUT

STANDARD 2951
SCALE: 3/16" = 1'-0"
REVISION –
SHEET 3 OF 16
CADD FILE: ES2951-03

BILL OF MATERIAL FOR LATERAL TURNOUT

QTY.	DESCRIPTION
1 EACH	No.24 RAILBOUND MANGANESE FROG ~ 42'-0" LONG
1 EACH	FROG PLATES No. F-1 THRU F-40
1 EACH	FROG GAGE PLATES FGP-1 THRU FGP-5
2 EACH	26'-0" U-69 ADJUSTABLE GUARD RAIL W/ PLATES
1 PAIR	61'-8" EXTENDED FIELD WELDED TYPE SWITCH POINTS (78'-0" RAIL)
1 EACH	R.H. & L.H. CURVED STOCK RAILS - 78'-0"
2 EACH	STRAIGHT LEAD RAILS - 80'-0"
1 EACH	CURVED LEAD RAILS - 39'-6" & 40'-6"
1 EACH	R.H. CURVED COLSURE RAIL - 38'-4" & 72'-11⅝"
1 EACH	R.H. PART CURVED RAIL - 80'-0"
1 EACH	STRAIGHT CLOSURE RAIL - 55'-0"
1 EACH	STRAIGHT CLOSURE RAIL - 56'-3"
12 PCS	RACOR SWITCH POINT ROLLER ASSEMBLIES
3 EACH	D.I. RAIL HOLD DOWN CLIP - E-3706
8 EACH	D.I. RAIL HOLD DOWN CLIP - E-3707
6 EACH	D.I. RAIL HOLD DOWN CLIP - E-3708
4 EACH	D.I. RAIL HOLD DOWN CLIP - E-3709
4 EACH	D.I. RAIL HOLD DOWN CLIP - E-3710
32 PCS.	BOLTLESS ADJUSTABLE BRACE ASSEMBLIES
748 PCS	"PANDROL", OR EQUAL, CLIP TYPE E-2055
8 PCS	"PANDROL", OR EQUAL, CLIP TYPE E-2063 (USE AT INSUL. JTS.)
16 PCS	"PANDROL", OR EQUAL, SHOULDER PR-2172-1 (USE ON FGP-4 & FGP-5)
1496 PCS	"PANDROL", OR EQUAL, SCREW SPIKES, 15/16" D. X 6" LONG
374 PCS	"PANDROL", OR EQUAL, STANDARD TIE PLATES
1 EACH	HELPER ROD ASSEMBLY
2 EACH	THERMAL STRESS BLOCK ASSEMBLY
1 EACH	R.H. & L.H. SAMSON STOCK RAILS
1 EACH	No. 1 SMJ TYPE SWITCH ROD
1 EACH	SWITCH RODS No.2 THRU 7 - SMJ TYPE
2 EACH	GAGE PLATE No. P-P
1 EACH	GAGE PLATE No. GP-0-P
1 EACH	GAGE PLATE No. GP-1-R OR GP-1-L
1 EACH	GAGE PLATE No. GP-2-R OR GP-2-L
1 EACH	GAGE PLATE No. GP-3-R OR GP-3-L
40 EACH	SLIDE PLATE S-8P
2 EACH	SLIDE PLATE S-9P
2 EACH	SLIDE PLATE S-11P
2 EACH	SLIDE PLATE S-12P
16 EACH	BRACE SLIDE PLATE S-5P
2 EACH	BRACE SLIDE PLATE S-7P
2 EACH	ROLLER BEARING BRACE PLATES RBP-1, RBP-2, & RBP-3
2 EACH	HEEL PLATE HP-5 & TURNOUT PLATES P-13 THRU P-37
2 EACH	EPOXY BONDED PREFABRICATED MITRE CUT INSULATED JOINT 20'-0"

BILL OF MATERIAL FOR HELPER ASSEMBLY

QTY.	DESCRIPTION
11	COTTER PIN, 3/16" x 1¾" LG
4	PIPE COUPLER
1	JAW PIN
9	COTTER PIN, 3/16" x 1½"
6	BOLT, ¾" - 10 X 3" LG, HVY HEX
8	PIN, PIPE CARRIER ROLLER
12	FLAT WASHER, ¾" , USS
12	LOCK WASHER, ¾" , HVY
6	NUT, ¾" - 10, HEAVY SQUARE
12	NUT, ¾" - 10, HEAVY HEX
6	RETAINER, BOLT
6	STUD, ¾"x14" W/3 - ¾" - 10 THREAD BOTH ENDS
1	ROD OPERATING - No. 7 HELPER
1	ROD OPERATING - No. 5 HELPER
2	ASSY - SWITCH POINT ADJUSTER
8	ROLLER, PIPE CARRIER
8	STAND, PIPE CARRIER
8	¾" x 5" LG LAG BOLT
16	½" x 4" LG LAG BOLT
8	RIVET, ¼" x 1½", ROUND, STEEL
4	CONE NUT, SWITCH POINT ADJUSTER
4	LOCK WASHER, 1¼" HEAVY
8	NUT, 1¼" - 7, HEAVY HEX, JAMB
2	PIPE - SCHEDULE 80 x 148⅞" LG
2	PIPE - SCHEDULE 80 x 212⅞" LG
1	CLEVIS
4	SCREW JAW ROD
4	SOLID JAW
11	JAW PIN
4	SCREW JAW, 1¼" - 7" x 6½" LG
3	CRANK STAND PIN
1	ADJUSTABLE LINK
1	CRANK, 3 ARM, STAGE 3
1	CRANK, 3 ARM, STAGE 2
1	CRANK, 3 ARM, STAGE 1
3	CRANK STAND
1	CRANK PLATE, STAGE 3
1	CRANK PLATE, STAGE 2
1	CRANK PLATE, STAGE 1

BILL OF SWITCH TIES FOR TURNOUT

PIECES	SIZE	LENGTH	BOARD FEET
42	7" x 9"	10'-0"	1680.00
20	7" x 9"	11'-0"	1155.00
16	7" x 9"	12'-0"	1008.00
14	7" x 9"	13'-0"	955.50
13	7" x 9"	14'-0"	955.50
2	10" x 9"	14'-0" DAP TIES	147.00
25	7" x 9"	15'-0"	1968.75
14	7" x 9"	16'-0"	1176.00
13	7" x 9"	17'-0"	1160.25
TOTAL			TOTAL
159			10192.00

FOR MAINTENANCE ONLY

REV.	DATE	DESCRIPTION	DES.	ENG.
X	XX-XX-XX	REVISION	XX	XX

DRAWN BY: A. CARLOS DATE: 03/31/2011

ASSISTANT DIRECTOR: STANDARDS & DESIGN

DIRECTOR OF ENGINEERING AND CONSTRUCTION

SCRRA ENGINEERING STANDARDS ARE INTENDED FOR SCRRA APPROVED USES ONLY. FOR NON-SCRRA APPROVED USES:
SCRRA SHALL NOT BE RESPONSIBLE FOR THE ACCURACY OR COMPLETENESS OF THE DATA OR INFORMATION CONTAINED HEREIN. THE SELECTION AND USE OF THESE STANDARDS IS THE SOLE RESPONSIBILITY OF THE USER AND SHOULD NOT BE USED WITHOUT CONSULTING A REGISTERED PROFESSIONAL ENGINEER. ALL WARRANTIES AND REPRESENTATIONS OF ANY KIND ARE DISCLAIMED. ANYONE MAKING USE OF THIS INFORMATION AGREES THAT IT ASSUMES ALL LIABILITY ARISING FROM SUCH USE. NO PART OF THESE STANDARDS SHOULD BE REPRODUCED OR DISTRIBUTED IN ANY FORM OR BY ANY MEANS WITHOUT THE PRIOR WRITTEN PERMISSION OF SCRRA. ALL RIGHTS RESERVED.

METROLINK®
SOUTHERN CALIFORNIA REGIONAL RAIL AUTHORITY
ONE GATEWAY PLAZA, 12TH FLOOR, L. A., CA. 90012

ENGINEERING STANDARDS

NO. 24, 136 LB. RH RBM FROG TURNOUT
BILL OF MATERIALS

STANDARD 2951
SCALE: NONE
REVISION –
SHEET 4 OF 16
CADD FILE: ES2951-04

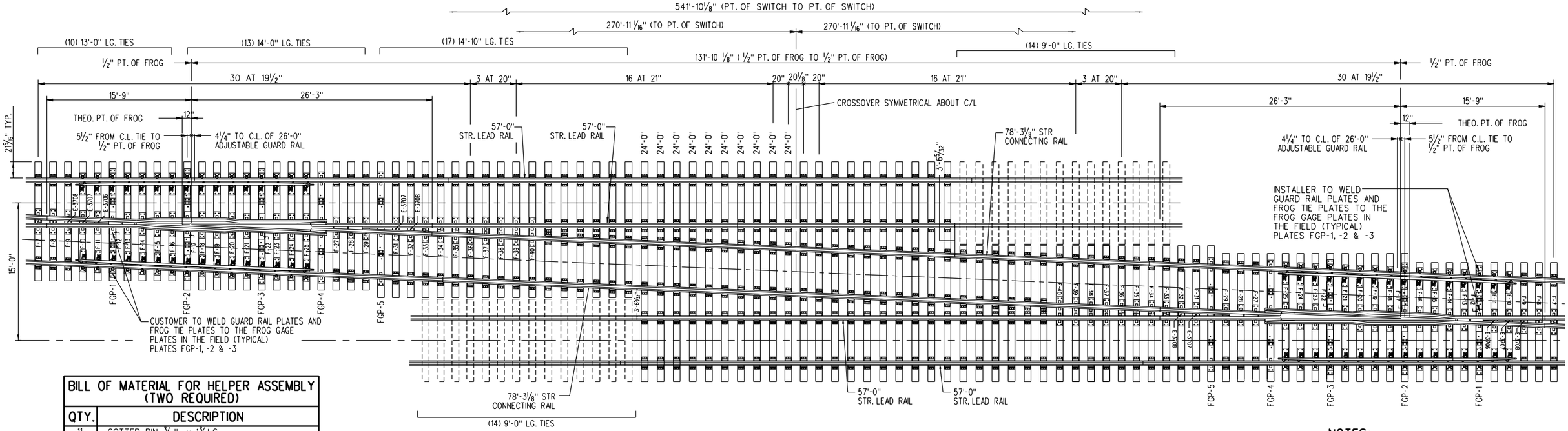

No. 24 CROSSOVER

FOR MAINTENANCE ONLY

BILL OF MATERIAL FOR HELPER ASSEMBLY (TWO REQUIRED)	
QTY.	DESCRIPTION
11	COTTER PIN, 3/16" x 1 3/4LG
4	PIPE COUPLER
1	JAW PIN
9	COTTER PIN, 3/16" x 1 1/2
6	BOLT, 3/4" - 10 X 3" LG, HVY HEX
8	PIN, PIPE CARRIER ROLLER
12	FLAT WASHER, 3/4", USS
12	LOCK WASHER, 3/4", HVY
6	NUT, 3/4" - 10, HEAVY SQUARE
12	NUT, 3/4" - 10, HEAVY HEX
6	RETAINER, BOLT
6	STUD, 3/4X 14 W 3" 3/4- 10 THREAD BOTH ENDS
1	ROD OPERATING - No. 7 HELPER
1	ROD OPERATING - No. 5 HELPER
2	ASSY - SWITCH POINT ADJUSTER
8	ROLLER, PIPE CARRIER
8	STAND, PIPE CARRIER
8	3/4" x 5" LG LAG BOLT
16	1/2" x 4" LG LAG BOLT
8	RIVET, 1/4" x 1 1/2", ROUND, STEEL
4	CONE NUT, SWITCH POINT ADJUSTER
4	LOCK WASHER, 1 1/4" HEAVY
8	NUT, 1 1/4" - 7, HEAVY HEX, JAMB
2	PIPE - SCHEDULE 80 x 148 7/8" LG
2	PIPE - SCHEDULE 80 x 212 7/8" LG
1	CLEVIS
4	SCREW JAW ROD
4	SOLID JAW
11	JAW PIN
4	SCREW JAW, 1 1/4" - 7 x 6 1/2LG
3	CRANK STAND PIN
1	ADJUSTABLE LINK
1	CRANK,3 ARM, STAGE 3
1	CRANK, 3 ARM, STAGE 2
1	CRANK, 3 ARM, STAGE 1
3	CRANK STAND
1	CRANK PLATE, STAGE 3
1	CRANK PLATE, STAGE 2
1	CRANK PLATE, STAGE 1

BILL OF MATERIAL FOR CROSSOVER	
QTY.	DESCRIPTION
2 SETS	PORTEC "POLY" TRANSIT INSULATED JOINT KITS (PART #400205503)
3610 PCS.	"PANDROL", OR EQUAL, SCREW SPIKES, 15/16" D. X 6" LONG
600 PCS.	"PANDROL", OR EQUAL, STANDARD TIE PLATES
2 PAIR	61'-8" EXTENDED FIELD WELDED TYPE SWITCH POINTS (78'-0" RAIL)
4 EACH	THERMAL STRESS BLOCK ASSEMBLY
2 EACH	R.H. & L.H. SAMSON STOCK RAILS
2 EACH	No. 1,5 & 7 SMJ TYPE SWITCH ROD
2 EACH	SWITCH RODS No. 2, 3, 4 & 6 SMJ TYPE
4 EACH	GAGE PLATE No. P-P
2 EACH	GAGE PLATE No. GP-0-P
2 EACH	GAGE PLATE No. GP-1-R OR GP-1-L
2 EACH	GAGE PLATE No. GP-2-R OR GP-2-L
2 EACH	GAGE PLATE No. GP-3-R OR GP-3-L
80 EACH	SLIDE PLATE S-8P
4 EACH	SLIDE PLATE S-9P
4 EACH	SLIDE PLATE S-11P
4 EACH	SLIDE PLATE S-12P
32 EACH	BRACE SLIDE PLATE S-5P
4 EACH	BRACE SLIDE PLATE S-7P
4 EACH	ROLLER BEARING BRACE PLATES RBP-1, RBP-2, & RBP-3
4 EACH	HEEL PLATE HP-5 & TURNOUT PLATES P-13 THRU P-37
6 EACH	EPOXY BONDED PREFABRICATED MITRE CUT INSULATED JOINTS 20'-0"

BILL OF MATERIAL FOR CROSSOVER	
QTY.	DESCRIPTION
2 EACH	No.24 RAILBOUND MANGANESE FROG ~ 42'-0" LONG
2 EACH	FROG PLATES No. F-1 THRU F-40
2 EACH	FROG GAGE PLATES FGP-1 THRU FGP-5
4 EACH	26'-0" U-69 ADJUSTABLE GUARD RAIL W/ PLATES
2 EACH	L.H. & R.H. STRAIGHT STOCK RAILS - 78'-0"
2 EACH	L.H. & R.H. CURVED STOCK RAILS - 78'-0"
4 EACH	STRAIGHT LEAD RAILS - 80'-0"
2 EACH	R.H. CURVED LEAD RAILS - 39'-6" & 40'-6"
2 EACH	R.H. CURVED CLOSURE RAILS - 38'-4" & 72'-11 5/8"
2 EACH	STRAIGHT CLOSURE RAILS - 55'-0" & 56'-3"
2 EACH	R.H. PART CURVED RAIL - 80'-0"
4 EACH	STRAIGHT LEAD RAILS - 57'-0"
2 EACH	STRAIGHT CONNECTING RAILS - 78'-3 1/8"
12 PCS.	RACOR SWITCH POINT ROLLER ASSEMBLIES
2 EACH	D.I. RAIL HOLD DOWN CLIP - E-3706
5 EACH	D.I. RAIL HOLD DOWN CLIP - E-3707
4 EACH	D.I. RAIL HOLD DOWN CLIP - E-3708
2 EACH	D.I. RAIL HOLD DOWN CLIP - E-3709
2 EACH	D.I. RAIL HOLD DOWN CLIP - E-3710
64 PCS.	BOLTLESS ADJUSTABLE BRACE ASSEMBLIES
2100 PCS.	"PANDROL", OR EQUAL, CLIP TYPE E-2055
24 PCS.	"PANDROL", OR EQUAL, CLIP TYPE E-2063 (USE AT INSUL. JTS.)
16 PCS.	"PANDROL", OR EQUAL, SHOULDER PR-2172-1 (USE ON FGP-4 & FGP-5)

NOTES:

1. FOR NOTES SEE DRAWING 2951-01
2. SEE DRAWING 2951-03 FOR NO. 24 TURNOUT.
3. CROSSOVER FOR 15'-0" TRACK CENTERS IS SHOWN. FOR 16'-0" OR GREATER TRACK CENTERS, USE TWO TURNOUTS PER DRAWING 2951-03. FOR OTHER TRACK CENTER SPACING, MANUFACTURER TO FURNISH SHOP DRAWINGS DETAILING RAIL AND TIE LAYOUT AND DIMENSIONS THAT FOLLOW THESE EXAMPLES.
4. CROSSOVER TO BE PRE-PLATED ON TIES. PREBORE TIES 5/8" X 5 1/2" DEEP. MANGANESE CASTINGS TO BE EXPLOSION HARDENED BRINELL 352 MINIMUM.

BILL OF SWITCH TIES FOR CROSSOVER			
PIECES	SIZE	LENGTH	BOARD FEET
76	7" x 9"	9'-0"	3591.00
84	7" x 9"	10'-0"	4410.00
38	7" x 9"	11'-0"	2194.50
32	7" x 9"	12'-0"	2016.00
28	7" x 9"	13'-0"	1911.00
26	7" x 9"	14'-0"	1911.00
4	10" x 9"	14'-0" DAP TIES	294.00
52	7" x 9"	14'-10"	4095.00
20	7" x 9"	24'-0"	2520.00
TOTAL			TOTAL
360			22942.50

REV.	DATE	DESCRIPTION	DES.	ENG.
X	XX-XX-XX	REVISION	XX	XX

DRAWN BY: A. CARLOS DATE: 03/31/2011

ASSISTANT DIRECTOR: STANDARDS & DESIGN

DIRECTOR OF ENGINEERING AND CONSTRUCTION

SCRRA ENGINEERING STANDARDS ARE INTENDED FOR SCRRA APPROVED USES ONLY. FOR NON-SCRRA APPROVED USES, SCRRA SHALL NOT BE RESPONSIBLE FOR THE ACCURACY OR COMPLETENESS OF THE DATA OR INFORMATION CONTAINED HEREIN. THE SELECTION AND USE OF THESE STANDARDS IS THE SOLE RESPONSIBILITY OF THE USER AND SHOULD NOT BE USED WITHOUT CONSULTING A REGISTERED PROFESSIONAL ENGINEER. ALL WARRANTIES AND REPRESENTATIONS OF ANY KIND ARE DISCLAIMED. ANYONE MAKING USE OF THIS INFORMATION AGREES THAT IT ASSUMES ALL LIABILITY ARISING FROM SUCH USE. NO PART OF THESE STANDARDS SHOULD BE REPRODUCED OR DISTRIBUTED IN ANY FORM OR BY ANY MEANS WITHOUT THE PRIOR WRITTEN PERMISSION OF SCRRA. ALL RIGHTS RESERVED.

METROLINK®

SOUTHERN CALIFORNIA REGIONAL RAIL AUTHORITY
ONE GATEWAY PLAZA, 12TH FLOOR, L. A., CA. 90012

ENGINEERING STANDARDS

NO. 24, 136 LB. R.H. RBM FROG CROSSOVER
LAYOUT AND BILL OF MATERIALS

STANDARD 2951
SCALE: 3/16" = 1'-0"
REVISION –
SHEET 5 OF 16
CADD FILE: ES2951-05

NOTES:

1. FROG ANGLE 2°-23'-13".
2. RAIL USED TO FABRICATE FROG IS TO BE 136 LB. HIGH STRENGTH.
3. RAIL BOUND MANGANESE STEEL FROG PER CURRENT AREMA PLAN NO. 621 & 625 WITH EXPLOSIVE HARDENED MANGANESE HIGH INTEGRITY CASTING PER CURRENT AREMA SPECIFICATIONS AND MODIFIED FOR ARM LENGTHS AND PLATES WITH PANDROL FASTENERS.
4. ALL FROG PLATES SHALL BE STAMPED IN 1/2" CHARACTERS TO INDICATE MFG., FROG NO., R.H., RAIL SECTION AND PLATE NUMBER. MARK TO BE STAMPED ON SAME END OF ALL FROG PLATES.
5. FOR DETAILS OF FROG PLATES SEE SHEET 2951-14.
6. WORKMANSHIP AND MATERIALS SHALL BE PER CURRENT "AREMA SPECIFICATIONS FOR SPECIAL TRACKWORK", EXCEPT AS OTHERWISE SPECIFIED.
7. ANY CONSTRUCTION DETAILS NOT SHOWN SHALL BE IN ACCORDANCE WITH CURRENT AREMA RECOMMENDED PRACTICE.
8. FROG PLATES ARE DESIGNED TO BE INSTALLED PERPENDICULAR TO MAIN TRACK.
9. BODY BOLTS 1 3/8" DIA., H.T.C.S. - PER AREMA SPECIFICATIONS.
10. TOE AND HEEL BLOCKS AND BOLTS PER AREMA SPECIFICATIONS.
11. PLATES TO BE MADE OF MILD ROLLED STEEL.

NOTES: CONT.

12. THE PLATES AS SHOWN ARE FOR A 136 LB., NO. 24, RIGHT HAND TURNOUT. FOR A LEFT HAND TURNOUT, PLATES ARE TO BE OPPOSITE.
13. THE "PANDROL", OR APPROVED EQUAL, TYPE WELD-ON PRESSED STEEL SHOULDER, MADE OF MILD STEEL AND MEETING "PANDROL'S" DESIGN SPECIFICATIONS SHALL BE USED.
14. THE PRESSED STEEL SHOULDER MUST BE CAREFULLY WELDED TO ALL PLATES WITH A MINIMUM 2 PASS 3/8 " • FILLET WELD ALONG THE BEVELED GROOVES OF THE SHOULDER. ANY WELD PROJECTING BEYOND THE VERTICAL FACE OF THE SHOULDER IN THE AREA OF THE BASE OF RAIL SEAT MUST BE MACHINED OUT TO PROVIDE A CLEAR RAIL SEAT DIMENSION AS CALLED FOR.
15. MANUFACTURER OF FROG PLATES SHALL USE COMPLETED FROG TO VERIFY LOCATION OF ADJUSTABLE CLAMPS ON FROG GAGE PLATES FGP-1, FGP-2, AND FGP-3 TO INSURE PROPER FIT. FROG PLATES WILL BE WELDED TO THE GAGE PLATES IN THE FIELD WITH A 3 PASS 1/2 • FILLET WELD. PLATES WILL BE WELDED ONLY AFTER THE GAGE PLATES ARE SECURED IN THE PROPER LOCATION ON THE TIE WITH THE FROG IN PLACE AT PROPER ALIGNMENT.
16. GUARD RAIL PLATES ARE TO BE INSTALLED AND WELDED TO THE FROG GAGE PLATES IN THE FIELD WITH A 3 PASS 1/2 • FILLET WELD CONTINUOUS ON BOTH ENDS OF THE PLATE. PLATES ARE TO BE WELDED ONLY AFTER THE GAGE PLATE AND THE FROG IS SECURED IN THE PROPER LOCATION ON THE TIE WITH PROPER ALIGNMENT.
17. IDENTIFICATION TAG WITH RAISED METAL CHARACTERS TO BE APPLIED WHICH WILL STATE WEIGHT OF RAIL, FROG NO., MANUFACTURER AND YEAR MANUFACTURED.
18. RAIL ENDS TO BE CUT AT 45 DEGREE ANGLE AT JOINT WITH FROG CASTING.

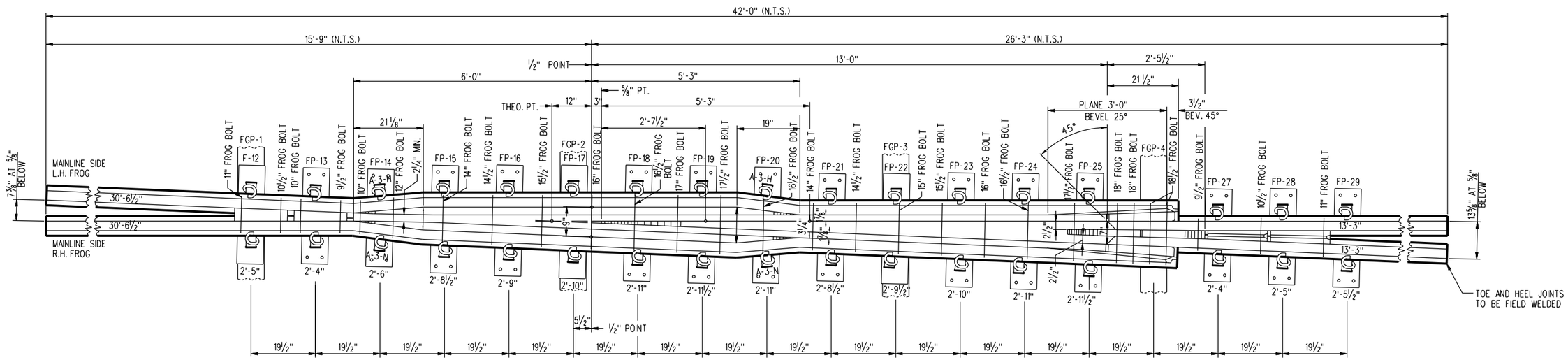

NO. 24 RAILBOUND MANGANESE STEEL FROG WITH PANDROLIZED PLATES

TIE SPACING ~ TIES ARE PERPENDICULAR TO MAIN LINE OF FROG
PLATES TO BE PERPENDICULAR TO CENTERLINE OF FROG

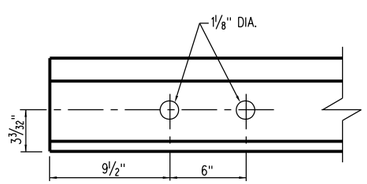

RAIL END DRILLING

NOTE: RAIL END DRILLING CAN BE ELIMINATED IF NO TEMPORARY BOLTED JOINTS ARE TO BE USED.

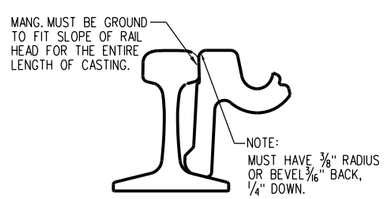

DETAIL OF FROG CASTING / RAIL FIT

SCALE: NONE

NOTE "A"

PLATES F-12, F-17 AND F-22 ARE TO BE LAYED OUT AND MARKED OFF FROM UNDER FROG TO INSURE PROPER LOCATION OF PANDROL SHOULDERS.

FOR MAINTENANCE ONLY

REV.	DATE	DESCRIPTION	DES.	ENG.
X	XX-XX-XX	REVISION	XX	XX

DRAWN BY: A. CARLOS DATE: 03/31/2011

ASSISTANT DIRECTOR: STANDARDS & DESIGN

DIRECTOR OF ENGINEERING AND CONSTRUCTION

SCRRA ENGINEERING STANDARDS ARE INTENDED FOR SCRRA APPROVED USES ONLY. FOR NON-SCRRA APPROVED USES, SCRRA SHALL NOT BE RESPONSIBLE FOR THE ACCURACY OR COMPLETENESS OF THE DATA OR INFORMATION CONTAINED HEREIN. THE SELECTION AND USE OF THESE STANDARDS IS THE SOLE RESPONSIBILITY OF THE USER AND SHOULD NOT BE USED WITHOUT CONSULTING A REGISTERED PROFESSIONAL ENGINEER. ALL WARRANTIES AND REPRESENTATIONS OF ANY KIND ARE DISCLAIMED. ANYONE MAKING USE OF THIS INFORMATION AGREES THAT IT ASSUMES ALL LIABILITY ARISING FROM SUCH USE. NO PART OF THESE STANDARDS SHOULD BE REPRODUCED OR DISTRIBUTED IN ANY FORM OR BY ANY MEANS WITHOUT THE PRIOR WRITTEN PERMISSION OF SCRRA. ALL RIGHTS RESERVED.

METROLINK®
SOUTHERN CALIFORNIA REGIONAL RAIL AUTHORITY
ONE GATEWAY PLAZA, 12TH FLOOR, L. A., CA. 90012

ENGINEERING STANDARDS

NO. 24 136 LB. R.H. RBM FROG LAYOUT

STANDARD 2951
SCALE: 3/4" = 1'-0"
REVISION –
SHEET 6 OF 16
CADD FILE: ES2951-06

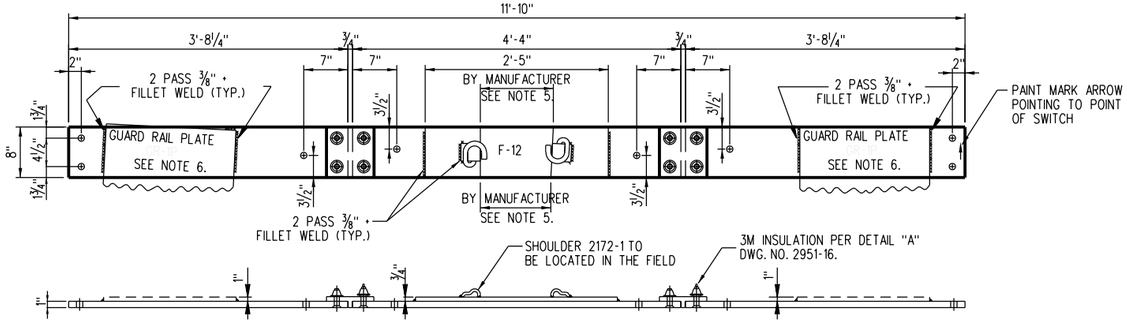

INSULATED FROG GAGE PLATE - FGP-1

1" x 8" - FLAT - W/3M INSULATION (1 PC. REQ'D. AS SHOWN)

NOTES:

1. PLATES TO BE MADE OF MILD ROLLED STEEL.
2. THE PLATES AS SHOWN ARE FOR A 136 LB., NO. 24, RIGHT HAND, MACHINE OPERATED TURNOUT. FOR A LEFT HAND TURNOUT, PLATES ARE TO BE OPPOSITE.
3. THE PANDROL TYPE, OR APPROVED EQUAL WELD-ON PRESSED STEEL SHOULDER, MADE OF MILD STEEL, AND MEETING PANDROLS DESIGN SPECIFICATIONS SHALL BE USED.
4. THE PRESSED STEEL SHOULDER MUST BE CAREFULLY WELDED TO ALL PLATES WITH A MINIMUM 2 PASS ⅜" • FILLET WELD ALONG THE BEVELED GROOVES OF THE SHOULDER. ANY WELD PROJECTING BEYOND THE VERTICAL FACE OF THE SHOULDER IN THE AREA OF THE BASE OF RAIL SEAT MUST BE MACHINED OUT TO PROVIDE A CLEAR RAIL SEAT DIMENSION AS CALLED FOR.
5. MANUFACTURER OF FROG PLATES SHALL USE COMPLETED FROG TO VERIFY LOCATION OF SHOULDERS ON FROG PLATES FGP-1, FGP-2, AND FGP-3 TO INSURE PROPER FIT. FROG PLATES WILL BE WELDED TO THE GAGE PLATES IN THE FIELD WITH A 3 PASS ½• FILLET WELD. PLATES WILL BE WELDED ONLY AFTER THE GAGE PLATES ARE SECURED IN THE PROPER LOCATION ON THE TIE WITH THE FROG IN PLACE AT PROPER ALIGNMENT.
6. GUARD RAIL PLATES ARE TO BE INSTALLED AND WELDED TO THE FROG GAGE PLATES IN THE FIELD WITH A 3 PASS ½• FILLET WELD CONTINUOUS ON BOTH ENDS OF THE PLATE. PLATES ARE ARE TO BE WELDED ONLY AFTER THE GAGE PLATE AND THE FROG IS SECURED IN THE PROPER LOCATION ON THE TIE WITH PROPER ALIGNMENT.

INSTRUCTIONS FOR WELDING GUARD RAILS TO GAGE PLATES:

1. POSITION GAGE PLATES AT DESIGNATED TIE LOCATIONS AND ANCHOR IN PLACE.
2. CHECK TRACK FOR CORRECT GAGE.
3. STARTING WITH ONE GAGE PLATE, PLACE FROG PLATES WITH ADJUSTABLE BRACES AND SECURE TO FROG AND GUARD RAIL WITH PANDROL CLIPS.
4. RECHECK TRACK GAGE AND CORRECT IF NECESSARY.
5. CAREFULLY WELD FROG PLATE AND GUARD RAIL PLATE TO FROG GAGE PLATES WITH 3 PASS ½" • FILLET WELD. FOR WELDING USE THE FOLLOWING:
   A. ELECTRODE, 5/32 INCH, WELDING SPEC. 7018XLM.
   B. ELECTRODE, 3/16 INCH, WELDING SPEC. 7018XLM.
   C. WIRE, 3/32 INCH, NR203, 1% NICKEL FLUX CORE
   OTHER WIRE OR ELECTRODES MEETING SPECIFICATIONS AS CALLED FOR AND APPROVED BY SCRRA DIRECTOR OF ENGINEERING MAY BE USED.

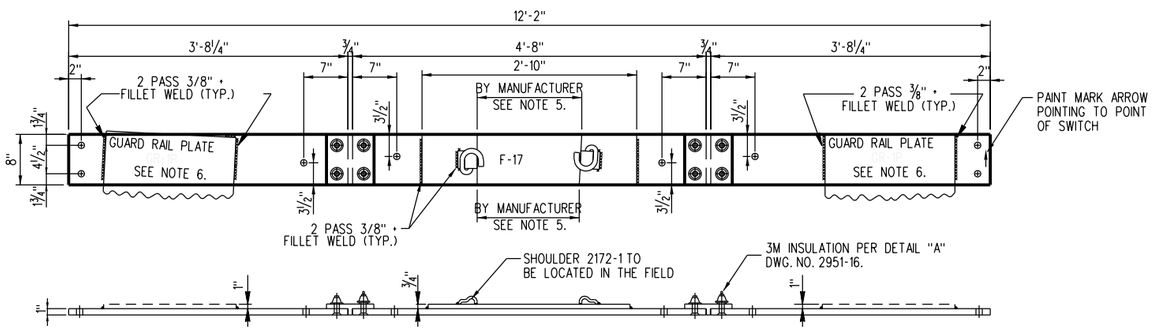

INSULATED FROG GAGE PLATE - FGP-2

1" x 8" - FLAT - W/3M INSULATION (1 PC. REQ'D. AS SHOWN)

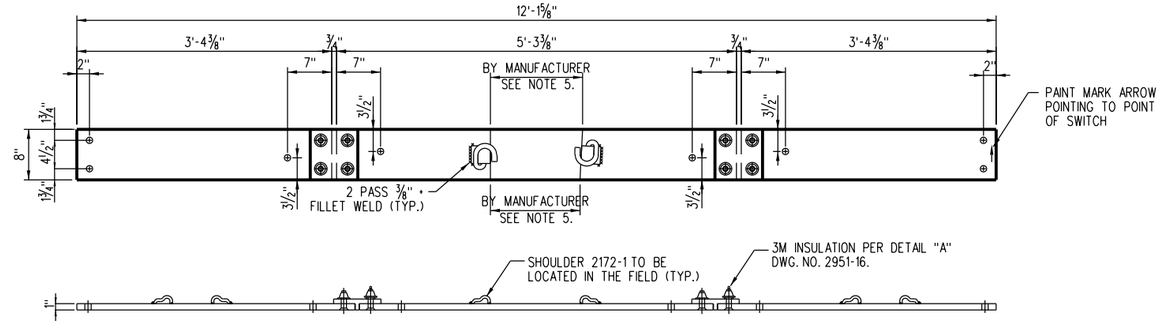

INSULATED FROG GAGE PLATE - FGP-4

1" x 8" - FLAT - W/3M INSULATION (1 PC. REQ'D. AS SHOWN)

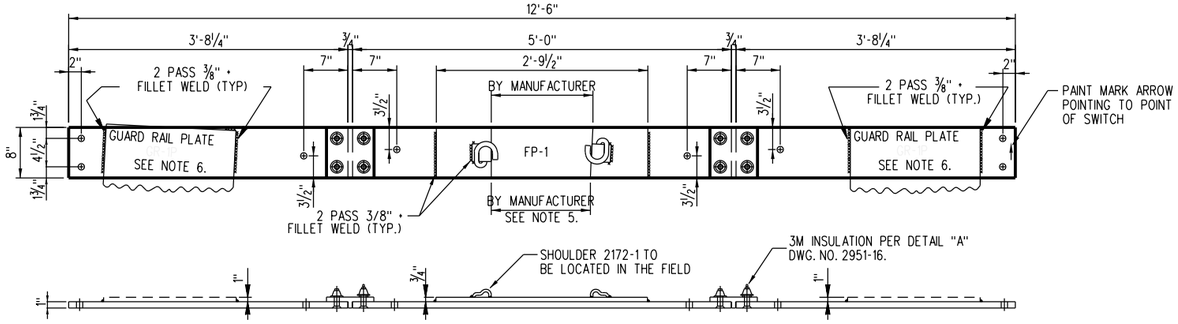

INSULATED FROG GAGE PLATE - FGP-3

1" x 8" - FLAT - W/3M INSULATION (1 PC. REQ'D. AS SHOWN)

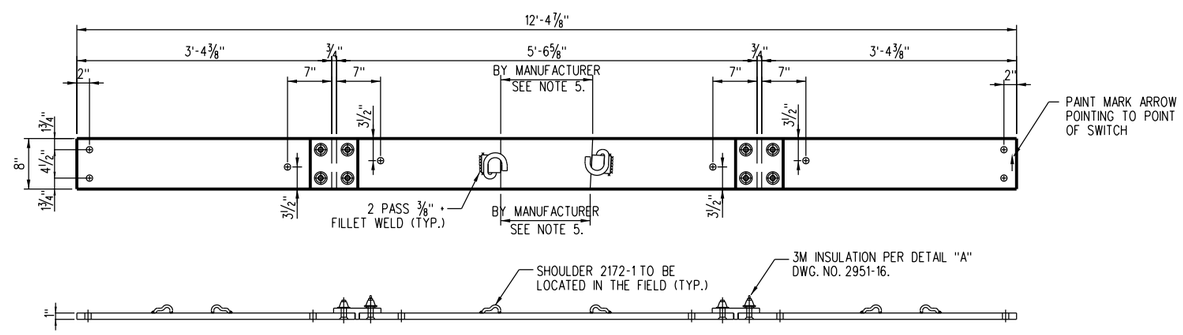

INSULATED FROG GAGE PLATE - FGP-5

1" x 8" - FLAT - W/3M INSULATION (1 PC. REQ'D. AS SHOWN)

FOR MAINTENANCE ONLY

REV.	DATE	DESCRIPTION	DES.	ENG.
X	XX-XX-XX	REVISION	XX	XX

DRAWN BY: A. CARLOS DATE: 03/31/2011

ASSISTANT DIRECTOR: STANDARDS & DESIGN

DIRECTOR OF ENGINEERING AND CONSTRUCTION

SCRRA ENGINEERING STANDARDS ARE INTENDED FOR SCRRA APPROVED USES ONLY. FOR NON-SCRRA APPROVED USES:
SCRRA SHALL NOT BE RESPONSIBLE FOR THE ACCURACY OR COMPLETENESS OF THE DATA OR INFORMATION CONTAINED HEREIN. THE SELECTION AND USE OF THESE STANDARDS IS THE SOLE RESPONSIBILITY OF THE USER AND SHOULD NOT BE USED WITHOUT CONSULTING A REGISTERED PROFESSIONAL ENGINEER. ALL WARRANTIES AND REPRESENTATIONS OF ANY KIND ARE DISCLAIMED. ANYONE MAKING USE OF THIS INFORMATION AGREES THAT IT ASSUMES ALL LIABILITY ARISING FROM SUCH USE. NO PART OF THESE STANDARDS SHOULD BE REPRODUCED OR DISTRIBUTED IN ANY FORM OR BY ANY MEANS WITHOUT THE PRIOR WRITTEN PERMISSION OF SCRRA. ALL RIGHTS RESERVED.

METROLINK®
SOUTHERN CALIFORNIA REGIONAL RAIL AUTHORITY
ONE GATEWAY PLAZA, 12TH FLOOR, L. A., CA. 90012

ENGINEERING STANDARDS

NO. 24 136 LB. R.H. RBM FROG GAGE PLATE DETAILS

STANDARD 2951
SCALE: 1" = 1'-0"
REVISION –
SHEET 7 OF 16
CADD FILE: ES2951-07

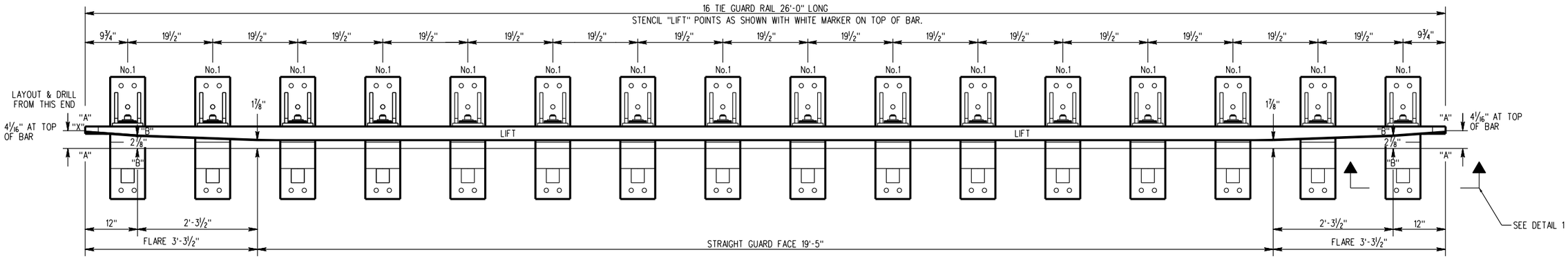

COLLECTIVE DRILLING FROM END OF GUARD BAR MARKED "X"

"X" 9¾"x 2'-5¼"x 4'-0¾"x 5'-8¼"x 7'-3¾"x 8'-11¼"x 10'-6¾"x 12'-2¼"x 13'-9¾"x
15'-5¼"x 17'-0¾"x 18'-8¼"x 20'-3¾"x 21'-11¼"x 23'-6¾"x 25'-2¼"

HOLES 1" DIA. ~ 1⅜" A.B.

ASSEMBLED 26'-0" GUARD RAIL

SCALE: 1" = 1'-0"

NOTES:

1. GUARD RAIL SECTION UIC 33; (U69) UIC 860.0 GRADE 90A (GUARD FACE BRINELL 319 MIN.)
2. BASE PLATE, BRACKET AND SHIMS MILD STEEL PER AREMA SPECIFICATION M7.
3. GUARD RAIL BOLT AND NUT PER A.R.E.M.A SPECIFICATION M11. EXCEPT BOLT TO GRADE 8 AND NUT TO BE SECURITY LOCKNUT.
4. WORKMANSHIP AND TOLERANCES PER AREMA SPECIFICATIONS FOR SPECIAL TRACKWORK.
5. WELDING PER ANSI•AWS D1.1-92 OR LATEST REVISION.

FOR MAINTENANCE ONLY

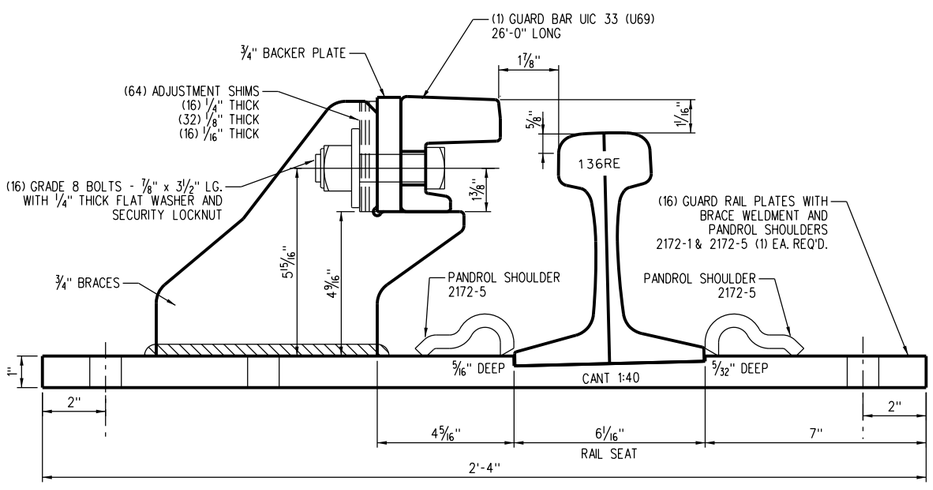

TYPICAL PLATE DETAIL

SCALE: NONE

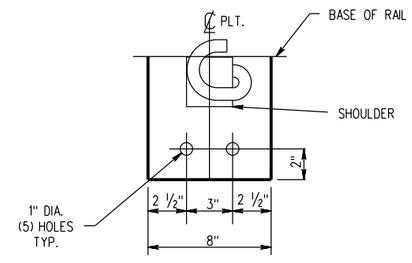

TYPICAL PLATE PUNCHING DETAIL

SCALE: NONE

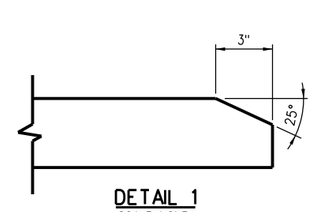

DETAIL 1

SCALE: NONE

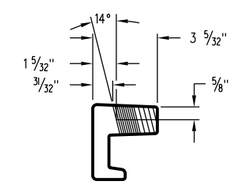

SECTION A-A

SCALE: NONE

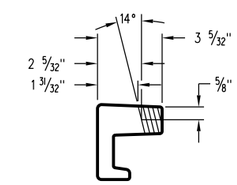

SECTION B-B

SCALE: NONE

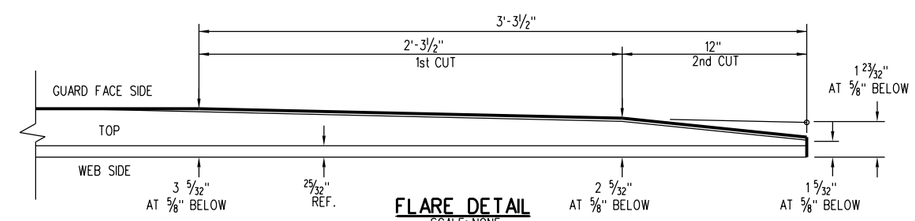

FLARE DETAIL

SCALE: NONE
BREAK SHARP CORNERS OF ALL MACHINED SURFACES

REV.	DATE	DESCRIPTION	DES.	ENG.
X	XX-XX-XX	REVISION	XX	XX

DRAWN BY: A. CARLOS DATE: 03/31/2011

ASSISTANT DIRECTOR: STANDARDS & DESIGN

DIRECTOR OF ENGINEERING AND CONSTRUCTION

SCRRA ENGINEERING STANDARDS ARE INTENDED FOR SCRRA APPROVED USES ONLY. FOR NON-SCRRA APPROVED USES:
SCRRA SHALL NOT BE RESPONSIBLE FOR THE ACCURACY OR COMPLETENESS OF THE DATA OR INFORMATION CONTAINED HEREIN. THE SELECTION AND USE OF THESE STANDARDS IS THE SOLE RESPONSIBILITY OF THE USER AND SHOULD NOT BE USED WITHOUT CONSULTING A REGISTERED PROFESSIONAL ENGINEER. ALL WARRANTIES AND REPRESENTATIONS OF ANY KIND ARE DISCLAIMED. ANYONE MAKING USE OF THIS INFORMATION AGREES THAT IT ASSUMES ALL LIABILITY ARISING FROM SUCH USE. NO PART OF THESE STANDARDS SHOULD BE REPRODUCED OR DISTRIBUTED IN ANY FORM OR BY ANY MEANS WITHOUT THE PRIOR WRITTEN PERMISSION OF SCRRA. ALL RIGHTS RESERVED.

METROLINK®
SOUTHERN CALIFORNIA REGIONAL RAIL AUTHORITY
ONE GATEWAY PLAZA, 12TH FLOOR, L. A., CA. 90012

ENGINEERING STANDARDS

NO. 24 136 LB. R.H. RBM FROG
GUARD RAIL DETAILS

STANDARD 2951
SCALE: 1" = 1'-0"
REVISION –
SHEET 8 OF 16
CADD FILE: ES2951-08

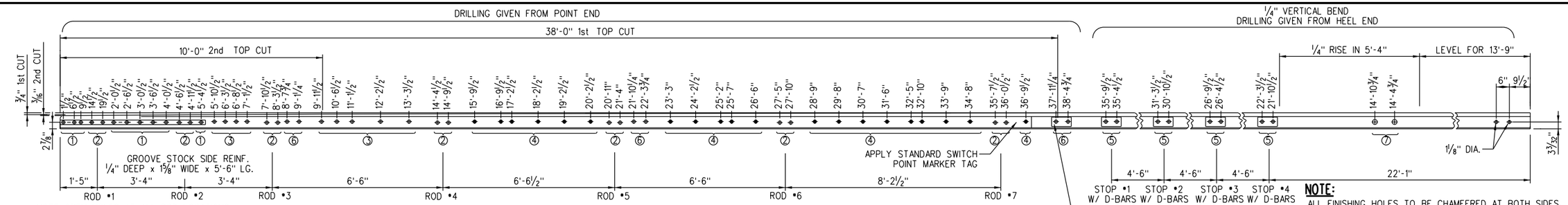

NOTE: OPEN HOLES AT ALL ROD LOCATIONS

NOTE:
ALL FINISHING HOLES TO BE CHAMFERED AT BOTH SIDES. BRAND ON RAIL AT EDGE OF BOLT HOLE TO BE CAREFULLY REMOVED BY GRINDING, BEFORE CHAMFERING.

SWITCH ANGLE = 0° -08'-00"
SIDE BEND 38'-9 13/16" x 1 15/32"

R.H. SW PT. (FOR LH TURNOUT) SHOWN
L.H. SW. PT. (FOR RH TURNOUT) OPP. HAND
(SCALE: 1/2" = 1'-0")

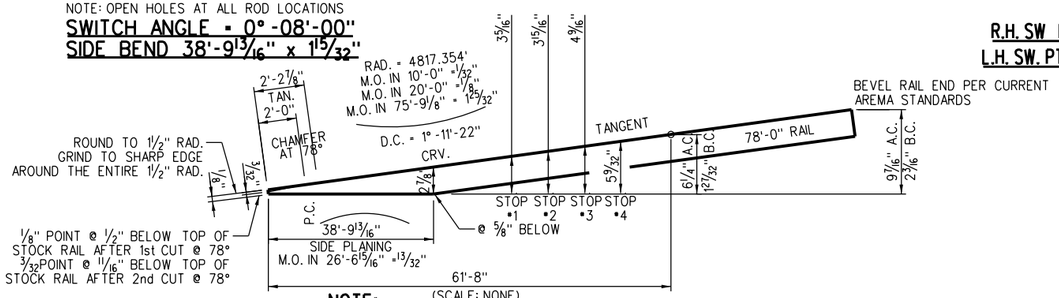

NOTE:
PLANE SIDE BEND TO FIT CURVED STOCK RAIL. POINT SIDE BEND MUST HAVE CURVED WEB TO CONFORM WITH CURVED WEB OF STOCK RAIL

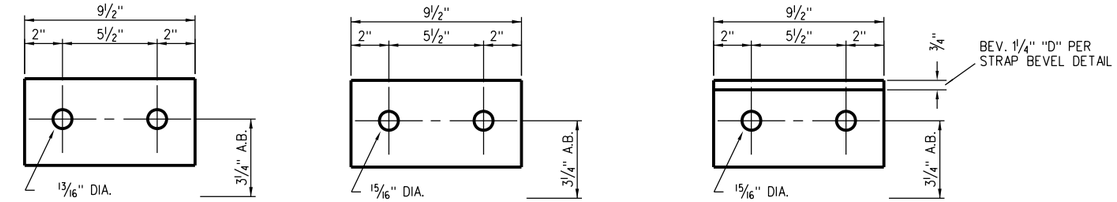

STOP BLOCK 1/2" "D" BARS
(2) PCS. REQ'D. PER STOP
USE 132RE REINF.
(SCALE: NONE)

ROLLER ASSY. BLOCK 1/2" "D" BAR
(1) PC. REQ'D. FOR STOCK SIDE
USE 132RE REINF.
(SCALE: NONE)

ROLLER ASSY. BLOCK 1 1/4" "D" BAR
(1) PC. REQ'D. FOR GAGE SIDE
USE 132RE REINF.
(SCALE: NONE)

QUANTITIES SHOWN FOR (1) SWITCH POINT			
REIN. BARS	GAGE SIDE STOCK RAIL SIDE	1 1/4" "D" x 37'-0" LG. 1/2" "D" x 37'-0" LG.	USE 132RE REINF.
CLIPS	HEAD ROD BACK RODS	TYPE "MJS" (FURNISHED WITH ROD) TYPE "MJS" (FURNISHED WITH ROD)	
WEB BOLTS	HEAD ROD BACK ROD	1" DIA. (FURNISHED WITH ROD) 1" DIA. (FURNISHED WITH ROD)	
ROD BOLTS	HEAD ROD BACK ROD	1" DIA. (FURNISHED WITH ROD) 1" DIA. (FURNISHED WITH ROD)	
STOP BOLTS	SEE BOLT TABLE		
REIN BAR	HUCKS - SEE BOLT TABLE BOLTS - SEE BOLT TABLE		
INSTRUCTIONS	RAIL TO BE 136RE HEAD HARDENED		

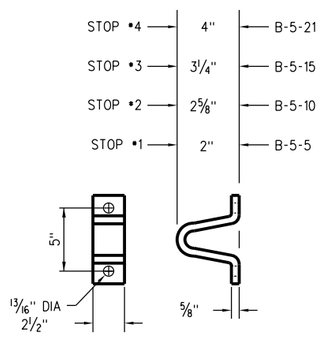

SWITCH POINT STOP BLOCKS
(1) PC. EA. REQ'D. PER PT.
(SCALE: NONE)

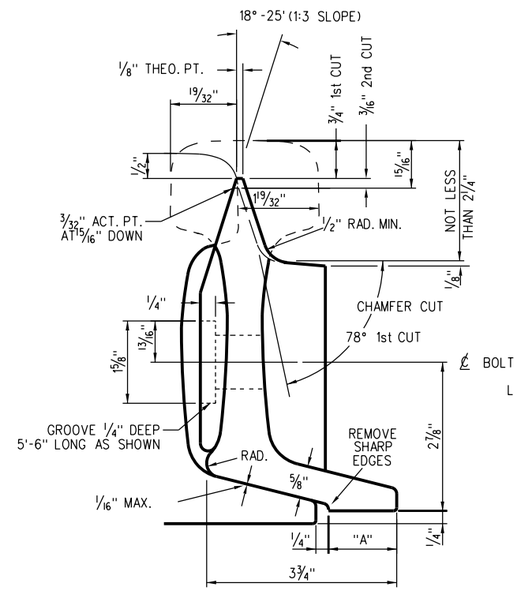

"A" AT POINT = 1 11/32"
"A" AT HEAD SEP. = 2 5/8"
BOTTOM PLANING = 61'-8"
(SCALE: NONE)

FOR MAINTENANCE ONLY

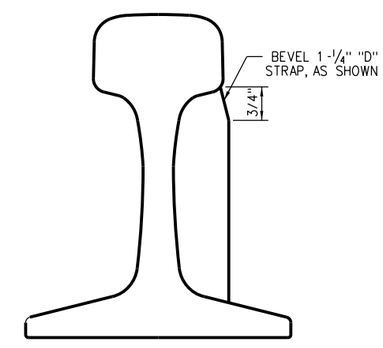

STRAP BEVEL DETAIL
(SCALE: NONE)

NOTES:

1. SWITCH POINTS TO BE MADE FROM NEW HIGH STRENGTH RAIL.
2. CURVED LEFT HAND SWITCH POINT AND STRAIGHT HAND SWITCH POINT FOR RIGHT HAND TURNOUT SHOWN. MAKE OPPOSITE HAND FOR RIGHT AND LEFT HAND SWITCH POINTS FOR LEFT HAND TURNOUT.
3. SIDE PLANING FIGURED ON GAGE LINE 5/8" BELOW TOP OF RAIL.
4. MATERIALS AND WORKMANSHIP, ALSO ANY CONSTRUCTION DETAILS NOT SHOWN, SHALL BE PER CURRENT AREMA "MANUAL AND PORTFOLIO", UNLESS OTHERWISE SPECIFIED ON THIS PLAN.
5. IN ORDER TO ELIMINATE STRESS RAISERS, MANUFACTURER SHALL PEEN THE EDGES OF THE BOLT HOLES AS INDICATED AT THE HEEL OF SWITCH POINT AND AT THE HEEL END OF THE SWITCH POINT RAIL, USING AIR HAMMER WITH SUITABLE HEAD AND FINISHING WITH DRIFT PIN. BRAND ON RAIL AT EDGE OF BOLT HOLE TO BE CAREFULLY REMOVED BY GRINDING BEFORE PEENING.
6. THE CONTOUR PLANING SHALL BE ON THE GAGE SIDE BEGINNING AT A DISTANCE OF 7'-6" FROM THE POINT OF SWITCH AND SHALL BE SHAPED TO THE CONTOUR OF A NEW 136 LB. RAIL AND SHALL RUN OUT AT THE END OF TOP PLANING, WHERE THE HEAD HAS FULL HEAD CONTOUR.
7. METAL IDENTIFICATION TAG SHOWING (1) DESIGN LENGTH OF SWITCH, (2) IN PERENTHESIS, THE ACTUAL LENGTH OF SWITCHPOINT RAIL AND (3) THE TURNOUT NUMBER. MARK TAG THUS: 61'-8" (78'-0") NO. 24. TAG TO BE FASTENED TO SWITCH POINT, ON GAGE SIDE OF RAIL AT HEEL SPACER BLOCK IN LOCATION SHOWN. A SECOND METAL IDENTIFICATION TAG SHOWING HAND OF SWITCH POINT, WEIGHT OF RAIL, HS, MANUFACTURER AND WHEN MADE, TO BE FASTENED TO SWITCH POINT AT LOCATION SHOWN.
8. UNLESS SPECIFIED ON ORDER, FRONT ROD LUG BOLTS AND TRANSIT CLIPS FOR SWITCH RODS NO. 1, 2, 3, 4, 5 AND 6 COMPLETE WITH BOLTS WILL NOT BE FURNISHED WITH SWITCH POINTS.
9. AT HEEL END OF SWITCH POINT RAIL, BREAK SHARP CORNER AROUND THE ENTIRE PERIPHERY BY SLIGHTLY GRINDING. ALSO, "DO NOT" END HARDEN RAIL END.
10. MANGANESE TIP SHALL BE USED ON DIVERGING POINTS.

• HUCKS
○ BOLTS

BOLT TABLE

BOLT •	BOLT DESCRIPTION	QTY.	HOLE DIA.	A.B.
1	H.T. MACH., TH. SQ. HD., 1" x 4 1/2", DR. 4", W/SQ. NUT, SPRG. WASH. & 1/4" COTT.	9	1 1/16"	2 7/8"
2	NONE - OPEN TYPE "MJS" CLIP HOLES	—	1 1/16"	2 7/8"
3	H.T. MACH., TH. SQ. HD., 1" x 4 3/4", DR. 4 1/4", W/SQ. NUT, SPRG. WASH. & 1/4" COTT.	9	1 1/16"	3 1/4"
4	HUCK PIN C50LR-BR-24-36 WITH COLLAR LC-2R-24	20	13/16"	3 1/4"
5	H.T. MACH., SQ. HD., 3/4" x 4 1/4", DR. 3 3/4", W/SQ. NUT, SPRG. WASH. & 1/4" COTT.	8	13/16"	3 1/4"
6	NONE - OPEN ROLLER HOLES	—	15/16"	3 1/4"
7	NONE - OPEN THERMAL STRESS BLOCK HOLES	—	1 1/2"	3 1/4"

REV.	DATE	DESCRIPTION	DES.	ENG.
X	XX-XX-XX	REVISION	XX	XX

DRAWN BY: A. CARLOS DATE: 03/31/2011

ASSISTANT DIRECTOR: STANDARDS & DESIGN

DIRECTOR OF ENGINEERING AND CONSTRUCTION

SCRRA ENGINEERING STANDARDS ARE INTENDED FOR SCRRA APPROVED USES ONLY. FOR NON-SCRRA APPROVED USES:
SCRRA SHALL NOT BE RESPONSIBLE FOR THE ACCURACY OR COMPLETENESS OF THE DATA OR INFORMATION CONTAINED HEREIN. THE SELECTION AND USE OF THESE STANDARDS IS THE SOLE RESPONSIBILITY OF THE USER AND SHOULD NOT BE USED WITHOUT CONSULTING A REGISTERED PROFESSIONAL ENGINEER. ALL WARRANTIES AND REPRESENTATIONS OF ANY KIND ARE DISCLAIMED. ANYONE MAKING USE OF THIS INFORMATION AGREES THAT IT ASSUMES ALL LIABILITY ARISING FROM SUCH USE. NO PART OF THESE STANDARDS SHOULD BE REPRODUCED OR DISTRIBUTED IN ANY FORM OR BY ANY MEANS WITHOUT THE PRIOR WRITTEN PERMISSION OF SCRRA. ALL RIGHTS RESERVED.

METROLINK®
SOUTHERN CALIFORNIA REGIONAL RAIL AUTHORITY
ONE GATEWAY PLAZA, 12TH FLOOR, L. A., CA. 90012

ENGINEERING STANDARDS

NO. 24 CURVED SPLIT SWITCH POINT DETAILS

STANDARD 2951
SCALE: AS NOTED
REVISION –
SHEET 9 OF 16
CADD FILE: ES2951-09

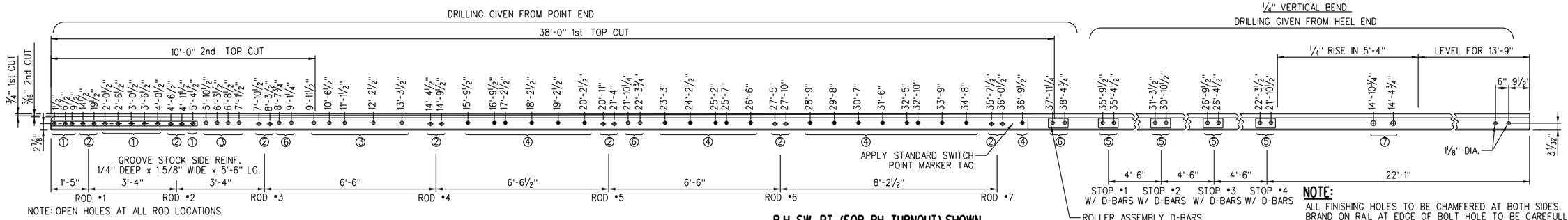

NOTE: OPEN HOLES AT ALL ROD LOCATIONS

NOTE:
ALL FINISHING HOLES TO BE CHAMFERED AT BOTH SIDES. BRAND ON RAIL AT EDGE OF BOLT HOLE TO BE CAREFULLY REMOVED BY GRINDING, BEFORE CHAMFERING.

SWITCH ANGLE = 0° -08'-00"
SIDE BEND 38'-9 13/16" x 1 15/32"

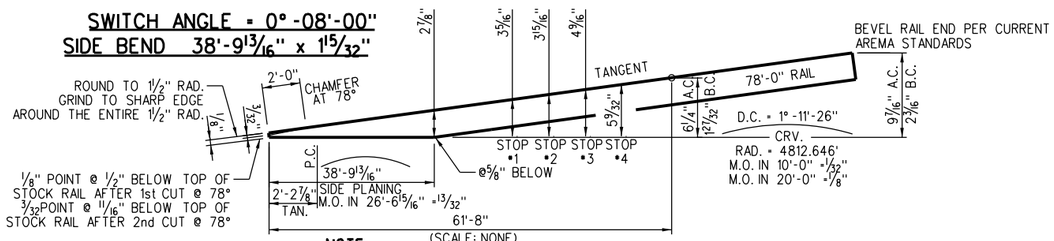

NOTE:
PLANE SIDE BEND TO FIT CURVED STOCK RAIL. POINT SIDE BEND MUST HAVE CURVED WEB TO CONFORM WITH CURVED WEB OF STOCK RAIL

R.H. SW PT. (FOR RH TURNOUT) SHOWN
L.H. SW. PT. (FOR LH TURNOUT) OPP. HAND
(SCALE: 1/2" = 1'-0")

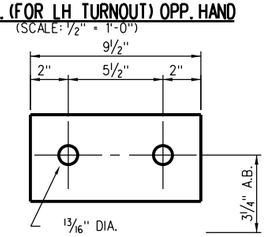

STOP BLOCK 1/2" "D" BARS
(2) PCS. REQ'D. PER STOP
USE 132RE REINF.
(SCALE: NONE)

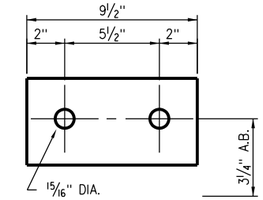

ROLLER ASSY. BLOCK 1/2" "D" BAR
(1) PC. REQ'D. FOR STOCK SIDE
USE 132RE REINF.
(SCALE: NONE)

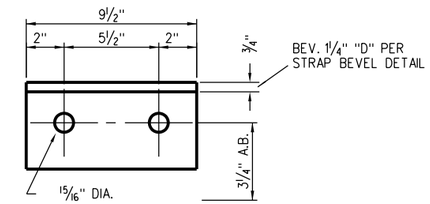

ROLLER ASSY. BLOCK 1 1/4" "D" BAR
(1) PC. REQ'D. FOR GAGE SIDE
USE 132RE REINF.
(SCALE: NONE)

QUANTITIES SHOWN FOR (1) SWITCH POINT		
REIN. BARS	GAGE SIDE 1 1/4" "D" x 37'-0" LG. STOCK RAIL SIDE 1/2" "D" x 37'-0" LG.	USE 132RE REINF.
CLIPS	HEAD ROD TYPE "MJS" (FURNISHED WITH ROD) BACK RODS TYPE "MJS" (FURNISHED WITH ROD)	
WEB BOLTS	HEAD ROD 1" DIA. (FURNISHED WITH ROD) BACK ROD 1" DIA. (FURNISHED WITH ROD)	
ROD BOLTS	HEAD ROD 1" DIA. (FURNISHED WITH ROD) BACK ROD 1" DIA. (FURNISHED WITH ROD)	
STOP BOLTS	SEE BOLT TABLE	
REIN BAR	HUCKS - SEE BOLT TABLE BOLTS - SEE BOLT TABLE	
INSTRUCTIONS	RAIL TO BE 136RE HEAD HARDENED	

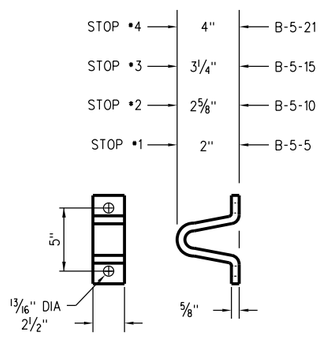

SWITCH POINT STOP BLOCKS
(1) PC. EA. REQ'D. PER PT.
(SCALE: NONE)

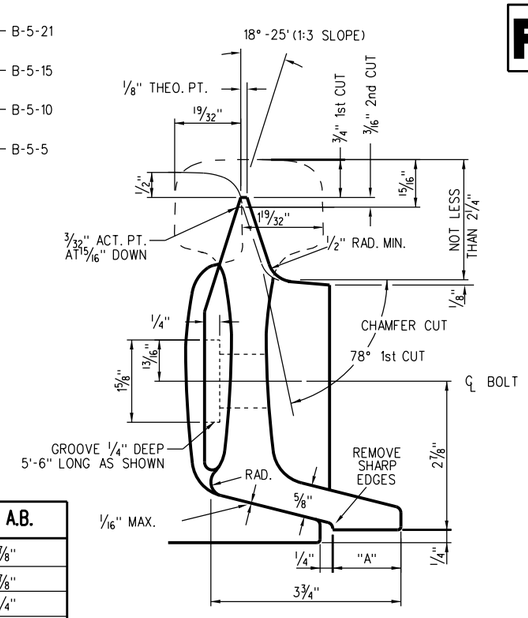

"A" AT POINT = 1 11/32"
"A" AT HEAD SEP. = 2 5/8"
BOTTOM PLANING = 61'-8"
(SCALE: NONE)

FOR MAINTENANCE ONLY

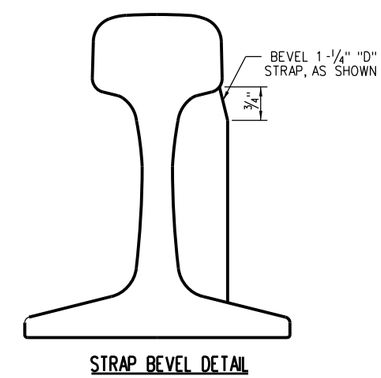

STRAP BEVEL DETAIL
(SCALE: NONE)

NOTES:

1. SWITCH POINTS TO BE MADE FROM NEW HIGH STRENGTH RAIL.
2. CURVED LEFT HAND SWITCH POINT AND STRAIGHT HAND SWITCH POINT FOR RIGHT HAND TURNOUT SHOWN. MAKE OPPOSITE HAND FOR RIGHT AND LEFT HAND SWITCH POINTS FOR LEFT HAND TURNOUT.
3. SIDE PLANING FIGURED ON GAGE LINE 5/8" BELOW TOP OF RAIL.
4. MATERIALS AND WORKMANSHIP, ALSO ANY CONSTRUCTION DETAILS NOT SHOWN, SHALL BE PER CURRENT AREMA "MANUAL AND PORTFOLIO", UNLESS OTHERWISE SPECIFIED ON THIS PLAN.
5. IN ORDER TO ELIMINATE STRESS RAISERS, MANUFACTURER SHALL PEEN THE EDGES OF THE BOLT HOLES AS INDICATED AT THE HEEL OF SWITCH POINT AND AT THE HEEL END OF THE SWITCH POINT RAIL, USING AIR HAMMER WITH SUITABLE HEAD AND FINISHING WITH DRIFT PIN. BRAND ON RAIL AT EDGE OF BOLT HOLE TO BE CAREFULLY REMOVED BY GRINDING BEFORE PEENING.
6. THE CONTOUR PLANING SHALL BE ON THE GAGE SIDE BEGINNING AT A DISTANCE OF 7'-6" FROM THE POINT OF SWITCH AND SHALL BE SHAPED TO THE CONTOUR OF A NEW 136 LB. RAIL AND SHALL RUN OUT AT THE END OF TOP PLANING, WHERE THE HEAD HAS FULL HEAD CONTOUR.
7. METAL IDENTIFICATION TAG SHOWING (1) DESIGN LENGTH OF SWITCH, (2) IN PERENTHESIS, THE ACTUAL LENGTH OF SWITCHPOINT RAIL AND (3) THE TURNOUT NUMBER. MARK TAG THUS: 61'-8" (78'-0") NO. 24. TAG TO BE FASTENED TO SWITCH POINT, ON GAGE SIDE OF RAIL AT HEEL SPACER BLOCK IN LOCATION SHOWN. A SECOND METAL IDENTIFICATION TAG SHOWING HAND OF SWITCH POINT, WEIGHT OF RAIL, HS, MANUFACTURER AND WHEN MADE, TO BE FASTENED TO SWITCH POINT AT LOCATION SHOWN.
8. UNLESS SPECIFIED ON ORDER, FRONT ROD LUG BOLTS AND TRANSIT CLIPS FOR SWITCH RODS NO. 1, 2, 3, 4, 5 AND 6 COMPLETE WITH BOLTS WILL NOT BE FURNISHED WITH SWITCH POINTS.
9. AT HEEL END OF SWITCH POINT RAIL, BREAK SHARP CORNER AROUND THE ENTIRE PERIPHERY BY SLIGHTLY GRINDING. ALSO, "DO NOT" END HARDEN RAIL END.
10. MANGANESE TIP SHALL BE USED ON DIVERGING POINTS.

- • HUCKS
- ○ BOLTS

BOLT TABLE

BOLT •	BOLT DESCRIPTION	QTY.	HOLE DIA.	A.B.
1	H.T. MACH., TH. SQ. HD., 1" x 4 1/2", DR. 4", W/SQ. NUT, SPRG. WASH. & 1/4" COTT.	9	1 1/16"	2 7/8"
2	NONE - OPEN TYPE "MJS" CLIP HOLES	—	1 1/16"	2 7/8"
3	H.T. MACH., TH. SQ. HD., 1" x 4 3/4", DR. 4 1/4", W/SQ. NUT, SPRG. WASH. & 1/4" COTT.	9	1 1/16"	3 1/4"
4	HUCK PIN C50LR-BR-24-36 WITH COLLAR LC-2R-24	20	13/16"	3 1/4"
5	H.T. MACH., SQ. HD., 3/4" x 4 1/4", DR. 3 3/4", W/SQ. NUT, SPRG. WASH. & 1/4" COTT.	8	13/16"	3 1/4"
6	NONE - OPEN ROLLER HOLES	—	15/16"	3 1/4"
7	NONE - OPEN THERMAL STRESS BLOCK HOLES	—	1 1/2"	3 1/4"

REV.	DATE	DESCRIPTION	DES.	ENG.
X	XX-XX-XX	REVISION	XX	XX

DRAWN BY: A. CARLOS DATE: 03/31/2011

ASSISTANT DIRECTOR: STANDARDS & DESIGN

DIRECTOR OF ENGINEERING AND CONSTRUCTION

SCRRA ENGINEERING STANDARDS ARE INTENDED FOR SCRRA APPROVED USES ONLY. FOR NON-SCRRA APPROVED USES:
SCRRA SHALL NOT BE RESPONSIBLE FOR THE ACCURACY OR COMPLETENESS OF THE DATA OR INFORMATION CONTAINED HEREIN. THE SELECTION AND USE OF THESE STANDARDS IS THE SOLE RESPONSIBILITY OF THE USER AND SHOULD NOT BE USED WITHOUT CONSULTING A REGISTERED PROFESSIONAL ENGINEER. ALL WARRANTIES AND REPRESENTATIONS OF ANY KIND ARE DISCLAIMED. ANYONE MAKING USE OF THIS INFORMATION AGREES THAT IT ASSUMES ALL LIABILITY ARISING FROM SUCH USE. NO PART OF THESE STANDARDS SHOULD BE REPRODUCED OR DISTRIBUTED IN ANY FORM OR BY ANY MEANS WITHOUT THE PRIOR WRITTEN PERMISSION OF SCRRA. ALL RIGHTS RESERVED.

METROLINK®
SOUTHERN CALIFORNIA REGIONAL RAIL AUTHORITY
ONE GATEWAY PLAZA, 12TH FLOOR, L. A., CA. 90012

ENGINEERING STANDARDS

NO. 24 STRAIGHT SPLIT SWITCH POINT DETAILS

STANDARD 2951
SCALE: AS NOTED
REVISION –
SHEET 10 OF 16
CADD FILE: ES2951-10

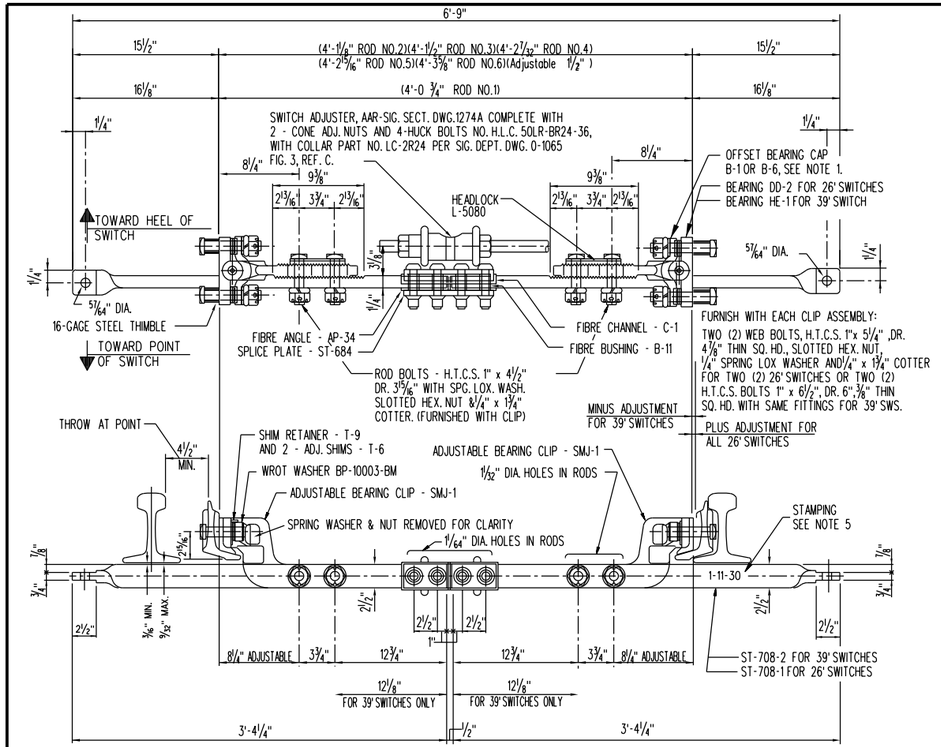

NO. 1 SWITCH ROD ASSEMBLY

(SHOWN FOR MACHINE ON RIGHT) SEE NOTE 2

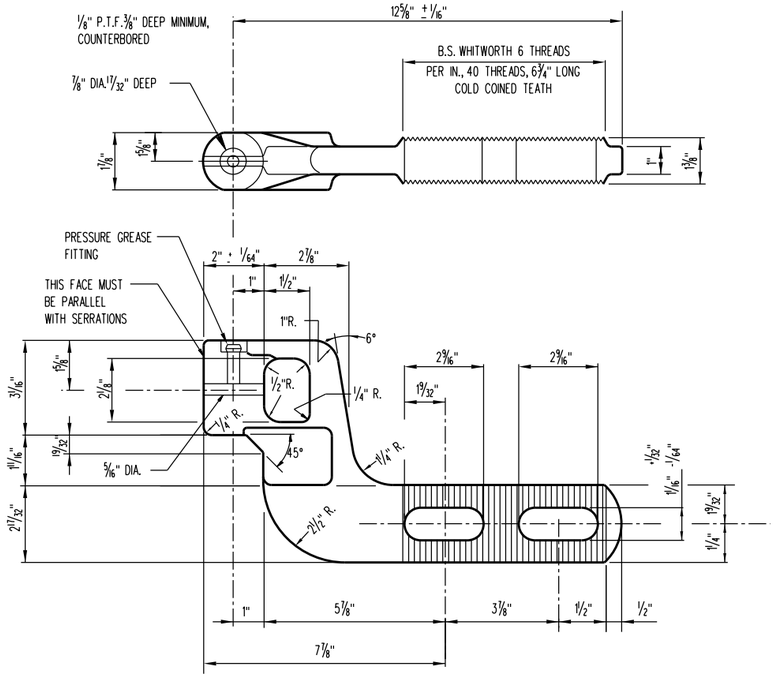

ADJUSTABLE BEARING CLIP - SMJ - 1

SCALE: 3" = 1'-0"

LENGTH OF SWITCH	QTY.	PART NUMBER	MATERIAL SPECIF.	DESCRIPTION	DETAIL REMARKS
			BILL OF MATERIAL FOR 1 TYPE "SMJ" SWITCH ROD ASSEMBLY		
			MATERIAL FOR CLIP ASSEMBLIES		
All	2	SMJ-1	S.A.E.1020-For.Stl.	Bearing Clip	MACHINED PER DETAIL
All	4		H.T.C.S.	Web Bolt	SEE NOTE
26'	2	DD-2	Malleable Iron	Bearing	PAT. NO. L-2910, MACHINED PER DETAIL
39'	2	HE-1	Malleable Iron	Bearing	PAT. NO. L-2915, MACHINED PER DETAIL
26'	2	B-1	S.A.E.1045-For.Stl.	Offset Bearing Cap	HEAT TREATED - BRINELL -.225 to .250
39'	2	B-6	S.A.E.1045-For.Stl.	Offset Bearing Cap	HEAT TREATED - BRINELL -.225 to .250
26'	2	B-6	S.A.E.1045-For.Stl.	Offset Bearing Cap	HEAT TREATED - BRINELL -.225 to .250
All	4	T-9	S.A.E.1020	Shim Retainer	⅛" x 1¾" x 2¼"
All	12	T-6	Stainless Steel	Adjustment Shim	1/16" x 2" x 1⅛"
All	4	BP-10003-BM	Wrot Iron	Wrot Washer	1 1/16" I.D. x 2" O.D. x ⅛" THICK
All	4		H.T.C.S.	Rod Bolt	1" x 4½" DR. 3 15/16" REG.SQ.HD.SLOTTED HEX NUT
All	4		Steel	Spg. Lox Washer	For 1" Rod Bolts
All	4		Steel	Cotter	¼" x 1¾" FOR ROD BOLTS
All	2		Steel	Grease Fitting	PRESSURE - FOR BEARING CLIP
All	2	L-5080	Malleable Iron	Headlock	FOR ROD BOLTS
26'	2		16-Gage Steel	Thimble	1½" LONG - FOR SHIPPING
39'	2		16-Gage Steel	Thimble	2½" LONG - FOR SHIPPING
			Material for Vertical Rod		
16'-6"	1			Vertical Rod	Use one-ST-708-1
					Use one-ST-708-1 TWIST, MACHINE AND DRILL END HOLE
39'	1			Vertical Rod	Use one-ST-708-2
					Use one-ST-708-2 TWIST, MACHINE AND DRILL END HOLE
All	4		High Strength Steel	Conn.& Insul.Bolt	HIGH FASTENER NO. HLC-50LR- BR24-36
All	4		Low Carbon Steel	Collar	HUCK FASTENER NO. LC-2R24
All	1	ST-684	H.R. Mild Steel	Splice Plate	½" x 2½" x 9½" FOR INSULATION
All	2	AP-34	AAR-Sig.Sec.13-52	Angle	½" x 2½" x 4 13/16" HARD FIBRE - PARAFIN COATED
All	4	B-11	AAR-Sig.Sec.13-52	Bushing	1" O.D. HARD FIBRE - PARAFIN COATED
All	1	C-1	AAR-Sig.Sec.13-52	Channel	⅛" x 1" x 10" HARD FIBRE - PARAFIN COATED
All	1		Malleable Iron	Switch Adjuster	
All	2		Malleable Iron	Cone Adj. Nut	FOR 1¼" THROW RODS

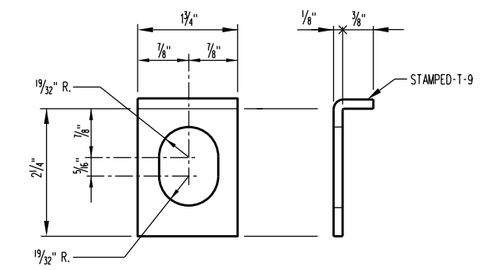

SHIM RETAINER - T - 9

SCALE: FULL

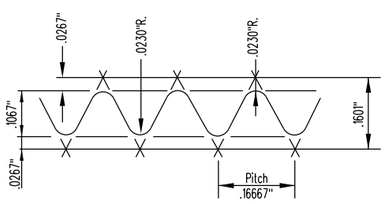

ENLARGED PROFILE OF SERRATIONS

SCALE: NONE

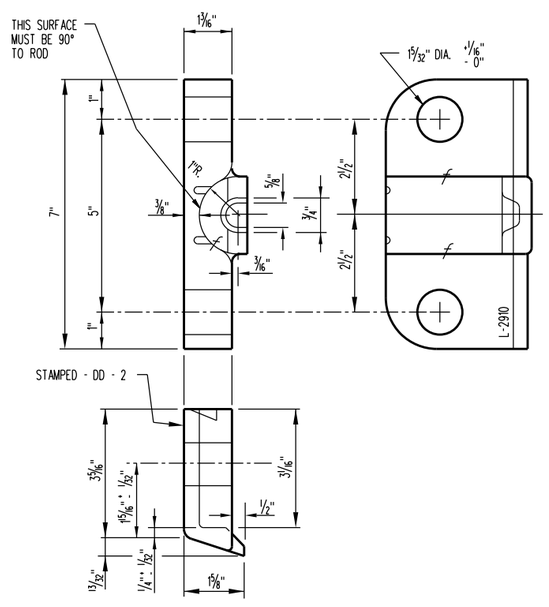

BEARING - DD - 2

SCALE: 6" = 1'-0"

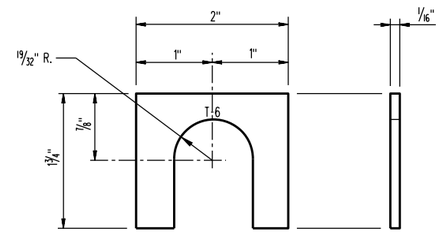

ADJUSTABLE SHIM - T - 6

SCALE: FULL

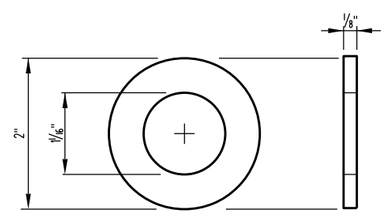

WROT WASHER - BP - 10003 - BM

SCALE: FULL

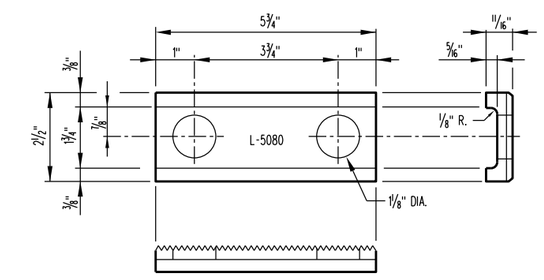

HEADLOCK L-5080

SCALE: 6" = 1'-0"

NOTES:

1. WHILE THIS PLAN SHOWS BEARING CLIPS ASSEMBLED TO SWITCH ROD THIS CLIP ASSEMBLY MAY BE REQUISITIONED AND ORDERED SEPARATELY. WHEN A BEARING CLIP ASSEMBLY ONLY IS WANTED, REQUISITIONS AND ORDERS SHALL SPECIFY, RAIL SECTION AND LENGTH OF SWITCH. ALL PARTS SHOWN IN BILL OF MATERIAL SHALL BE FURNISHED WITH THESE CLIP ASSEMBLIES. WHEN AN INDIVIDUAL PART IS REQUIRED IT SHALL BE ORDERED BY PART NUMBER.
2. WHEN COMPLETED RODS ARE ORDERED THEY SHALL BE ASSEMBLED AND INCLUDE ALL PARTS SHOWN IN BILL OF MATERIAL. REQUISITIONS AND ORDERS SHALL SPECIFY RAIL SECTION AND LENGTH OF SWITCH. ON INTERLOCKED SWITCHES WITH AUXILIARY THROW ROD, MACHINE SIDE (RIGHT OR LEFT) SHOULD ALSO BE SPECIFIED.
3. TWO WEB BOLTS SHALL BE FURNISHED WITH EACH CLIP ASSEMBLY AS CALLED FOR BY NOTE IN TOP VIEW OF ROD ASSEMBLY. WHEN ROD IS USED ON 11'-0" AND 16'-6" SWITCHES THE ¼" THICK SPRING WASHER SHOULD BE REPLACED WITH A ⅜" THICK SPRING WASHER BY THE STOREKEEPER OR FIELD FORCES, TO BRING COTTER WITHIN THE LIMITS OF SLOT IN WEB BOLT NUTS.
4. MATERIALS AND WORKMANSHIP SHALL MEET CURRENT A.R.E.M.A. SPECIFICATIONS FOR SPECIAL TRACKWORK UNLESS OTHERWISE SPECIFIED.
5. VERTICAL SWITCH ROD SHALL BE PLAINLY STAMPED TO INDICATE SWITCH THAT ROD ASSEMBLY CAN BE USED UPON. IDENTIFICATION MARKING WILL BE AS FOLLOWS:
   1-39 FOR USE ON 39'-0" SWITCHES, 132-LB. AND 136-LB. R.E. RAIL SECTIONS.
   1-11-30 FOR USE ON 11'-0" TO 30'-0" SWITCHES, 115-LB., 119-LB., 131-LB., 132-LB. AND 136-LB. R.E. RAIL SECTIONS

FOR MAINTENANCE ONLY

REV.	DATE	DESCRIPTION	DES.	ENG.
X	XX-XX-XX	REVISION	XX	XX

DRAWN BY: A. CARLOS DATE: 03/31/2011

ASSISTANT DIRECTOR: STANDARDS & DESIGN

DIRECTOR OF ENGINEERING AND CONSTRUCTION

SCRRA ENGINEERING STANDARDS ARE INTENDED FOR SCRRA APPROVED USES ONLY. FOR NON-SCRRA APPROVED USES:
SCRRA SHALL NOT BE RESPONSIBLE FOR THE ACCURACY OR COMPLETENESS OF THE DATA OR INFORMATION CONTAINED HEREIN. THE SELECTION AND USE OF THESE STANDARDS IS THE SOLE RESPONSIBILITY OF THE USER AND SHOULD NOT BE USED WITHOUT CONSULTING A REGISTERED PROFESSIONAL ENGINEER. ALL WARRANTIES AND REPRESENTATIONS OF ANY KIND ARE DISCLAIMED. ANYONE MAKING USE OF THIS INFORMATION AGREES THAT IT ASSUMES ALL LIABILITY ARISING FROM SUCH USE. NO PART OF THESE STANDARDS SHOULD BE REPRODUCED OR DISTRIBUTED IN ANY FORM OR BY ANY MEANS WITHOUT THE PRIOR WRITTEN PERMISSION OF SCRRA. ALL RIGHTS RESERVED.

METROLINK®
SOUTHERN CALIFORNIA REGIONAL RAIL AUTHORITY
ONE GATEWAY PLAZA, 12TH FLOOR, L. A., CA. 90012

ENGINEERING STANDARDS

NO. 24 SWITCH ROD DETAILS

STANDARD 2951
SCALE: AS NOTED
REVISION –
SHEET 11 OF 16
CADD FILE: ES2951-11

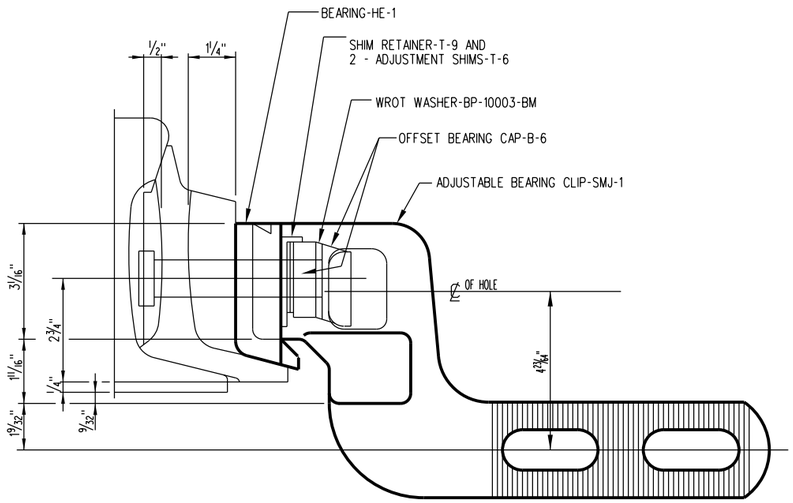

ELEVATION OF "SMJ"CLIP ASSEMBLY FOR 39' SWITCHES
(DRAWN FOR 136 LB. RAIL) SPRING WASHER AND NUT REMOVED

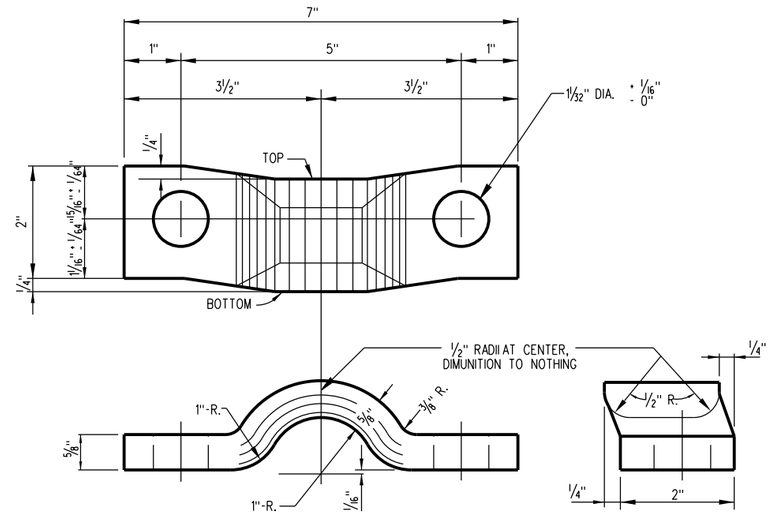

OFFSET BEARING CAP-B-1

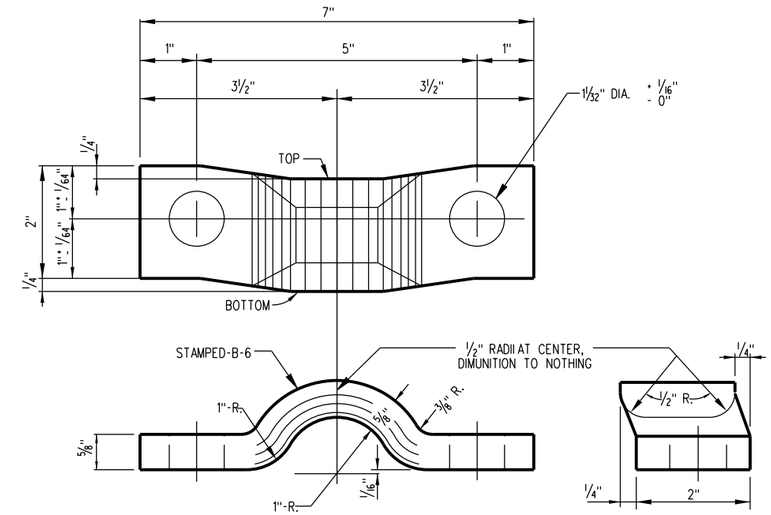

OFFSET BEARING CAP-B-6

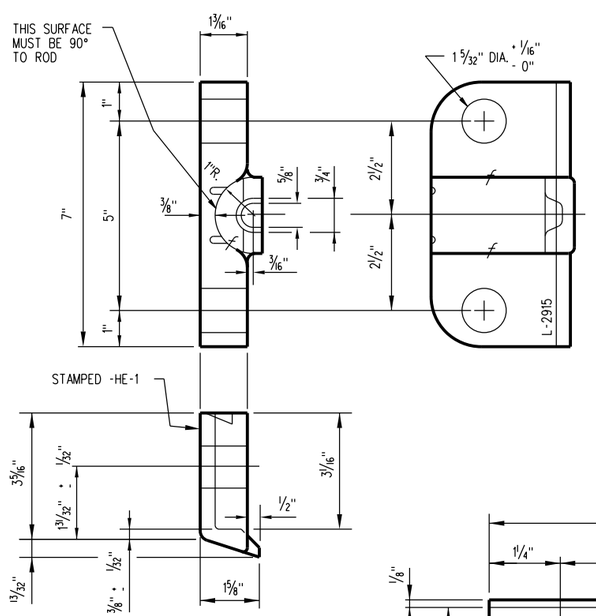

BEARING-HE-1

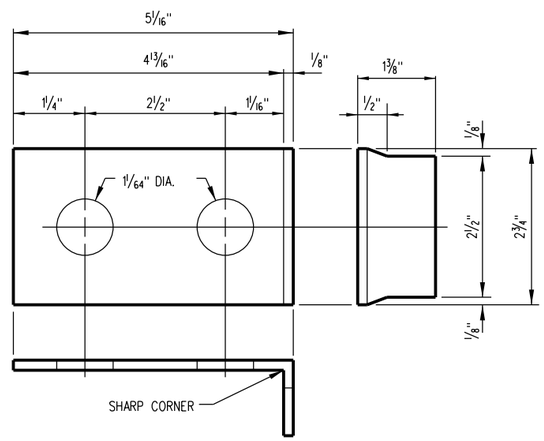

FIBRE ANGLE-AP-34

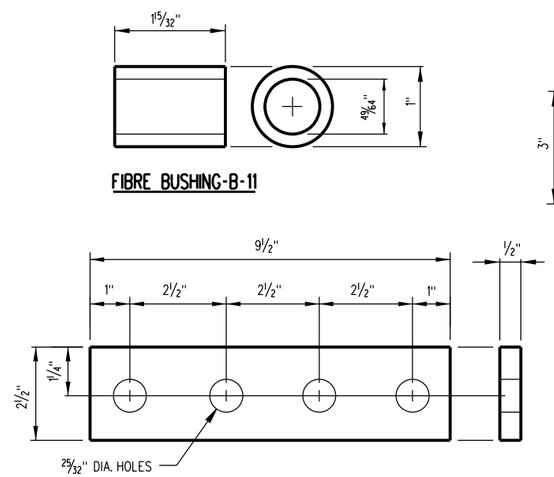

FIBRE BUSHING-B-11

SPLICE PLATE-ST-684

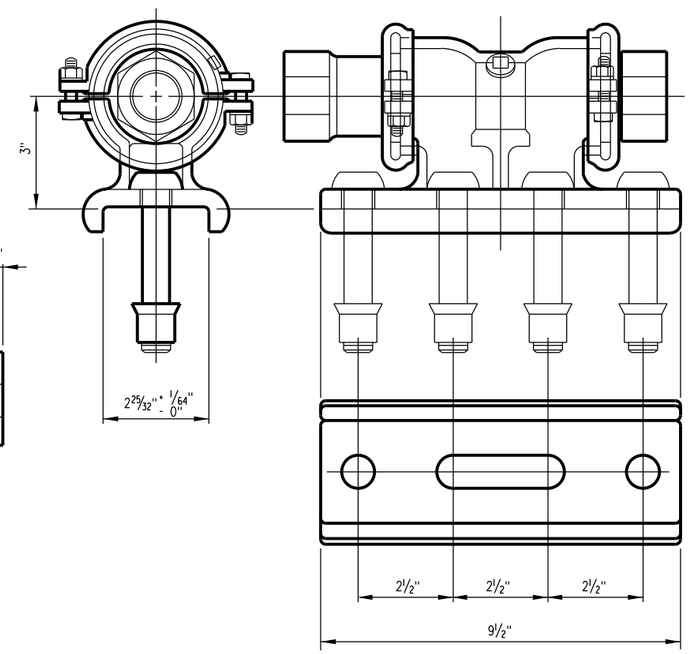

SWITCH ADJUSTER

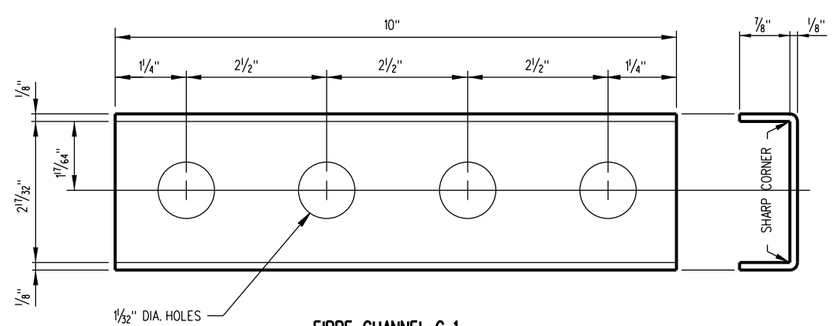

FIBRE CHANNEL-C-1

FOR MAINTENANCE ONLY

REV.	DATE	DESCRIPTION	DES.	ENG.
X	XX-XX-XX	REVISION	XX	XX

DRAWN BY: A. CARLOS DATE: 03/31/2011

ASSISTANT DIRECTOR: STANDARDS & DESIGN

DIRECTOR OF ENGINEERING AND CONSTRUCTION

SCRRA ENGINEERING STANDARDS ARE INTENDED FOR SCRRA APPROVED USES ONLY. FOR NON-SCRRA APPROVED USES:
SCRRA SHALL NOT BE RESPONSIBLE FOR THE ACCURACY OR COMPLETENESS OF THE DATA OR INFORMATION CONTAINED HEREIN. THE SELECTION AND USE OF THESE STANDARDS IS THE SOLE RESPONSIBILITY OF THE USER AND SHOULD NOT BE USED WITHOUT CONSULTING A REGISTERED PROFESSIONAL ENGINEER. ALL WARRANTIES AND REPRESENTATIONS OF ANY KIND ARE DISCLAIMED. ANYONE MAKING USE OF THIS INFORMATION AGREES THAT IT ASSUMES ALL LIABILITY ARISING FROM SUCH USE. NO PART OF THESE STANDARDS SHOULD BE REPRODUCED OR DISTRIBUTED IN ANY FORM OR BY ANY MEANS WITHOUT THE PRIOR WRITTEN PERMISSION OF SCRRA. ALL RIGHTS RESERVED.

METROLINK®
SOUTHERN CALIFORNIA REGIONAL RAIL AUTHORITY
ONE GATEWAY PLAZA, 12TH FLOOR, L. A., CA. 90012

ENGINEERING STANDARDS

NO. 24 SWITCH ROD MISCELLANEOUS DETAILS

STANDARD 2951
SCALE: AS NOTED
REVISION –
SHEET 12 OF 16
CADD FILE: ES2951-12

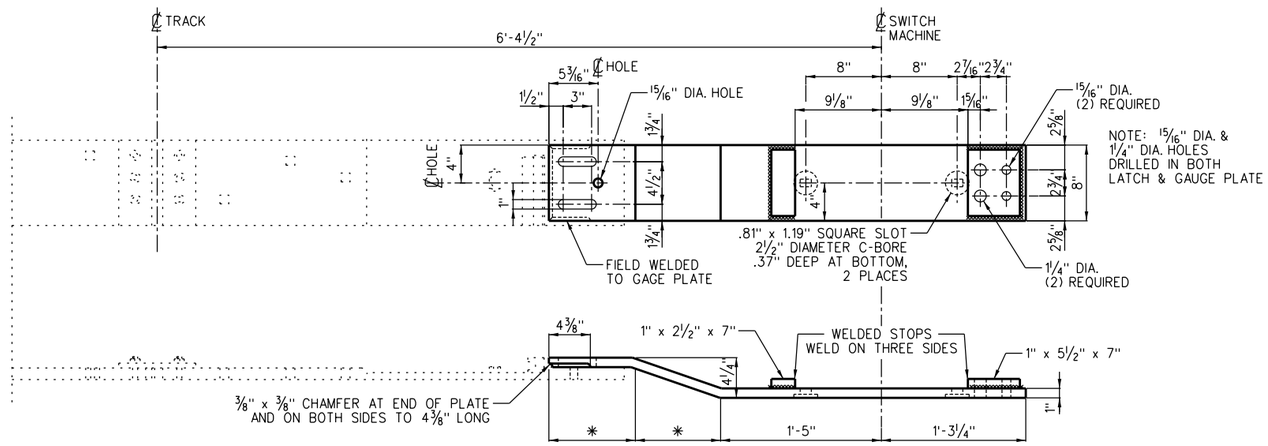

* MANUFACTURER TO CALCULATE AND PROVIDE ON DETAILED DRAWING.

EXTENSION PLATE

(2 PCS. REQ'D. AS SHOWN)

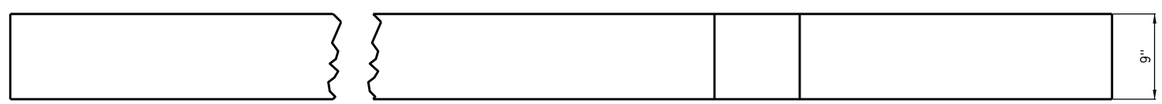

TOP VIEW

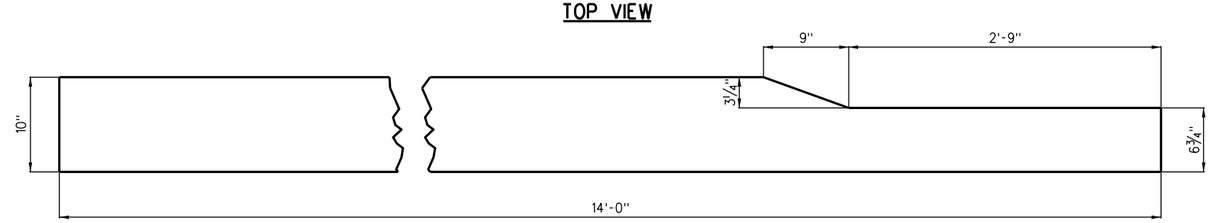

SIDE VIEW

TIES SHALL BE MADE OF DOUGLAS FIR OR GUM AND TREATED AFTER FRAMING.

DAP TIE

(2 PCS. REQ'D. AS SHOWN)

US&S M23-A SWITCH MACHINE MUST BE FURNISHED WITH FINISHED MOUNTING LUGS.

FOR MAINTENANCE ONLY

REV.	DATE	DESCRIPTION	DES.	ENG.
X	XX-XX-XX	REVISION	XX	XX

DRAWN BY: A. CARLOS DATE: 03/31/2011

ASSISTANT DIRECTOR: STANDARDS & DESIGN

DIRECTOR OF ENGINEERING AND CONSTRUCTION

SCRRA ENGINEERING STANDARDS ARE INTENDED FOR SCRRA APPROVED USES ONLY. FOR NON-SCRRA APPROVED USES:
SCRRA SHALL NOT BE RESPONSIBLE FOR THE ACCURACY OR COMPLETENESS OF THE DATA OR INFORMATION CONTAINED HEREIN. THE SELECTION AND USE OF THESE STANDARDS IS THE SOLE RESPONSIBILITY OF THE USER AND SHOULD NOT BE USED WITHOUT CONSULTING A REGISTERED PROFESSIONAL ENGINEER. ALL WARRANTIES AND REPRESENTATIONS OF ANY KIND ARE DISCLAIMED. ANYONE MAKING USE OF THIS INFORMATION AGREES THAT IT ASSUMES ALL LIABILITY ARISING FROM SUCH USE. NO PART OF THESE STANDARDS SHOULD BE REPRODUCED OR DISTRIBUTED IN ANY FORM OR BY ANY MEANS WITHOUT THE PRIOR WRITTEN PERMISSION OF SCRRA. ALL RIGHTS RESERVED.

METROLINK®
SOUTHERN CALIFORNIA REGIONAL RAIL AUTHORITY
ONE GATEWAY PLAZA, 12TH FLOOR, L. A., CA. 90012

ENGINEERING STANDARDS

NO. 24 EXTENSIONS PLATE AND DAP TIE DETAILS FOR M-23A SWITCH MACHINE

STANDARD 2951
SCALE: 1½" = 1'-0"
REVISION –
SHEET 13 OF 16
CADD FILE: ES2951-13

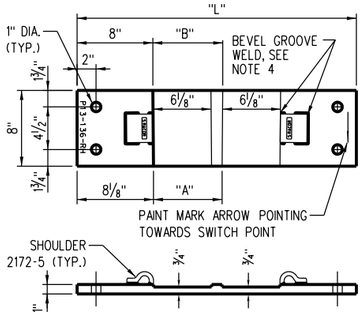

HEEL PLATE H-5P
TURNOUT PLATES P-13 THRU P-15

1" x 8" x "L" LONG

PLATE	"A"	"B"	"L"	QTY.
•H-5P	6 11/32"	6 15/32"	2'-5"	2
•P-13	6 5/8"	6 3/4"	2'-5"	2
•P-14	6 15/16"	7 1/16"	2'-5"	2
•P-15	7 1/4"	7 3/8"	2'-5 1/2"	2

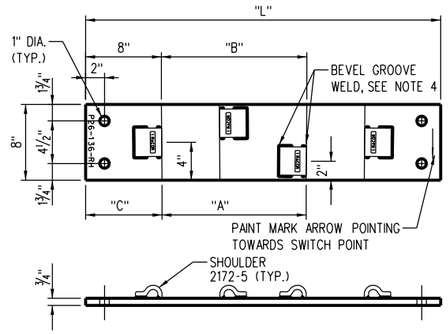

TURNOUT PLATES P-26 THRU P-37

1" x 8" x "L" LONG

PLATE	"A"	"B"	"C"	"L"	QTY.
•P-26	11 1/16"	11 7/32"	8 5/32"	2'-9 1/2"	2
•P-27	11 15/32"	11 5/8"	8 5/32"	2'-9 1/2"	2
•P-28	11 7/8"	12 1/32"	8 5/32"	2'-10"	2
•P-29	12 9/32"	12 7/16"	8 5/32"	2'-10 1/2"	2
•P-30	12 11/16"	12 27/32"	8 5/32"	2'-11"	2
•P-31	13 1/8"	13 9/32"	8 5/32"	2'-11 1/2"	2
•P-32	13 17/32"	13 23/32"	8 3/16"	3'-0"	2
•P-33	13 31/32"	14 5/32"	8 3/16"	3'-0"	2
•P-34	14 13/32"	14 19/32"	8 3/16"	3'-1"	2
•P-35	14 7/8"	15 1/16"	8 3/16"	3'-1"	2
•P-36	15 5/16"	15 1/2"	8 3/16"	3'-1 1/2"	2
•P-37	15 25/32"	15 31/32"	8 3/16"	3'-2"	2

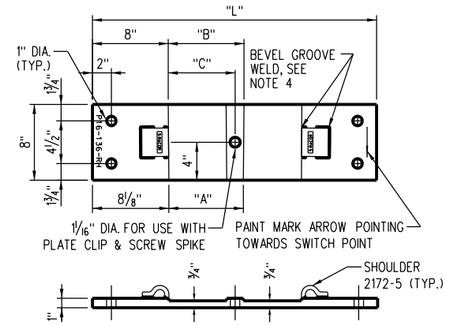

TURNOUT PLATES ~ P-16 THRU P-22

1" x 8" x "L" LONG

PLATE	"A"	"B"	"C"	"L"	QTY.
•P-16	7 17/32"	7 21/32"	6 7/8"	2'-6"	2
•P-17	7 7/8"	8"	7 1/16"	2'-6"	2
•P-18	8 3/16"	8 5/16"	7 7/32"	2'-7"	2
•P-19	8 17/32"	8 21/32"	7 13/32"	2'-7"	2
•P-20	8 7/8	9"	7 9/16"	2'-7"	2
•P-21	9 7/32"	9 11/32"	7 3/4"	2'-8"	2
•P-22	9 9/16"	9 11/16"	7 29/32"	2'-8"	2
•P-23	9 15/16"	10 3/32"	8 3/32"	2'-8"	2
•P-24	10 5/16"	10 15/32"	8 9/32"	2'-8 1/2"	2
•P-25	10 11/16"	10 27/32"	8 15/32"	2'-9"	2

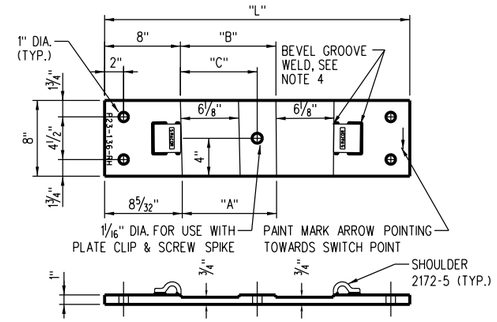

TURNOUT PLATES ~ P-23 THRU P-25

1" x 8" x "L" LONG

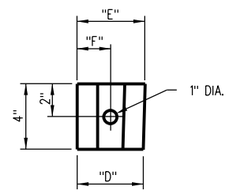

HOLD DOWN CLIP DETAIL

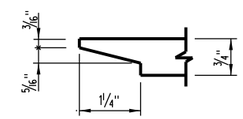

END DETAIL - BOTH ENDS

NOTES:

1. PLATES TO BE MADE OF MILD ROLLED STEEL.
2. EACH PLATE TO BE PLAINLY STAMPED WITH PLATE NUMBER AND 136 (WEIGHT OF RAIL) AND HAND OF TURNOUT (R.H. OR L.H)
3. THE "PANDROL" TYPE OR APPROVED EQUAL WELD ON PRESSED SHOULDER, MADE OF MILD STEEL, AND MEETING "PANDROL'S" DESIGN SPECIFICATIONS SHALL BE USED.
4. THE PRESSED STEEL SHOULDER MUST BE CAREFULLY WELDED TO ALL PLATES WITH A MINIMUM 2 PASS 3/8" • FILLET WELD ALONG THE BEVELED GROOVES OF THE SHOULDER. ANY WELD PROJECTING BEYOND THE VERTICAL FACE OF THE SHOULDER IN THE AREA OF THE BASE OF THE RAIL SEAT MUST BE MACHINED OUT TO PROVIDE A CLEAR RAIL SEAT DIMENSION AS CALLED FOR.
5. THE PLATES AS SHOWN ARE FOR A 136 LB. NO. 24 RIGHT HAND TURNOUT. FOR A LEFT HAND TURNOUT PLATES P-13 THRU P-37 INCLUSIVE AND FROG PLATE F-1 THRU F-36 ARE TO OPPOSITE.
6. DIRECTION OF ARROW SHOWN IS AN EXAMPLE ONLY. USING SHEET 2951-03 AS A GUIDE, PAINT MARK EACH PLATE WITH AN ARROW POINTING TOWARD SWITCH POINT.

WELDING SPECIFICATIONS:

1. SET PRESSED STEEL SHOULDER FLUSH AGAINST LINE OF BASE OF RAIL OR SHOULDER OF MILLED PLATE AS SHOWN AND WELD WITH 2 - PASS 3/8" • WELD.
2. STOP PLATE FOR ADJUSTABLE RAIL BRACE TO BE SET FLUSH WITH SHOULDER OF MILLED PLATE AS SHOWN AND WELD WITH 3 - PASS 1/2" • FILLET WELD.
3. SHOULDERS AND STOPS ARE TO BE CAREFULLY WEDLED TO PLATE. NO WELD SHALL PROJECT BEYOND THE VERTICAL EDGE OF THE UNWELDED FOURTH SIDE OF THE STOP PLATE OR VERTICAL FACE OF SHOULDER IN THE AREA OF THE RAIL SEAT. ANY WELD PROJECTING BEYOND THE FACE OF THE STOP OR SHOULDER MUST BE MACHINED OFF TO PROVIDE CLEAR DIMENSION CALLED FOR.
4. FOR WELDING PRESSED STEEL SHOULDERS OR PLATE STOPS FOR ADJUSTABLE USE THE FOLLOWING:
   A. ELECTRODE 1 5/32 INCH, WELDING SPEC. 7018XLM.
   B. ELECTRODE 3/16 INCH, WELDING SPEC. 7018XLM.
   C. WIRE, WELDING 3/32 INCH, NR203, 1% NICKEL FLUX CORE.

   OTHER WIRE OR ELECTRODES MEETING SPECIFICATIONS AS CALLED FOR, APPROVED BY DIRECTOR OF ENGINEERING, MAY BE USED.

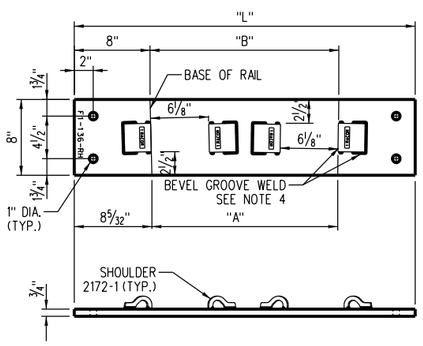

FROG PLATES ~ F-1 AND F-2 AND F-37 THRU F-40

3/4" x 8" x "L" LONG

PLATE	"A"	"B"	"L"	QTY.
•F-1	21 11/32"	21 21/32"	3'-2"	1
•F-2	20 23/32"	21 1/32"	3'-1"	1
•F-37	19 5/8"	19 15/16"	3'-0"	1
•F-38	20 7/16"	20 3/4"	3'-1"	1
•F-39	21 9/32"	21 19/32"	3'-1 1/2"	1
•F-40	22 1/8"	9 11/32"	3'-2"	1

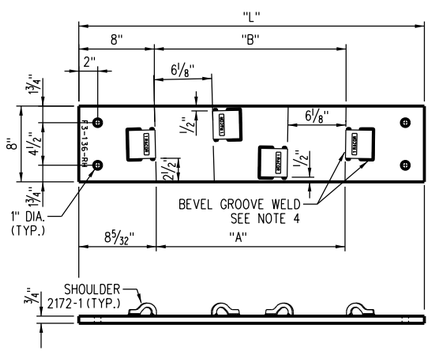

FROG PLATES ~ F-3 THRU F-8 AND F-33 THRU F-36

3/4" x 8" x "L" LONG

PLATE	"A"	"B"	"L"	QTY.
•F-3	19 29/32"	20 7/32"	3'-0 1/2"	1
•F-4	19 3/32"	19 13/32"	2'-11 1/2"	1
•F-5	18 5/16"	18 5/8"	2'-10 1/2"	1
•F-6	17 1/2"	17 13/16"	2'-10"	1
•F-7	16 23/32"	17 1/32"	2'-9"	1
•F-8	15 29/32"	16 7/32"	2'-8 1/2"	1
•F-33	16 11/32"	16 21/32"	2'-9"	1
•F-34	17 5/32"	17 15/32"	2'-9 1/2"	1
•F-35	17 31/32"	18 9/32"	2'-10 1/2"	1
•F-36	18 25/32"	19 3/32"	2'-11"	1

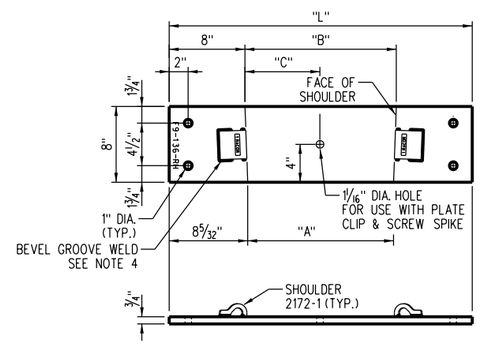

FROG PLATES ~ F-9 THRU F-11, F-13, F-27 THRU F-29, F-31 AND F-32

3/4" x 8" x "L" LONG

PLATE	"A"	"B"	"C"	"L"	QTY.
•F-9	15 3/32"	15 13/32"	7 23/32"	2'-7 1/2"	1
•F-10	14 9/32"	14 19/32"	7 5/16"	2'-6 1/2"	1
•F-11	13 15/32"	13 25/32"	6 29/32"	2'-6"	1
•F-13	11 27/32"	12 5/32"		2'-4"	1
•F-27	11 15/32"	11 25/32"		2'-4"	1
•F-28	12 9/32"	12 19/32"		2'-4 1/2"	1
•F-29	13 3/32"	13 13/32"		2'-5 1/2"	1
•F-31	14 23/32"	15 1/32"	7 17/32"	2'-7"	1
•F-32	15 17/32"	15 27/32"	7 15/16"	2'-8"	1

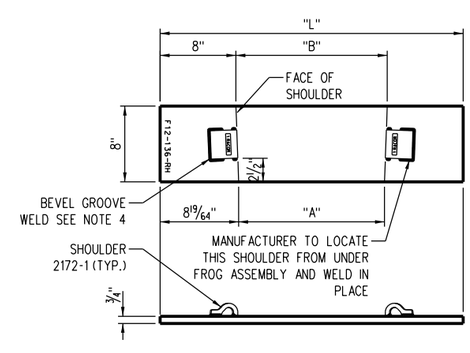

FROG PLATES ~ F-12, F-17 AND F-22

3/4" x 8" x "L" LONG

PLATE	"A"	"B"	"L"	QTY.
•F-12	12 27/32"	12 31/32"	2'-5"	2
•F-17	--	--	2'-10"	2
•F-22	--	--	2'-9 1/2"	2

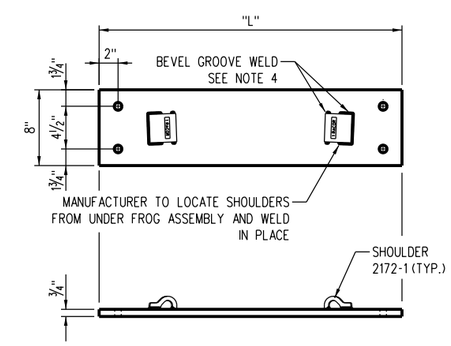

FROG PLATES ~ F-14 THRU F-16, F-18 THRU F-21 AND F-23 THRU F-25

3/4" x 8" x "L" LONG

PLATE	"L"
F-14	2'-6"
F-15	2'-8 1/2"
F-16	2'-9"
F-18	2'-11"
F-19	2'-11 1/2"
F-20	2'-11"
F-21	2'-8 1/2"
F-23	2'-10"
F-24	2'-11"
F-25	2'-11 1/2"

FOR MAINTENANCE ONLY

REV.	DATE	DESCRIPTION	DES.	ENG.
X	XX-XX-XX	REVISION	XX	XX

DRAWN BY: A. CARLOS DATE: 03/31/2011

ASSISTANT DIRECTOR: STANDARDS & DESIGN

DIRECTOR OF ENGINEERING AND CONSTRUCTION

SCRRA ENGINEERING STANDARDS ARE INTENDED FOR SCRRA APPROVED USES ONLY. FOR NON-SCRRA APPROVED USES:
SCRRA SHALL NOT BE RESPONSIBLE FOR THE ACCURACY OR COMPLETENESS OF THE DATA OR INFORMATION CONTAINED HEREIN. THE SELECTION AND USE OF THESE STANDARDS IS THE SOLE RESPONSIBILITY OF THE USER AND SHOULD NOT BE USED WITHOUT CONSULTING A REGISTERED PROFESSIONAL ENGINEER. ALL WARRANTIES AND REPRESENTATIONS OF ANY KIND ARE DISCLAIMED. ANYONE MAKING USE OF THIS INFORMATION AGREES THAT IT ASSUMES ALL LIABILITY ARISING FROM SUCH USE. NO PART OF THESE STANDARDS SHOULD BE REPRODUCED OR DISTRIBUTED IN ANY FORM OR BY ANY MEANS WITHOUT THE PRIOR WRITTEN PERMISSION OF SCRRA. ALL RIGHTS RESERVED.

METROLINK®
SOUTHERN CALIFORNIA REGIONAL RAIL AUTHORITY
ONE GATEWAY PLAZA, 12TH FLOOR, L. A., CA. 90012

ENGINEERING STANDARDS

NO. 24 TURNOUT AND FROG PLATE DETAILS

STANDARD 2951
SCALE: 1 1/2" = 1'-0"
REVISION –
SHEET 14 OF 16
CADD FILE: ES2951-14

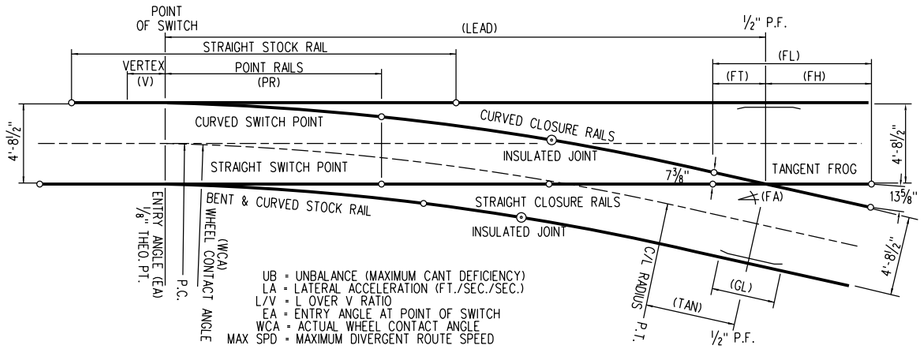

DIST. FROM P.S.	GAGE LINE OFFSET
75'-0"	8 7/8"
100'-0"	14 29/32"
125'-0"	22 15/32"
150'-0"	2'-7 5/8"
175'-0"	3'-6 11/32"

T.O./(MPH)	MAX SPD	FA ∡	UB	LA	L/V	C/L RADIUS	V	EA ∡	WCA ∡	LEAD	PR	LIMITS	FT	FH	FL	TAN	GL
24 (60)	69.29	2°-23'-13"	4"	1.60830	0.0672	4815.0000'	4'-5 23/32"	00°-08'-00"	00°-09'-39"	205'-0"	78'-0"	553'-0"	15'-9"	26'-3"	42'-0"	13'-7 3/4"	26'-0"

NO. 24 TANGENTIAL TURNOUT GEOMETRY

(SCALE: NONE)

SPECIFICATIONS:

TURNOUT & FROG ANGLE : STD. No.24 - 2°-23'-13"
RAIL: 136RE HEAD HARDENED
FLANGEWAYS: 1 7/8" WIDE x 1 7/8" DEEP (MIN. DEPTH)
JOINT DRILLING: 9 1/2" x 6" - 1 1/8" DIA. - 3 3/32" A.B.
EXCEPT INSULATED JOINTS: 3 1/2" x 6" x 6" - 1 1/8" DIA. - 3 3/32" A.B.
JOINT GAPS: 0" STD. - 3/16" INSUL.
SWITCH POINTS: 61'-8" LONG TANGENTIAL ALIGNMENT (78'-0" LONG RAIL), POINT DETAIL PER A.R.E.M.A. 5100
STOCK RAILS: 78'-0" SAMSON UNDERCUT
SWITCH RODS: VERTICAL TYPE WITH "SMJ" CLIPS - 1 1/4" x 2 1/2"
SWITCH PLATES: INSUL. GAGE PLATES - 1" x 8" MILLED WITH BOLTLESS ADJUSTABLE BRACE
SLIDE PLATES - 1" x 8" MILLED WITH PANDROL CLIPS
BRACE PLATES - 1" x 8" MILLED WITH BOLTLESS ADJUSTABLE BRACE
ROLLER ASSY. PLATES - 1" x 8" MILLED WITH PANDROL CLIPS & ROLLER ASSY.
TURNOUT PLATES #HP-5 & #P-13 TO #P-25 - 1" x 8" FLAT WITH PANDROL CLIPS & PLATE CLIPS (WHERE SHOWN)
TURNOUT PLATES #P-26 TO P-37 - 3/4" x 8" FLAT WITH PANDROL CLIPS
GUARD RAILS: H.T. UIC-33 (U-69) - 26'-0" LONG ADJUSTABLE GUARD RAIL - 1/2" RAISED
GUARD RAIL PLATES: 3/4" x 8" FLAT WITH PANDROL CLIPS & WELDED BRACKETS - PLT. "G"
STANDARD TIE PLATES: PANDROL ROLLED SHOULDER
FROG: NO. 24 RACOR RAILBOUND MANG. FROG - 42'-0" LG. - HI-INTEGRITY - MITERED HEEL - EXPLOSION HARDENED
FROG PLATES: TIE PLATES - 3/4" x 8" FLAT WITH PANDROL CLIPS
INSUL GAGE PLATES - 1" x 8" FLAT WITH PANDROL CLIPS

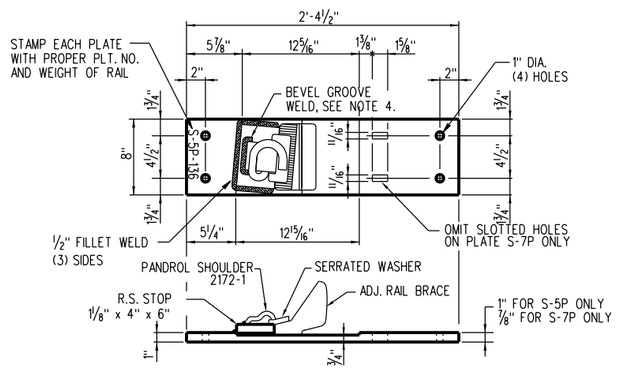

BRACE SLIDE PLATE - S-5P & S-7P

1" x 8" x 2'-4 1/2" LG. - MILLED - W/ADJ. RAIL BRACE
16 - S-5P PLATES REQUIRED AS SHOWN
2 - S-7P PLATES REQUIRED AS SHOWN
(SCALE: NONE)

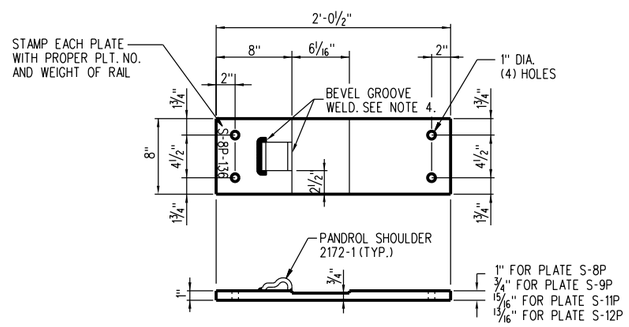

SLIDE PLATE - S-8P, S-9P, S-11P & S-12P

1" x 8" x 2'-0 1/2" LG. - MILLED - W/PANDROL CLIP
40 - S-8P PLATES REQUIRED AS SHOWN
2 - S-9P PLATES REQUIRED AS SHOWN
2 - S-11P PLATES REQUIRED AS SHOWN
2 - S-12P PLATES REQUIRED AS SHOWN
(SCALE: NONE)

NOTES:

1. PLATES TO BE MADE OF MILD ROLLED STEEL.
2. EACH PLATE TO BE PLAINLY STAMPED WITH PLATE NUMBER AND 136 (WEIGHT OF RAIL) AND HAND OF TURNOUT (R.H. OR L.H)
3. THE "PANDROL" TYPE OR APPROVED EQUAL WELD ON PRESSED SHOULDER, MADE OF MILD STEEL, AND MEETING "PANDROL'S" DESIGN SPECIFICATIONS SHALL BE USED.
4. THE PRESSED STEEL SHOULDER MUST BE CAREFULLY WELDED TO ALL PLATES WITH A MINIMUM 2 PASS 3/8" • FILLET WELD ALONG THE BEVELED GROOVES OF THE SHOULDER. ANY WELD PROJECTING BEYOND THE VERTICAL FACE OF THE SHOULDER IN THE AREA OF THE BASE OF THE RAIL SEAT MUST BE MACHINED OUT TO PROVIDE A CLEAR RAIL SEAT DIMENSION AS CALLED FOR.
5. THE PLATES AS SHOWN ARE FOR A 136 LB. NO. 24 RIGHT HAND TURNOUT. FOR A LEFT HAND TURNOUT PLATES P-13 THRU P-37 INCLUSIVE AND FROG PLATE F-1 THRU F-36 ARE TO BE OPPOSITE.
6. DIRECTION OF ARROW SHOWN IS AN EXAMPLE ONLY. USING SHEET 2951-03 AS A GUIDE, PAINT MARK EACH PLATE WITH AN ARROW POINTING TOWARD SWITCH POINT.

WELDING SPECIFICATIONS:

1. SET PRESSED STEEL SHOULDER FLUSH AGAINST LINE OF BASE OF RAIL OR SHOULDER OF MILLED PLATE AS SHOWN AND WELD WITH 2 - PASS 3/8" • WELD.
2. STOP PLATE FOR ADJUSTABLE RAIL BRACE TO BE SET FLUSH WITH SHOULDER OF MILLED PLATE AS SHOWN AND WELD WITH 3 - PASS 1/2" • FILLET WELD.
3. SHOULDERS AND STOPS ARE TO BE CAREFULLY WEDLED TO PLATE. NO WELD SHALL PROJECT BEYOND THE VERTICAL EDGE OF THE UNWELDED FOURTH SIDE OF THE STOP PLATE OR VERTICAL FACE OF SHOULDER IN THE AREA OF THE RAIL SEAT. ANY WELD PROJECTING BEYOND THE FACE OF THE STOP OR SHOULDER MUST BE MACHINED OFF TO PROVIDE CLEAR DIMENSION CALLED FOR.
4. FOR WELDING PRESSED STEEL SHOULDERS OR PLATE STOPS USE THE FOLLOWING:
   A. ELECTRODE 1 5/32 INCH, WELDING SPEC. 7018XLM.
   B. ELECTRODE 3/16 INCH, WELDING SPEC. 7018XLM.
   C. WIRE, WELDING 3/32 INCH, NR203, 1% NICKEL FLUX CORE.

OTHER WIRE OR ELECTRODES MEETING SPECIFICATIONS AS CALLED FOR, APPROVED BY DIRECTOR OF ENGINEERING, MAY BE USED.

FOR MAINTENANCE ONLY

X	XX-XX-XX	REVISION	XX	XX
REV.	DATE	DESCRIPTION	DES.	ENG.

DRAWN BY: A. CARLOS DATE: 03/31/2011

ASSISTANT DIRECTOR: STANDARDS & DESIGN

DIRECTOR OF ENGINEERING AND CONSTRUCTION

SCRRA ENGINEERING STANDARDS ARE INTENDED FOR SCRRA APPROVED USES ONLY. FOR NON-SCRRA APPROVED USES:
SCRRA SHALL NOT BE RESPONSIBLE FOR THE ACCURACY OR COMPLETENESS OF THE DATA OR INFORMATION CONTAINED HEREIN. THE SELECTION AND USE OF THESE STANDARDS IS THE SOLE RESPONSIBILITY OF THE USER AND SHOULD NOT BE USED WITHOUT CONSULTING A REGISTERED PROFESSIONAL ENGINEER. ALL WARRANTIES AND REPRESENTATIONS OF ANY KIND ARE DISCLAIMED. ANYONE MAKING USE OF THIS INFORMATION AGREES THAT IT ASSUMES ALL LIABILITY ARISING FROM SUCH USE. NO PART OF THESE STANDARDS SHOULD BE REPRODUCED OR DISTRIBUTED IN ANY FORM OR BY ANY MEANS WITHOUT THE PRIOR WRITTEN PERMISSION OF SCRRA. ALL RIGHTS RESERVED.

METROLINK®
SOUTHERN CALIFORNIA REGIONAL RAIL AUTHORITY
ONE GATEWAY PLAZA, 12TH FLOOR, L. A., CA. 90012

ENGINEERING STANDARDS

NO. 24 SWITCH PLATE DETAILS & TRACK GEOMETRY

STANDARD 2951
SCALE: NONE
REVISION –
SHEET 15 OF 16
CADD FILE: ES2951-15

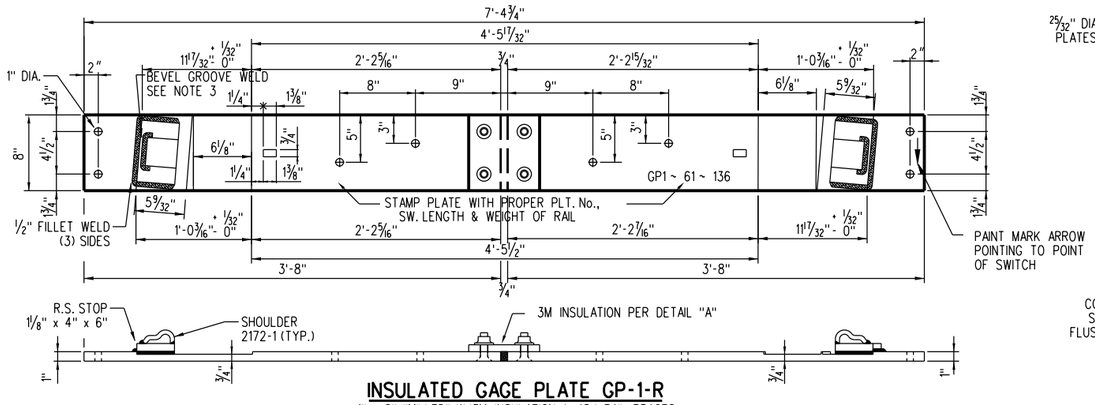

INSULATED GAGE PLATE GP-1-R

1" x 8" "MILLED" W/3M INSULATION & ADJ. RAIL BRACES
(1 PC. REQ'D. AS SHOWN)

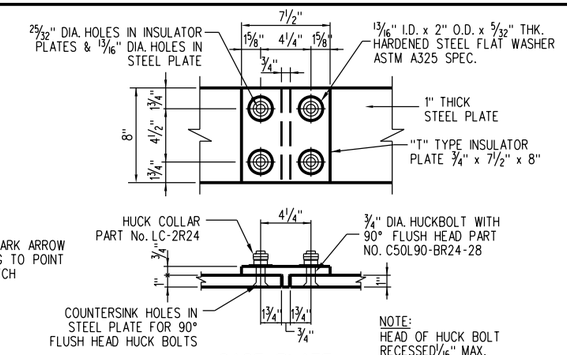

GAGE PLATE INSULATED JOINT ASSEMBLY GPI-77

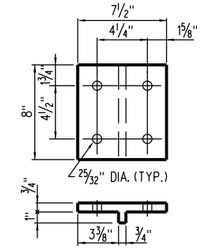

DETAIL OF INSULATION BLOCK

POLYESTER COATED STEEL CORE
W/ BUSHINGS, PORTEC #127-07547-01
OR FIBERGLASS REINFORCED THERMOSET RESIN.
PURCHASE PART NO. GPI52P05

DETAIL "A" INSULATION AT GAGE PLATES

(SCALE: NONE)

NOTES:

1. PLATES TO BE MADE OF MILD ROLLED STEEL.
2. THE PANDROL TYPE, OR APPROVED EQUAL, WELD - ON PRESSED STEEL SHOULDER, MADE OF MILD STEEL, AND MEETING PANDROLS DESIGN SPECIFICATIONS SHALL BE USED.
3. THE PRESSED STEEL SHOULDER MUST BE CAREFULLY WELDED TO GAGE PLATES WITH A MINIMUM 3/8" WELD ALONG THE BEVELED GROOVES OF THE SHOULDER. ANY WELD PROJECTING BEYOND THE VERTICAL FACE OF SHOULDER IN THE AREA OF THE RAIL SEAT MUST BE MACHINED OUT TO PROVIDE A CLEAR RAIL SEAT DIMENSION AS CALLED FOR.
4. SWITCH GAGE PLATES FOR RIGHT HAND TURNOUT, MCHINE ON RIGHT, ELECTRICALLY INTERLOCKED FOR U.S. & S. CO'S STYLE M23A MACHINE. IF OTHER SWITCH MACHINE IS USED, SWITCH GAGE PLATES GP-1-R AND GP-2-R MAY VARY AND SHOULD BE MODIFIED AS REQUIRED BY SWITCH MANUFACTURER TO PROVIDE PROPER SEATING.

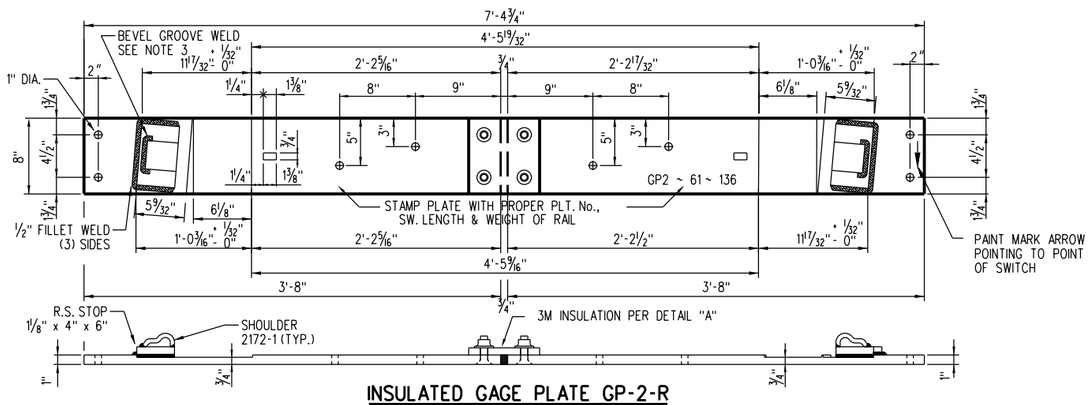

INSULATED GAGE PLATE GP-2-R

1" x 8" "MILLED" W/3M INSULATION & ADJ. RAIL BRACES
(1 PC. REQ'D. AS SHOWN)

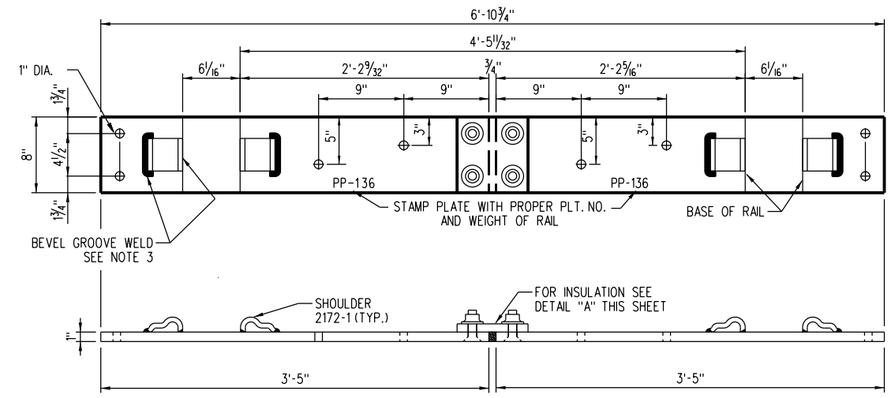

INSULATED GAGE PLATE PP WITH PANDROL CLIPS

1" x 8" "FLAT" W/3M INSULATION
(2 PC. REQ'D AS SHOWN)

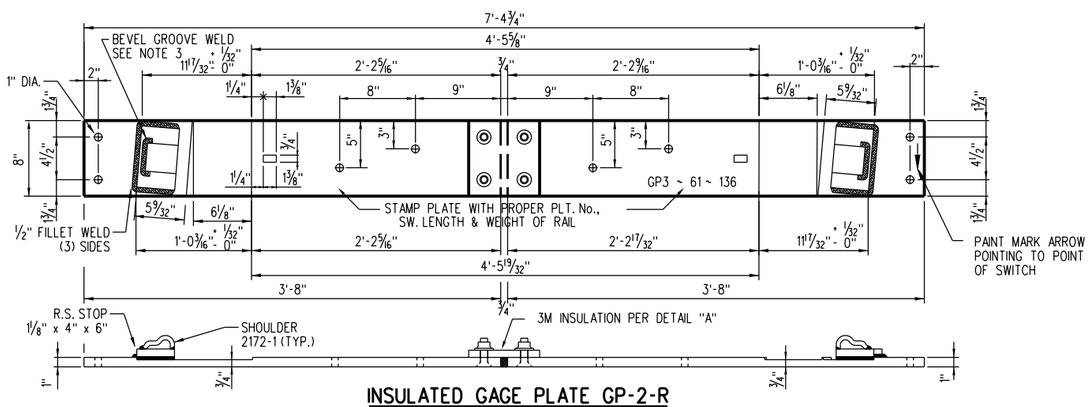

INSULATED GAGE PLATE GP-2-R

1" x 8" "MILLED" W/3M INSULATION & ADJ. RAIL BRACES
(1 PC. REQ'D. AS SHOWN)

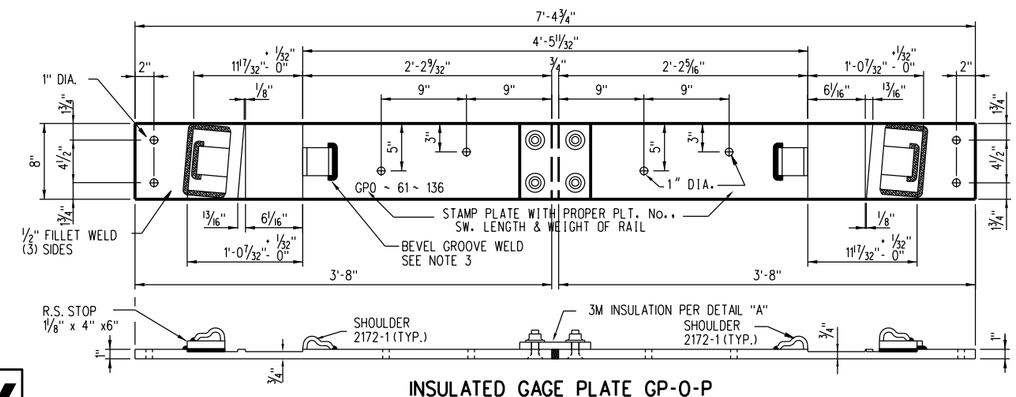

INSULATED GAGE PLATE GP-0-P

1" x 8" "MILLED" W/3M INSULATION & ADJ. RAIL BRACES
(1 PC. REQ'D. AS SHOWN)

FOR MAINTENANCE ONLY

X	XX-XX-XX	REVISION	XX	XX
REV.	DATE	DESCRIPTION	DES.	ENG.

DRAWN BY: A. CARLOS DATE: 03/31/2011

ASSISTANT DIRECTOR: STANDARDS & DESIGN

DIRECTOR OF ENGINEERING AND CONSTRUCTION

SCRRA ENGINEERING STANDARDS ARE INTENDED FOR SCRRA APPROVED USES ONLY. FOR NON-SCRRA APPROVED USES:
SCRRA SHALL NOT BE RESPONSIBLE FOR THE ACCURACY OR COMPLETENESS OF THE DATA OR INFORMATION CONTAINED HEREIN. THE SELECTION AND USE OF THESE STANDARDS IS THE SOLE RESPONSIBILITY OF THE USER AND SHOULD NOT BE USED WITHOUT CONSULTING A REGISTERED PROFESSIONAL ENGINEER. ALL WARRANTIES AND REPRESENTATIONS OF ANY KIND ARE DISCLAIMED. ANYONE MAKING USE OF THIS INFORMATION AGREES THAT IT ASSUMES ALL LIABILITY ARISING FROM SUCH USE. NO PART OF THESE STANDARDS SHOULD BE REPRODUCED OR DISTRIBUTED IN ANY FORM OR BY ANY MEANS WITHOUT THE PRIOR WRITTEN PERMISSION OF SCRRA. ALL RIGHTS RESERVED.

METROLINK®
SOUTHERN CALIFORNIA REGIONAL RAIL AUTHORITY
ONE GATEWAY PLAZA, 12TH FLOOR, L. A., CA. 90012

ENGINEERING STANDARDS

NO. 24 INSULATED GAGE PLATE DETAILS

STANDARD 2951
SCALE: 1 1/2" = 1'-0"
REVISION –
SHEET 16 OF 16
CADD FILE: ES2951-16

DISCLAIMER

SCRRA Engineering Standards are intended for SCRRA approved uses only. FOR NON-SCRRA APPROVED USES: SCRRA and its member agencies, directors, officers, employees and/or agents shall not be responsible for the accuracy or completeness of the data or information contained herein. The selection and use of these standards, while designed in accordance with generally accepted engineering principles and practices, is the sole responsibility of the user and should not be used without consulting a registered professional engineer. All warranties and representations of any kind are disclaimed. Anyone making use of this information agrees that it assumes all liability arising from such use. No part of these standards should be reproduced or distributed in any form or by any means without the prior written permission of SCRRA. All rights reserved.

Since revisions or additions to the engineering standards may occur at any time, the user agrees to indemnify, defend, by counsel satisfactory to SCRRA and Member Agency, and hold harmless SCRRA, Member Agencies, and Operating Railroad, and their respective officers, commissioners, employees, agents, successors and assigns. ("Indemnitees"), and each of them to the maximum extent allowed by law, from and against all loss, liability, claims, demands, suits, liens, claims of lien, damages (including incidental consequential damages), costs and expenses (including, without limitation, any fines, penalties, judgments, actual litigation expenses and experts' and actual attorneys' fees), that are incurred by or asserted against Indemnitees arising out of or connected in any manner with the user's use of outdated engineering standards.

Updating the contents of the manual is a continued process, and revisions/replacements are issued periodically. Questions, comments, and proposed recommendations for changes may be sent to SCRRA at 279 E. Arrow Highway, Suite A, San Dimas, CA 91773.

METROLINK (SCRRA)
ENGINEERING STANDARDS
NO 8 DOUBLE SLIP CROSSING

BILL OF MATERIAL	
QTY	DESCRIPTION
2 EACH	SOLID MANGANESE CENTER FROG
4 EACH	"D" STRAPS WITH BOLTS
4 EACH	27'-8 7/8" EXTENDED FIELD WELDED TYPE SWITCH POINTS
4 EACH	27'-2 3/8" STRAIGHT STOCK RAIL
4 EACH	31'-2 7/16" CURVED STOCK RAIL
4 EACH	23'-3 7/16" SWITCH POINTS
1 EACH	NO 1A SMJ TYPE SWITCH ROD W/ BASKET (INSULATED)
1 EACH	NO 1B SMJ TYPE SWITCH ROD W/ BASKET (INSULATED)
2 EACH	NO 2 SMJ TYPE SWITCH ROD W/ BASKET (INSULATED)
2 EACH	NO 3 SMJ TYPE SWITCH ROD W/ BASKET (INSULATED)
36 EACH	BRACE SLIDE PLATE DS-5P
22 EACH	SWITCH SLIDE PLATE DS-8P
2 EACH	INSULATED GAUGE PLATE DS-GP-1
1 EACH	INSULATED GAUGE PLATE DS-GP-2 AND DS-GP-3
2 EACH	SWITCH PLATE DS-1R, DS-1L, DS-2R, DS-2L, DS-3R & DS-3L
4 EACH	SWITCH PLATE DS-4P
2 EACH	SWITCH PLATES DS-6P THRU DS-15P
2 EACH	SWITCH PLATE DS-18P AND DS-19P
2 EACH	FROG PLATES F-1 THRU F-14
2 EACH	FROG GAUGE PLATES DS-FGP-1 THRU DS-FGP-3
2 EACH	NO 8 RBM FROG ~ 18'-0"
1 EACH	FROG GAUGE PLATES FGP-1 THRU FGP-3
4 EACH	13'-0" U-69 ADJUSTABLE GUARD RAIL W/ PLATES
2 EACH	DI RAIL HOLD DOWN CLIPS E-3706
6 EACH	DI RAIL HOLD DOWN CLIPS E-3708
8 EACH	DI RAIL HOLD DOWN CLIPS E-3709
2 EACH	DI RAIL HOLD DOWN CLIPS E-3710
12 PIECES	BOLTLESS ADJUSTABLE BRACE ASSEMBLY
20 PIECES	SCRRA ES2454 "PANDROL", OR EQUAL "E" - CLIP 6" TIE PLATE
224 PIECES	CLIP TYPE E-2055
24 PIECES	CLIP TYPE E-2063
720 PIECES	SCREW SPIKES 15/16" DIA X 6" ES2355
4 EACH	EPOXY BONDED PREFABRICATED INSULATED JOINT KITS

DRAWING INDEX

ES2840-01	NO 8 136 LB RE DOUBLE SLIP CROSSING WITH SOLID MANGANESE FROG BILL OF MATERIAL AND GENERAL NOTES
ES2840-02	NO 8 136 LB RE DOUBLE SLIP CROSSING WITH SOLID MANGANESE FROG LAYOUT AND CROSSING DATA
ES2840-03	NO 8 136 LB RE DOUBLE SLIP CROSSING WITH SOLID MANGANESE FROG LAYOUT AND CROSSING DATA
ES2840-04	CROSSING GEOMETRY AND CROSSING DATA NO 8 136 LB RE DOUBLE SLIP CROSSING
ES2840-11	136 LB RE 23'-3 7/16" STRAIGHT SWITCH POINT MADE FROM 40'-0" LONG RAIL NO 8 DOUBLE SLIP CROSSING
ES2840-12	136 LB RE 27'-8 7/8" CURVED SWITCH POINT MADE FROM 40'-0" LONG RAIL NO 8 DOUBLE SLIP CROSSING
ES2840-30	NO 8 136 LB RE DOUBLE SLIP CROSSING TIMBER TIE LAYOUT
ES2840-40	NO 8 RAILBOUND MANGANESE STEEL FROG WITH PANDROLIZED PLATES FOR A 136 LB RE DOUBLE SLIP CROSSING
ES2840-41	NO 8 DOUBLE SLIP CROSSING CENTER SECTION LAYOUT 136 LB RE RAIL
ES2840-44	INSULATED GAUGE PLATE DETAILS DS-GP-1, DS-GP-2 AND DS-GP-3 136 LB RE NO 8 DOUBLE SLIP CROSSING
ES2840-45	BRACE PLATE AND SLIDE PLATE DETAILS NO 8 136 LB RE DOUBLE SLIP CROSSING
ES2840-46	SWITCH SLIDE PLATE AND SWITCH HEEL PLATE DETAILS NO 8 136 LB RE DOUBLE SLIP CROSSING
ES2840-47	DETAILS INSULATED FROG GAUGE PLATES NO 8 136 LB RE DOUBLE SLIP CROSSING
ES2840-48	FROG PLATE DETAILS NO 8 136 LB RE DOUBLE SLIP CROSSING
ES2840-49	INSULATED HEAD ROD NO 1 FOR END POINTS NO 8 136 LB RE DOUBLE SLIP CROSSING
ES2840-50	INSULATED SPREAD RODS NO 2 & 3 FOR END POINTS NO 8 136 LB RE DOUBLE SLIP CROSSING
ES2840-60	GUARD RAIL DETAILS 13'-0" LONG

NOTES:

1. ENTIRE DOUBLE SLIP CROSSING TO BE FABRICATED FROM 136 LB HEAD HARDENED RAIL.
2. LOCATIONS OF INSULATED JOINTS ARE AS SHOWN ON ES2840-02 AND ES2840-03. IT WILL BE SATISFACTORY TO RELOCATE THE INSULATED JOINT IN THE FIELD UP TO 1'-0" SO AS TO PROVIDE A SUITABLE SUSPENDED JOINT, PROVIDED THE STAGGER OF THE INSULATED JOINTS DOES NOT EXCEED 4'-6". SUSPENDED INSULATED JOINTS MUST BE LOCATED IN A CRIB AREA BETWEEN TIES, A MINIMUM DISTANCE OF 4" FROM EDGE OF NEAREST TIE PLATE.
3. ALL INSULATED JOINTS ARE TO BE ADHESIVE BONDED INSULATED JOINTS UNLESS OTHERWISE SPECIFIED.
4. ALL MATERIALS REQUIRED FOR HAND OR MACHINE OPERATED SWITCH OPERATION WILL BE FURNISHED PER REQUIREMENTS OF THE SCRRA DIRECTOR OF ENGINEERING AND CONSTRUCTION.
5. MATERIALS AND WORKMANSHIP, ALSO ANY CONSTRUCTION DETAILS NOT SHOWN, SHALL BE PER CURRENT AREMA "TRACKWORK PLANS AND SPECIFICATIONS" UNLESS OTHERWISE SPECIFIED.
6. WHERE REQUIRED, ALL IDENTIFICATION SYMBOLS TO BE PLAINLY STAMPED.
7. GAUGE PLATES WILL BE FURNISHED INSULATED. SWITCH RODS WILL BE FURNISHED INSULATED UNLESS OTHERWISE SPECIFIED.
8. MANUFACTURER SHALL SUBMIT TWO COPIES OF SHOP DRAWINGS TO THE SCRRA DIRECTOR OF ENGINEERING AND CONSTRUCTION FOR APPROVAL PRIOR TO FABRICATION OF TURNOUT. SHOP DRAWINGS THAT CHANGE DETAILS OF THESE STANDARDS MUST CLEARLY SPECIFY SUCH PROPOSED CHANGES.
9. THE MATERIAL INCLUDED IN THE PURCHASE OF A "DOUBLE SLIP CROSSING COMPLETE" IS EVERYTHING LISTED IN THE BILL OF MATERIALS. TO CONSTRUCT A COMPLETE TURNOUT, SWITCH TIES (PER LIST ON THIS SHEET) AND INSULATED JOINTS, FIELD WELDS, RUNNING RAIL AND CLOSURE RAIL IDENTIFIED ON SUBSEQUENT SHEETS MUST ALSO BE SUPPLIED.
10. TIE PLATES SHALL CONFORM TO SCRRA STANDARD ES2454.
11. SCREW SPIKES (15/16" X 6-2 TPI) SHALL CONFORM TO SCRRA STANDARD ES2355. PLATE HOLES SHALL BE 1" DIAMETER. PILOT HOLES IN TIES SHALL BE 5/8" DIAMETER. SCREW SPIKES SHALL BE SCREWED INTO WOOD (NOT DRIVEN).
12. MANUFACTURER SHALL BEVEL RAIL ENDS PER CURRENT AREMA PLAN NO 1005.
13. THE 27'-8 7/8" SWITCH POINT, MADE FROM 40'-0" RAIL PER ES2840-12 IS TO BE FURNISHED WITH SWITCH RODS NO 1A AND 1B PER ES2840-49.
14. FOR CROSSING DATA FOR A NO 8 DOUBLE SLIP CROSSOVER 136 LB RE RAIL SEE CHART ON ES2840-02.
15. GAUGE PLATES FOR SWITCH AND FROG, SWITCH HEEL PLATE (FOR BOTH RH OR LH TURNOUTS) AND PLATES DS-10 THRU DS-19 ARE DESIGNED TO BE PERPENDICULAR TO THE MAIN LINE THRU RUN RAILS.
16. UPON COMPLETION OF TURNOUT INSTALLATION, RUNNING RAIL MUST BE ADJUSTED TO SCRRA NEUTRAL RAIL TEMPERATURE.
17. ENTIRE CROSSOVER TO BE FULLY FLOOR ASSEMBLED INCLUDING END FROGS AND HF GUARD RAILS.

REV.	DATE	DESCRIPTION	DES.	ENG.
X	XX-XX-XX	REVISION	XX	XX

DRAWN BY: A. CARLOS DATE: 03/31/2011

ASSISTANT DIRECTOR: STANDARDS & DESIGN

DIRECTOR OF ENGINEERING AND CONSTRUCTION

SCRRA ENGINEERING STANDARDS ARE INTENDED FOR SCRRA APPROVED USES ONLY. FOR NON-SCRRA APPROVED USES:
SCRRA SHALL NOT BE RESPONSIBLE FOR THE ACCURACY OR COMPLETENESS OF THE DATA OR INFORMATION CONTAINED HEREIN. THE SELECTION AND USE OF THESE STANDARDS IS THE SOLE RESPONSIBILITY OF THE USER AND SHOULD NOT BE USED WITHOUT CONSULTING A REGISTERED PROFESSIONAL ENGINEER. ALL WARRANTIES AND REPRESENTATIONS OF ANY KIND ARE DISCLAIMED. ANYONE MAKING USE OF THIS INFORMATION AGREES THAT IT ASSUMES ALL LIABILITY ARISING FROM SUCH USE. NO PART OF THESE STANDARDS SHOULD BE REPRODUCED OR DISTRIBUTED IN ANY FORM OR BY ANY MEANS WITHOUT THE PRIOR WRITTEN PERMISSION OF SCRRA. ALL RIGHTS RESERVED.

METROLINK®
SOUTHERN CALIFORNIA REGIONAL RAIL AUTHORITY
ONE GATEWAY PLAZA, 12TH FLOOR, L. A., CA. 90012

ENGINEERING STANDARDS

NO 8 136 LB RE DOUBLE SLIP CROSSING
WITH SOLID MANGANESE FROG
BILL OF MATERIAL AND GENERAL NOTES

STANDARD 2840
SCALE: NTS
REVISION –
SHEET 1 OF 1
CADD FILE: ES2840-01

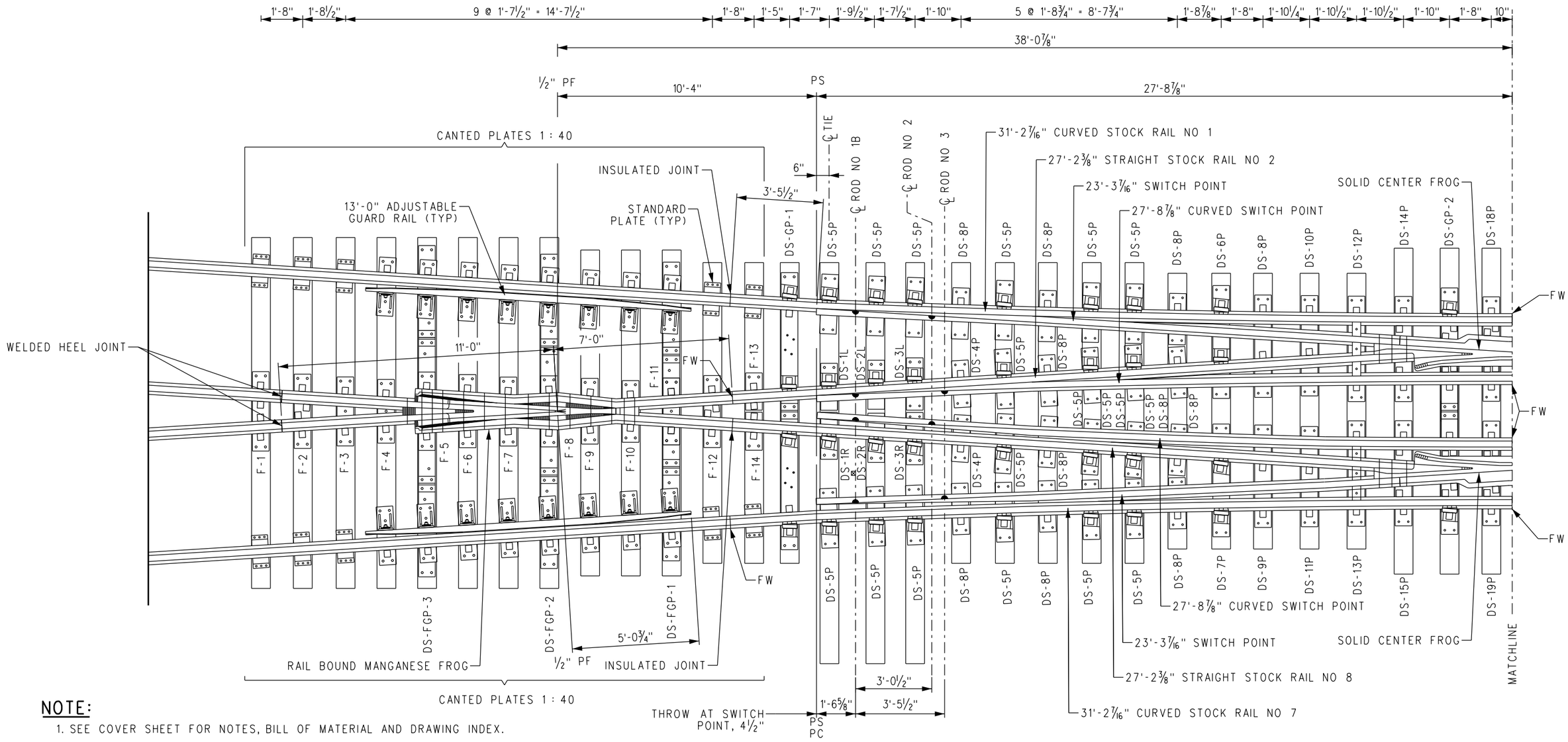

NOTE:

1. SEE COVER SHEET FOR NOTES, BILL OF MATERIAL AND DRAWING INDEX.

CROSSING DATA

BETWEEN THEORETICAL POINTS OF END FROGS	75'-5¾"	ANGLE OF CROSSING	7°-09'-10"
BETWEEN THEORETICAL POINTS OF END FROG & CENTER FROG	37'-9¾"	DEGREE OF CURVATURE	8°-26'-53"
FROM INSIDE SWITCH POINTS TO THEORETICAL POINT END FROG	10'-0¼"	GAUGE LINE RADIUS	678.8314'
FROM THEORETICAL POINT OF CENTER FROG TO HEEL JOINT	7'-6¹⁄₁₆"	THROW AT END PT	4" MIN, 4½" MAX
LENGTH OF INSIDE SAMSON STOCK RAILS	SEE ABOVE	GAUGE ON STRAIGHT TRACK	4'-8½"
LENGTH OF OUTSIDE SAMSON STOCK RAILS	31'-2⁷⁄₁₆"	GAUGE ON CURVED TRACK	4'-8⅝"
LENGTH OF FROG FROM THEORETICAL POINT TO TOE	6'-8"	GAUGE ON SWITCH PT	4'-8½"
LENGTH OF FROG FROM THEORETICAL POINT TO HEEL	11'-4"	SWITCH ANGLE	1°-14'-04"
LENGTH OF OUTSIDE SAMSON END SWITCH POINTS (0" SAMSON)	23'-3⁷⁄₁₆"	HEEL SPREAD OUTSIDE SWITCH POINTS 6¹⁄₃₂" BC, 10¹³⁄₁₆" AC	-
LENGTH OF INSIDE SAMSON END SWITCH POINTS (0" SAMSON)	27'-8⅞"	HEEL SPREAD INSIDE SWITCH POINTS 7³⁄₁₆" BC, 14" AC	-

REV.	DATE	DESCRIPTION	DES.	ENG.
X	XX-XX-XX	REVISION	XX	XX

DRAWN BY: A. CARLOS DATE: 03/31/2011

ASSISTANT DIRECTOR: STANDARDS & DESIGN

DIRECTOR OF ENGINEERING AND CONSTRUCTION

SCRRA ENGINEERING STANDARDS ARE INTENDED FOR SCRRA APPROVED USES ONLY. FOR NON-SCRRA APPROVED USES:
SCRRA SHALL NOT BE RESPONSIBLE FOR THE ACCURACY OR COMPLETENESS OF THE DATA OR INFORMATION CONTAINED HEREIN. THE SELECTION AND USE OF THESE STANDARDS IS THE SOLE RESPONSIBILITY OF THE USER AND SHOULD NOT BE USED WITHOUT CONSULTING A REGISTERED PROFESSIONAL ENGINEER. ALL WARRANTIES AND REPRESENTATIONS OF ANY KIND ARE DISCLAIMED. ANYONE MAKING USE OF THIS INFORMATION AGREES THAT IT ASSUMES ALL LIABILITY ARISING FROM SUCH USE. NO PART OF THESE STANDARDS SHOULD BE REPRODUCED OR DISTRIBUTED IN ANY FORM OR BY ANY MEANS WITHOUT THE PRIOR WRITTEN PERMISSION OF SCRRA. ALL RIGHTS RESERVED.

METROLINK®
SOUTHERN CALIFORNIA REGIONAL RAIL AUTHORITY
ONE GATEWAY PLAZA, 12TH FLOOR, L. A., CA. 90012

ENGINEERING STANDARDS

NO 8 136 LB RE DOUBLE SLIP CROSSING
WITH SOLID MANGANESE FROG
LAYOUT AND CROSSING DATA

STANDARD 2840
SCALE: NTS
REVISION –
SHEET 1 OF 2
CADD FILE: ES2840-02

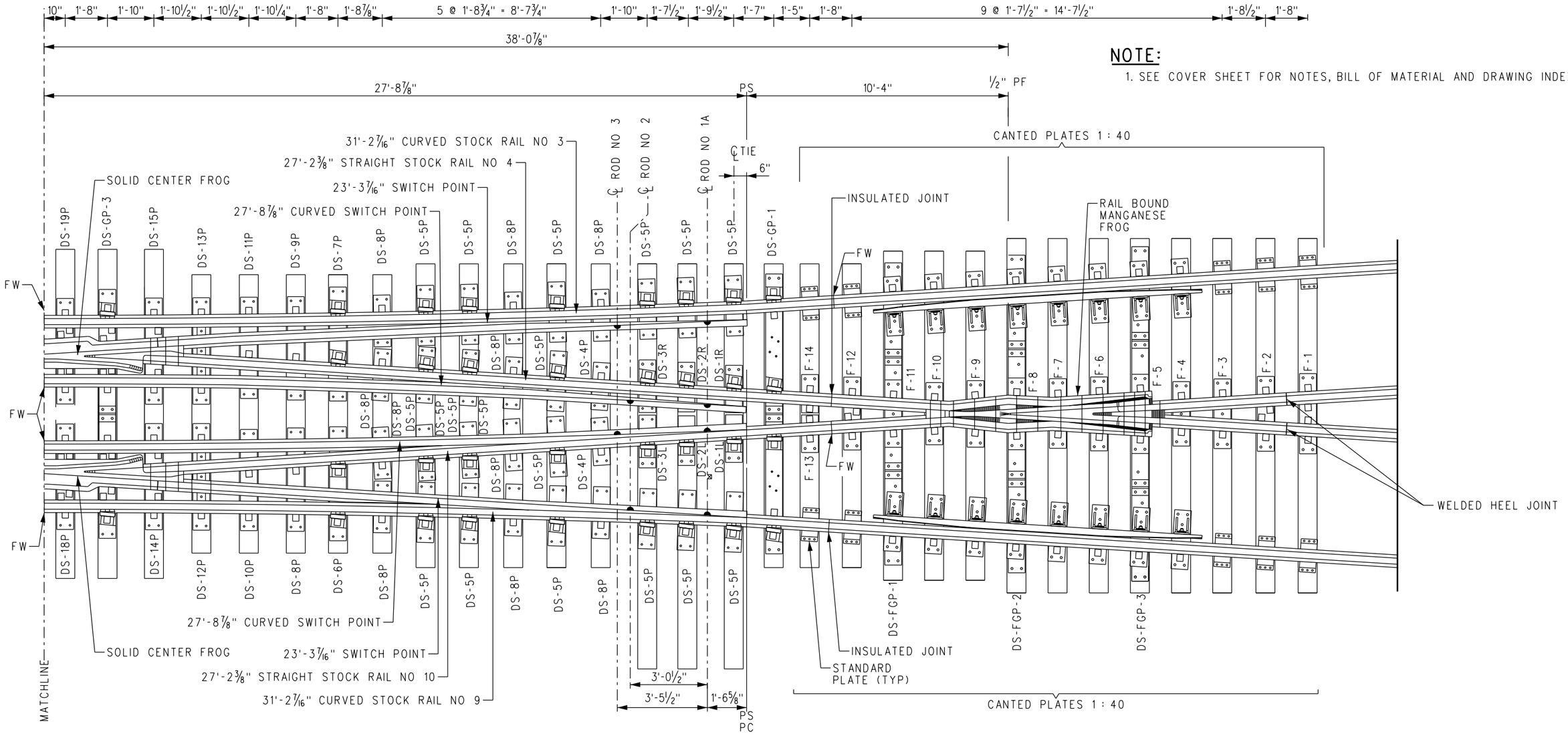

NOTE:

1. SEE COVER SHEET FOR NOTES, BILL OF MATERIAL AND DRAWING INDEX.

CROSSING DATA

BETWEEN THEORETICAL POINTS OF END FROGS	75'-5¾"	ANGLE OF CROSSING	7°-09'-10"
BETWEEN THEORETICAL POINTS OF END FROG & CENTER FROG	37'-9¾"	DEGREE OF CURVATURE	8°-26'-53"
FROM INSIDE SWITCH POINTS TO THEORETICAL POINT END FROG	10'-0¼"	GAUGE LINE RADIUS	678.8314'
FROM THEORETICAL POINT OF CENTER FROG TO HEEL JOINT	7'-6¹⁄₁₆"	THROW AT END PT	4" MIN, 4½" MAX
LENGTH OF INSIDE SAMSON STOCK RAILS	SEE ABOVE	GAUGE ON STRAIGHT TRACK	4'-8½"
LENGTH OF OUTSIDE SAMSON STOCK RAILS	31'-2⁷⁄₁₆"	GAUGE ON CURVED TRACK	4'-8⅝"
LENGTH OF FROG FROM THEORETICAL POINT TO TOE	6'-8"	GAUGE ON SWITCH PT	4'-8½"
LENGTH OF FROG FROM THEORETICAL POINT TO HEEL	11'-4"	SWITCH ANGLE	1°-14'-04"
LENGTH OF OUTSIDE SAMSON END SWITCH POINTS (0" SAMSON)	23'-3⁷⁄₁₆"	HEEL SPREAD OUTSIDE SWITCH POINTS 6¹⁄₃₂" BC, 10¹³⁄₁₆" AC	-
LENGTH OF INSIDE SAMSON END SWITCH POINTS (0" SAMSON)	27'-8⅞"	HEEL SPREAD INSIDE SWITCH POINTS 7³⁄₁₆" BC, 14" AC	-

REV.	DATE	DESCRIPTION	DES.	ENG.
X	XX-XX-XX	REVISION	XX	XX

DRAWN BY: A. CARLOS DATE: 03/31/2011

ASSISTANT DIRECTOR: STANDARDS & DESIGN

DIRECTOR OF ENGINEERING AND CONSTRUCTION

SCRRA ENGINEERING STANDARDS ARE INTENDED FOR SCRRA APPROVED USES ONLY. FOR NON-SCRRA APPROVED USES:
SCRRA SHALL NOT BE RESPONSIBLE FOR THE ACCURACY OR COMPLETENESS OF THE DATA OR INFORMATION CONTAINED HEREIN. THE SELECTION AND USE OF THESE STANDARDS IS THE SOLE RESPONSIBILITY OF THE USER AND SHOULD NOT BE USED WITHOUT CONSULTING A REGISTERED PROFESSIONAL ENGINEER. ALL WARRANTIES AND REPRESENTATIONS OF ANY KIND ARE DISCLAIMED. ANYONE MAKING USE OF THIS INFORMATION AGREES THAT IT ASSUMES ALL LIABILITY ARISING FROM SUCH USE. NO PART OF THESE STANDARDS SHOULD BE REPRODUCED OR DISTRIBUTED IN ANY FORM OR BY ANY MEANS WITHOUT THE PRIOR WRITTEN PERMISSION OF SCRRA. ALL RIGHTS RESERVED.

METROLINK®
SOUTHERN CALIFORNIA REGIONAL RAIL AUTHORITY
ONE GATEWAY PLAZA, 12TH FLOOR, L. A., CA. 90012

ENGINEERING STANDARDS

NO 8 136 LB RE DOUBLE SLIP CROSSING
WITH SOLID MANGANESE FROG
LAYOUT AND CROSSING DATA

STANDARD 2840
SCALE: NTS
REVISION –
SHEET 2 OF 2
CADD FILE: ES2840-03

CROSSING DATA			
BETWEEN THEORETICAL POINTS OF END FROGS	75'-5¾"	ANGLE OF CROSSING	7°-09'-10"
BETWEEN THEORETICAL POINTS OF END FROG & CENTER FROG	37'-9¾"	DEGREE OF CURVATURE	8°-26'-53"
FROM INSIDE SWITCH POINTS TO THEORETICAL POINT END FROG	10'-0¼"	GAUGE LINE RADIUS	678.8314'
FROM THEORETICAL POINT OF CENTER FROG TO HEEL JOINT	7'-6 1/16"	THROW AT END PT	4" MIN, 4½" MAX
LENGTH OF INSIDE SAMSON STOCK RAILS	27'-2⅜" 27'-2⅜"	GAUGE ON STRAIGHT TRACK	4'-8½"
LENGTH OF OUTSIDE SAMSON STOCK RAILS	31'-2 7/16"	GAUGE ON CURVED TRACK	4'-8⅝"
LENGTH OF FROG FROM THEORETICAL POINT TO TOE	6'-8"	GAUGE ON SWITCH PT	4'-8½"
LENGTH OF FROG FROM THEORETICAL POINT TO HEEL	11'-4"	SWITCH ANGLE	1°-14'-04"
LENGTH OF OUTSIDE SAMSON END SWITCH POINTS (0" SAMSON)	23'-3 7/16"	HEEL SPREAD OUTSIDE SWITCH POINTS 6 1/32" BC, 10 13/16" AC	-
LENGTH OF INSIDE SAMSON END SWITCH POINTS (0" SAMSON)	27'-8⅞"	HEEL SPREAD INSIDE SWITCH POINTS 7 3/16" BC, 14" AC	-

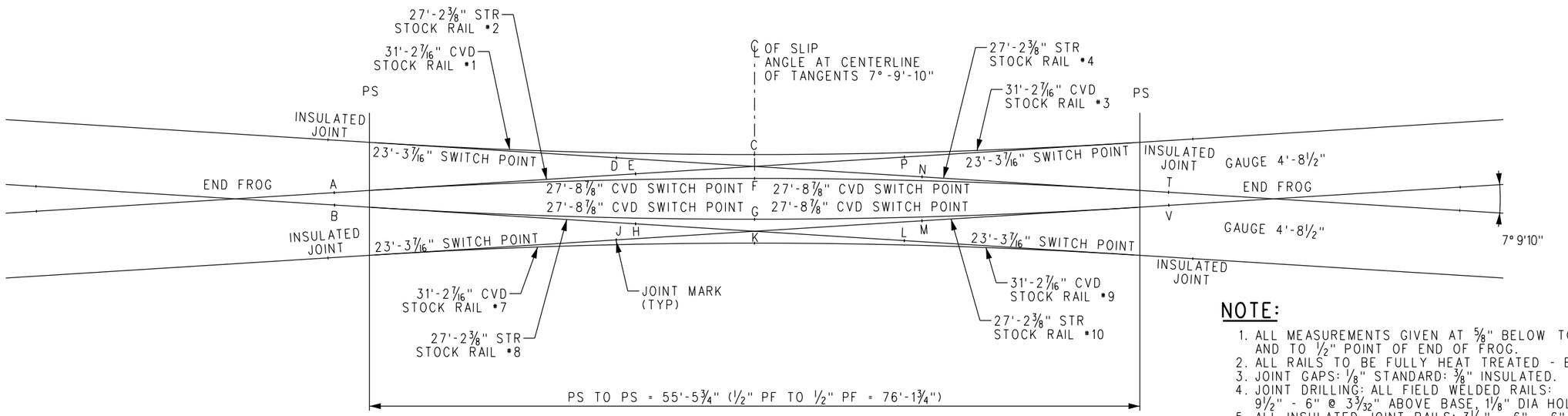

CROSSING DATA

NOTE:

1. ALL MEASUREMENTS GIVEN AT ⅝" BELOW TOP OF RAIL AND TO ½" POINT OF END OF FROG.
2. ALL RAILS TO BE FULLY HEAT TREATED - BRINELL 341-388.
3. JOINT GAPS: ⅛" STANDARD: ⅜" INSULATED.
4. JOINT DRILLING: ALL FIELD WELDED RAILS: 9½" - 6" @ 3 3/32" ABOVE BASE, 1⅛" DIA HOLES.
5. ALL INSULATED JOINT RAILS: 3½" - 6" - 6" @ 3 3/32" ABOVE BASE, 1¼" DIA HOLES.
6. PROPER LOCATION OF EDGE OF PLATES TO BE MARKED WITH WHITE PAINT ON OUTER FLANGE OF RAIL.
7. MATCH MARK ALL RAIL ENDS AS SHOWN.
8. ENTIRE CROSSOVER TO BE FULLY SHOP/FLOOR ASSEMBLED INCLUDING END FROGS AND HF GUARD RAILS.

SPECIFICATIONS:

1. CROSSING TYPE - NO 8 DOUBLE SLIP, GENERALLY PER AREMA PLAN. RAIL: 136 LB RE HEAT TREATED.
2. FROG - NO 8 RAIL BOUND MANGANESE FROG, 136 LB RE, 18'-0" LONG WITH PANDROL PLATES - MANGANESE CASTING TO BE EXPLOSIVE HARDENED.
3. SWITCH POINTS - 27'-8⅞" & 23'-3 7/16" LONG, CURVED AND STRAIGHT, SAMSON PLANING AREMA DETAIL 5100. CURVED POINTS TO BE EQUIPPED WITH REPLACEABLE MANGANESE INSERTS PER 2840-11 & 2840-12.
4. CLIPS AND RODS - VERTICAL RODS WITH "SMJ" CLIPS.
5. ADJUSTABLE BRACES - BOLTLESS WITH SPRING CLIPS.
6. GUARD RAILS - U-69 SECTION 13'-0" RAISED GUARD RAIL WITH BRACES AND PLATES.
7. GUAGE PLATES - TO BE FURNISHED INSTALLED.

REFERENCE DRAWING

LAYOUT - NO 8, DOUBLE SLIP CROSSING - 136 LB ---------- SHEET NO 2840-02

REV.	DATE	DESCRIPTION	DES.	ENG.
X	XX-XX-XX	REVISION	XX	XX

DRAWN BY: A. CARLOS DATE: 03/31/2011

ASSISTANT DIRECTOR: STANDARDS & DESIGN

DIRECTOR OF ENGINEERING AND CONSTRUCTION

SCRRA ENGINEERING STANDARDS ARE INTENDED FOR SCRRA APPROVED USES ONLY. FOR NON-SCRRA APPROVED USES:
SCRRA SHALL NOT BE RESPONSIBLE FOR THE ACCURACY OR COMPLETENESS OF THE DATA OR INFORMATION CONTAINED HEREIN. THE SELECTION AND USE OF THESE STANDARDS IS THE SOLE RESPONSIBILITY OF THE USER AND SHOULD NOT BE USED WITHOUT CONSULTING A REGISTERED PROFESSIONAL ENGINEER. ALL WARRANTIES AND REPRESENTATIONS OF ANY KIND ARE DISCLAIMED. ANYONE MAKING USE OF THIS INFORMATION AGREES THAT IT ASSUMES ALL LIABILITY ARISING FROM SUCH USE. NO PART OF THESE STANDARDS SHOULD BE REPRODUCED OR DISTRIBUTED IN ANY FORM OR BY ANY MEANS WITHOUT THE PRIOR WRITTEN PERMISSION OF SCRRA. ALL RIGHTS RESERVED.

METROLINK®
SOUTHERN CALIFORNIA REGIONAL RAIL AUTHORITY
ONE GATEWAY PLAZA, 12TH FLOOR, L. A., CA. 90012

ENGINEERING STANDARDS

CROSSING GEOMETRY AND CROSSING DATA
NO 8 136 LB RE DOUBLE SLIP CROSSING

STANDARD 2840
SCALE: NTS
REVISION –
SHEET 1 OF 1
CADD FILE: ES2840-04

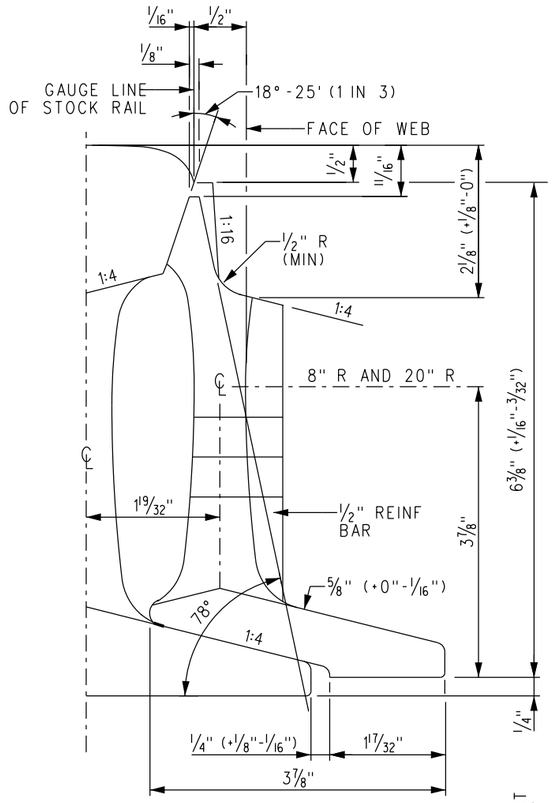

END VIEW OF POINT

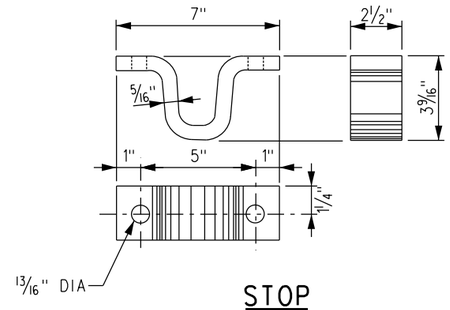

STOP

NOTES:

1. SWITCH POINTS TO BE MADE FROM NEW HEAD HARDENED RAIL.
2. METAL IDENTIFICATION TAG SHOWING HAND OF SWITCH POINT, WEIGHT OF RAIL, MANUFACTURER AND WHEN MADE, TO BE FASTENED TO SWITCH POINT AT LOCATION SHOWN.
3. RIGHT HAND TURNOUT SHOWN. MAKE OPPOSITE HAND FOR LEFT HAND SWITCH POINTS.
4. SIDE PLANING FIGURED ON GAUGE LINE 5/8" BELOW TOP OF RAIL.
5. MATERIAL AND WORKMANSHIP, ALSO ANY CONSTRUCTION DETAILS NOT SHOWN, SHALL BE PER CURRENT AREMA "MANUAL AND PORTFOLIO", UNLESS OTHERWISE SPECIFIED ON THIS PLAN.
6. IN ORDER TO ELIMINATE STRESS RAISERS, MANUFACTURER SHALL PEEN THE EDGES OF THE BOLT HOLES AS INDICATED AT THE HEEL OF THE SWITCH POINT AND AT THE HEEL END OF THE SWITCH POINT. USING AIR HAMMER WITH SUITABLE HEAD AND FINISHING WITH DRIFT PIN. BRAND ON RAIL AT EDGE OF BOLT HOLE TO BE CAREFULLY REMOVED BY GRINDING BEFORE PEENING.
7. THE CONTOUR PLANING SHALL BE ON THE GAUGE SIDE BEGINNING AT A DISTANCE OF 3'-0" FROM THE POINT OF SWITCH AND SHALL BE SHAPED TO THE CONTOUR OF A NEW 136 LB RE AND SHALL RUN OUT AT THE END OF THE TOP PLANING, WHERE THE SWITCH POINT HAS FULL HEAD CONTOUR.
8. METAL IDENTIFICATION TAG SHOWING (1) DESIGN LENGTH OF SWITCH, (2) IN PARENTHESIS, THE ACTUAL LENGTH OF SWITCH POINT RAIL AND (3) THE TURNOUT NUMBER. MARK TAG THUS: 16'-6" (40'-0") NO 8. TAG TO BE FASTENED TO SWITCH POINT, ON GAUGE SIDE OF RAIL AT HEEL SPACER BLOCK IN LOCATION SHOWN.
9. AT HEEL END OF SWITCH POINT RAIL, BREAK SHARP CORNER AROUND THE ENTIRE PERIPHERY BY SLIGHTLY GRINDING. ALSO, "DO NOT" END HARDEN RAIL END.
10. NON - INTERLOCKED AND INTERLOCKED SWITCH POINTS ARE MADE THE SAME.
11. UNLESS SWITCH POINT ORDER SPECIFICALLY CALLS FOR USE OF 3/4" RIVETS AND 3/4" STOP BOLTS, MANUFACTURER CAN SUBSTITUTE 3/4" HUCK FASTENERS, BOLT PART NO C-50-LR-BR2416 AND COLLAR PART NO L3-2-24G FOR 3/4" RIVETS. FOR 3/4" STOP BOLTS USE HUCK FASTENERS, BOLT PART NO C-50-LR-BR2424 AND COLLAR PART NO L3-2-R-24G.
12. TURNOUTS ARE TO BE FINISHED WITH MANGANESE STEEL INSERT ON THE REVERSE POINT (TURNOUT SIDE) AND A PLAIN SWITCH POINT ON THE NORMAL POINT (STRAIGHT SIDE). REPLACEMENT POINTS MUST SPECIFY WHETHER PLAIN POINT OR MANGANESE STEEL INSERT ARE TO BE FURNISHED.

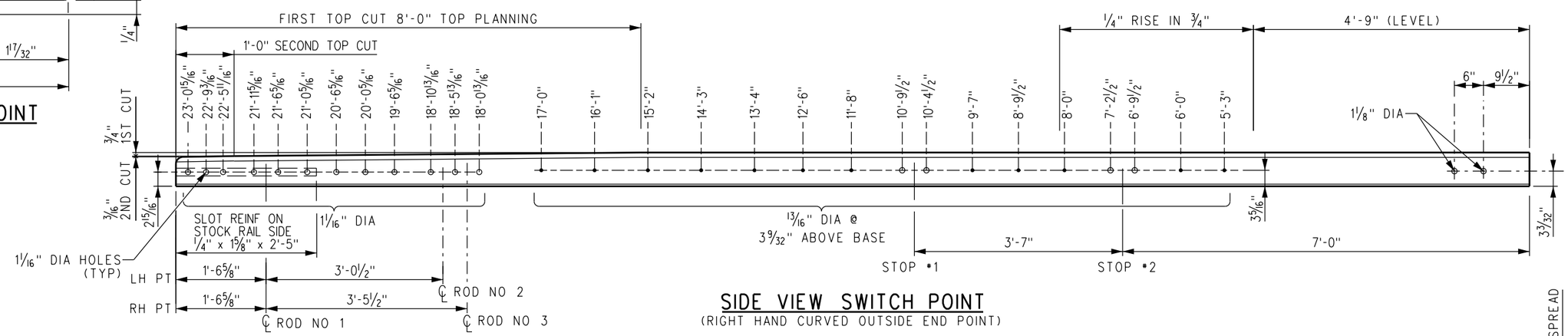

SIDE VIEW SWITCH POINT
(RIGHT HAND CURVED OUTSIDE END POINT)

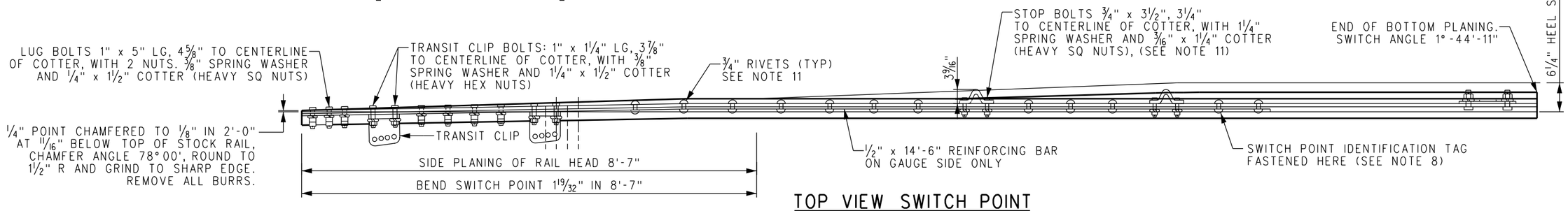

TOP VIEW SWITCH POINT

REV.	DATE	DESCRIPTION	DES.	ENG.
X	XX-XX-XX	REVISION	XX	XX

DRAWN BY: A. CARLOS DATE: 03/31/2011

ASSISTANT DIRECTOR: STANDARDS & DESIGN

DIRECTOR OF ENGINEERING AND CONSTRUCTION

SCRRA ENGINEERING STANDARDS ARE INTENDED FOR SCRRA APPROVED USES ONLY. FOR NON-SCRRA APPROVED USES:
SCRRA SHALL NOT BE RESPONSIBLE FOR THE ACCURACY OR COMPLETENESS OF THE DATA OR INFORMATION CONTAINED HEREIN. THE SELECTION AND USE OF THESE STANDARDS IS THE SOLE RESPONSIBILITY OF THE USER AND SHOULD NOT BE USED WITHOUT CONSULTING A REGISTERED PROFESSIONAL ENGINEER. ALL WARRANTIES AND REPRESENTATIONS OF ANY KIND ARE DISCLAIMED. ANYONE MAKING USE OF THIS INFORMATION AGREES THAT IT ASSUMES ALL LIABILITY ARISING FROM SUCH USE. NO PART OF THESE STANDARDS SHOULD BE REPRODUCED OR DISTRIBUTED IN ANY FORM OR BY ANY MEANS WITHOUT THE PRIOR WRITTEN PERMISSION OF SCRRA. ALL RIGHTS RESERVED.

METROLINK®
SOUTHERN CALIFORNIA REGIONAL RAIL AUTHORITY
ONE GATEWAY PLAZA, 12TH FLOOR, L. A., CA. 90012

ENGINEERING STANDARDS

136 LB RE 23'-3 7/16" STRAIGHT SWITCH POINT
MADE FROM 40'-0" LONG RAIL
NO 8 DOUBLE SLIP CROSSING

STANDARD 2840
SCALE: NTS
REVISION –
SHEET 1 OF 1
CADD FILE: ES2840-11

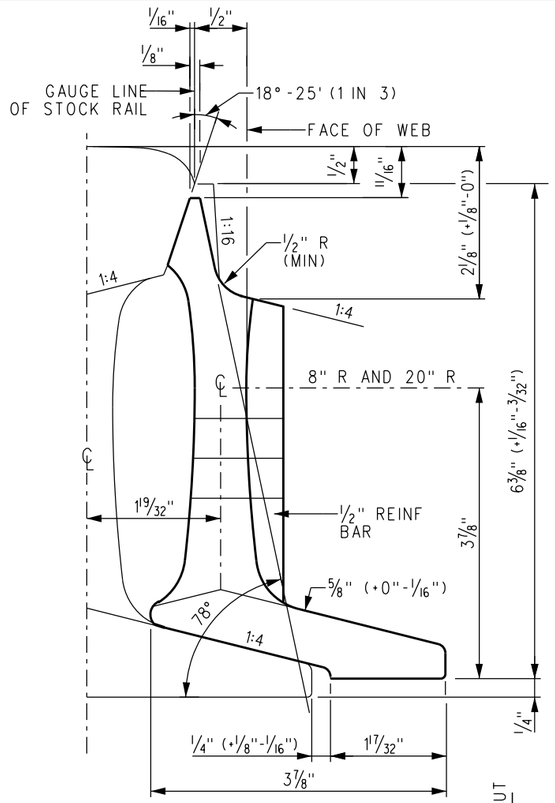

END VIEW OF POINT

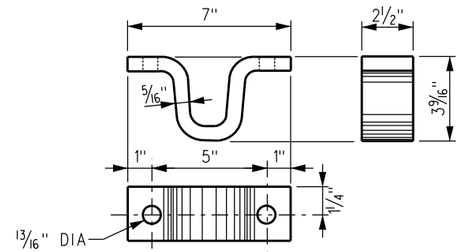

STOP

NOTES:

1. SWITCH POINTS TO BE MADE FROM NEW HEAD HARDENED RAIL.
2. METAL IDENTIFICATION TAG SHOWING HAND OF SWITCH POINT, WEIGHT OF RAIL, MANUFACTURER AND WHEN MADE, TO BE FASTENED TO SWITCH POINT AT LOCATION SHOWN.
3. RIGHT HAND TURNOUT SHOWN. MAKE OPPOSITE HAND FOR LEFT HAND SWITCH POINTS.
4. SIDE PLANING FIGURED ON GAUGE LINE 5/8" BELOW TOP OF RAIL.
5. MATERIAL AND WORKMANSHIP, ALSO ANY CONSTRUCTION DETAILS NOT SHOWN, SHALL BE PER CURRENT AREMA "MANUAL AND PORTFOLIO", UNLESS OTHERWISE SPECIFIED ON THIS PLAN.
6. IN ORDER TO ELIMINATE STRESS RAISERS, MANUFACTURER SHALL PEEN THE EDGES OF THE BOLT HOLES AS INDICATED AT THE HEEL OF THE SWITCH POINT AND AT THE HEEL END OF THE SWITCH POINT. USING AIR HAMMER WITH SUITABLE HEAD AND FINISHING WITH DRIFT PIN. BRAND ON RAIL AT EDGE OF BOLT HOLE TO BE CAREFULLY REMOVED BY GRINDING BEFORE PEENING.
7. THE CONTOUR PLANING SHALL BE ON THE GAUGE SIDE BEGINNING AT A DISTANCE OF 3'-0" FROM THE POINT OF SWITCH AND SHALL BE SHAPED TO THE CONTOUR OF A NEW 136 LB RE AND SHALL RUN OUT AT THE END OF THE TOP PLANING, WHERE THE SWITCH POINT HAS FULL HEAD CONTOUR.
8. METAL IDENTIFICATION TAG SHOWING (1) DESIGN LENGTH OF SWITCH, (2) IN PARENTHESIS, THE ACTUAL LENGTH OF SWITCH POINT RAIL AND (3) THE TURNOUT NUMBER. MARK TAG THUS: 16'-6" (40'-0") NO 8. TAG TO BE FASTENED TO SWITCH POINT, ON GAUGE SIDE OF RAIL AT HEEL SPACER BLOCK IN LOCATION SHOWN.
9. AT HEEL END OF SWITCH POINT RAIL, BREAK SHARP CORNER AROUND THE ENTIRE PERIPHERY BY SLIGHTLY GRINDING. ALSO, "DO NOT" END HARDEN RAIL END.
10. NON - INTERLOCKED AND INTERLOCKED SWITCH POINTS ARE MADE THE SAME.
11. UNLESS SWITCH POINT ORDER SPECIFICALLY CALLS FOR USE OF 3/4" RIVETS AND 3/4" STOP BOLTS, MANUFACTURER CAN SUBSTITUTE 3/4" HUCK FASTENERS, BOLT PART NO C-50-LR-BR2416 AND COLLAR PART NO L3-2-24G FOR 3/4" RIVETS. FOR 3/4" STOP BOLTS USE HUCK FASTENERS, BOLT PART NO C-50-LR-BR2424 AND COLLAR PART NO L3-2-R-24G.
12. TURNOUTS ARE TO BE FINISHED WITH MANGANESE STEEL INSERT ON THE REVERSE POINT (TURNOUT SIDE) AND A PLAIN SWITCH POINT ON THE NORMAL POINT (STRAIGHT SIDE). REPLACEMENT POINTS MUST SPECIFY WHETHER PLAIN POINT OR MANGANESE STEEL INSERT ARE TO BE FURNISHED.

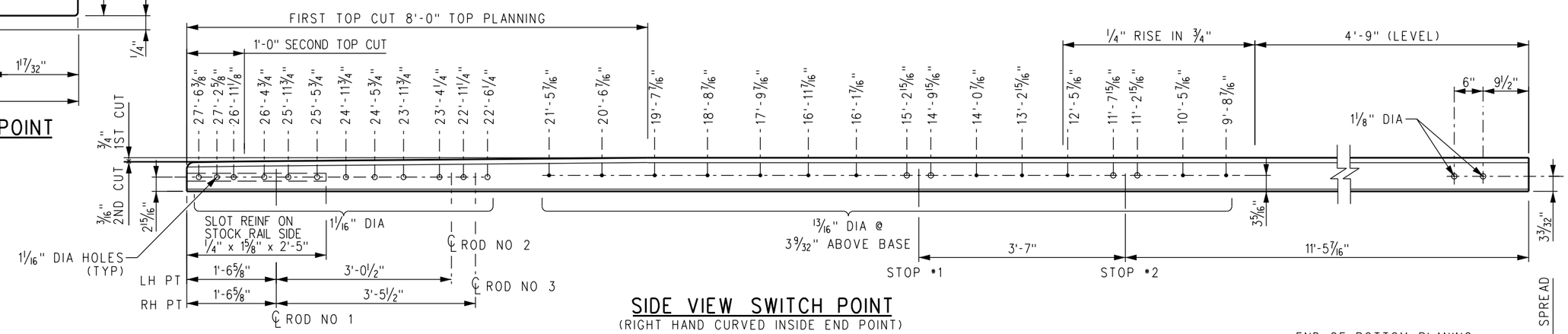

SIDE VIEW SWITCH POINT
(RIGHT HAND CURVED INSIDE END POINT)

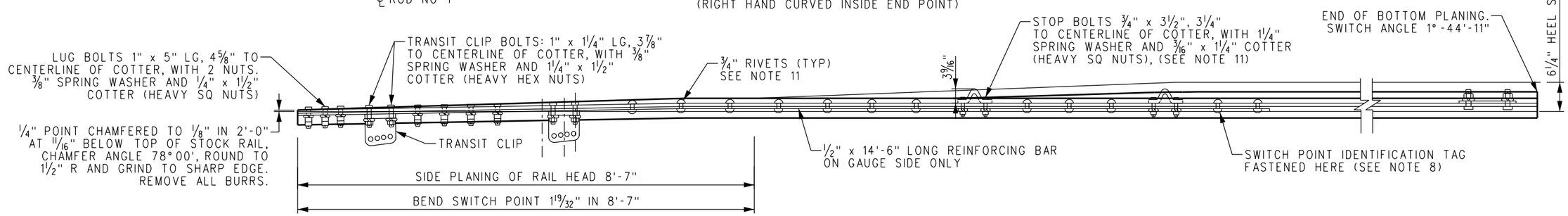

TOP VIEW SWITCH POINT

REV.	DATE	DESCRIPTION	DES.	ENG.
X	XX-XX-XX	REVISION	XX	XX

DRAWN BY: A. CARLOS DATE: 03/31/2011

ASSISTANT DIRECTOR: STANDARDS & DESIGN

DIRECTOR OF ENGINEERING AND CONSTRUCTION

SCRRA ENGINEERING STANDARDS ARE INTENDED FOR SCRRA APPROVED USES ONLY. FOR NON-SCRRA APPROVED USES:
SCRRA SHALL NOT BE RESPONSIBLE FOR THE ACCURACY OR COMPLETENESS OF THE DATA OR INFORMATION CONTAINED HEREIN. THE SELECTION AND USE OF THESE STANDARDS IS THE SOLE RESPONSIBILITY OF THE USER AND SHOULD NOT BE USED WITHOUT CONSULTING A REGISTERED PROFESSIONAL ENGINEER. ALL WARRANTIES AND REPRESENTATIONS OF ANY KIND ARE DISCLAIMED. ANYONE MAKING USE OF THIS INFORMATION AGREES THAT IT ASSUMES ALL LIABILITY ARISING FROM SUCH USE. NO PART OF THESE STANDARDS SHOULD BE REPRODUCED OR DISTRIBUTED IN ANY FORM OR BY ANY MEANS WITHOUT THE PRIOR WRITTEN PERMISSION OF SCRRA. ALL RIGHTS RESERVED.

METROLINK®
SOUTHERN CALIFORNIA REGIONAL RAIL AUTHORITY
ONE GATEWAY PLAZA, 12TH FLOOR, L. A., CA. 90012

ENGINEERING STANDARDS

136 LB RE 27'-8 7/8" CURVED SWITCH POINT
MADE FROM 40'-0" LONG RAIL
NO 8 DOUBLE SLIP CROSSING

STANDARD 2840
SCALE: NTS
REVISION –
SHEET 1 OF 1
CADD FILE: ES2840-12

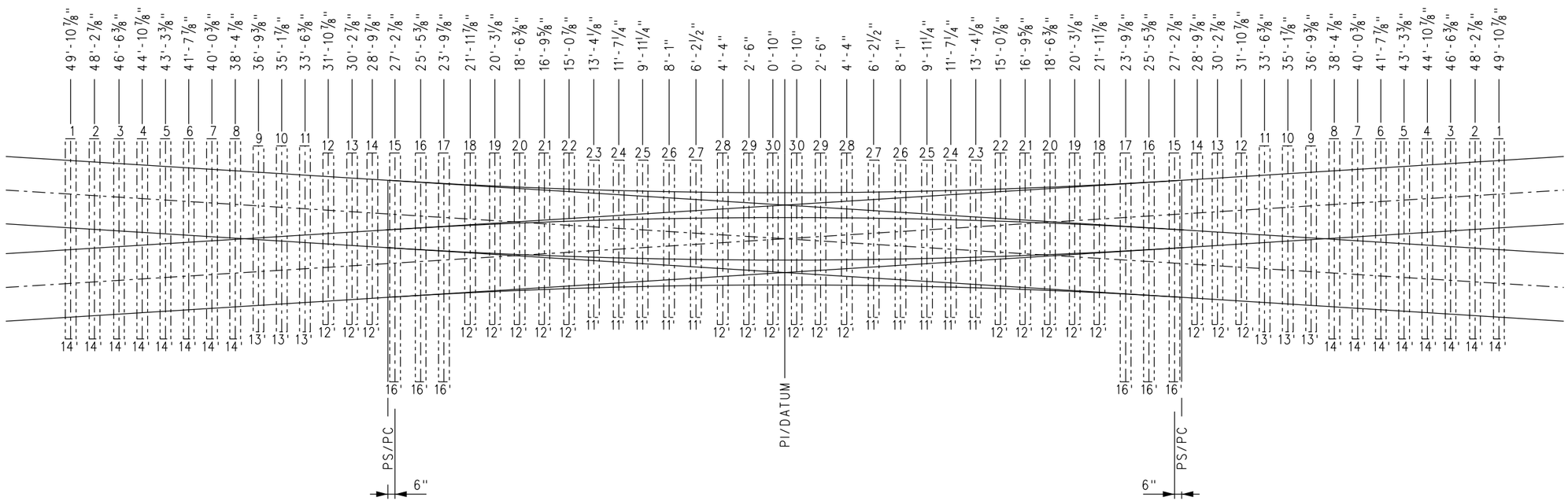

BILL OF SWITCH TIES			
PIECES	SIZE	LENGTH	BOARD FEET
10	7"x9"	11'-0"	577.5
22	7"x9"	12'-0"	1386.0
6	7"x9"	13'-0"	409.5
16	7"x9"	14'-0"	1176.0
0	7"x9"	15'-0"	0
6	7"x9"	16'-0"	504.0
TOTAL			TOTAL
60			4053

REV.	DATE	DESCRIPTION	DES.	ENG.
X	XX-XX-XX	REVISION	XX	XX

DRAWN BY: HDR DATE: 03/31/2011

ASSISTANT DIRECTOR: STANDARDS & DESIGN

DIRECTOR OF ENGINEERING AND CONSTRUCTION

SCRRA ENGINEERING STANDARDS ARE INTENDED FOR SCRRA APPROVED USES ONLY. FOR NON-SCRRA APPROVED USES:
SCRRA SHALL NOT BE RESPONSIBLE FOR THE ACCURACY OR COMPLETENESS OF THE DATA OR INFORMATION CONTAINED HEREIN. THE SELECTION AND USE OF THESE STANDARDS IS THE SOLE RESPONSIBILITY OF THE USER AND SHOULD NOT BE USED WITHOUT CONSULTING A REGISTERED PROFESSIONAL ENGINEER. ALL WARRANTIES AND REPRESENTATIONS OF ANY KIND ARE DISCLAIMED. ANYONE MAKING USE OF THIS INFORMATION AGREES THAT IT ASSUMES ALL LIABILITY ARISING FROM SUCH USE. NO PART OF THESE STANDARDS SHOULD BE REPRODUCED OR DISTRIBUTED IN ANY FORM OR BY ANY MEANS WITHOUT THE PRIOR WRITTEN PERMISSION OF SCRRA. ALL RIGHTS RESERVED.

METROLINK®

SOUTHERN CALIFORNIA REGIONAL RAIL AUTHORITY
ONE GATEWAY PLAZA, 12TH FLOOR, L. A., CA. 90012

ENGINEERING STANDARDS

NO 8 136 LB RE DOUBLE SLIP CROSSING
TIMBER TIE LAYOUT

STANDARD 2840
SCALE: NTS
REVISION –
SHEET 1 OF 1
CADD FILE: ES2840-30

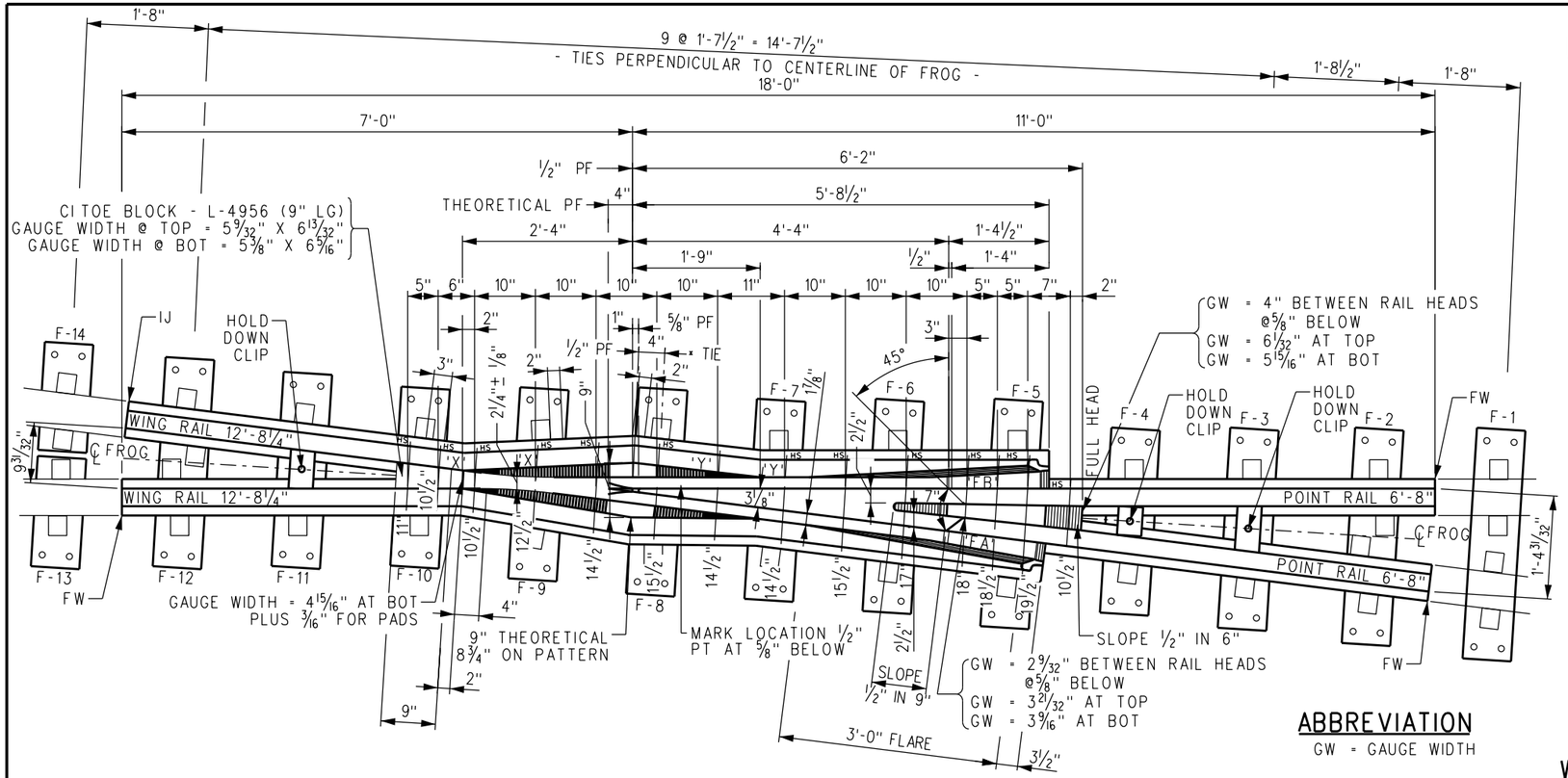

NO 8 RAILBOUND MANGANESE FROG 18'-0" LONG WITH PLATES

NOTES:

1. FROG ANGLE 7°-09'-10".
2. RAIL USED TO FABRICATE FROG IS TO BE 136 LB HEAD HARDENED.
3. RAIL BOUND MANGANESE FROG PER CURRENT AREMA PLAN NO 775, 1012 AN M2.7 WITH EXPLOSIVE HARDENED MANGANESE HIGH INTEGRITY CASTING PER CURRENT AREMA SPECIFICATIONS AND MODIFIED FOR ARM LENGTHS AND PLATES WITH "PANDROL" FASTENERS.
4. ALL FROG PLATES SHALL BE STAMPED IN ½" CHARACTERS TO INDICATE MFG, FROG NO, RH, RAIL SECTION AND PLATE NUMBER. MARK TO BE STAMPED ON SAME END OF ALL FROG PLATES.
5. FOR DETAILS OF FROG GAUGE PLATES SEE SHEET ES2840-47. FOR DETAILS OF FROG PLATES F-1 THRU F-4 SEE SHEET ES2840-48.
6. WORKMANSHIP AND MATERIALS SHALL BE PER CURRENT AREMA "SPECIFICATIONS FOR SPECIAL TRACKWORK", EXCEPT AS OTHERWISE SPECIFIED.
7. ANY CONSTRUCTION DETAILS NOT SHOWN SHALL BE IN ACCORDANCE WITH CURRENT AREMA RECOMMENDED PRACTICE.
8. FROG PLATES ARE DESIGNED TO BE INSTALLED PERPENDICULAR TO MAIN TRACK.
9. BODY BOLTS, 1⅜" DIA, H.T.C.S. - PER AREMA SPECIFICATIONS.
10. TOE AND HEEL BLOCKS AND BOLTS PER AREMA SPECIFICATIONS.
11. PLATES TO BE MADE OF MILD ROLLED STEEL.
12. THE PLATES AS SHOWN ARE FOR A 136 LB, NO 8, DOUBLE SLIP CROSSING.
13. THE "PANDROL" TYPE, OR APPROVED EQUAL, WELD - ON PRESSED STEEL SHOULDER, MADE OF MILD STEEL AND MEETING "PANDROL'S" DESIGN SPECIFICATIONS SHALL BE USED. THE PRESSED STEEL SHOULDER MUST BE CAREFULLY WELDED TO ALL PLATES WITH A MINIMUM 2 PASS ⅜" + FILLET WELD ALONG BEVELED GROOVES OF THE SHOULDER. ANY WELD PROJECTING BEYOND THE VERTICAL FACE OF THE SHOULDER IN THE AREA OF THE BASE OF RAIL SEAT MUST BE MACHINED OUT TO PROVIDE A CLEAR RAIL SEAT DIMENSION AS CALLED FOR.
14. MANUFACTURER OF FROG PLATES SHALL USE COMPLETED FROG TO VERIFY LOCATION OF ADJUSTABLE CLAMPS ON FROG PLATES F-1, F-2 AND F-3 TO INSURE PROPER FIT. FROG PLATES WILL BE WELDED TO THE GAUGE PLATES IN THE FIELD WITH A 3 PASS ½" + FILLET WELD. PLATES WILL BE WELDED ONLY AFTER THE GAUGE PLATES ARE SECURED IN THE PROPER LOCATION ON THE TIE WITH THE FROG IN PLACE AT PROPER ALIGNMENT.
15. GUARD RAIL PLATES ARE TO BE INSTALLED AND WELDED TO THE FROG GAUGE PLATES IN THE FIELD WITH A 3 PASS ½" + FILLET WELD CONTINUOUS ON BOTH ENDS OF THE PLATE. PLATES ARE TO BE WELDED ONLY AFTER THE GAUGE PLATE AND THE FROG IS SECURED IN THE PROPER LOCATION ON THE TIE WITH PROPER ALIGNMENT.
16. IDENTIFICATION TAG WITH RAISED METAL CHARACTERS TO BE APPLIED WHICH WILL STATE WEIGHT OF RAIL, FROG NO, MANUFACTURER AND YEAR MANUFACTURED.

ABBREVIATION

GW = GAUGE WIDTH

WELDING OF GAUGE PLATE & GUARD RAIL:

1. POSITION GAUGE PLATES AT DESIGNATED TIE LOCATIONS AND ANCHOR IN PLACE.
2. CHECK TRACK FOR CORRECT GAUGE.
3. STARTING WITH ONE GAUGE PLATE, PLACE FROG PLATES WITH ADJUSTABLE BRACES AND SECURE TO FROG AND GUARD RAIL WITH "PANDROL" CLIPS.
4. RECHECK TRACK GAUGE AND CORRECT IF NECESSARY.
5. CAREFULLY WELD FROG PLATE AND GUARD RAIL PLATE TO FROG GAUGE PLATES WITH 3 PASS ½" + FILLET WELD. FOR WELDING USE THE FOLLOWING:
   A. ELECTRODE, 5/32", WELDING SPEC 7018XLM.
   B. ELECTRODE, 3/16", WELDING SPEC 7018XLM.
   C. WIRE, 3/32", NR203, 1% NICKEL FLUX CORE.
   OTHER WIRE OR ELECTRODES MEETING SPECIFICATIONS AS CALLED FOR AND APPROVED BY SCRRA DIRECTOR OF ENGINEERING.

REFERENCE DRAWINGS

LAYOUT - NO 8, DOUBLE SLIP CROSSING - 136 LB ---------- NO 2840-02
U-69 GUARD RAIL - 136 LB ---------- NO 2840-60

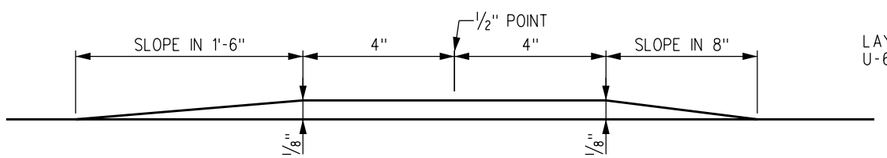

DETAIL OF WING WHEEL RISER

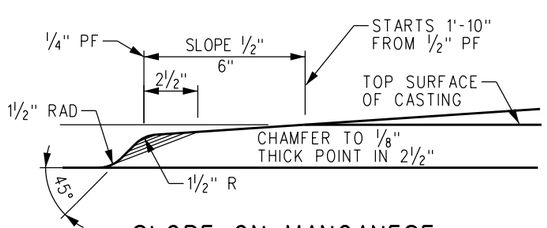

SLOPE ON MANGANESE AT SECTION "X" - "X" ON WING RAIL

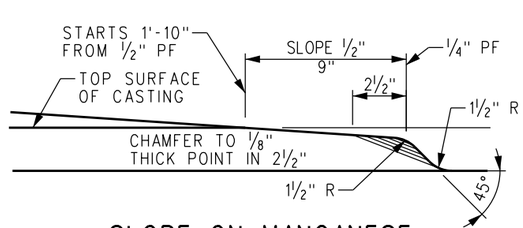

SLOPE ON MANGANESE AT SECTION "Y" - "Y" ON WING RAIL

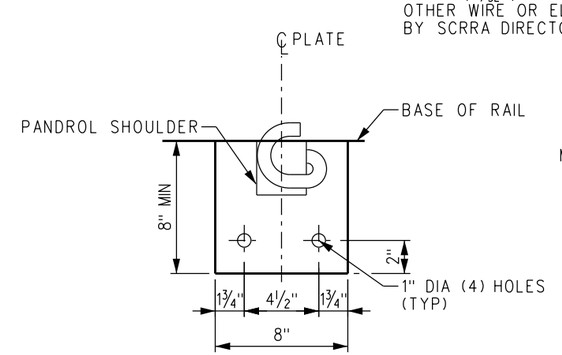

TYPICAL PLATE PUNCHING DETAIL

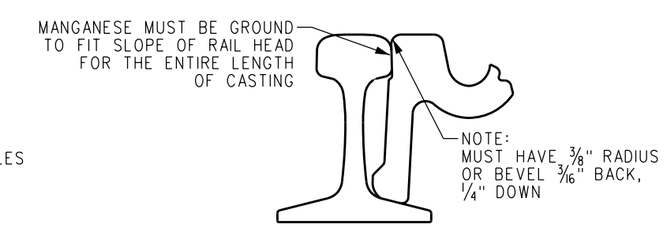

DETAIL OF FROG CASTING / RAIL FIT

REV.	DATE	DESCRIPTION	DES.	ENG.
X	XX-XX-XX	REVISION	XX	XX

DRAWN BY: A. CARLOS DATE: 03/31/2011

ASSISTANT DIRECTOR: STANDARDS & DESIGN

DIRECTOR OF ENGINEERING AND CONSTRUCTION

SCRRA ENGINEERING STANDARDS ARE INTENDED FOR SCRRA APPROVED USES ONLY. FOR NON-SCRRA APPROVED USES:
SCRRA SHALL NOT BE RESPONSIBLE FOR THE ACCURACY OR COMPLETENESS OF THE DATA OR INFORMATION CONTAINED HEREIN. THE SELECTION AND USE OF THESE STANDARDS IS THE SOLE RESPONSIBILITY OF THE USER AND SHOULD NOT BE USED WITHOUT CONSULTING A REGISTERED PROFESSIONAL ENGINEER. ALL WARRANTIES AND REPRESENTATIONS OF ANY KIND ARE DISCLAIMED. ANYONE MAKING USE OF THIS INFORMATION AGREES THAT IT ASSUMES ALL LIABILITY ARISING FROM SUCH USE. NO PART OF THESE STANDARDS SHOULD BE REPRODUCED OR DISTRIBUTED IN ANY FORM OR BY ANY MEANS WITHOUT THE PRIOR WRITTEN PERMISSION OF SCRRA. ALL RIGHTS RESERVED.

METROLINK®
SOUTHERN CALIFORNIA REGIONAL RAIL AUTHORITY
ONE GATEWAY PLAZA, 12TH FLOOR, L. A., CA. 90012

ENGINEERING STANDARDS

NO 8 RAILBOUND MANGANESE STEEL FROG WITH PANDROLIZED PLATES FOR A 136 LB RE DOUBLE SLIP CROSSING

STANDARD 2840
SCALE: NTS
REVISION –
SHEET 1 OF 1
CADD FILE: ES2840-40

NOTES:

1. HOLD DOWN CLIPS TO BE INSTALLED IN THE FIELD.
2. SOLID CAST MANGANESE STEEL CENTER FROGS PER CURRENT AREMA SPECIFICATIONS MODIFIED FOR USE WITH "PANDROL" TYPE FASTENERS.

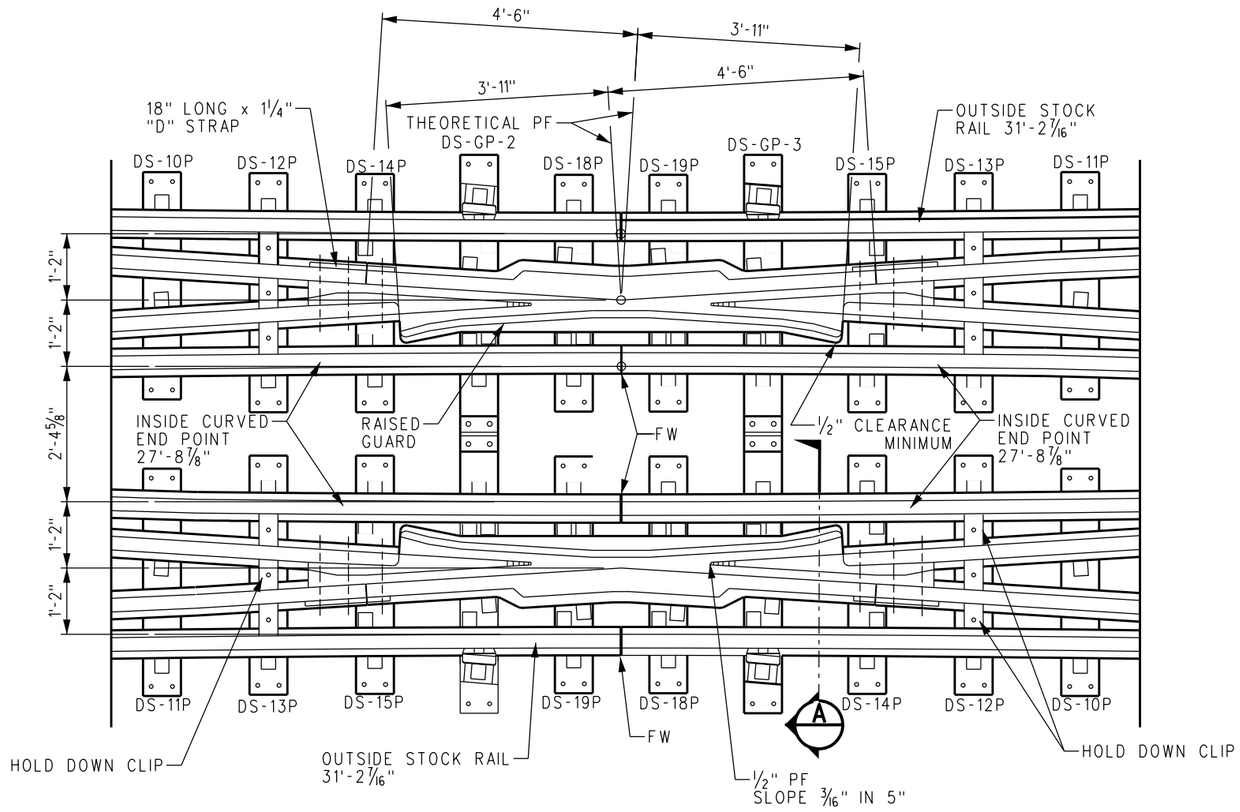

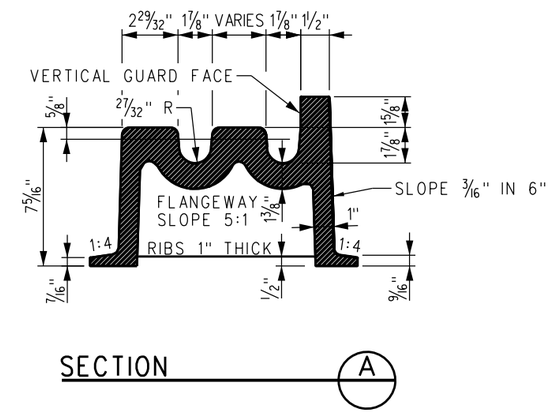

NO 8 DOUBLE SLIP CROSSING CENTER SECTION LAYOUT

FROG ANGLE 7° - 09' - 10"
FLANGEWAY 1⅞" WIDE, 1⅞" DEEP

REV.	DATE	DESCRIPTION	DES.	ENG.
X	XX-XX-XX	REVISION	XX	XX

DRAWN BY: A. CARLOS DATE: 03/31/2011

ASSISTANT DIRECTOR: STANDARDS & DESIGN

DIRECTOR OF ENGINEERING AND CONSTRUCTION

SCRRA ENGINEERING STANDARDS ARE INTENDED FOR SCRRA APPROVED USES ONLY. FOR NON-SCRRA APPROVED USES:
SCRRA SHALL NOT BE RESPONSIBLE FOR THE ACCURACY OR COMPLETENESS OF THE DATA OR INFORMATION CONTAINED HEREIN. THE SELECTION AND USE OF THESE STANDARDS IS THE SOLE RESPONSIBILITY OF THE USER AND SHOULD NOT BE USED WITHOUT CONSULTING A REGISTERED PROFESSIONAL ENGINEER. ALL WARRANTIES AND REPRESENTATIONS OF ANY KIND ARE DISCLAIMED. ANYONE MAKING USE OF THIS INFORMATION AGREES THAT IT ASSUMES ALL LIABILITY ARISING FROM SUCH USE. NO PART OF THESE STANDARDS SHOULD BE REPRODUCED OR DISTRIBUTED IN ANY FORM OR BY ANY MEANS WITHOUT THE PRIOR WRITTEN PERMISSION OF SCRRA. ALL RIGHTS RESERVED.

METROLINK®
SOUTHERN CALIFORNIA REGIONAL RAIL AUTHORITY
ONE GATEWAY PLAZA, 12TH FLOOR, L. A., CA. 90012

ENGINEERING STANDARDS

NO 8 DOUBLE SLIP CROSSING
CENTER SECTION LAYOUT
136 LB RE RAIL

STANDARD 2840
SCALE: NTS
REVISION –
SHEET 1 OF 1
CADD FILE: ES2840-41

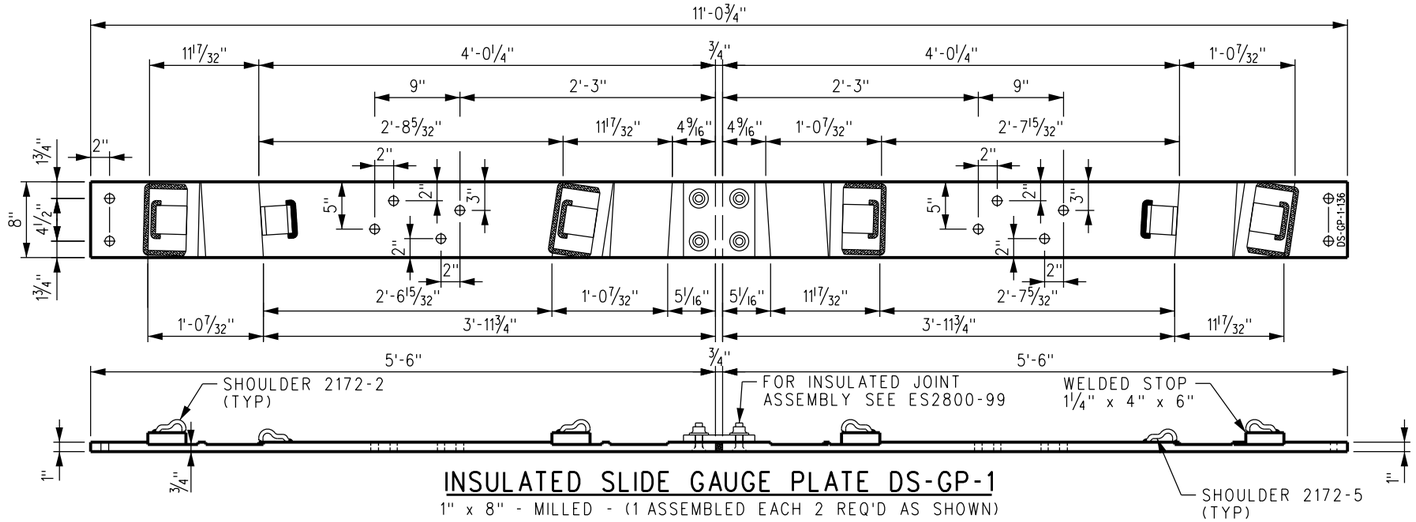

INSULATED SLIDE GAUGE PLATE DS-GP-1

1" x 8" - MILLED - (1 ASSEMBLED EACH 2 REQ'D AS SHOWN)

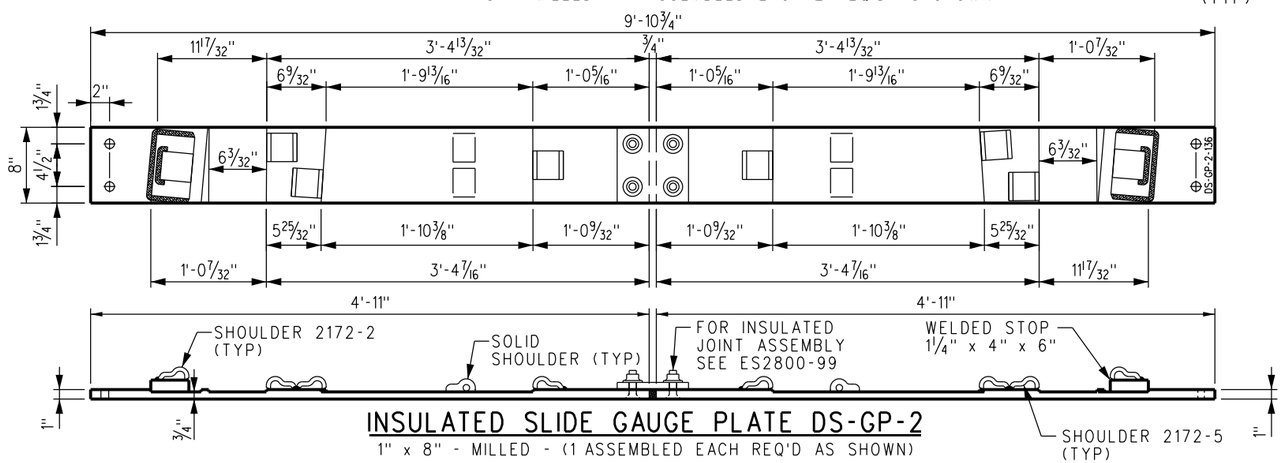

INSULATED SLIDE GAUGE PLATE DS-GP-2

1" x 8" - MILLED - (1 ASSEMBLED EACH REQ'D AS SHOWN)

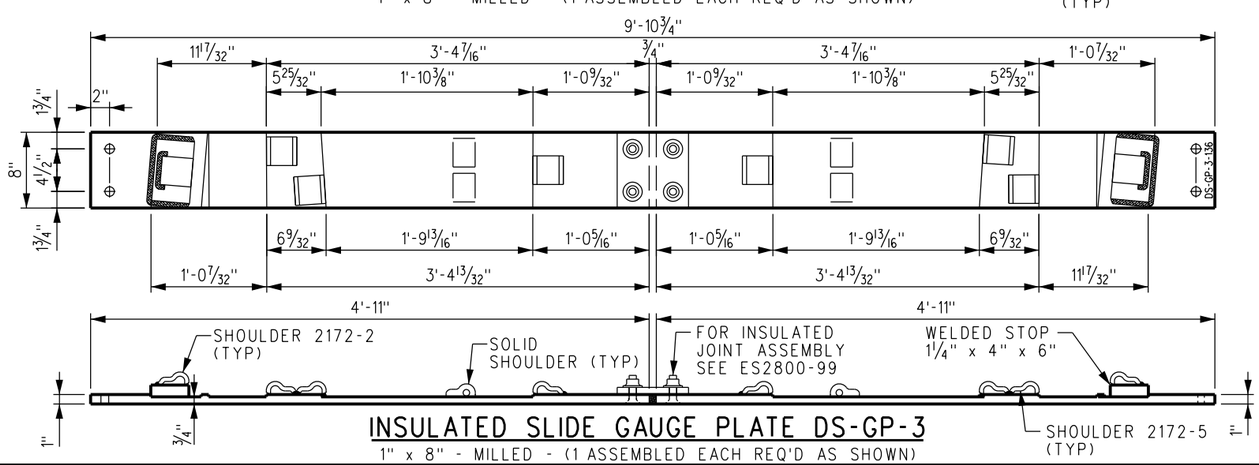

INSULATED SLIDE GAUGE PLATE DS-GP-3

1" x 8" - MILLED - (1 ASSEMBLED EACH REQ'D AS SHOWN)

NOTES:

1. PLATES TO BE MADE OF MILD ROLLED STEEL.
2. THE PLATES AS SHOWN ARE FOR A 136 LB, NO 8 DOUBLE SLIP CROSSING.
3. THE "PANDROL" TYPE, OR APPROVED EQUAL, WELD - ON PRESSED STEEL SHOULDER, MADE OF MILD ROLLED STEEL AND MEETING "PANDROL'S" DESIGN SPECIFICATIONS SHALL BE USED.
4. THE PRESSED STEEL SHOULDER MUST BE CAREFULLY WELDED TO GAUGE PLATES. ANY WELD PROJECTING BEYOND THE VERTICAL FACE OF SHOULDER IN THE AREA OF THE RAIL SEAT MUST BE MACHINED OUT TO PROVIDE A CLEAR RAIL SEAT DIMENSION AS CALLED FOR.
5. STAMP PLATE WITH PROPER PLATE NUMBER AND WEIGHT OF RAIL.
6. ALL WELDS ARE 1/2" FILLET WELDS UNLESS OTHERWISE NOTED.
7. HOLES IN PLATES ARE 1" IN DIA UNLESS OTHERWISE NOTED.

REFERENCE DRAWINGS

LAYOUT - NO 8, DOUBLE SLIP CROSSING - 136 LB -------- SHEET NO 2840-02

REV.	DATE	DESCRIPTION	DES.	ENG.
X	XX-XX-XX	REVISION	XX	XX

DRAWN BY: A. CARLOS DATE: 03/31/2011

ASSISTANT DIRECTOR: STANDARDS & DESIGN

DIRECTOR OF ENGINEERING AND CONSTRUCTION

SCRRA ENGINEERING STANDARDS ARE INTENDED FOR SCRRA APPROVED USES ONLY. FOR NON-SCRRA APPROVED USES:
SCRRA SHALL NOT BE RESPONSIBLE FOR THE ACCURACY OR COMPLETENESS OF THE DATA OR INFORMATION CONTAINED HEREIN. THE SELECTION AND USE OF THESE STANDARDS IS THE SOLE RESPONSIBILITY OF THE USER AND SHOULD NOT BE USED WITHOUT CONSULTING A REGISTERED PROFESSIONAL ENGINEER. ALL WARRANTIES AND REPRESENTATIONS OF ANY KIND ARE DISCLAIMED. ANYONE MAKING USE OF THIS INFORMATION AGREES THAT IT ASSUMES ALL LIABILITY ARISING FROM SUCH USE. NO PART OF THESE STANDARDS SHOULD BE REPRODUCED OR DISTRIBUTED IN ANY FORM OR BY ANY MEANS WITHOUT THE PRIOR WRITTEN PERMISSION OF SCRRA. ALL RIGHTS RESERVED.

METROLINK®
SOUTHERN CALIFORNIA REGIONAL RAIL AUTHORITY
ONE GATEWAY PLAZA, 12TH FLOOR, L. A., CA. 90012

ENGINEERING STANDARDS

INSULATED GAUGE PLATE DETAILS
DS–GP–1, DS–GP–2 AND DS–GP–3
136 LB RE NO 8 DOUBLE SLIP CROSSING

STANDARD 2840
SCALE: NTS
REVISION –
SHEET 1 OF 1
CADD FILE: ES2840–44

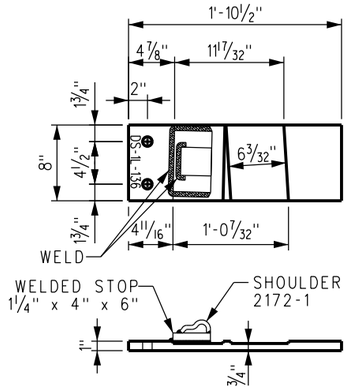

BRACE PLATE - DS-1L

1" x 8" x 1'-10½"
MILLED W/ADJ RAIL BRACE

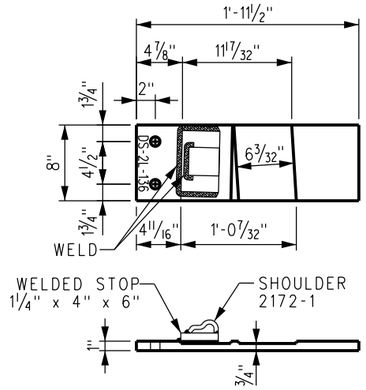

BRACE PLATE - DS-2L

1" x 8" x 1'-11½"
MILLED W/ADJ RAIL BRACE

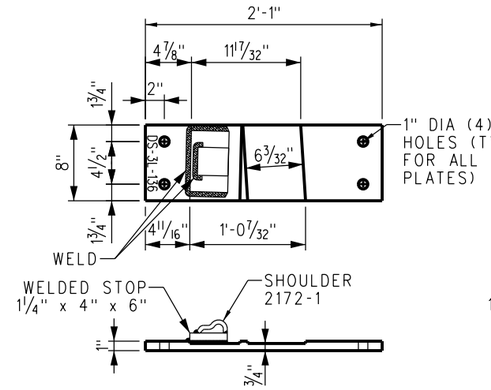

BRACE PLATE - DS-3L

1" x 8" x 2'-1"
MILLED W/ADJ RAIL BRACE

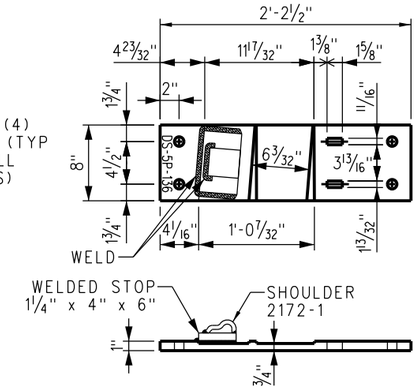

BRACE SLIDE PLATE - DS-5P

1" x 8" x 2'-2½"
MILLED W/ADJ RAIL BRACE

NOTES:

1. PLATES TO BE MADE OF MILD ROLLED STEEL.
2. EACH PLATE TO BE PLAINLY STAMPED WITH PLATE NO AND 136 (WEIGHT OF RAIL) & HAND OF TURNOUT (RH OR LH)
3. THE PANDROL TYPE, OR APPROVED EQUAL, WELD - ON PRESSED STEEL SHOULDER, MADE FROM MILD STEEL, AND MEETING PANDROL'S DESIGN SPECIFICATIONS, SHALL BE USED.
4. THE PRESSED STEEL SHOULDER MUST BE CAREFULLY WELDED TO THE PLATE. ANY WELD PROJECTING BEYOND THE VERTICAL FACE OF SHOULDER IN THE AREA OF THE RAIL SEAT MUST BE MACHINED OUT TO PROVIDE A CLEAR RAIL SEAT DIMENSION AS CALLED FOR.
5. THE PLATES AS SHOWN ARE FOR A 136 LB, NO 8 DOUBLE SLIP CROSSING.
6. HOLES IN PLATES ARE 1" IN DIA UNLESS OTHERWISE NOTED.

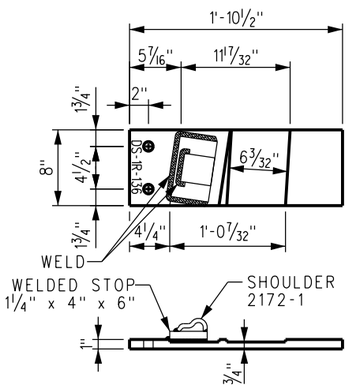

BRACE PLATE - DS-1R

1" x 8" x 1'-10½"
MILLED W/ADJ RAIL BRACE

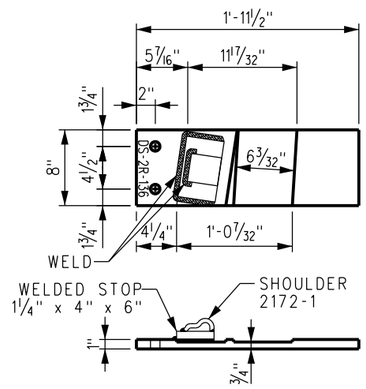

BRACE PLATE - DS-2R

1" x 8" x 1'-11½"
MILLED W/ADJ RAIL BRACE

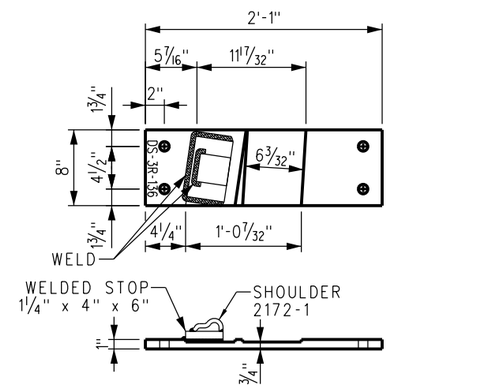

BRACE PLATE - DS-3R

1" x 8" x 2'-1"
MILLED W/ADJ RAIL BRACE

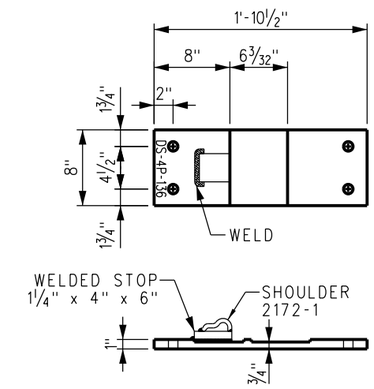

SLIDE PLATE - DS-4P

1" x 8" x 1'-10½"
MILLED W/ADJ RAIL BRACE

WELDING SPECIFICATIONS:

1. SET PRESSED STEEL SHOULDER FLUSH AGAINST LINE OF BASE OF RAIL OR SHOULDER OF MILLED PLATE AS SHOWN AND WELD WITH 2 - PASS ⅜" + WELD.
2. STOP PLATE FOR ADJUSTABLE RAIL BRACE TO BE SET FLUSH WITH SHOULDER OF MILLED PLATE AS SHOWN AND WELD WITH 3 - PASS ½" + FILLET WELD.
3. SHOULDERS AND STOPS ARE TO BE CAREFULLY WELDED TO PLATE. NO WELD SHALL PROJECT BEYOND THE VERTICAL EDGE OF THE UNWELDED FOURTH SIDE OF THE STOP PLATE OR VERTICAL FACE OF SHOULDER IN THE AREA OF THE RAIL SEAT. ANY WELD PROJECTING BEYOND THE FACE OF THE STOP OR SHOULDER MUST BE MACHINED OFF TO PROVIDE CLEAR DIMENSION CALLED FOR.
4. FOR WELDING PRESSED STEEL SHOULDERS OR PLATE STOPS FOR ADJUSTABLE USE THE FOLLOWING:
   A. ELECTRODE 1 5/32", WELDING SPEC. 7018XLM.
   B. ELECTRODE 3/16", WELDING SPEC. 7018XLM.
   C. WIRE, WELDING 3/32", NR203, 1% NICKEL FLUX CORE. OTHER WIRE OR ELECTRODES MEETING SPECIFICATIONS AS CALLED FOR, APPROVED BY DIRECTOR OF ENGINEERING, MAY BE USED.

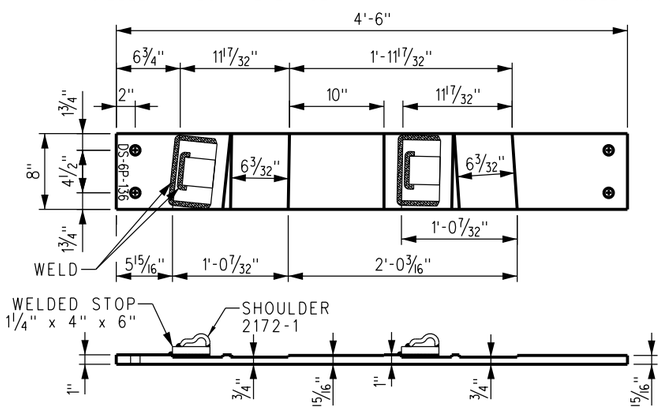

BRACE PLATE - DS-6P

1" x 8" x 4'-6"
MILLED W/ADJ RAIL BRACE

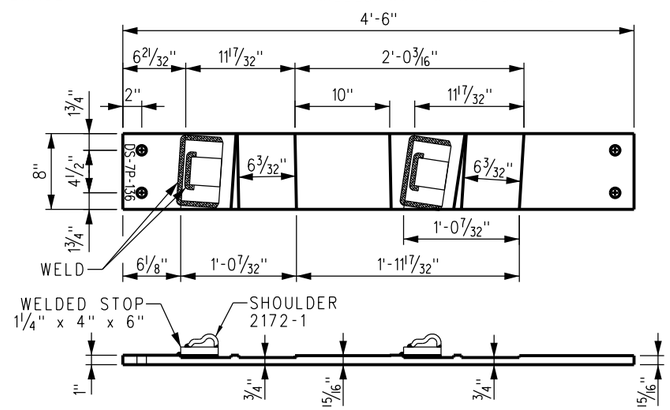

BRACE PLATE - DS-7P

1" x 8" x 4'-6"
MILLED W/ADJ RAIL BRACE

REFERENCE DRAWINGS

LAYOUT - NO 8, DOUBLE SLIP CROSSING - 136 LB -------- SHEET NO 2840-02

REV.	DATE	DESCRIPTION	DES.	ENG.
X	XX-XX-XX	REVISION	XX	XX

DRAWN BY: A. CARLOS DATE: 03/31/2011

ASSISTANT DIRECTOR: STANDARDS & DESIGN

DIRECTOR OF ENGINEERING AND CONSTRUCTION

SCRRA ENGINEERING STANDARDS ARE INTENDED FOR SCRRA APPROVED USES ONLY. FOR NON-SCRRA APPROVED USES:
SCRRA SHALL NOT BE RESPONSIBLE FOR THE ACCURACY OR COMPLETENESS OF THE DATA OR INFORMATION CONTAINED HEREIN. THE SELECTION AND USE OF THESE STANDARDS IS THE SOLE RESPONSIBILITY OF THE USER AND SHOULD NOT BE USED WITHOUT CONSULTING A REGISTERED PROFESSIONAL ENGINEER. ALL WARRANTIES AND REPRESENTATIONS OF ANY KIND ARE DISCLAIMED. ANYONE MAKING USE OF THIS INFORMATION AGREES THAT IT ASSUMES ALL LIABILITY ARISING FROM SUCH USE. NO PART OF THESE STANDARDS SHOULD BE REPRODUCED OR DISTRIBUTED IN ANY FORM OR BY ANY MEANS WITHOUT THE PRIOR WRITTEN PERMISSION OF SCRRA. ALL RIGHTS RESERVED.

METROLINK®
SOUTHERN CALIFORNIA REGIONAL RAIL AUTHORITY
ONE GATEWAY PLAZA, 12TH FLOOR, L. A., CA. 90012

ENGINEERING STANDARDS

BRACE PLATE AND SLIDE PLATE DETAILS
NO 8 136 LB RE DOUBLE SLIP CROSSING

STANDARD 2840
SCALE: NTS
REVISION –
SHEET 1 OF 1
CADD FILE: ES2840-45

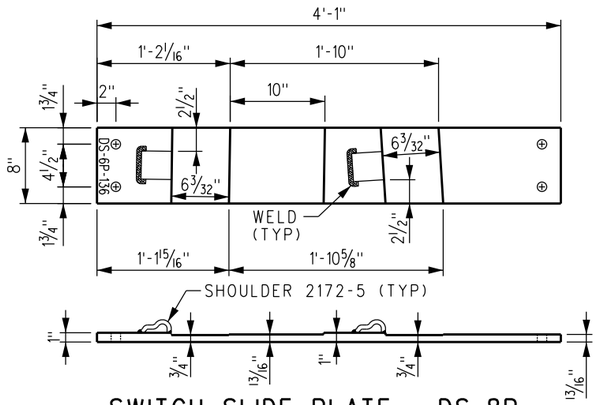

SWITCH SLIDE PLATE - DS-8P

1" x 8" x 4'-1" - MILLED - W/ADJ RAIL BRACE

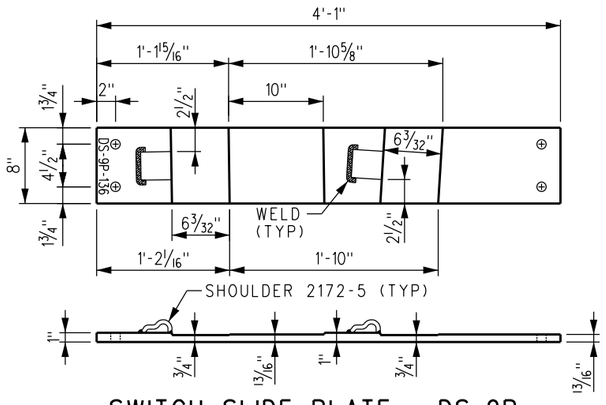

SWITCH SLIDE PLATE - DS-9P

1" x 8" x 4'-1" - MILLED - W/ADJ RAIL BRACE

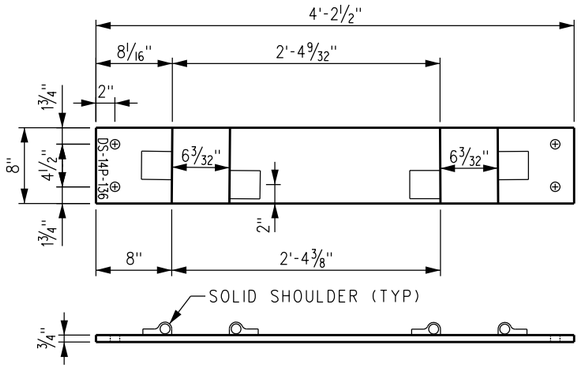

PLATE - DS-14P

3/4" x 8" x 4'-2 1/2" - FLAT

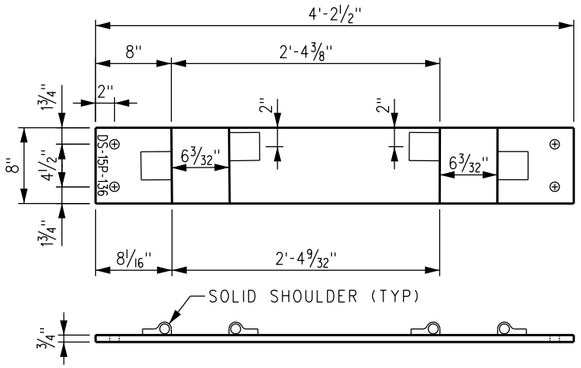

PLATE - DS-15P

3/4" x 8" x 4'-2 1/2" - FLAT

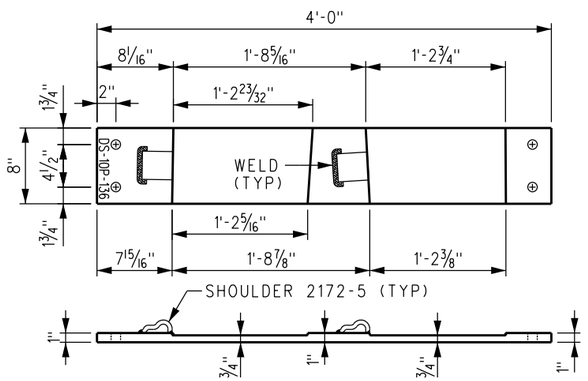

SWITCH SLIDE PLATE - DS-10P

1" x 8" x 4'-0" - MILLED - W/ADJ RAIL BRACE

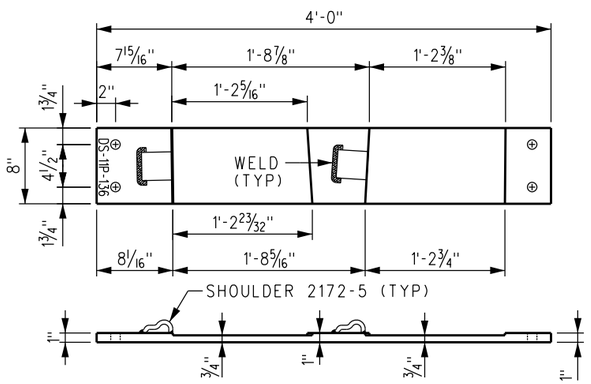

SWITCH SLIDE PLATE - DS-11P

1" x 8" x 4'-0" - MILLED - W/ADJ RAIL BRACE

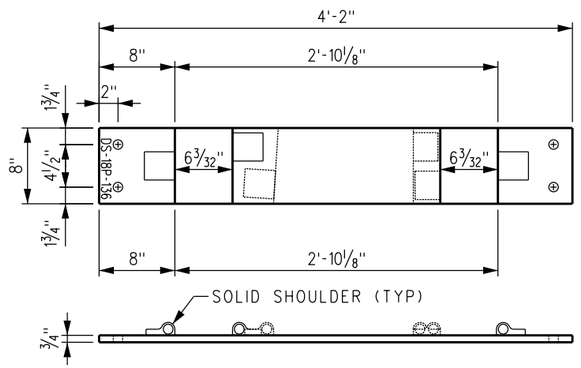

PLATE - DS-18P

3/4" x 8" x 4'-2" - FLAT

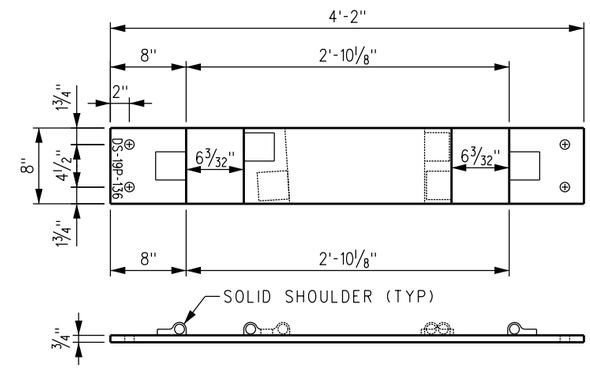

PLATE - DS-19P

3/4" x 8" x 4'-2" - FLAT

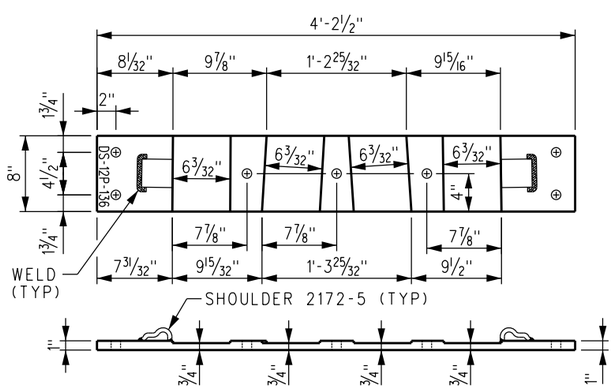

SWITCH HEEL PLATE - DS-12P

1" x 8" x 4'-2 1/2" - MILLED - W/ADJ RAIL BRACE

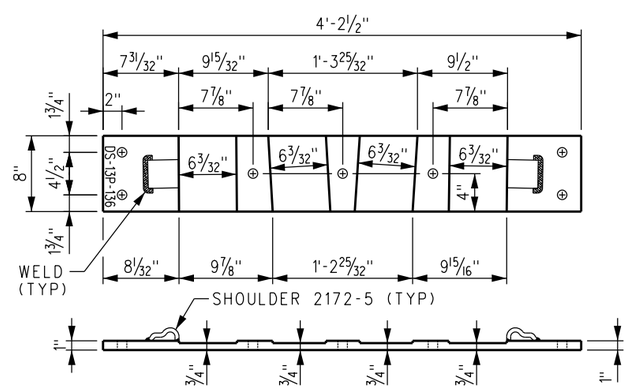

SWITCH HEEL PLATE - DS-13P

1" x 8" x 4'-2 1/2" - MILLED - W/ADJ RAIL BRACE

NOTES:

1. STAMP PLATE WITH PROPER PLATE NUMBER AND WEIGHT OF RAIL.
2. ALL WELDS ARE 1/2" FILLET WELDS UNLESS OTHERWISE NOTED.
3. HOLES IN PLATES ARE 1" IN DIA UNLESS OTHERWISE NOTED.

REFERENCE DRAWINGS

LAYOUT - NO 8, DOUBLE SLIP CROSSING - 136 LB -------- SHEET NO 2840-02

REV.	DATE	DESCRIPTION	DES.	ENG.
X	XX-XX-XX	REVISION	XX	XX

DRAWN BY: A. CARLOS DATE: 03/31/2011

ASSISTANT DIRECTOR: STANDARDS & DESIGN

DIRECTOR OF ENGINEERING AND CONSTRUCTION

SCRRA ENGINEERING STANDARDS ARE INTENDED FOR SCRRA APPROVED USES ONLY. FOR NON-SCRRA APPROVED USES:
SCRRA SHALL NOT BE RESPONSIBLE FOR THE ACCURACY OR COMPLETENESS OF THE DATA OR INFORMATION CONTAINED HEREIN. THE SELECTION AND USE OF THESE STANDARDS IS THE SOLE RESPONSIBILITY OF THE USER AND SHOULD NOT BE USED WITHOUT CONSULTING A REGISTERED PROFESSIONAL ENGINEER. ALL WARRANTIES AND REPRESENTATIONS OF ANY KIND ARE DISCLAIMED. ANYONE MAKING USE OF THIS INFORMATION AGREES THAT IT ASSUMES ALL LIABILITY ARISING FROM SUCH USE. NO PART OF THESE STANDARDS SHOULD BE REPRODUCED OR DISTRIBUTED IN ANY FORM OR BY ANY MEANS WITHOUT THE PRIOR WRITTEN PERMISSION OF SCRRA. ALL RIGHTS RESERVED.

METROLINK®

SOUTHERN CALIFORNIA REGIONAL RAIL AUTHORITY
ONE GATEWAY PLAZA, 12TH FLOOR, L. A., CA. 90012

ENGINEERING STANDARDS

SWITCH SLIDE PLATE AND
SWITCH HEEL PLATE DETAILS
NO 8 136 LB RE DOUBLE SLIP CROSSING

STANDARD: 2840
SCALE: NTS
REVISION: –
SHEET: 1 OF 1
CADD FILE: ES2840-46

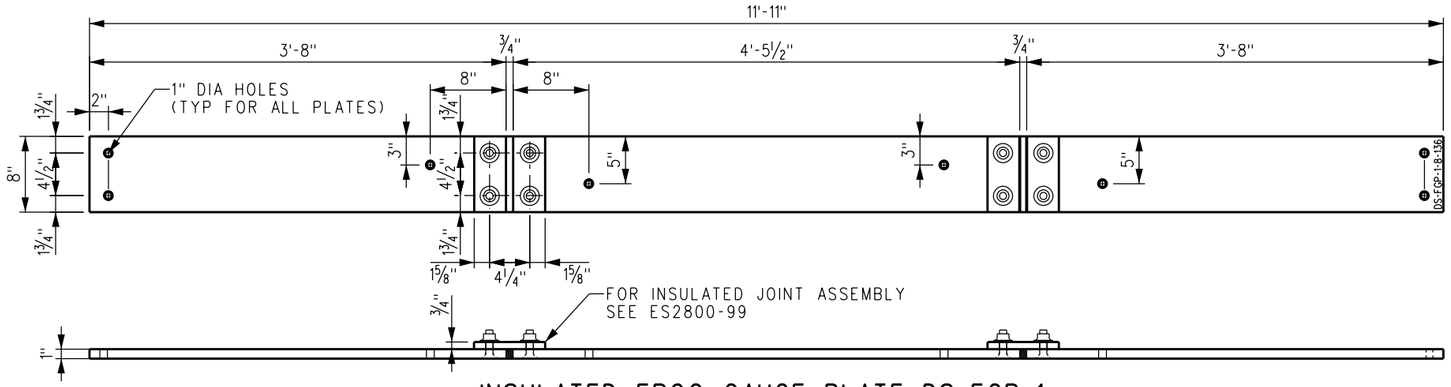

INSULATED FROG GAUGE PLATE DS-FGP-1

1" x 8" - FLAT

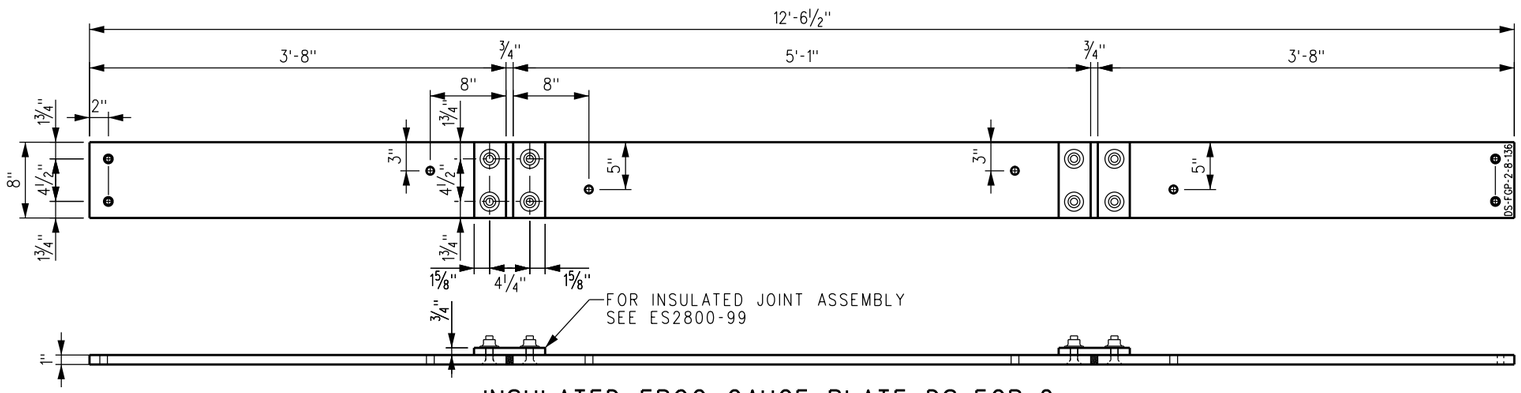

INSULATED FROG GAUGE PLATE DS-FGP-2

1" x 8" - FLAT

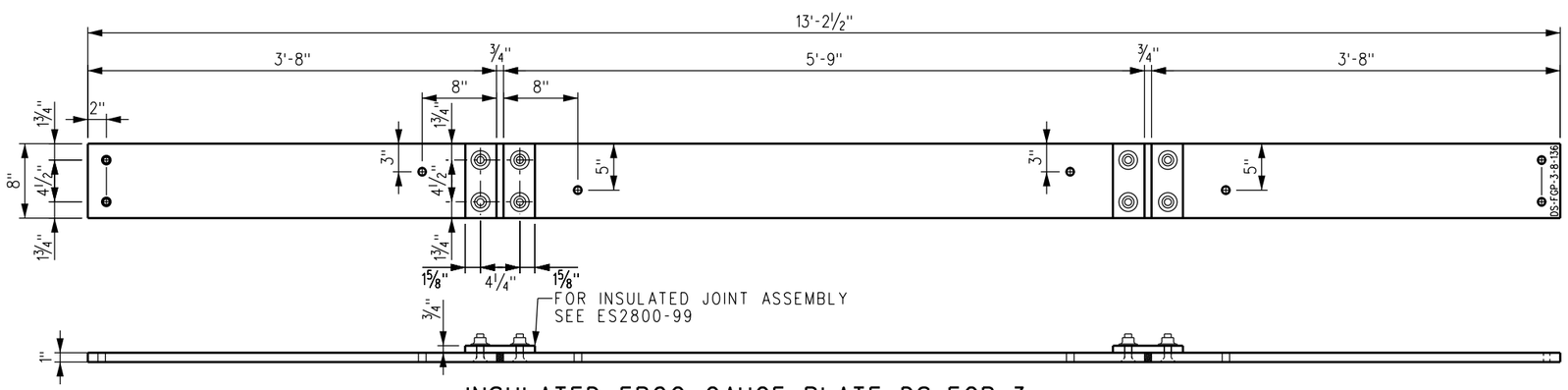

INSULATED FROG GAUGE PLATE DS-FGP-3

1" x 8" - FLAT

REFERENCE DRAWINGS

LAYOUT - NO 8, DOUBLE SLIP CROSSING - 136 LB -------- SHEET NO 2840-02

REV.	DATE	DESCRIPTION	DES.	ENG.
X	XX-XX-XX	REVISION	XX	XX

DRAWN BY: A. CARLOS DATE: 03/31/2011

ASSISTANT DIRECTOR: STANDARDS & DESIGN

DIRECTOR OF ENGINEERING AND CONSTRUCTION

SCRRA ENGINEERING STANDARDS ARE INTENDED FOR SCRRA APPROVED USES ONLY. FOR NON-SCRRA APPROVED USES:
SCRRA SHALL NOT BE RESPONSIBLE FOR THE ACCURACY OR COMPLETENESS OF THE DATA OR INFORMATION CONTAINED HEREIN. THE SELECTION AND USE OF THESE STANDARDS IS THE SOLE RESPONSIBILITY OF THE USER AND SHOULD NOT BE USED WITHOUT CONSULTING A REGISTERED PROFESSIONAL ENGINEER. ALL WARRANTIES AND REPRESENTATIONS OF ANY KIND ARE DISCLAIMED. ANYONE MAKING USE OF THIS INFORMATION AGREES THAT IT ASSUMES ALL LIABILITY ARISING FROM SUCH USE. NO PART OF THESE STANDARDS SHOULD BE REPRODUCED OR DISTRIBUTED IN ANY FORM OR BY ANY MEANS WITHOUT THE PRIOR WRITTEN PERMISSION OF SCRRA. ALL RIGHTS RESERVED.

METROLINK®
SOUTHERN CALIFORNIA REGIONAL RAIL AUTHORITY
ONE GATEWAY PLAZA, 12TH FLOOR, L. A., CA. 90012

ENGINEERING STANDARDS

DETAILS
INSULATED FROG GAUGE PLATES
NO 8 136 LB RE DOUBLE SLIP CROSSING

STANDARD 2840
SCALE: NTS
REVISION –
SHEET 1 OF 1
CADD FILE: ES2840-47

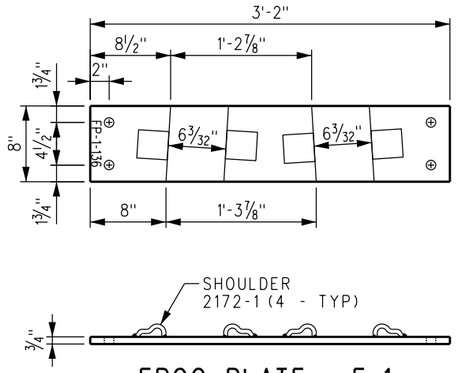

FROG PLATE - F-1

¾" x 8" x 3'-2" - FLAT

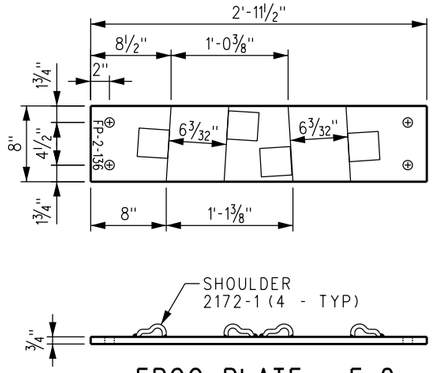

FROG PLATE - F-2

¾" x 8" x 2'-11½" - FLAT

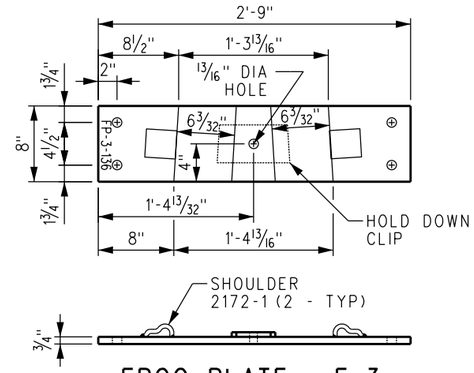

FROG PLATE - F-3

¾" x 8" x 2'-9" - FLAT

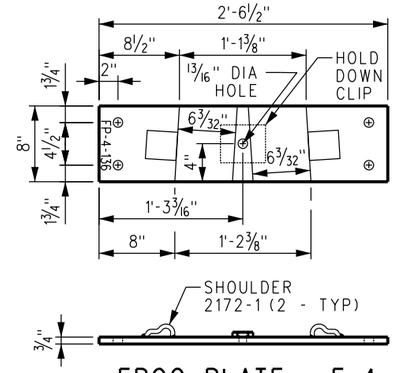

FROG PLATE - F-4

¾" x 8" x 2'-6½" - FLAT

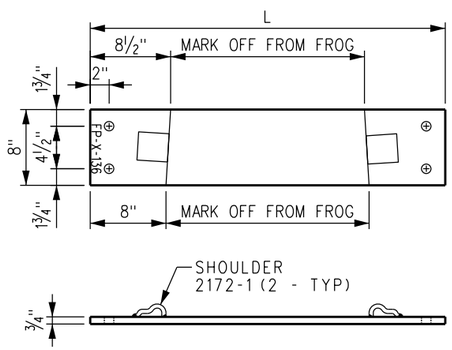

FROG PLATE - F-5, F-6 AND F-7

¾" x 8" x L - FLAT (SEE TABLE FOR LENGTHS)

DIMENSION TABLE		
PLATE	L	NO REQ'D
F-5	3'-1½"	1
F-6	2'-11"	1
F-7	2'-9"	1

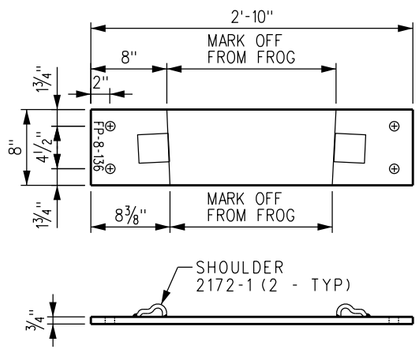

FROG PLATE - F-8

¾" x 8" x 2'-10" - FLAT

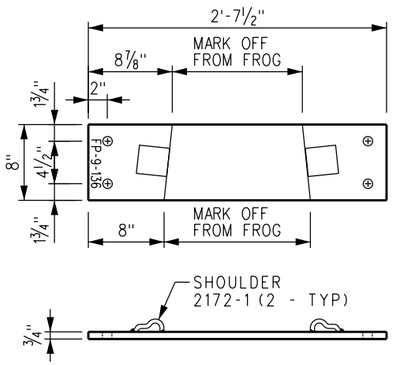

FROG PLATE - F-9

¾" x 8" x 2'-7½" - FLAT

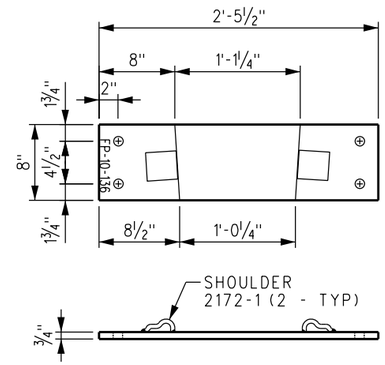

FROG PLATE - F-10

¾" x 8" x 2'-5½" - FLAT

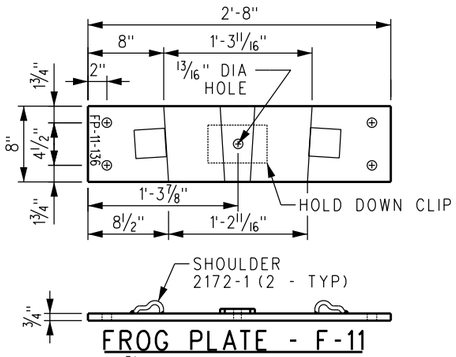

FROG PLATE - F-11

¾" x 8" x 2'-8" - FLAT

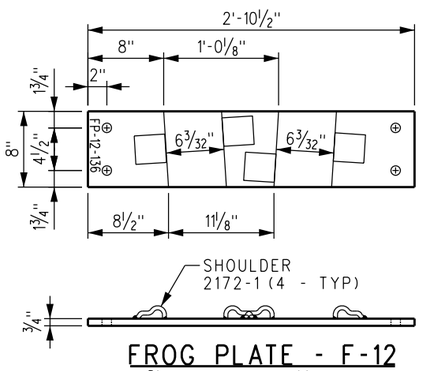

FROG PLATE - F-12

¾" x 8" x 2'-10½" - FLAT

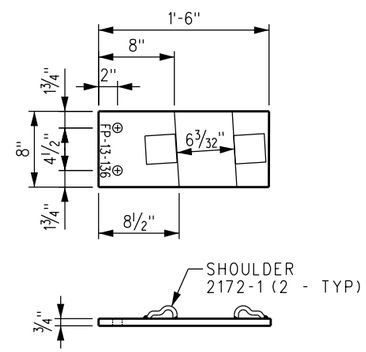

FROG PLATE - F-13

¾" x 8" x 1'-6" - FLAT

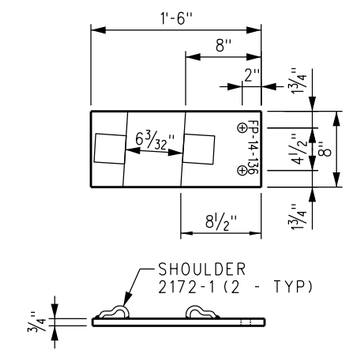

FROG PLATE - F-14

¾" x 8" x 1'-6" - FLAT

NOTES:

1. STAMP PLATE WITH PROPER PLATE NUMBER AND WEIGHT OF RAIL.
2. HOLES IN PLATES ARE 1" IN DIA UNLESS OTHERWISE NOTED.

REFERENCE DRAWINGS

LAYOUT - NO 8, DOUBLE SLIP CROSSING - 136 LB -------- SHEET NO 2840-02

REV.	DATE	DESCRIPTION	DES.	ENG.
X	XX-XX-XX	REVISION	XX	XX

DRAWN BY: A. CARLOS DATE: 03/31/2011

ASSISTANT DIRECTOR: STANDARDS & DESIGN

DIRECTOR OF ENGINEERING AND CONSTRUCTION

SCRRA ENGINEERING STANDARDS ARE INTENDED FOR SCRRA APPROVED USES ONLY. FOR NON-SCRRA APPROVED USES:
SCRRA SHALL NOT BE RESPONSIBLE FOR THE ACCURACY OR COMPLETENESS OF THE DATA OR INFORMATION CONTAINED HEREIN. THE SELECTION AND USE OF THESE STANDARDS IS THE SOLE RESPONSIBILITY OF THE USER AND SHOULD NOT BE USED WITHOUT CONSULTING A REGISTERED PROFESSIONAL ENGINEER. ALL WARRANTIES AND REPRESENTATIONS OF ANY KIND ARE DISCLAIMED. ANYONE MAKING USE OF THIS INFORMATION AGREES THAT IT ASSUMES ALL LIABILITY ARISING FROM SUCH USE. NO PART OF THESE STANDARDS SHOULD BE REPRODUCED OR DISTRIBUTED IN ANY FORM OR BY ANY MEANS WITHOUT THE PRIOR WRITTEN PERMISSION OF SCRRA. ALL RIGHTS RESERVED.

METROLINK®

SOUTHERN CALIFORNIA REGIONAL RAIL AUTHORITY
ONE GATEWAY PLAZA, 12TH FLOOR, L. A., CA. 90012

ENGINEERING STANDARDS

FROG PLATE DETAILS
NO 8 136 LB RE DOUBLE SLIP CROSSING

STANDARD: 2840
SCALE: NTS
REVISION: –
SHEET: 1 OF 1
CADD FILE: ES2840-48

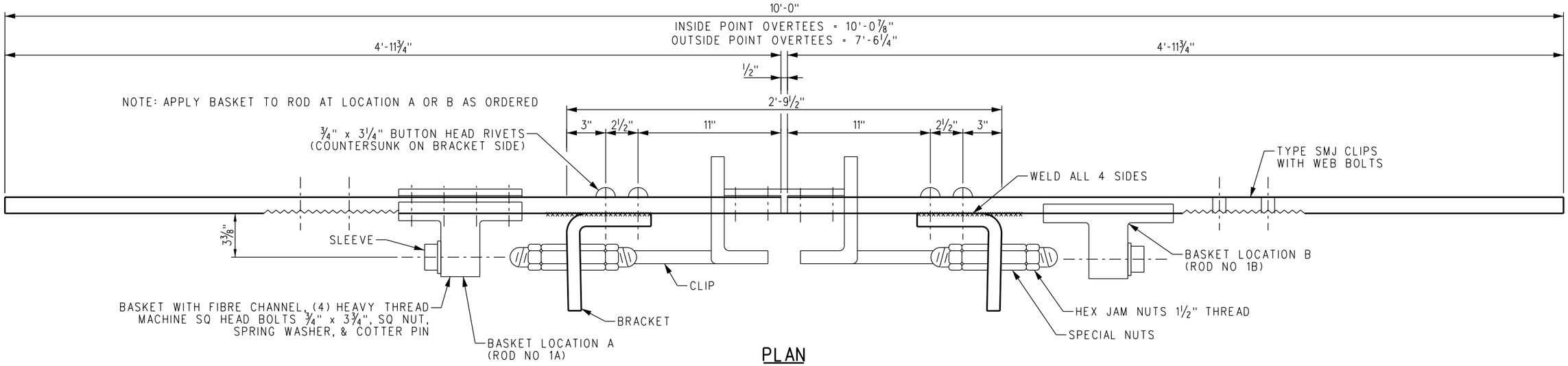

PLAN

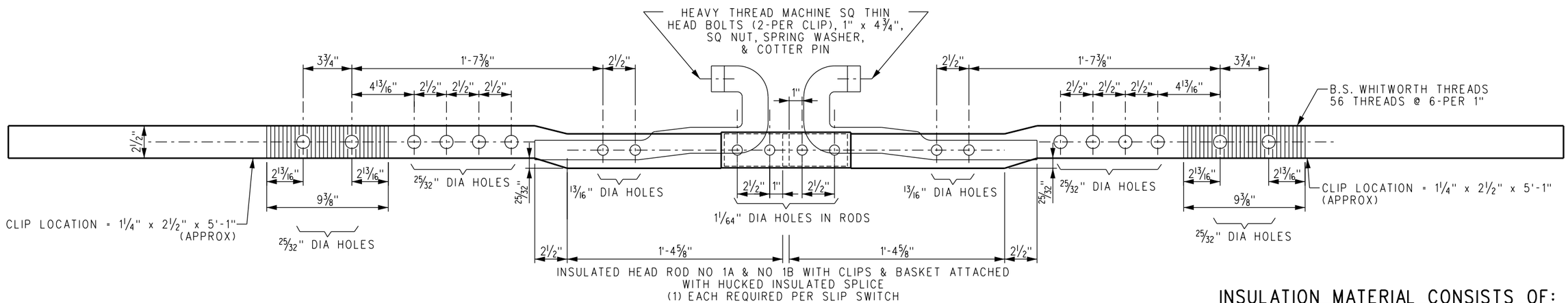

ELEVATION

NOTES:

ROD NO 1A, BASKET LOCATION A
ROD NO 1B, BASKET LOCATION B

INSULATION MATERIAL CONSISTS OF:

(1) FIBRE CHANNEL C-1
(2) FIBRE ANGLE PLATE AP-34
(4) FIBRE BUSHINGS B-11
(1) STEEL SPLICE PLATE ST-684
(1) STEEL CHANNEL ST-568
(4) 3/4" HUCK BOLTS C50LR-BR24-36
(4) HUCK COLLARS LC2R-24G

SWITCH INFORMATION

GAUGE = 4'-8 5/8"
THROW AT POINT = 4" MIN, 4 1/2" MAX
E DISTANCE = 1 19/32"
PT = 0" SAMSON
REINF = 1/2" D BOTH SIDES (SLOT 1/4" STOCK SIDE)
ROD SPACING = 1'-6 5/8"
BREAK ALL SHARP CORNERS
DEBURR ALL HOLES

STAMP RODS WITH "RESPECTIVE ROD NO-136-DSS"

REV.	DATE	DESCRIPTION	DES.	ENG.
X	XX-XX-XX	REVISION	XX	XX

DRAWN BY: A. CARLOS DATE: 03/31/2011

ASSISTANT DIRECTOR: STANDARDS & DESIGN

DIRECTOR OF ENGINEERING AND CONSTRUCTION

SCRRA ENGINEERING STANDARDS ARE INTENDED FOR SCRRA APPROVED USES ONLY. FOR NON-SCRRA APPROVED USES:
SCRRA SHALL NOT BE RESPONSIBLE FOR THE ACCURACY OR COMPLETENESS OF THE DATA OR INFORMATION CONTAINED HEREIN. THE SELECTION AND USE OF THESE STANDARDS IS THE SOLE RESPONSIBILITY OF THE USER AND SHOULD NOT BE USED WITHOUT CONSULTING A REGISTERED PROFESSIONAL ENGINEER. ALL WARRANTIES AND REPRESENTATIONS OF ANY KIND ARE DISCLAIMED. ANYONE MAKING USE OF THIS INFORMATION AGREES THAT IT ASSUMES ALL LIABILITY ARISING FROM SUCH USE. NO PART OF THESE STANDARDS SHOULD BE REPRODUCED OR DISTRIBUTED IN ANY FORM OR BY ANY MEANS WITHOUT THE PRIOR WRITTEN PERMISSION OF SCRRA. ALL RIGHTS RESERVED.

METROLINK®
SOUTHERN CALIFORNIA REGIONAL RAIL AUTHORITY
ONE GATEWAY PLAZA, 12TH FLOOR, L. A., CA. 90012

ENGINEERING STANDARDS

INSULATED HEAD ROD NO 1 FOR END POINTS
NO 8 136 LB RE DOUBLE SLIP CROSSING

STANDARD 2840
SCALE: NTS
REVISION –
SHEET 1 OF 1
CADD FILE: ES2840-49

INSULATION MATERIAL CONSISTS OF:

(1) FIBRE CHANNEL C-1.
(2) FIBRE ANGLE PLATE AP-34.
(4) FIBRE BUSHINGS B-11.
(1) STEEL SPLICE PLATE ST-684.
(1) STEEL CHANNEL ST-568.
(4) 3/4" HUCK BOLTS C50LR-BR24-36.
(4) HUCK COLLARS LC2R-24G.

SWITCH INFORMATION

GAUGE = 4'-8 5/8"
THROW AT POINT = 4" MIN, 4 1/2" MAX
E DISTANCE = 1 19/32"
PT = 0" SAMSON
REINF = 1/2" D BOTH SIDES (SLOT 1/4" STOCK SIDE)
ROD SPACING = 1'-6 5/8" x 3'-0 1/2" (NO 2 ROD)
ROD SPACING = 1'-6 5/8" x 3'-5 1/2" (NO 3 ROD)

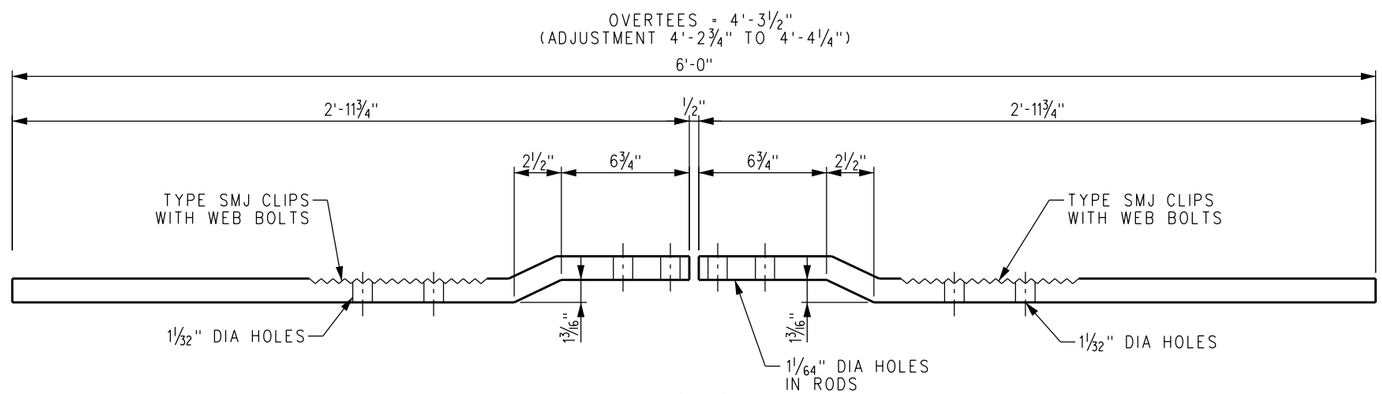

PLAN

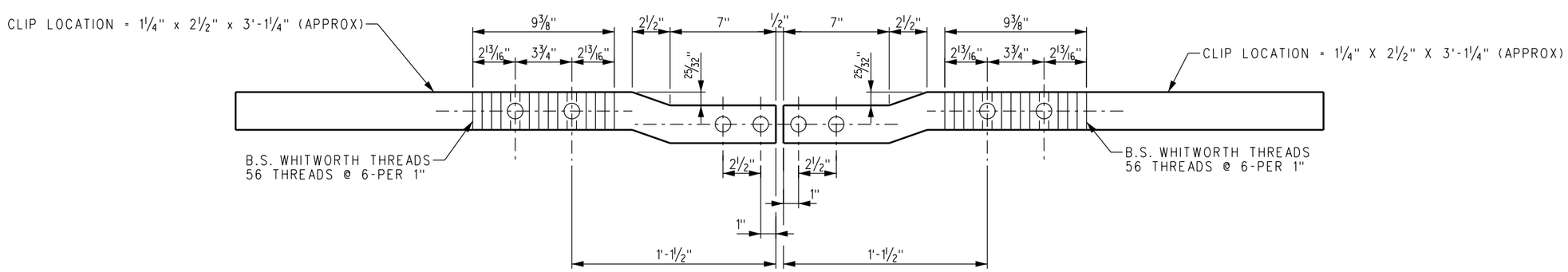

ELEVATION

NOTES:

1. INSULATED SPREAD RODS NO 2 OR 3 WITH CLIPS AND BOLTS ATTACHED WITH HUCKED INSULATED SPLICE, (2) EACH REQUIRED PER SLIP SWITCH
2. STAMP ROD WITH "RESPECTIVE ROD NO-136-DSS"

REV.	DATE	DESCRIPTION	DES.	ENG.
X	XX-XX-XX	REVISION	XX	XX

DRAWN BY: A. CARLOS DATE: 03/31/2011

ASSISTANT DIRECTOR: STANDARDS & DESIGN

DIRECTOR OF ENGINEERING AND CONSTRUCTION

SCRRA ENGINEERING STANDARDS ARE INTENDED FOR SCRRA APPROVED USES ONLY. FOR NON-SCRRA APPROVED USES:
SCRRA SHALL NOT BE RESPONSIBLE FOR THE ACCURACY OR COMPLETENESS OF THE DATA OR INFORMATION CONTAINED HEREIN. THE SELECTION AND USE OF THESE STANDARDS IS THE SOLE RESPONSIBILITY OF THE USER AND SHOULD NOT BE USED WITHOUT CONSULTING A REGISTERED PROFESSIONAL ENGINEER. ALL WARRANTIES AND REPRESENTATIONS OF ANY KIND ARE DISCLAIMED. ANYONE MAKING USE OF THIS INFORMATION AGREES THAT IT ASSUMES ALL LIABILITY ARISING FROM SUCH USE. NO PART OF THESE STANDARDS SHOULD BE REPRODUCED OR DISTRIBUTED IN ANY FORM OR BY ANY MEANS WITHOUT THE PRIOR WRITTEN PERMISSION OF SCRRA. ALL RIGHTS RESERVED.

METROLINK®
SOUTHERN CALIFORNIA REGIONAL RAIL AUTHORITY
ONE GATEWAY PLAZA, 12TH FLOOR, L. A., CA. 90012

ENGINEERING STANDARDS

INSULATED SPREAD RODS
NO 2 & 3 FOR END POINTS
NO 8 136 LB RE DOUBLE SLIP CROSSING

STANDARD 2840
SCALE: NTS
REVISION –
SHEET 1 OF 1
CADD FILE: ES2840-50

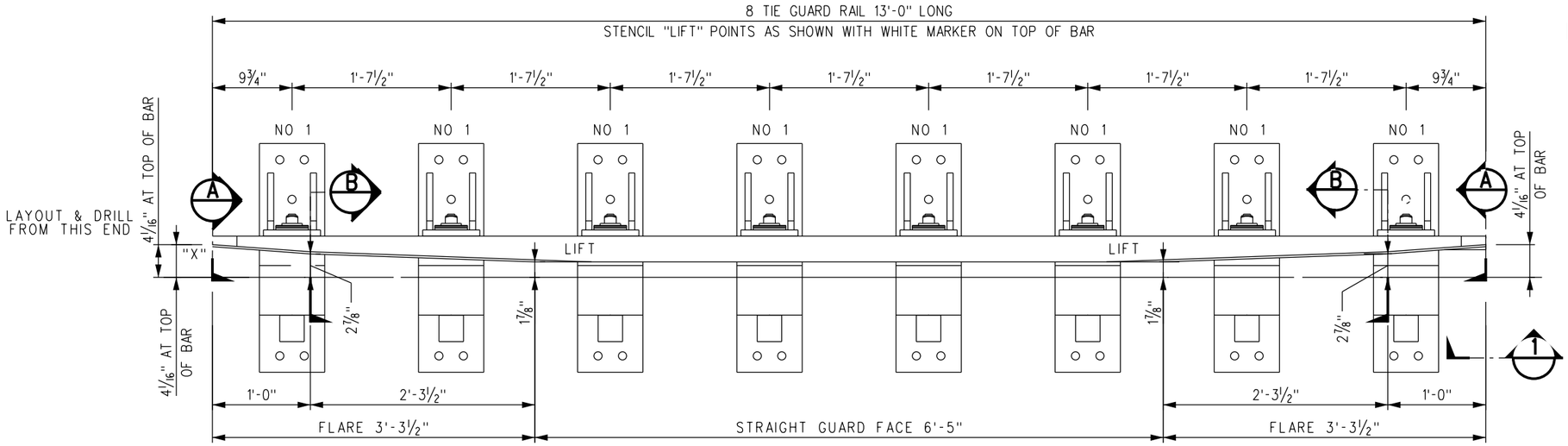

NOTES:

1. GUARD RAIL SECTION UIC 33, (U69) UIC 860.0 GRADE 90A (GUARD FACE BRINELL 319 MIN).
2. BASE PLATE, BRACKET AND SHIMS MADE FROM MILD STEEL PER AREMA SPECIFICATION M7.
3. GUARD RAIL BOLT AND NUT PER AREMA SPECIFICATION M11 EXCEPT BOLT TO BE GRADE 8 AND NUT TO BE SECURITY LOCKNUT.
4. WORKMANSHIP AND TOLERANCES PER AREMA "SPECIFICATIONS FOR SPECIAL TRACKWORK".
5. WELDING PER ANSI \ AWS D1.1-92 OR LATEST REVISION.

COLLECTIVE DRILLING FROM END OF GUARD BAR MARKED "X"

"X" 9¾" x 2'-5¼" x 4'-0¾" x 5'-8¼" x 7'-3¾" x 8'-11¼" x 10'-6¾" x 12'-2¼"

HOLES 1" DIA - 1⅜" ABOVE BASE

SECTION A

SECTION B

ASSEMBLED 13'-0" GUARD RAIL

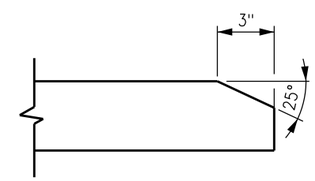

DETAIL 1

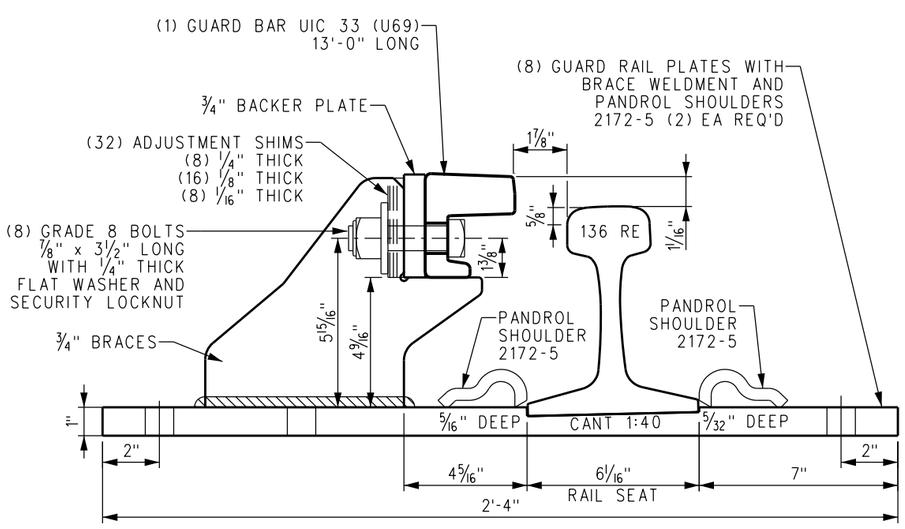

TYPICAL PLATE DETAIL

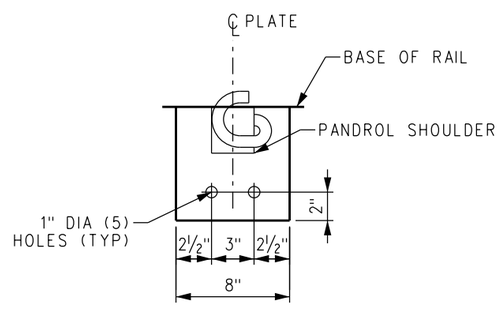

TYPICAL PLATE PUNCHING DETAIL

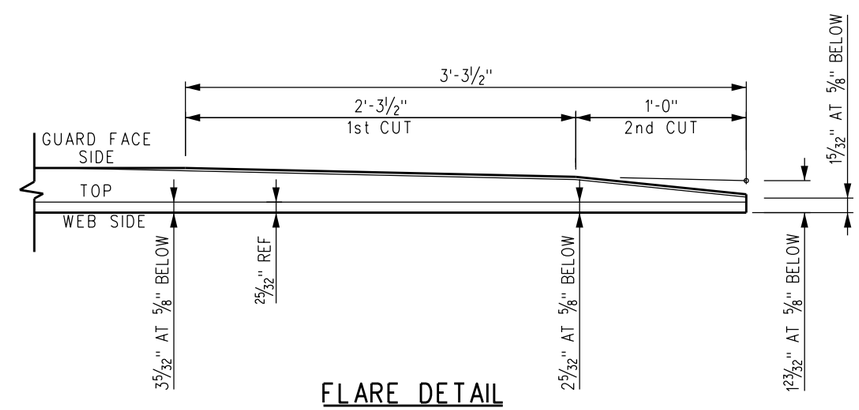

FLARE DETAIL

BREAK SHARP CORNERS OF ALL MACHINED SURFACES

REV.	DATE	DESCRIPTION	DES.	ENG.
X	XX-XX-XX	REVISION	XX	XX

DRAWN BY: A. CARLOS DATE: 03/31/2011

ASSISTANT DIRECTOR: STANDARDS & DESIGN

DIRECTOR OF ENGINEERING AND CONSTRUCTION

SCRRA ENGINEERING STANDARDS ARE INTENDED FOR SCRRA APPROVED USES ONLY. FOR NON-SCRRA APPROVED USES:
SCRRA SHALL NOT BE RESPONSIBLE FOR THE ACCURACY OR COMPLETENESS OF THE DATA OR INFORMATION CONTAINED HEREIN. THE SELECTION AND USE OF THESE STANDARDS IS THE SOLE RESPONSIBILITY OF THE USER AND SHOULD NOT BE USED WITHOUT CONSULTING A REGISTERED PROFESSIONAL ENGINEER. ALL WARRANTIES AND REPRESENTATIONS OF ANY KIND ARE DISCLAIMED. ANYONE MAKING USE OF THIS INFORMATION AGREES THAT IT ASSUMES ALL LIABILITY ARISING FROM SUCH USE. NO PART OF THESE STANDARDS SHOULD BE REPRODUCED OR DISTRIBUTED IN ANY FORM OR BY ANY MEANS WITHOUT THE PRIOR WRITTEN PERMISSION OF SCRRA. ALL RIGHTS RESERVED.

METROLINK®
SOUTHERN CALIFORNIA REGIONAL RAIL AUTHORITY
ONE GATEWAY PLAZA, 12TH FLOOR, L. A., CA. 90012

ENGINEERING STANDARDS

GUARD RAIL DETAILS
13'-0" LONG

STANDARD 2840
SCALE: NTS
REVISION –
SHEET 1 OF 1
CADD FILE: ES2840-60

METROLINK (SCRRA)
ENGINEERING STANDARDS
NO 10 DOUBLE SLIP CROSSING

BILL OF MATERIAL	
QTY	DESCRIPTION
2 EACH	SOLID MANGANESE CENTER FROG
4 EACH	"D" STRAPS WITH BOLTS
2 EACH	NO 1A & 1B HEAD ROD FOR END POINTS
2 EACH	NO 2 & 3 SPREAD RODS FOR END POINTS
2 EACH	NO 4 & 5 HEAD RODS FOR MOVEABLE CENTER POINTS
4 EACH	SLIDE PLATE S-5P
28 EACH	SLIDE PLATE S-8P
2 EACH	BRACE SLIDE PLATES 1A & 1B THRU 4A & 4B
2 EACH	BRACE SLIDE PLATES 5-C
8 EACH	BRACE PLATES 6A & 7A
2 EACH	GAUGE PLATE GP-1 THRU GP-6
2 EACH	SWITCH PLATE 14-L & 14-R THRU 19-L &19-R
2 EACH	FROG PLATES F-1 THRU F-15A & 15B
2 EACH	INSULATED FROG GAUGE PLATES FGP-1 THRU FGP-3
2 EACH	NO 10 RAIL BOUND MANGANESE FROG ~ 21'-2½"
4 EACH	16'-0" U-69 ADJUSTABLE GUARD RAIL W/ PLATES
2 EACH	DI RAIL HOLD DOWN CLIPS E-3707
4 EACH	DI RAIL HOLD DOWN CLIPS E-3709
12 PIECES	BOLTLESS ADJUSTABLE BRACE ASSEMBLY
20 PIECES	SCRRA ES2454 "PANDROL", OR EQUAL "E" - CLIP 6" TIE PLATE
356 PIECES	E-CLIP TYPE E-2055 (GALVANIZED)
24 PIECES	E-CLIP TYPE E-2063 (GALVANIZED)
924 PIECES	SCREW SPIKES 15/16" DIA X 6" ES2355
2 EACH	STRAIGHT STOCK RAIL 25'-0 15/16" LONG
4 EACH	BRACE RAIL - 5'-11¼" LONG
4 EACH	MOVEABLE POINT RAIL - 13'-1¼" LONG
2 EACH	OUTER SLIP RAIL - 20'-7⅞" LONG
4 EACH	SWITCH POINT RAIL - 22'-8½" LONG
2 EACH	KNUCKLE RAIL - 23'-11" LONG
2 EACH	STRAIGHT STOCK RAIL - 25'-0 11/16" LONG
4 EACH	CURVED STOCK RAIL - 28'-2¾" LONG
4 EACH	CURVED SWITCH POINT RAIL - 34'-7¾" LONG
4 EACH	EPOXY BONDED PREFABRICATED INSULATED JOINT KITS

BILL OF SWITCH TIES			
PIECES	SIZE	LENGTH	BOARD FEET
24	7"x9"	11'-0"	1386.00
18	7"x9"	12'-0"	1134.00
12	7"x9"	13'-0"	819.00
12	7"x9"	14'-0"	882.00
4	7"x9"	15'-0"	315.00
4	7"x9"	16'-0"	336.00
TOTAL			TOTAL
74			4872.00

DRAWING INDEX

ES2841-01	NO 10 136 LB DOUBLE SLIP CROSSING WITH SOLID MANGANESE FROG BILL OF MATERIAL AND GENERAL NOTES
ES2841-02	NO 10 136 LB RE DOUBLE SLIP CROSSING WITH SOLID MANGANESE FROG LAYOUT
ES2841-04	CROSSING GEOMETRY AND CROSSING DATA NO 10 136 LB RE DOUBLE SLIP CROSSING
ES2841-11	136 LB RE 22'-8½" STRAIGHT SWITCH POINT NO 10 DOUBLE SLIP CROSSING
ES2841-12	136 LB RE 34'-7¾" CURVED SWITCH POINT NO 10 DOUBLE SLIP CROSSING
ES2841-13	136 LB RE MOVEABLE CENTER POINT, 3RD RAIL FILLER AND BRACE RAIL DETAILS NO 10 DOUBLE SLIP CROSSING
ES2841-14	UNDERCUT STOCK RAILS FOR 22'-8½" SWITCH POINTS FOR NO 10 DOUBLE SLIP CROSSING
ES2841-30	NO 10 136 LB RE DOUBLE SLIP CROSSING TIMBER TIE LAYOUT
ES2841-40	NO 10 RAILBOUND MANGANESE STEEL FROG WITH PANDROLIZED PLATES FOR A 136 LB RE DOUBLE SLIP CROSSING
ES2841-41	NO 10 DOUBLE SLIP CROSSING CENTER SECTION LAYOUT 136 LB RE RAIL
ES2841-44	INSULATED GAUGE PLATE DETAILS DS-GP-1, DS-GP-2, DS-GP-3, AND DS-GP-4 136 LB RE NO 10 DOUBLE SLIP CROSSING
ES2841-45	INSULATED GAUGE PLATE DETAILS DS-GP-5 AND DS-GP-6 136 LB RE NO 10 DOUBLE SLIP CROSSING
ES2841-46	BRACE PLATE AND SLIDE PLATE DETAILS NO 10 136 LB RE DOUBLE SLIP CROSSING
ES2841-47	BRACE SLIDE PLATES AND INSULATED SLIDE PLATE DETAILS NO 10 136 LB RE DOUBLE SLIP CROSSING
ES2841-48	DETAILS INSULATED FROG GAUGE PLATE NO 10 136 LB RE DOUBLE SLIP CROSSING
ES2841-49	FROG PLATE DETAILS NO 10 136 LB RE DOUBLE SLIP CROSSING
ES2841-50	INSULATED HEAD ROD NO 1 FOR END POINTS NO 10 136 LB RE DOUBLE SLIP CROSSING
ES2841-51	INSULATED SPREAD RODS NO 2 & 3 FOR END POINTS NO 10 136 LB RE DOUBLE SLIP CROSSING
ES2841-52	INSULATED HEAD ROD NO 4 FOR MOVEABLE CENTER POINTS NO 10 136 LB RE DOUBLE SLIP CROSSING
ES2841-53	INSLUATED HEAD ROD NO 5 FOR MOVEABLE CENTER POINTS NO 10 136 LB RE DOUBLE SLIP CROSSING
ES2841-60	GUARD RAIL DETAILS 16'-0" LONG

NOTES:

1. ENTIRE DOUBLE SLIP CROSSING TO BE FABRICATED FROM 136 LB HEAD HARDENED RAIL.
2. LOCATIONS OF INSULATED JOINTS ARE AS SHOWN ON ES2841-02. IT WILL BE SATISFACTORY TO RELOCATE THE INSULATED JOINT IN THE FIELD UP TO 1'-0" SO AS TO PROVIDE A SUITABLE SUSPENDED JOINT, PROVIDED THE STAGGER OF THE INSULATED JOINTS DOES NOT EXCEED 4'-6". SUSPENDED INSULATED JOINTS MUST BE LOCATED IN A CRIB AREA BETWEEN TIES, A MINIMUM DISTANCE OF 4" FROM EDGE OF NEAREST TIE PLATE.
3. ALL INSULATED JOINTS ARE TO BE ADHESIVE BONDED INSULATED JOINTS UNLESS OTHERWISE SPECIFIED.
4. ALL MATERIALS REQUIRED FOR HAND OR MACHINE OPERATED SWITCH OPERATION WILL BE FURNISHED PER REQUIREMENTS OF THE SCRRA DIRECTOR OF ENGINEERING AND CONSTRUCTION.
5. MATERIALS AND WORKMANSHIP, ALSO ANY CONSTRUCTION DETAILS NOT SHOWN, SHALL BE PER CURRENT AREMA "TRACKWORK PLANS AND SPECIFICATIONS" UNLESS OTHERWISE SPECIFIED.
6. WHERE REQUIRED, ALL IDENTIFICATION SYMBOLS TO BE PLAINLY STAMPED.
7. GAUGE PLATES WILL BE FURNISHED INSULATED. SWITCH RODS WILL BE FURNISHED INSULATED UNLESS OTHERWISE SPECIFIED.
8. MANUFACTURER SHALL SUBMIT TWO COPIES OF SHOP DRAWINGS TO THE SCRRA DIRECTOR OF ENGINEERING AND CONSTRUCTION FOR APPROVAL PRIOR TO FABRICATION OF TURNOUT. SHOP DRAWINGS THAT CHANGE DETAILS OF THESE STANDARDS MUST CLEARLY SPECIFY SUCH PROPOSED CHANGES.
9. THE MATERIAL INCLUDED IN THE PURCHASE OF A "DOUBLE SLIP CROSSING COMPLETE" IS EVERYTHING LISTED IN THE BILL OF MATERIALS. TO CONSTRUCT A COMPLETE TURNOUT, SWITCH TIES (PER LIST ON THIS SHEET) AND INSULATED JOINTS, FIELD WELDS, RUNNING RAIL AND CLOSURE RAIL IDENTIFIED ON SUBSEQUENT SHEETS MUST ALSO BE SUPPLIED.
10. TIE PLATES SHALL CONFORM TO SCRRA STANDARD ES2454.
11. SCREW SPIKES (15/16" x 6-2 TPI) SHALL CONFORM TO SCRRA STANDARD ES2355. PLATE HOLES SHALL BE 1" DIAMETER. PILOT HOLES IN TIES SHALL BE ⅝" DIAMETER. SCREW SPIKES SHALL BE SCREWED INTO WOOD (NOT DRIVEN).
12. MANUFACTURER SHALL BEVEL RAIL ENDS PER CURRENT AREMA PLAN NO 1005.
13. THE 34'-7¾" SWITCH POINT, MADE FROM 40'-0" RAIL PER ES2841-12 IS TO BE FURNISHED WITH SWITCH RODS NO 1A, 1B, AND 2 THRU 5 PER ES2841-50 THRU ES2841-53.
14. FOR CROSSING DATA FOR A NO 10 DOUBLE SLIP CROSSOVER 136 LB RE RAIL SEE CHART ON ES2841-04.
15. GAUGE PLATES FOR SWITCH AND FROG, SWITCH HEEL PLATE (FOR BOTH RH AND LH TURNOUTS) AND PLATES 14 THRU 19 ARE DESIGNED TO BE PERPENDICULAR TO THE CENTRAL AXIS OF THE SWITCH.
16. UPON COMPLETION OF TURNOUT INSTALLATION, RUNNING RAIL MUST BE ADJUSTED TO SCRRA NEUTRAL RAIL TEMPERATURE.
17. ENTIRE CROSSOVER TO BE FULLY FLOOR ASSEMBLED INCLUDING END FROGS AND HF GUARD RAILS.
18. ALL E-CLIPS TO BE GALVANIZED.

REV.	DATE	DESCRIPTION	DES.	ENG.
X	XX-XX-XX	REVISION	XX	XX

DRAWN BY: A. CARLOS DATE: 03/31/2011

ASSISTANT DIRECTOR: STANDARDS & DESIGN

DIRECTOR OF ENGINEERING AND CONSTRUCTION

SCRRA ENGINEERING STANDARDS ARE INTENDED FOR SCRRA APPROVED USES ONLY. FOR NON-SCRRA APPROVED USES:
SCRRA SHALL NOT BE RESPONSIBLE FOR THE ACCURACY OR COMPLETENESS OF THE DATA OR INFORMATION CONTAINED HEREIN. THE SELECTION AND USE OF THESE STANDARDS IS THE SOLE RESPONSIBILITY OF THE USER AND SHOULD NOT BE USED WITHOUT CONSULTING A REGISTERED PROFESSIONAL ENGINEER. ALL WARRANTIES AND REPRESENTATIONS OF ANY KIND ARE DISCLAIMED. ANYONE MAKING USE OF THIS INFORMATION AGREES THAT IT ASSUMES ALL LIABILITY ARISING FROM SUCH USE. NO PART OF THESE STANDARDS SHOULD BE REPRODUCED OR DISTRIBUTED IN ANY FORM OR BY ANY MEANS WITHOUT THE PRIOR WRITTEN PERMISSION OF SCRRA. ALL RIGHTS RESERVED.

METROLINK®

SOUTHERN CALIFORNIA REGIONAL RAIL AUTHORITY
ONE GATEWAY PLAZA, 12TH FLOOR, L. A., CA. 90012

ENGINEERING STANDARDS

NO 10 136 LB DOUBLE SLIP CROSSING
WITH SOLID MANGANESE FROG
BILL OF MATERIAL AND GENERAL NOTES

STANDARD: 2841
SCALE: NTS
REVISION: –
SHEET: 1 OF 1
CADD FILE: ES2841-01

NOTES:

1. SEE COVER SHEET FOR NOTES, BILL OF MATERIAL AND CROSSING DATA.
2. USE CLIP ES2361 AT INSULATED JOINT LOCATIONS. USE CLIP ES2362 AT ALL OTHER LOCATIONS.

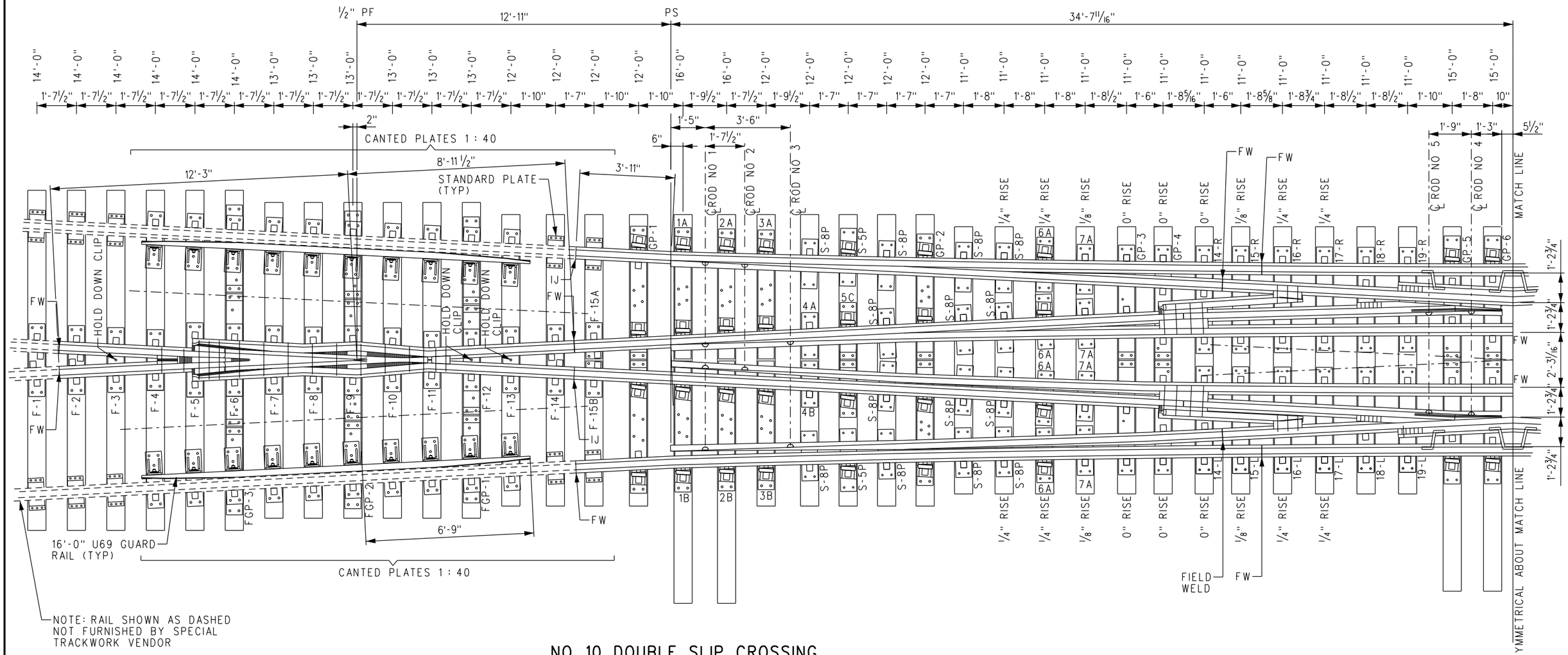

NO 10 DOUBLE SLIP CROSSING

X	XX-XX-XX	REVISION	XX	XX
REV.	DATE	DESCRIPTION	DES.	ENG.

DRAWN BY: A. CARLOS DATE: 03/31/2011

ASSISTANT DIRECTOR: STANDARDS & DESIGN

DIRECTOR OF ENGINEERING AND CONSTRUCTION

SCRRA ENGINEERING STANDARDS ARE INTENDED FOR SCRRA APPROVED USES ONLY. FOR NON-SCRRA APPROVED USES:
SCRRA SHALL NOT BE RESPONSIBLE FOR THE ACCURACY OR COMPLETENESS OF THE DATA OR INFORMATION CONTAINED HEREIN. THE SELECTION AND USE OF THESE STANDARDS IS THE SOLE RESPONSIBILITY OF THE USER AND SHOULD NOT BE USED WITHOUT CONSULTING A REGISTERED PROFESSIONAL ENGINEER. ALL WARRANTIES AND REPRESENTATIONS OF ANY KIND ARE DISCLAIMED. ANYONE MAKING USE OF THIS INFORMATION AGREES THAT IT ASSUMES ALL LIABILITY ARISING FROM SUCH USE. NO PART OF THESE STANDARDS SHOULD BE REPRODUCED OR DISTRIBUTED IN ANY FORM OR BY ANY MEANS WITHOUT THE PRIOR WRITTEN PERMISSION OF SCRRA. ALL RIGHTS RESERVED.

METROLINK®
SOUTHERN CALIFORNIA REGIONAL RAIL AUTHORITY
ONE GATEWAY PLAZA, 12TH FLOOR, L. A., CA. 90012

ENGINEERING STANDARDS

NO 10 136 LB RE DOUBLE SLIP CROSSING WITH SOLID MANGANESE FROG LAYOUT

STANDARD 2841
SCALE: NTS
REVISION –
SHEET 1 OF 1
CADD FILE: ES2841-02

CROSSING DATA			
BETWEEN THEORETICAL POINTS OF END FROGS	94'-3 3/8"	ANGLE OF CROSSING	5°-43'-29"
BETWEEN THEORETICAL POINT OF END FROG & CENTER FROG	47'-2 7/16"	DEGREE OF CURVATURE	4°-48'-09"
FROM INSIDE SWITCH POINTS TO THEORETICAL POINT END FROG	12'-6 3/16"	GAUGE LINE RADIUS	1193.4206'
FROM THEORETICAL POINT OF CENTER FROG TO HEEL JOINT	10'-4 1/8"	THROW AT END PT	4"
LENGTH OF INSIDE SAMSON STOCK RAILS	25'-0 11/16" 25'-0 15/16"	GAUGE ON STRAIGHT TRACK	4'-8 1/2"
LENGTH OF OUTSIDE SAMSON STOCK RAILS	28'-2 3/4"	GAUGE ON CURVED TRACK	4'-8 9/16"
LENGTH OF FROG FROM THEORETICAL POINT TO TOE	8'-1 1/2"	SWITCH ANGLE @ END POINTS	1°-11'-56"
LENGTH OF FROG FROM THEORETICAL POINT TO HEEL	12'-3"	HEEL SPREAD OUTSIDE SW PTS 5 11/16" B.C. 8 9/32" A.C.	-
LENGTH OF OUTSIDE SAMSON END SWITCH POINTS (0" SAMSON)	22'-8 1/2"	HEEL SPREAD INSIDE SW PTS 6 1/32" B.C. 14 3/4" A.C.	-
LENGTH OF INSIDE SAMSON END SWITCH POINTS (0" SAMSON)	34'-7 3/4"		

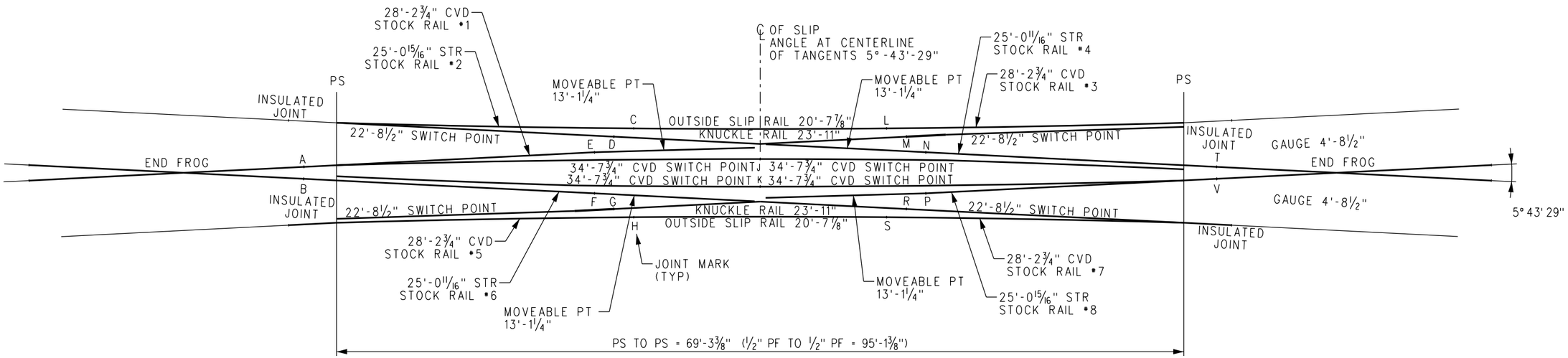

CROSSING DATA

NOTE:

1. ALL MEASUREMENTS GIVEN AT 5/8" BELOW TOP OF RAIL AND TO 1/2" POINT OF END OF FROG.
2. ALL RAILS TO BE FULLY HEAT TREATED - BRINELL 341-388.
3. JOINT GAPS: 1/8" STANDARD: 3/8" INSULATED.
4. JOINT DRILLING: ALL FIELD WELDED RAILS: 9 1/2" - 6" @ 3 3/32" ABOVE BASE, 1 1/8" DIA HOLES.
5. ALL INSULATED JOINT RAILS: 3 1/2" - 6" - 6" @ 3 3/32" ABOVE BASE, 1 1/4" DIA HOLES.
6. PROPER LOCATION OF EDGE OF PLATES TO BE MARKED WITH WHITE PAINT ON OUTER FLANGE OF RAIL.
7. MATCH MARK ALL RAIL ENDS AS SHOWN.
8. ENTIRE CROSSOVER TO BE FULLY FLOOR ASSEMBLED INCLUDING END FROGS AND HF GUARD RAILS.

SPECIFICATIONS:

1. CROSSING TYPE - NO 10 DOUBLE SLIP, GENERALLY PER AREMA PLAN NO 814. RAIL: 136RE HEAT TREATED.
2. FROG - NO 10 RAIL BOUND MANGANESE FROG, 136RE, 22'-6" LONG WITH PANDROL PLATES - MANGANESE CASTING TO BE EXPLOSIVE HARDENED.
3. SWITCH POINTS - 22'-8 1/2" & 34'-7 3/4" LONG, CURVED AND STRAIGHT, SAMSON PLANING AREMA DETAIL 5100. CURVED POINTS TO BE EQUIPED WITH REPLACEABLE MANGANESE INSERTS.
4. CLIPS AND RODS - VERTICAL RODS WITH "SMJ" CLIPS.
5. ADJUSTABLE BRACES - BOLTLESS WITH SPRING CLIPS.
6. GUARD RAILS - U-69 SECTION 16'-0" RAISED GUARD RAIL WITH BRACES AND PLATES.
7. GAUGE PLATES - TO BE FURNISHED INSTALLED.

REFERENCE DRAWING

136 LB - NO 10 - DOUBLE SLIP CROSSING ---------- SHEET NO 2841-02

REV.	DATE	DESCRIPTION	DES.	ENG.
X	XX-XX-XX	REVISION	XX	XX

DRAWN BY: A. CARLOS DATE: 03/31/2011

ASSISTANT DIRECTOR: STANDARDS & DESIGN

DIRECTOR OF ENGINEERING AND CONSTRUCTION

SCRRA ENGINEERING STANDARDS ARE INTENDED FOR SCRRA APPROVED USES ONLY. FOR NON-SCRRA APPROVED USES: SCRRA SHALL NOT BE RESPONSIBLE FOR THE ACCURACY OR COMPLETENESS OF THE DATA OR INFORMATION CONTAINED HEREIN. THE SELECTION AND USE OF THESE STANDARDS IS THE SOLE RESPONSIBILITY OF THE USER AND SHOULD NOT BE USED WITHOUT CONSULTING A REGISTERED PROFESSIONAL ENGINEER. ALL WARRANTIES AND REPRESENTATIONS OF ANY KIND ARE DISCLAIMED. ANYONE MAKING USE OF THIS INFORMATION AGREES THAT IT ASSUMES ALL LIABILITY ARISING FROM SUCH USE. NO PART OF THESE STANDARDS SHOULD BE REPRODUCED OR DISTRIBUTED IN ANY FORM OR BY ANY MEANS WITHOUT THE PRIOR WRITTEN PERMISSION OF SCRRA. ALL RIGHTS RESERVED.

METROLINK®
SOUTHERN CALIFORNIA REGIONAL RAIL AUTHORITY
ONE GATEWAY PLAZA, 12TH FLOOR, L. A., CA. 90012

ENGINEERING STANDARDS

CROSSING GEOMETRY AND CROSSING DATA
NO 10 136 LB RE DOUBLE SLIP CROSSING

STANDARD 2841
SCALE: NTS
REVISION –
SHEET 1 OF 1
CADD FILE: ES2841-04

NOTES:

1. SWITCH POINTS TO BE MADE FROM NEW HIGH STRENGTH RAIL.
2. METAL IDENTIFICATION TAG SHOWING HAND OF SWITCH POINT, WEIGHT OF RAIL, HS, MANUFACTURER AND WHEN MADE, TO BE FASTENED TO SWITCH POINT AT LOCATION SHOWN.
3. LEFT HAND TURNOUT SHOWN. MAKE OPPOSITE HAND FOR RIGHT HAND SWITCH POINT.
4. SIDE PLANING FIGURED ON GAUGE LINE 5/8" BELOW TOP OF RAIL.
5. MATERIAL AND WORKMANSHIP, ALSO ANY CONSTRUCTION DETAILS NOT SHOWN, SHALL BE PER CURRENT AREMA "TRACKWORK PLANS AND SPECIFICATIONS", UNLESS OTHERWISE SPECIFIED ON THIS PLAN.
6. IN ORDER TO ELIMINATE STRESS RAISERS, MANUFACTURER SHALL PEEN THE EDGES OF THE BOLT HOLES AS INDICATED AT THE HEEL OF THE SWITCH POINT AND AT HEEL END OF THE SWITCH POINT RAIL. USING AIR HAMMER WITH SUITABLE HEAD AND FINISHING WITH DRIFT PIN. BRAND ON RAIL AT EDGE OF BOLT HOLE TO BE CAREFULLY REMOVED BY GRINDING BEFORE PEENING.
7. THE CONTOUR PLANING SHALL BE ON THE GAUGE SIDE BEGINNING AT A DISTANCE OF 3'-0" FROM THE POINT OF SWITCH AND SHALL BE SHAPED TO THE CONTOUR OF A NEW 136 LB RE RAIL AND SHALL RUN OUT AT THE END OF THE TOP PLANING, WHERE THE SWITCH POINT HAS FULL HEAD CONTOUR.
8. METAL IDENTIFICATION TAG SHOWING (1) DESIGN LENGTH OF SWITCH, (2) IN PARENTHESES, THE ACTUAL LENGTH OF SWITCH POINT RAIL AND (3) THE TURNOUT NUMBER. MARK TAG THUS: 22'-8 1/2" NO 10. TAG TO BE FASTENED TO SWITCH POINT, ON GAUGE SIDE OF RAIL AT HEEL SPACER BLOCK IN LOCATION SHOWN.
9. AT HEEL END OF SWITCH POINT RAIL, BREAK SHARP CORNER AROUND THE ENTIRE PERIPHERY BY SLIGHTLY GRINDING. ALSO, DO NOT END HARDEN RAIL END.
10. NON - INTERLOCKED AND INTERLOCKED SWITCH POINTS ARE MADE THE SAME.
11. UNLESS SWITCH POINT ORDER SPECIFICALLY CALLS FOR USE OF 3/4" RIVETS AND 3/4" STOP BOLTS, MANUFACTURER CAN SUBSTITUTE 3/4" HACK FASTENERS, BOLT PART NOC-50-LR-BR2416 AND COLLAR PART NO L3-2-R-24G FOR 3/4" RIVETS. FOR 3/4" STOP BOLTS USE HUCK FASTENERS, BOLT PART NO C-50-LR-BR2424 AND COLLAR PART NO L3-2-R-24G.

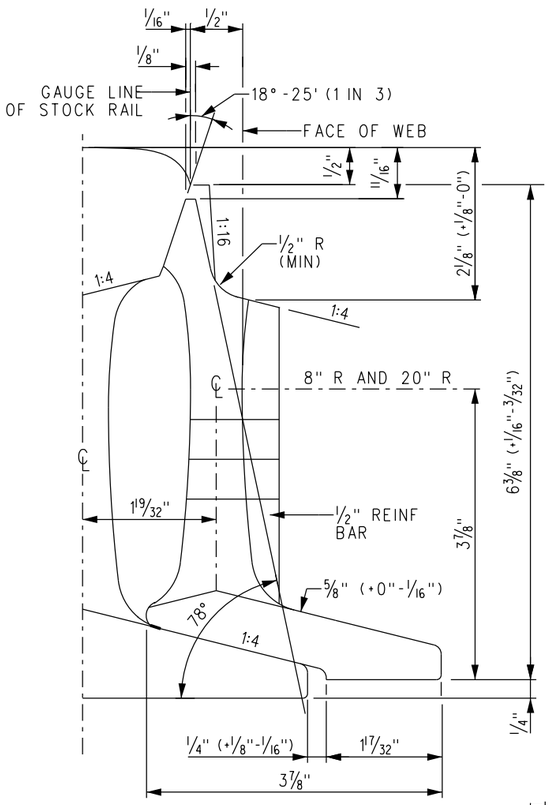

END VIEW OF POINT

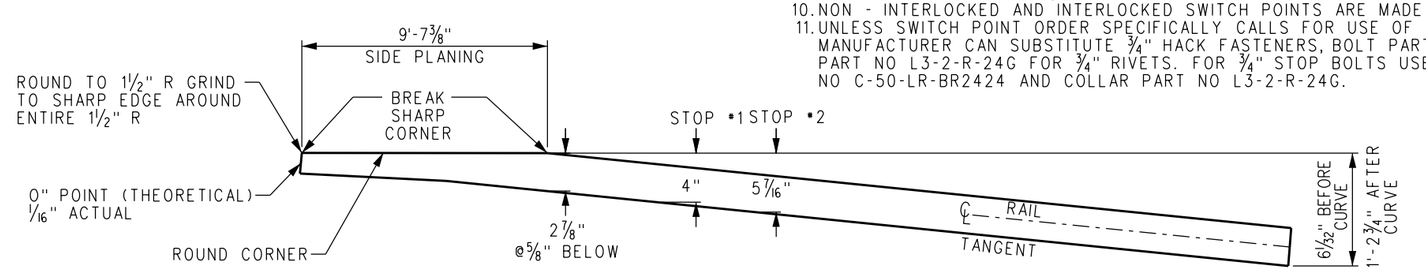

LEFT HAND CURVED INSIDE END
SWITCH POINT (RIGHT HAND OPPOSITE)

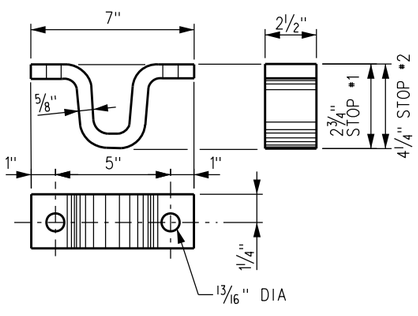

STOP

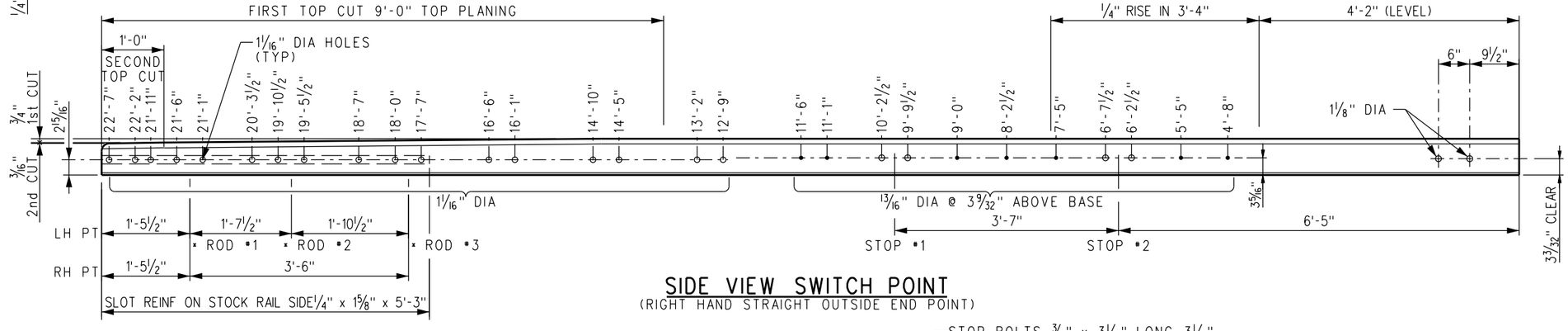

SIDE VIEW SWITCH POINT
(RIGHT HAND STRAIGHT OUTSIDE END POINT)

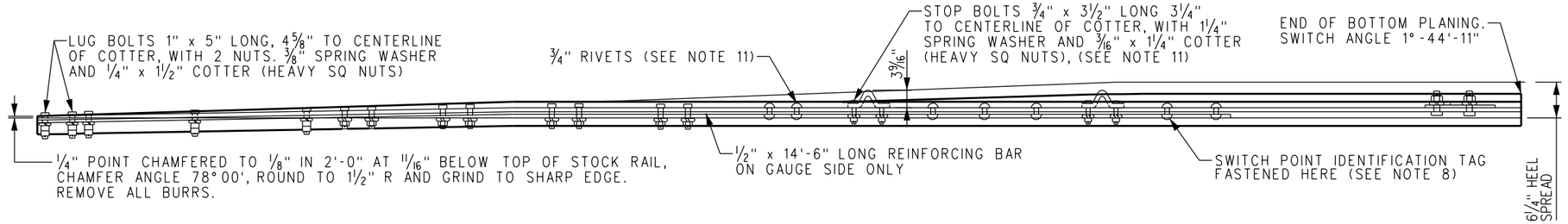

TOP VIEW SWITCH POINT

REV.	DATE	DESCRIPTION	DES.	ENG.
X	XX-XX-XX	REVISION	XX	XX

DRAWN BY: A. CARLOS DATE: 03/31/2011

ASSISTANT DIRECTOR: STANDARDS & DESIGN

DIRECTOR OF ENGINEERING AND CONSTRUCTION

SCRRA ENGINEERING STANDARDS ARE INTENDED FOR SCRRA APPROVED USES ONLY. FOR NON-SCRRA APPROVED USES:
SCRRA SHALL NOT BE RESPONSIBLE FOR THE ACCURACY OR COMPLETENESS OF THE DATA OR INFORMATION CONTAINED HEREIN. THE SELECTION AND USE OF THESE STANDARDS IS THE SOLE RESPONSIBILITY OF THE USER AND SHOULD NOT BE USED WITHOUT CONSULTING A REGISTERED PROFESSIONAL ENGINEER. ALL WARRANTIES AND REPRESENTATIONS OF ANY KIND ARE DISCLAIMED. ANYONE MAKING USE OF THIS INFORMATION AGREES THAT IT ASSUMES ALL LIABILITY ARISING FROM SUCH USE. NO PART OF THESE STANDARDS SHOULD BE REPRODUCED OR DISTRIBUTED IN ANY FORM OR BY ANY MEANS WITHOUT THE PRIOR WRITTEN PERMISSION OF SCRRA. ALL RIGHTS RESERVED.

METROLINK
SOUTHERN CALIFORNIA REGIONAL RAIL AUTHORITY
ONE GATEWAY PLAZA, 12TH FLOOR, L. A., CA. 90012

ENGINEERING STANDARDS

136 LB RE 22'-8 1/2" STRAIGHT SWITCH POINT
NO 10 DOUBLE SLIP CROSSING

STANDARD 2841
SCALE: NTS
REVISION –
SHEET 1 OF 1
CADD FILE: ES2841-11

NOTES:

1. SWITCH POINTS TO BE MADE FROM NEW HIGH STRENGTH RAIL.
2. METAL IDENTIFICATION TAG SHOWING HAND OF SWITCH POINT, WEIGHT OF RAIL, HS, MANUFACTURER AND WHEN MADE, TO BE FASTENED TO SWITCH POINT AT LOCATION SHOWN.
3. LEFT HAND TURNOUT SHOWN. MAKE OPPOSITE HAND FOR RIGHT HAND SWITCH POINT.
4. SIDE PLANING FIGURED ON GAUGE LINE 5/8" BELOW TOP OF RAIL.
5. MATERIAL AND WORKMANSHIP, ALSO ANY CONSTRUCTION DETAILS NOT SHOWN, SHALL BE PER CURRENT AREMA "TRACKWORK PLANS AND SPECIFICATIONS", UNLESS OTHERWISE SPECIFIED ON THIS PLAN.
6. IN ORDER TO ELIMINATE STRESS RAISERS, MANUFACTURER SHALL PEEN THE EDGES OF THE BOLT HOLES AS INDICATED AT THE HEEL OF THE SWITCH POINT AND AT HEEL END OF THE SWITCH POINT RAIL. USING AIR HAMMER WITH SUITABLE HEAD AND FINISHING WITH DRIFT PIN. BRAND ON RAIL AT EDGE OF BOLT HOLE TO BE CAREFULLY REMOVED BY GRINDING BEFORE PEENING.
7. THE CONTOUR PLANING SHALL BE ON THE GAUGE SIDE BEGINNING AT A DISTANCE OF 3'-0" FROM THE POINT OF SWITCH AND SHALL BE SHAPED TO THE CONTOUR OF A NEW 136 LB RAIL AND SHALL RUN OUT AT THE END OF THE TOP PLANING, WHERE THE SWITCH POINT HAS FULL HEAD CONTOUR.
8. METAL IDENTIFICATION TAG SHOWING (1) DESIGN LENGTH OF SWITCH, (2) IN PARENTHESES, THE ACTUAL LENGTH OF SWITCH POINT RAIL AND (3) THE TURNOUT NUMBER. MARK TAG THUS: 22'-8 1/2" NO 10. TAG TO BE FASTENED TO SWITCH POINT, ON GAUGE SIDE OF RAIL AT HEEL SPACER BLOCK IN LOCATION SHOWN.
9. AT HEEL END OF SWITCH POINT RAIL, BREAK SHARP CORNER AROUND THE ENTIRE PERIPHERY BY SLIGHTLY GRINDING. ALSO, DO NOT END HARDEN RAIL END.
10. NON - INTERLOCKED AND INTERLOCKED SWITCH POINTS ARE MADE THE SAME.
11. UNLESS SWITCH POINT ORDER SPECIFICALLY CALLS FOR USE OF 3/4" RIVETS AND 3/4" STOP BOLTS, MANUFACTURER CAN SUBSTITUTE 3/4" HACK FASTENERS, BOLT PART NO C-50-LR-BR2416 AND COLLAR PART NO L3-2-R-24G FOR 3/4" RIVETS. FOR 3/4" STOP BOLTS USE HUCK FASTENERS, BOLT PART NO C-50-LR-BR2424 AND COLLAR PART NO L3-2-R-24G.
12. SWITCH POINT MANUFACTURER MUST SUPPLY SHOP DRAWINGS OF MANGANESE STEEL INSERT FOR APPROVAL BY SCRRA DIRECTOR OF ENGINEERING PRIOR TO MANUFACTURING OF INSERT.

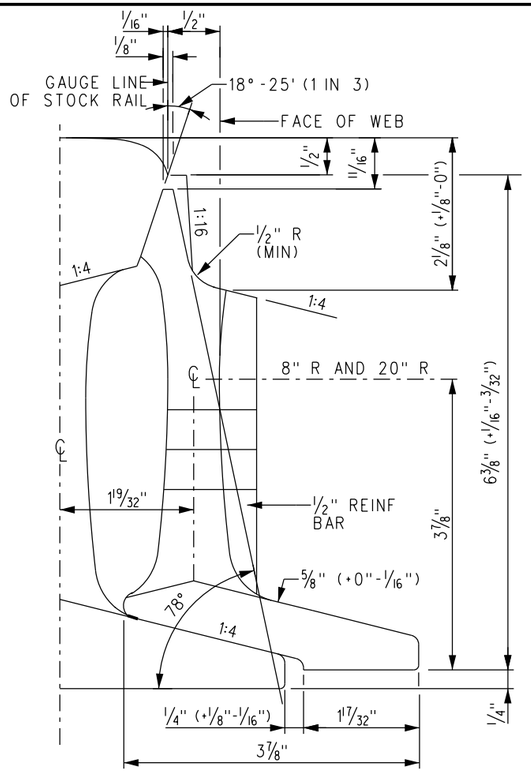

END VIEW OF POINT

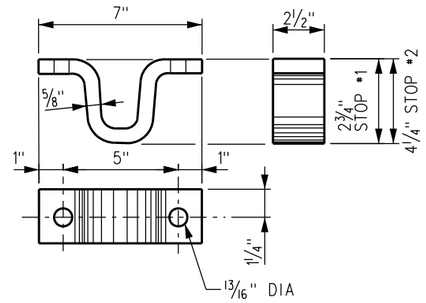

STOP

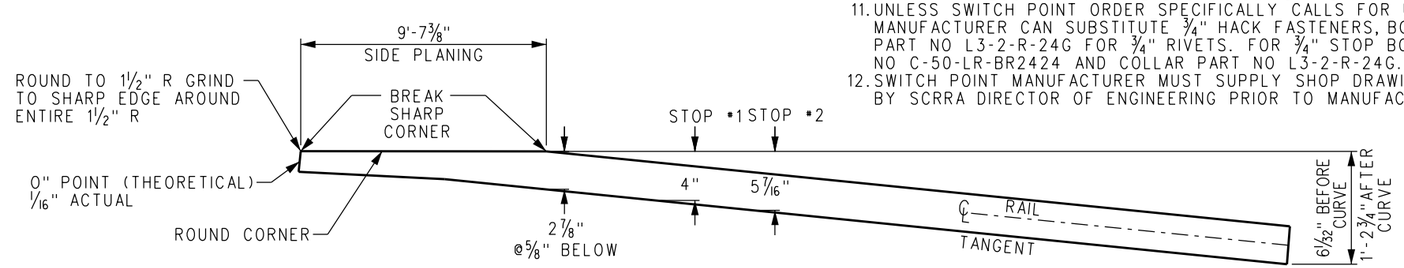

LEFT HAND CURVED INSIDE END SWITCH POINT (RIGHT HAND OPPOSITE)

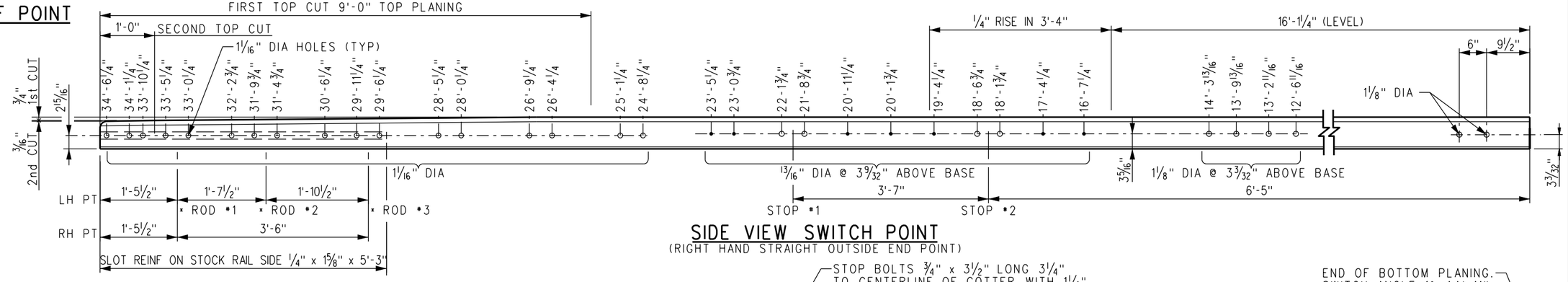

SIDE VIEW SWITCH POINT
(RIGHT HAND STRAIGHT OUTSIDE END POINT)

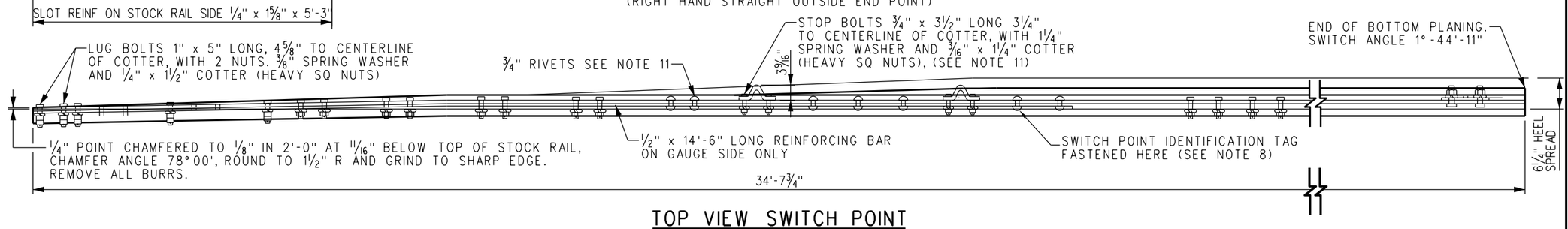

TOP VIEW SWITCH POINT

REV.	DATE	DESCRIPTION	DES.	ENG.
X	XX-XX-XX	REVISION	XX	XX

DRAWN BY: A. CARLOS DATE: 03/31/2011

ASSISTANT DIRECTOR: STANDARDS & DESIGN

DIRECTOR OF ENGINEERING AND CONSTRUCTION

SCRRA ENGINEERING STANDARDS ARE INTENDED FOR SCRRA APPROVED USES ONLY. FOR NON-SCRRA APPROVED USES, SCRRA SHALL NOT BE RESPONSIBLE FOR THE ACCURACY OR COMPLETENESS OF THE DATA OR INFORMATION CONTAINED HEREIN. THE SELECTION AND USE OF THESE STANDARDS IS THE SOLE RESPONSIBILITY OF THE USER AND SHOULD NOT BE USED WITHOUT CONSULTING A REGISTERED PROFESSIONAL ENGINEER. ALL WARRANTIES AND REPRESENTATIONS OF ANY KIND ARE DISCLAIMED. ANYONE MAKING USE OF THIS INFORMATION AGREES THAT IT ASSUMES ALL LIABILITY ARISING FROM SUCH USE. NO PART OF THESE STANDARDS SHOULD BE REPRODUCED OR DISTRIBUTED IN ANY FORM OR BY ANY MEANS WITHOUT THE PRIOR WRITTEN PERMISSION OF SCRRA. ALL RIGHTS RESERVED.

METROLINK®
SOUTHERN CALIFORNIA REGIONAL RAIL AUTHORITY
ONE GATEWAY PLAZA, 12TH FLOOR, L. A., CA. 90012

ENGINEERING STANDARDS

136 LB RE 34'-7 3/4" CURVED SWITCH POINT
NO 10 DOUBLE SLIP CROSSING

STANDARD 2841
SCALE: NTS
REVISION –
SHEET 1 OF 1
CADD FILE: ES2841-12

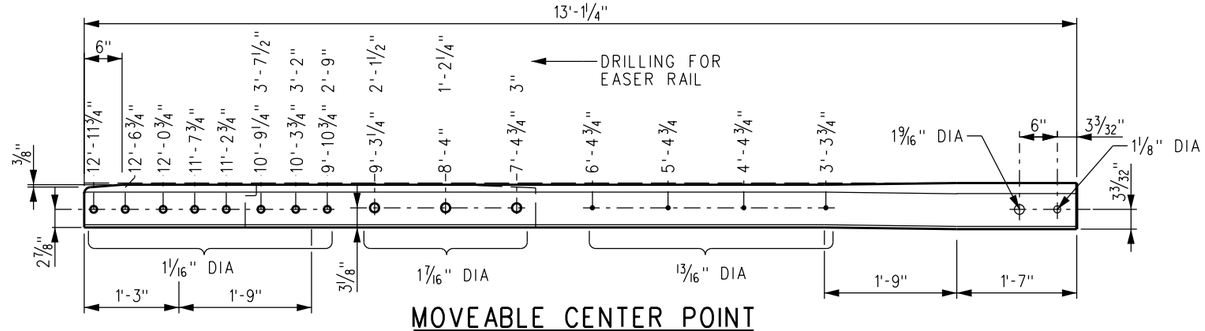

MOVEABLE CENTER POINT

(LEFT HAND AS SHOWN)

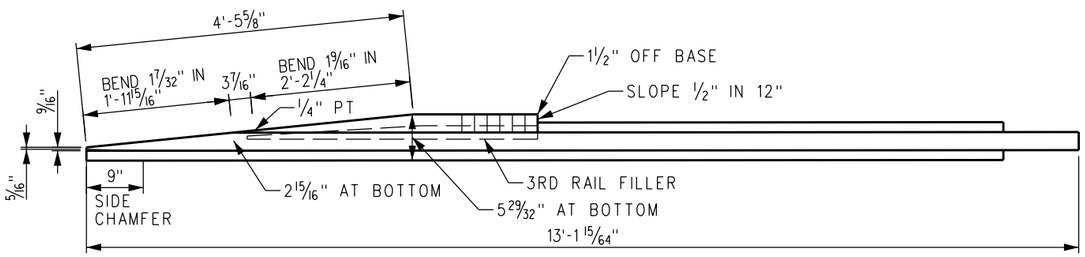

TOP VIEW MOVEABLE CENTER POINT

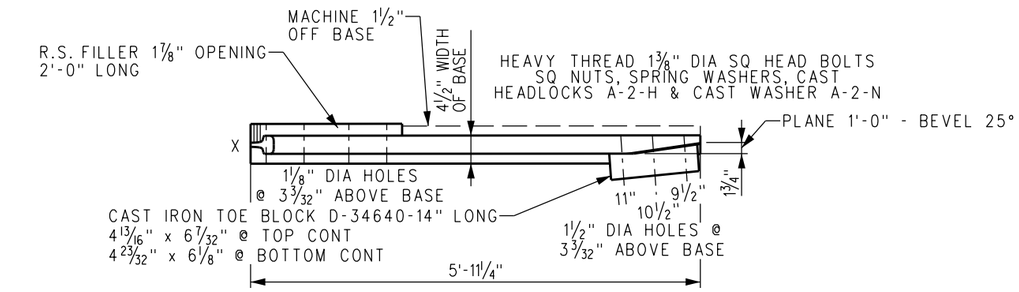

RIGHT HAND BRACE RAIL 5'-11¼" (STRAIGHT) (TWO REQUIRED)

ABBREVIATIONS:

CONT = CONTOUR

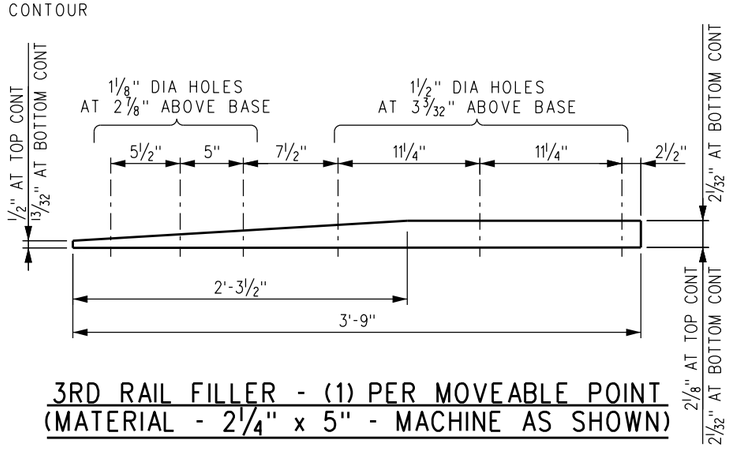

3RD RAIL FILLER - (1) PER MOVEABLE POINT (MATERIAL - 2¼" x 5" - MACHINE AS SHOWN)

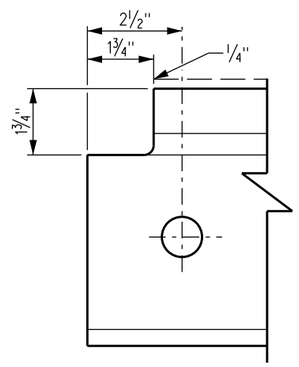

VIEW AT EASER RAIL POINT END

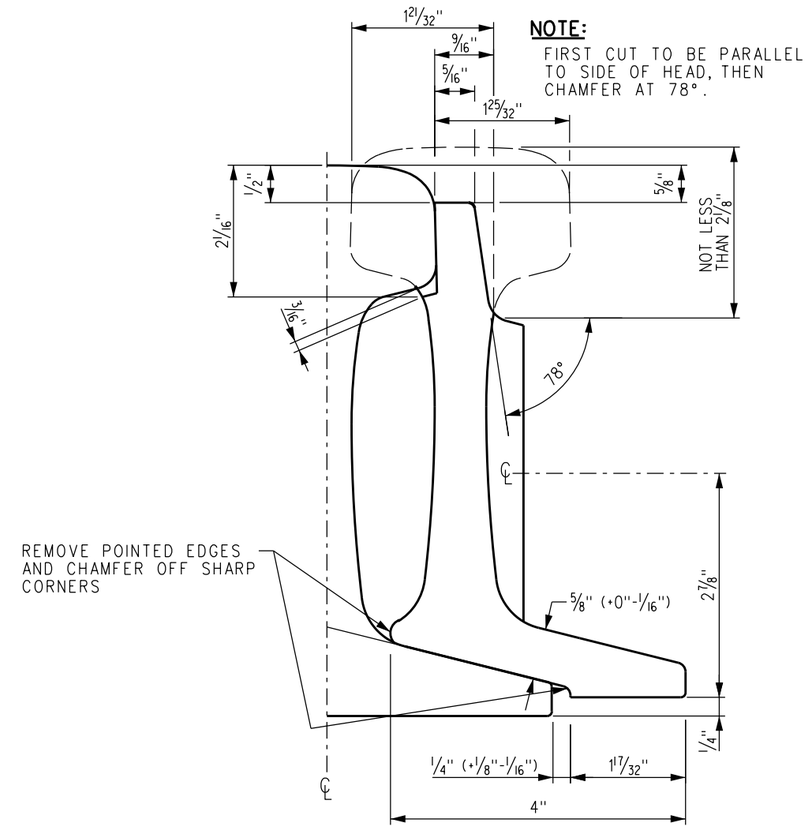

NOTE:
FIRST CUT TO BE PARALLEL TO SIDE OF HEAD, THEN CHAMFER AT 78°.

END VIEW OF POINT

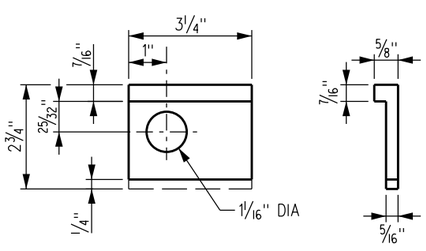

ROLLED HEADLOCK FOR 1, 2 AND 3

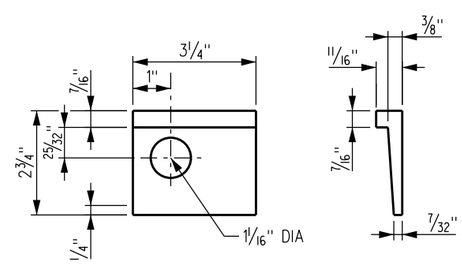

ROLLED HEADLOCK FOR 4

REV.	DATE	DESCRIPTION	DES.	ENG.
X	XX-XX-XX	REVISION	XX	XX

DRAWN BY: A. CARLOS DATE: 03/31/2011

ASSISTANT DIRECTOR: STANDARDS & DESIGN

DIRECTOR OF ENGINEERING AND CONSTRUCTION

SCRRA ENGINEERING STANDARDS ARE INTENDED FOR SCRRA APPROVED USES ONLY. FOR NON-SCRRA APPROVED USES:
SCRRA SHALL NOT BE RESPONSIBLE FOR THE ACCURACY OR COMPLETENESS OF THE DATA OR INFORMATION CONTAINED HEREIN. THE SELECTION AND USE OF THESE STANDARDS IS THE SOLE RESPONSIBILITY OF THE USER AND SHOULD NOT BE USED WITHOUT CONSULTING A REGISTERED PROFESSIONAL ENGINEER. ALL WARRANTIES AND REPRESENTATIONS OF ANY KIND ARE DISCLAIMED. ANYONE MAKING USE OF THIS INFORMATION AGREES THAT IT ASSUMES ALL LIABILITY ARISING FROM SUCH USE. NO PART OF THESE STANDARDS SHOULD BE REPRODUCED OR DISTRIBUTED IN ANY FORM OR BY ANY MEANS WITHOUT THE PRIOR WRITTEN PERMISSION OF SCRRA. ALL RIGHTS RESERVED.

METROLINK®
SOUTHERN CALIFORNIA REGIONAL RAIL AUTHORITY
ONE GATEWAY PLAZA, 12TH FLOOR, L. A., CA. 90012

ENGINEERING STANDARDS

136 LB RE MOVEABLE CENTER POINT, 3RD RAIL FILLER AND BRACE RAIL DETAILS NO 10 DOUBLE SLIP CROSSING

STANDARD 2841
SCALE: NTS
REVISION –
SHEET 1 OF 1
CADD FILE: ES2841-13

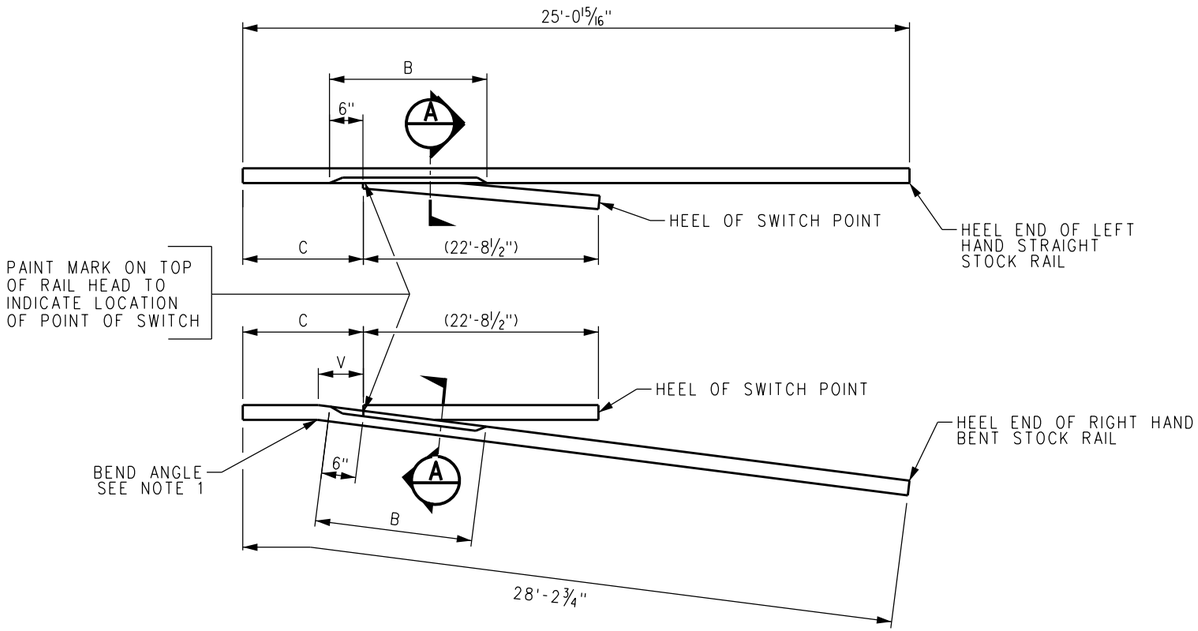

STOCK RAILS ARE SHOWN FOR "RIGHT HAND TURNOUT"

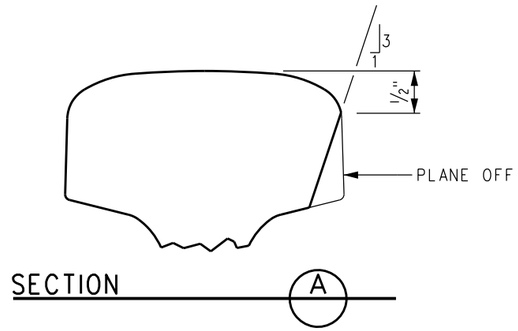

LENGTHS B, C, & D FOR 136 LB RAIL						
SW PT LENGTH	TO NO	STOCK RAIL	B	FOR NEW INSTALLATION		
				C	D	END DRILL SEE NO 10
22'-8 1/2"	10	STR	11'-0"	3'-11"	25'-0 15/16"	NONE
22'-8 1/2"	10	BENT	11'-0"	3'-11"	28'-2 3/4"	HEEL END ONLY

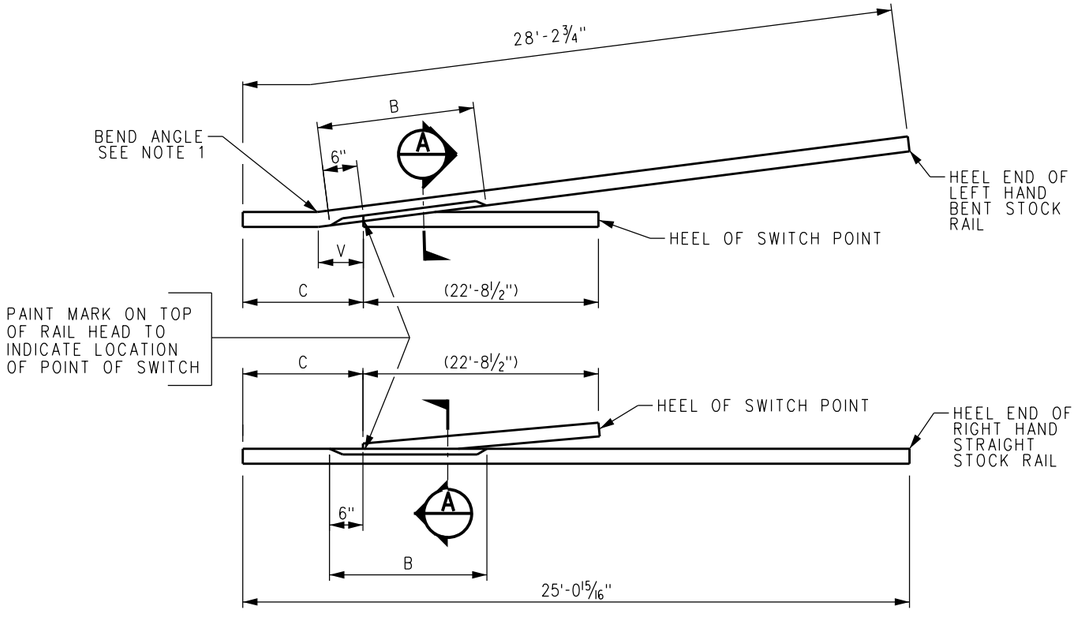

STOCK RAILS ARE SHOWN FOR "LEFT HAND TURNOUT"

NOTE:

1. BEND ANGLE IN BENT STOCK RAIL TO BE AS FOLLOWS:

SW LENGTH	BEND ANGLE	V (VERTEX DIST)
22'-8 1/2"	1° -44'-11" OR 1" IN 2'-9"	10 5/16"

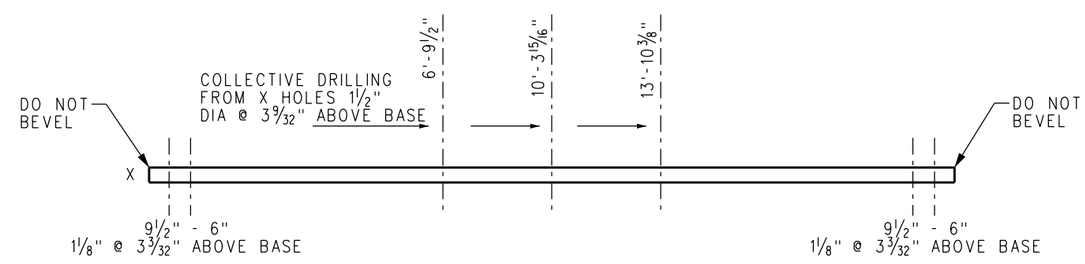

OUTSIDE SLIP RAIL - 20'-7 7/8" LONG

REV.	DATE	DESCRIPTION	DES.	ENG.
X	XX-XX-XX	REVISION	XX	XX

DRAWN BY: A. CARLOS DATE: 03/31/2011

ASSISTANT DIRECTOR: STANDARDS & DESIGN

DIRECTOR OF ENGINEERING AND CONSTRUCTION

SCRRA ENGINEERING STANDARDS ARE INTENDED FOR SCRRA APPROVED USES ONLY. FOR NON-SCRRA APPROVED USES:
SCRRA SHALL NOT BE RESPONSIBLE FOR THE ACCURACY OR COMPLETENESS OF THE DATA OR INFORMATION CONTAINED HEREIN. THE SELECTION AND USE OF THESE STANDARDS IS THE SOLE RESPONSIBILITY OF THE USER AND SHOULD NOT BE USED WITHOUT CONSULTING A REGISTERED PROFESSIONAL ENGINEER. ALL WARRANTIES AND REPRESENTATIONS OF ANY KIND ARE DISCLAIMED. ANYONE MAKING USE OF THIS INFORMATION AGREES THAT IT ASSUMES ALL LIABILITY ARISING FROM SUCH USE. NO PART OF THESE STANDARDS SHOULD BE REPRODUCED OR DISTRIBUTED IN ANY FORM OR BY ANY MEANS WITHOUT THE PRIOR WRITTEN PERMISSION OF SCRRA. ALL RIGHTS RESERVED.

METROLINK®
SOUTHERN CALIFORNIA REGIONAL RAIL AUTHORITY
ONE GATEWAY PLAZA, 12TH FLOOR, L. A., CA. 90012

ENGINEERING STANDARDS

UNDERCUT STOCK RAILS FOR 22'-8 1/2" SWITCH POINTS FOR NO 10 DOUBLE SLIP CROSSING

STANDARD 2841
SCALE: NTS
REVISION –
SHEET 1 OF 1
CADD FILE: ES2841-14

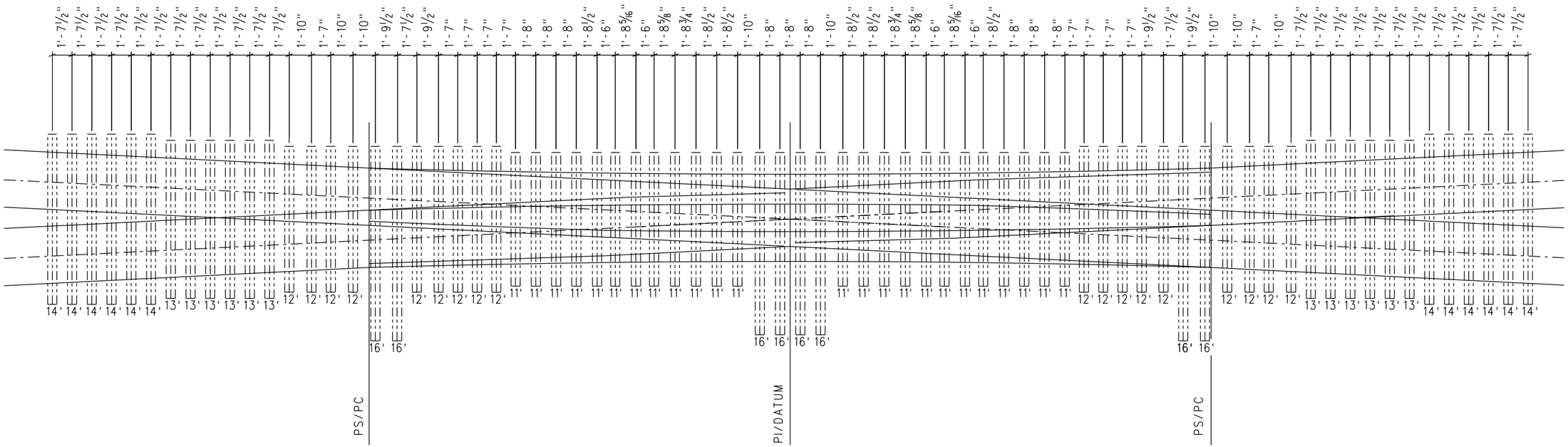

BILL OF SWITCH TIES			
PIECES	SIZE	LENGTH	BOARD FEET
24	7"x9"	11'-0"	1386
18	7"x9"	12'-0"	1134
12	7"x9"	13'-0"	819
12	7"x9"	14'-0"	882
0	7"x9"	15'-0"	0
8	7"x9"	16'-0"	672
TOTAL			TOTAL
74			4,893

REV.	DATE	DESCRIPTION	DES.	ENG.
X	XX-XX-XX	REVISION	XX	XX

DRAWN BY: HDR DATE: 03/31/2011

ASSISTANT DIRECTOR: STANDARDS & DESIGN

DIRECTOR OF ENGINEERING AND CONSTRUCTION

SCRRA ENGINEERING STANDARDS ARE INTENDED FOR SCRRA APPROVED USES ONLY. FOR NON-SCRRA APPROVED USES:
SCRRA SHALL NOT BE RESPONSIBLE FOR THE ACCURACY OR COMPLETENESS OF THE DATA OR INFORMATION CONTAINED HEREIN. THE SELECTION AND USE OF THESE STANDARDS IS THE SOLE RESPONSIBILITY OF THE USER AND SHOULD NOT BE USED WITHOUT CONSULTING A REGISTERED PROFESSIONAL ENGINEER. ALL WARRANTIES AND REPRESENTATIONS OF ANY KIND ARE DISCLAIMED. ANYONE MAKING USE OF THIS INFORMATION AGREES THAT IT ASSUMES ALL LIABILITY ARISING FROM SUCH USE. NO PART OF THESE STANDARDS SHOULD BE REPRODUCED OR DISTRIBUTED IN ANY FORM OR BY ANY MEANS WITHOUT THE PRIOR WRITTEN PERMISSION OF SCRRA. ALL RIGHTS RESERVED.

METROLINK®
SOUTHERN CALIFORNIA REGIONAL RAIL AUTHORITY
ONE GATEWAY PLAZA, 12TH FLOOR, L. A., CA. 90012

ENGINEERING STANDARDS

NO 10 136 LB RE DOUBLE SLIP CROSSING
TIMBER TIE LAYOUT

STANDARD 2841
SCALE: NTS
REVISION –
SHEET 1 OF 1
CADD FILE: ES2841-30

UserName=> carlosa Date Plotted: 10/5/2011 3:23:48 PM Plot Driver=> S:\Plot Drivers\pdf.plt FileName=> s:\V8EngStds\2000\Turnouts\No 10 Double Slip\ES2841-30.dgn

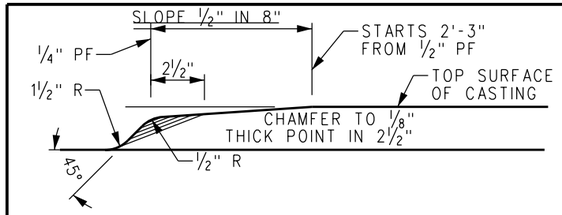

SLOPE ON MANGANESE @ SECTION "X" - "X"

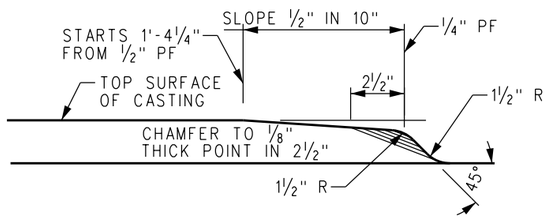

SLOPE ON MANGANESE @ SECTION "Y" - "Y"

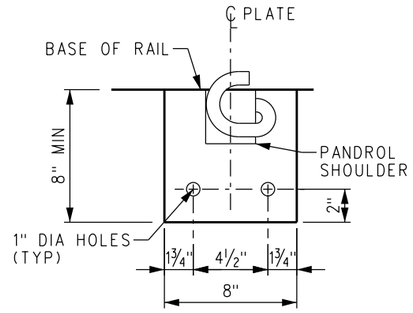

TYPICAL PLATE PUNCHING DETAIL

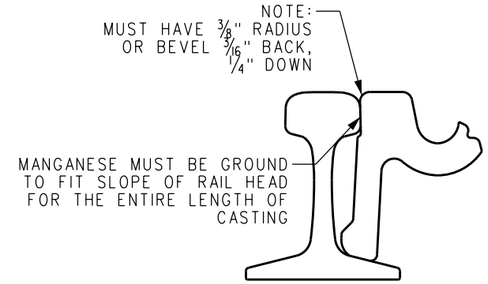

DETAIL OF FROG CASTING / RAIL FIT

NOTES:

1. RAIL USED TO FABRICATE FROG IS TO BE 136 LB HIGH STRENGTH.
2. RAIL BOUND MANGANESE STEEL FROG PER CURRENT AREMA PLAN NO 621 & 625 WITH EXPLOSIVE HARDENED MANGANESE HIGH INTEGRITY CASTING PER CURRENT AREMA SPECIFICATIONS AND MODIFIED FOR ARM LENGTHS AND PLATES WITH "PANDROL" FASTENERS.
3. ALL FROG PLATES SHALL BE STAMPED IN 1/2" CHARACTERS TO INDICATE MFG, FROG NO, RH, RAIL SECTION AND PLATE NUMBER. MARK TO BE STAMPED ON SAME END OF ALL FROG PLATES.
4. FOR DETAILS OF FROG PLATES F-1 THRU F-15, SEE SHEET ES2841-49.
5. WORKMANSHIP AND MATERIALS SHALL BE PER CURRENT AREMA SPECIFICATIONS FOR "SPECIAL TRACKWORK", EXCEPT AS OTHERWISE SPECIFIED.
6. ANY CONSTRUCTION DETAILS NOT SHOWN SHALL BE IN ACCORDANCE WITH CURRENT AREMA RECOMMENDED PRACTICE.
7. FROG PLATES ARE DESIGNED TO BE INSTALLED PERPENDICULAR TO MAIN TRACK.
8. BODY BOLTS 1 3/8" DIAMETER, H.T.C.S. - PER AREMA SPECIFICATIONS.
9. TOE AND HEEL BLOCKS AND BOLTS PER AREMA SPECIFICATIONS.
10. PLATES TO BE MADE OF MILD ROLLED STEEL.
11. THE PLATES AS SHOWN ARE FOR A 136 LB, NO 10, DOUBLE SLIP CROSSING, MACHINE OPERATED TURNOUT.
12. THE "PANDROL" TYPE WELD - ON PRESSED STEEL SHOULDER, MADE OF MILD STEEL, TO BE PURCHASED FROM "PANDROL INTERNATIONAL", OR APPROVED ALTERNATE MEETING "PANDROL'S" DESIGN SPECIFICATIONS. THE PRESSED STEEL SHOULDER MUST BE CAREFULLY WELDED TO ALL PLATES WITH A MINIMUM 2 PASS 3/8" + FILLET WELD ALONG THE BEVELED GROOVES OF THE SHOULDER. ANY WELD PROJECTING BEYOND THE VERTICAL FACE OF SHOULDER IN THE AREA OF THE BASE OF RAIL SEAT MUST BE MACHINED OUT TO PROVIDE A CLEAR RAIL SEAT DIMENSION AS CALLED FOR.
13. MANUFACTURER OF FROG PLATES SHALL USE COMPLETED FROG TO VERIFY LOCATION OF ADJUSTABLE CLAMPS ON FROG PLATES F-1, F-2 AND F-3 TO INSURE PROPER FIT. FROG PLATES WILL BE WELDED TO THE GAUGE PLATES IN THE FIELD WITH A 3 PASS 1/2" + FILLET WELD. PLATES WILL BE WELDED ONLY AFTER THE GAUGE PLATES ARE SECURED IN THE PROPER LOCATION ON THE TIE WITH THE FROG IN PLACE AT PROPER ALIGNMENT.
14. GUARD RAIL PLATES ARE TO BE INSTALLED AND WELDED TO THE FROG GAUGE PLATES IN THE FIELD WITH A 3 PASS 1/2" + FILLET WELD CONTINUOUS ON BOTH ENDS OF THE PLATE. PLATES ARE TO BE WELDED ONLY AFTER THE GAUGE PLATE AND THE FROG IS SECURED IN THE PROPER LOCATION ON THE TIE WITH THE FROG IN PLACE AT PROPER ALIGNMENT.
15. IDENTIFICATION TAG WITH RAISED METAL CHARACTERS TO BE APPLIED WHICH WILL STATE WEIGHT OF RAIL, FROG NO, MANUFACTURER AND YEAR MANUFACTURED.

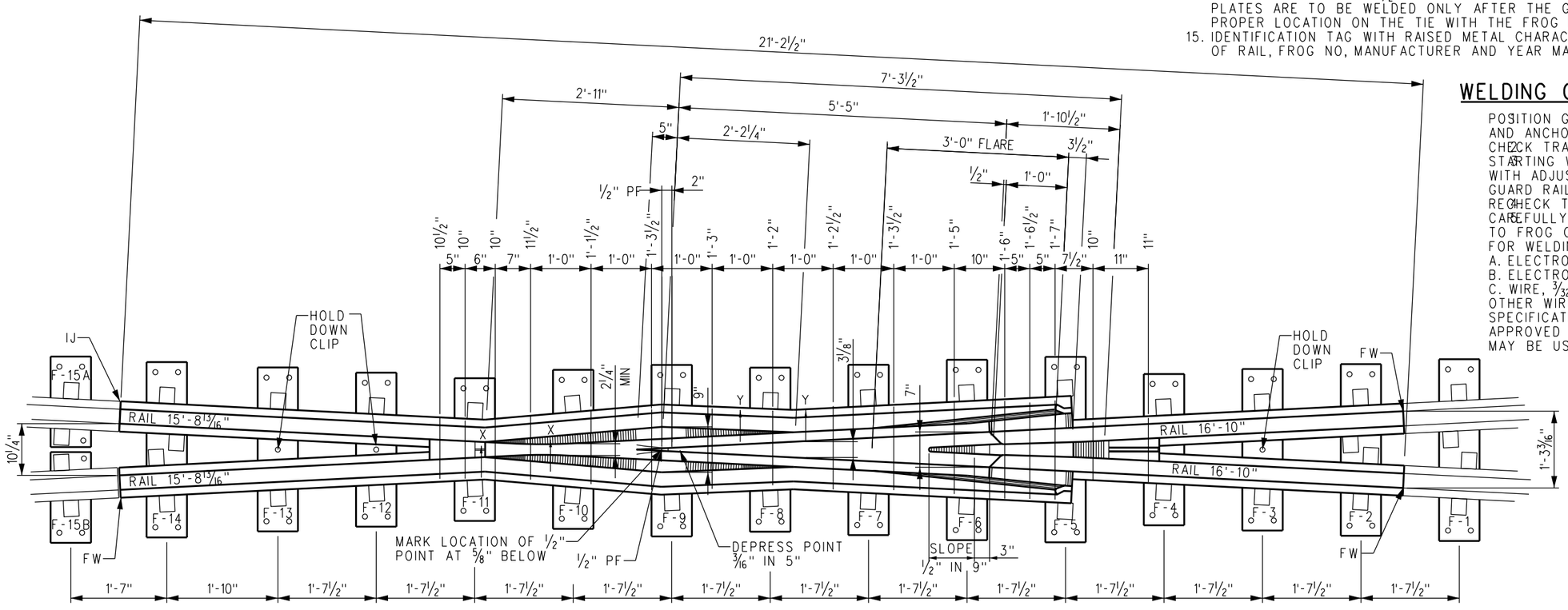

NO 10 RAILBOUND MANGANESE FROG 21'-2 1/2" LONG WITH PLATES

WELDING OF GAUGE PLATE & GUARD RAIL:

POSITION GAUGE PLATES AT DESIGNATED TIE LOCATIONS AND ANCHOR IN PLACE.
CHECK TRACK FOR CORRECT GAUGE.
STARTING WITH ONE GAUGE PLATE, PLACE FROG PLATES WITH ADJUSTABLE BRACES AND SECURE TO FROG AND GUARD RAIL WITH "PANDROL" CLIPS.
RECHECK TRACK GAUGE AND CORRECT IF NECESSARY.
CAREFULLY WELD FROG PLATE AND GUARD RAIL PLATE TO FROG GAUGE PLATES WITH 3 PASS 1/2" - FILLET WELD.
FOR WELDING USE THE FOLLOWING:
A. ELECTRODE, 5/32", WELDING SPEC 7018XLM.
B. ELECTRODE, 3/16", WELDING SPEC 7018XLM.
C. WIRE, 3/32", NR203, 1% NICKEL FLUX CORE.
OTHER WIRE OR ELECTRODES MEETING SPECIFICATIONS AS CALLED FOR AND APPROVED BY SCRRA DIRECTOR OF ENGINEERING MAY BE USED.

REFERENCE DRAWING

LAYOUT - NO 10 DOUBLE SLIP CROSSING - 136 LB ---------- NO 2841-02

REV.	DATE	DESCRIPTION	DES.	ENG.
X	XX-XX-XX	REVISION	XX	XX

DRAWN BY: A. CARLOS DATE: 03/31/2011

ASSISTANT DIRECTOR: STANDARDS & DESIGN

DIRECTOR OF ENGINEERING AND CONSTRUCTION

SCRRA ENGINEERING STANDARDS ARE INTENDED FOR SCRRA APPROVED USES ONLY. FOR NON-SCRRA APPROVED USES:
SCRRA SHALL NOT BE RESPONSIBLE FOR THE ACCURACY OR COMPLETENESS OF THE DATA OR INFORMATION CONTAINED HEREIN. THE SELECTION AND USE OF THESE STANDARDS IS THE SOLE RESPONSIBILITY OF THE USER AND SHOULD NOT BE USED WITHOUT CONSULTING A REGISTERED PROFESSIONAL ENGINEER. ALL WARRANTIES AND REPRESENTATIONS OF ANY KIND ARE DISCLAIMED. ANYONE MAKING USE OF THIS INFORMATION AGREES THAT IT ASSUMES ALL LIABILITY ARISING FROM SUCH USE. NO PART OF THESE STANDARDS SHOULD BE REPRODUCED OR DISTRIBUTED IN ANY FORM OR BY ANY MEANS WITHOUT THE PRIOR WRITTEN PERMISSION OF SCRRA. ALL RIGHTS RESERVED.

METROLINK®
SOUTHERN CALIFORNIA REGIONAL RAIL AUTHORITY
ONE GATEWAY PLAZA, 12TH FLOOR, L. A., CA. 90012

ENGINEERING STANDARDS

NO 10 RAILBOUND MANGANESE STEEL FROG WITH PANDROLIZED PLATES FOR A 136 LB RE DOUBLE SLIP CROSSING

STANDARD 2841
SCALE: NTS
REVISION –
SHEET 1 OF 1
CADD FILE: ES2841–40

UserName=> carlosa Date Plotted: 10/5/2011 3:23:49 PM Plot Driver=> S:\Plot Drivers\pdf.plt FileName=> s:\V8EngStds\2000\Turnouts\No 10 Double Slip\ES2841-40.dgn

NOTES:

1. HOLD DOWN CLIPS TO BE INSTALLED IN THE FIELD.

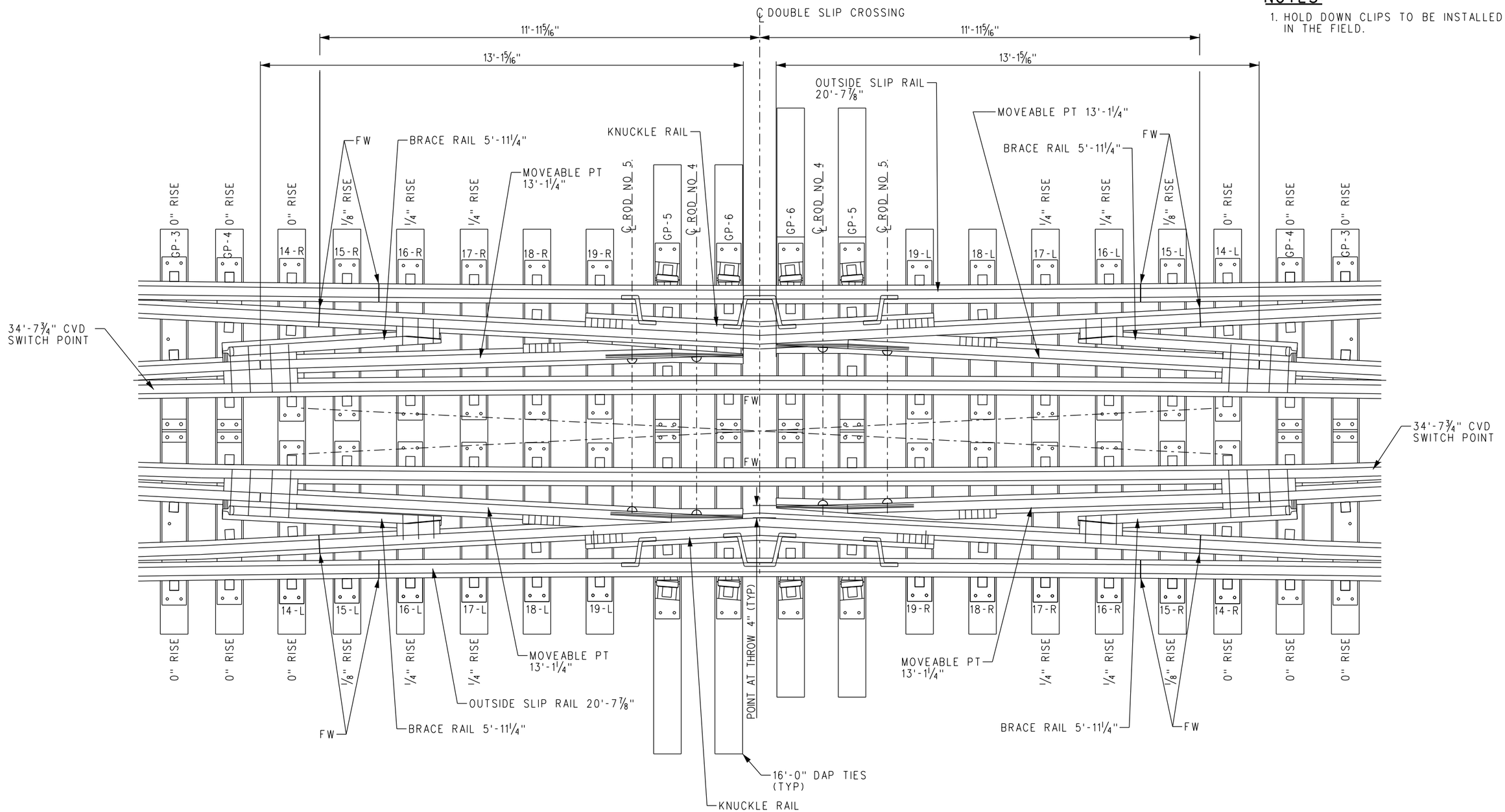

NO 10 DOUBLE SLIP CROSSING

REFERENCE DRAWING:

LAYOUT - NO 10, DOUBLE SLIP CROSSING - 136 LB -------- SHEET NO 2841-02

REV.	DATE	DESCRIPTION	DES.	ENG.
X	XX-XX-XX	REVISION	XX	XX

DRAWN BY: A. CARLOS DATE: 03/31/2011

ASSISTANT DIRECTOR: STANDARDS & DESIGN

DIRECTOR OF ENGINEERING AND CONSTRUCTION

SCRRA ENGINEERING STANDARDS ARE INTENDED FOR SCRRA APPROVED USES ONLY. FOR NON-SCRRA APPROVED USES:
SCRRA SHALL NOT BE RESPONSIBLE FOR THE ACCURACY OR COMPLETENESS OF THE DATA OR INFORMATION CONTAINED HEREIN. THE SELECTION AND USE OF THESE STANDARDS IS THE SOLE RESPONSIBILITY OF THE USER AND SHOULD NOT BE USED WITHOUT CONSULTING A REGISTERED PROFESSIONAL ENGINEER. ALL WARRANTIES AND REPRESENTATIONS OF ANY KIND ARE DISCLAIMED. ANYONE MAKING USE OF THIS INFORMATION AGREES THAT IT ASSUMES ALL LIABILITY ARISING FROM SUCH USE. NO PART OF THESE STANDARDS SHOULD BE REPRODUCED OR DISTRIBUTED IN ANY FORM OR BY ANY MEANS WITHOUT THE PRIOR WRITTEN PERMISSION OF SCRRA. ALL RIGHTS RESERVED.

METROLINK®
SOUTHERN CALIFORNIA REGIONAL RAIL AUTHORITY
ONE GATEWAY PLAZA, 12TH FLOOR, L. A., CA. 90012

ENGINEERING STANDARDS

NO 10 DOUBLE SLIP CROSSING
CENTER SECTION LAYOUT
136 LB RE RAIL

STANDARD 2841
SCALE: NTS
REVISION –
SHEET 1 OF 1
CADD FILE: ES2841-41

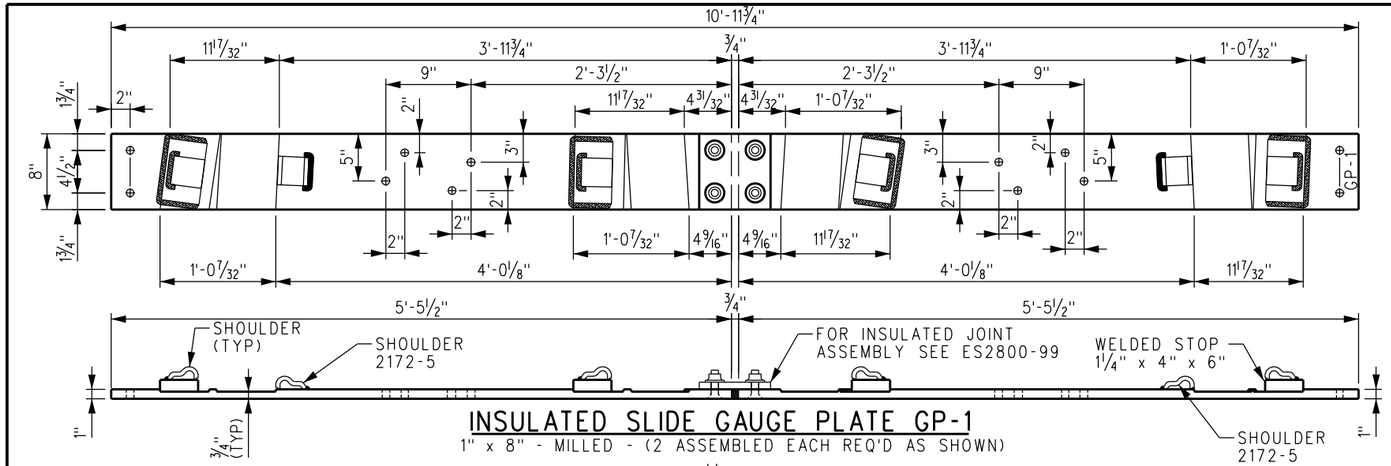

INSULATED SLIDE GAUGE PLATE GP-1

1" x 8" - MILLED - (2 ASSEMBLED EACH REQ'D AS SHOWN)

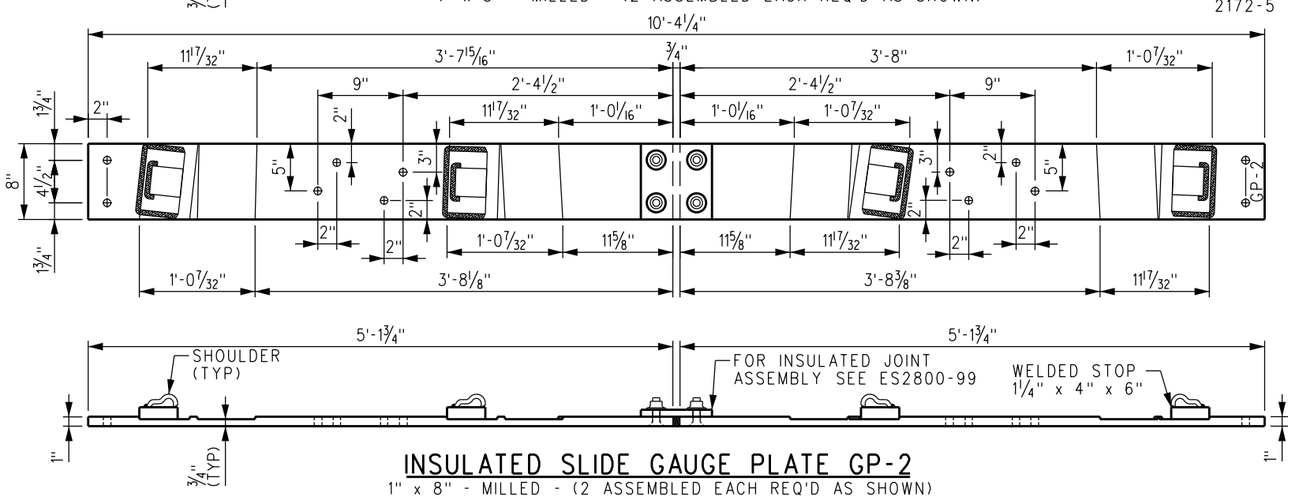

INSULATED SLIDE GAUGE PLATE GP-2

1" x 8" - MILLED - (2 ASSEMBLED EACH REQ'D AS SHOWN)

NOTES:

1. PLATES TO BE MADE OF MILD ROLLED STEEL.
2. THE PLATES AS SHOWN ARE FOR A 136 LB, NO 10 DOUBLE SLIP CROSSING.
3. ALL WELDS ARE ½" FILLET WELDS UNLESS OTHERWISE NOTED.
4. HOLES IN PLATES ARE 1" IN DIA UNLESS OTHERWISE NOTED.
5. GUARD RAIL PLATES ARE TO BE INSTALLED AND WELDED TO THE FROG GAUGE PLATES IN THE FIELD ON BOTH ENDS OF THE PLATE. PLATES ARE TO BE WELDED ONLY AFTER THE GAUGE PLATE AND THE FROG IS SECURED IN THE PROPER LOCATION ON THE TIE WITH PROPER ALIGNMENT.
6. FROG BASE PLATES FP-1, FP-4 AND FP-7 ARE TO BE WELDED TO THE FROG GAUGE PLATES IN THE FIELD WITH A PASS ½" + FILLET WELD CONTINUOUS ON BOTH ENDS OF THE PLATE. PLATES ARE TO BE WELDED ONLY AFTER THE GAUGE PLATE AND THE FROG IS SECURED IN THE PROPER LOCATION ON THE TIE WITH PROPER ALIGNMENT.
7. THE WELD - ON PRESSED STEEL SHOULDER, PURCHASED FROM "PANDROL INTERNATIONAL", TO BE MILD STEEL. OTHER APPROVED WELD - ON PRESSED STEEL SHOULDERS MEETING "PANDROL'S" DESIGN SPECIFICATIONS MAY BE USED.
8. THE PRESSED STEEL SHOULDER MUST BE CAREFULLY WELDED TO GAUGE PLATES. ANY WELD PROJECTING BEYOND THE VERTICAL FACE OF SHOULDER IN THE AREA OF THE RAIL SEAT MUST BE MACHINED OUT TO PROVIDE A CLEAR RAIL SEAT DIMENSION AS CALLED FOR.
9. ALL PANDROL SHOULDERS TO BE TYPE 1 FORGED, UNLESS OTHERWISE SHOWN.

REFERENCE DRAWING

LAYOUT - NO 10, DOUBLE SLIP CROSSING - 136 LB -------- SHEET NO 2841-02

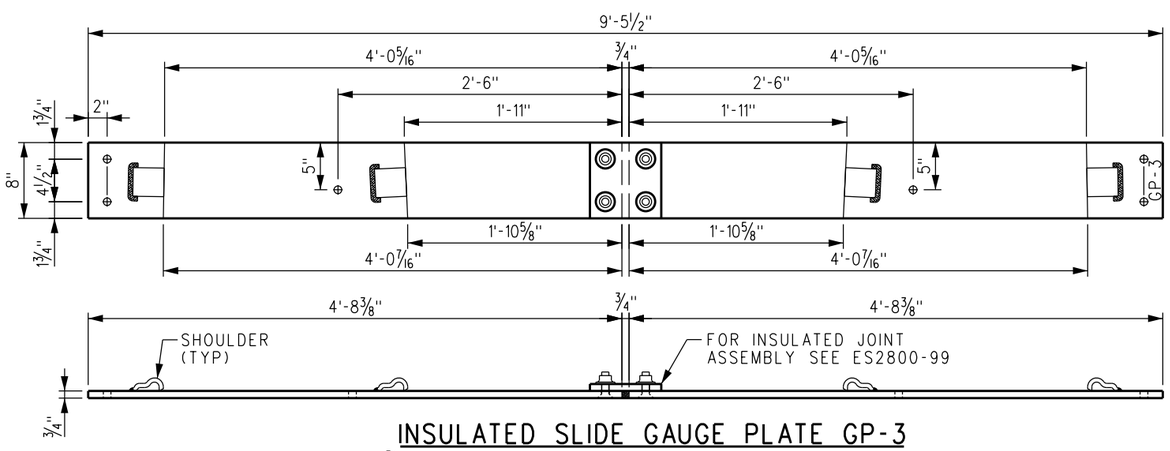

INSULATED SLIDE GAUGE PLATE GP-3

¾" x 8" - FLAT - (2 ASSEMBLED EACH REQ'D AS SHOWN)

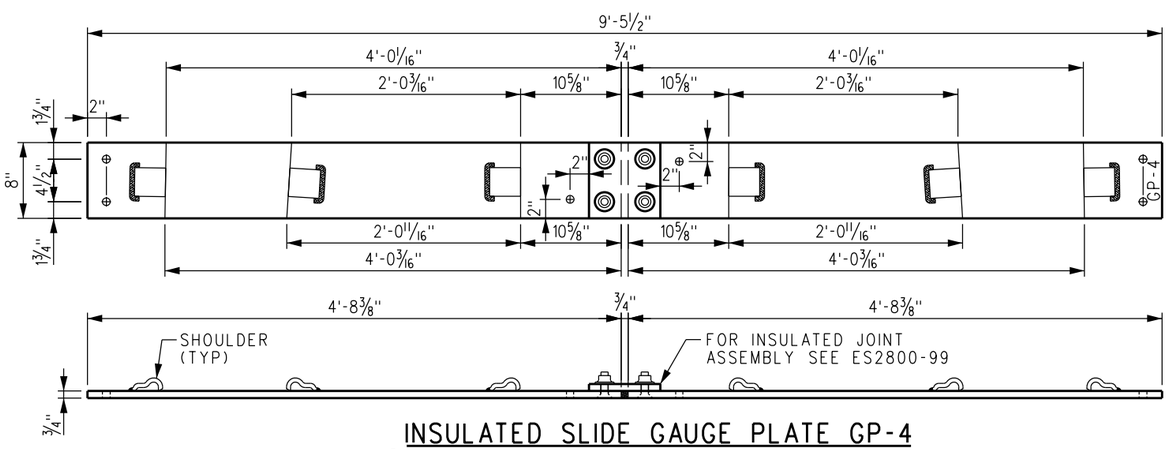

INSULATED SLIDE GAUGE PLATE GP-4

¾" x 8" - FLAT - (2 ASSEMBLED EACH REQ'D AS SHOWN)

REV.	DATE	DESCRIPTION	DES.	ENG.
X	XX-XX-XX	REVISION	XX	XX

DRAWN BY: A. CARLOS DATE: 03/31/2011

ASSISTANT DIRECTOR: STANDARDS & DESIGN

DIRECTOR OF ENGINEERING AND CONSTRUCTION

SCRRA ENGINEERING STANDARDS ARE INTENDED FOR SCRRA APPROVED USES ONLY. FOR NON-SCRRA APPROVED USES:
SCRRA SHALL NOT BE RESPONSIBLE FOR THE ACCURACY OR COMPLETENESS OF THE DATA OR INFORMATION CONTAINED HEREIN. THE SELECTION AND USE OF THESE STANDARDS IS THE SOLE RESPONSIBILITY OF THE USER AND SHOULD NOT BE USED WITHOUT CONSULTING A REGISTERED PROFESSIONAL ENGINEER. ALL WARRANTIES AND REPRESENTATIONS OF ANY KIND ARE DISCLAIMED. ANYONE MAKING USE OF THIS INFORMATION AGREES THAT IT ASSUMES ALL LIABILITY ARISING FROM SUCH USE. NO PART OF THESE STANDARDS SHOULD BE REPRODUCED OR DISTRIBUTED IN ANY FORM OR BY ANY MEANS WITHOUT THE PRIOR WRITTEN PERMISSION OF SCRRA. ALL RIGHTS RESERVED.

METROLINK®

SOUTHERN CALIFORNIA REGIONAL RAIL AUTHORITY
ONE GATEWAY PLAZA, 12TH FLOOR, L. A., CA. 90012

ENGINEERING STANDARDS

INSULATED GAUGE PLATE DETAILS
DS–GP–1, DS–GP–2, DS–GP–3 AND DS–GP–4
136 LB RE NO 10 DOUBLE SLIP CROSSING

STANDARD 2841
SCALE: NTS
REVISION –
SHEET 1 OF 1
CADD FILE: ES2841–44

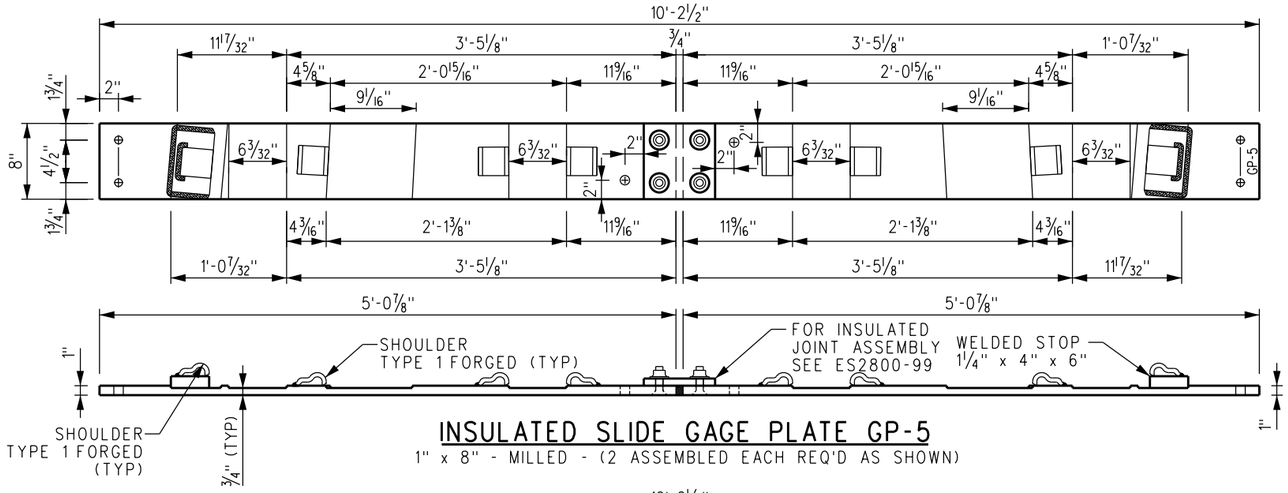

INSULATED SLIDE GAGE PLATE GP-5

1" x 8" - MILLED - (2 ASSEMBLED EACH REQ'D AS SHOWN)

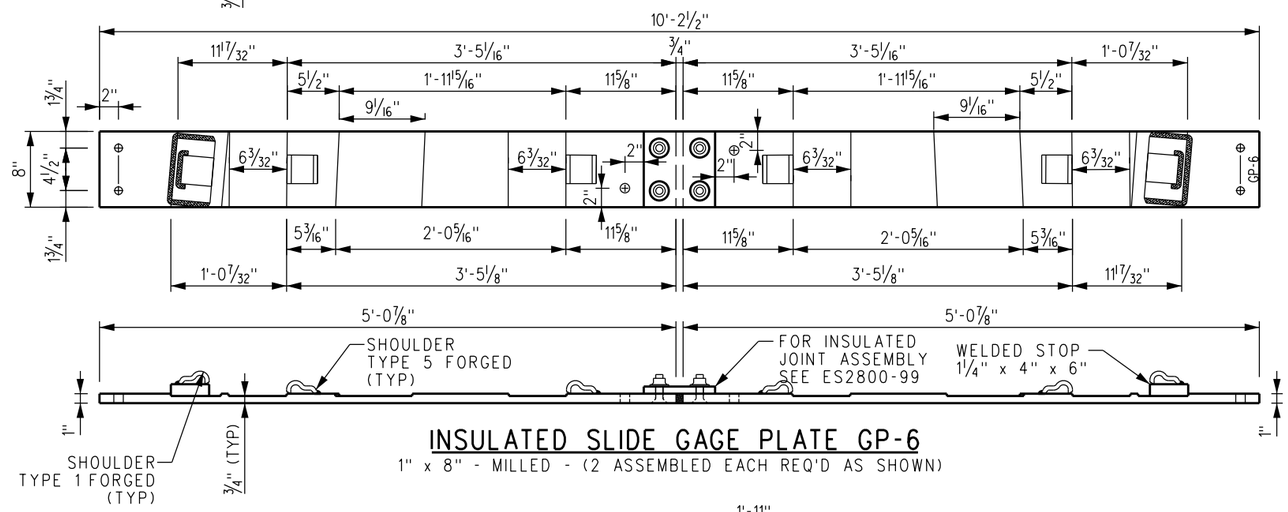

INSULATED SLIDE GAGE PLATE GP-6

1" x 8" - MILLED - (2 ASSEMBLED EACH REQ'D AS SHOWN)

REFERENCE DRAWINGS

LAYOUT - NO 10, DOUBLE SLIP CROSSING - 136 LB -------- SHEET NO 2841-02

NOTES:

1. PLATES TO BE MADE OF MILD ROLLED STEEL.
2. EACH PLATE TO BE PLAINLY STAMPED WITH PLATE NO AND 136 (WEIGHT OF RAIL) & HAND OF TURNOUT (RH OR LH).
3. THE PANDROL TYPE WELD - ON PRESSED STEEL SHOULDER, MADE FROM MILD STEEL, TO BE PURCHASED FROM PANDROL INTERNATIONAL OR APPROVED ALTERNATE MEETING PANDROL'S DESIGN SPECIFICATIONS.
4. THE PRESSED STEEL SHOULDER MUST BE CAREFULLY WELDED TO THE PLATE. ANY WELD PROJECTING BEYOND THE VERTICAL FACE OF SHOULDER IN THE AREA OF THE RAIL SEAT MUST BE MACHINED OUT TO PROVIDE A CLEAR RAIL SEAT DIMENSION AS CALLED FOR.
5. THE PLATES AS SHOWN ARE FOR A 136 LB, NO 10 DOUBLE SLIP SWITCH.
6. ALL WELDS ARE ½" FILLET WELDS UNLESS OTHERWISE NOTED.
7. HOLES IN PLATES ARE 1" IN DIA UNLESS OTHERWISE NOTED.

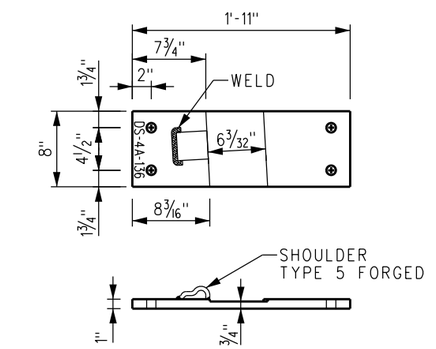

BRACE PLATE - 4A

1" x 8" x 1'-11" - MILLED - W/ADJ RAIL BRACE
(2 REQUIRED)

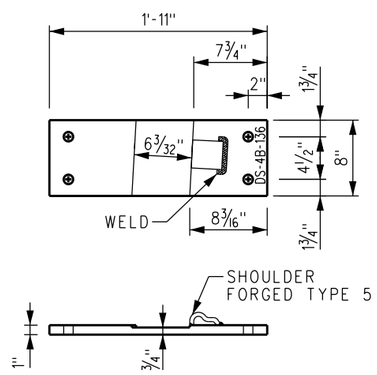

BRACE PLATE - 4B

1" x 8" x 1'-11" - MILLED - W/ADJ RAIL BRACE
(2 REQUIRED)

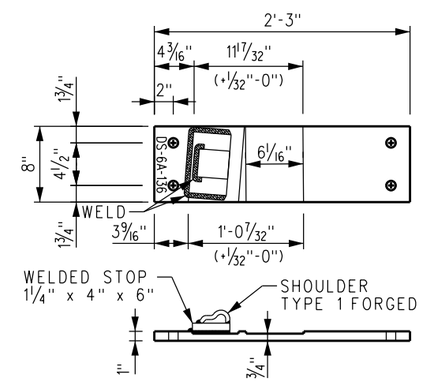

BRACE PLATE - 6A

1" x 8" x 2'-3" - MILLED - W/ADJ RAIL BRACE
(8 REQUIRED)

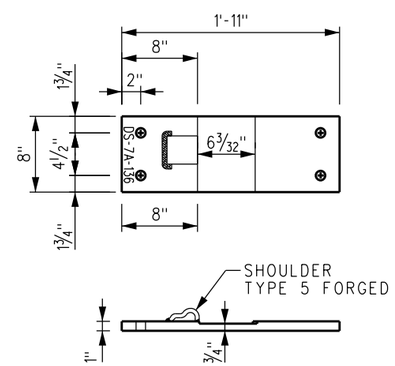

BRACE PLATE - 7A

1" x 8" x 1'-11" - MILLED - W/ADJ RAIL BRACE
(8 REQUIRED)

REV.	DATE	DESCRIPTION	DES.	ENG.
X	XX-XX-XX	REVISION	XX	XX

DRAWN BY: A. CARLOS DATE: 03/31/2011

ASSISTANT DIRECTOR: STANDARDS & DESIGN

DIRECTOR OF ENGINEERING AND CONSTRUCTION

SCRRA ENGINEERING STANDARDS ARE INTENDED FOR SCRRA APPROVED USES ONLY. FOR NON-SCRRA APPROVED USES:
SCRRA SHALL NOT BE RESPONSIBLE FOR THE ACCURACY OR COMPLETENESS OF THE DATA OR INFORMATION CONTAINED HEREIN. THE SELECTION AND USE OF THESE STANDARDS IS THE SOLE RESPONSIBILITY OF THE USER AND SHOULD NOT BE USED WITHOUT CONSULTING A REGISTERED PROFESSIONAL ENGINEER. ALL WARRANTIES AND REPRESENTATIONS OF ANY KIND ARE DISCLAIMED. ANYONE MAKING USE OF THIS INFORMATION AGREES THAT IT ASSUMES ALL LIABILITY ARISING FROM SUCH USE. NO PART OF THESE STANDARDS SHOULD BE REPRODUCED OR DISTRIBUTED IN ANY FORM OR BY ANY MEANS WITHOUT THE PRIOR WRITTEN PERMISSION OF SCRRA. ALL RIGHTS RESERVED.

METROLINK®
SOUTHERN CALIFORNIA REGIONAL RAIL AUTHORITY
ONE GATEWAY PLAZA, 12TH FLOOR, L. A., CA. 90012

ENGINEERING STANDARDS

INSULATED GAUGE PLATE DETAILS
DS-GP-5 AND DS-GP-6
136 LB RE NO 10 DOUBLE SLIP CROSSING

STANDARD 2841
SCALE: NTS
REVISION –
SHEET 1 OF 1
CADD FILE: ES2841-45

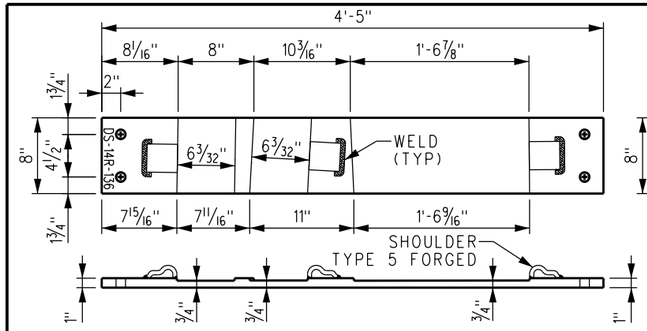

BRACE PLATE - 14R

1" x 8" x 4'-5" - MILLED - W/ADJ RAIL BRACE
(2 REQUIRED PER SLIP SWITCH)

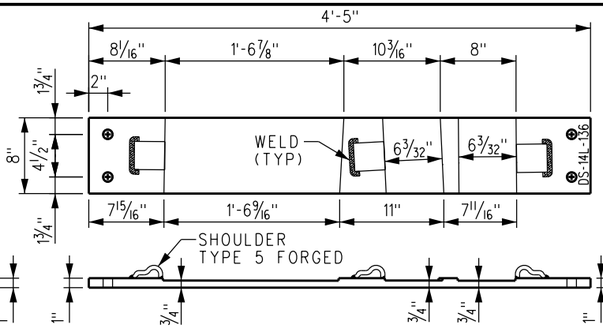

BRACE PLATE - 14L

1" x 8" x 4'-5" - MILLED - W/ADJ RAIL BRACE
(2 REQUIRED PER SLIP SWITCH)

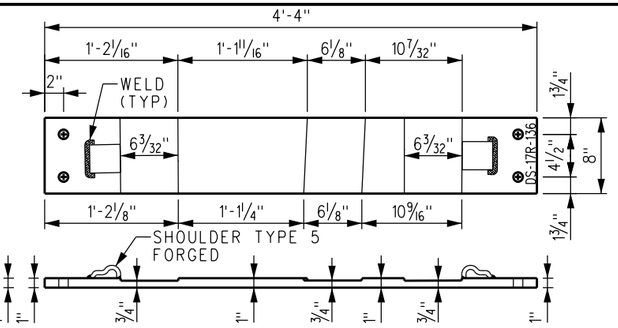

BRACE PLATE - 17R

1" x 8" x 4'-4" - MILLED - W/ADJ RAIL BRACE
(2 REQUIRED PER SLIP SWITCH)

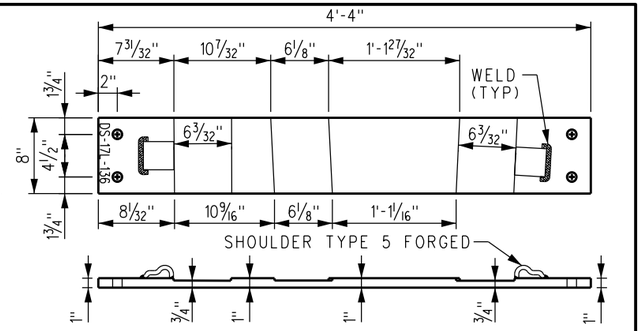

BRACE PLATE - 17L

1" x 8" x 4'-4" - MILLED - W/ADJ RAIL BRACE
(2 REQUIRED PER SLIP SWITCH)

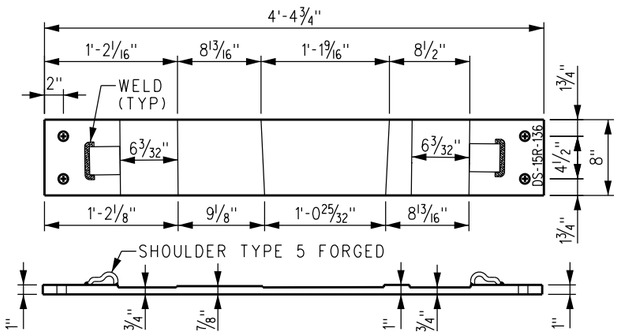

BRACE PLATE - 15R

1" x 8" x 4'-4 3/4" - MILLED - W/ADJ RAIL BRACE
(2 REQUIRED PER SLIP SWITCH)

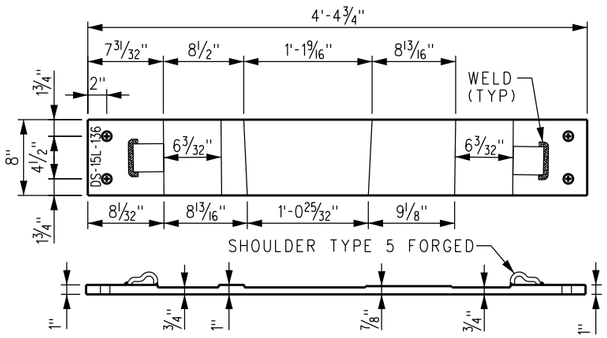

BRACE PLATE - 15L

1" x 8" x 4'-4 3/4" - MILLED - W/ADJ RAIL BRACE
(2 REQUIRED PER SLIP SWITCH)

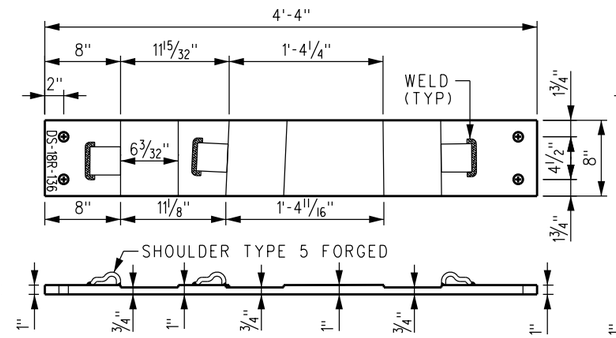

BRACE PLATE - 18R

1" x 8" x 4'-4" - MILLED - W/ADJ RAIL BRACE
(2 REQUIRED PER SLIP SWITCH)

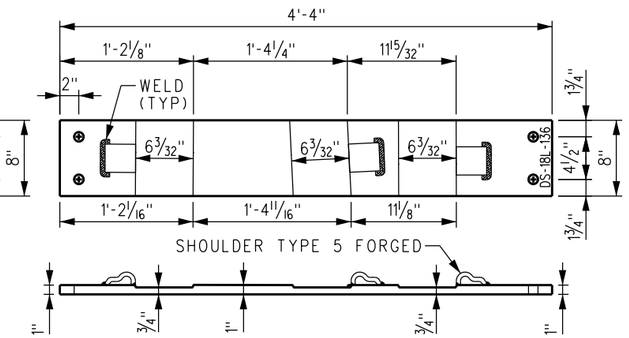

BRACE PLATE - 18L

1" x 8" x 4'-4" - MILLED - W/ADJ RAIL BRACE
(2 REQUIRED PER SLIP SWITCH)

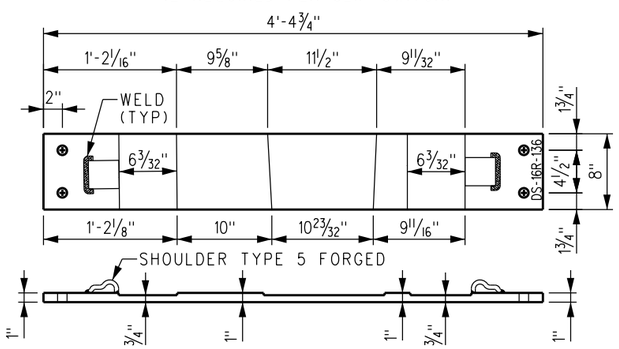

BRACE PLATE - 16R

1" x 8" x 4'-4 3/4" - MILLED - W/ADJ RAIL BRACE
(2 REQUIRED PER SLIP SWITCH)

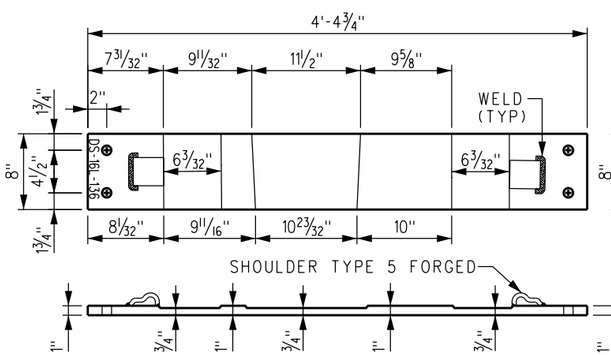

BRACE PLATE - 16L

1" x 8" x 4'-4 3/4" - MILLED - W/ADJ RAIL BRACE
(2 REQUIRED PER SLIP SWITCH)

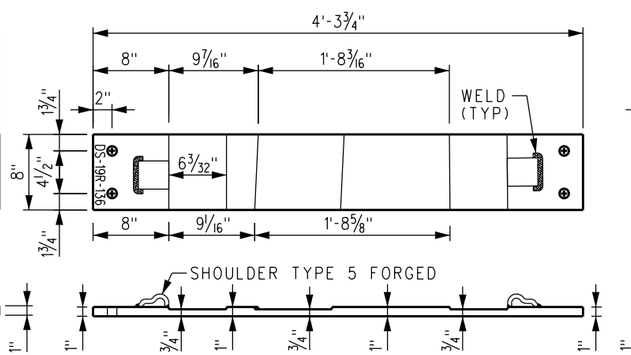

BRACE PLATE - 19R

1" x 8" x 4'-3 3/4" - MILLED - W/ADJ RAIL BRACE
(2 REQUIRED PER SLIP SWITCH)

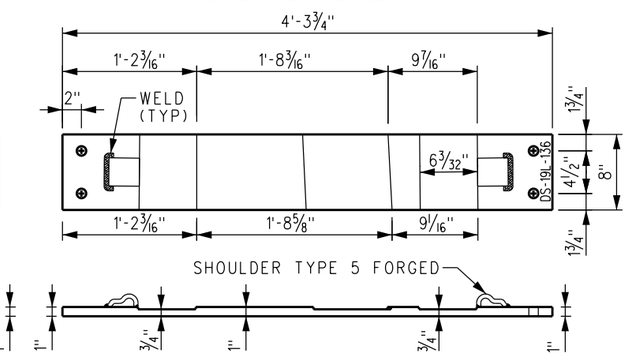

BRACE PLATE - 19L

1" x 8" x 4'-3 3/4" - MILLED - W/ADJ RAIL BRACE
(2 REQUIRED PER SLIP SWITCH)

REFERENCE DRAWING

LAYOUT - NO 10, DOUBLE SLIP CROSSING - 136 LB -------- SHEET NO 2841-02

NOTES:

1. PLATES TO BE MADE OF MILD ROLLED STEEL.
2. EACH PLATE TO BE PLAINLY STAMPED WITH PLATE NO AND 136 (WEIGHT OF RAIL) & HAND OF TURNOUT (RH OR LH).
3. PANDROL SHOULDER TO BE TYPE 5 FORGED.
4. THE PRESSED STEEL SHOULDER MUST BE CAREFULLY WELDED TO THE PLATE. ANY WELD PROJECTING BEYOND THE VERTICAL FACE OF SHOULDER IN THE AREA OF THE RAIL SEAT MUST BE MACHINED OUT TO PROVIDE A CLEAR RAIL SEAT DIMENSION AS CALLED FOR.
5. THE PLATES AS SHOWN ARE FOR A 136 LB, NO 10 DOUBLE SLIP CROSSING.
6. ALL WELDS ARE 1/2" FILLET WELDS UNLESS OTHERWISE NOTED.
7. HOLES IN PLATES ARE 1" IN DIA UNLESS OTHERWISE NOTED.

REV.	DATE	DESCRIPTION	DES.	ENG.
X	XX-XX-XX	REVISION	XX	XX

DRAWN BY: A. CARLOS DATE: 03/31/2011

ASSISTANT DIRECTOR: STANDARDS & DESIGN

DIRECTOR OF ENGINEERING AND CONSTRUCTION

SCRRA ENGINEERING STANDARDS ARE INTENDED FOR SCRRA APPROVED USES ONLY. FOR NON-SCRRA APPROVED USES:
SCRRA SHALL NOT BE RESPONSIBLE FOR THE ACCURACY OR COMPLETENESS OF THE DATA OR INFORMATION CONTAINED HEREIN. THE SELECTION AND USE OF THESE STANDARDS IS THE SOLE RESPONSIBILITY OF THE USER AND SHOULD NOT BE USED WITHOUT CONSULTING A REGISTERED PROFESSIONAL ENGINEER. ALL WARRANTIES AND REPRESENTATIONS OF ANY KIND ARE DISCLAIMED. ANYONE MAKING USE OF THIS INFORMATION AGREES THAT IT ASSUMES ALL LIABILITY ARISING FROM SUCH USE. NO PART OF THESE STANDARDS SHOULD BE REPRODUCED OR DISTRIBUTED IN ANY FORM OR BY ANY MEANS WITHOUT THE PRIOR WRITTEN PERMISSION OF SCRRA. ALL RIGHTS RESERVED.

METROLINK®
SOUTHERN CALIFORNIA REGIONAL RAIL AUTHORITY
ONE GATEWAY PLAZA, 12TH FLOOR, L. A., CA. 90012

ENGINEERING STANDARDS

BRACE PLATE AND SLIDE PLATE DETAILS
NO 10 136 LB RE DOUBLE SLIP CROSSING

STANDARD 2841
SCALE: NTS
REVISION –
SHEET 1 OF 1
CADD FILE: ES2841-46

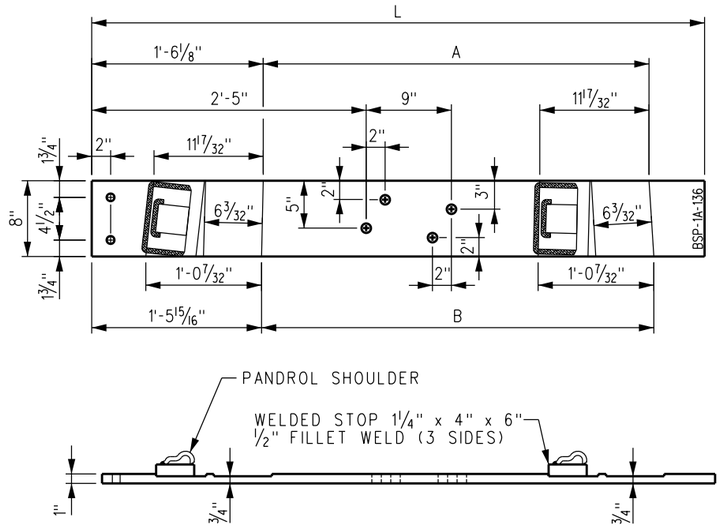

BRACE SLIDE PLATE

1" x 8" x L - (MILLED)

DIMENSION TABLE				
PLATE	A	B	L	NO REQ'D
1-A	3'-4 3/4"	3'-5 7/16"	5'-4 3/4"	2
2-A	3'-3 1/8"	3'-3 3/4"	5'-4 1/4"	2
3-A	3'-1 3/4"	3'-2 1/4"	5'-3 3/4"	2

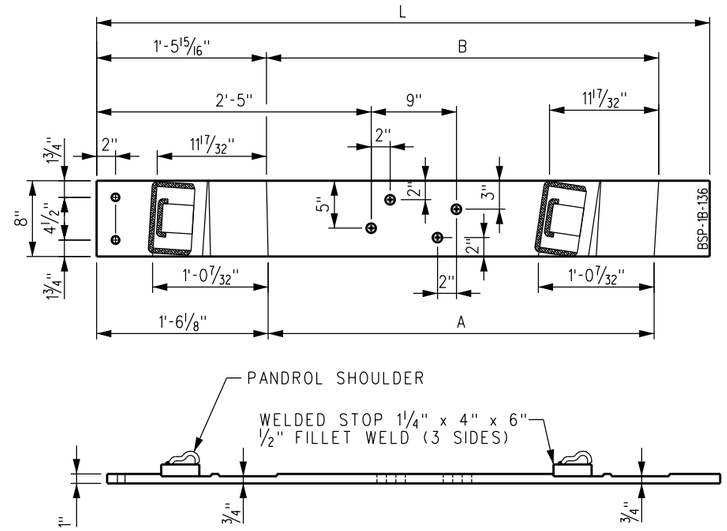

BRACE SLIDE PLATE

1" x 8" x L - (MILLED)

DIMENSION TABLE				
PLATE	A	B	L	NO REQ'D
1-B	3'-4 3/4"	3'-5 7/16"	5'-4 3/4"	2
2-B	3'-3 1/8"	3'-3 3/4"	5'-4 1/4"	2
3-B	3'-1 3/4"	3'-2 1/4"	5'-3 3/4"	2

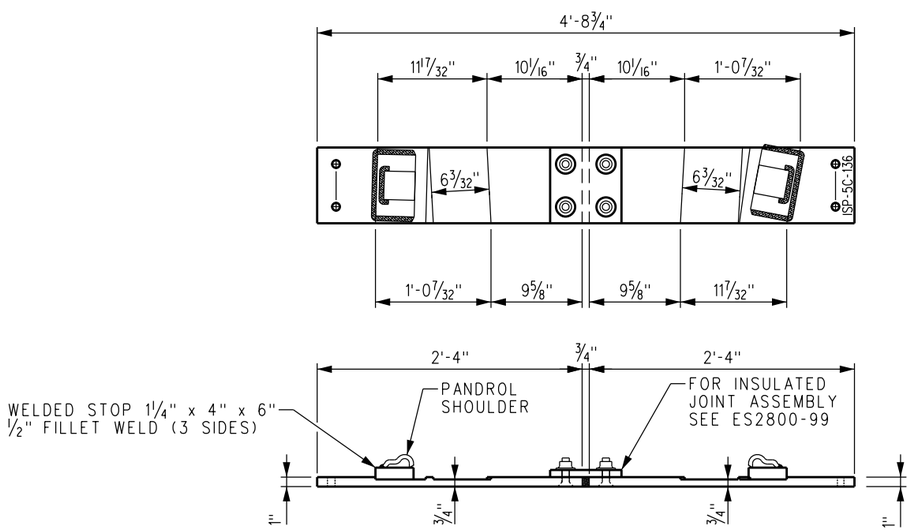

INSULATED SLIDE PLATE 5-C

1" x 8" - MILLED - (2 EACH REQ'D AS SHOWN)

NOTES:

1. PLATES TO BE MADE OF MILD ROLLED STEEL.
2. EACH PLATE TO BE PLAINLY STAMPED WITH PLATE NO AND 136 (WEIGHT OF RAIL) & HAND OF TURNOUT (RH OR LH)
3. PANDROL SHOULDER TO BE TYPE 1 FORGED.
4. THE PRESSED STEEL SHOULDER MUST BE CAREFULLY WELDED TO THE PLATE. ANY WELD PROJECTING BEYOND THE VERTICAL FACE OF SHOULDER IN THE AREA OF THE RAIL SEAT MUST BE MACHINED OUT TO PROVIDE A CLEAR RAIL SEAT DIMENSION AS CALLED FOR.
5. THE PLATES AS SHOWN ARE FOR A 136 LB, NO 10 DOUBLE SLIP CROSSING.

REFERENCE DRAWING

LAYOUT - NO 10, DOUBLE SLIP CROSSING - 136 LB -------- SHEET NO 2841-02

REV.	DATE	DESCRIPTION	DES.	ENG.
X	XX-XX-XX	REVISION	XX	XX

DRAWN BY: A. CARLOS DATE: 03/31/2011

ASSISTANT DIRECTOR: STANDARDS & DESIGN

DIRECTOR OF ENGINEERING AND CONSTRUCTION

SCRRA ENGINEERING STANDARDS ARE INTENDED FOR SCRRA APPROVED USES ONLY. FOR NON-SCRRA APPROVED USES:
SCRRA SHALL NOT BE RESPONSIBLE FOR THE ACCURACY OR COMPLETENESS OF THE DATA OR INFORMATION CONTAINED HEREIN. THE SELECTION AND USE OF THESE STANDARDS IS THE SOLE RESPONSIBILITY OF THE USER AND SHOULD NOT BE USED WITHOUT CONSULTING A REGISTERED PROFESSIONAL ENGINEER. ALL WARRANTIES AND REPRESENTATIONS OF ANY KIND ARE DISCLAIMED. ANYONE MAKING USE OF THIS INFORMATION AGREES THAT IT ASSUMES ALL LIABILITY ARISING FROM SUCH USE. NO PART OF THESE STANDARDS SHOULD BE REPRODUCED OR DISTRIBUTED IN ANY FORM OR BY ANY MEANS WITHOUT THE PRIOR WRITTEN PERMISSION OF SCRRA. ALL RIGHTS RESERVED.

METROLINK®

SOUTHERN CALIFORNIA REGIONAL RAIL AUTHORITY
ONE GATEWAY PLAZA, 12TH FLOOR, L. A., CA. 90012

ENGINEERING STANDARDS

BRACE SLIDE PLATES
AND INSULATED SLIDE PLATE DETAILS
NO 10 136 LB RE DOUBLE SLIP CROSSING

STANDARD 2841
SCALE: NTS
REVISION –
SHEET 1 OF 1
CADD FILE: ES2841-47

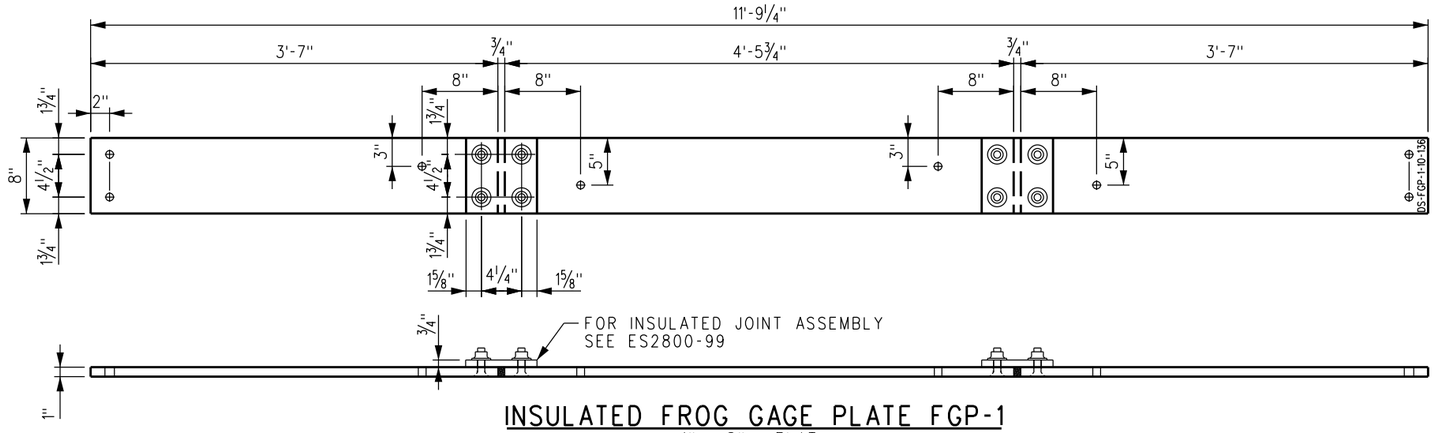

INSULATED FROG GAGE PLATE FGP-1

1" x 8" - FLAT

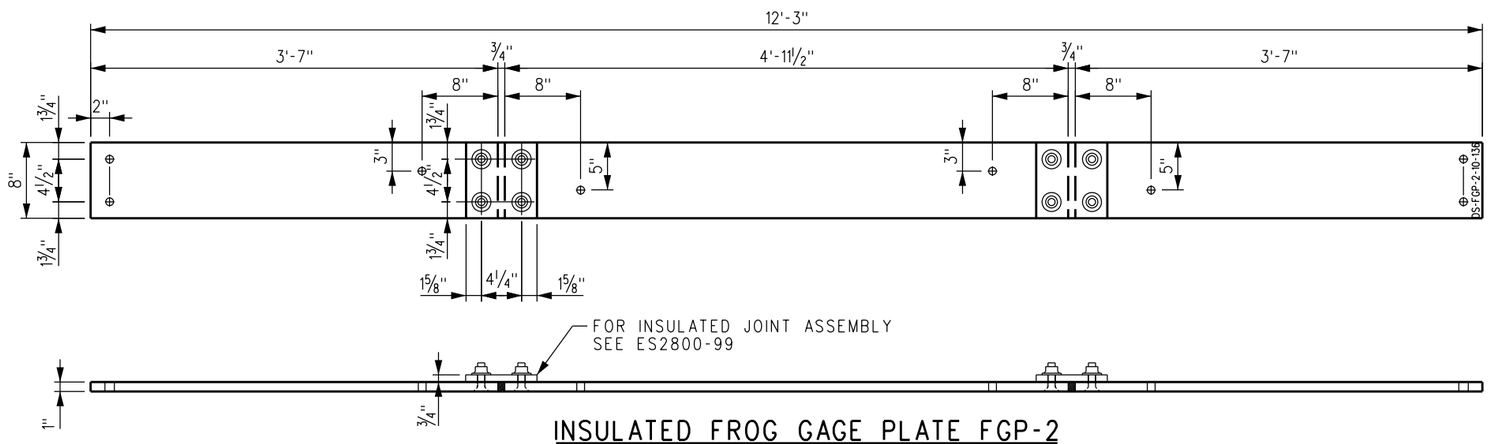

INSULATED FROG GAGE PLATE FGP-2

1" x 8" - FLAT

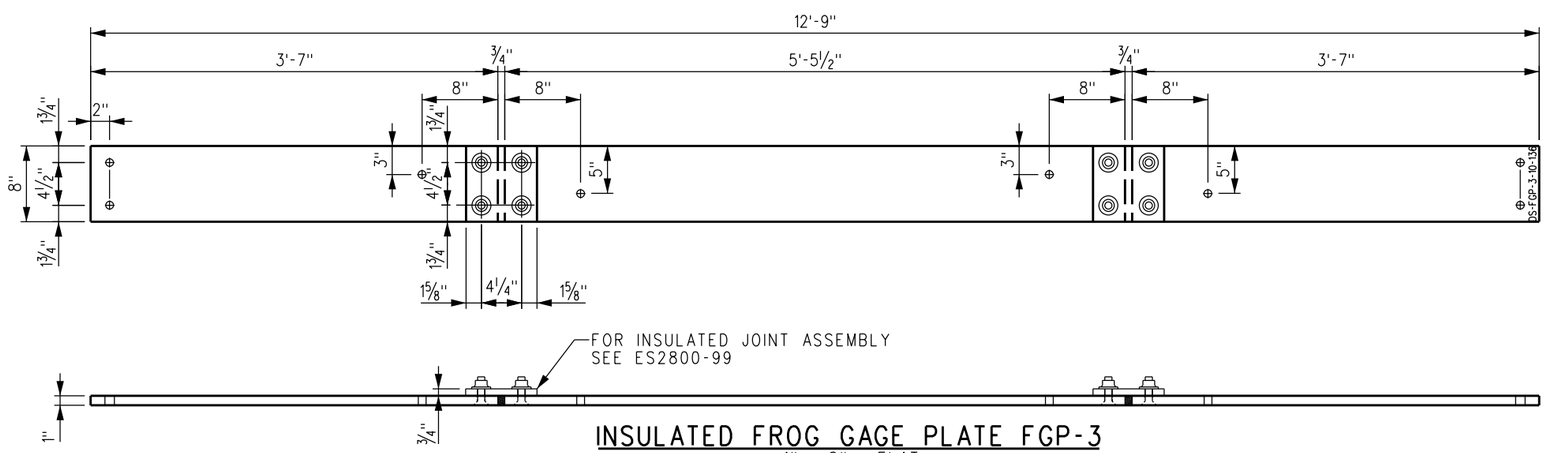

INSULATED FROG GAGE PLATE FGP-3

1" x 8" - FLAT

NOTES:

1. STAMP PLATE WITH PROPER PLATE NUMBER AND WEIGHT OF RAIL.
2. HOLES IN PLATES ARE 1" IN DIA UNLESS OTHERWISE NOTED.

REFERENCE DRAWING

LAYOUT - NO 10, DOUBLE SLIP CROSSING - 136 LB -------- SHEET NO 2841-02

REV.	DATE	DESCRIPTION	DES.	ENG.
X	XX-XX-XX	REVISION	XX	XX

DRAWN BY: A. CARLOS DATE: 03/31/2011

ASSISTANT DIRECTOR: STANDARDS & DESIGN

DIRECTOR OF ENGINEERING AND CONSTRUCTION

SCRRA ENGINEERING STANDARDS ARE INTENDED FOR SCRRA APPROVED USES ONLY. FOR NON-SCRRA APPROVED USES:
SCRRA SHALL NOT BE RESPONSIBLE FOR THE ACCURACY OR COMPLETENESS OF THE DATA OR INFORMATION CONTAINED HEREIN. THE SELECTION AND USE OF THESE STANDARDS IS THE SOLE RESPONSIBILITY OF THE USER AND SHOULD NOT BE USED WITHOUT CONSULTING A REGISTERED PROFESSIONAL ENGINEER. ALL WARRANTIES AND REPRESENTATIONS OF ANY KIND ARE DISCLAIMED. ANYONE MAKING USE OF THIS INFORMATION AGREES THAT IT ASSUMES ALL LIABILITY ARISING FROM SUCH USE. NO PART OF THESE STANDARDS SHOULD BE REPRODUCED OR DISTRIBUTED IN ANY FORM OR BY ANY MEANS WITHOUT THE PRIOR WRITTEN PERMISSION OF SCRRA. ALL RIGHTS RESERVED.

METROLINK®
SOUTHERN CALIFORNIA REGIONAL RAIL AUTHORITY
ONE GATEWAY PLAZA, 12TH FLOOR, L. A., CA. 90012

ENGINEERING STANDARDS

DETAILS
INSULATED FROG GAUGE PLATE
NO 10 136 LB RE DOUBLE SLIP CROSSING

STANDARD 2841
SCALE: NTS
REVISION –
SHEET 1 OF 1
CADD FILE: ES2841-48

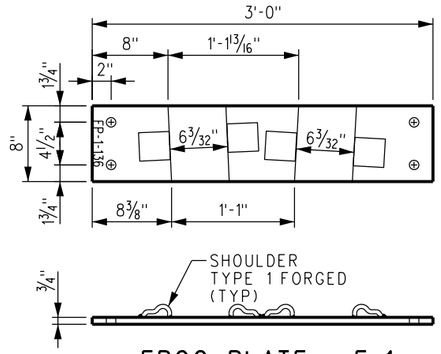

FROG PLATE - F-1

3/4" x 8" x 3'-0" - FLAT
(2 REQUIRED)

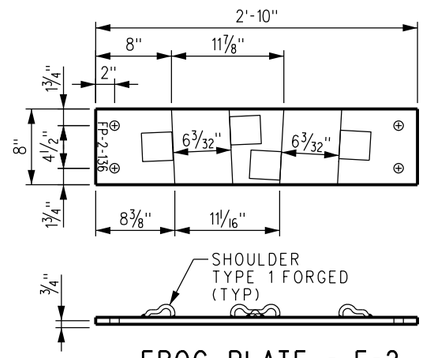

FROG PLATE - F-2

3/4" x 8" x 2'-10" - FLAT
(2 REQUIRED)

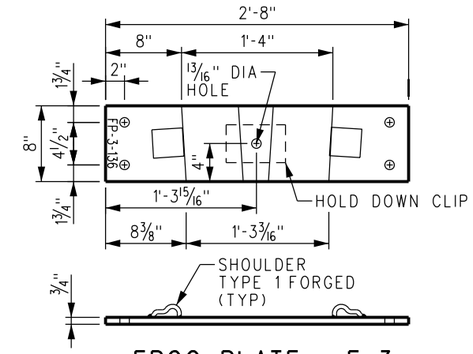

FROG PLATE - F-3

3/4" x 8" x 2'-8" - FLAT
(2 REQUIRED)

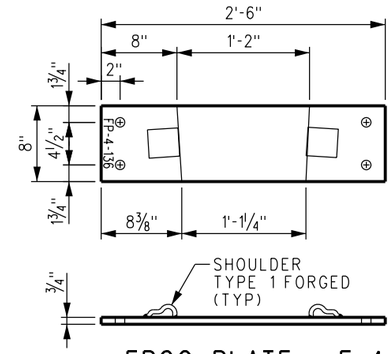

FROG PLATE - F-4

3/4" x 8" x 2'-6" - FLAT
(2 REQUIRED)

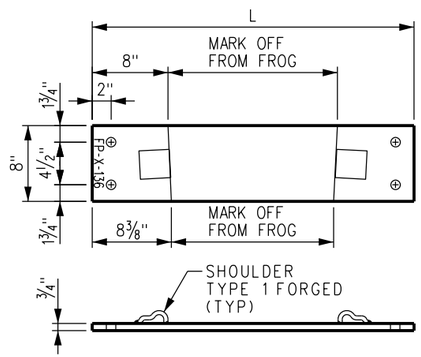

FROG PLATE - F-5 THRU F-7 AND F-10

3/4" x 8" - FLAT (SEE TABLE FOR LENGTHS)

DIMENSION TABLE		
PLATE	A	NO REQ'D
F-5	3'-0 3/4"	2
F-6	2'-11 3/4"	2
F-7	2'-9 3/4"	2
F-10	2'-7 1/2"	2

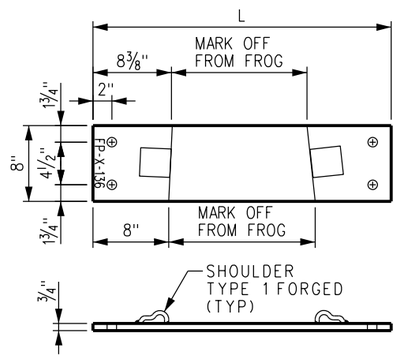

FROG PLATE - F-8, F-9 AND F-11

3/4" x 8" - FLAT (SEE TABLE FOR LENGTHS)

DIMENSION TABLE		
PLATE	A	NO REQ'D
F-8	2'-8 1/2"	2
F-9	2'-10"	2
F-11	2'-4 1/4"	2

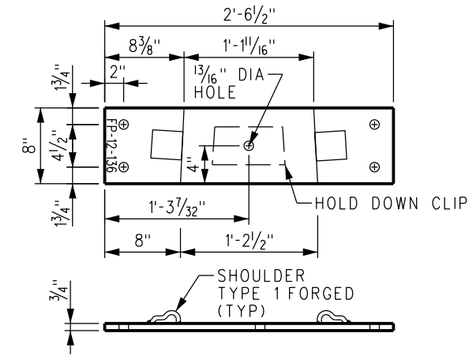

FROG PLATE - F-12

3/4" x 8" x 2'-6 1/2" - FLAT
(2 REQUIRED)

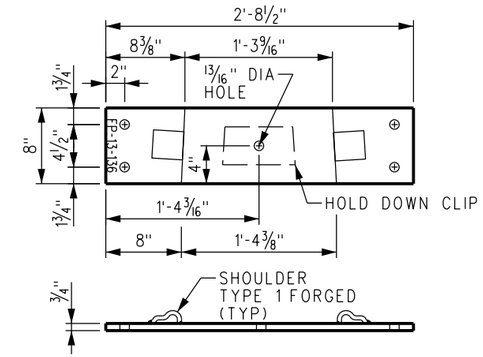

FROG PLATE - F-13

3/4" x 8" x 2'-8 1/2" - FLAT
(2 REQUIRED)

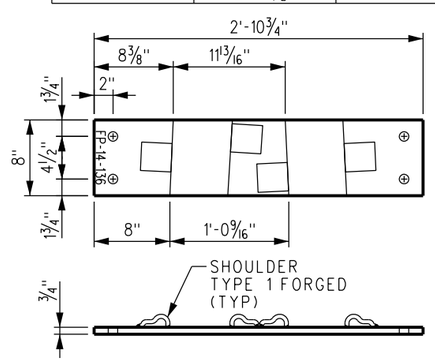

FROG PLATE - F-14

3/4" x 8" x 2'-10 3/4" - FLAT
(2 REQUIRED)

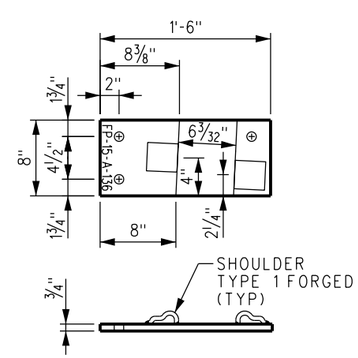

FROG PLATE - F-15-A

3/4" x 8" x 1'-6" - FLAT
(2 REQUIRED)

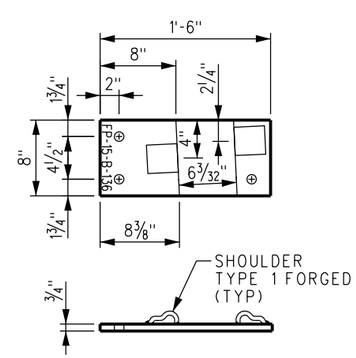

FROG PLATE - F-15-B

3/4" x 8" x 1'-6" - FLAT
(2 REQUIRED)

NOTES:

1. STAMP PLATE WITH PROPER PLATE NUMBER AND WEIGHT OF RAIL.
2. HOLES IN PLATES ARE 1" IN DIA UNLESS OTHERWISE NOTED.

REFERENCE DRAWING

LAYOUT - NO 10, DOUBLE SLIP CROSSING - 136 LB -------- SHEET NO 2841-02

REV.	DATE	DESCRIPTION	DES.	ENG.
X	XX-XX-XX	REVISION	XX	XX

DRAWN BY: A. CARLOS DATE: 03/31/2011

ASSISTANT DIRECTOR: STANDARDS & DESIGN

DIRECTOR OF ENGINEERING AND CONSTRUCTION

SCRRA ENGINEERING STANDARDS ARE INTENDED FOR SCRRA APPROVED USES ONLY. FOR NON-SCRRA APPROVED USES, SCRRA SHALL NOT BE RESPONSIBLE FOR THE ACCURACY OR COMPLETENESS OF THE DATA OR INFORMATION CONTAINED HEREIN. THE SELECTION AND USE OF THESE STANDARDS IS THE SOLE RESPONSIBILITY OF THE USER AND SHOULD NOT BE USED WITHOUT CONSULTING A REGISTERED PROFESSIONAL ENGINEER. ALL WARRANTIES AND REPRESENTATIONS OF ANY KIND ARE DISCLAIMED. ANYONE MAKING USE OF THIS INFORMATION AGREES THAT IT ASSUMES ALL LIABILITY ARISING FROM SUCH USE. NO PART OF THESE STANDARDS SHOULD BE REPRODUCED OR DISTRIBUTED IN ANY FORM OR BY ANY MEANS WITHOUT THE PRIOR WRITTEN PERMISSION OF SCRRA. ALL RIGHTS RESERVED.

METROLINK

SOUTHERN CALIFORNIA REGIONAL RAIL AUTHORITY
ONE GATEWAY PLAZA, 12TH FLOOR, L. A., CA. 90012

ENGINEERING STANDARDS

FROG PLATE DETAILS
NO 10 136 LB RE DOUBLE SLIP CROSSING

STANDARD 2841
SCALE: NTS
REVISION –
SHEET 1 OF 1
CADD FILE: ES2841-49

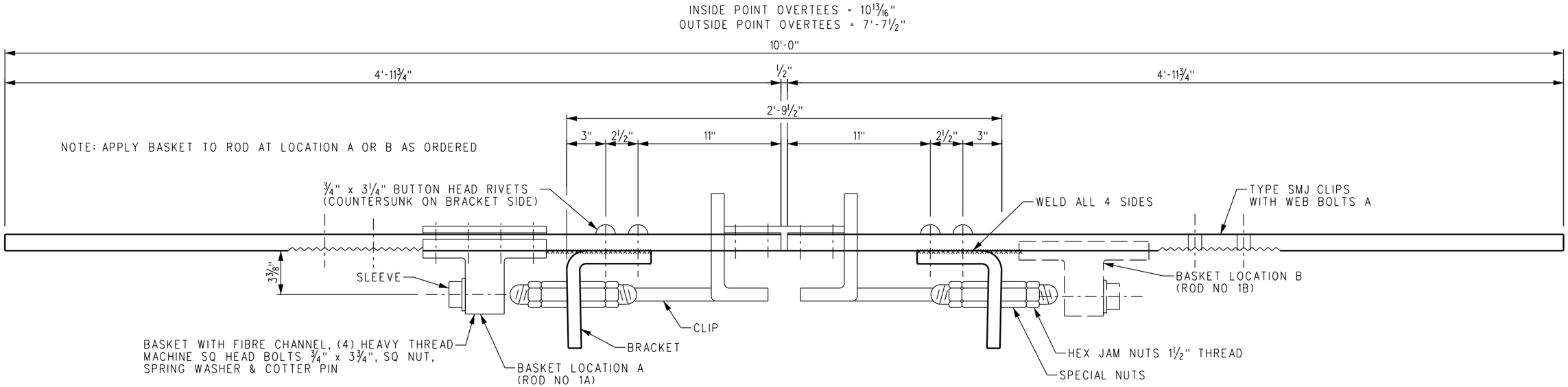

PLAN

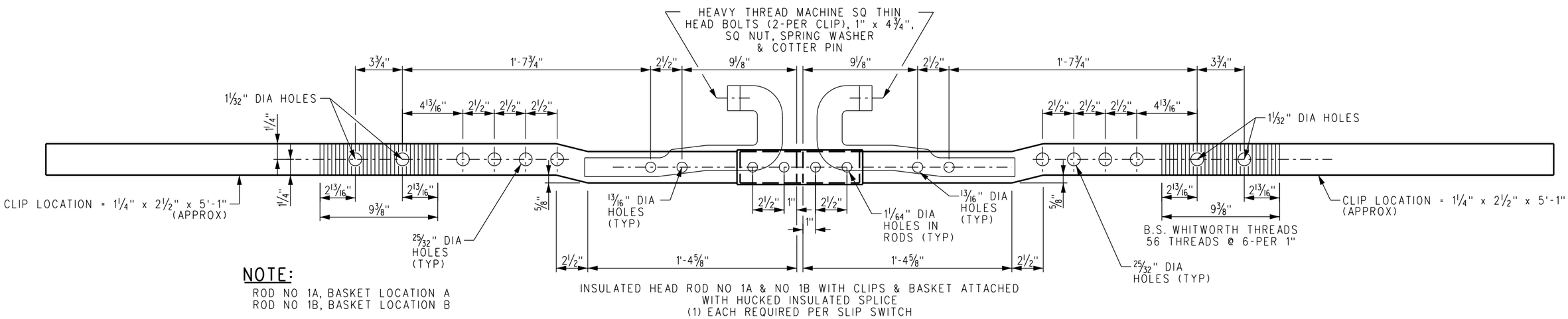

NOTE:

ROD NO 1A, BASKET LOCATION A
ROD NO 1B, BASKET LOCATION B

INSULATED HEAD ROD NO 1A & NO 1B WITH CLIPS & BASKET ATTACHED WITH HUCKED INSULATED SPLICE
(1) EACH REQUIRED PER SLIP SWITCH

ELEVATION

INSULATION MATERIAL CONSISTS OF:

(1) FIBRE CHANNEL C-1
(2) FIBRE ANGLE PLATE AP-34
(4) FIBRE BUSHINGS B-11
(1) STEEL SPLICE PLATE ST-684
(1) STEEL CHANNEL ST-568
(4) 3/4" HUCK BOLTS C50LR-BR24-36
(4) HUCK COLLARS LC2R-24G

SWITCH INFORMATION

GAUGE = 4'-8 5/8"
THROW AT POINT = 4" MIN, 4 1/2" MAX
E DISTANCE = 1 19/32"
PT = 0" SAMSON
REINF = 1/2" D BOTH SIDES (SLOT 1/4" STOCK SIDE)
ROD SPACING = 1'-6 5/8"
BREAK ALL SHARP CORNERS
DEBURR ALL HOLES

STAMP RODS WITH "RESPECTIVE ROD NO, 136, NO 10 DSS"

REV.	DATE	DESCRIPTION	DES.	ENG.
X	XX-XX-XX	REVISION	XX	XX

DRAWN BY: A. CARLOS DATE: 03/31/2011

ASSISTANT DIRECTOR: STANDARDS & DESIGN

DIRECTOR OF ENGINEERING AND CONSTRUCTION

SCRRA ENGINEERING STANDARDS ARE INTENDED FOR SCRRA APPROVED USES ONLY. FOR NON-SCRRA APPROVED USES:
SCRRA SHALL NOT BE RESPONSIBLE FOR THE ACCURACY OR COMPLETENESS OF THE DATA OR INFORMATION CONTAINED HEREIN. THE SELECTION AND USE OF THESE STANDARDS IS THE SOLE RESPONSIBILITY OF THE USER AND SHOULD NOT BE USED WITHOUT CONSULTING A REGISTERED PROFESSIONAL ENGINEER. ALL WARRANTIES AND REPRESENTATIONS OF ANY KIND ARE DISCLAIMED. ANYONE MAKING USE OF THIS INFORMATION AGREES THAT IT ASSUMES ALL LIABILITY ARISING FROM SUCH USE. NO PART OF THESE STANDARDS SHOULD BE REPRODUCED OR DISTRIBUTED IN ANY FORM OR BY ANY MEANS WITHOUT THE PRIOR WRITTEN PERMISSION OF SCRRA. ALL RIGHTS RESERVED.

METROLINK®
SOUTHERN CALIFORNIA REGIONAL RAIL AUTHORITY
ONE GATEWAY PLAZA, 12TH FLOOR, L. A., CA. 90012

ENGINEERING STANDARDS

INSULATED HEAD ROD NO 1 FOR END POINTS NO 10 136 LB RE DOUBLE SLIP CROSSING

STANDARD 2841
SCALE: NTS
REVISION –
SHEET 1 OF 1
CADD FILE: ES2841-50

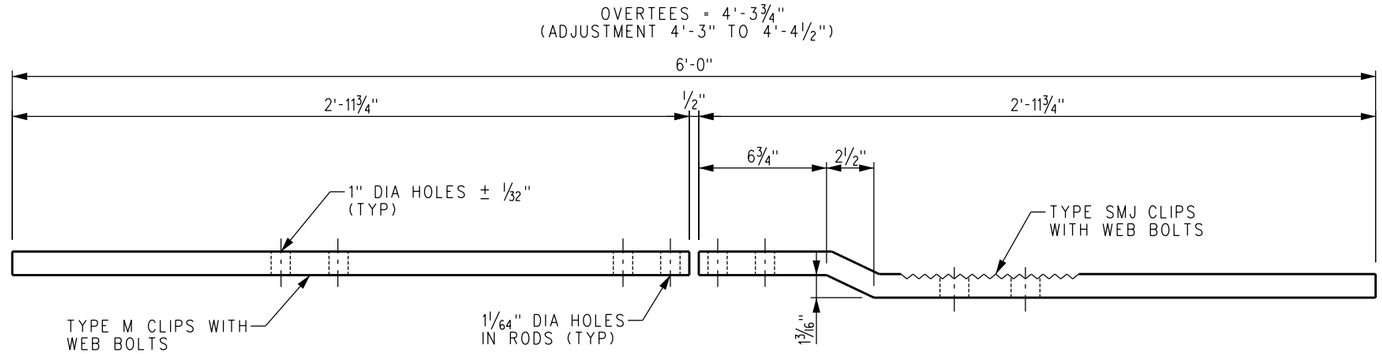

PLAN

NOTE:

TYPE M CLIP MUST BE WELDED TO ROD ALONG BOTH SIDES OF BOTTOM CLIPS.

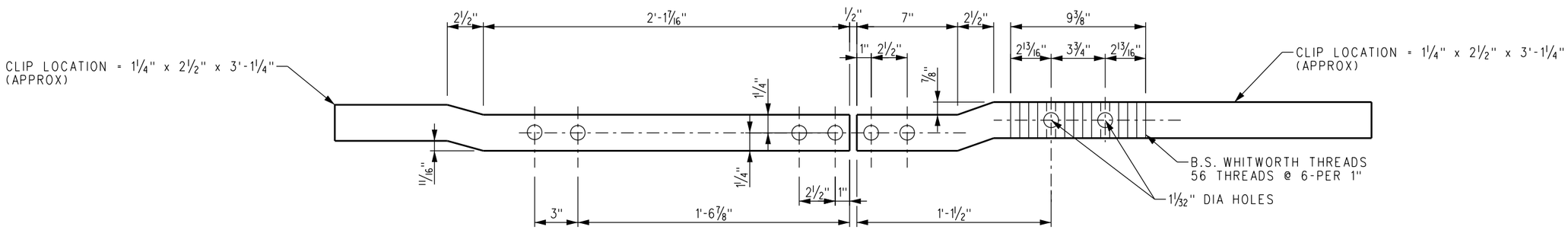

ELEVATION

INSULATED SPREAD RODS NO 2 OR 3 WITH CLIPS AND BOLTS ATTACHED WITH HUCKED INSULATED SPLICE, (2) EACH REQUIRED PER SLIP SWITCH

STAMP ROD WITH "RESPECTIVE ROD NO, 136, NO 10 DSS"

INSULATION MATERIAL CONSISTS OF:

(1) FIBRE CHANNEL C-1.
(2) FIBRE ANGLE PLATE AP-34.
(4) FIBRE BUSHINGS B-11.
(1) STEEL SPLICE PLATE ST-684.
(1) STEEL CHANNEL ST-568.
(4) ¾" HUCK BOLTS C50LR-BR24-36.
(4) HUCK COLLARS LC2R-24G.

SWITCH INFORMATION

GAUGE = 4'-8⅝"
THROW AT POINT = 4" MIN, 4½" MAX
E DISTANCE = 1 19/32"
PT = 0" SAMSON
REINF = ½" D BOTH SIDES (SLOT ¼" STOCK SIDE NO 2 ROD ONLY)
ROD SPACING = 1'-6⅝" x 3'-0½" (NO 2 ROD)
ROD SPACING = 1'-6⅝" x 3'-5½" (NO 3 ROD)

REV.	DATE	DESCRIPTION	DES.	ENG.
X	XX-XX-XX	REVISION	XX	XX

DRAWN BY: A. CARLOS DATE: 03/31/2011

ASSISTANT DIRECTOR: STANDARDS & DESIGN

DIRECTOR OF ENGINEERING AND CONSTRUCTION

SCRRA ENGINEERING STANDARDS ARE INTENDED FOR SCRRA APPROVED USES ONLY. FOR NON-SCRRA APPROVED USES:
SCRRA SHALL NOT BE RESPONSIBLE FOR THE ACCURACY OR COMPLETENESS OF THE DATA OR INFORMATION CONTAINED HEREIN. THE SELECTION AND USE OF THESE STANDARDS IS THE SOLE RESPONSIBILITY OF THE USER AND SHOULD NOT BE USED WITHOUT CONSULTING A REGISTERED PROFESSIONAL ENGINEER. ALL WARRANTIES AND REPRESENTATIONS OF ANY KIND ARE DISCLAIMED. ANYONE MAKING USE OF THIS INFORMATION AGREES THAT IT ASSUMES ALL LIABILITY ARISING FROM SUCH USE. NO PART OF THESE STANDARDS SHOULD BE REPRODUCED OR DISTRIBUTED IN ANY FORM OR BY ANY MEANS WITHOUT THE PRIOR WRITTEN PERMISSION OF SCRRA. ALL RIGHTS RESERVED.

METROLINK®
SOUTHERN CALIFORNIA REGIONAL RAIL AUTHORITY
ONE GATEWAY PLAZA, 12TH FLOOR, L. A., CA. 90012

ENGINEERING STANDARDS

INSULATED SPREAD RODS
NO 2 & 3 FOR END POINTS
NO 10 136 LB RE DOUBLE SLIP CROSSING

STANDARD 2841
SCALE: NTS
REVISION –
SHEET 1 OF 1
CADD FILE: ES2841-51

OVERTEES = 4'-3¾" (ADJUSTMENT 4'-3" TO 4'-4½")

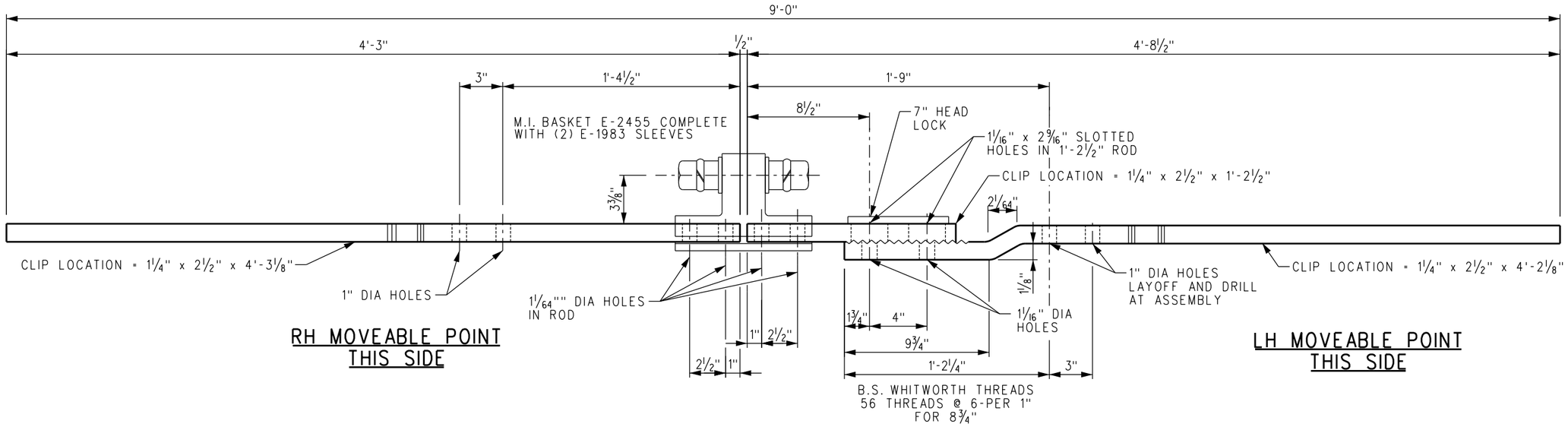

RH MOVEABLE POINT
THIS SIDE

LH MOVEABLE POINT
THIS SIDE

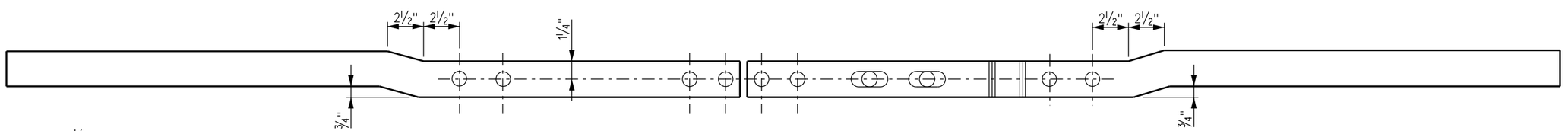

NO 4 HEAD ROD

(TWO REQUIRED PER CROSSING)

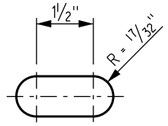

SLOTTED HOLE DETAIL

(1 1/16" x 2 9/16")

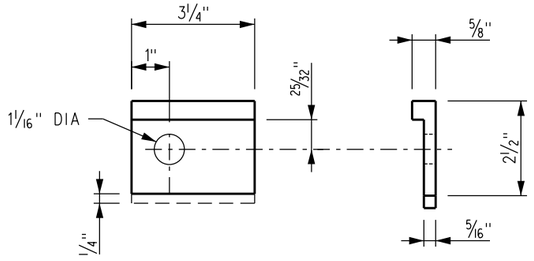

ROLLED HEADLOCK DETAIL

3¼" LONG (BETHLEHEM STEEL PART NO 834-0306)
(2) PIECES AS SHOWN FOR CLIP, LH MOVEABLE POINT
(2) PIECES OPPOSITE HAND FOR CLIP, RH MOVEABLE POINT

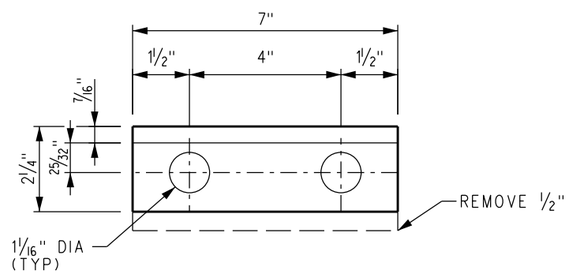

ROLLED HEADLOCK 7" LONG

(BETHLEHEM STEEL PART NO 834-0306)
(1) PIECE PER ROD

FURNISH: (2) HEAVY THREAD MACHINE SQ HEAD
BOLTS, 1" x 4½" WITH SLOTTED HEX NUT,
SPRING WASHER & COTTER PIN

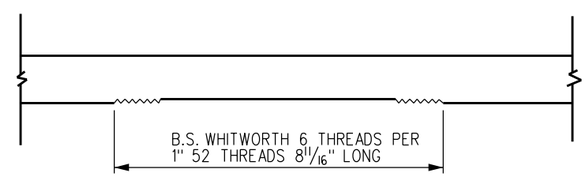

DETAIL OF SERRATIONS

(FOR 1'-2½" LONG STRAIGHT &
4'-2⅛" LONG BENT PIECE)

NOTE:

STAMP RODS WITH "RESPECTIVE ROD NO, 136, NO 10 DSS"

INSULATION MATERIAL

PER SRI-30 WITH COTTER, SLEEVE NUT
WITHOUT 1¼" SPACING WASHERS & 1¼" HEX NUTS.
TYPE M CLIP MUST BE WELDED TO ROD ALONG
BOTH SIDES OF BOTTOM OF CLIPS.
DEBURR ALL HOLES.

SWITCH INFORMATION

GAUGE = 4'-8 9/16"
THROW AT POINT = 4"
E DISTANCE = 1 27/32"
POINT = 9/16"
REINF = ½" D GAUGE SIDE
ROD SPACING = 1'-3"
HEEL SPREAD = 7½"

X	XX-XX-XX	REVISION	XX	XX
REV.	DATE	DESCRIPTION	DES.	ENG.

DRAWN BY: A. CARLOS DATE: 03/31/2011

ASSISTANT DIRECTOR: STANDARDS & DESIGN

DIRECTOR OF ENGINEERING AND CONSTRUCTION

SCRRA ENGINEERING STANDARDS ARE INTENDED FOR SCRRA APPROVED USES ONLY. FOR NON-SCRRA APPROVED USES:
SCRRA SHALL NOT BE RESPONSIBLE FOR THE ACCURACY OR COMPLETENESS OF THE DATA OR INFORMATION CONTAINED HEREIN. THE SELECTION AND USE OF THESE STANDARDS IS THE SOLE RESPONSIBILITY OF THE USER AND SHOULD NOT BE USED WITHOUT CONSULTING A REGISTERED PROFESSIONAL ENGINEER. ALL WARRANTIES AND REPRESENTATIONS OF ANY KIND ARE DISCLAIMED. ANYONE MAKING USE OF THIS INFORMATION AGREES THAT IT ASSUMES ALL LIABILITY ARISING FROM SUCH USE. NO PART OF THESE STANDARDS SHOULD BE REPRODUCED OR DISTRIBUTED IN ANY FORM OR BY ANY MEANS WITHOUT THE PRIOR WRITTEN PERMISSION OF SCRRA. ALL RIGHTS RESERVED.

METROLINK®
SOUTHERN CALIFORNIA REGIONAL RAIL AUTHORITY
ONE GATEWAY PLAZA, 12TH FLOOR, L. A., CA. 90012

ENGINEERING STANDARDS

INSULATED HEAD ROD NO 4
FOR MOVEABLE CENTER POINTS
NO 10 136 LB RE DOUBLE SLIP CROSSING

STANDARD 2841
SCALE: NTS
REVISION –
SHEET 1 OF 1
CADD FILE: ES2841-52

OVERTEES = 4'-3" (ADJUSTMENT 4'-2¼" TO 4'-3¾")

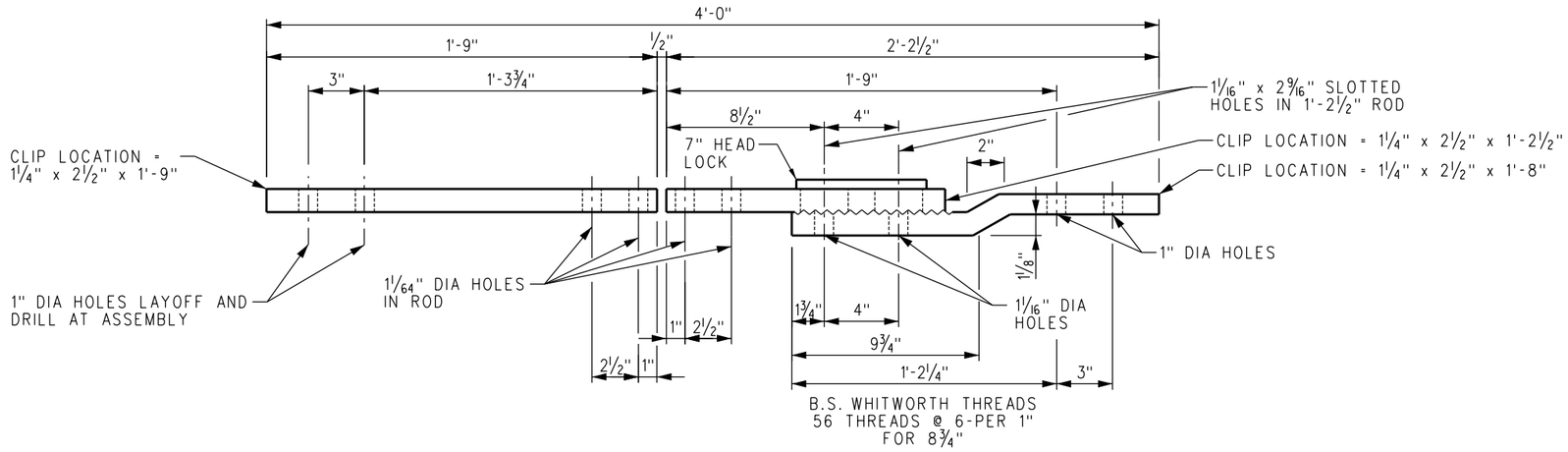

RH MOVEABLE POINT
THIS SIDE

LH MOVEABLE POINT
THIS SIDE

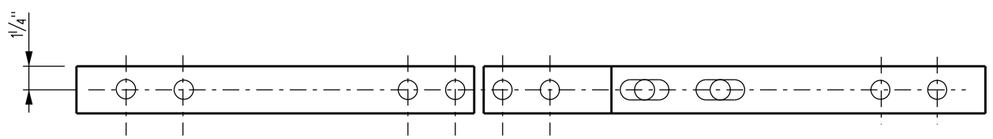

INSULATED SPREAD ROD NO 5

(2) REQUIRED PER SLIP SWITCH
WITH HUCKED INSULATED SPLICE

NOTE:

STAMP RODS WITH "RESPECTIVE ROD NO, 136, NO 10 DSS"

INSULATION MATERIAL

(1) FIBRE CHANNEL C-1.
(2) FIBRE ANGLE PLATE AP-34.
(4) FIBRE BUSHINGS B-11.
(1) STEEL SPLICE PLATE ST-684.
(1) STEEL CHANNEL ST-568.
(4) ¾" HUCK BOLTS C50LR-BR24-36.
(4) HUCK COLLARS LC2R-24G.

SWITCH INFORMATION

GAUGE = 4'-8⁹⁄₁₆"
THROW AT POINT = 4"
E DISTANCE = 1²⁷⁄₃₂"
POINT = ⁹⁄₁₆"
REINF = ½" D GAGE SIDE
ROD SPACING = 1'-3" x 1'-9"
HEEL SPREAD = 7½"

TYPE M CLIP MUST BE WELDED TO ROD ALONG BOTH SIDES OF BOTTOM OF CLIPS.
DEBURR ALL HOLES.

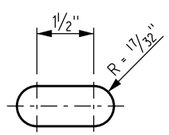

SLOTTED HOLE DETAIL

(1 ¹⁄₁₆" x 2⁹⁄₁₆")

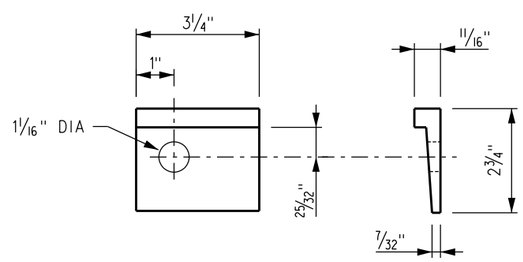

ROLLED HEADLOCK DETAIL

3¼" LONG (BETHLEHEM STEEL PART NO 834-0305)
(2) PIECES AS SHOWN FOR CLIP, RH MOVEABLE POINT
(2) PIECES OPPOSITE HAND FOR CLIP, LH MOVEABLE POINT

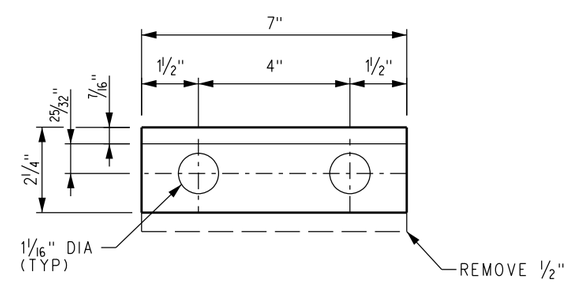

ROLLED HEADLOCK 7" LONG

(BETHLEHEM STEEL PART NO 834-0306)
(1) PIECE PER ROD

FURNISH: (2) HEAVY THREAD MACHINE SQ HEAD BOLTS, 1" x 4½" WITH SLOTTED HEX NUT, SPRING WASHER & COTTER PIN

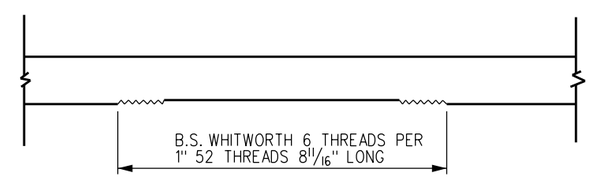

DETAIL OF SERRATIONS

(FOR 1'-2½" LONG STRAIGHT & 1'-8" LONG BENT PIECE)

REV.	DATE	DESCRIPTION	DES.	ENG.
X	XX-XX-XX	REVISION	XX	XX

DRAWN BY: A. CARLOS DATE: 03/31/2011

ASSISTANT DIRECTOR: STANDARDS & DESIGN

DIRECTOR OF ENGINEERING AND CONSTRUCTION

SCRRA ENGINEERING STANDARDS ARE INTENDED FOR SCRRA APPROVED USES ONLY. FOR NON-SCRRA APPROVED USES:
SCRRA SHALL NOT BE RESPONSIBLE FOR THE ACCURACY OR COMPLETENESS OF THE DATA OR INFORMATION CONTAINED HEREIN. THE SELECTION AND USE OF THESE STANDARDS IS THE SOLE RESPONSIBILITY OF THE USER AND SHOULD NOT BE USED WITHOUT CONSULTING A REGISTERED PROFESSIONAL ENGINEER. ALL WARRANTIES AND REPRESENTATIONS OF ANY KIND ARE DISCLAIMED. ANYONE MAKING USE OF THIS INFORMATION AGREES THAT IT ASSUMES ALL LIABILITY ARISING FROM SUCH USE. NO PART OF THESE STANDARDS SHOULD BE REPRODUCED OR DISTRIBUTED IN ANY FORM OR BY ANY MEANS WITHOUT THE PRIOR WRITTEN PERMISSION OF SCRRA. ALL RIGHTS RESERVED.

METROLINK®
SOUTHERN CALIFORNIA REGIONAL RAIL AUTHORITY
ONE GATEWAY PLAZA, 12TH FLOOR, L. A., CA. 90012

ENGINEERING STANDARDS

INSULATED HEAD ROD NO 5
FOR MOVEABLE CENTER POINTS
NO 10 136 LB RE DOUBLE SLIP CROSSING

STANDARD 2841
SCALE: NTS
REVISION –
SHEET 1 OF 1
CADD FILE: ES2841-53

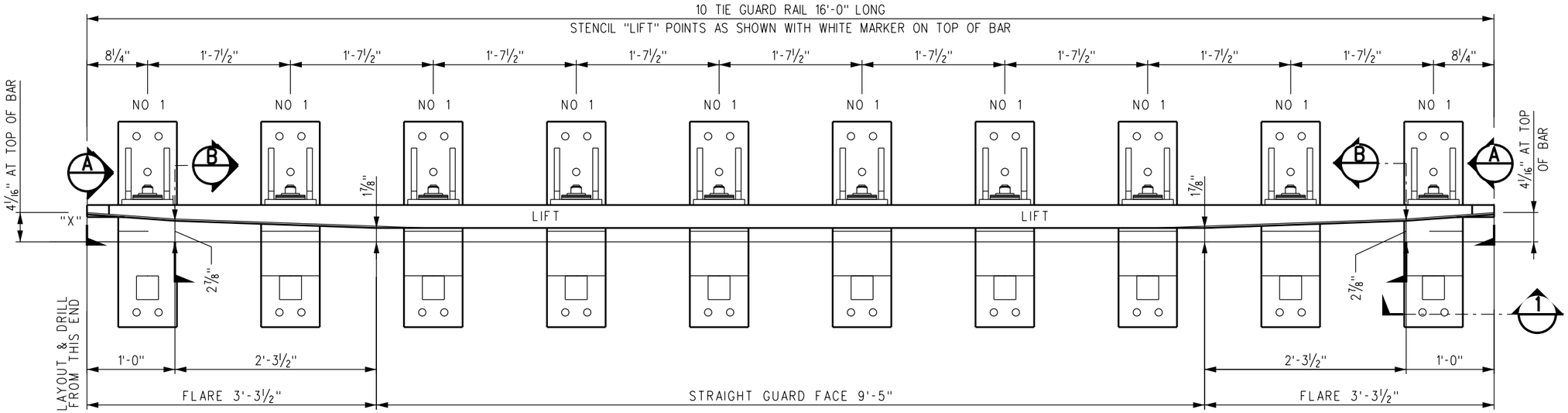

ASSEMBLED 16'-0" GUARD RAIL

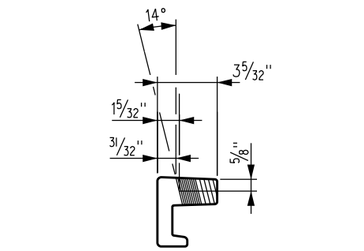

SECTION A

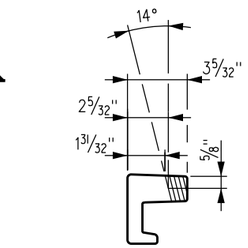

SECTION B

COLLECTIVE DRILLING FROM END OF GUARD BAR MARKED "X"

"X" 8¼" x 2'-3¾" x 3'-11¼" x 5'-6¾" x 7'-2¼" x 8'-9¾" x 10'-5¼" x 12'-0¾" x 13'-8¼" x 15'-3¾"

HOLES 1" DIA - 1⅜" ABOVE BASE

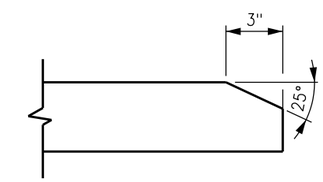

DETAIL 1

NOTES:

1. GUARD RAIL SECTION U.I.C. 33; (U69) UIC 860.0 GRADE 90A (GUARD FACE BRINELL 319 MIN)
2. BASE PLATE, BRACKET AND SHIMS MILD STEEL PER AREMA SPECIFICATION M7.
3. GUARD RAIL BOLT AND NUT PER AREMA SPECIFICATION M11. EXCEPT BOLT TO GRADE 8 AND NUT TO BE SECURITY LOCKNUT.
4. WORKMANSHIP AND TOLERANCES PER AREMA SPECIFICATIONS FOR SPECIAL TRACKWORK.
5. WELDING PER ANSI NO AWS D1.1-92 OR LATEST REVISION.

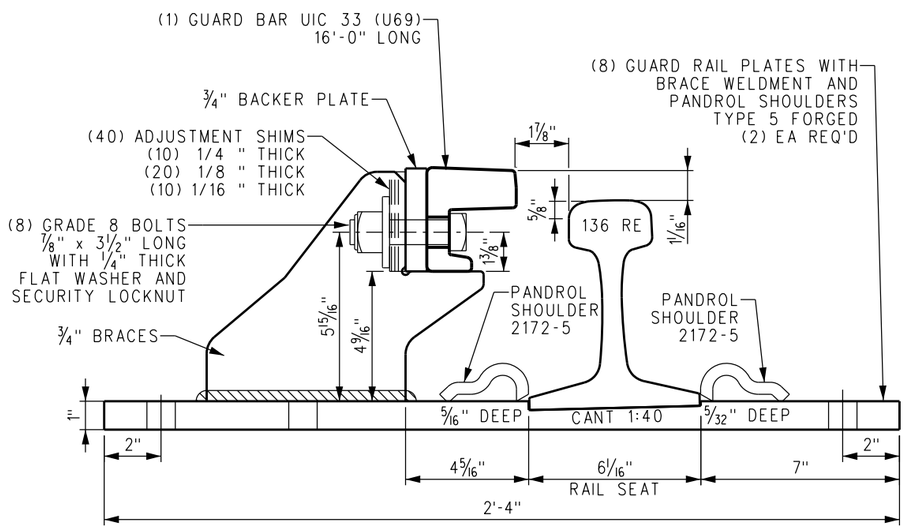

TYPICAL PLATE DETAIL

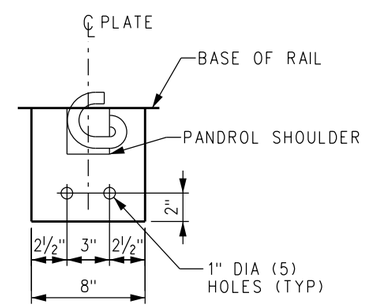

TYPICAL PLATE PUNCHING DETAIL

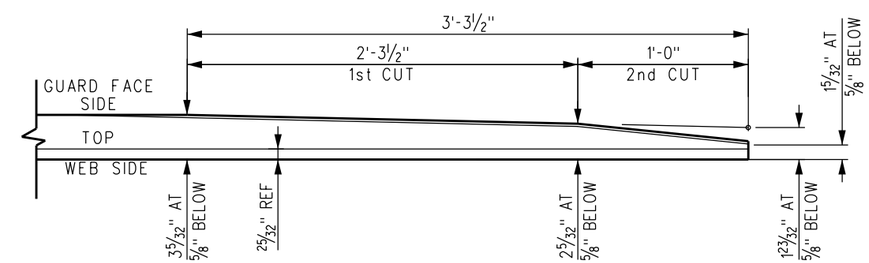

FLARE DETAIL

BREAK SHARP CORNERS OF ALL MACHINED SURFACES

REV.	DATE	DESCRIPTION	DES.	ENG.
X	XX-XX-XX	REVISION	XX	XX

DRAWN BY: A. CARLOS DATE: 03/31/2011

ASSISTANT DIRECTOR: STANDARDS & DESIGN

DIRECTOR OF ENGINEERING AND CONSTRUCTION

SCRRA ENGINEERING STANDARDS ARE INTENDED FOR SCRRA APPROVED USES ONLY. FOR NON-SCRRA APPROVED USES:
SCRRA SHALL NOT BE RESPONSIBLE FOR THE ACCURACY OR COMPLETENESS OF THE DATA OR INFORMATION CONTAINED HEREIN. THE SELECTION AND USE OF THESE STANDARDS IS THE SOLE RESPONSIBILITY OF THE USER AND SHOULD NOT BE USED WITHOUT CONSULTING A REGISTERED PROFESSIONAL ENGINEER. ALL WARRANTIES AND REPRESENTATIONS OF ANY KIND ARE DISCLAIMED. ANYONE MAKING USE OF THIS INFORMATION AGREES THAT IT ASSUMES ALL LIABILITY ARISING FROM SUCH USE. NO PART OF THESE STANDARDS SHOULD BE REPRODUCED OR DISTRIBUTED IN ANY FORM OR BY ANY MEANS WITHOUT THE PRIOR WRITTEN PERMISSION OF SCRRA. ALL RIGHTS RESERVED.

METROLINK®
SOUTHERN CALIFORNIA REGIONAL RAIL AUTHORITY
ONE GATEWAY PLAZA, 12TH FLOOR, L. A., CA. 90012

ENGINEERING STANDARDS

GUARD RAIL DETAILS
16'-0" LONG

STANDARD 2841
SCALE: NTS
REVISION –
SHEET 1 OF 1
CADD FILE: ES2841-60

DISCLAIMER

SCRRA Engineering Standards are intended for SCRRA approved uses only. FOR NON-SCRRA APPROVED USES: SCRRA and its member agencies, directors, officers, employees and/or agents shall not be responsible for the accuracy or completeness of the data or information contained herein. The selection and use of these standards, while designed in accordance with generally accepted engineering principles and practices, is the sole responsibility of the user and should not be used without consulting a registered professional engineer. All warranties and representations of any kind are disclaimed. Anyone making use of this information agrees that it assumes all liability arising from such use. No part of these standards should be reproduced or distributed in any form or by any means without the prior written permission of SCRRA. All rights reserved.

Since revisions or additions to the engineering standards may occur at any time, the user agrees to indemnify, defend, by counsel satisfactory to SCRRA and Member Agency, and hold harmless SCRRA, Member Agencies, and Operating Railroad, and their respective officers, commissioners, employees, agents, successors and assigns. ("Indemnitees"), and each of them to the maximum extent allowed by law, from and against all loss, liability, claims, demands, suits, liens, claims of lien, damages (including incidental consequential damages), costs and expenses (including, without limitation, any fines, penalties, judgments, actual litigation expenses and experts' and actual attorneys' fees), that are incurred by or asserted against Indemnitees arising out of or connected in any manner with the user's use of outdated engineering standards.

Updating the contents of the manual is a continued process, and revisions/replacements are issued periodically. Questions, comments, and proposed recommendations for changes may be sent to SCRRA at 279 E. Arrow Highway, Suite A, San Dimas, CA 91773.

SCRRA NO 10 TURNOUT
BILL OF MATERIALS & DRAWING NUMBERS

FROG NUMBER		NO 10															
HAND		LH								RH							
WSM OR RBM		WSM						RBM		WSM						RBM	
CONCRETE OR TIMBER TIES		CONCRETE						TIMBER		CONCRETE						TIMBER	
HST OR STANDARD TIES		HST		STD						HST		STD					
POWER OR MANUAL		POWER				MANUAL				POWER				MANUAL			
ML OR TO SIDE SW MACHINE OPERATION		ML SIDE	TO SIDE	ML SIDE	TO SIDE	ML SIDE	TO SIDE	ML SIDE	TO SIDE	ML SIDE	TO SIDE	ML SIDE	TO SIDE	ML SIDE	TO SIDE	ML SIDE	TO SIDE
TURNOUT LAYOUT	DRAWING NO	2803-01	2803-03	2803-05	2803-07	2803-09	2803-11	2802-01	2802-01	2803-02	2803-04	2803-06	2803-08	2803-10	2803-12	2802-02	2802-02
SWITCH PACK	DRAWING NO	2803-13	2803-15	2803-17	2803-19	2803-17	2803-19	2802-11	2802-11	2803-14	2803-16	2803-18	2803-20	2803-18	2803-20	2802-12	2802-12
TIE LAYOUT	DRAWING NO	2803-31	2803-31	2803-31	2803-31	2803-31	2803-31	2802-31	2802-31	2803-30	2803-30	2803-30	2803-30	2803-30	2803-30	2802-32	2802-32
HST/CONC HEADBLOCK TIE LAYOUT	DRAWING NO	2803-33	2803-35	2803-37	2803-39	2803-37	2803-39	-	-	2803-32	2803-34	2803-36	2803-38	2803-36	2803-38	-	-
FROG PACK	DRAWING NO	2803-41	2803-41	2803-41	2803-41	2803-41	2803-41	2802-41	2802-41	2803-40	2803-40	2803-40	2803-40	2803-40	2803-40	2802-40	2802-40
GUARD RAIL MAINLINE	DRAWING NO	2800-50	2800-50	2800-50	2800-50	2800-50	2800-50	2802-50	2802-50	2800-50	2800-50	2800-50	2800-50	2800-50	2800-50	2802-50	2802-50
GUARD RAIL TURNOUT	DRAWING NO	2803-51	2803-51	2803-51	2803-51	2803-51	2803-51	2802-50	2802-50	2803-52	2803-52	2803-52	2803-52	2803-52	2803-52	2802-50	2802-50
INSULATED RAIL ASSEMBLY	LENGTH	29'-6¾"	29'-6¾"	29'-6¾"	29'-6¾"	29'-6¾"	29'-6¾"	28'-8"	28'-8"	29'-6¾"	29'-6¾"	29'-6¾"	29'-6¾"	29'-6¾"	29'-6¾"	28'-8"	28'-8"
INSULATED RAIL ASSEMBLY	LENGTH	29'-11¼"	29'-11¼"	29'-11¼"	29'-11¼"	29'-11¼"	29'-11¼"	46'-6"	46'-6"	29'-11¼"	29'-11¼"	29'-11¼"	29'-11¼"	29'-11¼"	29'-11¼"	46'-6"	46'-6"
RAIL	LENGTH	2@26'-0"	2@26'-0"	2@26'-0"	2@26'-0"	2@26'-0"	2@26'-0"	19'-6"	19'-6"	2@26'-0"	2@26'-0"	2@26'-0"	2@26'-0"	2@26'-0"	2@26'-0"	19'-6"	19'-6"
RAIL	LENGTH	2@28'-0"	2@28'-0"	2@28'-0"	2@28'-0"	2@28'-0"	2@28'-0"	23'-6"	23'-6"	2@28'-0"	2@28'-0"	2@28'-0"	2@28'-0"	2@28'-0"	2@28'-0"	23'-6"	23'-6"
RAIL	LENGTH	29'-4½"	29'-4½"	29'-4½"	29'-4½"	29'-4½"	29'-4½"	28'-6"	28'-6"	29'-4½"	29'-4½"	29'-4½"	29'-4½"	29'-4½"	29'-4½"	28'-6"	28'-6"
RAIL	LENGTH	29'-9⅜"	29'-9⅜"	29'-9⅜"	29'-9⅜"	29'-9⅜"	29'-9⅜"	23'-0"	23'-0"	29'-9⅜"	29'-9⅜"	29'-9⅜"	29'-9⅜"	29'-9⅜"	29'-9⅜"	23'-0"	23'-0"
RAIL	LENGTH	40'-0"	40'-0"	40'-0"	40'-0"	40'-0"	40'-0"	28'-0"	28'-0"	40'-0"	40'-0"	40'-0"	40'-0"	40'-0"	40'-0"	28'-0"	28'-0"
RAIL	LENGTH	40'-4"	40'-4"	40'-4"	40'-4"	40'-4"	40'-4"	32'-0"	32'-0"	40'-4"	40'-4"	40'-4"	40'-4"	40'-4"	40'-4"	32'-0"	32'-0"
RAIL	LENGTH	-	-	-	-	-	-	4@39'-0"	4@39'-0"	-	-	-	-	-	-	4@39'-0"	4@39'-0"
TIE SCREWS CONCRETE	ES 2356 QUANTITY	276	276	300	300	300	300	-	-	276	276	300	300	300	300	-	-
TIE SCREWS TIMBER	ES 2355 QUANTITY	-	-	-	-	-	-	552	552	-	-	-	-	-	-	552	552
WASHER FLAT	ES 2356 QUANTITY	276	276	300	300	300	300	-	-	276	276	300	300	300	300	-	-
SPRING WASHER DOUBLE COIL	ES 2356 QUANTITY	276	276	300	300	300	300	-	-	276	276	300	300	300	300	-	-
TIE PLATE PANDROL	ES 2454 QUANTITY	-	-	-	-	-	-	138	138	-	-	-	-	-	-	138	138
E-CLIP PANDROL E2055	ES 2362 QUANTITY	224	224	224	224	224	224	276	276	224	224	224	224	224	224	276	276
INSULATOR PANDROL NYLON HD10	- QUANTITY	224	224	224	224	224	224	-	-	224	224	224	224	224	224	-	-
PANDROL JOINT CLIP E2063	ES 2361 QUANTITY	8	8	8	8	8	8	8	8	8	8	8	8	8	8	8	8
INSULATION PANDROL NYLON 6790	- QUANTITY	8	8	8	8	8	8	-	-	8	8	8	8	8	8	-	-
TIE PAD PANDROL 69935R	- QUANTITY	116	116	116	116	116	116	-	-	116	116	116	116	116	116	-	-
SHIM TO REDUCE PLATE FLEXURE	- QUANTITY	138	138	150	150	150	150	-	-	138	138	150	150	150	150	-	-

REV.	DATE	DESCRIPTION	DES.	ENG.
X	XX-XX-XX	REVISION	XX	XX

DRAWN BY: HDR DATE: 03/31/2011

ASSISTANT DIRECTOR: STANDARDS & DESIGN

DIRECTOR OF ENGINEERING AND CONSTRUCTION

SCRRA ENGINEERING STANDARDS ARE INTENDED FOR SCRRA APPROVED USES ONLY. FOR NON-SCRRA APPROVED USES:
SCRRA SHALL NOT BE RESPONSIBLE FOR THE ACCURACY OR COMPLETENESS OF THE DATA OR INFORMATION CONTAINED HEREIN. THE SELECTION AND USE OF THESE STANDARDS IS THE SOLE RESPONSIBILITY OF THE USER AND SHOULD NOT BE USED WITHOUT CONSULTING A REGISTERED PROFESSIONAL ENGINEER. ALL WARRANTIES AND REPRESENTATIONS OF ANY KIND ARE DISCLAIMED. ANYONE MAKING USE OF THIS INFORMATION AGREES THAT IT ASSUMES ALL LIABILITY ARISING FROM SUCH USE. NO PART OF THESE STANDARDS SHOULD BE REPRODUCED OR DISTRIBUTED IN ANY FORM OR BY ANY MEANS WITHOUT THE PRIOR WRITTEN PERMISSION OF SCRRA. ALL RIGHTS RESERVED.

METROLINK®
SOUTHERN CALIFORNIA REGIONAL RAIL AUTHORITY
ONE GATEWAY PLAZA, 12TH FLOOR, L. A., CA. 90012

ENGINEERING STANDARDS

NO 10 TURNOUT

STANDARD 2800
SCALE: NTS
REVISION –
SHEET 1 OF 1
CADD FILE: ES2800-10

BILL OF MATERIAL				
ITEM	QTY	DESCRIPTION	DWG NO	SCRRA PART NO
1	2	16'-6" EXTENDED FIELD WELDED TYPE SWITCH POINTS (40'-0" RAIL)	ES2802-24	
2	1	LH SAMSON STOCK RAILS 40'-0"	ES2802-25	
3	1	RH SAMSON STOCK RAILS 40'-0"	ES2802-25	
4	1	NO 1 SMJ TYPE SWITCH ROD WITH BASKET	ES2802-26	
5	1	VERTICAL SWITCH ROD WITH SMJ CLIPS	ES2802-26	
6	3	GAUGE PLATE P-P	ES2802-80	
7	1	GAUGE PLATE GP-1L	ES2802-81	
8	1	GAUGE PLATE GP-2L	ES2802-82	
9	6	SLIDE PLATE S-8P	ES2802-86	
10	4	SLIDE PLATE S-9P	ES2802-86	
11	4	BRACE SLIDE PLATE S-5P	ES2802-85	
12	2	BRACE SLIDE PLATE S-7P	ES2802-85	
13	2	BRACE SLIDE PLATE S-4P	ES2802-88	
14	2	HEEL PLATE P6-LH	ES2802-83	
15	2	TURNOUT PLATES P-10 THROUGH P-23	ES2802-91	
16	1	PLATES P-29 AND P-30	ES2802-91	
17	1	NO 10 RBM FROG 22'-6"	ES2802-42	
18	1	FROG PLATES NO FP-1 THROUGH FP-9	ES2802-44	
19	-	-	-	
20	1	FROG GAUGE PLATES FG-1P THROUGH FG-3P	ES2802-45	
21	2	16'-0" U-69 ADJUSTABLE GUARD RAIL WITH PLATES	ES2802-50	
22	5	DI RAIL HOLD DOWN CLIPS E-3706	-	
23	2	DI RAIL HOLD DOWN CLIPS E-3707	-	

BILL OF MATERIAL				
ITEM	QTY	DESCRIPTION	DWG NO	SCRRA PART NO
24	2	DI RAIL HOLD DOWN CLIPS E-3708	-	
25	138	TIE PLATES	ES2454	
26	552	PANDROL OR EQUAL SCREW SPIKES 15/16" DIA x 6" NO 2355	-	
27	276	PANDROL OR EQUAL E-CLIP TYPE E-2055	-	
28	8	PANDROL OR EQUAL E-CLIP TYPE E-2063	-	
29	12	BOLTLESS ADJUSTABLE BRACE ASSEMBLY	-	
30	1	DRILLED RAIL, 136 LB RE, 19'-6" LONG	-	
31	1	DRILLED RAIL, 136 LB RE, 23'-0" LONG	-	
32	1	DRILLED RAIL, 136 LB RE, 23'-6" LONG	-	
33	1	DRILLED RAIL, 136 LB RE, 28'-0" LONG	-	
34	1	DRILLED RAIL, 136 LB RE, 28'-6" LONG	-	
35	1	DRILLED RAIL, 136 LB RE, 32'-0" LONG	-	
36	4	DRILLED RAIL, 136 LB RE, 39'-0" LONG	-	
37	1	EPOXY BONDED PREFABRICATED MITRE CUT INSULATED JOINT (28'-8")	-	
38	1	EPOXY BONDED PREFABRICATED MITRE CUT INSULATED JOINT (46'-6")	-	
39	16	TIE, HARDWOOD, TREATED, 7" x 9" x 10'	-	
40	11	TIE, HARDWOOD, TREATED, 7" x 9" x 11'	-	
41	8	TIE, HARDWOOD, TREATED, 7" x 9" x 12'-0"	-	
42	7	TIE, HARDWOOD, TREATED, 7" x 9" x 13'-0"	-	
43	6	TIE, HARDWOOD, TREATED, 7" x 9" x 14'-0"	-	
44	2	TIE, HARDWOOD, TREATED, 10" x 9" x 14'-0", DAP	-	
45	6	TIE, HARDWOOD, TREATED, 7" x 9" x 15'-0"	-	
46	6	TIE, HARDWOOD, TREATED, 7" x 9" x 16'-0"	-	
47	9	TIE, HARDWOOD, TREATED, 7" x 9" x 17'-0"	-	

NOTE:

IF CONCRETE TIES ARE INSTALLED AHEAD OF SWITCH POINT, HEAD BLOCK TIE GAUGE PLATE P-P WILL NOT BE INSTALLED.

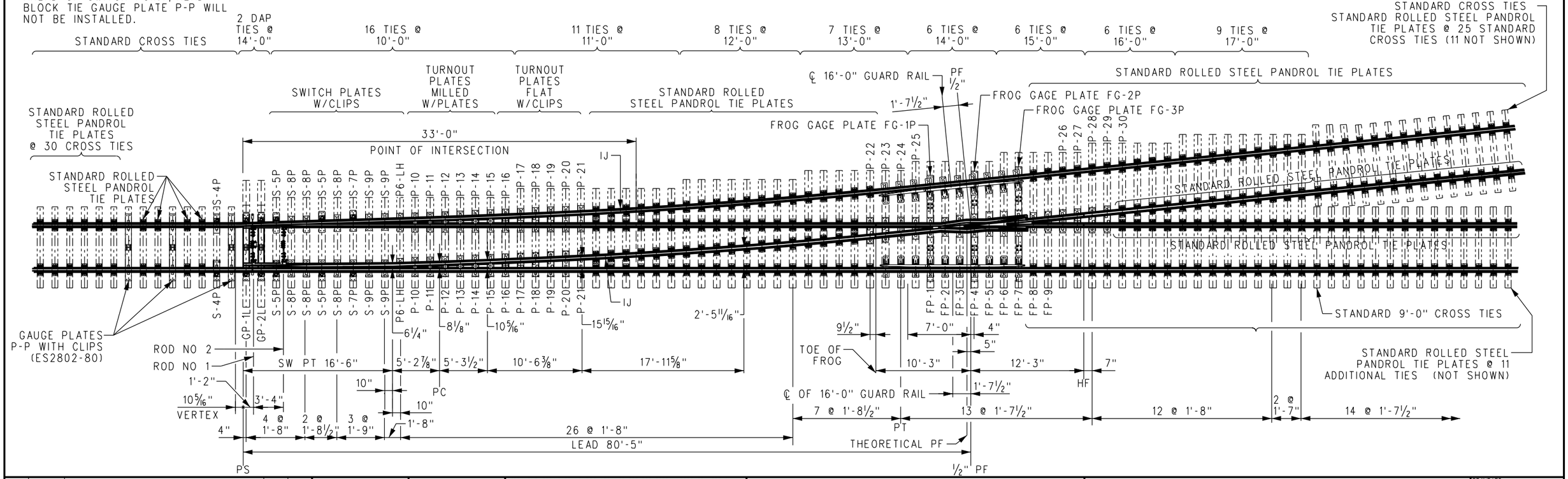

REV.	DATE	DESCRIPTION	DES.	ENG.
X	XX-XX-XX	REVISION	XX	XX

DRAWN BY: A. CARLOS DATE: 03/31/2011

ASSISTANT DIRECTOR: STANDARDS & DESIGN

DIRECTOR OF ENGINEERING AND CONSTRUCTION

SCRRA ENGINEERING STANDARDS ARE INTENDED FOR SCRRA APPROVED USES ONLY. FOR NON-SCRRA APPROVED USES: SCRRA SHALL NOT BE RESPONSIBLE FOR THE ACCURACY OR COMPLETENESS OF THE DATA OR INFORMATION CONTAINED HEREIN. THE SELECTION AND USE OF THESE STANDARDS IS THE SOLE RESPONSIBILITY OF THE USER AND SHOULD NOT BE USED WITHOUT CONSULTING A REGISTERED PROFESSIONAL ENGINEER. ALL WARRANTIES AND REPRESENTATIONS OF ANY KIND ARE DISCLAIMED. ANYONE MAKING USE OF THIS INFORMATION AGREES THAT IT ASSUMES ALL LIABILITY ARISING FROM SUCH USE. NO PART OF THESE STANDARDS SHOULD BE REPRODUCED OR DISTRIBUTED IN ANY FORM OR BY ANY MEANS WITHOUT THE PRIOR WRITTEN PERMISSION OF SCRRA. ALL RIGHTS RESERVED.

METROLINK®

SOUTHERN CALIFORNIA REGIONAL RAIL AUTHORITY
ONE GATEWAY PLAZA, 12TH FLOOR, L. A., CA. 90012

ENGINEERING STANDARDS

TURNOUT LAYOUT
NO 10–136 LB RE LH RBM FROG TURNOUT
TIMBER TIES, SWITCH STAND ON EITHER SIDE

STANDARD: 2802
SCALE: NTS
REVISION: –
SHEET: 1 OF 1
CADD FILE: ES2802–01

BILL OF MATERIAL				
ITEM	QTY	DESCRIPTION	DWG NO	SCRRA PART NO
1	2	16'-6" EXTENDED FIELD WELDED TYPE SWITCH POINTS (40'-0" RAIL)	ES2802-24	
2	1	RH SAMSON STOCK RAILS 40'-0"	ES2802-25	
3	1	LH SAMSON STOCK RAILS 40'-0"	ES2802-25	
4	1	NO 1 SMJ TYPE SWITCH ROD WITH BASKET	ES2802-26	
5	1	VERTICAL SWITCH ROD WITH SMJ CLIPS	ES2802-26	
6	3	GAUGE PLATE P-P	ES2802-80	
7	1	GAUGE PLATE GP-1R	ES2802-81	
8	1	GAUGE PLATE GP-2R	ES2802-82	
9	6	SLIDE PLATE S-8P	ES2802-86	
10	4	SLIDE PLATE S-9P	ES2802-86	
11	4	BRACE SLIDE PLATE S-5P	ES2802-85	
12	2	BRACE SLIDE PLATE S-7P	ES2802-85	
13	2	BRACE SLIDE PLATE S-4P	ES2802-88	
14	2	HEEL PLATE P5-RH	ES2802-84	
15	2	TURNOUT PLATES P-10 THROUGH P-23	ES2802-92	
16	1	PLATES P-29 AND P-30	ES2802-92	
17	1	NO 10 RBM FROG 22'-6"	ES2802-42	
18	1	FROG PLATES NO FP-1 THROUGH FP-9	ES2802-44	
19	-	-	-	
20	1	FROG GAUGE PLATES FG-1P THROUGH FG-3P	ES2802-45	
21	2	16'-0" U-69 ADJUSTABLE GUARD RAIL WITH PLATES	ES2802-52	
22	5	DI RAIL HOLD DOWN CLIPS E-3706	-	
23	2	DI RAIL HOLD DOWN CLIPS E-3707	-	

BILL OF MATERIAL				
ITEM	QTY	DESCRIPTION	DWG NO	SCRRA PART NO
24	2	DI RAIL HOLD DOWN CLIPS E-3708	-	
25	138	TIE PLATES	ES2454	
26	552	PANDROL OR EQUAL SCREW SPIKES 15/16" DIA x 6" NO 2355	-	
27	276	PANDROL OR EQUAL E-CLIP TYPE E-2055	-	
28	8	PANDROL OR EQUAL E-CLIP TYPE E-2063	-	
29	12	BOLTLESS ADJUSTABLE BRACE ASSEMBLY	-	
30	1	DRILLED RAIL, 136 LB RE, 19'-6" LONG	-	
31	1	DRILLED RAIL, 136 LB RE, 23'-0" LONG	-	
32	1	DRILLED RAIL, 136 LB RE, 23'-6" LONG	-	
33	1	DRILLED RAIL, 136 LB RE, 28'-0" LONG	-	
34	1	DRILLED RAIL, 136 LB RE, 28'-6" LONG	-	
35	1	DRILLED RAIL, 136 LB RE, 32'-0" LONG	-	
36	4	DRILLED RAIL, 136 LB RE, 39'-0" LONG	-	
37	1	EPOXY BONDED PREFABRICATED MITRE CUT INSULATED JOINT (28'-8")	-	
38	1	EPOXY BONDED PREFABRICATED MITRE CUT INSULATED JOINT (46'-6")	-	
39	16	TIE, HARDWOOD, TREATED, 7" x 9" x 10'-0"	-	
40	11	TIE, HARDWOOD, TREATED, 7" x 9" x 11'-0"	-	
41	8	TIE, HARDWOOD, TREATED, 7" x 9" x 12'-0"	-	
42	7	TIE, HARDWOOD, TREATED, 7" x 9" x 13'-0"	-	
43	6	TIE, HARDWOOD, TREATED, 7" x 9" x 14'-0"	-	
44	2	TIE, HARDWOOD, TREATED, 10" x 9" x 14'-0", DAP	-	
45	6	TIE, HARDWOOD, TREATED, 7" x 9" x 15'-0"	-	
46	6	TIE, HARDWOOD, TREATED, 7" x 9" x 16'-0"	-	
47	9	TIE, HARDWOOD, TREATED, 7" x 9" x 17'-0"	-	

NOTE:

IF CONCRETE TIES ARE INSTALLED AHEAD OF SWITCH POINT, HEAD BLOCK TIE GAUGE PLATE P-P WILL NOT BE INSTALLED.

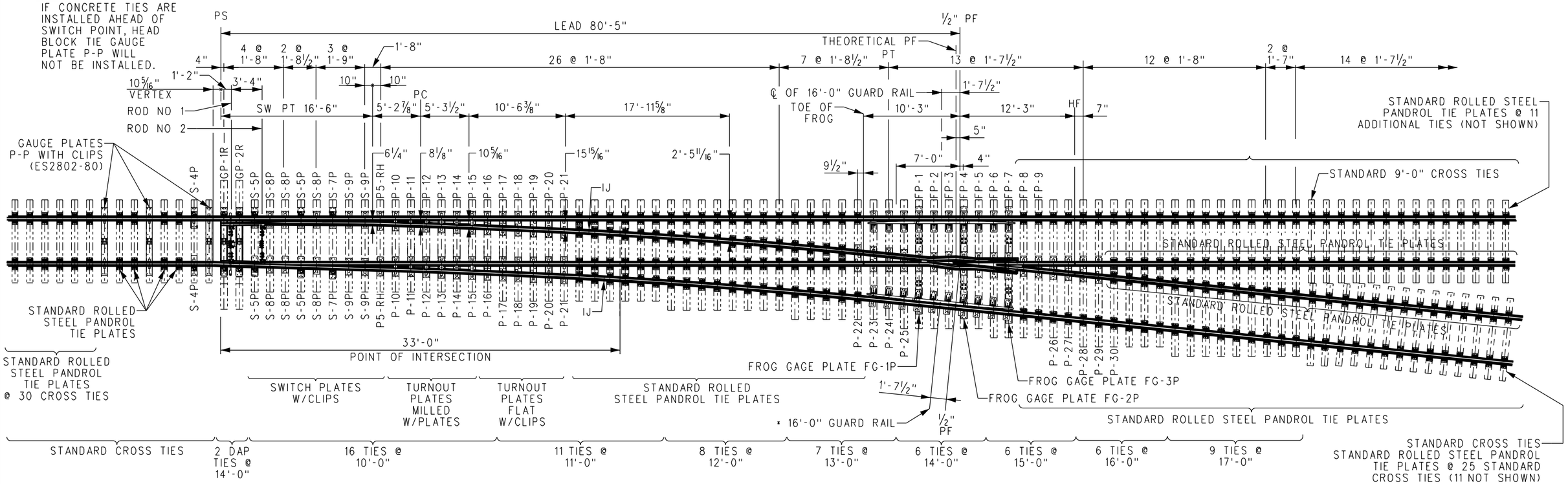

REV.	DATE	DESCRIPTION	DES.	ENG.
X	XX-XX-XX	REVISION	XX	XX

DRAWN BY: A. CARLOS DATE: 03/31/2011

ASSISTANT DIRECTOR: STANDARDS & DESIGN

DIRECTOR OF ENGINEERING AND CONSTRUCTION

SCRRA ENGINEERING STANDARDS ARE INTENDED FOR SCRRA APPROVED USES ONLY. FOR NON-SCRRA APPROVED USES: SCRRA SHALL NOT BE RESPONSIBLE FOR THE ACCURACY OR COMPLETENESS OF THE DATA OR INFORMATION CONTAINED HEREIN. THE SELECTION AND USE OF THESE STANDARDS IS THE SOLE RESPONSIBILITY OF THE USER AND SHOULD NOT BE USED WITHOUT CONSULTING A REGISTERED PROFESSIONAL ENGINEER. ALL WARRANTIES AND REPRESENTATIONS OF ANY KIND ARE DISCLAIMED. ANYONE MAKING USE OF THIS INFORMATION AGREES THAT IT ASSUMES ALL LIABILITY ARISING FROM SUCH USE. NO PART OF THESE STANDARDS SHOULD BE REPRODUCED OR DISTRIBUTED IN ANY FORM OR BY ANY MEANS WITHOUT THE PRIOR WRITTEN PERMISSION OF SCRRA. ALL RIGHTS RESERVED.

METROLINK®

SOUTHERN CALIFORNIA REGIONAL RAIL AUTHORITY
ONE GATEWAY PLAZA, 12TH FLOOR, L. A., CA. 90012

ENGINEERING STANDARDS

TURNOUT LAYOUT
NO 10–136 LB RE RH RBM FROG TURNOUT
TIMBER TIES, SWITCH STAND ON EITHER SIDE

STANDARD: 2802
SCALE: NTS
REVISION: –
SHEET: 1 OF 1
CADD FILE: ES2802–02

UserName=> carlosa Date Plotted: 10/5/2011 3:25:25 PM Plot Driver=> S:\Plot Drivers\pdf.plt FileName=> s:\V8EngStds\2000\Turnouts\No 10 Turnout\ES2802-02.dgn

BILL OF MATERIAL					BILL OF MATERIAL				
ITEM	QTY	DESCRIPTION	DWG NO	SCRRA PART NO	ITEM	QTY	DESCRIPTION	DWG NO	SCRRA PART NO
1	3	GAUGE PLATES P-P	ES2802-80		7	4	S-9P	ES2802-86	
2	1	GP-1L	ES2802-81		8	2	P6-LH	ES2802-83	
3	1	GP-2L	ES2802-82		9	2	PLATES P-10 THROUGH P-21	ES2802-91	
4	4	S-5P	ES2802-85		10	2	S-4P	ES2802-88	
5	6	S-8P	ES2802-86		11	-	-	-	
6	2	S-7P	ES2802-85		12	-	-	-	

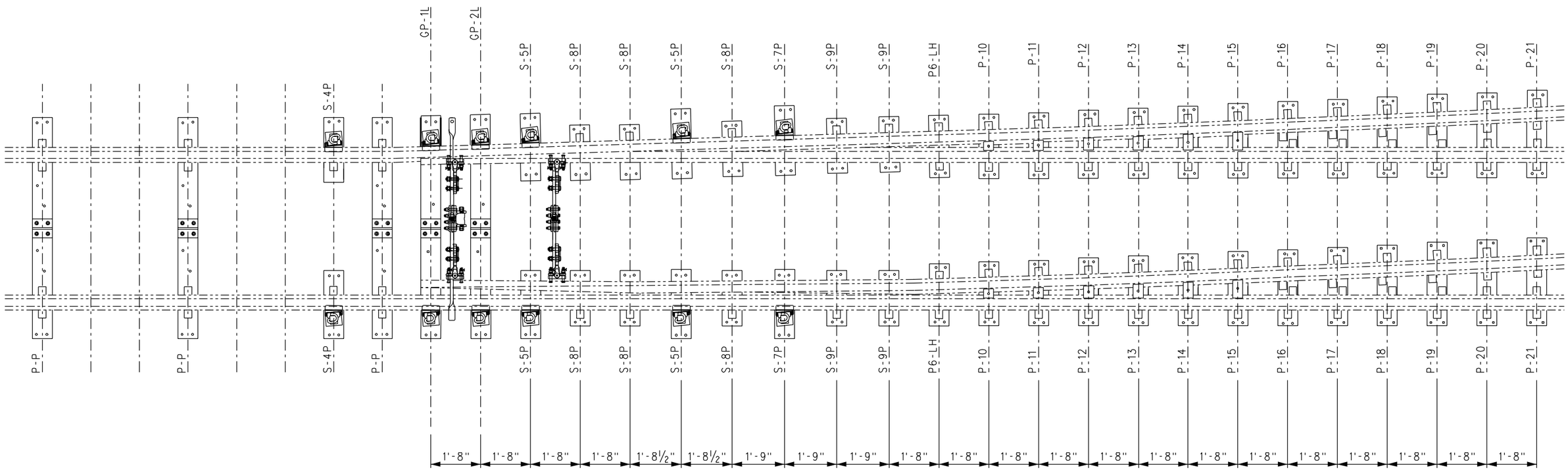

REV.	DATE	DESCRIPTION	DES.	ENG.
X	XX-XX-XX	REVISION	XX	XX

DRAWN BY: DRAFTER DATE: 03/31/2011

ASSISTANT DIRECTOR: STANDARDS & DESIGN

DIRECTOR OF ENGINEERING AND CONSTRUCTION

SCRRA ENGINEERING STANDARDS ARE INTENDED FOR SCRRA APPROVED USES ONLY. FOR NON-SCRRA APPROVED USES:
SCRRA SHALL NOT BE RESPONSIBLE FOR THE ACCURACY OR COMPLETENESS OF THE DATA OR INFORMATION CONTAINED HEREIN. THE SELECTION AND USE OF THESE STANDARDS IS THE SOLE RESPONSIBILITY OF THE USER AND SHOULD NOT BE USED WITHOUT CONSULTING A REGISTERED PROFESSIONAL ENGINEER. ALL WARRANTIES AND REPRESENTATIONS OF ANY KIND ARE DISCLAIMED. ANYONE MAKING USE OF THIS INFORMATION AGREES THAT IT ASSUMES ALL LIABILITY ARISING FROM SUCH USE. NO PART OF THESE STANDARDS SHOULD BE REPRODUCED OR DISTRIBUTED IN ANY FORM OR BY ANY MEANS WITHOUT THE PRIOR WRITTEN PERMISSION OF SCRRA. ALL RIGHTS RESERVED.

METROLINK®
SOUTHERN CALIFORNIA REGIONAL RAIL AUTHORITY
ONE GATEWAY PLAZA, 12TH FLOOR, L. A., CA. 90012

ENGINEERING STANDARDS

NO 10–136 LB RE LH SWITCH PACK,
TIMBER TIES,
SWITCH CONTROL ON EITHER SIDE

STANDARD 2802
SCALE: NTS
REVISION –
SHEET 1 OF 1
CADD FILE: ES2802–11

BILL OF MATERIAL					BILL OF MATERIAL				
ITEM	QTY	DESCRIPTION	DWG NO	SCRRA PART NO	ITEM	QTY	DESCRIPTION	DWG NO	SCRRA PART NO
1	3	GAUGE PLATES P-P	ES2802-80		7	4	S-9P	ES2802-86	
2	1	GP-1R	ES2802-81		8	2	P5-RH	ES2802-84	
3	1	GP-2R	ES2802-82		9	2	PLATES P-10 THROUGH P-21	ES2802-92	
4	4	S-5P	ES2802-85		10	2	S-4P	ES2802-88	
5	6	S-8P	ES2802-86		11	-	-	-	
6	2	S-7P	ES2802-85		12	-	-	-	

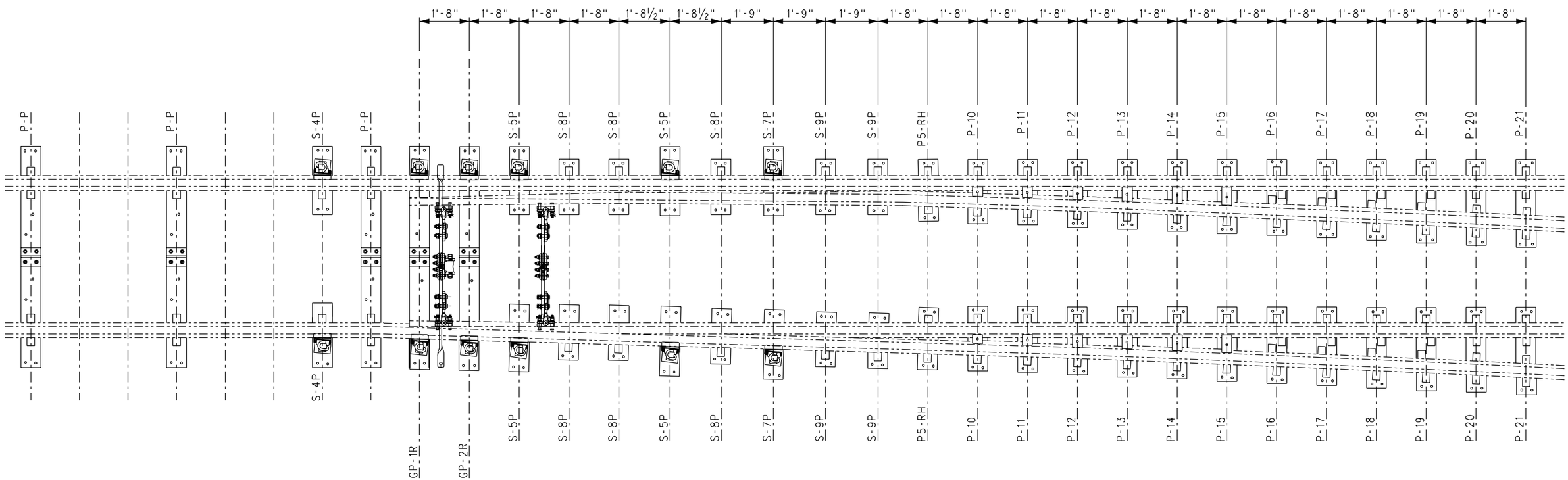

X	XX-XX-XX	REVISION	XX	XX
REV.	DATE	DESCRIPTION	DES.	ENG.

DRAWN BY: HDR DATE: 03/31/2011

ASSISTANT DIRECTOR: STANDARDS & DESIGN

DIRECTOR OF ENGINEERING AND CONSTRUCTION

SCRRA ENGINEERING STANDARDS ARE INTENDED FOR SCRRA APPROVED USES ONLY. FOR NON-SCRRA APPROVED USES:
SCRRA SHALL NOT BE RESPONSIBLE FOR THE ACCURACY OR COMPLETENESS OF THE DATA OR INFORMATION CONTAINED HEREIN. THE SELECTION AND USE OF THESE STANDARDS IS THE SOLE RESPONSIBILITY OF THE USER AND SHOULD NOT BE USED WITHOUT CONSULTING A REGISTERED PROFESSIONAL ENGINEER. ALL WARRANTIES AND REPRESENTATIONS OF ANY KIND ARE DISCLAIMED. ANYONE MAKING USE OF THIS INFORMATION AGREES THAT IT ASSUMES ALL LIABILITY ARISING FROM SUCH USE. NO PART OF THESE STANDARDS SHOULD BE REPRODUCED OR DISTRIBUTED IN ANY FORM OR BY ANY MEANS WITHOUT THE PRIOR WRITTEN PERMISSION OF SCRRA. ALL RIGHTS RESERVED.

METROLINK®

SOUTHERN CALIFORNIA REGIONAL RAIL AUTHORITY
ONE GATEWAY PLAZA, 12TH FLOOR, L. A., CA. 90012

ENGINEERING STANDARDS

NO 10–136 LB RE RH SWITCH PACK,
TIMBER TIES,
SWITCH CONTROL ON EITHER SIDE

STANDARD 2802
SCALE: NTS
REVISION –
SHEET 1 OF 1
CADD FILE: ES2802–12

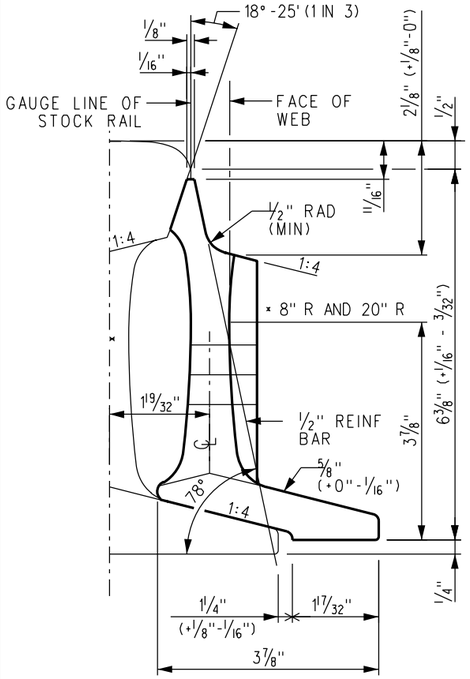

END VIEW OF POINT

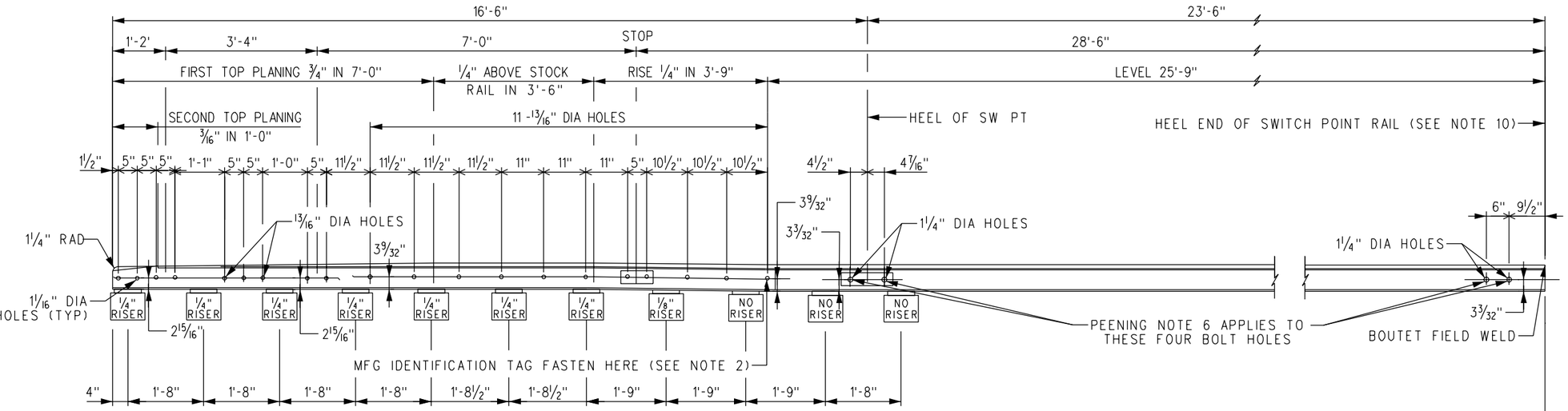

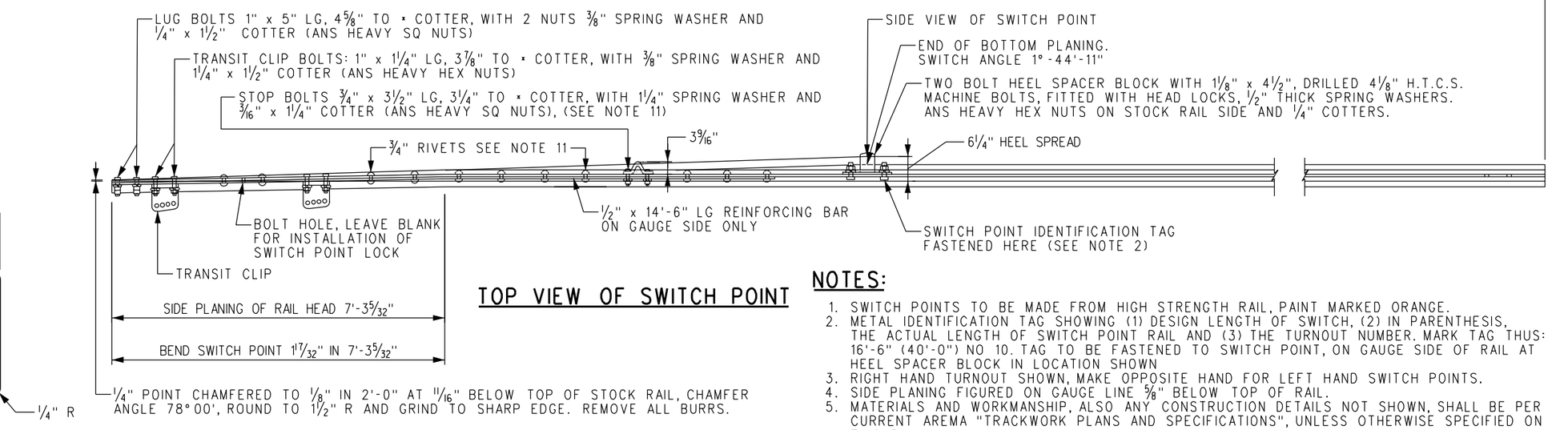

TOP VIEW OF SWITCH POINT

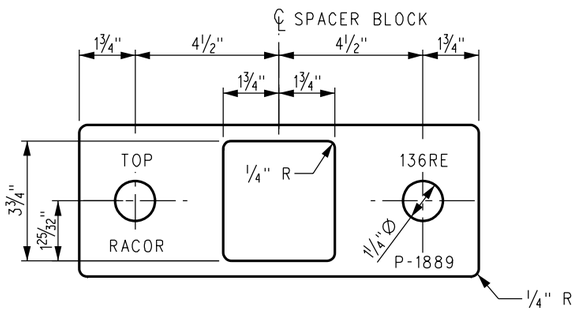

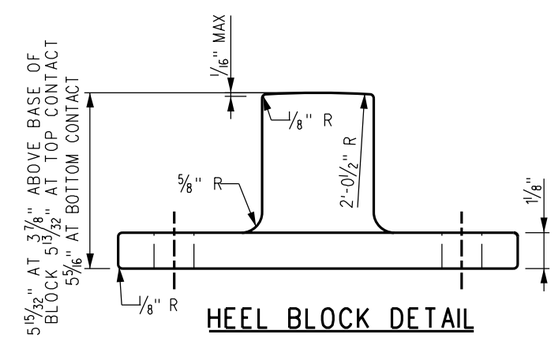

HEEL BLOCK DETAIL

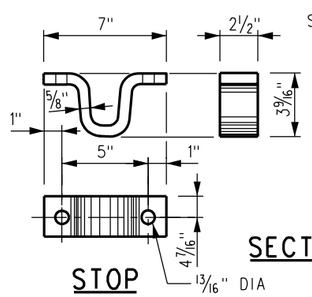

STOP

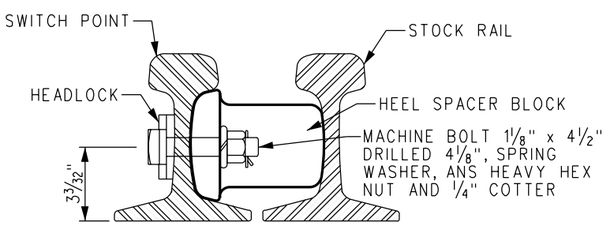

SECTION AT HEEL END OF 16'-6" SWITCH POINT MADE FROM 40'-0" LONG RAIL

NOTES:

1. SWITCH POINTS TO BE MADE FROM HIGH STRENGTH RAIL, PAINT MARKED ORANGE.
2. METAL IDENTIFICATION TAG SHOWING (1) DESIGN LENGTH OF SWITCH, (2) IN PARENTHESIS, THE ACTUAL LENGTH OF SWITCH POINT RAIL AND (3) THE TURNOUT NUMBER. MARK TAG THUS: 16'-6" (40'-0") NO 10. TAG TO BE FASTENED TO SWITCH POINT, ON GAUGE SIDE OF RAIL AT HEEL SPACER BLOCK IN LOCATION SHOWN
3. RIGHT HAND TURNOUT SHOWN, MAKE OPPOSITE HAND FOR LEFT HAND SWITCH POINTS.
4. SIDE PLANING FIGURED ON GAUGE LINE 5/8" BELOW TOP OF RAIL.
5. MATERIALS AND WORKMANSHIP, ALSO ANY CONSTRUCTION DETAILS NOT SHOWN, SHALL BE PER CURRENT AREMA "TRACKWORK PLANS AND SPECIFICATIONS", UNLESS OTHERWISE SPECIFIED ON THIS PLAN.
6. IN ORDER TO ELIMINATE STRESS RAISERS, MANUFACTURER SHALL PEEN THE EDGES OF THE BOLT HOLES AS INDICATED AT THE HEEL OF SWITCH POINT AND AT THE HEEL END OF THE SWITCH POINT RAIL, USING AIR HAMMER WITH SUITABLE HEAD AND FINISHING WITH DRIFT PIN. BRAND ON RAIL AT EDGE OF BOLT HOLE TO BE CAREFULLY REMOVED BY GRINDING BEFORE PEENING.
7. SWITCH POINTS FOR TURNOUT SIDE MAY BE ORDERED WITH MANGANESE STEEL TIP.
8. THE CONTOUR PLANING SHALL BE ON THE GAUGE SIDE BEGINNING AT A DISTANCE OF 3'-0" FROM THE POINT OF SWITCH AND SHALL BE SHAPED TO THE CONTOUR OF A NEW 136 LB RAIL AND SHALL RUN OUT AT THE END OF TOP PLANING, WHERE THE SWITCH POINT HAS FULL HEAD CONTOUR.
9. AT HEEL END OF SWITCH POINT RAIL, BREAK SHARP CORNER AROUND THE ENTIRE PERIPHERY BY SLIGHTLY GRINDING. ALSO, "DO NOT" END HARDEN RAIL END.
10. NON - INTERLOCKED AND INTERLOCKED SWITCH POINTS ARE MADE THE SAME.
11. UNLESS SWITCH POINT ORDER SPECIFICALLY CALLS FOR USE OF 3/4" RIVETS AND 3/4" STOP BOLTS, MANUFACTURER CAN SUBSTITUTE 3/4" HUCK FASTENERS, BOLT PART NO C-50-LR-BR2416 AND COLLAR PART NO L3-2-R-24G FOR 3/4" RIVETS, AND FOR 3/4" STOP BOLTS USE HUCK FASTENERS, BOLT PART NO C-50-LR-BR2424 AND COLLAR PART NO L3-2-R-24G.

REV.	DATE	DESCRIPTION	DES.	ENG.
X	XX-XX-XX	REVISION	XX	XX

DRAWN BY: A. CARLOS DATE: 03/31/2011

ASSISTANT DIRECTOR: STANDARDS & DESIGN

DIRECTOR OF ENGINEERING AND CONSTRUCTION

SCRRA ENGINEERING STANDARDS ARE INTENDED FOR SCRRA APPROVED USES ONLY. FOR NON-SCRRA APPROVED USES: SCRRA SHALL NOT BE RESPONSIBLE FOR THE ACCURACY OR COMPLETENESS OF THE DATA OR INFORMATION CONTAINED HEREIN. THE SELECTION AND USE OF THESE STANDARDS IS THE SOLE RESPONSIBILITY OF THE USER AND SHOULD NOT BE USED WITHOUT CONSULTING A REGISTERED PROFESSIONAL ENGINEER. ALL WARRANTIES AND REPRESENTATIONS OF ANY KIND ARE DISCLAIMED. ANYONE MAKING USE OF THIS INFORMATION AGREES THAT IT ASSUMES ALL LIABILITY ARISING FROM SUCH USE. NO PART OF THESE STANDARDS SHOULD BE REPRODUCED OR DISTRIBUTED IN ANY FORM OR BY ANY MEANS WITHOUT THE PRIOR WRITTEN PERMISSION OF SCRRA. ALL RIGHTS RESERVED.

METROLINK®
SOUTHERN CALIFORNIA REGIONAL RAIL AUTHORITY
ONE GATEWAY PLAZA, 12TH FLOOR, L. A., CA. 90012

ENGINEERING STANDARDS

NO 10 SPLIT SWITCH POINT DETAILS

STANDARD 2802
SCALE: NTS
REVISION –
SHEET 1 OF 1
CADD FILE: ES2802-24

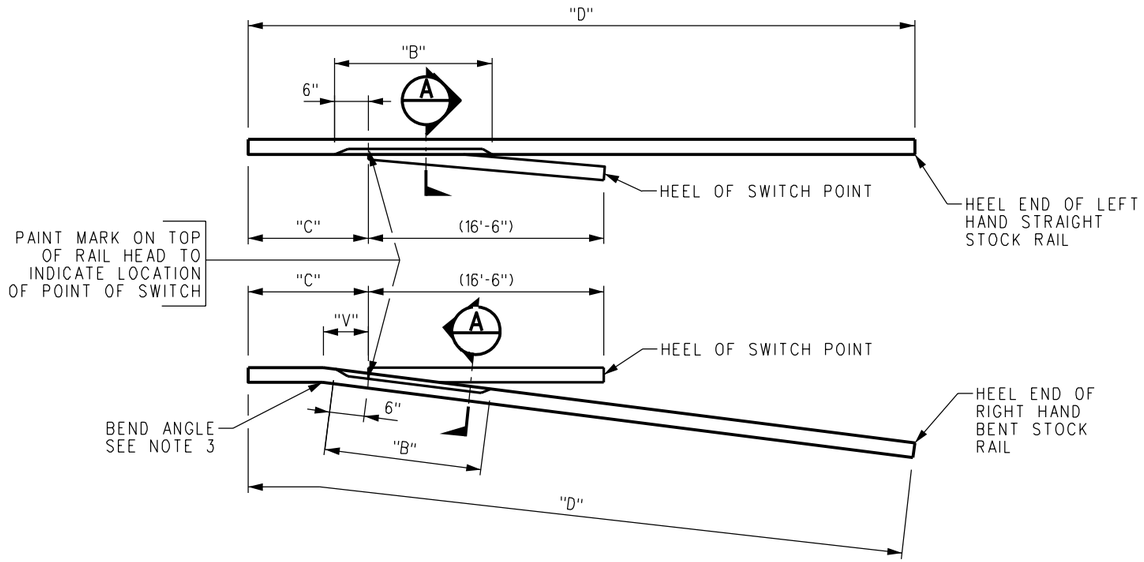

STOCK RAILS SHOWN ARE FOR "RIGHT HAND TURNOUT"

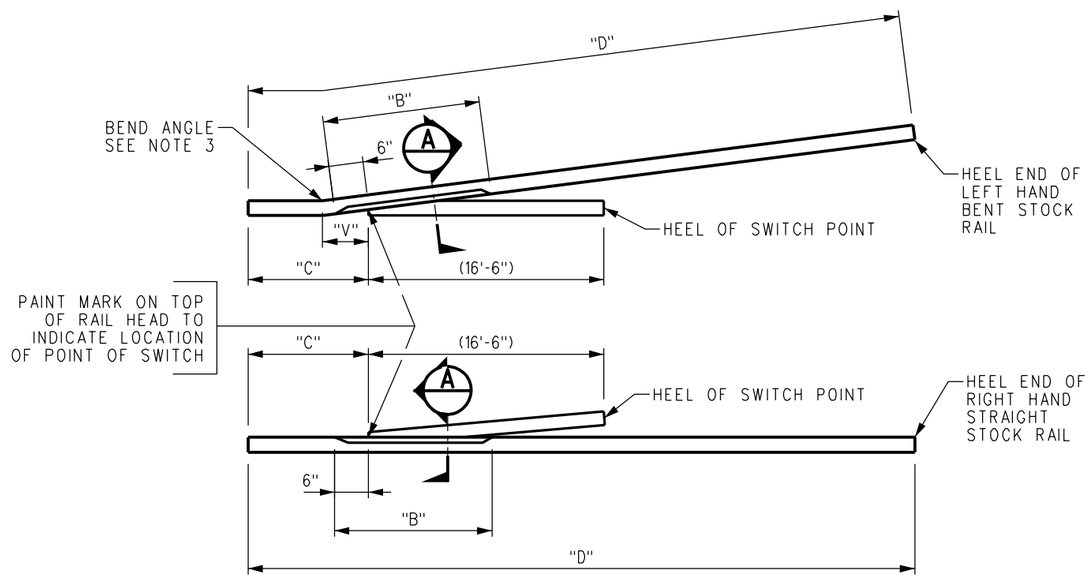

STOCK RAILS SHOWN ARE FOR "LEFT HAND TURNOUT"

NOTES:

1. UNDERCUT STOCK RAILS TO BE MADE OF HIGH STRENGTH RAIL WITH ENDS BEVELED PER CURRENT AREMA PLAN NO 1005.
2. FOR STOCK RAIL UNDERCUT LENGTH "B", PER SECTION "A", LENGTH "C" AND LENGTH "D" FOR NEW SAMSON SWITCH INSTALLATIONS OR REPLACEMENT ORDERS SEE TABLE BELOW.

LENGTHS B, C, & D FOR 136 LB RAIL									
SW PT LENGTH	TO NO	STOCK RAIL	B	FOR FIRST (NEW) INSTALL			FOR REPLACEMENT ORDERS ONLY		
				C	D	END DRILL SEE NO 10	C	D	END DRILL SEE NO 10
16'-6"	10	STR	9'-6"	10'-0"	40'-0"	NONE	10'-0"	52'-0"	NONE
16'-6"	10	BENT	9'-6"	10'-0"	40'-0"	HEEL END ONLY	10'-0"	52'-0"	HEEL END ONLY

3. BEND ANGLE IN BENT STOCK RAIL TO BE AS FOLLOWS:

SW LENGTH	BEND ANGLE	V (VERTEX DIST)
16'-6"	1°-44'-11" OR 1" IN 2'-9"	10 5/16"

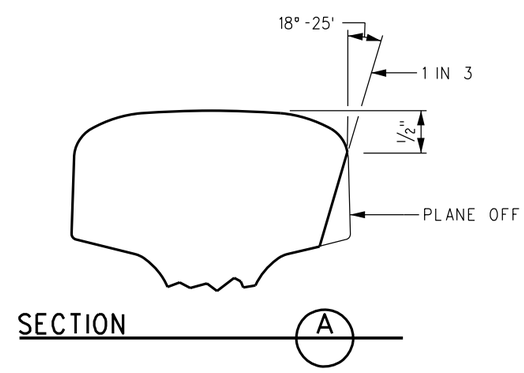

REV.	DATE	DESCRIPTION	DES.	ENG.
X	XX-XX-XX	REVISION	XX	XX

DRAWN BY: A. CARLOS DATE: 03/31/2011

ASSISTANT DIRECTOR: STANDARDS & DESIGN

DIRECTOR OF ENGINEERING AND CONSTRUCTION

SCRRA ENGINEERING STANDARDS ARE INTENDED FOR SCRRA APPROVED USES ONLY. FOR NON-SCRRA APPROVED USES: SCRRA SHALL NOT BE RESPONSIBLE FOR THE ACCURACY OR COMPLETENESS OF THE DATA OR INFORMATION CONTAINED HEREIN. THE SELECTION AND USE OF THESE STANDARDS IS THE SOLE RESPONSIBILITY OF THE USER AND SHOULD NOT BE USED WITHOUT CONSULTING A REGISTERED PROFESSIONAL ENGINEER. ALL WARRANTIES AND REPRESENTATIONS OF ANY KIND ARE DISCLAIMED. ANYONE MAKING USE OF THIS INFORMATION AGREES THAT IT ASSUMES ALL LIABILITY ARISING FROM SUCH USE. NO PART OF THESE STANDARDS SHOULD BE REPRODUCED OR DISTRIBUTED IN ANY FORM OR BY ANY MEANS WITHOUT THE PRIOR WRITTEN PERMISSION OF SCRRA. ALL RIGHTS RESERVED.

METROLINK®

SOUTHERN CALIFORNIA REGIONAL RAIL AUTHORITY
ONE GATEWAY PLAZA, 12TH FLOOR, L. A., CA. 90012

ENGINEERING STANDARDS

NO 10 STRAIGHT OR CURVED UNDERCUT STOCK RAILS

STANDARD 2802
SCALE: NTS
REVISION –
SHEET 1 OF 1
CADD FILE: ES2802-25

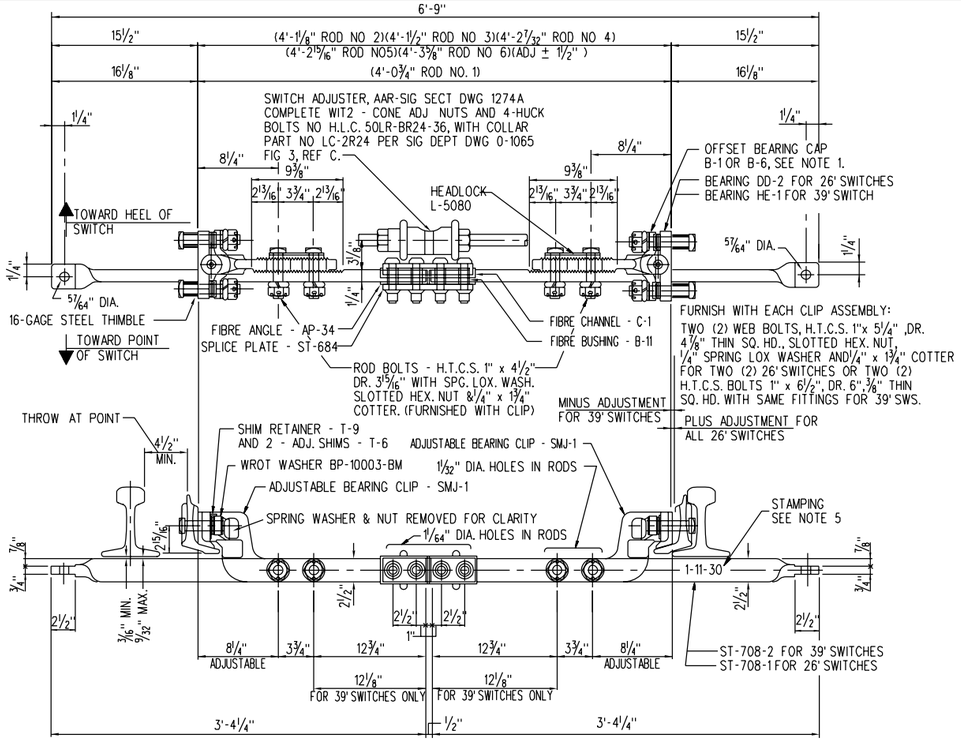

NO. 1 SWITCH ROD ASSEMBLY

(SHOWN FOR MACHINE ON RIGHT) SEE NOTE 2

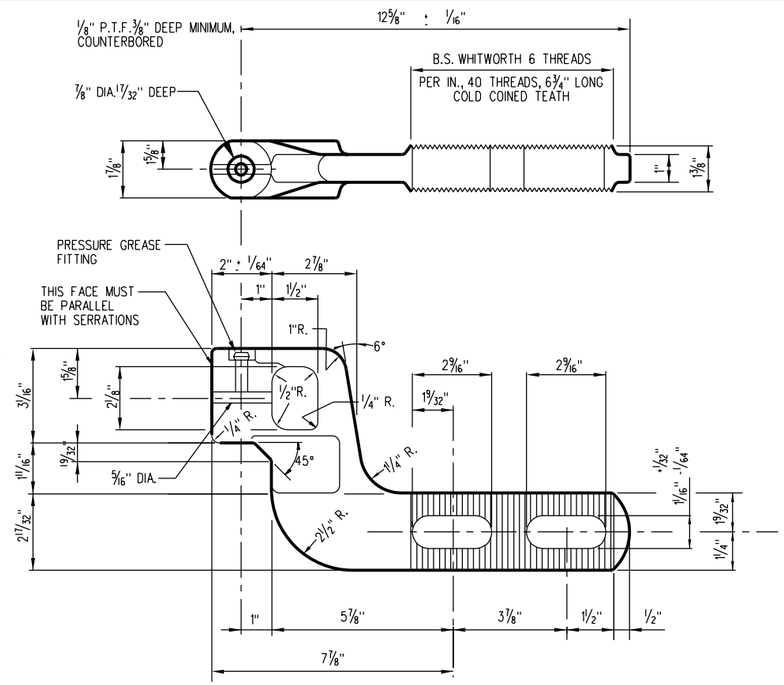

ADJUSTABLE BEARING CLIP - SMJ - 1

SCALE: 3" = 1'-0"

LENGTH OF SWITCH	QTY.	PART NUMBER	MATERIAL SPECIF.	DESCRIPTION	DETAIL REMARKS
BILL OF MATERIAL FOR 1 TYPE "SMJ" SWITCH ROD ASSEMBLY					
MATERIAL FOR CLIP ASSEMBLIES					
All	2	SMJ-1	S.A.E.1020-For.Stl.	Bearing Clip	MACHINED PER DETAIL
All	4		H.T.C.S.	Web Bolt	SEE NOTE
26'	2	DD-2	Malleable Iron	Bearing	PAT. NO. L-2910, MACHINED PER DETAIL
39'	2	HE-1	Malleable Iron	Bearing	PAT. NO. L-2915, MACHINED PER DETAIL
26'	2	B-1	S.A.E.1045-For.Stl.	Offset Bearing Cap	HEAT TREATED - BRINELL -.225 to .250
39'	2	B-6	S.A.E.1045-For.Stl.	Offset Bearing Cap	HEAT TREATED - BRINELL -.225 to .250
26'	2	B-6	S.A.E.1045-For.Stl.	Offset Bearing Cap	HEAT TREATED - BRINELL -.225 to .250
All	4	T-9	S.A.E.1020	Shim Retainer	⅛" x 3¾" x 2¼"
All	12	T-6	Stainless Steel	Adjustment Shim	1/16" x 2" x ⅛"
All	4	BP-10003-BM	Wrot Iron	Wrot Washer	11/16" I.D. x 2" O.D.x⅛" THICK
All	4		H.T.C.S.	Rod Bolt	1"x4½" DR.3 15/16" REG.SQ.HD.SLOTTED HEX NUT
All	4		Steel	Spg. Lox Washer	For 1" Rod Bolts
All	4		Steel	Cotter	¼" x 1¾" FOR ROD BOLTS
All	2		Steel	Grease Fitting	PRESSURE - FOR BEARING CLIP
All	2	L-5080	Malleable Iron	Headlock	FOR ROD BOLTS
26'	2		16-Gage Steel	Thimble	1½" LONG - FOR SHIPPING
39'	2		16-Gage Steel	Thimble	2½" LONG - FOR SHIPPING
Material for Vertical Rod					
16'-6"	1			Vertical Rod	Use one-ST-708-1
					Use one-ST-708-1 TWIST, MACHINE AND DRILL END HOLE
39'	1			Vertical Rod	Use one-ST-708-2
					Use one-ST-708-2 TWIST, MACHINE AND DRILL END HOLE
All	4		High Strength Steel	Conn.& Insul.Bolt	HIGH FASTENER NO. HLC-50LR- BR24-36
All	4		Low Carbon Steel	Collar	HUCK FASTENER NO. LC-2R24
All	1	ST-684	H.R. Mild Steel	Splice Plate	½" x 2½" x 9½" FOR INSULATION
All	2	AP-34	AAR-Sig.Sec.13-52	Angle	½" x 2½" x 4 15/16" HARD FIBRE - PARAFIN COATED
All	4	B-11	AAR-Sig.Sec.13-52	Bushing	1" O.D. HARD FIBRE - PARAFIN COATED
All	1	C-1	AAR-Sig.Sec.13-52	Channel	⅛" x 1" x 10" HARD FIBRE - PARAFIN COATED
All	1		Malleable Iron	Switch Adjuster	
All	2		Malleable Iron	Cone Adj. Nut	FOR 1¼" THROW RODS

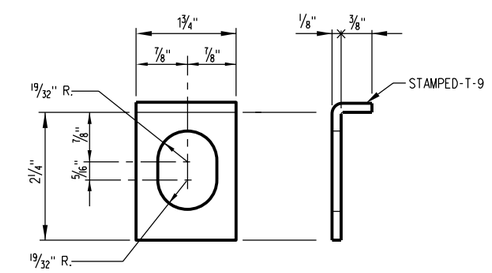

SHIM RETAINER - T - 9

SCALE: FULL

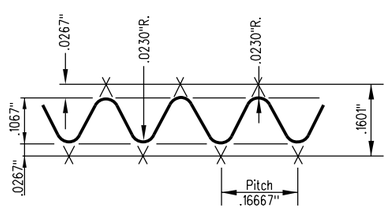

ENLARGED PROFILE OF SERRATIONS

SCALE: NONE

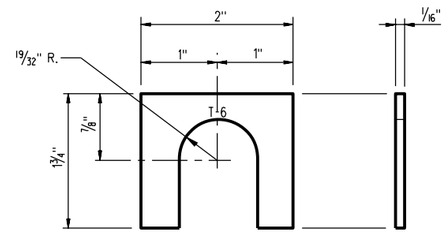

ADJUSTABLE SHIM - T - 6

SCALE: FULL

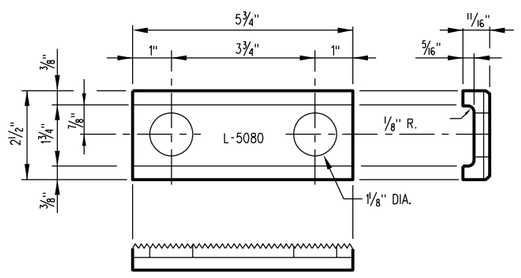

HEADLOCK L-5080

SCALE: 6" = 1'-0"

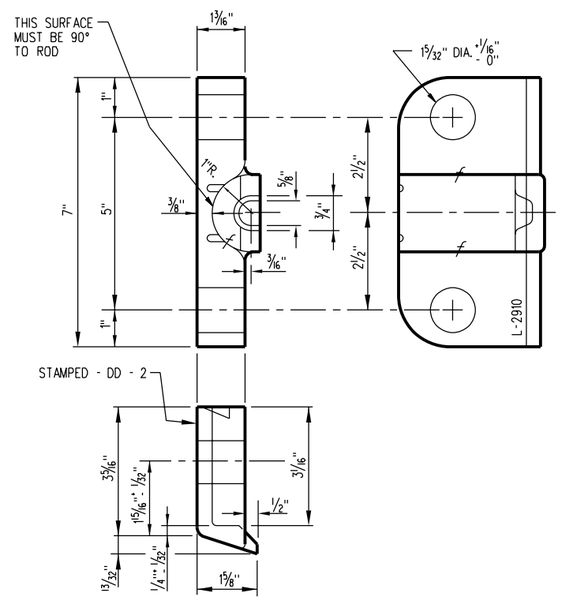

BEARING - DD - 2

SCALE: 6" = 1'-0"

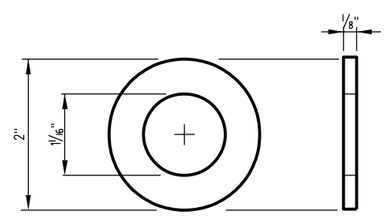

WROT WASHER - BP - 10003 - BM

SCALE: FULL

NOTES:

1. WHILE THIS PLAN SHOWS BEARING CLIPS ASSEMBLED TO SWITCH ROD, THIS CLIP ASSEMBLY MAY BE REQUISITIONED AND ORDERED SEPARATELY. WHEN A BEARING CLIP ASSEMBLY ONLY IS WANTED, REQUISITIONS AND ORDERS SHALL SPECIFY, RAIL SECTION AND LENGTH OF SWITCH. ALL PARTS SHOWN IN BILL OF MATERIAL SHALL BE FURNISHED WITH THESE CLIP ASSEMBLIES. WHEN AN INDIVIDUAL PART IS REQUIRED IT SHALL BE ORDERED BY PART NUMBER.
2. WHEN COMPLETED RODS ARE ORDERED THEY SHALL BE ASSEMBLED AND INCLUDE ALL PARTS SHOWN IN BILL OF MATERIAL. REQUISITIONS AND ORDERS SHALL SPECIFY RAIL SECTION AND LENGTH OF SWITCH. ON INTERLOCKED SWITCHES WITH AUXILIARY THROW ROD, MACHINE SIDE (RIGHT OF LEFT) SHOULD ALSO BE SPECIFIED.
3. TWO WEB BOLTS SHALL BE FURNISHED WITH EACH CLIP ASSEMBLY AS CALLED FOR BY NOTE IN TOP VIEW OF ROD ASSEMBLY. WHEN ROD IS USED ON 11'-0" AND 16'-6" SWITCHES THE ¼" THICK SPRING WASHER SHOULD BE REPLACED WITH A ⅜" THICK SPRING WASHER BY THE STOREKEEPER OR FIELD FORCES, TO BRING COTTER WITHIN THE LIMITS OF SLOT IN WEB BOLT NUTS.
4. MATERIALS AND WORKMANSHIP SHALL MEET CURRENT AREMA. SPECIFICATIONS FOR SPECIAL TRACKWORK UNLESS OTHERWISE SPECIFIED.
5. VERTICAL SWITCH ROD SHALL BE PLAINLY STAMPED TO INDICATE SWITCH THAT ROD ASSEMBLY CAN BE USED UPON. IDENTIFICATIOIN MARKING WILL BE AS FOLLOWS:
   1-39 FOR USE ON 39'-0" SWITCHES, 132 LB. AND 136 LB. RE RAIL SECTIONS.
   1-11-30 FOR USE ON 11'-0" TO 30'-0" SWITCHES, 115 LB., 119 LB., 131 LB., 132 LB. AND 136 LB. RE RAIL SECTIONS.

REV.	DATE	DESCRIPTION	DES.	ENG.
X	XX-XX-XX	REVISION	XX	XX

DRAWN BY: A. CARLOS DATE: 03/31/2011

ASSISTANT DIRECTOR: STANDARDS & DESIGN

DIRECTOR OF ENGINEERING AND CONSTRUCTION

SCRRA ENGINEERING STANDARDS ARE INTENDED FOR SCRRA APPROVED USES ONLY. FOR NON-SCRRA APPROVED USES:
SCRRA SHALL NOT BE RESPONSIBLE FOR THE ACCURACY OR COMPLETENESS OF THE DATA OR INFORMATION CONTAINED HEREIN. THE SELECTION AND USE OF THESE STANDARDS IS THE SOLE RESPONSIBILITY OF THE USER AND SHOULD NOT BE USED WITHOUT CONSULTING A REGISTERED PROFESSIONAL ENGINEER. ALL WARRANTIES AND REPRESENTATIONS OF ANY KIND ARE DISCLAIMED. ANYONE MAKING USE OF THIS INFORMATION AGREES THAT IT ASSUMES ALL LIABILITY ARISING FROM SUCH USE. NO PART OF THESE STANDARDS SHOULD BE REPRODUCED OR DISTRIBUTED IN ANY FORM OR BY ANY MEANS WITHOUT THE PRIOR WRITTEN PERMISSION OF SCRRA. ALL RIGHTS RESERVED.

METROLINK®
SOUTHERN CALIFORNIA REGIONAL RAIL AUTHORITY
ONE GATEWAY PLAZA, 12TH FLOOR, L. A., CA. 90012

ENGINEERING STANDARDS

NO 10 SWITCH ROD DETAILS

STANDARD 2802
SCALE: NTS
REVISION –
SHEET 1 OF 1
CADD FILE: ES2802-26

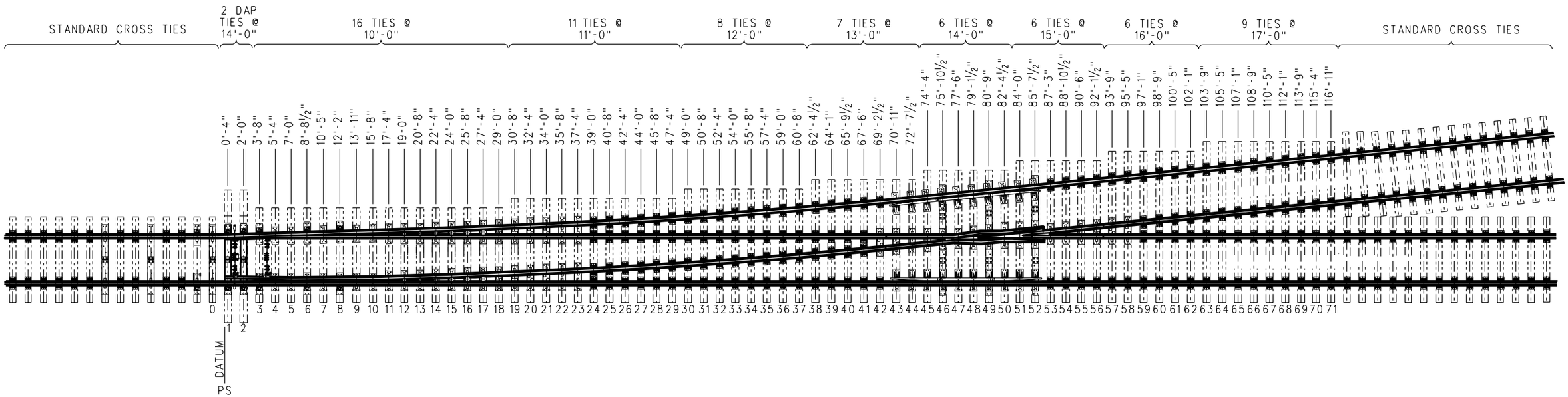

BILL OF SWITCH TIES			
PIECES	SIZE	LENGTH	BOARD FEET
16	7" x 9"	10'-0"	840.00
11	7" x 9"	11'-0"	635.25
8	7" x 9"	12'-0"	504.00
7	7" x 9"	13'-0"	477.75
6	7" x 9"	14'-0"	441.00
2	10" x 9"	14'-0" DAP TIES	210.00
6	7" x 9"	15'-0"	472.50
6	7" x 9"	16'-0"	504.00
9	7" x 9"	17'-0"	803.25
TOTAL			TOTAL
71			4887.75

REV.	DATE	DESCRIPTION	DES.	ENG.
X	XX-XX-XX	REVISION	XX	XX

DRAWN BY: HDR DATE: 03/31/2011

ASSISTANT DIRECTOR: STANDARDS & DESIGN

DIRECTOR OF ENGINEERING AND CONSTRUCTION

SCRRA ENGINEERING STANDARDS ARE INTENDED FOR SCRRA APPROVED USES ONLY. FOR NON-SCRRA APPROVED USES:
SCRRA SHALL NOT BE RESPONSIBLE FOR THE ACCURACY OR COMPLETENESS OF THE DATA OR INFORMATION CONTAINED HEREIN. THE SELECTION AND USE OF THESE STANDARDS IS THE SOLE RESPONSIBILITY OF THE USER AND SHOULD NOT BE USED WITHOUT CONSULTING A REGISTERED PROFESSIONAL ENGINEER. ALL WARRANTIES AND REPRESENTATIONS OF ANY KIND ARE DISCLAIMED. ANYONE MAKING USE OF THIS INFORMATION AGREES THAT IT ASSUMES ALL LIABILITY ARISING FROM SUCH USE. NO PART OF THESE STANDARDS SHOULD BE REPRODUCED OR DISTRIBUTED IN ANY FORM OR BY ANY MEANS WITHOUT THE PRIOR WRITTEN PERMISSION OF SCRRA. ALL RIGHTS RESERVED.

METROLINK®
SOUTHERN CALIFORNIA REGIONAL RAIL AUTHORITY
ONE GATEWAY PLAZA, 12TH FLOOR, L. A., CA. 90012

ENGINEERING STANDARDS

TIMBER TIE LAYOUT
NO 10–136 LB RE RBM FROG LH TURNOUT
MANUAL SWITCH MACHINE ON EITHER SIDE

STANDARD 2802
SCALE: NTS
REVISION –
SHEET 1 OF 1
CADD FILE: ES2802–31

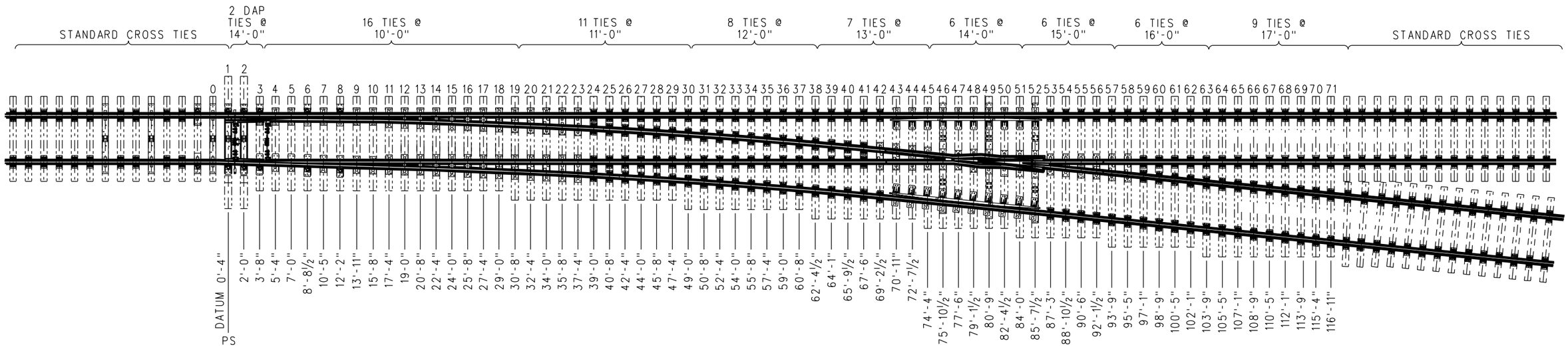

BILL OF SWITCH TIES			
PIECES	SIZE	LENGTH	BOARD FEET
16	7" x 9"	10'-0"	840.00
11	7" x 9"	11'-0"	635.25
8	7" x 9"	12'-0"	504.00
7	7" x 9"	13'-0"	477.75
6	7" x 9"	14'-0"	441.00
2	10" x 9"	14'-0" DAP TIES	210.00
6	7" x 9"	15'-0"	472.50
6	7" x 9"	16'-0"	504.00
9	7" x 9"	17'-0"	803.25
TOTAL			TOTAL
71			4887.75

REV.	DATE	DESCRIPTION	DES.	ENG.
X	XX-XX-XX	REVISION	XX	XX

DRAWN BY: HDR DATE: 03/31/2011

ASSISTANT DIRECTOR: STANDARDS & DESIGN

DIRECTOR OF ENGINEERING AND CONSTRUCTION

SCRRA ENGINEERING STANDARDS ARE INTENDED FOR SCRRA APPROVED USES ONLY. FOR NON-SCRRA APPROVED USES: SCRRA SHALL NOT BE RESPONSIBLE FOR THE ACCURACY OR COMPLETENESS OF THE DATA OR INFORMATION CONTAINED HEREIN. THE SELECTION AND USE OF THESE STANDARDS IS THE SOLE RESPONSIBILITY OF THE USER AND SHOULD NOT BE USED WITHOUT CONSULTING A REGISTERED PROFESSIONAL ENGINEER. ALL WARRANTIES AND REPRESENTATIONS OF ANY KIND ARE DISCLAIMED. ANYONE MAKING USE OF THIS INFORMATION AGREES THAT IT ASSUMES ALL LIABILITY ARISING FROM SUCH USE. NO PART OF THESE STANDARDS SHOULD BE REPRODUCED OR DISTRIBUTED IN ANY FORM OR BY ANY MEANS WITHOUT THE PRIOR WRITTEN PERMISSION OF SCRRA. ALL RIGHTS RESERVED.

METROLINK®

SOUTHERN CALIFORNIA REGIONAL RAIL AUTHORITY
ONE GATEWAY PLAZA, 12TH FLOOR, L. A., CA. 90012

ENGINEERING STANDARDS

TIMBER TIE LAYOUT
NO 10–136 LB RE RBM FROG RH TURNOUT
MANUAL SWITCH MACHINE ON EITHER SIDE

STANDARD 2802
SCALE: NTS
REVISION –
SHEET 1 OF 1
CADD FILE: ES2802–32

BILL OF MATERIAL				
ITEM	QTY	DESCRIPTION	DWG NO	SCRRA PART NO
1	1	NO 10 136 LB RE RH RBM FROG LAYOUT	ES2802-42	

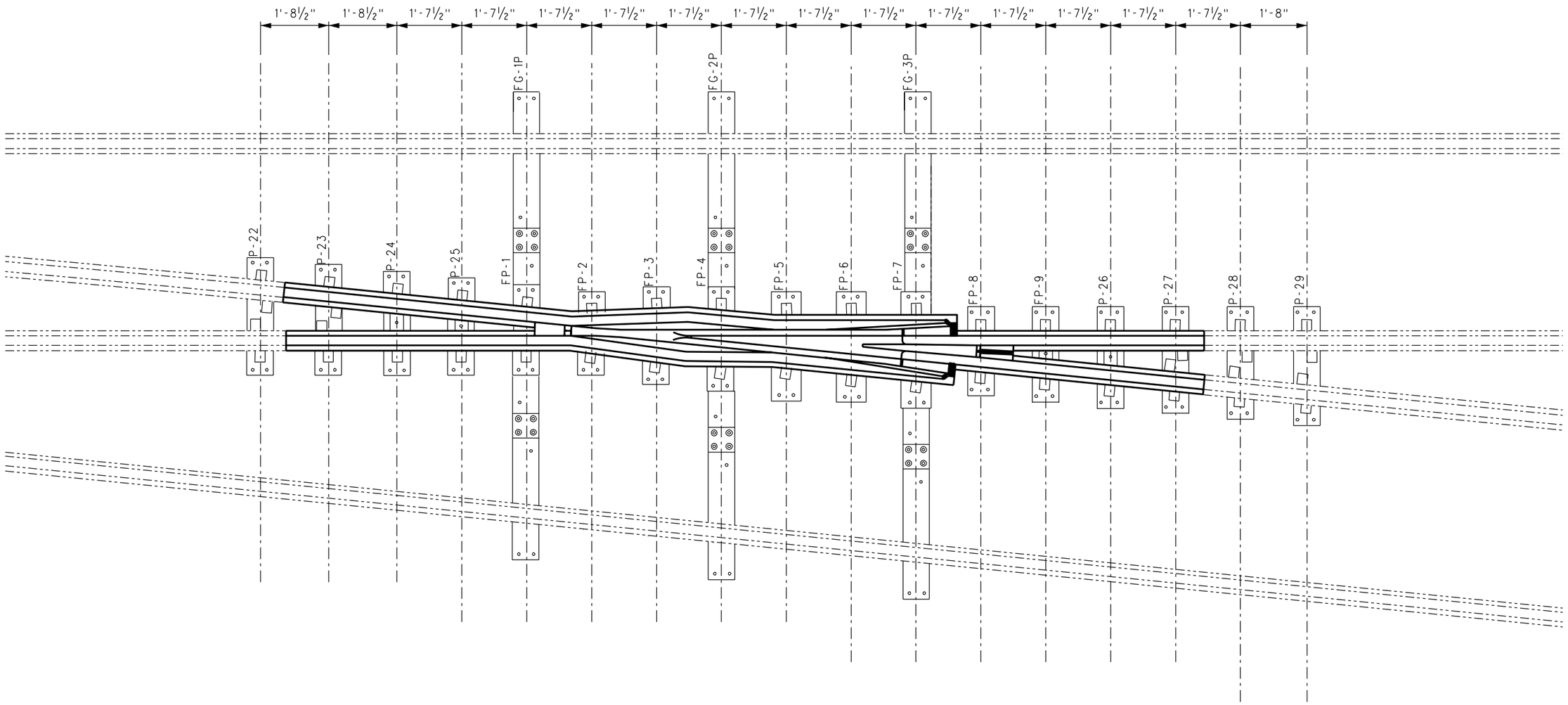

X	XX-XX-XX	REVISION	XX	XX
REV.	DATE	DESCRIPTION	DES.	ENG.

DRAWN BY: HDR DATE: 03/31/2011

ASSISTANT DIRECTOR: STANDARDS & DESIGN

DIRECTOR OF ENGINEERING AND CONSTRUCTION

SCRRA ENGINEERING STANDARDS ARE INTENDED FOR SCRRA APPROVED USES ONLY. FOR NON-SCRRA APPROVED USES: SCRRA SHALL NOT BE RESPONSIBLE FOR THE ACCURACY OR COMPLETENESS OF THE DATA OR INFORMATION CONTAINED HEREIN. THE SELECTION AND USE OF THESE STANDARDS IS THE SOLE RESPONSIBILITY OF THE USER AND SHOULD NOT BE USED WITHOUT CONSULTING A REGISTERED PROFESSIONAL ENGINEER. ALL WARRANTIES AND REPRESENTATIONS OF ANY KIND ARE DISCLAIMED. ANYONE MAKING USE OF THIS INFORMATION AGREES THAT IT ASSUMES ALL LIABILITY ARISING FROM SUCH USE. NO PART OF THESE STANDARDS SHOULD BE REPRODUCED OR DISTRIBUTED IN ANY FORM OR BY ANY MEANS WITHOUT THE PRIOR WRITTEN PERMISSION OF SCRRA. ALL RIGHTS RESERVED.

METROLINK®

SOUTHERN CALIFORNIA REGIONAL RAIL AUTHORITY
ONE GATEWAY PLAZA, 12TH FLOOR, L. A., CA. 90012

ENGINEERING STANDARDS

NO 10 RBM FROG RH
FROG ASSEMBLY PLAN VIEW AND FROG PACK
TIMBER TIES–136 LB RE RAIL

STANDARD 2802
SCALE: NTS
REVISION –
SHEET 1 OF 1
CADD FILE: ES2802–40

UserName=> carlosa Date Plotted: 10/5/2011 3:25:32 PM Plot Driver=> S:\Plot Drivers\pdf.plt FileName=> s:\V8EngStds\2000\Turnouts\No 10 Turnout\ES2802-40.dgn

BILL OF MATERIAL				
ITEM	QTY	DESCRIPTION	DWG NO	SCRRA PART NO
1	1	NO 10 136 LB RE LH RBM FROG LAYOUT	ES2802-42	

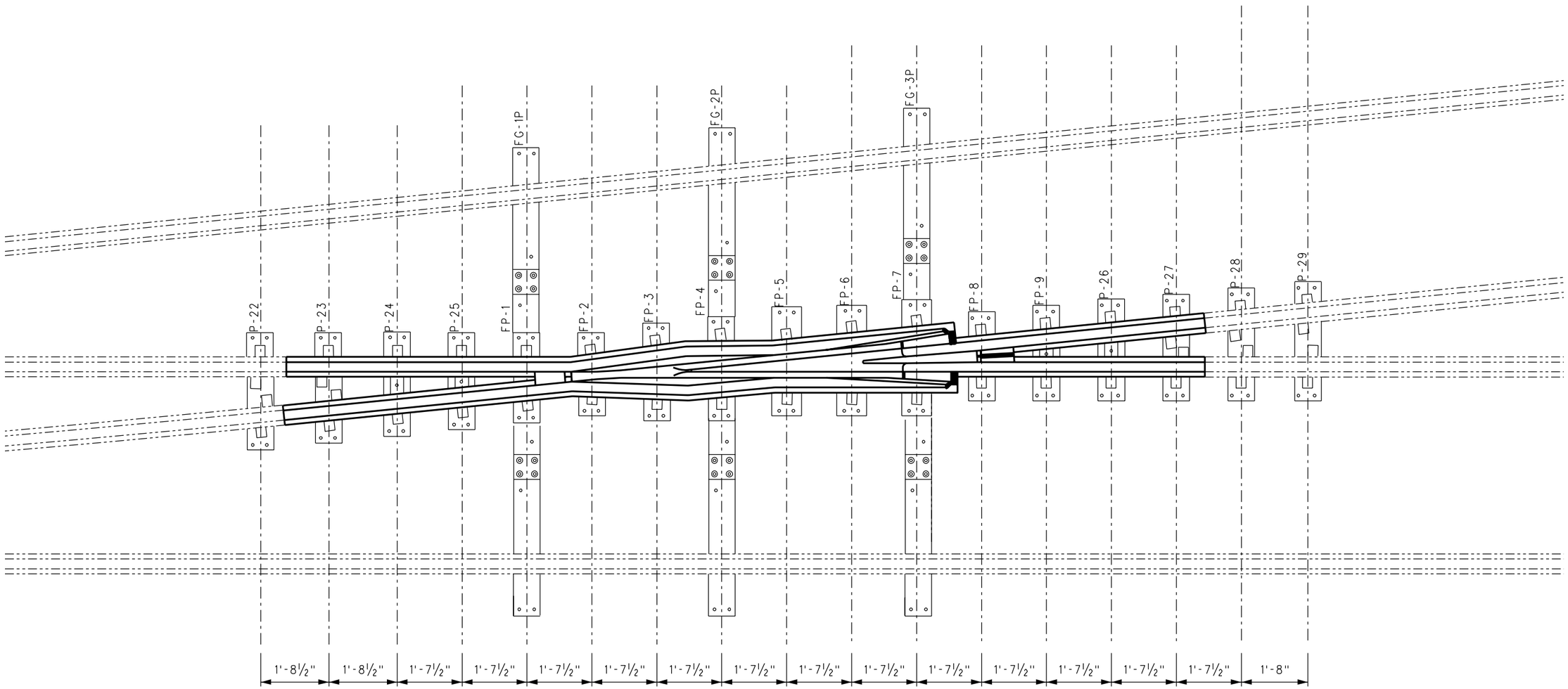

REV.	DATE	DESCRIPTION	DES.	ENG.
X	XX-XX-XX	REVISION	XX	XX

DRAWN BY: HDR DATE: 03/31/2011

ASSISTANT DIRECTOR: STANDARDS & DESIGN

DIRECTOR OF ENGINEERING AND CONSTRUCTION

SCRRA ENGINEERING STANDARDS ARE INTENDED FOR SCRRA APPROVED USES ONLY. FOR NON-SCRRA APPROVED USES:
SCRRA SHALL NOT BE RESPONSIBLE FOR THE ACCURACY OR COMPLETENESS OF THE DATA OR INFORMATION CONTAINED HEREIN. THE SELECTION AND USE OF THESE STANDARDS IS THE SOLE RESPONSIBILITY OF THE USER AND SHOULD NOT BE USED WITHOUT CONSULTING A REGISTERED PROFESSIONAL ENGINEER. ALL WARRANTIES AND REPRESENTATIONS OF ANY KIND ARE DISCLAIMED. ANYONE MAKING USE OF THIS INFORMATION AGREES THAT IT ASSUMES ALL LIABILITY ARISING FROM SUCH USE. NO PART OF THESE STANDARDS SHOULD BE REPRODUCED OR DISTRIBUTED IN ANY FORM OR BY ANY MEANS WITHOUT THE PRIOR WRITTEN PERMISSION OF SCRRA. ALL RIGHTS RESERVED.

METROLINK®

SOUTHERN CALIFORNIA REGIONAL RAIL AUTHORITY
ONE GATEWAY PLAZA, 12TH FLOOR, L. A., CA. 90012

ENGINEERING STANDARDS

NO 10 RBM FROG LH
FROG ASSEMBLY PLAN VIEW AND FROG PACK
TIMBER TIES – 136 LB RE RAIL

STANDARD 2802
SCALE: NTS
REVISION –
SHEET 1 OF 1
CADD FILE: ES2802-41

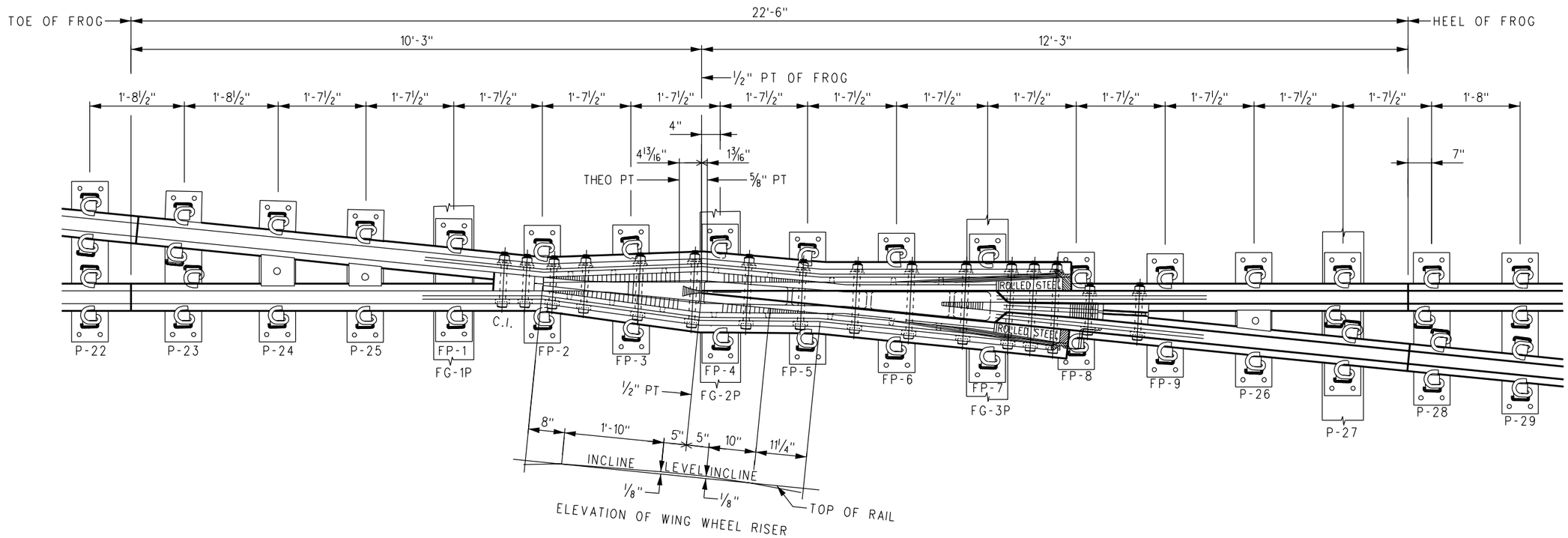

NO 10 RAILBOUND MANGANESE STEEL FROG

ANGLE 5°-43'-29"

NOTES:

1. FROG ANGLE 5°-43'-29".
2. RAIL USED IN FABRICATION OF FROG TO BE 136 LB "HIGH STRENGTH".
3. RAILBOUND MANGANESE STEEL FROG PER CURRENT AREMA. PLAN NUMBERS 621 AND 623 WITH EXPLOSIVE HARDENED MANGANESE HIGH INTEGRITY CASTING PER CURRENT AREMA. SPECIFICATIONS AND MODIFIED FOR ARM LENGTHS AND PLATES WITH PANDROL TYPE FASTENERS.
4. ALL FROG PLATES SHALL BE STAMPED IN 1/2" CHARACTERS TO INDICATE MANUFACTURER, FROG NUMBER, HAND OF TURNOUT, RAIL SECTION AND PLATE NUMBER. MARK TO BE STAMPED ON SAME END OF ALL FROG PLATES.
5. FOR DETAILS OF FROG PLATES SEE ES2802-44.
6. WORKMANSHIP AND MATERIALS SHALL BE PER CURRENT AREMA. SPECIFICATIONS FOR "SPECIAL TRACKWORK", EXCEPT AS OTHERWISE SPECIFIED.
7. ANY CONSTRUCTION DETAILS NOT SHOWN SHALL BE IN ACCORDANCE WITH CURRENT AREMA. RECOMMENDED PRACTICE.
8. FROG PLATES ARE DESIGNED TO BE INSTALLED PERPENDICULAR TO MAIN TRACK.
9. BODY BOLTS TO BE 1 3/8" DIA H.T.C.S. PER AREMA SPECIFICATIONS.
10. TOE AND HEEL BLOCKS AND BOLTS PER AREMA SPECIFICATIONS.
11. RAIL ENDS TO BE CUT AT 45 DEGREE ANGLE AT JOINT WITH FROG CASTING.

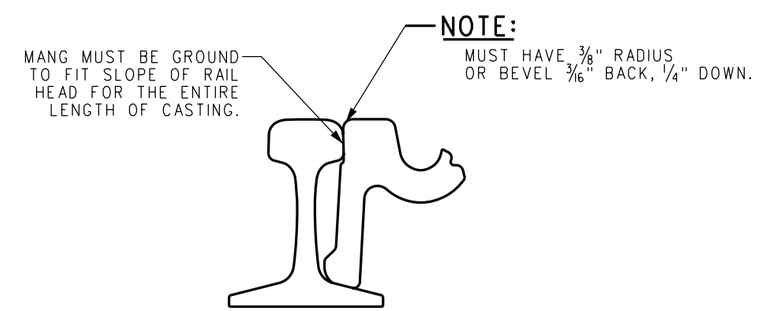

DETAIL OF FROG CASTING/RAIL FIT

REV.	DATE	DESCRIPTION	DES.	ENG.
X	XX-XX-XX	REVISION	XX	XX

DRAWN BY: A. CARLOS DATE: 03/31/2011

ASSISTANT DIRECTOR: STANDARDS & DESIGN

DIRECTOR OF ENGINEERING AND CONSTRUCTION

SCRRA ENGINEERING STANDARDS ARE INTENDED FOR SCRRA APPROVED USES ONLY. FOR NON-SCRRA APPROVED USES: SCRRA SHALL NOT BE RESPONSIBLE FOR THE ACCURACY OR COMPLETENESS OF THE DATA OR INFORMATION CONTAINED HEREIN. THE SELECTION AND USE OF THESE STANDARDS IS THE SOLE RESPONSIBILITY OF THE USER AND SHOULD NOT BE USED WITHOUT CONSULTING A REGISTERED PROFESSIONAL ENGINEER. ALL WARRANTIES AND REPRESENTATIONS OF ANY KIND ARE DISCLAIMED. ANYONE MAKING USE OF THIS INFORMATION AGREES THAT IT ASSUMES ALL LIABILITY ARISING FROM SUCH USE. NO PART OF THESE STANDARDS SHOULD BE REPRODUCED OR DISTRIBUTED IN ANY FORM OR BY ANY MEANS WITHOUT THE PRIOR WRITTEN PERMISSION OF SCRRA. ALL RIGHTS RESERVED.

METROLINK®

SOUTHERN CALIFORNIA REGIONAL RAIL AUTHORITY
ONE GATEWAY PLAZA, 12TH FLOOR, L. A., CA. 90012

ENGINEERING STANDARDS

NO 10 136 LB RE
RH RBM FROG LAYOUT

STANDARD: 2802
SCALE: NTS
REVISION: –
SHEET: 1 OF 1
CADD FILE: ES2802-42

UserName=> carlosa Date Plotted: 10/5/2011 3:25:33 PM Plot Driver=> S:\Plot Drivers\pdf.plt FileName=> s:\V8EngStds\2000\Turnouts\No 10 Turnout\ES2802-42.dgn

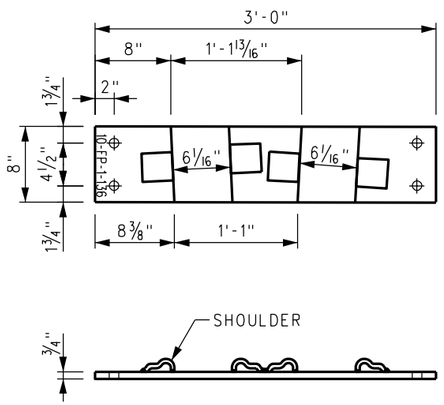

FROG PLATE - FP-1

3/4" x 8" x 3'-0" - FLAT
(2 REQUIRED)

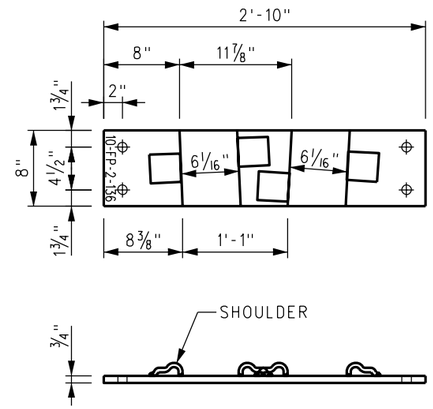

FROG PLATE - FP-2

3/4" x 8" x 2'-10" - FLAT
(2 REQUIRED)

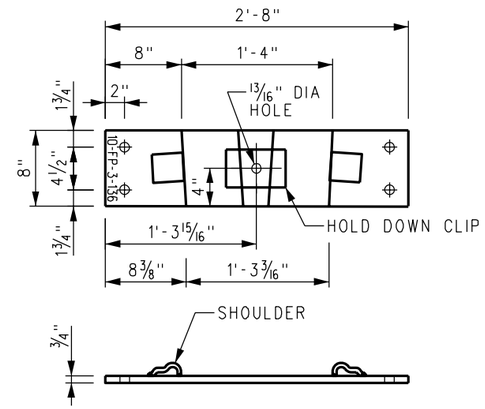

FROG PLATE - FP-3

3/4" x 8" x 2'-8" - FLAT
(2 REQUIRED)

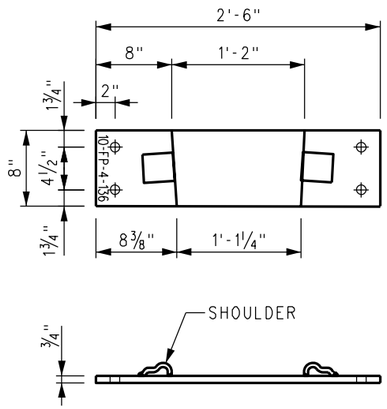

FROG PLATE - FP-4

3/4" x 8" x 2'-6" - FLAT
(2 REQUIRED)

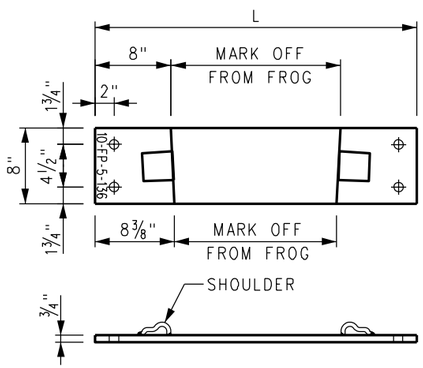

FROG PLATE - FP-5 THRU FP-7

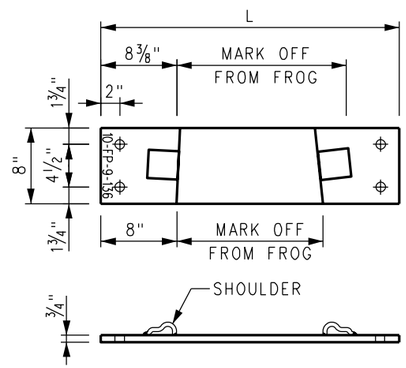

FROG PLATE - FP-8 AND FP-9

3/4" x 8" - FLAT (SEE TABLE FOR LENGTHS)

DIMENSION TABLE		
PLATE	L	NO REQ'D
FP-5	3'-0 3/4"	2
FP-6	2'-11 3/4"	2
FP-7	2'-9 3/4"	2

DIMENSION TABLE		
PLATE	L	NO REQ'D
FP-8	2'-8 1/2"	2
FP-9	2'-10"	2

NOTES:

1. STAMP PLATE WITH PROPER PLATE NUMBER AND WEIGHT OF RAIL.
2. HOLES IN PLATES ARE 1" IN DIA UNLESS OTHERWISE NOTED.
3. ALL SHOULDERS ARE PANDROL TYPE 1 FORGED.

REV.	DATE	DESCRIPTION	DES.	ENG.
X	XX-XX-XX	REVISION	XX	XX

DRAWN BY: A. CARLOS DATE: 03/31/2011

ASSISTANT DIRECTOR: STANDARDS & DESIGN

DIRECTOR OF ENGINEERING AND CONSTRUCTION

SCRRA ENGINEERING STANDARDS ARE INTENDED FOR SCRRA APPROVED USES ONLY. FOR NON-SCRRA APPROVED USES:
SCRRA SHALL NOT BE RESPONSIBLE FOR THE ACCURACY OR COMPLETENESS OF THE DATA OR INFORMATION CONTAINED HEREIN. THE SELECTION AND USE OF THESE STANDARDS IS THE SOLE RESPONSIBILITY OF THE USER AND SHOULD NOT BE USED WITHOUT CONSULTING A REGISTERED PROFESSIONAL ENGINEER. ALL WARRANTIES AND REPRESENTATIONS OF ANY KIND ARE DISCLAIMED. ANYONE MAKING USE OF THIS INFORMATION AGREES THAT IT ASSUMES ALL LIABILITY ARISING FROM SUCH USE. NO PART OF THESE STANDARDS SHOULD BE REPRODUCED OR DISTRIBUTED IN ANY FORM OR BY ANY MEANS WITHOUT THE PRIOR WRITTEN PERMISSION OF SCRRA. ALL RIGHTS RESERVED.

METROLINK®
SOUTHERN CALIFORNIA REGIONAL RAIL AUTHORITY
ONE GATEWAY PLAZA, 12TH FLOOR, L. A., CA. 90012

ENGINEERING STANDARDS

FROG PLATE DETAILS
NO 10-136 LB TIMBER TIE RBM

STANDARD 2802
SCALE: NTS
REVISION –
SHEET 1 OF 1
CADD FILE: ES2802-44

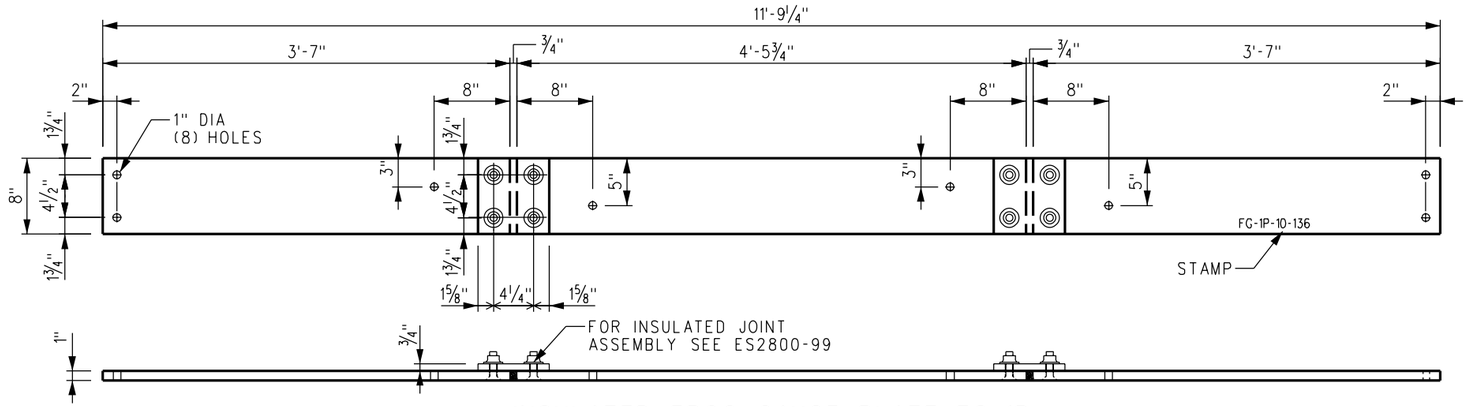

INSULATED FROG GAUGE PLATE FG-1P

1" x 8" - FLAT

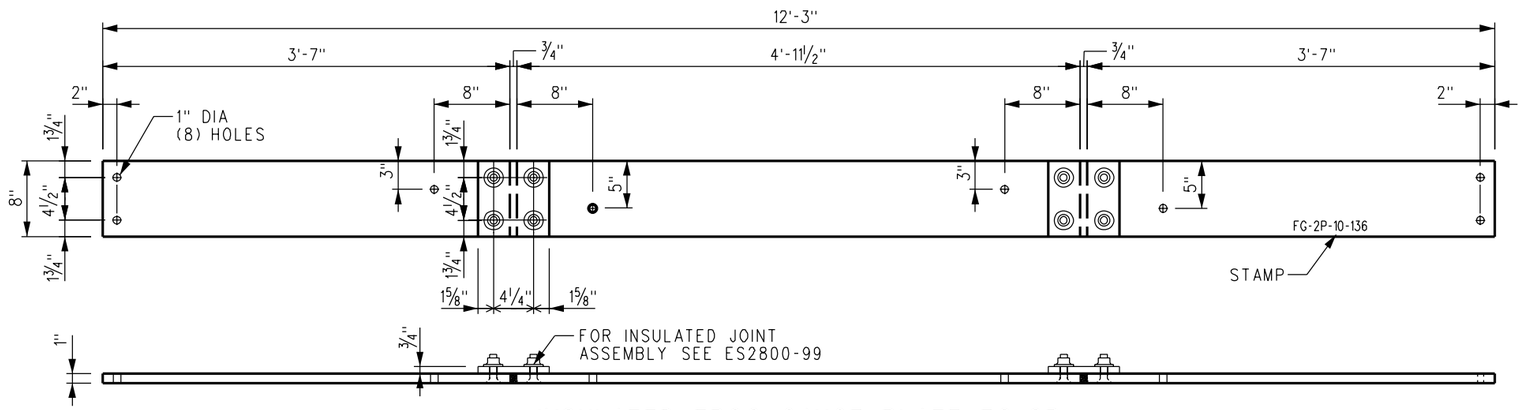

INSULATED FROG GAUGE PLATE FG-2P

1" x 8" - FLAT

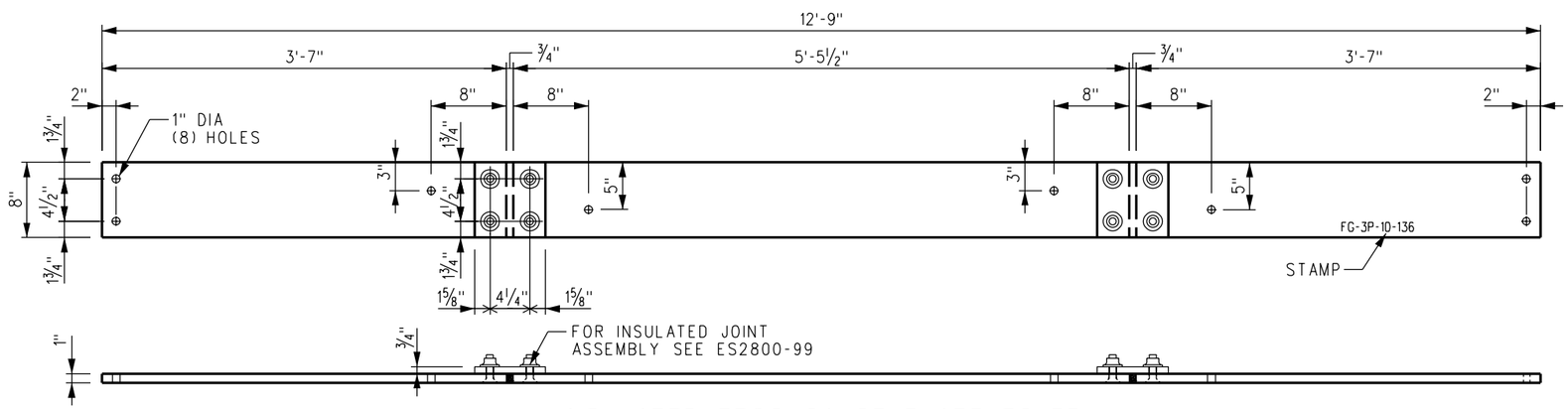

INSULATED FROG GAUGE PLATE FG-3P

1" x 8" - FLAT

REV.	DATE	DESCRIPTION	DES.	ENG.
X	XX-XX-XX	REVISION	XX	XX

DRAWN BY: A. CARLOS DATE: 03/31/2011

ASSISTANT DIRECTOR: STANDARDS & DESIGN

DIRECTOR OF ENGINEERING AND CONSTRUCTION

SCRRA ENGINEERING STANDARDS ARE INTENDED FOR SCRRA APPROVED USES ONLY. FOR NON-SCRRA APPROVED USES:
SCRRA SHALL NOT BE RESPONSIBLE FOR THE ACCURACY OR COMPLETENESS OF THE DATA OR INFORMATION CONTAINED HEREIN. THE SELECTION AND USE OF THESE STANDARDS IS THE SOLE RESPONSIBILITY OF THE USER AND SHOULD NOT BE USED WITHOUT CONSULTING A REGISTERED PROFESSIONAL ENGINEER. ALL WARRANTIES AND REPRESENTATIONS OF ANY KIND ARE DISCLAIMED. ANYONE MAKING USE OF THIS INFORMATION AGREES THAT IT ASSUMES ALL LIABILITY ARISING FROM SUCH USE. NO PART OF THESE STANDARDS SHOULD BE REPRODUCED OR DISTRIBUTED IN ANY FORM OR BY ANY MEANS WITHOUT THE PRIOR WRITTEN PERMISSION OF SCRRA. ALL RIGHTS RESERVED.

METROLINK®
SOUTHERN CALIFORNIA REGIONAL RAIL AUTHORITY
ONE GATEWAY PLAZA, 12TH FLOOR, L. A., CA. 90012

ENGINEERING STANDARDS

NO 10–136 LB RE
INSULATED FROG GAUGE PLATE DETAILS
TIMBER TIE TURNOUT

STANDARD 2802
SCALE: NTS
REVISION –
SHEET 1 OF 1
CADD FILE: ES2802–45

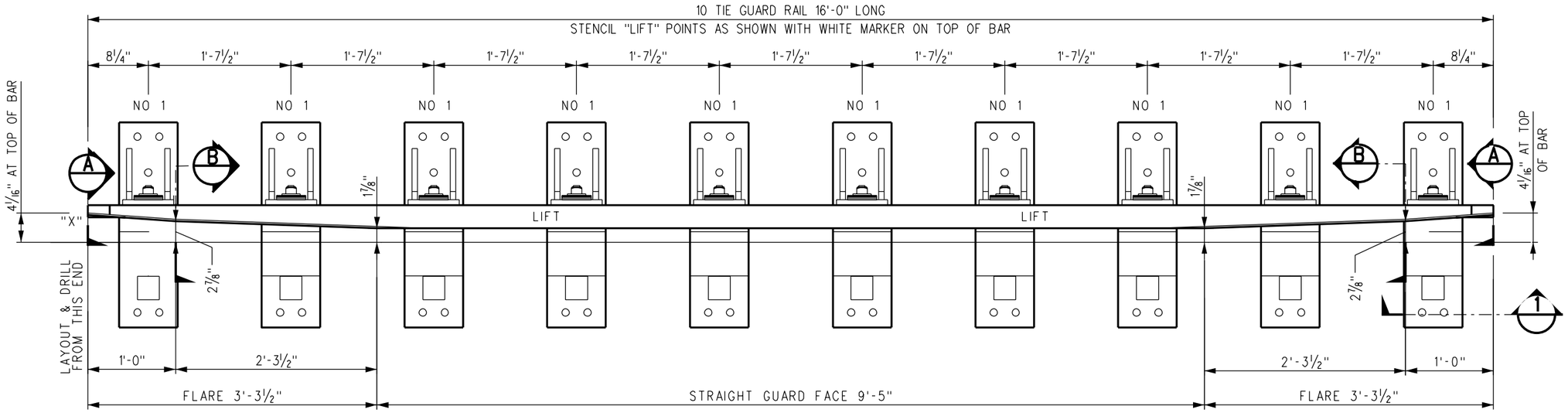

ASSEMBLED 16'-0" GUARD RAIL

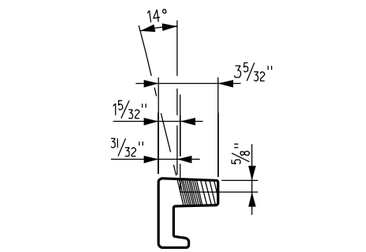

SECTION A

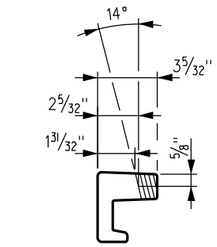

SECTION B

COLLECTIVE DRILLING FROM END OF GUARD BAR MARKED "X"

"X" 8¼" x 2'-3¾" x 3'-11¼" x 5'-6¾" x 7'-2¼" x 8'-9¾" x 10'-5¼" x 12'-0¾" x 13'-8¼" x 15'-3¾"

HOLES 1" DIA - 1⅜" ABOVE BASE

NOTES:

1. GUARD RAIL SECTION U.I.C. 33; (U69) UIC 860.0 GRADE 90A (GUARD FACE BRINELL 319 MIN)
2. BASE PLATE, BRACKET AND SHIMS MILD STEEL PER AREMA SPECIFICATION M7.
3. GUARD RAIL BOLT AND NUT PER AREMA SPECIFICATION M11. EXCEPT BOLT TO GRADE 8 AND NUT TO BE SECURITY LOCKNUT.
4. WORKMANSHIP AND TOLERANCES PER AREMA SPECIFICATIONS FOR SPECIAL TRACKWORK.
5. WELDING PER ANSI NO AWS D1.1-92 OR LATEST REVISION.

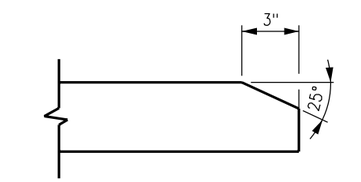

DETAIL 1

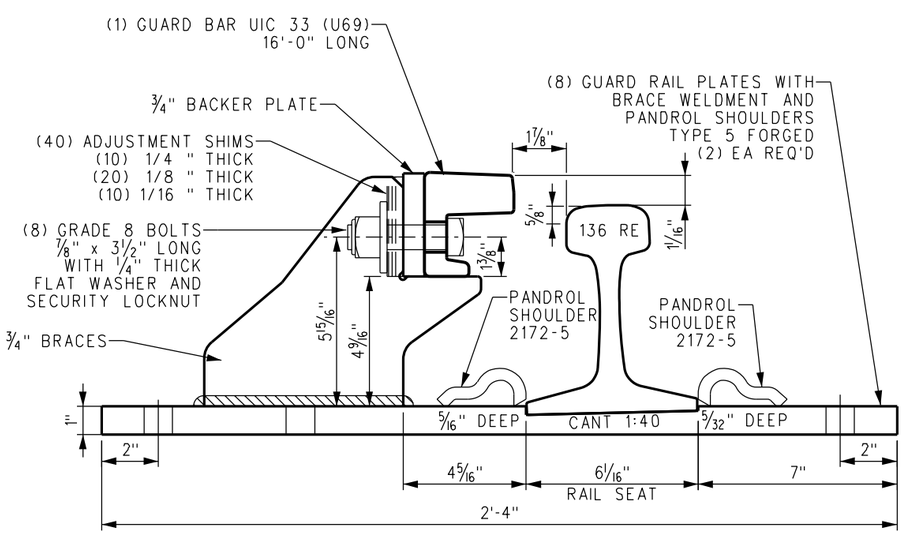

TYPICAL PLATE DETAIL

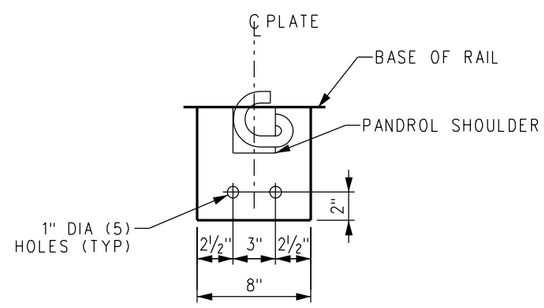

TYPICAL PLATE PUNCHING DETAIL

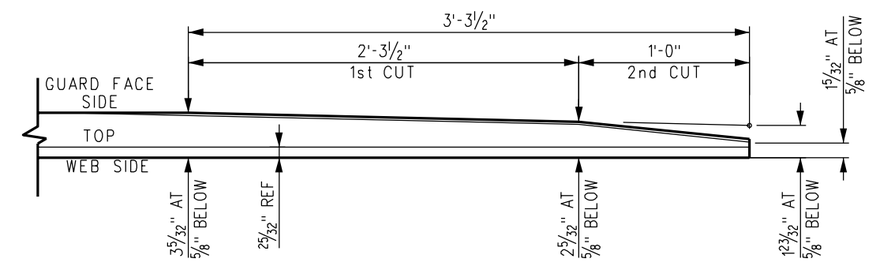

FLARE DETAIL

BREAK SHARP CORNERS OF ALL MACHINED SURFACES

REV.	DATE	DESCRIPTION	DES.	ENG.
X	XX-XX-XX	REVISION	XX	XX

DRAWN BY: A. CARLOS DATE: 03/31/2011

ASSISTANT DIRECTOR: STANDARDS & DESIGN

DIRECTOR OF ENGINEERING AND CONSTRUCTION

SCRRA ENGINEERING STANDARDS ARE INTENDED FOR SCRRA APPROVED USES ONLY. FOR NON-SCRRA APPROVED USES:
SCRRA SHALL NOT BE RESPONSIBLE FOR THE ACCURACY OR COMPLETENESS OF THE DATA OR INFORMATION CONTAINED HEREIN. THE SELECTION AND USE OF THESE STANDARDS IS THE SOLE RESPONSIBILITY OF THE USER AND SHOULD NOT BE USED WITHOUT CONSULTING A REGISTERED PROFESSIONAL ENGINEER. ALL WARRANTIES AND REPRESENTATIONS OF ANY KIND ARE DISCLAIMED. ANYONE MAKING USE OF THIS INFORMATION AGREES THAT IT ASSUMES ALL LIABILITY ARISING FROM SUCH USE. NO PART OF THESE STANDARDS SHOULD BE REPRODUCED OR DISTRIBUTED IN ANY FORM OR BY ANY MEANS WITHOUT THE PRIOR WRITTEN PERMISSION OF SCRRA. ALL RIGHTS RESERVED.

METROLINK®
SOUTHERN CALIFORNIA REGIONAL RAIL AUTHORITY
ONE GATEWAY PLAZA, 12TH FLOOR, L. A., CA. 90012

ENGINEERING STANDARDS

NO 10 136 LB RE RBM FROG GUARD RAIL DETAILS

STANDARD 2802
SCALE: NTS
REVISION –
SHEET 1 OF 1
CADD FILE: ES2802-50

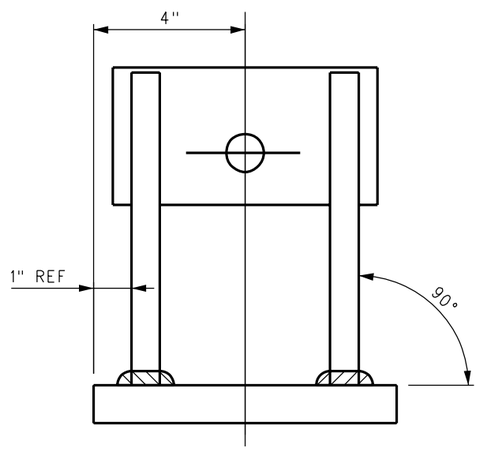

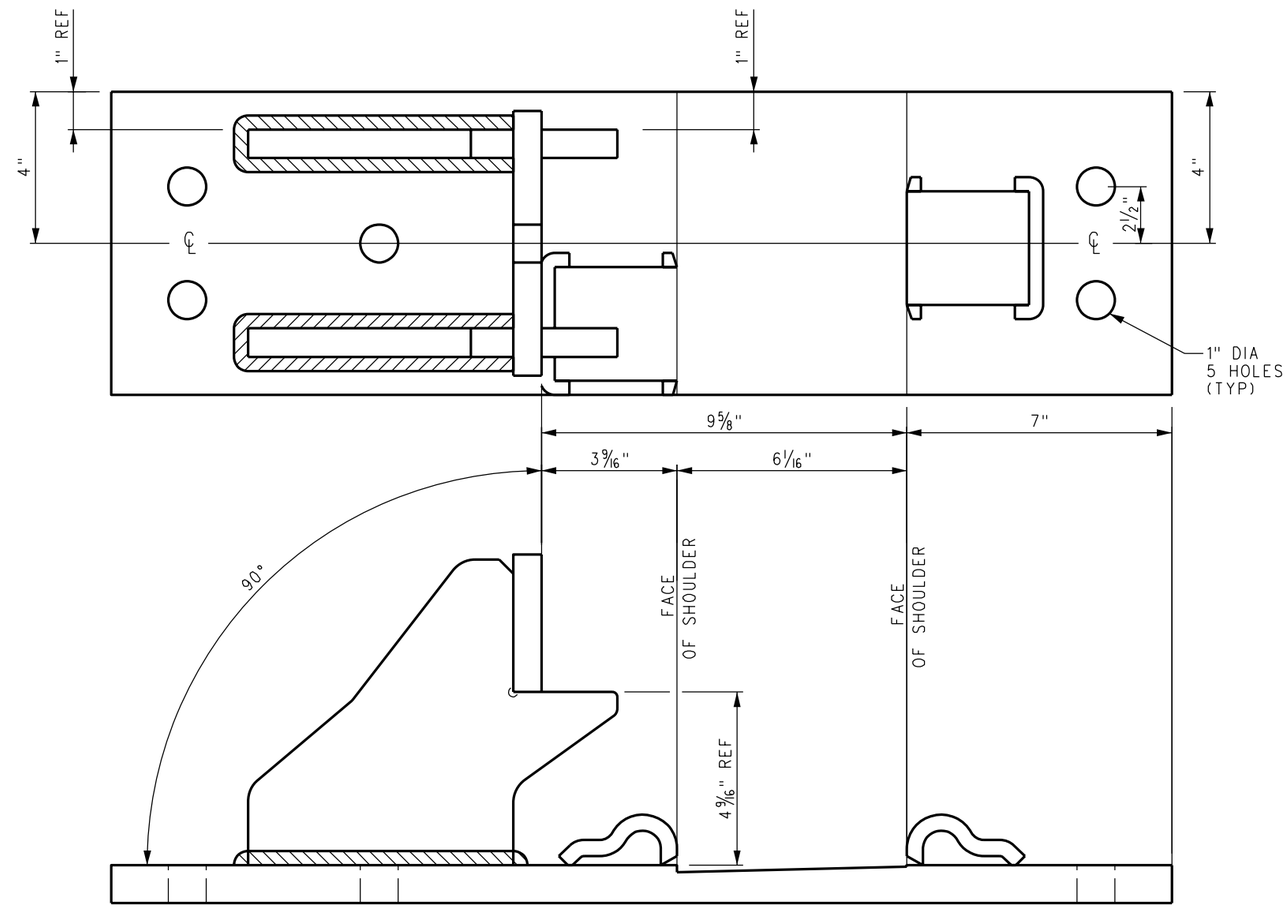

GUARD RAIL PLATE NO 1

NOTES:

1. TACK WELD BRACE WELDMENT IN PLACE ON PLATE FIXTURED TO DIMENSIONS SHOWN.
2. SHOULDERS ARE PANDROL TYPE 1 FORGED.

X	XX-XX-XX	REVISION	XX	XX
REV.	DATE	DESCRIPTION	DES.	ENG.

DRAWN BY: HDR DATE: 03/31/2011

ASSISTANT DIRECTOR: STANDARDS & DESIGN

DIRECTOR OF ENGINEERING AND CONSTRUCTION

SCRRA ENGINEERING STANDARDS ARE INTENDED FOR SCRRA APPROVED USES ONLY. FOR NON-SCRRA APPROVED USES:
SCRRA SHALL NOT BE RESPONSIBLE FOR THE ACCURACY OR COMPLETENESS OF THE DATA OR INFORMATION CONTAINED HEREIN. THE SELECTION AND USE OF THESE STANDARDS IS THE SOLE RESPONSIBILITY OF THE USER AND SHOULD NOT BE USED WITHOUT CONSULTING A REGISTERED PROFESSIONAL ENGINEER. ALL WARRANTIES AND REPRESENTATIONS OF ANY KIND ARE DISCLAIMED. ANYONE MAKING USE OF THIS INFORMATION AGREES THAT IT ASSUMES ALL LIABILITY ARISING FROM SUCH USE. NO PART OF THESE STANDARDS SHOULD BE REPRODUCED OR DISTRIBUTED IN ANY FORM OR BY ANY MEANS WITHOUT THE PRIOR WRITTEN PERMISSION OF SCRRA. ALL RIGHTS RESERVED.

METROLINK®
SOUTHERN CALIFORNIA REGIONAL RAIL AUTHORITY
ONE GATEWAY PLAZA, 12TH FLOOR, L. A., CA. 90012

ENGINEERING STANDARDS

NO 10–136 LB RE
1:40 CANTED PLATE WELDMENT
FOR RAISED U69 GUARD RAIL

STANDARD 2802
SCALE: NTS
REVISION –
SHEET 1 OF 1
CADD FILE: ES2802–53

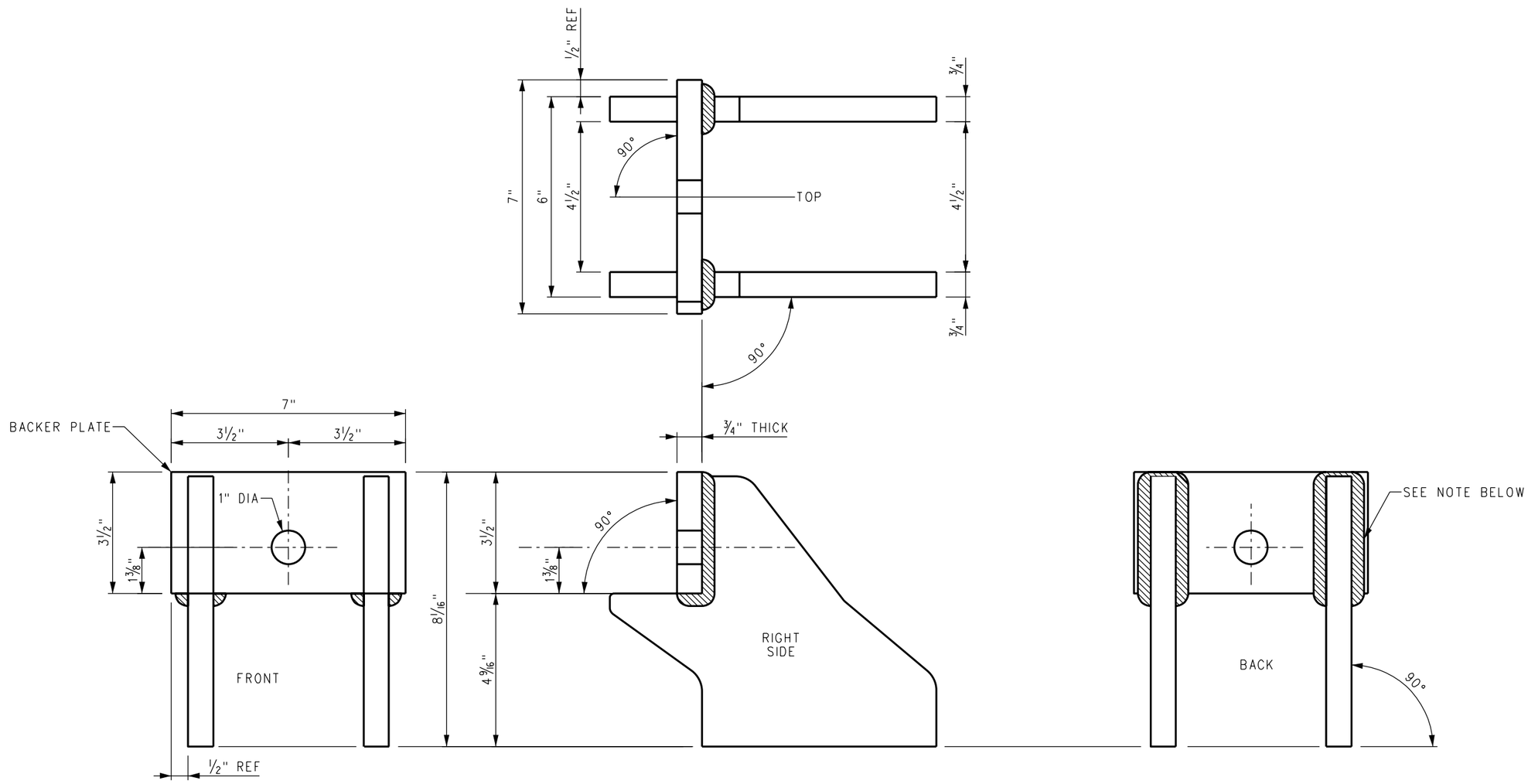

BRACE WELDMENT ASSEMBLY

BRACE WELDMENT ASSEMBLY

BRACE BOTTOMS TO BE STRAIGHT AND TRUE

AND MUST BE ALIGNED

NOTES:

1. SEE ES2802-55 FOR BRACE DETAIL DIMENSIONS.
2. BACKER PLATE MATERIAL: HR STEEL ASTM A663 GRADE 60 (GRADE A-36 ACCEPTABLE)

REV.	DATE	DESCRIPTION	DES.	ENG.
X	XX-XX-XX	REVISION	XX	XX

DRAWN BY: HDR DATE: 03/31/2011

ASSISTANT DIRECTOR: STANDARDS & DESIGN

DIRECTOR OF ENGINEERING AND CONSTRUCTION

SCRRA ENGINEERING STANDARDS ARE INTENDED FOR SCRRA APPROVED USES ONLY. FOR NON-SCRRA APPROVED USES:
SCRRA SHALL NOT BE RESPONSIBLE FOR THE ACCURACY OR COMPLETENESS OF THE DATA OR INFORMATION CONTAINED HEREIN. THE SELECTION AND USE OF THESE STANDARDS IS THE SOLE RESPONSIBILITY OF THE USER AND SHOULD NOT BE USED WITHOUT CONSULTING A REGISTERED PROFESSIONAL ENGINEER. ALL WARRANTIES AND REPRESENTATIONS OF ANY KIND ARE DISCLAIMED. ANYONE MAKING USE OF THIS INFORMATION AGREES THAT IT ASSUMES ALL LIABILITY ARISING FROM SUCH USE. NO PART OF THESE STANDARDS SHOULD BE REPRODUCED OR DISTRIBUTED IN ANY FORM OR BY ANY MEANS WITHOUT THE PRIOR WRITTEN PERMISSION OF SCRRA. ALL RIGHTS RESERVED.

METROLINK®
SOUTHERN CALIFORNIA REGIONAL RAIL AUTHORITY
ONE GATEWAY PLAZA, 12TH FLOOR, L. A., CA. 90012

ENGINEERING STANDARDS

NO 10–136 LB RE 1:40 CANTED,
BACKER PLATE AND BRACE WELDMENT
FOR RAISED U69 GUARD RAIL

STANDARD 2802
SCALE: NTS
REVISION –
SHEET 1 OF 1
CADD FILE: ES2802–54

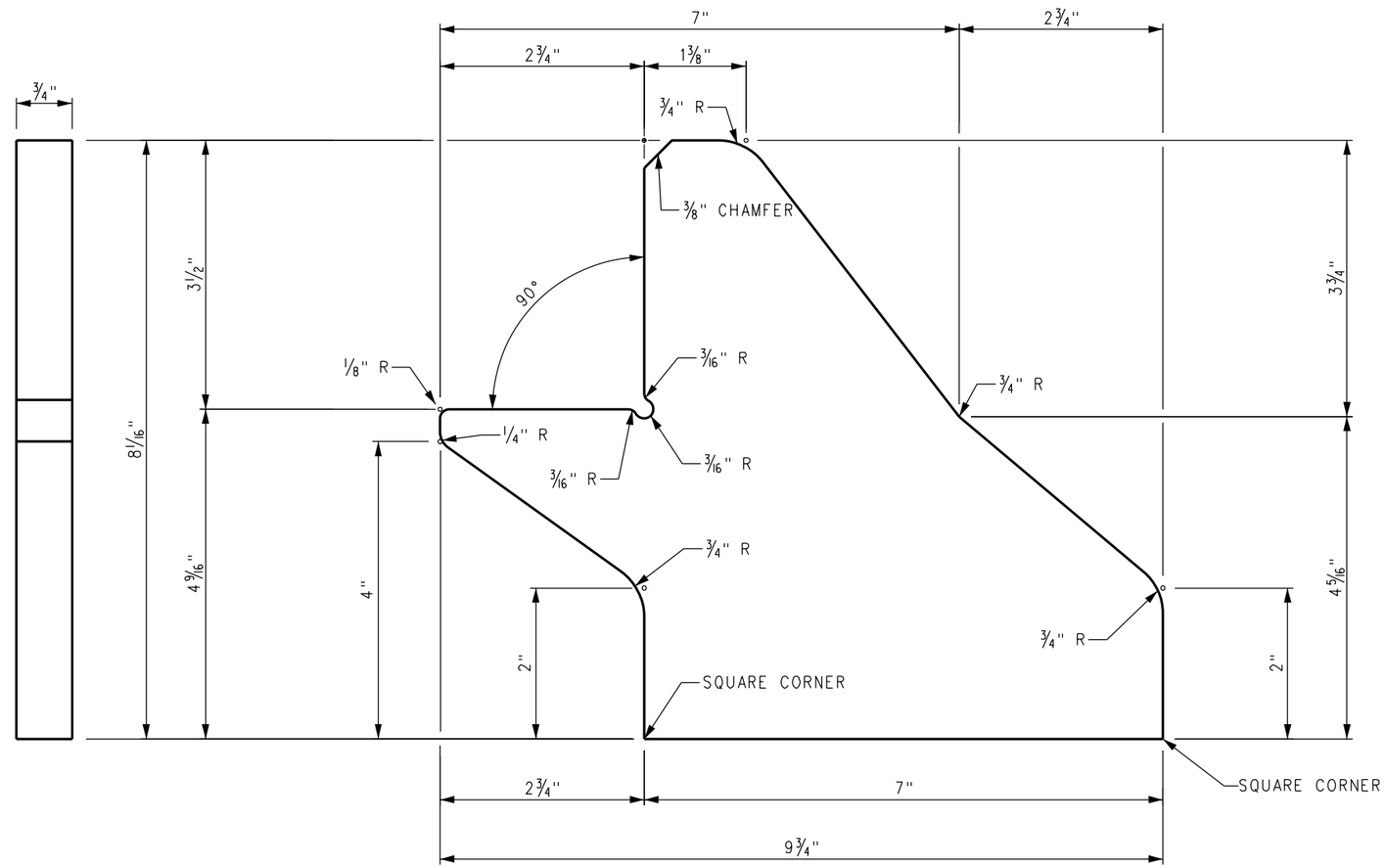

BRACE DETAIL

(2) PIECES REQ'D PER PLATE ASSEMBLY

NOTES:

1. MATERIAL: HR STEEL ASTM A663 GRADE 60 (GRADE A-36 ACCEPTABLE).

REV.	DATE	DESCRIPTION	DES.	ENG.
X	XX-XX-XX	REVISION	XX	XX

DRAWN BY: HDR DATE: 03/31/2011

ASSISTANT DIRECTOR: STANDARDS & DESIGN

DIRECTOR OF ENGINEERING AND CONSTRUCTION

SCRRA ENGINEERING STANDARDS ARE INTENDED FOR SCRRA APPROVED USES ONLY. FOR NON-SCRRA APPROVED USES: SCRRA SHALL NOT BE RESPONSIBLE FOR THE ACCURACY OR COMPLETENESS OF THE DATA OR INFORMATION CONTAINED HEREIN. THE SELECTION AND USE OF THESE STANDARDS IS THE SOLE RESPONSIBILITY OF THE USER AND SHOULD NOT BE USED WITHOUT CONSULTING A REGISTERED PROFESSIONAL ENGINEER. ALL WARRANTIES AND REPRESENTATIONS OF ANY KIND ARE DISCLAIMED. ANYONE MAKING USE OF THIS INFORMATION AGREES THAT IT ASSUMES ALL LIABILITY ARISING FROM SUCH USE. NO PART OF THESE STANDARDS SHOULD BE REPRODUCED OR DISTRIBUTED IN ANY FORM OR BY ANY MEANS WITHOUT THE PRIOR WRITTEN PERMISSION OF SCRRA. ALL RIGHTS RESERVED.

METROLINK®

SOUTHERN CALIFORNIA REGIONAL RAIL AUTHORITY
ONE GATEWAY PLAZA, 12TH FLOOR, L. A., CA. 90012

ENGINEERING STANDARDS

NO 10–136 LB RE 1:40 CANTED,
BRACE DETAIL
FOR RAISED U69 GUARD RAIL

STANDARD: 2802
SCALE: NTS
REVISION: –
SHEET: 1 OF 1
CADD FILE: ES2802–55

UserName=> carlosa Date Plotted: 10/5/2011 3:25:35 PM Plot Driver=> S:\Plot Drivers\pdf.plt FileName=> s:\V8EngStds\2000\Turnouts\No 10 Turnout\ES2802-55.dgn

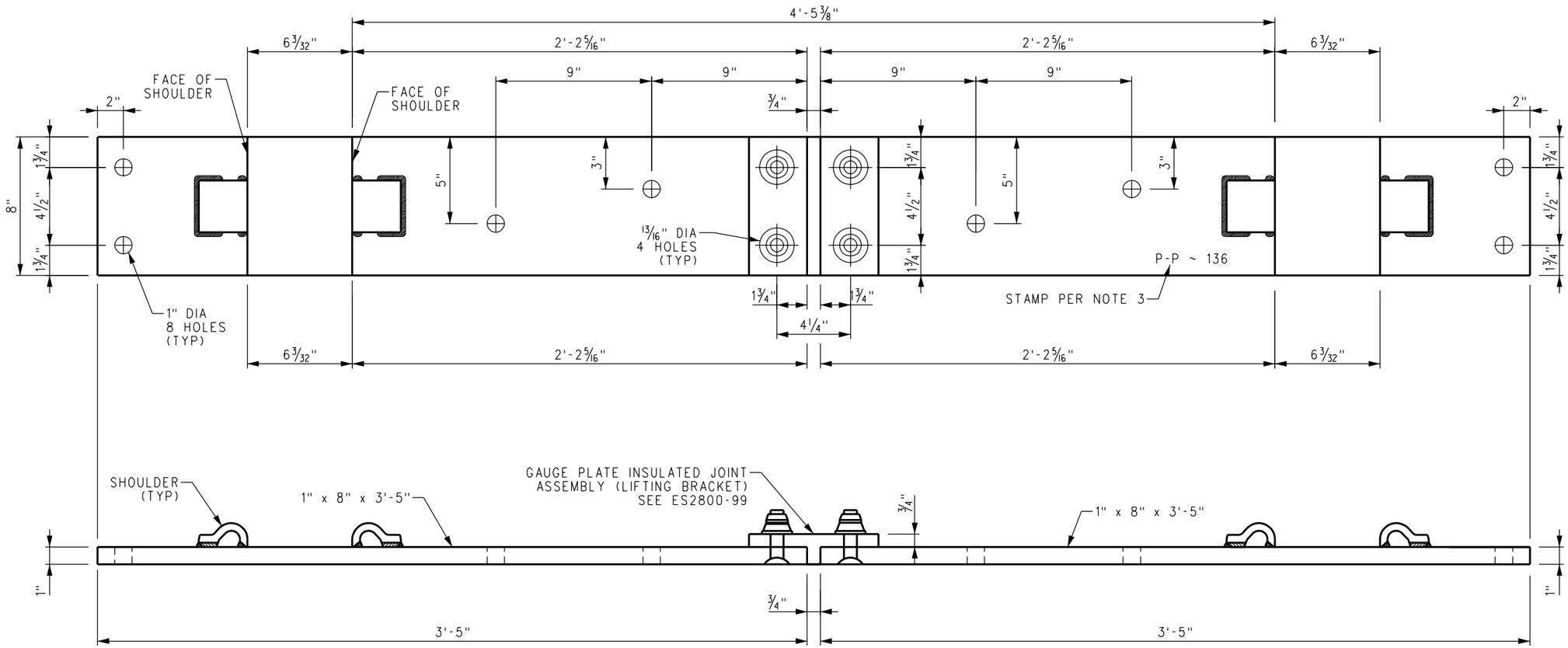

INSULATED GAUGE PLATE P-P ~ 1" x 8" ~ FLAT

NOTES:

1. METAL AREAS TO BE PAINTED MUST BE CLEANED OF ALL IMPURITIES.
2. ANCHOR HOLE SIZE IS 1" DIA ± 1/32".
3. STAMP PLATE AS SHOWN W/ PROPER PL NUMBER AND WEIGHT OF RAIL.
4. ALL SHOULDERS ARE PANDROL TYPE 1 FORGED.

REV.	DATE	DESCRIPTION	DES.	ENG.
X	XX-XX-XX	REVISION	XX	XX

DRAWN BY: HDR DATE: 03/31/2011

ASSISTANT DIRECTOR: STANDARDS & DESIGN

DIRECTOR OF ENGINEERING AND CONSTRUCTION

SCRRA ENGINEERING STANDARDS ARE INTENDED FOR SCRRA APPROVED USES ONLY. FOR NON-SCRRA APPROVED USES:
SCRRA SHALL NOT BE RESPONSIBLE FOR THE ACCURACY OR COMPLETENESS OF THE DATA OR INFORMATION CONTAINED HEREIN. THE SELECTION AND USE OF THESE STANDARDS IS THE SOLE RESPONSIBILITY OF THE USER AND SHOULD NOT BE USED WITHOUT CONSULTING A REGISTERED PROFESSIONAL ENGINEER. ALL WARRANTIES AND REPRESENTATIONS OF ANY KIND ARE DISCLAIMED. ANYONE MAKING USE OF THIS INFORMATION AGREES THAT IT ASSUMES ALL LIABILITY ARISING FROM SUCH USE. NO PART OF THESE STANDARDS SHOULD BE REPRODUCED OR DISTRIBUTED IN ANY FORM OR BY ANY MEANS WITHOUT THE PRIOR WRITTEN PERMISSION OF SCRRA. ALL RIGHTS RESERVED.

METROLINK®
SOUTHERN CALIFORNIA REGIONAL RAIL AUTHORITY
ONE GATEWAY PLAZA, 12TH FLOOR, L. A., CA. 90012

ENGINEERING STANDARDS

NO 10–136 LB RE
INSULATED GAUGE PLATE P–P

STANDARD 2802
SCALE: NTS
REVISION –
SHEET 1 OF 1
CADD FILE: ES2802–80

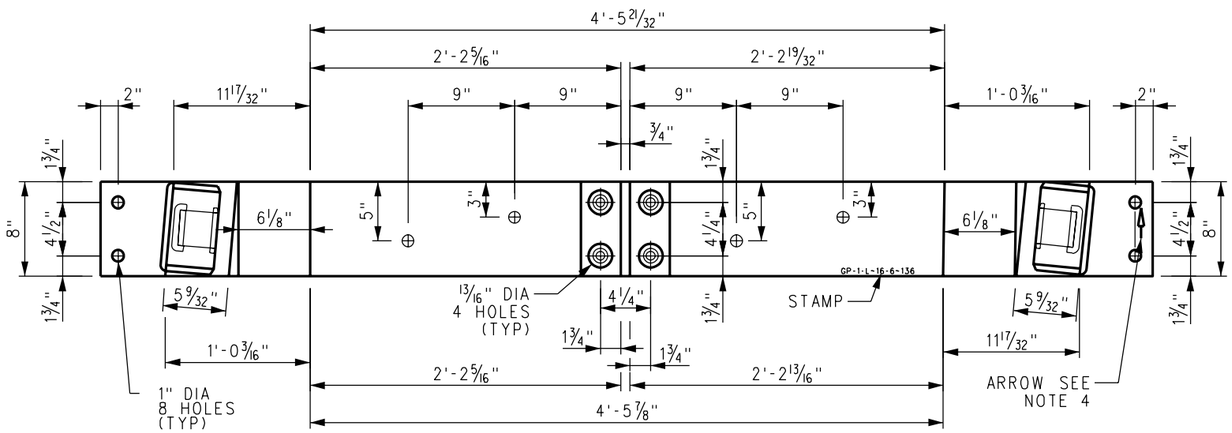

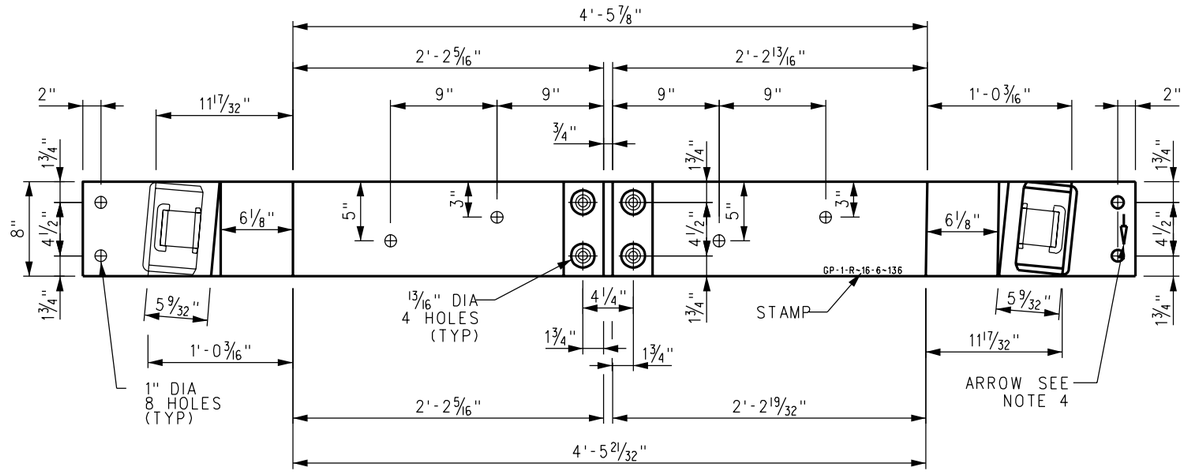

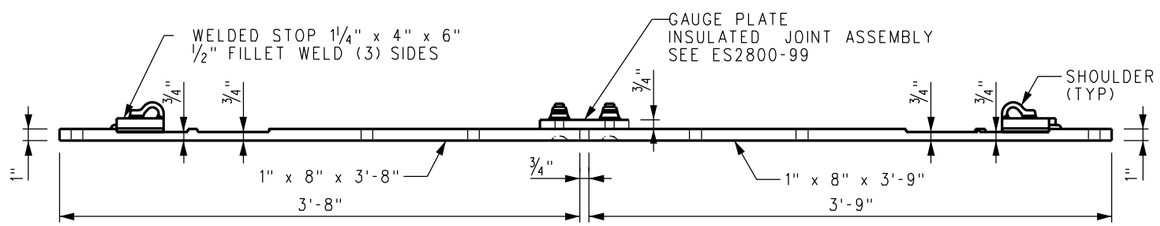

INSULATED SLIDE GAUGE PLATE GP-1L ~ 1" x 8" ~ MILLED, W/ BETHLEHEM BOLTLESS BRACES

GAUGE AT PT = 4'-8 1/2", HEEL SPREAD = 6 1/4", PT = 0"
GAUGE PLATE INSULATED JOINT TO BE "3M" TYPE, HUCKED TO PLATE.

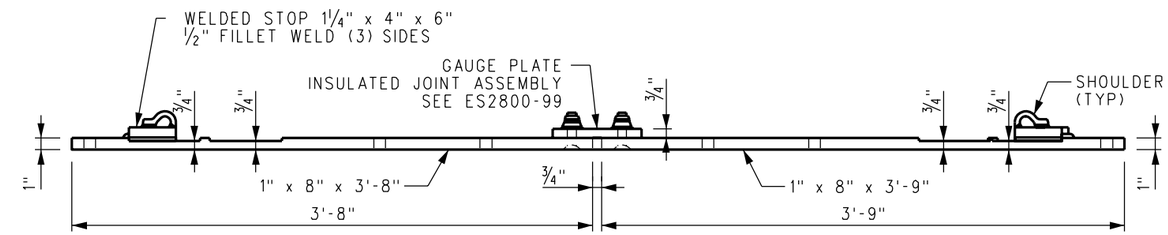

INSULATED SLIDE GAGE PLATE GP-1R ~ 1" x 8" ~ MILLED W/ BETHLEHEM BOLTLESS BRACES

GAUGE AT PT = 4'-8 1/2", HEEL SPREAD = 6 1/4", PT = 0"
GAUGE PLATE INSULATED JOINT TO BE "3M" TYPE, HUCKED TO PLATE.

NOTES:

1. METAL AREAS TO BE PAINTED MUST BE CLEANED OF ALL IMPURITIES.
2. ANCHOR HOLE SIZE IS 1" DIA ± 1/32".
3. STAMP PLATE AS SHOWN W/ PROPER PL NO ~ SWITCH LENGTH & WEIGHT OF RAIL.
4. PAINT MARK EACH PLATE WITH AN ARROW POINTING TOWARDS SWITCH POINT.
5. ALL SHOULDERS ARE PANDROL TYPE 1 FORGED.
6. FURNISH THE FOLLOWING WITH EACH PLATE:
   (2) BETHLEHEM BRACES
   (2) BETHLEHEM SERRATED WASHERS
   (2) PANDROL CLIP ES2362.

REV.	DATE	DESCRIPTION	DES.	ENG.
X	XX-XX-XX	REVISION	XX	XX

DRAWN BY: A. CARLOS DATE: 03/31/2011

ASSISTANT DIRECTOR: STANDARDS & DESIGN

DIRECTOR OF ENGINEERING AND CONSTRUCTION

SCRRA ENGINEERING STANDARDS ARE INTENDED FOR SCRRA APPROVED USES ONLY. FOR NON-SCRRA APPROVED USES:
SCRRA SHALL NOT BE RESPONSIBLE FOR THE ACCURACY OR COMPLETENESS OF THE DATA OR INFORMATION CONTAINED HEREIN. THE SELECTION AND USE OF THESE STANDARDS IS THE SOLE RESPONSIBILITY OF THE USER AND SHOULD NOT BE USED WITHOUT CONSULTING A REGISTERED PROFESSIONAL ENGINEER. ALL WARRANTIES AND REPRESENTATIONS OF ANY KIND ARE DISCLAIMED. ANYONE MAKING USE OF THIS INFORMATION AGREES THAT IT ASSUMES ALL LIABILITY ARISING FROM SUCH USE. NO PART OF THESE STANDARDS SHOULD BE REPRODUCED OR DISTRIBUTED IN ANY FORM OR BY ANY MEANS WITHOUT THE PRIOR WRITTEN PERMISSION OF SCRRA. ALL RIGHTS RESERVED.

METROLINK®
SOUTHERN CALIFORNIA REGIONAL RAIL AUTHORITY
ONE GATEWAY PLAZA, 12TH FLOOR, L. A., CA. 90012

ENGINEERING STANDARDS

NO 10–136 LB RE
INSULATED GAUGE PLATE GP–1L AND GP–1R

STANDARD 2802
SCALE: NTS
REVISION –
SHEET 1 OF 1
CADD FILE: ES2802–81

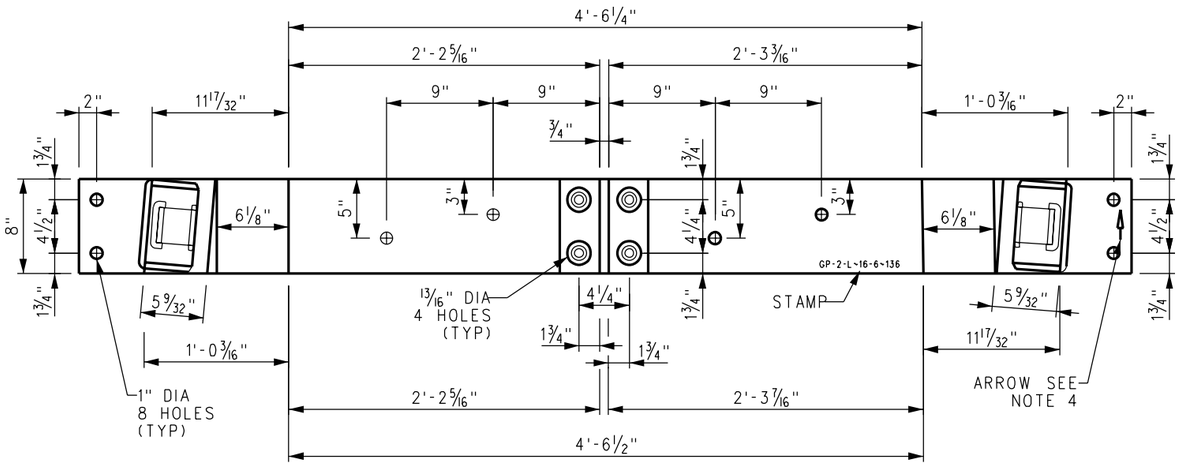

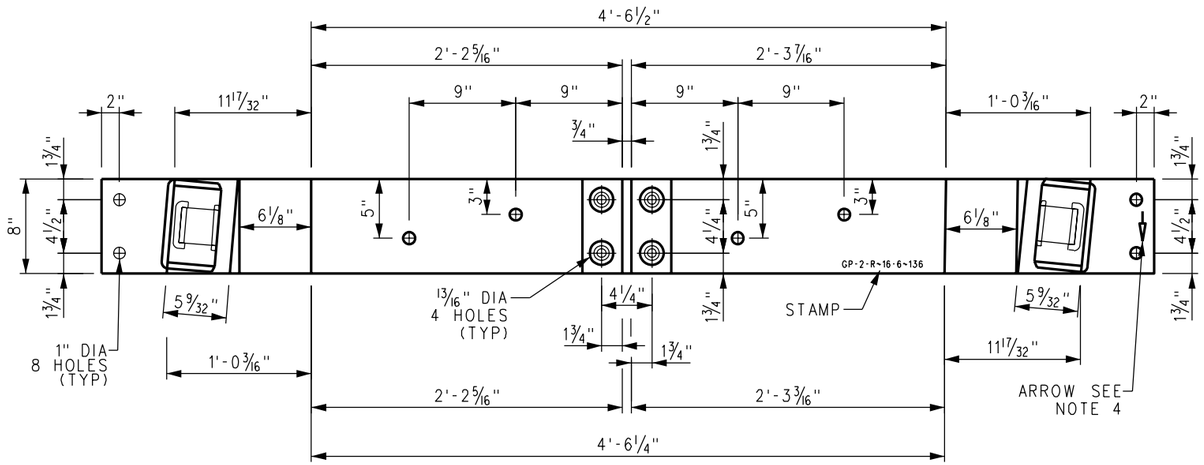

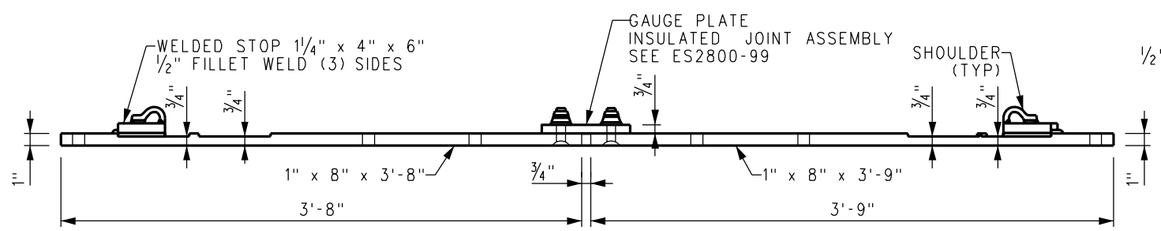

INSULATED SLIDE GAUGE PLATE GP-2L ~ 1" x 8" ~ MILLED, W/ BETHLEHEM BOLTLESS BRACES

GAUGE AT PT = 4'-8 1/2", HEEL SPREAD = 6 1/4", PT = 1/4"
GAUGE PLATE INSULATED JOINT TO BE "3M" TYPE, HUCKED TO PLATE

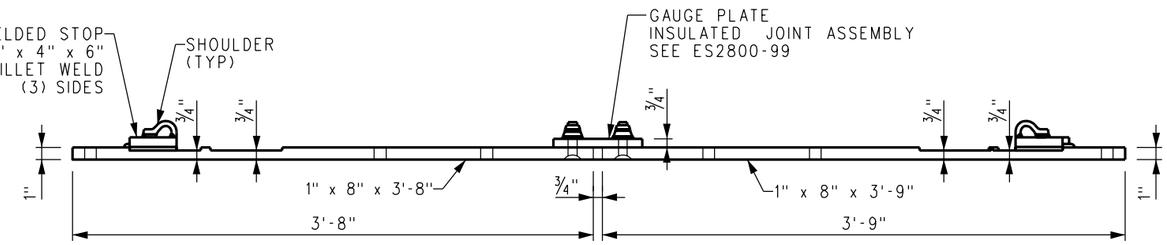

INSULATED SLIDE GAUGE PLATE GP-2R ~ 1" x 8" ~ MILLED, W/ BETHLEHEM BOLTLESS BRACES

GAUGE AT PT = 4'-8 1/2", HEEL SPREAD = 6 1/4", PT = 1/4"
GAUGE PLATE INSULATED JOINT TO BE "3M" TYPE, HUCKED TO PLATE

NOTES:

1. METAL AREAS TO BE PAINTED MUST BE CLEANED OF ALL IMPURITIES.
2. ANCHOR HOLE SIZE IS 1" DIA ± 1/32".
3. STAMP PLATE AS SHOWN W/ PROPER PL NO ~ SWITCH LENGTH & WEIGHT OF RAIL.
4. PAINT MARK EACH PLATE WITH AN ARROW POINTING TOWARDS SWITCH POINT.
5. FURNISH THE FOLLOWING WITH EACH PLATE:
   (2) BETHLEHEM BRACES
   (2) BETHLEHEM SERRATED WASHERS
   (2) PANDROL CLIP ES2362.
6. SHOULDERS TO PANDROL TYPE 1 FORGED.

REV.	DATE	DESCRIPTION	DES.	ENG.
X	XX-XX-XX	REVISION	XX	XX

DRAWN BY: A. CARLOS DATE: 03/31/2011

ASSISTANT DIRECTOR: STANDARDS & DESIGN

DIRECTOR OF ENGINEERING AND CONSTRUCTION

SCRRA ENGINEERING STANDARDS ARE INTENDED FOR SCRRA APPROVED USES ONLY. FOR NON-SCRRA APPROVED USES: SCRRA SHALL NOT BE RESPONSIBLE FOR THE ACCURACY OR COMPLETENESS OF THE DATA OR INFORMATION CONTAINED HEREIN. THE SELECTION AND USE OF THESE STANDARDS IS THE SOLE RESPONSIBILITY OF THE USER AND SHOULD NOT BE USED WITHOUT CONSULTING A REGISTERED PROFESSIONAL ENGINEER. ALL WARRANTIES AND REPRESENTATIONS OF ANY KIND ARE DISCLAIMED. ANYONE MAKING USE OF THIS INFORMATION AGREES THAT IT ASSUMES ALL LIABILITY ARISING FROM SUCH USE. NO PART OF THESE STANDARDS SHOULD BE REPRODUCED OR DISTRIBUTED IN ANY FORM OR BY ANY MEANS WITHOUT THE PRIOR WRITTEN PERMISSION OF SCRRA. ALL RIGHTS RESERVED.

METROLINK®
SOUTHERN CALIFORNIA REGIONAL RAIL AUTHORITY
ONE GATEWAY PLAZA, 12TH FLOOR, L. A., CA. 90012

ENGINEERING STANDARDS

NO 10–136 LB RE
INSULATED GAUGE PLATE GP–2L AND GP–2R

STANDARD: 2802
SCALE: NTS
REVISION: –
SHEET: 1 OF 2
CADD FILE: ES2802–82

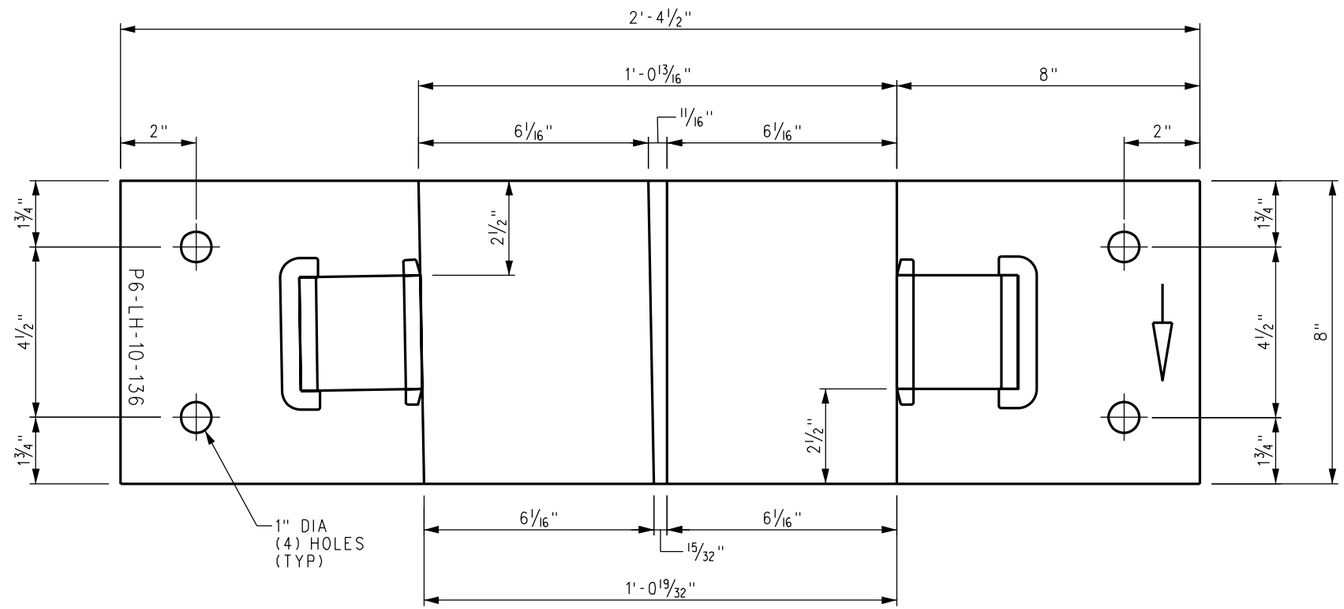

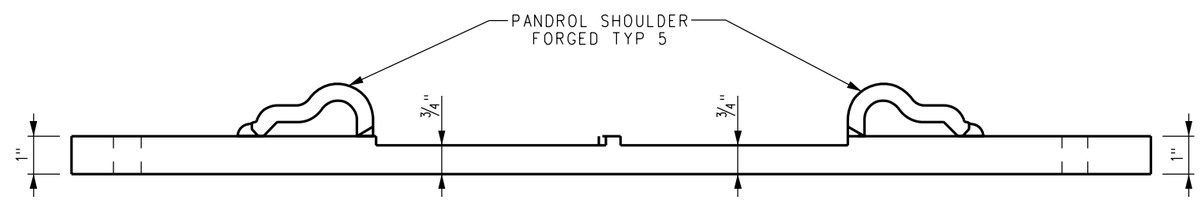

HEEL PLATE P6-LH

1" x 8" x 2'-4½" (MILLED) ~ W/ PANDROLS
(2 EA) FOR LEFT HAND TURNOUT

NOTES:

1. STAMP PLATE: "RESPECTIVE PLATE NUMBER, NO 10, 136".
2. ANCHOR HOLE SIZE IS 1" DIA ± 1/32".
3. PAINT MARK EACH PLATE WITH ARROW POINTING TOWARDS SWITCH POINT.

REV.	DATE	DESCRIPTION	DES.	ENG.
X	XX-XX-XX	REVISION	XX	XX

DRAWN BY: A. CARLOS DATE: 03/31/2011

ASSISTANT DIRECTOR: STANDARDS & DESIGN

DIRECTOR OF ENGINEERING AND CONSTRUCTION

SCRRA ENGINEERING STANDARDS ARE INTENDED FOR SCRRA APPROVED USES ONLY. FOR NON-SCRRA APPROVED USES:
SCRRA SHALL NOT BE RESPONSIBLE FOR THE ACCURACY OR COMPLETENESS OF THE DATA OR INFORMATION CONTAINED HEREIN. THE SELECTION AND USE OF THESE STANDARDS IS THE SOLE RESPONSIBILITY OF THE USER AND SHOULD NOT BE USED WITHOUT CONSULTING A REGISTERED PROFESSIONAL ENGINEER. ALL WARRANTIES AND REPRESENTATIONS OF ANY KIND ARE DISCLAIMED. ANYONE MAKING USE OF THIS INFORMATION AGREES THAT IT ASSUMES ALL LIABILITY ARISING FROM SUCH USE. NO PART OF THESE STANDARDS SHOULD BE REPRODUCED OR DISTRIBUTED IN ANY FORM OR BY ANY MEANS WITHOUT THE PRIOR WRITTEN PERMISSION OF SCRRA. ALL RIGHTS RESERVED.

METROLINK®
SOUTHERN CALIFORNIA REGIONAL RAIL AUTHORITY
ONE GATEWAY PLAZA, 12TH FLOOR, L. A., CA. 90012

ENGINEERING STANDARDS

NO 10–136 LB RE WOOD TIE TURNOUT
HEEL PLATE P6–LH

STANDARD 2802
SCALE: NTS
REVISION –
SHEET 1 OF 1
CADD FILE: ES2802–83

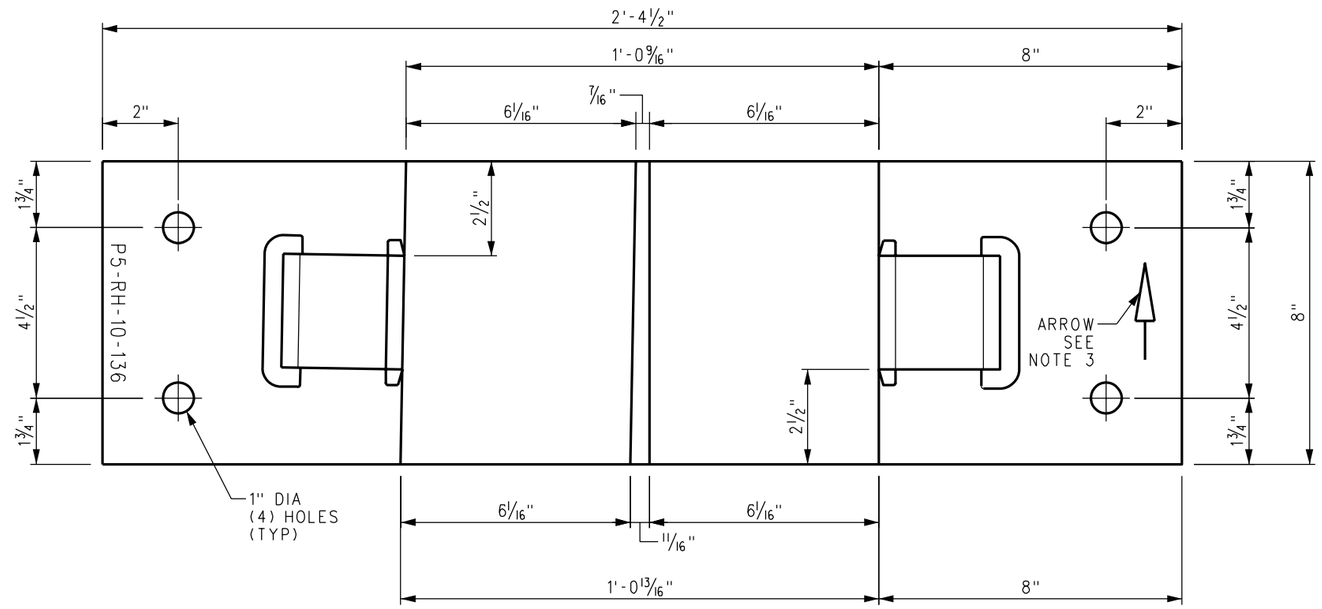

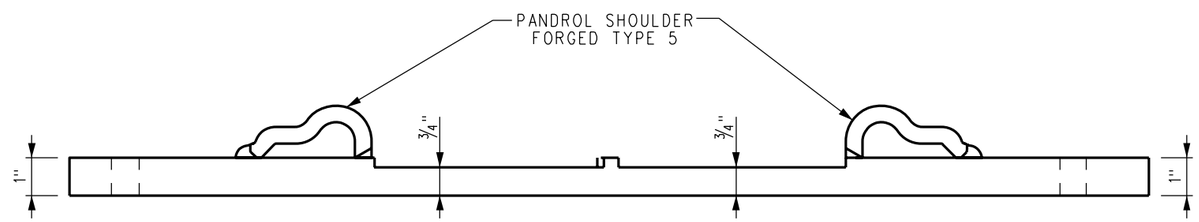

HEEL PLATE P5-RH

1" x 8" x 2'-4 1/2" (MILLED) ~ W/ PANDROLS
(2 EA) FOR RIGHT HAND TURNOUT

NOTES:

1. STAMP PLATE: "RESPECTIVE PLATE NUMBER, NO 10, 136".
2. ANCHOR HOLE SIZE IS 1" DIA ± 1/32".
3. PAINT MARK EACH PLATE WITH ARROW POINTING TOWARDS SWITCH POINT.

REV.	DATE	DESCRIPTION	DES.	ENG.
X	XX-XX-XX	REVISION	XX	XX

DRAWN BY: A. CARLOS DATE: 03/31/2011

ASSISTANT DIRECTOR: STANDARDS & DESIGN

DIRECTOR OF ENGINEERING AND CONSTRUCTION

SCRRA ENGINEERING STANDARDS ARE INTENDED FOR SCRRA APPROVED USES ONLY. FOR NON-SCRRA APPROVED USES:
SCRRA SHALL NOT BE RESPONSIBLE FOR THE ACCURACY OR COMPLETENESS OF THE DATA OR INFORMATION CONTAINED HEREIN. THE SELECTION AND USE OF THESE STANDARDS IS THE SOLE RESPONSIBILITY OF THE USER AND SHOULD NOT BE USED WITHOUT CONSULTING A REGISTERED PROFESSIONAL ENGINEER. ALL WARRANTIES AND REPRESENTATIONS OF ANY KIND ARE DISCLAIMED. ANYONE MAKING USE OF THIS INFORMATION AGREES THAT IT ASSUMES ALL LIABILITY ARISING FROM SUCH USE. NO PART OF THESE STANDARDS SHOULD BE REPRODUCED OR DISTRIBUTED IN ANY FORM OR BY ANY MEANS WITHOUT THE PRIOR WRITTEN PERMISSION OF SCRRA. ALL RIGHTS RESERVED.

METROLINK®
SOUTHERN CALIFORNIA REGIONAL RAIL AUTHORITY
ONE GATEWAY PLAZA, 12TH FLOOR, L. A., CA. 90012

ENGINEERING STANDARDS

NO 10–136 LB RE WOOD TIE TURNOUT
HEEL PLATE P5–RH

STANDARD 2802
SCALE: NTS
REVISION –
SHEET 1 OF 1
CADD FILE: ES2802–84

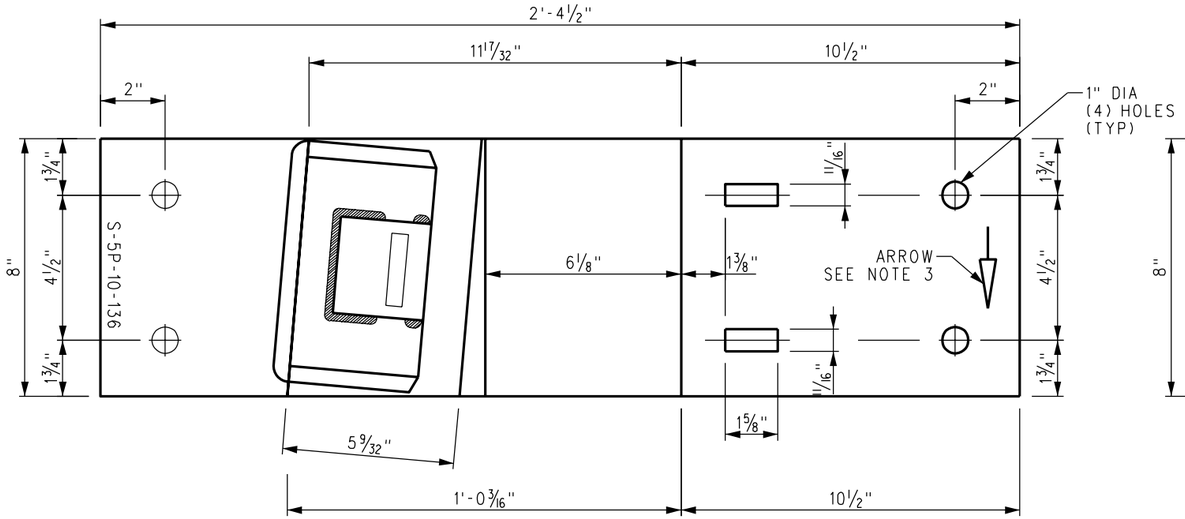

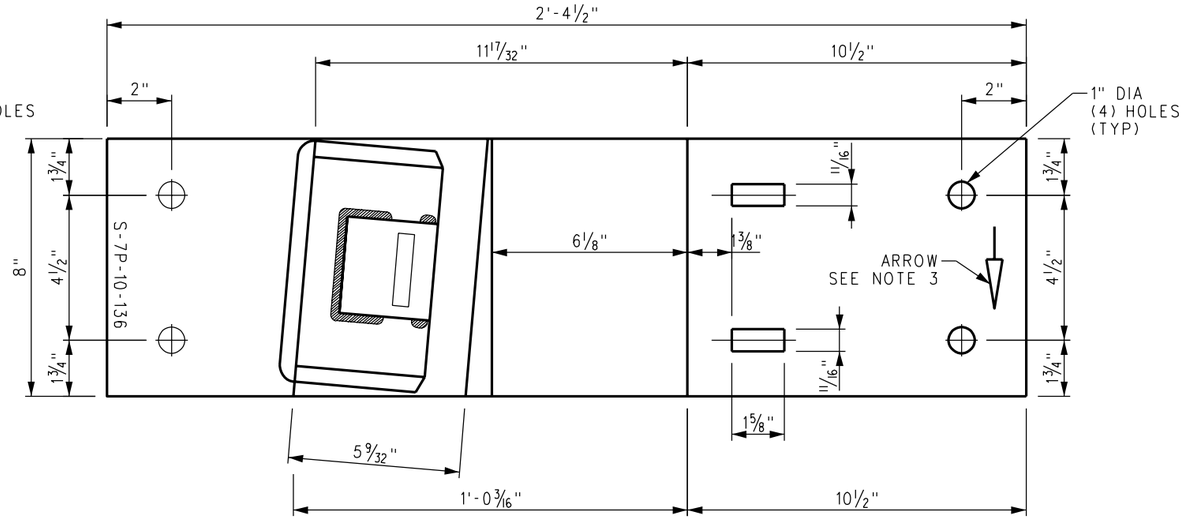

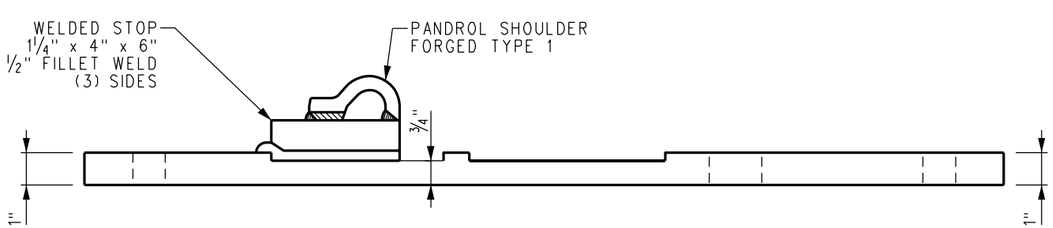

BRACE SLIDE PLATE S-5P

1" x 8" x 2'-4½" (MILLED)
⅛" RISER

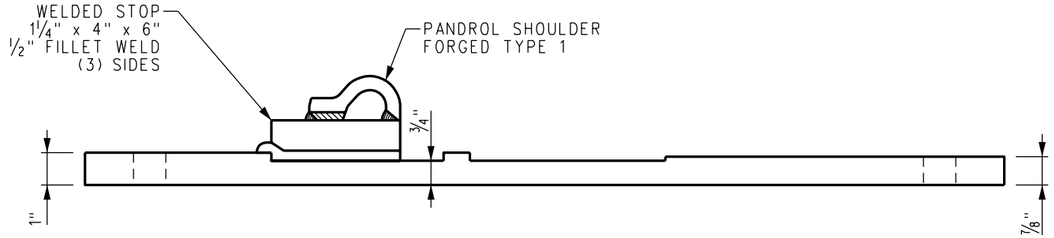

BRACE SLIDE PLATE S-7P

1" x 8" x 2'-4½" (MILLED)
⅛" RISER

FURNISH:

BETHLEHEM BOLTLESS ADJUSTABLE BRACE, CONSISTING OF:
(1) BETHLEHEM BRACE.
(1) BETHLEHEM SERRATED WASHER.

NOTES:

1. STAMP PLATE: "RESPECTIVE PLATE NUMBER, NO 10, 136".
2. ANCHOR HOLE SIZE IS 1" DIA ± 1/32".
3. PAINT MARK EACH PLATE WITH ARROW POINTING TOWARDS SWITCH POINT.

REV.	DATE	DESCRIPTION	DES.	ENG.
X	XX-XX-XX	REVISION	XX	XX

DRAWN BY: A. CARLOS DATE: 03/31/2011

ASSISTANT DIRECTOR: STANDARDS & DESIGN

DIRECTOR OF ENGINEERING AND CONSTRUCTION

SCRRA ENGINEERING STANDARDS ARE INTENDED FOR SCRRA APPROVED USES ONLY. FOR NON-SCRRA APPROVED USES: SCRRA SHALL NOT BE RESPONSIBLE FOR THE ACCURACY OR COMPLETENESS OF THE DATA OR INFORMATION CONTAINED HEREIN. THE SELECTION AND USE OF THESE STANDARDS IS THE SOLE RESPONSIBILITY OF THE USER AND SHOULD NOT BE USED WITHOUT CONSULTING A REGISTERED PROFESSIONAL ENGINEER. ALL WARRANTIES AND REPRESENTATIONS OF ANY KIND ARE DISCLAIMED. ANYONE MAKING USE OF THIS INFORMATION AGREES THAT IT ASSUMES ALL LIABILITY ARISING FROM SUCH USE. NO PART OF THESE STANDARDS SHOULD BE REPRODUCED OR DISTRIBUTED IN ANY FORM OR BY ANY MEANS WITHOUT THE PRIOR WRITTEN PERMISSION OF SCRRA. ALL RIGHTS RESERVED.

METROLINK®
SOUTHERN CALIFORNIA REGIONAL RAIL AUTHORITY
ONE GATEWAY PLAZA, 12TH FLOOR, L. A., CA. 90012

ENGINEERING STANDARDS

NO 10–136 LB RE
BRACE SLIDE PLATE
S–5P AND S–7P

STANDARD 2802
SCALE: NTS
REVISION –
SHEET 1 OF 1
CADD FILE: ES2802–85

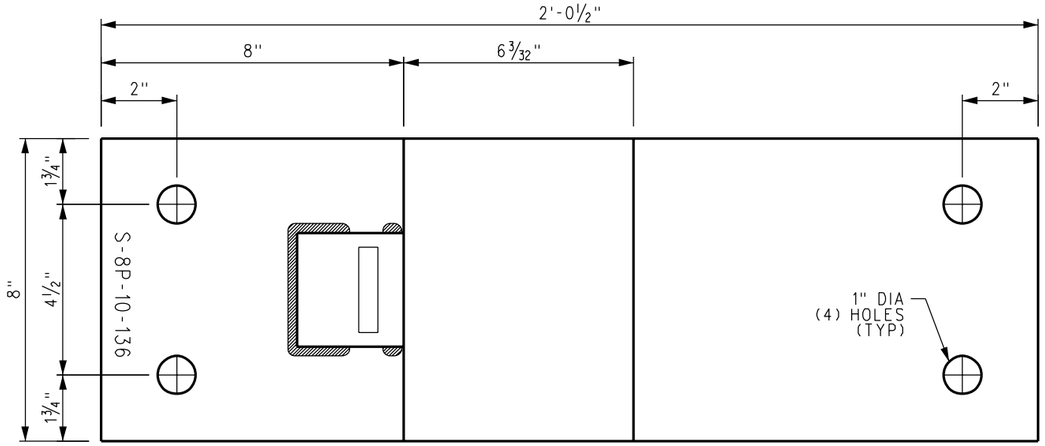

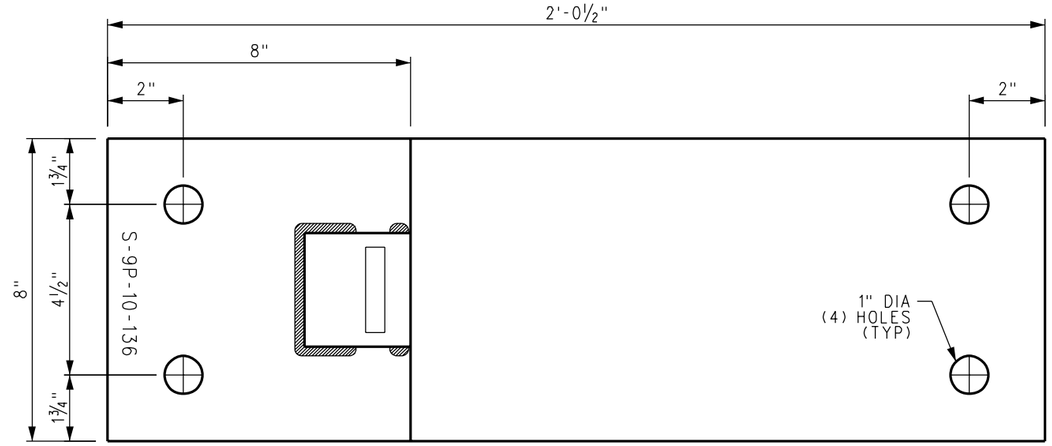

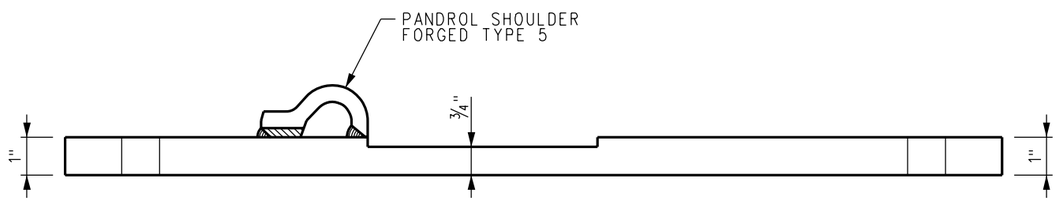

SLIDE PLATE S-8P

1" x 8" x 2'-0½" (MILLED)
0" RISER

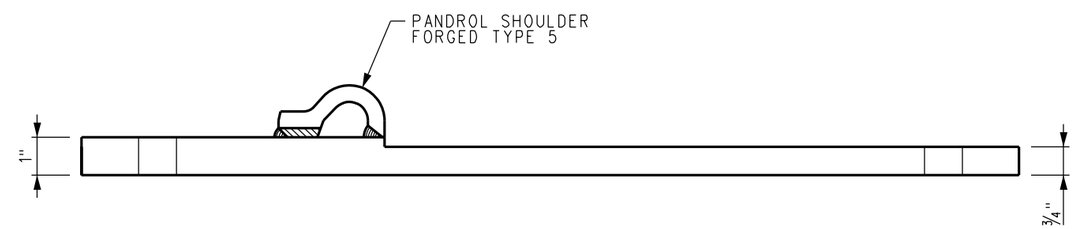

SLIDE PLATE S-9P

1" x 8" x 2'-0½" (MILLED)
0" RISER

NOTES:

1. STAMP PLATE: "RESPECTIVE PLATE NUMBER, NO 10, 136".
2. ANCHOR HOLE SIZE IS 1" DIA ± 1/32".

REV.	DATE	DESCRIPTION	DES.	ENG.
X	XX-XX-XX	REVISION	XX	XX

DRAWN BY: A. CARLOS DATE: 03/31/2011

ASSISTANT DIRECTOR: STANDARDS & DESIGN

DIRECTOR OF ENGINEERING AND CONSTRUCTION

SCRRA ENGINEERING STANDARDS ARE INTENDED FOR SCRRA APPROVED USES ONLY. FOR NON-SCRRA APPROVED USES:
SCRRA SHALL NOT BE RESPONSIBLE FOR THE ACCURACY OR COMPLETENESS OF THE DATA OR INFORMATION CONTAINED HEREIN. THE SELECTION AND USE OF THESE STANDARDS IS THE SOLE RESPONSIBILITY OF THE USER AND SHOULD NOT BE USED WITHOUT CONSULTING A REGISTERED PROFESSIONAL ENGINEER. ALL WARRANTIES AND REPRESENTATIONS OF ANY KIND ARE DISCLAIMED. ANYONE MAKING USE OF THIS INFORMATION AGREES THAT IT ASSUMES ALL LIABILITY ARISING FROM SUCH USE. NO PART OF THESE STANDARDS SHOULD BE REPRODUCED OR DISTRIBUTED IN ANY FORM OR BY ANY MEANS WITHOUT THE PRIOR WRITTEN PERMISSION OF SCRRA. ALL RIGHTS RESERVED.

METROLINK®
SOUTHERN CALIFORNIA REGIONAL RAIL AUTHORITY
ONE GATEWAY PLAZA, 12TH FLOOR, L. A., CA. 90012

ENGINEERING STANDARDS

NO 10–136 LB RE
SLIDE PLATES S–8P AND S–9P
FOR RH OR LH WOOD TIE TURNOUTS

STANDARD 2802
SCALE: NTS
REVISION –
SHEET 1 OF 2
CADD FILE: ES2802–86

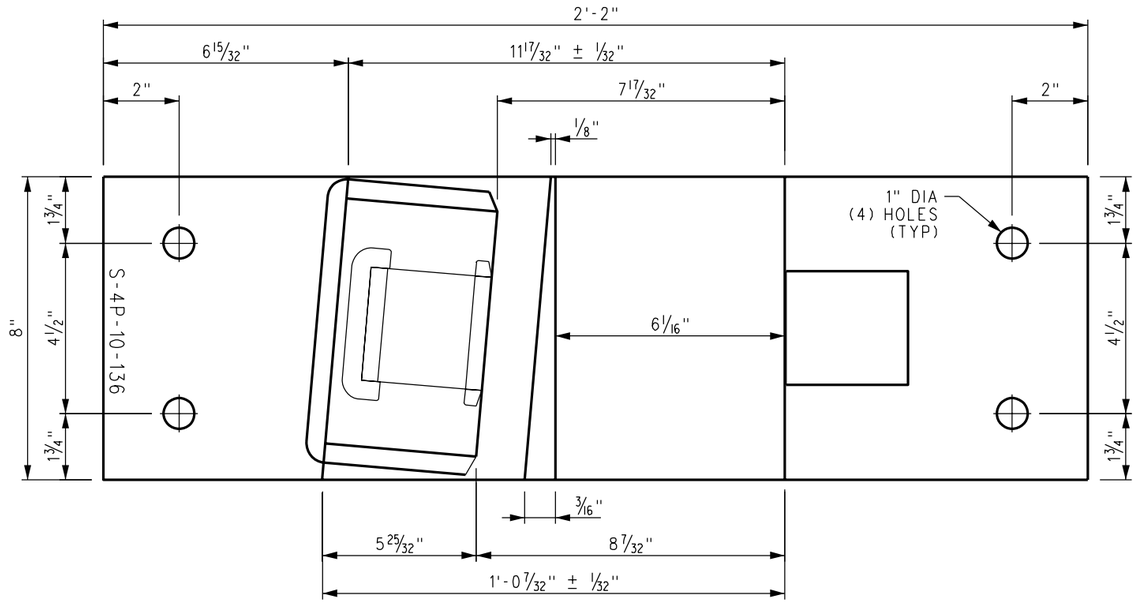

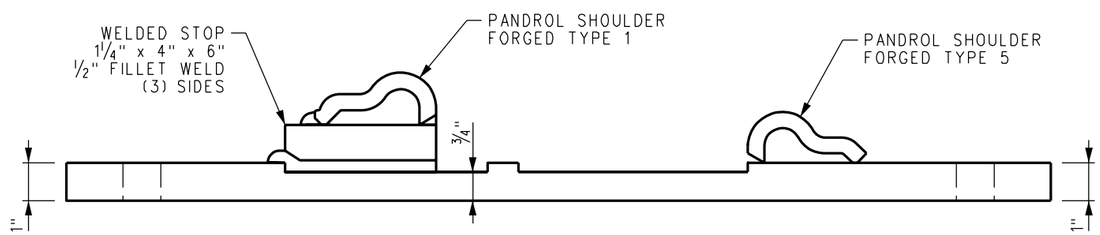

BRACE PLATE S-4P

1" x 8" x 2'-2" (MILLED)
FOR RIGHT & LEFT HAND TURNOUTS

NOTES:

1. STAMP PLATE: "RESPECTIVE PLATE NUMBER, NO 10, 136"
2. ANCHOR HOLE SIZE IS 1" DIA ± 1/32".

REV.	DATE	DESCRIPTION	DES.	ENG.
X	XX-XX-XX	REVISION	XX	XX

DRAWN BY: A. CARLOS DATE: 03/31/2011

ASSISTANT DIRECTOR: STANDARDS & DESIGN

DIRECTOR OF ENGINEERING AND CONSTRUCTION

SCRRA ENGINEERING STANDARDS ARE INTENDED FOR SCRRA APPROVED USES ONLY. FOR NON-SCRRA APPROVED USES:
SCRRA SHALL NOT BE RESPONSIBLE FOR THE ACCURACY OR COMPLETENESS OF THE DATA OR INFORMATION CONTAINED HEREIN. THE SELECTION AND USE OF THESE STANDARDS IS THE SOLE RESPONSIBILITY OF THE USER AND SHOULD NOT BE USED WITHOUT CONSULTING A REGISTERED PROFESSIONAL ENGINEER. ALL WARRANTIES AND REPRESENTATIONS OF ANY KIND ARE DISCLAIMED. ANYONE MAKING USE OF THIS INFORMATION AGREES THAT IT ASSUMES ALL LIABILITY ARISING FROM SUCH USE. NO PART OF THESE STANDARDS SHOULD BE REPRODUCED OR DISTRIBUTED IN ANY FORM OR BY ANY MEANS WITHOUT THE PRIOR WRITTEN PERMISSION OF SCRRA. ALL RIGHTS RESERVED.

METROLINK®
SOUTHERN CALIFORNIA REGIONAL RAIL AUTHORITY
ONE GATEWAY PLAZA, 12TH FLOOR, L. A., CA. 90012

ENGINEERING STANDARDS

NO 10–136 LB RE WOOD TIE TURNOUT
BRACE PLATE S–4P

STANDARD 2802
SCALE: NTS
REVISION –
SHEET 1 OF 1
CADD FILE: ES2802–88

DIMENSION TABLE					
PLATE	DIM "A"	DIM "B"	DIM "C"	DIM "L"	PL REQ'D
P-10-L	1'-1 1/8"	1'-1 3/8"	1'-2 19/32"	2'-5"	2 EA
P-11-L	1'-1 23/32"	1'-1 15/16"	1'-2 7/8"	2'-6"	2 EA
P-12-L	1'-2 11/32"	1'-2 19/32"	1'-3 3/16"	2'-6 1/2"	2 EA
P-13-L	1'-3"	1'-3 1/4"	1'-3 1/2"	2'-7 1/2"	2 EA
P-14-L	1'-3 11/16"	1'-3 31/32"	1'-3 27/32"	2'-8"	2 EA
P-15-L	1'-3 13/32"	1'-4 23/32"	1'-4 7/32"	2'-8 1/2"	2 EA

DIMENSION TABLE				
PLATE	DIM "A"	DIM "B"	DIM "L"	PL REQ'D
P-16-L	1'-5 1/8"	1'-5 7/16"	2'-9 1/2"	2 EA
P-17-L	1'-5 15/16"	1'-6 1/4"	2'-10"	2 EA
P-18-L	1'-6 25/32"	1'-7 5/32"	2'-11"	2 EA
P-23-L	1'-7 7/16"	1'-8 7/32"	2'-11"	1 EA
P-29-L	1'-7 11/32"	1'-8 1/8"	3'-0"	1 EA

DIMENSION TABLE				
PLATE	DIM "A"	DIM "B"	DIM "L"	PL REQ'D
P-19-L	1'-8 5/32"	1'-7 25/32"	3'-0"	2 EA
P-20-L	1'-9 1/8"	1'-8 3/4"	3'-1"	2 EA
P-21-L	1'-10 5/32"	1'-9 3/4"	3'-2"	2 EA
P-22-L	1'-10 3/16"	1'-9 7/16"	3'-2"	1 EA
P-30-L	1'-10 5/32"	1'-9 11/32"	3'-2"	1 EA

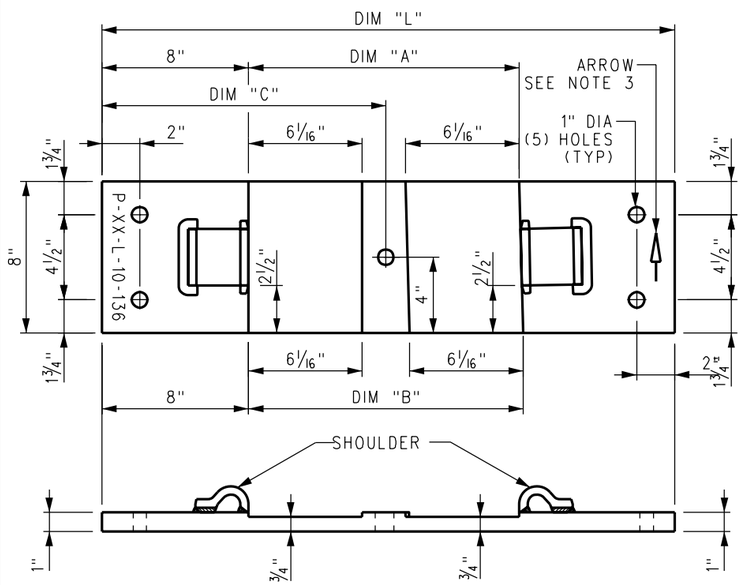

TURNOUT PLATES
P-10-L THRU P-15-L

1" x 8" x DIM "L" (MILLED) ~ W/PANDROLS
FOR LEFT HAND TURNOUT ONLY

NOTE: FURNISH WITH EACH PLATE

(2) PANDROL SHOULDER TYPE 5 FORGED
(2) PANDROL CLIP ES2362
(1) DI RAIL HOLD-DOWN CLIP (SEE CLIP TABLE)

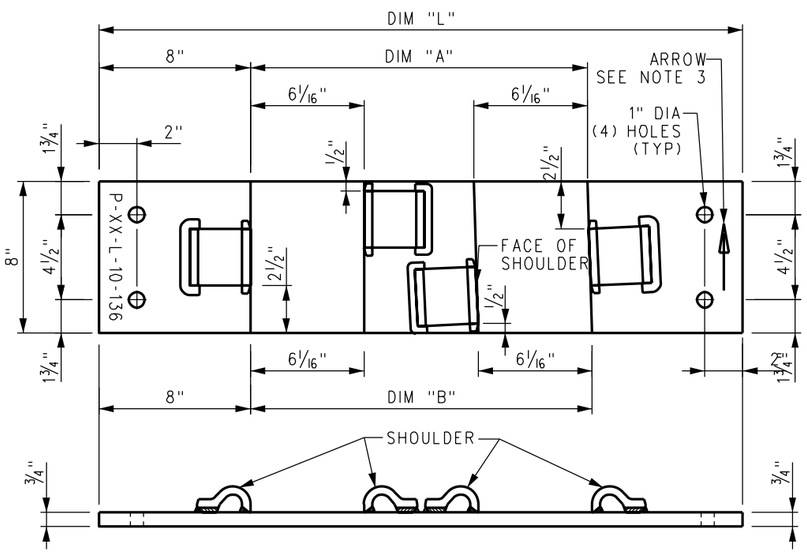

TURNOUT PLATES
P-16-L THRU P-18-L & P-23-L & P-29-L

3/4" x 8" x DIM "L" (FLAT) ~ W/ PANDROLS
FOR LEFT HAND TURNOUT ONLY

NOTE: FURNISH WITH EACH PLATE

(4) PANDROL SHOULDER TYPE 1 FORGED
(4) PANDROL CLIP ES2362

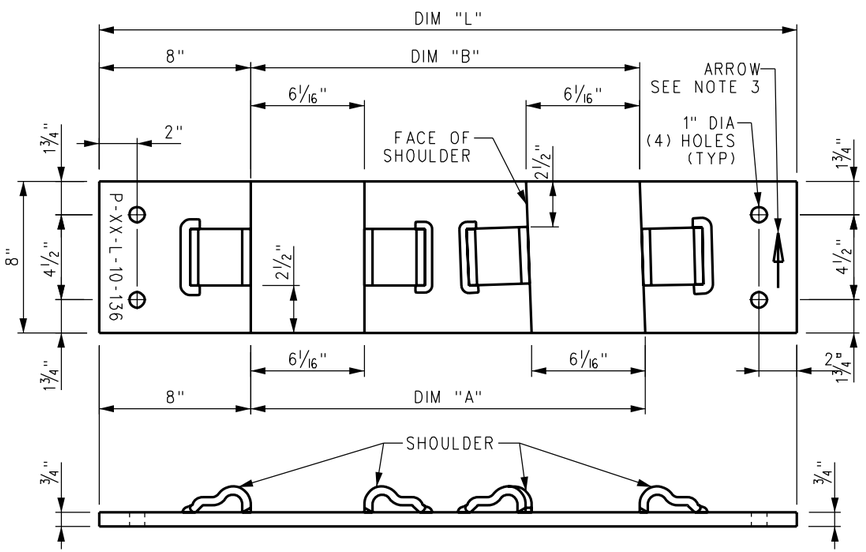

TURNOUT PLATES
P-19-L THRU P-22-L & P-30-L

3/4" x 8" x DIM "L" (FLAT) ~ W/ PANDROLS
FOR LEFT HAND TURNOUT ONLY

NOTE: FURNISH WITH EACH PLATE

(4) PANDROL SHOULDER TYPE 1 FORGED
(4) PANDROL CLIP ES2362

NOTES:

1. STAMP PLATE: "RESPECTIVE PLATE NO, NO 10, 136 RE".
2. ANCHOR HOLE SIZE IS 1" DIA ± 1/32".
3. PAINT MARK EACH PLATE WITH ARROW POINTING TOWARDS SWITCH POINT.

REV.	DATE	DESCRIPTION	DES.	ENG.
X	XX-XX-XX	REVISION	XX	XX

DRAWN BY: A. CARLOS DATE: 03/31/2011

ASSISTANT DIRECTOR: STANDARDS & DESIGN

DIRECTOR OF ENGINEERING AND CONSTRUCTION

SCRRA ENGINEERING STANDARDS ARE INTENDED FOR SCRRA APPROVED USES ONLY. FOR NON-SCRRA APPROVED USES:
SCRRA SHALL NOT BE RESPONSIBLE FOR THE ACCURACY OR COMPLETENESS OF THE DATA OR INFORMATION CONTAINED HEREIN. THE SELECTION AND USE OF THESE STANDARDS IS THE SOLE RESPONSIBILITY OF THE USER AND SHOULD NOT BE USED WITHOUT CONSULTING A REGISTERED PROFESSIONAL ENGINEER. ALL WARRANTIES AND REPRESENTATIONS OF ANY KIND ARE DISCLAIMED. ANYONE MAKING USE OF THIS INFORMATION AGREES THAT IT ASSUMES ALL LIABILITY ARISING FROM SUCH USE. NO PART OF THESE STANDARDS SHOULD BE REPRODUCED OR DISTRIBUTED IN ANY FORM OR BY ANY MEANS WITHOUT THE PRIOR WRITTEN PERMISSION OF SCRRA. ALL RIGHTS RESERVED.

METROLINK®
SOUTHERN CALIFORNIA REGIONAL RAIL AUTHORITY
ONE GATEWAY PLAZA, 12TH FLOOR, L. A., CA. 90012

ENGINEERING STANDARDS
NO 10–136 LB RE TURNOUT PLATES
P–10–L THRU P–23–L, P–29–L & P–30–L,
WOOD TIE TURNOUT W/SPRING FROG
FOR 16'–6" SWITCH (40'–0" RAIL)

STANDARD 2802
SCALE: NTS
REVISION –
SHEET 1 OF 1
CADD FILE: ES2802–91

DIMENSION TABLE					
PLATE	DIM "A"	DIM "B"	DIM "C"	DIM "L"	PL REQ'D
P-10-R	1'-1 1/8"	1'-1 3/8"	1'-2 19/32"	2'-5"	2 EA
P-11-R	1'-1 23/32"	1'-1 15/16"	1'-2 7/8"	2'-6"	2 EA
P-12-R	1'-2 11/32"	1'-2 19/32"	1'-3 3/16"	2'-6 1/2"	2 EA
P-13-R	1'-3"	1'-3 1/4"	1'-3 1/2"	2'-7 1/2"	2 EA
P-14-R	1'-3 11/16"	1'-3 31/32"	1'-3 27/32"	2'-8"	2 EA
P-15-R	1'-4 13/32"	1'-4 23/32"	1'-4 7/32"	2'-8 1/2"	2 EA

DIMENSION TABLE				
PLATE	DIM "A"	DIM "B"	DIM "L"	PL REQ'D
P-16-R	1'-5 1/8"	1'-5 7/16"	2'-9 1/2"	2 EA
P-17-R	1'-5 15/16"	1'-6 1/4"	2'-10"	2 EA
P-18-R	1'-6 25/32"	1'-7 5/32"	2'-11"	2 EA
P-23-R	1'-7 7/16"	1'-8 7/32"	2'-11"	1 EA
P-29-R	1'-7 11/32"	1'-8 1/8"	3'-0"	1 EA

DIMENSION TABLE				
PLATE	DIM "A"	DIM "B"	DIM "L"	PL REQ'D
P-19-R	1'-8 5/32"	1'-7 25/32"	3'-0"	2 EA
P-20-R	1'-9 1/8"	1'-8 3/4"	3'-1"	2 EA
P-21-R	1'-10 5/32"	1'-9 3/4"	3'-2"	2 EA
P-22-R	1'-10 3/16"	1'-9 7/16"	3'-2"	1 EA
P-30-R	1'-10 5/32"	1'-9 11/32"	3'-2"	1 EA

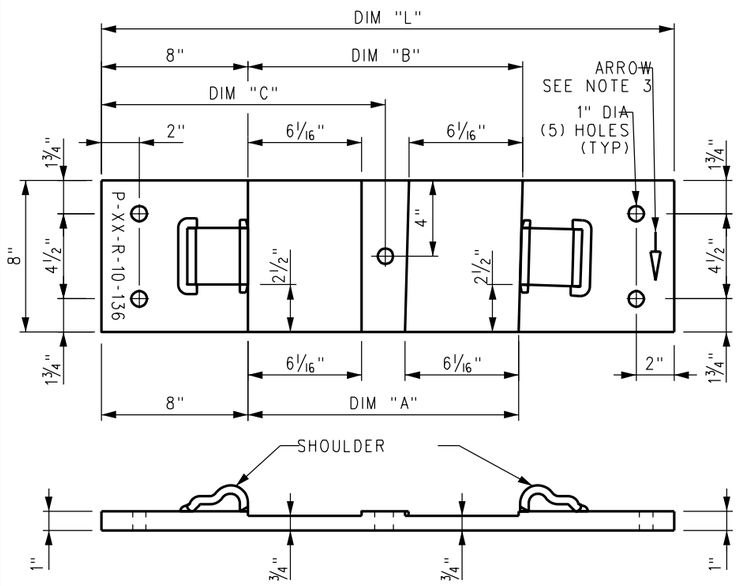

TURNOUT PLATES
P-10-R THRU P-15-R

1" x 8" x DIM "L" (MILLED) ~ W/PANDROLS
FOR RIGHT HAND TURNOUT

NOTE: FURNISH WITH EACH PLATE

(2) PANDROL SHOULDER ES2362
(2) PANDROL CLIP ES2362
(1) DI RAIL HOLD-DOWN CLIP (SEE CLIP TABLE)

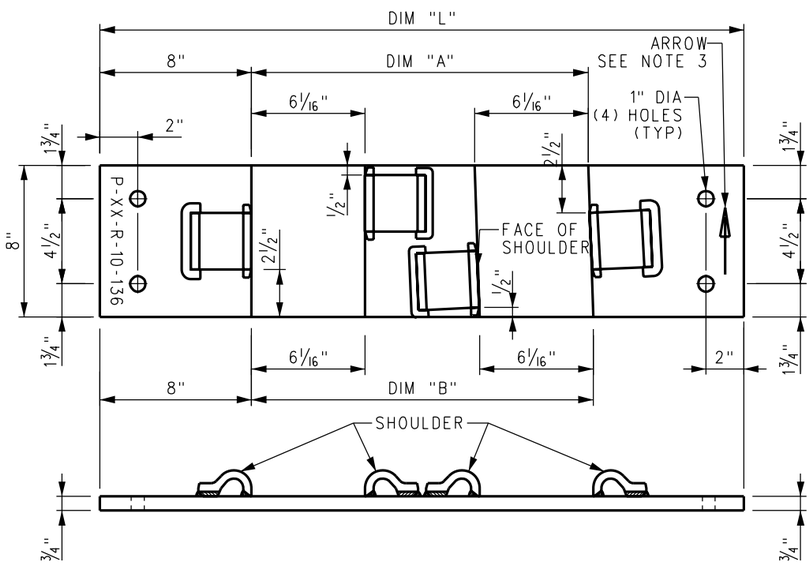

TURNOUT PLATES
P-16-R THRU P-18-R & P-23-R & P-29-R

3/4" x 8" x DIM "L" (FLAT) ~ W/ PANDROLS
FOR RIGHT HAND TURNOUT ONLY

NOTE: FURNISH WITH EACH PLATE

(4) PANDROL SHOULDER TYPE 1 FORGED
(4) PANDROL CLIP ES2362

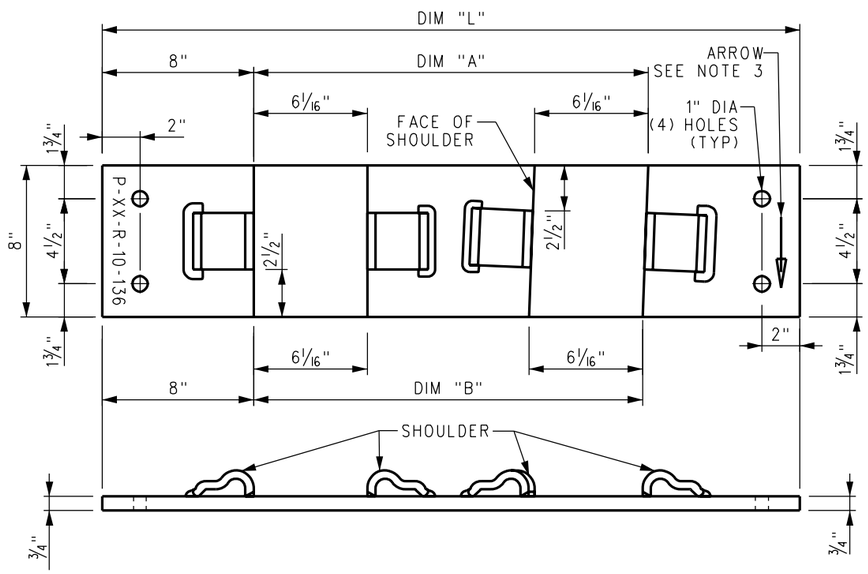

TURNOUT PLATES
P-19-R THRU P-22-R & P-30-R

3/4" x 8" x DIM "L" (FLAT) ~ W/PANDROLS
FOR RIGHT HAND TURNOUT ONLY

NOTE: FURNISH WITH EACH PLATE

(4) PANDROL SHOULDER TYPE 1 FORGED
(4) PANDROL CLIP ES2362

NOTES:

1. STAMP PLATE: "RESPECTIVE PLATE NO, NO 10, 136 RE".
2. ANCHOR HOLE SIZE IS 1" DIA ± 1/32".
3. PAINT MARK EACH PLATE WITH ARROW POINTING TOWARDS SWITCH POINT.

REV.	DATE	DESCRIPTION	DES.	ENG.
X	XX-XX-XX	REVISION	XX	XX

DRAWN BY: HDR DATE: 03/31/2011

ASSISTANT DIRECTOR: STANDARDS & DESIGN

DIRECTOR OF ENGINEERING AND CONSTRUCTION

SCRRA ENGINEERING STANDARDS ARE INTENDED FOR SCRRA APPROVED USES ONLY. FOR NON-SCRRA APPROVED USES:
SCRRA SHALL NOT BE RESPONSIBLE FOR THE ACCURACY OR COMPLETENESS OF THE DATA OR INFORMATION CONTAINED HEREIN. THE SELECTION AND USE OF THESE STANDARDS IS THE SOLE RESPONSIBILITY OF THE USER AND SHOULD NOT BE USED WITHOUT CONSULTING A REGISTERED PROFESSIONAL ENGINEER. ALL WARRANTIES AND REPRESENTATIONS OF ANY KIND ARE DISCLAIMED. ANYONE MAKING USE OF THIS INFORMATION AGREES THAT IT ASSUMES ALL LIABILITY ARISING FROM SUCH USE. NO PART OF THESE STANDARDS SHOULD BE REPRODUCED OR DISTRIBUTED IN ANY FORM OR BY ANY MEANS WITHOUT THE PRIOR WRITTEN PERMISSION OF SCRRA. ALL RIGHTS RESERVED.

METROLINK®
SOUTHERN CALIFORNIA REGIONAL RAIL AUTHORITY
ONE GATEWAY PLAZA, 12TH FLOOR, L. A., CA. 90012

ENGINEERING STANDARDS

NO 10–136 LB RE TURNOUT PLATES
P–10–R THRU P–23–R, P–29–R & P–30–R,
WOOD TIE TURNOUT W/SPRING FROG
FOR 16'–6" SWITCH (40'–0" RAIL)

STANDARD 2802
SCALE: NTS
REVISION –
SHEET 1 OF 1
CADD FILE: ES2802–92

UserName=> carlosa Date Plotted: 10/5/2011 3:25:39 PM Plot Driver=> S:\Plot Drivers\pdf.plt FileName=> s:\V8EngStds\2000\Turnouts\No 10 Turnout\ES2802-92.dgn

BILL OF MATERIAL				
ITEM	QTY	DESCRIPTION	DWG NO	SCRRA PART NO
1	1	SWITCH PACK, NO 10-136 LB RE MODIFIED TANGENTIAL, LH, HST	ES2803-13	
2	1	FROG PACK, NO 10-136 LB RE WSM, LH	ES2803-41	
3	1	GUARD RAIL ASSEMBLY BOLTLESS, 26'-0" LG, 136 LB RE RAISED 1", STRAIGHT	ES2800-50	
4	1	GUARD RAIL ASSEMBLY BOLTLESS, 15'-0" LG, 136 LB RE RAISED 1", LH	ES2803-51	
5	1	INSULATED RAIL ASSEMBLY, 29'-6¾" C/W BONDED INSULATED JOINT	-	
6	1	INSULATED RAIL ASSEMBLY, 29'-11¼" C/W BONDED INSULATED JOINT	-	
7	2	DRILLED RAIL, 136 LB RE, 26'-0" LONG	-	
8	2	DRILLED RAIL, 136 LB RE, 28'-0" LONG	-	
9	1	DRILLED RAIL, 136 LB RE, 29'-4½" LONG	-	
10	1	DRILLED RAIL, 136 LB RE, 29'-9⅜" LONG	-	
11	1	DRILLED RAIL, 136 LB RE, 40'-0" LONG	-	

BILL OF MATERIAL				
ITEM	QTY	DESCRIPTION	DWG NO	SCRRA PART NO
12	1	DRILLED RAIL, 136 LB RE, 40'-4" LONG	-	
13	276	TIE SCREW, CONCRETE ⅞" DIAMETER x 6" HEX HEAD	-	
14	276	WASHER FLAT ⅞" TYPE A NARROW 15⁄16" x 1¾" x 0.134"	-	
15	276	SPRING WASHER, DOUBLE COIL (Fe6)	-	
16	1	CONCRETE TIE SET, O-59 + (3) 1:80 TIES, PLATE PADS, LH	-	
17	224	CLIP PANDROL E2055	-	
18	224	INSULATOR PANDROL FEATURES BASE HOLDOWN NYLON HD-10	-	
19	8	CLIP PANDROL E2063	-	
20	8	INSULATION, PANDROL NYLON 6790	-	
21	116	TIE PAD PANDROL 6993SR	-	
22	138	SHIM, TO REDUCE PLATE FLEXURE	-	

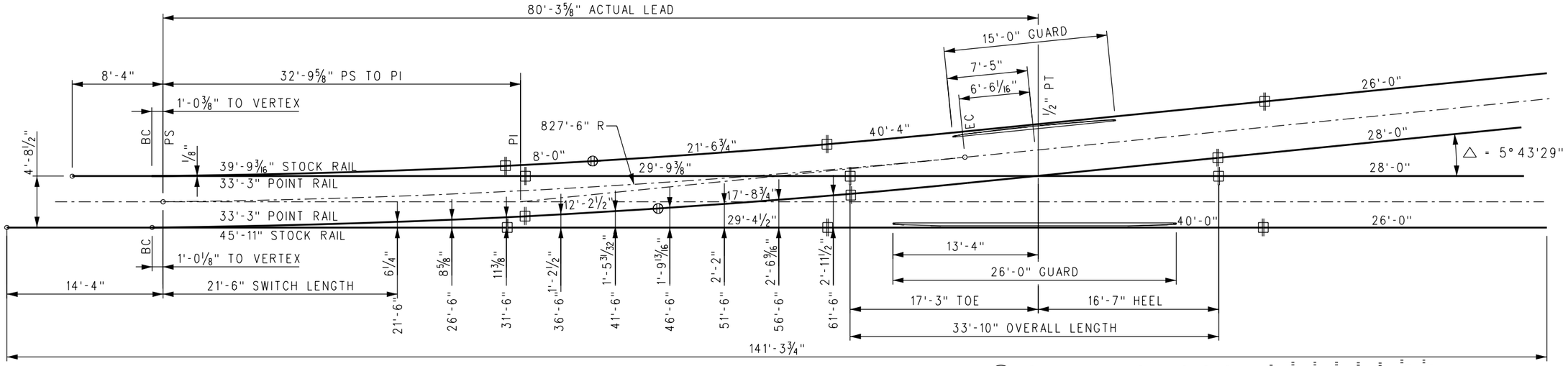

NOTES:

1. ALL RAILS SHALL HAVE IDENTIFICATION COLOR CODE PAINTED ON WEB, CLEAR OF JOINT AREA.
2. RAIL LENGTHS ALLOW ⅛" GAP BETWEEN RAIL JOINTS FOR WELDING.
3. GUARD RAILS ARE RAISED 1" AND FORM A 1⅞" FLANGEWAY.
4. SWITCH MACHINE AND MACHINE PLATE (NIC) MUST BE COORDINATED WITH SCRRA.
5. ALL LENGTHS SHALL INCLUDE 1'-9" FROM TIE ENDS TO RAIL CENTERLINE, EXCEPT AS NOTED AND 1:80 CANTED TIES.
6. TIGHTEN TIE SCREW WITH DOUBLE COIL SPRING WASHER IN PLACE.
7. ⊕ = INSULATED JOINT ⊕ = WELDED JOINT

TURNOUT DATA:

FROG
- NO 10 △ = 5° 43'29"
- TOE LENGTH: 17'-3"
- HEEL LENGTH: 16'-7"
- TOTAL LENGTH: 33'-10"

SWITCH
- LENGTH OF POINTS: 21'-6" / 33'-3"
- ENTRY ANGLE: 0° 37'11"
- VERTEX DISTANCE: VARIES PER SIDE
- THICKNESS AT POINT: ⅛"
- CENTERLINE RADIUS: 827'-6"
- THROW AT ROD #1: 4¾"

ACTUAL LEAD: 80'-3⅝"

CLOSURE AREA
- CENTERLINE RADIUS: 827'-6"
- DEGREE OF CURVE: 6° 55'41"

DESIGN SPEEDS
- 25 MPH PASSENGER @ 3" UNBALANCE
- 15 MPH FREIGHT @ 2" UNBALANCE

REV.	DATE	DESCRIPTION	DES.	ENG.
X	XX-XX-XX	REVISION	XX	XX

DRAWN BY: HDR DATE: 03/31/2011

ASSISTANT DIRECTOR: STANDARDS & DESIGN

DIRECTOR OF ENGINEERING AND CONSTRUCTION

SCRRA ENGINEERING STANDARDS ARE INTENDED FOR SCRRA APPROVED USES ONLY. FOR NON-SCRRA APPROVED USES: SCRRA SHALL NOT BE RESPONSIBLE FOR THE ACCURACY OR COMPLETENESS OF THE DATA OR INFORMATION CONTAINED HEREIN. THE SELECTION AND USE OF THESE STANDARDS IS THE SOLE RESPONSIBILITY OF THE USER AND SHOULD NOT BE USED WITHOUT CONSULTING A REGISTERED PROFESSIONAL ENGINEER. ALL WARRANTIES AND REPRESENTATIONS OF ANY KIND ARE DISCLAIMED. ANYONE MAKING USE OF THIS INFORMATION AGREES THAT IT ASSUMES ALL LIABILITY ARISING FROM SUCH USE. NO PART OF THESE STANDARDS SHOULD BE REPRODUCED OR DISTRIBUTED IN ANY FORM OR BY ANY MEANS WITHOUT THE PRIOR WRITTEN PERMISSION OF SCRRA. ALL RIGHTS RESERVED.

METROLINK®

SOUTHERN CALIFORNIA REGIONAL RAIL AUTHORITY
ONE GATEWAY PLAZA, 12TH FLOOR, L. A., CA. 90012

ENGINEERING STANDARDS

TURNOUT LAYOUT
NO 10–136 LB RE LH WSM FROG TURNOUT
HST, SWITCH MACHINE ON MAINLINE SIDE

STANDARD: 2803
SCALE: NTS
REVISION: –
SHEET: 1 OF 1
CADD FILE: ES2803–01

BILL OF MATERIAL				
ITEM	QTY	DESCRIPTION	DWG NO	SCRRA PART NO
1	1	SWITCH PACK, NO 10-136 LB RE MODIFIED TANGENTIAL, RH, HST	ES2803-14	
2	1	FROG PACK, NO 10-136 LB RE WSM, RH	ES2803-40	
3	1	GUARD RAIL ASSEMBLY BOLTLESS, 26'-0" LG, 136 LB RE RAISED 1", STRAIGHT	ES2800-50	
4	1	GUARD RAIL ASSEMBLY BOLTLESS, 15'-0" LG, 136 LB RE RAISED 1", RH	ES2803-52	
5	1	INSULATED RAIL ASSEMBLY, 29'-6¾" C/W BONDED INSULATED JOINT	-	
6	1	INSULATED RAIL ASSEMBLY, 29'-11¼" C/W BONDED INSULATED JOINT	-	
7	2	DRILLED RAIL, 136 LB RE, 26'-0" LONG	-	
8	2	DRILLED RAIL, 136 LB RE, 28'-0" LONG	-	
9	1	DRILLED RAIL, 136 LB RE, 29'-4½" LONG	-	
10	1	DRILLED RAIL, 136 LB RE, 29'-9⅜" LONG	-	
11	1	DRILLED RAIL, 136 LB RE, 40'-0" LONG	-	

BILL OF MATERIAL				
ITEM	QTY	DESCRIPTION	DWG NO	SCRRA PART NO
12	1	DRILLED RAIL, 136 LB RE, 40'-4" LONG	-	
13	276	TIE SCREW, CONCRETE ⅞" DIAMETER x 6" HEX HEAD	-	
14	276	WASHER FLAT ⅞" TYPE A NARROW 15/16" x 1¾" x 0.134"	-	
15	276	SPRING WASHER, DOUBLE COIL (Fe6)	-	
16	1	CONCRETE TIE SET, O-59 + (3) 1:80 TIES, PLATE PADS, RH	-	
17	224	CLIP PANDROL E2055	-	
18	224	INSULATOR PANDROL FEATURES BASE HOLDOWN NYLON HD-10	-	
19	8	CLIP PANDROL E2063	-	
20	8	INSULATION, PANDROL NYLON 6790	-	
21	116	TIE PAD PANDROL 6993SR	-	
22	138	SHIM, TO REDUCE PLATE FLEXURE	-	

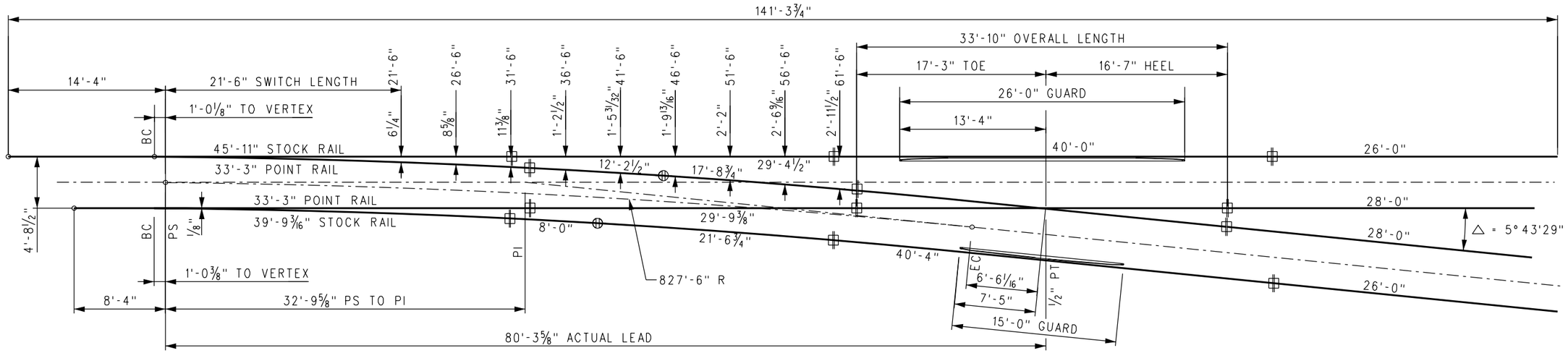

NOTES:

1. ALL RAILS SHALL HAVE IDENTIFICATION COLOR CODE PAINTED ON WEB, CLEAR OF JOINT AREA.
2. RAIL LENGTHS ALLOW ⅛" GAP BETWEEN RAIL JOINTS FOR WELDING.
3. GUARD RAILS ARE RAISED 1" AND FORM A 1⅞" FLANGEWAY.
4. SWITCH MACHINE AND MACHINE PLATE (NIC) MUST BE COORDINATED WITH SCRRA.
5. ALL LENGTHS SHALL INCLUDE 1'-9" FROM TIE ENDS TO RAIL CENTERLINE, EXCEPT AS NOTED AND 1:80 CANTED TIES.
6. TIGHTEN TIE SCREW WITH DOUBLE COIL SPRING WASHER IN PLACE.
7. ⊕ = INSULATED JOINT ⊕ = WELDED JOINT

TURNOUT DATA:

FROG
- NO 10 △ = 5° 43'29"
- TOE LENGTH: 17'-3"
- HEEL LENGTH: 16'-7"
- TOTAL LENGTH: 33'-10"

SWITCH
- LENGTH OF POINTS: 21'-6" / 33'-3"
- ENTRY ANGLE: 0° 37'11"
- VERTEX DISTANCE: VARIES PER SIDE
- THICKNESS AT POINT: ⅛"
- CENTERLINE RADIUS: 827'-6"
- THROW AT ROD #1: 4¾"

ACTUAL LEAD: 80'-3⅝"

CLOSURE AREA
- CENTERLINE RADIUS: 827'-6"
- DEGREE OF CURVE: 6° 55'41"

DESIGN SPEEDS
- 25 MPH PASSENGER @ 3" UNBALANCE
- 15 MPH FREIGHT @ 2" UNBALANCE

REV.	DATE	DESCRIPTION	DES.	ENG.
X	XX-XX-XX	REVISION	XX	XX

DRAWN BY: HDR DATE: 03/31/2011

ASSISTANT DIRECTOR: STANDARDS & DESIGN

DIRECTOR OF ENGINEERING AND CONSTRUCTION

SCRRA ENGINEERING STANDARDS ARE INTENDED FOR SCRRA APPROVED USES ONLY. FOR NON-SCRRA APPROVED USES: SCRRA SHALL NOT BE RESPONSIBLE FOR THE ACCURACY OR COMPLETENESS OF THE DATA OR INFORMATION CONTAINED HEREIN. THE SELECTION AND USE OF THESE STANDARDS IS THE SOLE RESPONSIBILITY OF THE USER AND SHOULD NOT BE USED WITHOUT CONSULTING A REGISTERED PROFESSIONAL ENGINEER. ALL WARRANTIES AND REPRESENTATIONS OF ANY KIND ARE DISCLAIMED. ANYONE MAKING USE OF THIS INFORMATION AGREES THAT IT ASSUMES ALL LIABILITY ARISING FROM SUCH USE. NO PART OF THESE STANDARDS SHOULD BE REPRODUCED OR DISTRIBUTED IN ANY FORM OR BY ANY MEANS WITHOUT THE PRIOR WRITTEN PERMISSION OF SCRRA. ALL RIGHTS RESERVED.

METROLINK®

SOUTHERN CALIFORNIA REGIONAL RAIL AUTHORITY
ONE GATEWAY PLAZA, 12TH FLOOR, L. A., CA. 90012

ENGINEERING STANDARDS

TURNOUT LAYOUT
NO 10–136 LB RE RH WSM FROG TURNOUT
HST, SWITCH MACHINE ON MAINLINE SIDE

STANDARD 2803
SCALE: NTS
REVISION –
SHEET 1 OF 1
CADD FILE: ES2803–02

BILL OF MATERIAL				
ITEM	QTY	DESCRIPTION	DWG NO	SCRRA PART NO
1	1	SWITCH PACK, NO 10-136 LB RE MODIFIED TANGENTIAL, LH, HST	ES2803-15	
2	1	FROG PACK, NO 10-136 LB RE WSM, LH	ES2803-41	
3	1	GUARD RAIL ASSEMBLY BOLTLESS, 26'-0" LONG, 136 LB RE RAISED 1", STRAIGHT	ES2800-50	
4	1	GUARD RAIL ASSEMBLY BOLTLESS, 15'-0" LONG, 136 LB RE RAISED 1", LH	ES2803-51	
5	1	INSULATED RAIL ASSEMBLY, 29'-6¾" C/W BONDED INSULATED JOINT	-	
6	1	INSULATED RAIL ASSEMBLY, 29'-11¼" C/W BONDED INSULATED JOINT	-	
7	2	DRILLED RAIL, 136 LB RE, 26'-0" LONG	-	
8	2	DRILLED RAIL, 136 LB RE, 28'-0" LONG	-	
9	1	DRILLED RAIL, 136 LB RE, 29'-4½" LONG	-	
10	1	DRILLED RAIL, 136 LB RE, 29'-9⅜" LONG	-	
11	1	DRILLED RAIL, 136 LB RE, 40'-0" LONG	-	

BILL OF MATERIAL				
ITEM	QTY	DESCRIPTION	DWG NO	SCRRA PART NO
12	1	DRILLED RAIL, 136 LB RE, 40'-4" LONG	-	
13	276	TIE SCREW, CONCRETE ⅞" DIAMETER x 6" HEX HEAD	-	
14	276	WASHER FLAT ⅞" TYPE A NARROW 15⁄16" x 1¾" x 0.134"	-	
15	276	SPRING WASHER, DOUBLE COIL (Fe6)	-	
16	1	CONCRETE TIE SET, O-59 + (3) 1:80 TIES, PLATE PADS, LH	-	
17	224	CLIP PANDROL E2055	-	
18	224	INSULATOR PANDROL FEATURES BASE HOLDOWN NYLON HD-10	-	
19	8	CLIP PANDROL E2063	-	
20	8	INSULATION, PANDROL NYLON 6790	-	
21	116	TIE PAD PANDROL 6993SR	-	
22	138	SHIM, TO REDUCE PLATE FLEXURE	-	

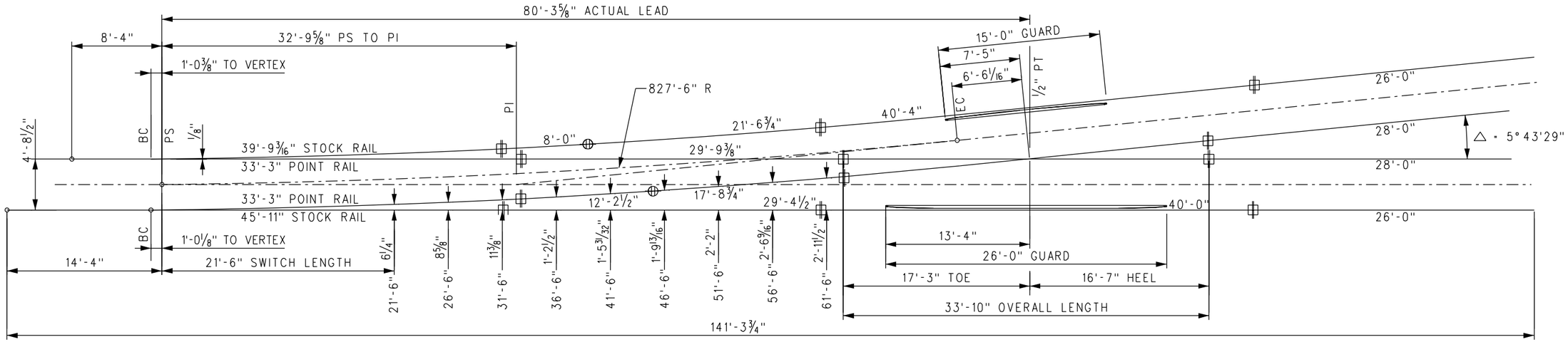

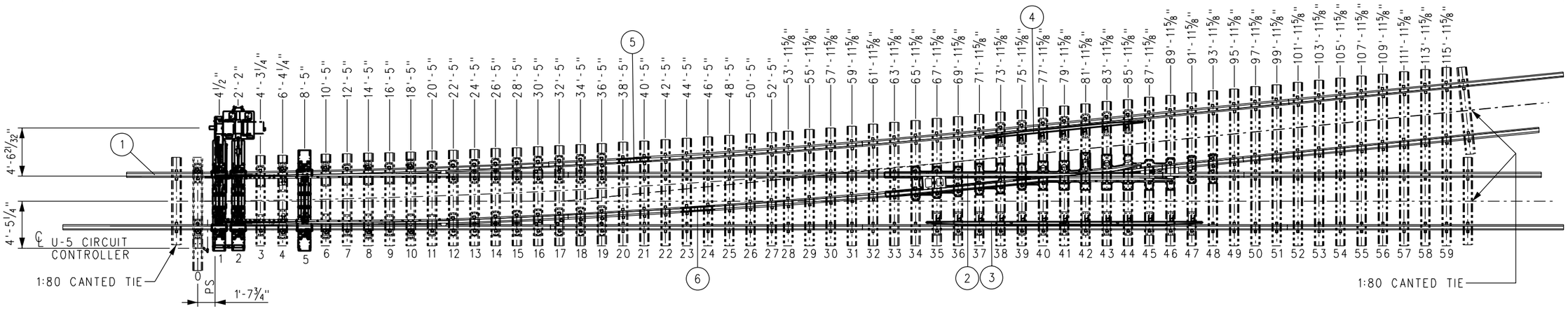

NOTES:

1. ALL RAILS SHALL HAVE IDENTIFICATION COLOR CODE PAINTED ON WEB, CLEAR OF JOINT AREA.
2. RAIL LENGTHS ALLOW ⅛" GAP BETWEEN RAIL JOINTS FOR WELDING.
3. GUARD RAILS ARE RAISED 1" AND FORM A 1⅛" FLANGEWAY.
4. SWITCH MACHINE AND MACHINE PLATE (NIC) MUST BE COORDINATED WITH SCRRA.
5. ALL LENGTHS SHALL INCLUDE 1'-9" FROM TIE ENDS TO RAIL CENTERLINE, EXCEPT AS NOTED AND 1:80 CANTED TIES.
6. TIGHTEN TIE SCREW WITH DOUBLE COIL SPRING WASHER IN PLACE.
7. ⊕ = INSULATED JOINT ⊡ = WELDED JOINT

TURNOUT DATA:

FROG
NO 10 △ = 5° 43'29"
TOE LENGTH: 17'-3"
HEEL LENGTH: 16'-7"
TOTAL LENGTH: 33'-10"

SWITCH
LENGTH OF POINTS: 21'-6" / 33'-3"
ENTRY ANGLE: 0° 37'11"
VERTEX DISTANCE: VARIES PER SIDE
THICKNESS AT POINT: ⅛"
CENTERLINE RADIUS: 827'-6"
THROW AT ROD #1: 4¾"

ACTUAL LEAD: 80'-3⅝"
CLOSURE AREA
CENTERLINE RADIUS: 827'-6"
DEGREE OF CURVE: 6° 55'41"
DESIGN SPEEDS
25 MPH PASSENGER @ 3" UNBALANCE
15 MPH FREIGHT @ 2" UNBALANCE

X	XX-XX-XX	REVISION	XX	XX
REV.	DATE	DESCRIPTION	DES.	ENG.

DRAWN BY: HDR DATE: 03/31/2011

ASSISTANT DIRECTOR: STANDARDS & DESIGN

DIRECTOR OF ENGINEERING AND CONSTRUCTION

SCRRA ENGINEERING STANDARDS ARE INTENDED FOR SCRRA APPROVED USES ONLY. FOR NON-SCRRA APPROVED USES:
SCRRA SHALL NOT BE RESPONSIBLE FOR THE ACCURACY OR COMPLETENESS OF THE DATA OR INFORMATION CONTAINED HEREIN. THE SELECTION AND USE OF THESE STANDARDS IS THE SOLE RESPONSIBILITY OF THE USER AND SHOULD NOT BE USED WITHOUT CONSULTING A REGISTERED PROFESSIONAL ENGINEER. ALL WARRANTIES AND REPRESENTATIONS OF ANY KIND ARE DISCLAIMED. ANYONE MAKING USE OF THIS INFORMATION AGREES THAT IT ASSUMES ALL LIABILITY ARISING FROM SUCH USE. NO PART OF THESE STANDARDS SHOULD BE REPRODUCED OR DISTRIBUTED IN ANY FORM OR BY ANY MEANS WITHOUT THE PRIOR WRITTEN PERMISSION OF SCRRA. ALL RIGHTS RESERVED.

METROLINK®
SOUTHERN CALIFORNIA REGIONAL RAIL AUTHORITY
ONE GATEWAY PLAZA, 12TH FLOOR, L. A., CA. 90012

ENGINEERING STANDARDS

TURNOUT LAYOUT
NO 10–136 LB RE LH WSM FROG TURNOUT
HST, SWITCH MACHINE ON TURNOUT SIDE

STANDARD 2803
SCALE: NTS
REVISION –
SHEET 1 OF 1
CADD FILE: ES2803–03

BILL OF MATERIAL				
ITEM	QTY	DESCRIPTION	DWG NO	SCRRA PART NO
1	1	SWITCH PACK, NO 10-136 LB RE MODIFIED TANGENTIAL, RH, HST	ES2803-16	
2	1	FROG PACK, NO 10-136 LB RE WSM, RH	ES2803-40	
3	1	GUARD RAIL ASSEMBLY BOLTLESS, 26'-0" LG, 136 LB RE RAISED 1", STRAIGHT	ES2800-50	
4	1	GUARD RAIL ASSEMBLY BOLTLESS, 15'-0" LG, 136 LB RE RAISED 1", RH	ES2803-52	
5	1	INSULATED RAIL ASSEMBLY, 29'-6¾" C/W BONDED INSULATED JOINT	-	
6	1	INSULATED RAIL ASSEMBLY, 29'-11¼" C/W BONDED INSULATED JOINT	-	
7	2	DRILLED RAIL, 136 LB RE, 26'-0" LONG	-	
8	2	DRILLED RAIL, 136 LB RE, 28'-0" LONG	-	
9	1	DRILLED RAIL, 136 LB RE, 29'-4½" LONG	-	
10	1	DRILLED RAIL, 136 LB RE, 29'-9⅜" LONG	-	
11	1	DRILLED RAIL, 136 LB RE, 40'-0" LONG	-	

BILL OF MATERIAL				
ITEM	QTY	DESCRIPTION	DWG NO	SCRRA PART NO
12	1	DRILLED RAIL, 136 LB RE, 40'-4" LONG	-	
13	276	TIE SCREW, CONCRETE ⅞" DIAMETER x 6" HEX HEAD	-	
14	276	WASHER FLAT ⅞" TYPE A NARROW 15/16" x 1¾" x 0.134"	-	
15	276	SPRING WASHER, DOUBLE COIL (Fe6)	-	
16	1	CONCRETE TIE SET, O-59 + (3) 1:80 TIES, PLATE PADS, RH	-	
17	224	CLIP PANDROL E2055	-	
18	224	INSULATOR PANDROL FEATURES BASE HOLDOWN NYLON HD-10	-	
19	8	CLIP PANDROL E2063	-	
20	8	INSULATION, PANDROL NYLON 6790	-	
21	116	TIE PAD PANDROL 6993SR	-	
22	138	SHIM, TO REDUCE PLATE FLEXURE	-	

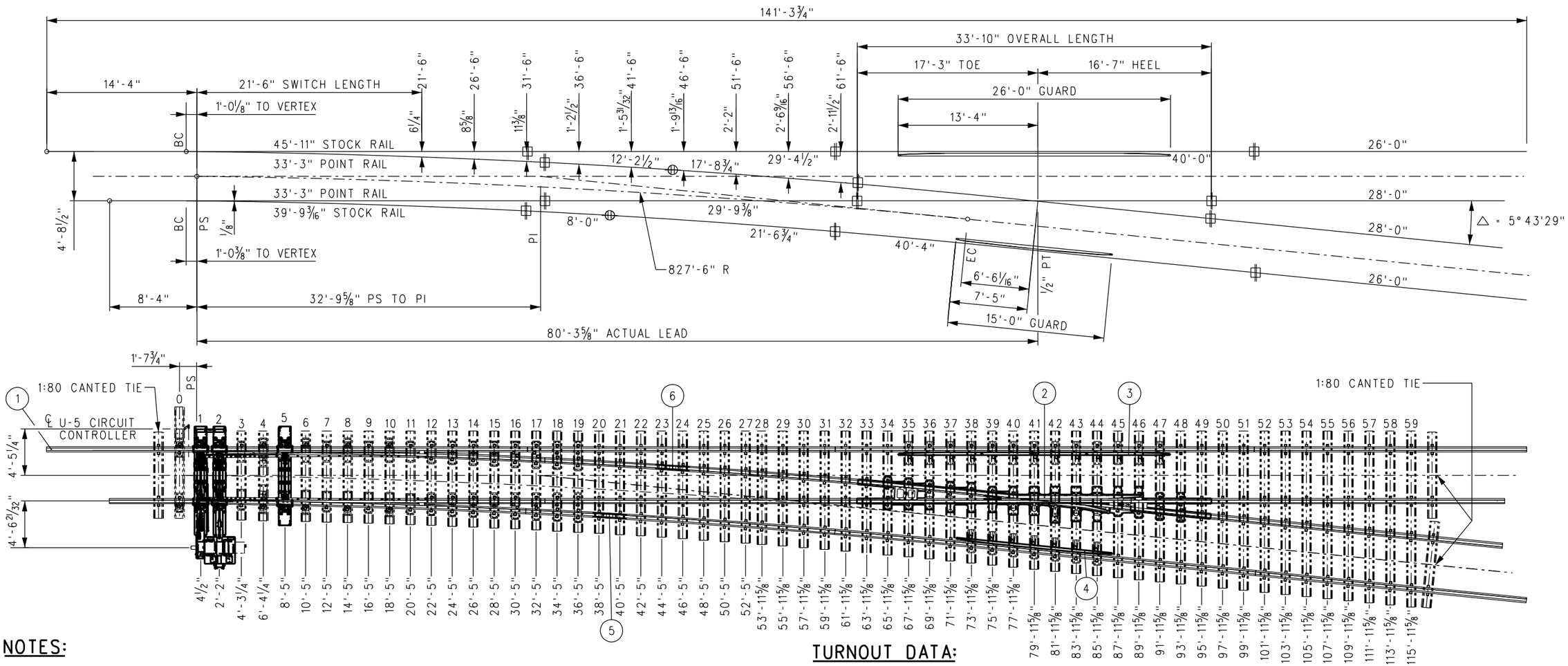

NOTES:

1. ALL RAILS SHALL HAVE IDENTIFICATION COLOR CODE PAINTED ON WEB, CLEAR OF JOINT AREA.
2. RAIL LENGTHS ALLOW ⅛" GAP BETWEEN RAIL JOINTS FOR WELDING.
3. GUARD RAILS ARE RAISED 1" AND FORM A 1⅛" FLANGEWAY.
4. SWITCH MACHINE AND MACHINE PLATE (NIC) MUST BE COORDINATED WITH SCRRA.
5. ALL LENGTHS SHALL INCLUDE 1'-9" FROM TIE ENDS TO RAIL CENTERLINE, EXCEPT AS NOTED AND 1:80 CANTED TIES.
6. TIGHTEN TIE SCREW WITH DOUBLE COIL SPRING WASHER IN PLACE.
7. ⊕ = INSULATED JOINT ⊕ = WELDED JOINT

TURNOUT DATA:

FROG
NO 10 △ = 5° 43'29"
TOE LENGTH: 17'-3"
HEEL LENGTH: 16'-7"
TOTAL LENGTH: 33'-10"

SWITCH
LENGTH OF POINTS: 21'-6" / 33'-3"
ENTRY ANGLE: 0° 37'11"
VERTEX DISTANCE: VARIES PER SIDE
THICKNESS AT POINT: ⅛"
CENTERLINE RADIUS: 827'-6"
THROW AT ROD #1: 4¾"

ACTUAL LEAD: 80'-3⅝"
CLOSURE AREA
CENTERLINE RADIUS: 827'-6"
DEGREE OF CURVE: 6° 55'41"
DESIGN SPEEDS
25 MPH PASSENGER @ 3" UNBALANCE
15 MPH FREIGHT @ 2" UNBALANCE

REV.	DATE	DESCRIPTION	DES.	ENG.
X	XX-XX-XX	REVISION	XX	XX

DRAWN BY: HDR DATE: 03/31/2011

ASSISTANT DIRECTOR: STANDARDS & DESIGN

DIRECTOR OF ENGINEERING AND CONSTRUCTION

SCRRA ENGINEERING STANDARDS ARE INTENDED FOR SCRRA APPROVED USES ONLY. FOR NON-SCRRA APPROVED USES: SCRRA SHALL NOT BE RESPONSIBLE FOR THE ACCURACY OR COMPLETENESS OF THE DATA OR INFORMATION CONTAINED HEREIN. THE SELECTION AND USE OF THESE STANDARDS IS THE SOLE RESPONSIBILITY OF THE USER AND SHOULD NOT BE USED WITHOUT CONSULTING A REGISTERED PROFESSIONAL ENGINEER. ALL WARRANTIES AND REPRESENTATIONS OF ANY KIND ARE DISCLAIMED. ANYONE MAKING USE OF THIS INFORMATION AGREES THAT IT ASSUMES ALL LIABILITY ARISING FROM SUCH USE. NO PART OF THESE STANDARDS SHOULD BE REPRODUCED OR DISTRIBUTED IN ANY FORM OR BY ANY MEANS WITHOUT THE PRIOR WRITTEN PERMISSION OF SCRRA. ALL RIGHTS RESERVED.

METROLINK®
SOUTHERN CALIFORNIA REGIONAL RAIL AUTHORITY
ONE GATEWAY PLAZA, 12TH FLOOR, L. A., CA. 90012

ENGINEERING STANDARDS

TURNOUT LAYOUT
NO 10–136 LB RE RH WSM FROG TURNOUT
HST, SWITCH MACHINE ON TURNOUT SIDE

STANDARD 2803
SCALE: NTS
REVISION –
SHEET 1 OF 1
CADD FILE: ES2803–04

BILL OF MATERIAL				
ITEM	QTY	DESCRIPTION	DWG NO	SCRRA PART NO
1	1	SWITCH PACK, NO 10-136 LB RE MODIFIED TANGENTIAL, LH	ES2803-17	
2	1	FROG PACK, NO 10-136 LB RE WSM, LH	ES2803-41	
3	1	GUARD RAIL ASSEMBLY BOLTLESS, 26'-0" LG, 136 LB RE RAISED 1", STRAIGHT	ES2800-50	
4	1	GUARD RAIL ASSEMBLY BOLTLESS, 15'-0" LG, 136 LB RE RAISED 1", LH	ES2803-51	
5	1	INSULATED RAIL ASSEMBLY, 29'-6¾" C/W BONDED INSULATED JOINT	-	
6	1	INSULATED RAIL ASSEMBLY, 29'-11¼" C/W BONDED INSULATED JOINT	-	
7	2	DRILLED RAIL, 136 LB RE, 26'-0" LONG	-	
8	2	DRILLED RAIL, 136 LB RE, 28'-0" LONG	-	
9	1	DRILLED RAIL, 136 LB RE, 29'-4½" LONG	-	
10	1	DRILLED RAIL, 136 LB RE, 29'-9⅜" LONG	-	
11	1	DRILLED RAIL, 136 LB RE, 40'-0" LONG	-	

BILL OF MATERIAL				
ITEM	QTY	DESCRIPTION	DWG NO	SCRRA PART NO
12	1	DRILLED RAIL, 136 LB RE, 40'-4" LONG	-	
13	300	TIE SCREW, CONCRETE ⅞" DIAMETER x 6" HEX HEAD	-	
14	300	WASHER FLAT ⅞" TYPE A NARROW 15⁄16" x 1¾" x 0.134"	-	
15	300	SPRING WASHER, DOUBLE COIL (Fe6)	-	
16	1	CONCRETE TIE SET, O-59 + (3) 1:80 TIES, PLATE PADS, LH	-	
17	1	HEADBLOCK TIE LAYOUT	-	
18	224	CLIP PANDROL E2055	-	
19	224	INSULATOR PANDROL FEATURES BASE HOLDOWN NYLON HD-10	-	
20	8	CLIP PANDROL E2063	-	
21	8	INSULATION, PANDROL NYLON 6790	-	
22	116	TIE PAD PANDROL 6993SR	-	
23	150	SHIM, TO REDUCE PLATE FLEXURE	-	

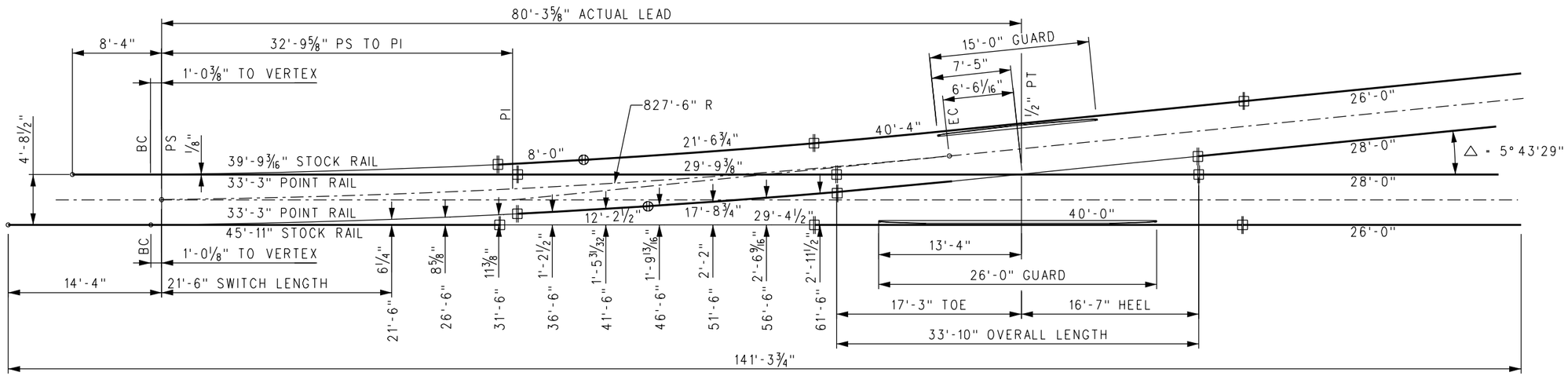

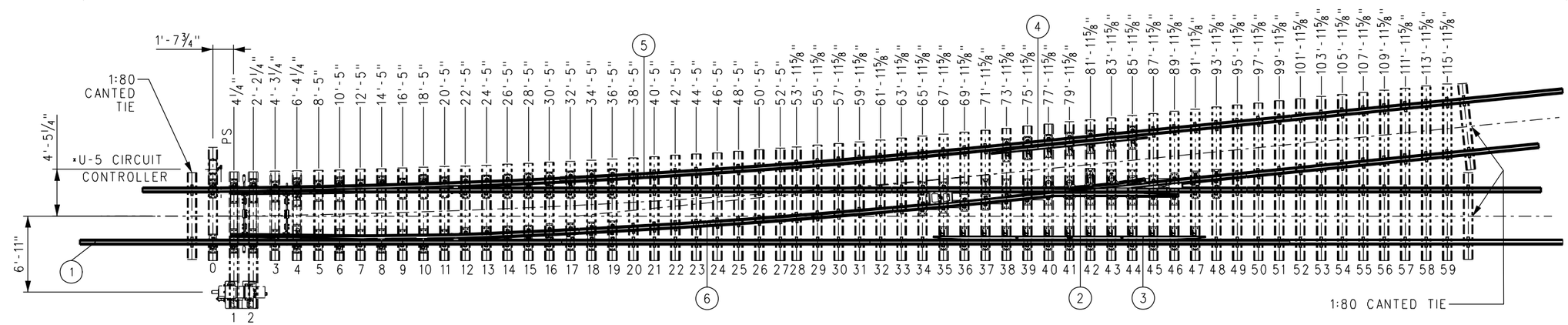

NOTES:

1. ALL RAILS SHALL HAVE IDENTIFICATION COLOR CODE PAINTED ON WEB, CLEAR OF JOINT AREA.
2. RAIL LENGTHS ALLOW ⅛" GAP BETWEEN RAIL JOINTS FOR WELDING.
3. GUARD RAILS ARE RAISED 1" AND FORM A 1⅞" FLANGEWAY.
4. SWITCH MACHINE AND MACHINE PLATE (NIC) MUST BE COORDINATED WITH SCRRA.
5. ALL LENGTHS SHALL INCLUDE 1'-9" FROM TIE ENDS TO RAIL CENTERLINE, EXCEPT AS NOTED AND 1:80 CANTED TIES.
6. TIGHTEN TIE SCREW WITH DOUBLE COIL SPRING WASHER IN PLACE.
7. ⊕ = INSULATED JOINT ⊕ = WELDED JOINT

TURNOUT DATA:

FROG
NO 10 △ = 5° 43'29"
TOE LENGTH: 17'-3"
HEEL LENGTH: 16'-7"
TOTAL LENGTH: 33'-10"

SWITCH
LENGTH OF POINTS: 21'-6" / 33'-3"
ENTRY ANGLE: 0° 37'11"
VERTEX DISTANCE: VARIES PER SIDE
THICKNESS AT POINT: ⅛"
CENTERLINE RADIUS: 827'-6"
THROW AT ROD #1: 4¾"

ACTUAL LEAD: 80'-3⅝"
CLOSURE AREA
CENTERLINE RADIUS: 827'-6"
DEGREE OF CURVE: 6° 55'41"
DESIGN SPEEDS
25 MPH PASSENGER @ 3" UNBALANCE
15 MPH FREIGHT @ 2" UNBALANCE

REV.	DATE	DESCRIPTION	DES.	ENG.
X	XX-XX-XX	REVISION	XX	XX

DRAWN BY: HDR DATE: 03/31/2011

ASSISTANT DIRECTOR: STANDARDS & DESIGN

DIRECTOR OF ENGINEERING AND CONSTRUCTION

SCRRA ENGINEERING STANDARDS ARE INTENDED FOR SCRRA APPROVED USES ONLY. FOR NON-SCRRA APPROVED USES:
SCRRA SHALL NOT BE RESPONSIBLE FOR THE ACCURACY OR COMPLETENESS OF THE DATA OR INFORMATION CONTAINED HEREIN. THE SELECTION AND USE OF THESE STANDARDS IS THE SOLE RESPONSIBILITY OF THE USER AND SHOULD NOT BE USED WITHOUT CONSULTING A REGISTERED PROFESSIONAL ENGINEER. ALL WARRANTIES AND REPRESENTATIONS OF ANY KIND ARE DISCLAIMED. ANYONE MAKING USE OF THIS INFORMATION AGREES THAT IT ASSUMES ALL LIABILITY ARISING FROM SUCH USE. NO PART OF THESE STANDARDS SHOULD BE REPRODUCED OR DISTRIBUTED IN ANY FORM OR BY ANY MEANS WITHOUT THE PRIOR WRITTEN PERMISSION OF SCRRA. ALL RIGHTS RESERVED.

METROLINK®
SOUTHERN CALIFORNIA REGIONAL RAIL AUTHORITY
ONE GATEWAY PLAZA, 12TH FLOOR, L. A., CA. 90012

ENGINEERING STANDARDS

TURNOUT LAYOUT
NO 10–136 LB RE LH WSM FROG TURNOUT
CONCRETE TIES, SWITCH MACHINE ON MAINLINE SIDE

STANDARD 2803
SCALE: NTS
REVISION –
SHEET 1 OF 1
CADD FILE: ES2803–05

BILL OF MATERIAL				
ITEM	QTY	DESCRIPTION	DWG NO	SCRRA PART NO
1	1	SWITCH PACK, NO 10-136 LB RE MODIFIED TANGENTIAL, RH	ES2803-18	
2	1	FROG PACK, NO 10-136 LB RE WSM, RH	ES2803-40	
3	1	GUARD RAIL ASSEMBLY BOLTLESS, 26'-0" LG, 136 LB RE RAISED 1", STRAIGHT	ES2800-50	
4	1	GUARD RAIL ASSEMBLY BOLTLESS, 15'-0" LG, 136 LB RE RAISED 1", RH	ES2803-52	
5	1	INSULATED RAIL ASSEMBLY, 29'-6¾" C/W BONDED INSULATED JOINT	-	
6	1	INSULATED RAIL ASSEMBLY, 29'-11¼" C/W BONDED INSULATED JOINT	-	
7	2	DRILLED RAIL, 136 LB RE, 26'-0" LONG	-	
8	2	DRILLED RAIL, 136 LB RE, 28'-0" LONG	-	
9	1	DRILLED RAIL, 136 LB RE, 29'-4½" LONG	-	
10	1	DRILLED RAIL, 136 LB RE, 29'-9⅜" LONG	-	
11	1	DRILLED RAIL, 136 LB RE, 40'-0" LONG	-	

BILL OF MATERIAL				
ITEM	QTY	DESCRIPTION	DWG NO	SCRRA PART NO
12	1	DRILLED RAIL, 136 LB RE, 40'-4" LONG	-	
13	300	TIE SCREW, CONCRETE ⅞" DIAMETER x 6" HEX HEAD	-	
14	300	WASHER FLAT ⅞" TYPE A NARROW 15/16" x 1¾" x 0.134"	-	
15	300	SPRING WASHER, DOUBLE COIL (Fe6)	-	
16	1	CONCRETE TIE SET, 0-59 + (3) 1:80 TIES, PLATE PADS, RH	-	
17	1	HEADBLOCK TIE LAYOUT	-	
18	224	CLIP PANDROL E2055	-	
19	224	INSULATOR PANDROL FEATURES BASE HOLDOWN NYLON HD-10	-	
20	8	CLIP PANDROL E2063	-	
21	8	INSULATION, PANDROL NYLON 6790	-	
22	116	TIE PAD PANDROL 6993SR	-	
23	150	SHIM, TO REDUCE PLATE FLEXURE	-	

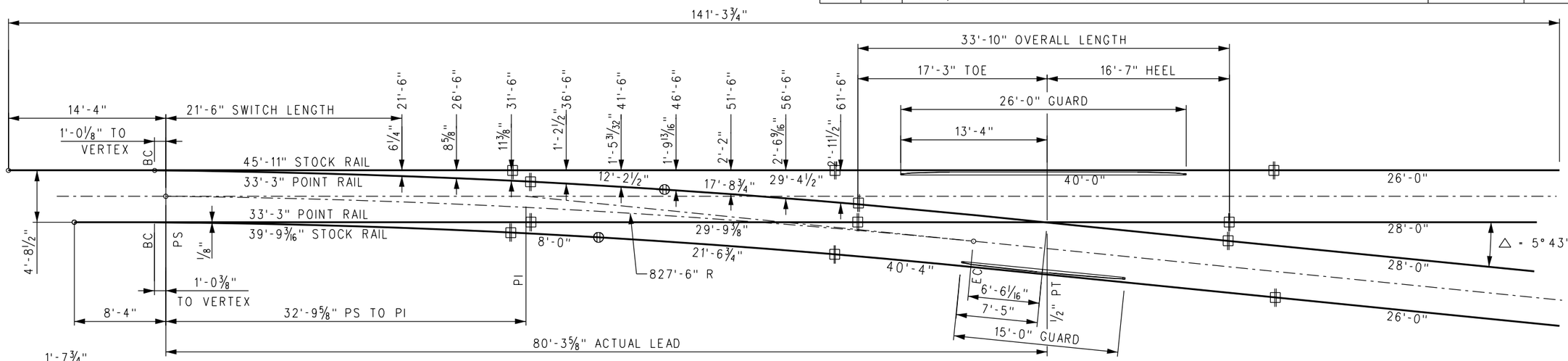

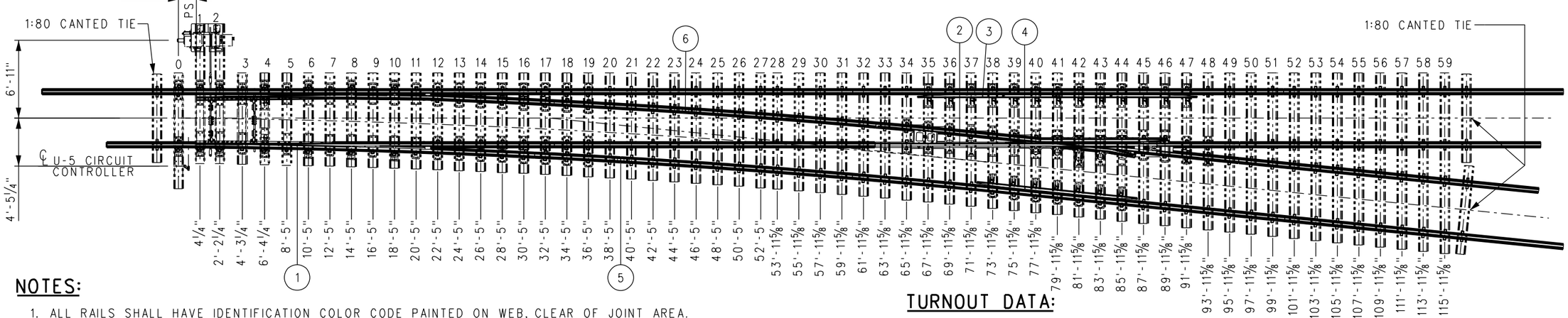

NOTES:

1. ALL RAILS SHALL HAVE IDENTIFICATION COLOR CODE PAINTED ON WEB, CLEAR OF JOINT AREA.
2. RAIL LENGTHS ALLOW ⅛" GAP BETWEEN RAIL JOINTS FOR WELDING.
3. GUARD RAILS ARE RAISED 1" AND FORM A 1⅞" FLANGEWAY.
4. SWITCH MACHINE AND MACHINE PLATE (NIC) MUST BE COORDINATED WITH SCRRA.
5. ALL LENGTHS SHALL INCLUDE 1'-9" FROM TIE ENDS TO RAIL CENTERLINE, EXCEPT AS NOTED AND 1:80 CANTED TIES.
6. TIGHTEN TIE SCREW WITH DOUBLE COIL SPRING WASHER IN PLACE.
7. ⊕ = INSULATED JOINT ⊡ = WELDED JOINT

TURNOUT DATA:

FROG
NO 10 △ = 5° 43'29"
TOE LENGTH: 17'-3"
HEEL LENGTH: 16'-7"
TOTAL LENGTH: 33'-10"

SWITCH
LENGTH OF POINTS: 21'-6" / 33'-3"
ENTRY ANGLE: 0° 37'11"
VERTEX DISTANCE: VARIES PER SIDE
THICKNESS AT POINT: ⅛"
CENTERLINE RADIUS: 827'-6"
THROW AT ROD •1: 4¾"

ACTUAL LEAD: 80'-3⅝"
CLOSURE AREA
CENTERLINE RADIUS: 827'-6"
DEGREE OF CURVE: 6° 55'41"
DESIGN SPEEDS
25 MPH PASSENGER @ 3" UNBALANCE
15 MPH FREIGHT @ 2" UNBALANCE

REV.	DATE	DESCRIPTION	DES.	ENG.
X	XX-XX-XX	REVISION	XX	XX

DRAWN BY: HDR DATE: 03/31/2011

ASSISTANT DIRECTOR: STANDARDS & DESIGN

DIRECTOR OF ENGINEERING AND CONSTRUCTION

SCRRA ENGINEERING STANDARDS ARE INTENDED FOR SCRRA APPROVED USES ONLY. FOR NON-SCRRA APPROVED USES:
SCRRA SHALL NOT BE RESPONSIBLE FOR THE ACCURACY OR COMPLETENESS OF THE DATA OR INFORMATION CONTAINED HEREIN. THE SELECTION AND USE OF THESE STANDARDS IS THE SOLE RESPONSIBILITY OF THE USER AND SHOULD NOT BE USED WITHOUT CONSULTING A REGISTERED PROFESSIONAL ENGINEER. ALL WARRANTIES AND REPRESENTATIONS OF ANY KIND ARE DISCLAIMED. ANYONE MAKING USE OF THIS INFORMATION AGREES THAT IT ASSUMES ALL LIABILITY ARISING FROM SUCH USE. NO PART OF THESE STANDARDS SHOULD BE REPRODUCED OR DISTRIBUTED IN ANY FORM OR BY ANY MEANS WITHOUT THE PRIOR WRITTEN PERMISSION OF SCRRA. ALL RIGHTS RESERVED.

METROLINK
SOUTHERN CALIFORNIA REGIONAL RAIL AUTHORITY
ONE GATEWAY PLAZA, 12TH FLOOR, L. A., CA. 90012

ENGINEERING STANDARDS

TURNOUT LAYOUT
NO 10–136 LB RE RH WSM FROG TURNOUT
CONCRETE TIES, SWITCH MACHINE ON MAINLINE SIDE

STANDARD 2803
SCALE: NTS
REVISION –
SHEET 1 OF 1
CADD FILE: ES2803–06

BILL OF MATERIAL				
ITEM	QTY	DESCRIPTION	DWG NO	SCRRA PART NO
1	1	SWITCH PACK, NO 10-136 LB RE MODIFIED TANGENTIAL, LH	ES2803-19	
2	1	FROG PACK, NO 10-136 LB RE WSM, LH	ES2803-41	
3	1	GUARD RAIL ASSEMBLY BOLTLESS, 26'-0" LG, 136 LB RE RAISED 1", STRAIGHT	ES2800-50	
4	1	GUARD RAIL ASSEMBLY BOLTLESS, 15'-0" LG, 136 LB RE RAISED 1", LH	ES2803-51	
5	1	INSULATED RAIL ASSEMBLY, 29'-6¾" C/W BONDED INSULATED JOINT	-	
6	1	INSULATED RAIL ASSEMBLY, 29'-11¼" C/W BONDED INSULATED JOINT	-	
7	2	DRILLED RAIL, 136 LB RE, 26'-0" LONG	-	
8	2	DRILLED RAIL, 136 LB RE, 28'-0" LONG	-	
9	1	DRILLED RAIL, 136 LB RE, 29'-4½" LONG	-	
10	1	DRILLED RAIL, 136 LB RE, 29'-9⅜" LONG	-	
11	1	DRILLED RAIL, 136 LB RE, 40'-0" LONG	-	

BILL OF MATERIAL				
ITEM	QTY	DESCRIPTION	DWG NO	SCRRA PART NO
12	1	DRILLED RAIL, 136 LB RE, 40'-4" LONG	-	
13	300	TIE SCREW, CONCRETE ⅞" DIAMETER x 6" HEX HEAD	-	
14	300	WASHER FLAT ⅞" TYPE A NARROW 15/16" x 1¾" x 0.134"	-	
15	300	SPRING WASHER, DOUBLE COIL (Fe6)	-	
16	1	CONCRETE TIE SET, O-59 + (3) 1:80 TIES, PLATE PADS, LH	-	
17	224	CLIP PANDROL E2055	-	
18	224	INSULATOR PANDROL FEATURES BASE HOLDOWN NYLON HD-10	-	
19	8	CLIP PANDROL E2063	-	
20	8	INSULATION, PANDROL NYLON 6790	-	
21	116	TIE PAD PANDROL 6993SR	-	
22	150	SHIM, TO REDUCE PLATE FLEXURE	-	

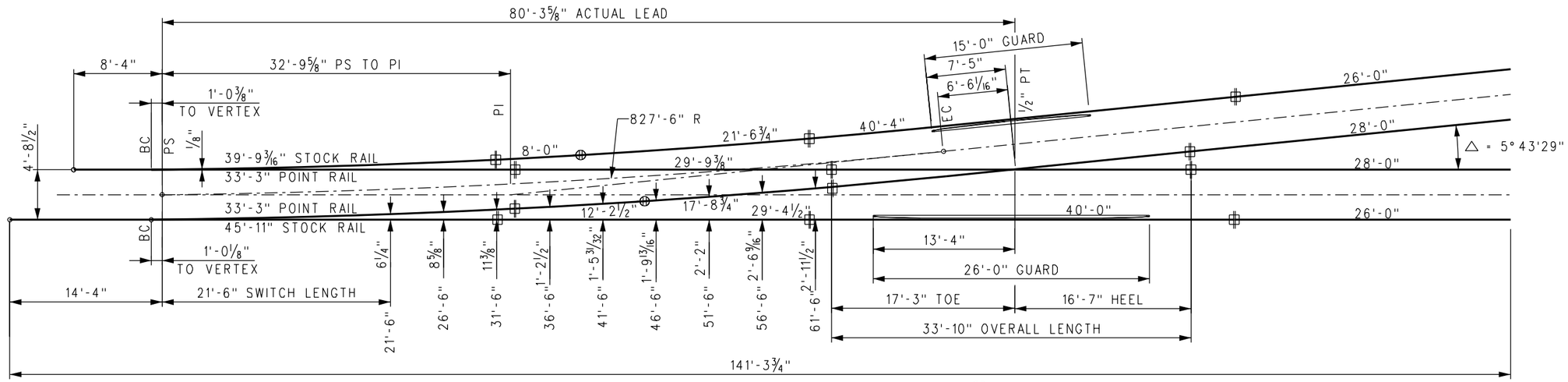

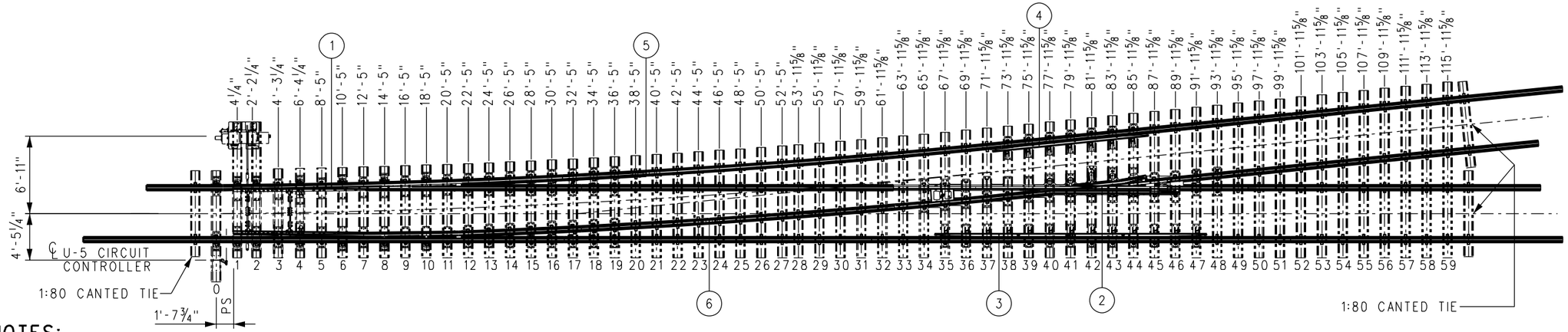

NOTES:

1. ALL RAILS SHALL HAVE IDENTIFICATION COLOR CODE PAINTED ON WEB, CLEAR OF JOINT AREA.
2. RAIL LENGTHS ALLOW ⅛" GAP BETWEEN RAIL JOINTS FOR WELDING.
3. GUARD RAILS ARE RAISED 1" AND FORM A 1⅞" FLANGEWAY.
4. SWITCH MACHINE AND MACHINE PLATE (NIC) MUST BE COORDINATED WITH SCRRA.
5. ALL LENGTHS SHALL INCLUDE 1'-9" FROM TIE ENDS TO RAIL CENTERLINE, EXCEPT AS NOTED AND 1:80 CANTED TIES.
6. TIGHTEN TIE SCREW WITH DOUBLE COIL SPRING WASHER IN PLACE.
7. ⊕ = INSULATED JOINT ⊕ = WELDED JOINT

TURNOUT DATA:

FROG
NO 10 Δ = 5° 43'29"
TOE LENGTH: 17'-3"
HEEL LENGTH: 16'-7"
TOTAL LENGTH: 33'-10"

SWITCH
LENGTH OF POINTS: 21'-6" / 33'-3"
ENTRY ANGLE: 0° 37'11"
VERTEX DISTANCE: VARIES PER SIDE
THICKNESS AT POINT: ⅛"
CENTERLINE RADIUS: 827'-6"
THROW AT ROD #1: 4¾"

ACTUAL LEAD: 80'-3⅝"
CLOSURE AREA
CENTERLINE RADIUS: 827'-6"
DEGREE OF CURVE: 6° 55'41"
DESIGN SPEEDS
25 MPH PASSENGER @ 3" UNBALANCE
15 MPH FREIGHT @ 2" UNBALANCE

REV.	DATE	DESCRIPTION	DES.	ENG.
X	XX-XX-XX	REVISION	XX	XX

DRAWN BY: HDR DATE: 03/31/2011

ASSISTANT DIRECTOR: STANDARDS & DESIGN

DIRECTOR OF ENGINEERING AND CONSTRUCTION

SCRRA ENGINEERING STANDARDS ARE INTENDED FOR SCRRA APPROVED USES ONLY. FOR NON-SCRRA APPROVED USES:
SCRRA SHALL NOT BE RESPONSIBLE FOR THE ACCURACY OR COMPLETENESS OF THE DATA OR INFORMATION CONTAINED HEREIN. THE SELECTION AND USE OF THESE STANDARDS IS THE SOLE RESPONSIBILITY OF THE USER AND SHOULD NOT BE USED WITHOUT CONSULTING A REGISTERED PROFESSIONAL ENGINEER. ALL WARRANTIES AND REPRESENTATIONS OF ANY KIND ARE DISCLAIMED. ANYONE MAKING USE OF THIS INFORMATION AGREES THAT IT ASSUMES ALL LIABILITY ARISING FROM SUCH USE. NO PART OF THESE STANDARDS SHOULD BE REPRODUCED OR DISTRIBUTED IN ANY FORM OR BY ANY MEANS WITHOUT THE PRIOR WRITTEN PERMISSION OF SCRRA. ALL RIGHTS RESERVED.

METROLINK®
SOUTHERN CALIFORNIA REGIONAL RAIL AUTHORITY
ONE GATEWAY PLAZA, 12TH FLOOR, L. A., CA. 90012

ENGINEERING STANDARDS

TURNOUT LAYOUT
NO 10–136 LB RE LH WSM FROG TURNOUT
CONCRETE TIES, SWITCH MACHINE ON TURNOUT SIDE

STANDARD 2803
SCALE: NTS
REVISION – SHEET 1 OF 1
CADD FILE: ES2803–07

BILL OF MATERIAL				
ITEM	QTY	DESCRIPTION	DWG NO	SCRRA PART NO
1	1	SWITCH PACK, NO 10-136 LB RE MODIFIED TANGENTIAL, RH	ES2803-20	
2	1	FROG PACK, NO 10-136 LB RE WSM, RH	ES2803-40	
3	1	GUARD RAIL ASSEMBLY BOLTLESS, 26'-0" LG, 136 LB RE RAISED 1", STRAIGHT	ES2800-50	
4	1	GUARD RAIL ASSEMBLY BOLTLESS, 15'-0" LG, 136 LB RE RAISED 1", RH	ES2803-52	
5	1	INSULATED RAIL ASSEMBLY, 29'-6¾" C/W BONDED INSULATED JOINT	-	
6	1	INSULATED RAIL ASSEMBLY, 29'-11¼" C/W BONDED INSULATED JOINT	-	
7	2	DRILLED RAIL, 136 LB RE, 26'-0" LONG	-	
8	2	DRILLED RAIL, 136 LB RE, 28'-0" LONG	-	
9	1	DRILLED RAIL, 136 LB RE, 29'-4½" LONG	-	
10	1	DRILLED RAIL, 136 LB RE, 29'-9⅜" LONG	-	
11	1	DRILLED RAIL, 136 LB RE, 40'-0" LONG	-	

BILL OF MATERIAL				
ITEM	QTY	DESCRIPTION	DWG NO	SCRRA PART NO
12	1	DRILLED RAIL, 136 LB RE, 40'-4" LONG	-	
13	300	TIE SCREW, CONCRETE ⅞" DIAMETER x 6" HEX HEAD	-	
14	300	WASHER FLAT ⅞" TYPE A NARROW 15/16" x 1¾" x 0.134"	-	
15	300	SPRING WASHER, DOUBLE COIL (Fe6)	-	
16	1	CONCRETE TIE SET, 0-59 + (3) 1:80 TIES, PLATE PADS, RH	-	
17	1	HEADBLOCK TIE LAYOUT	-	
18	224	CLIP PANDROL E2055	-	
19	224	INSULATOR PANDROL FEATURES BASE HOLDOWN NYLON HD-10	-	
20	8	CLIP PANDROL E2063	-	
21	8	INSULATION, PANDROL NYLON 6790	-	
22	116	TIE PAD PANDROL 6993SR	-	
23	150	SHIM, TO REDUCE PLATE FLEXURE	-	

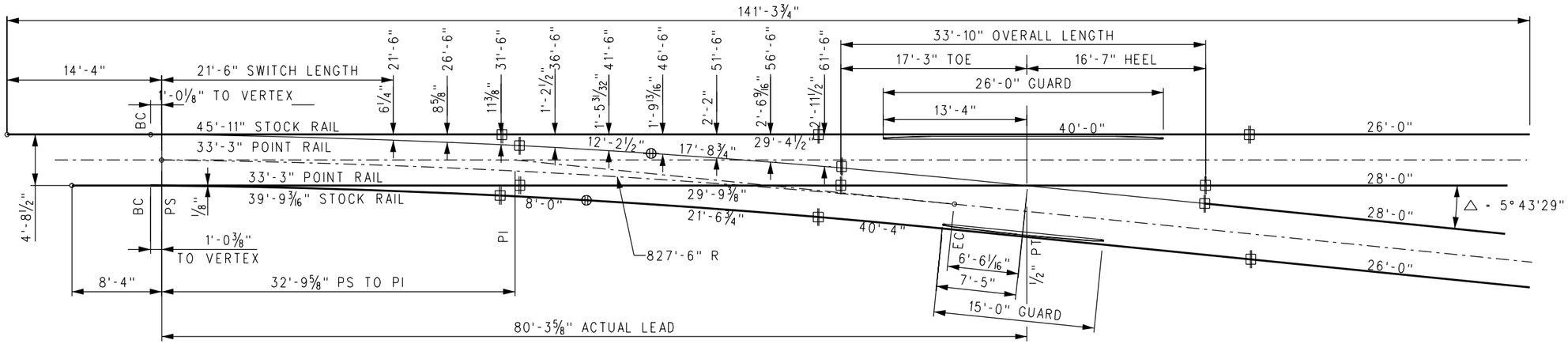

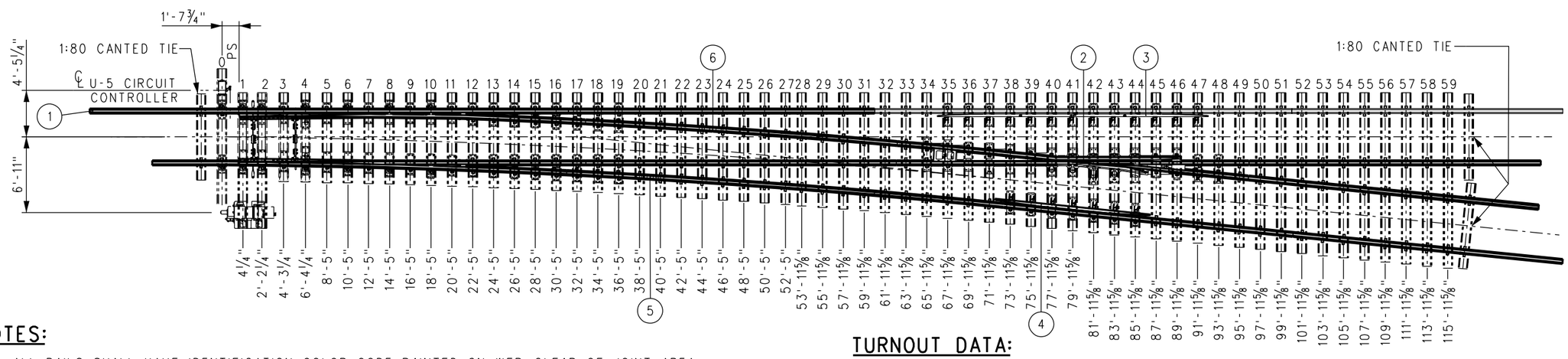

NOTES:

1. ALL RAILS SHALL HAVE IDENTIFICATION COLOR CODE PAINTED ON WEB, CLEAR OF JOINT AREA.
2. RAIL LENGTHS ALLOW ⅛" GAP BETWEEN RAIL JOINTS FOR WELDING.
3. GUARD RAILS ARE RAISED 1" AND FORM A 1⅞" FLANGEWAY.
4. SWITCH MACHINE AND MACHINE PLATE (NIC) MUST BE COORDINATED WITH SCRRA.
5. ALL LENGTHS SHALL INCLUDE 1'-9" FROM TIE ENDS TO RAIL CENTERLINE, EXCEPT AS NOTED AND 1:80 CANTED TIES.
6. TIGHTEN TIE SCREW WITH DOUBLE COIL SPRING WASHER IN PLACE.
7. ⊕ = INSULATED JOINT ⊕ = WELDED JOINT

TURNOUT DATA:

FROG
NO 10 △ = 5°43'29"
TOE LENGTH: 17'-3"
HEEL LENGTH: 16'-7"
TOTAL LENGTH: 33'-10"

SWITCH
LENGTH OF POINTS: 21'-6" / 33'-3"
ENTRY ANGLE: 0°37'11"
VERTEX DISTANCE: VARIES PER SIDE
THICKNESS AT POINT: ⅛"
CENTERLINE RADIUS: 827'-6"
THROW AT ROD #1: 4¾"

ACTUAL LEAD: 80'-3⅝"
CLOSURE AREA
CENTERLINE RADIUS: 827'-6"
DEGREE OF CURVE: 6°55'41"
DESIGN SPEEDS
25 MPH PASSENGER @ 3" UNBALANCE
15 MPH FREIGHT @ 2" UNBALANCE

REV.	DATE	DESCRIPTION	DES.	ENG.
X	XX-XX-XX	REVISION	XX	XX

DRAWN BY: DRAFTER DATE: 03/23/2011

ASSISTANT DIRECTOR: STANDARDS & DESIGN

DIRECTOR OF ENGINEERING AND CONSTRUCTION

SCRRA ENGINEERING STANDARDS ARE INTENDED FOR SCRRA APPROVED USES ONLY. FOR NON-SCRRA APPROVED USES:
SCRRA SHALL NOT BE RESPONSIBLE FOR THE ACCURACY OR COMPLETENESS OF THE DATA OR INFORMATION CONTAINED HEREIN. THE SELECTION AND USE OF THESE STANDARDS IS THE SOLE RESPONSIBILITY OF THE USER AND SHOULD NOT BE USED WITHOUT CONSULTING A REGISTERED PROFESSIONAL ENGINEER. ALL WARRANTIES AND REPRESENTATIONS OF ANY KIND ARE DISCLAIMED. ANYONE MAKING USE OF THIS INFORMATION AGREES THAT IT ASSUMES ALL LIABILITY ARISING FROM SUCH USE. NO PART OF THESE STANDARDS SHOULD BE REPRODUCED OR DISTRIBUTED IN ANY FORM OR BY ANY MEANS WITHOUT THE PRIOR WRITTEN PERMISSION OF SCRRA. ALL RIGHTS RESERVED.

METROLINK®
SOUTHERN CALIFORNIA REGIONAL RAIL AUTHORITY
ONE GATEWAY PLAZA, 12TH FLOOR, L. A., CA. 90012

ENGINEERING STANDARDS

TURNOUT LAYOUT
NO 10–136 LB RE RH WSM FROG TURNOUT
CONCRETE TIES, SWITCH MACHINE ON TURNOUT SIDE

STANDARD: ES2803
SCALE: NTS
REVISION: –
SHEET: 1 OF 1
CADD FILE: ES2803–08

BILL OF MATERIAL				
ITEM	QTY	DESCRIPTION	DWG NO	SCRRA PART NO
1	1	SWITCH PACK, NO 10-136 LB RE MODIFIED TANGENTIAL, LH	ES2803-17	
2	1	FROG PACK, NO 10-136 LB RE WSM, LH	ES2803-41	
3	1	GUARD RAIL ASSEMBLY BOLTLESS, 26'-0" LG, 136 LB RE RAISED 1", STRAIGHT	ES2800-50	
4	1	GUARD RAIL ASSEMBLY BOLTLESS, 15'-0" LG, 136 LB RE RAISED 1", LH	ES2803-51	
5	1	INSULATED RAIL ASSEMBLY, 29'-6¾" C/W BONDED INSULATED JOINT	-	
6	1	INSULATED RAIL ASSEMBLY, 29'-11¼" C/W BONDED INSULATED JOINT	-	
7	2	DRILLED RAIL, 136 LB RE, 26'-0" LONG	-	
8	2	DRILLED RAIL, 136 LB RE, 28'-0" LONG	-	
9	1	DRILLED RAIL, 136 LB RE, 29'-4½" LONG	-	
10	1	DRILLED RAIL, 136 LB RE, 29'-9⅜" LONG	-	
11	1	DRILLED RAIL, 136 LB RE, 40'-0" LONG	-	
12	1	DRILLED RAIL, 136 LB RE, 40'-4" LONG	-	
13	300	TIE SCREW, CONCRETE ⅞" DIAMETER x 6" HEX HEAD	-	
14	300	WASHER FLAT ⅞" TYPE A NARROW 15⁄16" x 1¾" x 0.134"	-	

BILL OF MATERIAL				
ITEM	QTY	DESCRIPTION	DWG NO	SCRRA PART NO
15	300	SPRING WASHER, DOUBLE COIL (Fe6)	-	
16	1	CONCRETE TIE SET, 0-59 + (3) 1:80 TIES, PLATE PADS, LH	-	
17	224	CLIP PANDROL E2055	-	
18	224	INSULATOR PANDROL FEATURES BASE HOLDOWN NYLON HD-10	-	
19	8	CLIP PANDROL E2063	-	
20	8	INSULATION, PANDROL NYLON 6790	-	
21	116	TIE PAD PANDROL 6993SR	-	
22	10	PLOW BOLT, ¾" DIA x 3½" LONG, ROUND HEAD, SQ NECK, GR 8	-	
23	10	WASHER, ¾" DIA, PLAIN, TYPE 'A' WIDE, 13⁄16" x 2" x 0.148" THICK	-	
24	10	SPRING WASHER, ¾" DIA, 7⁄16" THICK	-	
25	10	NUT, ¾" DIA, HEAVY HEX, GR 8	-	
26	1	SWITCH STAND MOUNTING PLATE, LOCK1-RH	-	
27	1	SWITCH STAND MOUNTING PLATE, LOCK2-RH	-	
28	150	SHIM, TO REDUCE PLATE FLEXURE	-	
29	1	SWITCH STAND ASSY NO 36E WITH ROD, TARGET AND BALL HANDLE	-	

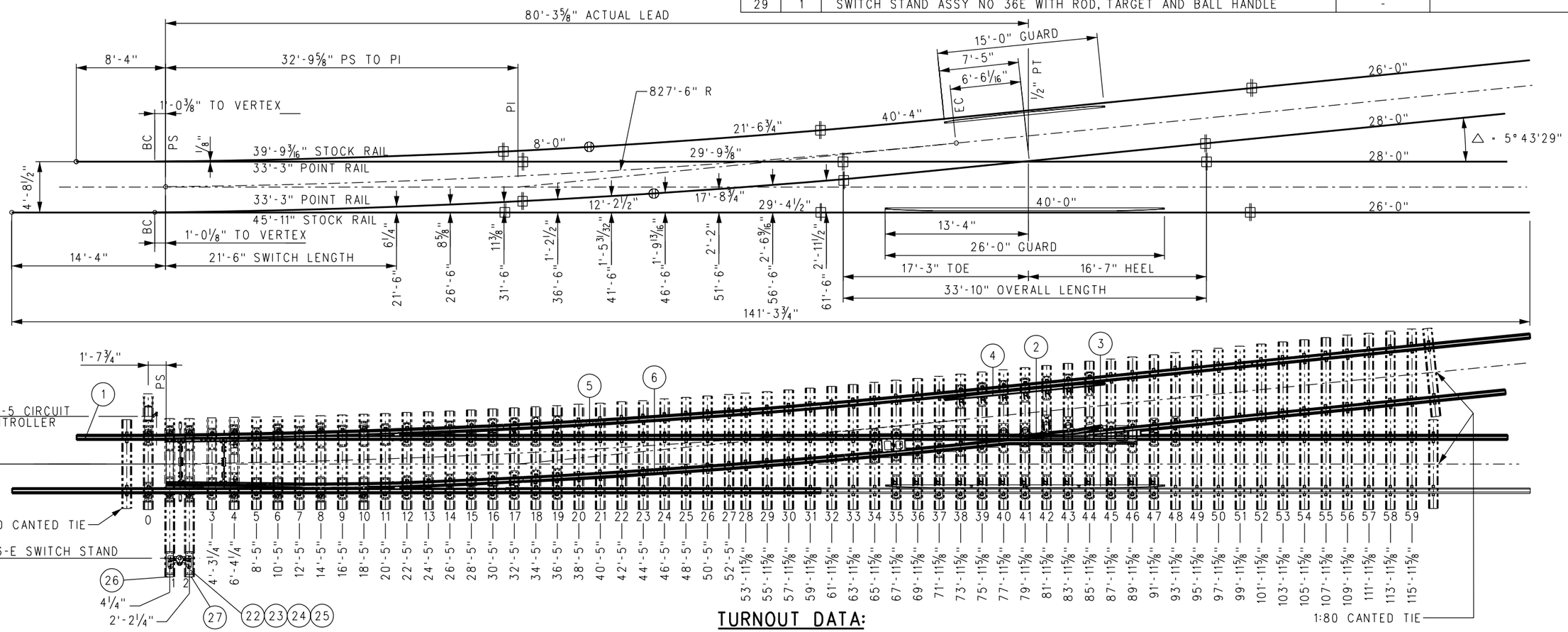

NOTES:

1. ALL RAILS SHALL HAVE IDENTIFICATION COLOR CODE PAINTED ON WEB, CLEAR OF JOINT AREA.
2. RAIL LENGTHS ALLOW ⅛" GAP BETWEEN RAIL JOINTS FOR WELDING.
3. GUARD RAILS ARE RAISED 1" AND FORM A 1⅞" FLANGEWAY.
4. SWITCH MACHINE AND MACHINE PLATE (NIC) MUST BE COORDINATED WITH SCRRA.
5. ALL LENGTHS SHALL INCLUDE 1'-9" FROM TIE ENDS TO RAIL CENTERLINE, EXCEPT AS NOTED AND 1:80 CANTED TIES.
6. TIGHTEN TIE SCREW WITH DOUBLE COIL SPRING WASHER IN PLACE.
7. ⊕ = INSULATED JOINT ⊡ = WELDED JOINT

TURNOUT DATA:

FROG
NO 10 Δ = 5° 43'29"
TOE LENGTH: 17'-3"
HEEL LENGTH: 16'-7"
TOTAL LENGTH: 33'-10"

SWITCH
LENGTH OF POINTS: 21'-6" / 33'-3"
ENTRY ANGLE: 0° 37'11"
VERTEX DISTANCE: VARIES PER SIDE
THICKNESS AT POINT: ⅛"
CENTERLINE RADIUS: 827'-6"
THROW AT ROD #1: 4¾"

ACTUAL LEAD: 80'-3⅝"
CLOSURE AREA
CENTERLINE RADIUS: 827'-6"
DEGREE OF CURVE: 6° 55'41"
DESIGN SPEEDS
25 MPH PASSENGER @ 3" UNBALANCE
15 MPH FREIGHT @ 2" UNBALANCE

REV.	DATE	DESCRIPTION	DES.	ENG.
X	XX-XX-XX	REVISION	XX	XX

DRAWN BY: HDR DATE: 03/31/2011

ASSISTANT DIRECTOR: STANDARDS & DESIGN

DIRECTOR OF ENGINEERING AND CONSTRUCTION

SCRRA ENGINEERING STANDARDS ARE INTENDED FOR SCRRA APPROVED USES ONLY. FOR NON-SCRRA APPROVED USES:
SCRRA SHALL NOT BE RESPONSIBLE FOR THE ACCURACY OR COMPLETENESS OF THE DATA OR INFORMATION CONTAINED HEREIN. THE SELECTION AND USE OF THESE STANDARDS IS THE SOLE RESPONSIBILITY OF THE USER AND SHOULD NOT BE USED WITHOUT CONSULTING A REGISTERED PROFESSIONAL ENGINEER. ALL WARRANTIES AND REPRESENTATIONS OF ANY KIND ARE DISCLAIMED. ANYONE MAKING USE OF THIS INFORMATION AGREES THAT IT ASSUMES ALL LIABILITY ARISING FROM SUCH USE. NO PART OF THESE STANDARDS SHOULD BE REPRODUCED OR DISTRIBUTED IN ANY FORM OR BY ANY MEANS WITHOUT THE PRIOR WRITTEN PERMISSION OF SCRRA. ALL RIGHTS RESERVED.

METROLINK®
SOUTHERN CALIFORNIA REGIONAL RAIL AUTHORITY
ONE GATEWAY PLAZA, 12TH FLOOR, L. A., CA. 90012

ENGINEERING STANDARDS

TURNOUT LAYOUT
NO 10–136 LB RE LH WSM FROG TURNOUT
CONCRETE TIES, SWITCH STAND ON MAINLINE SIDE

STANDARD 2803
SCALE: NTS
REVISION – SHEET 1 OF 1
CADD FILE: ES2803–09

BILL OF MATERIAL				
ITEM	QTY	DESCRIPTION	DWG NO	SCRRA PART NO
1	1	SWITCH PACK, NO 10-136 LB RE MODIFIED TANGENTIAL, RH	ES2803-18	
2	1	FROG PACK, NO 10-136 LB RE WSM, RH	ES2803-40	
3	1	GUARD RAIL ASSEMBLY BOLTLESS, 26'-0" LG, 136 LB RE RAISED 1", STRAIGHT	ES2800-50	
4	1	GUARD RAIL ASSEMBLY BOLTLESS, 15'-0" LG, 136 LB RE RAISED 1", RH	ES2803-52	
5	1	INSULATED RAIL ASSEMBLY, 29'-6¾" C/W BONDED INSULATED JOINT	-	
6	1	INSULATED RAIL ASSEMBLY, 29'-11¼" C/W BONDED INSULATED JOINT	-	
7	2	DRILLED RAIL, 136 LB RE, 26'-0" LONG	-	
8	2	DRILLED RAIL, 136 LB RE, 28'-0" LONG	-	
9	1	DRILLED RAIL, 136 LB RE, 29'-4½" LONG	-	
10	1	DRILLED RAIL, 136 LB RE, 29'-9⅜" LONG	-	
11	1	DRILLED RAIL, 136 LB RE, 40'-0" LONG	-	
12	1	DRILLED RAIL, 136 LB RE, 40'-4" LONG	-	
13	300	TIE SCREW, CONCRETE ⅞" DIAMETER x 6" HEX HEAD	-	
14	300	WASHER FLAT ⅞" TYPE A NARROW 15⁄16" x 1¾" x 0.134"	-	

BILL OF MATERIAL				
ITEM	QTY	DESCRIPTION	DWG NO	SCRRA PART NO
15	300	SPRING WASHER, DOUBLE COIL (Fe6)	-	
16	1	CONCRETE TIE SET, 0-59 + (3) 1:80 TIES, PLATE PADS, RH	-	
17	224	CLIP PANDROL E2055	-	
18	224	INSULATOR PANDROL FEATURES BASE HOLDOWN NYLON HD-10	-	
19	8	CLIP PANDROL E2063	-	
20	8	INSULATION, PANDROL NYLON 6790	-	
21	116	TIE PAD PANDROL 6993SR	-	
22	10	PLOW BOLT, ¾" DIA x 3½" LG, ROUND HEAD, SQ NECK, GR 8	-	
23	10	WASHER, ¾" DIA, PLAIN, TYPE 'A' WIDE, 13⁄16" x 2" x 0.148" THICK	-	
24	10	SPRING WASHER, ¾" DIA, 7⁄16" THICK	-	
25	10	NUT, ¾" DIA, HEAVY HEX, GR 8	-	
26	1	SWITCH STAND MOUNTING PLATE, LOCK1-LH	-	
27	1	SWITCH STAND MOUNTING PLATE, LOCK2-LH	-	
28	150	SHIM, TO REDUCE PLATE FLEXURE	-	
29	1	SWITCH STAND ASSY NO 36E WITH ROD, TARGET & BALL HANDLE	-	

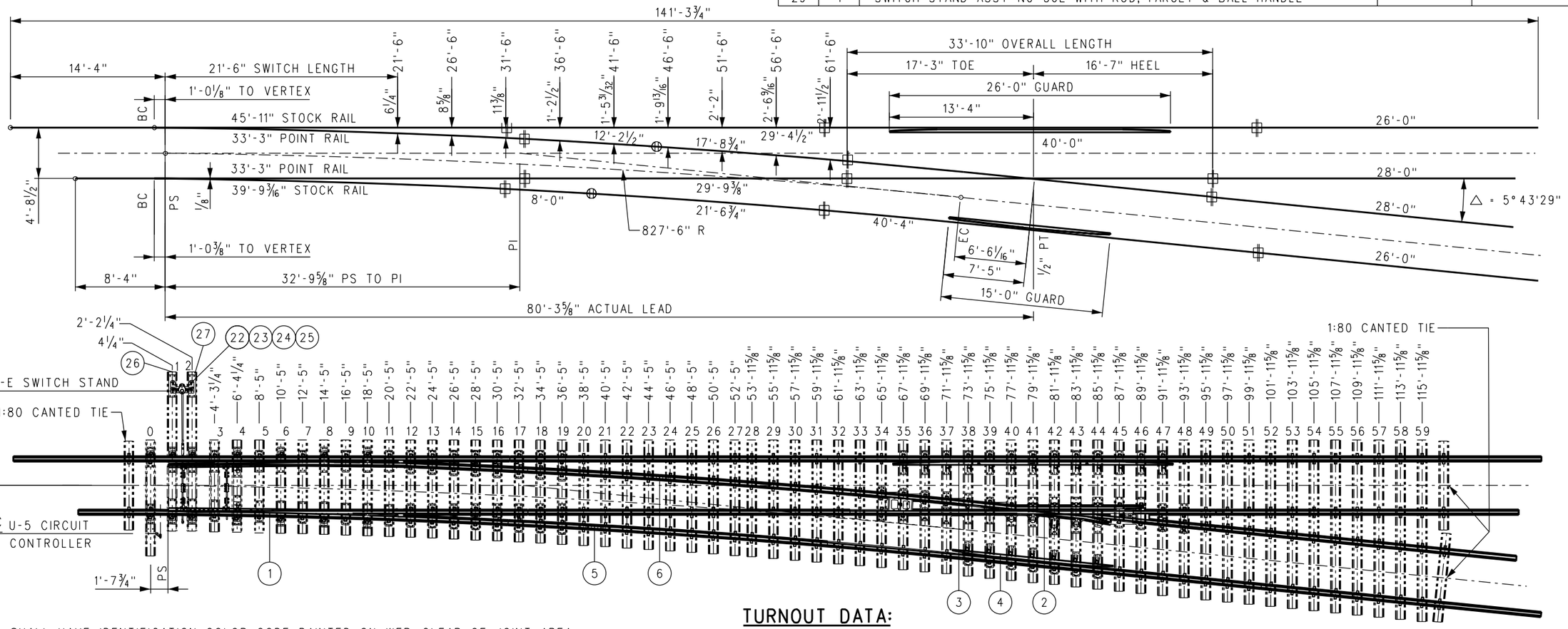

NOTES:

1. ALL RAILS SHALL HAVE IDENTIFICATION COLOR CODE PAINTED ON WEB, CLEAR OF JOINT AREA.
2. RAIL LENGTHS ALLOW ⅛" GAP BETWEEN RAIL JOINTS FOR WELDING.
3. GUARD RAILS ARE RAISED 1" AND FORM A 1⅞" FLANGEWAY.
4. SWITCH MACHINE AND MACHINE PLATE (NIC) MUST BE COORDINATED WITH SCRRA.
5. ALL LENGTHS SHALL INCLUDE 1'-9" FROM TIE ENDS TO RAIL CENTERLINE, EXCEPT AS NOTED AND 1:80 CANTED TIES.
6. TIGHTEN TIE SCREW WITH DOUBLE COIL SPRING WASHER IN PLACE.
7. ⊕ = INSULATED JOINT ⌽ = WELDED JOINT

TURNOUT DATA:

FROG
NO 10 △ = 5° 43'29"
TOE LENGTH: 17'-3"
HEEL LENGTH: 16'-7"
TOTAL LENGTH: 33'-10"

SWITCH
LENGTH OF POINTS: 21'-6"/33'-3"
ENTRY ANGLE: 0° 37'11"
VERTEX DISTANCE: VARIES PER SIDE
THICKNESS AT POINT: ⅛"
CENTERLINE RADIUS: 827'-6"
THROW AT ROD #1: 4¾"

ACTUAL LEAD: 80'-3⅝"
CLOSURE AREA
CENTERLINE RADIUS: 827'-6"
DEGREE OF CURVE: 6° 55'41"
DESIGN SPEEDS
25 MPH PASSENGER @ 3" UNBALANCE
15 MPH FREIGHT @ 2" UNBALANCE

REV.	DATE	DESCRIPTION	DES.	ENG.
X	XX-XX-XX	REVISION	XX	XX

DRAWN BY: HDR DATE: 03/31/2011

ASSISTANT DIRECTOR: STANDARDS & DESIGN

DIRECTOR OF ENGINEERING AND CONSTRUCTION

SCRRA ENGINEERING STANDARDS ARE INTENDED FOR SCRRA APPROVED USES ONLY. FOR NON-SCRRA APPROVED USES: SCRRA SHALL NOT BE RESPONSIBLE FOR THE ACCURACY OR COMPLETENESS OF THE DATA OR INFORMATION CONTAINED HEREIN. THE SELECTION AND USE OF THESE STANDARDS IS THE SOLE RESPONSIBILITY OF THE USER AND SHOULD NOT BE USED WITHOUT CONSULTING A REGISTERED PROFESSIONAL ENGINEER. ALL WARRANTIES AND REPRESENTATIONS OF ANY KIND ARE DISCLAIMED. ANYONE MAKING USE OF THIS INFORMATION AGREES THAT IT ASSUMES ALL LIABILITY ARISING FROM SUCH USE. NO PART OF THESE STANDARDS SHOULD BE REPRODUCED OR DISTRIBUTED IN ANY FORM OR BY ANY MEANS WITHOUT THE PRIOR WRITTEN PERMISSION OF SCRRA. ALL RIGHTS RESERVED.

METROLINK®
SOUTHERN CALIFORNIA REGIONAL RAIL AUTHORITY
ONE GATEWAY PLAZA, 12TH FLOOR, L. A., CA. 90012

ENGINEERING STANDARDS

TURNOUT LAYOUT
NO 10–136 LB RE RH WSM FROG TURNOUT
CONCRETE TIES, SWITCH STAND ON MAINLINE SIDE

STANDARD 2803
SCALE: NTS
REVISION –
SHEET 1 OF 1
CADD FILE: ES2803–10

BILL OF MATERIAL				
ITEM	QTY	DESCRIPTION	DWG NO	SCRRA PART NO
1	1	SWITCH PACK, NO 10-136 LB RE MODIFIED TANGENTIAL, LH	ES2803-19	
2	1	FROG PACK, NO 10-136 LB RE WSM, LH	ES2803-41	
3	1	GUARD RAIL ASSEMBLY BOLTLESS, 26'-0" LG, 136 LB RE RAISED 1", STRAIGHT	ES2800-50	
4	1	GUARD RAIL ASSEMBLY BOLTLESS, 15'-0" LG, 136 LB RE RAISED 1", LH	ES2803-51	
5	1	INSULATED RAIL ASSEMBLY, 29'-6¾" C/W BONDED INSULATED JOINT	-	
6	1	INSULATED RAIL ASSEMBLY, 29'-11¼" C/W BONDED INSULATED JOINT	-	
7	2	DRILLED RAIL, 136 LB RE, 26'-0" LONG	-	
8	2	DRILLED RAIL, 136 LB RE, 28'-0" LONG	-	
9	1	DRILLED RAIL, 136 LB RE, 29'-4½" LONG	-	
10	1	DRILLED RAIL, 136 LB RE, 29'-9⅜" LONG	-	
11	1	DRILLED RAIL, 136 LB RE, 40'-0" LONG	-	
12	1	DRILLED RAIL, 136 LB RE, 40'-4" LONG	-	
13	300	TIE SCREW, CONCRETE ⅞" DIAMETER x 6" HEX HEAD	-	
14	300	WASHER FLAT ⅞" TYPE A NARROW 15⁄16" x 1¾" x 0.134"	-	

BILL OF MATERIAL				
ITEM	QTY	DESCRIPTION	DWG NO	SCRRA PART NO
15	300	SPRING WASHER, DOUBLE COIL (Fe6)	-	
16	1	CONCRETE TIE SET, 0-59 + (3) 1:80 TIES, PLATE PADS, LH	-	
17	224	CLIP PANDROL E2055	-	
18	224	INSULATOR PANDROL FEATURES BASE HOLDOWN NYLON HD-10	-	
19	8	CLIP PANDROL E2063	-	
20	8	INSULATION, PANDROL NYLON 6790	-	
21	116	TIE PAD PANDROL 6993SR	-	
22	10	PLOW BOLT, ¾" DIA x 3½" LONG, ROUND HEAD, SQ NECK, GR 8	-	
23	10	WASHER, ¾" DIA, PLAIN, TYPE 'A' WIDE, 13⁄16" x 2" x 0.148" THICK	-	
24	10	SPRING WASHER, ¾" DIA, 7⁄16" THICK	-	
25	10	NUT, ¾" DIA, HEAVY HEX, GR 8	-	
26	1	SWITCH STAND MOUNTING PLATE, LOCK1-LH	-	
27	1	SWITCH STAND MOUNTING PLATE, LOCK2-LH	-	
28	150	SHIM, TO REDUCE PLATE FLEXURE	-	
29	1	SWITCH STAND ASSY NO 36E WITH ROD, TARGET AND BALL HANDLE	-	

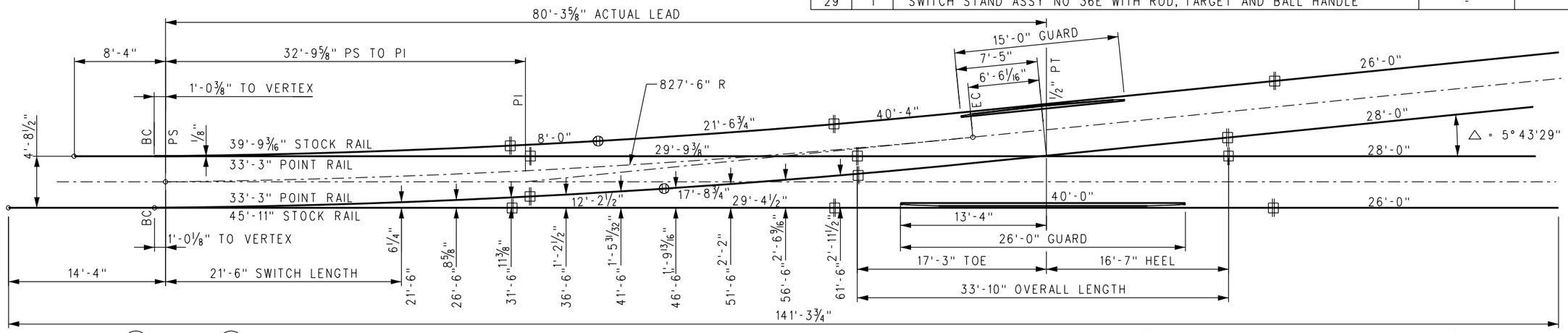

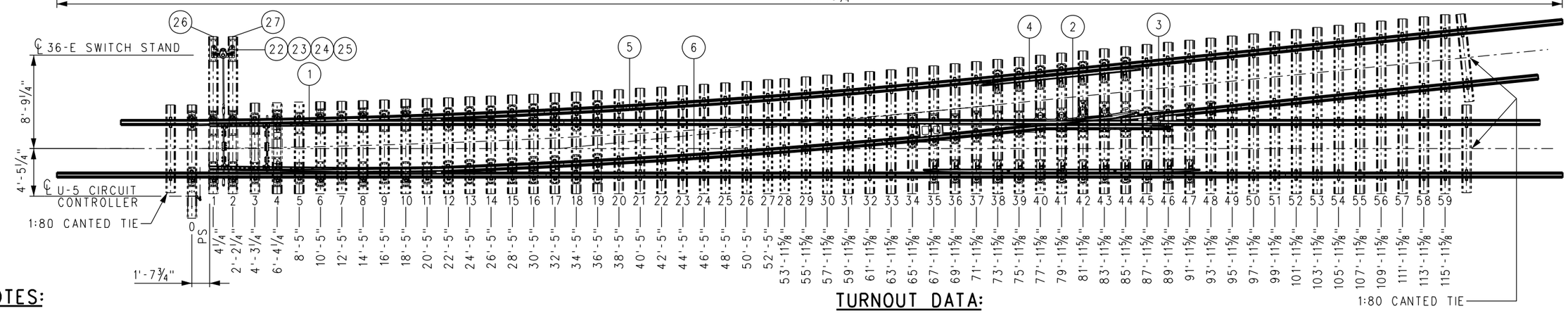

NOTES:

1. ALL RAILS SHALL HAVE IDENTIFICATION COLOR CODE PAINTED ON WEB, CLEAR OF JOINT AREA.
2. RAIL LENGTHS ALLOW ⅛" GAP BETWEEN RAIL JOINTS FOR WELDING.
3. GUARD RAILS ARE RAISED 1" AND FORM A 1⅞" FLANGEWAY.
4. SWITCH MACHINE AND MACHINE PLATE (NIC) MUST BE COORDINATED WITH SCRRA.
5. ALL LENGTHS SHALL INCLUDE 1'-9" FROM TIE ENDS TO RAIL CENTERLINE, EXCEPT AS NOTED AND 1:80 CANTED TIES.
6. TIGHTEN TIE SCREW WITH DOUBLE COIL SPRING WASHER IN PLACE.
7. ⊕ = INSULATED JOINT ⊡ = WELDED JOINT

TURNOUT DATA:

FROG
NO 10 △ = 5°43'29"
TOE LENGTH: 17'-3"
HEEL LENGTH: 16'-7"
TOTAL LENGTH: 33'-10"

SWITCH
LENGTH OF POINTS: 21'-6" / 33'-3"
ENTRY ANGLE: 0°37'11"
VERTEX DISTANCE: VARIES PER SIDE
THICKNESS AT POINT: ⅛"
CENTERLINE RADIUS: 827'-6"
THROW AT ROD #1: 4¾"

ACTUAL LEAD: 80'-3⅝"
CLOSURE AREA
CENTERLINE RADIUS: 827'-6"
DEGREE OF CURVE: 6°55'41"
DESIGN SPEEDS
25 MPH PASSENGER @ 3" UNBALANCE
15 MPH FREIGHT @ 2" UNBALANCE

REV.	DATE	DESCRIPTION	DES.	ENG.
X	XX-XX-XX	REVISION	XX	XX

DRAWN BY: HDR DATE: 03/31/2011

ASSISTANT DIRECTOR: STANDARDS & DESIGN

DIRECTOR OF ENGINEERING AND CONSTRUCTION

SCRRA ENGINEERING STANDARDS ARE INTENDED FOR SCRRA APPROVED USES ONLY. FOR NON-SCRRA APPROVED USES: SCRRA SHALL NOT BE RESPONSIBLE FOR THE ACCURACY OR COMPLETENESS OF THE DATA OR INFORMATION CONTAINED HEREIN. THE SELECTION AND USE OF THESE STANDARDS IS THE SOLE RESPONSIBILITY OF THE USER AND SHOULD NOT BE USED WITHOUT CONSULTING A REGISTERED PROFESSIONAL ENGINEER. ALL WARRANTIES AND REPRESENTATIONS OF ANY KIND ARE DISCLAIMED. ANYONE MAKING USE OF THIS INFORMATION AGREES THAT IT ASSUMES ALL LIABILITY ARISING FROM SUCH USE. NO PART OF THESE STANDARDS SHOULD BE REPRODUCED OR DISTRIBUTED IN ANY FORM OR BY ANY MEANS WITHOUT THE PRIOR WRITTEN PERMISSION OF SCRRA. ALL RIGHTS RESERVED.

METROLINK®
SOUTHERN CALIFORNIA REGIONAL RAIL AUTHORITY
ONE GATEWAY PLAZA, 12TH FLOOR, L. A., CA. 90012

ENGINEERING STANDARDS

TURNOUT LAYOUT
NO 10–136 LB RE LH WSM FROG TURNOUT
CONCRETE TIES, SWITCH STAND ON TURNOUT SIDE

STANDARD 2803
SCALE: NTS
REVISION –
SHEET 1 OF 1
CADD FILE: ES2803–11

BILL OF MATERIAL				
ITEM	QTY	DESCRIPTION	DWG NO	SCRRA PART NO
1	1	SWITCH PACK, NO 10-136 LB RE MODIFIED TANGENTIAL, RH	ES2803-20	
2	1	FROG PACK, NO 10-136 LB RE WSM, RH	ES2803-40	
3	1	GUARD RAIL ASSEMBLY BOLTLESS, 26'-0" LG, 136 LB RE RAISED 1", STRAIGHT	ES2800-50	
4	1	GUARD RAIL ASSEMBLY BOLTLESS, 15'-0" LG, 136 LB RE RAISED 1", RH	ES2803-52	
5	1	INSULATED RAIL ASSEMBLY, 29'-6¾" C/W BONDED INSULATED JOINT	-	
6	1	INSULATED RAIL ASSEMBLY, 29'-11¼" C/W BONDED INSULATED JOINT	-	
7	2	DRILLED RAIL, 136 LB RE, 26'-0" LONG	-	
8	2	DRILLED RAIL, 136 LB RE, 28'-0" LONG	-	
9	1	DRILLED RAIL, 136 LB RE, 29'-4½" LONG	-	
10	1	DRILLED RAIL, 136 LB RE, 29'-9⅜" LONG	-	
11	1	DRILLED RAIL, 136 LB RE, 40'-0" LONG	-	
12	1	DRILLED RAIL, 136 LB RE, 40'-4" LONG	-	
13	300	TIE SCREW, CONCRETE ⅞" DIAMETER x 6" HEX HEAD	-	
14	300	WASHER FLAT ⅞" TYPE A NARROW 15⁄16" x 1¾" x 0.134"	-	

BILL OF MATERIAL				
ITEM	QTY	DESCRIPTION	DWG NO	SCRRA PART NO
15	300	SPRING WASHER, DOUBLE COIL (Fe6)	-	
16	1	CONCRETE TIE SET, O-59 + (3) 1:80 TIES, PLATE PADS, RH	-	
17	224	CLIP PANDROL E2055	-	
18	224	INSULATOR PANDROL FEATURES BASE HOLDOWN NYLON HD-10	-	
19	8	CLIP PANDROL E2063	-	
20	8	INSULATION, PANDROL NYLON 6790	-	
21	116	TIE PAD PANDROL 6993SR	-	
22	10	PLOW BOLT, ¾" DIA x 3½" LG, ROUND HEAD, SQ NECK, GR 8	-	
23	10	WASHER, ¾" DIA, PLAIN, TYPE 'A' WIDE, 13⁄16" x 2" x 0.148" THICK	-	
24	10	SPRING WASHER, ¾" DIA, 7⁄16" THICK	-	
25	10	NUT, ¾" DIA, HEAVY HEX, GR 8	-	
26	1	SWITCH STAND MOUNTING PLATE, LOCK1-RH	-	
27	1	SWITCH STAND MOUNTING PLATE, LOCK2-RH	-	
28	150	SHIM, TO REDUCE PLATE FLEXURE	-	
29	1	SWITCH STAND ASSY NO 36E WITH ROD, TARGET & BALL HANDLE	-	

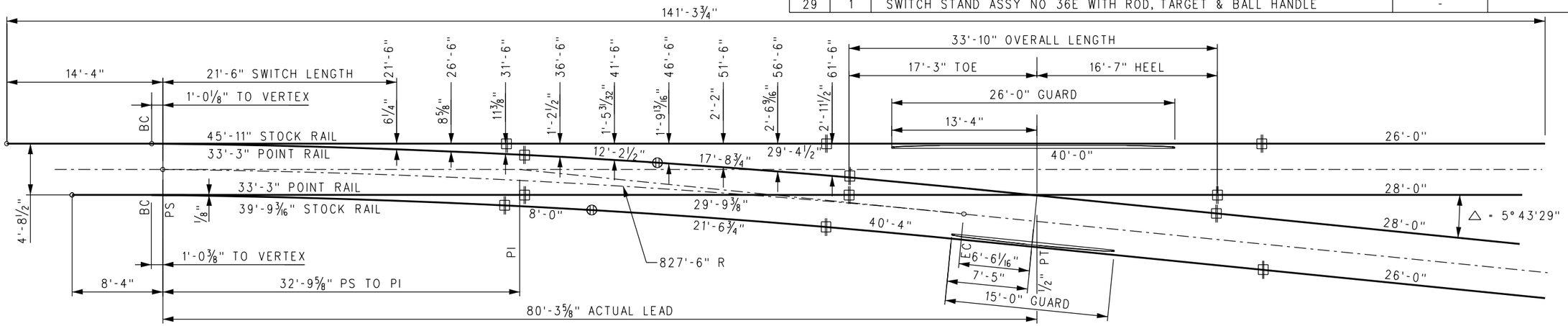

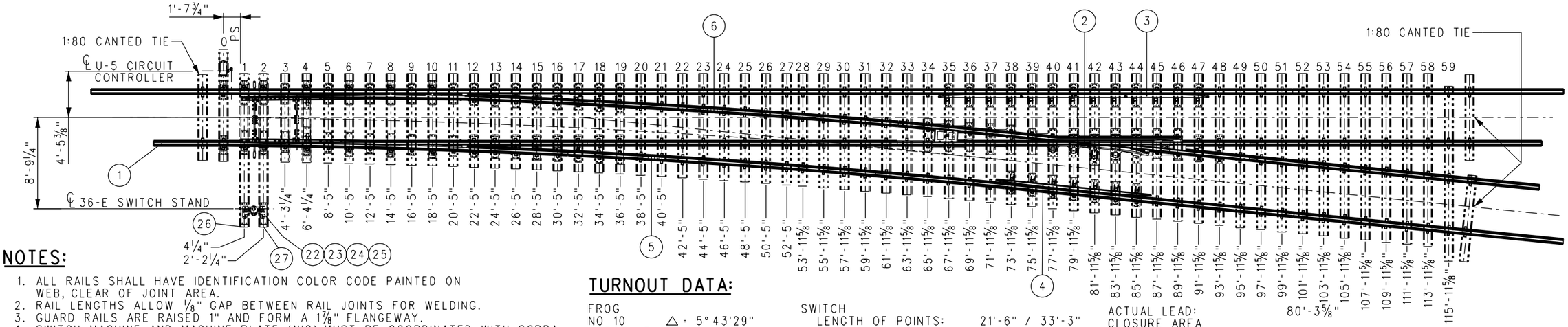

NOTES:

1. ALL RAILS SHALL HAVE IDENTIFICATION COLOR CODE PAINTED ON WEB, CLEAR OF JOINT AREA.
2. RAIL LENGTHS ALLOW ⅛" GAP BETWEEN RAIL JOINTS FOR WELDING.
3. GUARD RAILS ARE RAISED 1" AND FORM A 1⅞" FLANGEWAY.
4. SWITCH MACHINE AND MACHINE PLATE (NIC) MUST BE COORDINATED WITH SCRRA.
5. ALL LENGTHS SHALL INCLUDE 1'-9" FROM TIE ENDS TO RAIL CENTERLINE, EXCEPT AS NOTED AND 1:80 CANTED TIES.
6. TIGHTEN TIE SCREW WITH DOUBLE COIL SPRING WASHER IN PLACE.
7. ⊕ = INSULATED JOINT, ⊕ = WELDED JOINT

TURNOUT DATA:

FROG
NO 10 △ = 5° 43'29"
TOE LENGTH: 17'-3"
HEEL LENGTH: 16'-7"
TOTAL LENGTH: 33'-10"

SWITCH
LENGTH OF POINTS: 21'-6" / 33'-3"
ENTRY ANGLE: 0° 37'11"
VERTEX DISTANCE: VARIES PER SIDE
THICKNESS AT POINT: ⅛"
CENTERLINE RADIUS: 827'-6"
THROW AT ROD #1: 4¾"

ACTUAL LEAD: 80'-3⅝"
CLOSURE AREA
CENTERLINE RADIUS: 827'-6"
DEGREE OF CURVE: 6° 55'41"
DESIGN SPEEDS
25 MPH PASSENGER @ 3" UNBALANCE
15 MPH FREIGHT @ 2" UNBALANCE

REV.	DATE	DESCRIPTION	DES.	ENG.
X	XX-XX-XX	REVISION	XX	XX

DRAWN BY: HDR DATE: 03/31/2011

ASSISTANT DIRECTOR: STANDARDS & DESIGN

DIRECTOR OF ENGINEERING AND CONSTRUCTION

SCRRA ENGINEERING STANDARDS ARE INTENDED FOR SCRRA APPROVED USES ONLY. FOR NON-SCRRA APPROVED USES:
SCRRA SHALL NOT BE RESPONSIBLE FOR THE ACCURACY OR COMPLETENESS OF THE DATA OR INFORMATION CONTAINED HEREIN. THE SELECTION AND USE OF THESE STANDARDS IS THE SOLE RESPONSIBILITY OF THE USER AND SHOULD NOT BE USED WITHOUT CONSULTING A REGISTERED PROFESSIONAL ENGINEER. ALL WARRANTIES AND REPRESENTATIONS OF ANY KIND ARE DISCLAIMED. ANYONE MAKING USE OF THIS INFORMATION AGREES THAT IT ASSUMES ALL LIABILITY ARISING FROM SUCH USE. NO PART OF THESE STANDARDS SHOULD BE REPRODUCED OR DISTRIBUTED IN ANY FORM OR BY ANY MEANS WITHOUT THE PRIOR WRITTEN PERMISSION OF SCRRA. ALL RIGHTS RESERVED.

METROLINK®
SOUTHERN CALIFORNIA REGIONAL RAIL AUTHORITY
ONE GATEWAY PLAZA, 12TH FLOOR, L. A., CA. 90012

ENGINEERING STANDARDS

TURNOUT LAYOUT
NO 10–136 LB RE RH WSM FROG TURNOUT
CONCRETE TIES, SWITCH STAND ON TURNOUT SIDE

STANDARD 2803
SCALE: NTS
REVISION –
SHEET 1 OF 1
CADD FILE: ES2803–12

BILL OF MATERIAL					BILL OF MATERIAL				
ITEM	QTY	DESCRIPTION	DWG NO	SCRRA PART NO	ITEM	QTY	DESCRIPTION	DWG NO	SCRRA PART NO
1	1	HOLLOW SWITCH TIE & RODDING ASSEMBLY	ES2803-72		18	1	SWITCH PLATE (10-16LLC)	ES2803-82	
2	1	SAMSON POINT, 33'-3" LONG, DOUBLE REINFORCED, UR MANG TIP, STR, LH	ES2803-21		19	1	SWITCH PLATE (10-16LRC)	ES2803-82	
3	1	SAMSON POINT, 33'-3" LONG, DOUBLE REINFORCED, UR MANG TIP, CVD, RH	ES2803-22		20	1	SWITCH PLATE (10-17LLC)	ES2803-82	
4	1	SAMSON STOCK RAIL, 39'-9 3/16" LONG, CURVED, LH	ES2803-25		21	1	SWITCH PLATE (10-17LRC)	ES2803-82	
5	1	SAMSON STOCK RAIL, 45'-11" LONG, STRAIGHT, RH	ES2803-26		22	1	SWITCH PLATE (10-18LLC)	ES2803-83	
6	2	SWITCH PLATE, BRACE (BP1C-136)	ES2800-80		23	1	SWITCH PLATE (10-18LRC)	ES2803-83	
7	6	SWITCH PLATE, BRACE (BP2C-136)	ES2800-80		24	1	SWITCH PLATE (10-19LLC)	ES2803-83	
8	8	SWITCH PLATE (P4C-136)	ES2800-80		25	1	SWITCH PLATE (10-19LRC)	ES2803-83	
9	2	SWITCH PLATE, ROLLER (10-TR1C)	ES2800-80		26	2	HOLD DOWN CLIP (PC37A) "K" STYLE	-	
10	1	SWITCH PLATE (10-12LLC)	ES2803-81		27	2	HOLD DOWN CLIP (PC38A) "K" STYLE	-	
11	1	SWITCH PLATE (10-12LRC)	ES2803-81		28	2	HOLD DOWN CLIP (PC39A) "K" STYLE	-	
12	1	SWITCH PLATE (10-13LLC)	ES2803-81		29	2	POINT ROLLER ASSEMBLY, FLAT BACK C/W DOUBLE REINFORCED HARDWARE	-	
13	1	SWITCH PLATE (10-13LRC)	ES2803-81		30	10	BOLTLESS BRACE ASSEMBLY, SUREFIT, 136 LB RE C/W SERRATED WASHER	-	
14	1	SWITCH PLATE (10-14LLC)	ES2803-81		31	68	CLIP, PANDROL, E2055	-	
15	1	SWITCH PLATE (10-14LRC)	ES2803-81		32	6	T-BOLT, 7/8" DIAMETER 3 3/4" LONG, GR 8	-	
16	1	SWITCH PLATE (10-15LLC)	ES2803-82		33	6	SPRING WASHER 7/8" DIAMETER	-	
17	1	SWITCH PLATE (10-15LRC)	ES2803-82		34	6	NUT, 7/8" DIAMETER HEAVY HEX, GR 8	-	

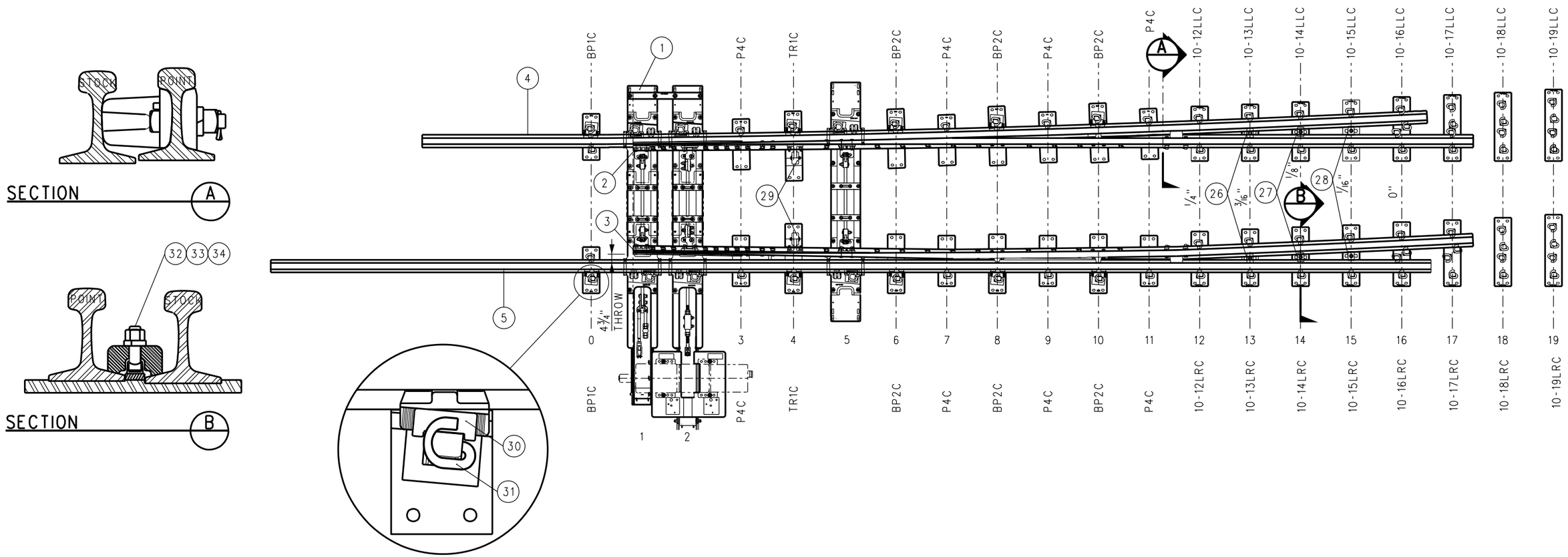

REV.	DATE	DESCRIPTION	DES.	ENG.
X	XX-XX-XX	REVISION	XX	XX

DRAWN BY: HDR DATE: 03/31/2011

ASSISTANT DIRECTOR: STANDARDS & DESIGN

DIRECTOR OF ENGINEERING AND CONSTRUCTION

SCRRA ENGINEERING STANDARDS ARE INTENDED FOR SCRRA APPROVED USES ONLY. FOR NON-SCRRA APPROVED USES:
SCRRA SHALL NOT BE RESPONSIBLE FOR THE ACCURACY OR COMPLETENESS OF THE DATA OR INFORMATION CONTAINED HEREIN. THE SELECTION AND USE OF THESE STANDARDS IS THE SOLE RESPONSIBILITY OF THE USER AND SHOULD NOT BE USED WITHOUT CONSULTING A REGISTERED PROFESSIONAL ENGINEER. ALL WARRANTIES AND REPRESENTATIONS OF ANY KIND ARE DISCLAIMED. ANYONE MAKING USE OF THIS INFORMATION AGREES THAT IT ASSUMES ALL LIABILITY ARISING FROM SUCH USE. NO PART OF THESE STANDARDS SHOULD BE REPRODUCED OR DISTRIBUTED IN ANY FORM OR BY ANY MEANS WITHOUT THE PRIOR WRITTEN PERMISSION OF SCRRA. ALL RIGHTS RESERVED.

METROLINK®

SOUTHERN CALIFORNIA REGIONAL RAIL AUTHORITY
ONE GATEWAY PLAZA, 12TH FLOOR, L. A., CA. 90012

ENGINEERING STANDARDS

NO 10–136 LB RE LH SWITCH PACK,
HOLLOW STEEL TIES,
SWITCH MACHINE ON MAINLINE SIDE

STANDARD 2803
SCALE: NTS
REVISION –
SHEET 1 OF 1
CADD FILE: ES2803–13

UserName=> carlosa Date Plotted: 10/5/2011 3:25:53 PM Plot Driver=> S:\Plot Drivers\pdf.plt FileName=> s:\V8EngStds\2000\Turnouts\No 10 Turnout\ES2803-13.dgn

BILL OF MATERIAL				
ITEM	QTY	DESCRIPTION	DWG NO	SCRRA PART NO
1	1	HOLLOW SWITCH TIE & RODDING ASSEMBLY	ES2803-71	
2	1	SAMSON POINT, 33'-3" LONG, DOUBLE REINFORCED, UR MANG TIP, CVD, LH	ES2803-23	
3	1	SAMSON POINT, 33'-3" LONG, DOUBLE REINFORCED, UR MANG TIP, STR, RH	ES2803-24	
4	1	SAMSON STOCK RAIL, 45'-11" LONG, STRAIGHT, LH	ES2803-27	
5	1	SAMSON STOCK RAIL, 39'-9 3/16" LONG, CURVED, RH	ES2803-28	
6	2	SWITCH PLATE, BRACE (BP1C-136)	ES2800-80	
7	6	SWITCH PLATE, BRACE (BP2C-136)	ES2800-80	
8	8	SWITCH PLATE (P4C-136)	ES2800-80	
9	2	SWITCH PLATE, ROLLER (10-TR1C)	ES2800-80	
10	1	SWITCH PLATE (10-12RLC)	ES2803-84	
11	1	SWITCH PLATE (10-12RRC)	ES2803-84	
12	1	SWITCH PLATE (10-13RLC)	ES2803-84	
13	1	SWITCH PLATE (10-13RRC)	ES2803-84	
14	1	SWITCH PLATE (10-14RLC)	ES2803-84	
15	1	SWITCH PLATE (10-14RRC)	ES2803-84	
16	1	SWITCH PLATE (10-15RLC)	ES2803-85	
17	1	SWITCH PLATE (10-15RRC)	ES2803-85	

BILL OF MATERIAL				
ITEM	QTY	DESCRIPTION	DWG NO	SCRRA PART NO
18	1	SWITCH PLATE (10-16RLC)	ES2803-85	
19	1	SWITCH PLATE (10-16RRC)	ES2803-85	
20	1	SWITCH PLATE (10-17RLC)	ES2803-85	
21	1	SWITCH PLATE (10-17RRC)	ES2803-85	
22	1	SWITCH PLATE (10-18RLC)	ES2803-86	
23	1	SWITCH PLATE (10-18RRC)	ES2803-86	
24	1	SWITCH PLATE (10-19RLC)	ES2803-86	
25	1	SWITCH PLATE (10-19RRC)	ES2803-86	
26	2	HOLD DOWN CLIP (PC37A) "K" STYLE	-	
27	2	HOLD DOWN CLIP (PC38A) "K" STYLE	-	
28	2	HOLD DOWN CLIP (PC39A) "K" STYLE	-	
29	2	POINT ROLLER ASSEMBLY, FLAT BACK C/W DOUBLE REINFORCED HARDWARE	-	
30	10	BOLTLESS BRACE ASSEMBLY, SUREFIT, 136 LB RE C/W SERRATED WASHER	-	
31	68	CLIP, PANDROL, E2055	-	
32	6	T-BOLT 7/8" DIAMETER 3 3/4" LONG, GR 8	-	
33	6	SPRING WASHER 7/8" DIAMETER	-	
34	6	NUT, 7/8" DIAMETER HEAVY HEX GR 8	-	

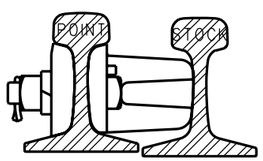

SECTION A

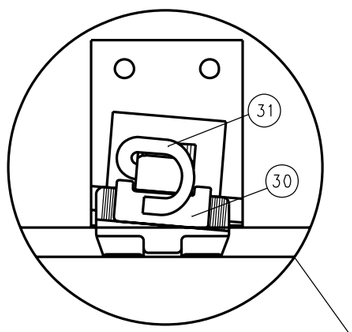

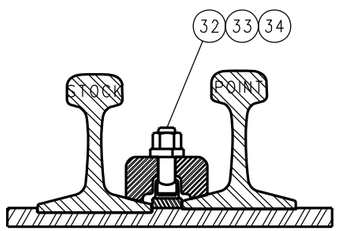

SECTION B

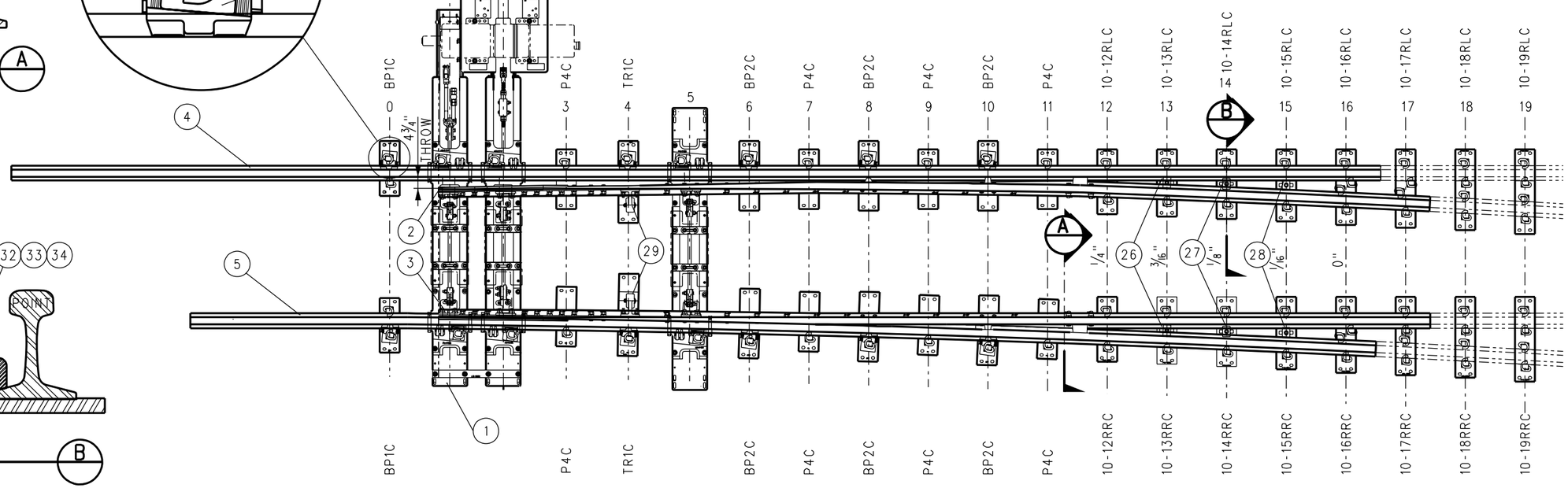

REV.	DATE	DESCRIPTION	DES.	ENG.
X	XX-XX-XX	REVISION	XX	XX

DRAWN BY: HDR DATE: 03/31/2011

ASSISTANT DIRECTOR: STANDARDS & DESIGN

DIRECTOR OF ENGINEERING AND CONSTRUCTION

SCRRA ENGINEERING STANDARDS ARE INTENDED FOR SCRRA APPROVED USES ONLY. FOR NON-SCRRA APPROVED USES:
SCRRA SHALL NOT BE RESPONSIBLE FOR THE ACCURACY OR COMPLETENESS OF THE DATA OR INFORMATION CONTAINED HEREIN. THE SELECTION AND USE OF THESE STANDARDS IS THE SOLE RESPONSIBILITY OF THE USER AND SHOULD NOT BE USED WITHOUT CONSULTING A REGISTERED PROFESSIONAL ENGINEER. ALL WARRANTIES AND REPRESENTATIONS OF ANY KIND ARE DISCLAIMED. ANYONE MAKING USE OF THIS INFORMATION AGREES THAT IT ASSUMES ALL LIABILITY ARISING FROM SUCH USE. NO PART OF THESE STANDARDS SHOULD BE REPRODUCED OR DISTRIBUTED IN ANY FORM OR BY ANY MEANS WITHOUT THE PRIOR WRITTEN PERMISSION OF SCRRA. ALL RIGHTS RESERVED.

METROLINK®
SOUTHERN CALIFORNIA REGIONAL RAIL AUTHORITY
ONE GATEWAY PLAZA, 12TH FLOOR, L. A., CA. 90012

ENGINEERING STANDARDS

NO 10–136 LB RE RH SWITCH PACK,
HOLLOW STEEL TIES,
SWITCH MACHINE ON MAINLINE SIDE

STANDARD 2803
SCALE: NTS
REVISION –
SHEET 1 OF 1
CADD FILE: ES2803–14

BILL OF MATERIAL					BILL OF MATERIAL				
ITEM	QTY	DESCRIPTION	DWG NO	SCRRA PART NO	ITEM	QTY	DESCRIPTION	DWG NO	SCRRA PART NO
1	1	HOLLOW SWITCH TIE & RODDING ASSEMBLY	ES2803-71		18	1	SWITCH PLATE (10-16LLC)	ES2803-82	
2	1	SAMSON POINT, 33'-3" LONG, DOUBLE REINFORCED, UR MANG TIP, STR, LH	ES2803-21		19	1	SWITCH PLATE (10-16LRC)	ES2803-82	
3	1	SAMSON POINT, 33'-3" LONG, DOUBLE REINFORCED, UR MANG TIP, CVD, RH	ES2803-22		20	1	SWITCH PLATE (10-17LLC)	ES2803-82	
4	1	SAMSON STOCK RAIL, 39'-9 3/16" LONG, CURVED, LH	ES2803-25		21	1	SWITCH PLATE (10-17LRC)	ES2803-82	
5	1	SAMSON STOCK RAIL, 45'-11" LONG, STRAIGHT, RH	ES2803-26		22	1	SWITCH PLATE (10-18LLC)	ES2803-83	
6	2	SWITCH PLATE, BRACE (BP1C-136)	ES2800-80		23	1	SWITCH PLATE (10-18LRC)	ES2803-83	
7	6	SWITCH PLATE, BRACE (BP2C-136)	ES2800-80		24	1	SWITCH PLATE (10-19LLC)	ES2803-83	
8	8	SWITCH PLATE (P4C-136)	ES2800-80		25	1	SWITCH PLATE (10-19LRC)	ES2803-83	
9	2	SWITCH PLATE, ROLLER (10-TR1C)	ES2800-80		26	2	HOLD DOWN CLIP (PC37A) "K" STYLE	-	
10	1	SWITCH PLATE (10-12LLC)	ES2803-81		27	2	HOLD DOWN CLIP (PC38A) "K" STYLE	-	
11	1	SWITCH PLATE (10-12LRC)	ES2803-81		28	2	HOLD DOWN CLIP (PC39A) "K" STYLE	-	
12	1	SWITCH PLATE (10-13LLC)	ES2803-81		29	2	POINT ROLLER ASSEMBLY, FLAT BACK C/W DOUBLE REINFORCED HARDWARE	-	
13	1	SWITCH PLATE (10-13LRC)	ES2803-81		30	10	BOLTLESS BRACE ASSEMBLY, SUREFIT, 136 LB RE C/W SERRATED WASHER	-	
14	1	SWITCH PLATE (10-14LLC)	ES2803-81		31	68	CLIP, PANDROL, E2055	-	
15	1	SWITCH PLATE (10-14LRC)	ES2803-81		32	6	T-BOLT, 7/8" DIAMETER 3 3/4" LONG, GR 8	-	
16	1	SWITCH PLATE (10-15LLC)	ES2803-82		33	6	SPRING WASHER 7/8" DIAMETER	-	
17	1	SWITCH PLATE (10-15LRC)	ES2803-82		34	6	NUT, 7/8" DIAMETER HEAVY HEX, GR 8	-	

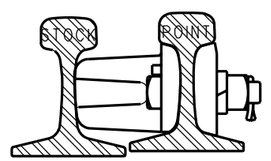

SECTION A

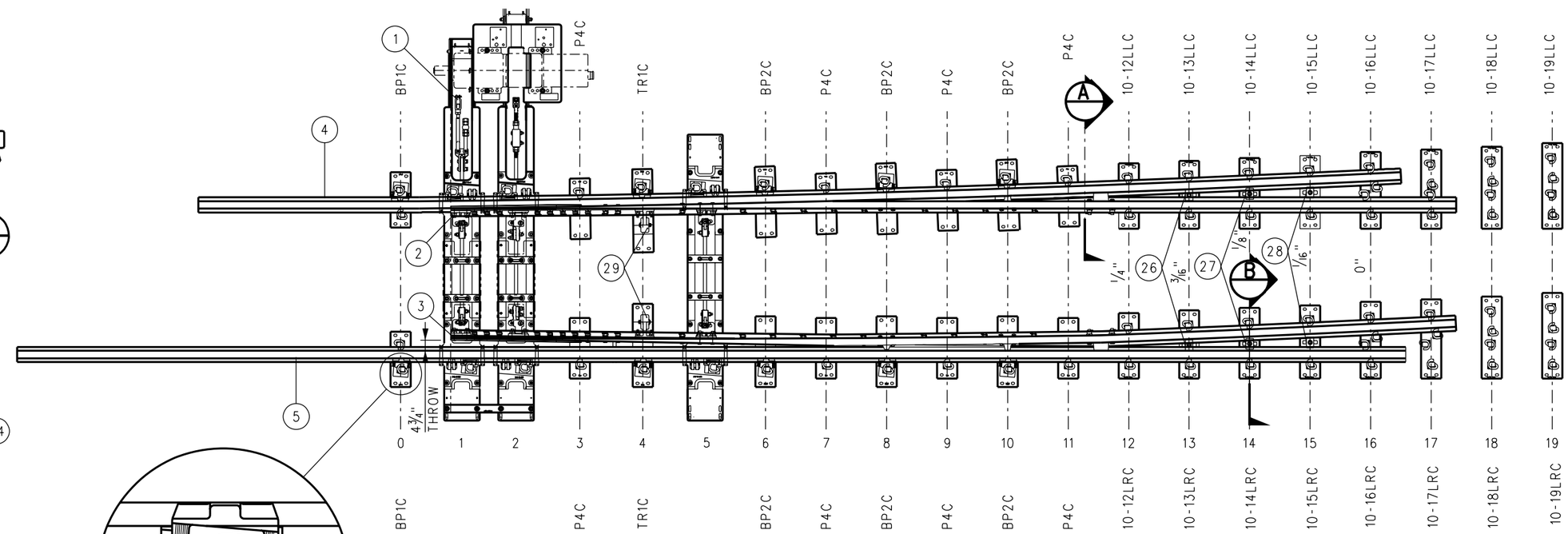

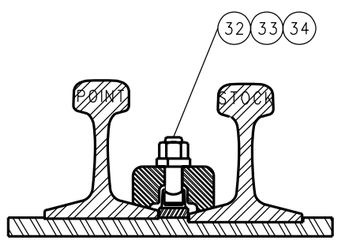

SECTION B

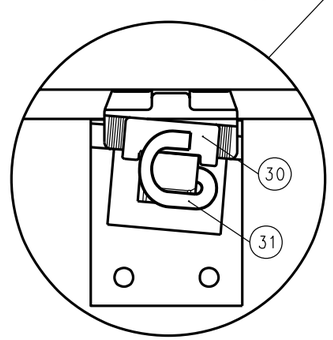

REV.	DATE	DESCRIPTION	DES.	ENG.
X	XX-XX-XX	REVISION	XX	XX

DRAWN BY: HDR DATE: 03/31/2011

ASSISTANT DIRECTOR: STANDARDS & DESIGN

DIRECTOR OF ENGINEERING AND CONSTRUCTION

SCRRA ENGINEERING STANDARDS ARE INTENDED FOR SCRRA APPROVED USES ONLY. FOR NON-SCRRA APPROVED USES:
SCRRA SHALL NOT BE RESPONSIBLE FOR THE ACCURACY OR COMPLETENESS OF THE DATA OR INFORMATION CONTAINED HEREIN. THE SELECTION AND USE OF THESE STANDARDS IS THE SOLE RESPONSIBILITY OF THE USER AND SHOULD NOT BE USED WITHOUT CONSULTING A REGISTERED PROFESSIONAL ENGINEER. ALL WARRANTIES AND REPRESENTATIONS OF ANY KIND ARE DISCLAIMED. ANYONE MAKING USE OF THIS INFORMATION AGREES THAT IT ASSUMES ALL LIABILITY ARISING FROM SUCH USE. NO PART OF THESE STANDARDS SHOULD BE REPRODUCED OR DISTRIBUTED IN ANY FORM OR BY ANY MEANS WITHOUT THE PRIOR WRITTEN PERMISSION OF SCRRA. ALL RIGHTS RESERVED.

METROLINK

SOUTHERN CALIFORNIA REGIONAL RAIL AUTHORITY
ONE GATEWAY PLAZA, 12TH FLOOR, L. A., CA. 90012

ENGINEERING STANDARDS

NO 10–136 LB RE LH SWITCH PACK,
HOLLOW STEEL TIES,
SWITCH MACHINE ON TURNOUT SIDE

STANDARD 2803
SCALE: NTS
REVISION –
SHEET 1 OF 1
CADD FILE: ES2803–15

UserName=> carlosa Date Plotted: 10/5/2011 3:25:55 PM Plot Driver=> S:\Plot Drivers\pdf.plt FileName=> s:\V8EngStds\2000\Turnouts\No 10 Turnout\ES2803-15.dgn

BILL OF MATERIAL					BILL OF MATERIAL				
ITEM	QTY	DESCRIPTION	DWG NO	SCRRA PART NO	ITEM	QTY	DESCRIPTION	DWG NO	SCRRA PART NO
1	1	HOLLOW SWITCH TIE & RODDING ASSEMBLY	ES2803-72		18	1	SWITCH PLATE (10-16RLC)	ES2803-85	
2	1	SAMSON POINT, 33'-3" LONG, DOUBLE REINFORCED, UR MANG TIP, CVD, LH	ES2803-23		19	1	SWITCH PLATE (10-16RRC)	ES2803-85	
3	1	SAMSON POINT, 33'-3" LONG, DOUBLE REINFORCED, UR MANG TIP, STR, RH	ES2803-24		20	1	SWITCH PLATE (10-17RLC)	ES2803-85	
4	1	SAMSON STOCK RAIL, 45'-11" LONG, STRAIGHT, LH	ES2803-27		21	1	SWITCH PLATE (10-17RRC)	ES2803-85	
5	1	SAMSON STOCK RAIL, 39'-9 3/16" LONG, CURVED, RH	ES2803-28		22	1	SWITCH PLATE (10-18RLC)	ES2803-86	
6	2	SWITCH PLATE, BRACE (BP1C-136)	ES2800-80		23	1	SWITCH PLATE (10-18RRC)	ES2803-86	
7	6	SWITCH PLATE, BRACE (BP2C-136)	ES2800-80		24	1	SWITCH PLATE (10-19RLC)	ES2803-86	
8	8	SWITCH PLATE (P4C-136)	ES2800-80		25	1	SWITCH PLATE (10-19RRC)	ES2803-86	
9	2	SWITCH PLATE, ROLLER (10-TR1C)	ES2800-80		26	2	HOLD DOWN CLIP (PC37A) "K" STYLE	-	
10	1	SWITCH PLATE (10-12RLC)	ES2803-84		27	2	HOLD DOWN CLIP (PC38A) "K" STYLE	-	
11	1	SWITCH PLATE (10-12RRC)	ES2803-84		28	2	HOLD DOWN CLIP (PC39A) "K" STYLE	-	
12	1	SWITCH PLATE (10-13RLC)	ES2803-84		29	2	POINT ROLLER ASSEMBLY, FLAT BACK C/W DOUBLE REINFORCED HARDWARE	-	
13	1	SWITCH PLATE (10-13RRC)	ES2803-84		30	10	BOLTLESS BRACE ASSEMBLY, SUREFIT, 136 LB RE C/W SERRATED WASHER	-	
14	1	SWITCH PLATE (10-14RLC)	ES2803-84		31	68	CLIP, PANDROL, E2055	-	
15	1	SWITCH PLATE (10-14RRC)	ES2803-84		32	6	T-BOLT 7/8" DIAMETER 3 3/4" LONG, GR 8	-	
16	1	SWITCH PLATE (10-15RLC)	ES2803-85		33	6	SPRING WASHER 7/8" DIAMETER	-	
17	1	SWITCH PLATE (10-15RRC)	ES2803-85		34	6	NUT, 7/8" DIAMETER HEAVY HEX GR 8	-	

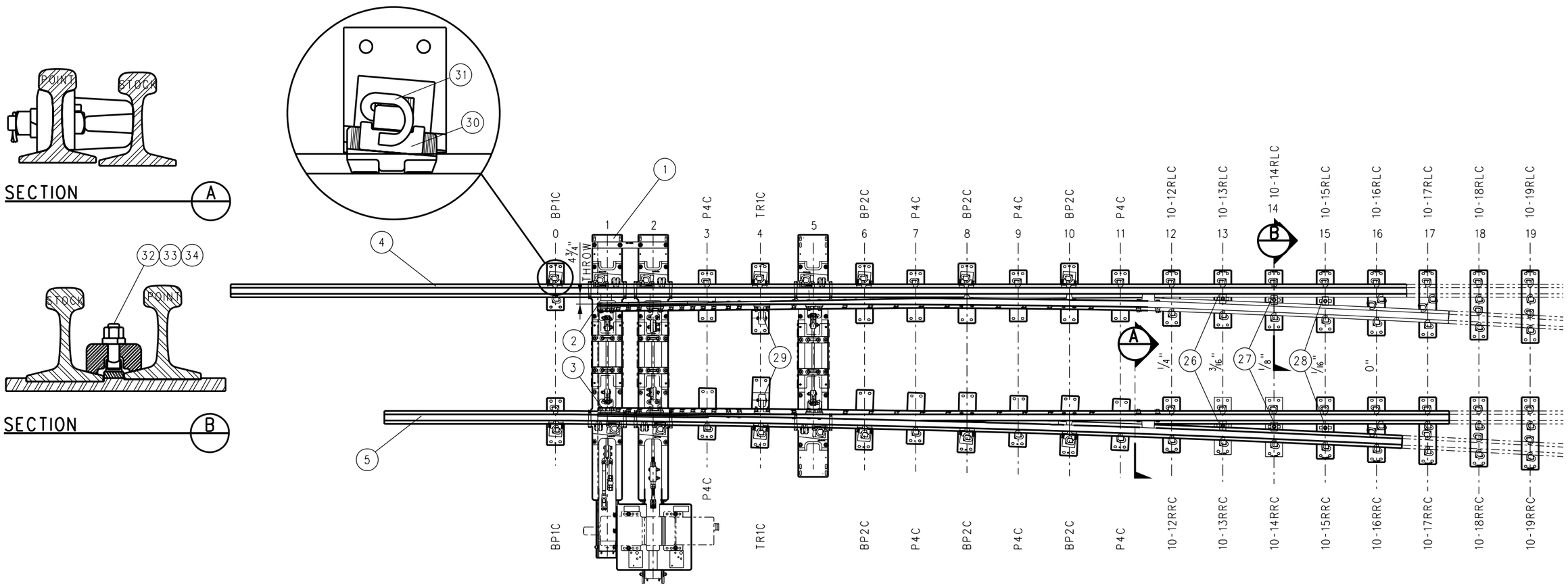

X	XX-XX-XX	REVISION	XX	XX
REV.	DATE	DESCRIPTION	DES.	ENG.

DRAWN BY: HDR DATE: 03/31/2011

ASSISTANT DIRECTOR: STANDARDS & DESIGN

DIRECTOR OF ENGINEERING AND CONSTRUCTION

SCRRA ENGINEERING STANDARDS ARE INTENDED FOR SCRRA APPROVED USES ONLY. FOR NON-SCRRA APPROVED USES:
SCRRA SHALL NOT BE RESPONSIBLE FOR THE ACCURACY OR COMPLETENESS OF THE DATA OR INFORMATION CONTAINED HEREIN. THE SELECTION AND USE OF THESE STANDARDS IS THE SOLE RESPONSIBILITY OF THE USER AND SHOULD NOT BE USED WITHOUT CONSULTING A REGISTERED PROFESSIONAL ENGINEER. ALL WARRANTIES AND REPRESENTATIONS OF ANY KIND ARE DISCLAIMED. ANYONE MAKING USE OF THIS INFORMATION AGREES THAT IT ASSUMES ALL LIABILITY ARISING FROM SUCH USE. NO PART OF THESE STANDARDS SHOULD BE REPRODUCED OR DISTRIBUTED IN ANY FORM OR BY ANY MEANS WITHOUT THE PRIOR WRITTEN PERMISSION OF SCRRA. ALL RIGHTS RESERVED.

METROLINK®

SOUTHERN CALIFORNIA REGIONAL RAIL AUTHORITY
ONE GATEWAY PLAZA, 12TH FLOOR, L. A., CA. 90012

ENGINEERING STANDARDS

NO 10–136 LB RE RH SWITCH PACK,
HOLLOW STEEL TIES,
SWITCH MACHINE ON TURNOUT SIDE

STANDARD 2803
SCALE: NTS
REVISION –
SHEET 1 OF 1
CADD FILE: ES2803–16

BILL OF MATERIAL					BILL OF MATERIAL				
ITEM	QTY	DESCRIPTION	DWG NO	SCRRA PART NO	ITEM	QTY	DESCRIPTION	DWG NO	SCRRA PART NO
1	1	SAMSON POINT, 33'-3" LONG, DOUBLE REINFORCED, UR MANG TIP, STR, LH	ES2803-21		19	1	SWITCH PLATE (10-16LLC)	ES2803-82	
2	1	SAMSON POINT, 33'-3" LONG, DOUBLE REINFORCED, UR MANG TIP, CVD, RH	ES2803-22		20	1	SWITCH PLATE (10-16LRC)	ES2803-82	
3	1	SAMSON STOCK RAIL, 39'-9 3/16" LONG, CURVED, LH	ES2803-25		21	1	SWITCH PLATE (10-17LLC)	ES2803-82	
4	1	SAMSON STOCK RAIL, 45'-11" LONG, STRAIGHT, RH	ES2803-26		22	1	SWITCH PLATE (10-17LRC)	ES2803-82	
5	1	SWITCH ROD NO 1	-		23	1	SWITCH PLATE (10-18LLC)	ES2803-83	
6	1	SWITCH ROD NO 2	-		24	1	SWITCH PLATE (10-18LRC)	ES2803-83	
7	2	SWITCH PLATE, BRACE (BP1C-136)	ES2800-80		25	1	SWITCH PLATE (10-19LLC)	ES2803-83	
8	10	SWITCH PLATE, BRACE (BP2C-136)	ES2800-80		26	1	SWITCH PLATE (10-19LRC)	ES2803-83	
9	10	SWITCH PLATE (P4C-136)	ES2800-80		27	2	HOLD DOWN CLIP (PC37A) "K" STYLE	-	
10	2	SWITCH PLATE, ROLLER (10-TR1C)	ES2800-80		28	2	HOLD DOWN CLIP (PC38A) "K" STYLE	-	
11	1	SWITCH PLATE (10-12LLC)	ES2803-81		29	2	HOLD DOWN CLIP (PC39A) "K" STYLE	-	
12	1	SWITCH PLATE (10-12LRC)	ES2803-81		30	2	POINT ROLLER ASSEMBLY, FLAT BACK C/W DOUBLE REINFORCED HARDWARE	-	
13	1	SWITCH PLATE (10-13LLC)	ES2803-81		31	10	BOLTLESS BRACE ASSEMBLY, SUREFIT, 136 LB RE C/W SERRATED WASHER	-	
14	1	SWITCH PLATE (10-13LRC)	ES2803-81		32	68	CLIP, PANDROL, E2055	-	
15	1	SWITCH PLATE (10-14LLC)	ES2803-81		33	6	T-BOLT, 7/8" DIAMETER 3 3/4" LONG, GR 8	-	
16	1	SWITCH PLATE (10-14LRC)	ES2803-81		34	6	SPRING WASHER 7/8" DIAMETER	-	
17	1	SWITCH PLATE (10-15LLC)	ES2803-82		35	6	NUT, 7/8" DIAMETER HEAVY HEX GR 8	-	
18	1	SWITCH PLATE (10-15LRC)	ES2803-82						

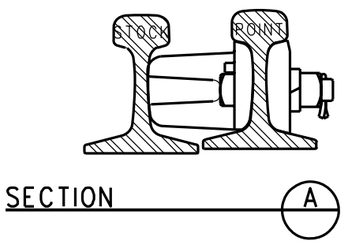

SECTION A

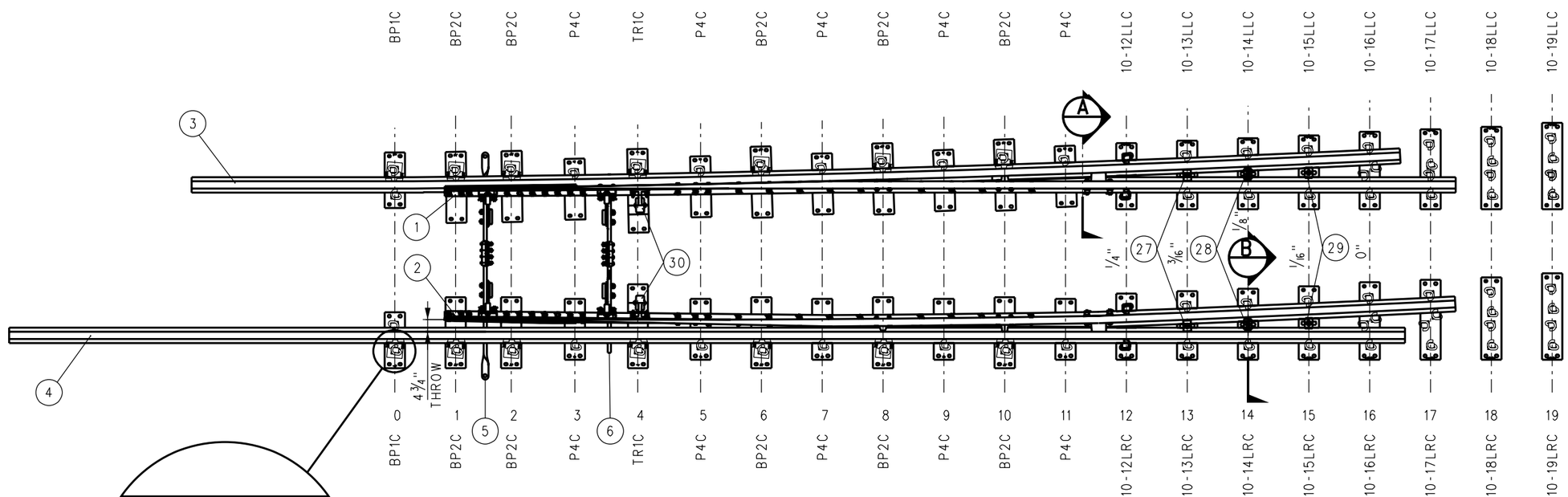

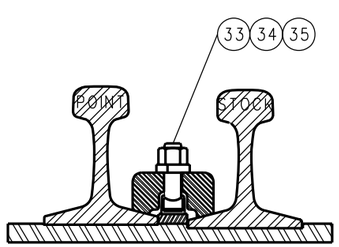

SECTION B

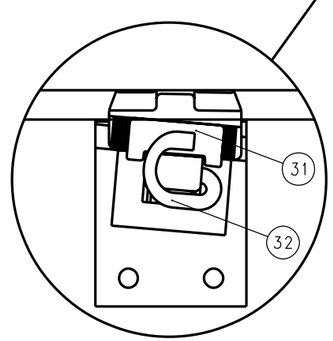

X	XX-XX-XX	REVISION	XX	XX
REV.	DATE	DESCRIPTION	DES.	ENG.

DRAWN BY: HDR DATE: 03/31/2011

ASSISTANT DIRECTOR: STANDARDS & DESIGN

DIRECTOR OF ENGINEERING AND CONSTRUCTION

SCRRA ENGINEERING STANDARDS ARE INTENDED FOR SCRRA APPROVED USES ONLY. FOR NON-SCRRA APPROVED USES: SCRRA SHALL NOT BE RESPONSIBLE FOR THE ACCURACY OR COMPLETENESS OF THE DATA OR INFORMATION CONTAINED HEREIN. THE SELECTION AND USE OF THESE STANDARDS IS THE SOLE RESPONSIBILITY OF THE USER AND SHOULD NOT BE USED WITHOUT CONSULTING A REGISTERED PROFESSIONAL ENGINEER. ALL WARRANTIES AND REPRESENTATIONS OF ANY KIND ARE DISCLAIMED. ANYONE MAKING USE OF THIS INFORMATION AGREES THAT IT ASSUMES ALL LIABILITY ARISING FROM SUCH USE. NO PART OF THESE STANDARDS SHOULD BE REPRODUCED OR DISTRIBUTED IN ANY FORM OR BY ANY MEANS WITHOUT THE PRIOR WRITTEN PERMISSION OF SCRRA. ALL RIGHTS RESERVED.

METROLINK®

SOUTHERN CALIFORNIA REGIONAL RAIL AUTHORITY
ONE GATEWAY PLAZA, 12TH FLOOR, L. A., CA. 90012

ENGINEERING STANDARDS

NO 10–136 LB RE LH SWITCH PACK,
CONCRETE TIES,
SWITCH CONTROL ON MAINLINE SIDE

STANDARD 2803
SCALE: NTS
REVISION –
SHEET 1 OF 1
CADD FILE: ES2803–17

BILL OF MATERIAL					BILL OF MATERIAL				
ITEM	QTY	DESCRIPTION	DWG NO	SCRRA PART NO	ITEM	QTY	DESCRIPTION	DWG NO	SCRRA PART NO
1	1	SAMSON POINT, 33'-3" LONG, DOUBLE REINFORCED, UR MANG TIP, CVD, LH	ES2803-23		19	1	SWITCH PLATE (10-16RLC)	ES2803-85	
2	1	SAMSON POINT, 33'-3" LONG, DOUBLE REINFORCED, UR MANG TIP, STR, RH	ES2803-24		20	1	SWITCH PLATE (10-16RRC)	ES2803-85	
3	1	SAMSON STOCK RAIL, 45'-11" LONG, STRAIGHT, LH	ES2803-27		21	1	SWITCH PLATE (10-17RLC)	ES2803-85	
4	1	SAMSON STOCK RAIL, 39'-9 3/16" LONG, CURVED, RH	ES2803-28		22	1	SWITCH PLATE (10-17RRC)	ES2803-85	
5	1	SWITCH ROD NO 1	-		23	1	SWITCH PLATE (10-18RLC)	ES2803-86	
6	1	SWITCH ROD NO 2	-		24	1	SWITCH PLATE (10-18RRC)	ES2803-86	
7	2	SWITCH PLATE, BRACE (BP1C-136)	ES2800-80		25	1	SWITCH PLATE (10-19RLC)	ES2803-86	
8	10	SWITCH PLATE, BRACE (BP2C-136)	ES2800-80		26	1	SWITCH PLATE (10-19RRC)	ES2803-86	
9	10	SWITCH PLATE (P4C-136)	ES2800-80		27	2	HOLD DOWN CLIP (PC37A) "K" STYLE	-	
10	2	SWITCH PLATE, ROLLER (10-TR1C)	ES2800-80		28	2	HOLD DOWN CLIP (PC38A) "K" STYLE	-	
11	1	SWITCH PLATE (10-12RLC)	ES2803-84		29	2	HOLD DOWN CLIP (PC39A) "K" STYLE	-	
12	1	SWITCH PLATE (10-12RRC)	ES2803-84		30	2	POINT ROLLER ASSEMBLY, FLAT BACK C/W DOUBLE REINFORCED HARDWARE	-	
13	1	SWITCH PLATE (10-13RLC)	ES2803-84		31	10	BOLTLESS BRACE ASSEMBLY, SUREFIT, 136 LB RE C/W SERRATED WASHER	-	
14	1	SWITCH PLATE (10-13RRC)	ES2803-84		32	68	CLIP, PANDROL, E2055	-	
15	1	SWITCH PLATE (10-14RLC)	ES2803-84		33	6	T-BOLT, 7/8" DIAMETER 3 3/4" LONG, GR 8	-	
16	1	SWITCH PLATE (10-14RRC)	ES2803-84		34	6	SPRING WASHER 7/8" DIAMETER	-	
17	1	SWITCH PLATE (10-15RLC)	ES2803-85		35	6	NUT, 7/8" DIAMETER HEAVY HEX GR 8	-	
18	1	SWITCH PLATE (10-15RRC)	ES2803-85						

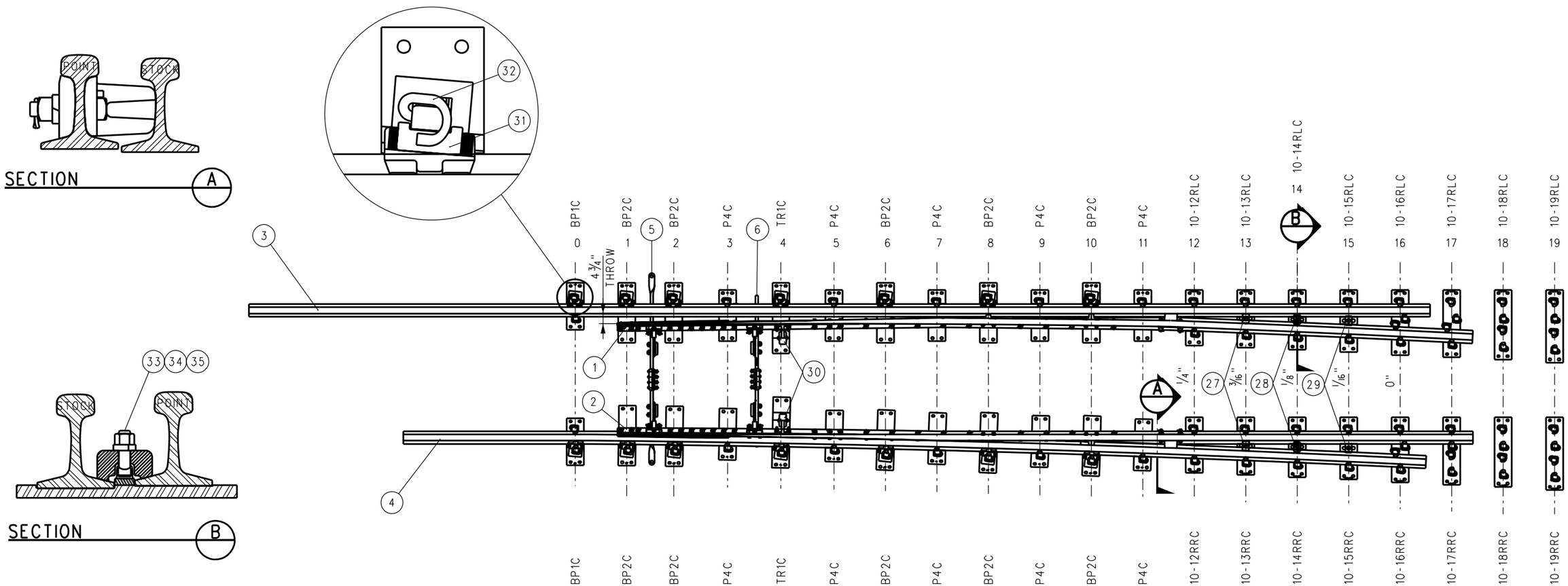

REV.	DATE	DESCRIPTION	DES.	ENG.
X	XX-XX-XX	REVISION	XX	XX

DRAWN BY: HDR DATE: 03/31/2011

ASSISTANT DIRECTOR: STANDARDS & DESIGN

DIRECTOR OF ENGINEERING AND CONSTRUCTION

SCRRA ENGINEERING STANDARDS ARE INTENDED FOR SCRRA APPROVED USES ONLY. FOR NON-SCRRA APPROVED USES: SCRRA SHALL NOT BE RESPONSIBLE FOR THE ACCURACY OR COMPLETENESS OF THE DATA OR INFORMATION CONTAINED HEREIN. THE SELECTION AND USE OF THESE STANDARDS IS THE SOLE RESPONSIBILITY OF THE USER AND SHOULD NOT BE USED WITHOUT CONSULTING A REGISTERED PROFESSIONAL ENGINEER. ALL WARRANTIES AND REPRESENTATIONS OF ANY KIND ARE DISCLAIMED. ANYONE MAKING USE OF THIS INFORMATION AGREES THAT IT ASSUMES ALL LIABILITY ARISING FROM SUCH USE. NO PART OF THESE STANDARDS SHOULD BE REPRODUCED OR DISTRIBUTED IN ANY FORM OR BY ANY MEANS WITHOUT THE PRIOR WRITTEN PERMISSION OF SCRRA. ALL RIGHTS RESERVED.

METROLINK®

SOUTHERN CALIFORNIA REGIONAL RAIL AUTHORITY
ONE GATEWAY PLAZA, 12TH FLOOR, L. A., CA. 90012

ENGINEERING STANDARDS

NO 10–136 LB RE RH SWITCH PACK,
CONCRETE TIES,
SWITCH CONTROL ON MAINLINE SIDE

STANDARD 2803
SCALE: NTS
REVISION –
SHEET 1 OF 1
CADD FILE: ES2803–18

BILL OF MATERIAL					BILL OF MATERIAL				
ITEM	QTY	DESCRIPTION	DWG NO	SCRRA PART NO	ITEM	QTY	DESCRIPTION	DWG NO	SCRRA PART NO
1	1	SAMSON POINT, 33'-3" LONG, DOUBLE REINFORCED, UR MANG TIP, STR, LH	ES2803-21		19	1	SWITCH PLATE (10-16LLC)	ES2803-82	
2	1	SAMSON POINT, 33'-3" LONG, DOUBLE REINFORCED, UR MANG TIP, CVD, RH	ES2803-22		20	1	SWITCH PLATE (10-16LRC)	ES2803-82	
3	1	SAMSON STOCK RAIL, 39'-9 3/16" LONG, CURVED, LH	ES2803-25		21	1	SWITCH PLATE (10-17LLC)	ES2803-82	
4	1	SAMSON STOCK RAIL, 45'-11" LONG, STRAIGHT, RH	ES2803-26		22	1	SWITCH PLATE (10-17LRC)	ES2803-82	
5	1	SWITCH ROD NO 1	-		23	1	SWITCH PLATE (10-18LLC)	ES2803-83	
6	1	SWITCH ROD NO 2	-		24	1	SWITCH PLATE (10-18LRC)	ES2803-83	
7	2	SWITCH PLATE, BRACE (BP1C-136)	ES2800-80		25	1	SWITCH PLATE (10-19LLC)	ES2803-83	
8	10	SWITCH PLATE, BRACE (BP2C-136)	ES2800-80		26	1	SWITCH PLATE (10-19LRC)	ES2803-83	
9	10	SWITCH PLATE (P4C-136)	ES2800-80		27	2	HOLD DOWN CLIP (PC37A) "K" STYLE	-	
10	2	SWITCH PLATE, ROLLER (10-TR1C)	ES2800-80		28	2	HOLD DOWN CLIP (PC38A) "K" STYLE	-	
11	1	SWITCH PLATE (10-12LLC)	ES2803-81		29	2	HOLD DOWN CLIP (PC39A) "K" STYLE	-	
12	1	SWITCH PLATE (10-12LRC)	ES2803-81		30	2	POINT ROLLER ASSEMBLY, FLAT BACK C/W DOUBLE REINFORCED HARDWARE	-	
13	1	SWITCH PLATE (10-13LLC)	ES2803-81		31	10	BOLTLESS BRACE ASSEMBLY, SUREFIT, 136 LB RE C/W SERRATED WASHER	-	
14	1	SWITCH PLATE (10-13LRC)	ES2803-81		32	68	CLIP, PANDROL, E2055	-	
15	1	SWITCH PLATE (10-14LLC)	ES2803-81		33	6	T-BOLT, 7/8" DIAMETER 3 3/4" LONG, GR 8	-	
16	1	SWITCH PLATE (10-14LRC)	ES2803-81		34	6	SPRING WASHER 7/8" DIAMETER	-	
17	1	SWITCH PLATE (10-15LLC)	ES2803-82		35	6	NUT, 7/8" DIAMETER HEAVY HEX GR 8	-	
18	1	SWITCH PLATE (10-15LRC)	ES2803-82						

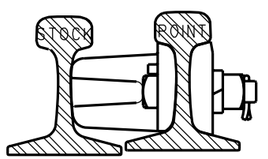

SECTION A

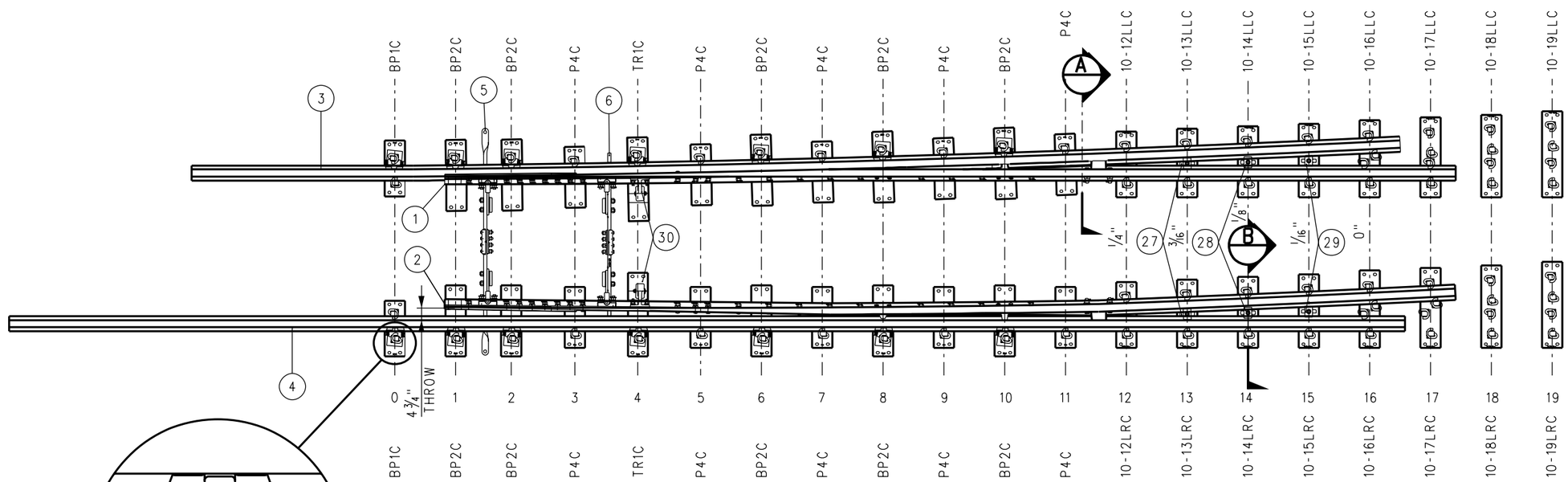

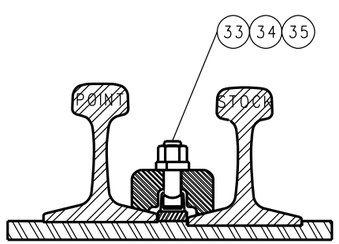

SECTION B

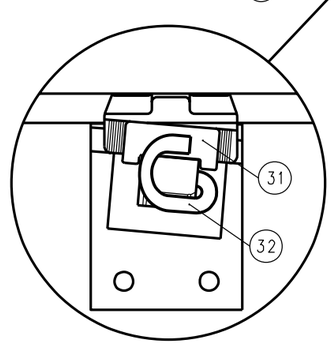

REV.	DATE	DESCRIPTION	DES.	ENG.
X	XX-XX-XX	REVISION	XX	XX

DRAWN BY: HDR DATE: 03/31/2011

ASSISTANT DIRECTOR: STANDARDS & DESIGN

DIRECTOR OF ENGINEERING AND CONSTRUCTION

SCRRA ENGINEERING STANDARDS ARE INTENDED FOR SCRRA APPROVED USES ONLY. FOR NON-SCRRA APPROVED USES: SCRRA SHALL NOT BE RESPONSIBLE FOR THE ACCURACY OR COMPLETENESS OF THE DATA OR INFORMATION CONTAINED HEREIN. THE SELECTION AND USE OF THESE STANDARDS IS THE SOLE RESPONSIBILITY OF THE USER AND SHOULD NOT BE USED WITHOUT CONSULTING A REGISTERED PROFESSIONAL ENGINEER. ALL WARRANTIES AND REPRESENTATIONS OF ANY KIND ARE DISCLAIMED. ANYONE MAKING USE OF THIS INFORMATION AGREES THAT IT ASSUMES ALL LIABILITY ARISING FROM SUCH USE. NO PART OF THESE STANDARDS SHOULD BE REPRODUCED OR DISTRIBUTED IN ANY FORM OR BY ANY MEANS WITHOUT THE PRIOR WRITTEN PERMISSION OF SCRRA. ALL RIGHTS RESERVED.

METROLINK®

SOUTHERN CALIFORNIA REGIONAL RAIL AUTHORITY
ONE GATEWAY PLAZA, 12TH FLOOR, L. A., CA. 90012

ENGINEERING STANDARDS

NO 10–136 LB RE LH SWITCH PACK,
CONCRETE TIES,
SWITCH CONTROL ON TURNOUT SIDE

STANDARD 2803
SCALE: NTS
REVISION –
SHEET 1 OF 1
CADD FILE: ES2803–19

BILL OF MATERIAL					BILL OF MATERIAL				
ITEM	QTY	DESCRIPTION	DWG NO	SCRRA PART NO	ITEM	QTY	DESCRIPTION	DWG NO	SCRRA PART NO
1	1	SAMSON POINT, 33'-3" LONG, DOUBLE REINFORCED, UR MANG TIP, CVD, LH	ES2803-23		19	1	SWITCH PLATE (10-16RLC)	ES2803-85	
2	1	SAMSON POINT, 33'-3" LONG, DOUBLE REINFORCED, UR MANG TIP, STR, RH	ES2803-24		20	1	SWITCH PLATE (10-16RRC)	ES2803-85	
3	1	SAMSON STOCK RAIL, 45'-11" LONG, STRAIGHT, LH	ES2803-27		21	1	SWITCH PLATE (10-17RLC)	ES2803-85	
4	1	SAMSON STOCK RAIL, 39'-9 3/16" LONG, CURVED, RH	ES2803-28		22	1	SWITCH PLATE (10-17RRC)	ES2803-85	
5	1	SWITCH ROD NO 1	-		23	1	SWITCH PLATE (10-18RLC)	ES2803-86	
6	1	SWITCH ROD NO 2	-		24	1	SWITCH PLATE (10-18RRC)	ES2803-86	
7	2	SWITCH PLATE, BRACE (BP1C-136)	ES2800-80		25	1	SWITCH PLATE (10-19RLC)	ES2803-86	
8	10	SWITCH PLATE, BRACE (BP2C-136)	ES2800-80		26	1	SWITCH PLATE (10-19RRC)	ES2803-86	
9	10	SWITCH PLATE (P4C-136)	ES2800-80		27	2	HOLD DOWN CLIP (PC37A) "K" STYLE	-	
10	2	SWITCH PLATE, ROLLER (10-TR1C)	ES2800-80		28	2	HOLD DOWN CLIP (PC38A) "K" STYLE	-	
11	1	SWITCH PLATE (10-12RLC)	ES2803-84		29	2	HOLD DOWN CLIP (PC39A) "K" STYLE	-	
12	1	SWITCH PLATE (10-12RRC)	ES2803-84		30	2	POINT ROLLER ASSEMBLY, FLAT BACK C/W DOUBLE REINFORCED HARDWARE	-	
13	1	SWITCH PLATE (10-13RLC)	ES2803-84		31	10	BOLTLESS BRACE ASSEMBLY, SUREFIT, 136 LB RE C/W SERRATED WASHER	-	
14	1	SWITCH PLATE (10-13RRC)	ES2803-84		32	68	CLIP, PANDROL, E2055	-	
15	1	SWITCH PLATE (10-14RLC)	ES2803-84		33	6	T-BOLT, 7/8" DIAMETER 3 3/4" LONG, GR 8	-	
16	1	SWITCH PLATE (10-14RRC)	ES2803-84		34	6	SPRING WASHER 7/8" DIAMETER	-	
17	1	SWITCH PLATE (10-15RLC)	ES2803-85		35	6	NUT, 7/8" DIAMETER HEAVY HEX GR 8	-	
18	1	SWITCH PLATE (10-15RRC)	ES2803-85						

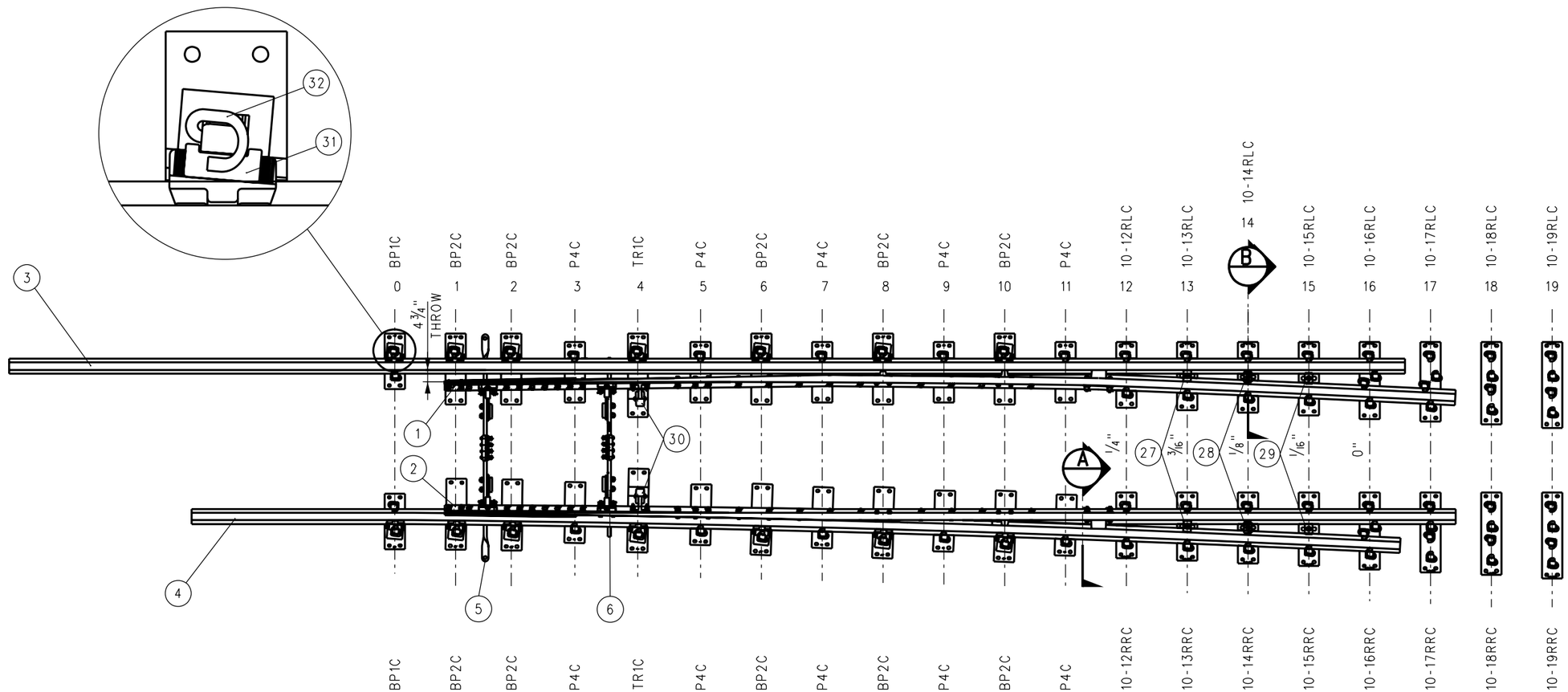

REV.	DATE	DESCRIPTION	DES.	ENG.
X	XX-XX-XX	REVISION	XX	XX

DRAWN BY: HDR DATE: 03/31/2011

ASSISTANT DIRECTOR: STANDARDS & DESIGN

DIRECTOR OF ENGINEERING AND CONSTRUCTION

SCRRA ENGINEERING STANDARDS ARE INTENDED FOR SCRRA APPROVED USES ONLY. FOR NON-SCRRA APPROVED USES: SCRRA SHALL NOT BE RESPONSIBLE FOR THE ACCURACY OR COMPLETENESS OF THE DATA OR INFORMATION CONTAINED HEREIN. THE SELECTION AND USE OF THESE STANDARDS IS THE SOLE RESPONSIBILITY OF THE USER AND SHOULD NOT BE USED WITHOUT CONSULTING A REGISTERED PROFESSIONAL ENGINEER. ALL WARRANTIES AND REPRESENTATIONS OF ANY KIND ARE DISCLAIMED. ANYONE MAKING USE OF THIS INFORMATION AGREES THAT IT ASSUMES ALL LIABILITY ARISING FROM SUCH USE. NO PART OF THESE STANDARDS SHOULD BE REPRODUCED OR DISTRIBUTED IN ANY FORM OR BY ANY MEANS WITHOUT THE PRIOR WRITTEN PERMISSION OF SCRRA. ALL RIGHTS RESERVED.

METROLINK®

SOUTHERN CALIFORNIA REGIONAL RAIL AUTHORITY
ONE GATEWAY PLAZA, 12TH FLOOR, L. A., CA. 90012

ENGINEERING STANDARDS

NO 10–136 LB RE RH SWITCH PACK,
CONCRETE TIES,
SWITCH CONTROL ON TURNOUT SIDE

STANDARD 2803
SCALE: NTS
REVISION –
SHEET 1 OF 1
CADD FILE: ES2803–20

BILL OF MATERIAL				BILL OF MATERIAL			
ITEM	QTY	DESCRIPTION	SCRRA PART NO	ITEM	QTY	DESCRIPTION	SCRRA PART NO
1	1	SWITCH POINT RAIL, 33'-3" LONG, UR MANG TIP, STRAIGHT, LH		10	7	BOLT, 1" DIA x 4" LONG, THIN SQUARE HEAD DRILLED @ 3½" GR 5	
2	1	MANGANESE TIP, 21'-6" LONG, 136 LB RE SAMSON SWITCH POINT, LH		11	10	BOLT, 1" DIA x 4" LONG, SQUARE HEAD DRILLED @ 3 7/16" GR 5	
3	1	REINFORCING BAR, GAUGE SIDE, ½" x 19'-6" LONG, SAMSON, LH POINT		12	4	NUT, ¾" DIA HEAVY HEX, GR 5	
4	1	REINFORCING BAR, STOCK SIDE, ½" x 15'-1½" LONG, SAMSON, LH POINT		13	20	NUT, 1" DIA HEAVY HEX, GR 5	
5	1	HEEL BLOCK ASSEMBLY, FLOATING C/W HARDWARE		14	4	SPRING WASHER, ¾" DIA	
6	1	POINT STOP 2 5/16" HIGH		15	20	SPRING WASHER, 1" DIA	
7	1	POINT STOP 3 13/16" HIGH		16	4	COTTER PIN, 3/16" DIA x 1¾" LONG	
8	4	BOLT, ¾" DIA x 4" LONG, SQUARE HEAD DRILLED @ 3 9/16" GR 5		17	20	COTTER PIN, ¼" DIA x 2" LONG	
9	3	BOLT, 1" DIA x 3¾" LONG, THIN SQUARE HEAD DRILLED @ 3 7/32" GR 5					

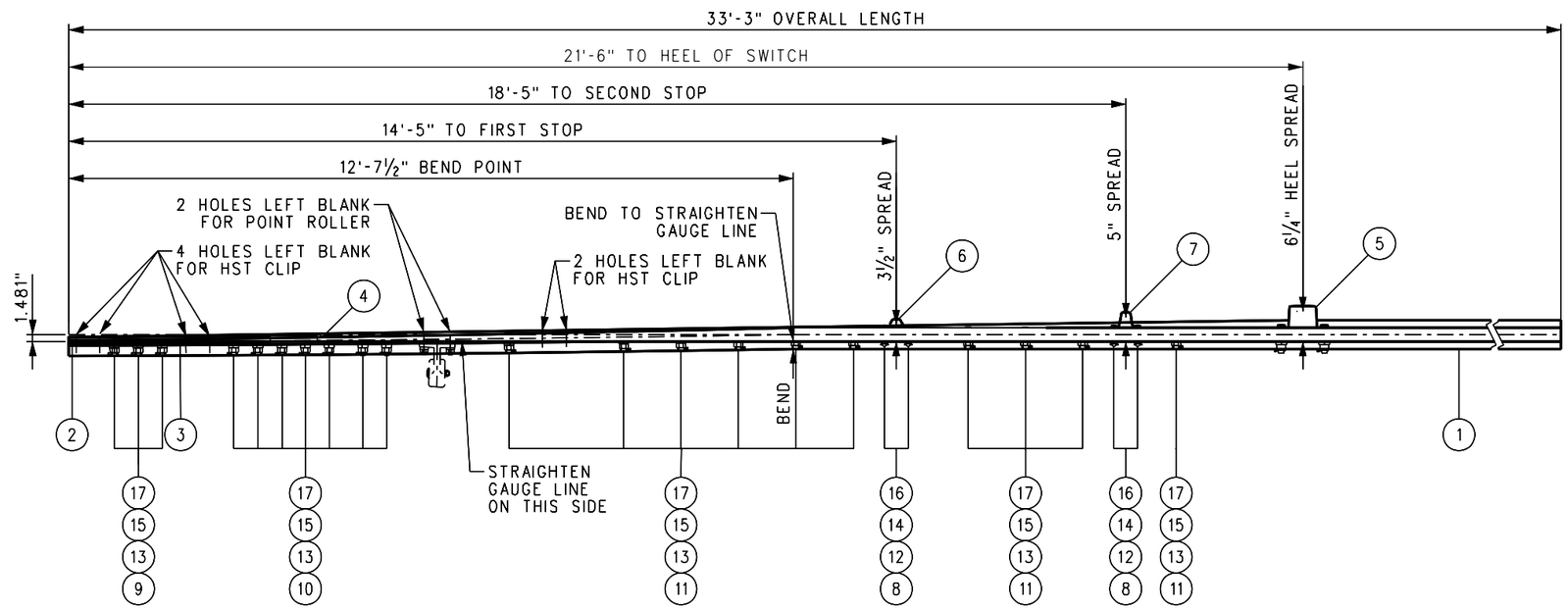

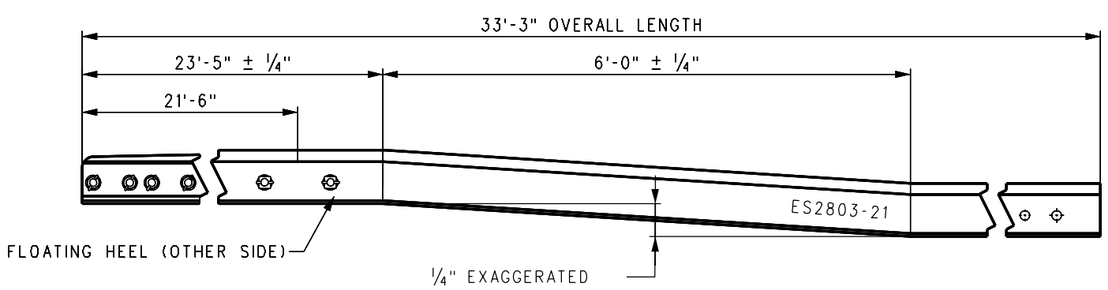

SIDE VIEW - VERTICAL BENDING DETAIL

NOTES:

1. ROUND EDGES OF SWITCH STOPS AT CONTACT AREAS, ½" R.
2. BEVEL ALL BOLT HOLES.
3. WRITE SCRRA ES NUMBER ON WEB OF RAIL WITH WATERPROOF MARKER OR PAINT.

REV.	DATE	DESCRIPTION	DES.	ENG.
X	XX-XX-XX	REVISION	XX	XX

DRAWN BY: HDR DATE: 03/31/2011

ASSISTANT DIRECTOR: STANDARDS & DESIGN

DIRECTOR OF ENGINEERING AND CONSTRUCTION

SCRRA ENGINEERING STANDARDS ARE INTENDED FOR SCRRA APPROVED USES ONLY. FOR NON-SCRRA APPROVED USES: SCRRA SHALL NOT BE RESPONSIBLE FOR THE ACCURACY OR COMPLETENESS OF THE DATA OR INFORMATION CONTAINED HEREIN. THE SELECTION AND USE OF THESE STANDARDS IS THE SOLE RESPONSIBILITY OF THE USER AND SHOULD NOT BE USED WITHOUT CONSULTING A REGISTERED PROFESSIONAL ENGINEER. ALL WARRANTIES AND REPRESENTATIONS OF ANY KIND ARE DISCLAIMED. ANYONE MAKING USE OF THIS INFORMATION AGREES THAT IT ASSUMES ALL LIABILITY ARISING FROM SUCH USE. NO PART OF THESE STANDARDS SHOULD BE REPRODUCED OR DISTRIBUTED IN ANY FORM OR BY ANY MEANS WITHOUT THE PRIOR WRITTEN PERMISSION OF SCRRA. ALL RIGHTS RESERVED.

METROLINK®
SOUTHERN CALIFORNIA REGIONAL RAIL AUTHORITY
ONE GATEWAY PLAZA, 12TH FLOOR, L. A., CA. 90012

ENGINEERING STANDARDS

SWITCH POINT ASSEMBLY, 136 LB RE SAMSON, STRAIGHT, LH NO 10 LH TURNOUT
33'-3" OVERALL LENGTH MANGANESE TIP

STANDARD 2803
SCALE: NTS
REVISION –
SHEET 1 OF 1
CADD FILE: ES2803-21

BILL OF MATERIAL				BILL OF MATERIAL			
ITEM	QTY	DESCRIPTION	SCRRA PART NO	ITEM	QTY	DESCRIPTION	SCRRA PART NO
1	1	SWITCH POINT RAIL, 33'-3" LONG, UR MANG TIP, CURVED, RH		10	7	BOLT, 1" DIA x 4" LONG, THIN SQUARE HEAD DRILLED @ 3½" GR 5	
2	1	MANGANESE TIP, 21'-6" LONG, 136 LB RE SAMSON SWITCH POINT, RH		11	10	BOLT, 1" DIA x 4" LONG, SQUARE HEAD DRILLED @ 3 7/16" GR 5	
3	1	REINFORCING BAR, GAUGE SIDE, ½" x 19'-6" LONG, SAMSON, RH POINT		12	4	NUT, ¾" DIA HEAVY HEX, GR 5	
4	1	REINFORCING BAR, STOCK SIDE, ½" x 15'-1⅞" LONG, SAMSON, RH POINT		13	20	NUT, 1" DIA HEAVY HEX, GR 5	
5	1	HEEL BLOCK ASSEMBLY, FLOATING C/W HARDWARE		14	4	SPRING WASHER, ¾" DIA	
6	1	POINT STOP 2 5/16" HIGH		15	20	SPRING WASHER, 1" DIA	
7	1	POINT STOP 3 13/16" HIGH		16	4	COTTER PIN, 3/16" DIA x 1¾" LONG	
8	4	BOLT, ¾" DIA x 4" LONG, SQUARE HEAD DRILLED @ 3 9/16" GR 5		17	20	COTTER PIN, ¼" DIA x 2" LONG	
9	3	BOLT, 1" DIA x 3¾" LONG, THIN SQUARE HEAD DRILLED @ 3 7/32" GR 5					

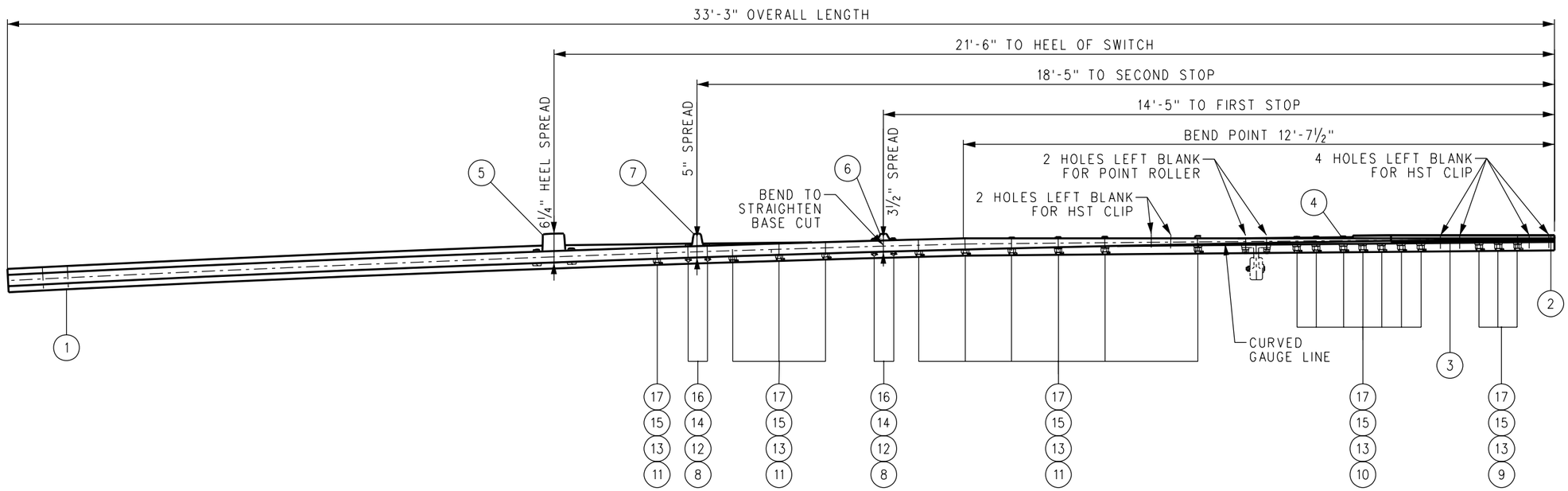

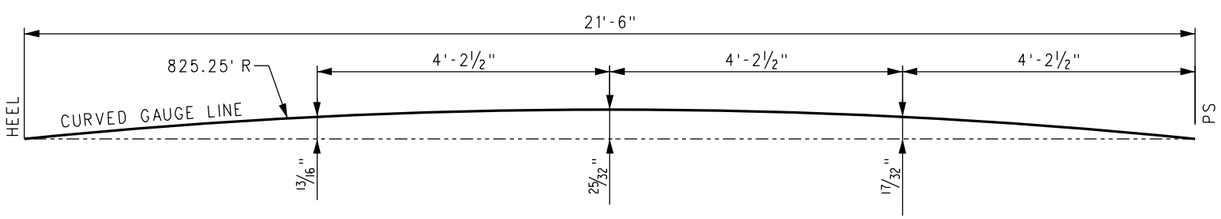

LATERAL CURVING DETAIL

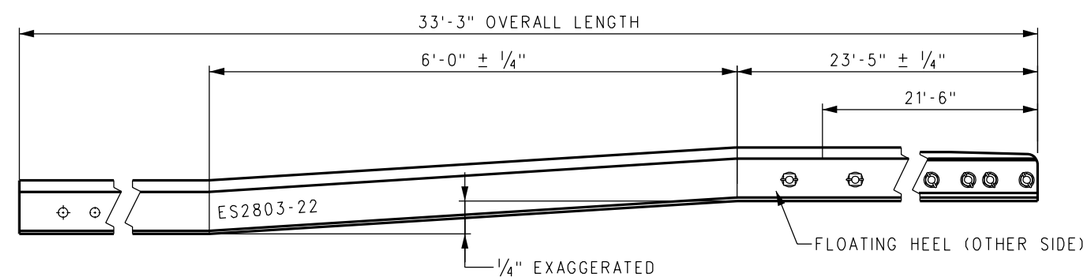

SIDE VIEW - VERTICAL BENDING DETAIL

NOTES:

1. ROUND EDGES OF SWITCH STOPS AT CONTACT AREAS, ½" R.
2. BEVEL ALL BOLT HOLES.
3. WRITE SCRRA ES NUMBER ON WEB OF RAIL WITH WATERPROOF MARKER OR PAINT.

REV.	DATE	DESCRIPTION	DES.	ENG.
X	XX-XX-XX	REVISION	XX	XX

DRAWN BY: HDR DATE: 03/31/2011

ASSISTANT DIRECTOR: STANDARDS & DESIGN

DIRECTOR OF ENGINEERING AND CONSTRUCTION

SCRRA ENGINEERING STANDARDS ARE INTENDED FOR SCRRA APPROVED USES ONLY. FOR NON-SCRRA APPROVED USES:
SCRRA SHALL NOT BE RESPONSIBLE FOR THE ACCURACY OR COMPLETENESS OF THE DATA OR INFORMATION CONTAINED HEREIN. THE SELECTION AND USE OF THESE STANDARDS IS THE SOLE RESPONSIBILITY OF THE USER AND SHOULD NOT BE USED WITHOUT CONSULTING A REGISTERED PROFESSIONAL ENGINEER. ALL WARRANTIES AND REPRESENTATIONS OF ANY KIND ARE DISCLAIMED. ANYONE MAKING USE OF THIS INFORMATION AGREES THAT IT ASSUMES ALL LIABILITY ARISING FROM SUCH USE. NO PART OF THESE STANDARDS SHOULD BE REPRODUCED OR DISTRIBUTED IN ANY FORM OR BY ANY MEANS WITHOUT THE PRIOR WRITTEN PERMISSION OF SCRRA. ALL RIGHTS RESERVED.

METROLINK®
SOUTHERN CALIFORNIA REGIONAL RAIL AUTHORITY
ONE GATEWAY PLAZA, 12TH FLOOR, L. A., CA. 90012

ENGINEERING STANDARDS

SWITCH POINT ASSEMBLY, 136 LB RE SAMSON, CURVED, RH NO 10 LH TURNOUT 33'–3" OVERALL LENGTH MANGANESE TIP

STANDARD 2803
SCALE: NTS
REVISION –
SHEET 1 OF 1
CADD FILE: ES2803–22

BILL OF MATERIAL			
ITEM	QTY	DESCRIPTION	SCRRA PART NO
1	1	SWITCH POINT RAIL, 33'-3" LONG, UR MANG TIP, CURVED, LH	
2	1	MANGANESE TIP, 21'-6" LONG, 136 LB RE SAMSON SWITCH POINT, LH	
3	1	REINFORCING BAR, GAUGE SIDE, 1/2" x 19'-6" LONG, SAMSON, LH POINT	
4	1	REINFORCING BAR, STOCK SIDE, 1/2" x 15'-1 1/2" LONG, SAMSON, LH POINT	
5	1	HEEL BLOCK ASSEMBLY, FLOATING C/W HARDWARE	
6	1	POINT STOP 2 5/16" HIGH	
7	1	POINT STOP 3 13/16" HIGH	
8	4	BOLT, 3/4" DIA x 4" LONG, SQUARE HEAD DRILLED @ 3 9/16" GRADE 5	
9	3	BOLT, 1" DIA x 3 3/4" LONG, THIN SQUARE HEAD DRILLED @ 3 7/32" GRADE 5	

BILL OF MATERIAL			
ITEM	QTY	DESCRIPTION	SCRRA PART NO
10	7	BOLT, 1" DIA x 4" LONG, THIN SQ HEAD DRILLED @ 3 1/2" GRADE 5	
11	10	BOLT, 1" DIA x 4" LONG, SQ HEAD DRILLED @ 3 7/16" GRADE 5	
12	4	NUT, 3/4" DIA HEAVY HEX, GRADE 5	
13	20	NUT, 1" DIA HEAVY HEX, GRADE 5	
14	4	SPRING WASHER, 3/4" DIA	
15	20	SPRING WASHER, 1" DIA	
16	4	COTTER PIN, 3/16" DIA x 1 3/4" LONG	
17	20	COTTER PIN, 1/4" DIA x 2" LONG	

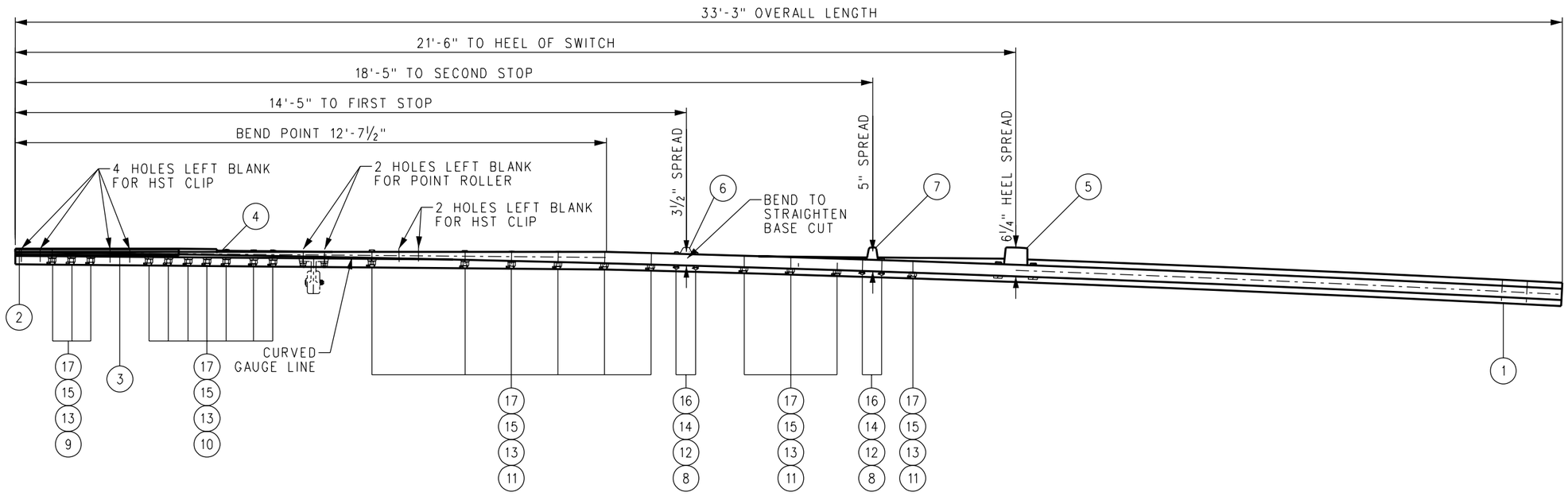

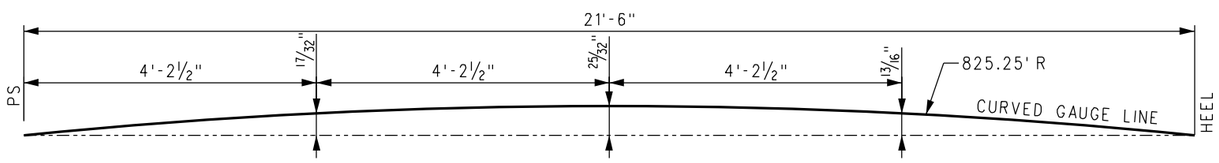

LATERAL CURVING DETAIL

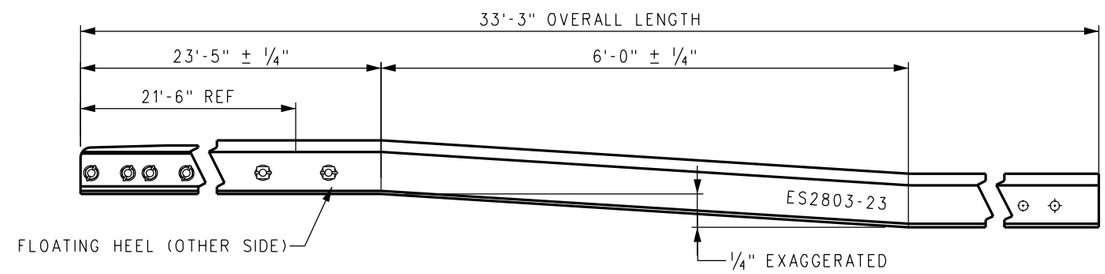

SIDE VIEW - VERTICAL BENDING DETAIL

NOTES:

1. ROUND EDGES OF SWITCH STOPS AT CONTACT AREAS, 1/2" R.
2. BEVEL ALL BOLT HOLES.
3. WRITE SCRRA ES NUMBER ON WEB OF RAIL WITH WATERPROOF MARKER OR PAINT.

REV.	DATE	DESCRIPTION	DES.	ENG.
X	XX-XX-XX	REVISION	XX	XX

DRAWN BY: HDR DATE: 03/31/2011

ASSISTANT DIRECTOR: STANDARDS & DESIGN

DIRECTOR OF ENGINEERING AND CONSTRUCTION

SCRRA ENGINEERING STANDARDS ARE INTENDED FOR SCRRA APPROVED USES ONLY. FOR NON-SCRRA APPROVED USES:
SCRRA SHALL NOT BE RESPONSIBLE FOR THE ACCURACY OR COMPLETENESS OF THE DATA OR INFORMATION CONTAINED HEREIN. THE SELECTION AND USE OF THESE STANDARDS IS THE SOLE RESPONSIBILITY OF THE USER AND SHOULD NOT BE USED WITHOUT CONSULTING A REGISTERED PROFESSIONAL ENGINEER. ALL WARRANTIES AND REPRESENTATIONS OF ANY KIND ARE DISCLAIMED. ANYONE MAKING USE OF THIS INFORMATION AGREES THAT IT ASSUMES ALL LIABILITY ARISING FROM SUCH USE. NO PART OF THESE STANDARDS SHOULD BE REPRODUCED OR DISTRIBUTED IN ANY FORM OR BY ANY MEANS WITHOUT THE PRIOR WRITTEN PERMISSION OF SCRRA. ALL RIGHTS RESERVED.

METROLINK®
SOUTHERN CALIFORNIA REGIONAL RAIL AUTHORITY
ONE GATEWAY PLAZA, 12TH FLOOR, L. A., CA. 90012

ENGINEERING STANDARDS

SWITCH POINT ASSEMBLY, 136 LB RE SAMSON, CURVED, LH NO 10 RH TURNOUT
33'-3" OVERALL LENGTH MANGANESE TIP

STANDARD 2803
SCALE: NTS
REVISION –
SHEET 1 OF 1
CADD FILE: ES2803-23

BILL OF MATERIAL			
ITEM	QTY	DESCRIPTION	SCRRA PART NO
1	1	SWITCH POINT RAIL, 33'-3" LONG, UR MANG TIP, STRAIGHT, RH	
2	1	MANGANESE TIP, 21'-6" LONG, 136 LB RE SAMSON SWITCH POINT, RH	
3	1	REINFORCING BAR, GAUGE SIDE, 1/2" x 19'-6" LONG, SAMSON, RH POINT	
4	1	REINFORCING BAR, STOCK SIDE, 1/2" x 15'-1 7/8" LONG, SAMSON, RH POINT	
5	1	HEEL BLOCK ASSEMBLY, FLOATING C/W HARDWARE	
6	1	POINT STOP 2 5/16" HIGH	
7	1	POINT STOP 3 13/16" HIGH	
8	4	BOLT, 3/4" DIA x 4" LONG, SQUARE HEAD DRILLED @ 3 9/16" GRADE 5	
9	3	BOLT, 1" DIA x 3 3/4" LONG, THIN SQUARE HEAD DRILLED @ 3 7/32" GRADE 5	

BILL OF MATERIAL			
ITEM	QTY	DESCRIPTION	SCRRA PART NO
10	7	BOLT, 1" DIA x 4" LONG, THIN SQ HEAD DRILLED @ 3 1/2" GRADE 5	
11	10	BOLT, 1" DIA x 4" LONG, SQ HEAD DRILLED @ 3 7/16" GRADE 5	
12	4	NUT, 3/4" DIA HEAVY HEX, GRADE 5	
13	20	NUT, 1" DIA HEAVY HEX, GRADE 5	
14	4	SPRING WASHER, 3/4" DIA	
15	20	SPRING WASHER, 1" DIA	
16	4	COTTER PIN, 3/16" DIA x 1 3/4" LONG	
17	20	COTTER PIN, 1/4" DIA x 2" LONG	

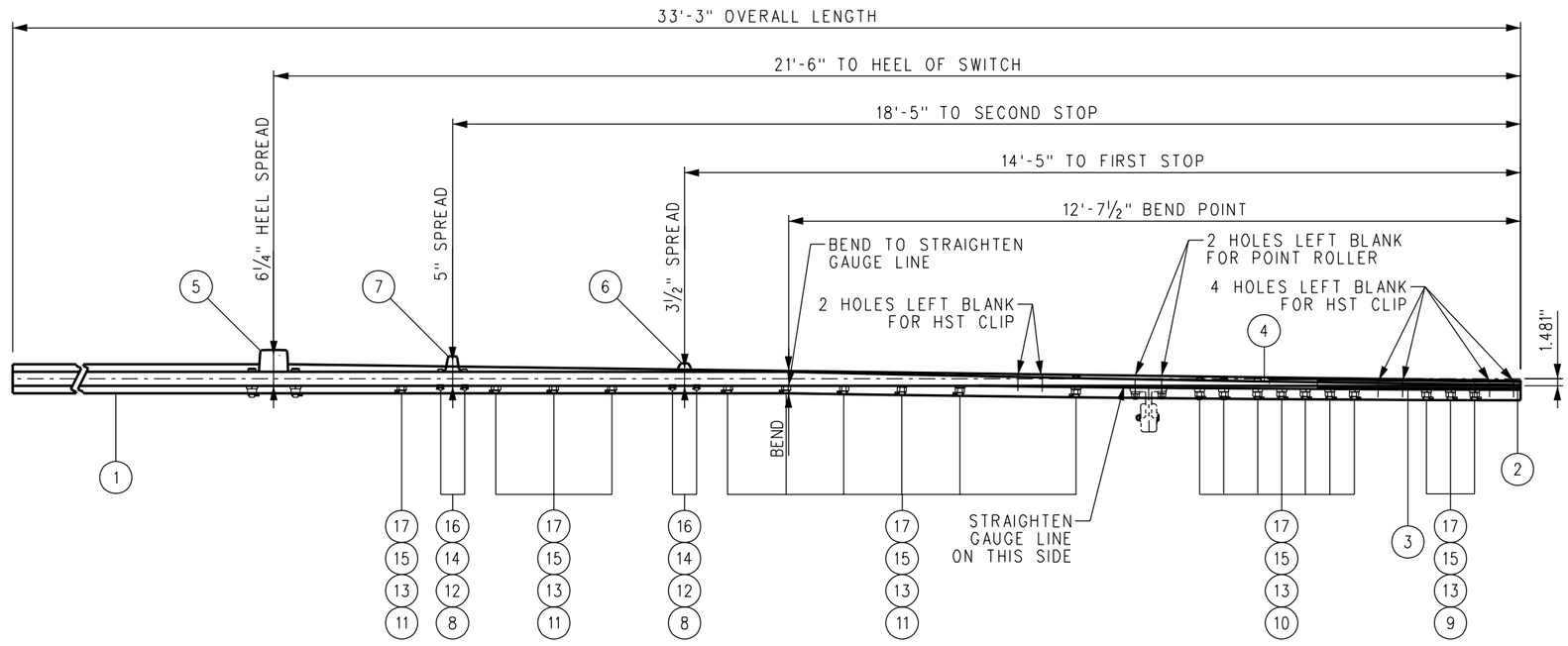

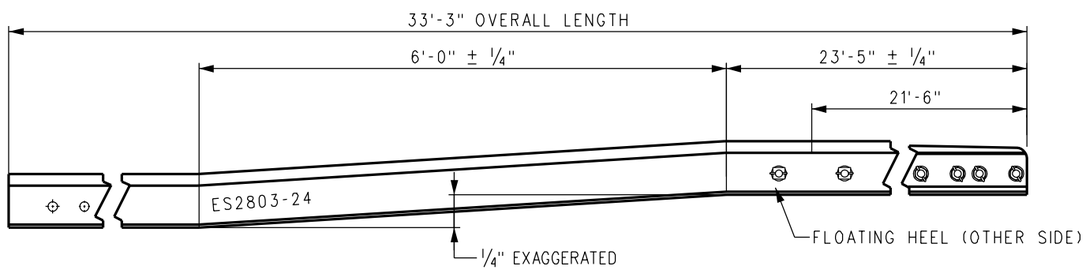

SIDE VIEW - VERTICAL BENDING DETAIL

NOTES:

1. ROUND EDGES OF SWITCH STOPS AT CONTACT AREAS, 1/2" R.
2. BEVEL ALL BOLT HOLES.
3. WRITE SCRRA ES NUMBER ON WEB OF RAIL WITH WATERPROOF MARKER OR PAINT.

REV.	DATE	DESCRIPTION	DES.	ENG.
X	XX-XX-XX	REVISION	XX	XX

DRAWN BY: HDR DATE: 03/31/2011

ASSISTANT DIRECTOR: STANDARDS & DESIGN

DIRECTOR OF ENGINEERING AND CONSTRUCTION

SCRRA ENGINEERING STANDARDS ARE INTENDED FOR SCRRA APPROVED USES ONLY. FOR NON-SCRRA APPROVED USES:
SCRRA SHALL NOT BE RESPONSIBLE FOR THE ACCURACY OR COMPLETENESS OF THE DATA OR INFORMATION CONTAINED HEREIN. THE SELECTION AND USE OF THESE STANDARDS IS THE SOLE RESPONSIBILITY OF THE USER AND SHOULD NOT BE USED WITHOUT CONSULTING A REGISTERED PROFESSIONAL ENGINEER. ALL WARRANTIES AND REPRESENTATIONS OF ANY KIND ARE DISCLAIMED. ANYONE MAKING USE OF THIS INFORMATION AGREES THAT IT ASSUMES ALL LIABILITY ARISING FROM SUCH USE. NO PART OF THESE STANDARDS SHOULD BE REPRODUCED OR DISTRIBUTED IN ANY FORM OR BY ANY MEANS WITHOUT THE PRIOR WRITTEN PERMISSION OF SCRRA. ALL RIGHTS RESERVED.

METROLINK®
SOUTHERN CALIFORNIA REGIONAL RAIL AUTHORITY
ONE GATEWAY PLAZA, 12TH FLOOR, L. A., CA. 90012

ENGINEERING STANDARDS

SWITCH POINT ASSEMBLY, 136 LB RE SAMSON, STRAIGHT, RH NO 10 RH TURNOUT 33'–3" OVERALL LENGTH MANGANESE TIP

STANDARD 2803
SCALE: NTS
REVISION –
SHEET 1 OF 1
CADD FILE: ES2803–24

BILL OF MATERIAL			
ITEM	QTY	DESCRIPTION	SCRRA PART NO
1	1	RAIL, 136 LB RE 39'-9 3/16" LONG	

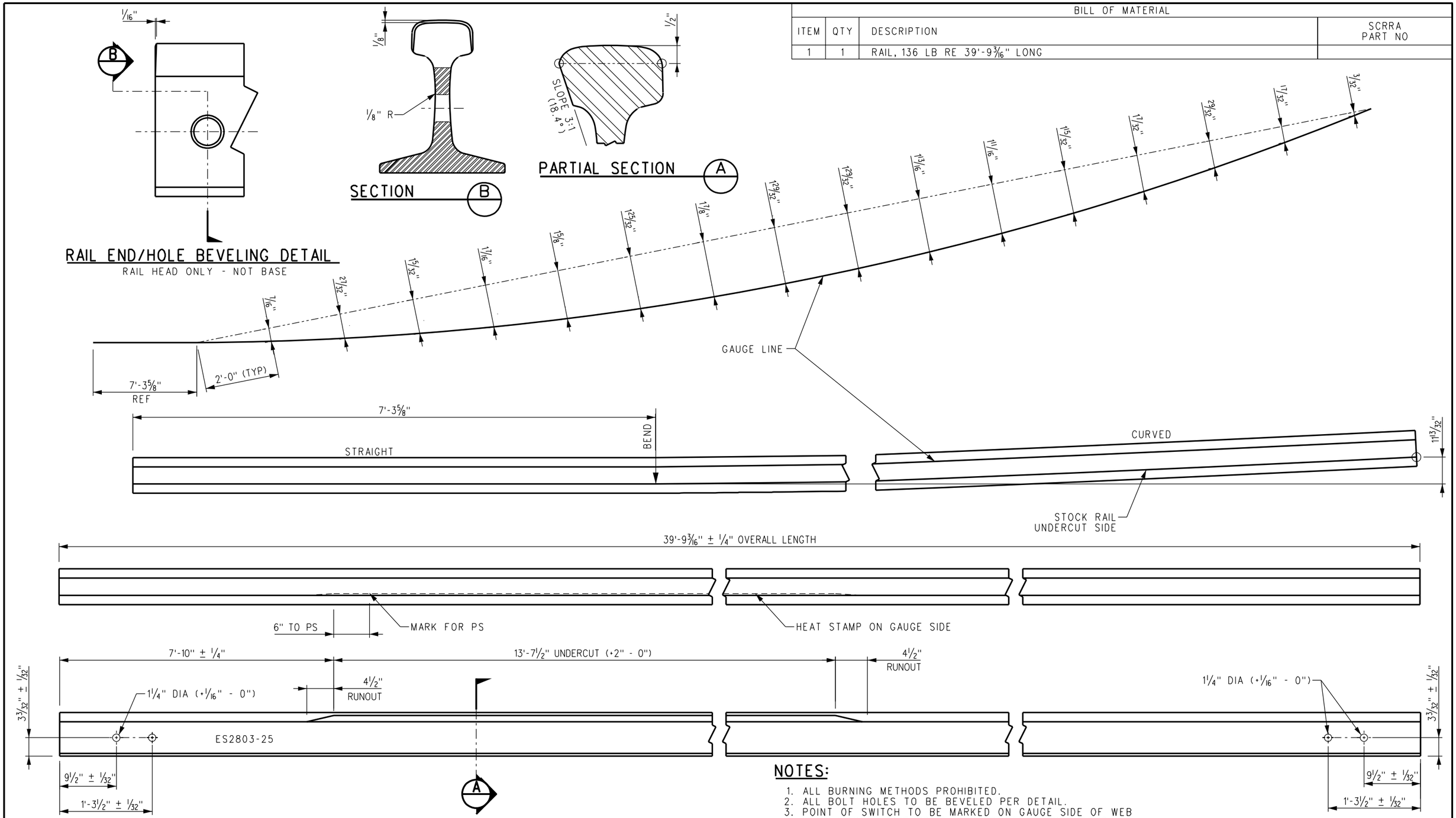

NOTES:

1. ALL BURNING METHODS PROHIBITED.
2. ALL BOLT HOLES TO BE BEVELED PER DETAIL.
3. POINT OF SWITCH TO BE MARKED ON GAUGE SIDE OF WEB WITH A WHITE LINE USING WATERPROOF MARKER OR PAINT.
4. WRITE SCRRA ES NUMBER ON WEB OF RAIL WITH WATERPROOF MARKER OR PAINT.

REV.	DATE	DESCRIPTION	DES.	ENG.
X	XX-XX-XX	REVISION	XX	XX

DRAWN BY: HDR DATE: 03/31/2011

ASSISTANT DIRECTOR: STANDARDS & DESIGN

DIRECTOR OF ENGINEERING AND CONSTRUCTION

SCRRA ENGINEERING STANDARDS ARE INTENDED FOR SCRRA APPROVED USES ONLY. FOR NON-SCRRA APPROVED USES: SCRRA SHALL NOT BE RESPONSIBLE FOR THE ACCURACY OR COMPLETENESS OF THE DATA OR INFORMATION CONTAINED HEREIN. THE SELECTION AND USE OF THESE STANDARDS IS THE SOLE RESPONSIBILITY OF THE USER AND SHOULD NOT BE USED WITHOUT CONSULTING A REGISTERED PROFESSIONAL ENGINEER. ALL WARRANTIES AND REPRESENTATIONS OF ANY KIND ARE DISCLAIMED. ANYONE MAKING USE OF THIS INFORMATION AGREES THAT IT ASSUMES ALL LIABILITY ARISING FROM SUCH USE. NO PART OF THESE STANDARDS SHOULD BE REPRODUCED OR DISTRIBUTED IN ANY FORM OR BY ANY MEANS WITHOUT THE PRIOR WRITTEN PERMISSION OF SCRRA. ALL RIGHTS RESERVED.

METROLINK®

SOUTHERN CALIFORNIA REGIONAL RAIL AUTHORITY
ONE GATEWAY PLAZA, 12TH FLOOR, L. A., CA. 90012

ENGINEERING STANDARDS

SAMSON STOCK RAIL, CURVED, LH
136 LB RE 39'-9 3/16" LONG
FOR NO 10 136 LB RE LH SWITCH PACK

STANDARD: 2803
SCALE: NTS
REVISION: –
SHEET: 1 OF 1
CADD FILE: ES2803-25

BILL OF MATERIAL			
ITEM	QTY	DESCRIPTION	SCRRA PART NO
1	1	RAIL, 136 LB RE 45'-11" LONG	

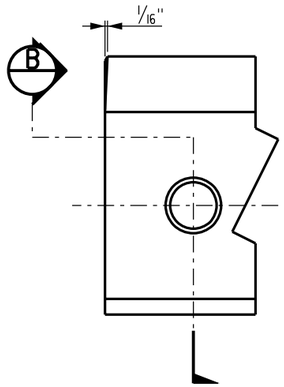

RAIL END/HOLE BEVELING DETAIL
RAIL HEAD ONLY - NOT BASE

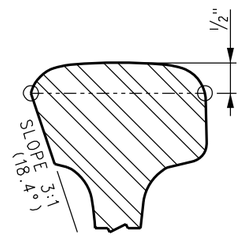

PARTIAL SECTION A

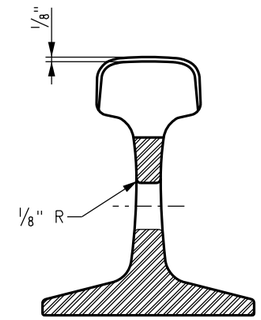

SECTION B

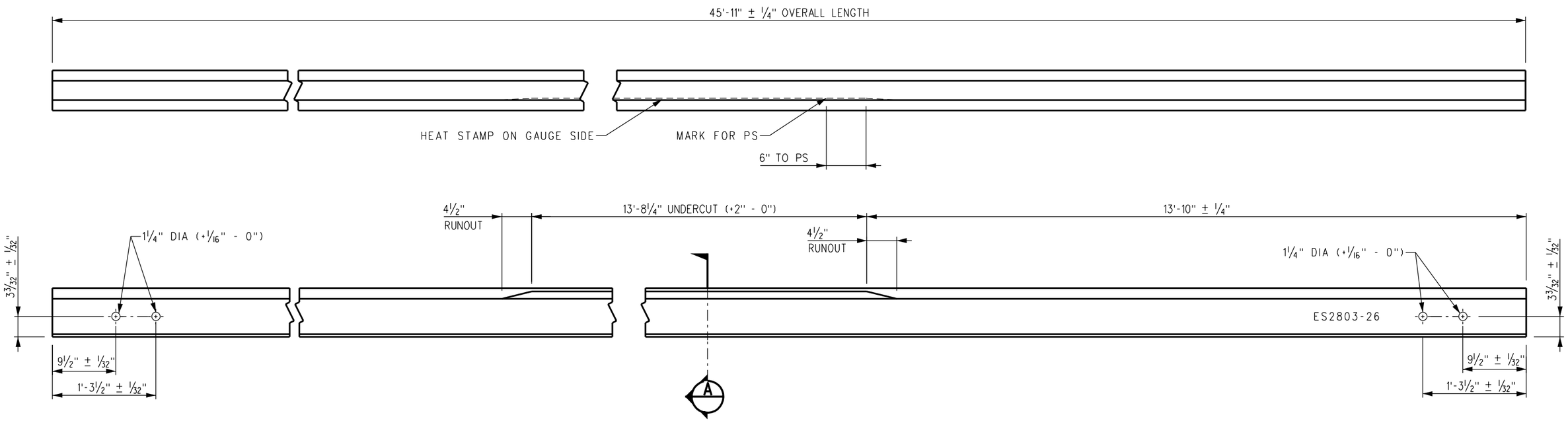

NOTES:

1. ALL BURNING METHODS PROHIBITED.
2. ALL BOLT HOLES TO BE BEVELED PER DETAIL.
3. POINT OF SWITCH TO BE MARKED ON GAUGE SIDE OF WEB WITH A WHITE LINE USING WATERPROOF MARKER OR PAINT.
4. WRITE SCRRA ES NUMBER ON WEB OF RAIL WITH WATERPROOF MARKER OR PAINT.

REV.	DATE	DESCRIPTION	DES.	ENG.
X	XX-XX-XX	REVISION	XX	XX

DRAWN BY: HDR DATE: 03/31/2011

ASSISTANT DIRECTOR: STANDARDS & DESIGN

DIRECTOR OF ENGINEERING AND CONSTRUCTION

SCRRA ENGINEERING STANDARDS ARE INTENDED FOR SCRRA APPROVED USES ONLY. FOR NON-SCRRA APPROVED USES:
SCRRA SHALL NOT BE RESPONSIBLE FOR THE ACCURACY OR COMPLETENESS OF THE DATA OR INFORMATION CONTAINED HEREIN. THE SELECTION AND USE OF THESE STANDARDS IS THE SOLE RESPONSIBILITY OF THE USER AND SHOULD NOT BE USED WITHOUT CONSULTING A REGISTERED PROFESSIONAL ENGINEER. ALL WARRANTIES AND REPRESENTATIONS OF ANY KIND ARE DISCLAIMED. ANYONE MAKING USE OF THIS INFORMATION AGREES THAT IT ASSUMES ALL LIABILITY ARISING FROM SUCH USE. NO PART OF THESE STANDARDS SHOULD BE REPRODUCED OR DISTRIBUTED IN ANY FORM OR BY ANY MEANS WITHOUT THE PRIOR WRITTEN PERMISSION OF SCRRA. ALL RIGHTS RESERVED.

METROLINK®
SOUTHERN CALIFORNIA REGIONAL RAIL AUTHORITY
ONE GATEWAY PLAZA, 12TH FLOOR, L. A., CA. 90012

ENGINEERING STANDARDS

SAMSON STOCK RAIL, STRAIGHT, RH
136 LB RE 45'-11" LONG
FOR NO 10 136 LB RE LH SWITCH PACK

STANDARD 2803
SCALE: NTS
REVISION –
SHEET 1 OF 1
CADD FILE: ES2803-26

BILL OF MATERIAL			
ITEM	QTY	DESCRIPTION	SCRRA PART NO
1	1	RAIL, 136 LB RE 45'-11" LONG	

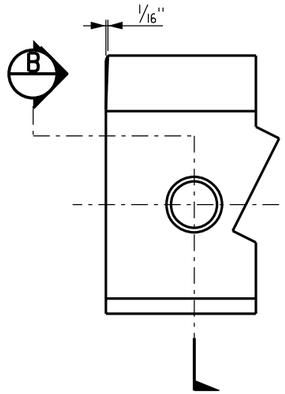

RAIL END/HOLE BEVELING DETAIL
RAIL HEAD ONLY - NOT BASE

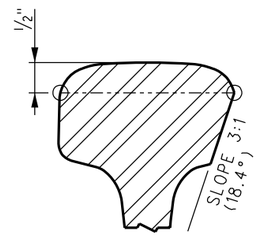

PARTIAL SECTION A

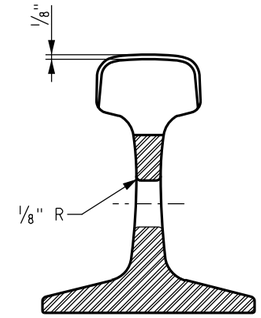

SECTION B

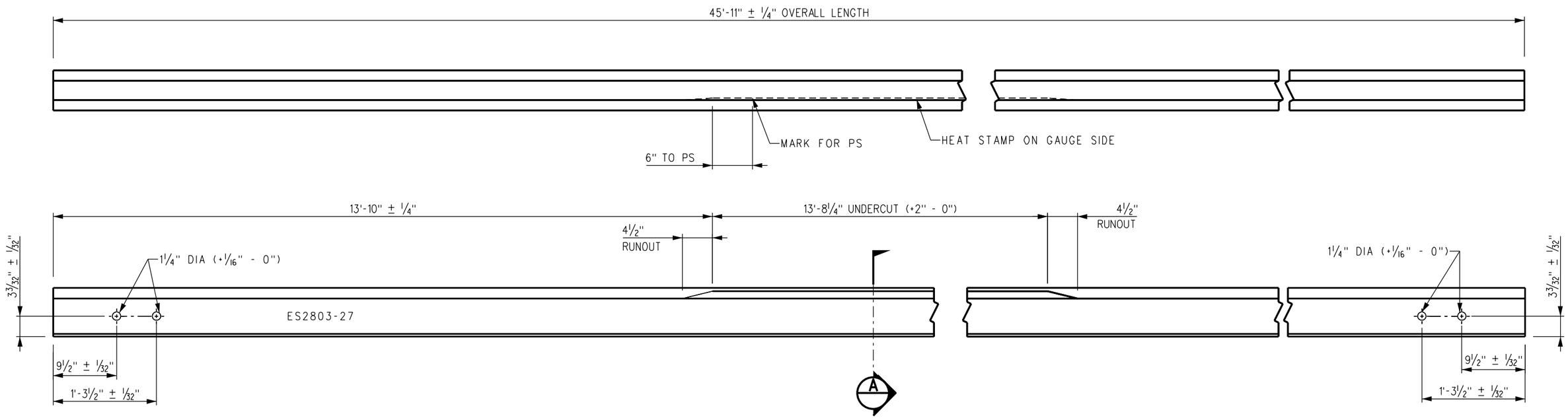

NOTES:

1. ALL BURNING METHODS PROHIBITED.
2. ALL BOLT HOLES TO BE BEVELED PER DETAIL.
3. POINT OF SWITCH TO BE MARKED ON GAUGE SIDE OF WEB WITH A WHITE LINE USING WATERPROOF MARKER OR PAINT.
4. WRITE SCRRA ES NUMBER ON WEB OF RAIL WITH WATERPROOF MARKER OR PAINT.

REV.	DATE	DESCRIPTION	DES.	ENG.
X	XX-XX-XX	REVISION	XX	XX

DRAWN BY: HDR DATE: 03/31/2011

ASSISTANT DIRECTOR: STANDARDS & DESIGN

DIRECTOR OF ENGINEERING AND CONSTRUCTION

SCRRA ENGINEERING STANDARDS ARE INTENDED FOR SCRRA APPROVED USES ONLY. FOR NON-SCRRA APPROVED USES:
SCRRA SHALL NOT BE RESPONSIBLE FOR THE ACCURACY OR COMPLETENESS OF THE DATA OR INFORMATION CONTAINED HEREIN. THE SELECTION AND USE OF THESE STANDARDS IS THE SOLE RESPONSIBILITY OF THE USER AND SHOULD NOT BE USED WITHOUT CONSULTING A REGISTERED PROFESSIONAL ENGINEER. ALL WARRANTIES AND REPRESENTATIONS OF ANY KIND ARE DISCLAIMED. ANYONE MAKING USE OF THIS INFORMATION AGREES THAT IT ASSUMES ALL LIABILITY ARISING FROM SUCH USE. NO PART OF THESE STANDARDS SHOULD BE REPRODUCED OR DISTRIBUTED IN ANY FORM OR BY ANY MEANS WITHOUT THE PRIOR WRITTEN PERMISSION OF SCRRA. ALL RIGHTS RESERVED.

METROLINK®
SOUTHERN CALIFORNIA REGIONAL RAIL AUTHORITY
ONE GATEWAY PLAZA, 12TH FLOOR, L. A., CA. 90012

ENGINEERING STANDARDS

SAMSON STOCK RAIL, STRAIGHT, LH
136 LB RE 45'-11" LONG
FOR NO 10 136 LB RE RH SWITCH PACK

STANDARD: 2803
SCALE: NTS
REVISION: –
SHEET: 1 OF 1
CADD FILE: ES2803-27

BILL OF MATERIAL			
ITEM	QTY	DESCRIPTION	SCRRA PART NO
1	1	RAIL, 136 LB RE 39'-9 3/16" LONG	

NOTES:

1. ALL BURNING METHODS PROHIBITED.
2. ALL BOLT HOLES TO BE BEVELED PER DETAIL.
3. POINT OF SWITCH TO BE MARKED ON GAUGE SIDE OF WEB WITH A WHITE LINE USING WATERPROOF MARKER OR PAINT.
4. WRITE SCRRA ES NUMBER ON WEB OF RAIL WITH WATERPROOF MARKER OR PAINT.

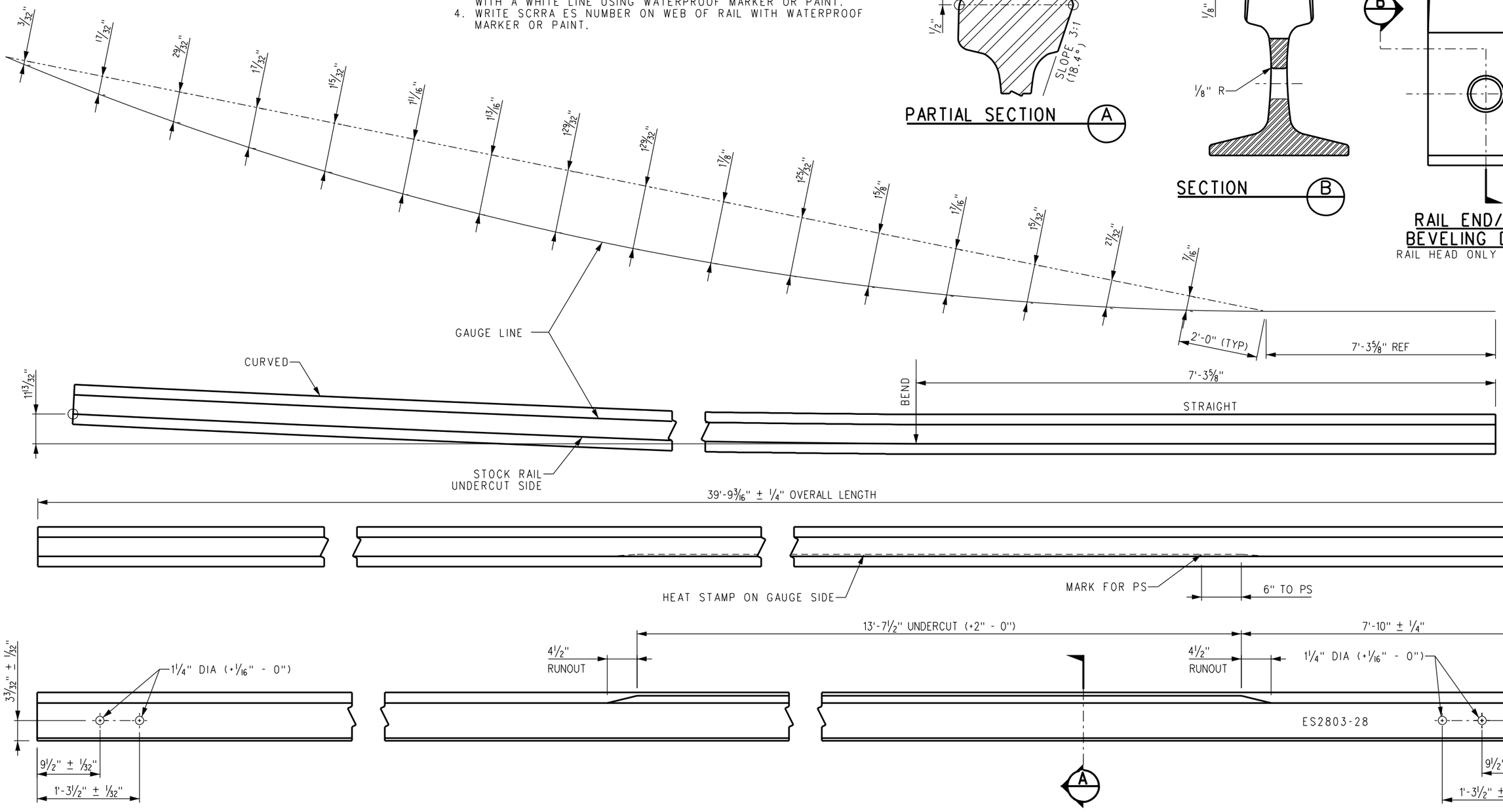

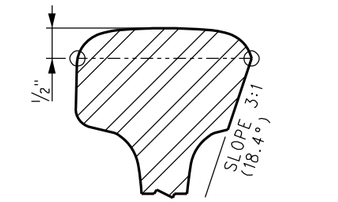

PARTIAL SECTION A

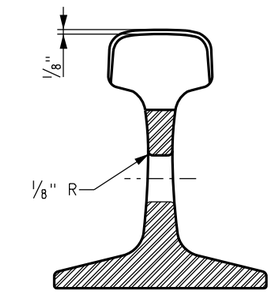

SECTION B

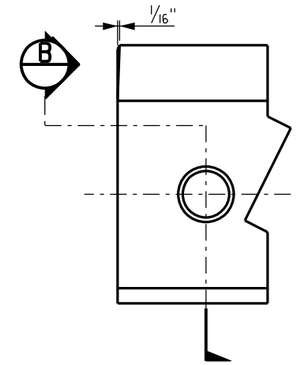

RAIL END/HOLE BEVELING DETAIL

RAIL HEAD ONLY - NOT BASE

REV.	DATE	DESCRIPTION	DES.	ENG.
X	XX-XX-XX	REVISION	XX	XX

DRAWN BY: HDR DATE: 03/31/2011

ASSISTANT DIRECTOR: STANDARDS & DESIGN

DIRECTOR OF ENGINEERING AND CONSTRUCTION

SCRRA ENGINEERING STANDARDS ARE INTENDED FOR SCRRA APPROVED USES ONLY. FOR NON-SCRRA APPROVED USES: SCRRA SHALL NOT BE RESPONSIBLE FOR THE ACCURACY OR COMPLETENESS OF THE DATA OR INFORMATION CONTAINED HEREIN. THE SELECTION AND USE OF THESE STANDARDS IS THE SOLE RESPONSIBILITY OF THE USER AND SHOULD NOT BE USED WITHOUT CONSULTING A REGISTERED PROFESSIONAL ENGINEER. ALL WARRANTIES AND REPRESENTATIONS OF ANY KIND ARE DISCLAIMED. ANYONE MAKING USE OF THIS INFORMATION AGREES THAT IT ASSUMES ALL LIABILITY ARISING FROM SUCH USE. NO PART OF THESE STANDARDS SHOULD BE REPRODUCED OR DISTRIBUTED IN ANY FORM OR BY ANY MEANS WITHOUT THE PRIOR WRITTEN PERMISSION OF SCRRA. ALL RIGHTS RESERVED.

METROLINK®

SOUTHERN CALIFORNIA REGIONAL RAIL AUTHORITY
ONE GATEWAY PLAZA, 12TH FLOOR, L. A., CA. 90012

ENGINEERING STANDARDS

SAMSON STOCK RAIL, CURVED, RH
136 LB RE 39'-9 3/16" LONG
FOR NO 10 136 LB RE RH SWITCH PACK

STANDARD: 2803
SCALE: NTS
REVISION: –
SHEET: 1 OF 1
CADD FILE: ES2803-28

UserName=> carlosa Date Plotted: 10/5/2011 3:26:02 PM Plot Driver=> S:\Plot Drivers\pdf.plt FileName=> s:\V8EngStds\2000\Turnouts\No 10 Turnout\ES2803-28.DGN

BILL OF MATERIALS			
ITEM	QTY	DESCRIPTION	DWG NO
1	3	TIES 1,2, AND 5, POWER SWITCH MACHINE ON MAINLINE SIDE FOR RH TURNOUT (HOLLOW STEEL)	ES2803-32
2	3	TIES 1,2, AND 5, POWER SWITCH MACHINE ON TURNOUT SIDE FOR RH TURNOUT (HOLLOW STEEL)	ES2803-34
3	3	TIES 1,2, AND 5, MANUAL OR POWER SWITCH MACHINE ON MAINLINE SIDE FOR RH TURNOUT (CONCRETE)	ES2803-36
4	3	TIES 1,2, AND 5, MANUAL OR POWER SWITCH MACHINE ON TURNOUT SIDE FOR RH TURNOUT (CONCRETE)	ES2803-38

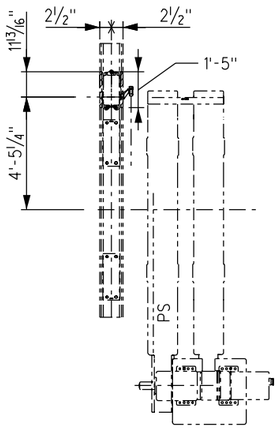

TIE "0" PLACEMENT
SWITCH MACHINE
ON TURNOUT (RH) SIDE

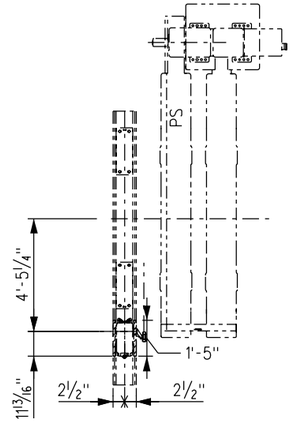

TIE "0" PLACEMENT
SWITCH MACHINE
ON MAINLINE (LH) SIDE

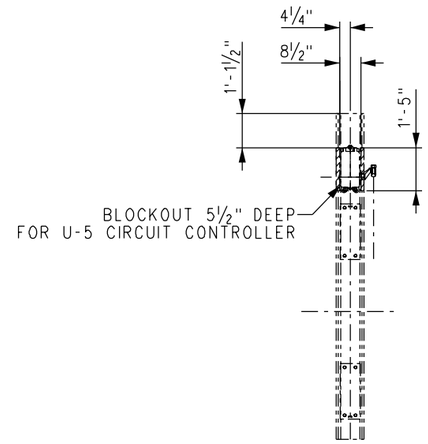

TIE "0" BLOCKOUT DETAIL

NOTES:

1. SET TO INCLUDE TIES 0, 3, 4, 6 THROUGH 59, THREE 1:80 CANTED TIES, PLATE TIE PADS AND PIM INSERTS.
2. TIE LENGTHS ARE DETERMINED BY ADDING 1'-10 7/16" FROM RAIL GAUGE LINE OR (1'-9" FROM RAIL CENTERLINE) PER SIDE AT THE CENTERLINE OF EACH TIE LOCATION.
3. ALL TIES ARE FLAT (NON-CANTED) EXCEPT 1:80 CANTED TIES.
4. TRANSITION TIES (QUANTITY 3) SHALL INCORPORATE 1:80 CANTED RAIL SEATS AND USE 4'-8 1/2" BETWEEN STRAIGHT RAIL SEAT GAUGES. LENGTH SHALL BE 8'-3".
5. THIS DRAWING SHOWS TIE "0" PLACEMENT FOR SWITCH MACHINE ON RH/TURNOUT SIDE. USE OPPOSITE HAND FOR SWITCH MACHINE ON THE LH/MAINLINE SIDE.
6. SEE BILL OF MATERIALS ABOVE FOR TIES 1,2, AND 5.

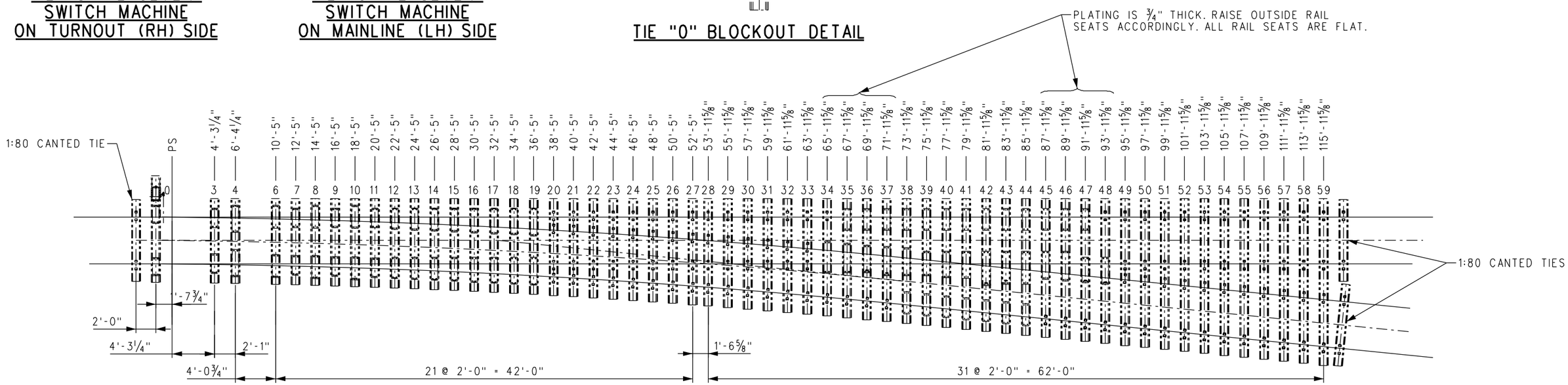

REV.	DATE	DESCRIPTION	DES.	ENG.
X	XX-XX-XX	REVISION	XX	XX

DRAWN BY: HDR DATE: 03/31/2011

ASSISTANT DIRECTOR: STANDARDS & DESIGN

DIRECTOR OF ENGINEERING AND CONSTRUCTION

SCRRA ENGINEERING STANDARDS ARE INTENDED FOR SCRRA APPROVED USES ONLY. FOR NON-SCRRA APPROVED USES:
SCRRA SHALL NOT BE RESPONSIBLE FOR THE ACCURACY OR COMPLETENESS OF THE DATA OR INFORMATION CONTAINED HEREIN. THE SELECTION AND USE OF THESE STANDARDS IS THE SOLE RESPONSIBILITY OF THE USER AND SHOULD NOT BE USED WITHOUT CONSULTING A REGISTERED PROFESSIONAL ENGINEER. ALL WARRANTIES AND REPRESENTATIONS OF ANY KIND ARE DISCLAIMED. ANYONE MAKING USE OF THIS INFORMATION AGREES THAT IT ASSUMES ALL LIABILITY ARISING FROM SUCH USE. NO PART OF THESE STANDARDS SHOULD BE REPRODUCED OR DISTRIBUTED IN ANY FORM OR BY ANY MEANS WITHOUT THE PRIOR WRITTEN PERMISSION OF SCRRA. ALL RIGHTS RESERVED.

METROLINK®
SOUTHERN CALIFORNIA REGIONAL RAIL AUTHORITY
ONE GATEWAY PLAZA, 12TH FLOOR, L. A., CA. 90012

ENGINEERING STANDARDS

CONCRETE TIE LAYOUT
NO 10–136 LB RE SPRING FROG TURNOUT, RH

STANDARD 2803
SCALE: NTS
REVISION –
SHEET 1 OF 1
CADD FILE: ES2803–30

BILL OF MATERIALS			
ITEM	QTY	DESCRIPTION	DWG NO
1	3	TIES 1,2, AND 5, POWER SWITCH MACHINE ON MAINLINE SIDE FOR LH TURNOUT (HOLLOW STEEL)	ES2803-33
2	3	TIES 1,2, AND 5, POWER SWITCH MACHINE ON TURNOUT SIDE FOR LH TURNOUT (HOLLOW STEEL)	ES2803-35
3	3	TIES 1,2, AND 5, MANUAL OR POWER SWITCH MACHINE ON MAINLINE SIDE FOR LH TURNOUT (CONCRETE)	ES2803-37
4	3	TIES 1,2, AND 5, MANUAL OR POWER SWITCH MACHINE ON TURNOUT SIDE FOR LH TURNOUT (CONCRETE)	ES2803-39

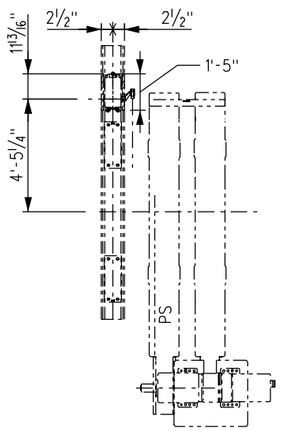

TIE "0" PLACEMENT
SWITCH MACHINE
ON MAINLINE (RH) SIDE

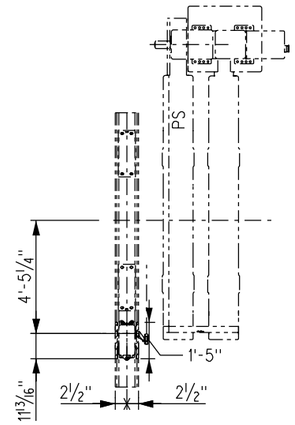

TIE "0" PLACEMENT
SWITCH MACHINE
ON TURNOUT (LH) SIDE

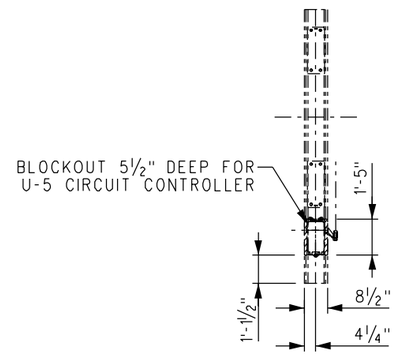

TIE "0" BLOCKOUT DETAIL

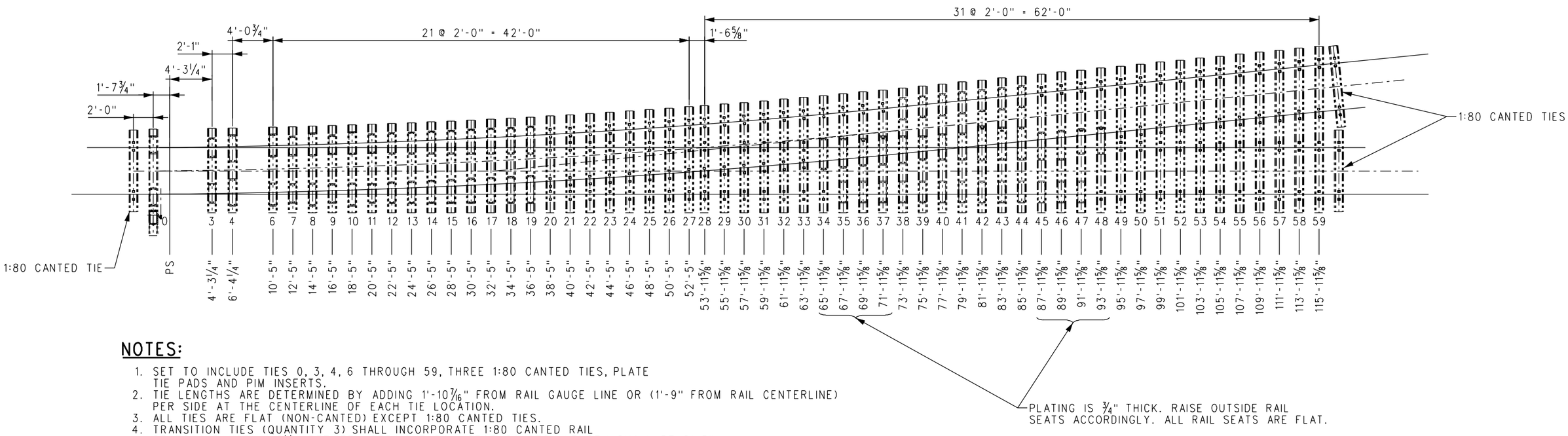

NOTES:

1. SET TO INCLUDE TIES 0, 3, 4, 6 THROUGH 59, THREE 1:80 CANTED TIES, PLATE TIE PADS AND PIM INSERTS.
2. TIE LENGTHS ARE DETERMINED BY ADDING 1'-10 7/16" FROM RAIL GAUGE LINE OR (1'-9" FROM RAIL CENTERLINE) PER SIDE AT THE CENTERLINE OF EACH TIE LOCATION.
3. ALL TIES ARE FLAT (NON-CANTED) EXCEPT 1:80 CANTED TIES.
4. TRANSITION TIES (QUANTITY 3) SHALL INCORPORATE 1:80 CANTED RAIL SEATS AND USE 4'-8 1/2" BETWEEN STRAIGHT RAIL SEAT GAUGES. LENGTH SHALL BE 8'-3".
5. THIS DRAWING SHOWS TIE "0" PLACEMENT FOR SWITCH MACHINE ON LH/TURNOUT SIDE. USE OPPOSITE HAND FOR SWITCH MACHINE ON THE RH/MAINLINE SIDE.
6. SEE BILL OF MATERIALS ABOVE FOR TIES 1, 2, AND 5.

REV.	DATE	DESCRIPTION	DES.	ENG.
X	XX-XX-XX	REVISION	XX	XX

DRAWN BY: HDR DATE: 03/31/2011

ASSISTANT DIRECTOR: STANDARDS & DESIGN

DIRECTOR OF ENGINEERING AND CONSTRUCTION

SCRRA ENGINEERING STANDARDS ARE INTENDED FOR SCRRA APPROVED USES ONLY. FOR NON-SCRRA APPROVED USES: SCRRA SHALL NOT BE RESPONSIBLE FOR THE ACCURACY OR COMPLETENESS OF THE DATA OR INFORMATION CONTAINED HEREIN. THE SELECTION AND USE OF THESE STANDARDS IS THE SOLE RESPONSIBILITY OF THE USER AND SHOULD NOT BE USED WITHOUT CONSULTING A REGISTERED PROFESSIONAL ENGINEER. ALL WARRANTIES AND REPRESENTATIONS OF ANY KIND ARE DISCLAIMED. ANYONE MAKING USE OF THIS DRAWING AGREES THAT IT ASSUMES ALL LIABILITY ARISING FROM SUCH USE. NO PART OF THESE STANDARDS SHOULD BE REPRODUCED OR DISTRIBUTED IN ANY FORM OR BY ANY MEANS WITHOUT THE PRIOR WRITTEN PERMISSION OF SCRRA. ALL RIGHTS RESERVED.

METROLINK®
SOUTHERN CALIFORNIA REGIONAL RAIL AUTHORITY
ONE GATEWAY PLAZA, 12TH FLOOR, L. A., CA. 90012

ENGINEERING STANDARDS

CONCRETE TIE LAYOUT
NO 10–136 LB RE SPRING FROG TURNOUT, LH

STANDARD 2803
SCALE: NTS
REVISION –
SHEET 1 OF 1
CADD FILE: ES2803–31

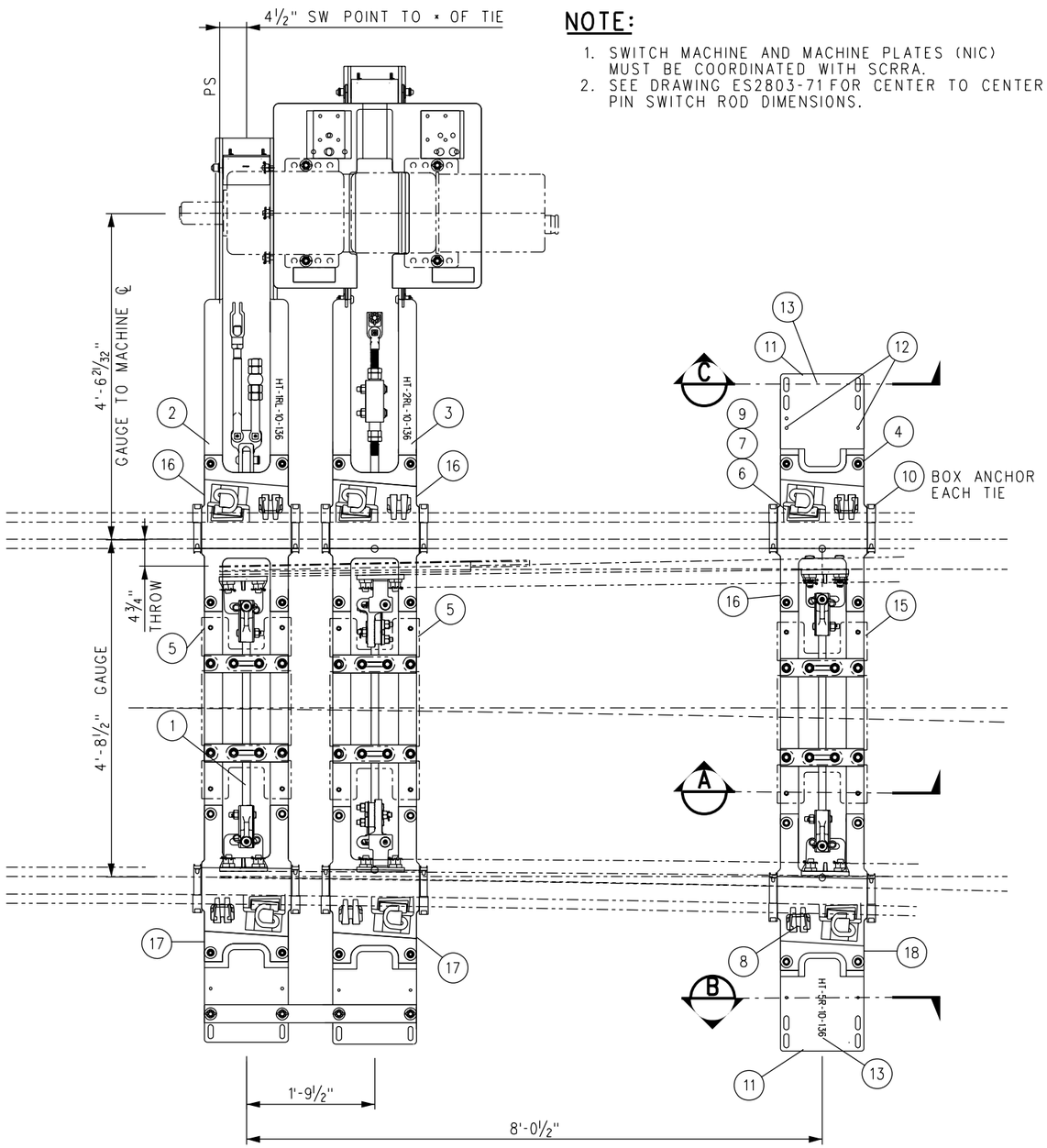

NOTE:

1. SWITCH MACHINE AND MACHINE PLATES (NIC) MUST BE COORDINATED WITH SCRRA.
2. SEE DRAWING ES2803-71 FOR CENTER TO CENTER PIN SWITCH ROD DIMENSIONS.

BILL OF MATERIAL

ITEM	QTY	DESCRIPTION	DWG NO	SCRRA PART NO
1	1	RODDING ASSEMBLY FOR NO 10-136 LB RE, SWITCH MACHINE ON LEFT SIDE	ES2803-71	
2	1	HOLLOW TIE ASSEMBLY (HT-1RL-10-136)	-	
3	1	HOLLOW TIE ASSEMBLY (HT-2RL-10-136)	-	
4	1	HOLLOW TIE ASSEMBLY (HT-5R-10-136)	-	
5×	2	COVER PLATE NO 1, HOLLOW SWITCH TIE	-	
6	6	LV BRACE FOR 136 LB RE	-	
7	6	SERRATED WASHER FOR LV BRACE	-	
8	6	CLIP, SAFELOK AB 2000	-	
9	6	CLIP, PANDROL, E2055	-	
10	12	RAIL ANCHOR UNIT DRIVE-ON TYPE 5	-	
11	2	STEEL COVER PLATE FOR HST TIE, TOP END	-	
12	20	PUSH PIN ASSEMBLY FOR HST COVERS	-	
13	2	STEEL SIDE END COVER PLATE ASSEMBLY FOR HST TIE	-	
14	4	COVER SUPPORT BRACKET	-	
15×	1	COVER PLATE NO 2, HOLLOW SWITCH TIE	-	
16	3	HST SWITCH PLATE HTP-206-STR	ES2800-90	
17	2	HST SWITCH PLATE HTP-201-R	ES2800-93	
18	1	HST SWITCH PLATE HTP-205-R	ES2800-95	

× NOT SHOWN ON ASSEMBLY FOR CLARITY

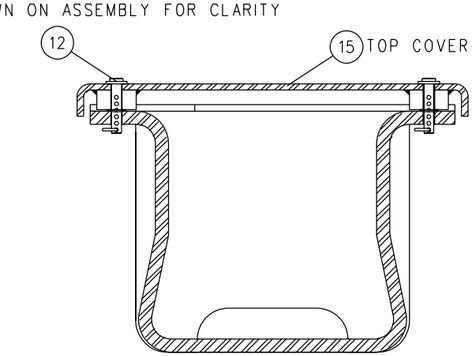

SECTION A
HOLLOW TIE TOP COVER DETAIL

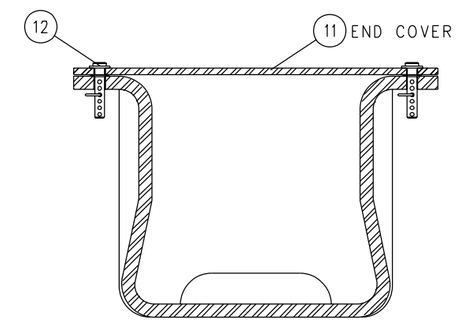

SECTION B
END COVER PLATE

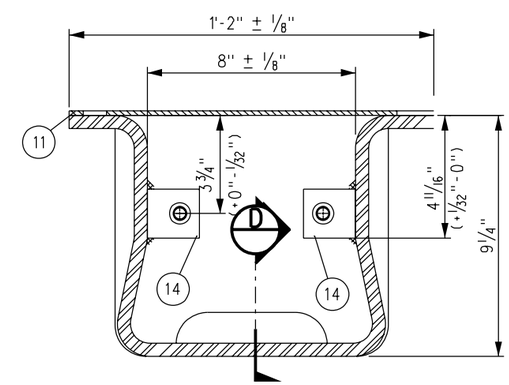

SECTION C
HOLLOW TIE SIDE END COVER DETAIL

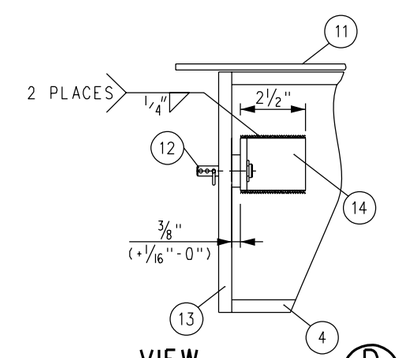

VIEW D
WELDING DETAIL

REV.	DATE	DESCRIPTION	DES.	ENG.
X	XX-XX-XX	REVISION	XX	XX

DRAWN BY: HDR DATE: 03/31/2011

ASSISTANT DIRECTOR: STANDARDS & DESIGN

DIRECTOR OF ENGINEERING AND CONSTRUCTION

SCRRA ENGINEERING STANDARDS ARE INTENDED FOR SCRRA APPROVED USES ONLY. FOR NON-SCRRA APPROVED USES: SCRRA SHALL NOT BE RESPONSIBLE FOR THE ACCURACY OR COMPLETENESS OF THE DATA OR INFORMATION CONTAINED HEREIN. THE SELECTION AND USE OF THESE STANDARDS IS THE SOLE RESPONSIBILITY OF THE USER AND SHOULD NOT BE USED WITHOUT CONSULTING A REGISTERED PROFESSIONAL ENGINEER. ALL WARRANTIES AND REPRESENTATIONS OF ANY KIND ARE DISCLAIMED. ANYONE MAKING USE OF THIS INFORMATION AGREES THAT IT ASSUMES ALL LIABILITY ARISING FROM SUCH USE. NO PART OF THESE STANDARDS SHOULD BE REPRODUCED OR DISTRIBUTED IN ANY FORM OR BY ANY MEANS WITHOUT THE PRIOR WRITTEN PERMISSION OF SCRRA. ALL RIGHTS RESERVED.

METROLINK®
SOUTHERN CALIFORNIA REGIONAL RAIL AUTHORITY
ONE GATEWAY PLAZA, 12TH FLOOR, L. A., CA. 90012

ENGINEERING STANDARDS

HOLLOW STEEL TIE LAYOUT
SWITCH MACHINE ON MAINLINE SIDE
NO 10-136 LB RE RH

STANDARD 2803
SCALE: NTS
REVISION –
SHEET 1 OF 1
CADD FILE: ES2803-32

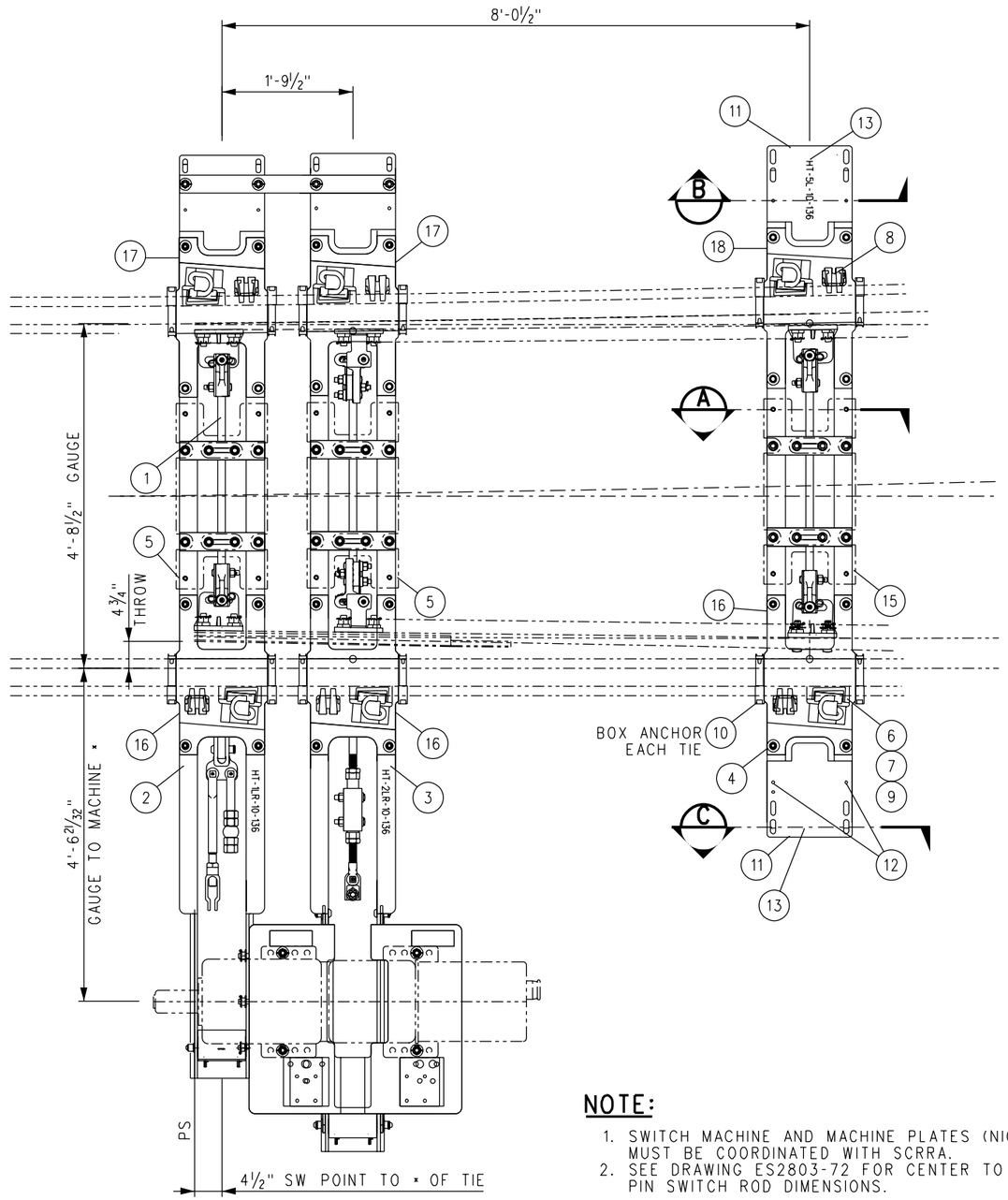

NOTE:

1. SWITCH MACHINE AND MACHINE PLATES (NIC) MUST BE COORDINATED WITH SCRRA.
2. SEE DRAWING ES2803-72 FOR CENTER TO CENTER PIN SWITCH ROD DIMENSIONS.

BILL OF MATERIAL

ITEM	QTY	DESCRIPTION	DWG NO	SCRRA PART NO
1	1	RODDING ASSEMBLY FOR NO 10-136 LB RE, SWITCH MACHINE ON RH SIDE	ES2803-72	
2	1	HOLLOW TIE ASSEMBLY (HT-1LR-10-136)	-	
3	1	HOLLOW TIE ASSEMBLY (HT-2LR-10-136)	-	
4	1	HOLLOW TIE ASSEMBLY (HT-5L-10-136)	-	
5*	2	COVER PLATE NO 1, HOLLOW SWITCH TIE	-	
6	6	LV BRACE FOR 136 LB RE	-	
7	6	SERRATED WASHER FOR LV BRACE	-	
8	6	CLIP, SAFELOK AB 2000	-	
9	6	CLIP, PANDROL, E2055	-	
10	12	RAIL ANCHOR, UNIT DRIVE-ON TYPE 5	-	
11	2	STEEL COVER PLATE FOR HST TIE, TOP END	-	
12	20	PUSH PIN ASSEMBLY FOR HST COVERS	-	
13	2	STEEL SIDE END COVER PLATE ASSEMBLY FOR HST TIE	-	
14	4	COVER SUPPORT BRACKET	-	
15*	1	COVER PLATE NO 2, HOLLOW SWITCH TIE	-	
16	3	HST SWITCH PLATE HTP-206-STR	ES2800-90	
17	2	HST SWITCH PLATE HTP-200-L	ES2800-93	
18	1	HST SWITCH PLATE HTP-204-L	ES2800-95	

* NOT SHOWN ON ASSEMBLY FOR CLARITY

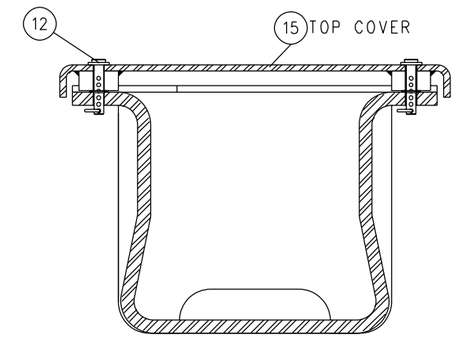

SECTION A
HOLLOW TIE TOP COVER DETAIL

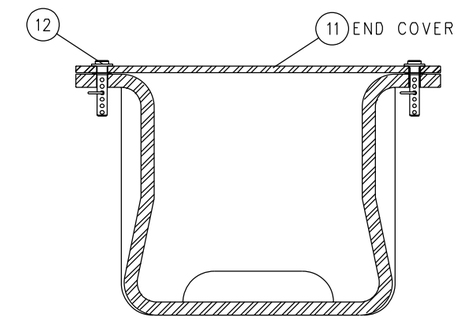

SECTION B
END COVER PLATE

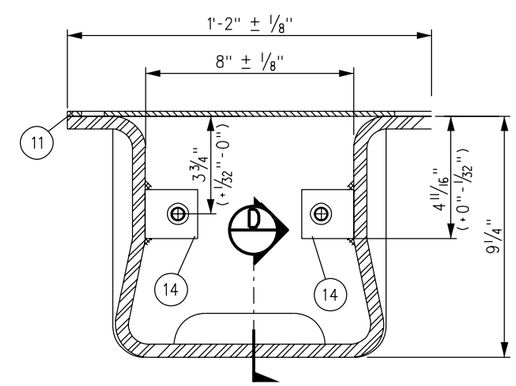

SECTION C
HOLLOW TIE SIDE END COVER DETAIL

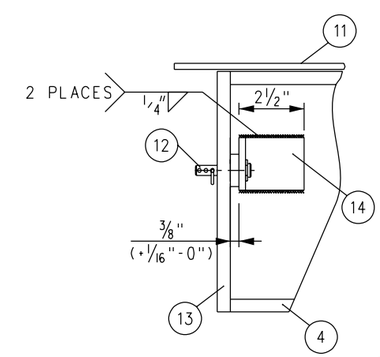

VIEW D
WELDING DETAIL

REV.	DATE	DESCRIPTION	DES.	ENG.
X	XX-XX-XX	REVISION	XX	XX

DRAWN BY: HDR DATE: 03/31/2011

ASSISTANT DIRECTOR: STANDARDS & DESIGN

DIRECTOR OF ENGINEERING AND CONSTRUCTION

SCRRA ENGINEERING STANDARDS ARE INTENDED FOR SCRRA APPROVED USES ONLY. FOR NON-SCRRA APPROVED USES: SCRRA SHALL NOT BE RESPONSIBLE FOR THE ACCURACY OR COMPLETENESS OF THE DATA OR INFORMATION CONTAINED HEREIN. THE SELECTION AND USE OF THESE STANDARDS IS THE SOLE RESPONSIBILITY OF THE USER AND SHOULD NOT BE USED WITHOUT CONSULTING A REGISTERED PROFESSIONAL ENGINEER. ALL WARRANTIES AND REPRESENTATIONS OF ANY KIND ARE DISCLAIMED. ANYONE MAKING USE OF THIS INFORMATION AGREES THAT IT ASSUMES ALL LIABILITY ARISING FROM SUCH USE. NO PART OF THESE STANDARDS SHOULD BE REPRODUCED OR DISTRIBUTED IN ANY FORM OR BY ANY MEANS WITHOUT THE PRIOR WRITTEN PERMISSION OF SCRRA. ALL RIGHTS RESERVED.

METROLINK®
SOUTHERN CALIFORNIA REGIONAL RAIL AUTHORITY
ONE GATEWAY PLAZA, 12TH FLOOR, L. A., CA. 90012

ENGINEERING STANDARDS

HOLLOW STEEL TIE LAYOUT
SWITCH MACHINE ON MAINLINE SIDE
NO 10-136 LB RE LH

STANDARD: 2803
SCALE: NTS
REVISION: –
SHEET: 1 OF 1
CADD FILE: ES2803-33

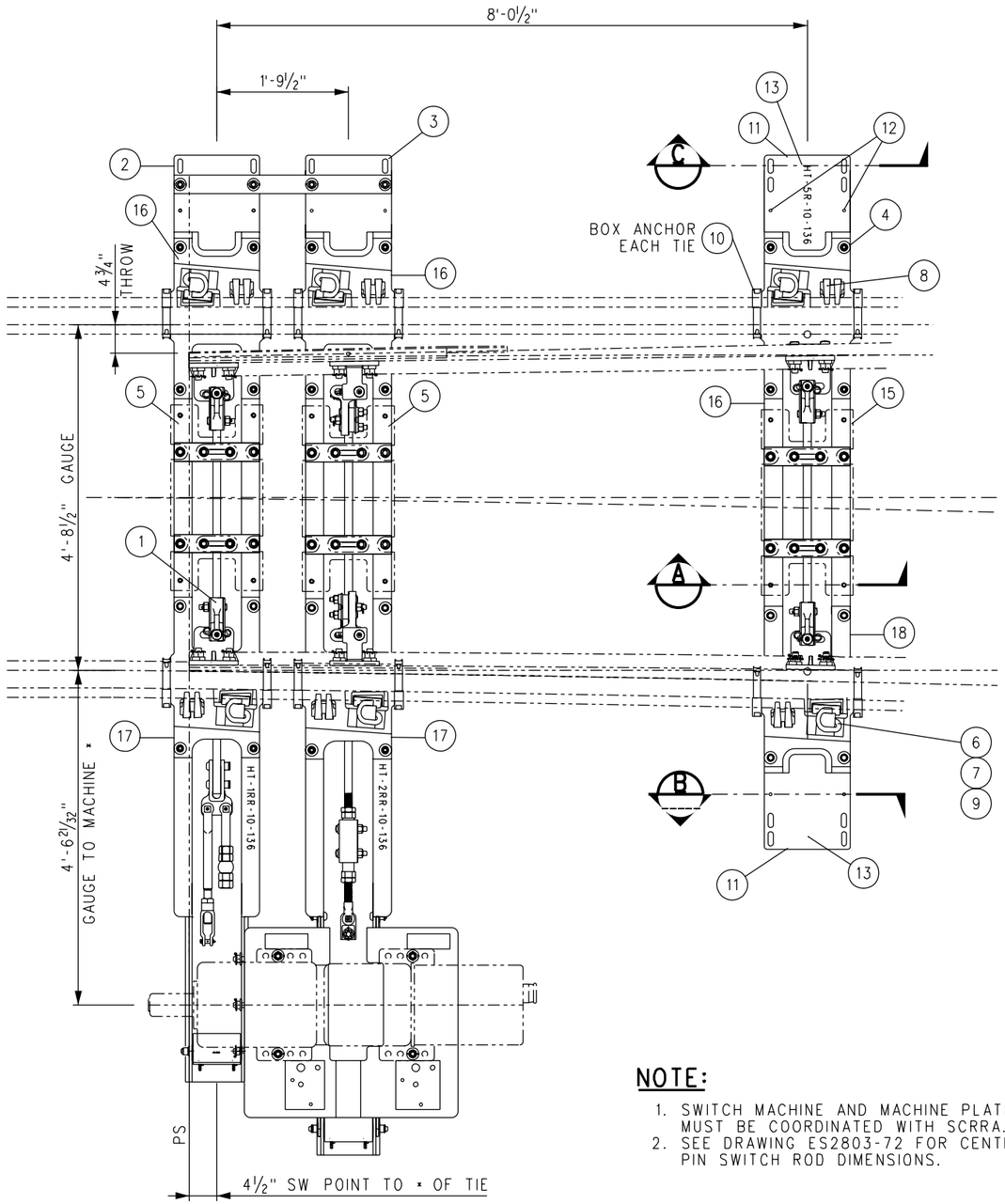

NOTE:

1. SWITCH MACHINE AND MACHINE PLATES (NIC) MUST BE COORDINATED WITH SCRRA.
2. SEE DRAWING ES2803-72 FOR CENTER TO CENTER PIN SWITCH ROD DIMENSIONS.

BILL OF MATERIAL

ITEM	QTY	DESCRIPTION	DWG NO	SCRRA PART NO
1	1	RODDING ASSEMBLY FOR NO 10-136 LB RE, SWITCH MACHINE ON RIGHT SIDE	ES2803-72	
2	1	HOLLOW TIE ASSEMBLY (HT-1RR-10-136)	-	
3	1	HOLLOW TIE ASSEMBLY (HT-2RR-10-136)	-	
4	1	HOLLOW TIE ASSEMBLY (HT-5R-10-136)	-	
5*	2	COVER PLATE NO 1, HOLLOW SWITCH TIE	-	
6	6	LV BRACE FOR 136 LB RE	-	
7	6	SERRATED WASHER FOR LV BRACE	-	
8	6	CLIP, SAFELOK AB 2000	-	
9	6	CLIP, PANDROL, E2055	-	
10	12	RAIL ANCHOR, UNIT DRIVE-ON TYPE 5	-	
11	2	STEEL COVER PLATE FOR HST TIE, TOP END	-	
12	20	PUSH PIN ASSEMBLY FOR HST COVERS	-	
13	2	STEEL SIDE END COVER PLATE ASSEMBLY FOR HST TIE	-	
14	4	COVER SUPPORT BRACKET	-	
15*	1	COVER PLATE NO 2, HOLLOW SWITCH TIE	-	
16	3	HST SWITCH PLATE HTP-206-STR	ES2800-90	
17	2	HST SWITCH PLATE HTP-201-R	ES2800-93	
18	1	HST SWITCH PLATE HTP-205-R	ES2800-95	

* NOT SHOWN ON ASSEMBLY FOR CLARITY

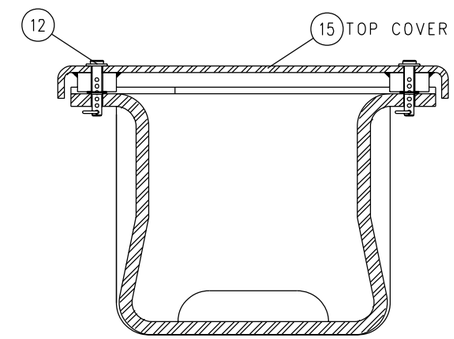

SECTION A
HOLLOW TIE TOP COVER DETAIL

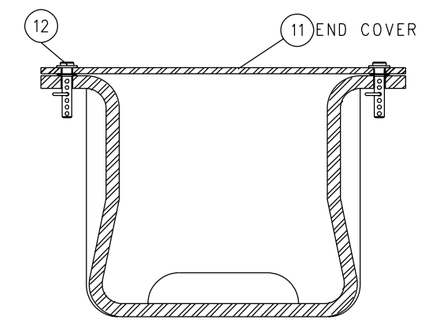

SECTION B
END COVER PLATE

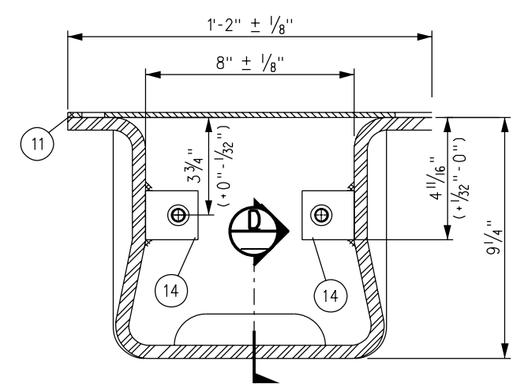

SECTION C
HOLLOW TIE SIDE END COVER DETAIL

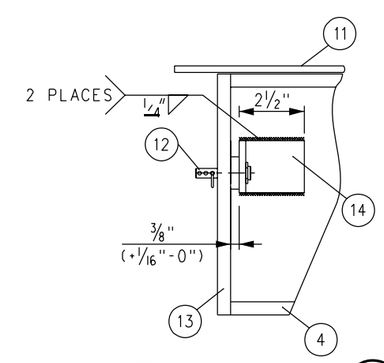

VIEW D
WELDING DETAIL

REV.	DATE	DESCRIPTION	DES.	ENG.
X	XX-XX-XX	REVISION	XX	XX

DRAWN BY: HDR DATE: 03/31/2011

ASSISTANT DIRECTOR: STANDARDS & DESIGN

DIRECTOR OF ENGINEERING AND CONSTRUCTION

SCRRA ENGINEERING STANDARDS ARE INTENDED FOR SCRRA APPROVED USES ONLY. FOR NON-SCRRA APPROVED USES:
SCRRA SHALL NOT BE RESPONSIBLE FOR THE ACCURACY OR COMPLETENESS OF THE DATA OR INFORMATION CONTAINED HEREIN. THE SELECTION AND USE OF THESE STANDARDS IS THE SOLE RESPONSIBILITY OF THE USER AND SHOULD NOT BE USED WITHOUT CONSULTING A REGISTERED PROFESSIONAL ENGINEER. ALL WARRANTIES AND REPRESENTATIONS OF ANY KIND ARE DISCLAIMED. ANYONE MAKING USE OF THIS INFORMATION AGREES THAT IT ASSUMES ALL LIABILITY ARISING FROM SUCH USE. NO PART OF THESE STANDARDS SHOULD BE REPRODUCED OR DISTRIBUTED IN ANY FORM OR BY ANY MEANS WITHOUT THE PRIOR WRITTEN PERMISSION OF SCRRA. ALL RIGHTS RESERVED.

METROLINK®
SOUTHERN CALIFORNIA REGIONAL RAIL AUTHORITY
ONE GATEWAY PLAZA, 12TH FLOOR, L. A., CA. 90012

ENGINEERING STANDARDS

HOLLOW STEEL TIE LAYOUT
SWITCH MACHINE ON TURNOUT SIDE
NO 10-136 LB RE RH

STANDARD 2803
SCALE: NTS
REVISION –
SHEET 1 OF 1
CADD FILE: ES2803-34

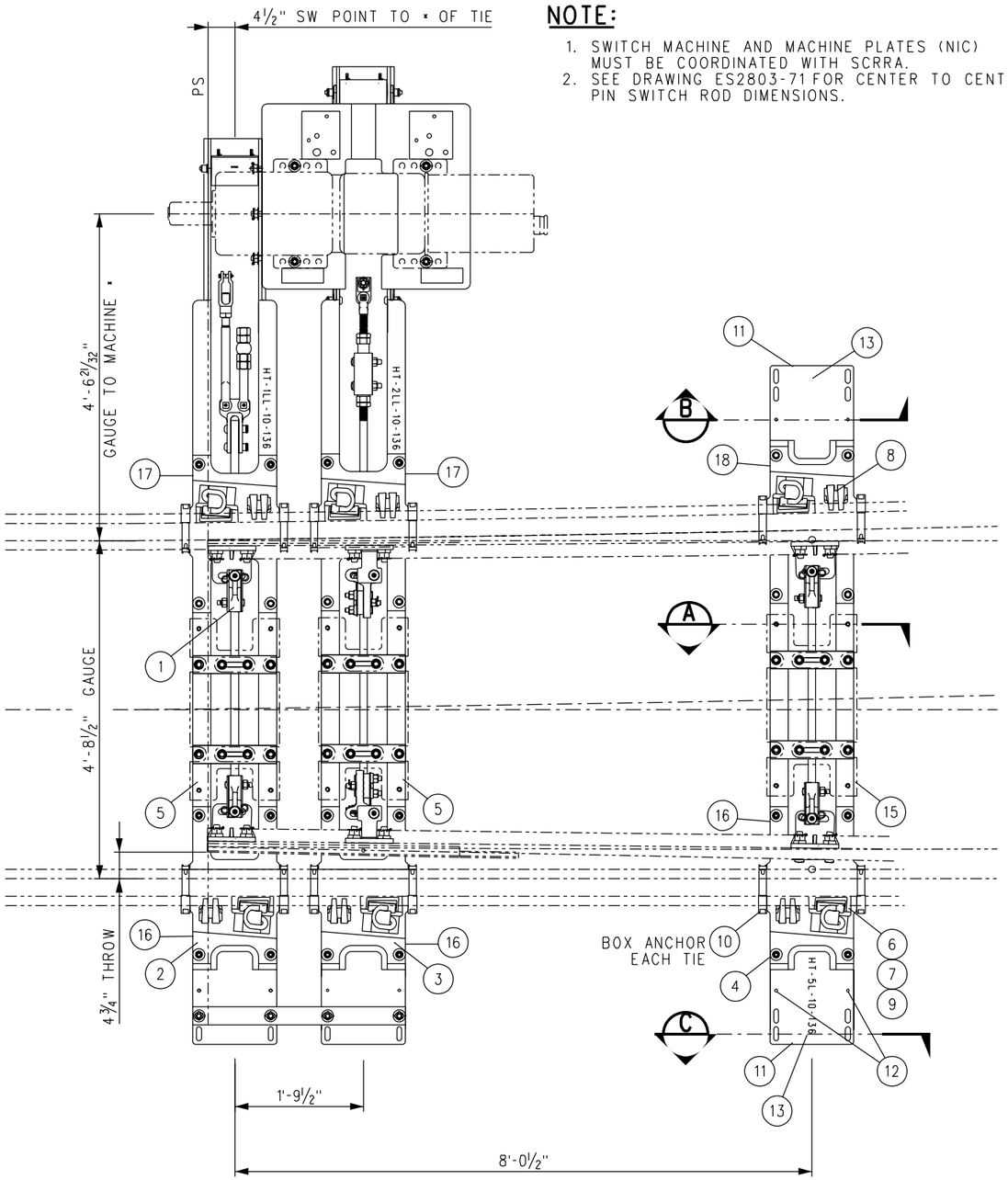

NOTE:

1. SWITCH MACHINE AND MACHINE PLATES (NIC) MUST BE COORDINATED WITH SCRRA.
2. SEE DRAWING ES2803-71 FOR CENTER TO CENTER PIN SWITCH ROD DIMENSIONS.

BILL OF MATERIAL

ITEM	QTY	DESCRIPTION	DWG NO	SCRRA PART NO
1	1	RODDING ASSEMBLY FOR NO 10-136 LB RE, SWITCH MACHINE ON LH SIDE	ES2803-71	
2	1	HOLLOW TIE ASSEMBLY (HT-1LL-10-136)	-	
3	1	HOLLOW TIE ASSEMBLY (HT-2LL-10-136)	-	
4	1	HOLLOW TIE ASSEMBLY (HT-5L-10-136)	-	
5*	2	COVER PLATE NO 1, HOLLOW SWITCH TIE	-	
6	6	LV BRACE FOR 136 LB RE	-	
7	6	SERRATED WASHER FOR LV BRACE	-	
8	6	CLIP, SAFELOK AB 2000	-	
9	6	CLIP, PANDROL, E2055	-	
10	12	RAIL ANCHOR, UNIT DRIVE-ON TYPE 5	-	
11	2	STEEL COVER PLATE FOR HST TIE, TOP END	-	
12	20	PUSH PIN ASSEMBLY FOR HST COVERS	-	
13	2	STEEL SIDE END COVER PLATE ASSEMBLY FOR HST TIE	-	
14	4	COVER SUPPORT BRACKET	-	
15*	1	COVER PLATE NO 2, HOLLOW SWITCH TIE	-	
16	3	HST SWITCH PLATE HTP-206-STR	ES2800-90	
17	2	HST SWITCH PLATE HTP-200-L	ES2800-93	
18	1	HST SWITCH PLATE HTP-204-L	ES2800-95	

* NOT SHOWN ON ASSEMBLY FOR CLARITY

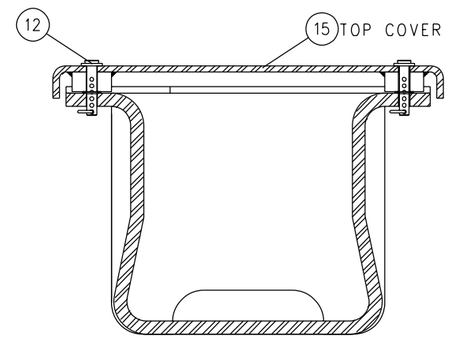

SECTION A
HOLLOW TIE TOP COVER DETAIL

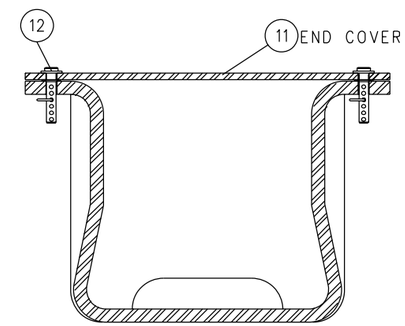

SECTION B
END COVER PLATE

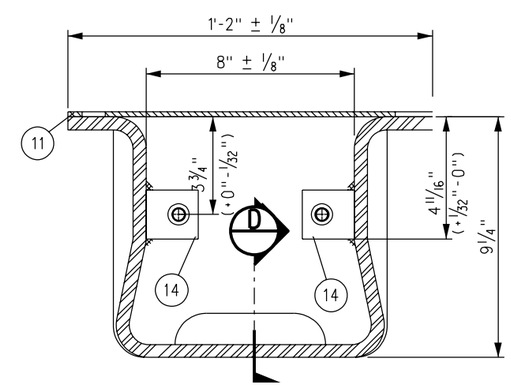

SECTION C
HOLLOW TIE SIDE END COVER DETAIL

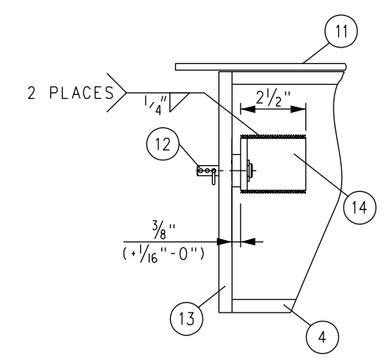

VIEW D
WELDING DETAIL

REV.	DATE	DESCRIPTION	DES.	ENG.
X	XX-XX-XX	REVISION	XX	XX

DRAWN BY: HDR DATE: 03/31/2011

ASSISTANT DIRECTOR: STANDARDS & DESIGN

DIRECTOR OF ENGINEERING AND CONSTRUCTION

SCRRA ENGINEERING STANDARDS ARE INTENDED FOR SCRRA APPROVED USES ONLY. FOR NON-SCRRA APPROVED USES: SCRRA SHALL NOT BE RESPONSIBLE FOR THE ACCURACY OR COMPLETENESS OF THE DATA OR INFORMATION CONTAINED HEREIN. THE SELECTION AND USE OF THESE STANDARDS IS THE SOLE RESPONSIBILITY OF THE USER AND SHOULD NOT BE USED WITHOUT CONSULTING A REGISTERED PROFESSIONAL ENGINEER. ALL WARRANTIES AND REPRESENTATIONS OF ANY KIND ARE DISCLAIMED. ANYONE MAKING USE OF THIS INFORMATION AGREES THAT IT ASSUMES ALL LIABILITY ARISING FROM SUCH USE. NO PART OF THESE STANDARDS SHOULD BE REPRODUCED OR DISTRIBUTED IN ANY FORM OR BY ANY MEANS WITHOUT THE PRIOR WRITTEN PERMISSION OF SCRRA. ALL RIGHTS RESERVED.

METROLINK
SOUTHERN CALIFORNIA REGIONAL RAIL AUTHORITY
ONE GATEWAY PLAZA, 12TH FLOOR, L. A., CA. 90012

ENGINEERING STANDARDS

HOLLOW STEEL TIE LAYOUT
SWITCH MACHINE ON TURNOUT SIDE
NO 10–136 LB RE LH

STANDARD 2803
SCALE: NTS
REVISION –
SHEET 1 OF 1
CADD FILE: ES2803–35

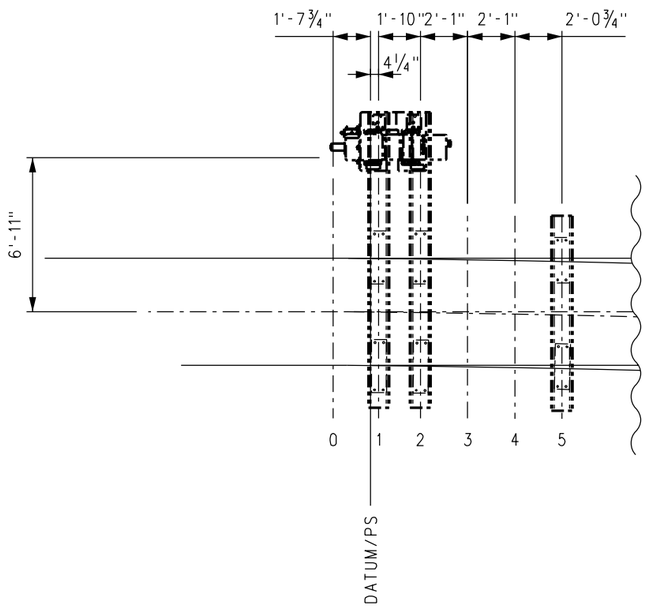

POWER-OPERATED

NOTES:

1. SWITCH MACHINE AND MACHINE PLATES (NIC) MUST BE COORDINATED WITH SCRRA.
2. LENGTH OF TIES 1 AND 2 ARE 13'-0".
3. LENGTH OF TIE 5 IS 8'-7".

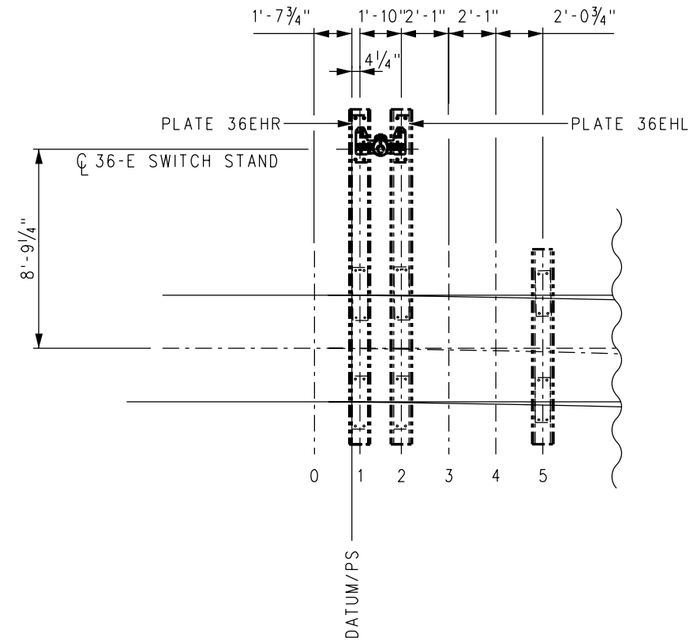

MANUAL THROW-WITHOUT ELECTRIC LOCK

NOTES:

1. LENGTH OF TIES 1 AND 2 ARE 14'-9".
2. LENGTH OF TIE 5 IS 8'-7".

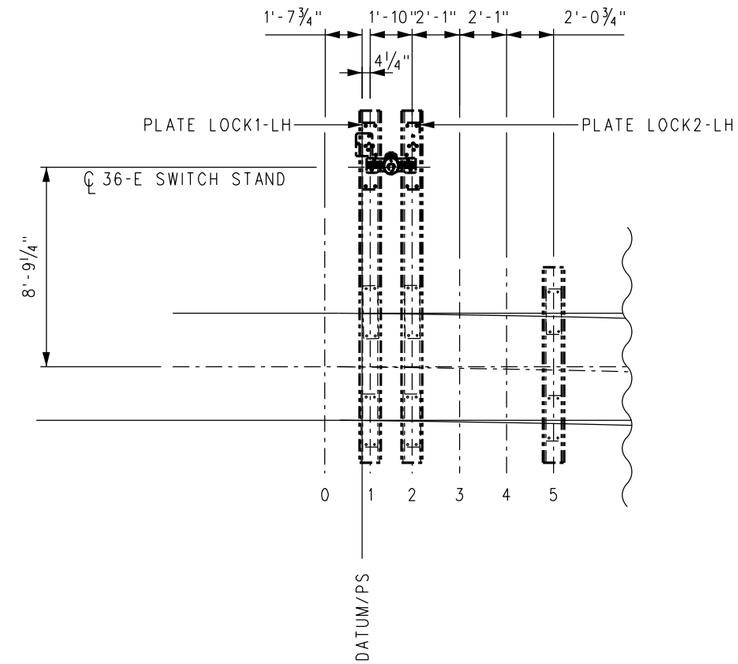

MANUAL THROW-WITH ELECTRIC LOCK

NOTES:

1. SEE ES2803-56 FOR DETAILS OF PLATES LOCK1-LH AND LOCK2-LH.
2. LENGTH OF TIES 1 AND 2 ARE 15'-6".
3. LENGTH OF TIE 5 IS 8'-7".
4. TIES 1 AND 2 ARE DAPPED DOWN 1" @ 45° PER DETAIL BELOW.

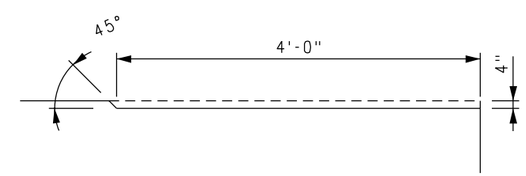

DAP FOR SWITCH STAND TIES 1 AND 2

REV.	DATE	DESCRIPTION	DES.	ENG.
X	XX-XX-XX	REVISION	XX	XX

DRAWN BY: HDR DATE: 03/31/2011

ASSISTANT DIRECTOR: STANDARDS & DESIGN

DIRECTOR OF ENGINEERING AND CONSTRUCTION

SCRRA ENGINEERING STANDARDS ARE INTENDED FOR SCRRA APPROVED USES ONLY. FOR NON-SCRRA APPROVED USES:
SCRRA SHALL NOT BE RESPONSIBLE FOR THE ACCURACY OR COMPLETENESS OF THE DATA OR INFORMATION CONTAINED HEREIN. THE SELECTION AND USE OF THESE STANDARDS IS THE SOLE RESPONSIBILITY OF THE USER AND SHOULD NOT BE USED WITHOUT CONSULTING A REGISTERED PROFESSIONAL ENGINEER. ALL WARRANTIES AND REPRESENTATIONS OF ANY KIND ARE DISCLAIMED. ANYONE MAKING USE OF THIS INFORMATION AGREES THAT IT ASSUMES ALL LIABILITY ARISING FROM SUCH USE. NO PART OF THESE STANDARDS SHOULD BE REPRODUCED OR DISTRIBUTED IN ANY FORM OR BY ANY MEANS WITHOUT THE PRIOR WRITTEN PERMISSION OF SCRRA. ALL RIGHTS RESERVED.

METROLINK®
SOUTHERN CALIFORNIA REGIONAL RAIL AUTHORITY
ONE GATEWAY PLAZA, 12TH FLOOR, L. A., CA. 90012

ENGINEERING STANDARDS

CONCRETE HEADBLOCK TIE LAYOUT
SWITCH STAND/SWITCH MACHINE ON MAINLINE SIDE
NO 10–136 LB RE RH

STANDARD: 2803
SCALE: NTS
REVISION: –
SHEET: 1 OF 1
CADD FILE: ES2803–36

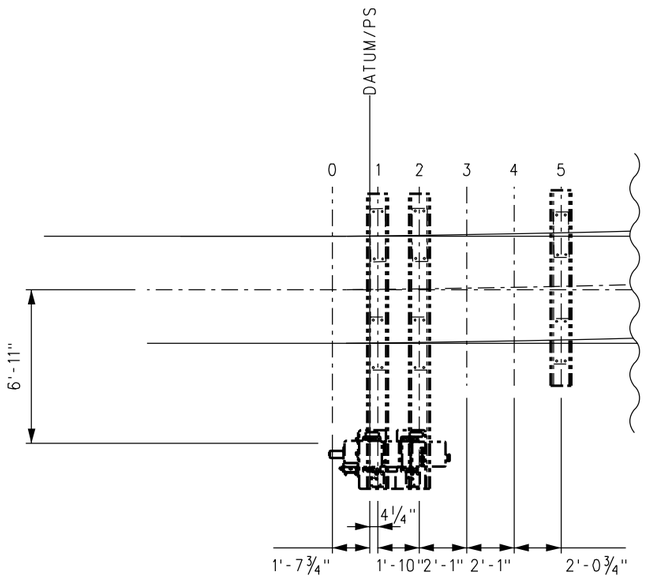

POWER-OPERATED

NOTES:

1. SWITCH MACHINE AND MACHINE PLATES (NIC) MUST BE COORDINATED WITH SCRRA.
2. LENGTH OF TIES 1 AND 2 ARE 13'-0".
3. LENGTH OF TIE 5 IS 8'-7".

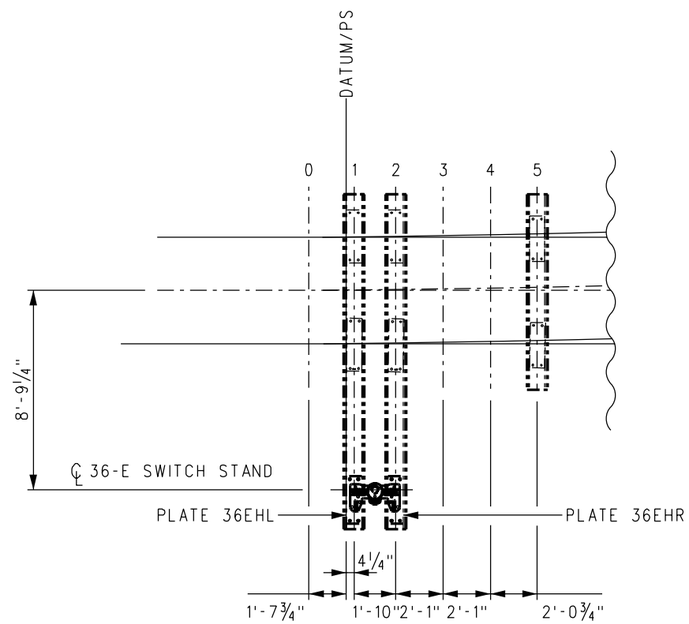

MANUAL THROW-WITHOUT ELECTRIC LOCK

NOTES:

1. LENGTH OF TIES 1 AND 2 ARE 14'-9".
2. LENGTH OF TIE 5 IS 8'-7".

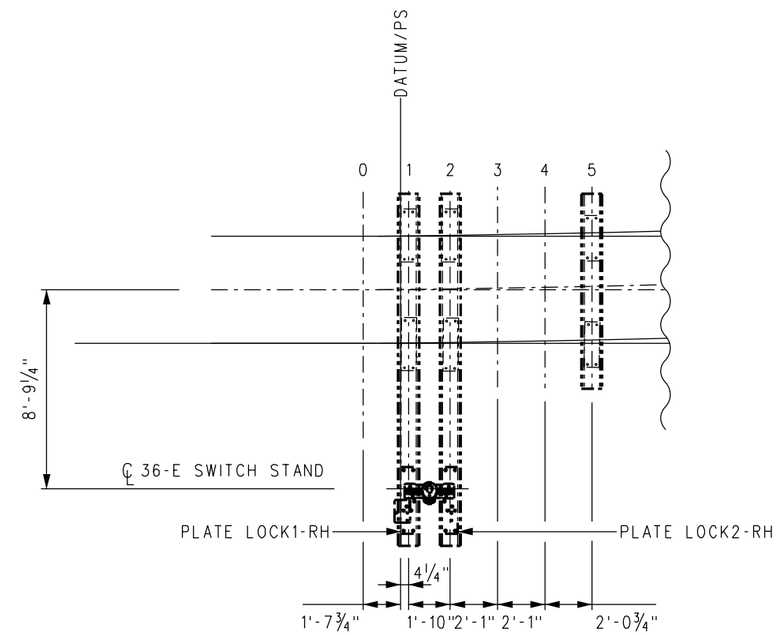

MANUAL THROW-WITH ELECTRIC LOCK

NOTES:

1. SEE ES2803-57 FOR DETAILS OF PLATES LOCK1-RH AND LOCK2-RH.
2. LENGTH OF TIES 1 AND 2 ARE 15'-6".
3. LENGTH OF TIE 5 IS 8'-7".
4. TIES 1 AND 2 ARE DAPPED DOWN 1" @ 45° PER DETAIL BELOW.

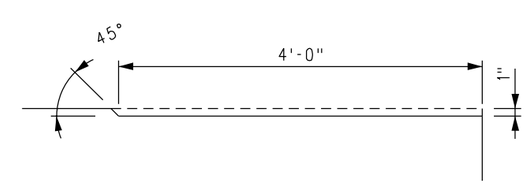

DAP FOR SWITCH STAND TIES 1 AND 2

REV.	DATE	DESCRIPTION	DES.	ENG.
X	XX-XX-XX	REVISION	XX	XX

DRAWN BY: HDR DATE: 03/31/2011

ASSISTANT DIRECTOR: STANDARDS & DESIGN

DIRECTOR OF ENGINEERING AND CONSTRUCTION

SCRRA ENGINEERING STANDARDS ARE INTENDED FOR SCRRA APPROVED USES ONLY. FOR NON-SCRRA APPROVED USES:
SCRRA SHALL NOT BE RESPONSIBLE FOR THE ACCURACY OR COMPLETENESS OF THE DATA OR INFORMATION CONTAINED HEREIN. THE SELECTION AND USE OF THESE STANDARDS IS THE SOLE RESPONSIBILITY OF THE USER AND SHOULD NOT BE USED WITHOUT CONSULTING A REGISTERED PROFESSIONAL ENGINEER. ALL WARRANTIES AND REPRESENTATIONS OF ANY KIND ARE DISCLAIMED. ANYONE MAKING USE OF THIS INFORMATION AGREES THAT IT ASSUMES ALL LIABILITY ARISING FROM SUCH USE. NO PART OF THESE STANDARDS SHOULD BE REPRODUCED OR DISTRIBUTED IN ANY FORM OR BY ANY MEANS WITHOUT THE PRIOR WRITTEN PERMISSION OF SCRRA. ALL RIGHTS RESERVED.

METROLINK®
SOUTHERN CALIFORNIA REGIONAL RAIL AUTHORITY
ONE GATEWAY PLAZA, 12TH FLOOR, L. A., CA. 90012

ENGINEERING STANDARDS

CONCRETE HEADBLOCK TIE LAYOUT
SWITCH STAND/SWITCH MACHINE ON MAINLINE SIDE
NO 10–136 LB RE LH

STANDARD 2803
SCALE: NTS
REVISION –
SHEET 1 OF 1
CADD FILE: ES2803–37

UserName=> carlosa Date Plotted: 10/5/2011 3:26:07 PM Plot Driver=> S:\Plot Drivers\pdf.plt FileName=> s:\V8EngStds\2000\Turnouts\No 10 Turnout\ES2803-37.dgn

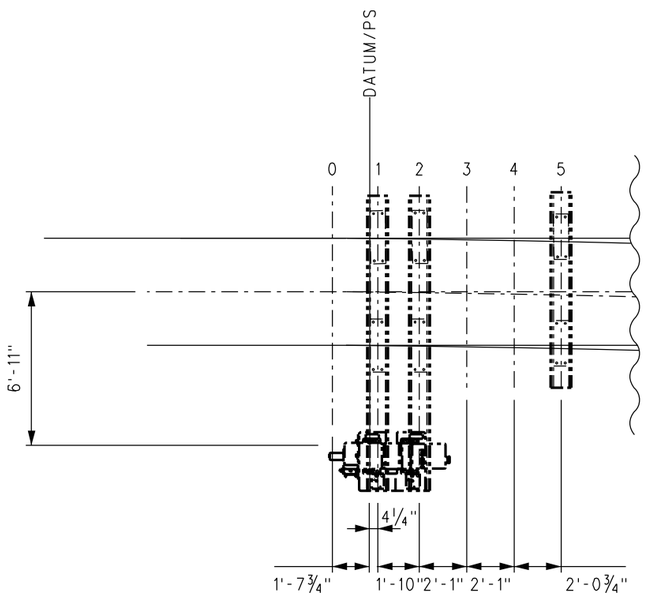

POWER-OPERATED

NOTES:

1. SWITCH MACHINE AND MACHINE PLATES (NIC) MUST BE COORDINATED WITH SCRRA.
2. LENGTH OF TIES 1 AND 2 ARE 13'-0".
3. LENGTH OF TIE 5 IS 8'-7".

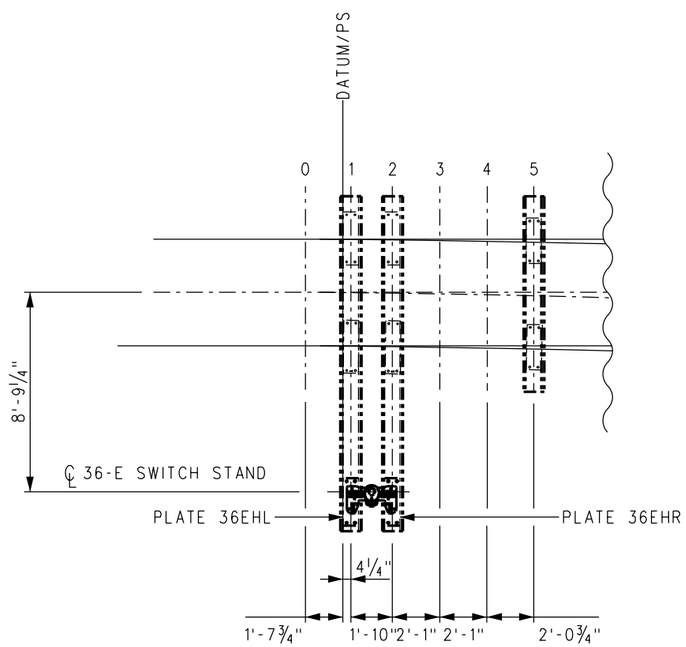

MANUAL THROW-WITHOUT ELECTRIC LOCK

NOTES:

1. LENGTH OF TIES 1 AND 2 ARE 14'-9".
2. LENGTH OF TIE 5 IS 8'-7".

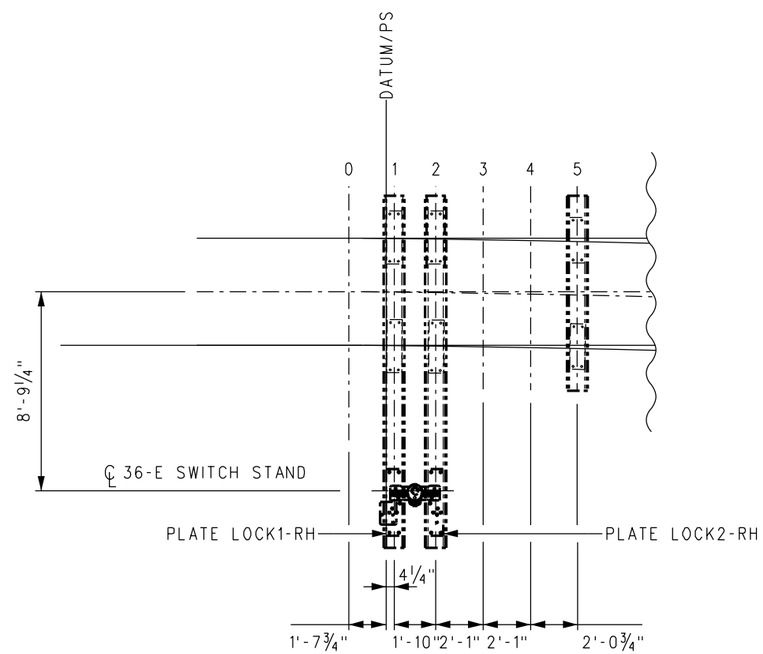

MANUAL THROW-WITH ELECTRIC LOCK

NOTES:

1. SEE ES2803-57 FOR DETAILS OF PLATES LOCK1-RH AND LOCK2-RH.
2. LENGTH OF TIES 1 AND 2 ARE 15'-6".
3. LENGTH OF TIE 5 IS 8'-7".
4. TIES 1 AND 2 ARE DAPPED DOWN 1" @ 45° PER DETAIL BELOW.

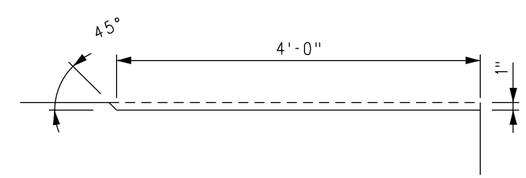

DAP FOR SWITCH STAND TIES 1 AND 2

REV.	DATE	DESCRIPTION	DES.	ENG.
X	XX-XX-XX	REVISION	XX	XX

DRAWN BY: HDR DATE: 03/31/2011

ASSISTANT DIRECTOR: STANDARDS & DESIGN

DIRECTOR OF ENGINEERING AND CONSTRUCTION

SCRRA ENGINEERING STANDARDS ARE INTENDED FOR SCRRA APPROVED USES ONLY. FOR NON-SCRRA APPROVED USES:
SCRRA SHALL NOT BE RESPONSIBLE FOR THE ACCURACY OR COMPLETENESS OF THE DATA OR INFORMATION CONTAINED HEREIN. THE SELECTION AND USE OF THESE STANDARDS IS THE SOLE RESPONSIBILITY OF THE USER AND SHOULD NOT BE USED WITHOUT CONSULTING A REGISTERED PROFESSIONAL ENGINEER. ALL WARRANTIES AND REPRESENTATIONS OF ANY KIND ARE DISCLAIMED. ANYONE MAKING USE OF THIS INFORMATION AGREES THAT IT ASSUMES ALL LIABILITY ARISING FROM SUCH USE. NO PART OF THESE STANDARDS SHOULD BE REPRODUCED OR DISTRIBUTED IN ANY FORM OR BY ANY MEANS WITHOUT THE PRIOR WRITTEN PERMISSION OF SCRRA. ALL RIGHTS RESERVED.

METROLINK®
SOUTHERN CALIFORNIA REGIONAL RAIL AUTHORITY
ONE GATEWAY PLAZA, 12TH FLOOR, L. A., CA. 90012

ENGINEERING STANDARDS

CONCRETE HEADBLOCK TIE LAYOUT
SWITCH STAND/SWITCH MACHINE ON TURNOUT SIDE
NO 10–136 LB RE RH

STANDARD 2803
SCALE: NTS
REVISION –
SHEET 1 OF 1
CADD FILE: ES2803–38

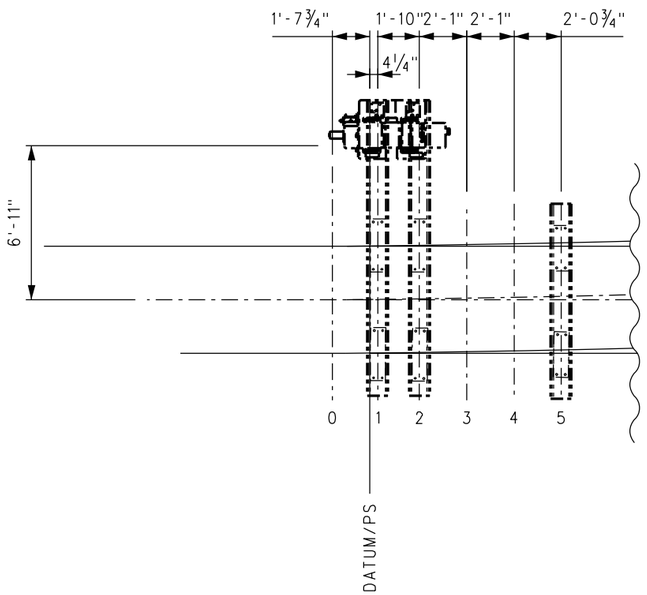

POWER-OPERATED

NOTES:

1. SWITCH MACHINE AND MACHINE PLATES (NIC) MUST BE COORDINATED WITH SCRRA.
2. LENGTH OF TIES 1 AND 2 ARE 13'-0".
3. LENGTH OF TIE 5 IS 8'-7".

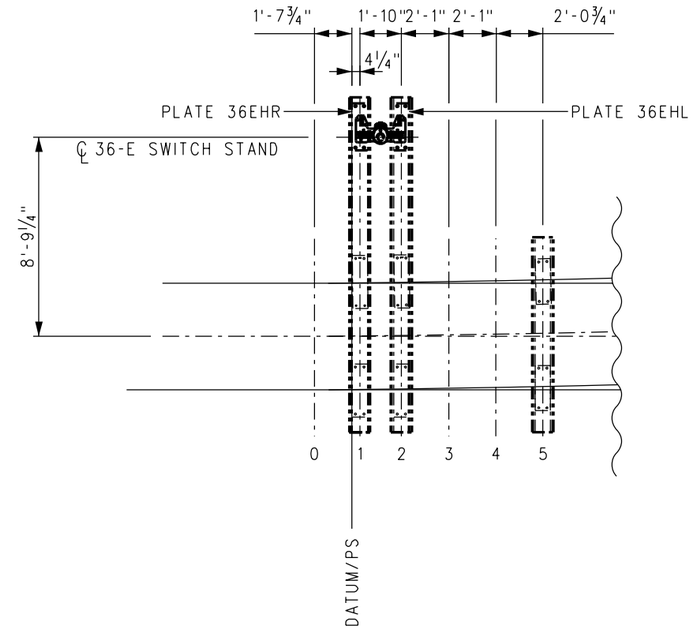

MANUAL THROW-WITHOUT ELECTRIC LOCK

NOTES:

1. LENGTH OF TIES 1 AND 2 ARE 14'-9".
2. LENGTH OF TIE 5 IS 8'-7".

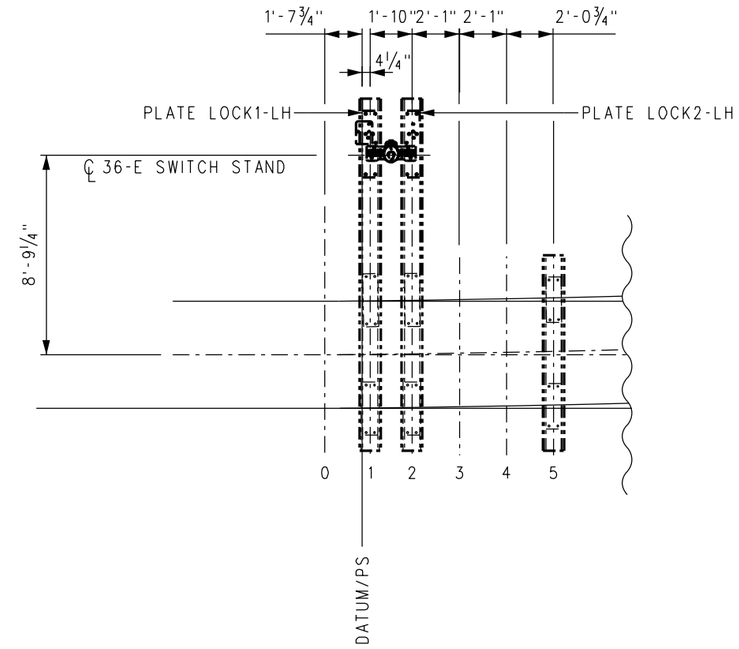

MANUAL THROW-WITH ELECTRIC LOCK

NOTES:

1. SEE ES2803-56 FOR DETAILS OF PLATES LOCK1-LH AND LOCK2-LH.
2. LENGTH OF TIES 1 AND 2 ARE 15'-6".
3. LENGTH OF TIE 5 IS 8'-7".
4. TIES 1 AND 2 ARE DAPPED DOWN 1" @ 45° PER DETAIL BELOW.

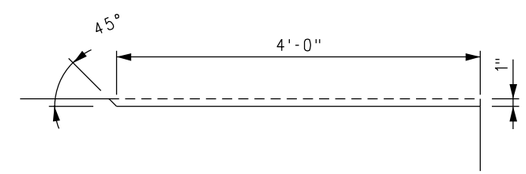

DAP FOR SWITCH STAND TIES 1 AND 2

REV.	DATE	DESCRIPTION	DES.	ENG.
X	XX-XX-XX	REVISION	XX	XX

DRAWN BY: HDR DATE: 03/31/2011

ASSISTANT DIRECTOR: STANDARDS & DESIGN

DIRECTOR OF ENGINEERING AND CONSTRUCTION

SCRRA ENGINEERING STANDARDS ARE INTENDED FOR SCRRA APPROVED USES ONLY. FOR NON-SCRRA APPROVED USES:
SCRRA SHALL NOT BE RESPONSIBLE FOR THE ACCURACY OR COMPLETENESS OF THE DATA OR INFORMATION CONTAINED HEREIN. THE SELECTION AND USE OF THESE STANDARDS IS THE SOLE RESPONSIBILITY OF THE USER AND SHOULD NOT BE USED WITHOUT CONSULTING A REGISTERED PROFESSIONAL ENGINEER. ALL WARRANTIES AND REPRESENTATIONS OF ANY KIND ARE DISCLAIMED. ANYONE MAKING USE OF THIS INFORMATION AGREES THAT IT ASSUMES ALL LIABILITY ARISING FROM SUCH USE. NO PART OF THESE STANDARDS SHOULD BE REPRODUCED OR DISTRIBUTED IN ANY FORM OR BY ANY MEANS WITHOUT THE PRIOR WRITTEN PERMISSION OF SCRRA. ALL RIGHTS RESERVED.

METROLINK®
SOUTHERN CALIFORNIA REGIONAL RAIL AUTHORITY
ONE GATEWAY PLAZA, 12TH FLOOR, L. A., CA. 90012

ENGINEERING STANDARDS

CONCRETE HEADBLOCK TIE LAYOUT
SWITCH STAND/SWITCH MACHINE ON TURNOUT SIDE
NO 10–136 LB RE LH

STANDARD: 2803
SCALE: NTS
REVISION: –
SHEET: 1 OF 1
CADD FILE: ES2803–39

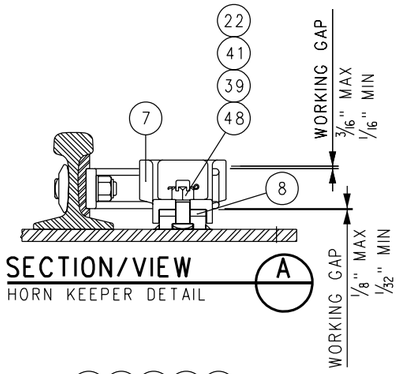

SECTION/VIEW (A)
HORN KEEPER DETAIL

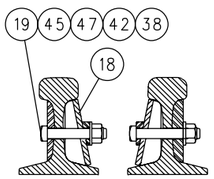

SECTION (B)
FOOT GUARD DETAIL

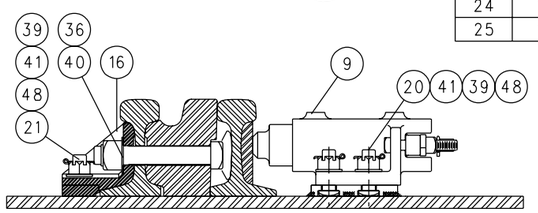

SECTION/VIEW (C)
SPRING BOX DETAIL

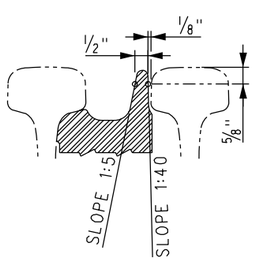

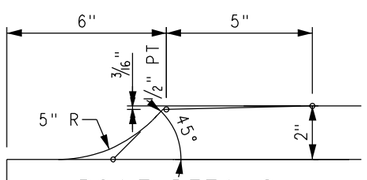

POINT DETAILS

BILL OF MATERIAL

ITEM	QTY	DESCRIPTION	DWG NO	SCRRA PART NO
1	1	NO 10-136 LB RE SPRING FROG, RH POINT ASSEMBLY	-	
2	1	SPRING WING RAIL, NO 10-136 LB RE, RIGID, RH	-	
3	1	SPRING WING RAIL, NO 10-136 LB RE, RH, C/W HARDWARE	-	
4	1	TOE BLOCK (SFTB136RE-10A)	-	
5	1	HEEL BLOCK (SFHB136RE-10A)	-	
6	1	FLARE FILLER BLOCK (FB136WHM-LCR)	-	
7	3	HORN KEEPER, REVERSIBLE	-	
8	3	HORN KEEPER WEAR PLATE, REVERSIBLE	-	
9	1	SPRING BOX ASSEMBLY	-	
10	1	FROG BASE PLATE (10-136-34RC)	ES2803-42	
11	1	FROG BASE PLATE (10-136-37RC)	ES2803-42	
12	1	FROG BASE PLATE (10-136-39RC)	ES2803-44	
13	1	FROG BASE PLATE (10-136-43RC)	ES2803-46	
14	1	FROG PLATE (10-136-47RC)	ES2803-48	
15	1	FROG PLATE (10-136-48RC)	ES2803-48	
16	4	PLATE CLIP, 136 LB RE	-	
17	1	HOLD-DOWN CLIP (10A1)	-	
18	1	FOOT GUARD, 136 LB RE x 1'-8" LONG	-	
19	2	BOLT, 3/4" DIA x 4 1/2" SQ HEAD, GR 8	-	
20	4	BOLT, 1" DIA x 3", THIN SQ HEAD, DRILLED 2 1/2", GR 5	-	
21	8	BOLT, 1" DIA x 3", THIN SQ HEAD, DRILLED 2 3/32", GR 5	-	
22	6	BOLT, 1" DIA x 3 1/2", THIN SQ HEAD, DRILLED 2 11/16", GR 5	-	
23	4	BOLT, 1 3/8" DIA x 5" SQ HEAD, GR 8	-	
24	1	BOLT, 1 3/8" DIA x 6 1/2" SQ HEAD, GR 8	-	
25	1	BOLT, 1 3/8" DIA x 7 1/2" SQ HEAD, GR 8	-	

BILL OF MATERIAL

ITEM	QTY	DESCRIPTION	DWG NO	SCRRA PART NO
26	1	BOLT, 1 3/8" DIA x 9" SQ HEAD, GR 8	-	
27	1	BOLT, 1 3/8" DIA x 9 1/2" SQ HEAD, GR 8	-	
28	1	BOLT, 1 3/8" DIA x 11" SQ HEAD, GR 8	-	
29	1	BOLT, 1 3/8" DIA x 1'-0" SQ HEAD, GR 8	-	
30	2	BOLT, 1 3/8" DIA x 1'-1 1/2" SQ HEAD, GR 8	-	
31	1	BOLT, 1 3/8" DIA x 1'-2 1/2" SQ HEAD, GR 8	-	
32	1	BOLT, 1 3/8" DIA x 1'-4" SQ HEAD, GR 8	-	
33	1	BOLT, 1 3/8" DIA x 1'-5 1/2" SQ HEAD, GR 8	-	
34	1	BOLT, 1 3/8" DIA x 1'-6" SQ HEAD, GR 8	-	
35	1	PLOW BOLT, 1" DIA x 4" ROUND HD, SQ NECK, GR 8	-	
36	16	NUT, SECURITY LOCK, 1 3/8" DIA HEAVY HEX	-	
37	1	NUT, SECURITY LOCK, 1" DIA HEAVY HEX	-	
38	2	NUT, SECURITY LOCK, 3/4" DIA HEAVY HEX	-	
39	18	NUT, SLOTTED, 1" DIA HEAVY HEX	-	
40	16	WASHER, HARDENED, 1 3/8" DIA x 5/32" THICK	-	
41	11	WASHER, HARDENED, 1" DIA x 5/32" THICK	-	
42	2	WASHER, HARDENED, 3/4" DIA x 3/16" THICK	-	
43	3	WASHER, HEADLOCK	-	
44	8	WASHER, TAIL	-	
45	2	WASHER, TAIL, 1/2" x 3" FOR 3/4" BOLT	-	
46	4	WASHER, TAIL	-	
47	2	WASHER, BEVELED, FOR 3/4" BOLT	-	
48	18	COTTER PIN, 1/4" DIA x 2" LONG	-	
49	26	CLIP, PANDROL E2055	-	
50	3	SHOULDER, PANDROL, FORGED TONGUELESS, TYPE 1	-	

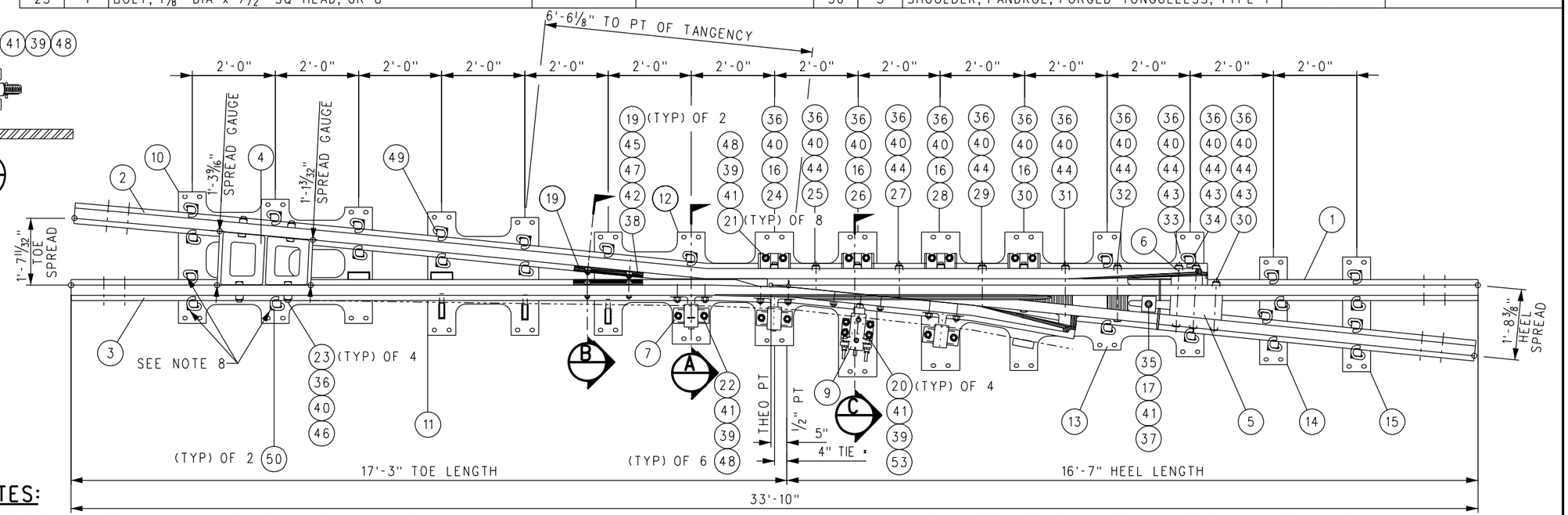

NOTES:

1. RETARDER CLOSING TIME RANGES FROM 1 TO 3 MINUTES.
2. SPRING BOX LOAD IS 300 LBS/IN.
3. SPRING WING SHALL BE THROWN TO A 1 7/8" FLANGEWAY AT THE 3/4" POINT TO DETERMINE THE SPRING WING THROWN POSITION.
4. RAIL END DRILLING SHALL BE @ 9" AND 1'-3 1/2", 3 3/32" ABOVE RAIL BASE, 1 5/16" DIA AT ALL 4 RAIL ENDS. ALL RAIL HOLE EDGES SHALL BE ROUNDED WITH A 1/8" R.
5. RETARDER BRACKET SHALL BE WELDED ADJACENT TO SPRING BOX ASSEMBLY.
6. FROG SHALL BE CONSTRUCTED TO TOLERANCES GIVEN ON LATEST AREMA PLAN 1010, PERMISSIBLE VARIATIONS IN COMPLETED FROGS.
7. INSERT TO BE EXPLOSIVE DEPTH HARDENED TO 352 BRINELL PER AREMA.
8. NAME TAG TO BE AFFIXED TO RIGID WING RAIL NEAR 1/2" PT WITH INFORMATION SHOWN.
9. SCRRA WILL CONSIDER A TAPERED HEEL SPRING OF SAME ALIGNMENT AND DIMENSIONS TO REPLACE WSM.

REV.	DATE	DESCRIPTION	DES.	ENG.
X	XX-XX-XX	REVISION	XX	XX

DRAWN BY: HDR DATE: 03/31/2011

ASSISTANT DIRECTOR: STANDARDS & DESIGN

DIRECTOR OF ENGINEERING AND CONSTRUCTION

SCRRA ENGINEERING STANDARDS ARE INTENDED FOR SCRRA APPROVED USES ONLY. FOR NON-SCRRA APPROVED USES: SCRRA SHALL NOT BE RESPONSIBLE FOR THE ACCURACY OR COMPLETENESS OF THE DATA OR INFORMATION CONTAINED HEREIN. THE SELECTION AND USE OF THESE STANDARDS IS THE SOLE RESPONSIBILITY OF THE USER AND SHOULD NOT BE USED WITHOUT CONSULTING A REGISTERED PROFESSIONAL ENGINEER. ALL WARRANTIES AND REPRESENTATIONS OF ANY KIND ARE DISCLAIMED. ANYONE MAKING USE OF THIS INFORMATION AGREES THAT IT ASSUMES ALL LIABILITY ARISING FROM SUCH USE. NO PART OF THESE STANDARDS SHOULD BE REPRODUCED OR DISTRIBUTED IN ANY FORM OR BY ANY MEANS WITHOUT THE PRIOR WRITTEN PERMISSION OF SCRRA. ALL RIGHTS RESERVED.

METROLINK®
SOUTHERN CALIFORNIA REGIONAL RAIL AUTHORITY
ONE GATEWAY PLAZA, 12TH FLOOR, L. A., CA. 90012

ENGINEERING STANDARDS

NO 10 WSM FROG RH
FROG ASSEMBLY PLAN VIEW AND FROG PACK
CONCRETE TIES–136 LB RE RAIL

STANDARD 2803
SCALE: NTS
REVISION –
SHEET 1 OF 1
CADD FILE: ES2803–40

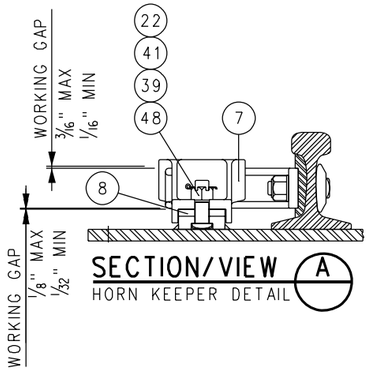

SECTION/VIEW (A)
HORN KEEPER DETAIL

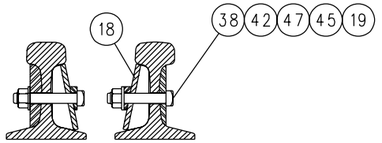

SECTION (B)
FOOT GUARD DETAIL

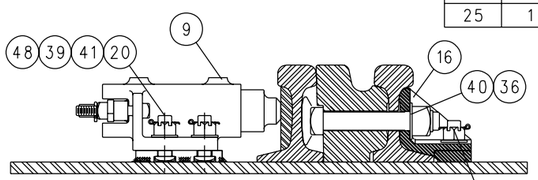

SECTION/VIEW (C)
SPRING BOX DETAIL

48 41 39 21

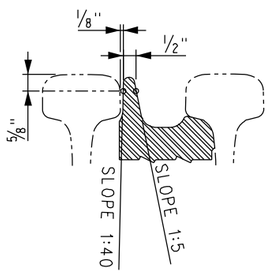

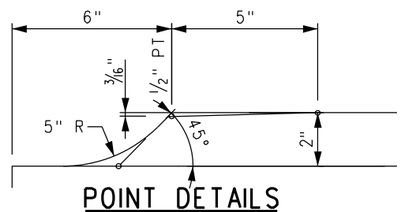

POINT DETAILS

BILL OF MATERIAL

ITEM	QTY	DESCRIPTION	DWG NO	SCRRA PART NO
1	1	NO 10-136 LB RE SPRING FROG, LH POINT ASSEMBLY	-	
2	1	SPRING WING RAIL, NO 10-136 LB RE, RIGID, LH	-	
3	1	SPRING WING RAIL, NO 10-136 LB RE, LH, C/W HARDWARE	-	
4	1	TOE BLOCK (SFTB136RE-10A)	-	
5	1	HEEL BLOCK (SFHB136RE-10A)	-	
6	1	FLARE FILLER BLOCK (FB136WHM-RCR)	-	
7	3	HORN KEEPER, REVERSIBLE	-	
8	3	HORN KEEPER WEAR PLATE, REVERSIBLE	-	
9	1	SPRING BOX ASSEMBLY	-	
10	1	FROG BASE PLATE (10-136-34LC)	ES2803-43	
11	1	FROG BASE PLATE (10-136-37LC)	ES2803-43	
12	1	FROG BASE PLATE (10-136-39LC)	ES2803-45	
13	1	FROG BASE PLATE (10-136-43LC)	ES2803-47	
14	1	FROG PLATE (10-136-47LC)	ES2803-49	
15	1	FROG PLATE (10-136-48LC)	ES2803-49	
16	4	PLATE CLIP, 136 LB RE	-	
17	1	HOLD-DOWN CLIP (10A1)	-	
18	1	FOOT GUARD, 136 LB RE x 1'-8" LONG	-	
19	2	BOLT, 3/4" DIA x 4 1/2" SQ HEAD, GR 8	-	
20	4	BOLT, 1" DIA x 3", THIN SQ HEAD, DRILLED 2 1/2", GR 5	-	
21	8	BOLT, 1" DIA x 3", THIN SQ HEAD, DRILLED 2 3/32", GR 5	-	
22	6	BOLT, 1" DIA x 3 1/2", THIN SQ HEAD, DRILLED 2 11/16", GR 5	-	
23	4	BOLT, 1 3/8" DIA x 5" SQ HEAD, GR 8	-	
24	1	BOLT, 1 3/8" DIA x 6 1/2" SQ HEAD, GR 8	-	
25	1	BOLT, 1 3/8" DIA x 7 1/2" SQ HEAD, GR 8	-	

BILL OF MATERIAL

ITEM	QTY	DESCRIPTION	DWG NO	SCRRA PART NO
26	1	BOLT, 1 3/8" DIA x 9" SQ HEAD, GR 8	-	
27	1	BOLT, 1 3/8" DIA x 9 1/2" SQ HEAD, GR 8	-	
28	1	BOLT, 1 3/8" DIA x 11" SQ HEAD, GR 8	-	
29	1	BOLT, 1 3/8" DIA x 1'-0" SQ HEAD, GR 8	-	
30	2	BOLT, 1 3/8" DIA x 1'-1 1/2" SQ HEAD, GR 8	-	
31	1	BOLT, 1 3/8" DIA x 1'-2 1/2" SQ HEAD, GR 8	-	
32	1	BOLT, 1 3/8" DIA x 1'-4" SQ HEAD, GR 8	-	
33	1	BOLT, 1 3/8" DIA x 1'-5 1/2" SQ HEAD, GR 8	-	
34	1	BOLT, 1 3/8" DIA x 1'-6" SQ HEAD, GR 8	-	
35	1	PLOW BOLT, 1" DIA x 4" ROUND HD, SQ NECK, GR 8	-	
36	16	NUT, SECURITY LOCK, 1 3/8" DIA HEAVY HEX	-	
37	1	NUT, SECURITY LOCK, 1" DIA HEAVY HEX	-	
38	2	NUT, SECURITY LOCK, 3/4" DIA HEAVY HEX	-	
39	18	NUT, SLOTTED, 1" DIA HEAVY HEX	-	
40	16	WASHER, HARDENED, 1 3/8" DIA x 5/32" THICK	-	
41	11	WASHER, HARDENED, 1" DIA x 5/32" THICK	-	
42	2	WASHER, HARDENED, 3/4" DIA x 3/16" THICK	-	
43	3	WASHER, HEADLOCK	-	
44	8	WASHER, TAIL	-	
45	2	WASHER, TAIL, 1/2" x 3" FOR 3/4" BOLT	-	
46	4	WASHER, TAIL	-	
47	2	WASHER, BEVELED, FOR 3/4" BOLT	-	
48	18	COTTER PIN, 1/4" DIA x 2" LONG	-	
49	26	CLIP, PANDROL E2055	-	
50	3	SHOULDER, FORGED TYPE 1	-	

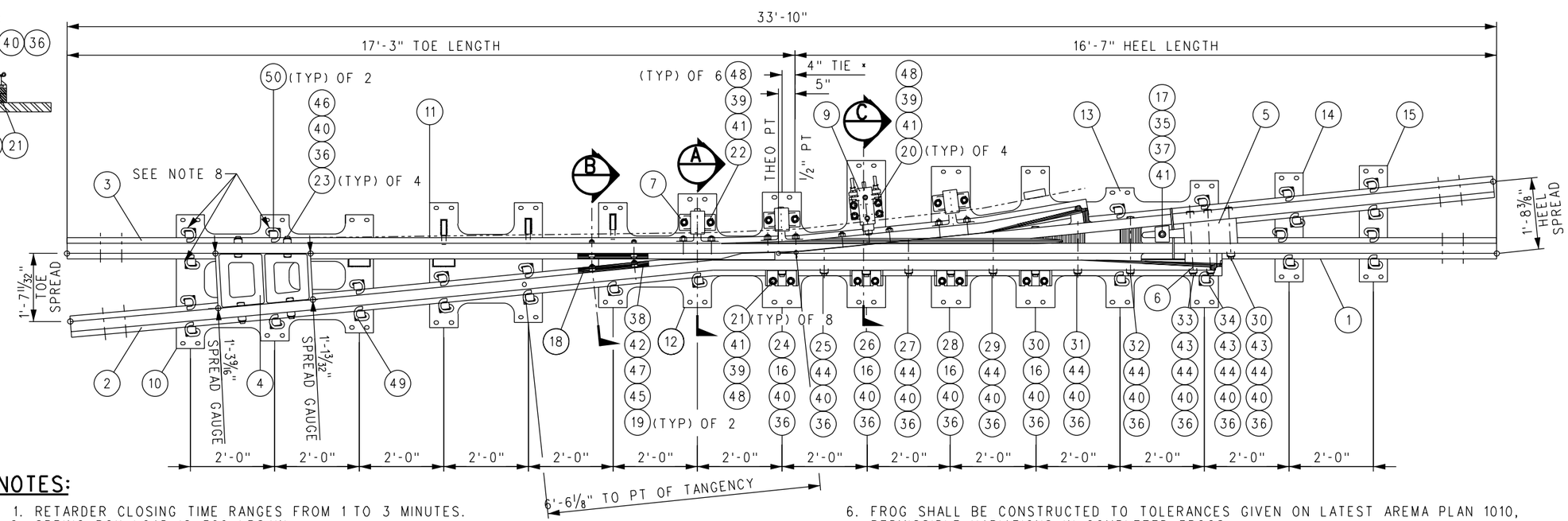

NOTES:

1. RETARDER CLOSING TIME RANGES FROM 1 TO 3 MINUTES.
2. SPRING BOX LOAD IS 300 LBS/IN.
3. SPRING WING SHALL BE THROWN TO A 1 7/8" FLANGEWAY AT THE 3/4" POINT TO DETERMINE THE SPRING WING THROWN POSITION.
4. RAIL END DRILLING SHALL BE @ 9" AND 1'-3 1/2", 3 3/32" ABOVE RAIL BASE, 1 5/16" DIA AT ALL 4 RAIL ENDS. ALL RAIL HOLE EDGES SHALL BE ROUNDED WITH A 1/8" R.
5. RETARDER BRACKET SHALL BE WELDED ADJACENT TO SPRING BOX ASSEMBLY.
6. FROG SHALL BE CONSTRUCTED TO TOLERANCES GIVEN ON LATEST AREMA PLAN 1010, PERMISSIBLE VARIATIONS IN COMPLETED FROGS.
7. INSERT TO BE EXPLOSIVE DEPTH HARDENED TO 352 BRINELL PER AREMA.
8. NAME TAG TO BE AFFIXED TO RIGID WING RAIL NEAR 1/2" PT WITH INFORMATION SHOWN.
9. SCRRA WILL CONSIDER A TAPERED HEEL SPRING OF SAME ALIGNMENT AND DIMENSIONS TO REPLACE WSM.

REV.	DATE	DESCRIPTION	DES.	ENG.
X	XX-XX-XX	REVISION	XX	XX

DRAWN BY: HDR DATE: 03/31/2011

ASSISTANT DIRECTOR: STANDARDS & DESIGN

DIRECTOR OF ENGINEERING AND CONSTRUCTION

SCRRA ENGINEERING STANDARDS ARE INTENDED FOR SCRRA APPROVED USES ONLY. FOR NON-SCRRA APPROVED USES:
SCRRA SHALL NOT BE RESPONSIBLE FOR THE ACCURACY OR COMPLETENESS OF THE DATA OR INFORMATION CONTAINED HEREIN. THE SELECTION AND USE OF THESE STANDARDS IS THE SOLE RESPONSIBILITY OF THE USER AND SHOULD NOT BE USED WITHOUT CONSULTING A REGISTERED PROFESSIONAL ENGINEER. ALL WARRANTIES AND REPRESENTATIONS OF ANY KIND ARE DISCLAIMED. ANYONE MAKING USE OF THIS INFORMATION AGREES THAT IT ASSUMES ALL LIABILITY ARISING FROM SUCH USE. NO PART OF THESE STANDARDS SHOULD BE REPRODUCED OR DISTRIBUTED IN ANY FORM OR BY ANY MEANS WITHOUT THE PRIOR WRITTEN PERMISSION OF SCRRA. ALL RIGHTS RESERVED.

METROLINK®
SOUTHERN CALIFORNIA REGIONAL RAIL AUTHORITY
ONE GATEWAY PLAZA, 12TH FLOOR, L. A., CA. 90012

ENGINEERING STANDARDS

NO 10 WSM FROG LH
FROG ASSEMBLY PLAN VIEW AND FROG PACK
CONCRETE TIES–136 LB RE RAIL

STANDARD 2803
SCALE: NTS
REVISION –
SHEET 1 OF 1
CADD FILE: ES2803–41

BILL OF MATERIAL					
ITEM	QTY FOR 10-34RC	QTY FOR 10-37RC	DESCRIPTION	DWG NO	SCRRA PART NO
1	1	1	BURNED PLATE, 3/4" THICK	-	
2	5	4	SHOULDER, PANDROL, FORGED TONGUELESS, TYPE 1	-	
3	1	1	FLAT BAR, ASTM A36, 2" x 6" x 1/2" THICK	-	
4	0	2	BURNED BRACE, 132/136 LB RE, ASTM A36, 7 1/16" x 1 1/4" x 1/2" THICK	-	

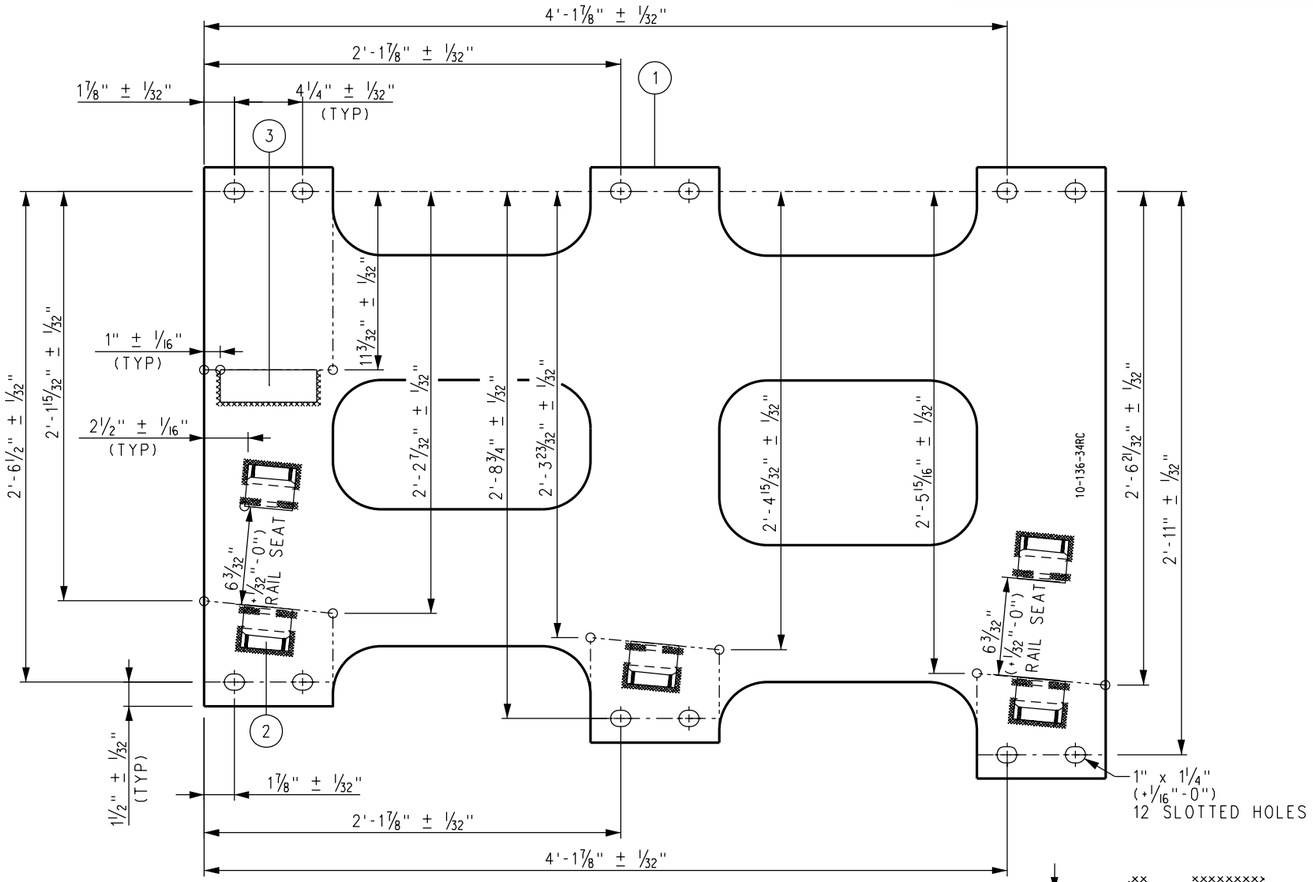

FROG BASE PLATE 10-136-34RC

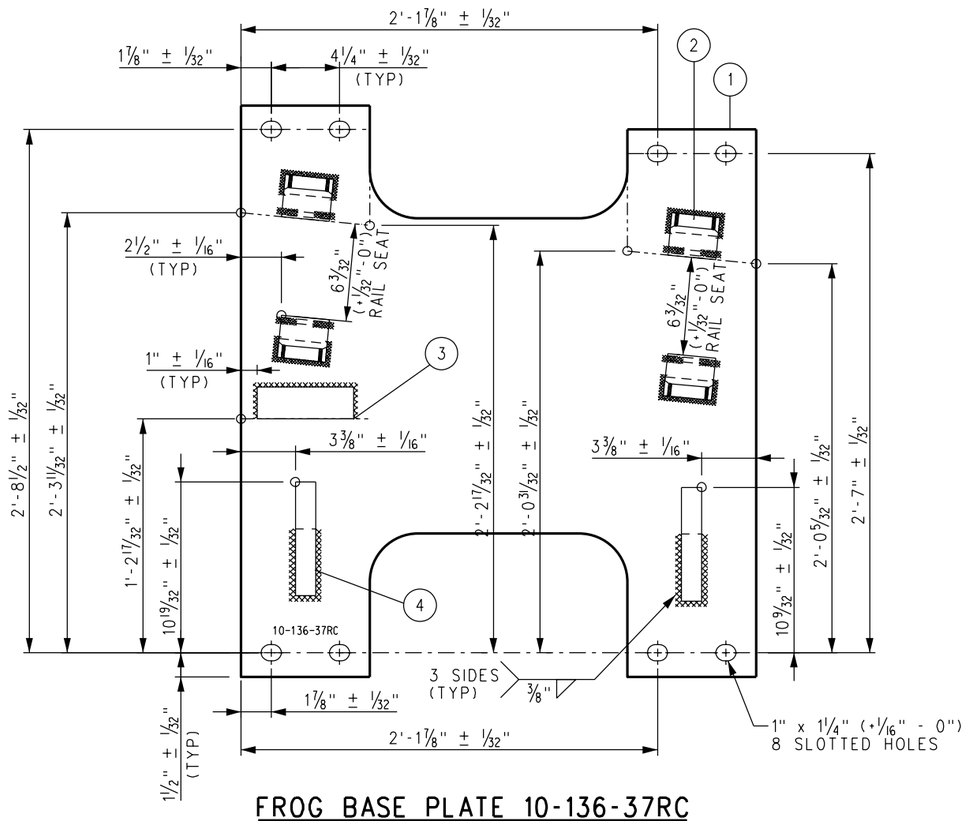

FROG BASE PLATE 10-136-37RC

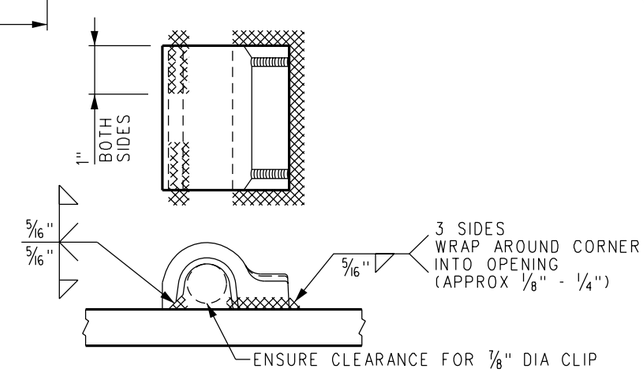

FORGED SHOULDER WELDING DETAIL

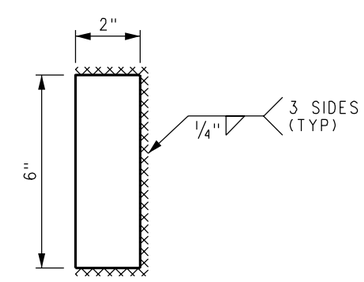

2" x 6" x 1/2"
STOP WELDING DETAIL

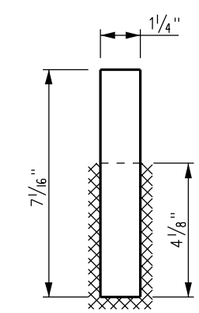

7 1/16" x 1 1/4" x 1/2"
132/136 LB RE BURNED BRACE

NOTES:

1. I.D. CHARACTERS TO BE 1/2" MINIMUM HEIGHT CLEARLY STAMPED AS SHOWN.
2. WELDS TO BE DRESSED FLUSH WITH SHOULDERS AND STOPS AND NOT TO PROTRUDE INTO RAIL SEAT.
3. SLOTTED HOLE CENTERS ARE INDICATED ON DRAWING.

REV.	DATE	DESCRIPTION	DES.	ENG.
X	XX-XX-XX	REVISION	XX	XX

DRAWN BY: HDR DATE: 03/31/2011

ASSISTANT DIRECTOR: STANDARDS & DESIGN

DIRECTOR OF ENGINEERING AND CONSTRUCTION

SCRRA ENGINEERING STANDARDS ARE INTENDED FOR SCRRA APPROVED USES ONLY. FOR NON-SCRRA APPROVED USES: SCRRA SHALL NOT BE RESPONSIBLE FOR THE ACCURACY OR COMPLETENESS OF THE DATA OR INFORMATION CONTAINED HEREIN. THE SELECTION AND USE OF THESE STANDARDS IS THE SOLE RESPONSIBILITY OF THE USER AND SHOULD NOT BE USED WITHOUT CONSULTING A REGISTERED PROFESSIONAL ENGINEER. ALL WARRANTIES AND REPRESENTATIONS OF ANY KIND ARE DISCLAIMED. ANYONE MAKING USE OF THIS INFORMATION AGREES THAT IT ASSUMES ALL LIABILITY ARISING FROM SUCH USE. NO PART OF THESE STANDARDS SHOULD BE REPRODUCED OR DISTRIBUTED IN ANY FORM OR BY ANY MEANS WITHOUT THE PRIOR WRITTEN PERMISSION OF SCRRA. ALL RIGHTS RESERVED.

METROLINK®
SOUTHERN CALIFORNIA REGIONAL RAIL AUTHORITY
ONE GATEWAY PLAZA, 12TH FLOOR, L. A., CA. 90012

ENGINEERING STANDARDS

NO 10 WSM FROG RH
FROG BASE PLATES 10–34RC AND 10–37RC
CONCRETE TIES–136 LB RE RAIL

STANDARD 2803
SCALE: NTS
REVISION –
SHEET 1 OF 1
CADD FILE: ES2803–42

BILL OF MATERIAL					
ITEM	QTY FOR 10-34LC	QTY FOR 10-37LC	DESCRIPTION	DWG NO	SCRRA PART NO
1	1	1	BURNED PLATE, ¾" THICK	-	
2	5	4	SHOULDER, PANDROL, FORGED TONGUELESS, TYPE 1	-	
3	1	1	FLAT BAR, ASTM A36, 2" x 6" x ½" THICK	-	
4	0	2	BURNED BRACE, 132/136 LB RE, ASTM A36, 7 1/16" x 1¼" x ½" THICK	-	

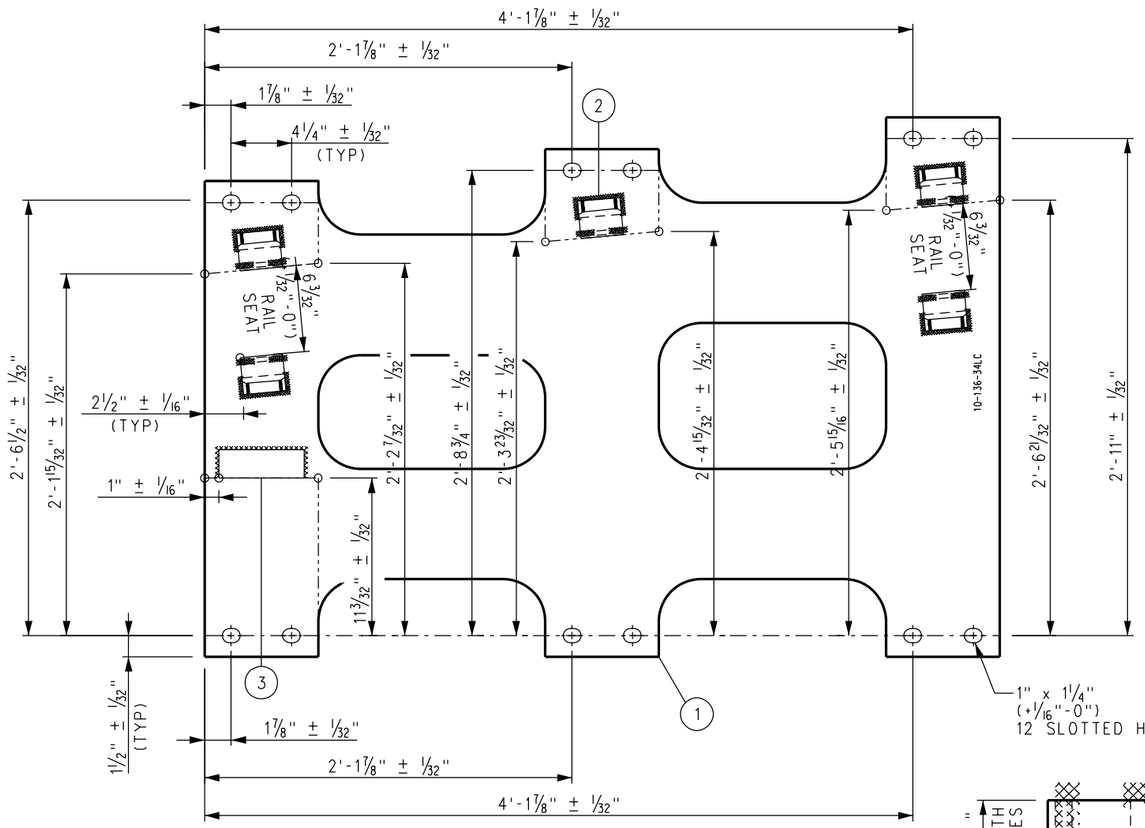

FROG BASE PLATE 10-136-34LC

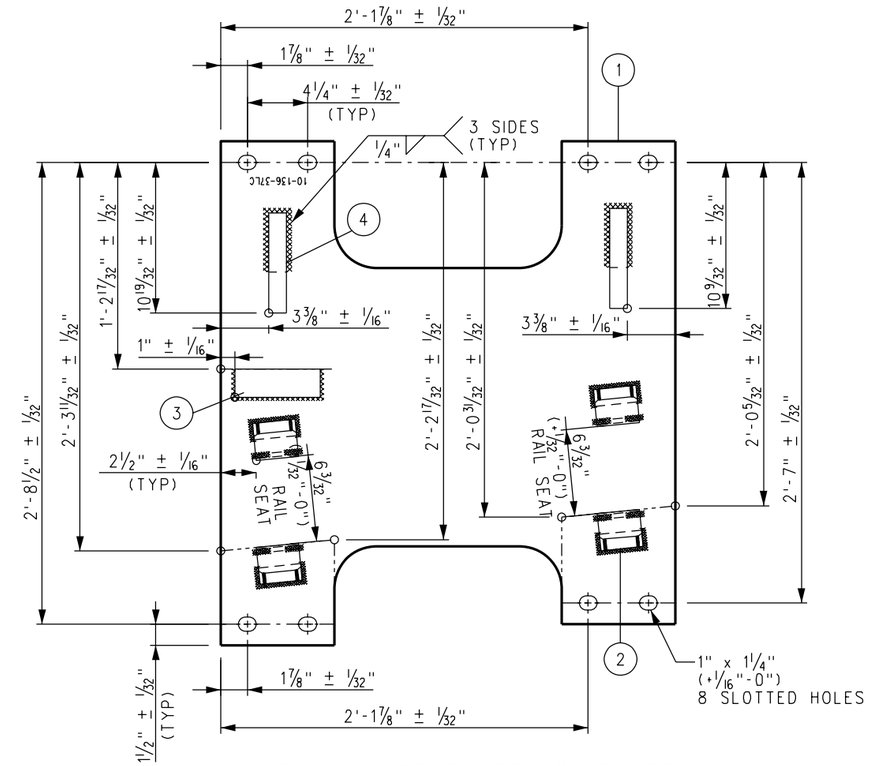

FROG BASE PLATE 10-136-37LC

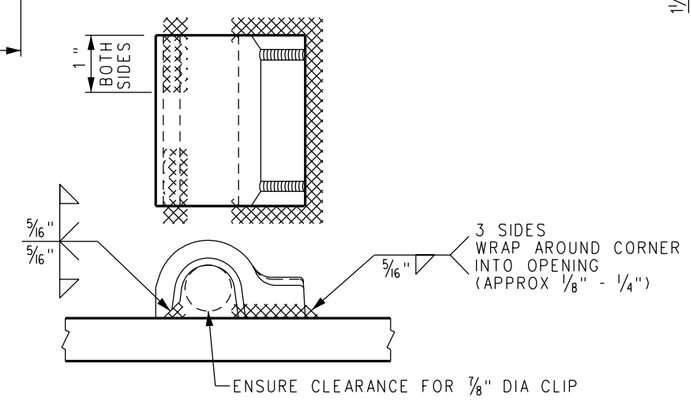

FORGED SHOULDER WELDING DETAIL

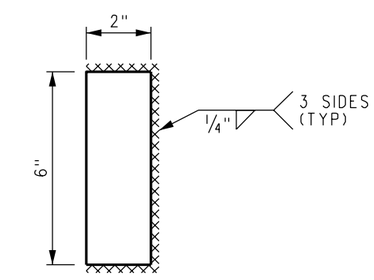

2" x 6" x ½"
STOP WELDING DETAIL

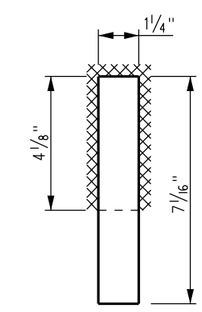

7 1/16" x 1¼" x ½"
132/136 LB RE BURNED BRACE

NOTES:

1. I.D. CHARACTERS TO BE ½" MINIMUM HEIGHT CLEARLY STAMPED AS SHOWN.
2. WELDS TO BE DRESSED FLUSH WITH SHOULDERS AND STOPS AND NOT TO PROTRUDE INTO RAIL SEAT.
3. SLOTTED HOLE CENTERS ARE INDICATED ON DRAWING.
4. SHOULDERS TO BE WELDED ON AFTER FITTING TOE BLOCK.

REV.	DATE	DESCRIPTION	DES.	ENG.
X	XX-XX-XX	REVISION	XX	XX

DRAWN BY: HDR DATE: 03/31/2011

ASSISTANT DIRECTOR: STANDARDS & DESIGN

DIRECTOR OF ENGINEERING AND CONSTRUCTION

SCRRA ENGINEERING STANDARDS ARE INTENDED FOR SCRRA APPROVED USES ONLY. FOR NON-SCRRA APPROVED USES: SCRRA SHALL NOT BE RESPONSIBLE FOR THE ACCURACY OR COMPLETENESS OF THE DATA OR INFORMATION CONTAINED HEREIN. THE SELECTION AND USE OF THESE STANDARDS IS THE SOLE RESPONSIBILITY OF THE USER AND SHOULD NOT BE USED WITHOUT CONSULTING A REGISTERED PROFESSIONAL ENGINEER. ALL WARRANTIES AND REPRESENTATIONS OF ANY KIND ARE DISCLAIMED. ANYONE MAKING USE OF THIS INFORMATION AGREES THAT IT ASSUMES ALL LIABILITY ARISING FROM SUCH USE. NO PART OF THESE STANDARDS SHOULD BE REPRODUCED OR DISTRIBUTED IN ANY FORM OR BY ANY MEANS WITHOUT THE PRIOR WRITTEN PERMISSION OF SCRRA. ALL RIGHTS RESERVED.

METROLINK®
SOUTHERN CALIFORNIA REGIONAL RAIL AUTHORITY
ONE GATEWAY PLAZA, 12TH FLOOR, L. A., CA. 90012

ENGINEERING STANDARDS

NO 10 WSM FROG LH
FROG BASE PLATES 10-34LC AND 10-37LC
CONCRETE TIES-136 LB RE RAIL

STANDARD 2803
SCALE: NTS
REVISION –
SHEET 1 OF 1
CADD FILE: ES2803-43

NOTES:

1. I.D. CHARACTERS TO BE 1/2" MINIMUM HEIGHT CLEARLY STAMPED AS SHOWN.
2. WELDS TO BE DRESSED FLUSH WITH SHOULDERS AND STOPS AND NOT TO PROTRUDE INTO RAIL SEAT.
3. OPENINGS IN BOLT CAPTURE BLOCKS SHALL BE FREE OF WELD AND SPATTER.
4. SLOTTED HOLE CENTERS ARE INDICATED ON DRAWING.
5. SEE ES2803-42 FOR SHOULDER WELDING DETAIL.

BILL OF MATERIAL

ITEM	QTY	DESCRIPTION	DWG NO	SCRRA PART NO
1	1	BURNED PLATE, 3/4" THICK	-	
2	2	CAPTURE BLOCK FOR PLATE CLIP	-	
3	2	CAPTURE BLOCK FOR HORN KEEPER	-	
4	1	CAPTURE BLOCK FOR SPRING BOX	-	
5	1	WELD ON BRACE, 7 1/16" x 1 1/4" x 1/2" THICK	-	
6	2	SHOULDER, PANDROL, FORGED TONGUELESS, TYPE 1	-	
7	1	FLAT BAR, ASTM A36, 1/2" x 7" x 1"	-	

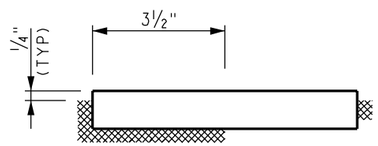

STOP WELDING DETAIL

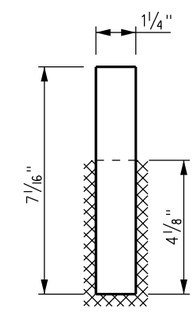

7 1/16" x 1 1/4" x 1/2"
WELD ON BRACE

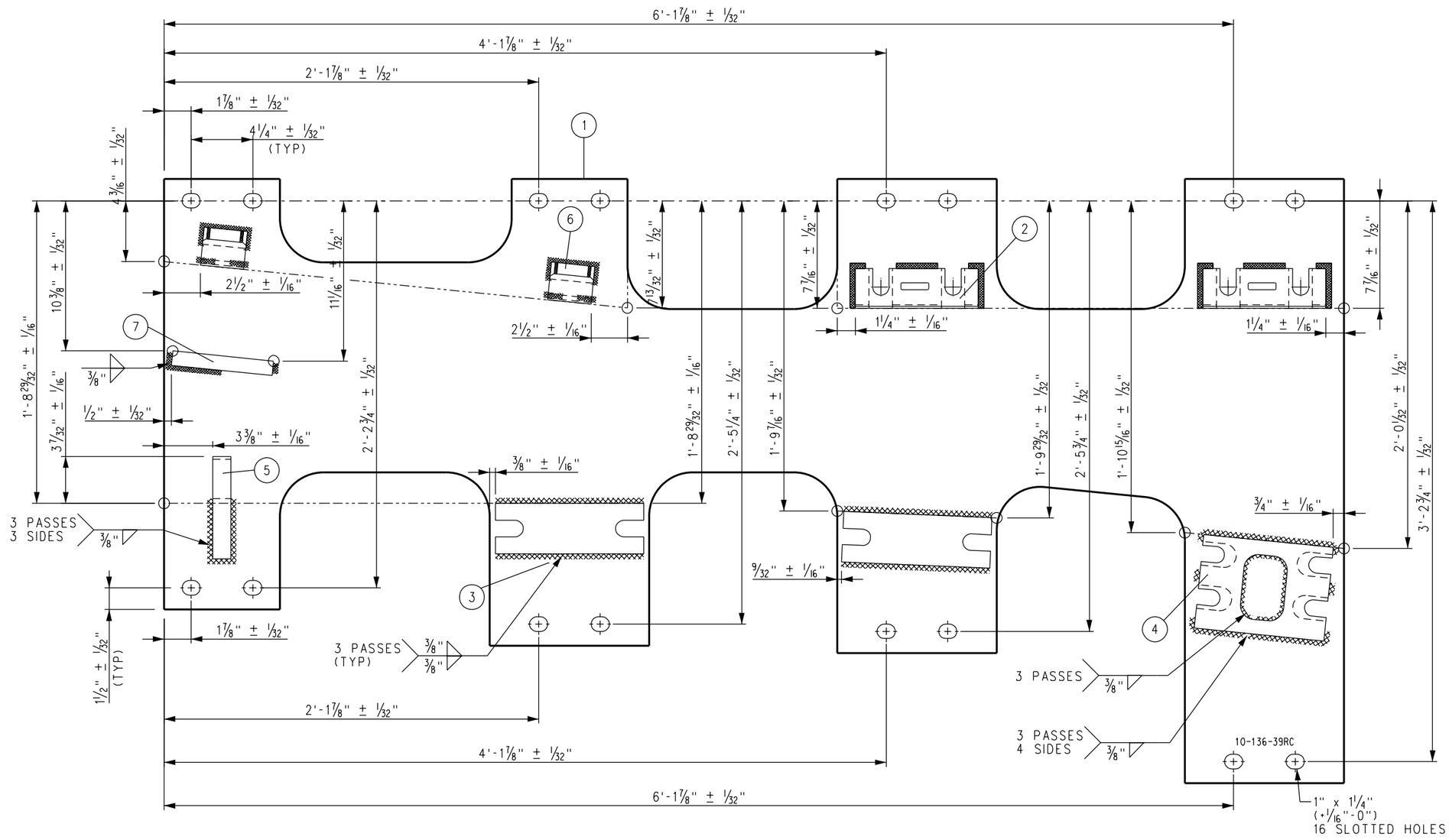

REV.	DATE	DESCRIPTION	DES.	ENG.
X	XX-XX-XX	REVISION	XX	XX

DRAWN BY: HDR DATE: 03/31/2011

ASSISTANT DIRECTOR: STANDARDS & DESIGN

DIRECTOR OF ENGINEERING AND CONSTRUCTION

SCRRA ENGINEERING STANDARDS ARE INTENDED FOR SCRRA APPROVED USES ONLY. FOR NON-SCRRA APPROVED USES:
SCRRA SHALL NOT BE RESPONSIBLE FOR THE ACCURACY OR COMPLETENESS OF THE DATA OR INFORMATION CONTAINED HEREIN. THE SELECTION AND USE OF THESE STANDARDS IS THE SOLE RESPONSIBILITY OF THE USER AND SHOULD NOT BE USED WITHOUT CONSULTING A REGISTERED PROFESSIONAL ENGINEER. ALL WARRANTIES AND REPRESENTATIONS OF ANY KIND ARE DISCLAIMED. ANYONE MAKING USE OF THIS INFORMATION AGREES THAT IT ASSUMES ALL LIABILITY ARISING FROM SUCH USE. NO PART OF THESE STANDARDS SHOULD BE REPRODUCED OR DISTRIBUTED IN ANY FORM OR BY ANY MEANS WITHOUT THE PRIOR WRITTEN PERMISSION OF SCRRA. ALL RIGHTS RESERVED.

METROLINK®
SOUTHERN CALIFORNIA REGIONAL RAIL AUTHORITY
ONE GATEWAY PLAZA, 12TH FLOOR, L. A., CA. 90012

ENGINEERING STANDARDS

NO 10 WSM FROG RH
FROG BASE PLATE 10-39RC
CONCRETE TIES-136 LB RE RAIL

STANDARD 2803
SCALE: NTS
REVISION –
SHEET 1 OF 1
CADD FILE: ES2803-44

BILL OF MATERIAL				
ITEM	QTY	DESCRIPTION	DWG NO	SCRRA PART NO
1	1	BURNED PLATE, 3/4" THICK	-	
2	2	CAPTURE BLOCK FOR PLATE CLIP	-	
3	2	CAPTURE BLOCK FOR HORN KEEPER	-	
4	1	CAPTURE BLOCK FOR SPRING BOX	-	
5	1	WELD ON BRACE 7 1/16" x 1 1/4" x 1/2" THICK	-	
6	2	SHOULDER, PANDROL, FORGED TONGUELESS, TYPE 1	-	
7	1	FLAT BAR, ASTM A36, 1/2" x 7" x 1"	-	

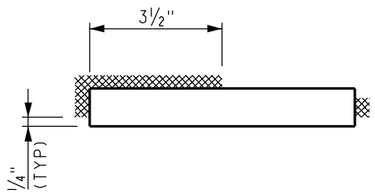

STOP WELDING DETAIL

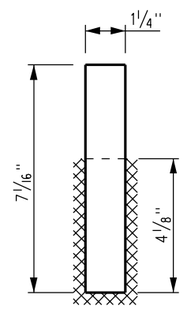

7 1/16" x 1 1/4" x 1/2"
WELD ON BRACE

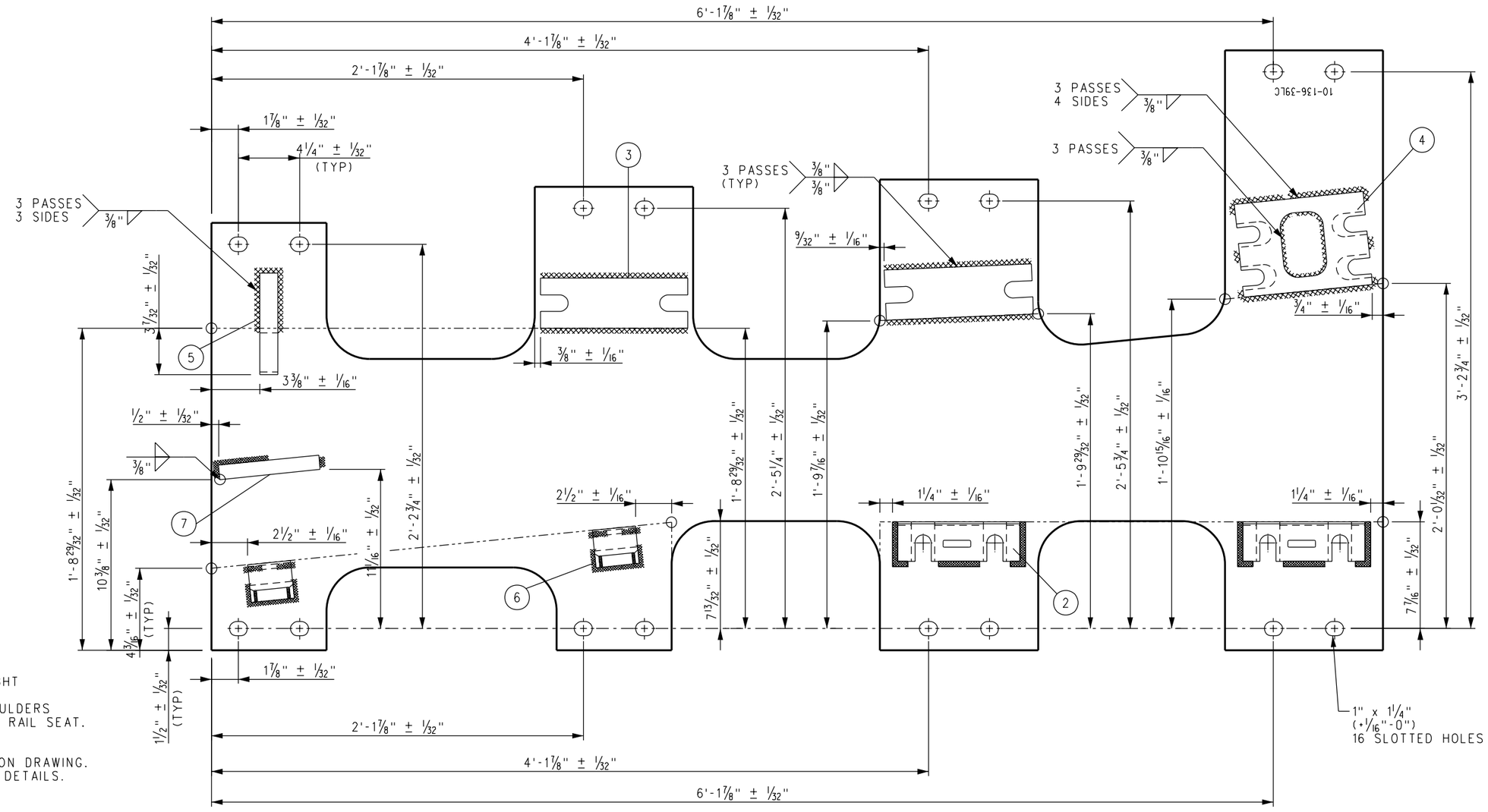

NOTES:

1. I.D. CHARACTERS TO BE 1/2" MINIMUM HEIGHT CLEARLY STAMPED AS SHOWN.
2. WELDS TO BE DRESSED FLUSH WITH SHOULDERS AND STOPS AND NOT TO PROTRUDE INTO RAIL SEAT.
3. OPENINGS IN BOLT CAPTURE BLOCKS SHALL BE FREE OF WELD AND SPATTER.
4. SLOTTED HOLE CENTERS ARE INDICATED ON DRAWING.
5. SEE ES2803-42 FOR SHOULDER WELDING DETAILS.

REV.	DATE	DESCRIPTION	DES.	ENG.
X	XX-XX-XX	REVISION	XX	XX

DRAWN BY: HDR DATE: 03/31/2011

ASSISTANT DIRECTOR: STANDARDS & DESIGN

DIRECTOR OF ENGINEERING AND CONSTRUCTION

SCRRA ENGINEERING STANDARDS ARE INTENDED FOR SCRRA APPROVED USES ONLY. FOR NON-SCRRA APPROVED USES:
SCRRA SHALL NOT BE RESPONSIBLE FOR THE ACCURACY OR COMPLETENESS OF THE DATA OR INFORMATION CONTAINED HEREIN. THE SELECTION AND USE OF THESE STANDARDS IS THE SOLE RESPONSIBILITY OF THE USER AND SHOULD NOT BE USED WITHOUT CONSULTING A REGISTERED PROFESSIONAL ENGINEER. ALL WARRANTIES AND REPRESENTATIONS OF ANY KIND ARE DISCLAIMED. ANYONE MAKING USE OF THIS INFORMATION AGREES THAT IT ASSUMES ALL LIABILITY ARISING FROM SUCH USE. NO PART OF THESE STANDARDS SHOULD BE REPRODUCED OR DISTRIBUTED IN ANY FORM OR BY ANY MEANS WITHOUT THE PRIOR WRITTEN PERMISSION OF SCRRA. ALL RIGHTS RESERVED.

METROLINK®
SOUTHERN CALIFORNIA REGIONAL RAIL AUTHORITY
ONE GATEWAY PLAZA, 12TH FLOOR, L. A., CA. 90012

ENGINEERING STANDARDS

NO 10 WSM FROG LH
FROG BASE PLATE 10-39LC
CONCRETE TIES-136 LB RE RAIL

STANDARD 2803
SCALE: NTS
REVISION –
SHEET 1 OF 1
CADD FILE: ES2803-45

UserName=> carlosa Date Plotted: 10/5/2011 3:26:12 PM Plot Driver=> S:\Plot Drivers\pdf.plt FileName=> s:\V8EngStds\2000\Turnouts\No 10 Turnout\ES2803-45.dgn

BILL OF MATERIAL				
ITEM	QTY	DESCRIPTION	DWG NO	SCRRA PART NO
1	1	BURNED PLATE, 3/4" THICK	-	
2	2	CAPTURE BLOCK FOR PLATE CLIP	-	
3	1	CAPTURE BLOCK FOR HORN KEEPER	-	
4	1	FLAT BAR, ASTM A36, 1/2" THICK x 2" x 6" LONG	-	
5	1	STOP 6" x 1 19/32" x 2 7/32" x 7/16" THICK	-	
6	4	SHOULDER, PANDROL, FORGED TONGUELESS, TYPE 1	-	

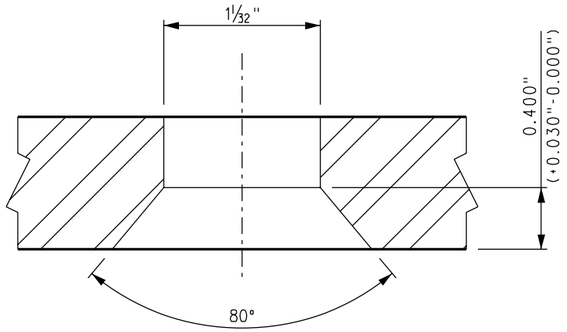

COUNTERSINK DETAIL
(PLOW BOLT)

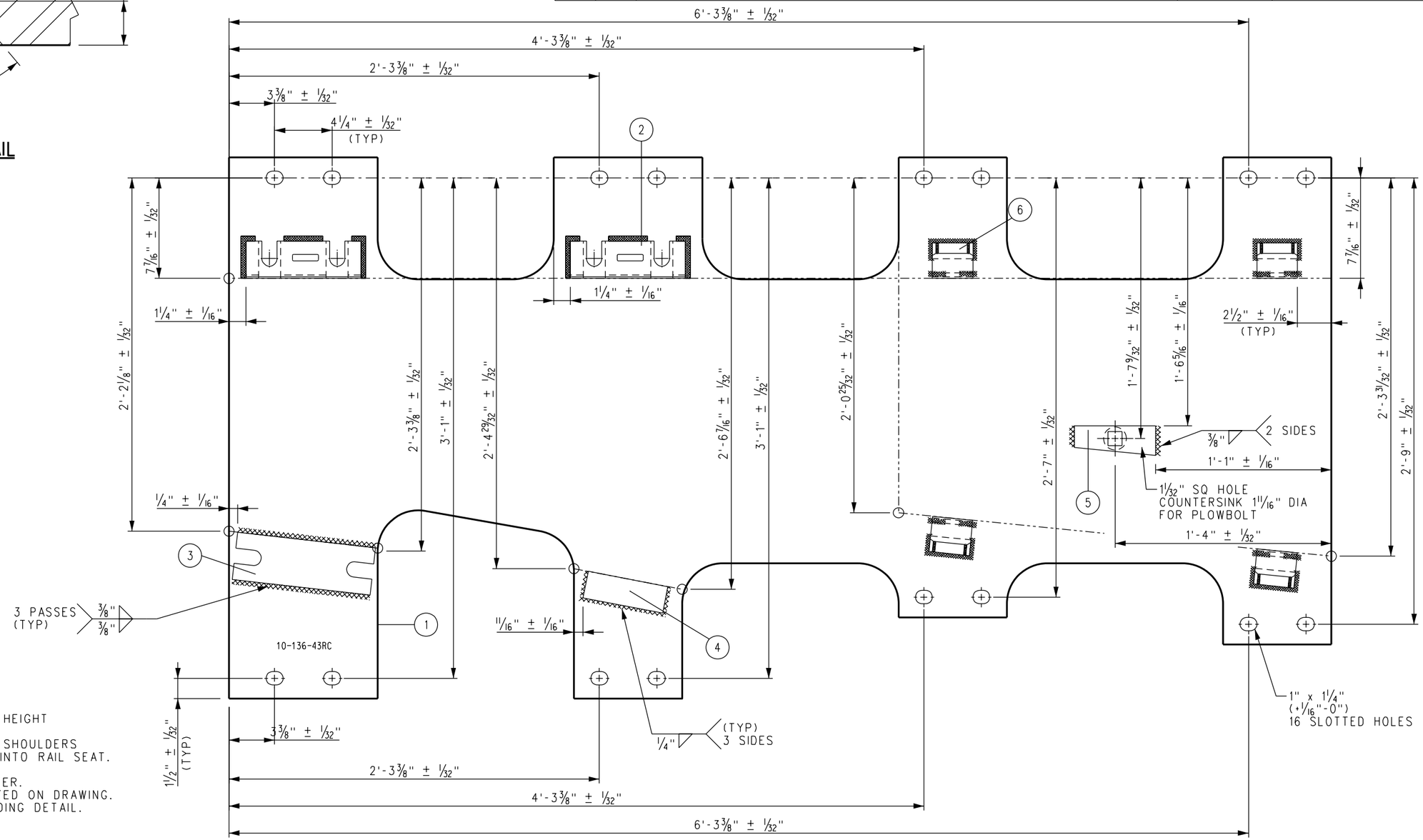

NOTES:

1. I.D. CHARACTERS TO BE 1/2" MINIMUM HEIGHT CLEARLY STAMPED AS SHOWN.
2. WELDS TO BE DRESSED FLUSH WITH SHOULDERS AND STOPS AND NOT TO PROTRUDE INTO RAIL SEAT.
3. OPENINGS IN BOLT CAPTURE BLOCKS SHALL BE FREE OF WELD AND SPATTER.
4. SLOTTED HOLE CENTERS ARE INDICATED ON DRAWING.
5. SEE ES2803-42 FOR SHOULDER WELDING DETAIL.

REV.	DATE	DESCRIPTION	DES.	ENG.
X	XX-XX-XX	REVISION	XX	XX

DRAWN BY: HDR DATE: 03/31/2011

ASSISTANT DIRECTOR: STANDARDS & DESIGN

DIRECTOR OF ENGINEERING AND CONSTRUCTION

SCRRA ENGINEERING STANDARDS ARE INTENDED FOR SCRRA APPROVED USES ONLY. FOR NON-SCRRA APPROVED USES: SCRRA SHALL NOT BE RESPONSIBLE FOR THE ACCURACY OR COMPLETENESS OF THE DATA OR INFORMATION CONTAINED HEREIN. THE SELECTION AND USE OF THESE STANDARDS IS THE SOLE RESPONSIBILITY OF THE USER AND SHOULD NOT BE USED WITHOUT CONSULTING A REGISTERED PROFESSIONAL ENGINEER. ALL WARRANTIES AND REPRESENTATIONS OF ANY KIND ARE DISCLAIMED. ANYONE MAKING USE OF THIS INFORMATION AGREES THAT IT ASSUMES ALL LIABILITY ARISING FROM SUCH USE. NO PART OF THESE STANDARDS SHOULD BE REPRODUCED OR DISTRIBUTED IN ANY FORM OR BY ANY MEANS WITHOUT THE PRIOR WRITTEN PERMISSION OF SCRRA. ALL RIGHTS RESERVED.

METROLINK®
SOUTHERN CALIFORNIA REGIONAL RAIL AUTHORITY
ONE GATEWAY PLAZA, 12TH FLOOR, L. A., CA. 90012

ENGINEERING STANDARDS

NO 10 WSM FROG RH
FROG BASE PLATE 10-43RC
CONCRETE TIES-136 LB RE RAIL

STANDARD 2803
SCALE: NTS
REVISION –
SHEET 1 OF 1
CADD FILE: ES2803-46

BILL OF MATERIAL				
ITEM	QTY	DESCRIPTION	DWG NO	SCRRA PART NO
1	1	BURNED PLATE, 3/4" THICK	-	
2	2	CAPTURE BLOCK FOR PLATE CLIP	-	
3	1	CAPTURE BLOCK FOR HORN KEEPER	-	
4	1	FLAT BAR, ASTM A36, 1/2" THICK x 2" x 6" LONG	-	
5	1	STOP 6" x 1 19/32" x 2 7/32" x 7/16" THICK	-	
6	4	SHOULDER, PANDROL, FORGED TONGUELESS, TYPE 1	-	

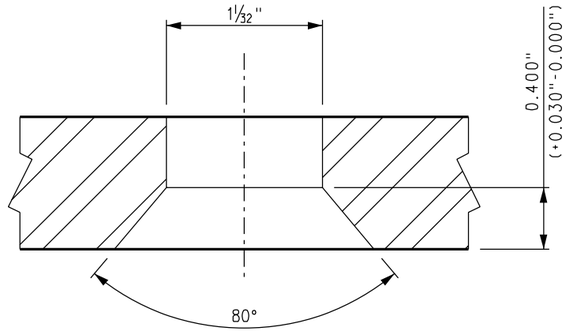

COUNTERSINK DETAIL
(PLOW BOLT)

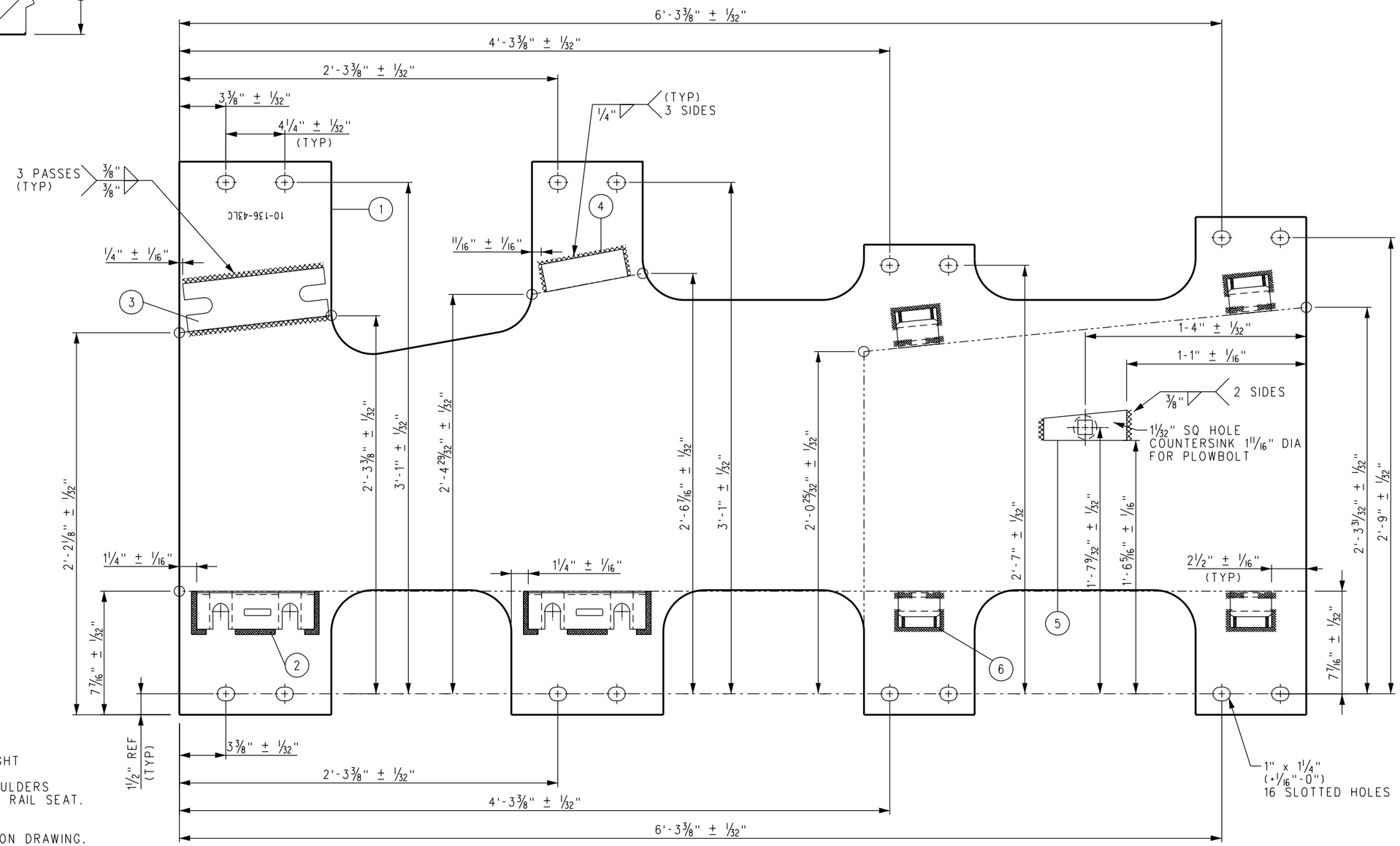

NOTES:

1. I.D. CHARACTERS TO BE 1/2" MINIMUM HEIGHT CLEARLY STAMPED AS SHOWN.
2. WELDS TO BE DRESSED FLUSH WITH SHOULDERS AND STOPS AND NOT TO PROTRUDE INTO RAIL SEAT.
3. OPENINGS IN BOLT CAPTURE BLOCKS SHALL BE FREE OF WELD AND SPATTER.
4. SLOTTED HOLE CENTERS ARE INDICATED ON DRAWING.
5. SEE ES2803-42 FOR SHOULDER WELDING DETAIL.

REV.	DATE	DESCRIPTION	DES.	ENG.
X	XX-XX-XX	REVISION	XX	XX

DRAWN BY: HDR DATE: 03/31/2011

ASSISTANT DIRECTOR: STANDARDS & DESIGN

DIRECTOR OF ENGINEERING AND CONSTRUCTION

SCRRA ENGINEERING STANDARDS ARE INTENDED FOR SCRRA APPROVED USES ONLY. FOR NON-SCRRA APPROVED USES:
SCRRA SHALL NOT BE RESPONSIBLE FOR THE ACCURACY OR COMPLETENESS OF THE DATA OR INFORMATION CONTAINED HEREIN. THE SELECTION AND USE OF THESE STANDARDS IS THE SOLE RESPONSIBILITY OF THE USER AND SHOULD NOT BE USED WITHOUT CONSULTING A REGISTERED PROFESSIONAL ENGINEER. ALL WARRANTIES AND REPRESENTATIONS OF ANY KIND ARE DISCLAIMED. ANYONE MAKING USE OF THIS INFORMATION AGREES THAT IT ASSUMES ALL LIABILITY ARISING FROM SUCH USE. NO PART OF THESE STANDARDS SHOULD BE REPRODUCED OR DISTRIBUTED IN ANY FORM OR BY ANY MEANS WITHOUT THE PRIOR WRITTEN PERMISSION OF SCRRA. ALL RIGHTS RESERVED.

METROLINK®
SOUTHERN CALIFORNIA REGIONAL RAIL AUTHORITY
ONE GATEWAY PLAZA, 12TH FLOOR, L. A., CA. 90012

ENGINEERING STANDARDS

NO 10 WSM FROG LH
FROG BASE PLATE 10-43LC
CONCRETE TIES-136 LB RE RAIL

STANDARD 2803
SCALE: NTS
REVISION –
SHEET 1 OF 1
CADD FILE: ES2803-47

BILL OF MATERIAL					
ITEM	QTY FOR 10-47RC	QTY FOR 10-48RC	DESCRIPTION	DWG NO	SCRRA PART NO
1	0	1	FLAT BAR, ASTM A36, 3/4" x 8" x 2'-9" LONG	-	
2	4	4	SHOULDER, PANDROL, FORGED TONGUELESS, TYPE 1	-	
3	1	0	FLAT BAR, ASTM A36, 3/4" x 8" x 2'-7" LONG	-	

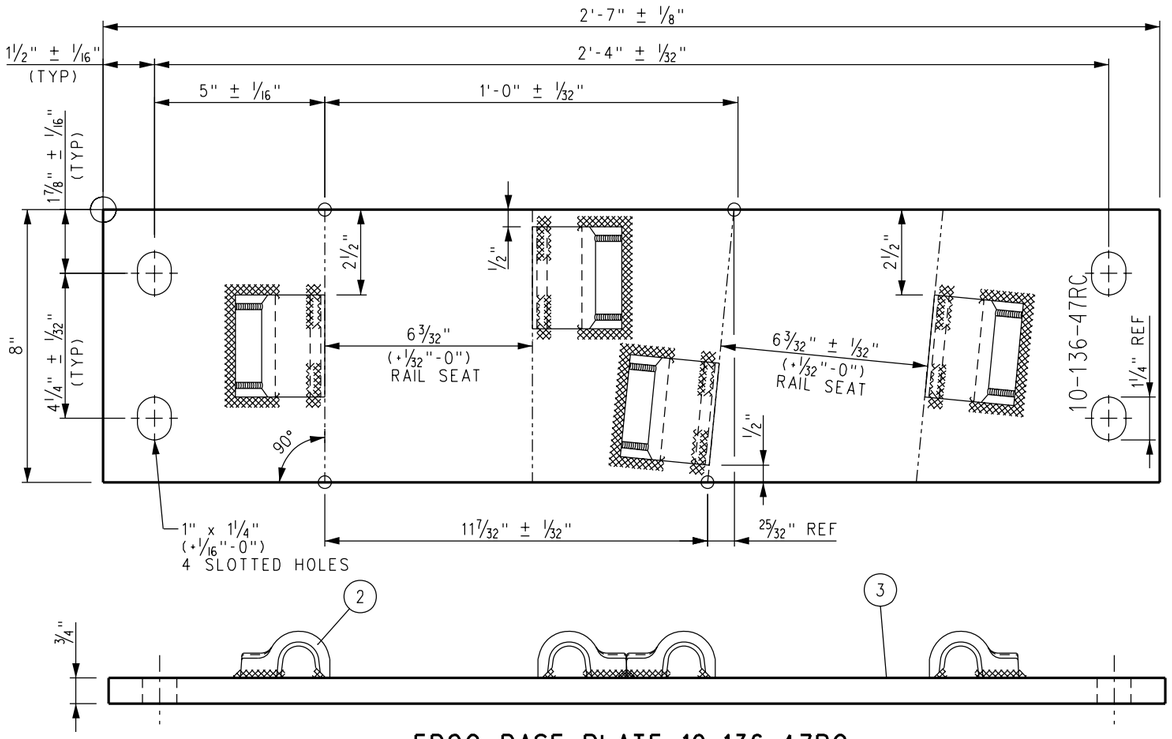

FROG BASE PLATE 10-136-47RC

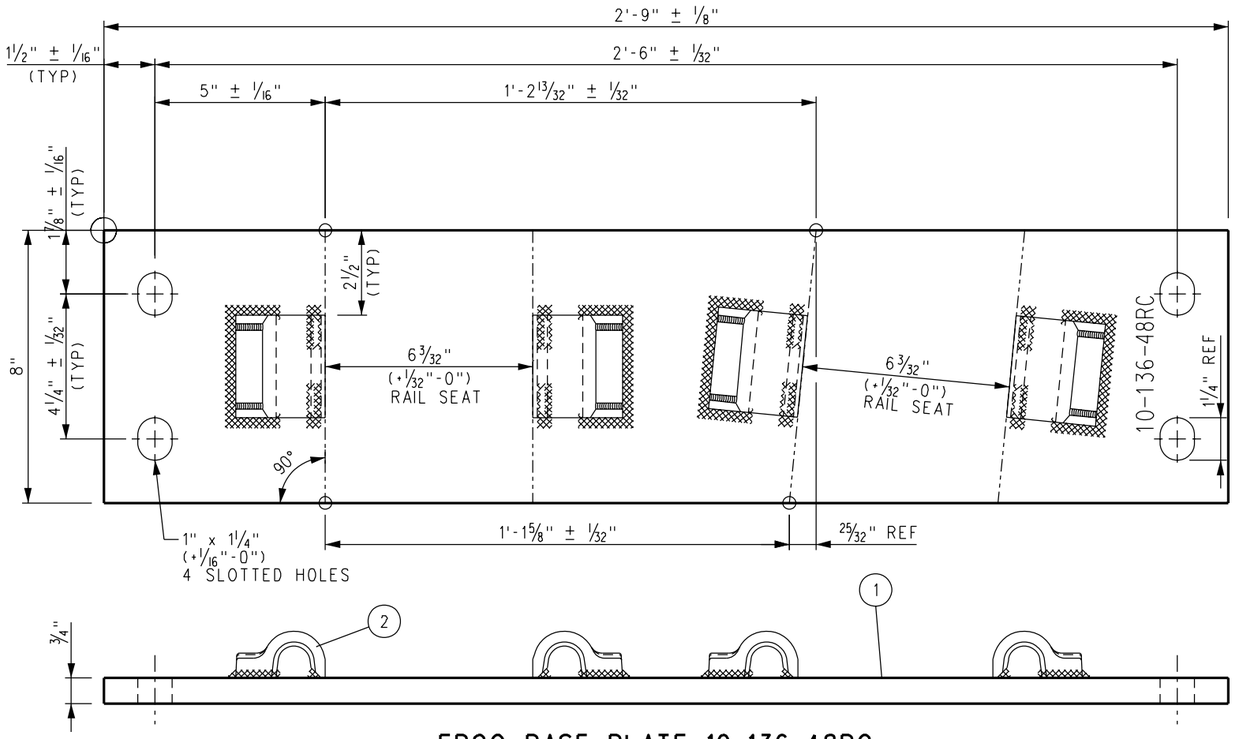

FROG BASE PLATE 10-136-48RC

NOTES:

1. I.D. CHARACTERS TO BE 1/2" MINIMUM HEIGHT CLEARLY STAMPED AS SHOWN.
2. WELDS TO BE DRESSED FLUSH WITH SHOULDER & NOT TO PROTRUDE INTO RAIL SEAT.
3. SEE ES2803-42 FOR SHOULDER WELDING DETAILS.

REV.	DATE	DESCRIPTION	DES.	ENG.
X	XX-XX-XX	REVISION	XX	XX

DRAWN BY: HDR DATE: 03/31/2011

ASSISTANT DIRECTOR: STANDARDS & DESIGN

DIRECTOR OF ENGINEERING AND CONSTRUCTION

SCRRA ENGINEERING STANDARDS ARE INTENDED FOR SCRRA APPROVED USES ONLY. FOR NON-SCRRA APPROVED USES:
SCRRA SHALL NOT BE RESPONSIBLE FOR THE ACCURACY OR COMPLETENESS OF THE DATA OR INFORMATION CONTAINED HEREIN. THE SELECTION AND USE OF THESE STANDARDS IS THE SOLE RESPONSIBILITY OF THE USER AND SHOULD NOT BE USED WITHOUT CONSULTING A REGISTERED PROFESSIONAL ENGINEER. ALL WARRANTIES AND REPRESENTATIONS OF ANY KIND ARE DISCLAIMED. ANYONE MAKING USE OF THIS INFORMATION AGREES THAT IT ASSUMES ALL LIABILITY ARISING FROM SUCH USE. NO PART OF THESE STANDARDS SHOULD BE REPRODUCED OR DISTRIBUTED IN ANY FORM OR BY ANY MEANS WITHOUT THE PRIOR WRITTEN PERMISSION OF SCRRA. ALL RIGHTS RESERVED.

METROLINK®
SOUTHERN CALIFORNIA REGIONAL RAIL AUTHORITY
ONE GATEWAY PLAZA, 12TH FLOOR, L. A., CA. 90012

ENGINEERING STANDARDS

NO 10 WSM FROG RH
FROG BASE PLATES 10–47RC AND 10–48RC
CONCRETE TIES–136 LB RE RAIL

STANDARD 2803
SCALE: NTS
REVISION –
SHEET 1 OF 1
CADD FILE: ES2803–48

BILL OF MATERIAL					
ITEM	QTY FOR 10-47LC	QTY FOR 10-48LC	DESCRIPTION	DWG NO	SCRRA PART NO
1	0	1	FLAT BAR, ASTM A36, 3/4" x 8" x 2'-9" LONG	-	
2	4	4	SHOULDER, PANDROL, FORGED TONGUELESS, TYPE 1	-	
3	1	0	FLAT BAR, ASTM A36, 3/4" x 8" x 2'-7" LONG	-	

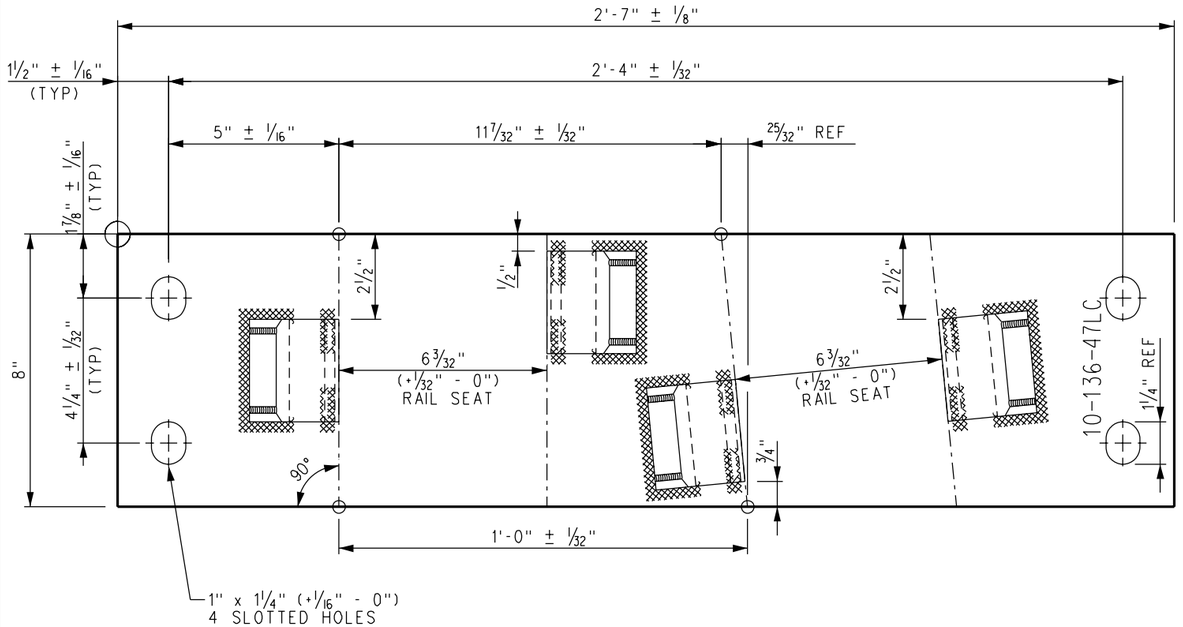

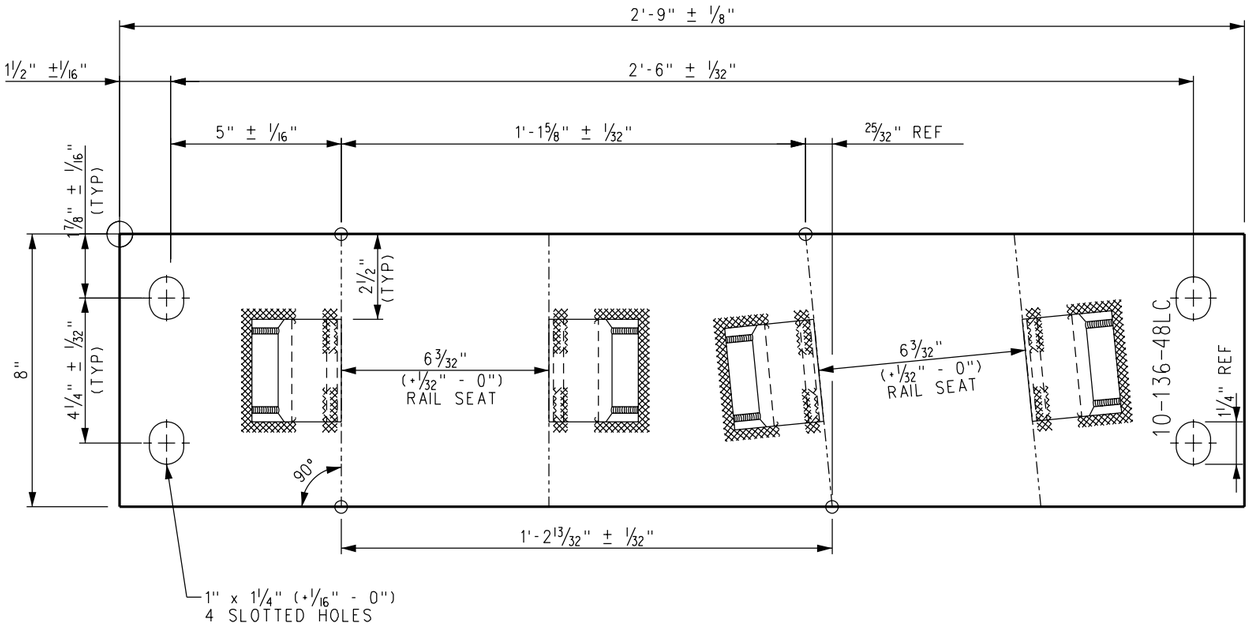

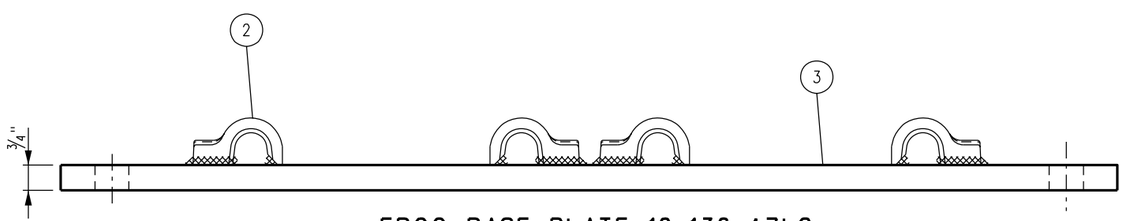

FROG BASE PLATE 10-136-47LC

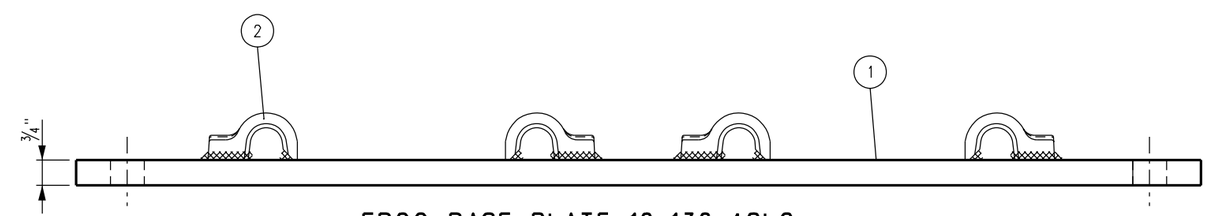

FROG BASE PLATE 10-136-48LC

NOTES:

1. I.D. CHARACTERS TO BE 1/2" MINIMUM HEIGHT CLEARLY STAMPED AS SHOWN.
2. WELDS TO BE DRESSED FLUSH WITH SHOULDER & NOT TO PROTRUDE INTO RAIL SEAT.
3. SEE ES2803-42 FOR SHOULDER WELDING DETAILS.

REV.	DATE	DESCRIPTION	DES.	ENG.
X	XX-XX-XX	REVISION	XX	XX

DRAWN BY: HDR DATE: 03/31/2011

ASSISTANT DIRECTOR: STANDARDS & DESIGN

DIRECTOR OF ENGINEERING AND CONSTRUCTION

SCRRA ENGINEERING STANDARDS ARE INTENDED FOR SCRRA APPROVED USES ONLY. FOR NON-SCRRA APPROVED USES: SCRRA SHALL NOT BE RESPONSIBLE FOR THE ACCURACY OR COMPLETENESS OF THE DATA OR INFORMATION CONTAINED HEREIN. THE SELECTION AND USE OF THESE STANDARDS IS THE SOLE RESPONSIBILITY OF THE USER AND SHOULD NOT BE USED WITHOUT CONSULTING A REGISTERED PROFESSIONAL ENGINEER. ALL WARRANTIES AND REPRESENTATIONS OF ANY KIND ARE DISCLAIMED. ANYONE MAKING USE OF THIS INFORMATION AGREES THAT IT ASSUMES ALL LIABILITY ARISING FROM SUCH USE. NO PART OF THESE STANDARDS SHOULD BE REPRODUCED OR DISTRIBUTED IN ANY FORM OR BY ANY MEANS WITHOUT THE PRIOR WRITTEN PERMISSION OF SCRRA. ALL RIGHTS RESERVED.

METROLINK®
SOUTHERN CALIFORNIA REGIONAL RAIL AUTHORITY
ONE GATEWAY PLAZA, 12TH FLOOR, L. A., CA. 90012

ENGINEERING STANDARDS

NO 10 WSM FROG LH
FROG BASE PLATES 10–47LC AND 10–48LC
CONCRETE TIES–136 LB RE RAIL

STANDARD 2803
SCALE: NTS
REVISION –
SHEET 1 OF 1
CADD FILE: ES2803–49

BILL OF MATERIAL				
ITEM	QTY	DESCRIPTION	DWG NO	SCRRA PART NO
1	1	GUARD BAR, UIC33 1200 SERIES x 15'-0" LONG	-	
2	7	GUARD RAIL PLATE ASSEMBLY, RAISED 1", LH SKEWED	-	
3	7	H-CLAMP	-	
4	21	CLIP, PANDROL, E2055	-	
5	7	LOCKING BLOCK	-	
6	28	SHIM, 1/8" x 3" x 6"	-	

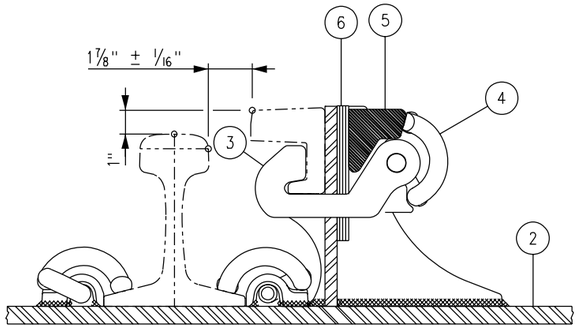

PARTIAL SECTION (A)
GUARD RAIL HARDWARE ASSEMBLY

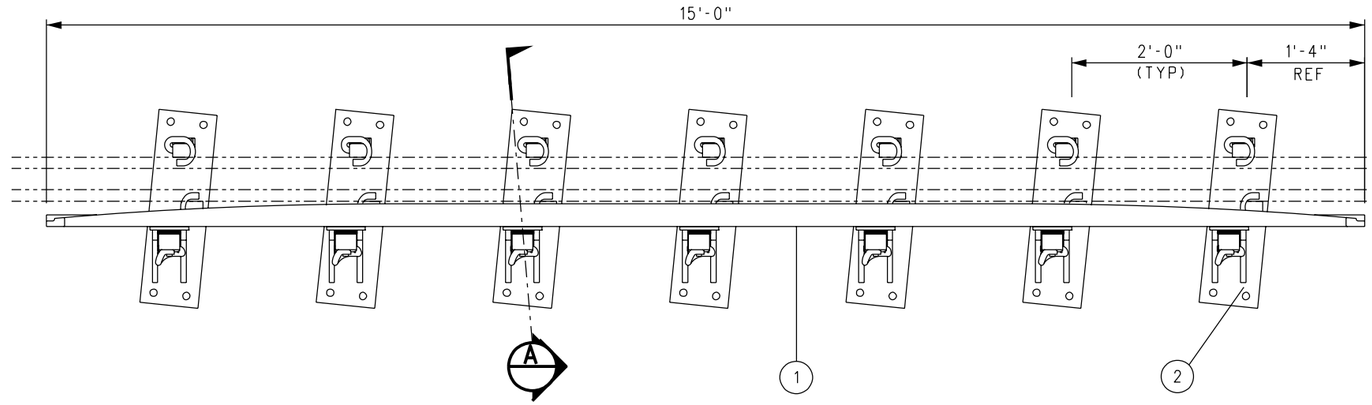

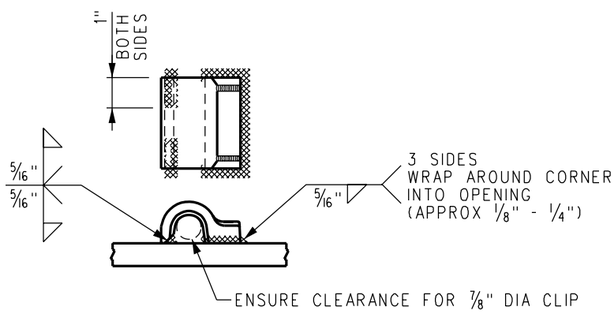

FORGED SHOULDER WELDING DETAIL

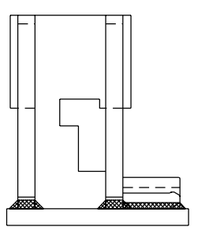

SECTION (B)

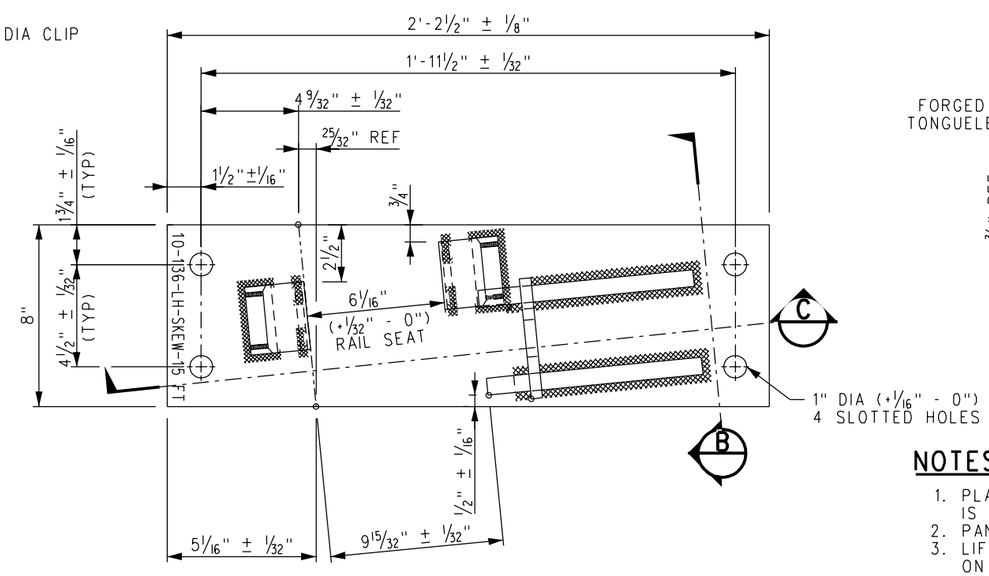

GUARD RAIL PLATE ASSEMBLY

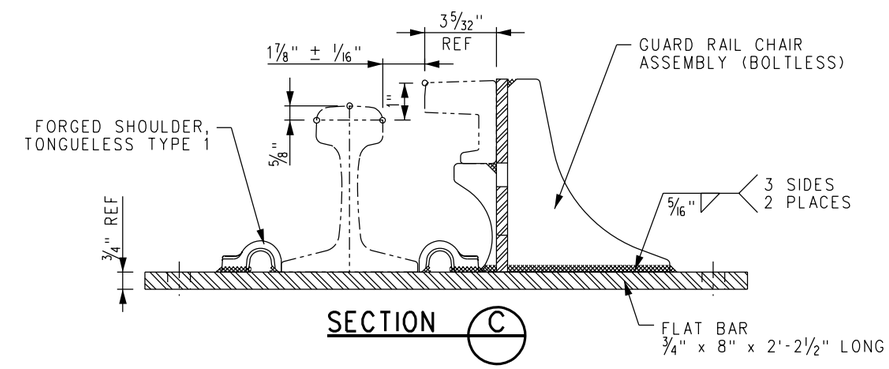

SECTION (C)

NOTES:

1. PLATE SPACING IS SET FOR SHIPPING ONLY. FINAL PLATE SPACING IS TO BE DETERMINED BY TIE SPACING AT TIME OF INSTALLATION.
2. PANDROL SPRING CLIPS (E2055) TO BE INCLUDED IN ASSEMBLY.
3. LIFT POINTS AND WEIGHT OF ASSEMBLY TO BE MARKED ON HEAD OF WEAR BAR WITH WHITE PAINT.
4. PLATE IS TO BE STAMPED WITH PLATE I.D. WITH 1/2" HIGH CHARACTERS AS SHOWN.
5. GRIND AWAY CORNER OF PANDROL SHOULDER TO CLEAR FOOT OF CHAIR ASSEMBLY.
6. SEE ES2800-50 FOR STRAIGHT SIDE GUARD RAIL.

REV.	DATE	DESCRIPTION	DES.	ENG.
X	XX-XX-XX	REVISION	XX	XX

DRAWN BY: HDR DATE: 03/31/2011

ASSISTANT DIRECTOR: STANDARDS & DESIGN

DIRECTOR OF ENGINEERING AND CONSTRUCTION

SCRRA ENGINEERING STANDARDS ARE INTENDED FOR SCRRA APPROVED USES ONLY. FOR NON-SCRRA APPROVED USES: SCRRA SHALL NOT BE RESPONSIBLE FOR THE ACCURACY OR COMPLETENESS OF THE DATA OR INFORMATION CONTAINED HEREIN. THE SELECTION AND USE OF THESE STANDARDS IS THE SOLE RESPONSIBILITY OF THE USER AND SHOULD NOT BE USED WITHOUT CONSULTING A REGISTERED PROFESSIONAL ENGINEER. ALL WARRANTIES AND REPRESENTATIONS OF ANY KIND ARE DISCLAIMED. ANYONE MAKING USE OF THIS INFORMATION AGREES THAT IT ASSUMES ALL LIABILITY ARISING FROM SUCH USE. NO PART OF THESE STANDARDS SHOULD BE REPRODUCED OR DISTRIBUTED IN ANY FORM OR BY ANY MEANS WITHOUT THE PRIOR WRITTEN PERMISSION OF SCRRA. ALL RIGHTS RESERVED.

METROLINK®
SOUTHERN CALIFORNIA REGIONAL RAIL AUTHORITY
ONE GATEWAY PLAZA, 12TH FLOOR, L. A., CA. 90012

ENGINEERING STANDARDS
NO 10 GUARD RAIL ASSEMBLY,
LH SKEWED WITH PLATES
15'-0" LONG, BOLTLESS, RAISED 1"
CONCRETE TIES – 136 LB RE RAIL, 1-7/8" FLANGEWAY

STANDARD: 2803
SCALE: NTS
REVISION: –
SHEET: 1 OF 1
CADD FILE: ES2803-51

BILL OF MATERIAL				
ITEM	QTY	DESCRIPTION	DWG NO	SCRRA PART NO
1	1	GUARD BAR, UIC33 1200 SERIES x 15'-0" LONG	-	
2	7	GUARD RAIL PLATE ASSEMBLY, RAISED 1", RH SKEWED	-	
3	7	H-CLAMP	-	
4	21	CLIP, PANDROL, E2055	-	
5	7	LOCKING BLOCK	-	
6	28	SHIM, 1/8" x 3" x 6"	-	

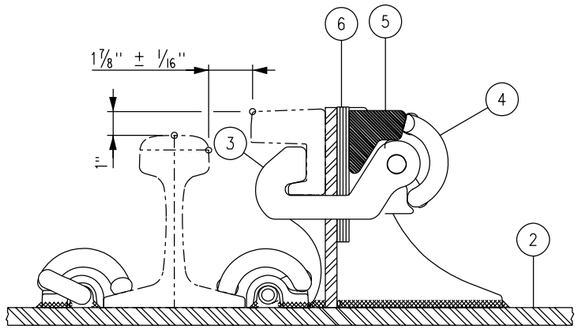

PARTIAL SECTION (A)
GUARD RAIL HARDWARE ASSEMBLY

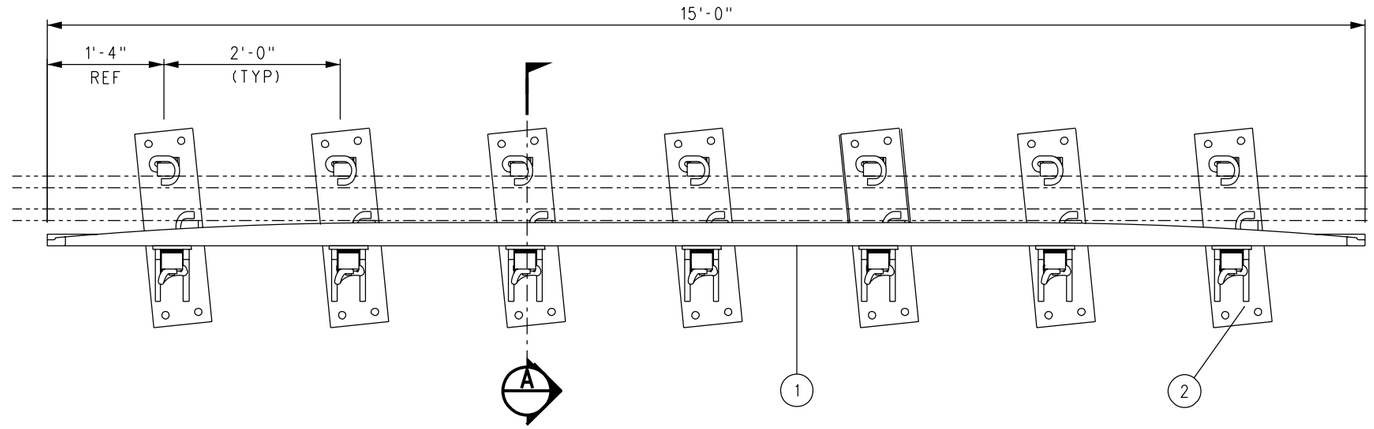

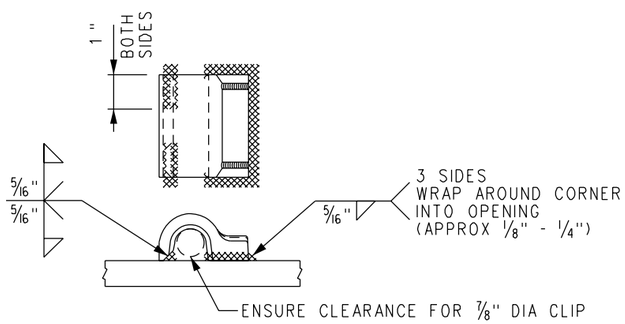

FORGED SHOULDER WELDING DETAIL

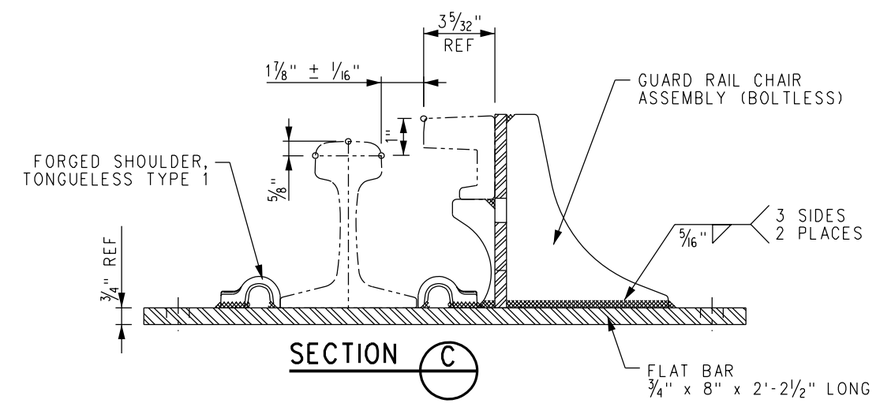

SECTION (C)

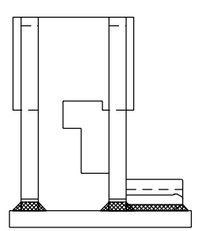

SECTION (B)

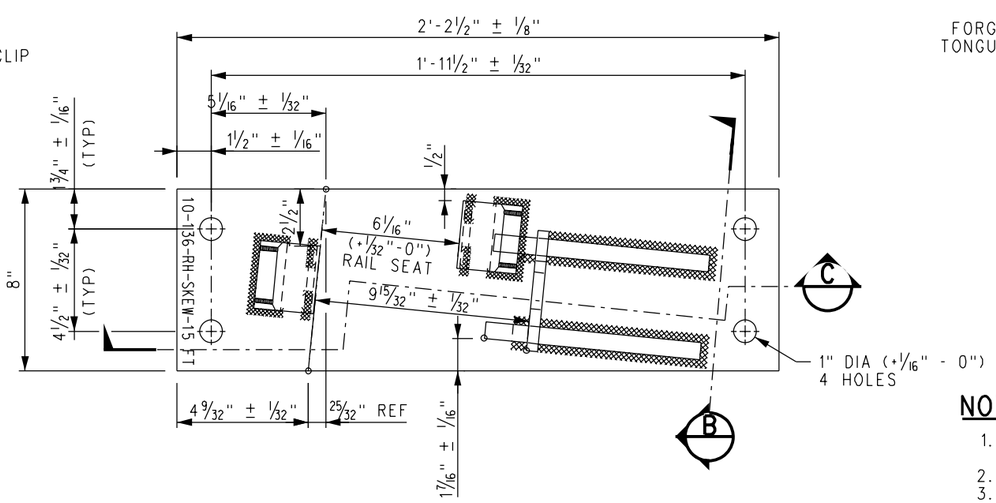

GUARD RAIL PLATE ASSEMBLY

NOTES:

1. PLATE SPACING IS SET FOR SHIPPING ONLY. FINAL PLATE SPACING IS TO BE DETERMINED BY TIE SPACING AT TIME OF INSTALLATION.
2. PANDROL SPRING CLIPS (E2055) TO BE INCLUDED IN ASSEMBLY.
3. LIFT POINTS AND WEIGHT OF ASSEMBLY TO BE MARKED ON HEAD OF WEAR BAR WITH WHITE PAINT.
4. PLATE IS TO BE STAMPED WITH PLATE I.D. WITH 1/2" HIGH CHARACTERS AS SHOWN.
5. GRIND AWAY CORNER OF PANDROL SHOULDER TO CLEAR FOOT OF CHAIR ASSEMBLY.
6. SEE ES2800-50 FOR STRAIGHT SIDE GUARD RAIL.

REV.	DATE	DESCRIPTION	DES.	ENG.
X	XX-XX-XX	REVISION	XX	XX

DRAWN BY: HDR DATE: 03/31/2011

ASSISTANT DIRECTOR: STANDARDS & DESIGN

DIRECTOR OF ENGINEERING AND CONSTRUCTION

SCRRA ENGINEERING STANDARDS ARE INTENDED FOR SCRRA APPROVED USES ONLY. FOR NON-SCRRA APPROVED USES:
SCRRA SHALL NOT BE RESPONSIBLE FOR THE ACCURACY OR COMPLETENESS OF THE DATA OR INFORMATION CONTAINED HEREIN. THE SELECTION AND USE OF THESE STANDARDS IS THE SOLE RESPONSIBILITY OF THE USER AND SHOULD NOT BE USED WITHOUT CONSULTING A REGISTERED PROFESSIONAL ENGINEER. ALL WARRANTIES AND REPRESENTATIONS OF ANY KIND ARE DISCLAIMED. ANYONE MAKING USE OF THIS INFORMATION AGREES THAT IT ASSUMES ALL LIABILITY ARISING FROM SUCH USE. NO PART OF THESE STANDARDS SHOULD BE REPRODUCED OR DISTRIBUTED IN ANY FORM OR BY ANY MEANS WITHOUT THE PRIOR WRITTEN PERMISSION OF SCRRA. ALL RIGHTS RESERVED.

METROLINK®
SOUTHERN CALIFORNIA REGIONAL RAIL AUTHORITY
ONE GATEWAY PLAZA, 12TH FLOOR, L. A., CA. 90012

ENGINEERING STANDARDS

NO 10 GUARD RAIL ASSEMBLY,
RH SKEWED WITH PLATES
15'-0" LONG, BOLTLESS, RAISED 1"
CONCRETE TIES – 136 LB RE RAIL, 1-7/8" FLANGEWAY

STANDARD: 2803
SCALE: NTS
REVISION: –
SHEET: 1 OF 1
CADD FILE: ES2803-52

BILL OF MATERIAL					
ITEM	QTY FOR LOCK1-LH	QTY FOR LOCK2-LH	DESCRIPTION	DWG NO	SCRRA PART NO
1	1	1	FLAT BAR, ASTM A36, 3/4" x 8" x 2'-11" LONG	-	
2	2	2	FILLER PLATE - 1" x 8" x 3"	-	
3	3	3	BOLT HEX 7/8"-9UNC-2A x 3 1/2" LONG	-	
4	3	3	NUT HEAVY HEX 7/8" UNC J995-GR8	-	
5	3	3	WASHER FLAT 7/8" DIA BOLT	-	
6	3	3	WASHER SPRING 7/8" SQ EDGE	-	

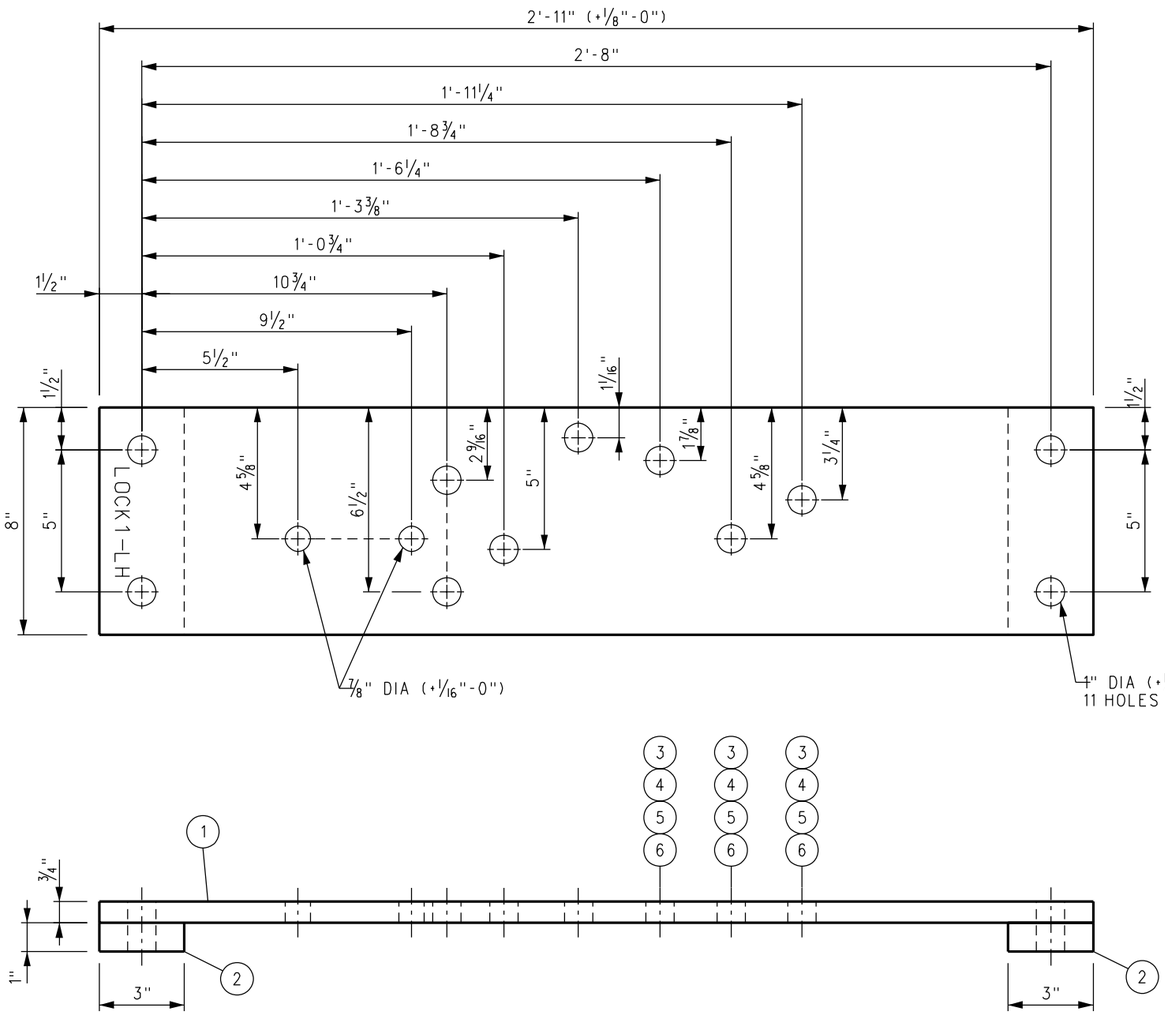

LOCK1-LH

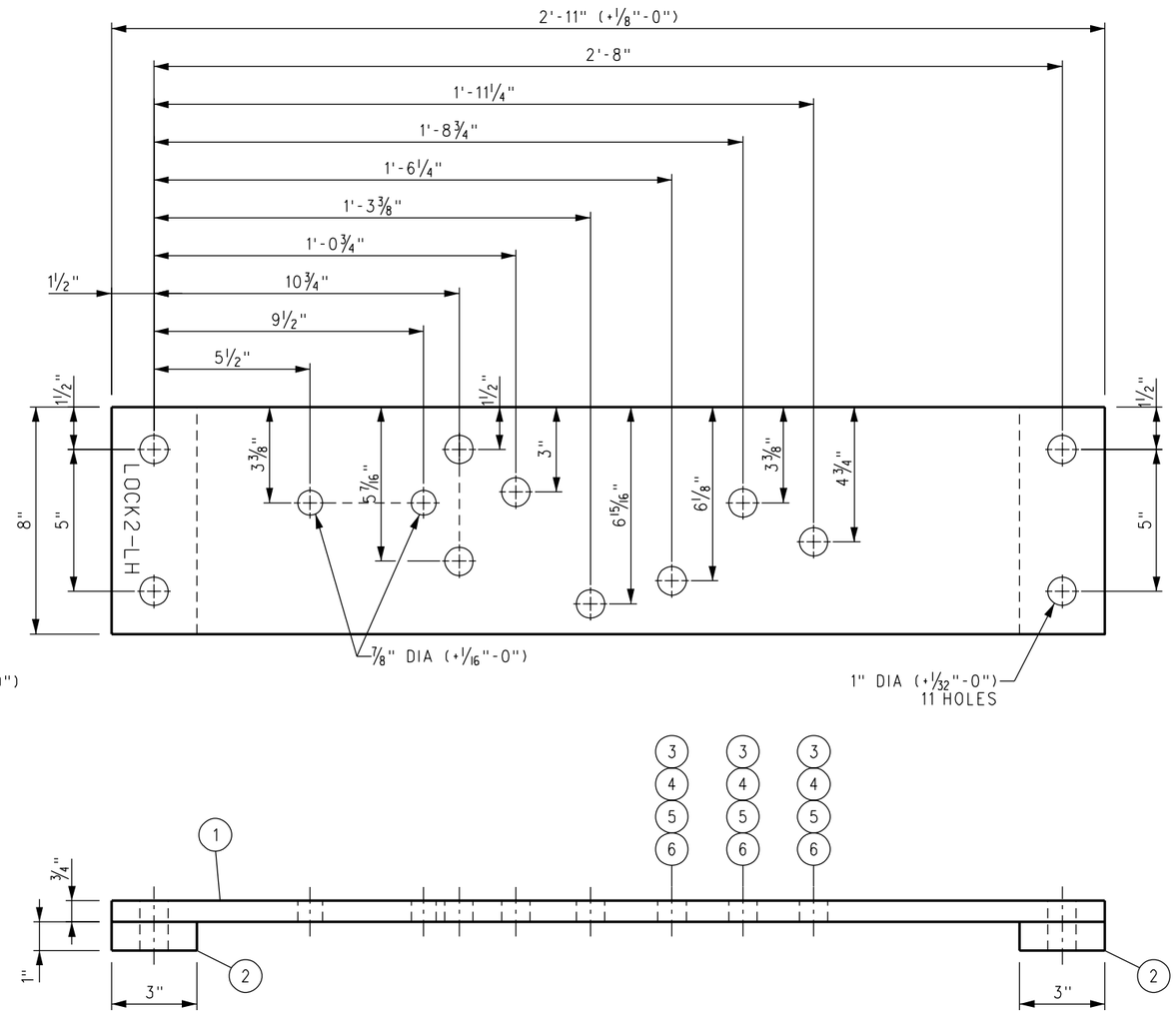

LOCK2-LH

NOTES:

1. ALL TOLERANCES ± 1/32" UNLESS OTHERWISE SPECIFIED.
2. STAMP PLATE I.D. CLEARLY AS SHOWN.
3. HARDWARE TO COME FULL ATTACHED TO PLATE.

REV.	DATE	DESCRIPTION	DES.	ENG.
X	XX-XX-XX	REVISION	XX	XX

DRAWN BY: HDR DATE: 03/31/2011

ASSISTANT DIRECTOR: STANDARDS & DESIGN

DIRECTOR OF ENGINEERING AND CONSTRUCTION

SCRRA ENGINEERING STANDARDS ARE INTENDED FOR SCRRA APPROVED USES ONLY. FOR NON-SCRRA APPROVED USES: SCRRA SHALL NOT BE RESPONSIBLE FOR THE ACCURACY OR COMPLETENESS OF THE DATA OR INFORMATION CONTAINED HEREIN. THE SELECTION AND USE OF THESE STANDARDS IS THE SOLE RESPONSIBILITY OF THE USER AND SHOULD NOT BE USED WITHOUT CONSULTING A REGISTERED PROFESSIONAL ENGINEER. ALL WARRANTIES AND REPRESENTATIONS OF ANY KIND ARE DISCLAIMED. ANYONE MAKING USE OF THIS INFORMATION AGREES THAT IT ASSUMES ALL LIABILITY ARISING FROM SUCH USE. NO PART OF THESE STANDARDS SHOULD BE REPRODUCED OR DISTRIBUTED IN ANY FORM OR BY ANY MEANS WITHOUT THE PRIOR WRITTEN PERMISSION OF SCRRA. ALL RIGHTS RESERVED.

METROLINK®

SOUTHERN CALIFORNIA REGIONAL RAIL AUTHORITY
ONE GATEWAY PLAZA, 12TH FLOOR, L. A., CA. 90012

ENGINEERING STANDARDS

LH SWITCH STAND ADAPTER PLATES
FOR 36E SWITCH STAND
NO 10-136 LB RE SPRING FROG
FOR TURNOUT WITH ELECTRIC LOCK

STANDARD 2803
SCALE: NTS
REVISION –
SHEET 1 OF 1
CADD FILE: ES2803-56

NOTES:

1. ALL TOLERANCES ± 1/32" UNLESS OTHERWISE SPECIFIED.
2. STAMP PLATE I.D. CLEARLY AS SHOWN.
3. HARDWARE TO COME FULL ATTACHED TO PLATE.

BILL OF MATERIAL

ITEM	QTY FOR LOCK1-RH	QTY FOR LOCK2-RH	DESCRIPTION	DWG NO	SCRRA PART NO
1	1	1	FLAT BAR, ASTM A36, 3/4" x 8" x 2'-11" LONG	-	
2	2	2	FILLER PLATE - 1" x 8" x 3"	-	
3	3	3	BOLT HEX 7/8"-9UNC-2A x 3 1/2" LONG	-	
4	3	3	NUT HEAVY HEX 7/8" UNC J995-GR8	-	
5	3	3	WASHER FLAT 7/8" DIA BOLT	-	
6	3	3	WASHER SPRING 7/8" SQ EDGE	-	

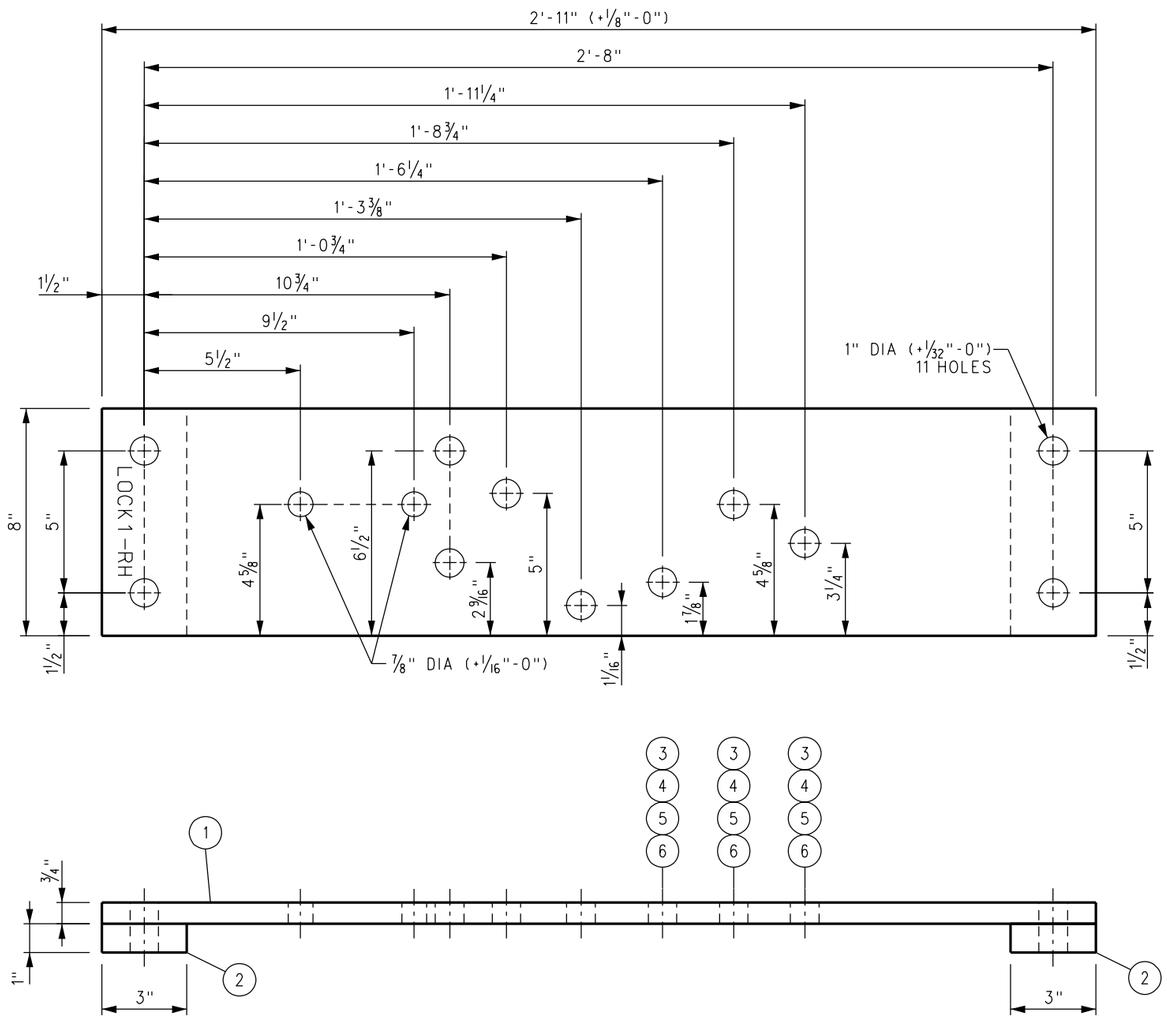

LOCK1-RH

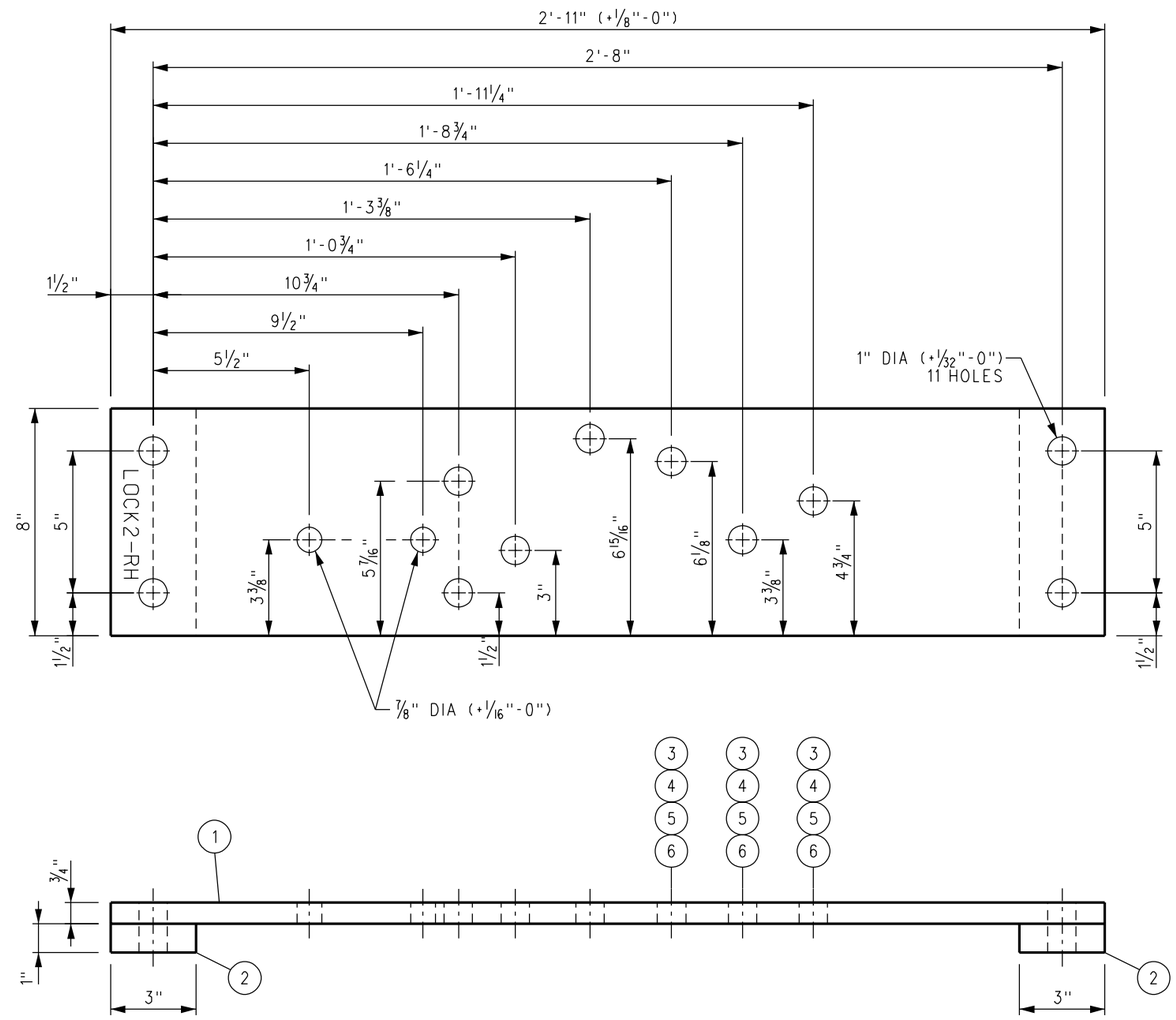

LOCK2-RH

REV.	DATE	DESCRIPTION	DES.	ENG.
X	XX-XX-XX	REVISION	XX	XX

DRAWN BY: HDR DATE: 03/31/2011

ASSISTANT DIRECTOR: STANDARDS & DESIGN

DIRECTOR OF ENGINEERING AND CONSTRUCTION

SCRRA ENGINEERING STANDARDS ARE INTENDED FOR SCRRA APPROVED USES ONLY. FOR NON-SCRRA APPROVED USES:
SCRRA SHALL NOT BE RESPONSIBLE FOR THE ACCURACY OR COMPLETENESS OF THE DATA OR INFORMATION CONTAINED HEREIN. THE SELECTION AND USE OF THESE STANDARDS IS THE SOLE RESPONSIBILITY OF THE USER AND SHOULD NOT BE USED WITHOUT CONSULTING A REGISTERED PROFESSIONAL ENGINEER. ALL WARRANTIES AND REPRESENTATIONS OF ANY KIND ARE DISCLAIMED. ANYONE MAKING USE OF THIS INFORMATION AGREES THAT IT ASSUMES ALL LIABILITY ARISING FROM SUCH USE. NO PART OF THESE STANDARDS SHOULD BE REPRODUCED OR DISTRIBUTED IN ANY FORM OR BY ANY MEANS WITHOUT THE PRIOR WRITTEN PERMISSION OF SCRRA. ALL RIGHTS RESERVED.

METROLINK®

SOUTHERN CALIFORNIA REGIONAL RAIL AUTHORITY
ONE GATEWAY PLAZA, 12TH FLOOR, L. A., CA. 90012

ENGINEERING STANDARDS

RH SWITCH STAND ADAPTER PLATES
FOR 36E SWITCH STAND
NO 10-136 LB RE SPRING FROG
FOR TURNOUT WITH ELECTRIC LOCK

STANDARD: 2803
SCALE: NTS
REVISION: –
SHEET: 1 OF 1
CADD FILE: ES2803-57

NOTE: CENTER TO CENTER PIN DIMENSION REQUIRED FOR 4 3/4" THROW

ROD #	C-C PIN DEMINSION
1	3'-3 15/16"
2	3'-4 3/16"
3	3'-5 9/16"

BILL OF MATERIAL

ITEM	QTY	DESCRIPTION	DWG NO	SCRRA PART NO
1	1	FRONT ROD FOR POINT DETECTOR/LOCK RODS NO 10-136-1	ES2803-73	
2	1	SWITCH ROD NO 10-136-2	ES2803-73	
3	1	SWITCH ROD NO 10-136-3	ES2803-73	
4	2	ROD POINT BRACKET ASSEMBLY, 136 LB RE HOLES @ 2 7/8" ABOVE RAIL BASE	-	
5	1	ROD POINT BRACKET FOR HST, ANTI-ROLL, HOLES @ 2 7/8" ABOVE RAIL BASE, LH	-	
6	1	ROD POINT BRACKET FOR HST, ANTI-ROLL, HOLES @ 2 7/8" ABOVE RAIL BASE, RH	-	
7	2	ROD POINT BRACKET ASSY	-	
8	1	POINT DETECTOR	-	
9	1	LOCK ROD, CONNECTOR, FOR US&S M23 SWITCH MACHINE	-	
10	1	DROP LUG FOR US&S M23 SWITCH MACHINE DRIVE BAR	-	
11	1	BOLT, 7/8" DIA x 3" LONG, DRILLED 2 9/16" BELOW HEAD, HEAVY HEX, GR 5	-	
12	1	NUT, 7/8" DIA SLOTTED HEAVY HEX, GR 8	-	
13	1	SPRING WASHER, 7/8" DIA	-	
14	1	COTTER PIN, 3/16" DIA x 1 3/4" LONG	-	

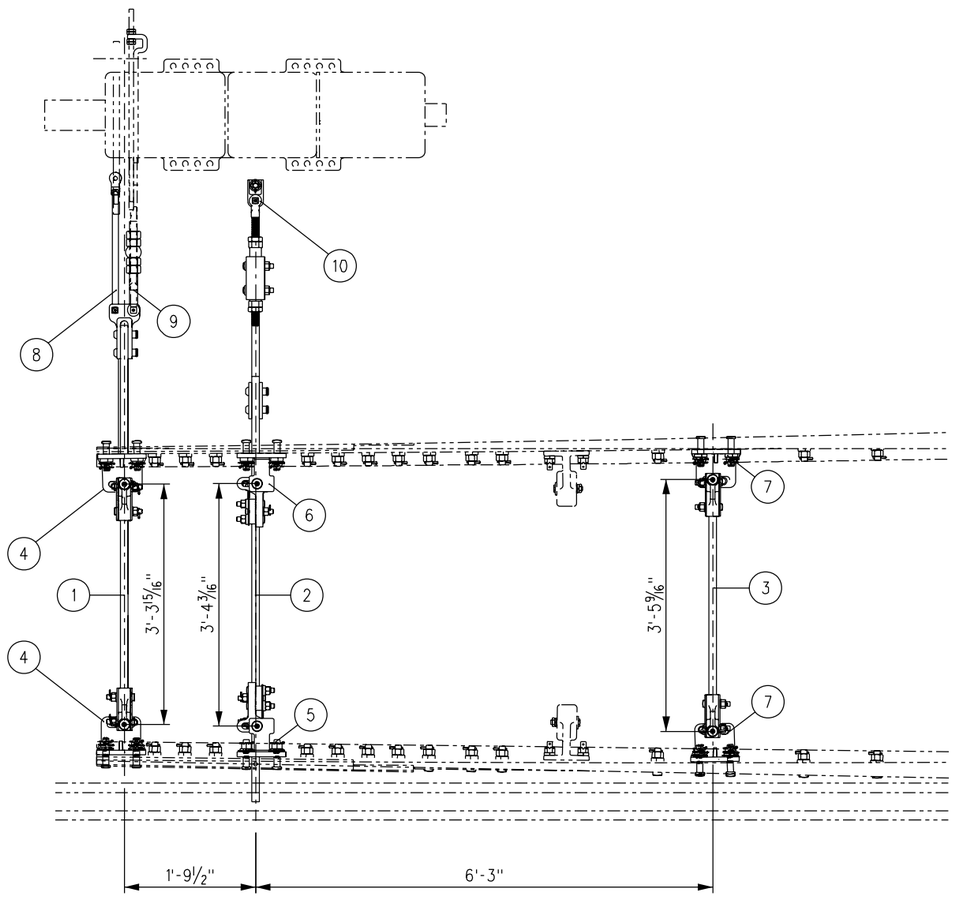

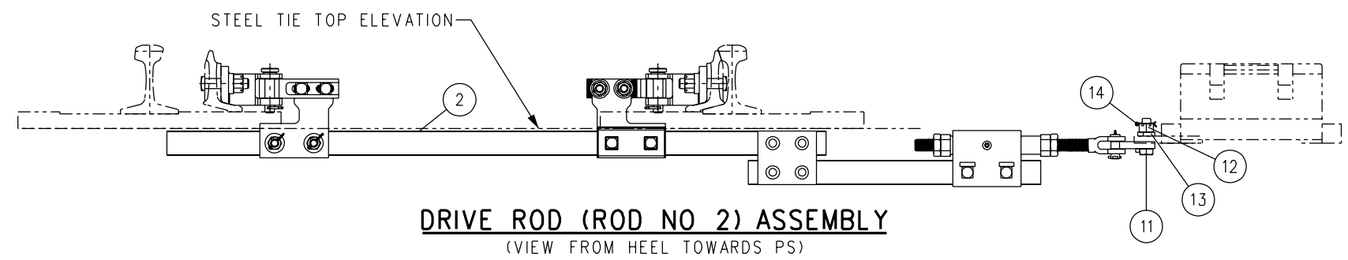

DRIVE ROD (ROD NO 2) ASSEMBLY

(VIEW FROM HEEL TOWARDS PS)

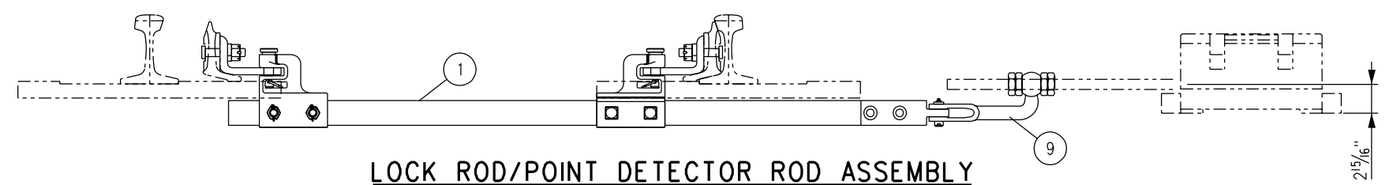

LOCK ROD/POINT DETECTOR ROD ASSEMBLY

LOCK ROD CONNECTION SHOWN
(VIEW FROM HEEL TOWARDS PS)

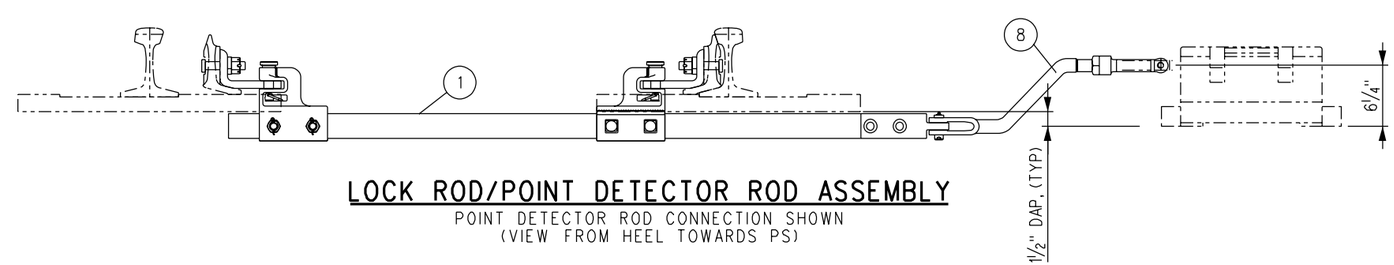

LOCK ROD/POINT DETECTOR ROD ASSEMBLY

POINT DETECTOR ROD CONNECTION SHOWN
(VIEW FROM HEEL TOWARDS PS)

REV.	DATE	DESCRIPTION	DES.	ENG.
X	XX-XX-XX	REVISION	XX	XX

DRAWN BY: HDR DATE: 03/31/2011

ASSISTANT DIRECTOR: STANDARDS & DESIGN

DIRECTOR OF ENGINEERING AND CONSTRUCTION

SCRRA ENGINEERING STANDARDS ARE INTENDED FOR SCRRA APPROVED USES ONLY. FOR NON-SCRRA APPROVED USES:
SCRRA SHALL NOT BE RESPONSIBLE FOR THE ACCURACY OR COMPLETENESS OF THE DATA OR INFORMATION CONTAINED HEREIN. THE SELECTION AND USE OF THESE STANDARDS IS THE SOLE RESPONSIBILITY OF THE USER AND SHOULD NOT BE USED WITHOUT CONSULTING A REGISTERED PROFESSIONAL ENGINEER. ALL WARRANTIES AND REPRESENTATIONS OF ANY KIND ARE DISCLAIMED. ANYONE MAKING USE OF THIS INFORMATION AGREES THAT IT ASSUMES ALL LIABILITY ARISING FROM SUCH USE. NO PART OF THESE STANDARDS SHOULD BE REPRODUCED OR DISTRIBUTED IN ANY FORM OR BY ANY MEANS WITHOUT THE PRIOR WRITTEN PERMISSION OF SCRRA. ALL RIGHTS RESERVED.

METROLINK®

SOUTHERN CALIFORNIA REGIONAL RAIL AUTHORITY
ONE GATEWAY PLAZA, 12TH FLOOR, L. A., CA. 90012

ENGINEERING STANDARDS

HOLLOW STEEL TIE RODDING ASSEMBLY
SWITCH MACHINE ON LEFT HAND SIDE
NO 10-136 LB RE SPRING FROG TURNOUT

STANDARD 2803
SCALE: NTS
REVISION –
SHEET 1 OF 1
CADD FILE: ES2803-71

NOTE: CENTER TO CENTER PIN DIMENSION REQUIRED FOR 4¾" THROW

ROD #	C-C PIN DEMINSION
1	3'-3 15/16"
2	3'-4 3/16"
3	3'-5 9/16"

BILL OF MATERIAL

ITEM	QTY	DESCRIPTION	DWG NO	SCRRA PART NO
1	1	FRONT ROD FOR POINT DETECTOR/LOCK RODS NO 10-136-1	ES2803-73	
2	1	SWITCH ROD NO 10-136-2	ES2803-73	
3	1	SWITCH ROD NO 10-136-3	ES2803-73	
4	2	ROD POINT BRACKET ASSEMBLY, 136 LB RE HOLES @ 2⅞" ABOVE RAIL BASE	-	
5	1	ROD POINT BRACKET FOR HST, ANTI-ROLL, HOLES @ 2⅞" ABOVE RAIL BASE, LH	-	
6	1	ROD POINT BRACKET FOR HST, ANTI-ROLL, HOLES @ 2⅞" ABOVE RAIL BASE, RH	-	
7	2	ROD POINT BRACKET ASSY	-	
8	1	POINT DETECTOR	-	
9	1	LOCK ROD, CONNECTOR, FOR US&S M23 SWITCH MACHINE	-	
10	1	DROP LUG FOR US&S M23 SWITCH MACHINE DRIVE BAR	-	
11	1	BOLT, ⅞" DIA x 3" LONG, DRILLED 2 9/16" BELOW HEAD, HEAVY HEX, GR 5	-	
12	1	NUT, ⅞" DIA SLOTTED HEAVY HEX, GR 8	-	
13	1	SPRING WASHER, ⅞" DIA	-	
14	1	COTTER PIN, 3/16" DIA x 1¾" LONG	-	

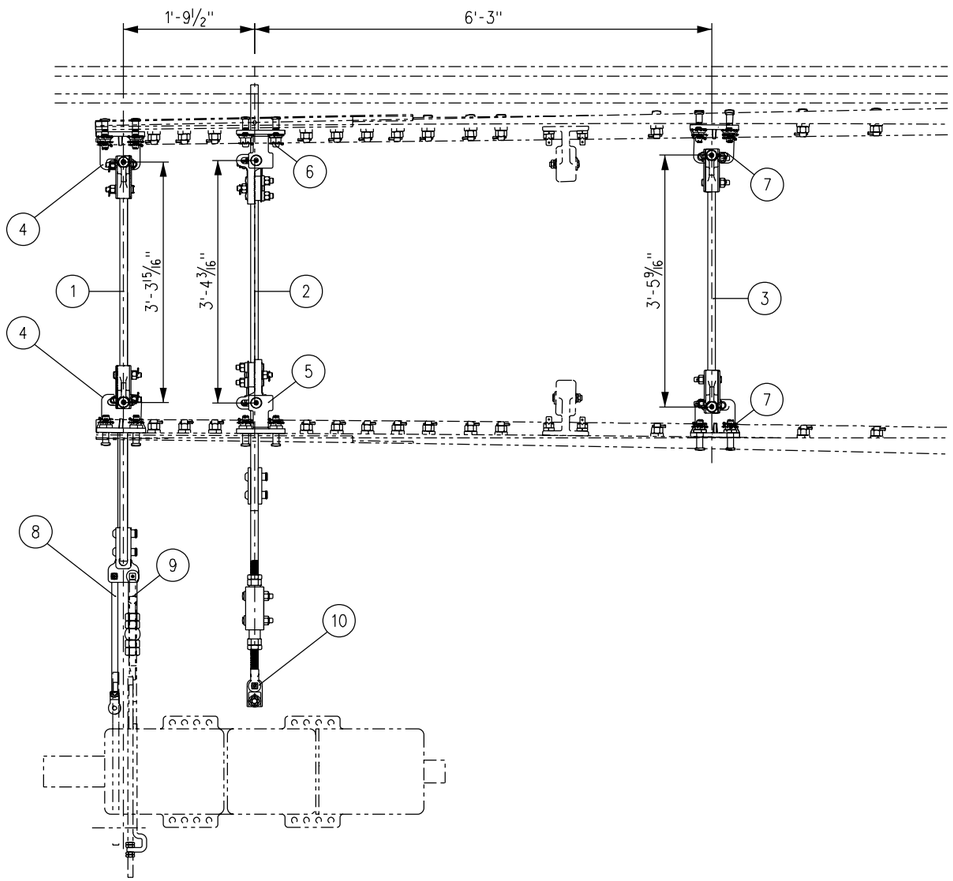

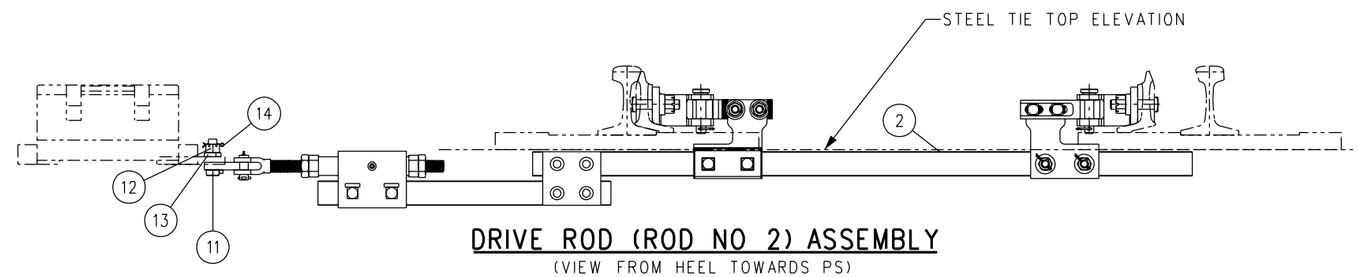

DRIVE ROD (ROD NO 2) ASSEMBLY

(VIEW FROM HEEL TOWARDS PS)

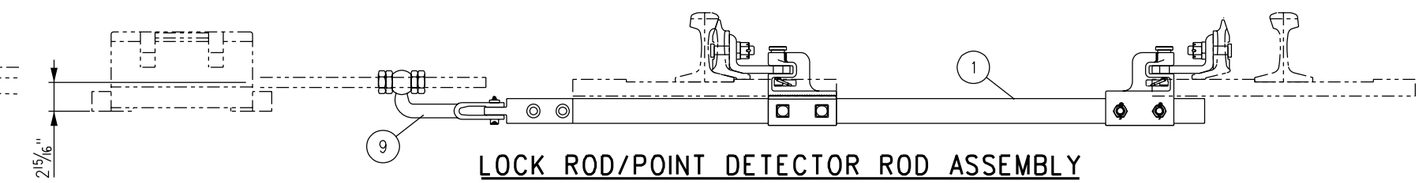

LOCK ROD/POINT DETECTOR ROD ASSEMBLY

LOCK ROD CONNECTION SHOWN
(VIEW FROM HEEL TOWARDS PS)

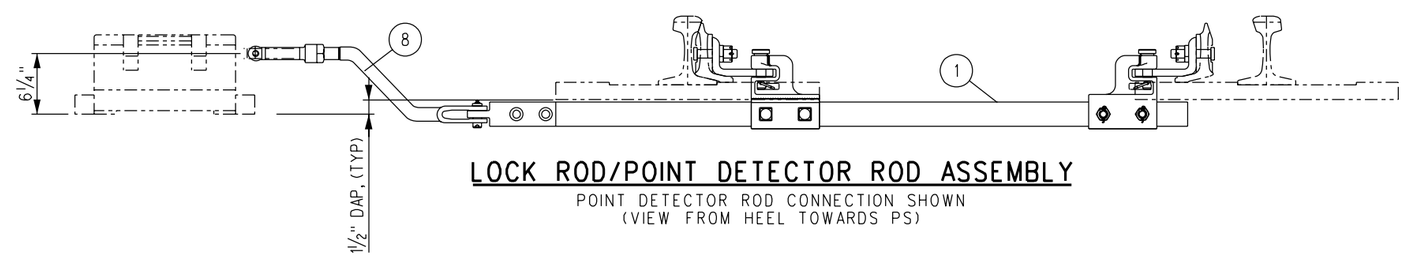

LOCK ROD/POINT DETECTOR ROD ASSEMBLY

POINT DETECTOR ROD CONNECTION SHOWN
(VIEW FROM HEEL TOWARDS PS)

REV.	DATE	DESCRIPTION	DES.	ENG.
X	XX-XX-XX	REVISION	XX	XX

DRAWN BY: HDR DATE: 03/31/2011

ASSISTANT DIRECTOR: STANDARDS & DESIGN

DIRECTOR OF ENGINEERING AND CONSTRUCTION

SCRRA ENGINEERING STANDARDS ARE INTENDED FOR SCRRA APPROVED USES ONLY. FOR NON-SCRRA APPROVED USES:
SCRRA SHALL NOT BE RESPONSIBLE FOR THE ACCURACY OR COMPLETENESS OF THE DATA OR INFORMATION CONTAINED HEREIN. THE SELECTION AND USE OF THESE STANDARDS IS THE SOLE RESPONSIBILITY OF THE USER AND SHOULD NOT BE USED WITHOUT CONSULTING A REGISTERED PROFESSIONAL ENGINEER. ALL WARRANTIES AND REPRESENTATIONS OF ANY KIND ARE DISCLAIMED. ANYONE MAKING USE OF THIS INFORMATION AGREES THAT IT ASSUMES ALL LIABILITY ARISING FROM SUCH USE. NO PART OF THESE STANDARDS SHOULD BE REPRODUCED OR DISTRIBUTED IN ANY FORM OR BY ANY MEANS WITHOUT THE PRIOR WRITTEN PERMISSION OF SCRRA. ALL RIGHTS RESERVED.

METROLINK®

SOUTHERN CALIFORNIA REGIONAL RAIL AUTHORITY
ONE GATEWAY PLAZA, 12TH FLOOR, L. A., CA. 90012

ENGINEERING STANDARDS

HOLLOW STEEL TIE RODDING ASSEMBLY
SWITCH MACHINE ON RIGHT HAND SIDE
NO 10–136 LB RE SPRING FROG TURNOUT

STANDARD 2803
SCALE: NTS
REVISION –
SHEET 1 OF 1
CADD FILE: ES2803–72

BILL OF MATERIAL FOR SWITCH ROD 10-136-1				
ITEM	QTY	DESCRIPTION	DWG NO	SCRRA PART NO
1	1	SWITCH ROD 10-136-1	-	
2	2	SWITCH CLIP ASSEMBLY, ADJUSTABLE, FOR HOLLOW TIE COMPOSITE RODS	-	
3	1	CONNECTOR LUG FOR POINT DETECTOR/LOCK RODS	-	
4	2	HUCK BOLT, 3/4" DIA (C50LR-BR24-36)	-	
5	2	HUCK COLLAR, 3/4" DIA (LC-2R24B)	-	

BILL OF MATERIAL FOR SWITCH ROD 10-136-2				
ITEM	QTY	DESCRIPTION	DWG NO	SCRRA PART NO
1	1	SWITCH ROD HALF 10-136-2A	-	
2	1	SWITCH ROD HALF 2-B	-	
3	2	CLIP/LUG ASSEMBLY, HST SWITCH, ANTI-ROLLOVER DESIGN	-	
4	1	ROD THROW FRONT AND BASKET ASSY, FOR HOLLOW TIE	-	
5	2	SPLICE PLATE	-	
6	4	HUCK BOLT, 3/4" DIA (C50LR-BR24-36)	-	
7	4	HUCK COLLAR, 3/4" DIA (LC-2R24B)	-	

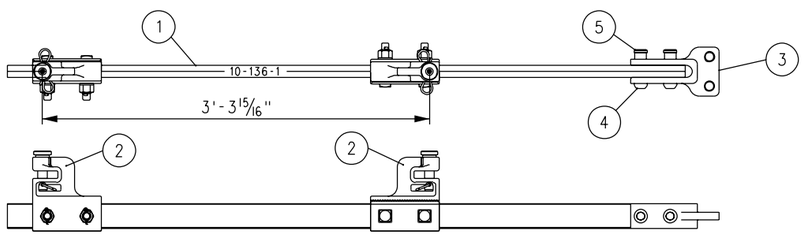

SWITCH ROD ASSEMBLY 10-136-1

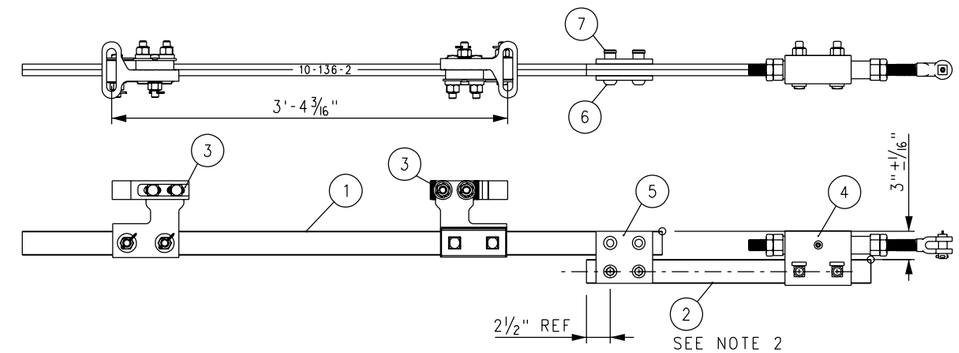

SWITCH ROD ASSEMBLY 10-136-2

BILL OF MATERIAL FOR SWITCH ROD 10-136-3				
ITEM	QTY	DESCRIPTION	DWG NO	SCRRA PART NO
1	1	SWITCH ROD 10-136-3	-	
2	2	SWITCH CLIP ASSEMBLY, ADJUSTABLE, FOR HOLLOW TIE	-	

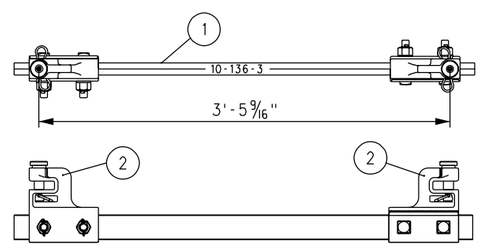

SWITCH ROD ASSEMBLY 10-136-3

NOTES:

1. ROD IDENTIFICATION TO BE ENGRAVED ON ROD CLEARLY AS SHOWN, 3/8" MIN HEIGHT.
2. SWITCH RODS MUST BE PARALLEL WITHIN 1/16" OVER LENGTH OF 2-B ROD.

REV.	DATE	DESCRIPTION	DES.	ENG.
X	XX-XX-XX	REVISION	XX	XX

DRAWN BY: HDR DATE: 03/31/2011

ASSISTANT DIRECTOR: STANDARDS & DESIGN

DIRECTOR OF ENGINEERING AND CONSTRUCTION

SCRRA ENGINEERING STANDARDS ARE INTENDED FOR SCRRA APPROVED USES ONLY. FOR NON-SCRRA APPROVED USES:
SCRRA SHALL NOT BE RESPONSIBLE FOR THE ACCURACY OR COMPLETENESS OF THE DATA OR INFORMATION CONTAINED HEREIN. THE SELECTION AND USE OF THESE STANDARDS IS THE SOLE RESPONSIBILITY OF THE USER AND SHOULD NOT BE USED WITHOUT CONSULTING A REGISTERED PROFESSIONAL ENGINEER. ALL WARRANTIES AND REPRESENTATIONS OF ANY KIND ARE DISCLAIMED. ANYONE MAKING USE OF THIS INFORMATION AGREES THAT IT ASSUMES ALL LIABILITY ARISING FROM SUCH USE. NO PART OF THESE STANDARDS SHOULD BE REPRODUCED OR DISTRIBUTED IN ANY FORM OR BY ANY MEANS WITHOUT THE PRIOR WRITTEN PERMISSION OF SCRRA. ALL RIGHTS RESERVED.

METROLINK®
SOUTHERN CALIFORNIA REGIONAL RAIL AUTHORITY
ONE GATEWAY PLAZA, 12TH FLOOR, L. A., CA. 90012

ENGINEERING STANDARDS

HOLLOW STEEL TIE SWITCH RODS
10–1, 10–2 AND 10–3
NO 10–136 LB RE

STANDARD 2803
SCALE: NTS
REVISION –
SHEET 1 OF 1
CADD FILE: ES2803–73

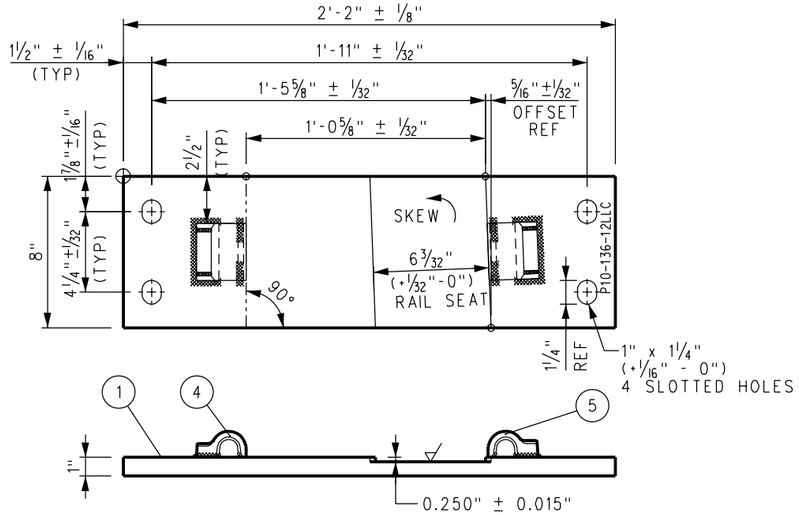

SWITCH PLATE P10-136-12LLC

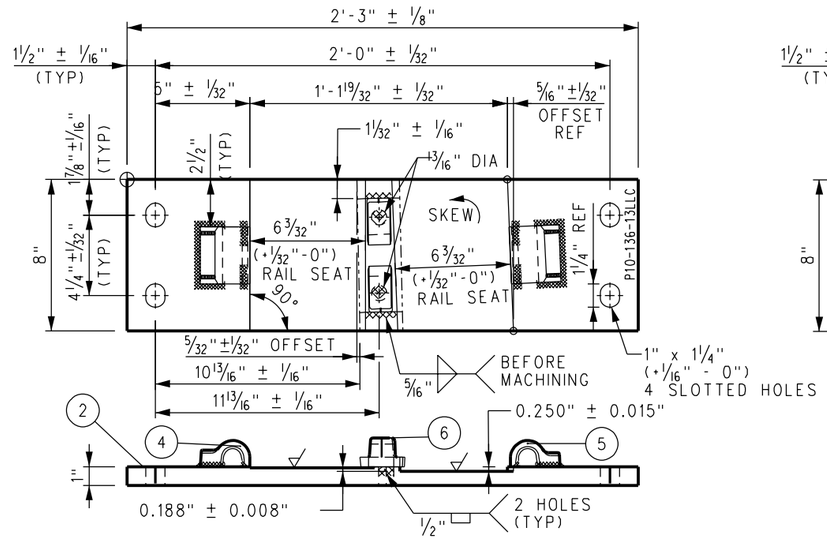

SWITCH PLATE P10-136-13LLC

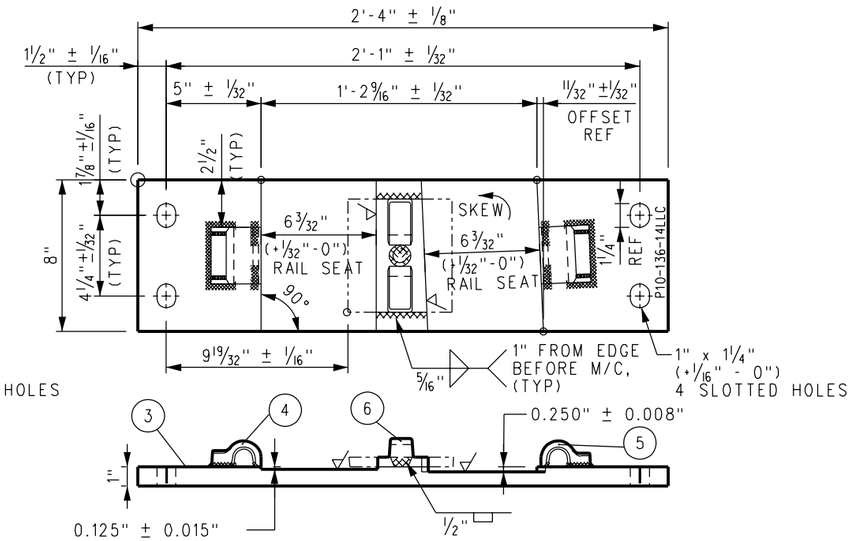

SWITCH PLATE P10-136-14LLC

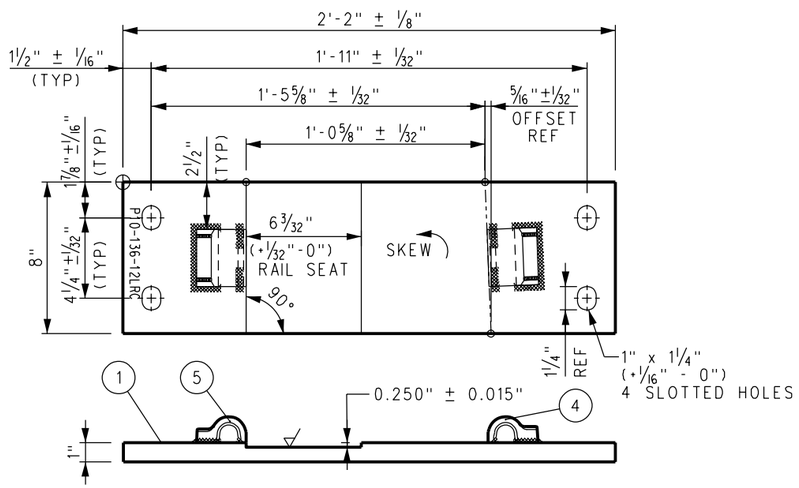

SWITCH PLATE P10-136-12LRC

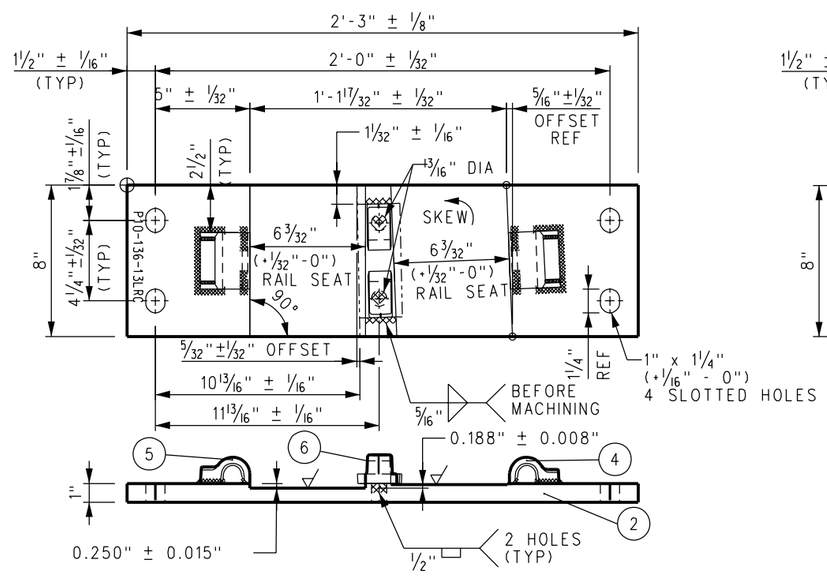

SWITCH PLATE P10-136-13LRC

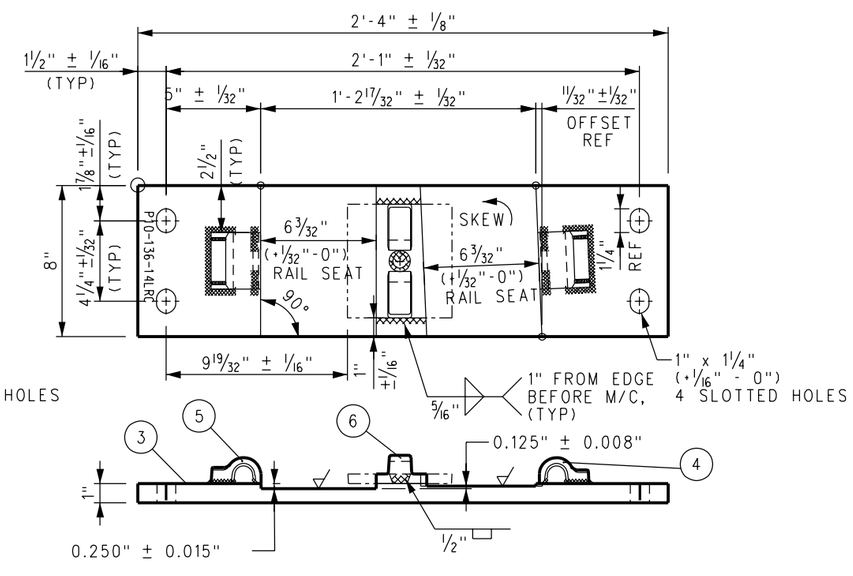

SWITCH PLATE P10-136-14LRC

BILL OF MATERIALS	
ITEM	DESCRIPTION
1	FLAT BAR, ASTM A36, 1" x 8" x 2'-2" LONG
2	FLAT BAR, ASTM A36, 1" x 8" x 2'-3" LONG
3	FLAT BAR, ASTM A36, 1" x 8" x 2'-4" LONG
4	SHOULDER, PANDROL, FORGED TONGUELESS, TYPE 1
5	SHOULDER, PANDROL, FORGED TONGUELESS, TYPE 5
6	STOP WITH INTEGRAL T-BOLT HOLD DOWN

NOTES:

1. I.D. CHARACTERS TO BE ½" MINIMUM HEIGHT CLEARLY STAMPED AS SHOWN.
2. WELDS TO BE DRESSED FLUSH WITH SHOULDER & NOT TO PROTRUDE INTO RAIL SEAT.
3. SLOTTED HOLE CENTERS ARE INDICATED ON DRAWING.

REV.	DATE	DESCRIPTION	DES.	ENG.
X	XX-XX-XX	REVISION	XX	XX

DRAWN BY: HDR DATE: 03/31/2011

ASSISTANT DIRECTOR: STANDARDS & DESIGN

DIRECTOR OF ENGINEERING AND CONSTRUCTION

SCRRA ENGINEERING STANDARDS ARE INTENDED FOR SCRRA APPROVED USES ONLY. FOR NON-SCRRA APPROVED USES:
SCRRA SHALL NOT BE RESPONSIBLE FOR THE ACCURACY OR COMPLETENESS OF THE DATA OR INFORMATION CONTAINED HEREIN. THE SELECTION AND USE OF THESE STANDARDS IS THE SOLE RESPONSIBILITY OF THE USER AND SHOULD NOT BE USED WITHOUT CONSULTING A REGISTERED PROFESSIONAL ENGINEER. ALL WARRANTIES AND REPRESENTATIONS OF ANY KIND ARE DISCLAIMED. ANYONE MAKING USE OF THIS INFORMATION AGREES THAT IT ASSUMES ALL LIABILITY ARISING FROM SUCH USE. NO PART OF THESE STANDARDS SHOULD BE REPRODUCED OR DISTRIBUTED IN ANY FORM OR BY ANY MEANS WITHOUT THE PRIOR WRITTEN PERMISSION OF SCRRA. ALL RIGHTS RESERVED.

METROLINK®
SOUTHERN CALIFORNIA REGIONAL RAIL AUTHORITY
ONE GATEWAY PLAZA, 12TH FLOOR, L. A., CA. 90012

ENGINEERING STANDARDS

SWITCH PLATES
(10–12LLC /LRC THROUGH 10–14LLC /LRC)
FOR NO 10 136 LB RE LH CONCRETE TIE TURNOUT

STANDARD 2803
SCALE: NTS
REVISION –
SHEET 1 OF 1
CADD FILE: ES2803–81

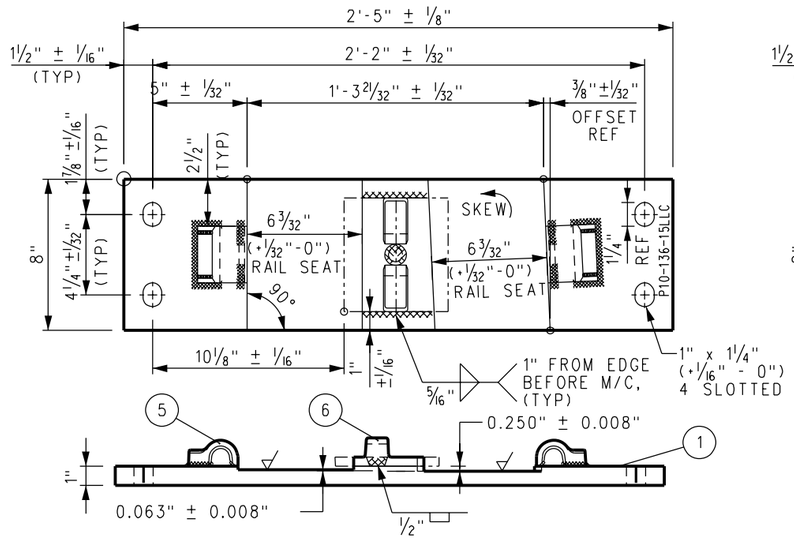

SWITCH PLATE P10-136-15LLC

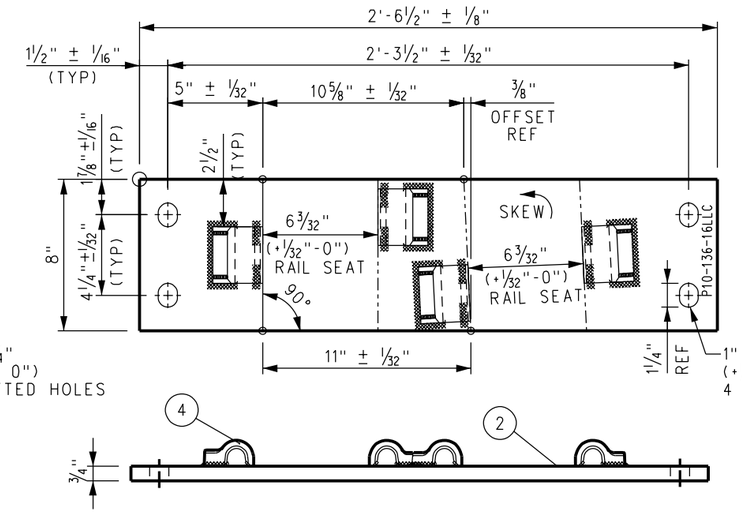

SWITCH PLATE P10-136-16LLC

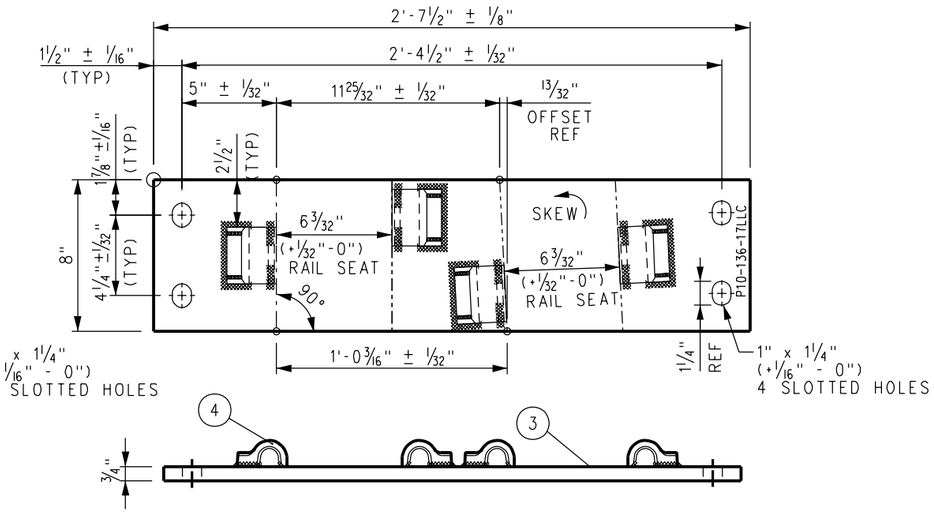

SWITCH PLATE P10-136-17LLC

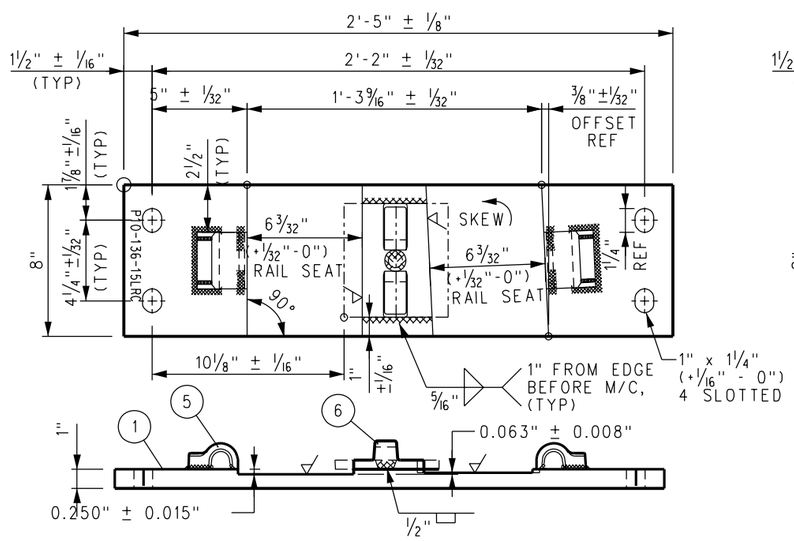

SWITCH PLATE P10-136-15LRC

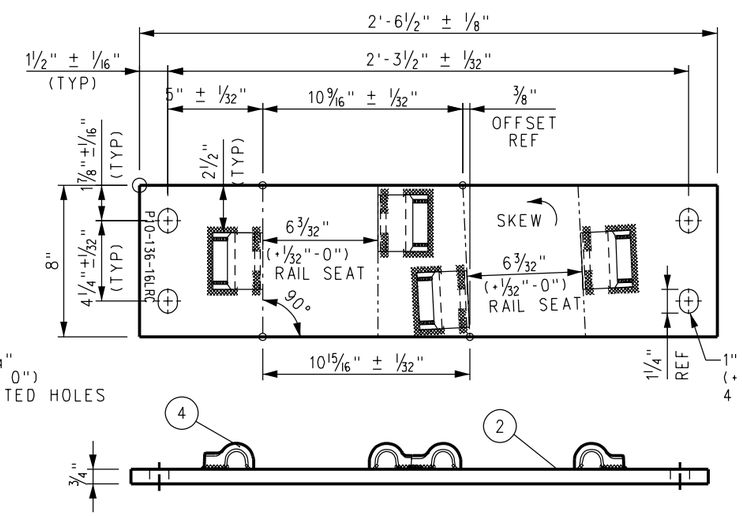

SWITCH PLATE P10-136-16LRC

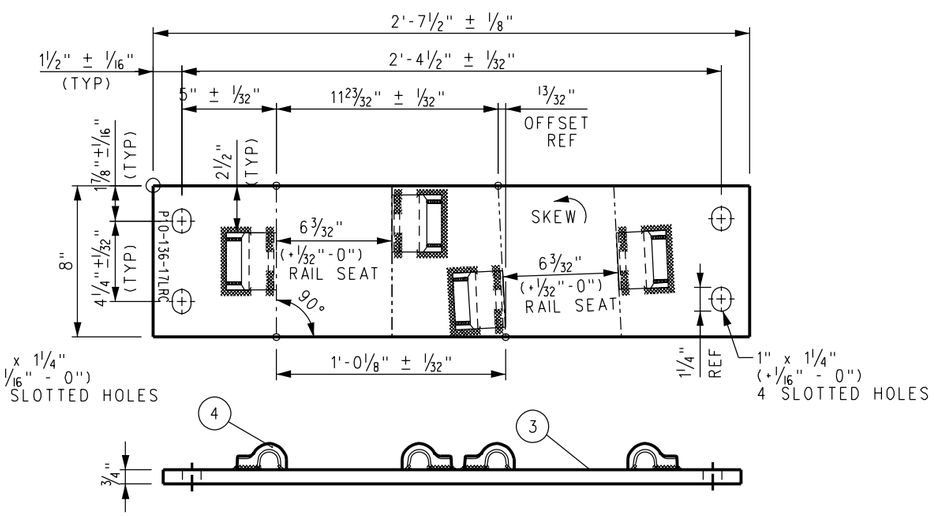

SWITCH PLATE P10-136-17LRC

BILL OF MATERIALS	
ITEM	DESCRIPTION
1	FLAT BAR, ASTM A36, 1" x 8" x 2'-5" LONG
2	FLAT BAR, ASTM A36, 3/4" x 8" x 2'-6 1/2" LONG
3	FLAT BAR, ASTM A36, 3/4" x 8" x 2'-7 1/2" LONG
4	SHOULDER, PANDROL, FORGED TONGUELESS, TYPE 1
5	SHOULDER, PANDROL, FORGED TONGUELESS, TYPE 5
6	STOP WITH INTEGRAL T-BOLT HOLD DOWN

NOTES:

1. I.D. CHARACTERS TO BE 1/2" MINIMUM HEIGHT CLEARLY STAMPED AS SHOWN.
2. WELDS TO BE DRESSED FLUSH WITH SHOULDER & NOT TO PROTRUDE INTO RAIL SEAT.
3. SLOTTED HOLE CENTERS ARE INDICATED ON DRAWING.

REV.	DATE	DESCRIPTION	DES.	ENG.
X	XX-XX-XX	REVISION	XX	XX

DRAWN BY: HDR DATE: 03/31/2011

ASSISTANT DIRECTOR: STANDARDS & DESIGN

DIRECTOR OF ENGINEERING AND CONSTRUCTION

SCRRA ENGINEERING STANDARDS ARE INTENDED FOR SCRRA APPROVED USES ONLY. FOR NON-SCRRA APPROVED USES: SCRRA SHALL NOT BE RESPONSIBLE FOR THE ACCURACY OR COMPLETENESS OF THE DATA OR INFORMATION CONTAINED HEREIN. THE SELECTION AND USE OF THESE STANDARDS IS THE SOLE RESPONSIBILITY OF THE USER AND SHOULD NOT BE USED WITHOUT CONSULTING A REGISTERED PROFESSIONAL ENGINEER. ALL WARRANTIES AND REPRESENTATIONS OF ANY KIND ARE DISCLAIMED. ANYONE MAKING USE OF THIS INFORMATION AGREES THAT IT ASSUMES ALL LIABILITY ARISING FROM SUCH USE. NO PART OF THESE STANDARDS SHOULD BE REPRODUCED OR DISTRIBUTED IN ANY FORM OR BY ANY MEANS WITHOUT THE PRIOR WRITTEN PERMISSION OF SCRRA. ALL RIGHTS RESERVED.

METROLINK®

SOUTHERN CALIFORNIA REGIONAL RAIL AUTHORITY
ONE GATEWAY PLAZA, 12TH FLOOR, L. A., CA. 90012

ENGINEERING STANDARDS

SWITCH PLATES
(10–15LLC / LRC THROUGH 10–17LLC / LRC)
FOR NO 10 136 LB RE LH CONCRETE TIE TURNOUT

STANDARD 2803
SCALE: NTS
REVISION –
SHEET 1 OF 1
CADD FILE: ES2803–82

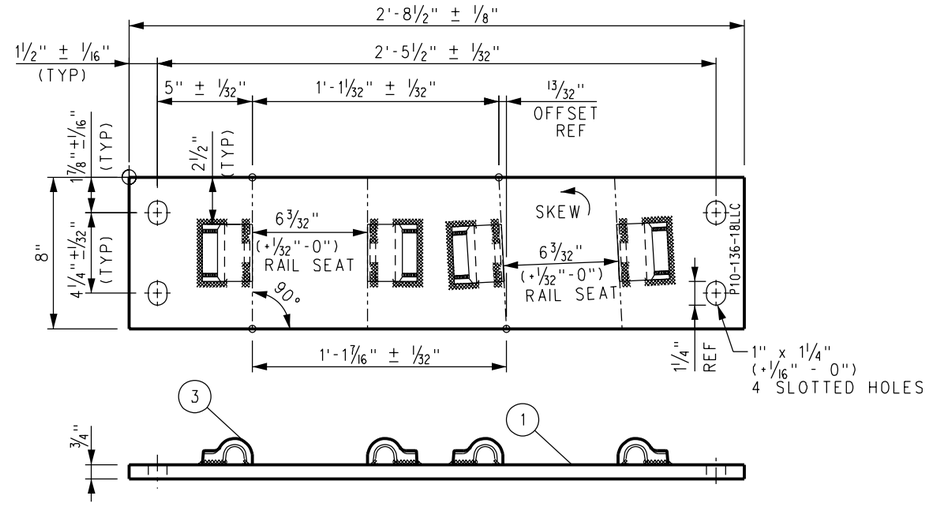

SWITCH PLATE P10-136-18LLC

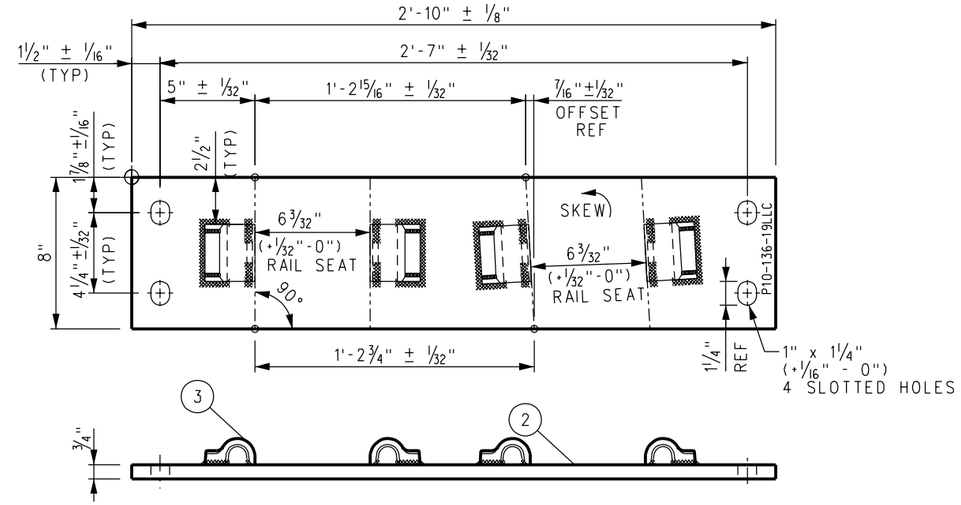

SWITCH PLATE P10-136-19LLC

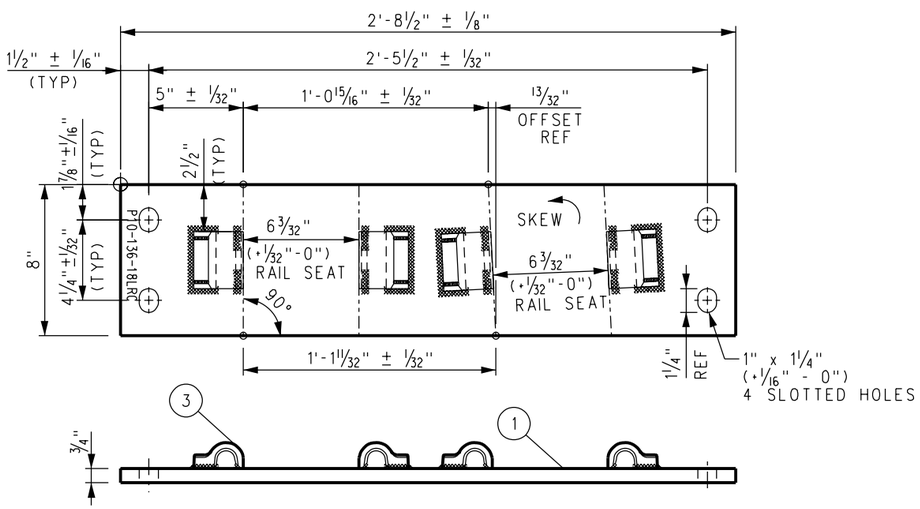

SWITCH PLATE P10-136-18LRC

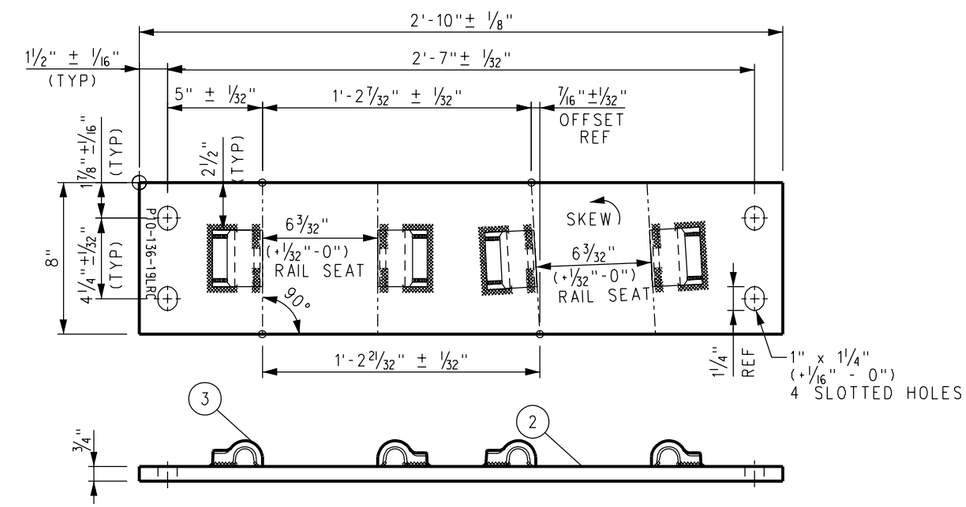

SWITCH PLATE P10-136-19LRC

BILL OF MATERIALS	
ITEM	DESCRIPTION
1	FLAT BAR, ASTM A36, ¾" x 8" x 2'-8½" LONG
2	FLAT BAR, ASTM A36, ¾" x 8" x 2'-10" LONG
3	SHOULDER, PANDROL, FORGED TONGUELESS, TYPE 1

NOTES:

1. I.D. CHARACTERS TO BE ½" MINIMUM HEIGHT CLEARLY STAMPED AS SHOWN.
2. WELDS TO BE DRESSED FLUSH WITH SHOULDER & NOT TO PROTRUDE INTO RAIL SEAT.
3. SLOTTED HOLE CENTERS ARE INDICATED ON DRAWING.

REV.	DATE	DESCRIPTION	DES.	ENG.
X	XX-XX-XX	REVISION	XX	XX

DRAWN BY: HDR DATE: 03/31/2011

ASSISTANT DIRECTOR: STANDARDS & DESIGN

DIRECTOR OF ENGINEERING AND CONSTRUCTION

SCRRA ENGINEERING STANDARDS ARE INTENDED FOR SCRRA APPROVED USES ONLY. FOR NON-SCRRA APPROVED USES: SCRRA SHALL NOT BE RESPONSIBLE FOR THE ACCURACY OR COMPLETENESS OF THE DATA OR INFORMATION CONTAINED HEREIN. THE SELECTION AND USE OF THESE STANDARDS IS THE SOLE RESPONSIBILITY OF THE USER AND SHOULD NOT BE USED WITHOUT CONSULTING A REGISTERED PROFESSIONAL ENGINEER. ALL WARRANTIES AND REPRESENTATIONS OF ANY KIND ARE DISCLAIMED. ANYONE MAKING USE OF THIS INFORMATION AGREES THAT IT ASSUMES ALL LIABILITY ARISING FROM SUCH USE. NO PART OF THESE STANDARDS SHOULD BE REPRODUCED OR DISTRIBUTED IN ANY FORM OR BY ANY MEANS WITHOUT THE PRIOR WRITTEN PERMISSION OF SCRRA. ALL RIGHTS RESERVED.

METROLINK®

SOUTHERN CALIFORNIA REGIONAL RAIL AUTHORITY
ONE GATEWAY PLAZA, 12TH FLOOR, L. A., CA. 90012

ENGINEERING STANDARDS

SWITCH PLATES
(10–18LLC / LRC THROUGH 10–19LLC / LRC)
FOR NO 10 136 LB RE LH CONCRETE TIE TURNOUT

STANDARD 2803
SCALE: NTS
REVISION –
SHEET 1 OF 1
CADD FILE: ES2803–83

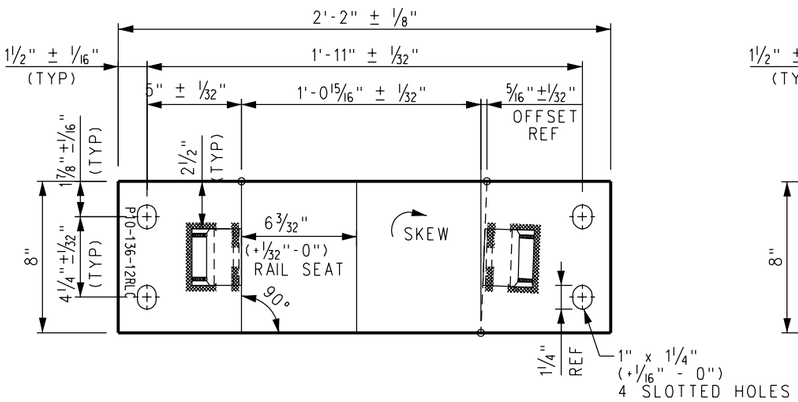

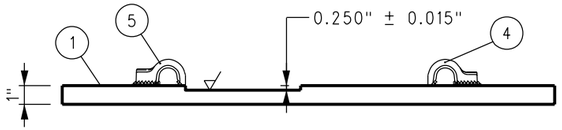

SWITCH PLATE P10-136-12RLC

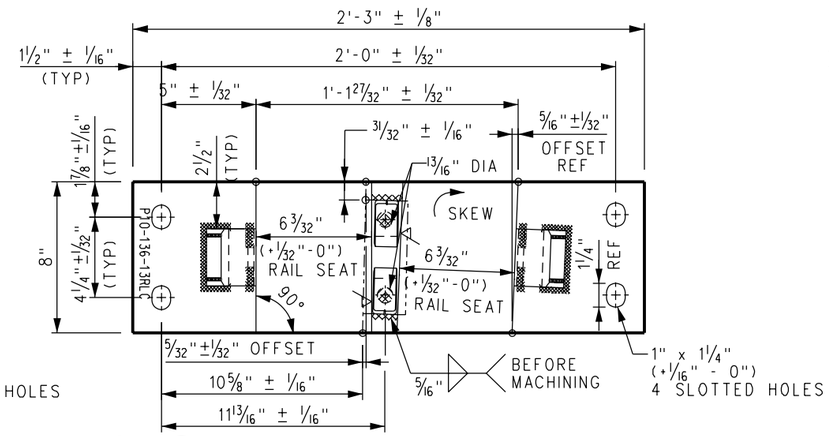

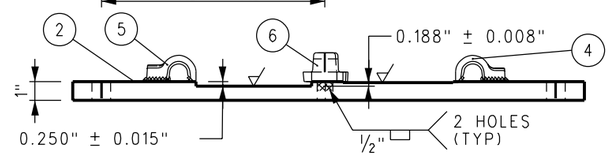

SWITCH PLATE P10-136-13RLC

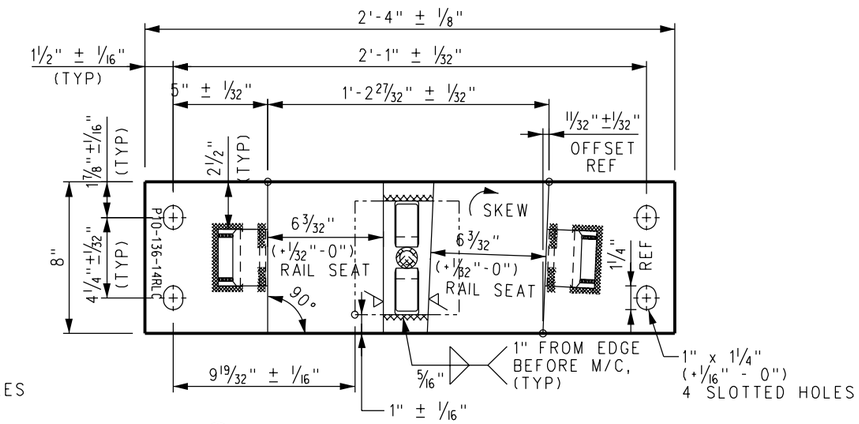

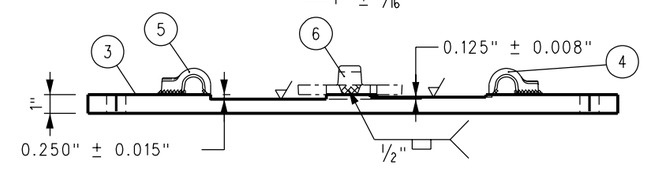

SWITCH PLATE P10-136-14RLC

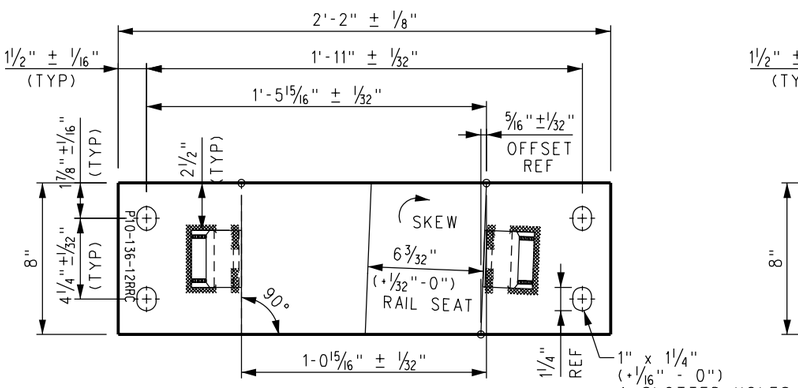

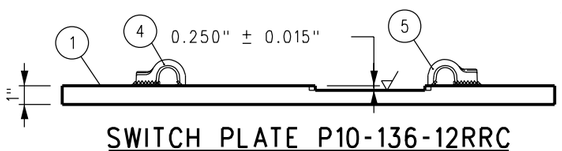

SWITCH PLATE P10-136-12RRC

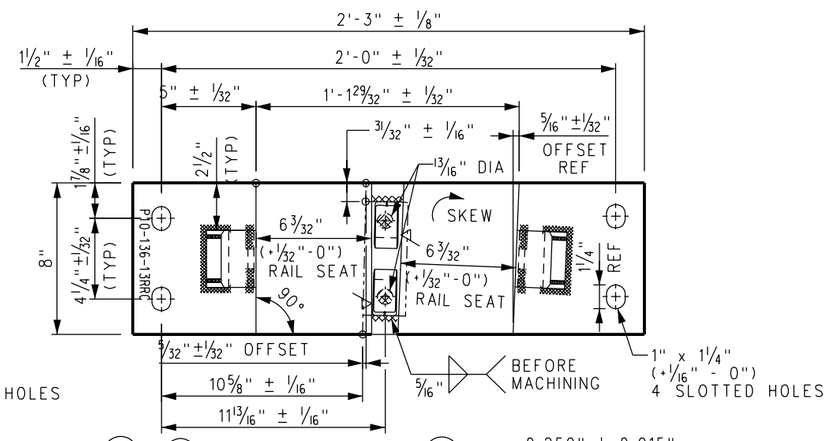

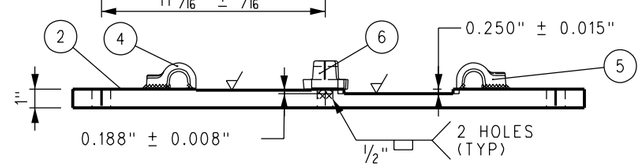

SWITCH PLATE P10-136-13RRC

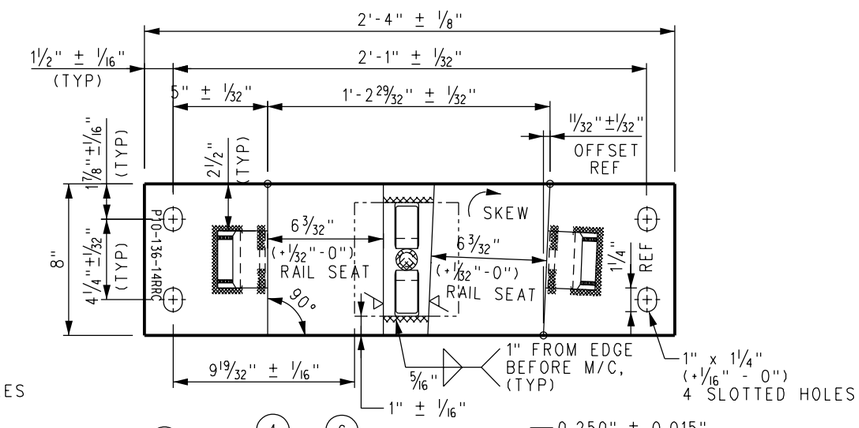

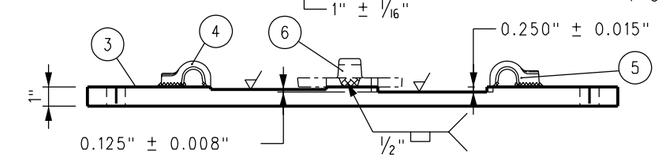

SWITCH PLATE P10-136-14RRC

BILL OF MATERIALS	
ITEM	DESCRIPTION
1	FLAT BAR, ASTM A36, 1" x 8" x 2'-2" LONG
2	FLAT BAR, ASTM A36, 1" x 8" x 2'-3" LONG
3	FLAT BAR, ASTM A36, 1" x 8" x 2'-4" LONG
4	SHOULDER, PANDROL, FORGED TONGUELESS, TYPE 1
5	SHOULDER, PANDROL, FORGED TONGUELESS, TYPE 5
6	STOP WITH INTEGRAL T-BOLT HOLD DOWN

NOTES:

1. I.D. CHARACTERS TO BE ½" MINIMUM HEIGHT CLEARLY STAMPED AS SHOWN.
2. WELDS TO BE DRESSED FLUSH WITH SHOULDER & NOT TO PROTRUDE INTO RAIL SEAT.
3. SLOTTED HOLE CENTERS ARE INDICATED ON DRAWING.

REV.	DATE	DESCRIPTION	DES.	ENG.
X	XX-XX-XX	REVISION	XX	XX

DRAWN BY: HDR DATE: 03/31/2011

ASSISTANT DIRECTOR: STANDARDS & DESIGN

DIRECTOR OF ENGINEERING AND CONSTRUCTION

SCRRA ENGINEERING STANDARDS ARE INTENDED FOR SCRRA APPROVED USES ONLY. FOR NON-SCRRA APPROVED USES:
SCRRA SHALL NOT BE RESPONSIBLE FOR THE ACCURACY OR COMPLETENESS OF THE DATA OR INFORMATION CONTAINED HEREIN. THE SELECTION AND USE OF THESE STANDARDS IS THE SOLE RESPONSIBILITY OF THE USER AND SHOULD NOT BE USED WITHOUT CONSULTING A REGISTERED PROFESSIONAL ENGINEER. ALL WARRANTIES AND REPRESENTATIONS OF ANY KIND ARE DISCLAIMED. ANYONE MAKING USE OF THIS INFORMATION AGREES THAT IT ASSUMES ALL LIABILITY ARISING FROM SUCH USE. NO PART OF THESE STANDARDS SHOULD BE REPRODUCED OR DISTRIBUTED IN ANY FORM OR BY ANY MEANS WITHOUT THE PRIOR WRITTEN PERMISSION OF SCRRA. ALL RIGHTS RESERVED.

METROLINK®
SOUTHERN CALIFORNIA REGIONAL RAIL AUTHORITY
ONE GATEWAY PLAZA, 12TH FLOOR, L. A., CA. 90012

ENGINEERING STANDARDS

SWITCH PLATES
(10–12RLC / RRC THROUGH 10–14RLC / RRC)
FOR NO 10 136 LB RE RH CONCRETE TIE TURNOUT

STANDARD 2803
SCALE: NTS
REVISION –
SHEET 1 OF 1
CADD FILE: ES2803–84

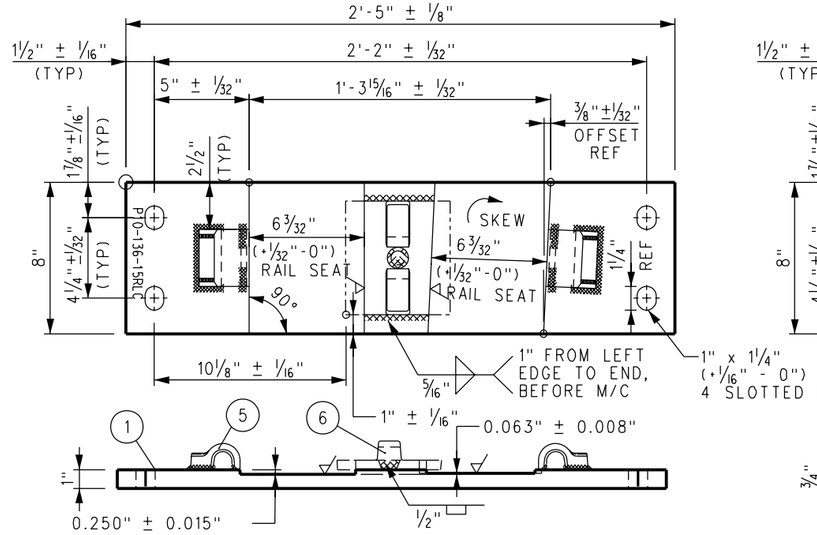

SWITCH PLATE P10-136-15RLC

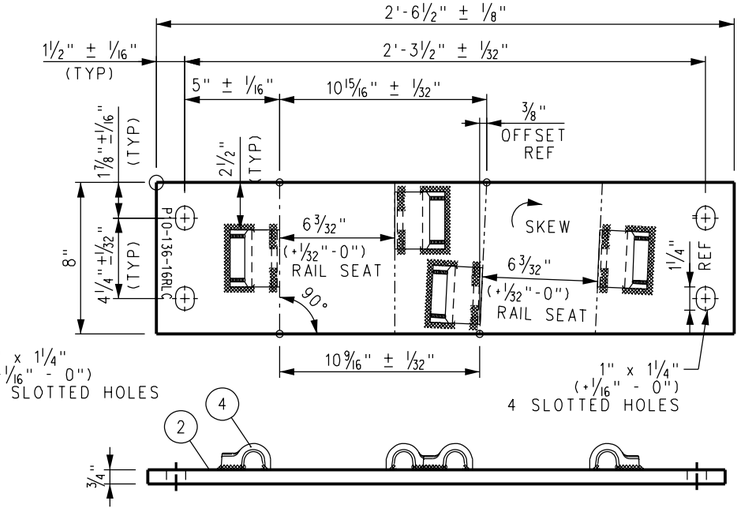

SWITCH PLATE P10-136-16RLC

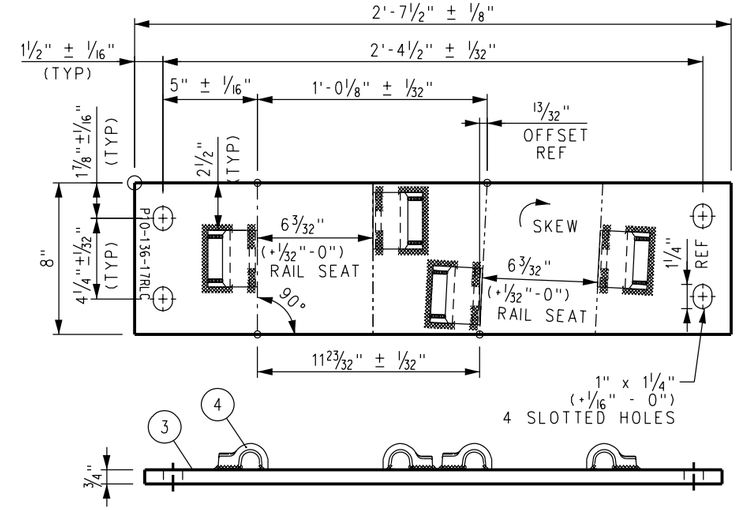

SWITCH PLATE P10-136-17RLC

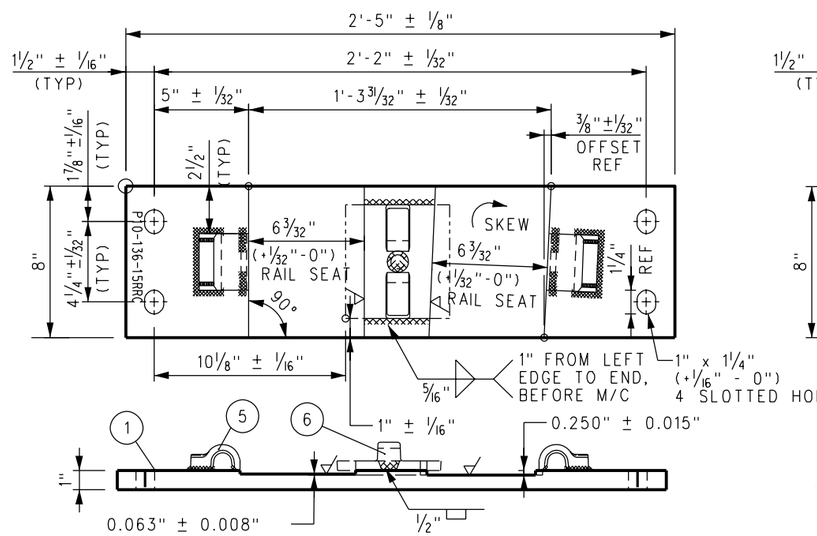

SWITCH PLATE P10-136-15RRC

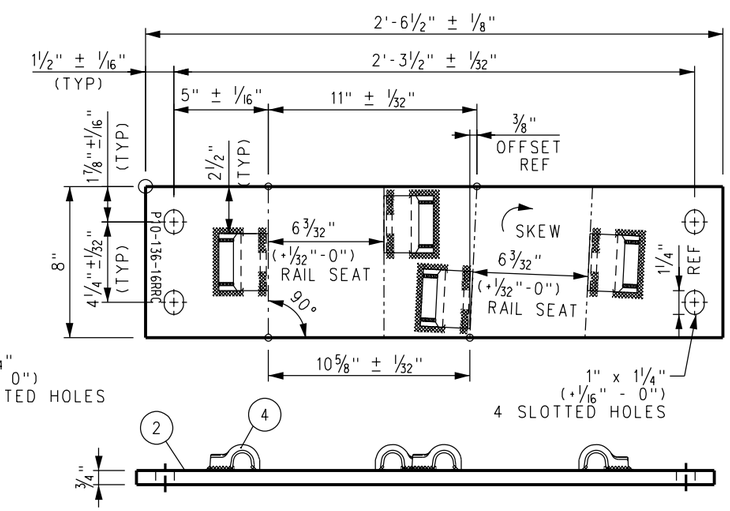

SWITCH PLATE P10-136-16RRC

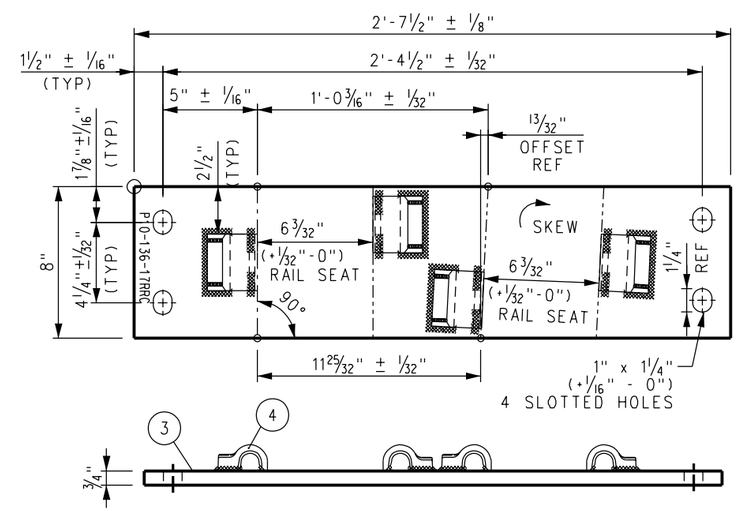

SWITCH PLATE P10-136-17RRC

NOTES:

1. I.D. CHARACTERS TO BE 1/2" MINIMUM HEIGHT CLEARLY STAMPED AS SHOWN.
2. WELDS TO BE DRESSED FLUSH WITH SHOULDER & NOT TO PROTRUDE INTO RAIL SEAT.
3. SLOTTED HOLE CENTERS ARE INDICATED ON DRAWING.

BILL OF MATERIALS

ITEM	DESCRIPTION
1	FLAT BAR, ASTM A36, 1" x 8" x 2'-5" LONG
2	FLAT BAR, ASTM A36, 3/4" x 8" x 2'-6 1/2" LONG
3	FLAT BAR, ASTM A36, 3/4" x 8" x 2'-7 1/2" LONG
4	SHOULDER, PANDROL, FORGED TONGUELESS, TYPE 1
5	SHOULDER, PANDROL, FORGED TONGUELESS, TYPE 5
6	STOP WITH INTEGRAL T-BOLT HOLD DOWN

REV.	DATE	DESCRIPTION	DES.	ENG.
X	XX-XX-XX	REVISION	XX	XX

DRAWN BY: HDR DATE: 03/31/2011

ASSISTANT DIRECTOR: STANDARDS & DESIGN

DIRECTOR OF ENGINEERING AND CONSTRUCTION

SCRRA ENGINEERING STANDARDS ARE INTENDED FOR SCRRA APPROVED USES ONLY. FOR NON-SCRRA APPROVED USES: SCRRA SHALL NOT BE RESPONSIBLE FOR THE ACCURACY OR COMPLETENESS OF THE DATA OR INFORMATION CONTAINED HEREIN. THE SELECTION AND USE OF THESE STANDARDS IS THE SOLE RESPONSIBILITY OF THE USER AND SHOULD NOT BE USED WITHOUT CONSULTING A REGISTERED PROFESSIONAL ENGINEER. ALL WARRANTIES AND REPRESENTATIONS OF ANY KIND ARE DISCLAIMED. ANYONE MAKING USE OF THIS INFORMATION AGREES THAT IT ASSUMES ALL LIABILITY ARISING FROM SUCH USE. NO PART OF THESE STANDARDS SHOULD BE REPRODUCED OR DISTRIBUTED IN ANY FORM OR BY ANY MEANS WITHOUT THE PRIOR WRITTEN PERMISSION OF SCRRA. ALL RIGHTS RESERVED.

METROLINK

SOUTHERN CALIFORNIA REGIONAL RAIL AUTHORITY
ONE GATEWAY PLAZA, 12TH FLOOR, L. A., CA. 90012

ENGINEERING STANDARDS

SWITCH PLATES
(10–15RLC /RRC THROUGH 10–17RLC /RRC)
FOR NO 10 136 LB RE RH CONCRETE TIE TURNOUT

STANDARD 2803
SCALE: NTS
REVISION –
SHEET 1 OF 1
CADD FILE: ES2803–85

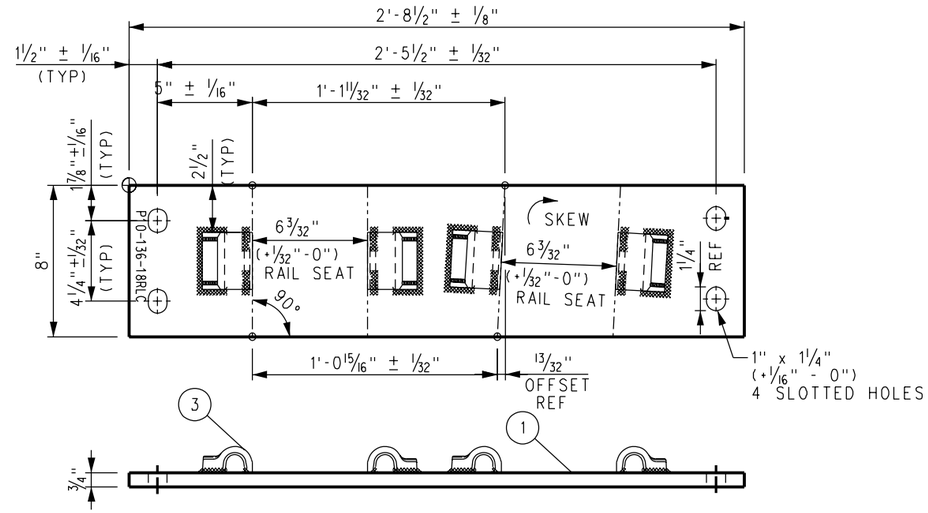

SWITCH PLATE P10-136-18RLC

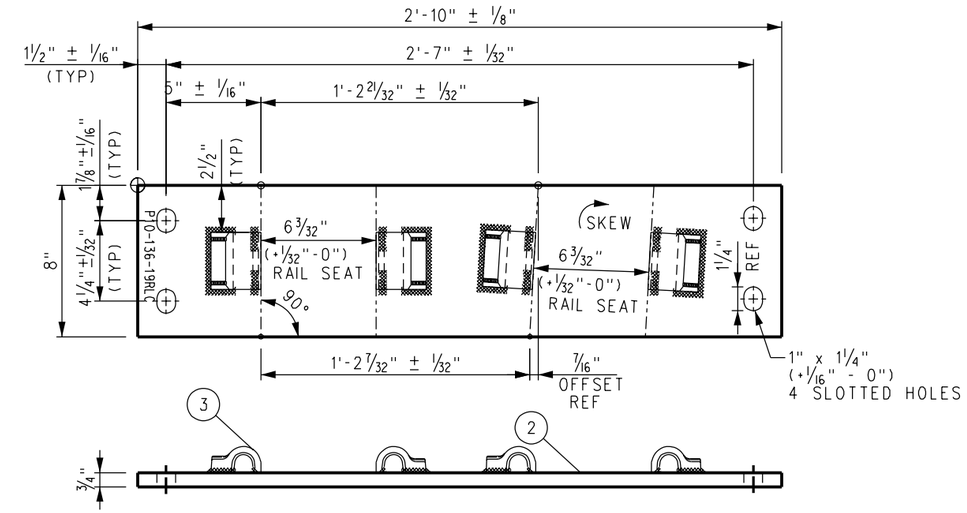

SWITCH PLATE P10-136-19RLC

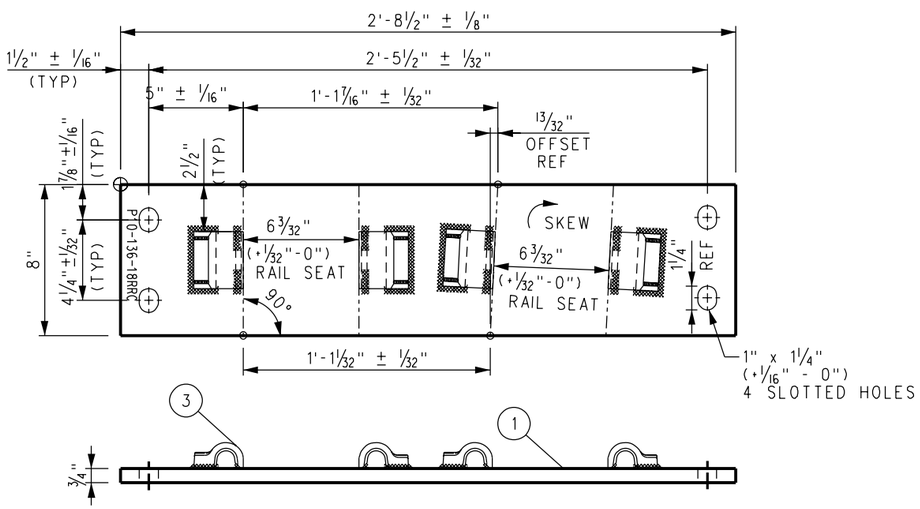

SWITCH PLATE P10-136-18RRC

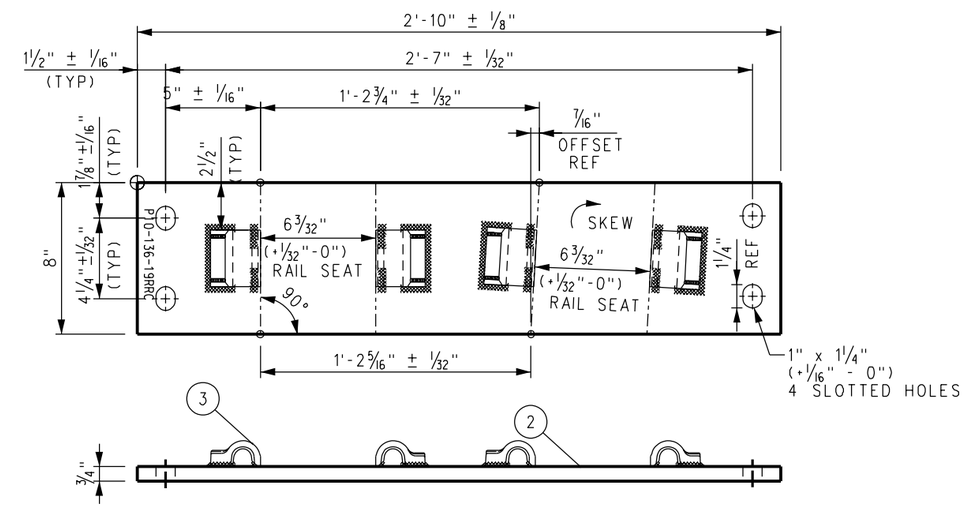

SWITCH PLATE P10-136-19RRC

BILL OF MATERIALS	
ITEM	DESCRIPTION
1	FLAT BAR, ASTM A36, ¾" x 8" x 2'-8½" LONG
2	FLAT BAR, ASTM A36, ¾" x 8" x 2'-10" LONG
3	SHOULDER, PANDROL, FORGED TONGUELESS, TYPE 1

NOTES:

1. I.D. CHARACTERS TO BE ½" MINIMUM HEIGHT CLEARLY STAMPED AS SHOWN.
2. WELDS TO BE DRESSED FLUSH WITH SHOULDER & NOT TO PROTRUDE INTO RAIL SEAT.
3. SLOTTED HOLE CENTERS ARE INDICATED ON DRAWING.

REV.	DATE	DESCRIPTION	DES.	ENG.
X	XX-XX-XX	REVISION	XX	XX

DRAWN BY: HDR DATE: 03/31/2011

ASSISTANT DIRECTOR: STANDARDS & DESIGN

DIRECTOR OF ENGINEERING AND CONSTRUCTION

SCRRA ENGINEERING STANDARDS ARE INTENDED FOR SCRRA APPROVED USES ONLY. FOR NON-SCRRA APPROVED USES: SCRRA SHALL NOT BE RESPONSIBLE FOR THE ACCURACY OR COMPLETENESS OF THE DATA OR INFORMATION CONTAINED HEREIN. THE SELECTION AND USE OF THESE STANDARDS IS THE SOLE RESPONSIBILITY OF THE USER AND SHOULD NOT BE USED WITHOUT CONSULTING A REGISTERED PROFESSIONAL ENGINEER. ALL WARRANTIES AND REPRESENTATIONS OF ANY KIND ARE DISCLAIMED. ANYONE MAKING USE OF THIS INFORMATION AGREES THAT IT ASSUMES ALL LIABILITY ARISING FROM SUCH USE. NO PART OF THESE STANDARDS SHOULD BE REPRODUCED OR DISTRIBUTED IN ANY FORM OR BY ANY MEANS WITHOUT THE PRIOR WRITTEN PERMISSION OF SCRRA. ALL RIGHTS RESERVED.

METROLINK®
SOUTHERN CALIFORNIA REGIONAL RAIL AUTHORITY
ONE GATEWAY PLAZA, 12TH FLOOR, L. A., CA. 90012

ENGINEERING STANDARDS

SWITCH PLATES
(10–18RLC / RRC THROUGH 10–19RLC / RRC)
FOR NO 10 136 LB RE RH CONCRETE TIE TURNOUT

STANDARD 2803
SCALE: NTS
REVISION –
SHEET 1 OF 1
CADD FILE: ES2803–86

DISCLAIMER

SCRRA Engineering Standards are intended for SCRRA approved uses only. FOR NON-SCRRA APPROVED USES: SCRRA and its member agencies, directors, officers, employees and/or agents shall not be responsible for the accuracy or completeness of the data or information contained herein. The selection and use of these standards, while designed in accordance with generally accepted engineering principles and practices, is the sole responsibility of the user and should not be used without consulting a registered professional engineer. All warranties and representations of any kind are disclaimed. Anyone making use of this information agrees that it assumes all liability arising from such use. No part of these standards should be reproduced or distributed in any form or by any means without the prior written permission of SCRRA. All rights reserved.

Since revisions or additions to the engineering standards may occur at any time, the user agrees to indemnify, defend, by counsel satisfactory to SCRRA and Member Agency, and hold harmless SCRRA, Member Agencies, and Operating Railroad, and their respective officers, commissioners, employees, agents, successors and assigns. ("Indemnitees"), and each of them to the maximum extent allowed by law, from and against all loss, liability, claims, demands, suits, liens, claims of lien, damages (including incidental consequential damages), costs and expenses (including, without limitation, any fines, penalties, judgments, actual litigation expenses and experts' and actual attorneys' fees), that are incurred by or asserted against Indemnitees arising out of or connected in any manner with the user's use of outdated engineering standards.

Updating the contents of the manual is a continued process, and revisions/replacements are issued periodically. Questions, comments, and proposed recommendations for changes may be sent to SCRRA at 279 E. Arrow Highway, Suite A, San Dimas, CA 91773.

SCRRA NO 14 TURNOUT
BILL OF MATERIALS & DRAWING NUMBERS

FROG NUMBER	NO 14			
HAND	LH		RH	
WSM OR RBM	WSM		WSM	
CONCRETE OR TIMBER TIES	CONCRETE		CONCRETE	
HST OR STANDARD TIES	HST		HST	
POWER OR MANUAL	POWER		POWER	
ML OR TO SIDE SW MACHINE OPERATION	MLSIDE	TOSIDE	MLSIDE	TOSIDE

TURNOUT LAYOUT	DRAWING NO		2805-01	2805-03	2805-02	2805-04
SWITCH PACK	DRAWING NO		2805-11	2805-13	2805-12	2805-14
CONCRETE TIE LAYOUT	DRAWING NO		2805-31	2805-31	2805-30	2805-30
HOLLOW STEEL TIE LAYOUT	DRAWING NO		2805-33	2805-35	2805-32	2805-34
FROG PACK	DRAWING NO		2805-41	2805-41	2805-42	2805-42
GUARD RAIL MAINLINE	DRAWING NO		2800-50	2800-50	2800-50	2800-50
GUARD RAIL TURNOUT	DRAWING NO		2805-61	2805-61	2805-62	2805-62
INSULATED RAIL ASSEMBLY	LENGTH		48'-10¾"	48'-10¾"	48'-10¾"	48'-10¾"
INSULATED RAIL ASSEMBLY	LENGTH		49'-0¼"	49'-0¼"	49'-0¼"	49'-0¼"
RAIL	LENGTH		2@30'-0"	2@30'-0"	2@30'-0"	2@30'-0"
RAIL	LENGTH		3@38'-0"	3@38'-0"	3@38'-0"	3@38'-0"
RAIL	LENGTH		40'-0"	40'-0"	40'-0"	40'-0"
RAIL	LENGTH		2@48'-11⅛"	2@48'-11⅛"	2@48'-11⅛"	2@48'-11⅛"
TIE SCREWS CONCRETE	ES2356	QUANTITY	352	352	352	352
TIE SCREWS TIMBER	ES2355	QUANTITY	-	-	-	-
WASHER FLAT	ES2356	QUANTITY	352	352	352	352
SPRING WASHER DOUBLE COIL	ES2356	QUANTITY	352	352	352	352
TIE PLATE PANDROL	ES2454	QUANTITY	-	-	-	-
E-CLIP PANDROL E2055	ES2362	QUANTITY	342	342	342	342
INSULATOR PANDROL NYLON HD10	-	QUANTITY	342	342	342	342
PANDROL JOINT CLIP E2063	ES2361	QUANTITY	8	8	8	8
INSULATION PANDROL NYLON 6790	-	QUANTITY	8	8	8	8
TIE PAD PANDROL 69935R	-	QUANTITY	175	175	175	175
SHIM TO REDUCE PLATE FLEXURE	-	QUANTITY	176	176	176	176

REV.	DATE	DESCRIPTION	DES.	ENG.
X	XX-XX-XX	REVISION	XX	XX

DRAWN BY: A. CARLOS DATE: 03/31/2011

ASSISTANT DIRECTOR: STANDARDS & DESIGN

DIRECTOR OF ENGINEERING AND CONSTRUCTION

SCRRA ENGINEERING STANDARDS ARE INTENDED FOR SCRRA APPROVED USES ONLY. FOR NON-SCRRA APPROVED USES: SCRRA SHALL NOT BE RESPONSIBLE FOR THE ACCURACY OR COMPLETENESS OF THE DATA OR INFORMATION CONTAINED HEREIN. THE SELECTION AND USE OF THESE STANDARDS IS THE SOLE RESPONSIBILITY OF THE USER AND SHOULD NOT BE USED WITHOUT CONSULTING A REGISTERED PROFESSIONAL ENGINEER. ALL WARRANTIES AND REPRESENTATIONS OF ANY KIND ARE DISCLAIMED. ANYONE MAKING USE OF THIS INFORMATION AGREES THAT IT ASSUMES ALL LIABILITY ARISING FROM SUCH USE. NO PART OF THESE STANDARDS SHOULD BE REPRODUCED OR DISTRIBUTED IN ANY FORM OR BY ANY MEANS WITHOUT THE PRIOR WRITTEN PERMISSION OF SCRRA. ALL RIGHTS RESERVED.

METROLINK®

SOUTHERN CALIFORNIA REGIONAL RAIL AUTHORITY
ONE GATEWAY PLAZA, 12TH FLOOR, L. A., CA. 90012

ENGINEERING STANDARDS

NO 14 TURNOUT

STANDARD: 2800
SCALE: NTS
REVISION: –
SHEET: 1 OF 1
CADD FILE: ES2800-14

BILL OF MATERIAL					BILL OF MATERIAL				
ITEM	QTY	DESCRIPTION	DWG NO	SCRRA PART NO	ITEM	QTY	DESCRIPTION	DWG NO	SCRRA PART NO
1	1	SWITCH PACK, NO 14-136 LB RE MODIFIED TANGENTIAL, LH, HST	2805-11		11	352	TIE SCREW, CONCRETE 7/8" DIA X 6" HEX HEAD	-	
2	1	FROG PACK, NO 14-136 LB RE WSM, LH	2805-41		12	352	WASHER FLAT 7/8" TYPE A NARROW 15/16" X 1 3/4" X 0.134"	-	
3	1	GUARD RAIL ASSEMBLY BOLTLESS, 26'-0" LONG, 136 LB RE RAISED 1", STRAIGHT	2800-50		13	352	SPRING WASHER, DOUBLE COIL (Fe6)	-	
4	1	GUARD RAIL ASSEMBLY BOLTLESS, 26'-0" LONG, 136 LB RE RAISED 1", LH	2805-61		14	1	CONCRETE TIE SET, 0-83 + (3) 1:80 TIES, PLATE PADS, PIM INSERTS, LH	2805-31	
5	1	INSULATED RAIL ASSEMBLY, 48'-10 3/4" C/W BONDED INSULATED JOINT	-		15	342	CLIP PANDROL E2055	-	
6	1	INSULATED RAIL ASSEMBLY, 49'-0 1/4" C/W BONDED INSULATED JOINT	-		16	342	INSULATOR PANDROL FEATURES BASE HOLDOWN NYLON HD-10	-	
7	2	DRILLED RAIL, 136 LB RE, 30'-0" LONG	-		17	8	CLIP PANDROL E2063	-	
8	3	DRILLED RAIL, 136 LB RE, 38'-0" LONG	-		18	8	INSULATION, PANDROL NYLON 6790	-	
9	1	DRILLED RAIL, 136 LB RE, 40'-0" LONG	-		19	175	TIE PAD PANDROL 6993SR	-	
10	2	DRILLED RAIL, 136 LB RE, 48'-11 1/8" LONG	-		20	176	SHIM, TO REDUCE PLATE FLEXURE	-	

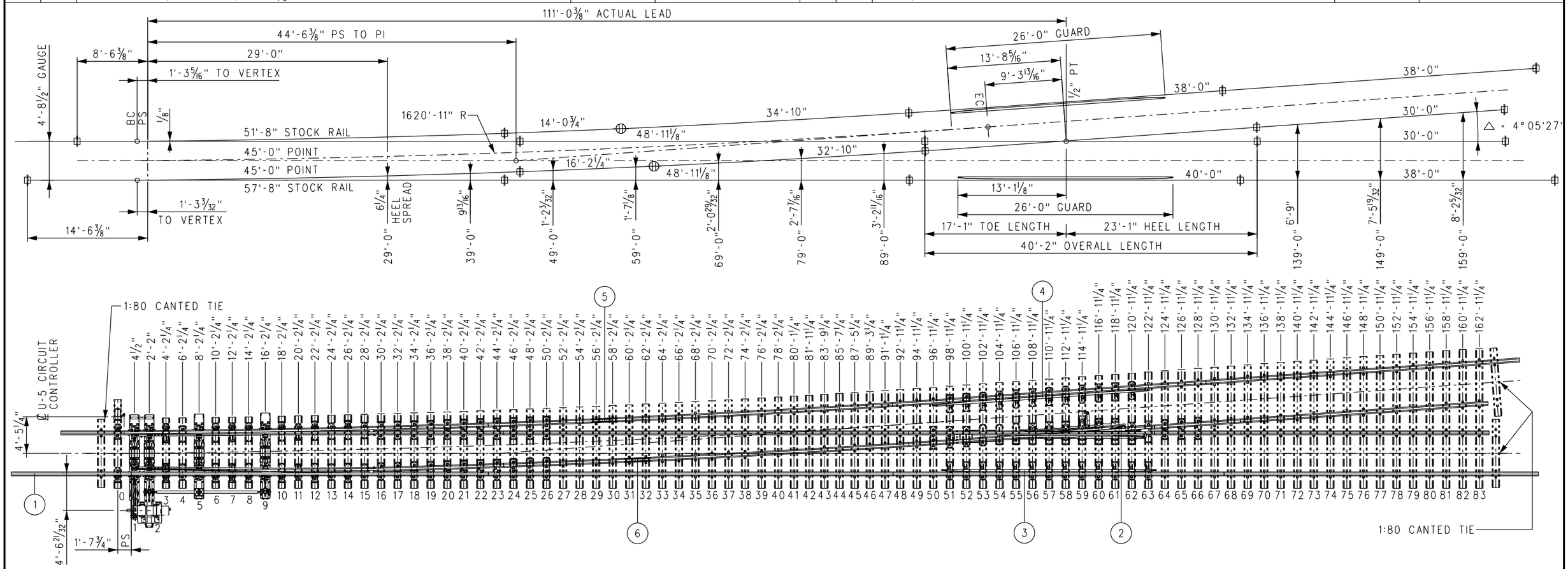

NOTES:

1. ALL RAILS SHALL HAVE IDENTIFICATION COLOR CODE PAINTED ON WEB, CLEAR OF JOINT AREA.
2. RAIL LENGTHS ALLOW 1/8" GAP BETWEEN RAIL JOINTS FOR WELDING.
3. GUARD RAILS ARE RAISED 1" AND FORM A 1 7/8" FLANGEWAY.
4. SWITCH MACHINE AND MACHINE PLATE (NIC) MUST BE COORDINATED WITH SCRRA.
5. ALL LENGTHS SHALL INCLUDE 1'-9" FROM TIE ENDS TO RAIL CENTERLINE, EXCEPT AS NOTED AND 1:80 CANTED TIES.
6. TIGHTEN TIE SCREW WITH DOUBLE COIL SPRING WASHER IN PLACE.
7. SCHWIHAG ROLLERS TO BE INSTALLED AND ADJUSTED IN THE FIELD.
8. ⊕ = INSULATED JOINT ⊞ = WELDED JOINT

TURNOUT DATA

FROG
- NO 14 Δ = 4° 05'27"
- TOE LENGTH: 17'-1"
- HEEL LENGTH: 23'-1"
- TOTAL LENGTH: 40'-2"

SWITCH
- LENGTH OF POINTS: 45'-0"
- VERTEX DISTANCE: 1'-3 7/32"
- ENTRY ANGLE: 0° 29'50"
- THICKNESS AT POINT: 1/8"
- THROW AT ROD #1: 4 3/4"

ACTUAL LEAD: 111'-0 3/8"
CLOSURE AREA
- CENTERLINE RADIUS: 1620'-11"
- DEGREE OF CURVE: 3° 32'07"

DESIGN SPEEDS
- 35 MPH PASSENGER @ 3" UNBALANCE
- 25 MPH FREIGHT @ 2" UNBALANCE

REV.	DATE	DESCRIPTION	DES.	ENG.
X	XX-XX-XX	REVISION	XX	XX

DRAWN BY: HDR DATE: 03/31/2011

ASSISTANT DIRECTOR: STANDARDS & DESIGN

DIRECTOR OF ENGINEERING AND CONSTRUCTION

SCRRA ENGINEERING STANDARDS ARE INTENDED FOR SCRRA APPROVED USES ONLY. FOR NON-SCRRA APPROVED USES:
SCRRA SHALL NOT BE RESPONSIBLE FOR THE ACCURACY OR COMPLETENESS OF THE DATA OR INFORMATION CONTAINED HEREIN. THE SELECTION AND USE OF THESE STANDARDS IS THE SOLE RESPONSIBILITY OF THE USER AND SHOULD NOT BE USED WITHOUT CONSULTING A REGISTERED PROFESSIONAL ENGINEER. ALL WARRANTIES AND REPRESENTATIONS OF ANY KIND ARE DISCLAIMED. ANYONE MAKING USE OF THIS INFORMATION AGREES THAT IT ASSUMES ALL LIABILITY ARISING FROM SUCH USE. NO PART OF THESE STANDARDS SHOULD BE REPRODUCED OR DISTRIBUTED IN ANY FORM OR BY ANY MEANS WITHOUT THE PRIOR WRITTEN PERMISSION OF SCRRA. ALL RIGHTS RESERVED.

METROLINK®
SOUTHERN CALIFORNIA REGIONAL RAIL AUTHORITY
ONE GATEWAY PLAZA, 12TH FLOOR, L. A., CA. 90012

ENGINEERING STANDARDS

TURNOUT LAYOUT
NO 14–136 LB RE LH WSM FROG TURNOUT
HST, SWITCH MACHINE ON MAINLINE SIDE

STANDARD 2805
SCALE: NTS
REVISION –
SHEET 1 OF 1
CADD FILE: ES2805–01

BILL OF MATERIAL					BILL OF MATERIAL				
ITEM	QTY	DESCRIPTION	DWG NO	SCRRA PART NO	ITEM	QTY	DESCRIPTION	DWG NO	SCRRA PART NO
1	1	SWITCH PACK, NO 14-136 LB RE MODIFIED TANGENTIAL, RH, HST	2805-12		11	352	TIE SCREW, CONCRETE 7/8" DIA x 6" HEX HEAD	-	
2	1	FROG PACK, NO 14-136 LB RE WSM, RH	2805-42		12	352	WASHER FLAT 7/8 TYPE A NARROW 15/16" x 1 3/4" x 0.134"	-	
3	1	GUARD RAIL ASSEMBLY BOLTLESS, 26'-0" LONG, 136 LB RE RAISED 1", STRAIGHT	2800-50		13	352	SPRING WASHER, DOUBLE COIL (Fe6)	-	
4	1	GUARD RAIL ASSEMBLY BOLTLESS, 26'-0" LONG, 136 LB RE RAISED 1", RH	2805-62		14	1	CONCRETE TIE SET, 0-83 + (3) 1:80 TIES, PLATE PADS, PIM INSERTS, RH	2805-30	
5	1	INSULATED RAIL ASSEMBLY, 48'-10 3/4" C/W BONDED INSULATED JOINT	-		15	342	CLIP PANDROL E2055	-	
6	1	INSULATED RAIL ASSEMBLY, 49'-0 1/4" C/W BONDED INSULATED JOINT	-		16	342	INSULATOR PANDROL FEATURES BASE HOLDOWN NYLON HD-10	-	
7	2	DRILLED RAIL, 136 LB RE, 30'-0" LONG	-		17	8	CLIP PANDROL E2063	-	
8	3	DRILLED RAIL, 136 LB RE, 38'-0" LONG	-		18	8	INSULATION, PANDROL NYLON 6790	-	
9	1	DRILLED RAIL, 136 LB RE, 40'-0" LONG	-		19	175	TIE PAD PANDROL 6993SR	-	
10	2	DRILLED RAIL, 136 LB RE, 48'-11 1/8" LONG	-		20	176	SHIM, TO REDUCE PLATE FLEXURE	-	

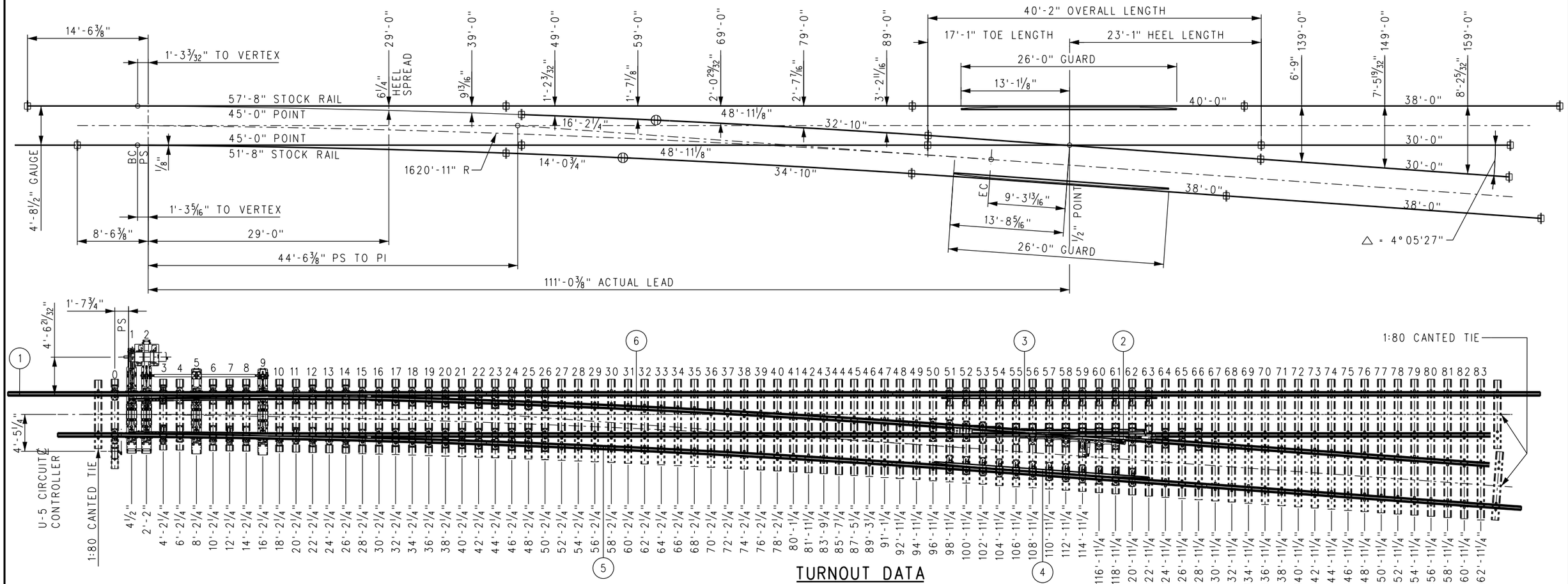

NOTES:

1. ALL RAILS SHALL HAVE IDENTIFICATION COLOR CODE PAINTED ON WEB, CLEAR OF JOINT AREA.
2. RAIL LENGTHS ALLOW 1/8" GAP BETWEEN RAIL JOINTS FOR WELDING.
3. GUARD RAILS ARE RAISED 1" AND FORM A 1 7/8" FLANGEWAY.
4. SWITCH MACHINE AND MACHINE PLATE (NIC) MUST BE COORDINATED WITH SCRRA.
5. ALL LENGTHS SHALL INCLUDE 1'-9" FROM TIE ENDS TO RAIL CENTERLINE, EXCEPT AS NOTED AND 1:80 CANTED TIES.
6. TIGHTEN TIE SCREW WITH DOUBLE COIL SPRING WASHER IN PLACE.
7. SCHWIHAG ROLLERS TO BE INSTALLED AND ADJUSTED IN THE FIELD.
8. ⊕ = INSULATED JOINT ⊕ = WELDED JOINT

TURNOUT DATA

FROG
- NO 14 △ = 4° 05'27"
- TOE LENGTH: 17'-1"
- HEEL LENGTH: 23'-1"
- TOTAL LENGTH: 40'-2"

SWITCH
- LENGTH OF POINTS: 45'-0"
- VERTEX DISTANCE: 1'-3 7/32"
- ENTRY ANGLE: 0° 29'50"
- THICKNESS AT POINT: 1/8"
- THROW AT ROD #1: 4 3/4"

ACTUAL LEAD: 111'-0 3/8"

CLOSURE AREA
- CENTERLINE RADIUS: 1620'-11"
- DEGREE OF CURVE: 3° 32'07"

DESIGN SPEEDS
- 35 MPH PASSENGER @ 3" UNBALANCE
- 25 MPH FREIGHT @ 2" UNBALANCE

REV.	DATE	DESCRIPTION	DES.	ENG.
X	XX-XX-XX	REVISION	XX	XX

DRAWN BY: HDR DATE: 03/31/2011

ASSISTANT DIRECTOR: STANDARDS & DESIGN

DIRECTOR OF ENGINEERING AND CONSTRUCTION

SCRRA ENGINEERING STANDARDS ARE INTENDED FOR SCRRA APPROVED USES ONLY. FOR NON-SCRRA APPROVED USES: SCRRA SHALL NOT BE RESPONSIBLE FOR THE ACCURACY OR COMPLETENESS OF THE DATA OR INFORMATION CONTAINED HEREIN. THE SELECTION AND USE OF THESE STANDARDS IS THE SOLE RESPONSIBILITY OF THE USER AND SHOULD NOT BE USED WITHOUT CONSULTING A REGISTERED PROFESSIONAL ENGINEER. ALL WARRANTIES AND REPRESENTATIONS OF ANY KIND ARE DISCLAIMED. ANYONE MAKING USE OF THIS INFORMATION AGREES THAT IT ASSUMES ALL LIABILITY ARISING FROM SUCH USE. NO PART OF THESE STANDARDS SHOULD BE REPRODUCED OR DISTRIBUTED IN ANY FORM OR BY ANY MEANS WITHOUT THE PRIOR WRITTEN PERMISSION OF SCRRA. ALL RIGHTS RESERVED.

METROLINK®
SOUTHERN CALIFORNIA REGIONAL RAIL AUTHORITY
ONE GATEWAY PLAZA, 12TH FLOOR, L. A., CA. 90012

ENGINEERING STANDARDS

TURNOUT LAYOUT
NO 14–136 LB RE RH WSM FROG TURNOUT
HST, SWITCH MACHINE ON MAINLINE SIDE

STANDARD: 2805
SCALE: NTS
REVISION: – SHEET: 1 OF 1
CADD FILE: ES2805–02

BILL OF MATERIAL					BILL OF MATERIAL				
ITEM	QTY	DESCRIPTION	DWG NO	SCRRA PART NO	ITEM	QTY	DESCRIPTION	DWG NO	SCRRA PART NO
1	1	SWITCH PACK, NO 14-136 LB RE MODIFIED TANGENTIAL, LH, HST	2805-13		11	352	TIE SCREW, CONCRETE 7/8" DIA X 6" HEX HEAD	-	
2	1	FROG PACK, NO 14-136 LB RE WSM, LH	2805-41		12	352	WASHER FLAT 7/8" TYPE A NARROW 15/16" X 1 3/4" X 0.134"	-	
3	1	GUARD RAIL ASSEMBLY BOLTLESS, 26'-0" LONG, 136 LB RE RAISED 1", STRAIGHT	2800-50		13	352	SPRING WASHER, DOUBLE COIL (Fe6)	-	
4	1	GUARD RAIL ASSEMBLY BOLTLESS, 26'-0" LONG, 136 LB RE RAISED 1", LH	2805-61		14	1	CONCRETE TIE SET, 0-83 + (3) 1:80 TIES, PLATE PADS, PIM INSERTS, LH	2805-31	
5	1	INSULATED RAIL ASSEMBLY, 48'-10 3/4" C/W BONDED INSULATED JOINT	-		15	342	CLIP PANDROL E2055	-	
6	1	INSULATED RAIL ASSEMBLY, 49'-0 1/4" C/W BONDED INSULATED JOINT	-		16	342	INSULATOR PANDROL FEATURES BASE HOLDOWN NYLON HD-10	-	
7	2	DRILLED RAIL, 136 LB RE, 30'-0" LONG	-		17	8	CLIP PANDROL E2063	-	
8	3	DRILLED RAIL, 136 LB RE, 38'-0" LONG	-		18	8	INSULATION, PANDROL NYLON 6790	-	
9	1	DRILLED RAIL, 136 LB RE, 40'-0" LONG	-		19	175	TIE PAD PANDROL 6993SR	-	
10	2	DRILLED RAIL, 136 LB RE, 48'-11 1/8" LONG	-		20	176	SHIM, TO REDUCE PLATE FLEXURE	-	

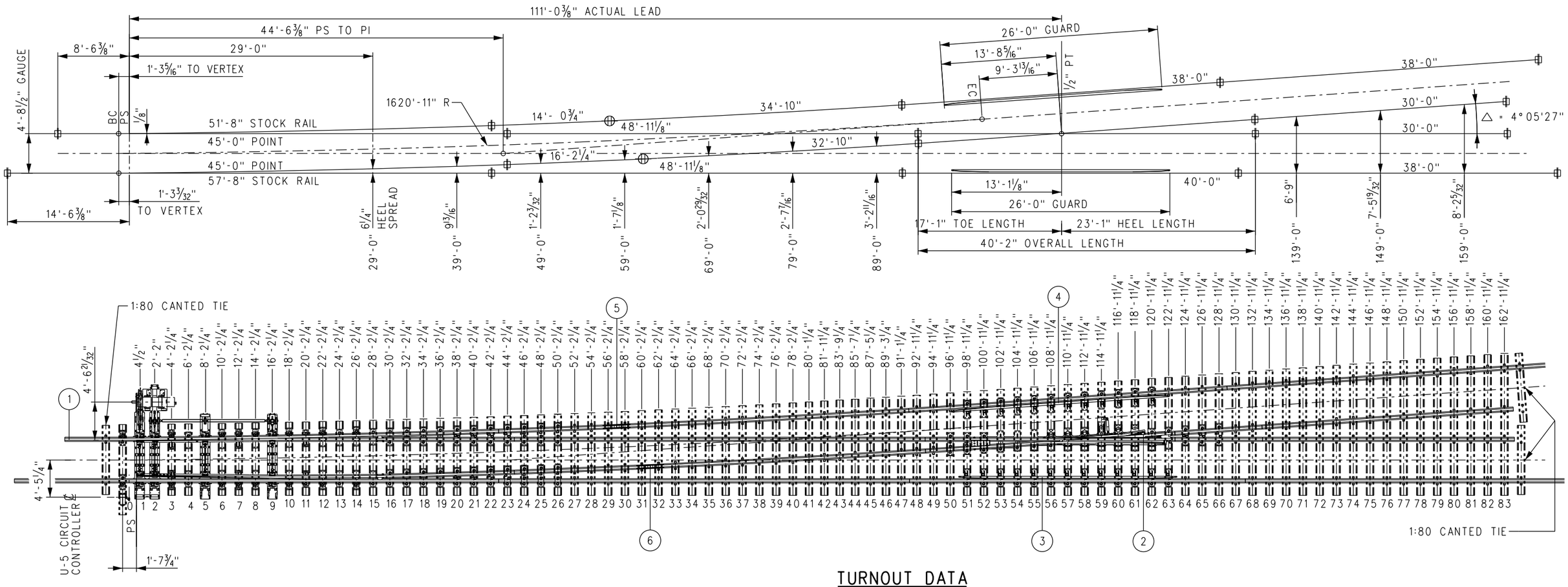

TURNOUT DATA

FROG
- NO 14 △ = 4° 05'27"
- TOE LENGTH: 17'-1"
- HEEL LENGTH: 23'-1"
- TOTAL LENGTH: 40'-2"

SWITCH
- LENGTH OF POINTS: 45'-0"
- VERTEX DISTANCE: 1'-3 7/32"
- ENTRY ANGLE: 0° 29'50"
- THICKNESS AT POINT: 1/8"
- THROW AT ROD #1: 4 3/4"

ACTUAL LEAD: 111'-0 3/8"

CLOSURE AREA
- CENTERLINE RADIUS: 1620'-11"
- DEGREE OF CURVE: 3° 32'07"

DESIGN SPEEDS
- 35 MPH PASSENGER @ 3" UNBALANCE
- 25 MPH FREIGHT @ 2" UNBALANCE

NOTES:

1. ALL RAILS SHALL HAVE IDENTIFICATION COLOR CODE PAINTED ON WEB, CLEAR OF JOINT AREA.
2. RAIL LENGTHS ALLOW 1/8" GAP BETWEEN RAIL JOINTS FOR WELDING.
3. GUARD RAILS ARE RAISED 1" AND FORM A 1 7/8" FLANGEWAY.
4. SWITCH MACHINE AND MACHINE PLATE (NIC) MUST BE COORDINATED WITH SCRRA.
5. ALL LENGTHS SHALL INCLUDE 1'-9" FROM TIE ENDS TO RAIL CENTERLINE, EXCEPT AS NOTED AND 1:80 CANTED TIES.
6. TIGHTEN TIE SCREW WITH DOUBLE COIL SPRING WASHER IN PLACE.
7. SCHWIHAG ROLLERS TO BE INSTALLED AND ADJUSTED IN THE FIELD.
8. ⊕ = INSULATED JOINT ⊕ = WELDED JOINT

REV.	DATE	DESCRIPTION	DES.	ENG.
X	XX-XX-XX	REVISION	XX	XX

DRAWN BY: HDR DATE: 03/31/2011

ASSISTANT DIRECTOR: STANDARDS & DESIGN

DIRECTOR OF ENGINEERING AND CONSTRUCTION

SCRRA ENGINEERING STANDARDS ARE INTENDED FOR SCRRA APPROVED USES ONLY. FOR NON-SCRRA APPROVED USES:
SCRRA SHALL NOT BE RESPONSIBLE FOR THE ACCURACY OR COMPLETENESS OF THE DATA OR INFORMATION CONTAINED HEREIN. THE SELECTION AND USE OF THESE STANDARDS IS THE SOLE RESPONSIBILITY OF THE USER AND SHOULD NOT BE USED WITHOUT CONSULTING A REGISTERED PROFESSIONAL ENGINEER. ALL WARRANTIES AND REPRESENTATIONS OF ANY KIND ARE DISCLAIMED. ANYONE MAKING USE OF THIS INFORMATION AGREES THAT IT ASSUMES ALL LIABILITY ARISING FROM SUCH USE. NO PART OF THESE STANDARDS SHOULD BE REPRODUCED OR DISTRIBUTED IN ANY FORM OR BY ANY MEANS WITHOUT THE PRIOR WRITTEN PERMISSION OF SCRRA. ALL RIGHTS RESERVED.

METROLINK®
SOUTHERN CALIFORNIA REGIONAL RAIL AUTHORITY
ONE GATEWAY PLAZA, 12TH FLOOR, L. A., CA. 90012

ENGINEERING STANDARDS

TURNOUT LAYOUT
NO 14–136 LB RE LH WSM FROG TURNOUT
HST, SWITCH MACHINE ON TURNOUT SIDE

STANDARD 2805
SCALE: NTS
REVISION –
SHEET 1 OF 1
CADD FILE: ES2805–03

BILL OF MATERIAL					BILL OF MATERIAL				
ITEM	QTY	DESCRIPTION	DWG NO	SCRRA PART NO	ITEM	QTY	DESCRIPTION	DWG NO	SCRRA PART NO
1	1	SWITCH PACK, NO 14-136 LB RE MODIFIED TANGENTIAL, RH, HST	2805-14		11	352	TIE SCREW, CONCRETE 7/8" DIA x 6" HEX HEAD	-	
2	1	FROG PACK, NO 14-136 LB RE WSM, RH	2805-42		12	352	WASHER FLAT 7/8" TYPE A NARROW 15/16" x 1 3/4" x 0.134"	-	
3	1	GUARD RAIL ASSEMBLY BOLTLESS, 26'-0" LONG, 136 LB RE RAISED 1", STRAIGHT	2800-50		13	352	SPRING WASHER, DOUBLE COIL (Fe6)	-	
4	1	GUARD RAIL ASSEMBLY BOLTLESS, 26'-0" LONG, 136 LB RE RAISED 1", RH	2805-62		14	1	CONCRETE TIE SET, 0-83 + (3) 1:80 TIES, PLATE PADS, PIM INSERTS, RH	2805-30	
5	1	INSULATED RAIL ASSEMBLY, 48'-10 3/4" C/W BONDED INSULATED JOINT	-		15	342	CLIP PANDROL E2055	-	
6	1	INSULATED RAIL ASSEMBLY, 49'-0 1/4" C/W BONDED INSULATED JOINT	-		16	342	INSULATOR PANDROL FEATURES BASE HOLDOWN NYLON HD-10	-	
7	2	DRILLED RAIL, 136 LB RE, 30'-0" LONG	-		17	8	CLIP PANDROL E2063	-	
8	3	DRILLED RAIL, 136 LB RE, 38'-0" LONG	-		18	8	INSULATION, PANDROL NYLON 6790	-	
9	1	DRILLED RAIL, 136 LB RE, 40'-0" LONG	-		19	175	TIE PAD PANDROL 6993SR	-	
10	2	DRILLED RAIL, 136 LB RE, 48'-11 1/8" LONG	-		20	176	SHIM, TO REDUCE PLATE FLEXURE	-	

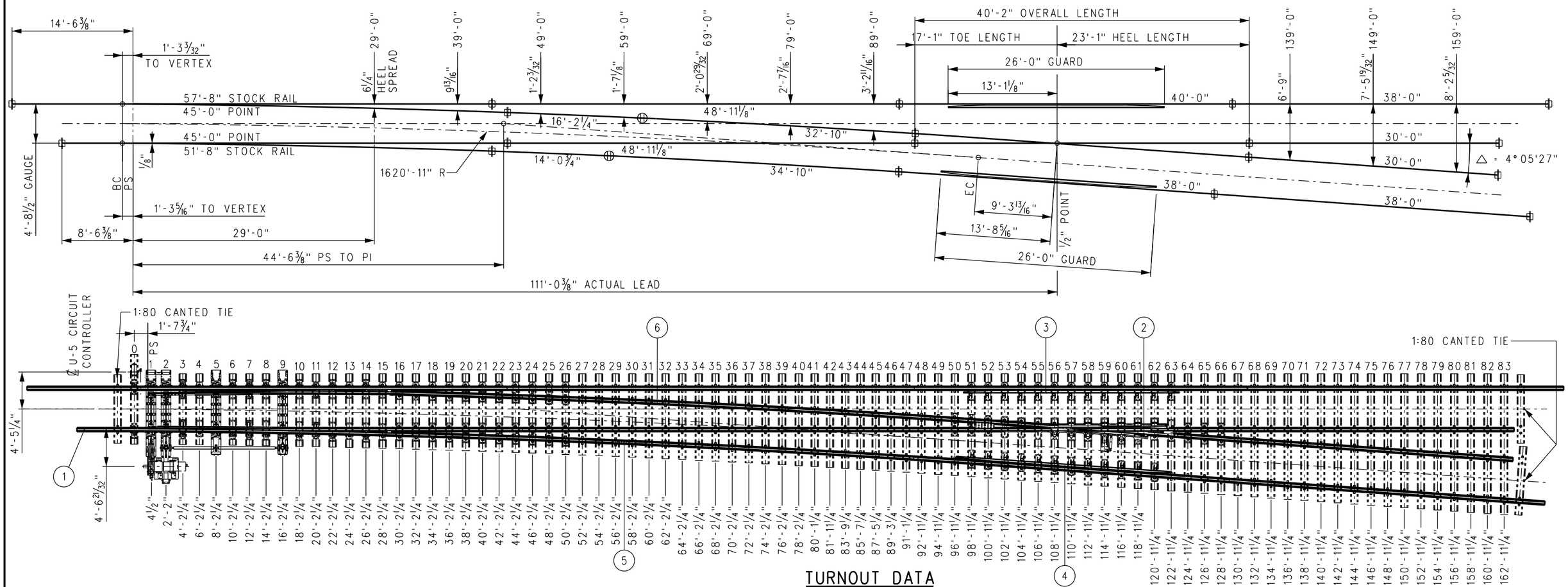

NOTES:

1. ALL RAILS SHALL HAVE IDENTIFICATION COLOR CODE PAINTED ON WEB, CLEAR OF JOINT AREA.
2. RAIL LENGTHS ALLOW 1/8" GAP BETWEEN RAIL JOINTS FOR WELDING.
3. GUARD RAILS ARE RAISED 1" AND FORM A 1 7/8" FLANGEWAY.
4. SWITCH MACHINE AND MACHINE PLATE (NIC) MUST BE COORDINATED WITH SCRRA.
5. ALL LENGTHS SHALL INCLUDE 1'-9" FROM TIE ENDS TO RAIL CENTERLINE, EXCEPT AS NOTED AND 1:80 CANTED TIES.
6. TIGHTEN TIE SCREW WITH DOUBLE COIL SPRING WASHER IN PLACE.
7. SCHWIHAG ROLLERS TO BE INSTALLED AND ADJUSTED IN THE FIELD.
8. ⊕ = INSULATED JOINT ⊕ = WELDED JOINT

TURNOUT DATA

FROG
- NO 14 △ = 4° 05'27"
- TOE LENGTH: 17'-1"
- HEEL LENGTH: 23'-1"
- TOTAL LENGTH: 40'-2"

SWITCH
- LENGTH OF POINTS: 45'-0"
- VERTEX DISTANCE: 1'-3 7/32"
- ENTRY ANGLE: 0° 29'50"
- THICKNESS AT POINT: 1/8"
- THROW AT ROD #1: 4 3/4"

ACTUAL LEAD: 111'-0 3/8"

CLOSURE AREA
- CENTERLINE RADIUS: 1620'-11"
- DEGREE OF CURVE: 3° 32'07"

DESIGN SPEEDS
- 35 MPH PASSENGER @ 3" UNBALANCE
- 25 MPH FREIGHT @ 2" UNBALANCE

REV.	DATE	DESCRIPTION	DES.	ENG.
X	XX-XX-XX	REVISION	XX	XX

DRAWN BY: HDR DATE: 03/31/2011

ASSISTANT DIRECTOR: STANDARDS & DESIGN

DIRECTOR OF ENGINEERING AND CONSTRUCTION

SCRRA ENGINEERING STANDARDS ARE INTENDED FOR SCRRA APPROVED USES ONLY. FOR NON-SCRRA APPROVED USES, SCRRA SHALL NOT BE RESPONSIBLE FOR THE ACCURACY OR COMPLETENESS OF THE DATA OR INFORMATION CONTAINED HEREIN. THE SELECTION AND USE OF THESE STANDARDS IS THE SOLE RESPONSIBILITY OF THE USER AND SHOULD NOT BE USED WITHOUT CONSULTING A REGISTERED PROFESSIONAL ENGINEER. ALL WARRANTIES AND REPRESENTATIONS OF ANY KIND ARE DISCLAIMED. ANYONE MAKING USE OF THIS INFORMATION AGREES THAT IT ASSUMES ALL LIABILITY ARISING FROM SUCH USE. NO PART OF THESE STANDARDS SHOULD BE REPRODUCED OR DISTRIBUTED IN ANY FORM OR BY ANY MEANS WITHOUT THE PRIOR WRITTEN PERMISSION OF SCRRA. ALL RIGHTS RESERVED.

METROLINK®

SOUTHERN CALIFORNIA REGIONAL RAIL AUTHORITY
ONE GATEWAY PLAZA, 12TH FLOOR, L. A., CA. 90012

ENGINEERING STANDARDS

TURNOUT LAYOUT
NO 14–136 LB RE RH WSM FROG TURNOUT
HST, SWITCH MACHINE ON TURNOUT SIDE

STANDARD 2805
SCALE: NTS
REVISION –
SHEET 1 OF 1
CADD FILE: ES2805–04

BILL OF MATERIAL				
ITEM	QTY	DESCRIPTION	DWG NO	SCRRA PART NO
1	1	HOLLOW SWITCH TIE & RODDING ASSEMBLY	ES2805-33	
2	1	SAMSON POINT, 45'-0" LONG, UR MANG TIP, STRAIGHT, LH	ES2805-21	
3	1	SAMSON POINT, 45'-0" LONG, UR MANG TIP, CURVED, RH	ES2805-22	
4	1	SAMSON STOCK RAIL, 51'-8" LONG, CURVED, LH	ES2805-25	
5	1	SAMSON STOCK RAIL, 57'-8" LONG, STRAIGHT, RH	ES2805-26	
6	2	SWITCH PLATE (BP1C-136)	ES2800-80	
7	10	SWITCH PLATE (BP2C-136)	ES2800-80	
8	6	SWITCH PLATE (P4C-136)	ES2800-80	
9	2	SWITCH PLATE, ROLLER SCHWIHAG RP-1-136	ES2800-96	
10	4	SWITCH PLATE, ROLLER SCHWIHAG RP-2-136	ES2800-97	
11	1	SWITCH PLATE (14-16LLC)	ES2805-81	
12	1	SWITCH PLATE (14-16LRC)	ES2805-81	
13	1	SWITCH PLATE (14-17LLC)	ES2805-81	
14	1	SWITCH PLATE (14-17LRC)	ES2805-81	
15	1	SWITCH PLATE (14-18LLC)	ES2805-81	

BILL OF MATERIAL				
ITEM	QTY	DESCRIPTION	DWG NO	SCRRA PART NO
16	1	SWITCH PLATE (14-18LRC)	ES2805-81	
17	1	SWITCH PLATE (14-19LLC)	ES2805-82	
18	1	SWITCH PLATE (14-19LRC)	ES2805-82	
19	2	SWITCH PLATE (14-20LC)	ES2805-82	
20	2	SWITCH PLATE (14-21LC)	ES2805-82	
21	2	SWITCH PLATE (14-22LC)	ES2805-82	
22	2	SWITCH PLATE (14-23LC)	ES2805-82	
23	2	SWITCH PLATE (14-24LC)	ES2805-83	
24	2	SWITCH PLATE (14-25LC)	ES2805-83	
25	2	SWITCH PLATE (14-26LC)	ES2805-83	
26	16	BRACE, BOLTLESS, 136 LB RE 'SUREFIT'	-	
27	16	WASHER, SERRATED FOR BOLTLESS BRACE	-	
28	98	CLIP, PANDROL, E2055	-	
29	2	ROLLER SCHWIHAG, SINGLE	-	
30	2	ROLLER SCHWIHAG, DOUBLE	-	
31	2	ROLLER SCHWIHAG, TRIPLE	-	

NOTES:

1. SEE DRAWING ES2805-31 FOR TIE LOCATION DIMENSIONS.
2. SWITCH RODS SHALL BE PREADJUSTED TO DIMENSIONS SHOWN IN DETAIL FOR EACH ROD LOCATION. MODIFY SPREADS AS NECESSARY WHEN INSTALLING INTO LAYOUT.

TYPICAL BOLTLESS BRACE ASSEMBLY

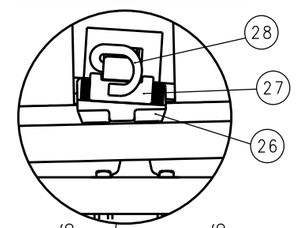

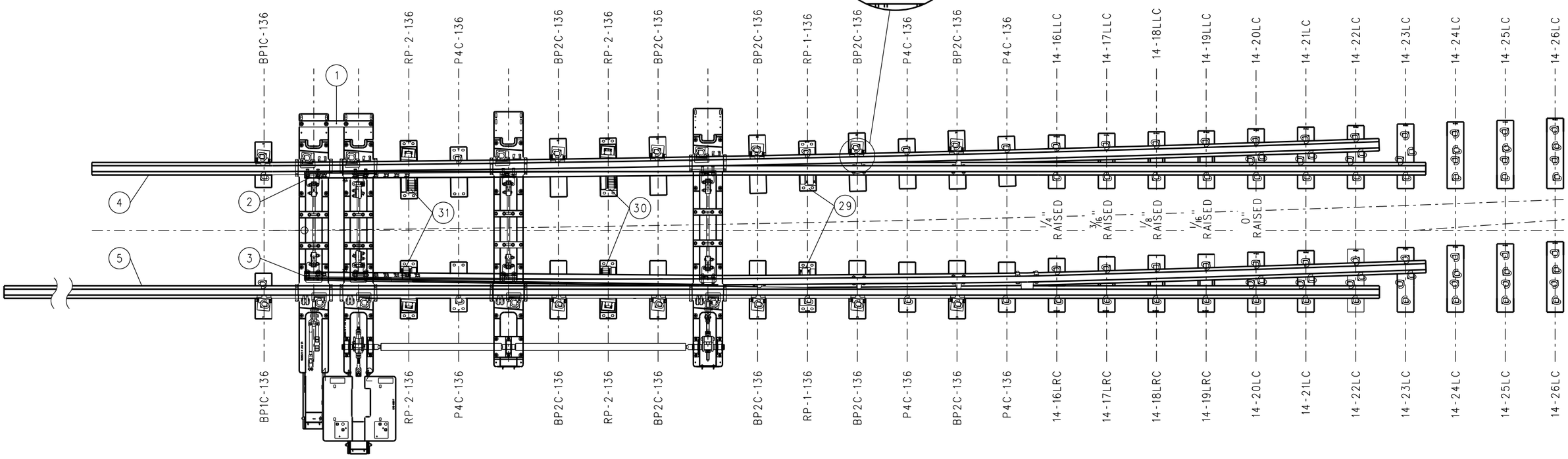

REV.	DATE	DESCRIPTION	DES.	ENG.
X	XX-XX-XX	REVISION	XX	XX

DRAWN BY: HDR DATE:

ASSISTANT DIRECTOR: STANDARDS & DESIGN

DIRECTOR OF ENGINEERING AND CONSTRUCTION

SCRRA ENGINEERING STANDARDS ARE INTENDED FOR SCRRA APPROVED USES ONLY. FOR NON-SCRRA APPROVED USES:
SCRRA SHALL NOT BE RESPONSIBLE FOR THE ACCURACY OR COMPLETENESS OF THE DATA OR INFORMATION CONTAINED HEREIN. THE SELECTION AND USE OF THESE STANDARDS IS THE SOLE RESPONSIBILITY OF THE USER AND SHOULD NOT BE USED WITHOUT CONSULTING A REGISTERED PROFESSIONAL ENGINEER. ALL WARRANTIES AND REPRESENTATIONS OF ANY KIND ARE DISCLAIMED. ANYONE MAKING USE OF THIS INFORMATION AGREES THAT IT ASSUMES ALL LIABILITY ARISING FROM SUCH USE. NO PART OF THESE STANDARDS SHOULD BE REPRODUCED OR DISTRIBUTED IN ANY FORM OR BY ANY MEANS WITHOUT THE PRIOR WRITTEN PERMISSION OF SCRRA. ALL RIGHTS RESERVED.

METROLINK®
SOUTHERN CALIFORNIA REGIONAL RAIL AUTHORITY
ONE GATEWAY PLAZA, 12TH FLOOR, L. A., CA. 90012

ENGINEERING STANDARDS

NO 14–136 LB RE LH SWITCH PACK,
HOLLOW STEEL TIES,
SWITCH MACHINE ON MAINLINE SIDE

STANDARD 2805
SCALE: NTS
REVISION –
SHEET 1 OF 1
CADD FILE: ES2805–11

BILL OF MATERIAL				
ITEM	QTY	DESCRIPTION	DWG NO	SCRRA PART NO
1	1	HOLLOW SWITCH TIE & RODDING ASSEMBLY	ES2805-32	16
2	1	SAMSON POINT, 45'-0" LONG, UR MANG TIP, CURVED, LH	ES2805-23	17
3	1	SAMSON POINT, 45'-0" LONG, UR MANG TIP, STRAIGHT, RH	ES2805-24	18
4	1	SAMSON STOCK RAIL, 57'-8" LONG, STRAIGHT, LH	ES2805-27	19
5	1	SAMSON STOCK RAIL, 51'-8" LONG, CURVED, RH	ES2805-28	20
6	2	SWITCH PLATE (BP1C-136)	ES2800-80	21
7	10	SWITCH PLATE (BP2C-136)	ES2800-80	22
8	6	SWITCH PLATE (P4C-136)	ES2800-80	23
9	2	SWITCH PLATE, ROLLER SCHWIHAG RP-1-136	ES2800-96	24
10	4	SWITCH PLATE, ROLLER SCHWIHAG RP-2-136	ES2800-97	25
11	1	SWITCH PLATE (14-16RLC)	ES2805-84	26
12	1	SWITCH PLATE (14-16RRC)	ES2805-84	27
13	1	SWITCH PLATE (14-17RLC)	ES2805-84	28
14	1	SWITCH PLATE (14-17RRC)	ES2805-84	29
15	1	SWITCH PLATE (14-18RLC)	ES2805-84	30
				31

BILL OF MATERIAL				
ITEM	QTY	DESCRIPTION	DWG NO	SCRRA PART NO
	1	SWITCH PLATE (14-18RRC)	ES2805-84	
	1	SWITCH PLATE (14-19RLC)	ES2805-85	
	1	SWITCH PLATE (14-19RRC)	ES2805-85	
	2	SWITCH PLATE (14-20RC)	ES2805-85	
	2	SWITCH PLATE (14-21RC)	ES2805-85	
	2	SWITCH PLATE (14-22RC)	ES2805-85	
	2	SWITCH PLATE (14-23RC)	ES2805-85	
	2	SWITCH PLATE (14-24RC)	ES2805-86	
	2	SWITCH PLATE (14-25RC)	ES2805-86	
	2	SWITCH PLATE (14-26RC)	ES2805-86	
	16	BRACE, BOLTLESS, 136 LB RE 'SUREFIT'	-	
	16	WASHER, SERRATED FOR BOLTLESS BRACE	-	
	96	CLIP, PANDROL, E2055	-	
	2	ROLLER SCHWIHAG, SINGLE	-	
	2	ROLLER SCHWIHAG, DOUBLE	-	
	2	ROLLER SCHWIHAG, TRIPLE	-	

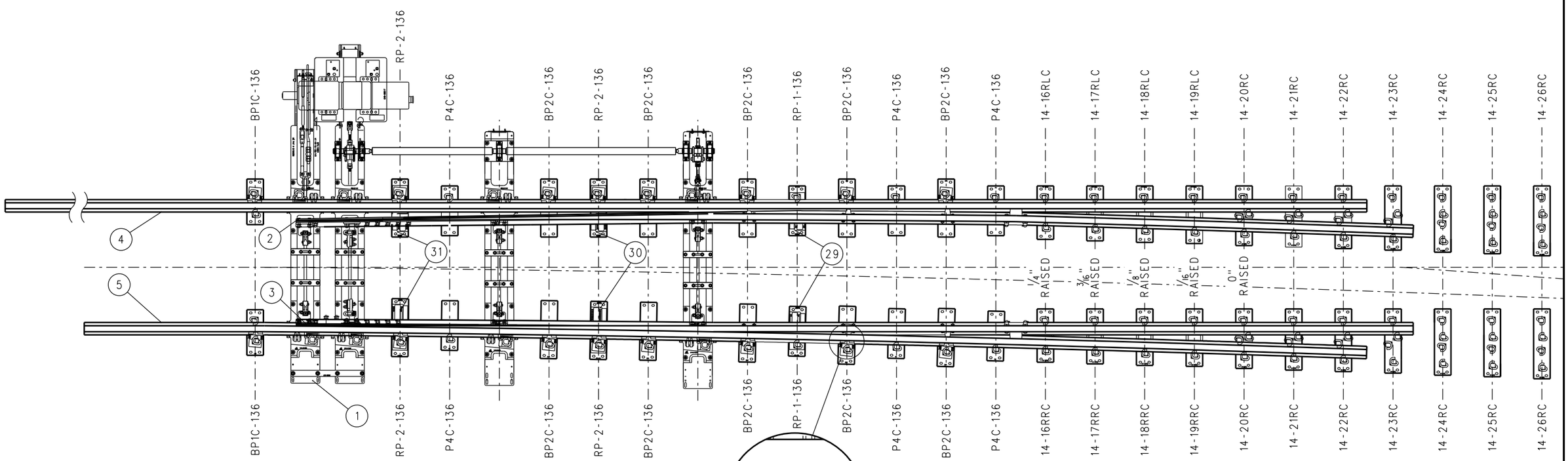

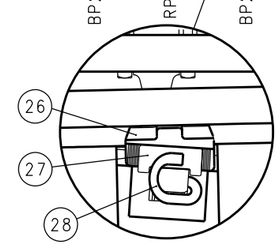

TYPICAL BOLTLESS BRACE ASSEMBLY

NOTES:

1. SEE DRAWING ES2805-31 FOR TIE LOCATION DIMENSIONS.
2. SWITCH RODS SHALL BE PREADJUSTED TO DIMENSIONS SHOWN IN DETAIL FOR EACH ROD LOCATION. MODIFY SPREADS AS NECESSARY WHEN INSTALLING INTO LAYOUT.

REV.	DATE	DESCRIPTION	DES.	ENG.
X	XX-XX-XX	REVISION	XX	XX

DRAWN BY: HDR DATE:

ASSISTANT DIRECTOR: STANDARDS & DESIGN

DIRECTOR OF ENGINEERING AND CONSTRUCTION

SCRRA ENGINEERING STANDARDS ARE INTENDED FOR SCRRA APPROVED USES ONLY. FOR NON-SCRRA APPROVED USES:
SCRRA SHALL NOT BE RESPONSIBLE FOR THE ACCURACY OR COMPLETENESS OF THE DATA OR INFORMATION CONTAINED HEREIN. THE SELECTION AND USE OF THESE STANDARDS IS THE SOLE RESPONSIBILITY OF THE USER AND SHOULD NOT BE USED WITHOUT CONSULTING A REGISTERED PROFESSIONAL ENGINEER. ALL WARRANTIES AND REPRESENTATIONS OF ANY KIND ARE DISCLAIMED. ANYONE MAKING USE OF THIS INFORMATION AGREES THAT IT ASSUMES ALL LIABILITY ARISING FROM SUCH USE. NO PART OF THESE STANDARDS SHOULD BE REPRODUCED OR DISTRIBUTED IN ANY FORM OR BY ANY MEANS WITHOUT THE PRIOR WRITTEN PERMISSION OF SCRRA. ALL RIGHTS RESERVED.

METROLINK®
SOUTHERN CALIFORNIA REGIONAL RAIL AUTHORITY
ONE GATEWAY PLAZA, 12TH FLOOR, L. A., CA. 90012

ENGINEERING STANDARDS

NO 14–136 LB RE RH SWITCH PACK,
HOLLOW STEEL TIES,
SWITCH MACHINE ON MAINLINE SIDE

STANDARD 2805
SCALE: NTS
REVISION –
SHEET 1 OF 1
CADD FILE: ES2805–12

BILL OF MATERIAL				
ITEM	QTY	DESCRIPTION	DWG NO	SCRRA PART NO
1	1	HOLLOW SWITCH TIE & RODDING ASSEMBLY	ES2805-35	
2	1	SAMSON POINT, 45'-0" LONG, UR MANG TIP, STRAIGHT, LH	ES2805-21	
3	1	SAMSON POINT, 45'-0" LONG, UR MANG TIP, CURVED, RH	ES2805-22	
4	1	SAMSON STOCK RAIL, 51'-8" LONG, CURVED, LH	ES2805-25	
5	1	SAMSON STOCK RAIL, 57'-8" LONG, STRAIGHT, RH	ES2805-26	
6	2	SWITCH PLATE (BP1C-136)	ES2800-80	
7	10	SWITCH PLATE (BP2C-136)	ES2800-80	
8	6	SWITCH PLATE (P4C-136)	ES2800-80	
9	2	SWITCH PLATE, ROLLER SCHWIHAG RP-1-136	ES2800-96	
10	4	SWITCH PLATE, ROLLER SCHWIHAG RP-2-136	ES2800-97	
11	1	SWITCH PLATE (14-16LLC)	ES2805-81	
12	1	SWITCH PLATE (14-16LRC)	ES2805-81	
13	1	SWITCH PLATE (14-17LLC)	ES2805-81	
14	1	SWITCH PLATE (14-17LRC)	ES2805-81	
15	1	SWITCH PLATE (14-18LLC)	ES2805-81	

BILL OF MATERIAL				
ITEM	QTY	DESCRIPTION	DWG NO	SCRRA PART NO
16	1	SWITCH PLATE (14-18LRC)	ES2805-81	
17	1	SWITCH PLATE (14-19LLC)	ES2805-82	
18	1	SWITCH PLATE (14-19LRC)	ES2805-82	
19	2	SWITCH PLATE (14-20LC)	ES2805-82	
20	2	SWITCH PLATE (14-21LC)	ES2805-82	
21	2	SWITCH PLATE (14-22LC)	ES2805-82	
22	2	SWITCH PLATE (14-23LC)	ES2805-82	
23	2	SWITCH PLATE (14-24LC)	ES2805-83	
24	2	SWITCH PLATE (14-25LC)	ES2805-83	
25	2	SWITCH PLATE (14-26LC)	ES2805-83	
26	16	BRACE, BOLTLESS, 136 LB RE 'SUREFIT'	-	
27	16	WASHER, SERRATED FOR BOLTLESS BRACE	-	
28	96	CLIP, PANDROL, E2055	-	
29	2	ROLLER SCHWIHAG, SINGLE	-	
30	2	ROLLER SCHWIHAG, DOUBLE	-	
31	2	ROLLER SCHWIHAG, TRIPLE	-	

NOTES:

1. SEE DRAWING ES2805-31 FOR TIE LOCATION DIMENSIONS.
2. SWITCH RODS SHALL BE PREADJUSTED TO DIMENSIONS SHOWN IN DETAIL FOR EACH ROD LOCATION. MODIFY SPREADS AS NECESSARY WHEN INSTALLING INTO LAYOUT.

TYPICAL BOLTLESS BRACE ASSEMBLY

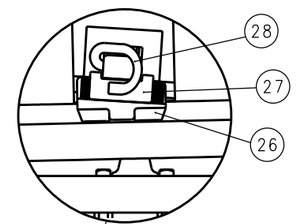

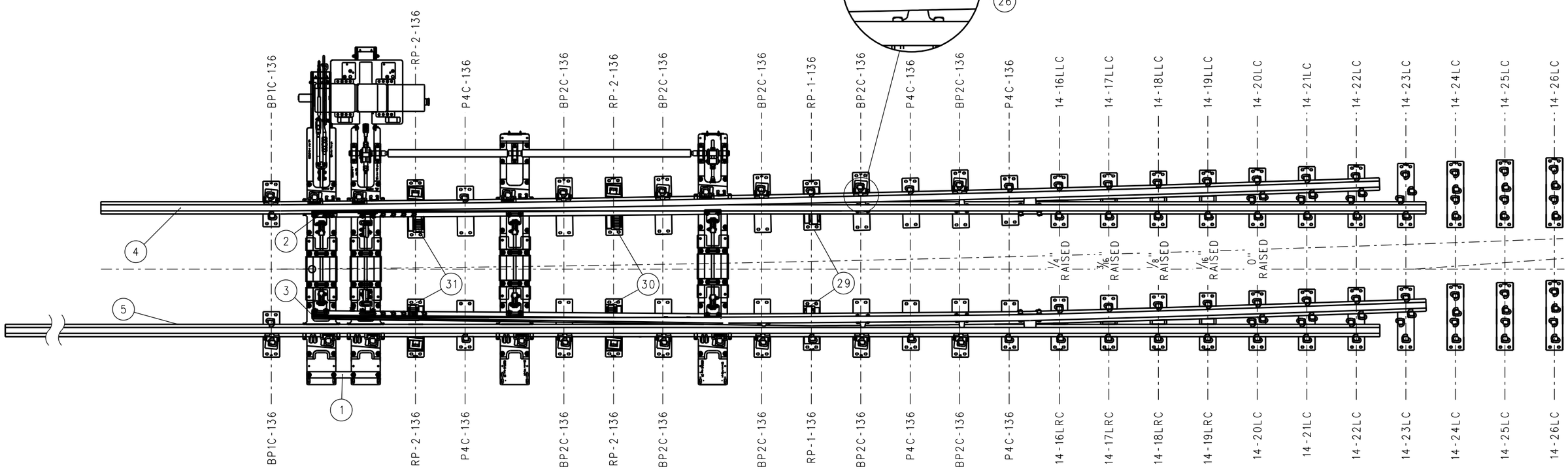

REV.	DATE	DESCRIPTION	DES.	ENG.
X	XX-XX-XX	REVISION	XX	XX

DRAWN BY: HDR DATE:

ASSISTANT DIRECTOR: STANDARDS & DESIGN

DIRECTOR OF ENGINEERING AND CONSTRUCTION

SCRRA ENGINEERING STANDARDS ARE INTENDED FOR SCRRA APPROVED USES ONLY. FOR NON-SCRRA APPROVED USES:
SCRRA SHALL NOT BE RESPONSIBLE FOR THE ACCURACY OR COMPLETENESS OF THE DATA OR INFORMATION CONTAINED HEREIN. THE SELECTION AND USE OF THESE STANDARDS IS THE SOLE RESPONSIBILITY OF THE USER AND SHOULD NOT BE USED WITHOUT CONSULTING A REGISTERED PROFESSIONAL ENGINEER. ALL WARRANTIES AND REPRESENTATIONS OF ANY KIND ARE DISCLAIMED. ANYONE MAKING USE OF THIS INFORMATION AGREES THAT IT ASSUMES ALL LIABILITY ARISING FROM SUCH USE. NO PART OF THESE STANDARDS SHOULD BE REPRODUCED OR DISTRIBUTED IN ANY FORM OR BY ANY MEANS WITHOUT THE PRIOR WRITTEN PERMISSION OF SCRRA. ALL RIGHTS RESERVED.

METROLINK®
SOUTHERN CALIFORNIA REGIONAL RAIL AUTHORITY
ONE GATEWAY PLAZA, 12TH FLOOR, L. A., CA. 90012

ENGINEERING STANDARDS

NO 14–136 LB RE LH SWITCH PACK, HOLLOW STEEL TIES, SWITCH MACHINE ON TURNOUT SIDE

STANDARD 2805
SCALE: NTS
REVISION –
SHEET 1 OF 1
CADD FILE: ES2805–13

BILL OF MATERIAL				
ITEM	QTY	DESCRIPTION	DWG NO	SCRRA PART NO
1	1	HOLLOW SWITCH TIE & RODDING ASSEMBLY	ES2805-34	
2	1	SAMSON POINT, 45'-0" LONG, UR MANG TIP, CURVED, LH	ES2805-23	
3	1	SAMSON POINT, 45'-0" LONG, UR MANG TIP, STRAIGHT, RH	ES2805-24	
4	1	SAMSON STOCK RAIL, 57'-8" LONG, STRAIGHT, LH	ES2805-27	
5	1	SAMSON STOCK RAIL, 51'-8" LONG, CURVED, RH	ES2805-28	
6	2	SWITCH PLATE (BP1C-136)	ES2800-80	
7	10	SWITCH PLATE (BP2C-136)	ES2800-80	
8	6	SWITCH PLATE (P4C-136)	ES2800-80	
9	2	SWITCH PLATE, ROLLER SCHWIHAG RP-1-136	ES2800-96	
10	4	SWITCH PLATE, ROLLER SCHWIHAG RP-2-136	ES2800-97	
11	1	SWITCH PLATE (14-16RLC)	ES2805-84	
12	1	SWITCH PLATE (14-16RRC)	ES2805-84	
13	1	SWITCH PLATE (14-17RLC)	ES2805-84	
14	1	SWITCH PLATE (14-17RRC)	ES2805-84	
15	1	SWITCH PLATE (14-18RLC)	ES2805-84	

BILL OF MATERIAL				
ITEM	QTY	DESCRIPTION	DWG NO	SCRRA PART NO
16	1	SWITCH PLATE (14-18RRC)	ES2805-84	
17	1	SWITCH PLATE (14-19RLC)	ES2805-85	
18	1	SWITCH PLATE (14-19RRC)	ES2805-85	
19	2	SWITCH PLATE (14-20RC)	ES2805-85	
20	2	SWITCH PLATE (14-21RC)	ES2805-85	
21	2	SWITCH PLATE (14-22RC)	ES2805-85	
22	2	SWITCH PLATE (14-23RC)	ES2805-85	
23	2	SWITCH PLATE (14-24RC)	ES2805-86	
24	2	SWITCH PLATE (14-25RC)	ES2805-86	
25	2	SWITCH PLATE (14-26RC)	ES2805-86	
26	16	BRACE, BOLTLESS, 136 LB RE 'SUREFIT'	-	
27	16	WASHER, SERRATED FOR BOLTLESS BRACE	-	
28	98	CLIP, PANDROL, E2055	-	
29	2	ROLLER SCHWIHAG, SINGLE	-	
30	2	ROLLER SCHWIHAG, DOUBLE	-	
31	2	ROLLER SCHWIHAG, TRIPLE	-	

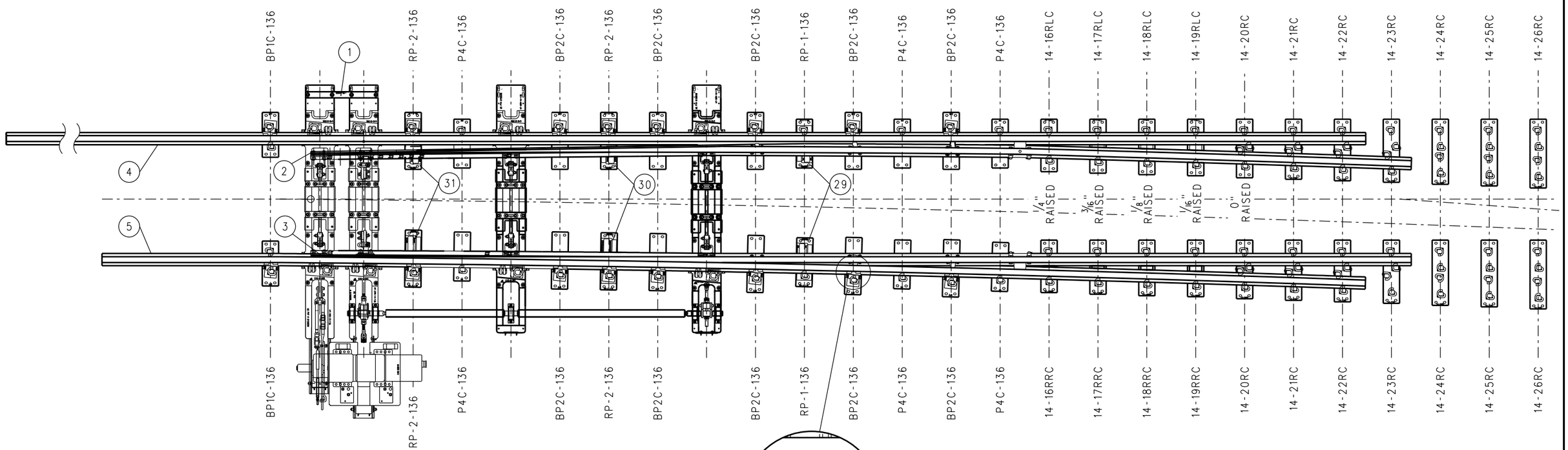

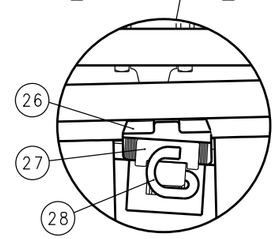

TYPICAL BOLTLESS BRACE ASSEMBLY

NOTES:

1. SEE DRAWING ES2805-31 FOR TIE LOCATION DIMENSIONS.
2. SWITCH RODS SHALL BE PREADJUSTED TO DIMENSIONS SHOWN IN DETAIL FOR EACH ROD LOCATION. MODIFY SPREADS AS NECESSARY WHEN INSTALLING INTO LAYOUT.

REV.	DATE	DESCRIPTION	DES.	ENG.
X	XX-XX-XX	REVISION	XX	XX

DRAWN BY: DRAFTER DATE:

ASSISTANT DIRECTOR: STANDARDS & DESIGN

DIRECTOR OF ENGINEERING AND CONSTRUCTION

SCRRA ENGINEERING STANDARDS ARE INTENDED FOR SCRRA APPROVED USES ONLY. FOR NON-SCRRA APPROVED USES:
SCRRA SHALL NOT BE RESPONSIBLE FOR THE ACCURACY OR COMPLETENESS OF THE DATA OR INFORMATION CONTAINED HEREIN. THE SELECTION AND USE OF THESE STANDARDS IS THE SOLE RESPONSIBILITY OF THE USER AND SHOULD NOT BE USED WITHOUT CONSULTING A REGISTERED PROFESSIONAL ENGINEER. ALL WARRANTIES AND REPRESENTATIONS OF ANY KIND ARE DISCLAIMED. ANYONE MAKING USE OF THIS INFORMATION AGREES THAT IT ASSUMES ALL LIABILITY ARISING FROM SUCH USE. NO PART OF THESE STANDARDS SHOULD BE REPRODUCED OR DISTRIBUTED IN ANY FORM OR BY ANY MEANS WITHOUT THE PRIOR WRITTEN PERMISSION OF SCRRA. ALL RIGHTS RESERVED.

METROLINK®

SOUTHERN CALIFORNIA REGIONAL RAIL AUTHORITY
ONE GATEWAY PLAZA, 12TH FLOOR, L. A., CA. 90012

ENGINEERING STANDARDS

NO 14–136 LB RE RH SWITCH PACK,
HOLLOW STEEL TIES,
SWITCH MACHINE ON TURNOUT SIDE

STANDARD 2805
SCALE: NTS
REVISION –
SHEET 1 OF 1
CADD FILE: ES2805–14

BILL OF MATERIAL				BILL OF MATERIAL			
ITEM	QTY	DESCRIPTION	SCRRA PART NO	ITEM	QTY	DESCRIPTION	SCRRA PART NO
1	1	SAMSON POINT RAIL, 45'-0" LONG, UR MANG TIP, STRAIGHT, LH		10	3	BOLT, 1" DIA x 3¾" LONG, THIN SQ HEAD DRILLED @ 3¼", GR 5	
2	1	MANGANESE TIP, LH, FOR 29'-0", 136 LB RE SAMSON SWITCH POINT		11	5	BOLT, 1" DIA x 4" LONG, THIN SQ HEAD DRILLED @ 3½", GR 5	
3	1	REINFORCING BAR, STOCK SIDE, ½" x 22'-11⅞" LONG, SAMSON, LH POINT		12	19	BOLT, 1" DIA x 3¾" LONG, SQ HEAD DRILLED @ 3⅜", GR 5	
4	1	REINFORCING BAR, GAUGE SIDE, ½" x 27'-4" LONG, SAMSON, LH POINT		13	6	NUT, ¾" DIA HEAVY HEX, GR 5	
5	1	POINT STOP 2 1/16" HIGH		14	27	NUT, 1" DIA HEAVY HEX, GR 5	
6	1	POINT STOP 3 1/16" HIGH		15	6	SPRING WASHER, ¾" DIA	
7	1	POINT STOP 4 3/16" HIGH		16	27	SPRING WASHER, 1" DIA	
8	1	HEEL BLOCK ASSEMBLY, FLOATING C/W HARDWARE		17	6	COTTER PIN, 3/16" DIA x 1¾" LONG	
9	6	BOLT, ¾" DIA x 4" LONG, SQ HEAD DRILLED @ 3 21/32", GR 5		18	27	COTTER PIN, ¼" DIA x 2" LONG	

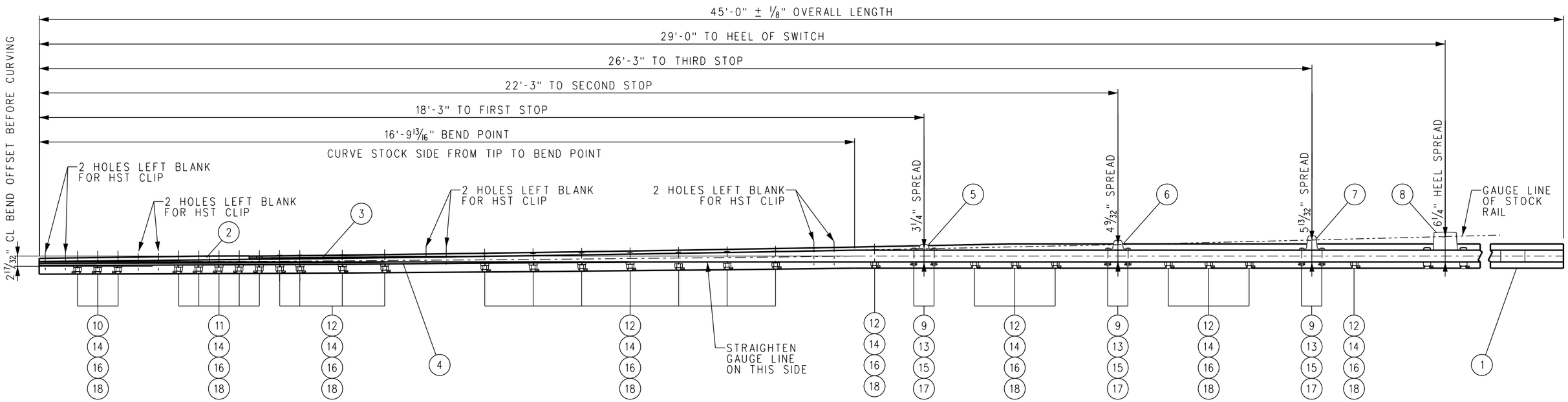

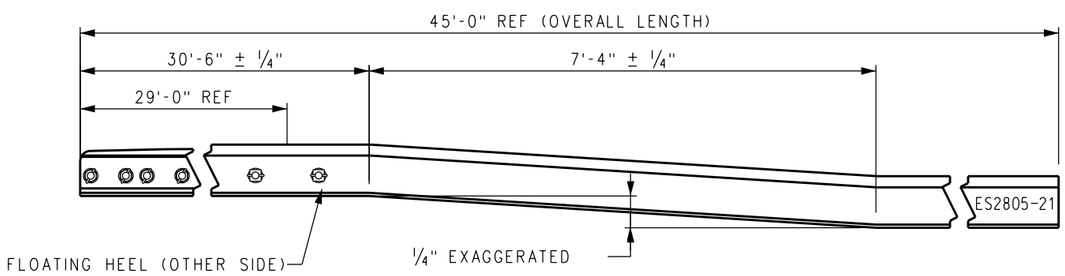

SIDE VIEW - VERTICAL BENDING DETAIL

NOTES:

1. ROUND EDGES OF SWITCH STOPS AT CONTACT AREAS, ½" R.
2. BEVEL ALL BOLT HOLES.
3. WRITE SCRRA ES NUMBER ON WEB OF RAIL WITH WATERPROOF MARKER OR PAINT.

REV.	DATE	DESCRIPTION	DES.	ENG.
X	XX-XX-XX	REVISION	XX	XX

DRAWN BY: HDR DATE:

ASSISTANT DIRECTOR: STANDARDS & DESIGN

DIRECTOR OF ENGINEERING AND CONSTRUCTION

SCRRA ENGINEERING STANDARDS ARE INTENDED FOR SCRRA APPROVED USES ONLY. FOR NON-SCRRA APPROVED USES: SCRRA SHALL NOT BE RESPONSIBLE FOR THE ACCURACY OR COMPLETENESS OF THE DATA OR INFORMATION CONTAINED HEREIN. THE SELECTION AND USE OF THESE STANDARDS IS THE SOLE RESPONSIBILITY OF THE USER AND SHOULD NOT BE USED WITHOUT CONSULTING A REGISTERED PROFESSIONAL ENGINEER. ALL WARRANTIES AND REPRESENTATIONS OF ANY KIND ARE DISCLAIMED. ANYONE MAKING USE OF THIS INFORMATION AGREES THAT IT ASSUMES ALL LIABILITY ARISING FROM SUCH USE. NO PART OF THESE STANDARDS SHOULD BE REPRODUCED OR DISTRIBUTED IN ANY FORM OR BY ANY MEANS WITHOUT THE PRIOR WRITTEN PERMISSION OF SCRRA. ALL RIGHTS RESERVED.

METROLINK®

SOUTHERN CALIFORNIA REGIONAL RAIL AUTHORITY
ONE GATEWAY PLAZA, 12TH FLOOR, L. A., CA. 90012

ENGINEERING STANDARDS

SWITCH POINT ASSEMBLY,
136 LB RE SAMSON, STRAIGHT, LH
NO 14 LH TURNOUT
45'-0" OVERALL LENGTH MANGANESE TIP

STANDARD: 2805
SCALE: NTS
REVISION: –
SHEET: 1 OF 1
CADD FILE: ES2805-21

BILL OF MATERIAL			
ITEM	QTY	DESCRIPTION	SCRRA PART NO
1	1	SAMSON POINT RAIL, 45'-0" LONG, UR MANG TIP, CURVED, RH	
2	1	MANGANESE TIP, RH, FOR 29'-0", 136 LB RE SAMSON SWITCH POINT	
3	1	REINFORCING BAR, STOCK SIDE, 1/2" x 22'-11 7/8" LONG, SAMSON, RH POINT	
4	1	REINFORCING BAR, GAUGE SIDE, 1/2" x 27'-4" LONG, SAMSON, RH POINT	
5	1	POINT STOP 2 1/16" HIGH	
6	1	POINT STOP 3 1/16" HIGH	
7	1	POINT STOP 4 3/16" HIGH	
8	1	HEEL BLOCK ASSEMBLY, FLOATING C/W HARDWARE	
9	6	BOLT, 3/4" DIA x 4" LONG, SQ HEAD DRILLED @ 3 21/32", GR 5	

BILL OF MATERIAL			
ITEM	QTY	DESCRIPTION	SCRRA PART NO
10	3	BOLT, 1" DIA x 3 3/4" LONG, THIN SQ HEAD DRILLED @ 3 1/4", GR 5	
11	5	BOLT, 1" DIA x 4" LONG, THIN SQ HEAD DRILLED @ 3 1/2", GR 5	
12	19	BOLT, 1" DIA x 3 3/4" LONG, SQ HEAD DRILLED @ 3 3/8", GR 5	
13	6	NUT, 3/4" DIA HEAVY HEX, GR 5	
14	27	NUT, 1" DIA HEAVY HEX, GR 5	
15	6	SPRING WASHER, 3/4" DIA	
16	27	SPRING WASHER, 1" DIA	
17	6	COTTER PIN, 3/16" DIA x 1 3/4" LONG	
18	27	COTTER PIN, 1/4" DIA x 2" LONG	

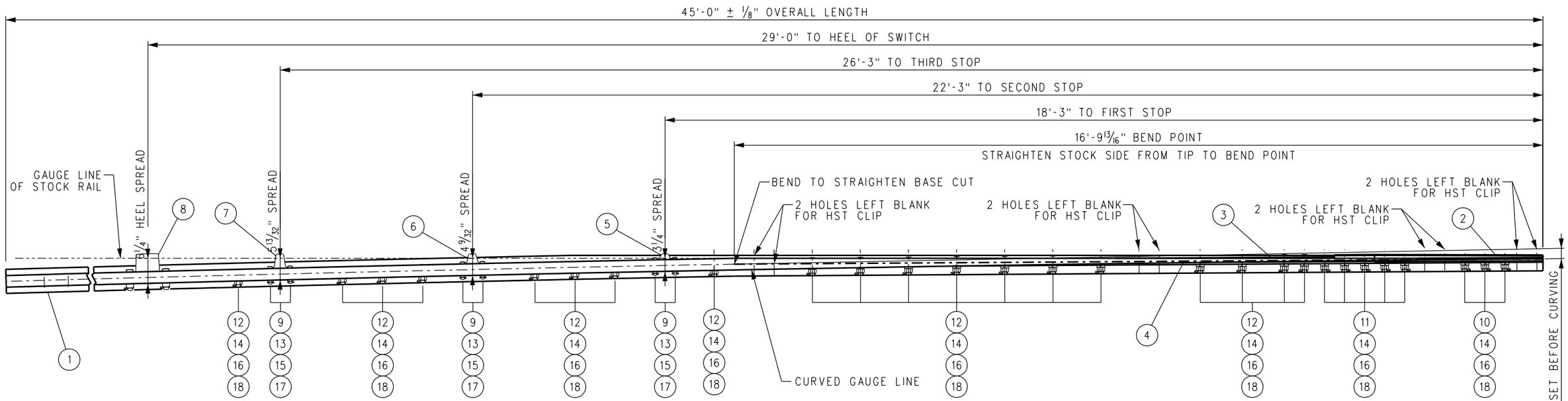

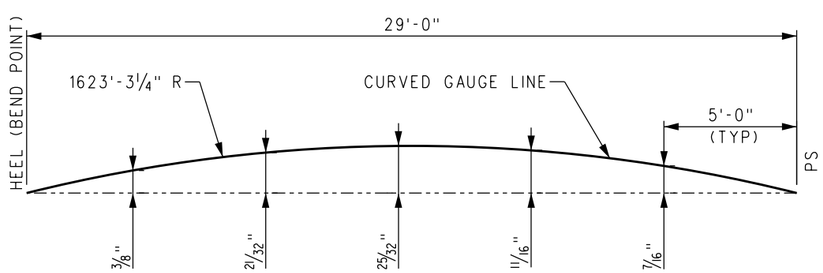

LATERAL CURVING DETAIL
GAUGE SIDE

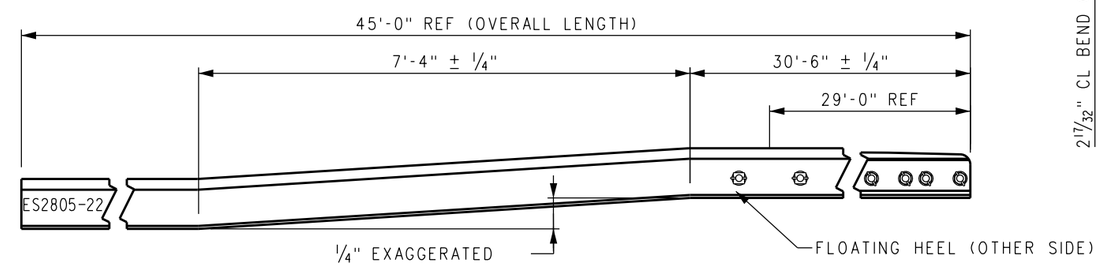

SIDE VIEW - VERTICAL BENDING DETAIL

NOTES:

1. ROUND EDGES OF SWITCH STOPS AT CONTACT AREAS, 1/2" R.
2. BEVEL ALL BOLT HOLES.
3. WRITE SCRRA ES NUMBER ON WEB OF RAIL WITH WATERPROOF MARKER OR PAINT.

REV.	DATE	DESCRIPTION	DES.	ENG.
X	XX-XX-XX	REVISION	XX	XX

DRAWN BY: HDR DATE:

ASSISTANT DIRECTOR: STANDARDS & DESIGN

DIRECTOR OF ENGINEERING AND CONSTRUCTION

SCRRA ENGINEERING STANDARDS ARE INTENDED FOR SCRRA APPROVED USES ONLY. FOR NON-SCRRA APPROVED USES:
SCRRA SHALL NOT BE RESPONSIBLE FOR THE ACCURACY OR COMPLETENESS OF THE DATA OR INFORMATION CONTAINED HEREIN. THE SELECTION AND USE OF THESE STANDARDS IS THE SOLE RESPONSIBILITY OF THE USER AND SHOULD NOT BE USED WITHOUT CONSULTING A REGISTERED PROFESSIONAL ENGINEER. ALL WARRANTIES AND REPRESENTATIONS OF ANY KIND ARE DISCLAIMED. ANYONE MAKING USE OF THIS INFORMATION AGREES THAT IT ASSUMES ALL LIABILITY ARISING FROM SUCH USE. NO PART OF THESE STANDARDS SHOULD BE REPRODUCED OR DISTRIBUTED IN ANY FORM OR BY ANY MEANS WITHOUT THE PRIOR WRITTEN PERMISSION OF SCRRA. ALL RIGHTS RESERVED.

METROLINK®
SOUTHERN CALIFORNIA REGIONAL RAIL AUTHORITY
ONE GATEWAY PLAZA, 12TH FLOOR, L. A., CA. 90012

ENGINEERING STANDARDS
SWITCH POINT ASSEMBLY,
136 LB RE SAMSON, CURVED, RH
NO 14 LH TURNOUT
45'-0" OVERALL LENGTH MANGANESE TIP

STANDARD 2805
SCALE: NTS
REVISION –
SHEET 1 OF 1
CADD FILE: ES2805-22

BILL OF MATERIAL				BILL OF MATERIAL			
ITEM	QTY	DESCRIPTION	SCRRA PART NO	ITEM	QTY	DESCRIPTION	SCRRA PART NO
1	1	SAMSON POINT RAIL, 45'-0" LONG, UR MANG TIP, CURVED, LH		10	3	BOLT, 1" DIA x 3¾" LONG, THIN SQ HEAD DRILLED @ 3¼", GR 5	
2	1	MANGANESE TIP, LH, FOR 29'-0", 136 LB RE SAMSON SWITCH POINT		11	5	BOLT, 1" DIA x 4" LONG, THIN SQ HEAD DRILLED @ 3½", GR 5	
3	1	REINFORCING BAR, STOCK SIDE, ½" x 22'-11⅞" LONG, SAMSON, LH POINT		12	19	BOLT, 1" DIA x 3¾" LONG, SQ HEAD DRILLED @ 3⅜", GR 5	
4	1	REINFORCING BAR, GAUGE SIDE, ½" x 27'-4" LONG, SAMSON, LH POINT		13	6	NUT, ¾" DIA HEAVY HEX, GR 5	
5	1	POINT STOP 2 1/16" HIGH		14	27	NUT, 1" DIA HEAVY HEX, GR 5	
6	1	POINT STOP 3 1/16" HIGH		15	6	SPRING WASHER, ¾" DIA	
7	1	POINT STOP 4 3/16" HIGH		16	27	SPRING WASHER, 1" DIA	
8	1	HEEL BLOCK ASSEMBLY, FLOATING C/W HARDWARE		17	6	COTTER PIN, 3/16" DIA x 1¾" LONG	
9	6	BOLT, ¾" DIA x 4" LONG, SQ HEAD DRILLED @ 3 21/32", GR 5		18	27	COTTER PIN, ¼" DIA x 2" LONG	

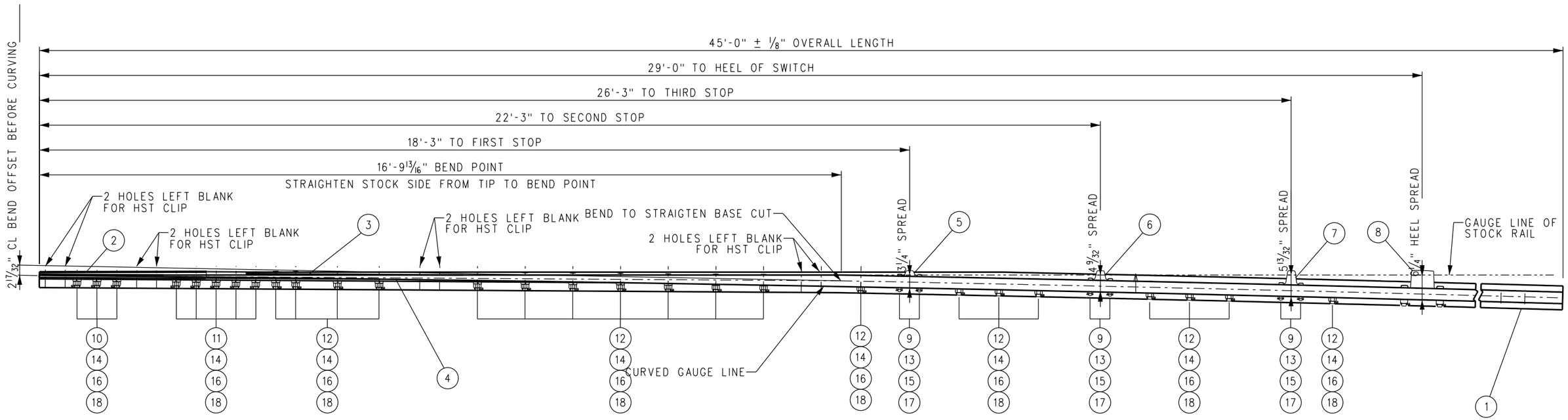

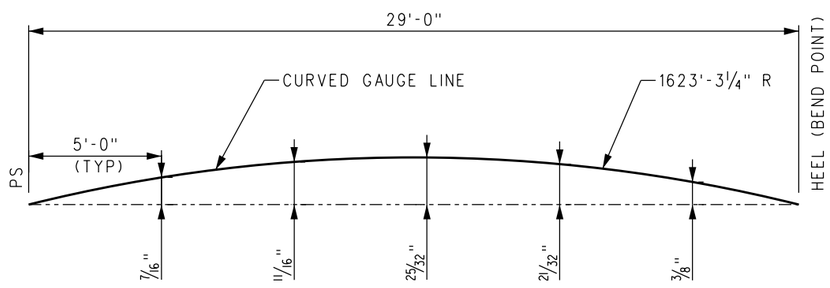

LATERAL CURVING DETAIL

GAUGE SIDE

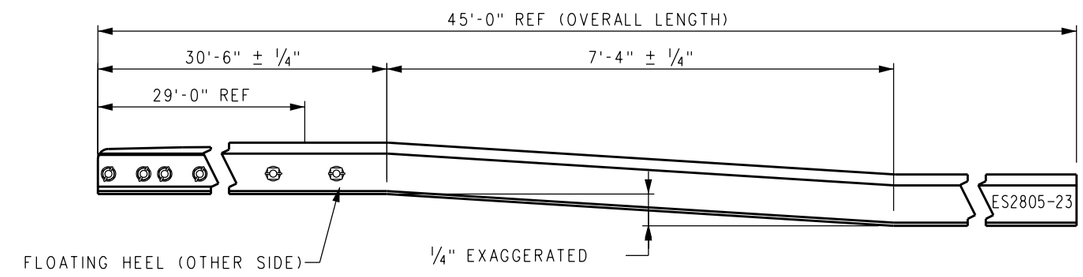

SIDE VIEW - VERTICAL BENDING DETAIL

NOTES:

1. ROUND EDGES OF SWITCH STOPS AT CONTACT AREAS, ½" R.
2. BEVEL ALL BOLT HOLES.
3. WRITE SCRRA ES NUMBER ON WEB OF RAIL WITH WATERPROOF MARKER OR PAINT.

REV.	DATE	DESCRIPTION	DES.	ENG.
X	XX-XX-XX	REVISION	XX	XX

DRAWN BY: HDR DATE:

ASSISTANT DIRECTOR: STANDARDS & DESIGN

DIRECTOR OF ENGINEERING AND CONSTRUCTION

SCRRA ENGINEERING STANDARDS ARE INTENDED FOR SCRRA APPROVED USES ONLY. FOR NON-SCRRA APPROVED USES:
SCRRA SHALL NOT BE RESPONSIBLE FOR THE ACCURACY OR COMPLETENESS OF THE DATA OR INFORMATION CONTAINED HEREIN. THE SELECTION AND USE OF THESE STANDARDS IS THE SOLE RESPONSIBILITY OF THE USER AND SHOULD NOT BE USED WITHOUT CONSULTING A REGISTERED PROFESSIONAL ENGINEER. ALL WARRANTIES AND REPRESENTATIONS OF ANY KIND ARE DISCLAIMED. ANYONE MAKING USE OF THIS INFORMATION AGREES THAT IT ASSUMES ALL LIABILITY ARISING FROM SUCH USE. NO PART OF THESE STANDARDS SHOULD BE REPRODUCED OR DISTRIBUTED IN ANY FORM OR BY ANY MEANS WITHOUT THE PRIOR WRITTEN PERMISSION OF SCRRA. ALL RIGHTS RESERVED.

METROLINK®

SOUTHERN CALIFORNIA REGIONAL RAIL AUTHORITY
ONE GATEWAY PLAZA, 12TH FLOOR, L. A., CA. 90012

ENGINEERING STANDARDS

SWITCH POINT ASSEMBLY,
136 LB RE SAMSON, CURVED, LH
NO 14 RH TURNOUT
45'–0" OVERALL LENGTH MANGANESE TIP

STANDARD 2805
SCALE: NTS
REVISION –
SHEET 1 OF 1
CADD FILE: ES2805–23

BILL OF MATERIAL			
ITEM	QTY	DESCRIPTION	SCRRA PART NO
1	1	SAMSON POINT RAIL, 45'-0" LONG, UR MANG TIP, STRAIGHT, RH	
2	1	MANGANESE TIP, RH, FOR 29'-0", 136 LB RE SAMSON SWITCH POINT	
3	1	REINFORCING BAR, STOCK SIDE, 1/2" x 22'-11 7/8" LONG, SAMSON, RH POINT	
4	1	REINFORCING BAR, GAUGE SIDE, 1/2" x 27'-4" LONG, SAMSON, RH POINT	
5	1	POINT STOP 2 1/16" HIGH	
6	1	POINT STOP 3 1/16" HIGH	
7	1	POINT STOP 4 3/16" HIGH	
8	1	HEEL BLOCK ASSEMBLY, FLOATING C/W HARDWARE	
9	6	BOLT, 3/4" DIA x 4" LONG, SQ HEAD DRILLED @ 3 21/32", GR 5	

BILL OF MATERIAL			
ITEM	QTY	DESCRIPTION	SCRRA PART NO
10	3	BOLT, 1" DIA x 3 3/4" LONG, THIN SQ HEAD DRILLED @ 3 1/4", GR 5	
11	5	BOLT, 1" DIA x 4" LONG, THIN SQ HEAD DRILLED @ 3 1/2", GR 5	
12	19	BOLT, 1" DIA x 3 3/4" LONG, SQ HEAD DRILLED @ 3 3/8", GR 5	
13	6	NUT, 3/4" DIA HEAVY HEX, GR 5	
14	27	NUT, 1" DIA HEAVY HEX, GR 5	
15	6	SPRING WASHER, 3/4" DIA	
16	27	SPRING WASHER, 1" DIA	
17	6	COTTER PIN, 3/16" DIA x 1 3/4" LONG	
18	27	COTTER PIN, 1/4" DIA x 2" LONG	

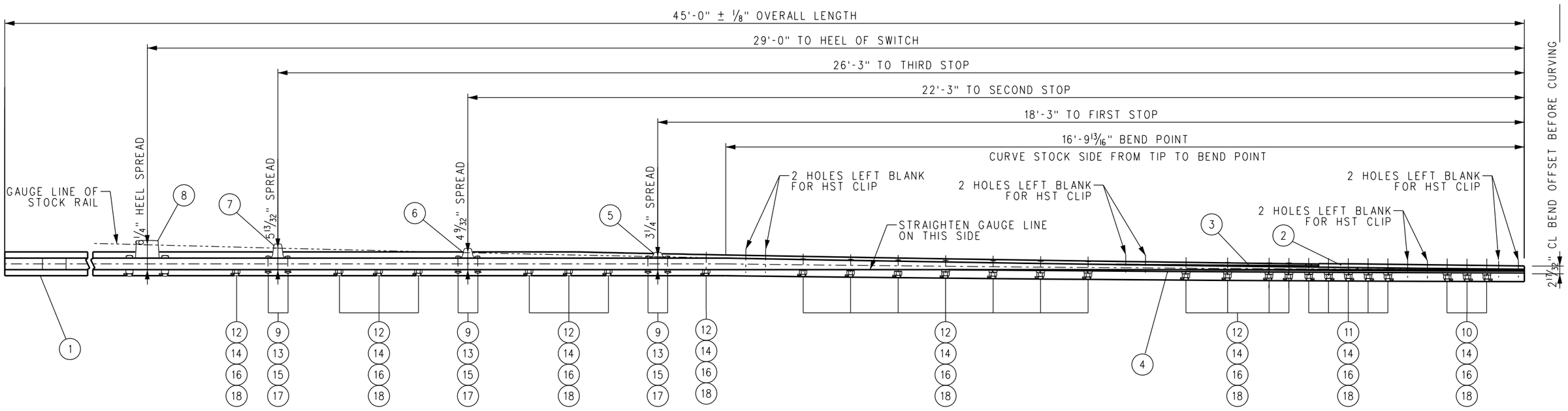

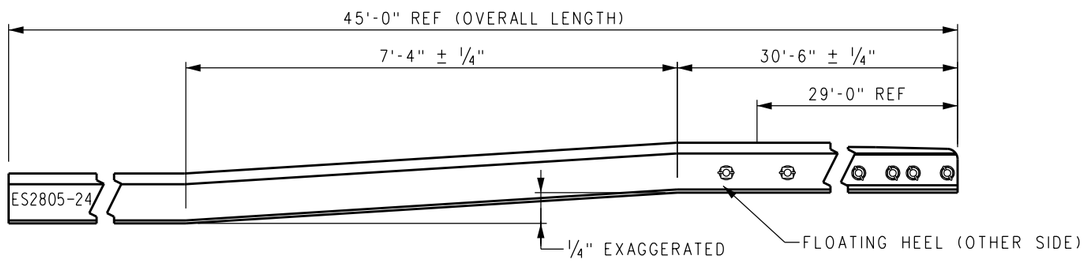

SIDE VIEW - VERTICAL BENDING DETAIL

NOTES:

1. ROUND EDGES OF SWITCH STOPS AT CONTACT AREAS, 1/2" R.
2. BEVEL ALL BOLT HOLES.
3. WRITE SCRRA ES NUMBER ON WEB OF RAIL WITH WATERPROOF MARKER OR PAINT.

REV.	DATE	DESCRIPTION	DES.	ENG.
X	XX-XX-XX	REVISION	XX	XX

DRAWN BY: HDR DATE:

ASSISTANT DIRECTOR: STANDARDS & DESIGN

DIRECTOR OF ENGINEERING AND CONSTRUCTION

SCRRA ENGINEERING STANDARDS ARE INTENDED FOR SCRRA APPROVED USES ONLY. FOR NON-SCRRA APPROVED USES: SCRRA SHALL NOT BE RESPONSIBLE FOR THE ACCURACY OR COMPLETENESS OF THE DATA OR INFORMATION CONTAINED HEREIN. THE SELECTION AND USE OF THESE STANDARDS IS THE SOLE RESPONSIBILITY OF THE USER AND SHOULD NOT BE USED WITHOUT CONSULTING A REGISTERED PROFESSIONAL ENGINEER. ALL WARRANTIES AND REPRESENTATIONS OF ANY KIND ARE DISCLAIMED. ANYONE MAKING USE OF THIS INFORMATION AGREES THAT IT ASSUMES ALL LIABILITY ARISING FROM SUCH USE. NO PART OF THESE STANDARDS SHOULD BE REPRODUCED OR DISTRIBUTED IN ANY FORM OR BY ANY MEANS WITHOUT THE PRIOR WRITTEN PERMISSION OF SCRRA. ALL RIGHTS RESERVED.

METROLINK

SOUTHERN CALIFORNIA REGIONAL RAIL AUTHORITY
ONE GATEWAY PLAZA, 12TH FLOOR, L. A., CA. 90012

ENGINEERING STANDARDS

SWITCH POINT ASSEMBLY,
136 LB RE SAMSON, STRAIGHT, RH
NO 14 RH TURNOUT
45'-0" OVERALL LENGTH MANGANESE TIP

STANDARD: 2805
SCALE: NTS
REVISION: –
SHEET: 1 OF 1
CADD FILE: ES2805-24

BILL OF MATERIAL			
ITEM	QTY	DESCRIPTION	SCRRA PART NO
1	1	RAIL, 136 LB RE 51'-8" LONG	

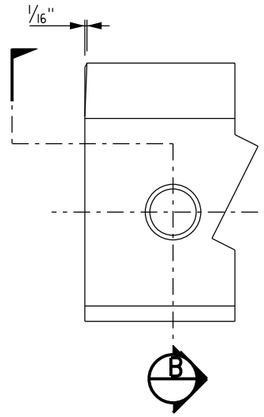

RAIL END/HOLE BEVELING DETAIL

RAIL HEAD ONLY - NOT BASE

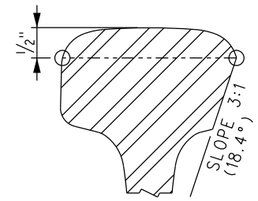

PARTIAL SECTION A

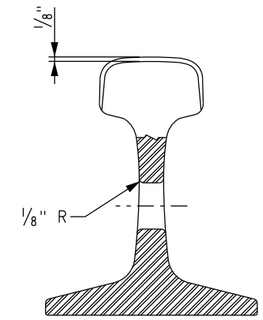

SECTION B

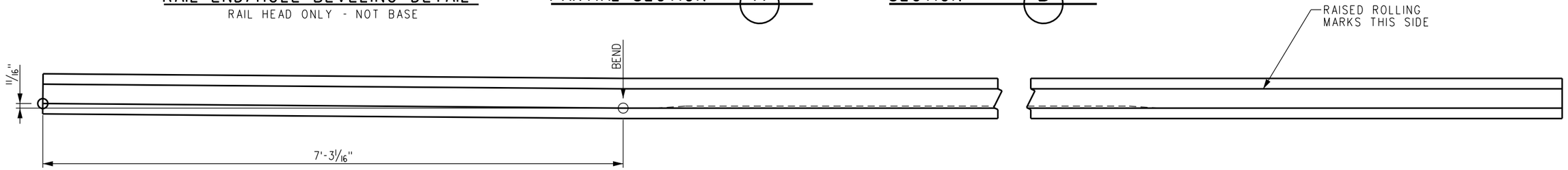

BENDING DETAILS

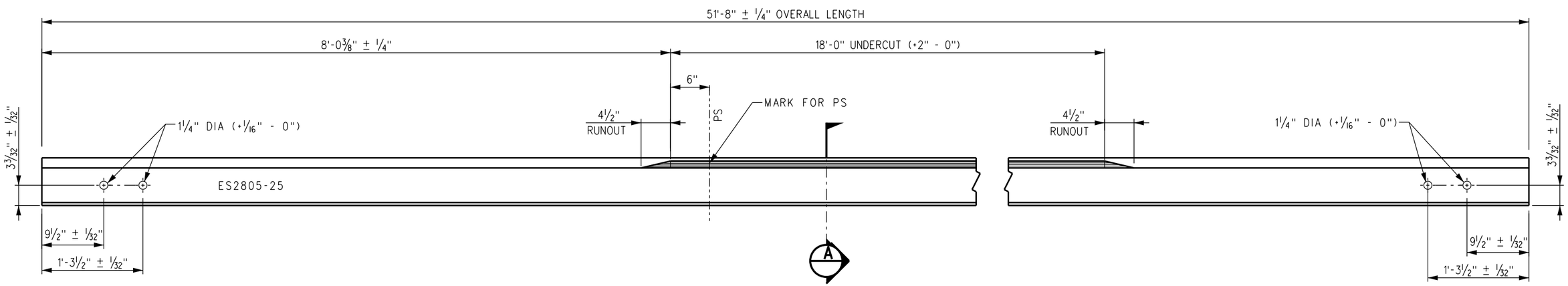

MACHINING DETAILS

NOTES:

1. ALL BURNING METHODS PROHIBITED.
2. ALL BOLT HOLES TO BE BEVELED PER DETAIL.
3. POINT OF SWITCH TO BE MARKED ON GAUGE SIDE OF WEB WITH A WHITE LINE USING WATERPROOF MARKER OR PAINT.
4. WRITE SCRRA ES NUMBER ON WEB OF RAIL WITH WATERPROOF MARKER OR PAINT.

REV.	DATE	DESCRIPTION	DES.	ENG.
X	XX-XX-XX	REVISION	XX	XX

DRAWN BY: HDR DATE: 03/31/2011

ASSISTANT DIRECTOR: STANDARDS & DESIGN

DIRECTOR OF ENGINEERING AND CONSTRUCTION

SCRRA ENGINEERING STANDARDS ARE INTENDED FOR SCRRA APPROVED USES ONLY. FOR NON-SCRRA APPROVED USES, SCRRA SHALL NOT BE RESPONSIBLE FOR THE ACCURACY OR COMPLETENESS OF THE DATA OR INFORMATION CONTAINED HEREIN. THE SELECTION AND USE OF THESE STANDARDS IS THE SOLE RESPONSIBILITY OF THE USER AND SHOULD NOT BE USED WITHOUT CONSULTING A REGISTERED PROFESSIONAL ENGINEER. ALL WARRANTIES AND REPRESENTATIONS OF ANY KIND ARE DISCLAIMED. ANYONE MAKING USE OF THIS INFORMATION AGREES THAT IT ASSUMES ALL LIABILITY ARISING FROM SUCH USE. NO PART OF THESE STANDARDS SHOULD BE REPRODUCED OR DISTRIBUTED IN ANY FORM OR BY ANY MEANS WITHOUT THE PRIOR WRITTEN PERMISSION OF SCRRA. ALL RIGHTS RESERVED.

METROLINK®

SOUTHERN CALIFORNIA REGIONAL RAIL AUTHORITY
ONE GATEWAY PLAZA, 12TH FLOOR, L. A., CA. 90012

ENGINEERING STANDARDS

SAMSON STOCK RAIL, CURVED, LH
136 LB RE 51'-8" LONG
FOR NO 14 136 LB RE LH SWITCH PACK

STANDARD: 2805
SCALE: NTS
REVISION: –
SHEET: 1 OF 1
CADD FILE: ES2805-25

BILL OF MATERIAL			
ITEM	QTY	DESCRIPTION	SCRRA PART NO
1	1	RAIL, 136 LB RE 57'-8" LONG	

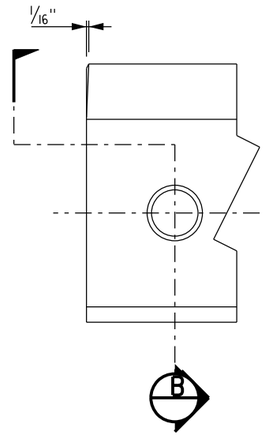

RAIL END/HOLE BEVELING DETAIL

RAIL HEAD ONLY - NOT BASE

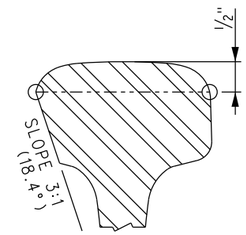

PARTIAL SECTION A

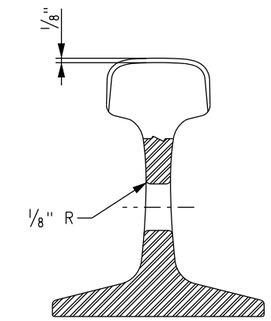

SECTION B

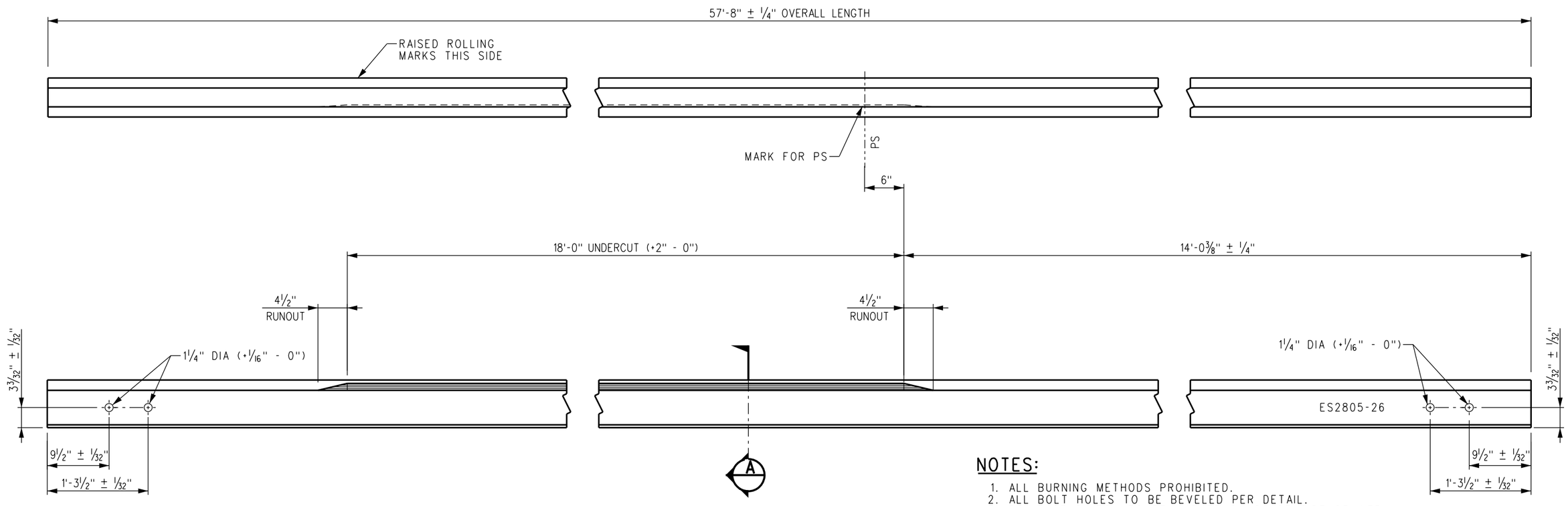

MACHINING DETAILS

NOTES:

1. ALL BURNING METHODS PROHIBITED.
2. ALL BOLT HOLES TO BE BEVELED PER DETAIL.
3. POINT OF SWITCH TO BE MARKED ON GAUGE SIDE OF WEB WITH A WHITE LINE USING WATERPROOF MARKER OR PAINT.
4. WRITE SCRRA ES NUMBER ON WEB OF RAIL WITH WATERPROOF MARKER OR PAINT.

REV.	DATE	DESCRIPTION	DES.	ENG.
X	XX-XX-XX	REVISION	XX	XX

DRAWN BY: HDR DATE: 03/31/2011

ASSISTANT DIRECTOR: STANDARDS & DESIGN

DIRECTOR OF ENGINEERING AND CONSTRUCTION

SCRRA ENGINEERING STANDARDS ARE INTENDED FOR SCRRA APPROVED USES ONLY. FOR NON-SCRRA APPROVED USES:
SCRRA SHALL NOT BE RESPONSIBLE FOR THE ACCURACY OR COMPLETENESS OF THE DATA OR INFORMATION CONTAINED HEREIN. THE SELECTION AND USE OF THESE STANDARDS IS THE SOLE RESPONSIBILITY OF THE USER AND SHOULD NOT BE USED WITHOUT CONSULTING A REGISTERED PROFESSIONAL ENGINEER. ALL WARRANTIES AND REPRESENTATIONS OF ANY KIND ARE DISCLAIMED. ANYONE MAKING USE OF THIS INFORMATION AGREES THAT IT ASSUMES ALL LIABILITY ARISING FROM SUCH USE. NO PART OF THESE STANDARDS SHOULD BE REPRODUCED OR DISTRIBUTED IN ANY FORM OR BY ANY MEANS WITHOUT THE PRIOR WRITTEN PERMISSION OF SCRRA. ALL RIGHTS RESERVED.

METROLINK®

SOUTHERN CALIFORNIA REGIONAL RAIL AUTHORITY
ONE GATEWAY PLAZA, 12TH FLOOR, L. A., CA. 90012

ENGINEERING STANDARDS

SAMSON STOCK RAIL, STRAIGHT, RH
136 LB RE 57'-8" LONG
FOR NO 14 136 LB RE LH SWITCH PACK

STANDARD 2805
SCALE: NTS
REVISION –
SHEET 1 OF 1
CADD FILE: ES2805-26

BILL OF MATERIAL			
ITEM	QTY	DESCRIPTION	SCRRA PART NO
1	1	RAIL, 136 LB RE 57'-8" LONG	

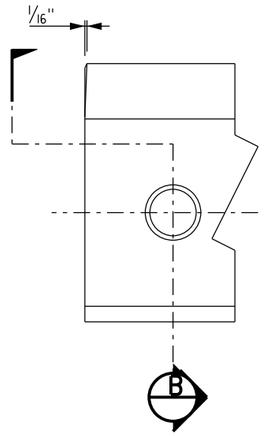

RAIL END/HOLE BEVELING DETAIL

RAIL HEAD ONLY - NOT BASE

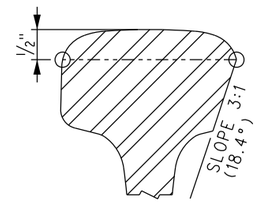

PARTIAL SECTION A

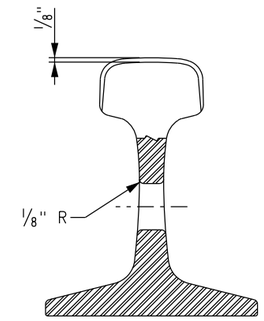

SECTION B

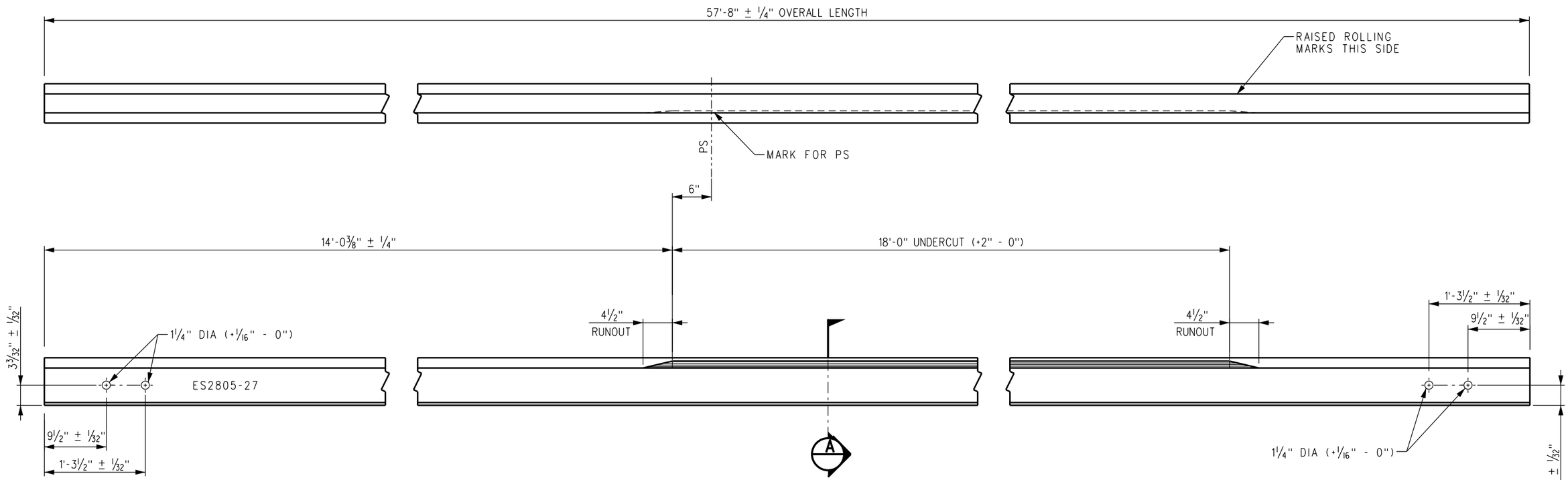

MACHINING DETAILS

NOTES:

1. ALL BURNING METHODS PROHIBITED.
2. ALL BOLT HOLES TO BE BEVELED PER DETAIL.
3. POINT OF SWITCH TO BE MARKED ON GAUGE SIDE OF WEB WITH A WHITE LINE USING WATERPROOF MARKER OR PAINT.
4. WRITE SCRRA ES NUMBER ON WEB OF RAIL WITH WATERPROOF MARKER OR PAINT.

REV.	DATE	DESCRIPTION	DES.	ENG.
X	XX-XX-XX	REVISION	XX	XX

DRAWN BY: HDR DATE: 03/31/2011

ASSISTANT DIRECTOR: STANDARDS & DESIGN

DIRECTOR OF ENGINEERING AND CONSTRUCTION

SCRRA ENGINEERING STANDARDS ARE INTENDED FOR SCRRA APPROVED USES ONLY. FOR NON-SCRRA APPROVED USES:
SCRRA SHALL NOT BE RESPONSIBLE FOR THE ACCURACY OR COMPLETENESS OF THE DATA OR INFORMATION CONTAINED HEREIN. THE SELECTION AND USE OF THESE STANDARDS IS THE SOLE RESPONSIBILITY OF THE USER AND SHOULD NOT BE USED WITHOUT CONSULTING A REGISTERED PROFESSIONAL ENGINEER. ALL WARRANTIES AND REPRESENTATIONS OF ANY KIND ARE DISCLAIMED. ANYONE MAKING USE OF THIS INFORMATION AGREES THAT IT ASSUMES ALL LIABILITY ARISING FROM SUCH USE. NO PART OF THESE STANDARDS SHOULD BE REPRODUCED OR DISTRIBUTED IN ANY FORM OR BY ANY MEANS WITHOUT THE PRIOR WRITTEN PERMISSION OF SCRRA. ALL RIGHTS RESERVED.

METROLINK®

SOUTHERN CALIFORNIA REGIONAL RAIL AUTHORITY
ONE GATEWAY PLAZA, 12TH FLOOR, L. A., CA. 90012

ENGINEERING STANDARDS

SAMSON STOCK RAIL, STRAIGHT, LH
136 LB RE 57'-8" LONG
FOR NO 14 136 LB RE RH SWITCH PACK

STANDARD 2805
SCALE: NTS
REVISION –
SHEET 1 OF 1
CADD FILE: ES2805-27

BILL OF MATERIAL			
ITEM	QTY	DESCRIPTION	SCRRA PART NO
1	1	RAIL, 136 LB RE 51'-8" LONG	

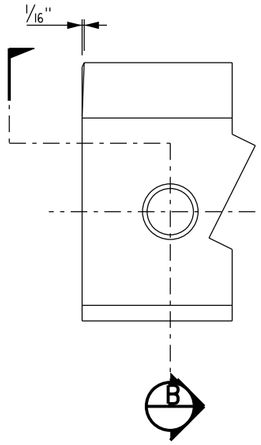

RAIL END/HOLE BEVELING DETAIL

RAIL HEAD ONLY - NOT BASE

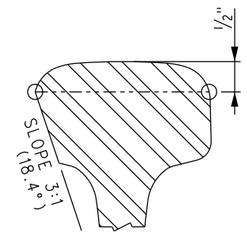

PARTIAL SECTION A

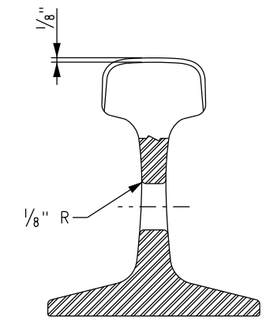

SECTION B

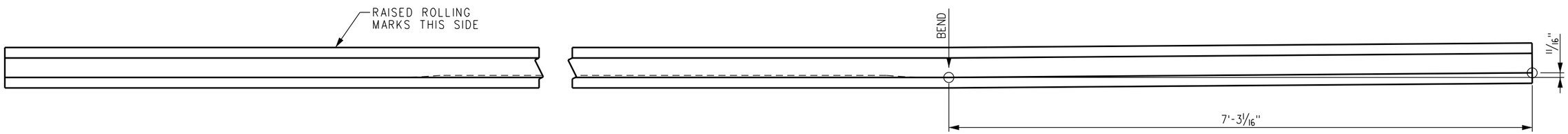

BENDING DETAILS

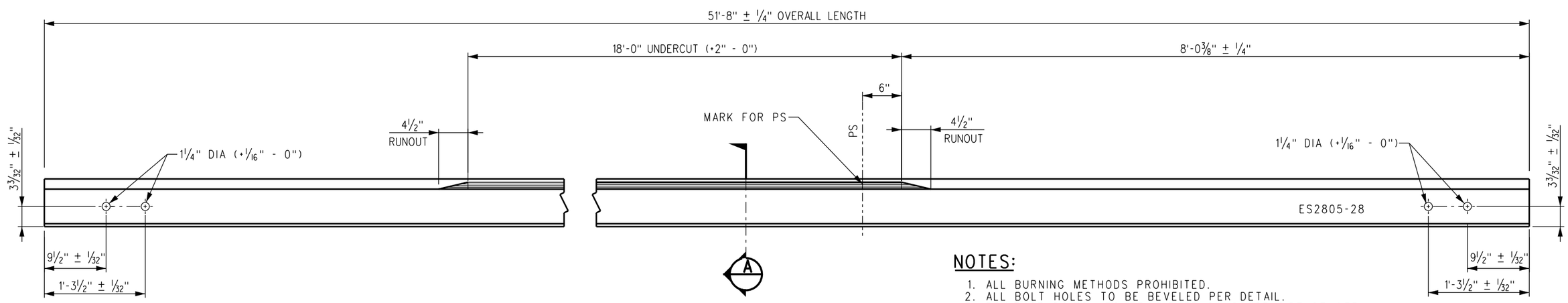

MACHINING DETAILS

NOTES:

1. ALL BURNING METHODS PROHIBITED.
2. ALL BOLT HOLES TO BE BEVELED PER DETAIL.
3. POINT OF SWITCH TO BE MARKED ON GAUGE SIDE OF WEB WITH A WHITE LINE USING WATERPROOF MARKER OR PAINT.
4. WRITE SCRRA ES NUMBER ON WEB OF RAIL WITH WATERPROOF MARKER OR PAINT.

REV.	DATE	DESCRIPTION	DES.	ENG.
X	XX-XX-XX	REVISION	XX	XX

DRAWN BY: HDR DATE: 03/31/2011

ASSISTANT DIRECTOR: STANDARDS & DESIGN

DIRECTOR OF ENGINEERING AND CONSTRUCTION

SCRRA ENGINEERING STANDARDS ARE INTENDED FOR SCRRA APPROVED USES ONLY. FOR NON-SCRRA APPROVED USES: SCRRA SHALL NOT BE RESPONSIBLE FOR THE ACCURACY OR COMPLETENESS OF THE DATA OR INFORMATION CONTAINED HEREIN. THE SELECTION AND USE OF THESE STANDARDS IS THE SOLE RESPONSIBILITY OF THE USER AND SHOULD NOT BE USED WITHOUT CONSULTING A REGISTERED PROFESSIONAL ENGINEER. ALL WARRANTIES AND REPRESENTATIONS OF ANY KIND ARE DISCLAIMED. ANYONE MAKING USE OF THIS INFORMATION AGREES THAT IT ASSUMES ALL LIABILITY ARISING FROM SUCH USE. NO PART OF THESE STANDARDS SHOULD BE REPRODUCED OR DISTRIBUTED IN ANY FORM OR BY ANY MEANS WITHOUT THE PRIOR WRITTEN PERMISSION OF SCRRA. ALL RIGHTS RESERVED.

METROLINK®

SOUTHERN CALIFORNIA REGIONAL RAIL AUTHORITY
ONE GATEWAY PLAZA, 12TH FLOOR, L. A., CA. 90012

ENGINEERING STANDARDS

SAMSON STOCK RAIL, CURVED, RH
136 LB RE 51'-8" LONG
FOR NO 14 136 LB RE RH SWITCH PACK

STANDARD: 2805
SCALE: NTS
REVISION: –
SHEET: 1 OF 1
CADD FILE: ES2805-28

BILL OF MATERIALS			
ITEM	QTY	DESCRIPTION	DWG NO
1	4	TIES 1,2,5 AND 9, POWER SWITCH MACHINE ON MAINLINE SIDE FOR RH TURNOUT (HOLLOW STEEL)	ES2805-32
2	4	TIES 1,2,5 AND 9, POWER SWITCH MACHINE ON TURNOUT SIDE FOR RH TURNOUT (HOLLOW STEEL)	ES2805-34

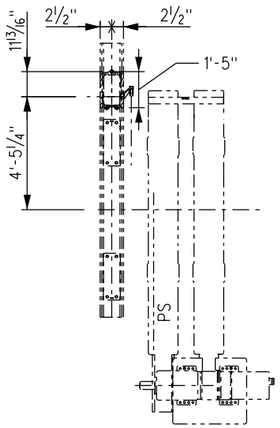

TIE "0" PLACEMENT
SWITCH MACHINE
ON TURNOUT (RH) SIDE

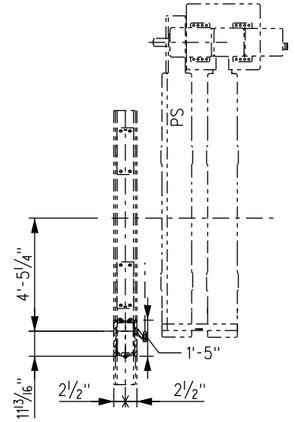

TIE "0" PLACEMENT
SWITCH MACHINE
ON MAINLINE (LH) SIDE

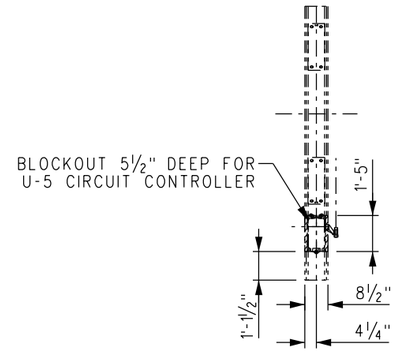

TIE "0" BLOCKOUT DETAIL

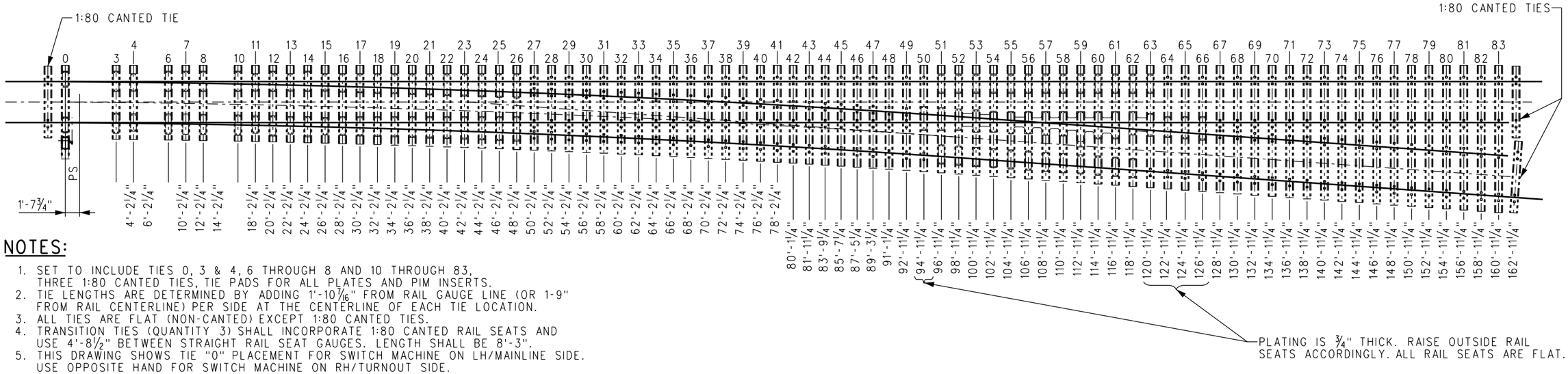

NOTES:

1. SET TO INCLUDE TIES 0, 3 & 4, 6 THROUGH 8 AND 10 THROUGH 83, THREE 1:80 CANTED TIES, TIE PADS FOR ALL PLATES AND PIM INSERTS.
2. TIE LENGTHS ARE DETERMINED BY ADDING 1'-10 7/16" FROM RAIL GAUGE LINE (OR 1-9" FROM RAIL CENTERLINE) PER SIDE AT THE CENTERLINE OF EACH TIE LOCATION.
3. ALL TIES ARE FLAT (NON-CANTED) EXCEPT 1:80 CANTED TIES.
4. TRANSITION TIES (QUANTITY 3) SHALL INCORPORATE 1:80 CANTED RAIL SEATS AND USE 4'-8 1/2" BETWEEN STRAIGHT RAIL SEAT GAUGES. LENGTH SHALL BE 8'-3".
5. THIS DRAWING SHOWS TIE "0" PLACEMENT FOR SWITCH MACHINE ON LH/MAINLINE SIDE. USE OPPOSITE HAND FOR SWITCH MACHINE ON RH/TURNOUT SIDE.
6. SEE BILL OF MATERIALS ABOVE FOR TIES 1, 2, 5 AND 9.

REV.	DATE	DESCRIPTION	DES.	ENG.
X	XX-XX-XX	REVISION	XX	XX

DRAWN BY: HDR DATE: 03/31/2011

ASSISTANT DIRECTOR: STANDARDS & DESIGN

DIRECTOR OF ENGINEERING AND CONSTRUCTION

SCRRA ENGINEERING STANDARDS ARE INTENDED FOR SCRRA APPROVED USES ONLY. FOR NON-SCRRA APPROVED USES:
SCRRA SHALL NOT BE RESPONSIBLE FOR THE ACCURACY OR COMPLETENESS OF THE DATA OR INFORMATION CONTAINED HEREIN. THE SELECTION AND USE OF THESE STANDARDS IS THE SOLE RESPONSIBILITY OF THE USER AND SHOULD NOT BE USED WITHOUT CONSULTING A REGISTERED PROFESSIONAL ENGINEER. ALL WARRANTIES AND REPRESENTATIONS OF ANY KIND ARE DISCLAIMED. ANYONE MAKING USE OF THIS INFORMATION AGREES THAT IT ASSUMES ALL LIABILITY ARISING FROM SUCH USE. NO PART OF THESE STANDARDS SHOULD BE REPRODUCED OR DISTRIBUTED IN ANY FORM OR BY ANY MEANS WITHOUT THE PRIOR WRITTEN PERMISSION OF SCRRA. ALL RIGHTS RESERVED.

METROLINK®
SOUTHERN CALIFORNIA REGIONAL RAIL AUTHORITY
ONE GATEWAY PLAZA, 12TH FLOOR, L. A., CA. 90012

ENGINEERING STANDARDS

CONCRETE TIE LAYOUT
NO 14–136 LB RE SPRING FROG TURNOUT, RH

STANDARD 2805
SCALE: NTS
REVISION –
SHEET 1 OF 1
CADD FILE: ES2805–30

BILL OF MATERIALS			
ITEM	QTY	DESCRIPTION	DWG NO
1	4	TIES 1,2,5 AND 9, POWER SWITCH MACHINE ON MAINLINE SIDE FOR LH TURNOUT (HOLLOW STEEL)	ES2805-33
2	4	TIES 1,2,5 AND 9, POWER SWITCH MACHINE ON TURNOUT SIDE FOR LH TURNOUT (HOLLOW STEEL)	ES2805-35

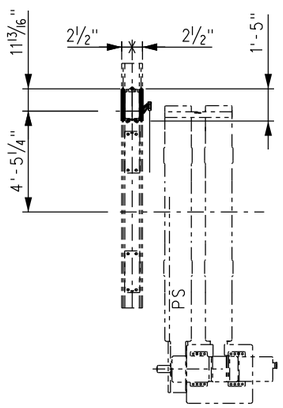

TIE "0" PLACEMENT
SWITCH MACHINE
ON MAINLINE (RH) SIDE

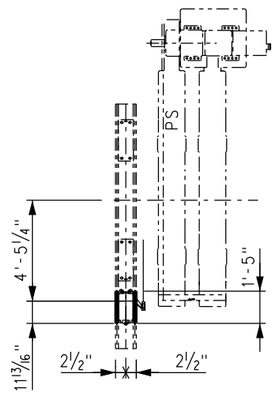

TIE "0" PLACEMENT
SWITCH MACHINE
ON TURNOUT (LH) SIDE

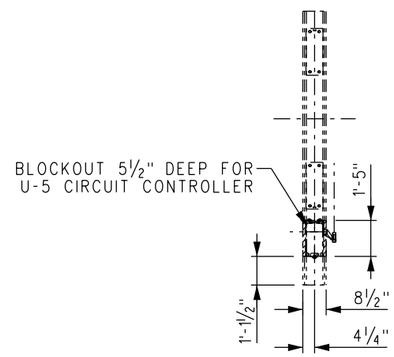

TIE "0" BLOCKOUT DETAIL

NOTES:

1. SET TO INCLUDE TIES 0, 3 & 4, 6 THROUGH 8 AND 10 THROUGH 83, THREE 1:80 CANTED TIES, TIE PADS FOR ALL PLATES AND PIM INSERTS.
2. TIE LENGTHS ARE DETERMINED BY ADDING 1'-10 7/16" FROM RAIL GAUGE LINE (OR 1-9" FROM RAIL CENTERLINE) PER SIDE AT THE CENTERLINE OF EACH TIE LOCATION.
3. ALL TIES ARE FLAT (NON-CANTED) EXCEPT 1:80 CANTED TIES.
4. TRANSITION TIES (QUANTITY 3) SHALL INCORPORATE 1:80 CANTED RAIL SEATS AND USE 4'-8 1/2" BETWEEN STRAIGHT RAIL SEAT GAUGES. LENGTH SHALL BE 8'-3".
5. THIS DRAWING SHOWS TIE "0" PLACEMENT FOR SWITCH MACHINE ON RH/MAINLINE SIDE. USE OPPOSITE HAND FOR SWITCH MACHINE ON LH/TURNOUT SIDE.
6. SEE BILL OF MATERIALS ABOVE FOR TIES 1, 2, 5 AND 9.

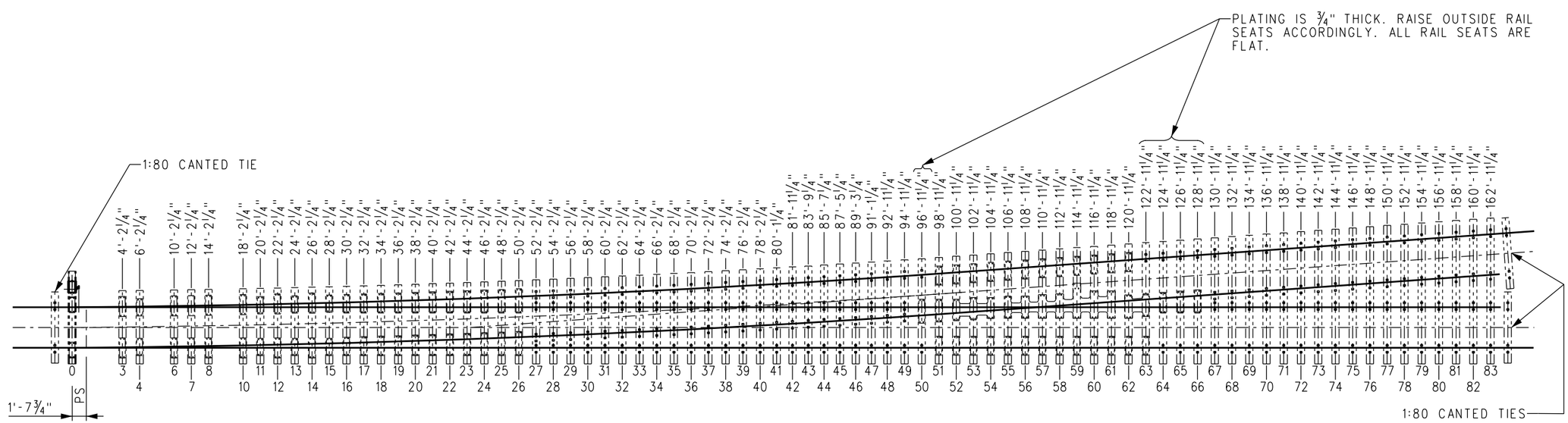

REV.	DATE	DESCRIPTION	DES.	ENG.
X	XX-XX-XX	REVISION	XX	XX

DRAWN BY: HDR DATE: 03/31/2011

ASSISTANT DIRECTOR: STANDARDS & DESIGN

DIRECTOR OF ENGINEERING AND CONSTRUCTION

SCRRA ENGINEERING STANDARDS ARE INTENDED FOR SCRRA APPROVED USES ONLY. FOR NON-SCRRA APPROVED USES:
SCRRA SHALL NOT BE RESPONSIBLE FOR THE ACCURACY OR COMPLETENESS OF THE DATA OR INFORMATION CONTAINED HEREIN. THE SELECTION AND USE OF THESE STANDARDS IS THE SOLE RESPONSIBILITY OF THE USER AND SHOULD NOT BE USED WITHOUT CONSULTING A REGISTERED PROFESSIONAL ENGINEER. ALL WARRANTIES AND REPRESENTATIONS OF ANY KIND ARE DISCLAIMED. ANYONE MAKING USE OF THIS INFORMATION AGREES THAT IT ASSUMES ALL LIABILITY ARISING FROM SUCH USE. NO PART OF THESE STANDARDS SHOULD BE REPRODUCED OR DISTRIBUTED IN ANY FORM OR BY ANY MEANS WITHOUT THE PRIOR WRITTEN PERMISSION OF SCRRA. ALL RIGHTS RESERVED.

METROLINK®
SOUTHERN CALIFORNIA REGIONAL RAIL AUTHORITY
ONE GATEWAY PLAZA, 12TH FLOOR, L. A., CA. 90012

ENGINEERING STANDARDS

CONCRETE TIE LAYOUT
NO 14–136 LB RE SPRING FROG TURNOUT, LH

STANDARD 2805
SCALE: NTS
REVISION –
SHEET 1 OF 1
CADD FILE: ES2805–31

BILL OF MATERIAL				
ITEM	QTY	DESCRIPTION	DWG NO	SCRRA PART NO
1	1	RODDING ASSEMBLY FOR NO 14-136 LB RE, SWITCH MACHINE ON LEFT SIDE	ES2805-71	
2	1	HOLLOW TIE ASSEMBLY (HT-1RL-14-136)	-	
3	1	HOLLOW TIE ASSEMBLY (HT-2RL-14-136)	-	
4	1	HOLLOW TIE ASSEMBLY (HT-5RL-14-136)	-	
5	1	HOLLOW TIE ASSEMBLY (HT-9RL-14-136)	-	
6*	2	COVER PLATE NO 1, HOLLOW SWITCH TIE	-	
7	8	LV BRACE FOR 136 LB RE	-	
8	8	SERRATED WASHER FOR LV BRACE	-	
9	8	CLIP, SAFELOK AB 2000		
10	8	CLIP, PANDROL, E2055	-	
11	16	RAIL ANCHOR UNIT DRIVE-ON TYPE 5	-	
12	2	STEEL COVER PLATE FOR HST TIE, TOP END	-	
13*	1	COVER PLATE NO 2, HOLLOW SWITCH TIE	-	
14*	1	COVER PLATE NO 3, HOLLOW SWITCH TIE	-	
15	1	END COVER PLATE FOR HST TIE, SHORT TOP VERSION	-	
16	30	PUSH PIN ASSEMBLY FOR HST COVERS	-	
17	4	STEEL SIDE END COVER PLATE ASSEMBLY FOR HST TIE	-	
18	8	COVER SUPPORT BRACKET	-	
19	4	HST SWITCH PLATE HTP-206-STR	ES2800-90	
20	1	HST SWITCH PLATE HTP-209-R	ES2800-92	
21	2	HST SWITCH PLATE HTP-201-R	ES2800-93	
22	1	HST SWITCH PLATE HTP-203-R	ES2800-94	
23	1	PILLOW BLOCK MOUNTING PLATE	-	

* NOT SHOWN ON ASSEMBLY FOR CLARITY

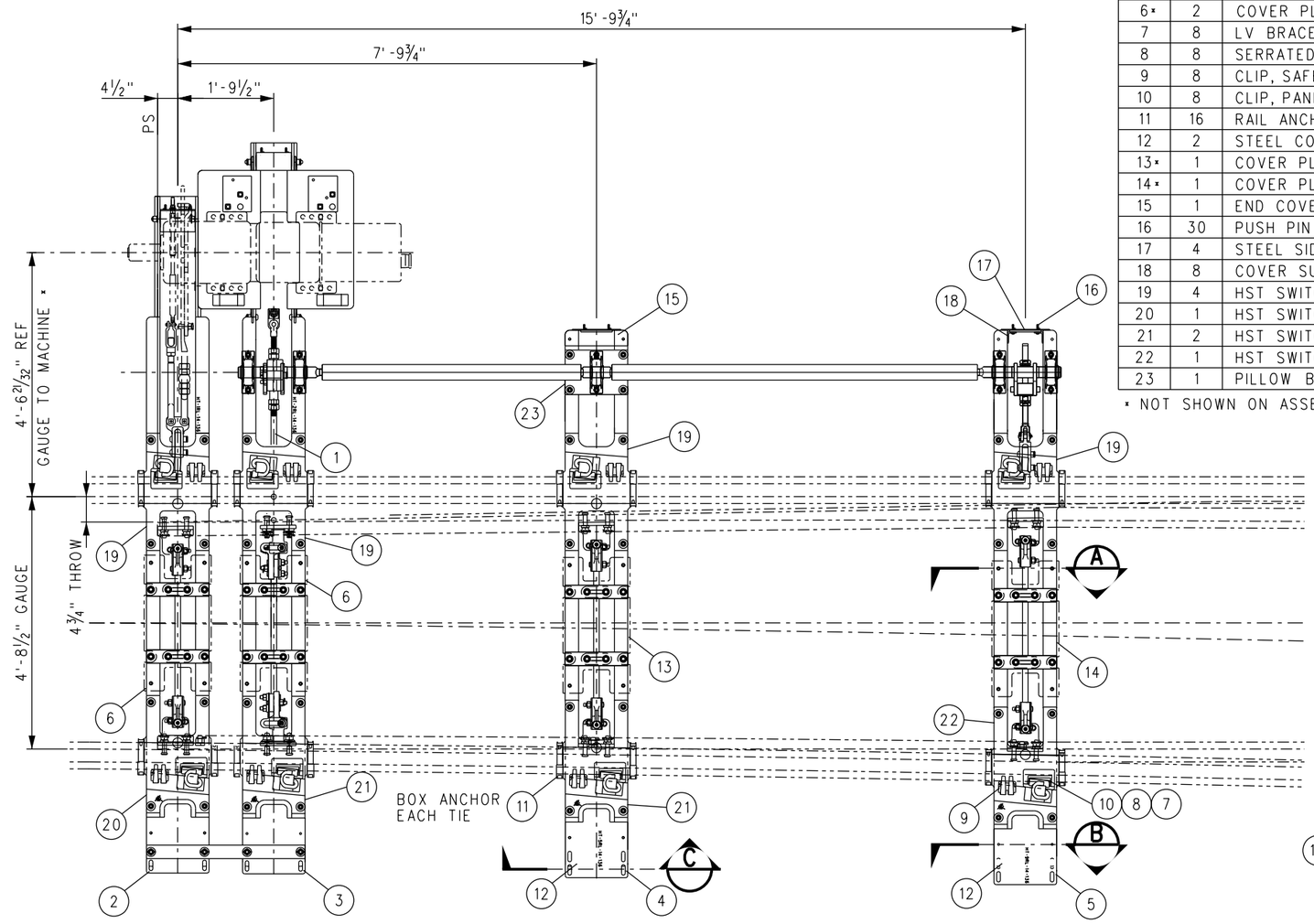

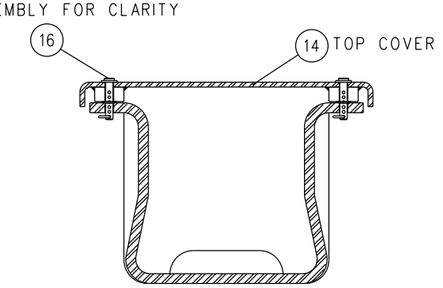

SECTION A
HOLLOW TIE TOP COVER DETAIL

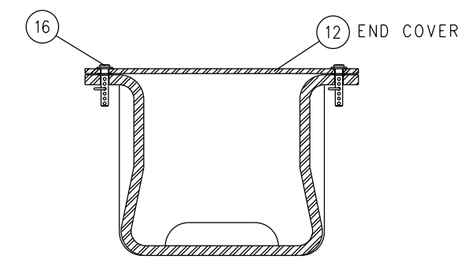

SECTION B
END COVER PLATE

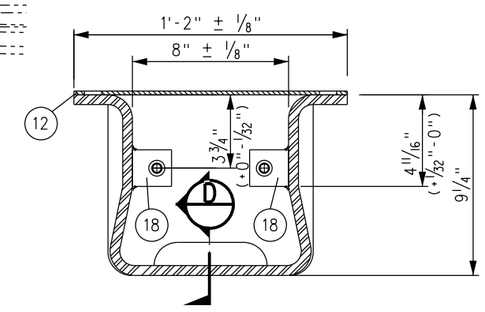

SECTION C
HOLLOW TIE SIDE END COVER DETAIL

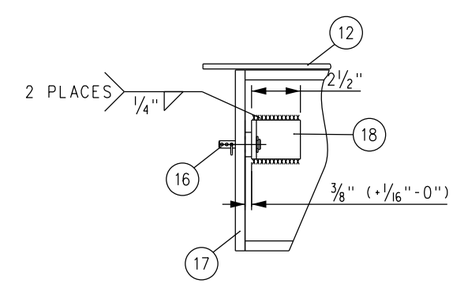

VIEW D
WELDING DETAIL

NOTE:

1. SWITCH MACHINE AND MACHINE PLATES (NIC) MUST BE COORDINATED WITH SCRRA.
2. SEE DRAWING ES2805-73 FOR CENTER TO CENTER PIN SWITCH ROD DIMENSIONS.

REV.	DATE	DESCRIPTION	DES.	ENG.
X	XX-XX-XX	REVISION	XX	XX

DRAWN BY: HDR DATE: 03/31/2011

ASSISTANT DIRECTOR: STANDARDS & DESIGN

DIRECTOR OF ENGINEERING AND CONSTRUCTION

SCRRA ENGINEERING STANDARDS ARE INTENDED FOR SCRRA APPROVED USES ONLY. FOR NON-SCRRA APPROVED USES:
SCRRA SHALL NOT BE RESPONSIBLE FOR THE ACCURACY OR COMPLETENESS OF THE DATA OR INFORMATION CONTAINED HEREIN. THE SELECTION AND USE OF THESE STANDARDS IS THE SOLE RESPONSIBILITY OF THE USER AND SHOULD NOT BE USED WITHOUT CONSULTING A REGISTERED PROFESSIONAL ENGINEER. ALL WARRANTIES AND REPRESENTATIONS OF ANY KIND ARE DISCLAIMED. ANYONE MAKING USE OF THIS INFORMATION AGREES THAT IT ASSUMES ALL LIABILITY ARISING FROM SUCH USE. NO PART OF THESE STANDARDS SHOULD BE REPRODUCED OR DISTRIBUTED IN ANY FORM OR BY ANY MEANS WITHOUT THE PRIOR WRITTEN PERMISSION OF SCRRA. ALL RIGHTS RESERVED.

METROLINK®
SOUTHERN CALIFORNIA REGIONAL RAIL AUTHORITY
ONE GATEWAY PLAZA, 12TH FLOOR, L. A., CA. 90012

ENGINEERING STANDARDS

HOLLOW STEEL TIE LAYOUT
SWITCH MACHINE ON MAINLINE SIDE
NO 14–136 LB RE RH

STANDARD 2805
SCALE: NTS
REVISION –
SHEET 1 OF 1
CADD FILE: ES2805–32

BILL OF MATERIAL				
ITEM	QTY	DESCRIPTION	DWG NO	SCRRA PART NO
1	1	RODDING ASSEMBLY FOR NO 14-136 LB RE, SWITCH MACHINE ON RIGHT SIDE	ES2805-72	
2	1	HOLLOW TIE ASSEMBLY (HT-1LR-14-136)	-	
3	1	HOLLOW TIE ASSEMBLY (HT-2LR-14-136)	-	
4	1	HOLLOW TIE ASSEMBLY (HT-5LR-14-136)	-	
5	1	HOLLOW TIE ASSEMBLY (HT-9LR-14-136)	-	
6*	2	COVER PLATE NO 1, HOLLOW SWITCH TIE	-	
7	8	LV BRACE FOR 136 LB RE	-	
8	8	SERRATED WASHER FOR LV BRACE	-	
9	8	CLIP, SAFELOK, AB2000	-	
10	8	CLIP, PANDROL, E2055	-	

BILL OF MATERIAL				
ITEM	QTY	DESCRIPTION	DWG NO	SCRRA PART NO
11	16	RAIL ANCHOR UNIT DRIVE-ON TYPE 5	-	
12	2	STEEL COVER PLATE FOR HST TIE, TOP END	-	
13*	1	COVER PLATE NO 2, HOLLOW SWITCH TIE	-	
14*	1	COVER PLATE NO 3, HOLLOW SWITCH TIE	-	
15	1	END COVER PLATE FOR HST TIE, SHORT TOP VERSION	-	
16	30	PUSH PIN ASSEMBLY FOR HST COVERS	-	
17	4	STEEL SIDE END COVER PLATE ASSEMBLY FOR HST TIE	-	
18	8	COVER SUPPORT BRACKET	-	
19	4	HST SWITCH PLATE HTP-206-STR	ES2800-90	
20	1	HST SWITCH PLATE HTP-208-L	ES2800-92	
21	1	HST SWITCH PLATE HTP-200-L	ES2800-93	
22	2	HST SWITCH PLATE HTP-202-L	ES2800-94	
23	1	PILLOW BLOCK MOUNTING PLATE	-	

* NOT SHOWN ON ASSEMBLY FOR CLARITY

NOTE:

1. SWITCH MACHINE AND MACHINE PLATES (NIC) MUST BE COORDINATED WITH SCRRA.
2. SEE DRAWING ES2805-73 FOR CENTER TO CENTER PIN SWITCH ROD DIMENSIONS.

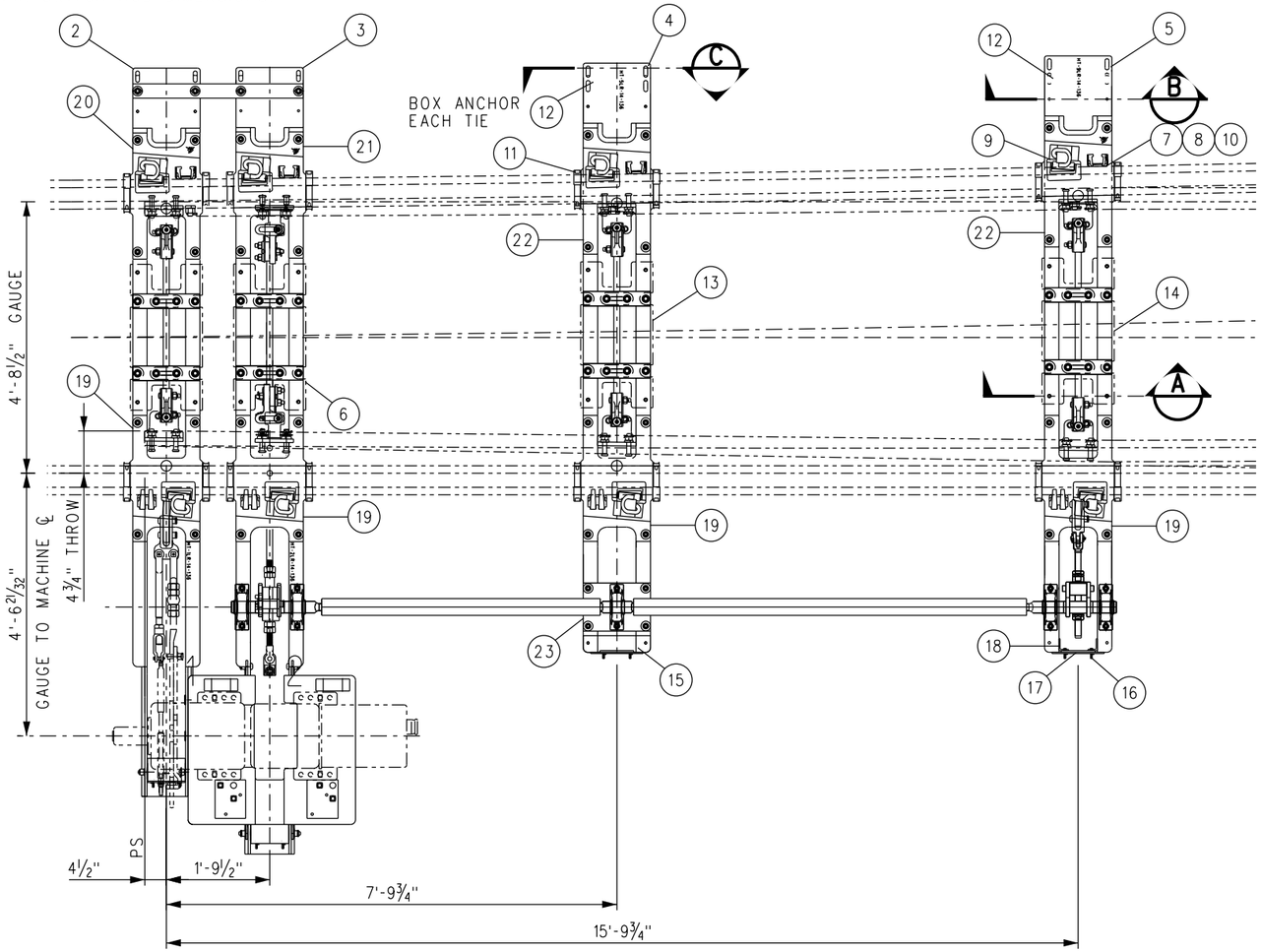

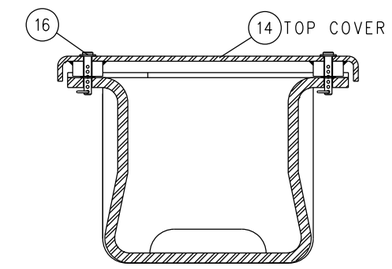

SECTION A
HOLLOW TIE TOP COVER DETAIL

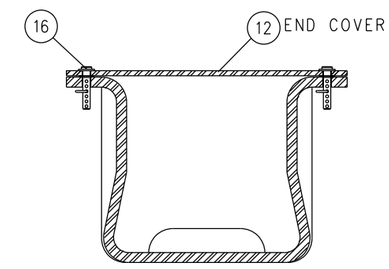

SECTION B
END COVER PLATE

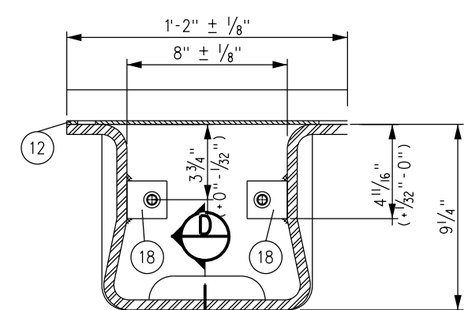

SECTION C
HOLLOW TIE SIDE END COVER DETAIL

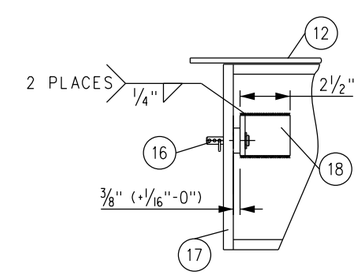

VIEW D
WELDING DETAIL

REV.	DATE	DESCRIPTION	DES.	ENG.
X	XX-XX-XX	REVISION	XX	XX

DRAWN BY: HDR DATE: 03/31/2011

ASSISTANT DIRECTOR: STANDARDS & DESIGN

DIRECTOR OF ENGINEERING AND CONSTRUCTION

SCRRA ENGINEERING STANDARDS ARE INTENDED FOR SCRRA APPROVED USES ONLY. FOR NON-SCRRA APPROVED USES:
SCRRA SHALL NOT BE RESPONSIBLE FOR THE ACCURACY OR COMPLETENESS OF THE DATA OR INFORMATION CONTAINED HEREIN. THE SELECTION AND USE OF THESE STANDARDS IS THE SOLE RESPONSIBILITY OF THE USER AND SHOULD NOT BE USED WITHOUT CONSULTING A REGISTERED PROFESSIONAL ENGINEER. ALL WARRANTIES AND REPRESENTATIONS OF ANY KIND ARE DISCLAIMED. ANYONE MAKING USE OF THIS INFORMATION AGREES THAT IT ASSUMES ALL LIABILITY ARISING FROM SUCH USE. NO PART OF THESE STANDARDS SHOULD BE REPRODUCED OR DISTRIBUTED IN ANY FORM OR BY ANY MEANS WITHOUT THE PRIOR WRITTEN PERMISSION OF SCRRA. ALL RIGHTS RESERVED.

METROLINK®
SOUTHERN CALIFORNIA REGIONAL RAIL AUTHORITY
ONE GATEWAY PLAZA, 12TH FLOOR, L. A., CA. 90012

ENGINEERING STANDARDS

HOLLOW STEEL TIE LAYOUT
SWITCH MACHINE ON MAINLINE SIDE
NO 14–136 LB RE LH

STANDARD: 2805
SCALE: NTS
REVISION: –
SHEET: 1 OF 1
CADD FILE: ES2805–33

BILL OF MATERIAL				
ITEM	QTY	DESCRIPTION	DWG NO	SCRRA PART NO
1	1	RODDING ASSEMBLY, FOR NO 14-136 LB RE, SWITCH MACHINE ON RIGHT SIDE	ES2805-72	
2	1	HOLLOW TIE ASSEMBLY (HT-1RR-14-136)	-	
3	1	HOLLOW TIE ASSEMBLY (HT-2RR-14-136)	-	
4	1	HOLLOW TIE ASSEMBLY (HT-5RR-14-136)	-	
5	1	HOLLOW TIE ASSEMBLY (HT-9RR-14-136)	-	
6*	2	COVER PLATE NO 1, HOLLOW SWITCH TIE	-	
7	8	LV BRACE FOR 136 LB RE	-	
8	8	SERRATED WASHER FOR LV BRACE	-	
9	8	CLIP, SAFELOK AB 2000	-	
10	8	CLIP, PANDROL, E2055	-	

BILL OF MATERIAL				
ITEM	QTY	DESCRIPTION	DWG NO	SCRRA PART NO
11	16	RAIL ANCHOR UNIT DRIVE-ON TYPE 5		
12	2	STEEL COVER PLATE FOR HST TIE, TOP END	-	
13*	1	COVER PLATE NO 2, HOLLOW SWITCH TIE	-	
14*	1	COVER PLATE NO 3, HOLLOW SWITCH TIE	-	
15	1	END COVER PLATE FOR HST TIE, SHORT TOP VERSION	-	
16	30	PUSH PIN ASSEMBLY FOR HST COVERS	-	
17	4	STEEL SIDE END COVER PLATE ASSEMBLY FOR HST TIE	-	
18	8	COVER SUPPORT BRACKET	-	
19	4	HST SWITCH PLATE HTP-206-STR	ES2800-90	
20	1	HST SWITCH PLATE HTP-209-R	ES2800-92	
21	2	HST SWITCH PLATE HTP-201-R	ES2800-93	
22	1	HST SWITCH PLATE HTP-203-R	ES2800-94	
23	1	PILLOW BLOCK MOUNTING PLATE	-	

* NOT SHOWN ON ASSEMBLY FOR CLARITY

NOTE:

1. SWITCH MACHINE AND MACHINE PLATES (NIC) MUST BE COORDINATED WITH SCRRA.
2. SEE DRAWING ES2805-73 FOR CENTER TO CENTER PIN SWITCH ROD DIMENSIONS.

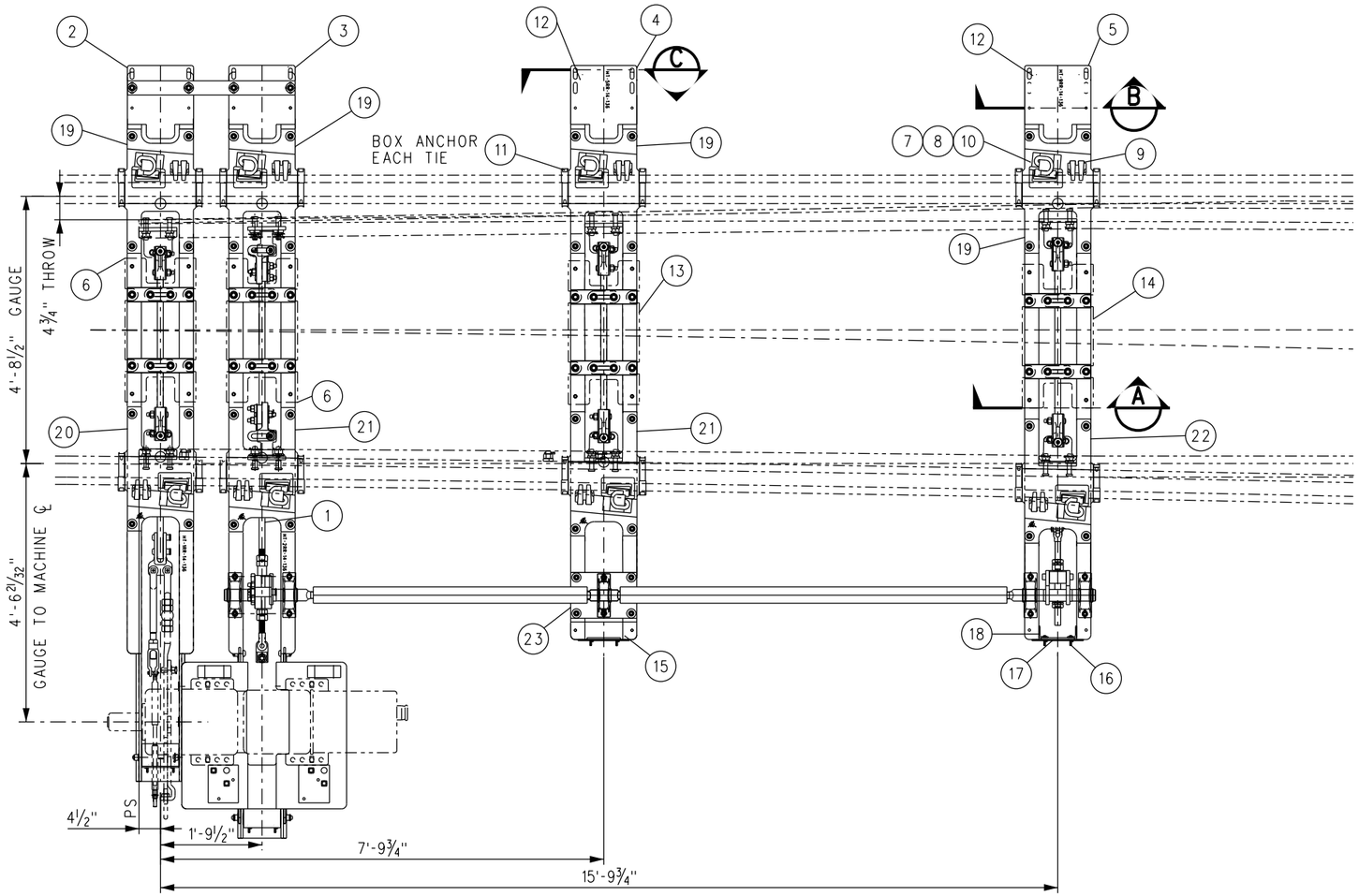

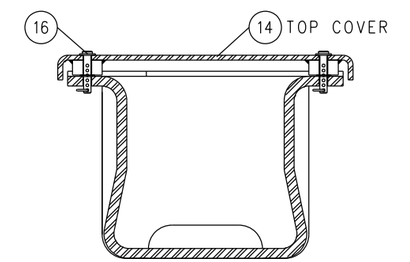

SECTION A
HOLLOW TIE TOP COVER DETAIL

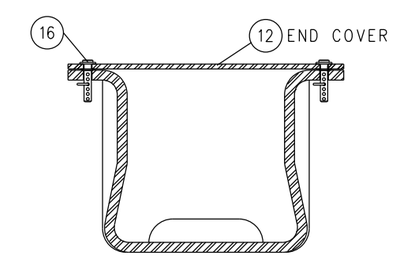

SECTION B
END COVER PLATE

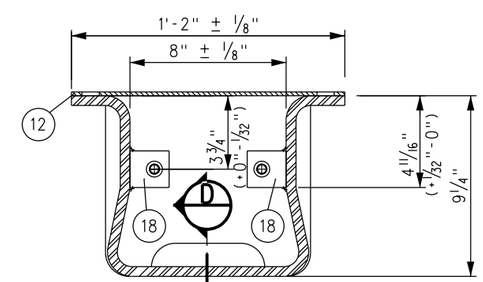

SECTION C
HOLLOW TIE SIDE END COVER DETAIL

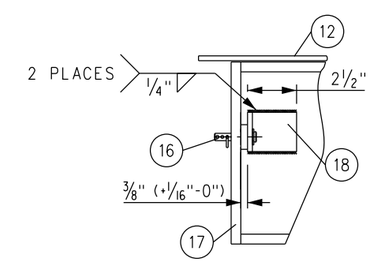

VIEW D
WELDING DETAIL

REV.	DATE	DESCRIPTION	DES.	ENG.
X	XX-XX-XX	REVISION	XX	XX

DRAWN BY: HDR DATE: 03/31/2011

ASSISTANT DIRECTOR: STANDARDS & DESIGN

DIRECTOR OF ENGINEERING AND CONSTRUCTION

SCRRA ENGINEERING STANDARDS ARE INTENDED FOR SCRRA APPROVED USES ONLY. FOR NON-SCRRA APPROVED USES:
SCRRA SHALL NOT BE RESPONSIBLE FOR THE ACCURACY OR COMPLETENESS OF THE DATA OR INFORMATION CONTAINED HEREIN. THE SELECTION AND USE OF THESE STANDARDS IS THE SOLE RESPONSIBILITY OF THE USER AND SHOULD NOT BE USED WITHOUT CONSULTING A REGISTERED PROFESSIONAL ENGINEER. ALL WARRANTIES AND REPRESENTATIONS OF ANY KIND ARE DISCLAIMED. ANYONE MAKING USE OF THIS INFORMATION AGREES THAT IT ASSUMES ALL LIABILITY ARISING FROM SUCH USE. NO PART OF THESE STANDARDS SHOULD BE REPRODUCED OR DISTRIBUTED IN ANY FORM OR BY ANY MEANS WITHOUT THE PRIOR WRITTEN PERMISSION OF SCRRA. ALL RIGHTS RESERVED.

METROLINK®
SOUTHERN CALIFORNIA REGIONAL RAIL AUTHORITY
ONE GATEWAY PLAZA, 12TH FLOOR, L. A., CA. 90012

ENGINEERING STANDARDS

HOLLOW STEEL TIE LAYOUT
SWITCH MACHINE ON TURNOUT SIDE
NO 14-136 LB RE RH

STANDARD 2805
SCALE: NTS
REVISION –
SHEET 1 OF 1
CADD FILE: ES2805-34

NOTE:

1. SWITCH MACHINE AND MACHINE PLATES (NIC) MUST BE COORDINATED WITH SCRRA.
2. SEE DRAWING ES2805-73 FOR CENTER TO CENTER PIN SWITCH ROD DIMENSIONS.

BILL OF MATERIAL				
ITEM	QTY	DESCRIPTION	DWG NO	SCRRA PART NO
1	1	RODDING ASSEMBLY FOR NO 14-136 LB RE, SWITCH MACHINE ON LEFT SIDE	ES2805-71	
2	1	HOLLOW TIE ASSEMBLY (HT-1LL-14-136)	-	
3	1	HOLLOW TIE ASSEMBLY (HT-2LL-14-136)	-	
4	1	HOLLOW TIE ASSEMBLY (HT-5LL-14-136)	-	
5	1	HOLLOW TIE ASSEMBLY (HT-9LL-14-136)	-	
6*	2	LV BRACE FOR 136 LB RE	-	
7	8	COVER PLATE NO 1, HOLLOW SWITCH TIE	-	
8	8	SERRATED WASHER FOR LV BRACE	-	
9	8	CLIP, SAFELOK AB 2000	-	
10	8	CLIP, PANDROL, E2055	-	
11	16	RAIL ANCHOR UNIT DRIVE-ON TYPE 5	-	
12	2	STEEL COVER PLATE FOR HST TIE, TOP END	-	
13*	1	COVER PLATE NO 2, HOLLOW SWITCH TIE	-	
14*	1	COVER PLATE NO 3, HOLLOW SWITCH TIE	-	
15	1	END COVER PLATE FOR HST TIE, SHORT TOP VERSION	-	
16	30	PUSH PIN ASSEMBLY FOR HST COVERS	-	
17	4	STEEL SIDE END COVER PLATE ASSEMBLY FOR HST TIE	-	
18	8	COVER SUPPORT BRACKET	-	
19	4	HST SWITCH PLATE HTP-206-STR	ES2800-90	
20	1	HST SWITCH PLATE HTP-208-L	ES2800-92	
21	1	HST SWITCH PLATE HTP-200-L	ES2800-93	
22	2	HST SWITCH PLATE HTP-202-L	ES2800-94	
23	1	PILLOW BLOCK MOUNTING PLATE	-	

* NOT SHOWN ON ASSEMBLY FOR CLARITY

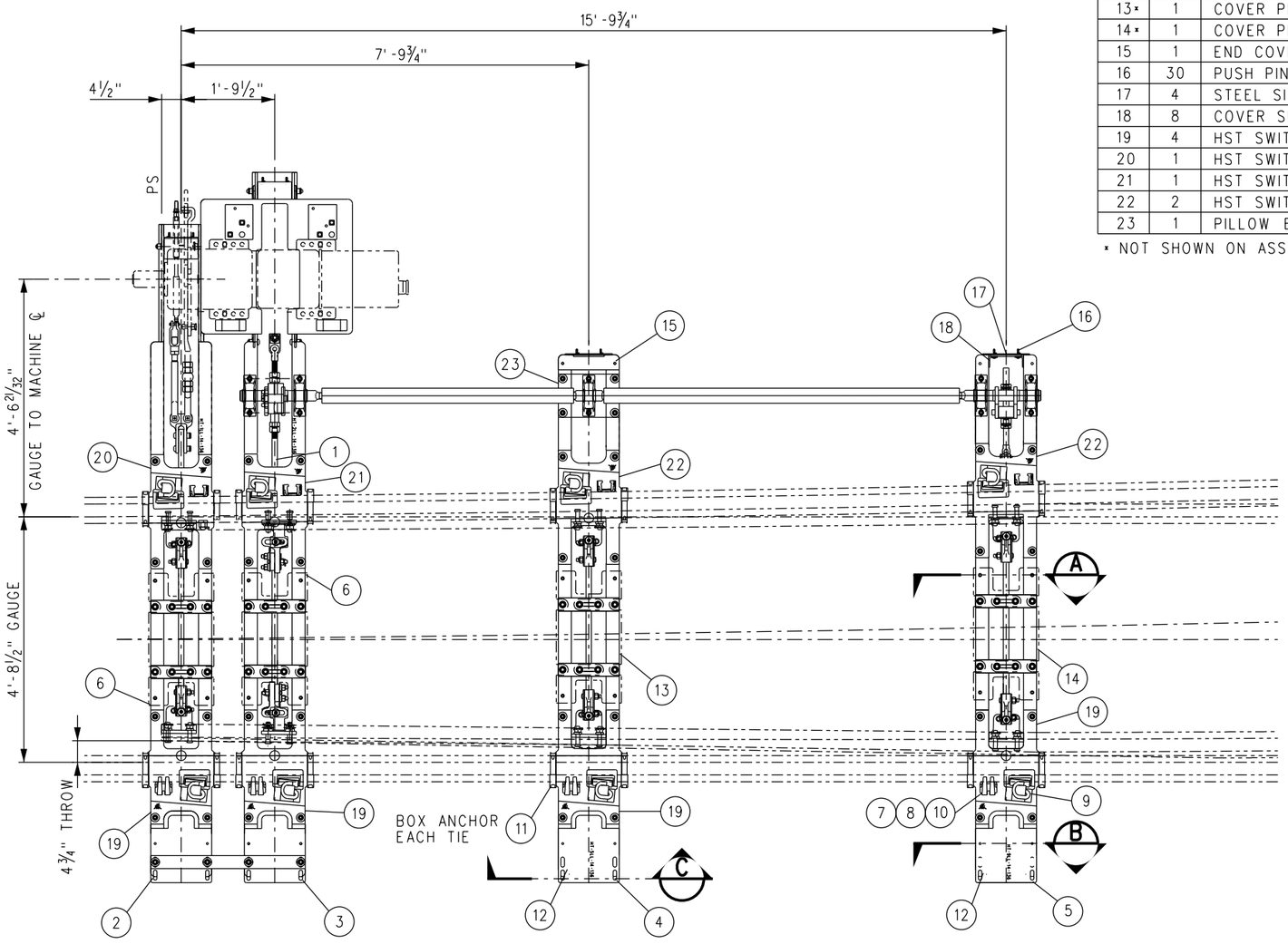

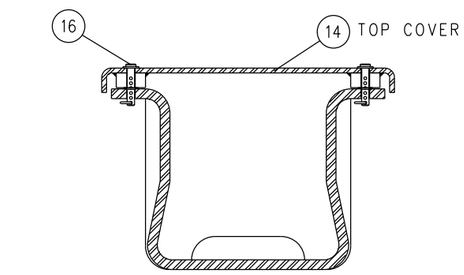

SECTION A
HOLLOW TIE TOP COVER DETAIL

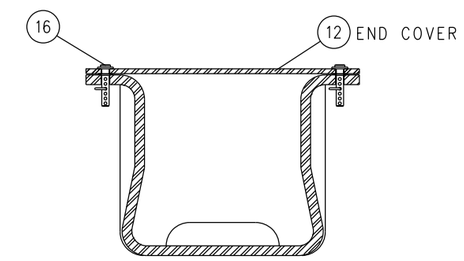

SECTION B
END COVER PLATE

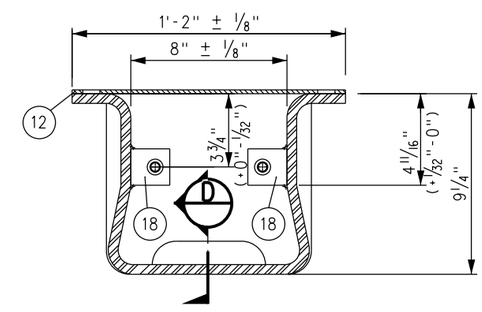

SECTION C
HOLLOW TIE SIDE END COVER DETAIL

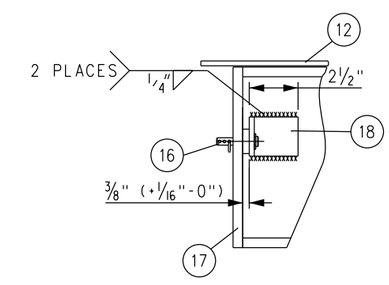

VIEW D
WELDING DETAIL

X	XX-XX-XX	REVISION	XX	XX
REV.	DATE	DESCRIPTION	DES.	ENG.

DRAWN BY: HDR DATE: 03/31/2011

ASSISTANT DIRECTOR: STANDARDS & DESIGN

DIRECTOR OF ENGINEERING AND CONSTRUCTION

SCRRA ENGINEERING STANDARDS ARE INTENDED FOR SCRRA APPROVED USES ONLY. FOR NON-SCRRA APPROVED USES:
SCRRA SHALL NOT BE RESPONSIBLE FOR THE ACCURACY OR COMPLETENESS OF THE DATA OR INFORMATION CONTAINED HEREIN. THE SELECTION AND USE OF THESE STANDARDS IS THE SOLE RESPONSIBILITY OF THE USER AND SHOULD NOT BE USED WITHOUT CONSULTING A REGISTERED PROFESSIONAL ENGINEER. ALL WARRANTIES AND REPRESENTATIONS OF ANY KIND ARE DISCLAIMED. ANYONE MAKING USE OF THIS INFORMATION AGREES THAT IT ASSUMES ALL LIABILITY ARISING FROM SUCH USE. NO PART OF THESE STANDARDS SHOULD BE REPRODUCED OR DISTRIBUTED IN ANY FORM OR BY ANY MEANS WITHOUT THE PRIOR WRITTEN PERMISSION OF SCRRA. ALL RIGHTS RESERVED.

METROLINK
SOUTHERN CALIFORNIA REGIONAL RAIL AUTHORITY
ONE GATEWAY PLAZA, 12TH FLOOR, L. A., CA. 90012

ENGINEERING STANDARDS

HOLLOW STEEL TIE LAYOUT
SWITCH MACHINE ON TURNOUT SIDE
NO 14–136 LB RE LH

STANDARD	2805
SCALE:	NTS
REVISION –	SHEET 1 OF 1
CADD FILE:	ES2805–35

BILL OF MATERIAL				
ITEM	QTY	DESCRIPTION	DWG NO	SCRRA PART NO
1	1	NO 14-136 LB RE SPRING FROG, LH POINT ASSEMBLY	-	
2	1	SPRING WING RAIL, NO 14-136 LB RE, LH C/W HARDWARE	-	
3	1	TOE BLOCK, NO 14-136 LB RE WSM	-	
4	1	FROG PLATE (14-136-50LC)	ES2805-43	
5	1	FROG PLATE (14-136-51LC)	ES2805-43	
6	1	FROG PLATE (14-136-52LC)	ES2805-45	
7	1	FROG PLATE (14-136-55LC)	ES2805-47	
8	1	FROG PLATE (14-136-62LC)	ES2805-49	
9	1	FROG PLATE (14-136-64LC)	ES2805-49	
10	1	FROG PLATE (14-136-65LC)	ES2805-51	
11	1	FROG PLATE (14-136-66LC)	ES2805-51	
12	4	HORN KEEPER, REVERSIBLE	-	
13	4	WEAR PLATE FOR REVERSIBLE HORN KEEPER	-	
14	1	SPRING BOX ASSEMBLY, WITH 3" MAXIMUM PLUNGER TRAVEL	-	
15	1	RETARDER, ENIDINE P/N: SP22917, CLEVIS ENDS WITH HARDWARE	-	

BILL OF MATERIAL				
ITEM	QTY	DESCRIPTION	DWG NO	SCRRA PART NO
16	1	RETARDER PLATE BRACKET FOR FROG C/W HYDRAULIC RETARDER	-	
17	3	FLAT RAIL BRACE FOR NON D-BAR APPLICATIONS	-	
18	6	WASHER, BOLT CAPTURE STYLE, 1/4" THICK	-	
19	16	BOLT, 1" DIA x 3", THIN SQ HEAD, DRILLED @ 2 1/2", GR 5	-	
20	8	BOLT, 1" DIA x 3 1/2", THIN SQ HEAD, DRILLED @ 2 11/16", GR 5	-	
21	2	BOLT, 1" DIA x 4 1/8", HEAVY HEX HEAD, GR 8	-	
22	6	BOLT, 1 3/8" DIA x 5 1/2", SQUARE HEAD, GR 8	-	
23	2	SECURITY LOCK NUT, 1" DIA, HEX (SH521), GR 5	-	
24	24	NUT, 1" DIA HEAVY HEX, SLOTTED, GR 5	-	
25	6	SECURITY LOCK NUT, 1 3/8" DIA HEX (SH530), GR 8	-	
26	16	FLAT WASHER, FOR 1" DIA x 5/32" THICK, HARDENED	-	
27	6	FLAT WASHER, FOR 1 3/8" DIA x 1/4" THICK, HARDENED	-	
28	6	TAIL WASHER, FLAT (837K)	-	
29	28	PANDROL SPRING CLIP E2055	-	
30	1	PANDROL SPRING CLIP E2056	-	
31	24	COTTER PIN, 1/4" DIA x 2" LONG	-	

NOTES:

1. RETARDER CLOSING TIME RANGES FROM 1 TO 3 MINUTES.
2. SPRING BOX LOAD IS 300 LBS/IN.
3. SPRING WING SHALL BE THROWN TO A 1 7/8" FLANGEWAY AT THE 3/4" POINT TO DETERMINE THE SPRING WING THROWN POSITION.
4. FLAT RAIL BRACES (ITEM NO 17) SHALL BE WELDED WHERE SHOWN, UP AGAINST SPRING WING WHEN FULLY THROWN.
5. RAIL END DRILLING SHALL BE @ 9" AND 1'-3 1/2", 3 3/32" ABOVE RAIL BASE, 1 5/16" DIA AT ALL 4 RAIL ENDS. ALL RAIL HOLE EDGES SHALL BE ROUNDED WITH A 1/8" R.
6. RETARDER BRACKET (ITEM NO 16) SHALL BE WELDED AS SHOWN.
7. FROG SHALL BE CONSTRUCTED TO TOLERANCES GIVEN ON LATEST AREMA PLAN 1010, PERMISSIBLE VARIATIONS IN COMPLETED FROGS.
8. INSERT TO BE EXPLOSIVE DEPTH HARDENED TO 352 BRINELL PER AREMA.
9. NAME TAG TO BE AFFIXED TO RIGID WING RAIL NEAR 1/2" PT WITH INFORMATION SHOWN.
10. SCRRA WILL CONSIDER A TAPERED HEEL SPRING OF SAME ALIGNMENT AND DIMENSIONS TO REPLACE WSM.

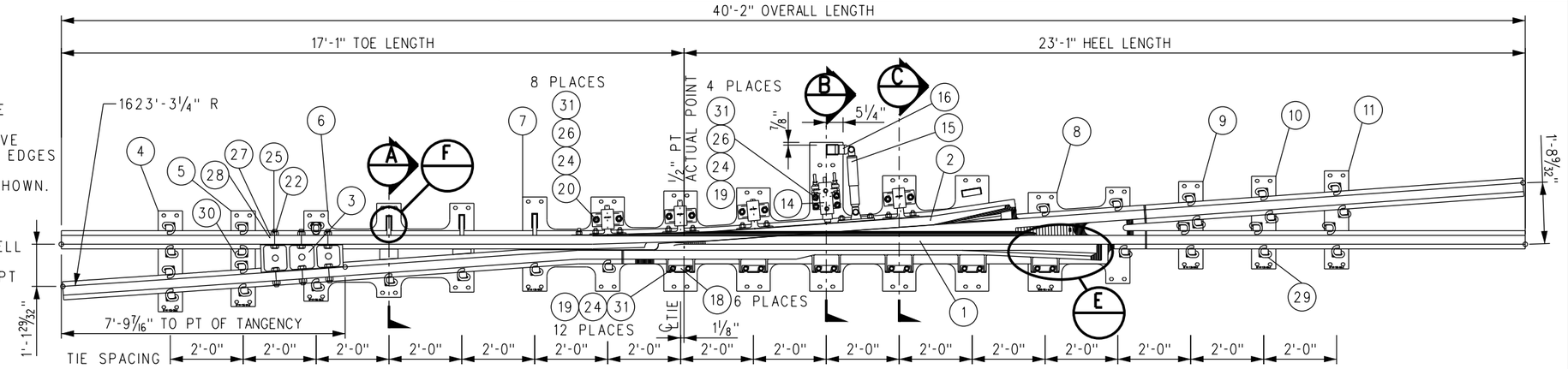

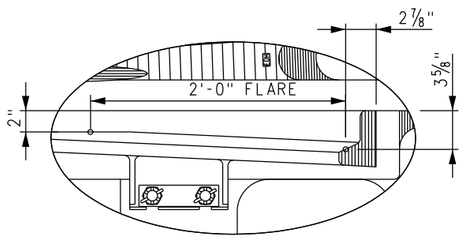

DETAIL E
DIMENSIONS AT GAUGE ELEVATION

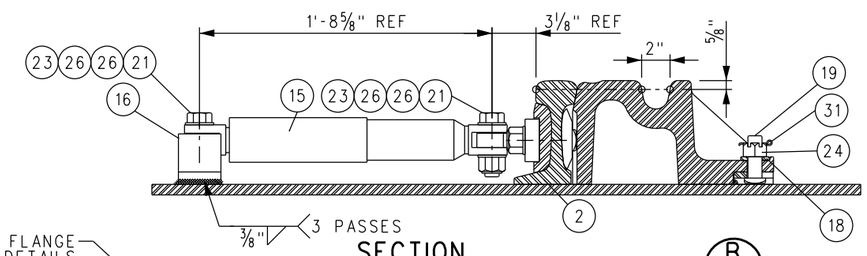

SECTION B
RETARDER MOUNTING DETAIL
SPRING BOX REMOVED FOR CLARITY

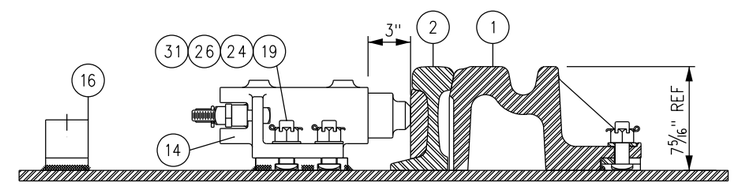

SECTION B
SPRING BOX DETAIL
RETARDER REMOVED FOR CLARITY

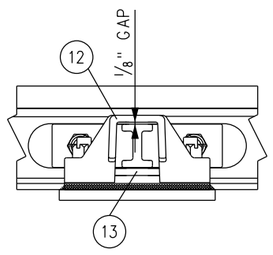

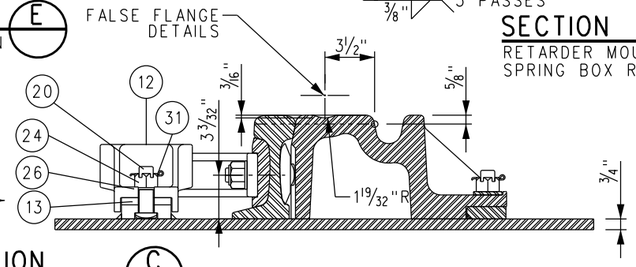

SECTION C
HORN AND KEEPER MOUNTING DETAILS

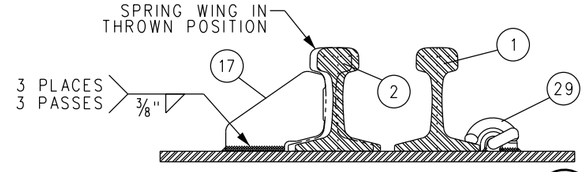

SECTION A
FLAT RAIL BRACE MOUNTING DETAILS, TYPICAL 3 PLACES

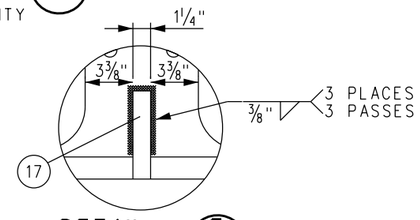

DETAIL F

REV.	DATE	DESCRIPTION	DES.	ENG.
X	XX-XX-XX	REVISION	XX	XX

DRAWN BY: HDR DATE: 03/31/2011

ASSISTANT DIRECTOR: STANDARDS & DESIGN

DIRECTOR OF ENGINEERING AND CONSTRUCTION

SCRRA ENGINEERING STANDARDS ARE INTENDED FOR SCRRA APPROVED USES ONLY. FOR NON-SCRRA APPROVED USES:
SCRRA SHALL NOT BE RESPONSIBLE FOR THE ACCURACY OR COMPLETENESS OF THE DATA OR INFORMATION CONTAINED HEREIN. THE SELECTION AND USE OF THESE STANDARDS IS THE SOLE RESPONSIBILITY OF THE USER AND SHOULD NOT BE USED WITHOUT CONSULTING A REGISTERED PROFESSIONAL ENGINEER. ALL WARRANTIES AND REPRESENTATIONS OF ANY KIND ARE DISCLAIMED. ANYONE MAKING USE OF THIS INFORMATION AGREES THAT IT ASSUMES ALL LIABILITY ARISING FROM SUCH USE. NO PART OF THESE STANDARDS SHOULD BE REPRODUCED OR DISTRIBUTED IN ANY FORM OR BY ANY MEANS WITHOUT THE PRIOR WRITTEN PERMISSION OF SCRRA. ALL RIGHTS RESERVED.

METROLINK®
SOUTHERN CALIFORNIA REGIONAL RAIL AUTHORITY
ONE GATEWAY PLAZA, 12TH FLOOR, L. A., CA. 90012

ENGINEERING STANDARDS

NO 14 WSM FROG LH
FROG ASSEMBLY PLAN VIEW AND FROG PACK
CONCRETE TIES–136 LB RE RAIL

STANDARD 2805
SCALE: NTS
REVISION –
SHEET 1 OF 1
CADD FILE: ES2805–41

BILL OF MATERIAL				
ITEM	QTY	DESCRIPTION	DWG NO	SCRRA PART NO
1	1	NO 14-136 LB RE SPRING FROG, RH POINT ASSEMBLY	-	
2	1	SPRING WING RAIL, NO 14-136 LB RE, RH, C/W HARDWARE	-	
3	1	TOE BLOCK, NO 14-136 LB RE WSM	-	
4	1	FROG PLATE (14-136-50RC)	ES2805-44	
5	1	FROG PLATE (14-136-51RC)	ES2805-44	
6	1	FROG PLATE (14-136-52RC)	ES2805-46	
7	1	FROG PLATE (14-136-55RC)	ES2805-48	
8	1	FROG PLATE (14-136-62RC)	ES2805-50	
9	1	FROG PLATE (14-136-64RC)	ES2805-50	
10	1	FROG PLATE (14-136-65RC)	ES2805-52	
11	1	FROG PLATE (14-136-66RC)	ES2805-52	
12	4	HORN KEEPER, REVERSIBLE	-	
13	4	WEAR PLATE FOR REVERSIBLE HORN KEEPER	-	
14	1	SPRING BOX ASSEMBLY, WITH 3" MAXIMUM PLUNGER TRAVEL	-	
15	1	RETARDER, ENIDINE P/N: SP22917, CLEVIS ENDS WITH HARDWARE	-	

BILL OF MATERIAL				
ITEM	QTY	DESCRIPTION	DWG NO	SCRRA PART NO
16	1	RETARDER PLATE BRACKET FOR FROG C/W HYDRAULIC RETARDER	-	
17	3	FLAT RAIL BRACE FOR NON D-BAR APPLICATIONS	-	
18	6	WASHER, BOLT CAPTURE STYLE, 1/4" THICK	-	
19	16	BOLT, 1" DIA x 3", THIN SQ HEAD, DRILLED @ 2 1/2", GR 5	-	
20	8	BOLT, 1" DIA x 3 1/2", THIN SQ HEAD, DRILLED @ 2 11/16", GR 5	-	
21	2	BOLT, 1" DIA x 4 1/8", HEAVY HEX HEAD, GR 8	-	
22	6	BOLT, 1 3/8" DIA x 5 1/2", SQUARE HEAD, GR 8	-	
23	2	SECURITY LOCK NUT, 1" DIA, HEX (SH521), GR 5	-	
24	24	NUT, 1" DIA HEAVY HEX, SLOTTED, GR 5	-	
25	6	SECURITY LOCK NUT, 1 3/8" DIA HEX (SH530), GR 8	-	
26	16	FLAT WASHER, FOR 1" DIA x 5/32" THICK, HARDENED	-	
27	6	FLAT WASHER, FOR 1 3/8" DIA x 1/4" THICK, HARDENED	-	
28	6	TAIL WASHER, FLAT (837K)	-	
29	27	PANDROL SPRING CLIP E2055	-	
30	2	PANDROL SPRING CLIP E2056	-	
31	24	COTTER PIN, 1/4" DIA x 2" LONG	-	

NOTES:

1. RETARDER CLOSING TIME RANGES FROM 1 TO 3 MINUTES.
2. SPRING BOX LOAD IS 300 LBS/IN.
3. SPRING WING SHALL BE THROWN TO A 1 7/8" FLANGEWAY AT THE 3/4" POINT TO DETERMINE THE SPRING WING THROWN POSITION.
4. FLAT RAIL BRACES (ITEM NO 17) SHALL BE WELDED WHERE SHOWN, UP AGAINST SPRING WING WHEN FULLY THROWN.
5. RAIL END DRILLING SHALL BE @ 9" AND 1'-3 1/2", 3 3/32" ABOVE RAIL BASE, 1 5/16" DIA AT ALL 4 RAIL ENDS. ALL RAIL HOLE EDGES SHALL BE ROUNDED WITH A 1/8" R.
6. RETARDER BRACKET (ITEM NO 16) SHALL BE WELDED AS SHOWN.
7. FROG SHALL BE CONSTRUCTED TO TOLERANCES GIVEN ON LATEST AREMA PLAN 1010, PERMISSIBLE VARIATIONS IN COMPLETED FROGS.
8. INSERT TO BE EXPLOSIVE DEPTH HARDENED TO 352 BRINELL PER AREMA.
9. NAME TAG TO BE AFFIXED TO RIGID WING RAIL NEAR 1/2" PT WITH INFORMATION SHOWN.
10. SCRRA WILL CONSIDER A TAPERED HEEL SPRING OF SAME ALIGNMENT AND DIMENSIONS TO REPLACE WSM.

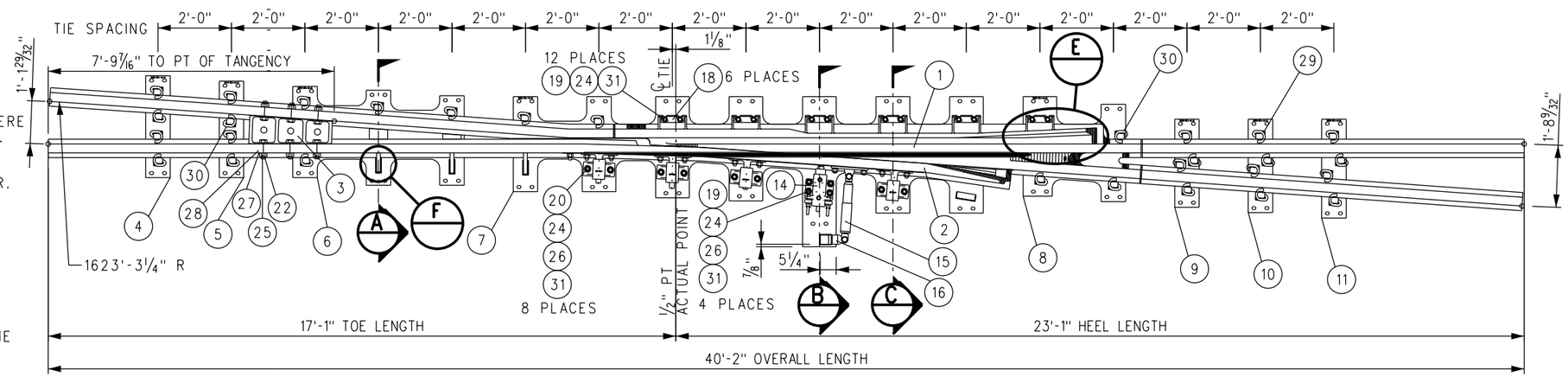

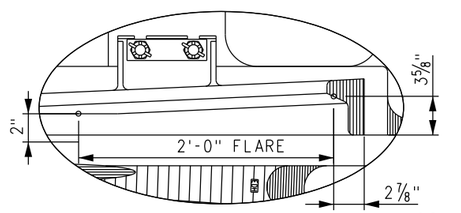

DETAIL E
DIMENSIONS AT GAUGE ELEVATION

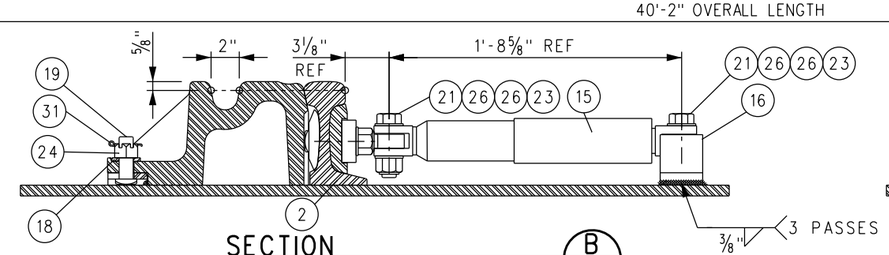

SECTION B
RETARDER MOUNTING DETAIL
SPRING BOX REMOVED FOR CLARITY

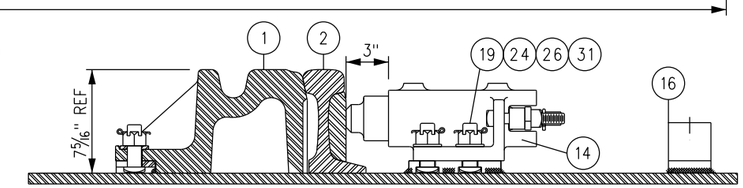

SECTION B
SPRING BOX DETAIL
RETARDER REMOVED FOR CLARITY

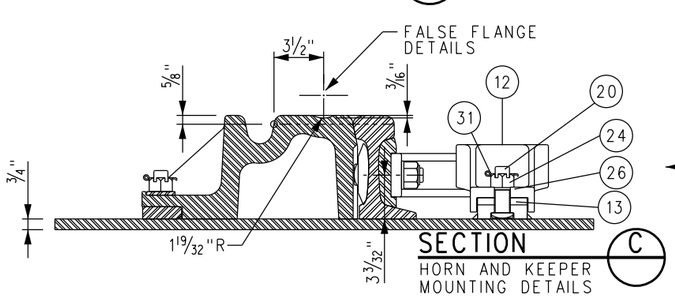

SECTION C
HORN AND KEEPER MOUNTING DETAILS

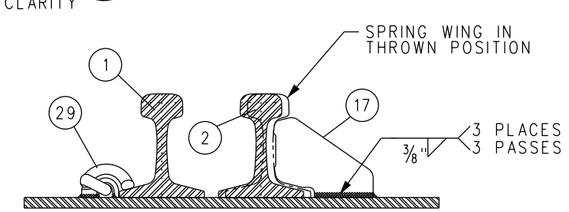

SECTION A
FLAT RAIL BRACE MOUNTING DETAILS, TYPICAL 3 PLACES

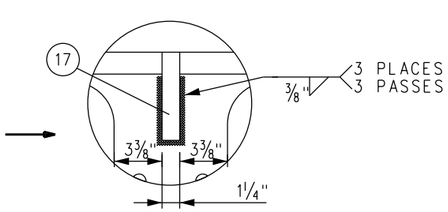

DETAIL F

REV.	DATE	DESCRIPTION	DES.	ENG.
X	XX-XX-XX	REVISION	XX	XX

DRAWN BY: HDR DATE: 03/31/2011

ASSISTANT DIRECTOR: STANDARDS & DESIGN

DIRECTOR OF ENGINEERING AND CONSTRUCTION

SCRRA ENGINEERING STANDARDS ARE INTENDED FOR SCRRA APPROVED USES ONLY. FOR NON-SCRRA APPROVED USES:
SCRRA SHALL NOT BE RESPONSIBLE FOR THE ACCURACY OR COMPLETENESS OF THE DATA OR INFORMATION CONTAINED HEREIN. THE SELECTION AND USE OF THESE STANDARDS IS THE SOLE RESPONSIBILITY OF THE USER AND SHOULD NOT BE USED WITHOUT CONSULTING A REGISTERED PROFESSIONAL ENGINEER. ALL WARRANTIES AND REPRESENTATIONS OF ANY KIND ARE DISCLAIMED. ANYONE MAKING USE OF THIS INFORMATION AGREES THAT IT ASSUMES ALL LIABILITY ARISING FROM SUCH USE. NO PART OF THESE STANDARDS SHOULD BE REPRODUCED OR DISTRIBUTED IN ANY FORM OR BY ANY MEANS WITHOUT THE PRIOR WRITTEN PERMISSION OF SCRRA. ALL RIGHTS RESERVED.

METROLINK®
SOUTHERN CALIFORNIA REGIONAL RAIL AUTHORITY
ONE GATEWAY PLAZA, 12TH FLOOR, L. A., CA. 90012

ENGINEERING STANDARDS

NO 14 WSM FROG RH
FROG ASSEMBLY PLAN VIEW AND FROG PACK
CONCRETE TIES–136 LB RE RAIL

STANDARD 2805
SCALE: NTS
REVISION –
SHEET 1 OF 1
CADD FILE: ES2805–42

BILL OF MATERIAL					
ITEM	QTY FOR 14-136-50LC	QTY FOR 14-136-51LC	DESCRIPTION	DWG NO	SCRRA PART NO
1	1	0	FLAT BAR, ASTM A36, 3/4" x 8" x 2'-9 1/4" LONG	-	
2	0	1	FLAT BAR, ASTM A36, 3/4" x 8" x 2'-7 1/2" LONG	-	
3	4	4	SHOULDER, PANDROL, FORGED TONGUELESS, TYPE 1	-	

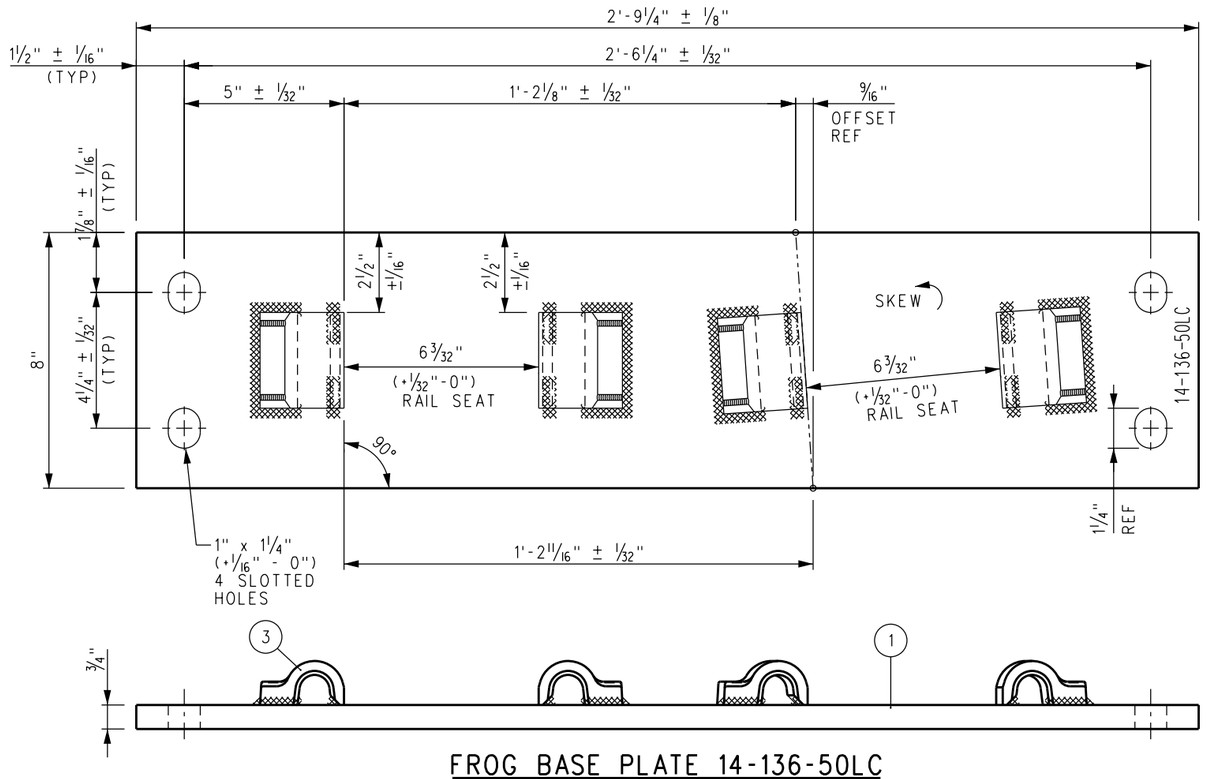

FROG BASE PLATE 14-136-50LC

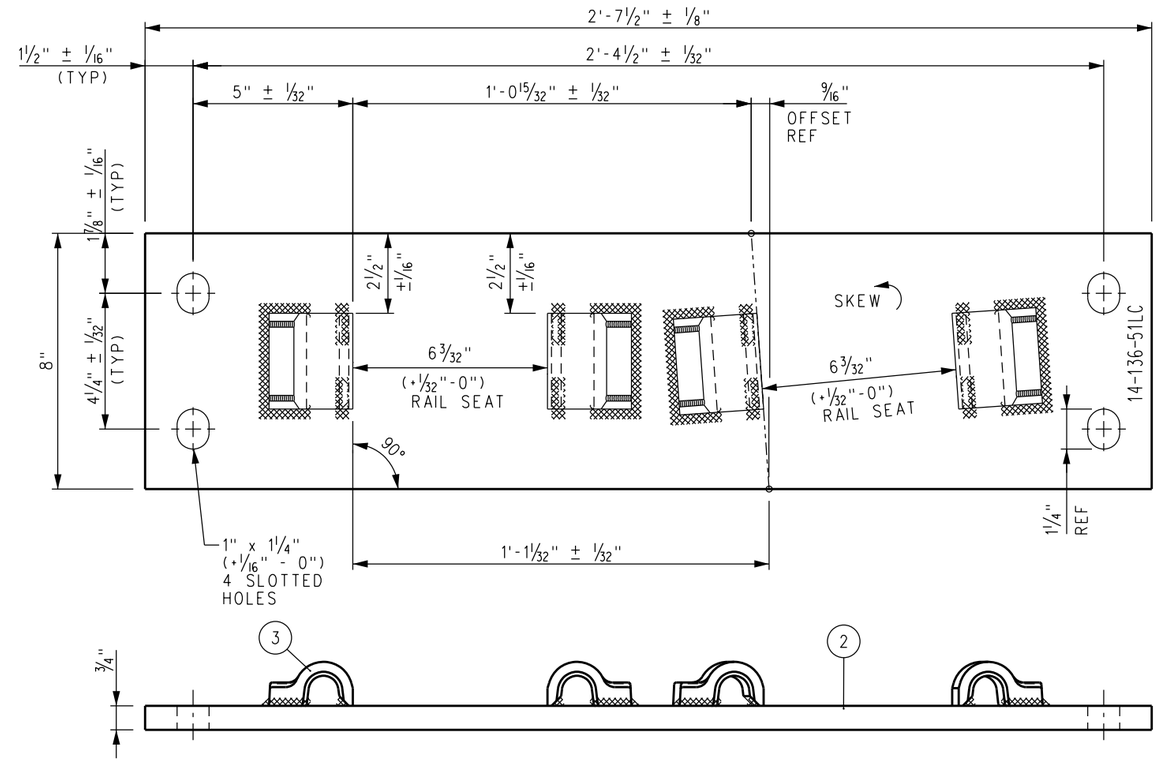

FROG BASE PLATE 14-136-51LC

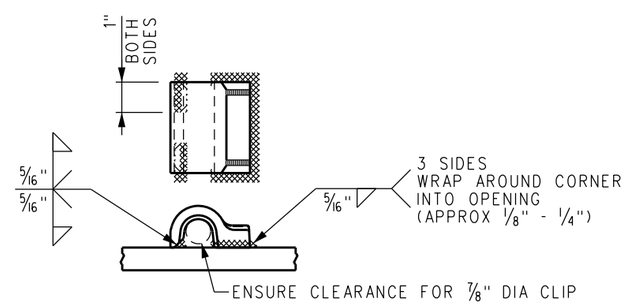

FORGED SHOULDER WELDING DETAIL

NOTES:

1. I.D. CHARACTERS TO BE 1/2" MINIMUM HEIGHT CLEARLY STAMPED AS SHOWN.
2. WELDS TO BE DRESSED FLUSH WITH SHOULDER & NOT TO PROTRUDE INTO RAIL SEAT.
3. SLOTTED HOLE CENTERS ARE INDICATED ON DRAWING.

REV.	DATE	DESCRIPTION	DES.	ENG.
X	XX-XX-XX	REVISION	XX	XX

DRAWN BY: HDR DATE: 03/31/2011

ASSISTANT DIRECTOR: STANDARDS & DESIGN

DIRECTOR OF ENGINEERING AND CONSTRUCTION

SCRRA ENGINEERING STANDARDS ARE INTENDED FOR SCRRA APPROVED USES ONLY. FOR NON-SCRRA APPROVED USES:
SCRRA SHALL NOT BE RESPONSIBLE FOR THE ACCURACY OR COMPLETENESS OF THE DATA OR INFORMATION CONTAINED HEREIN. THE SELECTION AND USE OF THESE STANDARDS IS THE SOLE RESPONSIBILITY OF THE USER AND SHOULD NOT BE USED WITHOUT CONSULTING A REGISTERED PROFESSIONAL ENGINEER. ALL WARRANTIES AND REPRESENTATIONS OF ANY KIND ARE DISCLAIMED. ANYONE MAKING USE OF THIS INFORMATION AGREES THAT IT ASSUMES ALL LIABILITY ARISING FROM SUCH USE. NO PART OF THESE STANDARDS SHOULD BE REPRODUCED OR DISTRIBUTED IN ANY FORM OR BY ANY MEANS WITHOUT THE PRIOR WRITTEN PERMISSION OF SCRRA. ALL RIGHTS RESERVED.

METROLINK®
SOUTHERN CALIFORNIA REGIONAL RAIL AUTHORITY
ONE GATEWAY PLAZA, 12TH FLOOR, L. A., CA. 90012

ENGINEERING STANDARDS

NO 14 WSM FROG LH
FROG BASE PLATES 14–50LC AND 14–51LC
CONCRETE TIES–136 LB RE RAIL

STANDARD 2805
SCALE: NTS
REVISION –
SHEET 1 OF 1
CADD FILE: ES2805–43

BILL OF MATERIAL					
ITEM	QTY FOR 24-136-50RC	QTY FOR 24-136-51RC	DESCRIPTION	DWG NO	SCRRA PART NO
1	1	0	FLAT BAR, ASTM A36, 3/4" x 8" x 2'-9 1/4" LONG	-	
2	0	1	FLAT BAR, ASTM A36, 3/4" x 8" x 2'-7 1/2" LONG	-	
3	4	4	SHOULDER, PANDROL, FORGED TONGUELESS, TYPE 1	-	

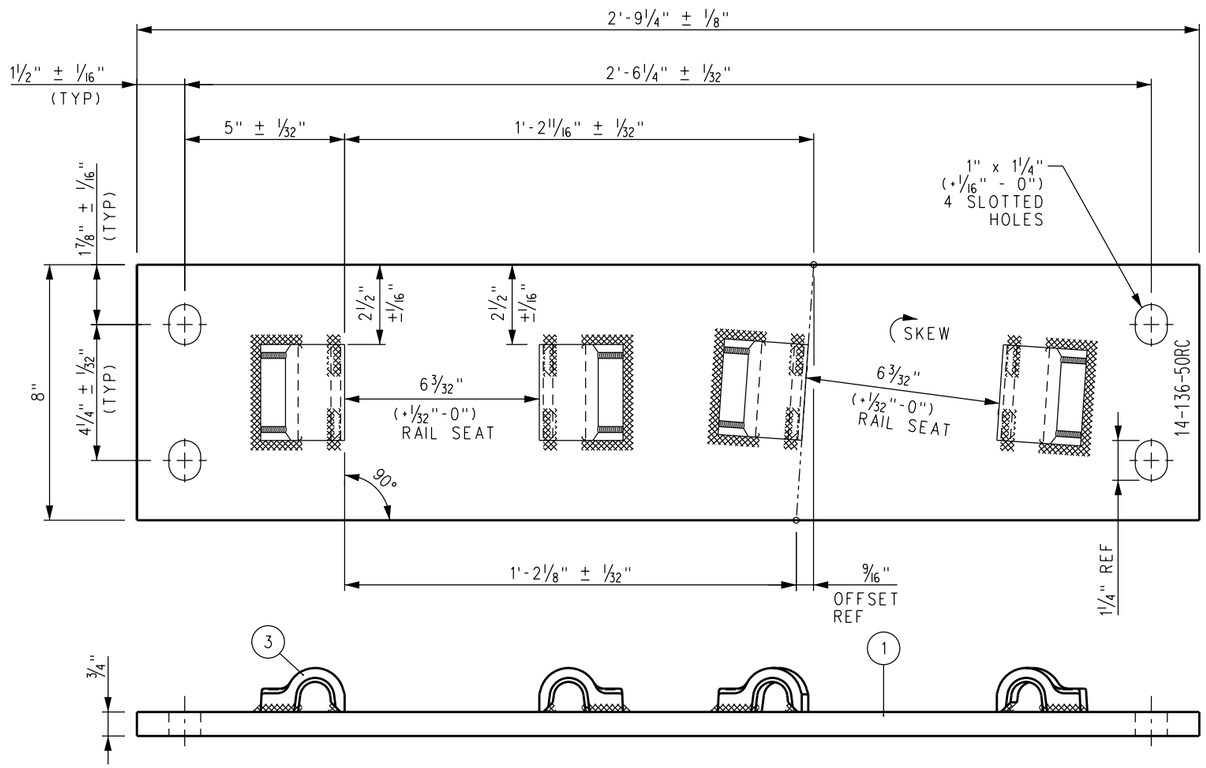

FROG BASE PLATE 14-136-50RC

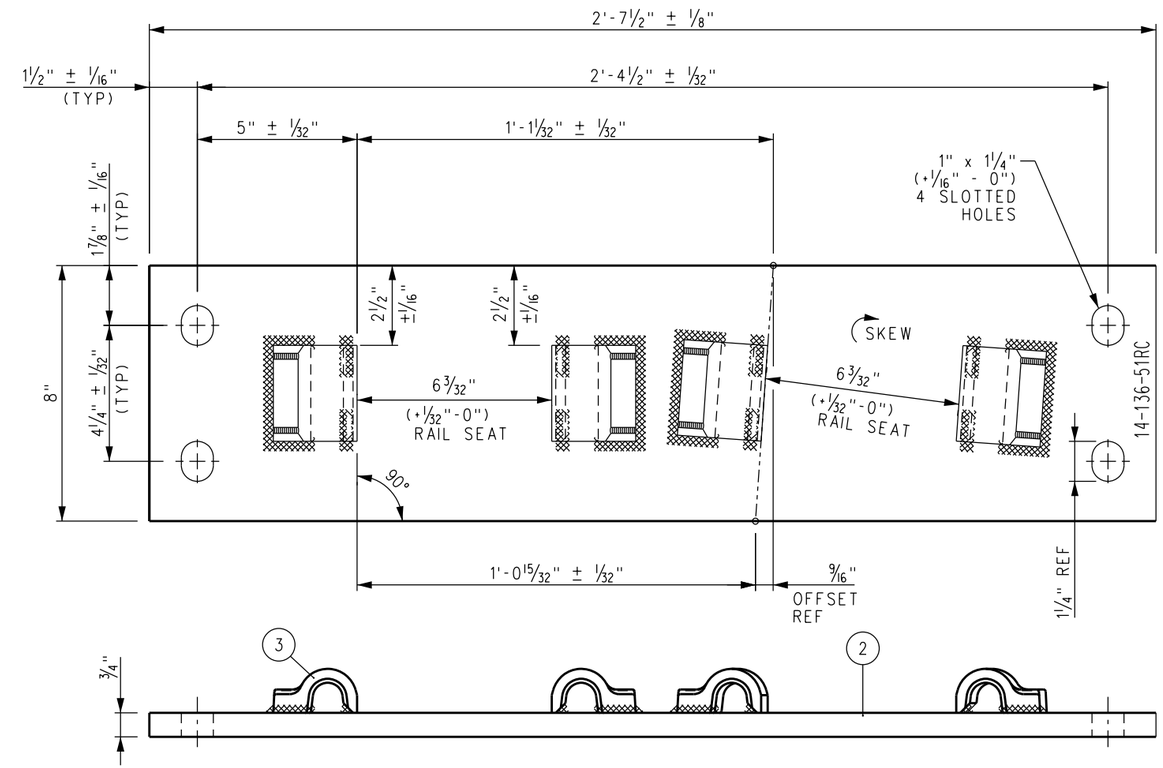

FROG BASE PLATE 14-136-51RC

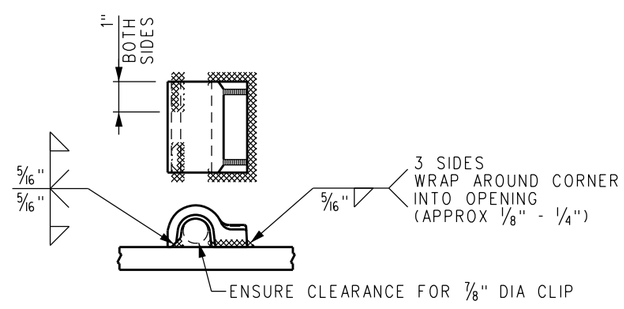

FORGED SHOULDER WELDING DETAIL

NOTES:

1. I.D. CHARACTERS TO BE 1/2" MINIMUM HEIGHT CLEARLY STAMPED AS SHOWN.
2. WELDS TO BE DRESSED FLUSH WITH SHOULDER & NOT TO PROTRUDE INTO RAIL SEAT.
3. SLOTTED HOLE CENTERS ARE INDICATED ON DRAWING.

REV.	DATE	DESCRIPTION	DES.	ENG.
X	XX-XX-XX	REVISION	XX	XX

DRAWN BY: HDR DATE: 03/31/2011

ASSISTANT DIRECTOR: STANDARDS & DESIGN

DIRECTOR OF ENGINEERING AND CONSTRUCTION

SCRRA ENGINEERING STANDARDS ARE INTENDED FOR SCRRA APPROVED USES ONLY. FOR NON-SCRRA APPROVED USES: SCRRA SHALL NOT BE RESPONSIBLE FOR THE ACCURACY OR COMPLETENESS OF THE DATA OR INFORMATION CONTAINED HEREIN. THE SELECTION AND USE OF THESE STANDARDS IS THE SOLE RESPONSIBILITY OF THE USER AND SHOULD NOT BE USED WITHOUT CONSULTING A REGISTERED PROFESSIONAL ENGINEER. ALL WARRANTIES AND REPRESENTATIONS OF ANY KIND ARE DISCLAIMED. ANYONE MAKING USE OF THIS INFORMATION AGREES THAT IT ASSUMES ALL LIABILITY ARISING FROM SUCH USE. NO PART OF THESE STANDARDS SHOULD BE REPRODUCED OR DISTRIBUTED IN ANY FORM OR BY ANY MEANS WITHOUT THE PRIOR WRITTEN PERMISSION OF SCRRA. ALL RIGHTS RESERVED.

METROLINK®
SOUTHERN CALIFORNIA REGIONAL RAIL AUTHORITY
ONE GATEWAY PLAZA, 12TH FLOOR, L. A., CA. 90012

ENGINEERING STANDARDS

NO 14 WSM FROG RH
FROG BASE PLATES 14-50RC AND 14-51RC
CONCRETE TIES-136 LB RE RAIL

STANDARD 2805
SCALE: NTS
REVISION –
SHEET 1 OF 1
CADD FILE: ES2805-44

BILL OF MATERIAL				
ITEM	QTY	DESCRIPTION	DWG NO	SCRRA PART NO
1	1	BURNED PLATE, 3/4" THICK	-	
2	1	BURNED STOP, 1/2" THICK, TAPERED 1 5/16" TO 1 3/4", 6" LONG	-	
3	1	BURNED STOP, 1/2" THICK, TAPERED 3 1/32" TO 3 15/32", 6" LONG	-	
4	4	SHOULDER, PANDROL, FORGED TONGUELESS, TYPE 1	-	

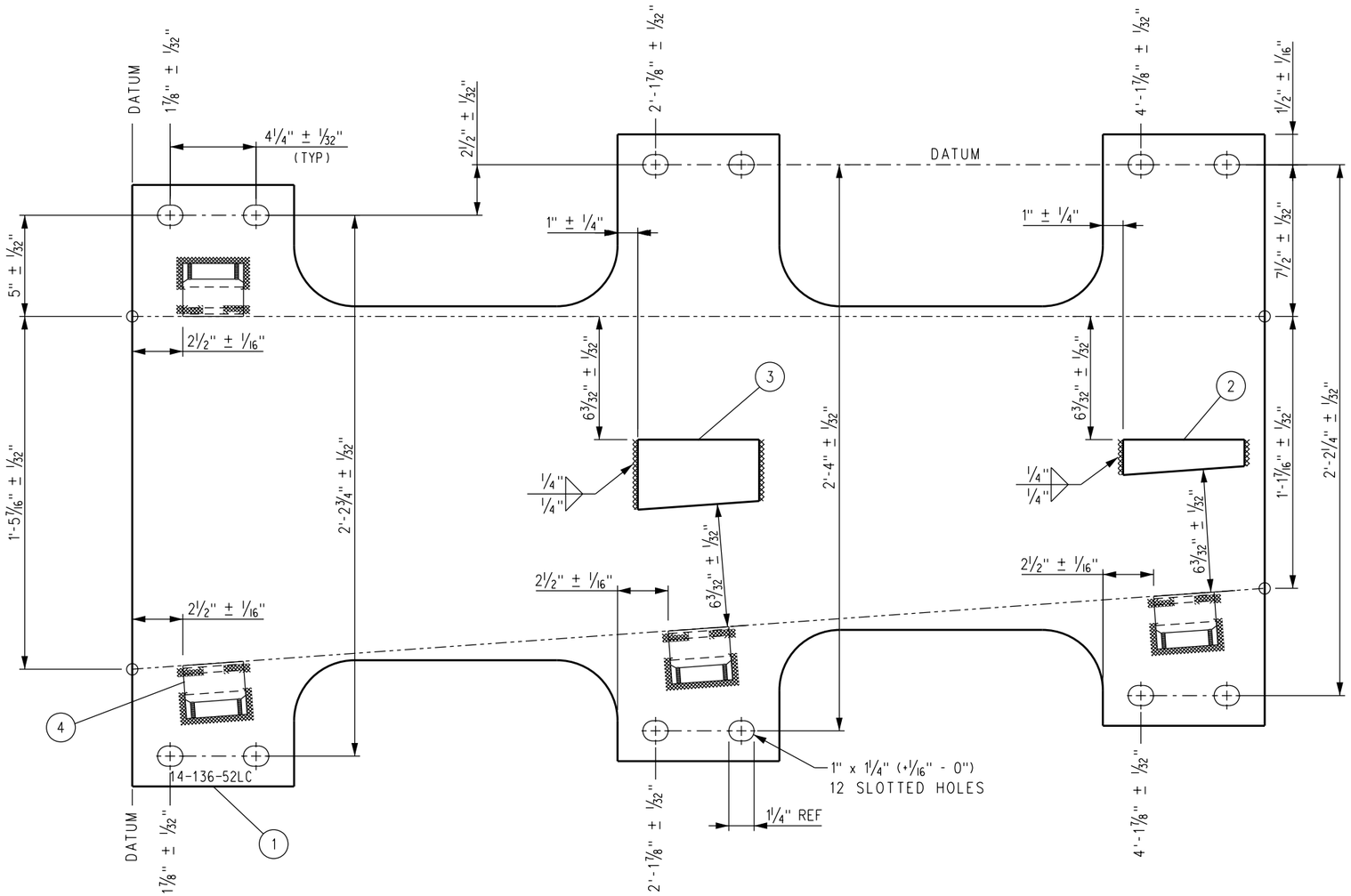

FROG BASE PLATE 14-136-52LC

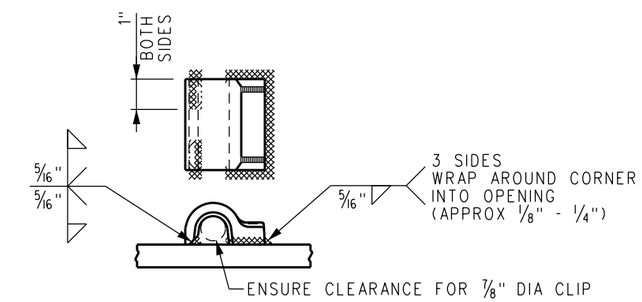

FORGED SHOULDER WELDING DETAIL

NOTES:

1. I.D. CHARACTERS TO BE 1/2" MINIMUM HEIGHT CLEARLY STAMPED AS SHOWN.
2. WELDS TO BE DRESSED FLUSH WITH SHOULDERS AND STOPS AND NOT TO PROTRUDE INTO RAIL SEAT.
3. SLOTTED HOLE CENTERS ARE INDICATED ON DRAWING.

REV.	DATE	DESCRIPTION	DES.	ENG.
X	XX-XX-XX	REVISION	XX	XX

DRAWN BY: HDR DATE: 03/31/2011

ASSISTANT DIRECTOR: STANDARDS & DESIGN

DIRECTOR OF ENGINEERING AND CONSTRUCTION

SCRRA ENGINEERING STANDARDS ARE INTENDED FOR SCRRA APPROVED USES ONLY. FOR NON-SCRRA APPROVED USES, SCRRA SHALL NOT BE RESPONSIBLE FOR THE ACCURACY OR COMPLETENESS OF THE DATA OR INFORMATION CONTAINED HEREIN. THE SELECTION AND USE OF THESE STANDARDS IS THE SOLE RESPONSIBILITY OF THE USER AND SHOULD NOT BE USED WITHOUT CONSULTING A REGISTERED PROFESSIONAL ENGINEER. ALL WARRANTIES AND REPRESENTATIONS OF ANY KIND ARE DISCLAIMED. ANYONE MAKING USE OF THIS INFORMATION AGREES THAT IT ASSUMES ALL LIABILITY ARISING FROM SUCH USE. NO PART OF THESE STANDARDS SHOULD BE REPRODUCED OR DISTRIBUTED IN ANY FORM OR BY ANY MEANS WITHOUT THE PRIOR WRITTEN PERMISSION OF SCRRA. ALL RIGHTS RESERVED.

METROLINK®
SOUTHERN CALIFORNIA REGIONAL RAIL AUTHORITY
ONE GATEWAY PLAZA, 12TH FLOOR, L. A., CA. 90012

ENGINEERING STANDARDS

NO 14 WSM FROG LH
FROG BASE PLATE 14–52LC
CONCRETE TIES–136 LB RE RAIL

STANDARD: 2805
SCALE: NTS
REVISION: –
SHEET: 1 OF 1
CADD FILE: ES2805–45

BILL OF MATERIAL				
ITEM	QTY	DESCRIPTION	DWG NO	SCRRA PART NO
1	1	BURNED PLATE, 3/4" THICK	-	
2	1	BURNED STOP, 1/2" THICK, TAPERED 1 5/16" TO 1 3/4", 6" LONG	-	
3	1	BURNED STOP, 1/2" THICK, TAPERED 3 1/32" TO 3 15/32", 6" LONG	-	
4	4	SHOULDER, PANDROL, FORGED TONGUELESS, TYPE 1	-	

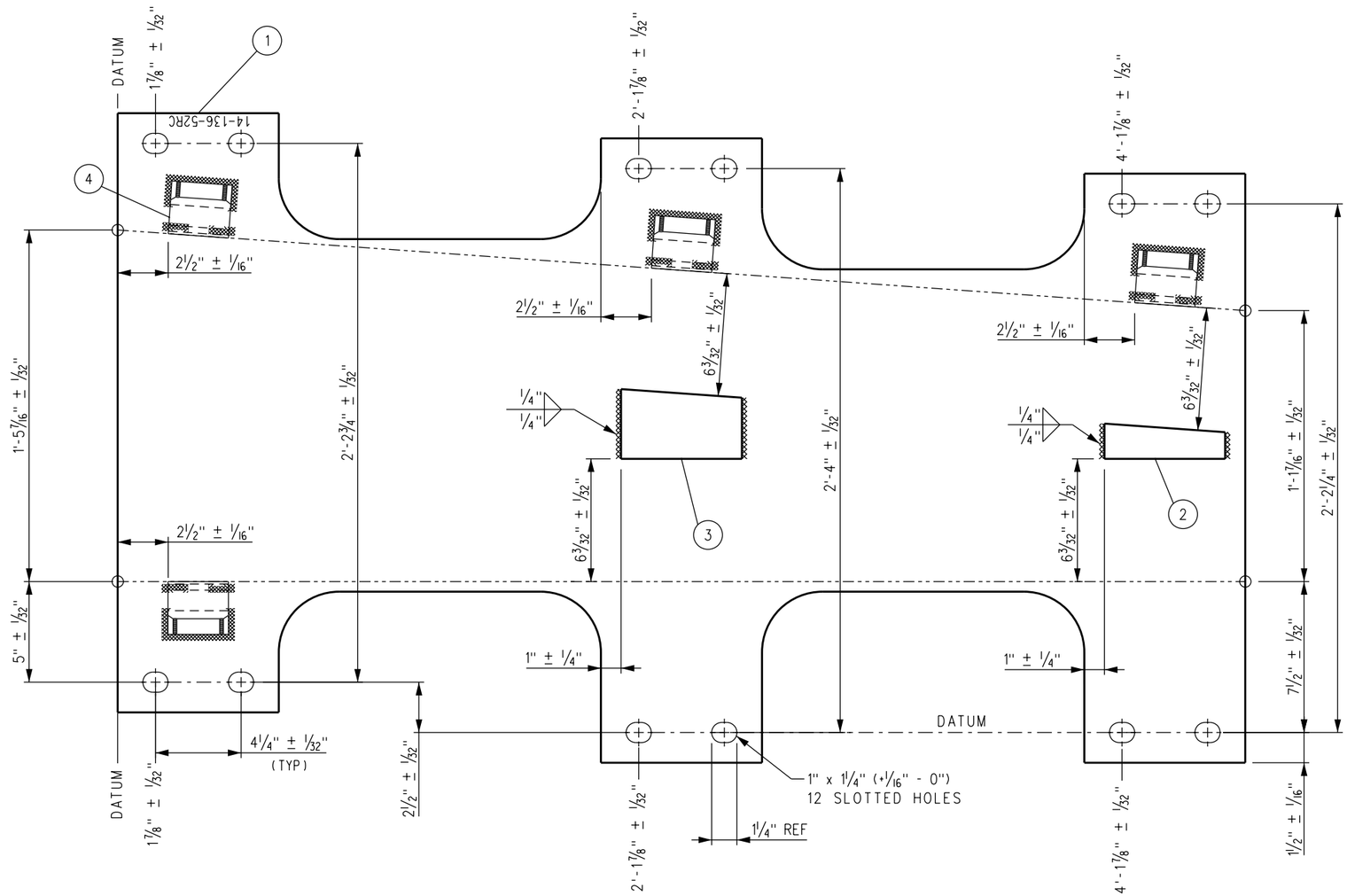

FROG BASE PLATE 14-136-52RC

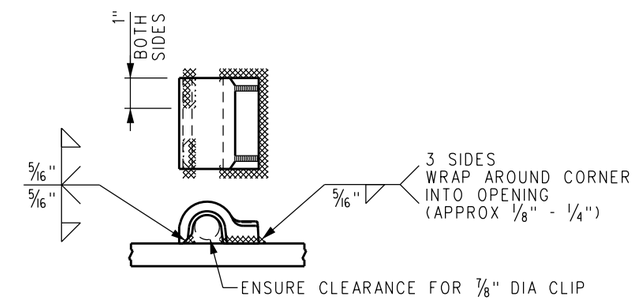

FORGED SHOULDER WELDING DETAIL

NOTES:

1. I.D. CHARACTERS TO BE 1/2" MINIMUM HEIGHT CLEARLY STAMPED AS SHOWN.
2. WELDS TO BE DRESSED FLUSH WITH SHOULDERS AND STOPS AND NOT TO PROTRUDE INTO RAIL SEAT.
3. SLOTTED HOLE CENTERS ARE INDICATED ON DRAWING.

REV.	DATE	DESCRIPTION	DES.	ENG.
X	XX-XX-XX	REVISION	XX	XX

DRAWN BY: HDR DATE: 03/31/2011

ASSISTANT DIRECTOR: STANDARDS & DESIGN

DIRECTOR OF ENGINEERING AND CONSTRUCTION

SCRRA ENGINEERING STANDARDS ARE INTENDED FOR SCRRA APPROVED USES ONLY. FOR NON-SCRRA APPROVED USES: SCRRA SHALL NOT BE RESPONSIBLE FOR THE ACCURACY OR COMPLETENESS OF THE DATA OR INFORMATION CONTAINED HEREIN. THE SELECTION AND USE OF THESE STANDARDS IS THE SOLE RESPONSIBILITY OF THE USER AND SHOULD NOT BE USED WITHOUT CONSULTING A REGISTERED PROFESSIONAL ENGINEER. ALL WARRANTIES AND REPRESENTATIONS OF ANY KIND ARE DISCLAIMED. ANYONE MAKING USE OF THIS INFORMATION AGREES THAT IT ASSUMES ALL LIABILITY ARISING FROM SUCH USE. NO PART OF THESE STANDARDS SHOULD BE REPRODUCED OR DISTRIBUTED IN ANY FORM OR BY ANY MEANS WITHOUT THE PRIOR WRITTEN PERMISSION OF SCRRA. ALL RIGHTS RESERVED.

METROLINK®
SOUTHERN CALIFORNIA REGIONAL RAIL AUTHORITY
ONE GATEWAY PLAZA, 12TH FLOOR, L. A., CA. 90012

ENGINEERING STANDARDS

NO 14 WSM FROG RH
FROG BASE PLATE 14–52RC
CONCRETE TIES–136 LB RE RAIL

STANDARD 2805
SCALE: NTS
REVISION –
SHEET 1 OF 1
CADD FILE: ES2805–46

NOTES:

1. I.D. CHARACTERS TO BE 1/2" MINIMUM HEIGHT CLEARLY STAMPED AS SHOWN.
2. WELDS TO BE DRESSED FLUSH WITH SHOULDERS AND STOPS AND NOT TO PROTRUDE INTO RAIL SEAT.
3. OPENINGS IN BOLT CAPTURE BLOCKS SHALL BE FREE OF WELD AND SPATTER.
4. SLOTTED HOLE CENTERS ARE INDICATED ON DRAWING.

BILL OF MATERIAL

ITEM	QTY	DESCRIPTION	DWG NO	SCRRA PART NO
1	1	BURNED PLATE, 3/4" THICK	-	
2	1	CAPTURE BLOCK FOR SPRING BOX	-	
3	5	CAPTURE BLOCK FOR PLATE CLIP	-	
4	4	CAPTURE BLOCK FOR HORN KEEPER	-	
5	1	FLAT BAR, ASTM A36, 1/2" THICK x 2" x 6" LONG	-	
6	2	SHOULDER, PANDROL, FORGED TONGUELESS, TYPE 1	-	

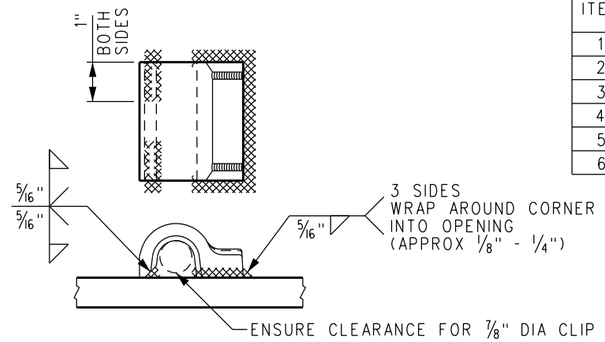

FORGED SHOULDER WELDING DETAIL

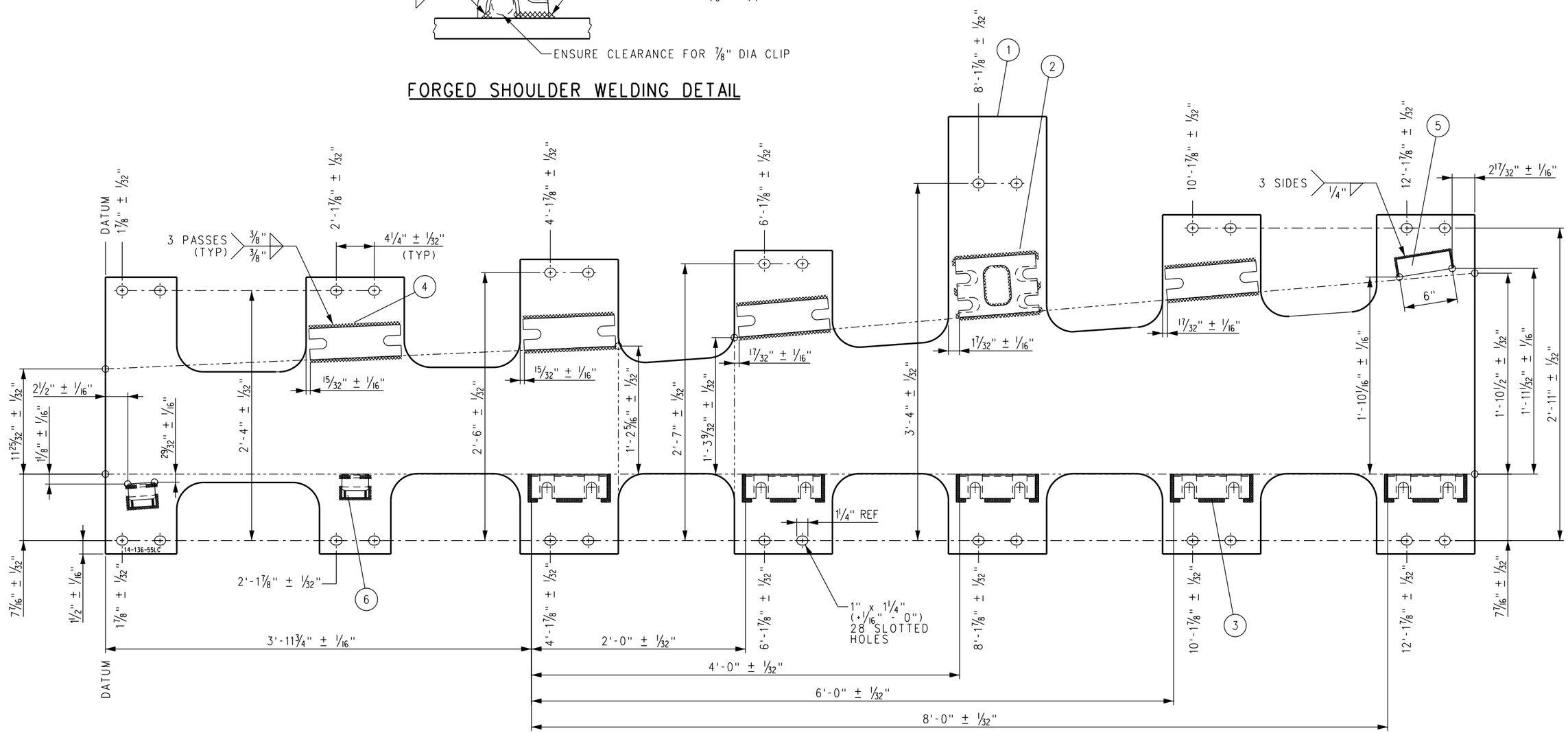

FROG BASE PLATE 14-136-55LC

REV.	DATE	DESCRIPTION	DES.	ENG.
X	XX-XX-XX	REVISION	XX	XX

DRAWN BY: HDR DATE: 03/31/2011

ASSISTANT DIRECTOR: STANDARDS & DESIGN

DIRECTOR OF ENGINEERING AND CONSTRUCTION

SCRRA ENGINEERING STANDARDS ARE INTENDED FOR SCRRA APPROVED USES ONLY. FOR NON-SCRRA APPROVED USES: SCRRA SHALL NOT BE RESPONSIBLE FOR THE ACCURACY OR COMPLETENESS OF THE DATA OR INFORMATION CONTAINED HEREIN. THE SELECTION AND USE OF THESE STANDARDS IS THE SOLE RESPONSIBILITY OF THE USER AND SHOULD NOT BE USED WITHOUT CONSULTING A REGISTERED PROFESSIONAL ENGINEER. ALL WARRANTIES AND REPRESENTATIONS OF ANY KIND ARE DISCLAIMED. ANYONE MAKING USE OF THIS INFORMATION AGREES THAT IT ASSUMES ALL LIABILITY ARISING FROM SUCH USE. NO PART OF THESE STANDARDS SHOULD BE REPRODUCED OR DISTRIBUTED IN ANY FORM OR BY ANY MEANS WITHOUT THE PRIOR WRITTEN PERMISSION OF SCRRA. ALL RIGHTS RESERVED.

METROLINK®

SOUTHERN CALIFORNIA REGIONAL RAIL AUTHORITY
ONE GATEWAY PLAZA, 12TH FLOOR, L. A., CA. 90012

ENGINEERING STANDARDS

NO 14 WSM FROG LH
FROG BASE PLATE 14-55LC
CONCRETE TIES-136 LB RE RAIL

STANDARD 2805
SCALE: NTS
REVISION –
SHEET 1 OF 1
CADD FILE: ES2805-47

UserName=> carlosa Date Plotted: 10/5/2011 3:53:44 PM Plot Driver=> S:\Plot Drivers\pdf.plt FileName=> s:\V8EngStds\2000\Turnouts\No 14 Turnout\ES2805-47.DGN

BILL OF MATERIAL				
ITEM	QTY	DESCRIPTION	DWG NO	SCRRA PART NO
1	1	BURNED PLATE, 3/4" THICK	-	
2	1	CAPTURE BLOCK FOR SPRING BOX	-	
3	5	CAPTURE BLOCK FOR PLATE CLIP	-	
4	4	CAPTURE BLOCK FOR HORN KEEPER	-	
5	1	FLAT BAR, ASTM A36, 1/2" THICK x 2" x 6" LONG	-	
6	2	SHOULDER, PANDROL, FORGED TONGUELESS, TYPE 1	-	

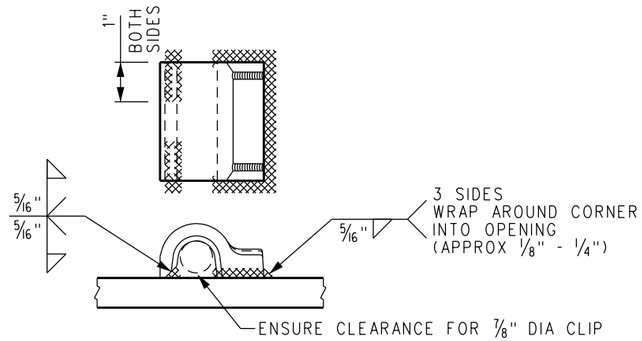

FORGED SHOULDER WELDING DETAIL

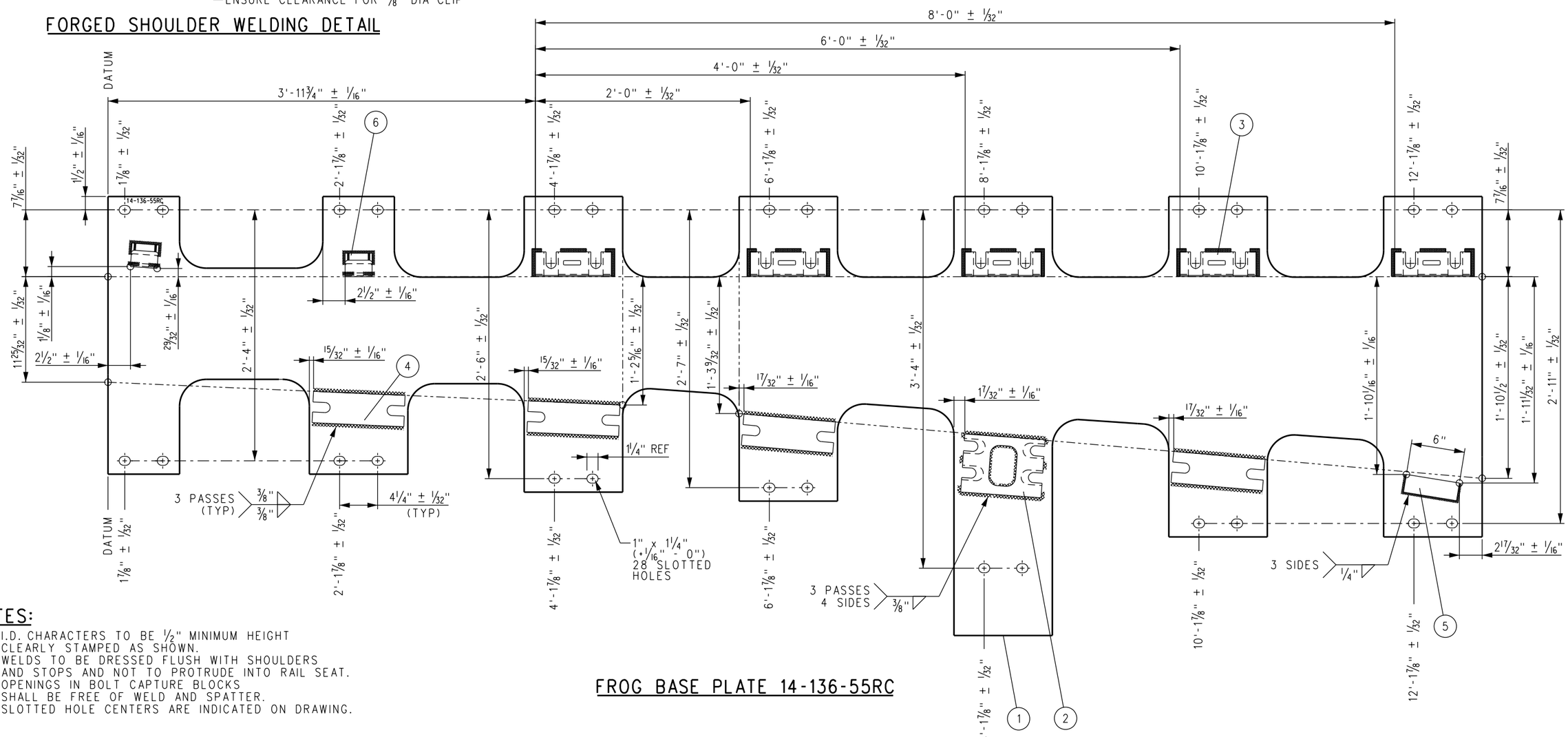

FROG BASE PLATE 14-136-55RC

NOTES:

1. I.D. CHARACTERS TO BE 1/2" MINIMUM HEIGHT CLEARLY STAMPED AS SHOWN.
2. WELDS TO BE DRESSED FLUSH WITH SHOULDERS AND STOPS AND NOT TO PROTRUDE INTO RAIL SEAT.
3. OPENINGS IN BOLT CAPTURE BLOCKS SHALL BE FREE OF WELD AND SPATTER.
4. SLOTTED HOLE CENTERS ARE INDICATED ON DRAWING.

REV.	DATE	DESCRIPTION	DES.	ENG.
X	XX-XX-XX	REVISION	XX	XX

DRAWN BY: HDR DATE: 03/31/2011

ASSISTANT DIRECTOR: STANDARDS & DESIGN

DIRECTOR OF ENGINEERING AND CONSTRUCTION

SCRRA ENGINEERING STANDARDS ARE INTENDED FOR SCRRA APPROVED USES ONLY. FOR NON-SCRRA APPROVED USES:
SCRRA SHALL NOT BE RESPONSIBLE FOR THE ACCURACY OR COMPLETENESS OF THE DATA OR INFORMATION CONTAINED HEREIN. THE SELECTION AND USE OF THESE STANDARDS IS THE SOLE RESPONSIBILITY OF THE USER AND SHOULD NOT BE USED WITHOUT CONSULTING A REGISTERED PROFESSIONAL ENGINEER. ALL WARRANTIES AND REPRESENTATIONS OF ANY KIND ARE DISCLAIMED. ANYONE MAKING USE OF THIS INFORMATION AGREES THAT IT ASSUMES ALL LIABILITY ARISING FROM SUCH USE. NO PART OF THESE STANDARDS SHOULD BE REPRODUCED OR DISTRIBUTED IN ANY FORM OR BY ANY MEANS WITHOUT THE PRIOR WRITTEN PERMISSION OF SCRRA. ALL RIGHTS RESERVED.

METROLINK®
SOUTHERN CALIFORNIA REGIONAL RAIL AUTHORITY
ONE GATEWAY PLAZA, 12TH FLOOR, L. A., CA. 90012

ENGINEERING STANDARDS

NO 14 WSM FROG RH
FROG BASE PLATE 14–55RC
CONCRETE TIES–136 LB RE RAIL

STANDARD 2805
SCALE: NTS
REVISION –
SHEET 1 OF 1
CADD FILE: ES2805–48

BILL OF MATERIAL					
ITEM	QTY FOR 14-136-62LC	QTY FOR 14-136-64LC	DESCRIPTION	DWG NO	SCRRA PART NO
1	1	0	BURNED PLATE, ¾" THICK	-	
2	1	0	CAPTURE BLOCK FOR HORN KEEPER	-	
3	3	4	SHOULDER, PANDROL, FORGED TONGUELESS, TYPE 1	-	
4	0	1	FLAT BAR, ASTM A36, ¾" x 8" x 2'-4¾" LONG	-	

NOTES:

1. I.D. CHARACTERS TO BE ½" MINIMUM HEIGHT CLEARLY STAMPED AS SHOWN.
2. WELDS TO BE DRESSED FLUSH WITH SHOULDERS AND STOPS AND NOT TO PROTRUDE INTO RAIL SEAT.
3. OPENINGS IN BOLT CAPTURE BLOCKS SHALL BE FREE OF WELD AND SPATTER.
4. SLOTTED HOLE CENTERS ARE INDICATED ON DRAWING.

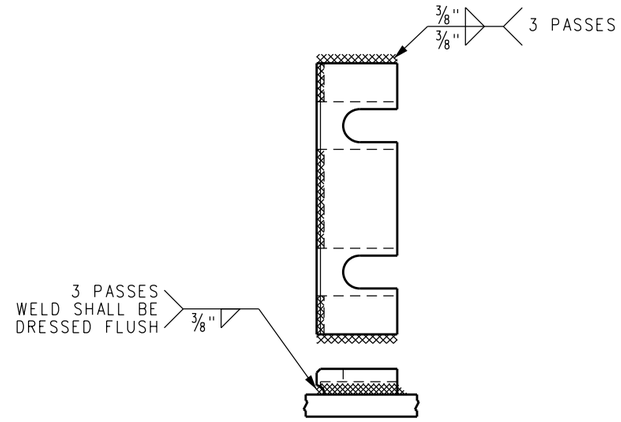

PLATE BRACE CAPTURE BLOCK WELDING DETAILS

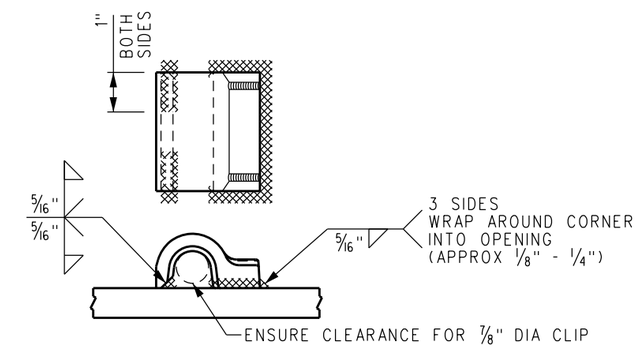

FORGED SHOULDER WELDING DETAIL

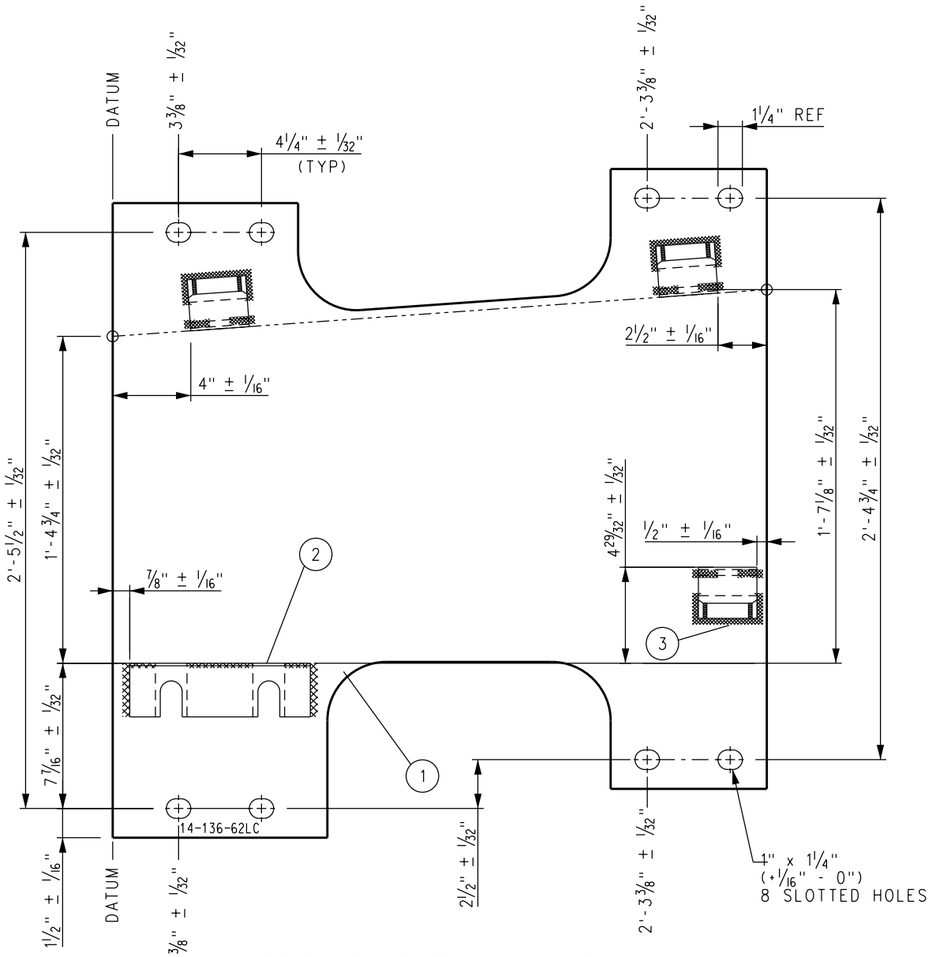

FROG BASE PLATE 14-136-62LC

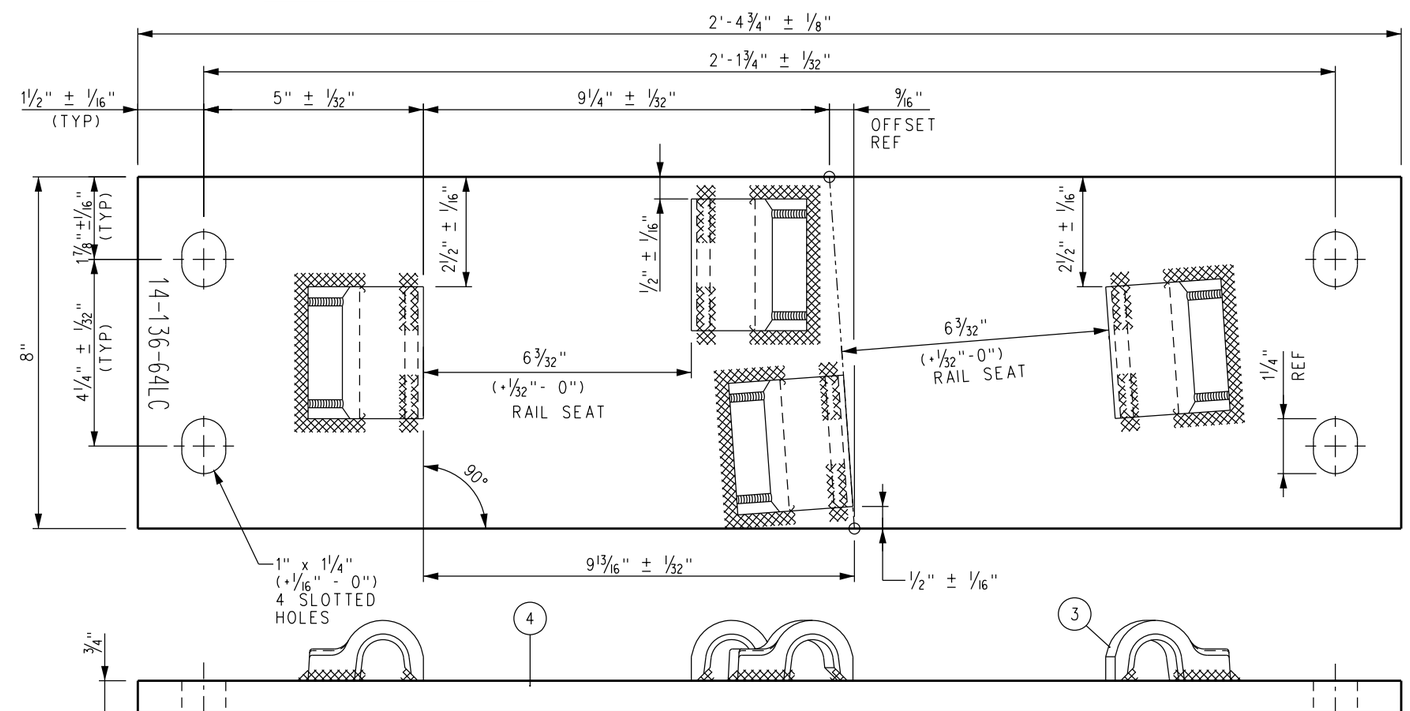

FROG BASE PLATE 14-136-64LC

REV.	DATE	DESCRIPTION	DES.	ENG.
X	XX-XX-XX	REVISION	XX	XX

DRAWN BY: HDR DATE: 03/31/2011

ASSISTANT DIRECTOR: STANDARDS & DESIGN

DIRECTOR OF ENGINEERING AND CONSTRUCTION

SCRRA ENGINEERING STANDARDS ARE INTENDED FOR SCRRA APPROVED USES ONLY. FOR NON-SCRRA APPROVED USES:
SCRRA SHALL NOT BE RESPONSIBLE FOR THE ACCURACY OR COMPLETENESS OF THE DATA OR INFORMATION CONTAINED HEREIN. THE SELECTION AND USE OF THESE STANDARDS IS THE SOLE RESPONSIBILITY OF THE USER AND SHOULD NOT BE USED WITHOUT CONSULTING A REGISTERED PROFESSIONAL ENGINEER. ALL WARRANTIES AND REPRESENTATIONS OF ANY KIND ARE DISCLAIMED. ANYONE MAKING USE OF THIS INFORMATION AGREES THAT IT ASSUMES ALL LIABILITY ARISING FROM SUCH USE. NO PART OF THESE STANDARDS SHOULD BE REPRODUCED OR DISTRIBUTED IN ANY FORM OR BY ANY MEANS WITHOUT THE PRIOR WRITTEN PERMISSION OF SCRRA. ALL RIGHTS RESERVED.

METROLINK®
SOUTHERN CALIFORNIA REGIONAL RAIL AUTHORITY
ONE GATEWAY PLAZA, 12TH FLOOR, L. A., CA. 90012

ENGINEERING STANDARDS

NO 14 WSM FROG LH
FROG BASE PLATES 14-62LC AND 14-64LC
CONCRETE TIES-136 LB RE RAIL

STANDARD: 2805
SCALE: NTS
REVISION: –
SHEET: 1 OF 1
CADD FILE: ES2805-49

BILL OF MATERIAL					
ITEM	QTY FOR 14-136-62RC	QTY FOR 14-136-64RC	DESCRIPTION	DWG NO	SCRRA PART NO
1	1	0	BURNED PLATE, ¾" THICK	-	
2	1	0	CAPTURE BLOCK FOR HORN KEEPER	-	
3	3	4	SHOULDER, PANDROL, FORGED TONGUELESS, TYPE 1	-	
4	0	1	FLAT BAR, ASTM A36, ¾" x 8" x 2'-4¾" LONG	-	

NOTES:

1. I.D. CHARACTERS TO BE ½" MINIMUM HEIGHT CLEARLY STAMPED AS SHOWN.
2. WELDS TO BE DRESSED FLUSH WITH SHOULDERS AND STOPS AND NOT TO PROTRUDE INTO RAIL SEAT.
3. OPENINGS IN BOLT CAPTURE BLOCKS SHALL BE FREE OF WELD AND SPATTER.
4. SLOTTED HOLE CENTERS ARE INDICATED ON DRAWING.

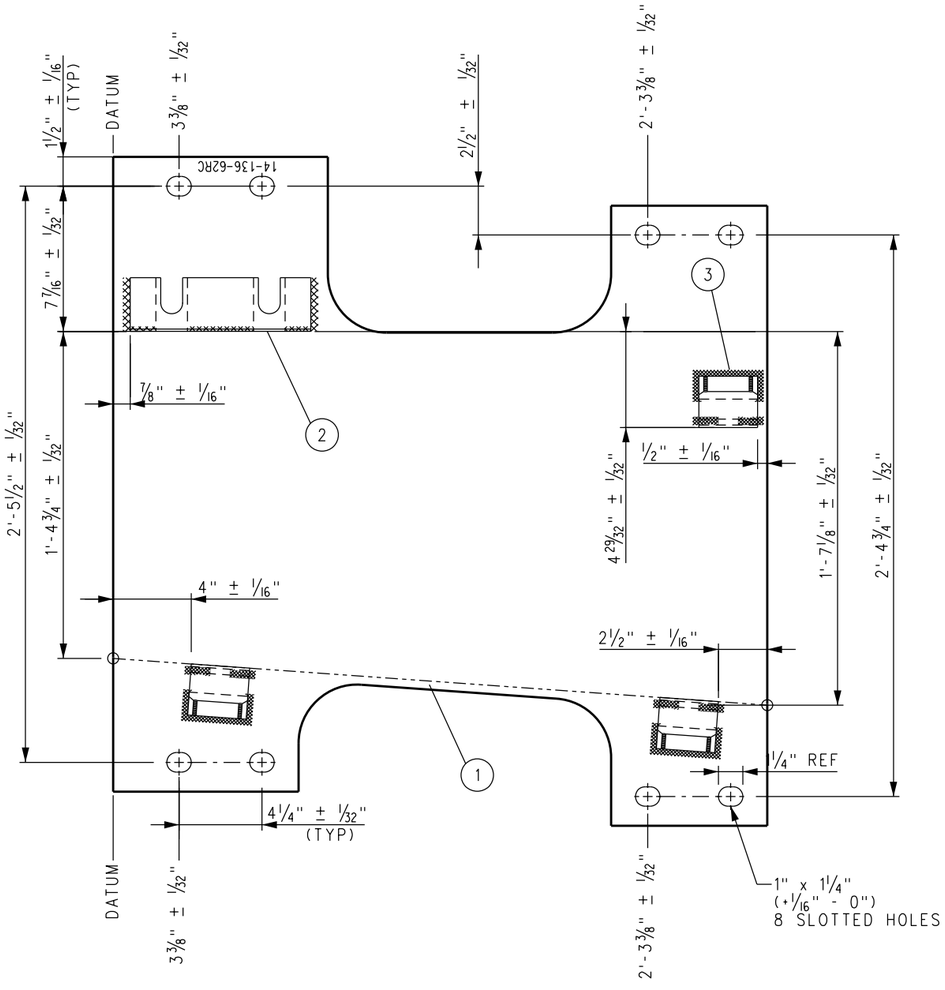

FROG BASE PLATE 14-136-62RC

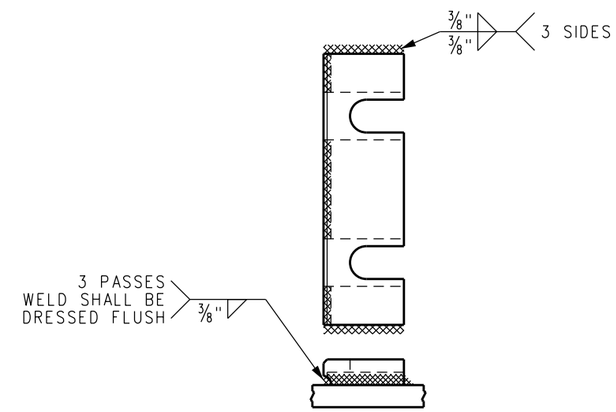

PLATE BRACE CAPTURE BLOCK WELDING DETAILS

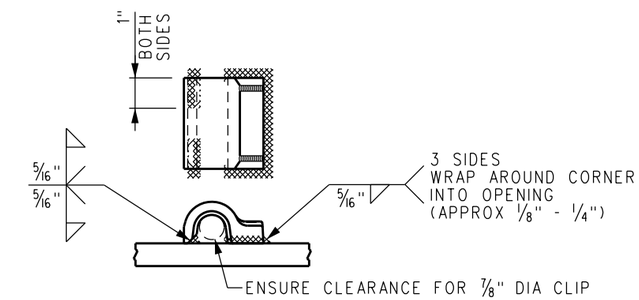

FORGED SHOULDER WELDING DETAIL

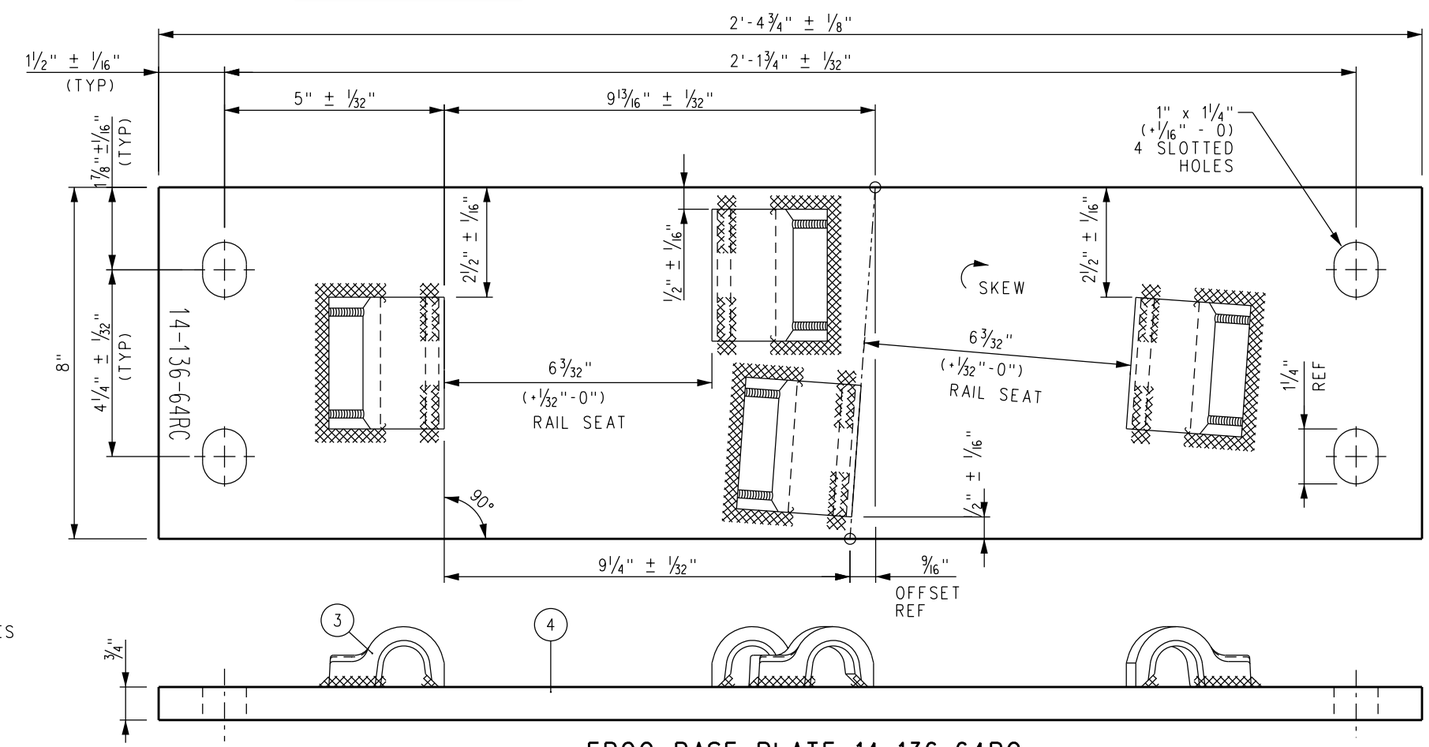

FROG BASE PLATE 14-136-64RC

X	XX-XX-XX	REVISION	XX	XX
REV.	DATE	DESCRIPTION	DES.	ENG.

DRAWN BY: HDR DATE: 03/31/2011

ASSISTANT DIRECTOR: STANDARDS & DESIGN

DIRECTOR OF ENGINEERING AND CONSTRUCTION

SCRRA ENGINEERING STANDARDS ARE INTENDED FOR SCRRA APPROVED USES ONLY. FOR NON-SCRRA APPROVED USES: SCRRA SHALL NOT BE RESPONSIBLE FOR THE ACCURACY OR COMPLETENESS OF THE DATA OR INFORMATION CONTAINED HEREIN. THE SELECTION AND USE OF THESE STANDARDS IS THE SOLE RESPONSIBILITY OF THE USER AND SHOULD NOT BE USED WITHOUT CONSULTING A REGISTERED PROFESSIONAL ENGINEER. ALL WARRANTIES AND REPRESENTATIONS OF ANY KIND ARE DISCLAIMED. ANYONE MAKING USE OF THIS INFORMATION AGREES THAT IT ASSUMES ALL LIABILITY ARISING FROM SUCH USE. NO PART OF THESE STANDARDS SHOULD BE REPRODUCED OR DISTRIBUTED IN ANY FORM OR BY ANY MEANS WITHOUT THE PRIOR WRITTEN PERMISSION OF SCRRA. ALL RIGHTS RESERVED.

METROLINK®

SOUTHERN CALIFORNIA REGIONAL RAIL AUTHORITY
ONE GATEWAY PLAZA, 12TH FLOOR, L. A., CA. 90012

ENGINEERING STANDARDS

NO 14 WSM FROG RH
FROG BASE PLATES 14–62RC AND 14–64RC
CONCRETE TIES–136 LB RE RAIL

STANDARD 2805
SCALE: NTS
REVISION –
SHEET 1 OF 1
CADD FILE: ES2805–50

BILL OF MATERIAL					
ITEM	QTY FOR 14-136-65LC	QTY FOR 14-136-66LC	DESCRIPTION	DWG NO	SCRRA PART NO
1	1	0	FLAT BAR, ASTM A36, 3/4" x 8" x 2'-6 1/2" LONG	-	
2	0	1	FLAT BAR, ASTM A36, 3/4" x 8" x 2'-8 1/4" LONG	-	
3	4	4	SHOULDER, PANDROL, FORGED TONGUELESS, TYPE 1	-	

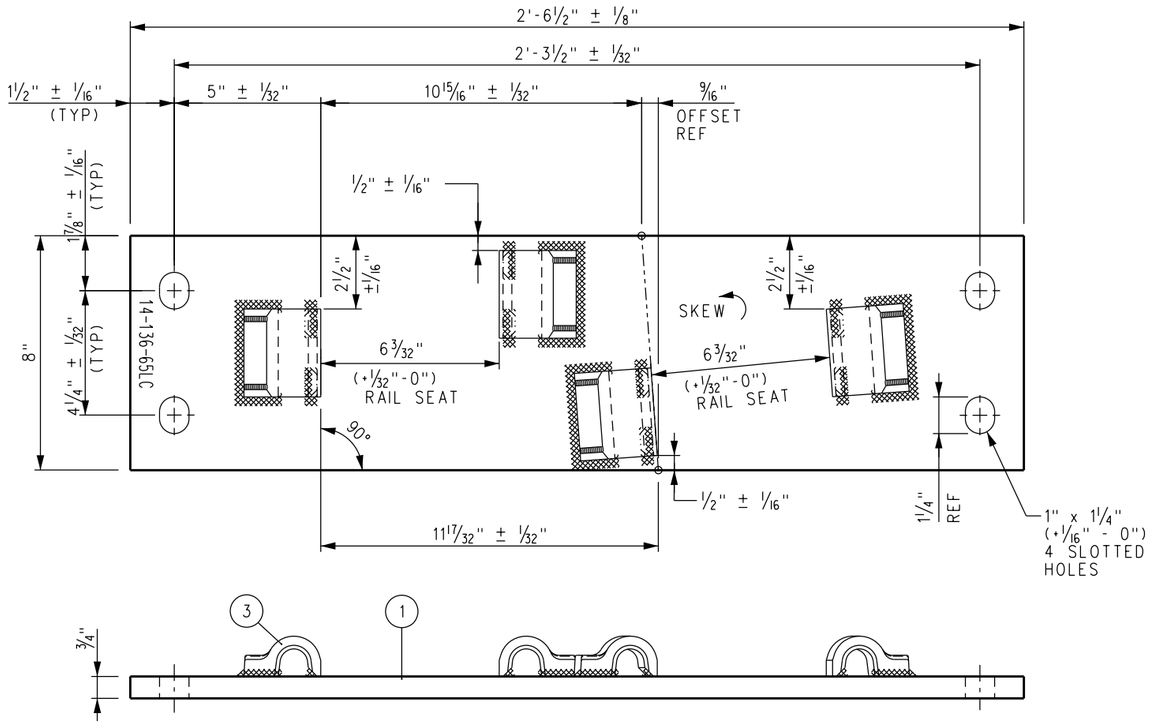

FROG BASE PLATE 14-136-65LC

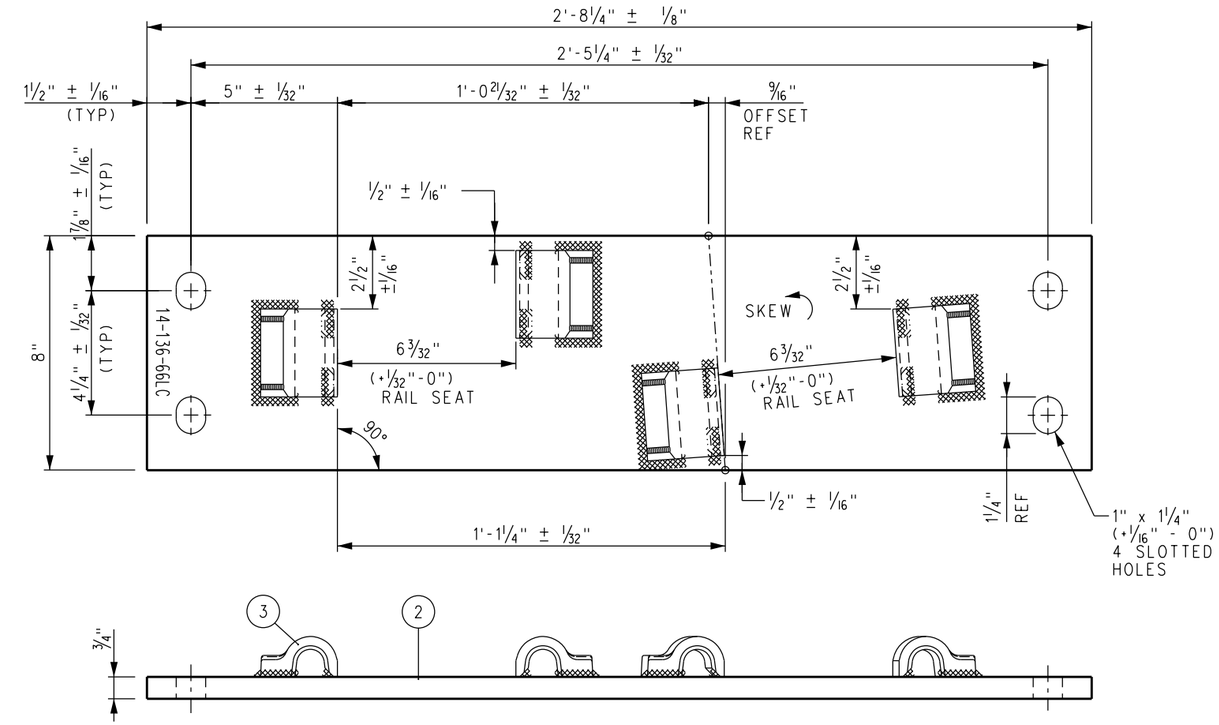

FROG BASE PLATE 14-136-66LC

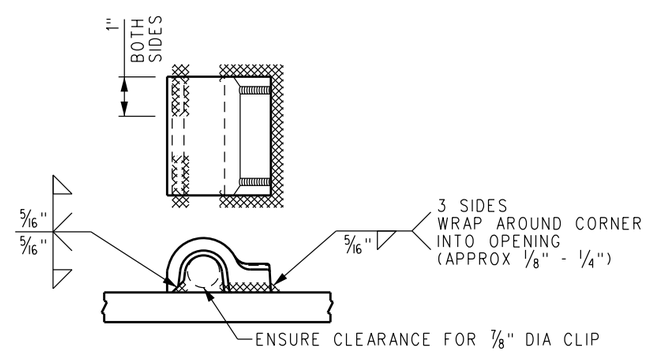

FORGED SHOULDER WELDING DETAIL

NOTES:

1. I.D. CHARACTERS TO BE 1/2" MINIMUM HEIGHT CLEARLY STAMPED AS SHOWN.
2. WELDS TO BE DRESSED FLUSH WITH SHOULDER & NOT TO PROTRUDE INTO RAIL SEAT.
3. SLOTTED HOLE CENTERS ARE INDICATED ON DRAWING.

REV.	DATE	DESCRIPTION	DES.	ENG.
X	XX-XX-XX	REVISION	XX	XX

DRAWN BY: HDR DATE: 03/31/2011

ASSISTANT DIRECTOR: STANDARDS & DESIGN

DIRECTOR OF ENGINEERING AND CONSTRUCTION

SCRRA ENGINEERING STANDARDS ARE INTENDED FOR SCRRA APPROVED USES ONLY. FOR NON-SCRRA APPROVED USES:
SCRRA SHALL NOT BE RESPONSIBLE FOR THE ACCURACY OR COMPLETENESS OF THE DATA OR INFORMATION CONTAINED HEREIN. THE SELECTION AND USE OF THESE STANDARDS IS THE SOLE RESPONSIBILITY OF THE USER AND SHOULD NOT BE USED WITHOUT CONSULTING A REGISTERED PROFESSIONAL ENGINEER. ALL WARRANTIES AND REPRESENTATIONS OF ANY KIND ARE DISCLAIMED. ANYONE MAKING USE OF THIS INFORMATION AGREES THAT IT ASSUMES ALL LIABILITY ARISING FROM SUCH USE. NO PART OF THESE STANDARDS SHOULD BE REPRODUCED OR DISTRIBUTED IN ANY FORM OR BY ANY MEANS WITHOUT THE PRIOR WRITTEN PERMISSION OF SCRRA. ALL RIGHTS RESERVED.

METROLINK®
SOUTHERN CALIFORNIA REGIONAL RAIL AUTHORITY
ONE GATEWAY PLAZA, 12TH FLOOR, L. A., CA. 90012

ENGINEERING STANDARDS

N0 14 WSM FROG LH
FROG BASE PLATES 14-65LC AND 14-66LC
CONCRETE TIES-136 LB RE RAIL

STANDARD 2805
SCALE: NTS
REVISION -
SHEET 1 OF 1
CADD FILE: ES2805-51

BILL OF MATERIAL					
ITEM	QTY FOR 14-136-65RC	QTY FOR 14-136-66RC	DESCRIPTION	DWG NO	SCRRA PART NO
1	1	0	FLAT BAR, ASTM A36, 3/4" x 8" x 2'-6 1/2" LONG	-	
2	0	1	FLAT BAR, ASTM A36, 3/4" x 8" x 2'-8 1/4" LONG	-	
3	4	4	SHOULDER, PANDROL, FORGED TONGUELESS, TYPE 1	-	

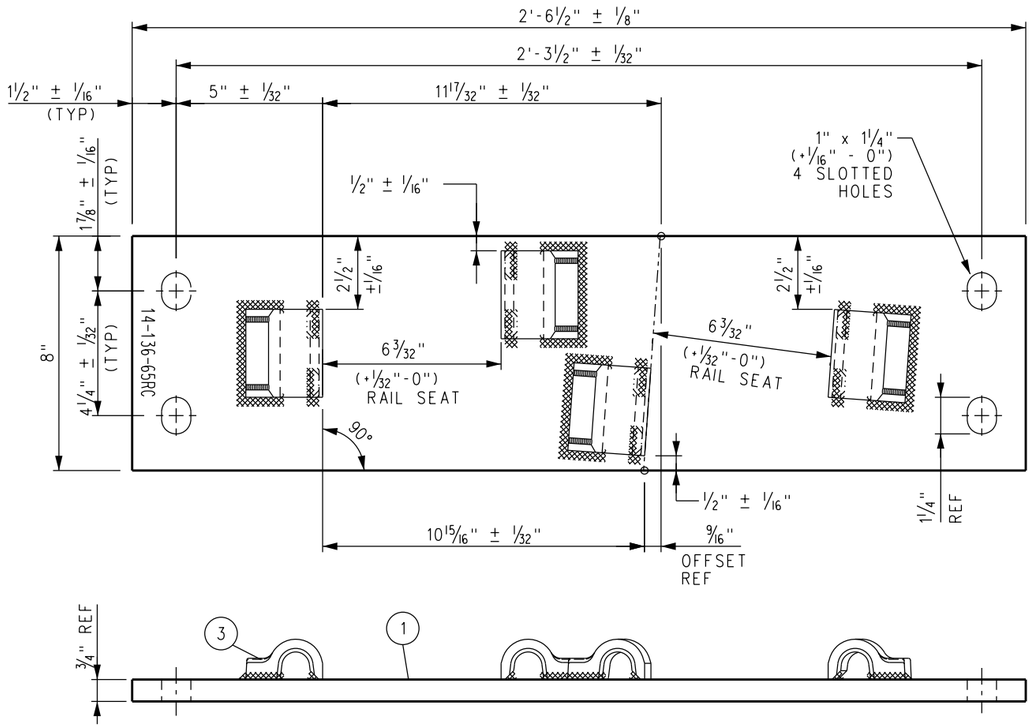

FROG BASE PLATE 14-136-65RC

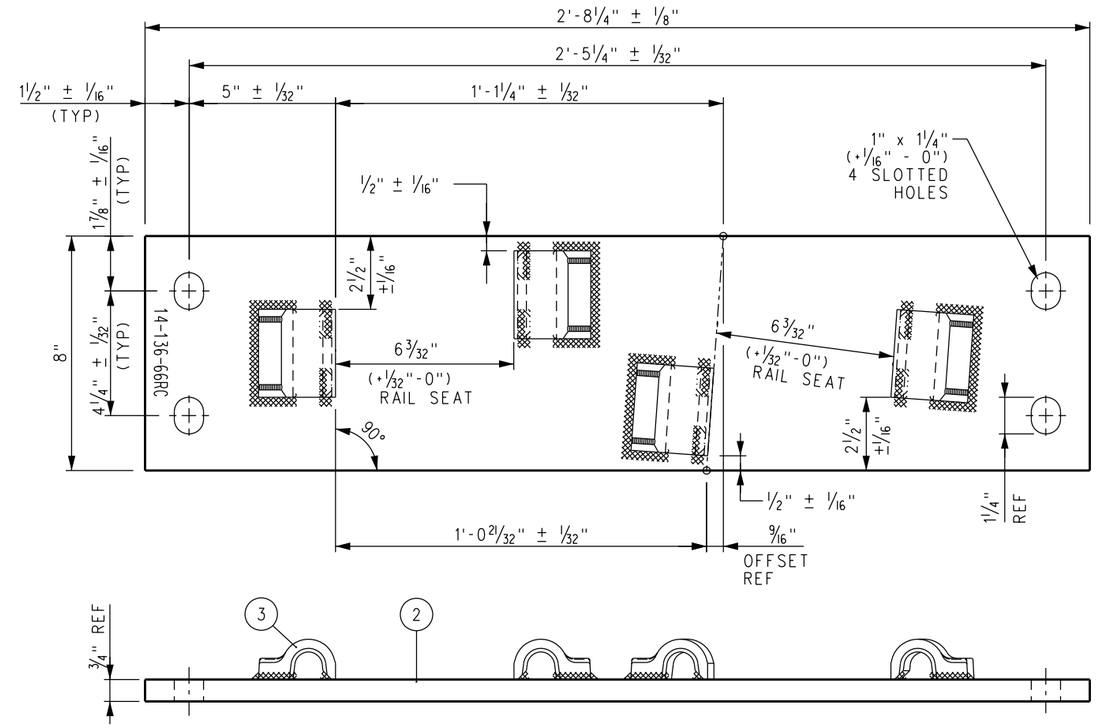

FROG BASE PLATE 14-136-66RC

NOTES:

1. I.D. CHARACTERS TO BE 1/2" MINIMUM HEIGHT CLEARLY STAMPED AS SHOWN.
2. WELDS TO BE DRESSED FLUSH WITH SHOULDER & NOT TO PROTRUDE INTO RAIL SEAT.
3. SLOTTED HOLE CENTERS ARE INDICATED ON DRAWING.

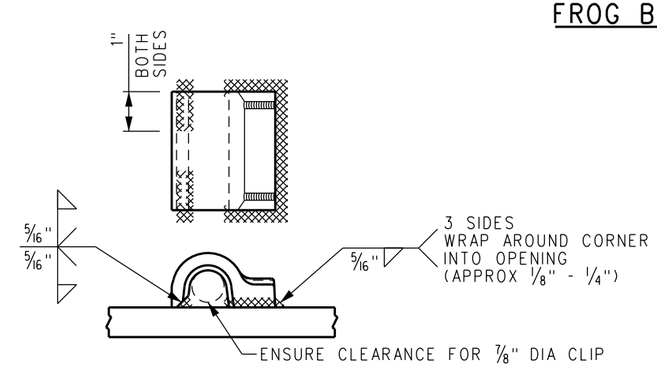

FORGED SHOULDER WELDING DETAIL

REV.	DATE	DESCRIPTION	DES.	ENG.
X	XX-XX-XX	REVISION	XX	XX

DRAWN BY: HDR DATE: 03/31/2011

ASSISTANT DIRECTOR: STANDARDS & DESIGN

DIRECTOR OF ENGINEERING AND CONSTRUCTION

SCRRA ENGINEERING STANDARDS ARE INTENDED FOR SCRRA APPROVED USES ONLY. FOR NON-SCRRA APPROVED USES:
SCRRA SHALL NOT BE RESPONSIBLE FOR THE ACCURACY OR COMPLETENESS OF THE DATA OR INFORMATION CONTAINED HEREIN. THE SELECTION AND USE OF THESE STANDARDS IS THE SOLE RESPONSIBILITY OF THE USER AND SHOULD NOT BE USED WITHOUT CONSULTING A REGISTERED PROFESSIONAL ENGINEER. ALL WARRANTIES AND REPRESENTATIONS OF ANY KIND ARE DISCLAIMED. ANYONE MAKING USE OF THIS INFORMATION AGREES THAT IT ASSUMES ALL LIABILITY ARISING FROM SUCH USE. NO PART OF THESE STANDARDS SHOULD BE REPRODUCED OR DISTRIBUTED IN ANY FORM OR BY ANY MEANS WITHOUT THE PRIOR WRITTEN PERMISSION OF SCRRA. ALL RIGHTS RESERVED.

METROLINK®
SOUTHERN CALIFORNIA REGIONAL RAIL AUTHORITY
ONE GATEWAY PLAZA, 12TH FLOOR, L. A., CA. 90012

ENGINEERING STANDARDS

NO 14 WSM FROG RH
FROG BASE PLATES 14–65RC AND 14–66RC
CONCRETE TIES–136 LB RE RAIL

STANDARD 2805
SCALE: NTS
REVISION –
SHEET 1 OF 1
CADD FILE: ES2805–52

BILL OF MATERIAL				
ITEM	QTY	DESCRIPTION	DWG NO	SCRRA PART NO
1	1	GUARD BAR, UIC33 1200 SERIES x 26'-0" LONG	-	
2	12	GUARD RAIL PLATE ASSEMBLY, RAISED 1", LH SKEWED	-	
3	12	H-CLAMP	-	
4	36	CLIP, PANDROL, E2055	-	
5	12	LOCKING BLOCK	-	
6	48	SHIM, 1/8" THICK x 3" x 6" LONG	-	

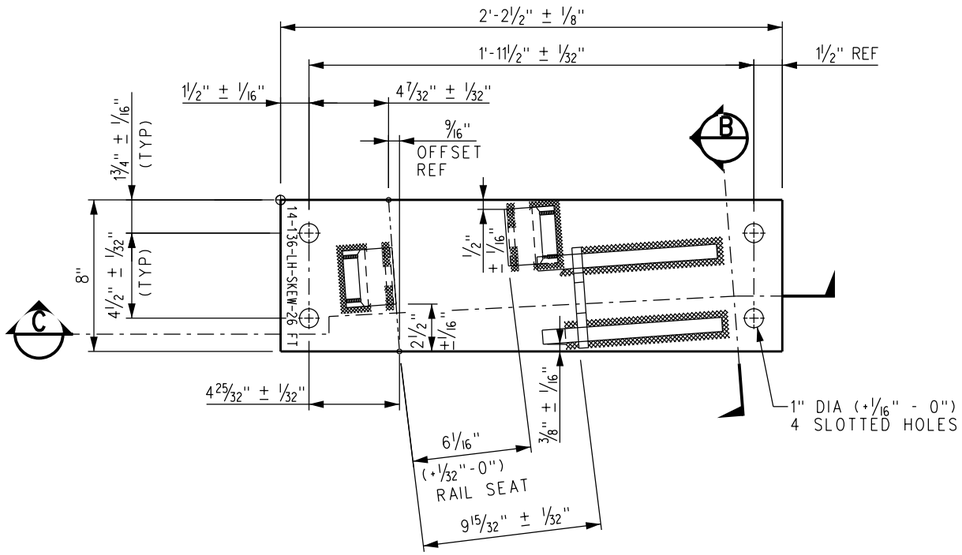

GUARD RAIL PLATE ASSEMBLY

NOTES:

1. PLATE SPACING IS SET FOR SHIPPING ONLY. FINAL PLATE SPACING IS TO BE DETERMINED BY TIE SPACING AT TIME OF INSTALLATION.
2. PANDROL SPRING CLIPS (E2055) TO BE INCLUDED IN ASSEMBLY.
3. LIFT POINTS AND WEIGHT OF ASSEMBLY TO BE MARKED ON HEAD OF WEAR BAR WITH WHITE PAINT.
4. PLATE IS TO BE STAMPED WITH PLATE I.D. WITH 1/2" HIGH CHARACTERS AS SHOWN.
5. GRIND AWAY CORNER OF PANDROL SHOULDER TO CLEAR FOOT OF CHAIR ASSEMBLY.
6. SEE ES2800-50 FOR STRAIGHT SIDE GUARD RAIL.

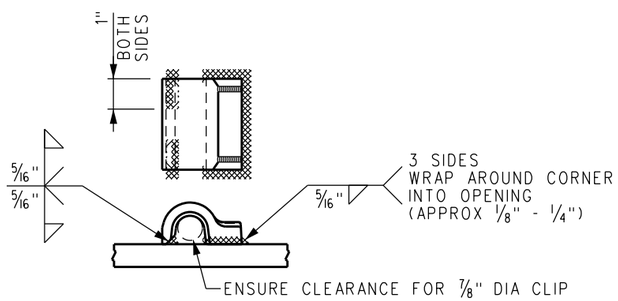

FORGED SHOULDER WELDING DETAIL

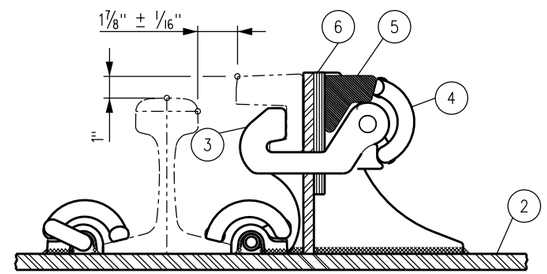

PARTIAL SECTION A
GUARD RAIL HARDWARE ASSEMBLY

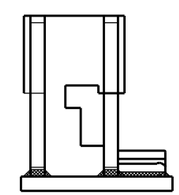

VIEW B

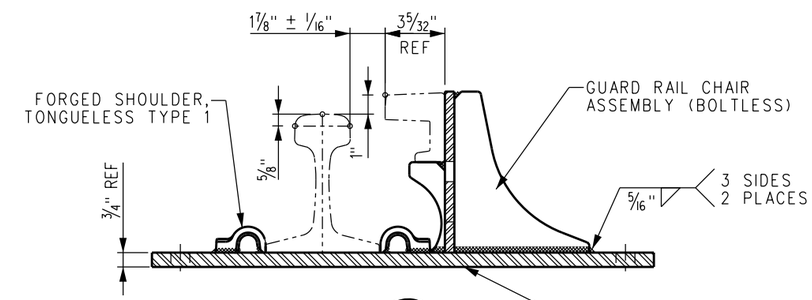

SECTION C

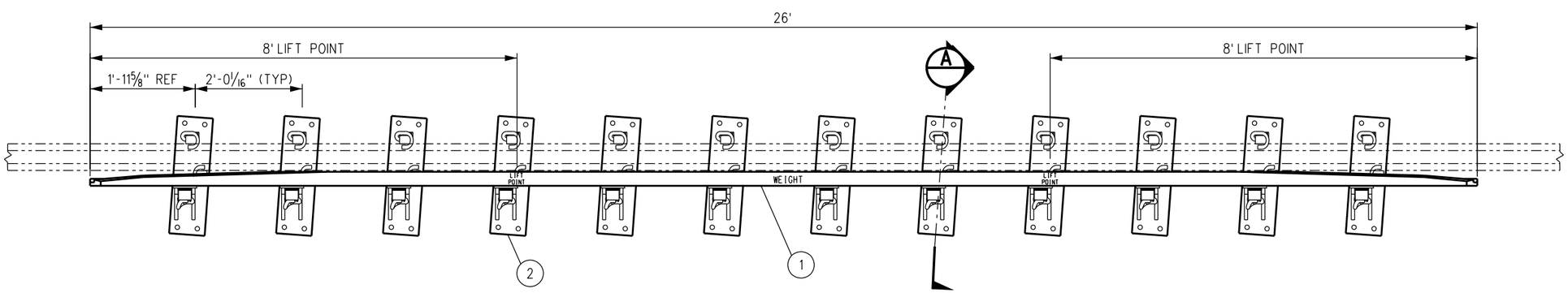

REV.	DATE	DESCRIPTION	DES.	ENG.
X	XX-XX-XX	REVISION	XX	XX

DRAWN BY: HDR DATE: 03/31/2011

ASSISTANT DIRECTOR: STANDARDS & DESIGN

DIRECTOR OF ENGINEERING AND CONSTRUCTION

SCRRA ENGINEERING STANDARDS ARE INTENDED FOR SCRRA APPROVED USES ONLY. FOR NON-SCRRA APPROVED USES, SCRRA SHALL NOT BE RESPONSIBLE FOR THE ACCURACY OR COMPLETENESS OF THE DATA OR INFORMATION CONTAINED HEREIN. THE SELECTION AND USE OF THESE STANDARDS IS THE SOLE RESPONSIBILITY OF THE USER AND SHOULD NOT BE USED WITHOUT CONSULTING A REGISTERED PROFESSIONAL ENGINEER. ALL WARRANTIES AND REPRESENTATIONS OF ANY KIND ARE DISCLAIMED. ANYONE MAKING USE OF THIS INFORMATION AGREES THAT IT ASSUMES ALL LIABILITY ARISING FROM SUCH USE. NO PART OF THESE STANDARDS SHOULD BE REPRODUCED OR DISTRIBUTED IN ANY FORM OR BY ANY MEANS WITHOUT THE PRIOR WRITTEN PERMISSION OF SCRRA. ALL RIGHTS RESERVED.

METROLINK®
SOUTHERN CALIFORNIA REGIONAL RAIL AUTHORITY
ONE GATEWAY PLAZA, 12TH FLOOR, L. A., CA. 90012

ENGINEERING STANDARDS

NO 14 GUARD RAIL ASSEMBLY, LH SKEWED WITH PLATES 26'-0" LONG, BOLTLESS, RAISED 1" CONCRETE TIES-136 LB RE RAIL, 1-7/8" FLANGEWAY

STANDARD 2805
SCALE: NTS
REVISION –
SHEET 1 OF 1
CADD FILE: ES2805-61

BILL OF MATERIAL				
ITEM	QTY	DESCRIPTION	DWG NO	SCRRA PART NO
1	1	GUARD BAR, UIC33 1200 SERIES x 26'-0" LONG	-	
2	12	GUARD RAIL PLATE ASSEMBLY, RAISED 1", RH SKEWED	-	
3	12	H-CLAMP	-	
4	36	CLIP, PANDROL, E2055	-	
5	12	LOCKING BLOCK	-	
6	48	SHIM, 1/8" THICK x 3" x 6" LONG	-	

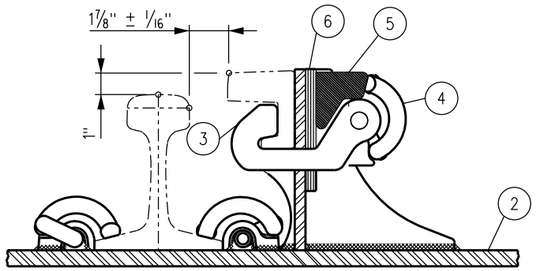

PARTIAL SECTION (A)
GUARD RAIL HARDWARE ASSEMBLY

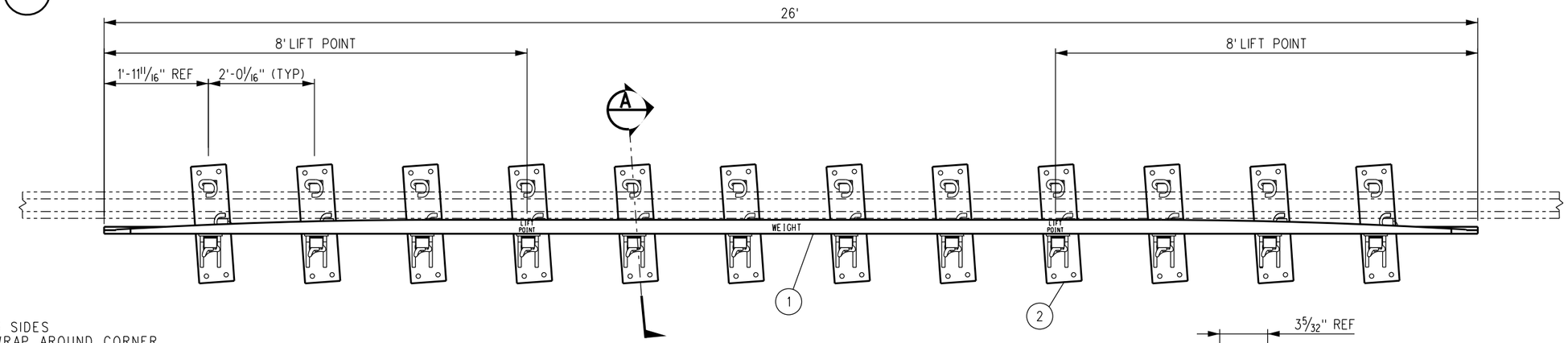

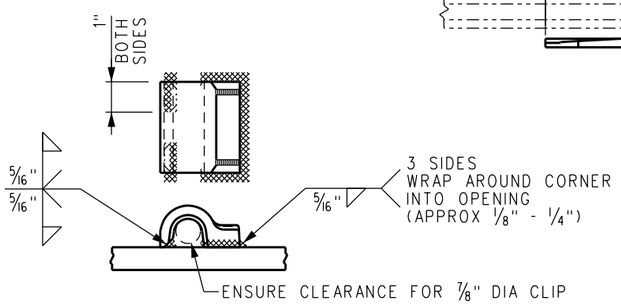

FORGED SHOULDER WELDING DETAIL

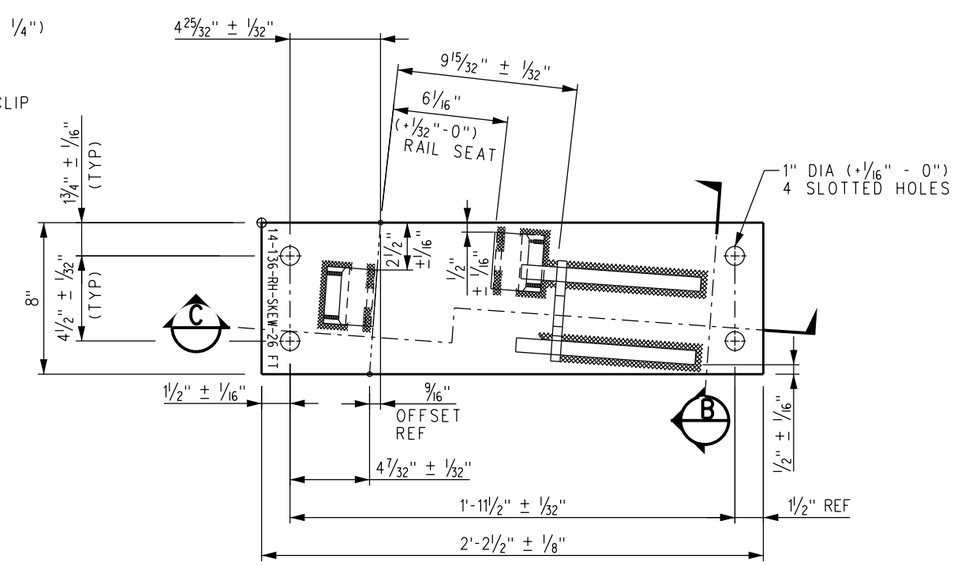

GUARD RAIL PLATE ASSEMBLY

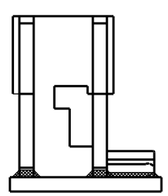

VIEW (B)

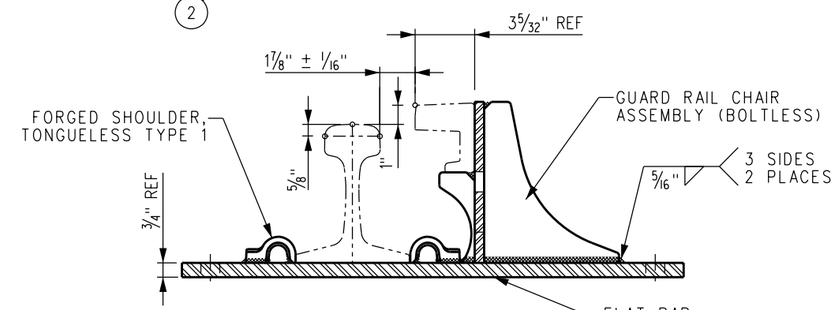

SECTION (C)

NOTES:

1. PLATE SPACING IS SET FOR SHIPPING ONLY. FINAL PLATE SPACING IS TO BE DETERMINED BY TIE SPACING AT TIME OF INSTALLATION.
2. PANDROL SPRING CLIPS (E2055) TO BE INCLUDED IN ASSEMBLY.
3. LIFT POINTS AND WEIGHT OF ASSEMBLY TO BE MARKED ON HEAD OF WEAR BAR WITH WHITE PAINT.
4. PLATE IS TO BE STAMPED WITH PLATE I.D. WITH 1/2" HIGH CHARACTERS AS SHOWN.
5. GRIND AWAY CORNER OF PANDROL SHOULDER TO CLEAR FOOT OF CHAIR ASSEMBLY.
6. SEE ES2800-50 FOR STRAIGHT SIDE GUARD RAIL.

REV.	DATE	DESCRIPTION	DES.	ENG.
X	XX-XX-XX	REVISION	XX	XX

DRAWN BY: HDR DATE: 03/31/2011

ASSISTANT DIRECTOR: STANDARDS & DESIGN

DIRECTOR OF ENGINEERING AND CONSTRUCTION

SCRRA ENGINEERING STANDARDS ARE INTENDED FOR SCRRA APPROVED USES ONLY. FOR NON-SCRRA APPROVED USES, SCRRA SHALL NOT BE RESPONSIBLE FOR THE ACCURACY OR COMPLETENESS OF THE DATA OR INFORMATION CONTAINED HEREIN. THE SELECTION AND USE OF THESE STANDARDS IS THE SOLE RESPONSIBILITY OF THE USER AND SHOULD NOT BE USED WITHOUT CONSULTING A REGISTERED PROFESSIONAL ENGINEER. ALL WARRANTIES AND REPRESENTATIONS OF ANY KIND ARE DISCLAIMED. ANYONE MAKING USE OF THIS INFORMATION AGREES THAT IT ASSUMES ALL LIABILITY ARISING FROM SUCH USE. NO PART OF THESE STANDARDS SHOULD BE REPRODUCED OR DISTRIBUTED IN ANY FORM OR BY ANY MEANS WITHOUT THE PRIOR WRITTEN PERMISSION OF SCRRA. ALL RIGHTS RESERVED.

METROLINK®
SOUTHERN CALIFORNIA REGIONAL RAIL AUTHORITY
ONE GATEWAY PLAZA, 12TH FLOOR, L. A., CA. 90012

ENGINEERING STANDARDS
NO 14 GUARD RAIL ASSEMBLY,
RH SKEWED WITH PLATES
26'-0" LONG, BOLTLESS, RAISED 1"
CONCRETE TIES-136 LB RE RAIL, 1-7/8" FLANGEWAY

STANDARD 2805
SCALE: NTS
REVISION –
SHEET 1 OF 1
CADD FILE: ES2805-62

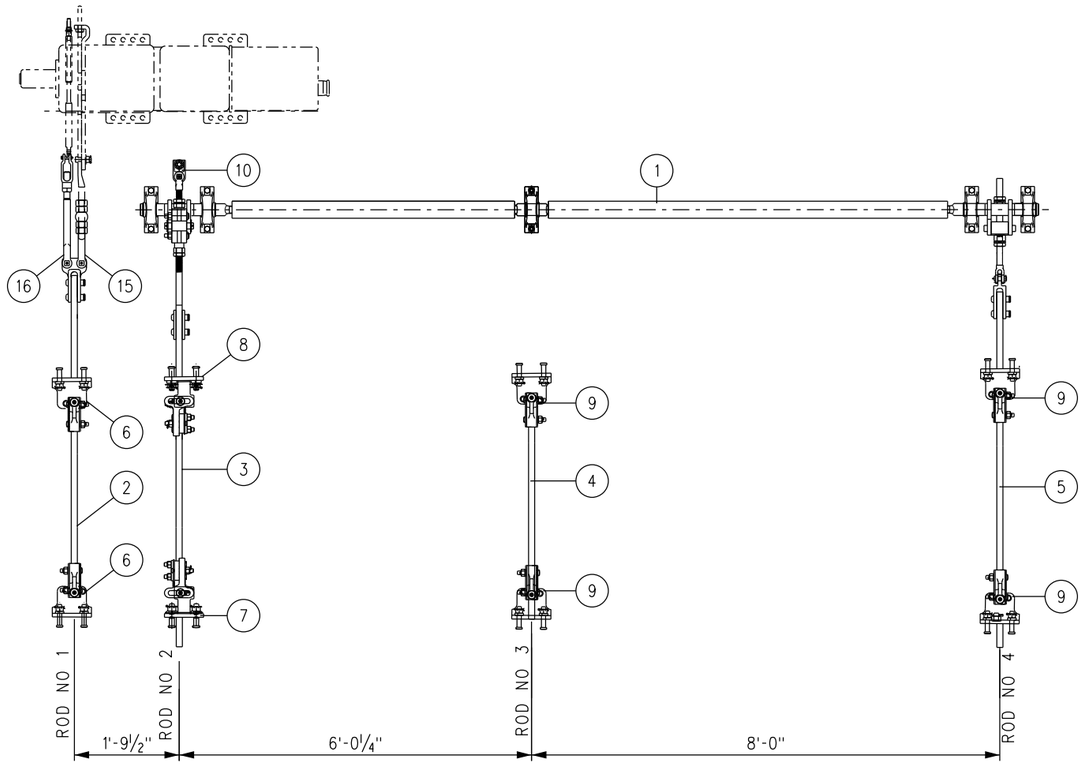

BILL OF MATERIAL				
ITEM	QTY	DESCRIPTION	DWG NO	SCRRA PART NO
1	1	ROTARY ASSIST ASSEMBLY FOR NO 14-136 LB RE TURNOUT	-	
2	1	SWITCH ROD NO 1, FOR POINT DETECTOR/LOCK ROD, (14-136-1)	ES2805-73	
3	1	SWITCH ROD NO 2, DRIVE, C/W BASKET (14-136-2)	ES2805-73	
4	1	SWITCH ROD NO 3, THROW, (14-136-3)	ES2805-73	
5	1	SWITCH ROD NO 4, THROW, (14-136-4)	ES2805-73	
6	2	ROD POINT BRACKET, DETECTOR/LOCK ROD, HOLES AT 2⅞" ARB*	-	
7	1	ROD POINT BRACKET, THROW ROD, ANTI-ROLL, HOLES AT 2⅞" ARB*, LH	-	
8	1	ROD POINT BRACKET, THROW ROD, ANTI-ROLL, HOLES AT 2⅞" ARB*, RH	-	
9	4	ROD POINT BRACKET, HOLES AT 2⅜" ARB*, C/W SQ BOLTS	-	
10	1	DROP LUG FOR US&S M23 SWITCH MACHINE DRIVE BAR	-	
11	1	BOLT, ⅞" DIA x 3" LONG, DRILLED 2⁹⁄₁₆" BELOW HEAD, HEAVY HEX, GR 5	-	
12	1	NUT, ⅞" DIA SLOTTED HEAVY HEX, GR 8	-	
13	1	SPRING WASHER, ⅞" DIA	-	
14	1	COTTER PIN, ³⁄₁₆" DIA x 1¾" LONG	-	
15	1	LOCK ROD, FOR M23 SWITCH MACHINE, HST	-	
16	1	DETECTOR ROD, FOR M23 SWITCH MACHINE, HST	-	

ARB*-ABOVE RAIL BASE

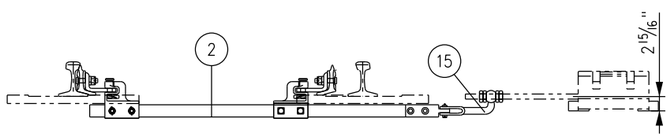

SWITCH ROD ASSEMBLY NO 1

LOCK ROD CONNECTION SHOWN
(VIEW FROM HEEL TOWARDS PS)

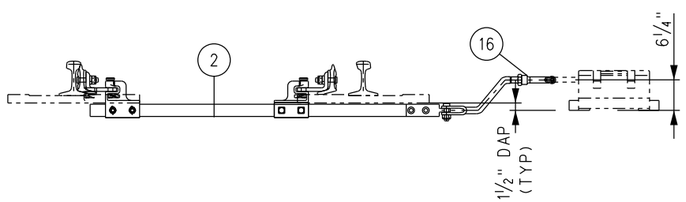

SWITCH ROD ASSEMBLY NO 1

POINT DETECTOR ROD CONNECTION SHOWN
(VIEW FROM HEEL TOWARDS PS)

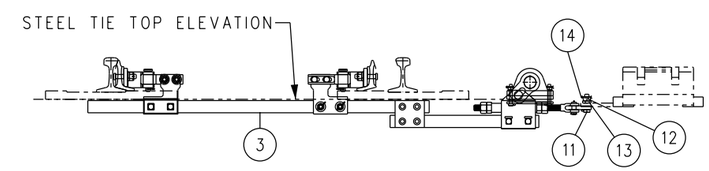

DRIVE ROD (ROD NO 2) ASSEMBLY

FRONT HELPER ROD CRANK ATTACHES TO BASKET
(VIEW FROM HEEL TOWARDS PS)

REAR HELPER (ROD NO 4) DRIVE ROD ASSEMBLY

REAR HELPER ROD CRANK ATTACHES TO ROD PIN

REV.	DATE	DESCRIPTION	DES.	ENG.
X	XX-XX-XX	REVISION	XX	XX

DRAWN BY: HDR DATE: 03/31/2011

ASSISTANT DIRECTOR: STANDARDS & DESIGN

DIRECTOR OF ENGINEERING AND CONSTRUCTION

SCRRA ENGINEERING STANDARDS ARE INTENDED FOR SCRRA APPROVED USES ONLY. FOR NON-SCRRA APPROVED USES:
SCRRA SHALL NOT BE RESPONSIBLE FOR THE ACCURACY OR COMPLETENESS OF THE DATA OR INFORMATION CONTAINED HEREIN. THE SELECTION AND USE OF THESE STANDARDS IS THE SOLE RESPONSIBILITY OF THE USER AND SHOULD NOT BE USED WITHOUT CONSULTING A REGISTERED PROFESSIONAL ENGINEER. ALL WARRANTIES AND REPRESENTATIONS OF ANY KIND ARE DISCLAIMED. ANYONE MAKING USE OF THIS INFORMATION AGREES THAT IT ASSUMES ALL LIABILITY ARISING FROM SUCH USE. NO PART OF THESE STANDARDS SHOULD BE REPRODUCED OR DISTRIBUTED IN ANY FORM OR BY ANY MEANS WITHOUT THE PRIOR WRITTEN PERMISSION OF SCRRA. ALL RIGHTS RESERVED.

METROLINK®
SOUTHERN CALIFORNIA REGIONAL RAIL AUTHORITY
ONE GATEWAY PLAZA, 12TH FLOOR, L. A., CA. 90012

ENGINEERING STANDARDS

HOLLOW STEEL TIE RODDING ASSEMBLY
SWITCH MACHINE ON LEFT HAND SIDE
NO 14–136 LB RE SPRING FROG TURNOUT

STANDARD 2805
SCALE: NTS
REVISION –
SHEET 1 OF 1
CADD FILE: ES2805–71

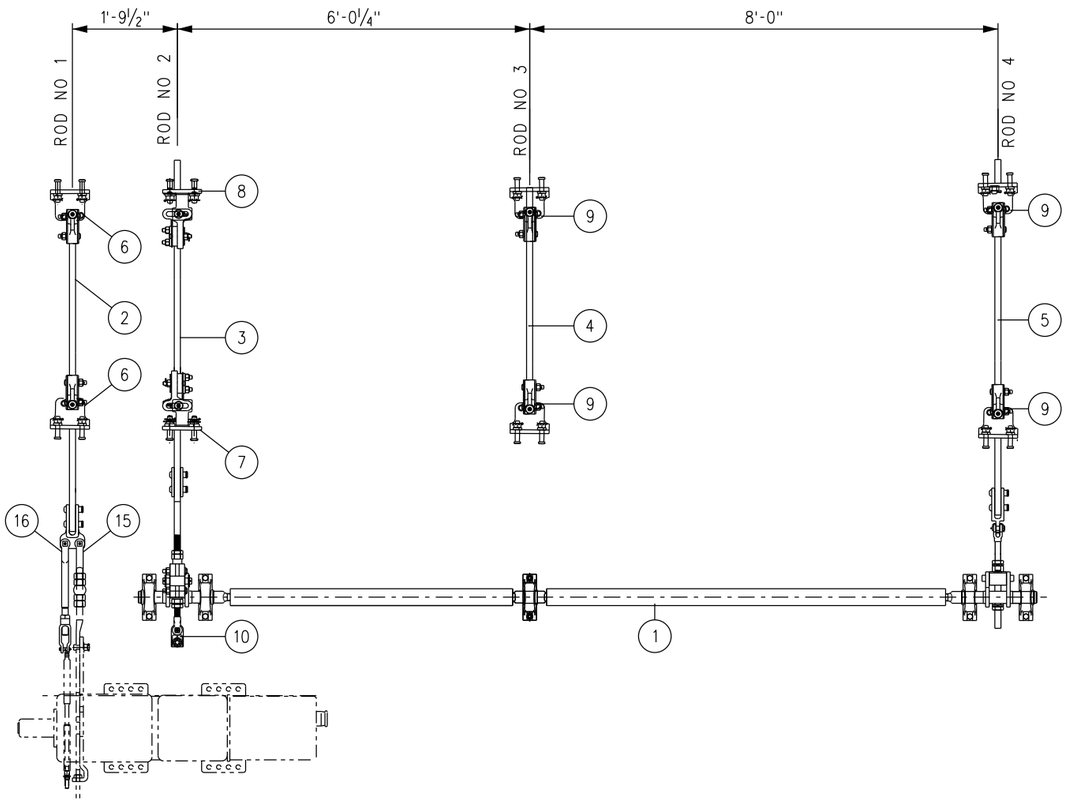

BILL OF MATERIAL				
ITEM	QTY	DESCRIPTION	DWG NO	SCRRA PART NO
1	1	ROTARY ASSIST ASSEMBLY FOR NO 14-136 LB RE TURNOUT	-	
2	1	SWITCH ROD NO 1, FOR POINT DETECTOR/LOCK ROD, (14-136-1)	ES2805-73	
3	1	SWITCH ROD NO 2, DRIVE, C/W BASKET (14-136-2)	ES2805-73	
4	1	SWITCH ROD NO 3, THROW, (14-136-3)	ES2805-73	
5	1	SWITCH ROD NO 4, THROW, (14-136-4)	ES2805-73	
6	2	ROD POINT BRACKET, DETECTOR/LOCK ROD, HOLES AT 2⅞" ARB*	-	
7	1	ROD POINT BRACKET, THROW ROD, ANTI-ROLL, HOLES AT 2⅞" ARB*, LH	-	
8	1	ROD POINT BRACKET, THROW ROD, ANTI-ROLL, HOLES AT 2⅞" ARB*, RH	-	
9	4	ROD POINT BRACKET, HOLES AT 2⅜" ARB*, C/W SQ BOLTS	-	
10	1	DROP LUG FOR US&S M23 SWITCH MACHINE DRIVE BAR	-	
11	1	BOLT, ⅞" DIA x 3" LONG, DRILLED 2 9/16" BELOW HEAD, HEAVY HEX, GR 5	-	
12	1	NUT, ⅞" DIA SLOTTED HEAVY HEX, GR 8	-	
13	1	SPRING WASHER, ⅞" DIA	-	
14	1	COTTER PIN, 3/16" DIA x 1¾" LONG	-	
15	1	LOCK ROD, FOR M23 SWITCH MACHINE, HST	-	
16	1	DETECTOR ROD, FOR M23 SWITCH MACHINE, HST	-	

ARB*-ABOVE RAIL BASE

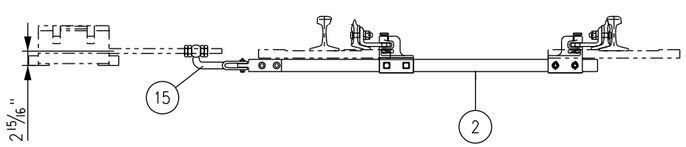

SWITCH ROD ASSEMBLY NO 1

LOCK ROD CONNECTION SHOWN
(VIEW FROM HEEL TOWARDS PS)

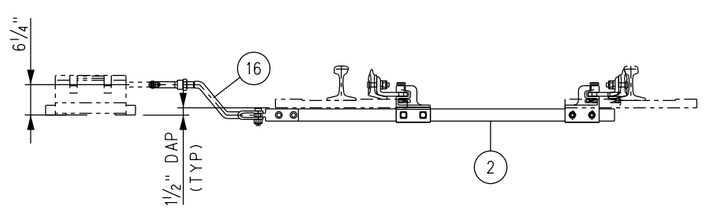

SWITCH ROD ASSEMBLY NO 1

POINT DETECTOR ROD CONNECTION SHOWN
(VIEW FROM HEEL TOWARDS PS)

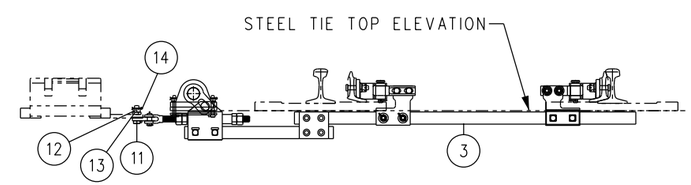

DRIVE ROD (ROD NO 2) ASSEMBLY

FRONT HELPER ROD CRANK ATTACHES TO BASKET
(VIEW FROM HEEL TOWARDS PS)

REAR HELPER (ROD NO 4) DRIVE ROD ASSEMBLY

REAR HELPER ROD CRANK ATTACHES TO ROD PIN

REV.	DATE	DESCRIPTION	DES.	ENG.
X	XX-XX-XX	REVISION	XX	XX

DRAWN BY: HDR DATE: 03/31/2011

ASSISTANT DIRECTOR: STANDARDS & DESIGN

DIRECTOR OF ENGINEERING AND CONSTRUCTION

SCRRA ENGINEERING STANDARDS ARE INTENDED FOR SCRRA APPROVED USES ONLY. FOR NON-SCRRA APPROVED USES:
SCRRA SHALL NOT BE RESPONSIBLE FOR THE ACCURACY OR COMPLETENESS OF THE DATA OR INFORMATION CONTAINED HEREIN. THE SELECTION AND USE OF THESE STANDARDS IS THE SOLE RESPONSIBILITY OF THE USER AND SHOULD NOT BE USED WITHOUT CONSULTING A REGISTERED PROFESSIONAL ENGINEER. ALL WARRANTIES AND REPRESENTATIONS OF ANY KIND ARE DISCLAIMED. ANYONE MAKING USE OF THIS INFORMATION AGREES THAT IT ASSUMES ALL LIABILITY ARISING FROM SUCH USE. NO PART OF THESE STANDARDS SHOULD BE REPRODUCED OR DISTRIBUTED IN ANY FORM OR BY ANY MEANS WITHOUT THE PRIOR WRITTEN PERMISSION OF SCRRA. ALL RIGHTS RESERVED.

METROLINK®
SOUTHERN CALIFORNIA REGIONAL RAIL AUTHORITY
ONE GATEWAY PLAZA, 12TH FLOOR, L. A., CA. 90012

ENGINEERING STANDARDS

HOLLOW STEEL TIE RODDING ASSEMBLY
SWITCH MACHINE ON RIGHT HAND SIDE
NO 14–136 LB RE SPRING FROG TURNOUT

STANDARD 2805
SCALE: NTS
REVISION –
SHEET 1 OF 1
CADD FILE: ES2805–72

BILL OF MATERIAL FOR SWITCH ROD 14-136-1				
ITEM	QTY	DESCRIPTION	DWG NO	SCRRA PART NO
1	1	SWITCH ROD 14-136-1	-	
2	2	SWITCH CLIP ASSEMBLY, ADJUSTABLE, FOR HOLLOW TIE COMPOSITE RODS	-	
3	1	CONNECTOR LUG FOR POINT DETECTOR/LOCK RODS	-	
4	2	HUCK BOLT, 3/4" DIA (C50LR-BR24-36)	-	
5	2	HUCK COLLAR, 3/4" DIA (LC-2R24B)	-	

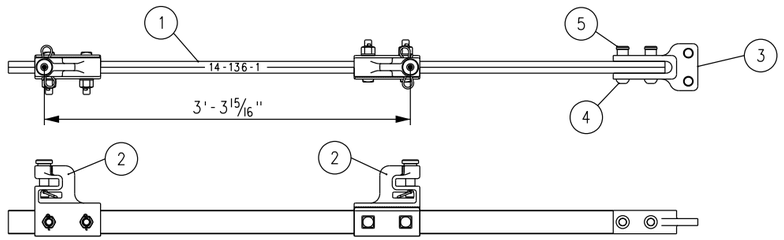

SWITCH ROD ASSEMBLY 14-136-1

BILL OF MATERIAL FOR SWITCH ROD 14-136-2				
ITEM	QTY	DESCRIPTION	DWG NO	SCRRA PART NO
1	1	BLUE ROD, PULTRUDED COMPOSITE, 1 1/4" x 2 1/2" x 5'-10" LONG, 14-136-2A	-	
2	2	CLIP/LUG ASSEMBLY, HST SWITCH, ANTI-ROLLOVER DESIGN, LH	-	
3	4	HUCK BOLT, 3/4" DIA (C50LR-BR24-36)	-	
4	4	HUCK COLLAR, 3/4" DIA (LC-2R24B)	-	
5	2	SPLICE PLATE, FOR BLUE ROD BASKET ASSEMBLY RODS	-	
6	1	BASKET/ROD ASSEMBLY FOR HST WITH ROTARY ASSIST	-	
7	1	BLUE ROD, PULTRUDED COMPOSITE, 1 1/4" x 2 1/2" x 2'-7" LONG, 2-B ROD	-	

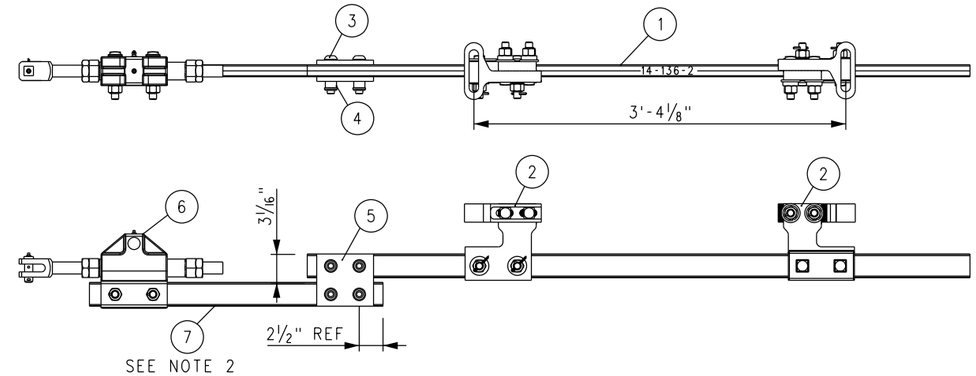

SWITCH ROD ASSEMBLY 14-136-2

BILL OF MATERIAL FOR SWITCH ROD 14-136-3				
ITEM	QTY	DESCRIPTION	DWG NO	SCRRA PART NO
1	1	SWITCH ROD 14-136-3	-	
2	2	SWITCH CLIP ASSEMBLY, ADJUSTABLE, FOR HOLLOW TIE	-	

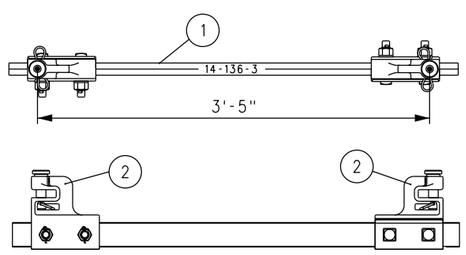

SWITCH ROD ASSEMBLY 14-136-3

NOTE: CENTER TO CENTER PIN DIMENSIONS REQUIRED FOR 4 3/4" THROW

ROD #	C-C PIN DEMINSION
1	3'-3 15/16"
2	3'-4 1/8"
3	3'-5"
4	3'-6 5/8"

BILL OF MATERIAL FOR SWITCH ROD 14-136-4				
ITEM	QTY	DESCRIPTION	DWG NO	SCRRA PART NO
1	1	SWITCH ROD 14-136-4	-	
2	2	SWITCH CLIP ASSEMBLY, ADJUSTABLE	-	
3	1	CONNECTOR LUG FOR REAR DRIVE ROD	-	
4	2	HUCK BOLT, 3/4" DIA (C50LR-BR24-36)	-	
5	2	HUCK COLLAR, 3/4" DIA (LC-2R24B)	-	

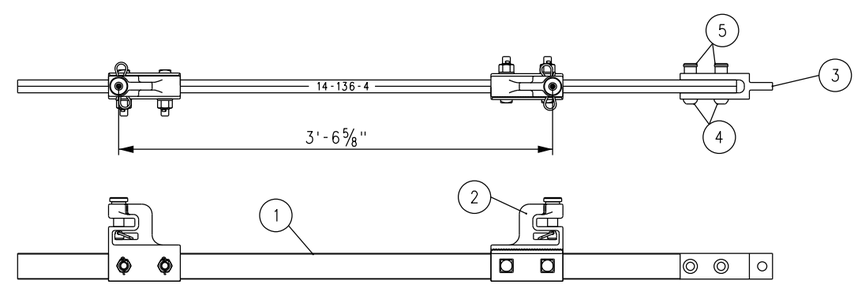

SWITCH ROD ASSEMBLY 14-136-4

NOTES:

1. ROD IDENTIFICATION TO BE ENGRAVED ON ROD CLEARLY AS SHOWN, 3/8" MIN HEIGHT.
2. SWITCH RODS MUST BE PARALLEL WITHIN 1/16" OVER LENGTH OF 2-B ROD.

REV.	DATE	DESCRIPTION	DES.	ENG.
X	XX-XX-XX	REVISION	XX	XX

DRAWN BY: HDR DATE: 03/31/2011

ASSISTANT DIRECTOR: STANDARDS & DESIGN

DIRECTOR OF ENGINEERING AND CONSTRUCTION

SCRRA ENGINEERING STANDARDS ARE INTENDED FOR SCRRA APPROVED USES ONLY. FOR NON-SCRRA APPROVED USES: SCRRA SHALL NOT BE RESPONSIBLE FOR THE ACCURACY OR COMPLETENESS OF THE DATA OR INFORMATION CONTAINED HEREIN. THE SELECTION AND USE OF THESE STANDARDS IS THE SOLE RESPONSIBILITY OF THE USER AND SHOULD NOT BE USED WITHOUT CONSULTING A REGISTERED PROFESSIONAL ENGINEER. ALL WARRANTIES AND REPRESENTATIONS OF ANY KIND ARE DISCLAIMED. ANYONE MAKING USE OF THIS INFORMATION AGREES THAT IT ASSUMES ALL LIABILITY ARISING FROM SUCH USE. NO PART OF THESE STANDARDS SHOULD BE REPRODUCED OR DISTRIBUTED IN ANY FORM OR BY ANY MEANS WITHOUT THE PRIOR WRITTEN PERMISSION OF SCRRA. ALL RIGHTS RESERVED.

METROLINK®
SOUTHERN CALIFORNIA REGIONAL RAIL AUTHORITY
ONE GATEWAY PLAZA, 12TH FLOOR, L. A., CA. 90012

ENGINEERING STANDARDS

HOLLOW STEEL TIE SWITCH RODS
14–1, 14–2, 14–3 AND 14–4
NO 14–136 LB RE

STANDARD 2805
SCALE: NTS
REVISION –
SHEET 1 OF 1
CADD FILE: ES2805–73

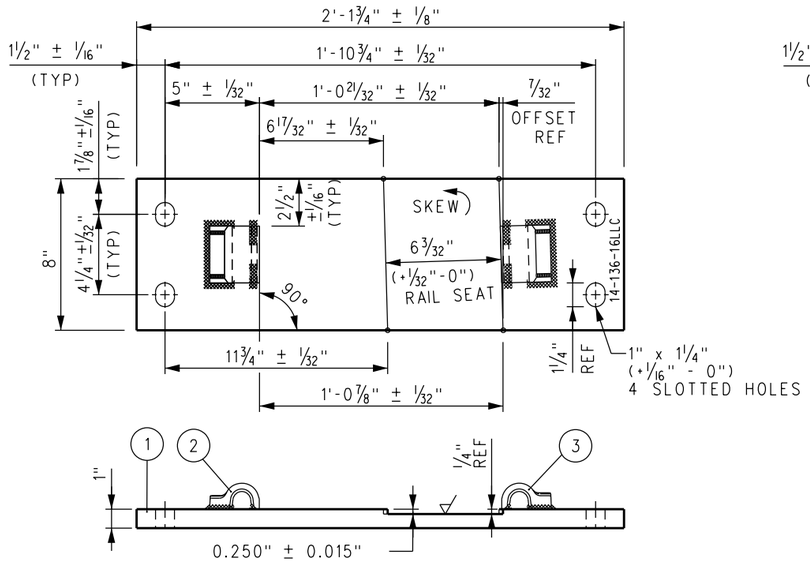

SWITCH PLATE P14-136-16LLC

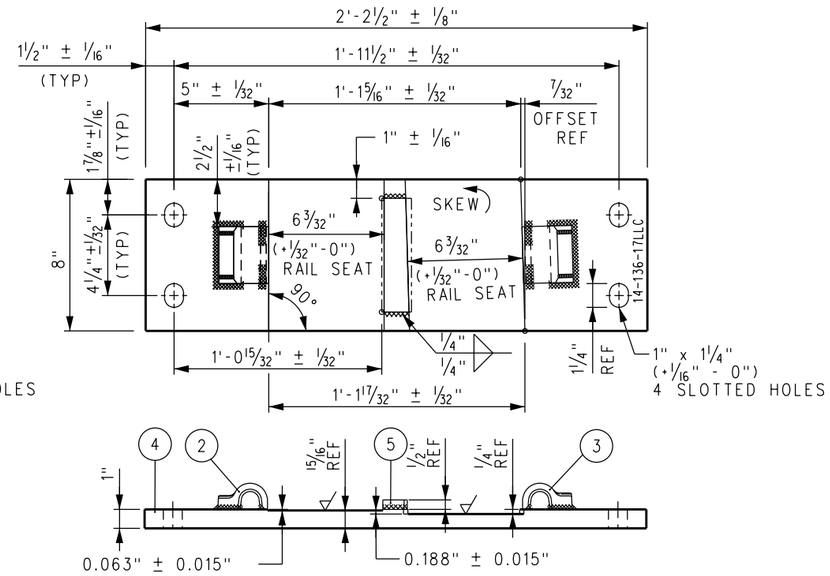

SWITCH PLATE P14-136-17LLC

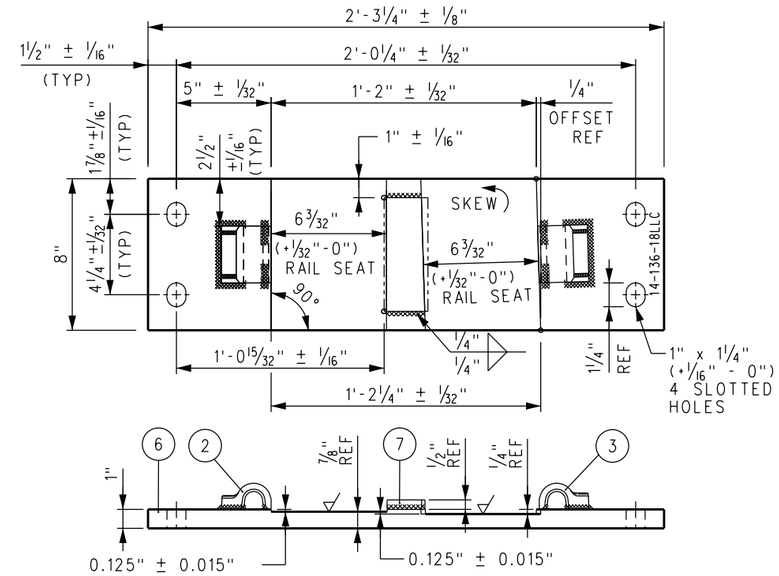

SWITCH PLATE P14-136-18LLC

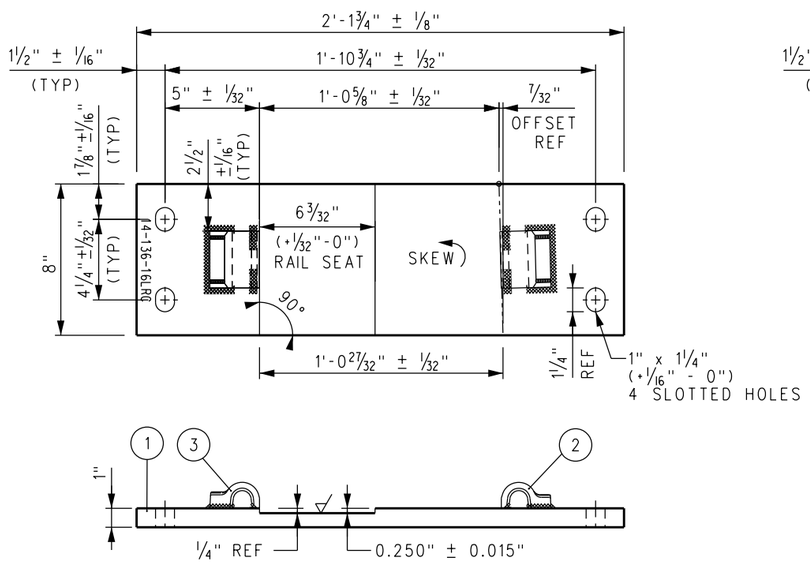

SWITCH PLATE P14-136-16LRC

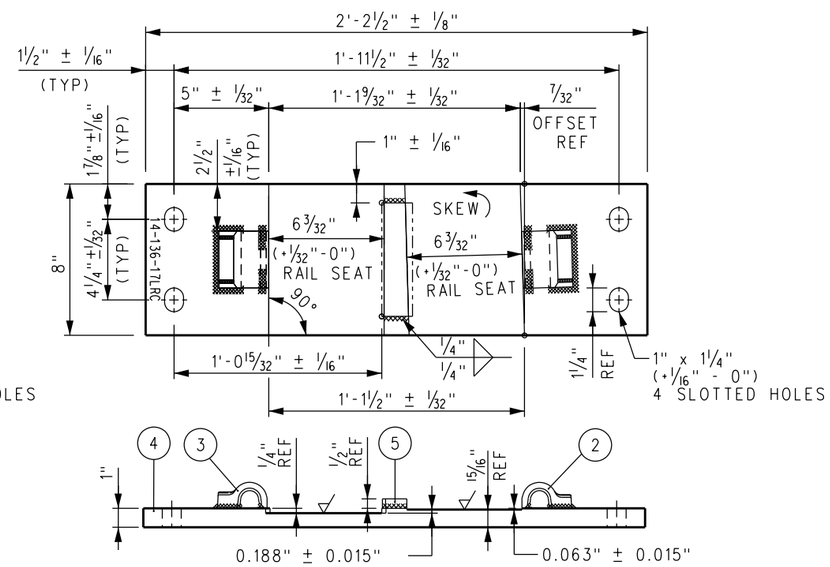

SWITCH PLATE P14-136-17LRC

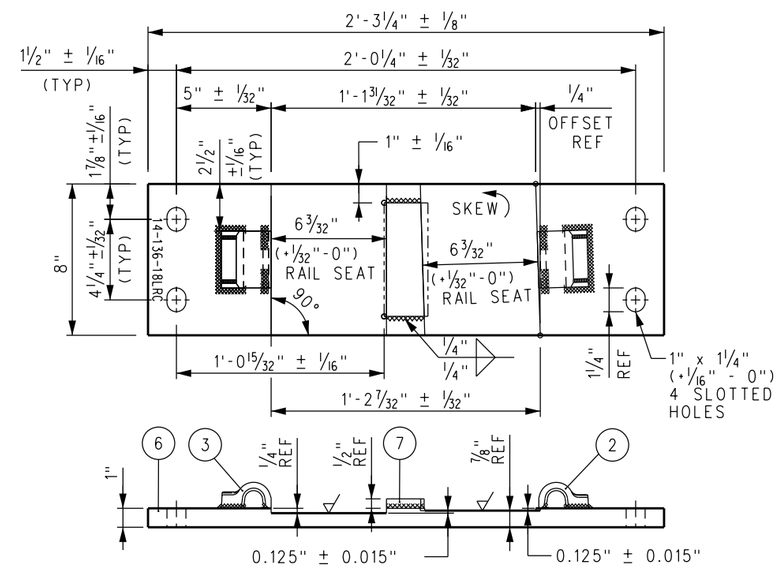

SWITCH PLATE P14-136-18LRC

BILL OF MATERIALS		BILL OF MATERIALS	
ITEM	DESCRIPTION	ITEM	DESCRIPTION
1	FLAT BAR, ASTM A36, 1" x 8" x 2'-1¾"	5	FLAT BAR, ASTM A36, ½" x 6" x 1⅝"
2	SHOULDER, PANDROL, FORGED TONGUELESS, TYPE 1	6	FLAT BAR, ASTM A36, 1" x 8" x 2'-3¼"
3	SHOULDER, PANDROL, FORGED TONGUELESS, TYPE 5	7	FLAT BAR, ASTM A36, ½" x 6" x 2 5/16"
4	FLAT BAR, ASTM A36, 1" x 8" x 2'-2½"		

NOTES:

1. I.D. CHARACTERS TO BE ½" MINIMUM HEIGHT CLEARLY STAMPED AS SHOWN.
2. WELDS TO BE DRESSED FLUSH WITH SHOULDER & NOT TO PROTRUDE INTO RAIL SEAT.
3. SLOTTED HOLE CENTERS ARE INDICATED ON DRAWING.

REV.	DATE	DESCRIPTION	DES.	ENG.
X	XX-XX-XX	REVISION	XX	XX

DRAWN BY: A. CARLOS DATE: 03/31/2011

ASSISTANT DIRECTOR: STANDARDS & DESIGN

DIRECTOR OF ENGINEERING AND CONSTRUCTION

SCRRA ENGINEERING STANDARDS ARE INTENDED FOR SCRRA APPROVED USES ONLY. FOR NON-SCRRA APPROVED USES, SCRRA SHALL NOT BE RESPONSIBLE FOR THE ACCURACY OR COMPLETENESS OF THE DATA OR INFORMATION CONTAINED HEREIN. THE SELECTION AND USE OF THESE STANDARDS IS THE SOLE RESPONSIBILITY OF THE USER AND SHOULD NOT BE USED WITHOUT CONSULTING A REGISTERED PROFESSIONAL ENGINEER. ALL WARRANTIES AND REPRESENTATIONS OF ANY KIND ARE DISCLAIMED. ANYONE MAKING USE OF THIS INFORMATION AGREES THAT IT ASSUMES ALL LIABILITY ARISING FROM SUCH USE. NO PART OF THESE STANDARDS SHOULD BE REPRODUCED OR DISTRIBUTED IN ANY FORM OR BY ANY MEANS WITHOUT THE PRIOR WRITTEN PERMISSION OF SCRRA. ALL RIGHTS RESERVED.

METROLINK®

SOUTHERN CALIFORNIA REGIONAL RAIL AUTHORITY
ONE GATEWAY PLAZA, 12TH FLOOR, L. A., CA. 90012

ENGINEERING STANDARDS

SWITCH PLATES
(14–16LLC /LRC THROUGH 14–18LLC /LRC)
FOR NO 14 136 LB RE LH CONCRETE TIE TURNOUT

STANDARD 2805
SCALE: NTS
REVISION –
SHEET 1 OF 1
CADD FILE: ES2805–81

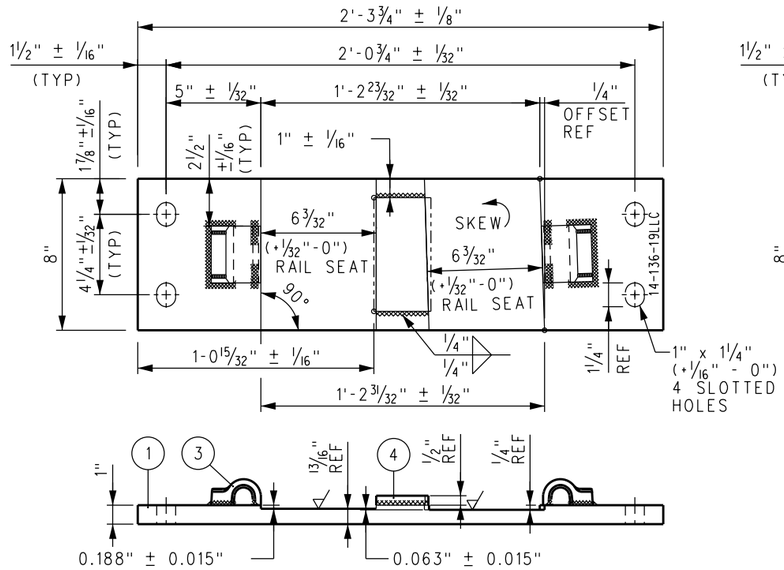

SWITCH PLATE P14-136-19LLC

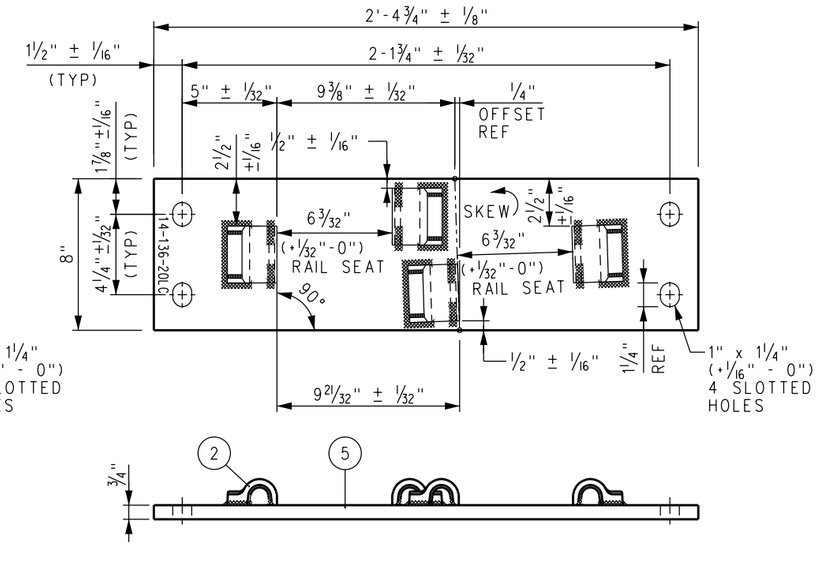

SWITCH PLATE P14-136-20LC

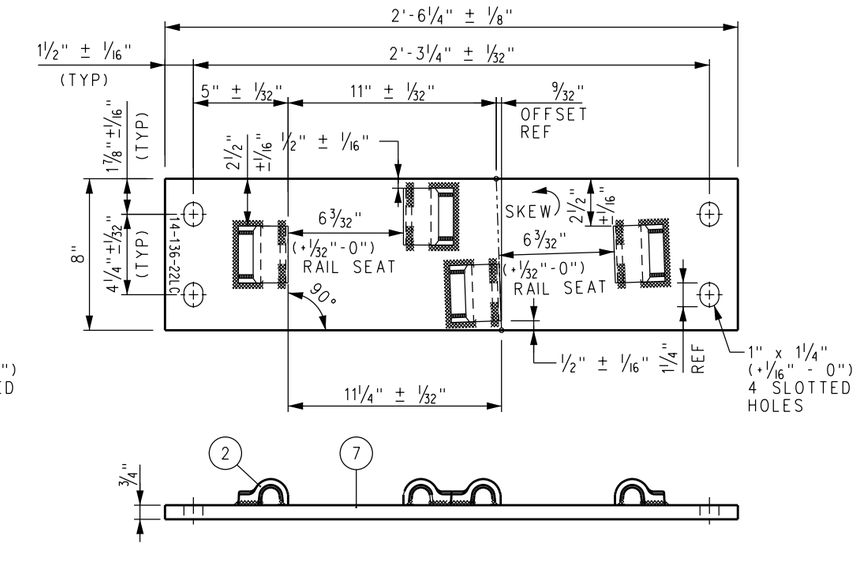

SWITCH PLATE P14-136-22LC

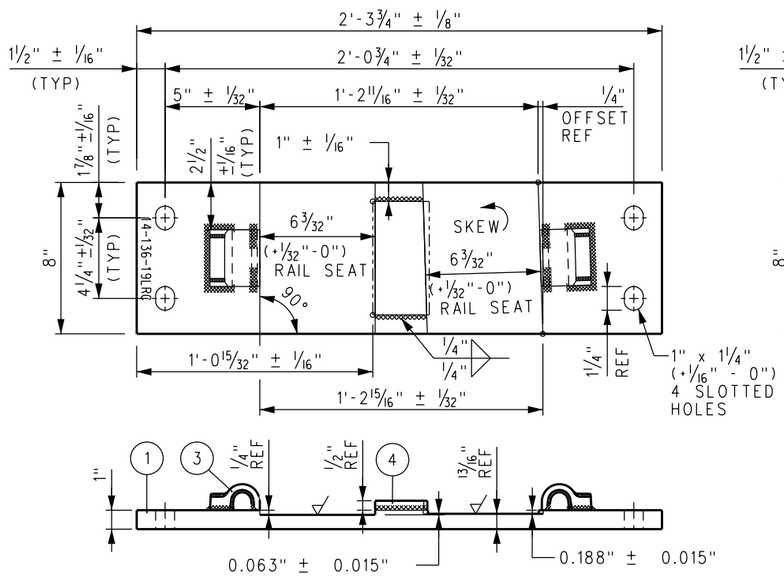

SWITCH PLATE P14-136-19LRC

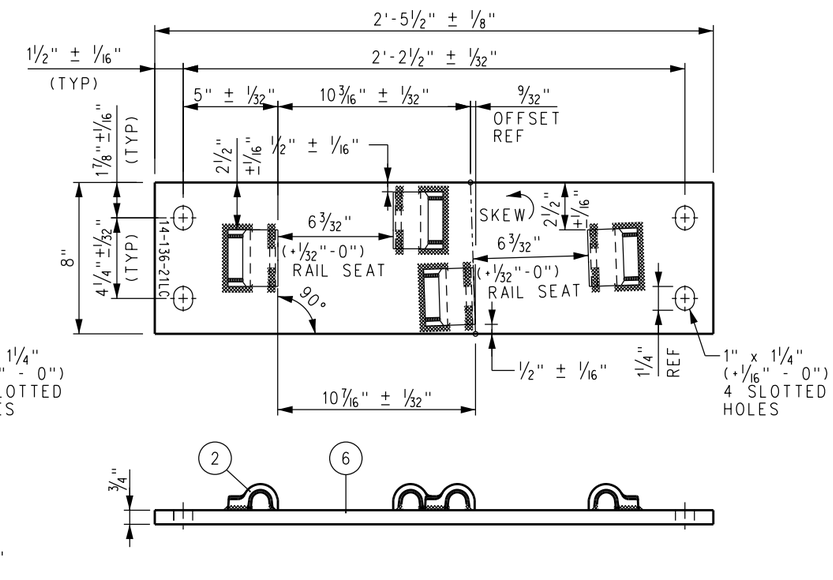

SWITCH PLATE P14-136-21LC

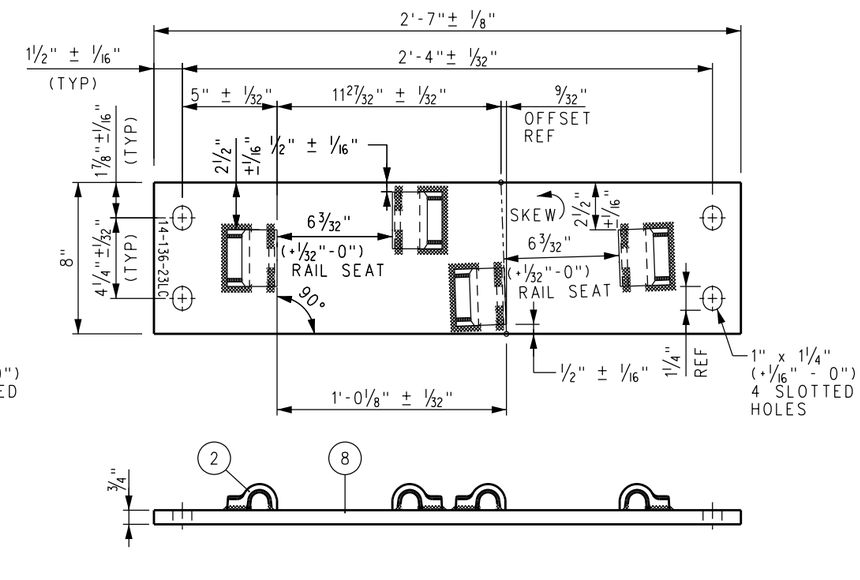

SWITCH PLATE P14-136-23LC

BILL OF MATERIALS		BILL OF MATERIALS	
ITEM	DESCRIPTION	ITEM	DESCRIPTION
1	FLAT BAR, ASTM A36, 1" x 8" x 2'-3¾"	5	FLAT BAR, ASTM A36, ¾" x 8" x 2'-4¾"
2	SHOULDER, PANDROL, FORGED TONGUELESS, TYPE 1	6	FLAT BAR, ASTM A36, ¾" x 8" x 2'-5½"
3	SHOULDER, PANDROL, FORGED TONGUELESS, TYPE 5	7	FLAT BAR, ASTM A36, ¾" x 8" x 2'-6¼"
4	FLAT BAR, ASTM A36, ½" x 6" x 3"	8	FLAT BAR, ASTM A36, ¾" x 8" x 2'-7"

NOTES:

1. I.D. CHARACTERS TO BE ½" MINIMUM HEIGHT CLEARLY STAMPED AS SHOWN.
2. WELDS TO BE DRESSED FLUSH WITH SHOULDER & NOT TO PROTRUDE INTO RAIL SEAT.
3. SLOTTED HOLE CENTERS ARE INDICATED ON DRAWING.
4. TYPE 1 PANDROL SHOULDER UNLESS NOTED OTHERWISE.

REV.	DATE	DESCRIPTION	DES.	ENG.
X	XX-XX-XX	REVISION	XX	XX

DRAWN BY: HDR DATE: 03/31/2011

ASSISTANT DIRECTOR: STANDARDS & DESIGN

DIRECTOR OF ENGINEERING AND CONSTRUCTION

SCRRA ENGINEERING STANDARDS ARE INTENDED FOR SCRRA APPROVED USES ONLY. FOR NON-SCRRA APPROVED USES:
SCRRA SHALL NOT BE RESPONSIBLE FOR THE ACCURACY OR COMPLETENESS OF THE DATA OR INFORMATION CONTAINED HEREIN. THE SELECTION AND USE OF THESE STANDARDS IS THE SOLE RESPONSIBILITY OF THE USER AND SHOULD NOT BE USED WITHOUT CONSULTING A REGISTERED PROFESSIONAL ENGINEER. ALL WARRANTIES AND REPRESENTATIONS OF ANY KIND ARE DISCLAIMED. ANYONE MAKING USE OF THIS INFORMATION AGREES THAT IT ASSUMES ALL LIABILITY ARISING FROM SUCH USE. NO PART OF THESE STANDARDS SHOULD BE REPRODUCED OR DISTRIBUTED IN ANY FORM OR BY ANY MEANS WITHOUT THE PRIOR WRITTEN PERMISSION OF SCRRA. ALL RIGHTS RESERVED.

METROLINK®
SOUTHERN CALIFORNIA REGIONAL RAIL AUTHORITY
ONE GATEWAY PLAZA, 12TH FLOOR, L. A., CA. 90012

ENGINEERING STANDARDS

SWITCH PLATES (14–19LLC /LRC)
(14–20LC THROUGH 14–23LC)
FOR NO 14 136 LB RE LH CONCRETE TIE TURNOUT

STANDARD 2805
SCALE: NTS
REVISION –
SHEET 1 OF 1
CADD FILE: ES2805–82

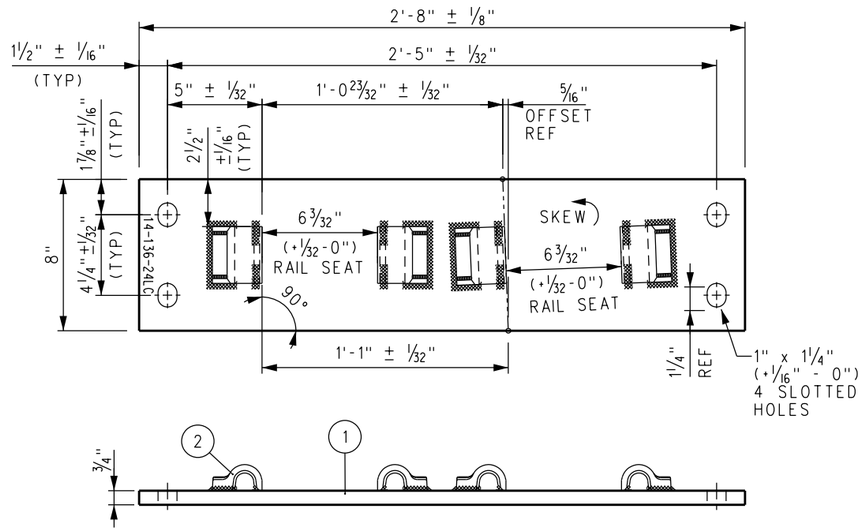

SWITCH PLATE P14-136-24LC

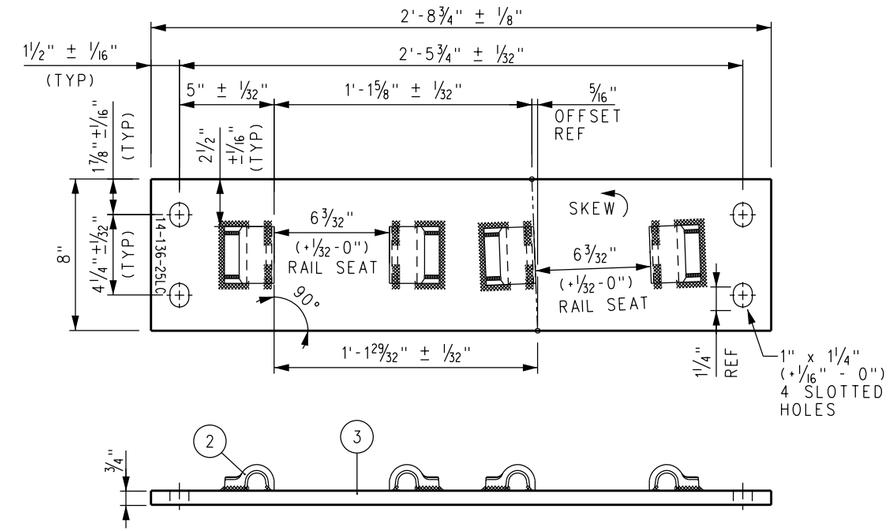

SWITCH PLATE P14-136-25LC

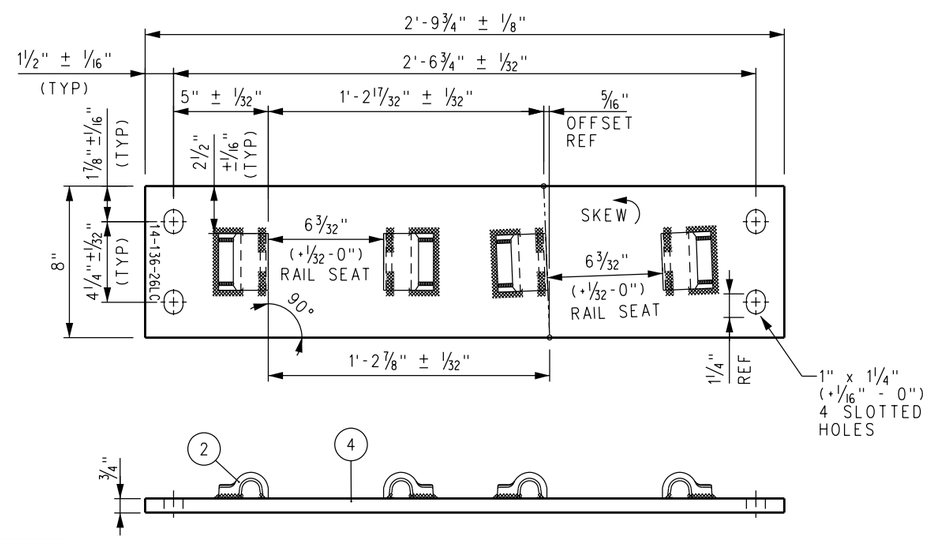

SWITCH PLATE P14-136-26LC

NOTES:

1. I.D. CHARACTERS TO BE 1/2" MINIMUM HEIGHT CLEARLY STAMPED AS SHOWN.
2. WELDS TO BE DRESSED FLUSH WITH SHOULDER & NOT TO PROTRUDE INTO RAIL SEAT.
3. SLOTTED HOLE CENTERS ARE INDICATED ON DRAWING.
4. TYPE 1 PANDROL SHOULDER UNLESS NOTED OTHERWISE.

BILL OF MATERIALS	
ITEM	DESCRIPTION
1	FLAT BAR, ASTM A36, 3/4" x 8" x 2'-8" LONG
2	SHOULDER, PANDROL, FORGED TONGUELESS, TYPE 1
3	FLAT BAR, ASTM A36, 3/4" x 8" x 2'-8 3/4"
4	FLAT BAR, ASTM A36, 3/4" x 8" x 2'-9 3/4"

REV.	DATE	DESCRIPTION	DES.	ENG.
X	XX-XX-XX	REVISION	XX	XX

DRAWN BY: HDR DATE: 03/31/2011

ASSISTANT DIRECTOR: STANDARDS & DESIGN

DIRECTOR OF ENGINEERING AND CONSTRUCTION

SCRRA ENGINEERING STANDARDS ARE INTENDED FOR SCRRA APPROVED USES ONLY. FOR NON-SCRRA APPROVED USES:
SCRRA SHALL NOT BE RESPONSIBLE FOR THE ACCURACY OR COMPLETENESS OF THE DATA OR INFORMATION CONTAINED HEREIN. THE SELECTION AND USE OF THESE STANDARDS IS THE SOLE RESPONSIBILITY OF THE USER AND SHOULD NOT BE USED WITHOUT CONSULTING A REGISTERED PROFESSIONAL ENGINEER. ALL WARRANTIES AND REPRESENTATIONS OF ANY KIND ARE DISCLAIMED. ANYONE MAKING USE OF THIS INFORMATION AGREES THAT IT ASSUMES ALL LIABILITY ARISING FROM SUCH USE. NO PART OF THESE STANDARDS SHOULD BE REPRODUCED OR DISTRIBUTED IN ANY FORM OR BY ANY MEANS WITHOUT THE PRIOR WRITTEN PERMISSION OF SCRRA. ALL RIGHTS RESERVED.

METROLINK®
SOUTHERN CALIFORNIA REGIONAL RAIL AUTHORITY
ONE GATEWAY PLAZA, 12TH FLOOR, L. A., CA. 90012

ENGINEERING STANDARDS

SWITCH PLATES (14–24LC THROUGH 14–26LC)
FOR NO 14 136 LB RE LH CONCRETE TIE TURNOUT

STANDARD 2805
SCALE: NTS
REVISION –
SHEET 1 OF 1
CADD FILE: ES2805–83

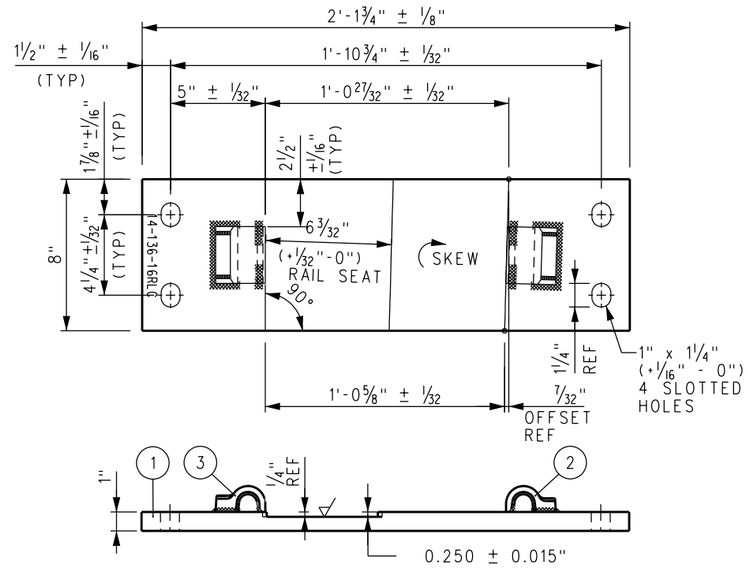

SWITCH PLATE P14-136-16RLC

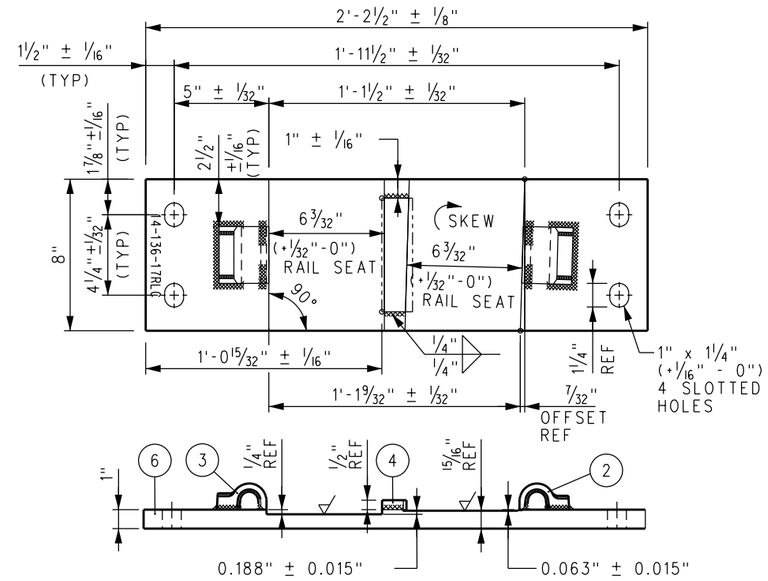

SWITCH PLATE P14-136-17RLC

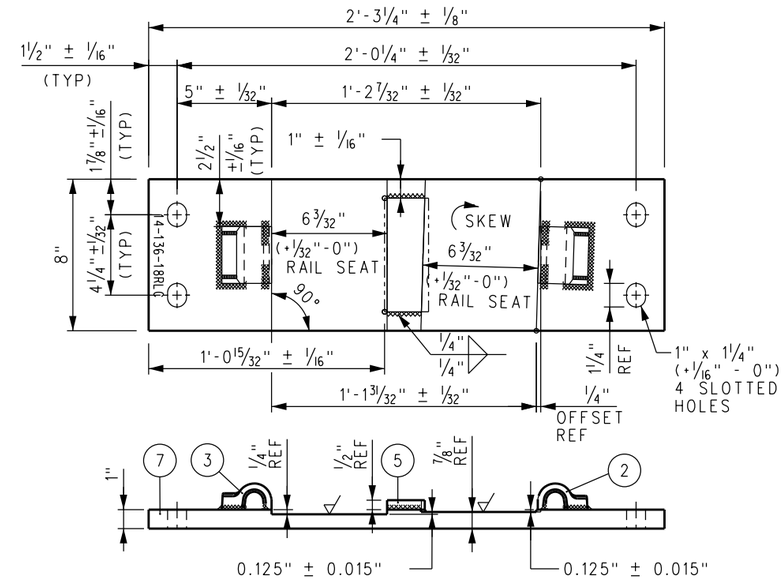

SWITCH PLATE P14-136-18RLC

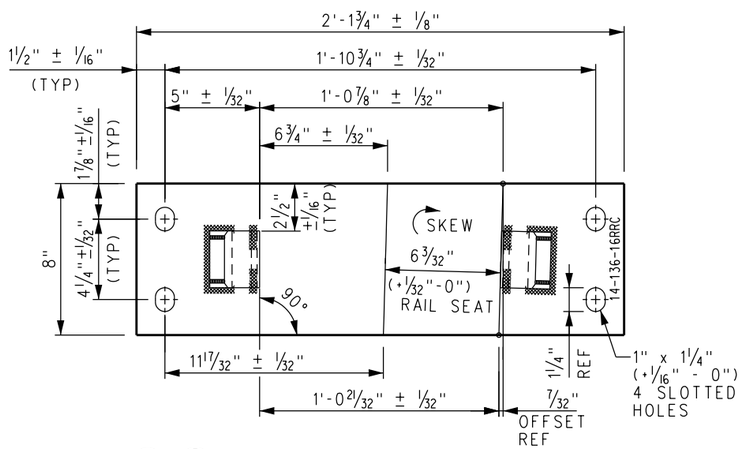

SWITCH PLATE P14-136-16RRC

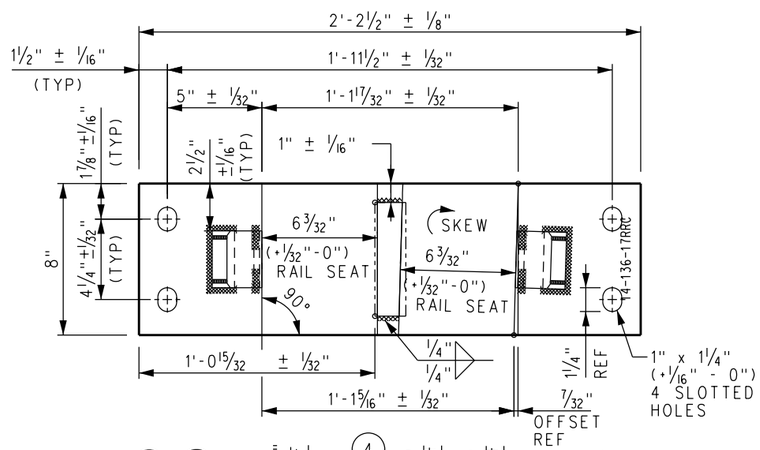

SWITCH PLATE P14-136-17RRC

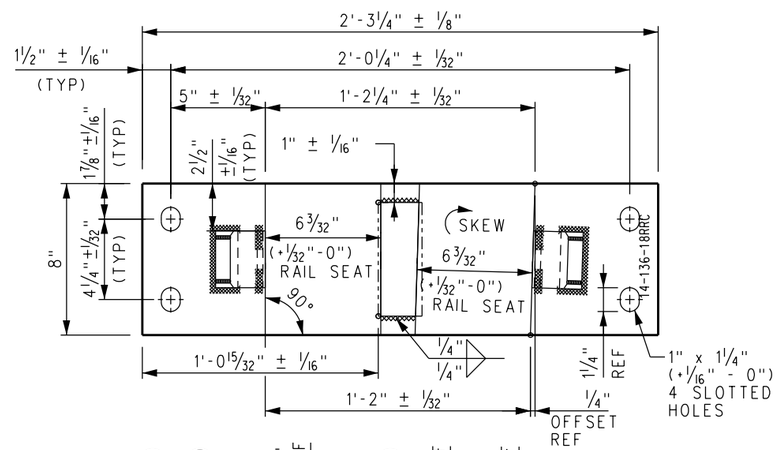

SWITCH PLATE P14-136-18RRC

BILL OF MATERIALS	
ITEM	DESCRIPTION
1	FLAT BAR, ASTM A36, 1" x 8" x 2'-1¾"
2	SHOULDER, PANDROL, FORGED TONGUELESS, TYPE 1
3	SHOULDER, PANDROL, FORGED TONGUELESS, TYPE 5
4	FLAT BAR, ASTM A36, ½" x 6" x 1⅝"

BILL OF MATERIALS	
ITEM	DESCRIPTION
5	FLAT BAR, ASTM A36, ½" x 6" x 2⁵⁄₁₆"
6	FLAT BAR, ASTM A36, 1" x 8" x 2'-2½"
7	FLAT BAR, ASTM A36, 1" x 8" x 2'-3¼"

NOTES:

1. I.D. CHARACTERS TO BE ½" MINIMUM HEIGHT CLEARLY STAMPED AS SHOWN.
2. WELDS TO BE DRESSED FLUSH WITH SHOULDER & NOT TO PROTRUDE INTO RAIL SEAT.
3. SLOTTED HOLE CENTERS ARE INDICATED ON DRAWING.

REV.	DATE	DESCRIPTION	DES.	ENG.
X	XX-XX-XX	REVISION	XX	XX

DRAWN BY: HDR DATE: 03/31/2011

ASSISTANT DIRECTOR: STANDARDS & DESIGN

DIRECTOR OF ENGINEERING AND CONSTRUCTION

SCRRA ENGINEERING STANDARDS ARE INTENDED FOR SCRRA APPROVED USES ONLY. FOR NON-SCRRA APPROVED USES:
SCRRA SHALL NOT BE RESPONSIBLE FOR THE ACCURACY OR COMPLETENESS OF THE DATA OR INFORMATION CONTAINED HEREIN. THE SELECTION AND USE OF THESE STANDARDS IS THE SOLE RESPONSIBILITY OF THE USER AND SHOULD NOT BE USED WITHOUT CONSULTING A REGISTERED PROFESSIONAL ENGINEER. ALL WARRANTIES AND REPRESENTATIONS OF ANY KIND ARE DISCLAIMED. ANYONE MAKING USE OF THIS INFORMATION AGREES THAT IT ASSUMES ALL LIABILITY ARISING FROM SUCH USE. NO PART OF THESE STANDARDS SHOULD BE REPRODUCED OR DISTRIBUTED IN ANY FORM OR BY ANY MEANS WITHOUT THE PRIOR WRITTEN PERMISSION OF SCRRA. ALL RIGHTS RESERVED.

METROLINK

SOUTHERN CALIFORNIA REGIONAL RAIL AUTHORITY
ONE GATEWAY PLAZA, 12TH FLOOR, L. A., CA. 90012

ENGINEERING STANDARDS

SWITCH PLATES
(14–16RLC /RRC THROUGH 14–18RLC /RRC)
FOR NO 14 136 LB RE RH CONCRETE TIE TURNOUT

STANDARD: 2805
SCALE: NTS
REVISION: –
SHEET: 1 OF 1
CADD FILE: ES2805–84

UserName•> carlosa Date Plotted: 10/5/2011 3:53:52 PM Plot Driver•> S:\Plot Drivers\pdf.plt FileName•> s:\V8EngStds\2000\Turnouts\No 14 Turnout\ES2805-84.dgn

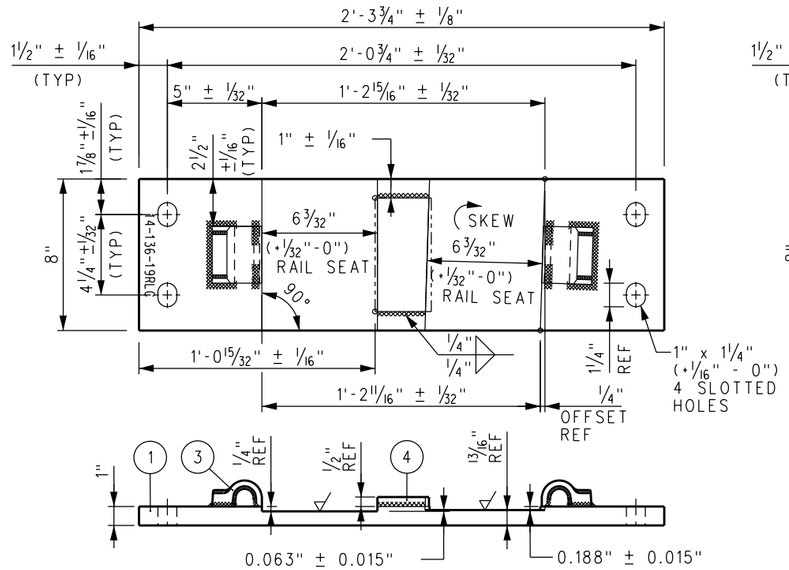

SWITCH PLATE P14-136-19RLC

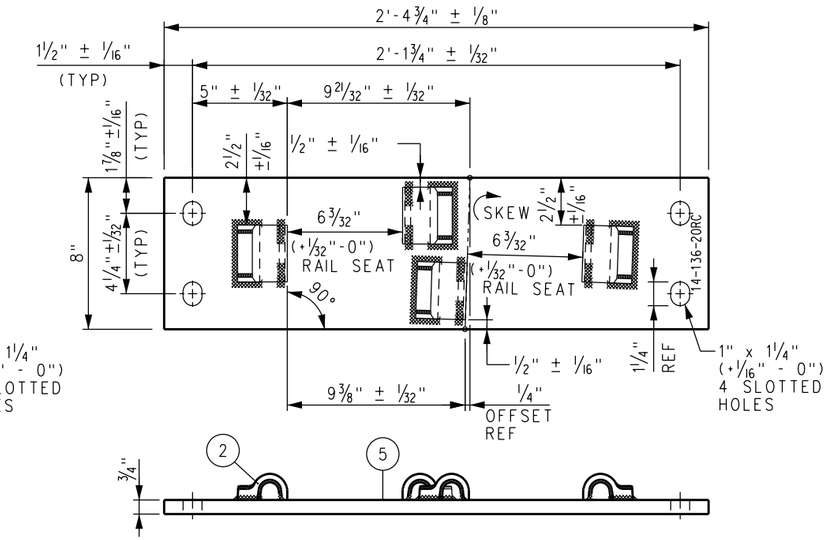

SWITCH PLATE P14-136-20RC

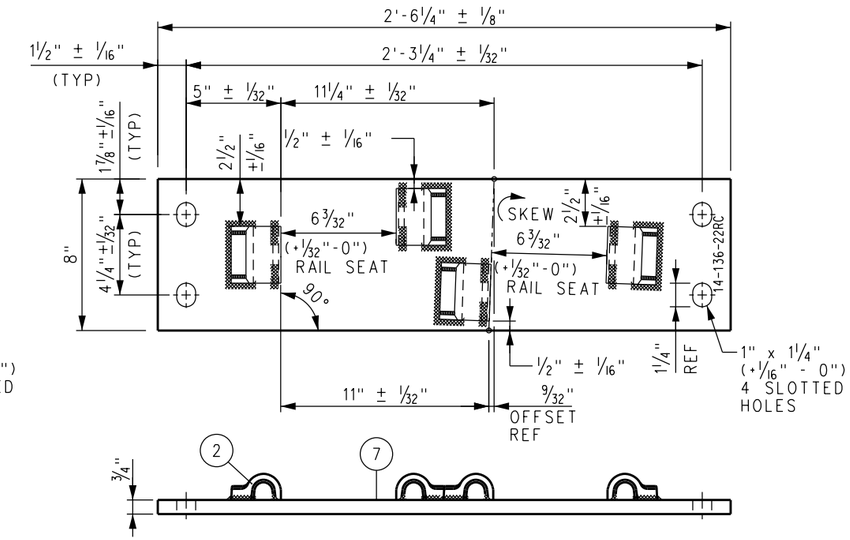

SWITCH PLATE P14-136-22RC

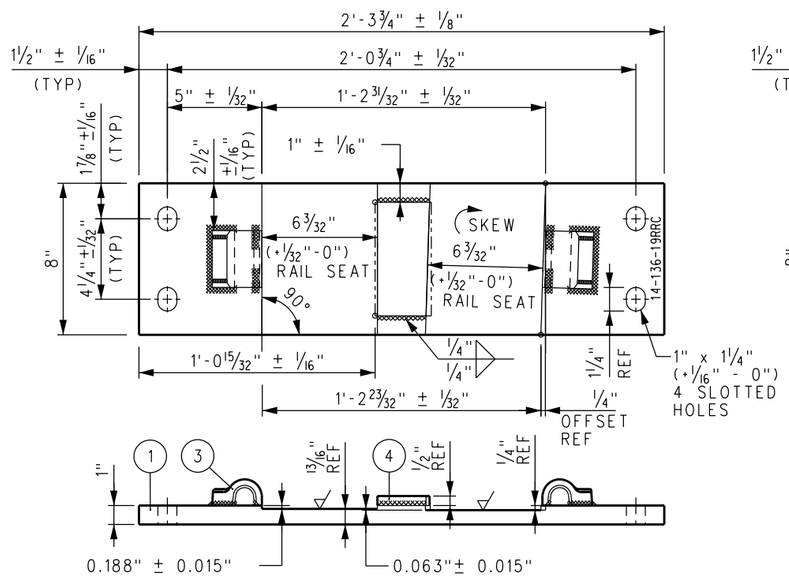

SWITCH PLATE P14-136-19RRC

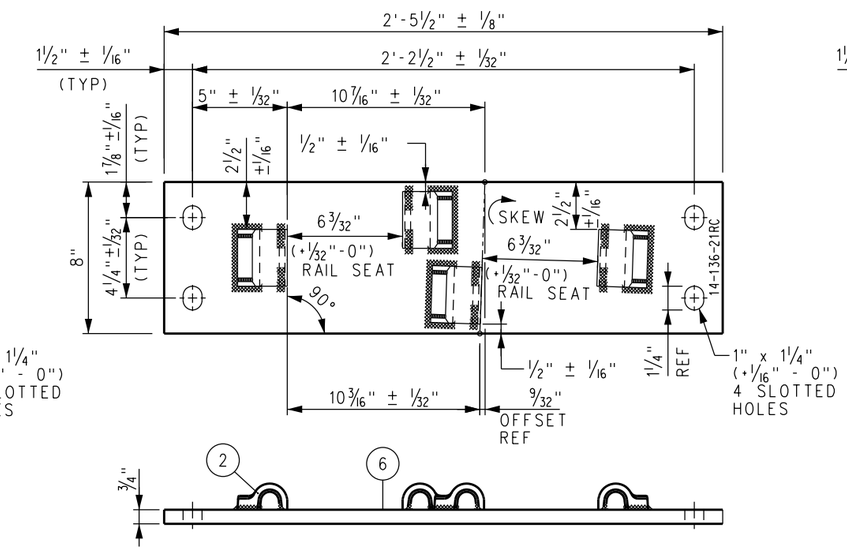

SWITCH PLATE P14-136-21RC

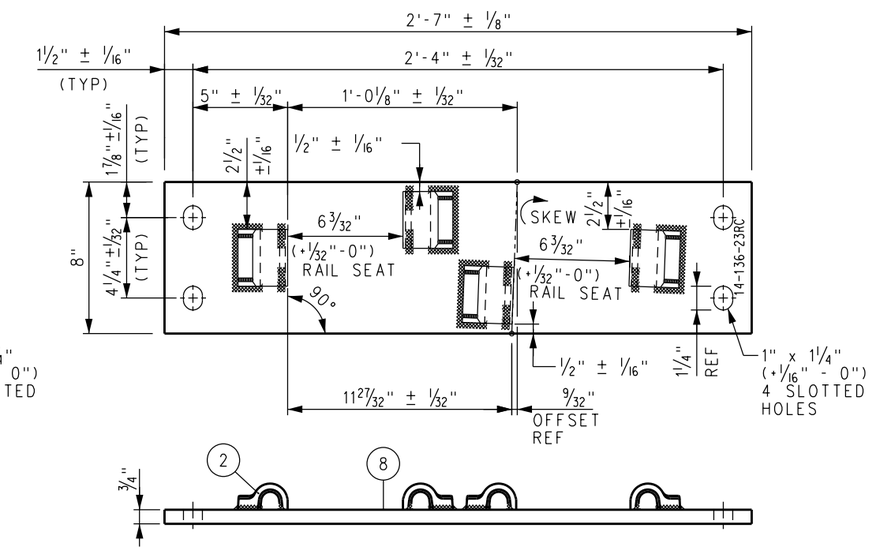

SWITCH PLATE P14-136-23RC

BILL OF MATERIALS		BILL OF MATERIALS	
ITEM	DESCRIPTION	ITEM	DESCRIPTION
1	FLAT BAR, ASTM A36, 1" x 8" x 2'-3¾"	5	FLAT BAR, ASTM A36, ¾" x 8" x 2'-4¾"
2	SHOULDER, PANDROL, FORGED TONGUELESS, TYPE 1	6	FLAT BAR, ASTM A36, ¾" x 8" x 2'-5½"
3	SHOULDER, PANDROL, FORGED TONGUELESS, TYPE 5	7	FLAT BAR, ASTM A36, ¾" x 8" x 2'-6¼"
4	FLAT BAR, ASTM A36, ½" x 6" x 3"	8	FLAT BAR, ASTM A36, ¾" x 8" x 2'-7"

NOTES:

1. I.D. CHARACTERS TO BE ½" MINIMUM HEIGHT CLEARLY STAMPED AS SHOWN.
2. WELDS TO BE DRESSED FLUSH WITH SHOULDER & NOT TO PROTRUDE INTO RAIL SEAT.
3. SLOTTED HOLE CENTERS ARE INDICATED ON DRAWING.
4. TYPE 1 PANDROL SHOULDER UNLESS NOTED OTHERWISE.

REV.	DATE	DESCRIPTION	DES.	ENG.
X	XX-XX-XX	REVISION	XX	XX

DRAWN BY: HDR DATE: 03/31/2011

ASSISTANT DIRECTOR: STANDARDS & DESIGN

DIRECTOR OF ENGINEERING AND CONSTRUCTION

SCRRA ENGINEERING STANDARDS ARE INTENDED FOR SCRRA APPROVED USES ONLY. FOR NON-SCRRA APPROVED USES:
SCRRA SHALL NOT BE RESPONSIBLE FOR THE ACCURACY OR COMPLETENESS OF THE DATA OR INFORMATION CONTAINED HEREIN. THE SELECTION AND USE OF THESE STANDARDS IS THE SOLE RESPONSIBILITY OF THE USER AND SHOULD NOT BE USED WITHOUT CONSULTING A REGISTERED PROFESSIONAL ENGINEER. ALL WARRANTIES AND REPRESENTATIONS OF ANY KIND ARE DISCLAIMED. ANYONE MAKING USE OF THIS INFORMATION AGREES THAT IT ASSUMES ALL LIABILITY ARISING FROM SUCH USE. NO PART OF THESE STANDARDS SHOULD BE REPRODUCED OR DISTRIBUTED IN ANY FORM OR BY ANY MEANS WITHOUT THE PRIOR WRITTEN PERMISSION OF SCRRA. ALL RIGHTS RESERVED.

METROLINK®
SOUTHERN CALIFORNIA REGIONAL RAIL AUTHORITY
ONE GATEWAY PLAZA, 12TH FLOOR, L. A., CA. 90012

ENGINEERING STANDARDS

SWITCH PLATES (14–19RLC /RRC)
(14–20RC THROUGH 14–23RC)
FOR NO 14 136 LB RE RH CONCRETE TIE TURNOUT

STANDARD 2805
SCALE: NTS
REVISION –
SHEET 1 OF 1
CADD FILE: ES2805–85

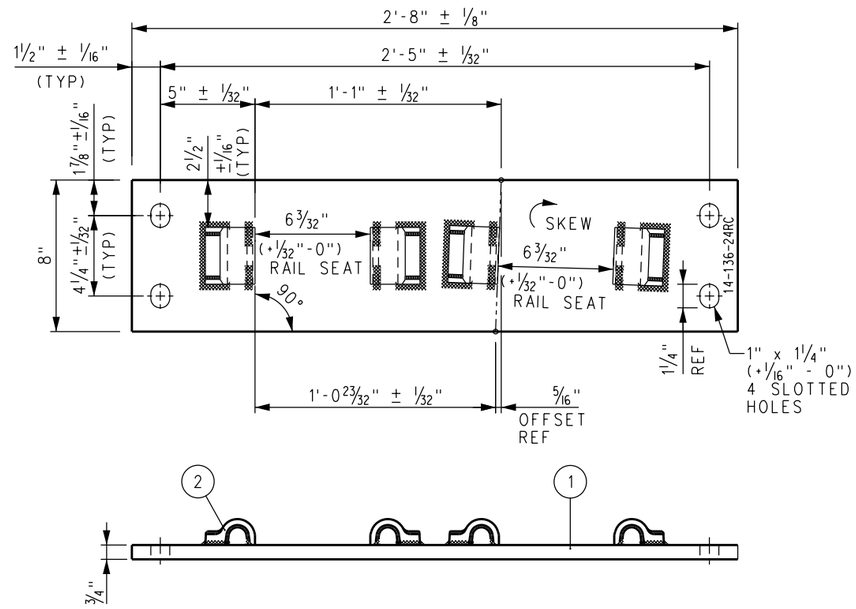

SWITCH PLATE P14-136-24RC

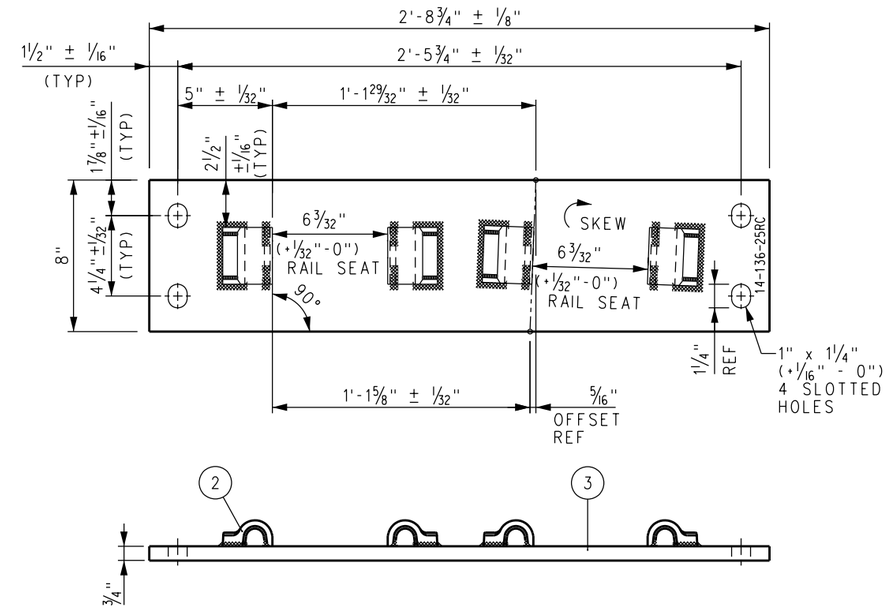

SWITCH PLATE P14-136-25RC

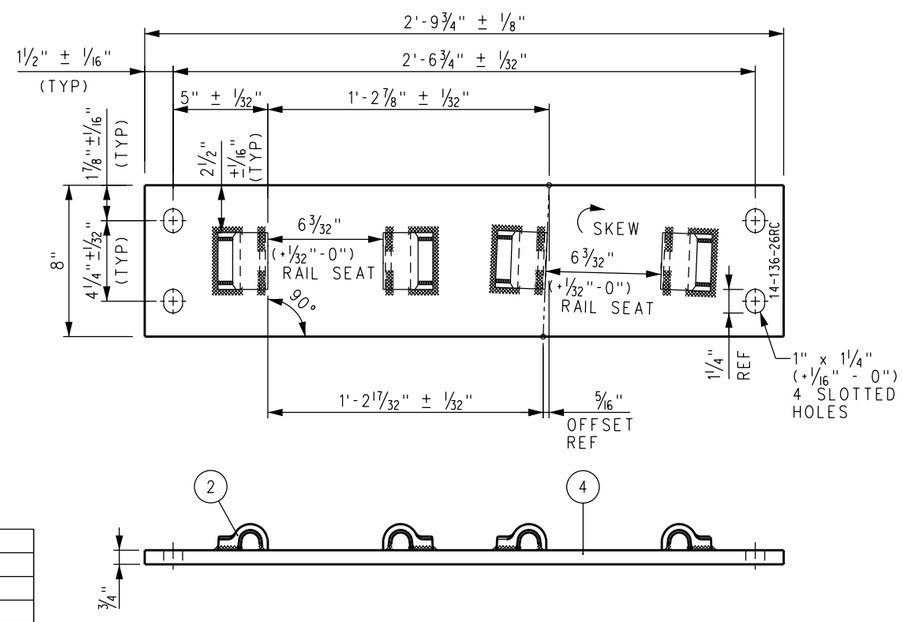

SWITCH PLATE P14-136-26RC

NOTES:

1. I.D. CHARACTERS TO BE 1/2" MINIMUM HEIGHT CLEARLY STAMPED AS SHOWN.
2. WELDS TO BE DRESSED FLUSH WITH SHOULDER & NOT TO PROTRUDE INTO RAIL SEAT.
3. SLOTTED HOLE CENTERS ARE INDICATED ON DRAWING.
4. TYPE 1 PANDROL SHOULDER UNLESS NOTED OTHERWISE.

BILL OF MATERIALS

ITEM	DESCRIPTION
1	FLAT BAR, ASTM A36, 3/4" x 8" x 2'-8"
2	SHOULDER, PANDROL, FORGED TONGUELESS, TYPE 1
3	FLAT BAR, ASTM A36, 3/4" x 8" x 2'-8 3/4"
4	FLAT BAR, ASTM A36, 3/4" x 8" x 2'-9 3/4"

REV.	DATE	DESCRIPTION	DES.	ENG.
X	XX-XX-XX	REVISION	XX	XX

DRAWN BY: HDR DATE: 03/31/2011

ASSISTANT DIRECTOR: STANDARDS & DESIGN

DIRECTOR OF ENGINEERING AND CONSTRUCTION

SCRRA ENGINEERING STANDARDS ARE INTENDED FOR SCRRA APPROVED USES ONLY. FOR NON-SCRRA APPROVED USES:
SCRRA SHALL NOT BE RESPONSIBLE FOR THE ACCURACY OR COMPLETENESS OF THE DATA OR INFORMATION CONTAINED HEREIN. THE SELECTION AND USE OF THESE STANDARDS IS THE SOLE RESPONSIBILITY OF THE USER AND SHOULD NOT BE USED WITHOUT CONSULTING A REGISTERED PROFESSIONAL ENGINEER. ALL WARRANTIES AND REPRESENTATIONS OF ANY KIND ARE DISCLAIMED. ANYONE MAKING USE OF THIS INFORMATION AGREES THAT IT ASSUMES ALL LIABILITY ARISING FROM SUCH USE. NO PART OF THESE STANDARDS SHOULD BE REPRODUCED OR DISTRIBUTED IN ANY FORM OR BY ANY MEANS WITHOUT THE PRIOR WRITTEN PERMISSION OF SCRRA. ALL RIGHTS RESERVED.

METROLINK®
SOUTHERN CALIFORNIA REGIONAL RAIL AUTHORITY
ONE GATEWAY PLAZA, 12TH FLOOR, L. A., CA. 90012

ENGINEERING STANDARDS

SWITCH PLATES (14–24RC THROUGH 14–26RC)
FOR NO 14 136 LB RE RH CONCRETE TIE TURNOUT

STANDARD 2805
SCALE: NTS
REVISION –
SHEET 1 OF 1
CADD FILE: ES2805–86

DISCLAIMER

SCRRA Engineering Standards are intended for SCRRA approved uses only. FOR NON-SCRRA APPROVED USES: SCRRA and its member agencies, directors, officers, employees and/or agents shall not be responsible for the accuracy or completeness of the data or information contained herein. The selection and use of these standards, while designed in accordance with generally accepted engineering principles and practices, is the sole responsibility of the user and should not be used without consulting a registered professional engineer. All warranties and representations of any kind are disclaimed. Anyone making use of this information agrees that it assumes all liability arising from such use. No part of these standards should be reproduced or distributed in any form or by any means without the prior written permission of SCRRA. All rights reserved.

Since revisions or additions to the engineering standards may occur at any time, the user agrees to indemnify, defend, by counsel satisfactory to SCRRA and Member Agency, and hold harmless SCRRA, Member Agencies, and Operating Railroad, and their respective officers, commissioners, employees, agents, successors and assigns. ("Indemnitees"), and each of them to the maximum extent allowed by law, from and against all loss, liability, claims, demands, suits, liens, claims of lien, damages (including incidental consequential damages), costs and expenses (including, without limitation, any fines, penalties, judgments, actual litigation expenses and experts' and actual attorneys' fees), that are incurred by or asserted against Indemnitees arising out of or connected in any manner with the user's use of outdated engineering standards.

Updating the contents of the manual is a continued process, and revisions/replacements are issued periodically. Questions, comments, and proposed recommendations for changes may be sent to SCRRA at 279 E. Arrow Highway, Suite A, San Dimas, CA 91773.

SCRRA NO 20 TURNOUT
BILL OF MATERIALS & DRAWING NUMBERS

FROG NUMBER		NO 20			
HAND		LH		RH	
WSM OR RBM		WSM		WSM	
CONCRETE OR TIMBER TIES		CONCRETE		CONCRETE	
HST OR STANDARD TIES		HST		HST	
POWER OR MANUAL		POWER		POWER	
ML OR TO SIDE SW MACHINE OPERATION		MLSIDE	TOSIDE	MLSIDE	TOSIDE
TURNOUT LAYOUT	DRAWING NO	2806-01	2806-03	2806-02	2806-04
SWITCH PACK	DRAWING NO	2806-11	2806-13	2806-12	2806-14
CONCRETE TIE LAYOUT	DRAWING NO	2806-31	2806-31	2806-30	2806-30
HOLLOW STEEL TIE LAYOUT	DRAWING NO	2806-33	2806-35	2806-32	2806-34
FROG PACK	DRAWING NO	2806-41	2806-41	2806-42	2806-42
GUARD RAIL MAINLINE	DRAWING NO	2800-50	2800-50	2800-50	2800-50
GUARD RAIL TURNOUT	DRAWING NO	2806-61	2806-61	2806-62	2806-62
INSULATED RAIL ASSEMBLY	LENGTH	78'-0¾"	78'-0¾"	78'-0¾"	78'-0¾"
INSULATED RAIL ASSEMBLY	LENGTH	78'-2"	78'-2"	78'-2"	78'-2"
RAIL	LENGTH	2@30'-0"	2@30'-0"	2@30'-0"	2@30'-0"
RAIL	LENGTH	2@57'-6"	2@57'-6"	2@57'-6"	2@57'-6"
RAIL	LENGTH	2@77'-6"	2@77'-6"	2@77'-6"	2@77'-6"
RAIL	LENGTH	78'-0"	78'-0"	78'-0"	78'-0"
RAIL	LENGTH	78'-1¼"	78'-1¼"	78'-1¼"	78'-1¼"
TIE SCREWS CONCRETE	ES2356	QUANTITY	492	492	492	492
TIE SCREWS TIMBER	ES2355	QUANTITY	-	-	-	-
WASHER FLAT	ES2356	QUANTITY	492	492	492	492
SPRING WASHER DOUBLE COIL	ES2356	QUANTITY	492	492	492	492
TIE PLATE PANDROL	ES2454	QUANTITY	-	-	-	-
E-CLIP PANDROL E2055	ES2362	QUANTITY	500	500	500	500
INSULATOR PANDROL NYLON HD10	-	QUANTITY	500	500	500	500
PANDROL JOINT CLIP E2063	ES2361	QUANTITY	8	8	8	8
INSULATION PANDROL NYLON 6790	-	QUANTITY	8	8	8	8
TIE PAD PANDROL 69935R	-	QUANTITY	254	254	254	254
SHIM TO REDUCE PLATE FLEXURE	-	QUANTITY	246	246	246	246

REV.	DATE	DESCRIPTION	DES.	ENG.
X	XX-XX-XX	REVISION	XX	XX

DRAWN BY: HDR DATE: 03/31/2011

ASSISTANT DIRECTOR: STANDARDS & DESIGN

DIRECTOR OF ENGINEERING AND CONSTRUCTION

SCRRA ENGINEERING STANDARDS ARE INTENDED FOR SCRRA APPROVED USES ONLY. FOR NON-SCRRA APPROVED USES:
SCRRA SHALL NOT BE RESPONSIBLE FOR THE ACCURACY OR COMPLETENESS OF THE DATA OR INFORMATION CONTAINED HEREIN. THE SELECTION AND USE OF THESE STANDARDS IS THE SOLE RESPONSIBILITY OF THE USER AND SHOULD NOT BE USED WITHOUT CONSULTING A REGISTERED PROFESSIONAL ENGINEER. ALL WARRANTIES AND REPRESENTATIONS OF ANY KIND ARE DISCLAIMED. ANYONE MAKING USE OF THIS INFORMATION AGREES THAT IT ASSUMES ALL LIABILITY ARISING FROM SUCH USE. NO PART OF THESE STANDARDS SHOULD BE REPRODUCED OR DISTRIBUTED IN ANY FORM OR BY ANY MEANS WITHOUT THE PRIOR WRITTEN PERMISSION OF SCRRA. ALL RIGHTS RESERVED.

METROLINK®
SOUTHERN CALIFORNIA REGIONAL RAIL AUTHORITY
ONE GATEWAY PLAZA, 12TH FLOOR, L. A., CA. 90012

ENGINEERING STANDARDS

NO 20 TURNOUT

STANDARD 2800
SCALE: NTS
REVISION –
SHEET 1 OF 1
CADD FILE: ES2800–20

BILL OF MATERIAL				
ITEM	QTY	DESCRIPTION	DWG NO	SCRRA PART NO
1	1	SWITCH PACK, NO 20-136 LB RE MODIFIED TANGENTIAL, LH, HST	ES2806-11	
2	1	FROG PACK, NO 20-136 LB RE WSM, LH	ES2806-41	
3	1	GUARD RAIL ASSEMBLY BOLTLESS, 26'-0" LG, 136 LB RE RAISED 1", STRAIGHT	ES2800-50	
4	1	GUARD RAIL ASSEMBLY BOLTLESS, 26'-0" LG, 136 LB RE RAISED 1", LH	ES2806-61	
5	1	INSULATED RAIL ASSEMBLY, 78'-0¾" C/W BONDED INSULATED JOINT	-	
6	1	INSULATED RAIL ASSEMBLY, 78'-2" C/W BONDED INSULATED JOINT	-	
7	2	DRILLED RAIL, 136 LB RE, 30'-0" LONG	-	
8	2	DRILLED RAIL, 136 LB RE, 57'-6" LONG	-	
9	2	DRILLED RAIL, 136 LB RE, 77'-6" LONG	-	
10	1	DRILLED RAIL, 136 LB RE, 78'-0" LONG	-	
11	1	DRILLED RAIL, 136 LB RE, 78'-1¼" LONG	-	

BILL OF MATERIAL				
ITEM	QTY	DESCRIPTION	DWG NO	SCRRA PART NO
12	492	TIE SCREW, CONCRETE ⅞" DIA x 6" HEX HEAD	-	
13	492	WASHER FLAT ⅞" TYPE A NARROW 15/16" x 1¾" x 0.134"	-	
14	492	SPRING WASHER, DOUBLE COIL (FE6)	-	
15	1	CONCRETE TIE SET, 0-121 + (3) 1:80 TIES, PLATE PADS, PIM INSERTS, LH	-	
16	500	CLIP PANDROL E2055	-	
17	500	INSULATOR PANDROL FEATURES BASE HOLDOWN NYLON HD-10	-	
18	8	CLIP PANDROL E2063	-	
19	8	INSULATION, PANDROL NYLON 6790	-	
20	254	TIE PAD PANDROL 6993SR	-	
21	246	SHIM, TO REDUCE PLATE FLEXURE	-	

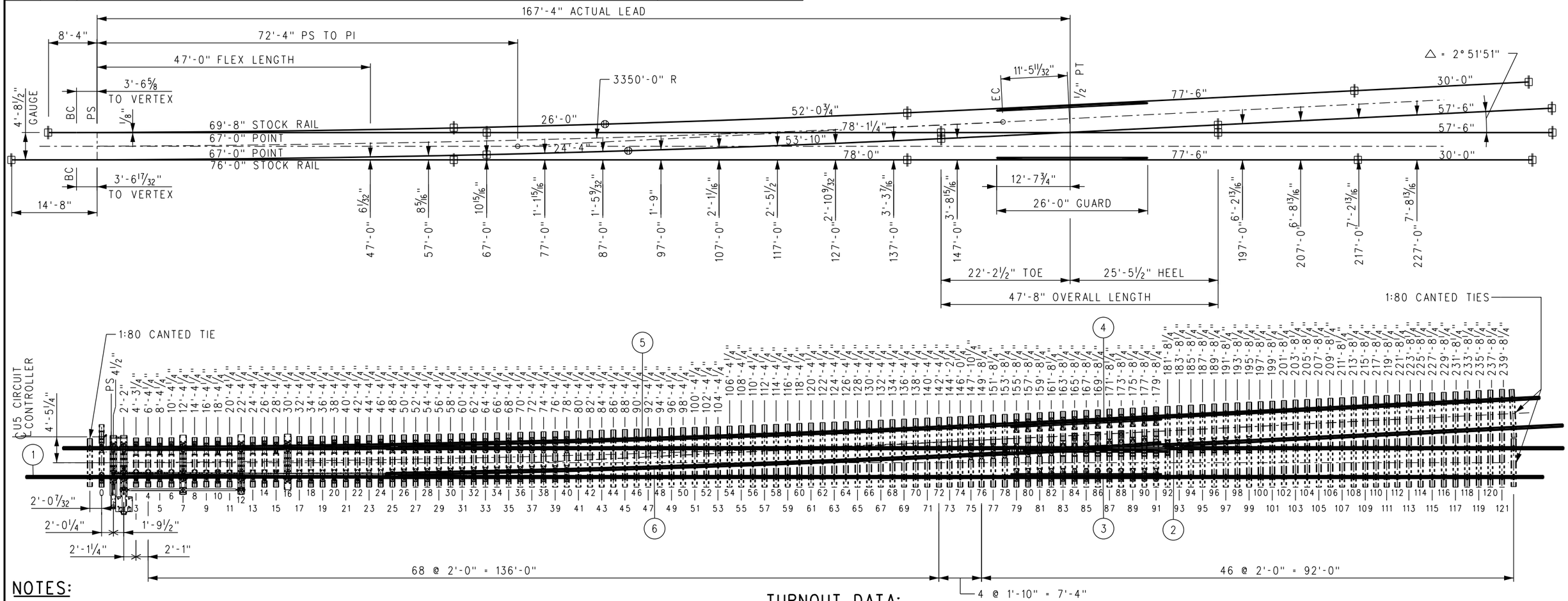

NOTES:

1. ALL RAILS SHALL HAVE IDENTIFICATION COLOR CODE PAINTED ON WEB, CLEAR OF JOINT AREA.
2. RAIL LENGTHS ALLOW ⅛" GAP BETWEEN RAIL JOINTS FOR WELDING.
3. GUARD RAILS ARE RAISED 1" AND FORM A 1⅞" FLANGEWAY.
4. SWITCH MACHINE AND MACHINE PLATE (NIC) MUST BE COORDINATED WITH SCRRA.
5. ALL LENGTHS SHALL INCLUDE 1'-9" FROM TIE ENDS TO RAIL CENTERLINE, EXCEPT AS NOTED AND 1:80 CANTED TIES.
6. TIGHTEN TIE SCREW WITH DOUBLE COIL SPRING WASHER IN PLACE.
7. SCHWIHAG ROLLERS TO BE INSTALLED AND ADJUSTED IN THE FIELD.
8. ⊕ = INSULATED JOINT ⊕ = WELDED JOINT

TURNOUT DATA:

FROG
NO 20 △ = 2° 51'51"
TOE LENGTH: 22'-2½"
HEEL LENGTH: 25'-5½"
TOTAL LENGTH: 47'-8"

SWITCH
LENGTH OF POINTS: 47'-0" / 67'-0"
VERTEX DISTANCE: VARIES PER SIDE
ENTRY ANGLE: 0° 11'55"
THICKNESS AT POINT: ⅛"
THROW AT ROD #1: 4¾"

ACTUAL LEAD: 167'-4"
CLOSURE AREA
CENTERLINE RADIUS: 3350'-0"
DEGREE OF CURVE: 1° 42'37"
DESIGN SPEEDS
50 MPH PASSENGER @ 3" UNBALANCE
40 MPH FREIGHT @ 2" UNBALANCE

REV.	DATE	DESCRIPTION	DES.	ENG.
X	XX-XX-XX	REVISION	XX	XX

DRAWN BY: HDR DATE: 03/31/2011

ASSISTANT DIRECTOR: STANDARDS & DESIGN

DIRECTOR OF ENGINEERING AND CONSTRUCTION

SCRRA ENGINEERING STANDARDS ARE INTENDED FOR SCRRA APPROVED USES ONLY. FOR NON-SCRRA APPROVED USES:
SCRRA SHALL NOT BE RESPONSIBLE FOR THE ACCURACY OR COMPLETENESS OF THE DATA OR INFORMATION CONTAINED HEREIN. THE SELECTION AND USE OF THESE STANDARDS IS THE SOLE RESPONSIBILITY OF THE USER AND SHOULD NOT BE USED WITHOUT CONSULTING A REGISTERED PROFESSIONAL ENGINEER. ALL WARRANTIES AND REPRESENTATIONS OF ANY KIND ARE DISCLAIMED. ANYONE MAKING USE OF THIS INFORMATION AGREES THAT IT ASSUMES ALL LIABILITY ARISING FROM SUCH USE. NO PART OF THESE STANDARDS SHOULD BE REPRODUCED OR DISTRIBUTED IN ANY FORM OR BY ANY MEANS WITHOUT THE PRIOR WRITTEN PERMISSION OF SCRRA. ALL RIGHTS RESERVED.

METROLINK®
SOUTHERN CALIFORNIA REGIONAL RAIL AUTHORITY
ONE GATEWAY PLAZA, 12TH FLOOR, L. A., CA. 90012

ENGINEERING STANDARDS

TURNOUT LAYOUT
NO 20–136 LB RE LH WSM FROG TURNOUT
HST, SWITCH MACHINE ON MAINLINE SIDE

STANDARD: 2806
SCALE: NTS
REVISION: –
SHEET: 1 OF 1
CADD FILE: ES2806–01

BILL OF MATERIAL				
ITEM	QTY	DESCRIPTION	DWG NO	SCRRA PART NO
1	1	SWITCH PACK, NO 20-136 LB RE MODIFIED TANGENTIAL, RH, HST	ES2806-12	
2	1	FROG PACK, NO 20-136 LB RE WSM, RH	ES2806-42	
3	1	GUARD RAIL ASSEMBLY BOLTLESS, 26'-0" LG, 136 LB RE RAISED 1", STRAIGHT	ES2800-50	
4	1	GUARD RAIL ASSEMBLY BOLTLESS, 26'-0" LG, 136 LB RE RAISED 1", RH	ES2806-62	
5	1	INSULATED RAIL ASSEMBLY, 78'-0¾" C/W BONDED INSULATED JOINT	-	
6	1	INSULATED RAIL ASSEMBLY, 78'-2" C/W BONDED INSULATED JOINT	-	
7	2	DRILLED RAIL, 136 LB RE, 30'-0" LONG	-	
8	2	DRILLED RAIL, 136 LB RE, 57'-6" LONG	-	
9	2	DRILLED RAIL, 136 LB RE, 77'-6" LONG	-	
10	1	DRILLED RAIL, 136 LB RE, 78'-0" LONG	-	
11	1	DRILLED RAIL, 136 LB RE, 78'-1¼" LONG	-	

BILL OF MATERIAL				
ITEM	QTY	DESCRIPTION	DWG NO	SCRRA PART NO
12	492	TIE SCREW, CONCRETE ⅞" DIA x 6" HEX HEAD	-	
13	492	WASHER FLAT ⅞" TYPE A NARROW 15/16" x 1¾" x 0.134"	-	
14	492	SPRING WASHER, DOUBLE COIL (FE6)	-	
15	1	CONCRETE TIE SET, 0-121 + (3) 1:80 TIES, PLATE PADS, PIM INSERTS, RH	-	
16	500	CLIP PANDROL E2055	-	
17	500	INSULATOR PANDROL FEATURES BASE HOLDOWN NYLON HD-10	-	
18	8	CLIP PANDROL E2063	-	
19	8	INSULATION, PANDROL NYLON 6790	-	
20	254	TIE PAD PANDROL 6993SR	-	
21	246	SHIM, TO REDUCE PLATE FLEXURE	-	

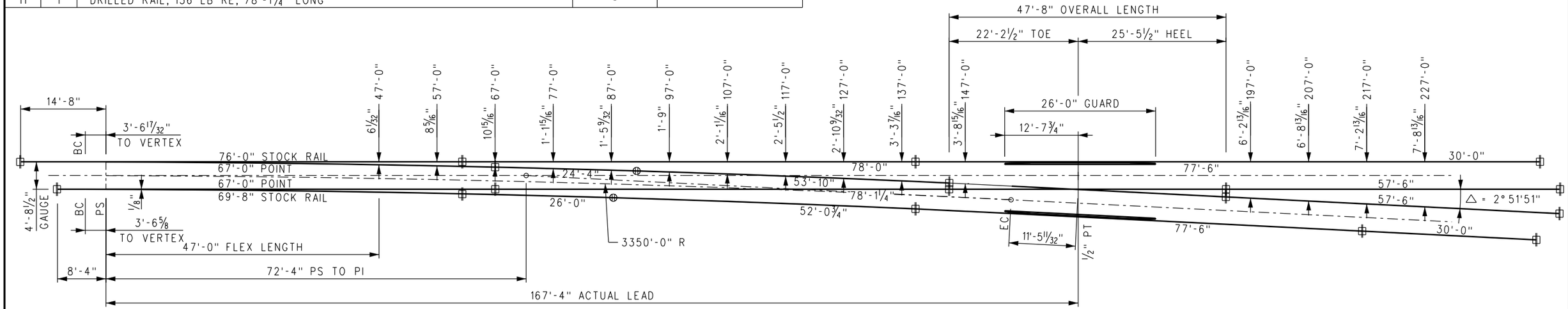

NOTES:

1. ALL RAILS SHALL HAVE IDENTIFICATION COLOR CODE PAINTED ON WEB, CLEAR OF JOINT AREA.
2. RAIL LENGTHS ALLOW ⅛" GAP BETWEEN RAIL JOINTS FOR WELDING.
3. GUARD RAILS ARE RAISED 1" AND FORM A 1⅞" FLANGEWAY.
4. SWITCH MACHINE AND MACHINE PLATE (NIC) MUST BE COORDINATED WITH SCRRA.
5. ALL LENGTHS SHALL INCLUDE 1'-9" FROM TIE ENDS TO RAIL CENTERLINE, EXCEPT AS NOTED AND 1:80 CANTED TIES.
6. TIGHTEN TIE SCREW WITH DOUBLE COIL SPRING WASHER IN PLACE.
7. SCHWIHAG ROLLERS TO BE INSTALLED AND ADJUSTED IN THE FIELD.
8. ⊕ = INSULATED JOINT ⊕ = WELDED JOINT

TURNOUT DATA:

FROG
NO 20 △ = 2° 51'51"
TOE LENGTH: 22'-2½"
HEEL LENGTH: 25'-5½"
TOTAL LENGTH: 47'-8"

SWITCH
LENGTH OF POINTS: 47'-0" / 67'-0"
VERTEX DISTANCE: VARIES PER SIDE
ENTRY ANGLE: 0° 11'55"
THICKNESS AT POINT: ⅛"
THROW AT ROD #1: 4¾"

ACTUAL LEAD: 167'-4"
CLOSURE AREA
CENTERLINE RADIUS: 3350'-0"
DEGREE OF CURVE: 1° 42'37"
DESIGN SPEEDS
50 MPH PASSENGER @ 3" UNBALANCE
40 MPH FREIGHT @ 2" UNBALANCE

REV.	DATE	DESCRIPTION	DES.	ENG.
X	XX-XX-XX	REVISION	XX	XX

DRAWN BY: HDR DATE: 03/31/2011

ASSISTANT DIRECTOR: STANDARDS & DESIGN

DIRECTOR OF ENGINEERING AND CONSTRUCTION

SCRRA ENGINEERING STANDARDS ARE INTENDED FOR SCRRA APPROVED USES ONLY. FOR NON-SCRRA APPROVED USES:
SCRRA SHALL NOT BE RESPONSIBLE FOR THE ACCURACY OR COMPLETENESS OF THE DATA OR INFORMATION CONTAINED HEREIN. THE SELECTION AND USE OF THESE STANDARDS IS THE SOLE RESPONSIBILITY OF THE USER AND SHOULD NOT BE USED WITHOUT CONSULTING A REGISTERED PROFESSIONAL ENGINEER. ALL WARRANTIES AND REPRESENTATIONS OF ANY KIND ARE DISCLAIMED. ANYONE MAKING USE OF THIS INFORMATION AGREES THAT IT ASSUMES ALL LIABILITY ARISING FROM SUCH USE. NO PART OF THESE STANDARDS SHOULD BE REPRODUCED OR DISTRIBUTED IN ANY FORM OR BY ANY MEANS WITHOUT THE PRIOR WRITTEN PERMISSION OF SCRRA. ALL RIGHTS RESERVED.

METROLINK®
SOUTHERN CALIFORNIA REGIONAL RAIL AUTHORITY
ONE GATEWAY PLAZA, 12TH FLOOR, L. A., CA. 90012

ENGINEERING STANDARDS

TURNOUT LAYOUT
NO 20–136 LB RE RH WSM FROG TURNOUT
HST, SWITCH MACHINE ON MAINLINE SIDE

STANDARD 2806
SCALE: NTS
REVISION –
SHEET 1 OF 1
CADD FILE: ES2806–02

BILL OF MATERIAL				
ITEM	QTY	DESCRIPTION	DWG NO	SCRRA PART NO
1	1	SWITCH PACK, NO 20-136 LB RE MODIFIED TANGENTIAL, LH, HST	ES2806-13	
2	1	FROG PACK, NO 20-136 LB RE WSM, LH	ES2806-41	
3	1	GUARD RAIL ASSEMBLY BOLTLESS, 26'-0" LG, 136 LB RE RAISED 1", STRAIGHT	ES2800-50	
4	1	GUARD RAIL ASSEMBLY BOLTLESS, 26'-0" LG, 136 LB RE RAISED 1", LH	ES2806-61	
5	1	INSULATED RAIL ASSEMBLY, 78'-0¾" C/W BONDED INSULATED JOINT	-	
6	1	INSULATED RAIL ASSEMBLY, 78'-2" C/W BONDED INSULATED JOINT	-	
7	2	DRILLED RAIL, 136 LB RE, 30'-0" LONG	-	
8	2	DRILLED RAIL, 136 LB RE, 57'-6" LONG	-	
9	2	DRILLED RAIL, 136 LB RE, 77'-6" LONG	-	
10	1	DRILLED RAIL, 136 LB RE, 78'-0" LONG	-	
11	1	DRILLED RAIL, 136 LB RE, 78'-1¼" LONG	-	

BILL OF MATERIAL				
ITEM	QTY	DESCRIPTION	DWG NO	SCRRA PART NO
12	492	TIE SCREW, CONCRETE ⅞" DIA x 6" HEX HEAD	-	
13	492	WASHER FLAT ⅞" TYPE A NARROW 15/16" x 1¾" x 0.134"	-	
14	492	SPRING WASHER, DOUBLE COIL (FE6)	-	
15	1	CONCRETE TIE SET, 0-121 + (3) 1:80 TIES, PLATE PADS, LH	-	
16	500	CLIP PANDROL E2055	-	
17	500	INSULATOR PANDROL FEATURES BASE HOLDOWN NYLON HD-10	-	
18	8	CLIP PANDROL E2063	-	
19	8	INSULATION, PANDROL NYLON 6790	-	
20	254	TIE PAD PANDROL 6993SR	-	
21	246	SHIM, TO REDUCE PLATE FLEXURE	-	

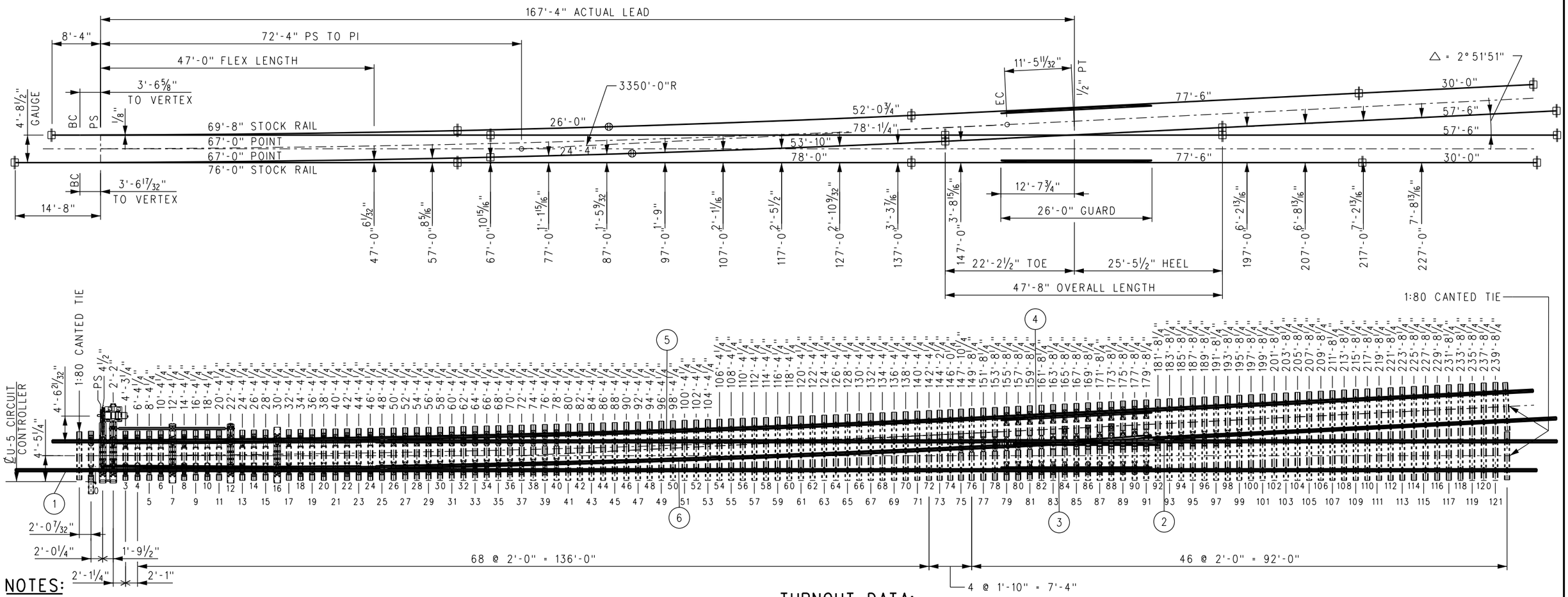

NOTES:

1. ALL RAILS SHALL HAVE IDENTIFICATION COLOR CODE PAINTED ON WEB, CLEAR OF JOINT AREA.
2. RAIL LENGTHS ALLOW ⅛" GAP BETWEEN RAIL JOINTS FOR WELDING.
3. GUARD RAILS ARE RAISED 1" AND FORM A 1⅞" FLANGEWAY.
4. SWITCH MACHINE AND MACHINE PLATE (NIC) MUST BE COORDINATED WITH SCRRA.
5. ALL LENGTHS SHALL INCLUDE 1'-9" FROM TIE ENDS TO RAIL CENTERLINE, EXCEPT AS NOTED AND 1:80 CANTED TIES.
6. TIGHTEN TIE SCREW WITH DOUBLE COIL SPRING WASHER IN PLACE.
7. SCHWIHAG ROLLERS TO BE INSTALLED AND ADJUSTED IN THE FIELD.
8. ⊕ = INSULATED JOINT ⊕ = WELDED JOINT

TURNOUT DATA:

FROG
NO 20 △ = 2° 51'51"
TOE LENGTH: 22'-2½"
HEEL LENGTH: 25'-5½"
TOTAL LENGTH: 47'-8"

SWITCH
LENGTH OF POINTS: 47'-0" / 67'-0"
VERTEX DISTANCE: VARIES PER SIDE
ENTRY ANGLE: 0° 11'55"
THICKNESS AT POINT: ⅛"
THROW AT ROD •1: 4¾"

ACTUAL LEAD: 167'-4"
CLOSURE AREA
CENTERLINE RADIUS: 3350'-0"
DEGREE OF CURVE: 1° 42'37"
DESIGN SPEEDS
50 MPH PASSENGER @ 3" UNBALANCE
40 MPH FREIGHT @ 2" UNBALANCE

REV.	DATE	DESCRIPTION	DES.	ENG.
X	XX-XX-XX	REVISION	XX	XX

DRAWN BY: HDR DATE: 03/31/2011

ASSISTANT DIRECTOR: STANDARDS & DESIGN

DIRECTOR OF ENGINEERING AND CONSTRUCTION

SCRRA ENGINEERING STANDARDS ARE INTENDED FOR SCRRA APPROVED USES ONLY. FOR NON-SCRRA APPROVED USES:
SCRRA SHALL NOT BE RESPONSIBLE FOR THE ACCURACY OR COMPLETENESS OF THE DATA OR INFORMATION CONTAINED HEREIN. THE SELECTION AND USE OF THESE STANDARDS IS THE SOLE RESPONSIBILITY OF THE USER AND SHOULD NOT BE USED WITHOUT CONSULTING A REGISTERED PROFESSIONAL ENGINEER. ALL WARRANTIES AND REPRESENTATIONS OF ANY KIND ARE DISCLAIMED. ANYONE MAKING USE OF THIS INFORMATION AGREES THAT IT ASSUMES ALL LIABILITY ARISING FROM SUCH USE. NO PART OF THESE STANDARDS SHOULD BE REPRODUCED OR DISTRIBUTED IN ANY FORM OR BY ANY MEANS WITHOUT THE PRIOR WRITTEN PERMISSION OF SCRRA. ALL RIGHTS RESERVED.

METROLINK®
SOUTHERN CALIFORNIA REGIONAL RAIL AUTHORITY
ONE GATEWAY PLAZA, 12TH FLOOR, L. A., CA. 90012

ENGINEERING STANDARDS

TURNOUT LAYOUT
NO 20–136 LB RE LH WSM FROG TURNOUT
HST, SWITCH MACHINE ON TURNOUT SIDE

STANDARD 2806
SCALE: NTS
REVISION –
SHEET 1 OF 1
CADD FILE: ES2806–03

BILL OF MATERIAL				
ITEM	QTY	DESCRIPTION	DWG NO	SCRRA PART NO
1	1	SWITCH PACK, NO 20-136 LB RE MODIFIED TANGENTIAL, RH, HST	ES2806-14	
2	1	FROG PACK, NO 20-136 LB RE WSM, RH	ES2806-42	
3	1	GUARD RAIL ASSEMBLY BOLTLESS, 26'-0" LG, 136 LB RE RAISED 1", STRAIGHT	ES2800-50	
4	1	GUARD RAIL ASSEMBLY BOLTLESS, 26'-0" LG, 136 LB RE RAISED 1", RH	ES2806-62	
5	1	INSULATED RAIL ASSEMBLY, 78'-0¾" C/W BONDED INSULATED JOINT	-	
6	1	INSULATED RAIL ASSEMBLY, 78'-2" C/W BONDED INSULATED JOINT	-	
7	2	DRILLED RAIL, 136 LB RE, 30'-0" LONG	-	
8	2	DRILLED RAIL, 136 LB RE, 57'-6" LONG	-	
9	2	DRILLED RAIL, 136 LB RE, 77'-6" LONG	-	
10	1	DRILLED RAIL, 136 LB RE, 78'-0" LONG	-	
11	1	DRILLED RAIL, 136 LB RE, 78'-1¼" LONG	-	

BILL OF MATERIAL				
ITEM	QTY	DESCRIPTION	DWG NO	SCRRA PART NO
12	492	TIE SCREW, CONCRETE ⅞" DIA x 6" HEX HEAD	-	
13	492	WASHER FLAT ⅞" TYPE A NARROW 15/16" x 1¾" x 0.134"	-	
14	492	SPRING WASHER, DOUBLE COIL (FE6)	-	
15	1	CONCRETE TIE SET, 0-121 + (3) 1:80 TIES, PLATE PADS, RH	-	
16	500	CLIP PANDROL E2055	-	
17	500	INSULATOR PANDROL FEATURES BASE HOLDOWN NYLON HD-10	-	
18	8	CLIP PANDROL E2063	-	
19	8	INSULATION, PANDROL NYLON 6790	-	
20	254	TIE PAD PANDROL 6993SR	-	
21	246	SHIM, TO REDUCE PLATE FLEXURE	-	

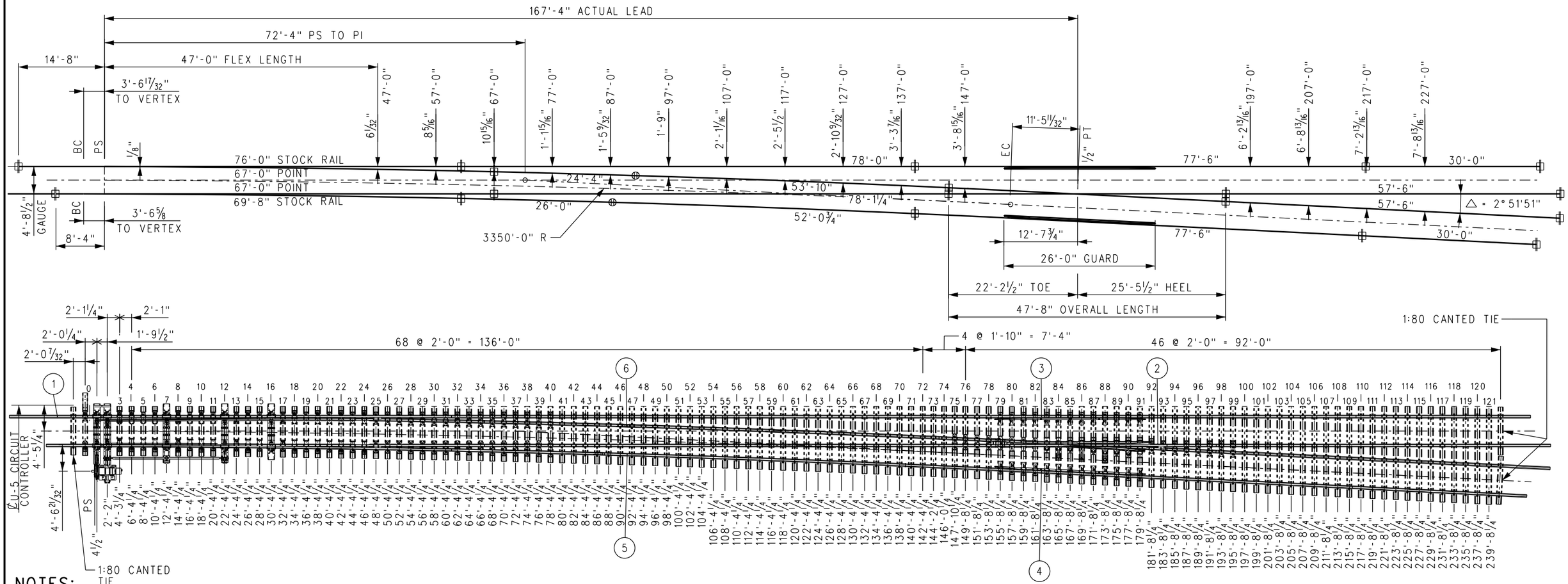

NOTES:

1. ALL RAILS SHALL HAVE IDENTIFICATION COLOR CODE PAINTED ON WEB, CLEAR OF JOINT AREA.
2. RAIL LENGTHS ALLOW ⅛" GAP BETWEEN RAIL JOINTS FOR WELDING.
3. GUARD RAILS ARE RAISED 1" AND FORM A 1⅛" FLANGEWAY.
4. SWITCH MACHINE AND MACHINE PLATE (NIC) MUST BE COORDINATED WITH SCRRA.
5. ALL LENGTHS SHALL INCLUDE 1'-9" FROM TIE ENDS TO RAIL CENTERLINE, EXCEPT AS NOTED AND 1:80 CANTED TIES.
6. TIGHTEN TIE SCREW WITH DOUBLE COIL SPRING WASHER IN PLACE.
7. SCHWIHAG ROLLERS TO BE INSTALLED AND ADJUSTED IN THE FIELD.
8. ⊕ = INSULATED JOINT ⊕ = WELDED JOINT

TURNOUT DATA:

FROG
NO 20 △ = 2° 51'51"
TOE LENGTH: 22'-2½"
HEEL LENGTH: 25'-5½"
TOTAL LENGTH: 47'-8"

SWITCH
LENGTH OF POINTS: 47'-0" / 67'-0"
VERTEX DISTANCE: VARIES PER SIDE
ENTRY ANGLE: 0° 11'55"
THICKNESS AT POINT: ⅛"
THROW AT ROD #1: 4¾"

ACTUAL LEAD: 167'-4"
CLOSURE AREA
CENTERLINE RADIUS: 3350'-0"
DEGREE OF CURVE: 1° 42'37"
DESIGN SPEEDS
50 MPH PASSENGER @ 3" UNBALANCE
40 MPH FREIGHT @ 2" UNBALANCE

REV.	DATE	DESCRIPTION	DES.	ENG.
X	XX-XX-XX	REVISION	XX	XX

DRAWN BY: HDR DATE: 03/31/2011

ASSISTANT DIRECTOR: STANDARDS & DESIGN

DIRECTOR OF ENGINEERING AND CONSTRUCTION

SCRRA ENGINEERING STANDARDS ARE INTENDED FOR SCRRA APPROVED USES ONLY. FOR NON-SCRRA APPROVED USES:
SCRRA SHALL NOT BE RESPONSIBLE FOR THE ACCURACY OR COMPLETENESS OF THE DATA OR INFORMATION CONTAINED HEREIN. THE SELECTION AND USE OF THESE STANDARDS IS THE SOLE RESPONSIBILITY OF THE USER AND SHOULD NOT BE USED WITHOUT CONSULTING A REGISTERED PROFESSIONAL ENGINEER. ALL WARRANTIES AND REPRESENTATIONS OF ANY KIND ARE DISCLAIMED. ANYONE MAKING USE OF THIS INFORMATION AGREES THAT IT ASSUMES ALL LIABILITY ARISING FROM SUCH USE. NO PART OF THESE STANDARDS SHOULD BE REPRODUCED OR DISTRIBUTED IN ANY FORM OR BY ANY MEANS WITHOUT THE PRIOR WRITTEN PERMISSION OF SCRRA. ALL RIGHTS RESERVED.

METROLINK®
SOUTHERN CALIFORNIA REGIONAL RAIL AUTHORITY
ONE GATEWAY PLAZA, 12TH FLOOR, L. A., CA. 90012

ENGINEERING STANDARDS

TURNOUT LAYOUT
NO 20–136 LB RE RH WSM FROG TURNOUT
HST, SWITCH MACHINE ON TURNOUT SIDE

STANDARD 2806
SCALE: NTS
REVISION –
SHEET 1 OF 1
CADD FILE: ES2806–04

BILL OF MATERIAL				
ITEM	QTY	DESCRIPTION	DWG NO	SCRRA PART NO
1	1	HOLLOW SWITCH TIE & RODDING ASSEMBLY	ES2806-33	
2	1	SAMSON POINT, 67'-0" LONG, DOUBLE REINFORCED, UR MANG TIP, LH	ES2806-21	
3	1	SAMSON POINT, 67'-0" LONG, DOUBLE REINFORCED, UR MANG TIP, RH	ES2806-22	
4	1	SAMSON STOCK RAIL, 69'-8" LONG, CURVED, LH	ES2806-23	
5	1	SAMSON STOCK RAIL, 76'-0" LONG, STRAIGHT, RH	ES2806-24	
6	1	SWITCH HEEL BLOCK, 136 LB RE, UNIFORM RISER, LH	-	
7	1	SWITCH HEEL BLOCK, 136 LB RE, UNIFORM RISER, RH	-	
8	2	SWITCH PLATE (BP1C-136)	ES2800-80	
9	16	SWITCH PLATE (BP2C-136)	ES2800-80	
10	14	SWITCH PLATE (P4C-136)	ES2800-80	
11	4	SWITCH ROLLER PLATE (RP-1-136) SCHWIHAG	ES2800-96	
12	4	SWITCH ROLLER PLATE (RP-2-136) SCHWIHAG	ES2800-97	
13	1	SWITCH PLATE (20-25LLC)	ES2806-81	
14	1	SWITCH PLATE (20-25LRC)	ES2806-81	
15	1	SWITCH PLATE (20-26LLC)	ES2806-81	
16	1	SWITCH PLATE (20-26LRC)	ES2806-81	
17	1	SWITCH PLATE (20-27LLC)	ES2806-81	
18	1	SWITCH PLATE (20-27LRC)	ES2806-81	
19	1	SWITCH PLATE (20-28LLC)	ES2806-82	
20	1	SWITCH PLATE (20-28LRC)	ES2806-82	
21	1	SWITCH PLATE (20-29LLC)	ES2806-82	
22	1	SWITCH PLATE (20-29LRC)	ES2806-82	

BILL OF MATERIAL				
ITEM	QTY	DESCRIPTION	DWG NO	SCRRA PART NO
23	2	SWITCH PLATE (20-30LC)	ES2806-82	
24	2	SWITCH PLATE (20-31LC)	ES2806-82	
25	2	SWITCH PLATE (20-32LC)	ES2806-83	
26	2	SWITCH PLATE (20-33LC)	ES2806-83	
27	2	SWITCH PLATE (20-34LC)	ES2806-83	
28	2	SWITCH PLATE (20-35LC)	ES2806-83	
29	2	SWITCH PLATE (20-36LC)	ES2806-83	
30	2	SWITCH PLATE (20-37LC)	ES2806-83	
31	2	SWITCH PLATE (20-38LC)	ES2806-84	
32	2	SWITCH PLATE (20-39LC)	ES2806-84	
33	2	SWITCH PLATE (20-40LC)	ES2806-84	
34	2	ROLLER SCHWIHAG, SINGLE	-	
35	4	ROLLER SCHWIHAG, DOUBLE	-	
36	2	ROLLER SCHWIHAG, TRIPLE	-	
37	22	BRACE, BOLTLESS, 136 LB RE 'SUREFIT'	-	
38	22	SERRATED WASHER FOR BOLTLESS BRACE	-	
39	142	CLIP, PANDROL, E2055	-	
40	6	BOLT, 1⅛" DIA x 10½" LONG, SQUARE HEAD, DRILLED @ 10 1/16", GR 5	-	
41	6	SPRING WASHER FOR 1⅛" DIA BOLT	-	
42	6	NUT, 1⅛" DIA HEAVY SQUARE, GR 5	-	
43	6	COTTER PIN, ¼" DIA x 2¼" LONG	-	
44	2	FISH PLATE, 3-HOLE, ½" D-BAR x 16" LONG, HEADLOCKED	-	
45	2	FISH PLATE, 3-HOLE, ½" D-BAR x 16" LONG	-	

NOTES:

1. SEE DRAWING ES2806-31 FOR TIE LOCATION DIMENSIONS.
2. SWITCH RODS SHALL BE PREADJUSTED TO DIMENSIONS SHOWN IN DETAIL FOR EACH ROD LOCATION. MODIFY SPREADS AS NECESSARY WHEN INSTALLING INTO LAYOUT.

TYPICAL BOLTLESS BRACE ASSEMBLY

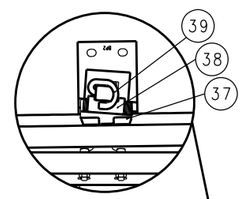

TYPICAL SWITCH HEEL ASSEMBLY

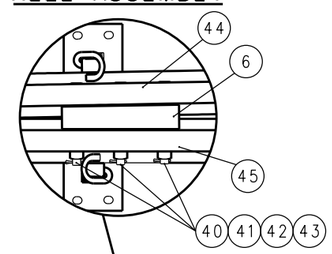

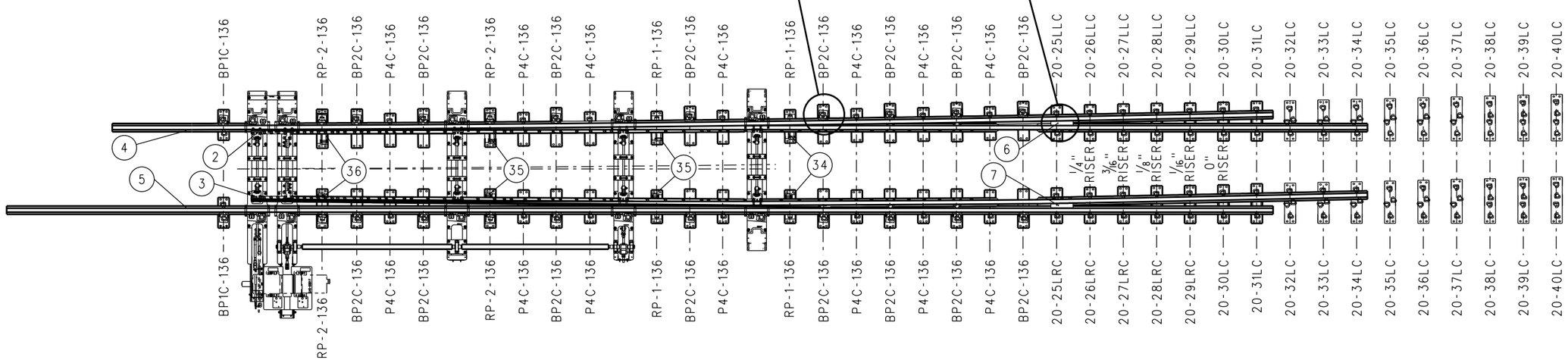

REV.	DATE	DESCRIPTION	DES.	ENG.
X	XX-XX-XX	REVISION	XX	XX

DRAWN BY: HDR DATE: 03/31/2011

ASSISTANT DIRECTOR: STANDARDS & DESIGN

DIRECTOR OF ENGINEERING AND CONSTRUCTION

SCRRA ENGINEERING STANDARDS ARE INTENDED FOR SCRRA APPROVED USES ONLY. FOR NON-SCRRA APPROVED USES:
SCRRA SHALL NOT BE RESPONSIBLE FOR THE ACCURACY OR COMPLETENESS OF THE DATA OR INFORMATION CONTAINED HEREIN. THE SELECTION AND USE OF THESE STANDARDS IS THE SOLE RESPONSIBILITY OF THE USER AND SHOULD NOT BE USED WITHOUT CONSULTING A REGISTERED PROFESSIONAL ENGINEER. ALL WARRANTIES AND REPRESENTATIONS OF ANY KIND ARE DISCLAIMED. ANYONE MAKING USE OF THIS INFORMATION AGREES THAT IT ASSUMES ALL LIABILITY ARISING FROM SUCH USE. NO PART OF THESE STANDARDS SHOULD BE REPRODUCED OR DISTRIBUTED IN ANY FORM OR BY ANY MEANS WITHOUT THE PRIOR WRITTEN PERMISSION OF SCRRA. ALL RIGHTS RESERVED.

METROLINK®

SOUTHERN CALIFORNIA REGIONAL RAIL AUTHORITY
ONE GATEWAY PLAZA, 12TH FLOOR, L. A., CA. 90012

ENGINEERING STANDARDS

NO 20–136 LB RE LH SWITCH PACK,
HOLLOW STEEL TIES,
SWITCH MACHINE ON MAINLINE SIDE

STANDARD: 2806
SCALE: NTS
REVISION: –
SHEET: 1 OF 1
CADD FILE: ES2806–11

UserName=> carlosa Date Plotted: 10/5/2011 3:55:37 PM Plot Driver=> S:\Plot Drivers\pdf.plt FileName=> s:\V8EngStds\2000\Turnouts\No 20 Turnout\ES2806-11.dgn

BILL OF MATERIAL				
ITEM	QTY	DESCRIPTION	DWG NO	SCRRA PART NO
1	1	HOLLOW SWITCH TIE & RODDING ASSEMBLY	ES2806-32	
2	1	SAMSON POINT, 67'-0" LONG, DOUBLE REINFORCED, UR MANG TIP, LH	ES2806-21	
3	1	SAMSON POINT, 67'-0" LONG, DOUBLE REINFORCED, UR MANG TIP, RH	ES2806-22	
4	1	SAMSON STOCK RAIL, 76'-0" LONG, STRAIGHT, LH	ES2806-25	
5	1	SAMSON STOCK RAIL, 69'-8" LONG, CURVED, RH	ES2806-26	
6	1	SWITCH HEEL BLOCK, 136 LB RE, UNIFORM RISER, LH	-	
7	1	SWITCH HEEL BLOCK, 136 LB RE, UNIFORM RISER, RH	-	
8	2	SWITCH PLATE (BP1C-136)	ES2800-80	
9	16	SWITCH PLATE (BP2C-136)	ES2800-80	
10	14	SWITCH PLATE (P4C-136)	ES2800-80	
11	4	SWITCH ROLLER PLATE (RP-1-136) SCHWIHAG	ES2800-96	
12	4	SWITCH ROLLER PLATE (RP-2-136) SCHWIHAG	ES2800-97	
13	1	SWITCH PLATE (20-25RLC)	ES2806-85	
14	1	SWITCH PLATE (20-25RRC)	ES2806-85	
15	1	SWITCH PLATE (20-26RLC)	ES2806-85	
16	1	SWITCH PLATE (20-26RRC)	ES2806-85	
17	1	SWITCH PLATE (20-27RLC)	ES2806-85	
18	1	SWITCH PLATE (20-27RRC)	ES2806-85	
19	1	SWITCH PLATE (20-28RLC)	ES2806-86	
20	1	SWITCH PLATE (20-28RRC)	ES2806-86	
21	1	SWITCH PLATE (20-29RLC)	ES2806-86	
22	1	SWITCH PLATE (20-29RRC)	ES2806-86	

BILL OF MATERIAL				
ITEM	QTY	DESCRIPTION	DWG NO	SCRRA PART NO
23	2	SWITCH PLATE (20-30RC)	ES2806-86	
24	2	SWITCH PLATE (20-31RC)	ES2806-86	
25	2	SWITCH PLATE (20-32RC)	ES2806-87	
26	2	SWITCH PLATE (20-33RC)	ES2806-87	
27	2	SWITCH PLATE (20-34RC)	ES2806-87	
28	2	SWITCH PLATE (20-35RC)	ES2806-87	
29	2	SWITCH PLATE (20-36RC)	ES2806-87	
30	2	SWITCH PLATE (20-37RC)	ES2806-87	
31	2	SWITCH PLATE (20-38RC)	ES2806-88	
32	2	SWITCH PLATE (20-39RC)	ES2806-88	
33	2	SWITCH PLATE (20-40RC)	ES2806-88	
34	2	ROLLER SCHWIHAG, SINGLE	-	
35	4	ROLLER SCHWIHAG, DOUBLE	-	
36	2	ROLLER SCHWIHAG, TRIPLE	-	
37	22	BRACE, BOLTLESS, 136 LB RE 'SUREFIT'	-	
38	22	SERRATED WASHER FOR BOLTLESS BRACE	-	
39	142	CLIP, PANDROL, E2055	-	
40	6	BOLT, 1 1/8" DIA x 10 1/2" LONG, SQUARE HEAD, DRILLED @ 10 1/16", GR 5	-	
41	6	SPRING WASHER FOR 1 1/8" DIA BOLT	-	
42	6	NUT, 1 1/8" DIA HEAVY SQUARE, GR 5	-	
43	6	COTTER PIN, 1/4" DIA x 2 1/4" LONG	-	
44	2	FISH PLATE, 3-HOLE, 1/2" D-BAR x 16" LONG, HEADLOCKED	-	
45	2	FISH PLATE, 3-HOLE, 1/2" D-BAR x 16" LONG	-	

NOTES:

1. SEE DRAWING ES2806-30 FOR TIE LOCATION DIMENSIONS.
2. SWITCH RODS SHALL BE PREADJUSTED TO DIMENSIONS SHOWN IN DETAIL FOR EACH ROD LOCATION. MODIFY SPREADS AS NECESSARY WHEN INSTALLING INTO LAYOUT.

TYPICAL BOLTLESS BRACE ASSEMBLY

TYPICAL SWITCH HEEL ASSEMBLY

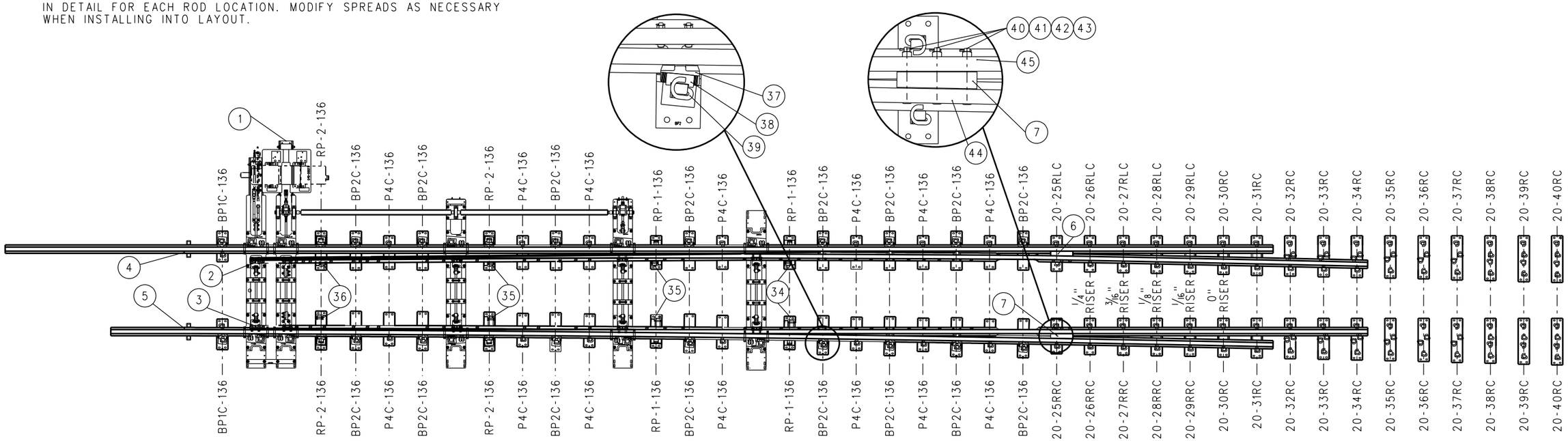

REV.	DATE	DESCRIPTION	DES.	ENG.
X	XX-XX-XX	REVISION	XX	XX

DRAWN BY: HDR DATE: 03/31/2011

ASSISTANT DIRECTOR: STANDARDS & DESIGN

DIRECTOR OF ENGINEERING AND CONSTRUCTION

SCRRA ENGINEERING STANDARDS ARE INTENDED FOR SCRRA APPROVED USES ONLY. FOR NON-SCRRA APPROVED USES:
SCRRA SHALL NOT BE RESPONSIBLE FOR THE ACCURACY OR COMPLETENESS OF THE DATA OR INFORMATION CONTAINED HEREIN. THE SELECTION AND USE OF THESE STANDARDS IS THE SOLE RESPONSIBILITY OF THE USER AND SHOULD NOT BE USED WITHOUT CONSULTING A REGISTERED PROFESSIONAL ENGINEER. ALL WARRANTIES AND REPRESENTATIONS OF ANY KIND ARE DISCLAIMED. ANYONE MAKING USE OF THIS INFORMATION AGREES THAT IT ASSUMES ALL LIABILITY ARISING FROM SUCH USE. NO PART OF THESE STANDARDS SHOULD BE REPRODUCED OR DISTRIBUTED IN ANY FORM OR BY ANY MEANS WITHOUT THE PRIOR WRITTEN PERMISSION OF SCRRA. ALL RIGHTS RESERVED.

METROLINK®
SOUTHERN CALIFORNIA REGIONAL RAIL AUTHORITY
ONE GATEWAY PLAZA, 12TH FLOOR, L. A., CA. 90012

ENGINEERING STANDARDS

NO 20–136 LB RE RH SWITCH PACK, HOLLOW STEEL TIES, SWITCH MACHINE ON MAINLINE SIDE

STANDARD 2806
SCALE: NTS
REVISION –
SHEET 1 OF 1
CADD FILE: ES2806–12

BILL OF MATERIAL				
ITEM	QTY	DESCRIPTION	DWG NO	SCRRA PART NO
1	1	HOLLOW SWITCH TIE & RODDING ASSEMBLY	ES2806-35	
2	1	SAMSON POINT, 67'-0" LONG, DOUBLE REINFORCED, UR MANG TIP, LH	ES2806-21	
3	1	SAMSON POINT, 67'-0" LONG, DOUBLE REINFORCED, UR MANG TIP, RH	ES2806-22	
4	1	SAMSON STOCK RAIL, 69'-8" LONG, CURVED, LH	ES2806-23	
5	1	SAMSON STOCK RAIL, 76'-0" LONG, STRAIGHT, RH	ES2806-24	
6	1	SWITCH HEEL BLOCK, 136 LB RE, UNIFORM RISER, LH	-	
7	1	SWITCH HEEL BLOCK, 136 LB RE, UNIFORM RISER, RH	-	
8	2	SWITCH PLATE (BP1C-136)	ES2800-80	
9	16	SWITCH PLATE (BP2C-136)	ES2800-80	
10	14	SWITCH PLATE (P4C-136)	ES2800-80	
11	4	SWITCH ROLLER PLATE (RP-1-136) SCHWIHAG	ES2800-96	
12	4	SWITCH ROLLER PLATE (RP-2-136) SCHWIHAG	ES2800-97	
13	1	SWITCH PLATE (20-25LLC)	ES2806-81	
14	1	SWITCH PLATE (20-25LRC)	ES2806-81	
15	1	SWITCH PLATE (20-26LLC)	ES2806-81	
16	1	SWITCH PLATE (20-26LRC)	ES2806-81	
17	1	SWITCH PLATE (20-27LLC)	ES2806-81	
18	1	SWITCH PLATE (20-27LRC)	ES2806-81	
19	1	SWITCH PLATE (20-28LLC)	ES2806-82	
20	1	SWITCH PLATE (20-28LRC)	ES2806-82	
21	1	SWITCH PLATE (20-29LLC)	ES2806-82	
22	1	SWITCH PLATE (20-29LRC)	ES2806-82	

BILL OF MATERIAL				
ITEM	QTY	DESCRIPTION	DWG NO	SCRRA PART NO
23	2	SWITCH PLATE (20-30LC)	ES2806-82	
24	2	SWITCH PLATE (20-31LC)	ES2806-82	
25	2	SWITCH PLATE (20-32LC)	ES2806-83	
26	2	SWITCH PLATE (20-33LC)	ES2806-83	
27	2	SWITCH PLATE (20-34LC)	ES2806-83	
28	2	SWITCH PLATE (20-35LC)	ES2806-83	
29	2	SWITCH PLATE (20-36LC)	ES2806-83	
30	2	SWITCH PLATE (20-37LC)	ES2806-83	
31	2	SWITCH PLATE (20-38LC)	ES2806-84	
32	2	SWITCH PLATE (20-39LC)	ES2806-84	
33	2	SWITCH PLATE (20-40LC)	ES2806-84	
34	2	ROLLER SCHWIHAG, SINGLE	-	
35	4	ROLLER SCHWIHAG, DOUBLE	-	
36	2	ROLLER SCHWIHAG, TRIPLE	-	
37	22	BRACE, BOLTLESS, 136 LB RE 'SUREFIT'	-	
38	22	SERRATED WASHER FOR BOLTLESS BRACE	-	
39	142	CLIP, PANDROL, E2055	-	
40	6	BOLT, 1⅛" DIA x 10½" LONG, SQUARE HEAD, DRILLED @ 10 1/16", GR 5	-	
41	6	SPRING WASHER FOR 1⅛" DIA BOLT	-	
42	6	NUT, 1⅛" DIA HEAVY SQUARE, GR 5	-	
43	6	COTTER PIN, ¼" DIA x 2¼" LONG	-	
44	2	FISH PLATE, 3-HOLE, ½" D-BAR x 16" LONG, HEADLOCKED	-	
45	2	FISH PLATE, 3-HOLE, ½" D-BAR x 16" LONG	-	

NOTES:

1. SEE DRAWING ES2806-31 FOR TIE LOCATION DIMENSIONS.
2. SWITCH RODS SHALL BE PREADJUSTED TO DIMENSIONS SHOWN IN DETAIL FOR EACH ROD LOCATION. MODIFY SPREADS AS NECESSARY WHEN INSTALLING INTO LAYOUT.

TYPICAL BOLTLESS BRACE ASSEMBLY

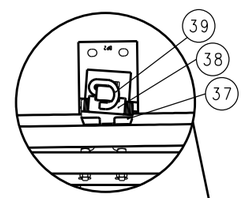

TYPICAL SWITCH HEEL ASSEMBLY

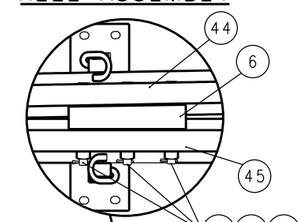

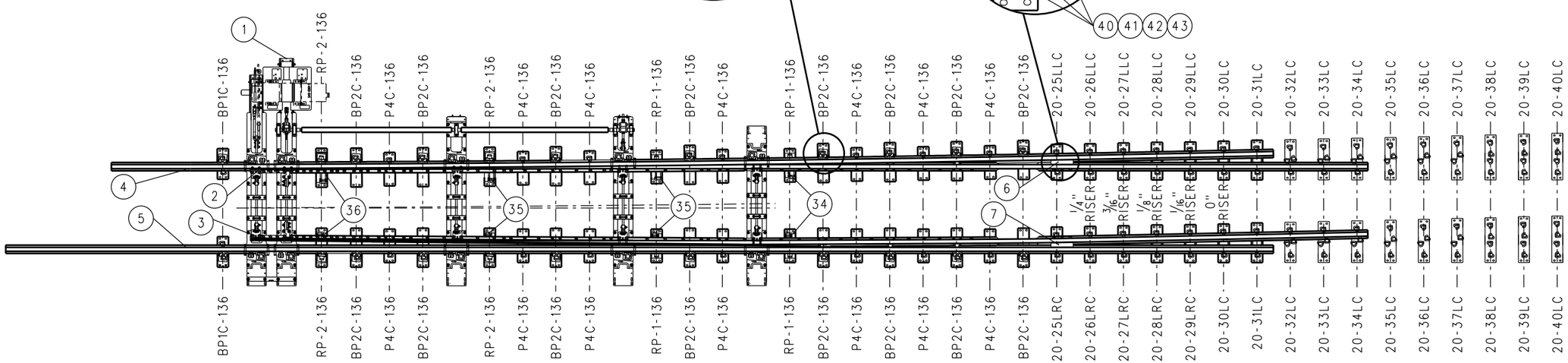

REV.	DATE	DESCRIPTION	DES.	ENG.
X	XX-XX-XX	REVISION	XX	XX

DRAWN BY: HDR DATE: 03/31/2011

ASSISTANT DIRECTOR: STANDARDS & DESIGN

DIRECTOR OF ENGINEERING AND CONSTRUCTION

SCRRA ENGINEERING STANDARDS ARE INTENDED FOR SCRRA APPROVED USES ONLY. FOR NON-SCRRA APPROVED USES:
SCRRA SHALL NOT BE RESPONSIBLE FOR THE ACCURACY OR COMPLETENESS OF THE DATA OR INFORMATION CONTAINED HEREIN. THE SELECTION AND USE OF THESE STANDARDS IS THE SOLE RESPONSIBILITY OF THE USER AND SHOULD NOT BE USED WITHOUT CONSULTING A REGISTERED PROFESSIONAL ENGINEER. ALL WARRANTIES AND REPRESENTATIONS OF ANY KIND ARE DISCLAIMED. ANYONE MAKING USE OF THIS INFORMATION AGREES THAT IT ASSUMES ALL LIABILITY ARISING FROM SUCH USE. NO PART OF THESE STANDARDS SHOULD BE REPRODUCED OR DISTRIBUTED IN ANY FORM OR BY ANY MEANS WITHOUT THE PRIOR WRITTEN PERMISSION OF SCRRA. ALL RIGHTS RESERVED.

METROLINK®

SOUTHERN CALIFORNIA REGIONAL RAIL AUTHORITY
ONE GATEWAY PLAZA, 12TH FLOOR, L. A., CA. 90012

ENGINEERING STANDARDS

NO 20–136 LB RE LH SWITCH PACK,
HOLLOW STEEL TIES,
SWITCH MACHINE ON TURNOUT SIDE

STANDARD 2806
SCALE: NTS
REVISION –
SHEET 1 OF 1
CADD FILE: ES2806–13

BILL OF MATERIAL				
ITEM	QTY	DESCRIPTION	DWG NO	SCRRA PART NO
1	1	HOLLOW SWITCH TIE & RODDING ASSEMBLY	ES2806-34	
2	1	SAMSON POINT, 67'-0" LONG, DOUBLE REINFORCED, UR MANG TIP, LH	ES2806-21	
3	1	SAMSON POINT, 67'-0" LONG DOUBLE REINFORCED, UR MANG TIP, RH	ES2806-22	
4	1	SAMSON STOCK RAIL, 76'-0" LONG, STRAIGHT, LH	ES2806-25	
5	1	SAMSON STOCK RAIL, 69'-8" LONG, CURVED, RH	ES2806-26	
6	1	SWITCH HEEL BLOCK, 136 LB RE, UNIFORM RISER, LH	-	
7	1	SWITCH HEEL BLOCK, 136 LB RE, UNIFORM RISER, RH	-	
8	2	SWITCH PLATE (BP1C-136)	ES2800-80	
9	16	SWITCH PLATE (BP2C-136)	ES2800-80	
10	14	SWITCH PLATE (P4C-136)	ES2800-80	
11	4	SWITCH ROLLER PLATE (RP-1-136) SCHWIHAG	ES2800-96	
12	4	SWITCH ROLLER PLATE (RP-2-136) SCHWIHAG	ES2800-97	
13	1	SWITCH PLATE (20-25RLC)	ES2806-85	
14	1	SWITCH PLATE (20-25RRC)	ES2806-85	
15	1	SWITCH PLATE (20-26RLC)	ES2806-85	
16	1	SWITCH PLATE (20-26RRC)	ES2806-85	
17	1	SWITCH PLATE (20-27RLC)	ES2806-85	
18	1	SWITCH PLATE (20-27RRC)	ES2806-85	
19	1	SWITCH PLATE (20-28RLC)	ES2806-86	
20	1	SWITCH PLATE (20-28RRC)	ES2806-86	
21	1	SWITCH PLATE (20-29RLC)	ES2806-86	
22	1	SWITCH PLATE (20-29RRC)	ES2806-86	

BILL OF MATERIAL				
ITEM	QTY	DESCRIPTION	DWG NO	SCRRA PART NO
23	2	SWITCH PLATE (20-30RC)	ES2806-86	
24	2	SWITCH PLATE (20-31RC)	ES2806-86	
25	2	SWITCH PLATE (20-32RC)	ES2806-87	
26	2	SWITCH PLATE (20-33RC)	ES2806-87	
27	2	SWITCH PLATE (20-34RC)	ES2806-87	
28	2	SWITCH PLATE (20-35RC)	ES2806-87	
29	2	SWITCH PLATE (20-36RC)	ES2806-87	
30	2	SWITCH PLATE (20-37RC)	ES2806-87	
31	2	SWITCH PLATE (20-38RC)	ES2806-88	
32	2	SWITCH PLATE (20-39RC)	ES2806-88	
33	2	SWITCH PLATE (20-40RC)	ES2806-88	
34	2	ROLLER SCHWIHAG, SINGLE	-	
35	4	ROLLER SCHWIHAG, DOUBLE	-	
36	2	ROLLER SCHWIHAG, TRIPLE	-	
37	22	BRACE, BOLTLESS, 136 LB RE 'SUREFIT'	-	
38	22	SERRATED WASHER FOR BOLTLESS BRACE	-	
39	142	CLIP, PANDROL, E2055	-	
40	6	BOLT, 1⅛" DIA x 10½" LONG, SQUARE HEAD, DRILLED @ 10 1/16", GR 5	-	
41	6	SPRING WASHER FOR 1⅛" DIA BOLT	-	
42	6	NUT, 1⅛" DIA HEAVY SQUARE, GR 5	-	
43	6	COTTER PIN, ¼" DIA x 2¼" LONG	-	
44	2	FISH PLATE, 3-HOLE, ½" D-BAR x 16" LONG, HEADLOCKED	-	
45	2	FISH PLATE, 3-HOLE, ½" D-BAR x 16" LONG	-	

NOTES:

1. SEE DRAWING ES2806-30 FOR TIE LOCATION DIMENSIONS.
2. SWITCH RODS SHALL BE PREADJUSTED TO DIMENSIONS SHOWN IN DETAIL FOR EACH ROD LOCATION. MODIFY SPREADS AS NECESSARY WHEN INSTALLING INTO LAYOUT.

TYPICAL BOLTLESS BRACE ASSEMBLY

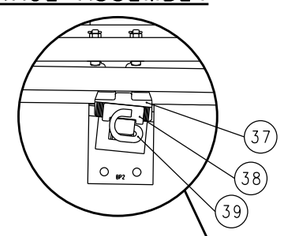

TYPICAL SWITCH HEEL ASSEMBLY

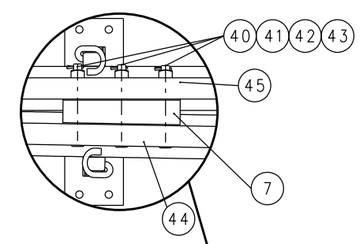

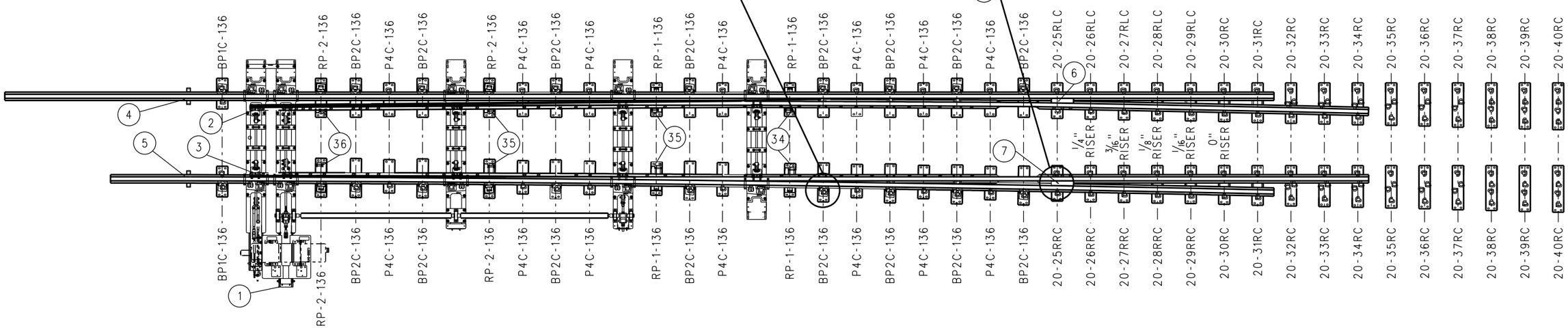

REV.	DATE	DESCRIPTION	DES.	ENG.
X	XX-XX-XX	REVISION	XX	XX

DRAWN BY: HDR DATE: 03/31/2011

ASSISTANT DIRECTOR: STANDARDS & DESIGN

DIRECTOR OF ENGINEERING AND CONSTRUCTION

SCRRA ENGINEERING STANDARDS ARE INTENDED FOR SCRRA APPROVED USES ONLY. FOR NON-SCRRA APPROVED USES:
SCRRA SHALL NOT BE RESPONSIBLE FOR THE ACCURACY OR COMPLETENESS OF THE DATA OR INFORMATION CONTAINED HEREIN. THE SELECTION AND USE OF THESE STANDARDS IS THE SOLE RESPONSIBILITY OF THE USER AND SHOULD NOT BE USED WITHOUT CONSULTING A REGISTERED PROFESSIONAL ENGINEER. ALL WARRANTIES AND REPRESENTATIONS OF ANY KIND ARE DISCLAIMED. ANYONE MAKING USE OF THIS INFORMATION AGREES THAT IT ASSUMES ALL LIABILITY ARISING FROM SUCH USE. NO PART OF THESE STANDARDS SHOULD BE REPRODUCED OR DISTRIBUTED IN ANY FORM OR BY ANY MEANS WITHOUT THE PRIOR WRITTEN PERMISSION OF SCRRA. ALL RIGHTS RESERVED.

METROLINK®

SOUTHERN CALIFORNIA REGIONAL RAIL AUTHORITY
ONE GATEWAY PLAZA, 12TH FLOOR, L. A., CA. 90012

ENGINEERING STANDARDS

NO 20–136 LB RE RH SWITCH PACK,
HOLLOW STEEL TIES,
SWITCH MACHINE ON TURNOUT SIDE

STANDARD 2806
SCALE: NTS
REVISION –
SHEET 1 OF 1
CADD FILE: ES2806–14

BILL OF MATERIAL			
ITEM	QTY	DESCRIPTION	SCRRA PART NO
1	1	RAIL, 136 LB RE x 67'-0" LONG	

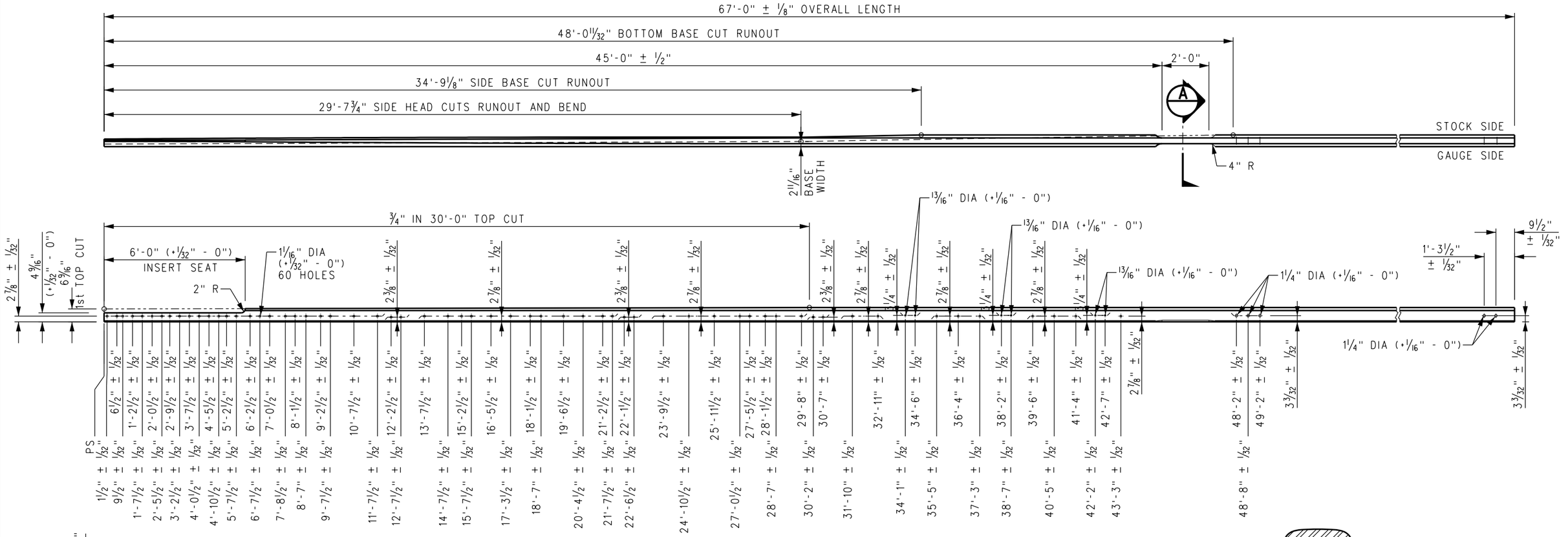

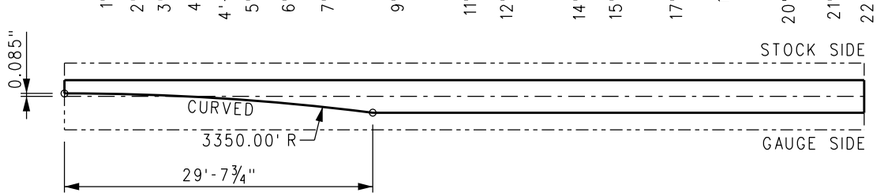

GAUGE SIDE HEAD CUT:
DIMENSIONS @ 6 11/16" AT RAIL BEND
STRAIGHT WEB, TOP VIEW

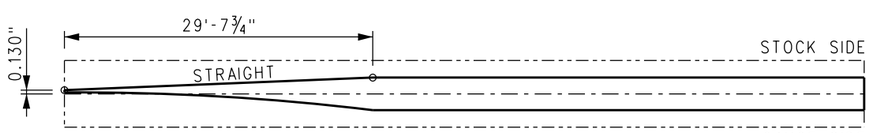

STOCK SIDE HEAD CUT:
DIMENSIONS @ 6 11/16" AT RAIL BEND
STRAIGHT WEB, TOP VIEW

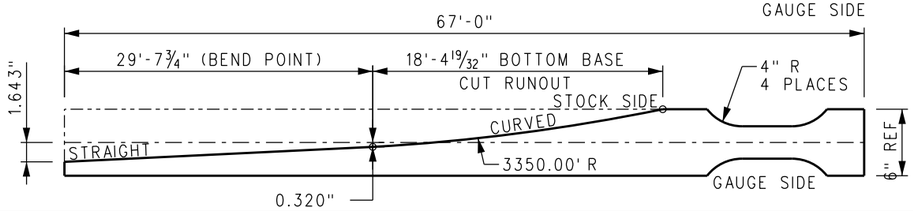

UNDERSIDE BASE CUT:
DIMENSIONS @ BASE.
STRAIGHT WEB, TOP VIEW

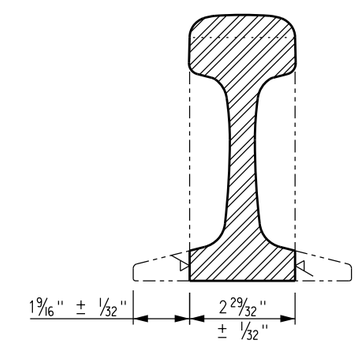

HALF SIZE (A)

NOTES:

1. MACHINE SIDE HEAD CUTS BEFORE REMOVING HEAD AND WEB AREA SHOWN FOR MANGANESE TIP.
2. POINT TO BE MACHINED STRAIGHT.
3. ALL HOLES SHALL BE CHAMFERED WITH 1/8" R EDGES.

REV.	DATE	DESCRIPTION	DES.	ENG.
X	XX-XX-XX	REVISION	XX	XX

DRAWN BY: HDR DATE: 03/31/2011

ASSISTANT DIRECTOR: STANDARDS & DESIGN

DIRECTOR OF ENGINEERING AND CONSTRUCTION

SCRRA ENGINEERING STANDARDS ARE INTENDED FOR SCRRA APPROVED USES ONLY. FOR NON-SCRRA APPROVED USES:
SCRRA SHALL NOT BE RESPONSIBLE FOR THE ACCURACY OR COMPLETENESS OF THE DATA OR INFORMATION CONTAINED HEREIN. THE SELECTION AND USE OF THESE STANDARDS IS THE SOLE RESPONSIBILITY OF THE USER AND SHOULD NOT BE USED WITHOUT CONSULTING A REGISTERED PROFESSIONAL ENGINEER. ALL WARRANTIES AND REPRESENTATIONS OF ANY KIND ARE DISCLAIMED. ANYONE MAKING USE OF THIS INFORMATION AGREES THAT IT ASSUMES ALL LIABILITY ARISING FROM SUCH USE. NO PART OF THESE STANDARDS SHOULD BE REPRODUCED OR DISTRIBUTED IN ANY FORM OR BY ANY MEANS WITHOUT THE PRIOR WRITTEN PERMISSION OF SCRRA. ALL RIGHTS RESERVED.

METROLINK®
SOUTHERN CALIFORNIA REGIONAL RAIL AUTHORITY
ONE GATEWAY PLAZA, 12TH FLOOR, L. A., CA. 90012

ENGINEERING STANDARDS

SWITCH POINT ASSEMBLY, 136 LB RE SAMSON, LH
NO 20 LH /RH TURNOUT
67'-0" OVERALL LENGTH MANGANESE TIP

STANDARD: 2806
SCALE: NTS
REVISION: –
SHEET: 1 OF 1
CADD FILE: ES2806-21

BILL OF MATERIAL			
ITEM	QTY	DESCRIPTION	SCRRA PART NO
1	1	RAIL, 136 LB RE x 67'-0" LONG	

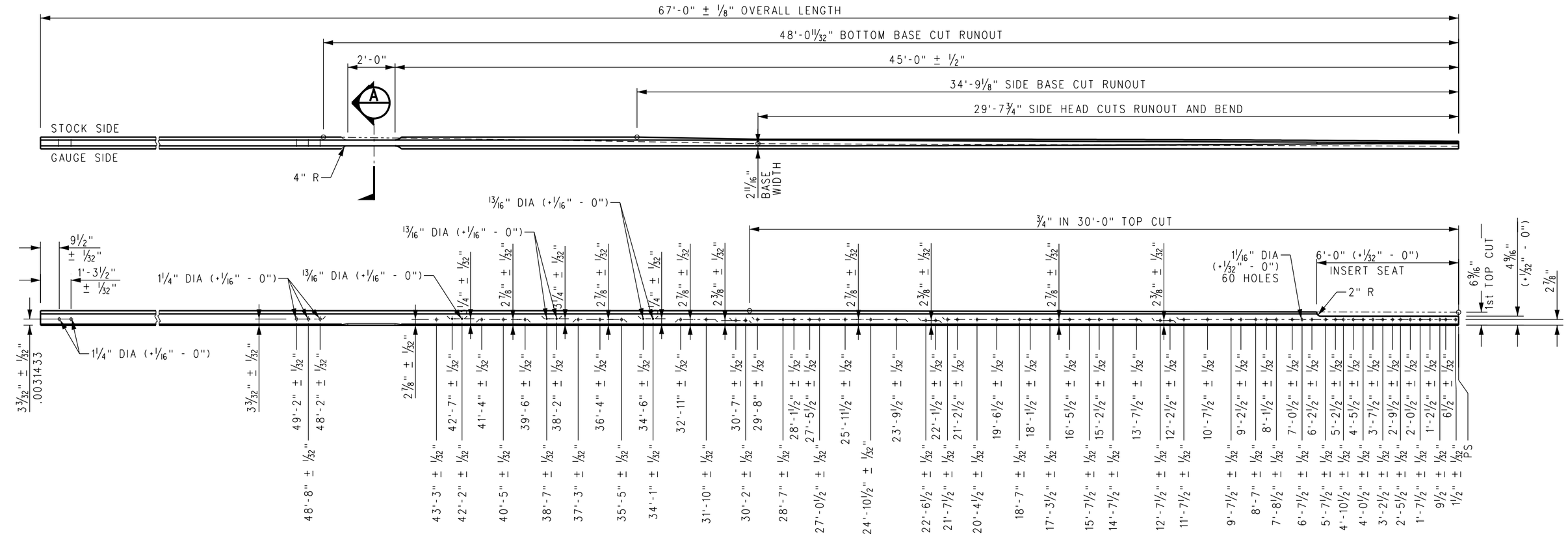

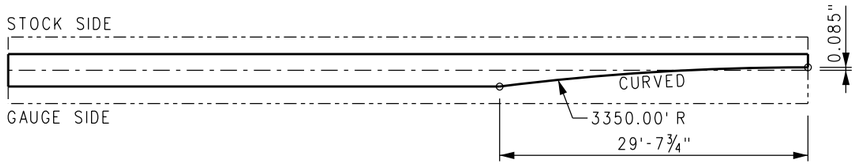

GAUGE SIDE HEAD CUT:
DIMENSIONS @ 6 11/16" AT RAIL BEND
STRAIGHT WEB, TOP VIEW

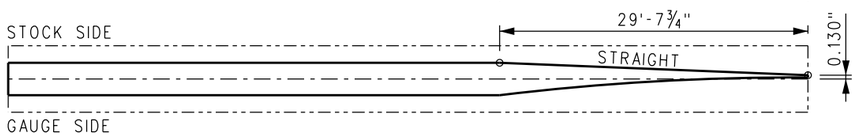

STOCK SIDE HEAD CUT:
DIMENSIONS @ 6 11/16" AT RAIL BEND
STRAIGHT WEB, TOP VIEW

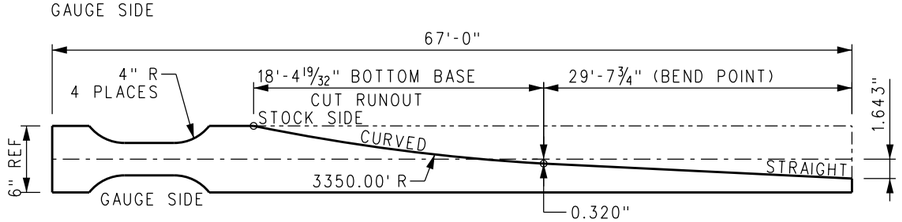

UNDERSIDE BASE CUT:
DIMENSIONS @ BASE.
STRAIGHT WEB, TOP VIEW

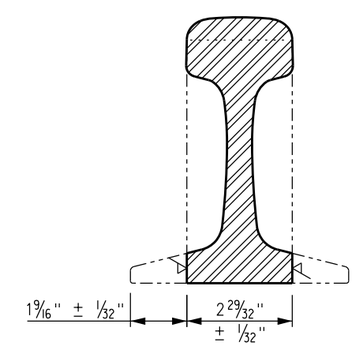

NOTES:

1. MACHINE SIDE HEAD CUTS BEFORE REMOVING HEAD AND WEB AREA SHOWN FOR MANGANESE TIP.
2. POINT TO BE MACHINED STRAIGHT.
3. ALL HOLES SHALL BE CHAMFERED WITH 1/8" R EDGES.

REV.	DATE	DESCRIPTION	DES.	ENG.
X	XX-XX-XX	REVISION	XX	XX

DRAWN BY: HDR DATE: 03/31/2011

ASSISTANT DIRECTOR: STANDARDS & DESIGN

DIRECTOR OF ENGINEERING AND CONSTRUCTION

SCRRA ENGINEERING STANDARDS ARE INTENDED FOR SCRRA APPROVED USES ONLY. FOR NON-SCRRA APPROVED USES: SCRRA SHALL NOT BE RESPONSIBLE FOR THE ACCURACY OR COMPLETENESS OF THE DATA OR INFORMATION CONTAINED HEREIN. THE SELECTION AND USE OF THESE STANDARDS IS THE SOLE RESPONSIBILITY OF THE USER AND SHOULD NOT BE USED WITHOUT CONSULTING A REGISTERED PROFESSIONAL ENGINEER. ALL WARRANTIES AND REPRESENTATIONS OF ANY KIND ARE DISCLAIMED. ANYONE MAKING USE OF THIS INFORMATION AGREES THAT IT ASSUMES ALL LIABILITY ARISING FROM SUCH USE. NO PART OF THESE STANDARDS SHOULD BE REPRODUCED OR DISTRIBUTED IN ANY FORM OR BY ANY MEANS WITHOUT THE PRIOR WRITTEN PERMISSION OF SCRRA. ALL RIGHTS RESERVED.

METROLINK®
SOUTHERN CALIFORNIA REGIONAL RAIL AUTHORITY
ONE GATEWAY PLAZA, 12TH FLOOR, L. A., CA. 90012

ENGINEERING STANDARDS

SWITCH POINT ASSEMBLY, 136 LB RE SAMSON, RH
NO 20 LH /RH TURNOUT
67'-0" OVERALL LENGTH MANGANESE TIP

STANDARD 2806
SCALE: NTS
REVISION –
SHEET 1 OF 1
CADD FILE: ES2806-22

BILL OF MATERIAL			
ITEM	QTY	DESCRIPTION	SCRRA PART NO
1	1	RAIL, 136 LB RE 69'-8" LONG	

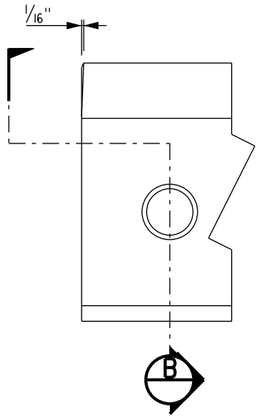

RAIL END/HOLE BEVELING DETAIL

RAIL HEAD ONLY - NOT BASE

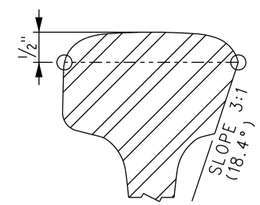

PARTIAL SECTION A

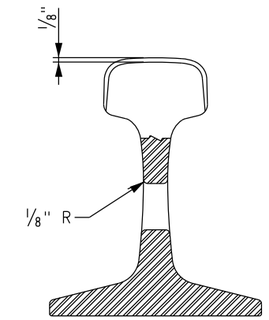

SECTION B

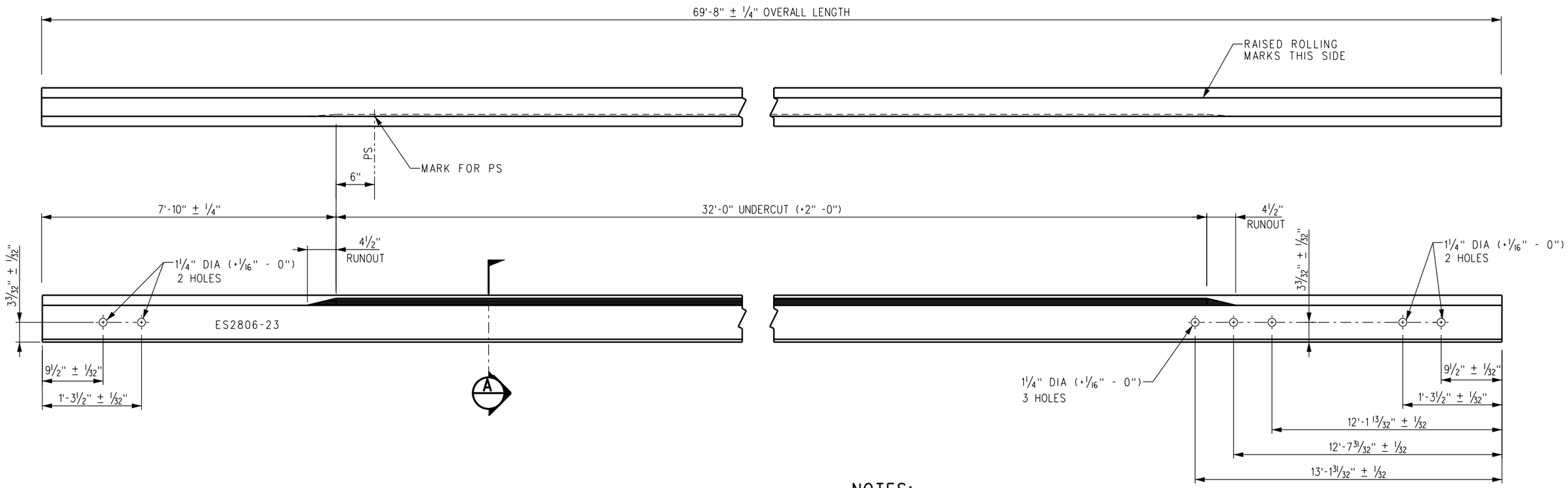

NOTES:

1. ALL BURNING METHODS PROHIBITED.
2. ALL BOLT HOLES TO BE BEVELED PER DETAIL.
3. POINT OF SWITCH TO BE MARKED ON GAUGE SIDE OF WEB WITH A WHITE LINE USING WATERPROOF MARKER OR PAINT.
4. WRITE SCRRA ES NUMBER ON WEB OF RAIL WITH WATERPROOF MARKER OR PAINT.

REV.	DATE	DESCRIPTION	DES.	ENG.
X	XX-XX-XX	REVISION	XX	XX

DRAWN BY: HDR DATE: 03/31/2011

ASSISTANT DIRECTOR: STANDARDS & DESIGN

DIRECTOR OF ENGINEERING AND CONSTRUCTION

SCRRA ENGINEERING STANDARDS ARE INTENDED FOR SCRRA APPROVED USES ONLY. FOR NON-SCRRA APPROVED USES:
SCRRA SHALL NOT BE RESPONSIBLE FOR THE ACCURACY OR COMPLETENESS OF THE DATA OR INFORMATION CONTAINED HEREIN. THE SELECTION AND USE OF THESE STANDARDS IS THE SOLE RESPONSIBILITY OF THE USER AND SHOULD NOT BE USED WITHOUT CONSULTING A REGISTERED PROFESSIONAL ENGINEER. ALL WARRANTIES AND REPRESENTATIONS OF ANY KIND ARE DISCLAIMED. ANYONE MAKING USE OF THIS INFORMATION AGREES THAT IT ASSUMES ALL LIABILITY ARISING FROM SUCH USE. NO PART OF THESE STANDARDS SHOULD BE REPRODUCED OR DISTRIBUTED IN ANY FORM OR BY ANY MEANS WITHOUT THE PRIOR WRITTEN PERMISSION OF SCRRA. ALL RIGHTS RESERVED.

METROLINK®

SOUTHERN CALIFORNIA REGIONAL RAIL AUTHORITY
ONE GATEWAY PLAZA, 12TH FLOOR, L. A., CA. 90012

ENGINEERING STANDARDS

SAMSON STOCK RAIL, LH
136 LB RE 69'-8" LONG
FOR NO 20 136 LB RE LH SWITCH PACK

STANDARD 2806
SCALE: NTS
REVISION –
SHEET 1 OF 1
CADD FILE: ES2806-23

BILL OF MATERIAL			
ITEM	QTY	DESCRIPTION	SCRRA PART NO
1	1	RAIL, 136 LB RE 76'-0" LONG	

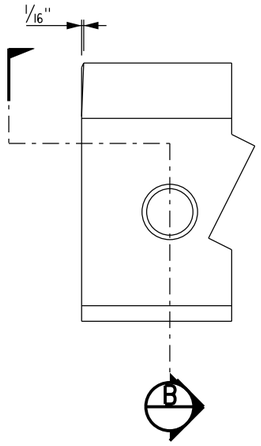

RAIL END/HOLE BEVELING DETAIL
RAIL HEAD ONLY - NOT BASE

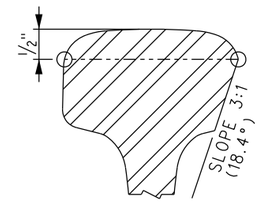

PARTIAL SECTION A

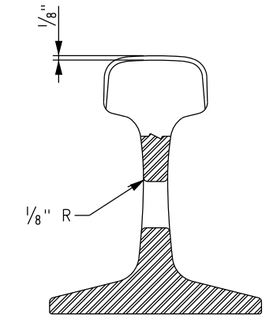

SECTION B

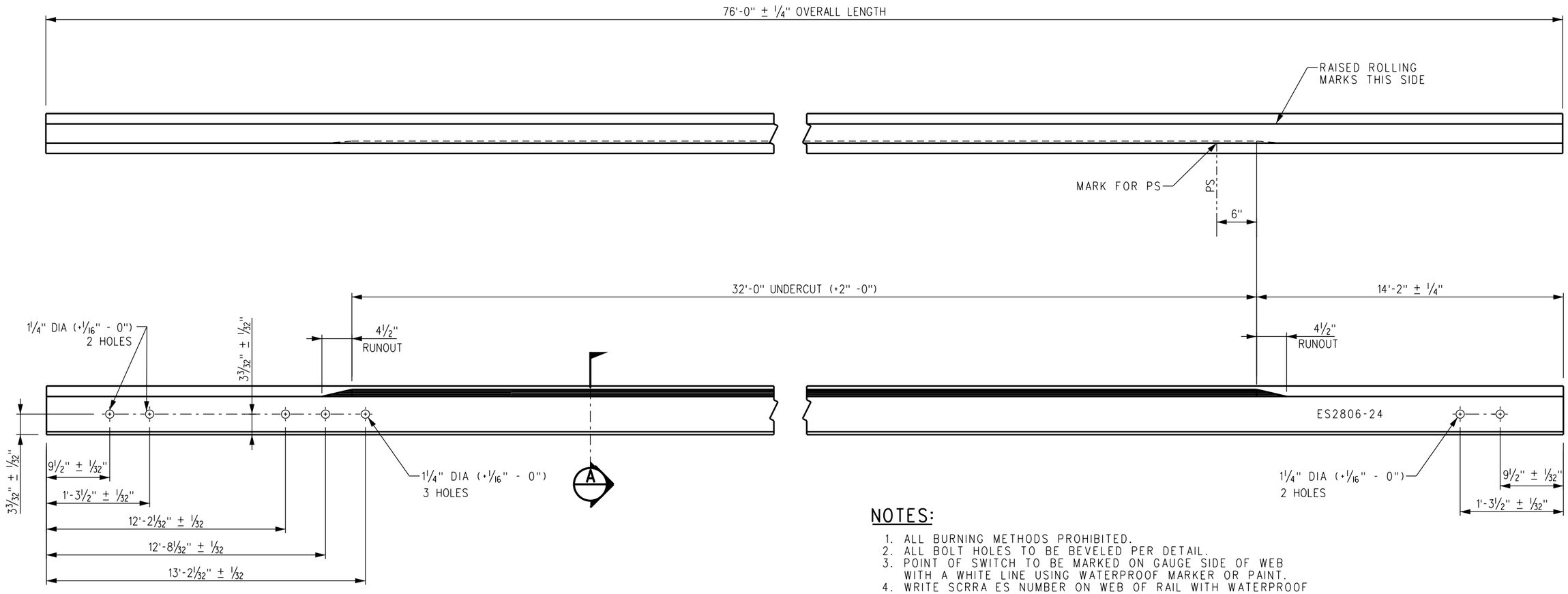

NOTES:

1. ALL BURNING METHODS PROHIBITED.
2. ALL BOLT HOLES TO BE BEVELED PER DETAIL.
3. POINT OF SWITCH TO BE MARKED ON GAUGE SIDE OF WEB WITH A WHITE LINE USING WATERPROOF MARKER OR PAINT.
4. WRITE SCRRA ES NUMBER ON WEB OF RAIL WITH WATERPROOF MARKER OR PAINT.

REV.	DATE	DESCRIPTION	DES.	ENG.
X	XX-XX-XX	REVISION	XX	XX

DRAWN BY: HDR DATE: 03/31/2011

ASSISTANT DIRECTOR: STANDARDS & DESIGN

DIRECTOR OF ENGINEERING AND CONSTRUCTION

SCRRA ENGINEERING STANDARDS ARE INTENDED FOR SCRRA APPROVED USES ONLY. FOR NON-SCRRA APPROVED USES:
SCRRA SHALL NOT BE RESPONSIBLE FOR THE ACCURACY OR COMPLETENESS OF THE DATA OR INFORMATION CONTAINED HEREIN. THE SELECTION AND USE OF THESE STANDARDS IS THE SOLE RESPONSIBILITY OF THE USER AND SHOULD NOT BE USED WITHOUT CONSULTING A REGISTERED PROFESSIONAL ENGINEER. ALL WARRANTIES AND REPRESENTATIONS OF ANY KIND ARE DISCLAIMED. ANYONE MAKING USE OF THIS INFORMATION AGREES THAT IT ASSUMES ALL LIABILITY ARISING FROM SUCH USE. NO PART OF THESE STANDARDS SHOULD BE REPRODUCED OR DISTRIBUTED IN ANY FORM OR BY ANY MEANS WITHOUT THE PRIOR WRITTEN PERMISSION OF SCRRA. ALL RIGHTS RESERVED.

METROLINK®
SOUTHERN CALIFORNIA REGIONAL RAIL AUTHORITY
ONE GATEWAY PLAZA, 12TH FLOOR, L. A., CA. 90012

ENGINEERING STANDARDS

SAMSON STOCK RAIL, RH
136 LB RE 76'-0" LONG
FOR NO 20 136 LB RE LH SWITCH PACK

STANDARD 2806
SCALE: NTS
REVISION –
SHEET 1 OF 1
CADD FILE: ES2806-24

BILL OF MATERIAL			
ITEM	QTY	DESCRIPTION	SCRRA PART NO
1	1	RAIL, 136 LB RE 76'-0" LONG	

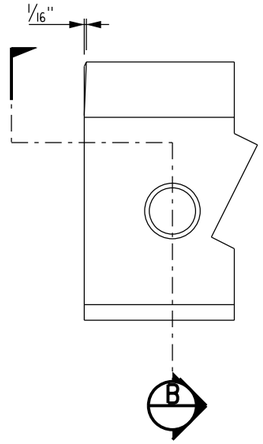

RAIL END/HOLE BEVELING DETAILS

RAIL HEAD ONLY - NOT BASE

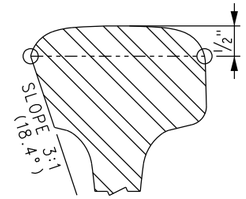

PARTIAL SECTION A

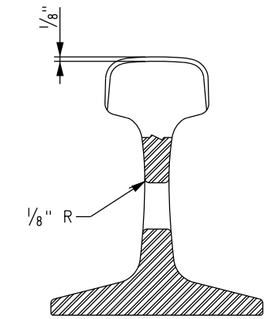

SECTION B

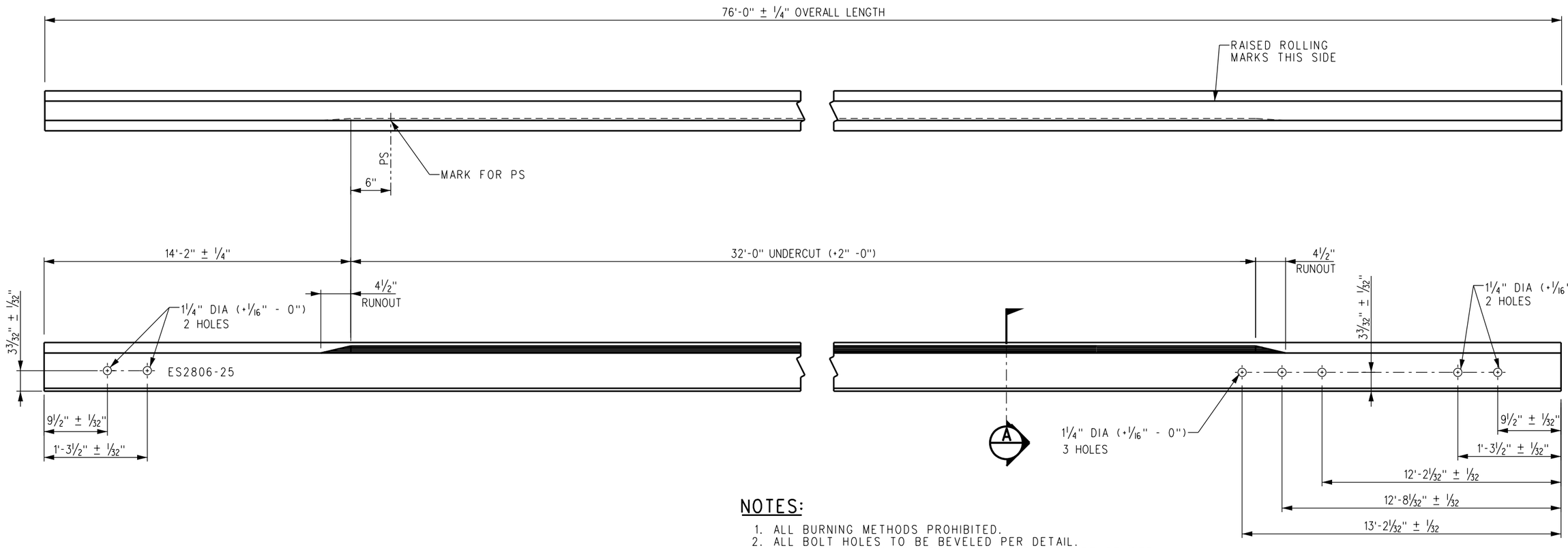

NOTES:

1. ALL BURNING METHODS PROHIBITED.
2. ALL BOLT HOLES TO BE BEVELED PER DETAIL.
3. POINT OF SWITCH TO BE MARKED ON GAUGE SIDE OF WEB WITH A WHITE LINE USING WATERPROOF MARKER OR PAINT.
4. WRITE SCRRA ES NUMBER ON WEB OF RAIL WITH WATERPROOF MARKER OR PAINT.

REV.	DATE	DESCRIPTION	DES.	ENG.
X	XX-XX-XX	REVISION	XX	XX

DRAWN BY: HDR DATE: 03/31/2011

ASSISTANT DIRECTOR: STANDARDS & DESIGN

DIRECTOR OF ENGINEERING AND CONSTRUCTION

SCRRA ENGINEERING STANDARDS ARE INTENDED FOR SCRRA APPROVED USES ONLY. FOR NON-SCRRA APPROVED USES, SCRRA SHALL NOT BE RESPONSIBLE FOR THE ACCURACY OR COMPLETENESS OF THE DATA OR INFORMATION CONTAINED HEREIN. THE SELECTION AND USE OF THESE STANDARDS IS THE SOLE RESPONSIBILITY OF THE USER AND SHOULD NOT BE USED WITHOUT CONSULTING A REGISTERED PROFESSIONAL ENGINEER. ALL WARRANTIES AND REPRESENTATIONS OF ANY KIND ARE DISCLAIMED. ANYONE MAKING USE OF THIS INFORMATION AGREES THAT IT ASSUMES ALL LIABILITY ARISING FROM SUCH USE. NO PART OF THESE STANDARDS SHOULD BE REPRODUCED OR DISTRIBUTED IN ANY FORM OR BY ANY MEANS WITHOUT THE PRIOR WRITTEN PERMISSION OF SCRRA. ALL RIGHTS RESERVED.

METROLINK®

SOUTHERN CALIFORNIA REGIONAL RAIL AUTHORITY
ONE GATEWAY PLAZA, 12TH FLOOR, L. A., CA. 90012

ENGINEERING STANDARDS

SAMSON STOCK RAIL, LH
136 LB RE 76'-0" LONG
FOR NO 20 136 LB RE RH SWITCH PACK

STANDARD: 2806
SCALE: NTS
REVISION: –
SHEET: 1 OF 1
CADD FILE: ES2806-25

BILL OF MATERIAL			
ITEM	QTY	DESCRIPTION	SCRRA PART NO
1	1	RAIL, 136 LB RE 69'-8" LONG	

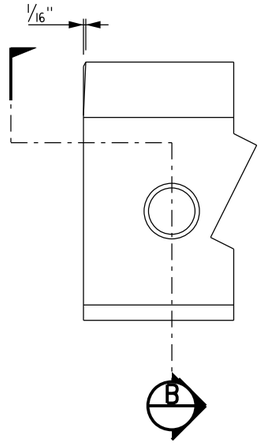

RAIL END/HOLE BEVELING DETAILS

RAIL HEAD ONLY - NOT BASE

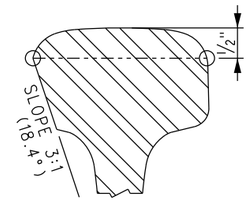

PARTIAL SECTION A

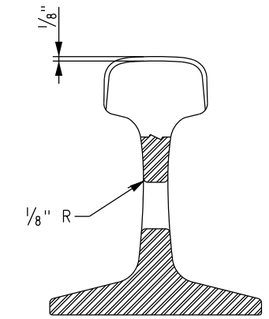

SECTION B

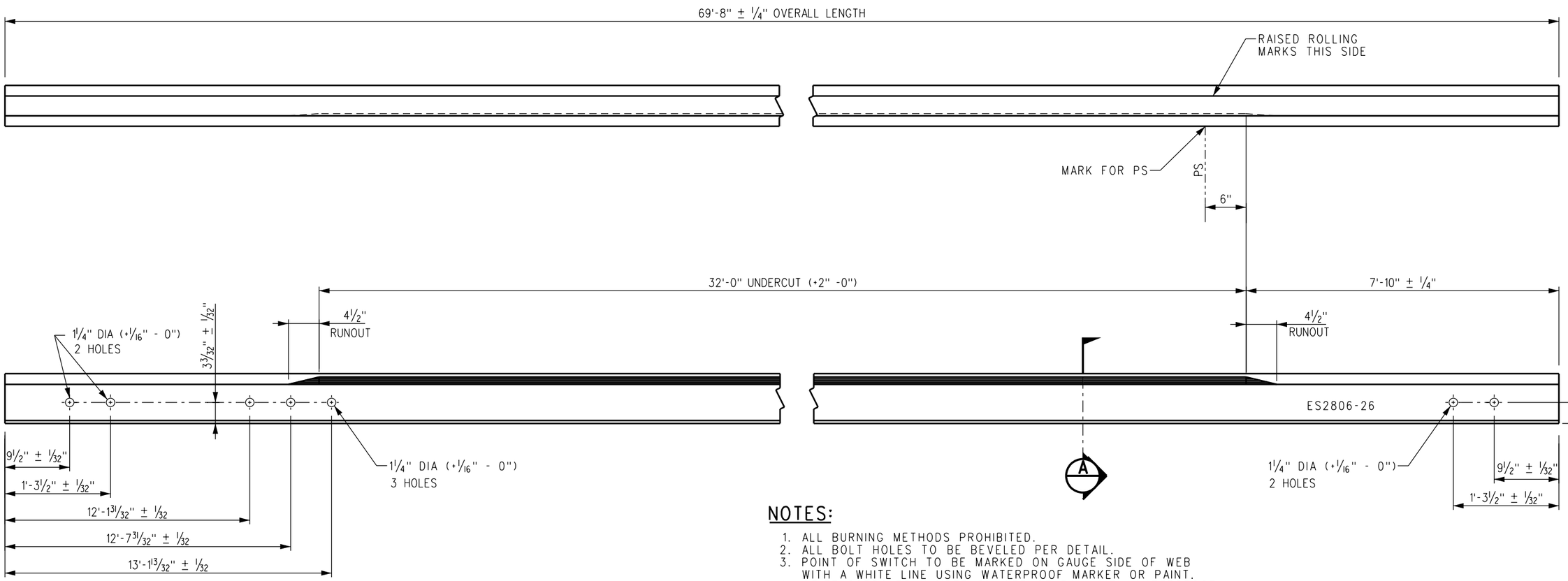

NOTES:

1. ALL BURNING METHODS PROHIBITED.
2. ALL BOLT HOLES TO BE BEVELED PER DETAIL.
3. POINT OF SWITCH TO BE MARKED ON GAUGE SIDE OF WEB WITH A WHITE LINE USING WATERPROOF MARKER OR PAINT.
4. WRITE SCRRA ES NUMBER ON WEB OF RAIL WITH WATERPROOF MARKER OR PAINT.

REV.	DATE	DESCRIPTION	DES.	ENG.
X	XX-XX-XX	REVISION	XX	XX

DRAWN BY: HDR DATE: 03/31/2011

ASSISTANT DIRECTOR: STANDARDS & DESIGN

DIRECTOR OF ENGINEERING AND CONSTRUCTION

SCRRA ENGINEERING STANDARDS ARE INTENDED FOR SCRRA APPROVED USES ONLY. FOR NON-SCRRA APPROVED USES, SCRRA SHALL NOT BE RESPONSIBLE FOR THE ACCURACY OR COMPLETENESS OF THE DATA OR INFORMATION CONTAINED HEREIN. THE SELECTION AND USE OF THESE STANDARDS IS THE SOLE RESPONSIBILITY OF THE USER AND SHOULD NOT BE USED WITHOUT CONSULTING A REGISTERED PROFESSIONAL ENGINEER. ALL WARRANTIES AND REPRESENTATIONS OF ANY KIND ARE DISCLAIMED. ANYONE MAKING USE OF THIS INFORMATION AGREES THAT IT ASSUMES ALL LIABILITY ARISING FROM SUCH USE. NO PART OF THESE STANDARDS SHOULD BE REPRODUCED OR DISTRIBUTED IN ANY FORM OR BY ANY MEANS WITHOUT THE PRIOR WRITTEN PERMISSION OF SCRRA. ALL RIGHTS RESERVED.

METROLINK®

SOUTHERN CALIFORNIA REGIONAL RAIL AUTHORITY
ONE GATEWAY PLAZA, 12TH FLOOR, L. A., CA. 90012

ENGINEERING STANDARDS

SAMSON STOCK RAIL, RH
136 LB RE 69'-8" LONG
FOR NO 20 136 LB RE RH SWITCH PACK

STANDARD: 2806
SCALE: NTS
REVISION: –
SHEET: 1 OF 1
CADD FILE: ES2806-26

BILL OF MATERIALS			
ITEM	QTY	DESCRIPTION	DWG NO
1	5	TIES 1,2,7,12 AND 16, POWER SWITCH MACHINE ON MAINLINE SIDE FOR RH TURNOUT (HOLLOW STEEL)	ES2806-32
2	5	TIES 1,2,7,12 AND 16, POWER SWITCH MACHINE ON TURNOUT SIDE FOR RH TURNOUT (HOLLOW STEEL)	ES2806-34

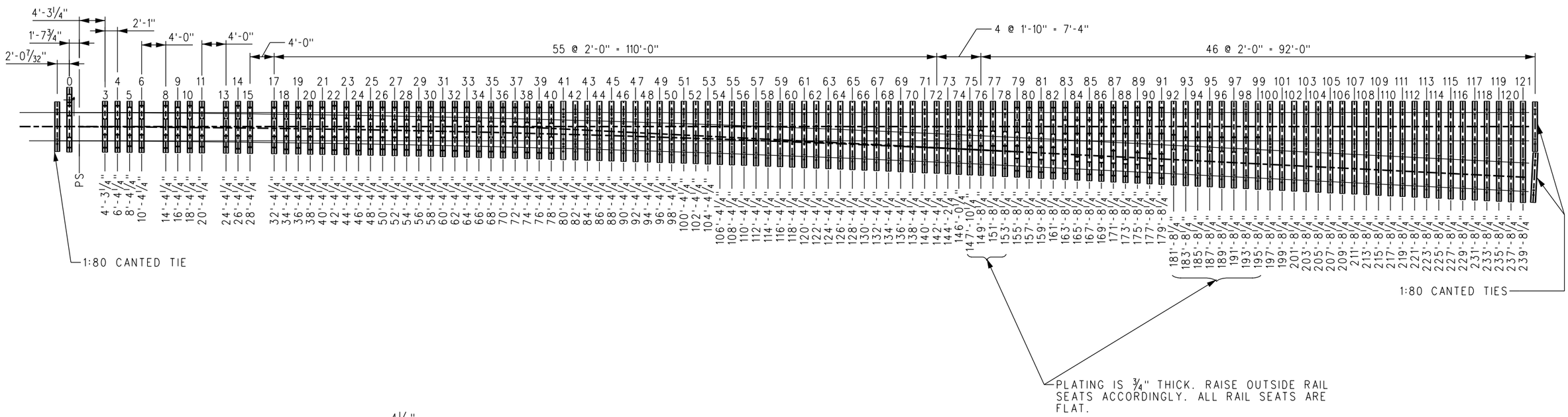

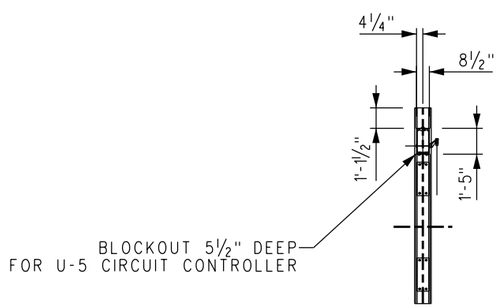

TIE #0 BLOCKOUT DETAIL

NOTES:

1. SET TO INCLUDE TIES 0, 3 THROUGH 6, 8 THROUGH 11, 13 THROUGH 15 AND 17 THROUGH 121, THREE 1:80 CANTED TIES, PLATE TIE PADS AND RIM INSERTS.
2. TIE LENGTHS ARE DETERMINED BY ADDING 1'-10 7/16" FROM RAIL GAUGE LINE (OR 1'-9" FROM RAIL CENTERLINE) PER SIDE AT THE CENTERLINE OF EACH TIE LOCATION.
3. ALL TIES ARE FLAT (NON-CANTED) EXCEPT 1:80 CANTED TIES.
4. TRANSITION TIES (QUANTITY 3) SHALL INCORPORATE 1:80 CANTED RAIL SEATS AND USE 4'-8½" BETWEEN STRAIGHT RAIL SEAT GAUGES. LENGTH SHALL BE 8'-3".
5. THIS DRAWING SHOWS TIE "0" PLACEMENT FOR SWITCH MACHINE ON RH/TURNOUT SIDE. USE OPPOSITE HAND FOR SWITCH MACHINE ON LH/MAINLINE SIDE.
6. SEE BILL OF MATERIALS ABOVE FOR TIES 1, 2, 7, 12 AND 16.

REV.	DATE	DESCRIPTION	DES.	ENG.
X	XX-XX-XX	REVISION	XX	XX

DRAWN BY: HDR DATE: 03/31/2011

ASSISTANT DIRECTOR: STANDARDS & DESIGN

DIRECTOR OF ENGINEERING AND CONSTRUCTION

SCRRA ENGINEERING STANDARDS ARE INTENDED FOR SCRRA APPROVED USES ONLY. FOR NON-SCRRA APPROVED USES: SCRRA SHALL NOT BE RESPONSIBLE FOR THE ACCURACY OR COMPLETENESS OF THE DATA OR INFORMATION CONTAINED HEREIN. THE SELECTION AND USE OF THESE STANDARDS IS THE SOLE RESPONSIBILITY OF THE USER AND SHOULD NOT BE USED WITHOUT CONSULTING A REGISTERED PROFESSIONAL ENGINEER. ALL WARRANTIES AND REPRESENTATIONS OF ANY KIND ARE DISCLAIMED. ANYONE MAKING USE OF THIS INFORMATION AGREES THAT IT ASSUMES ALL LIABILITY ARISING FROM SUCH USE. NO PART OF THESE STANDARDS SHOULD BE REPRODUCED OR DISTRIBUTED IN ANY FORM OR BY ANY MEANS WITHOUT THE PRIOR WRITTEN PERMISSION OF SCRRA. ALL RIGHTS RESERVED.

METROLINK®

SOUTHERN CALIFORNIA REGIONAL RAIL AUTHORITY
ONE GATEWAY PLAZA, 12TH FLOOR, L. A., CA. 90012

ENGINEERING STANDARDS

CONCRETE TIE LAYOUT
NO 20–136 LB RE SPRING FROG TURNOUT, RH

STANDARD 2806
SCALE: NTS
REVISION –
SHEET 1 OF 1
CADD FILE: ES2806–30

BILL OF MATERIALS			
ITEM	QTY	DESCRIPTION	DWG NO
1	5	TIES 1,2,7,12 AND 16, POWER SWITCH MACHINE ON MAINLINE SIDE FOR LH TURNOUT (HOLLOW STEEL)	ES2806-33
2	5	TIES 1,2,7,12 AND 16, POWER SWITCH MACHINE ON TURNOUT SIDE FOR LH TURNOUT (HOLLOW STEEL)	ES2806-35

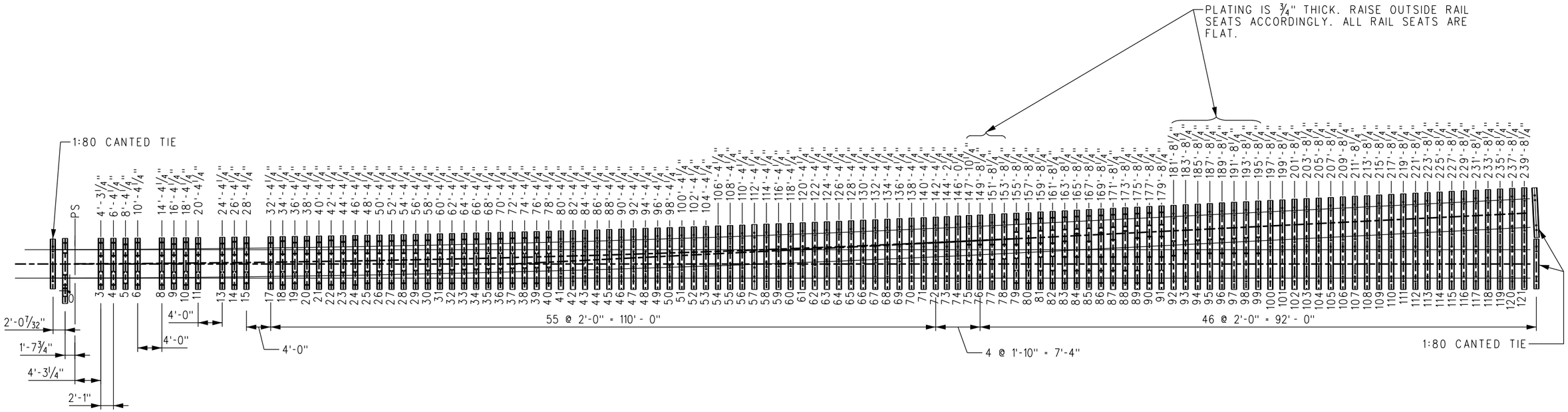

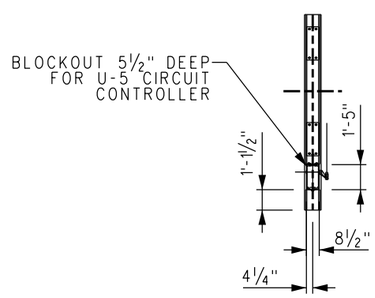

TIE #0 BLOCKOUT DETAIL

NOTES:

1. SET TO INCLUDE TIES 0, 3 THROUGH 6, 8 THROUGH 11, 13 THROUGH 15 AND 17 THROUGH 121, THREE 1:80 CANTED TIES, PLATE TIE PADS AND RIM INSERTS.
2. TIE LENGTHS ARE DETERMINED BY ADDING 1'-10 7/16" FROM RAIL GAUGE LINE (OR 1'-9" FROM RAIL CENTERLINE) PER SIDE AT THE CENTERLINE OF EACH TIE LOCATION.
3. ALL TIES ARE FLAT (NON-CANTED) EXCEPT 1:80 CANTED TIES.
4. TRANSITION TIES (QUANTITY 3) SHALL INCORPORATE 1:80 CANTED RAIL SEATS AND USE 4'-8½" BETWEEN STRAIGHT RAIL SEAT GAUGES. LENGTH SHALL BE 8'-3".
5. THIS DRAWING SHOWS TIE "0" PLACEMENT FOR SWITCH MACHINE ON LH/TURNOUT SIDE. USE OPPOSITE HAND FOR SWITCH MACHINE ON RH/MAINLINE SIDE.
6. SEE BILL OF MATERIALS ABOVE FOR TIES 1, 2, 7, 12 AND 16.

REV.	DATE	DESCRIPTION	DES.	ENG.
X	XX-XX-XX	REVISION	XX	XX

DRAWN BY: HDR DATE: 03/31/2011

ASSISTANT DIRECTOR: STANDARDS & DESIGN

DIRECTOR OF ENGINEERING AND CONSTRUCTION

SCRRA ENGINEERING STANDARDS ARE INTENDED FOR SCRRA APPROVED USES ONLY. FOR NON-SCRRA APPROVED USES:
SCRRA SHALL NOT BE RESPONSIBLE FOR THE ACCURACY OR COMPLETENESS OF THE DATA OR INFORMATION CONTAINED HEREIN. THE SELECTION AND USE OF THESE STANDARDS IS THE SOLE RESPONSIBILITY OF THE USER AND SHOULD NOT BE USED WITHOUT CONSULTING A REGISTERED PROFESSIONAL ENGINEER. ALL WARRANTIES AND REPRESENTATIONS OF ANY KIND ARE DISCLAIMED. ANYONE MAKING USE OF THIS INFORMATION AGREES THAT IT ASSUMES ALL LIABILITY ARISING FROM SUCH USE. NO PART OF THESE STANDARDS SHOULD BE REPRODUCED OR DISTRIBUTED IN ANY FORM OR BY ANY MEANS WITHOUT THE PRIOR WRITTEN PERMISSION OF SCRRA. ALL RIGHTS RESERVED.

METROLINK®
SOUTHERN CALIFORNIA REGIONAL RAIL AUTHORITY
ONE GATEWAY PLAZA, 12TH FLOOR, L. A., CA. 90012

ENGINEERING STANDARDS

CONCRETE TIE LAYOUT
NO 20–136 LB RE SPRING FROG TURNOUT, LH

STANDARD 2806
SCALE: NTS
REVISION –
SHEET 1 OF 1
CADD FILE: ES2806–31

BILL OF MATERIAL					BILL OF MATERIAL				
ITEM	QTY	DESCRIPTION	DWG NO	SCRRA PART NO	ITEM	QTY	DESCRIPTION	DWG NO	SCRRA PART NO
1	1	RODDING ASSEMBLY FOR NO 20-136 LB RE, SWITCH MACHINE ON RH SIDE	ES2806-71		13	10	LV BRACE FOR 136 LB RE	-	
2	1	HOLLOW TIE ASSEMBLY (HT-1LR-20-136)	-		14	10	SERRATED WASHER FOR LV BRACE	-	
3	1	HOLLOW TIE ASSEMBLY (HT-2LR-20-136)	-		15	10	CLIP, PANDROL, E2055	-	
4	1	HOLLOW TIE ASSEMBLY (HT-7LR-20-136)	-		16	10	CLIP, SAFELOK, AB2000	-	
5	1	HOLLOW TIE ASSEMBLY (HT-12LR-20-136)	-		17	20	RAIL ANCHOR, UNIT DRIVE-ON TYPE 5	-	
6	1	HOLLOW TIE ASSEMBLY (HT-16L-20-136)	-		18	1	STEEL COVER PLATE FOR HST TIE, SHORT TOP VERSION	-	
7*	2	COVER PLATE NO 1, HOLLOW SWITCH TIE	-		19	4	STEEL COVER PLATE FOR HST TIE, TOP END	-	
8*	1	COVER PLATE NO 2, HOLLOW SWITCH TIE	-		20	5	HST SWITCH PLATE HTP-206-STR	ES2800-90	
9*	2	COVER PLATE NO 3, HOLLOW SWITCH TIE	-		21	1	HST SWITCH PLATE HTP-208-R	ES2800-92	
10	42	PUSH PIN ASSEMBLY FOR HST COVERS	-		22	2	HST SWITCH PLATE HTP-200-R	ES2800-93	
11	6	STEEL SIDE END COVER PLATE ASSEMBLY FOR HST TIE	-		23	2	HST SWITCH PLATE HTP-301-R	ES2800-91	
12	12	COVER SUPPORT BRACKET	-		24	1	PILLOW BLOCK MOUNTING PLATE	-	

* COVER PLATES SHOWN TRANSPARENT FOR CLARITY

NOTE:

1. SWITCH MACHINE AND MACHINE PLATES (NIC) MUST BE COORDINATED WITH SCRRA.
2. SEE DRAWING ES2806-73 & ES2806-74 FOR CENTER TO CENTER PIN SWITCH ROD DIMENSIONS.

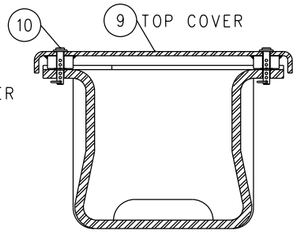

SECTION A
HOLLOW TIE TOP COVER DETAIL

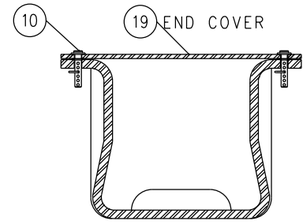

SECTION B
END COVER PLATE

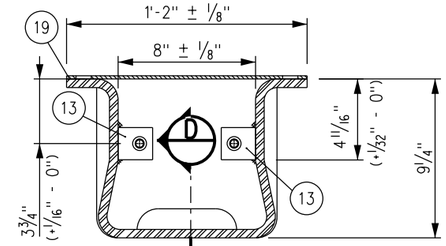

SECTION C
HOLLOW TIE SIDE END COVER DETAIL

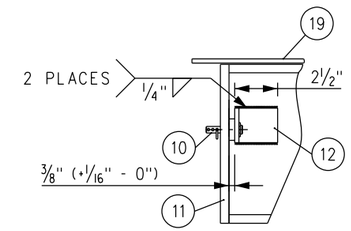

VIEW D
WELDING DETAIL

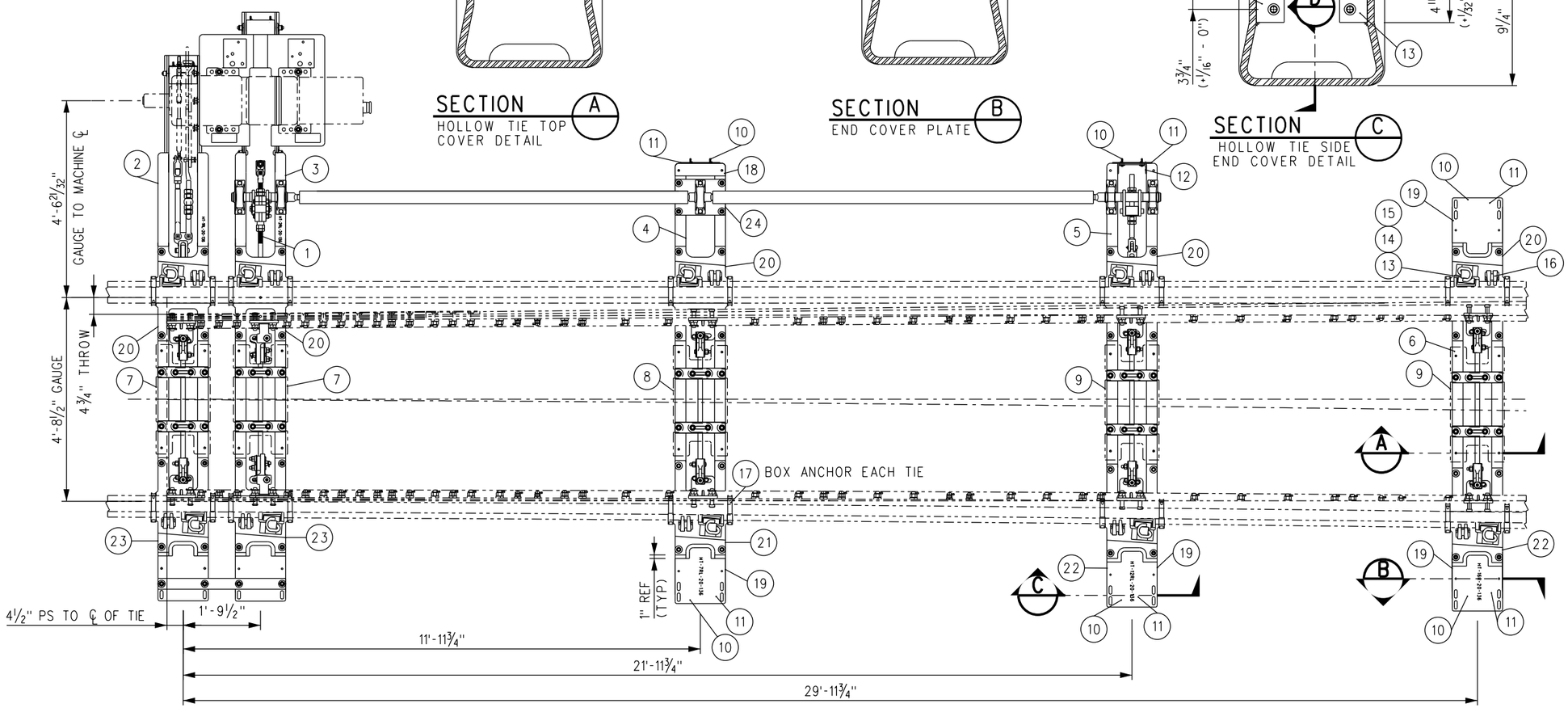

X	XX-XX-XX	REVISION	XX	XX
REV.	DATE	DESCRIPTION	DES.	ENG.

DRAWN BY: HDR DATE: 03/31/2011

ASSISTANT DIRECTOR: STANDARDS & DESIGN

DIRECTOR OF ENGINEERING AND CONSTRUCTION

SCRRA ENGINEERING STANDARDS ARE INTENDED FOR SCRRA APPROVED USES ONLY. FOR NON-SCRRA APPROVED USES:
SCRRA SHALL NOT BE RESPONSIBLE FOR THE ACCURACY OR COMPLETENESS OF THE DATA OR INFORMATION CONTAINED HEREIN. THE SELECTION AND USE OF THESE STANDARDS IS THE SOLE RESPONSIBILITY OF THE USER AND SHOULD NOT BE USED WITHOUT CONSULTING A REGISTERED PROFESSIONAL ENGINEER. ALL WARRANTIES AND REPRESENTATIONS OF ANY KIND ARE DISCLAIMED. ANYONE MAKING USE OF THIS INFORMATION AGREES THAT IT ASSUMES ALL LIABILITY ARISING FROM SUCH USE. NO PART OF THESE STANDARDS SHOULD BE REPRODUCED OR DISTRIBUTED IN ANY FORM OR BY ANY MEANS WITHOUT THE PRIOR WRITTEN PERMISSION OF SCRRA. ALL RIGHTS RESERVED.

METROLINK®
SOUTHERN CALIFORNIA REGIONAL RAIL AUTHORITY
ONE GATEWAY PLAZA, 12TH FLOOR, L. A., CA. 90012

ENGINEERING STANDARDS

HOLLOW STEEL TIE LAYOUT
SWITCH MACHINE ON MAINLINE SIDE
NO 20-136 LB RE RH

STANDARD 2806
SCALE: NTS
REVISION –
SHEET 1 OF 1
CADD FILE: ES2806-32

BILL OF MATERIAL				
ITEM	QTY	DESCRIPTION	DWG NO	SCRRA PART NO
1	1	RODDING ASSEMBLY FOR NO 20-136 LB RE, SWITCH MACHINE ON RH SIDE	ES2806-72	
2	1	HOLLOW TIE ASSEMBLY (HT-1LR-20-136)	-	
3	1	HOLLOW TIE ASSEMBLY (HT-2LR-20-136)	-	
4	1	HOLLOW TIE ASSEMBLY (HT-7LR-20-136)	-	
5	1	HOLLOW TIE ASSEMBLY (HT-12LR-20-136)	-	
6	1	HOLLOW TIE ASSEMBLY (HT-16L-20-136)	-	
7*	2	COVER PLATE NO 1, HOLLOW SWITCH TIE	-	
8*	1	COVER PLATE NO 2, HOLLOW SWITCH TIE	-	
9*	2	COVER PLATE NO 3, HOLLOW SWITCH TIE	-	
10	42	PUSH PIN ASSEMBLY FOR HST COVERS	-	
11	6	STEEL SIDE END COVER PLATE ASSEMBLY FOR HST TIE	-	
12	12	COVER SUPPORT BRACKET	-	

BILL OF MATERIAL				
ITEM	QTY	DESCRIPTION	DWG NO	SCRRA PART NO
13	10	LV BRACE FOR 136 LB RE	-	
14	10	SERRATED WASHER FOR LV BRACE	-	
15	10	CLIP, PANDROL, E2055	-	
16	10	CLIP, SAFELOK, AB2000	-	
17	20	RAIL ANCHOR, UNIT DRIVE-ON TYPE 5	-	
18	1	STEEL COVER PLATE FOR HST TIE, SHORT TOP VERSION	-	
19	4	STEEL COVER PLATE FOR HST TIE, TOP END	-	
20	5	HST SWITCH PLATE HTP-206-STR	ES2800-90	
21	1	HST SWITCH PLATE HTP-208-L	ES2800-92	
22	2	HST SWITCH PLATE HTP-200-L	ES2800-93	
23	2	HST SWITCH PLATE HTP-300-L	ES2800-91	
24	1	PILLOW BLOCK MOUNTING PLATE	-	

* COVER PLATES SHOWN TRANSPARENT FOR CLARITY

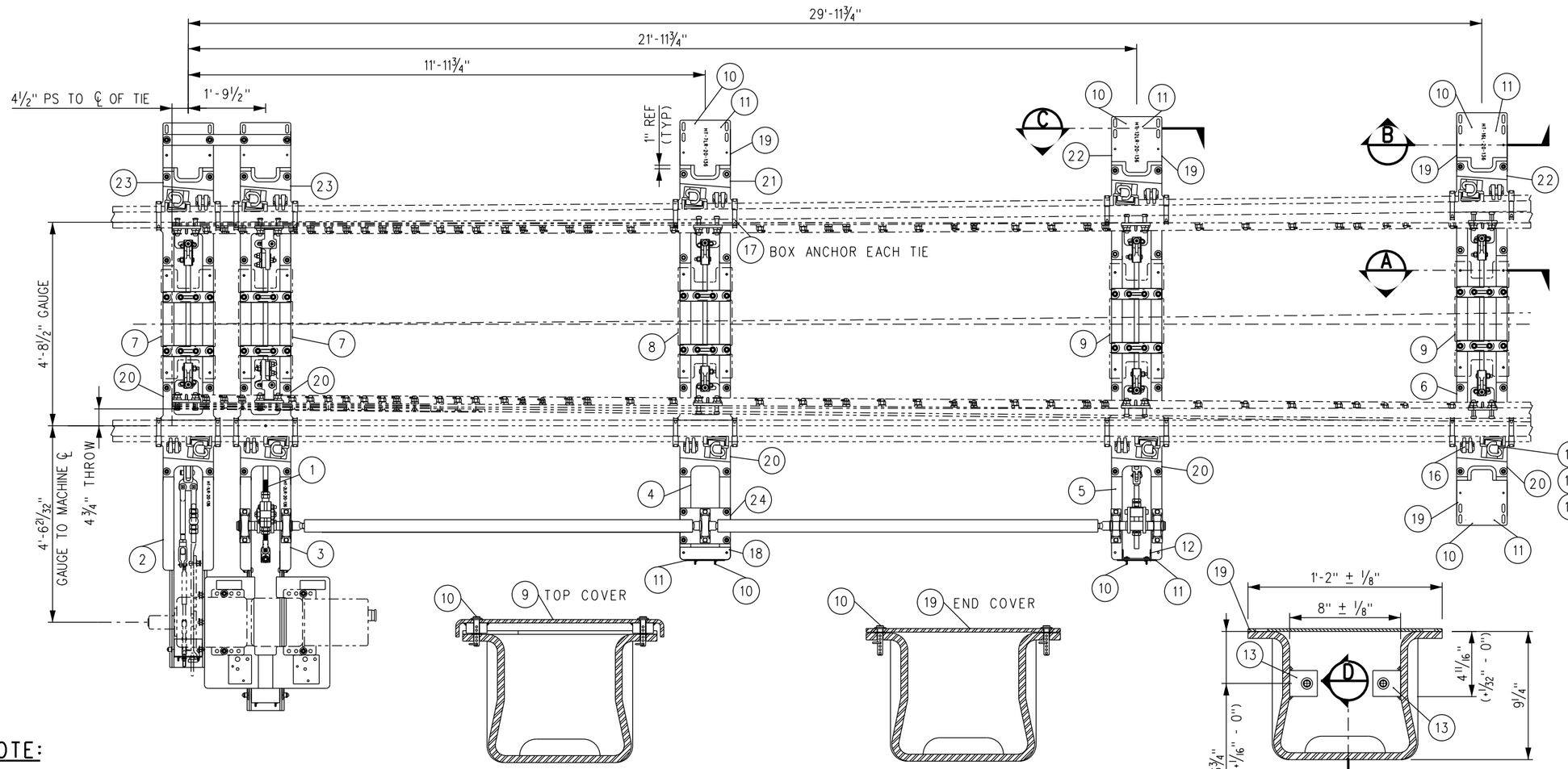

NOTE:

1. SWITCH MACHINE AND MACHINE PLATES (NIC) MUST BE COORDINATED WITH SCRRA.
2. SEE DRAWING ES2806-73 & ES2806-74 FOR CENTER TO CENTER PIN SWITCH ROD DIMENSIONS.

SECTION A — HOLLOW TIE TOP COVER DETAIL

SECTION B — END COVER PLATE

SECTION C — HOLLOW TIE SIDE END COVER DETAIL

VIEW D — WELDING DETAIL

REV.	DATE	DESCRIPTION	DES.	ENG.
X	XX-XX-XX	REVISION	XX	XX

DRAWN BY: HDR DATE: 03/31/2011

ASSISTANT DIRECTOR: STANDARDS & DESIGN

DIRECTOR OF ENGINEERING AND CONSTRUCTION

SCRRA ENGINEERING STANDARDS ARE INTENDED FOR SCRRA APPROVED USES ONLY. FOR NON-SCRRA APPROVED USES:
SCRRA SHALL NOT BE RESPONSIBLE FOR THE ACCURACY OR COMPLETENESS OF THE DATA OR INFORMATION CONTAINED HEREIN. THE SELECTION AND USE OF THESE STANDARDS IS THE SOLE RESPONSIBILITY OF THE USER AND SHOULD NOT BE USED WITHOUT CONSULTING A REGISTERED PROFESSIONAL ENGINEER. ALL WARRANTIES AND REPRESENTATIONS OF ANY KIND ARE DISCLAIMED. ANYONE MAKING USE OF THIS INFORMATION AGREES THAT IT ASSUMES ALL LIABILITY ARISING FROM SUCH USE. NO PART OF THESE STANDARDS SHOULD BE REPRODUCED OR DISTRIBUTED IN ANY FORM OR BY ANY MEANS WITHOUT THE PRIOR WRITTEN PERMISSION OF SCRRA. ALL RIGHTS RESERVED.

METROLINK®
SOUTHERN CALIFORNIA REGIONAL RAIL AUTHORITY
ONE GATEWAY PLAZA, 12TH FLOOR, L. A., CA. 90012

ENGINEERING STANDARDS

HOLLOW STEEL TIE LAYOUT
SWITCH MACHINE ON MAINLINE SIDE
NO 20–136 LB RE LH

STANDARD: 2806
SCALE: NTS
REVISION: –
SHEET: 1 OF 1
CADD FILE: ES2806–33

BILL OF MATERIAL					BILL OF MATERIAL				
ITEM	QTY	DESCRIPTION	DWG NO	SCRRA PART NO	ITEM	QTY	DESCRIPTION	DWG NO	SCRRA PART NO
1	1	RODDING ASSEMBLY FOR NO 20-136 LB RE, SWITCH MACHINE ON RH SIDE	ES2806-72		13	10	LV BRACE FOR 136 LB RE	-	
2	1	HOLLOW TIE ASSEMBLY (HT-1RR-20-136)	-		14	10	SERRATED WASHER FOR LV BRACE	-	
3	1	HOLLOW TIE ASSEMBLY (HT-2RR-20-136)	-		15	10	CLIP, PANDROL, E2055	-	
4	1	HOLLOW TIE ASSEMBLY (HT-7RR-20-136)	-		16	10	CLIP, SAFELOK, AB2000	-	
5	1	HOLLOW TIE ASSEMBLY (HT-12RR-20-136)	-		17	20	RAIL ANCHOR, UNIT DRIVE-ON TYPE 5	-	
6	1	HOLLOW TIE ASSEMBLY (HT-16R-20-136)	-		18	1	STEEL COVER PLATE FOR HST TIE, SHORT TOP VERSION	-	
7*	2	COVER PLATE NO 1, HOLLOW SWITCH TIE	-		19	4	STEEL COVER PLATE FOR HST TIE, TOP END	-	
8*	1	COVER PLATE NO 2, HOLLOW SWITCH TIE	-		20	5	HST SWITCH PLATE HTP-206-STR	ES2800-90	
9*	2	COVER PLATE NO 3, HOLLOW SWITCH TIE	-		21	1	HST SWITCH PLATE HTP-208-R	ES2800-92	
10	42	PUSH PIN ASSEMBLY FOR HST COVERS	-		22	2	HST SWITCH PLATE HTP-200-R	ES2800-93	
11	6	STEEL SIDE END COVER PLATE ASSEMBLY FOR HST TIE	-		23	2	HST SWITCH PLATE HTP-301-R	ES2800-91	
12	12	COVER SUPPORT BRACKET	-		24	1	PILLOW BLOCK MOUNTING PLATE	-	

* COVER PLATES SHOWN TRANSPARENT FOR CLARITY

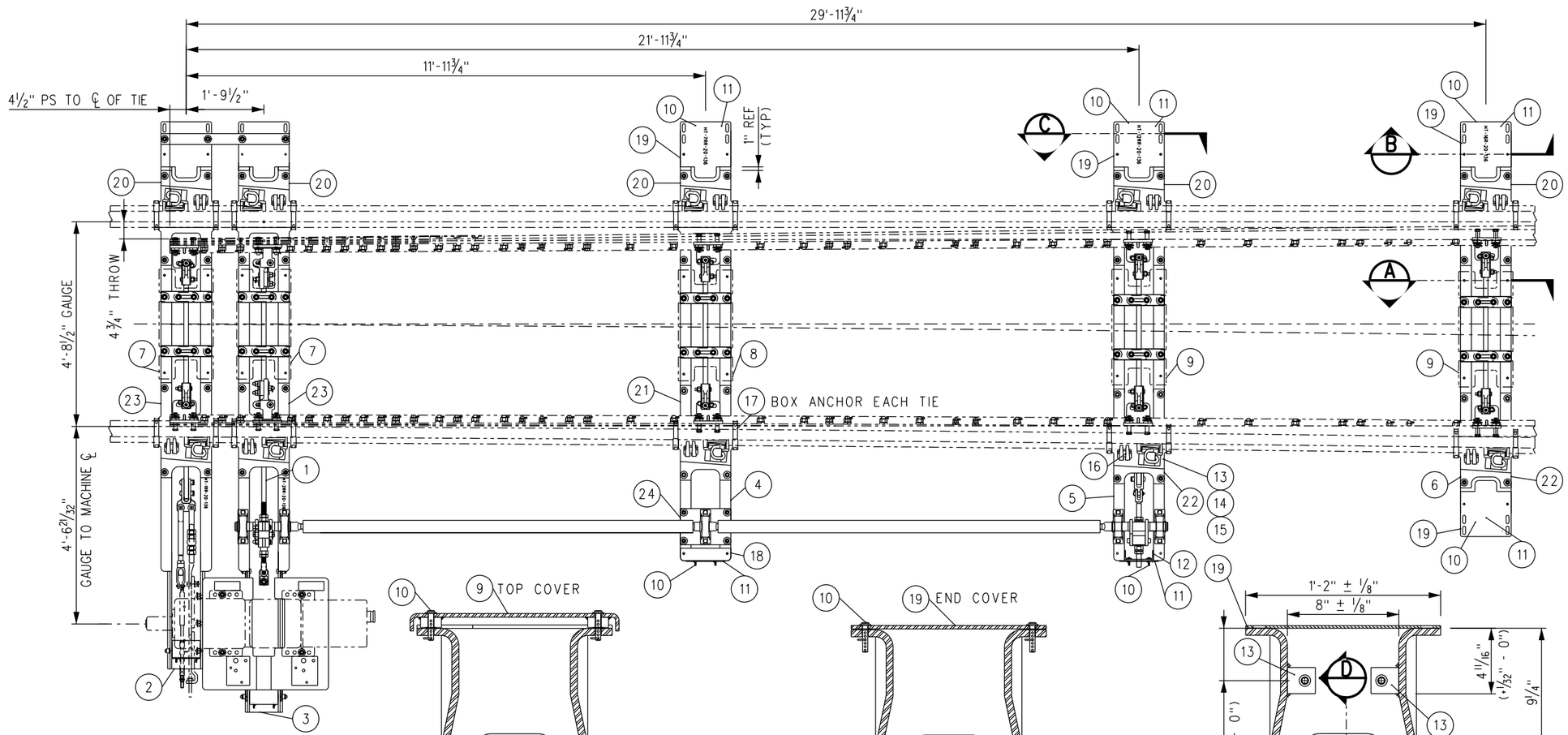

NOTE:

1. SWITCH MACHINE AND MACHINE PLATES (NIC) MUST BE COORDINATED WITH SCRRA.
2. SEE DRAWING ES2806-73 & ES2806-74 FOR CENTER TO CENTER PIN SWITCH ROD DIMENSIONS.

SECTION A
HOLLOW TIE TOP COVER DETAIL

SECTION B
END COVER PLATE

SECTION C
HOLLOW TIE SIDE END COVER DETAIL

VIEW D
WELDING DETAIL

REV.	DATE	DESCRIPTION	DES.	ENG.
X	XX-XX-XX	REVISION	XX	XX

DRAWN BY: HDR DATE: 03/31/2011

ASSISTANT DIRECTOR: STANDARDS & DESIGN

DIRECTOR OF ENGINEERING AND CONSTRUCTION

SCRRA ENGINEERING STANDARDS ARE INTENDED FOR SCRRA APPROVED USES ONLY. FOR NON-SCRRA APPROVED USES:
SCRRA SHALL NOT BE RESPONSIBLE FOR THE ACCURACY OR COMPLETENESS OF THE DATA OR INFORMATION CONTAINED HEREIN. THE SELECTION AND USE OF THESE STANDARDS IS THE SOLE RESPONSIBILITY OF THE USER AND SHOULD NOT BE USED WITHOUT CONSULTING A REGISTERED PROFESSIONAL ENGINEER. ALL WARRANTIES AND REPRESENTATIONS OF ANY KIND ARE DISCLAIMED. ANYONE MAKING USE OF THIS INFORMATION AGREES THAT IT ASSUMES ALL LIABILITY ARISING FROM SUCH USE. NO PART OF THESE STANDARDS SHOULD BE REPRODUCED OR DISTRIBUTED IN ANY FORM OR BY ANY MEANS WITHOUT THE PRIOR WRITTEN PERMISSION OF SCRRA. ALL RIGHTS RESERVED.

METROLINK®
SOUTHERN CALIFORNIA REGIONAL RAIL AUTHORITY
ONE GATEWAY PLAZA, 12TH FLOOR, L. A., CA. 90012

ENGINEERING STANDARDS

HOLLOW STEEL TIE LAYOUT
SWITCH MACHINE ON TURNOUT SIDE
NO 20–136 LB RE RH

STANDARD: 2806
SCALE: NTS
REVISION: –
SHEET: 1 OF 1
CADD FILE: ES2806–34

UserName=> carlosa Date Plotted: 10/5/2011 3:55:48 PM Plot Driver=> S:\Plot Drivers\pdf.plt FileName=> s:\V8EngStds\2000\Turnouts\No 20 Turnout\ES2806-34.dgn

BILL OF MATERIAL				
ITEM	QTY	DESCRIPTION	DWG NO	SCRRA PART NO
1	1	RODDING ASSEMBLY FOR NO 20-136 LB RE, SWITCH MACHINE ON LH SIDE	ES2806-71	
2	1	HOLLOW TIE ASSEMBLY (HT-1LL-20-136)	-	
3	1	HOLLOW TIE ASSEMBLY (HT-2LL-20-136)	-	
4	1	HOLLOW TIE ASSEMBLY (HT-7LL-20-136)	-	
5	1	HOLLOW TIE ASSEMBLY (HT-12LL-20-136)	-	
6	1	HOLLOW TIE ASSEMBLY (HT-16L-20-136)	-	
7*	2	COVER PLATE NO 1, HOLLOW SWITCH TIE	-	
8*	1	COVER PLATE NO 2, HOLLOW SWITCH TIE	-	
9*	2	COVER PLATE NO 3, HOLLOW SWITCH TIE	-	
10	42	PUSH PIN ASSEMBLY FOR HST COVERS	-	
11	6	STEEL SIDE END COVER PLATE ASSEMBLY FOR HST TIE	-	
12	12	COVER SUPPORT BRACKET	-	

BILL OF MATERIAL				
ITEM	QTY	DESCRIPTION	DWG NO	SCRRA PART NO
13	10	LV BRACE FOR 136 LB RE	-	
14	10	SERRATED WASHER FOR LV BRACE	-	
15	10	CLIP, PANDROL, E2055	-	
16	10	CLIP, SAFELOK, AB2000	-	
17	20	RAIL ANCHOR, UNIT DRIVE-ON TYPE 5	-	
18	1	STEEL COVER PLATE FOR HST TIE, SHORT TOP VERSION	-	
19	4	STEEL COVER PLATE FOR HST TIE, TOP END	-	
20	5	HST SWITCH PLATE HTP-206-STR	ES2800-90	
21	1	HST SWITCH PLATE HTP-208-L	ES2800-92	
22	2	HST SWITCH PLATE HTP-200-L	ES2800-93	
23	2	HST SWITCH PLATE HTP-300-L	ES2800-91	
24	1	PILLOW BLOCK MOUNTING PLATE	-	

* COVER PLATES SHOWN TRANSPARENT FOR CLARITY

NOTE:

1. SWITCH MACHINE AND MACHINE PLATES (NIC) MUST BE COORDINATED WITH SCRRA.
2. SEE DRAWING ES2806-73 & ES2806-74 FOR CENTER TO CENTER PIN SWITCH ROD DIMENSIONS.

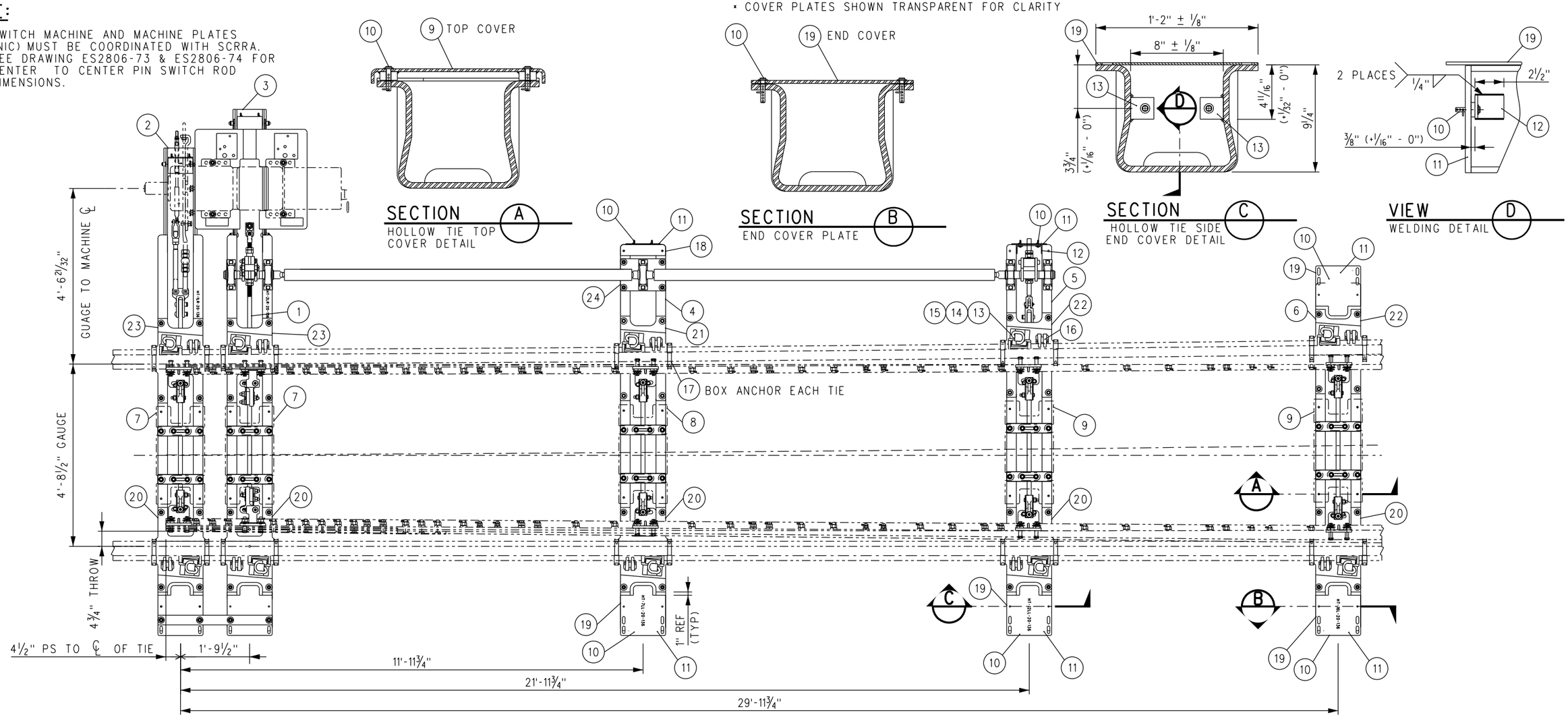

REV.	DATE	DESCRIPTION	DES.	ENG.
X	XX-XX-XX	REVISION	XX	XX

DRAWN BY: HDR DATE: 03/31/2011

ASSISTANT DIRECTOR: STANDARDS & DESIGN

DIRECTOR OF ENGINEERING AND CONSTRUCTION

SCRRA ENGINEERING STANDARDS ARE INTENDED FOR SCRRA APPROVED USES ONLY. FOR NON-SCRRA APPROVED USES:
SCRRA SHALL NOT BE RESPONSIBLE FOR THE ACCURACY OR COMPLETENESS OF THE DATA OR INFORMATION CONTAINED HEREIN. THE SELECTION AND USE OF THESE STANDARDS IS THE SOLE RESPONSIBILITY OF THE USER AND SHOULD NOT BE USED WITHOUT CONSULTING A REGISTERED PROFESSIONAL ENGINEER. ALL WARRANTIES AND REPRESENTATIONS OF ANY KIND ARE DISCLAIMED. ANYONE MAKING USE OF THIS INFORMATION AGREES THAT IT ASSUMES ALL LIABILITY ARISING FROM SUCH USE. NO PART OF THESE STANDARDS SHOULD BE REPRODUCED OR DISTRIBUTED IN ANY FORM OR BY ANY MEANS WITHOUT THE PRIOR WRITTEN PERMISSION OF SCRRA. ALL RIGHTS RESERVED.

METROLINK®

SOUTHERN CALIFORNIA REGIONAL RAIL AUTHORITY
ONE GATEWAY PLAZA, 12TH FLOOR, L. A., CA. 90012

ENGINEERING STANDARDS

HOLLOW STEEL TIE LAYOUT
SWITCH MACHINE ON TURNOUT SIDE
NO 20–136 LB RE LH

STANDARD 2806
SCALE: NTS
REVISION –
SHEET 1 OF 1
CADD FILE: ES2806–35

BILL OF MATERIAL					BILL OF MATERIAL				
ITEM	QTY	DESCRIPTION	DWG NO	SCRRA PART NO	ITEM	QTY	DESCRIPTION	DWG NO	SCRRA PART NO
1	1	NO 20-136 LB RE SPRING FROG, LH POINT ASSEMBLY	-		21	1	SPRING BOX ASSEMBLY, WITH 5½" MAXIMUM PLUNGER TRAVEL	-	
2	1	SPRING WING RAIL, NO 20-136 LB RE, LH, C/W D-BAR	-		22	1	RETARDER TIMING DEVICE (ENIDINE P/N SP22917)	-	
3	1	TOE BLOCK, NO 20-136 LB RE WSM	-		23	1	RETARDER BRACKET FOR SPRING FROGS	-	
4	1	FROG PLATE (SF20-136-75LC)	ES2806-43		24	1	RETARDER PLATE BRACKET FOR FROG	-	
5	1	FROG PLATE (SF20-136-76LC)	ES2806-43		25	3	FLAT RAIL BRACE FOR NON D-BAR APPLICATIONS	-	
6	1	FROG PLATE (SF20-136-77LC)	ES2806-43		26	7	WASHER, BOLT CAPTURE STYLE, ¼" THICK	-	
7	1	FROG PLATE (SF20-136-78LC)	ES2806-45		27	18	BOLT, 1" DIA x 3" LONG, THIN SQUARE HEAD, DRILLED @ 2½", GR 5	-	
8	1	FROG PLATE (SF20-136-83LC)	ES2806-47		28	10	BOLT, 1" DIA x 3½" LONG, THIN SQUARE HEAD, DRILLED @ 2 11/16", GR 5	-	
9	1	FROG PLATE (SF20-136-88LC)	ES2806-49		29	2	BOLT, 1" DIA x 4⅛" LONG, HEAVY HEX HEAD, GR 8	-	
10	1	FROG PLATE (SF20-136-93LC)	ES2806-51		30	14	BOLT, 1" DIA x 4½" LONG, SQUARE HEAD, GR 5	-	
11	1	FROG PLATE (SF20-136-94LC)	ES2806-51		31	6	BOLT, 1⅜" DIA x 5½" LONG, SQUARE HEAD, GR 8	-	
12	1	FROG PLATE (SF20-136-95LC)	ES2806-51		32	16	SECURITY LOCK NUT, 1" DIA, HEX (SH521), GR 5	-	
13	1	FROG PLATE (SF20-136-96LC)	ES2806-53		33	28	NUT, 1" DIA HEAVY HEX, SLOTTED, GR 5	-	
14	1	FROG PLATE (SF20-136-97LC)	ES2806-53		34	6	SECURITY LOCK NUT, 1⅜" DIA HEX (SH530), GR 8	-	
15	1	FROG PLATE (SF20-136-98LC)	ES2806-55		35	32	FLAT WASHER, FOR 1" DIA x 5/32" THICK, HARDENED	-	
16	1	FROG PLATE (SF20-136-99LC)	ES2806-55		36	6	FLAT WASHER, FOR 1⅜" DIA x ¼" THICK, HARDENED	-	
17	5	HORN KEEPER, REVERSIBLE	-		37	6	TAIL WASHER, FLAT (837K)	-	
18	5	HOLD-DOWN HORN	-		38	14	HEADLOCK WASHER, FLAT (837P)	-	
19	5	WEAR PLATE FOR REVERSIBLE HORN KEEPER	-		39	48	CLIP, PANDROL, E2055	-	
20	1	SPRING BOX ASSEMBLY, WITH 3" MAXIMUM PLUNGER TRAVEL	-		40	28	COTTER PIN, ¼" DIA x 2" LONG	-	

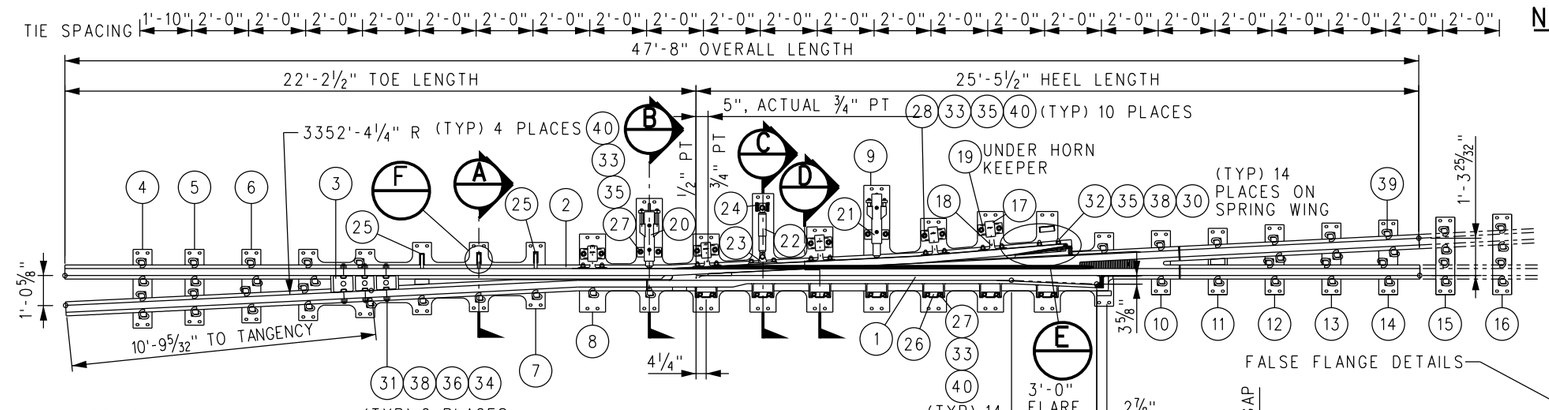

NOTES:

1. RETARDER CLOSING TIME RANGES FROM 1 TO 3 MINUTES.
2. SPRING BOX LOAD IS 300 LB/IN.
3. SPRING WING SHALL BE THROWN TO A 1⅞" FLANGEWAY AT THE ¾" POINT TO DETERMINE THE SPRING WING THROWN POSITION.
4. FLAT RAIL BRACES (ITEM NO 25) SHALL BE WELDED WHERE SHOWN, UP AGAINST SPRING WING WHEN FULLY THROWN.
5. RAIL END DRILLING SHALL BE @ 9" AND 1'-3½", 3 3/32" ABOVE RAIL BASE, 1 5/16" DIA AT ALL 4 RAIL ENDS. ALL RAIL HOLE EDGES SHALL BE ROUNDED WITH A ⅛" R.
6. RETARDER BRACKET (ITEM NO 23) SHALL BE WELDED AS SHOWN.
7. FROG SHALL BE CONSTRUCTED TO TOLERANCES GIVEN ON LATEST AREMA PLAN 1010, PERMISSIBLE VARIATIONS IN COMPLETED FROGS.
8. INSERT TO BE EXPLOSIVE DEPTH HARDENED TO 352 BRINELL PER AREMA.
9. NAME TAG TO BE AFFIXED TO RIGID WING RAIL NEAR ½" PT WITH INFORMATION SHOWN.
10. SCRRA WILL CONSIDER A TAPERED HEEL SPRING OF SAME ALIGNMENT AND DIMENSIONS TO REPLACE WSM.

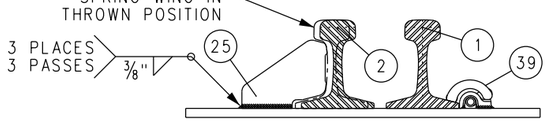

SECTION A
FLAT RAIL BRACE MOUNTING DETAILS, TYPICAL 3 PLACES

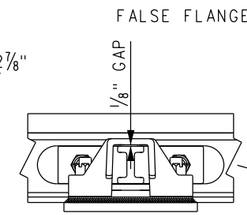

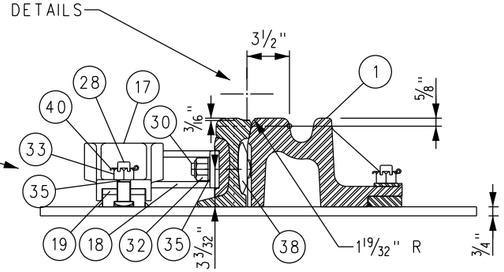

SECTION D
HORN AND KEEPER MOUNTING DETAILS

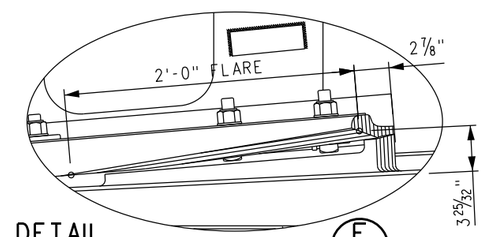

DETAIL E
DIMENSIONS AT GAUGE ELEVATION

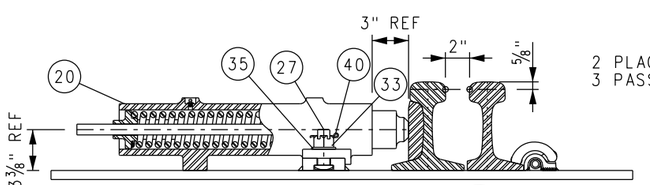

SECTION B
SPRING BOX MOUNTING DETAILS

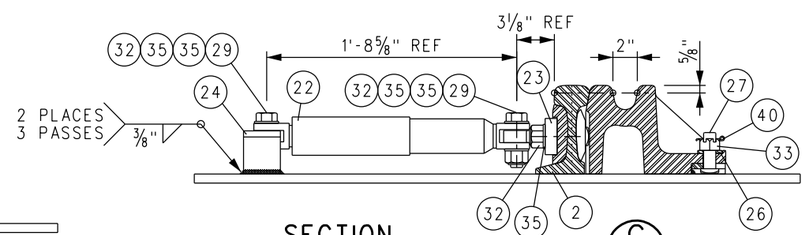

SECTION C
RETARDER MOUNTING DETAILS
(RETARDER NOT SHOWN SECTIONAL)

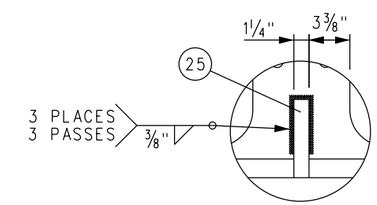

DETAIL F

REV.	DATE	DESCRIPTION	DES.	ENG.
X	XX-XX-XX	REVISION	XX	XX

DRAWN BY: HDR DATE: 03/31/2011

ASSISTANT DIRECTOR: STANDARDS & DESIGN

DIRECTOR OF ENGINEERING AND CONSTRUCTION

SCRRA ENGINEERING STANDARDS ARE INTENDED FOR SCRRA APPROVED USES ONLY. FOR NON-SCRRA APPROVED USES:
SCRRA SHALL NOT BE RESPONSIBLE FOR THE ACCURACY OR COMPLETENESS OF THE DATA OR INFORMATION CONTAINED HEREIN. THE SELECTION AND USE OF THESE STANDARDS IS THE SOLE RESPONSIBILITY OF THE USER AND SHOULD NOT BE USED WITHOUT CONSULTING A REGISTERED PROFESSIONAL ENGINEER. ALL WARRANTIES AND REPRESENTATIONS OF ANY KIND ARE DISCLAIMED. ANYONE MAKING USE OF THIS INFORMATION AGREES THAT IT ASSUMES ALL LIABILITY ARISING FROM SUCH USE. NO PART OF THESE STANDARDS SHOULD BE REPRODUCED OR DISTRIBUTED IN ANY FORM OR BY ANY MEANS WITHOUT THE PRIOR WRITTEN PERMISSION OF SCRRA. ALL RIGHTS RESERVED.

METROLINK®
SOUTHERN CALIFORNIA REGIONAL RAIL AUTHORITY
ONE GATEWAY PLAZA, 12TH FLOOR, L. A., CA. 90012

ENGINEERING STANDARDS

NO 20 WSM FROG LH
FROG ASSEMBLY PLAN VIEW AND FROG PACK
CONCRETE TIES–136 LB RE RAIL

STANDARD 2806
SCALE: NTS
REVISION –
SHEET 1 OF 1
CADD FILE: ES2806-41

BILL OF MATERIAL					BILL OF MATERIAL				
ITEM	QTY	DESCRIPTION	DWG NO	SCRRA PART NO	ITEM	QTY	DESCRIPTION	DWG NO	SCRRA PART NO
1	1	NO 20-136 LB RE SPRING FROG, RH POINT ASSEMBLY	-		21	1	SPRING BOX ASSEMBLY, WITH 5½" MAXIMUM PLUNGER TRAVEL	-	
2	1	SPRING WING RAIL, NO 20-136 LB RE, RH, C/W D-BAR	-		22	1	RETARDER TIMING DEVICE (ENIDINE P/N SP22917)	-	
3	1	TOE BLOCK, NO 20-136 LB RE WSM	-		23	1	RETARDER BRACKET FOR SPRING FROGS	-	
4	1	FROG PLATE (SF20-136-75RC)	ES2806-44		24	1	RETARDER PLATE BRACKET FOR FROG	-	
5	1	FROG PLATE (SF20-136-76RC)	ES2806-44		25	3	FLAT RAIL BRACE FOR NON D-BAR APPLICATIONS	-	
6	1	FROG PLATE (SF20-136-77RC)	ES2806-44		26	7	WASHER, BOLT CAPTURE STYLE, ¼" THICK	-	
7	1	FROG PLATE (SF20-136-78RC)	ES2806-46		27	18	BOLT, 1" DIA x 3" LONG, THIN SQUARE HEAD, DRILLED @ 2½", GR 5	-	
8	1	FROG PLATE (SF20-136-83RC)	ES2806-48		28	10	BOLT, 1" DIA x 3½" LONG, THIN SQUARE HEAD, DRILLED @ 2 11/16", GR 5	-	
9	1	FROG PLATE (SF20-136-88RC)	ES2806-50		29	2	BOLT, 1" DIA x 4⅛" LONG, HEAVY HEX HEAD, GR 8	-	
10	1	FROG PLATE (SF20-136-93RC)	ES2806-52		30	14	BOLT, 1" DIA x 4½" LONG, SQUARE HEAD, GR 5	-	
11	1	FROG PLATE (SF20-136-94RC)	ES2806-52		31	6	BOLT, 1⅜" DIA x 5½" LONG, SQUARE HEAD, GR 8	-	
12	1	FROG PLATE (SF20-136-95RC)	ES2806-52		32	16	SECURITY LOCK NUT, 1" DIA, HEX (SH521), GR 5	-	
13	1	FROG PLATE (SF20-136-96RC)	ES2806-54		33	28	NUT, 1" DIA HEAVY HEX, SLOTTED, GR 5	-	
14	1	FROG PLATE (SF20-136-97RC)	ES2806-54		34	6	SECURITY LOCK NUT, 1⅜" DIA HEX (SH530), GR 8	-	
15	1	FROG PLATE (SF20-136-98RC)	ES2806-56		35	32	FLAT WASHER, FOR 1" DIA x 5/32" THICK, HARDENED	-	
16	1	FROG PLATE (SF20-136-99RC)	ES2806-56		36	6	FLAT WASHER, FOR 1⅜" DIA x ¼" THICK, HARDENED	-	
17	5	HORN KEEPER, REVERSIBLE	-		37	6	TAIL WASHER, FLAT (837K)	-	
18	5	HOLD-DOWN HORN	-		38	14	HEADLOCK WASHER, FLAT (837P)	-	
19	5	WEAR PLATE FOR REVERSIBLE HORN KEEPER	-		39	48	CLIP, PANDROL, E2055	-	
20	1	SPRING BOX ASSEMBLY, WITH 3" MAXIMUM PLUNGER TRAVEL	-		40	28	COTTER PIN, ¼" DIA x 2" LONG	-	

NOTES:

1. RETARDER CLOSING TIME RANGES FROM 1 TO 3 MINUTES.
2. SPRING BOX LOAD IS 300 LB/IN.
3. SPRING WING SHALL BE THROWN TO A 1⅞" FLANGEWAY AT THE ¾" POINT TO DETERMINE THE SPRING WING THROWN POSITION.
4. FLAT RAIL BRACES (ITEM NO 25) SHALL BE WELDED WHERE SHOWN, UP AGAINST SPRING WING WHEN FULLY THROWN.
5. RAIL END DRILLING SHALL BE @ 9" AND 1'-3½", 3 3/32" ABOVE RAIL BASE, 15/16" DIA AT ALL 4 RAIL ENDS. ALL RAIL HOLE EDGES SHALL BE ROUNDED WITH A ⅛" R.
6. RETARDER BRACKET (ITEM NO 23) SHALL BE WELDED AS SHOWN.
7. FROG SHALL BE CONSTRUCTED TO TOLERANCES GIVEN ON LATEST AREMA PLAN 1010, PERMISSIBLE VARIATIONS IN COMPLETED FROGS.
8. INSERT TO BE EXPLOSIVE DEPTH HARDENED TO 352 BRINELL PER AREMA.
9. NAME TAG TO BE AFFIXED TO RIGID WING RAIL NEAR ½" PT WITH INFORMATION SHOWN.
10. SCRRA WILL CONSIDER A TAPERED HEEL SPRING OF SAME ALIGNMENT AND DIMENSIONS TO REPLACE WSM.

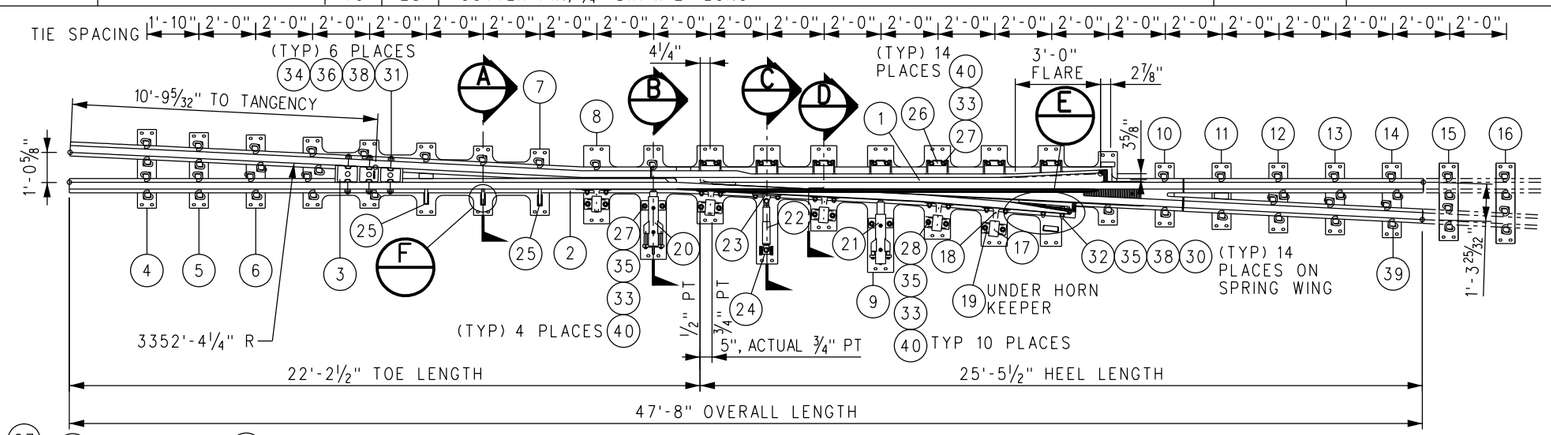

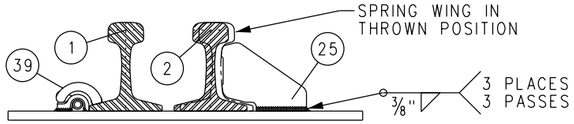

SECTION A
FLAT RAIL BRACE MOUNTING DETAILS, TYPICAL 3 PLACES

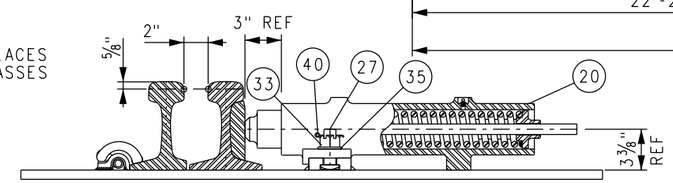

SECTION B
SPRING BOX MOUNTING DETAILS

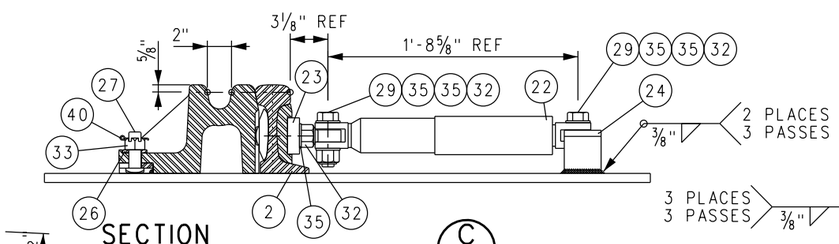

SECTION C
RETARDER MOUNTING DETAILS
(RETARDER NOT SHOWN SECTIONAL)

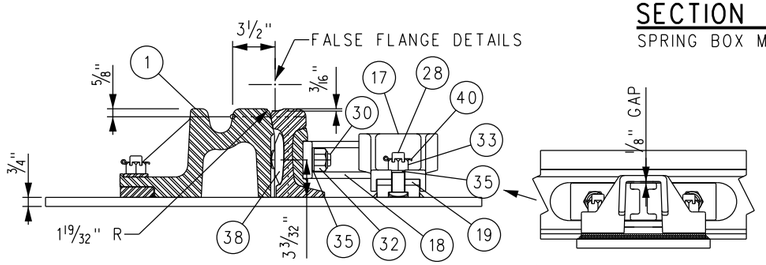

SECTION D
HORN AND KEEPER MOUNTING DETAILS

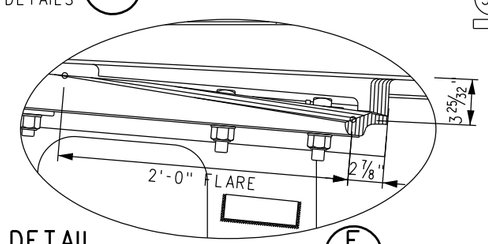

DETAIL E
DIMENSIONS AT GAUGE ELEVATION

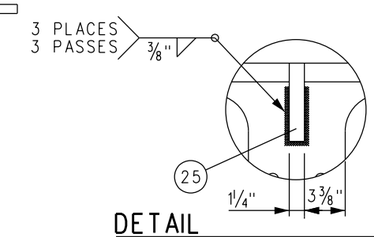

DETAIL F

REV.	DATE	DESCRIPTION	DES.	ENG.
X	XX-XX-XX	REVISION	XX	XX

DRAWN BY: HDR DATE: 03/31/2011

ASSISTANT DIRECTOR: STANDARDS & DESIGN

DIRECTOR OF ENGINEERING AND CONSTRUCTION

SCRRA ENGINEERING STANDARDS ARE INTENDED FOR SCRRA APPROVED USES ONLY. FOR NON-SCRRA APPROVED USES:
SCRRA SHALL NOT BE RESPONSIBLE FOR THE ACCURACY OR COMPLETENESS OF THE DATA OR INFORMATION CONTAINED HEREIN. THE SELECTION AND USE OF THESE STANDARDS IS THE SOLE RESPONSIBILITY OF THE USER AND SHOULD NOT BE USED WITHOUT CONSULTING A REGISTERED PROFESSIONAL ENGINEER. ALL WARRANTIES AND REPRESENTATIONS OF ANY KIND ARE DISCLAIMED. ANYONE MAKING USE OF THIS INFORMATION AGREES THAT IT ASSUMES ALL LIABILITY ARISING FROM SUCH USE. NO PART OF THESE STANDARDS SHOULD BE REPRODUCED OR DISTRIBUTED IN ANY FORM OR BY ANY MEANS WITHOUT THE PRIOR WRITTEN PERMISSION OF SCRRA. ALL RIGHTS RESERVED.

METROLINK
SOUTHERN CALIFORNIA REGIONAL RAIL AUTHORITY
ONE GATEWAY PLAZA, 12TH FLOOR, L. A., CA. 90012

ENGINEERING STANDARDS

NO 20 WSM FROG RH
FROG ASSEMBLY PLAN VIEW AND FROG PACK
CONCRETE TIES–136 LB RE RAIL

STANDARD 2806
SCALE: NTS
REVISION –
SHEET 1 OF 1
CADD FILE: ES2806–42

BILL OF MATERIAL						
ITEM	QTY FOR 20-75LC	QTY FOR 20-76LC	QTY FOR 20-77LC	DESCRIPTION	DWG NO	SCRRA PART NO
1	1	0	0	FLAT BAR, ASTM A36, 3/4" x 8" x 2'-9 1/4" LONG	-	
2	0	1	0	FLAT BAR, ASTM A36, 3/4" x 8" x 2'-8" LONG	-	
3	0	0	1	FLAT BAR, ASTM A36, 3/4" x 8" x 2'-7" LONG	-	
4	4	4	4	SHOULDER, PANDROL, FORGED TONGUELESS, TYPE 1	-	

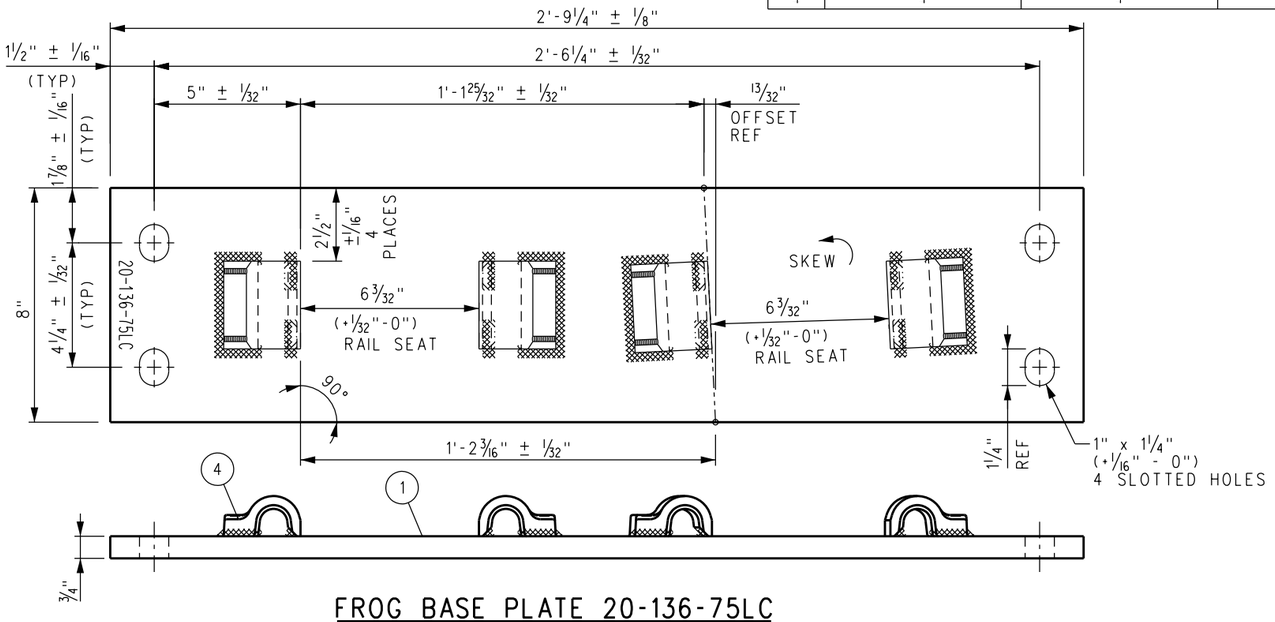

FROG BASE PLATE 20-136-75LC

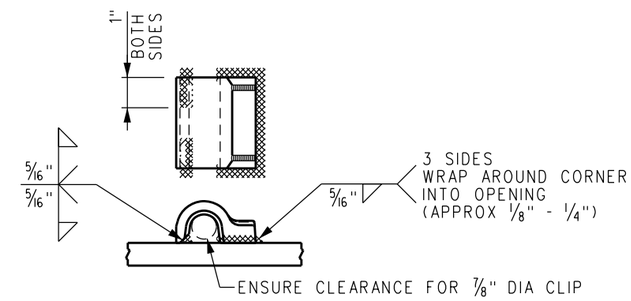

FORGED SHOULDER WELDING DETAIL

NOTES:

1. I.D. CHARACTERS TO BE 1/2" MINIMUM HEIGHT CLEARLY STAMPED AS SHOWN.
2. WELDS TO BE DRESSED FLUSH WITH SHOULDER & NOT TO PROTRUDE INTO RAIL SEAT.
3. SLOTTED HOLE CENTERS ARE INDICATED ON DRAWING.

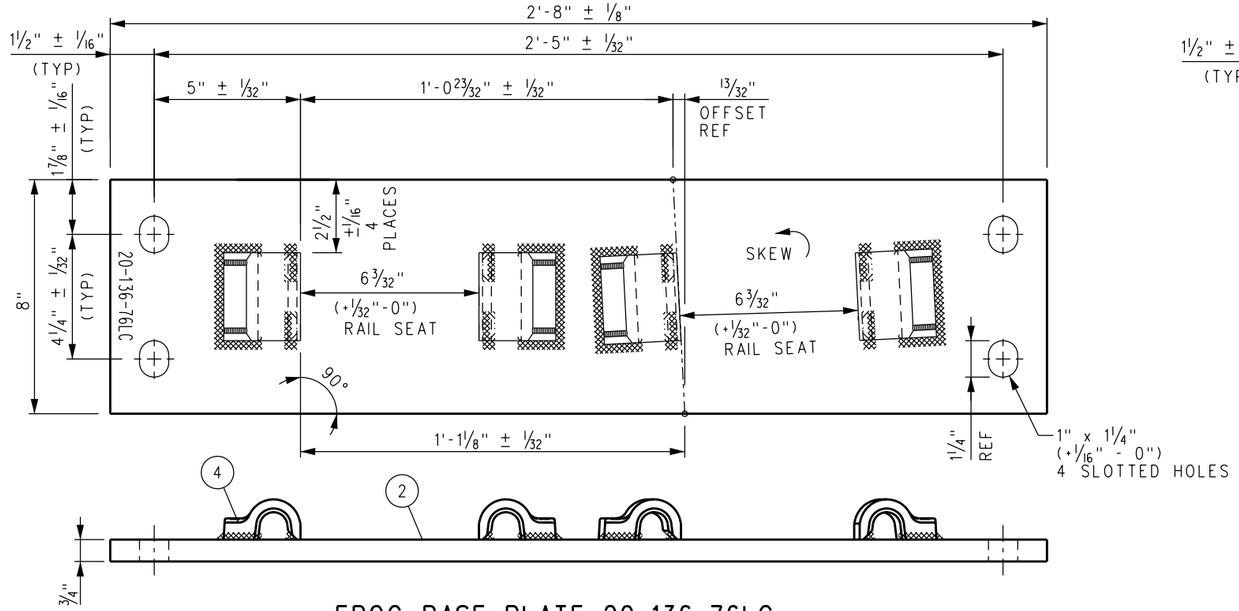

FROG BASE PLATE 20-136-76LC

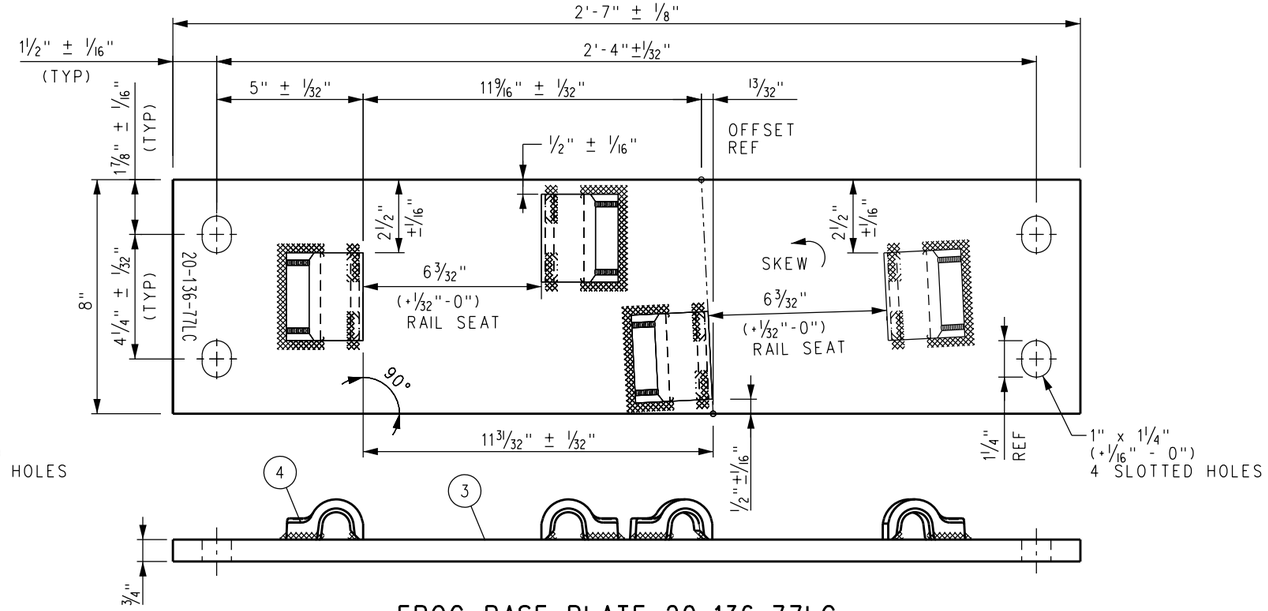

FROG BASE PLATE 20-136-77LC

REV.	DATE	DESCRIPTION	DES.	ENG.
X	XX-XX-XX	REVISION	XX	XX

DRAWN BY: HDR DATE: 03/31/2011

ASSISTANT DIRECTOR: STANDARDS & DESIGN

DIRECTOR OF ENGINEERING AND CONSTRUCTION

SCRRA ENGINEERING STANDARDS ARE INTENDED FOR SCRRA APPROVED USES ONLY. FOR NON-SCRRA APPROVED USES:
SCRRA SHALL NOT BE RESPONSIBLE FOR THE ACCURACY OR COMPLETENESS OF THE DATA OR INFORMATION CONTAINED HEREIN. THE SELECTION AND USE OF THESE STANDARDS IS THE SOLE RESPONSIBILITY OF THE USER AND SHOULD NOT BE USED WITHOUT CONSULTING A REGISTERED PROFESSIONAL ENGINEER. ALL WARRANTIES AND REPRESENTATIONS OF ANY KIND ARE DISCLAIMED. ANYONE MAKING USE OF THIS INFORMATION AGREES THAT IT ASSUMES ALL LIABILITY ARISING FROM SUCH USE. NO PART OF THESE STANDARDS SHOULD BE REPRODUCED OR DISTRIBUTED IN ANY FORM OR BY ANY MEANS WITHOUT THE PRIOR WRITTEN PERMISSION OF SCRRA. ALL RIGHTS RESERVED.

METROLINK®
SOUTHERN CALIFORNIA REGIONAL RAIL AUTHORITY
ONE GATEWAY PLAZA, 12TH FLOOR, L. A., CA. 90012

ENGINEERING STANDARDS

NO 20 WSM FROG LH
FROG BASE PLATES 20–75LC, 20–76LC AND 20–77LC
CONCRETE TIES–136 LB RE RAIL

STANDARD 2806
SCALE: NTS
REVISION –
SHEET 1 OF 1
CADD FILE: ES2806–43

BILL OF MATERIAL						
ITEM	QTY FOR 20-75RC	QTY FOR 20-76RC	QTY FOR 20-77RC	DESCRIPTION	DWG NO	SCRRA PART NO
1	1	0	0	FLAT BAR, ASTM A36, 3/4" x 8" x 2'-9 1/4" LONG	-	
2	0	1	0	FLAT BAR, ASTM A36, 3/4" x 8" x 2'-8" LONG	-	
3	0	0	1	FLAT BAR, ASTM A36, 3/4" x 8" x 2'-7" LONG	-	
4	4	4	4	SHOULDER, PANDROL, FORGED TONGUELESS, TYPE 1	-	

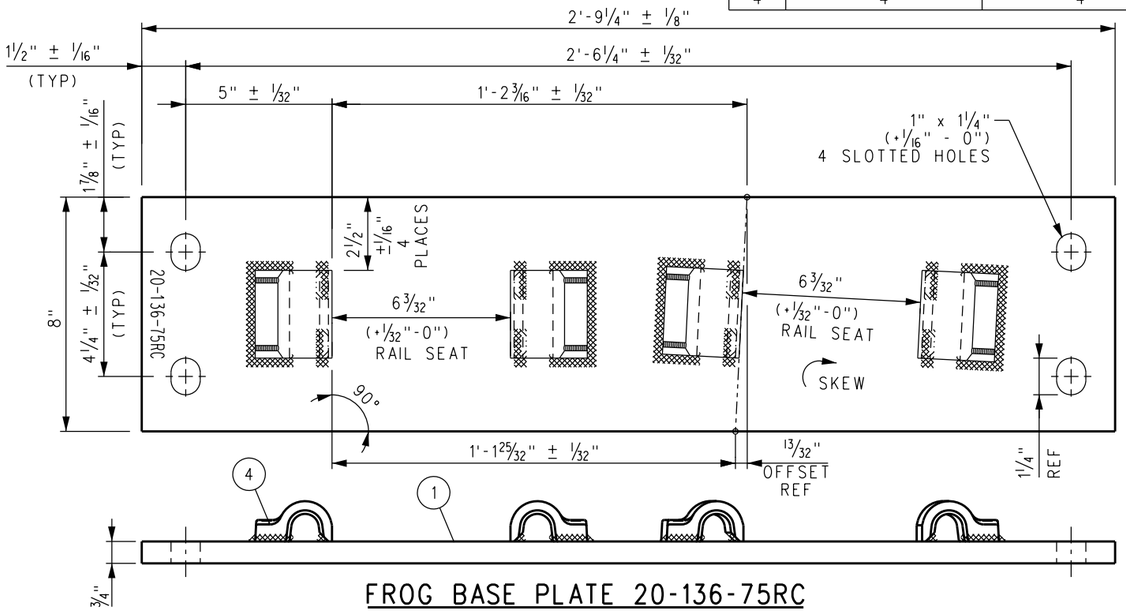

FROG BASE PLATE 20-136-75RC

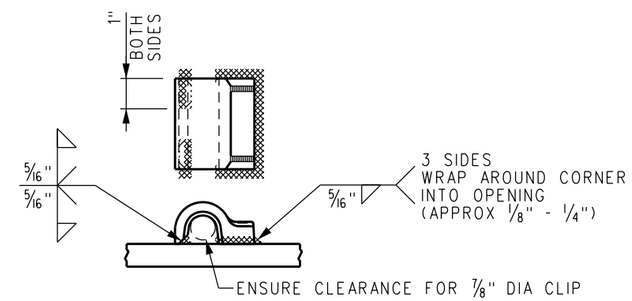

FORGED SHOULDER WELDING DETAIL

NOTES:

1. I.D. CHARACTERS TO BE 1/2" MINIMUM HEIGHT CLEARLY STAMPED AS SHOWN.
2. WELDS TO BE DRESSED FLUSH WITH SHOULDER & NOT TO PROTRUDE INTO RAIL SEAT.
3. SLOTTED HOLE CENTERS ARE INDICATED ON DRAWING.

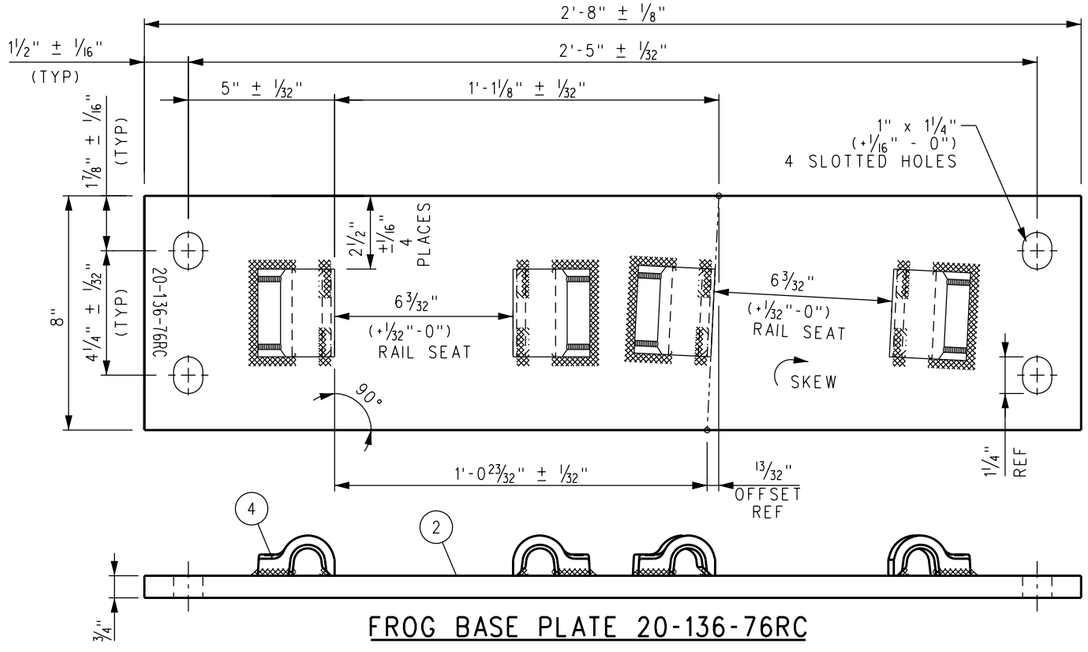

FROG BASE PLATE 20-136-76RC

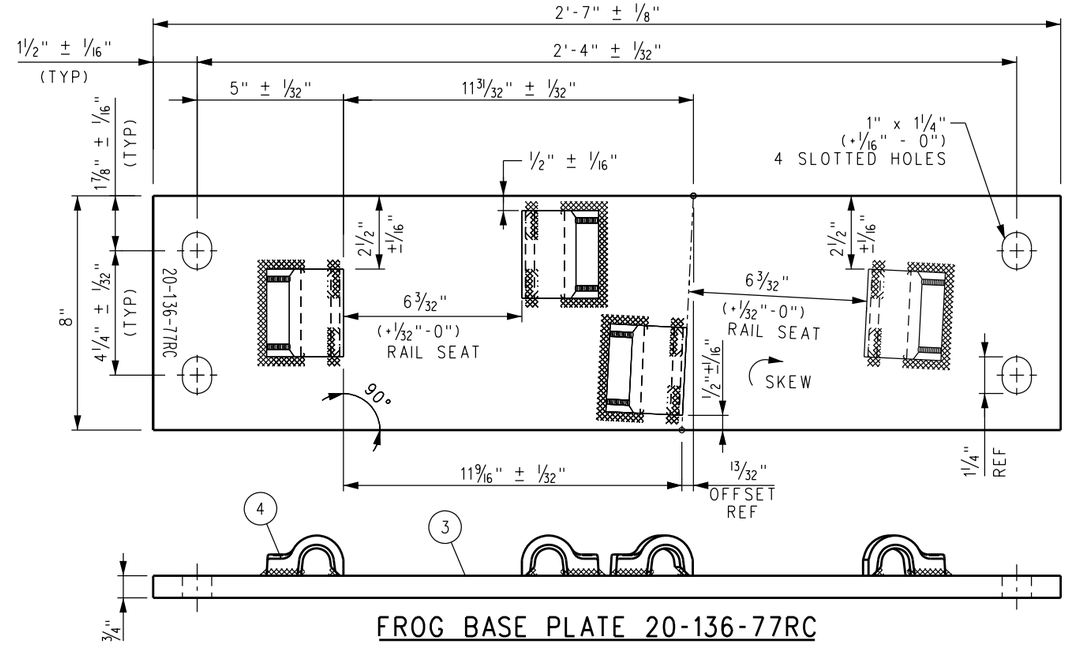

FROG BASE PLATE 20-136-77RC

REV.	DATE	DESCRIPTION	DES.	ENG.
X	XX-XX-XX	REVISION	XX	XX

DRAWN BY: HDR DATE: 03/31/2011

ASSISTANT DIRECTOR: STANDARDS & DESIGN

DIRECTOR OF ENGINEERING AND CONSTRUCTION

SCRRA ENGINEERING STANDARDS ARE INTENDED FOR SCRRA APPROVED USES ONLY. FOR NON-SCRRA APPROVED USES:
SCRRA SHALL NOT BE RESPONSIBLE FOR THE ACCURACY OR COMPLETENESS OF THE DATA OR INFORMATION CONTAINED HEREIN. THE SELECTION AND USE OF THESE STANDARDS IS THE SOLE RESPONSIBILITY OF THE USER AND SHOULD NOT BE USED WITHOUT CONSULTING A REGISTERED PROFESSIONAL ENGINEER. ALL WARRANTIES AND REPRESENTATIONS OF ANY KIND ARE DISCLAIMED. ANYONE MAKING USE OF THIS INFORMATION AGREES THAT IT ASSUMES ALL LIABILITY ARISING FROM SUCH USE. NO PART OF THESE STANDARDS SHOULD BE REPRODUCED OR DISTRIBUTED IN ANY FORM OR BY ANY MEANS WITHOUT THE PRIOR WRITTEN PERMISSION OF SCRRA. ALL RIGHTS RESERVED.

METROLINK®
SOUTHERN CALIFORNIA REGIONAL RAIL AUTHORITY
ONE GATEWAY PLAZA, 12TH FLOOR, L. A., CA. 90012

ENGINEERING STANDARDS

NO 20 WSM FROG RH
FROG BASE PLATES 20-75RC, 20-76RC AND 20-77RC
CONCRETE TIES-136 LB RE RAIL

STANDARD 2806
SCALE: NTS
REVISION -
SHEET 1 OF 1
CADD FILE: ES2806-44

UserName=> carlosa Date Plotted: 10/5/2011 3:55:52 PM Plot Driver=> S:\Plot Drivers\pdf.plt FileName=> s:\V8EngStds\2000\Turnouts\No 20 Turnout\ES2806-44.dgn

BILL OF MATERIAL				
ITEM	QTY	DESCRIPTION	DWG NO	SCRRA PART NO
1	1	BURNED PLATE, ASTM A36, 3/4" THICK	-	
2	1	BURNED STOP, 1/2" THICK, TAPERED 1 15/16" TO 2 1/4", 6" LONG	-	
3	9	SHOULDER, PANDROL, FORGED TONGUELESS, TYPE 1	-	

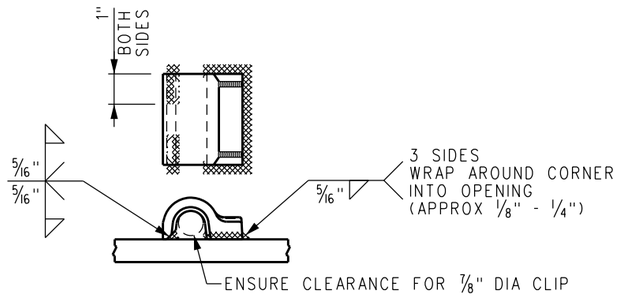

FORGED SHOULDER WELDING DETAIL

NOTES:

1. I.D. CHARACTERS TO BE 1/2" MINIMUM HEIGHT CLEARLY STAMPED AS SHOWN.
2. WELDS TO BE DRESSED FLUSH WITH SHOULDER & NOT TO PROTRUDE INTO RAIL SEAT.
3. SLOTTED HOLE CENTERS ARE INDICATED ON DRAWING.

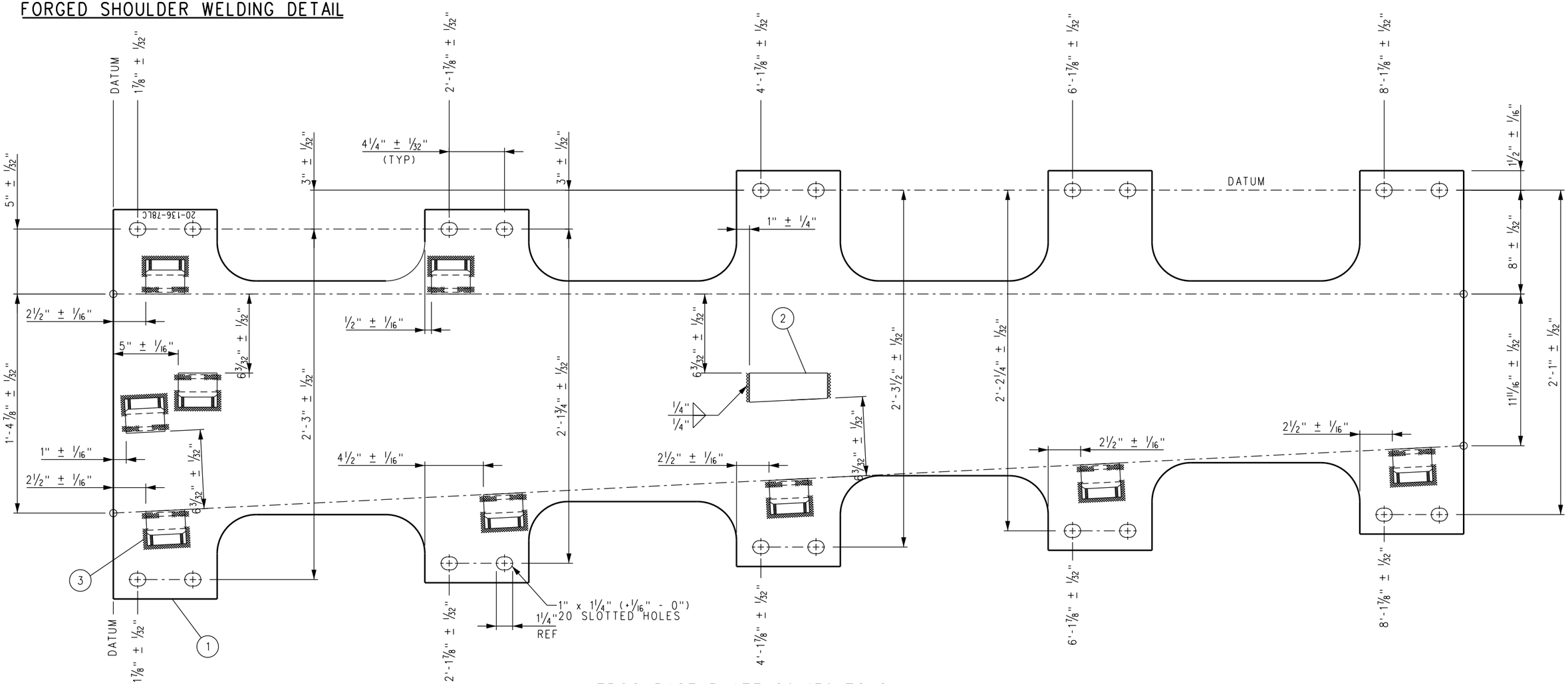

FROG BASE PLATE 20-136-78LC

REV.	DATE	DESCRIPTION	DES.	ENG.
X	XX-XX-XX	REVISION	XX	XX

DRAWN BY: HDR DATE: 03/31/2011

ASSISTANT DIRECTOR: STANDARDS & DESIGN

DIRECTOR OF ENGINEERING AND CONSTRUCTION

SCRRA ENGINEERING STANDARDS ARE INTENDED FOR SCRRA APPROVED USES ONLY. FOR NON-SCRRA APPROVED USES:
SCRRA SHALL NOT BE RESPONSIBLE FOR THE ACCURACY OR COMPLETENESS OF THE DATA OR INFORMATION CONTAINED HEREIN. THE SELECTION AND USE OF THESE STANDARDS IS THE SOLE RESPONSIBILITY OF THE USER AND SHOULD NOT BE USED WITHOUT CONSULTING A REGISTERED PROFESSIONAL ENGINEER. ALL WARRANTIES AND REPRESENTATIONS OF ANY KIND ARE DISCLAIMED. ANYONE MAKING USE OF THIS INFORMATION AGREES THAT IT ASSUMES ALL LIABILITY ARISING FROM SUCH USE. NO PART OF THESE STANDARDS SHOULD BE REPRODUCED OR DISTRIBUTED IN ANY FORM OR BY ANY MEANS WITHOUT THE PRIOR WRITTEN PERMISSION OF SCRRA. ALL RIGHTS RESERVED.

METROLINK®
SOUTHERN CALIFORNIA REGIONAL RAIL AUTHORITY
ONE GATEWAY PLAZA, 12TH FLOOR, L. A., CA. 90012

ENGINEERING STANDARDS

NO 20 WSM FROG LH
FROG BASE PLATE 20–78LC
CONCRETE TIES–136 LB RE RAIL

STANDARD 2806
SCALE: NTS
REVISION –
SHEET 1 OF 1
CADD FILE: ES2806–45

BILL OF MATERIAL				
ITEM	QTY	DESCRIPTION	DWG NO	SCRRA PART NO
1	1	BURNED PLATE, ASTM A36, 3/4" THICK	-	
2	1	BURNED STOP, 1/2" THICK, TAPERED 1 15/16" TO 2 1/4", 6" LONG	-	
3	9	SHOULDER, PANDROL, FORGED TONGUELESS, TYPE 1	-	

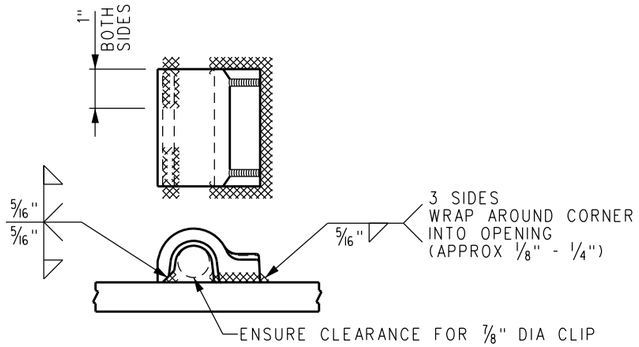

FORGED SHOULDER WELDING DETAIL

NOTES:

1. I.D. CHARACTERS TO BE 1/2" MINIMUM HEIGHT CLEARLY STAMPED AS SHOWN.
2. WELDS TO BE DRESSED FLUSH WITH SHOULDER & NOT TO PROTRUDE INTO RAIL SEAT.
3. SLOTTED HOLE CENTERS ARE INDICATED ON DRAWING.

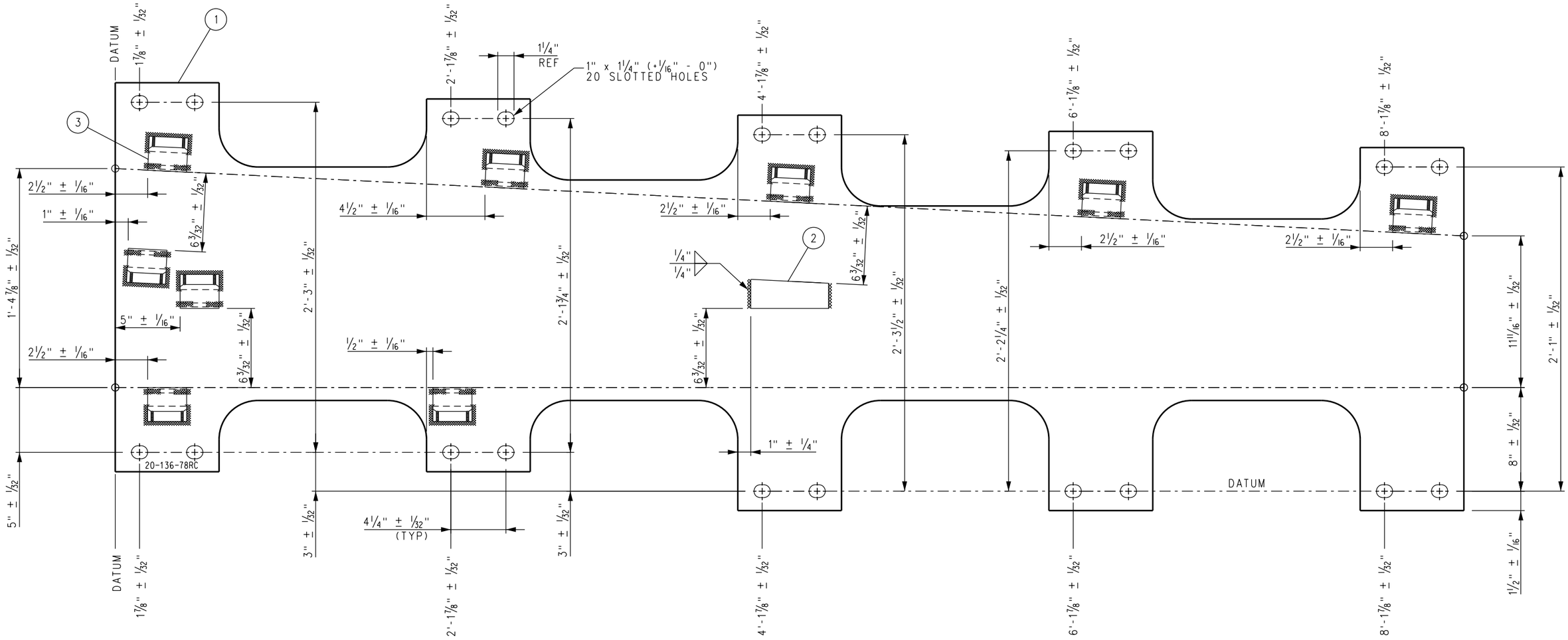

FROG BASE PLATE 20-136-78RC

X	XX-XX-XX	REVISION	XX	XX
REV.	DATE	DESCRIPTION	DES.	ENG.

DRAWN BY: HDR DATE: 03/31/2011

ASSISTANT DIRECTOR: STANDARDS & DESIGN

DIRECTOR OF ENGINEERING AND CONSTRUCTION

SCRRA ENGINEERING STANDARDS ARE INTENDED FOR SCRRA APPROVED USES ONLY. FOR NON-SCRRA APPROVED USES:
SCRRA SHALL NOT BE RESPONSIBLE FOR THE ACCURACY OR COMPLETENESS OF THE DATA OR INFORMATION CONTAINED HEREIN. THE SELECTION AND USE OF THESE STANDARDS IS THE SOLE RESPONSIBILITY OF THE USER AND SHOULD NOT BE USED WITHOUT CONSULTING A REGISTERED PROFESSIONAL ENGINEER. ALL WARRANTIES AND REPRESENTATIONS OF ANY KIND ARE DISCLAIMED. ANYONE MAKING USE OF THIS INFORMATION AGREES THAT IT ASSUMES ALL LIABILITY ARISING FROM SUCH USE. NO PART OF THESE STANDARDS SHOULD BE REPRODUCED OR DISTRIBUTED IN ANY FORM OR BY ANY MEANS WITHOUT THE PRIOR WRITTEN PERMISSION OF SCRRA. ALL RIGHTS RESERVED.

METROLINK®
SOUTHERN CALIFORNIA REGIONAL RAIL AUTHORITY
ONE GATEWAY PLAZA, 12TH FLOOR, L. A., CA. 90012

ENGINEERING STANDARDS

NO 20 WSM FROG RH
FROG BASE PLATE 20-78RC
CONCRETE TIES-136 LB RE RAIL

STANDARD 2806
SCALE: NTS
REVISION –
SHEET 1 OF 1
CADD FILE: ES2806-46

NOTES:

1. I.D. CHARACTERS TO BE 1/2" MINIMUM HEIGHT CLEARLY STAMPED AS SHOWN.
2. WELDS TO BE DRESSED FLUSH WITH SHOULDER & NOT TO PROTRUDE INTO RAIL SEAT.
3. OPENINGS IN BOLT CAPTURE BLOCKS SHALL BE FREE OF WELD AND SPATTER.
4. SLOTTED HOLE CENTERS ARE INDICATED ON DRAWING.

BILL OF MATERIAL

ITEM	QTY	DESCRIPTION	DWG NO	SCRRA PART NO
1	1	BURNED PLATE, ASTM A36, 3/4" THICK	-	
2	3	CAPTURE BLOCK FOR PLATE CLIP	-	
3	4	CAPTURE BLOCK FOR HORN KEEPER	-	
4	2	SHOULDER, PANDROL, FORGED TONGUELESS, TYPE 1	-	

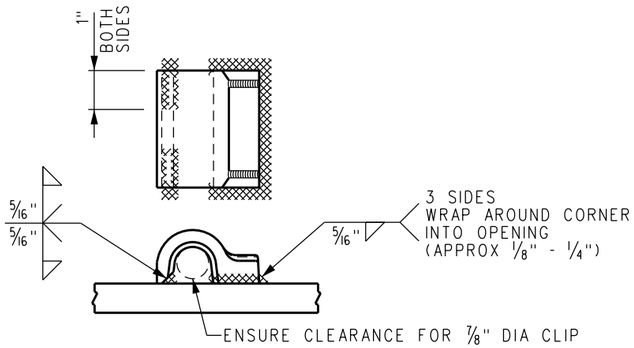

FORGED SHOULDER WELDING DETAIL

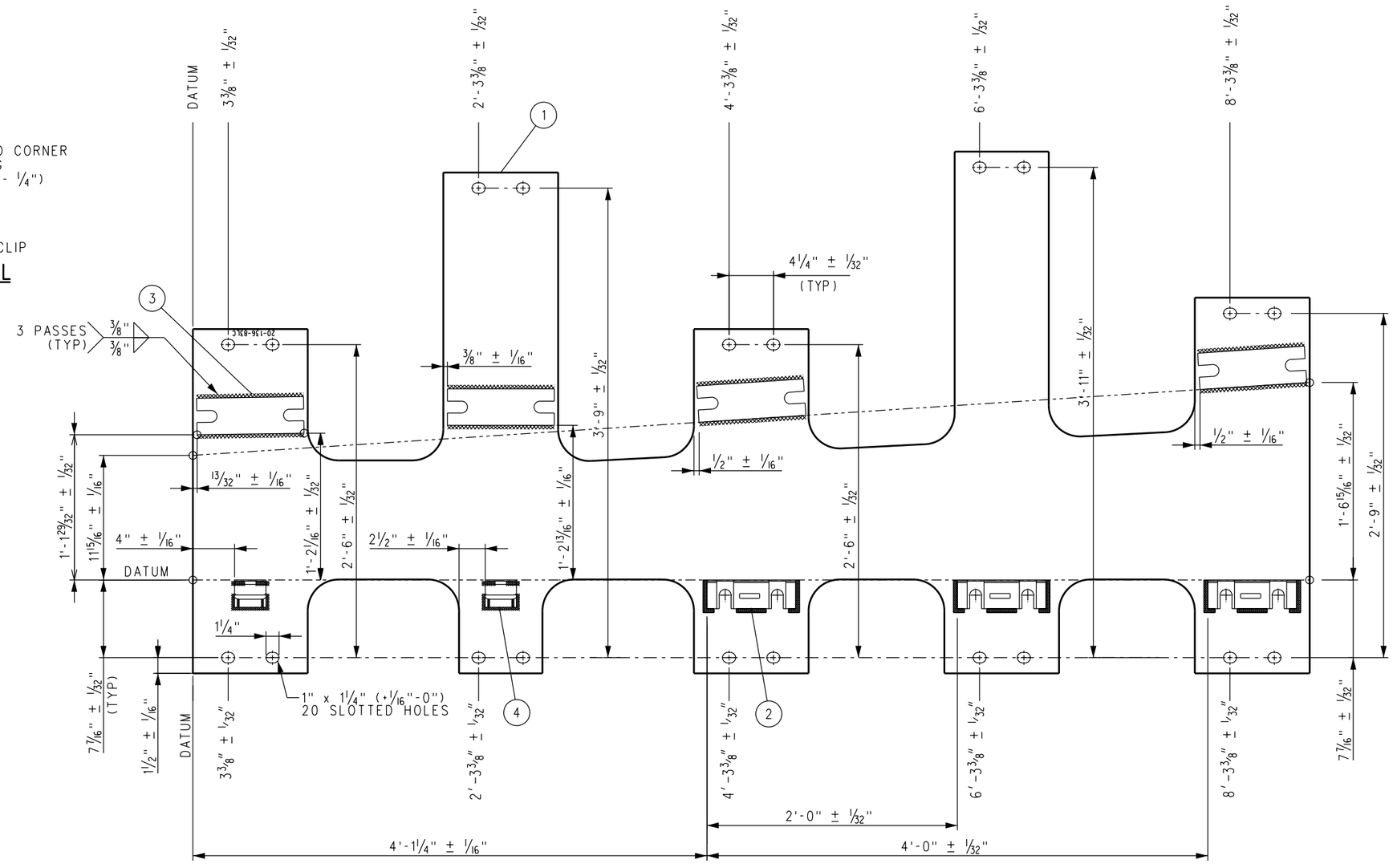

FROG BASE PLATE 20-136-83LC

REV.	DATE	DESCRIPTION	DES.	ENG.
X	XX-XX-XX	REVISION	XX	XX

DRAWN BY: HDR DATE: 03/31/2011

ASSISTANT DIRECTOR: STANDARDS & DESIGN

DIRECTOR OF ENGINEERING AND CONSTRUCTION

SCRRA ENGINEERING STANDARDS ARE INTENDED FOR SCRRA APPROVED USES ONLY. FOR NON-SCRRA APPROVED USES: SCRRA SHALL NOT BE RESPONSIBLE FOR THE ACCURACY OR COMPLETENESS OF THE DATA OR INFORMATION CONTAINED HEREIN. THE SELECTION AND USE OF THESE STANDARDS IS THE SOLE RESPONSIBILITY OF THE USER AND SHOULD NOT BE USED WITHOUT CONSULTING A REGISTERED PROFESSIONAL ENGINEER. ALL WARRANTIES AND REPRESENTATIONS OF ANY KIND ARE DISCLAIMED. ANYONE MAKING USE OF THIS INFORMATION AGREES THAT IT ASSUMES ALL LIABILITY ARISING FROM SUCH USE. NO PART OF THESE STANDARDS SHOULD BE REPRODUCED OR DISTRIBUTED IN ANY FORM OR BY ANY MEANS WITHOUT THE PRIOR WRITTEN PERMISSION OF SCRRA. ALL RIGHTS RESERVED.

METROLINK®
SOUTHERN CALIFORNIA REGIONAL RAIL AUTHORITY
ONE GATEWAY PLAZA, 12TH FLOOR, L. A., CA. 90012

ENGINEERING STANDARDS

NO 20 WSM FROG LH
FROG BASE PLATE 20-83LC
CONCRETE TIES-136 LB RE RAIL

STANDARD 2806
SCALE: NTS
REVISION –
SHEET 1 OF 1
CADD FILE: ES2806-47

NOTES:

1. I.D. CHARACTERS TO BE ½" MINIMUM HEIGHT CLEARLY STAMPED AS SHOWN.
2. WELDS TO BE DRESSED FLUSH WITH SHOULDER & NOT TO PROTRUDE INTO RAIL SEAT.
3. OPENINGS IN BOLT CAPTURE BLOCKS SHALL BE FREE OF WELD AND SPATTER.
4. SLOTTED HOLE CENTERS ARE INDICATED ON DRAWING.

BILL OF MATERIAL

ITEM	QTY	DESCRIPTION	DWG NO	SCRRA PART NO
1	1	BURNED PLATE, ASTM A36, ¾" THICK	-	
2	3	CAPTURE BLOCK FOR PLATE CLIP	-	
3	4	CAPTURE BLOCK FOR HORN KEEPER	-	
4	2	SHOULDER, PANDROL, FORGED TONGUELESS, TYPE 1	-	

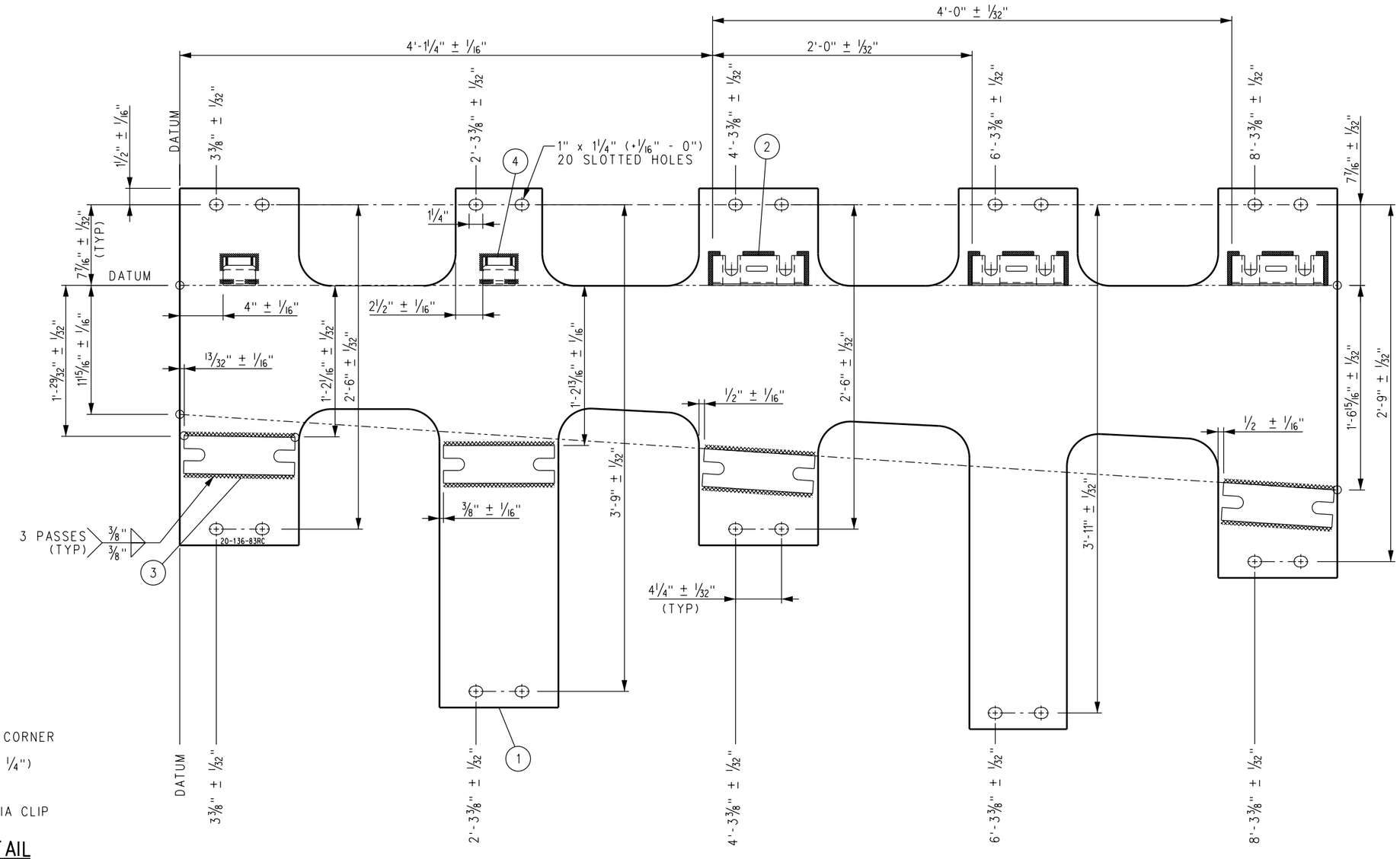

FORGED SHOULDER WELDING DETAIL

FROG BASE PLATE 20-136-83RC

REV.	DATE	DESCRIPTION	DES.	ENG.
X	XX-XX-XX	REVISION	XX	XX

DRAWN BY: HDR DATE: 03/31/2011

ASSISTANT DIRECTOR: STANDARDS & DESIGN

DIRECTOR OF ENGINEERING AND CONSTRUCTION

SCRRA ENGINEERING STANDARDS ARE INTENDED FOR SCRRA APPROVED USES ONLY. FOR NON-SCRRA APPROVED USES: SCRRA SHALL NOT BE RESPONSIBLE FOR THE ACCURACY OR COMPLETENESS OF THE DATA OR INFORMATION CONTAINED HEREIN. THE SELECTION AND USE OF THESE STANDARDS IS THE SOLE RESPONSIBILITY OF THE USER AND SHOULD NOT BE USED WITHOUT CONSULTING A REGISTERED PROFESSIONAL ENGINEER. ALL WARRANTIES AND REPRESENTATIONS OF ANY KIND ARE DISCLAIMED. ANYONE MAKING USE OF THIS INFORMATION AGREES THAT IT ASSUMES ALL LIABILITY ARISING FROM SUCH USE. NO PART OF THESE STANDARDS SHOULD BE REPRODUCED OR DISTRIBUTED IN ANY FORM OR BY ANY MEANS WITHOUT THE PRIOR WRITTEN PERMISSION OF SCRRA. ALL RIGHTS RESERVED.

METROLINK®

SOUTHERN CALIFORNIA REGIONAL RAIL AUTHORITY
ONE GATEWAY PLAZA, 12TH FLOOR, L. A., CA. 90012

ENGINEERING STANDARDS

NO 20 WSM FROG RH
FROG BASE PLATE 20-83RC
CONCRETE TIES-136 LB RE RAIL

STANDARD 2806
SCALE: NTS
REVISION –
SHEET 1 OF 1
CADD FILE: ES2806-48

NOTES:

1. I.D. CHARACTERS TO BE 1/2" MINIMUM HEIGHT CLEARLY STAMPED AS SHOWN.
2. WELDS TO BE DRESSED FLUSH WITH SHOULDER AND NOT TO PROTRUDE INTO RAIL SEAT.
3. OPENINGS IN BOLT CAPTURE BLOCKS SHALL BE FREE OF WELD AND SPATTER.
4. SLOTTED HOLE CENTERS ARE INDICATED ON DRAWING.

BILL OF MATERIAL

ITEM	QTY	DESCRIPTION	DWG NO	SCRRA PART NO
1	1	BURNED PLATE, ASTM A36, 3/4" THICK	-	
2	4	CAPTURE BLOCK FOR PLATE CLIP	-	
3	3	CAPTURE BLOCK FOR HORN KEEPER	-	
4	2	FLAT BAR, ASTM A36, 1/2" THICK x 2" x 6" LONG	-	
5	1	SHOULDER, PANDROL, FORGED TONGUELESS, TYPE 1	-	

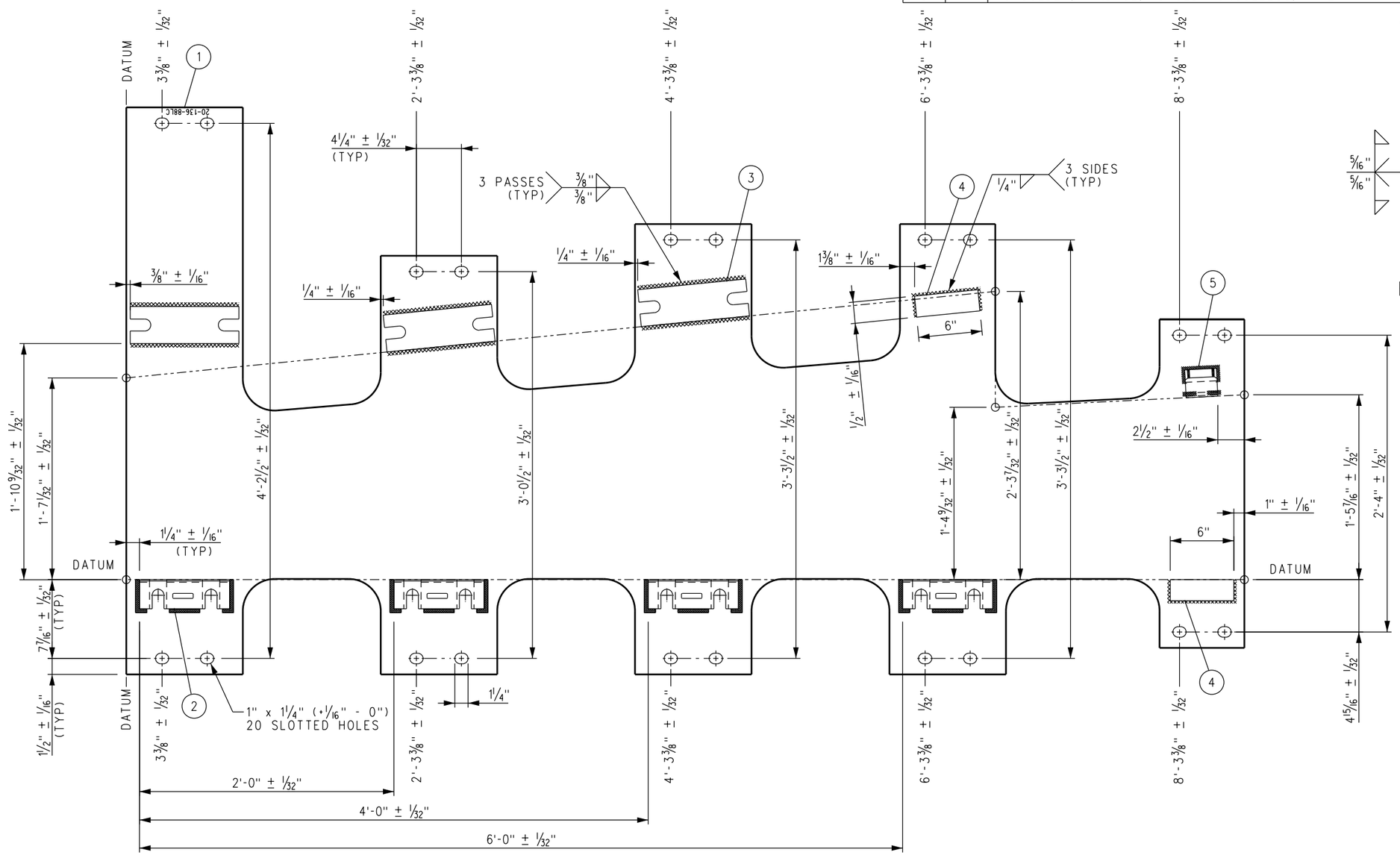

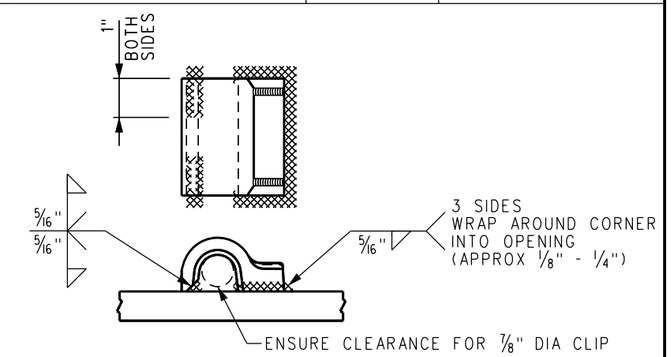

FORGED SHOULDER WELDING DETAIL

FROG BASE PLATE 20-136-88LC

REV.	DATE	DESCRIPTION	DES.	ENG.
X	XX-XX-XX	REVISION	XX	XX

DRAWN BY: HDR DATE: 03/31/2011

ASSISTANT DIRECTOR: STANDARDS & DESIGN

DIRECTOR OF ENGINEERING AND CONSTRUCTION

SCRRA ENGINEERING STANDARDS ARE INTENDED FOR SCRRA APPROVED USES ONLY. FOR NON-SCRRA APPROVED USES:
SCRRA SHALL NOT BE RESPONSIBLE FOR THE ACCURACY OR COMPLETENESS OF THE DATA OR INFORMATION CONTAINED HEREIN. THE SELECTION AND USE OF THESE STANDARDS IS THE SOLE RESPONSIBILITY OF THE USER AND SHOULD NOT BE USED WITHOUT CONSULTING A REGISTERED PROFESSIONAL ENGINEER. ALL WARRANTIES AND REPRESENTATIONS OF ANY KIND ARE DISCLAIMED. ANYONE MAKING USE OF THIS INFORMATION AGREES THAT IT ASSUMES ALL LIABILITY ARISING FROM SUCH USE. NO PART OF THESE STANDARDS SHOULD BE REPRODUCED OR DISTRIBUTED IN ANY FORM OR BY ANY MEANS WITHOUT THE PRIOR WRITTEN PERMISSION OF SCRRA. ALL RIGHTS RESERVED.

METROLINK®
SOUTHERN CALIFORNIA REGIONAL RAIL AUTHORITY
ONE GATEWAY PLAZA, 12TH FLOOR, L. A., CA. 90012

ENGINEERING STANDARDS

NO 20 WSM FROG LH
FROG BASE PLATE 20-88LC
CONCRETE TIES-136 LB RE RAIL

STANDARD 2806
SCALE: NTS
REVISION –
SHEET 1 OF 1
CADD FILE: ES2806-49

BILL OF MATERIAL				
ITEM	QTY	DESCRIPTION	DWG NO	SCRRA PART NO
1	1	BURNED PLATE, 3/4" THICK	-	
2	4	CAPTURE BLOCK FOR PLATE CLIP	-	
3	3	CAPTURE BLOCK FOR HORN KEEPER	-	
4	2	FLAT BAR, ASTM A36, 1/2" THICK x 2" x 6" LONG	-	
5	1	SHOULDER, PANDROL, FORGED TONGUELESS, TYPE 1	-	

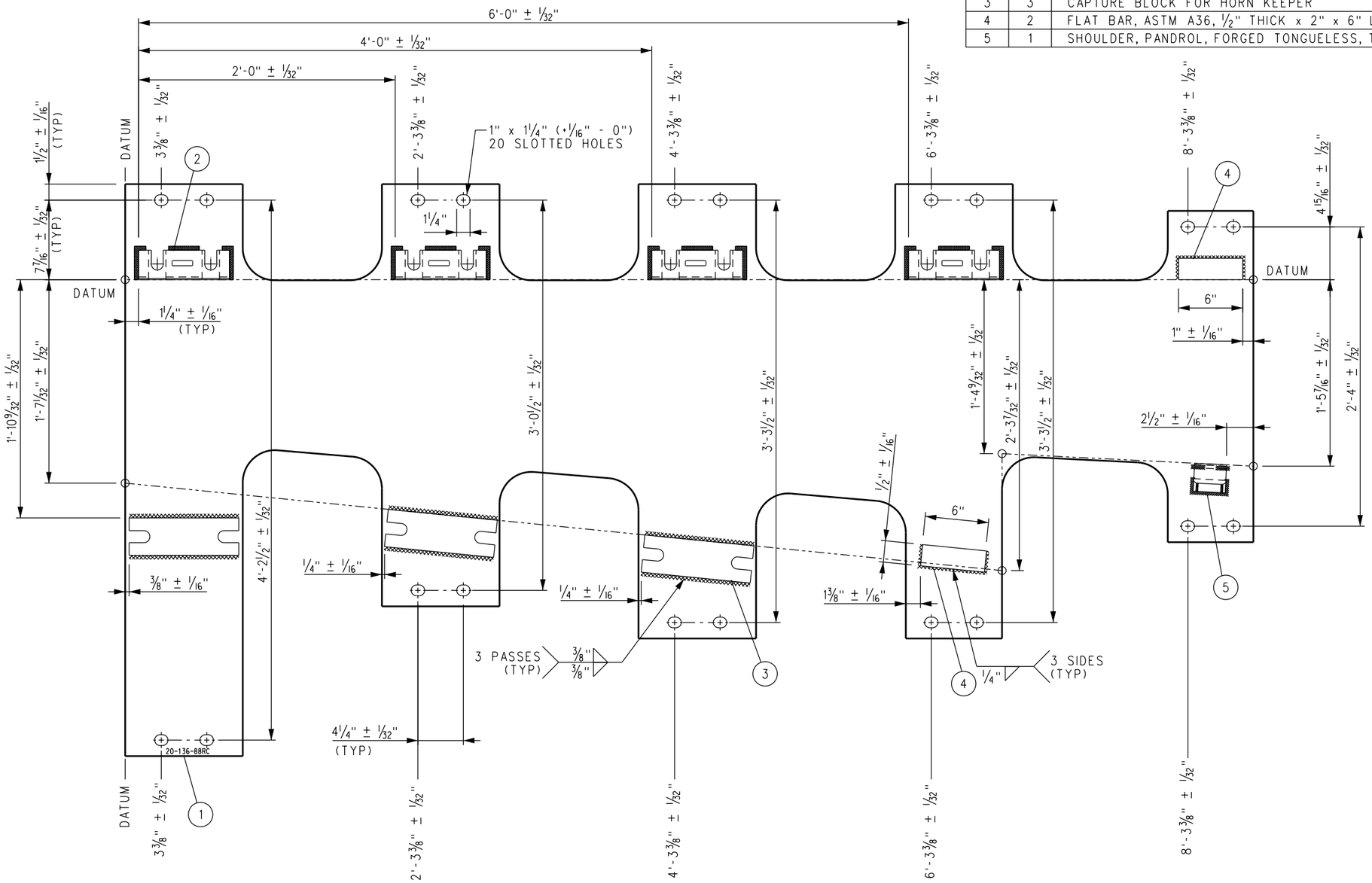

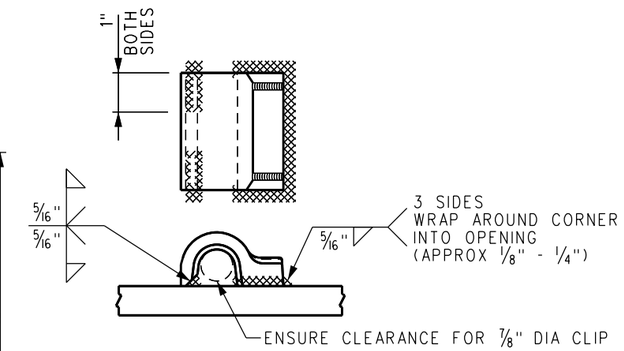

FORGED SHOULDER WELDING DETAIL

FROG BASE PLATE 20-136-88RC

NOTES:

1. I.D. CHARACTERS TO BE 1/2" MINIMUM HEIGHT CLEARLY STAMPED AS SHOWN.
2. WELDS TO BE DRESSED FLUSH WITH SHOULDER AND NOT TO PROTRUDE INTO RAIL SEAT.
3. OPENINGS IN BOLT CAPTURE BLOCKS SHALL BE FREE OF WELD AND SPATTER.
4. SLOTTED HOLE CENTERS ARE INDICATED ON DRAWING.

REV.	DATE	DESCRIPTION	DES.	ENG.
X	XX-XX-XX	REVISION	XX	XX

DRAWN BY: HDR DATE: 03/31/2011

ASSISTANT DIRECTOR: STANDARDS & DESIGN

DIRECTOR OF ENGINEERING AND CONSTRUCTION

SCRRA ENGINEERING STANDARDS ARE INTENDED FOR SCRRA APPROVED USES ONLY. FOR NON-SCRRA APPROVED USES:
SCRRA SHALL NOT BE RESPONSIBLE FOR THE ACCURACY OR COMPLETENESS OF THE DATA OR INFORMATION CONTAINED HEREIN. THE SELECTION AND USE OF THESE STANDARDS IS THE SOLE RESPONSIBILITY OF THE USER AND SHOULD NOT BE USED WITHOUT CONSULTING A REGISTERED PROFESSIONAL ENGINEER. ALL WARRANTIES AND REPRESENTATIONS OF ANY KIND ARE DISCLAIMED. ANYONE MAKING USE OF THIS INFORMATION AGREES THAT IT ASSUMES ALL LIABILITY ARISING FROM SUCH USE. NO PART OF THESE STANDARDS SHOULD BE REPRODUCED OR DISTRIBUTED IN ANY FORM OR BY ANY MEANS WITHOUT THE PRIOR WRITTEN PERMISSION OF SCRRA. ALL RIGHTS RESERVED.

METROLINK®
SOUTHERN CALIFORNIA REGIONAL RAIL AUTHORITY
ONE GATEWAY PLAZA, 12TH FLOOR, L. A., CA. 90012

ENGINEERING STANDARDS

NO 20 WSM FROG RH
FROG BASE PLATE 20-88RC
CONCRETE TIES-136 LB RE RAIL

STANDARD 2806
SCALE: NTS
REVISION –
SHEET 1 OF 1
CADD FILE: ES2806-50

BILL OF MATERIAL						
ITEM	QTY FOR 20-93LC	QTY FOR 20-94LC	QTY FOR 20-95LC	DESCRIPTION	DWG NO	SCRRA PART NO
1	1	0	0	FLAT BAR, ASTM A36, 3/4" x 8" x 2'-3" LONG	-	
2	0	1	0	FLAT BAR, ASTM A36, 3/4" x 8" x 2'-4" LONG	-	
3	0	0	1	FLAT BAR, ASTM A36, 3/4" x 8" x 2'-5 1/2" LONG	-	
4	2	2	4	SHOULDER, PANDROL, FORGED TONGUELESS, TYPE 1	-	
5	0	1	0	BURNED STOP, 1/2" THICK, TAPERED 2 3/8" TO 2 21/32", 6" LONG	-	

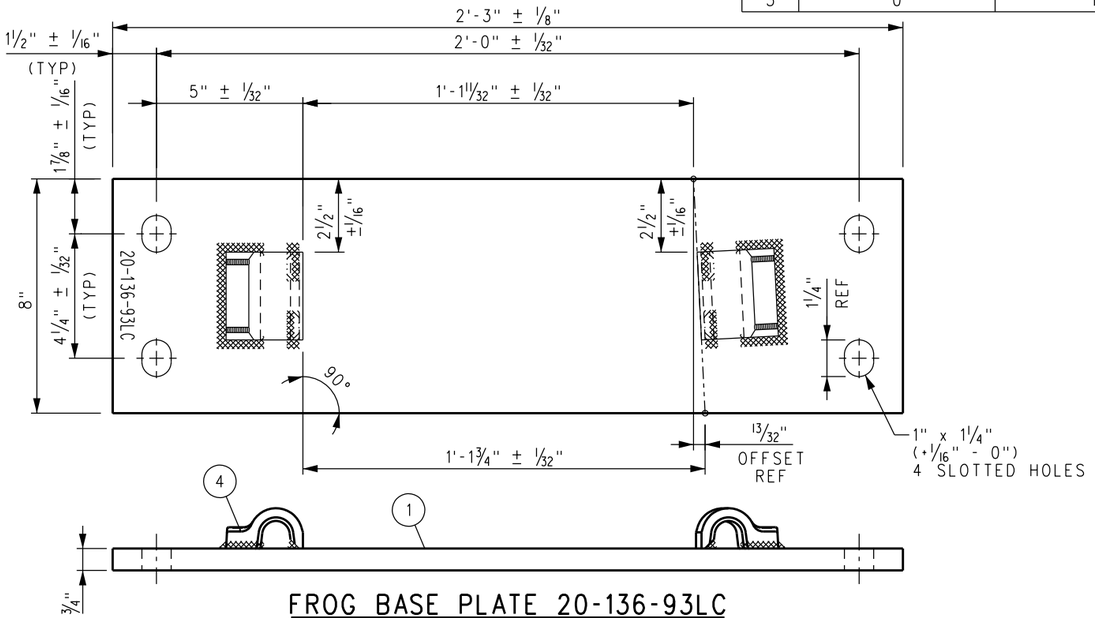

FROG BASE PLATE 20-136-93LC

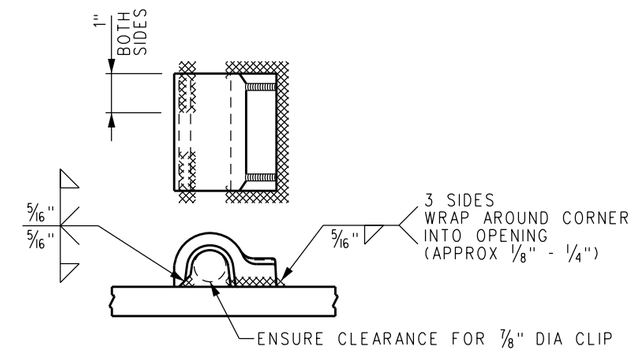

FORGED SHOULDER WELDING DETAIL

NOTES:

1. I.D. CHARACTERS TO BE 1/2" MINIMUM HEIGHT CLEARLY STAMPED AS SHOWN.
2. WELDS TO BE DRESSED FLUSH WITH SHOULDER & NOT TO PROTRUDE INTO RAIL SEAT.
3. SLOTTED HOLE CENTERS ARE INDICATED ON DRAWING.

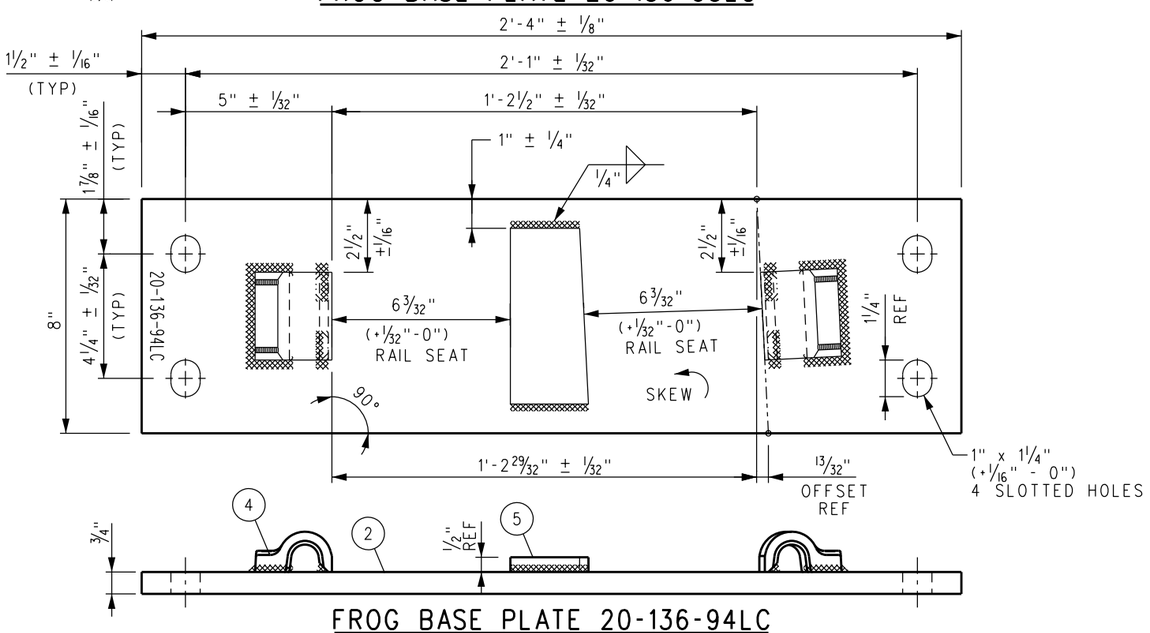

FROG BASE PLATE 20-136-94LC

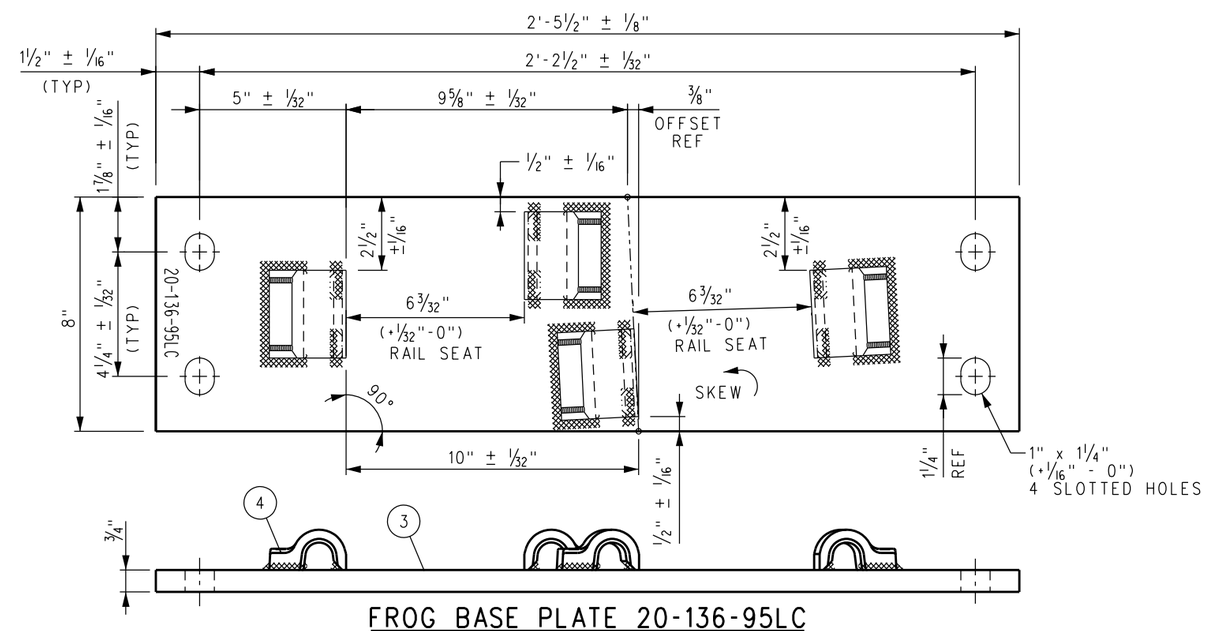

FROG BASE PLATE 20-136-95LC

REV.	DATE	DESCRIPTION	DES.	ENG.
X	XX-XX-XX	REVISION	XX	XX

DRAWN BY: HDR DATE: 03/31/2011

ASSISTANT DIRECTOR: STANDARDS & DESIGN

DIRECTOR OF ENGINEERING AND CONSTRUCTION

SCRRA ENGINEERING STANDARDS ARE INTENDED FOR SCRRA APPROVED USES ONLY. FOR NON-SCRRA APPROVED USES:
SCRRA SHALL NOT BE RESPONSIBLE FOR THE ACCURACY OR COMPLETENESS OF THE DATA OR INFORMATION CONTAINED HEREIN. THE SELECTION AND USE OF THESE STANDARDS IS THE SOLE RESPONSIBILITY OF THE USER AND SHOULD NOT BE USED WITHOUT CONSULTING A REGISTERED PROFESSIONAL ENGINEER. ALL WARRANTIES AND REPRESENTATIONS OF ANY KIND ARE DISCLAIMED. ANYONE MAKING USE OF THIS INFORMATION AGREES THAT IT ASSUMES ALL LIABILITY ARISING FROM SUCH USE. NO PART OF THESE STANDARDS SHOULD BE REPRODUCED OR DISTRIBUTED IN ANY FORM OR BY ANY MEANS WITHOUT THE PRIOR WRITTEN PERMISSION OF SCRRA. ALL RIGHTS RESERVED.

METROLINK®
SOUTHERN CALIFORNIA REGIONAL RAIL AUTHORITY
ONE GATEWAY PLAZA, 12TH FLOOR, L. A., CA. 90012

ENGINEERING STANDARDS

NO 20 WSM FROG LH
FROG BASE PLATES 20-93LC, 20-94LC AND 20-95LC
CONCRETE TIES-136 LB RE RAIL

STANDARD: 2806
SCALE: NTS
REVISION: -
SHEET: 1 OF 1
CADD FILE: ES2806-51

BILL OF MATERIAL						
ITEM	QTY FOR 20-93RC	QTY FOR 20-94RC	QTY FOR 20-95RC	DESCRIPTION	DWG NO	SCRRA PART NO
1	1	0	0	FLAT BAR, ASTM A36, 3/4" x 8" x 2'-3" LONG	-	
2	0	1	0	FLAT BAR, ASTM A36, 3/4" x 8" x 2'-4" LONG	-	
3	0	0	1	FLAT BAR, ASTM A36, 3/4" x 8" x 2'-5 1/2" LONG	-	
4	2	2	4	SHOULDER, PANDROL, FORGED TONGUELESS, TYPE 1	-	
5	0	1	0	BURNED STOP, 1/2" THICK, TAPERED 2 3/8" TO 2 21/32", 6" LONG	-	

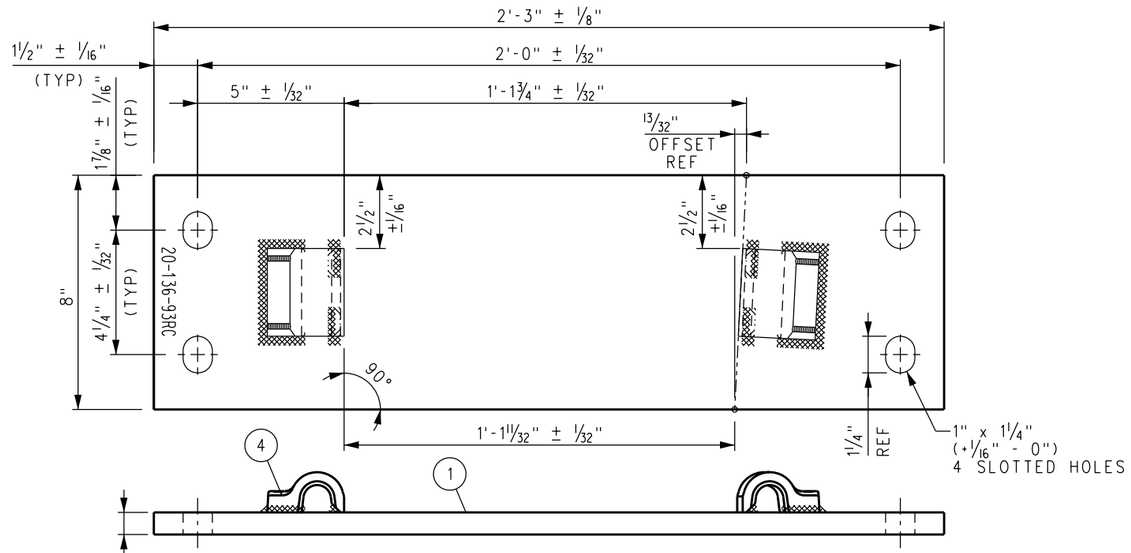

FROG BASE PLATE 20-136-93RC

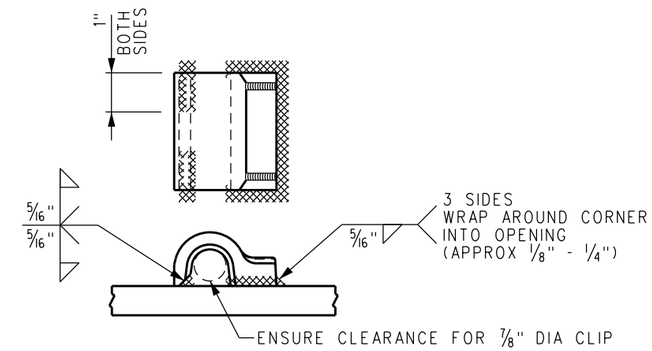

FORGED SHOULDER WELDING DETAIL

NOTES:

1. I.D. CHARACTERS TO BE 1/2" MINIMUM HEIGHT CLEARLY STAMPED AS SHOWN.
2. WELDS TO BE DRESSED FLUSH WITH SHOULDER & NOT TO PROTRUDE INTO RAIL SEAT.
3. SLOTTED HOLE CENTERS ARE INDICATED ON DRAWING.

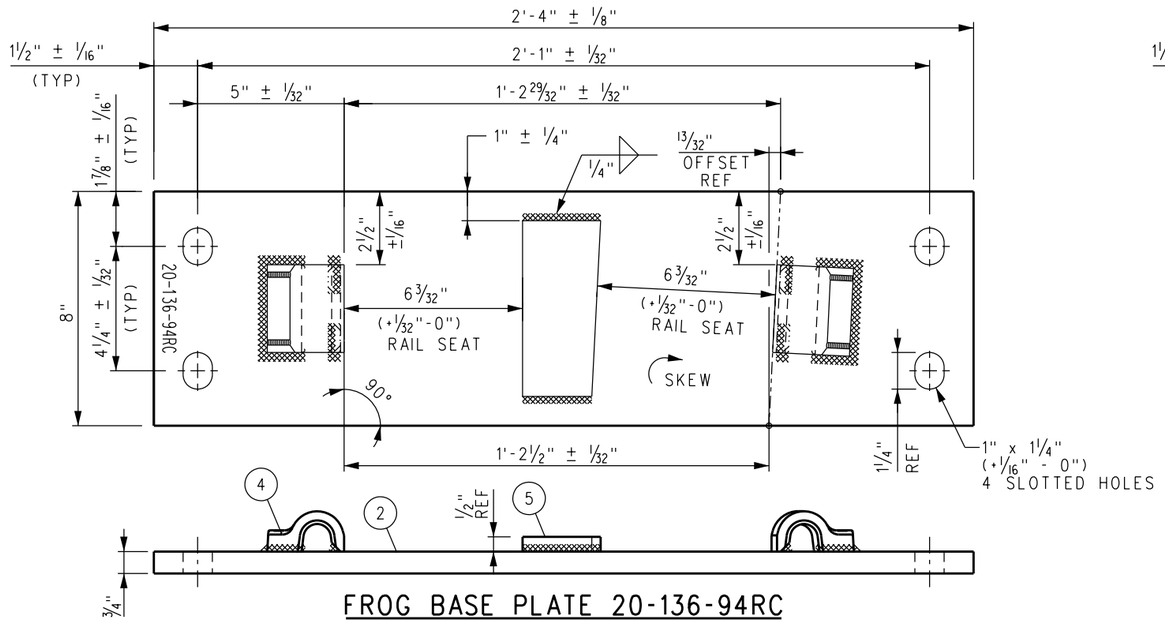

FROG BASE PLATE 20-136-94RC

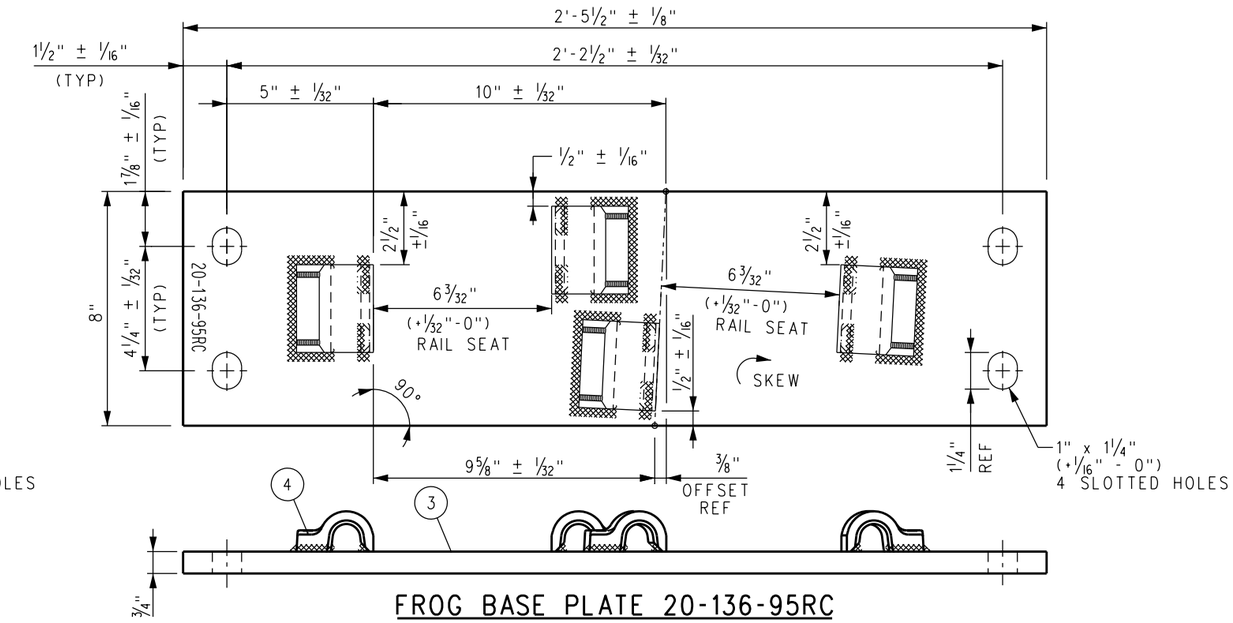

FROG BASE PLATE 20-136-95RC

REV.	DATE	DESCRIPTION	DES.	ENG.
X	XX-XX-XX	REVISION	XX	XX

DRAWN BY: HDR DATE: 03/31/2011

ASSISTANT DIRECTOR: STANDARDS & DESIGN

DIRECTOR OF ENGINEERING AND CONSTRUCTION

SCRRA ENGINEERING STANDARDS ARE INTENDED FOR SCRRA APPROVED USES ONLY. FOR NON-SCRRA APPROVED USES:
SCRRA SHALL NOT BE RESPONSIBLE FOR THE ACCURACY OR COMPLETENESS OF THE DATA OR INFORMATION CONTAINED HEREIN. THE SELECTION AND USE OF THESE STANDARDS IS THE SOLE RESPONSIBILITY OF THE USER AND SHOULD NOT BE USED WITHOUT CONSULTING A REGISTERED PROFESSIONAL ENGINEER. ALL WARRANTIES AND REPRESENTATIONS OF ANY KIND ARE DISCLAIMED. ANYONE MAKING USE OF THIS INFORMATION AGREES THAT IT ASSUMES ALL LIABILITY ARISING FROM SUCH USE. NO PART OF THESE STANDARDS SHOULD BE REPRODUCED OR DISTRIBUTED IN ANY FORM OR BY ANY MEANS WITHOUT THE PRIOR WRITTEN PERMISSION OF SCRRA. ALL RIGHTS RESERVED.

METROLINK®

SOUTHERN CALIFORNIA REGIONAL RAIL AUTHORITY
ONE GATEWAY PLAZA, 12TH FLOOR, L. A., CA. 90012

ENGINEERING STANDARDS

NO 20 WSM FROG RH
FROG BASE PLATES 20–93RC, 20–94RC AND 20–95RC
CONCRETE TIES–136 LB RE RAIL

STANDARD 2806
SCALE: NTS
REVISION –
SHEET 1 OF 1
CADD FILE: ES2806–52

BILL OF MATERIAL					
ITEM	QTY FOR 20-96LC	QTY FOR 20-97LC	DESCRIPTION	DWG NO	SCRRA PART NO
1	1	0	FLAT BAR, ASTM A36, 3/4" x 8" x 2'-6 1/4" LONG	-	
2	0	1	FLAT BAR, ASTM A36, 3/4" x 8" x 2'-7 1/2" LONG	-	
3	4	4	SHOULDER, PANDROL, FORGED TONGUELESS, TYPE 1	-	

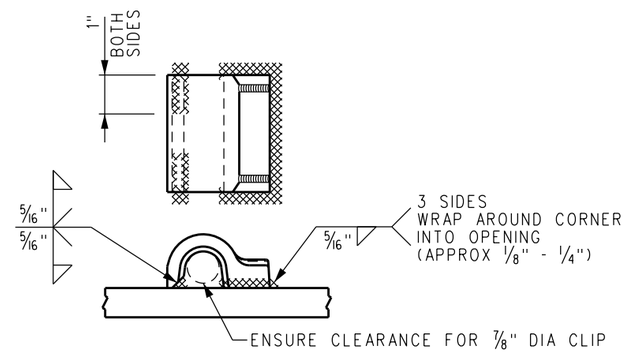

FORGED SHOULDER WELDING DETAIL

NOTES:

1. I.D. CHARACTERS TO BE 1/2" MINIMUM HEIGHT CLEARLY STAMPED AS SHOWN.
2. WELDS TO BE DRESSED FLUSH WITH SHOULDER & NOT TO PROTRUDE INTO RAIL SEAT.
3. SLOTTED HOLE CENTERS ARE INDICATED ON DRAWING.

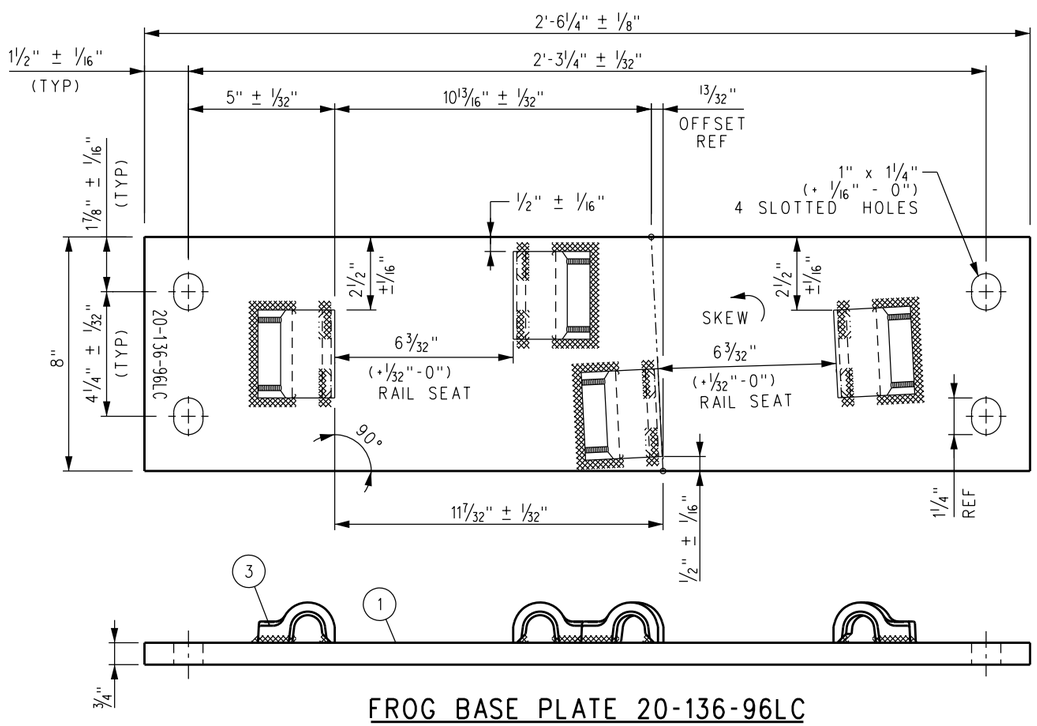

FROG BASE PLATE 20-136-96LC

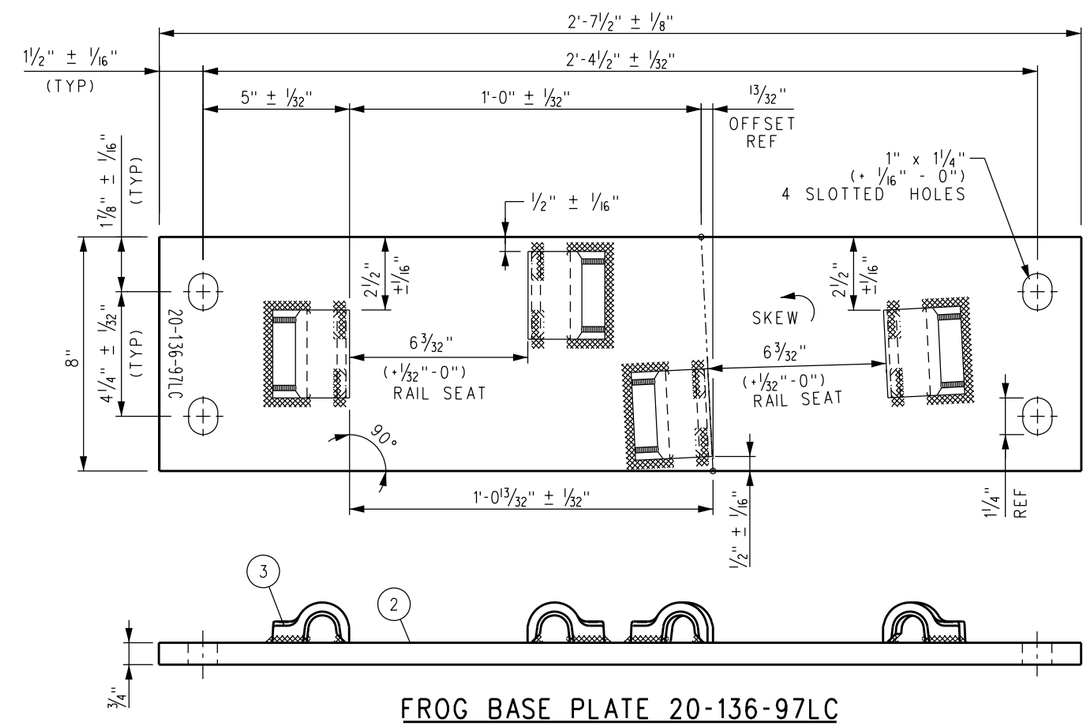

FROG BASE PLATE 20-136-97LC

REV.	DATE	DESCRIPTION	DES.	ENG.
X	XX-XX-XX	REVISION	XX	XX

DRAWN BY: HDR DATE: 03/31/2011

ASSISTANT DIRECTOR: STANDARDS & DESIGN

DIRECTOR OF ENGINEERING AND CONSTRUCTION

SCRRA ENGINEERING STANDARDS ARE INTENDED FOR SCRRA APPROVED USES ONLY. FOR NON-SCRRA APPROVED USES:
SCRRA SHALL NOT BE RESPONSIBLE FOR THE ACCURACY OR COMPLETENESS OF THE DATA OR INFORMATION CONTAINED HEREIN. THE SELECTION AND USE OF THESE STANDARDS IS THE SOLE RESPONSIBILITY OF THE USER AND SHOULD NOT BE USED WITHOUT CONSULTING A REGISTERED PROFESSIONAL ENGINEER. ALL WARRANTIES AND REPRESENTATIONS OF ANY KIND ARE DISCLAIMED. ANYONE MAKING USE OF THIS INFORMATION AGREES THAT IT ASSUMES ALL LIABILITY ARISING FROM SUCH USE. NO PART OF THESE STANDARDS SHOULD BE REPRODUCED OR DISTRIBUTED IN ANY FORM OR BY ANY MEANS WITHOUT THE PRIOR WRITTEN PERMISSION OF SCRRA. ALL RIGHTS RESERVED.

METROLINK®
SOUTHERN CALIFORNIA REGIONAL RAIL AUTHORITY
ONE GATEWAY PLAZA, 12TH FLOOR, L. A., CA. 90012

ENGINEERING STANDARDS

NO 20 WSM FROG LH
FROG BASE PLATES 20-96LC AND 20-97LC
CONCRETE TIES-136 LB RE RAIL

STANDARD: 2806
SCALE: NTS
REVISION: -
SHEET: 1 OF 1
CADD FILE: ES2806-53

BILL OF MATERIAL					
ITEM	QTY FOR 20-96RC	QTY FOR 20-97RC	DESCRIPTION	DWG NO	SCRRA PART NO
1	1	0	FLAT BAR, ASTM A36, 3/4" x 8" x 2'-6 1/4" LONG	-	
2	0	1	FLAT BAR, ASTM A36, 3/4" x 8" x 2'-7 1/2" LONG	-	
3	4	4	SHOULDER, PANDROL, FORGED TONGUELESS, TYPE 1	-	

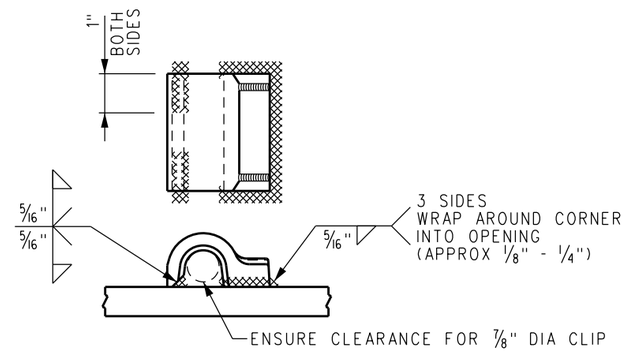

FORGED SHOULDER WELDING DETAIL

NOTES:

1. I.D. CHARACTERS TO BE 1/2" MINIMUM HEIGHT CLEARLY STAMPED AS SHOWN.
2. WELDS TO BE DRESSED FLUSH WITH SHOULDER & NOT TO PROTRUDE INTO RAIL SEAT.
3. SLOTTED HOLE CENTERS ARE INDICATED ON DRAWING.

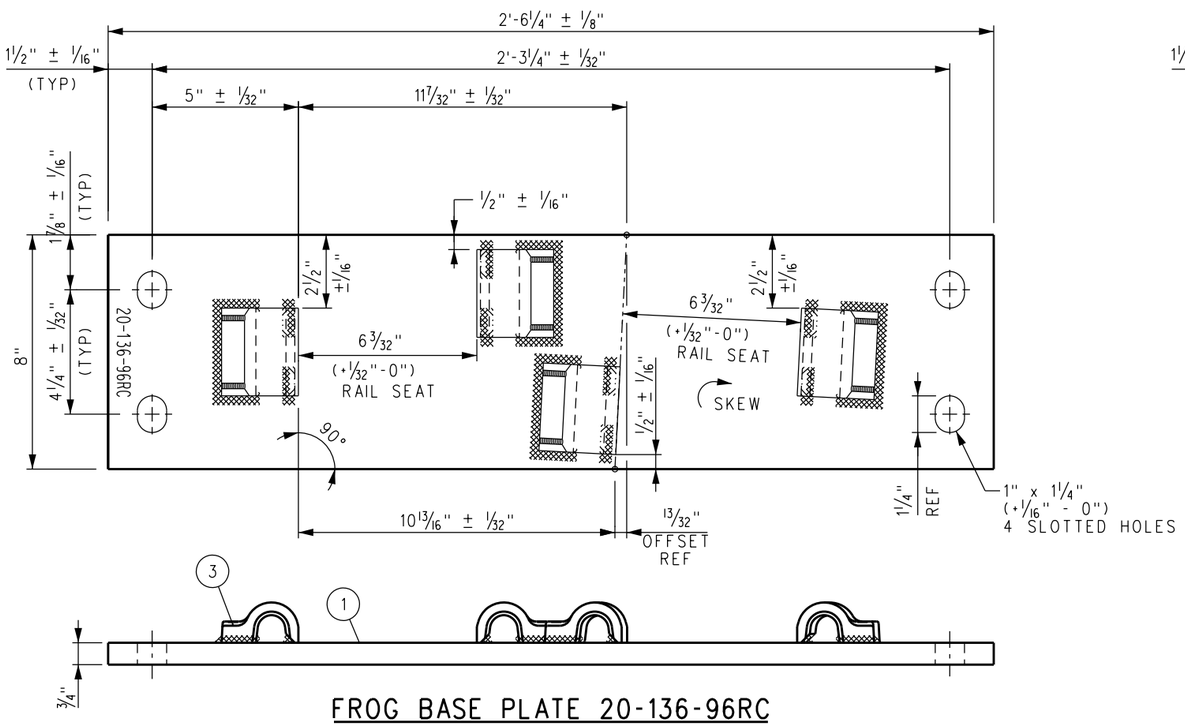

FROG BASE PLATE 20-136-96RC

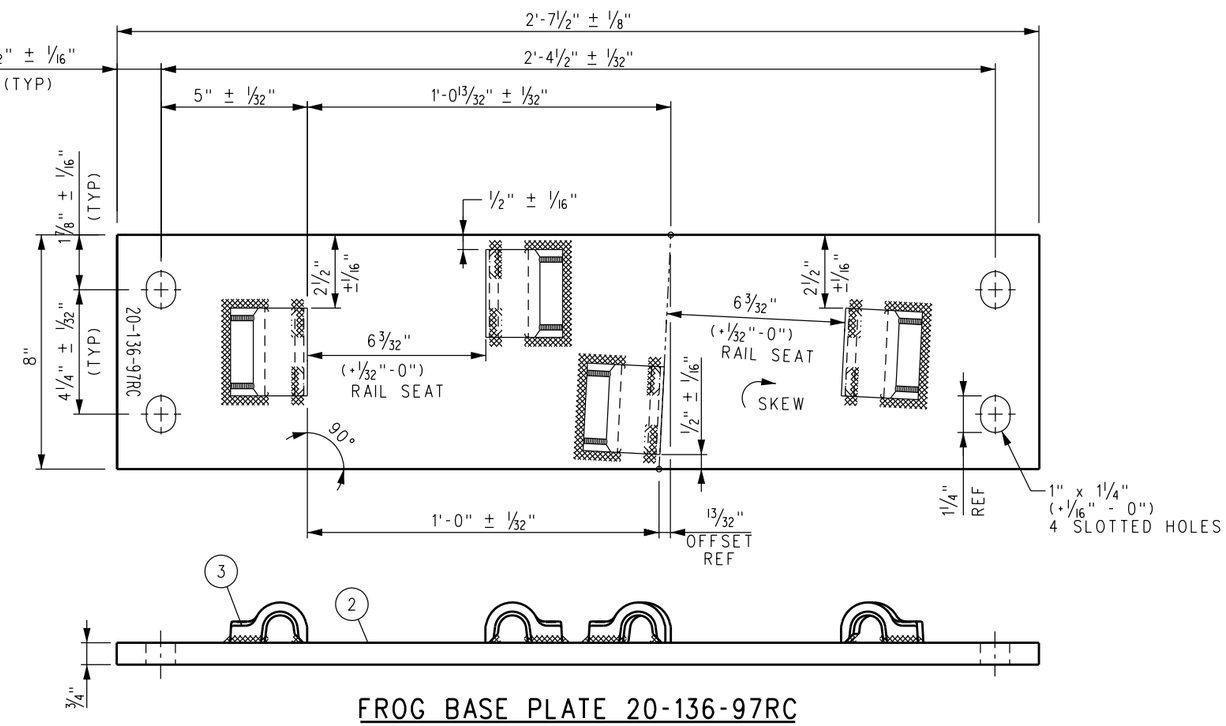

FROG BASE PLATE 20-136-97RC

REV.	DATE	DESCRIPTION	DES.	ENG.
X	XX-XX-XX	REVISION	XX	XX

DRAWN BY: HDR DATE: 03/31/2011

ASSISTANT DIRECTOR: STANDARDS & DESIGN

DIRECTOR OF ENGINEERING AND CONSTRUCTION

SCRRA ENGINEERING STANDARDS ARE INTENDED FOR SCRRA APPROVED USES ONLY. FOR NON-SCRRA APPROVED USES:
SCRRA SHALL NOT BE RESPONSIBLE FOR THE ACCURACY OR COMPLETENESS OF THE DATA OR INFORMATION CONTAINED HEREIN. THE SELECTION AND USE OF THESE STANDARDS IS THE SOLE RESPONSIBILITY OF THE USER AND SHOULD NOT BE USED WITHOUT CONSULTING A REGISTERED PROFESSIONAL ENGINEER. ALL WARRANTIES AND REPRESENTATIONS OF ANY KIND ARE DISCLAIMED. ANYONE MAKING USE OF THIS INFORMATION AGREES THAT IT ASSUMES ALL LIABILITY ARISING FROM SUCH USE. NO PART OF THESE STANDARDS SHOULD BE REPRODUCED OR DISTRIBUTED IN ANY FORM OR BY ANY MEANS WITHOUT THE PRIOR WRITTEN PERMISSION OF SCRRA. ALL RIGHTS RESERVED.

METROLINK®
SOUTHERN CALIFORNIA REGIONAL RAIL AUTHORITY
ONE GATEWAY PLAZA, 12TH FLOOR, L. A., CA. 90012

ENGINEERING STANDARDS

NO 20 WSM FROG RH
FROG BASE PLATES 20–96RC AND 20–97RC
CONCRETE TIES–136 LB RE RAIL

STANDARD 2806
SCALE: NTS
REVISION –
SHEET 1 OF 1
CADD FILE: ES2806–54

BILL OF MATERIAL					
ITEM	QTY FOR 20-98LC	QTY FOR 20-99LC	DESCRIPTION	DWG NO	SCRRA PART NO
1	1	0	FLAT BAR, ASTM A36, 3/4" x 8" x 2'-8 3/4" LONG	-	
2	0	1	FLAT BAR, ASTM A36, 3/4" x 8" x 2'-10" LONG	-	
3	4	4	SHOULDER, PANDROL, FORGED TONGUELESS, TYPE 1	-	

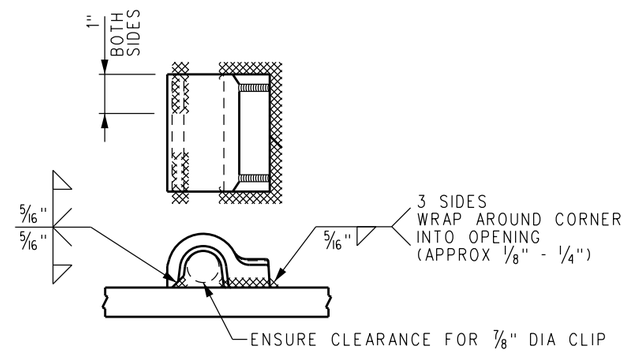

FORGED SHOULDER WELDING DETAIL

NOTES:

1. I.D. CHARACTERS TO BE 1/2" MINIMUM HEIGHT CLEARLY STAMPED AS SHOWN.
2. WELDS TO BE DRESSED FLUSH WITH SHOULDER & NOT TO PROTRUDE INTO RAIL SEAT.
3. SLOTTED HOLE CENTERS ARE INDICATED ON DRAWING.

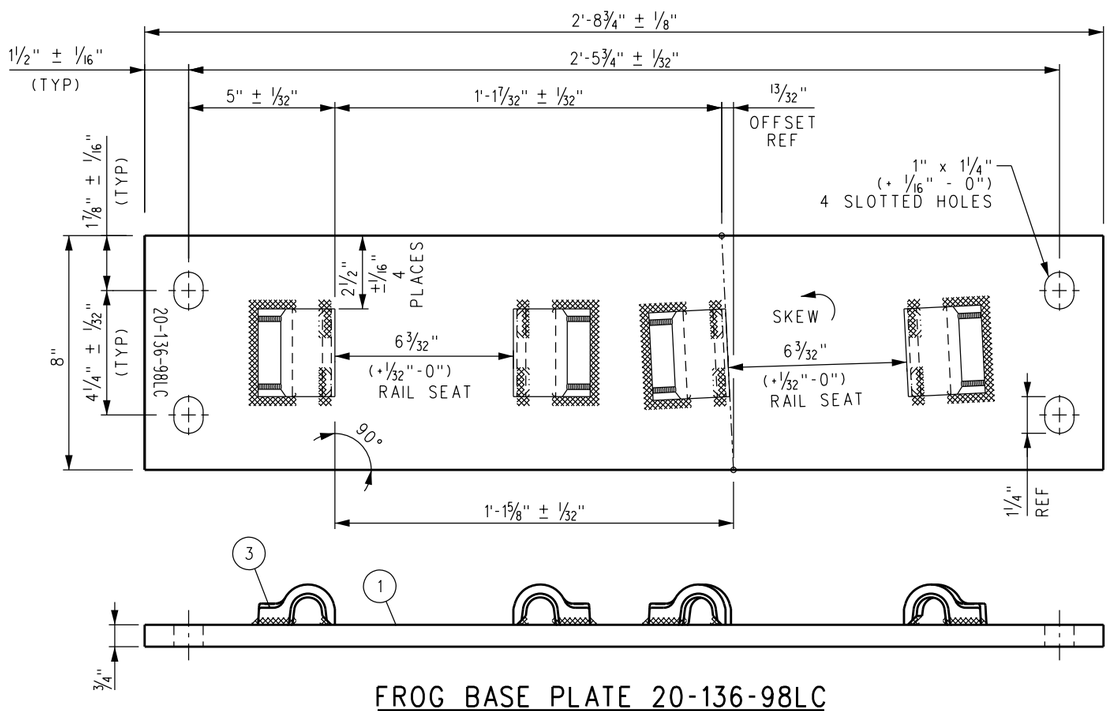

FROG BASE PLATE 20-136-98LC

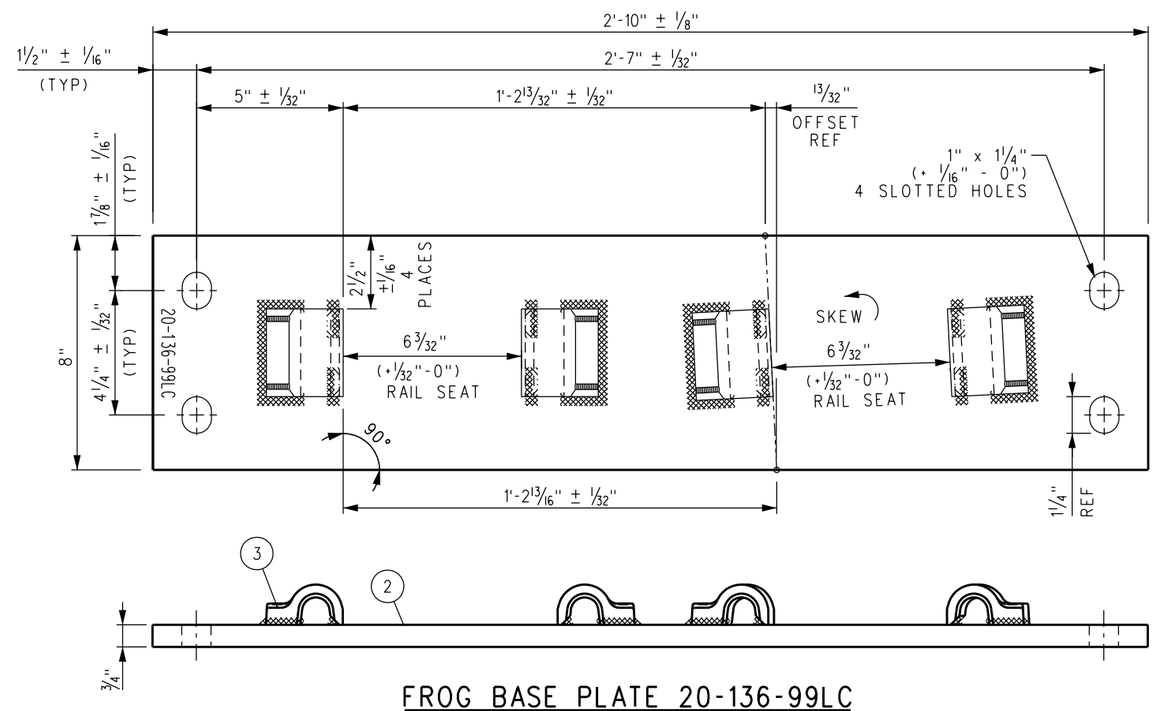

FROG BASE PLATE 20-136-99LC

REV.	DATE	DESCRIPTION	DES.	ENG.
X	XX-XX-XX	REVISION	XX	XX

DRAWN BY: HDR DATE: 03/31/2011

ASSISTANT DIRECTOR: STANDARDS & DESIGN

DIRECTOR OF ENGINEERING AND CONSTRUCTION

SCRRA ENGINEERING STANDARDS ARE INTENDED FOR SCRRA APPROVED USES ONLY. FOR NON-SCRRA APPROVED USES:
SCRRA SHALL NOT BE RESPONSIBLE FOR THE ACCURACY OR COMPLETENESS OF THE DATA OR INFORMATION CONTAINED HEREIN. THE SELECTION AND USE OF THESE STANDARDS IS THE SOLE RESPONSIBILITY OF THE USER AND SHOULD NOT BE USED WITHOUT CONSULTING A REGISTERED PROFESSIONAL ENGINEER. ALL WARRANTIES AND REPRESENTATIONS OF ANY KIND ARE DISCLAIMED. ANYONE MAKING USE OF THIS INFORMATION AGREES THAT IT ASSUMES ALL LIABILITY ARISING FROM SUCH USE. NO PART OF THESE STANDARDS SHOULD BE REPRODUCED OR DISTRIBUTED IN ANY FORM OR BY ANY MEANS WITHOUT THE PRIOR WRITTEN PERMISSION OF SCRRA. ALL RIGHTS RESERVED.

METROLINK®
SOUTHERN CALIFORNIA REGIONAL RAIL AUTHORITY
ONE GATEWAY PLAZA, 12TH FLOOR, L. A., CA. 90012

ENGINEERING STANDARDS

NO 20 WSM FROG LH
FROG BASE PLATES 20-98LC AND 20-99LC
CONCRETE TIES-136 LB RE RAIL

STANDARD 2806
SCALE: NTS
REVISION –
SHEET 1 OF 1
CADD FILE: ES2806-55

BILL OF MATERIAL					
ITEM	QTY FOR 20-98RC	QTY FOR 20-99RC	DESCRIPTION	DWG NO	SCRRA PART NO
1	1	0	FLAT BAR, ASTM A36, 3/4" x 8" x 2'-8 3/4" LONG	-	
2	0	1	FLAT BAR, ASTM A36, 3/4" x 8" x 2'-10" LONG	-	
3	4	4	SHOULDER, PANDROL, FORGED TONGUELESS, TYPE 1	-	

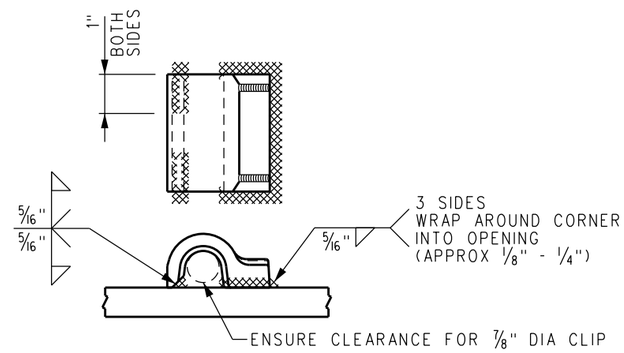

FORGED SHOULDER WELDING DETAIL

NOTES:

1. I.D. CHARACTERS TO BE 1/2" MINIMUM HEIGHT CLEARLY STAMPED AS SHOWN.
2. WELDS TO BE DRESSED FLUSH WITH SHOULDER & NOT TO PROTRUDE INTO RAIL SEAT.
3. SLOTTED HOLE CENTERS ARE INDICATED ON DRAWING.

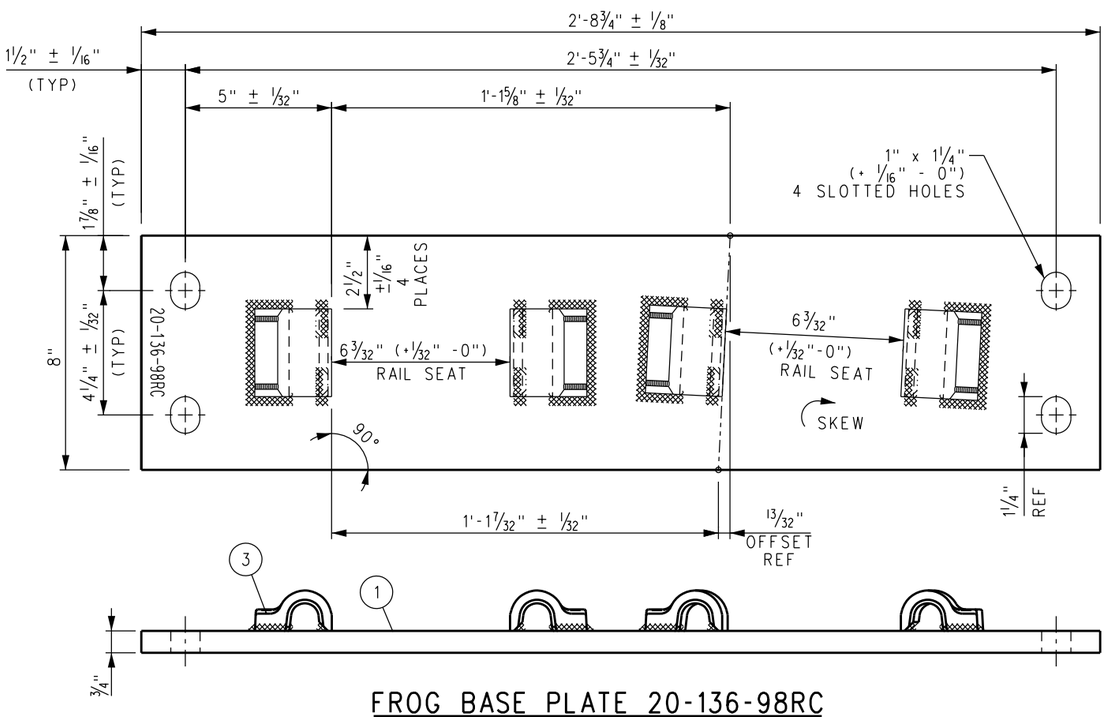

FROG BASE PLATE 20-136-98RC

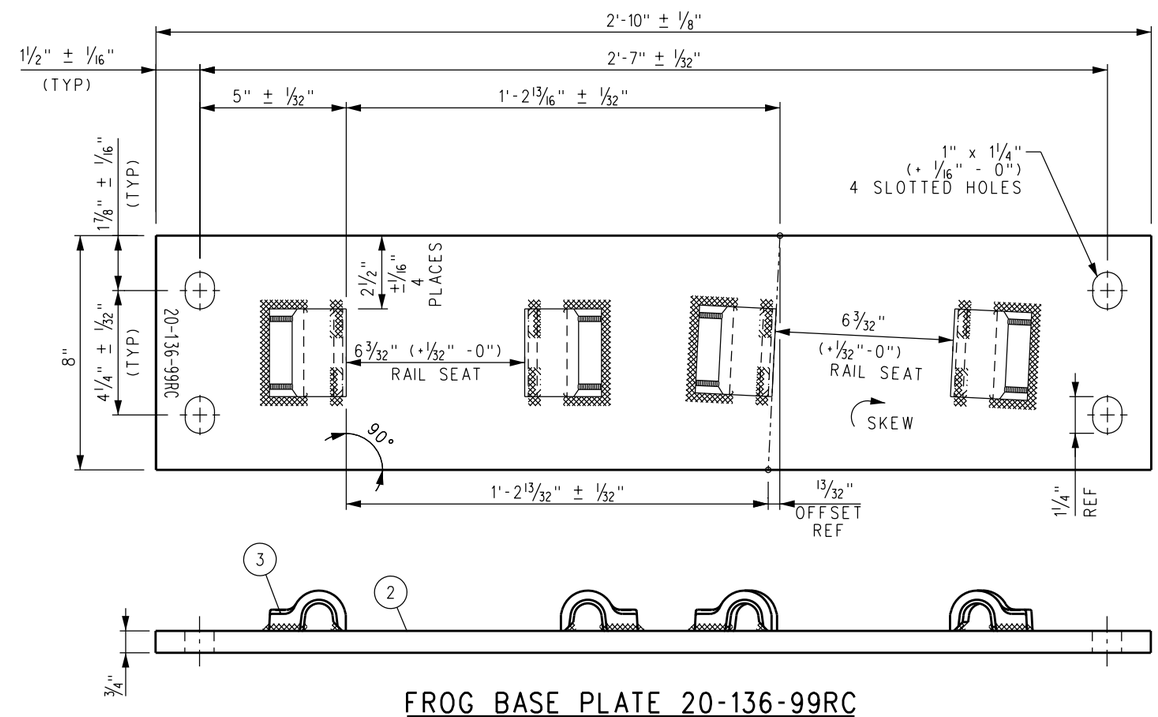

FROG BASE PLATE 20-136-99RC

REV.	DATE	DESCRIPTION	DES.	ENG.
X	XX-XX-XX	REVISION	XX	XX

DRAWN BY: HDR DATE: 03/31/2011

ASSISTANT DIRECTOR: STANDARDS & DESIGN

DIRECTOR OF ENGINEERING AND CONSTRUCTION

SCRRA ENGINEERING STANDARDS ARE INTENDED FOR SCRRA APPROVED USES ONLY. FOR NON-SCRRA APPROVED USES:
SCRRA SHALL NOT BE RESPONSIBLE FOR THE ACCURACY OR COMPLETENESS OF THE DATA OR INFORMATION CONTAINED HEREIN. THE SELECTION AND USE OF THESE STANDARDS IS THE SOLE RESPONSIBILITY OF THE USER AND SHOULD NOT BE USED WITHOUT CONSULTING A REGISTERED PROFESSIONAL ENGINEER. ALL WARRANTIES AND REPRESENTATIONS OF ANY KIND ARE DISCLAIMED. ANYONE MAKING USE OF THIS INFORMATION AGREES THAT IT ASSUMES ALL LIABILITY ARISING FROM SUCH USE. NO PART OF THESE STANDARDS SHOULD BE REPRODUCED OR DISTRIBUTED IN ANY FORM OR BY ANY MEANS WITHOUT THE PRIOR WRITTEN PERMISSION OF SCRRA. ALL RIGHTS RESERVED.

METROLINK®
SOUTHERN CALIFORNIA REGIONAL RAIL AUTHORITY
ONE GATEWAY PLAZA, 12TH FLOOR, L. A., CA. 90012

ENGINEERING STANDARDS

NO 20 WSM FROG RH
FROG BASE PLATES 20–98RC AND 20–99RC
CONCRETE TIES–136 LB RE RAIL

STANDARD 2806
SCALE: NTS
REVISION –
SHEET 1 OF 1
CADD FILE: ES2806–56

NOTES:

1. PLATE SPACING IS SET FOR SHIPPING ONLY. FINAL PLATE SPACING IS TO BE DETERMINED BY TIE SPACING AT TIME OF INSTALLATION.
2. PANDROL SPRING CLIPS (E2055) TO BE INCLUDED IN ASSEMBLY.
3. LIFT POINTS AND WEIGHT OF ASSEMBLY TO BE MARKED ON HEAD OF WEAR BAR WITH WHITE PAINT.
4. PLATE IS TO BE STAMPED WITH PLATE I.D. WITH 1/2" HIGH CHARACTERS AS SHOWN.
5. GRIND AWAY CORNER OF PANDROL SHOULDER TO CLEAR FOOT OF CHAIR ASSEMBLY.
6. SEE ES2800-50 FOR STRAIGHT SIDE GUARD RAIL.

BILL OF MATERIAL

ITEM	QTY	DESCRIPTION	DWG NO	SCRRA PART NO
1	1	GUARD BAR, UIC33 1200 SERIES x 26'-0" LONG	-	
2	13	GUARD RAIL PLATE ASSEMBLY, RAISED 1", LH SKEWED	-	
3	13	H-CLAMP	-	
4	39	CLIP, PANDROL, E2055	-	
5	13	LOCKING BLOCK	-	
6	52	SHIM, 1/8" x 3" x 6"	-	

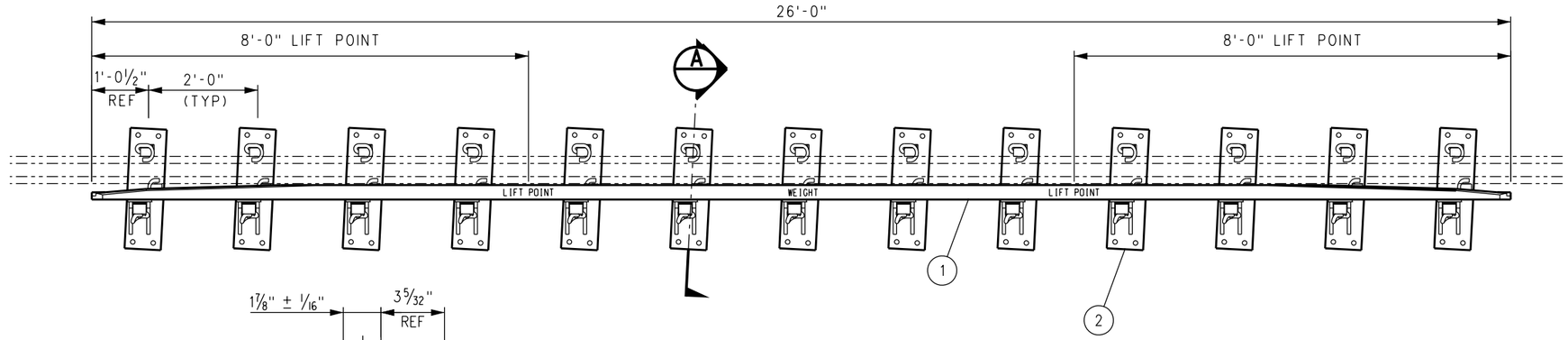

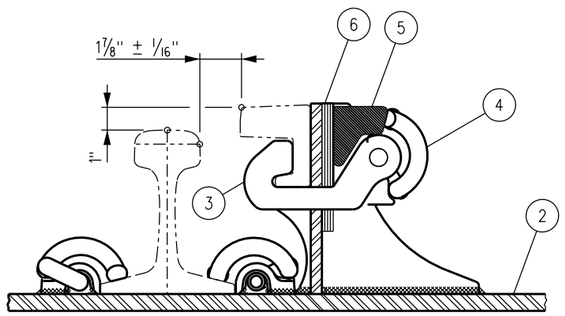

PARTIAL SECTION A
GUARD RAIL HARDWARE ASSEMBLY

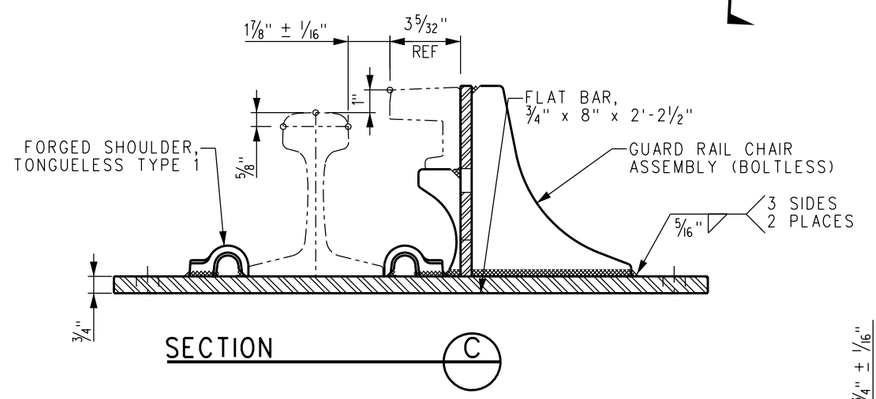

SECTION C

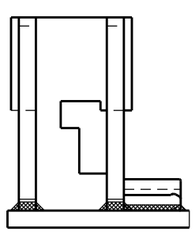

VIEW B

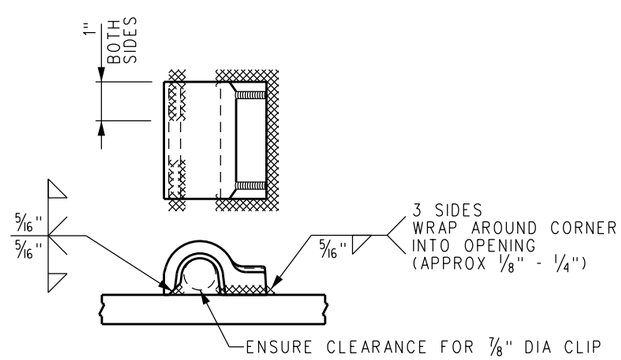

FORGED SHOULDER WELDING DETAIL

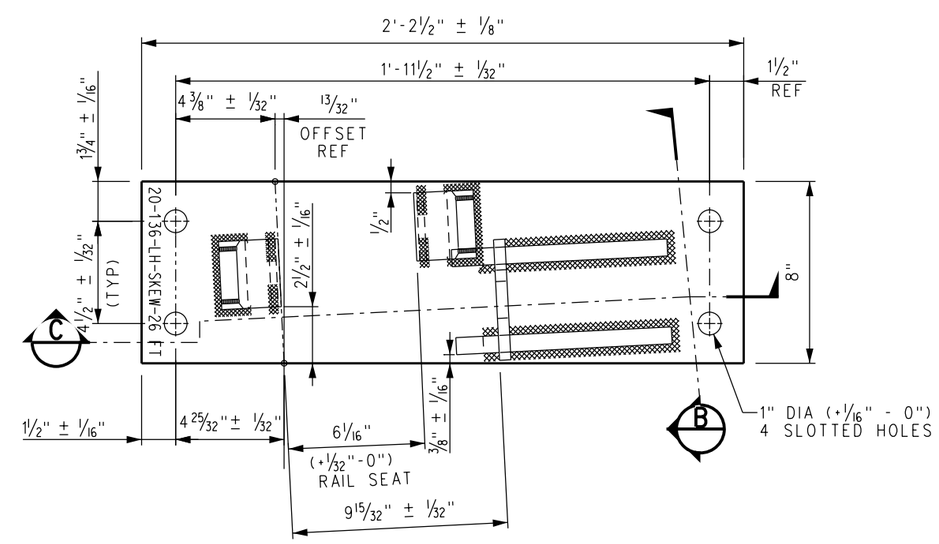

GUARD RAIL PLATE ASSEMBLY

REV.	DATE	DESCRIPTION	DES.	ENG.
X	XX-XX-XX	REVISION	XX	XX

DRAWN BY: HDR DATE: 03/31/2011

ASSISTANT DIRECTOR: STANDARDS & DESIGN

DIRECTOR OF ENGINEERING AND CONSTRUCTION

SCRRA ENGINEERING STANDARDS ARE INTENDED FOR SCRRA APPROVED USES ONLY. FOR NON-SCRRA APPROVED USES:
SCRRA SHALL NOT BE RESPONSIBLE FOR THE ACCURACY OR COMPLETENESS OF THE DATA OR INFORMATION CONTAINED HEREIN. THE SELECTION AND USE OF THESE STANDARDS IS THE SOLE RESPONSIBILITY OF THE USER AND SHOULD NOT BE USED WITHOUT CONSULTING A REGISTERED PROFESSIONAL ENGINEER. ALL WARRANTIES AND REPRESENTATIONS OF ANY KIND ARE DISCLAIMED. ANYONE MAKING USE OF THIS INFORMATION AGREES THAT IT ASSUMES ALL LIABILITY ARISING FROM SUCH USE. NO PART OF THESE STANDARDS SHOULD BE REPRODUCED OR DISTRIBUTED IN ANY FORM OR BY ANY MEANS WITHOUT THE PRIOR WRITTEN PERMISSION OF SCRRA. ALL RIGHTS RESERVED.

METROLINK
SOUTHERN CALIFORNIA REGIONAL RAIL AUTHORITY
ONE GATEWAY PLAZA, 12TH FLOOR, L. A., CA. 90012

ENGINEERING STANDARDS
NO 20 GUARD RAIL ASSEMBLY,
LH SKEWED WITH PLATES
26'-0" LONG, BOLTLESS, RAISED 1"
CONCRETE TIES-136 LB RE RAIL, 1-7/8" FLANGEWAY

STANDARD 2806
SCALE: NTS
REVISION –
SHEET 1 OF 1
CADD FILE: ES2806-61

NOTES:

1. PLATE SPACING IS SET FOR SHIPPING ONLY. FINAL PLATE SPACING IS TO BE DETERMINED BY TIE SPACING AT TIME OF INSTALLATION.
2. PANDROL SPRING CLIPS (E2055) TO BE INCLUDED IN ASSEMBLY.
3. LIFT POINTS AND WEIGHT OF ASSEMBLY TO BE MARKED ON HEAD OF WEAR BAR WITH WHITE PAINT.
4. PLATE IS TO BE STAMPED WITH PLATE I.D. WITH 1/2" HIGH CHARACTERS AS SHOWN.
5. GRIND AWAY CORNER OF PANDROL SHOULDER TO CLEAR FOOT OF CHAIR ASSEMBLY.
6. SEE ES2800-50 FOR STRAIGHT SIDE GUARD RAIL.

BILL OF MATERIAL

ITEM	QTY	DESCRIPTION	DWG NO	SCRRA PART NO
1	1	GUARD BAR, UIC33 1200 SERIES x 26'-0" LONG	-	
2	13	GUARD RAIL PLATE ASSEMBLY, RAISED 1", RH SKEWED	-	
3	13	H-CLAMP	-	
4	39	CLIP, PANDROL, E2055	-	
5	13	LOCKING BLOCK	-	
6	52	SHIM, 1/8" x 3" x 6"	-	

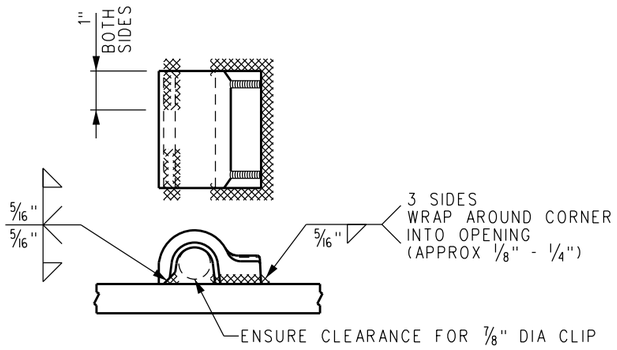

FORGED SHOULDER WELDING DETAIL

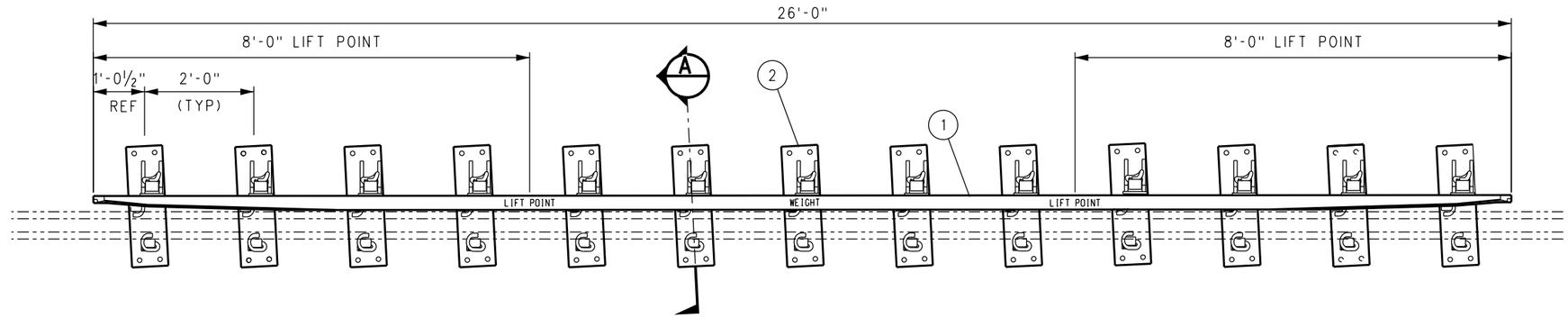

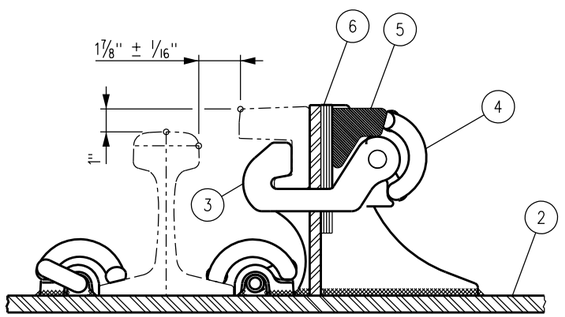

PARTIAL SECTION A
GUARD RAIL HARDWARE ASSEMBLY

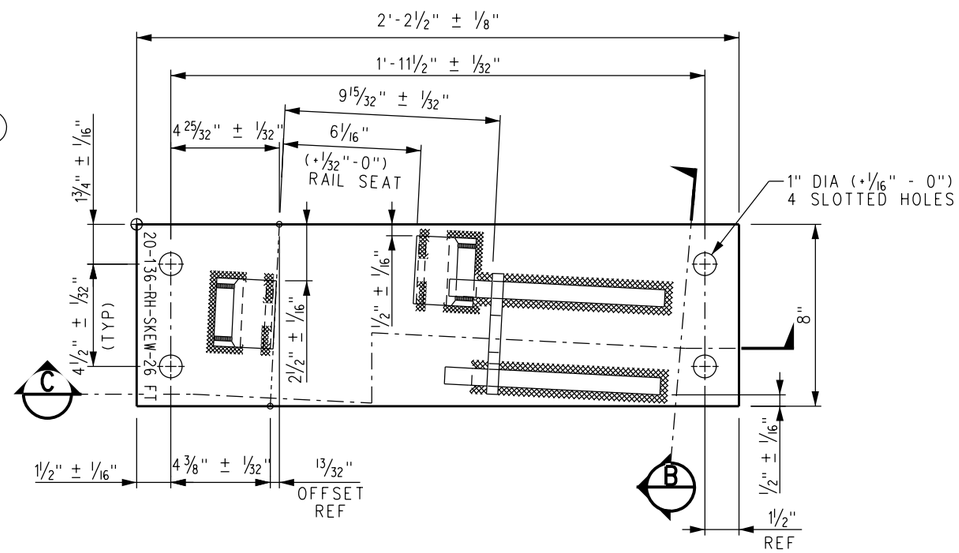

GUARD RAIL PLATE ASSEMBLY

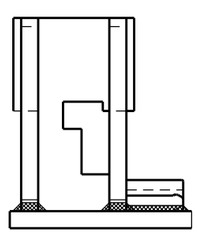

VIEW B

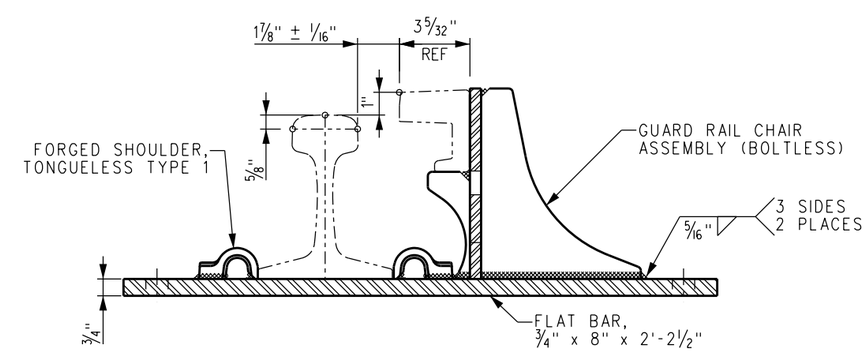

SECTION C

REV.	DATE	DESCRIPTION	DES.	ENG.
X	XX-XX-XX	REVISION	XX	XX

DRAWN BY: HDR DATE: 03/31/2011

ASSISTANT DIRECTOR: STANDARDS & DESIGN

DIRECTOR OF ENGINEERING AND CONSTRUCTION

SCRRA ENGINEERING STANDARDS ARE INTENDED FOR SCRRA APPROVED USES ONLY. FOR NON-SCRRA APPROVED USES:
SCRRA SHALL NOT BE RESPONSIBLE FOR THE ACCURACY OR COMPLETENESS OF THE DATA OR INFORMATION CONTAINED HEREIN. THE SELECTION AND USE OF THESE STANDARDS IS THE SOLE RESPONSIBILITY OF THE USER AND SHOULD NOT BE USED WITHOUT CONSULTING A REGISTERED PROFESSIONAL ENGINEER. ALL WARRANTIES AND REPRESENTATIONS OF ANY KIND ARE DISCLAIMED. ANYONE MAKING USE OF THIS INFORMATION AGREES THAT IT ASSUMES ALL LIABILITY ARISING FROM SUCH USE. NO PART OF THESE STANDARDS SHOULD BE REPRODUCED OR DISTRIBUTED IN ANY FORM OR BY ANY MEANS WITHOUT THE PRIOR WRITTEN PERMISSION OF SCRRA. ALL RIGHTS RESERVED.

METROLINK®
SOUTHERN CALIFORNIA REGIONAL RAIL AUTHORITY
ONE GATEWAY PLAZA, 12TH FLOOR, L. A., CA. 90012

ENGINEERING STANDARDS
NO 20 GUARD RAIL ASSEMBLY,
RH SKEWED WITH PLATES
26'-0" LONG, BOLTLESS, RAISED 1"
CONCRETE TIES-136 LB RE RAIL, 1-7/8" FLANGEWAY

STANDARD 2806
SCALE: NTS
REVISION –
SHEET 1 OF 1
CADD FILE: ES2806-62

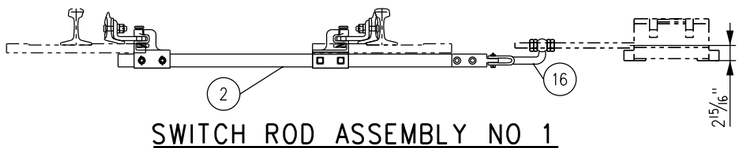

SWITCH ROD ASSEMBLY NO 1

LOCK ROD CONNECTION SHOWN
(VIEW FROM HEEL TOWARDS PS)

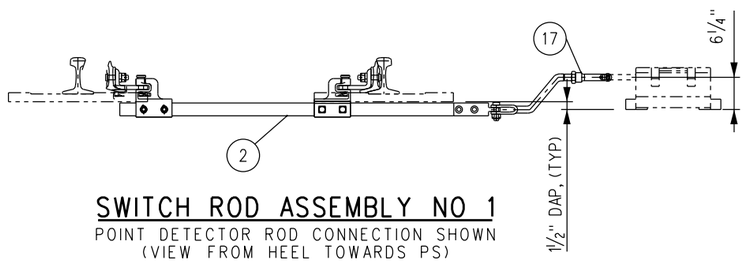

SWITCH ROD ASSEMBLY NO 1

POINT DETECTOR ROD CONNECTION SHOWN
(VIEW FROM HEEL TOWARDS PS)

BILL OF MATERIAL				
ITEM	QTY	DESCRIPTION	DWG NO	SCRRA PART NO
1	1	ROTARY ASSIST ASSEMBLY FOR NO 20-136 LB RE TURNOUT	-	
2	1	SWITCH ROD NO 1, FOR POINT DETECTOR/LOCK ROD, (20-136-1)	ES2806-73	
3	1	SWITCH ROD NO 2, DRIVE, C/W BASKET (20-136-2)	ES2806-73	
4	1	SWITCH ROD NO 3, THROW, (20-136-3)	ES2806-73	
5	1	SWITCH ROD NO 4, THROW, (20-136-4)	ES2806-74	
6	1	SWITCH ROD NO 5, THROW, (20-136-5)	ES2806-74	
7	2	ROD POINT BRACKET, DETECTOR/LOCK ROD, HOLES AT 2 7/8" ARB*	-	
8	1	ROD POINT BRACKET, THROW ROD, ANTI-ROLL, HOLES AT 2 7/8" ARB*, LH	-	
9	1	ROD POINT BRACKET, THROW ROD, ANTI-ROLL, HOLES AT 2 7/8" ARB*, RH	-	
10	6	ROD POINT BRACKET, HOLES AT 2 3/8" ARB* C/W SQUARE BOLTS	-	
11	1	DROP LUG FOR US&S M23 SWITCH MACHINE DRIVE BAR	-	
12	1	BOLT, 7/8" DIA x 3" LONG, DRILLED 2 9/16" BELOW HEAD, HEAVY HEX, GR 5	-	
13	1	NUT, 7/8" DIA SLOTTED HEAVY HEX, GR 8	-	
14	1	SPRING WASHER, 7/8" DIA	-	
15	1	COTTER PIN, 3/16" DIA x 1 3/4" LONG	-	
16	1	LOCK ROD, FOR M23 SWITCH MACHINE, HST	-	
17	1	DETECTOR ROD, FOR M23 SWITCH MACHINE, HST	-	

ARB* - ABOVE RAIL BASE

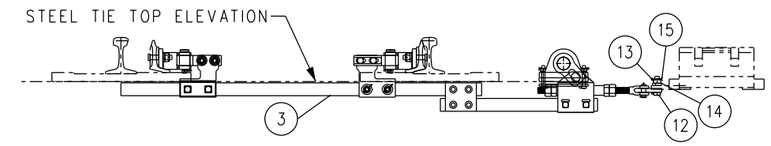

DRIVE ROD (ROD NO 2) ASSEMBLY

FRONT HELPER ROD CRANK ATTACHES TO BASKET
(VIEW FROM HEEL TOWARDS PS)

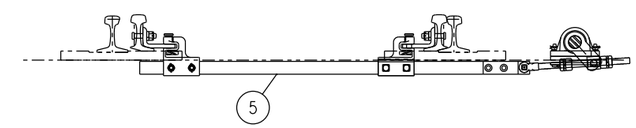

REAR HELPER (ROD NO 4) DRIVE ROD ASSEMBLY

REAR HELPER ROD CRANK ATTACHES TO ROD PIN

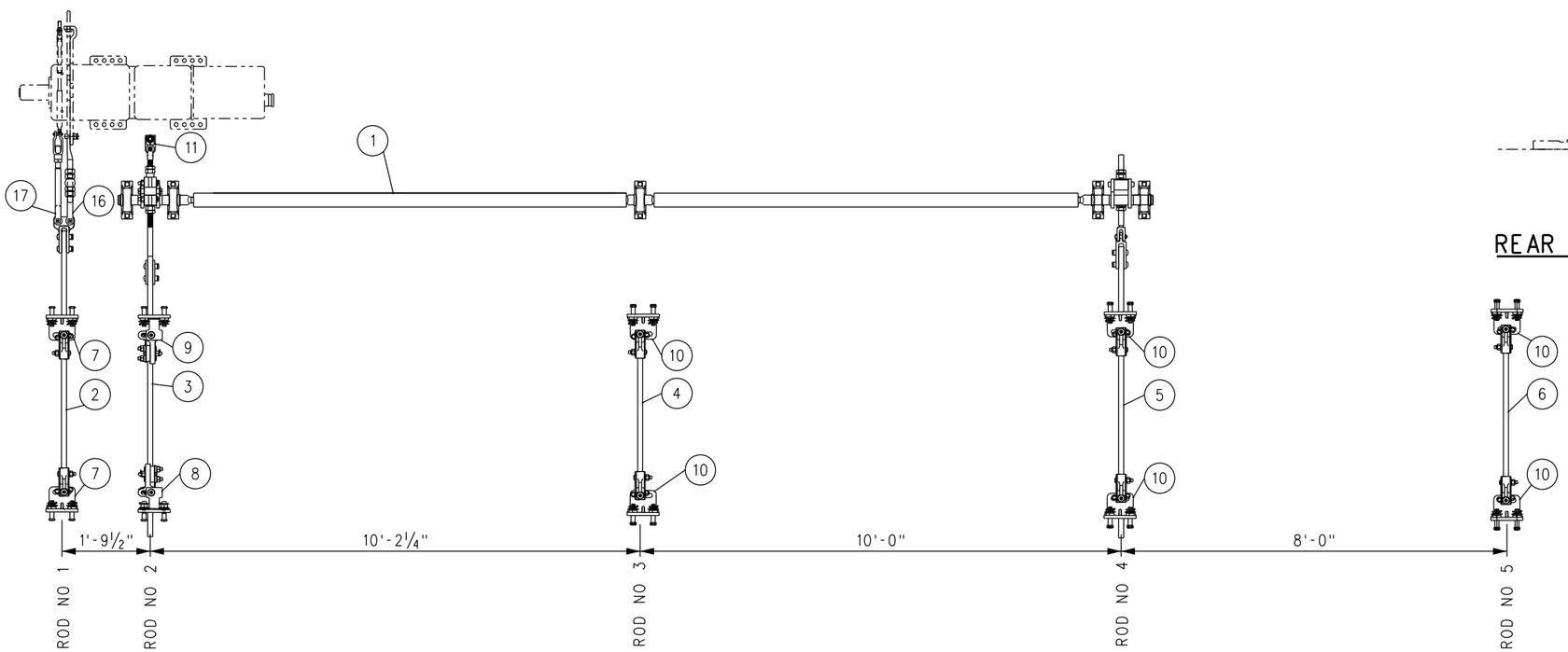

REV.	DATE	DESCRIPTION	DES.	ENG.
X	XX-XX-XX	REVISION	XX	XX

DRAWN BY: HDR DATE: 03/31/2011

ASSISTANT DIRECTOR: STANDARDS & DESIGN

DIRECTOR OF ENGINEERING AND CONSTRUCTION

SCRRA ENGINEERING STANDARDS ARE INTENDED FOR SCRRA APPROVED USES ONLY. FOR NON-SCRRA APPROVED USES:
SCRRA SHALL NOT BE RESPONSIBLE FOR THE ACCURACY OR COMPLETENESS OF THE DATA OR INFORMATION CONTAINED HEREIN. THE SELECTION AND USE OF THESE STANDARDS IS THE SOLE RESPONSIBILITY OF THE USER AND SHOULD NOT BE USED WITHOUT CONSULTING A REGISTERED PROFESSIONAL ENGINEER. ALL WARRANTIES AND REPRESENTATIONS OF ANY KIND ARE DISCLAIMED. ANYONE MAKING USE OF THIS INFORMATION AGREES THAT IT ASSUMES ALL LIABILITY ARISING FROM SUCH USE. NO PART OF THESE STANDARDS SHOULD BE REPRODUCED OR DISTRIBUTED IN ANY FORM OR BY ANY MEANS WITHOUT THE PRIOR WRITTEN PERMISSION OF SCRRA. ALL RIGHTS RESERVED.

METROLINK®
SOUTHERN CALIFORNIA REGIONAL RAIL AUTHORITY
ONE GATEWAY PLAZA, 12TH FLOOR, L. A., CA. 90012

ENGINEERING STANDARDS

HOLLOW STEEL TIE RODDING ASSEMBLY
SWITCH MACHINE ON LEFT HAND SIDE
NO 20–136 LB RE SPRING FROG TURNOUT

STANDARD 2806
SCALE: NTS
REVISION –
SHEET 1 OF 1
CADD FILE: ES2806–71

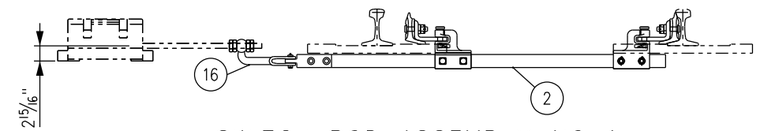

SWITCH ROD ASSEMBLY NO 1

LOCK ROD CONNECTION SHOWN
(VIEW FROM HEEL TOWARDS PS)

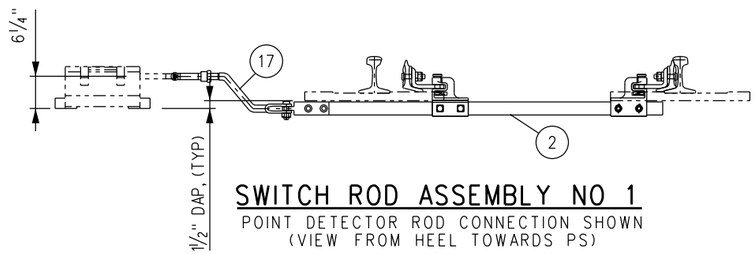

SWITCH ROD ASSEMBLY NO 1

POINT DETECTOR ROD CONNECTION SHOWN
(VIEW FROM HEEL TOWARDS PS)

BILL OF MATERIAL

ITEM	QTY	DESCRIPTION	DWG NO	SCRRA PART NO
1	1	ROTARY ASSIST ASSEMBLY FOR NO 20-136 LB RE TURNOUT	-	
2	1	SWITCH ROD NO 1, FOR POINT DETECTOR/LOCK ROD, (20-136-1)	ES2806-73	
3	1	SWITCH ROD NO 2, DRIVE, C/W BASKET (20-136-2)	ES2806-73	
4	1	SWITCH ROD NO 3, THROW, (20-136-3)	ES2806-73	
5	1	SWITCH ROD NO 4, THROW, (20-136-4)	ES2806-74	
6	1	SWITCH ROD NO 5, THROW, (20-136-5)	ES2806-74	
7	2	ROD POINT BRACKET, DETECTOR/LOCK ROD, HOLES AT 2 7/8" ARB*	-	
8	1	ROD POINT BRACKET, THROW ROD, ANTI-ROLL, HOLES AT 2 7/8" ARB*, LH	-	
9	1	ROD POINT BRACKET, THROW ROD, ANTI-ROLL, HOLES AT 2 7/8" ARB*, RH	-	
10	6	ROD POINT BRACKET, HOLES AT 2 3/8" ARB* C/W SQUARE BOLTS	-	
11	1	DROP LUG FOR US&S M23 SWITCH MACHINE DRIVE BAR	-	
12	1	BOLT, 7/8" DIA x 3" LONG, DRILLED 2 9/16" BELOW HEAD, HEAVY HEX, GR 5	-	
13	1	NUT, 7/8" DIA SLOTTED HEAVY HEX, GR 8	-	
14	1	SPRING WASHER, 7/8" DIA	-	
15	1	COTTER PIN, 3/16" DIA x 1 3/4" LONG	-	
16	1	LOCK ROD, FOR M23 SWITCH MACHINE, HST	-	
17	1	DETECTOR ROD, FOR M23 SWITCH MACHINE, HST	-	

ARB* - ABOVE RAIL BASE

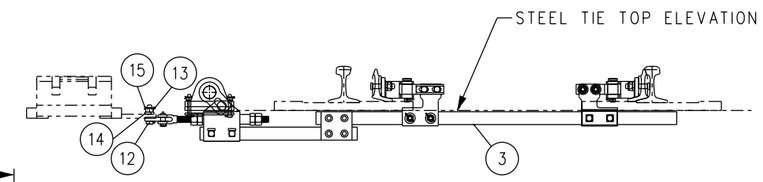

DRIVE ROD (ROD NO 2) ASSEMBLY

FRONT HELPER ROD CRANK ATTACHES TO BASKET
(VIEW FROM HEEL TOWARDS PS)

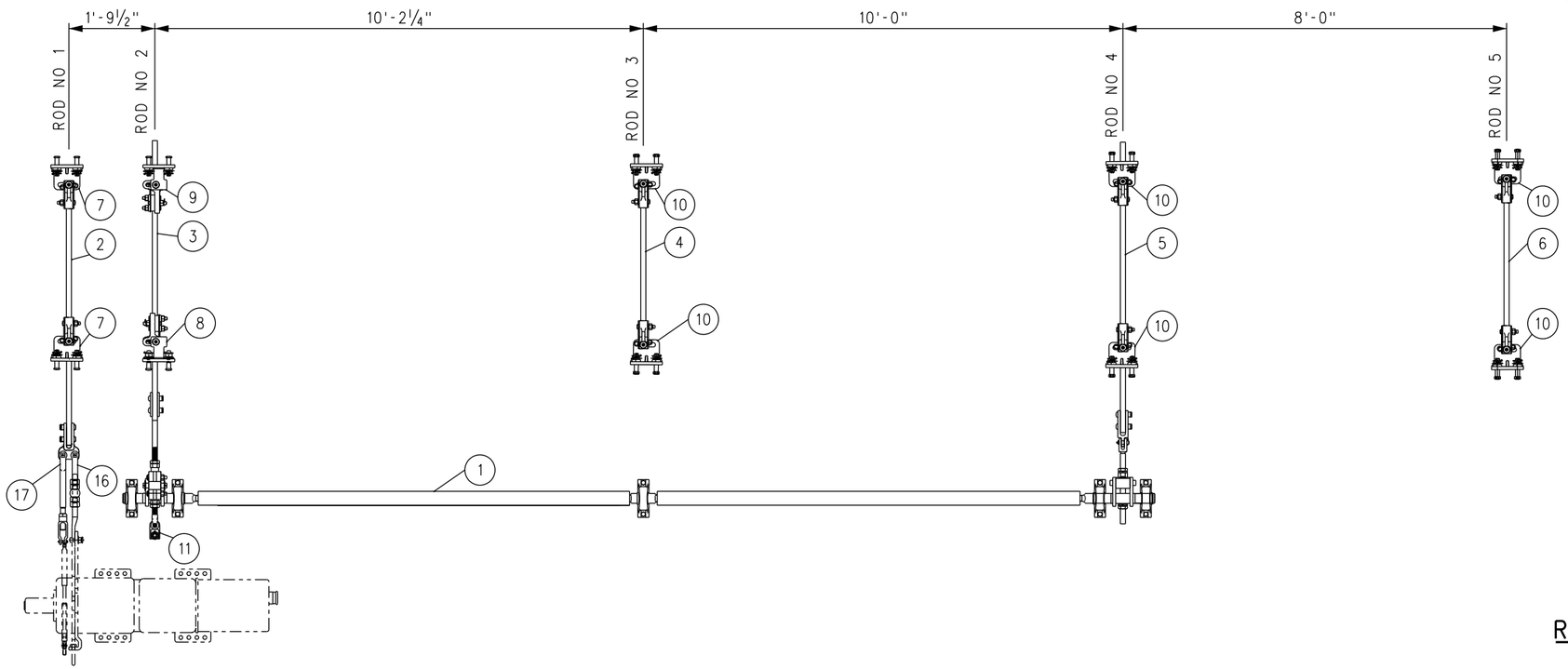

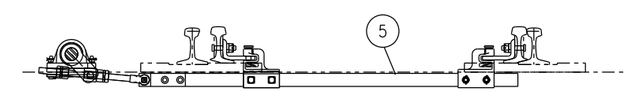

REAR HELPER (ROD NO 4) DRIVE ROD ASSEMBLY

REAR HELPER ROD CRANK ATTACHES TO ROD PIN

REV.	DATE	DESCRIPTION	DES.	ENG.
X	XX-XX-XX	REVISION	XX	XX

DRAWN BY: HDR DATE: 03/31/2011

ASSISTANT DIRECTOR: STANDARDS & DESIGN

DIRECTOR OF ENGINEERING AND CONSTRUCTION

SCRRA ENGINEERING STANDARDS ARE INTENDED FOR SCRRA APPROVED USES ONLY. FOR NON-SCRRA APPROVED USES, SCRRA SHALL NOT BE RESPONSIBLE FOR THE ACCURACY OR COMPLETENESS OF THE DATA OR INFORMATION CONTAINED HEREIN. THE SELECTION AND USE OF THESE STANDARDS IS THE SOLE RESPONSIBILITY OF THE USER AND SHOULD NOT BE USED WITHOUT CONSULTING A REGISTERED PROFESSIONAL ENGINEER. ALL WARRANTIES AND REPRESENTATIONS OF ANY KIND ARE DISCLAIMED. ANYONE MAKING USE OF THIS INFORMATION AGREES THAT IT ASSUMES ALL LIABILITY ARISING FROM SUCH USE. NO PART OF THESE STANDARDS SHOULD BE REPRODUCED OR DISTRIBUTED IN ANY FORM OR BY ANY MEANS WITHOUT THE PRIOR WRITTEN PERMISSION OF SCRRA. ALL RIGHTS RESERVED.

METROLINK

SOUTHERN CALIFORNIA REGIONAL RAIL AUTHORITY
ONE GATEWAY PLAZA, 12TH FLOOR, L. A., CA. 90012

ENGINEERING STANDARDS

HOLLOW STEEL TIE RODDING ASSEMBLY
SWITCH MACHINE ON RIGHT HAND SIDE
NO 20–136 LB RE SPRING FROG TURNOUT

STANDARD: 2806
SCALE: NTS
REVISION: –
SHEET: 1 OF 1
CADD FILE: ES2806–72

BILL OF MATERIALS FOR SWITCH ROD 20-136-1				
ITEM	QTY	DESCRIPTION	DWG NO	SCRRA PART NO
1	1	SWITCH ROD 20-136-1	-	
2	2	SWITCH CLIP ASSEMBLY, ADJUSTABLE, FOR HOLLOW TIE COMPOSITE RODS	-	
3	1	CONNECTOR LUG FOR POINT DETECTOR/LOCK RODS	-	
4	2	HUCK BOLT, 3/4" DIA (C50LR-BR24-36)	-	
5	2	HUCK COLLAR, 3/4" DIA (LC-2R24B)	-	

BILL OF MATERIALS FOR SWITCH ROD 20-136-2				
ITEM	QTY	DESCRIPTION	DWG NO	SCRRA PART NO
1	1	BLUE ROD, PULTRUDED COMPOSITE, 1 1/4" x 2 1/2" x 5'-10" LONG, 20-136-2	-	
2	2	CLIP/LUG ASSEMBLY, HST SWITCH, ANTI-ROLLOVER DESIGN, LH	-	
3	4	HUCK BOLT, 3/4" DIA (C50LR-BR24-36)	-	
4	4	HUCK COLLAR, 3/4" DIA (LC-2R24B)	-	
5	2	SPLICE PLATE, FOR BLUE ROD BASKET ASSEMBLY RODS	-	
6	1	BASKET/ROD ASSEMBLY FOR HST WITH ROTARY ASSIST	-	
7	1	BLUE ROD, PULTRUDED COMPOSITE, 1 1/4" x 2 1/2" x 2'-7" LONG, 1-B	-	

NOTES:

1. ROD IDENTIFICATION TO BE ENGRAVED ON ROD CLEARLY AS SHOWN, 3/8" MIN HEIGHT.
2. SWITCH RODS MUST BE PARALLEL WITHIN 1/16" OVER LENGTH OF 1-B ROD.

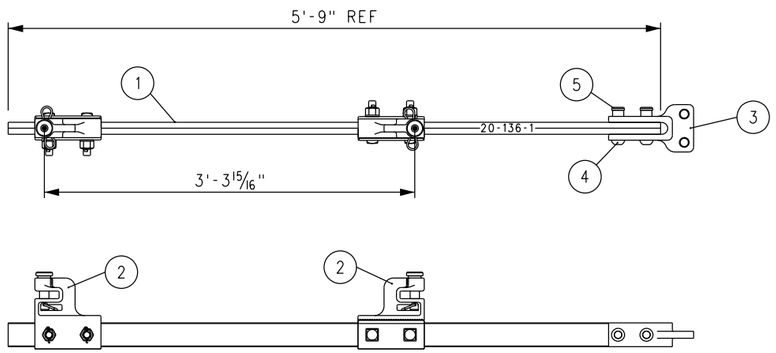

SWITCH ROD ASSEMBLY 20-136-1

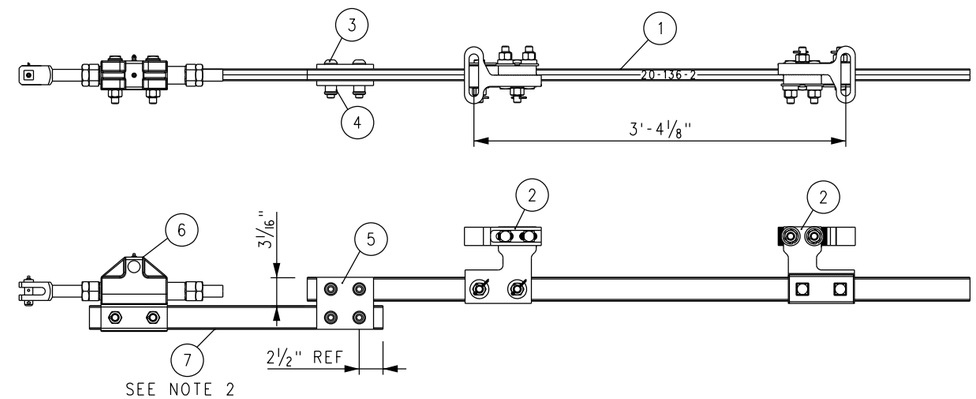

SWITCH ROD ASSEMBLY 20-136-2

BILL OF MATERIALS FOR SWITCH ROD 20-136-3				
ITEM	QTY	DESCRIPTION	DWG NO	SCRRA PART NO
1	1	SWITCH ROD 20-136-3	-	
2	2	SWITCH CLIP ASSEMBLY, ADJUSTABLE, FOR HOLLOW TIE	-	

NOTE: CENTER TO CENTER PIN DIMENSION REQUIRED FOR 4 3/4" THROW

ROD #	C-C PIN DIMENSION
1	3'-3 15/16"
2	3'-4 1/8"
3	3'-4 13/16"
4	3'-5 7/8"
5	3'-7"

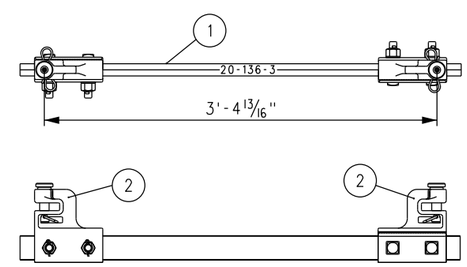

SWITCH ROD ASSEMBLY 20-136-3

REV.	DATE	DESCRIPTION	DES.	ENG.
X	XX-XX-XX	REVISION	XX	XX

DRAWN BY: HDR DATE: 03/31/2011

ASSISTANT DIRECTOR: STANDARDS & DESIGN

DIRECTOR OF ENGINEERING AND CONSTRUCTION

SCRRA ENGINEERING STANDARDS ARE INTENDED FOR SCRRA APPROVED USES ONLY. FOR NON-SCRRA APPROVED USES:
SCRRA SHALL NOT BE RESPONSIBLE FOR THE ACCURACY OR COMPLETENESS OF THE DATA OR INFORMATION CONTAINED HEREIN. THE SELECTION AND USE OF THESE STANDARDS IS THE SOLE RESPONSIBILITY OF THE USER AND SHOULD NOT BE USED WITHOUT CONSULTING A REGISTERED PROFESSIONAL ENGINEER. ALL WARRANTIES AND REPRESENTATIONS OF ANY KIND ARE DISCLAIMED. ANYONE MAKING USE OF THIS INFORMATION AGREES THAT IT ASSUMES ALL LIABILITY ARISING FROM SUCH USE. NO PART OF THESE STANDARDS SHOULD BE REPRODUCED OR DISTRIBUTED IN ANY FORM OR BY ANY MEANS WITHOUT THE PRIOR WRITTEN PERMISSION OF SCRRA. ALL RIGHTS RESERVED.

METROLINK®
SOUTHERN CALIFORNIA REGIONAL RAIL AUTHORITY
ONE GATEWAY PLAZA, 12TH FLOOR, L. A., CA. 90012

ENGINEERING STANDARDS

HOLLOW STEEL TIE SWITCH RODS
20–1, 20–2 AND 20–3
NO 20–136 LB RE

STANDARD 2806
SCALE: NTS
REVISION –
SHEET 1 OF 1
CADD FILE: ES2806–73

BILL OF MATERIALS FOR SWITCH ROD 20-136-4				
ITEM	QTY	DESCRIPTION	DWG NO	SCRRA PART NO
1	1	SWITCH ROD 20-136-4	-	
2	2	SWITCH CLIP ASSEMBLY, ADJUSTABLE, FOR HOLLOW TIES	-	
3	1	CONNECTOR LUG FOR REAR DRIVE ROD	-	
4	2	HUCK BOLT, ¾" DIA (C50LR-BR24-36)	-	
5	2	HUCK COLLAR, ¾" DIA (LC-2R24B)	-	

BILL OF MATERIALS FOR SWITCH ROD 20-136-5				
ITEM	QTY	DESCRIPTION	DWG NO	SCRRA PART NO
1	1	SWITCH ROD 20-136-5	-	
2	2	SWITCH CLIP ASSEMBLY, ADJUSTABLE, FOR HOLLOW TIES	-	

NOTE:

1. ROD IDENTIFICATION TO BE ENGRAVED ON ROD CLEARLY AS SHOWN, ⅜" MIN HEIGHT.

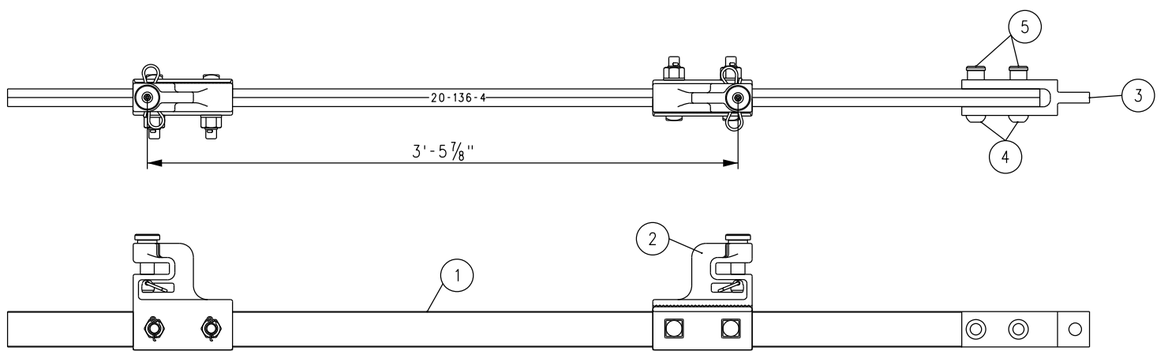

SWITCH ROD ASSEMBLY 20-136-4

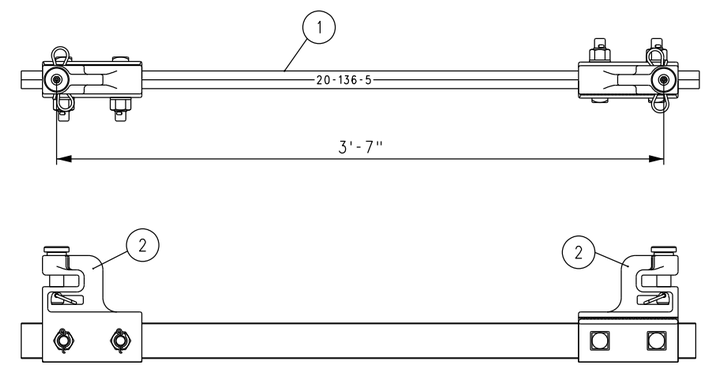

SWITCH ROD ASSEMBLY 20-136-5

REV.	DATE	DESCRIPTION	DES.	ENG.
X	XX-XX-XX	REVISION	XX	XX

DRAWN BY: HDR DATE: 03/31/2011

ASSISTANT DIRECTOR: STANDARDS & DESIGN

DIRECTOR OF ENGINEERING AND CONSTRUCTION

SCRRA ENGINEERING STANDARDS ARE INTENDED FOR SCRRA APPROVED USES ONLY. FOR NON-SCRRA APPROVED USES:
SCRRA SHALL NOT BE RESPONSIBLE FOR THE ACCURACY OR COMPLETENESS OF THE DATA OR INFORMATION CONTAINED HEREIN. THE SELECTION AND USE OF THESE STANDARDS IS THE SOLE RESPONSIBILITY OF THE USER AND SHOULD NOT BE USED WITHOUT CONSULTING A REGISTERED PROFESSIONAL ENGINEER. ALL WARRANTIES AND REPRESENTATIONS OF ANY KIND ARE DISCLAIMED. ANYONE MAKING USE OF THIS INFORMATION AGREES THAT IT ASSUMES ALL LIABILITY ARISING FROM SUCH USE. NO PART OF THESE STANDARDS SHOULD BE REPRODUCED OR DISTRIBUTED IN ANY FORM OR BY ANY MEANS WITHOUT THE PRIOR WRITTEN PERMISSION OF SCRRA. ALL RIGHTS RESERVED.

METROLINK®
SOUTHERN CALIFORNIA REGIONAL RAIL AUTHORITY
ONE GATEWAY PLAZA, 12TH FLOOR, L. A., CA. 90012

ENGINEERING STANDARDS

HOLLOW STEEL TIE SWITCH RODS 20–4 AND 20–5
NO 20–136 LB RE

STANDARD 2806
SCALE: NTS
REVISION –
SHEET 1 OF 1
CADD FILE: ES2806–74

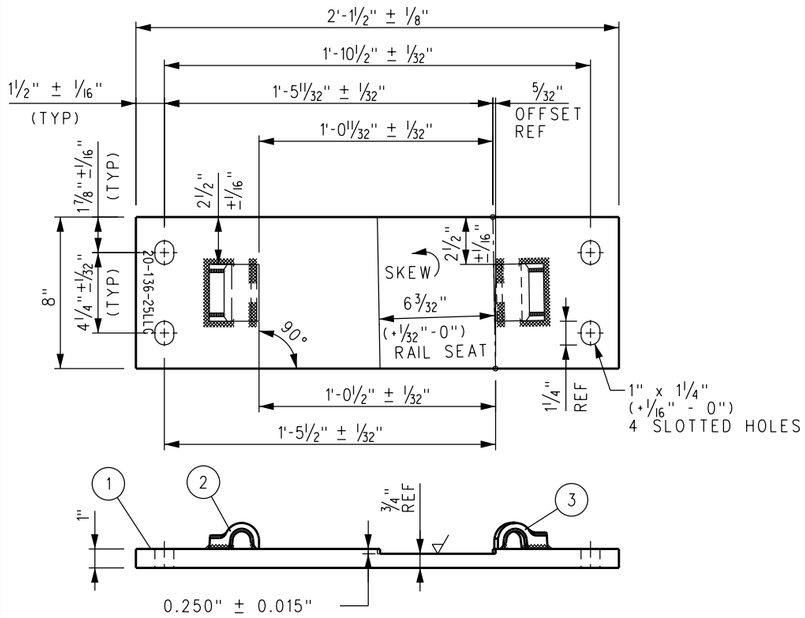

SWITCH PLATE P20-136-25LLC

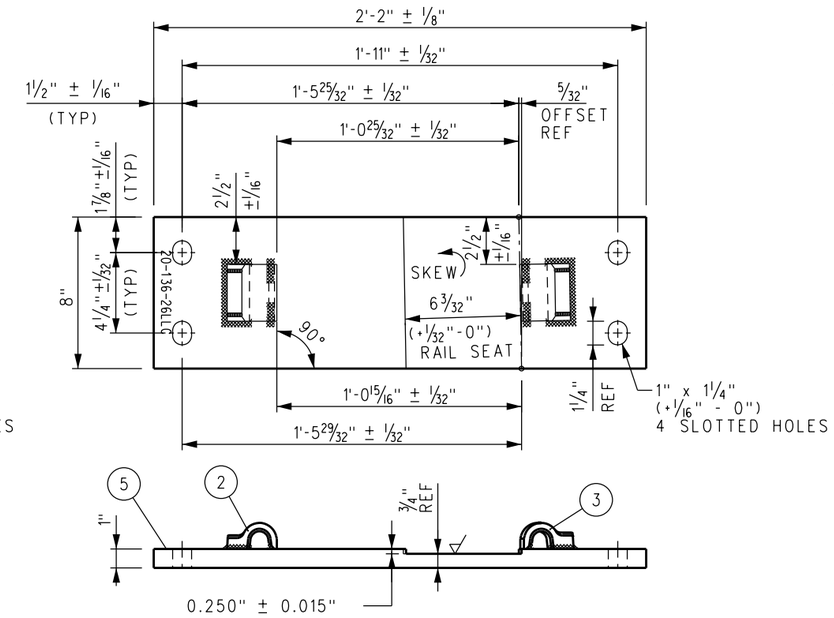

SWITCH PLATE P20-136-26LLC

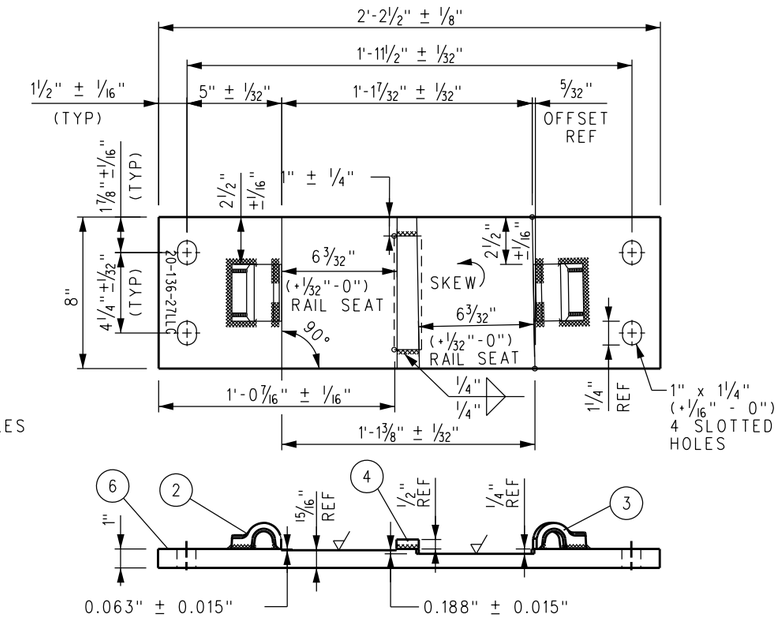

SWITCH PLATE P20-136-27LLC

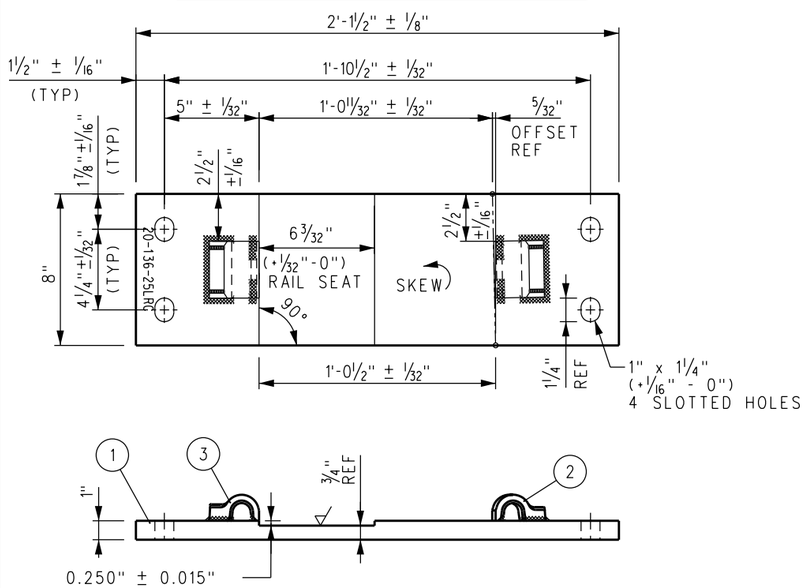

SWITCH PLATE P20-136-25LRC

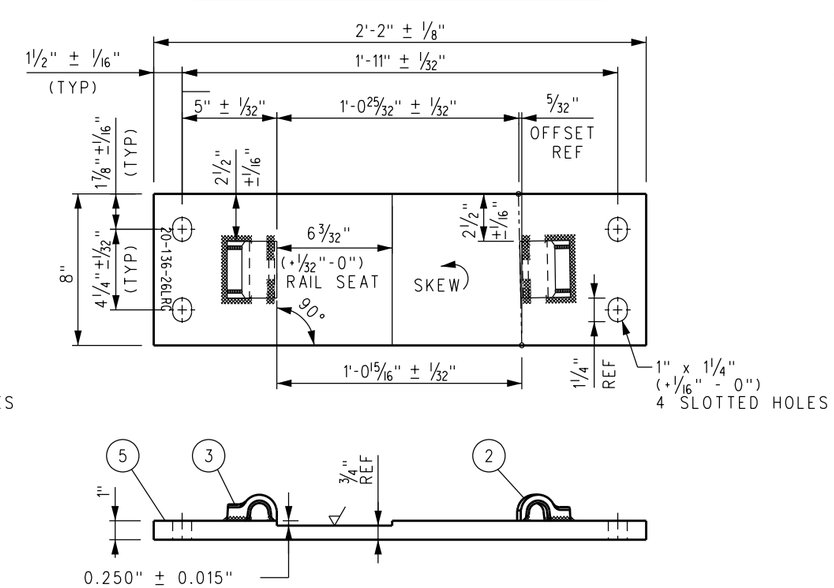

SWITCH PLATE P20-136-26LRC

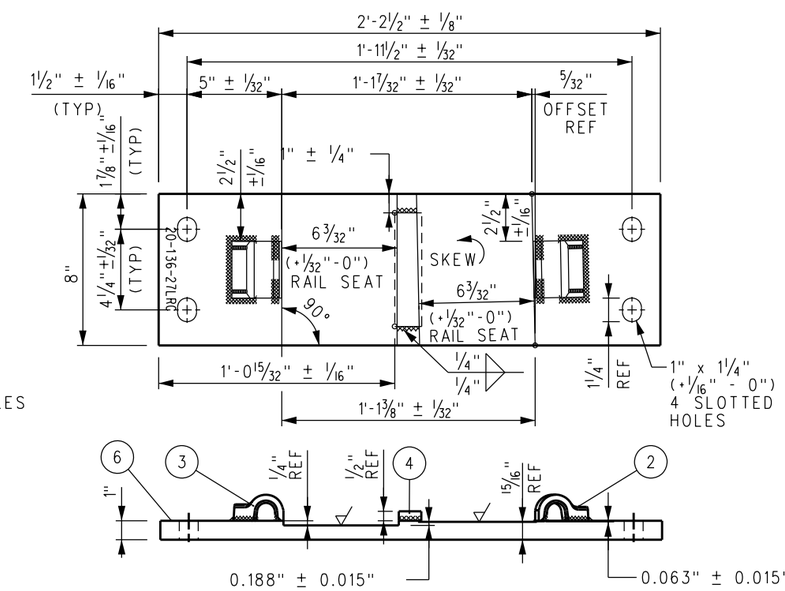

SWITCH PLATE P20-136-27LRC

BILL OF MATERIALS		BILL OF MATERIALS	
ITEM	DESCRIPTION	ITEM	DESCRIPTION
1	FLAT BAR, ASTM A36, 1" x 8" x 2'-1½	4	FLAT BAR, ASTM A36, ½" x 6" x 1 7/16"
2	SHOULDER, PANDROL, FORGED TONGUELESS, TYPE 1	5	FLAT BAR, ASTM A36, 1" X 8" X 2'-2"
3	SHOULDER, PANDROL, FORGED TONGUELESS, TYPE 5	6	FLAT BAR, ASTM A36, 1" X 8" X 2'-2½"

NOTES:

1. I.D. CHARACTERS TO BE ½" MINIMUM HEIGHT CLEARLY STAMPED AS SHOWN.
2. WELDS TO BE DRESSED FLUSH WITH SHOULDER & NOT TO PROTRUDE INTO RAIL SEAT.
3. SLOTTED HOLE CENTERS ARE INDICATED ON DRAWING.

REV.	DATE	DESCRIPTION	DES.	ENG.
X	XX-XX-XX	REVISION	XX	XX

DRAWN BY: HDR DATE: 03/31/2011

ASSISTANT DIRECTOR: STANDARDS & DESIGN

DIRECTOR OF ENGINEERING AND CONSTRUCTION

SCRRA ENGINEERING STANDARDS ARE INTENDED FOR SCRRA APPROVED USES ONLY. FOR NON-SCRRA APPROVED USES:
SCRRA SHALL NOT BE RESPONSIBLE FOR THE ACCURACY OR COMPLETENESS OF THE DATA OR INFORMATION CONTAINED HEREIN. THE SELECTION AND USE OF THESE STANDARDS IS THE SOLE RESPONSIBILITY OF THE USER AND SHOULD NOT BE USED WITHOUT CONSULTING A REGISTERED PROFESSIONAL ENGINEER. ALL WARRANTIES AND REPRESENTATIONS OF ANY KIND ARE DISCLAIMED. ANYONE MAKING USE OF THIS INFORMATION AGREES THAT IT ASSUMES ALL LIABILITY ARISING FROM SUCH USE. NO PART OF THESE STANDARDS SHOULD BE REPRODUCED OR DISTRIBUTED IN ANY FORM OR BY ANY MEANS WITHOUT THE PRIOR WRITTEN PERMISSION OF SCRRA. ALL RIGHTS RESERVED.

METROLINK®
SOUTHERN CALIFORNIA REGIONAL RAIL AUTHORITY
ONE GATEWAY PLAZA, 12TH FLOOR, L. A., CA. 90012

ENGINEERING STANDARDS

SWITCH PLATES
(20–25LLC /LRC THROUGH 20–27LLC /LRC)
FOR NO 20 136 LB RE LH CONCRETE TIE TURNOUT

STANDARD 2806
SCALE: NTS
REVISION –
SHEET 1 OF 1
CADD FILE: ES2806–81

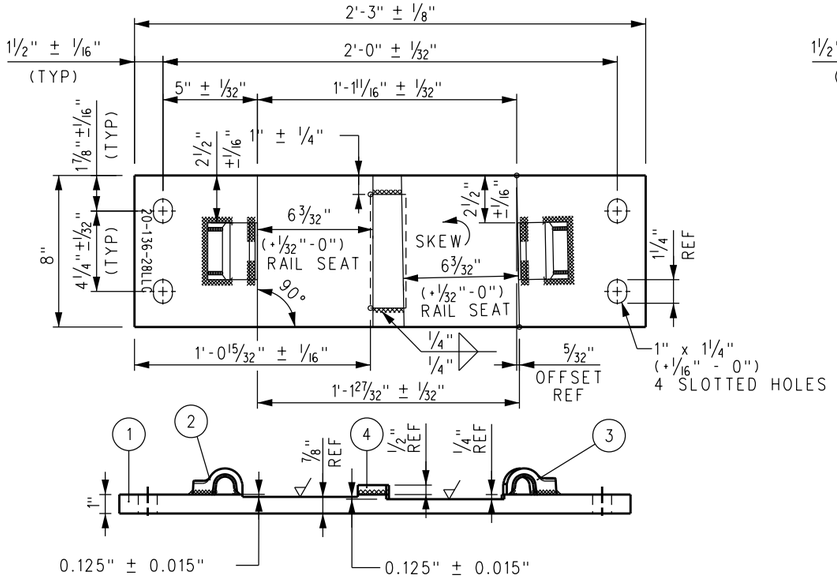

SWITCH PLATE P20-136-28LLC

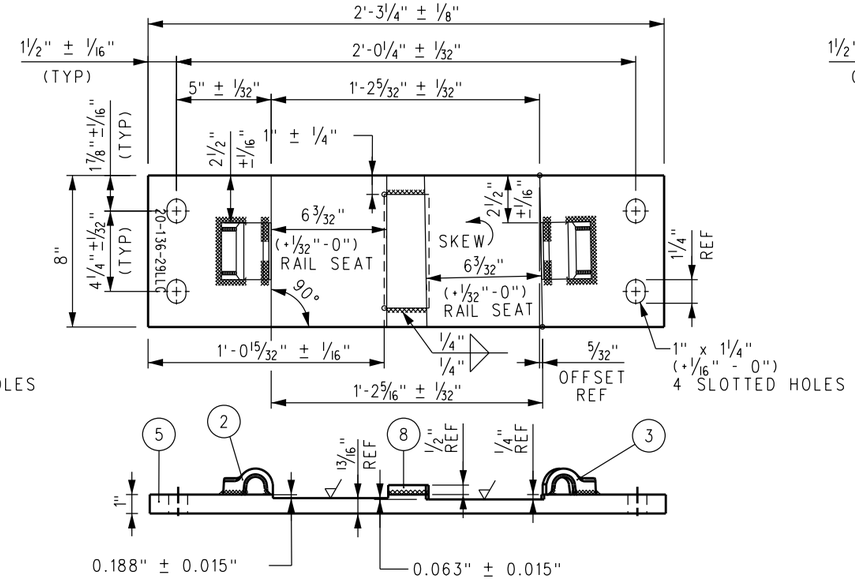

SWITCH PLATE P20-136-29LLC

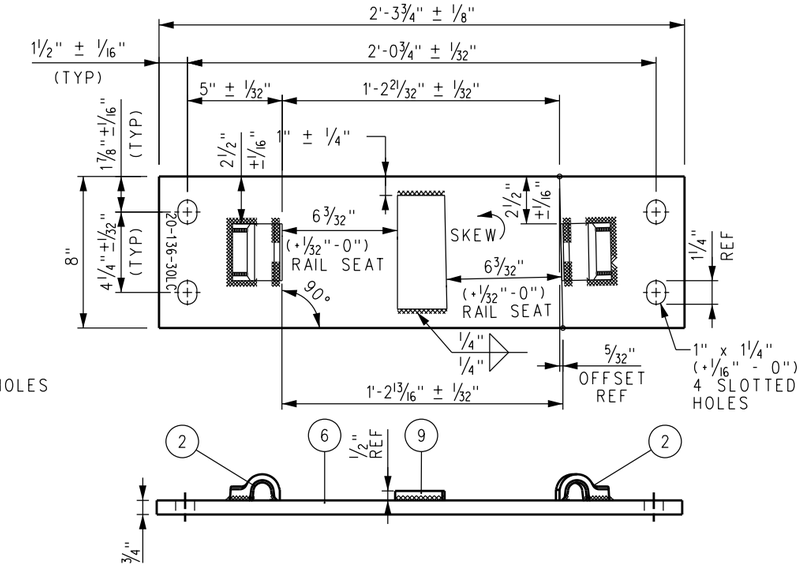

SWITCH PLATE P20-136-30LC

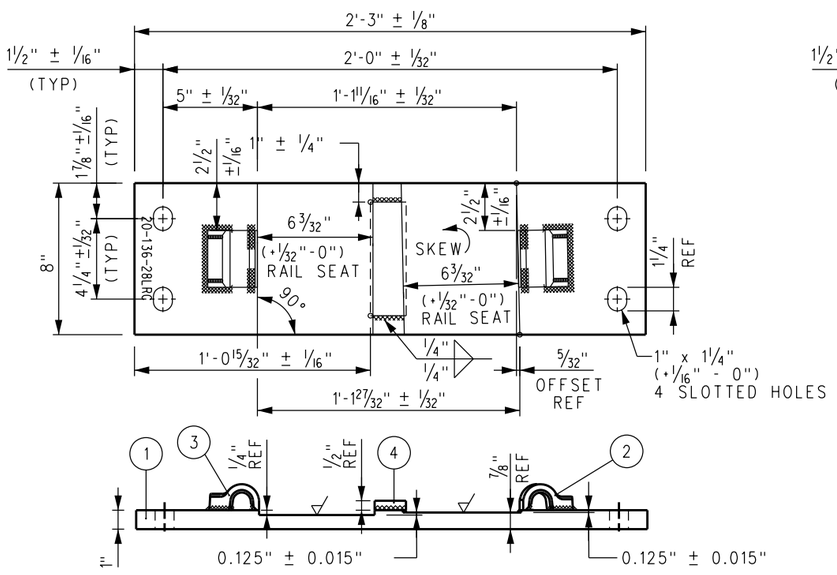

SWITCH PLATE P20-136-28LRC

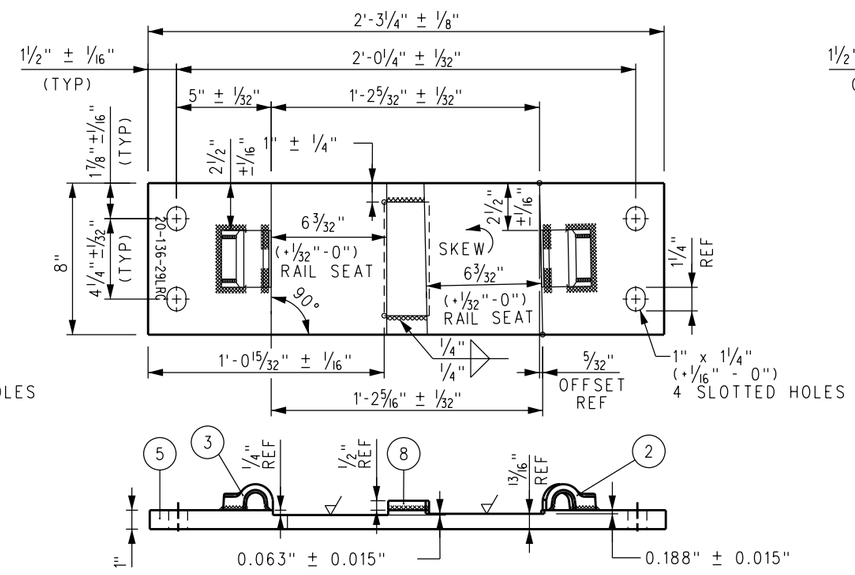

SWITCH PLATE P20-136-29LRC

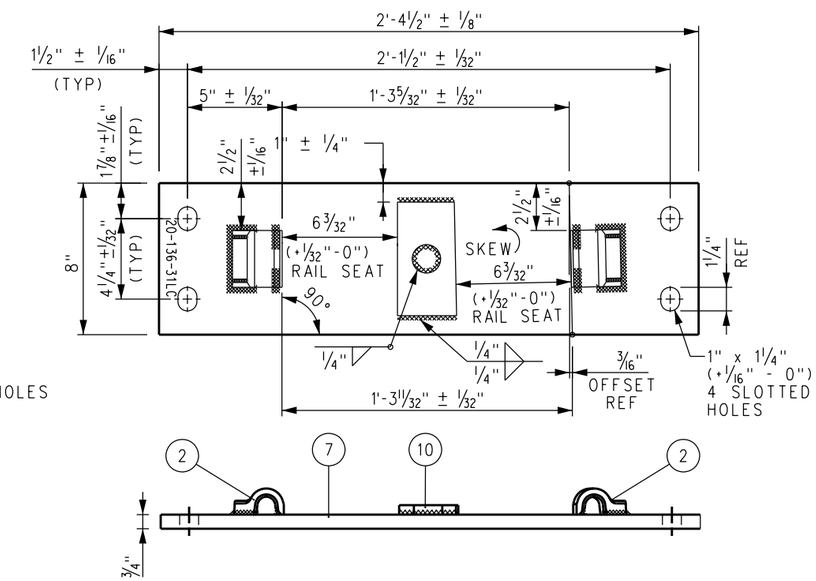

SWITCH PLATE P20-136-31LC

BILL OF MATERIALS		BILL OF MATERIALS	
ITEM	DESCRIPTION	ITEM	DESCRIPTION
1	FLAT BAR, ASTM A36, 1" x 8" x 2'-3"	6	FLAT BAR, ASTM A36, 3/4" x 8" x 2'-3 3/4"
2	SHOULDER, PANDROL, FORGED TONGUELESS, TYPE 1	7	FLAT BAR, ASTM A36, 3/4" x 8" x 2'-4 1/2"
3	SHOULDER, PANDROL, FORGED TONGUELESS, TYPE 5	8	FLAT BAR, ASTM A36, 1/2" x 6" x 2 3/8"
4	FLAT BAR, ASTM A36, 1/2" x 6" x 1 7/8"	9	BURNED STOP, 1/2" THICK, TAPERED 2 5/8" TO 2 1/2", OVER 6"
5	FLAT BAR, ASTM A36, 1" x 8" x 2'-3 1/4"	10	BURNED STOP, 1/2" THICK, TAPERED 3" TO 3 1/8", OVER 6"

NOTES:

1. I.D. CHARACTERS TO BE 1/2" MINIMUM HEIGHT CLEARLY STAMPED AS SHOWN.
2. WELDS TO BE DRESSED FLUSH WITH SHOULDER & NOT TO PROTRUDE INTO RAIL SEAT.
3. SLOTTED HOLE CENTERS ARE INDICATED ON DRAWING.

REV.	DATE	DESCRIPTION	DES.	ENG.
X	XX-XX-XX	REVISION	XX	XX

DRAWN BY: HDR DATE: 03/31/2011

ASSISTANT DIRECTOR: STANDARDS & DESIGN

DIRECTOR OF ENGINEERING AND CONSTRUCTION

SCRRA ENGINEERING STANDARDS ARE INTENDED FOR SCRRA APPROVED USES ONLY. FOR NON-SCRRA APPROVED USES:
SCRRA SHALL NOT BE RESPONSIBLE FOR THE ACCURACY OR COMPLETENESS OF THE DATA OR INFORMATION CONTAINED HEREIN. THE SELECTION AND USE OF THESE STANDARDS IS THE SOLE RESPONSIBILITY OF THE USER AND SHOULD NOT BE USED WITHOUT CONSULTING A REGISTERED PROFESSIONAL ENGINEER. ALL WARRANTIES AND REPRESENTATIONS OF ANY KIND ARE DISCLAIMED. ANYONE MAKING USE OF THIS INFORMATION AGREES THAT IT ASSUMES ALL LIABILITY ARISING FROM SUCH USE. NO PART OF THESE STANDARDS SHOULD BE REPRODUCED OR DISTRIBUTED IN ANY FORM OR BY ANY MEANS WITHOUT THE PRIOR WRITTEN PERMISSION OF SCRRA. ALL RIGHTS RESERVED.

METROLINK

SOUTHERN CALIFORNIA REGIONAL RAIL AUTHORITY
ONE GATEWAY PLAZA, 12TH FLOOR, L. A., CA. 90012

ENGINEERING STANDARDS

SWITCH PLATES
(20–28LLC /LRC THROUGH 29LLC /LRC)
(20–30LC THROUGH 20–31LC)
FOR NO 20 136 LB RE LH CONCRETE TIE TURNOUT

STANDARD 2806
SCALE: NTS
REVISION –
SHEET 1 OF 1
CADD FILE: ES2806–82

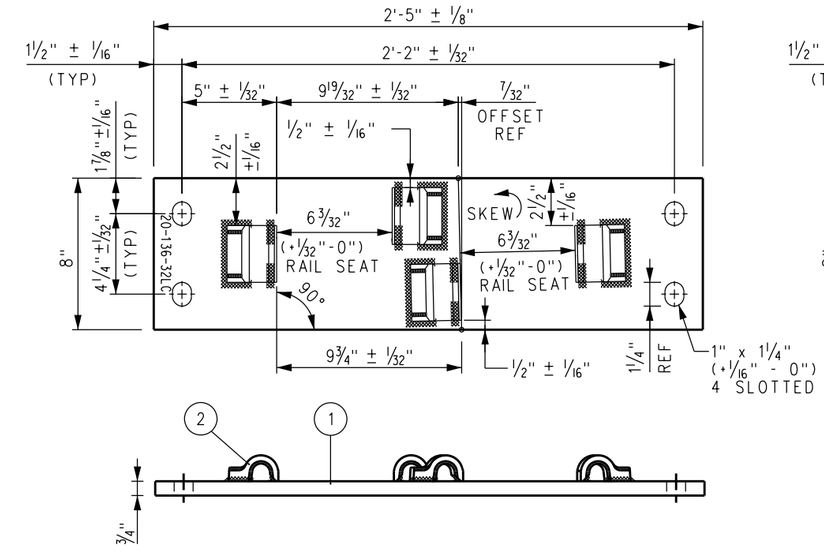

SWITCH PLATE P20-136-32LC

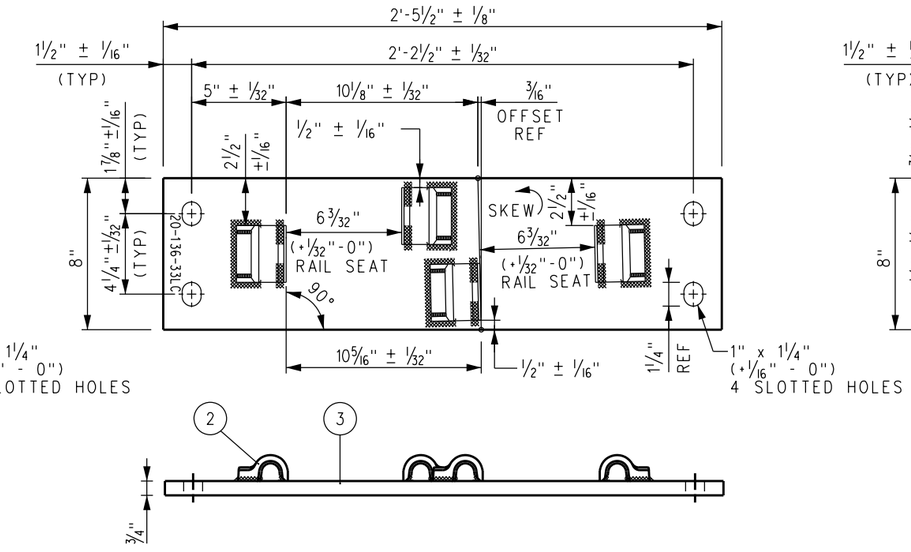

SWITCH PLATE P20-136-33LC

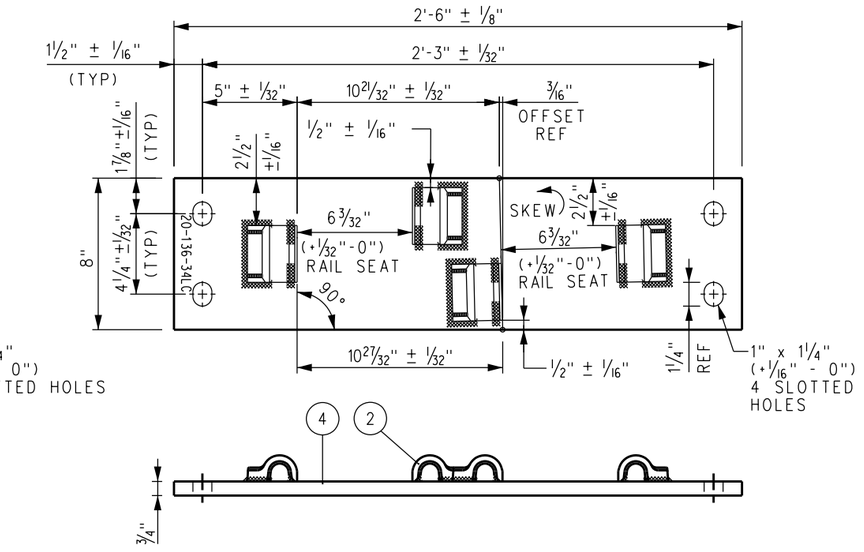

SWITCH PLATE P20-136-34LC

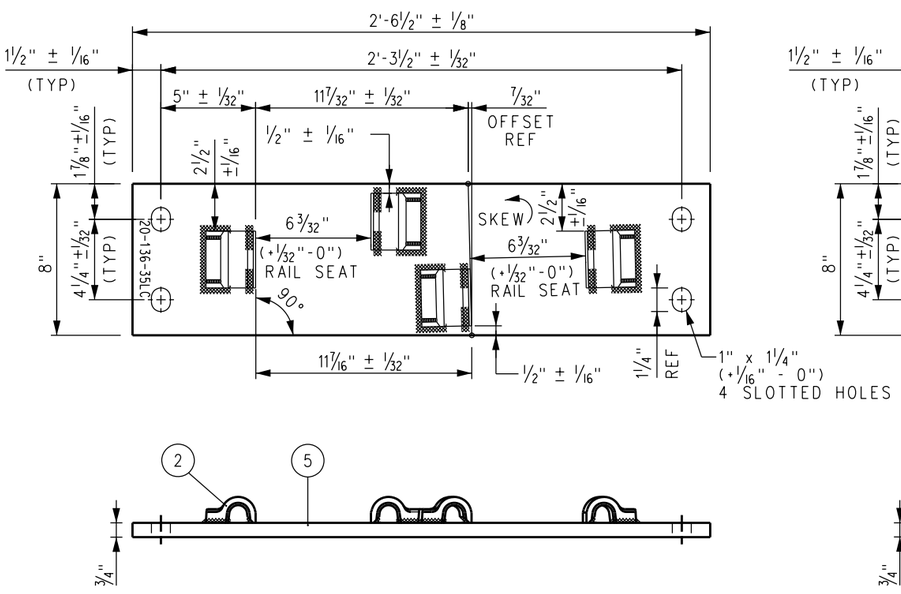

SWITCH PLATE P20-136-35LC

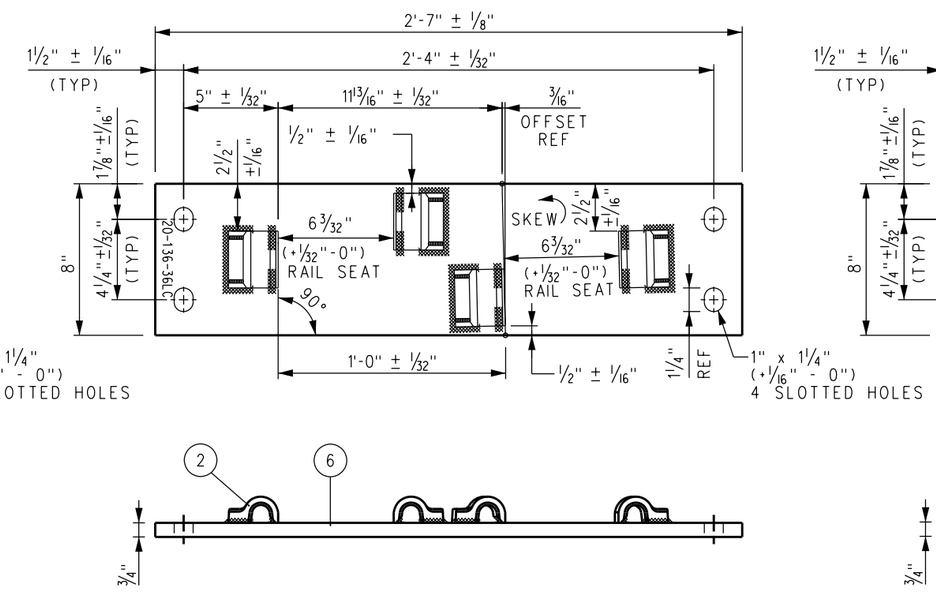

SWITCH PLATE P20-136-36LC

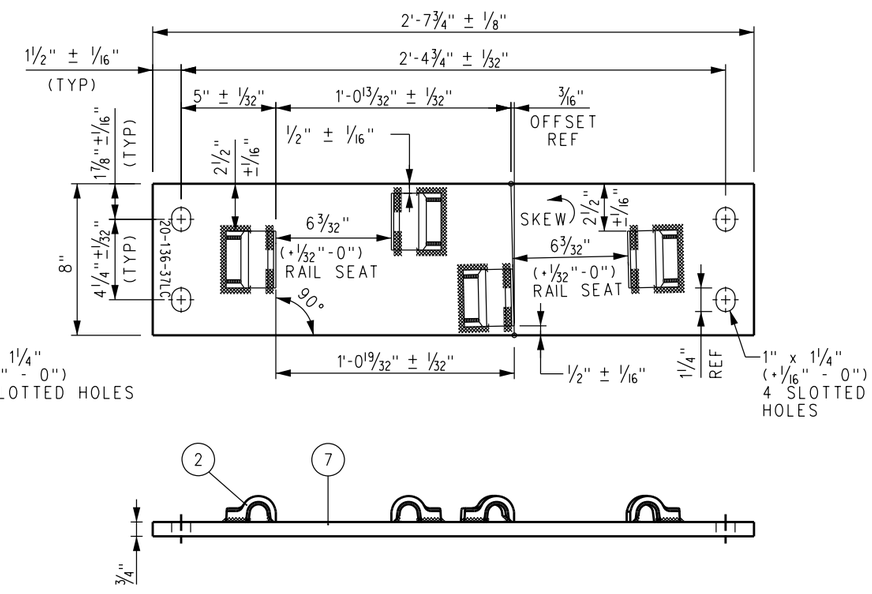

SWITCH PLATE P20-136-37LC

BILL OF MATERIALS	
ITEM	DESCRIPTION
1	FLAT BAR, ASTM A36, 3/4" x 8" x 2'-5"
2	SHOULDER, PANDROL, FORGED TONGUELESS, TYPE 1
3	FLAT BAR, ASTM A36, 3/4" x 8" x 2'-5 1/2"
4	FLAT BAR, ASTM A36, 3/4" x 8" x 2'-6"

BILL OF MATERIALS	
ITEM	DESCRIPTION
5	FLAT BAR, ASTM A36, 3/4" x 8" x 2'-6 1/2"
6	FLAT BAR, ASTM A36, 3/4" x 8" x 2'-7"
7	FLAT BAR, ASTM A36, 3/4" x 8" x 2'-7 3/4"

NOTES:

1. I.D. CHARACTERS TO BE 1/2" MINIMUM HEIGHT CLEARLY STAMPED AS SHOWN.
2. WELDS TO BE DRESSED FLUSH WITH SHOULDER & NOT TO PROTRUDE INTO RAIL SEAT.
3. SLOTTED HOLE CENTERS ARE INDICATED ON DRAWING.

REV.	DATE	DESCRIPTION	DES.	ENG.
X	XX-XX-XX	REVISION	XX	XX

DRAWN BY: HDR DATE: 03/31/2011

ASSISTANT DIRECTOR: STANDARDS & DESIGN

DIRECTOR OF ENGINEERING AND CONSTRUCTION

SCRRA ENGINEERING STANDARDS ARE INTENDED FOR SCRRA APPROVED USES ONLY. FOR NON-SCRRA APPROVED USES:
SCRRA SHALL NOT BE RESPONSIBLE FOR THE ACCURACY OR COMPLETENESS OF THE DATA OR INFORMATION CONTAINED HEREIN. THE SELECTION AND USE OF THESE STANDARDS IS THE SOLE RESPONSIBILITY OF THE USER AND SHOULD NOT BE USED WITHOUT CONSULTING A REGISTERED PROFESSIONAL ENGINEER. ALL WARRANTIES AND REPRESENTATIONS OF ANY KIND ARE DISCLAIMED. ANYONE MAKING USE OF THIS INFORMATION AGREES THAT IT ASSUMES ALL LIABILITY ARISING FROM SUCH USE. NO PART OF THESE STANDARDS SHOULD BE REPRODUCED OR DISTRIBUTED IN ANY FORM OR BY ANY MEANS WITHOUT THE PRIOR WRITTEN PERMISSION OF SCRRA. ALL RIGHTS RESERVED.

METROLINK

SOUTHERN CALIFORNIA REGIONAL RAIL AUTHORITY
ONE GATEWAY PLAZA, 12TH FLOOR, L. A., CA. 90012

ENGINEERING STANDARDS

SWITCH PLATES (20–32LC THROUGH 20–37LC)
FOR NO 20 136 LB RE LH CONCRETE TIE TURNOUT

STANDARD: 2806
SCALE: NTS
REVISION: –
SHEET: 1 OF 1
CADD FILE: ES2806–83

UserName=> carlosa Date Plotted: 10/5/2011 3:56:03 PM Plot Driver=> S:\Plot Drivers\pdf.plt FileName=> s:\V8EngStds\2000\Turnouts\No 20 Turnout\ES2806-83.dgn

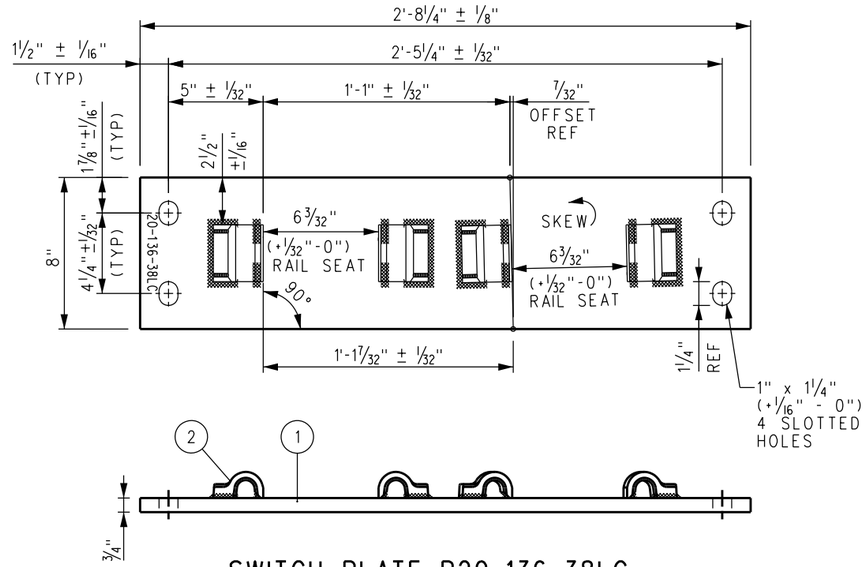

SWITCH PLATE P20-136-38LC

NOTES:

1. I.D. CHARACTERS TO BE ½" MINIMUM HEIGHT CLEARLY STAMPED AS SHOWN.
2. WELDS TO BE DRESSED FLUSH WITH SHOULDER & NOT TO PROTRUDE INTO RAIL SEAT.
3. SLOTTED HOLE CENTERS ARE INDICATED ON DRAWING.

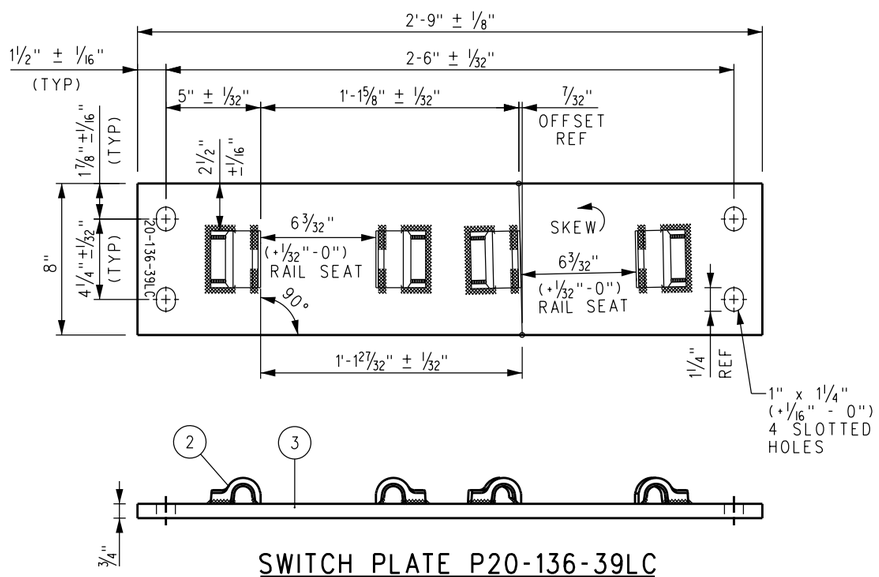

SWITCH PLATE P20-136-39LC

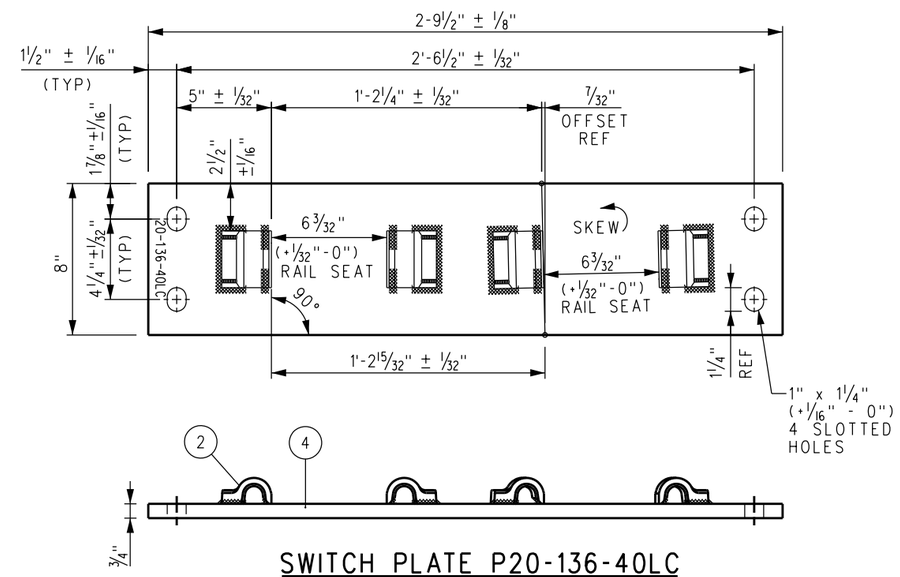

SWITCH PLATE P20-136-40LC

BILL OF MATERIALS		BILL OF MATERIALS	
ITEM	DESCRIPTION	ITEM	DESCRIPTION
1	FLAT BAR, ASTM A36, ¾" x 8" x 2'-8¼"	3	FLAT BAR, ASTM A36, ¾" x 8" x 2'-9"
2	SHOULDER, PANDROL, FORGED TONGUELESS, TYPE 1	4	FLAT BAR, ASTM A36, ¾" x 8" x 2'-9½"

REV.	DATE	DESCRIPTION	DES.	ENG.
X	XX-XX-XX	REVISION	XX	XX

DRAWN BY: HDR DATE: 03/31/2011

ASSISTANT DIRECTOR: STANDARDS & DESIGN

DIRECTOR OF ENGINEERING AND CONSTRUCTION

SCRRA ENGINEERING STANDARDS ARE INTENDED FOR SCRRA APPROVED USES ONLY. FOR NON-SCRRA APPROVED USES:
SCRRA SHALL NOT BE RESPONSIBLE FOR THE ACCURACY OR COMPLETENESS OF THE DATA OR INFORMATION CONTAINED HEREIN. THE SELECTION AND USE OF THESE STANDARDS IS THE SOLE RESPONSIBILITY OF THE USER AND SHOULD NOT BE USED WITHOUT CONSULTING A REGISTERED PROFESSIONAL ENGINEER. ALL WARRANTIES AND REPRESENTATIONS OF ANY KIND ARE DISCLAIMED. ANYONE MAKING USE OF THIS INFORMATION AGREES THAT IT ASSUMES ALL LIABILITY ARISING FROM SUCH USE. NO PART OF THESE STANDARDS SHOULD BE REPRODUCED OR DISTRIBUTED IN ANY FORM OR BY ANY MEANS WITHOUT THE PRIOR WRITTEN PERMISSION OF SCRRA. ALL RIGHTS RESERVED.

METROLINK®
SOUTHERN CALIFORNIA REGIONAL RAIL AUTHORITY
ONE GATEWAY PLAZA, 12TH FLOOR, L. A., CA. 90012

ENGINEERING STANDARDS

SWITCH PLATES (20–38LC THROUGH 20–40LC)
FOR NO 20 136 LB RE LH CONCRETE TIE TURNOUT

STANDARD 2806
SCALE: NTS
REVISION –
SHEET 1 OF 1
CADD FILE: ES2806–84

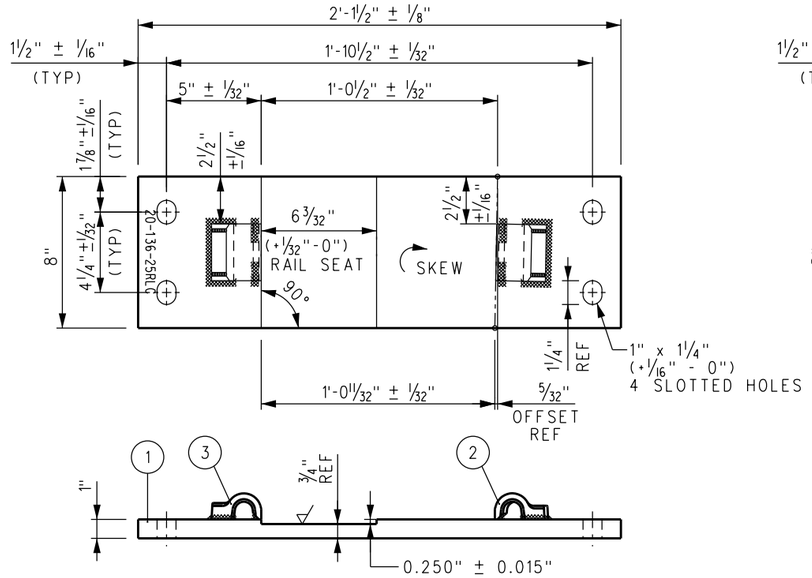

SWITCH PLATE P20-136-25RLC

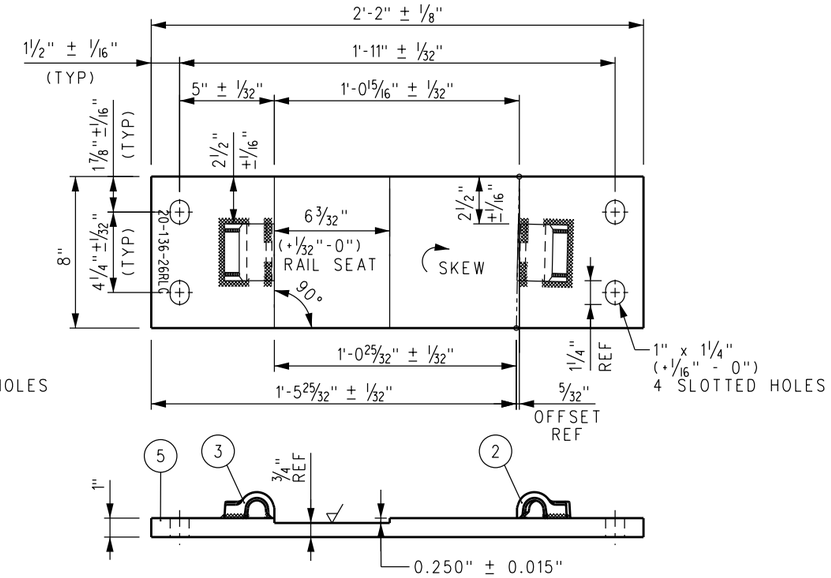

SWITCH PLATE P20-136-26RLC

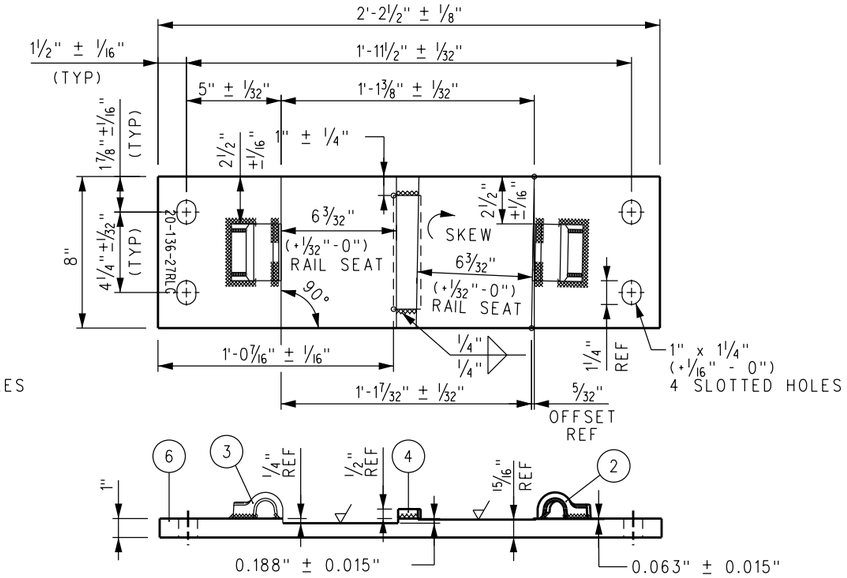

SWITCH PLATE P20-136-27RLC

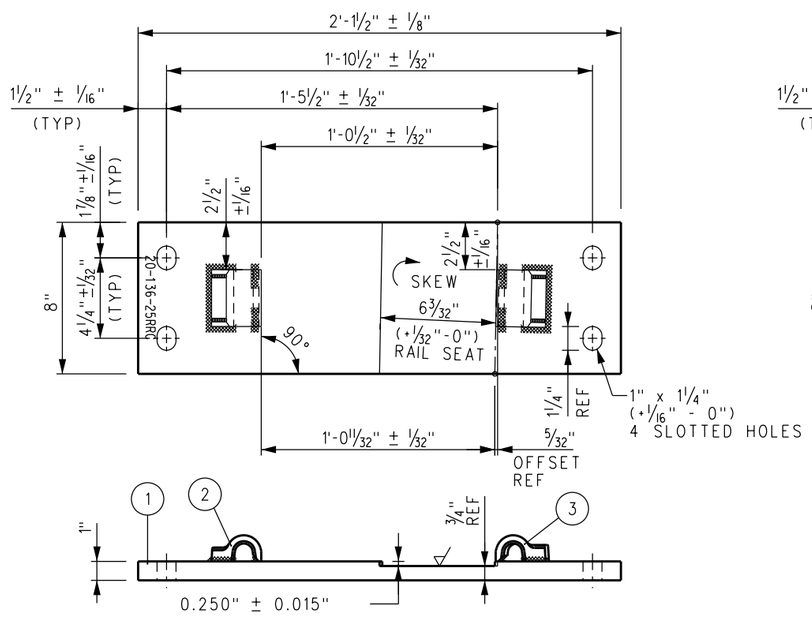

SWITCH PLATE P20-136-25RRC

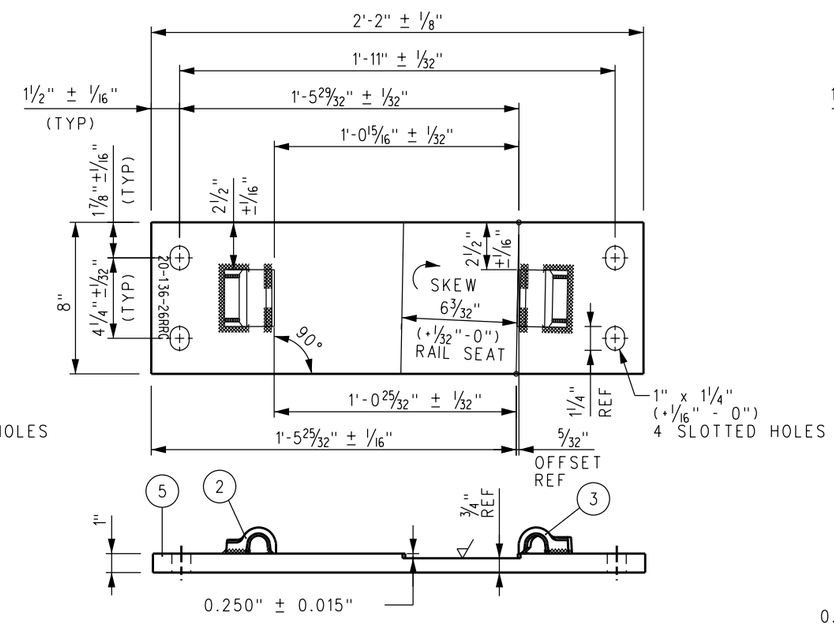

SWITCH PLATE P20-136-26RRC

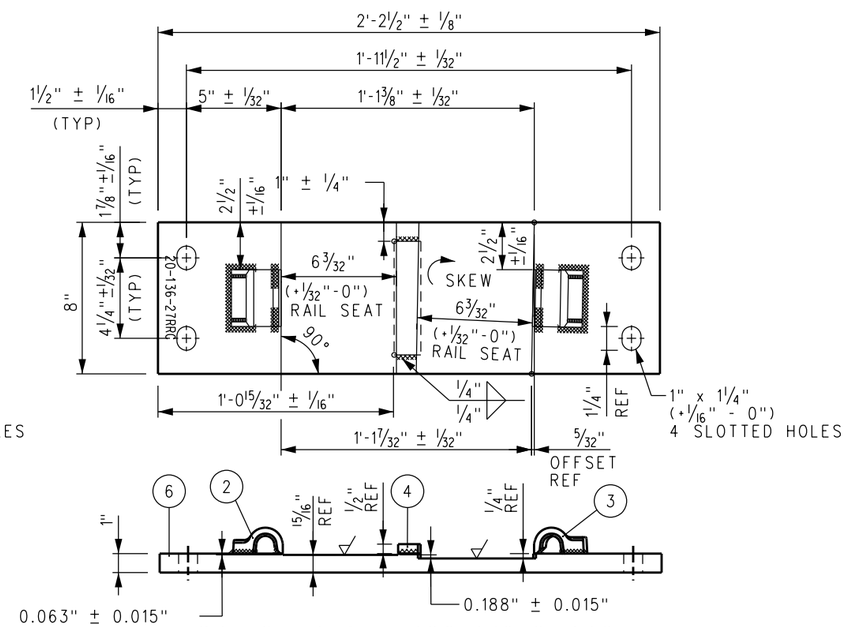

SWITCH PLATE P20-136-27RRC

BILL OF MATERIALS		BILL OF MATERIALS	
ITEM	DESCRIPTION	ITEM	DESCRIPTION
1	FLAT BAR, ASTM A36, 1" x 8" x 2'-1½	4	FLAT BAR, ASTM A36, ½" x 6" x 1 7/16"
2	SHOULDER, PANDROL, FORGED TONGUELESS, TYPE 1	5	FLAT BAR, ASTM A36, 1" X 8" X 2'-2"
3	SHOULDER, PANDROL, FORGED TONGUELESS, TYPE 5	6	FLAT BAR, ASTM A36, 1" x 8" x 2'-2½"

NOTES:

1. I.D. CHARACTERS TO BE ½" MINIMUM HEIGHT CLEARLY STAMPED AS SHOWN.
2. WELDS TO BE DRESSED FLUSH WITH SHOULDER & NOT TO PROTRUDE INTO RAIL SEAT.
3. SLOTTED HOLE CENTERS ARE INDICATED ON DRAWING.

REV.	DATE	DESCRIPTION	DES.	ENG.
X	XX-XX-XX	REVISION	XX	XX

DRAWN BY: HDR DATE: 03/31/2011

ASSISTANT DIRECTOR: STANDARDS & DESIGN

DIRECTOR OF ENGINEERING AND CONSTRUCTION

SCRRA ENGINEERING STANDARDS ARE INTENDED FOR SCRRA APPROVED USES ONLY. FOR NON-SCRRA APPROVED USES:
SCRRA SHALL NOT BE RESPONSIBLE FOR THE ACCURACY OR COMPLETENESS OF THE DATA OR INFORMATION CONTAINED HEREIN. THE SELECTION AND USE OF THESE STANDARDS IS THE SOLE RESPONSIBILITY OF THE USER AND SHOULD NOT BE USED WITHOUT CONSULTING A REGISTERED PROFESSIONAL ENGINEER. ALL WARRANTIES AND REPRESENTATIONS OF ANY KIND ARE DISCLAIMED. ANYONE MAKING USE OF THIS INFORMATION AGREES THAT IT ASSUMES ALL LIABILITY ARISING FROM SUCH USE. NO PART OF THESE STANDARDS SHOULD BE REPRODUCED OR DISTRIBUTED IN ANY FORM OR BY ANY MEANS WITHOUT THE PRIOR WRITTEN PERMISSION OF SCRRA. ALL RIGHTS RESERVED.

METROLINK®
SOUTHERN CALIFORNIA REGIONAL RAIL AUTHORITY
ONE GATEWAY PLAZA, 12TH FLOOR, L. A., CA. 90012

ENGINEERING STANDARDS

SWITCH PLATES
(20–25RLC /RRC THROUGH 20–27RLC /RRC)
FOR NO 20 136 LB RE RH CONCRETE TIE TURNOUT

STANDARD 2806
SCALE: NTS
REVISION –
SHEET 1 OF 1
CADD FILE: ES2806–85

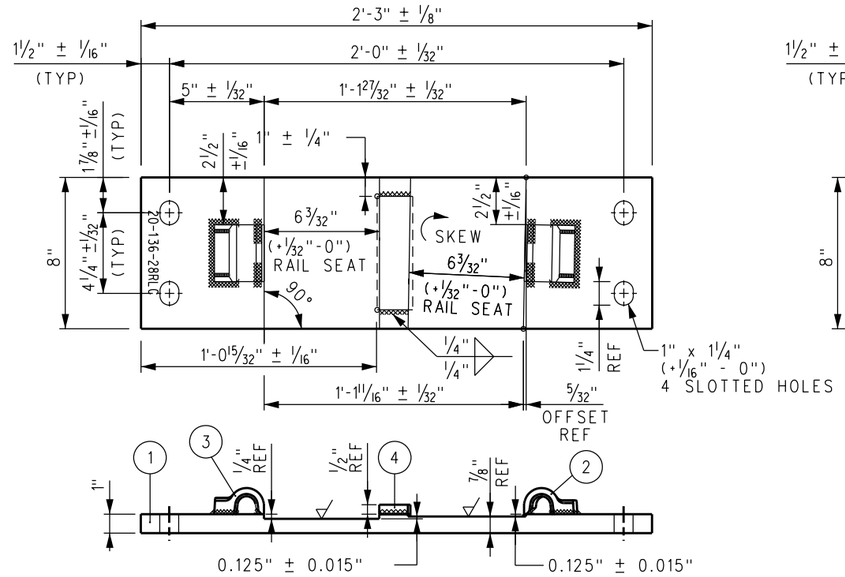

SWITCH PLATE P20-136-28RLC

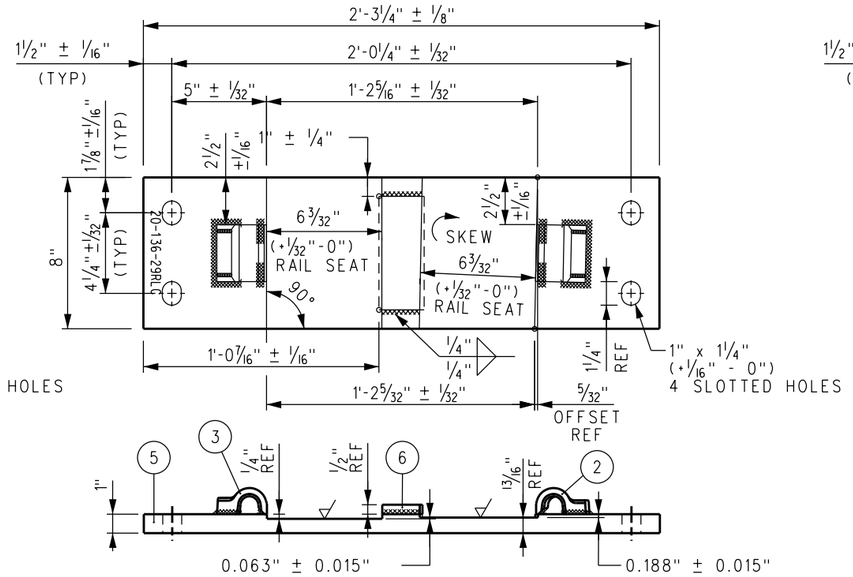

SWITCH PLATE P20-136-29RLC

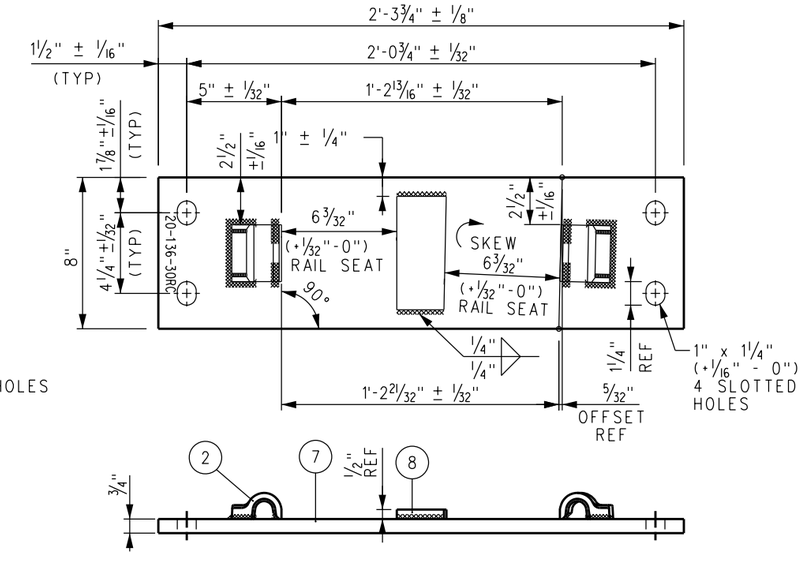

SWITCH PLATE P20-136-30RC

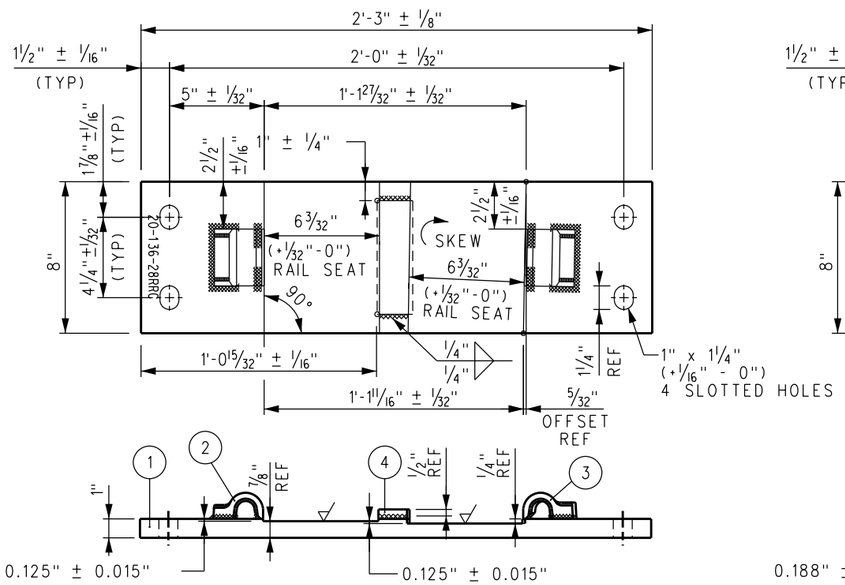

SWITCH PLATE P20-136-28RRC

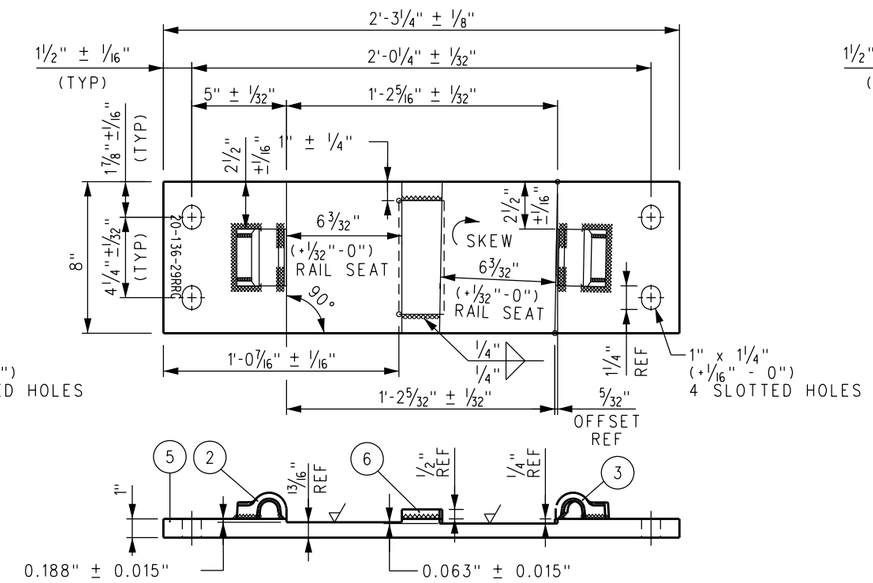

SWITCH PLATE P20-136-29RRC

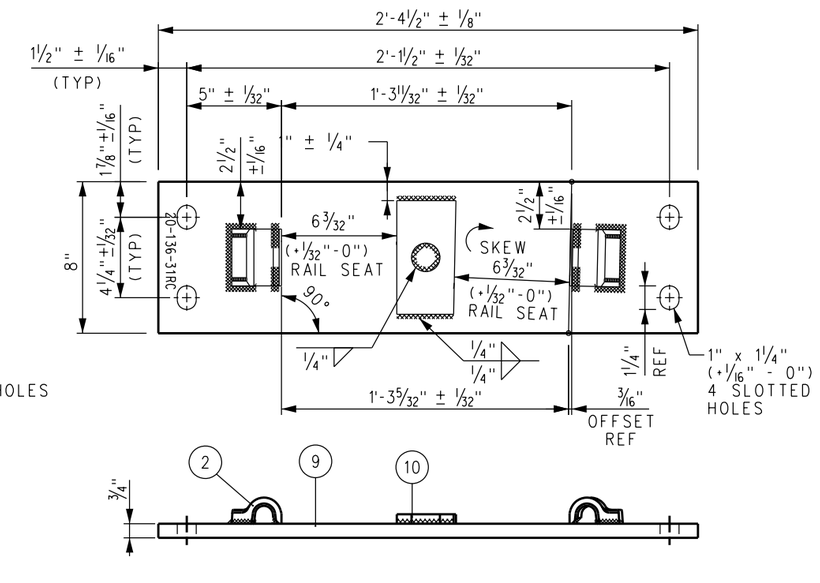

SWITCH PLATE P20-136-31RC

BILL OF MATERIALS		BILL OF MATERIALS	
ITEM	DESCRIPTION	ITEM	DESCRIPTION
1	FLAT BAR, ASTM A36, 1" x 8" x 2'-3"	6	FLAT BAR, ASTM A36, 1/2" x 6" x 2 3/8"
2	SHOULDER, PANDROL, FORGED TONGUELESS, TYPE 1	7	FLAT BAR, ASTM A36, 3/4" x 8" x 2'-3 3/4"
3	SHOULDER, PANDROL, FORGED TONGUELESS, TYPE 5	8	BURNED STOP, 1/2" THICK, TAPERED 2 5/8" TO 2 1/2", OVER 6"
4	FLAT BAR, ASTM A36, 1/2" x 6" x 1 7/8"	9	FLAT BAR, ASTM A36, 3/4" x 8" x 2'-4 1/2"
5	FLAT BAR, ASTM A36, 1" x 8" x 2'-3 1/4"	10	BURNED STOP, 1/2" THICK, TAPERED 3" TO 3 1/8", OVER 6"

NOTES:

1. I.D. CHARACTERS TO BE 1/2" MINIMUM HEIGHT CLEARLY STAMPED AS SHOWN.
2. WELDS TO BE DRESSED FLUSH WITH SHOULDER & NOT TO PROTRUDE INTO RAIL SEAT.
3. SLOTTED HOLE CENTERS ARE INDICATED ON DRAWING.

REV.	DATE	DESCRIPTION	DES.	ENG.
X	XX-XX-XX	REVISION	XX	XX

DRAWN BY: HDR DATE: 03/31/2011

ASSISTANT DIRECTOR: STANDARDS & DESIGN

DIRECTOR OF ENGINEERING AND CONSTRUCTION

SCRRA ENGINEERING STANDARDS ARE INTENDED FOR SCRRA APPROVED USES ONLY. FOR NON-SCRRA APPROVED USES:
SCRRA SHALL NOT BE RESPONSIBLE FOR THE ACCURACY OR COMPLETENESS OF THE DATA OR INFORMATION CONTAINED HEREIN. THE SELECTION AND USE OF THESE STANDARDS IS THE SOLE RESPONSIBILITY OF THE USER AND SHOULD NOT BE USED WITHOUT CONSULTING A REGISTERED PROFESSIONAL ENGINEER. ALL WARRANTIES AND REPRESENTATIONS OF ANY KIND ARE DISCLAIMED. ANYONE MAKING USE OF THIS INFORMATION AGREES THAT IT ASSUMES ALL LIABILITY ARISING FROM SUCH USE. NO PART OF THESE STANDARDS SHOULD BE REPRODUCED OR DISTRIBUTED IN ANY FORM OR BY ANY MEANS WITHOUT THE PRIOR WRITTEN PERMISSION OF SCRRA. ALL RIGHTS RESERVED.

METROLINK

SOUTHERN CALIFORNIA REGIONAL RAIL AUTHORITY
ONE GATEWAY PLAZA, 12TH FLOOR, L. A., CA. 90012

ENGINEERING STANDARDS

SWITCH PLATES
(20–28RLC /RRC THROUGH 20–29RLC /RRC)
(20–30RC THROUGH 20–31RC)
FOR NO 20 136 LB RE RH CONCRETE TIE TURNOUT

STANDARD: 2806
SCALE: NTS
REVISION: –
SHEET: 1 OF 1
CADD FILE: ES2806–86

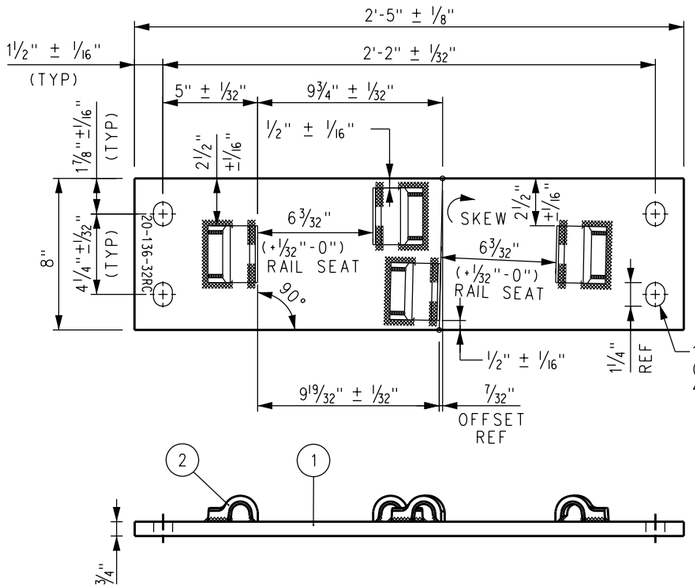

SWITCH PLATE P20-136-32RC

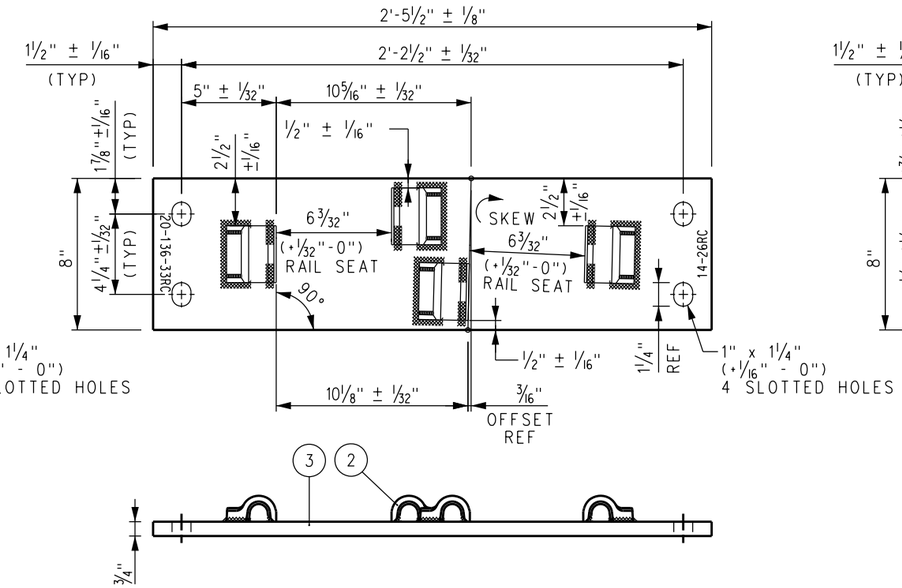

SWITCH PLATE P20-136-33RC

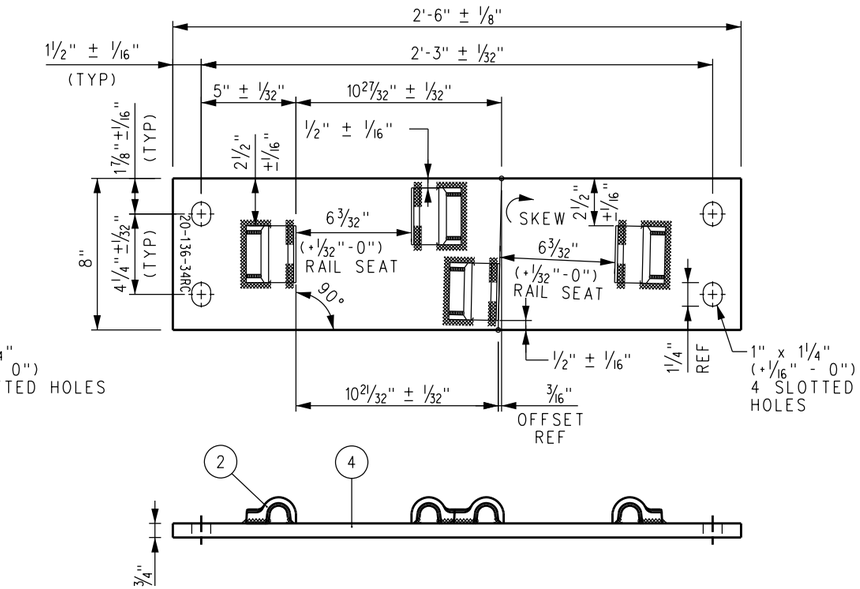

SWITCH PLATE P20-136-34RC

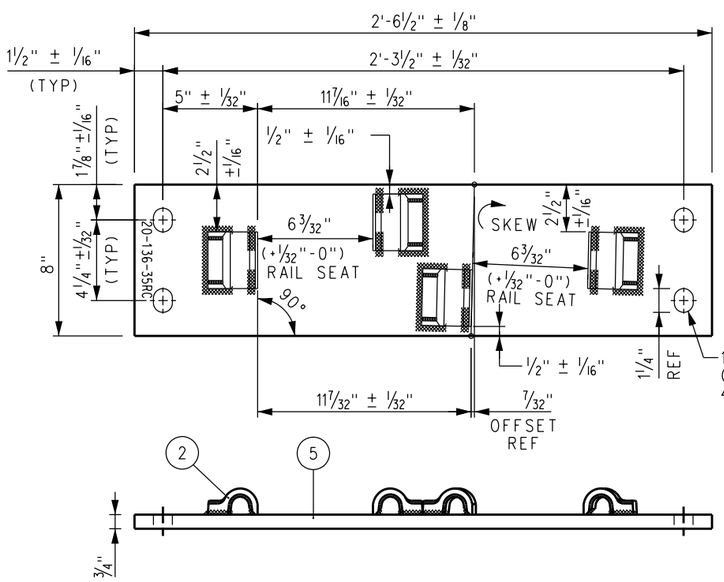

SWITCH PLATE P20-136-35RC

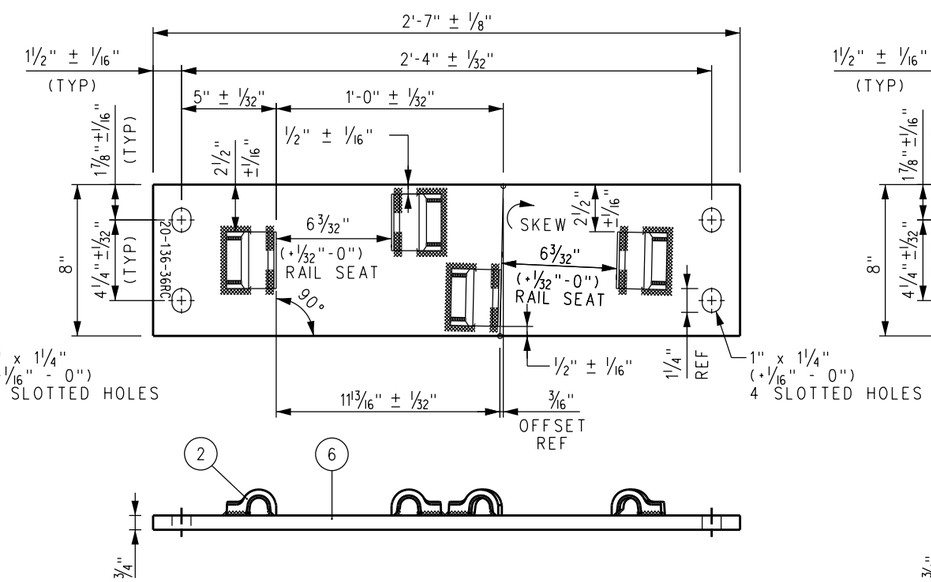

SWITCH PLATE P20-136-36RC

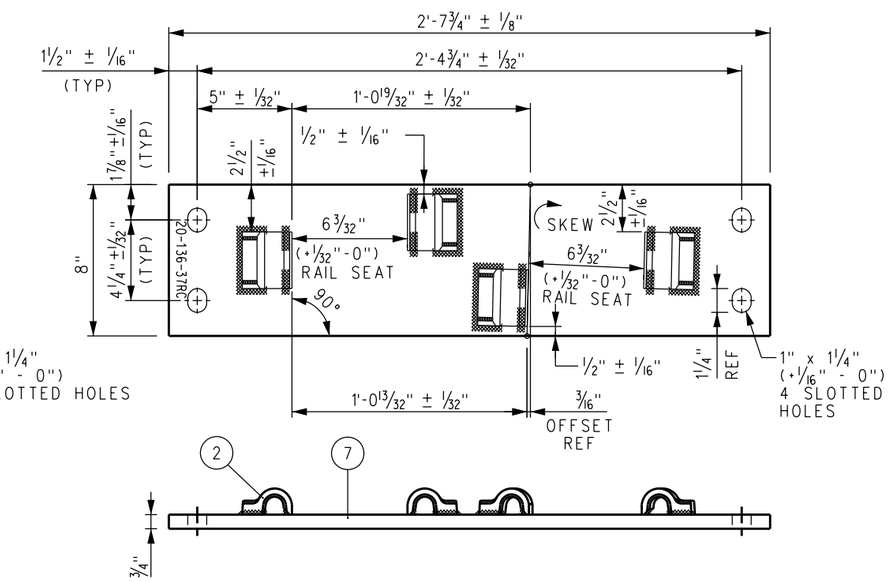

SWITCH PLATE P20-136-37RC

BILL OF MATERIALS		BILL OF MATERIALS	
ITEM	DESCRIPTION	ITEM	DESCRIPTION
1	FLAT BAR, ASTM A36, 3/4" x 8" x 2'-5"	5	FLAT BAR, ASTM A36, 3/4" x 8" x 2'-6 1/2"
2	SHOULDER, PANDROL, FORGED TONGUELESS, TYPE 1	6	FLAT BAR, ASTM A36, 3/4" x 8" x 2'-7"
3	FLAT BAR, ASTM A36, 3/4" x 8" x 2'-5 1/2"	7	FLAT BAR, ASTM A36, 3/4" x 8" x 2'-7 3/4"
4	FLAT BAR, ASTM A36, 3/4" x 8" x 2'-6"		

NOTES:

1. I.D. CHARACTERS TO BE 1/2" MINIMUM HEIGHT CLEARLY STAMPED AS SHOWN.
2. WELDS TO BE DRESSED FLUSH WITH SHOULDER & NOT TO PROTRUDE INTO RAIL SEAT.
3. SLOTTED HOLE CENTERS ARE INDICATED ON DRAWING.

REV.	DATE	DESCRIPTION	DES.	ENG.
X	XX-XX-XX	REVISION	XX	XX

DRAWN BY: HDR DATE: 03/31/2011

ASSISTANT DIRECTOR: STANDARDS & DESIGN

DIRECTOR OF ENGINEERING AND CONSTRUCTION

SCRRA ENGINEERING STANDARDS ARE INTENDED FOR SCRRA APPROVED USES ONLY. FOR NON-SCRRA APPROVED USES:
SCRRA SHALL NOT BE RESPONSIBLE FOR THE ACCURACY OR COMPLETENESS OF THE DATA OR INFORMATION CONTAINED HEREIN. THE SELECTION AND USE OF THESE STANDARDS IS THE SOLE RESPONSIBILITY OF THE USER AND SHOULD NOT BE USED WITHOUT CONSULTING A REGISTERED PROFESSIONAL ENGINEER. ALL WARRANTIES AND REPRESENTATIONS OF ANY KIND ARE DISCLAIMED. ANYONE MAKING USE OF THIS INFORMATION AGREES THAT IT ASSUMES ALL LIABILITY ARISING FROM SUCH USE. NO PART OF THESE STANDARDS SHOULD BE REPRODUCED OR DISTRIBUTED IN ANY FORM OR BY ANY MEANS WITHOUT THE PRIOR WRITTEN PERMISSION OF SCRRA. ALL RIGHTS RESERVED.

METROLINK

SOUTHERN CALIFORNIA REGIONAL RAIL AUTHORITY
ONE GATEWAY PLAZA, 12TH FLOOR, L. A., CA. 90012

ENGINEERING STANDARDS

SWITCH PLATES (20-32RC THROUGH 20-37RC) FOR NO 20 136 LB RE RH CONCRETE TIE TURNOUT

STANDARD: 2806
SCALE: NTS
REVISION: –
SHEET: 1 OF 1
CADD FILE: ES2806-87

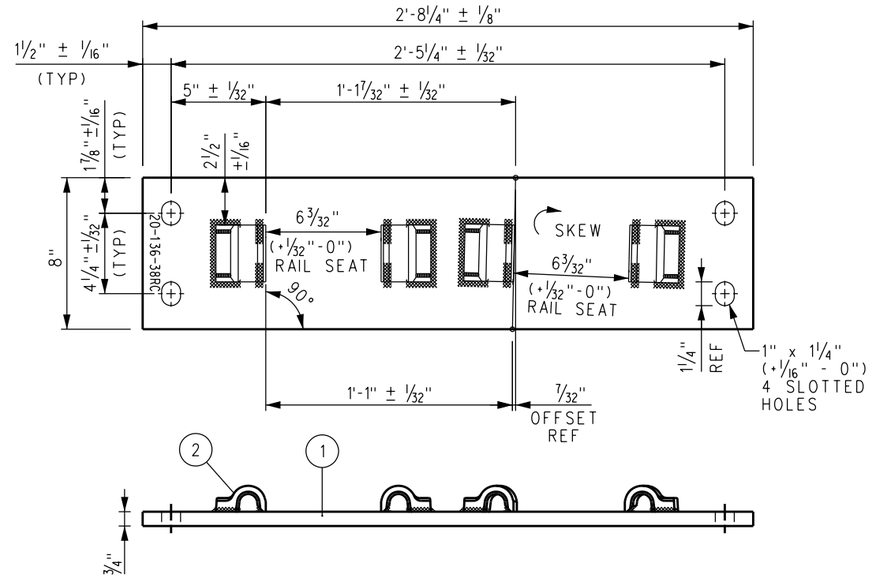

SWITCH PLATE P20-136-38RC

NOTES:

1. I.D. CHARACTERS TO BE ½" MINIMUM HEIGHT CLEARLY STAMPED AS SHOWN.
2. WELDS TO BE DRESSED FLUSH WITH SHOULDER & NOT TO PROTRUDE INTO RAIL SEAT.
3. SLOTTED HOLE CENTERS ARE INDICATED ON DRAWING.

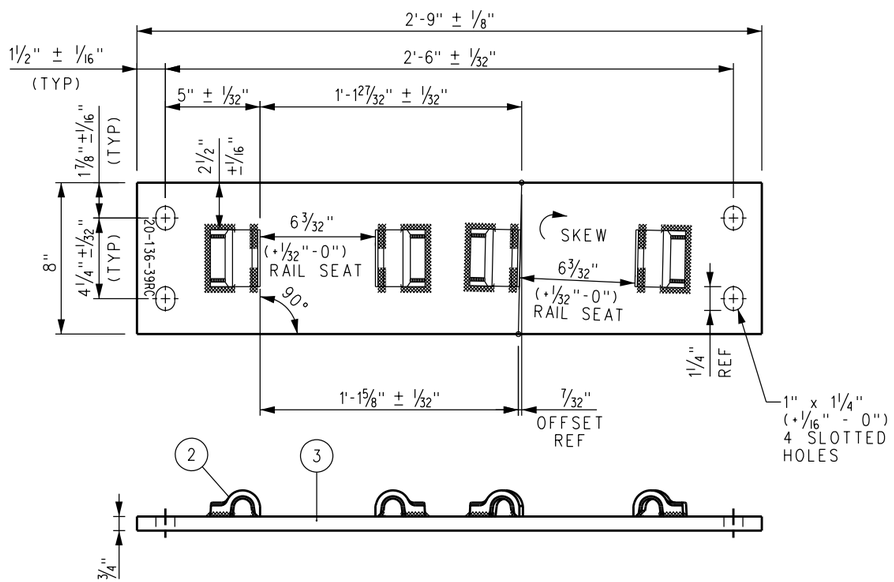

SWITCH PLATE P20-136-39RC

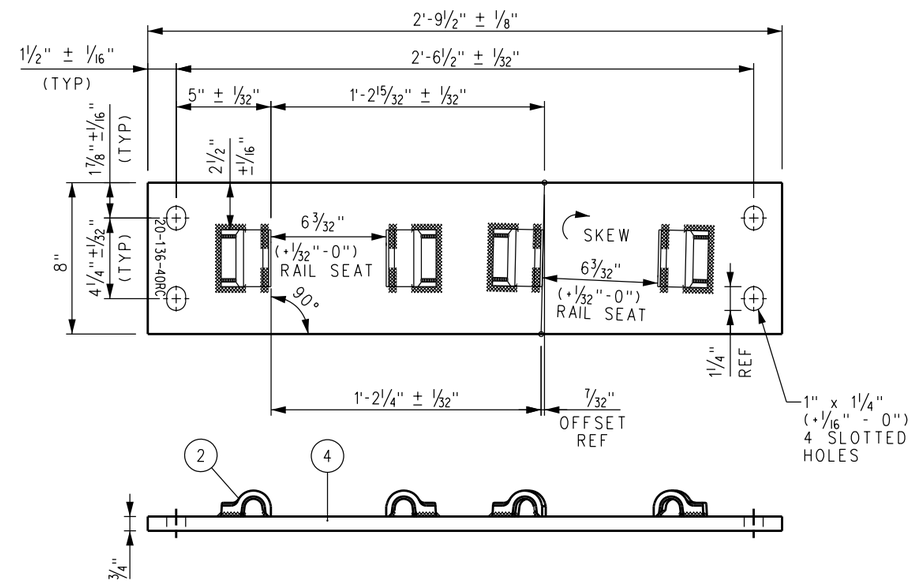

SWITCH PLATE P20-136-40RC

BILL OF MATERIALS	
ITEM	DESCRIPTION
1	FLAT BAR, ASTM A36, ¾" x 8" x 2'-8¼"
2	SHOULDER, PANDROL, FORGED TONGUELESS, TYPE 1

BILL OF MATERIALS	
ITEM	DESCRIPTION
3	FLAT BAR, ASTM A36, ¾" x 8" x 2'-9"
4	FLAT BAR, ASTM A36, ¾" x 8" x 2'-9½"

REV.	DATE	DESCRIPTION	DES.	ENG.
X	XX-XX-XX	REVISION	XX	XX

DRAWN BY: HDR DATE: 03/31/2011

ASSISTANT DIRECTOR: STANDARDS & DESIGN

DIRECTOR OF ENGINEERING AND CONSTRUCTION

SCRRA ENGINEERING STANDARDS ARE INTENDED FOR SCRRA APPROVED USES ONLY. FOR NON-SCRRA APPROVED USES, SCRRA SHALL NOT BE RESPONSIBLE FOR THE ACCURACY OR COMPLETENESS OF THE DATA OR INFORMATION CONTAINED HEREIN. THE SELECTION AND USE OF THESE STANDARDS IS THE SOLE RESPONSIBILITY OF THE USER AND SHOULD NOT BE USED WITHOUT CONSULTING A REGISTERED PROFESSIONAL ENGINEER. ALL WARRANTIES AND REPRESENTATIONS OF ANY KIND ARE DISCLAIMED. ANYONE MAKING USE OF THIS INFORMATION AGREES THAT IT ASSUMES ALL LIABILITY ARISING FROM SUCH USE. NO PART OF THESE STANDARDS SHOULD BE REPRODUCED OR DISTRIBUTED IN ANY FORM OR BY ANY MEANS WITHOUT THE PRIOR WRITTEN PERMISSION OF SCRRA. ALL RIGHTS RESERVED.

METROLINK®

SOUTHERN CALIFORNIA REGIONAL RAIL AUTHORITY
ONE GATEWAY PLAZA, 12TH FLOOR, L. A., CA. 90012

ENGINEERING STANDARDS

SWITCH PLATES (20–38RC THROUGH 20–40RC) FOR NO 20 136 LB RE RH CONCRETE TIE TURNOUT

STANDARD 2806
SCALE: NTS
REVISION –
SHEET 1 OF 1
CADD FILE: ES2806–88

DISCLAIMER

SCRRA Engineering Standards are intended for SCRRA approved uses only. FOR NON-SCRRA APPROVED USES: SCRRA and its member agencies, directors, officers, employees and/or agents shall not be responsible for the accuracy or completeness of the data or information contained herein. The selection and use of these standards, while designed in accordance with generally accepted engineering principles and practices, is the sole responsibility of the user and should not be used without consulting a registered professional engineer. All warranties and representations of any kind are disclaimed. Anyone making use of this information agrees that it assumes all liability arising from such use. No part of these standards should be reproduced or distributed in any form or by any means without the prior written permission of SCRRA. All rights reserved.

Since revisions or additions to the engineering standards may occur at any time, the user agrees to indemnify, defend, by counsel satisfactory to SCRRA and Member Agency, and hold harmless SCRRA, Member Agencies, and Operating Railroad, and their respective officers, commissioners, employees, agents, successors and assigns. ("Indemnitees"), and each of them to the maximum extent allowed by law, from and against all loss, liability, claims, demands, suits, liens, claims of lien, damages (including incidental consequential damages), costs and expenses (including, without limitation, any fines, penalties, judgments, actual litigation expenses and experts' and actual attorneys' fees), that are incurred by or asserted against Indemnitees arising out of or connected in any manner with the user's use of outdated engineering standards.

Updating the contents of the manual is a continued process, and revisions/replacements are issued periodically. Questions, comments, and proposed recommendations for changes may be sent to SCRRA at 279 E. Arrow Highway, Suite A, San Dimas, CA 91773.

SCRRA NO 24 TURNOUT
BILL OF MATERIALS & DRAWING NUMBERS

FROG NUMBER		NO 24			
HAND		LH		RH	
WSM OR RBM		WSM		WSM	
CONCRETE OR TIMBER TIES		CONCRETE		CONCRETE	
HST OR STANDARD TIES		HST		HST	
POWER OR MANUAL		POWER		POWER	
ML OR TO SIDE SW MACHINE OPERATION		MLSIDE	TOSIDE	MLSIDE	TOSIDE
TURNOUT LAYOUT	DRAWING NO	2807-01	2807-03	2807-02	2807-04
SWITCH PACK	DRAWING NO	2807-11	2807-13	2807-12	2807-14
CONCRETE TIE LAYOUT	DRAWING NO	2807-31	2807-31	2807-30	2807-30
HOLLOW STEEL TIE LAYOUT	DRAWING NO	2807-33	2807-35	2807-32	2807-34
FROG PACK	DRAWING NO	2807-41	2807-41	2807-40	2807-40
GUARD RAIL MAINLINE	DRAWING NO	2807-60	2807-60	2807-60	2807-60
GUARD RAIL TURNOUT	DRAWING NO	2807-61	2807-61	2807-62	2807-62
INSULATED RAIL ASSEMBLY	LENGTH	56'-0"	56'-0"	56'-0"	56'-0"
INSULATED RAIL ASSEMBLY	LENGTH	46'-0"	46'-0"	46'-0"	46'-0"
RAIL	LENGTH	40'-0"	40'-0"	40'-0"	40'-0"
RAIL	LENGTH	3@80'-0"	3@80'-0"	3@80'-0"	3@80'-0"
RAIL	LENGTH	2@55'-11	2@55'-11	2@55'-11	2@55'-11
RAIL	LENGTH	2@58'-0"	2@58'-0"	2@58'-0"	2@58'-0"
RAIL	LENGTH	72'-0"	72'-0"	72'-0"	72'-0"
RAIL	LENGTH	54'-0⅝"	54'-0⅝"	54'-0⅝"	54'-0⅝"
RAIL	LENGTH	64'-0¼"	64'-0¼"	64'-0¼"	64'-0¼"
TIE SCREWS CONCRETE	ES2356 QUANTITY	584	584	584	584
TIE SCREWS TIMBER	ES2355 QUANTITY	-	-	-	-
WASHER FLAT	ES2356 QUANTITY	584	584	584	584
SPRING WASHER DOUBLE COIL	ES2356 QUANTITY	584	584	584	584
TIE PLATE PANDROL	ES2454 QUANTITY	-	-	-	-
E-CLIP PANDROL E2055	ES2362 QUANTITY	632	632	632	632
INSULATOR PANDROL NYLON HD10	- QUANTITY	632	632	632	632
PANDROL JOINT CLIP E2063	ES2361 QUANTITY	8	8	8	8
INSULATION PANDROL NYLON 6790	- QUANTITY	8	8	8	8
TIE PAD PANDROL 69935R	- QUANTITY	320	320	320	320
SHIM TO REDUCE PLATE FLEXURE	- QUANTITY	292	292	292	292

REV.	DATE	DESCRIPTION	DES.	ENG.
X	XX-XX-XX	REVISION	XX	XX

DRAWN BY: HDR DATE: 03/31/2011

ASSISTANT DIRECTOR: STANDARDS & DESIGN

DIRECTOR OF ENGINEERING AND CONSTRUCTION

SCRRA ENGINEERING STANDARDS ARE INTENDED FOR SCRRA APPROVED USES ONLY. FOR NON-SCRRA APPROVED USES:
SCRRA SHALL NOT BE RESPONSIBLE FOR THE ACCURACY OR COMPLETENESS OF THE DATA OR INFORMATION CONTAINED HEREIN. THE SELECTION AND USE OF THESE STANDARDS IS THE SOLE RESPONSIBILITY OF THE USER AND SHOULD NOT BE USED WITHOUT CONSULTING A REGISTERED PROFESSIONAL ENGINEER. ALL WARRANTIES AND REPRESENTATIONS OF ANY KIND ARE DISCLAIMED. ANYONE MAKING USE OF THIS INFORMATION AGREES THAT IT ASSUMES ALL LIABILITY ARISING FROM SUCH USE. NO PART OF THESE STANDARDS SHOULD BE REPRODUCED OR DISTRIBUTED IN ANY FORM OR BY ANY MEANS WITHOUT THE PRIOR WRITTEN PERMISSION OF SCRRA. ALL RIGHTS RESERVED.

METROLINK®
SOUTHERN CALIFORNIA REGIONAL RAIL AUTHORITY
ONE GATEWAY PLAZA, 12TH FLOOR, L. A., CA. 90012

ENGINEERING STANDARDS

NO 24 TURNOUT

STANDARD 2800
SCALE: NTS
REVISION –
SHEET 1 OF 1
CADD FILE: ES2800-24

BILL OF MATERIAL				
ITEM	QTY	DESCRIPTION	DWG NO	SCRRA PART NO
1	1	SWITCH PACK, NO 24-136 LB RE MODIFIED TANGENTIAL, LH, HST	ES2807-11	
2	1	FROG PACK, NO 24-136 LB RE WSM, LH	ES2807-41	
3	1	GUARD RAIL ASSEMBLY BOLTLESS, 26'-0" LONG, 136 LB RE RAISED 1", LH	ES2807-61	
4	1	GUARD RAIL ASSEMBLY BOLTLESS, 26'-0" LONG, 136 LB RE RAISED 1", STRAIGHT	ES2807-60	
5	1	INSULATED RAIL ASSEMBLY, 56'-0" C/W BONDED INSULATED JOINT	-	
6	1	INSULATED RAIL ASSEMBLY, 46'-0" C/W BONDED INSULATED JOINT	-	
7	1	DRILLED RAIL, 136 LB RE, 40'-0" LONG	-	
8	3	DRILLED RAIL, 136 LB RE, 80'-0" LONG	-	
9	2	DRILLED RAIL, 136 LB RE, 55'-11" LONG	-	
10	2	DRILLED RAIL, 136 LB RE, 58'-0" LONG	-	
11	1	DRILLED RAIL, 136 LB RE, 72'-0" LONG	-	

BILL OF MATERIAL				
ITEM	QTY	DESCRIPTION	DWG NO	SCRRA PART NO
12	1	CONCRETE TIE SET, 0-149 + (3) 1:80 TIES, PLATE PADS, LH	-	
13	584	TIE SCREW, CONCRETE 7/8" DIA x 6" HEX HEAD	-	
14	584	WASHER FLAT 7/8" TYPE A NARROW 15/16" x 1 3/4" x 0.134"	-	
15	584	SPRING WASHER, DOUBLE COIL (FE6)	-	
16	632	CLIP PANDROL E2055	-	
17	632	INSULATOR PANDROL FEATURES BASE HOLDOWN NYLON HD-10	-	
18	8	CLIP PANDROL E2063	-	
19	8	INSULATION, PANDROL NYLON 6790	-	
20	320	TIE PAD PANDROL 6993SR	-	
21	292	SHIM, TO REDUCE PLATE FLEXURE	-	
22	1	DRILLED RAIL, 136 LB RE, 64'-0 1/4" LONG	-	
23	1	DRILLED RAIL, 136 LB RE, 54'-0 5/8" LONG	-	

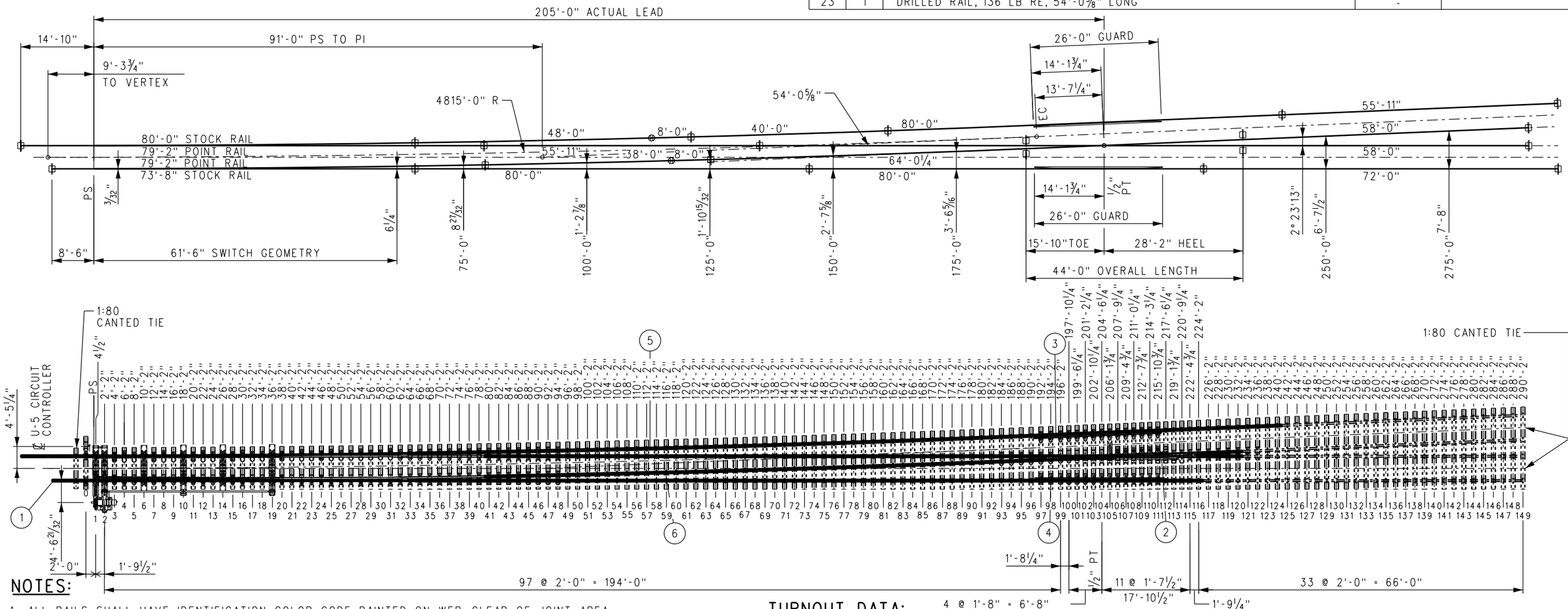

NOTES:

1. ALL RAILS SHALL HAVE IDENTIFICATION COLOR CODE PAINTED ON WEB, CLEAR OF JOINT AREA.
2. RAIL LENGTHS ALLOW 1/8" GAP BETWEEN RAIL JOINTS FOR WELDING.
3. GUARD RAILS ARE RAISED 1" AND FORM A 1 7/8" FLANGEWAY.
4. SWITCH MACHINE AND MACHINE PLATE (NIC) MUST BE COORDINATED WITH SCRRA.
5. ALL LENGTHS SHALL INCLUDE 1'-9" FROM TIE ENDS TO RAIL CENTERLINE, EXCEPT AS NOTED AND 1:80 CANTED TIES.
6. TIGHTEN TIE SCREWS WITH DOUBLE COIL SPRING WASHER IN PLACE.
7. ALL HD-10 INSULATORS FOR SPRING CLIPS SHALL BE INSTALLED ON FIELD SIDE OF RAILS IF NOT USED IN ALL LOCATIONS.
8. SCHWIHAG ROLLERS TO BE INSTALLED AND ADJUSTED IN THE FIELD.
9. ⊕ = INSULATED JOINT ⊕ = WELDED JOINT

TURNOUT DATA:

FROG
- NO 24 △ = 2° 23'13"
- TOE LENGTH: 15'-10"
- HEEL LENGTH: 28'-2"
- TOTAL LENGTH: 44'-0"

SWITCH
- LENGTH OF POINTS: 61'-6" / 79'-2"
- ENTRY ANGLE: 0° 6'39"
- VERTEX DISTANCE: 9'-3 3/4"
- THICKNESS AT POINT: 3/32"
- THROW AT ROD #1: 4 3/4"
- ACTUAL LEAD: 205'-0"

CLOSURE AREA
- CENTERLINE RADIUS: 4815'-0"
- DEGREE OF CURVE: 1° 11'24"

DESIGN SPEEDS
- 60 MPH PASSENGER AT 3" UNBALANCE
- 50 MPH FREIGHT AT 2" UNBALANCE

REV.	DATE	DESCRIPTION	DES.	ENG.
X	XX-XX-XX	REVISION	XX	XX

DRAWN BY: HDR DATE: 03/31/2011

ASSISTANT DIRECTOR: STANDARDS & DESIGN

DIRECTOR OF ENGINEERING AND CONSTRUCTION

SCRRA ENGINEERING STANDARDS ARE INTENDED FOR SCRRA APPROVED USES ONLY. FOR NON-SCRRA APPROVED USES:
SCRRA SHALL NOT BE RESPONSIBLE FOR THE ACCURACY OR COMPLETENESS OF THE DATA OR INFORMATION CONTAINED HEREIN. THE SELECTION AND USE OF THESE STANDARDS IS THE SOLE RESPONSIBILITY OF THE USER AND SHOULD NOT BE USED WITHOUT CONSULTING A REGISTERED PROFESSIONAL ENGINEER. ALL WARRANTIES AND REPRESENTATIONS OF ANY KIND ARE DISCLAIMED. ANYONE MAKING USE OF THIS INFORMATION AGREES THAT IT ASSUMES ALL LIABILITY ARISING FROM SUCH USE. NO PART OF THESE STANDARDS SHOULD BE REPRODUCED OR DISTRIBUTED IN ANY FORM OR BY ANY MEANS WITHOUT THE PRIOR WRITTEN PERMISSION OF SCRRA. ALL RIGHTS RESERVED.

METROLINK®
SOUTHERN CALIFORNIA REGIONAL RAIL AUTHORITY
ONE GATEWAY PLAZA, 12TH FLOOR, L. A., CA. 90012

ENGINEERING STANDARDS

TURNOUT LAYOUT
NO 24–136 LB RE LH WSM FROG TURNOUT
HST, SWITCH MACHINE ON MAINLINE SIDE

STANDARD: 2807
SCALE: NTS
REVISION: –
SHEET: 1 OF 1
CADD FILE: ES2807-01

BILL OF MATERIAL				
ITEM	QTY	DESCRIPTION	DWG NO	SCRRA PART NO
1	1	SWITCH PACK, NO 24-136 LB RE MODIFIED TANGENTIAL, RH, HST	ES2807-12	
2	1	FROG PACK, NO 24-136 LB RE WSM, RH	ES2807-40	
3	1	GUARD RAIL ASSEMBLY BOLTLESS, 26'-0" LONG, 136 LB RE RAISED 1", RH	ES2807-62	
4	1	GUARD RAIL ASSEMBLY BOLTLESS, 26'-0" LONG, 136 LB RE RAISED 1", STRAIGHT	ES2807-60	
5	1	INSULATED RAIL ASSEMBLY, 56'-0" C/W BONDED INSULATED JOINT	-	
6	1	INSULATED RAIL ASSEMBLY, 46'-0" C/W BONDED INSULATED JOINT	-	
7	1	DRILLED RAIL, 136 LB RE, 40'-0" LONG	-	
8	3	DRILLED RAIL, 136 LB RE, 80'-0" LONG	-	
9	2	DRILLED RAIL, 136 LB RE, 55'-11" LONG	-	
10	2	DRILLED RAIL, 136 LB RE, 58'-0" LONG	-	
11	1	DRILLED RAIL, 136 LB RE, 72'-0" LONG	-	
12	1	CONCRETE TIE SET, 0-149 + (3) 1:80 TIES, PLATE PADS, RH	-	

BILL OF MATERIAL				
ITEM	QTY	DESCRIPTION	DWG NO	SCRRA PART NO
13	584	TIE SCREW, CONCRETE 7/8" DIA x 6" HEX HEAD	-	
14	584	WASHER FLAT 7/8" TYPE A NARROW 15/16" x 1 3/4" x 0.134"	-	
15	584	SPRING WASHER, DOUBLE COIL (FE6)	-	
16	632	CLIP PANDROL E2055	-	
17	632	INSULATOR PANDROL FEATURES BASE HOLDOWN NYLON HD-10	-	
18	8	CLIP PANDROL E2063	-	
19	8	INSULATION, PANDROL NYLON 6790	-	
20	320	TIE PAD PANDROL 6993SR	-	
21	292	SHIM, TO REDUCE PLATE FLEXURE	-	
22	1	DRILLED RAIL, 136 LB RE, 64'-0 1/4" LONG	-	
23	1	DRILLED RAIL, 136 LB RE, 54'-0 5/8" LONG	-	

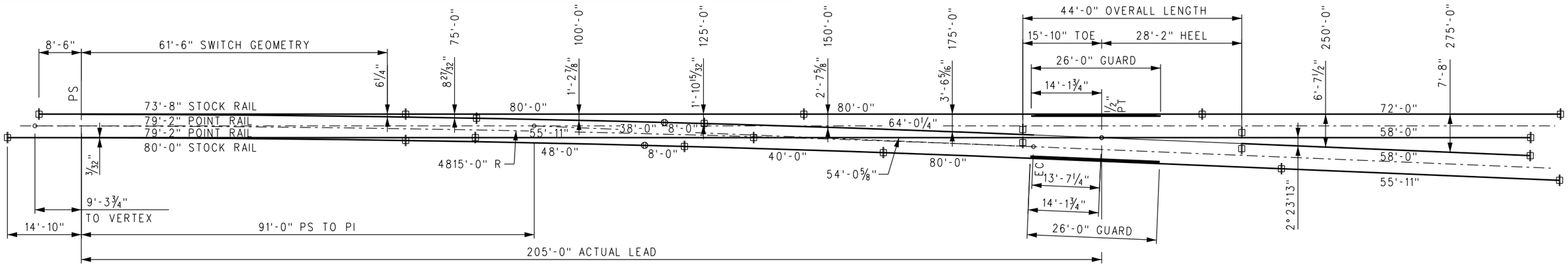

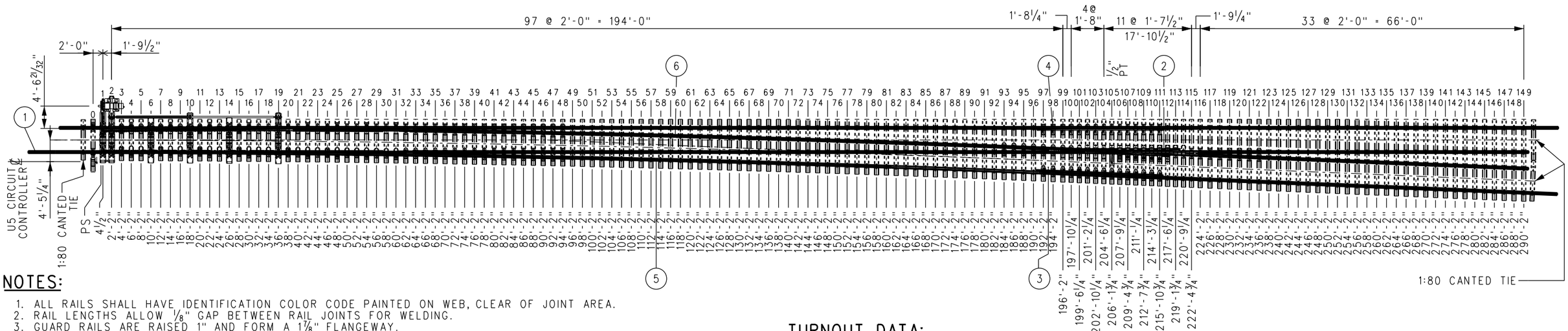

NOTES:

1. ALL RAILS SHALL HAVE IDENTIFICATION COLOR CODE PAINTED ON WEB, CLEAR OF JOINT AREA.
2. RAIL LENGTHS ALLOW 1/8" GAP BETWEEN RAIL JOINTS FOR WELDING.
3. GUARD RAILS ARE RAISED 1" AND FORM A 1 7/8" FLANGEWAY.
4. SWITCH MACHINE AND MACHINE PLATE (NIC) MUST BE COORDINATED WITH SCRRA.
5. ALL LENGTHS SHALL INCLUDE 1'-9" FROM TIE ENDS TO RAIL CENTERLINE, EXCEPT AS NOTED AND WITH 1:80 CANTED TIES.
6. TIGHTEN TIE SCREW WITH DOUBLE COIL SPRING WASHER IN PLACE.
7. ALL HD-10 INSULATORS FOR SPRING CLIPS SHALL BE INSTALLED ON FIELD SIDE OF RAILS IF NOT USED IN ALL LOCATIONS.
8. SCHWIHAG ROLLERS TO BE INSTALLED AND ADJUSTED IN THE FIELD.
9. ⊕ = INSULATED JOINT ⊕ = WELDED JOINT

TURNOUT DATA:

FROG
NO 24 △ = 2° 23'13"
TOE LENGTH: 15'-10"
HEEL LENGTH: 28'-2"
TOTAL LENGTH: 44'-0"

SWITCH
LENGTH OF POINTS: 61'-6" / 79'-2"
VERTEX DISTANCE: VARIES PER SIDE
ENTRY ANGLE: 0° 6'39"
THICKNESS AT POINT: 3/32"
THROW AT ROD #1: 4 3/4"

ACTUAL LEAD: 205'-0"
CLOSURE AREA
CENTERLINE RADIUS: 4815'-0"
DEGREE OF CURVE: 1° 11'24"
DESIGN SPEEDS
60 MPH PASSENGER @ 3" UNBALANCE
50 MPH FREIGHT @ 2" UNBALANCE

REV.	DATE	DESCRIPTION	DES.	ENG.
X	XX-XX-XX	REVISION	XX	XX

DRAWN BY: HDR DATE: 03/31/2011

ASSISTANT DIRECTOR: STANDARDS & DESIGN

DIRECTOR OF ENGINEERING AND CONSTRUCTION

SCRRA ENGINEERING STANDARDS ARE INTENDED FOR SCRRA APPROVED USES ONLY. FOR NON-SCRRA APPROVED USES:
SCRRA SHALL NOT BE RESPONSIBLE FOR THE ACCURACY OR COMPLETENESS OF THE DATA OR INFORMATION CONTAINED HEREIN. THE SELECTION AND USE OF THESE STANDARDS IS THE SOLE RESPONSIBILITY OF THE USER AND SHOULD NOT BE USED WITHOUT CONSULTING A REGISTERED PROFESSIONAL ENGINEER. ALL WARRANTIES AND REPRESENTATIONS OF ANY KIND ARE DISCLAIMED. ANYONE MAKING USE OF THIS INFORMATION AGREES THAT IT ASSUMES ALL LIABILITY ARISING FROM SUCH USE. NO PART OF THESE STANDARDS SHOULD BE REPRODUCED OR DISTRIBUTED IN ANY FORM OR BY ANY MEANS WITHOUT THE PRIOR WRITTEN PERMISSION OF SCRRA. ALL RIGHTS RESERVED.

METROLINK®
SOUTHERN CALIFORNIA REGIONAL RAIL AUTHORITY
ONE GATEWAY PLAZA, 12TH FLOOR, L. A., CA. 90012

ENGINEERING STANDARDS

TURNOUT LAYOUT
NO 24–136 LB RE RH WSM FROG TURNOUT
HST, SWITCH MACHINE ON MAINLINE SIDE

STANDARD 2807
SCALE: NTS
REVISION –
SHEET 1 OF 1
CADD FILE: ES2807–02

BILL OF MATERIAL				
ITEM	QTY	DESCRIPTION	DWG NO	SCRRA PART NO
1	1	SWITCH PACK, NO 24-136 LB RE MODIFIED TANGENTIAL, LH, HST	ES2807-13	
2	1	FROG PACK, NO 24-136 LB RE WSM, LH	ES2807-41	
3	1	GUARD RAIL ASSEMBLY BOLTLESS, 26'-0" LONG, 136 LB RE RAISED 1", LH	ES2807-61	
4	1	GUARD RAIL ASSEMBLY BOLTLESS, 26'-0" LONG, 136 LB RE RAISED 1", STRAIGHT	ES2807-60	
5	1	INSULATED RAIL ASSEMBLY, 56'-0" C/W BONDED INSULATED JOINT	-	
6	1	INSULATED RAIL ASSEMBLY, 46'-0" C/W BONDED INSULATED JOINT	-	
7	1	DRILLED RAIL, 136 LB RE, 40'-0" LONG	-	
8	3	DRILLED RAIL, 136 LB RE, 80'-0" LONG	-	
9	2	DRILLED RAIL, 136 LB RE, 55'-11" LONG	-	
10	2	DRILLED RAIL, 136 LB RE, 58'-0" LONG	-	
11	1	DRILLED RAIL, 136 LB RE, 72'-0" LONG	-	
12	1	CONCRETE TIE SET, 0-149 + (3) 1:80 TIES, PLATE PADS, LH	-	

BILL OF MATERIAL				
ITEM	QTY	DESCRIPTION	DWG NO	SCRRA PART NO
13	584	TIE SCREW, CONCRETE 7/8" DIA x 6" HEX HEAD	-	
14	584	WASHER FLAT 7/8" TYPE A NARROW 15/16" x 1 3/4" x 0.134"	-	
15	584	SPRING WASHER, DOUBLE COIL (FE6)	-	
16	632	CLIP PANDROL E2055	-	
17	632	INSULATOR PANDROL FEATURES BASE HOLDOWN NYLON HD-10	-	
18	8	CLIP PANDROL E2063	-	
19	8	INSULATION, PANDROL NYLON 6790	-	
20	320	TIE PAD PANDROL 6993SR	-	
21	292	SHIM, TO REDUCE PLATE FLEXURE	-	
22	1	DRILLED RAIL, 136 LB RE, 64'-0 1/4" LONG	-	
23	1	DRILLED RAIL, 136 LB RE, 54'-0 5/8" LONG	-	

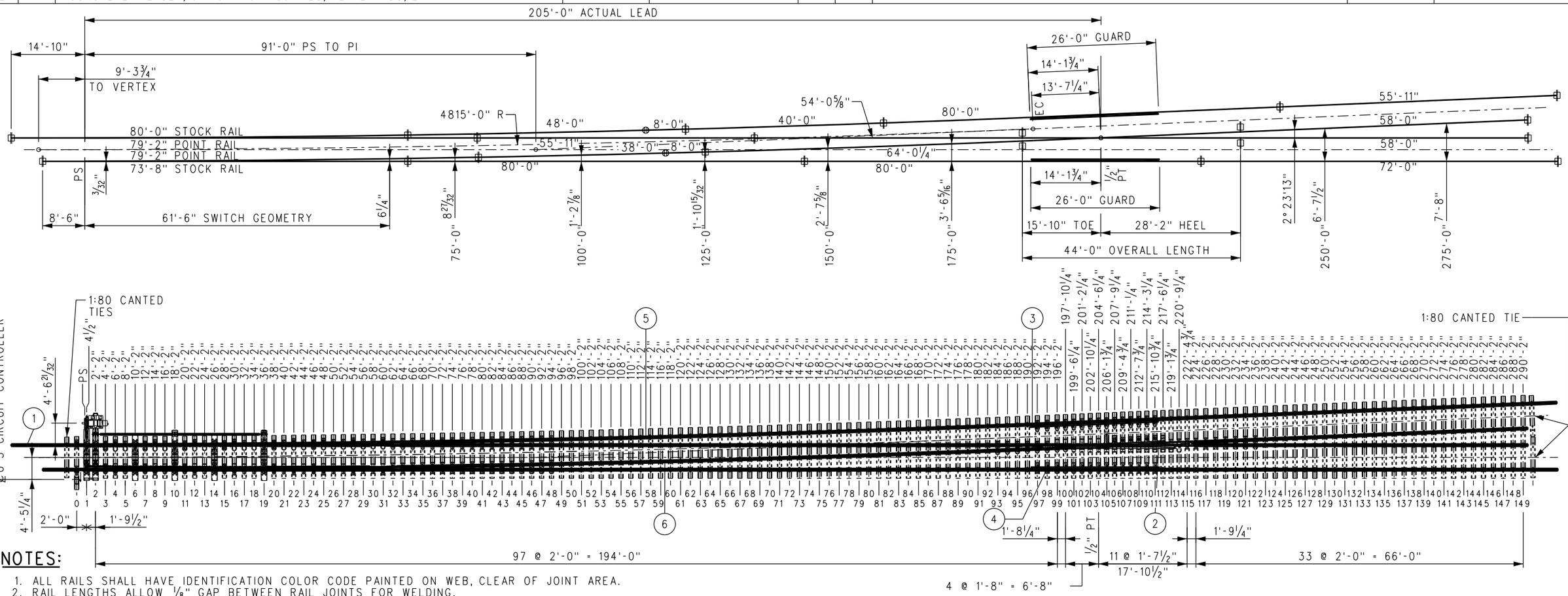

NOTES:

1. ALL RAILS SHALL HAVE IDENTIFICATION COLOR CODE PAINTED ON WEB, CLEAR OF JOINT AREA.
2. RAIL LENGTHS ALLOW 1/8" GAP BETWEEN RAIL JOINTS FOR WELDING.
3. GUARD RAILS ARE RAISED 1" AND FORM A 1 1/8" FLANGEWAY.
4. SWITCH MACHINE AND MACHINE PLATE (NIC) MUST BE COORDINATED WITH SCRRA.
5. ALL LENGTHS SHALL INCLUDE 1'-9" FROM TIE ENDS TO RAIL CENTERLINE, EXCEPT AS NOTED AND 1:80 CANTED TIES.
6. TIGHTEN TIE SCREWS WITH DOUBLE COIL SPRING WASHER IN PLACE.
7. ALL HD-10 INSULATORS FOR SPRING CLIPS SHALL BE INSTALLED ON FIELD SIDE OF RAILS IF NOT USED IN ALL LOCATIONS.
8. SCHWIHAG ROLLERS TO BE INSTALLED AND ADJUSTED IN THE FIELD.
9. ⊕ = INSULATED JOINT ⊕ = WELDED JOINT

TURNOUT DATA:

FROG
NO 24 — Δ = 2° 23'13"
- TOE LENGTH: 15'-10"
- HEEL LENGTH: 28'-2"
- TOTAL LENGTH: 44'-0"

SWITCH
- LENGTH OF POINTS: 61'-6" / 79'-2"
- VERTEX DISTANCE: 9'-3 3/4"
- ENTRY ANGLE: 0° 6'39"
- THICKNESS AT POINT: 3/32"
- THROW AT ROD #1: 4 3/4"

ACTUAL LEAD: 205'-0"
CLOSURE AREA
- CENTERLINE RADIUS: 4815'-0"
- DEGREE OF CURVE: 1° 11'24"

DESIGN SPEEDS
- 60 MPH PASSENGER @ 3" UNBALANCE
- 50 MPH FREIGHT @ 2" UNBALANCE

X	XX-XX-XX	REVISION	XX	XX
REV.	DATE	DESCRIPTION	DES.	ENG.

DRAWN BY: HDR DATE: 03/31/2011

ASSISTANT DIRECTOR: STANDARDS & DESIGN

DIRECTOR OF ENGINEERING AND CONSTRUCTION

SCRRA ENGINEERING STANDARDS ARE INTENDED FOR SCRRA APPROVED USES ONLY. FOR NON-SCRRA APPROVED USES:
SCRRA SHALL NOT BE RESPONSIBLE FOR THE ACCURACY OR COMPLETENESS OF THE DATA OR INFORMATION CONTAINED HEREIN. THE SELECTION AND USE OF THESE STANDARDS IS THE SOLE RESPONSIBILITY OF THE USER AND SHOULD NOT BE USED WITHOUT CONSULTING A REGISTERED PROFESSIONAL ENGINEER. ALL WARRANTIES AND REPRESENTATIONS OF ANY KIND ARE DISCLAIMED. ANYONE MAKING USE OF THIS INFORMATION AGREES THAT IT ASSUMES ALL LIABILITY ARISING FROM SUCH USE. NO PART OF THESE STANDARDS SHOULD BE REPRODUCED OR DISTRIBUTED IN ANY FORM OR BY ANY MEANS WITHOUT THE PRIOR WRITTEN PERMISSION OF SCRRA. ALL RIGHTS RESERVED.

METROLINK®
SOUTHERN CALIFORNIA REGIONAL RAIL AUTHORITY
ONE GATEWAY PLAZA, 12TH FLOOR, L. A., CA. 90012

ENGINEERING STANDARDS

TURNOUT LAYOUT
NO 24–136 LB RE LH WSM FROG TURNOUT
HST, SWITCH MACHINE ON TURNOUT SIDE

STANDARD: 2807
SCALE: NTS
REVISION: –
SHEET: 1 OF 1
CADD FILE: ES2807–03

BILL OF MATERIAL				
ITEM	QTY	DESCRIPTION	DWG NO	SCRRA PART NO
1	1	SWITCH PACK, NO 24-136 LB RE MODIFIED TANGENTIAL, RH, HST	ES2807-14	
2	1	FROG PACK, NO 24-136 LB RE WSM, RH	ES2807-40	
3	1	GUARD RAIL ASSEMBLY BOLTLESS, 26'-0" LONG, 136 LB RE RAISED 1", RH	ES2807-62	
4	1	GUARD RAIL ASSEMBLY BOLTLESS, 26'-0" LONG, 136 LB RE RAISED 1", STRAIGHT	ES2807-60	
5	1	INSULATED RAIL ASSEMBLY, 56'-0" C/W BONDED INSULATED JOINT	-	
6	1	INSULATED RAIL ASSEMBLY, 46'-0" C/W BONDED INSULATED JOINT	-	
7	1	DRILLED RAIL, 136 LB RE, 40'-0" LONG	-	
8	3	DRILLED RAIL, 136 LB RE, 80'-0" LONG	-	
9	2	DRILLED RAIL, 136 LB RE, 55'-11" LONG	-	
10	2	DRILLED RAIL, 136 LB RE, 58'-0" LONG	-	
11	1	DRILLED RAIL, 136 LB RE, 72'-0" LONG	-	

BILL OF MATERIAL				
ITEM	QTY	DESCRIPTION	DWG NO	SCRRA PART NO
12	1	CONCRETE TIE SET, 0-149 + (3) 1:80 TIES, PLATE PADS, RH	-	
13	584	TIE SCREW, CONCRETE 7/8" DIA x 6" HEX HEAD	-	
14	584	WASHER FLAT 7/8" TYPE A NARROW 15/16" x 1 3/4" x 0.134"	-	
15	584	SPRING WASHER, DOUBLE COIL (FE6)	-	
16	632	CLIP PANDROL E2055	-	
17	632	INSULATOR PANDROL FEATURES BASE HOLDOWN NYLON HD-10	-	
18	8	CLIP PANDROL E2063	-	
19	8	INSULATION, PANDROL NYLON 6790	-	
20	320	TIE PAD PANDROL 6993SR	-	
21	292	SHIM, TO REDUCE PLATE FLEXURE	-	
22	1	DRILLED RAIL, 136 LB RE, 64'-0 1/4" LONG	-	
23	1	DRILLED RAIL, 136 LB RE, 54'-0 5/8" LONG	-	

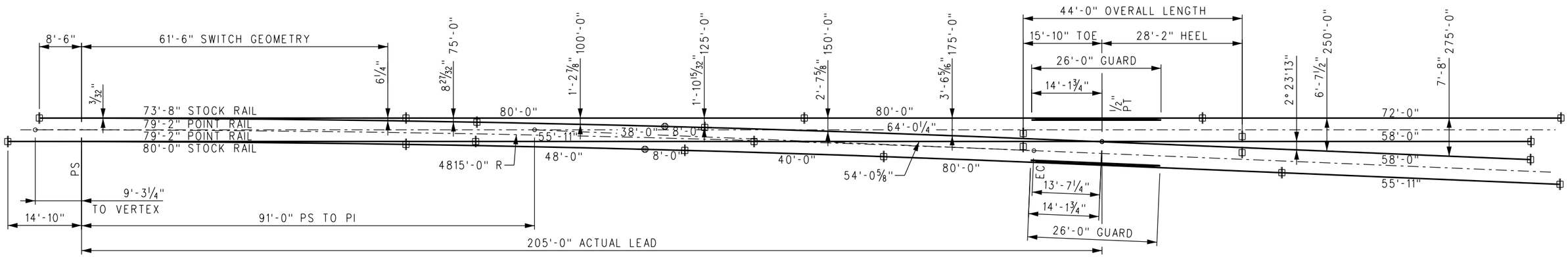

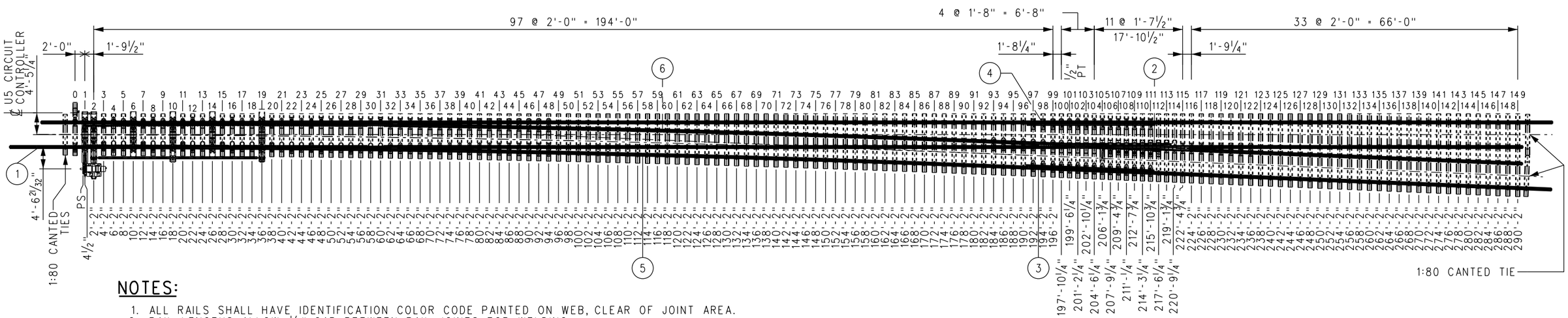

NOTES:

1. ALL RAILS SHALL HAVE IDENTIFICATION COLOR CODE PAINTED ON WEB, CLEAR OF JOINT AREA.
2. RAIL LENGTHS ALLOW 1/8" GAP BETWEEN RAIL JOINTS FOR WELDING.
3. GUARD RAILS ARE RAISED 1" AND FORM A 1 7/8" FLANGEWAY.
4. SWITCH MACHINE AND MACHINE PLATE (NIC) MUST BE COORDINATED WITH SCRRA.
5. ALL LENGTHS SHALL INCLUDE 1'-9" FROM TIE ENDS TO RAIL CENTERLINE, EXCEPT AS NOTED AND 1:80 CANTED TIES.
6. TIGHTEN TIE SCREWS WITH DOUBLE COIL SPRING WASHER IN PLACE.
7. ALL HD-10 INSULATORS FOR SPRING CLIPS SHALL BE INSTALLED ON FIELD SIDE OF RAILS IF NOT USED IN ALL LOCATIONS.
8. SCHWIHAG ROLLERS TO BE INSTALLED AND ADJUSTED IN THE FIELD.
9. ⊕ = INSULATED JOINT ⊕ = WELDED JOINT

TURNOUT DATA:

FROG
NO 24 — Δ = 2° 23'13"
- TOE LENGTH: 15'-10"
- HEEL LENGTH: 28'-2"
- TOTAL LENGTH: 44'-0"

SWITCH
- LENGTH OF POINTS: 61'-6" / 79'-2"
- VERTEX DISTANCE: 9'-3 1/4"
- ENTRY ANGLE: 0° 6'39"
- THICKNESS AT POINT: 3/32"
- THROW AT ROD #1: 4 3/4"

ACTUAL LEAD: 205'-0"
CLOSURE AREA
- CENTERLINE RADIUS: 4815'-0"
- DEGREE OF CURVE: 1° 11'24"

DESIGN SPEEDS
- 60 MPH PASSENGER @ 3" UNBALANCE
- 50 MPH FREIGHT @ 2" UNBALANCE

REV.	DATE	DESCRIPTION	DES.	ENG.
X	XX-XX-XX	REVISION	XX	XX

DRAWN BY: HDR DATE: 03/31/2011

ASSISTANT DIRECTOR: STANDARDS & DESIGN

DIRECTOR OF ENGINEERING AND CONSTRUCTION

SCRRA ENGINEERING STANDARDS ARE INTENDED FOR SCRRA APPROVED USES ONLY. FOR NON-SCRRA APPROVED USES:
SCRRA SHALL NOT BE RESPONSIBLE FOR THE ACCURACY OR COMPLETENESS OF THE DATA OR INFORMATION CONTAINED HEREIN. THE SELECTION AND USE OF THESE STANDARDS IS THE SOLE RESPONSIBILITY OF THE USER AND SHOULD NOT BE USED WITHOUT CONSULTING A REGISTERED PROFESSIONAL ENGINEER. ALL WARRANTIES AND REPRESENTATIONS OF ANY KIND ARE DISCLAIMED. ANYONE MAKING USE OF THIS INFORMATION AGREES THAT IT ASSUMES ALL LIABILITY ARISING FROM SUCH USE. NO PART OF THESE STANDARDS SHOULD BE REPRODUCED OR DISTRIBUTED IN ANY FORM OR BY ANY MEANS WITHOUT THE PRIOR WRITTEN PERMISSION OF SCRRA. ALL RIGHTS RESERVED.

METROLINK®
SOUTHERN CALIFORNIA REGIONAL RAIL AUTHORITY
ONE GATEWAY PLAZA, 12TH FLOOR, L. A., CA. 90012

ENGINEERING STANDARDS

TURNOUT LAYOUT
NO 24–136 LB RE RH WSM FROG TURNOUT
HST, SWITCH MACHINE ON TURNOUT SIDE

STANDARD 2807
SCALE: NTS
REVISION –
SHEET 1 OF 1
CADD FILE: ES2807–04

BILL OF MATERIAL				
ITEM	QTY	DESCRIPTION	DWG NO	SCRRA PART NO
1	1	HOLLOW SWITCH TIE & RODDING ASSEMBLY	ES2807-33	
2	1	SAMSON POINT, 79'-2" LONG, DOUBLE REINFORCED, UR MANG TIP, LH	ES2807-21	
3	1	SAMSON POINT, 79'-2" LONG, DOUBLE REINFORCED, UR MANG TIP, RH	ES2807-22	
4	1	SAMSON STOCK RAIL, 80'-0" LONG, LH	ES2807-23	
5	1	SAMSON STOCK RAIL, 73'-8" LONG, RH	ES2807-24	
6	1	THERMAL STRESS BLOCK, 136 LB RE, UNIFORM RISER, LH	-	
7	1	THERMAL STRESS BLOCK, 136 LB RE, UNIFORM RISER, RH	-	
8	2	SWITCH PLATE (BP1C-136)	ES2800-80	
9	16	SWITCH PLATE (BP2C-136)	ES2800-80	
10	22	SWITCH PLATE (P4C-136)	ES2800-80	
11	12	SWITCH ROLLER PLATE (RP-1-136) SCHWIHAG	ES2800-96	
12	1	SWITCH PLATE (24-32LLC)	ES2807-80	
13	1	SWITCH PLATE (24-32LRC)	ES2807-80	
14	1	SWITCH PLATE (24-33LLC)	ES2807-80	
15	1	SWITCH PLATE (24-33LRC)	ES2807-80	
16	1	SWITCH PLATE (24-34LLC)	ES2807-80	
17	1	SWITCH PLATE (24-34LRC)	ES2807-80	
18	1	SWITCH PLATE (24-35LLC)	ES2807-81	
19	1	SWITCH PLATE (24-35LRC)	ES2800-81	
20	1	SWITCH PLATE (24-36LLC)	ES2807-81	
21	1	SWITCH PLATE (24-36LRC)	ES2807-81	
22	1	SWITCH PLATE (24-37LLC)	ES2807-81	
23	1	SWITCH PLATE (24-37LRC)	ES2807-81	
24	1	SWITCH PLATE (24-38LLC)	ES2807-82	

BILL OF MATERIAL				
ITEM	QTY	DESCRIPTION	DWG NO	SCRRA PART NO
25	1	SWITCH PLATE (24-38LRC)	ES2807-82	
26	2	SWITCH PLATE (24-39LC)	ES2807-83	
27	2	SWITCH PLATE (24-40LC)	ES2807-83	
28	2	SWITCH PLATE (24-41LC)	ES2807-83	
29	2	SWITCH PLATE (24-42LC)	ES2807-83	
30	2	SWITCH PLATE (24-43LC)	ES2807-83	
31	2	SWITCH PLATE (24-44LC)	ES2807-83	
32	2	SWITCH PLATE (24-45LC)	ES2807-84	
33	2	SWITCH PLATE (24-46LC)	ES2807-84	
34	2	SWITCH PLATE (24-47LC)	ES2807-84	
35	2	SWITCH PLATE (24-48LC)	ES2807-84	
36	6	ROLLER SCHWIHAG, SINGLE	-	
37	4	ROLLER SCHWIHAG, DOUBLE	-	
38	18	BRACE, BOLTLESS, 136 LB RE 'SUREFIT'	-	
39	18	SERRATED WASHER FOR BOLTLESS BRACE	-	
40	178	CLIP, PANDROL, E2055	-	
41	6	BOLT, 1 1/8" DIA x 10 1/2" LONG, SQUARE HEAD, DRILLED @ 10 1/16", GR 5	-	
42	6	SPRING WASHER FOR 1 1/8" DIA BOLT	-	
43	6	NUT, 1 1/8" DIA HEAVY SQUARE, GR 5	-	
44	6	COTTER PIN, 1/4" DIA x 2 1/4" LONG	-	
45	2	FISH PLATE, 3-HOLE, 1/2" D-BAR x 16" LONG, HEADLOCKED	-	
46	2	FISH PLATE, 3-HOLE, 1/2" D-BAR x 16" LONG	-	
47	2	ROLLER SCHWIHAG, TRIPLE	-	

NOTES:

1. SEE TURNOUT DRAWING ES2807-01 FOR TIE LOCATION DIMENSIONS.
2. SWITCH RODS SHALL BE PREADJUSTED TO DIMENSIONS SHOWN IN DETAIL FOR EACH ROD LOCATION. MODIFY SPREADS AS NECESSARY WHEN INSTALLING INTO LAYOUT.

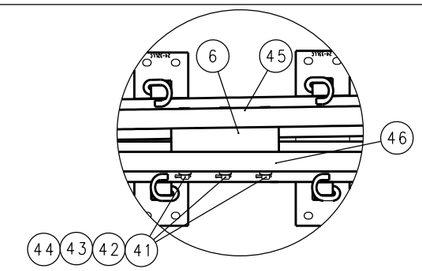

DETAIL A

TYPICAL SWITCH HEEL ASSEMBLY

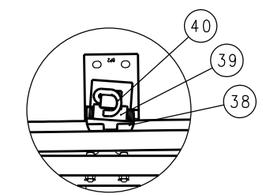

DETAIL B

TYPICAL BOLTLESS BRACE ASSEMBLY

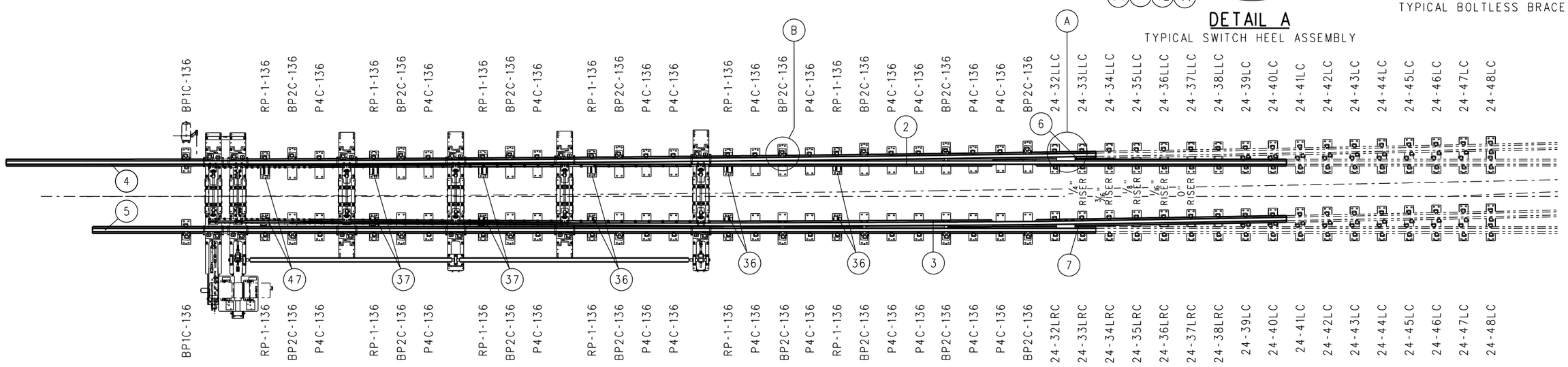

REV.	DATE	DESCRIPTION	DES.	ENG.
X	XX-XX-XX	REVISION	XX	XX

DRAWN BY: HDR DATE: 03/31/2011

ASSISTANT DIRECTOR: STANDARDS & DESIGN

DIRECTOR OF ENGINEERING AND CONSTRUCTION

SCRRA ENGINEERING STANDARDS ARE INTENDED FOR SCRRA APPROVED USES ONLY. FOR NON-SCRRA APPROVED USES:
SCRRA SHALL NOT BE RESPONSIBLE FOR THE ACCURACY OR COMPLETENESS OF THE DATA OR INFORMATION CONTAINED HEREIN. THE SELECTION AND USE OF THESE STANDARDS IS THE SOLE RESPONSIBILITY OF THE USER AND SHOULD NOT BE USED WITHOUT CONSULTING A REGISTERED PROFESSIONAL ENGINEER. ALL WARRANTIES AND REPRESENTATIONS OF ANY KIND ARE DISCLAIMED. ANYONE MAKING USE OF THIS INFORMATION AGREES THAT IT ASSUMES ALL LIABILITY ARISING FROM SUCH USE. NO PART OF THESE STANDARDS SHOULD BE REPRODUCED OR DISTRIBUTED IN ANY FORM OR BY ANY MEANS WITHOUT THE PRIOR WRITTEN PERMISSION OF SCRRA. ALL RIGHTS RESERVED.

METROLINK®

SOUTHERN CALIFORNIA REGIONAL RAIL AUTHORITY
ONE GATEWAY PLAZA, 12TH FLOOR, L. A., CA. 90012

ENGINEERING STANDARDS

NO 24–136 LB RE LH SWITCH PACK,
HOLLOW STEEL TIES,
SWITCH MACHINE ON MAINLINE SIDE

STANDARD: 2807
SCALE: NTS
REVISION: –
SHEET: 1 OF 1
CADD FILE: ES2807–11

BILL OF MATERIAL				
ITEM	QTY	DESCRIPTION	DWG NO	SCRRA PART NO
1	1	HOLLOW SWITCH TIE & RODDING ASSEMBLY	ES2807-32	
2	1	SAMSON POINT, 79'-2" LONG, DOUBLE REINFORCED, UR MANG TIP, LH	ES2807-21	
3	1	SAMSON POINT, 79'-2" LONG, DOUBLE REINFORCED, UR MANG TIP, RH	ES2807-22	
4	1	SAMSON STOCK RAIL, 73'-8" LONG, LH	ES2807-25	
5	1	SAMSON STOCK RAIL, 80'-0" LONG, RH	ES2807-26	
6	1	THERMAL STRESS BLOCK, 136 LB RE, UNIFORM RISER, LH	-	
7	1	THERMAL STRESS BLOCK, 136 LB RE, UNIFORM RISER, RH	-	
8	2	SWITCH PLATE (BP1C-136)	ES2800-80	
9	16	SWITCH PLATE (BP2C-136)	ES2800-80	
10	22	SWITCH PLATE (P4C-136)	ES2800-80	
11	12	SWITCH ROLLER PLATE (RP-1-136) SCHWIHAG	ES2800-96	
12	1	SWITCH PLATE (24-32RLC)	ES2807-85	
13	1	SWITCH PLATE (24-32RRC)	ES2807-85	
14	1	SWITCH PLATE (24-33RLC)	ES2807-85	
15	1	SWITCH PLATE (24-33RRC)	ES2807-85	
16	1	SWITCH PLATE (24-34RLC)	ES2807-85	
17	1	SWITCH PLATE (24-34RRC)	ES2807-85	
18	1	SWITCH PLATE (24-35RLC)	ES2908-86	
19	1	SWITCH PLATE (24-35RRC)	ES2807-86	
20	1	SWITCH PLATE (24-36RLC)	ES2807-86	
21	1	SWITCH PLATE (24-36RRC)	ES2807-86	
22	1	SWITCH PLATE (24-37RLC)	ES2807-86	
23	1	SWITCH PLATE (24-37RRC)	ES2807-86	
24	1	SWITCH PLATE (24-38RLC)	ES2807-87	

BILL OF MATERIAL				
ITEM	QTY	DESCRIPTION	DWG NO	SCRRA PART NO
25	1	SWITCH PLATE (24-38RRC)	ES2807-87	
26	2	SWITCH PLATE (24-39RC)	ES2807-88	
27	2	SWITCH PLATE (24-40RC)	ES2807-88	
28	2	SWITCH PLATE (24-41RC)	ES2807-88	
29	2	SWITCH PLATE (24-42RC)	ES2807-88	
30	2	SWITCH PLATE (24-43RC)	ES2807-88	
31	2	SWITCH PLATE (24-44RC)	ES2807-88	
32	2	SWITCH PLATE (24-45RC)	ES2807-89	
33	2	SWITCH PLATE (24-46RC)	ES2807-89	
34	2	SWITCH PLATE (24-47RC)	ES2807-89	
35	2	SWITCH PLATE (24-48RC)	ES2807-89	
36	6	ROLLER SCHWIHAG, SINGLE	-	
37	4	ROLLER SCHWIHAG, DOUBLE	-	
38	18	BRACE, BOLTLESS, 136 LB RE 'SUREFIT'	-	
39	18	SERRATED WASHER FOR BOLTLESS BRACE	-	
40	178	CLIP, PANDROL, E2055	-	
41	6	BOLT, 1⅛" DIA x 10½" LONG, SQUARE HEAD, DRILLED @ 10 1/16", GR 5	-	
42	6	SPRING WASHER FOR 1⅛" DIA BOLT	-	
43	6	NUT, 1⅛" DIA HEAVY SQUARE, GR 5	-	
44	6	COTTER PIN, ¼" DIA x 2¼" LONG	-	
45	2	FISH PLATE, 3-HOLE, ½" D-BAR x 16" LONG, HEADLOCKED	-	
46	2	FISH PLATE, 3-HOLE, ½" D-BAR x 16" LONG	-	
47	2	ROLLER SCHWIHAG, TRIPLE	-	

NOTES:

1. SEE TURNOUT DRAWING ES2807-02 FOR TIE LOCATION DIMENSIONS.
2. SWITCH RODS SHALL BE PREADJUSTED TO DIMENSIONS SHOWN IN DETAIL FOR EACH ROD LOCATION. MODIFY SPREADS AS NECESSARY WHEN INSTALLING INTO LAYOUT.

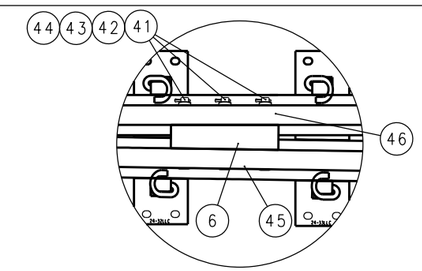

DETAIL A

TYPICAL SWITCH HEEL ASSEMBLY

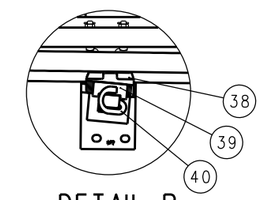

DETAIL B

TYPICAL BOLTLESS BRACE ASSEMBLY

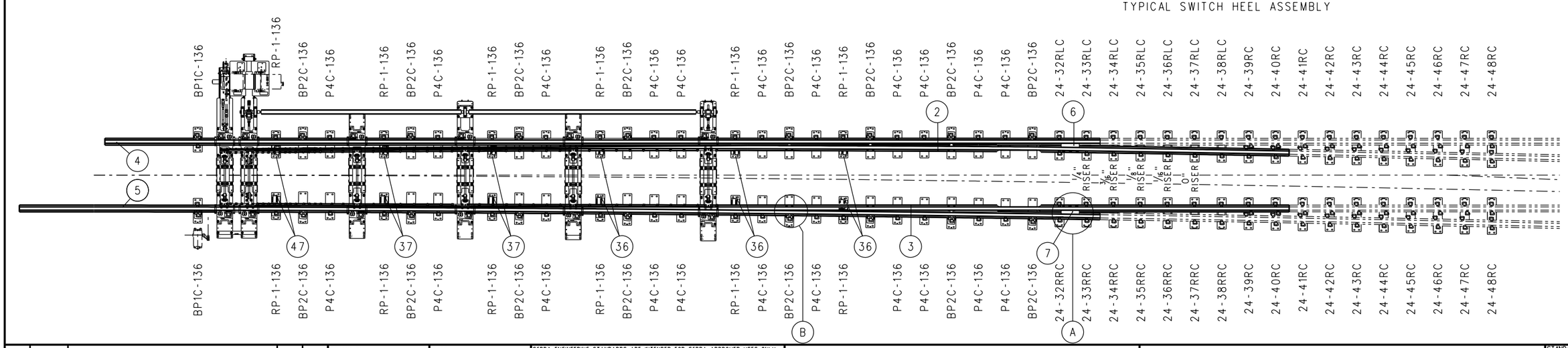

REV.	DATE	DESCRIPTION	DES.	ENG.
X	XX-XX-XX	REVISION	XX	XX

DRAWN BY: HDR DATE:

ASSISTANT DIRECTOR: STANDARDS & DESIGN

DIRECTOR OF ENGINEERING AND CONSTRUCTION

SCRRA ENGINEERING STANDARDS ARE INTENDED FOR SCRRA APPROVED USES ONLY. FOR NON-SCRRA APPROVED USES:
SCRRA SHALL NOT BE RESPONSIBLE FOR THE ACCURACY OR COMPLETENESS OF THE DATA OR INFORMATION CONTAINED HEREIN. THE SELECTION AND USE OF THESE STANDARDS IS THE SOLE RESPONSIBILITY OF THE USER AND SHOULD NOT BE USED WITHOUT CONSULTING A REGISTERED PROFESSIONAL ENGINEER. ALL WARRANTIES AND REPRESENTATIONS OF ANY KIND ARE DISCLAIMED. ANYONE MAKING USE OF THIS INFORMATION AGREES THAT IT ASSUMES ALL LIABILITY ARISING FROM SUCH USE. NO PART OF THESE STANDARDS SHOULD BE REPRODUCED OR DISTRIBUTED IN ANY FORM OR BY ANY MEANS WITHOUT THE PRIOR WRITTEN PERMISSION OF SCRRA. ALL RIGHTS RESERVED.

METROLINK

SOUTHERN CALIFORNIA REGIONAL RAIL AUTHORITY
ONE GATEWAY PLAZA, 12TH FLOOR, L. A., CA. 90012

ENGINEERING STANDARDS

NO 24–136 LB RE RH SWITCH PACK,
HOLLOW STEEL TIES,
SWITCH MACHINE ON MAINLINE SIDE

STANDARD 2807
SCALE: NTS
REVISION –
SHEET 1 OF 1
CADD FILE: ES2807–12

BILL OF MATERIAL				
ITEM	QTY	DESCRIPTION	DWG NO	SCRRA PART NO
1	1	HOLLOW SWITCH TIE & RODDING ASSEMBLY	ES2807-35	
2	1	SAMSON POINT, 79'-2" LONG, DOUBLE REINFORCED, UR MANG TIP, LH	ES2807-21	
3	1	SAMSON POINT, 79'-2" LONG, DOUBLE REINFORCED, UR MANG TIP, RH	ES2807-22	
4	1	SAMSON STOCK RAIL, 80'-0" LONG, LH	ES2807-23	
5	1	SAMSON STOCK RAIL, 73'-8" LONG, RH	ES2807-24	
6	1	THERMAL STRESS BLOCK, 136 LB RE, UNIFORM RISER, LH	-	
7	1	THERMAL STRESS BLOCK, 136 LB RE, UNIFORM RISER, RH	-	
8	2	SWITCH PLATE (BP1C-136)	ES2800-80	
9	16	SWITCH PLATE (BP2C-136)	ES2800-80	
10	22	SWITCH PLATE (P4C-136)	ES2800-80	
11	12	SWITCH ROLLER PLATE (RP-1-136) SCHWIHAG	ES2800-96	
12	1	SWITCH PLATE (24-32LLC)	ES2807-80	
13	1	SWITCH PLATE (24-32LRC)	ES2807-80	
14	1	SWITCH PLATE (24-33LLC)	ES2807-80	
15	1	SWITCH PLATE (24-33LRC)	ES2807-80	
16	1	SWITCH PLATE (24-34LLC)	ES2807-80	
17	1	SWITCH PLATE (24-34LRC)	ES2807-80	
18	1	SWITCH PLATE (24-35LLC)	ES2807-81	
19	1	SWITCH PLATE (24-35LRC)	ES2807-81	
20	1	SWITCH PLATE (24-36LLC)	ES2807-81	
21	1	SWITCH PLATE (24-36LRC)	ES2807-81	
22	1	SWITCH PLATE (24-37LLC)	ES2807-81	
23	1	SWITCH PLATE (24-37LRC)	ES2807-81	
24	1	SWITCH PLATE (24-38LLC)	ES2807-82	

BILL OF MATERIAL				
ITEM	QTY	DESCRIPTION	DWG NO	SCRRA PART NO
25	1	SWITCH PLATE (24-38LRC)	ES2807-82	
26	2	SWITCH PLATE (24-39LC)	ES2807-83	
27	2	SWITCH PLATE (24-40LC)	ES2807-83	
28	2	SWITCH PLATE (24-41LC)	ES2807-83	
29	2	SWITCH PLATE (24-42LC)	ES2807-83	
30	2	SWITCH PLATE (24-43LC)	ES2807-83	
31	2	SWITCH PLATE (24-44LC)	ES2807-83	
32	2	SWITCH PLATE (24-45LC)	ES2807-84	
33	2	SWITCH PLATE (24-46LC)	ES2807-84	
34	2	SWITCH PLATE (24-47LC)	ES2807-84	
35	2	SWITCH PLATE (24-48LC)	ES2807-84	
36	6	ROLLER SCHWIHAG, SINGLE	-	
37	4	ROLLER SCHWIHAG, DOUBLE	-	
38	18	BRACE, BOLTLESS, 136 LB RE 'SUREFIT'	-	
39	18	SERRATED WASHER FOR BOLTLESS BRACE	-	
40	178	CLIP, PANDROL, E2055	-	
41	6	BOLT, 1⅛" DIA x 10½" LONG, SQUARE HEAD, DRILLED @ 10 1/16", GR 5	-	
42	6	SPRING WASHER FOR 1⅛" DIA BOLT	-	
43	6	NUT, 1⅛" DIA HEAVY SQUARE, GR 5	-	
44	6	COTTER PIN, ¼" DIA x 2¼" LONG	-	
45	2	FISH PLATE, 3-HOLE, ½" D-BAR x 16" LONG, HEADLOCKED	-	
46	2	FISH PLATE, 3-HOLE, ½" D-BAR x 16" LONG	-	
47	2	ROLLER SCHWIHAG, TRIPLE	-	

NOTES:

1. SEE TURNOUT DRAWING ES2807-03 FOR TIE LOCATION DIMENSIONS.
2. SWITCH RODS SHALL BE PREADJUSTED TO DIMENSIONS SHOWN IN DETAIL FOR EACH ROD LOCATION. MODIFY SPREADS AS NECESSARY WHEN INSTALLING INTO LAYOUT.

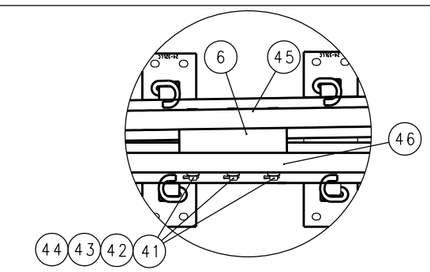

DETAIL A

TYPICAL SWITCH HEEL ASSEMBLY

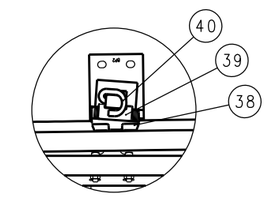

DETAIL B

TYPICAL BOLTLESS BRACE ASSEMBLY

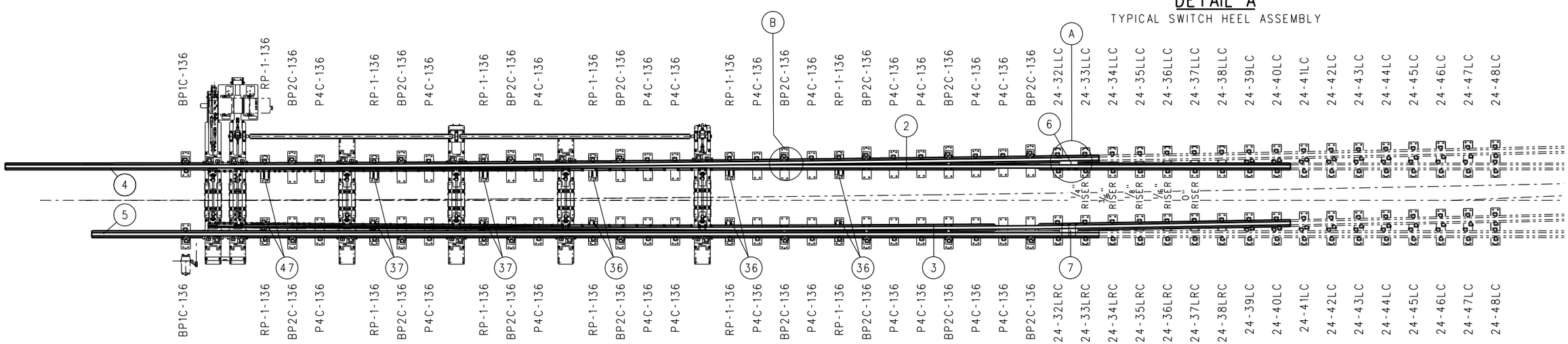

REV.	DATE	DESCRIPTION	DES.	ENG.
X	XX-XX-XX	REVISION	XX	XX

DRAWN BY: HDR DATE:

ASSISTANT DIRECTOR: STANDARDS & DESIGN

DIRECTOR OF ENGINEERING AND CONSTRUCTION

SCRRA ENGINEERING STANDARDS ARE INTENDED FOR SCRRA APPROVED USES ONLY. FOR NON-SCRRA APPROVED USES:
SCRRA SHALL NOT BE RESPONSIBLE FOR THE ACCURACY OR COMPLETENESS OF THE DATA OR INFORMATION CONTAINED HEREIN. THE SELECTION AND USE OF THESE STANDARDS IS THE SOLE RESPONSIBILITY OF THE USER AND SHOULD NOT BE USED WITHOUT CONSULTING A REGISTERED PROFESSIONAL ENGINEER. ALL WARRANTIES AND REPRESENTATIONS OF ANY KIND ARE DISCLAIMED. ANYONE MAKING USE OF THIS INFORMATION AGREES THAT IT ASSUMES ALL LIABILITY ARISING FROM SUCH USE. NO PART OF THESE STANDARDS SHOULD BE REPRODUCED OR DISTRIBUTED IN ANY FORM OR BY ANY MEANS WITHOUT THE PRIOR WRITTEN PERMISSION OF SCRRA. ALL RIGHTS RESERVED.

METROLINK®

SOUTHERN CALIFORNIA REGIONAL RAIL AUTHORITY
ONE GATEWAY PLAZA, 12TH FLOOR, L. A., CA. 90012

ENGINEERING STANDARDS

NO 24-136 LB RE LH SWITCH PACK,
HOLLOW STEEL TIES,
SWITCH MACHINE ON TURNOUT SIDE

STANDARD 2807
SCALE: NTS
REVISION –
SHEET 1 OF 1
CADD FILE: ES2807-13

BILL OF MATERIAL				
ITEM	QTY	DESCRIPTION	DWG NO	SCRRA PART NO
1	1	HOLLOW SWITCH TIE & RODDING ASSEMBLY	ES2807-34	
2	1	SAMSON POINT, 79'-2" LONG, DOUBLE REINFORCED, UR MANG TIP, LH	ES2807-21	
3	1	SAMSON POINT, 79'-2" LONG, DOUBLE REINFORCED, UR MANG TIP, RH	ES2807-22	
4	1	SAMSON STOCK RAIL, 73'-8" LONG, LH	ES2807-25	
5	1	SAMSON STOCK RAIL, 80'-0" LONG, RH	ES2807-26	
6	1	THERMAL STRESS BLOCK, 136 LB RE, UNIFORM RISER, LH	-	
7	1	THERMAL STRESS BLOCK, 136 LB RE, UNIFORM RISER, RH	-	
8	2	SWITCH PLATE (BP1C-136)	ES2800-80	
9	16	SWITCH PLATE (BP2C-136)	ES2800-80	
10	22	SWITCH PLATE (P4C-136)	ES2800-80	
11	12	SWITCH ROLLER PLATE (RP-1-136) SCHWIHAG	ES2800-96	
12	1	SWITCH PLATE (24-32RLC)	ES2807-85	
13	1	SWITCH PLATE (24-32RRC)	ES2807-85	
14	1	SWITCH PLATE (24-33RLC)	ES2807-85	
15	1	SWITCH PLATE (24-33RRC)	ES2807-85	
16	1	SWITCH PLATE (24-34RLC)	ES2807-85	
17	1	SWITCH PLATE (24-34RRC)	ES2807-85	
18	1	SWITCH PLATE (24-35RLC)	ES2807-86	
19	1	SWITCH PLATE (24-35RRC)	ES2800-86	
20	1	SWITCH PLATE (24-36RLC)	ES2807-86	
21	1	SWITCH PLATE (24-36RRC)	ES2807-86	
22	1	SWITCH PLATE (24-37RLC)	ES2807-86	
23	1	SWITCH PLATE (24-37RRC)	ES2807-86	
24	1	SWITCH PLATE (24-38RLC)	ES2807-87	

BILL OF MATERIAL				
ITEM	QTY	DESCRIPTION	DWG NO	SCRRA PART NO
25	1	SWITCH PLATE (24-38RRC)	ES2807-87	
26	2	SWITCH PLATE (24-39RC)	ES2807-88	
27	2	SWITCH PLATE (24-40RC)	ES2807-88	
28	2	SWITCH PLATE (24-41RC)	ES2807-88	
29	2	SWITCH PLATE (24-42RC)	ES2807-88	
30	2	SWITCH PLATE (24-43RC)	ES2807-88	
31	2	SWITCH PLATE (24-44RC)	ES2807-88	
32	2	SWITCH PLATE (24-45RC)	ES2807-89	
33	2	SWITCH PLATE (24-46RC)	ES2807-89	
34	2	SWITCH PLATE (24-47RC)	ES2807-89	
35	2	SWITCH PLATE (24-48RC)	ES2807-89	
36	6	ROLLER SCHWIHAG, SINGLE	-	
37	4	ROLLER SCHWIHAG, DOUBLE	-	
38	18	BRACE, BOLTLESS, 136 LB RE 'SUREFIT'	-	
39	18	SERRATED WASHER FOR BOLTLESS BRACE	-	
40	178	CLIP, PANDROL, E2055	-	
41	6	BOLT, 1⅛" DIA x 10½" LONG, SQUARE HEAD, DRILLED @ 10 1/16", GR 5	-	
42	6	SPRING WASHER FOR 1⅛" DIA BOLT	-	
43	6	NUT, 1⅛" DIA HEAVY SQUARE, GR 5	-	
44	6	COTTER PIN, ¼" DIA x 2¼" LONG	-	
45	2	FISH PLATE, 3-HOLE, ½" D-BAR x 16" LONG, HEADLOCKED	-	
46	2	FISH PLATE, 3-HOLE, ½" D-BAR x 16" LONG	-	
47	2	ROLLER SCHWIHAG, TRIPLE	-	

NOTES:

1. SEE TURNOUT DRAWING ES2807-04 FOR TIE LOCATION DIMENSIONS.
2. SWITCH RODS SHALL BE PREADJUSTED TO DIMENSIONS SHOWN IN DETAIL FOR EACH ROD LOCATION. MODIFY SPREADS AS NECESSARY WHEN INSTALLING INTO LAYOUT.

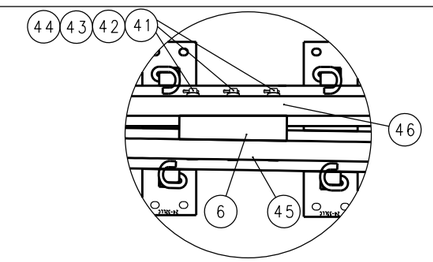

DETAIL A

TYPICAL SWITCH HEEL ASSEMBLY

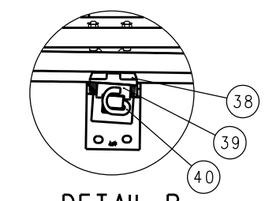

DETAIL B

TYPICAL BOLTLESS BRACE ASSEMBLY

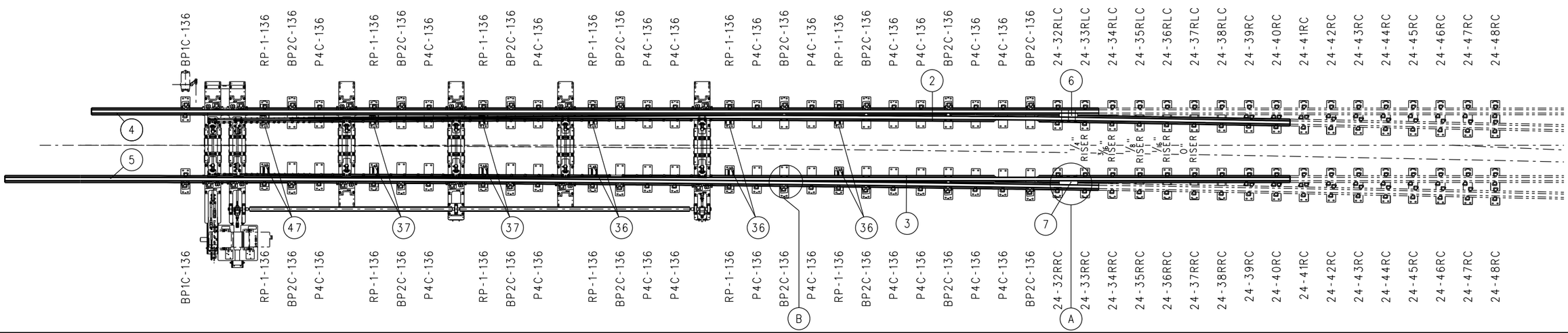

REV.	DATE	DESCRIPTION	DES.	ENG.
X	XX-XX-XX	REVISION	XX	XX

DRAWN BY: HDR DATE:

ASSISTANT DIRECTOR: STANDARDS & DESIGN

DIRECTOR OF ENGINEERING AND CONSTRUCTION

SCRRA ENGINEERING STANDARDS ARE INTENDED FOR SCRRA APPROVED USES ONLY. FOR NON-SCRRA APPROVED USES:
SCRRA SHALL NOT BE RESPONSIBLE FOR THE ACCURACY OR COMPLETENESS OF THE DATA OR INFORMATION CONTAINED HEREIN. THE SELECTION AND USE OF THESE STANDARDS IS THE SOLE RESPONSIBILITY OF THE USER AND SHOULD NOT BE USED WITHOUT CONSULTING A REGISTERED PROFESSIONAL ENGINEER. ALL WARRANTIES AND REPRESENTATIONS OF ANY KIND ARE DISCLAIMED. ANYONE MAKING USE OF THIS INFORMATION AGREES THAT IT ASSUMES ALL LIABILITY ARISING FROM SUCH USE. NO PART OF THESE STANDARDS SHOULD BE REPRODUCED OR DISTRIBUTED IN ANY FORM OR BY ANY MEANS WITHOUT THE PRIOR WRITTEN PERMISSION OF SCRRA. ALL RIGHTS RESERVED.

METROLINK®

SOUTHERN CALIFORNIA REGIONAL RAIL AUTHORITY
ONE GATEWAY PLAZA, 12TH FLOOR, L. A., CA. 90012

ENGINEERING STANDARDS

NO 24 – 136 LB RE RH SWITCH PACK, HOLLOW STEEL TIES, SWITCH MACHINE ON TURNOUT SIDE

STANDARD 2807
SCALE: NTS
REVISION –
SHEET 1 OF 1
CADD FILE: ES2807-14

BILL OF MATERIAL			
ITEM	QTY	DESCRIPTION	SCRRA PART NO
1	1	RAIL, 136 LB RE 79'-2" LONG	

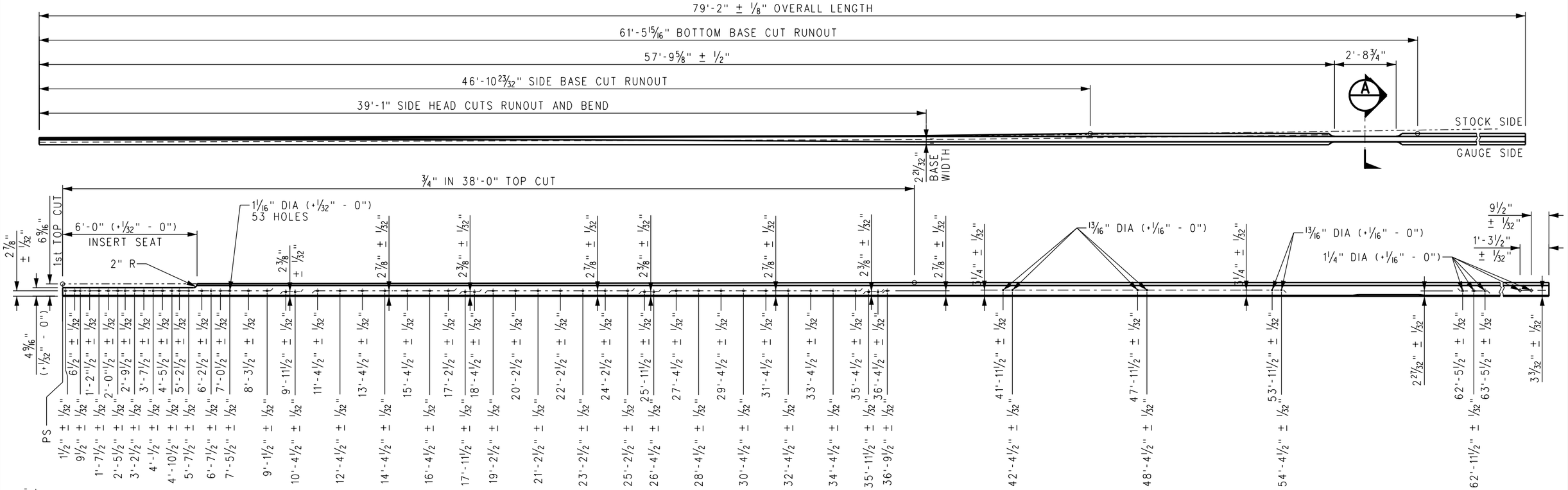

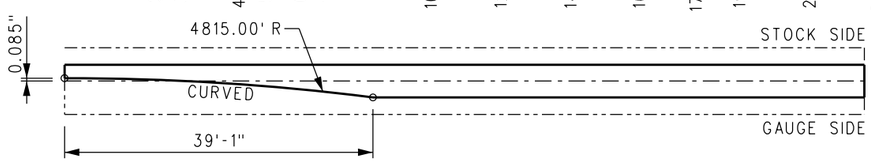

GAUGE SIDE HEAD CUT:
DIMENSIONS @ 6 11/16" AT RAIL BEND
STRAIGHT WEB, TOP VIEW

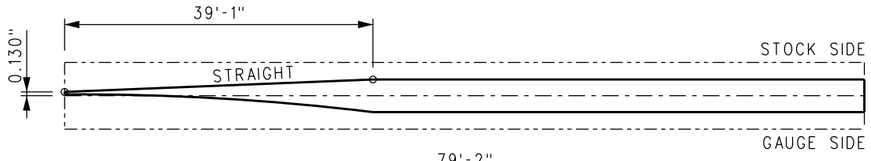

STOCK SIDE HEAD CUT:
DIMENSIONS @ 6 11/16" AT RAIL BEND
STRAIGHT WEB, TOP VIEW

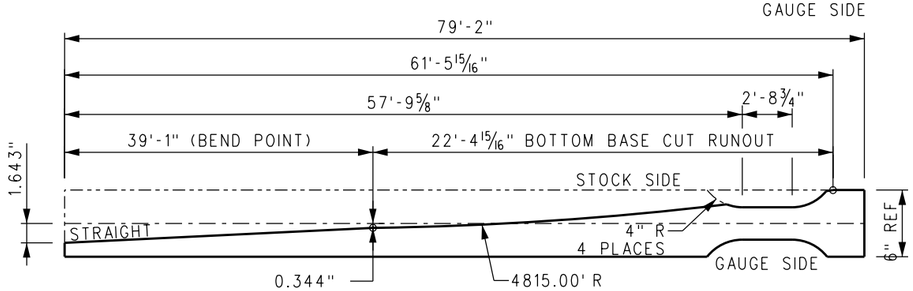

UNDERSIDE BASE CUT:
DIMENSIONS @ BASE.
STRAIGHT WEB, TOP VIEW

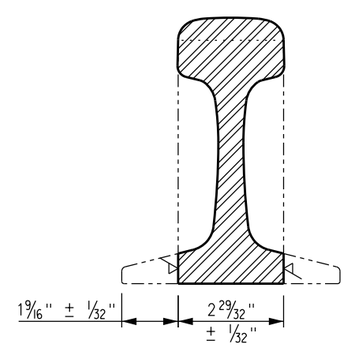

SECTION A

NOTES:

1. MACHINE SIDE HEAD CUTS BEFORE REMOVING HEAD AND WEB AREA SHOWN FOR MANGANESE TIP.
2. POINT TO BE MACHINED STRAIGHT.
3. ALL HOLES SHALL BE CHAMFERED WITH 1/8" R EDGES.

REV.	DATE	DESCRIPTION	DES.	ENG.
X	XX-XX-XX	REVISION	XX	XX

DRAWN BY: HDR DATE: 03/31/2011

ASSISTANT DIRECTOR: STANDARDS & DESIGN

DIRECTOR OF ENGINEERING AND CONSTRUCTION

SCRRA ENGINEERING STANDARDS ARE INTENDED FOR SCRRA APPROVED USES ONLY. FOR NON-SCRRA APPROVED USES:
SCRRA SHALL NOT BE RESPONSIBLE FOR THE ACCURACY OR COMPLETENESS OF THE DATA OR INFORMATION CONTAINED HEREIN. THE SELECTION AND USE OF THESE STANDARDS IS THE SOLE RESPONSIBILITY OF THE USER AND SHOULD NOT BE USED WITHOUT CONSULTING A REGISTERED PROFESSIONAL ENGINEER. ALL WARRANTIES AND REPRESENTATIONS OF ANY KIND ARE DISCLAIMED. ANYONE MAKING USE OF THIS INFORMATION AGREES THAT IT ASSUMES ALL LIABILITY ARISING FROM SUCH USE. NO PART OF THESE STANDARDS SHOULD BE REPRODUCED OR DISTRIBUTED IN ANY FORM OR BY ANY MEANS WITHOUT THE PRIOR WRITTEN PERMISSION OF SCRRA. ALL RIGHTS RESERVED.

METROLINK®
SOUTHERN CALIFORNIA REGIONAL RAIL AUTHORITY
ONE GATEWAY PLAZA, 12TH FLOOR, L. A., CA. 90012

ENGINEERING STANDARDS

SWITCH POINT ASSEMBLY, 136 LB RE SAMSON, LH
NO 24 LH /RH TURNOUT
79'-2" OVERALL LENGTH MANGANESE TIP

STANDARD 2807
SCALE: NTS
REVISION –
SHEET 1 OF 1
CADD FILE: ES2807-21

BILL OF MATERIAL			
ITEM	QTY	DESCRIPTION	SCRRA PART NO
1	1	RAIL, 136 LB RE 79'-2" LONG	

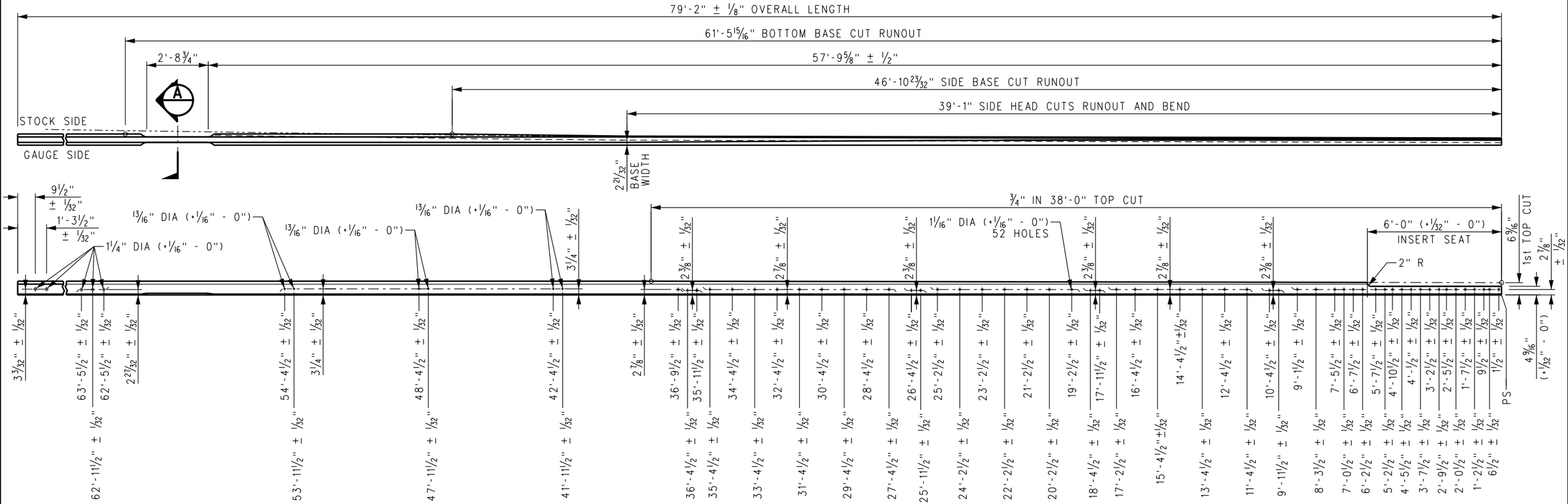

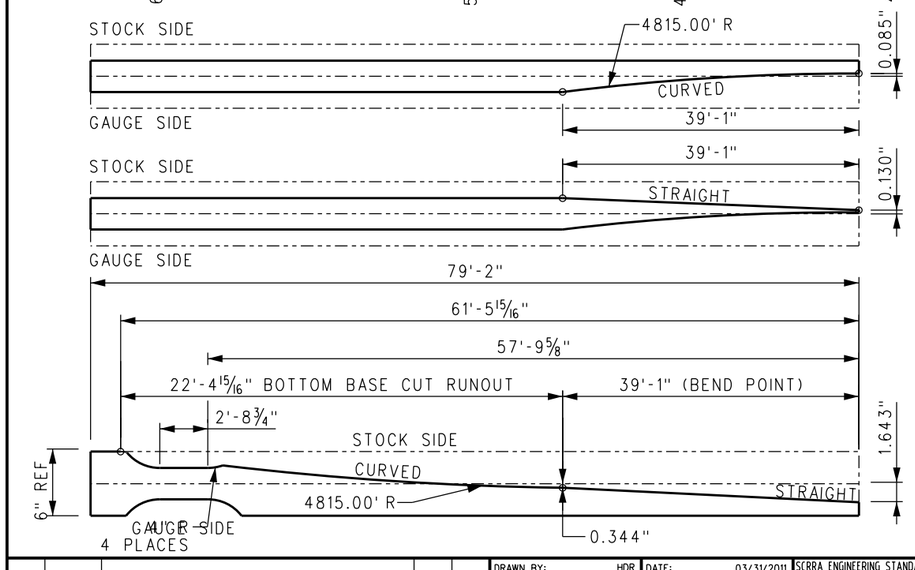

GAUGE SIDE HEAD CUT:
DIMENSIONS @ 6 11/16" AT RAIL BEND
STRAIGHT WEB, TOP VIEW

STOCK SIDE HEAD CUT:
DIMENSIONS @ 6 11/16" AT RAIL BEND
STRAIGHT WEB, TOP VIEW

UNDERSIDE BASE CUT:
DIMENSIONS @ BASE.
STRAIGHT WEB, TOP VIEW

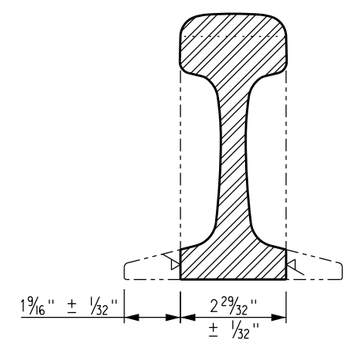

SECTION A

NOTES:

1. MACHINE SIDE HEAD CUTS BEFORE REMOVING HEAD AND WEB AREA SHOWN FOR MANGANESE TIP.
2. POINT TO BE MACHINED STRAIGHT.
3. ALL HOLES SHALL BE CHAMFERED WITH 1/8" R EDGES.

REV.	DATE	DESCRIPTION	DES.	ENG.
X	XX-XX-XX	REVISION	XX	XX

DRAWN BY: HDR DATE: 03/31/2011

ASSISTANT DIRECTOR: STANDARDS & DESIGN

DIRECTOR OF ENGINEERING AND CONSTRUCTION

SCRRA ENGINEERING STANDARDS ARE INTENDED FOR SCRRA APPROVED USES ONLY. FOR NON-SCRRA APPROVED USES:
SCRRA SHALL NOT BE RESPONSIBLE FOR THE ACCURACY OR COMPLETENESS OF THE DATA OR INFORMATION CONTAINED HEREIN. THE SELECTION AND USE OF THESE STANDARDS IS THE SOLE RESPONSIBILITY OF THE USER AND SHOULD NOT BE USED WITHOUT CONSULTING A REGISTERED PROFESSIONAL ENGINEER. ALL WARRANTIES AND REPRESENTATIONS OF ANY KIND ARE DISCLAIMED. ANYONE MAKING USE OF THIS INFORMATION AGREES THAT IT ASSUMES ALL LIABILITY ARISING FROM SUCH USE. NO PART OF THESE STANDARDS SHOULD BE REPRODUCED OR DISTRIBUTED IN ANY FORM OR BY ANY MEANS WITHOUT THE PRIOR WRITTEN PERMISSION OF SCRRA. ALL RIGHTS RESERVED.

METROLINK®
SOUTHERN CALIFORNIA REGIONAL RAIL AUTHORITY
ONE GATEWAY PLAZA, 12TH FLOOR, L. A., CA. 90012

ENGINEERING STANDARDS

SWITCH POINT ASSEMBLY, 136 LB RE SAMSON, RH
NO 24 LH /RH TURNOUT
79'-2" OVERALL LENGTH MANGANESE TIP

STANDARD 2807
SCALE: NTS
REVISION –
SHEET 1 OF 1
CADD FILE: ES2807-22

BILL OF MATERIAL			
ITEM	QTY	DESCRIPTION	SCRRA PART NO
1	1	RAIL, 136 LB RE 80'-0" LONG	

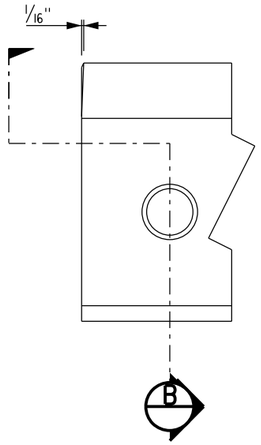

RAIL END/HOLE BEVELING DETAIL

RAIL HEAD ONLY - NOT BASE

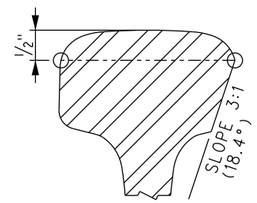

PARTIAL SECTION A

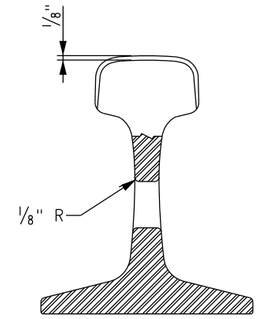

SECTION B

NOTES:

1. ALL BURNING METHODS PROHIBITED.
2. ALL BOLT HOLES TO BE BEVELED PER DETAIL.
3. POINT OF SWITCH TO BE MARKED ON GAUGE SIDE OF WEB WITH A WHITE LINE USING WATERPROOF MARKER OR PAINT.
4. WRITE SCRRA ES NUMBER ON WEB OF RAIL WITH WATERPROOF MARKER OR PAINT.

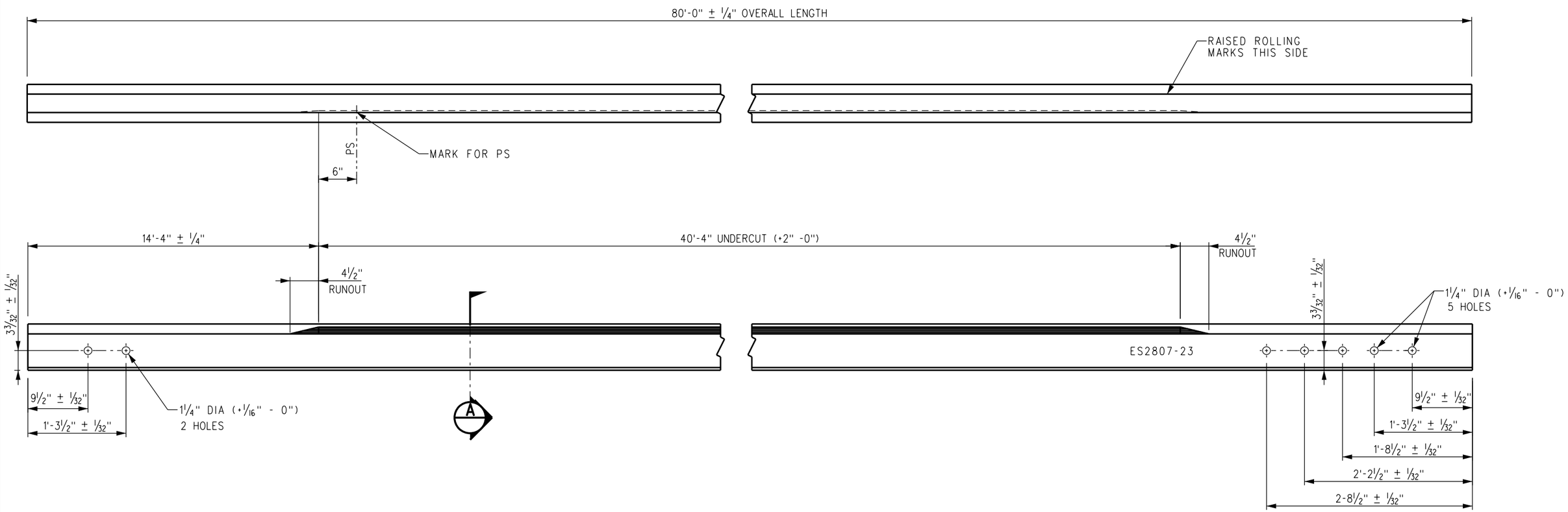

REV.	DATE	DESCRIPTION	DES.	ENG.
X	XX-XX-XX	REVISION	XX	XX

DRAWN BY: HDR DATE: 03/31/2011

ASSISTANT DIRECTOR: STANDARDS & DESIGN

DIRECTOR OF ENGINEERING AND CONSTRUCTION

SCRRA ENGINEERING STANDARDS ARE INTENDED FOR SCRRA APPROVED USES ONLY. FOR NON-SCRRA APPROVED USES:
SCRRA SHALL NOT BE RESPONSIBLE FOR THE ACCURACY OR COMPLETENESS OF THE DATA OR INFORMATION CONTAINED HEREIN. THE SELECTION AND USE OF THESE STANDARDS IS THE SOLE RESPONSIBILITY OF THE USER AND SHOULD NOT BE USED WITHOUT CONSULTING A REGISTERED PROFESSIONAL ENGINEER. ALL WARRANTIES AND REPRESENTATIONS OF ANY KIND ARE DISCLAIMED. ANYONE MAKING USE OF THIS INFORMATION AGREES THAT IT ASSUMES ALL LIABILITY ARISING FROM SUCH USE. NO PART OF THESE STANDARDS SHOULD BE REPRODUCED OR DISTRIBUTED IN ANY FORM OR BY ANY MEANS WITHOUT THE PRIOR WRITTEN PERMISSION OF SCRRA. ALL RIGHTS RESERVED.

METROLINK®

SOUTHERN CALIFORNIA REGIONAL RAIL AUTHORITY
ONE GATEWAY PLAZA, 12TH FLOOR, L. A., CA. 90012

ENGINEERING STANDARDS

SAMSON STOCK RAIL, LH
136 LB RE 80'-0" LONG
FOR NO 24 136 LB RE LH SWITCH PACK

STANDARD 2807
SCALE: NTS
REVISION –
SHEET 1 OF 1
CADD FILE: ES2807-23

BILL OF MATERIAL			
ITEM	QTY	DESCRIPTION	SCRRA PART NO
1	1	RAIL, 136 LB RE 73'-8" LONG	

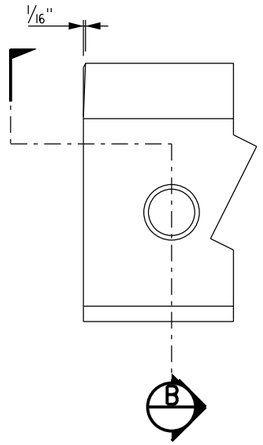

RAIL END/HOLE BEVELING DETAIL

RAIL HEAD ONLY - NOT BASE

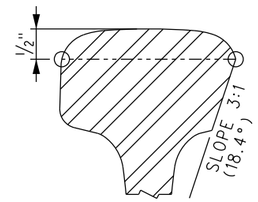

PARTIAL SECTION A

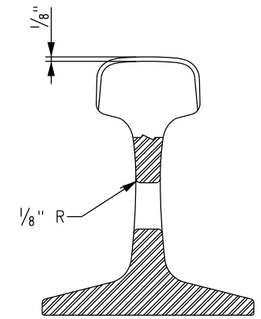

SECTION B

NOTES:

1. ALL BURNING METHODS PROHIBITED.
2. ALL BOLT HOLES TO BE BEVELED PER DETAIL.
3. POINT OF SWITCH TO BE MARKED ON GAUGE SIDE OF WEB WITH A WHITE LINE USING WATERPROOF MARKER OR PAINT.
4. WRITE SCRRA ES NUMBER ON WEB OF RAIL WITH WATERPROOF MARKER OR PAINT.

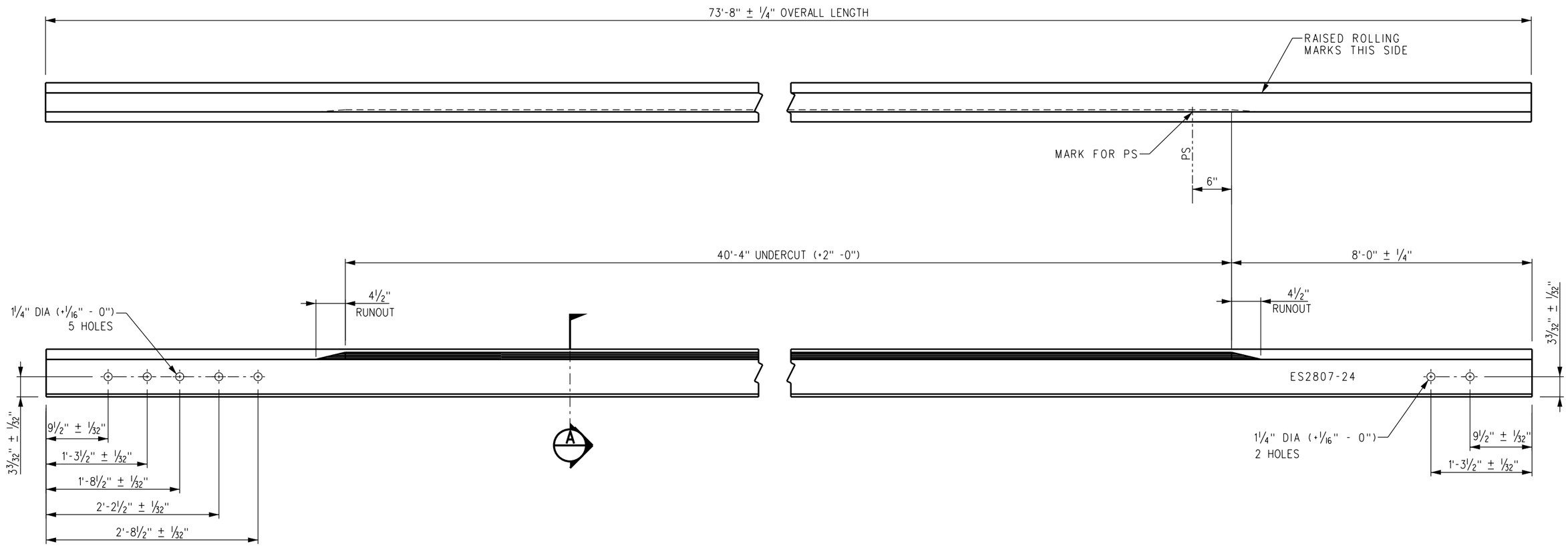

REV.	DATE	DESCRIPTION	DES.	ENG.
X	XX-XX-XX	REVISION	XX	XX

DRAWN BY: HDR DATE: 03/31/2011

ASSISTANT DIRECTOR: STANDARDS & DESIGN

DIRECTOR OF ENGINEERING AND CONSTRUCTION

SCRRA ENGINEERING STANDARDS ARE INTENDED FOR SCRRA APPROVED USES ONLY. FOR NON-SCRRA APPROVED USES:
SCRRA SHALL NOT BE RESPONSIBLE FOR THE ACCURACY OR COMPLETENESS OF THE DATA OR INFORMATION CONTAINED HEREIN. THE SELECTION AND USE OF THESE STANDARDS IS THE SOLE RESPONSIBILITY OF THE USER AND SHOULD NOT BE USED WITHOUT CONSULTING A REGISTERED PROFESSIONAL ENGINEER. ALL WARRANTIES AND REPRESENTATIONS OF ANY KIND ARE DISCLAIMED. ANYONE MAKING USE OF THIS INFORMATION AGREES THAT IT ASSUMES ALL LIABILITY ARISING FROM SUCH USE. NO PART OF THESE STANDARDS SHOULD BE REPRODUCED OR DISTRIBUTED IN ANY FORM OR BY ANY MEANS WITHOUT THE PRIOR WRITTEN PERMISSION OF SCRRA. ALL RIGHTS RESERVED.

METROLINK®

SOUTHERN CALIFORNIA REGIONAL RAIL AUTHORITY
ONE GATEWAY PLAZA, 12TH FLOOR, L. A., CA. 90012

ENGINEERING STANDARDS

SAMSON STOCK RAIL, RH
136 LB RE 73'-8" LONG
FOR NO 24 136 LB RE LH SWITCH PACK

STANDARD: 2807
SCALE: NTS
REVISION: –
SHEET: 1 OF 1
CADD FILE: ES2807-24

BILL OF MATERIAL			
ITEM	QTY	DESCRIPTION	SCRRA PART NO
1	1	RAIL, 136 LB RE 73'-8" LONG	

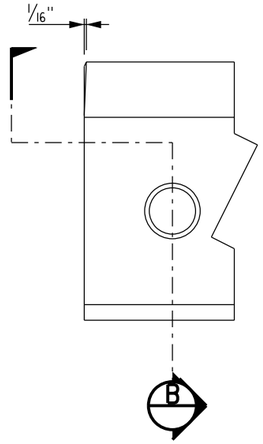

RAIL END/HOLE BEVELING DETAILS

RAIL HEAD ONLY - NOT BASE

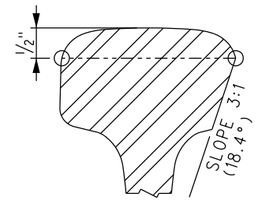

PARTIAL SECTION A

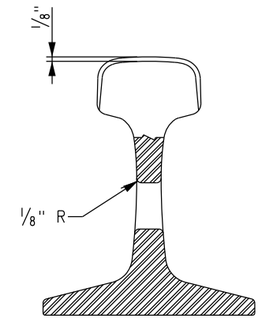

SECTION B

NOTES:

1. ALL BURNING METHODS PROHIBITED.
2. ALL BOLT HOLES TO BE BEVELED PER DETAIL.
3. POINT OF SWITCH TO BE MARKED ON GAUGE SIDE OF WEB WITH A WHITE LINE USING WATERPROOF MARKER OR PAINT.
4. WRITE SCRRA ES NUMBER ON WEB OF RAIL WITH WATERPROOF MARKER OR PAINT.

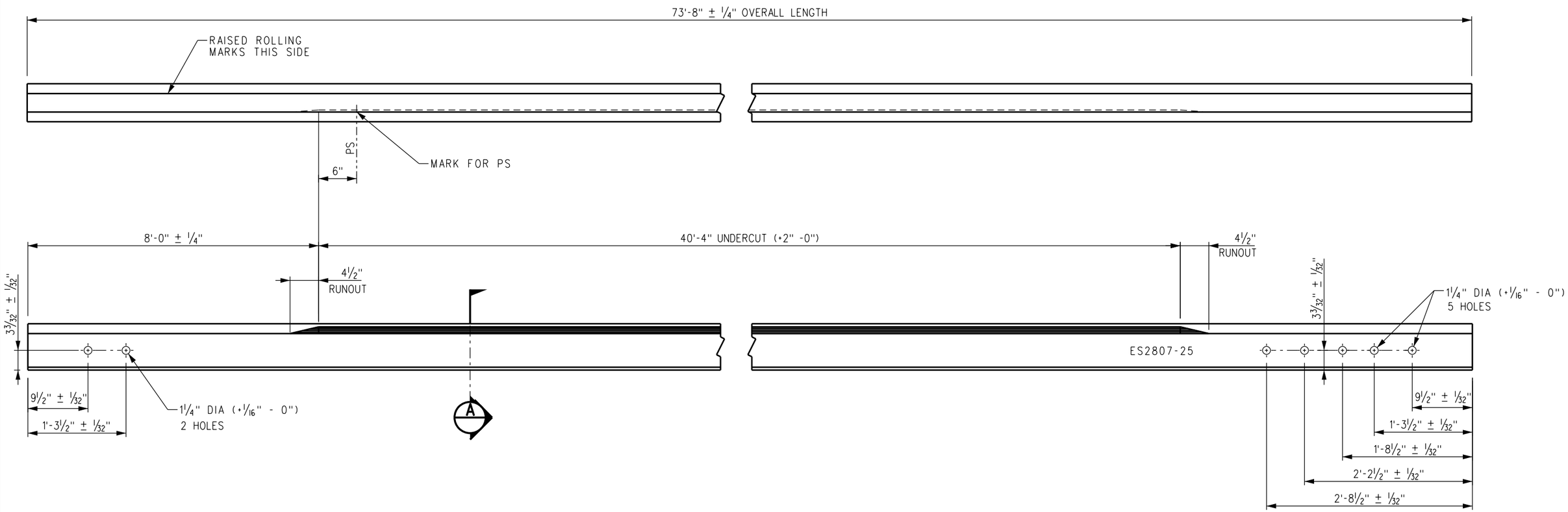

X	XX-XX-XX	REVISION	XX	XX
REV.	DATE	DESCRIPTION	DES.	ENG.

DRAWN BY: HDR DATE: 03/31/2011

ASSISTANT DIRECTOR: STANDARDS & DESIGN

DIRECTOR OF ENGINEERING AND CONSTRUCTION

SCRRA ENGINEERING STANDARDS ARE INTENDED FOR SCRRA APPROVED USES ONLY. FOR NON-SCRRA APPROVED USES:
SCRRA SHALL NOT BE RESPONSIBLE FOR THE ACCURACY OR COMPLETENESS OF THE DATA OR INFORMATION CONTAINED HEREIN. THE SELECTION AND USE OF THESE STANDARDS IS THE SOLE RESPONSIBILITY OF THE USER AND SHOULD NOT BE USED WITHOUT CONSULTING A REGISTERED PROFESSIONAL ENGINEER. ALL WARRANTIES AND REPRESENTATIONS OF ANY KIND ARE DISCLAIMED. ANYONE MAKING USE OF THIS INFORMATION AGREES THAT IT ASSUMES ALL LIABILITY ARISING FROM SUCH USE. NO PART OF THESE STANDARDS SHOULD BE REPRODUCED OR DISTRIBUTED IN ANY FORM OR BY ANY MEANS WITHOUT THE PRIOR WRITTEN PERMISSION OF SCRRA. ALL RIGHTS RESERVED.

METROLINK®

SOUTHERN CALIFORNIA REGIONAL RAIL AUTHORITY
ONE GATEWAY PLAZA, 12TH FLOOR, L. A., CA. 90012

ENGINEERING STANDARDS

SAMSON STOCK RAIL, LH
136 LB RE 73'-8" LONG
FOR NO 24 136 LB RE RH SWITCH PACK

STANDARD 2807
SCALE: NTS
REVISION –
SHEET 1 OF 1
CADD FILE: ES2807-25

BILL OF MATERIAL			
ITEM	QTY	DESCRIPTION	SCRRA PART NO
1	1	RAIL, 136 LB RE 80'-0" LONG	

NOTES:

1. ALL BURNING METHODS PROHIBITED.
2. ALL BOLT HOLES TO BE BEVELED PER DETAIL.
3. POINT OF SWITCH TO BE MARKED ON GAUGE SIDE OF WEB WITH A WHITE LINE USING WATERPROOF MARKER OR PAINT.
4. WRITE SCRRA ES NUMBER ON WEB OF RAIL WITH WATERPROOF MARKER OR PAINT.

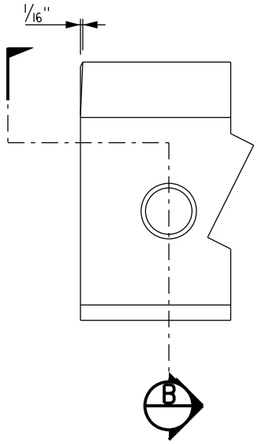

RAIL END/HOLE BEVELING DETAILS

RAIL HEAD ONLY - NOT BASE

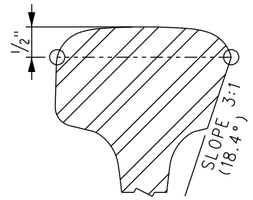

PARTIAL SECTION A

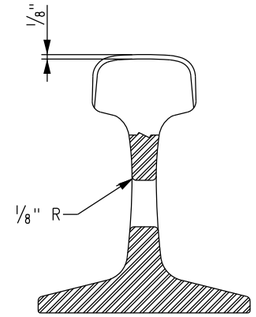

SECTION B

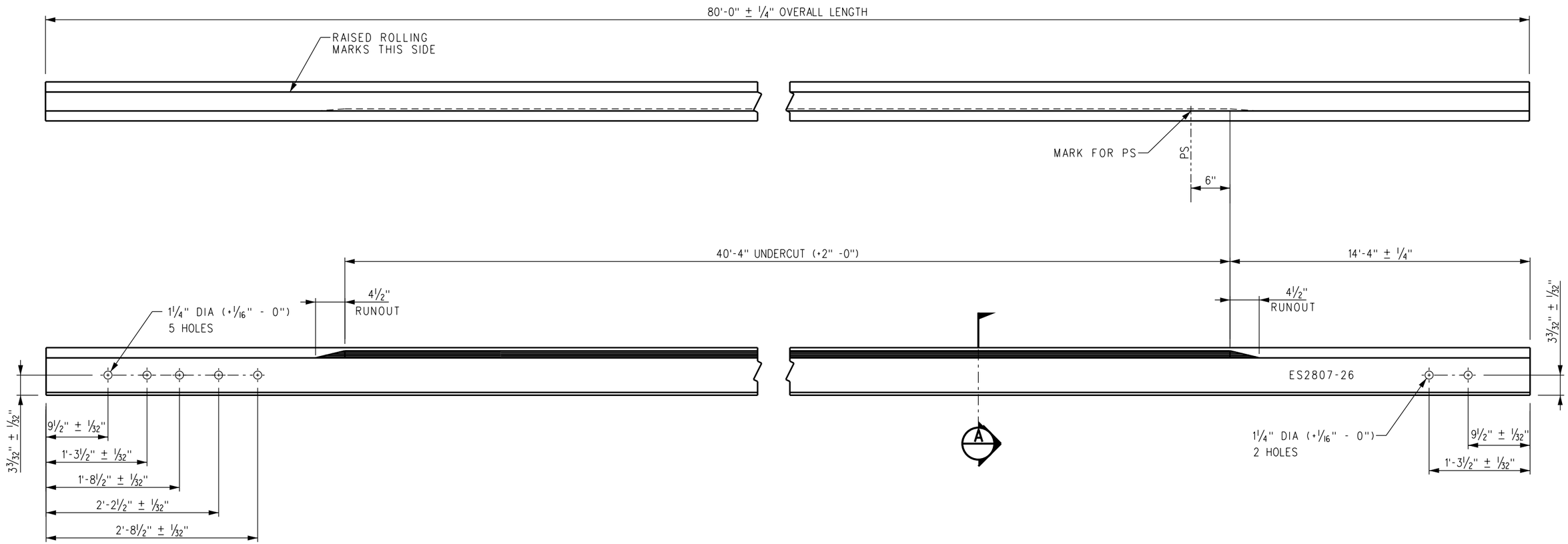

REV.	DATE	DESCRIPTION	DES.	ENG.
X	XX-XX-XX	REVISION	XX	XX

DRAWN BY: HDR DATE: 03/31/2011

ASSISTANT DIRECTOR: STANDARDS & DESIGN

DIRECTOR OF ENGINEERING AND CONSTRUCTION

SCRRA ENGINEERING STANDARDS ARE INTENDED FOR SCRRA APPROVED USES ONLY. FOR NON-SCRRA APPROVED USES:
SCRRA SHALL NOT BE RESPONSIBLE FOR THE ACCURACY OR COMPLETENESS OF THE DATA OR INFORMATION CONTAINED HEREIN. THE SELECTION AND USE OF THESE STANDARDS IS THE SOLE RESPONSIBILITY OF THE USER AND SHOULD NOT BE USED WITHOUT CONSULTING A REGISTERED PROFESSIONAL ENGINEER. ALL WARRANTIES AND REPRESENTATIONS OF ANY KIND ARE DISCLAIMED. ANYONE MAKING USE OF THIS INFORMATION AGREES THAT IT ASSUMES ALL LIABILITY ARISING FROM SUCH USE. NO PART OF THESE STANDARDS SHOULD BE REPRODUCED OR DISTRIBUTED IN ANY FORM OR BY ANY MEANS WITHOUT THE PRIOR WRITTEN PERMISSION OF SCRRA. ALL RIGHTS RESERVED.

METROLINK®

SOUTHERN CALIFORNIA REGIONAL RAIL AUTHORITY
ONE GATEWAY PLAZA, 12TH FLOOR, L. A., CA. 90012

ENGINEERING STANDARDS

SAMSON STOCK RAIL, RH
136 LB RE 80'-0" LONG
FOR NO 24 136 LB RE RH SWITCH PACK

STANDARD: 2807
SCALE: NTS
REVISION: –
SHEET: 1 OF 1
CADD FILE: ES2807-26

BILL OF MATERIAL			
ITEM	QTY	DESCRIPTION	DWG NO
1	6	TIES 1,2,6,10,14 AND 19, POWER SWITCH MACHINE ON MAINLINE SIDE FOR RH TURNOUT (HOLLOW STEEL)	ES2807-32
2	6	TIES 1,2,6,10,14 AND 19, POWER SWITCH MACHINE ON TURNOUT SIDE FOR RH TURNOUT (HOLLOW STEEL)	ES2807-34

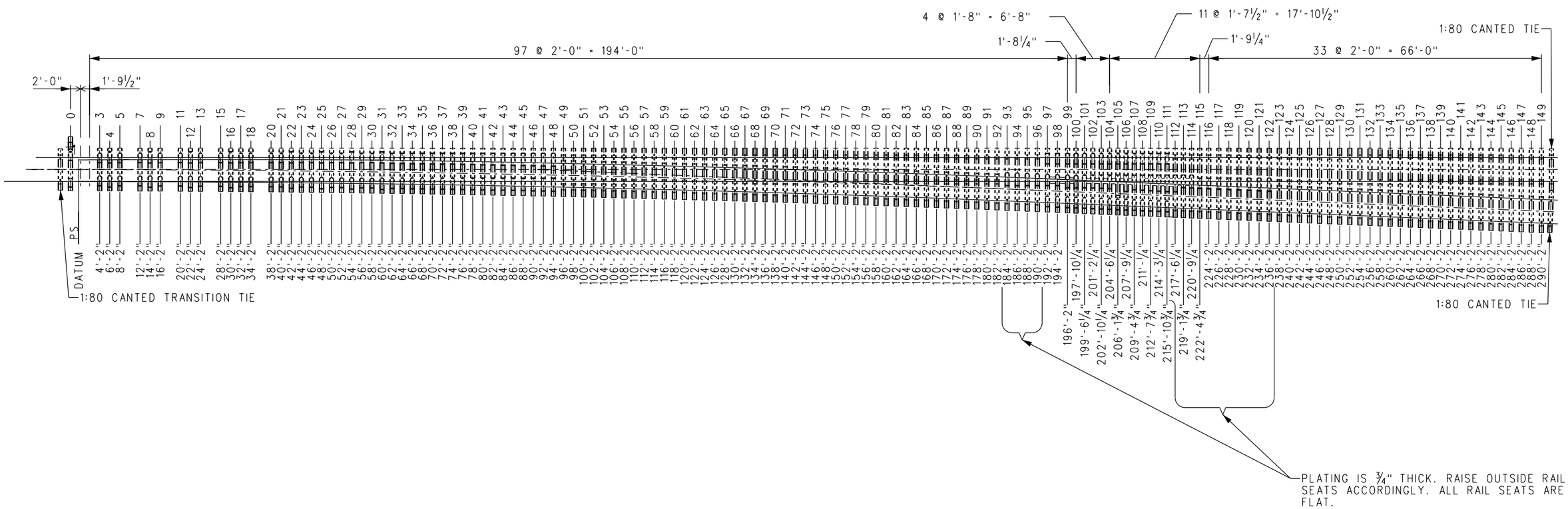

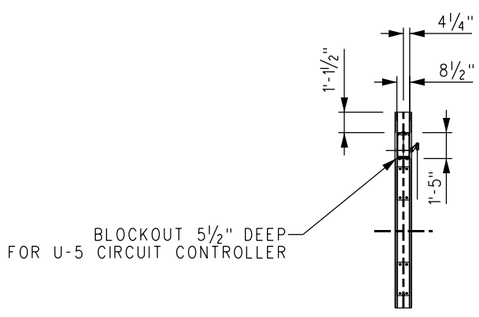

TIE #0 BLOCKOUT DETAIL

NOTES:

1. SET TO INCLUDE TIES 0, 3 THROUGH 5, 7 THROUGH 9, 11 THROUGH 13, 15 THROUGH 18 AND 20 THROUGH 149, THREE 1:80 CANTED TIES, TIE PADS FOR ALL PLATES, AND PIM INSERTS.
2. TIE LENGTHS ARE DETERMINED BY ADDING 1'-10 7/16" FROM RAIL GAUGE LINE (OR 1'-9" FROM RAIL CENTERLINE) PER SIDE AT THE CENTERLINE OF EACH TIE LOCATION.
3. ALL TIES ARE FLAT (NON-CANTED) EXCEPT 1:80 CANTED TIES.
4. TRANSITION TIES (QUANTITY 3) SHALL INCORPORATE 1:80 CANTED RAIL SEATS AND USE 4'-8½" BETWEEN STRAIGHT RAIL SEAT GAUGES. LENGTH SHALL BE 8'-3".
5. THIS DRAWING SHOWS TIE "0" PLACEMENT FOR SWITCH MACHINE ON RH/TURNOUT SIDE. USE OPPOSITE HAND FOR SWITCH MACHINE ON LH/MAINLINE SIDE.
6. SEE BILL OF MATERIALS ABOVE FOR TIES 1, 2, 6, 10, 14, AND 19.

REV.	DATE	DESCRIPTION	DES.	ENG.
X	XX-XX-XX	REVISION	XX	XX

DRAWN BY: HDR DATE: 03/31/2011

ASSISTANT DIRECTOR: STANDARDS & DESIGN

DIRECTOR OF ENGINEERING AND CONSTRUCTION

SCRRA ENGINEERING STANDARDS ARE INTENDED FOR SCRRA APPROVED USES ONLY. FOR NON-SCRRA APPROVED USES:
SCRRA SHALL NOT BE RESPONSIBLE FOR THE ACCURACY OR COMPLETENESS OF THE DATA OR INFORMATION CONTAINED HEREIN. THE SELECTION AND USE OF THESE STANDARDS IS THE SOLE RESPONSIBILITY OF THE USER AND SHOULD NOT BE USED WITHOUT CONSULTING A REGISTERED PROFESSIONAL ENGINEER. ALL WARRANTIES AND REPRESENTATIONS OF ANY KIND ARE DISCLAIMED. ANYONE MAKING USE OF THIS INFORMATION AGREES THAT IT ASSUMES ALL LIABILITY ARISING FROM SUCH USE. NO PART OF THESE STANDARDS SHOULD BE REPRODUCED OR DISTRIBUTED IN ANY FORM OR BY ANY MEANS WITHOUT THE PRIOR WRITTEN PERMISSION OF SCRRA. ALL RIGHTS RESERVED.

METROLINK®
SOUTHERN CALIFORNIA REGIONAL RAIL AUTHORITY
ONE GATEWAY PLAZA, 12TH FLOOR, L. A., CA. 90012

ENGINEERING STANDARDS

CONCRETE TIE LAYOUT
NO 24–136 LB RE SPRING FROG TURNOUT, RH

STANDARD 2807
SCALE: NTS
REVISION –
SHEET 1 OF 1
CADD FILE: ES2807–30

BILL OF MATERIAL			
ITEM	QTY	DESCRIPTION	DWG NO
1	6	TIES 1,2,6,10,14 AND 19, POWER SWITCH MACHINE ON MAINLINE SIDE FOR LH TURNOUT (HOLLOW STEEL)	ES2807-33
2	6	TIES 1,2,6,10,14 AND 19, POWER SWITCH MACHINE ON TURNOUT SIDE FOR LH TURNOUT (HOLLOW STEEL)	ES2807-35

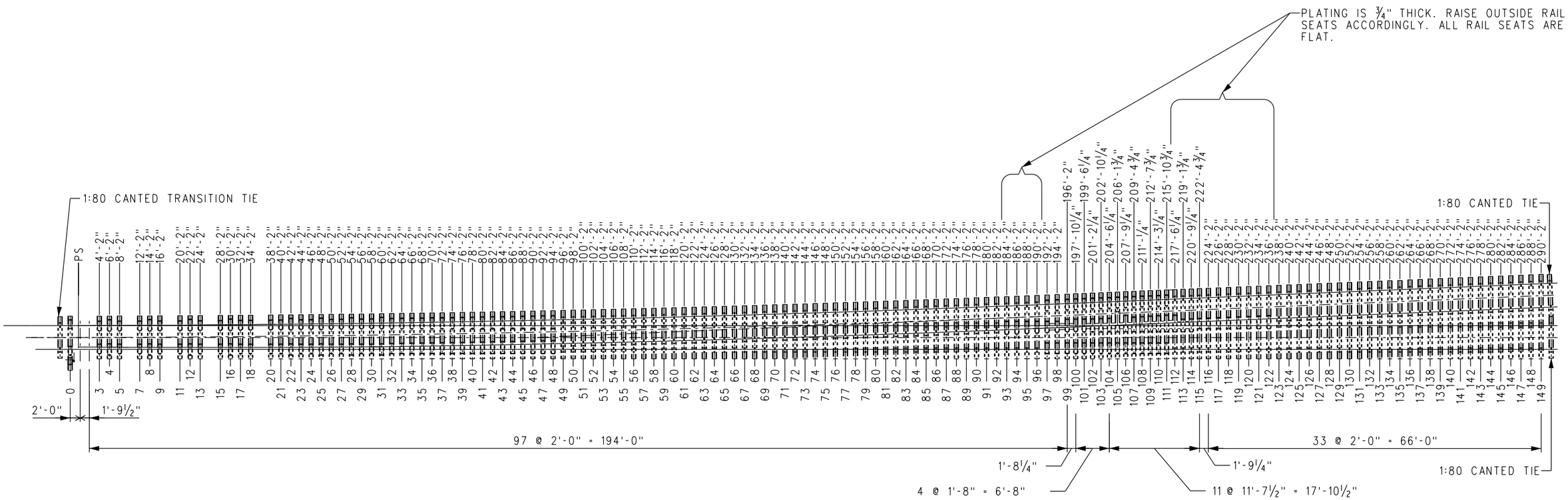

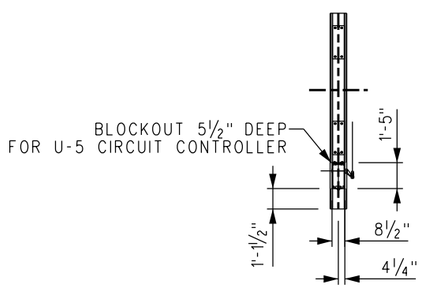

TIE #0 BLOCKOUT DETAIL

NOTES:

1. SET TO INCLUDE TIES 0, 3 THROUGH 5, 7 THROUGH 9, 11 THROUGH 13, 15 THROUGH 18 AND 20 THROUGH 149, THREE 1:80 CANTED TIES, TIE PADS FOR ALL PLATES, AND PIM INSERTS.
2. TIE LENGTHS ARE DETERMINED BY ADDING 1'-10 7/16" FROM RAIL GAUGE LINE (OR 21" FROM RAIL CENTERLINE) PER SIDE AT THE CENTERLINE OF EACH TIE LOCATION
3. ALL TIES ARE FLAT (NON-CANTED) EXCEPT 1:80 CANTED TIES.
4. TRANSITION TIES (QUANTITY 3) SHALL INCORPORATE 1:80 CANTED RAIL SEATS AND USE 4'-8½" BETWEEN STRAIGHT RAIL SEAT GAUGES. LENGTH SHALL BE 8'-3".
5. THIS DRAWING SHOWS TIE "0" PLACEMENT FOR SWITCH MACHINE ON LH/TURNOUT SIDE. USE OPPOSITE HAND FOR SWITCH MACHINE ON RH/MAINLINE SIDE.
6. SEE BILL OF MATERIALS ABOVE FOR TIES 1, 2, 6, 10, 14, AND 19.

REV.	DATE	DESCRIPTION	DES.	ENG.
X	XX-XX-XX	REVISION	XX	XX

DRAWN BY: HDR DATE: 03/31/2011

ASSISTANT DIRECTOR: STANDARDS & DESIGN

DIRECTOR OF ENGINEERING AND CONSTRUCTION

SCRRA ENGINEERING STANDARDS ARE INTENDED FOR SCRRA APPROVED USES ONLY. FOR NON-SCRRA APPROVED USES:
SCRRA SHALL NOT BE RESPONSIBLE FOR THE ACCURACY OR COMPLETENESS OF THE DATA OR INFORMATION CONTAINED HEREIN. THE SELECTION AND USE OF THESE STANDARDS IS THE SOLE RESPONSIBILITY OF THE USER AND SHOULD NOT BE USED WITHOUT CONSULTING A REGISTERED PROFESSIONAL ENGINEER. ALL WARRANTIES AND REPRESENTATIONS OF ANY KIND ARE DISCLAIMED. ANYONE MAKING USE OF THIS INFORMATION AGREES THAT IT ASSUMES ALL LIABILITY ARISING FROM SUCH USE. NO PART OF THESE STANDARDS SHOULD BE REPRODUCED OR DISTRIBUTED IN ANY FORM OR BY ANY MEANS WITHOUT THE PRIOR WRITTEN PERMISSION OF SCRRA. ALL RIGHTS RESERVED.

METROLINK®
SOUTHERN CALIFORNIA REGIONAL RAIL AUTHORITY
ONE GATEWAY PLAZA, 12TH FLOOR, L. A., CA. 90012

ENGINEERING STANDARDS

CONCRETE TIE LAYOUT
NO 24–136 LB RE SPRING FROG TURNOUT, LH

STANDARD 2807
SCALE: NTS
REVISION –
SHEET 1 OF 1
CADD FILE: ES2807–31

BILL OF MATERIAL					BILL OF MATERIAL				
ITEM	QTY	DESCRIPTION	DWG NO	SCRRA PART NO	ITEM	QTY	DESCRIPTION	DWG NO	SCRRA PART NO
1	1	RODDING ASSEMBLY FOR NO 24-136 LB RE, SWITCH MACHINE ON LH SIDE	ES2807-71		13	16	COVER SUPPORT BRACKET	-	
2	1	HOLLOW TIE ASSEMBLY (HT-1RL-24-136)	-		14	12	LV BRACE FOR 136 LB RE	-	
3	1	HOLLOW TIE ASSEMBLY (HT-2RL-24-136)	-		15	12	SERRATED WASHER FOR LV BRACE	-	
4	1	HOLLOW TIE ASSEMBLY (HT-6R-24-136)	-		16	12	CLIP, PANDROL, E2055	-	
5	1	HOLLOW TIE ASSEMBLY (HT-10RL-24-136)	-		17	12	CLIP, SAFELOK, AB2000	-	
6	1	HOLLOW TIE ASSEMBLY (HT-14R-24-136)	-		18	24	RAIL ANCHOR, UNIT DRIVE-ON TYPE 5	-	
7	1	HOLLOW TIE ASSEMBLY (HT-19RL-24-136)	-		19	1	STEEL COVER PLATE FOR HST TIE, SHORT TOP VERSION	-	
8*	2	COVER PLATE NO 1, HOLLOW SWITCH TIE	-		20	6	STEEL COVER PLATE FOR HST TIE, TOP END	-	
9*	2	COVER PLATE NO 2, HOLLOW SWITCH TIE	-		21	8	HST SWITCH PLATE HTP-206-STR	ES2800-90	
10*	2	COVER PLATE NO 3, HOLLOW SWITCH TIE	-		22	2	HST SWITCH PLATE HTP-301-R	ES2800-91	
11	54	PUSH PIN ASSEMBLY FOR HST COVERS	-		23	2	HST SWITCH PLATE HTP-209-R	ES2800-92	
12	8	STEEL SIDE END COVER PLATE ASSEMBLY FOR HST TIE	-		24	1	PILLOW BLOCK MOUNTING PLATE	-	

* COVER PLATES SHOWN TRANSPARENT FOR CLARITY

NOTES:

1. SWITCH MACHINE AND MACHINE PLATES (NIC) MUST BE COORDINATED WITH SCRRA.
2. SEE DRAWING ES2807-73 & ES2807-74 FOR CENTER TO CENTER PIN SWITCH ROD DIMENSIONS.

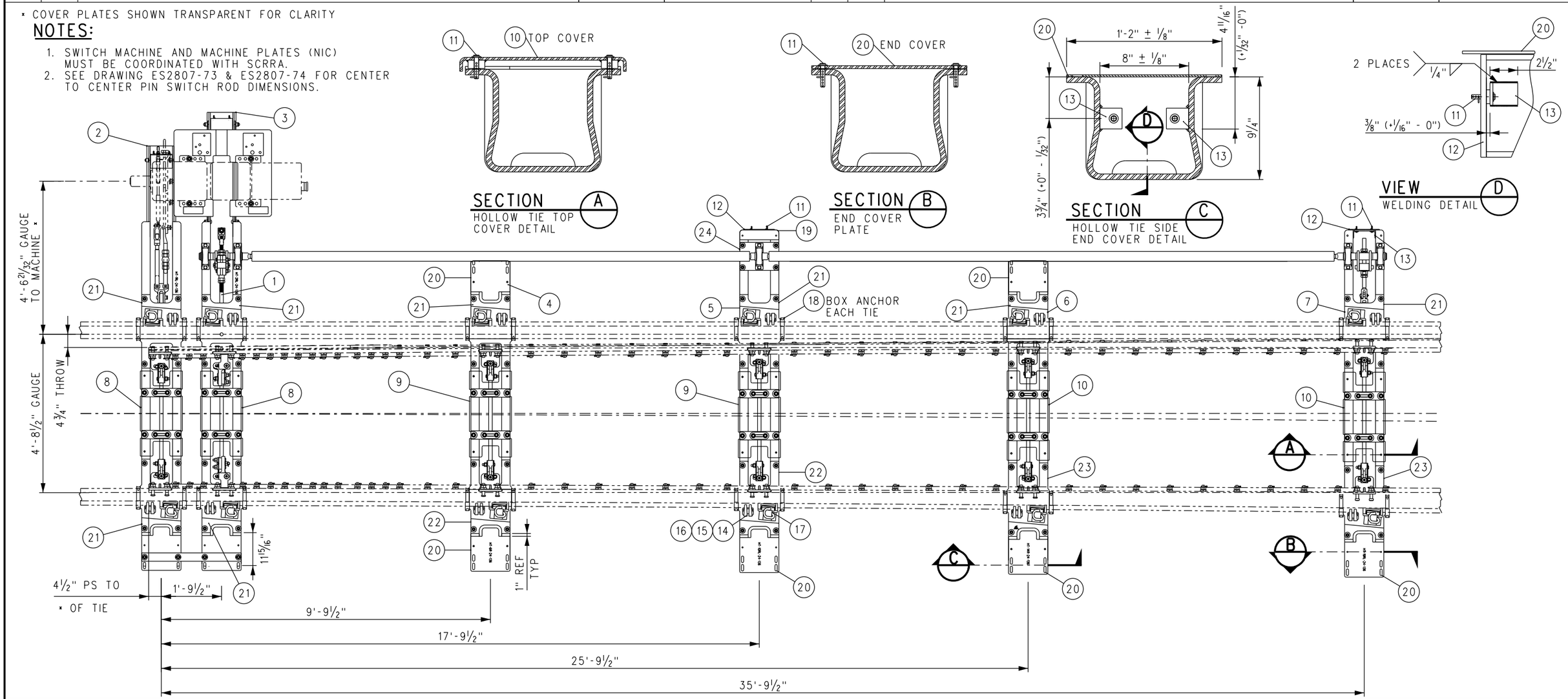

REV.	DATE	DESCRIPTION	DES.	ENG.
X	XX-XX-XX	REVISION	XX	XX

DRAWN BY: HDR DATE: 03/31/2011

ASSISTANT DIRECTOR: STANDARDS & DESIGN

DIRECTOR OF ENGINEERING AND CONSTRUCTION

SCRRA ENGINEERING STANDARDS ARE INTENDED FOR SCRRA APPROVED USES ONLY. FOR NON-SCRRA APPROVED USES:
SCRRA SHALL NOT BE RESPONSIBLE FOR THE ACCURACY OR COMPLETENESS OF THE DATA OR INFORMATION CONTAINED HEREIN. THE SELECTION AND USE OF THESE STANDARDS IS THE SOLE RESPONSIBILITY OF THE USER AND SHOULD NOT BE USED WITHOUT CONSULTING A REGISTERED PROFESSIONAL ENGINEER. ALL WARRANTIES AND REPRESENTATIONS OF ANY KIND ARE DISCLAIMED. ANYONE MAKING USE OF THIS INFORMATION AGREES THAT IT ASSUMES ALL LIABILITY ARISING FROM SUCH USE. NO PART OF THESE STANDARDS SHOULD BE REPRODUCED OR DISTRIBUTED IN ANY FORM OR BY ANY MEANS WITHOUT THE PRIOR WRITTEN PERMISSION OF SCRRA. ALL RIGHTS RESERVED.

METROLINK®

SOUTHERN CALIFORNIA REGIONAL RAIL AUTHORITY
ONE GATEWAY PLAZA, 12TH FLOOR, L. A., CA. 90012

ENGINEERING STANDARDS

HOLLOW STEEL TIE LAYOUT
SWITCH MACHINE ON MAINLINE SIDE
NO 24-136 LB RE RH

STANDARD: 2807
SCALE: NTS
REVISION: –
SHEET: 1 OF 1
CADD FILE: ES2807-32

BILL OF MATERIAL					BILL OF MATERIAL				
ITEM	QTY	DESCRIPTION	DWG NO	SCRRA PART NO	ITEM	QTY	DESCRIPTION	DWG NO	SCRRA PART NO
1	1	RODDING ASSEMBLY FOR NO 24-136 LB RE SWITCH MACHINE ON RH SIDE	ES2807-72		13	16	COVER SUPPORT BRACKET	-	
2	1	HOLLOW TIE ASSEMBLY (HT-1LR-24-136)	-		14	12	LV BRACE FOR 136 LB RE	-	
3	1	HOLLOW TIE ASSEMBLY (HT-2LR-24-136)	-		15	12	SERRATED WASHER FOR LV BRACE	-	
4	1	HOLLOW TIE ASSEMBLY (HT-6L-24-136)	-		16	12	CLIP, PANDROL, E2055 RH	-	
5	1	HOLLOW TIE ASSEMBLY (HT-10LR-24-136)	-		17	12	CLIP, SAFELOK, AB2000	-	
6	1	HOLLOW TIE ASSEMBLY (HT-14L-24-136)	-		18	24	RAIL ANCHOR, UNIT DRIVE-ON TYPE 5	-	
7	1	HOLLOW TIE ASSEMBLY (HT-19LR-24-136)	-		19	1	STEEL COVER PLATE FOR HST TIE, SHORT TOP VERSION	-	
8*	2	COVER PLATE NO 1, HOLLOW SWITCH TIE	-		20	6	STEEL COVER PLATE FOR HST TIE, TOP END	-	
9*	2	COVER PLATE NO 2, HOLLOW SWITCH TIE	-		21	8	HST SWITCH PLATE HTP-206-STR	ES2800-90	
10*	2	COVER PLATE NO 3, HOLLOW SWITCH TIE	-		22	2	HST SWITCH PLATE HTP-300-L	ES2800-91	
11	54	PUSH PIN ASSEMBLY FOR HST COVERS	-		23	2	HST SWITCH PLATE HTP-208-L	ES2800-92	
12	8	STEEL SIDE END COVER PLATE ASSEMBLY FOR HST TIE	-		24	1	PILLOW BLOCK MOUNTING PLATE	-	

* COVER PLATES SHOWN TRANSPARENT FOR CLARITY

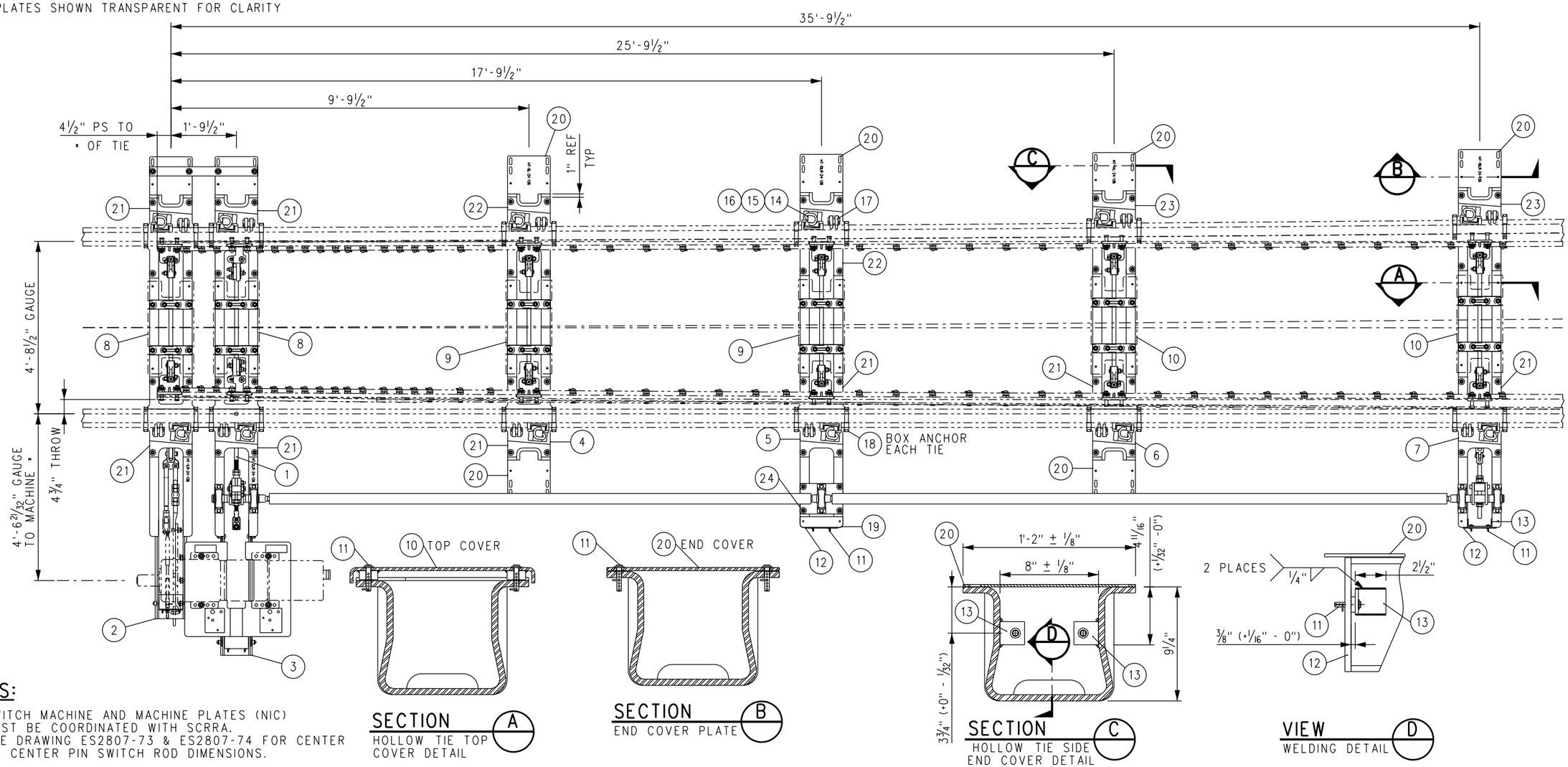

NOTES:

1. SWITCH MACHINE AND MACHINE PLATES (NIC) MUST BE COORDINATED WITH SCRRA.
2. SEE DRAWING ES2807-73 & ES2807-74 FOR CENTER TO CENTER PIN SWITCH ROD DIMENSIONS.

SECTION A
HOLLOW TIE TOP COVER DETAIL

SECTION B
END COVER PLATE

SECTION C
HOLLOW TIE SIDE END COVER DETAIL

VIEW D
WELDING DETAIL

REV.	DATE	DESCRIPTION	DES.	ENG.
X	XX-XX-XX	REVISION	XX	XX

DRAWN BY: HDR DATE: 03/31/2011

ASSISTANT DIRECTOR: STANDARDS & DESIGN

DIRECTOR OF ENGINEERING AND CONSTRUCTION

SCRRA ENGINEERING STANDARDS ARE INTENDED FOR SCRRA APPROVED USES ONLY. FOR NON-SCRRA APPROVED USES: SCRRA SHALL NOT BE RESPONSIBLE FOR THE ACCURACY OR COMPLETENESS OF THE DATA OR INFORMATION CONTAINED HEREIN. THE SELECTION AND USE OF THESE STANDARDS IS THE SOLE RESPONSIBILITY OF THE USER AND SHOULD NOT BE USED WITHOUT CONSULTING A REGISTERED PROFESSIONAL ENGINEER. ALL WARRANTIES AND REPRESENTATIONS OF ANY KIND ARE DISCLAIMED. ANYONE MAKING USE OF THIS INFORMATION AGREES THAT IT ASSUMES ALL LIABILITY ARISING FROM SUCH USE. NO PART OF THESE STANDARDS SHOULD BE REPRODUCED OR DISTRIBUTED IN ANY FORM OR BY ANY MEANS WITHOUT THE PRIOR WRITTEN PERMISSION OF SCRRA. ALL RIGHTS RESERVED.

METROLINK
SOUTHERN CALIFORNIA REGIONAL RAIL AUTHORITY
ONE GATEWAY PLAZA, 12TH FLOOR, L. A., CA. 90012

ENGINEERING STANDARDS

HOLLOW STEEL TIE LAYOUT
SWITCH MACHINE ON MAINLINE SIDE
NO 24-136 LB RE LH

STANDARD 2807
SCALE: NTS
REVISION –
SHEET 1 OF 1
CADD FILE: ES2807-33

BILL OF MATERIAL				
ITEM	QTY	DESCRIPTION	DWG NO	SCRRA PART NO
1	1	RODDING ASSEMBLY FOR NO 24-136 LB RE, SWITCH MACHINE ON RH SIDE	ES2807-72	
2	1	HOLLOW TIE ASSEMBLY (HT-1RR-24-136)	-	
3	1	HOLLOW TIE ASSEMBLY (HT-2RR-24-136)	-	
4	1	HOLLOW TIE ASSEMBLY (HT-6R-24-136)	-	
5	1	HOLLOW TIE ASSEMBLY (HT-10RR-24-136)	-	
6	1	HOLLOW TIE ASSEMBLY (HT-14R-24-136)	-	
7	1	HOLLOW TIE ASSEMBLY (HT-19RR-24-136)	-	
8*	2	COVER PLATE NO 1, HOLLOW SWITCH TIE	-	
9*	2	COVER PLATE NO 2, HOLLOW SWITCH TIE	-	
10*	2	COVER PLATE NO 3, HOLLOW SWITCH TIE	-	
11	54	PUSH PIN ASSEMBLY FOR HST COVERS	-	
12	8	STEEL SIDE END COVER PLATE ASSEMBLY FOR HST TIE	-	

BILL OF MATERIAL				
ITEM	QTY	DESCRIPTION	DWG NO	SCRRA PART NO
13	16	COVER SUPPORT BRACKET	-	
14	12	LV BRACE FOR 136 LB RE	-	
15	12	SERRATED WASHER FOR LV BRACE	-	
16	12	CLIP, PANDROL, E2055	-	
17	12	CLIP, SAFELOK, AB2000	-	
18	24	RAIL ANCHOR, UNIT DRIVE-ON TYPE 5	-	
19	1	STEEL COVER PLATE FOR HST TIE, SHORT TOP VERSION	-	
20	6	STEEL COVER PLATE FOR HST TIE, TOP END	-	
21	8	HST SWITCH PLATE HTP-206-STR	ES2800-90	
22	2	HST SWITCH PLATE HTP-301-R	ES2800-91	
23	2	HST SWITCH PLATE HTP-209-R	ES2800-92	
24	1	PILLOW BLOCK MOUNTING PLATE	-	

* COVER PLATES SHOWN TRANSPARENT FOR CLARITY

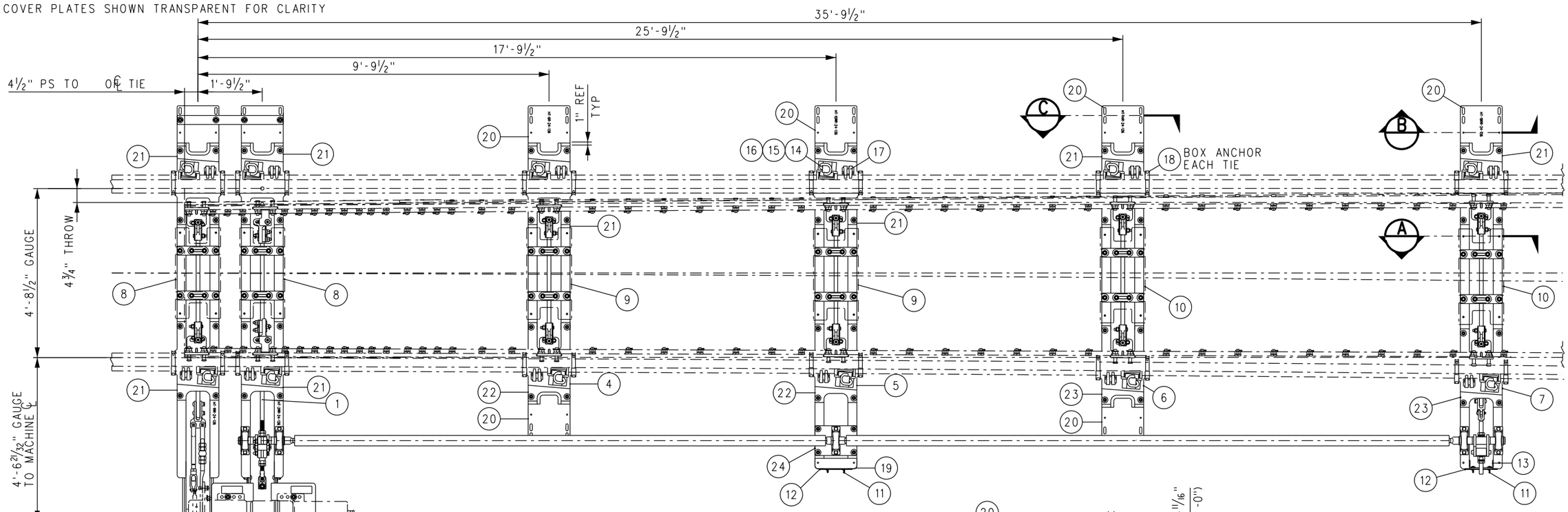

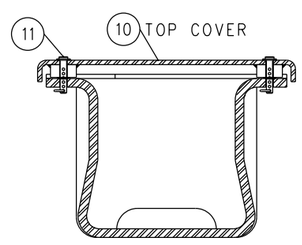

SECTION A
HOLLOW TIE TOP COVER DETAIL

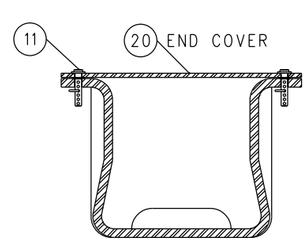

SECTION B
END COVER PLATE

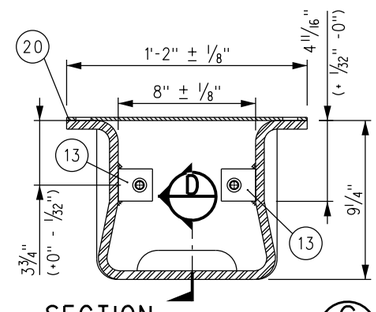

SECTION C
HOLLOW TIE SIDE END COVER DETAIL

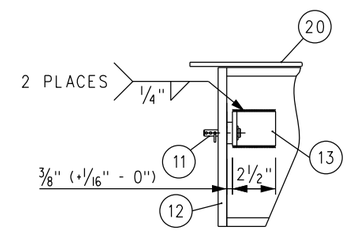

VIEW D
WELDING DETAIL

NOTES:

1. SWITCH MACHINE AND MACHINE PLATES (NIC) MUST BE COORDINATED WITH SCRRA.
2. SEE DRAWING ES2807-73 & ES2807-74 FOR CENTER TO CENTER PIN SWITCH ROD DIMENSIONS.

REV.	DATE	DESCRIPTION	DES.	ENG.
X	XX-XX-XX	REVISION	XX	XX

DRAWN BY: HDR DATE: 03/31/2011

ASSISTANT DIRECTOR: STANDARDS & DESIGN

DIRECTOR OF ENGINEERING AND CONSTRUCTION

SCRRA ENGINEERING STANDARDS ARE INTENDED FOR SCRRA APPROVED USES ONLY. FOR NON-SCRRA APPROVED USES:
SCRRA SHALL NOT BE RESPONSIBLE FOR THE ACCURACY OR COMPLETENESS OF THE DATA OR INFORMATION CONTAINED HEREIN. THE SELECTION AND USE OF THESE STANDARDS IS THE SOLE RESPONSIBILITY OF THE USER AND SHOULD NOT BE USED WITHOUT CONSULTING A REGISTERED PROFESSIONAL ENGINEER. ALL WARRANTIES AND REPRESENTATIONS OF ANY KIND ARE DISCLAIMED. ANYONE MAKING USE OF THIS INFORMATION AGREES THAT IT ASSUMES ALL LIABILITY ARISING FROM SUCH USE. NO PART OF THESE STANDARDS SHOULD BE REPRODUCED OR DISTRIBUTED IN ANY FORM OR BY ANY MEANS WITHOUT THE PRIOR WRITTEN PERMISSION OF SCRRA. ALL RIGHTS RESERVED.

METROLINK®
SOUTHERN CALIFORNIA REGIONAL RAIL AUTHORITY
ONE GATEWAY PLAZA, 12TH FLOOR, L. A., CA. 90012

ENGINEERING STANDARDS

HOLLOW STEEL TIE LAYOUT
SWITCH MACHINE ON TURNOUT SIDE
NO 24-136 LB RE RH

STANDARD 2807
SCALE: NTS
REVISION –
SHEET 1 OF 1
CADD FILE: ES2807-34

BILL OF MATERIAL				
ITEM	QTY	DESCRIPTION	DWG NO	SCRRA PART NO
1	1	RODDING ASSEMBLY FOR NO 24-136 LB RE, SWITCH MACHINE ON LH SIDE	ES2807-71	
2	1	HOLLOW TIE ASSEMBLY (HT-1LL-24-136)	-	
3	1	HOLLOW TIE ASSEMBLY (HT-2LL-24-136)	-	
4	1	HOLLOW TIE ASSEMBLY (HT-6L-24-136)	-	
5	1	HOLLOW TIE ASSEMBLY (HT-10LL-24-136)	-	
6	1	HOLLOW TIE ASSEMBLY (HT-14L-24-136)	-	
7	1	HOLLOW TIE ASSEMBLY (HT-19LL-24-136)	-	
8*	2	COVER PLATE NO 1, HOLLOW SWITCH TIE	-	
9*	2	COVER PLATE NO 2, HOLLOW SWITCH TIE	-	
10*	2	COVER PLATE NO 3, HOLLOW SWITCH TIE	-	
11	54	PUSH PIN ASSEMBLY FOR HST COVERS	-	
12	8	STEEL SIDE END COVER PLATE ASSEMBLY FOR HST TIE	-	

BILL OF MATERIAL				
ITEM	QTY	DESCRIPTION	DWG NO	SCRRA PART NO
13	16	COVER SUPPORT BRACKET	-	
14	12	LV BRACE FOR 136 LB RE	-	
15	12	SERRATED WASHER FOR LV BRACE	-	
16	12	CLIP, PANDROL, E2055	-	
17	12	CLIP, SAFELOK, AB2000	-	
18	24	RAIL ANCHOR, UNIT DRIVE-ON TYPE 5	-	
19	1	STEEL COVER PLATE FOR HST TIE, SHORT TOP VERSION	-	
20	6	STEEL COVER PLATE FOR HST TIE, TOP END	-	
21	8	HST SWITCH PLATE HTP-206-STR	ES2800-90	
22	2	HST SWITCH PLATE HTP-300-L	ES2800-91	
23	2	HST SWITCH PLATE HTP-208-L	ES2800-92	
24	1	PILLOW BLOCK MOUNTING PLATE	-	

* COVER PLATES SHOWN TRANSPARENT FOR CLARITY

NOTES:

1. SWITCH MACHINE AND MACHINE PLATES (NIC) MUST BE COORDINATED WITH SCRRA.
2. SEE DRAWING ES2807-73 & ES2807-74 FOR CENTER TO CENTER PIN SWITCH ROD DIMENSIONS.

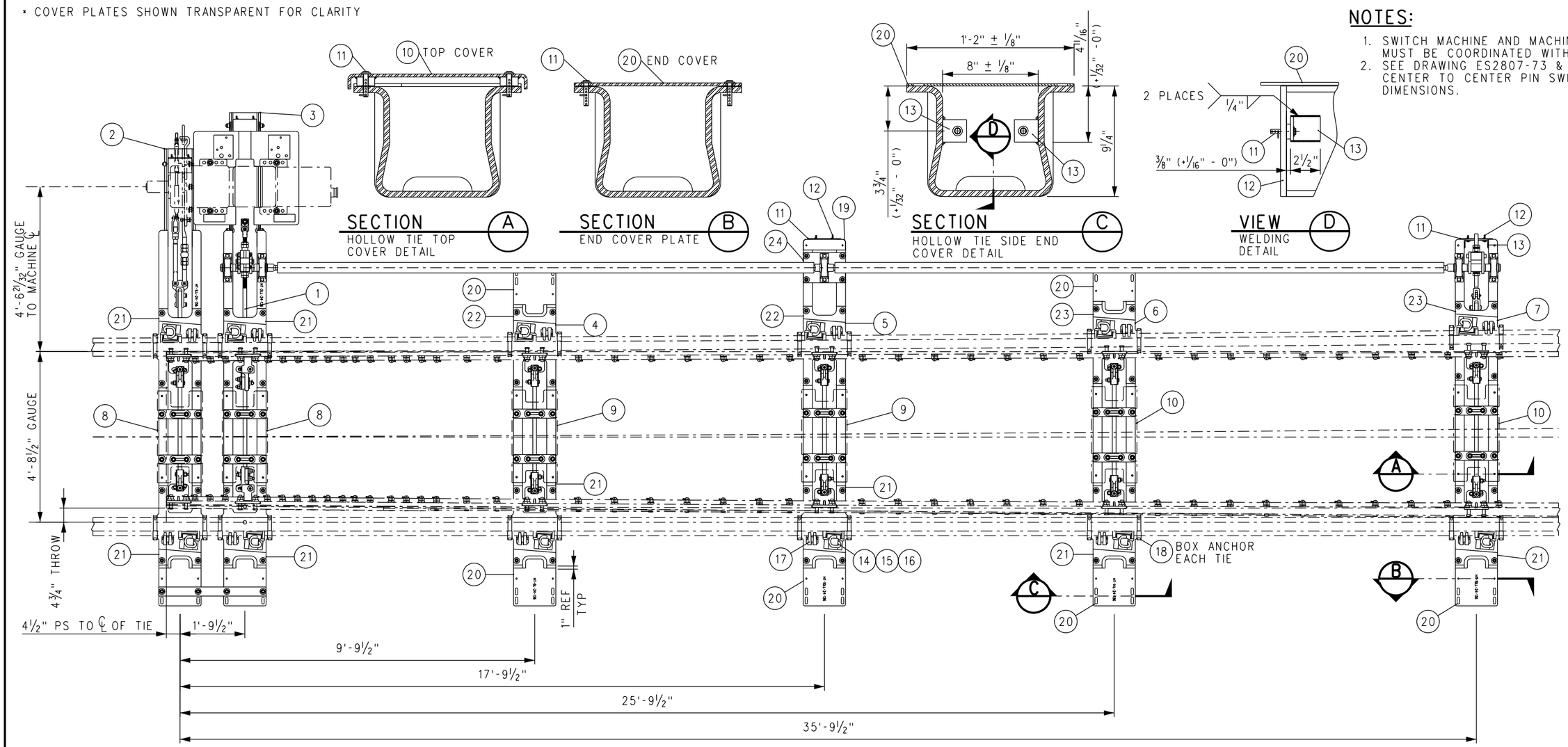

REV.	DATE	DESCRIPTION	DES.	ENG.
X	XX-XX-XX	REVISION	XX	XX

DRAWN BY: HDR DATE: 03/31/2011

ASSISTANT DIRECTOR: STANDARDS & DESIGN

DIRECTOR OF ENGINEERING AND CONSTRUCTION

SCRRA ENGINEERING STANDARDS ARE INTENDED FOR SCRRA APPROVED USES ONLY. FOR NON-SCRRA APPROVED USES, SCRRA SHALL NOT BE RESPONSIBLE FOR THE ACCURACY OR COMPLETENESS OF THE DATA OR INFORMATION CONTAINED HEREIN. THE SELECTION AND USE OF THESE STANDARDS IS THE SOLE RESPONSIBILITY OF THE USER AND SHOULD NOT BE USED WITHOUT CONSULTING A REGISTERED PROFESSIONAL ENGINEER. ALL WARRANTIES AND REPRESENTATIONS OF ANY KIND ARE DISCLAIMED. ANYONE MAKING USE OF THIS INFORMATION AGREES THAT IT ASSUMES ALL LIABILITY ARISING FROM SUCH USE. NO PART OF THESE STANDARDS SHOULD BE REPRODUCED OR DISTRIBUTED IN ANY FORM OR BY ANY MEANS WITHOUT THE PRIOR WRITTEN PERMISSION OF SCRRA. ALL RIGHTS RESERVED.

METROLINK

SOUTHERN CALIFORNIA REGIONAL RAIL AUTHORITY
ONE GATEWAY PLAZA, 12TH FLOOR, L. A., CA. 90012

ENGINEERING STANDARDS

HOLLOW STEEL TIE LAYOUT
SWITCH MACHINE ON TURNOUT SIDE
NO 24–136 LB RE LH

STANDARD 2807
SCALE: NTS
REVISION –
SHEET 1 OF 1
CADD FILE: ES2807–35

BILL OF MATERIAL				
ITEM	QTY	DESCRIPTION	DWG NO	SCRRA PART NO
1	1	NO 24-136 LB RE SPRING FROG, RH POINT ASSEMBLY	-	
2	1	SPRING WING RAIL, NO 24-136 LB RE, RH, C/W HARDWARE	-	
3	1	FROG PLATE (SF24-136-1R)	ES2807-44	
4	1	FROG PLATE (SF24-136-2R)	ES2807-44	
5	1	FROG PLATE (SF24-136-3R)	ES2807-46	
6	1	FROG PLATE (SF24-136-4R)	ES2807-46	
7	1	FROG BASE PLATE (SF24-136-5R)	ES2807-48	
8	1	FROG BASE PLATE (SF24-136-6R)	ES2807-50	
9	1	FROG BASE PLATE (SF24-136-7R)	ES2807-52	
10	1	FROG PLATE (SF24-136-8R)	ES2807-54	
11	1	FROG PLATE (SF24-136-9R)	ES2807-54	
12	1	FROG PLATE (SF24-136-10R)	ES2807-54	
13	1	FROG PLATE (SF24-136-11R)	ES2807-56	
14	1	FROG PLATE (SF24-136-12R)	ES2807-56	
15	1	FROG PLATE (SF24-136-13R)	ES2807-56	
16	1	FROG PLATE (SF24-136-14R)	ES2807-58	
17	1	FROG PLATE (SF24-136-15R)	ES2807-58	
18	1	TOE ANCHOR BLOCK, NO 24-136 LB RE	-	
19	6	WASHER, CAST, FLAT, 132 LB RE-140 LB RE	-	
20	6	BOLT, 1⅜" DIA x 4" SQUARE HEAD, GR 8	-	
21	2	PLATE CLIP	-	

BILL OF MATERIAL				
ITEM	QTY	DESCRIPTION	DWG NO	SCRRA PART NO
22	2	WASHER, HEADLOCK CAST, 132 LB RE-140 LB RE	-	
23	2	BOLT, 1⅜" DIA x 4½" SQUARE HEAD, GR 8	-	
24	8	HARDENED FLAT WASHER FOR 1⅜" BOLT	-	
25	8	NUT, SECURITY LOCK, HEX FOR 1⅜" BOLT GR 8	-	
26	9	WASHER, BOLT CAPTURE STYLE, ¼" THICK	-	
27	2	FLAT RAIL BRACE FOR NON D-BAR APPLICATIONS	-	
28	4	FLAT RAIL BRACE FOR D-BAR APPLICATIONS	-	
29	1	RETARDER, SPRING FROG HYDRAULIC TIMING DEVICE, ENIDINE	-	
30	1	RETARDER, PLATE BRACKET	-	
31	1	SPRING BOX ASSEMBLY	-	
32	5	HOLD DOWN, HORNS	-	
33	5	PLATE, RISER FOR HORN KEEPERS, REVERSIBLE	-	
34	4	BOLT, THIN SQ 1" DIA x 2⅝", DRILLED @ 2⅛" BELOW HEAD, GR 8	-	
35	18	BOLT, THIN SQ 1" DIA x 2¾", DRILLED @ 2⅜" BELOW HEAD, GR 8	-	
36	4	BOLT, THIN SQ 1" DIA x 3", DRILLED @ 2½" BELOW HEAD, GR 8	-	
37	10	BOLT, THIN SQ 1" DIA x 3½", DRILLED @ 3" BELOW HEAD, GR 8	-	
38	4	HARDENED FLAT WASHER FOR 1" BOLT	-	
39	14	WASHER, 1" FLAT x ¼" THICK	-	
40	36	NUT, HEAVY, SLOTTED, HEX FOR 1" BOLT GR 8	-	
41	36	COTTER PIN, ¼" DIA x 2" LONG	-	
42	53	CLIP, PANDROL, E2055	-	
43	1	CLIP, PANDROL, E2056	-	

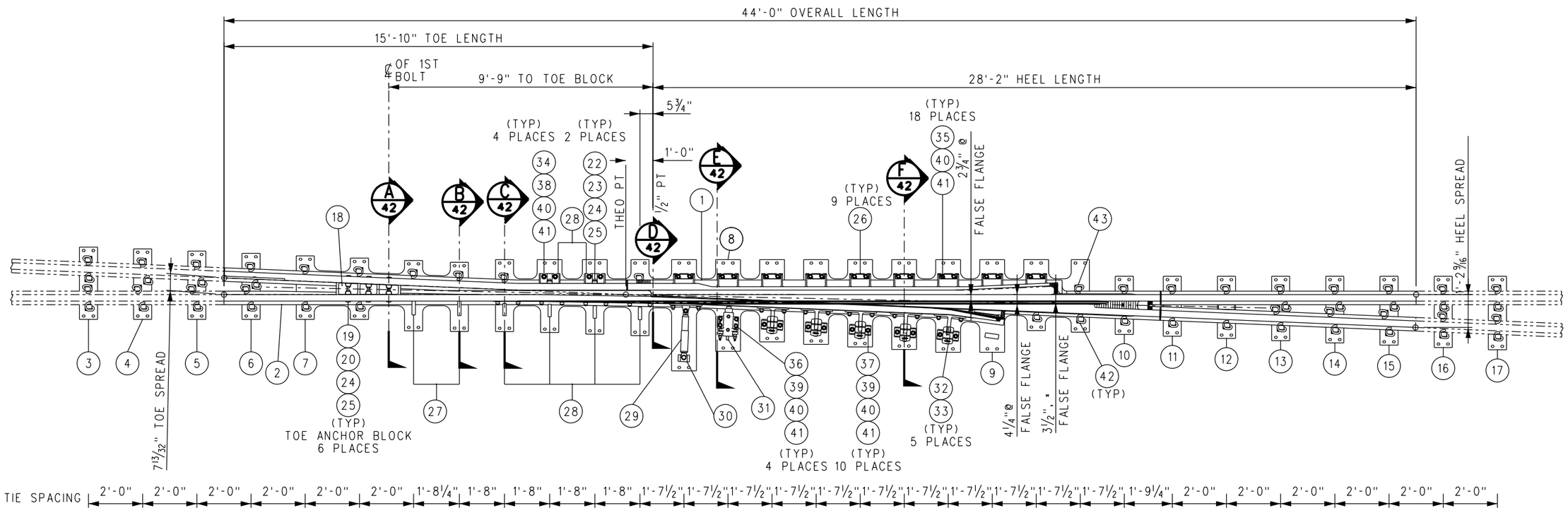

NOTE:

1. SEE ES2807-42 FOR CROSS SECTIONS, DETAILS, AND NOTES.

REV.	DATE	DESCRIPTION	DES.	ENG.
X	XX-XX-XX	REVISION	XX	XX

DRAWN BY: HDR DATE: 03/31/2011

ASSISTANT DIRECTOR: STANDARDS & DESIGN

DIRECTOR OF ENGINEERING AND CONSTRUCTION

SCRRA ENGINEERING STANDARDS ARE INTENDED FOR SCRRA APPROVED USES ONLY. FOR NON-SCRRA APPROVED USES:
SCRRA SHALL NOT BE RESPONSIBLE FOR THE ACCURACY OR COMPLETENESS OF THE DATA OR INFORMATION CONTAINED HEREIN. THE SELECTION AND USE OF THESE STANDARDS IS THE SOLE RESPONSIBILITY OF THE USER AND SHOULD NOT BE USED WITHOUT CONSULTING A REGISTERED PROFESSIONAL ENGINEER. ALL WARRANTIES AND REPRESENTATIONS OF ANY KIND ARE DISCLAIMED. ANYONE MAKING USE OF THIS INFORMATION AGREES THAT IT ASSUMES ALL LIABILITY ARISING FROM SUCH USE. NO PART OF THESE STANDARDS SHOULD BE REPRODUCED OR DISTRIBUTED IN ANY FORM OR BY ANY MEANS WITHOUT THE PRIOR WRITTEN PERMISSION OF SCRRA. ALL RIGHTS RESERVED.

METROLINK®
SOUTHERN CALIFORNIA REGIONAL RAIL AUTHORITY
ONE GATEWAY PLAZA, 12TH FLOOR, L. A., CA. 90012

ENGINEERING STANDARDS

NO 24 WSM FROG RH
FROG ASSEMBLY PLAN VIEW AND FROG PACK
CONCRETE TIES–136 LB RE RAIL

STANDARD 2807
SCALE: NTS
REVISION –
SHEET 1 OF 1
CADD FILE: ES2807–40

BILL OF MATERIAL				
ITEM	QTY	DESCRIPTION	DWG NO	SCRRA PART NO
1	1	NO 24-136 LB RE SPRING FROG, LH POINT ASSEMBLY	-	
2	1	SPRING WING RAIL, NO 24-136 LB RE, LH, C/W HARDWARE	-	
3	1	FROG PLATE (SF24-136-1L)	ES2807-45	
4	1	FROG PLATE (SF24-136-2L)	ES2807-45	
5	1	FROG PLATE (SF24-136-3L)	ES2807-47	
6	1	FROG PLATE (SF24-136-4L)	ES2807-47	
7	1	FROG BASE PLATE (SF24-136-5L)	ES2807-49	
8	1	FROG BASE PLATE (SF24-136-6L)	ES2807-51	
9	1	FROG BASE PLATE (SF24-136-7L)	ES2807-53	
10	1	FROG PLATE (SF24-136-8L)	ES2807-55	
11	1	FROG PLATE (SF24-136-9L)	ES2807-55	
12	1	FROG PLATE (SF24-136-10L)	ES2807-55	
13	1	FROG PLATE (SF24-136-11L)	ES2807-57	
14	1	FROG PLATE (SF24-136-12L)	ES2807-57	
15	1	FROG PLATE (SF24-136-13L)	ES2807-57	
16	1	FROG PLATE (SF24-136-14L)	ES2807-59	
17	1	FROG PLATE (SF24-136-15L)	ES2807-59	
18	1	TOE ANCHOR BLOCK, NO 24-136 LB RE	-	
19	6	WASHER, CAST, FLAT, 132 LB RE-140 LB RE	-	
20	6	BOLT, 1⅜" DIA x 4" SQUARE HEAD, GR 8	-	
21	2	PLATE CLIP	-	

BILL OF MATERIAL				
ITEM	QTY	DESCRIPTION	DWG NO	SCRRA PART NO
22	2	WASHER, HEADLOCK CAST, 132 LB RE-140 LB RE	-	
23	2	BOLT, 1⅜" DIA x 4½" SQUARE HEAD, GR 8	-	
24	8	HARDENED FLAT WASHER FOR 1⅜" BOLT	-	
25	8	NUT, SECURITY LOCK, HEX FOR 1⅜" BOLT GR 8	-	
26	9	WASHER, BOLT CAPTURE STYLE, ¼" THICK	-	
27	2	FLAT RAIL BRACE FOR NON D-BAR APPLICATIONS	-	
28	4	FLAT RAIL BRACE FOR D-BAR APPLICATIONS	-	
29	1	RETARDER, SPRING FROG HYDRAULIC TIMING DEVICE, ENIDINE	-	
30	1	RETARDER, PLATE BRACKET	-	
31	1	SPRING BOX ASSEMBLY	-	
32	5	HOLD DOWN, HORNS	-	
33	5	PLATE, RISER FOR HORN KEEPERS, REVERSIBLE	-	
34	4	BOLT, THIN SQ 1" DIA x 2⅝", DRILLED @ 2⅛" BELOW HEAD, GR 8	-	
35	18	BOLT, THIN SQ 1" DIA x 2¾", DRILLED @ 2⅜" BELOW HEAD, GR 8	-	
36	4	BOLT, THIN SQ 1" DIA x 3", DRILLED @ 2½" BELOW HEAD, GR 8	-	
37	10	BOLT, THIN SQ 1" DIA x 3½", DRILLED @ 3" BELOW HEAD, GR 8	-	
38	4	HARDENED FLAT WASHER FOR 1" BOLT	-	
39	14	WASHER, 1" FLAT x ¼" THICK	-	
40	36	NUT, HEAVY, SLOTTED, HEX FOR 1" BOLT GR 8	-	
41	36	COTTER PIN, ¼" DIA x 2" LONG	-	
42	53	CLIP, PANDROL, E2055	-	
43	1	CLIP, PANDROL, E2056	-	

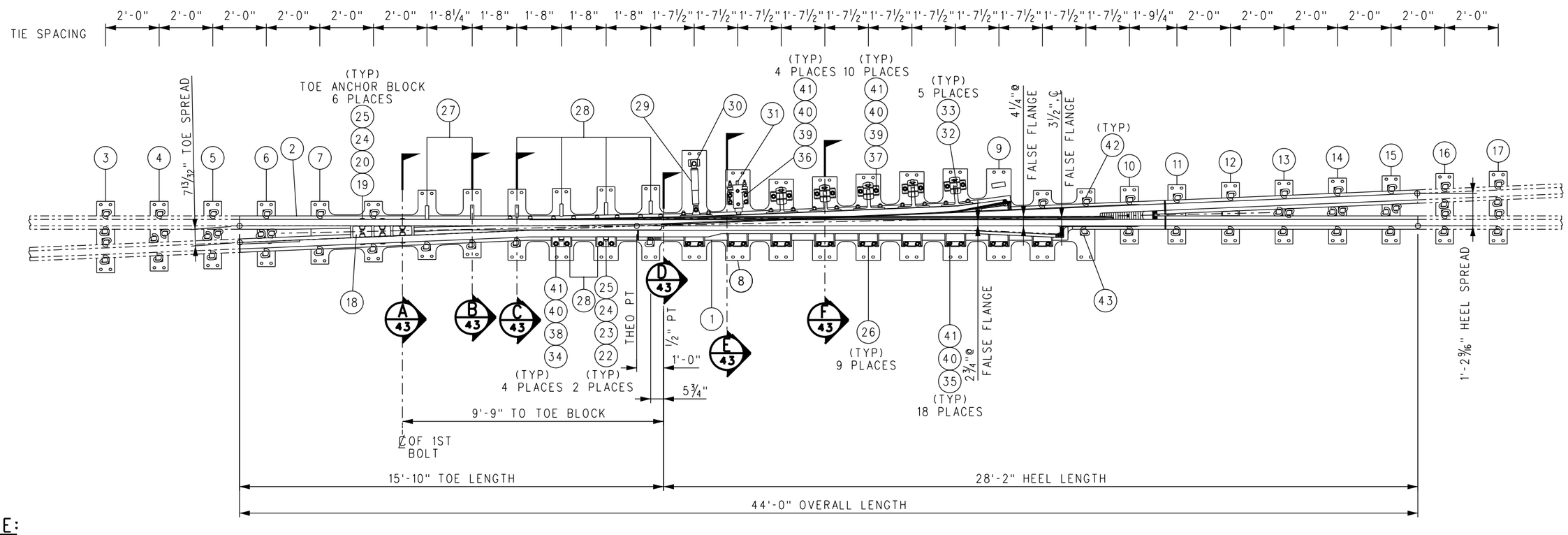

NOTE:

1. SEE ES2807-43 FOR CROSS SECTIONS, DETAILS, AND NOTES.

REV.	DATE	DESCRIPTION	DES.	ENG.
X	XX-XX-XX	REVISION	XX	XX

DRAWN BY: HDR DATE: 03/31/2011

ASSISTANT DIRECTOR: STANDARDS & DESIGN

DIRECTOR OF ENGINEERING AND CONSTRUCTION

SCRRA ENGINEERING STANDARDS ARE INTENDED FOR SCRRA APPROVED USES ONLY. FOR NON-SCRRA APPROVED USES:
SCRRA SHALL NOT BE RESPONSIBLE FOR THE ACCURACY OR COMPLETENESS OF THE DATA OR INFORMATION CONTAINED HEREIN. THE SELECTION AND USE OF THESE STANDARDS IS THE SOLE RESPONSIBILITY OF THE USER AND SHOULD NOT BE USED WITHOUT CONSULTING A REGISTERED PROFESSIONAL ENGINEER. ALL WARRANTIES AND REPRESENTATIONS OF ANY KIND ARE DISCLAIMED. ANYONE MAKING USE OF THIS INFORMATION AGREES THAT IT ASSUMES ALL LIABILITY ARISING FROM SUCH USE. NO PART OF THESE STANDARDS SHOULD BE REPRODUCED OR DISTRIBUTED IN ANY FORM OR BY ANY MEANS WITHOUT THE PRIOR WRITTEN PERMISSION OF SCRRA. ALL RIGHTS RESERVED.

METROLINK®
SOUTHERN CALIFORNIA REGIONAL RAIL AUTHORITY
ONE GATEWAY PLAZA, 12TH FLOOR, L. A., CA. 90012

ENGINEERING STANDARDS

NO 24 WSM FROG LH
FROG ASSEMBLY PLAN VIEW AND FROG PACK
CONCRETE TIES–136 LB RE RAIL

STANDARD 2807
SCALE: NTS
REVISION –
SHEET 1 OF 1
CADD FILE: ES2807–41

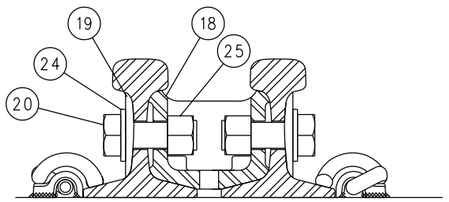

SECTION A

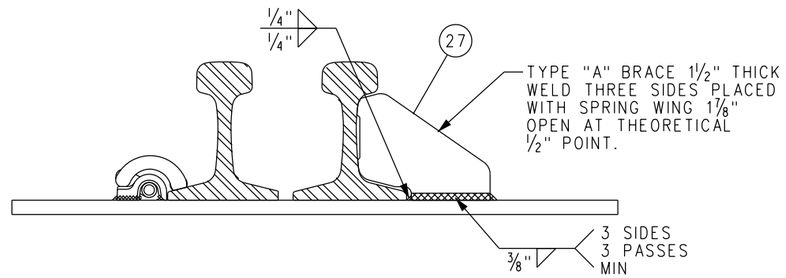

WELDED RAIL BRACE PLATE DETAIL B

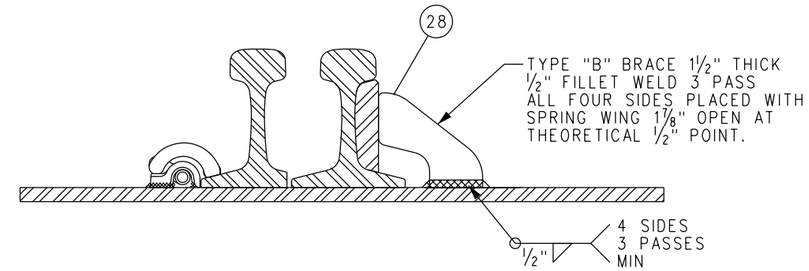

SECTION C

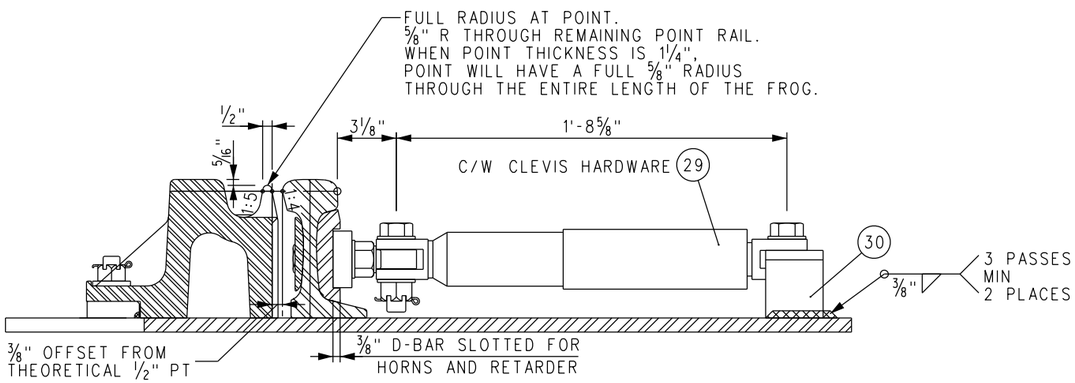

POINT AND RETARDER DETAILS D
(AT THEORETICAL 1/2" PT)

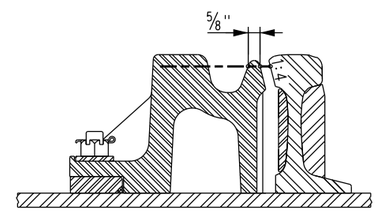

POINT DETAILS @
THEORETICAL 5/8" POINT

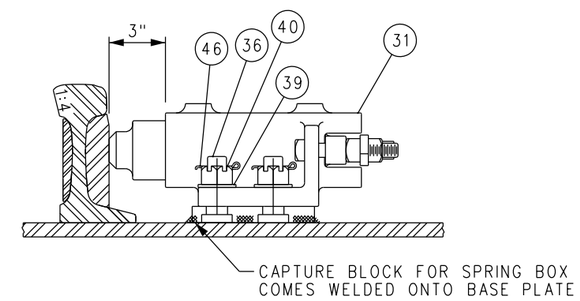

SPRING BOX DETAIL E

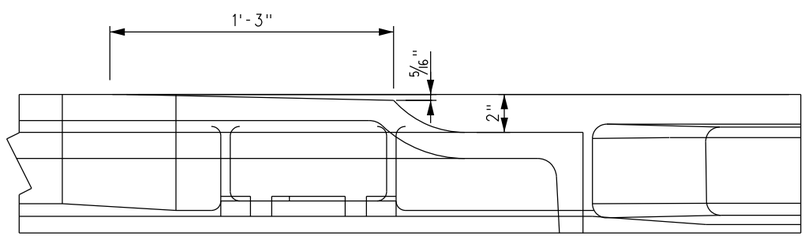

POINT DETAILS

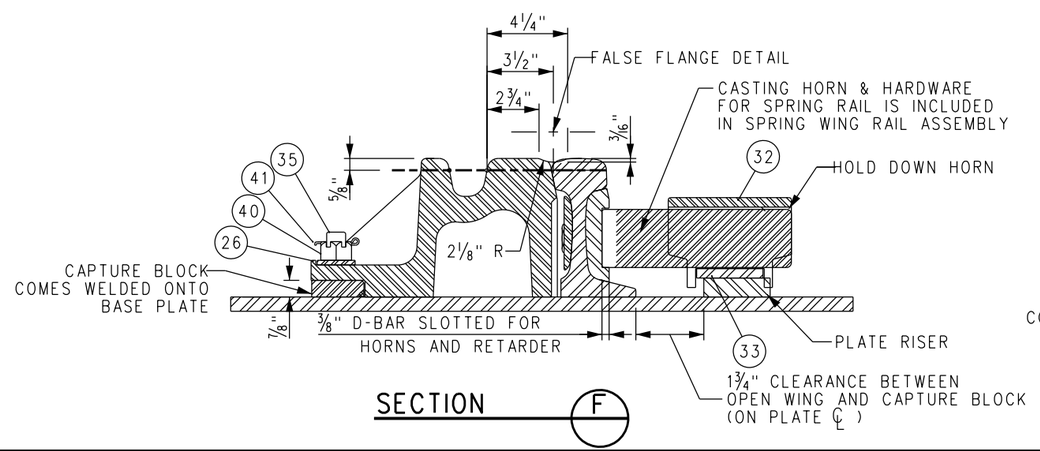

SECTION F

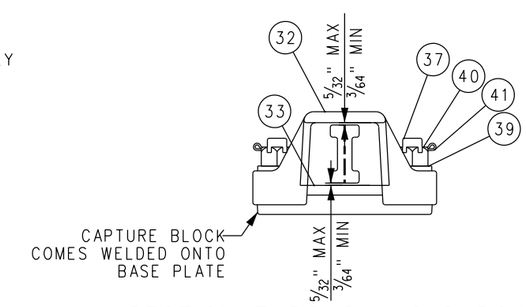

SECTION THROUGH HOLD DOWN

REV.	DATE	DESCRIPTION	DES.	ENG.
X	XX-XX-XX	REVISION	XX	XX

DRAWN BY: HDR DATE: 03/31/2011

ASSISTANT DIRECTOR: STANDARDS & DESIGN

DIRECTOR OF ENGINEERING AND CONSTRUCTION

SCRRA ENGINEERING STANDARDS ARE INTENDED FOR SCRRA APPROVED USES ONLY. FOR NON-SCRRA APPROVED USES:
SCRRA SHALL NOT BE RESPONSIBLE FOR THE ACCURACY OR COMPLETENESS OF THE DATA OR INFORMATION CONTAINED HEREIN. THE SELECTION AND USE OF THESE STANDARDS IS THE SOLE RESPONSIBILITY OF THE USER AND SHOULD NOT BE USED WITHOUT CONSULTING A REGISTERED PROFESSIONAL ENGINEER. ALL WARRANTIES AND REPRESENTATIONS OF ANY KIND ARE DISCLAIMED. ANYONE MAKING USE OF THIS INFORMATION AGREES THAT IT ASSUMES ALL LIABILITY ARISING FROM SUCH USE. NO PART OF THESE STANDARDS SHOULD BE REPRODUCED OR DISTRIBUTED IN ANY FORM OR BY ANY MEANS WITHOUT THE PRIOR WRITTEN PERMISSION OF SCRRA. ALL RIGHTS RESERVED.

METROLINK®
SOUTHERN CALIFORNIA REGIONAL RAIL AUTHORITY
ONE GATEWAY PLAZA, 12TH FLOOR, L. A., CA. 90012

ENGINEERING STANDARDS

NO 24 WSM FROG RH – DETAILS
FROG ASSEMBLY DETAILS AND FROG PACK
CONCRETE TIES–136 LB RE RAIL

STANDARD 2807
SCALE: NTS
REVISION –
SHEET 1 OF 1
CADD FILE: ES2807–42

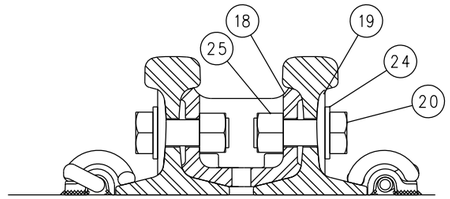

SECTION A

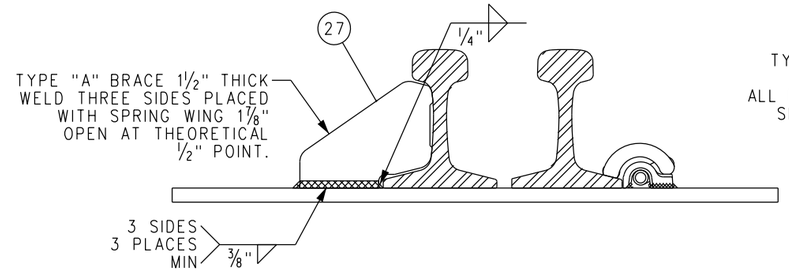

WELDED RAIL BRACE PLATE DETAIL B

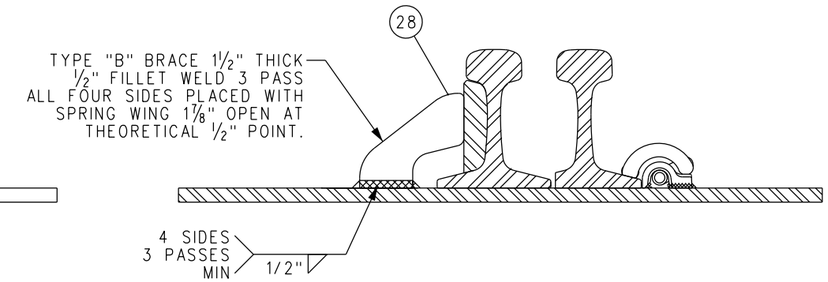

SECTION C

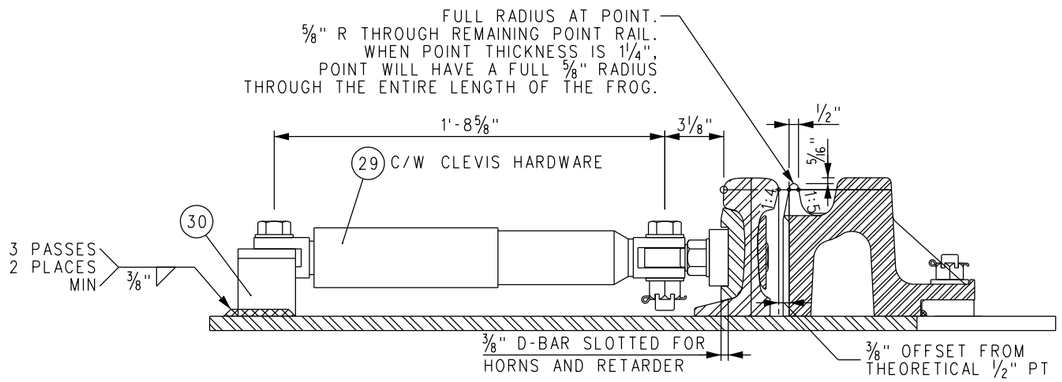

POINT AND RETARDER DETAILS D
(AT THEORETICAL 1/2" PT)

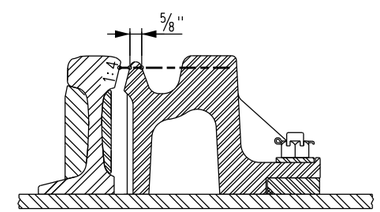

POINT DETAILS @
THEORETICAL 5/8" POINT

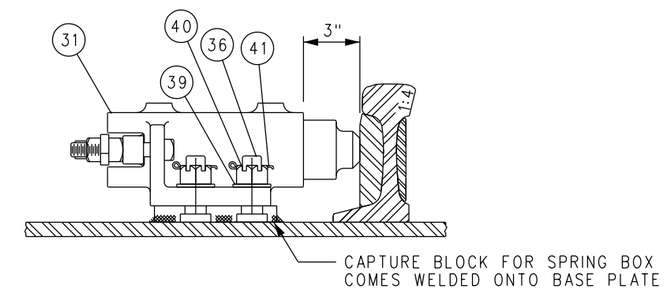

SPRING BOX DETAIL E

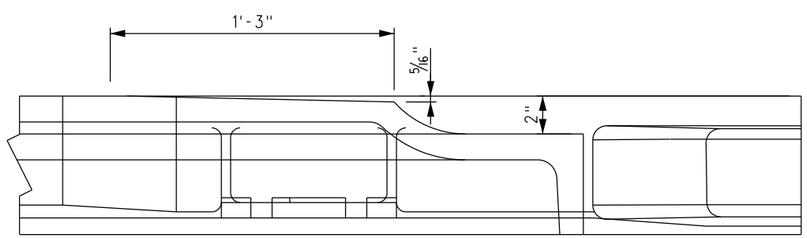

POINT DETAILS

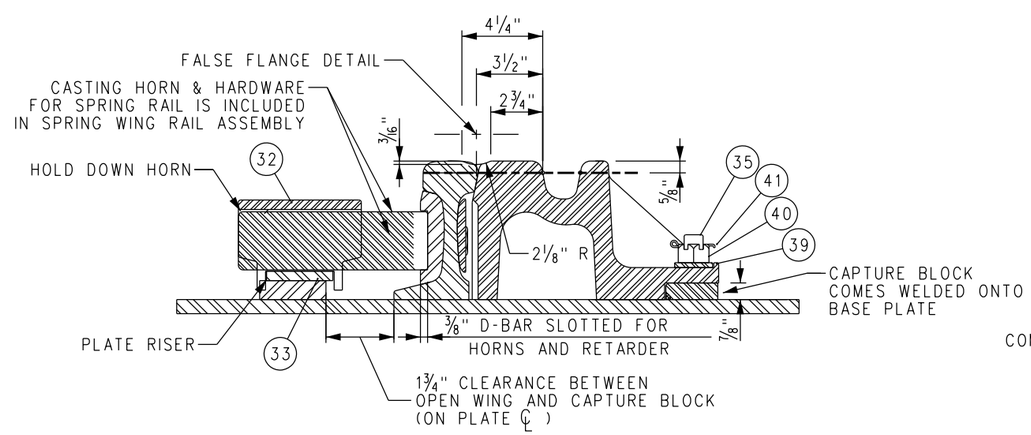

SECTION F

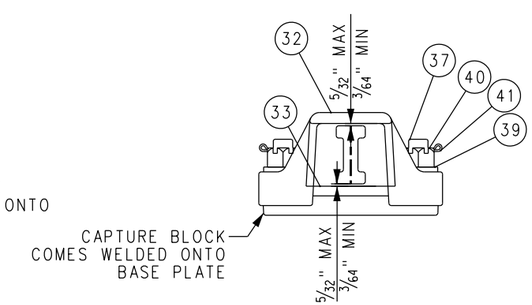

SECTION THROUGH HOLD DOWN

REV.	DATE	DESCRIPTION	DES.	ENG.
X	XX-XX-XX	REVISION	XX	XX

DRAWN BY: HDR DATE:

ASSISTANT DIRECTOR: STANDARDS & DESIGN

DIRECTOR OF ENGINEERING AND CONSTRUCTION

SCRRA ENGINEERING STANDARDS ARE INTENDED FOR SCRRA APPROVED USES ONLY. FOR NON-SCRRA APPROVED USES: SCRRA SHALL NOT BE RESPONSIBLE FOR THE ACCURACY OR COMPLETENESS OF THE DATA OR INFORMATION CONTAINED HEREIN. THE SELECTION AND USE OF THESE STANDARDS IS THE SOLE RESPONSIBILITY OF THE USER AND SHOULD NOT BE USED WITHOUT CONSULTING A REGISTERED PROFESSIONAL ENGINEER. ALL WARRANTIES AND REPRESENTATIONS OF ANY KIND ARE DISCLAIMED. ANYONE MAKING USE OF THIS INFORMATION AGREES THAT IT ASSUMES ALL LIABILITY ARISING FROM SUCH USE. NO PART OF THESE STANDARDS SHOULD BE REPRODUCED OR DISTRIBUTED IN ANY FORM OR BY ANY MEANS WITHOUT THE PRIOR WRITTEN PERMISSION OF SCRRA. ALL RIGHTS RESERVED.

METROLINK®
SOUTHERN CALIFORNIA REGIONAL RAIL AUTHORITY
ONE GATEWAY PLAZA, 12TH FLOOR, L. A., CA. 90012

ENGINEERING STANDARDS

NO 24 WSM FROG LH – DETAILS
FROG ASSEMBLY DETAILS AND FROG PACK
CONCRETE TIES–136 LB RE RAIL

STANDARD 2807
SCALE: NTS
REVISION –
SHEET 1 OF 1
CADD FILE: ES2807–43

BILL OF MATERIAL					
ITEM	QTY FOR 24-136-1R	QTY FOR 24-136-2R	DESCRIPTION	DWG NO	SCRRA PART NO
1	1	0	FLAT BAR, ASTM A36, 3/4" x 8" x 2'-8" LONG	-	
2	0	1	FLAT BAR, ASTM A36, 3/4" x 8" x 2'-7 1/4" LONG	-	
3	4	4	SHOULDER, PANDROL, FORGED TONGUELESS, TYPE 1	-	

NOTES:

1. I.D. CHARACTERS TO BE 1/2" MINIMUM HEIGHT CLEARLY STAMPED AS SHOWN.
2. WELDS TO BE DRESSED FLUSH WITH SHOULDER & NOT TO PROTRUDE INTO RAIL SEAT.
3. SLOTTED HOLE CENTERS ARE INDICATED ON DRAWING.

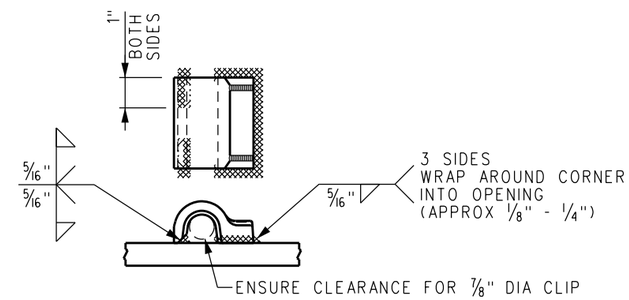

FORGED SHOULDER WELDING DETAIL

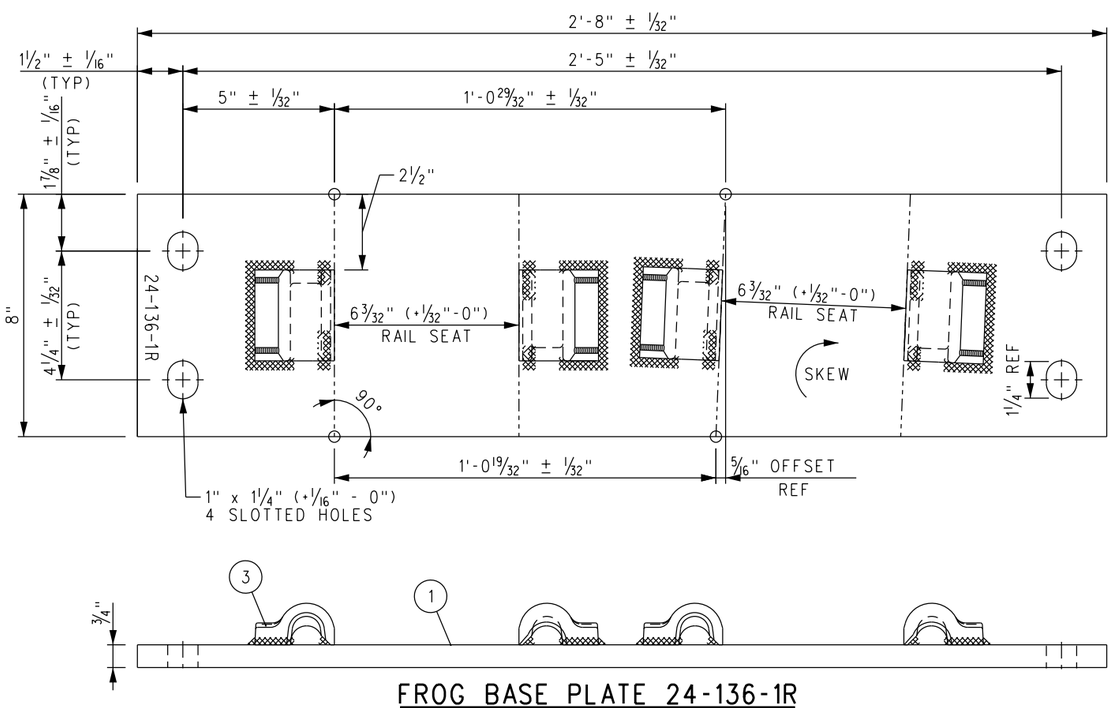

FROG BASE PLATE 24-136-1R

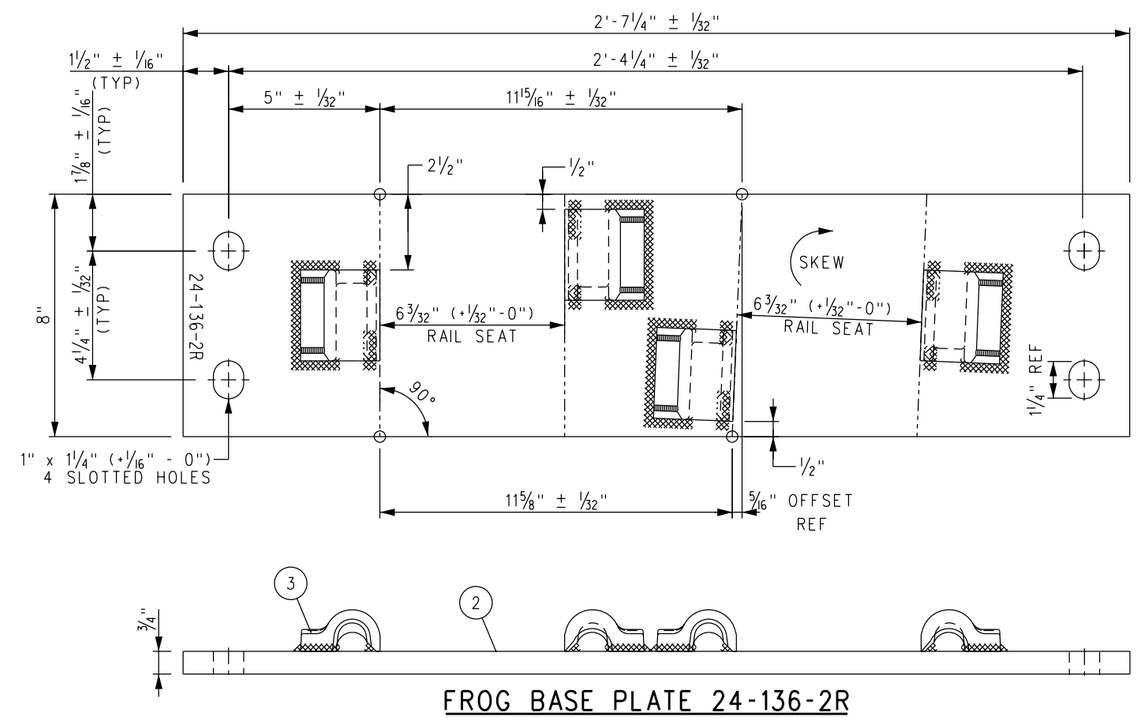

FROG BASE PLATE 24-136-2R

REV.	DATE	DESCRIPTION	DES.	ENG.
X	XX-XX-XX	REVISION	XX	XX

DRAWN BY: HDR DATE: 03/31/2011

ASSISTANT DIRECTOR: STANDARDS & DESIGN

DIRECTOR OF ENGINEERING AND CONSTRUCTION

SCRRA ENGINEERING STANDARDS ARE INTENDED FOR SCRRA APPROVED USES ONLY. FOR NON-SCRRA APPROVED USES:
SCRRA SHALL NOT BE RESPONSIBLE FOR THE ACCURACY OR COMPLETENESS OF THE DATA OR INFORMATION CONTAINED HEREIN. THE SELECTION AND USE OF THESE STANDARDS IS THE SOLE RESPONSIBILITY OF THE USER AND SHOULD NOT BE USED WITHOUT CONSULTING A REGISTERED PROFESSIONAL ENGINEER. ALL WARRANTIES AND REPRESENTATIONS OF ANY KIND ARE DISCLAIMED. ANYONE MAKING USE OF THIS INFORMATION AGREES THAT IT ASSUMES ALL LIABILITY ARISING FROM SUCH USE. NO PART OF THESE STANDARDS SHOULD BE REPRODUCED OR DISTRIBUTED IN ANY FORM OR BY ANY MEANS WITHOUT THE PRIOR WRITTEN PERMISSION OF SCRRA. ALL RIGHTS RESERVED.

METROLINK®
SOUTHERN CALIFORNIA REGIONAL RAIL AUTHORITY
ONE GATEWAY PLAZA, 12TH FLOOR, L. A., CA. 90012

ENGINEERING STANDARDS

NO 24 WSM FROG RH
FROG BASE PLATES 24-1R AND 24-2R
CONCRETE TIES-136 LB RE RAIL

STANDARD 2807
SCALE: NTS
REVISION –
SHEET 1 OF 1
CADD FILE: ES2807-44

BILL OF MATERIAL					
ITEM	QTY FOR 24-136-1L	QTY FOR 24-136-2L	DESCRIPTION	DWG NO	SCRRA PART NO
1	1	0	FLAT BAR, ASTM A36, 3/4" x 8" x 2'-8" LONG	-	
2	0	1	FLAT BAR, ASTM A36, 3/4" x 8" x 2'-7 1/4" LONG	-	
3	4	4	SHOULDER, PANDROL, FORGED TONGUELESS, TYPE 1	-	

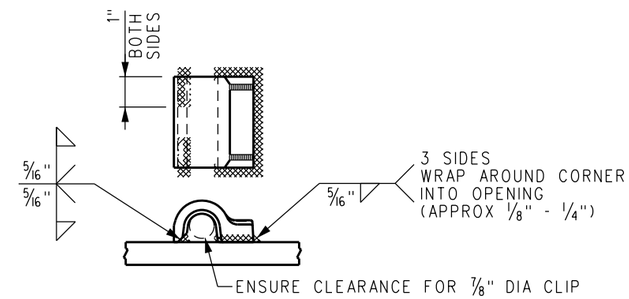

NOTES:

1. I.D. CHARACTERS TO BE 1/2" MINIMUM HEIGHT CLEARLY STAMPED AS SHOWN.
2. WELDS TO BE DRESSED FLUSH WITH SHOULDER & NOT TO PROTRUDE INTO RAIL SEAT.
3. SLOTTED HOLE CENTERS ARE INDICATED ON DRAWING.

FORGED SHOULDER WELDING DETAIL

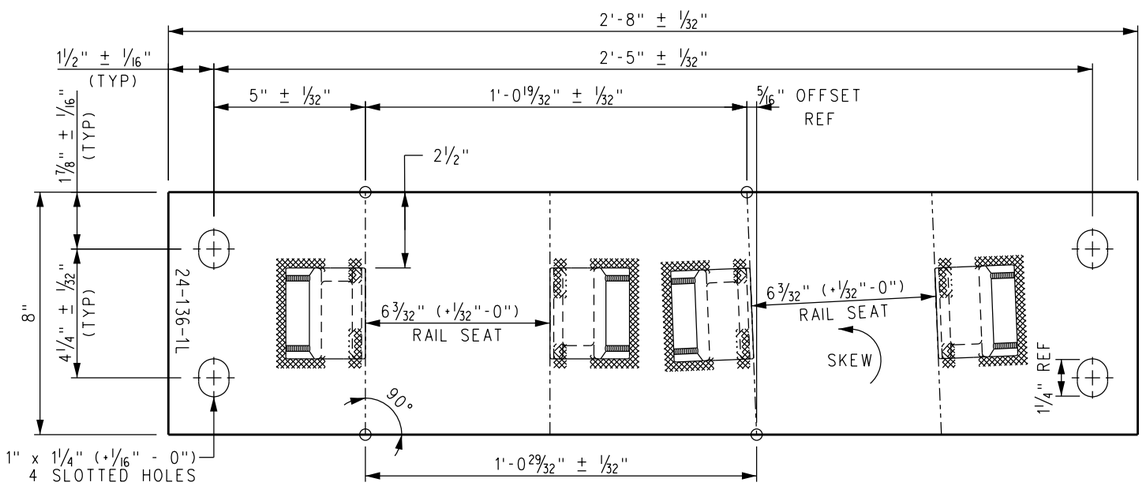

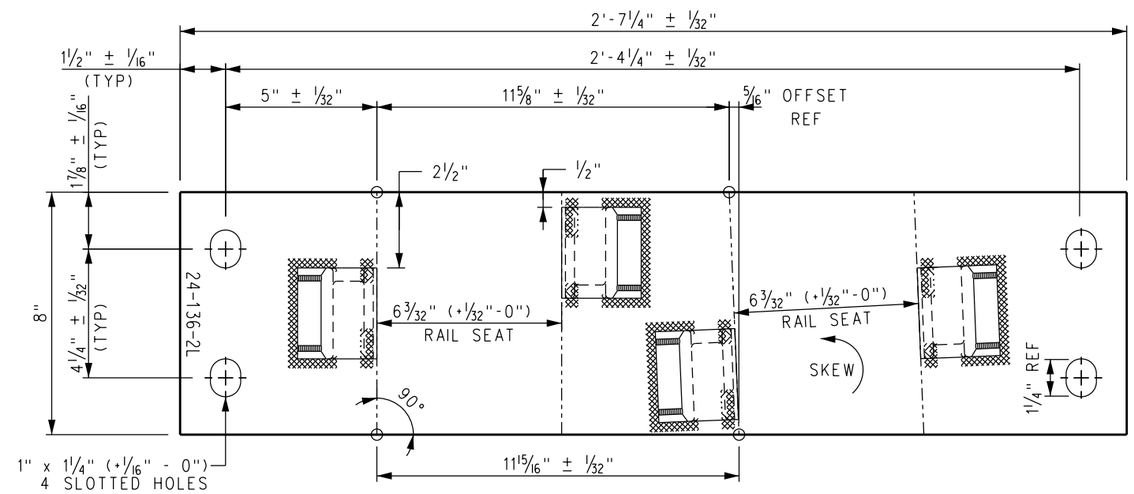

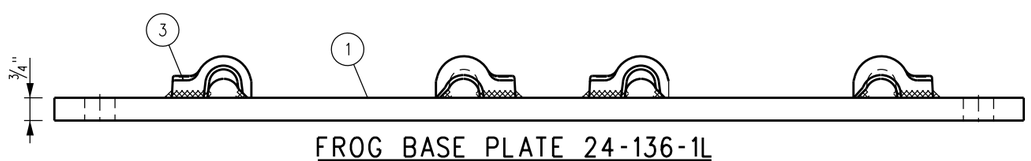

FROG BASE PLATE 24-136-1L

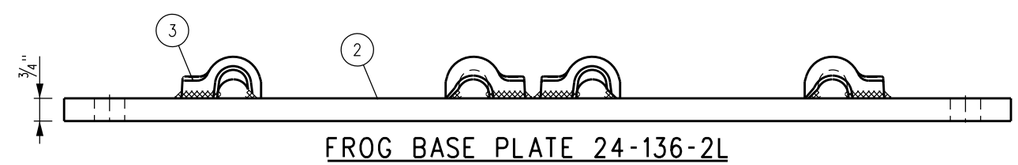

FROG BASE PLATE 24-136-2L

REV.	DATE	DESCRIPTION	DES.	ENG.
X	XX-XX-XX	REVISION	XX	XX

DRAWN BY: HDR DATE: 03/31/2011

ASSISTANT DIRECTOR: STANDARDS & DESIGN

DIRECTOR OF ENGINEERING AND CONSTRUCTION

SCRRA ENGINEERING STANDARDS ARE INTENDED FOR SCRRA APPROVED USES ONLY. FOR NON-SCRRA APPROVED USES:
SCRRA SHALL NOT BE RESPONSIBLE FOR THE ACCURACY OR COMPLETENESS OF THE DATA OR INFORMATION CONTAINED HEREIN. THE SELECTION AND USE OF THESE STANDARDS IS THE SOLE RESPONSIBILITY OF THE USER AND SHOULD NOT BE USED WITHOUT CONSULTING A REGISTERED PROFESSIONAL ENGINEER. ALL WARRANTIES AND REPRESENTATIONS OF ANY KIND ARE DISCLAIMED. ANYONE MAKING USE OF THIS INFORMATION AGREES THAT IT ASSUMES ALL LIABILITY ARISING FROM SUCH USE. NO PART OF THESE STANDARDS SHOULD BE REPRODUCED OR DISTRIBUTED IN ANY FORM OR BY ANY MEANS WITHOUT THE PRIOR WRITTEN PERMISSION OF SCRRA. ALL RIGHTS RESERVED.

METROLINK®
SOUTHERN CALIFORNIA REGIONAL RAIL AUTHORITY
ONE GATEWAY PLAZA, 12TH FLOOR, L. A., CA. 90012

ENGINEERING STANDARDS

NO 24 WSM FROG LH
FROG BASE PLATES 24-1L AND 24-2L
CONCRETE TIES-136 LB RE RAIL

STANDARD 2807
SCALE: NTS
REVISION –
SHEET 1 OF 1
CADD FILE: ES2807-45

BILL OF MATERIAL					
ITEM	QTY FOR 24-136-3R	QTY FOR 24-136-4R	DESCRIPTION	DWG NO	SCRRA PART NO
1	1	0	FLAT BAR, ASTM A36, 3/4" x 8" x 2'-6 1/4" LONG	-	
2	0	1	FLAT BAR, ASTM A36, 3/4" x 8" x 2'-5 1/4" LONG	-	
3	4	4	SHOULDER, PANDROL, FORGED TONGUELESS, TYPE 1	-	

NOTES:

1. I.D. CHARACTERS TO BE 1/2" MINIMUM HEIGHT CLEARLY STAMPED AS SHOWN.
2. WELDS TO BE DRESSED FLUSH WITH SHOULDER & NOT TO PROTRUDE INTO RAIL SEAT.
3. SLOTTED HOLE CENTERS ARE INDICATED ON DRAWING.

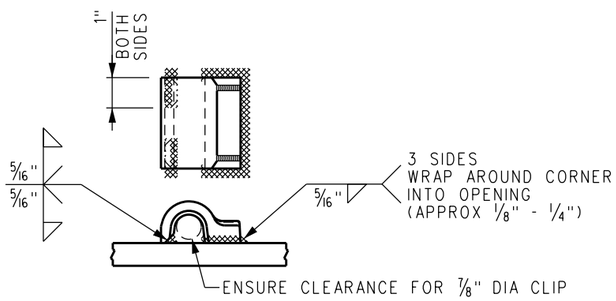

FORGED SHOULDER WELDING DETAIL

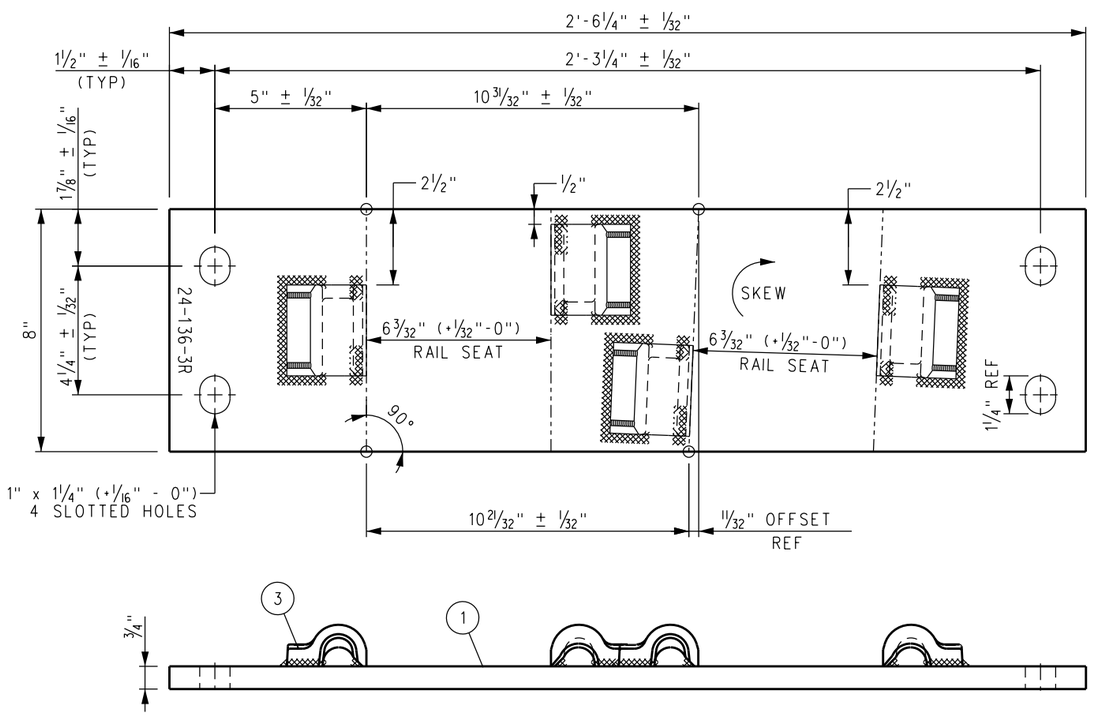

FROG BASE PLATE 24-136-3R

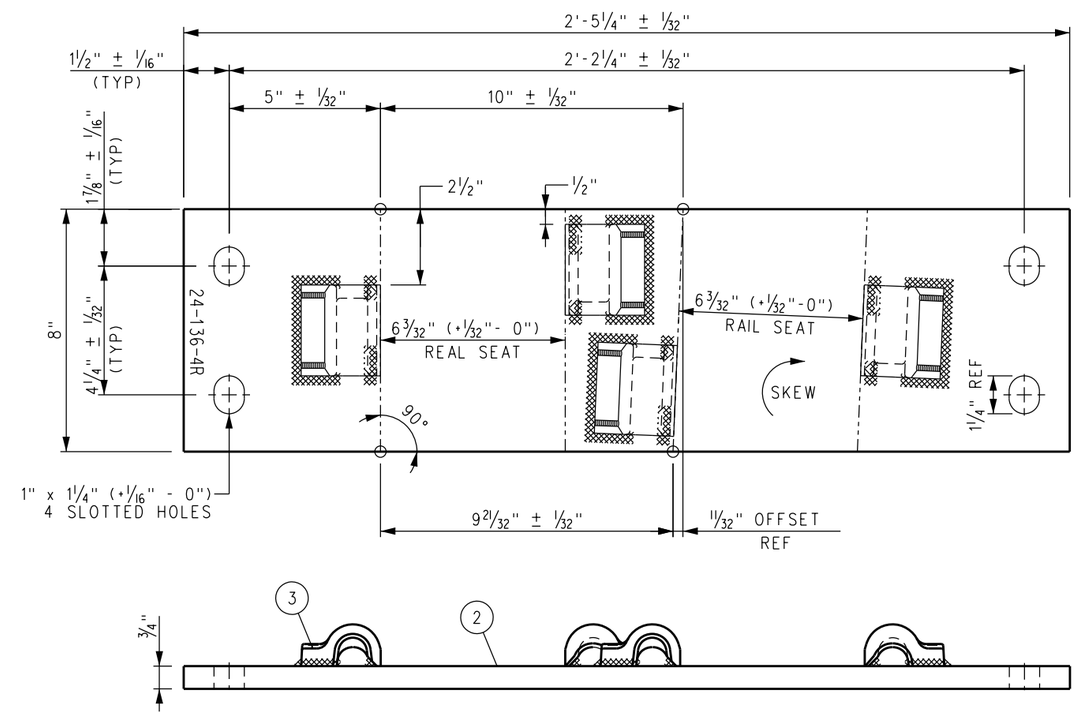

FROG BASE PLATE 24-136-4R

REV.	DATE	DESCRIPTION	DES.	ENG.
X	XX-XX-XX	REVISION	XX	XX

DRAWN BY: HDR DATE: 03/31/2011

ASSISTANT DIRECTOR: STANDARDS & DESIGN

DIRECTOR OF ENGINEERING AND CONSTRUCTION

SCRRA ENGINEERING STANDARDS ARE INTENDED FOR SCRRA APPROVED USES ONLY. FOR NON-SCRRA APPROVED USES: SCRRA SHALL NOT BE RESPONSIBLE FOR THE ACCURACY OR COMPLETENESS OF THE DATA OR INFORMATION CONTAINED HEREIN. THE SELECTION AND USE OF THESE STANDARDS IS THE SOLE RESPONSIBILITY OF THE USER AND SHOULD NOT BE USED WITHOUT CONSULTING A REGISTERED PROFESSIONAL ENGINEER. ALL WARRANTIES AND REPRESENTATIONS OF ANY KIND ARE DISCLAIMED. ANYONE MAKING USE OF THIS INFORMATION AGREES THAT IT ASSUMES ALL LIABILITY ARISING FROM SUCH USE. NO PART OF THESE STANDARDS SHOULD BE REPRODUCED OR DISTRIBUTED IN ANY FORM OR BY ANY MEANS WITHOUT THE PRIOR WRITTEN PERMISSION OF SCRRA. ALL RIGHTS RESERVED.

METROLINK®

SOUTHERN CALIFORNIA REGIONAL RAIL AUTHORITY
ONE GATEWAY PLAZA, 12TH FLOOR, L. A., CA. 90012

ENGINEERING STANDARDS

NO 24 WSM FROG RH
FROG BASE PLATES 24-3R AND 24-4R
CONCRETE TIES-136 LB RE RAIL

STANDARD 2807
SCALE: NTS
REVISION –
SHEET 1 OF 1
CADD FILE: ES2807-46

UserName=> carlosa Date Plotted: 10/5/2011 3:58:11 PM Plot Driver=> S:\Plot Drivers\pdf.plt FileName=> s:\V8EngStds\2000\Turnouts\No 24 Turnout\ES2807-46.dgn

BILL OF MATERIAL					
ITEM	QTY FOR 24-136-3L	QTY FOR 24-136-4L	DESCRIPTION	DWG NO	SCRRA PART NO
1	1	0	FLAT BAR, ASTM A36, 3/4" x 8" x 2'-6 1/4" LONG	-	
2	0	1	FLAT BAR, ASTM A36, 3/4" x 8" x 2'-5 1/4" LONG	-	
3	4	4	SHOULDER, PANDROL, FORGED TONGUELESS, TYPE 1	-	

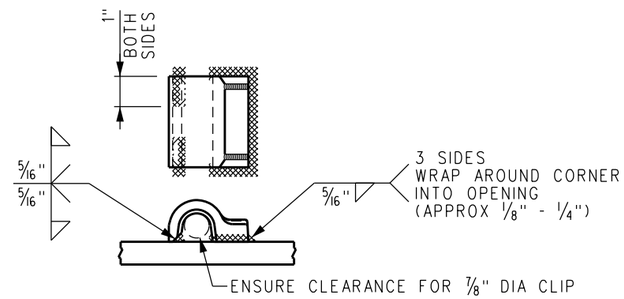

NOTES:

1. I.D. CHARACTERS TO BE 1/2" MINIMUM HEIGHT CLEARLY STAMPED AS SHOWN.
2. WELDS TO BE DRESSED FLUSH WITH SHOULDER & NOT TO PROTRUDE INTO RAIL SEAT.
3. SLOTTED HOLE CENTERS ARE INDICATED ON DRAWING.

FORGED SHOULDER WELDING DETAIL

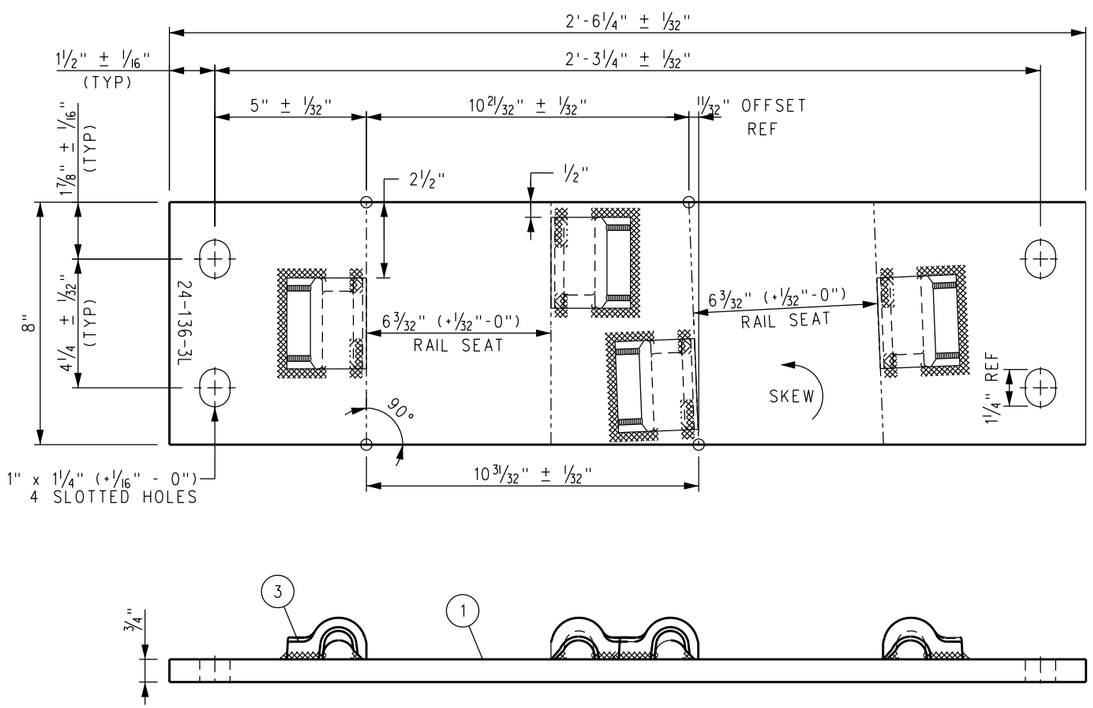

FROG BASE PLATE 24-136-3L

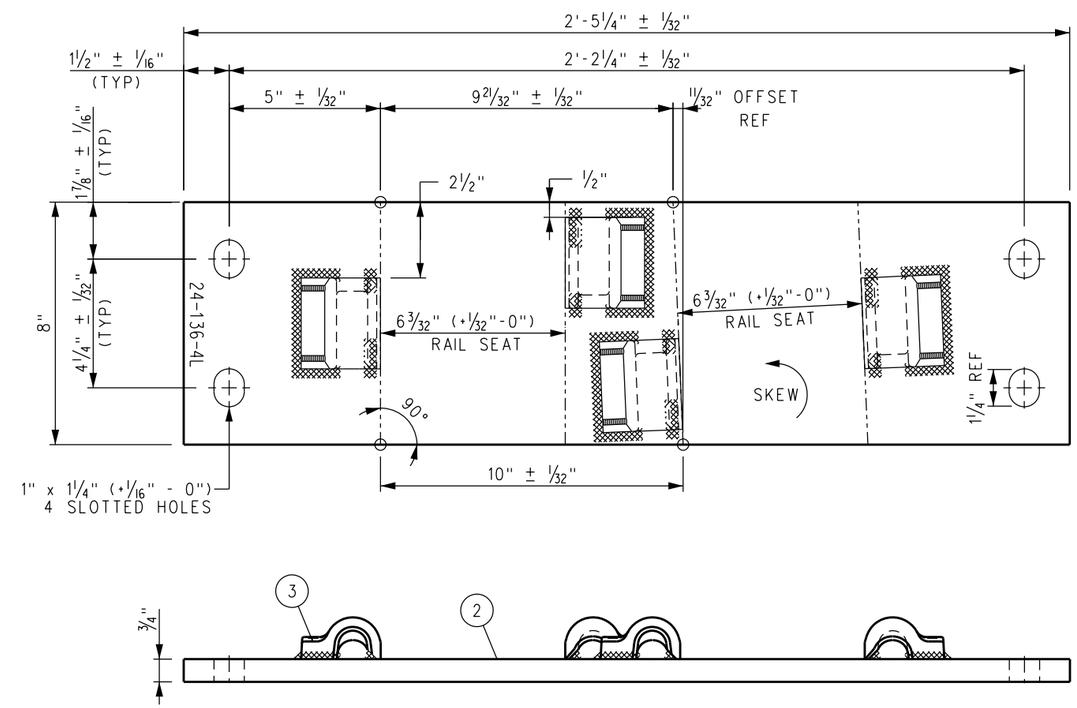

FROG BASE PLATE 24-136-4L

REV.	DATE	DESCRIPTION	DES.	ENG.
X	XX-XX-XX	REVISION	XX	XX

DRAWN BY: HDR DATE: 03/31/2011

ASSISTANT DIRECTOR: STANDARDS & DESIGN

DIRECTOR OF ENGINEERING AND CONSTRUCTION

SCRRA ENGINEERING STANDARDS ARE INTENDED FOR SCRRA APPROVED USES ONLY. FOR NON-SCRRA APPROVED USES:
SCRRA SHALL NOT BE RESPONSIBLE FOR THE ACCURACY OR COMPLETENESS OF THE DATA OR INFORMATION CONTAINED HEREIN. THE SELECTION AND USE OF THESE STANDARDS IS THE SOLE RESPONSIBILITY OF THE USER AND SHOULD NOT BE USED WITHOUT CONSULTING A REGISTERED PROFESSIONAL ENGINEER. ALL WARRANTIES AND REPRESENTATIONS OF ANY KIND ARE DISCLAIMED. ANYONE MAKING USE OF THIS INFORMATION AGREES THAT IT ASSUMES ALL LIABILITY ARISING FROM SUCH USE. NO PART OF THESE STANDARDS SHOULD BE REPRODUCED OR DISTRIBUTED IN ANY FORM OR BY ANY MEANS WITHOUT THE PRIOR WRITTEN PERMISSION OF SCRRA. ALL RIGHTS RESERVED.

METROLINK®
SOUTHERN CALIFORNIA REGIONAL RAIL AUTHORITY
ONE GATEWAY PLAZA, 12TH FLOOR, L. A., CA. 90012

ENGINEERING STANDARDS

NO 24 WSM FROG LH
FROG BASE PLATES 24–3L AND 24–4L
CONCRETE TIES–136 LB RE RAIL

STANDARD 2807
SCALE: NTS
REVISION –
SHEET 1 OF 1
CADD FILE: ES2807–47

BILL OF MATERIAL				
ITEM	QTY	DESCRIPTION	DWG NO	SCRRA PART NO
1	1	BURNED PLATE, ASTM A36, ¾" THICK	-	
2	6	SHOULDER, PANDROL, FORGED TONGUELESS, TYPE 1	-	

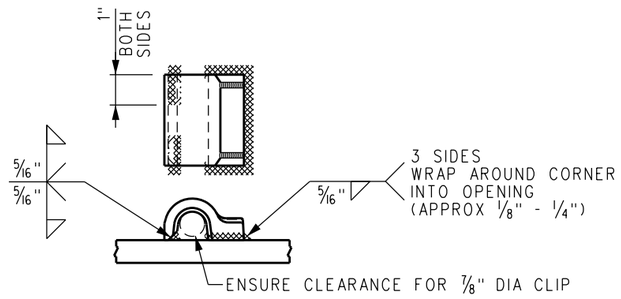

FORGED SHOULDER WELDING DETAIL

NOTES:

1. I.D. CHARACTERS TO BE ½" MINIMUM HEIGHT CLEARLY STAMPED AS SHOWN.
2. WELDS TO BE DRESSED FLUSH WITH SHOULDER & NOT TO PROTRUDE INTO RAIL SEAT.
3. SLOTTED HOLE CENTERS ARE INDICATED ON DRAWING.

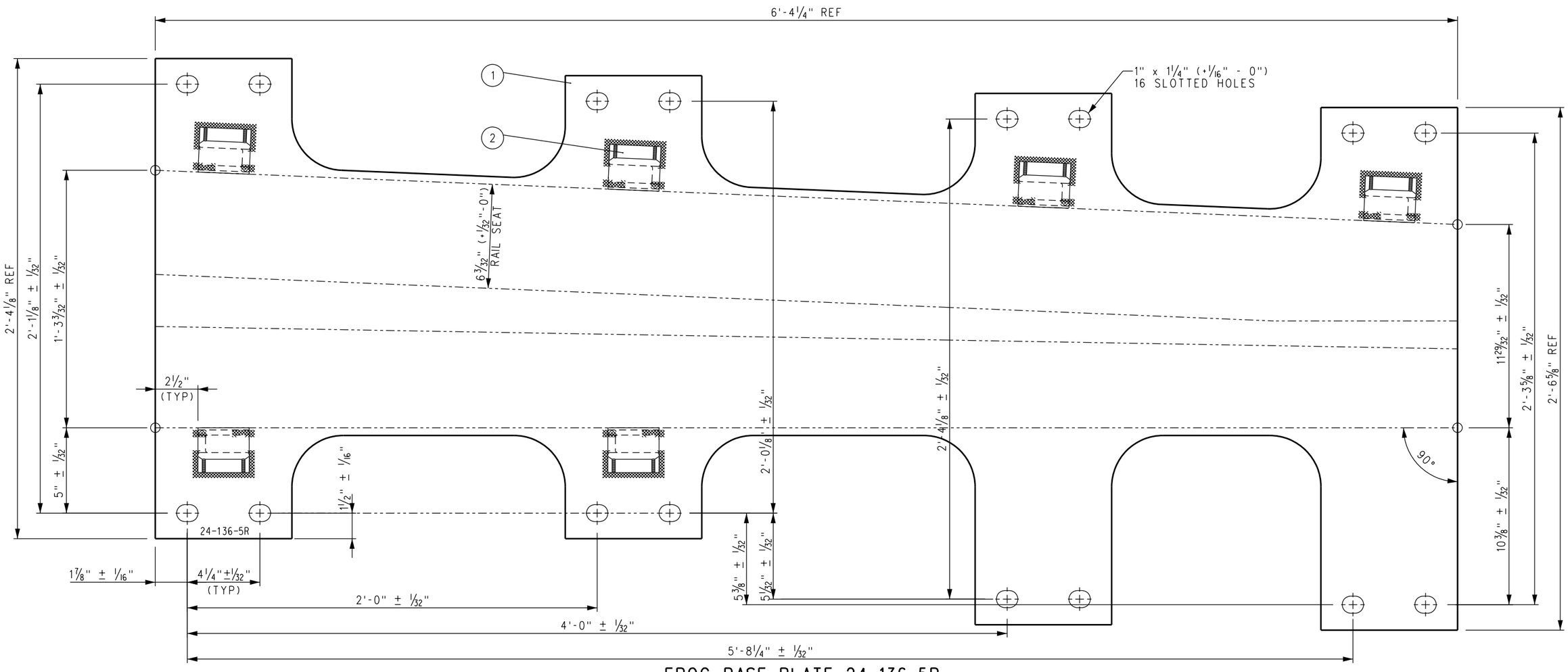

FROG BASE PLATE 24-136-5R

REV.	DATE	DESCRIPTION	DES.	ENG.
X	XX-XX-XX	REVISION	XX	XX

DRAWN BY: HDR DATE: 03/31/2011

ASSISTANT DIRECTOR: STANDARDS & DESIGN

DIRECTOR OF ENGINEERING AND CONSTRUCTION

SCRRA ENGINEERING STANDARDS ARE INTENDED FOR SCRRA APPROVED USES ONLY. FOR NON-SCRRA APPROVED USES:
SCRRA SHALL NOT BE RESPONSIBLE FOR THE ACCURACY OR COMPLETENESS OF THE DATA OR INFORMATION CONTAINED HEREIN. THE SELECTION AND USE OF THESE STANDARDS IS THE SOLE RESPONSIBILITY OF THE USER AND SHOULD NOT BE USED WITHOUT CONSULTING A REGISTERED PROFESSIONAL ENGINEER. ALL WARRANTIES AND REPRESENTATIONS OF ANY KIND ARE DISCLAIMED. ANYONE MAKING USE OF THIS INFORMATION AGREES THAT IT ASSUMES ALL LIABILITY ARISING FROM SUCH USE. NO PART OF THESE STANDARDS SHOULD BE REPRODUCED OR DISTRIBUTED IN ANY FORM OR BY ANY MEANS WITHOUT THE PRIOR WRITTEN PERMISSION OF SCRRA. ALL RIGHTS RESERVED.

METROLINK®
SOUTHERN CALIFORNIA REGIONAL RAIL AUTHORITY
ONE GATEWAY PLAZA, 12TH FLOOR, L. A., CA. 90012

ENGINEERING STANDARDS

NO 24 WSM FROG RH
FROG BASE PLATE 24-5R
CONCRETE TIES-136 LB RE RAIL

STANDARD 2807
SCALE: NTS
REVISION –
SHEET 1 OF 1
CADD FILE: ES2807-48

UserName=> carlosa Date Plotted: 10/5/2011 3:58:12 PM Plot Driver=> S:\Plot Drivers\pdf.plt FileName=> s:\V8EngStds\2000\Turnouts\No 24 Turnout\ES2807-48.dgn

BILL OF MATERIAL				
ITEM	QTY	DESCRIPTION	DWG NO	SCRRA PART NO
1	1	BURNED PLATE, ASTM A36, ¾" THICK	-	
2	6	SHOULDER, PANDROL, FORGED TONGUELESS, TYPE 1	-	

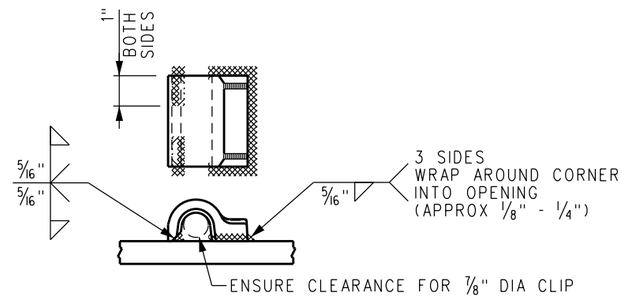

FORGED SHOULDER WELDING DETAIL

NOTES:

1. I.D. CHARACTERS TO BE ½" MINIMUM HEIGHT CLEARLY STAMPED AS SHOWN.
2. WELDS TO BE DRESSED FLUSH WITH SHOULDER & NOT TO PROTRUDE INTO RAIL SEAT.
3. SLOTTED HOLE CENTERS ARE INDICATED ON DRAWING.

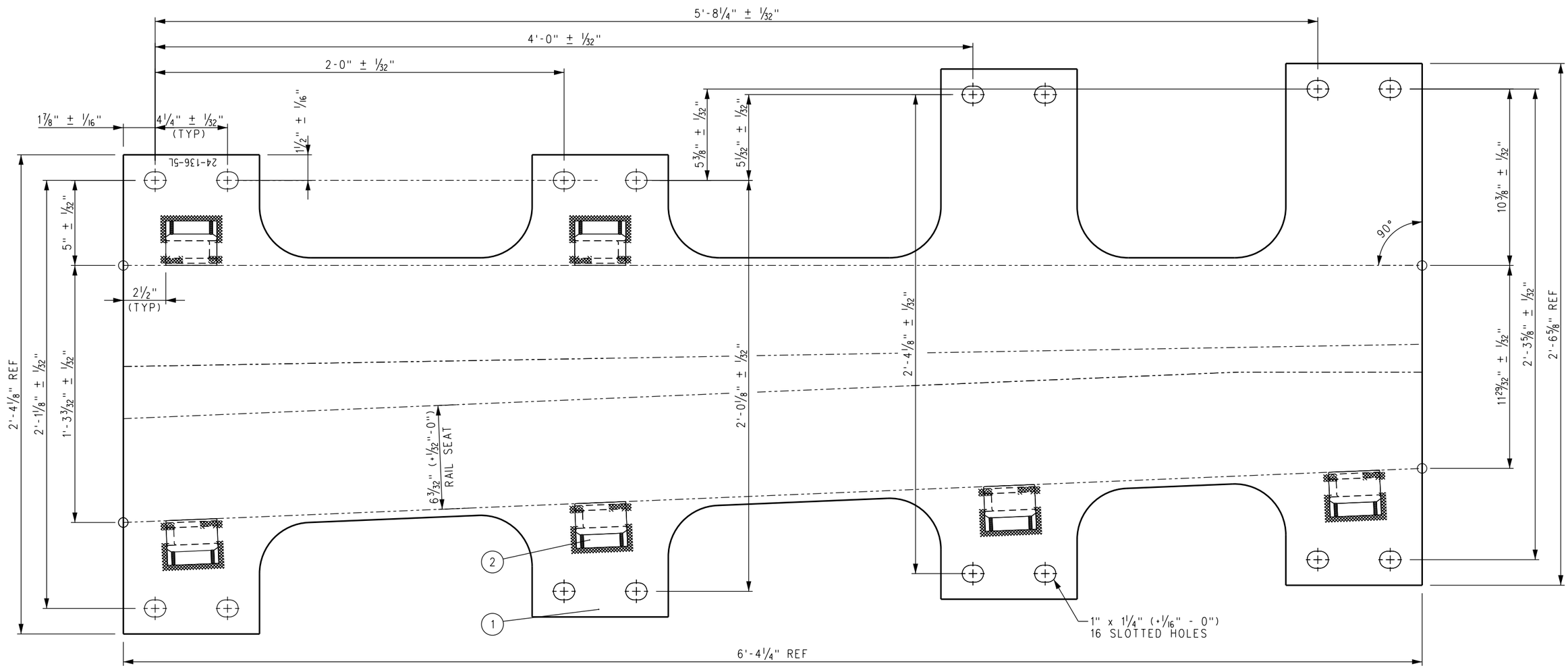

FROG BASE PLATE 24-136-5L

REV.	DATE	DESCRIPTION	DES.	ENG.
X	XX-XX-XX	REVISION	XX	XX

DRAWN BY: HDR DATE: 03/31/2011

ASSISTANT DIRECTOR: STANDARDS & DESIGN

DIRECTOR OF ENGINEERING AND CONSTRUCTION

SCRRA ENGINEERING STANDARDS ARE INTENDED FOR SCRRA APPROVED USES ONLY. FOR NON-SCRRA APPROVED USES: SCRRA SHALL NOT BE RESPONSIBLE FOR THE ACCURACY OR COMPLETENESS OF THE DATA OR INFORMATION CONTAINED HEREIN. THE SELECTION AND USE OF THESE STANDARDS IS THE SOLE RESPONSIBILITY OF THE USER AND SHOULD NOT BE USED WITHOUT CONSULTING A REGISTERED PROFESSIONAL ENGINEER. ALL WARRANTIES AND REPRESENTATIONS OF ANY KIND ARE DISCLAIMED. ANYONE MAKING USE OF THIS INFORMATION AGREES THAT IT ASSUMES ALL LIABILITY ARISING FROM SUCH USE. NO PART OF THESE STANDARDS SHOULD BE REPRODUCED OR DISTRIBUTED IN ANY FORM OR BY ANY MEANS WITHOUT THE PRIOR WRITTEN PERMISSION OF SCRRA. ALL RIGHTS RESERVED.

METROLINK®

SOUTHERN CALIFORNIA REGIONAL RAIL AUTHORITY
ONE GATEWAY PLAZA, 12TH FLOOR, L. A., CA. 90012

ENGINEERING STANDARDS

NO 24 WSM FROG LH
FROG BASE PLATE 24–5L
CONCRETE TIES–136 LB RE RAIL

STANDARD 2807
SCALE: NTS
REVISION –
SHEET 1 OF 1
CADD FILE: ES2807–49

BILL OF MATERIAL				
ITEM	QTY	DESCRIPTION	DWG NO	SCRRA PART NO
1	1	BURNED PLATE, ASTM A36, ¾" THICK	-	
2	5	CAPTURE BLOCK FOR PLATE CLIP	-	
3	1	BLOCK CASTING CAPTURE HORN HOLDDOWN	-	
4	1	CAPTURE BLOCK FOR SPRING BOX	-	
5	2	SHOULDER, PANDROL, FORGED TONGUELESS, TYPE 1	-	

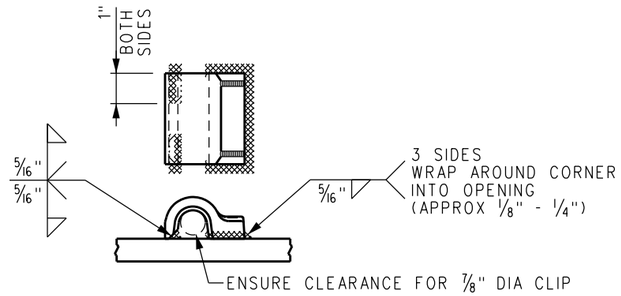

FORGED SHOULDER WELDING DETAIL

NOTES:

1. I.D. CHARACTERS TO BE ½" MINIMUM HEIGHT CLEARLY STAMPED AS SHOWN.
2. WELDS TO BE DRESSED FLUSH WITH SHOULDER & NOT TO PROTRUDE INTO RAIL SEAT.
3. SLOTTED HOLE CENTERS ARE INDICATED ON DRAWING.
4. OPENINGS IN BOLT CAPTURE BLOCKS SHALL BE FREE OF WELD AND SPATTER.
5. UNLESS OTHERWISE NOTED, ALL TOLERANCES SHALL BE ± 1/32".

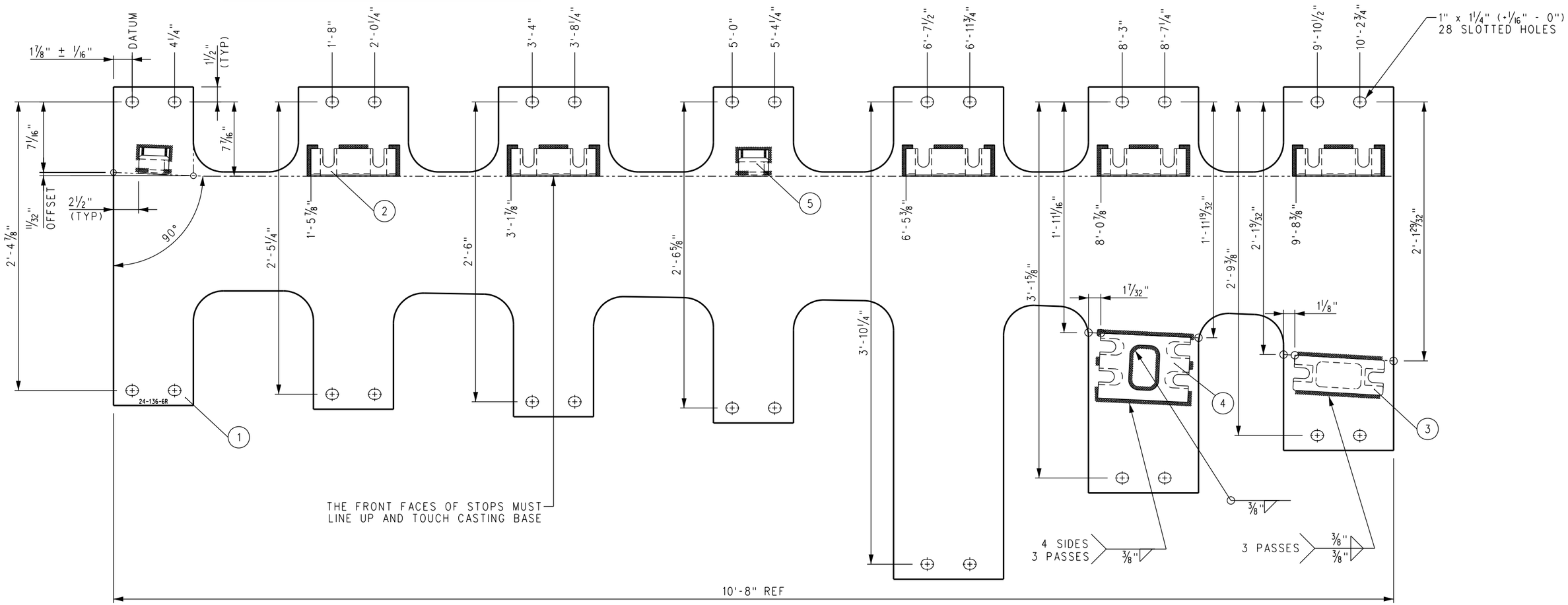

FROG BASE PLATE 24-136-6R

REV.	DATE	DESCRIPTION	DES.	ENG.
X	XX-XX-XX	REVISION	XX	XX

DRAWN BY: HDR DATE: 03/31/2011

ASSISTANT DIRECTOR: STANDARDS & DESIGN

DIRECTOR OF ENGINEERING AND CONSTRUCTION

SCRRA ENGINEERING STANDARDS ARE INTENDED FOR SCRRA APPROVED USES ONLY. FOR NON-SCRRA APPROVED USES, SCRRA SHALL NOT BE RESPONSIBLE FOR THE ACCURACY OR COMPLETENESS OF THE DATA OR INFORMATION CONTAINED HEREIN. THE SELECTION AND USE OF THESE STANDARDS IS THE SOLE RESPONSIBILITY OF THE USER AND SHOULD NOT BE USED WITHOUT CONSULTING A REGISTERED PROFESSIONAL ENGINEER. ALL WARRANTIES AND REPRESENTATIONS OF ANY KIND ARE DISCLAIMED. ANYONE MAKING USE OF THIS INFORMATION AGREES THAT IT ASSUMES ALL LIABILITY ARISING FROM SUCH USE. NO PART OF THESE STANDARDS SHOULD BE REPRODUCED OR DISTRIBUTED IN ANY FORM OR BY ANY MEANS WITHOUT THE PRIOR WRITTEN PERMISSION OF SCRRA. ALL RIGHTS RESERVED.

METROLINK®

SOUTHERN CALIFORNIA REGIONAL RAIL AUTHORITY
ONE GATEWAY PLAZA, 12TH FLOOR, L. A., CA. 90012

ENGINEERING STANDARDS

NO 24 WSM FROG RH
FROG BASE PLATE 24-6R
CONCRETE TIES-136 LB RE RAIL

STANDARD: 2807
SCALE: NTS
REVISION: –
SHEET: 1 OF 1
CADD FILE: ES2807-50

UserName•> carlosa Date Plotted: 10/5/2011 3:58:13 PM Plot Driver•> S:\Plot Drivers\pdf.plt FileName•> s:\V8EngStds\2000\Turnouts\No 24 Turnout\ES2807-50.dgn

BILL OF MATERIAL				
ITEM	QTY	DESCRIPTION	DWG NO	SCRRA PART NO
1	1	BURNED PLATE, ASTM A36, ¾" THICK	-	
2	5	CAPTURE BLOCK FOR PLATE CLIP	-	
3	1	BLOCK CASTING CAPTURE HORN HOLDDOWN	-	
4	1	CAPTURE BLOCK FOR SPRING BOX	-	
5	2	SHOULDER, PANDROL, FORGED TONGUELESS, TYPE 1	-	

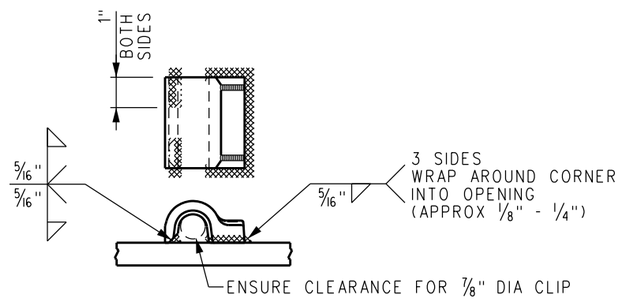

FORGED SHOULDER WELDING DETAIL

NOTES:

1. I.D. CHARACTERS TO BE ½" MINIMUM HEIGHT CLEARLY STAMPED AS SHOWN.
2. WELDS TO BE DRESSED FLUSH WITH SHOULDER & NOT TO PROTRUDE INTO RAIL SEAT.
3. SLOTTED HOLE CENTERS ARE INDICATED ON DRAWING.
4. OPENINGS IN BOLT CAPTURE BLOCKS SHALL BE FREE OF WELD AND SPATTER.
5. UNLESS OTHERWISE NOTED, ALL TOLERANCES SHALL BE ± 1/32".

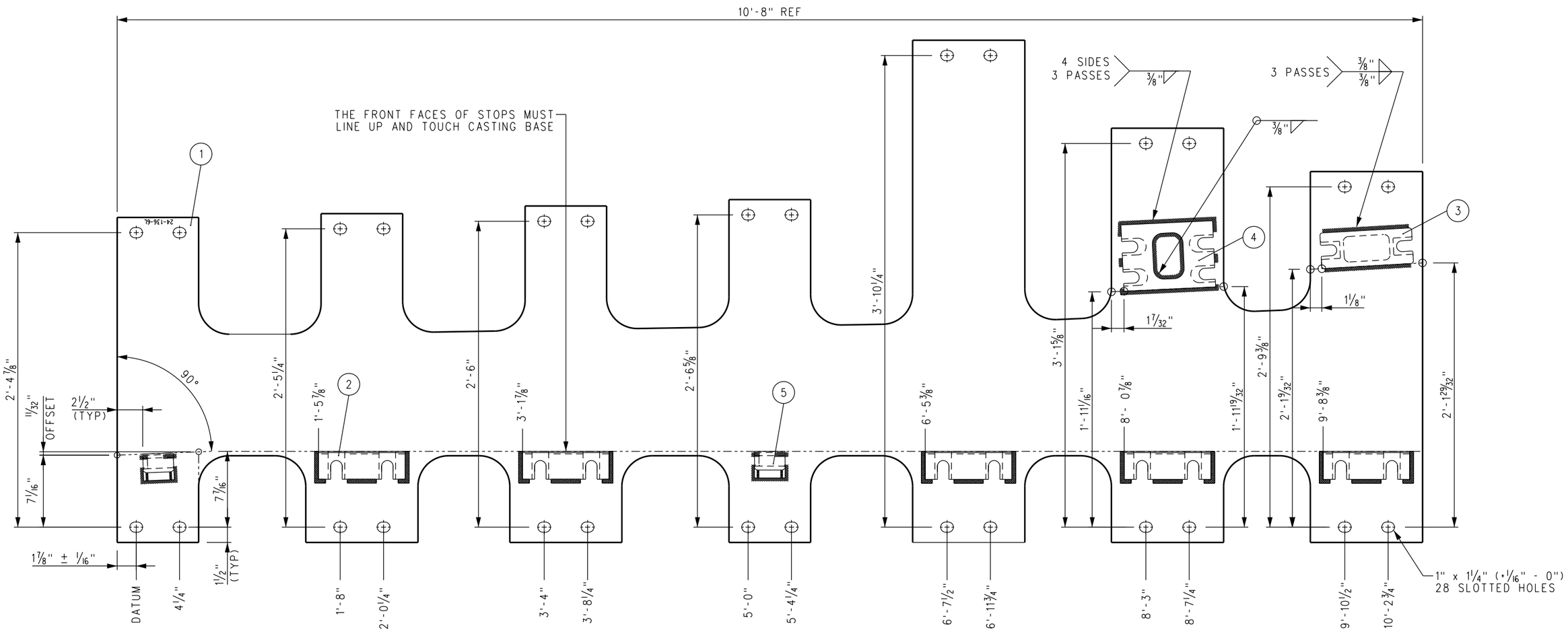

FROG BASE PLATE 24-136-6L

REV.	DATE	DESCRIPTION	DES.	ENG.
X	XX-XX-XX	REVISION	XX	XX

DRAWN BY: HDR DATE: 03/31/2011

ASSISTANT DIRECTOR: STANDARDS & DESIGN

DIRECTOR OF ENGINEERING AND CONSTRUCTION

SCRRA ENGINEERING STANDARDS ARE INTENDED FOR SCRRA APPROVED USES ONLY. FOR NON-SCRRA APPROVED USES:
SCRRA SHALL NOT BE RESPONSIBLE FOR THE ACCURACY OR COMPLETENESS OF THE DATA OR INFORMATION CONTAINED HEREIN. THE SELECTION AND USE OF THESE STANDARDS IS THE SOLE RESPONSIBILITY OF THE USER AND SHOULD NOT BE USED WITHOUT CONSULTING A REGISTERED PROFESSIONAL ENGINEER. ALL WARRANTIES AND REPRESENTATIONS OF ANY KIND ARE DISCLAIMED. ANYONE MAKING USE OF THIS INFORMATION AGREES THAT IT ASSUMES ALL LIABILITY ARISING FROM SUCH USE. NO PART OF THESE STANDARDS SHOULD BE REPRODUCED OR DISTRIBUTED IN ANY FORM OR BY ANY MEANS WITHOUT THE PRIOR WRITTEN PERMISSION OF SCRRA. ALL RIGHTS RESERVED.

METROLINK®
SOUTHERN CALIFORNIA REGIONAL RAIL AUTHORITY
ONE GATEWAY PLAZA, 12TH FLOOR, L. A., CA. 90012

ENGINEERING STANDARDS

NO 24 WSM FROG LH
FROG BASE PLATE 24-6L
CONCRETE TIES-136 LB RE RAIL

STANDARD 2807
SCALE: NTS
REVISION –
SHEET 1 OF 1
CADD FILE: ES2807-51

UserName-> carlosa Date Plotted: 10/5/2011 3:58:13 PM Plot Driver-> S:\Plot Drivers\pdf.plt FileName-> s:\V8EngStds\2000\Turnouts\No 24 Turnout\ES2807-51.dgn

BILL OF MATERIAL				
ITEM	QTY	DESCRIPTION	DWG NO	SCRRA PART NO
1	1	BURNED PLATE, ASTM A36, ¾" THICK	-	
2	6	CAPTURE BLOCK FOR PLATE CLIP	-	
3	4	BLOCK CASTING CAPTURE HORN HOLDDOWN	-	
4	3	SHOULDER, PANDROL, FORGED TONGUELESS, TYPE 1	-	
5	1	FLAT BAR, ASTM A36, ½" THICK x 2" x 6"	-	

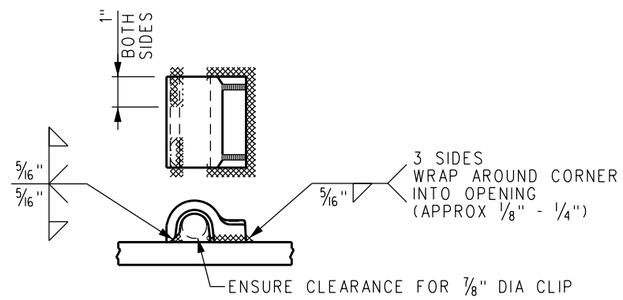

FORGED SHOULDER WELDING DETAIL

NOTES:

1. I.D. CHARACTERS TO BE ½" MINIMUM HEIGHT CLEARLY STAMPED AS SHOWN.
2. WELDS TO BE DRESSED FLUSH WITH SHOULDER & NOT TO PROTRUDE INTO RAIL SEAT.
3. SLOTTED HOLE CENTERS ARE INDICATED ON DRAWING.
4. OPENINGS IN BOLT CAPTURE BLOCKS SHALL BE FREE OF WELD AND SPATTER.
5. UNLESS OTHERWISE NOTED, ALL TOLERANCES SHALL BE ± 1/32".

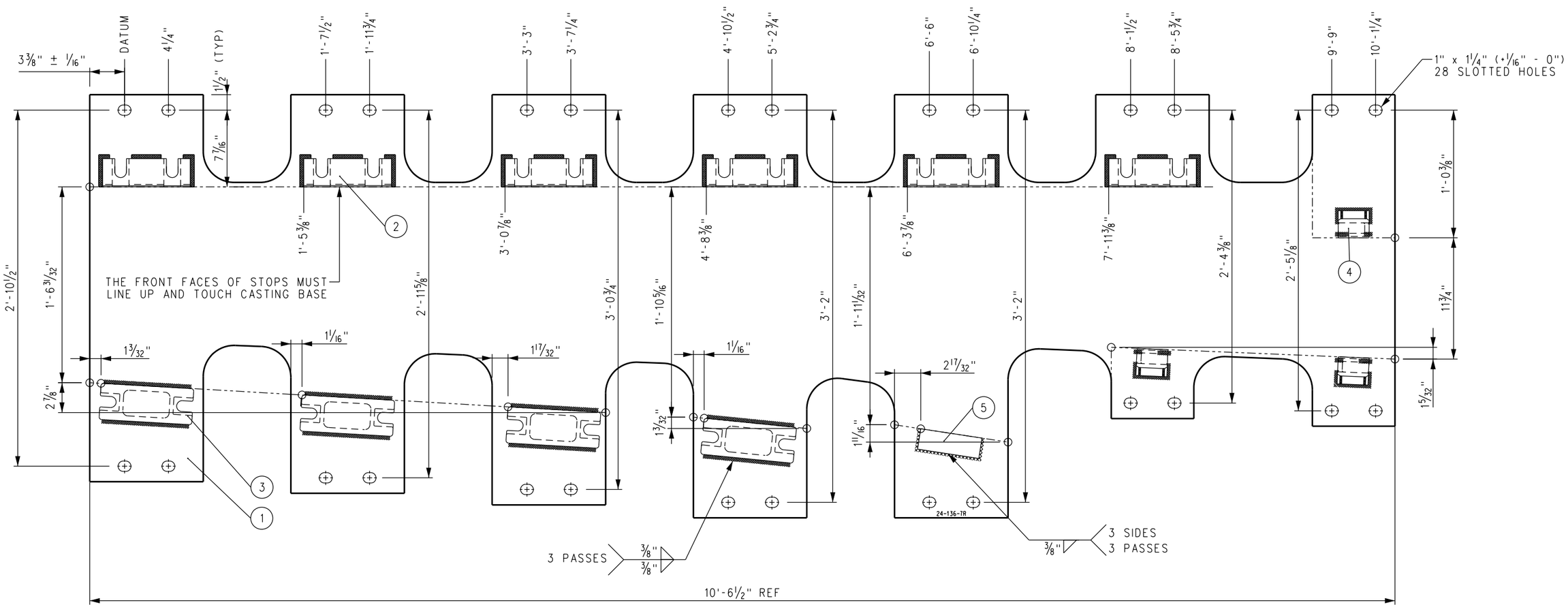

FROG BASE PLATE 24-136-7R

REV.	DATE	DESCRIPTION	DES.	ENG.
X	XX-XX-XX	REVISION	XX	XX

DRAWN BY: HDR DATE: 03/31/2011

ASSISTANT DIRECTOR: STANDARDS & DESIGN

DIRECTOR OF ENGINEERING AND CONSTRUCTION

SCRRA ENGINEERING STANDARDS ARE INTENDED FOR SCRRA APPROVED USES ONLY. FOR NON-SCRRA APPROVED USES:
SCRRA SHALL NOT BE RESPONSIBLE FOR THE ACCURACY OR COMPLETENESS OF THE DATA OR INFORMATION CONTAINED HEREIN. THE SELECTION AND USE OF THESE STANDARDS IS THE SOLE RESPONSIBILITY OF THE USER AND SHOULD NOT BE USED WITHOUT CONSULTING A REGISTERED PROFESSIONAL ENGINEER. ALL WARRANTIES AND REPRESENTATIONS OF ANY KIND ARE DISCLAIMED. ANYONE MAKING USE OF THIS INFORMATION AGREES THAT IT ASSUMES ALL LIABILITY ARISING FROM SUCH USE. NO PART OF THESE STANDARDS SHOULD BE REPRODUCED OR DISTRIBUTED IN ANY FORM OR BY ANY MEANS WITHOUT THE PRIOR WRITTEN PERMISSION OF SCRRA. ALL RIGHTS RESERVED.

METROLINK®
SOUTHERN CALIFORNIA REGIONAL RAIL AUTHORITY
ONE GATEWAY PLAZA, 12TH FLOOR, L. A., CA. 90012

ENGINEERING STANDARDS

NO 24 WSA FROG RH
FROG BASE PLATE 24-7R
CONCRETE TIES-136 LB RE RAIL

STANDARD 2807
SCALE: NTS
REVISION –
SHEET 1 OF 1
CADD FILE: ES2807-52

BILL OF MATERIAL				
ITEM	QTY	DESCRIPTION	DWG NO	SCRRA PART NO
1	1	BURNED PLATE, ASTM A36, ¾" THICK	-	
2	6	CAPTURE BLOCK FOR PLATE CLIP	-	
3	4	BLOCK CASTING CAPTURE HORN HOLDDOWN	-	
4	3	SHOULDER, PANDROL, FORGED TONGUELESS, TYPE 1	-	
5	1	FLAT BAR, ASTM A36, ½" THICK x 2" x 6"	-	

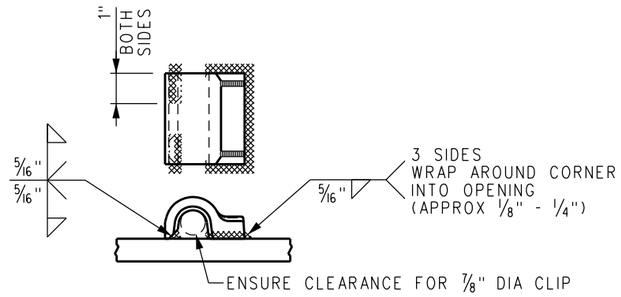

FORGED SHOULDER WELDING DETAIL

NOTES:

1. I.D. CHARACTERS TO BE ½" MINIMUM HEIGHT CLEARLY STAMPED AS SHOWN.
2. WELDS TO BE DRESSED FLUSH WITH SHOULDER & NOT TO PROTRUDE INTO RAIL SEAT.
3. SLOTTED HOLE CENTERS ARE INDICATED ON DRAWING.
4. OPENINGS IN BOLT CAPTURE BLOCKS SHALL BE FREE OF WELD AND SPATTER.
5. UNLESS OTHERWISE NOTED, ALL TOLERANCES SHALL BE ± 1/32".

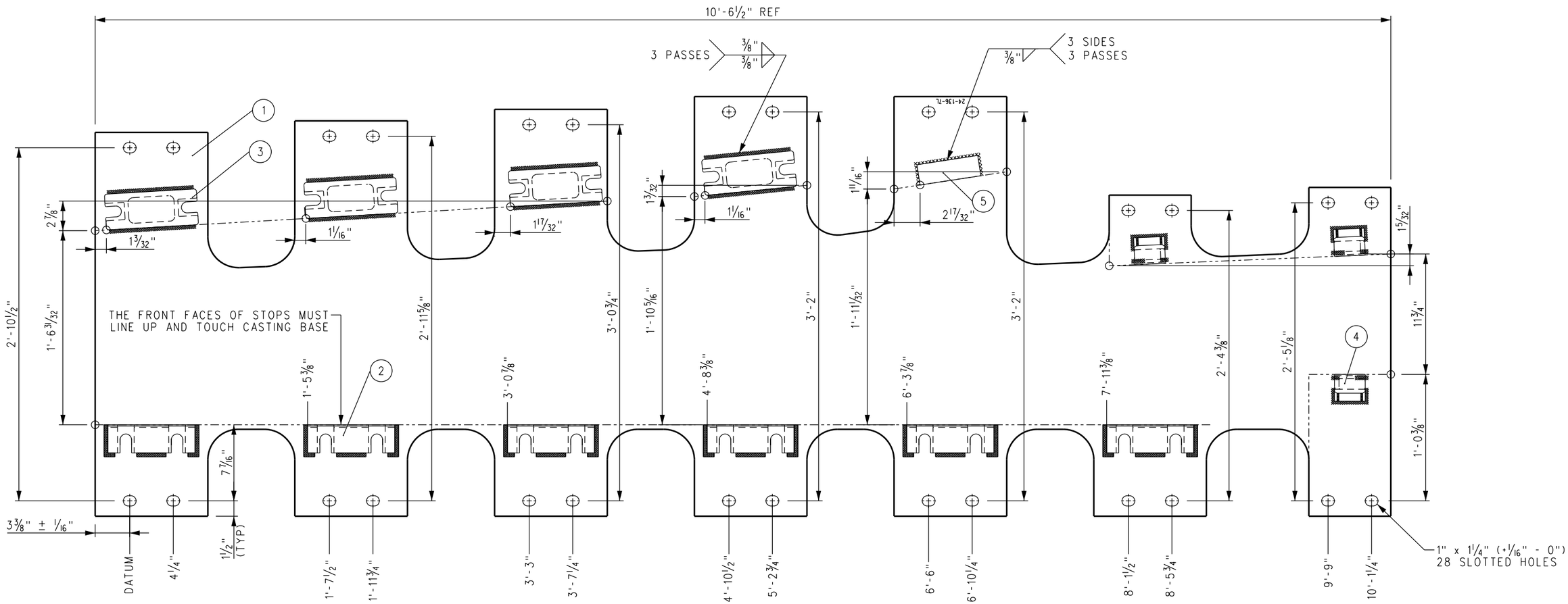

FROG BASE PLATE 24-136-7L

REV.	DATE	DESCRIPTION	DES.	ENG.
X	XX-XX-XX	REVISION	XX	XX

DRAWN BY: HDR DATE: 03/31/2011

ASSISTANT DIRECTOR: STANDARDS & DESIGN

DIRECTOR OF ENGINEERING AND CONSTRUCTION

SCRRA ENGINEERING STANDARDS ARE INTENDED FOR SCRRA APPROVED USES ONLY. FOR NON-SCRRA APPROVED USES:
SCRRA SHALL NOT BE RESPONSIBLE FOR THE ACCURACY OR COMPLETENESS OF THE DATA OR INFORMATION CONTAINED HEREIN. THE SELECTION AND USE OF THESE STANDARDS IS THE SOLE RESPONSIBILITY OF THE USER AND SHOULD NOT BE USED WITHOUT CONSULTING A REGISTERED PROFESSIONAL ENGINEER. ALL WARRANTIES AND REPRESENTATIONS OF ANY KIND ARE DISCLAIMED. ANYONE MAKING USE OF THIS INFORMATION AGREES THAT IT ASSUMES ALL LIABILITY ARISING FROM SUCH USE. NO PART OF THESE STANDARDS SHOULD BE REPRODUCED OR DISTRIBUTED IN ANY FORM OR BY ANY MEANS WITHOUT THE PRIOR WRITTEN PERMISSION OF SCRRA. ALL RIGHTS RESERVED.

METROLINK®
SOUTHERN CALIFORNIA REGIONAL RAIL AUTHORITY
ONE GATEWAY PLAZA, 12TH FLOOR, L. A., CA. 90012

ENGINEERING STANDARDS

NO 24 WSM FROG LH
FROG BASE PLATE 24–7L
CONCRETE TIES–136 LB RE RAIL

STANDARD 2807
SCALE: NTS
REVISION –
SHEET 1 OF 1
CADD FILE: ES2807–53

BILL OF MATERIAL						
ITEM	QTY FOR 24-136-8R	QTY FOR 24-136-9R	QTY FOR 24-136-10R	DESCRIPTION	DWG NO	SCRRA PART NO
1	1	0	0	FLAT BAR, ASTM A36, 3/4" x 8" x 2'-1 3/4" LONG	-	
2	0	1	0	FLAT BAR, ASTM A36, 3/4" x 8" x 2'-2 1/2" LONG	-	
3	0	0	1	FLAT BAR, ASTM A36, 3/4" x 8" x 2'-3 1/2" LONG	-	
4	0	0	1	BURNED STOP, 1/2" THICK, 7" LONG, 1 29/32" TO 2 7/32" TAPER	-	
5	2	2	2	SHOULDER, PANDROL, FORGED TONGUELESS, TYPE 1	-	

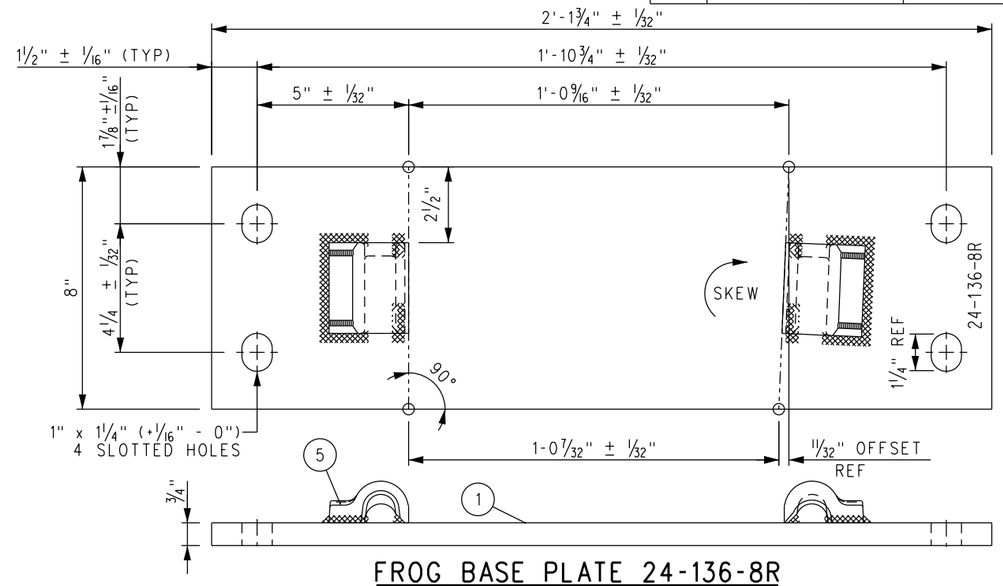

FROG BASE PLATE 24-136-8R

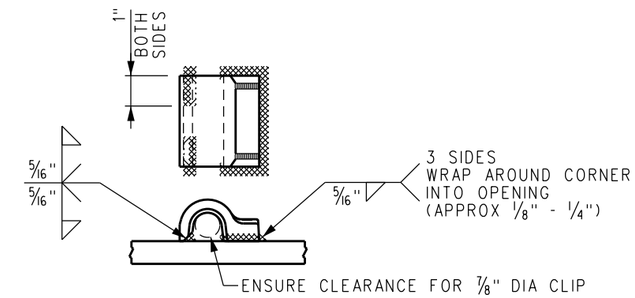

FORGED SHOULDER WELDING DETAIL

NOTES:

1. I.D. CHARACTERS TO BE 1/2" MINIMUM HEIGHT CLEARLY STAMPED AS SHOWN.
2. WELDS TO BE DRESSED FLUSH WITH SHOULDER & NOT TO PROTRUDE INTO RAIL SEAT.
3. SLOTTED HOLE CENTERS ARE INDICATED ON DRAWING.

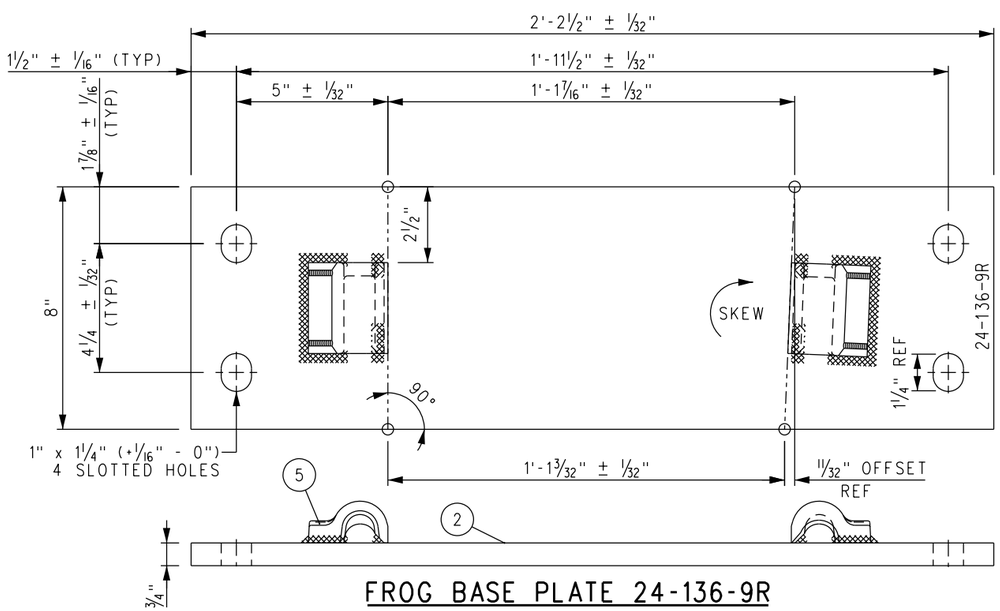

FROG BASE PLATE 24-136-9R

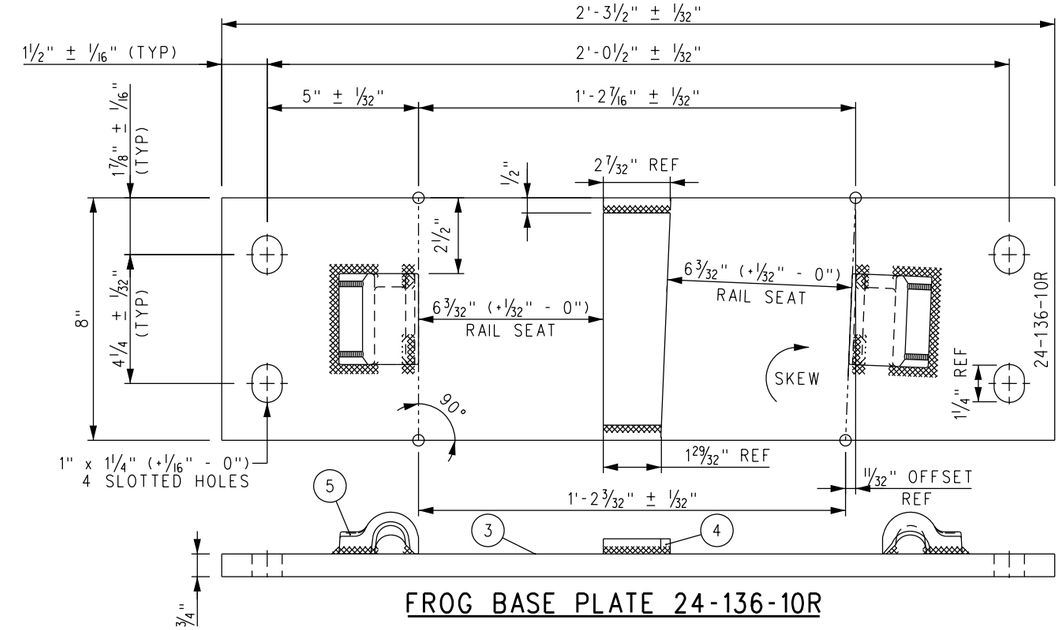

FROG BASE PLATE 24-136-10R

REV.	DATE	DESCRIPTION	DES.	ENG.
X	XX-XX-XX	REVISION	XX	XX

DRAWN BY: HDR DATE: 03/31/2011

ASSISTANT DIRECTOR: STANDARDS & DESIGN

DIRECTOR OF ENGINEERING AND CONSTRUCTION

SCRRA ENGINEERING STANDARDS ARE INTENDED FOR SCRRA APPROVED USES ONLY. FOR NON-SCRRA APPROVED USES: SCRRA SHALL NOT BE RESPONSIBLE FOR THE ACCURACY OR COMPLETENESS OF THE DATA OR INFORMATION CONTAINED HEREIN. THE SELECTION AND USE OF THESE STANDARDS IS THE SOLE RESPONSIBILITY OF THE USER AND SHOULD NOT BE USED WITHOUT CONSULTING A REGISTERED PROFESSIONAL ENGINEER. ALL WARRANTIES AND REPRESENTATIONS OF ANY KIND ARE DISCLAIMED. ANYONE MAKING USE OF THIS INFORMATION AGREES THAT IT ASSUMES ALL LIABILITY ARISING FROM SUCH USE. NO PART OF THESE STANDARDS SHOULD BE REPRODUCED OR DISTRIBUTED IN ANY FORM OR BY ANY MEANS WITHOUT THE PRIOR WRITTEN PERMISSION OF SCRRA. ALL RIGHTS RESERVED.

METROLINK®

SOUTHERN CALIFORNIA REGIONAL RAIL AUTHORITY
ONE GATEWAY PLAZA, 12TH FLOOR, L. A., CA. 90012

ENGINEERING STANDARDS

NO 24 WSM FROG RH
FROG BASE PLATES 24–8R, 24–9R AND 24–10R
CONCRETE TIES–136 LB RE RAIL

STANDARD 2807
SCALE: NTS
REVISION –
SHEET 1 OF 1
CADD FILE: ES2807–54

BILL OF MATERIAL						
ITEM	QTY FOR 24-136-8L	QTY FOR 24-136-9L	QTY FOR 24-136-10L	DESCRIPTION	DWG NO	SCRRA PART NO
1	1	0	0	FLAT BAR, ASTM A36, 3/4" x 8" x 2'-1 3/4" LONG	-	
2	0	1	0	FLAT BAR, ASTM A36, 3/4" x 8" x 2'-2 1/2" LONG	-	
3	0	0	1	FLAT BAR, ASTM A36, 3/4" x 8" x 2'-3 1/2" LONG	-	
4	0	0	1	BURNED STOP, 1/2" THICK, 7" LONG, 1 29/32" TO 2 7/32" TAPER	-	
5	2	2	2	SHOULDER, PANDROL, FORGED TONGUELESS, TYPE 1	-	

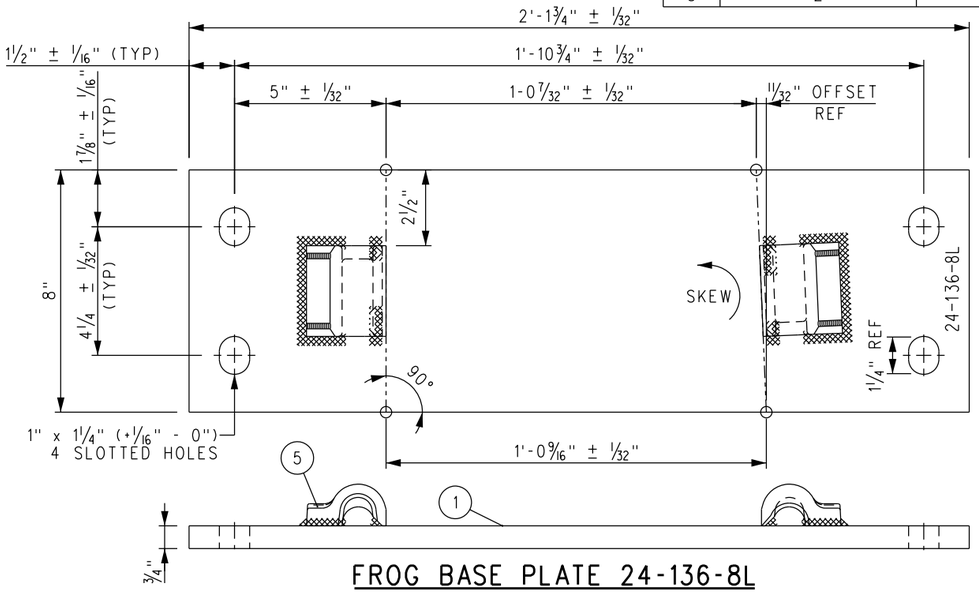

FROG BASE PLATE 24-136-8L

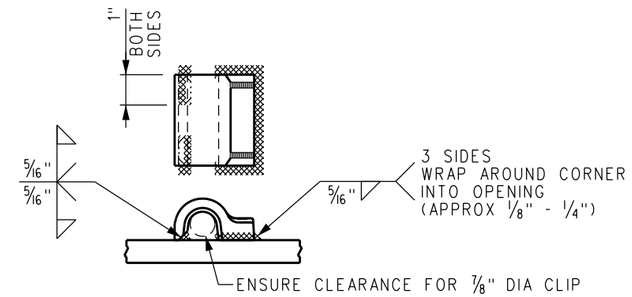

FORGED SHOULDER WELDING DETAIL

NOTES:

1. I.D. CHARACTERS TO BE 1/2" MINIMUM HEIGHT CLEARLY STAMPED AS SHOWN.
2. WELDS TO BE DRESSED FLUSH WITH SHOULDER & NOT TO PROTRUDE INTO RAIL SEAT.
3. SLOTTED HOLE CENTERS ARE INDICATED ON DRAWING.

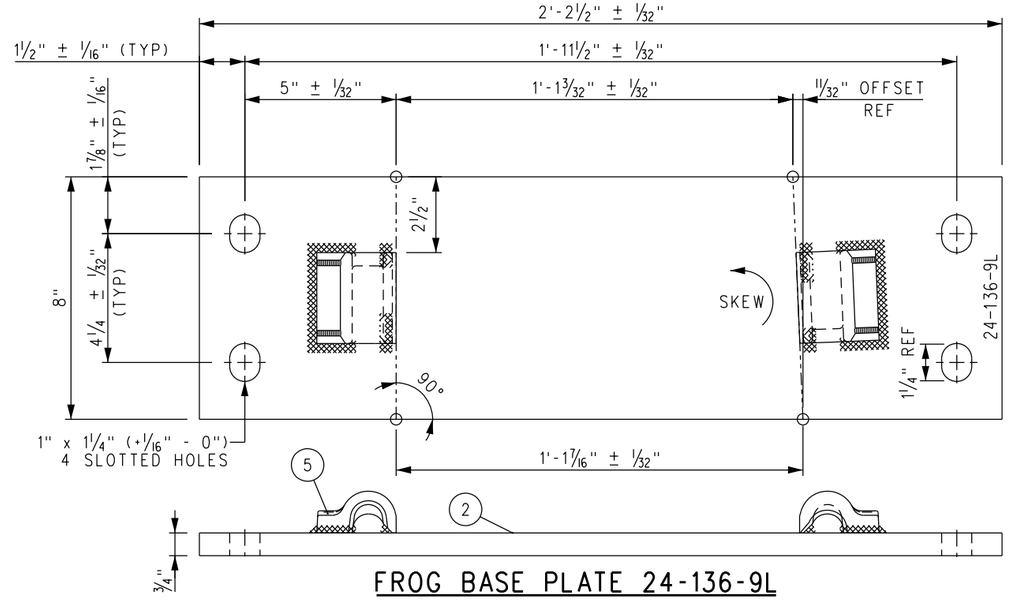

FROG BASE PLATE 24-136-9L

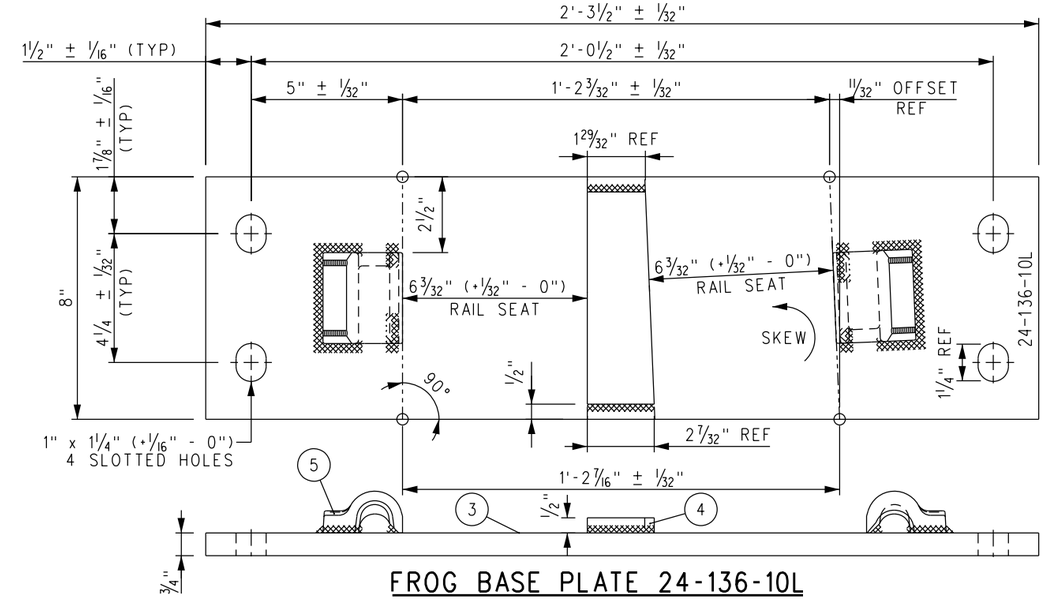

FROG BASE PLATE 24-136-10L

REV.	DATE	DESCRIPTION	DES.	ENG.
X	XX-XX-XX	REVISION	XX	XX

DRAWN BY: HDR DATE: 03/31/2011

ASSISTANT DIRECTOR: STANDARDS & DESIGN

DIRECTOR OF ENGINEERING AND CONSTRUCTION

SCRRA ENGINEERING STANDARDS ARE INTENDED FOR SCRRA APPROVED USES ONLY. FOR NON-SCRRA APPROVED USES:
SCRRA SHALL NOT BE RESPONSIBLE FOR THE ACCURACY OR COMPLETENESS OF THE DATA OR INFORMATION CONTAINED HEREIN. THE SELECTION AND USE OF THESE STANDARDS IS THE SOLE RESPONSIBILITY OF THE USER AND SHOULD NOT BE USED WITHOUT CONSULTING A REGISTERED PROFESSIONAL ENGINEER. ALL WARRANTIES AND REPRESENTATIONS OF ANY KIND ARE DISCLAIMED. ANYONE MAKING USE OF THIS INFORMATION AGREES THAT IT ASSUMES ALL LIABILITY ARISING FROM SUCH USE. NO PART OF THESE STANDARDS SHOULD BE REPRODUCED OR DISTRIBUTED IN ANY FORM OR BY ANY MEANS WITHOUT THE PRIOR WRITTEN PERMISSION OF SCRRA. ALL RIGHTS RESERVED.

METROLINK®
SOUTHERN CALIFORNIA REGIONAL RAIL AUTHORITY
ONE GATEWAY PLAZA, 12TH FLOOR, L. A., CA. 90012

ENGINEERING STANDARDS

NO 24 WSM FROG LH
FROG BASE PLATES 24–8L, 24–9L AND 24–10L
CONCRETE TIES–136 LB RE RAIL

STANDARD 2807
SCALE: NTS
REVISION –
SHEET 1 OF 1
CADD FILE: ES2807–55

BILL OF MATERIAL						
ITEM	QTY FOR 24-136-11R	QTY FOR 24-136-12R	QTY FOR 24-136-13R	DESCRIPTION	DWG NO	SCRRA PART NO
1	1	0	0	FLAT BAR, ASTM A36, 3/4" x 8" x 2'-4 1/2" LONG	-	
2	0	1	0	FLAT BAR, ASTM A36, 3/4" x 8" x 2'-5 1/2" LONG	-	
3	0	0	1	FLAT BAR, ASTM A36, 3/4" x 8" x 2'-6 1/2" LONG	-	
4	4	4	4	SHOULDER, PANDROL, FORGED TONGUELESS, TYPE 1	-	

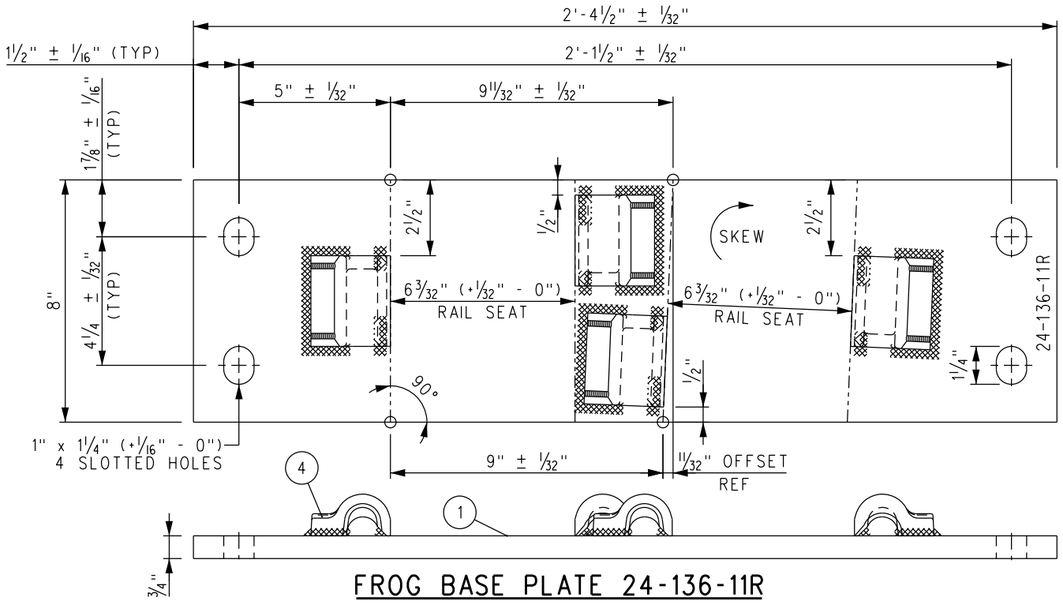

FROG BASE PLATE 24-136-11R

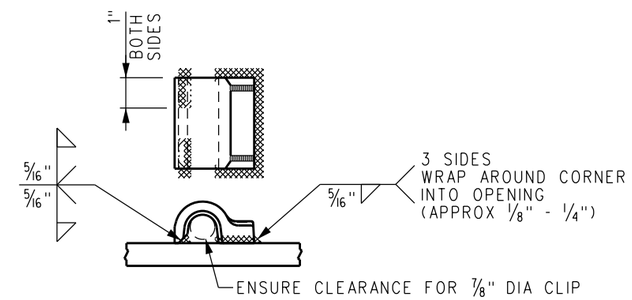

FORGED SHOULDER WELDING DETAIL

NOTES:

1. I.D. CHARACTERS TO BE 1/2" MINIMUM HEIGHT CLEARLY STAMPED AS SHOWN.
2. WELDS TO BE DRESSED FLUSH WITH SHOULDER & NOT TO PROTRUDE INTO RAIL SEAT.
3. SLOTTED HOLE CENTERS ARE INDICATED ON DRAWING.

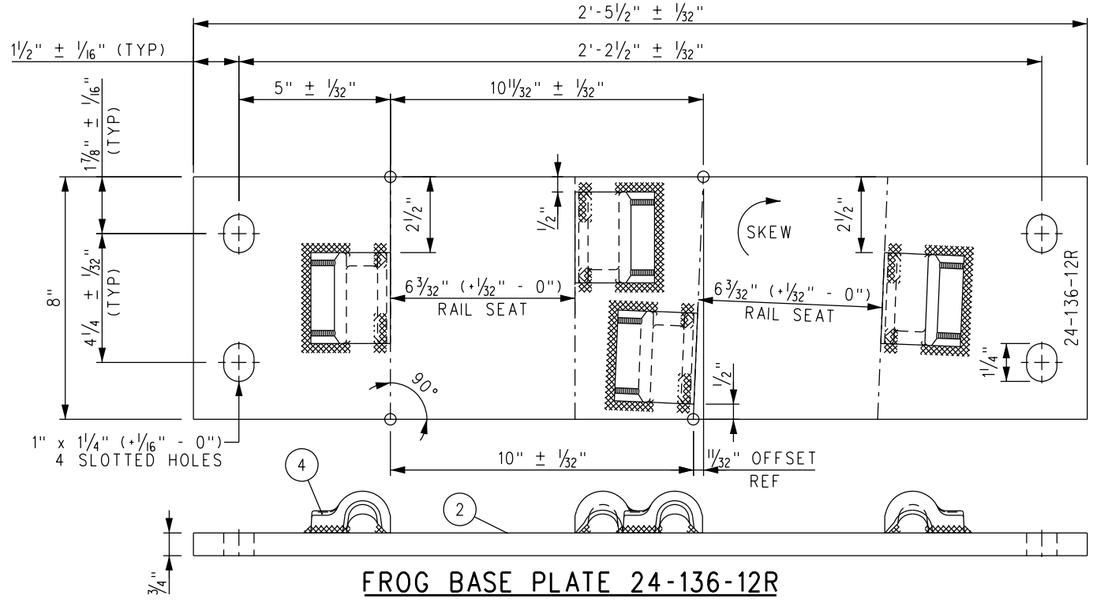

FROG BASE PLATE 24-136-12R

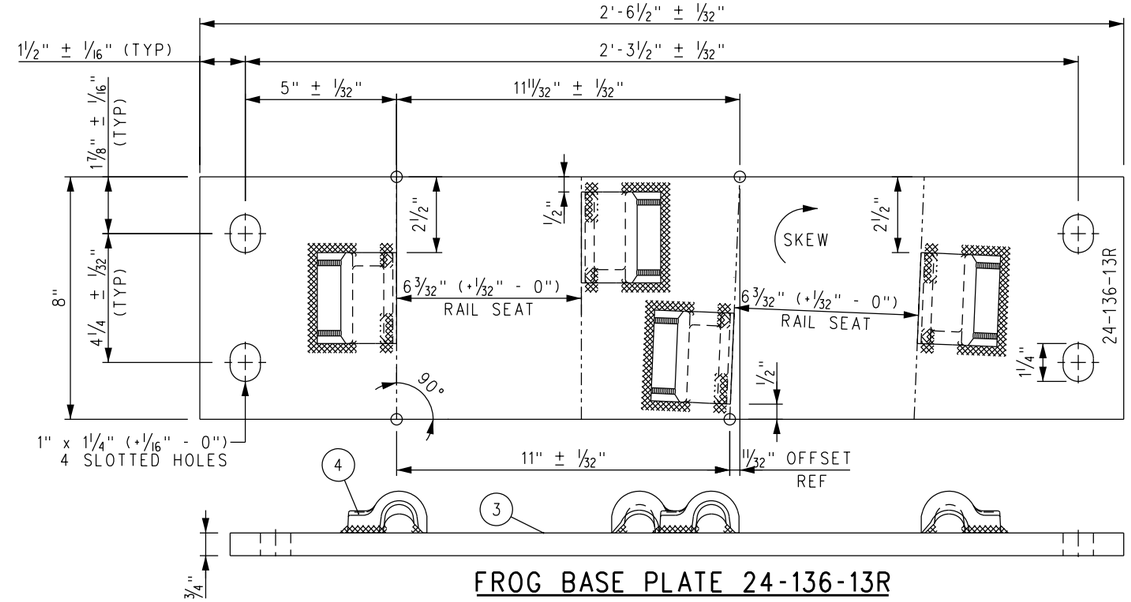

FROG BASE PLATE 24-136-13R

REV.	DATE	DESCRIPTION	DES.	ENG.
X	XX-XX-XX	REVISION	XX	XX

DRAWN BY: HDR DATE: 03/31/2011

ASSISTANT DIRECTOR: STANDARDS & DESIGN

DIRECTOR OF ENGINEERING AND CONSTRUCTION

SCRRA ENGINEERING STANDARDS ARE INTENDED FOR SCRRA APPROVED USES ONLY. FOR NON-SCRRA APPROVED USES:
SCRRA SHALL NOT BE RESPONSIBLE FOR THE ACCURACY OR COMPLETENESS OF THE DATA OR INFORMATION CONTAINED HEREIN. THE SELECTION AND USE OF THESE STANDARDS IS THE SOLE RESPONSIBILITY OF THE USER AND SHOULD NOT BE USED WITHOUT CONSULTING A REGISTERED PROFESSIONAL ENGINEER. ALL WARRANTIES AND REPRESENTATIONS OF ANY KIND ARE DISCLAIMED. ANYONE MAKING USE OF THIS INFORMATION AGREES THAT IT ASSUMES ALL LIABILITY ARISING FROM SUCH USE. NO PART OF THESE STANDARDS SHOULD BE REPRODUCED OR DISTRIBUTED IN ANY FORM OR BY ANY MEANS WITHOUT THE PRIOR WRITTEN PERMISSION OF SCRRA. ALL RIGHTS RESERVED.

METROLINK®
SOUTHERN CALIFORNIA REGIONAL RAIL AUTHORITY
ONE GATEWAY PLAZA, 12TH FLOOR, L. A., CA. 90012

ENGINEERING STANDARDS

NO 24 WSM FROG RH
FROG BASE PLATES 24-11R, 24-12R AND 24-13R
CONCRETE TIES-136 LB RE RAIL

STANDARD 2807
SCALE: NTS
REVISION –
SHEET 1 OF 1
CADD FILE: ES2807-56

BILL OF MATERIAL						
ITEM	QTY FOR 24-136-11L	QTY FOR 24-136-12L	QTY FOR 24-136-13L	DESCRIPTION	DWG NO	SCRRA PART NO
1	1	0	0	FLAT BAR, ASTM A36, 3/4" x 8" x 2'-4 1/2" LONG	-	
2	0	1	0	FLAT BAR, ASTM A36, 3/4" x 8" x 2'-5 1/2" LONG	-	
3	0	0	1	FLAT BAR, ASTM A36, 3/4" x 8" x 2'-6 1/2" LONG	-	
4	4	4	4	SHOULDER, PANDROL, FORGED TONGUELESS, TYPE 1	-	

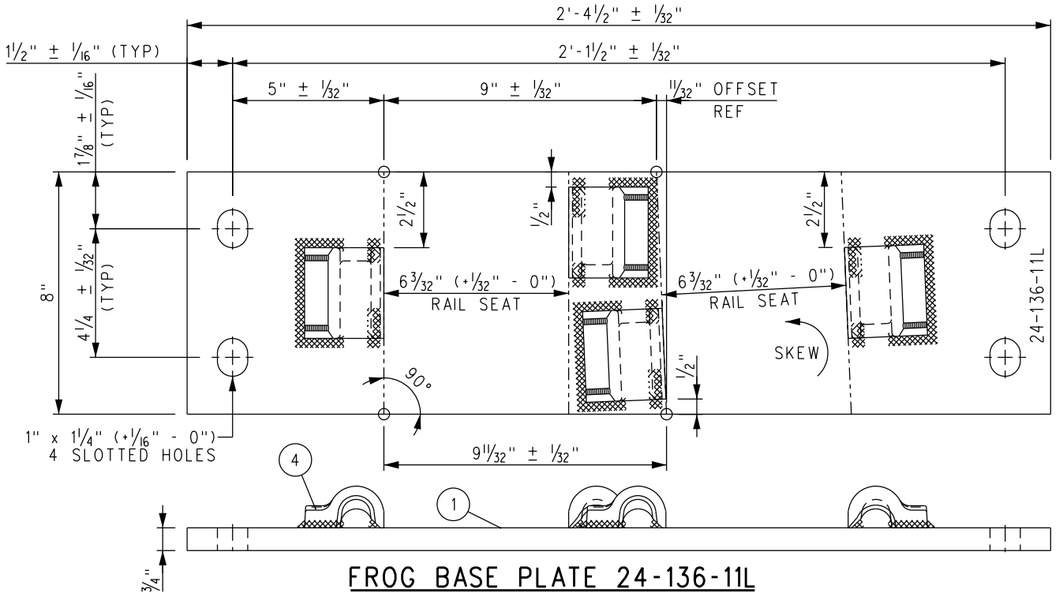

FROG BASE PLATE 24-136-11L

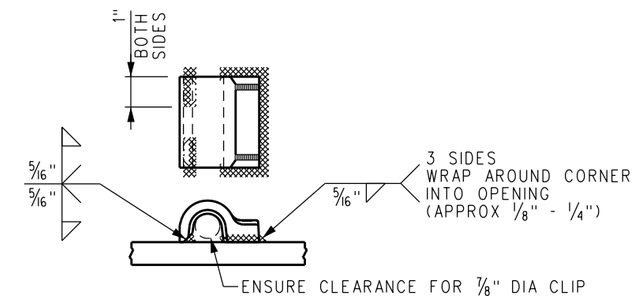

FORGED SHOULDER WELDING DETAIL

NOTES:

1. I.D. CHARACTERS TO BE 1/2" MINIMUM HEIGHT CLEARLY STAMPED AS SHOWN.
2. WELDS TO BE DRESSED FLUSH WITH SHOULDER & NOT TO PROTRUDE INTO RAIL SEAT.
3. SLOTTED HOLE CENTERS ARE INDICATED ON DRAWING.

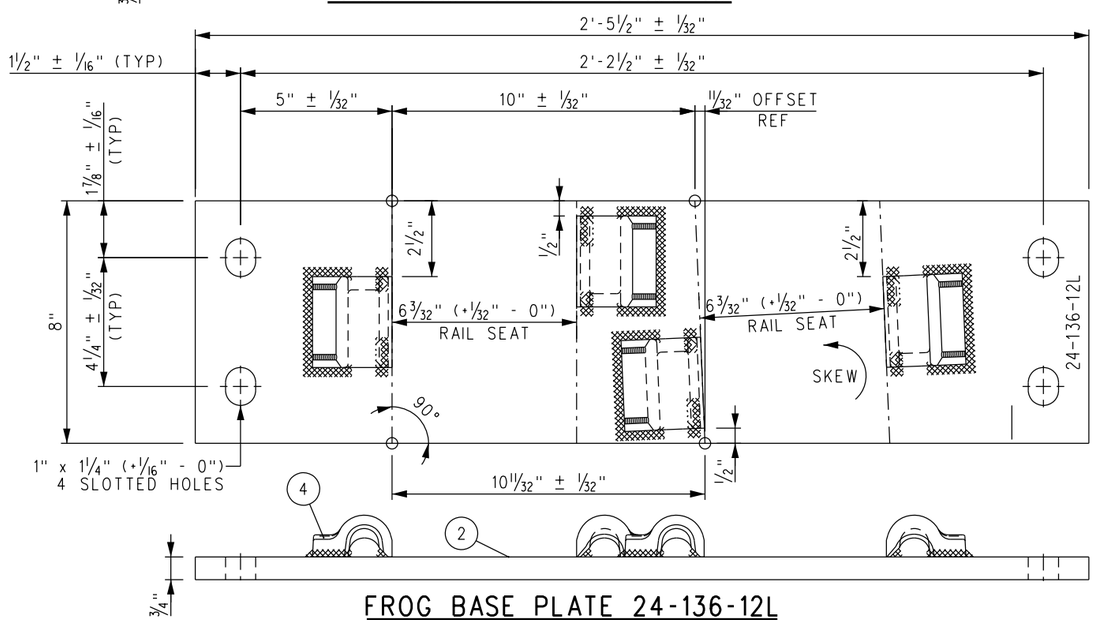

FROG BASE PLATE 24-136-12L

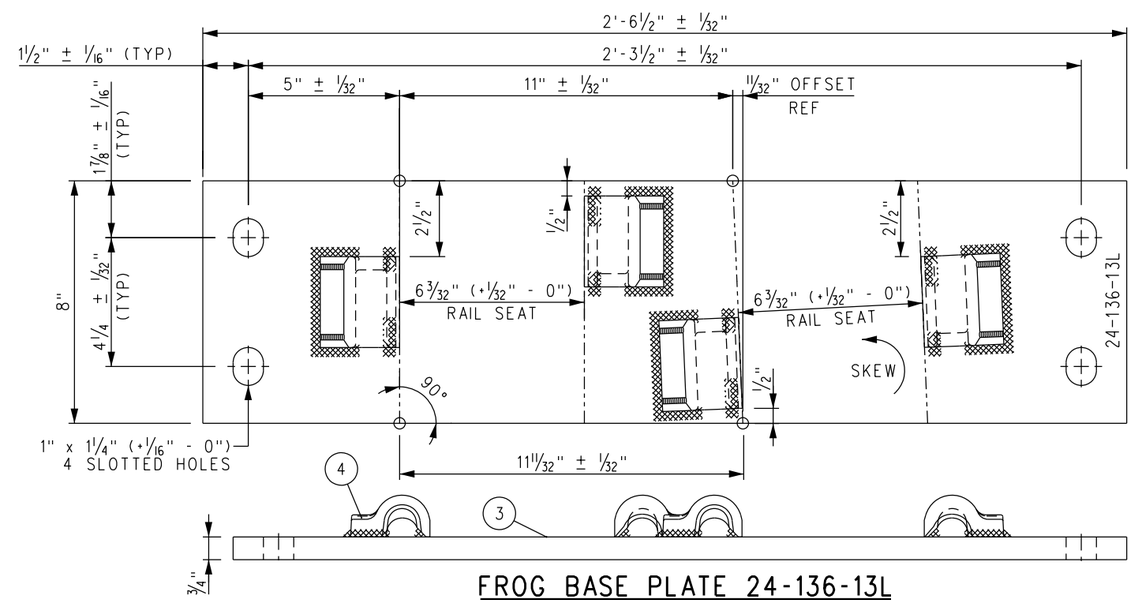

FROG BASE PLATE 24-136-13L

REV.	DATE	DESCRIPTION	DES.	ENG.
X	XX-XX-XX	REVISION	XX	XX

DRAWN BY: HDR DATE: 03/31/2011

ASSISTANT DIRECTOR: STANDARDS & DESIGN

DIRECTOR OF ENGINEERING AND CONSTRUCTION

SCRRA ENGINEERING STANDARDS ARE INTENDED FOR SCRRA APPROVED USES ONLY. FOR NON-SCRRA APPROVED USES:
SCRRA SHALL NOT BE RESPONSIBLE FOR THE ACCURACY OR COMPLETENESS OF THE DATA OR INFORMATION CONTAINED HEREIN. THE SELECTION AND USE OF THESE STANDARDS IS THE SOLE RESPONSIBILITY OF THE USER AND SHOULD NOT BE USED WITHOUT CONSULTING A REGISTERED PROFESSIONAL ENGINEER. ALL WARRANTIES AND REPRESENTATIONS OF ANY KIND ARE DISCLAIMED. ANYONE MAKING USE OF THIS INFORMATION AGREES THAT IT ASSUMES ALL LIABILITY ARISING FROM SUCH USE. NO PART OF THESE STANDARDS SHOULD BE REPRODUCED OR DISTRIBUTED IN ANY FORM OR BY ANY MEANS WITHOUT THE PRIOR WRITTEN PERMISSION OF SCRRA. ALL RIGHTS RESERVED.

METROLINK®
SOUTHERN CALIFORNIA REGIONAL RAIL AUTHORITY
ONE GATEWAY PLAZA, 12TH FLOOR, L. A., CA. 90012

ENGINEERING STANDARDS

NO 24 WSM FROG LH
FROG BASE PLATES 24-11L, 24-12L AND 24-13L
CONCRETE TIES-136 LB RE RAIL

STANDARD 2807
SCALE: NTS
REVISION –
SHEET 1 OF 1
CADD FILE: ES2807-57

BILL OF MATERIAL					
ITEM	QTY FOR 24-136-14R	QTY FOR 24-136-15R	DESCRIPTION	DRAWING NO	SCRRA PART NO
1	1	0	FLAT BAR, ASTM A36, 3/4" x 8" x 2'-7 1/2" LONG	-	
2	0	1	FLAT BAR, ASTM A36, 3/4" x 8" x 2'-8 1/2" LONG	-	
3	4	4	SHOULDER, PANDROL, FORGED TONGUELESS, TYPE 1	-	

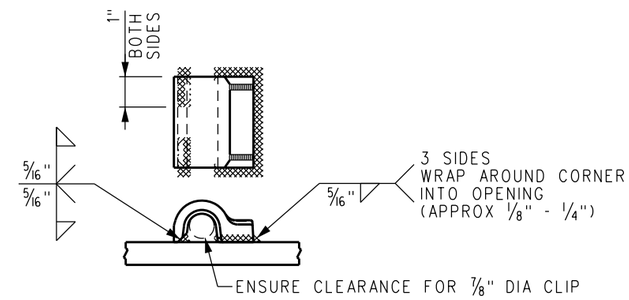

NOTES:

1. I.D. CHARACTERS TO BE 1/2" MINIMUM HEIGHT CLEARLY STAMPED AS SHOWN.
2. WELDS TO BE DRESSED FLUSH WITH SHOULDER & NOT TO PROTRUDE INTO RAIL SEAT.
3. SLOTTED HOLE CENTERS ARE INDICATED ON DRAWING.

FORGED SHOULDER WELDING DETAIL

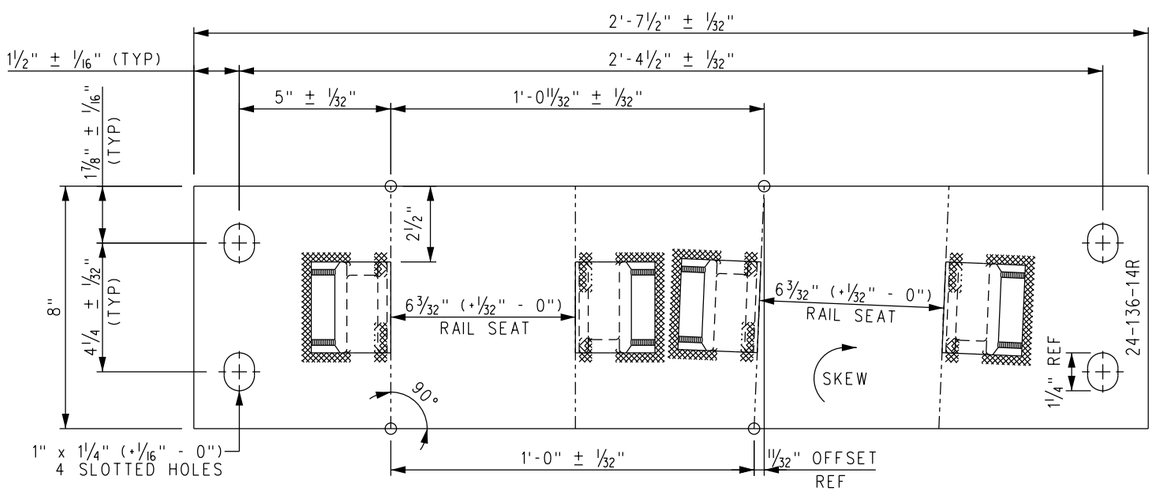

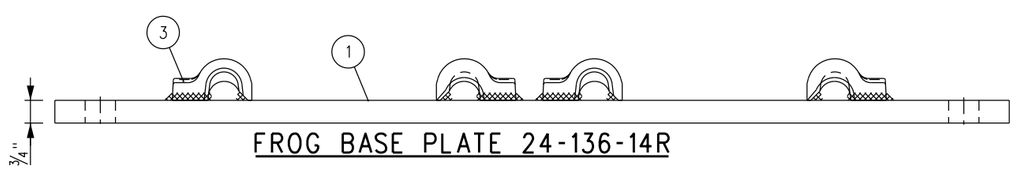

FROG BASE PLATE 24-136-14R

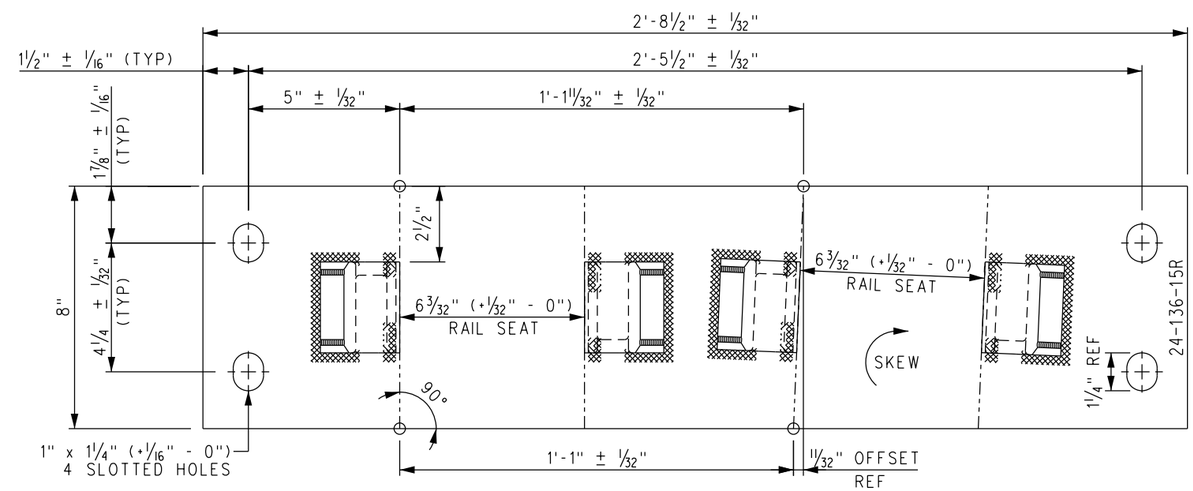

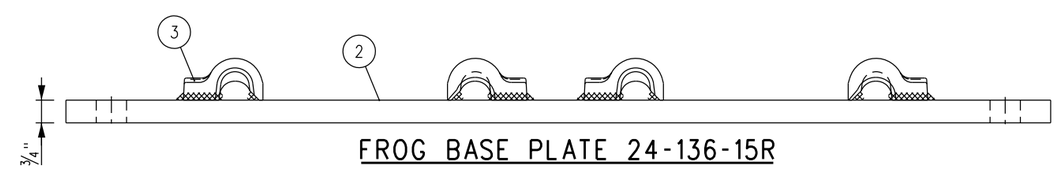

FROG BASE PLATE 24-136-14R

REV.	DATE	DESCRIPTION	DES.	ENG.
X	XX-XX-XX	REVISION	XX	XX

DRAWN BY: HDR DATE: 03/31/2011

ASSISTANT DIRECTOR: STANDARDS & DESIGN

DIRECTOR OF ENGINEERING AND CONSTRUCTION

SCRRA ENGINEERING STANDARDS ARE INTENDED FOR SCRRA APPROVED USES ONLY. FOR NON-SCRRA APPROVED USES:
SCRRA SHALL NOT BE RESPONSIBLE FOR THE ACCURACY OR COMPLETENESS OF THE DATA OR INFORMATION CONTAINED HEREIN. THE SELECTION AND USE OF THESE STANDARDS IS THE SOLE RESPONSIBILITY OF THE USER AND SHOULD NOT BE USED WITHOUT CONSULTING A REGISTERED PROFESSIONAL ENGINEER. ALL WARRANTIES AND REPRESENTATIONS OF ANY KIND ARE DISCLAIMED. ANYONE MAKING USE OF THIS INFORMATION AGREES THAT IT ASSUMES ALL LIABILITY ARISING FROM SUCH USE. NO PART OF THESE STANDARDS SHOULD BE REPRODUCED OR DISTRIBUTED IN ANY FORM OR BY ANY MEANS WITHOUT THE PRIOR WRITTEN PERMISSION OF SCRRA. ALL RIGHTS RESERVED.

METROLINK®
SOUTHERN CALIFORNIA REGIONAL RAIL AUTHORITY
ONE GATEWAY PLAZA, 12TH FLOOR, L. A., CA. 90012

ENGINEERING STANDARDS

NO 24 WSM FROG RH
FROG BASE PLATES 24–14R AND 24–15R
CONCRETE TIES–136 LB RE RAIL

STANDARD 2807
SCALE: NTS
REVISION –
SHEET 1 OF 1
CADD FILE: ES2807–58

UserName-> carlosa Date Plotted: 10/5/2011 3:58:17 PM Plot Driver-> S:\Plot Drivers\pdf.plt FileName-> s:\V8EngStds\2000\Turnouts\No 24 Turnout\ES2807-58.dgn

BILL OF MATERIAL					
ITEM	QTY FOR 24-136-14L	QTY FOR 24-136-15L	DESCRIPTION	DRAWING NO	SCRRA PART NO
1	1	0	FLAT BAR, ASTM A36, 3/4" x 8" x 2'-7 1/2" LONG	-	
2	0	1	FLAT BAR, ASTM A36, 3/4" x 8" x 2'-8 1/2" LONG	-	
3	4	4	SHOULDER, PANDROL, FORGED TONGUELESS, TYPE 1	-	

NOTES:

1. I.D. CHARACTERS TO BE 1/2" MINIMUM HEIGHT CLEARLY STAMPED AS SHOWN.
2. WELDS TO BE DRESSED FLUSH WITH SHOULDER & NOT TO PROTRUDE INTO RAIL SEAT.
3. SLOTTED HOLE CENTERS ARE INDICATED ON DRAWING.

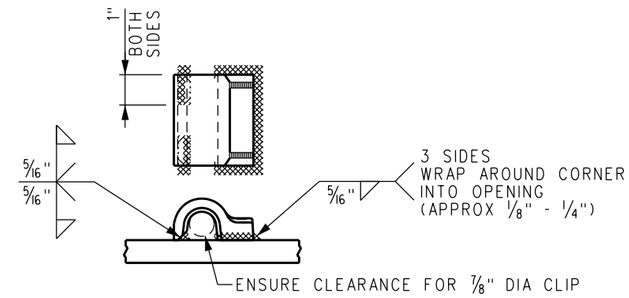

FORGED SHOULDER WELDING DETAIL

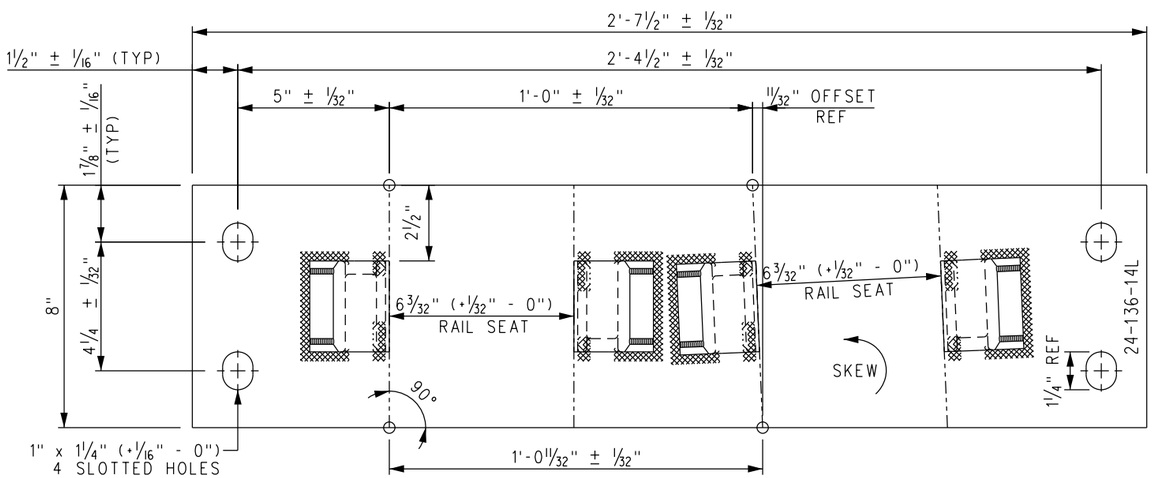

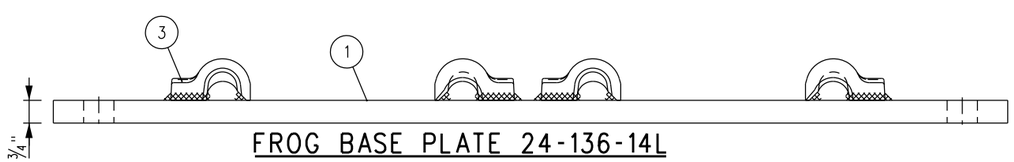

FROG BASE PLATE 24-136-14L

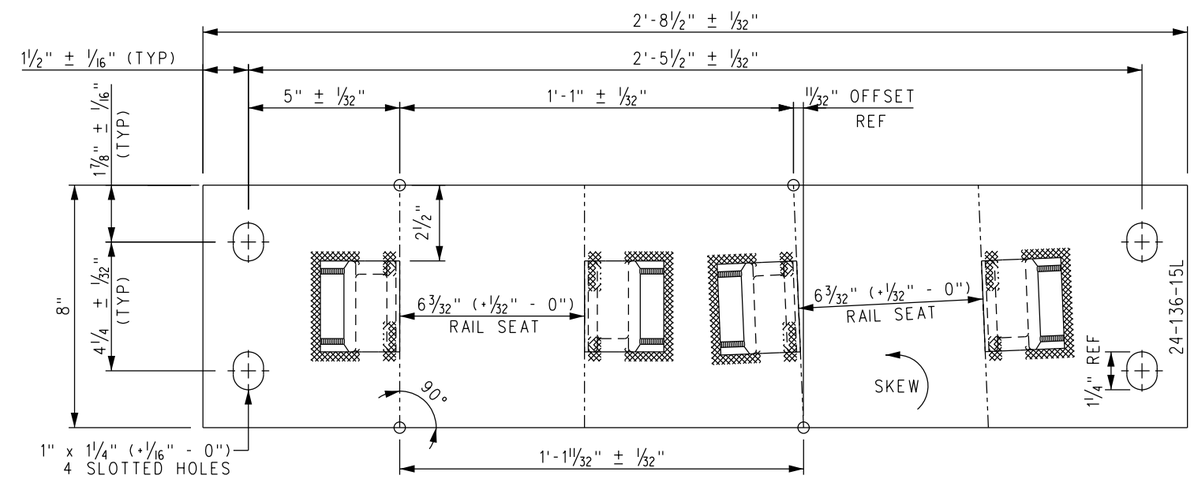

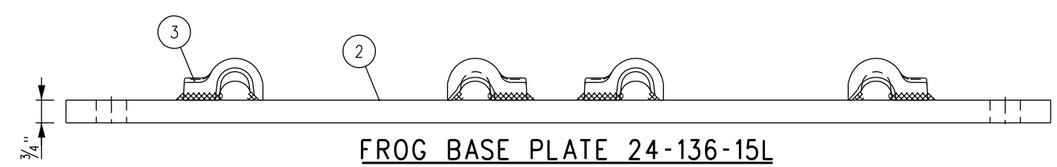

FROG BASE PLATE 24-136-15L

REV.	DATE	DESCRIPTION	DES.	ENG.
X	XX-XX-XX	REVISION	XX	XX

DRAWN BY: HDR DATE: 03/31/2011

ASSISTANT DIRECTOR: STANDARDS & DESIGN

DIRECTOR OF ENGINEERING AND CONSTRUCTION

SCRRA ENGINEERING STANDARDS ARE INTENDED FOR SCRRA APPROVED USES ONLY. FOR NON-SCRRA APPROVED USES:
SCRRA SHALL NOT BE RESPONSIBLE FOR THE ACCURACY OR COMPLETENESS OF THE DATA OR INFORMATION CONTAINED HEREIN. THE SELECTION AND USE OF THESE STANDARDS IS THE SOLE RESPONSIBILITY OF THE USER AND SHOULD NOT BE USED WITHOUT CONSULTING A REGISTERED PROFESSIONAL ENGINEER. ALL WARRANTIES AND REPRESENTATIONS OF ANY KIND ARE DISCLAIMED. ANYONE MAKING USE OF THIS INFORMATION AGREES THAT IT ASSUMES ALL LIABILITY ARISING FROM SUCH USE. NO PART OF THESE STANDARDS SHOULD BE REPRODUCED OR DISTRIBUTED IN ANY FORM OR BY ANY MEANS WITHOUT THE PRIOR WRITTEN PERMISSION OF SCRRA. ALL RIGHTS RESERVED.

METROLINK®
SOUTHERN CALIFORNIA REGIONAL RAIL AUTHORITY
ONE GATEWAY PLAZA, 12TH FLOOR, L. A., CA. 90012

ENGINEERING STANDARDS

NO 24 WSM FROG LH
FROG BASE PLATES 24–14L AND 24–15L
CONCRETE TIES–136 LB RE RAIL

STANDARD 2807
SCALE: NTS
REVISION –
SHEET 1 OF 1
CADD FILE: ES2807–59

BILL OF MATERIAL				
ITEM	QTY	DESCRIPTION	DWG NO	SCRRA PART NO
1	1	GUARD BAR, UIC33 1200 SERIES x 26'-0" LONG	-	
2	13	GUARD RAIL PLATE ASSEMBLY, 136 LB RE RAISED 1", STRAIGHT	-	
3	13	H-CLAMP	-	
4	39	CLIP, PANDROL, E2055	-	
5	13	LOCKING BLOCK	-	
6	52	SHIM, 1/8" x 3" X 6"	-	

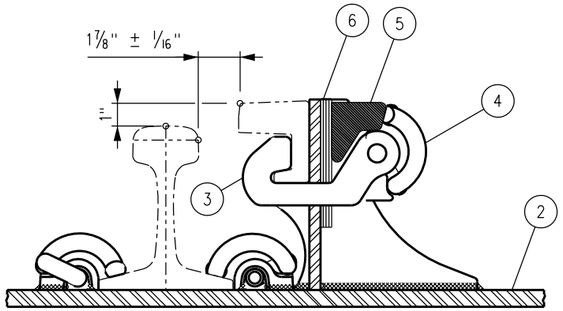

PARTIAL SECTION (A)
GUARD RAIL HARDWARE ASSEMBLY

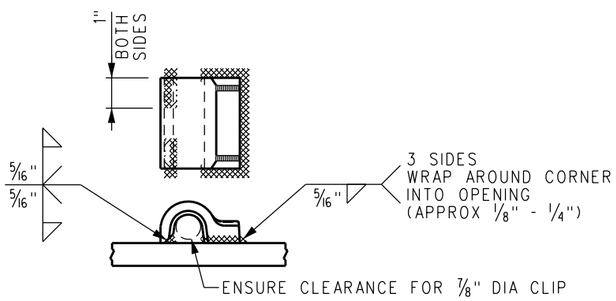

FORGED SHOULDER WELDING DETAIL

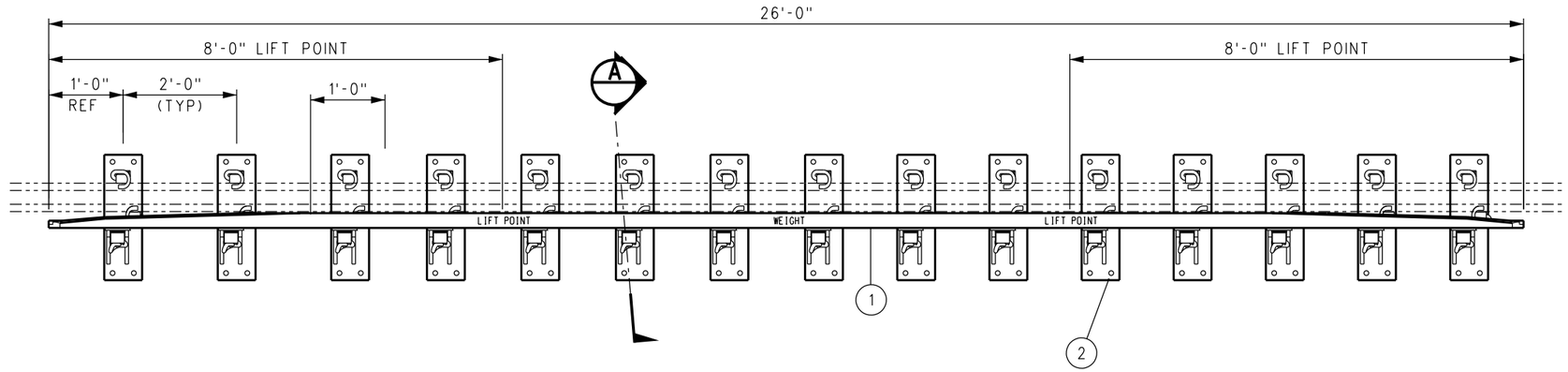

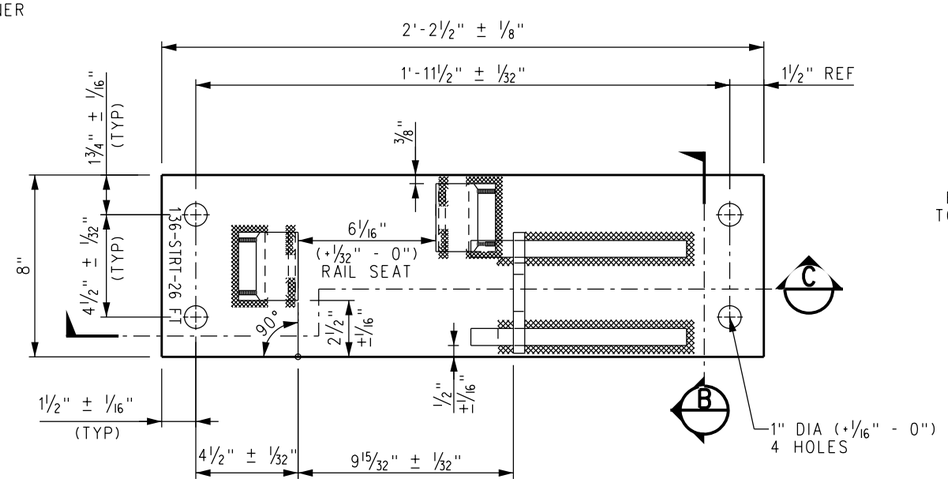

GUARD RAIL PLATE ASSEMBLY

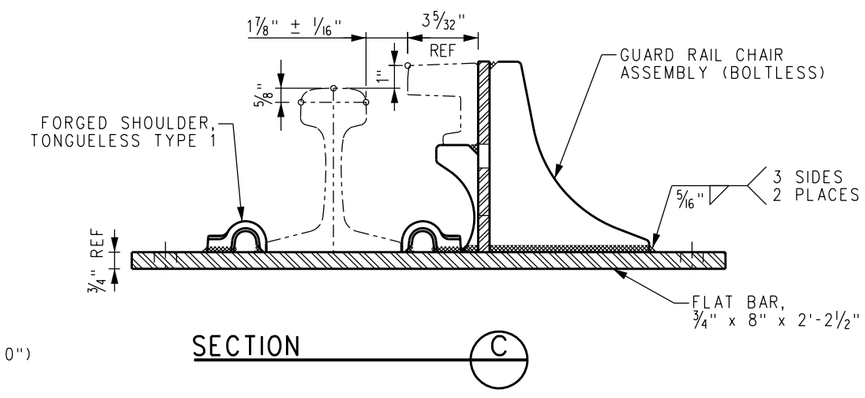

SECTION (C)

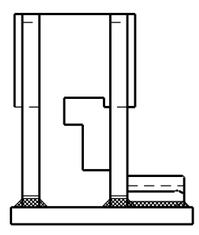

VIEW (B)

NOTES:

1. PLATE SPACING IS SET FOR SHIPPING ONLY. FINAL PLATE SPACING IS TO BE DETERMINED BY TIE SPACING AT TIME OF INSTALLATION.
2. PANDROL SPRING CLIPS (E2055) TO BE INCLUDED IN ASSEMBLY.
3. LIFT POINTS AND WEIGHT OF ASSEMBLY TO BE MARKED ON HEAD OF WEAR BAR WITH WHITE PAINT.
4. PLATE IS TO BE STAMPED WITH PLATE I.D. WITH 1/2" HIGH CHARACTERS AS SHOWN.
5. GRIND AWAY CORNER OF PANDROL SHOULDER TO CLEAR FOOT OF CHAIR ASSEMBLY.

REV.	DATE	DESCRIPTION	DES.	ENG.
X	XX-XX-XX	REVISION	XX	XX

DRAWN BY: HDR DATE: 03/31/2011

ASSISTANT DIRECTOR: STANDARDS & DESIGN

DIRECTOR OF ENGINEERING AND CONSTRUCTION

SCRRA ENGINEERING STANDARDS ARE INTENDED FOR SCRRA APPROVED USES ONLY. FOR NON-SCRRA APPROVED USES:
SCRRA SHALL NOT BE RESPONSIBLE FOR THE ACCURACY OR COMPLETENESS OF THE DATA OR INFORMATION CONTAINED HEREIN. THE SELECTION AND USE OF THESE STANDARDS IS THE SOLE RESPONSIBILITY OF THE USER AND SHOULD NOT BE USED WITHOUT CONSULTING A REGISTERED PROFESSIONAL ENGINEER. ALL WARRANTIES AND REPRESENTATIONS OF ANY KIND ARE DISCLAIMED. ANYONE MAKING USE OF THIS INFORMATION AGREES THAT IT ASSUMES ALL LIABILITY ARISING FROM SUCH USE. NO PART OF THESE STANDARDS SHOULD BE REPRODUCED OR DISTRIBUTED IN ANY FORM OR BY ANY MEANS WITHOUT THE PRIOR WRITTEN PERMISSION OF SCRRA. ALL RIGHTS RESERVED.

METROLINK®
SOUTHERN CALIFORNIA REGIONAL RAIL AUTHORITY
ONE GATEWAY PLAZA, 12TH FLOOR, L. A., CA. 90012

ENGINEERING STANDARDS
NO 24 GUARD RAIL ASSEMBLY,
STRAIGHT WITH PLATES 26'-0" LONG,
BOLTLESS, RAISED 1"
CONCRETE TIES-136 LB RE RAIL, 1-7/8" FLANGEWAY

STANDARD 2807
SCALE: NTS
REVISION –
SHEET 1 OF 1
CADD FILE: ES2807-60

BILL OF MATERIAL				
ITEM	QTY	DESCRIPTION	DWG NO	SCRRA PART NO
1	1	GUARD BAR, UIC33 1200 SERIES x 26'-0" LONG	-	
2	15	GUARD RAIL PLATE ASSEMBLY, RAISED 1", LH SKEWED	-	
3	15	H-CLAMP	-	
4	45	CLIP, PANDROL, E2055	-	
5	15	LOCKING BLOCK	-	
6	60	SHIM, 1/8" x 3" x 6"	-	

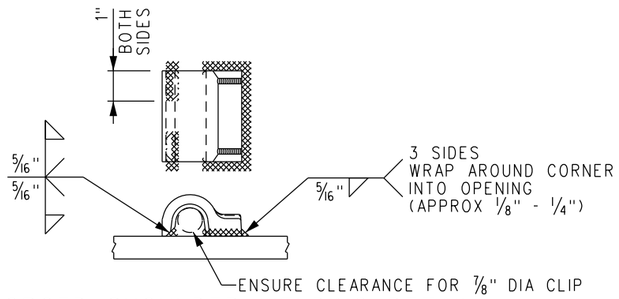

FORGED SHOULDER WELDING DETAIL

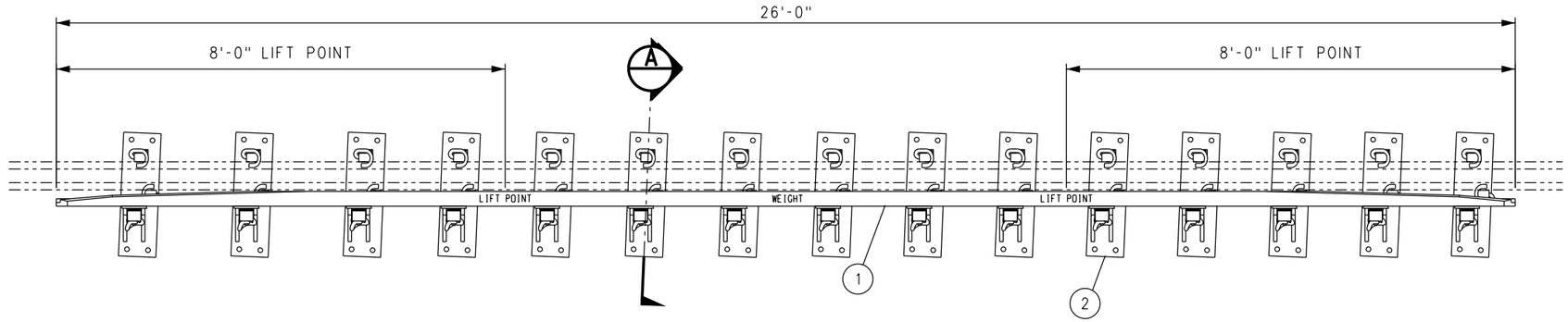

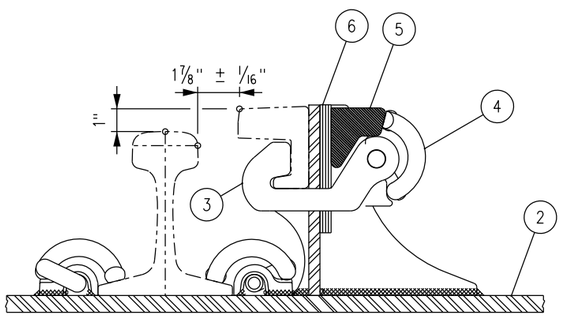

PARTIAL SECTION A

GUARD RAIL HARDWARE ASSEMBLY

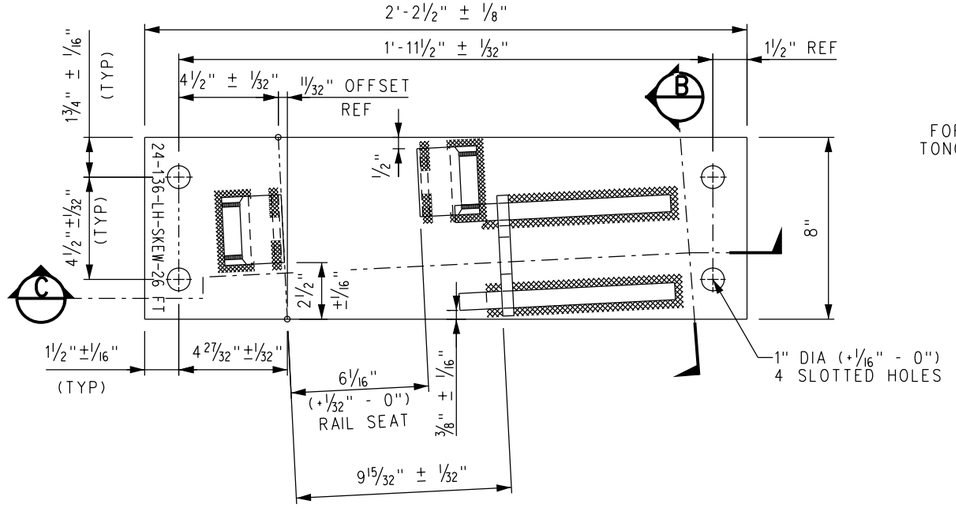

GUARD RAIL PLATE ASSEMBLY

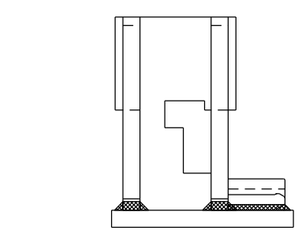

VIEW B

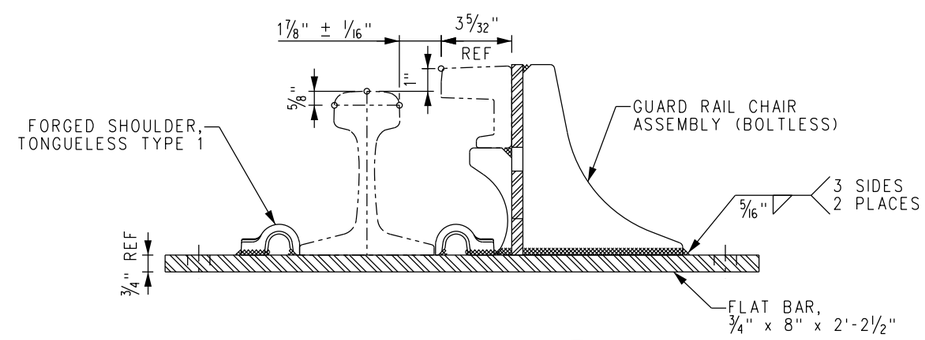

SECTION C

NOTES:

1. PLATE SPACING IS SET FOR SHIPPING ONLY. FINAL PLATE SPACING IS TO BE DETERMINED BY TIE SPACING AT TIME OF INSTALLATION.
2. PANDROL SPRING CLIPS (E2055) TO BE INCLUDED IN ASSEMBLY.
3. LIFT POINTS AND WEIGHT OF ASSEMBLY TO BE MARKED ON HEAD OF WEAR BAR WITH WHITE PAINT.
4. PLATE IS TO BE STAMPED WITH PLATE I.D. WITH 1/2" HIGH CHARACTERS AS SHOWN.
5. GRIND AWAY CORNER OF PANDROL SHOULDER TO CLEAR FOOT OF CHAIR ASSEMBLY.

REV.	DATE	DESCRIPTION	DES.	ENG.
X	XX-XX-XX	REVISION	XX	XX

DRAWN BY: HDR DATE: 03/31/2011

ASSISTANT DIRECTOR: STANDARDS & DESIGN

DIRECTOR OF ENGINEERING AND CONSTRUCTION

SCRRA ENGINEERING STANDARDS ARE INTENDED FOR SCRRA APPROVED USES ONLY. FOR NON-SCRRA APPROVED USES:
SCRRA SHALL NOT BE RESPONSIBLE FOR THE ACCURACY OR COMPLETENESS OF THE DATA OR INFORMATION CONTAINED HEREIN. THE SELECTION AND USE OF THESE STANDARDS IS THE SOLE RESPONSIBILITY OF THE USER AND SHOULD NOT BE USED WITHOUT CONSULTING A REGISTERED PROFESSIONAL ENGINEER. ALL WARRANTIES AND REPRESENTATIONS OF ANY KIND ARE DISCLAIMED. ANYONE MAKING USE OF THIS INFORMATION AGREES THAT IT ASSUMES ALL LIABILITY ARISING FROM SUCH USE. NO PART OF THESE STANDARDS SHOULD BE REPRODUCED OR DISTRIBUTED IN ANY FORM OR BY ANY MEANS WITHOUT THE PRIOR WRITTEN PERMISSION OF SCRRA. ALL RIGHTS RESERVED.

METROLINK®
SOUTHERN CALIFORNIA REGIONAL RAIL AUTHORITY
ONE GATEWAY PLAZA, 12TH FLOOR, L. A., CA. 90012

ENGINEERING STANDARDS

NO 24 GUARD RAIL ASSEMBLY,
LH SKEWED WITH PLATES
26'-0" LONG, BOLTLESS, RAISED 1"
CONCRETE TIES-136 LB RE RAIL, 1-7/8" FLANGEWAY

STANDARD: 2807
SCALE: NTS
REVISION: -
SHEET: 1 OF 1
CADD FILE: ES2807-61

BILL OF MATERIAL				
ITEM	QTY	DESCRIPTION	DWG NO	SCRRA PART NO
1	1	GUARD BAR, UIC33 1200 SERIES x 26'-0" LONG	-	
2	15	GUARD RAIL PLATE ASSEMBLY, RAISED 1", RH SKEWED	-	
3	15	H-CLAMP	-	
4	45	CLIP, PANDROL, E2055	-	
5	15	LOCKING BLOCK	-	
6	60	SHIM, 1/8" x 3" x 6"	-	

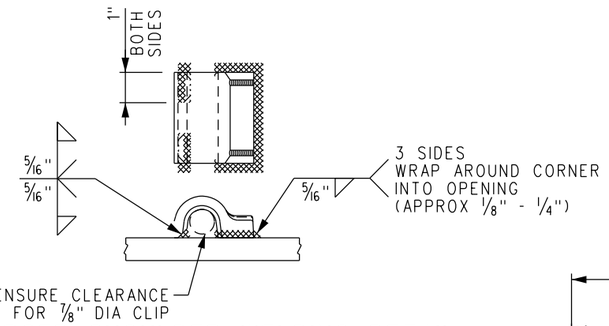

FORGED SHOULDER WELDING DETAIL

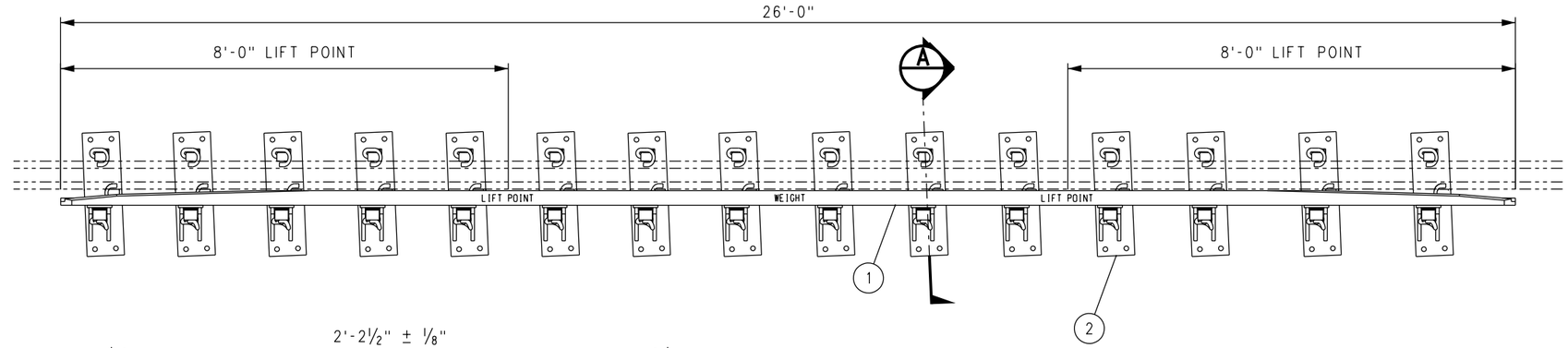

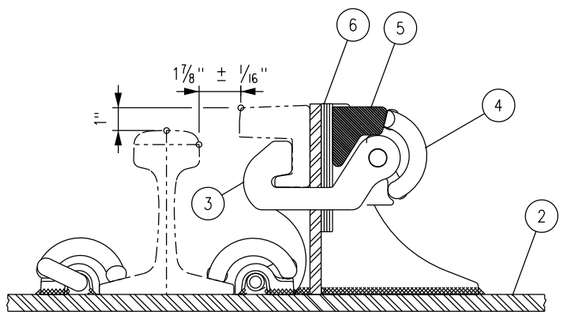

PARTIAL SECTION A

GUARD RAIL HARDWARE ASSEMBLY

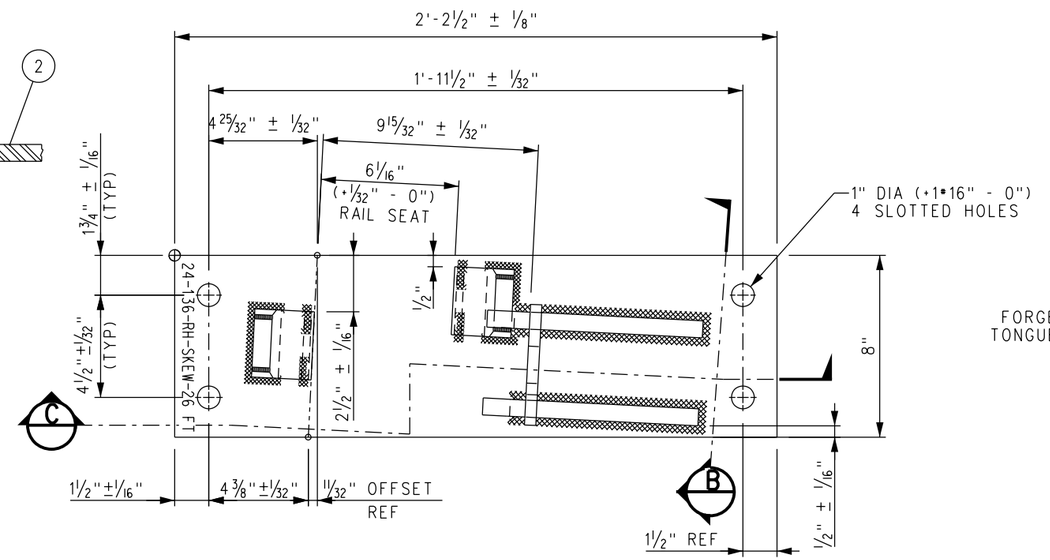

GUARD RAIL PLATE ASSEMBLY

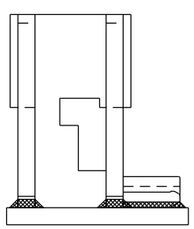

VIEW B

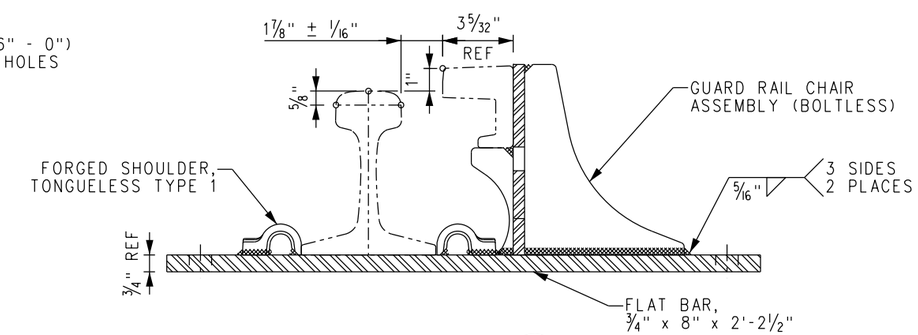

SECTION C

NOTES:

1. PLATE SPACING IS SET FOR SHIPPING ONLY. FINAL PLATE SPACING IS TO BE DETERMINED BY TIE SPACING AT TIME OF INSTALLATION.
2. PANDROL SPRING CLIPS (E2055) TO BE INCLUDED IN ASSEMBLY.
3. LIFT POINTS AND WEIGHT OF ASSEMBLY TO BE MARKED ON HEAD OF WEAR BAR WITH WHITE PAINT.
4. PLATE IS TO BE STAMPED WITH PLATE I.D. WITH 1/2" HIGH CHARACTERS AS SHOWN.
5. GRIND AWAY CORNER OF PANDROL SHOULDER TO CLEAR FOOT OF CHAIR ASSEMBLY.

REV.	DATE	DESCRIPTION	DES.	ENG.
X	XX-XX-XX	REVISION	XX	XX

DRAWN BY: HDR DATE: 03/31/2011

ASSISTANT DIRECTOR: STANDARDS & DESIGN

DIRECTOR OF ENGINEERING AND CONSTRUCTION

SCRRA ENGINEERING STANDARDS ARE INTENDED FOR SCRRA APPROVED USES ONLY. FOR NON-SCRRA APPROVED USES:
SCRRA SHALL NOT BE RESPONSIBLE FOR THE ACCURACY OR COMPLETENESS OF THE DATA OR INFORMATION CONTAINED HEREIN. THE SELECTION AND USE OF THESE STANDARDS IS THE SOLE RESPONSIBILITY OF THE USER AND SHOULD NOT BE USED WITHOUT CONSULTING A REGISTERED PROFESSIONAL ENGINEER. ALL WARRANTIES AND REPRESENTATIONS OF ANY KIND ARE DISCLAIMED. ANYONE MAKING USE OF THIS INFORMATION AGREES THAT IT ASSUMES ALL LIABILITY ARISING FROM SUCH USE. NO PART OF THESE STANDARDS SHOULD BE REPRODUCED OR DISTRIBUTED IN ANY FORM OR BY ANY MEANS WITHOUT THE PRIOR WRITTEN PERMISSION OF SCRRA. ALL RIGHTS RESERVED.

METROLINK
SOUTHERN CALIFORNIA REGIONAL RAIL AUTHORITY
ONE GATEWAY PLAZA, 12TH FLOOR, L. A., CA. 90012

ENGINEERING STANDARDS

NO 24 GUARD RAIL ASSEMBLY,
RH SKEWED WITH PLATES
26'-0" LONG, BOLTLESS, RAISED 1"
CONCRETE TIES–136 LB RE RAIL, 1–7/8" FLANGEWAY

STANDARD 2807
SCALE: NTS
REVISION –
SHEET 1 OF 1
CADD FILE: ES2807-62

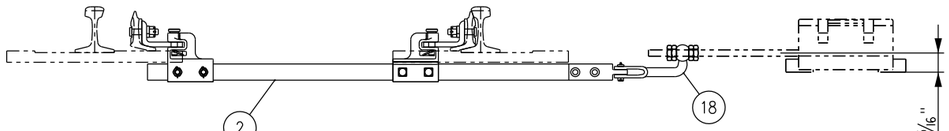

SWITCH ROD ASSEMBLY NO 1

LOCK ROD CONNECTION SHOWN
(VIEW FROM HEEL TOWARDS PS)

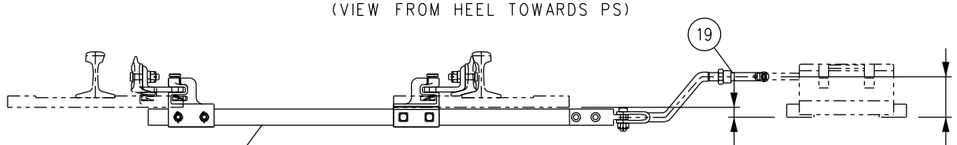

SWITCH ROD ASSEMBLY NO 1

POINT DETECTOR ROD CONNECTION SHOWN
(VIEW FROM HEEL TOWARDS PS)

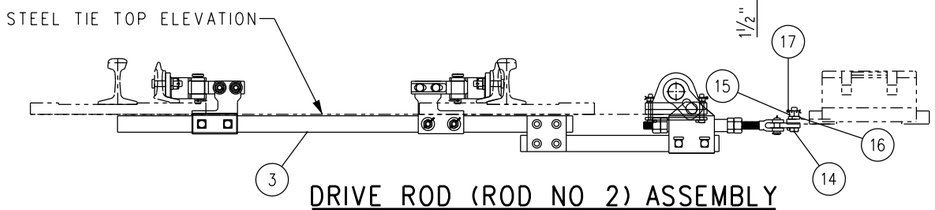

DRIVE ROD (ROD NO 2) ASSEMBLY

FRONT HELPER ROD CRANK ATTACHES TO BASKET
(VIEW FROM HEEL TOWARDS PS)

BILL OF MATERIAL				
ITEM	QTY	DESCRIPTION	DWG NO	SCRRA PART NO
1	1	ROTARY ASSIST ASSEMBLY FOR NO 24-136 LB RE TURNOUT	-	
2	1	SWITCH ROD NO 1, FOR POINT DETECTOR/LOCK ROD, (24-136-1)	ES2807-73	
3	1	SWITCH ROD NO 2, DRIVE, C/W BASKET (24-136-2)	ES2807-73	
4	1	SWITCH ROD NO 3, THROW, (24-136-3)	ES2807-73	
5	1	SWITCH ROD NO 4, THROW, (24-136-4)	ES2807-74	
6	1	SWITCH ROD NO 5, THROW, (24-136-5)	ES2807-74	
7	1	SWITCH ROD NO 6, THROW, (24-136-6)	ES2807-74	
8	2	ROD POINT BRACKET, DETECTOR/LOCK ROD, HOLES AT 2 7/8" ARB*	-	
9	1	ROD POINT BRACKET, THROW ROD, ANTI-ROLL, HOLES AT 2 7/8" ARB*, LH	-	
10	1	ROD POINT BRACKET, THROW ROD, ANTI-ROLL, HOLES AT 2 7/8" ARB*, RH	-	
11	2	ROD POINT BRACKET, HOLES AT 2 3/8" ARB* C/W SQUARE BOLTS	-	
12	6	ROD POINT BRACKET, HOLES AT 2 3/8" ARB* C/W THIN HEAD SQUARE BOLTS	-	
13	1	DROP LUG FOR US&S M23 SWITCH MACHINE DRIVE BAR	-	
14	1	BOLT, 7/8" DIA x 3" LONG, DRILLED 2 9/16" BELOW HEAD, HEAVY HEX, GR 5	-	
15	1	NUT, 7/8" DIA SLOTTED HEAVY HEX, GR 8	-	
16	1	SPRING WASHER, 7/8" DIA	-	
17	1	COTTER PIN, 3/16" DIA x 1 3/4" LONG	-	
18	1	LOCK ROD, FOR M23 SWITCH MACHINE, HST	-	
19	1	DETECTOR ROD, FOR M23 SWITCH MACHINE, HST	-	

ARB* - ABOVE RAIL BASE

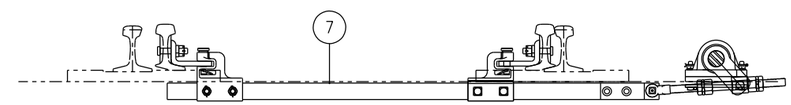

REAR HELPER (ROD NO 6) DRIVE ROD ASSEMBLY

REAR HELPER ROD CRANK ATTACHES TO ROD PIN

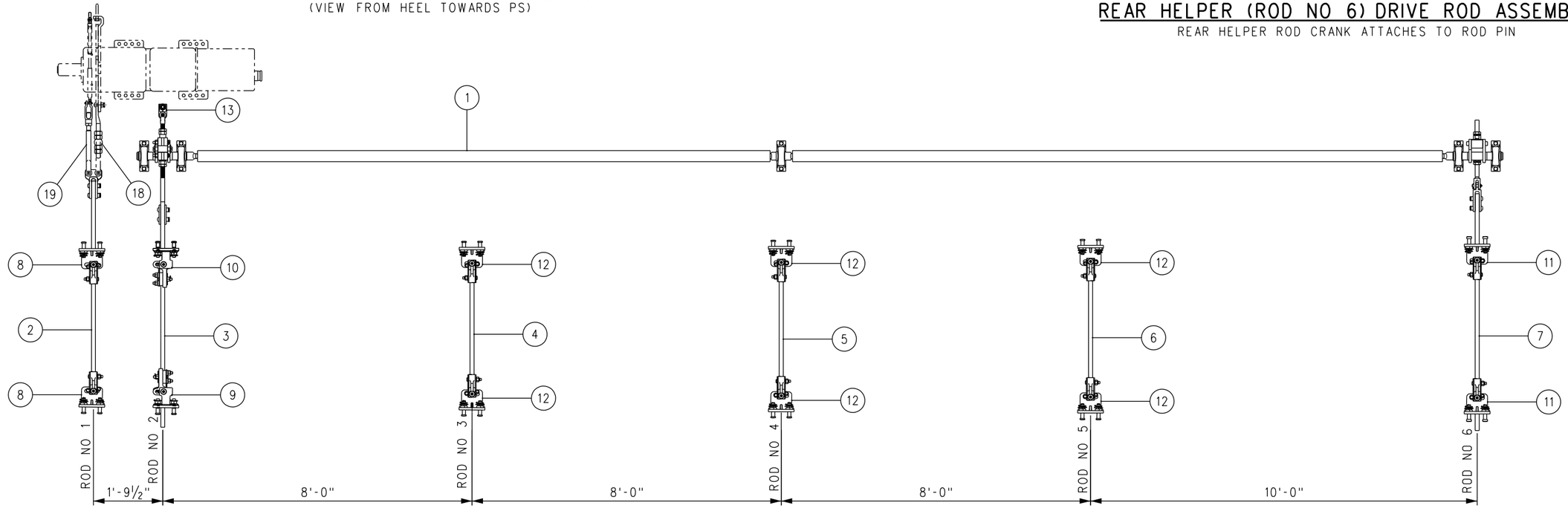

REV.	DATE	DESCRIPTION	DES.	ENG.
X	XX-XX-XX	REVISION	XX	XX

DRAWN BY: HDR DATE: 03/31/2011

ASSISTANT DIRECTOR: STANDARDS & DESIGN

DIRECTOR OF ENGINEERING AND CONSTRUCTION

SCRRA ENGINEERING STANDARDS ARE INTENDED FOR SCRRA APPROVED USES ONLY. FOR NON-SCRRA APPROVED USES:
SCRRA SHALL NOT BE RESPONSIBLE FOR THE ACCURACY OR COMPLETENESS OF THE DATA OR INFORMATION CONTAINED HEREIN. THE SELECTION AND USE OF THESE STANDARDS IS THE SOLE RESPONSIBILITY OF THE USER AND SHOULD NOT BE USED WITHOUT CONSULTING A REGISTERED PROFESSIONAL ENGINEER. ALL WARRANTIES AND REPRESENTATIONS OF ANY KIND ARE DISCLAIMED. ANYONE MAKING USE OF THIS INFORMATION AGREES THAT IT ASSUMES ALL LIABILITY ARISING FROM SUCH USE. NO PART OF THESE STANDARDS SHOULD BE REPRODUCED OR DISTRIBUTED IN ANY FORM OR BY ANY MEANS WITHOUT THE PRIOR WRITTEN PERMISSION OF SCRRA. ALL RIGHTS RESERVED.

METROLINK®
SOUTHERN CALIFORNIA REGIONAL RAIL AUTHORITY
ONE GATEWAY PLAZA, 12TH FLOOR, L. A., CA. 90012

ENGINEERING STANDARDS

HOLLOW STEEL TIE RODDING ASSEMBLY
SWITCH MACHINE ON LEFT HAND SIDE
NO 24-136 LB RE SPRING FROG TURNOUT

STANDARD 2807
SCALE: NTS
REVISION –
SHEET 1 OF 1
CADD FILE: ES2807-71

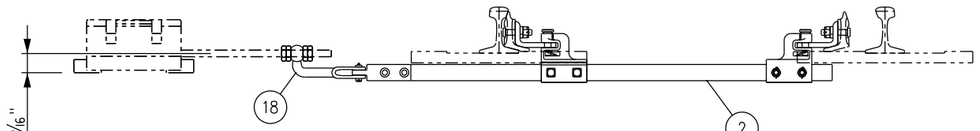

SWITCH ROD ASSEMBLY NO 1

LOCK ROD CONNECTION SHOWN
(VIEW FROM HEEL TOWARDS PS)

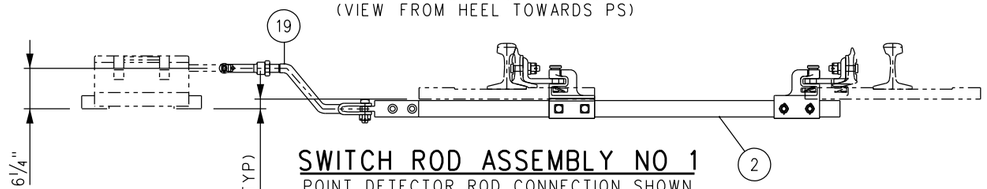

SWITCH ROD ASSEMBLY NO 1

POINT DETECTOR ROD CONNECTION SHOWN
(VIEW FROM HEEL TOWARDS PS)

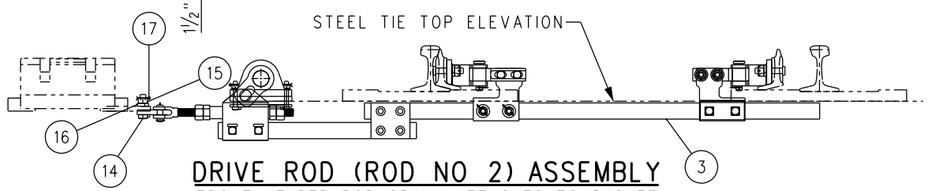

DRIVE ROD (ROD NO 2) ASSEMBLY

FRONT HELPER ROD CRANK ATTACHES TO BASKET
(VIEW FROM HEEL TOWARDS PS)

BILL OF MATERIAL

ITEM	QTY	DESCRIPTION	DWG NO	SCRRA PART NO
1	1	ROTARY ASSIST ASSEMBLY FOR NO 24-136 LB RE TURNOUT	-	
2	1	SWITCH ROD NO 1, FOR POINT DETECTOR/LOCK ROD, (24-136-1)	ES2807-73	
3	1	SWITCH ROD NO 2, DRIVE, C/W BASKET (24-136-2)	ES2807-73	
4	1	SWITCH ROD NO 3, THROW, (24-136-3)	ES2807-73	
5	1	SWITCH ROD NO 4, THROW, (24-136-4)	ES2807-74	
6	1	SWITCH ROD NO 5, THROW, (24-136-5)	ES2807-74	
7	1	SWITCH ROD NO 6, THROW, (24-136-6)	ES2807-74	
8	2	ROD POINT BRACKET, DETECTOR/LOCK ROD, HOLES AT 2 7/8" ARB*	-	
9	1	ROD POINT BRACKET, THROW ROD, ANTI-ROLL, HOLES AT 2 7/8" ARB*, LH	-	
10	1	ROD POINT BRACKET, THROW ROD, ANTI-ROLL, HOLES AT 2 7/8" ARB*, RH	-	
11	2	ROD POINT BRACKET, HOLES AT 2 3/8" ARB* C/W SQUARE BOLTS	-	
12	6	ROD POINT BRACKET, HOLES AT 2 3/8" ARB* C/W THIN HEAD SQUARE BOLTS	-	
13	1	DROP LUG FOR US&S M23 SWITCH MACHINE DRIVE BAR	-	
14	1	BOLT, 7/8" DIA x 3" LONG, DRILLED 2 9/16" BELOW HEAD, HEAVY HEX, GR 5	-	
15	1	NUT, 7/8" DIA SLOTTED HEAVY HEX, GR 8	-	
16	1	SPRING WASHER, 7/8" DIA	-	
17	1	COTTER PIN, 3/16" DIA x 1 3/4" LONG	-	
18	1	LOCK ROD, FOR M23 SWITCH MACHINE, HST	-	
19	1	DETECTOR ROD, FOR M23 SWITCH MACHINE, HST	-	

ARB* - ABOVE RAIL BASE

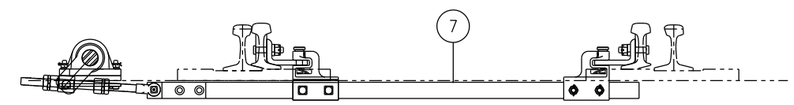

REAR HELPER (ROD NO 6) DRIVE ROD ASSEMBLY

REAR HELPER ROD CRANK ATTACHES TO ROD PIN

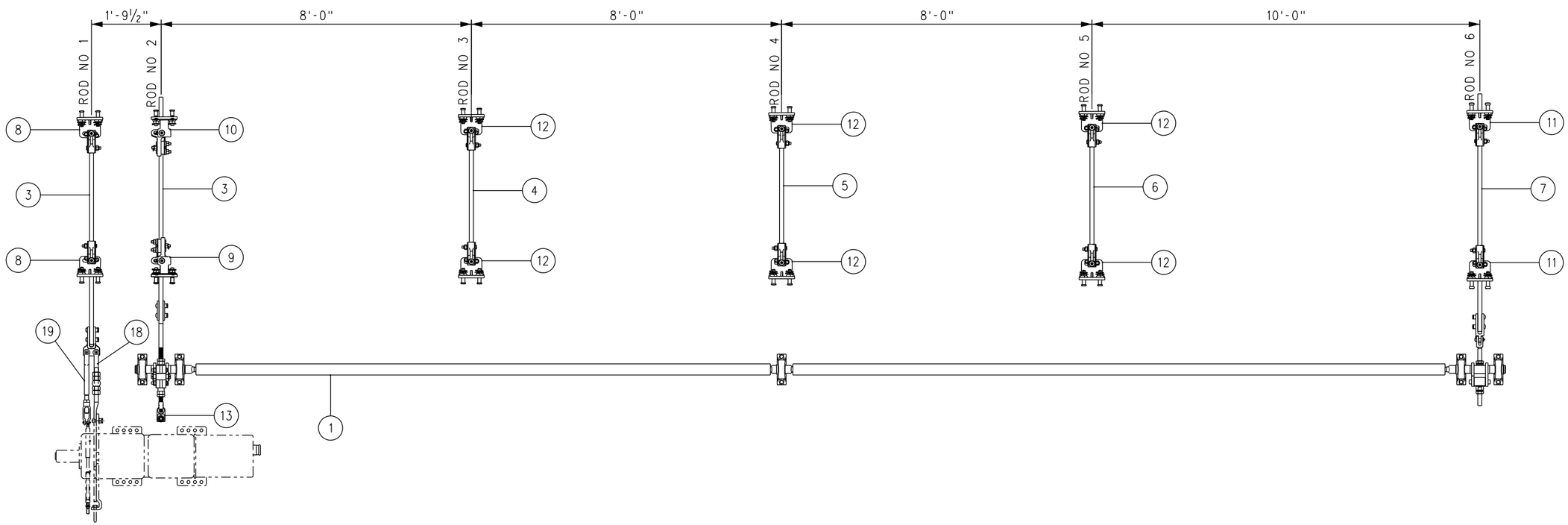

REV.	DATE	DESCRIPTION	DES.	ENG.
X	XX-XX-XX	REVISION	XX	XX

DRAWN BY: HDR DATE: 03/31/2011

ASSISTANT DIRECTOR: STANDARDS & DESIGN

DIRECTOR OF ENGINEERING AND CONSTRUCTION

SCRRA ENGINEERING STANDARDS ARE INTENDED FOR SCRRA APPROVED USES ONLY. FOR NON-SCRRA APPROVED USES, SCRRA SHALL NOT BE RESPONSIBLE FOR THE ACCURACY OR COMPLETENESS OF THE DATA OR INFORMATION CONTAINED HEREIN. THE SELECTION AND USE OF THESE STANDARDS IS THE SOLE RESPONSIBILITY OF THE USER AND SHOULD NOT BE USED WITHOUT CONSULTING A REGISTERED PROFESSIONAL ENGINEER. ALL WARRANTIES AND REPRESENTATIONS OF ANY KIND ARE DISCLAIMED. ANYONE MAKING USE OF THIS INFORMATION AGREES THAT IT ASSUMES ALL LIABILITY ARISING FROM SUCH USE. NO PART OF THESE STANDARDS SHOULD BE REPRODUCED OR DISTRIBUTED IN ANY FORM OR BY ANY MEANS WITHOUT THE PRIOR WRITTEN PERMISSION OF SCRRA. ALL RIGHTS RESERVED.

METROLINK®

SOUTHERN CALIFORNIA REGIONAL RAIL AUTHORITY
ONE GATEWAY PLAZA, 12TH FLOOR, L. A., CA. 90012

ENGINEERING STANDARDS

HOLLOW STEEL TIE RODDING ASSEMBLY
SWITCH MACHINE ON RIGHT HAND SIDE
NO 24–136 LB RE SPRING FROG TURNOUT

STANDARD 2807
SCALE: NTS
REVISION –
SHEET 1 OF 1
CADD FILE: ES2807–72

BILL OF MATERIAL FOR SWITCH ROD 24-136-1				
ITEM	QTY	DESCRIPTION	DWG NO	SCRRA PART NO
1	1	SWITCH ROD 24-136-1	-	
2	2	SWITCH CLIP ASSEMBLY, ADJUSTABLE, FOR HOLLOW TIE COMPOSITE RODS	-	
3	1	CONNECTOR LUG FOR POINT DETECTOR/LOCK RODS	-	
4	2	HUCK BOLT, 3/4" DIA (C50LR-BR24-36)	-	
5	2	HUCK COLLAR, 3/4" DIA (LC-2R24B)	-	

BILL OF MATERIAL FOR SWITCH ROD 24-136-2				
ITEM	QTY	DESCRIPTION	DWG NO	SCRRA PART NO
1	1	BLUE ROD, PULTRUDED COMPOSITE, 1 1/4" x 2 1/2" x 5'-10" LONG, 24-136-2	-	
2	2	CLIP/LUG ASSEMBLY, HST SWITCH, ANTI-ROLLOVER DESIGN, LH	-	
3	4	HUCK BOLT, 3/4" DIA (C50LR-BR24-36)	-	
4	4	HUCK COLLAR, 3/4" DIA (LC-2R24B)	-	
5	2	SPLICE PLATE, FOR BLUE ROD BASKET ASSEMBLY RODS	-	
6	1	BASKET/ROD ASSEMBLY FOR HST WITH ROTARY ASSIST	-	
7	1	BLUE ROD, PULTRUDED COMPOSITE, 1 1/4" x 2 1/2" x 2'-7" LONG, 1-B ROD	-	

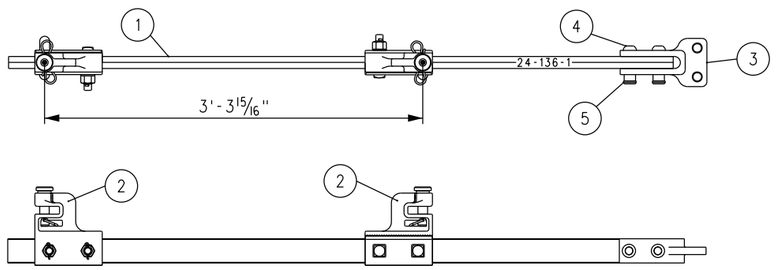

SWITCH ROD ASSEMBLY 24-136-1

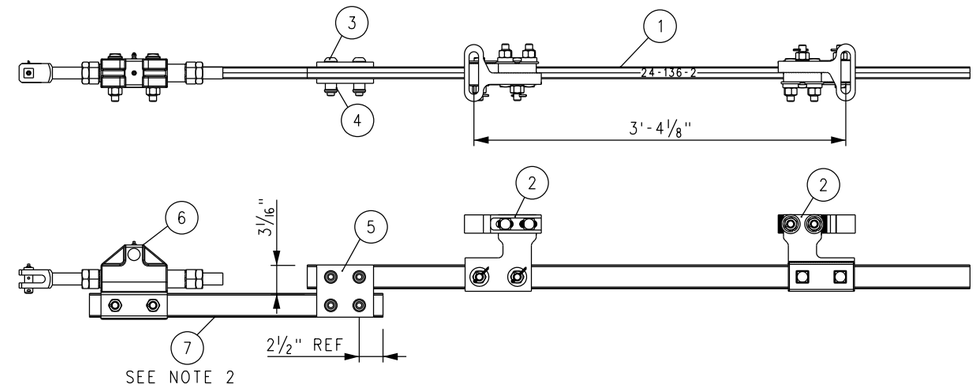

SWITCH ROD ASSEMBLY 24-136-2

BILL OF MATERIAL FOR SWITCH ROD 24-136-3				
ITEM	QTY	DESCRIPTION	DWG NO	SCRRA PART NO
1	1	SWITCH ROD 24-136-3	-	
2	2	SWITCH CLIP ASSEMBLY, ADJUSTABLE, FOR HOLLOW TIE	-	

NOTE: CENTER TO CENTER PIN DIMENSION REQUIRED FOR 4 3/4" THROW

ROD *	C-C PIN DEMINSION
1	3'-3 15/16"
2	3'-4 1/8"
3	3'-5 3/32"
4	3'-5 7/8"
5	3'-6 15/32"
6	3'-7"

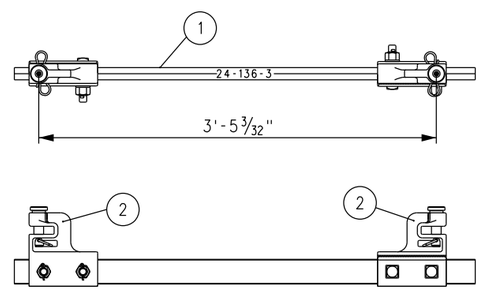

SWITCH ROD ASSEMBLY 24-136-3

NOTES:

1. ROD IDENTIFICATION TO BE ENGRAVED ON ROD CLEARLY AS SHOWN, 3/8" MIN HEIGHT.
2. SWITCH RODS MUST BE PARALLEL WITHIN 1/16" OVER LENGTH OF 1-B ROD.

REV.	DATE	DESCRIPTION	DES.	ENG.
X	XX-XX-XX	REVISION	XX	XX

DRAWN BY: HDR DATE: 03/31/2011

ASSISTANT DIRECTOR: STANDARDS & DESIGN

DIRECTOR OF ENGINEERING AND CONSTRUCTION

SCRRA ENGINEERING STANDARDS ARE INTENDED FOR SCRRA APPROVED USES ONLY. FOR NON-SCRRA APPROVED USES:
SCRRA SHALL NOT BE RESPONSIBLE FOR THE ACCURACY OR COMPLETENESS OF THE DATA OR INFORMATION CONTAINED HEREIN. THE SELECTION AND USE OF THESE STANDARDS IS THE SOLE RESPONSIBILITY OF THE USER AND SHOULD NOT BE USED WITHOUT CONSULTING A REGISTERED PROFESSIONAL ENGINEER. ALL WARRANTIES AND REPRESENTATIONS OF ANY KIND ARE DISCLAIMED. ANYONE MAKING USE OF THIS INFORMATION AGREES THAT IT ASSUMES ALL LIABILITY ARISING FROM SUCH USE. NO PART OF THESE STANDARDS SHOULD BE REPRODUCED OR DISTRIBUTED IN ANY FORM OR BY ANY MEANS WITHOUT THE PRIOR WRITTEN PERMISSION OF SCRRA. ALL RIGHTS RESERVED.

METROLINK®
SOUTHERN CALIFORNIA REGIONAL RAIL AUTHORITY
ONE GATEWAY PLAZA, 12TH FLOOR, L. A., CA. 90012

ENGINEERING STANDARDS

HOLLOW STEEL TIE SWITCH RODS
24–1, 24–2 AND 24–3
NO 24–136 LB RE

STANDARD 2807
SCALE: NTS
REVISION –
SHEET 1 OF 1
CADD FILE: ES2807–73

BILL OF MATERIAL FOR SWITCH ROD 24-136-4				
ITEM	QTY	DESCRIPTION	DWG NO	SCRRA PART NO
1	1	SWITCH ROD 24-136-4	-	
2	2	SWITCH CLIP ASSEMBLY, ADJUSTABLE, FOR HOLLOW TIE	-	

BILL OF MATERIAL FOR SWITCH ROD 24-136-5				
ITEM	QTY	DESCRIPTION	DWG NO	SCRRA PART NO
1	1	SWITCH ROD 24-136-5	-	
2	2	SWITCH CLIP ASSEMBLY, ADJUSTABLE, FOR HOLLOW TIE	-	

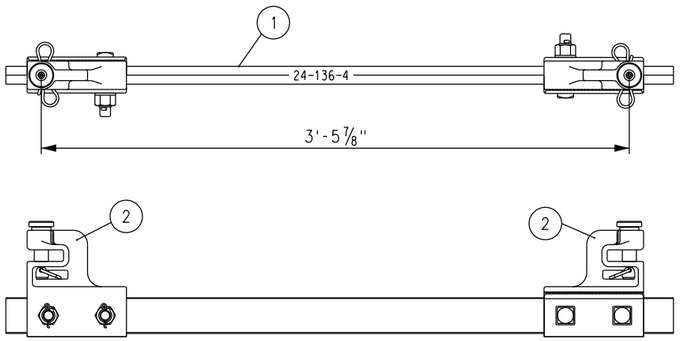

SWITCH ROD ASSEMBLY 24-136-4

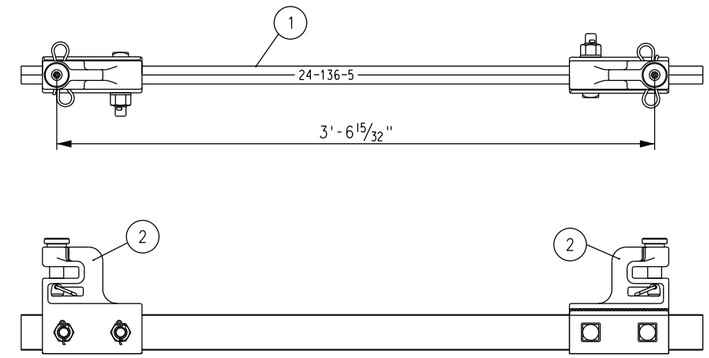

SWITCH ROD ASSEMBLY 24-136-5

BILL OF MATERIALS FOR SWITCH ROD 24-136-6				
ITEM	QTY	DESCRIPTION	DWG NO	SCRRA PART NO
1	1	SWITCH ROD 24-136-6	-	
2	2	SWITCH CLIP ASSEMBLY, ADJUSTABLE, FOR HOLLOW TIES	-	
3	1	CONNECTOR LUG FOR REAR DRIVE ROD	-	
4	2	HUCK BOLT, 3/4" DIA (C50LR-BR24-36)	-	
5	2	HUCK COLLAR, 3/4" DIA (LC-2R24B)	-	

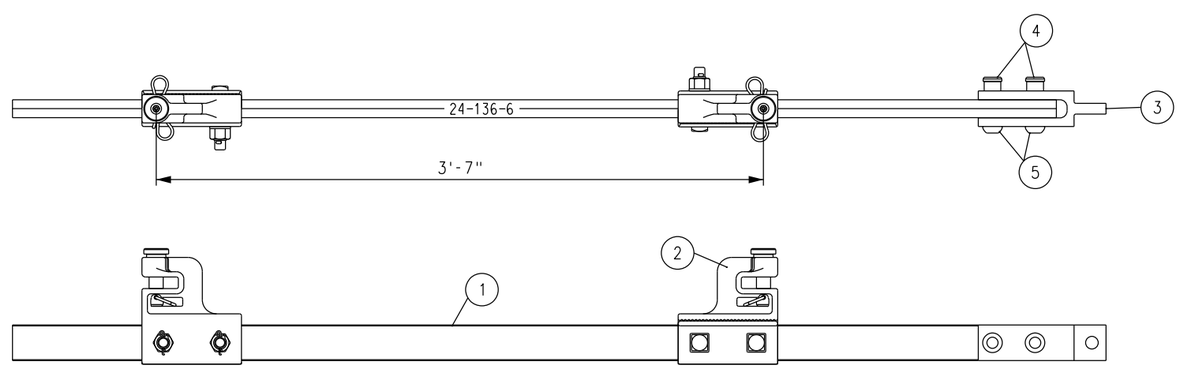

SWITCH ROD ASSEMBLY 24-136-6

NOTE:

1. ROD IDENTIFICATION TO BE ENGRAVED ON ROD CLEARLY AS SHOWN, 3/8" MIN HEIGHT.

REV.	DATE	DESCRIPTION	DES.	ENG.
X	XX-XX-XX	REVISION	XX	XX

DRAWN BY: HDR DATE: 03/31/2011

ASSISTANT DIRECTOR: STANDARDS & DESIGN

DIRECTOR OF ENGINEERING AND CONSTRUCTION

SCRRA ENGINEERING STANDARDS ARE INTENDED FOR SCRRA APPROVED USES ONLY. FOR NON-SCRRA APPROVED USES:
SCRRA SHALL NOT BE RESPONSIBLE FOR THE ACCURACY OR COMPLETENESS OF THE DATA OR INFORMATION CONTAINED HEREIN. THE SELECTION AND USE OF THESE STANDARDS IS THE SOLE RESPONSIBILITY OF THE USER AND SHOULD NOT BE USED WITHOUT CONSULTING A REGISTERED PROFESSIONAL ENGINEER. ALL WARRANTIES AND REPRESENTATIONS OF ANY KIND ARE DISCLAIMED. ANYONE MAKING USE OF THIS INFORMATION AGREES THAT IT ASSUMES ALL LIABILITY ARISING FROM SUCH USE. NO PART OF THESE STANDARDS SHOULD BE REPRODUCED OR DISTRIBUTED IN ANY FORM OR BY ANY MEANS WITHOUT THE PRIOR WRITTEN PERMISSION OF SCRRA. ALL RIGHTS RESERVED.

METROLINK®
SOUTHERN CALIFORNIA REGIONAL RAIL AUTHORITY
ONE GATEWAY PLAZA, 12TH FLOOR, L. A., CA. 90012

ENGINEERING STANDARDS

HOLLOW STEEL TIE SWITCH RODS
24-4, 24-5 AND 24-6
NO 24-136 LB RE

STANDARD: 2807
SCALE: NTS
REVISION: –
SHEET: 1 OF 1
CADD FILE: ES2807-74

UserName=> carlosa Date Plotted: 10/5/2011 3:58:21 PM Plot Driver=> S:\Plot Drivers\pdf.plt FileName=> s:\V8EngStds\2000\Turnouts\No 24 Turnout\ES2807-74.dgn

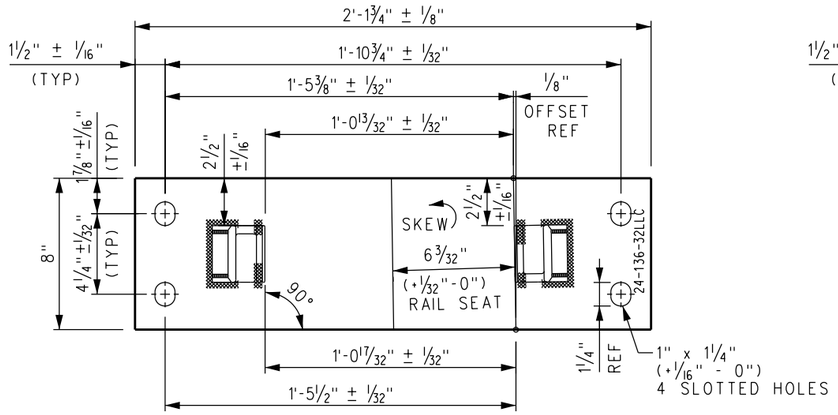

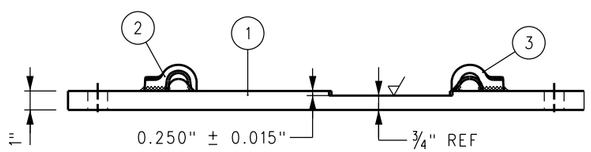

SWITCH PLATE P24-136-32LLC

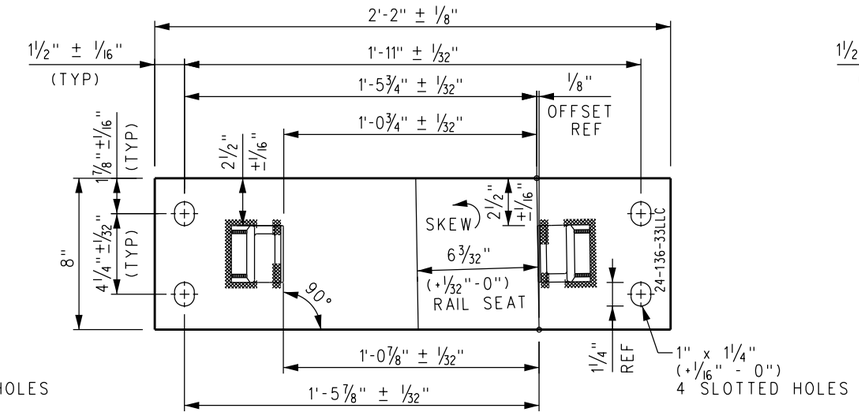

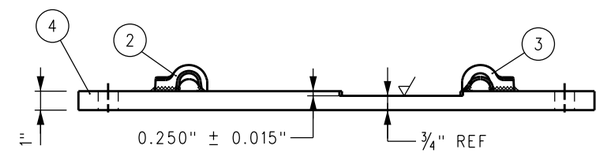

SWITCH PLATE P24-136-33LLC

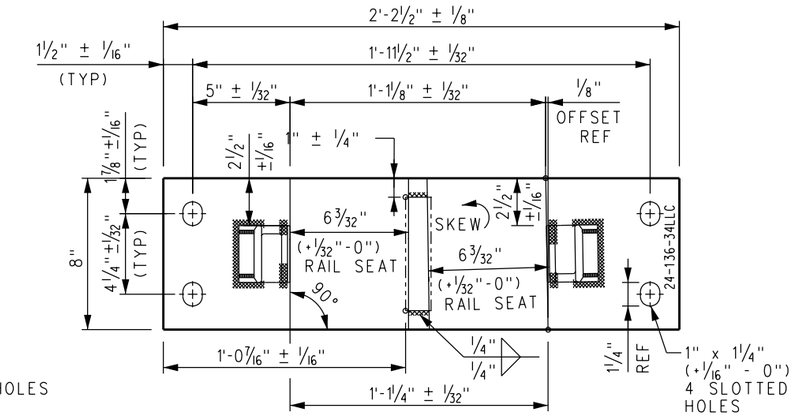

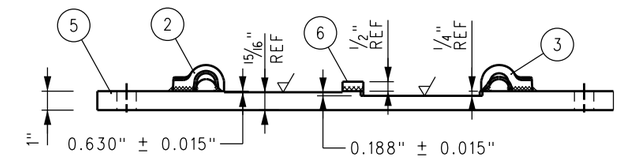

SWITCH PLATE P24-136-34LLC

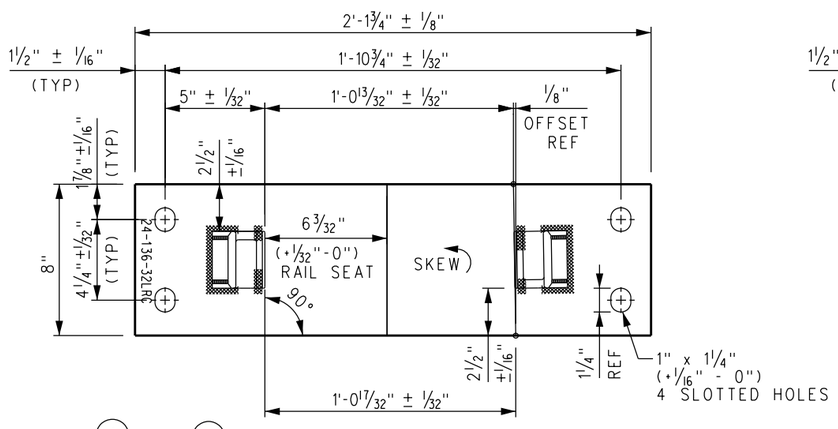

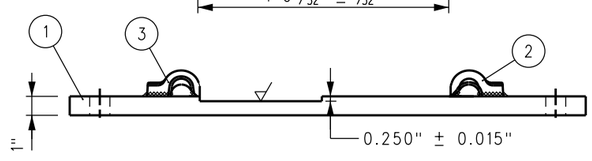

SWITCH PLATE P24-136-32LRC

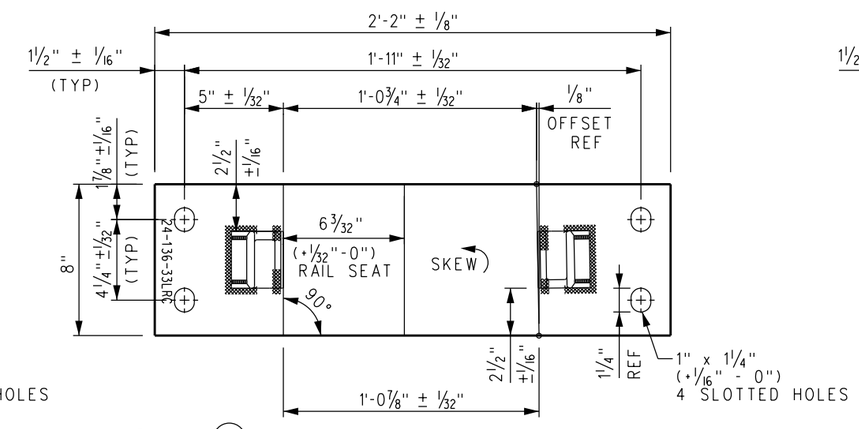

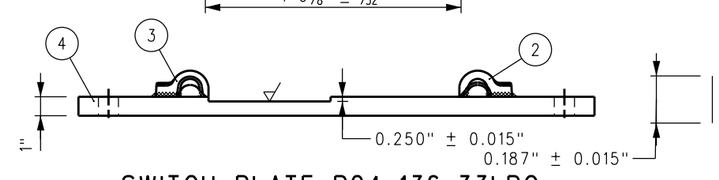

SWITCH PLATE P24-136-33LRC

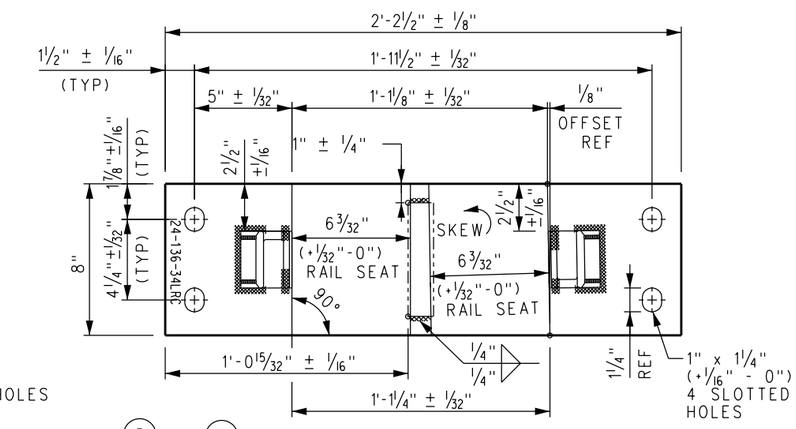

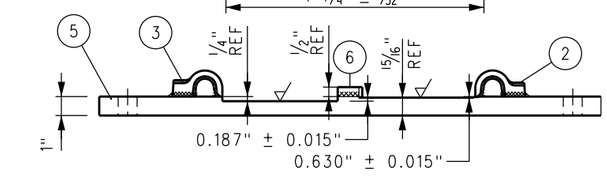

SWITCH PLATE P24-136-34LRC

BILL OF MATERIALS		BILL OF MATERIALS	
ITEM	DESCRIPTION	ITEM	DESCRIPTION
1	FLAT BAR, ASTM A36, 1" x 8" x 2'-1¾"	4	FLAT BAR, ASTM A36, 1" x 8" x 2'-2"
2	SHOULDER, PANDROL, FORGED, TYPE 1, ANTI-OVERDRIVE	5	FLAT BAR, ASTM A36, 1" x 8" x 2'-2½"
3	SHOULDER, PANDROL, FORGED, TYPE 5, ANTI-OVERDRIVE	6	FLAT BAR, ASTM A36, ½" x 6" x 1 5/16"

NOTES:

1. I.D. CHARACTERS TO BE ½" MINIMUM HEIGHT CLEARLY STAMPED AS SHOWN.
2. WELDS TO BE DRESSED FLUSH WITH SHOULDER & NOT TO PROTRUDE INTO RAIL SEAT.
3. SLOTTED HOLE CENTERS ARE INDICATED ON DRAWING.

REV.	DATE	DESCRIPTION	DES.	ENG.
X	XX-XX-XX	REVISION	XX	XX

DRAWN BY: HDR DATE: 03/31/2011

ASSISTANT DIRECTOR: STANDARDS & DESIGN

DIRECTOR OF ENGINEERING AND CONSTRUCTION

SCRRA ENGINEERING STANDARDS ARE INTENDED FOR SCRRA APPROVED USES ONLY. FOR NON-SCRRA APPROVED USES:
SCRRA SHALL NOT BE RESPONSIBLE FOR THE ACCURACY OR COMPLETENESS OF THE DATA OR INFORMATION CONTAINED HEREIN. THE SELECTION AND USE OF THESE STANDARDS IS THE SOLE RESPONSIBILITY OF THE USER AND SHOULD NOT BE USED WITHOUT CONSULTING A REGISTERED PROFESSIONAL ENGINEER. ALL WARRANTIES AND REPRESENTATIONS OF ANY KIND ARE DISCLAIMED. ANYONE MAKING USE OF THIS INFORMATION AGREES THAT IT ASSUMES ALL LIABILITY ARISING FROM SUCH USE. NO PART OF THESE STANDARDS SHOULD BE REPRODUCED OR DISTRIBUTED IN ANY FORM OR BY ANY MEANS WITHOUT THE PRIOR WRITTEN PERMISSION OF SCRRA. ALL RIGHTS RESERVED.

METROLINK®

SOUTHERN CALIFORNIA REGIONAL RAIL AUTHORITY
ONE GATEWAY PLAZA, 12TH FLOOR, L. A., CA. 90012

ENGINEERING STANDARDS

SWITCH PLATES
(24–32LLC /LRC THROUGH 24–34LLC /LRC)
FOR NO 24 136 LB RE LH CONCRETE TIE TURNOUT

STANDARD 2807
SCALE: NTS
REVISION –
SHEET 1 OF 1
CADD FILE: ES2807–80

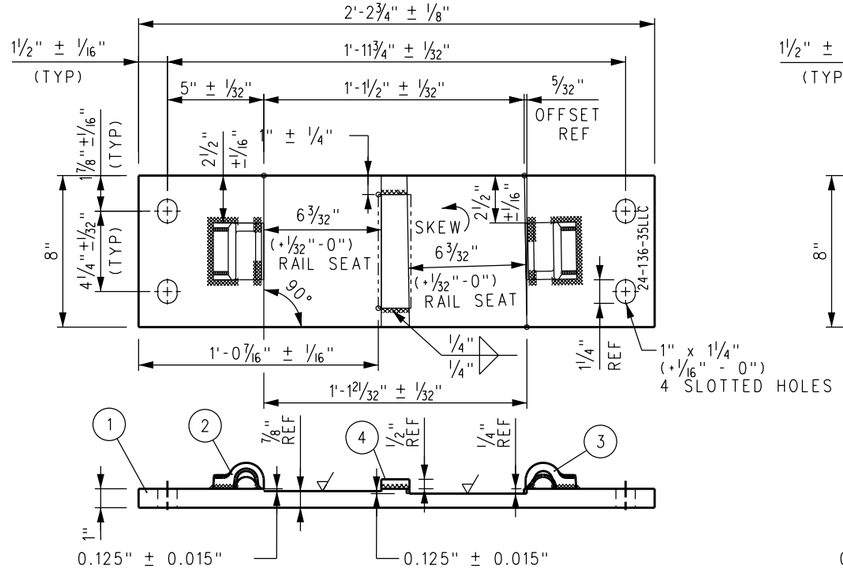

SWITCH PLATE P24-136-35LLC

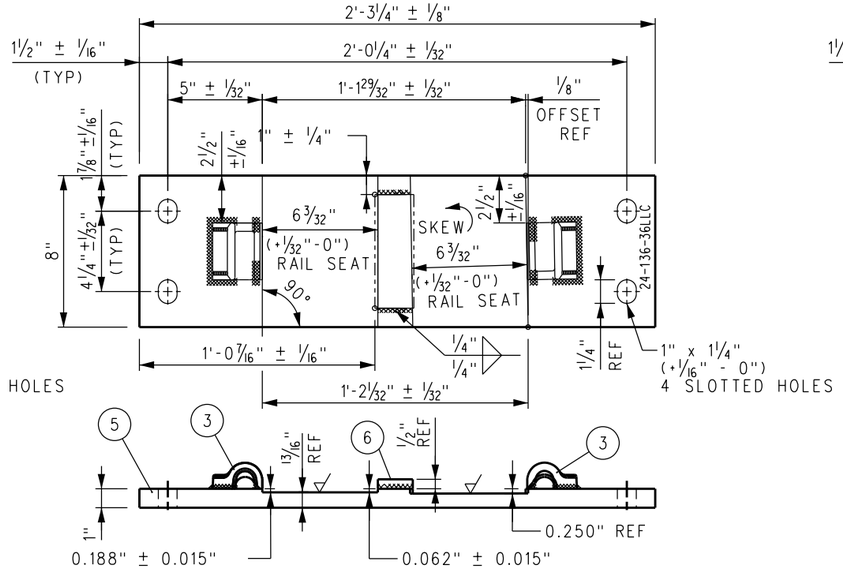

SWITCH PLATE P24-136-36LLC

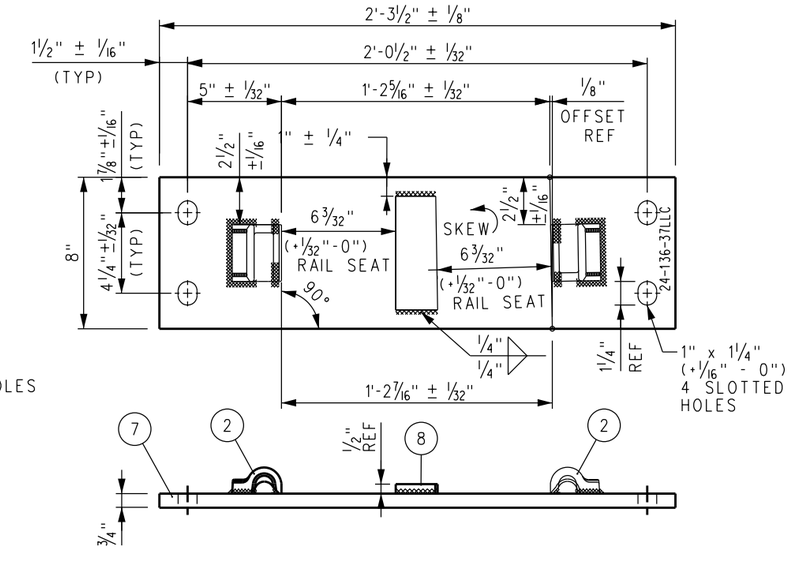

SWITCH PLATE P24-136-37LLC

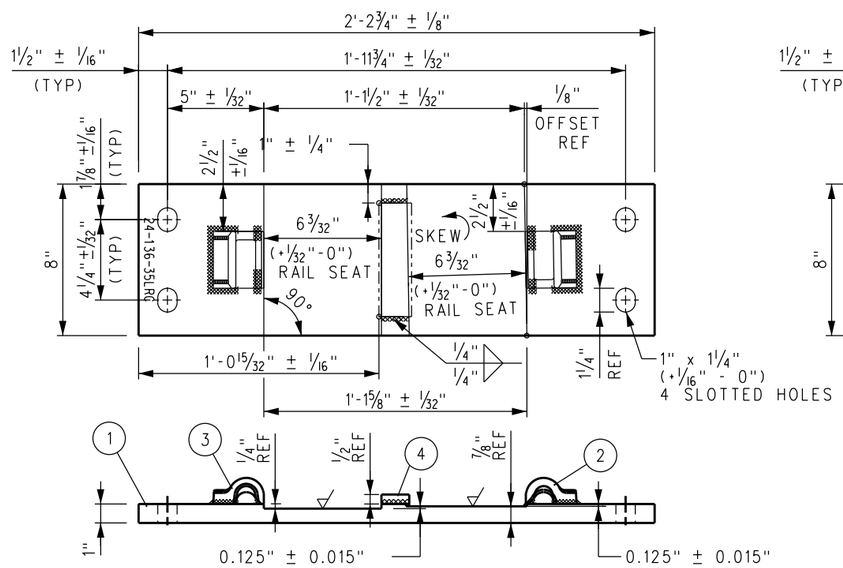

SWITCH PLATE P24-136-35LRC

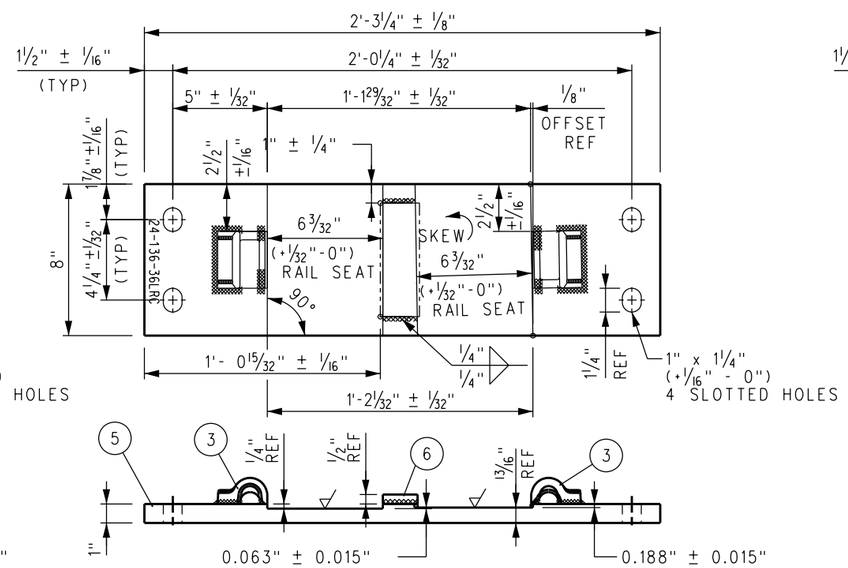

SWITCH PLATE P24-136-36LRC

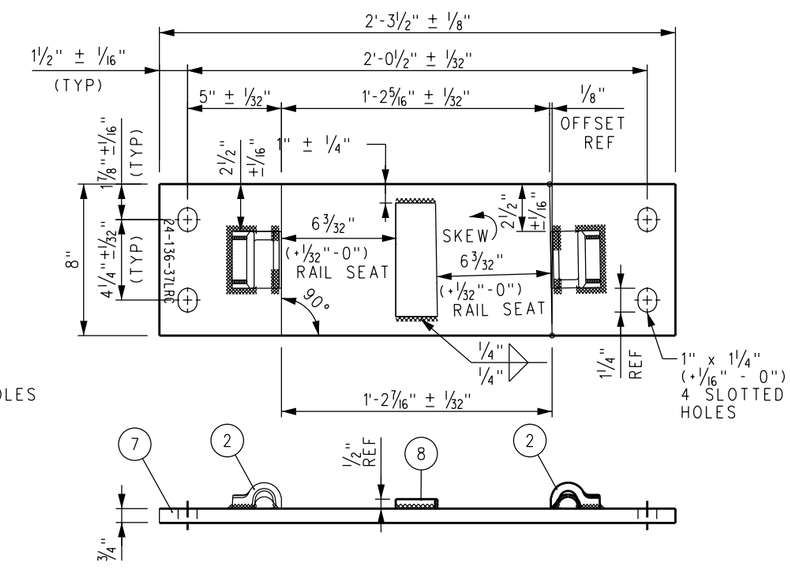

SWITCH PLATE P24-136-37LRC

BILL OF MATERIALS		BILL OF MATERIALS	
ITEM	DESCRIPTION	ITEM	DESCRIPTION
1	FLAT BAR, ASTM A36, 1 x 8" x 2'-2¾"	5	FLAT BAR, ASTM A36, 1" x 8" x 2'-3¼"
2	SHOULDER, PANDROL, FORGED, TYPE 1, ANTI-OVERDRIVE	6	FLAT BAR, ASTM A36, ½" x 6" x 2 1/16"
3	SHOULDER, PANDROL, FORGED, TYPE 5, ANTI-OVERDRIVE	7	FLAT BAR, ASTM A36, ¾" x 8" x 2'-3½"
4	FLAT BAR, ASTM A36, ½" x 6" x 1 11/16"	8	STOP, BURNED SKEWED, ½" x 6" x 2 7/16"

NOTES:

1. I.D. CHARACTERS TO BE ½" MINIMUM HEIGHT CLEARLY STAMPED AS SHOWN.
2. WELDS TO BE DRESSED FLUSH WITH SHOULDER & NOT TO PROTRUDE INTO RAIL SEAT.
3. SLOTTED HOLE CENTERS ARE INDICATED ON DRAWING.

REV.	DATE	DESCRIPTION	DES.	ENG.
X	XX-XX-XX	REVISION	XX	XX

DRAWN BY: HDR DATE: 03/31/2011

ASSISTANT DIRECTOR: STANDARDS & DESIGN

DIRECTOR OF ENGINEERING AND CONSTRUCTION

SCRRA ENGINEERING STANDARDS ARE INTENDED FOR SCRRA APPROVED USES ONLY. FOR NON-SCRRA APPROVED USES:
SCRRA SHALL NOT BE RESPONSIBLE FOR THE ACCURACY OR COMPLETENESS OF THE DATA OR INFORMATION CONTAINED HEREIN. THE SELECTION AND USE OF THESE STANDARDS IS THE SOLE RESPONSIBILITY OF THE USER AND SHOULD NOT BE USED WITHOUT CONSULTING A REGISTERED PROFESSIONAL ENGINEER. ALL WARRANTIES AND REPRESENTATIONS OF ANY KIND ARE DISCLAIMED. ANYONE MAKING USE OF THIS INFORMATION AGREES THAT IT ASSUMES ALL LIABILITY ARISING FROM SUCH USE. NO PART OF THESE STANDARDS SHOULD BE REPRODUCED OR DISTRIBUTED IN ANY FORM OR BY ANY MEANS WITHOUT THE PRIOR WRITTEN PERMISSION OF SCRRA. ALL RIGHTS RESERVED.

METROLINK®
SOUTHERN CALIFORNIA REGIONAL RAIL AUTHORITY
ONE GATEWAY PLAZA, 12TH FLOOR, L. A., CA. 90012

ENGINEERING STANDARDS

SWITCH PLATES
(24–35LLC /LRC THROUGH 24–37LLC /LRC)
FOR NO 24 136 LB RE CONCRETE TIE TURNOUT

STANDARD 2807
SCALE: NTS
REVISION –
SHEET 1 OF 1
CADD FILE: ES2807–81

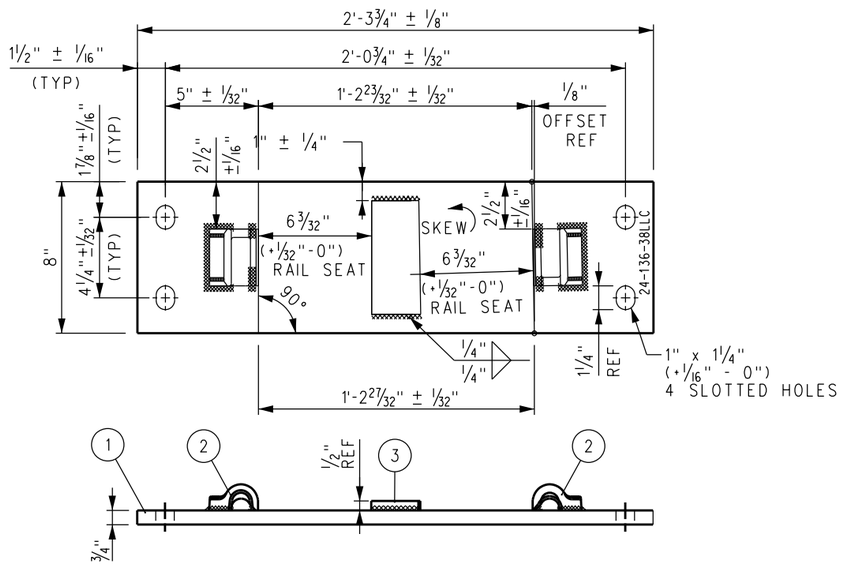

SWITCH PLATE P24-136-38LLC

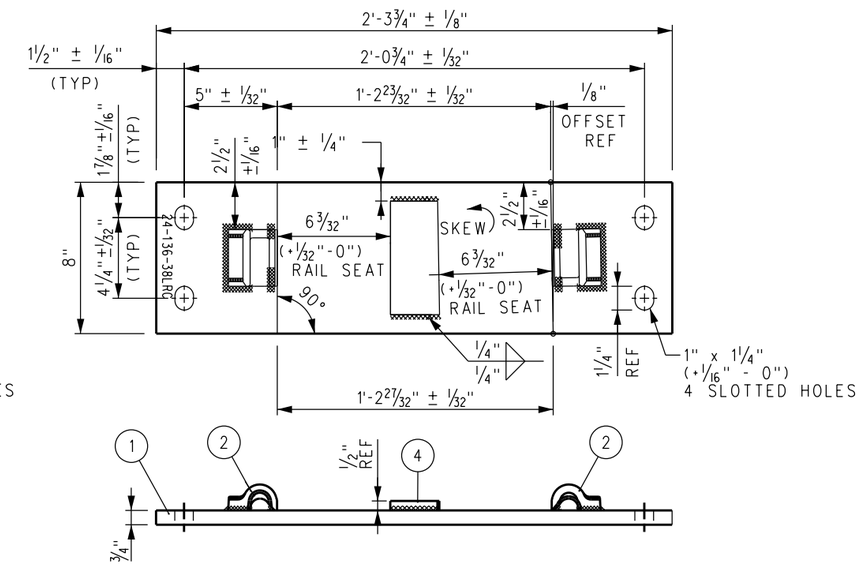

SWITCH PLATE P24-136-38LRC

BILL OF MATERIALS	
ITEM	DESCRIPTION
1	FLAT BAR, ASTM A36, ¾" x 8" x 2'-3¾"
2	SHOULDER, PANDROL, FORGED, TYPE 1, ANTI-OVERDRIVE
3	STOP, BURNED SKEW, ½" THICK, TAPERED 2 17/32" TO 2⅝" OVER 6"

NOTES:

1. I.D. CHARACTERS TO BE ½" MINIMUM HEIGHT CLEARLY STAMPED AS SHOWN.
2. WELDS TO BE DRESSED FLUSH WITH SHOULDER & NOT TO PROTRUDE INTO RAIL SEAT.
3. SLOTTED HOLE CENTERS ARE INDICATED ON DRAWING.

REV.	DATE	DESCRIPTION	DES.	ENG.
X	XX-XX-XX	REVISION	XX	XX

DRAWN BY: HDR DATE: 03/31/2011

ASSISTANT DIRECTOR: STANDARDS & DESIGN

DIRECTOR OF ENGINEERING AND CONSTRUCTION

SCRRA ENGINEERING STANDARDS ARE INTENDED FOR SCRRA APPROVED USES ONLY. FOR NON-SCRRA APPROVED USES:
SCRRA SHALL NOT BE RESPONSIBLE FOR THE ACCURACY OR COMPLETENESS OF THE DATA OR INFORMATION CONTAINED HEREIN. THE SELECTION AND USE OF THESE STANDARDS IS THE SOLE RESPONSIBILITY OF THE USER AND SHOULD NOT BE USED WITHOUT CONSULTING A REGISTERED PROFESSIONAL ENGINEER. ALL WARRANTIES AND REPRESENTATIONS OF ANY KIND ARE DISCLAIMED. ANYONE MAKING USE OF THIS INFORMATION AGREES THAT IT ASSUMES ALL LIABILITY ARISING FROM SUCH USE. NO PART OF THESE STANDARDS SHOULD BE REPRODUCED OR DISTRIBUTED IN ANY FORM OR BY ANY MEANS WITHOUT THE PRIOR WRITTEN PERMISSION OF SCRRA. ALL RIGHTS RESERVED.

METROLINK®
SOUTHERN CALIFORNIA REGIONAL RAIL AUTHORITY
ONE GATEWAY PLAZA, 12TH FLOOR, L. A., CA. 90012

ENGINEERING STANDARDS

SWITCH PLATES (24–38LLC / LRC)
FOR NO 24 136 LB RE LH CONCRETE TIE TURNOUT

STANDARD 2807
SCALE: NTS
REVISION –
SHEET 1 OF 1
CADD FILE: ES2807–82

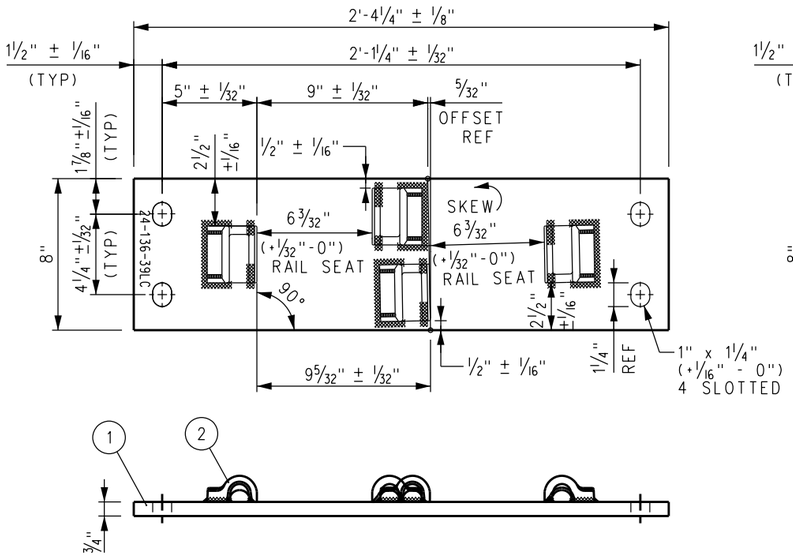

SWITCH PLATE P24-136-39LC

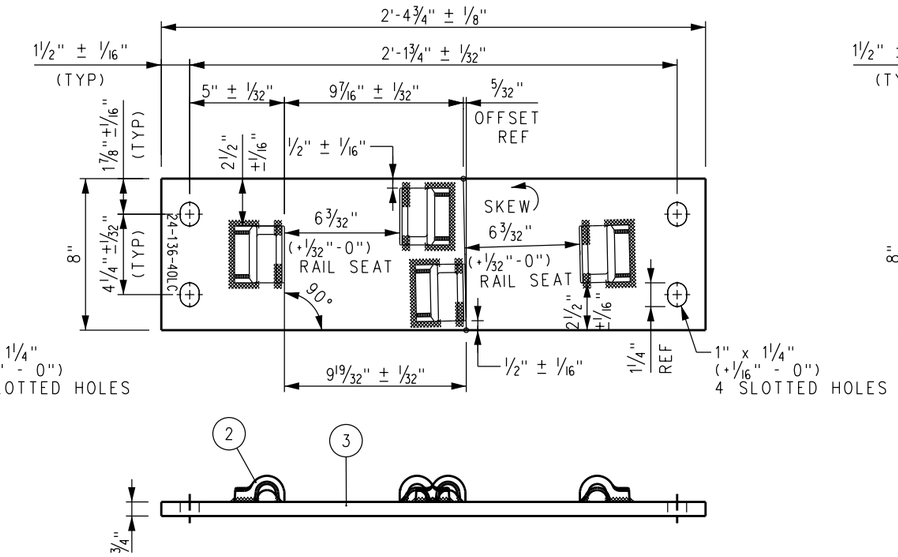

SWITCH PLATE P24-136-40LC

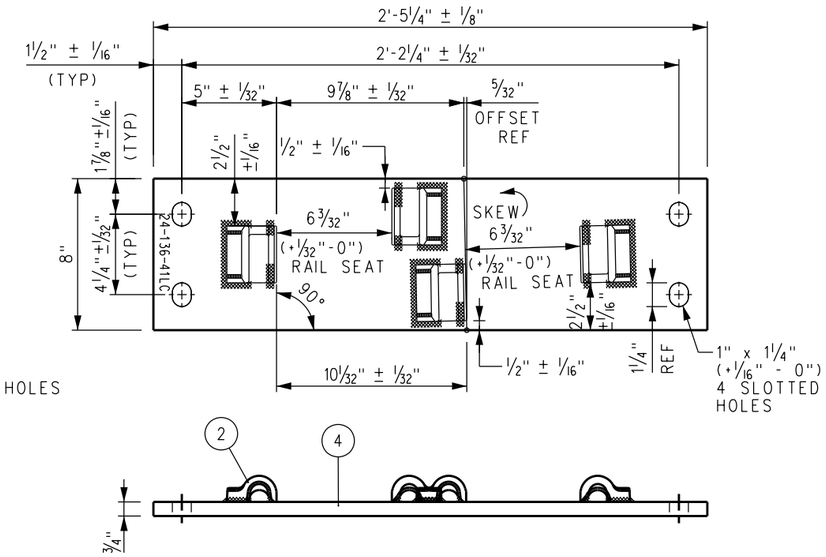

SWITCH PLATE P24-136-41LC

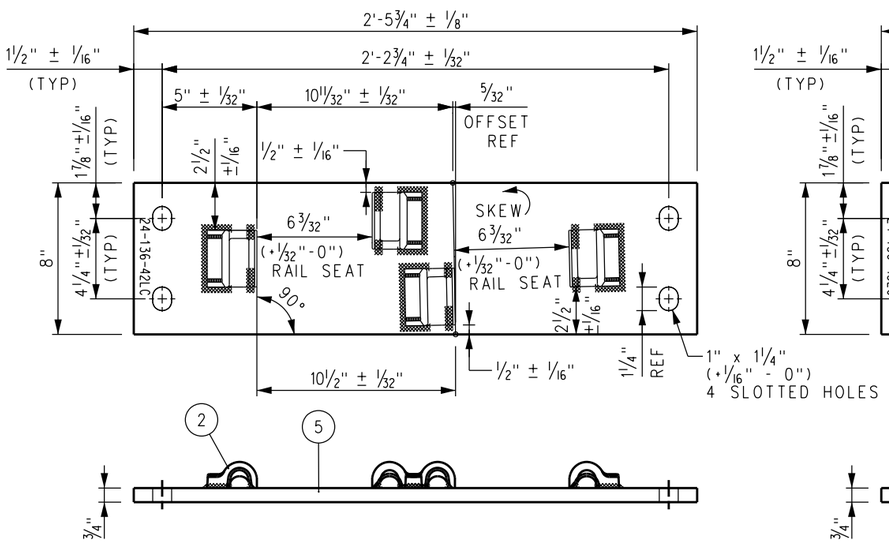

SWITCH PLATE P24-136-42LC

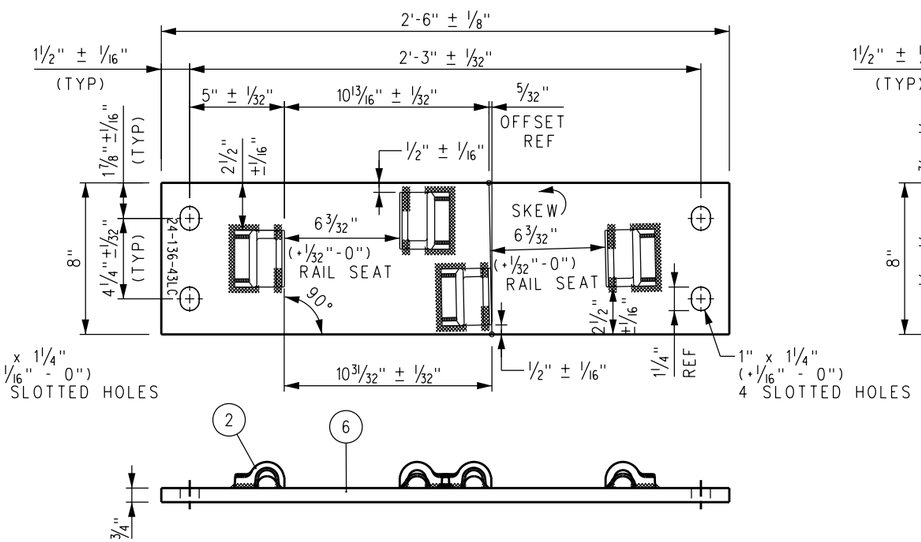

SWITCH PLATE P24-136-43LC

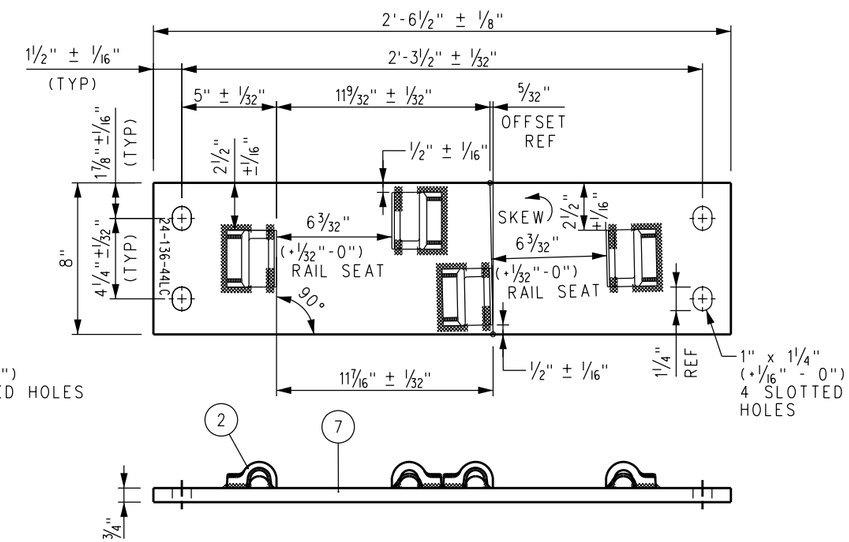

SWITCH PLATE P24-136-44LC

BILL OF MATERIALS		BILL OF MATERIALS	
ITEM	DESCRIPTION	ITEM	DESCRIPTION
1	FLAT BAR, ASTM A36, 3/4" x 8" x 2'-4 1/4"	5	FLAT BAR, ASTM A36, 3/4" x 8" x 2'-5 3/4"
2	SHOULDER, PANDROL, FORGED, TYPE 1, ANTI-OVERDRIVE	6	FLAT BAR, ASTM A36, 3/4" x 8" x 2'-6"
3	FLAT BAR, ASTM A36, 3/4" x 8" x 2'-4 3/4"	7	FLAT BAR, ASTM A36, 3/4" x 8" x 2'-6 1/2"
4	FLAT BAR, ASTM A36, 3/4" x 8" x 2'-5 1/4"		

NOTES:

1. I.D. CHARACTERS TO BE 1/2" MINIMUM HEIGHT CLEARLY STAMPED AS SHOWN.
2. WELDS TO BE DRESSED FLUSH WITH SHOULDER & NOT TO PROTRUDE INTO RAIL SEAT.
3. SLOTTED HOLE CENTERS ARE INDICATED ON DRAWING.

REV.	DATE	DESCRIPTION	DES.	ENG.
X	XX-XX-XX	REVISION	XX	XX

DRAWN BY: HDR DATE: 03/31/2011

ASSISTANT DIRECTOR: STANDARDS & DESIGN

DIRECTOR OF ENGINEERING AND CONSTRUCTION

SCRRA ENGINEERING STANDARDS ARE INTENDED FOR SCRRA APPROVED USES ONLY. FOR NON-SCRRA APPROVED USES, SCRRA SHALL NOT BE RESPONSIBLE FOR THE ACCURACY OR COMPLETENESS OF THE DATA OR INFORMATION CONTAINED HEREIN. THE SELECTION AND USE OF THESE STANDARDS IS THE SOLE RESPONSIBILITY OF THE USER AND SHOULD NOT BE USED WITHOUT CONSULTING A REGISTERED PROFESSIONAL ENGINEER. ALL WARRANTIES AND REPRESENTATIONS OF ANY KIND ARE DISCLAIMED. ANYONE MAKING USE OF THIS INFORMATION AGREES THAT IT ASSUMES ALL LIABILITY ARISING FROM SUCH USE. NO PART OF THESE STANDARDS SHOULD BE REPRODUCED OR DISTRIBUTED IN ANY FORM OR BY ANY MEANS WITHOUT THE PRIOR WRITTEN PERMISSION OF SCRRA. ALL RIGHTS RESERVED.

METROLINK

SOUTHERN CALIFORNIA REGIONAL RAIL AUTHORITY
ONE GATEWAY PLAZA, 12TH FLOOR, L. A., CA. 90012

ENGINEERING STANDARDS

SWITCH PLATES (24–39LC THROUGH 24–44LC)
FOR NO 24 136 LB RE LH CONCRETE TIE TURNOUT

STANDARD 2807
SCALE: NTS
REVISION –
SHEET 1 OF 1
CADD FILE: ES2807–83

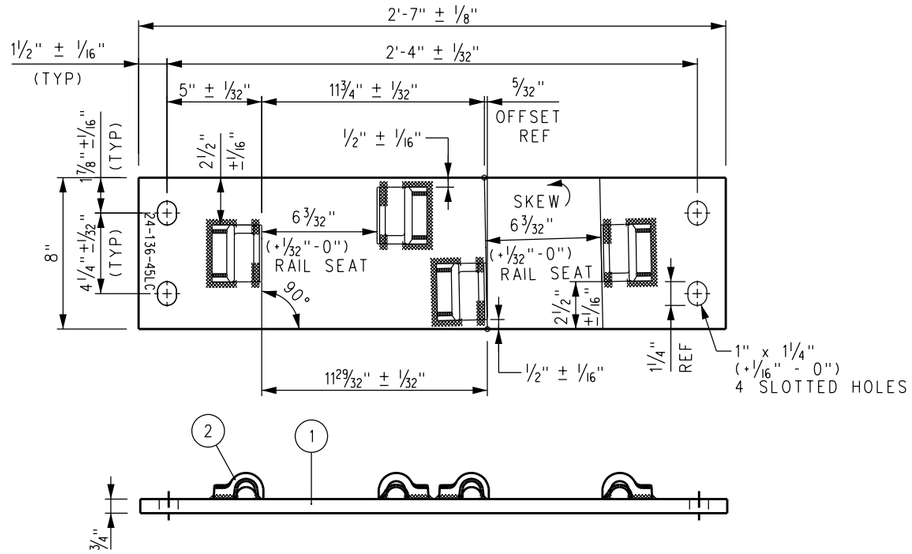

SWITCH PLATE P24-136-45LC

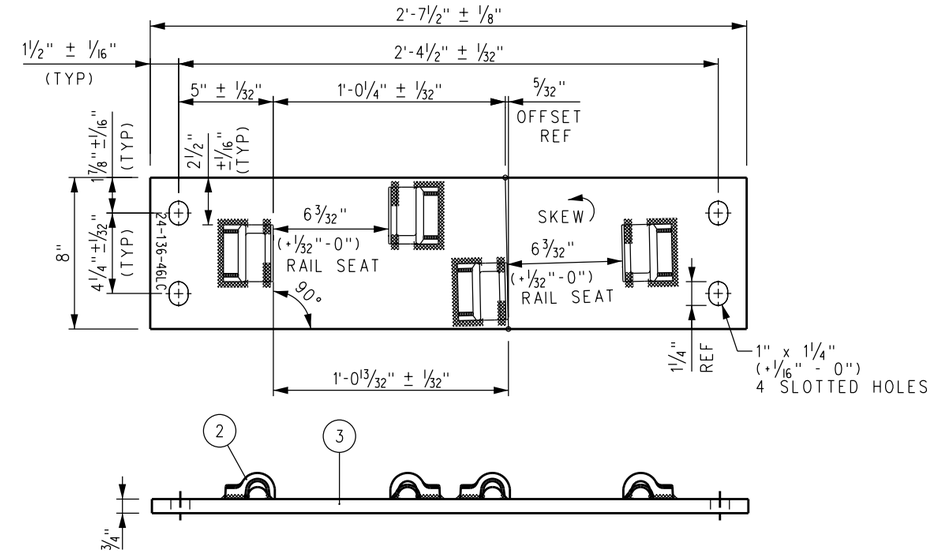

SWITCH PLATE P24-136-46LC

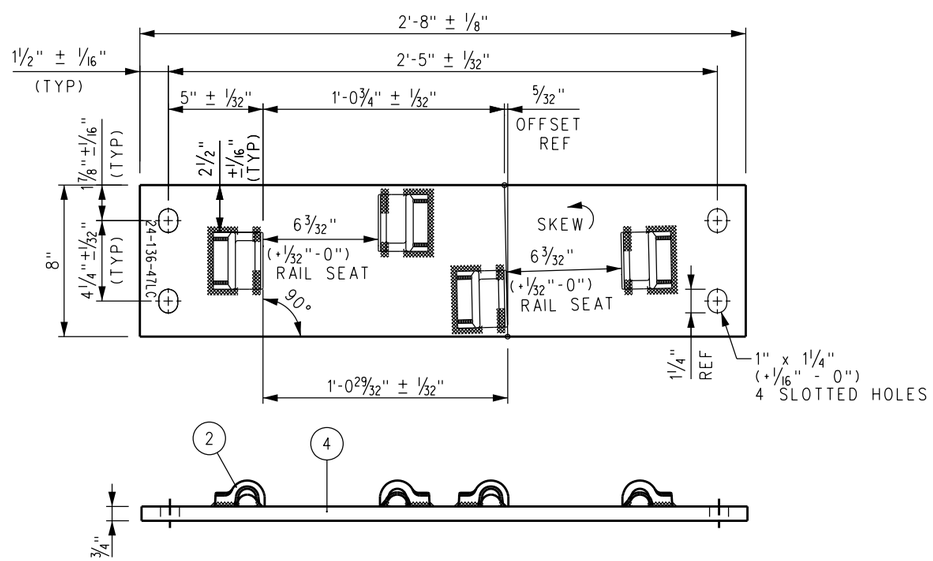

SWITCH PLATE P24-136-47LC

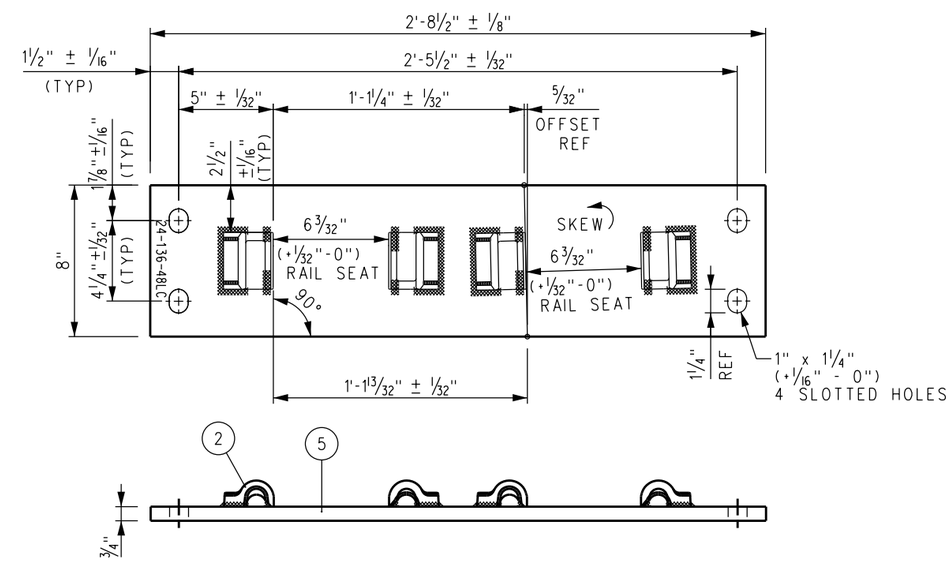

SWITCH PLATE P24-136-48LC

BILL OF MATERIALS		BILL OF MATERIALS	
ITEM	DESCRIPTION	ITEM	DESCRIPTION
1	FLAT BAR, ASTM A36, 3/4" x 8" x 2'-7"	4	FLAT BAR, ASTM A36, 3/4" x 8" x 2'-8"
2	SHOULDER, PANDROL, FORGED, TYPE 1, ANTI-OVERDRIVE	5	FLAT BAR, ASTM A36, 3/4" x 8" x 2'-8 1/2"
3	FLAT BAR, ASTM A36, 3/4" x 8" x 2'-7 1/2"		

NOTES:

1. I.D. CHARACTERS TO BE 1/2" MINIMUM HEIGHT CLEARLY STAMPED AS SHOWN.
2. WELDS TO BE DRESSED FLUSH WITH SHOULDER & NOT TO PROTRUDE INTO RAIL SEAT.
3. SLOTTED HOLE CENTERS ARE INDICATED ON DRAWING.

REV.	DATE	DESCRIPTION	DES.	ENG.
X	XX-XX-XX	REVISION	XX	XX

DRAWN BY: HDR DATE: 03/31/2011

ASSISTANT DIRECTOR: STANDARDS & DESIGN

DIRECTOR OF ENGINEERING AND CONSTRUCTION

SCRRA ENGINEERING STANDARDS ARE INTENDED FOR SCRRA APPROVED USES ONLY. FOR NON-SCRRA APPROVED USES, SCRRA SHALL NOT BE RESPONSIBLE FOR THE ACCURACY OR COMPLETENESS OF THE DATA OR INFORMATION CONTAINED HEREIN. THE SELECTION AND USE OF THESE STANDARDS IS THE SOLE RESPONSIBILITY OF THE USER AND SHOULD NOT BE USED WITHOUT CONSULTING A REGISTERED PROFESSIONAL ENGINEER. ALL WARRANTIES AND REPRESENTATIONS OF ANY KIND ARE DISCLAIMED. ANYONE MAKING USE OF THIS INFORMATION AGREES THAT IT ASSUMES ALL LIABILITY ARISING FROM SUCH USE. NO PART OF THESE STANDARDS SHOULD BE REPRODUCED OR DISTRIBUTED IN ANY FORM OR BY ANY MEANS WITHOUT THE PRIOR WRITTEN PERMISSION OF SCRRA. ALL RIGHTS RESERVED.

METROLINK

SOUTHERN CALIFORNIA REGIONAL RAIL AUTHORITY
ONE GATEWAY PLAZA, 12TH FLOOR, L. A., CA. 90012

ENGINEERING STANDARDS

SWITCH PLATES (24–45LC THROUGH 24–48LC)
FOR NO 24 136 LB RE LH CONCRETE TIE TURNOUT

STANDARD 2807
SCALE: NTS
REVISION –
SHEET 1 OF 1
CADD FILE: ES2807–84

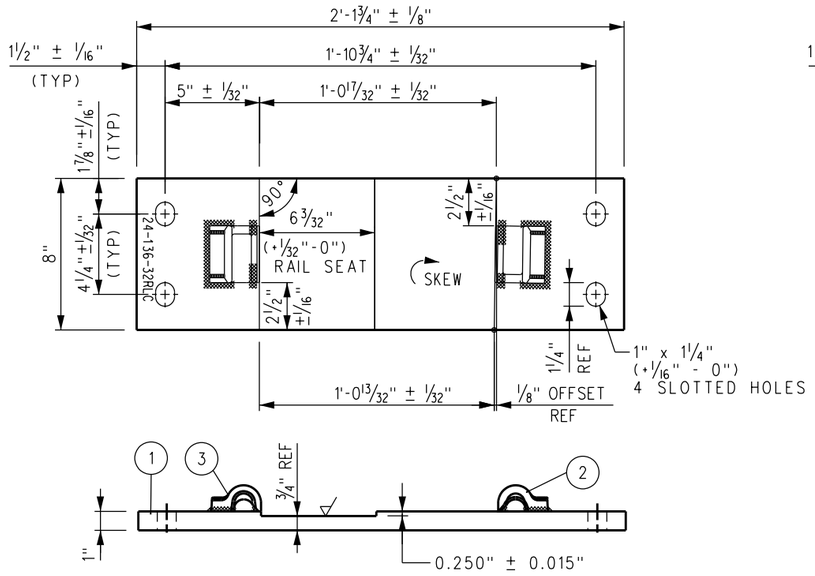

SWITCH PLATE P24-136-32RLC

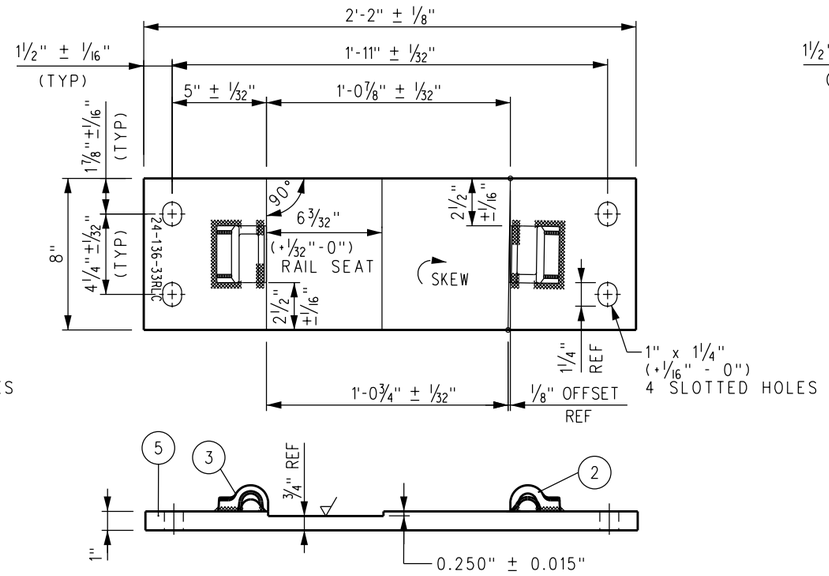

SWITCH PLATE P24-136-33RLC

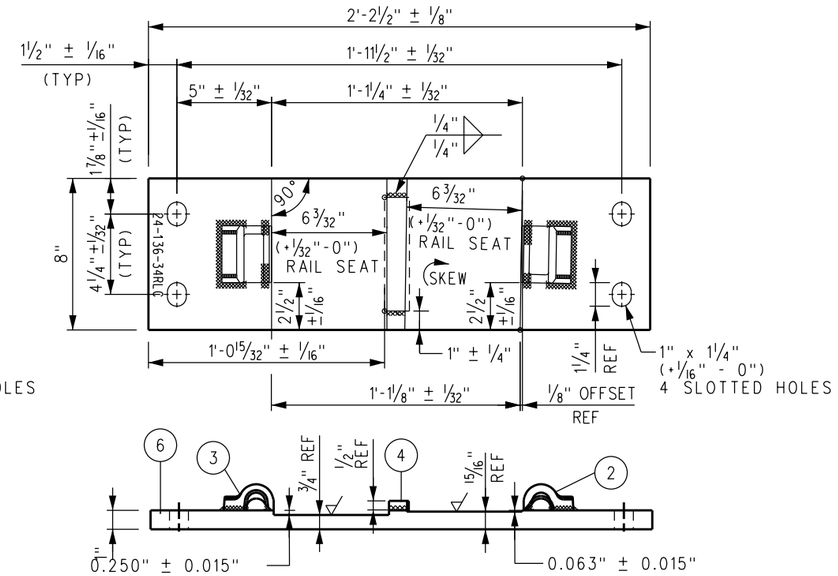

SWITCH PLATE P24-136-34RLC

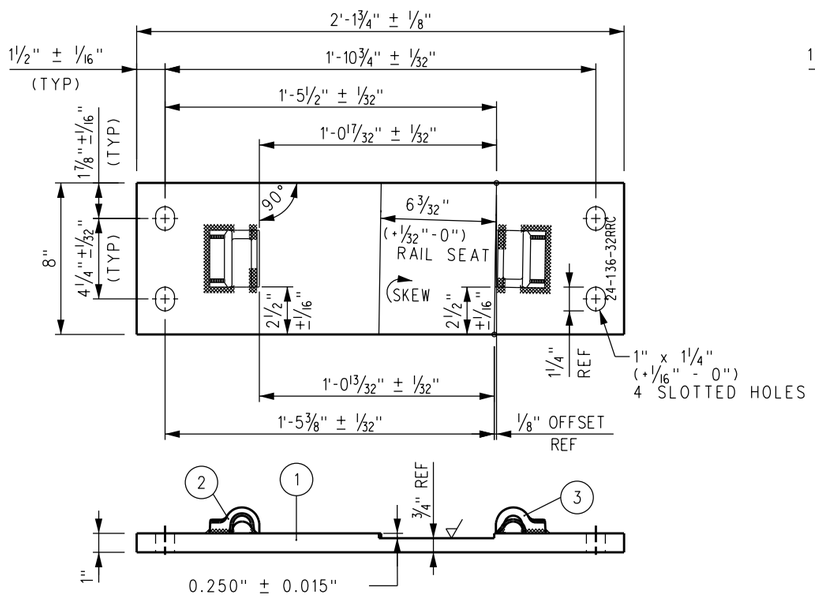

SWITCH PLATE P24-136-32RRC

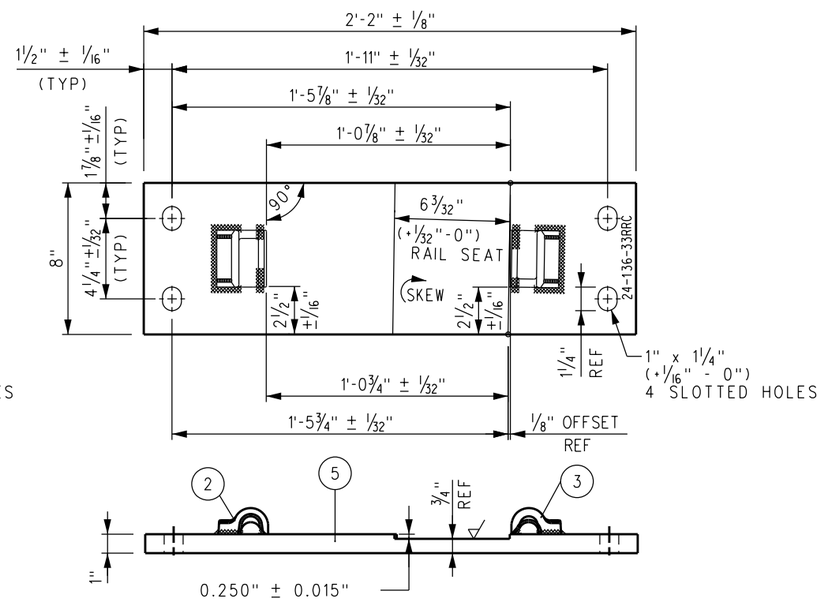

SWITCH PLATE P24-136-33RRC

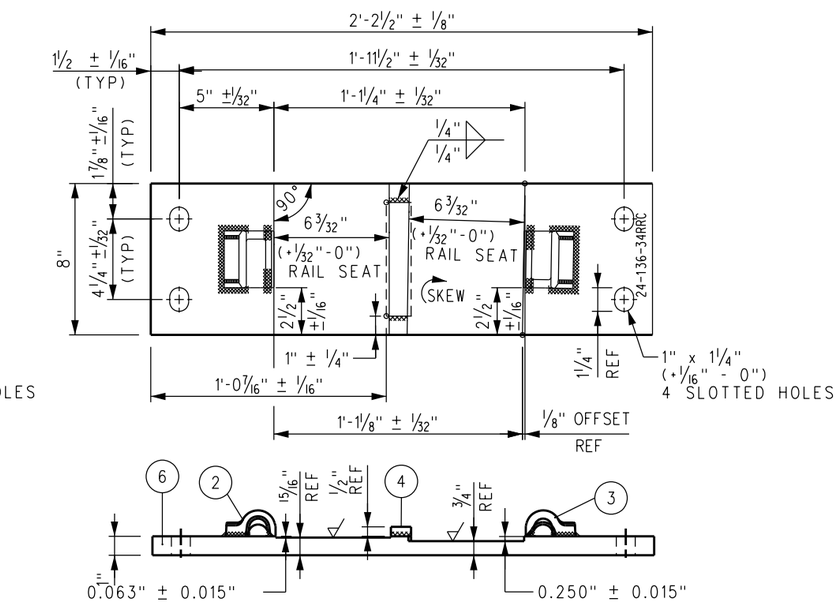

SWITCH PLATE P24-136-34RRC

BILL OF MATERIALS		BILL OF MATERIALS	
ITEM	DESCRIPTION	ITEM	DESCRIPTION
1	FLAT BAR, ASTM A36, 1" x 8" x 2'-1¾"	4	FLAT BAR, ASTM A36, ½" x 6" x 1 5/16"
2	SHOULDER, PANDROL, FORGED, TYPE 1, ANTI-OVERDRIVE	5	FLAT BAR, ASTM A36, 1" x 8" x 2'-2"
3	SHOULDER, PANDROL, FORGED, TYPE 5, ANTI-OVERDRIVE	6	FLAT BAR, ASTM A36, 1" x 8" x 2'-2½"

NOTES:

1. I.D. CHARACTERS TO BE ½" MINIMUM HEIGHT CLEARLY STAMPED AS SHOWN.
2. WELDS TO BE DRESSED FLUSH WITH SHOULDER & NOT TO PROTRUDE INTO RAIL SEAT.
3. SLOTTED HOLE CENTERS ARE INDICATED ON DRAWING.

REV.	DATE	DESCRIPTION	DES.	ENG.
X	XX-XX-XX	REVISION	XX	XX

DRAWN BY: HDR DATE: 03/31/2011

ASSISTANT DIRECTOR: STANDARDS & DESIGN

DIRECTOR OF ENGINEERING AND CONSTRUCTION

SCRRA ENGINEERING STANDARDS ARE INTENDED FOR SCRRA APPROVED USES ONLY. FOR NON-SCRRA APPROVED USES:
SCRRA SHALL NOT BE RESPONSIBLE FOR THE ACCURACY OR COMPLETENESS OF THE DATA OR INFORMATION CONTAINED HEREIN. THE SELECTION AND USE OF THESE STANDARDS IS THE SOLE RESPONSIBILITY OF THE USER AND SHOULD NOT BE USED WITHOUT CONSULTING A REGISTERED PROFESSIONAL ENGINEER. ALL WARRANTIES AND REPRESENTATIONS OF ANY KIND ARE DISCLAIMED. ANYONE MAKING USE OF THIS INFORMATION AGREES THAT IT ASSUMES ALL LIABILITY ARISING FROM SUCH USE. NO PART OF THESE STANDARDS SHOULD BE REPRODUCED OR DISTRIBUTED IN ANY FORM OR BY ANY MEANS WITHOUT THE PRIOR WRITTEN PERMISSION OF SCRRA. ALL RIGHTS RESERVED.

METROLINK®
SOUTHERN CALIFORNIA REGIONAL RAIL AUTHORITY
ONE GATEWAY PLAZA, 12TH FLOOR, L. A., CA. 90012

ENGINEERING STANDARDS

SWITCH PLATES
(24–32RLC / RRC THROUGH 24–34RLC / RRC)
FOR NO 24 136 LB RE RH CONCRETE TIE TURNOUT

STANDARD 2807
SCALE: NTS
REVISION –
SHEET 1 OF 1
CADD FILE: ES2807–85

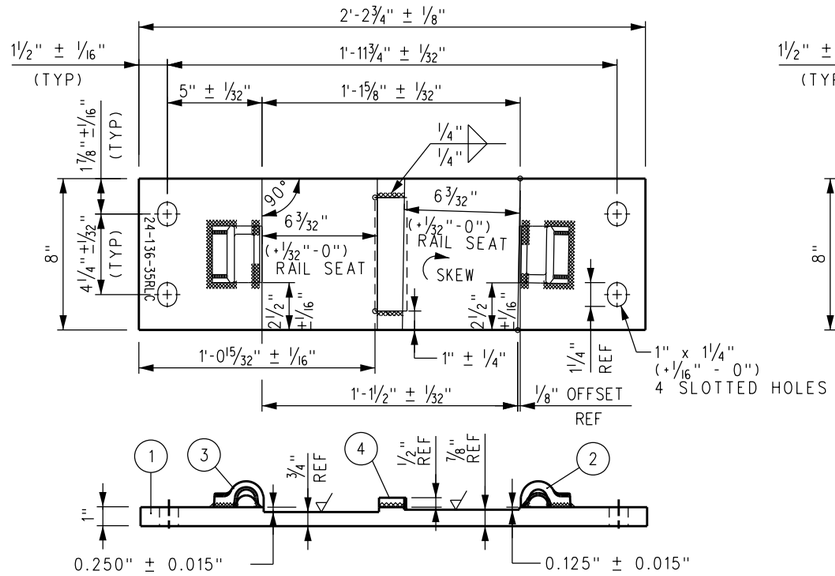

SWITCH PLATE P24-136-35RLC

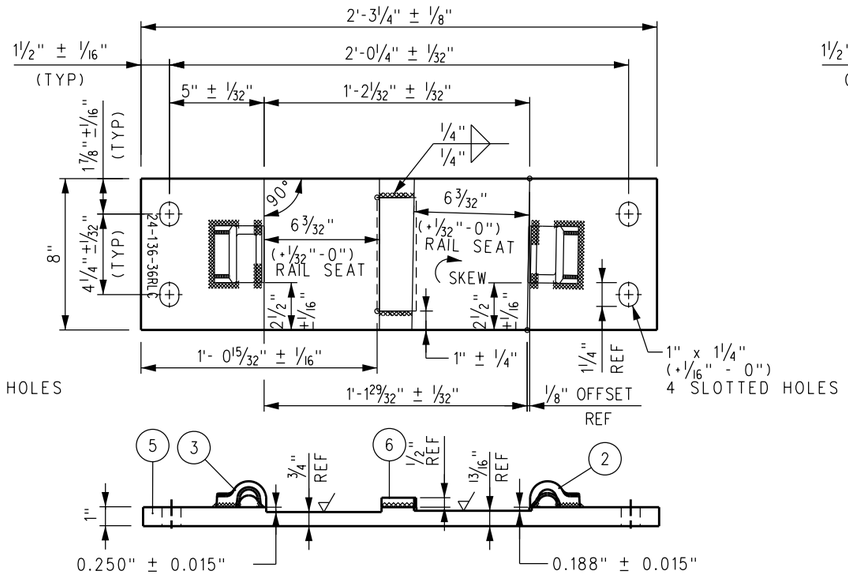

SWITCH PLATE P24-136-36RLC

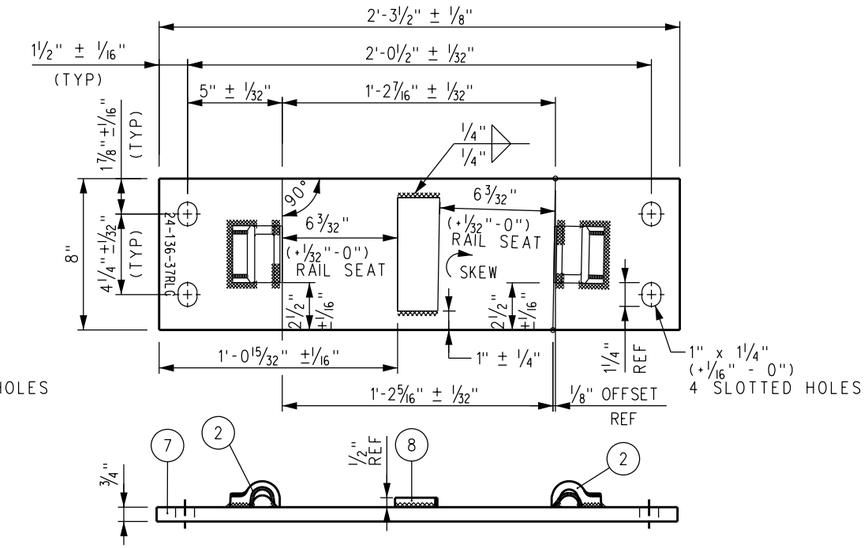

SWITCH PLATE P24-136-37RLC

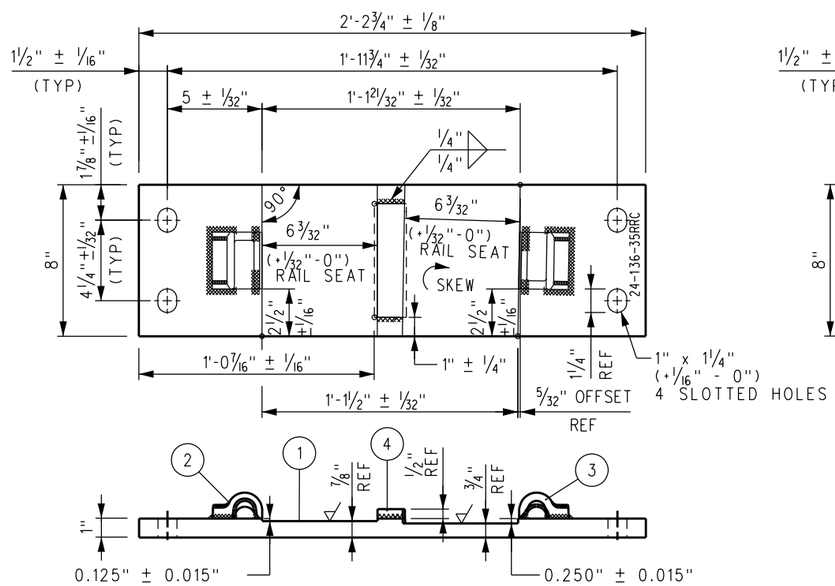

SWITCH PLATE P24-136-35RRC

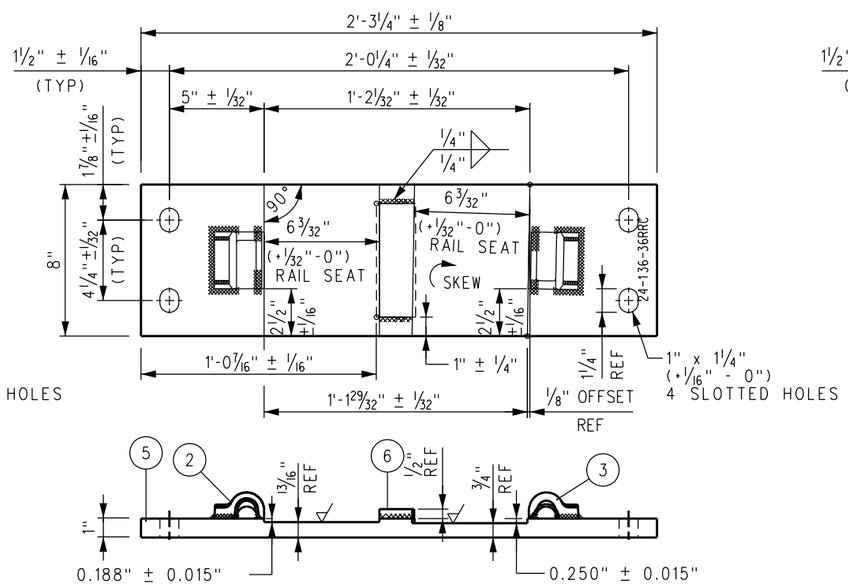

SWITCH PLATE P24-136-36RRC

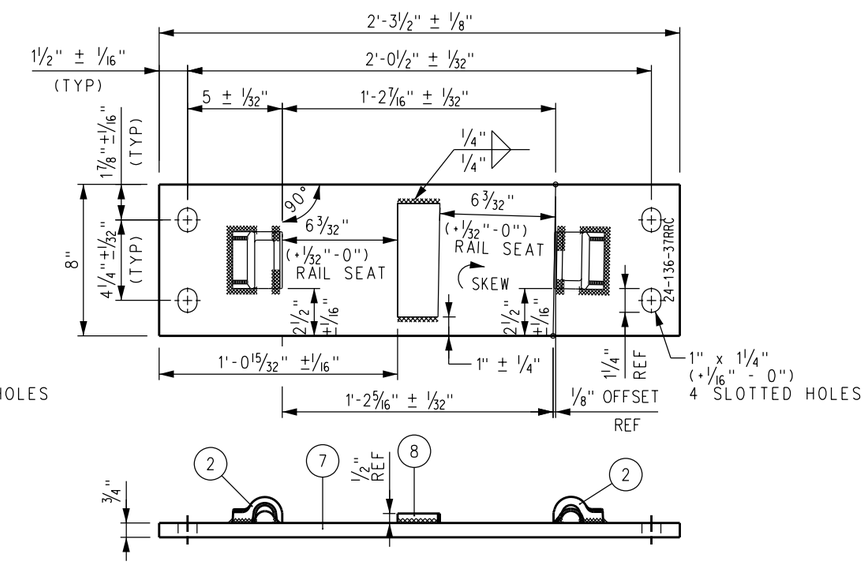

SWITCH PLATE P24-136-37RRC

BILL OF MATERIALS		BILL OF MATERIALS	
ITEM	DESCRIPTION	ITEM	DESCRIPTION
1	FLAT BAR, ASTM A36, 1" x 8" x 2'-2¾"	5	FLAT BAR, ASTM A36, 1" x 8" x 2'-3¼"
2	SHOULDER, PANDROL, FORGED, TYPE 1, ANTI-OVERDRIVE	6	FLAT BAR, ASTM A36, ½" x 6" x 2 1/16"
3	SHOULDER, PANDROL, FORGED, TYPE 5, ANTI-OVERDRIVE	7	FLAT BAR, ASTM A36, ¾" x 8" x 2'-3½"
4	FLAT BAR, ASTM A36, ½" x 6" x 1 11/16"	8	BURNED STOP, ½" THICK, TAPERED 2⅛" to 2 7/32" OVER 6"

NOTES:

1. I.D. CHARACTERS TO BE ½" MINIMUM HEIGHT CLEARLY STAMPED AS SHOWN.
2. WELDS TO BE DRESSED FLUSH WITH SHOULDER & NOT TO PROTRUDE INTO RAIL SEAT.
3. SLOTTED HOLE CENTERS ARE INDICATED ON DRAWING.

REV.	DATE	DESCRIPTION	DES.	ENG.
X	XX-XX-XX	REVISION	XX	XX

DRAWN BY: HDR DATE: 03/31/2011

ASSISTANT DIRECTOR: STANDARDS & DESIGN

DIRECTOR OF ENGINEERING AND CONSTRUCTION

SCRRA ENGINEERING STANDARDS ARE INTENDED FOR SCRRA APPROVED USES ONLY. FOR NON-SCRRA APPROVED USES:
SCRRA SHALL NOT BE RESPONSIBLE FOR THE ACCURACY OR COMPLETENESS OF THE DATA OR INFORMATION CONTAINED HEREIN. THE SELECTION AND USE OF THESE STANDARDS IS THE SOLE RESPONSIBILITY OF THE USER AND SHOULD NOT BE USED WITHOUT CONSULTING A REGISTERED PROFESSIONAL ENGINEER. ALL WARRANTIES AND REPRESENTATIONS OF ANY KIND ARE DISCLAIMED. ANYONE MAKING USE OF THIS INFORMATION AGREES THAT IT ASSUMES ALL LIABILITY ARISING FROM SUCH USE. NO PART OF THESE STANDARDS SHOULD BE REPRODUCED OR DISTRIBUTED IN ANY FORM OR BY ANY MEANS WITHOUT THE PRIOR WRITTEN PERMISSION OF SCRRA. ALL RIGHTS RESERVED.

METROLINK®
SOUTHERN CALIFORNIA REGIONAL RAIL AUTHORITY
ONE GATEWAY PLAZA, 12TH FLOOR, L. A., CA. 90012

ENGINEERING STANDARDS

SWITCH PLATES
(24–35RLC / RRC THROUGH 24–37RLC / RRC)
FOR NO 24 136 LB RE RH CONCRETE TIE TURNOUT

STANDARD 2807
SCALE: NTS
REVISION –
SHEET 1 OF 1
CADD FILE: ES2807–86

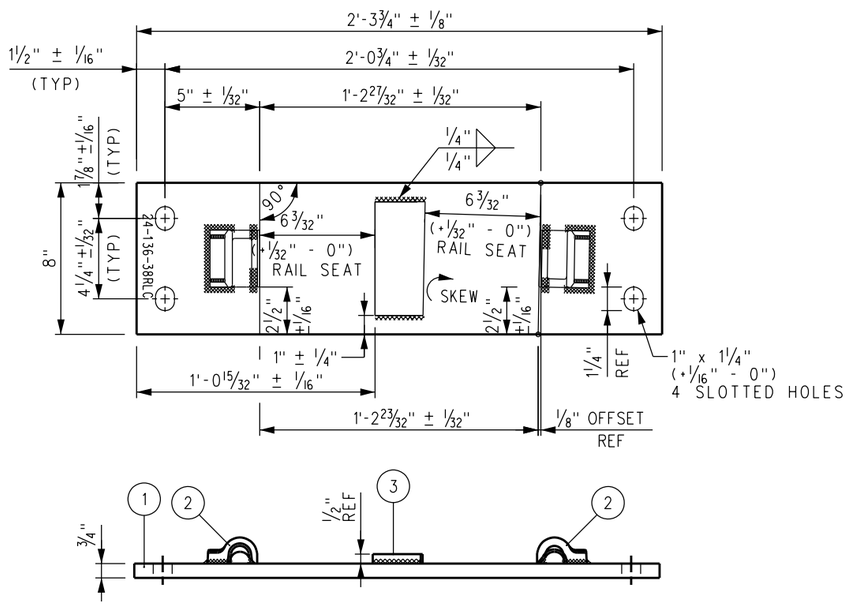

SWITCH PLATE P24-136-38RLC

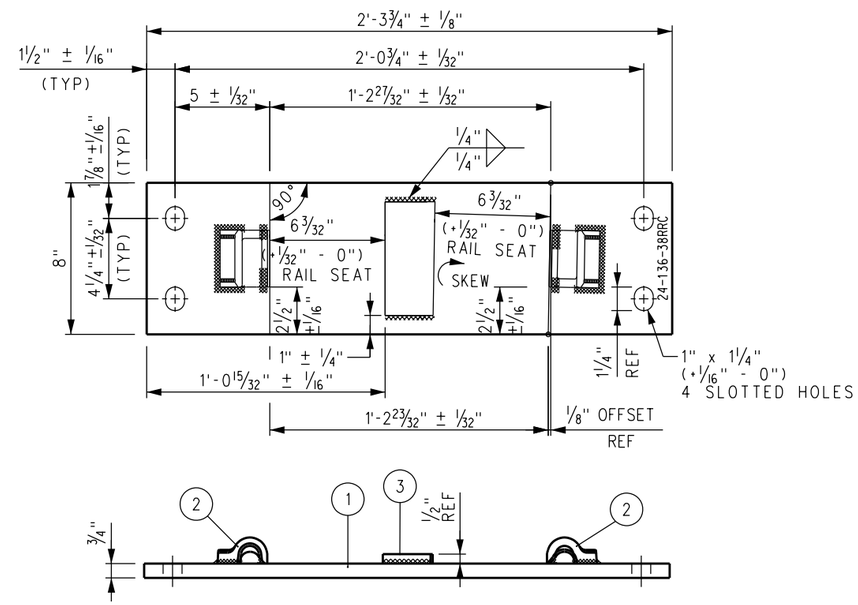

SWITCH PLATE P24-136-38RRC

BILL OF MATERIALS	
ITEM	DESCRIPTION
1	FLAT BAR, ASTM A36, ¾" x 8" x 2'-3¾"
2	SHOULDER, PANDROL, FORGED, TYPE 1, ANTI-OVERDRIVE
3	BURNED STOP, ½" THICK, TAPERED 2 17/32" TO 2⅝" OVER 6"

NOTES:

1. I.D. CHARACTERS TO BE ½" MINIMUM HEIGHT CLEARLY STAMPED AS SHOWN.
2. WELDS TO BE DRESSED FLUSH WITH SHOULDER & NOT TO PROTRUDE INTO RAIL SEAT.
3. SLOTTED HOLE CENTERS ARE INDICATED ON DRAWING.

REV.	DATE	DESCRIPTION	DES.	ENG.
X	XX-XX-XX	REVISION	XX	XX

DRAWN BY: HDR DATE: 03/31/2011

ASSISTANT DIRECTOR: STANDARDS & DESIGN

DIRECTOR OF ENGINEERING AND CONSTRUCTION

SCRRA ENGINEERING STANDARDS ARE INTENDED FOR SCRRA APPROVED USES ONLY. FOR NON-SCRRA APPROVED USES: SCRRA SHALL NOT BE RESPONSIBLE FOR THE ACCURACY OR COMPLETENESS OF THE DATA OR INFORMATION CONTAINED HEREIN. THE SELECTION AND USE OF THESE STANDARDS IS THE SOLE RESPONSIBILITY OF THE USER AND SHOULD NOT BE USED WITHOUT CONSULTING A REGISTERED PROFESSIONAL ENGINEER. ALL WARRANTIES AND REPRESENTATIONS OF ANY KIND ARE DISCLAIMED. ANYONE MAKING USE OF THIS INFORMATION AGREES THAT IT ASSUMES ALL LIABILITY ARISING FROM SUCH USE. NO PART OF THESE STANDARDS SHOULD BE REPRODUCED OR DISTRIBUTED IN ANY FORM OR BY ANY MEANS WITHOUT THE PRIOR WRITTEN PERMISSION OF SCRRA. ALL RIGHTS RESERVED.

METROLINK®

SOUTHERN CALIFORNIA REGIONAL RAIL AUTHORITY
ONE GATEWAY PLAZA, 12TH FLOOR, L. A., CA. 90012

ENGINEERING STANDARDS

SWITCH PLATES (24–38RLC / RRC)
FOR NO 24 136 LB RE RH CONCRETE TIE TURNOUT

STANDARD 2807
SCALE: NTS
REVISION –
SHEET 1 OF 1
CADD FILE: ES2807–87

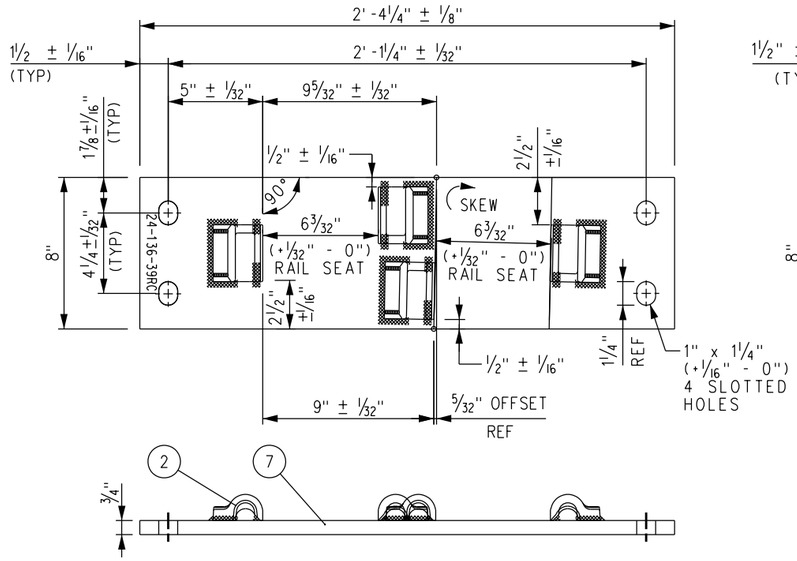

SWITCH PLATE P24-136-39RC

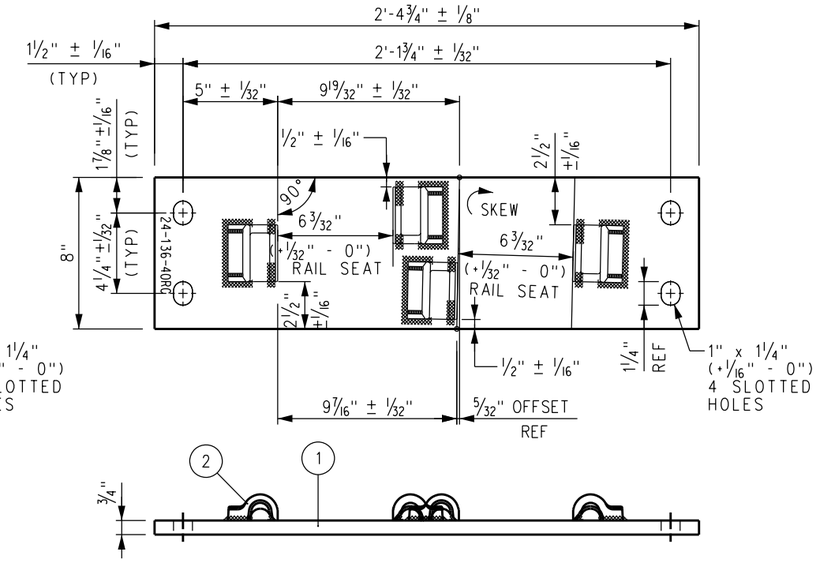

SWITCH PLATE P24-136-40RC

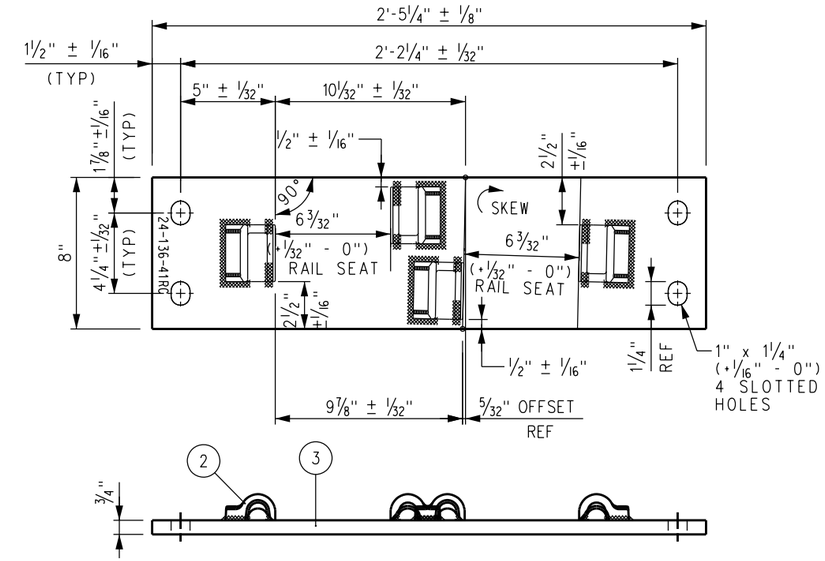

SWITCH PLATE P24-136-41RC

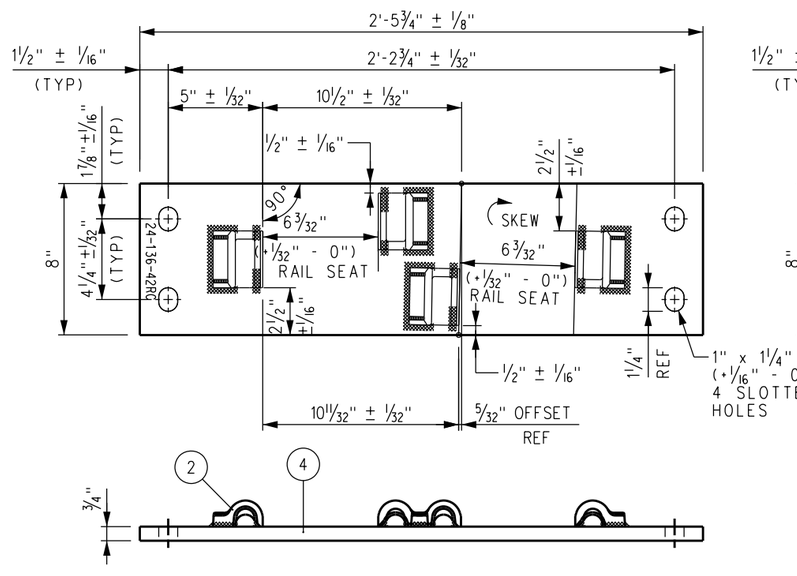

SWITCH PLATE P24-136-42RC

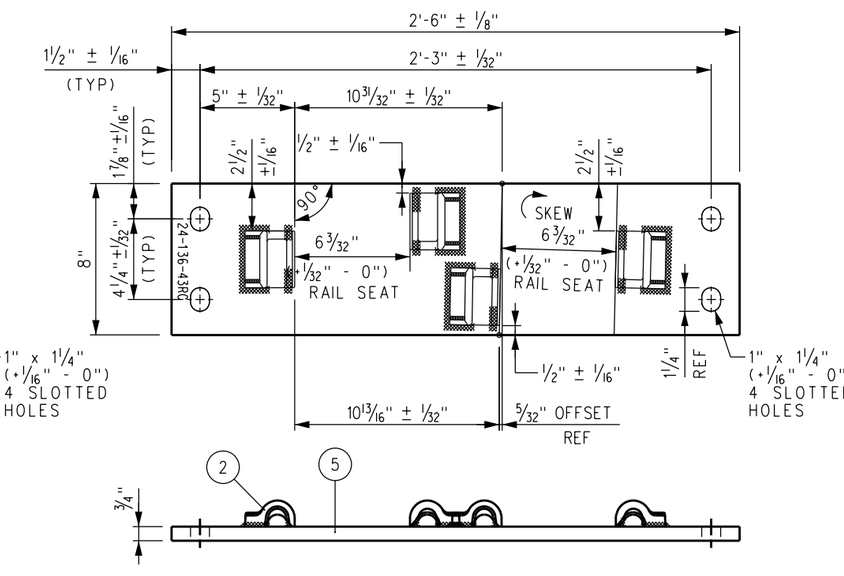

SWITCH PLATE P24-136-43RC

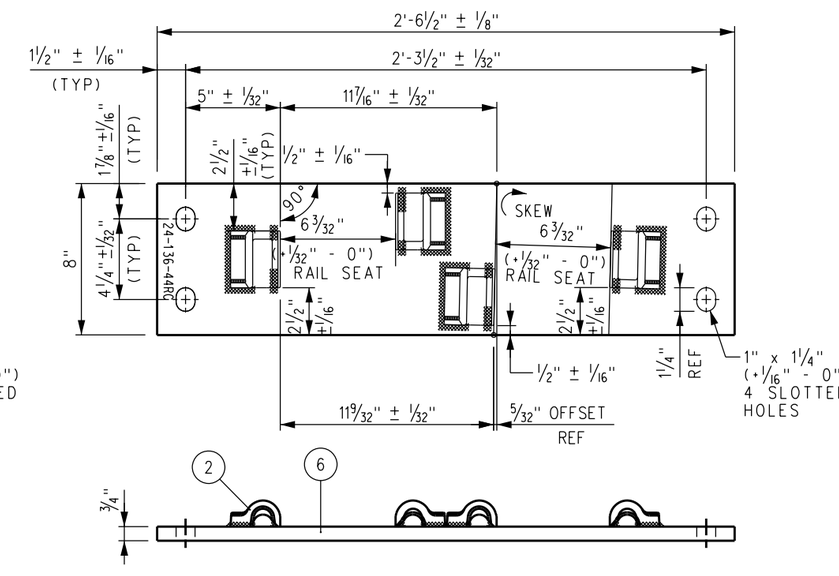

SWITCH PLATE P24-136-44RC

BILL OF MATERIALS		BILL OF MATERIALS	
ITEM	DESCRIPTION	ITEM	DESCRIPTION
1	FLAT BAR, ASTM A36, 3/4" x 8" x 2'-4 3/4"	4	FLAT BAR, ASTM A36, 3/4" x 8" x 2'-5 3/4"
2	SHOULDER, PANDROL, FORGED, TYPE 1, ANTI-OVERDRIVE	5	FLAT BAR, ASTM A36, 3/4" x 8" x 2'-6"
3	FLAT BAR, ASTM A36, 3/4" x 8" x 2'-5 1/4"	6	FLAT BAR, ASTM A36, 3/4" x 8" x 2'-6 1/2"
		7	FLAT BAR, ASTM A36, 3/4" x 8" x 2'-4 1/4"

NOTES:

1. I.D. CHARACTERS TO BE 1/2" MINIMUM HEIGHT CLEARLY STAMPED AS SHOWN.
2. WELDS TO BE DRESSED FLUSH WITH SHOULDER & NOT TO PROTRUDE INTO RAIL SEAT.
3. SLOTTED HOLE CENTERS ARE INDICATED ON DRAWING.

REV.	DATE	DESCRIPTION	DES.	ENG.
X	XX-XX-XX	REVISION	XX	XX

DRAWN BY: HDR DATE:

ASSISTANT DIRECTOR: STANDARDS & DESIGN

DIRECTOR OF ENGINEERING AND CONSTRUCTION

SCRRA ENGINEERING STANDARDS ARE INTENDED FOR SCRRA APPROVED USES ONLY. FOR NON-SCRRA APPROVED USES:
SCRRA SHALL NOT BE RESPONSIBLE FOR THE ACCURACY OR COMPLETENESS OF THE DATA OR INFORMATION CONTAINED HEREIN. THE SELECTION AND USE OF THESE STANDARDS IS THE SOLE RESPONSIBILITY OF THE USER AND SHOULD NOT BE USED WITHOUT CONSULTING A REGISTERED PROFESSIONAL ENGINEER. ALL WARRANTIES AND REPRESENTATIONS OF ANY KIND ARE DISCLAIMED. ANYONE MAKING USE OF THIS INFORMATION AGREES THAT IT ASSUMES ALL LIABILITY ARISING FROM SUCH USE. NO PART OF THESE STANDARDS SHOULD BE REPRODUCED OR DISTRIBUTED IN ANY FORM OR BY ANY MEANS WITHOUT THE PRIOR WRITTEN PERMISSION OF SCRRA. ALL RIGHTS RESERVED.

METROLINK®
SOUTHERN CALIFORNIA REGIONAL RAIL AUTHORITY
ONE GATEWAY PLAZA, 12TH FLOOR, L. A., CA. 90012

ENGINEERING STANDARDS

SWITCH PLATES (24–39RC THROUGH 24–44RC)
FOR NO 24 136 LB RE RH CONCRETE TIE TURNOUT

STANDARD 2807
SCALE: NTS
REVISION –
SHEET 1 OF 1
CADD FILE: ES2807–88

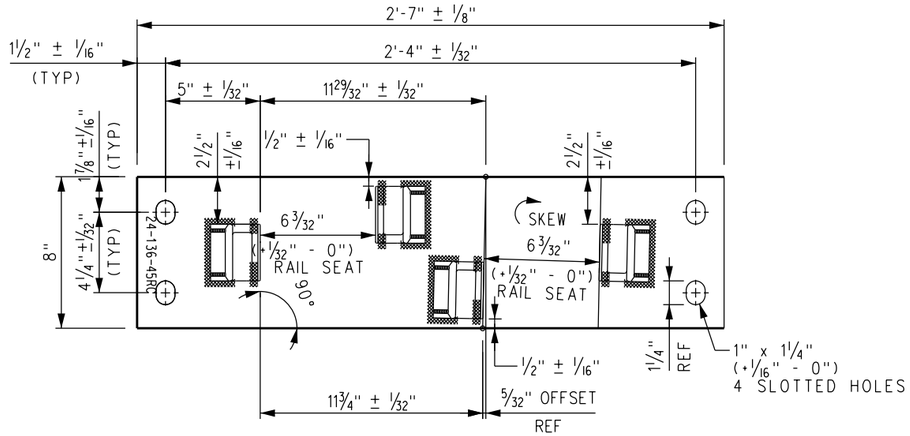

SWITCH PLATE P24-136-45RC

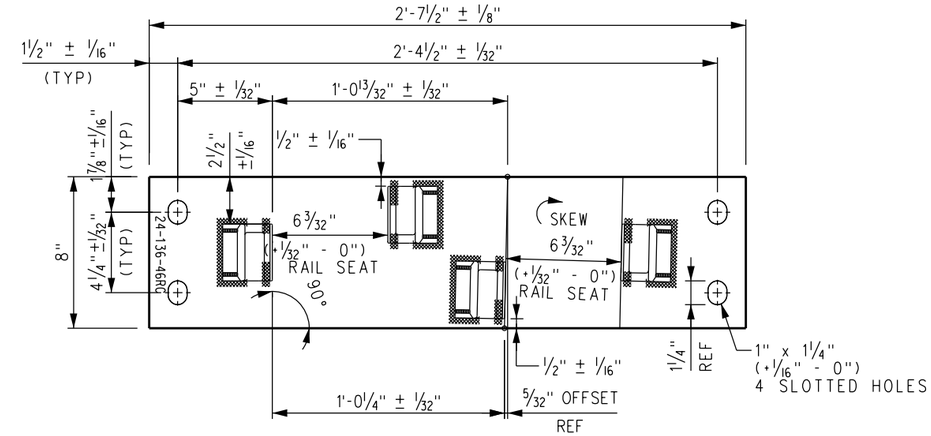

SWITCH PLATE P24-136-46RC

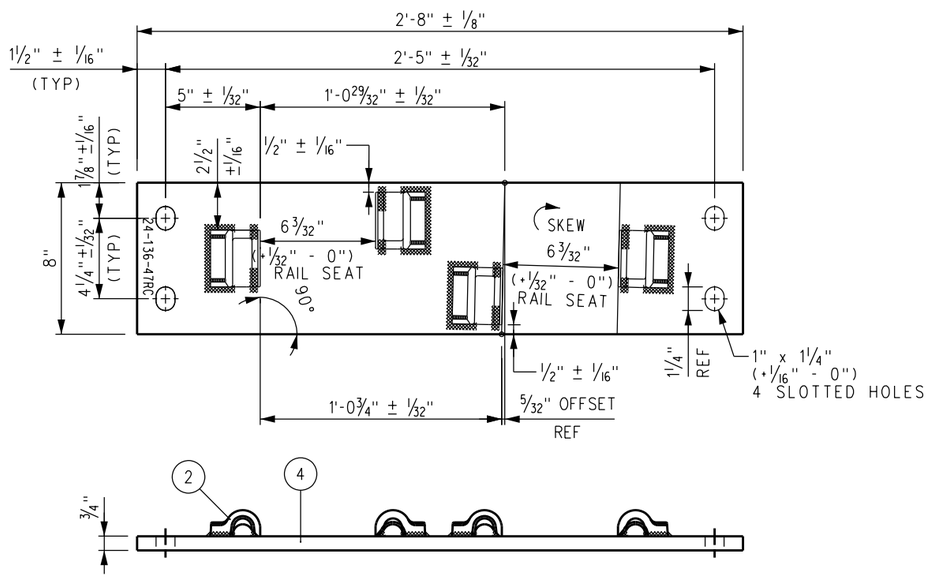

SWITCH PLATE P24-136-47RC

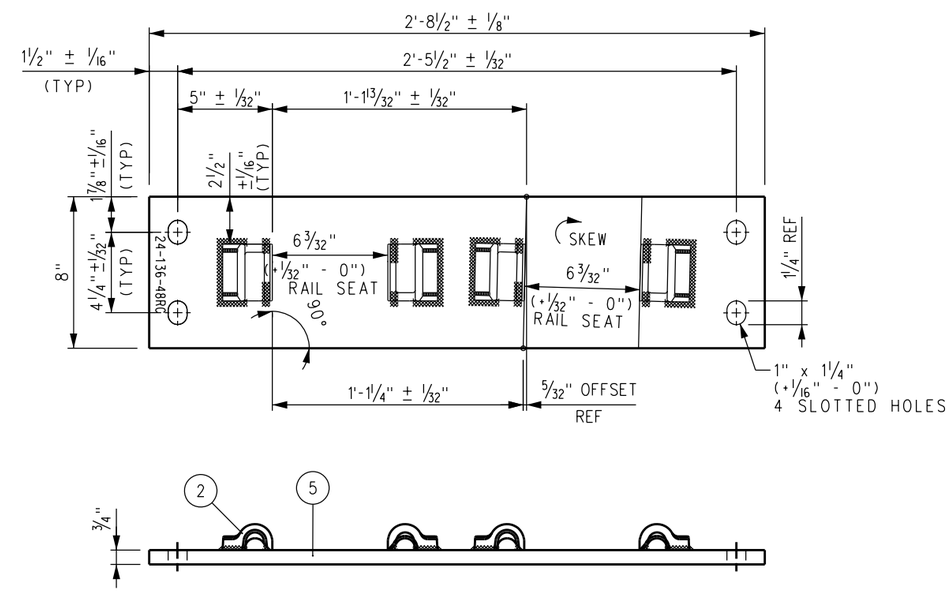

SWITCH PLATE P24-136-48RC

BILL OF MATERIALS		BILL OF MATERIALS	
ITEM	DESCRIPTION	ITEM	DESCRIPTION
1	FLAT BAR, ASTM A36, 3/4" x 8" x 2'-7"	4	FLAT BAR, ASTM A36, 3/4" x 8" x 2'-8"
2	SHOULDER PANDROL FORGED TYPE 1 ANTI-OVERDRIVE	5	FLAT BAR, ASTM A36, 3/4" x 8" x 2'-8 1/2"
3	FLAT BAR, ASTM A36, 3/4" x 8" x 2'-7 1/2"		

NOTES:

1. I.D. CHARACTERS TO BE 1/2" MINIMUM HEIGHT CLEARLY STAMPED AS SHOWN.
2. WELDS TO BE DRESSED FLUSH WITH SHOULDER & NOT TO PROTRUDE INTO RAIL SEAT.
3. SLOTTED HOLE CENTERS ARE INDICATED ON DRAWING.

REV.	DATE	DESCRIPTION	DES.	ENG.
X	XX-XX-XX	REVISION	XX	XX

DRAWN BY: HDR DATE:

ASSISTANT DIRECTOR: STANDARDS & DESIGN

DIRECTOR OF ENGINEERING AND CONSTRUCTION

SCRRA ENGINEERING STANDARDS ARE INTENDED FOR SCRRA APPROVED USES ONLY. FOR NON-SCRRA APPROVED USES:
SCRRA SHALL NOT BE RESPONSIBLE FOR THE ACCURACY OR COMPLETENESS OF THE DATA OR INFORMATION CONTAINED HEREIN. THE SELECTION AND USE OF THESE STANDARDS IS THE SOLE RESPONSIBILITY OF THE USER AND SHOULD NOT BE USED WITHOUT CONSULTING A REGISTERED PROFESSIONAL ENGINEER. ALL WARRANTIES AND REPRESENTATIONS OF ANY KIND ARE DISCLAIMED. ANYONE MAKING USE OF THIS INFORMATION AGREES THAT IT ASSUMES ALL LIABILITY ARISING FROM SUCH USE. NO PART OF THESE STANDARDS SHOULD BE REPRODUCED OR DISTRIBUTED IN ANY FORM OR BY ANY MEANS WITHOUT THE PRIOR WRITTEN PERMISSION OF SCRRA. ALL RIGHTS RESERVED.

METROLINK®
SOUTHERN CALIFORNIA REGIONAL RAIL AUTHORITY
ONE GATEWAY PLAZA, 12TH FLOOR, L. A., CA. 90012

ENGINEERING STANDARDS

SWITCH PLATES (24-45RC THROUGH 24-48RC)
FOR NO 24 136 LB RE RH CONCRETE TIE TURNOUT

STANDARD 2807
SCALE: SCALE
REVISION –
SHEET 1 OF 1
CADD FILE: ES2807-89

DISCLAIMER

SCRRA Engineering Standards are intended for SCRRA approved uses only. FOR NON-SCRRA APPROVED USES: SCRRA and its member agencies, directors, officers, employees and/or agents shall not be responsible for the accuracy or completeness of the data or information contained herein. The selection and use of these standards, while designed in accordance with generally accepted engineering principles and practices, is the sole responsibility of the user and should not be used without consulting a registered professional engineer. All warranties and representations of any kind are disclaimed. Anyone making use of this information agrees that it assumes all liability arising from such use. No part of these standards should be reproduced or distributed in any form or by any means without the prior written permission of SCRRA. All rights reserved.

Since revisions or additions to the engineering standards may occur at any time, the user agrees to indemnify, defend, by counsel satisfactory to SCRRA and Member Agency, and hold harmless SCRRA, Member Agencies, and Operating Railroad, and their respective officers, commissioners, employees, agents, successors and assigns. ("Indemnitees"), and each of them to the maximum extent allowed by law, from and against all loss, liability, claims, demands, suits, liens, claims of lien, damages (including incidental consequential damages), costs and expenses (including, without limitation, any fines, penalties, judgments, actual litigation expenses and experts' and actual attorneys' fees), that are incurred by or asserted against Indemnitees arising out of or connected in any manner with the user's use of outdated engineering standards.

Updating the contents of the manual is a continued process, and revisions/replacements are issued periodically. Questions, comments, and proposed recommendations for changes may be sent to SCRRA at 279 E. Arrow Highway, Suite A, San Dimas, CA 91773.

ABBREVIATIONS, LEGEND, AND GENERAL NOTES

ABBREVIATIONS:

AMS	AMBIENT NOISE SENSOR
CCTV	CLOSED CIRCUIT TELEVISION
CS	COMMUNICATIONS SHELTER
C/F	CLOSED CIRCUIT TELEVISION AND FIBER OPTIC
DA	DATA ACQUISITION
DVM	DEBIT CARD VALIDATOR MACHINE
D/T	DATA ACQUISITION / TELEPHONE
(E)	EXISTING
EMP	EMERGENCY MANAGEMENT PANEL
EPIS	ELECTRONIC PASSENGER INFORMATION SYSTEM
ET	EMERGENCY TELEPHONE
FO	FIBER OPTIC
FOPP	FIBER OPTIC PATCH PANEL
IC	INTERFACE CONVERTER
LED	LIGHT EMMITTING DIODE MESSAGE SIGN
MC	MEDIA CONVERTER
MTTV	MULTI-TRIP TICKET VALIDATOR MACHINE
NMP	NETWORK MEDIA PLAYER
P	POWER
PA	PUBLIC ADDRESS
PVC	POLYVINYL CHLORIDE CONDUIT
T	TELEPHONE
TDD	TELECOMMUNICATION DEVICE FOR THE DEAF
TVM	TICKET VENDING MACHINE
TVSS	TRANSIENT VOLTAGE SUPPRESION SYSTEM

LEGEND:

- LIGHT POLE
- LIGHT POLE WITH SPEAKERS
- LIGHT POLE WITH SPEAKERS AND SINGLE SIDE CMS
- LIGHT POLE WITH SPEAKERS AND DOUBLE SIDED CMS
- CANOPY
- AMBIENT NOISE SENSOR
- STROBE LIGHT
- SPEAKER
- M — LCD MONITOR
- V — VAULT (4' x 4' x 4')
- C — COMM. PULL BOX (11" x 17")
- E — ELEC. PULL BOX (11" x 17")
- 1 — ELEC.PULL BOX (17"L X 11"W X 12"D)
- 2 — COMM. PULL BOX (17"L X 11"W X 12"D)
- STUB
- 1" CONDUIT (1 EA.)
- 2" CONDUIT (QTY.)
- 3" CONDUIT (QTY.)
- 4" CONDUIT (QTY.)
- R.O.W. FENCE

NOTES:

1. CONDUIT SIZES SHOWN AT STUB-OUTS TYPICAL FOR ENTIRE RUN UNLESS NOTED OTHERWISE.
2. ALL CONDUITS SHALL BE PVC MINIMUM 2'-0" BELOW GRADE.
3. REFER TO ARCHITECTURAL DRAWINGS FOR LOCATION OF PULL BOXES, PRIOR TO ROUGH-IN OF CONDUITS.
4. PROVIDE 12" SEPARATION BETWEEN POWER AND COMMUNICATION CONDUITS.
5. CONDUITS TO BE STUBBED INTO BOTTOM OF JUNCTION BOX.
6. PROVIDE SEPARATE 120 VAC, 20 AMP CIRCUIT TO EACH TVM LOCATION. CONDUCTORS TO BE RUN FROM STATION POWER PANEL TO EACH TVM LOCATION: SHALL BE XHHW #10 AWG OR #12 AWG SIZED FOR LENGTH OF RUN.
7. PROVIDE 6 FOOT LONG PIGTAIL AT EACH TVM LOCATION TO ALLOW CONNECTION OF (3) CONDUCTORS (LINE, NEUTRAL, GROUND) TO EQUIPMENT.
8. INSTALLATION OF CABLE IN D/T CONDUIT SYSTEM BY SCRRA.
9. FOR COMMUNICATION EQUIPMENT ROOM, SEE COMMUNICATIONS STANDARD DRAWINGS ES9400 THRU ES9440.

REV.	DATE	DESCRIPTION	DES.	ENG.
X	XX-XX-XX	REVISION	XX	XX

DRAWN BY: A. CARLOS DATE: 03/31/2011

ASSISTANT DIRECTOR: STANDARDS & DESIGN

DIRECTOR OF ENGINEERING AND CONSTRUCTION

SCRRA ENGINEERING STANDARDS ARE INTENDED FOR SCRRA APPROVED USES ONLY. FOR NON-SCRRA APPROVED USES:
SCRRA SHALL NOT BE RESPONSIBLE FOR THE ACCURACY OR COMPLETENESS OF THE DATA OR INFORMATION CONTAINED HEREIN. THE SELECTION AND USE OF THESE STANDARDS IS THE SOLE RESPONSIBILITY OF THE USER AND SHOULD NOT BE USED WITHOUT CONSULTING A REGISTERED PROFESSIONAL ENGINEER. ALL WARRANTIES AND REPRESENTATIONS OF ANY KIND ARE DISCLAIMED. ANYONE MAKING USE OF THIS INFORMATION AGREES THAT IT ASSUMES ALL LIABILITY ARISING FROM SUCH USE. NO PART OF THESE STANDARDS SHOULD BE REPRODUCED OR DISTRIBUTED IN ANY FORM OR BY ANY MEANS WITHOUT THE PRIOR WRITTEN PERMISSION OF SCRRA. ALL RIGHTS RESERVED.

METROLINK®
SOUTHERN CALIFORNIA REGIONAL RAIL AUTHORITY
ONE GATEWAY PLAZA, 12TH FLOOR, L. A., CA. 90012

ENGINEERING STANDARDS

STATIONS
ABBREVIATIONS, LEGEND
AND GENERAL NOTES

STANDARD: 3001
SCALE: NTS
REVISION: –
SHEET: 1 OF 1
CADD FILE: ES3001

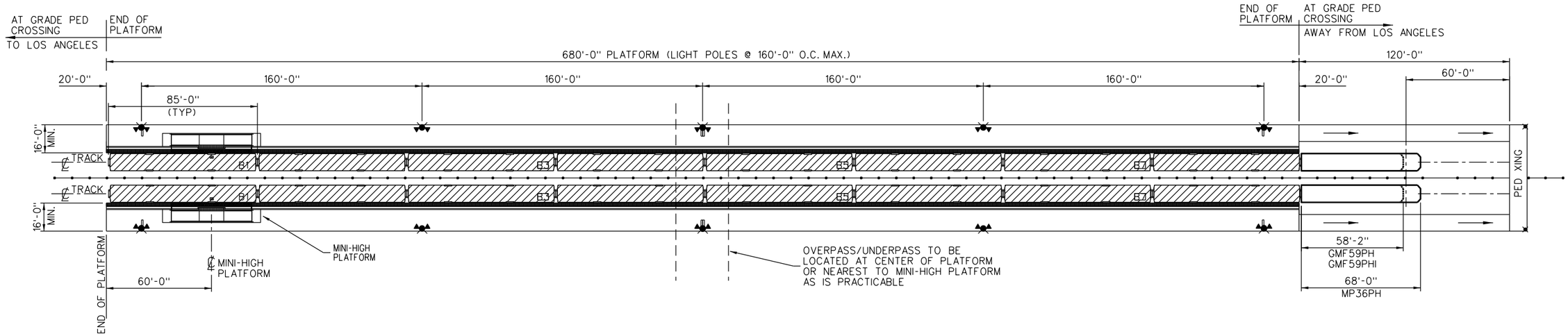

BOMBARDIER CARS

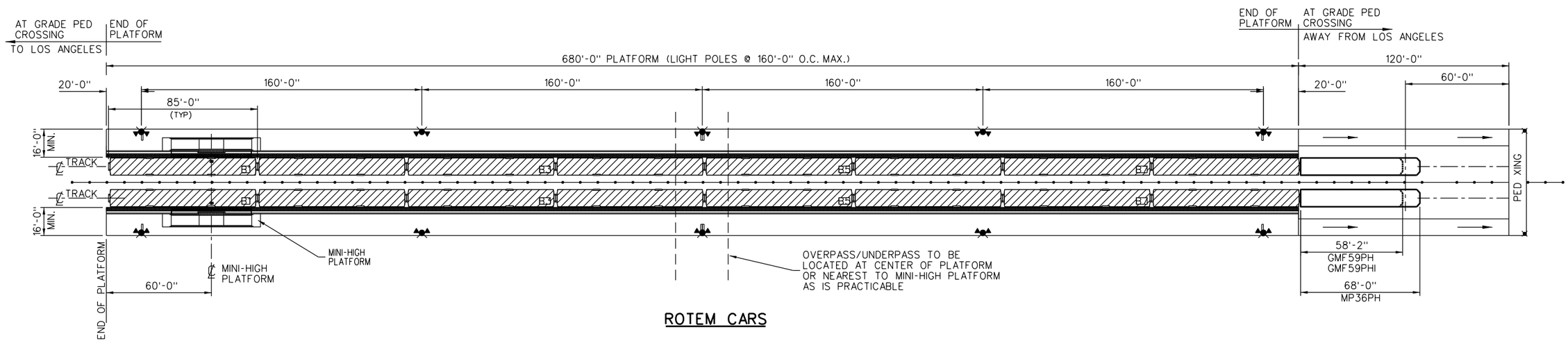

ROTEM CARS

NOTES:

1. STANDARD PLATFORM LENGTH TO BE 680 FEET.
2. STANDARD PLATFORM WIDTH TO BE A MINIMUM OF 16 FEET FOR SIDE PLATFORMS.
3. MINI-HIGH PLATFORM TO BE CENTERED 60'-0" FROM LOS ANGELES END OF PLATFORM.
4. CANOPIES TO BE SET BACK A MINIMUM OF 14 FEET FROM CENTERLINE OF TRACK.
5. INTERTRACK FENCE TO EXTEND FULL LENGTH OF PLATFORM AND AT LEAST 150 FEET BEYOND EACH END.

NOTES: (CONT.)

6. COMMUNICATIONS SHELTER NOT SHOWN FOR CLARITY. FOR COMMUNICATIONS SHELTER LOCATION SEE SCRRA DESIGN CRITERIA.
7. CRITERIA SHOWN ON THIS DRAWING FOR PEDESTRIAN CROSSING SHALL BE APPLIED WHEN A PEDESTRIAN CROSSING IS REQUIRED AT OPPOSITE END OF PLATFORM. FOR ADDITIONAL INFORMATION ON PEDESTRIAN CROSSING SEE SCRRA STANDARD DRAWING ES4032.
8. 6" DIAMETER CRUSHED ROCK IN FILL REQUIRED AT ENDS OF PLATFORM PER ES4032.

REV.	DATE	DESCRIPTION	DES.	ENG.
x	xx-xx-xx	REVISION	xx	xx

DRAWN BY: A. CARLOS DATE: 03/31/2011

ASSISTANT DIRECTOR: STANDARDS & DESIGN

DIRECTOR OF ENGINEERING AND CONSTRUCTION

SCRRA ENGINEERING STANDARDS ARE INTENDED FOR SCRRA APPROVED USES ONLY. FOR NON-SCRRA APPROVED USES:
SCRRA SHALL NOT BE RESPONSIBLE FOR THE ACCURACY OR COMPLETENESS OF THE DATA OR INFORMATION CONTAINED HEREIN. THE SELECTION AND USE OF THESE STANDARDS IS THE SOLE RESPONSIBILITY OF THE USER AND SHOULD NOT BE USED WITHOUT CONSULTING A REGISTERED PROFESSIONAL ENGINEER. ALL WARRANTIES AND REPRESENTATIONS OF ANY KIND ARE DISCLAIMED. ANYONE MAKING USE OF THIS INFORMATION AGREES THAT IT ASSUMES ALL LIABILITY ARISING FROM SUCH USE. NO PART OF THESE STANDARDS SHOULD BE REPRODUCED OR DISTRIBUTED IN ANY FORM OR BY ANY MEANS WITHOUT THE PRIOR WRITTEN PERMISSION OF SCRRA. ALL RIGHTS RESERVED.

METROLINK®
SOUTHERN CALIFORNIA REGIONAL RAIL AUTHORITY
ONE GATEWAY PLAZA, 12TH FLOOR, L. A., CA. 90012

ENGINEERING STANDARDS

METROLINK STATION STANDARDS
SIDE PLATFORMS

STANDARD 3002
SCALE: 1" = 30'-0"
REVISION –
SHEET 1 OF 1
CADD FILE: ES3002

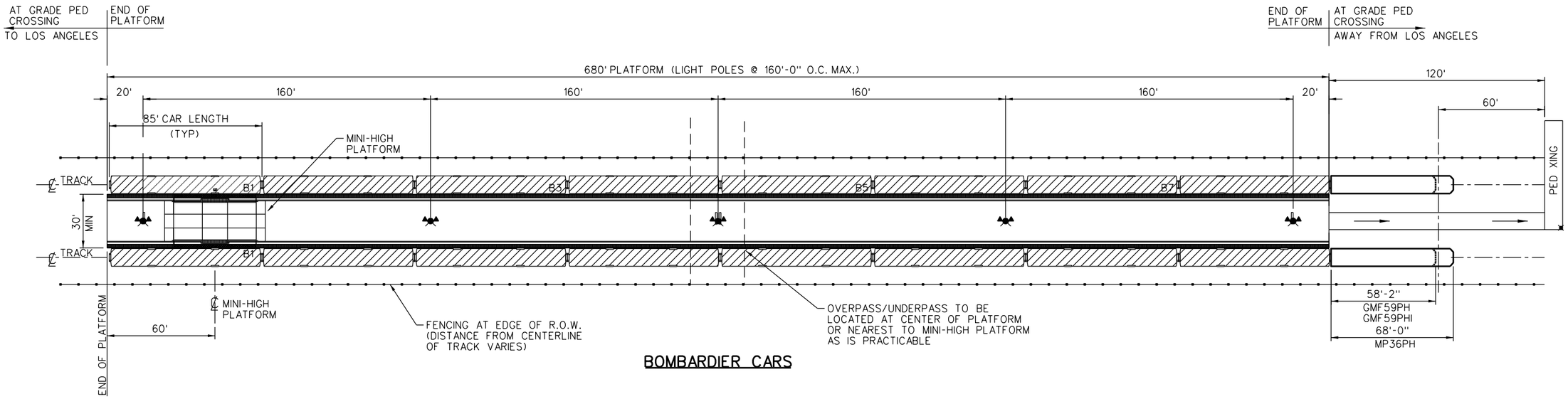

BOMBARDIER CARS

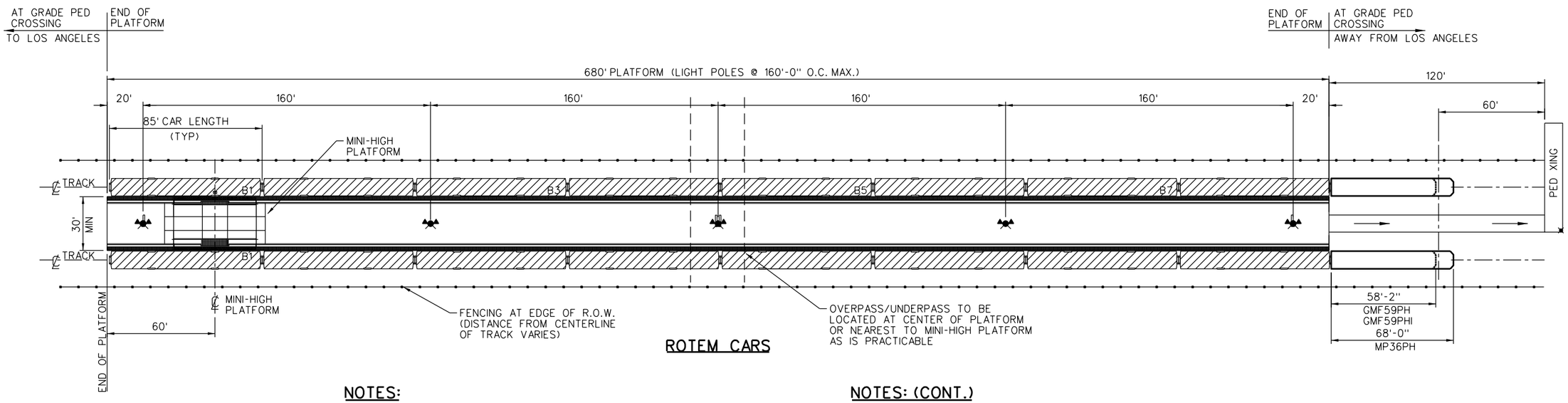

ROTEM CARS

NOTES:

1. STANDARD PLATFORM LENGTH TO BE 680 FEET.
2. STANDARD PLATFORM WIDTH TO BE 30'-0" FOR CENTER PLATFORMS.
3. MINI-HIGH PLATFORM TO BE CENTERED 60'-0" FROM LOS ANGELES END OF PLATFORM.
4. CANOPIES TO BE SET BACK A MINIMUM OF 14 FEET FROM CENTERLINE OF TRACK.
5. COMMUNICATIONS SHELTER NOT SHOWN FOR CLARITY. FOR COMMUNICATIONS SHELTER LOCATION SEE SCRRA DESIGN CRITERIA.

NOTES: (CONT.)

6. CRITERIA SHOWN ON THIS DRAWING FOR PEDESTRIAN CROSSING SHALL ALSO BE APPLIED WHEN A PEDESTRIAN CROSSING IS REQUIRED AT OPPOSITE END OF PLATFORM. FOR ADDITIONAL
7. INFORMATION ON PEDESTRIAN CROSSING SEE SCRRA STANDARD DRAWING ES4032.
   IF APPROVAL IS GRANTED FOR CONSTRUCTION OF CENTER PLATFORM BY SCRRA DIRECTOR OF ENGINEERING AND CONSTRUCTION, THE CONFIGURATION SHOWN ON THIS DRAWING IS RECOMMENDED.
8. 6" DIAMETER CRUSHED ROCK IN FILL REQUIRED AT ENDS OF PLATFORM PER ES4032.

REV.	DATE	DESCRIPTION	DES.	ENG.
X	XX-XX-XX	REVISION	XX	XX

DRAWN BY: A. CARLOS DATE: 03/31/2011

ASSISTANT DIRECTOR: STANDARDS & DESIGN

DIRECTOR OF ENGINEERING AND CONSTRUCTION

SCRRA ENGINEERING STANDARDS ARE INTENDED FOR SCRRA APPROVED USES ONLY. FOR NON-SCRRA APPROVED USES, SCRRA SHALL NOT BE RESPONSIBLE FOR THE ACCURACY OR COMPLETENESS OF THE DATA OR INFORMATION CONTAINED HEREIN. THE SELECTION AND USE OF THESE STANDARDS IS THE SOLE RESPONSIBILITY OF THE USER AND SHOULD NOT BE USED WITHOUT CONSULTING A REGISTERED PROFESSIONAL ENGINEER. ALL WARRANTIES AND REPRESENTATIONS OF ANY KIND ARE DISCLAIMED. ANYONE MAKING USE OF THIS INFORMATION AGREES THAT IT ASSUMES ALL LIABILITY ARISING FROM SUCH USE. NO PART OF THESE STANDARDS SHOULD BE REPRODUCED OR DISTRIBUTED IN ANY FORM OR BY ANY MEANS WITHOUT THE PRIOR WRITTEN PERMISSION OF SCRRA. ALL RIGHTS RESERVED.

METROLINK®

SOUTHERN CALIFORNIA REGIONAL RAIL AUTHORITY
ONE GATEWAY PLAZA, 12TH FLOOR, L. A., CA. 90012

ENGINEERING STANDARDS

METROLINK STATION STANDARDS
CENTER PLATFORMS

STANDARD 3003
SCALE: 1" = 30'-0"
REVISION –
SHEET 1 OF 1
CADD FILE: ES3003

NOTES:

1. ADDITIONAL LOCOMOTIVE NUMBER GMF59PH NOT SHOWN FOR CLARITY.
2. FOR ADDITIONAL PLATFORM INFORMATION SEE SCRRA STANDARD DRAWINGS ES3002 AND ES3003.

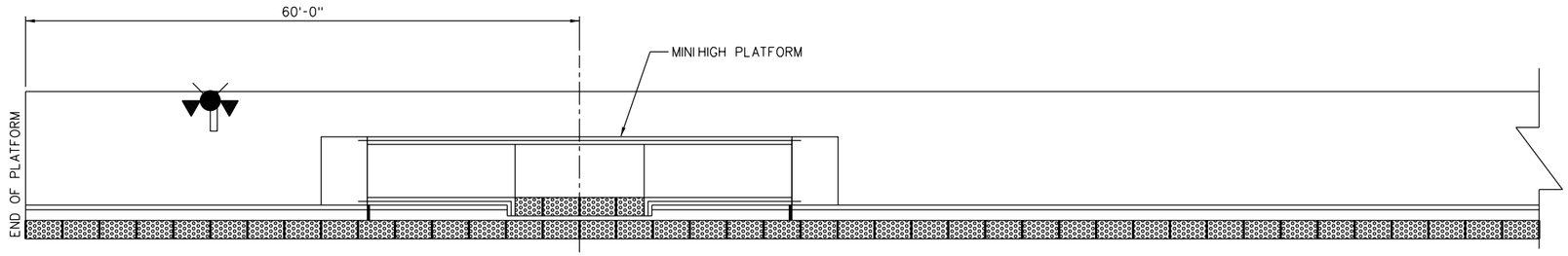

TO LOS ANGELES

PARTIAL PLAN @ TYPICAL SIDE PLATFORM

AWAY FROM LOS ANGELES

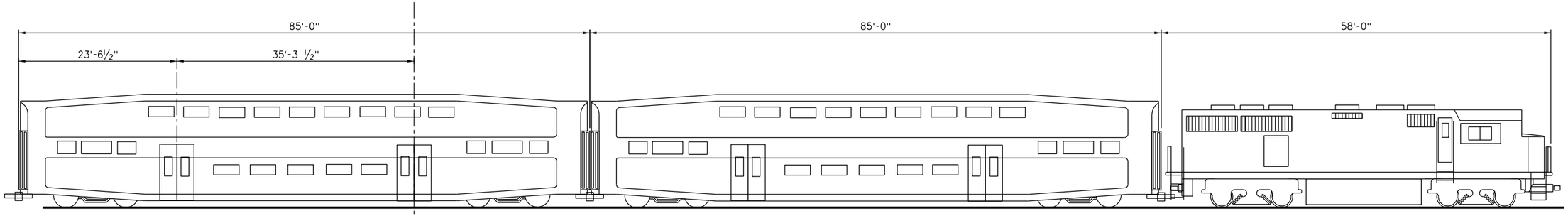

GM F59PH LOCOMOTIVE & BOMBARDIER CAR

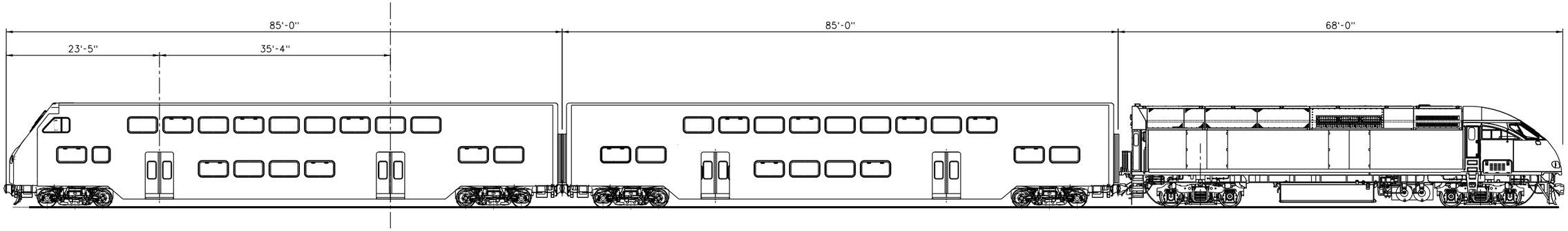

MP36PH LOCOMOTIVE & ROTEM CARS

X	XX-XX-XX	REVISION	XX	XX
REV.	DATE	DESCRIPTION	DES.	ENG.

DRAWN BY: A. CARLOS DATE: 03/31/2011

ASSISTANT DIRECTOR: STANDARDS & DESIGN

DIRECTOR OF ENGINEERING AND CONSTRUCTION

SCRRA ENGINEERING STANDARDS ARE INTENDED FOR SCRRA APPROVED USES ONLY. FOR NON-SCRRA APPROVED USES:
SCRRA SHALL NOT BE RESPONSIBLE FOR THE ACCURACY OR COMPLETENESS OF THE DATA OR INFORMATION CONTAINED HEREIN. THE SELECTION AND USE OF THESE STANDARDS IS THE SOLE RESPONSIBILITY OF THE USER AND SHOULD NOT BE USED WITHOUT CONSULTING A REGISTERED PROFESSIONAL ENGINEER. ALL WARRANTIES AND REPRESENTATIONS OF ANY KIND ARE DISCLAIMED. ANYONE MAKING USE OF THIS INFORMATION AGREES THAT IT ASSUMES ALL LIABILITY ARISING FROM SUCH USE. NO PART OF THESE STANDARDS SHOULD BE REPRODUCED OR DISTRIBUTED IN ANY FORM OR BY ANY MEANS WITHOUT THE PRIOR WRITTEN PERMISSION OF SCRRA. ALL RIGHTS RESERVED.

METROLINK®

SOUTHERN CALIFORNIA REGIONAL RAIL AUTHORITY
ONE GATEWAY PLAZA, 12TH FLOOR, L. A., CA. 90012

ENGINEERING STANDARDS

LOCOMOTIVE AND CAR ELEVATIONS

STANDARD: 3004
SCALE: ⅛" = 1'-0"
REVISION: –
SHEET: 1 OF 1
CADD FILE: ES3004

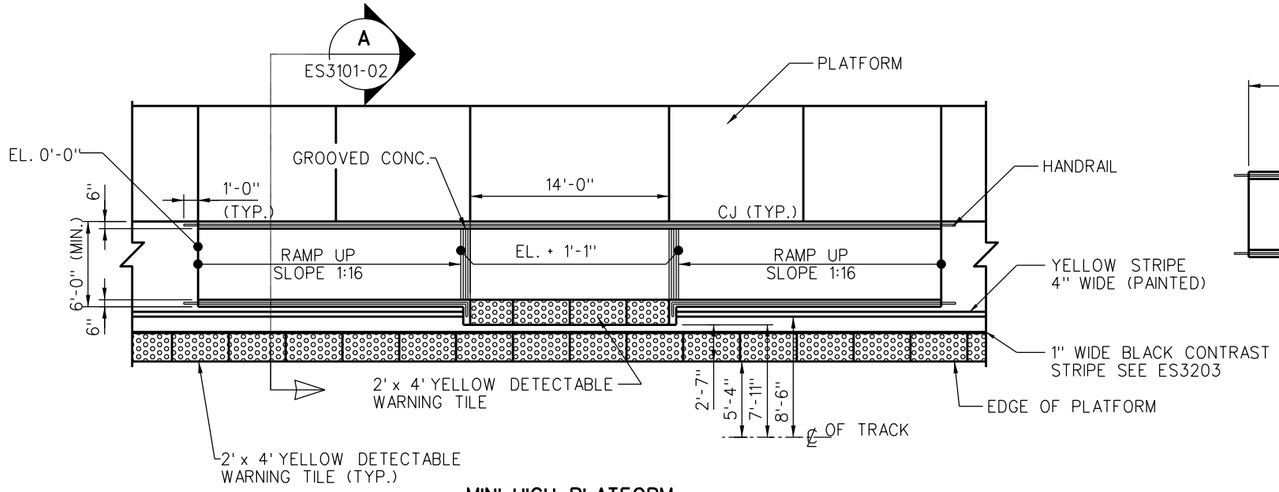

MINI-HIGH PLATFORM

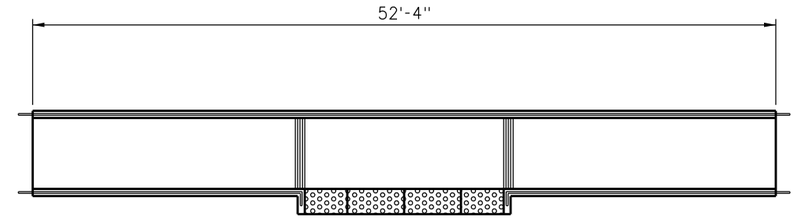

TYPE 1
SIDE PLATFORM (DOUBLE RAMP)

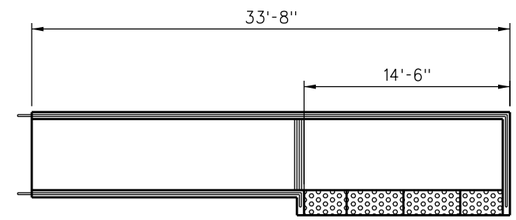

TYPE 2
SIDE PLATFORM (SINGLE RAMP)
(TYP. OPP.)

REAR VIEW

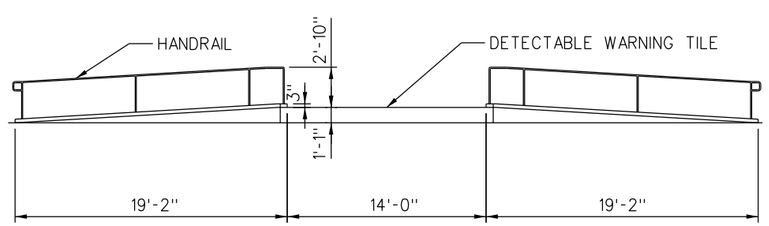

FRONT VIEW

MINI-HIGH HANDRAIL

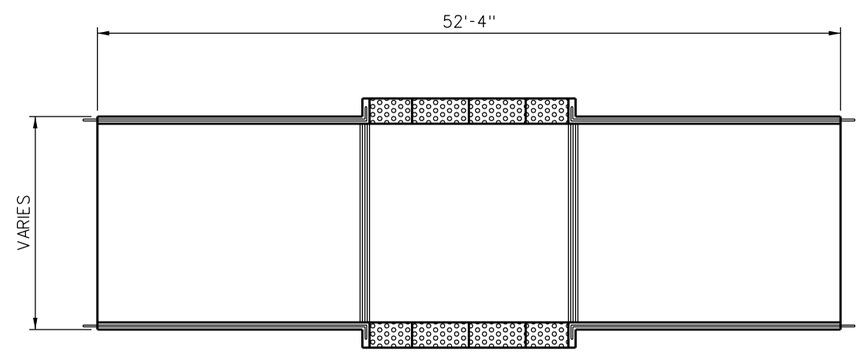

TYPE 3
CENTER PLATFORM

NOTE:

MINI-HIGH PLATFORM DESIGN, MATERIAL, FABRICATION AND INSTALLATION SHALL BE AS PER SCRRA SPECIFICATIONS.

PLATFORM SCHEDULES

REV.	DATE	DESCRIPTION	DES.	ENG.
X	XX-XX-XX	REVISION	XX	XX

DRAWN BY: A. CARLOS DATE: 03/31/2011

ASSISTANT DIRECTOR: STANDARDS & DESIGN

DIRECTOR OF ENGINEERING AND CONSTRUCTION

SCRRA ENGINEERING STANDARDS ARE INTENDED FOR SCRRA APPROVED USES ONLY. FOR NON-SCRRA APPROVED USES, SCRRA SHALL NOT BE RESPONSIBLE FOR THE ACCURACY OR COMPLETENESS OF THE DATA OR INFORMATION CONTAINED HEREIN. THE SELECTION AND USE OF THESE STANDARDS IS THE SOLE RESPONSIBILITY OF THE USER AND SHOULD NOT BE USED WITHOUT CONSULTING A REGISTERED PROFESSIONAL ENGINEER. ALL WARRANTIES AND REPRESENTATIONS OF ANY KIND ARE DISCLAIMED. ANYONE MAKING USE OF THIS INFORMATION AGREES THAT IT ASSUMES ALL LIABILITY ARISING FROM SUCH USE. NO PART OF THESE STANDARDS SHOULD BE REPRODUCED OR DISTRIBUTED IN ANY FORM OR BY ANY MEANS WITHOUT THE PRIOR WRITTEN PERMISSION OF SCRRA. ALL RIGHTS RESERVED.

METROLINK®
SOUTHERN CALIFORNIA REGIONAL RAIL AUTHORITY
ONE GATEWAY PLAZA, 12TH FLOOR, L. A., CA. 90012

ENGINEERING STANDARDS

MINI – HIGH PLATFORM DETAILS

STANDARD: 3101
SCALE: NTS
REVISION: –
SHEET: 1 OF 4
CADD FILE: ES3101-01

NOTE:

1. CLEARANCE SHOWN WILL ALSO APPLY TO HANDRAILS PARALLEL TO THE TRACK e.g. APPROACH RAMPS TO THE ADA PLATFORM.
2. SEE NOTE 4, ES2102.

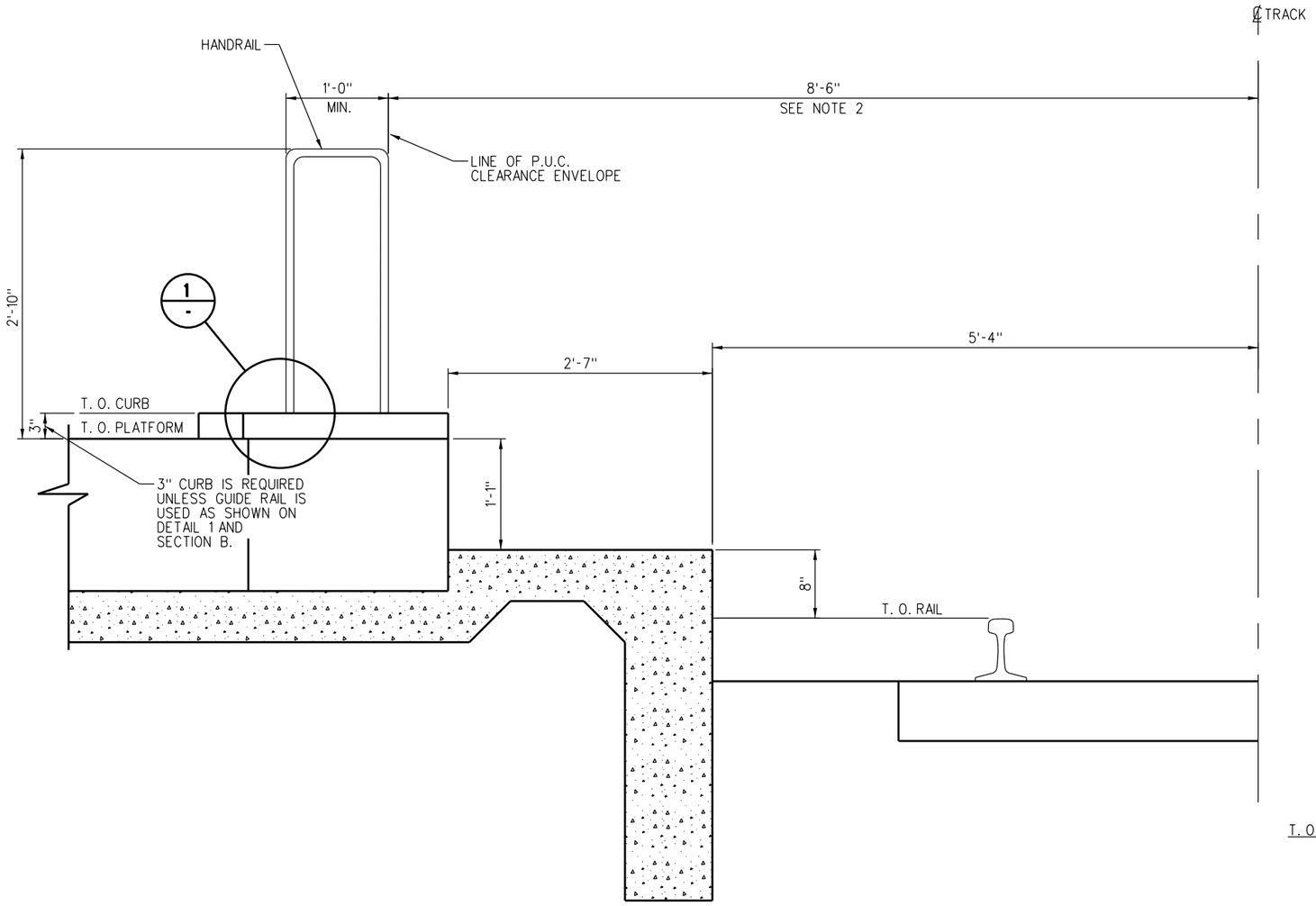

SECTION A
ES3101-01

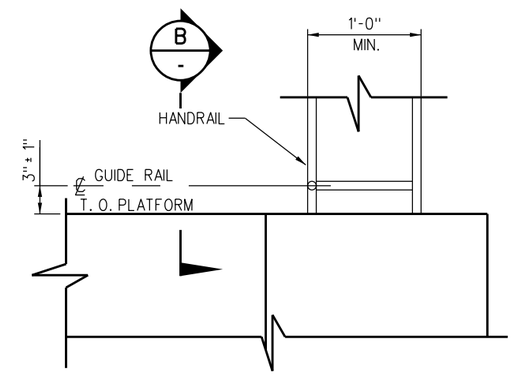

DETAIL 1
-

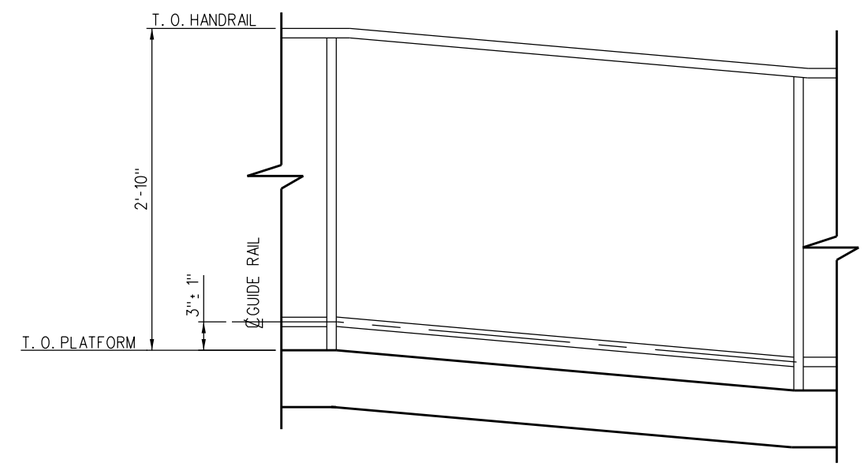

SECTION B
-

REV.	DATE	DESCRIPTION	DES.	ENG.
X	XX-XX-XX	REVISION	XX	XX

DRAWN BY: A. CARLOS DATE: 03/31/2011

ASSISTANT DIRECTOR: STANDARDS & DESIGN

DIRECTOR OF ENGINEERING AND CONSTRUCTION

SCRRA ENGINEERING STANDARDS ARE INTENDED FOR SCRRA APPROVED USES ONLY. FOR NON-SCRRA APPROVED USES:
SCRRA SHALL NOT BE RESPONSIBLE FOR THE ACCURACY OR COMPLETENESS OF THE DATA OR INFORMATION CONTAINED HEREIN. THE SELECTION AND USE OF THESE STANDARDS IS THE SOLE RESPONSIBILITY OF THE USER AND SHOULD NOT BE USED WITHOUT CONSULTING A REGISTERED PROFESSIONAL ENGINEER. ALL WARRANTIES AND REPRESENTATIONS OF ANY KIND ARE DISCLAIMED. ANYONE MAKING USE OF THIS INFORMATION AGREES THAT IT ASSUMES ALL LIABILITY ARISING FROM SUCH USE. NO PART OF THESE STANDARDS SHOULD BE REPRODUCED OR DISTRIBUTED IN ANY FORM OR BY ANY MEANS WITHOUT THE PRIOR WRITTEN PERMISSION OF SCRRA. ALL RIGHTS RESERVED.

METROLINK®
SOUTHERN CALIFORNIA REGIONAL RAIL AUTHORITY
ONE GATEWAY PLAZA, 12TH FLOOR, L. A., CA. 90012

ENGINEERING STANDARDS

MINI – HIGH PLATFORM DETAILS

STANDARD 3101
SCALE: NTS
REVISION –
SHEET 2 OF 4
CADD FILE: ES3101–02

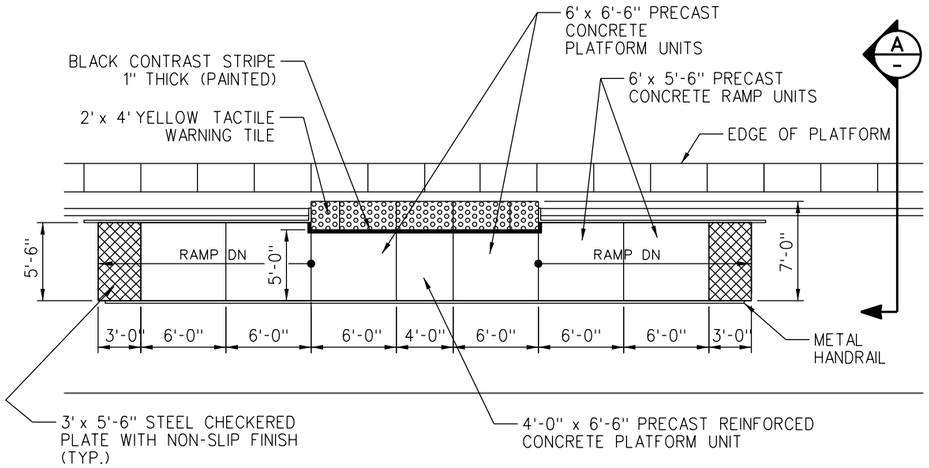

MINI-HIGH PLATFORM

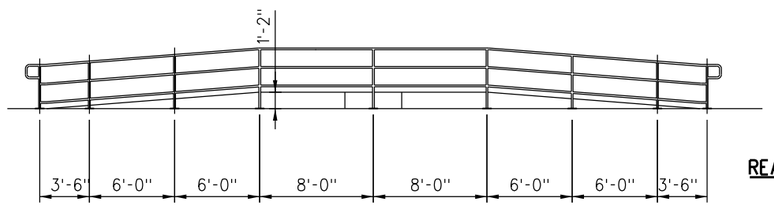

REAR VIEW

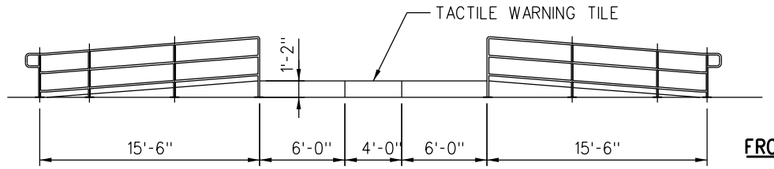

FRONT VIEW

MINI-HIGH HANDRAIL

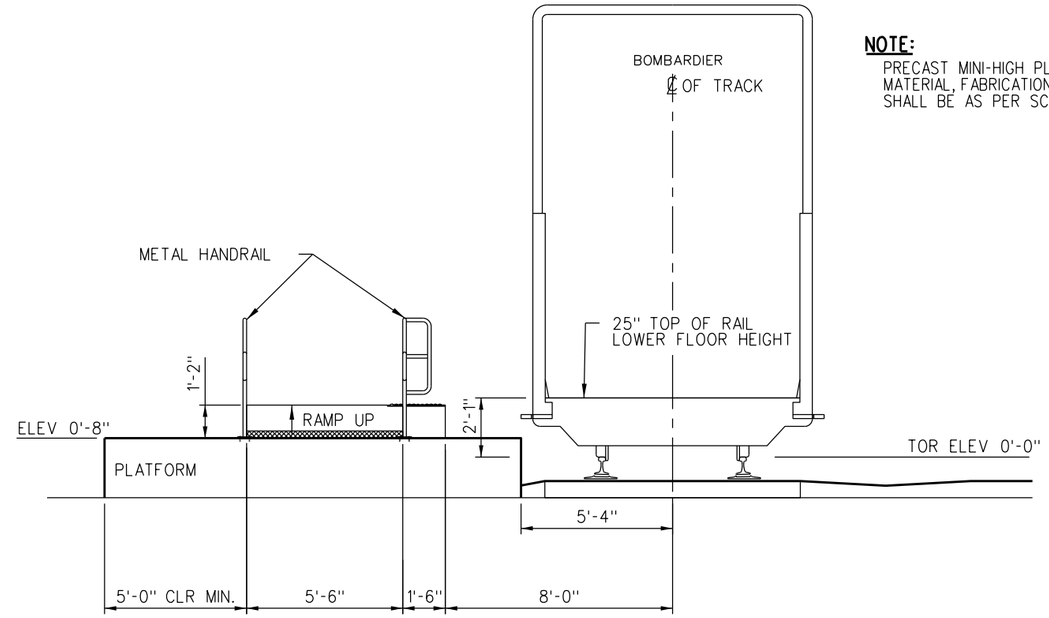

NOTE:
PRECAST MINI-HIGH PLATFORM DESIGN, MATERIAL, FABRICATION AND INSTALLATION SHALL BE AS PER SCRRA SPECIFICATIONS.

A — **SECTION**
NTS

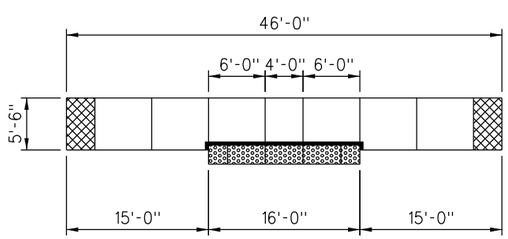

TYPE 1

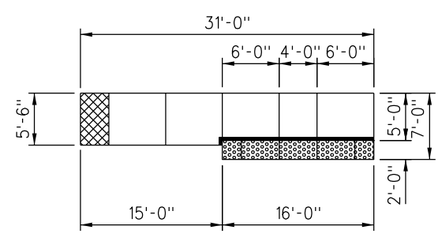

TYPE 2
(TYP. OPP.)

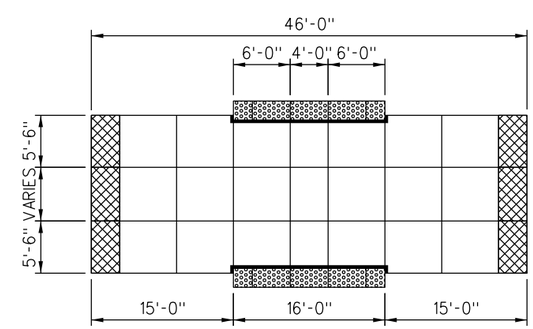

TYPE 3

MINI-HIGH SCHEDULES

X	XX-XX-XX	REVISION	XX	XX
REV.	DATE	DESCRIPTION	DES.	ENG.

DRAWN BY: A. CARLOS DATE: 03/31/2011

ASSISTANT DIRECTOR: STANDARDS & DESIGN

DIRECTOR OF ENGINEERING AND CONSTRUCTION

SCRRA ENGINEERING STANDARDS ARE INTENDED FOR SCRRA APPROVED USES ONLY. FOR NON-SCRRA APPROVED USES:
SCRRA SHALL NOT BE RESPONSIBLE FOR THE ACCURACY OR COMPLETENESS OF THE DATA OR INFORMATION CONTAINED HEREIN. THE SELECTION AND USE OF THESE STANDARDS IS THE SOLE RESPONSIBILITY OF THE USER AND SHOULD NOT BE USED WITHOUT CONSULTING A REGISTERED PROFESSIONAL ENGINEER. ALL WARRANTIES AND REPRESENTATIONS OF ANY KIND ARE DISCLAIMED. ANYONE MAKING USE OF THIS INFORMATION AGREES THAT IT ASSUMES ALL LIABILITY ARISING FROM SUCH USE. NO PART OF THESE STANDARDS SHOULD BE REPRODUCED OR DISTRIBUTED IN ANY FORM OR BY ANY MEANS WITHOUT THE PRIOR WRITTEN PERMISSION OF SCRRA. ALL RIGHTS RESERVED.

METROLINK®
SOUTHERN CALIFORNIA REGIONAL RAIL AUTHORITY
ONE GATEWAY PLAZA, 12TH FLOOR, L. A., CA. 90012

ENGINEERING STANDARDS

PRECAST MINI- HIGH PLATFORM

STANDARD 3101
SCALE: NTS
REVISION –
SHEET 3 OF 4
CADD FILE: ES3101-03

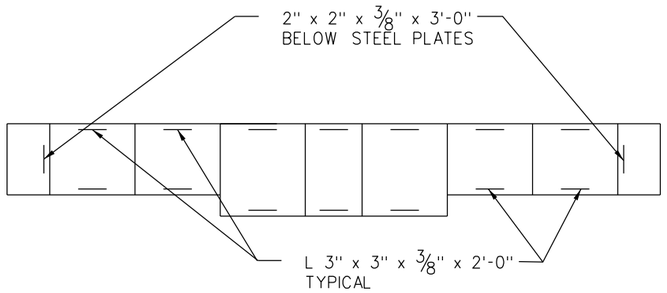

PRECAST RAMP ANCHOR ANGLES

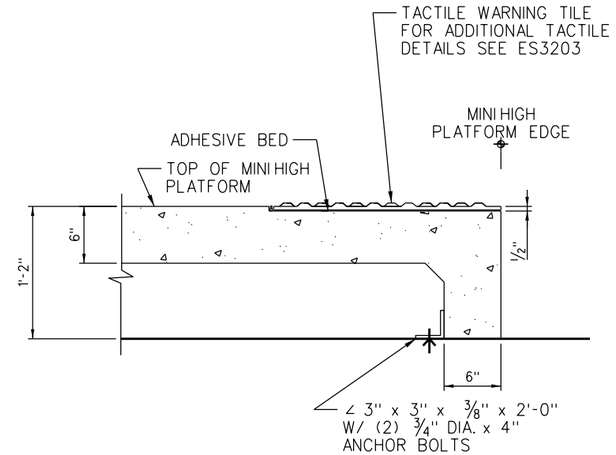

TACTILE WARNING TILE

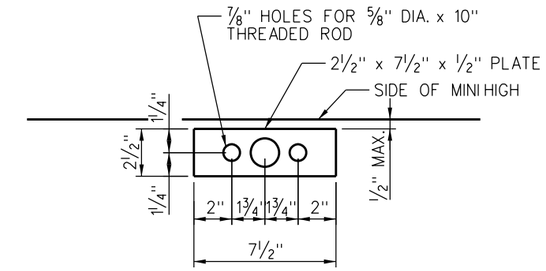

BASE PLATE FOR SINGLE POST

A DETAIL
SCALE: NTS

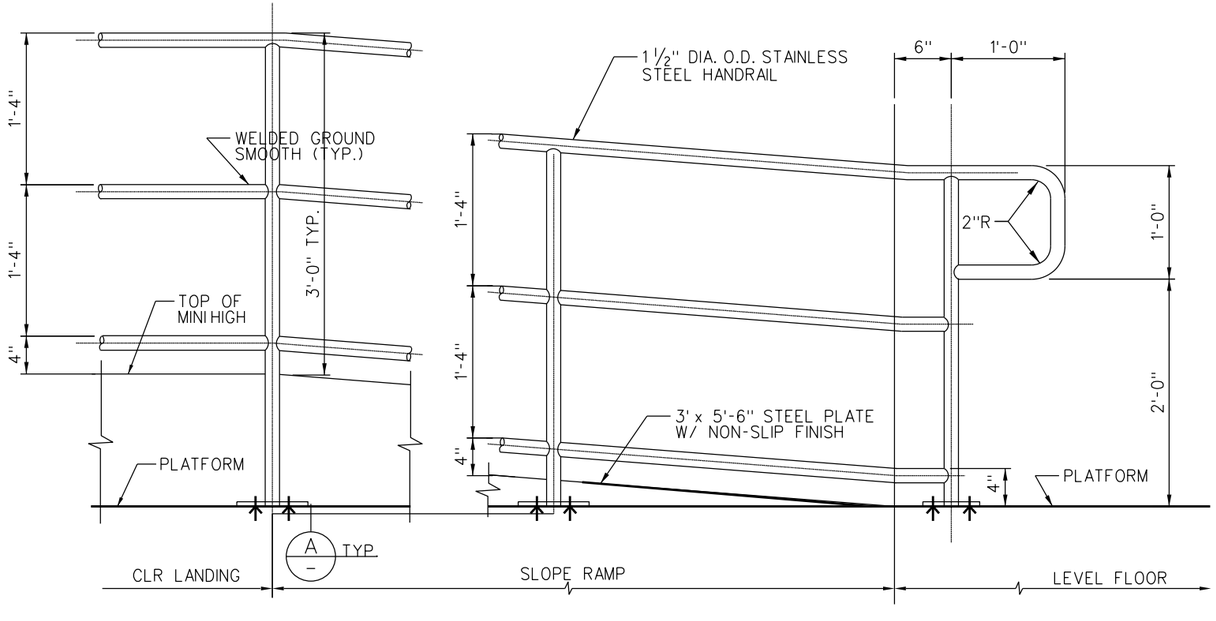

TYPICAL HANDRAIL 1

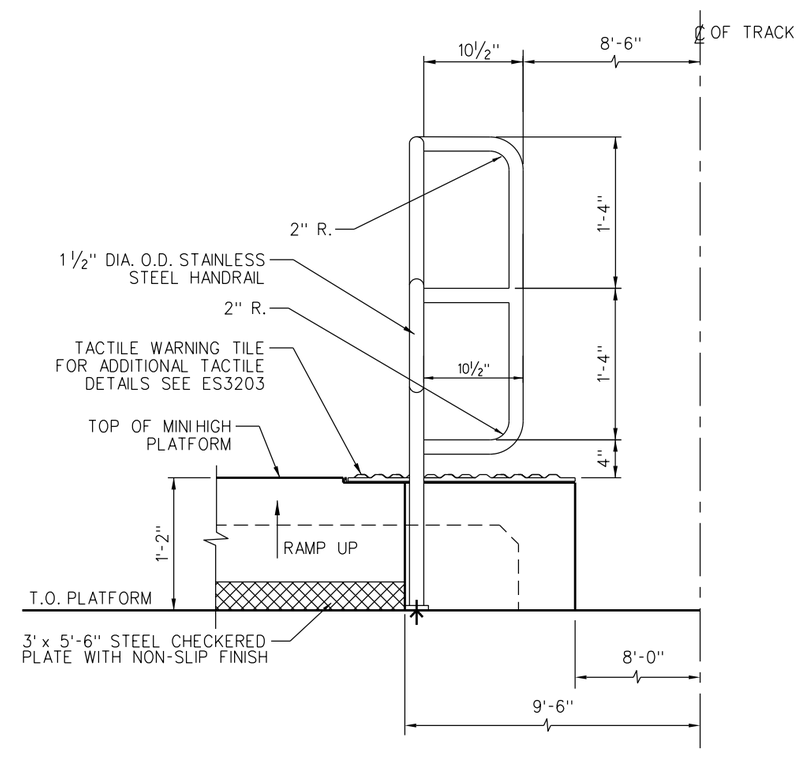

TYPICAL HANDRAIL 2

X	XX-XX-XX	REVISION	XX	XX
REV.	DATE	DESCRIPTION	DES.	ENG.

DRAWN BY: A. CARLOS DATE: 03/31/2011

ASSISTANT DIRECTOR: STANDARDS & DESIGN

DIRECTOR OF ENGINEERING AND CONSTRUCTION

SCRRA ENGINEERING STANDARDS ARE INTENDED FOR SCRRA APPROVED USES ONLY. FOR NON-SCRRA APPROVED USES:
SCRRA SHALL NOT BE RESPONSIBLE FOR THE ACCURACY OR COMPLETENESS OF THE DATA OR INFORMATION CONTAINED HEREIN. THE SELECTION AND USE OF THESE STANDARDS IS THE SOLE RESPONSIBILITY OF THE USER AND SHOULD NOT BE USED WITHOUT CONSULTING A REGISTERED PROFESSIONAL ENGINEER. ALL WARRANTIES AND REPRESENTATIONS OF ANY KIND ARE DISCLAIMED. ANYONE MAKING USE OF THIS INFORMATION AGREES THAT IT ASSUMES ALL LIABILITY ARISING FROM SUCH USE. NO PART OF THESE STANDARDS SHOULD BE REPRODUCED OR DISTRIBUTED IN ANY FORM OR BY ANY MEANS WITHOUT THE PRIOR WRITTEN PERMISSION OF SCRRA. ALL RIGHTS RESERVED.

METROLINK®
SOUTHERN CALIFORNIA REGIONAL RAIL AUTHORITY
ONE GATEWAY PLAZA, 12TH FLOOR, L. A., CA. 90012

ENGINEERING STANDARDS

PRECAST MINI – HIGH PLATFORM DETAILS

STANDARD 3101
SCALE: NONE
REVISION –
SHEET 4 OF 4
CADD FILE: ES3101-04

NOTES:

1. LIGHT POLE AND CANOPY SHOWN AS REFERENCE ONLY ACTUAL DESIGN TO BE DETERMINED BY THE ARCHITECT.
2. STATION FURNITURE (BENCHES, TRASH RECEPTACLES) SHALL BE PLACED AT THE BACK OF THE PLATFORM.

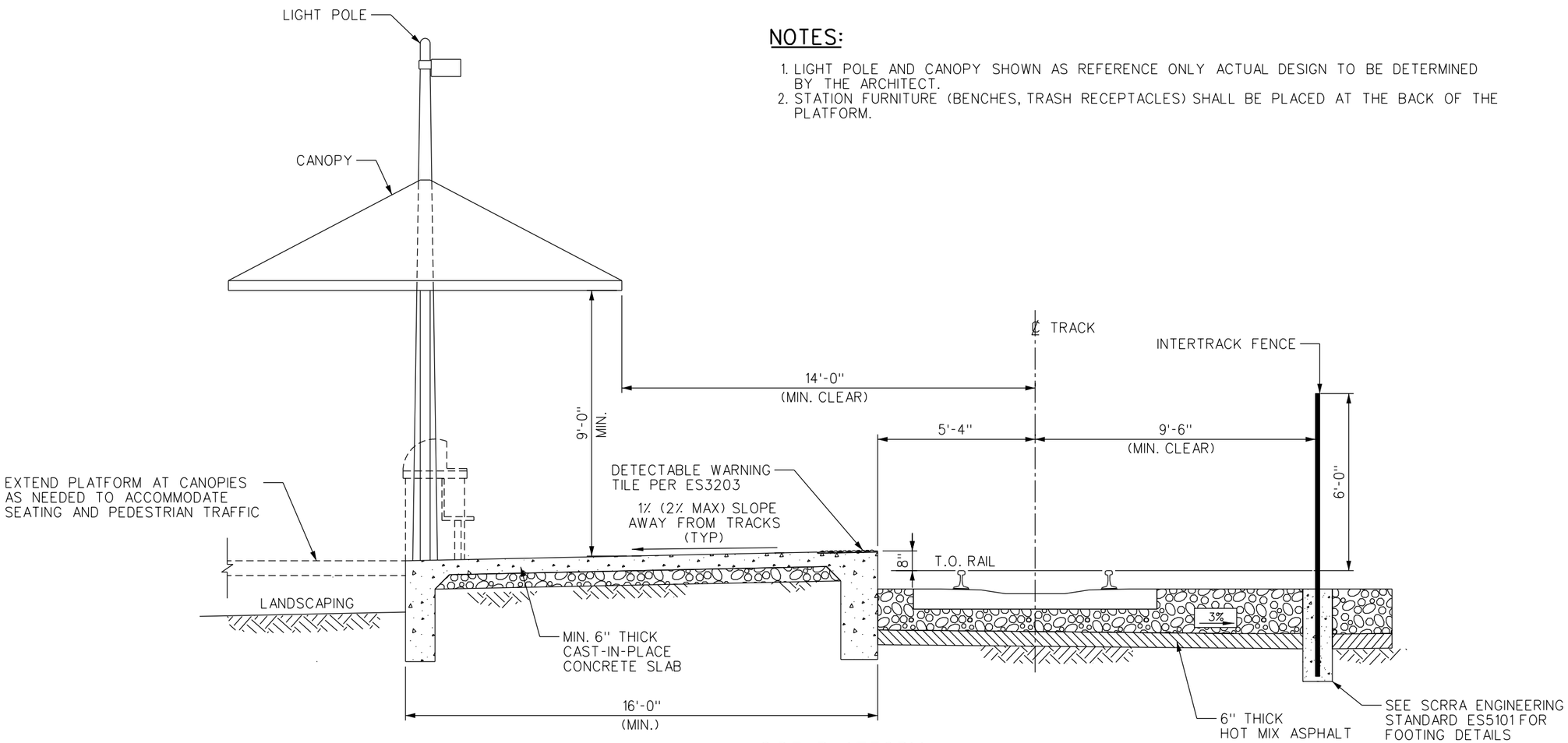

SIDE PLATFORM

REV.	DATE	DESCRIPTION	DES.	ENG.
X	XX-XX-XX	REVISION	XX	XX

DRAWN BY: A. CARLOS DATE: 03/31/2011

ASSISTANT DIRECTOR: STANDARDS & DESIGN

DIRECTOR OF ENGINEERING AND CONSTRUCTION

SCRRA ENGINEERING STANDARDS ARE INTENDED FOR SCRRA APPROVED USES ONLY. FOR NON-SCRRA APPROVED USES:
SCRRA SHALL NOT BE RESPONSIBLE FOR THE ACCURACY OR COMPLETENESS OF THE DATA OR INFORMATION CONTAINED HEREIN. THE SELECTION AND USE OF THESE STANDARDS IS THE SOLE RESPONSIBILITY OF THE USER AND SHOULD NOT BE USED WITHOUT CONSULTING A REGISTERED PROFESSIONAL ENGINEER. ALL WARRANTIES AND REPRESENTATIONS OF ANY KIND ARE DISCLAIMED. ANYONE MAKING USE OF THIS INFORMATION AGREES THAT IT ASSUMES ALL LIABILITY ARISING FROM SUCH USE. NO PART OF THESE STANDARDS SHOULD BE REPRODUCED OR DISTRIBUTED IN ANY FORM OR BY ANY MEANS WITHOUT THE PRIOR WRITTEN PERMISSION OF SCRRA. ALL RIGHTS RESERVED.

METROLINK®

SOUTHERN CALIFORNIA REGIONAL RAIL AUTHORITY
ONE GATEWAY PLAZA, 12TH FLOOR, L. A., CA. 90012

ENGINEERING STANDARDS

SIDE PLATFORMS
TYPICAL SECTIONS

STANDARD: 3201
SCALE: NTS
REVISION: –
SHEET: 1 OF 1
CADD FILE: ES3201

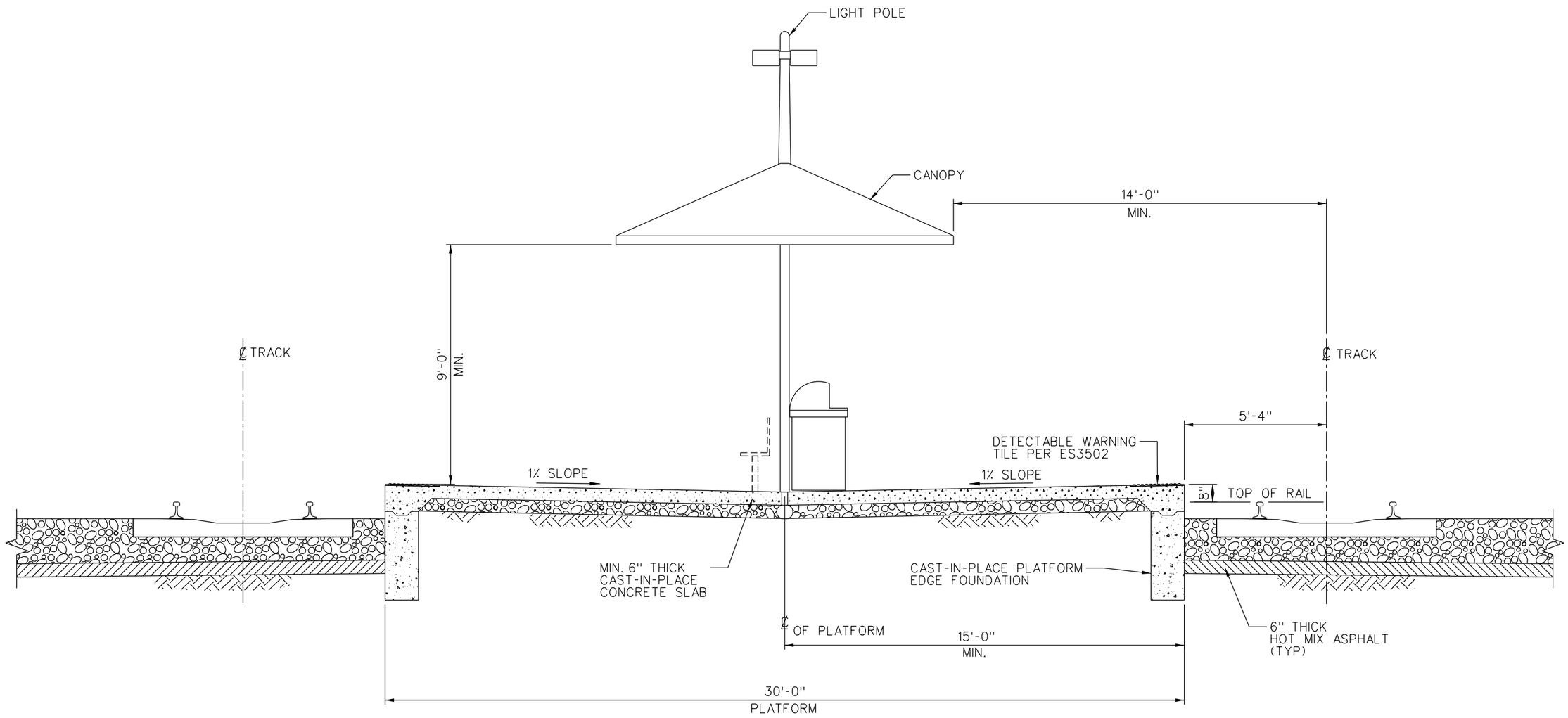

CENTER PLATFORM

NOTE:

1. STATION FURNITURE (BENCHES, TRASH RECEPTACLES) SHALL BE PLACED AT THE CENTER OF THE PLATFORM.
2. IF APPROVAL IS GRANTED FOR CONSTRUCTION OF CENTER PLATFORM BY SCRRA DIRECTOR OF ENGINEERING AND CONSTRUCTION, THE CONFIGURATION SHOWN ON THIS DRAWING IS RECOMMENDED.

REV.	DATE	DESCRIPTION	DES.	ENG.
X	XX-XX-XX	REVISION	XX	XX

DRAWN BY: A. CARLOS DATE: 03/31/2011

ASSISTANT DIRECTOR: STANDARDS & DESIGN

DIRECTOR OF ENGINEERING AND CONSTRUCTION

SCRRA ENGINEERING STANDARDS ARE INTENDED FOR SCRRA APPROVED USES ONLY. FOR NON-SCRRA APPROVED USES:
SCRRA SHALL NOT BE RESPONSIBLE FOR THE ACCURACY OR COMPLETENESS OF THE DATA OR INFORMATION CONTAINED HEREIN. THE SELECTION AND USE OF THESE STANDARDS IS THE SOLE RESPONSIBILITY OF THE USER AND SHOULD NOT BE USED WITHOUT CONSULTING A REGISTERED PROFESSIONAL ENGINEER. ALL WARRANTIES AND REPRESENTATIONS OF ANY KIND ARE DISCLAIMED. ANYONE MAKING USE OF THIS INFORMATION AGREES THAT IT ASSUMES ALL LIABILITY ARISING FROM SUCH USE. NO PART OF THESE STANDARDS SHOULD BE REPRODUCED OR DISTRIBUTED IN ANY FORM OR BY ANY MEANS WITHOUT THE PRIOR WRITTEN PERMISSION OF SCRRA. ALL RIGHTS RESERVED.

METROLINK®
SOUTHERN CALIFORNIA REGIONAL RAIL AUTHORITY
ONE GATEWAY PLAZA, 12TH FLOOR, L. A., CA. 90012

ENGINEERING STANDARDS

CENTER PLATFORMS
TYPICAL SECTIONS

STANDARD 3202
SCALE: NTS
REVISION –
SHEET 1 OF 1
CADD FILE: ES3202

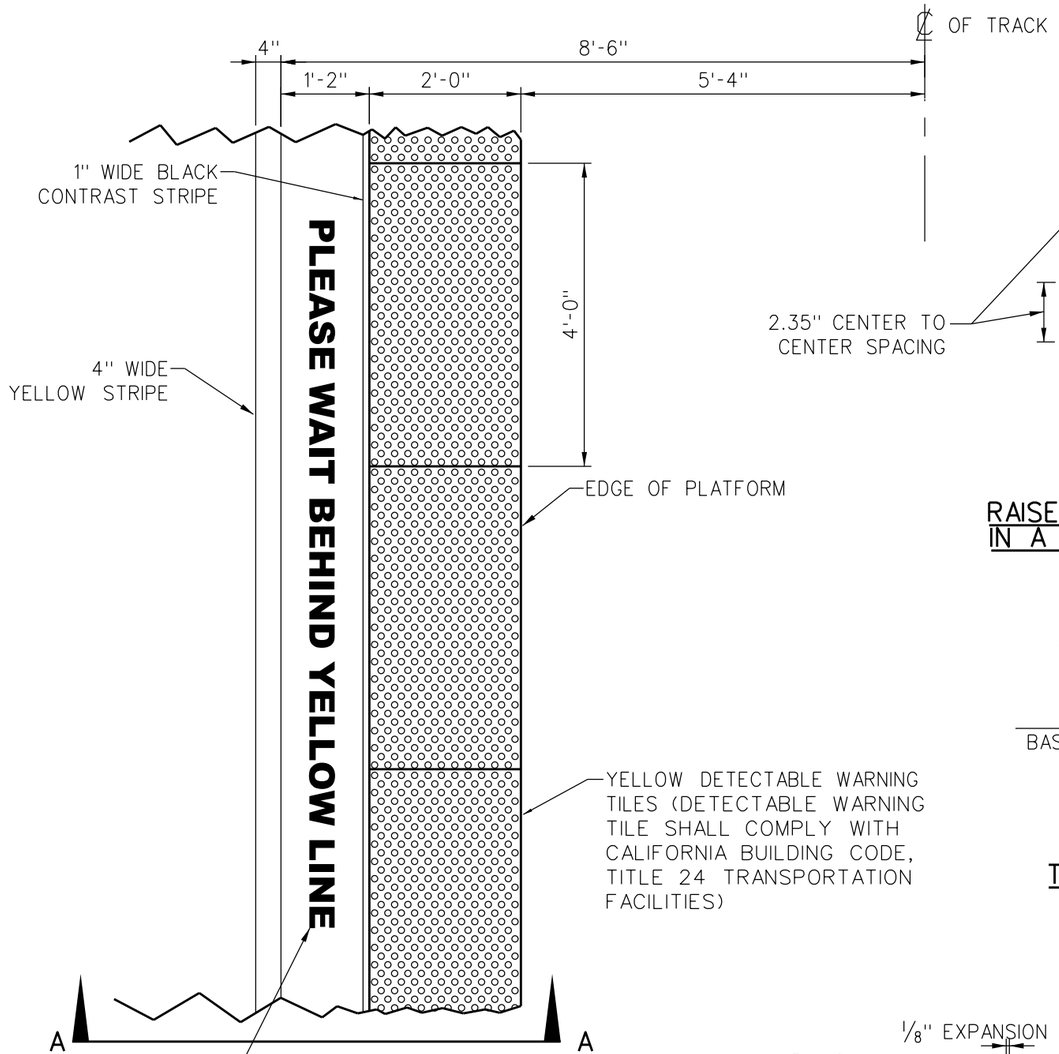

PLAN

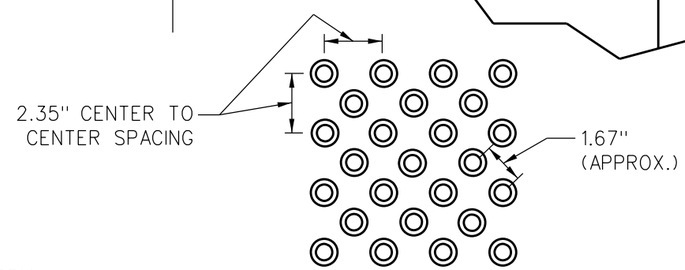

RAISED, TRUNCATED DOMES IN A STAGGERED PATTERN

SCALE: NONE

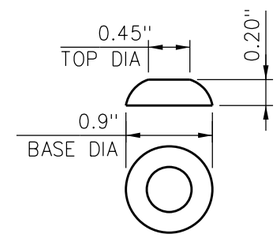

RAISED TRUNCATED DOME

SCALE: NONE

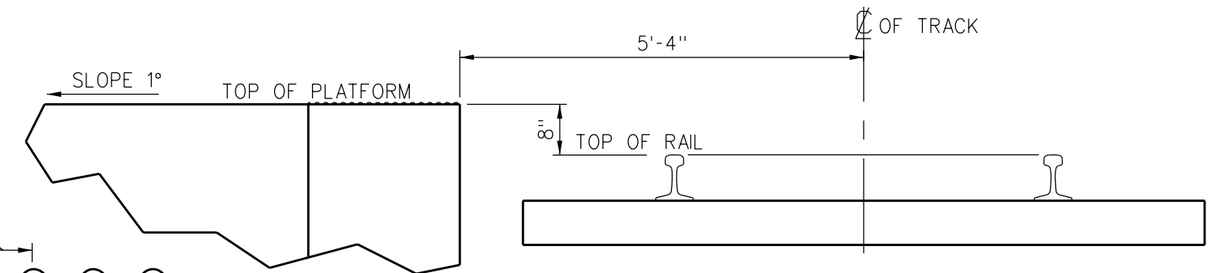

ELEVATION

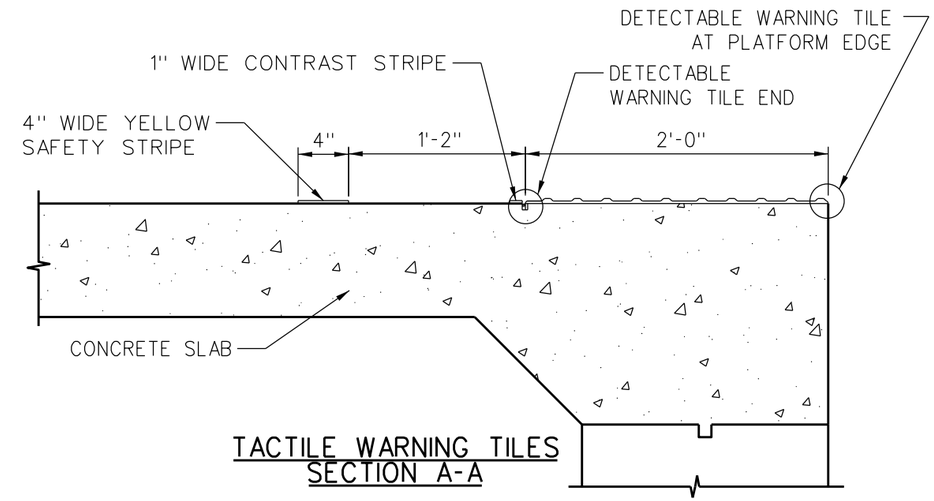

TACTILE WARNING TILES SECTION A-A

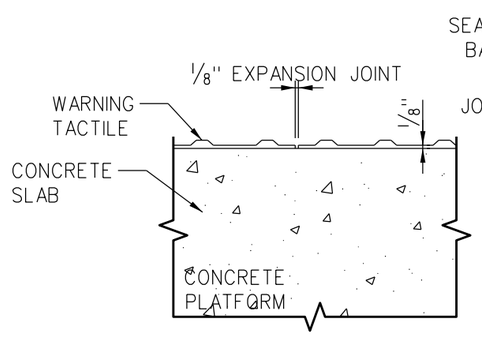

DETECTABLE WARNING TILE JOINTS

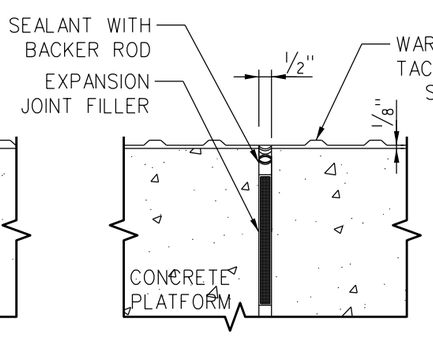

DETECTABLE WARNING TILE AT EXPANSION JOINTS

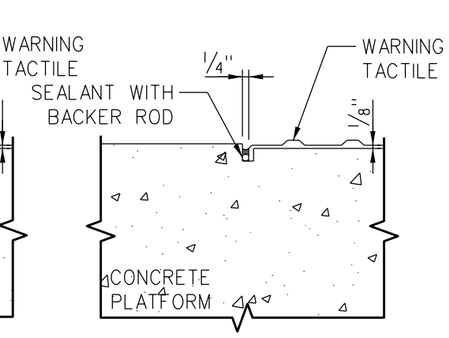

DETECTABLE WARNING TILE END

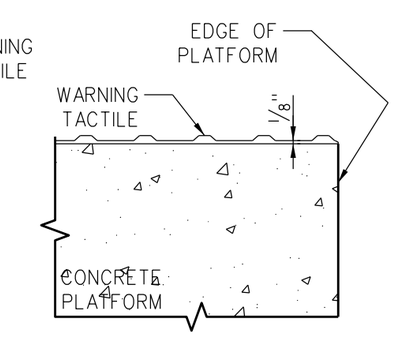

DETECTABLE WARNING TILE AT PLATFORM EDGE

REV.	DATE	DESCRIPTION	DES.	ENG.
X	XX-XX-XX	REVISION	XX	XX

DRAWN BY: A. CARLOS DATE: 03/31/2011

ASSISTANT DIRECTOR: STANDARDS & DESIGN

DIRECTOR OF ENGINEERING AND CONSTRUCTION

SCRRA ENGINEERING STANDARDS ARE INTENDED FOR SCRRA APPROVED USES ONLY. FOR NON-SCRRA APPROVED USES, SCRRA SHALL NOT BE RESPONSIBLE FOR THE ACCURACY OR COMPLETENESS OF THE DATA OR INFORMATION CONTAINED HEREIN. THE SELECTION AND USE OF THESE STANDARDS IS THE SOLE RESPONSIBILITY OF THE USER AND SHOULD NOT BE USED WITHOUT CONSULTING A REGISTERED PROFESSIONAL ENGINEER. ALL WARRANTIES AND REPRESENTATIONS OF ANY KIND ARE DISCLAIMED. ANYONE MAKING USE OF THIS INFORMATION AGREES THAT IT ASSUMES ALL LIABILITY ARISING FROM SUCH USE. NO PART OF THESE STANDARDS SHOULD BE REPRODUCED OR DISTRIBUTED IN ANY FORM OR BY ANY MEANS WITHOUT THE PRIOR WRITTEN PERMISSION OF SCRRA. ALL RIGHTS RESERVED.

METROLINK®

SOUTHERN CALIFORNIA REGIONAL RAIL AUTHORITY
ONE GATEWAY PLAZA, 12TH FLOOR, L. A., CA. 90012

ENGINEERING STANDARDS

DETECTABLE WARNING TILE AND MARKING DETAILS

STANDARD 3203

SCALE: 1" = 1'-0"

REVISION –

SHEET 1 OF 1

CADD FILE: ES3203

GENERAL NOTES

1. ALL TYPESETTING SHALL BE PROVIDED BY SIGN CONTRACTOR. LETTER SPACING TO BE "NORMAL" SPACING FOR ALL SIGNS EXCEPT AS SPECIFIED OTHERWISE. SIGN CONTRACTOR SHALL PROVIDE SKA WITH TYPICAL SPACING PATTERNS FOR APPROVAL PRIOR TO FABRICATION.

2. ALL INSTALLATION LOCATIONS & CONDITIONS SHALL BE FIELD VERIFIED PRIOR TO FABRICATION.

3. ALL SIGNS SHALL BE INSTALLED AS PER EXISTING/CURRENT CODE REQUIREMENTS FOR SAFE & SECURE MOUNTING.

4. SIGN CONTRACTOR SHALL COORDINATE ALL SIGN INSTALLATIONS WITH METROLINK.

5. SIGN CONTRACTOR SHALL REFER TO SPECIFICATIONS FOR ALL MATERIAL DETAILS & SPECIFIC INSTRUCTIONS.

6. SIGN CONTRACTOR SHALL PROVIDE ALL ENGINEERING OF SIGN & GRAPHIC ITEMS INCLUDING, BUT NOT LIMITED TO, INTERNAL STRUCTURE, ELECTRICAL & MECHANICAL PARTS, CONCRETE FOOTINGS & APPLICABLE CODES & REGULATIONS. SHOP DRAWINGS SHALL CARRY THE ENGINEER'S STAMP & BE SIGNED BY A CALIFORNIA REGISTERED CIVIL ENGINEER.

7. SIGN CONTRACTOR TO PROVIDE SHOP DRAWINGS FOR ALL SIGNS. ALL ATTACHMENT DETAILS SHALL BE SHOWN ON SHOP DRAWINGS & DRAWINGS SHALL BE SUBMITTED TO SKA FOR APPROVAL PRIOR TO FABRICATION.

8. ALL EXPOSED SIGN SURFACES, ATTACHMENTS, EDGES & SEAMS SHALL BE PAINTED OR PORCELAINIZED AS NOTED TO PREVENT RUST.

9. NO SIGN SHALL BE INSTALLED WITHIN THE PUBLIC UTILITIES COMMISSION CLEARANCE ENVELOPE. POST, POLES AND SIGNS MUST HAVE A MINIMUM CLEARANCE OF 8'-6" TO CENTER OF TANGENT TRACK.

SHEET INDEX

PAGE	DESCRIPTION
ES3301-01	SHEET INDEX AND GENERAL NOTES
ES3301-02	GRAPHIC STANDARDS
ES3302-01	STATION SIGN MENU
ES3302-02	STATION SIGN MENU
LOCATION PLANS	
ES3303-01	STATION SITE - TYPICAL SIGN LOCATION PLAN
ES3303-02	SIDE PLATFORM - TYPICAL SIGN LOCATION PLAN
ES3303-03	SIDE PLATFORM - TYPICAL SIGN LOCATION PLAN
DESIGN DRAWINGS	
ES3305	SIGN TYPE 1: PRIMARY IDENTIFICATION MONUMENT SIGN
ES3306	SIGN TYPE 2: VEHICULAR DIRECTIONAL - FREESTANDING SIGN
ES3307-01	SIGN TYPE 3: INFORMATION/RESTRICTIVE - COPY LAYOUTS
ES3307-02	SIGN TYPE 3: INFORMATION/RESTRICTIVE - MOUNTING CONDITIONS
ES3307-03	SIGN TYPE 3: INFORMATION/RESTRICTIVE - ATTACHMENT DETAILS
ES3307-04	SIGN TYPE 3: INFORMATION/RESTRICTIVE - EXIT SIGN INSTALLATION DETAILS
ES3308	SIGN TYPE 4: TRAILBLAZER DIRECTIONAL
ES3309	SIGN TYPE 5: PARKING RESTRICTIVE SIGN - POLE MOUNTED
ES3310	SIGN TYPE 6: ACCESSIBLE PARKING - IDENTIFICATION SIGN
ES3311	SIGN TYPE 7: ACCESSIBLE PARKING INFORMATION SIGN
ES3314	SIGN TYPE 11: TRACK DIRECTIONAL SIGN - POLE MOUNTED
ES3315	SIGN TYPE 12: ELEVATOR DIRECTIONAL SIGN - POLE MOUNTED
ES3316	SIGN TYPE 13: ELEVATOR IDENTIFICATION SIGN - FLAG MOUNTED
ES3317	SIGN TYPE 14: PEDESTRIAN CROSSING - WARNING SIGN
ES3318	SIGN TYPE 15: PEDESTRIAN DIRECTIONAL SIGN - GATE MOUNTED
ES3319	SIGN TYPE 16: PEDESTRIAN DIRECTIONAL LOOK SIGN - POST MOUNTED
ES3320	SIGN TYPE 20: STATION IDENTIFICATION SIGN - SMALL
ES3321	SIGN TYPE 21: STATION IDENTIFICATION SIGN - LARGE
ES3322	SIGN TYPE 22: CPUC RAILROAD CROSSING SIGN - POST MOUNTED
ES3323	SIGN TYPE 23: ACCESSIBILITY SIGN
ES3324	SIGN TYPE 24: PEDESTRIAN RESTRICTIVE/INFORMATION SIGN
ES3325	SIGN TYPE 25: A.D.A STATION IDENTIFICATION SIGN (BRAILLE)
ES3326	SIGN TYPE 26: MAP/INFORMATION KIOSK FREESTANDING
ES3327	SIGN TYPE 27: A.D.A STATION IDENTIFICATION SIGN AT TRACK
ES3328-01	SIGN TYPE 28: DISPLAY CASE - WALL OR POST MOUNTED
ES3328-02	SIGN TYPE 28.1: DISPLAY CASE - POST MOUNTED (SINGLE-SIDED)
ES3330-01	SIGN TYPE 30: TRAIN POSITION MARKER SIGN
ES3330-02	SIGN TYPE 30.1: NEW TRAIN POSITION MARKER SIGN
ES3330-03	SIDE PLATFORM - TYPICAL SIGN LOCATION PLAN
ES3330-04	SIDE PLATFORMS - LOCOMOTIVE POSITION MARKER PLAN
ES3330-05	SIDE PLATFORMS - LOCOMOTIVE POSITION MARKER PLAN
ES3330-06	CENTER PLATFORM - LOCOMOTIVE POSITION MARKER PLAN
ES3331	SIGN TYPE 31: TICKET VALIDATOR DECAL
ES3332	SIGN TYPE 41: PASSENGER INFORMATION TELEPHONE

REV.	DATE	DESCRIPTION	DES.	ENG.
X	XX-XX-XX	REVISION	XX	XX

DRAWN BY: DRAFTER DATE: 03/31/2011

ASSISTANT DIRECTOR: STANDARDS & DESIGN

DIRECTOR OF ENGINEERING AND CONSTRUCTION

SCRRA ENGINEERING STANDARDS ARE INTENDED FOR SCRRA APPROVED USES ONLY. FOR NON-SCRRA APPROVED USES:
SCRRA SHALL NOT BE RESPONSIBLE FOR THE ACCURACY OR COMPLETENESS OF THE DATA OR INFORMATION CONTAINED HEREIN. THE SELECTION AND USE OF THESE STANDARDS IS THE SOLE RESPONSIBILITY OF THE USER AND SHOULD NOT BE USED WITHOUT CONSULTING A REGISTERED PROFESSIONAL ENGINEER. ALL WARRANTIES AND REPRESENTATIONS OF ANY KIND ARE DISCLAIMED. ANYONE MAKING USE OF THIS INFORMATION AGREES THAT IT ASSUMES ALL LIABILITY ARISING FROM SUCH USE. NO PART OF THESE STANDARDS SHOULD BE REPRODUCED OR DISTRIBUTED IN ANY FORM OR BY ANY MEANS WITHOUT THE PRIOR WRITTEN PERMISSION OF SCRRA. ALL RIGHTS RESERVED.

METROLINK®
SOUTHERN CALIFORNIA REGIONAL RAIL AUTHORITY
ONE GATEWAY PLAZA, 12TH FLOOR, L. A., CA. 90012

ENGINEERING STANDARDS

SHEET INDEX AND GENERAL NOTES

STANDARD 3301
SCALE: NTS
REVISION –
SHEET 1 OF 2
CADD FILE: ES3301-01

PROJECT COLORS

PRIMARY	SECONDARY	WARNING & TRACKS
BLACK PMS BLACK	FOREST GREEN PMS 3302	ACCESS BLUE PMS 801
WHITE TYPICAL BRIGHT WHITE	GRAY PMS COOL GRAY 7	RED PMS 193
TEAL PMS 323		YELLOW PMS 116
LIGHT BLUE PMS 298		ORANGE PMS 021
SEA GREEN PMS 318		GREEN PMS 355
		BLUE PMS 542

PROJECT LOGO

NOTE: DIGITAL FILES OF METROLINK LOGOTYPE TO BE PROVIDED BY SCRRA

METROLINK®

PROJECT GRAPHIC STRIPES

NOTE: STRIPES ON SIGNS WILL HAVE SLIGHT VARIATIONS

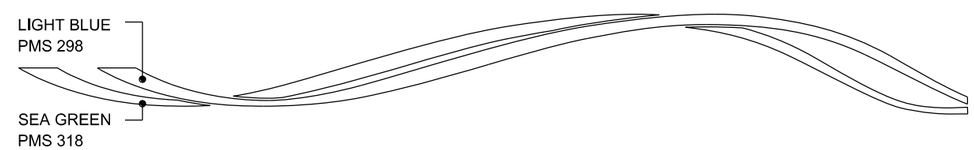

PROJECT SYMBOLS

PROJECT TYPOGRAPHY

AKZIDENZ GROTESK MEDIUM

ABCDEFGHIJKLMNOPQRSTUVWXYZ
abcdefghijklmnopqrstuvwxyz
0123456789

AKZIDENZ GROTESK REGULAR

ABCDEFGHIJKLMNOPQRSTUVWXYZ
abcdefghijklmnopqrstuvwxyz
0123456789

REV.	DATE	DESCRIPTION	DES.	ENG.
X	XX-XX-XX	REVISION	XX	XX

DRAWN BY: A. CARLOS DATE: 03/31/2011

ASSISTANT DIRECTOR: STANDARDS & DESIGN

DIRECTOR OF ENGINEERING AND CONSTRUCTION

SCRRA ENGINEERING STANDARDS ARE INTENDED FOR SCRRA APPROVED USES ONLY. FOR NON-SCRRA APPROVED USES:
SCRRA SHALL NOT BE RESPONSIBLE FOR THE ACCURACY OR COMPLETENESS OF THE DATA OR INFORMATION CONTAINED HEREIN. THE SELECTION AND USE OF THESE STANDARDS IS THE SOLE RESPONSIBILITY OF THE USER AND SHOULD NOT BE USED WITHOUT CONSULTING A REGISTERED PROFESSIONAL ENGINEER. ALL WARRANTIES AND REPRESENTATIONS OF ANY KIND ARE DISCLAIMED. ANYONE MAKING USE OF THIS INFORMATION AGREES THAT IT ASSUMES ALL LIABILITY ARISING FROM SUCH USE. NO PART OF THESE STANDARDS SHOULD BE REPRODUCED OR DISTRIBUTED IN ANY FORM OR BY ANY MEANS WITHOUT THE PRIOR WRITTEN PERMISSION OF SCRRA. ALL RIGHTS RESERVED.

METROLINK®
SOUTHERN CALIFORNIA REGIONAL RAIL AUTHORITY
ONE GATEWAY PLAZA, 12TH FLOOR, L. A., CA. 90012

ENGINEERING STANDARDS

GRAPHIC STANDARDS

STANDARD 3301
SCALE: NTS
REVISION –
SHEET 2 OF 2
CADD FILE: ES3301-02

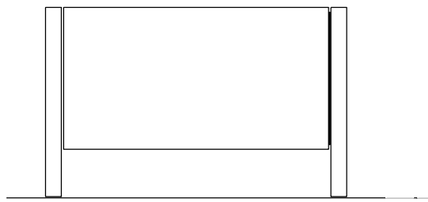

SIGN TYPE 1
PRIMARY IDENTIFICATION SIGN - MONUMENT

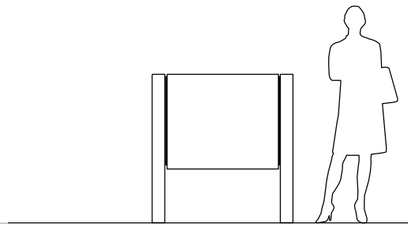

SIGN TYPE 2
VEHICULAR DIRECTIONAL SIGN - FREESTANDING

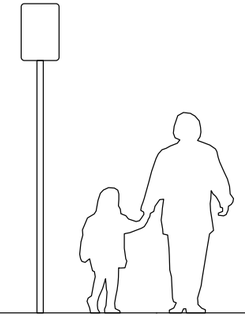

SIGN TYPE 3
INFORMATION/ RESTRICTIVE SIGN

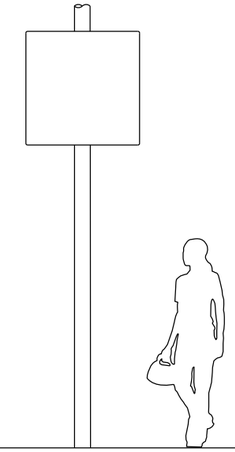

SIGN TYPE 4
TRAILBLAZER DIRECTIONAL SIGN

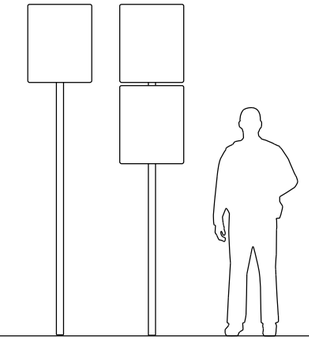

SIGN TYPE 5
PARKING RESTRICTIVE SIGN - POLE MOUNTED

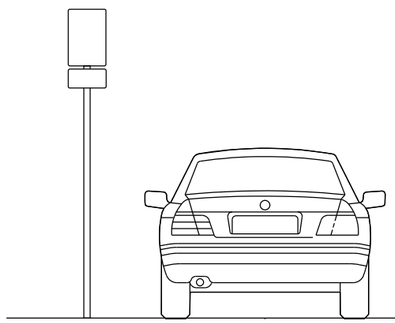

SIGN TYPE 6
ACCESSIBLE PARKING IDENTIFICATION SIGN

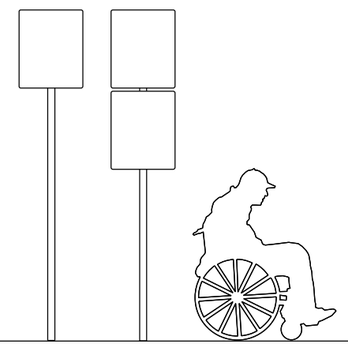

SIGN TYPE 7
ACCESSIBLE PARKING INFORMATION SIGN

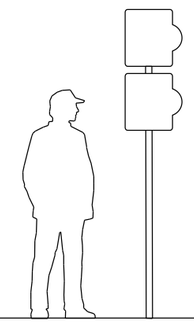

SIGN TYPE 11
TRACK DIRECTIONAL SIGN

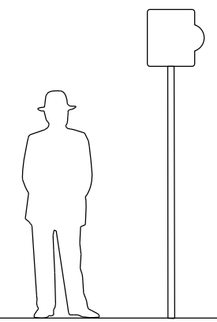

SIGN TYPE 12
ELEVATOR DIRECTIONAL SIGN

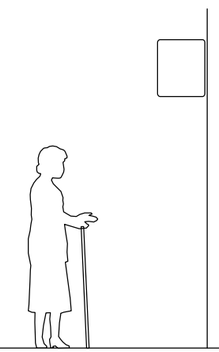

SIGN TYPE 13
ELEVATOR IDENTIFICATION SIGN - FLAG MOUNTED

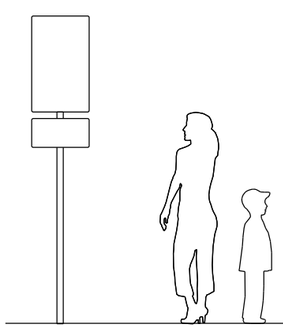

SIGN TYPE 16
PEDESTRIAN DIRECTIONAL SIGN - POLE MOUNTED

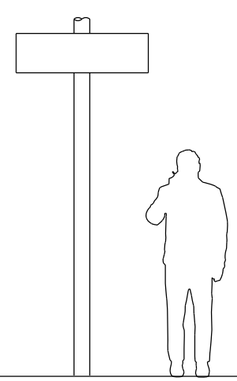

SIGN TYPE 20
STATION IDENTIFICATION SIGN - SMALL POLE MOUNTED

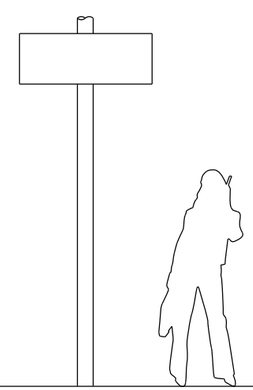

SIGN TYPE 21
STATION IDENTIFICATION SIGN - LARGE POLE MOUNTED

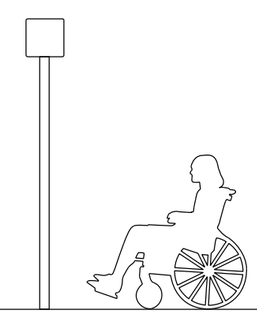

SIGN TYPE 23
ACCESSIBILITY SIGN

REV.	DATE	DESCRIPTION	DES.	ENG.
X	XX-XX-XX	REVISION	XX	XX

DRAWN BY: A. CARLOS DATE: 03/31/2011

ASSISTANT DIRECTOR: STANDARDS & DESIGN

DIRECTOR OF ENGINEERING AND CONSTRUCTION

SCRRA ENGINEERING STANDARDS ARE INTENDED FOR SCRRA APPROVED USES ONLY. FOR NON-SCRRA APPROVED USES, SCRRA SHALL NOT BE RESPONSIBLE FOR THE ACCURACY OR COMPLETENESS OF THE DATA OR INFORMATION CONTAINED HEREIN. THE SELECTION AND USE OF THESE STANDARDS IS THE SOLE RESPONSIBILITY OF THE USER AND SHOULD NOT BE USED WITHOUT CONSULTING A REGISTERED PROFESSIONAL ENGINEER. ALL WARRANTIES AND REPRESENTATIONS OF ANY KIND ARE DISCLAIMED. ANYONE MAKING USE OF THIS INFORMATION AGREES THAT IT ASSUMES ALL LIABILITY ARISING FROM SUCH USE. NO PART OF THESE STANDARDS SHOULD BE REPRODUCED OR DISTRIBUTED IN ANY FORM OR BY ANY MEANS WITHOUT THE PRIOR WRITTEN PERMISSION OF SCRRA. ALL RIGHTS RESERVED.

METROLINK®

SOUTHERN CALIFORNIA REGIONAL RAIL AUTHORITY
ONE GATEWAY PLAZA, 12TH FLOOR, L. A., CA. 90012

ENGINEERING STANDARDS

STATION SIGN MENU

STANDARD: 3302
SCALE: NTS
REVISION: –
SHEET: 1 OF 2
CADD FILE: ES3302-01

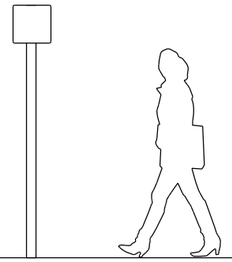

SIGN TYPE 24
PEDESTRIAN RESTRICTIVE/
INFORMATION SIGN

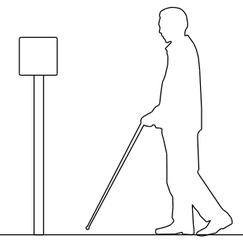

SIGN TYPE 25
A.D.A. STATION
IDENTIFICATION SIGN

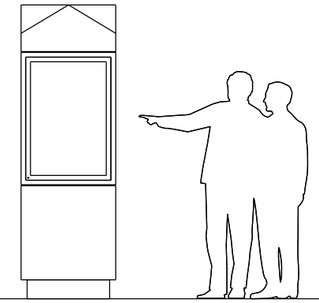

SIGN TYPE 26
MAP/ INFO KIOSK
FREESTANDING

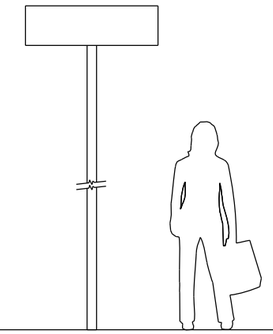

SIGN TYPE 27
ADA STATION IDENTIFICATION SIGN
AT TRACK

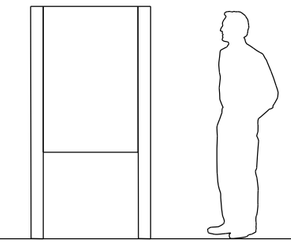

SIGN TYPE 28
DISPLAY CASE

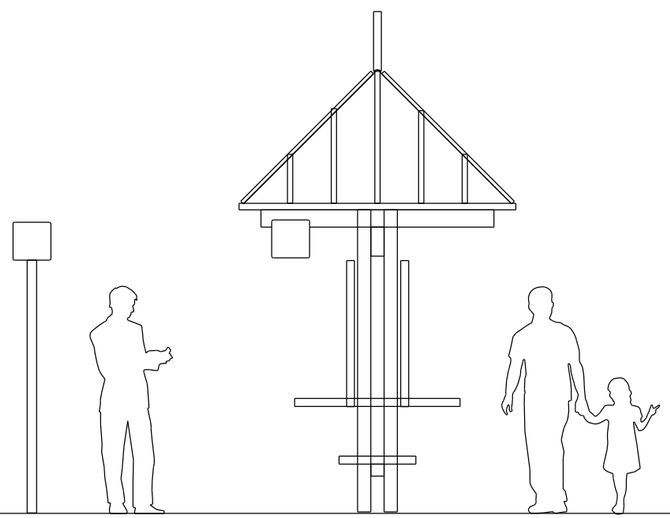

SIGN TYPE 30
POSITION MARKER &
TRACK IDENTIFICATION SIGN

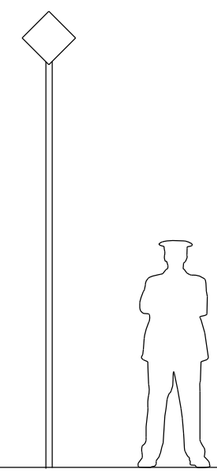

SIGN TYPE 30.1
LOCOMOTIVE POSITION MARKER

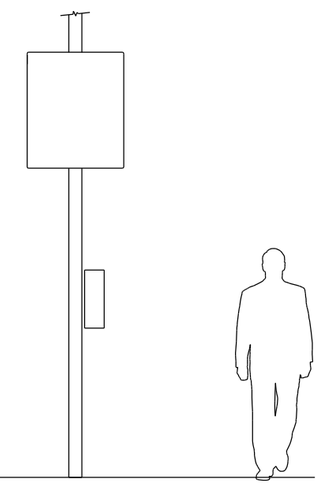

SIGN TYPE 41
PASSENGER INFORMATION TELEPHONE

REV.	DATE	DESCRIPTION	DES.	ENG.
X	XX-XX-XX	REVISION	XX	XX

DRAWN BY: A. CARLOS DATE: 03/31/2011

ASSISTANT DIRECTOR: STANDARDS & DESIGN

DIRECTOR OF ENGINEERING AND CONSTRUCTION

SCRRA ENGINEERING STANDARDS ARE INTENDED FOR SCRRA APPROVED USES ONLY. FOR NON-SCRRA APPROVED USES, SCRRA SHALL NOT BE RESPONSIBLE FOR THE ACCURACY OR COMPLETENESS OF THE DATA OR INFORMATION CONTAINED HEREIN. THE SELECTION AND USE OF THESE STANDARDS IS THE SOLE RESPONSIBILITY OF THE USER AND SHOULD NOT BE USED WITHOUT CONSULTING A REGISTERED PROFESSIONAL ENGINEER. ALL WARRANTIES AND REPRESENTATIONS OF ANY KIND ARE DISCLAIMED. ANYONE MAKING USE OF THIS INFORMATION AGREES THAT IT ASSUMES ALL LIABILITY ARISING FROM SUCH USE. NO PART OF THESE STANDARDS SHOULD BE REPRODUCED OR DISTRIBUTED IN ANY FORM OR BY ANY MEANS WITHOUT THE PRIOR WRITTEN PERMISSION OF SCRRA. ALL RIGHTS RESERVED.

METROLINK®
SOUTHERN CALIFORNIA REGIONAL RAIL AUTHORITY
ONE GATEWAY PLAZA, 12TH FLOOR, L. A., CA. 90012

ENGINEERING STANDARDS

STATION SIGN MENU

STANDARD 3302
SCALE: NTS
REVISION –
SHEET 2 OF 2
CADD FILE: ES3302-02

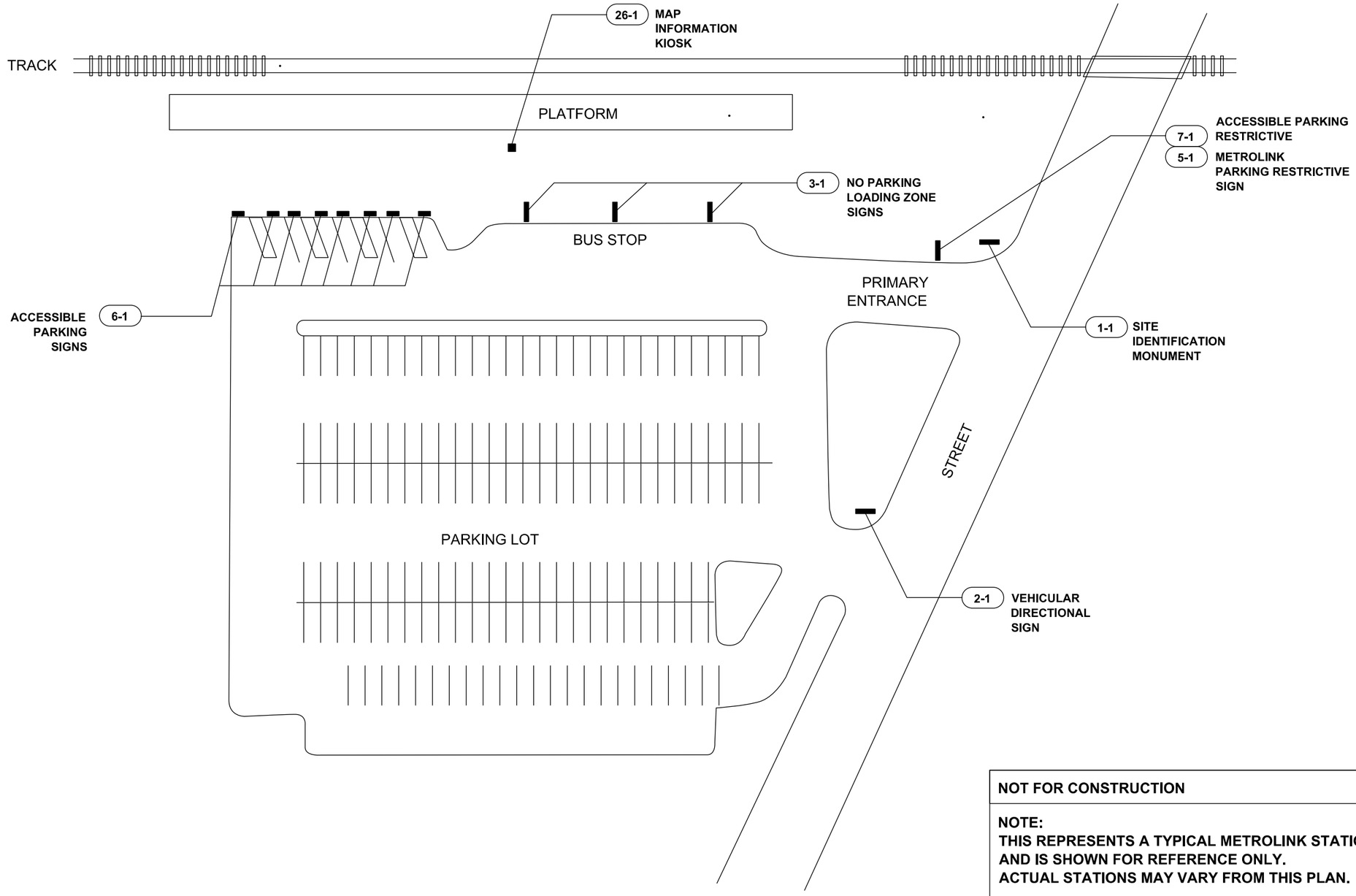

NOT FOR CONSTRUCTION

NOTE:
THIS REPRESENTS A TYPICAL METROLINK STATION AND IS SHOWN FOR REFERENCE ONLY.
ACTUAL STATIONS MAY VARY FROM THIS PLAN.

PLAN

SCALE: NTS

REV.	DATE	DESCRIPTION	DES.	ENG.
X	XX-XX-XX	REVISION	XX	XX

DRAWN BY: A. CARLOS DATE: 03/31/2011

ASSISTANT DIRECTOR: STANDARDS & DESIGN

DIRECTOR OF ENGINEERING AND CONSTRUCTION

SCRRA ENGINEERING STANDARDS ARE INTENDED FOR SCRRA APPROVED USES ONLY. FOR NON-SCRRA APPROVED USES, SCRRA SHALL NOT BE RESPONSIBLE FOR THE ACCURACY OR COMPLETENESS OF THE DATA OR INFORMATION CONTAINED HEREIN. THE SELECTION AND USE OF THESE STANDARDS IS THE SOLE RESPONSIBILITY OF THE USER AND SHOULD NOT BE USED WITHOUT CONSULTING A REGISTERED PROFESSIONAL ENGINEER. ALL WARRANTIES AND REPRESENTATIONS OF ANY KIND ARE DISCLAIMED. ANYONE MAKING USE OF THIS INFORMATION AGREES THAT IT ASSUMES ALL LIABILITY ARISING FROM SUCH USE. NO PART OF THESE STANDARDS SHOULD BE REPRODUCED OR DISTRIBUTED IN ANY FORM OR BY ANY MEANS WITHOUT THE PRIOR WRITTEN PERMISSION OF SCRRA. ALL RIGHTS RESERVED.

METROLINK®
SOUTHERN CALIFORNIA REGIONAL RAIL AUTHORITY
ONE GATEWAY PLAZA, 12TH FLOOR, L. A., CA. 90012

ENGINEERING STANDARDS

STATION SITE
TYPICAL SIGN LOCATION PLAN

STANDARD: 3303
SCALE: NTS
REVISION: –
SHEET: 1 OF 3
CADD FILE: ES3303-01

UserName•> carlosa Date Plotted: 10/5/2011 2:24:57 PM Plot Driver•> S:\Plot Drivers\pdf.plt FileName•> s:\V8EngStds\3000\ES3303-01.dgn

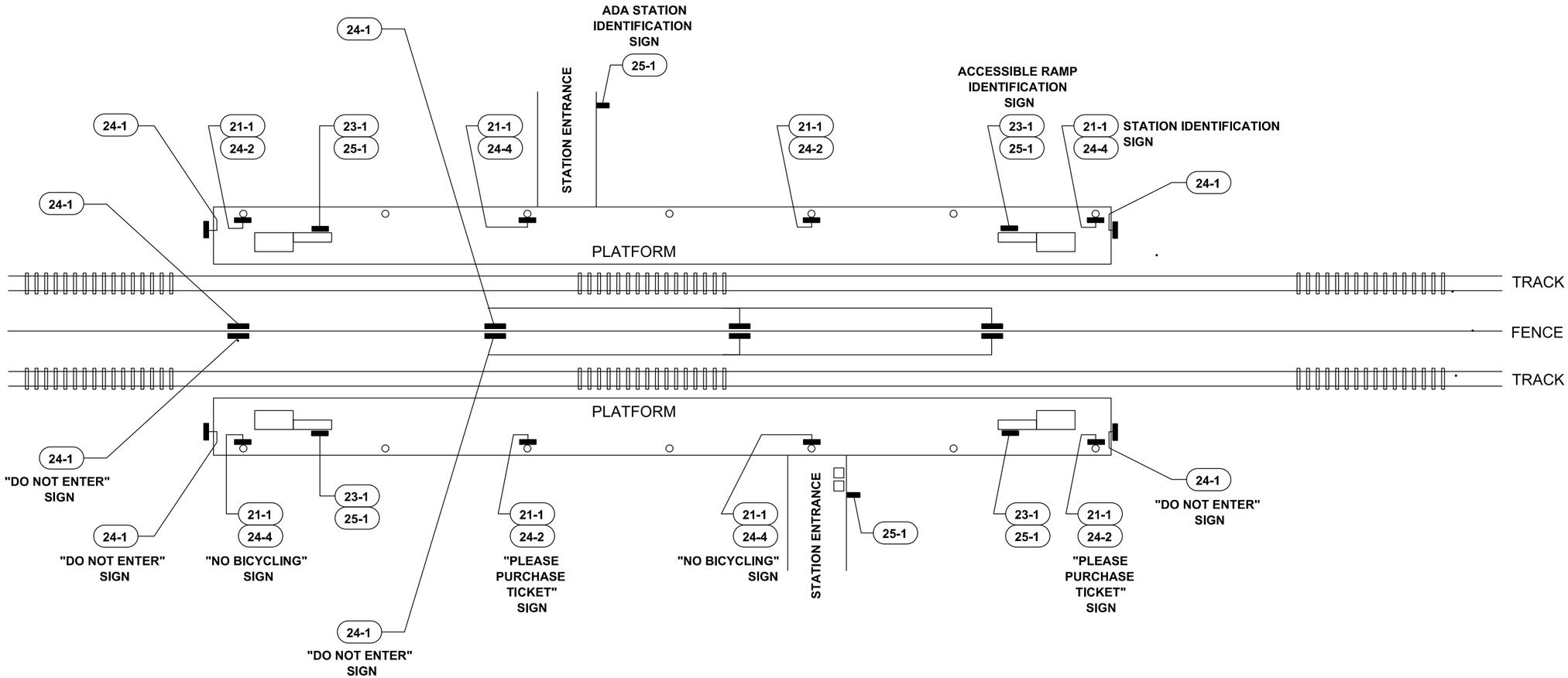

NOT FOR CONSTRUCTION

NOTE:
THIS REPRESENTS A TYPICAL METROLINK STATION AND IS SHOWN FOR REFERENCE ONLY.
ACTUAL STATIONS MAY VARY FROM THIS PLAN.

PLAN

SCALE: NTS

REV.	DATE	DESCRIPTION	DES.	ENG.
X	XX-XX-XX	REVISION	XX	XX

DRAWN BY: A. CARLOS DATE: 03/31/2011

ASSISTANT DIRECTOR: STANDARDS & DESIGN

DIRECTOR OF ENGINEERING AND CONSTRUCTION

SCRRA ENGINEERING STANDARDS ARE INTENDED FOR SCRRA APPROVED USES ONLY. FOR NON-SCRRA APPROVED USES, SCRRA SHALL NOT BE RESPONSIBLE FOR THE ACCURACY OR COMPLETENESS OF THE DATA OR INFORMATION CONTAINED HEREIN. THE SELECTION AND USE OF THESE STANDARDS IS THE SOLE RESPONSIBILITY OF THE USER AND SHOULD NOT BE USED WITHOUT CONSULTING A REGISTERED PROFESSIONAL ENGINEER. ALL WARRANTIES AND REPRESENTATIONS OF ANY KIND ARE DISCLAIMED. ANYONE MAKING USE OF THIS INFORMATION AGREES THAT IT ASSUMES ALL LIABILITY ARISING FROM SUCH USE. NO PART OF THESE STANDARDS SHOULD BE REPRODUCED OR DISTRIBUTED IN ANY FORM OR BY ANY MEANS WITHOUT THE PRIOR WRITTEN PERMISSION OF SCRRA. ALL RIGHTS RESERVED.

METROLINK®
SOUTHERN CALIFORNIA REGIONAL RAIL AUTHORITY
ONE GATEWAY PLAZA, 12TH FLOOR, L. A., CA. 90012

ENGINEERING STANDARDS

SIDE PLATFORM
TYPICAL SIGN LOCATION PLAN

STANDARD: 3303
SCALE: NTS
REVISION: –
SHEET: 2 OF 3
CADD FILE: ES3303-02

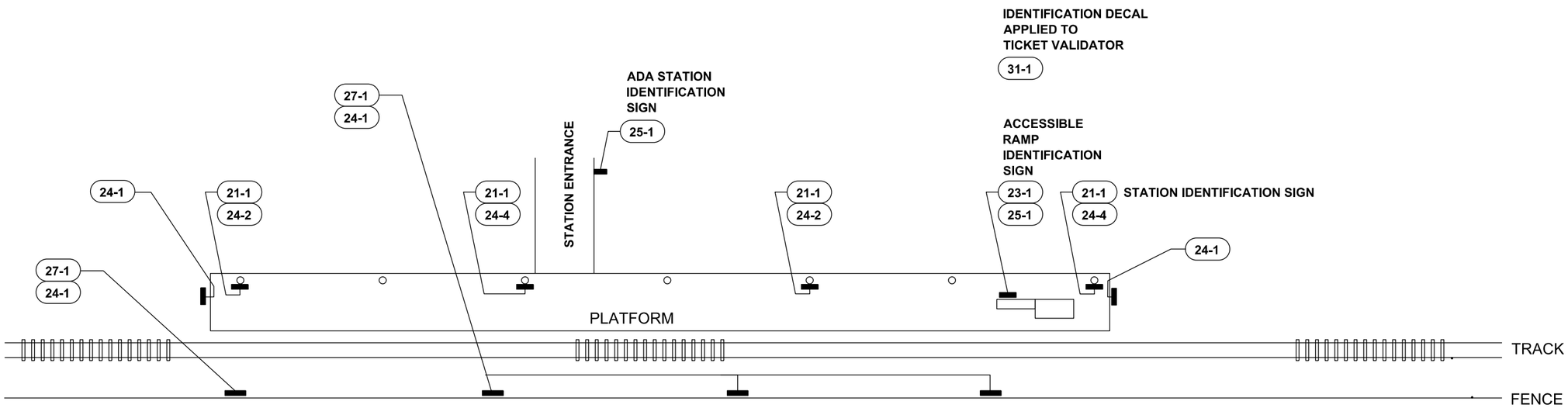

NOT FOR CONSTRUCTION

NOTE:
THIS REPRESENTS A TYPICAL METROLINK STATION AND IS SHOWN FOR REFERENCE ONLY.
ACTUAL STATIONS MAY VARY FROM THIS PLAN.

PLAN

SCALE: NTS

REV.	DATE	DESCRIPTION	DES.	ENG.
X	XX-XX-XX	REVISION	XX	XX

DRAWN BY: A. CARLOS DATE: 03/31/2011

ASSISTANT DIRECTOR: STANDARDS & DESIGN

DIRECTOR OF ENGINEERING AND CONSTRUCTION

SCRRA ENGINEERING STANDARDS ARE INTENDED FOR SCRRA APPROVED USES ONLY. FOR NON-SCRRA APPROVED USES:
SCRRA SHALL NOT BE RESPONSIBLE FOR THE ACCURACY OR COMPLETENESS OF THE DATA OR INFORMATION CONTAINED HEREIN. THE SELECTION AND USE OF THESE STANDARDS IS THE SOLE RESPONSIBILITY OF THE USER AND SHOULD NOT BE USED WITHOUT CONSULTING A REGISTERED PROFESSIONAL ENGINEER. ALL WARRANTIES AND REPRESENTATIONS OF ANY KIND ARE DISCLAIMED. ANYONE MAKING USE OF THIS INFORMATION AGREES THAT IT ASSUMES ALL LIABILITY ARISING FROM SUCH USE. NO PART OF THESE STANDARDS SHOULD BE REPRODUCED OR DISTRIBUTED IN ANY FORM OR BY ANY MEANS WITHOUT THE PRIOR WRITTEN PERMISSION OF SCRRA. ALL RIGHTS RESERVED.

METROLINK®
SOUTHERN CALIFORNIA REGIONAL RAIL AUTHORITY
ONE GATEWAY PLAZA, 12TH FLOOR, L. A., CA. 90012

ENGINEERING STANDARDS

SIDE PLATFORM
TYPICAL SIGN LOCATION PLAN

STANDARD: 3303
SCALE: NTS
REVISION: –
SHEET: 3 OF 3
CADD FILE: ES3303-03

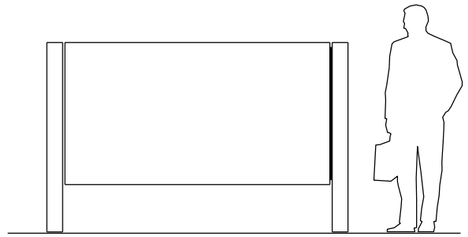

SIGN TYPE 1
PRIMARY IDENTIFICATION SIGN - MONUMENT

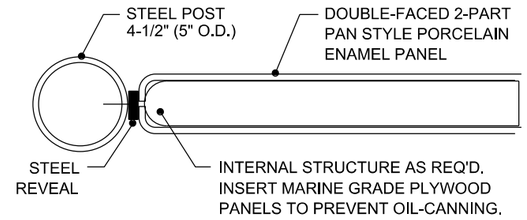

E **PLAN SECTION**

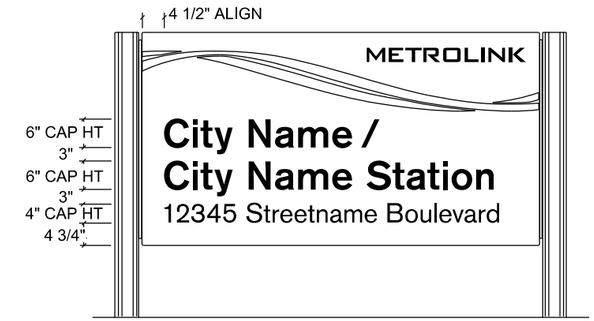

D **ELEVATION / 2 LINES / DOUBLE-FACED**

NOTES:

1. SIGN CONTRACTOR SHALL ENGINEER FABRICATION & INSTALLATION OF SIGN STRUCTURE TO SATISFY ALL LOCAL CODES & WIND LOAD FACTORS.
2. SIGN PANEL TO BE PORCELAIN ENAMEL W/ SMOOTH-FINISHED EDGES & SEAMS; MARINE GRADE PLYWOOD-FILLED INTERIOR.
3. ALL FASTENERS SHALL BE PLATED FASTENERS & SHALL BE PAINTED TO MATCH SIGN FACE.

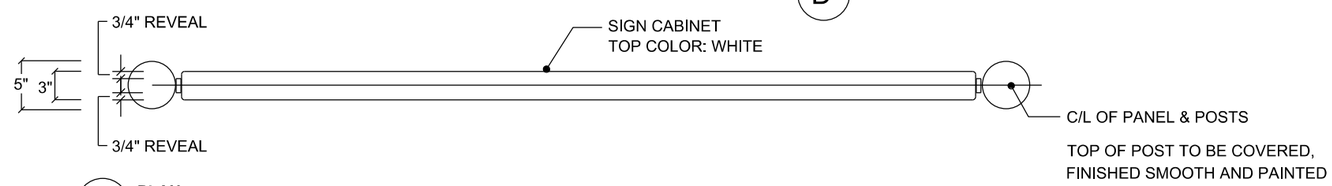

C **PLAN**
SCALE: 3/4" = 1'-0"

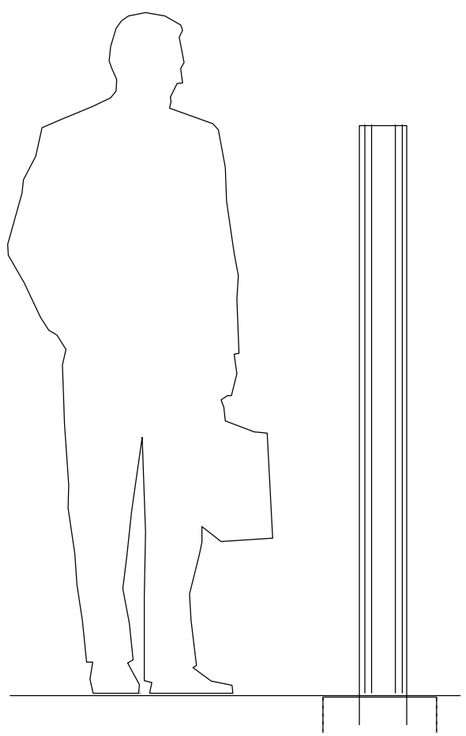

B **SIDE**

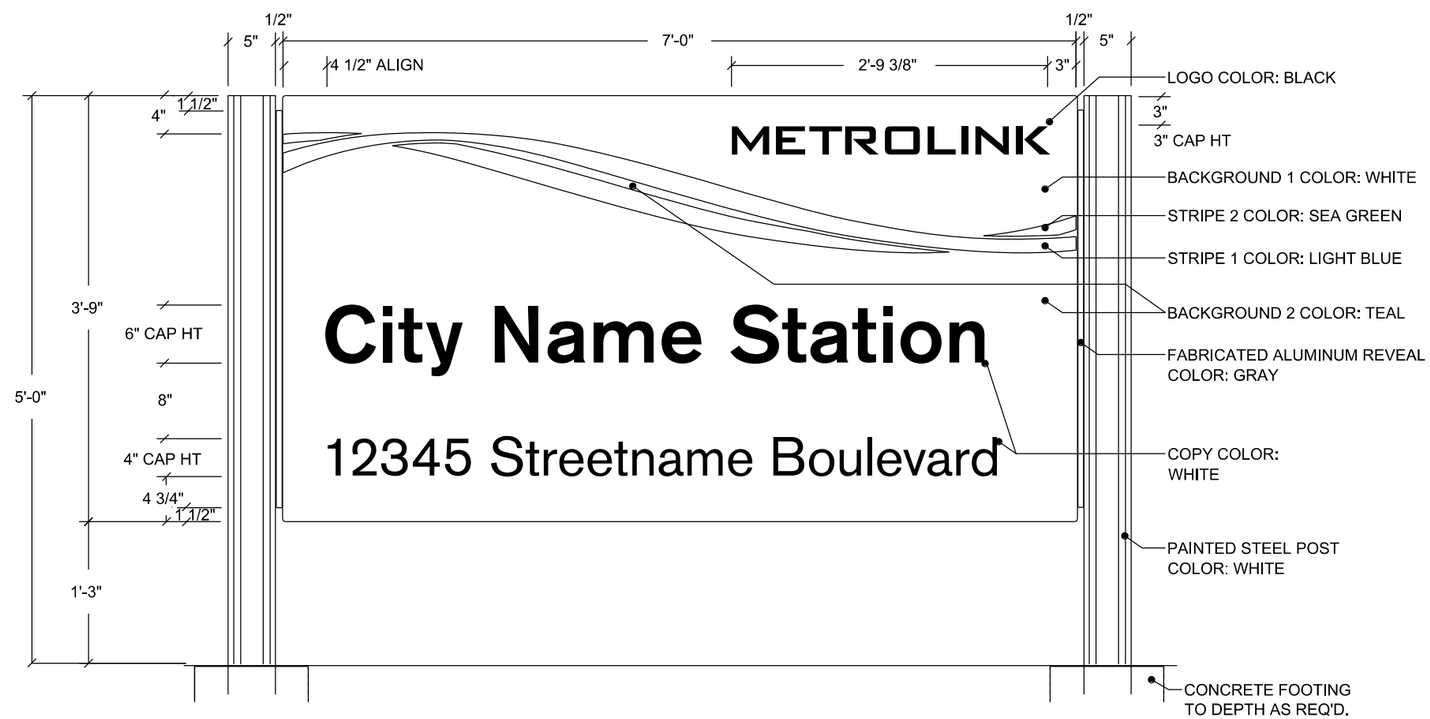

A **ELEVATION / 1 LINE / DOUBLE-FACED**

REV.	DATE	DESCRIPTION	DES.	ENG.
X	XX-XX-XX	REVISION	XX	XX

DRAWN BY: A. CARLOS DATE: 03/31/2011

ASSISTANT DIRECTOR: STANDARDS & DESIGN

DIRECTOR OF ENGINEERING AND CONSTRUCTION

SCRRA ENGINEERING STANDARDS ARE INTENDED FOR SCRRA APPROVED USES ONLY. FOR NON-SCRRA APPROVED USES:
SCRRA SHALL NOT BE RESPONSIBLE FOR THE ACCURACY OR COMPLETENESS OF THE DATA OR INFORMATION CONTAINED HEREIN. THE SELECTION AND USE OF THESE STANDARDS IS THE SOLE RESPONSIBILITY OF THE USER AND SHOULD NOT BE USED WITHOUT CONSULTING A REGISTERED PROFESSIONAL ENGINEER. ALL WARRANTIES AND REPRESENTATIONS OF ANY KIND ARE DISCLAIMED. ANYONE MAKING USE OF THIS INFORMATION AGREES THAT IT ASSUMES ALL LIABILITY ARISING FROM SUCH USE. NO PART OF THESE STANDARDS SHOULD BE REPRODUCED OR DISTRIBUTED IN ANY FORM OR BY ANY MEANS WITHOUT THE PRIOR WRITTEN PERMISSION OF SCRRA. ALL RIGHTS RESERVED.

METROLINK®
SOUTHERN CALIFORNIA REGIONAL RAIL AUTHORITY
ONE GATEWAY PLAZA, 12TH FLOOR, L. A., CA. 90012

ENGINEERING STANDARDS

PRIMARY IDENTIFICATION MONUMENT SIGN
SIGN TYPE I

STANDARD: 3305
SCALE: NTS
REVISION: –
SHEET: 1 OF 1
CADD FILE: ES3305

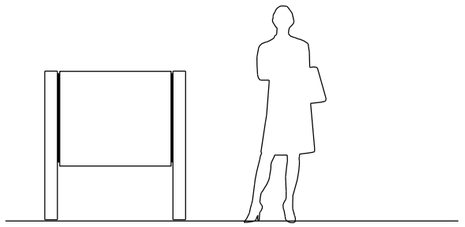

SIGN TYPE 2

VEHICULAR DIRECTIONAL SIGN - FREESTANDING

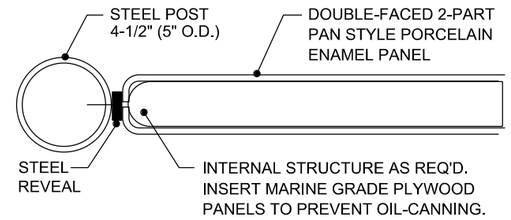

D **PLAN SECTION**

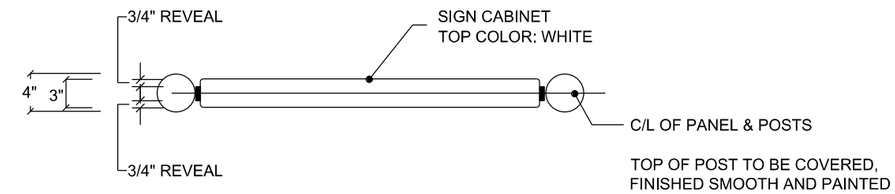

C **PLAN**

NOTES:

1. SIGN CONTRACTOR SHALL ENGINEER FABRICATION & INSTALLATION OF SIGN STRUCTURE TO SATISFY ALL LOCAL CODES & WIND LOAD FACTORS.
2. SIGN PANEL TO BE PORCELAIN ENAMEL W/ SMOOTH-FINISHED EDGES & SEAMS; MARINE GRADE PLYWOOD-FILLED INTERIOR.
3. ALL FASTENERS SHALL BE PLATED FASTENERS & SHALL BE PAINTED TO MATCH SIGN FACE.

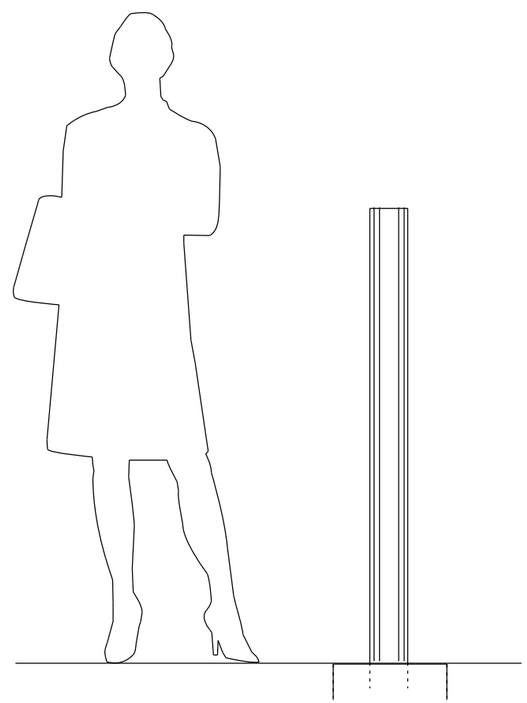

B **SIDE**

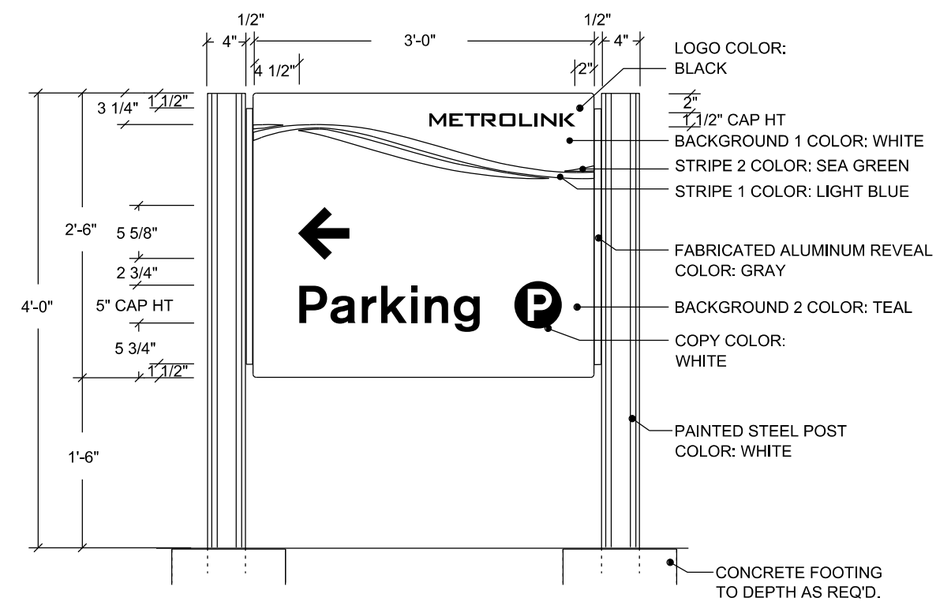

A **ELEVATION / DOUBLE-FACED**

REV.	DATE	DESCRIPTION	DES.	ENG.
X	XX-XX-XX	REVISION	XX	XX

DRAWN BY: A. CARLOS DATE: 03/31/2011

ASSISTANT DIRECTOR: STANDARDS & DESIGN

DIRECTOR OF ENGINEERING AND CONSTRUCTION

SCRRA ENGINEERING STANDARDS ARE INTENDED FOR SCRRA APPROVED USES ONLY. FOR NON-SCRRA APPROVED USES:
SCRRA SHALL NOT BE RESPONSIBLE FOR THE ACCURACY OR COMPLETENESS OF THE DATA OR INFORMATION CONTAINED HEREIN. THE SELECTION AND USE OF THESE STANDARDS IS THE SOLE RESPONSIBILITY OF THE USER AND SHOULD NOT BE USED WITHOUT CONSULTING A REGISTERED PROFESSIONAL ENGINEER. ALL WARRANTIES AND REPRESENTATIONS OF ANY KIND ARE DISCLAIMED. ANYONE MAKING USE OF THIS INFORMATION AGREES THAT IT ASSUMES ALL LIABILITY ARISING FROM SUCH USE. NO PART OF THESE STANDARDS SHOULD BE REPRODUCED OR DISTRIBUTED IN ANY FORM OR BY ANY MEANS WITHOUT THE PRIOR WRITTEN PERMISSION OF SCRRA. ALL RIGHTS RESERVED.

METROLINK®

SOUTHERN CALIFORNIA REGIONAL RAIL AUTHORITY
ONE GATEWAY PLAZA, 12TH FLOOR, L. A., CA. 90012

ENGINEERING STANDARDS

VEHICULAR DIRECTIONAL
FREESTANDING SIGN
SIGN TYPE 2

STANDARD 3306
SCALE: NTS
REVISION –
SHEET 1 OF 1
CADD FILE: ES3306

UserName=> carlosa Date Plotted: 10/5/2011 2:25:00 PM Plot Driver=> S:\Plot Drivers\pdf.plt FileName=> s:\V8EngStds\3000\ES3306.dgn

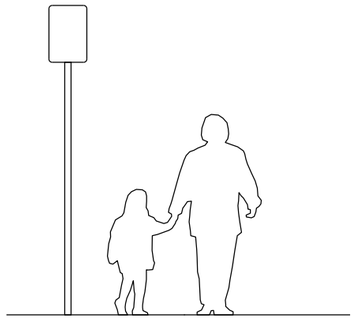

SIGN TYPE 3
INFORMATION / DIRECTIONAL SIGN

B **COPY LAYOUTS**

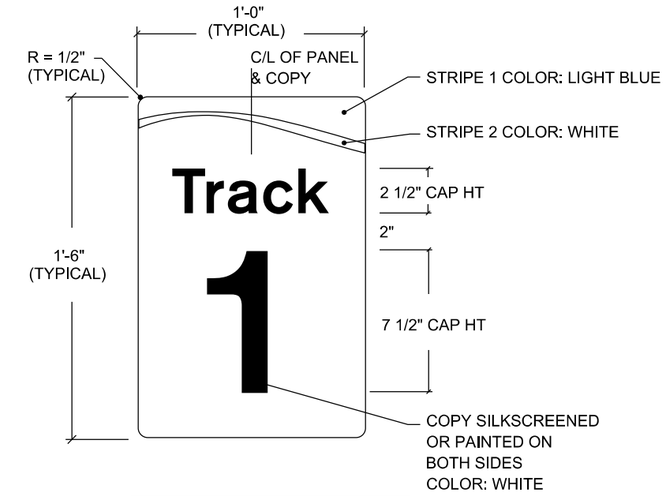

1 **TRACK ID SIGN**
(SEE ES3307-03 FOR INSTALLATION)

NOTE: ALL TRACK NUMBER SIGNS ARE TO BE DOUBLE-FACED

6 **DIRECTIONAL SIGN**
4 COPY LINES

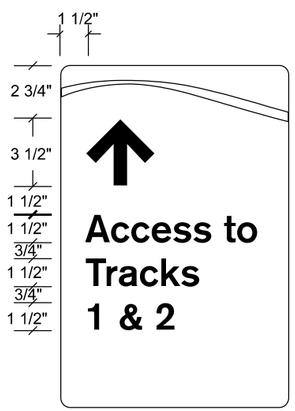

5 **DIRECTIONAL SIGN**
3 COPY LINES

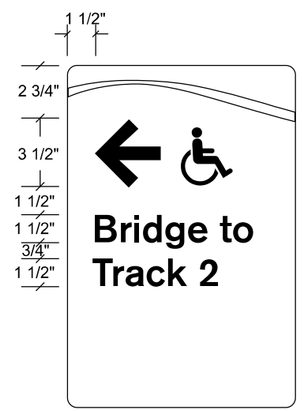

4 **DIRECTIONAL SIGN**
2 COPY LINES

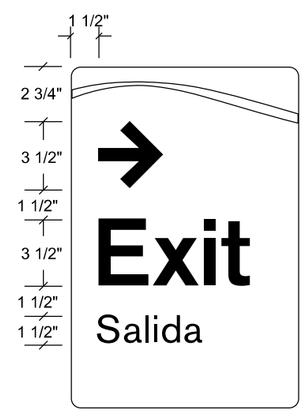

3 **EXIT SIGN**
(SEE ES3307-04 FOR INSTALLATION)

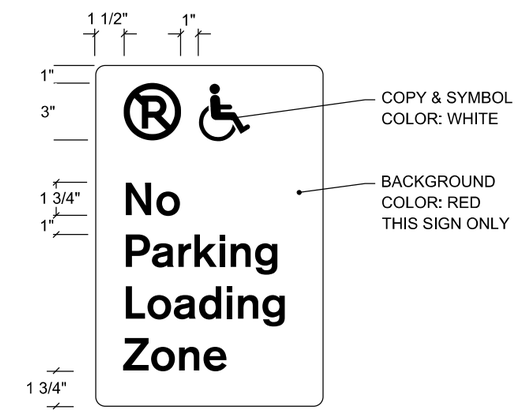

2 **RESTRICTIVE SIGN**

A **COPY LAYOUTS**

NOTES:
1. DIMENSIONS & NOTES TYPICAL EXCEPT AS NOTED.
2. CONTINUE PAINT COLOR USED ON FRONT SURFACE OF SIGNS TO SIDES. PAINT BACK OF PANEL SOLID WITH DOMINANT COLOR.
3. SEAL SIGNS WITH TRANSPARENT ANTI-GRAFFITI FILM.

SIGN TYPE 3 NUMBERS CHART		
3-01 THRU 3-19	3-20 THRU 3-29	3-30 THRU 3-39
REGULATORY SIGNS	DIRECTIONAL SIGNS	TRACK NUMBER / IDENTIFICATION SIGNS

REV.	DATE	DESCRIPTION	DES.	ENG.
X	XX-XX-XX	REVISION	XX	XX

DRAWN BY: A. CARLOS DATE: 03/31/2011

ASSISTANT DIRECTOR: STANDARDS & DESIGN

DIRECTOR OF ENGINEERING AND CONSTRUCTION

SCRRA ENGINEERING STANDARDS ARE INTENDED FOR SCRRA APPROVED USES ONLY. FOR NON-SCRRA APPROVED USES: SCRRA SHALL NOT BE RESPONSIBLE FOR THE ACCURACY OR COMPLETENESS OF THE DATA OR INFORMATION CONTAINED HEREIN. THE SELECTION AND USE OF THESE STANDARDS IS THE SOLE RESPONSIBILITY OF THE USER AND SHOULD NOT BE USED WITHOUT CONSULTING A REGISTERED PROFESSIONAL ENGINEER. ALL WARRANTIES AND REPRESENTATIONS OF ANY KIND ARE DISCLAIMED. ANYONE MAKING USE OF THIS INFORMATION AGREES THAT IT ASSUMES ALL LIABILITY ARISING FROM SUCH USE. NO PART OF THESE STANDARDS SHOULD BE REPRODUCED OR DISTRIBUTED IN ANY FORM OR BY ANY MEANS WITHOUT THE PRIOR WRITTEN PERMISSION OF SCRRA. ALL RIGHTS RESERVED.

METROLINK®
SOUTHERN CALIFORNIA REGIONAL RAIL AUTHORITY
ONE GATEWAY PLAZA, 12TH FLOOR, L. A., CA. 90012

ENGINEERING STANDARDS

INFORMATION / RESTRICTIVE
COPY LAYOUTS
SIGN TYPE 3

STANDARD 3307
SCALE: NTS
REVISION –
SHEET 1 OF 4
CADD FILE: ES3307-01

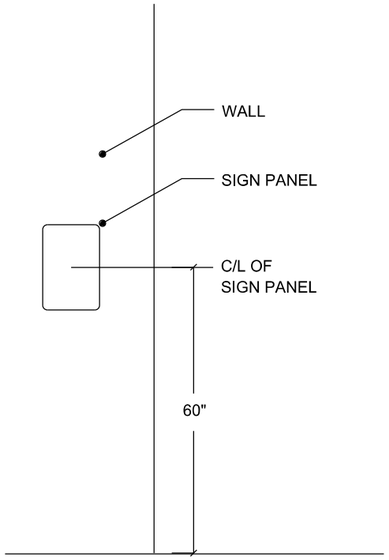

1 **WALL MOUNT**

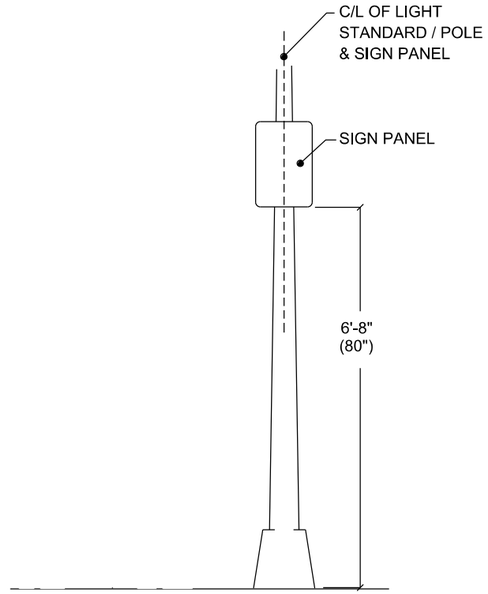

2 **LIGHT POLE MOUNT**
(DIRECTIONAL SIGN)

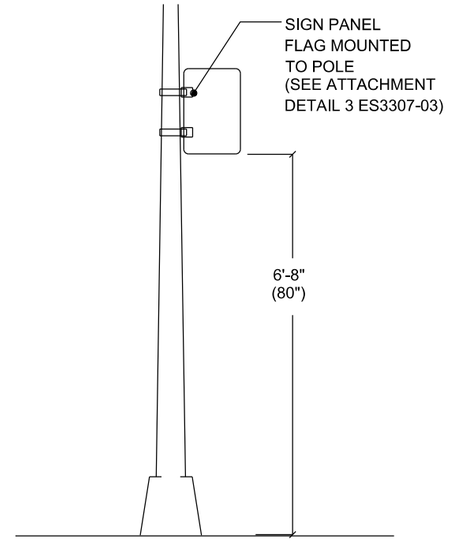

3 **LIGHT POLE MOUNT**
(TRACK IDENTIFICATION SIGN)

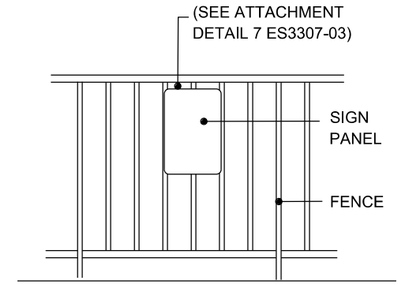

4 **FENCE MOUNT**

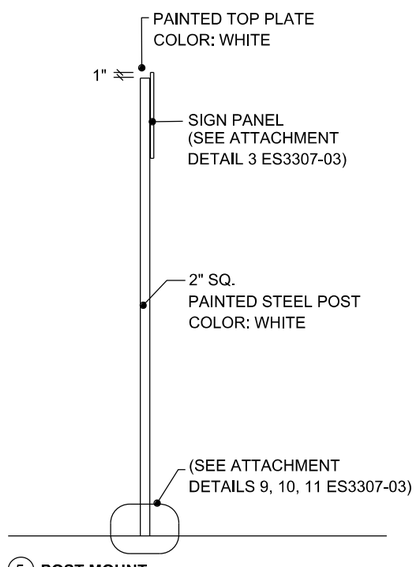

5 **POST MOUNT**
(RESTRICTIVE SIGN)

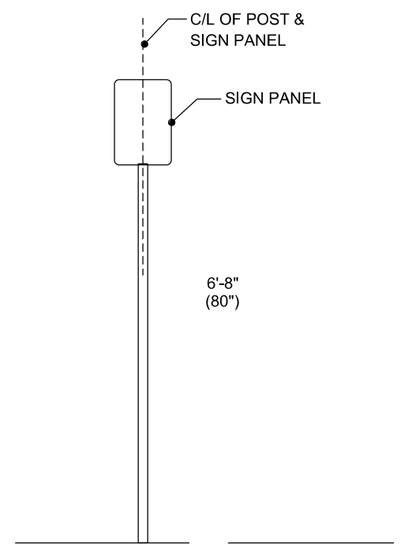

6 **POST MOUNT**
(RESTRICTIVE SIGN)

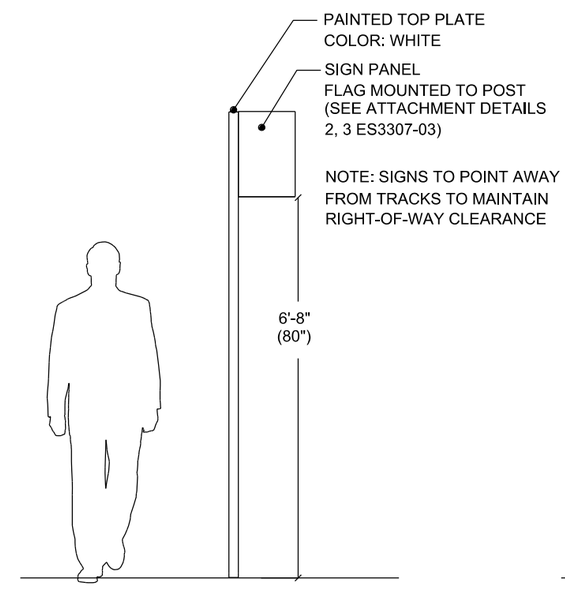

7 **FLAG MOUNT - TALL**
(EXIT SIGN)

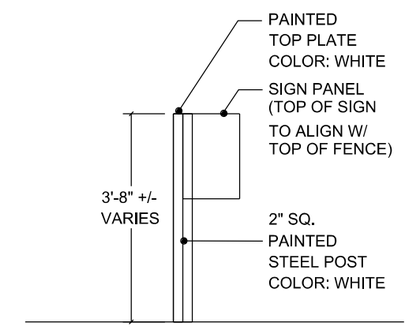

8 **FLAG MOUNT - SHORT**
(EXIT SIGN)

A **ELEVATIONS / MOUNTING CONDITIONS**

REV.	DATE	DESCRIPTION	DES.	ENG.
X	XX-XX-XX	REVISION	XX	XX

DRAWN BY: A. CARLOS DATE: 03/31/2011

ASSISTANT DIRECTOR: STANDARDS & DESIGN

DIRECTOR OF ENGINEERING AND CONSTRUCTION

SCRRA ENGINEERING STANDARDS ARE INTENDED FOR SCRRA APPROVED USES ONLY. FOR NON-SCRRA APPROVED USES:
SCRRA SHALL NOT BE RESPONSIBLE FOR THE ACCURACY OR COMPLETENESS OF THE DATA OR INFORMATION CONTAINED HEREIN. THE SELECTION AND USE OF THESE STANDARDS IS THE SOLE RESPONSIBILITY OF THE USER AND SHOULD NOT BE USED WITHOUT CONSULTING A REGISTERED PROFESSIONAL ENGINEER. ALL WARRANTIES AND REPRESENTATIONS OF ANY KIND ARE DISCLAIMED. ANYONE MAKING USE OF THIS INFORMATION AGREES THAT IT ASSUMES ALL LIABILITY ARISING FROM SUCH USE. NO PART OF THESE STANDARDS SHOULD BE REPRODUCED OR DISTRIBUTED IN ANY FORM OR BY ANY MEANS WITHOUT THE PRIOR WRITTEN PERMISSION OF SCRRA. ALL RIGHTS RESERVED.

METROLINK®
SOUTHERN CALIFORNIA REGIONAL RAIL AUTHORITY
ONE GATEWAY PLAZA, 12TH FLOOR, L. A., CA. 90012

ENGINEERING STANDARDS

INFORMATION / RESTRICTIVE SIGN
DETAILS
SIGN TYPE 3

STANDARD 3307
SCALE: NTS
REVISION –
SHEET 2 OF 4
CADD FILE: ES3307-02

UserName=> carlosa Date Plotted: 10/5/2011 2:25:02 PM Plot Driver=> S:\Plot Drivers\pdf.plt FileName=> s:\V8EngStds\3000\ES3307-02.dgn

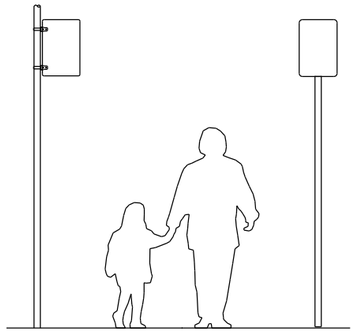

SIGN TYPE 3 - TRACK IDENTIFICATION
INFORMATION / DIRECTIONAL SIGN

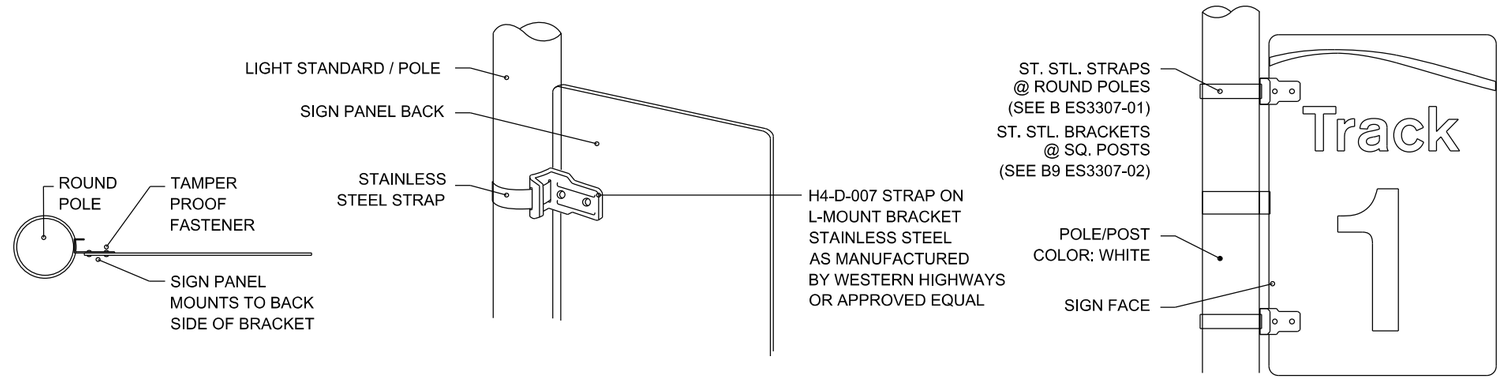

1 **FLAG MOUNT TO ROUND POLE**

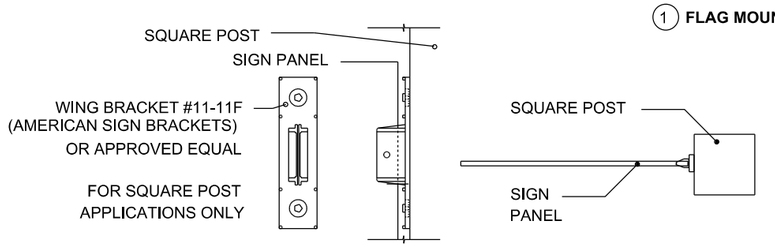

2 **FLAG MOUNT TO SQUARE POST**

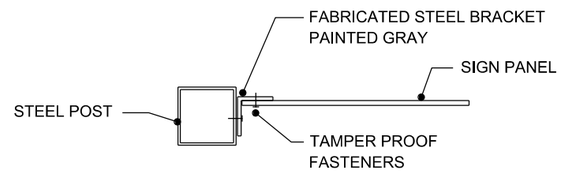

3 **FLAG MOUNT TO SQUARE STEEL POST**

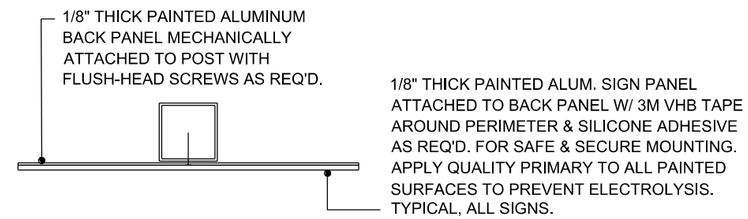

4 **SQUARE POST MOUNT**

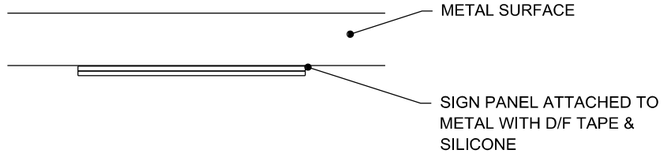

5 **WALL MOUNT TO METAL**

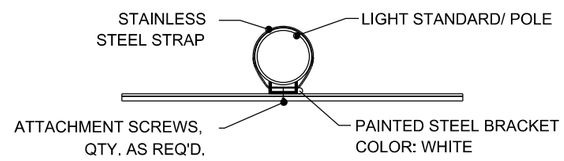

6 **POLE MOUNT ON EXISTING POLE**

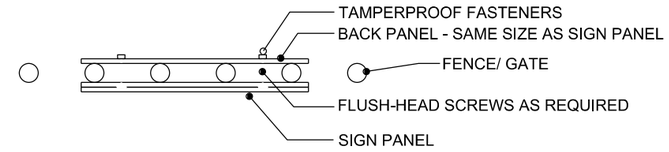

7 **FENCE MOUNT**

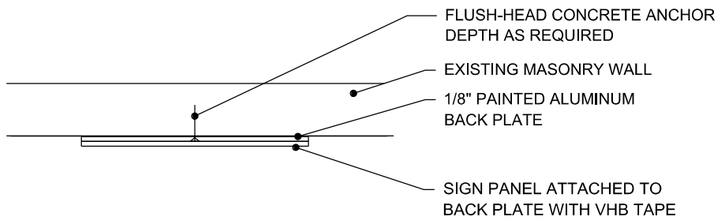

8 **WALL MOUNT TO MASONRY**

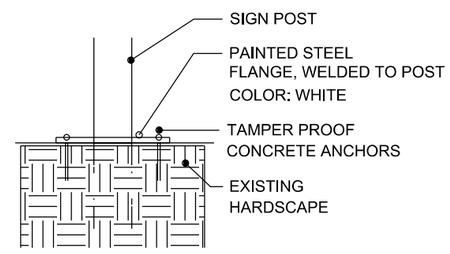

9 **HARDSCAPE MOUNTING CONDITION WITH FLANGE**

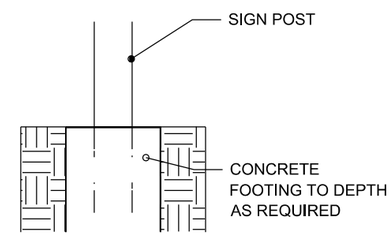

10 **LANDSCAPE MOUNTING CONDITION**

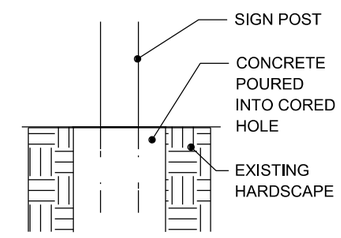

11 **HARDSCAPE MOUNTING CONDITION CORE AND DRILL**

A **ATTACHMENT DETAILS**

REV.	DATE	DESCRIPTION	DES.	ENG.
X	XX-XX-XX	REVISION	XX	XX

DRAWN BY: A. CARLOS DATE: 03/31/2011

ASSISTANT DIRECTOR: STANDARDS & DESIGN

DIRECTOR OF ENGINEERING AND CONSTRUCTION

SCRRA ENGINEERING STANDARDS ARE INTENDED FOR SCRRA APPROVED USES ONLY. FOR NON-SCRRA APPROVED USES:
SCRRA SHALL NOT BE RESPONSIBLE FOR THE ACCURACY OR COMPLETENESS OF THE DATA OR INFORMATION CONTAINED HEREIN. THE SELECTION AND USE OF THESE STANDARDS IS THE SOLE RESPONSIBILITY OF THE USER AND SHOULD NOT BE USED WITHOUT CONSULTING A REGISTERED PROFESSIONAL ENGINEER. ALL WARRANTIES AND REPRESENTATIONS OF ANY KIND ARE DISCLAIMED. ANYONE MAKING USE OF THIS INFORMATION AGREES THAT IT ASSUMES ALL LIABILITY ARISING FROM SUCH USE. NO PART OF THESE STANDARDS SHOULD BE REPRODUCED OR DISTRIBUTED IN ANY FORM OR BY ANY MEANS WITHOUT THE PRIOR WRITTEN PERMISSION OF SCRRA. ALL RIGHTS RESERVED.

METROLINK®
SOUTHERN CALIFORNIA REGIONAL RAIL AUTHORITY
ONE GATEWAY PLAZA, 12TH FLOOR, L. A., CA. 90012

ENGINEERING STANDARDS

INFORMATION / RESTRICTIVE SIGN
ATTACHMENT DETAILS
SIGN TYPE 3

STANDARD: 3307
SCALE: NTS
REVISION: –
SHEET: 3 OF 4
CADD FILE: ES3307-03

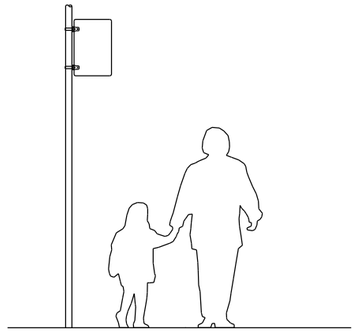

SIGN TYPE 3 - EXIT SIGN
INFORMATION / DIRECTIONAL SIGN

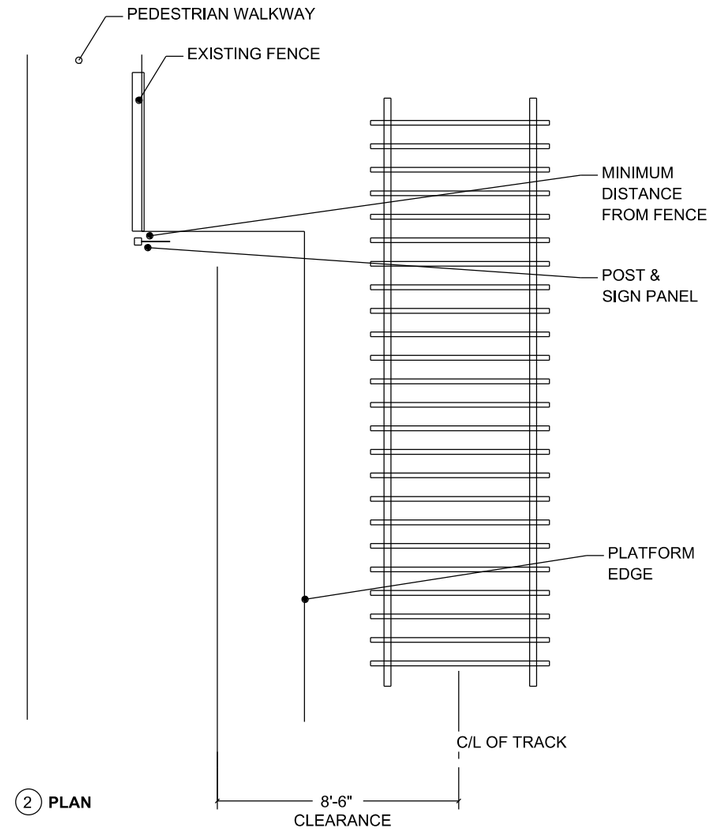

2 **PLAN**

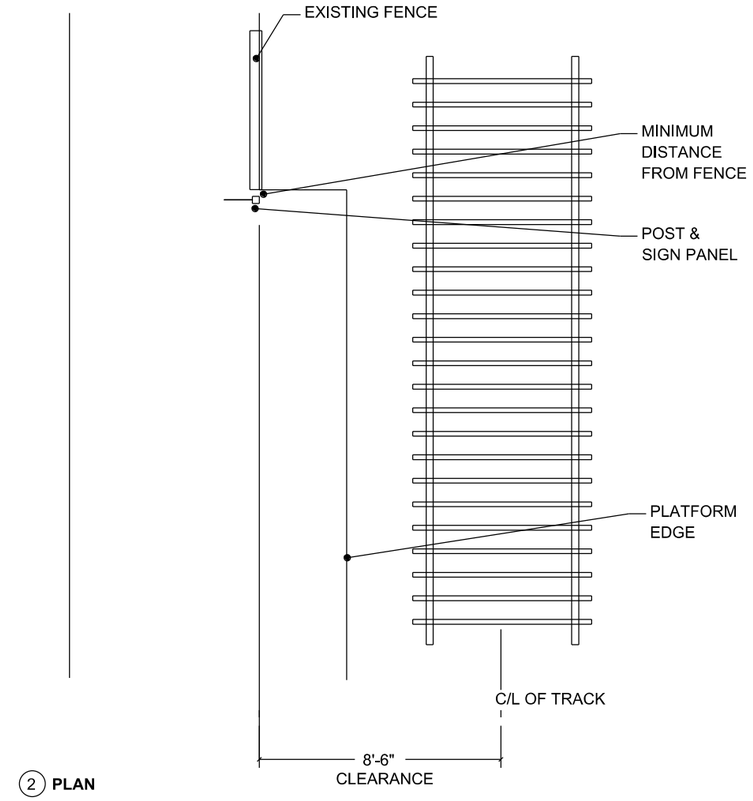

2 **PLAN**

NOTES:

1. WHERE FENCE IS LOCATED LESS THAN 10'-2" FROM CENTERLINE OF TRACK, INSTALL TALL VERSION OF SIGN WITH SIGN PANEL POINTING AWAY FROM TRACK. (SEE A)

2. WHERE DISTANCE FROM CENTERLINE OF TRACK TO FENCE IS 10'-2" OR GREATER, INSTALL SHORT VERSION OF SIGN WITH SIGN PANEL POINTING TOWARD TRACK. (SEE B)

3. SEE NOTE 4, ES2102.

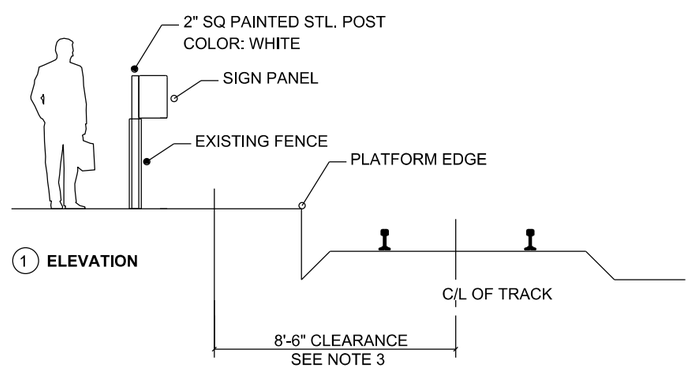

1 **ELEVATION**

B **FLAG MOUNT - SHORT (EXIT SIGN)**

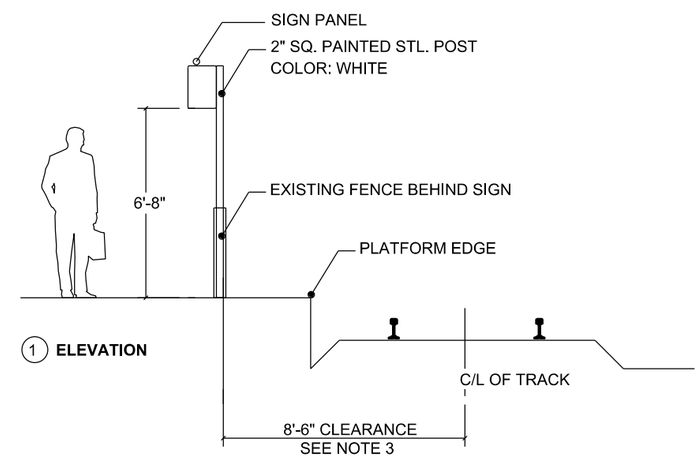

1 **ELEVATION**

A **FLAG MOUNT - TALL (EXIT SIGN)**

REV.	DATE	DESCRIPTION	DES.	ENG.
X	XX-XX-XX	REVISION	XX	XX

DRAWN BY: A. CARLOS DATE: 03/31/2011

ASSISTANT DIRECTOR: STANDARDS & DESIGN

DIRECTOR OF ENGINEERING AND CONSTRUCTION

SCRRA ENGINEERING STANDARDS ARE INTENDED FOR SCRRA APPROVED USES ONLY. FOR NON-SCRRA APPROVED USES:
SCRRA SHALL NOT BE RESPONSIBLE FOR THE ACCURACY OR COMPLETENESS OF THE DATA OR INFORMATION CONTAINED HEREIN. THE SELECTION AND USE OF THESE STANDARDS IS THE SOLE RESPONSIBILITY OF THE USER AND SHOULD NOT BE USED WITHOUT CONSULTING A REGISTERED PROFESSIONAL ENGINEER. ALL WARRANTIES AND REPRESENTATIONS OF ANY KIND ARE DISCLAIMED. ANYONE MAKING USE OF THIS INFORMATION AGREES THAT IT ASSUMES ALL LIABILITY ARISING FROM SUCH USE. NO PART OF THESE STANDARDS SHOULD BE REPRODUCED OR DISTRIBUTED IN ANY FORM OR BY ANY MEANS WITHOUT THE PRIOR WRITTEN PERMISSION OF SCRRA. ALL RIGHTS RESERVED.

METROLINK®
SOUTHERN CALIFORNIA REGIONAL RAIL AUTHORITY
ONE GATEWAY PLAZA, 12TH FLOOR, L. A., CA. 90012

ENGINEERING STANDARDS

INFORMATION / RESTRICTIVE SIGN
EXIT SIGN INSTALLATION DETAILS
SIGN TYPE 3

STANDARD 3307
SCALE: NTS
REVISION –
SHEET 4 OF 4
CADD FILE: ES3307-04

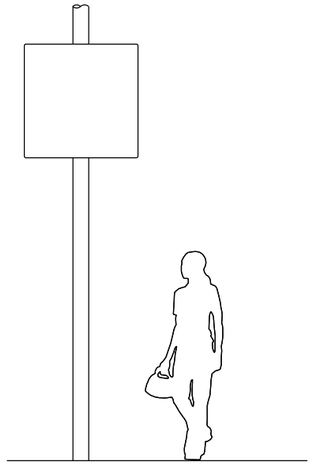

SIGN TYPE 4
TRAILBLAZER DIRECTIONAL SIGN

NOTES:
1. CONTINUE PAINT COLOR USED ON FRONT SURFACE OF SIGNS AROUND EDGES.
2. PAINT BACK SIGN PANEL TEAL.
3. ALL FASTENERS SHALL BE PLATED AND PAINTED TO MATCH SURROUNDING COLOR.
4. SEAL SIGN WITH TRANSPARENT ANTI-GRAFFITI FILM.

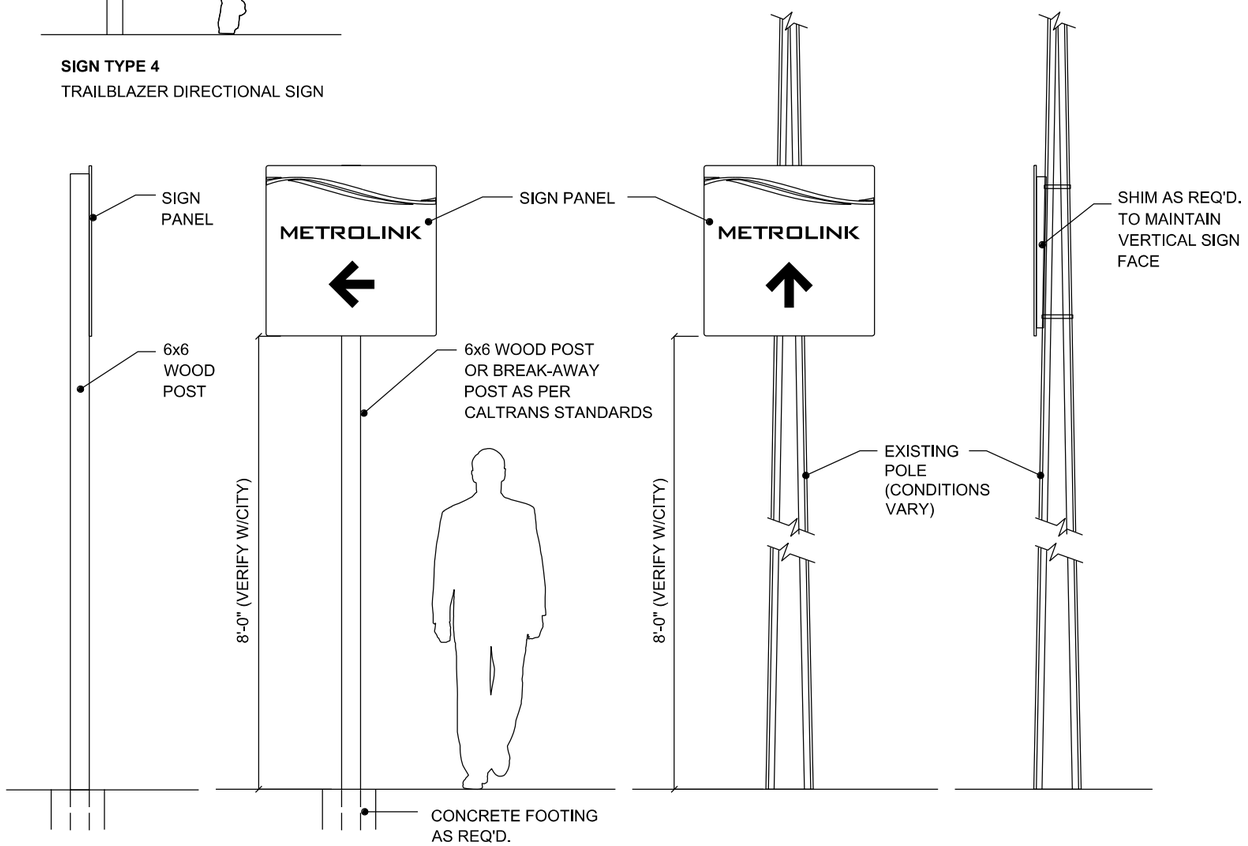

1 SIDE VIEW - POST MOUNTED
2 FRONT VIEW - POST MOUNTED
3 FRONT VIEW - POLE MOUNTED
4 SIDE VIEW - POLE MOUNTED

B ELEVATIONS

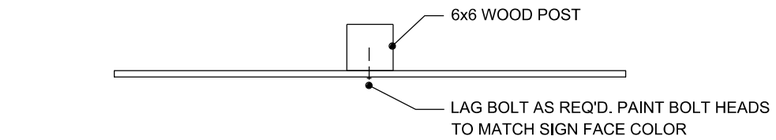

D PLAN SECTION - POST MOUNTED

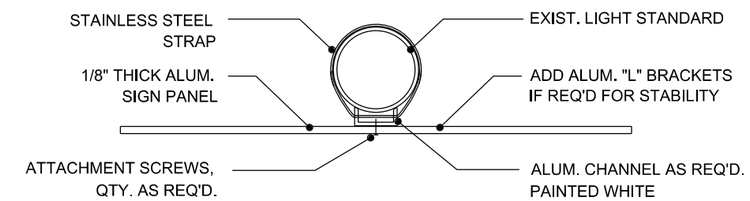

C PLAN SECTION - POLE MOUNTED

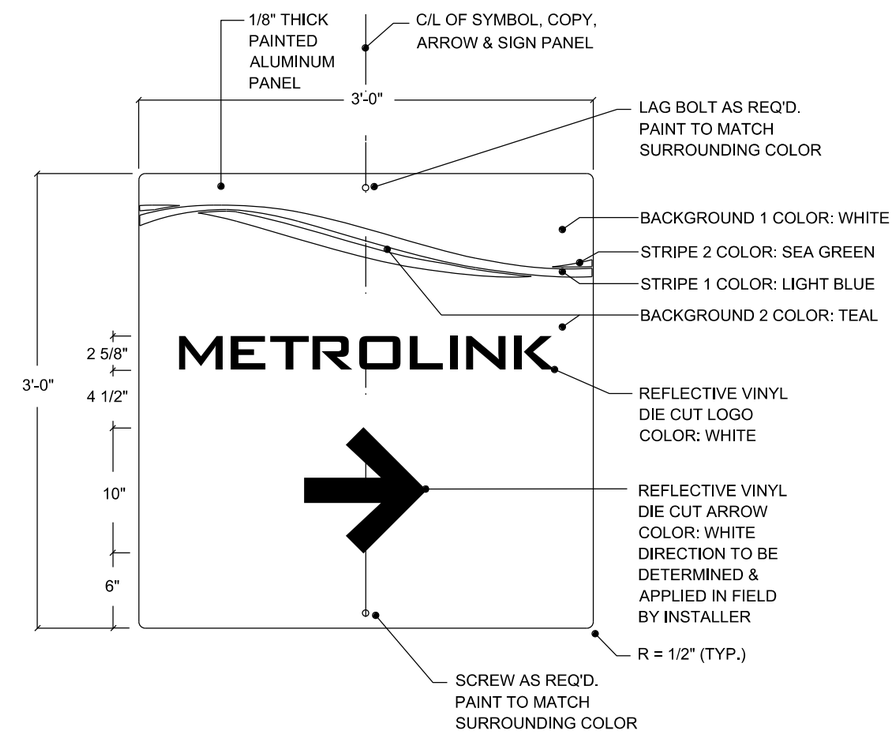

A COPY LAYOUT 4-1

REV.	DATE	DESCRIPTION	DES.	ENG.
X	XX-XX-XX	REVISION	XX	XX

DRAWN BY: A. CARLOS DATE: 03/31/2011

ASSISTANT DIRECTOR: STANDARDS & DESIGN

DIRECTOR OF ENGINEERING AND CONSTRUCTION

SCRRA ENGINEERING STANDARDS ARE INTENDED FOR SCRRA APPROVED USES ONLY. FOR NON-SCRRA APPROVED USES:
SCRRA SHALL NOT BE RESPONSIBLE FOR THE ACCURACY OR COMPLETENESS OF THE DATA OR INFORMATION CONTAINED HEREIN. THE SELECTION AND USE OF THESE STANDARDS IS THE SOLE RESPONSIBILITY OF THE USER AND SHOULD NOT BE USED WITHOUT CONSULTING A REGISTERED PROFESSIONAL ENGINEER. ALL WARRANTIES AND REPRESENTATIONS OF ANY KIND ARE DISCLAIMED. ANYONE MAKING USE OF THIS INFORMATION AGREES THAT IT ASSUMES ALL LIABILITY ARISING FROM SUCH USE. NO PART OF THESE STANDARDS SHOULD BE REPRODUCED OR DISTRIBUTED IN ANY FORM OR BY ANY MEANS WITHOUT THE PRIOR WRITTEN PERMISSION OF SCRRA. ALL RIGHTS RESERVED.

METROLINK®
SOUTHERN CALIFORNIA REGIONAL RAIL AUTHORITY
ONE GATEWAY PLAZA, 12TH FLOOR, L. A., CA. 90012

ENGINEERING STANDARDS

TRAILBLAZER DIRECTIONAL SIGN
SIGN TYPE 4

STANDARD 3308
SCALE: NTS
REVISION –
SHEET 1 OF 1
CADD FILE: ES3308

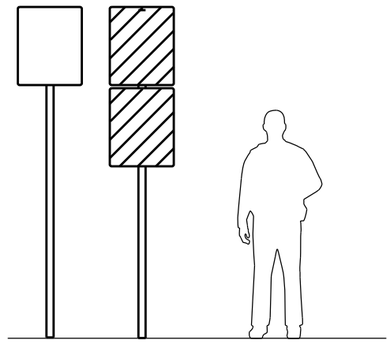

SIGN TYPE 5

PARKING RESTRICTIVE SIGN - POLE MOUNTED

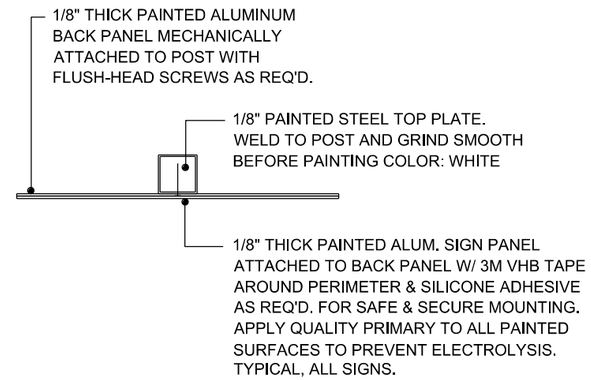

D **ATTACHMENT DETAIL - PLAN SECTION**

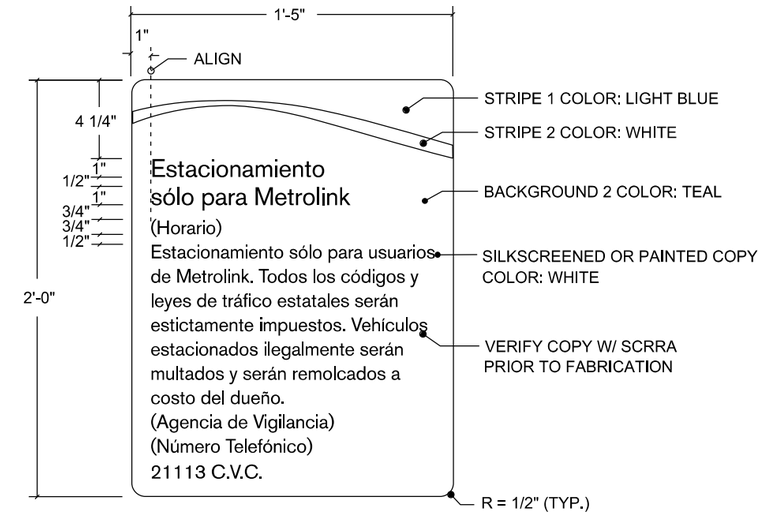

C **COPY LAYOUT** 5-1S

NOTES:

1. CONTINUE PAINT COLOR USED ON FRONT SURFACE OF SIGNS AROUND EDGES.
2. PAINT BACK SIGN PANEL TEAL.
3. ALL FASTENERS SHALL BE PLATED AND PAINTED TO MATCH SURROUNDING COLOR.
4. SEAL SIGN WITH TRANSPARENT ANTI-GRAFFITI FILM.
5. PHONE NUMBERS AND ADDRESS TO BE PROVIDED BY CITY PRIOR TO FABRICATION.

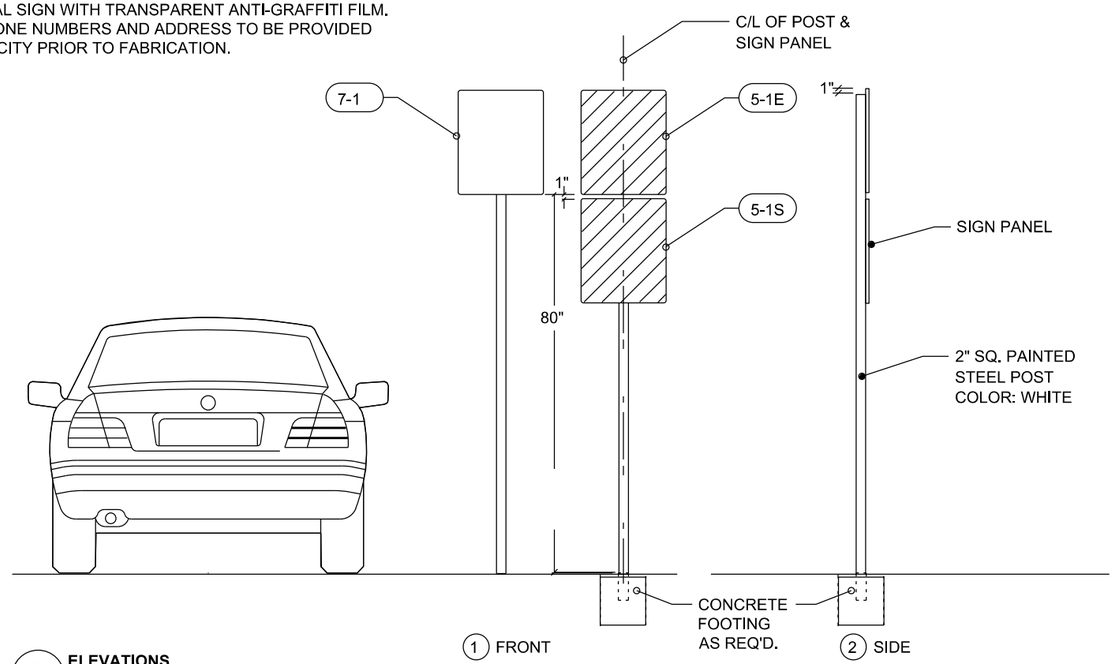

B **ELEVATIONS**

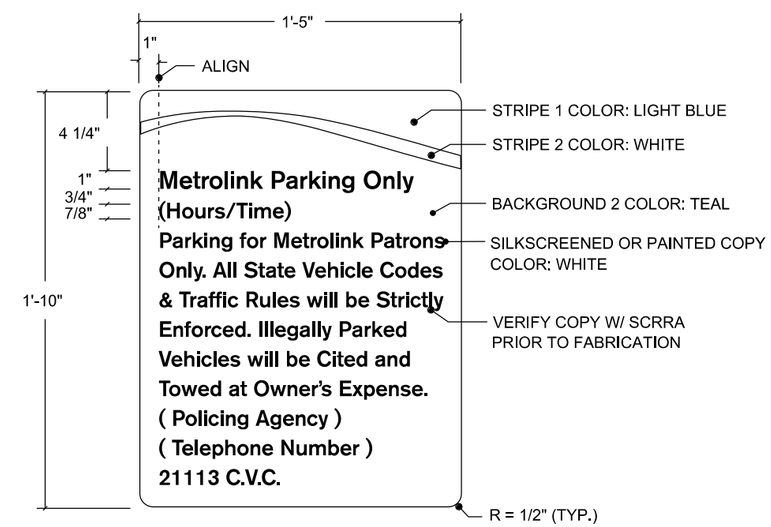

A **COPY LAYOUT** 5-1E

REV.	DATE	DESCRIPTION	DES.	ENG.
X	XX-XX-XX	REVISION	XX	XX

DRAWN BY: A. CARLOS DATE: 03/31/2011

ASSISTANT DIRECTOR: STANDARDS & DESIGN

DIRECTOR OF ENGINEERING AND CONSTRUCTION

SCRRA ENGINEERING STANDARDS ARE INTENDED FOR SCRRA APPROVED USES ONLY. FOR NON-SCRRA APPROVED USES:
SCRRA SHALL NOT BE RESPONSIBLE FOR THE ACCURACY OR COMPLETENESS OF THE DATA OR INFORMATION CONTAINED HEREIN. THE SELECTION AND USE OF THESE STANDARDS IS THE SOLE RESPONSIBILITY OF THE USER AND SHOULD NOT BE USED WITHOUT CONSULTING A REGISTERED PROFESSIONAL ENGINEER. ALL WARRANTIES AND REPRESENTATIONS OF ANY KIND ARE DISCLAIMED. ANYONE MAKING USE OF THIS INFORMATION AGREES THAT IT ASSUMES ALL LIABILITY ARISING FROM SUCH USE. NO PART OF THESE STANDARDS SHOULD BE REPRODUCED OR DISTRIBUTED IN ANY FORM OR BY ANY MEANS WITHOUT THE PRIOR WRITTEN PERMISSION OF SCRRA. ALL RIGHTS RESERVED.

METROLINK®

SOUTHERN CALIFORNIA REGIONAL RAIL AUTHORITY
ONE GATEWAY PLAZA, 12TH FLOOR, L. A., CA. 90012

ENGINEERING STANDARDS

PARKING RESTRICTIVE SIGN
POLE MOUNTED
SIGN TYPE 5

STANDARD 3309
SCALE: NTS
REVISION –
SHEET 1 OF 1
CADD FILE: ES3309

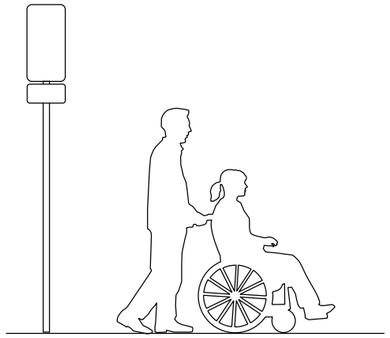

SIGN TYPE 6
ACCESSIBLE PARKING IDENTIFICATION SIGN

NOTES:

1. SIGN COPY AND FINISHES SHALL CONFORM TO CALIFORNIA ACCESSIBILITY STANDARDS.
2. PAINT BACK OF SIGN PANEL BLUE.
3. ACCESSIBILITY PARKING SIGNS WHICH ARE SIMILAR TO THOSE SHOWN IN OUR STANDARDS MUST COMPLY WITH THE AMERICANS WITH DISABILITIES ACT ACCESSIBILITY GUIDELINES AND CALIFORNIA ACCESSIBILITY REGULATIONS CONTAINED IN TITLE 24, CALIFORNIA CODE OF REGULATIONS.

C **ATTACHMENT DETAIL - PLAN SECTION**

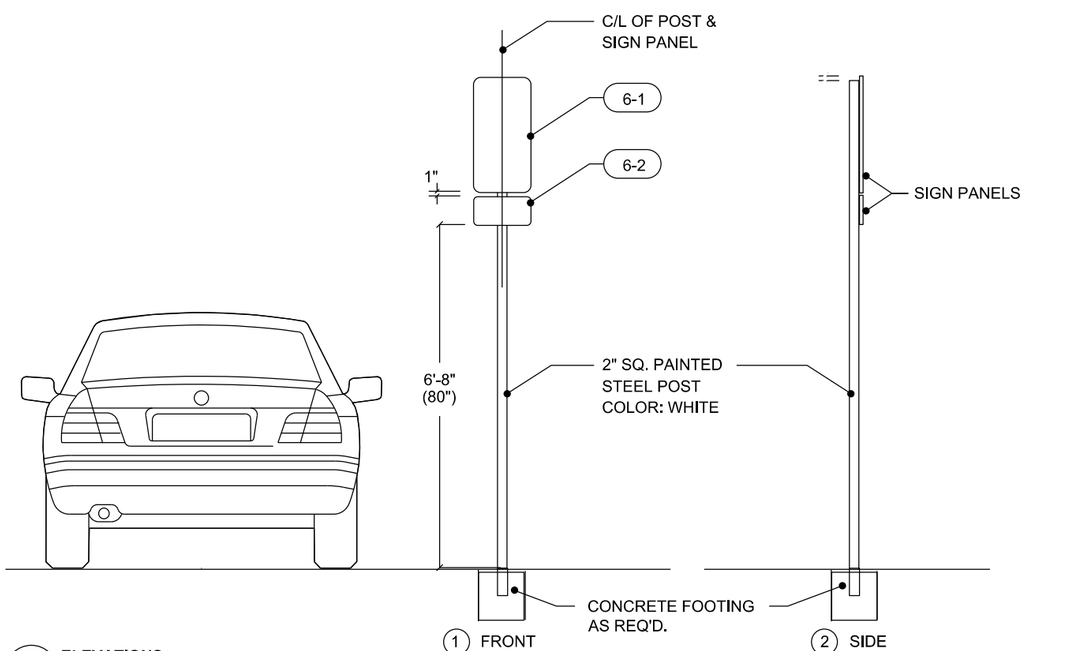

B **ELEVATIONS**

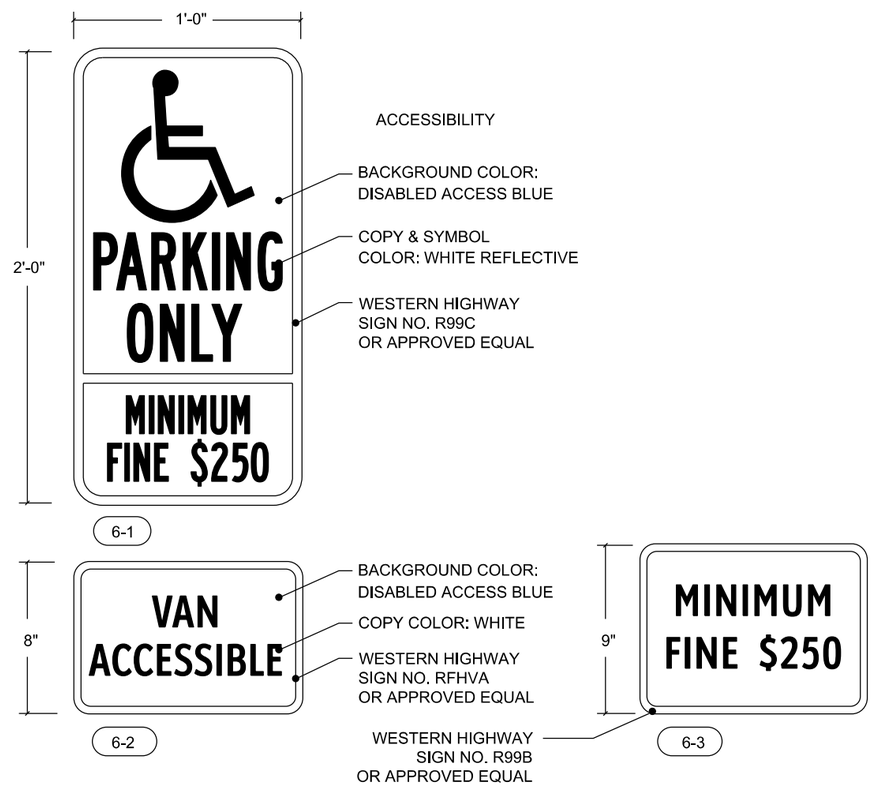

A **COPY LAYOUTS**

NOTE: THIS SIGN ATTACHES TO POST
1" BELOW BOTTOM EDGE OF EXISTING
ACCESSIBLE PARKING ONLY SIGNS

REV.	DATE	DESCRIPTION	DES.	ENG.
X	XX-XX-XX	REVISION	XX	XX

DRAWN BY: A. CARLOS DATE: 03/31/2011

ASSISTANT DIRECTOR: STANDARDS & DESIGN

DIRECTOR OF ENGINEERING AND CONSTRUCTION

SCRRA ENGINEERING STANDARDS ARE INTENDED FOR SCRRA APPROVED USES ONLY. FOR NON-SCRRA APPROVED USES:
SCRRA SHALL NOT BE RESPONSIBLE FOR THE ACCURACY OR COMPLETENESS OF THE DATA OR INFORMATION CONTAINED HEREIN. THE SELECTION AND USE OF THESE STANDARDS IS THE SOLE RESPONSIBILITY OF THE USER AND SHOULD NOT BE USED WITHOUT CONSULTING A REGISTERED PROFESSIONAL ENGINEER. ALL WARRANTIES AND REPRESENTATIONS OF ANY KIND ARE DISCLAIMED. ANYONE MAKING USE OF THIS INFORMATION AGREES THAT IT ASSUMES ALL LIABILITY ARISING FROM SUCH USE. NO PART OF THESE STANDARDS SHOULD BE REPRODUCED OR DISTRIBUTED IN ANY FORM OR BY ANY MEANS WITHOUT THE PRIOR WRITTEN PERMISSION OF SCRRA. ALL RIGHTS RESERVED.

METROLINK®
SOUTHERN CALIFORNIA REGIONAL RAIL AUTHORITY
ONE GATEWAY PLAZA, 12TH FLOOR, L. A., CA. 90012

ENGINEERING STANDARDS

ACCESSIBLE PARKING
IDENTIFICATION SIGN
SIGN TYPE 6

STANDARD 3310
SCALE: NTS
REVISION –
SHEET 1 OF 1
CADD FILE: ES3310

NOTES:

1. SIGN COPY AND FINISHES SHALL CONFORM TO CALIFORNIA ACCESSIBILITY STANDARDS.
2. PAINT BACK OF SIGN PANEL BLUE.
3. PHONE NUMBERS AND ADDRESS TO BE PROVIDED BY CITY PRIOR TO FABRICATION.
4. ACCESSIBILITY PARKING SIGNS WHICH ARE SIMILAR TO THOSE SHOWN IN OUR STANDARDS MUST COMPLY WITH THE AMERICANS WITH DISABILITIES ACT ACCESSIBILITY GUIDELINES AND CALIFORNIA ACCESSIBILITY REGULATIONS CONTAINED IN TITLE 24, CALIFORNIA CODE OF REGULATIONS.

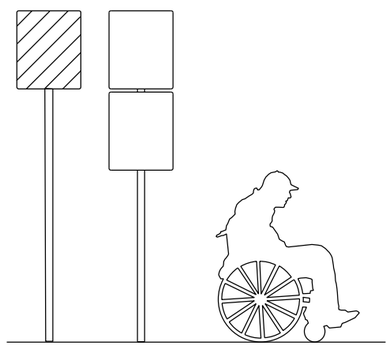

SIGN TYPE 7

ACCESSIBLE PARKING INFORMATION SIGN

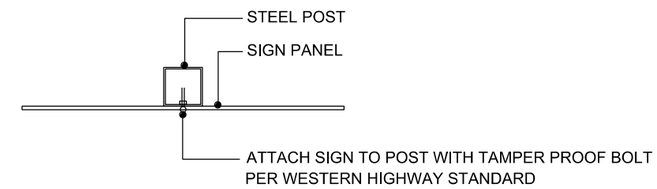

C **ATTACHMENT DETAIL - PLAN SECTION**

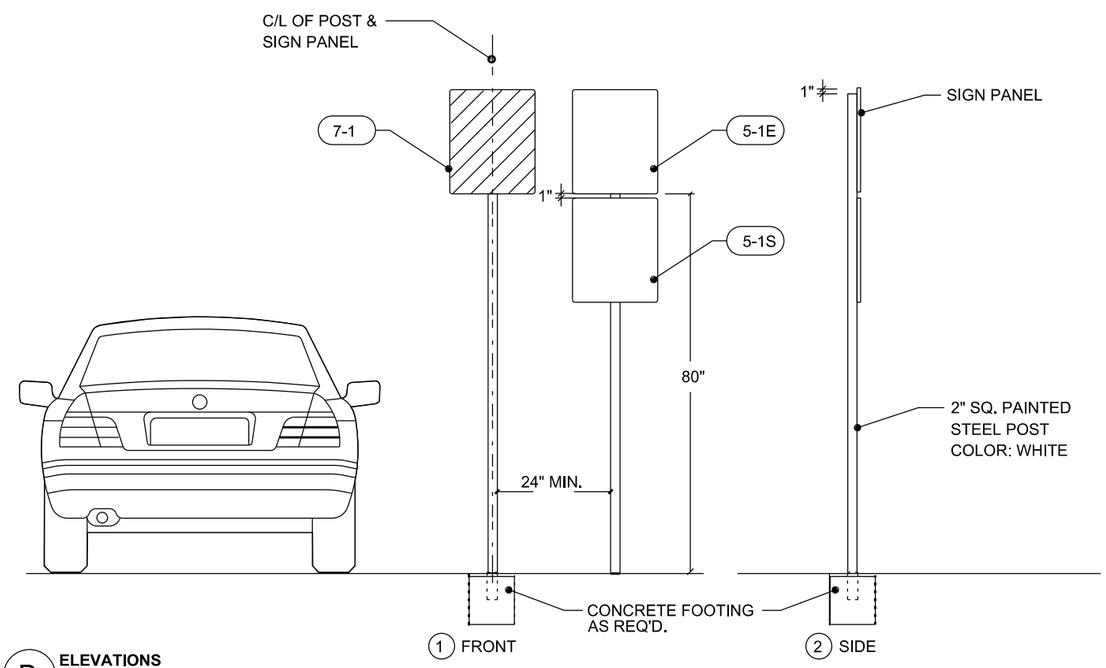

B **ELEVATIONS**

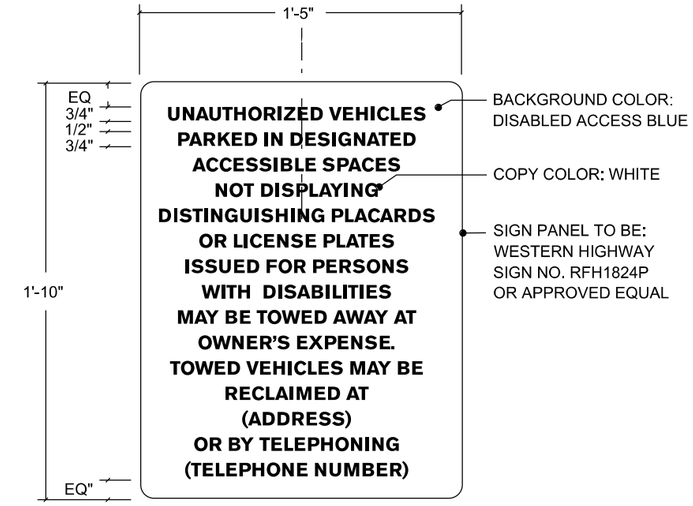

A **COPY LAYOUT**

REV.	DATE	DESCRIPTION	DES.	ENG.
X	XX-XX-XX	REVISION	XX	XX

DRAWN BY: A. CARLOS DATE: 03/31/2011

ASSISTANT DIRECTOR: STANDARDS & DESIGN

DIRECTOR OF ENGINEERING AND CONSTRUCTION

SCRRA ENGINEERING STANDARDS ARE INTENDED FOR SCRRA APPROVED USES ONLY. FOR NON-SCRRA APPROVED USES:
SCRRA SHALL NOT BE RESPONSIBLE FOR THE ACCURACY OR COMPLETENESS OF THE DATA OR INFORMATION CONTAINED HEREIN. THE SELECTION AND USE OF THESE STANDARDS IS THE SOLE RESPONSIBILITY OF THE USER AND SHOULD NOT BE USED WITHOUT CONSULTING A REGISTERED PROFESSIONAL ENGINEER. ALL WARRANTIES AND REPRESENTATIONS OF ANY KIND ARE DISCLAIMED. ANYONE MAKING USE OF THIS INFORMATION AGREES THAT IT ASSUMES ALL LIABILITY ARISING FROM SUCH USE. NO PART OF THESE STANDARDS SHOULD BE REPRODUCED OR DISTRIBUTED IN ANY FORM OR BY ANY MEANS WITHOUT THE PRIOR WRITTEN PERMISSION OF SCRRA. ALL RIGHTS RESERVED.

METROLINK®

SOUTHERN CALIFORNIA REGIONAL RAIL AUTHORITY
ONE GATEWAY PLAZA, 12TH FLOOR, L. A., CA. 90012

ENGINEERING STANDARDS

ACCESSIBLE PARKING INFORMATION SIGN
SIGN TYPE 7

STANDARD 3311
SCALE: NTS
REVISION –
SHEET 1 OF 1
CADD FILE: ES3311

UserName=> carlosa Date Plotted: 10/5/2011 2:25:08 PM Plot Driver=> S:\Plot Drivers\pdf.plt FileName=> s:\V8EngStds\3000\ES3311.dgn

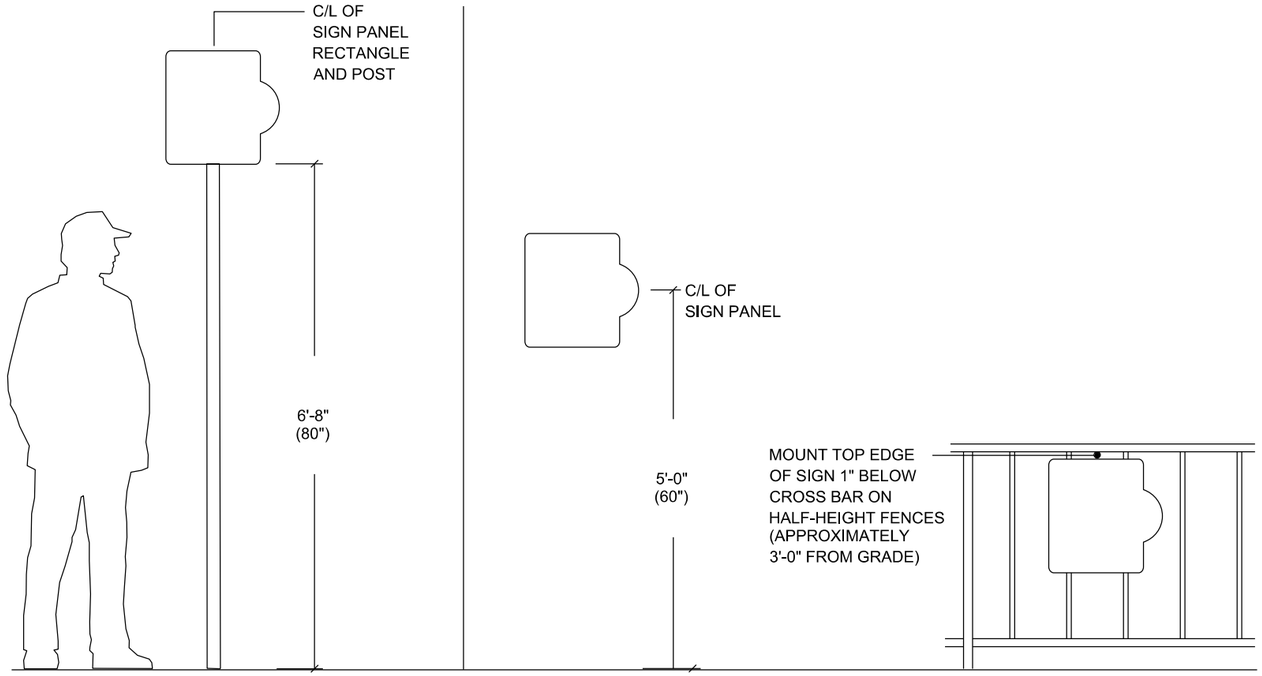

1 POST MOUNT

2 WALL MOUNT / HIGH FENCE MOUNT
TYPICAL UNLESS NOTED OTHERWISE

3 HALF-HEIGHT FENCE MOUNT

D **ELEVATIONS**

SIGN PANEL
MATERIAL: 1/8" THICK ALUMINUM
FINISH: PAINTED TWO-PART
POLYURETHANE SATIN
COLORS TO MATCH:
PMS COOL GRAY 7C - BACK PANEL
PMS 323C TEAL - FACE CIRCLE
PMS 021C ORANGE - FACE TRACK 1
PMS 355C GREEN - FACE TRACK 2
PMS 542C SKY BLUE - FACE TRACK 3

COPY
MATERIAL: LASER CUT VINYL
FINISH: MATTE - NON GLARE
COLOR: BRIGHT WHITE
APPLICATION: FIRST SURFACE

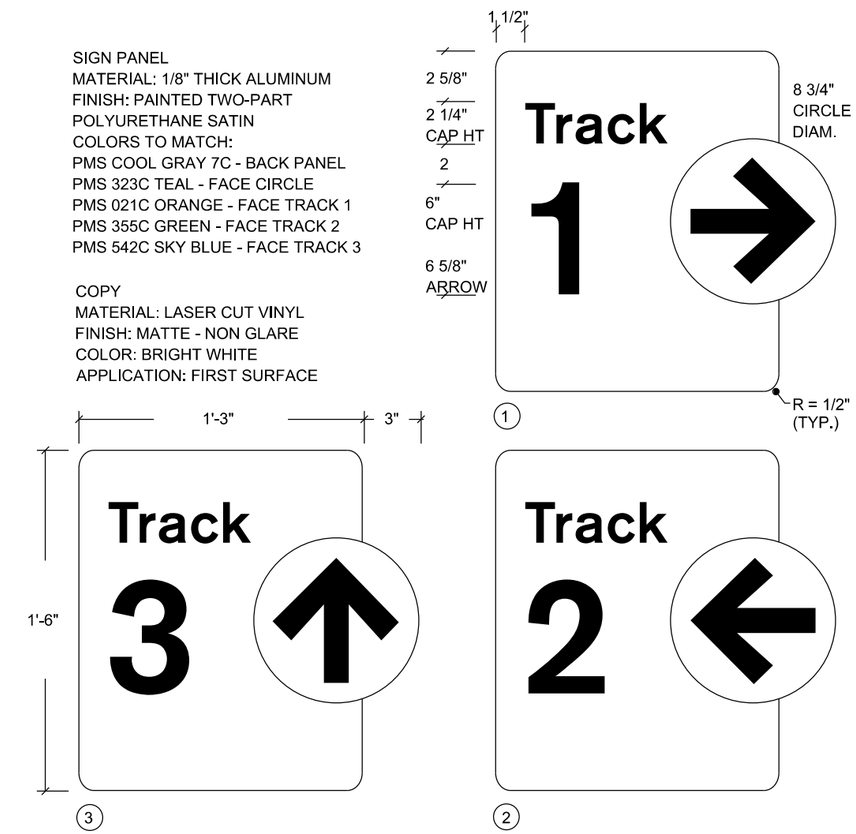

A **TRACK DIRECTIONAL / FACE PANEL COPY LAYOUTS**

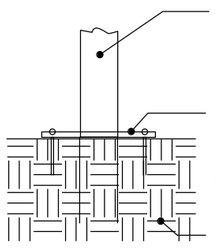

1 SIGN POST: HARDSCAPE
MOUNTING CONDITION WITH FLANGE

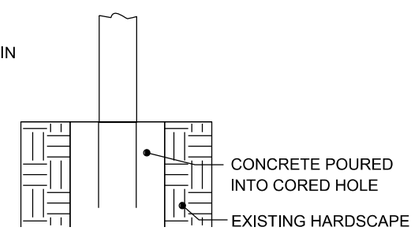

2 SIGN POST: HARDSCAPE
MOUNTING CONDITION WITH CORE AND DRILL

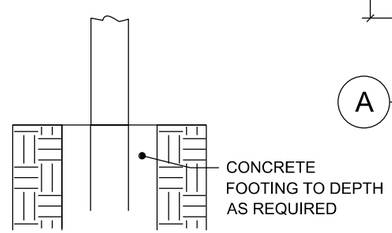

3 SIGN POST: LANDSCAPE MOUNTING CONDITION

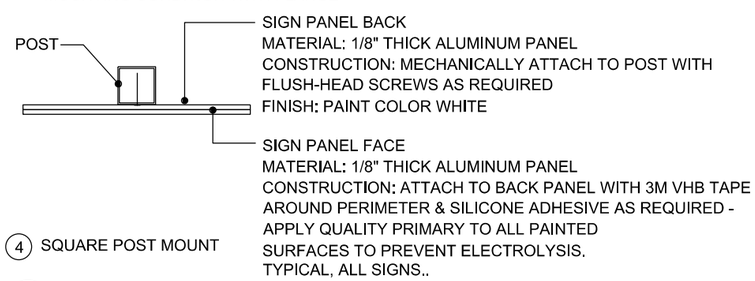

4 SQUARE POST MOUNT

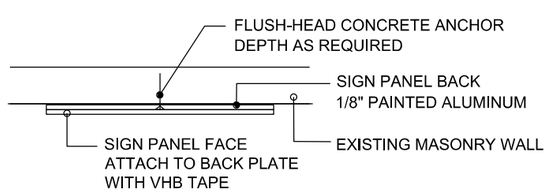

5 WALL MOUNT TO MASONRY

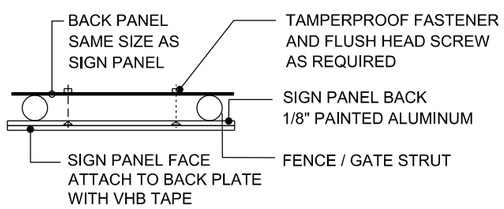

6 FENCE MOUNT

C **ATTACHMENT DETAILS**

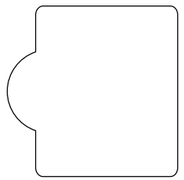

B **TRACK DIRECTIONAL / BACK PANEL**

REV.	DATE	DESCRIPTION	DES.	ENG.
X	XX-XX-XX	REVISION	XX	XX

DRAWN BY: A. CARLOS DATE: 03/31/2011

ASSISTANT DIRECTOR: STANDARDS & DESIGN

DIRECTOR OF ENGINEERING AND CONSTRUCTION

SCRRA ENGINEERING STANDARDS ARE INTENDED FOR SCRRA APPROVED USES ONLY. FOR NON-SCRRA APPROVED USES:
SCRRA SHALL NOT BE RESPONSIBLE FOR THE ACCURACY OR COMPLETENESS OF THE DATA OR INFORMATION CONTAINED HEREIN. THE SELECTION AND USE OF THESE STANDARDS IS THE SOLE RESPONSIBILITY OF THE USER AND SHOULD NOT BE USED WITHOUT CONSULTING A REGISTERED PROFESSIONAL ENGINEER. ALL WARRANTIES AND REPRESENTATIONS OF ANY KIND ARE DISCLAIMED. ANYONE MAKING USE OF THIS INFORMATION AGREES THAT IT ASSUMES ALL LIABILITY ARISING FROM SUCH USE. NO PART OF THESE STANDARDS SHOULD BE REPRODUCED OR DISTRIBUTED IN ANY FORM OR BY ANY MEANS WITHOUT THE PRIOR WRITTEN PERMISSION OF SCRRA. ALL RIGHTS RESERVED.

METROLINK®
SOUTHERN CALIFORNIA REGIONAL RAIL AUTHORITY
ONE GATEWAY PLAZA, 12TH FLOOR, L. A., CA. 90012

ENGINEERING STANDARDS

TRACK DIRECTIONAL SIGN
SIGN TYPE 11

STANDARD 3314
SCALE: NTS
REVISION –
SHEET 1 OF 1
CADD FILE: ES3314

UserName-> carlosa Date Plotted: 10/5/2011 2:25:09 PM Plot Driver-> S:\Plot Drivers\pdf.plt FileName-> s:\V8EngStds\3000\ES3314.dgn

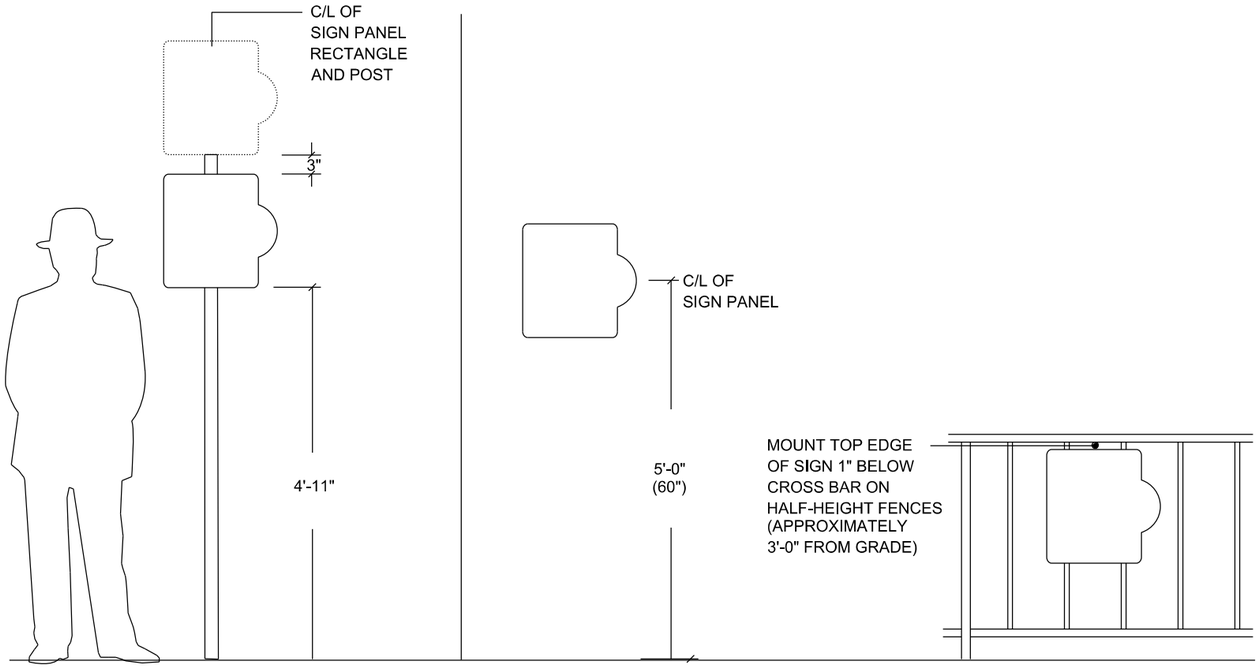

D **ELEVATIONS**

SIGN PANEL
MATERIAL: 1/8" THICK ALUMINUM
FINISH: PAINTED TWO-PART
POLYURETHANE SATIN
COLORS TO MATCH:
PMS COOL GRAY 7C - BACK PANEL
PMS 323C TEAL - FACE CIRCLE
PMS 021C ORANGE - FACE TRACK 1
PMS 355C GREEN - FACE TRACK 2
PMS 542C SKY BLUE - FACE TRACK 3

COPY
MATERIAL: LASER CUT VINYL
FINISH: MATTE - NON GLARE
COLOR: BRIGHT WHITE
APPLICATION: FIRST SURFACE

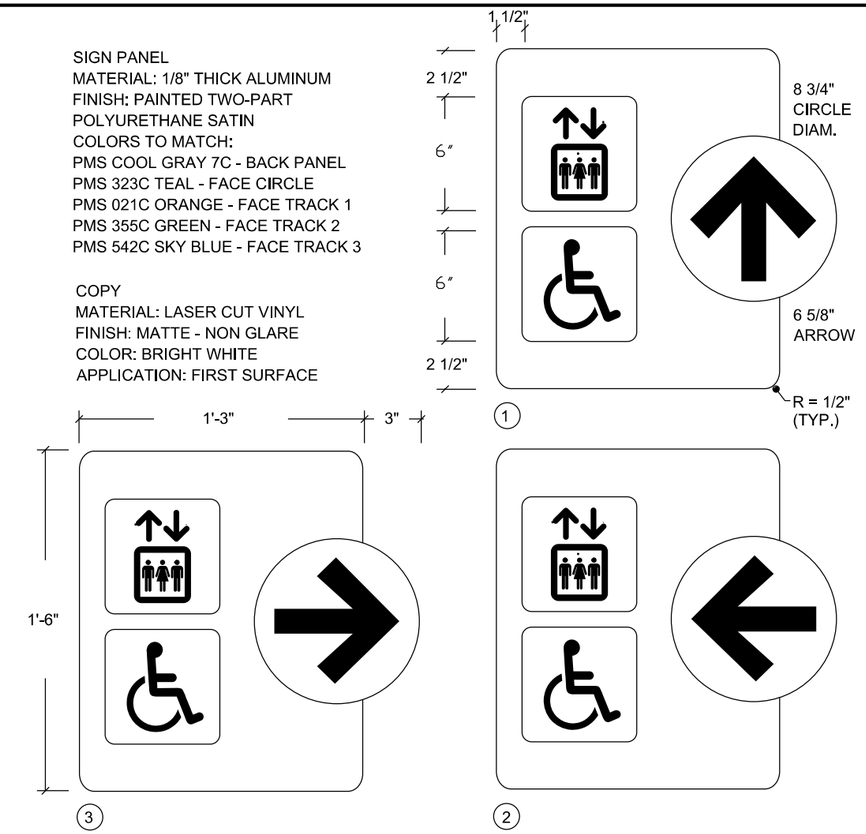

A **ELEVATOR DIRECTIONAL / FACE PANEL COPY LAYOUTS**

1 SIGN POST: HARDSCAPE
MOUNTING CONDITION WITH FLANGE

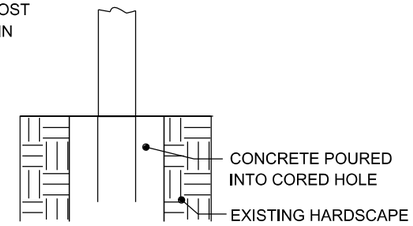

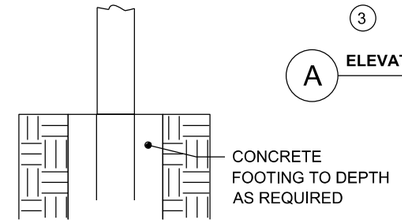

3 SIGN POST: LANDSCAPE MOUNTING CONDITION

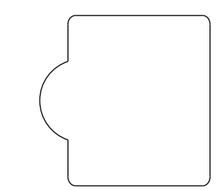

B **ELEVATOR DIRECTIONAL / BACK PANEL**

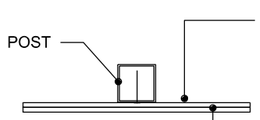

SIGN PANEL BACK
MATERIAL: 1/8" THICK ALUMINUM PANEL
CONSTRUCTION: MECHANICALLY ATTACH TO POST WITH
FLUSH-HEAD SCREWS AS REQUIRED
FINISH PAINT COLOR: WHITE

SIGN PANEL FACE
MATERIAL: 1/8" THICK ALUMINUM PANEL
CONSTRUCTION: ATTACH TO BACK PANEL WITH 3M VHB TAPE
AROUND PERIMETER & SILICONE ADHESIVE AS REQUIRED -
APPLY QUALITY PRIMARY TO ALL PAINTED
SURFACES TO PREVENT ELECTROLYSIS.
TYPICAL, ALL SIGNS.

4 SQUARE POST MOUNT

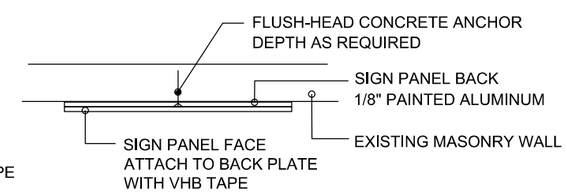

5 WALL MOUNT TO MASONRY

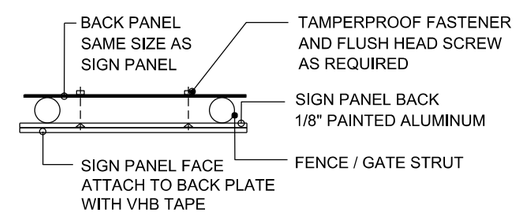

6 FENCE MOUNT

C **ATTACHMENT DETAILS**

REV.	DATE	DESCRIPTION	DES.	ENG.
X	XX-XX-XX	REVISION	XX	XX

DRAWN BY: A. CARLOS DATE: 03/31/2011

ASSISTANT DIRECTOR: STANDARDS & DESIGN

DIRECTOR OF ENGINEERING AND CONSTRUCTION

SCRRA ENGINEERING STANDARDS ARE INTENDED FOR SCRRA APPROVED USES ONLY. FOR NON-SCRRA APPROVED USES:
SCRRA SHALL NOT BE RESPONSIBLE FOR THE ACCURACY OR COMPLETENESS OF THE DATA OR INFORMATION CONTAINED HEREIN. THE SELECTION AND USE OF THESE STANDARDS IS THE SOLE RESPONSIBILITY OF THE USER AND SHOULD NOT BE USED WITHOUT CONSULTING A REGISTERED PROFESSIONAL ENGINEER. ALL WARRANTIES AND REPRESENTATIONS OF ANY KIND ARE DISCLAIMED. ANYONE MAKING USE OF THIS INFORMATION AGREES THAT IT ASSUMES ALL LIABILITY ARISING FROM SUCH USE. NO PART OF THESE STANDARDS SHOULD BE REPRODUCED OR DISTRIBUTED IN ANY FORM OR BY ANY MEANS WITHOUT THE PRIOR WRITTEN PERMISSION OF SCRRA. ALL RIGHTS RESERVED.

METROLINK®
SOUTHERN CALIFORNIA REGIONAL RAIL AUTHORITY
ONE GATEWAY PLAZA, 12TH FLOOR, L. A., CA. 90012

ENGINEERING STANDARDS

ELEVATOR DIRECTIONAL SIGN
SIGN TYPE 12

STANDARD 3315
SCALE: NTS
REVISION –
SHEET 1 OF 1
CADD FILE: ES3315

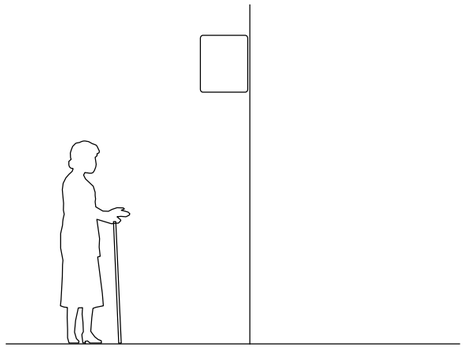

SIGN TYPE 13
ELEVATOR IDENTIFICATION SIGN - FLAG MOUNTED

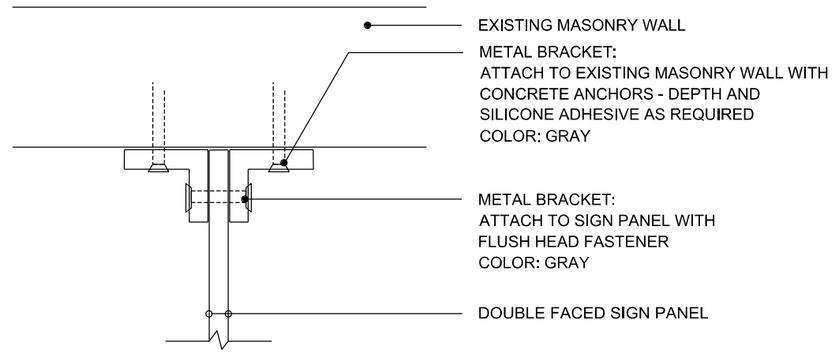

B **ATTACHMENT DETAIL**
FLAG MOUNT TO MASONRY WALL

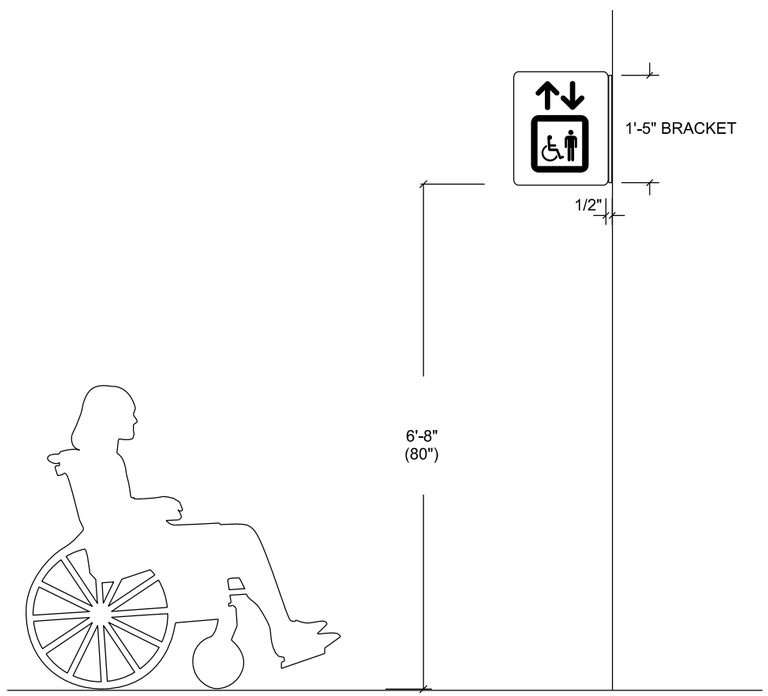

C **ELEVATION**
FLAG MOUNT / TYPICAL UNLESS NOTED OTHERWISE

SIGN PANEL
MATERIAL: 1/8" THICK ALUMINUM
FINISH: PAINTED TWO-PART
POLYURETHANE SATIN
COLOR: PMS 323C TEAL

COPY
MATERIAL: LASER CUT VINYL
FINISH: MATTE - NON GLARE
COLOR: BRIGHT WHITE
APPLICATION: FIRST SURFACE

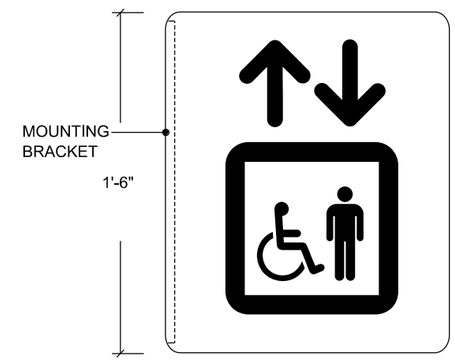

1 SIGN PANEL FACE 1

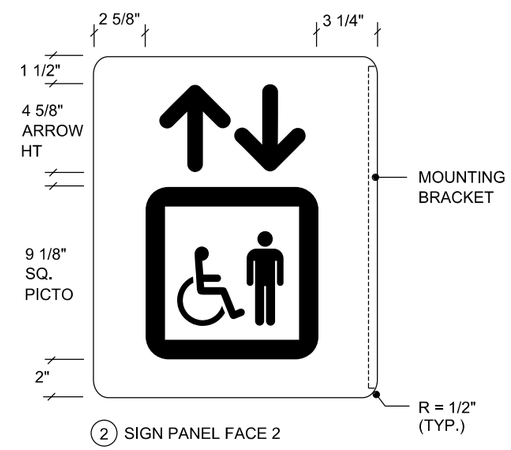

2 SIGN PANEL FACE 2

A **COPY LAYOUTS**

X	XX-XX-XX	REVISION	XX	XX
REV.	DATE	DESCRIPTION	DES.	ENG.

DRAWN BY: A. CARLOS DATE: 03/31/2011

ASSISTANT DIRECTOR: STANDARDS & DESIGN

DIRECTOR OF ENGINEERING AND CONSTRUCTION

SCRRA ENGINEERING STANDARDS ARE INTENDED FOR SCRRA APPROVED USES ONLY. FOR NON-SCRRA APPROVED USES:
SCRRA SHALL NOT BE RESPONSIBLE FOR THE ACCURACY OR COMPLETENESS OF THE DATA OR INFORMATION CONTAINED HEREIN. THE SELECTION AND USE OF THESE STANDARDS IS THE SOLE RESPONSIBILITY OF THE USER AND SHOULD NOT BE USED WITHOUT CONSULTING A REGISTERED PROFESSIONAL ENGINEER. ALL WARRANTIES AND REPRESENTATIONS OF ANY KIND ARE DISCLAIMED. ANYONE MAKING USE OF THIS INFORMATION AGREES THAT IT ASSUMES ALL LIABILITY ARISING FROM SUCH USE. NO PART OF THESE STANDARDS SHOULD BE REPRODUCED OR DISTRIBUTED IN ANY FORM OR BY ANY MEANS WITHOUT THE PRIOR WRITTEN PERMISSION OF SCRRA. ALL RIGHTS RESERVED.

METROLINK®
SOUTHERN CALIFORNIA REGIONAL RAIL AUTHORITY
ONE GATEWAY PLAZA, 12TH FLOOR, L. A., CA. 90012

ENGINEERING STANDARDS

ELEVATOR IDENTIFICATION
FLAG MOUNTED
SIGN TYPE 13

STANDARD 3316
SCALE: NTS
REVISION –
SHEET 1 OF 1
CADD FILE: ES3316

NOTE:

FOR MOUNTING INSTRUCTIONS SEE METROLINK ENGINEERING STANDARD ES3307-03.

B DETAIL / PICTOGRAPH

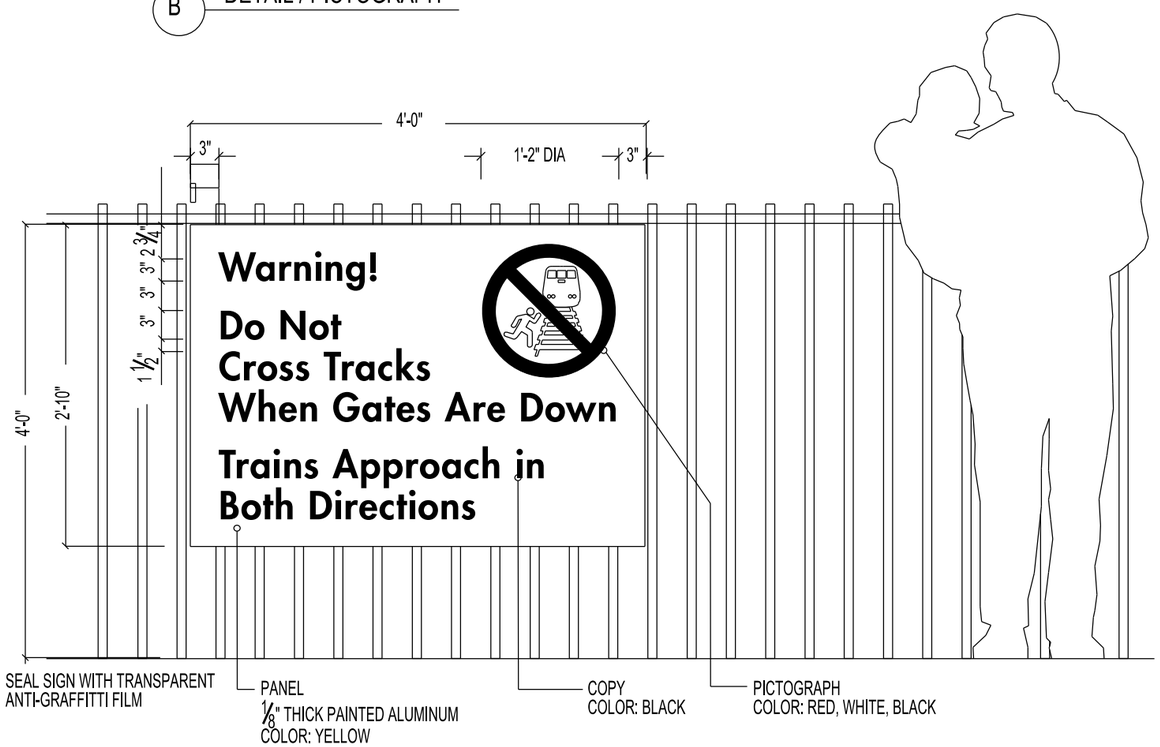

A ELEVATION - CROSSING WARNING SIGN
(SIGN TYPE 14)

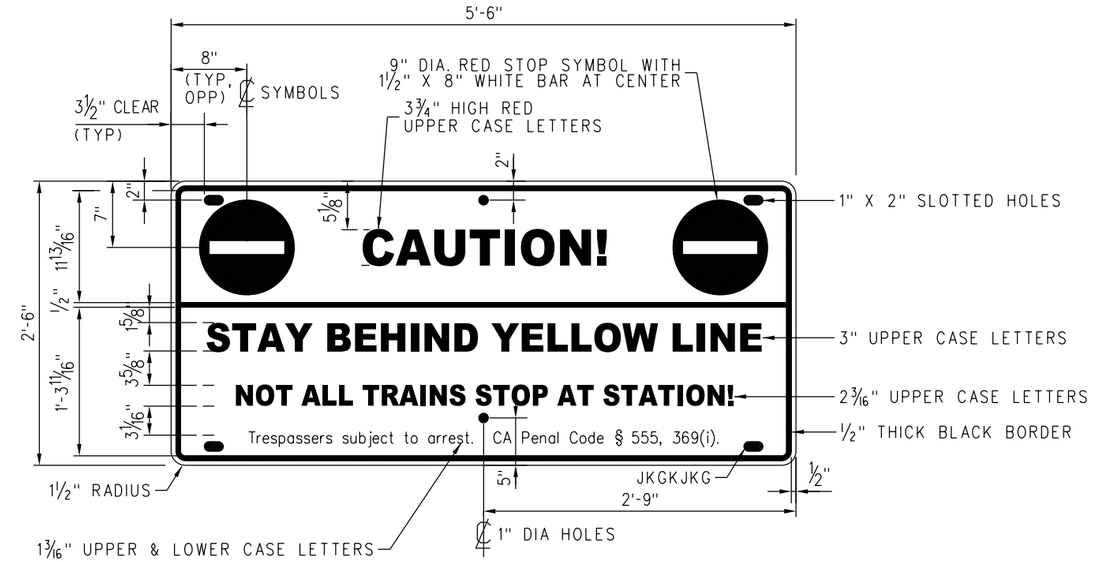

C CAUTION SIGN

DETAIL "C" NOTES:

1. SIGN TO BE CONSTRUCTED OF 1/8" THICK MILL FINISH ALUMINUM PANEL, ALCOA 6016-T6 OR EQUAL.
2. SIGN FILM/SHEETING TO BE 3M ENGINEERED REFLECTIVE GRADE SERIES 3290-WHITE.
3. SIGN TO BE COATED WITH 3M 1160 PREMIUM PROTECTIVE OVERLAY.
4. COPY AND BORDER TO BE BLACK UNLESS OTHERWISE NOTED.
5. COLOR SPECIFICATIONS PER METROLINK ENGINEERING STANDARD ES3301.
6. FOR MOUNTING INSTRUCTIONS SEE METROLINK ENGINEERING STANDARD ES3307-03.
7. SIGNS TO BE PLACED STARTING 50 FEET AWAY FROM NEAREST PEDESTRIAN CROSSING, ADDITIONAL SIGNS TO BE SPACED 100 FEET APART AS NEEDED ALONG FENCING TO COVER ENTIRE LENGTH OF PLATFORM.
8. FOR STATIONS THAT DO NOT HAVE INTERTRACK FENCING, SIGNS ARE TO BE LOCATED ON STATION PLATFORM AT LOCATIONS CLEARLY VISIBLE TO ALL PASSENGERS AND PEDESTRIANS.

REV.	DATE	DESCRIPTION	DES.	ENG.
1	04/11/11	ADDED DETAIL "C" AND NOTES	AC	NDP

DRAWN BY: A. CARLOS DATE: 03/31/2011

ASSISTANT DIRECTOR: STANDARDS & DESIGN

DIRECTOR OF ENGINEERING AND CONSTRUCTION

SCRRA ENGINEERING STANDARDS ARE INTENDED FOR SCRRA APPROVED USES ONLY. FOR NON-SCRRA APPROVED USES, SCRRA SHALL NOT BE RESPONSIBLE FOR THE ACCURACY OR COMPLETENESS OF THE DATA OR INFORMATION CONTAINED HEREIN. THE SELECTION AND USE OF THESE STANDARDS IS THE SOLE RESPONSIBILITY OF THE USER AND SHOULD NOT BE USED WITHOUT CONSULTING A REGISTERED PROFESSIONAL ENGINEER. ALL WARRANTIES AND REPRESENTATIONS OF ANY KIND ARE DISCLAIMED. ANYONE MAKING USE OF THIS INFORMATION AGREES THAT IT ASSUMES ALL LIABILITY ARISING FROM SUCH USE. NO PART OF THESE STANDARDS SHOULD BE REPRODUCED OR DISTRIBUTED IN ANY FORM OR BY ANY MEANS WITHOUT THE PRIOR WRITTEN PERMISSION OF SCRRA. ALL RIGHTS RESERVED.

METROLINK®
SOUTHERN CALIFORNIA REGIONAL RAIL AUTHORITY
ONE GATEWAY PLAZA, 12TH FLOOR, L. A., CA. 90012

ENGINEERING STANDARDS

PEDESTRIAN WARNING SIGNS
AT STATION PLATFORMS

STANDARD 3317
SCALE: NTS
REVISION 1 SHEET 1 OF 1
CADD FILE: ES3317

NOTE:

SEE ES4002 FOR ADDITIONAL SIGN MOUNTING INFORMATION

B RESTRICTIVE SIGN — COPY LAYOUT — COPY LAYOUT

MOUNTING DETAIL
FOR GATE CONDITION
SEE DETAIL B-3
PER ES3307-02

C DETAIL

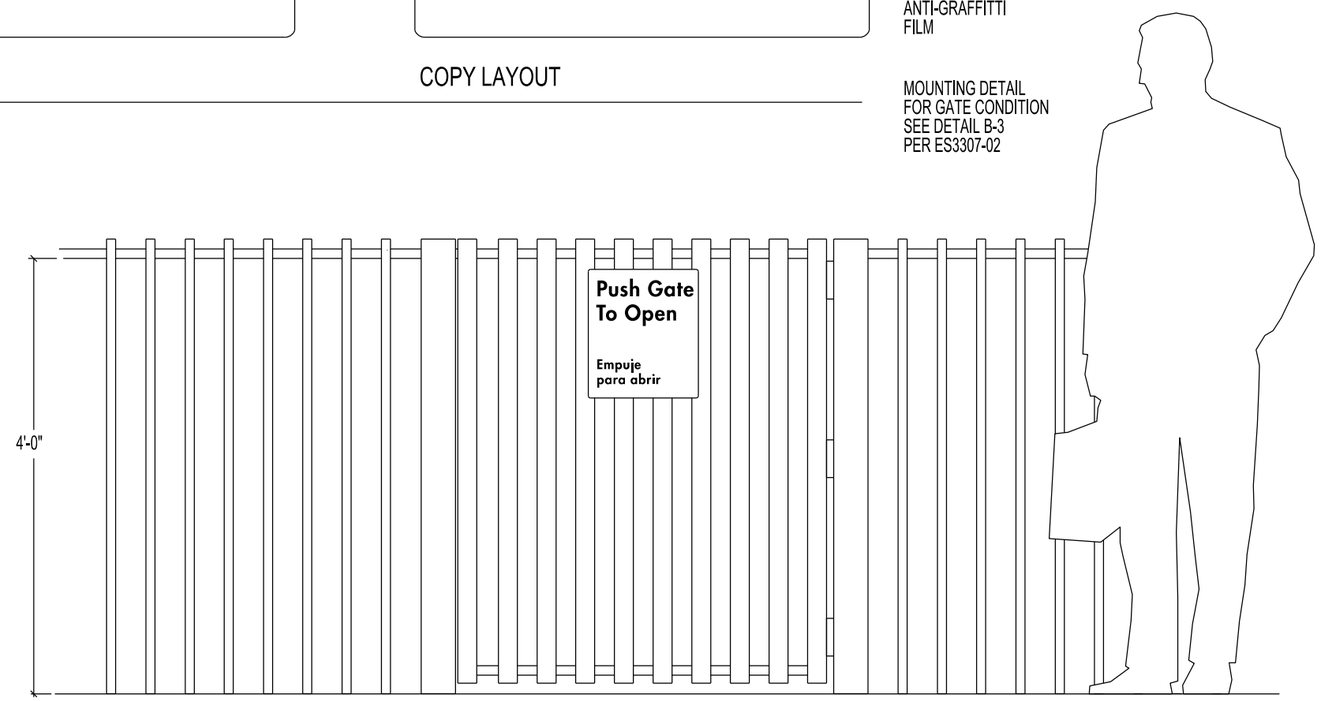

A ELEVATION

X	XX-XX-XX	REVISION	XX	XX
REV.	DATE	DESCRIPTION	DES.	ENG.

DRAWN BY: A. CARLOS DATE: 03/31/2011

ASSISTANT DIRECTOR: STANDARDS & DESIGN

DIRECTOR OF ENGINEERING AND CONSTRUCTION

SCRRA ENGINEERING STANDARDS ARE INTENDED FOR SCRRA APPROVED USES ONLY. FOR NON-SCRRA APPROVED USES, SCRRA SHALL NOT BE RESPONSIBLE FOR THE ACCURACY OR COMPLETENESS OF THE DATA OR INFORMATION CONTAINED HEREIN. THE SELECTION AND USE OF THESE STANDARDS IS THE SOLE RESPONSIBILITY OF THE USER AND SHOULD NOT BE USED WITHOUT CONSULTING A REGISTERED PROFESSIONAL ENGINEER. ALL WARRANTIES AND REPRESENTATIONS OF ANY KIND ARE DISCLAIMED. ANYONE MAKING USE OF THIS INFORMATION AGREES THAT IT ASSUMES ALL LIABILITY ARISING FROM SUCH USE. NO PART OF THESE STANDARDS SHOULD BE REPRODUCED OR DISTRIBUTED IN ANY FORM OR BY ANY MEANS WITHOUT THE PRIOR WRITTEN PERMISSION OF SCRRA. ALL RIGHTS RESERVED.

METROLINK®

SOUTHERN CALIFORNIA REGIONAL RAIL AUTHORITY
ONE GATEWAY PLAZA, 12TH FLOOR, L. A., CA. 90012

ENGINEERING STANDARDS

PEDESTRIAN DIRECTIONAL SIGN
GATE MOUNTED
SIGN TYPE 15

STANDARD: 3318
SCALE: NTS
REVISION: –
SHEET: 1 OF 1
CADD FILE: ES3318

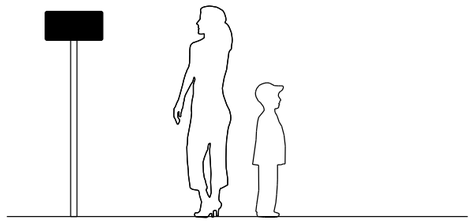

SIGN TYPE 16

PEDESTRIAN DIRECTIONAL SIGN - POLE MOUNTED

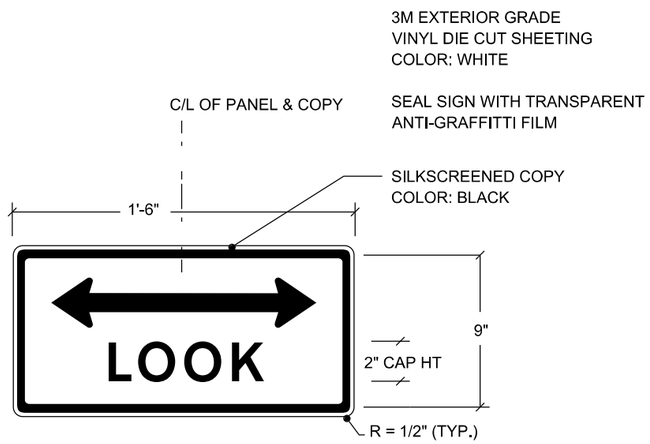

B **COPY LAYOUT**

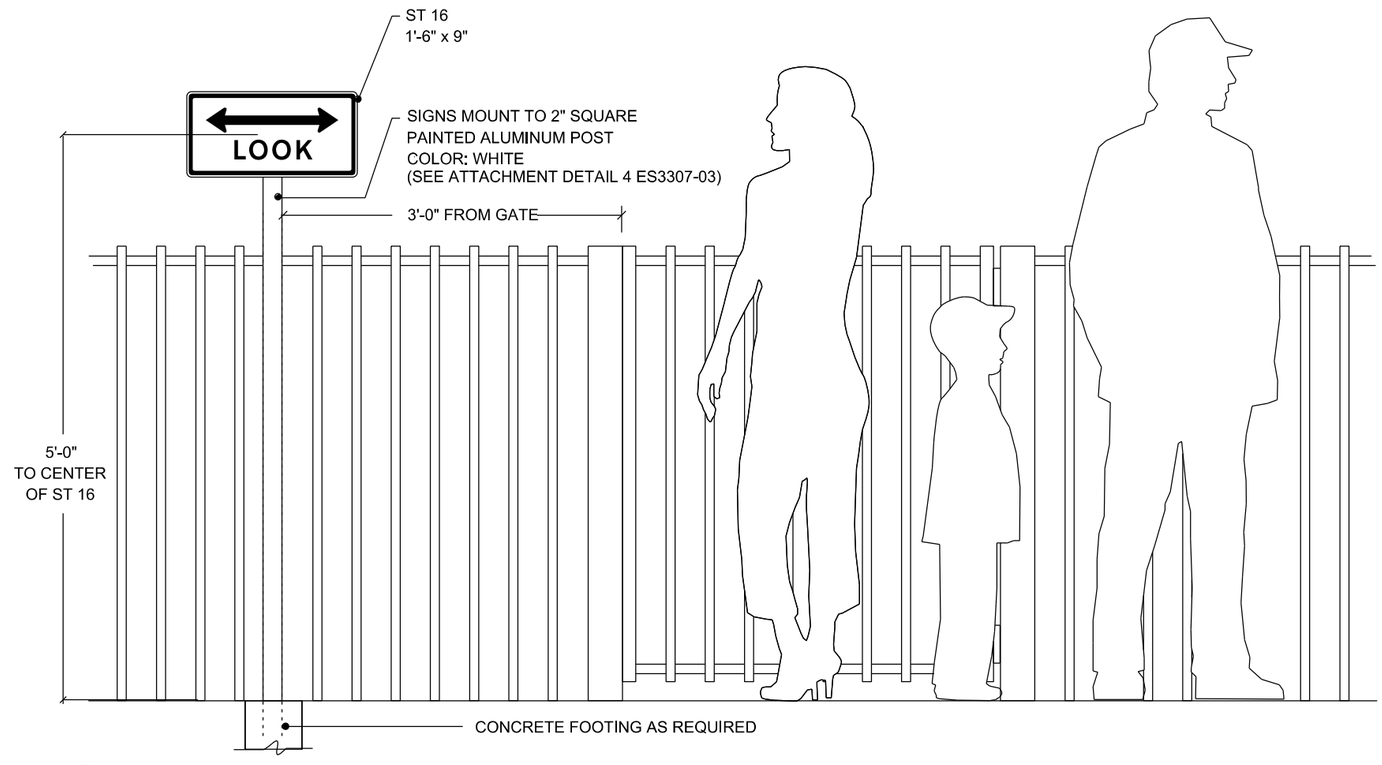

A **ELEVATION**

REV.	DATE	DESCRIPTION	DES.	ENG.
X	XX-XX-XX	REVISION	XX	XX

DRAWN BY: A. CARLOS DATE: 03/31/2011

ASSISTANT DIRECTOR: STANDARDS & DESIGN

DIRECTOR OF ENGINEERING AND CONSTRUCTION

SCRRA ENGINEERING STANDARDS ARE INTENDED FOR SCRRA APPROVED USES ONLY. FOR NON-SCRRA APPROVED USES:
SCRRA SHALL NOT BE RESPONSIBLE FOR THE ACCURACY OR COMPLETENESS OF THE DATA OR INFORMATION CONTAINED HEREIN. THE SELECTION AND USE OF THESE STANDARDS IS THE SOLE RESPONSIBILITY OF THE USER AND SHOULD NOT BE USED WITHOUT CONSULTING A REGISTERED PROFESSIONAL ENGINEER. ALL WARRANTIES AND REPRESENTATIONS OF ANY KIND ARE DISCLAIMED. ANYONE MAKING USE OF THIS INFORMATION AGREES THAT IT ASSUMES ALL LIABILITY ARISING FROM SUCH USE. NO PART OF THESE STANDARDS SHOULD BE REPRODUCED OR DISTRIBUTED IN ANY FORM OR BY ANY MEANS WITHOUT THE PRIOR WRITTEN PERMISSION OF SCRRA. ALL RIGHTS RESERVED.

METROLINK®

SOUTHERN CALIFORNIA REGIONAL RAIL AUTHORITY
ONE GATEWAY PLAZA, 12TH FLOOR, L. A., CA. 90012

ENGINEERING STANDARDS

PEDESTRIAN DIRECTIONAL LOOK SIGN
POST MOUNTED
SIGN TYPE 16

STANDARD 3319
SCALE: NTS
REVISION –
SHEET 1 OF 1
CADD FILE: ES3319

UserName=> carlosa Date Plotted: 10/5/2011 2:25:13 PM Plot Driver=> S:\Plot Drivers\pdf.plt FileName=> s:\V8EngStds\3000\ES3319.dgn

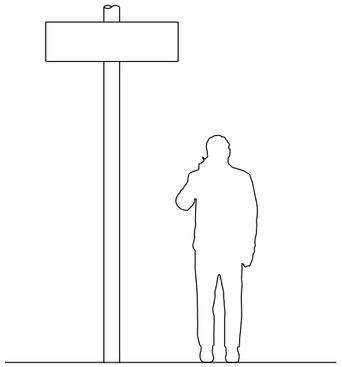

SIGN TYPE 20
STATION IDENTIFICATION SIGN
SMALL POLE MOUNTED

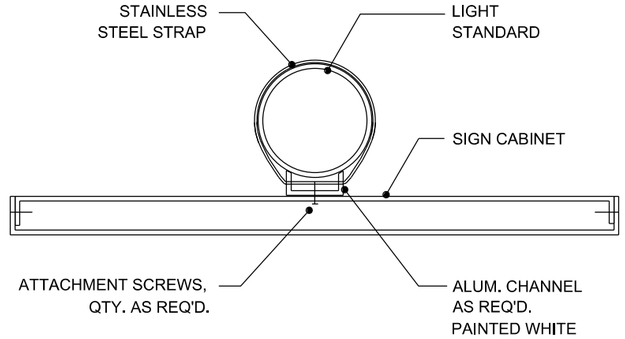

E **ATTACHMENT DETAIL - PLAN SECTION**

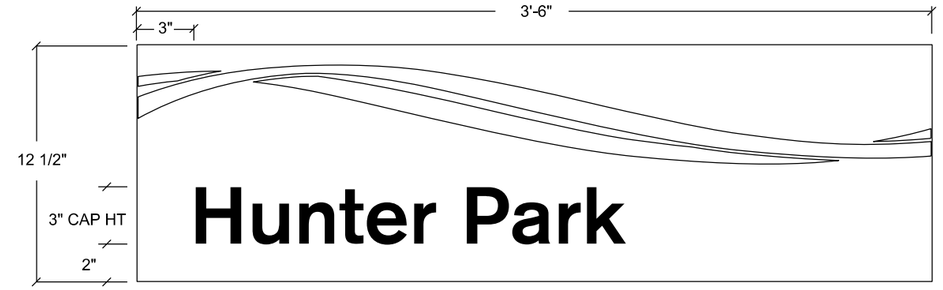

D **COPY LAYOUT**

NOTES:
1. CONTINUE PAINT COLORS USED ON FRONT SURFACE OF SIGN CABINET AROUND EDGES.
2. BACK OF SIGN CABINET COLOR: TEAL.

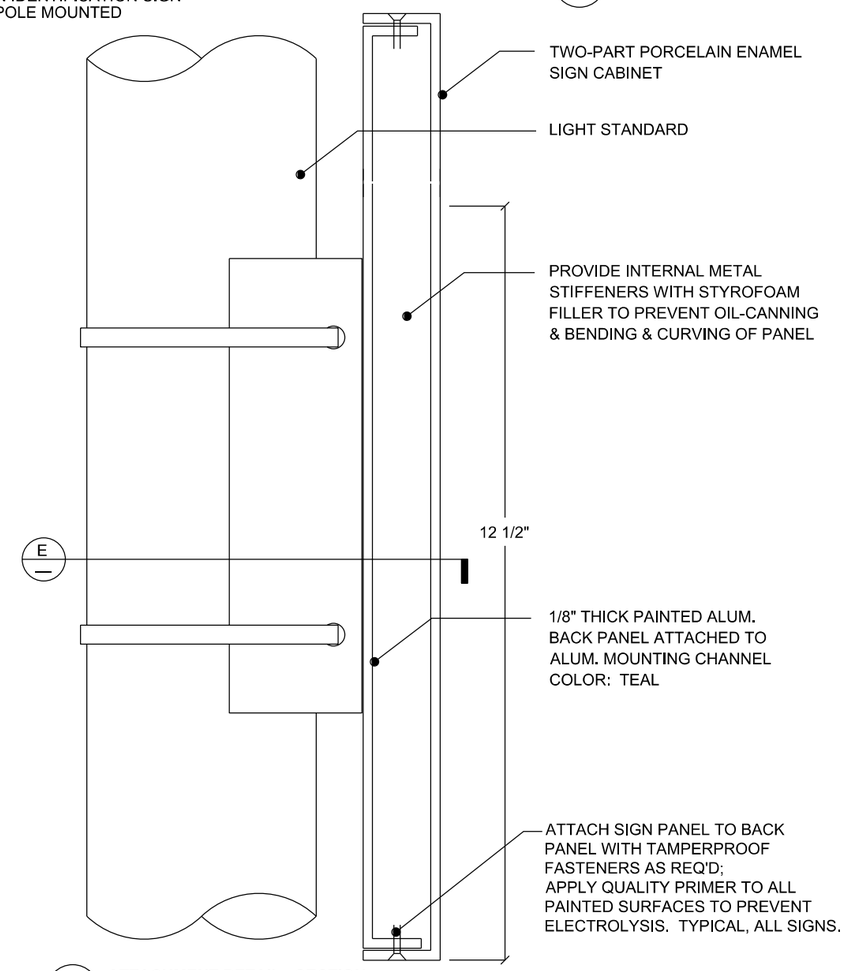

C **ATTACHMENT DETAIL - SECTION**

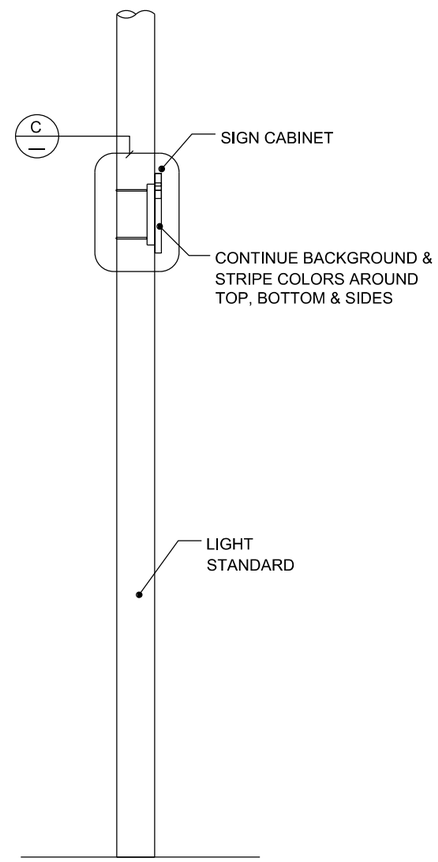

B **SIDE ELEVATION**

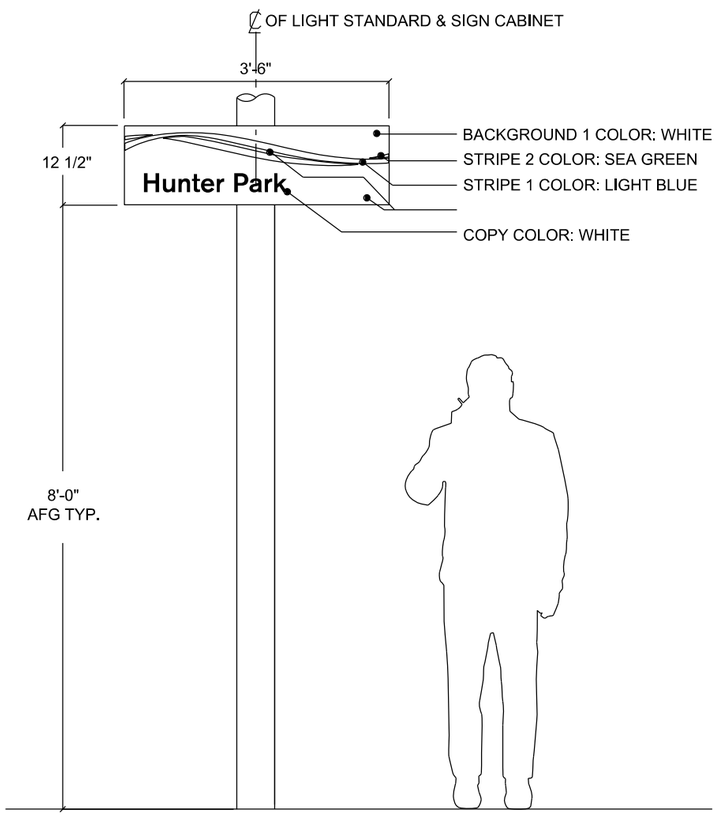

A **ELEVATION**

X	XX-XX-XX	REVISION	XX	XX
REV.	DATE	DESCRIPTION	DES.	ENG.

DRAWN BY: A. CARLOS DATE: 03/31/2011

ASSISTANT DIRECTOR: STANDARDS & DESIGN

DIRECTOR OF ENGINEERING AND CONSTRUCTION

SCRRA ENGINEERING STANDARDS ARE INTENDED FOR SCRRA APPROVED USES ONLY. FOR NON-SCRRA APPROVED USES:
SCRRA SHALL NOT BE RESPONSIBLE FOR THE ACCURACY OR COMPLETENESS OF THE DATA OR INFORMATION CONTAINED HEREIN. THE SELECTION AND USE OF THESE STANDARDS IS THE SOLE RESPONSIBILITY OF THE USER AND SHOULD NOT BE USED WITHOUT CONSULTING A REGISTERED PROFESSIONAL ENGINEER. ALL WARRANTIES AND REPRESENTATIONS OF ANY KIND ARE DISCLAIMED. ANYONE MAKING USE OF THIS INFORMATION AGREES THAT IT ASSUMES ALL LIABILITY ARISING FROM SUCH USE. NO PART OF THESE STANDARDS SHOULD BE REPRODUCED OR DISTRIBUTED IN ANY FORM OR BY ANY MEANS WITHOUT THE PRIOR WRITTEN PERMISSION OF SCRRA. ALL RIGHTS RESERVED.

METROLINK®
SOUTHERN CALIFORNIA REGIONAL RAIL AUTHORITY
ONE GATEWAY PLAZA, 12TH FLOOR, L. A., CA. 90012

ENGINEERING STANDARDS

STATION IDENTIFICATION SIGN (SMALL)
SIGN TYPE 20

STANDARD 3320
SCALE: NTS
REVISION –
SHEET 1 OF 1
CADD FILE: ES3320

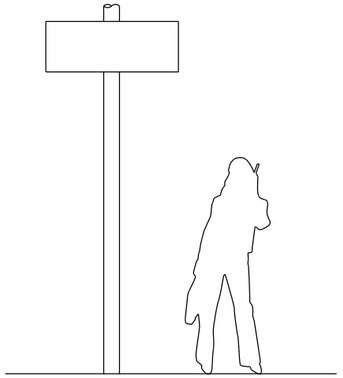

SIGN TYPE 21
STATION IDENTIFICATION SIGN
LARGE POLE MOUNTED

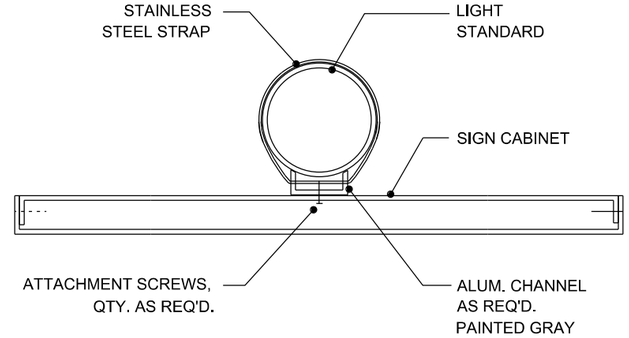

E **ATTACHMENT DETAIL - PLAN SECTION**

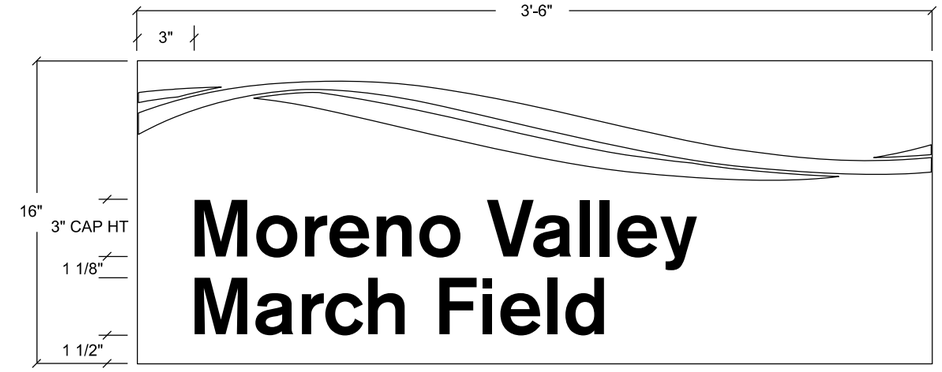

D **COPY LAYOUT**

NOTES:
1. CONTINUE PAINT COLORS USED ON FRONT SURFACE OF SIGN CABINET AROUND EDGES.
2. BACK OF SIGN CABINET COLOR: TEAL.

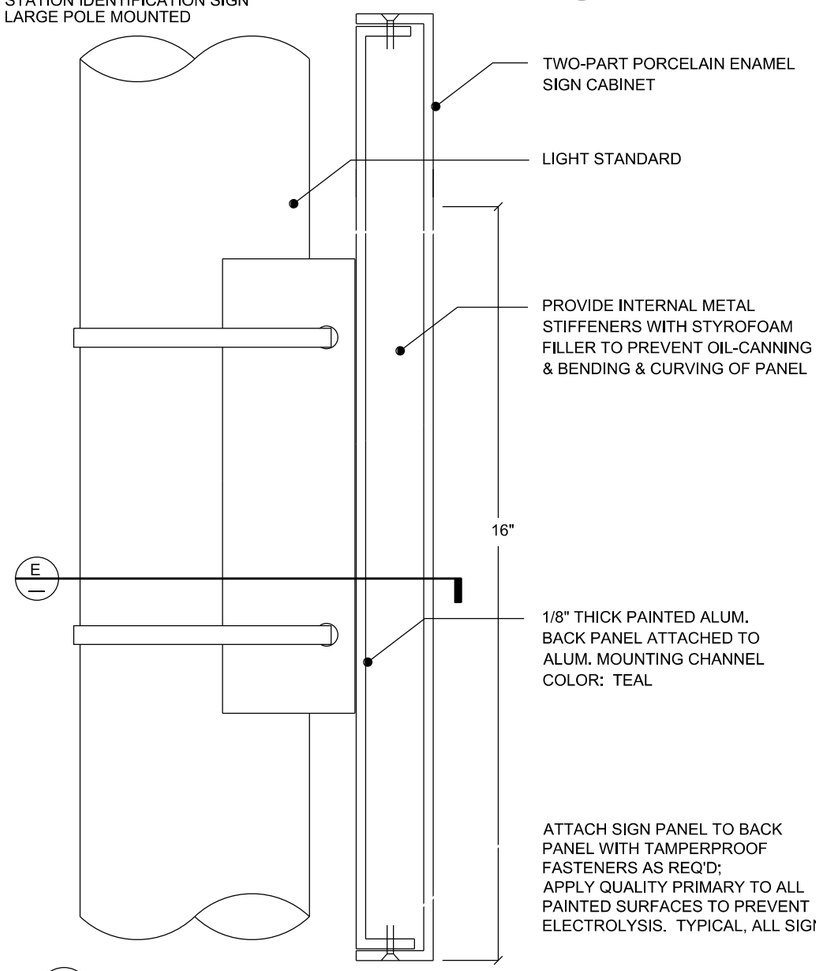

C **ATTACHMENT DETAIL - SECTION**

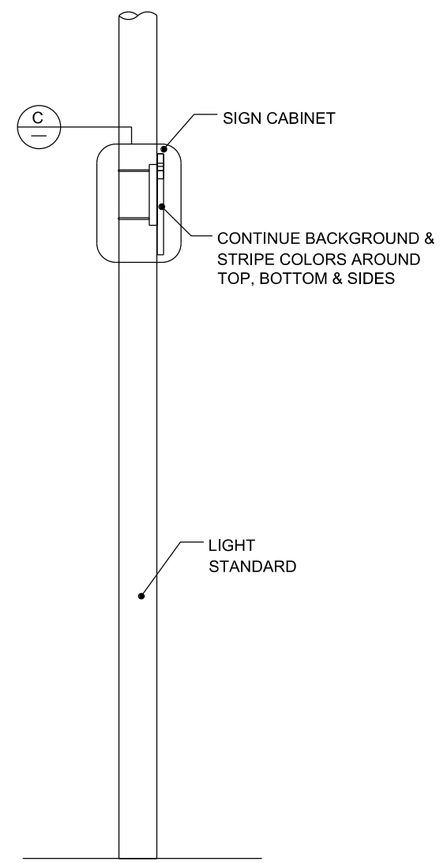

B **SIDE ELEVATION**

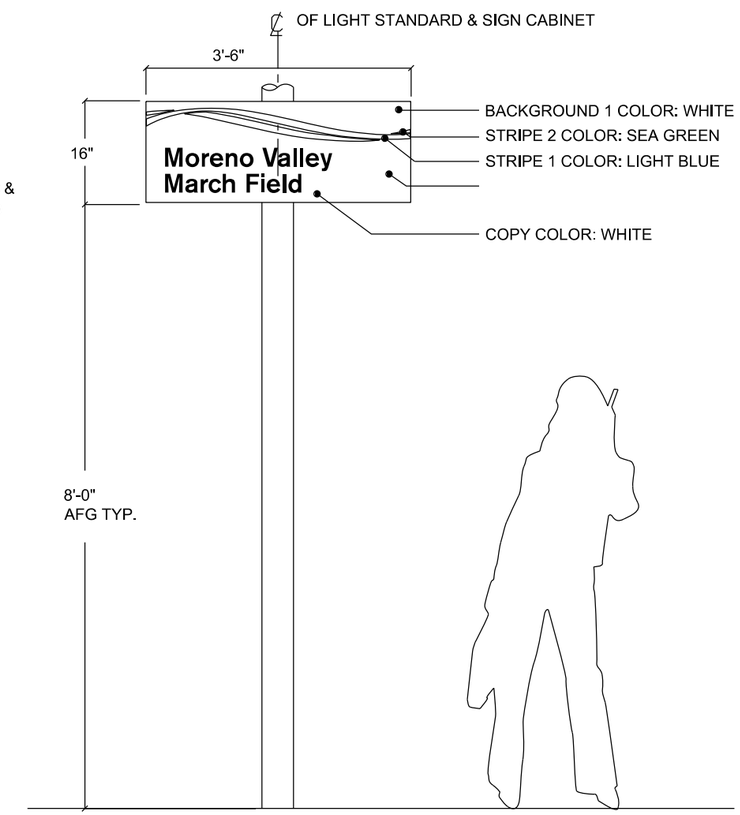

A **ELEVATION**

X	XX-XX-XX	REVISION	XX	XX
REV.	DATE	DESCRIPTION	DES.	ENG.

DRAWN BY: A. CARLOS DATE: 03/31/2011

ASSISTANT DIRECTOR: STANDARDS & DESIGN

DIRECTOR OF ENGINEERING AND CONSTRUCTION

SCRRA ENGINEERING STANDARDS ARE INTENDED FOR SCRRA APPROVED USES ONLY. FOR NON-SCRRA APPROVED USES:
SCRRA SHALL NOT BE RESPONSIBLE FOR THE ACCURACY OR COMPLETENESS OF THE DATA OR INFORMATION CONTAINED HEREIN. THE SELECTION AND USE OF THESE STANDARDS IS THE SOLE RESPONSIBILITY OF THE USER AND SHOULD NOT BE USED WITHOUT CONSULTING A REGISTERED PROFESSIONAL ENGINEER. ALL WARRANTIES AND REPRESENTATIONS OF ANY KIND ARE DISCLAIMED. ANYONE MAKING USE OF THIS INFORMATION AGREES THAT IT ASSUMES ALL LIABILITY ARISING FROM SUCH USE. NO PART OF THESE STANDARDS SHOULD BE REPRODUCED OR DISTRIBUTED IN ANY FORM OR BY ANY MEANS WITHOUT THE PRIOR WRITTEN PERMISSION OF SCRRA. ALL RIGHTS RESERVED.

METROLINK®
SOUTHERN CALIFORNIA REGIONAL RAIL AUTHORITY
ONE GATEWAY PLAZA, 12TH FLOOR, L. A., CA. 90012

ENGINEERING STANDARDS

STATION IDENTIFICATION SIGN (LARGE)
SIGN TYPE 21

STANDARD 3321
SCALE: NTS
REVISION –
SHEET 1 OF 1
CADD FILE: ES3321

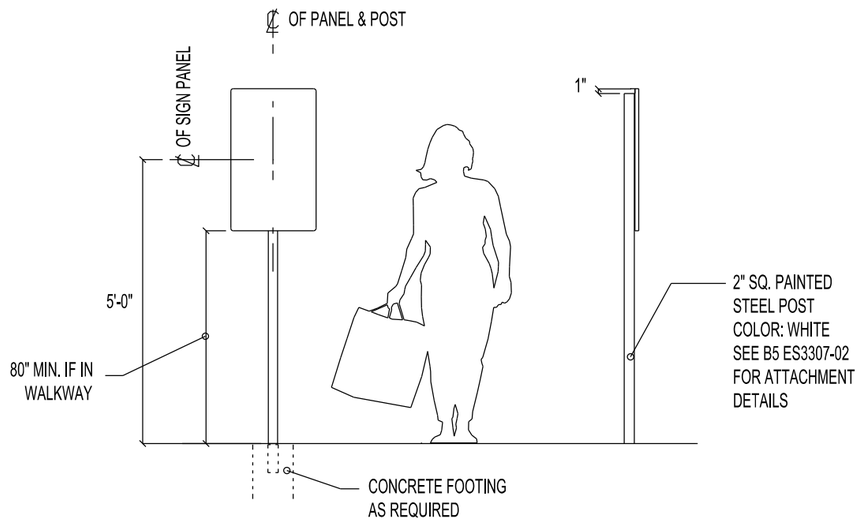

B ELEVATIONS

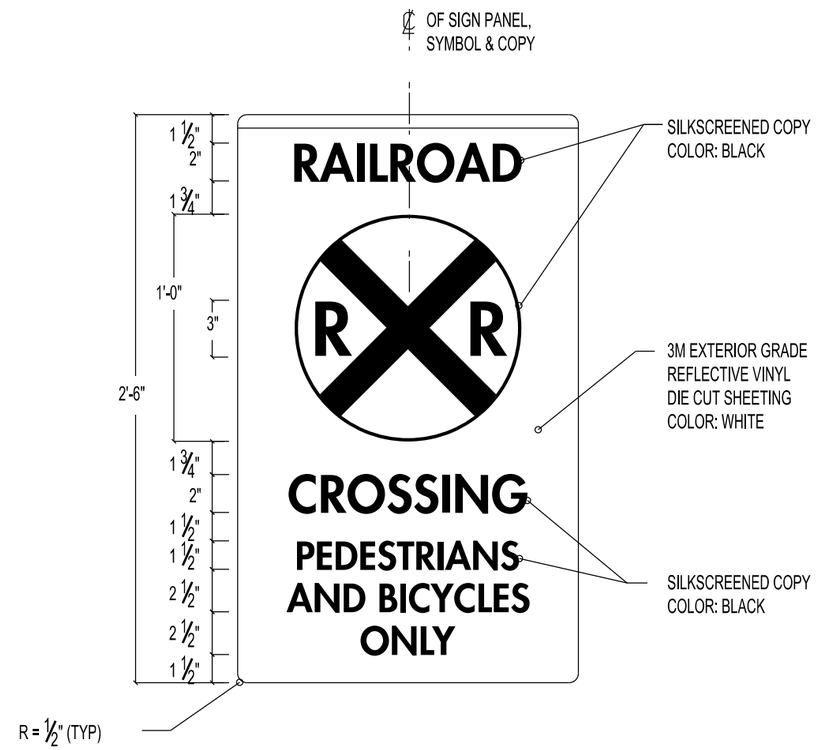

A COPY LAYOUT 22-1

REV.	DATE	DESCRIPTION	DES.	ENG.
X	XX-XX-XX	REVISION	XX	XX

DRAWN BY: A. CARLOS DATE: 03/31/2011

ASSISTANT DIRECTOR: STANDARDS & DESIGN

DIRECTOR OF ENGINEERING AND CONSTRUCTION

SCRRA ENGINEERING STANDARDS ARE INTENDED FOR SCRRA APPROVED USES ONLY. FOR NON-SCRRA APPROVED USES: SCRRA SHALL NOT BE RESPONSIBLE FOR THE ACCURACY OR COMPLETENESS OF THE DATA OR INFORMATION CONTAINED HEREIN. THE SELECTION AND USE OF THESE STANDARDS IS THE SOLE RESPONSIBILITY OF THE USER AND SHOULD NOT BE USED WITHOUT CONSULTING A REGISTERED PROFESSIONAL ENGINEER. ALL WARRANTIES AND REPRESENTATIONS OF ANY KIND ARE DISCLAIMED. ANYONE MAKING USE OF THIS INFORMATION AGREES THAT IT ASSUMES ALL LIABILITY ARISING FROM SUCH USE. NO PART OF THESE STANDARDS SHOULD BE REPRODUCED OR DISTRIBUTED IN ANY FORM OR BY ANY MEANS WITHOUT THE PRIOR WRITTEN PERMISSION OF SCRRA. ALL RIGHTS RESERVED.

METROLINK®
SOUTHERN CALIFORNIA REGIONAL RAIL AUTHORITY
ONE GATEWAY PLAZA, 12TH FLOOR, L. A., CA. 90012

ENGINEERING STANDARDS

CPUC RAILROAD CROSSING SIGN
POST MOUNTED
SIGN TYPE 22

STANDARD 3322
SCALE: NTS
REVISION –
SHEET 1 OF 1
CADD FILE: ES3322

UserName=> carlosa Date Plotted: 10/5/2011 2:25:16 PM Plot Driver=> S:\Plot Drivers\pdf.plt FileName=> s:\V8EngStds\3000\ES3322.dgn

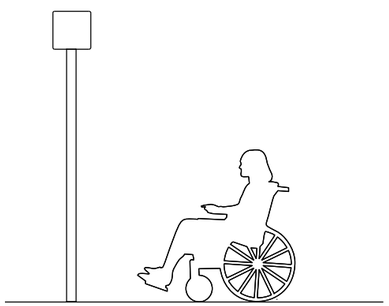

SIGN TYPE 23
ACCESSIBILITY SIGN

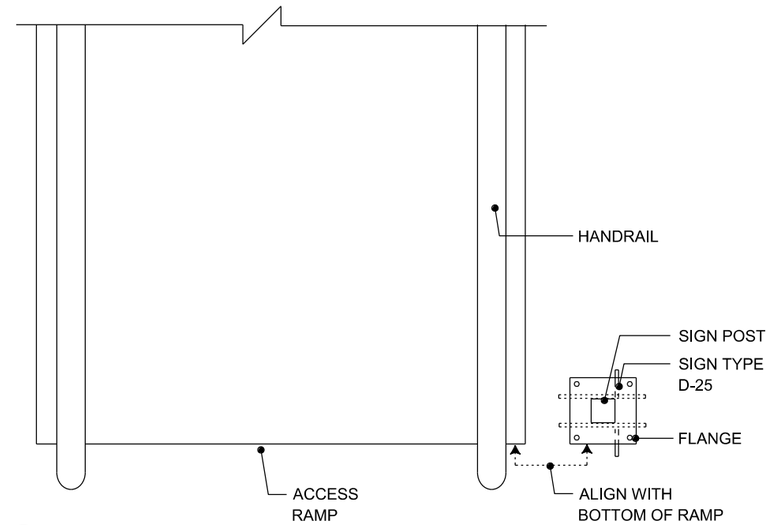

D **DETAIL - PLAN**

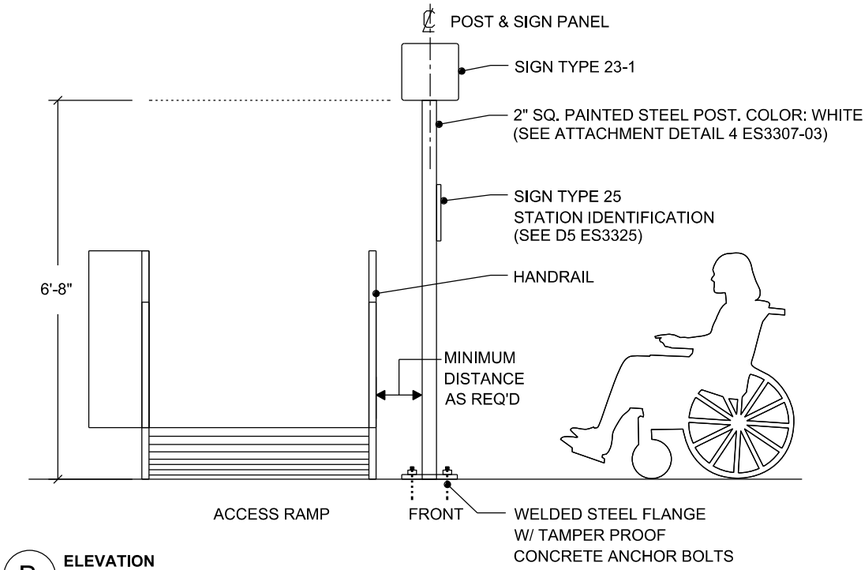

B **ELEVATION**

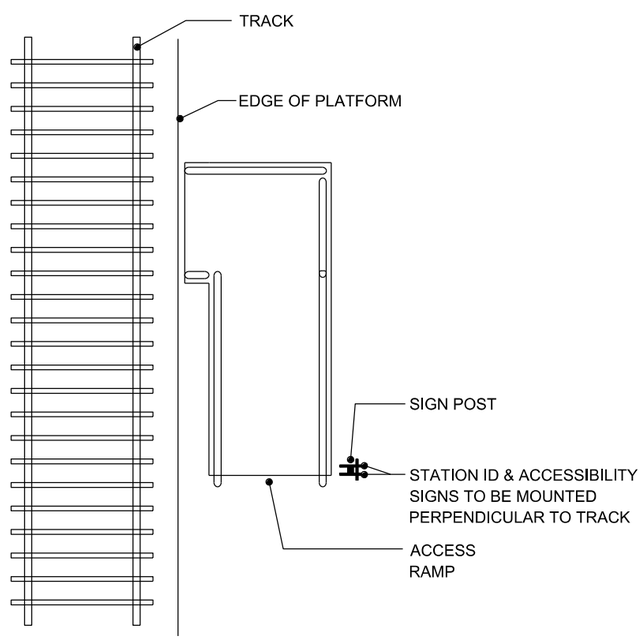

C **PLAN**

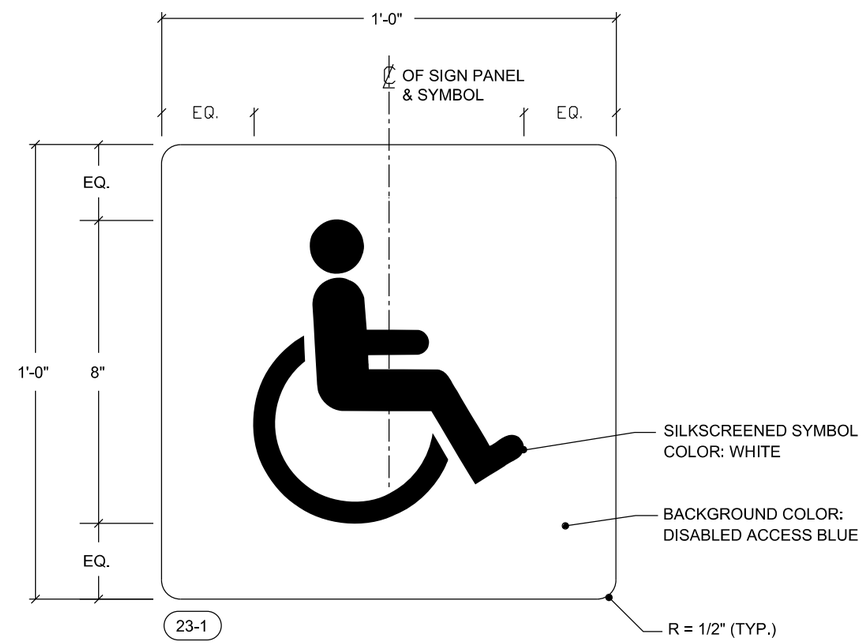

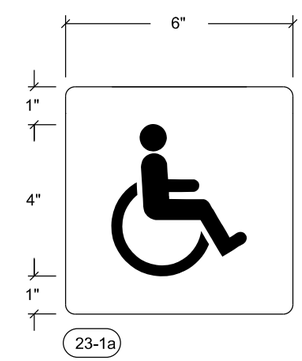

A **COPY LAYOUTS**

REV.	DATE	DESCRIPTION	DES.	ENG.
X	XX-XX-XX	REVISION	XX	XX

DRAWN BY: A. CARLOS DATE: 03/31/2011

ASSISTANT DIRECTOR: STANDARDS & DESIGN

DIRECTOR OF ENGINEERING AND CONSTRUCTION

SCRRA ENGINEERING STANDARDS ARE INTENDED FOR SCRRA APPROVED USES ONLY. FOR NON-SCRRA APPROVED USES:
SCRRA SHALL NOT BE RESPONSIBLE FOR THE ACCURACY OR COMPLETENESS OF THE DATA OR INFORMATION CONTAINED HEREIN. THE SELECTION AND USE OF THESE STANDARDS IS THE SOLE RESPONSIBILITY OF THE USER AND SHOULD NOT BE USED WITHOUT CONSULTING A REGISTERED PROFESSIONAL ENGINEER. ALL WARRANTIES AND REPRESENTATIONS OF ANY KIND ARE DISCLAIMED. ANYONE MAKING USE OF THIS INFORMATION AGREES THAT IT ASSUMES ALL LIABILITY ARISING FROM SUCH USE. NO PART OF THESE STANDARDS SHOULD BE REPRODUCED OR DISTRIBUTED IN ANY FORM OR BY ANY MEANS WITHOUT THE PRIOR WRITTEN PERMISSION OF SCRRA. ALL RIGHTS RESERVED.

METROLINK®
SOUTHERN CALIFORNIA REGIONAL RAIL AUTHORITY
ONE GATEWAY PLAZA, 12TH FLOOR, L. A., CA. 90012

ENGINEERING STANDARDS

ACCESSIBILITY SIGN
SIGN TYPE 23

STANDARD 3323
SCALE: NTS
REVISION –
SHEET 1 OF 1
CADD FILE: ES3323

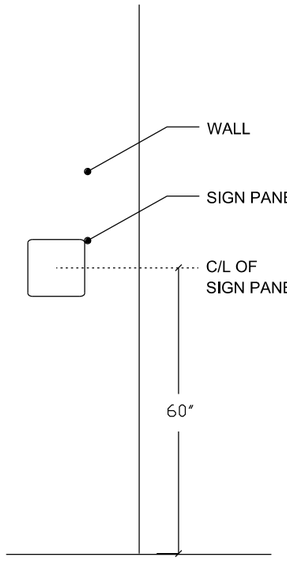

1 WALL MOUNT
(SEE 5 ES3307-03 FOR INSTALLATION)

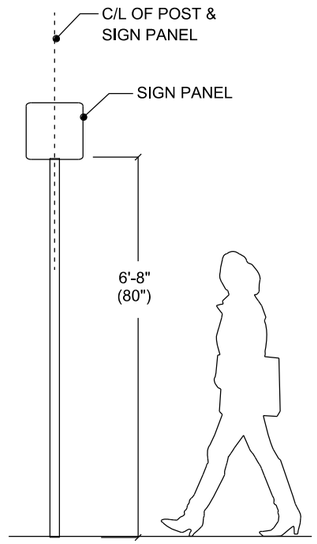

2 POST MOUNT
(SEE 4 ES3307-03 FOR INSTALLATION)

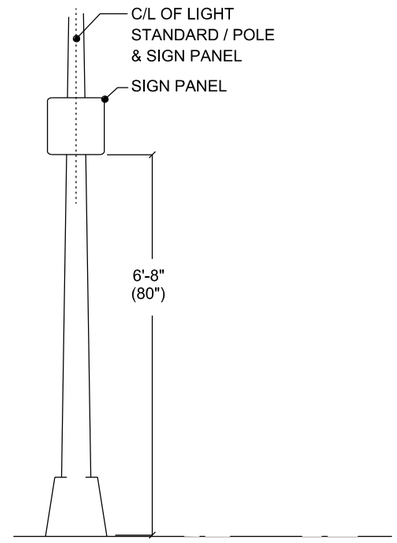

3 LIGHT POLE MOUNT
(SEE 6 ES3307-03 FOR INSTALLATION)

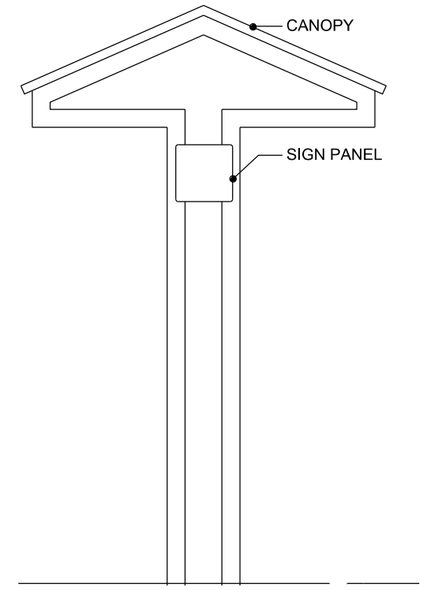

4 CANOPY MOUNT
(SEE 4 ES3307-03 FOR INSTALLATION)

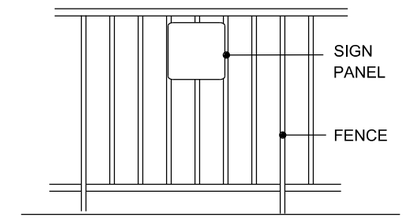

5 FENCE MOUNT
(SEE 7 ES3307-03 FOR INSTALLATION)

B ELEVATIONS

NOTES:
1. ALL DIMENSIONS & NOTES TYPICAL EXCEPT AS NOTED.
2. CONTINUE PAINT COLOR USED ON FRONT SURFACE OF SIGNS AROUND EDGES.
3. BACK OF SIGN PANELS TO BE PAINTED TEAL UNLESS NOTED.
4. SEAL SIGNS WITH TRANSPARENT ANTI-GRAFFITI FILM.
5. VERIFY SPANISH TRANSLATIONS WITH METROLINK PRIOR TO FABRICATION.

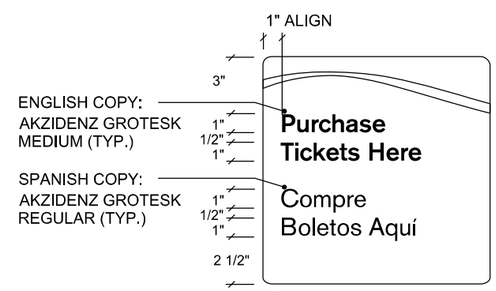

24-8

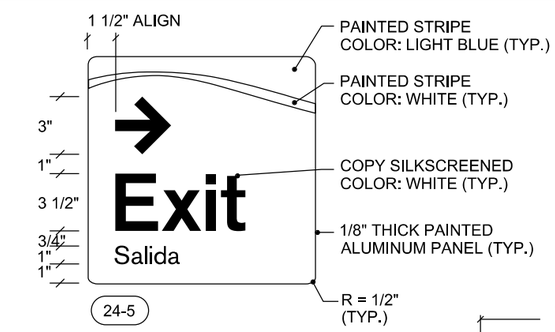

24-5

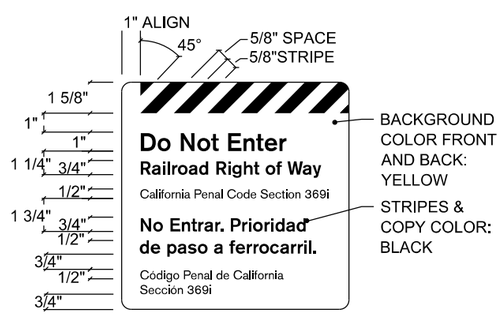

24-1

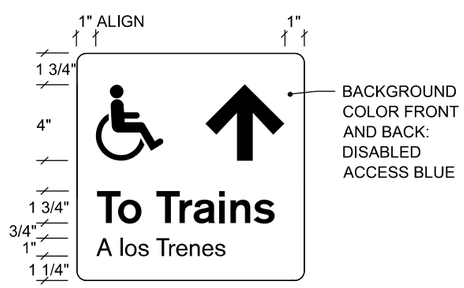

24-6

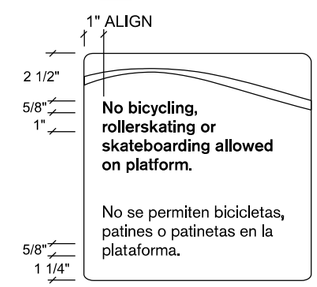

24-4

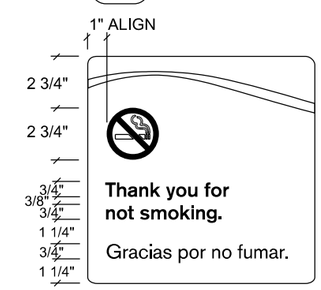

24-3

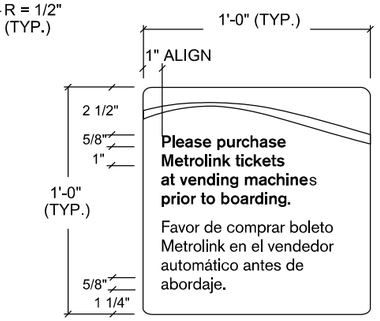

24-2

A COPY LAYOUTS

REV.	DATE	DESCRIPTION	DES.	ENG.
X	XX-XX-XX	REVISION	XX	XX

DRAWN BY: A. CARLOS DATE: 03/31/2011

ASSISTANT DIRECTOR: STANDARDS & DESIGN

DIRECTOR OF ENGINEERING AND CONSTRUCTION

SCRRA ENGINEERING STANDARDS ARE INTENDED FOR SCRRA APPROVED USES ONLY. FOR NON-SCRRA APPROVED USES:
SCRRA SHALL NOT BE RESPONSIBLE FOR THE ACCURACY OR COMPLETENESS OF THE DATA OR INFORMATION CONTAINED HEREIN. THE SELECTION AND USE OF THESE STANDARDS IS THE SOLE RESPONSIBILITY OF THE USER AND SHOULD NOT BE USED WITHOUT CONSULTING A REGISTERED PROFESSIONAL ENGINEER. ALL WARRANTIES AND REPRESENTATIONS OF ANY KIND ARE DISCLAIMED. ANYONE MAKING USE OF THIS INFORMATION AGREES THAT IT ASSUMES ALL LIABILITY ARISING FROM SUCH USE. NO PART OF THESE STANDARDS SHOULD BE REPRODUCED OR DISTRIBUTED IN ANY FORM OR BY ANY MEANS WITHOUT THE PRIOR WRITTEN PERMISSION OF SCRRA. ALL RIGHTS RESERVED.

METROLINK®
SOUTHERN CALIFORNIA REGIONAL RAIL AUTHORITY
ONE GATEWAY PLAZA, 12TH FLOOR, L. A., CA. 90012

ENGINEERING STANDARDS

PEDESTRIAN RESTRICTIVE / INFORMATION SIGN
SIGN TYPE 24

STANDARD 3324
SCALE: NTS
REVISION –
SHEET 1 OF 1
CADD FILE: ES3324

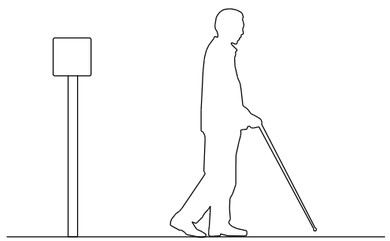

SIGN TYPE 25
A.D.A. STATION IDENTIFICATION SIGN

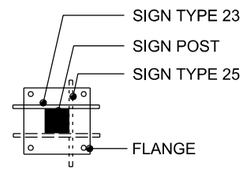

C **DETAIL - PLAN**
SCALE: NTS

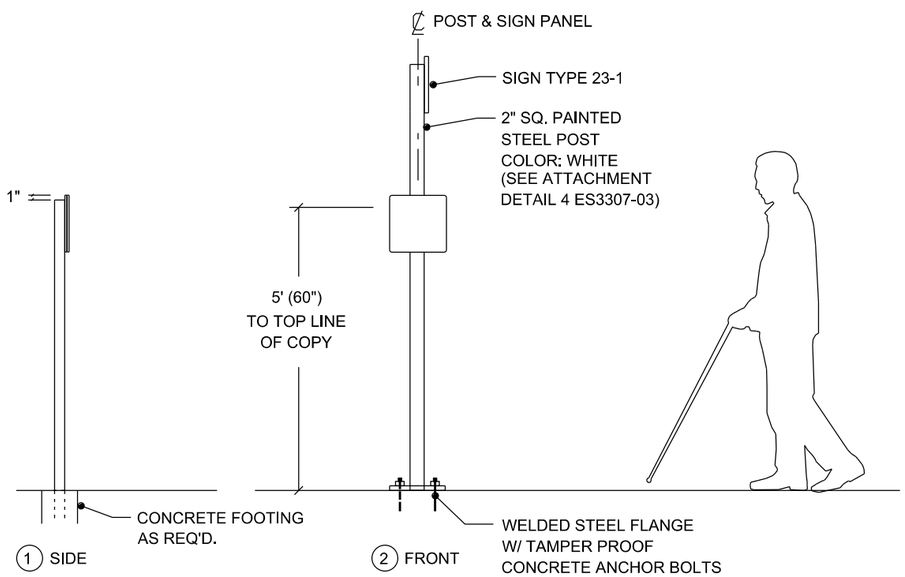

B **ELEVATION**

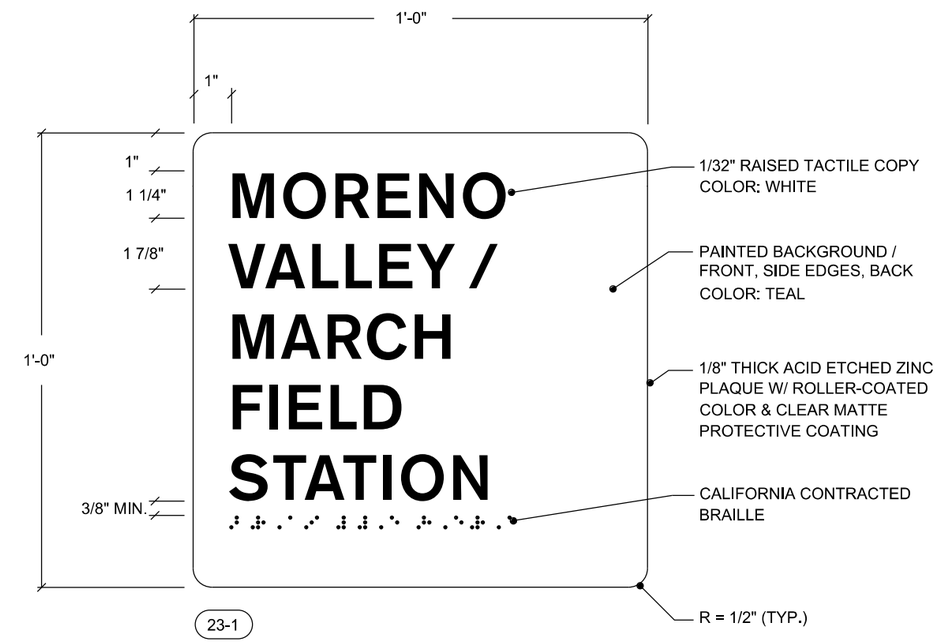

A **COPY LAYOUT**

REV.	DATE	DESCRIPTION	DES.	ENG.
X	XX-XX-XX	REVISION	XX	XX

DRAWN BY: A. CARLOS DATE: 03/31/2011

ASSISTANT DIRECTOR: STANDARDS & DESIGN

DIRECTOR OF ENGINEERING AND CONSTRUCTION

SCRRA ENGINEERING STANDARDS ARE INTENDED FOR SCRRA APPROVED USES ONLY. FOR NON-SCRRA APPROVED USES:
SCRRA SHALL NOT BE RESPONSIBLE FOR THE ACCURACY OR COMPLETENESS OF THE DATA OR INFORMATION CONTAINED HEREIN. THE SELECTION AND USE OF THESE STANDARDS IS THE SOLE RESPONSIBILITY OF THE USER AND SHOULD NOT BE USED WITHOUT CONSULTING A REGISTERED PROFESSIONAL ENGINEER. ALL WARRANTIES AND REPRESENTATIONS OF ANY KIND ARE DISCLAIMED. ANYONE MAKING USE OF THIS INFORMATION AGREES THAT IT ASSUMES ALL LIABILITY ARISING FROM SUCH USE. NO PART OF THESE STANDARDS SHOULD BE REPRODUCED OR DISTRIBUTED IN ANY FORM OR BY ANY MEANS WITHOUT THE PRIOR WRITTEN PERMISSION OF SCRRA. ALL RIGHTS RESERVED.

METROLINK®
SOUTHERN CALIFORNIA REGIONAL RAIL AUTHORITY
ONE GATEWAY PLAZA, 12TH FLOOR, L. A., CA. 90012

ENGINEERING STANDARDS

ADA STATION IDENTIFICATION SIGN (BRAILLE)
SIGN TYPE 25

STANDARD 3325
SCALE: NTS
REVISION –
SHEET 1 OF 1
CADD FILE: ES3325

UserName=> carlosa Date Plotted: 10/5/2011 2:25:19 PM Plot Driver=> S:\Plot Drivers\pdf.plt FileName=> s:\V8EngStds\3000\ES3325.dgn

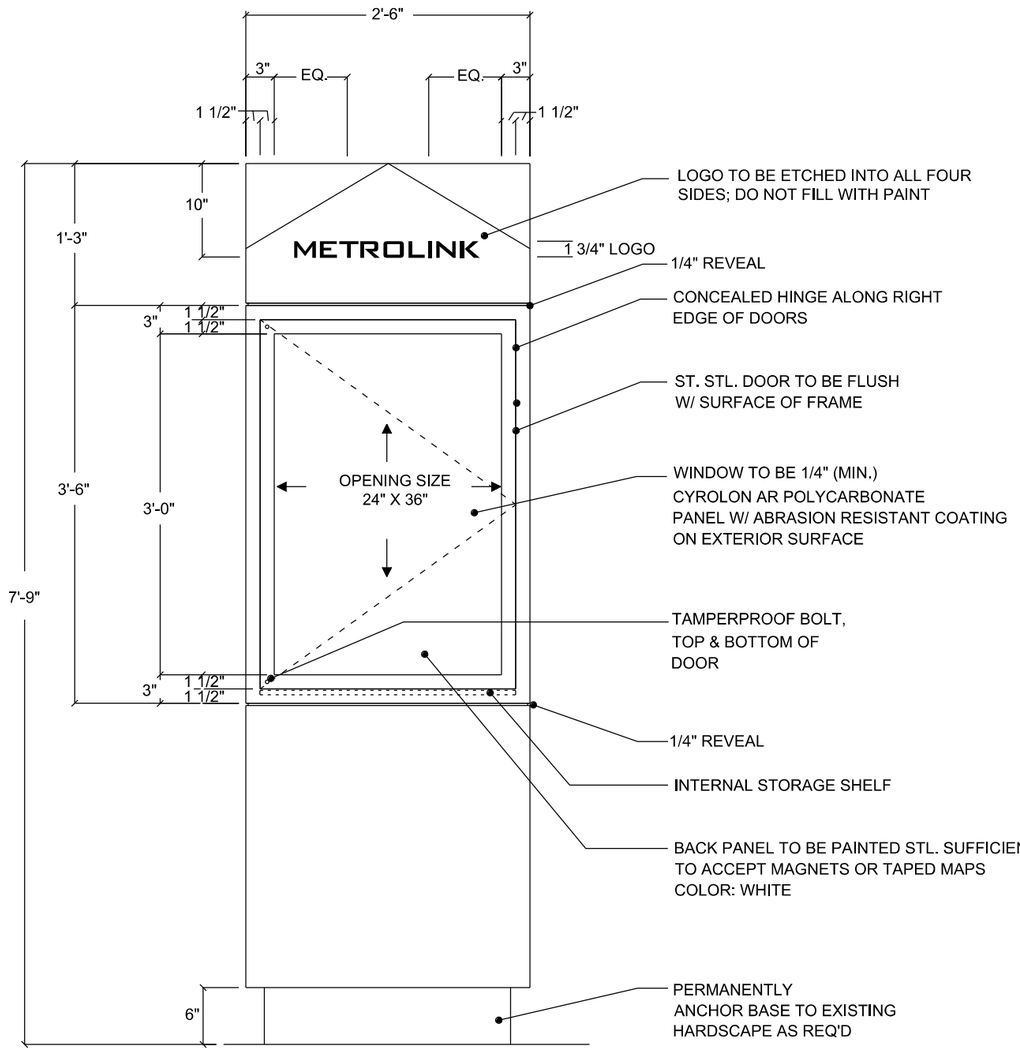

NOTE: ALL SIDES IDENTICAL.

A **ELEVATION** 26-1

NOTES:

- KIOSK CABINET SHALL BE FABRICATED STAINLESS STEEL W/ VERTICAL GRAIN BRUSHED FINISH. CABINET SHALL BE CONSTRUCTED WITH INTERNAL STEEL STRUCTURE AS REQUIRED. ALL CORNERS SHALL BE REINFORCED TO PREVENT SEPARATION.
- CABINET SHALL HAVE NO VISIBLE SEAMS.
- CABINET SHALL BE WEIGHTED AND ANCHORED TO EXISTING HARDSCAPE (CONDITIONS VARY) FOR SAFE AND SECURE INSTALLATION. SIGN CONTRACTOR SHALL ENGINEER FABRICATION & INSTALLATION OF CABINET TO SATISFY ALL LOCAL CODES & WIND LOAD FACTORS.
- CABINET SHALL BE WEATHERPROOFED.
- CABINET DOORS SHALL HAVE STAINLESS STEEL COUNTERSUNK, TAMPERPROOF STAR-HEAD BOLTS ON NON-HINGED SIDE. WELD NUT TO BOLT ON INTERIOR SIDE OF DOOR TO PREVENT BOLTS FROM BEING REMOVED.
- CABINET SHALL HAVE INTERIOR STORAGE SHELF.
- CABINET SHALL HAVE ONE HINGED INTERIOR PANEL TO ACCESS STORAGE SHELF. PROVIDE NON-HINGED SIDE OF PANEL W/ STAR-HEAD BOLTS.
- ACCESS TO CABINET SHALL BE BY REMOVING BOLTS ALONG LEFT SIDE OF DOORS.
- SHOW ALL DETAILS ON SHOP DRAWINGS.
- PROVIDE CHANNELS AS REQ'D TO FACILITATE REPLACEMENT OF CLEAR WINDOW PANELS.

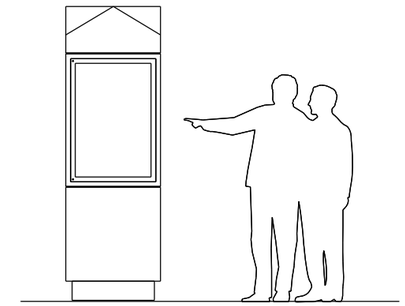

SIGN TYPE 26

MAP/ INFO KIOSK - FREESTANDING

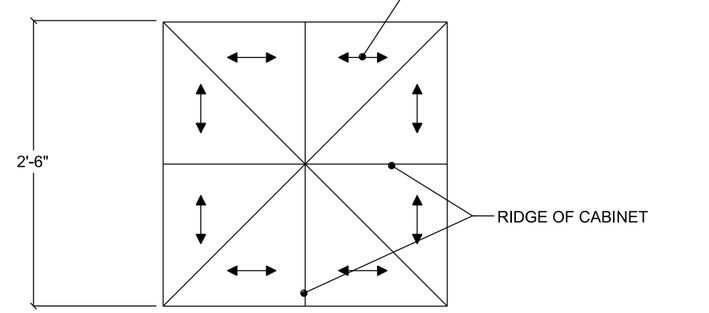

B **PLAN**

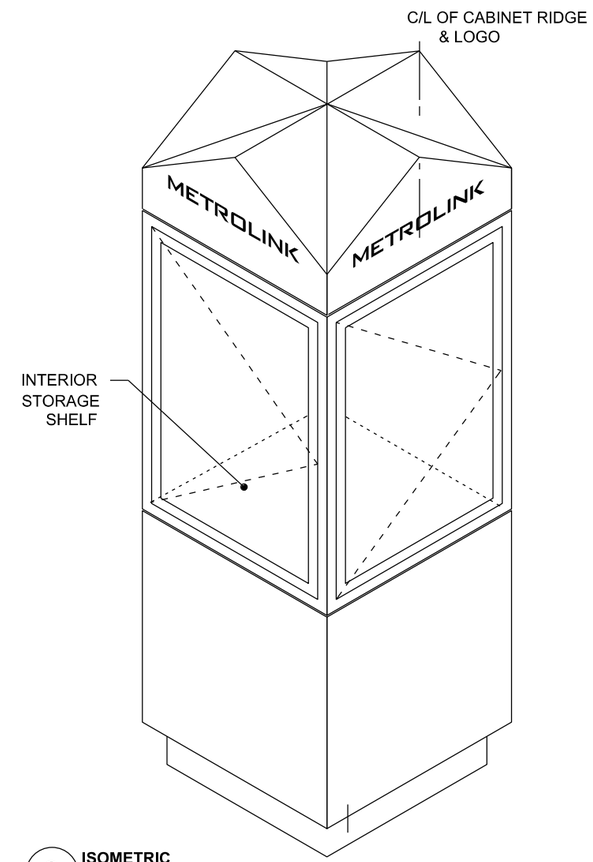

C **ISOMETRIC**

REV.	DATE	DESCRIPTION	DES.	ENG.
X	XX-XX-XX	REVISION	XX	XX

DRAWN BY: A. CARLOS DATE: 03/31/2011

ASSISTANT DIRECTOR: STANDARDS & DESIGN

DIRECTOR OF ENGINEERING AND CONSTRUCTION

SCRRA ENGINEERING STANDARDS ARE INTENDED FOR SCRRA APPROVED USES ONLY. FOR NON-SCRRA APPROVED USES, SCRRA SHALL NOT BE RESPONSIBLE FOR THE ACCURACY OR COMPLETENESS OF THE DATA OR INFORMATION CONTAINED HEREIN. THE SELECTION AND USE OF THESE STANDARDS IS THE SOLE RESPONSIBILITY OF THE USER AND SHOULD NOT BE USED WITHOUT CONSULTING A REGISTERED PROFESSIONAL ENGINEER. ALL WARRANTIES AND REPRESENTATIONS OF ANY KIND ARE DISCLAIMED. ANYONE MAKING USE OF THIS INFORMATION AGREES THAT IT ASSUMES ALL LIABILITY ARISING FROM SUCH USE. NO PART OF THESE STANDARDS SHOULD BE REPRODUCED OR DISTRIBUTED IN ANY FORM OR BY ANY MEANS WITHOUT THE PRIOR WRITTEN PERMISSION OF SCRRA. ALL RIGHTS RESERVED.

METROLINK®

SOUTHERN CALIFORNIA REGIONAL RAIL AUTHORITY
ONE GATEWAY PLAZA, 12TH FLOOR, L. A., CA. 90012

ENGINEERING STANDARDS

MAP / INFO KIOSK
FREESTANDING
SIGN TYPE 26

STANDARD 3326
SCALE: NTS
REVISION –
SHEET 1 OF 1
CADD FILE: ES3326

UserName•> carlosa Date Plotted: 10/5/2011 2:25:20 PM Plot Driver•> S:\Plot Drivers\pdf.plt FileName•> s:\V8EngStds\3000\ES3326.dgn

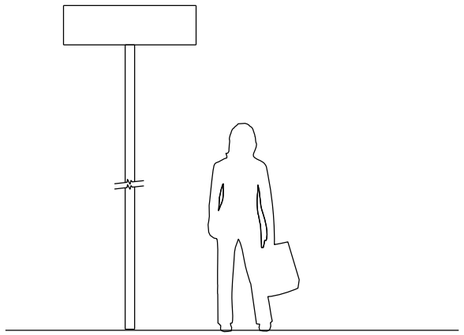

SIGN TYPE 27
ADA STATION IDENTIFICATION SIGN - AT TRACK

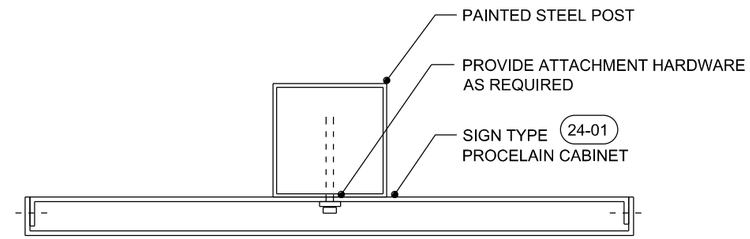

D **PLAN SECTION**

NOTES:
1. CONTINUE PAINT COLOR USED ON FRONT SURFACE OF SIGNS AROUND EDGES.
2. PAINT BACK SIGN PANEL TEAL.
3. ALL FASTENERS SHALL BE STAINLESS STEEL & SHALL BE PAINTED TO MATCH SURROUNDING COLOR.
4. SEAL SIGN WITH TRANSPARENT ANTI-GRAFFITI FILM.
5. REFER TO ES3320 AND ES3321 FOR ADDITIONAL FABRICATION NOTES.

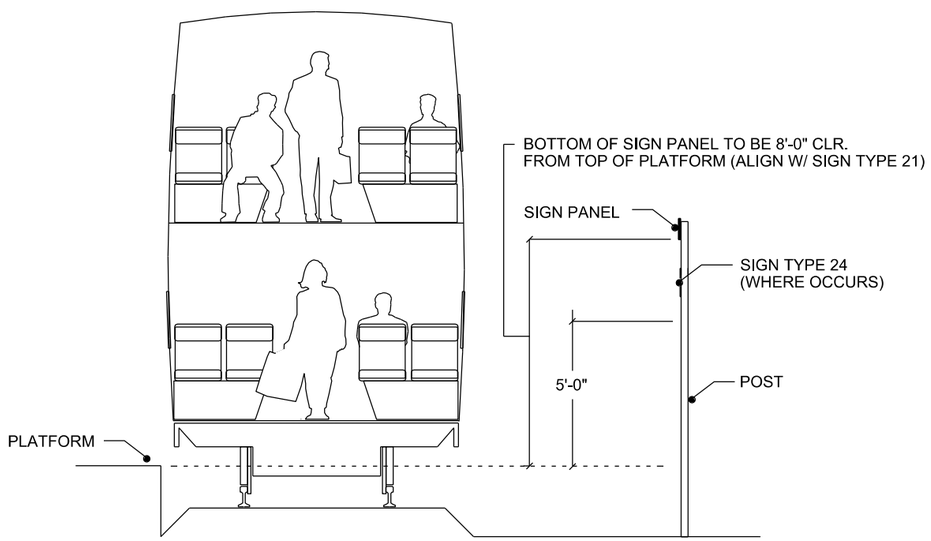

C **INSTALLATION DETAIL**

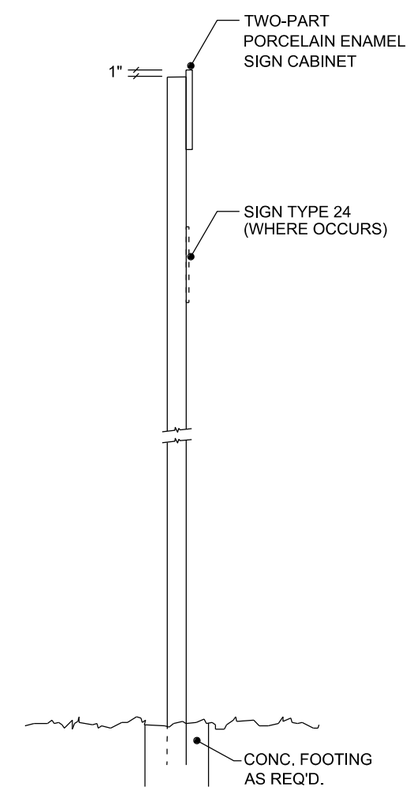

B **SIDE**

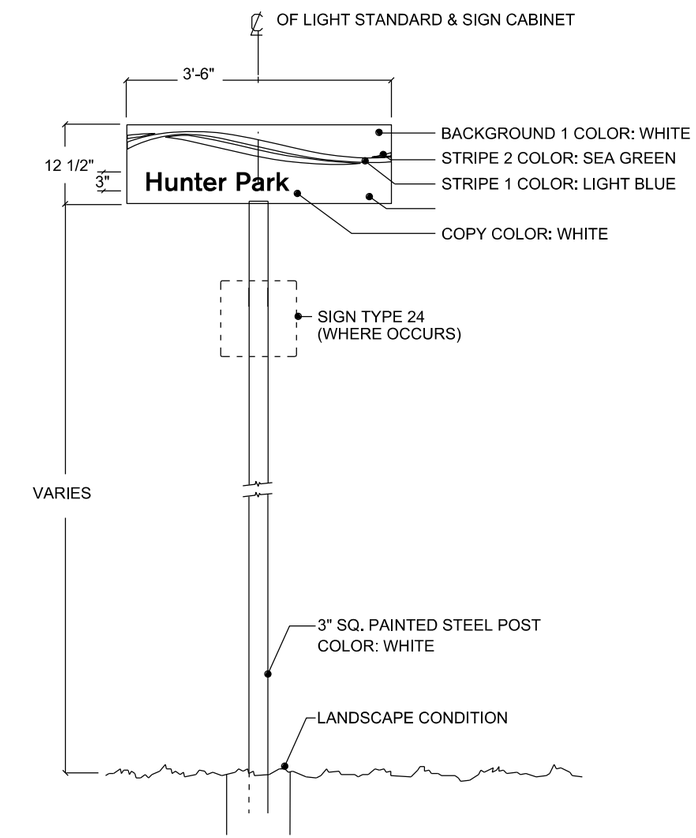

A **ELEVATION** 27-1

REV.	DATE	DESCRIPTION	DES.	ENG.
X	XX-XX-XX	REVISION	XX	XX

DRAWN BY: A. CARLOS DATE: 03/31/2011

ASSISTANT DIRECTOR: STANDARDS & DESIGN

DIRECTOR OF ENGINEERING AND CONSTRUCTION

SCRRA ENGINEERING STANDARDS ARE INTENDED FOR SCRRA APPROVED USES ONLY. FOR NON-SCRRA APPROVED USES: SCRRA SHALL NOT BE RESPONSIBLE FOR THE ACCURACY OR COMPLETENESS OF THE DATA OR INFORMATION CONTAINED HEREIN. THE SELECTION AND USE OF THESE STANDARDS IS THE SOLE RESPONSIBILITY OF THE USER AND SHOULD NOT BE USED WITHOUT CONSULTING A REGISTERED PROFESSIONAL ENGINEER. ALL WARRANTIES AND REPRESENTATIONS OF ANY KIND ARE DISCLAIMED. ANYONE MAKING USE OF THIS INFORMATION AGREES THAT IT ASSUMES ALL LIABILITY ARISING FROM SUCH USE. NO PART OF THESE STANDARDS SHOULD BE REPRODUCED OR DISTRIBUTED IN ANY FORM OR BY ANY MEANS WITHOUT THE PRIOR WRITTEN PERMISSION OF SCRRA. ALL RIGHTS RESERVED.

METROLINK®
SOUTHERN CALIFORNIA REGIONAL RAIL AUTHORITY
ONE GATEWAY PLAZA, 12TH FLOOR, L. A., CA. 90012

ENGINEERING STANDARDS

ADA STATION IDENTIFICATION
AT TRACK
SIGN TYPE 27

STANDARD 3327
SCALE: NTS
REVISION –
SHEET 1 OF 1
CADD FILE: ES3327

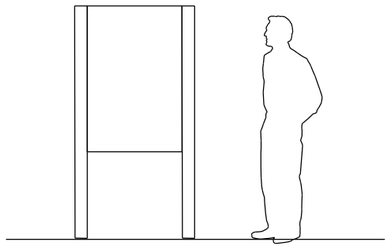

SIGN TYPE 28
DISPLAY CASE

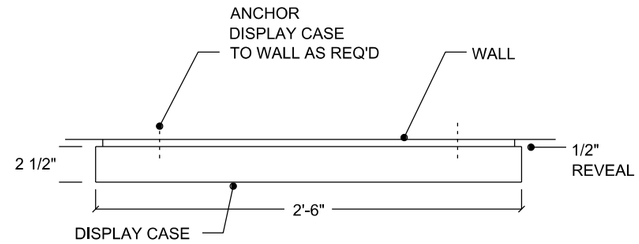

1 WALL MOUNTED

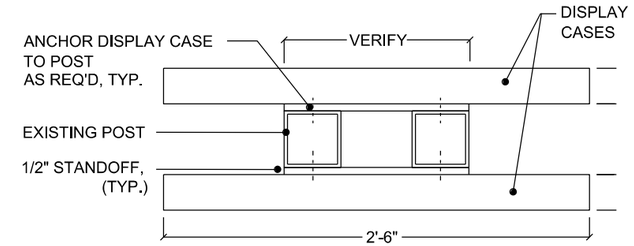

2 POST/CANOPY MOUNTED

D PLAN

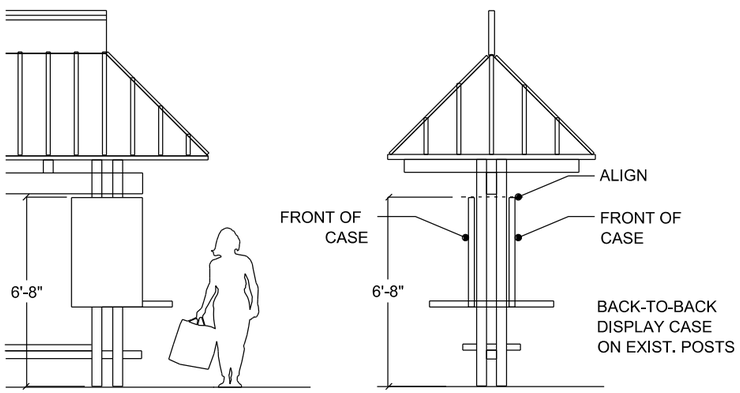

1 FRONT

2 SIDE

E ELEVATION - CANOPY STRUCTURE MOUNTED

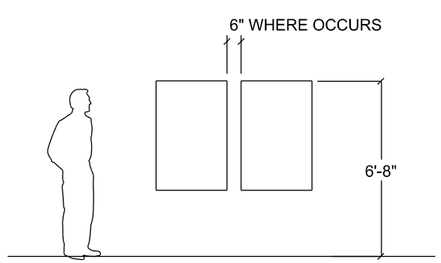

C ELEVATION - WALL MOUNTED

NOTE:
REFER TO D-26 FOR FABRICATION & INSTALLATION NOTES.

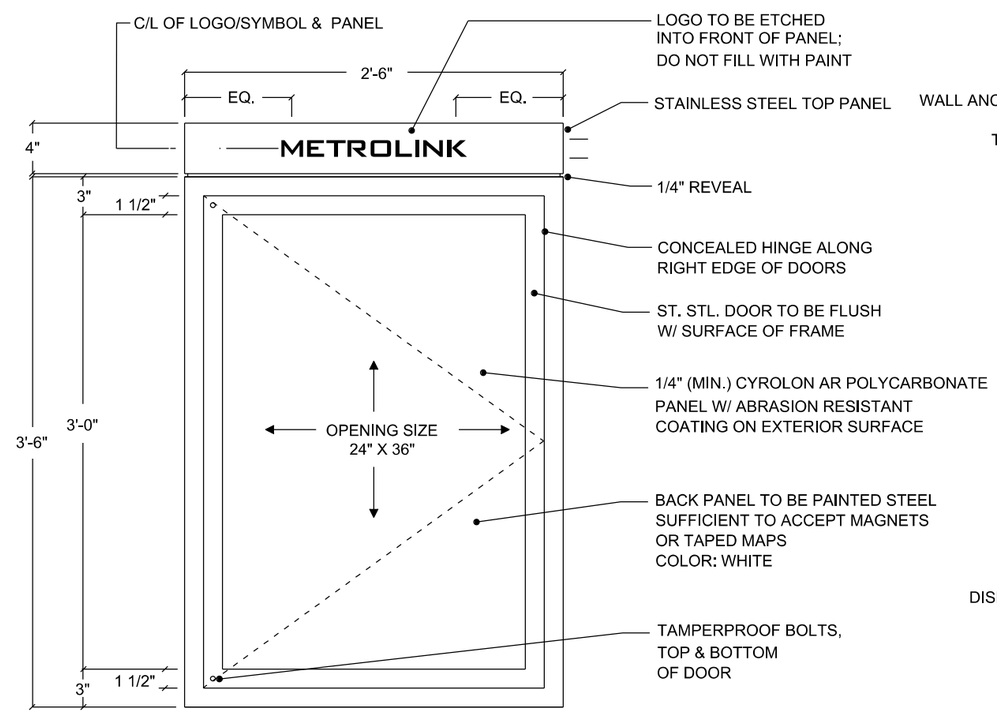

B ELEVATION 28-1

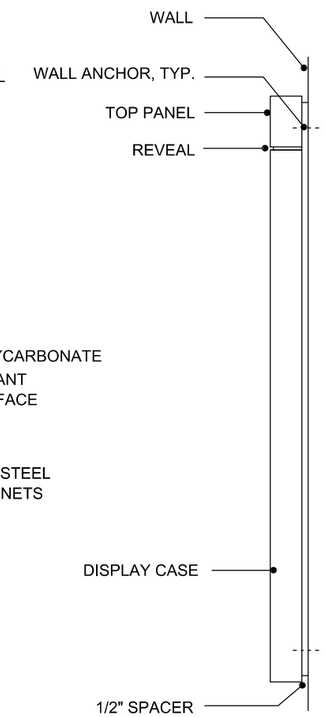

A SIDE

REV.	DATE	DESCRIPTION	DES.	ENG.
X	XX-XX-XX	REVISION	XX	XX

DRAWN BY: A. CARLOS DATE: 03/31/2011

ASSISTANT DIRECTOR: STANDARDS & DESIGN

DIRECTOR OF ENGINEERING AND CONSTRUCTION

SCRRA ENGINEERING STANDARDS ARE INTENDED FOR SCRRA APPROVED USES ONLY. FOR NON-SCRRA APPROVED USES:
SCRRA SHALL NOT BE RESPONSIBLE FOR THE ACCURACY OR COMPLETENESS OF THE DATA OR INFORMATION CONTAINED HEREIN. THE SELECTION AND USE OF THESE STANDARDS IS THE SOLE RESPONSIBILITY OF THE USER AND SHOULD NOT BE USED WITHOUT CONSULTING A REGISTERED PROFESSIONAL ENGINEER. ALL WARRANTIES AND REPRESENTATIONS OF ANY KIND ARE DISCLAIMED. ANYONE MAKING USE OF THIS INFORMATION AGREES THAT IT ASSUMES ALL LIABILITY ARISING FROM SUCH USE. NO PART OF THESE STANDARDS SHOULD BE REPRODUCED OR DISTRIBUTED IN ANY FORM OR BY ANY MEANS WITHOUT THE PRIOR WRITTEN PERMISSION OF SCRRA. ALL RIGHTS RESERVED.

METROLINK®
SOUTHERN CALIFORNIA REGIONAL RAIL AUTHORITY
ONE GATEWAY PLAZA, 12TH FLOOR, L. A., CA. 90012

ENGINEERING STANDARDS

DISPLAY CASE
WALL OR POST MOUNTED
SIGN TYPE 28

STANDARD 3328
SCALE: NTS
REVISION –
SHEET 1 OF 2
CADD FILE: ES3328-01

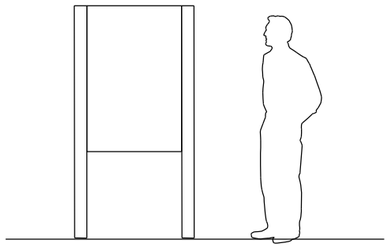

SIGN TYPE 28
DISPLAY CASE - SINGLE SIDED

NOTES:

1. DISPLAY CASE SHALL BE FABRICATED STAINLESS STEEL W/ VERTICAL GRAIN BRUSHED FINISH. CASE SHALL BE CONSTRUCTED WITH INTERNAL STEEL STRUCTURE AS REQUIRED. ALL CORNERS SHALL BE REINFORCED TO PREVENT SEPARATION.
2. CASE SHALL HAVE NO VISIBLE SEAMS.
3. CASE SHALL BE WEIGHTED AND ANCHORED TO EXISTING HARDSCAPE (CONDITIONS VARY) FOR SAFE AND SECURE INSTALLATION. SIGN CONTRACTOR SHALL ENGINEER FABRICATION & INSTALLATION OF CASE TO SATISFY ALL LOCAL CODES & WIND LOAD FACTORS.
4. CASE SHALL BE WEATHERPROOFED.
5. CASE DOORS SHALL HAVE STAINLESS STEEL COUNTERSUNK, TAMPERPROOF STAR-HEAD BOLTS ON NON-HINGED SIDE. WELD NUT TO BOLT ON INTERIOR SIDE OF DOOR TO PREVENT BOLTS FROM BEING REMOVED.
6. SHOW ALL DETAILS ON SHOP DRAWINGS.
7. PROVIDE CHANNELS AS REQ'D TO FACILITATE REPLACEMENT OF CLEAR WINDOW PANELS.

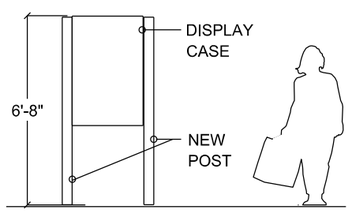

1 FRONT

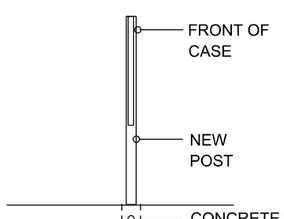

2 SIDE

CONCRETE FOOTING OR FLANGE-MOUNT AS REQUIRED. SIGN CONTRACTOR TO ENGINEER DETAILS AND SHOW ON SHOP DRAWINGS. SEE SHEETS ES3312 AND ES3322.

B **ELEVATION - POST MOUNTED**

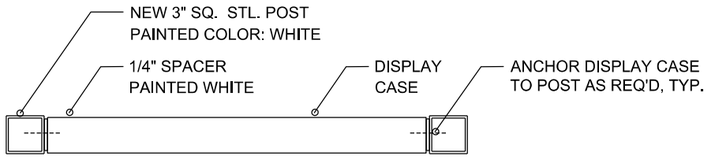

C **PLAN**

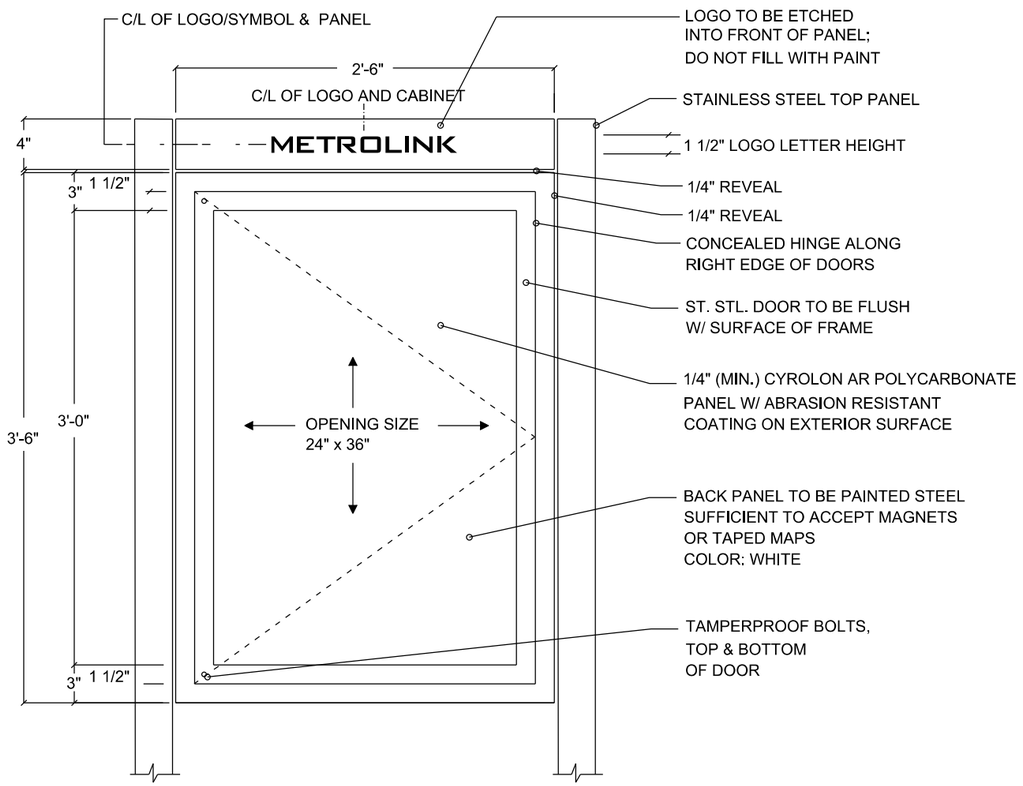

A **ELEVATION**

REV.	DATE	DESCRIPTION	DES.	ENG.
X	XX-XX-XX	REVISION	XX	XX

DRAWN BY: A. CARLOS DATE: 03/31/2011

ASSISTANT DIRECTOR: STANDARDS & DESIGN

DIRECTOR OF ENGINEERING AND CONSTRUCTION

SCRRA ENGINEERING STANDARDS ARE INTENDED FOR SCRRA APPROVED USES ONLY. FOR NON-SCRRA APPROVED USES:
SCRRA SHALL NOT BE RESPONSIBLE FOR THE ACCURACY OR COMPLETENESS OF THE DATA OR INFORMATION CONTAINED HEREIN. THE SELECTION AND USE OF THESE STANDARDS IS THE SOLE RESPONSIBILITY OF THE USER AND SHOULD NOT BE USED WITHOUT CONSULTING A REGISTERED PROFESSIONAL ENGINEER. ALL WARRANTIES AND REPRESENTATIONS OF ANY KIND ARE DISCLAIMED. ANYONE MAKING USE OF THIS INFORMATION AGREES THAT IT ASSUMES ALL LIABILITY ARISING FROM SUCH USE. NO PART OF THESE STANDARDS SHOULD BE REPRODUCED OR DISTRIBUTED IN ANY FORM OR BY ANY MEANS WITHOUT THE PRIOR WRITTEN PERMISSION OF SCRRA. ALL RIGHTS RESERVED.

METROLINK®
SOUTHERN CALIFORNIA REGIONAL RAIL AUTHORITY
ONE GATEWAY PLAZA, 12TH FLOOR, L. A., CA. 90012

ENGINEERING STANDARDS

DISPLAY CASE
POST MOUNTED SINGLE SIDED
SIGN TYPE 28

STANDARD 3328
SCALE: NTS
REVISION –
SHEET 2 OF 2
CADD FILE: ES3328-02

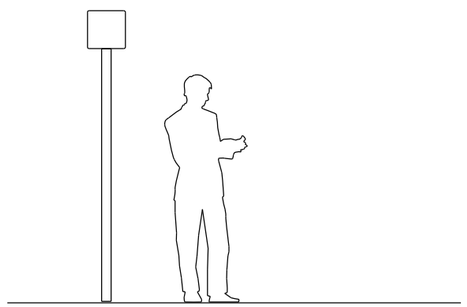

SIGN TYPE 30

POSITION MARKER & TRACK IDENTIFICATION SIGN

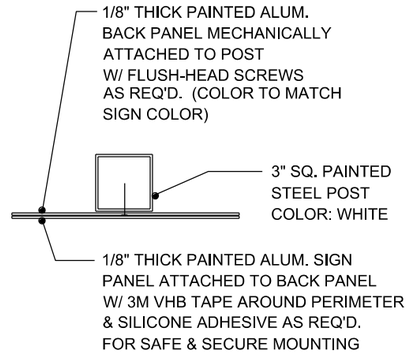

F **PLAN SECTION**

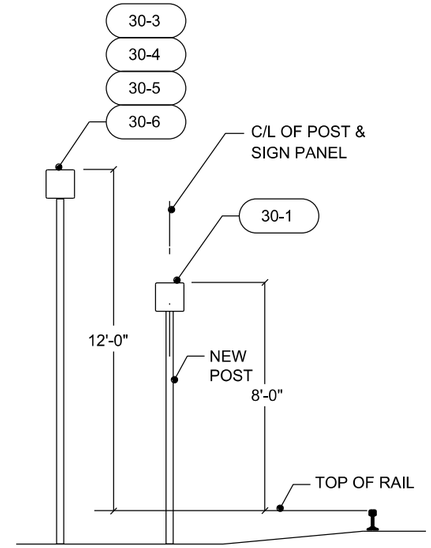

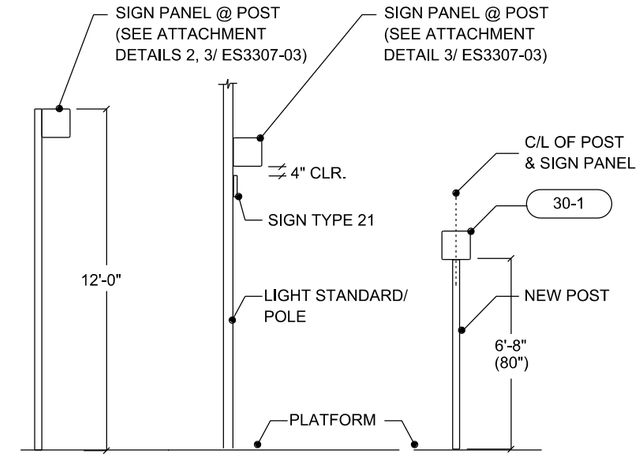

NOTE:
USE CORE & DRILL INSTALLATION METHOD OR FLANGE METHOD WHEN SIGNS ARE INSTALLED ON PLATFORM.
USE CONCRETE FOOTING WHEN INSTALLING IN RIGHT OF WAY.
REFER TO ES3307-03 FOR DETAILS.

E **ELEVATIONS**

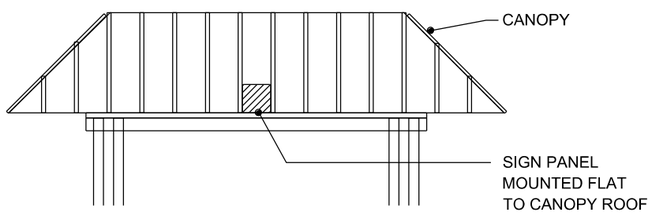

D **PARTIAL ELEVATION - CANOPY**

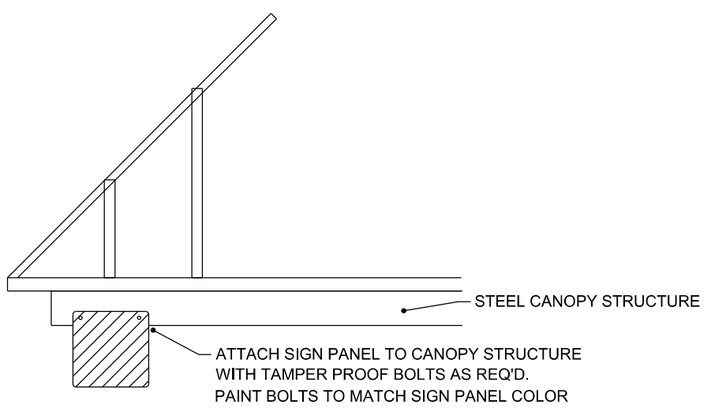

C **ATTACHMENT DETAIL**

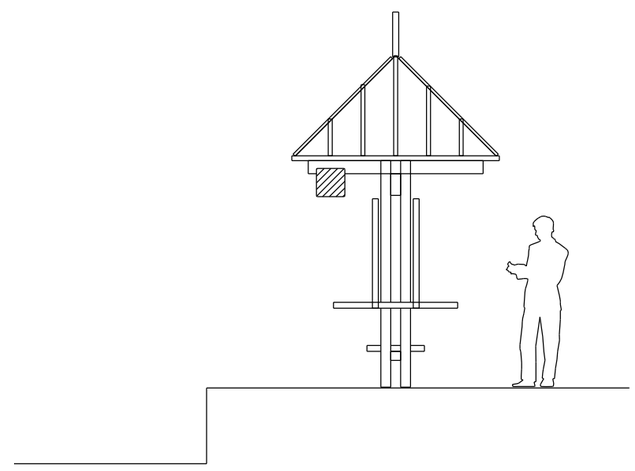

B **ELEVATION - CANOPY STRUCTURE MOUNTED**

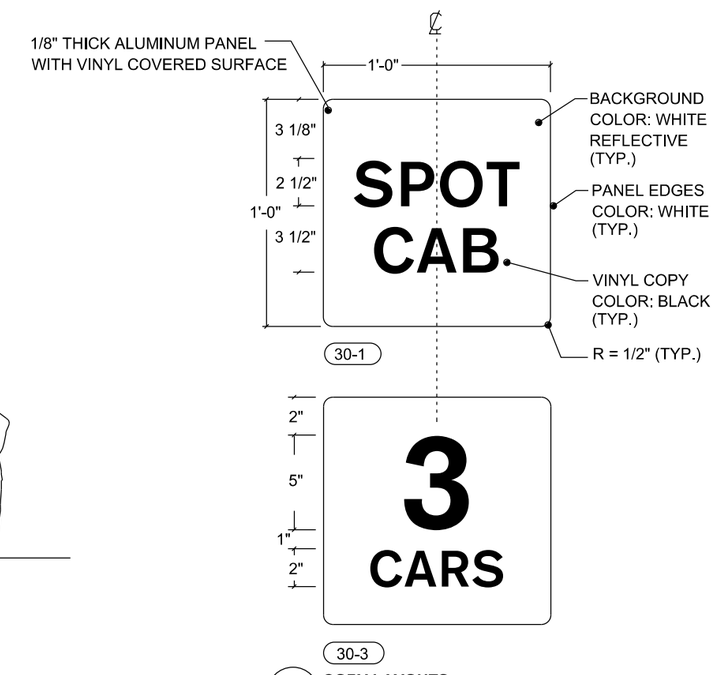

A **COPY LAYOUTS**

REV.	DATE	DESCRIPTION	DES.	ENG.
X	XX-XX-XX	REVISION	XX	XX

DRAWN BY: A. CARLOS DATE: 03/31/2011

ASSISTANT DIRECTOR: STANDARDS & DESIGN

DIRECTOR OF ENGINEERING AND CONSTRUCTION

SCRRA ENGINEERING STANDARDS ARE INTENDED FOR SCRRA APPROVED USES ONLY. FOR NON-SCRRA APPROVED USES:
SCRRA SHALL NOT BE RESPONSIBLE FOR THE ACCURACY OR COMPLETENESS OF THE DATA OR INFORMATION CONTAINED HEREIN. THE SELECTION AND USE OF THESE STANDARDS IS THE SOLE RESPONSIBILITY OF THE USER AND SHOULD NOT BE USED WITHOUT CONSULTING A REGISTERED PROFESSIONAL ENGINEER. ALL WARRANTIES AND REPRESENTATIONS OF ANY KIND ARE DISCLAIMED. ANYONE MAKING USE OF THIS INFORMATION AGREES THAT IT ASSUMES ALL LIABILITY ARISING FROM SUCH USE. NO PART OF THESE STANDARDS SHOULD BE REPRODUCED OR DISTRIBUTED IN ANY FORM OR BY ANY MEANS WITHOUT THE PRIOR WRITTEN PERMISSION OF SCRRA. ALL RIGHTS RESERVED.

METROLINK®

SOUTHERN CALIFORNIA REGIONAL RAIL AUTHORITY
ONE GATEWAY PLAZA, 12TH FLOOR, L. A., CA. 90012

ENGINEERING STANDARDS

TRAIN POSITION MARKER
SIGN TYPE 30

STANDARD 3330
SCALE: NTS
REVISION –
SHEET 1 OF 6
CADD FILE: ES3330-01

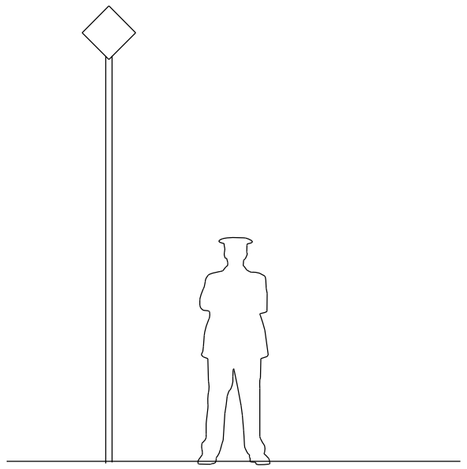

SIGN TYPE 30.1
LOCOMOTIVE POSITION MARKER SIGN

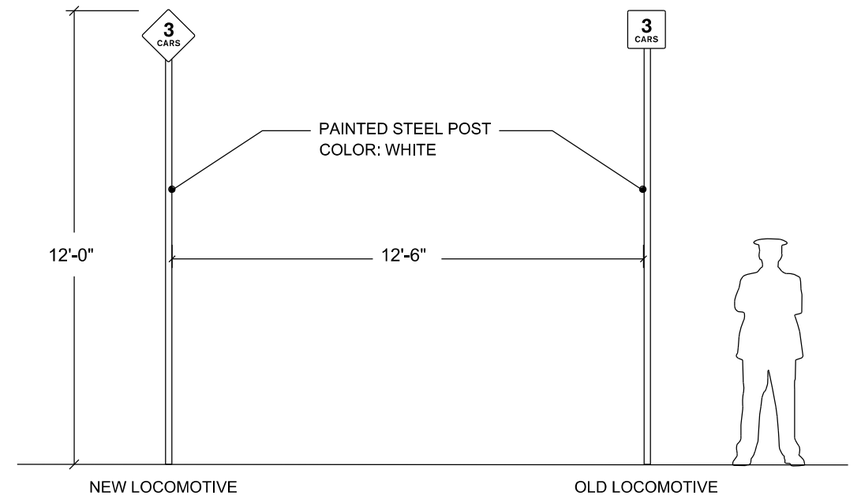

A **ELEVATION / COMPARISON OF NEW AND EXISTING SIGNS**

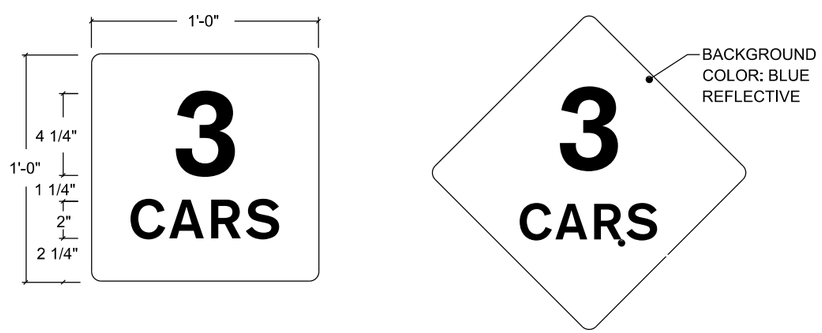

OLD LOCOMOTIVE (30A-3) NEW LOCOMOTIVE (30B-3)

B **COPY LAYOUTS**

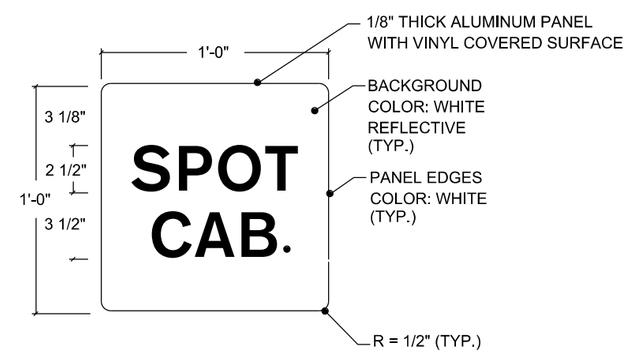

(30-1)

C **EXISTING SIGN**

X	XX-XX-XX	REVISION	XX	XX
REV.	DATE	DESCRIPTION	DES.	ENG.

DRAWN BY: A. CARLOS DATE: 03/31/2011

ASSISTANT DIRECTOR: STANDARDS & DESIGN

DIRECTOR OF ENGINEERING AND CONSTRUCTION

SCRRA ENGINEERING STANDARDS ARE INTENDED FOR SCRRA APPROVED USES ONLY. FOR NON-SCRRA APPROVED USES:
SCRRA SHALL NOT BE RESPONSIBLE FOR THE ACCURACY OR COMPLETENESS OF THE DATA OR INFORMATION CONTAINED HEREIN. THE SELECTION AND USE OF THESE STANDARDS IS THE SOLE RESPONSIBILITY OF THE USER AND SHOULD NOT BE USED WITHOUT CONSULTING A REGISTERED PROFESSIONAL ENGINEER. ALL WARRANTIES AND REPRESENTATIONS OF ANY KIND ARE DISCLAIMED. ANYONE MAKING USE OF THIS INFORMATION AGREES THAT IT ASSUMES ALL LIABILITY ARISING FROM SUCH USE. NO PART OF THESE STANDARDS SHOULD BE REPRODUCED OR DISTRIBUTED IN ANY FORM OR BY ANY MEANS WITHOUT THE PRIOR WRITTEN PERMISSION OF SCRRA. ALL RIGHTS RESERVED.

METROLINK®
SOUTHERN CALIFORNIA REGIONAL RAIL AUTHORITY
ONE GATEWAY PLAZA, 12TH FLOOR, L. A., CA. 90012

ENGINEERING STANDARDS

NEW TRAIN POSITION MARKER
SIGN TYPE 30

STANDARD 3330
SCALE: NTS
REVISION –
SHEET 2 OF 6
CADD FILE: ES3330-02

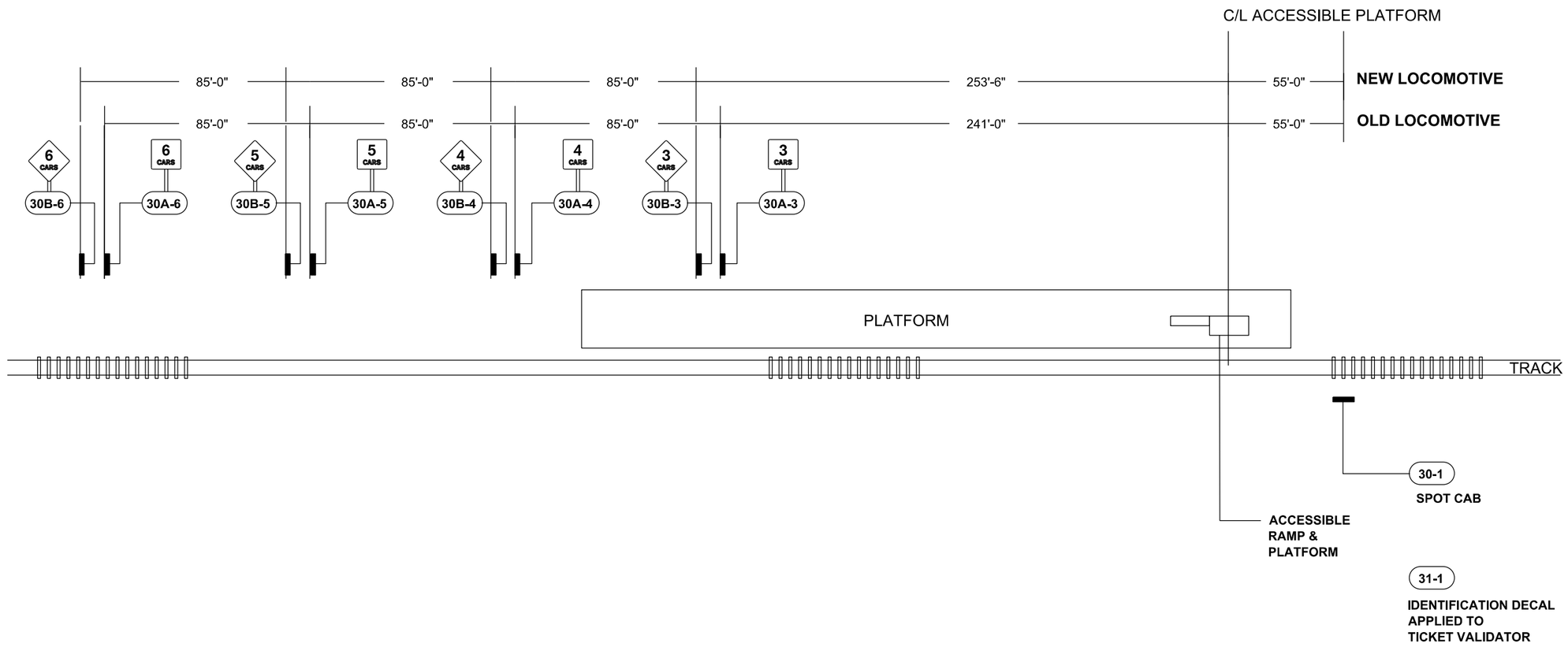

SIGN KEY

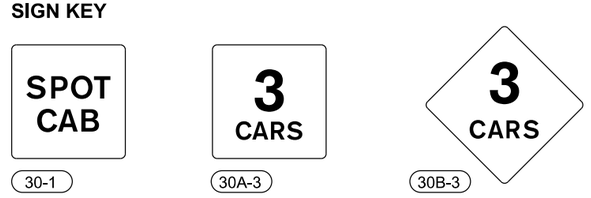

NOT FOR CONSTRUCTION

NOTE:
THIS REPRESENTS A TYPICAL METROLINK STATION AND IS SHOWN FOR REFERENCE ONLY.
ACTUAL STATIONS MAY VARY FROM THIS PLAN.

PLAN

SCALE: NTS

REV.	DATE	DESCRIPTION	DES.	ENG.
X	XX-XX-XX	REVISION	XX	XX

DRAWN BY: A. CARLOS DATE: 03/31/2011

ASSISTANT DIRECTOR: STANDARDS & DESIGN

DIRECTOR OF ENGINEERING AND CONSTRUCTION

SCRRA ENGINEERING STANDARDS ARE INTENDED FOR SCRRA APPROVED USES ONLY. FOR NON-SCRRA APPROVED USES:
SCRRA SHALL NOT BE RESPONSIBLE FOR THE ACCURACY OR COMPLETENESS OF THE DATA OR INFORMATION CONTAINED HEREIN. THE SELECTION AND USE OF THESE STANDARDS IS THE SOLE RESPONSIBILITY OF THE USER AND SHOULD NOT BE USED WITHOUT CONSULTING A REGISTERED PROFESSIONAL ENGINEER. ALL WARRANTIES AND REPRESENTATIONS OF ANY KIND ARE DISCLAIMED. ANYONE MAKING USE OF THIS INFORMATION AGREES THAT IT ASSUMES ALL LIABILITY ARISING FROM SUCH USE. NO PART OF THESE STANDARDS SHOULD BE REPRODUCED OR DISTRIBUTED IN ANY FORM OR BY ANY MEANS WITHOUT THE PRIOR WRITTEN PERMISSION OF SCRRA. ALL RIGHTS RESERVED.

METROLINK®
SOUTHERN CALIFORNIA REGIONAL RAIL AUTHORITY
ONE GATEWAY PLAZA, 12TH FLOOR, L. A., CA. 90012

ENGINEERING STANDARDS

SIDE PLATFORM
TYPICAL SIGN LOCATION PLAN

STANDARD: 3330
SCALE: NTS
REVISION: –
SHEET: 3 OF 6
CADD FILE: ES3330–03

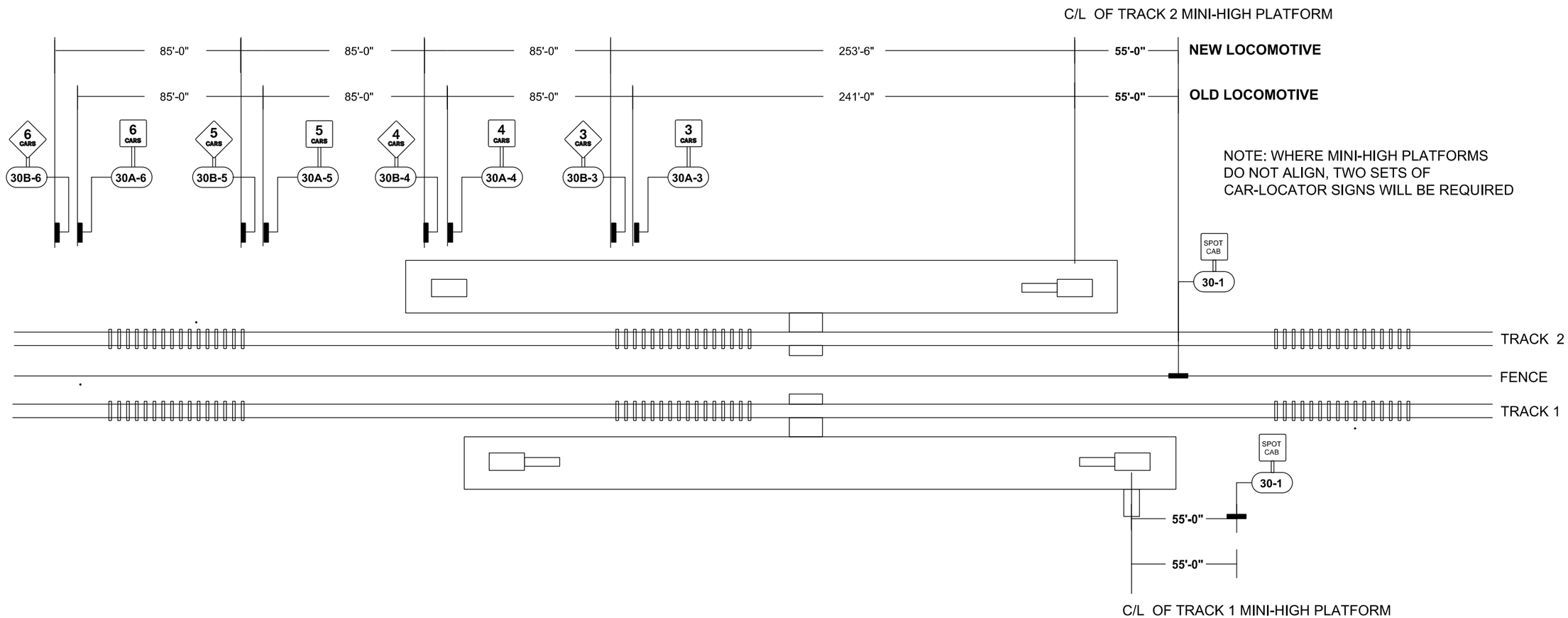

NOTE: WHERE MINI-HIGH PLATFORMS DO NOT ALIGN, TWO SETS OF CAR-LOCATOR SIGNS WILL BE REQUIRED

31-1

IDENTIFICATION DECAL APPLIED TO TICKET VALIDATOR

SIGN KEY

SPOT CAB	3 CARS	3 CARS
30-1	30A-3	30B-3
	OLD LOCOMOTIVE	NEW LOCOMOTIVE

NOT FOR CONSTRUCTION

NOTE:
THIS REPRESENTS A TYPICAL METROLINK STATION AND IS SHOWN FOR REFERENCE ONLY.
ACTUAL STATIONS MAY VARY FROM THIS PLAN.

PLAN

SCALE: NTS

REV.	DATE	DESCRIPTION	DES.	ENG.
X	XX-XX-XX	REVISION	XX	XX

DRAWN BY: A. CARLOS DATE: 03/31/2011

ASSISTANT DIRECTOR: STANDARDS & DESIGN

DIRECTOR OF ENGINEERING AND CONSTRUCTION

SCRRA ENGINEERING STANDARDS ARE INTENDED FOR SCRRA APPROVED USES ONLY. FOR NON-SCRRA APPROVED USES:
SCRRA SHALL NOT BE RESPONSIBLE FOR THE ACCURACY OR COMPLETENESS OF THE DATA OR INFORMATION CONTAINED HEREIN. THE SELECTION AND USE OF THESE STANDARDS IS THE SOLE RESPONSIBILITY OF THE USER AND SHOULD NOT BE USED WITHOUT CONSULTING A REGISTERED PROFESSIONAL ENGINEER. ALL WARRANTIES AND REPRESENTATIONS OF ANY KIND ARE DISCLAIMED. ANYONE MAKING USE OF THIS INFORMATION AGREES THAT IT ASSUMES ALL LIABILITY ARISING FROM SUCH USE. NO PART OF THESE STANDARDS SHOULD BE REPRODUCED OR DISTRIBUTED IN ANY FORM OR BY ANY MEANS WITHOUT THE PRIOR WRITTEN PERMISSION OF SCRRA. ALL RIGHTS RESERVED.

METROLINK®
SOUTHERN CALIFORNIA REGIONAL RAIL AUTHORITY
ONE GATEWAY PLAZA, 12TH FLOOR, L. A., CA. 90012

ENGINEERING STANDARDS

SIDE PLATFORMS
LOCOMOTIVE POSITION MARKER PLAN

STANDARD 3330
SCALE: NTS
REVISION –
SHEET 4 OF 6
CADD FILE: ES3330–04

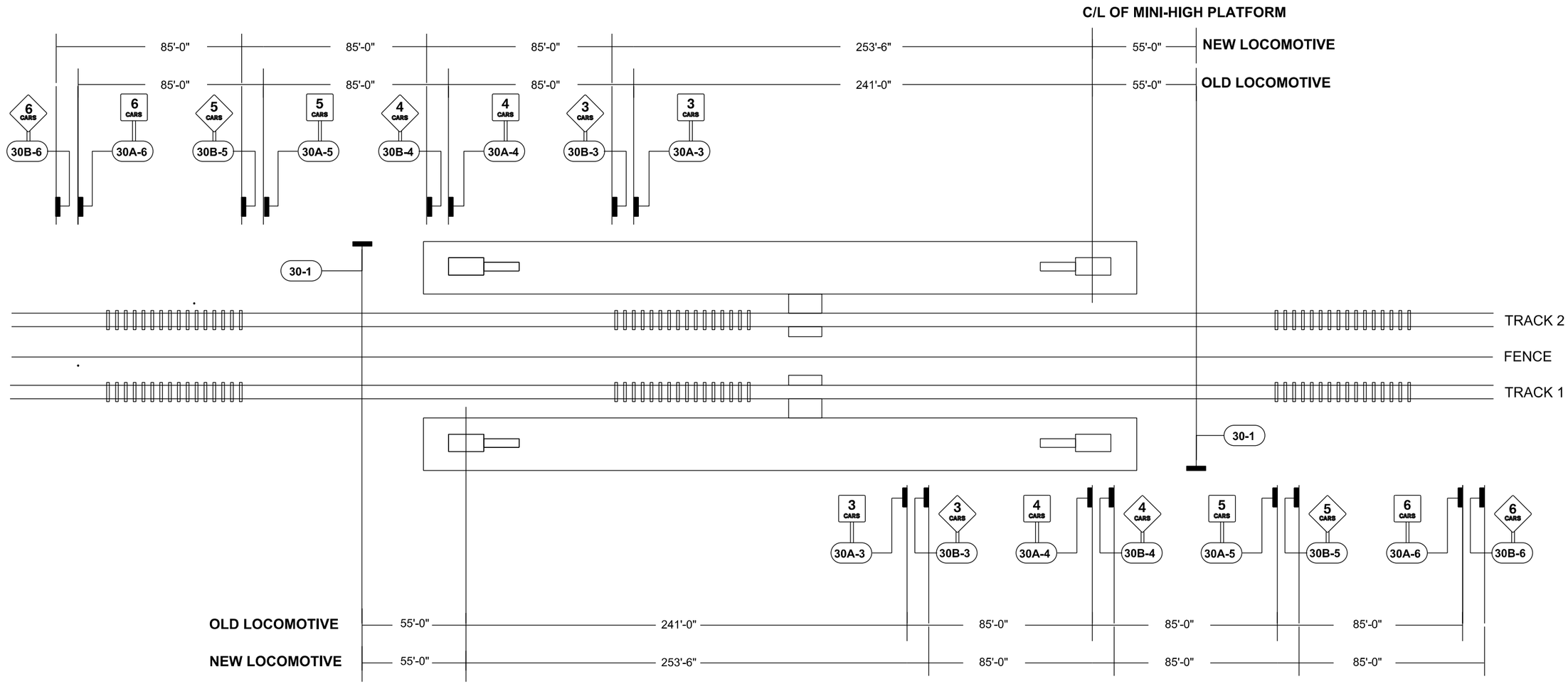

IDENTIFICATION DECAL APPLIED TO TICKET VALIDATOR

SIGN KEY

SPOT CAB	3 CARS	3 CARS
30-1	30A-3	30B-3
	OLD LOCOMOTIVE	NEW LOCOMOTIVE

NOT FOR CONSTRUCTION

NOTE:
THIS REPRESENTS A TYPICAL METROLINK STATION AND IS SHOWN FOR REFERENCE ONLY.
ACTUAL STATIONS MAY VARY FROM THIS PLAN.

PLAN

SCALE: NTS

REV.	DATE	DESCRIPTION	DES.	ENG.
X	XX-XX-XX	REVISION	XX	XX

DRAWN BY: A. CARLOS DATE: 03/31/2011

ASSISTANT DIRECTOR: STANDARDS & DESIGN

DIRECTOR OF ENGINEERING AND CONSTRUCTION

SCRRA ENGINEERING STANDARDS ARE INTENDED FOR SCRRA APPROVED USES ONLY. FOR NON-SCRRA APPROVED USES:
SCRRA SHALL NOT BE RESPONSIBLE FOR THE ACCURACY OR COMPLETENESS OF THE DATA OR INFORMATION CONTAINED HEREIN. THE SELECTION AND USE OF THESE STANDARDS IS THE SOLE RESPONSIBILITY OF THE USER AND SHOULD NOT BE USED WITHOUT CONSULTING A REGISTERED PROFESSIONAL ENGINEER. ALL WARRANTIES AND REPRESENTATIONS OF ANY KIND ARE DISCLAIMED. ANYONE MAKING USE OF THIS INFORMATION AGREES THAT IT ASSUMES ALL LIABILITY ARISING FROM SUCH USE. NO PART OF THESE STANDARDS SHOULD BE REPRODUCED OR DISTRIBUTED IN ANY FORM OR BY ANY MEANS WITHOUT THE PRIOR WRITTEN PERMISSION OF SCRRA. ALL RIGHTS RESERVED.

METROLINK®
SOUTHERN CALIFORNIA REGIONAL RAIL AUTHORITY
ONE GATEWAY PLAZA, 12TH FLOOR, L. A., CA. 90012

ENGINEERING STANDARDS

SIDE PLATFORMS
LOCOMOTIVE POSITION MARKER PLAN

STANDARD 3330
SCALE: NTS
REVISION –
SHEET 5 OF 6
CADD FILE: ES3330-05

UserName•> carlosa Date Plotted: 10/5/2011 2:25:26 PM Plot Driver•> S:\Plot Drivers\pdf.plt FileName•> s:\V8EngStds\3000\ES3330-05.dgn

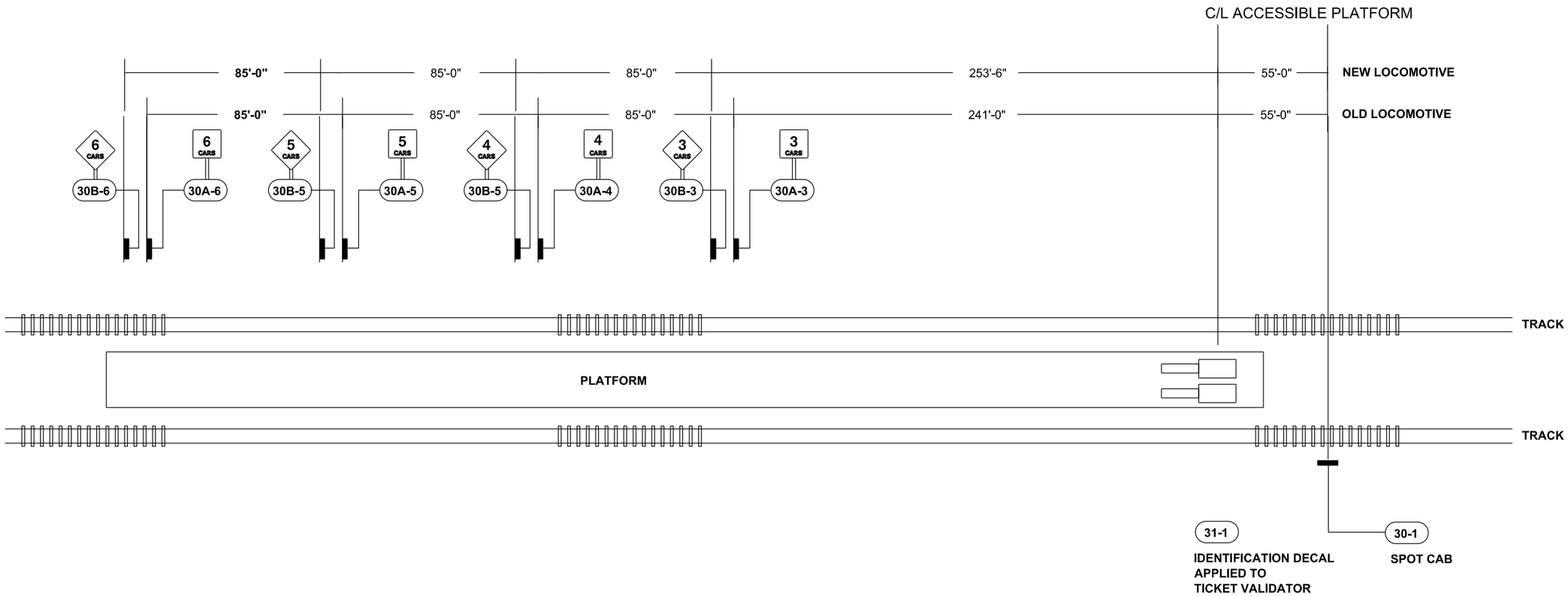

SIGN KEY

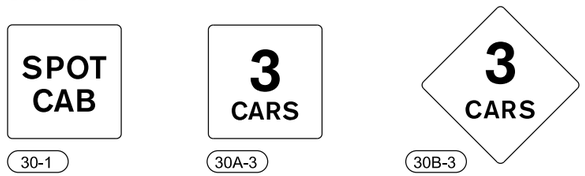

NOT FOR CONSTRUCTION

NOTE:
THIS REPRESENTS A TYPICAL METROLINK STATION AND IS SHOWN FOR REFERENCE ONLY. ACTUAL STATIONS MAY VARY FROM THIS PLAN.

PLAN

SCALE: NTS

REV.	DATE	DESCRIPTION	DES.	ENG.
X	XX-XX-XX	REVISION	XX	XX

DRAWN BY: A. CARLOS DATE: 03/31/2011

ASSISTANT DIRECTOR: STANDARDS & DESIGN

DIRECTOR OF ENGINEERING AND CONSTRUCTION

SCRRA ENGINEERING STANDARDS ARE INTENDED FOR SCRRA APPROVED USES ONLY. FOR NON-SCRRA APPROVED USES: SCRRA SHALL NOT BE RESPONSIBLE FOR THE ACCURACY OR COMPLETENESS OF THE DATA OR INFORMATION CONTAINED HEREIN. THE SELECTION AND USE OF THESE STANDARDS IS THE SOLE RESPONSIBILITY OF THE USER AND SHOULD NOT BE USED WITHOUT CONSULTING A REGISTERED PROFESSIONAL ENGINEER. ALL WARRANTIES AND REPRESENTATIONS OF ANY KIND ARE DISCLAIMED. ANYONE MAKING USE OF THIS INFORMATION AGREES THAT IT ASSUMES ALL LIABILITY ARISING FROM SUCH USE. NO PART OF THESE STANDARDS SHOULD BE REPRODUCED OR DISTRIBUTED IN ANY FORM OR BY ANY MEANS WITHOUT THE PRIOR WRITTEN PERMISSION OF SCRRA. ALL RIGHTS RESERVED.

METROLINK®
SOUTHERN CALIFORNIA REGIONAL RAIL AUTHORITY
ONE GATEWAY PLAZA, 12TH FLOOR, L. A., CA. 90012

ENGINEERING STANDARDS

CENTER PLATFORM
LOCOMOTIVE POSITION MARKER PLAN

STANDARD 3330
SCALE: NTS
REVISION –
SHEET 6 OF 6
CADD FILE: ES3330-06

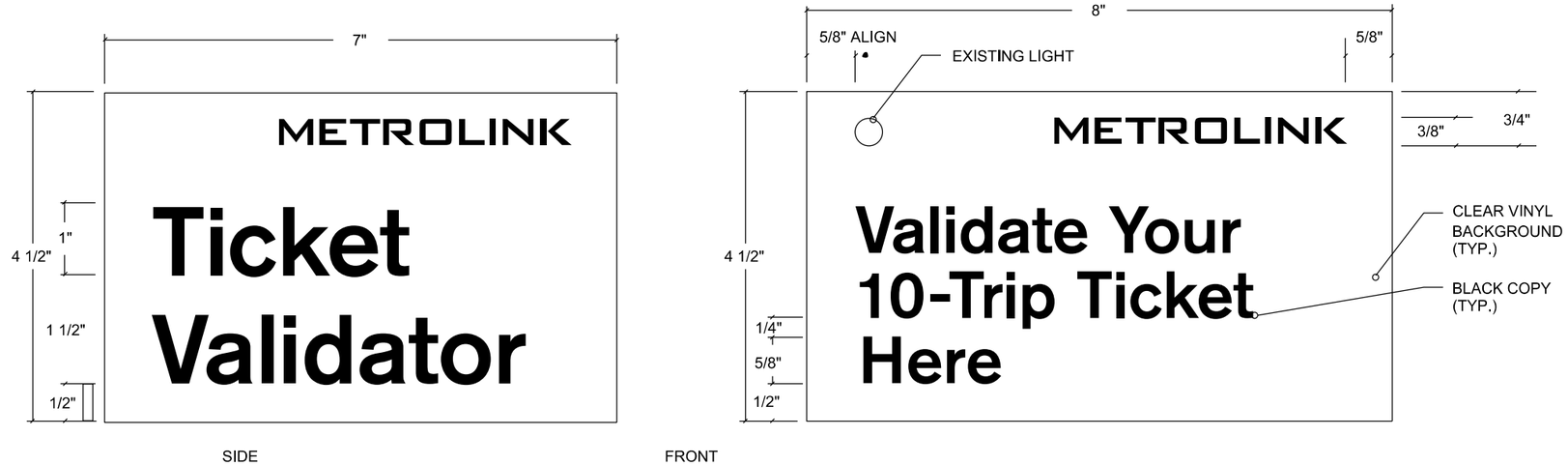

B COPY LAYOUTS

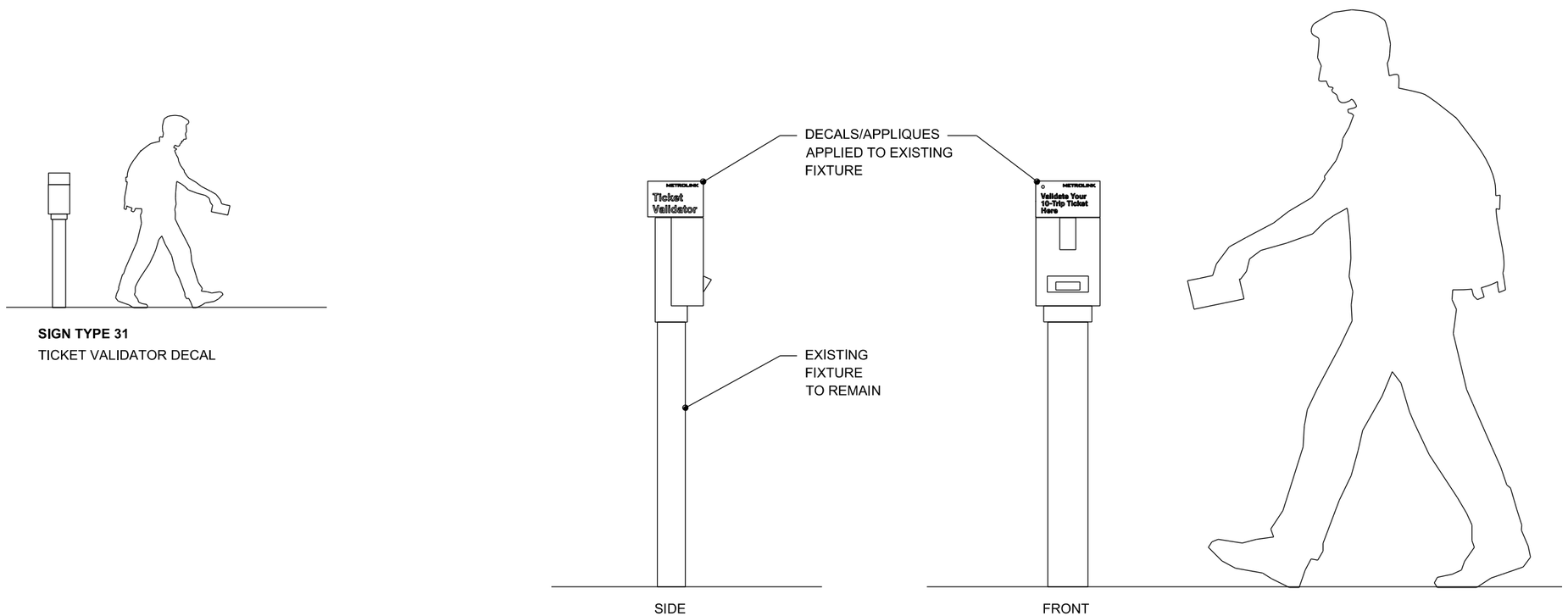

SIGN TYPE 31
TICKET VALIDATOR DECAL

A ELEVATIONS

REV.	DATE	DESCRIPTION	DES.	ENG.
X	XX-XX-XX	REVISION	XX	XX

DRAWN BY: A. CARLOS DATE: 03/31/2011

ASSISTANT DIRECTOR: STANDARDS & DESIGN

DIRECTOR OF ENGINEERING AND CONSTRUCTION

SCRRA ENGINEERING STANDARDS ARE INTENDED FOR SCRRA APPROVED USES ONLY. FOR NON-SCRRA APPROVED USES, SCRRA SHALL NOT BE RESPONSIBLE FOR THE ACCURACY OR COMPLETENESS OF THE DATA OR INFORMATION CONTAINED HEREIN. THE SELECTION AND USE OF THESE STANDARDS IS THE SOLE RESPONSIBILITY OF THE USER AND SHOULD NOT BE USED WITHOUT CONSULTING A REGISTERED PROFESSIONAL ENGINEER. ALL WARRANTIES AND REPRESENTATIONS OF ANY KIND ARE DISCLAIMED. ANYONE MAKING USE OF THIS INFORMATION AGREES THAT IT ASSUMES ALL LIABILITY ARISING FROM SUCH USE. NO PART OF THESE STANDARDS SHOULD BE REPRODUCED OR DISTRIBUTED IN ANY FORM OR BY ANY MEANS WITHOUT THE PRIOR WRITTEN PERMISSION OF SCRRA. ALL RIGHTS RESERVED.

METROLINK®
SOUTHERN CALIFORNIA REGIONAL RAIL AUTHORITY
ONE GATEWAY PLAZA, 12TH FLOOR, L. A., CA. 90012

ENGINEERING STANDARDS

TICKET VALIDATOR DECAL
SIGN TYPE 31

STANDARD: 3331
SCALE: NTS
REVISION: –
SHEET: 1 OF 1
CADD FILE: ES3331

UserName•> carlosa Date Plotted: 10/5/2011 2:25:28 PM Plot Driver•> S:\Plot Drivers\pdf.plt FileName•> s:\V8EngStds\3000\ES3331.dgn

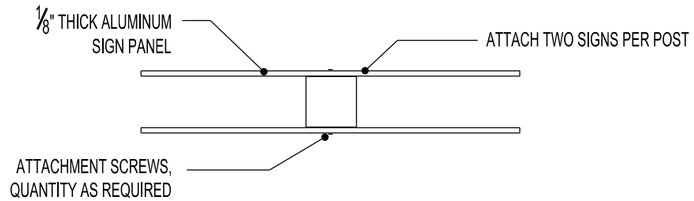

C PLAN SECTION - POLE MOUNTED

NOTES:

1. CONTINUE PAINT COLOR USED ON FRONT SURFACE OF SIGNS AROUND EDGES.
2. PAINT BACK SIGN PANEL TEAL.
3. ALL FASTENERS SHALL BE PLATED AND PAINTED TO MATCH SURROUNDING COLOR.
4. SEAL SIGN WITH TRANSPARENT ANTI-GRAFFITI FILM

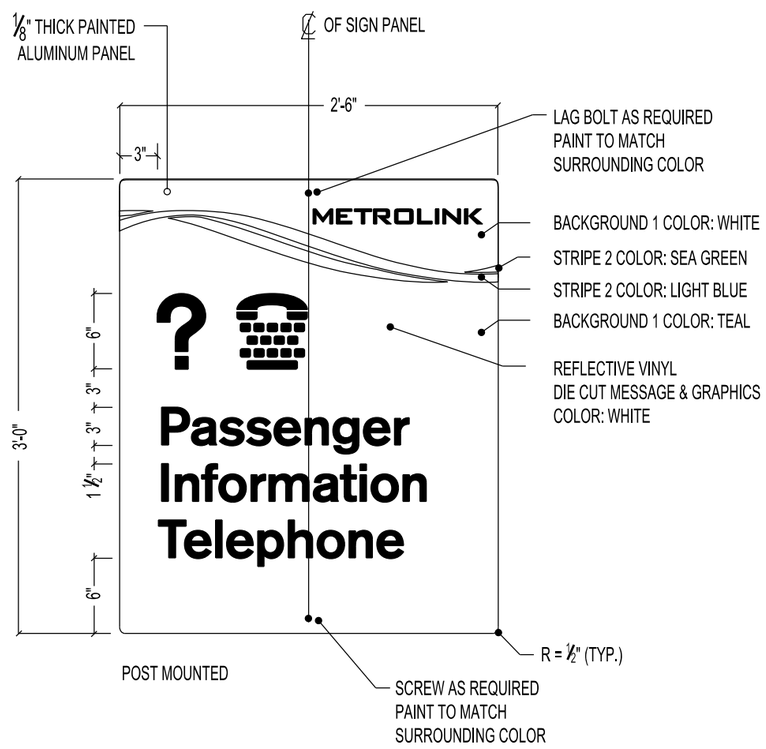

A COPY LAYOUT

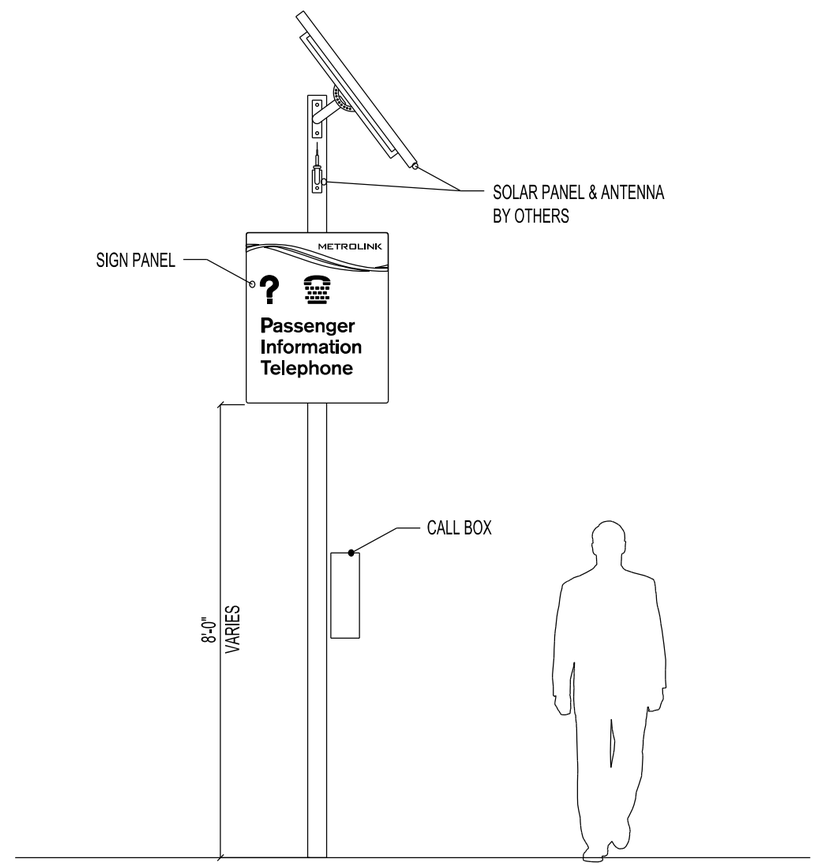

1 FRONT VIEW – LIGHT POLE MOUNTED

B ELEVATIONS

REV.	DATE	DESCRIPTION	DES.	ENG.
X	XX-XX-XX	REVISION	XX	XX

DRAWN BY: A. CARLOS DATE: 03/31/2011

ASSISTANT DIRECTOR: STANDARDS & DESIGN

DIRECTOR OF ENGINEERING AND CONSTRUCTION

SCRRA ENGINEERING STANDARDS ARE INTENDED FOR SCRRA APPROVED USES ONLY. FOR NON-SCRRA APPROVED USES, SCRRA SHALL NOT BE RESPONSIBLE FOR THE ACCURACY OR COMPLETENESS OF THE DATA OR INFORMATION CONTAINED HEREIN. THE SELECTION AND USE OF THESE STANDARDS IS THE SOLE RESPONSIBILITY OF THE USER AND SHOULD NOT BE USED WITHOUT CONSULTING A REGISTERED PROFESSIONAL ENGINEER. ALL WARRANTIES AND REPRESENTATIONS OF ANY KIND ARE DISCLAIMED. ANYONE MAKING USE OF THIS INFORMATION AGREES THAT IT ASSUMES ALL LIABILITY ARISING FROM SUCH USE. NO PART OF THESE STANDARDS SHOULD BE REPRODUCED OR DISTRIBUTED IN ANY FORM OR BY ANY MEANS WITHOUT THE PRIOR WRITTEN PERMISSION OF SCRRA. ALL RIGHTS RESERVED.

METROLINK®
SOUTHERN CALIFORNIA REGIONAL RAIL AUTHORITY
ONE GATEWAY PLAZA, 12TH FLOOR, L. A., CA. 90012

ENGINEERING STANDARDS

PASSENGER INFORMATION TELEPHONE SIGN TYPE 41

STANDARD: 3332
SCALE: NTS
REVISION: –
SHEET: 1 OF 1
CADD FILE: ES3332

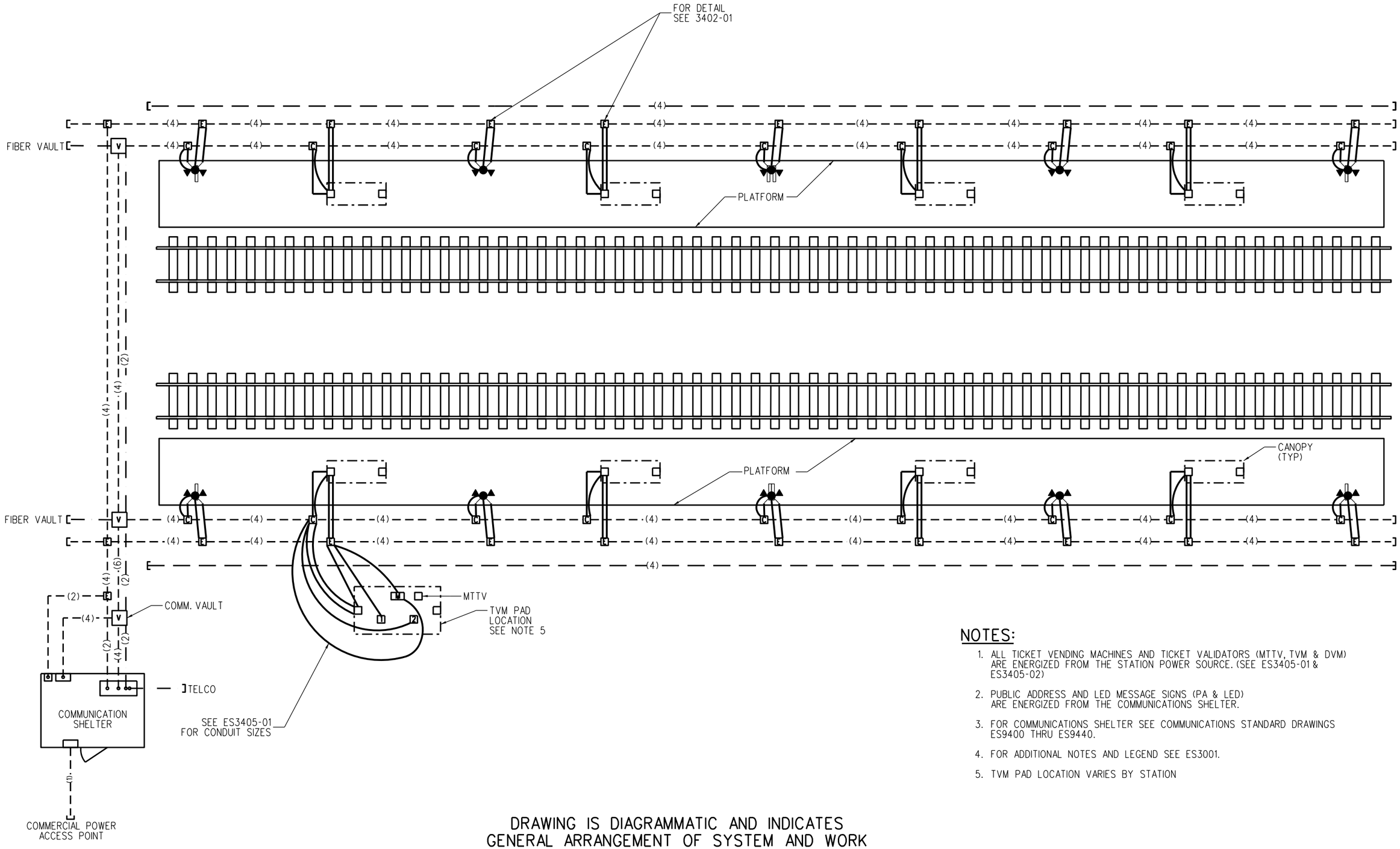

NOTES:

1. ALL TICKET VENDING MACHINES AND TICKET VALIDATORS (MTTV, TVM & DVM) ARE ENERGIZED FROM THE STATION POWER SOURCE. (SEE ES3405-01 & ES3405-02)
2. PUBLIC ADDRESS AND LED MESSAGE SIGNS (PA & LED) ARE ENERGIZED FROM THE COMMUNICATIONS SHELTER.
3. FOR COMMUNICATIONS SHELTER SEE COMMUNICATIONS STANDARD DRAWINGS ES9400 THRU ES9440.
4. FOR ADDITIONAL NOTES AND LEGEND SEE ES3001.
5. TVM PAD LOCATION VARIES BY STATION

DRAWING IS DIAGRAMMATIC AND INDICATES
GENERAL ARRANGEMENT OF SYSTEM AND WORK

REV.	DATE	DESCRIPTION	DES.	ENG.
X	XX-XX-XX	REVISION	XX	XX

DRAWN BY: A. CARLOS DATE: 03/31/2011

ASSISTANT DIRECTOR: STANDARDS & DESIGN

DIRECTOR OF ENGINEERING AND CONSTRUCTION

SCRRA ENGINEERING STANDARDS ARE INTENDED FOR SCRRA APPROVED USES ONLY. FOR NON-SCRRA APPROVED USES:
SCRRA SHALL NOT BE RESPONSIBLE FOR THE ACCURACY OR COMPLETENESS OF THE DATA OR INFORMATION CONTAINED HEREIN. THE SELECTION AND USE OF THESE STANDARDS IS THE SOLE RESPONSIBILITY OF THE USER AND SHOULD NOT BE USED WITHOUT CONSULTING A REGISTERED PROFESSIONAL ENGINEER. ALL WARRANTIES AND REPRESENTATIONS OF ANY KIND ARE DISCLAIMED. ANYONE MAKING USE OF THIS INFORMATION AGREES THAT IT ASSUMES ALL LIABILITY ARISING FROM SUCH USE. NO PART OF THESE STANDARDS SHOULD BE REPRODUCED OR DISTRIBUTED IN ANY FORM OR BY ANY MEANS WITHOUT THE PRIOR WRITTEN PERMISSION OF SCRRA. ALL RIGHTS RESERVED.

METROLINK®
SOUTHERN CALIFORNIA REGIONAL RAIL AUTHORITY
ONE GATEWAY PLAZA, 12TH FLOOR, L. A., CA. 90012

ENGINEERING STANDARDS

METROLINK STATION CONDUIT LAYOUT
SIDE PLATFORM

STANDARD: 3401
SCALE: NTS
REVISION: –
SHEET: 1 OF 2
CADD FILE: ES3401-01

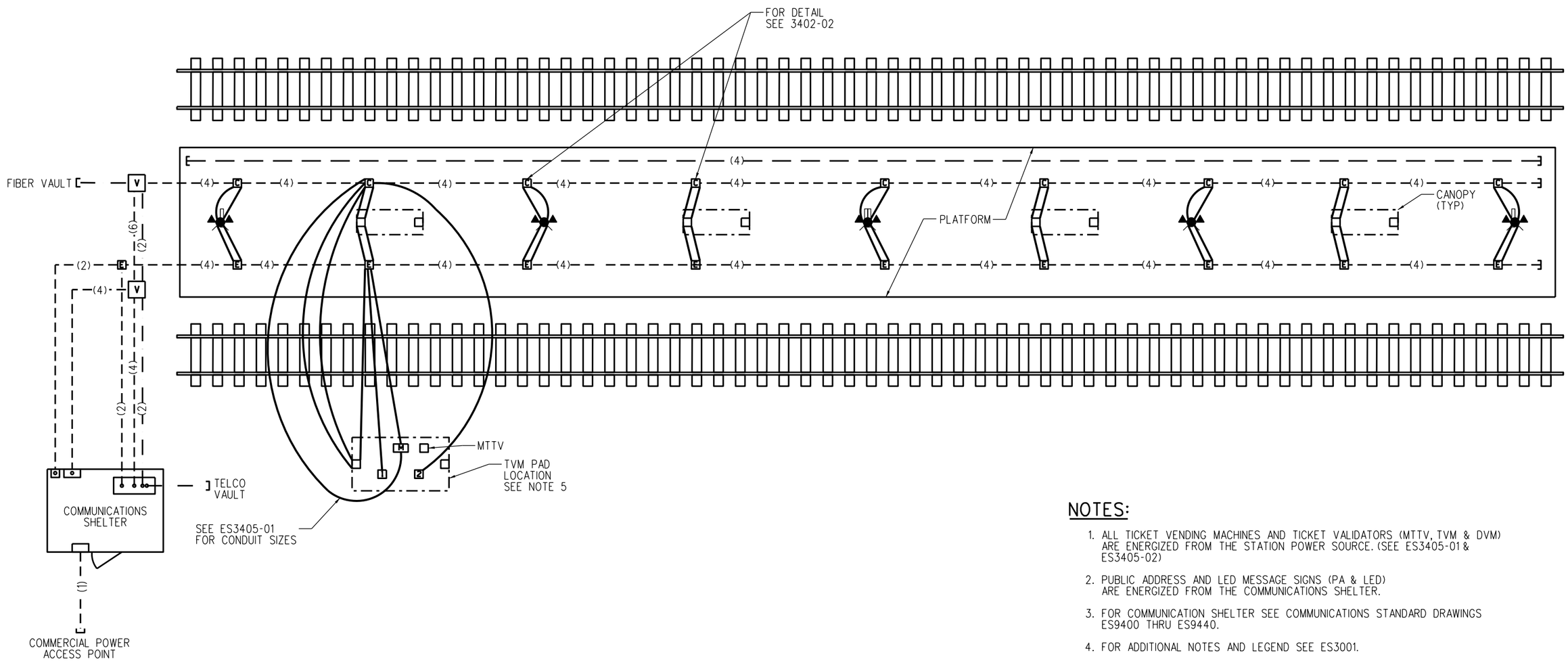

NOTES:

1. ALL TICKET VENDING MACHINES AND TICKET VALIDATORS (MTTV, TVM & DVM) ARE ENERGIZED FROM THE STATION POWER SOURCE. (SEE ES3405-01 & ES3405-02)
2. PUBLIC ADDRESS AND LED MESSAGE SIGNS (PA & LED) ARE ENERGIZED FROM THE COMMUNICATIONS SHELTER.
3. FOR COMMUNICATION SHELTER SEE COMMUNICATIONS STANDARD DRAWINGS ES9400 THRU ES9440.
4. FOR ADDITIONAL NOTES AND LEGEND SEE ES3001.
5. TVM PAD LOCATION VARIES BY STATION

DRAWING IS DIAGRAMMATIC AND INDICATES
GENERAL ARRANGEMENT OF SYSTEM AND WORK

REV.	DATE	DESCRIPTION	DES.	ENG.
X	XX-XX-XX	REVISION	XX	XX

DRAWN BY: A. CARLOS DATE: 03/31/2011

ASSISTANT DIRECTOR: STANDARDS & DESIGN

DIRECTOR OF ENGINEERING AND CONSTRUCTION

SCRRA ENGINEERING STANDARDS ARE INTENDED FOR SCRRA APPROVED USES ONLY. FOR NON-SCRRA APPROVED USES:
SCRRA SHALL NOT BE RESPONSIBLE FOR THE ACCURACY OR COMPLETENESS OF THE DATA OR INFORMATION CONTAINED HEREIN. THE SELECTION AND USE OF THESE STANDARDS IS THE SOLE RESPONSIBILITY OF THE USER AND SHOULD NOT BE USED WITHOUT CONSULTING A REGISTERED PROFESSIONAL ENGINEER. ALL WARRANTIES AND REPRESENTATIONS OF ANY KIND ARE DISCLAIMED. ANYONE MAKING USE OF THIS INFORMATION AGREES THAT IT ASSUMES ALL LIABILITY ARISING FROM SUCH USE. NO PART OF THESE STANDARDS SHOULD BE REPRODUCED OR DISTRIBUTED IN ANY FORM OR BY ANY MEANS WITHOUT THE PRIOR WRITTEN PERMISSION OF SCRRA. ALL RIGHTS RESERVED.

METROLINK®
SOUTHERN CALIFORNIA REGIONAL RAIL AUTHORITY
ONE GATEWAY PLAZA, 12TH FLOOR, L. A., CA. 90012

ENGINEERING STANDARDS

METROLINK STATION CONDUIT LAYOUT
CENTER PLATFORM

STANDARD 3401
SCALE: NTS
REVISION –
SHEET 2 OF 2
CADD FILE: ES3401-02

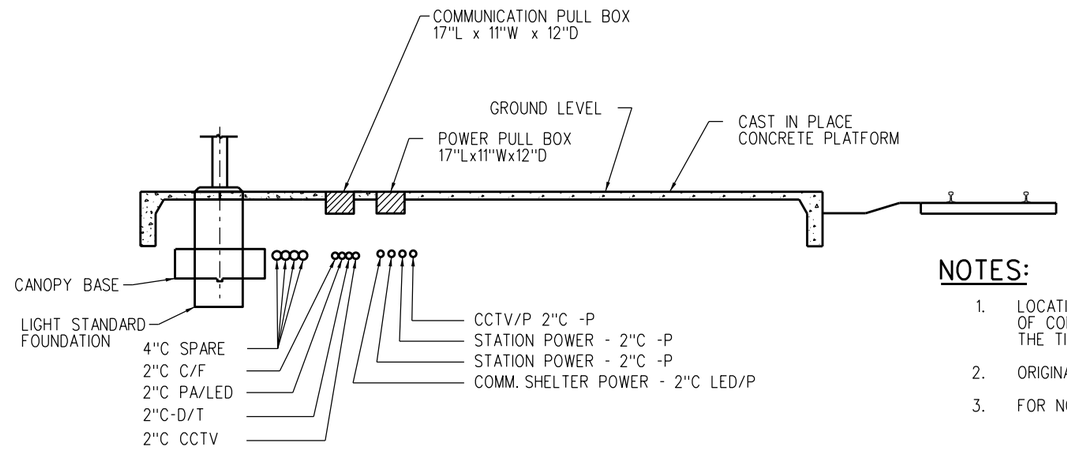

TYPICAL SECTION THRU SINGLE PLATFORM

NOTES:

1. LOCATION OF CONDUITS ON THIS DRAWING SHOWN FOR REFERENCE ONLY. ACTUAL LOCATION OF CONDUITS WILL VARY DUE TO SITE SPECIFIC CONDITIONS AND TO BE DETERMINED AT THE TIME OF DESIGN.
2. ORIGINATION OF POWER AND COMMUNICATION FEEDS TO TVM PAD VARIES BY LOCATION.
3. FOR NOTES AND LEGEND SEE ES3001.

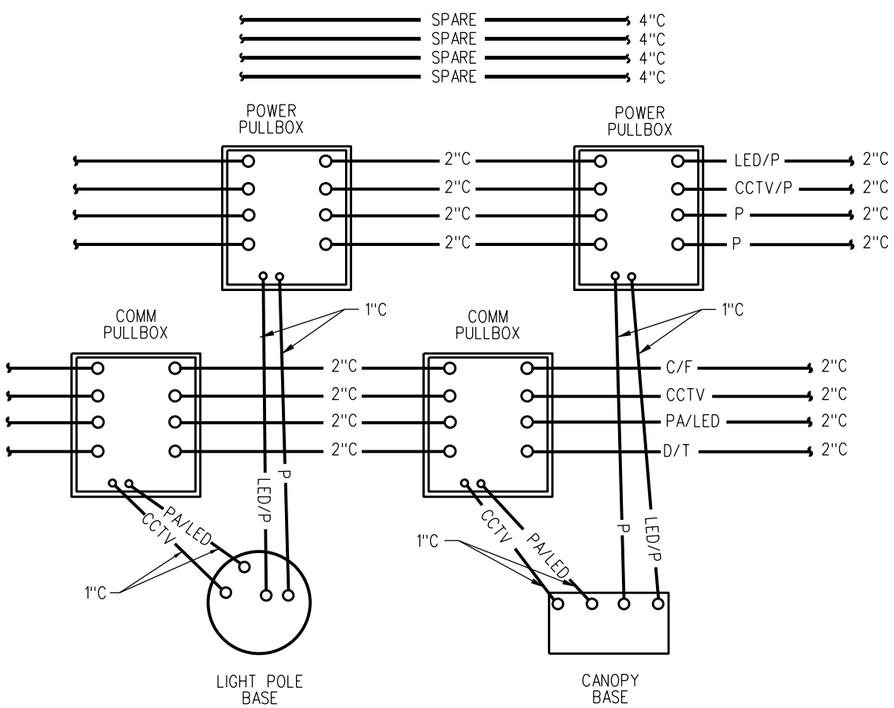

CONDUIT LAYOUT AT LIGHT POLE AND CANOPY

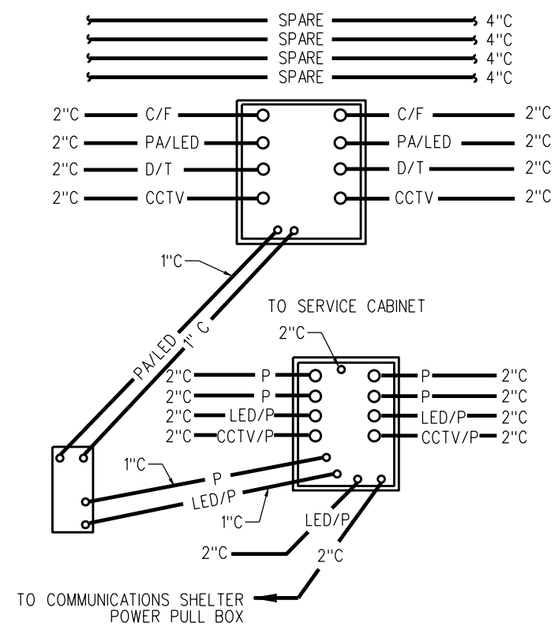

CONDUIT LAYOUT AT EMERGENCY MANAGEMENT PANEL

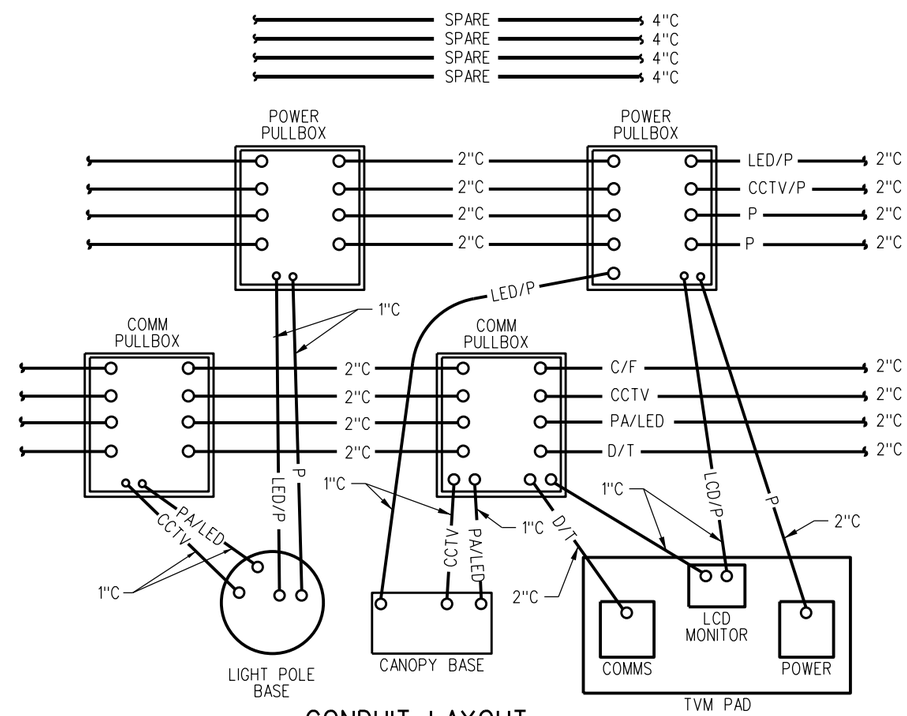

CONDUIT LAYOUT AT TVM PAD

REV.	DATE	DESCRIPTION	DES.	ENG.
X	XX-XX-XX	REVISION	XX	XX

DRAWN BY: A. CARLOS DATE: 03/31/2011

ASSISTANT DIRECTOR: STANDARDS & DESIGN

DIRECTOR OF ENGINEERING AND CONSTRUCTION

SCRRA ENGINEERING STANDARDS ARE INTENDED FOR SCRRA APPROVED USES ONLY. FOR NON-SCRRA APPROVED USES:
SCRRA SHALL NOT BE RESPONSIBLE FOR THE ACCURACY OR COMPLETENESS OF THE DATA OR INFORMATION CONTAINED HEREIN. THE SELECTION AND USE OF THESE STANDARDS IS THE SOLE RESPONSIBILITY OF THE USER AND SHOULD NOT BE USED WITHOUT CONSULTING A REGISTERED PROFESSIONAL ENGINEER. ALL WARRANTIES AND REPRESENTATIONS OF ANY KIND ARE DISCLAIMED. ANYONE MAKING USE OF THIS INFORMATION AGREES THAT IT ASSUMES ALL LIABILITY ARISING FROM SUCH USE. NO PART OF THESE STANDARDS SHOULD BE REPRODUCED OR DISTRIBUTED IN ANY FORM OR BY ANY MEANS WITHOUT THE PRIOR WRITTEN PERMISSION OF SCRRA. ALL RIGHTS RESERVED.

METROLINK®
SOUTHERN CALIFORNIA REGIONAL RAIL AUTHORITY
ONE GATEWAY PLAZA, 12TH FLOOR, L. A., CA. 90012

ENGINEERING STANDARDS

METROLINK STATION
CONDUIT LAYOUT DETAILS
SIDE PLATFORM

STANDARD 3402
SCALE: NTS
REVISION –
SHEET 1 OF 2
CADD FILE: ES3402-01

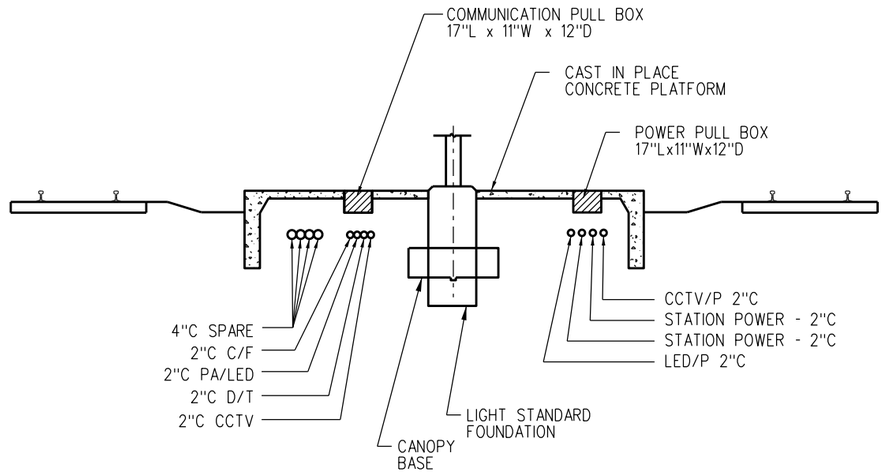

TYPICAL SECTION THRU CENTER PLATFORM

NOTES:

1. LOCATION OF CONDUITS ON THIS DRAWING SHOWN FOR REFERENCE ONLY. ACTUAL LOCATION OF CONDUITS WILL VARY DUE TO SITE SPECIFIC CONDITIONS AND TO BE DETERMINED AT THE TIME OF DESIGN.
2. FOR NOTES AND LEGEND SEE ES3001.

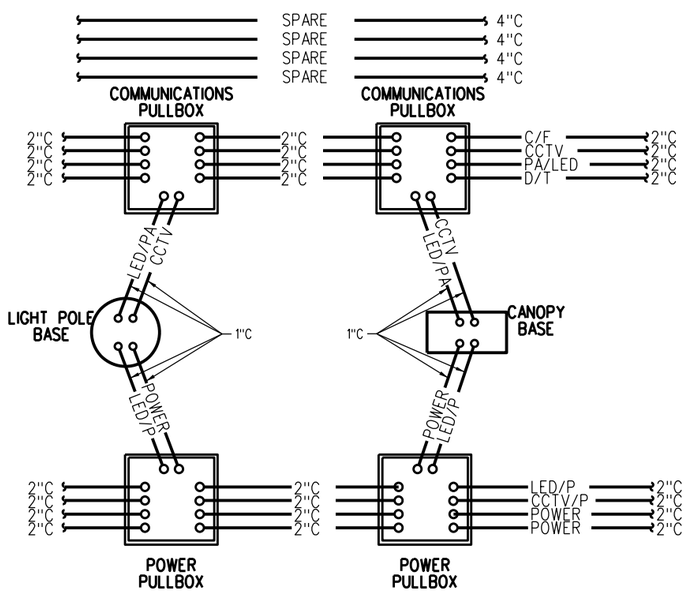

CONDUIT LAYOUT AT LIGHT POLE AND CANOPY

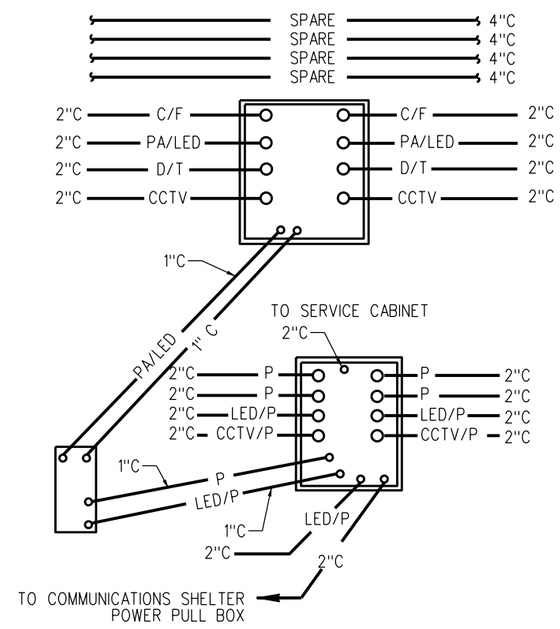

CONDUIT LAYOUT AT EMERGENCY MANAGEMENT PANEL

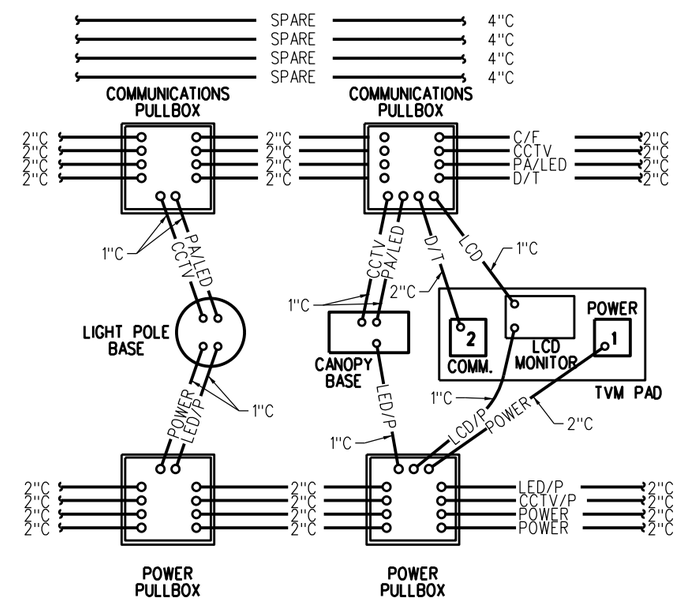

CONDUIT LAYOUT AT TVM PAD

REV.	DATE	DESCRIPTION	DES.	ENG.
X	XX-XX-XX	REVISION	XX	XX

DRAWN BY: SYSTRA DATE: 03/31/2011

ASSISTANT DIRECTOR: STANDARDS & DESIGN

DIRECTOR OF ENGINEERING AND CONSTRUCTION

SCRRA ENGINEERING STANDARDS ARE INTENDED FOR SCRRA APPROVED USES ONLY. FOR NON-SCRRA APPROVED USES:
SCRRA SHALL NOT BE RESPONSIBLE FOR THE ACCURACY OR COMPLETENESS OF THE DATA OR INFORMATION CONTAINED HEREIN. THE SELECTION AND USE OF THESE STANDARDS IS THE SOLE RESPONSIBILITY OF THE USER AND SHOULD NOT BE USED WITHOUT CONSULTING A REGISTERED PROFESSIONAL ENGINEER. ALL WARRANTIES AND REPRESENTATIONS OF ANY KIND ARE DISCLAIMED. ANYONE MAKING USE OF THIS INFORMATION AGREES THAT IT ASSUMES ALL LIABILITY ARISING FROM SUCH USE. NO PART OF THESE STANDARDS SHOULD BE REPRODUCED OR DISTRIBUTED IN ANY FORM OR BY ANY MEANS WITHOUT THE PRIOR WRITTEN PERMISSION OF SCRRA. ALL RIGHTS RESERVED.

METROLINK®
SOUTHERN CALIFORNIA REGIONAL RAIL AUTHORITY
ONE GATEWAY PLAZA, 12TH FLOOR, L. A., CA. 90012

ENGINEERING STANDARDS

METROLINK STATION
CONDUIT LAYOUT DETAILS
CENTER PLATFORM

STANDARD 3402
SCALE: NTS
REVISION –
SHEET 2 OF 2
CADD FILE: ES3402-02

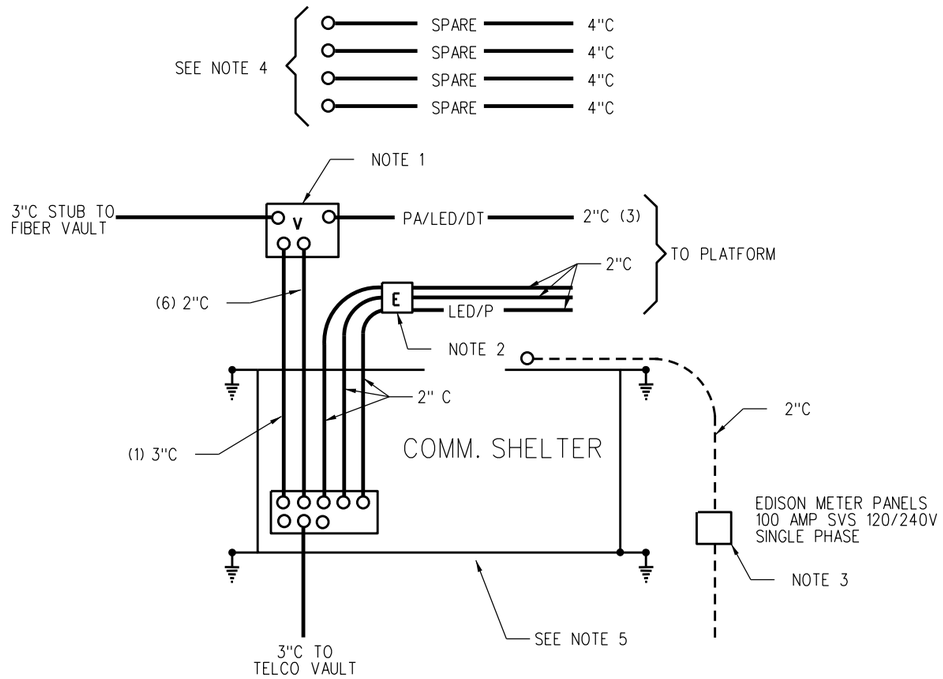

CENTER PLATFORMS

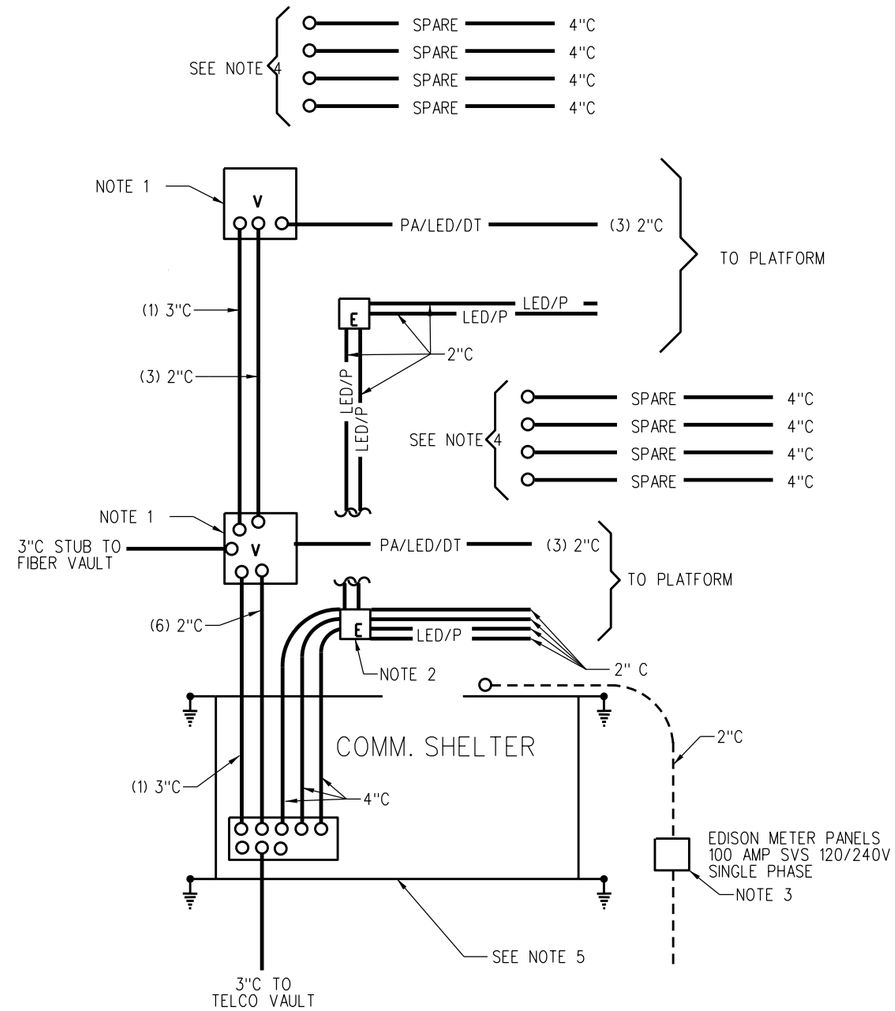

SIDE PLATFORMS

NOTES:

1. 4'-0" x 4'-0" x 4'-0" DEEP VAULT WITH GALVANIZED COVER.
2. 11" x 17" PULL BOX.
3. SEPARATE METER SERVICE 100 AMP/ 120/ 240V SINGLE PHASE.
4. SPARE CONDUIT TO RUN LENGTH OF PLATFORM AND STUBBED OFF AT END.
5. FOR COMMUNICATIONS SHELTER SEE COMMUNICATIONS STANDARD DRAWINGS ES9400 THRU ES9440.
6. FOR ADDITIONAL NOTES AND LEGEND SEE ES3001.

REV.	DATE	DESCRIPTION	DES.	ENG.
X	XX-XX-XX	REVISION	XX	XX

DRAWN BY: A. CARLOS DATE: 03/31/2011

ASSISTANT DIRECTOR: STANDARDS & DESIGN

DIRECTOR OF ENGINEERING AND CONSTRUCTION

SCRRA ENGINEERING STANDARDS ARE INTENDED FOR SCRRA APPROVED USES ONLY. FOR NON-SCRRA APPROVED USES: SCRRA SHALL NOT BE RESPONSIBLE FOR THE ACCURACY OR COMPLETENESS OF THE DATA OR INFORMATION CONTAINED HEREIN. THE SELECTION AND USE OF THESE STANDARDS IS THE SOLE RESPONSIBILITY OF THE USER AND SHOULD NOT BE USED WITHOUT CONSULTING A REGISTERED PROFESSIONAL ENGINEER. ALL WARRANTIES AND REPRESENTATIONS OF ANY KIND ARE DISCLAIMED. ANYONE MAKING USE OF THIS INFORMATION AGREES THAT IT ASSUMES ALL LIABILITY ARISING FROM SUCH USE. NO PART OF THESE STANDARDS SHOULD BE REPRODUCED OR DISTRIBUTED IN ANY FORM OR BY ANY MEANS WITHOUT THE PRIOR WRITTEN PERMISSION OF SCRRA. ALL RIGHTS RESERVED.

METROLINK®
SOUTHERN CALIFORNIA REGIONAL RAIL AUTHORITY
ONE GATEWAY PLAZA, 12TH FLOOR, L. A., CA. 90012

ENGINEERING STANDARDS

SINGLE TENNANT
COMMUNICATION EQUIPMENT ROOM
CONDUIT LAYOUT

STANDARD 3403
SCALE: NTS
REVISION –
SHEET 1 OF 1
CADD FILE: ES3403

NOTES:

1. 4'-0" x 4'-0" x 4'-0" DEEP VAULT WITH GALVANIZED COVER.
2. 11" x 17" PULL BOX.
3. SEPARATE METER SERVICE 100 AMP/ 120/ 240V SINGLE PHASE.
4. SPARE CONDUIT TO RUN LENGTH OF PLATFORM AND STUBBED OFF AT END.
5. FOR COMMUNICATIONS SHELTER SEE COMMUNICATIONS STANDARD DRAWINGS ES9400 THRU ES9440.
6. EXISTING STATIONS ARE SINGLE TENANT, NEW STATIONS ARE SHARED TENANT
7. FOR ADDITIONAL NOTES AND LEGEND SEE ES3001.

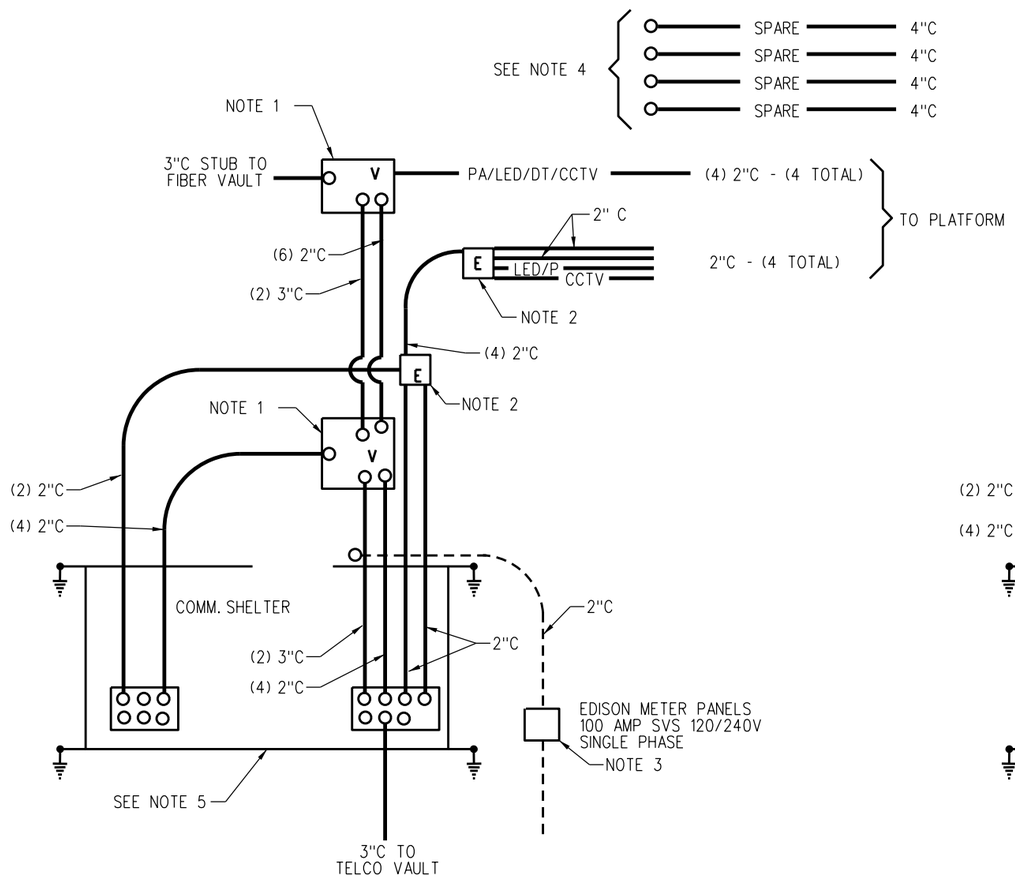

SINGLE/CENTER PLATFORM

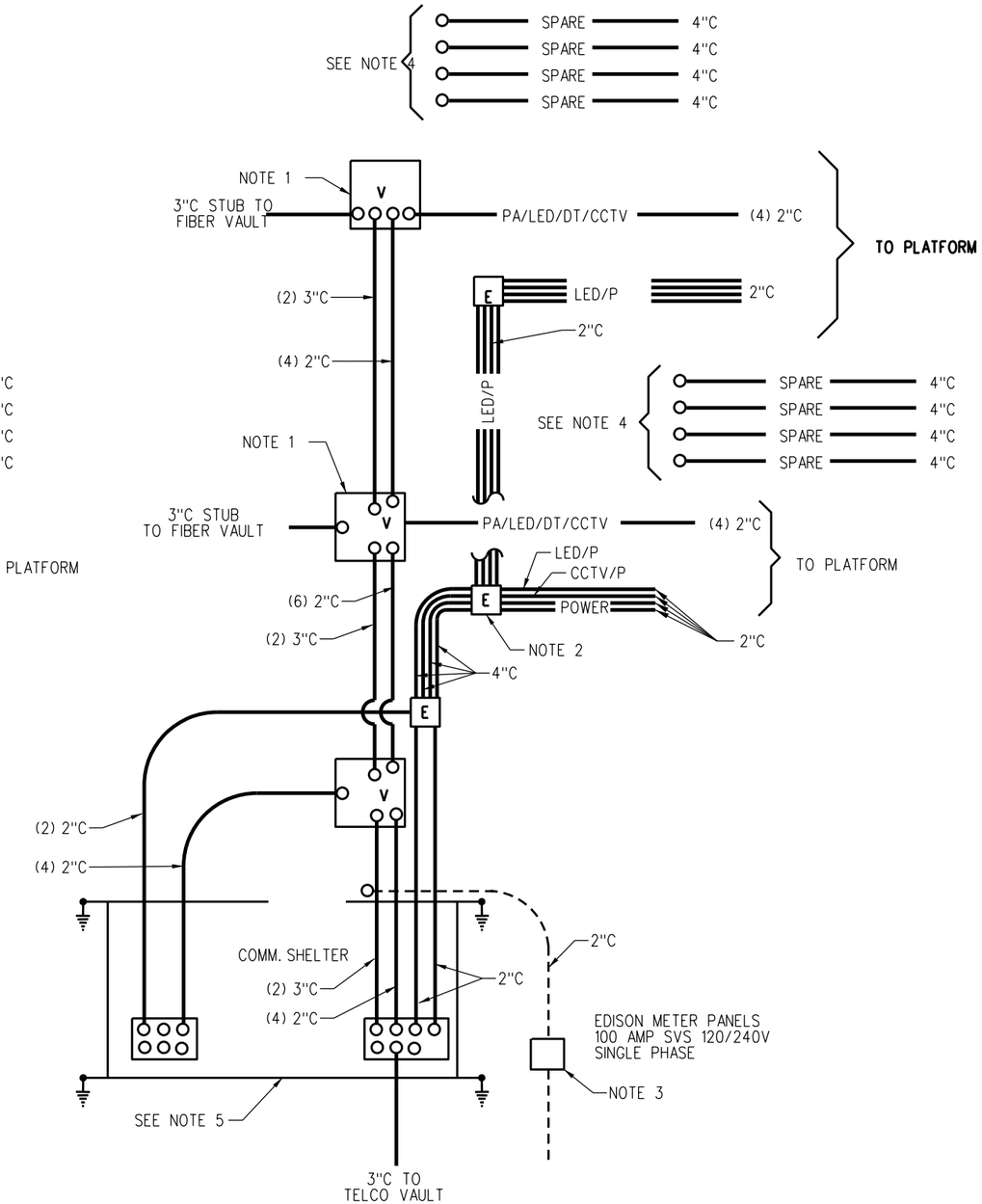

DOUBLE PLATFORM

REV.	DATE	DESCRIPTION	DES.	ENG.
X	XX-XX-XX	REVISION	XX	XX

DRAWN BY: A. CARLOS DATE: 03/31/2011

ASSISTANT DIRECTOR: STANDARDS & DESIGN

DIRECTOR OF ENGINEERING AND CONSTRUCTION

SCRRA ENGINEERING STANDARDS ARE INTENDED FOR SCRRA APPROVED USES ONLY. FOR NON-SCRRA APPROVED USES:
SCRRA SHALL NOT BE RESPONSIBLE FOR THE ACCURACY OR COMPLETENESS OF THE DATA OR INFORMATION CONTAINED HEREIN. THE SELECTION AND USE OF THESE STANDARDS IS THE SOLE RESPONSIBILITY OF THE USER AND SHOULD NOT BE USED WITHOUT CONSULTING A REGISTERED PROFESSIONAL ENGINEER. ALL WARRANTIES AND REPRESENTATIONS OF ANY KIND ARE DISCLAIMED. ANYONE MAKING USE OF THIS INFORMATION AGREES THAT IT ASSUMES ALL LIABILITY ARISING FROM SUCH USE. NO PART OF THESE STANDARDS SHOULD BE REPRODUCED OR DISTRIBUTED IN ANY FORM OR BY ANY MEANS WITHOUT THE PRIOR WRITTEN PERMISSION OF SCRRA. ALL RIGHTS RESERVED.

METROLINK®
SOUTHERN CALIFORNIA REGIONAL RAIL AUTHORITY
ONE GATEWAY PLAZA, 12TH FLOOR, L. A., CA. 90012

ENGINEERING STANDARDS

SHARED TENNANT
COMMUNICATION EQUIPMENT ROOM
CONDUIT LAYOUT

STANDARD 3404
SCALE: NTS
REVISION –
SHEET 1 OF 1
CADD FILE: ES3404

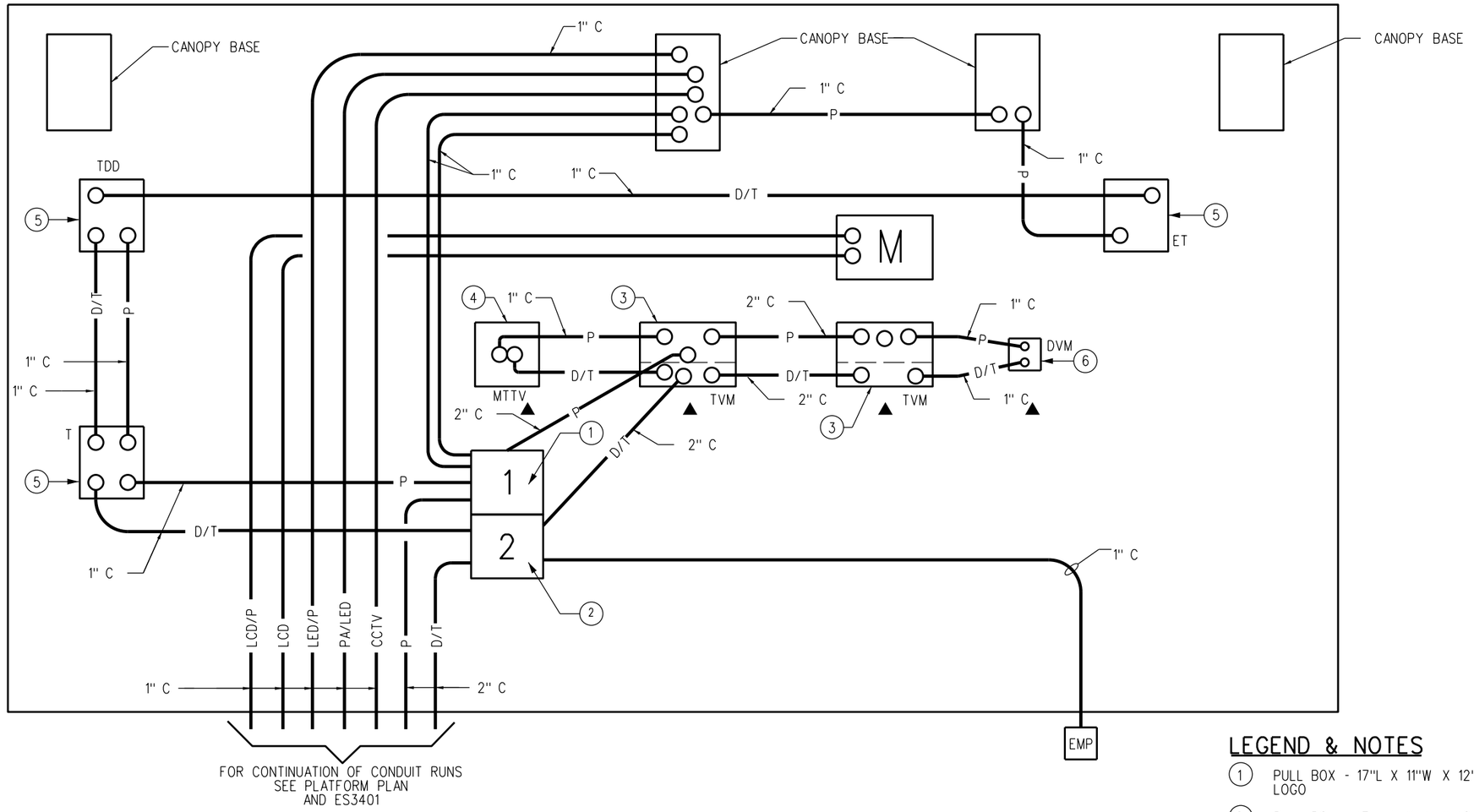

LEGEND & NOTES

1. PULL BOX - 17"L X 11"W X 12"D WITH ELECTRIC LOGO
2. PULL BOX - 17"L X 11"W X 12" D WITH "COM" LOGO
3. CHECKERED COVER SIDEWALK JUNCTION BOX 12" X 8" X 6" WITH BARRIER AS INDICATED, CROUSE HINDS "WJBF120806" OR APPROVED EQUAL
4. BLOCKOUT 12" X 12" X 2.5" DEEP IN PLATFORM FLOOR FOR MTTV PER DETAIL
5. CHECKERED COVER SIDEWALK JUNCTION BOX 6" X 4" X 4" DEEP WITH BARRIER AS INDICATED, CROUSE HINDS "WJBF060404" OR APPROVED EQUAL
6. CHECKERED COVER SIDEWALK JUNCTION BOX 4" X 4" X 4" DEEP CROUSE HINDS "WJBF040404" OR APPROVED EQUAL

▲ INDICATES FRONT FACE OF INSTALLED EQUIPMENT

FOR ADDITIONAL NOTES AND LEGEND SEE ES3001

REV.	DATE	DESCRIPTION	DES.	ENG.
X	XX-XX-XX	REVISION	XX	XX

DRAWN BY: A. CARLOS DATE: 03/31/2011

ASSISTANT DIRECTOR: STANDARDS & DESIGN

DIRECTOR OF ENGINEERING AND CONSTRUCTION

SCRRA ENGINEERING STANDARDS ARE INTENDED FOR SCRRA APPROVED USES ONLY. FOR NON-SCRRA APPROVED USES:
SCRRA SHALL NOT BE RESPONSIBLE FOR THE ACCURACY OR COMPLETENESS OF THE DATA OR INFORMATION CONTAINED HEREIN. THE SELECTION AND USE OF THESE STANDARDS IS THE SOLE RESPONSIBILITY OF THE USER AND SHOULD NOT BE USED WITHOUT CONSULTING A REGISTERED PROFESSIONAL ENGINEER. ALL WARRANTIES AND REPRESENTATIONS OF ANY KIND ARE DISCLAIMED. ANYONE MAKING USE OF THIS INFORMATION AGREES THAT IT ASSUMES ALL LIABILITY ARISING FROM SUCH USE. NO PART OF THESE STANDARDS SHOULD BE REPRODUCED OR DISTRIBUTED IN ANY FORM OR BY ANY MEANS WITHOUT THE PRIOR WRITTEN PERMISSION OF SCRRA. ALL RIGHTS RESERVED.

METROLINK®
SOUTHERN CALIFORNIA REGIONAL RAIL AUTHORITY
ONE GATEWAY PLAZA, 12TH FLOOR, L. A., CA. 90012

ENGINEERING STANDARDS

METROLINK STATION
TVM PAD (COMPLETE CONFIGURATION)

STANDARD 3405
SCALE: NTS
REVISION –
SHEET 1 OF 2
CADD FILE: ES3405-01

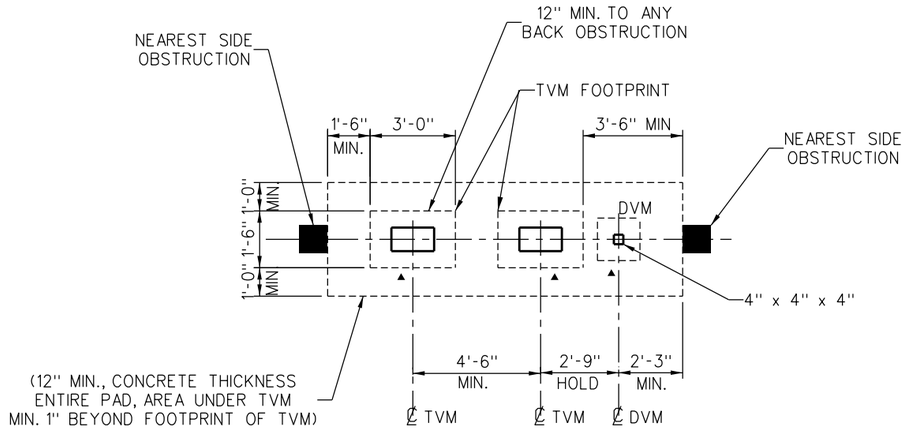

NOTES & LEGEND:

1. PULL BOX - 17"Lx11"Wx12"D WITH ELECTRIC LOGO
2. PULL BOX - 17"Lx11"Wx12" D WITH "COM" LOGO
3. CHECKERED COVER SIDEWALK JUNCTION BOX 12"x8"x6"
4. CROUSE HINDS "WJBF120806" OR APPROVED EQUAL. CHECKERED COVER SIDEWALK JUNCTION BOX 4"x4"x4' DEEP
5. FOR ADDITIONAL NOTES AND LEGEND SEE ES3001

▲ INDICATES FRONT FACE OF EQUIPMENT (CROUSE HINDS WJBF040404 OR APPROVED EQUAL)

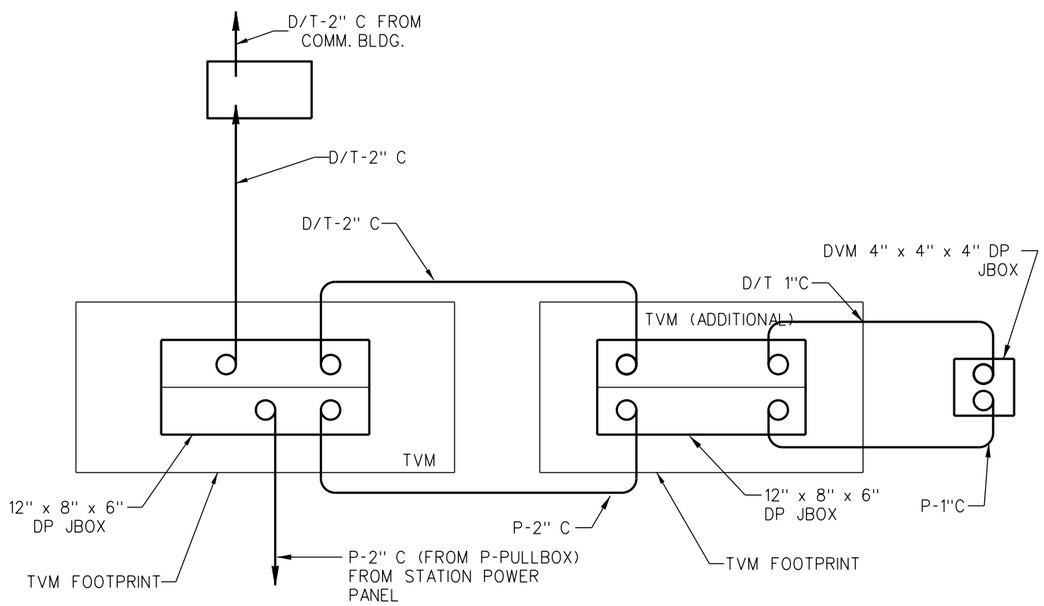

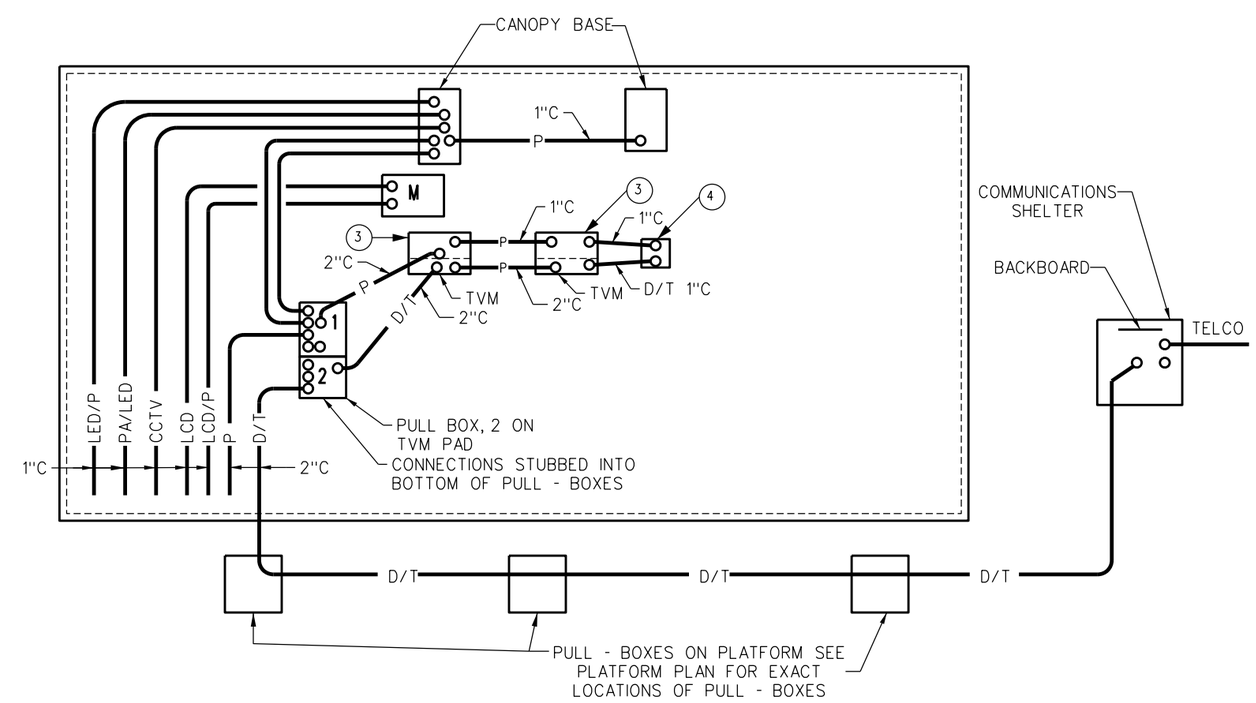

REV.	DATE	DESCRIPTION	DES.	ENG.
X	XX-XX-XX	REVISION	XX	XX

DRAWN BY: A. CARLOS DATE: 03/31/2011

ASSISTANT DIRECTOR: STANDARDS & DESIGN

DIRECTOR OF ENGINEERING AND CONSTRUCTION

SCRRA ENGINEERING STANDARDS ARE INTENDED FOR SCRRA APPROVED USES ONLY. FOR NON-SCRRA APPROVED USES:
SCRRA SHALL NOT BE RESPONSIBLE FOR THE ACCURACY OR COMPLETENESS OF THE DATA OR INFORMATION CONTAINED HEREIN. THE SELECTION AND USE OF THESE STANDARDS IS THE SOLE RESPONSIBILITY OF THE USER AND SHOULD NOT BE USED WITHOUT CONSULTING A REGISTERED PROFESSIONAL ENGINEER. ALL WARRANTIES AND REPRESENTATIONS OF ANY KIND ARE DISCLAIMED. ANYONE MAKING USE OF THIS INFORMATION AGREES THAT IT ASSUMES ALL LIABILITY ARISING FROM SUCH USE. NO PART OF THESE STANDARDS SHOULD BE REPRODUCED OR DISTRIBUTED IN ANY FORM OR BY ANY MEANS WITHOUT THE PRIOR WRITTEN PERMISSION OF SCRRA. ALL RIGHTS RESERVED.

METROLINK®
SOUTHERN CALIFORNIA REGIONAL RAIL AUTHORITY
ONE GATEWAY PLAZA, 12TH FLOOR, L. A., CA. 90012

ENGINEERING STANDARDS

METROLINK STATION
TVM PAD (MINIMUM CONFIGURATION)

STANDARD 3405
SCALE: NTS
REVISION –
SHEET 2 OF 2
CADD FILE: ES3405-02

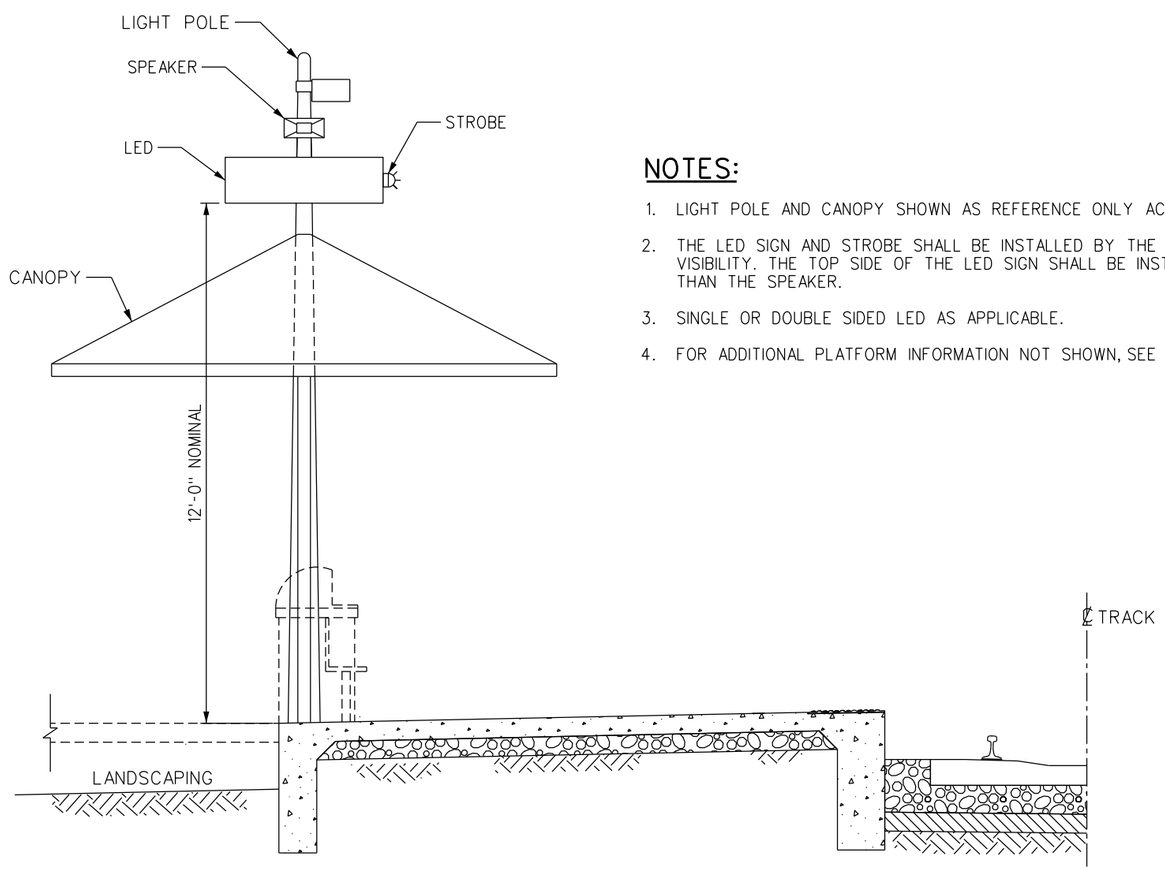

SIDE PLATFORM

NOTES:

1. LIGHT POLE AND CANOPY SHOWN AS REFERENCE ONLY ACTUAL DESIGN VARIES BY STATION.
2. THE LED SIGN AND STROBE SHALL BE INSTALLED BY THE CONTRACTOR TO PROVIDE MAXIMUM VISIBILITY. THE TOP SIDE OF THE LED SIGN SHALL BE INSTALLED APPROXIMATELY 1' LOWER THAN THE SPEAKER.
3. SINGLE OR DOUBLE SIDED LED AS APPLICABLE.
4. FOR ADDITIONAL PLATFORM INFORMATION NOT SHOWN, SEE DRAWINGS ES3201.

REV.	DATE	DESCRIPTION	DES.	ENG.
X	XX-XX-XX	REVISION	XX	XX

DRAWN BY: A. CARLOS DATE: 03/31/2011

ASSISTANT DIRECTOR: STANDARDS & DESIGN

DIRECTOR OF ENGINEERING AND CONSTRUCTION

SCRRA ENGINEERING STANDARDS ARE INTENDED FOR SCRRA APPROVED USES ONLY. FOR NON-SCRRA APPROVED USES:
SCRRA SHALL NOT BE RESPONSIBLE FOR THE ACCURACY OR COMPLETENESS OF THE DATA OR INFORMATION CONTAINED HEREIN. THE SELECTION AND USE OF THESE STANDARDS IS THE SOLE RESPONSIBILITY OF THE USER AND SHOULD NOT BE USED WITHOUT CONSULTING A REGISTERED PROFESSIONAL ENGINEER. ALL WARRANTIES AND REPRESENTATIONS OF ANY KIND ARE DISCLAIMED. ANYONE MAKING USE OF THIS INFORMATION AGREES THAT IT ASSUMES ALL LIABILITY ARISING FROM SUCH USE. NO PART OF THESE STANDARDS SHOULD BE REPRODUCED OR DISTRIBUTED IN ANY FORM OR BY ANY MEANS WITHOUT THE PRIOR WRITTEN PERMISSION OF SCRRA. ALL RIGHTS RESERVED.

METROLINK®
SOUTHERN CALIFORNIA REGIONAL RAIL AUTHORITY
ONE GATEWAY PLAZA, 12TH FLOOR, L. A., CA. 90012

ENGINEERING STANDARDS

EPIS MOUNTING LOCATION
SIDE PLATFORMS

STANDARD 3502
SCALE: NTS
REVISION –
SHEET 1 OF 1
CADD FILE: ES3502

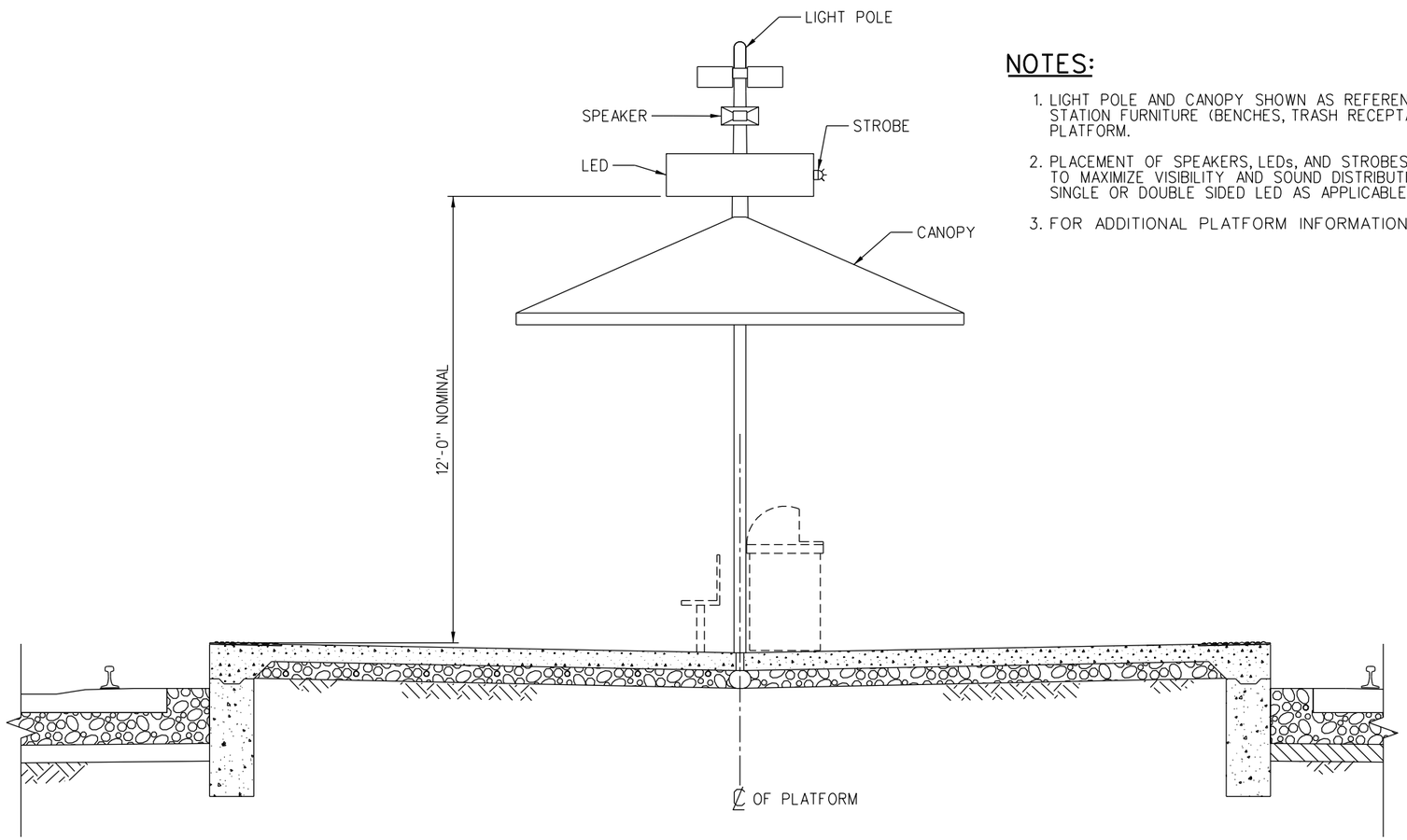

NOTES:

1. LIGHT POLE AND CANOPY SHOWN AS REFERENCE ONLY ACTUAL DESIGN VARIES BY STATION. STATION FURNITURE (BENCHES, TRASH RECEPTACLES) SHALL BE PLACED AT THE BACK OF THE PLATFORM.
2. PLACEMENT OF SPEAKERS, LEDs, AND STROBES SHALL BE LOCATED BY THE CONTRACTOR TO MAXIMIZE VISIBILITY AND SOUND DISTRIBUTION, AND VARIES BY STATION SINGLE OR DOUBLE SIDED LED AS APPLICABLE
3. FOR ADDITIONAL PLATFORM INFORMATION NOT SHOWN, SEE DRAWING ES3202.

CENTER PLATFORM

REV.	DATE	DESCRIPTION	DES.	ENG.
X	XX-XX-XX	REVISION	XX	XX

DRAWN BY: A. CARLOS DATE: 03/31/2011

ASSISTANT DIRECTOR: STANDARDS & DESIGN

DIRECTOR OF ENGINEERING AND CONSTRUCTION

SCRRA ENGINEERING STANDARDS ARE INTENDED FOR SCRRA APPROVED USES ONLY. FOR NON-SCRRA APPROVED USES:
SCRRA SHALL NOT BE RESPONSIBLE FOR THE ACCURACY OR COMPLETENESS OF THE DATA OR INFORMATION CONTAINED HEREIN. THE SELECTION AND USE OF THESE STANDARDS IS THE SOLE RESPONSIBILITY OF THE USER AND SHOULD NOT BE USED WITHOUT CONSULTING A REGISTERED PROFESSIONAL ENGINEER. ALL WARRANTIES AND REPRESENTATIONS OF ANY KIND ARE DISCLAIMED. ANYONE MAKING USE OF THIS INFORMATION AGREES THAT IT ASSUMES ALL LIABILITY ARISING FROM SUCH USE. NO PART OF THESE STANDARDS SHOULD BE REPRODUCED OR DISTRIBUTED IN ANY FORM OR BY ANY MEANS WITHOUT THE PRIOR WRITTEN PERMISSION OF SCRRA. ALL RIGHTS RESERVED.

METROLINK®
SOUTHERN CALIFORNIA REGIONAL RAIL AUTHORITY
ONE GATEWAY PLAZA, 12TH FLOOR, L. A., CA. 90012

ENGINEERING STANDARDS

EPIS MOUNTING LOCATION
CENTER PLATFORMS

STANDARD: 3503
SCALE: NTS
REVISION: –
SHEET: 1 OF 1
CADD FILE: ES3503

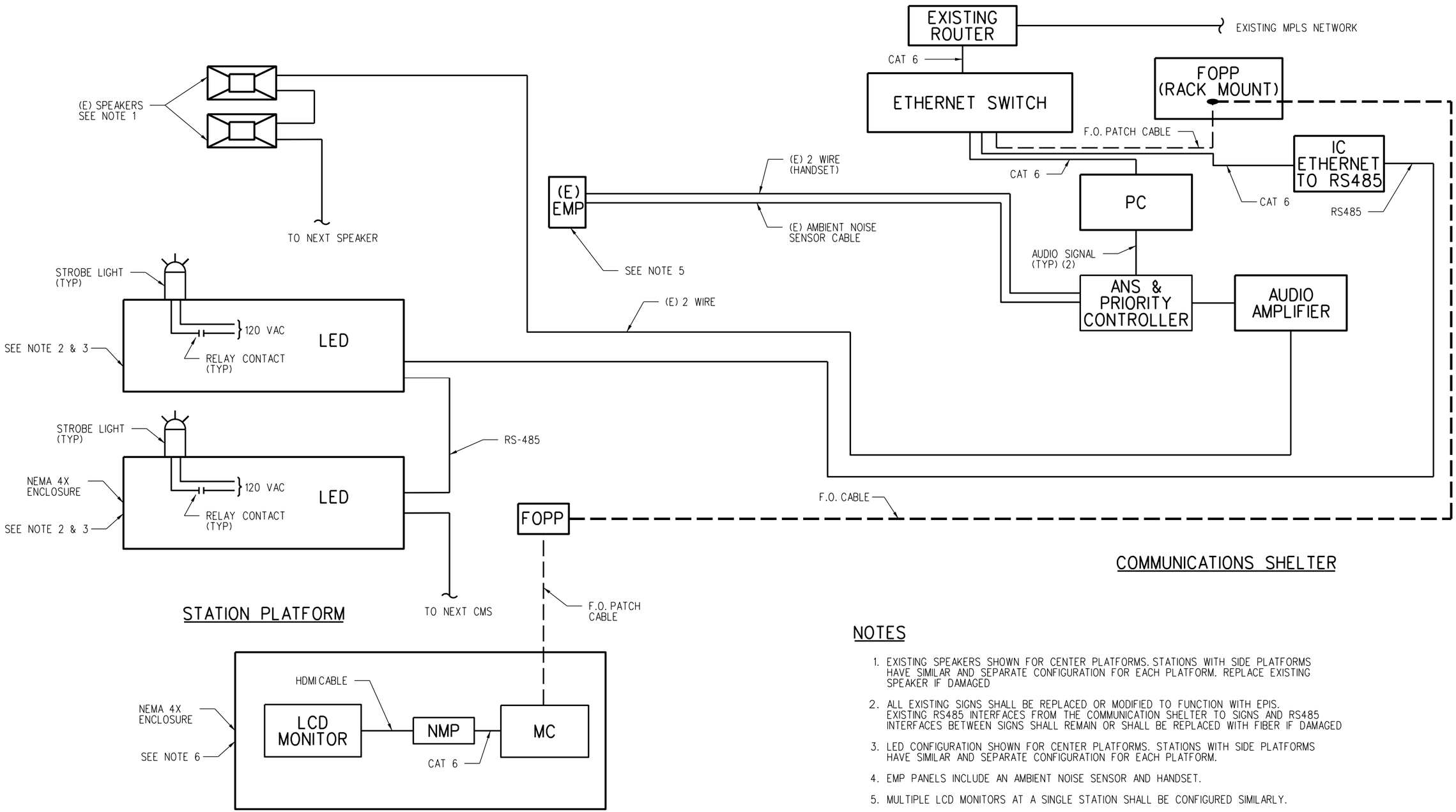

NOTES

1. EXISTING SPEAKERS SHOWN FOR CENTER PLATFORMS. STATIONS WITH SIDE PLATFORMS HAVE SIMILAR AND SEPARATE CONFIGURATION FOR EACH PLATFORM. REPLACE EXISTING SPEAKER IF DAMAGED
2. ALL EXISTING SIGNS SHALL BE REPLACED OR MODIFIED TO FUNCTION WITH EPIS. EXISTING RS485 INTERFACES FROM THE COMMUNICATION SHELTER TO SIGNS AND RS485 INTERFACES BETWEEN SIGNS SHALL REMAIN OR SHALL BE REPLACED WITH FIBER IF DAMAGED
3. LED CONFIGURATION SHOWN FOR CENTER PLATFORMS. STATIONS WITH SIDE PLATFORMS HAVE SIMILAR AND SEPARATE CONFIGURATION FOR EACH PLATFORM.
4. EMP PANELS INCLUDE AN AMBIENT NOISE SENSOR AND HANDSET.
5. MULTIPLE LCD MONITORS AT A SINGLE STATION SHALL BE CONFIGURED SIMILARLY.
6. POWER DISTRIBUTION SHOWN ON ES3507

REV.	DATE	DESCRIPTION	DES.	ENG.
X	XX-XX-XX	REVISION	XX	XX

DRAWN BY: SYSTRA DATE: 03/31/2011

ASSISTANT DIRECTOR: STANDARDS & DESIGN

DIRECTOR OF ENGINEERING AND CONSTRUCTION

SCRRA ENGINEERING STANDARDS ARE INTENDED FOR SCRRA APPROVED USES ONLY. FOR NON-SCRRA APPROVED USES, SCRRA SHALL NOT BE RESPONSIBLE FOR THE ACCURACY OR COMPLETENESS OF THE DATA OR INFORMATION CONTAINED HEREIN. THE SELECTION AND USE OF THESE STANDARDS IS THE SOLE RESPONSIBILITY OF THE USER AND SHOULD NOT BE USED WITHOUT CONSULTING A REGISTERED PROFESSIONAL ENGINEER. ALL WARRANTIES AND REPRESENTATIONS OF ANY KIND ARE DISCLAIMED. ANYONE MAKING USE OF THIS INFORMATION AGREES THAT IT ASSUMES ALL LIABILITY ARISING FROM SUCH USE. NO PART OF THESE STANDARDS SHOULD BE REPRODUCED OR DISTRIBUTED IN ANY FORM OR BY ANY MEANS WITHOUT THE PRIOR WRITTEN PERMISSION OF SCRRA. ALL RIGHTS RESERVED.

METROLINK®

SOUTHERN CALIFORNIA REGIONAL RAIL AUTHORITY
ONE GATEWAY PLAZA, 12TH FLOOR, L. A., CA. 90012

ENGINEERING STANDARDS

METROLINK STATION
EPIS BLOCK DIAGRAM
(EXISTING STATION)

STANDARD 3505
SCALE: NTS
REVISION –
SHEET 1 OF 2
CADD FILE: ES3505-01

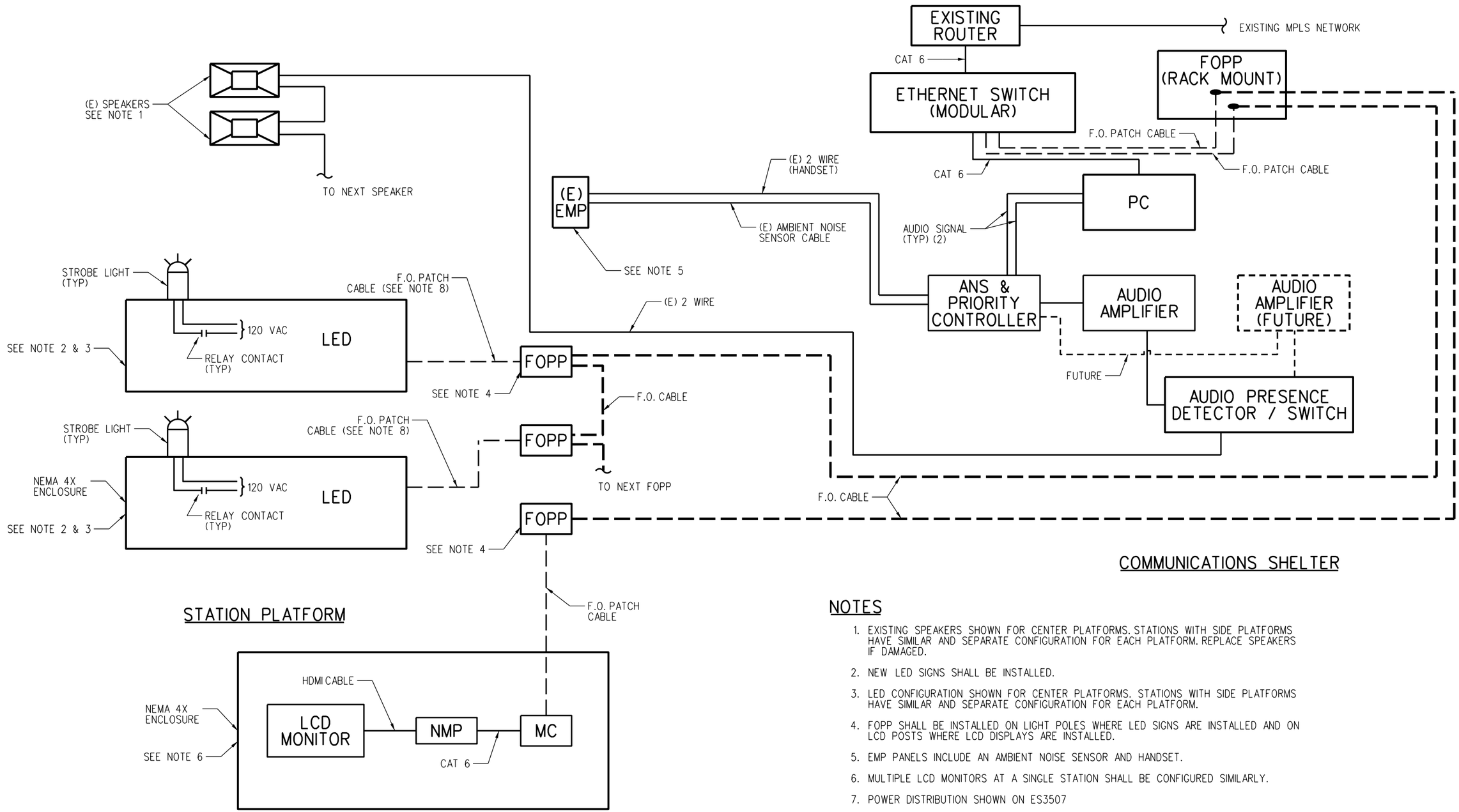

NOTES

1. EXISTING SPEAKERS SHOWN FOR CENTER PLATFORMS. STATIONS WITH SIDE PLATFORMS HAVE SIMILAR AND SEPARATE CONFIGURATION FOR EACH PLATFORM. REPLACE SPEAKERS IF DAMAGED.
2. NEW LED SIGNS SHALL BE INSTALLED.
3. LED CONFIGURATION SHOWN FOR CENTER PLATFORMS. STATIONS WITH SIDE PLATFORMS HAVE SIMILAR AND SEPARATE CONFIGURATION FOR EACH PLATFORM.
4. FOPP SHALL BE INSTALLED ON LIGHT POLES WHERE LED SIGNS ARE INSTALLED AND ON LCD POSTS WHERE LCD DISPLAYS ARE INSTALLED.
5. EMP PANELS INCLUDE AN AMBIENT NOISE SENSOR AND HANDSET.
6. MULTIPLE LCD MONITORS AT A SINGLE STATION SHALL BE CONFIGURED SIMILARLY.
7. POWER DISTRIBUTION SHOWN ON ES3507
8. EACH LED SIGN SHALL COMMUNICATE OVER ONE DEDICATED PAIR OF FIBER STRANDS.

REV.	DATE	DESCRIPTION	DES.	ENG.
X	XX-XX-XX	REVISION	XX	XX

DRAWN BY: SYSTRA DATE: 03/31/2011

ASSISTANT DIRECTOR: STANDARDS & DESIGN

DIRECTOR OF ENGINEERING AND CONSTRUCTION

SCRRA ENGINEERING STANDARDS ARE INTENDED FOR SCRRA APPROVED USES ONLY. FOR NON-SCRRA APPROVED USES, SCRRA SHALL NOT BE RESPONSIBLE FOR THE ACCURACY OR COMPLETENESS OF THE DATA OR INFORMATION CONTAINED HEREIN. THE SELECTION AND USE OF THESE STANDARDS IS THE SOLE RESPONSIBILITY OF THE USER AND SHOULD NOT BE USED WITHOUT CONSULTING A REGISTERED PROFESSIONAL ENGINEER. ALL WARRANTIES AND REPRESENTATIONS OF ANY KIND ARE DISCLAIMED. ANYONE MAKING USE OF THIS INFORMATION AGREES THAT IT ASSUMES ALL LIABILITY ARISING FROM SUCH USE. NO PART OF THESE STANDARDS SHOULD BE REPRODUCED OR DISTRIBUTED IN ANY FORM OR BY ANY MEANS WITHOUT THE PRIOR WRITTEN PERMISSION OF SCRRA. ALL RIGHTS RESERVED.

METROLINK®
SOUTHERN CALIFORNIA REGIONAL RAIL AUTHORITY
ONE GATEWAY PLAZA, 12TH FLOOR, L. A., CA. 90012

ENGINEERING STANDARDS

METROLINK STATION
EPIS BLOCK DIAGRAM
(NEW STATION)

STANDARD 3505
SCALE: NTS
REVISION –
SHEET 2 OF 2
CADD FILE: ES3505-02

NOTES:

1. PROVIDE METAL PLATE FLUSH WITH TOP OF PLATFORM TO COVER OPENING UNTIL MTTV MACHINE IS INSTALLED.
2. FOR ADDITIONAL NOTES AND LEGEND SEE ES3001.
3. MTTV'S LOCATED AWAY FROM TVM PAD DO NOT REQUIRE D/T CONDUIT.

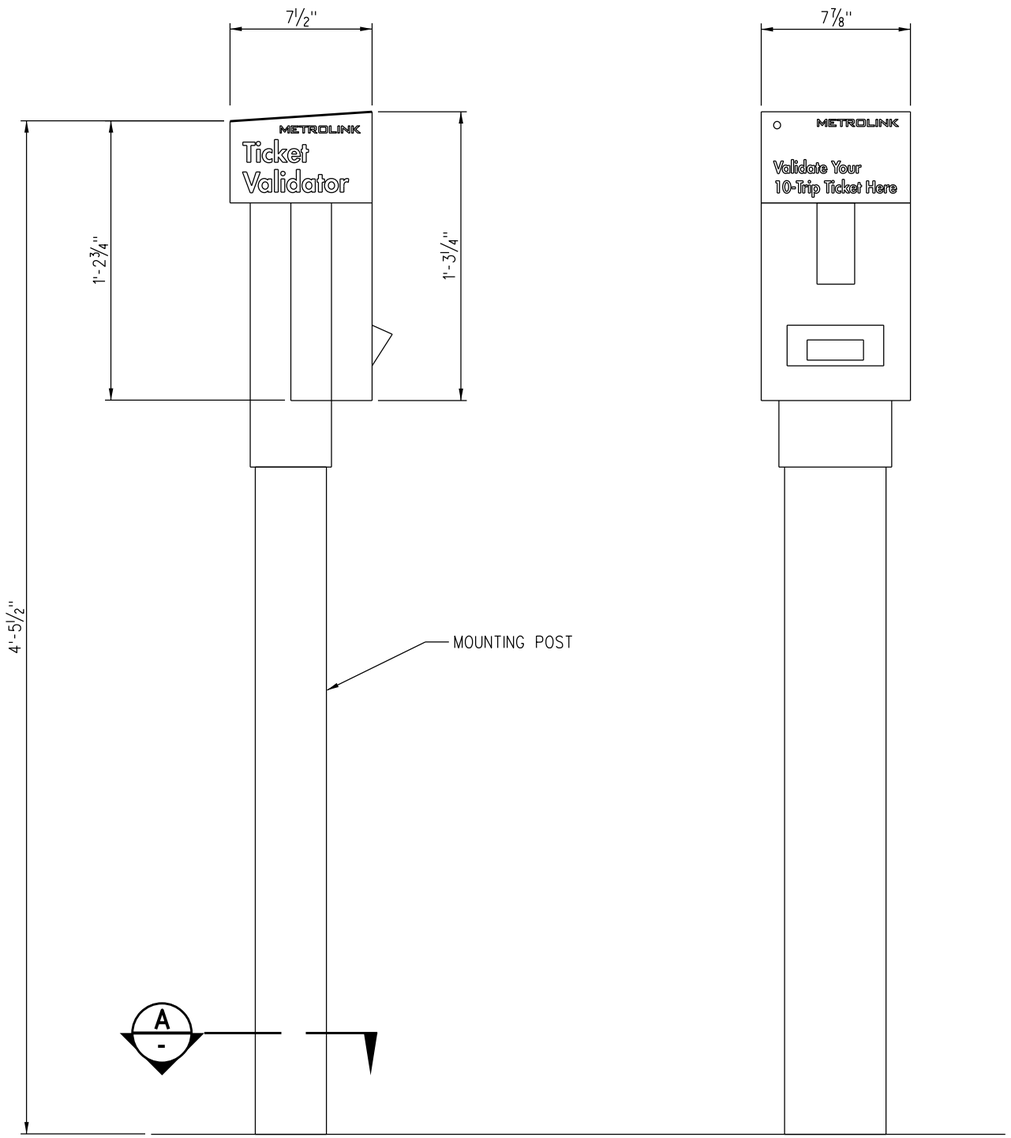

SIDE VIEW

FRONT VIEW

TICKET VALIDATOR

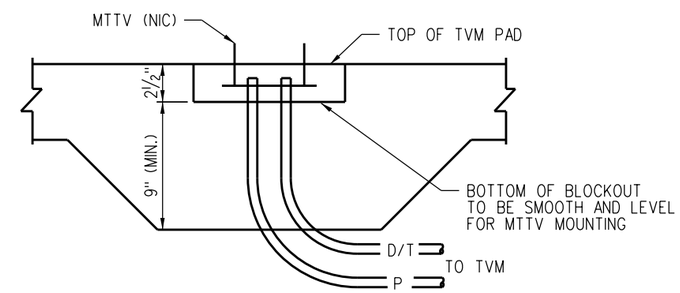

SECTION B -

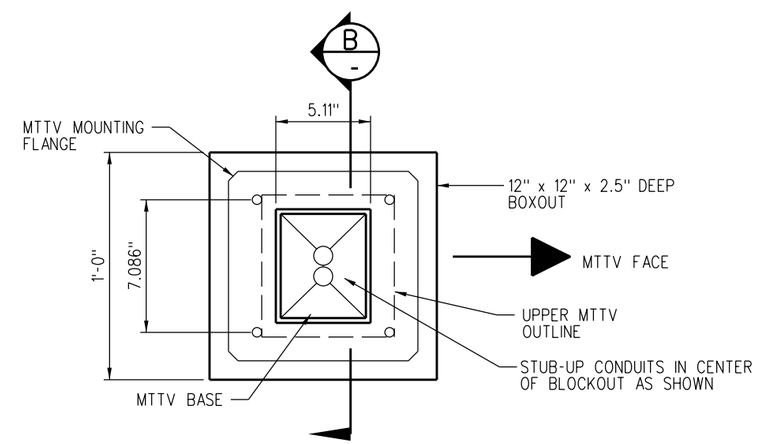

SECTION A -

REV.	DATE	DESCRIPTION	DES.	ENG.
X	XX-XX-XX	REVISION	XX	XX

DRAWN BY: A. CARLOS DATE: 03/31/2011

ASSISTANT DIRECTOR: STANDARDS & DESIGN

DIRECTOR OF ENGINEERING AND CONSTRUCTION

SCRRA ENGINEERING STANDARDS ARE INTENDED FOR SCRRA APPROVED USES ONLY. FOR NON-SCRRA APPROVED USES:
SCRRA SHALL NOT BE RESPONSIBLE FOR THE ACCURACY OR COMPLETENESS OF THE DATA OR INFORMATION CONTAINED HEREIN. THE SELECTION AND USE OF THESE STANDARDS IS THE SOLE RESPONSIBILITY OF THE USER AND SHOULD NOT BE USED WITHOUT CONSULTING A REGISTERED PROFESSIONAL ENGINEER. ALL WARRANTIES AND REPRESENTATIONS OF ANY KIND ARE DISCLAIMED. ANYONE MAKING USE OF THIS INFORMATION AGREES THAT IT ASSUMES ALL LIABILITY ARISING FROM SUCH USE. NO PART OF THESE STANDARDS SHOULD BE REPRODUCED OR DISTRIBUTED IN ANY FORM OR BY ANY MEANS WITHOUT THE PRIOR WRITTEN PERMISSION OF SCRRA. ALL RIGHTS RESERVED.

METROLINK®
SOUTHERN CALIFORNIA REGIONAL RAIL AUTHORITY
ONE GATEWAY PLAZA, 12TH FLOOR, L. A., CA. 90012

ENGINEERING STANDARDS

METROLINK STATION
MTTV BLOCKOUT PLAN

STANDARD: 3506
SCALE: NTS
REVISION: –
SHEET: 1 OF 1
CADD FILE: ES3506

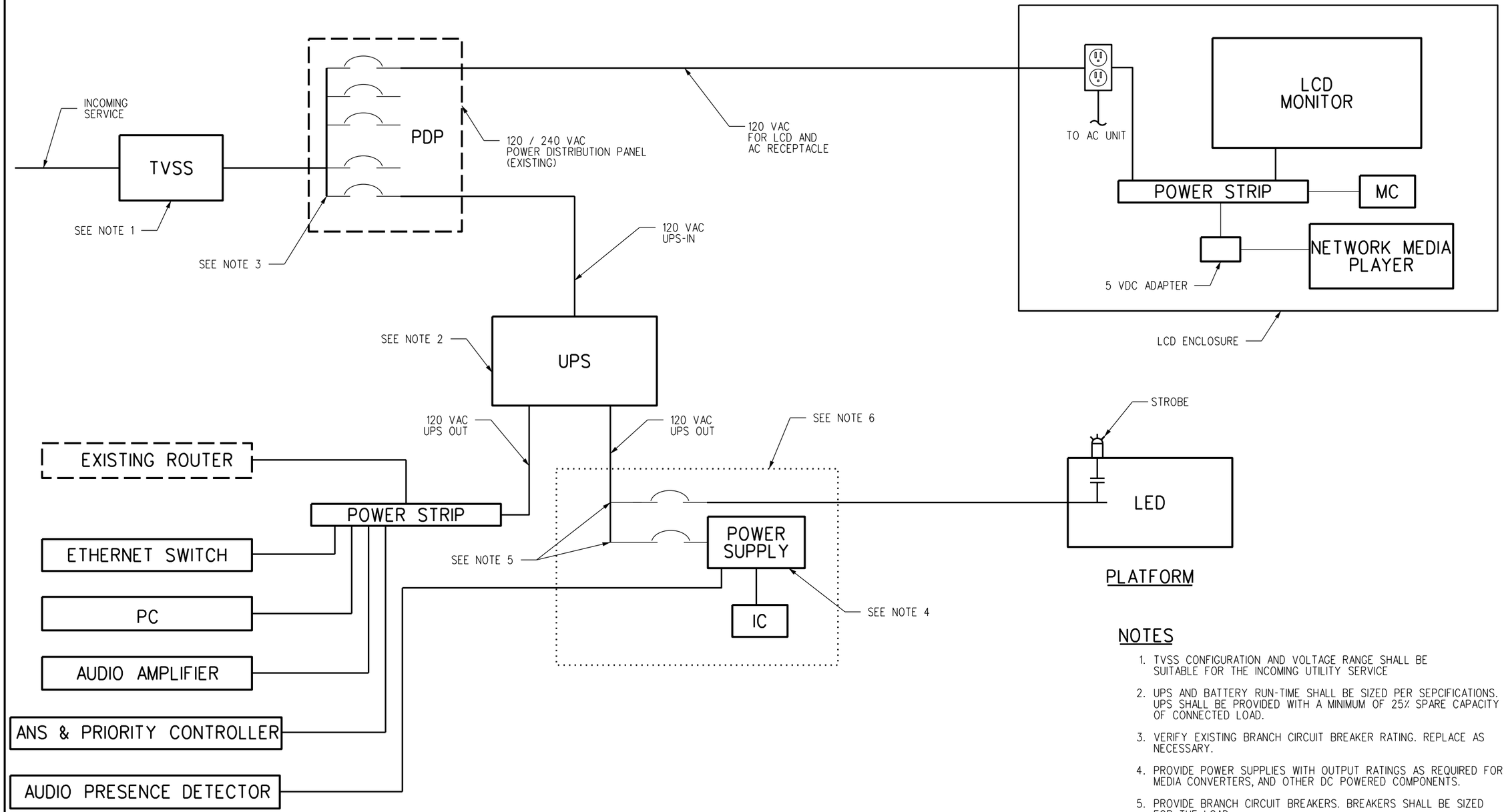

NOTES

1. TVSS CONFIGURATION AND VOLTAGE RANGE SHALL BE SUITABLE FOR THE INCOMING UTILITY SERVICE
2. UPS AND BATTERY RUN-TIME SHALL BE SIZED PER SEPCIFICATIONS. UPS SHALL BE PROVIDED WITH A MINIMUM OF 25% SPARE CAPACITY OF CONNECTED LOAD.
3. VERIFY EXISTING BRANCH CIRCUIT BREAKER RATING. REPLACE AS NECESSARY.
4. PROVIDE POWER SUPPLIES WITH OUTPUT RATINGS AS REQUIRED FOR MEDIA CONVERTERS, AND OTHER DC POWERED COMPONENTS.
5. PROVIDE BRANCH CIRCUIT BREAKERS. BREAKERS SHALL BE SIZED FOR THE LOAD.
6. CIRCUIT BREAKERS, POWER SUPPLY, AND INTERFACE CONVERTER TO BE MOUNTED ON A 19" RACK MOUNT FLAT PANEL.

REV.	DATE	DESCRIPTION	DES.	ENG.
X	XX-XX-XX	REVISION	XX	XX

DRAWN BY: SYSTRA DATE: 03/31/2011

ASSISTANT DIRECTOR: STANDARDS & DESIGN

DIRECTOR OF ENGINEERING AND CONSTRUCTION

SCRRA ENGINEERING STANDARDS ARE INTENDED FOR SCRRA APPROVED USES ONLY. FOR NON-SCRRA APPROVED USES: SCRRA SHALL NOT BE RESPONSIBLE FOR THE ACCURACY OR COMPLETENESS OF THE DATA OR INFORMATION CONTAINED HEREIN. THE SELECTION AND USE OF THESE STANDARDS IS THE SOLE RESPONSIBILITY OF THE USER AND SHOULD NOT BE USED WITHOUT CONSULTING A REGISTERED PROFESSIONAL ENGINEER. ALL WARRANTIES AND REPRESENTATIONS OF ANY KIND ARE DISCLAIMED. ANYONE MAKING USE OF THIS INFORMATION AGREES THAT IT ASSUMES ALL LIABILITY ARISING FROM SUCH USE. NO PART OF THESE STANDARDS SHOULD BE REPRODUCED OR DISTRIBUTED IN ANY FORM OR BY ANY MEANS WITHOUT THE PRIOR WRITTEN PERMISSION OF SCRRA. ALL RIGHTS RESERVED.

METROLINK®
SOUTHERN CALIFORNIA REGIONAL RAIL AUTHORITY
ONE GATEWAY PLAZA, 12TH FLOOR, L. A., CA. 90012

ENGINEERING STANDARDS

METROLINK STATION
EPIS POWER DISTRIBUTION
BLOCK DIAGRAM

STANDARD 3507
SCALE: NTS
REVISION –
SHEET 1 OF 1
CADD FILE: ES3507

UserName=> carlosa Date Plotted: 10/5/2011 2:25:42 PM Plot Driver=> S:\Plot Drivers\pdf.plt FileName=> s:\V8EngStds\3000\ES3507.dgn

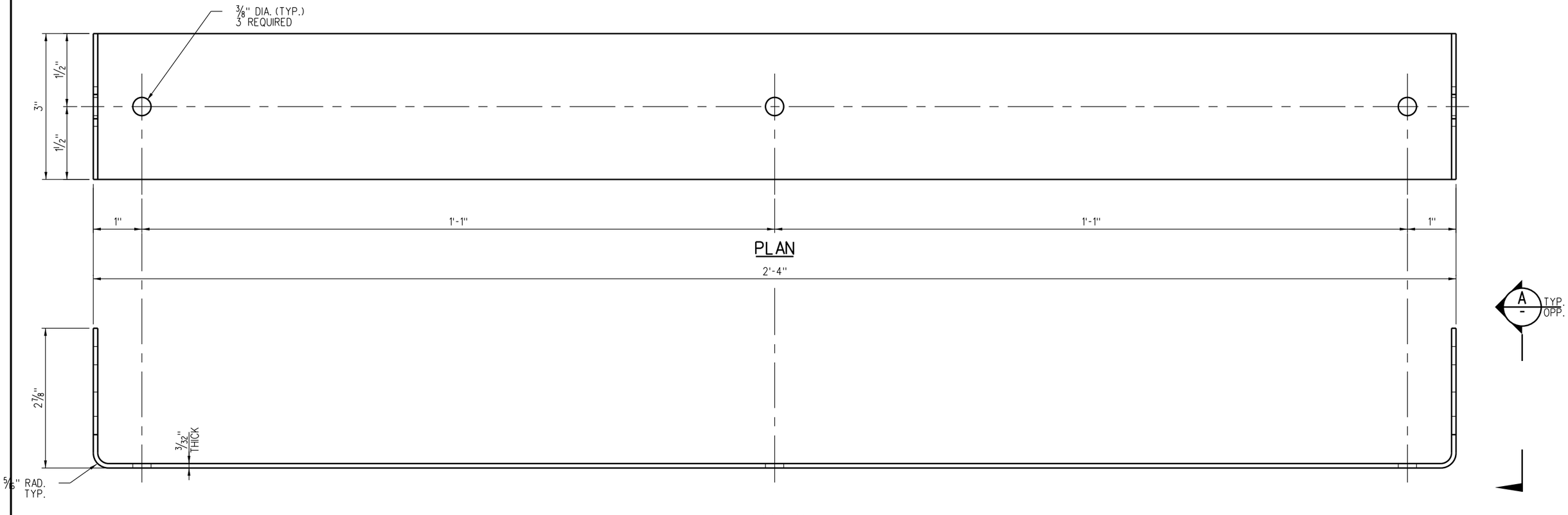

PLAN

ELEVATON

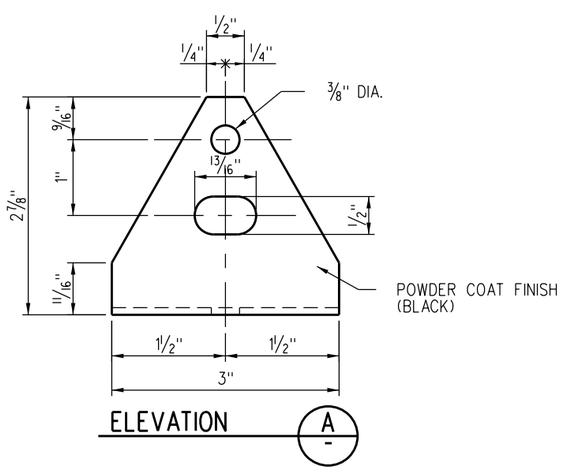

ELEVATION A

NOTES:

1. BRACKET TO BE MADE FROM 3/32" THICK SHEET METAL.
2. GRIND ALL SHARP EDGES SMOOTH
3. POWDER COAT FINISH TO BE GLOSS BLACK
4. ACTUAL BRACKET DIMENSION TBD PENDING APPROVED LED MODEL

REV.	DATE	DESCRIPTION	DES.	ENG.
X	XX-XX-XX	REVISION	XX	XX

DRAWN BY: A. CARLOS DATE: 03/31/2011

ASSISTANT DIRECTOR: STANDARDS & DESIGN

DIRECTOR OF ENGINEERING AND CONSTRUCTION

SCRRA ENGINEERING STANDARDS ARE INTENDED FOR SCRRA APPROVED USES ONLY. FOR NON-SCRRA APPROVED USES:
SCRRA SHALL NOT BE RESPONSIBLE FOR THE ACCURACY OR COMPLETENESS OF THE DATA OR INFORMATION CONTAINED HEREIN. THE SELECTION AND USE OF THESE STANDARDS IS THE SOLE RESPONSIBILITY OF THE USER AND SHOULD NOT BE USED WITHOUT CONSULTING A REGISTERED PROFESSIONAL ENGINEER. ALL WARRANTIES AND REPRESENTATIONS OF ANY KIND ARE DISCLAIMED. ANYONE MAKING USE OF THIS INFORMATION AGREES THAT IT ASSUMES ALL LIABILITY ARISING FROM SUCH USE. NO PART OF THESE STANDARDS SHOULD BE REPRODUCED OR DISTRIBUTED IN ANY FORM OR BY ANY MEANS WITHOUT THE PRIOR WRITTEN PERMISSION OF SCRRA. ALL RIGHTS RESERVED.

METROLINK®
SOUTHERN CALIFORNIA REGIONAL RAIL AUTHORITY
ONE GATEWAY PLAZA, 12TH FLOOR, L. A., CA. 90012

ENGINEERING STANDARDS

CHANGEABLE MESSAGE SIGN
MOUNTING BRACKET DETAILS

STANDARD: 3508
SCALE: FULL
REVISION: –
SHEET: 1 OF 1
CADD FILE: ES3508

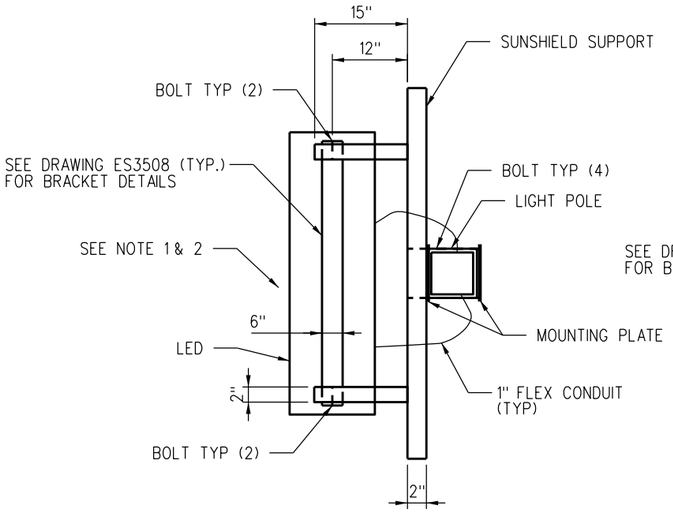

LED MOUNTING DETAIL TOP VIEW - SINGLE SIDED

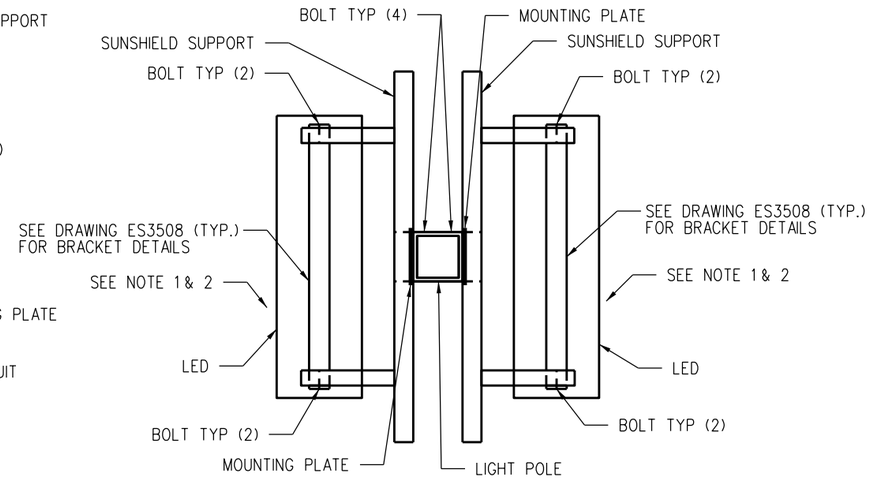

LED MOUNTING DETAIL TOP VIEW - DUAL SIDED

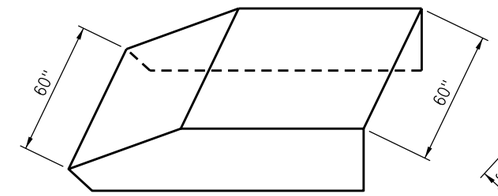

SUNSHIELD 3D VIEW

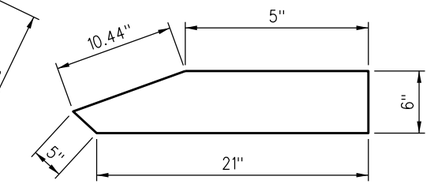

SUNSHIELD SIDE VIEW

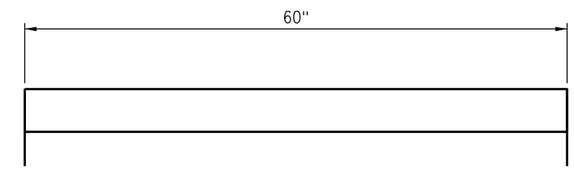

SUNSHIELD FRONT VIEW

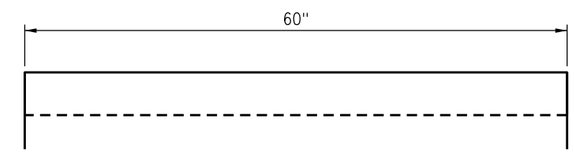

SUNSHIELD BACK VIEW

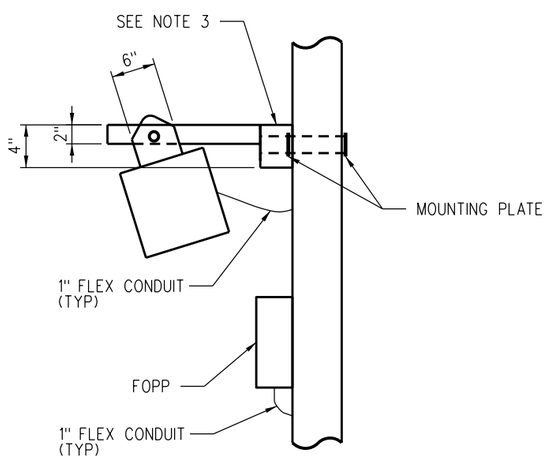

LED MOUNTING DETAIL ELEVATION - SINGLE SIDED

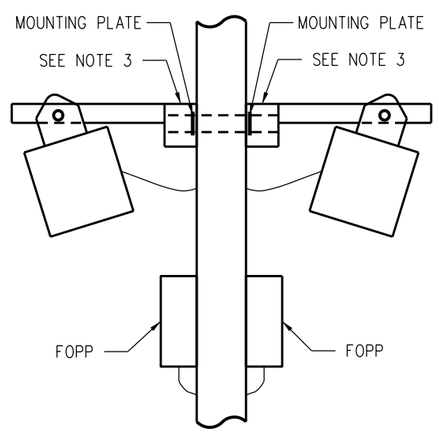

LED MOUNTING DETAIL ELEVATION - DUAL SIDED

NOTES

1. SUNSHIELD AND STROBE LIGHT ARE NOT SHOWN.
2. SUNSHIELD SUPPORT TO BE WELDED TO SUNSHIELD.
3. SUNSHIELD SUPPORT NOT SHOWN FOR CLARITY.
4. DIMENSIONS FOR ALL DETAILS SHALL NOT BE EXCEEDED. DIMENSIONS ARE BASED ON SIGN MAXIMUM DIMENSIONS OF 55"W x 17"H x 11"D.
5. CONDUIT ENTRY WILL BE SHOWN WHEN COMPONENT PART NUMBERS ARE FINALIZED.

REV.	DATE	DESCRIPTION	DES.	ENG.
X	XX-XX-XX	REVISION	XX	XX

DRAWN BY: SYSTRA DATE: 03/31/2011

ASSISTANT DIRECTOR: STANDARDS & DESIGN

DIRECTOR OF ENGINEERING AND CONSTRUCTION

SCRRA ENGINEERING STANDARDS ARE INTENDED FOR SCRRA APPROVED USES ONLY. FOR NON-SCRRA APPROVED USES:
SCRRA SHALL NOT BE RESPONSIBLE FOR THE ACCURACY OR COMPLETENESS OF THE DATA OR INFORMATION CONTAINED HEREIN. THE SELECTION AND USE OF THESE STANDARDS IS THE SOLE RESPONSIBILITY OF THE USER AND SHOULD NOT BE USED WITHOUT CONSULTING A REGISTERED PROFESSIONAL ENGINEER. ALL WARRANTIES AND REPRESENTATIONS OF ANY KIND ARE DISCLAIMED. ANYONE MAKING USE OF THIS INFORMATION AGREES THAT IT ASSUMES ALL LIABILITY ARISING FROM SUCH USE. NO PART OF THESE STANDARDS SHOULD BE REPRODUCED OR DISTRIBUTED IN ANY FORM OR BY ANY MEANS WITHOUT THE PRIOR WRITTEN PERMISSION OF SCRRA. ALL RIGHTS RESERVED.

METROLINK®
SOUTHERN CALIFORNIA REGIONAL RAIL AUTHORITY
ONE GATEWAY PLAZA, 12TH FLOOR, L. A., CA. 90012

ENGINEERING STANDARDS

METROLINK EPIS
LED MOUNTING DETAILS

STANDARD 3509
SCALE: NTS
REVISION –
SHEET 1 OF 1
CADD FILE: ES3509

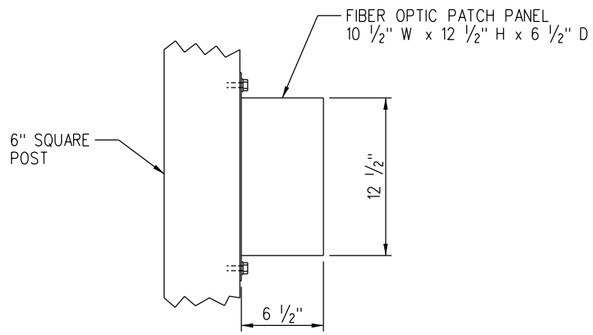

DETAIL "A"
FOPP INSTALLATION DETAIL

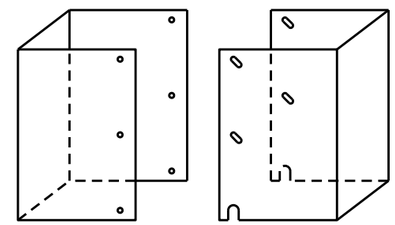

AIR CONDITIONER/HEATER ENCLOSURE ASSEMBLY

NOTES:

1. AC/HEATER AND AC/HEATER MOUNTING BRACKET NOT SHOWN
2. DIMENSIONS OF AC/HEATER ENCLOSURE ASSEMBLY TO BE DETERMINED BY CONTRACTOR, BASED ON APPROVED AC/HEATER UNIT
3. CONTRACTOR TO PROVIDE AC/HEATER MOUNTING KIT
4. AC/HEATER ENCLOSURE TO BE WELDED TO THE POST AND BE FASTENED WITH TAMPER PROOF SCREWS TO LCD ENCLOSURE
5. CONTRACTOR TO SUPPLY ENCLOSURE AS SPECIFIED

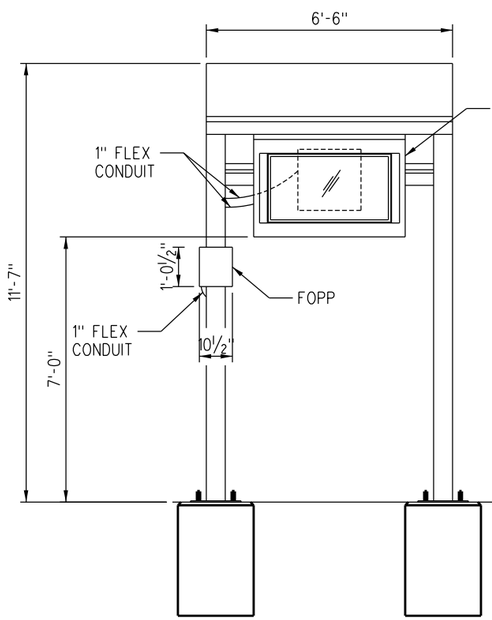

FRONT VIEW

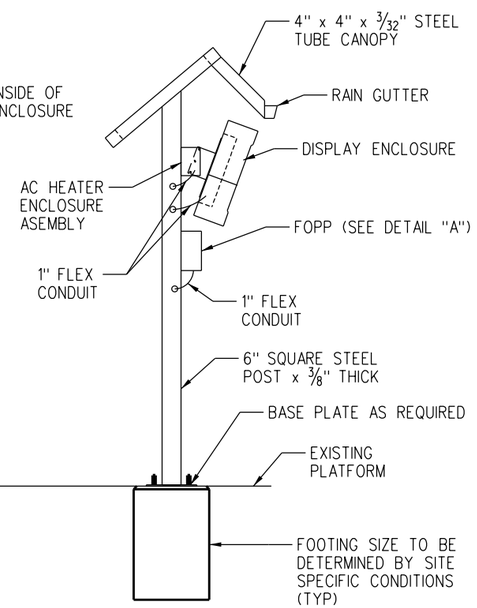

SIDE VIEW

DUAL POST MOUNTING DETAILS

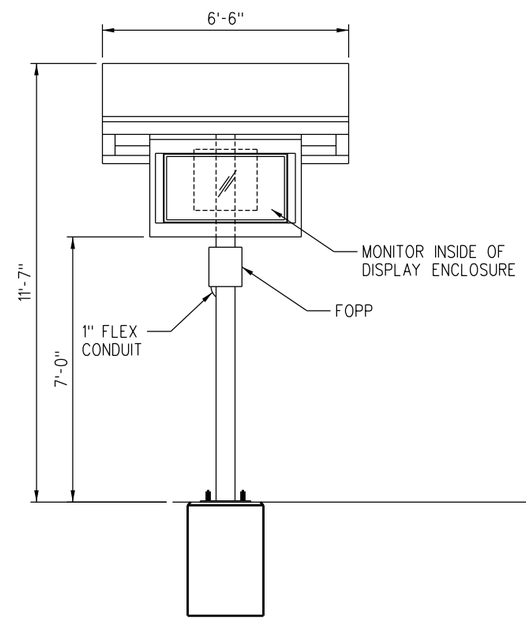

FRONT VIEW

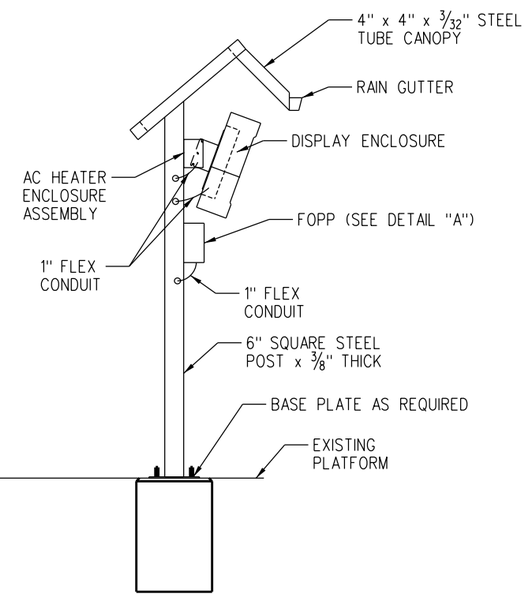

SIDE VIEW

SINGLE POST MOUNTING DETAILS

REV.	DATE	DESCRIPTION	DES.	ENG.
X	XX-XX-XX	REVISION	XX	XX

DRAWN BY: A. CARLOS DATE: 03/31/2011

ASSISTANT DIRECTOR: STANDARDS & DESIGN

DIRECTOR OF ENGINEERING AND CONSTRUCTION

SCRRA ENGINEERING STANDARDS ARE INTENDED FOR SCRRA APPROVED USES ONLY. FOR NON-SCRRA APPROVED USES:
SCRRA SHALL NOT BE RESPONSIBLE FOR THE ACCURACY OR COMPLETENESS OF THE DATA OR INFORMATION CONTAINED HEREIN. THE SELECTION AND USE OF THESE STANDARDS IS THE SOLE RESPONSIBILITY OF THE USER AND SHOULD NOT BE USED WITHOUT CONSULTING A REGISTERED PROFESSIONAL ENGINEER. ALL WARRANTIES AND REPRESENTATIONS OF ANY KIND ARE DISCLAIMED. ANYONE MAKING USE OF THIS INFORMATION AGREES THAT IT ASSUMES ALL LIABILITY ARISING FROM SUCH USE. NO PART OF THESE STANDARDS SHOULD BE REPRODUCED OR DISTRIBUTED IN ANY FORM OR BY ANY MEANS WITHOUT THE PRIOR WRITTEN PERMISSION OF SCRRA. ALL RIGHTS RESERVED.

METROLINK®
SOUTHERN CALIFORNIA REGIONAL RAIL AUTHORITY
ONE GATEWAY PLAZA, 12TH FLOOR, L. A., CA. 90012

ENGINEERING STANDARDS

METROLINK EPIS
LCD MOUNTING DETAILS

STANDARD: 3510
SCALE: NTS
REVISION: –
SHEET: 1 OF 1
CADD FILE: ES3510

MATERIALS LIST

EXISTING STATIONS

ITEM:	DESCRIPTION:	RECOMMENDED MANUFACTURERS	MODEL #:
1.	ETHERNET SWITCH	CISCO	SRW2048
2.	AUDIO AMPLIFIER	CROWN	CTs 4200
3.	PRIORITY CONTROLLER	BSS AUDIO	BLU-16
4.	LED MESSAGE SIGN COMPLETE WITH ALL INTERFACE AND CONVERTERS		
5.	42" COMMERCIAL LCD DISPLAY	VIEWSONIC	CD4220
6.	NETWORK MEDIA PLAYER	VIEWSONIC	NMP-530, VS11681
7.	STROBE LIGHT	FEDERAL SIGNAL	131DST
8.	INDUSTRIAL PERSONAL COMPUTER	ADVANTEC	SEE SPEC 270526, SECTION 3.012
11.	ENVIRONMENTAL DISTRIBUTION CENTER	CORNING	EDC-02P-NH
12.	RACK MOUNT CONNECTOR HOUSING	CORNING	PCH SERIES
13.	TRANSIT VOLTAGE SUPPRESSION	EATON INNOVATIVE TECHNOLOGY	PT SERIES
14.	UPS	EATON INNOVATIVE TECHNOLOGY	9130
15.	CLOSET CONNECTOR HOUISING-PIGTAIL MODULES	CORNING	CCH SERIES
16.	SPLICE TRAYS	CORNING	M67 SERIES
17.	LCD ENCLOSURE (INCLUDING 42" MONITOR ENCLOSURE, INSULATION, ENCLOSURE POST, BRACKETS, MOUNTS, T20 2000 BTU AIR CONDITIONER/HEATER) STAINLESS STEEL MOUNTING POST AND BRACKETS	ITS ENCLOSURES	VS-0-CUSTOM, X-7088-000F12, VS-PEE-201-0171-SLV, PER-SF660-BL, MC-T20-0216-G150 VS-T20 WALLMOUNT-SS, VS-POST-SS
18.	SPEAKERS - IF INSTALLED	UNIVERSITY SOUND	PA430 SERIES

NEW STATIONS

ITEM:	DESCRIPTION:	RECOMMENDED MANUFACTURERS	MODEL #:
1.	ETHERNET SWITCH	CISCO	SRW2048
2.	AUDIO AMPLIFIER	CROWN	CTs 4200
3.	PRIORITY CONTROLLER	BSS AUDIO	BLU-16
4.	LED MESSAGE SIGN COMPLETE WITH ALL INTERFACE AND CONVERTERS		
5.	42" COMMERCIAL LCD DISPLAY	VIEWSONIC	CD4220
6.	NETWORK MEDIA PLAYER	VIEWSONIC	NMP-530, VS11681
7.	STROBE LIGHT	FEDERAL SIGNAL	131DST
9.	AUDIO PRESENCE DETECTOR	DAVICOM	DAPD-01
10.	PERSONAL COMPUTER	ADANTEC	SEE SPEC 270526, SECTION 3.012
11.	INTERFACE CONVERTER	BLACK BOX	LES401A
12.	ENVIRONMENTAL DISTRIBUTION CENTER	CORNING	EDC-02P-NH
13.	RACK MOUNT CONNECTOR HOUSING	CORNING	PCH SERIES
14.	TRANSIT VOLTAGE SUPPRESSION	EATON INNOVATIVE TECHNOLOGY	PT SERIES
15.	UPS	EATON INNOVATIVE TECHNOLOGY	9130
16.	CLOSET CONNECTOR HOUISING-PIGTAIL MODULES	CORNING	CCH SERIES
17.	SPLICE TRAYS	CORNING	M67 SERIES
18.	LCD ENCLOSURE (INCLUDING 42" MONITOR ENCLOSURE, INSULATION, ENCLOSURE POST, BRACKETS, MOUNTS, T20 2000 BTU AIR CONDITIONER/HEATER) STAINLESS STEEL MOUNTING POST AND BRACKETS)	ITS ENCLOSURES	VS-0-CUSTOM, X-7088-000F12, VS-PEE-201-0171-SLV, PER-SF660-BL, MC-T20-0216-G150 VS-T20 WALLMOUNT-SS, VS-POST-SS
19.	SPEAKERS - IF INSTALLED	UNIVERSITY SOUND	PA430

REV.	DATE	DESCRIPTION	DES.	ENG.
X	XX-XX-XX	REVISION	XX	XX

DRAWN BY: A. CARLOS DATE: 03/31/2011

ASSISTANT DIRECTOR: STANDARDS & DESIGN

DIRECTOR OF ENGINEERING AND CONSTRUCTION

SCRRA ENGINEERING STANDARDS ARE INTENDED FOR SCRRA APPROVED USES ONLY. FOR NON-SCRRA APPROVED USES:
SCRRA SHALL NOT BE RESPONSIBLE FOR THE ACCURACY OR COMPLETENESS OF THE DATA OR INFORMATION CONTAINED HEREIN. THE SELECTION AND USE OF THESE STANDARDS IS THE SOLE RESPONSIBILITY OF THE USER AND SHOULD NOT BE USED WITHOUT CONSULTING A REGISTERED PROFESSIONAL ENGINEER. ALL WARRANTIES AND REPRESENTATIONS OF ANY KIND ARE DISCLAIMED. ANYONE MAKING USE OF THIS INFORMATION AGREES THAT IT ASSUMES ALL LIABILITY ARISING FROM SUCH USE. NO PART OF THESE STANDARDS SHOULD BE REPRODUCED OR DISTRIBUTED IN ANY FORM OR BY ANY MEANS WITHOUT THE PRIOR WRITTEN PERMISSION OF SCRRA. ALL RIGHTS RESERVED.

METROLINK®
SOUTHERN CALIFORNIA REGIONAL RAIL AUTHORITY
ONE GATEWAY PLAZA, 12TH FLOOR, L. A., CA. 90012

ENGINEERING STANDARDS

EPIS MATERIALS LIST

STANDARD: 3512
SCALE: NTS
REVISION: –
SHEET: 1 OF 1
CADD FILE: ES3512

DISCLAIMER

SCRRA Engineering Standards are intended for SCRRA approved uses only. FOR NON-SCRRA APPROVED USES: SCRRA and its member agencies, directors, officers, employees and/or agents shall not be responsible for the accuracy or completeness of the data or information contained herein. The selection and use of these standards, while designed in accordance with generally accepted engineering principles and practices, is the sole responsibility of the user and should not be used without consulting a registered professional engineer. All warranties and representations of any kind are disclaimed. Anyone making use of this information agrees that it assumes all liability arising from such use. No part of these standards should be reproduced or distributed in any form or by any means without the prior written permission of SCRRA. All rights reserved.

Since revisions or additions to the engineering standards may occur at any time, the user agrees to indemnify, defend, by counsel satisfactory to SCRRA and Member Agency, and hold harmless SCRRA, Member Agencies, and Operating Railroad, and their respective officers, commissioners, employees, agents, successors and assigns. ("Indemnitees"), and each of them to the maximum extent allowed by law, from and against all loss, liability, claims, demands, suits, liens, claims of lien, damages (including incidental consequential damages), costs and expenses (including, without limitation, any fines, penalties, judgments, actual litigation expenses and experts' and actual attorneys' fees), that are incurred by or asserted against Indemnitees arising out of or connected in any manner with the user's use of outdated engineering standards.

Updating the contents of the manual is a continued process, and revisions/replacements are issued periodically. Questions, comments, and proposed recommendations for changes may be sent to SCRRA at 279 E. Arrow Highway, Suite A, San Dimas, CA 91773.

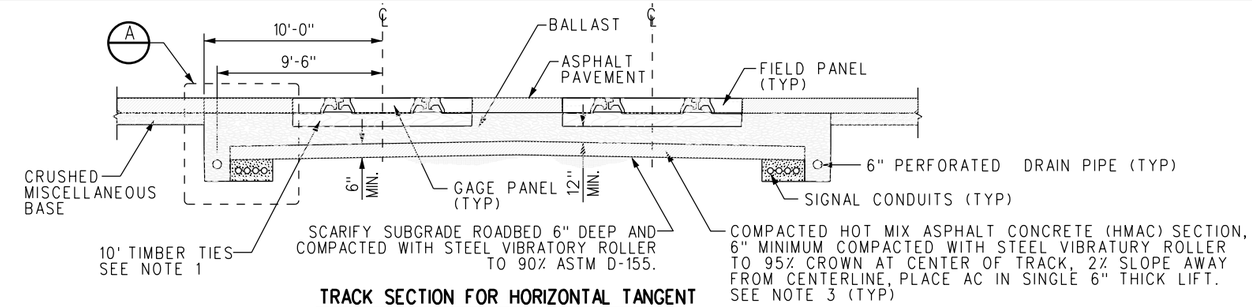

TRACK SECTION FOR HORIZONTAL TANGENT

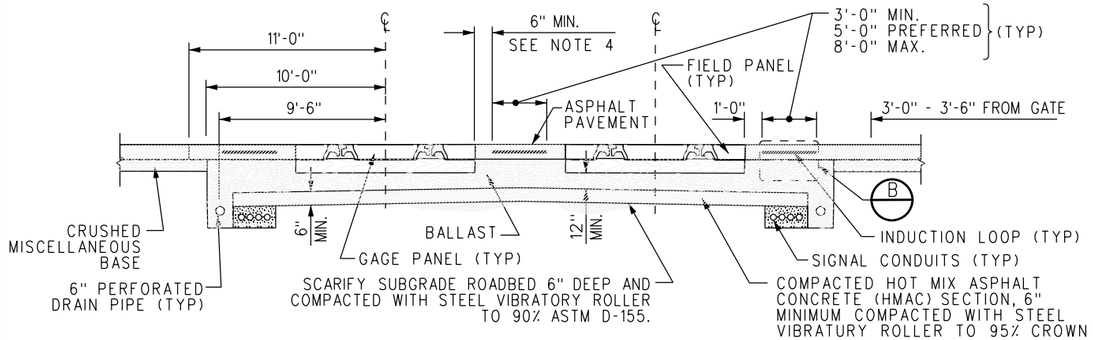

TRACK SECTION FOR HORIZONTAL TANGENT AT CROSSING WITH EXIT GATES AND INDUCTION LOOPS

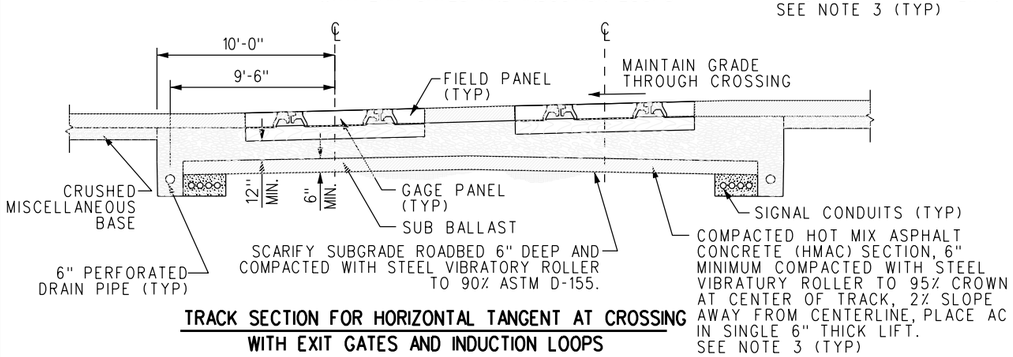

TRACK SECTION FOR HORIZONTAL TANGENT AT CROSSING WITH EXIT GATES AND INDUCTION LOOPS

NOTES:

1. REFER TO ES 2006 FOR GRADE CROSSING TRACK COMPONENTS.
2. PAVEMENT OUTSIDE OF RAILROAD TRACKS SHALL BE CONSTRUCTED AS PER APWA STANDARD 133-2.
3. HOT MIX ASPHALT CONCRETE IN ACCORDANCE WITH SCRRA'S SPECIFICATION 02513.
4. INDUCTION LOOP SHALL BE CENTERED BETWEEN THE TWO ADJACENT TRACKS.
5. REFER TO SCRRA STANDARD ES8405 FOR INDUCTION LOOP DETAILS.

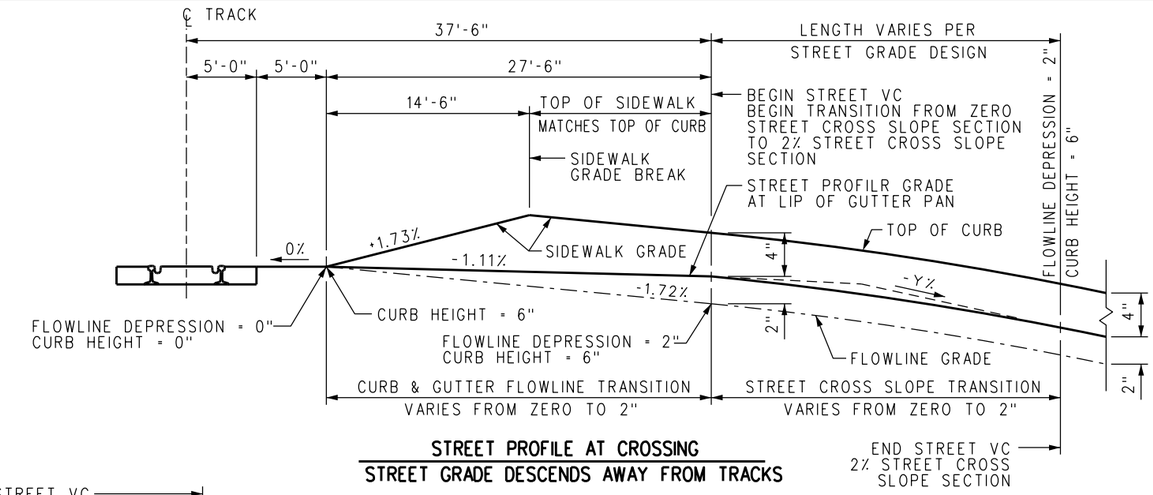

STREET PROFILE AT CROSSING
STREET GRADE DESCENDS AWAY FROM TRACKS

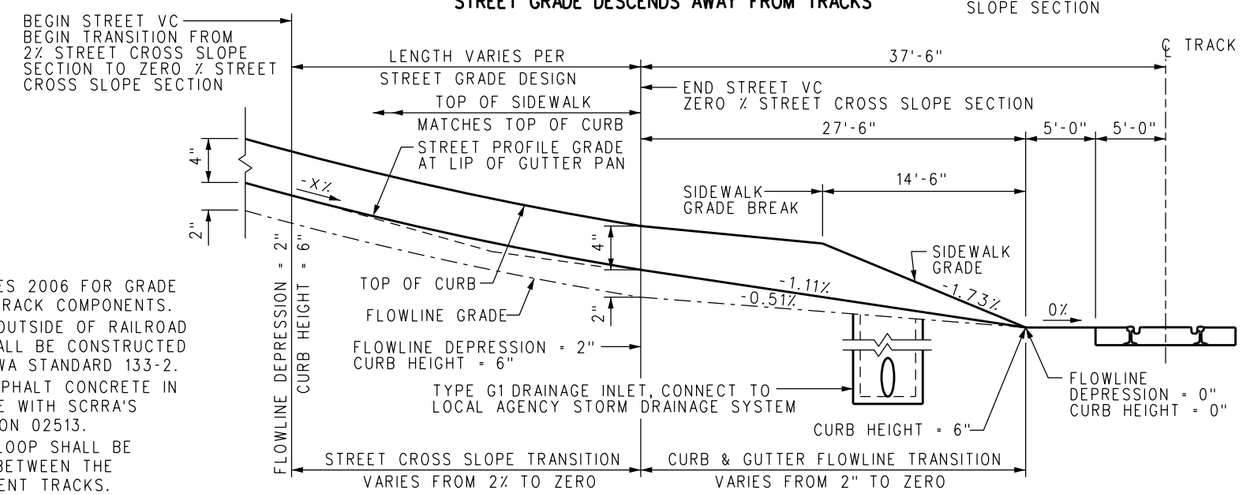

STREET PROFILE AT CROSSING
STREET GRADE DESCENDS TOWARDS TRACKS

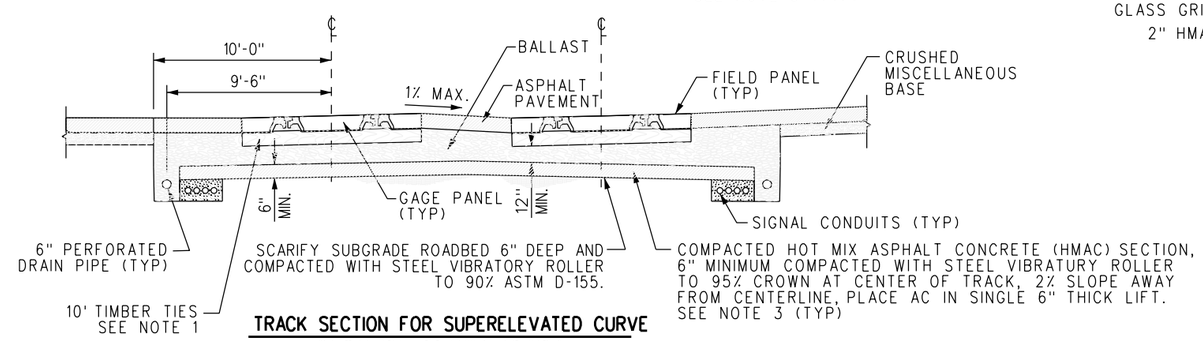

TRACK SECTION FOR SUPERELEVATED CURVE
(RAILS NOT IN SAME PLANE)

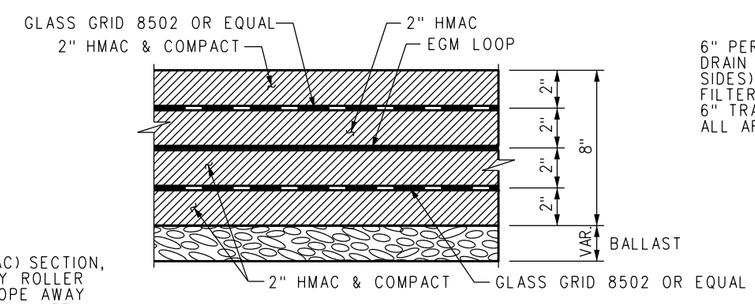

TYPICAL SECTION (B)
PAVEMENT SECTION EGM LOOPS

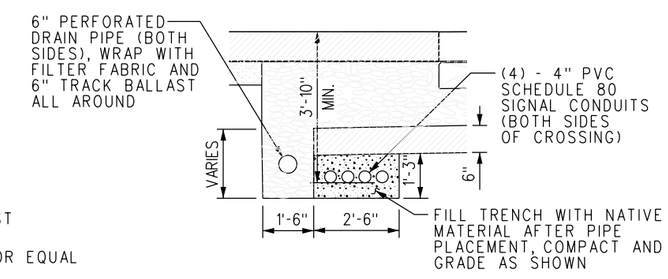

TYPICAL SECTION (A)
DRAINAGE PIPE AND CONDUIT DETAILS

REV.	DATE	DESCRIPTION	DES.	ENG.
X	XX-XX-XX	REVISION	XX	XX

DRAWN BY: A. CARLOS DATE: 03/31/2011

ASSISTANT DIRECTOR: STANDARDS & DESIGN

DIRECTOR OF ENGINEERING AND CONSTRUCTION

SCRRA ENGINEERING STANDARDS ARE INTENDED FOR SCRRA APPROVED USES ONLY. FOR NON-SCRRA APPROVED USES:
SCRRA SHALL NOT BE RESPONSIBLE FOR THE ACCURACY OR COMPLETENESS OF THE DATA OR INFORMATION CONTAINED HEREIN. THE SELECTION AND USE OF THESE STANDARDS IS THE SOLE RESPONSIBILITY OF THE USER AND SHOULD NOT BE USED WITHOUT CONSULTING A REGISTERED PROFESSIONAL ENGINEER. ALL WARRANTIES AND REPRESENTATIONS OF ANY KIND ARE DISCLAIMED. ANYONE MAKING USE OF THIS INFORMATION AGREES THAT IT ASSUMES ALL LIABILITY ARISING FROM SUCH USE. NO PART OF THESE STANDARDS SHOULD BE REPRODUCED OR DISTRIBUTED IN ANY FORM OR BY ANY MEANS WITHOUT THE PRIOR WRITTEN PERMISSION OF SCRRA. ALL RIGHTS RESERVED.

METROLINK®
SOUTHERN CALIFORNIA REGIONAL RAIL AUTHORITY
ONE GATEWAY PLAZA, 12TH FLOOR, L. A., CA. 90012

ENGINEERING STANDARDS

HIGHWAY–RAIL GRADE CROSSING
TYPICAL SECTIONS

STANDARD 4001
SCALE: NTS
REVISION –
SHEET 1 OF 1
CADD FILE: ES4001

NOTES:

1. A DUPLEX SYSTEM (PAINT OR POWDER COAT OVER GALVANIZING) SHALL BE USED FOR THE SWING GATE ASSEMBLY AND HAND RAILING. AFTER FABRICATION AND SURFACE PREPARATION, THE SWING GATE ASSEMBLY AND HANDRAILING SHALL BE HOT-DIP GALVANIZED IN ACCORDANCE WITH ASTM A123 (PRODUCTS) AND A153 (HARDWARE). COATING WHICH HAS BEEN SHOP OR FIELD CUT, BURNED BY WELDING OR DAMAGED SHALL BE REPAIRED OR RE-COATED IN ACCORDANCE WITH ASTM A780.
2. AFTER CLEANING AND PROFILING GALVANIZED SURFACE IN ACCORDANCE WITH ASTM D6386, THE SWING GATE ASSEMBLY AND HANDRAILING SHALL BE PAINTED OR POWDERCOATED WITH A ZINC-RICH PRIME COAT, HIGH PERFORMANCE FIRST COAT AND ACRYLIC TOP COAT. THE PAINT COLOR SHALL BE FEDERAL COLOR NO. FS34092 UNLESS NOTED OTHERWISE.

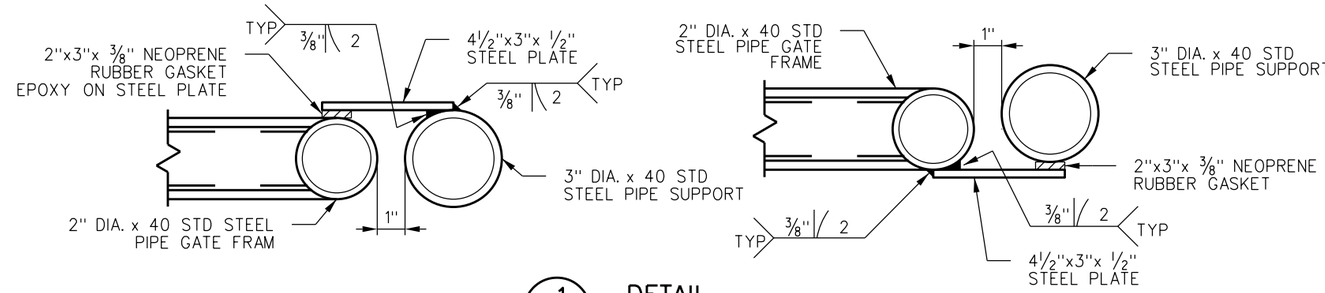

1 / - DETAIL
NOT TO SCALE

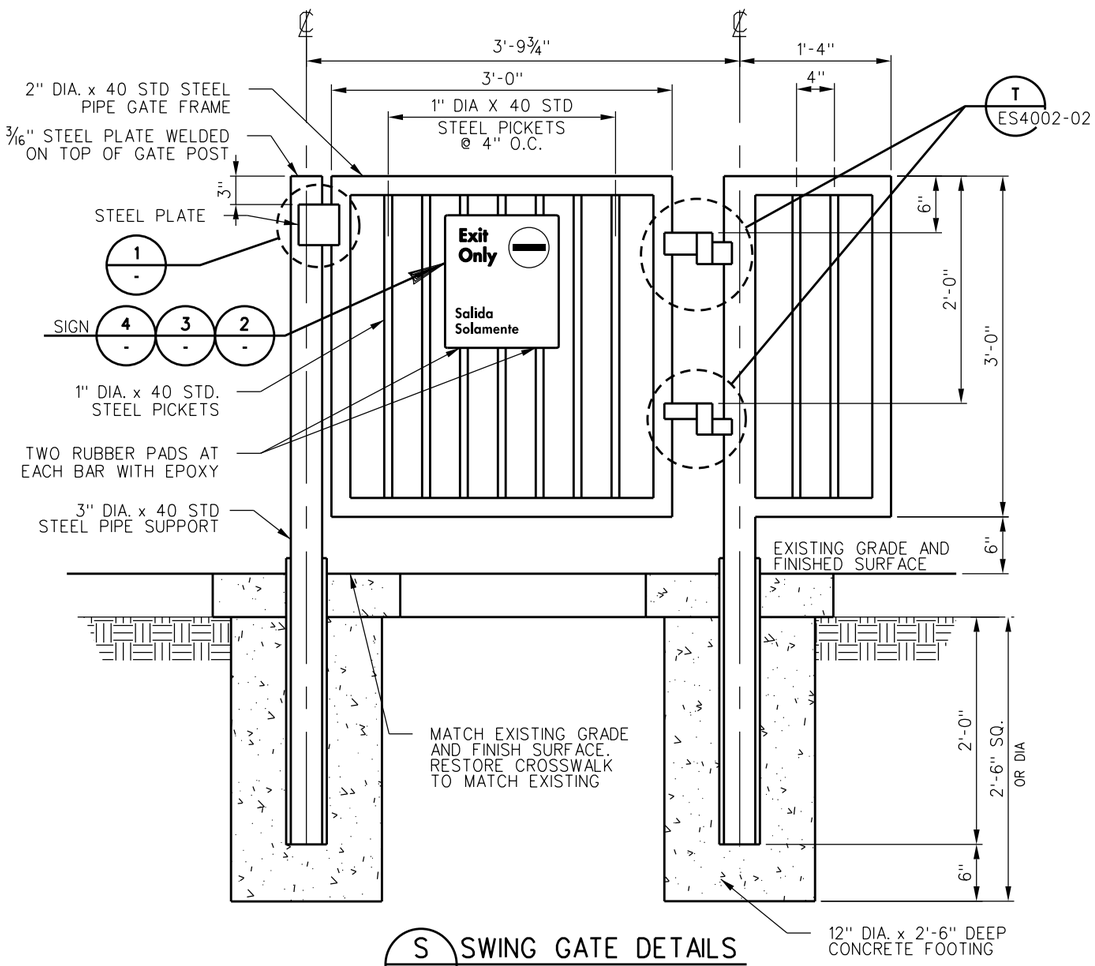

S / - SWING GATE DETAILS
SCALE: 1 1/2" = 1'-0"

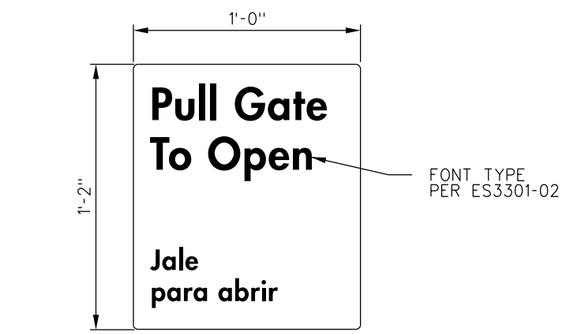

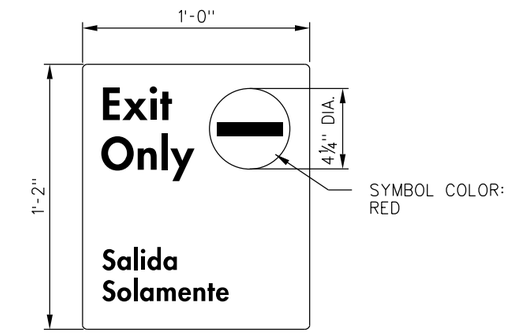

3 / - APPROACH SIDE EMERGENCY EXIT GATE
SCALE: 3/4" = 1'-0"

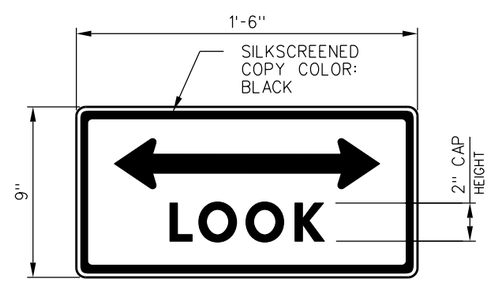

*MAY BE MOUNTED ON SEPARATE POST

NOTES:

1. 3M EXTERIOR GRADE VINYL DIE CUT SHEETING, COLOR: WHITE
2. SEAL SIGN WITH TRANSPARENT ANTI-GRAFFITTI FILM.
3. FOR ADDITIONAL SIGN DETAILS SEE ES3318 AND ES3319.

2 / - APPROACH SIDE ENTRY/EXIT GATE
SCALE: 3/4" = 1'-0"

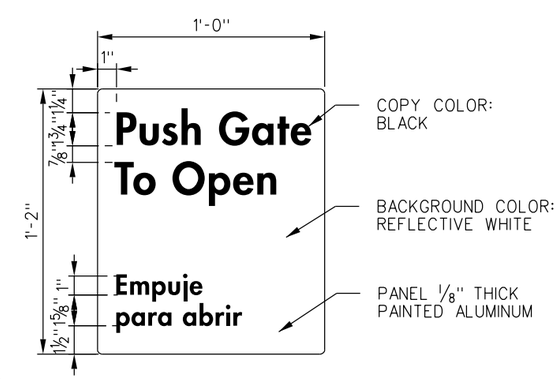

4 / - TRACK SIDE EMERGENCY EXIT GATE AND ENTRY/EXIT GATE
SCALE: 3/4" = 1'-0"

REV.	DATE	DESCRIPTION	DES.	ENG.
1	9-21-10	REVISED NOTES DETAIL 1 AND DETAIL S	AC	NDP

DRAWN BY: A. CARLOS DATE: 03/31/2011

ASSISTANT DIRECTOR: STANDARDS & DESIGN

DIRECTOR OF ENGINEERING AND CONSTRUCTION

SCRRA ENGINEERING STANDARDS ARE INTENDED FOR SCRRA APPROVED USES ONLY. FOR NON-SCRRA APPROVED USES: SCRRA SHALL NOT BE RESPONSIBLE FOR THE ACCURACY OR COMPLETENESS OF THE DATA OR INFORMATION CONTAINED HEREIN. THE SELECTION AND USE OF THESE STANDARDS IS THE SOLE RESPONSIBILITY OF THE USER AND SHOULD NOT BE USED WITHOUT CONSULTING A REGISTERED PROFESSIONAL ENGINEER. ALL WARRANTIES AND REPRESENTATIONS OF ANY KIND ARE DISCLAIMED. ANYONE MAKING USE OF THIS INFORMATION AGREES THAT IT ASSUMES ALL LIABILITY ARISING FROM SUCH USE. NO PART OF THESE STANDARDS SHOULD BE REPRODUCED OR DISTRIBUTED IN ANY FORM OR BY ANY MEANS WITHOUT THE PRIOR WRITTEN PERMISSION OF SCRRA. ALL RIGHTS RESERVED.

METROLINK
SOUTHERN CALIFORNIA REGIONAL RAIL AUTHORITY
ONE GATEWAY PLAZA, 12TH FLOOR, L. A., CA. 90012

ENGINEERING STANDARDS

PEDESTRIAN SWING GATE DETAILS

STANDARD 4002
SCALE: AS NOTED
REVISION 1 SHEET 1 OF 2
CADD FILE: ES4002-01

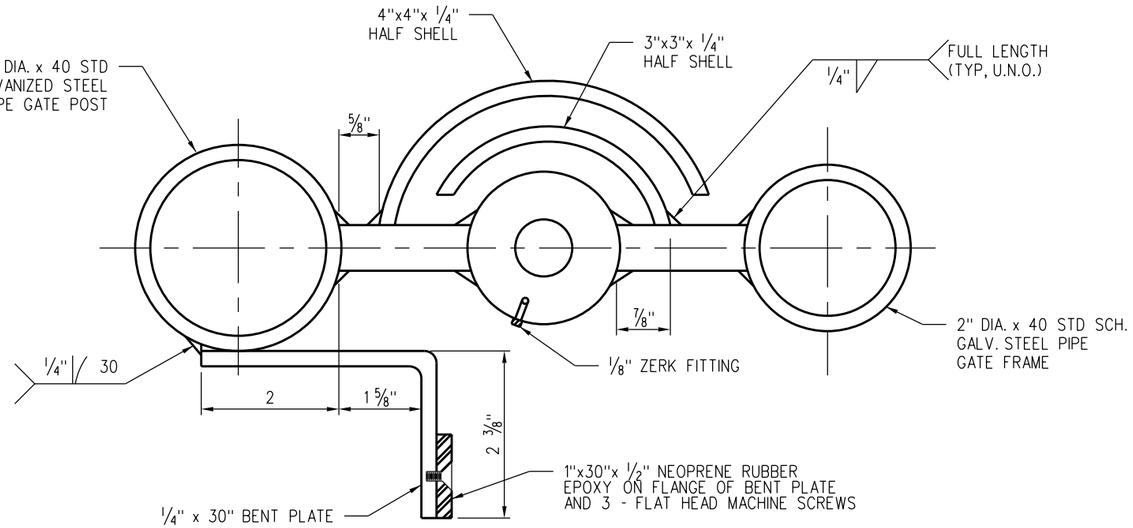

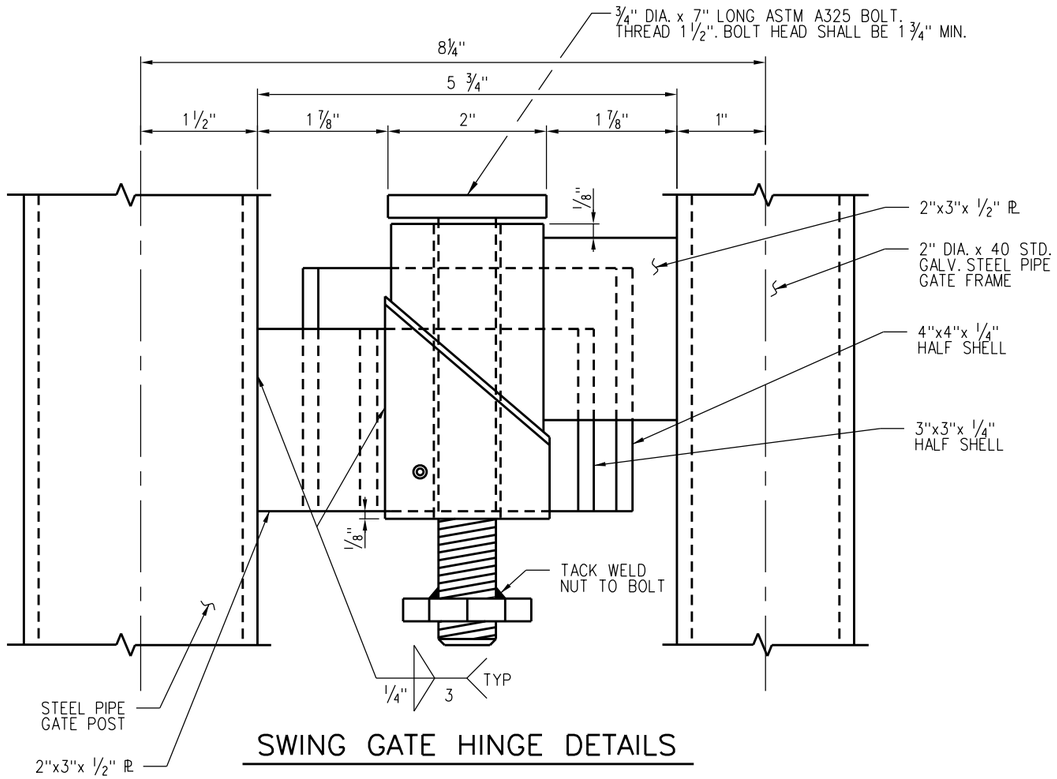

SWING GATE HINGE DETAILS

T / - DETAIL T

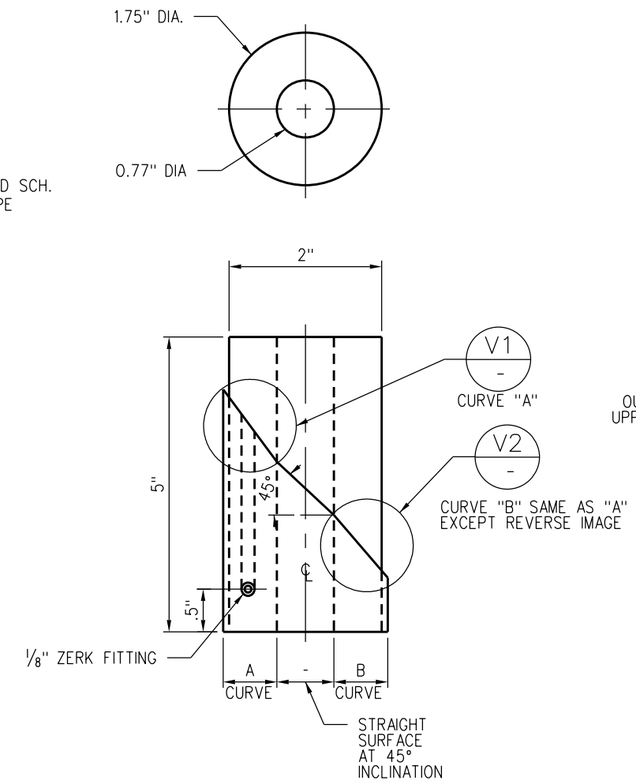

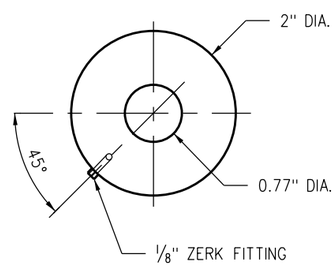

HINGE SLEEVE DETAILS

U / - DETAIL U

NOTES:

1. HINGE SLEEVE GRADE OF STEEL TO BE ASTM A441 HARDENED STEEL.
2. ALL HINGE SLEEVE DIMENSIONS ARE IN INCHES UNLESS OTHERWISE NOTED.
3. HINGE SLEEVE MACHINING SHALL BE PRECISION TO THE NEAREST THOUSANDTH OF AN INCH (0.001).
4. ROTATING CURVED CONTACT SURFACES OF HINGE SLEEVE, (CURVE SURFACES 'B' AND 'A') TO BE POLISHED.
5. CONSTRUCT AND ASSEMBLE ONE GATE FOR TESTING, SCRRA TO WITNESS GATE TESTING AND APPROVE GATE OPENING AND CLOSING OPERATION BEFORE ANY WORK DONE AT ANY STATION PEDESTRIAN CROSSING. IF GATE OPERATION IS NOT APPROVED BY SCRRA, MODIFY GATE AND GATE HINGE AS NECESSARY AND REPEAT TESTING UNTIL GATE OPERATION IS APPROVED BY SCRRA.
6. FORCE REQUIRED TO OPERATE SHALL BE 22N (5 LBS) MAX.

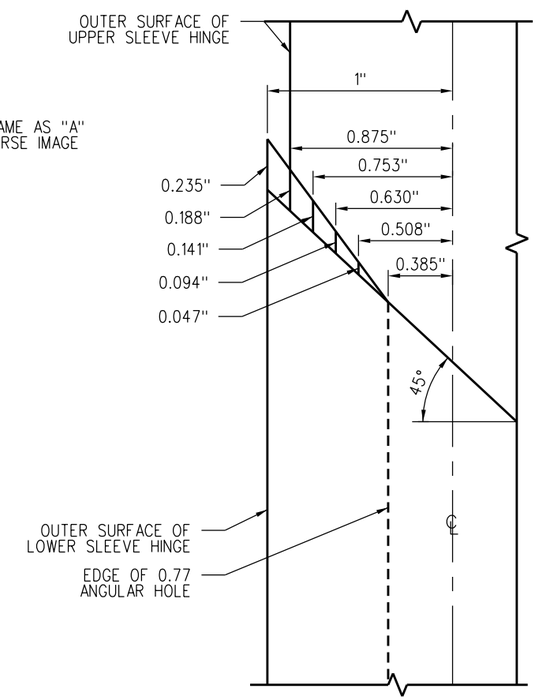

HINGE SLEEVE CURVE DETAIL

CURVE "B" SAME AS "A"
EXCEPT REVERSE IMAGE

V / - DETAIL V1 & V2

REV.	DATE	DESCRIPTION	DES.	ENG.
1	9-21-10	REVED NOTE DETAIL "T" AND NOTE	AC	NDP

DRAWN BY: A. CARLOS DATE: 03/31/2011

ASSISTANT DIRECTOR: STANDARDS & DESIGN

DIRECTOR OF ENGINEERING AND CONSTRUCTION

SCRRA ENGINEERING STANDARDS ARE INTENDED FOR SCRRA APPROVED USES ONLY. FOR NON-SCRRA APPROVED USES, SCRRA SHALL NOT BE RESPONSIBLE FOR THE ACCURACY OR COMPLETENESS OF THE DATA OR INFORMATION CONTAINED HEREIN. THE SELECTION AND USE OF THESE STANDARDS IS THE SOLE RESPONSIBILITY OF THE USER AND SHOULD NOT BE USED WITHOUT CONSULTING A REGISTERED PROFESSIONAL ENGINEER. ALL WARRANTIES AND REPRESENTATIONS OF ANY KIND ARE DISCLAIMED. ANYONE MAKING USE OF THIS INFORMATION AGREES THAT IT ASSUMES ALL LIABILITY ARISING FROM SUCH USE. NO PART OF THESE STANDARDS SHOULD BE REPRODUCED OR DISTRIBUTED IN ANY FORM OR BY ANY MEANS WITHOUT THE PRIOR WRITTEN PERMISSION OF SCRRA. ALL RIGHTS RESERVED.

METROLINK®
SOUTHERN CALIFORNIA REGIONAL RAIL AUTHORITY
ONE GATEWAY PLAZA, 12TH FLOOR, L. A., CA. 90012

ENGINEERING STANDARDS

PEDESTRIAN SWING GATE DETAILS

STANDARD 4002
SCALE: NTS
REVISION 1 SHEET 2 OF 2
CADD FILE: ES4002-02

NOTES:

PEDESTRIAN CROSSING SHOULD PROVIDE A SAFE ENVIRONMENT FOR PEDESTRIANS, BICYCLISTS AND PERSONS WITH DISABILITIES WHILE NAVIGATING THE CROSSING. DURING THE DESIGN OF THE CROSSING, THE DESIGN ENGINEER SHALL CONSIDER FACTORS SUCH AS PRESENT OF STATIONS IN THE VICINITY, ESTABLISHMENT OF QUIET ZONES, NUMBER OF TRACKS, TRAVEL DISTANCE ACROSS TRACKS TO REACH A SAFE REFUGE LOCATION, SKEW AND VERTICAL PROFILE ACROSS THE CROSSING, VISIBILITY RESTRICTIONS, VOLUME OF PEDESTRIAN ACTIVITY, CURRENT AND FUTURE DEVELOPMENT IN AND AROUND THE CROSSING AND RIGHT-OF-WAY.
IN THE DISCUSSION OF THE DESIGN CONSIDERATIONS, THE TERM "FULL PEDESTRIAN TREATMENTS" SHALL INCLUDE SIGNAGE, MARKINGS, CHANNELIZATION, ACTIVE WARNING DEVICES WITH GATES AND SWING GATES.
SCRRA's POLICY AND PRACTICE IS TO APPLY FULL PEDESTRIAN TREATMENTS TO HIGHWAY RAIL CROSSINGS.
THE ATTACHED FIGURE GRAPHICALLY SHOWS THE DECISION STEPS THAT SHALL BE FOLLOWED DURING THE DESIGN OF THE PEDESTRIAN TREATMENT AT CROSSINGS. THIS PROCESS SHALL BE SIMILAR FOR ANY TYPE OF PEDESTRIAN CROSSING AND DEFINES THE SCRRA RECOMMENDED APPROACH TO THE APPLICATION OF PEDESTRIAN TREATMENTS AT CROSSINGS.

DECISION POINT 1
THE EXISTENCE OF PEDESTRIAN ACTIVITY SHALL BE DETERMINED. THIS INCLUDES SIDEWALKS LEADING UP TO THE RIGHT-OF-WAY, OR EVIDENCE OF PEDESTRIANS CROSSING AT THE LOCATION. SCRRA STANDARDS CALL FOR THE ADDITION OF PEDESTRIAN TREATMENTS IF PEDESTRIANS UTILIZE THE AREA FOR CROSSING. THE DESIGN ENGINEER SHALL TAKE THE FOLLOWING ACTIONS WHEN EVIDENCE OF ACTIVITY EXISTS WITHOUT PEDESTRIAN FACILITIES:

- DETERMINE IF THE PEDESTRIAN ACTIVITY IS LEGAL.
- WORK WITH THE LOCAL MUNICIPALITY TO IMPLEMENT SIDEWALKS.
- IF WARRANTED, THE DESIGN SHALL PROVIDE SIDEWALKS OVER THE RIGHT-OF-WAY.
- IF WARRANTED, TAKE STEPS TO PREVENT POSSIBLE TRESPASSING.

DECISION POINT 2
IF THE CROSSING IS TO BE INCLUDED IN A QUIET ZONE, THE CROSSING SHALL RECEIVE FULL TREATMENT FOR SAFETY ENHANCEMENTS AND QUIET ZONE SIGNAGE SHALL BE INSTALLED.

DECISION POINT 3
THE TYPE OF PEDESTRIAN CROSSING IS ANALYZED AT THIS STEP. A PEDESTRIAN CROSSING WITHIN A STATION – OR A PEDESTRIAN CROSSING ASSOCIATED WITH A VEHICLE CROSSING ADJACENT TO THE STATION – REQUIRES FULL PEDESTRIAN TREATMENT.

DECISION POINT 4
IS THE CROSSING LOCATED WITHIN A 10 MINUTE WALKING DISTANCE OF A SCHOOL, HOSPITAL, OR OTHER FACILITY THAT CAN BE EXPECTED TO SUPPORT DISABLED PEOPLE? IF THE ANSWER IS YES TO ANY OF THE LISTED FACILITIES, THEN THE CROSSING REQUIRES FULL PEDESTRIAN TREATMENT. IF THE ANSWER IS NO, THEN IS THERE SIGNIFICANT PEDESTRIAN ACTIVITY AT THE CROSSING? IN ORDER TO ANSWER NO TO WEATHER THERE IS SIGNIFICANT PEDESTRIAN ACTIVITY, THE DESIGN ENGINEER SHALL CONDUCT A STUDY OF THE CROSSING, IN ORDER TO DETERMINE THE VOLUME OF PEDESTRIANS USING THE CROSSING BOTH ON-PEAK AND OFF-PEAK HOURS, THE TYPES OF PEDESTRIANS (i.e. SCHOOL CHILDREN, ELDERLY, DISABLED, BIKE RIDERS, etc.) AND THE BEHAVIOR PATTERN OF THE PEDESTRIANS (ARE THE PEDESTRIANS BEHAVING IN A SAFE MANNER IN USING THE CROSSING, COGNIZANT OF POTENTIAL TRAIN ACTIVITY), AND THEN DISCUSS THE RESULTS OF THIS STUDY WITH SCRRA AND CPUC FOR CLEAR CONSENSUS WITH THE SAFETY REVIEW TEAM AS TO THE PRESENCE OR ABSENCE OF SIGNIFICANT PEDESTRIAN ACTIVITY. FULL TREATMENTS ARE REQUIRED IN THE EVENT OF A YES ANSWER TO ANY OF THESE QUESTIONS.

DECISION POINT 5
DOES THE CROSSING HAVE THREE OR MORE MAIN OR CONTROLLED SIDING RAILROAD TRACKS? IF THE ANSWER IS YES, THE PEDESTRIAN CROSSING SHALL BE GRADE SEPERATED. THE GRADE SEPERATION CAN BE AN OVERHEAD OR UNDERPASS.

DECISION POINT 6
DOES THE CROSSING HAVE TWO MAIN RAILROAD TRACKS? THIS DECISION POINT IS ARRANGED SO THAT A YES ANSWER FOR THIS QUESTION ACCOUNTS FOR TWO TRACKS IN RURAL AREAS THAT SEE FEW PEDESTRIANS. IN THIS CASE, IT MAY NOT BE APPROPRIATE TO INSTALL FULL PEDESTRIAN TREATMENTS, BUT SHALL NEED APPROVAL FROM SCRRA. IN AN URBAN ENVIRONMENT, HOWEVER, FULL TREATMENTS ARE REQUIRED WHEN MULTIPLE TRACKS ARE IN A LOCATION WITH LIMITED VISIBILITY.

DECISION POINT 7
DOES THE CROSSING LOCATION HAVE RESTRICTED VISIBILITY? FULL TREATMENTS ARE REQUIRED WHEN THERE IS LIMITED VISIBILITY AT CROSSINGS.

DECISION POINT 8
IS THE RIGHT-OF-WAY NECESSARY TO COMPLY WITH THE MANUAL UNOBTAINABLE? IF NOT, THEN FULL PEDESTRIAN TREATMENTS ARE REQUIRED. SCRRA STANDARD DRAWINGS INCLUDE VARIATIONS TO THE STANDARD CONFIGURATION DEPENDING ON THE AVAILABLE RIGHT-OF-WAY. IN CASES WHERE THE RIGHT-OF-WAY REQUIRED FOR THE USE OF ONE OF THESE STANDARD APPLICATIONS CANNOT BE AQUIRED DUE TO EXISTING PROPERTY USES, OR BECAUSE OF OTHER CONDITIONS, THE DESIGN ENGINEER SHALL REQUEST A DEVIATION FROM STANDARD, AND DESIGN A NON STANDARD APPLICATION.

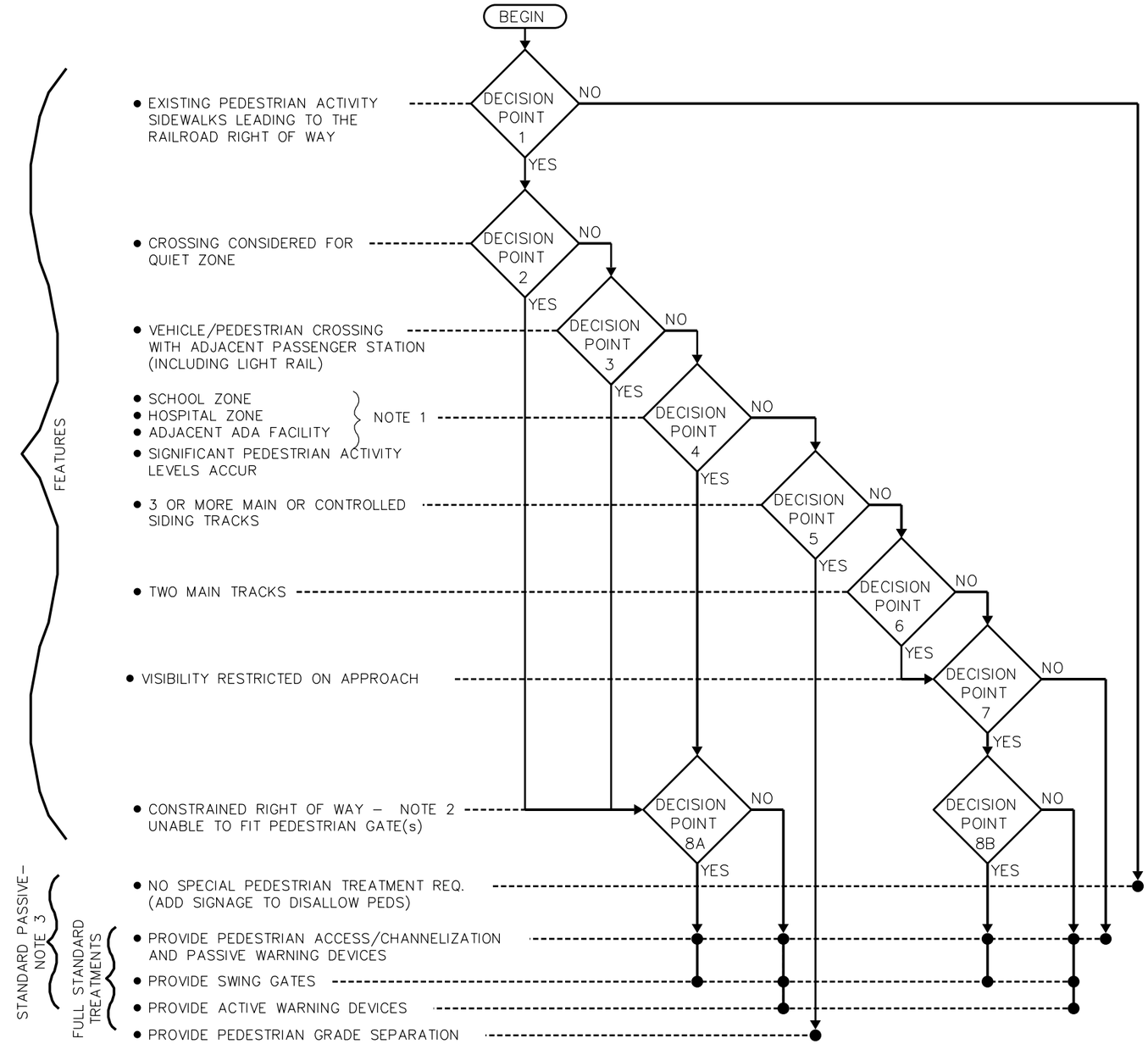

NOTES:

1. TEN MINUTE WALK RULE – CROSSING LOCATED WITHIN TEN MINUTES WALK ($\frac{1}{3}$ TO $\frac{1}{2}$ MILE WALK).
2. SCRRA APPROVAL REQUIRED.
3. FOR PASSIVE WARNING DEVICES, THE DESIGNER SHALL USE THE FOLLOWING ORDER FROM LEAST THE MOST:
   A. SIGNAGE (IF NO SIDEWALKS ARE PRESENT OR PLANNED).
   B. SIGNAGE AND DETECTABLE STRIP.
   C. SIGNAGE, DETECTABLE STRIPS AND SWING GATES.
   D. SIGNAGE, DETECTABLE STRIPS, SWING GATES AND CHANNELIZATION.

REV.	DATE	DESCRIPTION	DES.	ENG.
X	XX-XX-XX	REVISION	XX	XX

DRAWN BY: A. CARLOS DATE: 03/31/2011

ASSISTANT DIRECTOR: STANDARDS & DESIGN

DIRECTOR OF ENGINEERING AND CONSTRUCTION

SCRRA ENGINEERING STANDARDS ARE INTENDED FOR SCRRA APPROVED USES ONLY. FOR NON-SCRRA APPROVED USES:
SCRRA SHALL NOT BE RESPONSIBLE FOR THE ACCURACY OR COMPLETENESS OF THE DATA OR INFORMATION CONTAINED HEREIN. THE SELECTION AND USE OF THESE STANDARDS IS THE SOLE RESPONSIBILITY OF THE USER AND SHOULD NOT BE USED WITHOUT CONSULTING A REGISTERED PROFESSIONAL ENGINEER. ALL WARRANTIES AND REPRESENTATIONS OF ANY KIND ARE DISCLAIMED. ANYONE MAKING USE OF THIS INFORMATION AGREES THAT IT ASSUMES ALL LIABILITY ARISING FROM SUCH USE. NO PART OF THESE STANDARDS SHOULD BE REPRODUCED OR DISTRIBUTED IN ANY FORM OR BY ANY MEANS WITHOUT THE PRIOR WRITTEN PERMISSION OF SCRRA. ALL RIGHTS RESERVED.

METROLINK®
SOUTHERN CALIFORNIA REGIONAL RAIL AUTHORITY
ONE GATEWAY PLAZA, 12TH FLOOR, L. A., CA. 90012

ENGINEERING STANDARDS

PEDESTRIAN CROSSING DESIGN CONSIDERATION TABLE

STANDARD 4004
SCALE: NTS
REVISION –
SHEET 1 OF 1
CADD FILE: ES4004

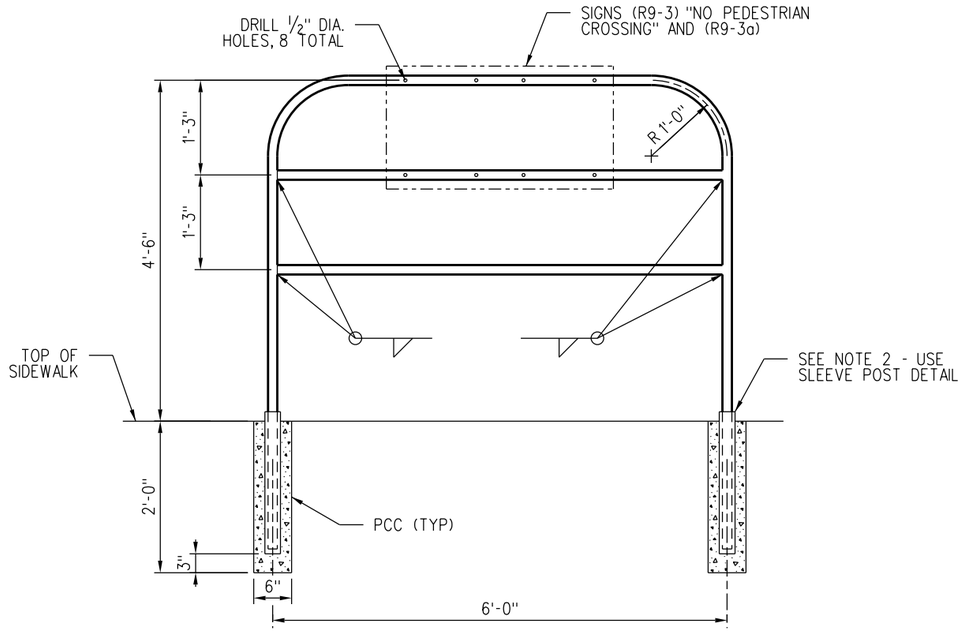

TYPE 1

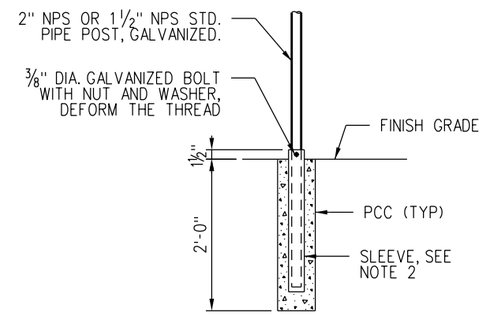

SLEEVE POST DETAIL

NOTES:

1. PEDESTRIAN BARRICADE SHALL BE AS PER CALTRANS PLAN ES-7P AND AS MODIFIED HEREWITH.
2. PIPE POST TO BE SET 1'-6" BACK FROM FACE OF CURB UNLESS OTHERWISE SPECIFIED.
3. STEEL SLEEVE TO BE CONSTRUCTED WITH A DIAMETER OF 1/10" LARGER THAN POST. WALL THICKNESS OF SLEAVE TO BE SAME AS POST OR LARGER.
4. CONTRACTOR MAY SUBMIT ALTERNATIVE DETAILS FOR APPROVAL BY SCRRA.
5. FOR MINIMUM PIPE DIAMETERS AND WALL THICKNESS REFER TO ASTM A6M.
6. THE LOCATION OF BARRICADE SHALL BE COORDINATED WITH LOCAL AUTHORITY AND SCRRA.
7. THE "CROSS ONLY AT CROSSWALKS" (R9-2) AND "USE CROSSWALK" (R9-3b) SIGNS AS PER CA MUTCD SHALL BE INSTALLED AT APPROPRIATE LOCATIONS AS NEEDED.

PEDESTRIAN BARRICADE DETAILS

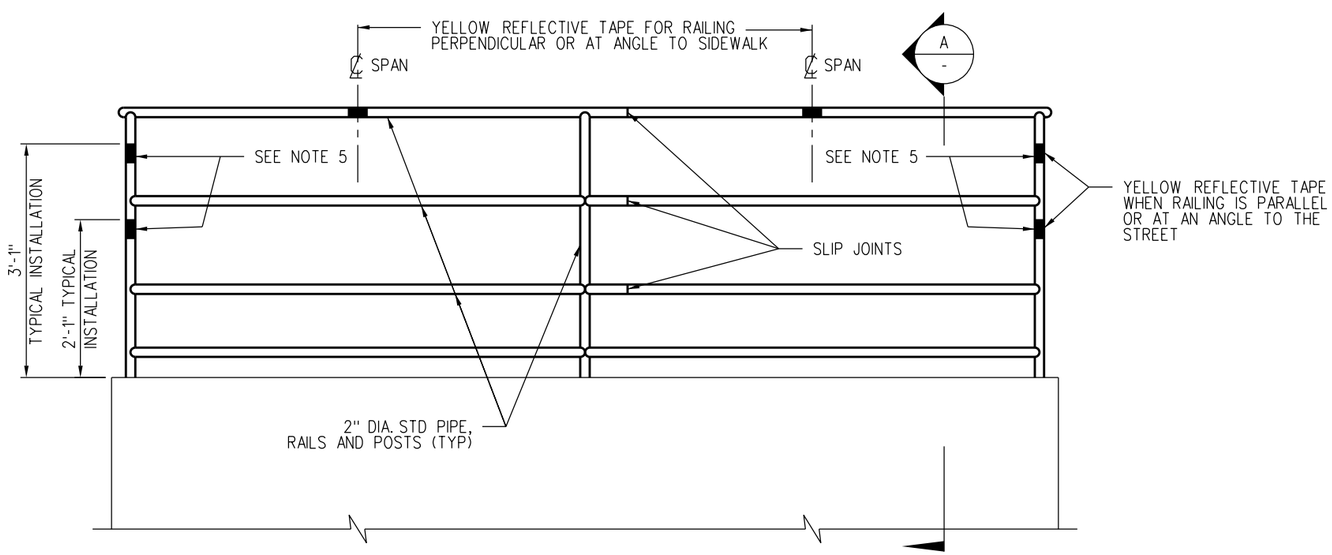

TYPE B

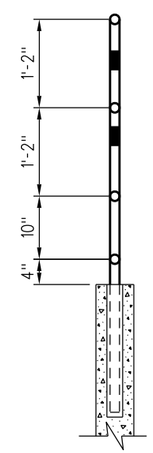

SECTION A

NOTES:

1. METAL HAND RAILING SHALL BE AS PER APWA STANDARD PLAN 600-2, "TYPE B" AND AS MODIFIED HEREWITH.
2. RAILS, POSTS AND PICKETS SHALL BE GALVANIZED STEEL PIPE.
3. MAXIMUM SPACING OF POSTS SHALL BE 8'-0" ON STRAIGHT ALIGNMENTS, AND 6'-0" ON CURVED ALIGNMENTS WITH LESS THAN 30' RADIUS. MAKE SPACING UNIFORM BETWEEN CHANGES IN ALIGNMENTS.
4. WELDS SHALL BE SLOT OR FILLET WELDS EQUAL TO THICKNESS OF PIPE. WELD ALL JOINTS ALL AROUND.
5. INSTALL HIGH VISIBILITY YELLOW REFLECTIVE TAPE 3" x 3".

METAL HAND RAILING DETAILS

REV.	DATE	DESCRIPTION	DES.	ENG.
X	XX-XX-XX	REVISION	XX	XX

DRAWN BY: A. CARLOS DATE: 03/31/2011

ASSISTANT DIRECTOR: STANDARDS & DESIGN

DIRECTOR OF ENGINEERING AND CONSTRUCTION

SCRRA ENGINEERING STANDARDS ARE INTENDED FOR SCRRA APPROVED USES ONLY. FOR NON-SCRRA APPROVED USES:
SCRRA SHALL NOT BE RESPONSIBLE FOR THE ACCURACY OR COMPLETENESS OF THE DATA OR INFORMATION CONTAINED HEREIN. THE SELECTION AND USE OF THESE STANDARDS IS THE SOLE RESPONSIBILITY OF THE USER AND SHOULD NOT BE USED WITHOUT CONSULTING A REGISTERED PROFESSIONAL ENGINEER. ALL WARRANTIES AND REPRESENTATIONS OF ANY KIND ARE DISCLAIMED. ANYONE MAKING USE OF THIS INFORMATION AGREES THAT IT ASSUMES ALL LIABILITY ARISING FROM SUCH USE. NO PART OF THESE STANDARDS SHOULD BE REPRODUCED OR DISTRIBUTED IN ANY FORM OR BY ANY MEANS WITHOUT THE PRIOR WRITTEN PERMISSION OF SCRRA. ALL RIGHTS RESERVED.

METROLINK®
SOUTHERN CALIFORNIA REGIONAL RAIL AUTHORITY
ONE GATEWAY PLAZA, 12TH FLOOR, L. A., CA. 90012

ENGINEERING STANDARDS

PEDESTRIAN BARRICADE AND METAL HAND RAILING DETAILS

STANDARD 4005
SCALE: NTS
REVISION –
SHEET 1 OF 1
CADD FILE: ES4005

NOTE:

FOR NOTES AND LEGEND SEE SHEET 2 OF 2.

LEGEND:

✳ - LOCATION TO BE DETERMINED BASED ON CA MUTCD TABLE 2C-4.

QZ - QUIET ZONE

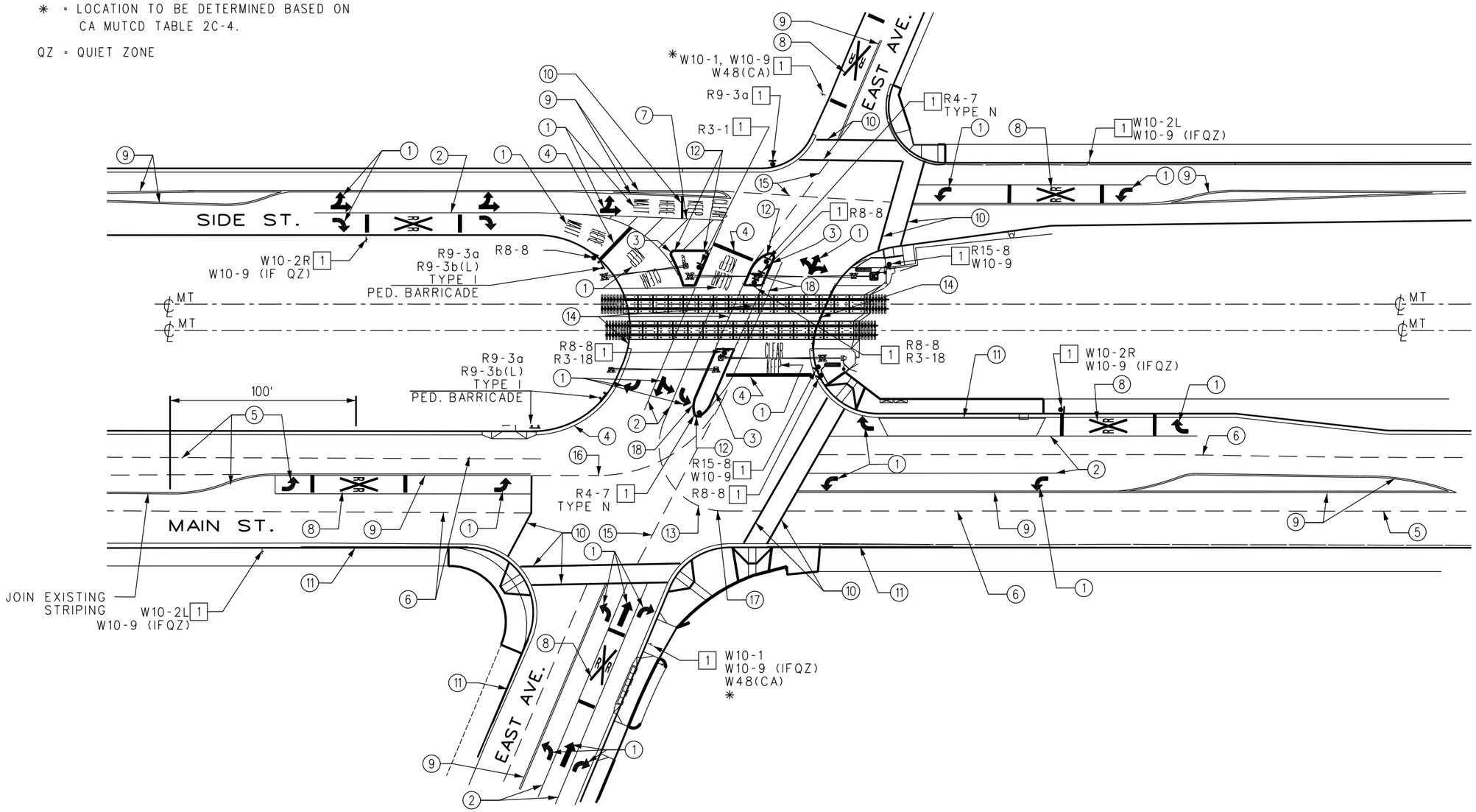

STREET SIGN INDEX

TYPE N 18"X18"

R3-1 30"X30" ACTIVATED BLANK OUT

R3-18 30"X30"

R4-7 24"X30"

DO NOT STOP ON TRACKS
R8-8 24"X30"

R9-3a 30"X30"

USE CROSSWALK
R9-3b (L) 30"X30"

LOOK
R15-8 18"X36"

R R
W10-1 36"X36"

NO TRAIN HORN
W10-9 18"X24"

W10-2L 36"X36"

2 TRACKS
W48 (CA) 24"X30"

W10-2R 36"X36"

REV.	DATE	DESCRIPTION	DES.	ENG.
X	XX-XX-XX	REVISION	XX	XX

DRAWN BY: A. CARLOS DATE: 07/18/2011

ASSISTANT DIRECTOR: STANDARDS & DESIGN

DIRECTOR OF ENGINEERING AND CONSTRUCTION

SCRRA ENGINEERING STANDARDS ARE INTENDED FOR SCRRA APPROVED USES ONLY. FOR NON-SCRRA APPROVED USES:
SCRRA SHALL NOT BE RESPONSIBLE FOR THE ACCURACY OR COMPLETENESS OF THE DATA OR INFORMATION CONTAINED HEREIN. THE SELECTION AND USE OF THESE STANDARDS IS THE SOLE RESPONSIBILITY OF THE USER AND SHOULD NOT BE USED WITHOUT CONSULTING A REGISTERED PROFESSIONAL ENGINEER. ALL WARRANTIES AND REPRESENTATIONS OF ANY KIND ARE DISCLAIMED. ANYONE MAKING USE OF THIS INFORMATION AGREES THAT IT ASSUMES ALL LIABILITY ARISING FROM SUCH USE. NO PART OF THESE STANDARDS SHOULD BE REPRODUCED OR DISTRIBUTED IN ANY FORM OR BY ANY MEANS WITHOUT THE PRIOR WRITTEN PERMISSION OF SCRRA. ALL RIGHTS RESERVED.

METROLINK®

SOUTHERN CALIFORNIA REGIONAL RAIL AUTHORITY
ONE GATEWAY PLAZA, 12TH FLOOR, L. A., CA. 90012

ENGINEERING STANDARDS

GRADE CROSSING MARKING AND SIGNAGE

STANDARD 4006

SCALE: NTS

REVISION – SHEET 1 OF 2

CADD FILE: ES4006-01

UserName-> carlosa Date Plotted: 10/5/2011 2:25:49 PM Plot Driver-> S:\Plot Drivers\pdf.plt FileName-> s:\V8EngStds\4000\ES4006-01.dgn

GENERAL NOTES:

1. THE METHOD OF PAVEMENT MARKING AND MARKER INSTALLATION SHALL CONFORM TO SECTION 84 AND 85 OF CALTRANS LATEST STANDARD SPECIFICATIONS OR AS REQUIRED BY LOCAL JURISDICTION.
2. NO MARKING TO BE DONE PRIOR TO FIELD INSPECTION AND APPROVAL OF LAYOUT BY SCRRA IN THE FIELD.
3. PAVEMENT MARKING SHALL BE THERMOPLASTIC MATERIALS AND SHALL CONFORM TO SECTION 84-2.0.2 OF THE CALTRANS STANDARD SPECIFICATION OR AS REQUIRED BY LOCAL JURISDICTION.
4. THE APPLICATIONS OF THERMOPLASTIC MATERIALS SHALL BE IN ACCORDANCE WITH CALTRANS STANDARD SPECIFICATIONS SECTION 84-2.04 OR AS REQUIRED BY LOCAL JURISDICTION.
5. PAVEMENT DELINEATIONS PATTERNS SHALL CONFORM TO THE DETAILS IN THE CALTRANS STANDARD PLAN A20-A, A20-B, A20-C, A20-D AND A24-E ARROW SYMBOLS SHALL BE WHITE UNLESS SPECIFIED IN THE PLANS AND CA MUTCD LATEST EDITION.
6. PAVEMENT ARROW IN FRONT OF A TURN LANE SHALL BE PLACED APPROXIMATELY 10 FEET FROM THE LIMIT LINE AND THE ARROW AT THE BACK OF A TURN LANE SHALL BE PLACE APPROXIMATELY 5 FEET FROM THE END WHERE THE VEHICLE ENTERS THE LANE.
7. ALL CROSSWALKS PER CA MUTCD AND LOCAL JURISDICTION REQUIREMENTS
8. BEYOND RESURFACING LIMITS, ALL CONFLICTING MARKINGS, PAINTED SYMBOLS, AND RAISED PAVEMENT MARKERS SHALL BE REMOVED. PAINTED MARKING SHALL BE REMOVED BY WET SAND BLASTING OR AS REQUIRED BY LOCAL JURISDICTION.
9. ALL EXISTING SIGNS AND POSTS NOT TO BE REUSED SHALL BE REMOVED.
10. RELOCATED OR NEW SIGNS AS SHOWN ON PLANS SHALL BE INSTALLED ON NEW POST, EXCEPT WHERE STREET LIGHT POLES ARE USED FOR SIGN POSTING, NEW SIGN POSTS SHALL BE UNI STRUT BREAK AWAY TYPE, 2-INCH SQUARE TUBE.
11. ALL TRAFFIC SIGNS SHALL BE HAVE RETRO REFLECTIVE SHEETING AS SPECIFIED IN SECTION 312 OF THE SPECIAL PROVISIONS AND SHALL CONFIRM TO LATEST CALTRANS STANDARD PLANS AND SPECIFICATIONS AND THE LATEST CALIFORNIA SIGN SPECIFICATIONS. ALL SIGNS SHALL BE INSTALLED IN ACCORDANCE WITH CALTRANS STANDARDS PLANS AND SPECIFICATIONS OR AS REQUIRED BY LOCAL JURISDICTION.
12. PEDESTRIAN BARRICADE AS PER SCRRA ENGINEERING STANDARD DRAWING ES4005.
13. NO SIGNS SHALL BE INSTALLED PRIOR TO FIELD INSPECTION AND APPROVAL OF LAYOUT BY SCRRA IN THE FIELD. THE SIGNS SHALL NOT BLOCK CLEAR VIEWS OF RAILROAD WARNING SIGNAL LIGHTS.
14. QUIET ZONE SIGNS SHALL BE INSTALLED ONLY IN DESIGNATED QUIET ZONES.

MARKING NOTES:

1. PAVEMENT MARKING AS PER CALTRANS STD PLAN A24A OR A24D OR A24E OR CA MUTCD (LATEST EDITION)
2. 8" PAINTED WHITE CHANNELIZING LINE WITH REFLECTIVE AND RAISED PAVEMENT MARKERS PER CALTRANS DETAIL 38
3. 4" SOLID YELLOW MARKING AROUND MEDIAN PER CALTRANS DETAIL 24
4. 24" SOLID WHITE STOP LINE PER CALTRANS STD PLAN A24B
5. REPAINT EXISTING MARKINGS AS NEEDED
6. 4" WHITE MARKING AND MARKER PER CALTRANS STD DETAIL 9
7. 4" SOLID WHITE EDGELINE PER CALTRANS DETAIL 27B
8. RAILROAD CROSSING SYMBOL PER CALTRANS STD PLAN A24B
9. 4" DOUBLE YELLOW MARKING PER CALTRANS DETAIL 21
10. 12" WHITE CROSSWALK LINE PER CALTRANS STD PLAN A24E
11. RED CURB (TYP)
12. MEDIAN NOSE YELLOW W/ RPM'S 2' O.C. TYPE "D"
13. LANE LINE EXTENSIONS PER CALTRANS DETAIL 40
14. MARKING AND PAVEMENT MARKERS PER SCRRA STD. ES4016
15. CENTER LINE EXTENSIONS PER CALTRANS DETAIL 41
16. CENTER LINE EXTENSIONS TYPE "AY" NON-REFLECTIVE PER CALTRANS DETAIL 41A
17. LANE LINE EXTENSIONS TYPE "A" NON-REFLECTIVE PER CALTRANS DETAIL 40A
18. 4" PAINTED YELLOW EDGELINE AND MARKER PER CALTRANS DETAIL 25

SIGN NOTES:

1. ROAD SIDE SIGN AND POST

REV.	DATE	DESCRIPTION	DES.	ENG.
X	XX-XX-XX	REVISION	XX	XX

DRAWN BY: A. CARLOS DATE: 07/18/2011

ASSISTANT DIRECTOR: STANDARDS & DESIGN

DIRECTOR OF ENGINEERING AND CONSTRUCTION

SCRRA ENGINEERING STANDARDS ARE INTENDED FOR SCRRA APPROVED USES ONLY. FOR NON-SCRRA APPROVED USES:
SCRRA SHALL NOT BE RESPONSIBLE FOR THE ACCURACY OR COMPLETENESS OF THE DATA OR INFORMATION CONTAINED HEREIN. THE SELECTION AND USE OF THESE STANDARDS IS THE SOLE RESPONSIBILITY OF THE USER AND SHOULD NOT BE USED WITHOUT CONSULTING A REGISTERED PROFESSIONAL ENGINEER. ALL WARRANTIES AND REPRESENTATIONS OF ANY KIND ARE DISCLAIMED. ANYONE MAKING USE OF THIS INFORMATION AGREES THAT IT ASSUMES ALL LIABILITY ARISING FROM SUCH USE. NO PART OF THESE STANDARDS SHOULD BE REPRODUCED OR DISTRIBUTED IN ANY FORM OR BY ANY MEANS WITHOUT THE PRIOR WRITTEN PERMISSION OF SCRRA. ALL RIGHTS RESERVED.

METROLINK®
SOUTHERN CALIFORNIA REGIONAL RAIL AUTHORITY
ONE GATEWAY PLAZA, 12TH FLOOR, L. A., CA. 90012

ENGINEERING STANDARDS

GRADE CROSSING
MARKING AND SIGNAGE

STANDARD 4006
SCALE: NTS
REVISION –
SHEET 2 OF 2
CADD FILE: ES4006-02

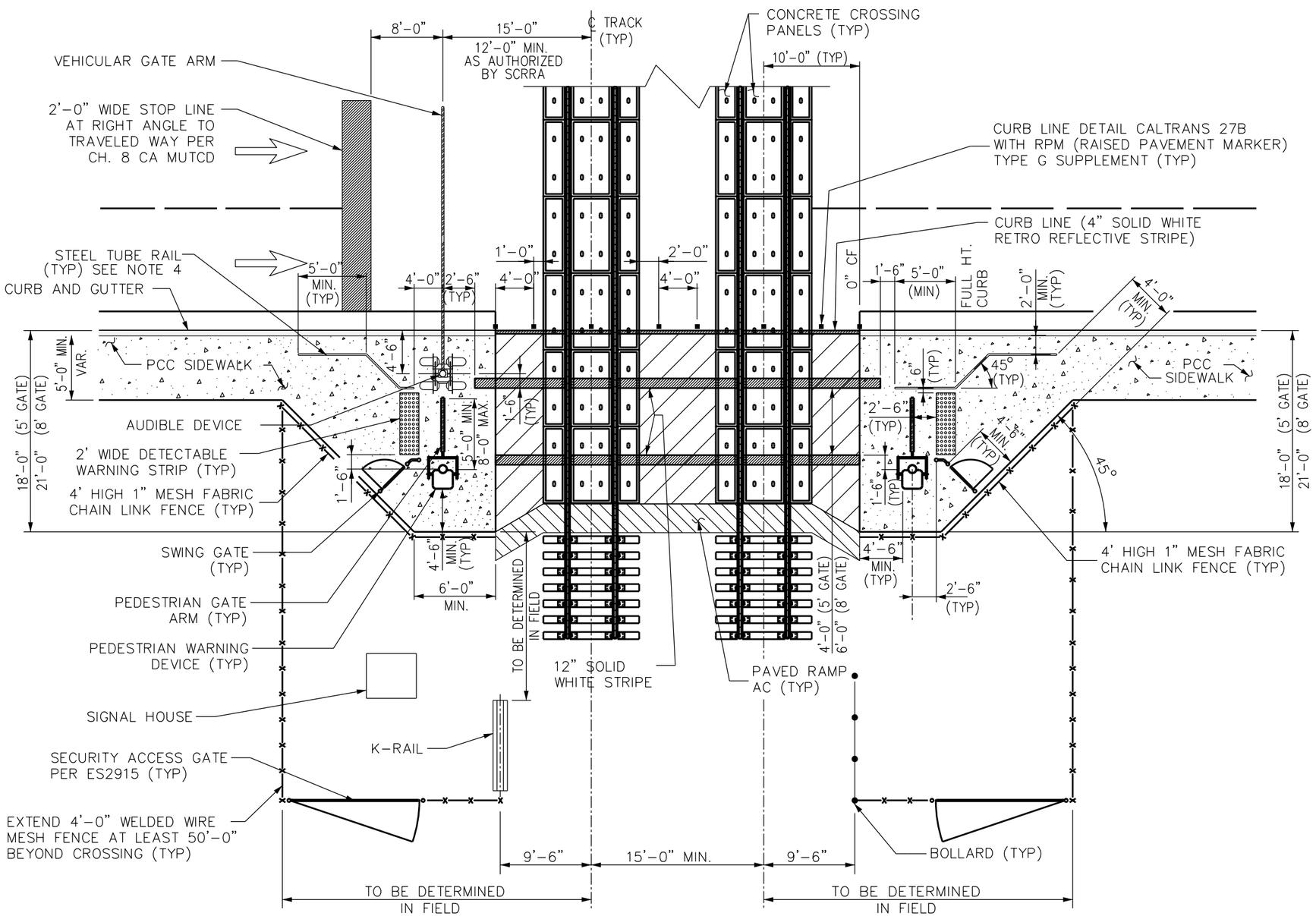

12 0 12 24

1"=12'

NOTES:

1. THESE STANDARDS ARE NOT INTENDED TO REPLACE EXISTING REGULATORY STANDARDS, NOR TO BE A SUBSTITUTE FOR ENGINEERING KNOWLEDGE, EXPERIENCE AND JUDGMENT, BUT ARE REQUIREMENTS, WHICH ARE MOST IMPORTANT FOR SAFE CONSTRUCTION, MAINTENANCE AND OPERATION OF PEDESTRIAN FACILITIES AT HIGHWAY-RAIL GRADE CROSSINGS. SINCE THE ACTUAL DESIGN WILL TYPICALLY BE SITE SPECIFIC, INFORMATION SHOWN ON THIS DRAWING WILL BE MODIFIED AS NECESSARY IN CLOSE COLLABORATION WITH SCRRA.
2. FOLLOW CALIFORNIA MUTCD FOR STRIPING, SIGNING, AND OTHER TRAFFIC WARNING DEVICES.
3. REFER TO THE FOLLOWING FOR ADDITIONAL DESIGN INFORMATION:
   a. SCRRA ENGINEERING STANDARD ES4201 FOR CONCRETE PANELS AND PAVED END RAMP.
   b. SCRRA ENGINEERING STANDARD ES5101 FOR INTER-TRACK FENCE.
   c. SCRRA ENGINEERING STANDARD ES5107 FOR SECURITY ACCESS GATE, K-RAIL AND BOLLARDS.
   d. SCRRA ENGINEERING STANDARD ES4001 FOR TRACK SECTIONS AND ASPHALT CONCRETE PAVEMENT DETAILS.
   e. SCRRA ENGINEERING STANDARD ES4002 FOR SWING GATE DETAILS.
   f. SCRRA ENGINEERING STANDARD ES8308 AND ES8309 FOR PEDESTRIAN WARNING DEVICES.
   g. CALTRANS STANDARD PLANS A20A FOR TRAFFIC LINES (STRIPES) AND A88A FOR DETECTABLE WARNING SURFACE (STRIPE), SQUARE GRID PATTERN.
   h. CALTRANS STANDARD PLANS A20B DETAIL 27B AND A20C TYPE "G" FOR PAVEMENT MARKERS.
   i. APWA STANDARD PLAN 606-2, TYPE "B" FOR STEEL TUBE RAIL. (ONE ADDITIONAL RAIL 4" FROM BOTTOM).
4. FENCING AND STEEL TUBE RAIL LOCATIONS SHALL BE ADJUSTED AS NECESSARY TO PROVIDE SCRRA MAINTENANCE VEHICLES ACCESS TO RIGHT-OF-WAY AND SIGNAL & TRACK FACILITIES WITH SCRRA APPROVAL.
5. PREEMPTION AND TOTAL WARNING TIME SHALL TAKE INTO CONSIDERATION THE PEDESTRIAN WALKING DISTANCE AND CLEARANCE TIME AND SHALL MEET THE REGULATIONS AND REQUIREMENTS OF THE AMERICAN WITH DISABILITIES ACT (ADA) AND CA MUTCD.
6. THE WIDTH OF SIDEWALKS ON THE SIDE OF THE GATES OPPOSITE THE RAIL SHALL BE A MINIMUM OF FIVE (5) FEET.

LEGEND

- STRIPING
- DETECTABLE WARNING STRIP
- CONCRETE
- AC PAVEMENT (SHOWN FOR PEDESTRIAN FACILITY ONLY)
- DIRECTION OF TRAFFIC

REV.	DATE	DESCRIPTION	DES.	ENG.
1	9-13-10	REPLACE TUBE STEEL RAIL WITH CHAIN LINK FENCE	AC	NDP

DRAWN BY: A. CARLOS DATE: 03/31/2011

ASSISTANT DIRECTOR: STANDARDS & DESIGN

DIRECTOR OF ENGINEERING AND CONSTRUCTION

SCRRA ENGINEERING STANDARDS ARE INTENDED FOR SCRRA APPROVED USES ONLY. FOR NON-SCRRA APPROVED USES:
SCRRA SHALL NOT BE RESPONSIBLE FOR THE ACCURACY OR COMPLETENESS OF THE DATA OR INFORMATION CONTAINED HEREIN. THE SELECTION AND USE OF THESE STANDARDS IS THE SOLE RESPONSIBILITY OF THE USER AND SHOULD NOT BE USED WITHOUT CONSULTING A REGISTERED PROFESSIONAL ENGINEER. ALL WARRANTIES AND REPRESENTATIONS OF ANY KIND ARE DISCLAIMED. ANYONE MAKING USE OF THIS INFORMATION AGREES THAT IT ASSUMES ALL LIABILITY ARISING FROM SUCH USE. NO PART OF THESE STANDARDS SHOULD BE REPRODUCED OR DISTRIBUTED IN ANY FORM OR BY ANY MEANS WITHOUT THE PRIOR WRITTEN PERMISSION OF SCRRA. ALL RIGHTS RESERVED.

METROLINK®
SOUTHERN CALIFORNIA REGIONAL RAIL AUTHORITY
ONE GATEWAY PLAZA, 12TH FLOOR, L. A., CA. 90012

ENGINEERING STANDARDS

PEDESTRIAN FACILITIES AT VEHICLE CROSSING ENTRANCE GATES ONLY

STANDARD 4011
SCALE: NTS
REVISION 1 SHEET 1 OF 1
CADD FILE: ES4011

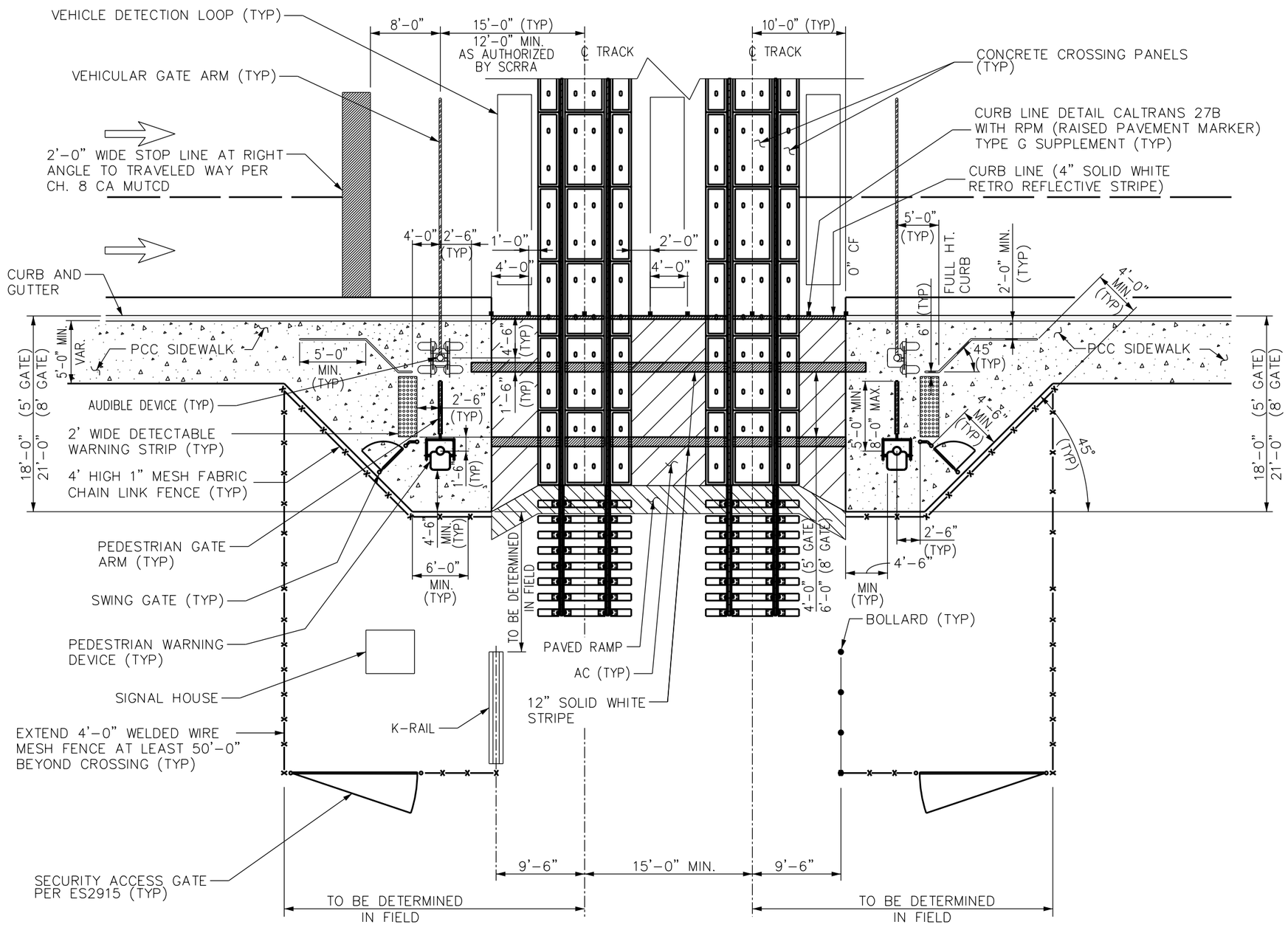

NOTES:

1. THESE STANDARDS ARE NOT INTENDED TO REPLACE EXISTING REGULATORY STANDARDS, NOR TO BE A SUBSTITUTE FOR ENGINEERING KNOWLEDGE, EXPERIENCE AND JUDGMENT, BUT ARE REQUIREMENTS, WHICH ARE MOST IMPORTANT FOR SAFE CONSTRUCTION, MAINTENANCE AND OPERATION OF PEDESTRIAN FACILITIES AT HIGHWAY–RAIL GRADE CROSSINGS. SINCE THE ACTUAL DESIGN WILL TYPICALLY BE SITE SPECIFIC, INFORMATION SHOWN ON THIS DRAWING WILL BE MODIFIED AS NECESSARY IN CLOSE COLLABORATION WITH SCRRA.
2. FOLLOW CALIFORNIA MUTCD FOR STRIPING, SIGNING, AND OTHER TRAFFIC WARNING DEVICES.
3. REFER TO THE FOLLOWING FOR ADDITIONAL DESIGN INFORMATION:
   a. SCRRA ENGINEERING STANDARD ES4201 FOR CONCRETE PANELS AND PAVED END RAMP.
   b. SCRRA ENGINEERING STANDARD ES5101 FOR INTER–TRACK FENCE.
   c. SCRRA ENGINEERING STANDARD ES5107 FOR SECURITY ACCESS GATE, K–RAIL AND BOLLARDS.
   d. SCRRA ENGINEERING STANDARD ES4001 FOR TRACK SECTIONS AND ASPHALT CONCRETE PAVEMENT DETAILS.
   e. SCRRA ENGINEERING STANDARD ES4002 FOR SWING GATE DETAILS.
   f. SCRRA ENGINEERING STANDARD ES8308 AND ES8309 FOR PEDESTRIAN WARNING DEVICES.
   g. CALTRANS STANDARD PLANS A20A FOR TRAFFIC LINES (STRIPES) AND A88A FOR DETECTABLE WARNING SURFACE (STRIPE), SQUARE GRID PATTERN.
   h. CALTRANS STANDARD PLANS A20B DETAIL 27B AND A20C TYPE "G" FOR PAVEMENT MARKERS.
   i. APWA STANDARD PLAN 606–2, TYPE "B" FOR STEEL TUBE RAIL. (ONE ADDITIONAL RAIL 4" FROM BOTTOM).
4. FENCING AND STEEL TUBE RAIL LOCATIONS SHALL BE ADJUSTED AS NECESSARY TO PROVIDE SCRRA MAINTENANCE VEHICLES ACCESS TO RIGHT–OF–WAY AND SIGNAL & TRACK FACILITIES WITH SCRRA APPROVAL.
5. PREEMPTION AND TOTAL WARNING TIME SHALL TAKE INTO CONSIDERATION THE PEDESTRIAN WALKING DISTANCE AND CLEARANCE TIME AND SHALL MEET THE REGULATIONS AND REQUIREMENTS OF THE AMERICAN WITH DISABILITIES ACT (ADA) AND CA MUTCD.
6. THE WIDTH OF SIDEWALKS ON THE SIDE OF THE GATES OPPOSITE THE RAIL SHALL BE A MINIMUM OF FIVE (5) FEET.

LEGEND

- STRIPING
- DETECTABLE WARNING STRIP
- CONCRETE
- AC PAVEMENT (SHOWN FOR PEDESTRIAN FACILITY ONLY)
- DIRECTION OF TRAFFIC

REV.	DATE	DESCRIPTION	DES.	ENG.
1	9-13-10	REPLACE TUBE STEEL RAIL WITH CHAIN LINK FENCE	AC	NDP

DRAWN BY: A. CARLOS DATE: 03/31/2011

ASSISTANT DIRECTOR: STANDARDS & DESIGN

DIRECTOR OF ENGINEERING AND CONSTRUCTION

SCRRA ENGINEERING STANDARDS ARE INTENDED FOR SCRRA APPROVED USES ONLY. FOR NON-SCRRA APPROVED USES:
SCRRA SHALL NOT BE RESPONSIBLE FOR THE ACCURACY OR COMPLETENESS OF THE DATA OR INFORMATION CONTAINED HEREIN. THE SELECTION AND USE OF THESE STANDARDS IS THE SOLE RESPONSIBILITY OF THE USER AND SHOULD NOT BE USED WITHOUT CONSULTING A REGISTERED PROFESSIONAL ENGINEER. ALL WARRANTIES AND REPRESENTATIONS OF ANY KIND ARE DISCLAIMED. ANYONE MAKING USE OF THIS INFORMATION AGREES THAT IT ASSUMES ALL LIABILITY ARISING FROM SUCH USE. NO PART OF THESE STANDARDS SHOULD BE REPRODUCED OR DISTRIBUTED IN ANY FORM OR BY ANY MEANS WITHOUT THE PRIOR WRITTEN PERMISSION OF SCRRA. ALL RIGHTS RESERVED.

METROLINK®
SOUTHERN CALIFORNIA REGIONAL RAIL AUTHORITY
ONE GATEWAY PLAZA, 12TH FLOOR, L. A., CA. 90012

ENGINEERING STANDARDS

PEDESTRIAN FACILITIES AT VEHICLE CROSSING ENTRANCE / EXIT GATES

STANDARD 4012
SCALE: NTS
REVISION 1 SHEET 1 OF 1
CADD FILE: ES4012

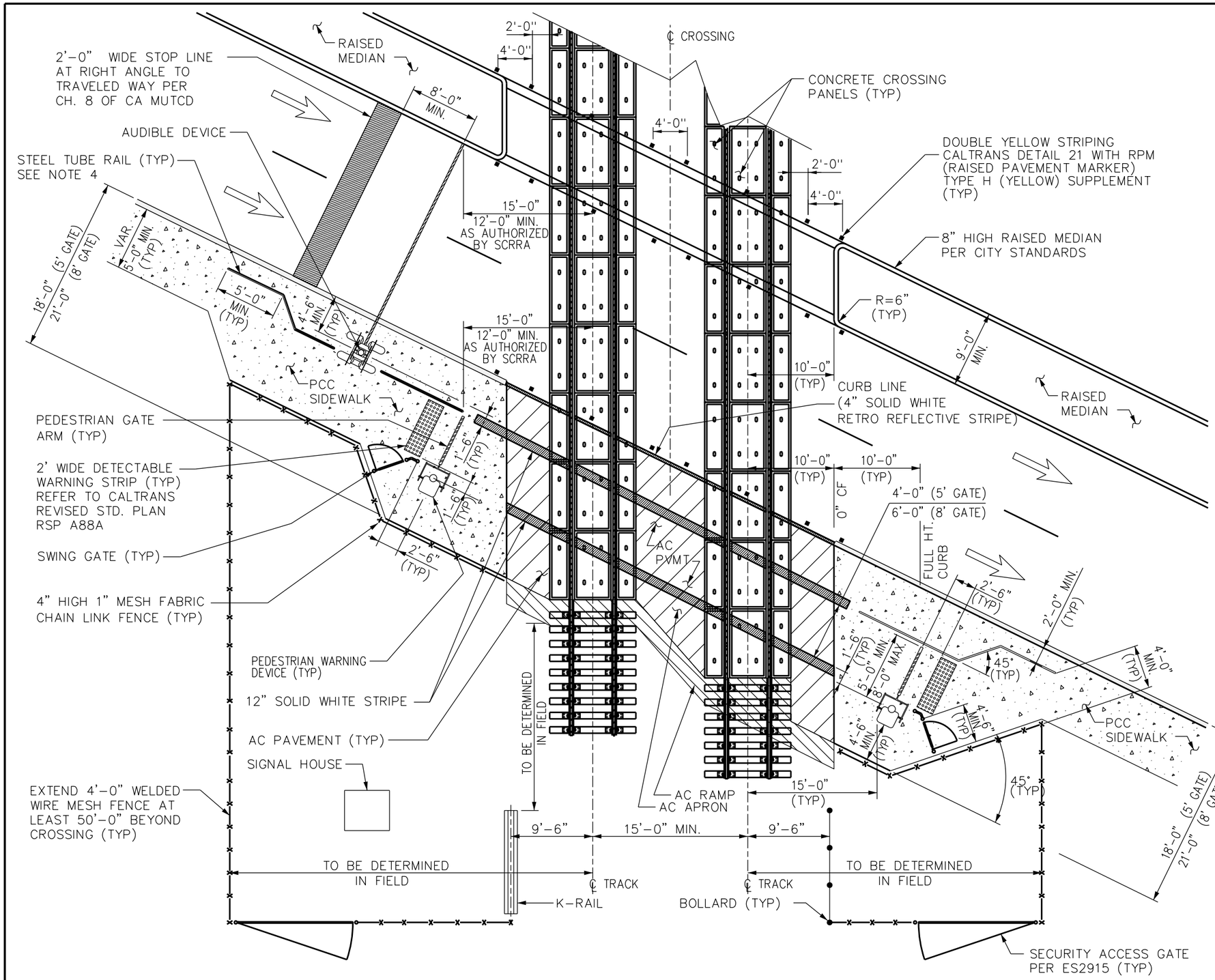

NOTES:

1. THESE STANDARDS ARE NOT INTENDED TO REPLACE EXISTING REGULATORY STANDARDS, NOR TO BE A SUBSTITUTE FOR ENGINEERING KNOWLEDGE, EXPERIENCE AND JUDGMENT, BUT ARE REQUIREMENTS, WHICH ARE MOST IMPORTANT FOR SAFE CONSTRUCTION, MAINTENANCE AND OPERATION OF PEDESTRIAN FACILITIES AT HIGHWAY–RAIL GRADE CROSSINGS. SINCE THE ACTUAL DESIGN WILL TYPICALLY BE SITE SPECIFIC, INFORMATION SHOWN ON THIS DRAWING WILL BE MODIFIED AS NECESSARY IN CLOSE COLLABORATION WITH SCRRA.
2. FOLLOW CALIFORNIA MUTCD FOR STRIPING, SIGNING, AND OTHER TRAFFIC WARNING DEVICES.
3. REFER TO THE FOLLOWING FOR ADDITIONAL DESIGN INFORMATION:
   a. SCRRA ENGINEERING STANDARD ES4201 FOR CONCRETE PANELS AND PAVED END RAMP.
   b. SCRRA ENGINEERING STANDARD ES5101 FOR INTER–TRACK FENCE.
   c. SCRRA ENGINEERING STANDARD ES5107 FOR SECURITY ACCESS GATE, K–RAIL AND BOLLARDS.
   d. SCRRA ENGINEERING STANDARD ES4001 FOR TRACK SECTIONS AND ASPHALT CONCRETE PAVEMENT DETAILS.
   e. SCRRA ENGINEERING STANDARD ES4002 FOR SWING GATE DETAILS.
   f. SCRRA ENGINEERING STANDARD ES8308 AND ES8309 FOR PEDESTRIAN WARNING DEVICES.
   g. CALTRANS STANDARD PLANS A20A FOR TRAFFIC LINES (STRIPES) AND A88A FOR DETECTABLE WARNING SURFACE (STRIPE), SQUARE GRID PATTERN.
   h. CALTRANS STANDARD PLANS A20B DETAIL 27B AND A20C TYPE "G" FOR PAVEMENT MARKERS.
   i. APWA STANDARD PLAN 606–2, TYPE "B" FOR STEEL TUBE RAIL. (ONE ADDITIONAL RAIL 4" FROM BOTTOM).
4. FENCING AND STEEL TUBE RAIL LOCATIONS SHALL BE ADJUSTED AS NECESSARY TO PROVIDE SCRRA MAINTENANCE VEHICLES ACCESS TO RIGHT–OF–WAY AND SIGNAL & TRACK FACILITIES WITH SCRRA APPROVAL.
5. PREEMPTION AND TOTAL WARNING TIME SHALL TAKE INTO CONSIDERATION THE PEDESTRIAN WALKING DISTANCE AND CLEARANCE TIME AND SHALL MEET THE REGULATIONS AND REQUIREMENTS OF THE AMERICAN WITH DISABILITIES ACT (ADA) AND CA MUTCD.
6. THE WIDTH OF SIDEWALKS ON THE SIDE OF THE GATES OPPOSITE THE RAIL SHALL BE A MINIMUM OF FIVE (5) FEET.

LEGEND

- STRIPING
- DETECTABLE WARNING STRIP
- CONCRETE
- AC PAVEMENT (SHOWN FOR PEDESTRIAN FACILITY ONLY)
- DIRECTION OF TRAFFIC

12 0 12 24

1"=12'

REV.	DATE	DESCRIPTION	DES.	ENG.

DRAWN BY: A. CARLOS DATE: 03/31/2011

ASSISTANT DIRECTOR: STANDARDS & DESIGN

DIRECTOR OF ENGINEERING AND CONSTRUCTION

SCRRA ENGINEERING STANDARDS ARE INTENDED FOR SCRRA APPROVED USES ONLY. FOR NON-SCRRA APPROVED USES:
SCRRA SHALL NOT BE RESPONSIBLE FOR THE ACCURACY OR COMPLETENESS OF THE DATA OR INFORMATION CONTAINED HEREIN. THE SELECTION AND USE OF THESE STANDARDS IS THE SOLE RESPONSIBILITY OF THE USER AND SHOULD NOT BE USED WITHOUT CONSULTING A REGISTERED PROFESSIONAL ENGINEER. ALL WARRANTIES AND REPRESENTATIONS OF ANY KIND ARE DISCLAIMED. ANYONE MAKING USE OF THIS INFORMATION AGREES THAT IT ASSUMES ALL LIABILITY ARISING FROM SUCH USE. NO PART OF THESE STANDARDS SHOULD BE REPRODUCED OR DISTRIBUTED IN ANY FORM OR BY ANY MEANS WITHOUT THE PRIOR WRITTEN PERMISSION OF SCRRA. ALL RIGHTS RESERVED.

METROLINK®

SOUTHERN CALIFORNIA REGIONAL RAIL AUTHORITY
ONE GATEWAY PLAZA, 12TH FLOOR, L. A., CA. 90012

ENGINEERING STANDARDS

PEDESTRIAN FICILITIES AT ACUTE ANGLE VEHICLE CROSSING – ENTRANCE GATES ONLY

STANDARD 4013
SCALE: NTS
REVISION 1 SHEET 1 OF 1
CADD FILE: ES4013

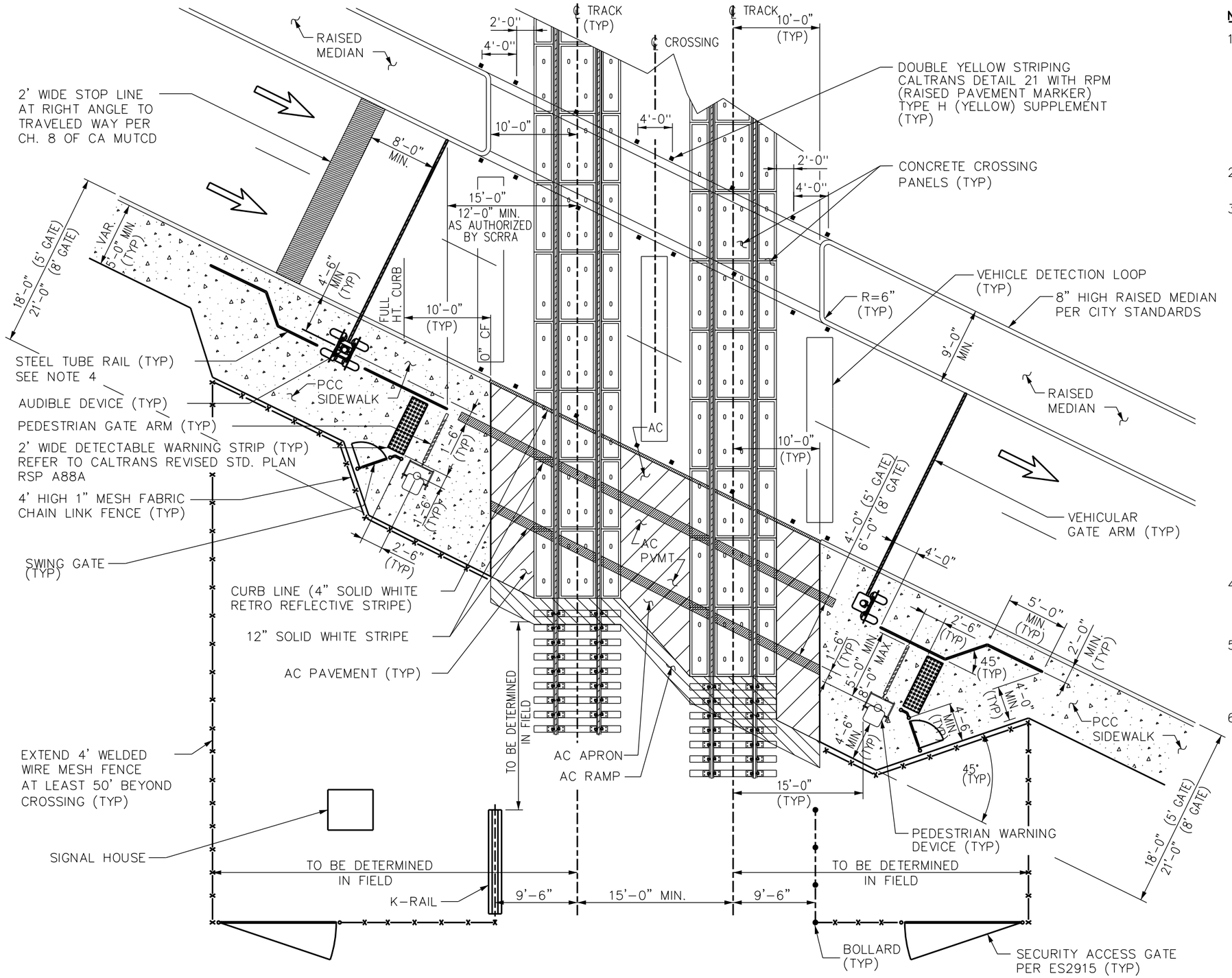

NOTES:

1. THESE STANDARDS ARE NOT INTENDED TO REPLACE EXISTING REGULATORY STANDARDS, NOR TO BE A SUBSTITUTE FOR ENGINEERING KNOWLEDGE, EXPERIENCE AND JUDGMENT, BUT ARE REQUIREMENTS, WHICH ARE MOST IMPORTANT FOR SAFE CONSTRUCTION, MAINTENANCE AND OPERATION OF PEDESTRIAN FACILITIES AT HIGHWAY–RAIL GRADE CROSSINGS. SINCE THE ACTUAL DESIGN WILL TYPICALLY BE SITE SPECIFIC, INFORMATION SHOWN ON THIS DRAWING WILL BE MODIFIED AS NECESSARY IN CLOSE COLLABORATION WITH SCRRA.
2. FOLLOW CALIFORNIA MUTCD FOR STRIPING, SIGNING, AND OTHER TRAFFIC WARNING DEVICES.
3. REFER TO THE FOLLOWING FOR ADDITIONAL DESIGN INFORMATION:
   a. SCRRA ENGINEERING STANDARD ES4201 FOR CONCRETE PANELS AND PAVED END RAMP.
   b. SCRRA ENGINEERING STANDARD ES5101 FOR INTER–TRACK FENCE.
   c. SCRRA ENGINEERING STANDARD ES5107 FOR SECURITY ACCESS GATE, K–RAIL AND BOLLARDS.
   d. SCRRA ENGINEERING STANDARD ES4001 FOR TRACK SECTIONS AND ASPHALT CONCRETE PAVEMENT DETAILS.
   e. SCRRA ENGINEERING STANDARD ES4002 FOR SWING GATE DETAILS.
   f. SCRRA ENGINEERING STANDARD ES8308 AND ES8309 FOR PEDESTRIAN WARNING DEVICES.
   g. CALTRANS STANDARD PLANS A20A FOR TRAFFIC LINES (STRIPES) AND A88A FOR DETECTABLE WARNING SURFACE (STRIPE), SQUARE GRID PATTERN.
   h. CALTRANS STANDARD PLANS A20B DETAIL 27B AND A20C TYPE "G" FOR PAVEMENT MARKERS.
   i. APWA STANDARD PLAN 606–2, TYPE "B" FOR STEEL TUBE RAIL. (ONE ADDITIONAL RAIL 4" FROM BOTTOM).
4. FENCING AND STEEL TUBE RAIL LOCATIONS SHALL BE ADJUSTED AS NECESSARY TO PROVIDE SCRRA MAINTENANCE VEHICLES ACCESS TO RIGHT–OF–WAY AND SIGNAL & TRACK FACILITIES WITH SCRRA APPROVAL.
5. PREEMPTION AND TOTAL WARNING TIME SHALL TAKE INTO CONSIDERATION THE PEDESTRIAN WALKING DISTANCE AND CLEARANCE TIME AND SHALL MEET THE REGULATIONS AND REQUIREMENTS OF THE AMERICAN WITH DISABILITIES ACT (ADA) AND CA MUTCD.
6. THE WIDTH OF SIDEWALKS ON THE SIDE OF THE GATES OPPOSITE THE RAIL SHALL BE A MINIMUM OF FIVE (5) FEET.

LEGEND

- STRIPING
- DETECTABLE WARNING STRIP
- CONCRETE
- AC PAVEMENT (SHOWN FOR PEDESTRIAN FACILITY ONLY)
- DIRECTION OF TRAFFIC

12 0 12 24

1"=12'

REV.	DATE	DESCRIPTION	DES.	ENG.

DRAWN BY: A. CARLOS DATE: 03/31/2011

ASSISTANT DIRECTOR: STANDARDS & DESIGN

DIRECTOR OF ENGINEERING AND CONSTRUCTION

SCRRA ENGINEERING STANDARDS ARE INTENDED FOR SCRRA APPROVED USES ONLY. FOR NON-SCRRA APPROVED USES:
SCRRA SHALL NOT BE RESPONSIBLE FOR THE ACCURACY OR COMPLETENESS OF THE DATA OR INFORMATION CONTAINED HEREIN. THE SELECTION AND USE OF THESE STANDARDS IS THE SOLE RESPONSIBILITY OF THE USER AND SHOULD NOT BE USED WITHOUT CONSULTING A REGISTERED PROFESSIONAL ENGINEER. ALL WARRANTIES AND REPRESENTATIONS OF ANY KIND ARE DISCLAIMED. ANYONE MAKING USE OF THIS INFORMATION AGREES THAT IT ASSUMES ALL LIABILITY ARISING FROM SUCH USE. NO PART OF THESE STANDARDS SHOULD BE REPRODUCED OR DISTRIBUTED IN ANY FORM OR BY ANY MEANS WITHOUT THE PRIOR WRITTEN PERMISSION OF SCRRA. ALL RIGHTS RESERVED.

METROLINK®

SOUTHERN CALIFORNIA REGIONAL RAIL AUTHORITY
ONE GATEWAY PLAZA, 12TH FLOOR, L. A., CA. 90012

ENGINEERING STANDARDS

PEDESTRIAN FACILITIES AT ACUTE ANGLE VEHICLE CROSSING – ENTRANCE / EXIT GATES

STANDARD 4014
SCALE: NTS
REVISION 1 SHEET 1 OF 1
CADD FILE: ES4014

NOTES:

1. THESE STANDARDS ARE NOT INTENDED TO REPLACE EXISTING REGULATORY STANDARDS, NOR TO BE A SUBSTITUTE FOR ENGINEERING KNOWLEDGE, EXPERIENCE AND JUDGMENT, BUT ARE REQUIREMENTS, WHICH ARE MOST IMPORTANT FOR SAFE CONSTRUCTION, MAINTENANCE AND OPERATION OF PEDESTRIAN FACILITIES AT HIGHWAY–RAIL GRADE CROSSINGS. SINCE THE ACTUAL DESIGN WILL TYPICALLY BE SITE SPECIFIC, INFORMATION SHOWN ON THIS DRAWING WILL BE MODIFIED AS NECESSARY IN CLOSE COLLABORATION WITH SCRRA.
2. FOLLOW CALIFORNIA MUTCD FOR STRIPING, SIGNING, AND OTHER TRAFFIC WARNING DEVICES.
3. REFER TO THE FOLLOWING FOR ADDITIONAL DESIGN INFORMATION:
   - a. SCRRA ENGINEERING STANDARD ES4201 FOR CONCRETE PANELS AND PAVED END RAMP.
   - b. SCRRA ENGINEERING STANDARD ES5101 FOR INTER–TRACK FENCE.
   - c. SCRRA ENGINEERING STANDARD ES5107 FOR SECURITY ACCESS GATE, K–RAIL AND BOLLARDS.
   - d. SCRRA ENGINEERING STANDARD ES4001 FOR TRACK SECTIONS AND ASPHALT CONCRETE PAVEMENT DETAILS.
   - e. SCRRA ENGINEERING STANDARD ES4002 FOR SWING GATE DETAILS.
   - f. SCRRA ENGINEERING STANDARD ES8308 AND ES8309 FOR PEDESTRIAN WARNING DEVICES.
   - g. CALTRANS STANDARD PLANS A20A FOR TRAFFIC LINES (STRIPES) AND A88A FOR DETECTABLE WARNING SURFACE (STRIPE), SQUARE GRID PATTERN.
   - h. CALTRANS STANDARD PLANS A20B DETAIL 27B AND A20C TYPE "G" FOR PAVEMENT MARKERS.
   - i. APWA STANDARD PLAN 606–2, TYPE "B" FOR STEEL TUBE RAIL. (ONE ADDITIONAL RAIL 4" FROM BOTTOM).
4. FENCING AND STEEL TUBE RAIL LOCATIONS SHALL BE ADJUSTED AS NECESSARY TO PROVIDE SCRRA MAINTENANCE VEHICLES ACCESS TO RIGHT–OF–WAY AND SIGNAL & TRACK FACILITIES WITH SCRRA APPROVAL.
5. PREEMPTION AND TOTAL WARNING TIME SHALL TAKE INTO CONSIDERATION THE PEDESTRIAN WALKING DISTANCE AND CLEARANCE TIME AND SHALL MEET THE REGULATIONS AND REQUIREMENTS OF THE AMERICAN WITH DISABILITIES ACT (ADA) AND CA MUTCD.
6. THE WIDTH OF SIDEWALKS ON THE SIDE OF THE GATES OPPOSITE THE RAIL SHALL BE A MINIMUM OF FIVE (5) FEET.

LEGEND

- STRIPING
- DETECTABLE WARNING STRIP
- CONCRETE
- AC PAVEMENT (SHOWN FOR PEDESTRIAN FACILITY ONLY)
- DIRECTION OF TRAFFIC

12 0 12 24

1"=12'

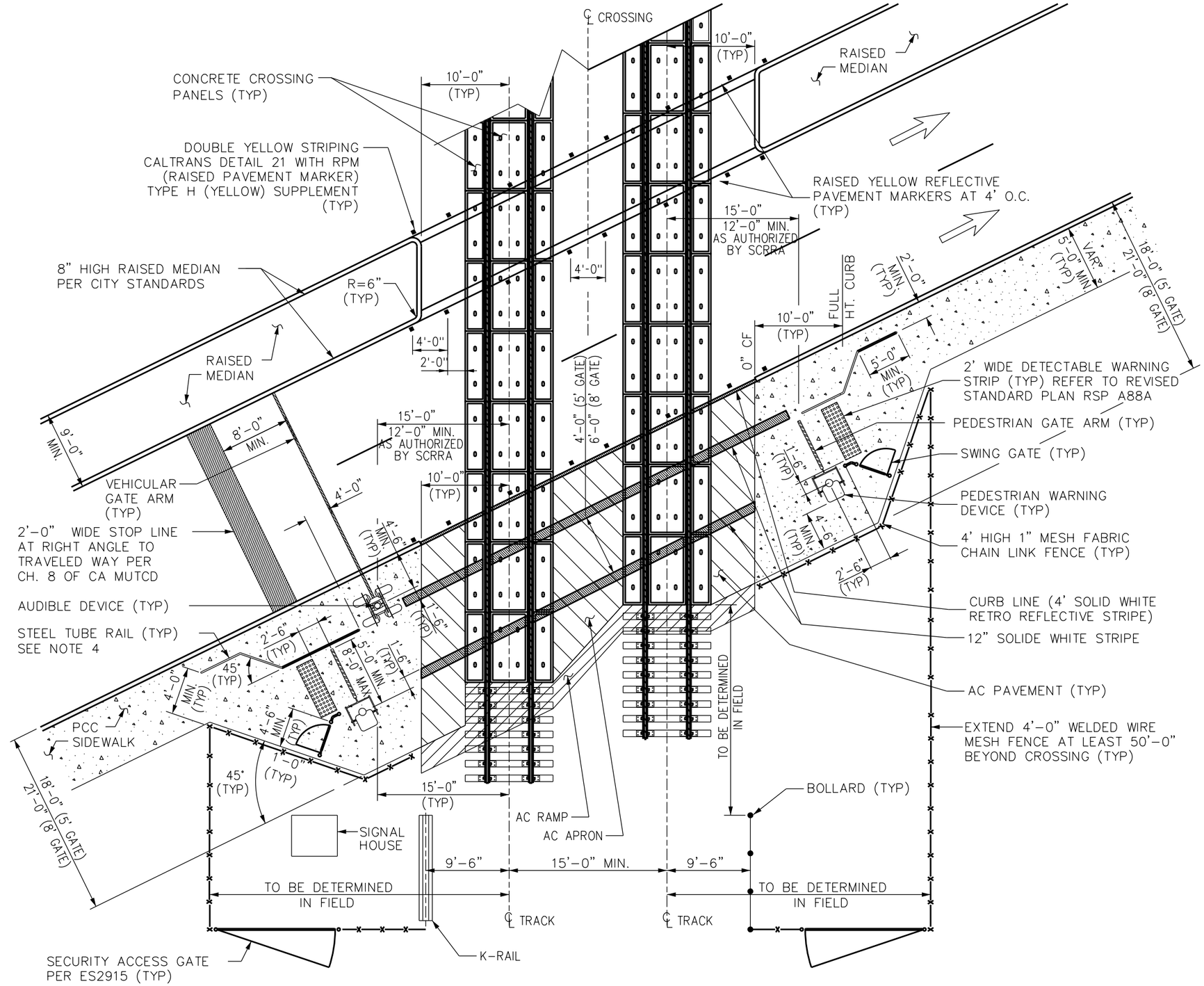

REV.	DATE	DESCRIPTION	DES.	ENG.

DRAWN BY: A. CARLOS DATE: 03/31/2011

ASSISTANT DIRECTOR: STANDARDS & DESIGN

DIRECTOR OF ENGINEERING AND CONSTRUCTION

SCRRA ENGINEERING STANDARDS ARE INTENDED FOR SCRRA APPROVED USES ONLY. FOR NON-SCRRA APPROVED USES:
SCRRA SHALL NOT BE RESPONSIBLE FOR THE ACCURACY OR COMPLETENESS OF THE DATA OR INFORMATION CONTAINED HEREIN. THE SELECTION AND USE OF THESE STANDARDS IS THE SOLE RESPONSIBILITY OF THE USER AND SHOULD NOT BE USED WITHOUT CONSULTING A REGISTERED PROFESSIONAL ENGINEER. ALL WARRANTIES AND REPRESENTATIONS OF ANY KIND ARE DISCLAIMED. ANYONE MAKING USE OF THIS INFORMATION AGREES THAT IT ASSUMES ALL LIABILITY ARISING FROM SUCH USE. NO PART OF THESE STANDARDS SHOULD BE REPRODUCED OR DISTRIBUTED IN ANY FORM OR BY ANY MEANS WITHOUT THE PRIOR WRITTEN PERMISSION OF SCRRA. ALL RIGHTS RESERVED.

METROLINK®

SOUTHERN CALIFORNIA REGIONAL RAIL AUTHORITY
ONE GATEWAY PLAZA, 12TH FLOOR, L. A., CA. 90012

ENGINEERING STANDARDS

PEDESTRIAN FACILITIES AT OBTUSE ANGLE VEHICLE CROSSING – ENTRANCE GATES ONLY

STANDARD 4015
SCALE: NTS
REVISION 1 SHEET 1 OF 1
CADD FILE: ES4015

NOTES:

1. THESE STANDARDS ARE NOT INTENDED TO REPLACE EXISTING REGULATORY STANDARDS, NOR TO BE A SUBSTITUTE FOR ENGINEERING KNOWLEDGE, EXPERIENCE AND JUDGMENT, BUT ARE REQUIREMENTS, WHICH ARE MOST IMPORTANT FOR SAFE CONSTRUCTION, MAINTENANCE AND OPERATION OF PEDESTRIAN FACILITIES AT HIGHWAY–RAIL GRADE CROSSINGS. SINCE THE ACTUAL DESIGN WILL TYPICALLY BE SITE SPECIFIC, INFORMATION SHOWN ON THIS DRAWING WILL BE MODIFIED AS NECESSARY IN CLOSE COLLABORATION WITH SCRRA.
2. FOLLOW CALIFORNIA MUTCD FOR STRIPING, SIGNING, AND OTHER TRAFFIC WARNING DEVICES.
3. REFER TO THE FOLLOWING FOR ADDITIONAL DESIGN INFORMATION:
   - a. SCRRA ENGINEERING STANDARD ES4201 FOR CONCRETE PANELS AND PAVED END RAMP.
   - b. SCRRA ENGINEERING STANDARD ES5101 FOR INTER–TRACK FENCE.
   - c. SCRRA ENGINEERING STANDARD ES5107 FOR SECURITY ACCESS GATE, K–RAIL AND BOLLARDS.
   - d. SCRRA ENGINEERING STANDARD ES4001 FOR TRACK SECTIONS AND ASPHALT CONCRETE PAVEMENT DETAILS.
   - e. SCRRA ENGINEERING STANDARD ES4002 FOR SWING GATE DETAILS.
   - f. SCRRA ENGINEERING STANDARD ES8308 AND ES8309 FOR PEDESTRIAN WARNING DEVICES.
   - g. CALTRANS STANDARD PLANS A20A FOR TRAFFIC LINES (STRIPES) AND A88A FOR DETECTABLE WARNING SURFACE (STRIPE), SQUARE GRID PATTERN.
   - h. CALTRANS STANDARD PLANS A20B DETAIL 27B AND A20C TYPE "G" FOR PAVEMENT MARKERS.
   - i. APWA STANDARD PLAN 606–2, TYPE "B" FOR STEEL TUBE RAIL. (ONE ADDITIONAL RAIL 4" FROM BOTTOM).
4. FENCING AND STEEL TUBE RAIL LOCATIONS SHALL BE ADJUSTED AS NECESSARY TO PROVIDE SCRRA MAINTENANCE VEHICLES ACCESS TO RIGHT–OF–WAY AND SIGNAL & TRACK FACILITIES WITH SCRRA APPROVAL.
5. PREEMPTION AND TOTAL WARNING TIME SHALL TAKE INTO CONSIDERATION THE PEDESTRIAN WALKING DISTANCE AND CLEARANCE TIME AND SHALL MEET THE REGULATIONS AND REQUIREMENTS OF THE AMERICAN WITH DISABILITIES ACT (ADA) AND CA MUTCD.
6. THE WIDTH OF SIDEWALKS ON THE SIDE OF THE GATES OPPOSITE THE RAIL SHALL BE A MINIMUM OF FIVE (5) FEET.

LEGEND

- STRIPING
- DETECTABLE WARNING STRIP
- CONCRETE
- AC PAVEMENT (SHOWN FOR PEDESTRIAN FACILITY ONLY)
- DIRECTION OF TRAFFIC

12 0 12 24

1"=12'

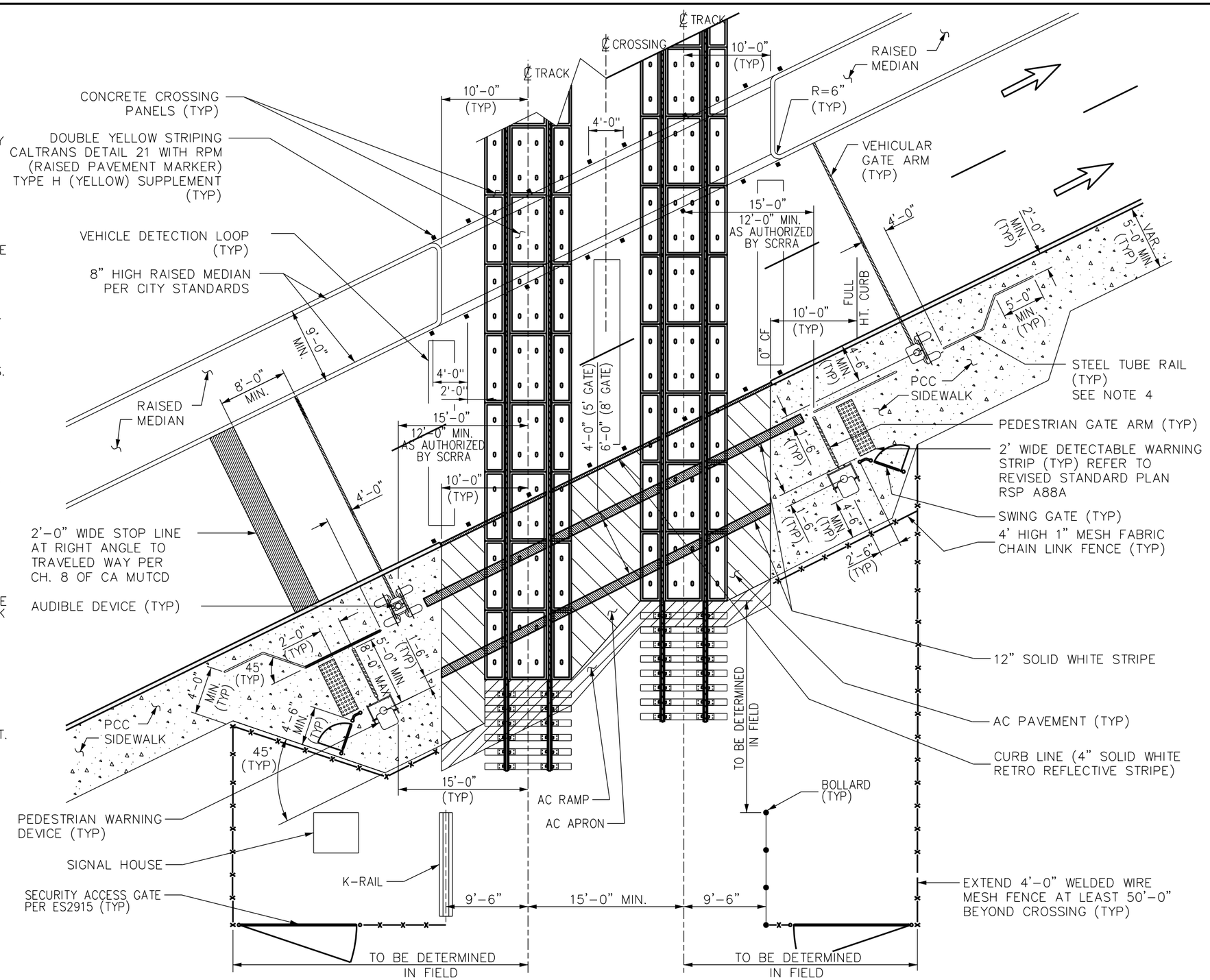

REV.	DATE	DESCRIPTION	DES.	ENG.

DRAWN BY: A. CARLOS DATE: 03/31/2011

ASSISTANT DIRECTOR: STANDARDS & DESIGN

DIRECTOR OF ENGINEERING AND CONSTRUCTION

SCRRA ENGINEERING STANDARDS ARE INTENDED FOR SCRRA APPROVED USES ONLY. FOR NON-SCRRA APPROVED USES:
SCRRA SHALL NOT BE RESPONSIBLE FOR THE ACCURACY OR COMPLETENESS OF THE DATA OR INFORMATION CONTAINED HEREIN. THE SELECTION AND USE OF THESE STANDARDS IS THE SOLE RESPONSIBILITY OF THE USER AND SHOULD NOT BE USED WITHOUT CONSULTING A REGISTERED PROFESSIONAL ENGINEER. ALL WARRANTIES AND REPRESENTATIONS OF ANY KIND ARE DISCLAIMED. ANYONE MAKING USE OF THIS INFORMATION AGREES THAT IT ASSUMES ALL LIABILITY ARISING FROM SUCH USE. NO PART OF THESE STANDARDS SHOULD BE REPRODUCED OR DISTRIBUTED IN ANY FORM OR BY ANY MEANS WITHOUT THE PRIOR WRITTEN PERMISSION OF SCRRA. ALL RIGHTS RESERVED.

METROLINK
SOUTHERN CALIFORNIA REGIONAL RAIL AUTHORITY
ONE GATEWAY PLAZA, 12TH FLOOR, L. A., CA. 90012

ENGINEERING STANDARDS

PEDESTRIAN FACILITIES AT OBTUSE ANGLE VEHICLE CROSSING – ENTRANCE / EXIT GATES

STANDARD 4016
SCALE: NTS
REVISION 1 SHEET 1 OF 1
CADD FILE: ES4016

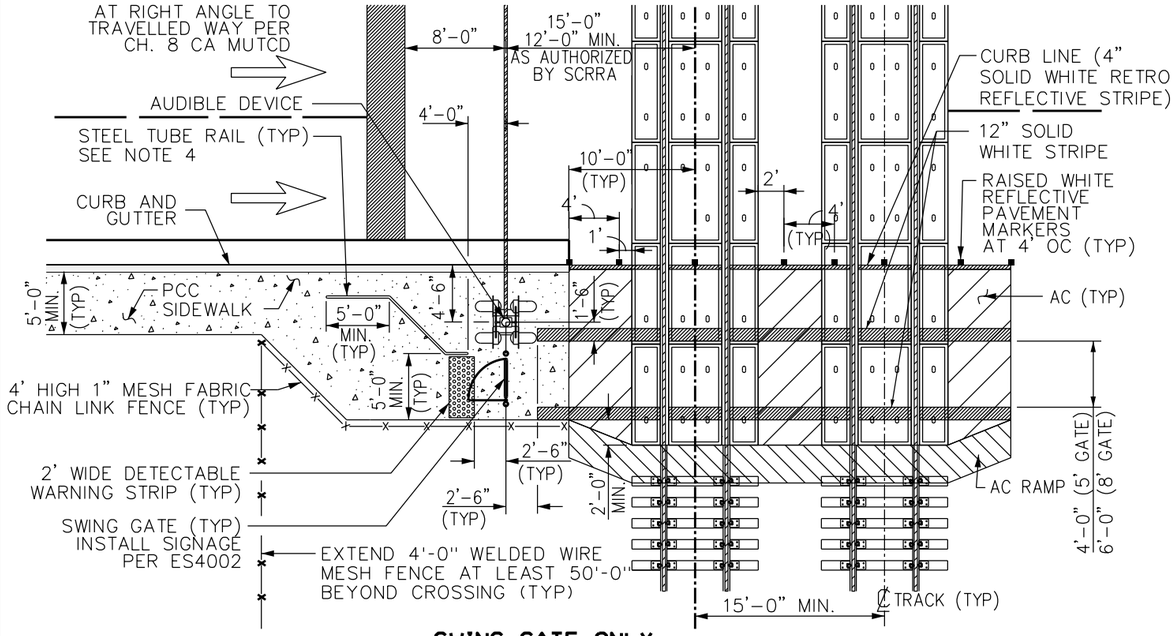

SWING GATE ONLY

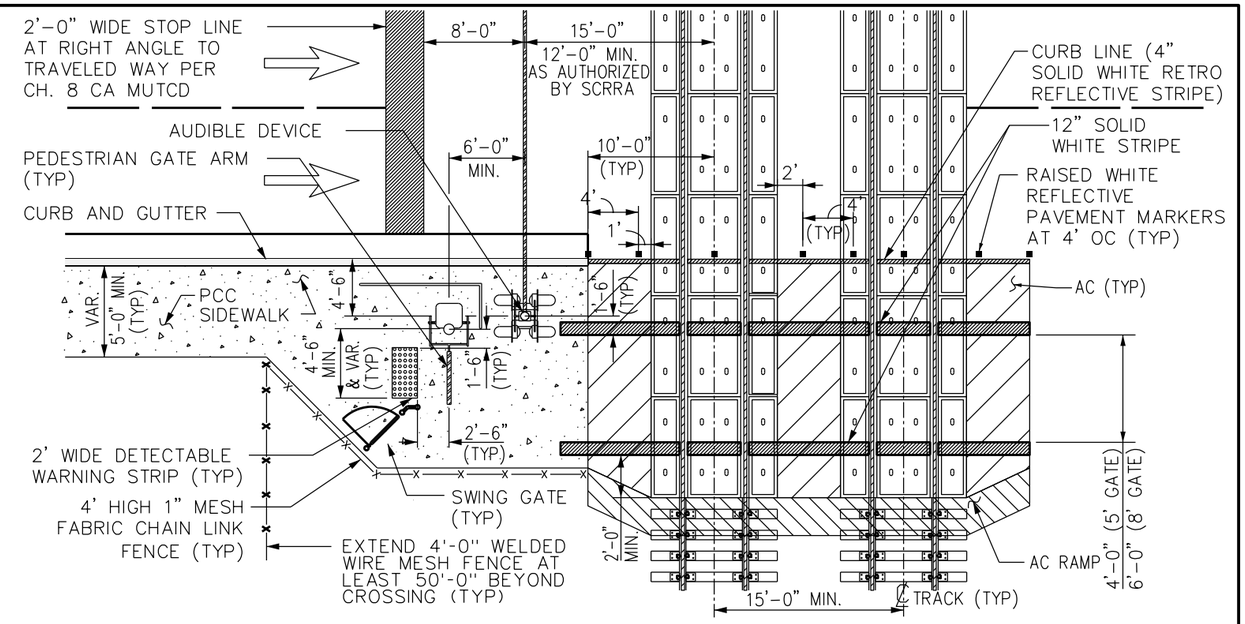

PED GATE IN-LINE WITH WARNING DEVICES WITH EMERGENCY REFUGE AREA WITH LIMITED RIGHT-OF-WAY

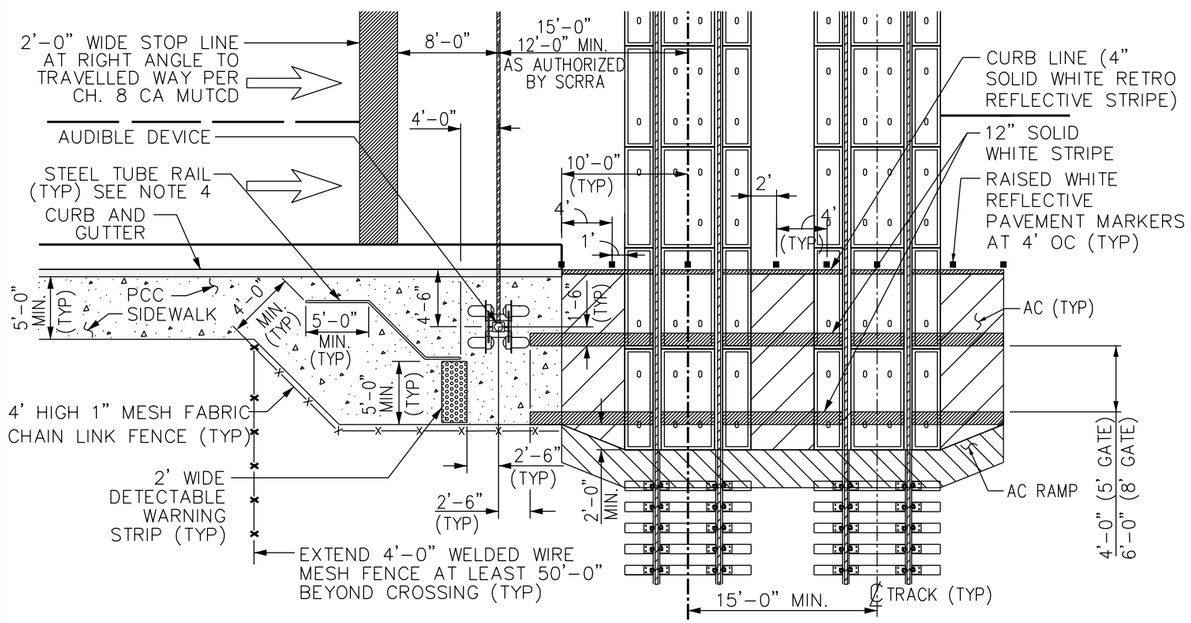

NO PED GATE OR PED SWING GATE

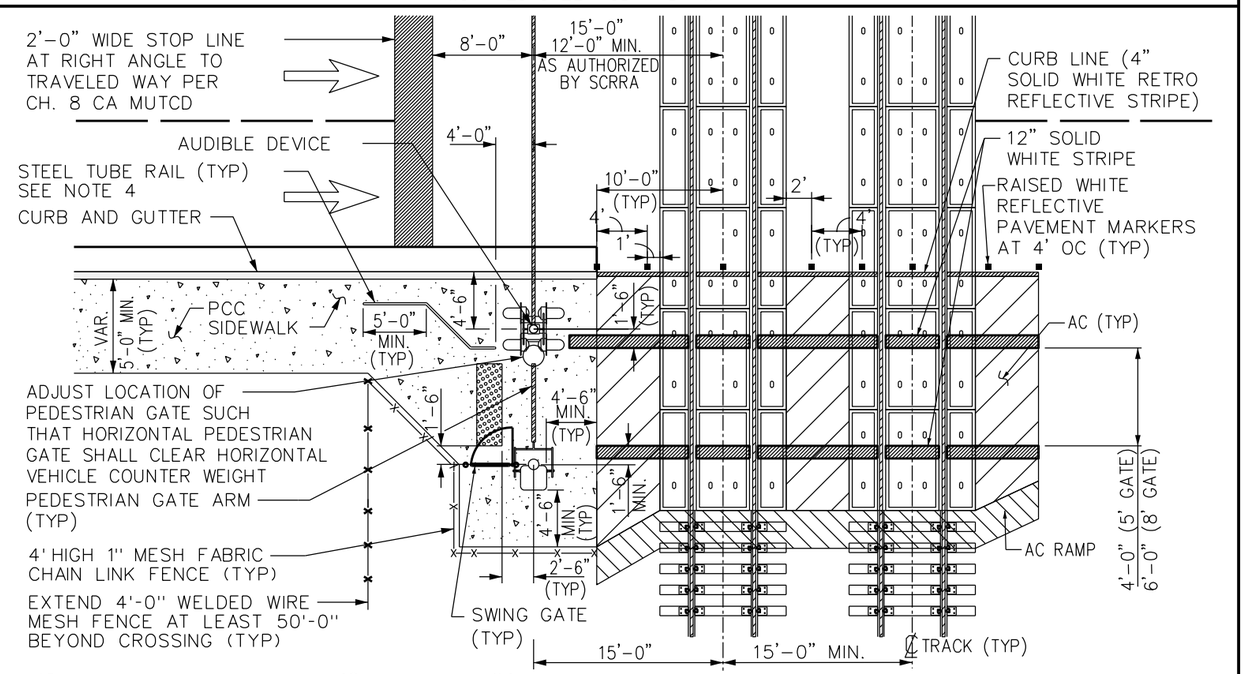

12 0 12 24

1"=12'

PED GATE WITH EMERGENCY REFUGE AREA

NOTE:

THESE STANDARDS ARE NOT INTENDED TO REPLACE EXISTING REGULATORY STANDARDS, NOR TO BE A SUBSTITUTE FOR ENGINEERING KNOWLEDGE, EXPERIENCE AND JUDGMENT, BUT ARE REQUIREMENTS, WHICH ARE MOST IMPORTANT FOR SAFE CONSTRUCTION, MAINTENANCE AND OPERATION OF PEDESTRIAN FACILITIES AT HIGHWAY-RAIL GRADE CROSSINGS. SINCE THE ACTUAL DESIGN WILL TYPICALLY BE SITE SPECIFIC, INFORMATION SHOWN ON THIS DRAWING WILL BE MODIFIED AS NECESSARY IN CLOSE COLLABORATION WITH SCRRA.

REV.	DATE	DESCRIPTION	DES.	ENG.

DRAWN BY: A. CARLOS DATE: 03/31/2011

ASSISTANT DIRECTOR: STANDARDS & DESIGN

DIRECTOR OF ENGINEERING AND CONSTRUCTION

SCRRA ENGINEERING STANDARDS ARE INTENDED FOR SCRRA APPROVED USES ONLY. FOR NON-SCRRA APPROVED USES, SCRRA SHALL NOT BE RESPONSIBLE FOR THE ACCURACY OR COMPLETENESS OF THE DATA OR INFORMATION CONTAINED HEREIN. THE SELECTION AND USE OF THESE STANDARDS IS THE SOLE RESPONSIBILITY OF THE USER AND SHOULD NOT BE USED WITHOUT CONSULTING A REGISTERED PROFESSIONAL ENGINEER. ALL WARRANTIES AND REPRESENTATIONS OF ANY KIND ARE DISCLAIMED. ANYONE MAKING USE OF THIS INFORMATION AGREES THAT IT ASSUMES ALL LIABILITY ARISING FROM SUCH USE. NO PART OF THESE STANDARDS SHOULD BE REPRODUCED OR DISTRIBUTED IN ANY FORM OR BY ANY MEANS WITHOUT THE PRIOR WRITTEN PERMISSION OF SCRRA. ALL RIGHTS RESERVED.

METROLINK

SOUTHERN CALIFORNIA REGIONAL RAIL AUTHORITY
ONE GATEWAY PLAZA, 12TH FLOOR, L. A., CA. 90012

ENGINEERING STANDARDS

TYPICAL PEDESTRIAN TREATMENT DETAILS

STANDARD 4017
SCALE: NTS
REVISION 1
SHEET 1 OF 1
CADD FILE: ES4017

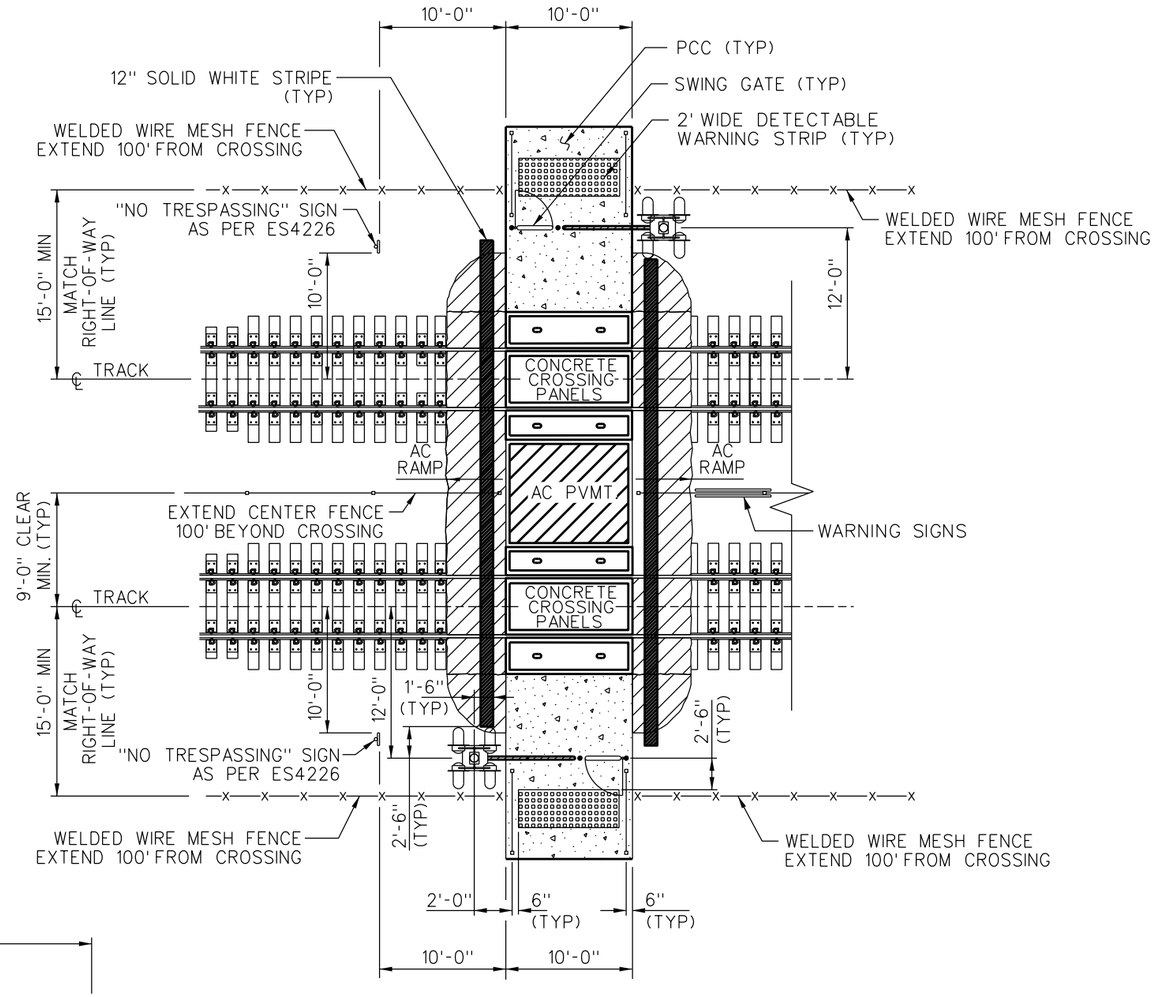

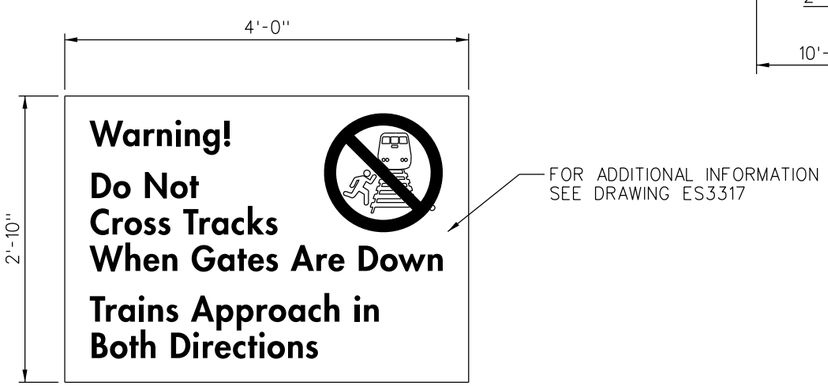

WARNING SIGN DETAIL

SCALE: NONE

NOTES:

1. THESE STANDARDS ARE NOT INTENDED TO REPLACE EXISTING REGULATORY STANDARDS, NOR TO BE A SUBSTITUTE FOR ENGINEERING KNOWLEDGE, EXPERIENCE AND JUDGMENT, BUT ARE REQUIREMENTS, WHICH ARE MOST IMPORTANT FOR SAFE CONSTRUCTION, MAINTENANCE AND OPERATION OF PEDESTRIAN FACILITIES AT HIGHWAY–RAIL GRADE CROSSINGS. SINCE THE ACTUAL DESIGN WILL TYPICALLY BE SITE SPECIFIC, INFORMATION SHOWN ON THIS DRAWING WILL BE MODIFIED AS NECESSARY IN CLOSE COLLABORATION WITH SCRRA.
2. FOLLOW CALIFORNIA MUTCD FOR STRIPING, SIGNING, AND OTHER TRAFFIC WARNING DEVICES.
3. REFER TO THE FOLLOWING FOR ADDITIONAL DESIGN INFORMATION:
   a. SCRRA ENGINEERING STANDARD ES4201 FOR CONCRETE PANELS AND PAVED END RAMP.
   b. SCRRA ENGINEERING STANDARD ES5101 FOR INTER–TRACK FENCE.
   c. SCRRA ENGINEERING STANDARD ES5107 FOR SECURITY ACCESS GATE, K–RAIL AND BOLLARDS.
   d. SCRRA ENGINEERING STANDARD ES4001 FOR TRACK SECTIONS AND ASPHALT CONCRETE PAVEMENT DETAILS.
   e. SCRRA ENGINEERING STANDARD ES4002 FOR SWING GATE DETAILS.
   f. SCRRA ENGINEERING STANDARD ES8308 AND ES8309 FOR PEDESTRIAN WARNING DEVICES.
   g. CALTRANS STANDARD PLANS A20A FOR TRAFFIC LINES (STRIPES) AND A88A FOR DETECTABLE WARNING SURFACE (STRIPE), SQUARE GRID PATTERN.
   h. CALTRANS STANDARD PLANS A20B DETAIL 27B AND A20C TYPE "G" FOR PAVEMENT MARKERS.
   i. APWA STANDARD PLAN 606–2, TYPE "B" FOR STEEL TUBE RAIL. (ONE ADDITIONAL RAIL 4" FROM BOTTOM).
4. FENCING AND STEEL TUBE RAIL LOCATIONS SHALL BE ADJUSTED AS NECESSARY TO PROVIDE SCRRA MAINTENANCE VEHICLES ACCESS TO RIGHT–OF–WAY AND SIGNAL & TRACK FACILITIES WITH SCRRA APPROVAL.
5. PREEMPTION AND TOTAL WARNING TIME SHALL TAKE INTO CONSIDERATION THE PEDESTRIAN WALKING DISTANCE AND CLEARANCE TIME AND SHALL MEET THE REGULATIONS AND REQUIREMENTS OF THE AMERICAN WITH DISABILITIES ACT (ADA) AND CA MUTCD.
6. THE WIDTH OF SIDEWALKS ON THE SIDE OF THE GATES OPPOSITE THE RAIL SHALL BE A MINIMUM OF FIVE (5) FEET.

REV.	DATE	DESCRIPTION	DES.	ENG.
X	XX-XX-XX	REVISION	XX	XX

DRAWN BY: A. CARLOS DATE: 03/31/2011

ASSISTANT DIRECTOR: STANDARDS & DESIGN

DIRECTOR OF ENGINEERING AND CONSTRUCTION

SCRRA ENGINEERING STANDARDS ARE INTENDED FOR SCRRA APPROVED USES ONLY. FOR NON-SCRRA APPROVED USES, SCRRA SHALL NOT BE RESPONSIBLE FOR THE ACCURACY OR COMPLETENESS OF THE DATA OR INFORMATION CONTAINED HEREIN. THE SELECTION AND USE OF THESE STANDARDS IS THE SOLE RESPONSIBILITY OF THE USER AND SHOULD NOT BE USED WITHOUT CONSULTING A REGISTERED PROFESSIONAL ENGINEER. ALL WARRANTIES AND REPRESENTATIONS OF ANY KIND ARE DISCLAIMED. ANYONE MAKING USE OF THIS INFORMATION AGREES THAT IT ASSUMES ALL LIABILITY ARISING FROM SUCH USE. NO PART OF THESE STANDARDS SHOULD BE REPRODUCED OR DISTRIBUTED IN ANY FORM OR BY ANY MEANS WITHOUT THE PRIOR WRITTEN PERMISSION OF SCRRA. ALL RIGHTS RESERVED.

METROLINK®

SOUTHERN CALIFORNIA REGIONAL RAIL AUTHORITY
ONE GATEWAY PLAZA, 12TH FLOOR, L. A., CA. 90012

ENGINEERING STANDARDS

PEDESTRIAN CROSSING ONLY

STANDARD: 4018
SCALE: NTS
REVISION: –
SHEET: 1 OF 1
CADD FILE: ES4018

NOTES:

1. THESE STANDARDS ARE NOT INTENDED TO REPLACE EXISTING REGULATORY STANDARDS, NOR TO BE A SUBSTITUTE FOR ENGINEERING KNOWLEDGE, EXPERIENCE AND JUDGMENT, BUT ARE REQUIREMENTS, WHICH ARE MOST IMPORTANT FOR SAFE CONSTRUCTION, MAINTENANCE AND OPERATION OF PEDESTRIAN FACILITIES AT HIGHWAY–RAIL GRADE CROSSINGS. SINCE THE ACTUAL DESIGN WILL TYPICALLY BE SITE SPECIFIC, INFORMATION SHOWN ON THIS DRAWING WILL BE MODIFIED AS NECESSARY IN CLOSE COLLABORATION WITH SCRRA.
2. FOLLOW CALIFORNIA MUTCD FOR STRIPING, SIGNING, AND OTHER TRAFFIC WARNING DEVICES.
3. REFER TO THE FOLLOWING FOR ADDITIONAL DESIGN INFORMATION:
   - a. SCRRA ENGINEERING STANDARD ES4201 FOR CONCRETE PANELS AND PAVED END RAMP.
   - b. SCRRA ENGINEERING STANDARD ES5101 FOR INTER–TRACK FENCE.
   - c. SCRRA ENGINEERING STANDARD ES5107 FOR SECURITY ACCESS GATE, K–RAIL AND BOLLARDS.
   - d. SCRRA ENGINEERING STANDARD ES4001 FOR TRACK SECTIONS AND ASPHALT CONCRETE PAVEMENT DETAILS.
   - e. SCRRA ENGINEERING STANDARD ES4002 FOR SWING GATE DETAILS.
   - f. SCRRA ENGINEERING STANDARD ES8308 AND ES8309 FOR PEDESTRIAN WARNING DEVICES.
   - g. CALTRANS STANDARD PLANS A20A FOR TRAFFIC LINES (STRIPES) AND A88A FOR DETECTABLE WARNING SURFACE (STRIPE), SQUARE GRID PATTERN.
   - h. CALTRANS STANDARD PLANS A20B DETAIL 27B AND A20C TYPE "G" FOR PAVEMENT MARKERS.
   - i. APWA STANDARD PLAN 606–2, TYPE "B" FOR STEEL TUBE RAIL. (ONE ADDITIONAL RAIL 4" FROM BOTTOM).
4. FENCING AND STEEL TUBE RAIL LOCATIONS SHALL BE ADJUSTED AS NECESSARY TO PROVIDE SCRRA MAINTENANCE VEHICLES ACCESS TO RIGHT–OF–WAY AND SIGNAL & TRACK FACILITIES WITH SCRRA APPROVAL.
5. PREEMPTION AND TOTAL WARNING TIME SHALL TAKE INTO CONSIDERATION THE PEDESTRIAN WALKING DISTANCE AND CLEARANCE TIME AND SHALL MEET THE REGULATIONS AND REQUIREMENTS OF THE AMERICAN WITH DISABILITIES ACT (ADA) AND CA MUTCD.
6. THE WIDTH OF SIDEWALKS ON THE SIDE OF THE GATES OPPOSITE THE RAIL SHALL BE A MINIMUM OF FIVE (5) FEET.

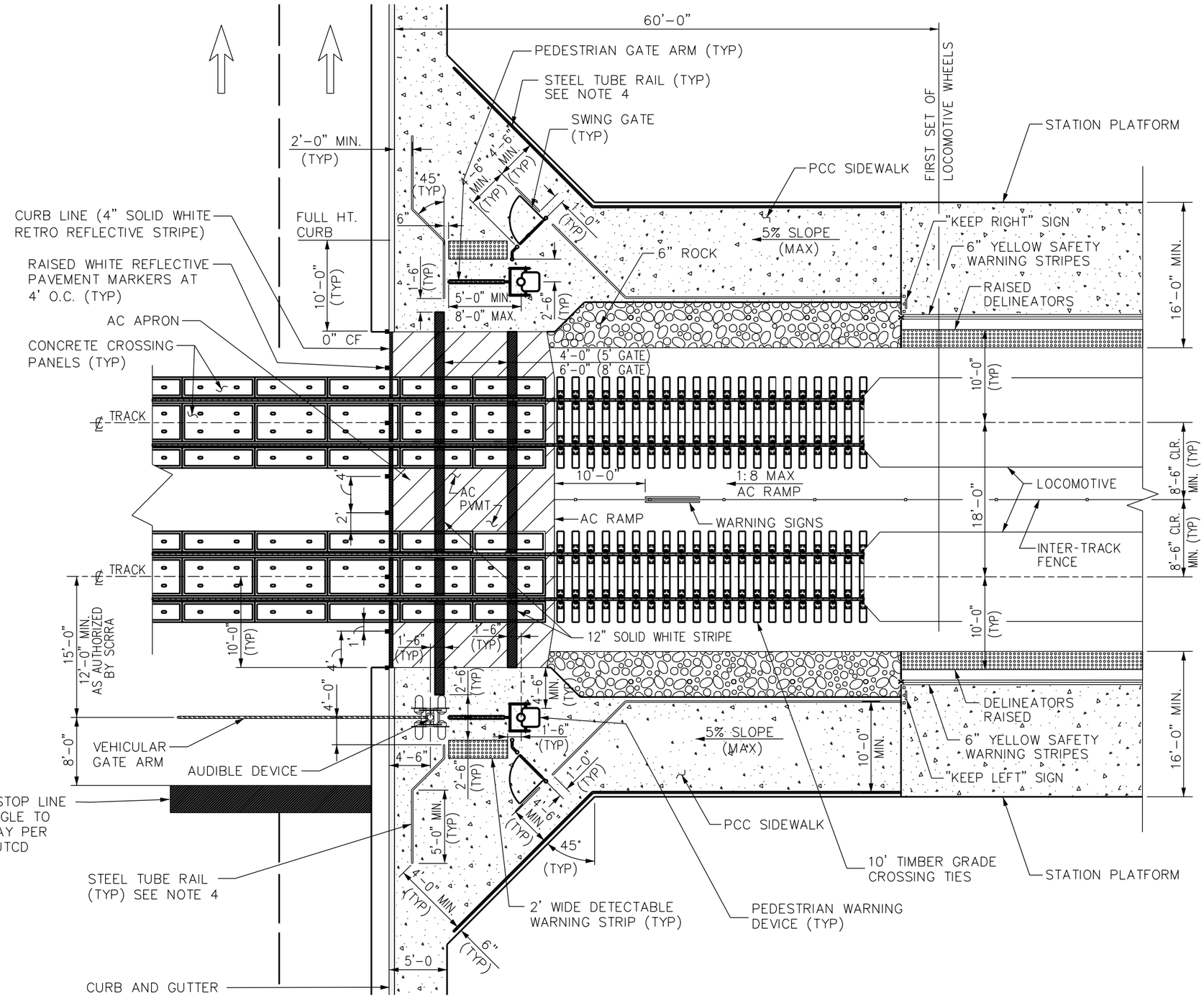

LEGEND

- STRIPING
- DETECTABLE WARNING STRIP
- CONCRETE
- AC PAVEMENT (SHOWN FOR PEDESTRIAN FACILITY ONLY)
- DIRECTION OF TRAFFIC

12 0 12 24

1"=12'

REV.	DATE	DESCRIPTION	DES.	ENG.
X	XX-XX-XX	REVISION	XX	XX

DRAWN BY: A. CARLOS DATE: 03/31/2011

ASSISTANT DIRECTOR: STANDARDS & DESIGN

DIRECTOR OF ENGINEERING AND CONSTRUCTION

SCRRA ENGINEERING STANDARDS ARE INTENDED FOR SCRRA APPROVED USES ONLY. FOR NON-SCRRA APPROVED USES:
SCRRA SHALL NOT BE RESPONSIBLE FOR THE ACCURACY OR COMPLETENESS OF THE DATA OR INFORMATION CONTAINED HEREIN. THE SELECTION AND USE OF THESE STANDARDS IS THE SOLE RESPONSIBILITY OF THE USER AND SHOULD NOT BE USED WITHOUT CONSULTING A REGISTERED PROFESSIONAL ENGINEER. ALL WARRANTIES AND REPRESENTATIONS OF ANY KIND ARE DISCLAIMED. ANYONE MAKING USE OF THIS INFORMATION AGREES THAT IT ASSUMES ALL LIABILITY ARISING FROM SUCH USE. NO PART OF THESE STANDARDS SHOULD BE REPRODUCED OR DISTRIBUTED IN ANY FORM OR BY ANY MEANS WITHOUT THE PRIOR WRITTEN PERMISSION OF SCRRA. ALL RIGHTS RESERVED.

METROLINK®
SOUTHERN CALIFORNIA REGIONAL RAIL AUTHORITY
ONE GATEWAY PLAZA, 12TH FLOOR, L. A., CA. 90012

ENGINEERING STANDARDS

PEDESTRIAN / VEHICLE CROSSING ADJACENT TO STATION

STANDARD 4020
SCALE: NTS
REVISION –
SHEET 1 OF 1
CADD FILE: ES4020

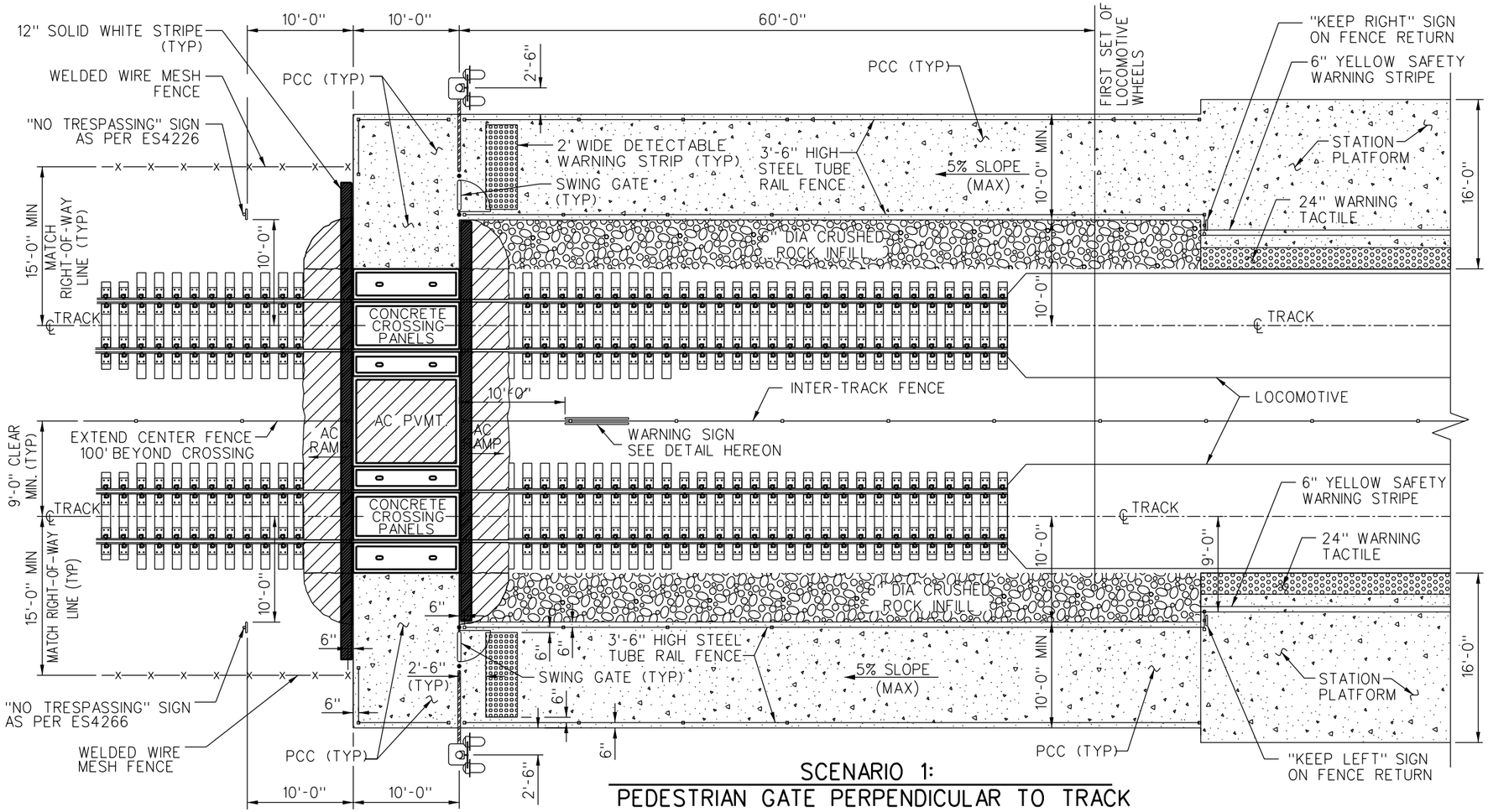

SCENARIO 1:
PEDESTRIAN GATE PERPENDICULAR TO TRACK

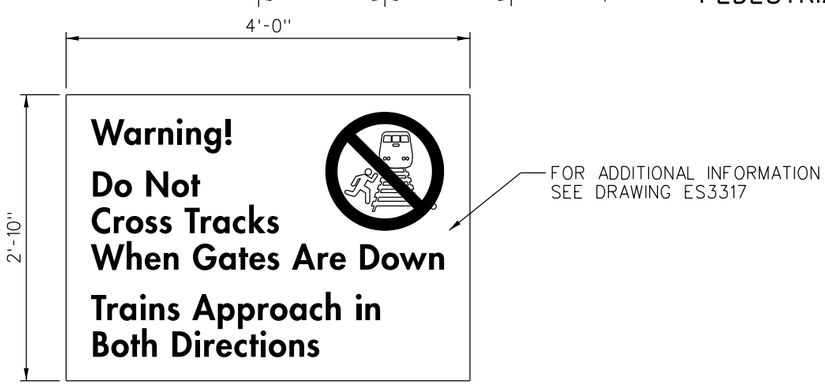

WARNING SIGN DETAIL
SCALE: NONE

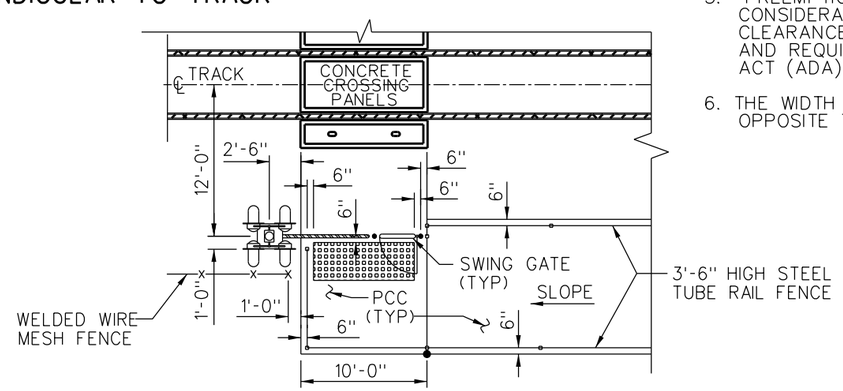

SCENARIO 2:
PEDESTRIAN GATE PARALLEL TO TRACK

NOTES:

1. THESE STANDARDS ARE NOT INTENDED TO REPLACE EXISTING REGULATORY STANDARDS, NOR TO BE A SUBSTITUTE FOR ENGINEERING KNOWLEDGE, EXPERIENCE AND JUDGMENT, BUT ARE REQUIREMENTS, WHICH ARE MOST IMPORTANT FOR SAFE CONSTRUCTION, MAINTENANCE AND OPERATION OF PEDESTRIAN FACILITIES AT HIGHWAY-RAIL GRADE CROSSINGS. SINCE THE ACTUAL DESIGN WILL TYPICALLY BE SITE SPECIFIC, INFORMATION SHOWN ON THIS DRAWING WILL BE MODIFIED AS NECESSARY IN CLOSE COLLABORATION WITH SCRRA.
2. FOLLOW CALIFORNIA MUTCD FOR STRIPING, SIGNING, AND OTHER TRAFFIC WARNING DEVICES.
3. REFER TO THE FOLLOWING FOR ADDITIONAL DESIGN INFORMATION:
   a. SCRRA ENGINEERING STANDARD ES4201 FOR CONCRETE PANELS AND PAVED END RAMP.
   b. SCRRA ENGINEERING STANDARD ES5101 FOR INTER-TRACK FENCE.
   c. SCRRA ENGINEERING STANDARD ES5107 FOR SECURITY ACCESS GATE, K-RAIL AND BOLLARDS.
   d. SCRRA ENGINEERING STANDARD ES4001 FOR TRACK SECTIONS AND ASPHALT CONCRETE PAVEMENT DETAILS.
   e. SCRRA ENGINEERING STANDARD ES4002 FOR SWING GATE DETAILS.
   f. SCRRA ENGINEERING STANDARD ES8308 AND ES8309 FOR PEDESTRIAN WARNING DEVICES.
   g. CALTRANS STANDARD PLANS A20A FOR TRAFFIC LINES (STRIPES) AND A88A FOR DETECTABLE WARNING SURFACE (STRIPE), SQUARE GRID PATTERN.
   h. CALTRANS STANDARD PLANS A20B DETAIL 27B AND A20C TYPE "G" FOR PAVEMENT MARKERS.
   i. APWA STANDARD PLAN 606-2, TYPE "B" FOR STEEL TUBE RAIL. (ONE ADDITIONAL RAIL 4" FROM BOTTOM).
4. FENCING AND STEEL TUBE RAIL LOCATIONS SHALL BE ADJUSTED AS NECESSARY TO PROVIDE SCRRA MAINTENANCE VEHICLES ACCESS TO RIGHT-OF-WAY AND SIGNAL & TRACK FACILITIES WITH SCRRA APPROVAL.
5. PREEMPTION AND TOTAL WARNING TIME SHALL TAKE INTO CONSIDERATION THE PEDESTRIAN WALKING DISTANCE AND CLEARANCE TIME AND SHALL MEET THE REGULATIONS AND REQUIREMENTS OF THE AMERICAN WITH DISABILITIES ACT (ADA) AND CA MUTCD.
6. THE WIDTH OF SIDEWALKS ON THE SIDE OF THE GATES OPPOSITE THE RAIL SHALL BE A MINIMUM OF FIVE (5) FEET.

REV.	DATE	DESCRIPTION	DES.	ENG.
X	XX-XX-XX	REVISION	XX	XX

DRAWN BY: A. CARLOS DATE: 03/31/2011

ASSISTANT DIRECTOR: STANDARDS & DESIGN

DIRECTOR OF ENGINEERING AND CONSTRUCTION

SCRRA ENGINEERING STANDARDS ARE INTENDED FOR SCRRA APPROVED USES ONLY. FOR NON-SCRRA APPROVED USES: SCRRA SHALL NOT BE RESPONSIBLE FOR THE ACCURACY OR COMPLETENESS OF THE DATA OR INFORMATION CONTAINED HEREIN. THE SELECTION AND USE OF THESE STANDARDS IS THE SOLE RESPONSIBILITY OF THE USER AND SHOULD NOT BE USED WITHOUT CONSULTING A REGISTERED PROFESSIONAL ENGINEER. ALL WARRANTIES AND REPRESENTATIONS OF ANY KIND ARE DISCLAIMED. ANYONE MAKING USE OF THIS INFORMATION AGREES THAT IT ASSUMES ALL LIABILITY ARISING FROM SUCH USE. NO PART OF THESE STANDARDS SHOULD BE REPRODUCED OR DISTRIBUTED IN ANY FORM OR BY ANY MEANS WITHOUT THE PRIOR WRITTEN PERMISSION OF SCRRA. ALL RIGHTS RESERVED.

METROLINK
SOUTHERN CALIFORNIA REGIONAL RAIL AUTHORITY
ONE GATEWAY PLAZA, 12TH FLOOR, L. A., CA. 90012

ENGINEERING STANDARDS

PEDESTRIAN CROSSING ADJACENT TO STATION

STANDARD 4021
SCALE: NTS
REVISION –
SHEET 1 OF 1
CADD FILE: ES4021

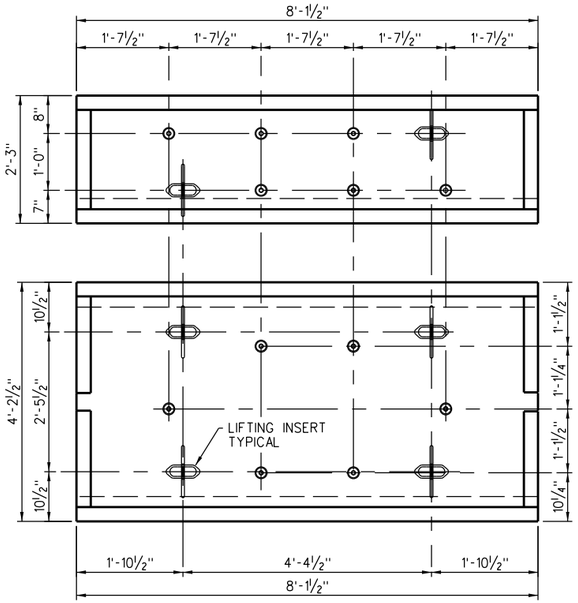

PLAN

SCALE: ¾" = 1'-0"

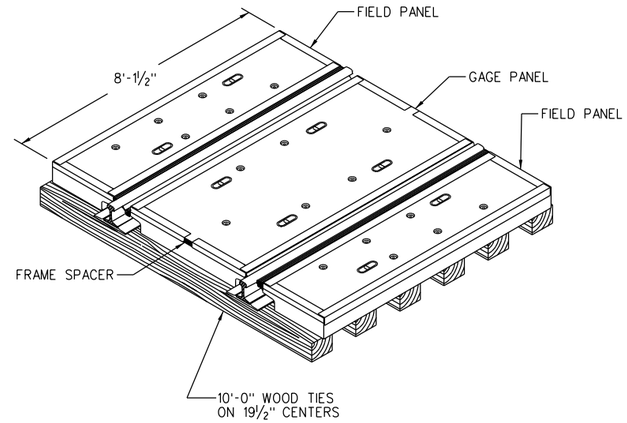

ISOMETRIC VIEW

SCALE: NONE

RAIL SIZE	PANEL HEIGHT	GAGE PANEL WEIGHT	FIELD PANEL WEIGHT
136	7⅞"	3125 LBS.	1675 LBS.

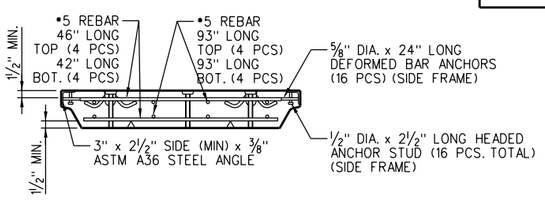

CROSS SECTION - GAGE PANEL DETIAIL 1

SCALE: ¾" = 1'-0"

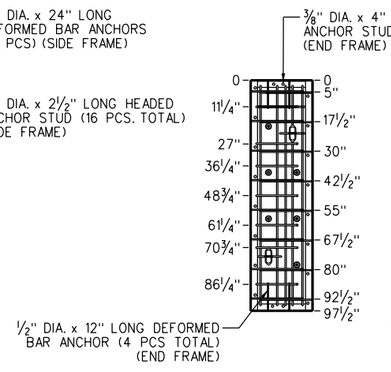

FIELD PANEL DETAIL 3

SCALE: ⅜" = 1'-0"

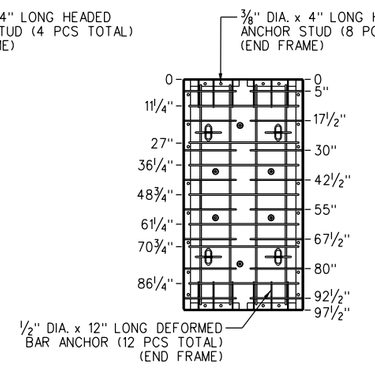

GAGE PANEL DETAIL 4

SCALE: ⅜" = 1'-0"

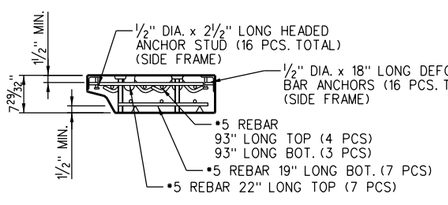

CROSS SECTION - FIELD PANEL DETAIL 2

SCALE: ¾" = 1'-0"

NOTE:

Concrete compressive strength shall be as follows:
28 days = 6000psi MINIMUM.
Shipment = 4000psi MINIMUM.
Removal from forms = 2500psi MINIMUM.

MATERIAL SPECIFICATIONS:

1. STRUCTURAL STEEL SHALL CONFORM TO ASTM A-36 SPECIFICATIONS. WELDING TO BE PER AWS CODE.
2. ALL EXPOSED STEEL TO RECEIVE ONE COAT PRIMER.
3. END ANGLES FOR GAGE PANEL SHOULD HAVE 3" GAP MINIMUM RESISTANCE TO IMPROVE SHUNT RESISTANCE. REINFORCING MATERIAL AND CLADDING TO BE CONSTRUCTED TO MEET SHUNTING REQUIREMENT. A NON-CONDUCTIVE SPACER TO BE ATTACHED TO GAGE FRAME
4. CLADDING ON ENDS OF PANELS SHOULD EXTEND BEYOND CONCRETE +/- 1/8 " , -0" TO IMPROVE MATCH WITH ADJACENT PANELS.
5. REINFORCING STEEL SHALL CONFORM TO CURRENT ASTM A-615 SPECIFICATION, GRADE 60. IF ANY WELDING OF REINFORCEMENT STEEL IS REQUIRED, MATERIAL SHALL CONFORM TO ASTM A-706 SPECIFICATION, GRADE 60.
6. CONCRETE MATERIAL MIXING, PLACING AND CURING TO BE IN ACCORDANCE WITH PCI "MANUAL FOR QUALITY CONTROL: PRECAST AND PRESTRESSED CONCRETE." MANUAL 115, EDITION 4. CEMENT SHALL HAVE NO MORE THAN 0.6% TOTAL ALKALI CONTENT. MAXIMUM WATER/CEMENT RATIO = 0.44 (BY WEIGHT). AIR ENTRAINMENT = 6% +/- 1% IN PLASTIC CONCRETE. SLUMP 3" MAXIMUM.
7. TOP SURFACE SHALL BE NON-CRACK DESIGN AND IS TO BE SEALED TO PREVENT ION MIGRATION DUE TO SALTING.
8. CURING SHALL FOLLOW THE RECOMMENDATIONS AND PROCEDURES FO PCI IN 4TH EDITION DIVISION 4.
9. 3/16 " WEEP/INSPECTION HOLES SHALL BE PLACED EVERY TWO FEET MINIMUM ALONG THE TOP OF THE STEEL FRAME ALONG A LINE 3/4 " FROM OUTSIDE EDGE.
10. FLANGEWAY FILLER TO BE PERMANENTLY PRE-ATTACHED AND HAVE THE FOLLOWING PROPERTIES:
    - TENSILE STRENGTH (ASTM D412) 850 PSI MIN.
    - ULTIMATE ELONGATION (ASTM D412) 400% MIN.
    - TEAR STRENGTH (ASTM D624) AT 25 DEGREES CELSIUS, 150-PLI MIN.
    - HARDNESS (ASTM D2240) 75 +/- 5% SHORE A.
    - COMPRESSION SET (ASTM 395 METHOD B) 100 DEGREES CELSIUS FOR 70 HOURS, 45% MAX.
    - ACCELERATED AGING TEST (ASTM D573) 70 HOURS AT 100 DEGREES CELSIUS MUST NOT EXHIBIT A REDUCTION IN PROPERTIES BY GREATER THAN 20%.
    - OZONE RESISTANCE TEST (ASTM D518) MUST HAVE NO CRACKING AFTER EXPOSURE TO 50-PPHM OZONE FOR 96 HOURS AT 40 DEGREES CELSIUS.
    - VOLUME RESISTIVITY = 1 X 10 (OHM-CM) OR GREATER (ASTM D257), BUT USING 18% NACL/WATER SOLUTION IN PLACE OF DISTILLED WATER FOR 168 HOURS AT 25 DEGREES CELSIUS AND TESTED AT 500 VDC.
    - ELECTRICAL RESISTANCE: MINIMUM RESISTANCE 10 MEGA OHMS MEASURED AT 500 VDC.
    - LOW TEMPERATURE BRITTLENESS (ASTM D2137) AT -40 DEGREES CELSIUS.
    - A SAMPLE SELECTION OF THE FLANGEWAY MATERIAL SHALL BE PHYSICALLY TESTED BY APPLYING A LATERAL FORCE OF 10 LB./IN. AT 50 DEGREES CELSIUS. THE MAXIMUM LATERAL DISPLACEMENT OF THE TEST IS NOT TO EXCEED 1/4 ". TEST RESULTS MUST BE SUBMITTED FOR APPROVAL OF SCRRA DIRECTOR OF ENGINEERING AND CONSTRUCTION.
    - MANUFACTURER TO DESIGN THE PRE-ATTACHED FLANGEWAY FILLER TO ALLOW FOR REMOVAL OF PANELS FOR MAINTENANCE WITHOUT DAMAGING THE FLANGEWAY FILLER OR ANY OTHER COMPONENTS DESIGNED TO HOLD PANEL TOGETHER.

FINISH:

1. ALL RECESSES AND MINOR CONCRETE SPALLS ARE TO BE FILLED AND FINISHED TO THE PANEL DIMENSIONS USING THE PROPER BONDING AGENT AND REPAIR MATERIAL. SURFACE OF THE REPAIRED AREA IS TO MATCH THE COLOR AND TEXTURE OF THE SURROUNDING AREAS.
2. THE DRIVING SURFACE IS TO HAVE A LIGHT BROOM FINISH OR AS APPROVED BY THE SCRRA DIRECTOR OF ENGINEERING AND CONSTRUCTION. THE ADDITION OF WATER TO THE CONCRETE SURFACE FINISH DURING CASTING IS NOT PERMITTED.

GENERAL:

1. THE MANUFACTURER SHALL BE ISO 9000 OR AAR M-1003 CERTIFIED. ALL TESTING PERSONNEL SHALL BE A MINIMUM OF ACI LEVEL 1 CERTIFIED.
2. THE FABRICATOR SHALL BE RESPONSIBLE FOR LOADING AND PROPERLY SECURING ALL PRECAST CONCRETE MEMBERS FOR SHIPMENT.
3. THE MANUFACTURER SHALL WARRANTY THE PRODUCT FOR A MINIMUM OF TEN YEARS AGAINST DEFECTS IN MATERIALS AND WORKMANSHIP.
4. MANUFACTURER TO PERMANENTLY MARK EACH PANEL WITH A CONCRETE IMPRINT FOR SIZE OF RAIL, WEIGHT OF PANEL, MANUFACTURER'S I.D., MONTH/DAY/YEAR OF MANUFACTURE AND CROSSING TYPE. END OF EACH PANEL TO BE STENCILED PAINTED WITH SIZE OF RAIL, WEIGHT OF PANEL AND CROSSING TYPE.

NOTES:

1. GRADE CROSSING GAGE PANELS SHALL BE SHUNT RESISTANT.
2. PANELS SHALL BE STEEL CLAD USING 3" X 3" X ⅜" ANGLE.
3. PANELS MUST BE MANUFACTURED FOR USE WITH SCRRA STANDARD 136 LB. WELDED RAIL WITH "PANDROL" TYPE PLATES AND FASTENERS (OR APPROVED EQUAL).
4. PANELS SHOULD BE INSTALLED ON 10 FT., FLAT, GOOD QUALITY TIMBER RAILROAD TIES. TIE SPACING THROUGH CROSSING AREA SHOULD BE 19½" CENTERS.
5. REFER TO MANUFACTURER'S INSTALLATION AND HANDLING MANUAL FOR INSTALLATION INSTRUCTIONS.
6. EXCAVATION FOR CROSSING SUBGRADE OR SIGNAL CONDUITS SHALL NOT OCCUR UNTIL SCRRA SIGNAL LINES AND PUBLIC UTILITY UNDERGROUND LINES HAVE BEEN LOCATED BY THEIR OWNERS.
7. A 6" ASPHALT UNDERLAYMENT WILL BE PLACED OVER COMPACTED SUBGRADE (95% RELATIVE COMPACTION) AND CROWNED IN THE CENTER TO DRAIN TO BOTH SIDES OF THE TRACK STRUCTURE WITH A 2% SLOPE TOWARDS THE 6" PERFORATED PIPES. THE ASPHALT LAYER SHOULD EXTEND 10 FT. BEYOND THE ENDS OF THE CROSSING ALONG THE TRACK
8. BALLAST SECTION UNDER CROSSING TIES TO BE A MINIMUM OF 10" OF 1½" TO 2" ROCK.
9. SIGNAL CONDUITS AND SPARES ARE TO BE PLACED IN TRENCHES. CROSSINGS WHERE RAISED MEDIAN ISLANDS ARE TO BE INSTALLED, ONE OF THE FOUR CONDUITS (ON BOTH SIDES OF THE TRACK) IS TO BE TERMINATED AND CAPPED IN THE CENTER OF CROSSING. ALL SIGNAL CONDUITS AND SPARES ARE TO BE CAPPED ON BOTH ENDS. SIGNAL CONDUITS ARE TO EXTEND A MINIMUM OF 8 FT. BEYOND TRAVELED ROADWAY OR SIDEWALK AREA.
10. PERFORATED DRAIN LINES WILL BE INSTALLED TO SUIT LOCAL CONDITIONS TO DISCHARGE WATER AWAY FROM CROSSING. DRAIN LINES WILL BE EXTENDED TO MEET LOCAT DITCHES, STORM DRAINS, OR CHANNELS WHERE AVAILABLE. DRAIN LINES ARE TO HAVE A MINIMUM FALL OF ¼" INCH PER FOOT PARALLEL TO THE TRACK AND ½" INCH PER FOOT AT EXTENSIONS. UNLESS LOCAL CONDITIONS DICTATE OTHERWISE, FALL OF PIPE WILL FOLLOW GENERAL GRADE OF TRACK FOR GRADES OF 0.5% OR MORE, FOR LESSER GRADES THE PIPE WILL PEAK IN CENTER OF CROSSINGS AND FALL IN BOTH DIRECTIONS. ALL PORTIONS OF THE DRAIN LINES BEYOND 12 FEET FROM TRACK CENTERLINE ARE TO BE 8 INCH DIAMETER, ¼" INCH WALL STEEL PIPE
11. CONCRETE CROSSING PANELS WITH PRE- ATTACHED RUBBER -FILLERS TO BE INSTALLED PER MANUFACTURERS INSTRUCTIONS.
12. ON EITHER END OF THE NEW CROSSING PANEL LIMITS, 24 - 10 FOOT LONG WOOD TIES AT 19½" CENTER TO CENTER WITH "PANDROL" TYPE, OR APPROVED EQUAL PLATES, WITH SCREW SPIKES, SHALL BE INSTALLED BEYOND THE END OF THE CROSSING PANELS. INSTALL WOOD TIES WITH HEART DOWN. BEYOND THE LIMITS OF THE NEW CROSSING PANELS, 40 FOOT LENGTH OF NEW RAIL PER SIDE SHALL BE INSTALLED PER SCRRA STANDARDS. 10 FOOT WOOD TIES MUST BE OF GOOD QUALITY. TIES SHALL BE STRAIGHT, WELL SAWN, BE SQUARE AT ENDS, HAVE BOTTOM AND TOP PARALLEL. CHECK TIES FOR HIGH AND LOW SPOTS. A TIE IS CONSIDERED STRAIGHT WHEN A STRAIGHT LINE FROM A POINT ON ONE END OF THE CROSS TIE TO A CORRESPONDING POINT ON THE OTHER END IS NO MORE THAN 1½" FROM THE SURFACE AT ANY POINT.
13. NO RAIL JOINTS ALLOWED IN CROSSING UNLESS APPROVED BY SCRRA DIRECTOR OF ENGINEERING AND CONSTRUCTION.
14. PANELS SHOULD BE PLACED IN A WIDTH SUITABLE TO COVER THE PROJECTED BACK OF SIDEWALK ON BOTH SIDES OF THE STREET AND 3 FT. MINIMUM BEYOND BACK OF SIDEWALK.
15. BALLAST IN THE CRIB AREA IS TO BE APPROXIMATELY ¾" LOWER THAN THE TOP OF THE TIE. REMOVE ANY DEBRIS AND STONES FROM THE TOP OF THE TIES.
16. PLACE THE FIRST PANELS IN THE CENTER OF THE CROSSING. PLACE PANELS WORKING TOWARDS EITHER END. DOING THIS WILL MINIMIZE ANY MISTAKES IN THE TIE SPACING.
17. TIES ARE TO BE FIELD -DRILLED FOR LAG SCREWS DO NOT OVERDRIVE THE LAG SCREW.
18. HIGHWAY APPROACHES SHOULD BE AT LEAST 3 TO 8 FT. WIDE, ALLOWING FOR PROPER COMPACTING USING A VIBRATORY ROLLER. PLATE COMPACTORS ARE NOT SUFFICIENT FOR HIGHWAY APPLICATIONS. LIFTS OF ASPHALT SHOULD NOT BE MORE THAN 3" THICK. THE FINAL LIFT OF ASPHALT SHOULD BE ¼" TO ½" HIGHER THAN THE TOP OF THE CROSSING SURFACE (ASPHALT WILL SETTLE). DO NOT ALLOW HIGHWAY TRAFFIC OVER THE CROSSING UNTIL THE FINAL LAYER OF ASPHALT HAS BEEN COMPACTED.
19. THE HOT MIX ASPHALTIC CONCRETE SECTION (HMAC) SHALL EXTEND TEN FEET PAST THE END OF THE CONCRETE PANEL IN EACH DIRECTION PER ASTM DSST. D1557-91 90% COMPACTION.
20. ALL HOLES AND BLOCKOUTS WITHIN SIDEWALK AREA SHALL BE FILLED FLUSH WITH EPOXY TO MATCH THE COLOR OF THE SURROUNDING AREA.

TOLERANCES:

1. OUT OF SQUARE 3/16" (MEASURED ALONG THE DIAGONAL)
2. LENGTH, WIDTH AND THICKNESS: +/- ⅛"
3. THE BOTTOM SURFACE, WHICH WILL BE IN CONTACT WITH THE TIES, SHALL NOT UNDULATE IN ANY DIRECTION MORE THAN 3/32". SEE SPECIAL TESTING NOTE 3.
4. REINFORCEMENT PLACEMENT SHALL BE +/- ¾" HORIZONTAL, +/- ⅛" VERTICAL.

SPECIAL TESTING:

1. TWICE ANNUALLY, VENDORS SHALL SUBMIT (VIA AN INDEPENDENT TESTING LABORATORY TO SCRRA) THE FOLLOWING TEST ON THE APPROVED MIX DESIGN:
   - ASTM C666 FREEZE/THAW
   - ASTM C227 MORTAR BAR METHOD
   - ASTM C1260 AT TOTAL ALKALI BURDEN = 0.06%
2. GAGE PANELS SHALL BE DESIGNED WITH SHUNT RESISTANT FEATURES IN ORDER TO PROVIDE A MINIMUM ELECTRICAL RESISTANCE.
3. A REPRESENTATIVE SAMPLE OF PANELS SHALL BE CHECKED PERIODICALLY FOR BOTTOM FLATNESS BY USING A STRAIGHT EDGE CALIBRATED TO WITHIN +/- 1/32" AND A TAPER GAGE AS FOLLOWS:
   8 POSITIONS OF FLATBAR (----) CHECK FLATNESS AT EACH POSITION USING TAPER GAGE.

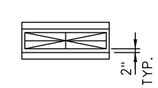

REV.	DATE	DESCRIPTION	DES.	ENG.
X	XX-XX-XX	REVISION	XX	XX

DRAWN BY: A. CARLOS DATE: 03/31/2011

ASSISTANT DIRECTOR: STANDARDS & DESIGN

DIRECTOR OF ENGINEERING AND CONSTRUCTION

SCRRA ENGINEERING STANDARDS ARE INTENDED FOR SCRRA APPROVED USES ONLY. FOR NON-SCRRA APPROVED USES, SCRRA SHALL NOT BE RESPONSIBLE FOR THE ACCURACY OR COMPLETENESS OF THE DATA OR INFORMATION CONTAINED HEREIN. THE SELECTION AND USE OF THESE STANDARDS IS THE SOLE RESPONSIBILITY OF THE USER AND SHOULD NOT BE USED WITHOUT CONSULTING A REGISTERED PROFESSIONAL ENGINEER. ALL WARRANTIES AND REPRESENTATIONS OF ANY KIND ARE DISCLAIMED. ANYONE MAKING USE OF THIS INFORMATION AGREES THAT IT ASSUMES ALL LIABILITY ARISING FROM SUCH USE. NO PART OF THESE STANDARDS SHOULD BE REPRODUCED OR DISTRIBUTED IN ANY FORM OR BY ANY MEANS WITHOUT THE PRIOR WRITTEN PERMISSION OF SCRRA. ALL RIGHTS RESERVED.

METROLINK®

SOUTHERN CALIFORNIA REGIONAL RAIL AUTHORITY
ONE GATEWAY PLAZA, 12TH FLOOR, L. A., CA. 90012

ENGINEERING STANDARDS

PRECAST CONCRETE PANELS FOR HIGHWAY – RAIL GRADE CROSSING

STANDARD 4201
SCALE: AS NOTED
REVISION –
SHEET 1 OF 3
CADD FILE: ES4201-01

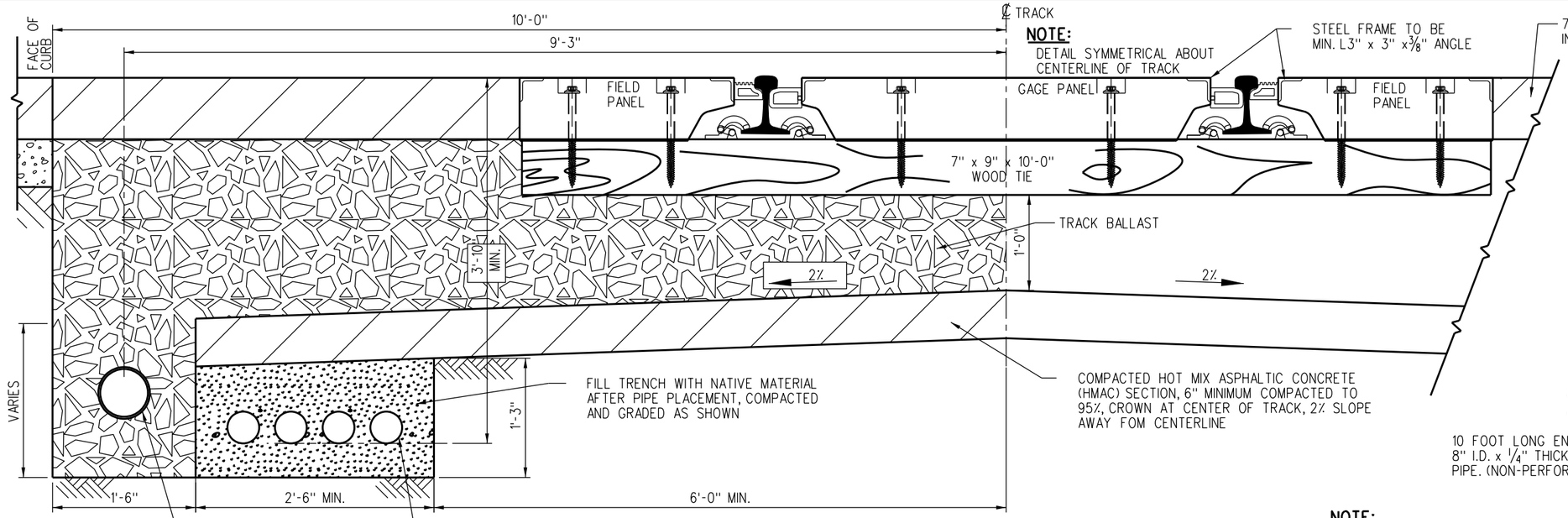

NOTE:
DETAIL SYMMETRICAL ABOUT CENTERLINE OF TRACK

STEEL FRAME TO BE MIN. L3" x 3" x 3/8" ANGLE

7" MIN. HOT MIX ASPHALT CONCRETE INSTALLED IN NO MORE THAN 3 LIFTS

TYPICAL BALLAST AND ASPHALT DETAIL
SINGLE TRACK
SCALE: 1 1/2" = 1'-0"

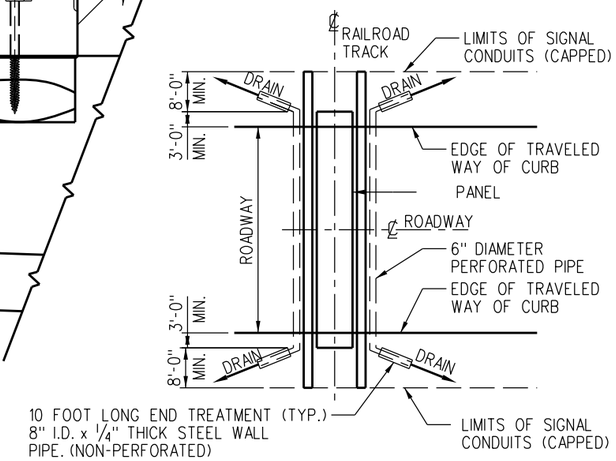

NOTE:
FOR NOTES SEE ES4201-01.

TYPICAL DRAIN PIPE LAYOUT
SINGLE TRACK
SCALE: NONE

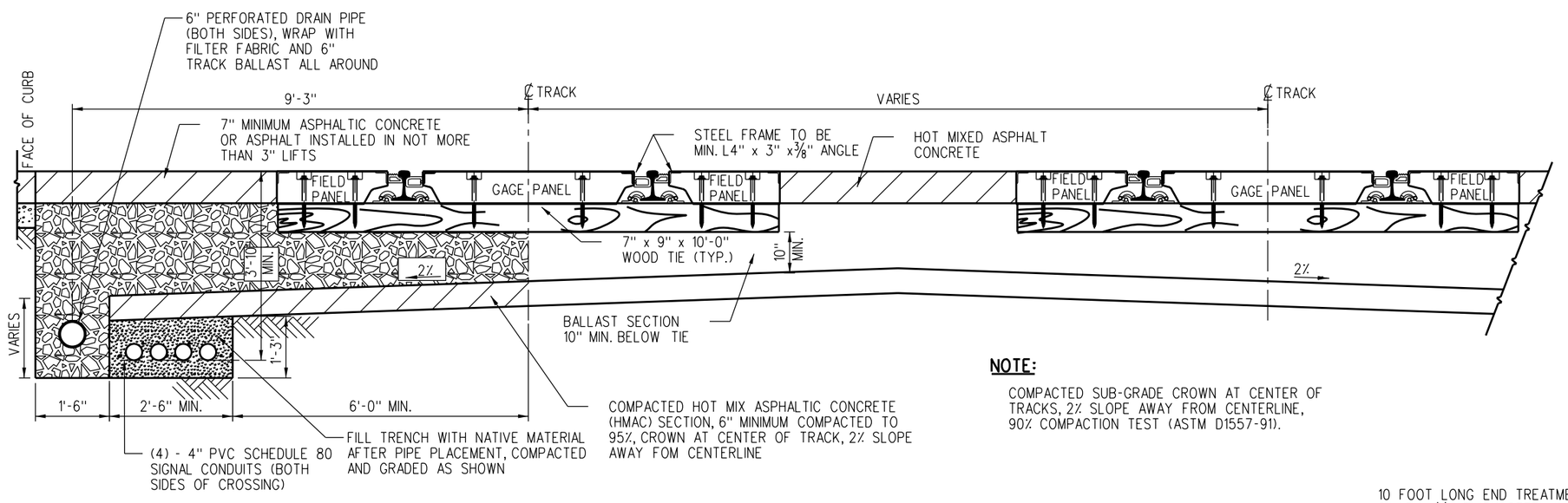

NOTE:
COMPACTED SUB-GRADE CROWN AT CENTER OF TRACKS, 2% SLOPE AWAY FROM CENTERLINE, 90% COMPACTION TEST (ASTM D1557-91).

TYPICAL BALLAST AND ASPHALT DETAIL
DOUBLE TRACK
SCALE: 3/4" = 1'-0"

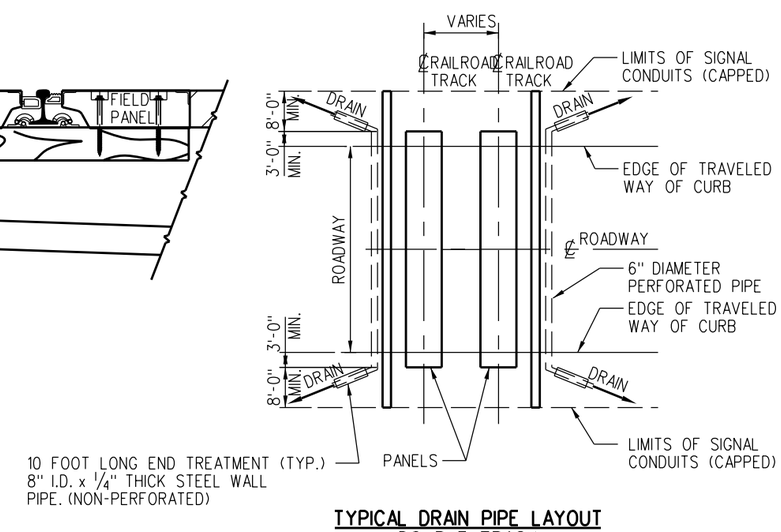

TYPICAL DRAIN PIPE LAYOUT
DOUBLE TRACK
SCALE: NONE

REV.	DATE	DESCRIPTION	DES.	ENG.
X	XX-XX-XX	REVISION	XX	XX

DRAWN BY: A. CARLOS DATE: 03/31/2011

ASSISTANT DIRECTOR: STANDARDS & DESIGN

DIRECTOR OF ENGINEERING AND CONSTRUCTION

SCRRA ENGINEERING STANDARDS ARE INTENDED FOR SCRRA APPROVED USES ONLY. FOR NON-SCRRA APPROVED USES: SCRRA SHALL NOT BE RESPONSIBLE FOR THE ACCURACY OR COMPLETENESS OF THE DATA OR INFORMATION CONTAINED HEREIN. THE SELECTION AND USE OF THESE STANDARDS IS THE SOLE RESPONSIBILITY OF THE USER AND SHOULD NOT BE USED WITHOUT CONSULTING A REGISTERED PROFESSIONAL ENGINEER. ALL WARRANTIES AND REPRESENTATIONS OF ANY KIND ARE DISCLAIMED. ANYONE MAKING USE OF THIS INFORMATION AGREES THAT IT ASSUMES ALL LIABILITY ARISING FROM SUCH USE. NO PART OF THESE STANDARDS SHOULD BE REPRODUCED OR DISTRIBUTED IN ANY FORM OR BY ANY MEANS WITHOUT THE PRIOR WRITTEN PERMISSION OF SCRRA. ALL RIGHTS RESERVED.

METROLINK®
SOUTHERN CALIFORNIA REGIONAL RAIL AUTHORITY
ONE GATEWAY PLAZA, 12TH FLOOR, L. A., CA. 90012

ENGINEERING STANDARDS

PRECAST CONCRETE PANELS FOR HIGHWAY – RAIL GRADE CROSSING

STANDARD 4201
SCALE: AS NOTED
REVISION –
SHEET 2 OF 3
CADD FILE: ES4201-02

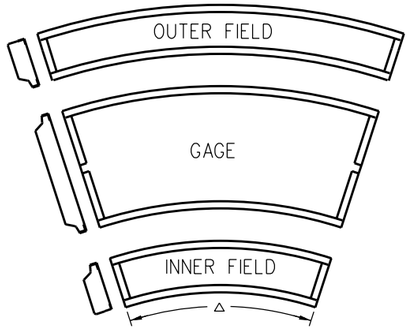

(SEE PANEL CURVATURE TABLES)

CURVATURE TABLE (ON CONCRETE TIES)			
DEGREE OF CURVE	RADIUS IN FEET	Δ	CURVE PANEL?
2° OR LESS	2865'	0.20°	NO
3°	1910'	0.30°	YES
4°	1433'	0.40°	YES
5°	1146'	0.50°	YES
6°	955'	0.60°	YES
7°	819'	0.70°	YES
8°	717'	0.80°	YES
9°	637'	0.90°	YES
10°	574'	1.00°	YES
11°	522'	1.10°	YES
12°	478'	1.20°	YES
13°	442'	1.30°	YES
14°	410'	1.40°	YES

CURVATURE TABLE (ON WOOD TIES)			
DEGREE OF CURVE	RADIUS IN FEET	Δ	CURVE PANEL?
3° OR LESS	1910'	0.24°	NO
4°	1433'	0.32°	YES
5°	1146'	0.40°	YES
6°	955'	0.48°	YES
7°	819'	0.56°	YES
8°	717'	0.66°	YES
9°	637'	0.74°	YES
10°	574'	0.82°	YES
11°	522'	0.90°	YES
12°	478'	0.98°	YES
13°	442'	1.06°	YES
14°	410'	1.14°	YES

NOTES:

A. A CURVED PANEL IS A PANEL THAT IS PIE SHAPED WITH A LONGER OUTER LENGTH THAN THE INNER LENGTH WITH TRUE RADIUSED OUTER AND INNER STEEL.

B. CURVED PANELS USE STANDARD REINFORCEMENT SIMILAR TO TANGENT PANEL STANDARD REINFORCEMENT.

C. LAG HOLES MUST LINE UP WITH THE CENTERLINE OF TIES.

CURVED CONCRETE PANELS
DETAIL 5

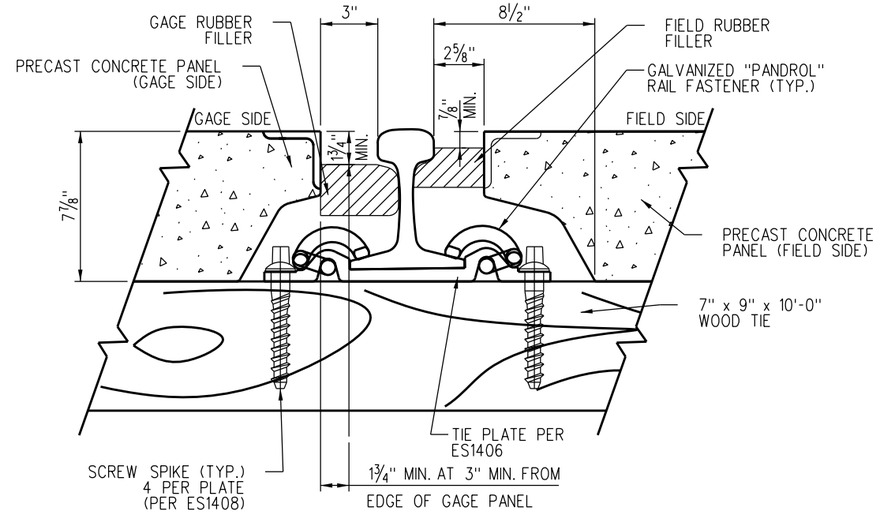

NOTES:

A. VENDOR SHALL SUBMIT PRE-ATTACHED FLANGEWAY FILLER DESIGN AND DETAILS FOR REVIEW AND APPROVAL PRIOR TO FABRICATION.
B. SHUNT RESISTANT RUBBER FILLERS BOLTED TO STEEL FRAME ON 12" CENTERS.
C. LAG-DOWN CONCRETE PANELS WITH PRE-ATTACHED RUBBER FILLER COMES IN STANDARD LENGTHS OF 8'-1½".

DETAIL 6

NOTE:

FOR NOTES SEE ES4201-01.

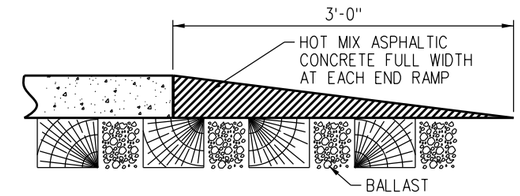

PAVED END RAMP
DETAIL 7

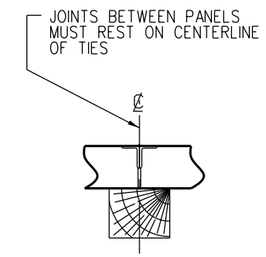

JOINT BETWEEN PANELS
DETAIL 8

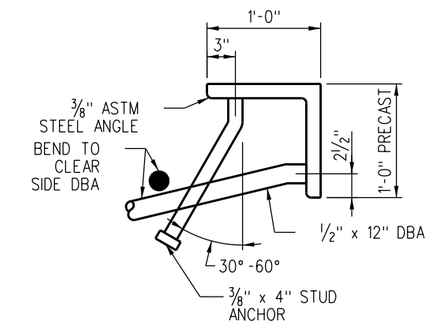

NOTE:

DBA = DEFORMED BAR ANCHOR

END FRAME
DETAIL 9

NOTE:

ALL RADII TO BE ¼" EXCEPT WHERE NOTED.

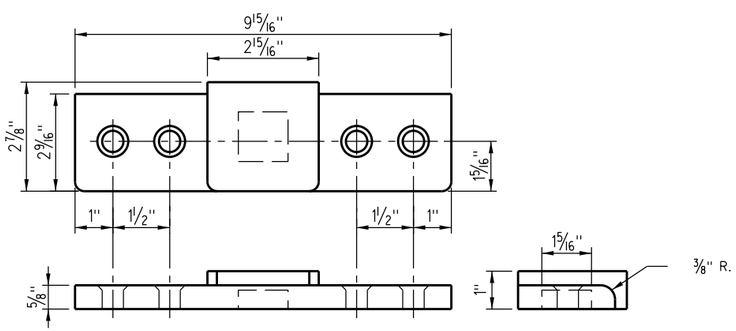

TYPICAL SHUNT SPACER
DETAIL 10

MINIMUM BLOCKOUT DEPTH 3"

LIFTING INSERTS SHALL BE DESIGNED WITH A MINIMUM SAFETY FACTOR=4. PROFESSIONAL ENGINEER STAMPED AND SEALED DETAILS AND DESIGN CALCULATIONS MUST BE SUBMITTED TO THE SCRRA DIRECTOR OF ENGINEERING AND CONSTRUCTION FOR REVIEW AND APPROVAL PRIOR TO FABRICATION.

LIFTING INSERTS SHALL BE MECHANICALLY GALVANIZED OR SIMILARILY PROTECTED AGAINST CORROSION.

LIFTING DEVICES SHALL BE USABLE WITH BURKE OR DAYTON 5-TON CLUTCH SYSTEMS.

TYPICAL LIFTING DEVICE AND BLOCKOUT
DETAIL 11

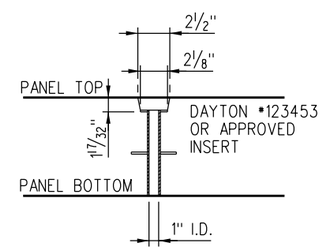

LAG HOLE DETAIL
DETAIL 12

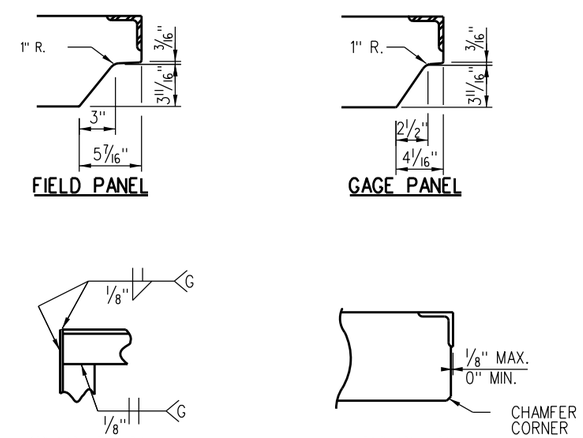

TYPICAL ANGLE DETAILS

REV.	DATE	DESCRIPTION	DES.	ENG.
X	XX-XX-XX	REVISION	XX	XX

DRAWN BY: A. CARLOS DATE: 03/31/2011

ASSISTANT DIRECTOR: STANDARDS & DESIGN

DIRECTOR OF ENGINEERING AND CONSTRUCTION

SCRRA ENGINEERING STANDARDS ARE INTENDED FOR SCRRA APPROVED USES ONLY. FOR NON-SCRRA APPROVED USES:
SCRRA SHALL NOT BE RESPONSIBLE FOR THE ACCURACY OR COMPLETENESS OF THE DATA OR INFORMATION CONTAINED HEREIN. THE SELECTION AND USE OF THESE STANDARDS IS THE SOLE RESPONSIBILITY OF THE USER AND SHOULD NOT BE USED WITHOUT CONSULTING A REGISTERED PROFESSIONAL ENGINEER. ALL WARRANTIES AND REPRESENTATIONS OF ANY KIND ARE DISCLAIMED. ANYONE MAKING USE OF THIS INFORMATION AGREES THAT IT ASSUMES ALL LIABILITY ARISING FROM SUCH USE. NO PART OF THESE STANDARDS SHOULD BE REPRODUCED OR DISTRIBUTED IN ANY FORM OR BY ANY MEANS WITHOUT THE PRIOR WRITTEN PERMISSION OF SCRRA. ALL RIGHTS RESERVED.

METROLINK
SOUTHERN CALIFORNIA REGIONAL RAIL AUTHORITY
ONE GATEWAY PLAZA, 12TH FLOOR, L. A., CA. 90012

ENGINEERING STANDARDS

PRECAST CONCRETE PANELS FOR HIGHWAY – RAIL CROSSING

STANDARD: 4201
SCALE: NTS
REVISION: –
SHEET: 3 OF 3
CADD FILE: ES4201-03

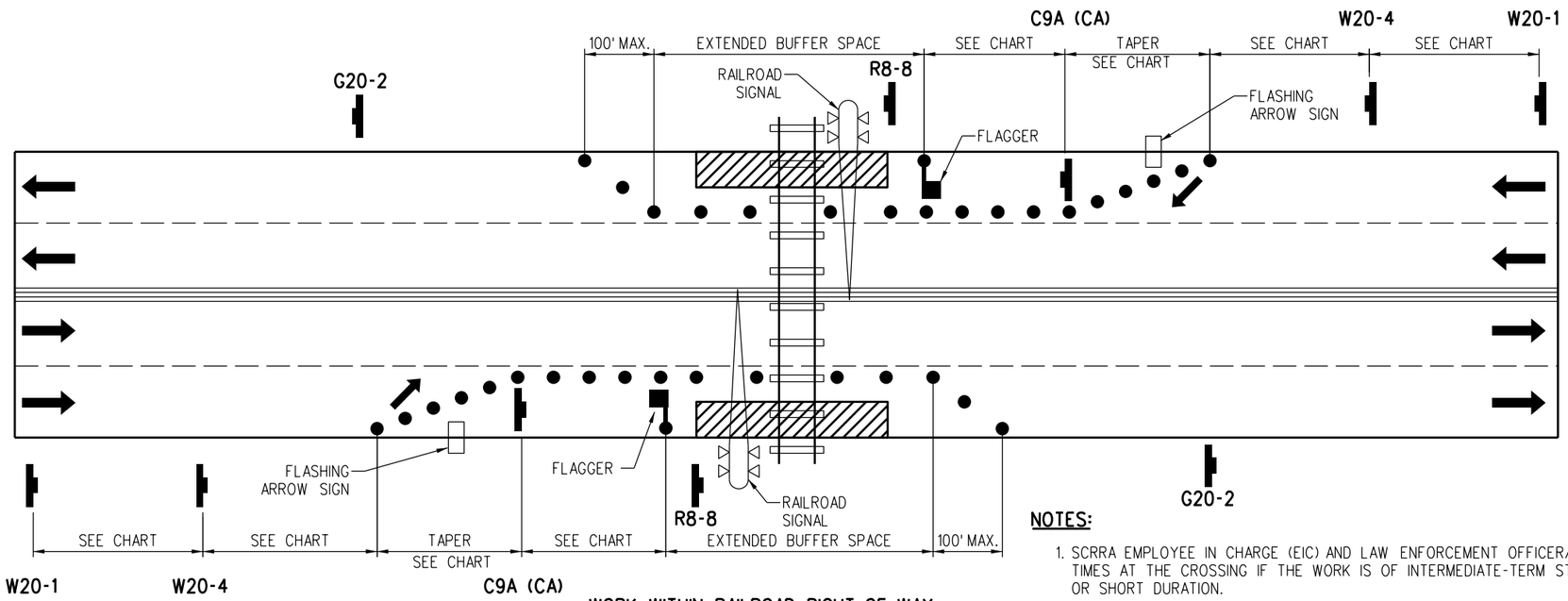

WORK WITHIN RAILROAD RIGHT-OF-WAY
TYPICAL APPLICATION

LEGEND:

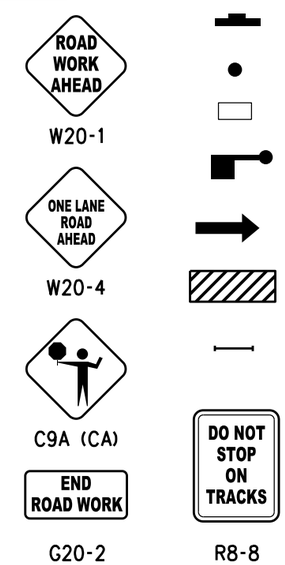

- SIGN
- CONE OR PORTABLE DELINEATOR
- FLASHING ARROW SIGN
- FLAGGER
- DIRECTION OF TRAFFIC
- WORK SPACE
- TYPE III BARRICADE

NOTE:

FOR ADDITIONAL NOTES AND CHART SEE SHEET ES4301-02.

NOTES:

1. SCRRA EMPLOYEE IN CHARGE (EIC) AND LAW ENFORCEMENT OFFICER/FLAGGER WILL BE PRESENT AT ALL TIMES AT THE CROSSING IF THE WORK IS OF INTERMEDIATE-TERM STATIONARY, SHORT-TERM STATIONARY, OR SHORT DURATION.
2. THE HIGHWAY-RAIL CROSSING WILL BE CLSED TO ROAD USERS IF THE WORK IS OF LONG-TERM STATIONARY DURATION.

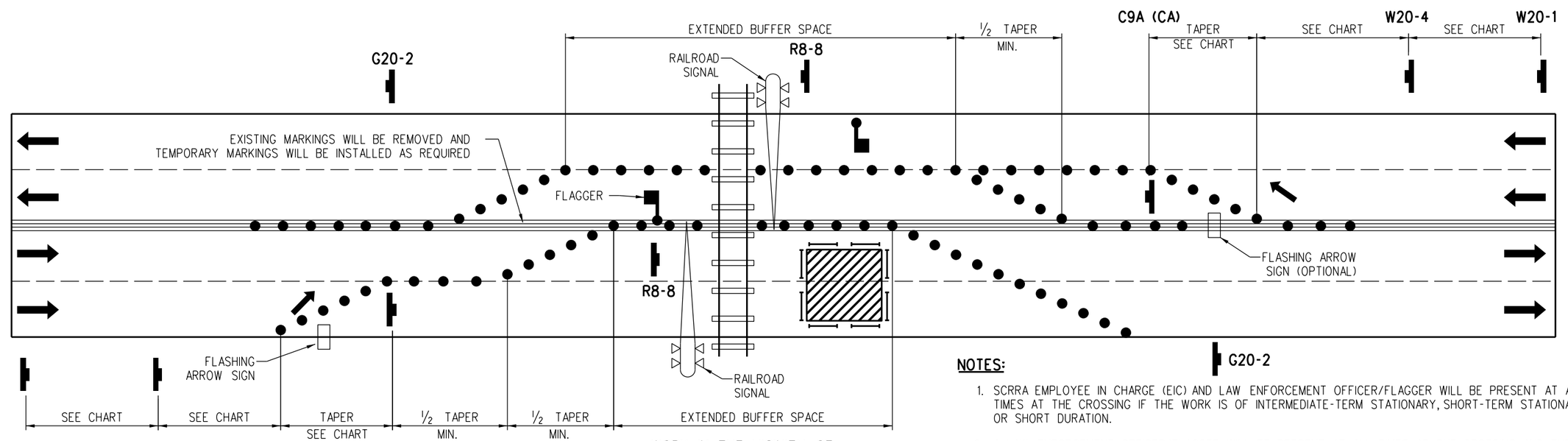

WORK IN THE VICINITY OF
RAILROAD RIGHT-OF-WAY
TYPICAL APPLICATION

NOTES:

1. SCRRA EMPLOYEE IN CHARGE (EIC) AND LAW ENFORCEMENT OFFICER/FLAGGER WILL BE PRESENT AT ALL TIMES AT THE CROSSING IF THE WORK IS OF INTERMEDIATE-TERM STATIONARY, SHORT-TERM STATIONARY, OR SHORT DURATION.
2. A LAW ENFORCEMENT OFFICER/FLAGGER WILL BE PRESENT AT ALL TIMES AT THE CROSSING AND THE RAILROAD CROSSING WARNING SIGNALS WILL BE RELOCATED OR INSTALLED TO PREVENT VEHICLES FROM STOPPING ON THE TRACK IF THE WORK IS OF LONG-TERM STATIONARY DURATION.

REV.	DATE	DESCRIPTION	DES.	ENG.
X	XX-XX-XX	REVISION	XX	XX

DRAWN BY: A. CARLOS DATE: 03/31/2011

ASSISTANT DIRECTOR: STANDARDS & DESIGN

DIRECTOR OF ENGINEERING AND CONSTRUCTION

SCRRA ENGINEERING STANDARDS ARE INTENDED FOR SCRRA APPROVED USES ONLY. FOR NON-SCRRA APPROVED USES, SCRRA SHALL NOT BE RESPONSIBLE FOR THE ACCURACY OR COMPLETENESS OF THE DATA OR INFORMATION CONTAINED HEREIN. THE SELECTION AND USE OF THESE STANDARDS IS THE SOLE RESPONSIBILITY OF THE USER AND SHOULD NOT BE USED WITHOUT CONSULTING A REGISTERED PROFESSIONAL ENGINEER. ALL WARRANTIES AND REPRESENTATIONS OF ANY KIND ARE DISCLAIMED. ANYONE MAKING USE OF THIS INFORMATION AGREES THAT IT ASSUMES ALL LIABILITY ARISING FROM SUCH USE. NO PART OF THESE STANDARDS SHOULD BE REPRODUCED OR DISTRIBUTED IN ANY FORM OR BY ANY MEANS WITHOUT THE PRIOR WRITTEN PERMISSION OF SCRRA. ALL RIGHTS RESERVED.

METROLINK®
SOUTHERN CALIFORNIA REGIONAL RAIL AUTHORITY
ONE GATEWAY PLAZA, 12TH FLOOR, L. A., CA. 90012

ENGINEERING STANDARDS

TEMPORARY TRAFFIC CONTROL
AT OR NEAR GRADE CROSSINGS

STANDARD: 4301
SCALE: NTS
REVISION: –
SHEET: 1 OF 2
CADD FILE: ES4301-01

FLOW CHART

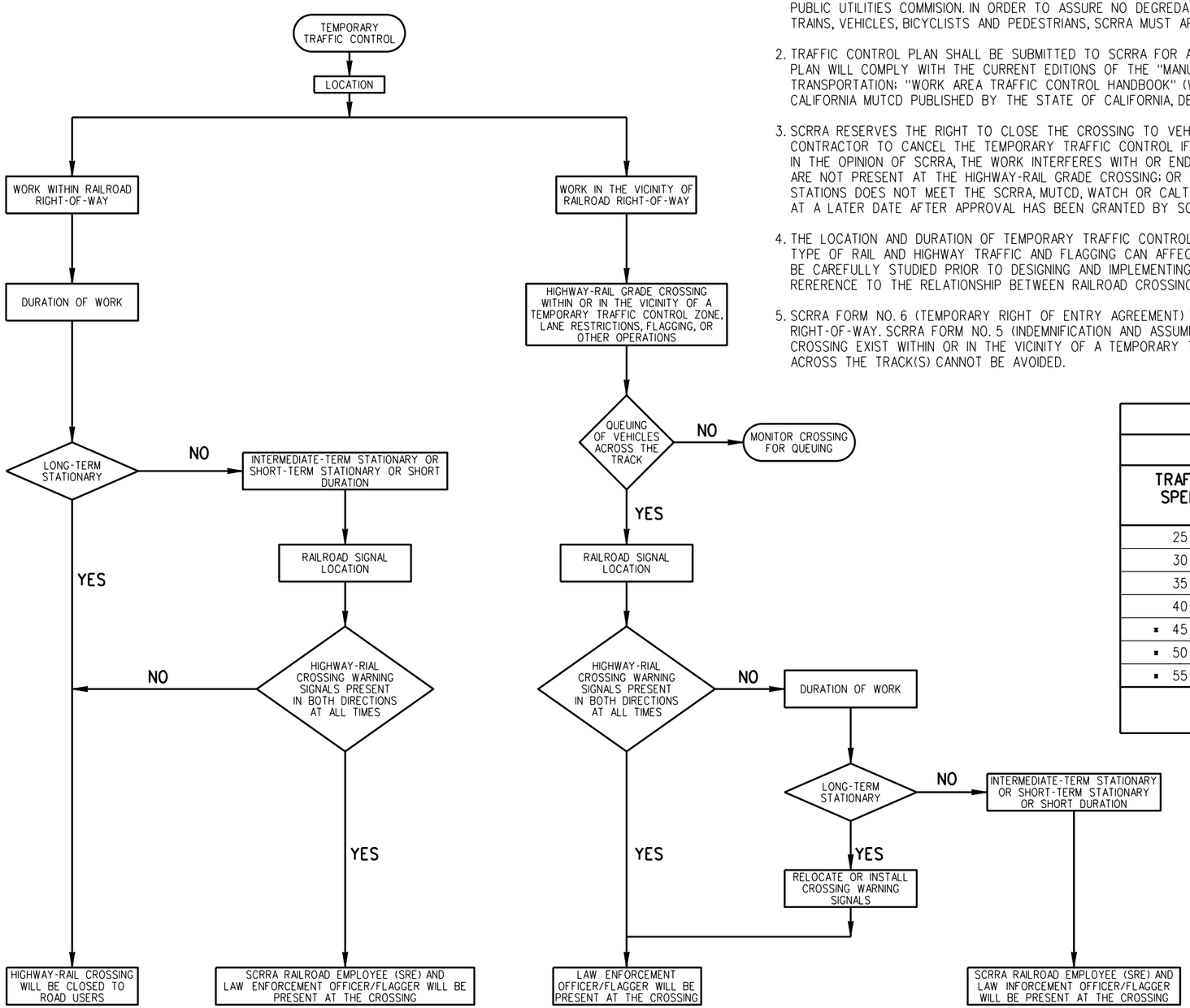

NOTES:

1. TEMPORARY TRAFFIC CONTROL PLANNING AND DESIGN SHALL BE COORDINATED WITH THE SOUTHERN CALIFORNIA REGIONAL RAIL AUTHORITY (SCRRA) SINCE PUBLIC AGENCIES AND SCRRA ARE OBLIGATED TO COORDINATE ALL INSTALLATION, OPERATION, MAINTENANCE USE AND PROTECTION OF GRADE CROSSINGS ACTIVITIES UNDER THE CALIFORNIA PUBLIC UTILITIES COMMISION. IN ORDER TO ASSURE NO DEGREDATION OF THE SAFE OPERATION OF GRADE CROSSINGS AND TO PROVIDE SAFE AND EFFICIENT MOVEMENTS OF TRAINS, VEHICLES, BICYCLISTS AND PEDESTRIANS, SCRRA MUST APPROVE ANY AND ALL TEMPORARY TRAFFIC CONTROL PLANS AND DEVICES.

2. TRAFFIC CONTROL PLAN SHALL BE SUBMITTED TO SCRRA FOR ALL ACTIVITIES LOCATED WITHIN OR IN THE VICINITY OF HIGHWAY-RAIL GRADE CROSSINGS. TRAFFIC CONTROL PLAN WILL COMPLY WITH THE CURRENT EDITIONS OF THE "MANUAL OF UNIFORM TRAFFIC CONTROL DEVICES" (MUTCD) PUBLISHED BY THE U.S. DEPARTMENT OF TRANSPORTATION; "WORK AREA TRAFFIC CONTROL HANDBOOK" (WATCH) PUBLISHED BY SOUTHERN CALIFORNIA CHAPTER OF THE AMERICAN PUBLIC WORKS ASSOCIATION AND CALIFORNIA MUTCD PUBLISHED BY THE STATE OF CALIFORNIA, DEPARTMENT OF TRANSPORTATION (CALTRANS).

3. SCRRA RESERVES THE RIGHT TO CLOSE THE CROSSING TO VEHICLE TRAFFIC, REVOKE THE TEMPORARY RIGHT OF ENTRY AGREEMENT OR ASK THE PUBLIC AGENCY OR THE CONTRACTOR TO CANCEL THE TEMPORARY TRAFFIC CONTROL IF, THE PUBLIC AGENCY OR CONTRACTOR ACTIVITY DOES NOT MEET CALIFORNIA MUTCD SECTION 6G REQUIREMENTS; IN THE OPINION OF SCRRA, THE WORK INTERFERES WITH OR ENDANGERS THE MOVEMENT OF ROAD USERS AND TRAIN TRAFFIC; LAW ENFORCEMENT OFFICER(S) OR FLAGGER(S) ARE NOT PRESENT AT THE HIGHWAY-RAIL GRADE CROSSING; OR THE FLAGGER QUALIFICATIONS, CLOTHING, HAND-SIGNAL DEVICES, FLAGGER PROCEDURES AND FLAGGER STATIONS DOES NOT MEET THE SCRRA, MUTCD, WATCH OR CALTRANS REQUIREMENTS. THE TRAFFIC CONTROL WILL BE TERMINATED INSTANTLY AND WORK WILL BE RESUMED AT A LATER DATE AFTER APPROVAL HAS BEEN GRANTED BY SCRRA.

4. THE LOCATION AND DURATION OF TEMPORARY TRAFFIC CONTROL, PROTECTION OR LACK OF PROTECTION BY RAILROAD CROSSING WARNING SYSTEM IN BOTH DIRECTIONS, TYPE OF RAIL AND HIGHWAY TRAFFIC AND FLAGGING CAN AFFECT THE DESIGN AND SELECTION OF TEMPORARY TRAFFIC CONTROL PLAN. THESE VARIABLE FACTORS SHOULD BE CAREFULLY STUDIED PRIOR TO DESIGNING AND IMPLEMENTING TEMPORARY TRAFFIC CONTROL ZONES. REFER TO THE ACCOMPANIED FLOW CHART THAT PROVIDES A QUICK RERERENCE TO THE RELATIONSHIP BETWEEN RAILROAD CROSSING CONDITIONS AND TRAFFIC CONTROL REQUIREMENTS.

5. SCRRA FORM NO. 6 (TEMPORARY RIGHT OF ENTRY AGREEMENT) WILL BE EXECUTED AND SUBMITTED WHEN THE CONSTRUCTION ACTIVITY IS LOCATED WITHIN THE RAILROAD RIGHT-OF-WAY. SCRRA FORM NO. 5 (INDEMNIFICATION AND ASSUMPTION OF LIABILITY AGREEMENT) WILL BE EXECUTED AND SUBMITTED WHEN HIGHWAY-RAIL GRADE CROSSING EXIST WITHIN OR IN THE VICINITY OF A TEMPORARY TRAFFIC CONTROL ZONE, LANE RESTRICITIONS, FLAGGING OR OTHER OPERATIONS AND QUEUING OF VEHICLES ACROSS THE TRACK(S) CANNOT BE AVOIDED.

CHART

MINIMUM RECOMMENDED DELINEATOR AND SIGN PLACEMENT

TRAFFIC ** SPEED	TAPER LENGTH (EACH LANE)	DELINEATOR SPACING		SIGN SPACING (BETWEEN SIGNS)	BUFFER SPACE (OR FLAGGER STATION)
		TAPER	TANGENT		
25 MPH	150 Ft	25 Ft	50 Ft	150 Ft	55 Ft
30 MPH	200 Ft	30 Ft	60 Ft	200 Ft	85 Ft
35 MPH	250 Ft	35 Ft	70 Ft	250 Ft	120 Ft
40 MPH	350 Ft	40 Ft	80 Ft	350 Ft	170 Ft
* 45 MPH	550 Ft	45 Ft	90 Ft	550 Ft	220 Ft
* 50 MPH	600 Ft	50 Ft	100 Ft	600 Ft	280 Ft
* 55 MPH	1000 Ft	50 Ft	100 Ft	1000 Ft	335 Ft

NOTES:
* REFER TO SECTION 8 OF WATCH MANUAL FOR HIGH SPEED SITUATIONS. DISTANCES SHOWN IN PARENTHESIS ARE APPROXIMATE.
** 85TH PERCENTILE SPEED OR AS DIRECTED BY THE ENGINEER.

REV.	DATE	DESCRIPTION	DES.	ENG.
X	XX-XX-XX	REVISION	XX	XX

DRAWN BY: A. CARLOS DATE: 03/31/2011

ASSISTANT DIRECTOR: STANDARDS & DESIGN

DIRECTOR OF ENGINEERING AND CONSTRUCTION

SCRRA ENGINEERING STANDARDS ARE INTENDED FOR SCRRA APPROVED USES ONLY. FOR NON-SCRRA APPROVED USES:
SCRRA SHALL NOT BE RESPONSIBLE FOR THE ACCURACY OR COMPLETENESS OF THE DATA OR INFORMATION CONTAINED HEREIN. THE SELECTION AND USE OF THESE STANDARDS IS THE SOLE RESPONSIBILITY OF THE USER AND SHOULD NOT BE USED WITHOUT CONSULTING A REGISTERED PROFESSIONAL ENGINEER. ALL WARRANTIES AND REPRESENTATIONS OF ANY KIND ARE DISCLAIMED. ANYONE MAKING USE OF THIS INFORMATION AGREES THAT IT ASSUMES ALL LIABILITY ARISING FROM SUCH USE. NO PART OF THESE STANDARDS SHOULD BE REPRODUCED OR DISTRIBUTED IN ANY FORM OR BY ANY MEANS WITHOUT THE PRIOR WRITTEN PERMISSION OF SCRRA. ALL RIGHTS RESERVED.

METROLINK®
SOUTHERN CALIFORNIA REGIONAL RAIL AUTHORITY
ONE GATEWAY PLAZA, 12TH FLOOR, L. A., CA. 90012

ENGINEERING STANDARDS

TEMPORARY TRAFFIC CONTROL AT OR NEAR GRADE CROSSINGS

STANDARD 4301
SCALE: NTS
REVISION –
SHEET 2 OF 2
CADD FILE: ES4301-02

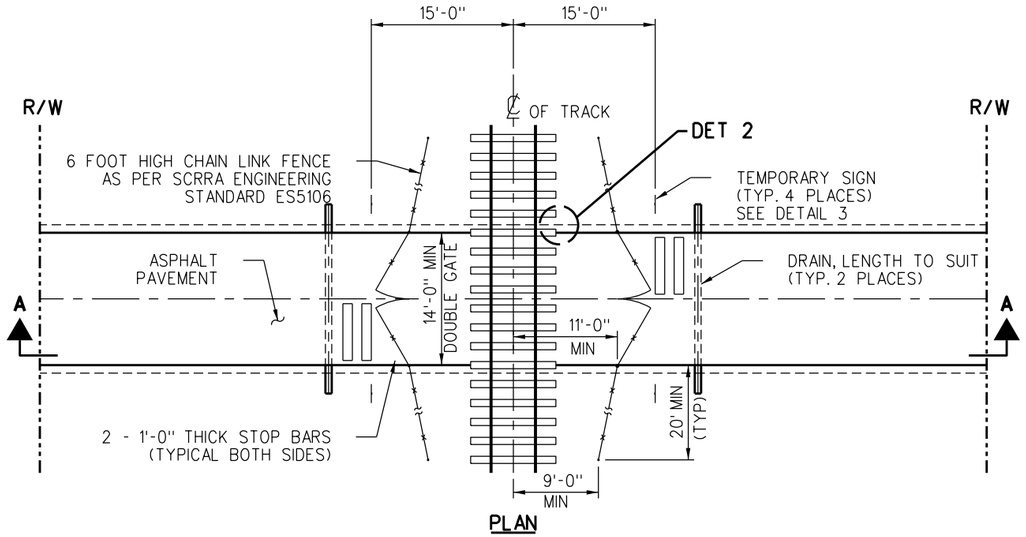

PLAN

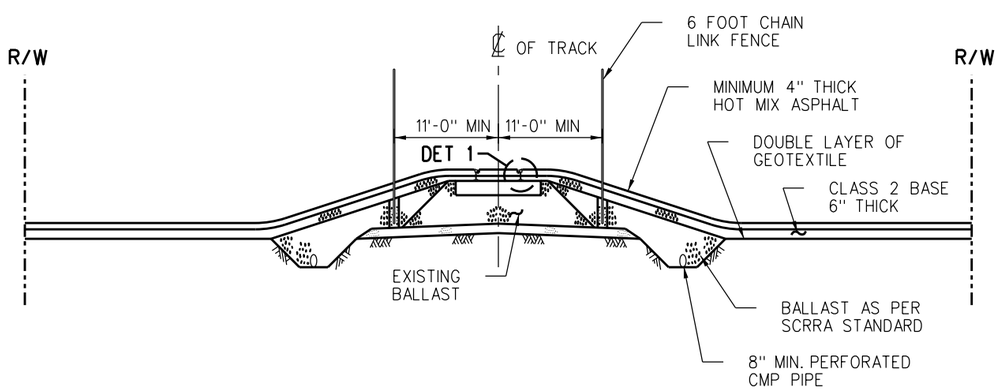

SECTION A-A

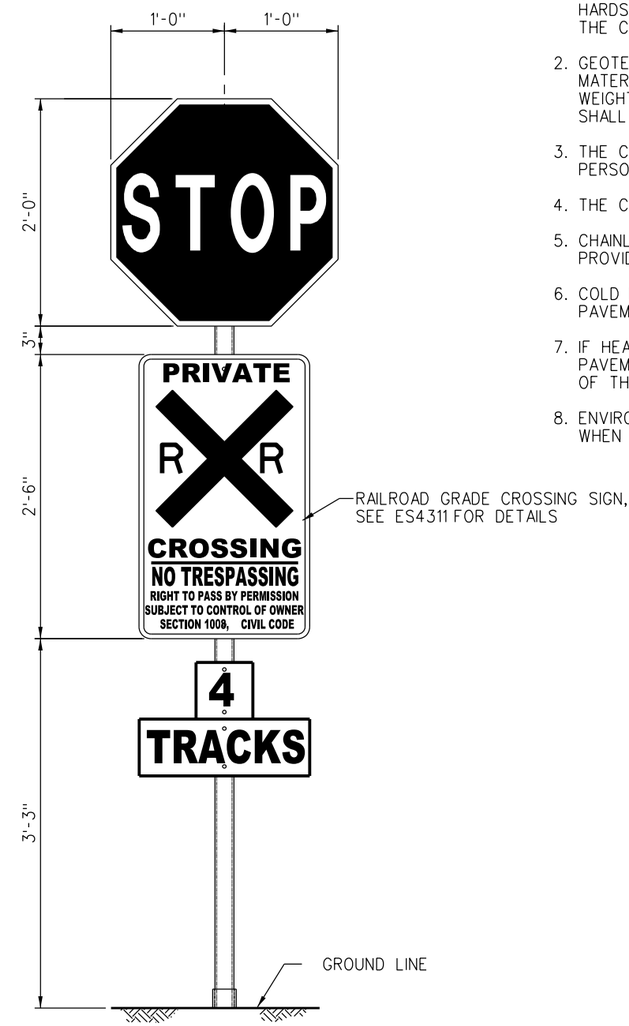

DETAIL 3

NOTES:

1. REQUESTS FOR TEMPORARY CONSTRUCTION CROSSINGS WILL BE CONSIDERED BY SCRRA ONLY WHERE IT IS SHOWN THAT EXTREME HARDSHIP AND/OR UNUSUAL CONDITIONS EXIST THAT JUSTIFIES THE CROSSING.
2. GEOTEXTILE MUST BE PLACED OVER THE TIE PLATES AND OTHER TRACK MATERIAL (OTM) TO KEEP ASPHALT AND BASE AWAY. THE MINIMUM WEIGHT OF GEOTEXTILE SHALL BE 4.5 OZ. PER SQ. YARD AND THICKNESS SHALL BE 40 MILS.
3. THE CROSSING MUST NOT BE USED WITHOUT SCRRA AUTHORIZED PERSONNEL.
4. THE CHAINLINK FENCE SHALL MEET SCRRA ENGINEERING STANDARD ES5106.
5. CHAINLINK FENCE GATES WILL BE LOCKED WITH SCRRA LOCK ONLY. PROVIDE KEEPERS TO HOLD GATES OPEN.
6. COLD MIX ASPHALT IS NOT AN SCRRA APPROVED MATERIAL FOR THE PAVEMENT. HOT MIX ASPHALT MUST COMPLY WITH CALTRANS SPECIFICATIONS.
7. IF HEAVY EQUIPMENT WILL BE CROSSING THE TRACKS, THE ASPHALT PAVEMENT ELEVATION MUST BE AT THE SAME ELEVATION AS THE TOP OF THE RAIL ELEVATION FOR 200 FEET ON EACH SIDE OF THE TRACK.
8. ENVIRONMENTAL RULES OF THE LOCAL AUTHORITY SHALL BE FOLLOWED WHEN DISPOSING OF THE ASPHALT MATERIALS.

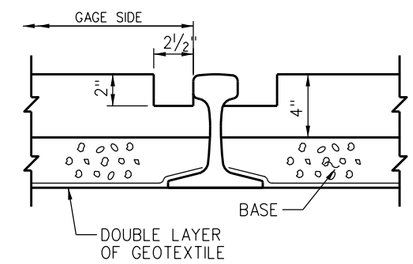

DETAIL 1

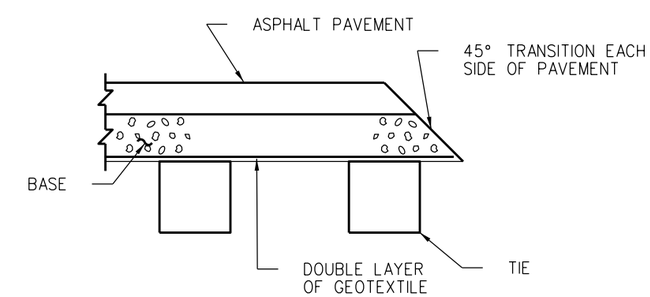

SECTION VIEW

DETAIL 2

REV.	DATE	DESCRIPTION	DES.	ENG.
X	XX-XX-XX	REVISION	XX	XX

DRAWN BY: A. CARLOS DATE: 03/31/2011

ASSISTANT DIRECTOR: STANDARDS & DESIGN

DIRECTOR OF ENGINEERING AND CONSTRUCTION

SCRRA ENGINEERING STANDARDS ARE INTENDED FOR SCRRA APPROVED USES ONLY. FOR NON-SCRRA APPROVED USES, SCRRA SHALL NOT BE RESPONSIBLE FOR THE ACCURACY OR COMPLETENESS OF THE DATA OR INFORMATION CONTAINED HEREIN. THE SELECTION AND USE OF THESE STANDARDS IS THE SOLE RESPONSIBILITY OF THE USER AND SHOULD NOT BE USED WITHOUT CONSULTING A REGISTERED PROFESSIONAL ENGINEER. ALL WARRANTIES AND REPRESENTATIONS OF ANY KIND ARE DISCLAIMED. ANYONE MAKING USE OF THIS INFORMATION AGREES THAT IT ASSUMES ALL LIABILITY ARISING FROM SUCH USE. NO PART OF THESE STANDARDS SHOULD BE REPRODUCED OR DISTRIBUTED IN ANY FORM OR BY ANY MEANS WITHOUT THE PRIOR WRITTEN PERMISSION OF SCRRA. ALL RIGHTS RESERVED.

METROLINK®

SOUTHERN CALIFORNIA REGIONAL RAIL AUTHORITY
ONE GATEWAY PLAZA, 12TH FLOOR, L. A., CA. 90012

ENGINEERING STANDARDS

TEMPORARY CONSTRUCTION CROSSING

STANDARD 4302
SCALE: NTS
REVISION –
SHEET 1 OF 1
CADD FILE: ES4302

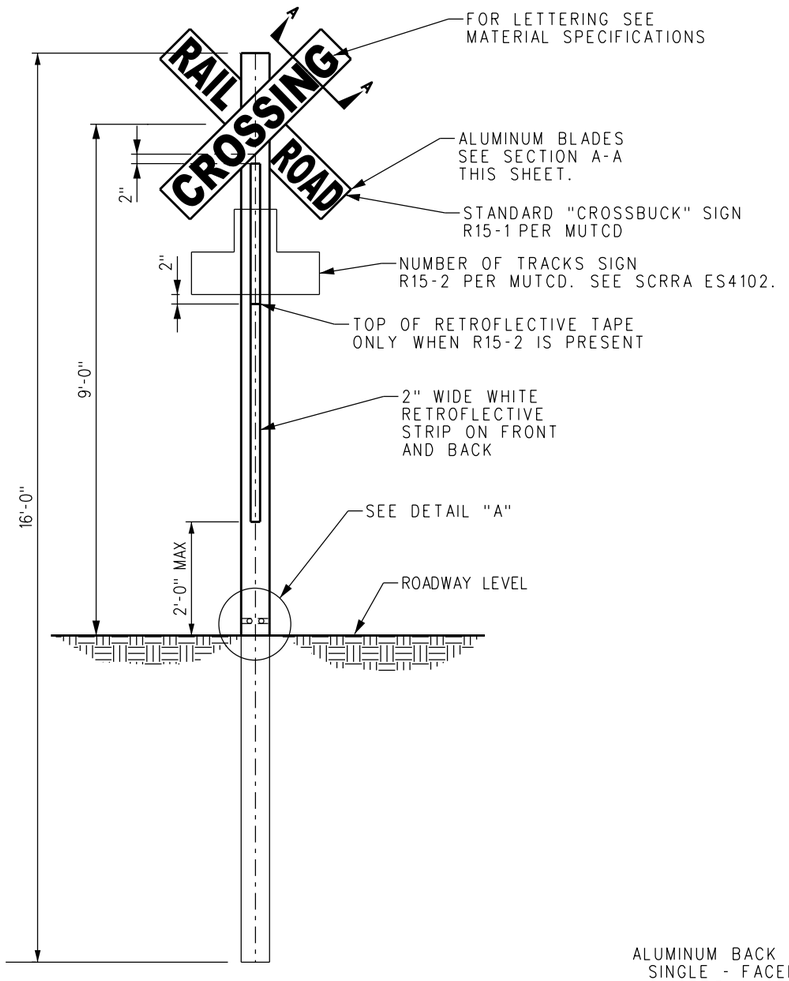

"CROSSBUCK" SIGN

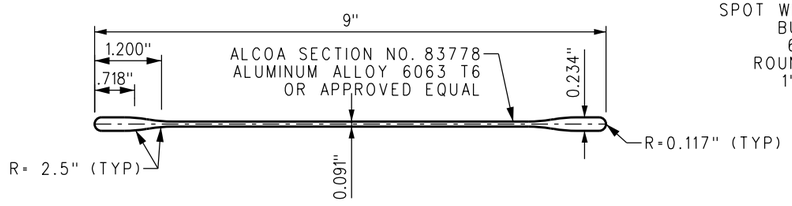

SECTION A-A

THIS SIGN COMPLIES WITH THE REQUIREMENTS OF CALIFORNIA PUBLIC UTILTIES COMMISSION GENERAL ORDER NO. 75-C AND MUTCD SECTION 8B-2.

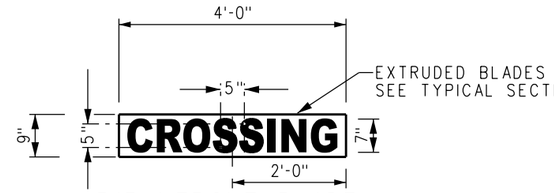

R15-1 FRONT BLADE

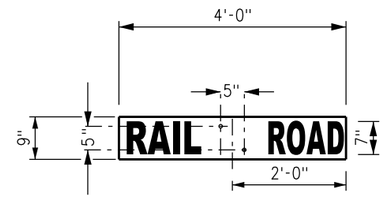

R15-1 REAR BLADE

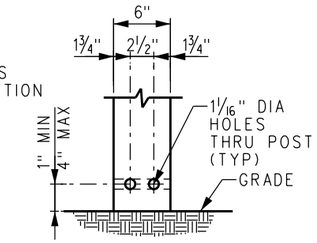

DETAIL "A"

"BREAK AWAY" SIGN POST, 6" x 6" POST MUST BE DRILLED PER DETAIL "A". IF 4" x 4" POST IS USED, DRILLING PER DETAIL "A" NOT REQUIRED.

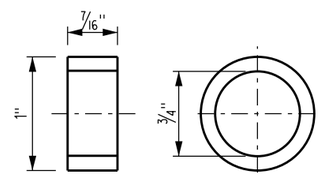

DETAIL OF ALUMINUM BUSHING

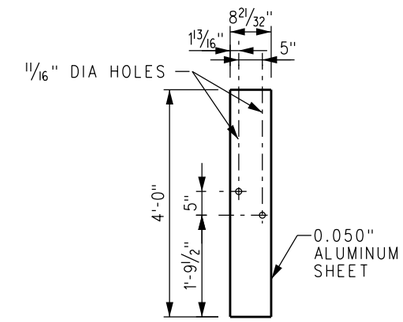

DETAIL OF INSERT

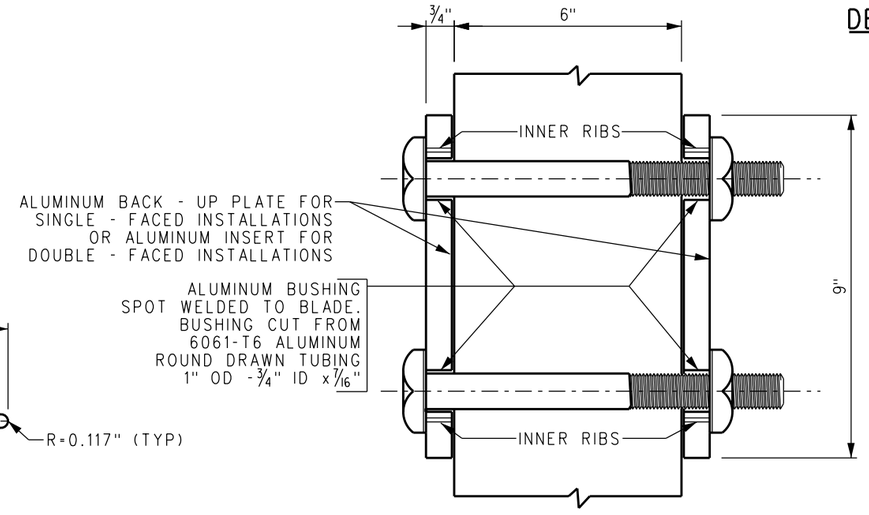

FRONT BACK

SECTION THRU ALTERNATE BLADES

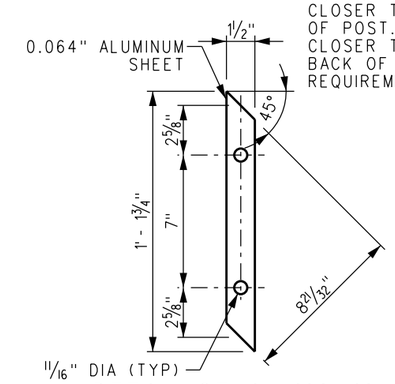

DETAIL OF ALUMINUM BACK UP PLATE

BILL OF MATERIAL

ITEM	
NO REQ'D	RAILROAD CROSSING SIGN-COMPLETE
1 SET	NO. R15-1 ALUMINUM CROSSBUCKS, ALCOA EXTRUDED SECTION NO. 83778, ALUMINUM ALLOY 6063 T6, OR APPROVED EQUAL, 2 BLADES PER SET.
1	6" x 6" x 16'-0" "CLEAN" TREATED TIMBER POST.
2*	⅝" x 7-1/2" GALVANIZED MACHINE BOLTS.
2	GALVANIZED CUT WASHERS FOR ⅝" DIA BOLTS.
4	GALVANIZED HEX NUTS, TAMPER RESISTANT, ⅝" DIA TAP.
2	2" WIDE WHITE RETROFLECTIVE STRIP. (LENGTH VARIES)
*	ADJUST BOLT LENGTH IF POST DIMENSIONS ARE OTHER THAN 6" X 6".
NO REQ'D	RAILROAD CROSSING SIGN-COMPLETE (ALTERNATE)
	SAME COMPONENTS AS ABOVE PLUS:
1 SET	NO. R15-1 INSERTS (2 PER SET).

NOTES:

NO. R15-1 RAILROAD CROSSING SIGN:

1. SIGN NO R15-1 SHALL BE USED ON NEW INSTALLATIONS AND FOR THE REPLACEMENT OF EXISTING RAILROAD HIGHWAY CROSSING SIGNS, ON AN ATTRITION BASIS, AS RENEWALS ARE REQUIRED. EXISTING WOODEN "CROSSBUCK" BLADES SHALL BE REPLACED WITH EXTRUDED ALUMINUM BLADES PER THIS DRAWING, WHEN RENEWAL OF SIGN MESSAGE IS REQUIRED.
2. TWO DOUBLE - FACED, HIGHWAY CROSSING SIGNS SHALL BE PROVIDED AT EACH HIGHWAY CROSSING OF A TRACK OR TRACKS, ONE ON EACH SIDE OF THE TRACK OR ON THE OUTSIDE OF MULTIPLE TRACK CROSSINGS EXCEPT AS OTHERWISE PROVIDED.
3. NUMBER OF TRACKS SIGN, MUTCD NO. R15-2 SHALL BE USED IN CONJUNCTION WITH SIGN NO. R15-1 WHEN REQUIRED.
4. THE SIGN SHALL BE ERECTED ON THE RIGHT HAND SIDE OF THE ROADWAY ON EACH APPROACH TO THE CROSSING. THE SIGN SHALL BE NO CLOSER THAN 4'-1" FROM THE FACE OF THE CURB TO THE CENTER OF POST OR WHERE THERE IS NO CURB, NO CLOSER THAN 8'-1" FROM EDGE OF TRAVELED WAY TO CENTER OF POST. ADDITIONALLY THE SIGNS SHALL BE PLACED NO CLOSER THAN 12'-6" FROM THE CENTER LINE OF TRACK TO THE BACK OF POST EXCEPT AS SHOWN FOR INDIVIDUAL STATE REQUIREMENTS.

MATERIAL SPECIFICATIONS:

SIGNS:
SEE BILL OF MATERIAL FOR EXTRUSION SPECIFICATIONS. PAINT ALL SIDES WITH LINEAR POLYURATHANE. COLOR FACE OF PANEL WITH ENGINEERING GRADE, PRESSURE SENSITIVE, RETRO-REFLECTIVE WHITE VINYL SHEETING. SILK SCREEN LEGEND WITH BLACK INK. FINISH WITH EXTERIOR GRADE PRESSURE SENSITIVE CLEAR MYLAR, 3M-1150 OR EQUAL.

TEXT STYLE:
"ARIAL BOLD" PER SCRRA ES1212, SIZE AS INDICATED.

HARDWARE:
SEE BILL OF MATERIAL, THIS SHEET.

REV.	DATE	DESCRIPTION	DES.	ENG.
X	XX-XX-XX	REVISION	XX	XX

DRAWN BY: A. CARLOS DATE: 03/31/2011

ASSISTANT DIRECTOR: STANDARDS & DESIGN

DIRECTOR OF ENGINEERING AND CONSTRUCTION

SCRRA ENGINEERING STANDARDS ARE INTENDED FOR SCRRA APPROVED USES ONLY. FOR NON-SCRRA APPROVED USES:
SCRRA SHALL NOT BE RESPONSIBLE FOR THE ACCURACY OR COMPLETENESS OF THE DATA OR INFORMATION CONTAINED HEREIN. THE SELECTION AND USE OF THESE STANDARDS IS THE SOLE RESPONSIBILITY OF THE USER AND SHOULD NOT BE USED WITHOUT CONSULTING A REGISTERED PROFESSIONAL ENGINEER. ALL WARRANTIES AND REPRESENTATIONS OF ANY KIND ARE DISCLAIMED. ANYONE MAKING USE OF THIS INFORMATION AGREES THAT IT ASSUMES ALL LIABILITY ARISING FROM SUCH USE. NO PART OF THESE STANDARDS SHOULD BE REPRODUCED OR DISTRIBUTED IN ANY FORM OR BY ANY MEANS WITHOUT THE PRIOR WRITTEN PERMISSION OF SCRRA. ALL RIGHTS RESERVED.

METROLINK®
SOUTHERN CALIFORNIA REGIONAL RAIL AUTHORITY
ONE GATEWAY PLAZA, 12TH FLOOR, L. A., CA. 90012

ENGINEERING STANDARDS

HIGHWAY – RAILROAD CROSSING CROSSBUCK SIGN

STANDARD 4310
SCALE: NTS
REVISION –
SHEET 1 OF 1
CADD FILE: ES4310

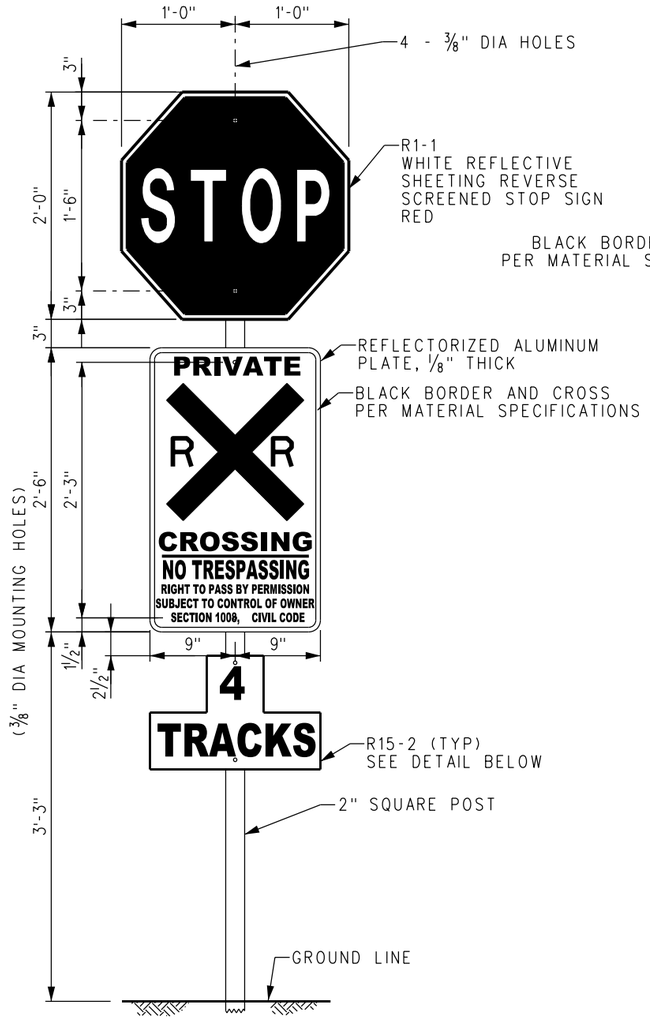

ANCHORED PER SCRRA ES5210

CPUC STANDARD NO. 1-C

THIS SIGN COMPLIES WITH THE REQUIREMENTS OF CALIFORNIA PUBLIC UTILITIES GENERAL ORDER NO. 75-D

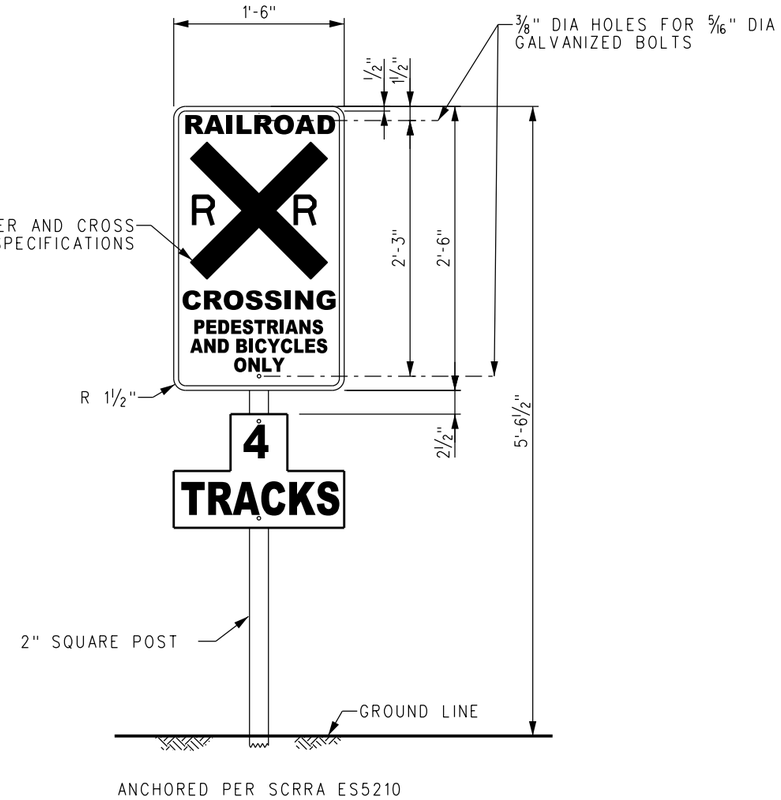

ANCHORED PER SCRRA ES5210

CPUC STANDARD NO. 1-D

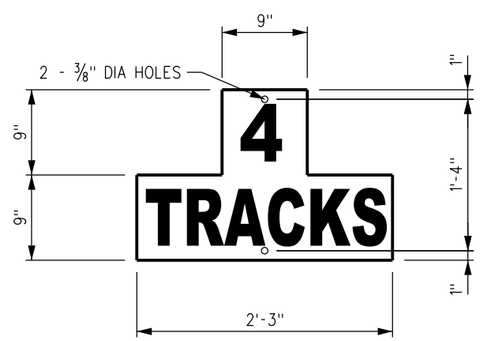

R15-2

NOTE:

SIGN R15-2 USED ONLY IF THERE IS MORE THAN ONE TRACK. NUMBER SHALL CORRESPOND TO NUMBER OF TRACKS AT CROSSING.

BILL OF MATERIAL

NUMBER REQUIRED	ITEM
	NO. 1-C PRIVATE CROSSING SIGN - COMPLETE
1	24" STOP SIGN (MUTCD R1-1)
1	3.75 SQ. FT. ALUMINUM PANEL (PRIVATE CROSSING SIGN)
1	2" X 2" SQUARE POST (LENGTH VARIES WITH TERRAIN)
4	3" LONG BOLT WITH NUT AND WASHERS PER SCRRA ES5210
1	ANCHOR PER SCRRA ES5210
	NO. 1-D PEDESTRIAN AND BICYCLE CROSSING SIGN - COMPLETE
1	3.75 SQ. FT. ALUMINUM PANEL (PEDESTRIAN/BICYCLE CROSSING SIGN)
1	2" X 2" SQUARE POST (LENGTH VARIES WITH TERRAIN)
2	3" LONG BOLT WITH NUT AND WASHERS PER SCRRA ES5210
1	ANCHOR PER SCRRA ES5210
	NUMBER OF TRACKS SIGN (WHERE REQUIRED)
1	SIGN (MUTCD 15-2)
2	3" LONG BOLT WITH NUT AND WASHERS PER SCRRA ES5210

NOTES:

1. CPUC STANDARD NO. 1-C PRIVATE CROSSING SIGN: TWO SIGNS SHALL BE USED AT EACH PRIVATE GRADE CROSSING NOT EQUIPPED WITH AUTOMATIC WARNING DEVICES, ONE FACING EACH ROAD APPROACH UNLESS THERE IS NO SPACE TO LOCATE THE SIGN OR SIGNS.
2. CPUC STANDARD NO. 1-D PEDESTRIAN AND BICYCLE CROSSING SIGN: FOR USE AT LOCATIONS DESIGNATED BY ORDER OF THE CALIFORNIA PUBLIC UTILITIES COMMISSION. THE WORDING "AND BICYCLES" IS OPTIONAL AND MAY BE OMITTED WHERE APPROPRIATE.
3. THE SIGNS SHALL BE PLACED NO CLOSER THAN 12'-6" FROM THE CENTER LINE OF TRACK TO THE BACK OF POST EXCEPT AS SHOWN FOR INDIVIDUAL STATE REQUIREMENTS.

MATERIAL SPECIFICATIONS:

SIGNS:
1/8" THICK MILL FINISH ALUMINUM PANEL, ALCOA 6016-T6 OR EQUAL. PAINT ALL SIDES WITH LINEAR POLYURETHANE. COLOR FACE OF PANEL WITH ENGINEERING GRADE, PRESSURE SENSITIVE, RETRO-REFLECTIVE WHITE VINYL SHEETING. SILK SCREEN LEGEND WITH BLACK INK. FINISH WITH EXTERIOR GRADE PRESSURE SENSITIVE CLEAR MYLAR, 3M-1150 OR EQUAL.

POST, ANCHOR AND HARDWARE:
PER SCRRA ES5210.

TEXT STYLE:
"ARIAL BOLD" PER SCRRA 1212, SIZE AS INDICATED.

REV.	DATE	DESCRIPTION	DES.	ENG.
X	XX-XX-XX	REVISION	XX	XX

DRAWN BY: A. CARLOS DATE: 03/31/2011

ASSISTANT DIRECTOR: STANDARDS & DESIGN

DIRECTOR OF ENGINEERING AND CONSTRUCTION

SCRRA ENGINEERING STANDARDS ARE INTENDED FOR SCRRA APPROVED USES ONLY. FOR NON-SCRRA APPROVED USES: SCRRA SHALL NOT BE RESPONSIBLE FOR THE ACCURACY OR COMPLETENESS OF THE DATA OR INFORMATION CONTAINED HEREIN. THE SELECTION AND USE OF THESE STANDARDS IS THE SOLE RESPONSIBILITY OF THE USER AND SHOULD NOT BE USED WITHOUT CONSULTING A REGISTERED PROFESSIONAL ENGINEER. ALL WARRANTIES AND REPRESENTATIONS OF ANY KIND ARE DISCLAIMED. ANYONE MAKING USE OF THIS INFORMATION AGREES THAT IT ASSUMES ALL LIABILITY ARISING FROM SUCH USE. NO PART OF THESE STANDARDS SHOULD BE REPRODUCED OR DISTRIBUTED IN ANY FORM OR BY ANY MEANS WITHOUT THE PRIOR WRITTEN PERMISSION OF SCRRA. ALL RIGHTS RESERVED.

METROLINK®
SOUTHERN CALIFORNIA REGIONAL RAIL AUTHORITY
ONE GATEWAY PLAZA, 12TH FLOOR, L. A., CA. 90012

ENGINEERING STANDARDS

PRIVATE, PEDESTRIAN AND BICYCLE RAILROAD GRADE CROSSING SIGN

STANDARD: 4311
SCALE: NTS
REVISION: –
SHEET: 1 OF 1
CADD FILE: ES4311

DISCLAIMER

SCRRA Engineering Standards are intended for SCRRA approved uses only. FOR NON-SCRRA APPROVED USES: SCRRA and its member agencies, directors, officers, employees and/or agents shall not be responsible for the accuracy or completeness of the data or information contained herein. The selection and use of these standards, while designed in accordance with generally accepted engineering principles and practices, is the sole responsibility of the user and should not be used without consulting a registered professional engineer. All warranties and representations of any kind are disclaimed. Anyone making use of this information agrees that it assumes all liability arising from such use. No part of these standards should be reproduced or distributed in any form or by any means without the prior written permission of SCRRA. All rights reserved.

Since revisions or additions to the engineering standards may occur at any time, the user agrees to indemnify, defend, by counsel satisfactory to SCRRA and Member Agency, and hold harmless SCRRA, Member Agencies, and Operating Railroad, and their respective officers, commissioners, employees, agents, successors and assigns. ("Indemnitees"), and each of them to the maximum extent allowed by law, from and against all loss, liability, claims, demands, suits, liens, claims of lien, damages (including incidental consequential damages), costs and expenses (including, without limitation, any fines, penalties, judgments, actual litigation expenses and experts' and actual attorneys' fees), that are incurred by or asserted against Indemnitees arising out of or connected in any manner with the user's use of outdated engineering standards.

Updating the contents of the manual is a continued process, and revisions/replacements are issued periodically. Questions, comments, and proposed recommendations for changes may be sent to SCRRA at 279 E. Arrow Highway, Suite A, San Dimas, CA 91773.

NOTES:

1. SCOPE

PIPELINES INCLUDED UNDER THESE SPECIFICATIONS ARE THOSE INSTALLED TO CARRYSTEAM, WATER OR ANY NON-FLAMMABLE SUBSTANCE WHICH FROM ITS NATURE ORPRESSURE, MIGHT CAUSE DAMAGE IF ESCAPING ON OR IN THE VICINITY OF SCRRA PROPERTY. ADDITIONAL PIPELINES COVERED UNDER THESE STANDARDS INCLUDE SMALL DIAMETER PIPES USED TO INSTALL OR PROTECT FIBER OPTIC SYSTEMS AND TELECOMMUNICATION LINES. THESE STANDARDS SHALL BE USED IN CONJUNCTION WITH THE SCRRA DESIGN CRITERIA MANUAL, CHAPTER 9, UTILITIES, AND THE AREMA MANUAL OF RAILWAY ENGINEERING CHAPTER 1, PART 5.

2. GENERAL REQUIREMENTS

a. PIPELINES UNDER SCRRA TRACKS AND ACROSS SCRRA RIGHTS-OF-WAY SHALL BE ENCASED IN A LARGER PIPE OR CONDUIT CALLED THE CASING PIPE AS INDICATED IN FIGURE 1. EXCEPTION MAY BE GRANTED ON CASE BY CASE BASIS FOR NON-PRESSURE PIPELINE.
b. CASING PIPE AND NON-CASED PIPELINES SHALL BE DESIGNED TO CARRY COOPER'S E-80 RAILROAD LIVE LOADING WITH DIESEL IMPACT FACTOR AS PER AREMA.
c. PIPELINES SHALL BE LOCATED, WHERE PRACTICABLE, TO CROSS TRACKS AT APPROXIMATELY RIGHT ANGLES BUT PREFERABLY AT NO LESS THAN 45 DEGREES AND SHALL NOT BE PLACED WITHIN CULVERTS NOR UNDER RAILWAY BRIDGES.
d. TEST BORING OR OTHER SOIL INVESTIGATIONS, APPROVED BY SCRRA SHALL BE MADE, TO DETERMINE THE NATURE OF THE UNDERLYING MATERIAL FOR ALL PIPELINES WITH SIZES EQUAL OR GREATER THAN 48 INCHES IN DIAMETER AND A DEPTH FROM TOP OF PIPE TO BASE OF RAIL BETWEEN FIVE FEET SIX INCHES AND TEN FEET. THE TEST BORING SHOULD BE MADE ON THE CENTERLINE OF THE PIPE NEAR THE END OF THE BALLAST SECTION (IF POSSIBLE) ON EACH SIDE OF THE TRACKS AND AS DEEP AS THE BOTTOM OF THE BORE.
e. EXCEPTION TO ANY DESIGN, CONSTRUCTION, LOCATION OR SPECIFICATIONS CONTAINED IN THIS STANDARD MUST BE AUTHORIZED BY SCRRA. REQUESTS FOR EXCEPTIONS WILL BE CONSIDERED ONLY WHERE IT IS SHOWN THAT EXTREME HARDSHIP AND/OR UNUSUAL CONDITIONS PROVIDE JUSTIFICATION AND WHERE ALTERNATE MEASURES CAN BE USED IN KEEPING WITH THE INTENT OF THIS STANDARD. ALL REQUESTS FOR EXCEPTIONS SHALL BE FULLY DOCUMENTED WITH DESIGN DATA, CALCULATIONS, COST COMPARISONS AND OTHER PERTINENT INFORMATION.
f. ALL PIPELINES SHALL BE PROMINENTLY MARKED BY SIGNS OR MARKERS (MAINTAINED BY OWNER) LOCATED OVER THE PIPE.

3. CARRIER PIPE

a. CARRIER LINE PIPE AND JOINTS SHALL BE OF ACCEPTED MATERIAL AND CONSTRUCTION AS APPROVED BY THE SCRRA DIRECTOR OF ENGINEERING AND CONSTRUCTION. JOINTS FOR CARRIER LINE PIPE OPERATING UNDER PRESSURE SHALL BE MECHANICAL OR WELDED TYPE. THE PIPE SHALL BE LAID WITH SUFFICIENT SLACK SO THAT IT IS NOT IN TENSION.
b. CARRIER PIPES SHALL BE MANUFACTURED IN ACCORDANCE WITH THE FOLLOWING STANDARDS AND SPECIFICATIONS:

A. STEEL PIPE - ASTM OR API.
B. DUCTILE IRON PIPE - ANSI A21.51/AWWA C151, CLASS 56.
C. REINFORCED CONCRETE PIPE - ASTM C76, MINIMUM OF CLASS III (3000 D) RCP IS ACCEPTABLE WITHOUT CASING FOR LONGITUDINAL PIPE LOCATED 45 FEET OR MORE FROM THE CENTERLINE OF THE NEAREST TRACK.
D. VITRIFIED CLAY PIPE - ASTM C700.
E PVC PLASTIC PIPE - ASTM D1784, MINIMUM SCHEDULE 40 PIPE.
F. HIGH DENSITY POLYETHYLENE (HDPE) SOLID WALL PIPE - ASTM D1248.
G. SEE AREMA CHAPTER 1, SECTION 5.2 FOR NON-FLAMMABLE GAS PIPE LINES.

4. CASING PIPE

a. CASING PIPE AND JOINTS SHALL BE OF STEEL AND LEAK PROOF CONSTRUCTION, CAPABLE OF AREMA (COOPER E-80 LIVE LOAD) AND HAVE A SPECIFIED MINIMUM YIELD STRENGTH OF AT LEAST 35,000 PSI. THE INSIDE DIAMETER OF THE CASING PIPE SHALL BE AT LEAST TWO INCHES GREATER THAN THE LARGEST OUTSIDE DIAMETER OF THE CARRIER PIPE, JOINTS OR COUPLINGS FOR CARRIER PIPE LESS THAN SIX INCHES IN DIAMETER; AND AT LEAST FOUR INCHES GREATER FOR CARRIER PIPE SIX INCHES AND OVER IN DIAMETER. IN ALL CASES THE SPACE PROVIDED SHALL BE ADEQUATE TO ALLOW FOR REMOVAL WITHOUT DISTURBING THE CASING PIPE OR ROADBED.
b. TABLE 1 INDICATES A MINIMUM THICKNESS BASED UPON SUPERIMPOSED LOADS ONLY AND IT IS THE RESPONSIBILITY OF THE LICENSEE AND/OR THE INSTALLER TO PROVIDE A CASING WHICH IS ADEQUATE FOR THE LOADS THAT RESULT DURING INSTALLATION. THE WALL THICKNESS MAY BE DECREASED BY 0.063 INCH, IF THE CASING IS INSTALLED WITH A PROTECTIVE COATING AND IS CATHODICALLY PROTECTED, EXCEPT FOR DIAMETERS UNDER 14 INCHES.
c. CASING PIPE UNDER SCRRA TRACKS AND ACROSS SCRRA RIGHT-OF-WAY SHALL EXTEND THE GREATER OF THE FOLLOWING DISTANCES, MEASURED AT RIGHT ANGLE TO CENTERLINE OF TRACK. IF ADDITIONAL TRACKS ARE CONSTRUCTED IN THE FUTURE, THE CASING SHALL BE EXTENDED AT THE LICENSEE'S EXPENSE.
A. ACROSS THE ENTIRE WIDTH OF THE SCRRA RIGHT-OF-WAY.
B. THREE FEET BEYOND THE DITCH LINE.
C. TWO FEET BEYOND THE TOE OF SLOPE.
D. A MINIMUM DISTANCE OF 25 FEET FROM EACH SIDE OF THE CENTERLINE OF OUTSIDE TRACK WHEN CASING IS SEALED AT BOTH ENDS AND,
E. A MINIMUM DISTANCE OF 45 FEET FROM EACH SIDE OF THE CENTERLINE OF OUTSIDE TRACK WHEN CASING IS OPEN AT BOTH ENDS.
d. THE DEPTH OF THE CASING SHALL NOT BE LESS THAN AS SHOWN IN FIGURE 1. HORIZONTAL DIRECTIONAL DRILLING OF A PIPELINE NOT CARRYING LIQUID SUBSTANCES AND HAVING A NOMINAL DIAMETER OF SIX INCHES OR LESS SHALL HAVE A MINIMUM COVER OF SIX FEET FROM BASE OF RAIL TO TOP OF PIPELINE. HORIZONTAL DIRECTIONAL DRILLING FOR ALL PIPELINES EXCEEDING SIX INCHES NOMINAL DIAMETER, OR FOR ANY NOMINAL DIAMETER PIPELINE CARRYING LIQUID SUBSTANCES SHALL HAVE A MINIMUM COVER FROM BASE OF RAIL TO TOP OF PIPELINE OF 12 FEET. INSTALLATION SHALL BE BY THE DRY BORE METHOD ONLY.

5. CONSTRUCTION

a. CASING PIPE SHALL BE CONSTRUCTED AS TO PREVENT LEAKAGE OF ANY SUBSTANCE FROM THE CASING THROUGHOUT ITS LENGTH, EXCEPT AT ENDS. CASING SHALL BE INSTALLED AS TO PREVENT THE FORMATION OF A WATERWAY UNDER THE ROADBED, AND WITH AN EVEN BEARING THROUGHOUT ITS LENGTH, AND SHALL SLOPE TO ONE END (EXCEPT FOR LONGITUDINAL OCCUPANCY).
b. THE FACES OF ALL PITS (JACKING AND RECEIVING) SHALL BE LOCATED A MINIMUM OF 25 FEET FROM THE CENTERLINE OF THE NEAREST TRACK, MEASURED AT RIGHT ANGLES TO TRACK. SHORING, IF REQUIRED, SHALL MEET SCRRA'S EXCAVATION SUPPORT GUIDELINES.
c. FOR ALL PIPELINES WITH SIZES EQUAL OR GREATER THAN 48 INCHES, RAIL ELEVATIONS OVER THE WORK MUST BE MONITORED AT INTERVALS PRESCRIBED BY SCRRA TO DETECT ANY TRACK MOVEMENT. MOVEMENTS OVER 1/4" VERTICALLY SHALL BE IMMEDIATELY REPORTED TO SCRRA. SCRRA WILL SURFACE THE TRACK SEVERAL TIMES IN ONE YEAR IF THERE IS ANY MOVEMENT AT LICENSEE AND/OR INSTALLER'S COST.
d. THE METHOD OF CONSTRUCTION SHALL MEET ALL CURRENT AREMA AND "GREEN BOOK" SPECIFICATIONS AND REQUIREMENTS.
e. THE BORING, TUNNELING OR JACKING OPERATION SHALL BE PROGRESSED ON A 24 HOUR BASIS WITHOUT STOPPAGE WHEN THE CASING IS 20 FEET FROM THE CENTERLINE OF THE NEAREST TRACK.
f. THE BORING, TUNNELING OR JACKING INSTALLATION SHALL HAVE A BORED HOLE DIAMETER ESSENTIALLY THE SAME AS THE OUTSIDE DIAMETER OF THE PIPE PLUS THE THICKNESS OF THE PROTECTIVE COATING. IF VOIDS SHOULD DEVELOP OR IF THE BORED HOLE DIAMETER IS GREATER THAN THE OUTSIDE DIAMETER OF THE PIPE (INCLUDING COATING) BY MORE THAN APPROXIMATELY 1 INCH, THE SPACE SHALL BE FILLED BY GROUTING OR OTHER REMEDIAL MEASURES TAKEN AS APPROVED BY SCRRA.
g. THE BORE AND JACK METHOD (PUSHING PIPE INTO THE EARTH WITH A BORING AUGER ROTATING WITHIN PIPE TO REMOVE SPOIL) IS ACCEPTABLE.
h. JACKING METHOD (PUSHING SECTIONS OF PIPE INTO POSITION WITH JACKS PLACED AGAINST A BACKSTOP AND EXCAVATION PERFORMED BY HAND FROM WITHIN THE JACKING SHIELD AT THE HEAD OF THE PIPE) IS ACCEPTABLE. IMMEDIATELY AFTER COMPLETION OF JACKING OPERATION, THE INSTALLATION SHALL BE PRESSURE GROUTED.
i. TUNNELING METHOD (PLACING RINGS OF LINER PLATE WITHIN THE TAIL SECTION OF A TUNNELING SHIELD OR TUNNELING MACHINE) IS ACCEPTABLE. TUNNELING SHALL NOT BE CONSIDERED WHERE LESS THAN SIX FEET OF COVER EXISTS OR WHERE EXCESSIVELY SANDY, LOOSE OR ROCKY SOILS ARE ANTICIPATED.
j. HORIZONTAL DIRECTIONAL DRILLING METHOD (BORING A SMALL DIAMETER PILOT HOLE ON A DESIRED VERTICAL AND HORIZONTAL ALIGNMENT USING A CUTTING HEAD WITH VISCOUS SLURRY AND PULLING A PIPE WITH A REAMER) IS ACCEPTABLE.
k. PIPE RAMMING METHOD (PUSHING A SOLID STEEL ROD UNDER THE ROADBED, ATTACHING A CONE SHAPED EXPANDER TO THE END OF THE ROD, ATTACHING A CASING PIPE TO THE EXPANDER AND PULLING BACK THE ROD) IS NOT ACCEPTABLE.
l. THE USE OF WATER JETTING TO FACILITATE CASING PLACEMENT AND SPOIL REMOVAL IS NOT PERMITTED.
m. JACKING, BORING, OR TUNNELING PIPES EQUAL TO OR GREATER THAN 48 INCHES NOMINAL DIAMETER WILL NOT BE ALLOWED WITH LESS THAN ONE AND ONE HALF TIMES THE PIPES NOMINAL DIAMETER OF COVER FROM BASE OF RAIL TO TOP OF PIPELINE.
n. JACKING AND BORING OF PIPELINES WITH A NOMINAL DIAMETER GREATER THAN 72 INCHES SHALL NOT BE ALLOWED UNLESS OTHERWISE APPROVED BY SCRRA.

6. SEALS AND SUPPORTS

THE ENDS OF CASING ARE TO BE SUITABLY SEALED AGAINST THE ENTRANCE OF FOREIGN MATERIAL, BUT ARE NOT TO BE TIGHTLY SEALED. ALL SUPPORTS, INSULATORS AND CENTERING DEVICES FOR THE CARRIER PIPE SHALL BE SO DESIGNED AND CONSTRUCTED THAT NO LOADS FROM THE ROADBED, TRAFFIC OR CASING PIPE ITSELF ARE TRANSMITTED TO CARRIER PIPE. THE SPACING OF SUCH SUPPORTS LONGITUDINALLY SHALL NOT BE GREATER THAN TEN FEET.

7. SHUT-OFF VALVES

ACCESSIBLE EMERGENCY SHUT-OFF VALVES SHALL BE INSTALLED WITHIN EFFECTIVE DISTANCES EACH SIDE OF THE TRACK AS MUTUALLY AGREED TO BY SCRRA AND THE PIPELINE COMPANY. WHERE PIPELINES ARE PROVIDED WITH AUTOMATIC CONTROL STATIONS AT LOCATIONS AND WITHIN DISTANCES APPROVED BY SCRRA DIRECTOR OF ENGINEERING AND CONSTRUCTION, NO ADDITIONAL VALVES SHALL BE REQUIRED. SHUT-OFF VALVES ON SCRRA RIGHT-OF-WAY SHOULD BE AVOIDED.

8. LONGITUDINAL PIPELINES

PIPELINES LAID LONGITUDINALLY ON SCRRA RIGHT-OF-WAY SHALL BE LOCATED AS FAR AS PRACTICABLE FROM ANY TRACKS OR OTHER IMPORTANT STRUCTURES AND AS CLOSE TO THE RAILROAD PROPERTY LINE AS POSSIBLE. IF LOCATED WITHIN 25 FEET OF THE CENTERLINE OF ANY TRACK OR WHERE THERE IS DANGER OF DAMAGE TO ANY BRIDGE, BUILDING OR STRUCTURE, THE CARRIER PIPE SHALL BE ENCASED OR OF SPECIAL DESIGN AS APPROVED BY SCRRA DIRECTOR OF ENGINEERING AND CONSTRUCTION. PIPELINES SHALL BE BURIED NOT LESS THAN FOUR (4) FEET FROM THE GROUND SURFACE TO THE TOP OF THE PIPE.

9. APPROVAL OF PLANS

SCRRA'S RIGHT-OF-WAY ENCROACHMENT APPLICATION, PLAN REVIEW FEES, AND PLANS FOR PROPOSED INSTALLATION SHALL BE SUBMITTED TO SCRRA FOR APPROVAL PRIOR TO CONSTRUCTION. PLANS SHALL BE DRAWN TO SCALE SHOWING THE RELATION OF THE PROPOSED PIPELINE TO SCRRA TRACKS, ANGLE OF CROSSING, LOCATION OF VALVES, SCRRA SURVEY STATION, RIGHT-OF-WAY LINES AND GENERAL LAYOUT OF TRACKS AND SCRRA FACILITIES. PLANS SHOULD ALSO SHOW A CROSS SECTION (OR SECTIONS) FROM FIELD SURVEY, SHOWING PIPE IN RELATION TO ACTUAL PROFILE OF GROUND AND TRACKS. ADDITONAL INFORMATION ON APPROVAL PROCESSES AND REQUIREMENTS ARE AVAILABLE ON SCRRA'S WEBSITE AT WWW.METROLINKTRAINS.COM.

10. EXECUTION OF WORK

THE PIPELINE REAL ESTATE AGREEMENT AND SCRRA'S TEMPORARY RIGHT-OF-ENTRY AGREEMENT (SCRRA FORM NO. 36) SHALL BE FULLY EXECUTED BEFORE ANY WORK WILL BE ALLOWED ON SCRRA RIGHT-OF-WAY. THE EXECUTION OF WORK ON SCRRA RIGHTS-OF-WAY, INCLUDING THE SUPPORTING OF TRACKS, SHALL BE SUBJECT TO THE INSPECTION AND DIRECTION OF SCRRA RIGHT-OF-WAY ENGINEER OR HIS/HER AUTHORIZED REPRESENTATIVE. THE INSTALLER SHALL PERFORM THE CONSTRUCTION OR MAINTENANCE WORK IN SUCH A MANNER AND AT SUCH TIMES AS SHALL NOT ENDANGER OR INTERFERE WITH SCRRA'S OPERATIONS, INCLUDING RELATION TO THE PROPER MANNER OF PROTECTING THE TRACKS, SIGNALS, FIBER OPTIC CABLES, PIPELINES, OTHER PROPERTY AND TENANTS OR LICENSEES AT OR IN THE VICINITY OF THE WORK DURING THE PERIOD OF CONSTRUCTION.

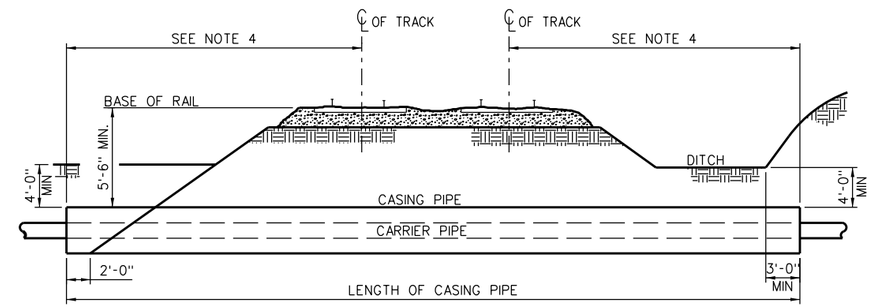

CASING REQUIREMENTS - FIGURE 1

TABLE 1

STEEL CASING (UNCOATED AND UNPROTECTED)			
NOMINAL DIAMETER (INCHES)	MIN. WALL THICKNESS (INCHES)	NOMINAL DIAMETER (INCHES)	MIN. WALL THICKNESS (INCHES)
14" & UNDER	0.250" (1/4")	44" & 46"	0.656" (21/32")
16"	0.281" (9/32")	48"	0.688" (11/16")
18"	0.312" (5/16")	50"	0.719" (23/32")
20" & 22"	0.344" (11/32")	52"	0.750" (3/4")
24"	0.375" (3/8")	54"	0.781" (25/32")
26"	0.406" (13/32")	56" & 58"	0.812" (13/16")
28"	0.438" (7/16")	60"	0.844" (27/32")
30"	0.469" (15/32")	62"	0.875" (7/8")
32"	0.500" (1/2")	64"	0.906" (29/32")
34" & 36"	0.531" (17/32")	66" & 68"	0.938" (15/16")
38"	0.562" (9/16")	70"	0.969" (31/32")
40"	0.594" (19/32")	72"	1.000" (1")
42"	0.625" (5/8")	OVER 72" MUST BE APPROVED BY SCRRA	

REV.	DATE	DESCRIPTION	DES.	ENG.
X	XX-XX-XX	REVISION	XX	XX

DRAWN BY: A. CARLOS DATE: 03/31/2011

ASSISTANT DIRECTOR: STANDARDS & DESIGN

DIRECTOR OF ENGINEERING AND CONSTRUCTION

SCRRA ENGINEERING STANDARDS ARE INTENDED FOR SCRRA APPROVED USES ONLY. FOR NON-SCRRA APPROVED USES, SCRRA SHALL NOT BE RESPONSIBLE FOR THE ACCURACY OR COMPLETENESS OF THE DATA OR INFORMATION CONTAINED HEREIN. THE SELECTION AND USE OF THESE STANDARDS IS THE SOLE RESPONSIBILITY OF THE USER AND SHOULD NOT BE USED WITHOUT CONSULTING A REGISTERED PROFESSIONAL ENGINEER. ALL WARRANTIES AND REPRESENTATIONS OF ANY KIND ARE DISCLAIMED. ANYONE MAKING USE OF THIS INFORMATION AGREES THAT IT ASSUMES ALL LIABILITY ARISING FROM SUCH USE. NO PART OF THESE STANDARDS SHOULD BE REPRODUCED OR DISTRIBUTED IN ANY FORM OR BY ANY MEANS WITHOUT THE PRIOR WRITTEN PERMISSION OF SCRRA. ALL RIGHTS RESERVED.

METROLINK®
SOUTHERN CALIFORNIA REGIONAL RAIL AUTHORITY
ONE GATEWAY PLAZA, 12TH FLOOR, L. A., CA. 90012

ENGINEERING STANDARDS

PIPE LINES
FOR NON – FLAMMABLE SUBSTANCES
ACROSS OR ALONG RIGHT OR WAY

STANDARD 5001
SCALE: NTS
REVISION –
SHEET 1 OF 1
CADD FILE: ES5001

NOTES:

1. SCOPE

PIPELINES INCLUDED UNDER THESE SPECIFICATIONS ARE THOSE INSTALLED TO CARRY LIQUID FLAMMABLE PRODUCTS, HAZARDOUS PRODUCTS OR OTHER, HIGHLY VOLATILE SUBSTANCES UNDER PRESSURE. THESE STANDARDS SHALL BE USED IN CONJUNCTION WITH THE SCRRA DESIGN CRITERIA MANUAL, CHAPTER 9, UTILITIES, AND THE AREMA MANUAL OF RAILWAY ENGINEERING CHAPTER 1, PART 5.

2. GENERAL REQUIREMENTS

a. PIPELINES UNDER SCRRA TRACKS AND ACROSS SCRRA RIGHTS-OF-WAY SHALL BE ENCASED IN A LARGER PIPE OR CONDUIT CALLED THE CASING PIPE AS INDICATED IN FIGURE 1.
b. CASING PIPE AND NON-CASED PIPELINES SHALL BE DESIGNED TO CARRY COOPER'S E-80 RAILROAD LIVE LOADING WITH DIESEL IMPACT FACTOR AS PER AREMA.
c. PIPELINES SHALL BE LOCATED, WHERE PRACTICABLE, TO CROSS TRACKS AT APPROXIMATELY RIGHT ANGLES BUT PREFERABLY AT NO LESS THAN 45 DEGREES AND SHALL NOT BE PLACED WITHIN CULVERTS NOR UNDER RAILWAY BRIDGES.
d. TEST BORING OR OTHER SOIL INVESTIGATIONS, APPROVED BY SCRRA SHALL BE MADE, TO DETERMINE THE NATURE OF THE UNDERLYING MATERIAL FOR ALL PIPELINES WITH SIZES EQUAL OR GREATER THAN 48 INCHES IN DIAMETER AND A DEPTH FROM TOP OF PIPE TO BASE OF RAIL BETWEEN FIVE FEET SIX INCHES AND TEN FEET. THE TEST BORING SHOULD BE MADE ON THE CENTERLINE OF THE PIPE NEAR THE END OF THE BALLAST SECTION (IF POSSIBLE) ON EACH SIDE OF THE TRACKS AND AS DEEP AS THE BOTTOM OF THE BORE.
e. EXCEPTION TO ANY DESIGN, CONSTRUCTION, LOCATION OR SPECIFICATION CONTAINED IN THIS STANDARD MUST BE AUTHORIZED BY SCRRA. REQUESTS FOR EXCEPTIONS WILL BE CONSIDERED ONLY WHERE IT IS SHOWN THAT EXTREME HARDSHIP AND/OR UNUSUAL CONDITIONS PROVIDE JUSTIFICATION AND WHERE ALTERNATE MEASURES CAN BE USED IN KEEPING WITH THE INTENT OF THIS STANDARD. ALL REQUESTS FOR EXCEPTIONS SHALL BE FULLY DOCUMENTED WITH DESIGN DATA, CALCULATIONS, COST COMPARISONS AND OTHER PERTINENT INFORMATION.
f. ALL PIPELINES SHALL BE PROMINENTLY MARKED BY SIGNS OR MARKERS (MAINTAINED BY OWNER) LOCATED OVER THE PIPELINE.

3. CARRIER PIPE

a. CARRIER LINE PIPE SHALL BE OF STEEL AND CONFORM TO THE REQUIREMENTS OF THE CURRENT ANSI B 31.4 LIQUID TRANSPORTATION SYSTEMS FOR HYDROCARBONS, LIQUID PETROLEUM GAS, ANHYDROUS AMMONIA, AND ALCOHOLS, AND OTHER APPLICABLE ANSI CODES, EXCEPT THAT THE MAXIMUM ALLOWABLE STRESSES FOR DESIGN FOR STEEL PIPE SHALL NOT EXCEED THE FOLLOWING PERCENTAGES OF THE SPECIFIED MINIMUM YIELD STRENGTH (MULTIPLIED BY LONGITUDINAL JOINT FACTOR) OF THE PIPE AS DEFINED IN THE ABOVE CODES.

A. THE FOLLOWING PERCENTAGES APPLY TO HOOP STRESS IN STEEL PIPE WITHIN A CASING UNDER SCRRA TRACKS AND ACROSS SCRRA RIGHTS-OF-WAY.

SEVENTY-TWO PERCENT ON OIL PIPELINES
FIFTY PERCENT FOR PIPELINES CARRYING CONDENSATE, NATURAL GASOLINE, NATURAL GAS LIQUIDS, LIQUIFIED PETROLEUM GAS, OTHER LIQUID PETROLEUM PRODUCTS, HAZARDOUS PRODUCTS, OR OTHER HIGHLY VOLATILE SUBSTANCES.

B. THE FOLLOWING PERCENTAGES APPLY TO HOOP STRESS IN STEEL PIPE LAID LONGITUDINALLY ON SCRAA RIGHTS-OF-WAY.

SIXTY PERCENT ON OIL PIPELINES
FORTY PERCENT FOR PIPELINES CARRYING CONDENSATE, NATURAL GASOLINE, NATURAL GAS LIQUIDS, LIQUIFIED PETROLEUM GAS, OTHER LIQUID PETROLEUM PRODUCTS, HAZARDOUS PRODUCTS, OR OTHER HIGHLY VOLATILE SUBSTANCES.

C. SEE AREMA CHAPTER 1, SECTION 5.2 FOR GAS PIPELINES.

b. THE PIPE SHALL BE LAID WITH SUFFICIENT SLACK SO THAT IT IS NOT IN TENSION.

4. CASING PIPE

a. CASING PIPE AND JOINTS SHALL BE OF STEEL AND OF LEAK PROOF CONSTRUCTION, CAPABLE OF WITHSTANDING AREMA (COOPER E80 LIVE LOAD) AND HAVE A SPECIFIED MINIMUM YIELD STRENGTH OF AT LEAST 35,000 PSI. THE INSIDE DIAMETER OF THE CASING PIPE SHALL BE AT LEAST TWO INCHES GREATER THAN THE LARGEST OUTSIDE DIAMETER OF THE CARRIER PIPE, JOINTS OR COUPLINGS FOR CARRIER PIPE LESS THAN SIX INCHES IN DIAMETER; AND AT LEAST FOUR INCHES GREATER FOR CARRIER PIPE SIX INCHES AND OVER IN DIAMETER. IN ALL CASES THE SPACE PROVIDED SHALL BE ADEQUATE TO ALLOW FOR REMOVAL WITHOUT DISTURBING THE CASING PIPE OR ROADBED.
b. TABLE 1 INDICATES A MINIMUM THICKNESS BASED UPON SUPERIMPOSED LOADS ONLY AND IT IS THE RESPONSIBILITY OF THE LICENSEE AND/OR THE INSTALLER TO PROVIDE A CASING WHICH IS ADEQUATE FOR THE LOADS THAT RESULT DURING INSTALLATION. THE WALL THICKNESS MAY BE DECREASED BY 0.063 INCH, IF THE CASING IS INSTALLED WITH A PROTECTIVE COATING AND IS CATHODICALLY PROTECTED, EXCEPT FOR DIAMETERS UNDER 14 INCHES.
c. CASING PIPE UNDER SCRRA TRACKS AND ACROSS SCRRA RIGHT-OF-WAY SHALL EXTEND TO THE GREATER OF THE FOLLOWING DISTANCES, MEASURED AT RIGHT ANGLE TO CENTERLINE OF TRACK. IF ADDITIONAL TRACKS ARE CONSTRUCTED IN THE FUTURE, THE CASING SHALL BE EXTENDED AT THE LICENSEE'S EXPENSE.
A. ACROSS THE ENTIRE WIDTH OF THE SCRRA RIGHT-OF-WAY.
B. THREE FEET BEYOND THE DITCH LINE.
C. TWO FEET BEYOND THE TOE OF SLOPE.
D. A MINIMUM DISTANCE OF 25 FEET FROM EACH SIDE OF THE CENTERLINE OF OUTSIDE TRACK WHEN CASING IS SEALED AT BOTH ENDS, AND
E. A MINIMUM DISTANCE OF 45 FEET FROM EACH SIDE OF THE CENTERLINE OF OUTSIDE TRACK WHEN CASING IS OPEN AT BOTH ENDS.
d. THE DEPTH OF THE CASING SHALL NOT BE LESS THAN AS SHOWN IN FIGURE 1. HORIZONTAL DIRECTIONAL DRILLING OF A PIPELINE CARRYING FLAMMABLE, HAZARDOUS, OR HIGHLY VOLATILE SUBSTANCES SHALL HAVE A MINIMUM COVER FROM BASE OF RAIL TO TOP OF PIPELINE OF 25 FEET. INSTALLATION SHALL BE BY THE DRY BORE METHOD ONLY.

5. CONSTRUCTION

a. CASING PIPE SHALL BE CONSTRUCTED AS TO PREVENT LEAKAGE OF ANY SUBSTANCE FROM THE CASING THROUGHOUT IT'S LENGTH, EXCEPT AT THE ENDS. CASING SHALL BE INSTALLED AS TO PREVENT THE FORMATION OF A WATERWAY UNDER THE ROADBED, AND WITH AN EVEN BEARING THROUGHOUT IT'S LENGTH, AND SHALL SLOPE TO ONE END (EXCEPT FOR LONGITUDINAL OCCUPANCY).
b. THE FACES OF ALL PITS (JACKING AND RECEIVING) SHALL BE LOCATED A MINIMUM OF 25 FEET FROM THE CENTERLINE OF THE NEAREST TRACK, MEASURED AT RIGHT ANGLES TO TRACK. SHORING, IF REQUIRED, SHALL MEET SCRRA'S EXCAVATION SUPPORT GUIDELINES.
c. FOR ALL PIPELINES WITH SIZES EQUAL OR GREATER THAN 48 INCHES, RAIL ELEVATIONS OVER THE WORK MUST BE MONITORED AT INTERVALS PRESCRIBED BY SCRRA TO DETECT ANY TRACK MOVEMENT. MOVEMENTS OVER 1/4" VERTICALLY SHALL BE IMMEDIATELY REPORTED TO SCRRA. SCRRA WILL SURFACE THE TRACK SEVERAL TIMES IN ONE YEAR IF THERE IS ANY MOVEMENT AT LICENSEE AND/OR INSTALLERS'S COST.
d. THE METHOD OF CONSTRUCTION SHALL MEET ALL CURRENT AREMA AND "GREEN BOOK" SPECIFICATIONS AND REQUIREMENTS.
e. THE BORING, TUNNELING OR JACKING OPERATION SHALL BE PROGRESSED ON A 24-HOUR BASIS WITHOUT STOPPAGE WHEN THE CASING IS 20 FEET FROM THE CENTERLINE OF THE NEAREST TRACK.
f. THE BORING, TUNNELING OR JACKING INSTALLATIONS SHALL HAVE A BORED HOLE DIAMETER ESSENTIALLY THE SAME AS THE OUTSIDE DIAMETER OR THE PIPE PLUS THE THICKNESS OF THE PROTECTIVE COATING. IF VOIDS SHOULD DEVELOP OR IF THE BORED HOLE DIAMETER IS GREATER THAN THE OUTSIDE DIAMETER OF THE PIPE (INCLUDING COATING) BY MORE THAN APPROXIMATELY 1 INCH, THE SPACE SHALL BE FILLED BY GROUTING OR OTHER REMEDIAL MEASURES TAKEN AS APPROVED BY SCRRA.
g. THE BORE AND JACK METHOD (PUSHING PIPE INTO THE EARTH WITH A BORING AUGER ROTATING WITHIN PIPE TO REMOVE SPOIL) IS ACCEPTABLE.
h. JACKING METHOD (PUSHING SECTIONS OF PIPE INTO POSITION WITH JACKS PLACED AGAINST A BACKSTOP AND EXCAVATION PERFORMED BY HAND FROM WITHIN THE JACKING SHIELD AT THE HEAD OF THE PIPE) IS ACCEPTABLE. TUNNELING SHALL NOT BE CONSIDERED WHERE LESS THAN SIX FEET OF COVER EXISTS OR WHERE EXCESSIVELY SANDY, LOOSE OR ROCKY SOILS ARE ANTICIPATED.
i. TUNNELING METHOD (PLACING RINGS OF LINER PLATE WITHIN THE TAIL SECTION OF A TUNNELING SHIELD OR TUNNELING MACHINE) IS ACCEPTABLE. TUNNELING SHALL NOT BE CONSIDERED WHERE LESS THAN SIX FEET OF COVER EXISTS OR WHERE EXCESSIVELY SANDY, LOOSE OR ROCKY SOILS ARE ANTICIPATED.
j. HORIZONTAL DIRECTIONAL DRILLING METHOD (BORING A SMALL DIAMETER PILOT HOLE ON A DESIRED VERTICAL AND HORIZONTAL ALIGNMENT USING A CUTTING HEAD WITH VISCOUS SLURRY AND PULLING A PIPE WITH A REAMER) IS ACCEPTABLE.
k. PIPE RAMMING METHOD (PUSHING A SOLID STEEL ROD UNDER THE ROADBED, ATTACHING A CONE SHAPED EXPANDER TO THE END OF THE ROD, ATTACHING A CASING PIPE TO THE EXPANDER AND PULLING BACK THE ROD) IS NOT ACCEPTABLE.
l. THE USE OF WATER JETTING TO FACILITATE CASING PLACEMENT AND SPOIL REMOVAL IS NOT PEMITTED.
m. JACKING, BORING, OR TUNNELING PIPES EQUAL TO OR GREATER THAN 48 INCHES NOMINAL DIAMETER WILL NOT BE ALLOWED WITH LESS THAN ONE AND ONE HALF TIMES THE PIPES NOMINAL DIAMETER OF COVER FROM BASE OF RAIL TO TOP OF PIPELINE.
n. JACKING AND BORING OF PIPELINES WITH A NOMINAL DIAMETER GREATER THAN 72 INCHES SHALL NOT BE ALLOWED UNLESS OTHERWISE APPROVED BY SCRRA.

6. CATHODIC PROTECTION

WHERE CASING AND/OR CARRIER PIPE IS CATHODICALLY PROTECTED, SCRRA SHALL BE NOTIFIED AND A SUITABLE TEST MADE TO VERIFY THAT OTHER SCRRA STRUCTURES AND FACILITIES ARE ADEQUATELY PROTECTED FROM THE CATHODIC CURRENT IN ACCORDANCE WITH THE RECOMMENDATION OF CURRENT REPORTS OF CORRELATING COMMITTEE OF CATHODIC PROTECTION, PUBLISHED BY THE NATIONAL ASSOCIATION OF CORROSION ENGINEERS.

7. INSPECTION AND TESTING

ANSI CODES CURRENT AT TIME OF CONSTRUCTING THE PIPELINE, SHALL GOVERN THE INSPECTION AND TESTING OF THE FACILITY WITHIN SCRRA RIGHTS-OF-WAY EXCEPT AS FOLLOWS:

ONE-HUNDRED PERCENT OF ALL FIELD WELDS SHALL BE INSPECTED BY RADIOGRAPHIC EXAMINATION, AND SUCH FIELD WELDS SHALL BE INSPECTED FOR 100% OF THE CIRCUMFERENCE.
THE PROOF TESTING OF THE STRENGTH OF THE CARRIER PIPE SHALL BE IN ACCORDANCE WITH ANSI REQUIREMENTS.

8. SEALS AND SUPPORTS

THE ENDS OF CASING ARE TO BY SUITABLY SEALED AGAINST THE ENTRANCE OF FOREIGN MATERIAL, BUT ARE NOT TO BE TIGHTLY SEALED. ALL SUPPORTS, INSULATORS OR CENTERING DEVICES FOR THE CARRIER PIPE SHALL BE SO DESIGNED AND CONSTRUCTED THAT NO LOADS FROM THE ROADBED, TRAFFIC OR CASING PIPE ITSELF ARE TRANSMITTED TO THE CARRIER PIPE. THE SPACING OF SUCH SUPPORTS LONGITUDINALLY SHALL NOT BE GREATER THAN 10 FEET.

9. VENTS

CASING PIPE WHEN SEALED, SHALL BE PROPERLY VENTED. VENT PIPES SHALL BE SUFFICIENT DIAMETER, BUT IN NO CASE LESS THAN 2 INCHES IN DIAMETER, SHALL BE ATTACHED NEAR END OF CASING AND PROJECT THROUGH GROUND SURFACE AT RIGHT-OF-WAY LINES OR NOT LESS THAN 45 FEET (MEASURED AT RIGHT ANGLES) FROM CENTERLINE OF NEAREST TRACK. VENT PIPE, OR PIPES, SHALL EXTEND NOT LESS THAN 4 FEET ABOVE GROUND SURFACE. TOP OF VENT PIPE SHALL BE FITTED WITH DOWN-TURNED ELBOW PROPERLY SCREENED, OR A RELIEF VALVE. VENTS IN LOCATIONS SUBJECT TO HIGH WATER SHALL BE EXTENDED ABOVE THE MINIMUM ELEVATION OF HIGH WATER AND SHALL BE SUPPORTED AND PROTECTED IN A MANNER THAT MEETS THE APPROVAL OF SCRRA RIGHT-OF-WAY ENGINEER OR HIS/HER DESIGNATED REPRESENTATIVE. VENT PIPES SHALL NOT BE CLOSER THAN 4 FEET (VERTICALLY) FROM ELECTRIC WIRES.

10. SHUT-OFF VALVES

ACCESSIBLE EMERGENCY SHUT-OFF VALVES SHALL BE INSTALLED WITHIN EFFECTIVE DISTANCES EACH SIDE OF THE TRACK AS MUTUALLY AGREED TO BY SCRRA AND THE PIPELINE COMPANY. WHERE PIPELINES ARE PROVIDED WITH AUTOMATIC CONTROL STATIONS AT LOCATIONS AND WITHIN DISTANCES APPROVED BY SCRRA DIRECTOR OF ENGINEERING AND CONSTRUCTION, NO ADDITIONAL VALVES SHALL BE REQUIRED. SHUT-OFF VALVES ON SCRRA RIGHT-OF-WAY SHOULD BE AVOIDED.

11. LONGITUDINAL PIPELINES

PIPELINES LAID LONGITUDINALLY ON SCRRA RIGHT-OF-WAY SHALL BE LOCATED AS FAR AS PRACTICABLE FROM ANY TRACKS OR OTHER IMPORTANT STRUCTURES AND AS CLOSE TO THE SCRRA PROPERTY LINE AS POSSIBLE. THEY MUST NOT BE WITHIN 25 FEET OF ANY TRACK AND MUST HAVE MINIMUM OF SIX (6) FEET GROUND COVER OVER THE PIPELINE UP TO 50 FEET FROM THE CENTERLINE OF TRACK. WHERE PIPELINE IS LAID MORE THAN 50 FEET FROM CENTERLINE OF TRACK, MINIMUM COVER SHALL BE AT LEAST FIVE (5) FEET. PIPELINE MUST BE MARKED BY A SIGN APPROVED BY SCRRA EVERY 500 FEET AND AT EVERY ROAD CROSSING, STREAMBED, OTHER UTILITY CROSSING AND AT LOCATIONS OF MAJOR CHANGE IN DIRECTION OF THE PIPE.

12. APPROVAL OF PLANS

SCRRA'S RIGHT-OF-WAY ENCROACHMENT APPLICATION, PLAN REVIEW FEES, AND PLANS FOR PROPOSED INSTALLATION SHALL BE SUBMITTED TO SCRRA FOR APPROVAL PRIOR TO CONSTRUCTION. PLANS SHALL BE DRAWN TO SCALE SHOWING THE RELATION OF THE PROPOSED PIPELINE TO SCRRA TRACKS, ANGLE OF CROSSING, LOCATION OF VALVES, SCRRA SURVEY STATION, RIGHT-OF-WAY LINES AND GENERAL LAYOUT OF TRACKS AND SCRRA FACILITIES. PLANS SHOULD ALSO SHOW A CROSS SECTION (OR SECTIONS) FROM FIELD SURVEY, SHOWING PIPE IN RELATION TO ACTUAL PROFILE OF GROUND AND TRACKS. ADDITONAL INFORMATION ON APPROVAL PROCESSES AND REQUIREMENTS ARE AVAILABLE ON SCRRA'S WEBSITE AT WWW.METROLINKTRAINS.COM.

13. EXECUTION OF WORK

THE PIPELINE REAL ESTATE AGREEMENT AND SCRRA'S TEMPORARY RIGHT-OF-ENTRY AGREEMENT (SCRRA FORM NO. 36) SHALL BE FULLY EXECUTED BEFORE ANY WORK WILL BE ALLOWED ON SCRRA RIGHT-OF-WAY. THE EXECUTION OF WORK ON SCRRA RIGHTS-OF-WAY, INCLUDING THE SUPPORTING OF TRACKS, SHALL BE SUBJECT TO THE INSPECTION AND DIRECTION OF SCRRA RIGHT-OF-WAY ENGINEER OR HIS/HER AUTHORIZED REPRESENTATIVE. THE INSTALLER SHALL PERFORM THE CONSTRUCTION OR MAINTENANCE WORK IN SUCH A MANNER AND AT SUCH TIMES AS SHALL NOT ENDANGER OR INTERFERE WITH SCRRA'S OPERATIONS, INCLUDING RELATION TO THE PROPER MANNER OF PROTECTING THE TRACKS, SIGNALS, FIBER OPTIC CABLES, PIPELINES, OTHER PROPERTY AND TENANTS OR LICENSEES AT OR IN THE VICINITY OF THE WORK DURING THE PERIOD OF CONSTRUCTION.

TABLE 1

STEEL CASING
(UNCOATED AND UNPROTECTED)

NOMINAL DIAMETER (INCHES)	MIN. WALL THICKNESS (INCHES)	NOMINAL DIAMETER (INCHES)	MIN. WALL THICKNESS (INCHES)
14" & UNDER	0.250" (1/4")	44" & 46"	0.656" (21/32")
16"	0.281" (9/32")	48"	0.688" (11/16")
18"	0.312" (5/16")	50"	0.719" (23/32")
20" & 22"	0.344" (11/32")	52"	0.750" (3/4")
24"	0.375" (3/8")	54"	0.781" (25/32")
26"	0.406" (13/32")	56" & 58"	0.812" (13/16")
28"	0.438" (7/16")	60"	0.844" (27/32")
30"	0.469" (15/32")	62"	0.875" (7/8")
32"	0.500" (1/2")	64"	0.906" (29/32")
34" & 36"	0.531" (17/32")	66" & 68"	0.938" (15/16")
38"	0.562" (9/16")	70"	0.969" (31/32")
40"	0.594" (19/32")	72"	1.000" (1")
42"	0.625" (5/8")	OVER 72" MUST BE APPROVED BY SCRRA	

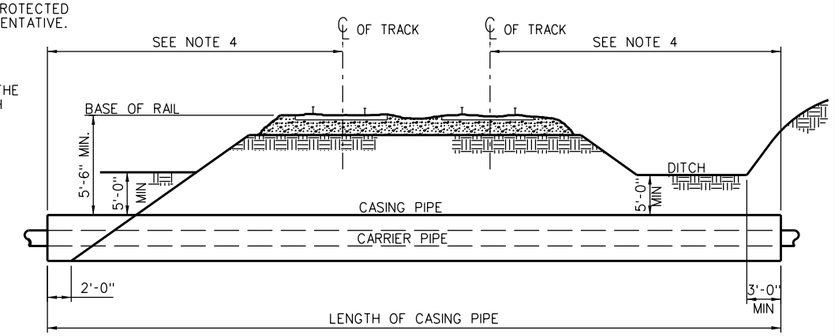

CASING REQUIREMENTS - FIGURE 1

REV.	DATE	DESCRIPTION	DES.	ENG.
X	XX-XX-XX	REVISION	XX	XX

DRAWN BY: A. CARLOS DATE: 03/31/2011

ASSISTANT DIRECTOR: STANDARDS & DESIGN

DIRECTOR OF ENGINEERING AND CONSTRUCTION

SCRRA ENGINEERING STANDARDS ARE INTENDED FOR SCRRA APPROVED USES ONLY. FOR NON-SCRRA APPROVED USES:
SCRRA SHALL NOT BE RESPONSIBLE FOR THE ACCURACY OR COMPLETENESS OF THE DATA OR INFORMATION CONTAINED HEREIN. THE SELECTION AND USE OF THESE STANDARDS IS THE SOLE RESPONSIBILITY OF THE USER AND SHOULD NOT BE USED WITHOUT CONSULTING A REGISTERED PROFESSIONAL ENGINEER. ALL WARRANTIES AND REPRESENTATIONS OF ANY KIND ARE DISCLAIMED. ANYONE MAKING USE OF THIS INFORMATION AGREES THAT IT ASSUMES ALL LIABILITY ARISING FROM SUCH USE. NO PART OF THESE STANDARDS SHOULD BE REPRODUCED OR DISTRIBUTED IN ANY FORM OR BY ANY MEANS WITHOUT THE PRIOR WRITTEN PERMISSION OF SCRRA. ALL RIGHTS RESERVED.

METROLINK
SOUTHERN CALIFORNIA REGIONAL RAIL AUTHORITY
ONE GATEWAY PLAZA, 12TH FLOOR, L. A., CA. 90012

ENGINEERING STANDARDS

PIPE LINES FOR FLAMMABLE AND HAZARDOUS SUBSTANCES ACROSS OR ALONG RIGHT OF WAY

STANDARD 5002
SCALE: NTS
REVISION –
SHEET 1 OF 1
CADD FILE: ES5002

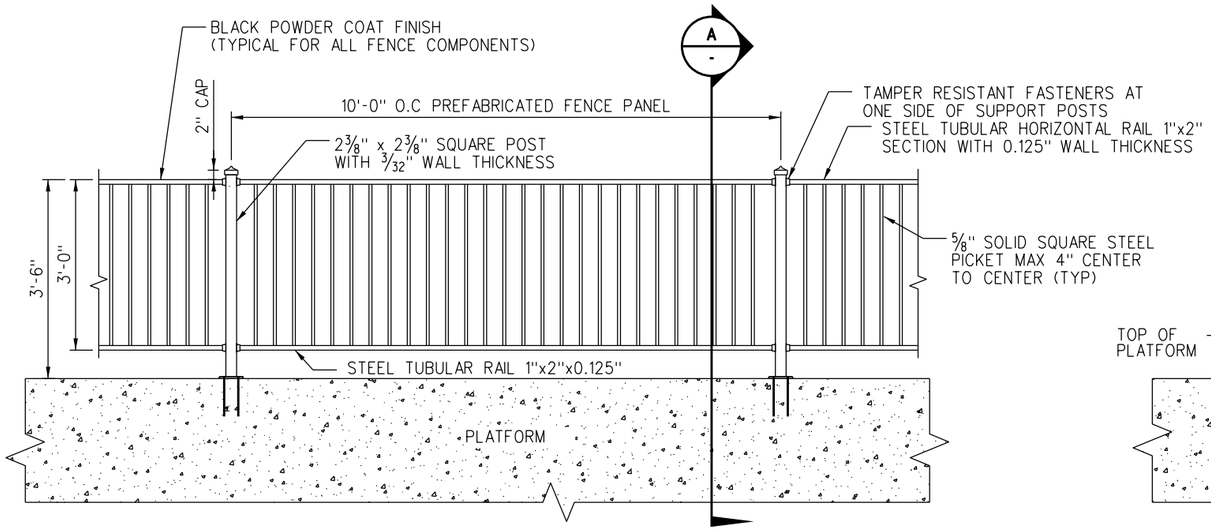

EDGE FENCING ELEVATION

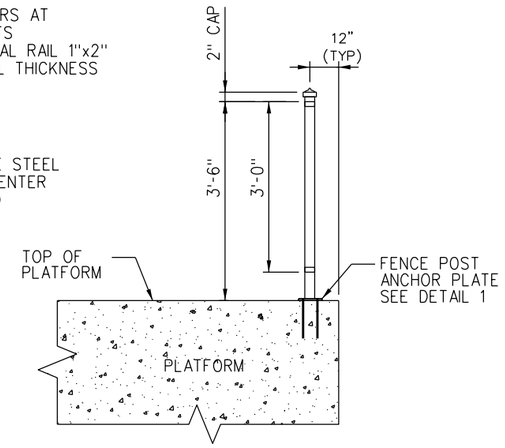

SECTION A / NTS

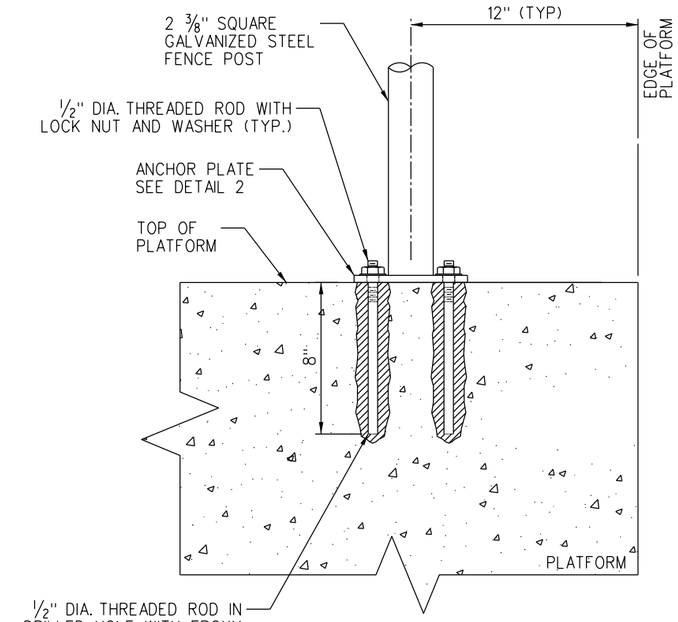

DETAIL 1
FENCE POST ANCHORAGE

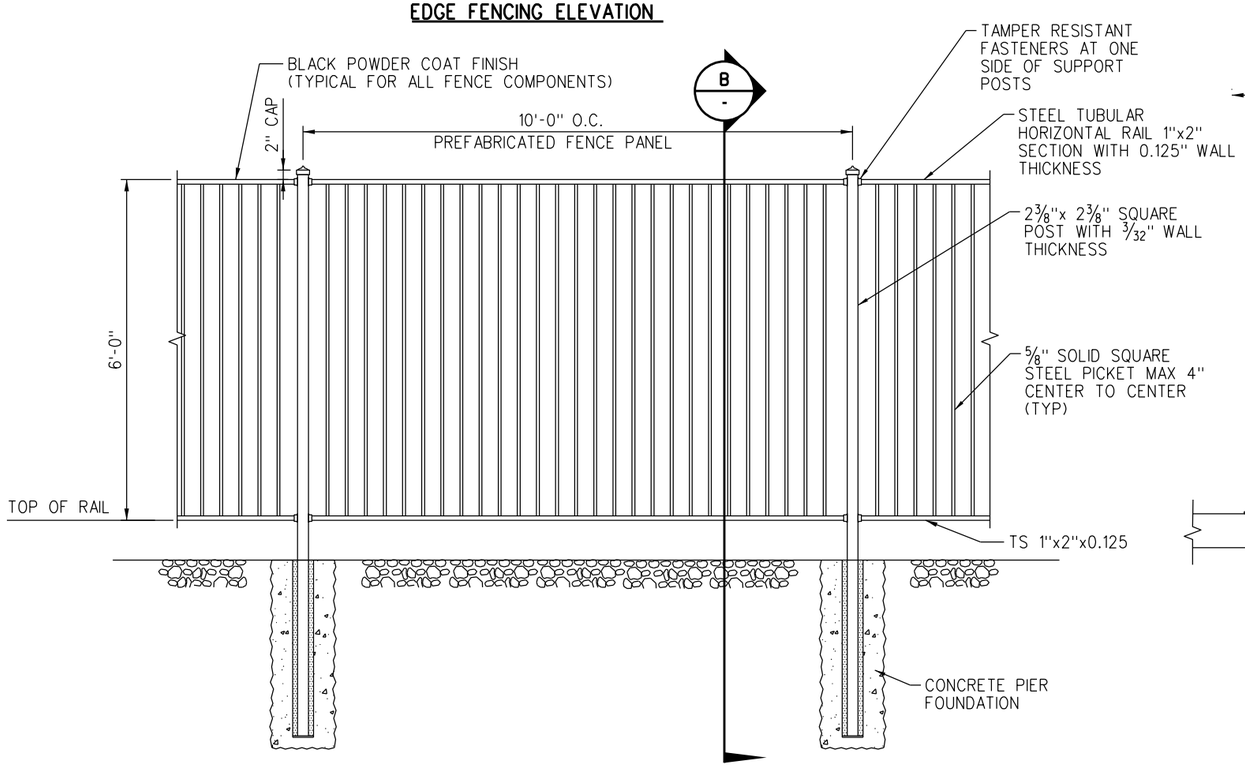

INTER-TRACK FENCE ELEVATION

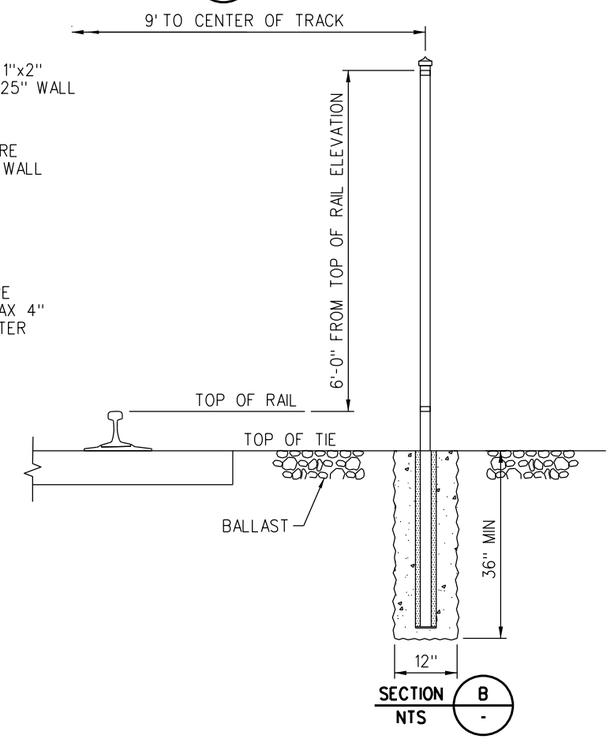

SECTION B / NTS

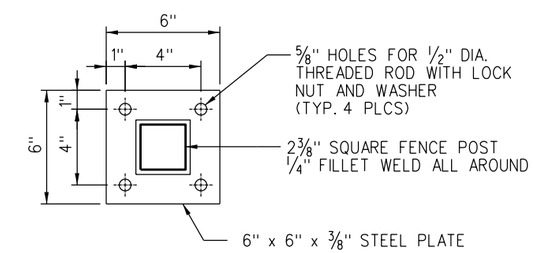

DETAIL 2
ANCHOR PLATE

NOTE:

ALL METAL SHALL BE HOT DIP GALVANIZED STEEL

REV.	DATE	DESCRIPTION	DES.	ENG.
X	XX-XX-XX	REVISION	XX	XX

DRAWN BY: A. CARLOS DATE: 03/31/2011

ASSISTANT DIRECTOR: STANDARDS & DESIGN

DIRECTOR OF ENGINEERING AND CONSTRUCTION

SCRRA ENGINEERING STANDARDS ARE INTENDED FOR SCRRA APPROVED USES ONLY. FOR NON-SCRRA APPROVED USES:
SCRRA SHALL NOT BE RESPONSIBLE FOR THE ACCURACY OR COMPLETENESS OF THE DATA OR INFORMATION CONTAINED HEREIN. THE SELECTION AND USE OF THESE STANDARDS IS THE SOLE RESPONSIBILITY OF THE USER AND SHOULD NOT BE USED WITHOUT CONSULTING A REGISTERED PROFESSIONAL ENGINEER. ALL WARRANTIES AND REPRESENTATIONS OF ANY KIND ARE DISCLAIMED. ANYONE MAKING USE OF THIS INFORMATION AGREES THAT IT ASSUMES ALL LIABILITY ARISING FROM SUCH USE. NO PART OF THESE STANDARDS SHOULD BE REPRODUCED OR DISTRIBUTED IN ANY FORM OR BY ANY MEANS WITHOUT THE PRIOR WRITTEN PERMISSION OF SCRRA. ALL RIGHTS RESERVED.

METROLINK®
SOUTHERN CALIFORNIA REGIONAL RAIL AUTHORITY
ONE GATEWAY PLAZA, 12TH FLOOR, L. A., CA. 90012

ENGINEERING STANDARDS

STATION FENCING
PLATFORM EDGE FENCE
AND INTER-TRACK FENCE

STANDARD 5102
SCALE: NTS
REVISION –
SHEET 1 OF 1
CADD FILE: ES5102

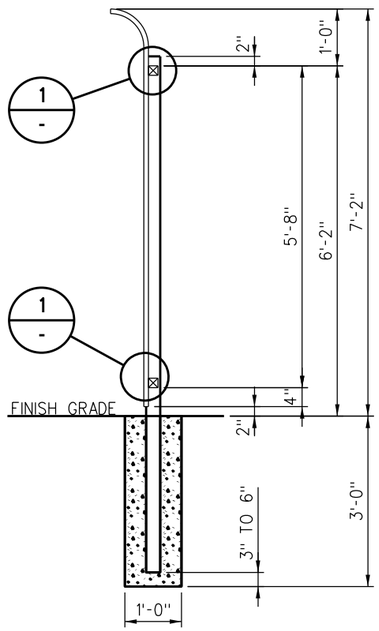

SIDE VIEW
SCALE: 3/4" = 1'-0"

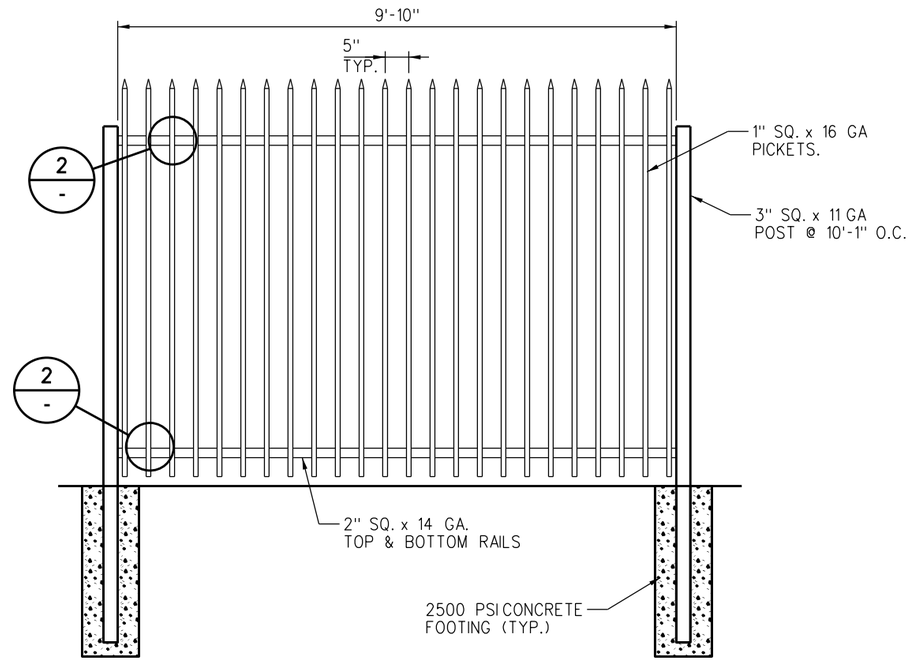

FRONT VIEW
SCALE: 3/4" = 1'-0"

NOTES:

1. ALL STEEL TUBING TO BE H.D. GALVANIZED PER ASTM A123.
2. ALL CONCRETE FOOTINGS SHALL HAVE A MINIMUM 28 DAY COMPRESSIVE STRENGTH OF 2,500 PSI.
3. FINISH GRADE REQUIRED PRIOR TO FENCE INSTALLATION. LOCATION OF START / END POSTS, CORNER POSTS AND GATE POSTS REQUIRED PRIOR TO FENCE INSTALLATION.

MATERIAL SPECIFICATIONS:

A. PICKETS: 1 INCH. SQUARE STEEL TUBULAR MEMBERS MANUFACTERED PER ASTM A-500 HAVING A YIELD STRENGTH OF 50,000 PSI. WALL THICKNESS SHALL BE 16 GAUGE. SPACE PICKETS AT 5 INCHES CENTER TO CENTER. ATTACH EACH PICKET TO RAILS BY WELDING WITH GAS METAL ARC METHOD.
B. RAILS: 2 INCH SQUARE STEEL TUBULAR MEMBERS MANUFACTURED PER ASTM A-500, HAVING A YIELD STRENGTH OF 50,000 PSI. WALL THICKNESS SHALL BE 14 GAUGE. ATTACH EACH RAIL TO POSTS BY WELDING WITH THE GAS METAL ARC METHOD.
C. POSTS: 3 INCH SQUARE STEEL TUBULAR MEMBERS MANUFACTURED PER ASTM A-500 HAVING A YIELD STRENGTH OF 50,000 PSI. WALL THICKNESS SHALL BE 11 GAUGE. SPACE POSTS AT 10'-1" CENTER TO CENTER.
D. FINISH: ALL COMPONENTS TO BE GIVEN A 4-STAGE PRE-TREATMENT PROCESS THAT CLEANS AND PREPARES THE GALVANIZED SURFACE FOR THE FINISH COAT. ALL METAL IS THEN TO BE GIVEN A POLYESTER RESIN BASED POWDER COATING APPLIED BY THE ELECTROSTATIC SPRAY PROCESS, TO A THICKNESS OF 2.5 MILS. THE FINISH IS THEN TO BE BAKED IN A 450 DEG. OVEN FOR 20 MINUTES. COLOR FOR FINISH TO BE BLACK.

FENCE SELECTION CRITERIA

1. CHAIN LINK FENCING SHALL BE USED ONLY FOR MAINTENENACE OF EXISTING CHAIN LINK FENCES.
2. WELDED WIRE MESH FENCING SHALL BE USED FOR ALL RIGHT-OF-WAY FENCES.
3. TUBULAR STEEL FENCING WILL BE USED FOR PROPERTY LEASES AND STORAGE FACILITIES WHERE AESTHETICS ARE A MAJOR CONCERN AND AS DIRECTED BY SCRRA.
4. INTER-TRACK FENCING SHALL BE USED BETWEEN THE TRACKS AT ALL STATIONS.
5. CONCRETE BLOCK WALLS SHALL BE USED FOR COMMERCIAL, AND RESIDENTIAL DEVELOPMENTS. REMOVAL OF GRAFFITI ON BOTH SIDES OF THE WALL SHALL BE THE OWNER/ DEVELOPER'S RESPONSIBILITY.
6. TEMPORARY RAILING (TYPE K) WITH WELDED WIRE MESH FENCING SHALL BE USED FOR ALL PARKING LEASES. K-RAIL AND FENCE ANCHORS SHALL BE AS PER CALTRANS STANDARD PLANS T3 AND T4).
7. LANDSCAPE VINES SHALL NOT BE ALLOWED TO GROW ON THE FENCE UNLESS WRITTEN APPROVAL IS GRANTED BY SCRRA. IF LANDSCAPE VINES ARE ALLOWED TO GROW, THEY WILL BE TRIMMED REGULARLY SO THAT THEY WILL NOT EXTEND OVER THE WALL. SAFETY MEASURES REQUIRED BY SCRRA SHALL BE FOLLOWED IN THE TRIMMING OF THE VINES.
8. SIX-INCH OPENINGS AT REGULAR INTERVALS IN FENCES AND WALLS SHALL BE PROVIDED TO DRAIN WATER AWAY FROM TRACKS AND RAILROAD RIGHT-OF-WAY.

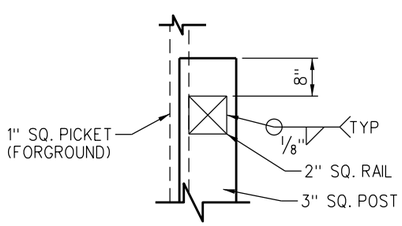

DETAIL 1 / -
SCALE: 3" = 1'-0"

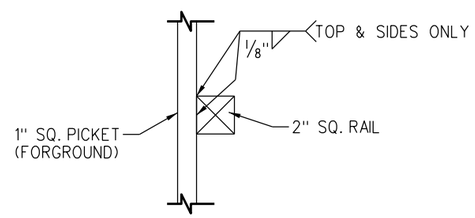

DETAIL 2 / -
SCALE: 3" = 1'-0"

REV.	DATE	DESCRIPTION	DES.	ENG.
X	XX-XX-XX	REVISION	XX	XX

DRAWN BY: A. CARLOS DATE: 03/31/2011

ASSISTANT DIRECTOR: STANDARDS & DESIGN

DIRECTOR OF ENGINEERING AND CONSTRUCTION

SCRRA ENGINEERING STANDARDS ARE INTENDED FOR SCRRA APPROVED USES ONLY. FOR NON-SCRRA APPROVED USES:
SCRRA SHALL NOT BE RESPONSIBLE FOR THE ACCURACY OR COMPLETENESS OF THE DATA OR INFORMATION CONTAINED HEREIN. THE SELECTION AND USE OF THESE STANDARDS IS THE SOLE RESPONSIBILITY OF THE USER AND SHOULD NOT BE USED WITHOUT CONSULTING A REGISTERED PROFESSIONAL ENGINEER. ALL WARRANTIES AND REPRESENTATIONS OF ANY KIND ARE DISCLAIMED. ANYONE MAKING USE OF THIS INFORMATION AGREES THAT IT ASSUMES ALL LIABILITY ARISING FROM SUCH USE. NO PART OF THESE STANDARDS SHOULD BE REPRODUCED OR DISTRIBUTED IN ANY FORM OR BY ANY MEANS WITHOUT THE PRIOR WRITTEN PERMISSION OF SCRRA. ALL RIGHTS RESERVED.

METROLINK®
SOUTHERN CALIFORNIA REGIONAL RAIL AUTHORITY
ONE GATEWAY PLAZA, 12TH FLOOR, L. A., CA. 90012

ENGINEERING STANDARDS

RIGHT OF WAY FENCING
TUBE STEEL FENCING

STANDARD 5104
SCALE: AS NOTED
REVISION –
SHEET 1 OF 1
CADD FILE: ES5104

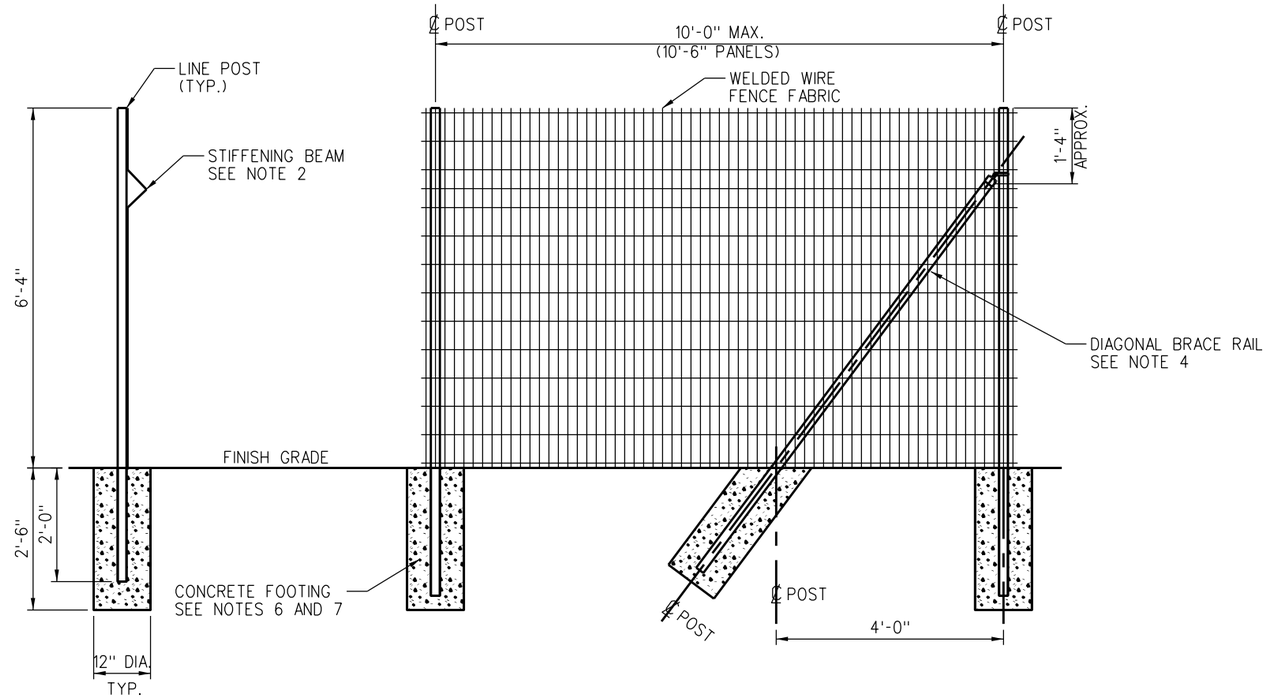

SIDE VIEW

FRONT VIEW

NOTES:

1. WELDED WIRE FENCE FABRIC TO BE #6 GAUGE HARDENED STEEL WIRE WELDED INTO A 2" X 6" RECTANGULAR PATTERN PER ASTM A123, CLASS C1, 1.2 OZ. PER SQUARE FOOT. HOT DIP GALVANIZED AFTER WELDING.
2. TRIANGULAR SHAPED STIFFENING BEAM TO BE PLACED HORIZONTALLY APPROXIMATELY 12" DOWN FROM TOP OF WELDED WIRE MESH PANEL.
3. POSTS, BRACE RAILS AND GATE FRAMES SHALL BE STANDARD WEIGHT SHEDULE 40 GALVANIZED PIPE PER ASTM A53 WITH A MINIMUM YIELD STRENGTH OF 35,000 PSI.
4. DIAGONAL BRACING AT 500 FT. MAXIMUM SPACING AND AT ALL TERMINAL, GATE AND CORNER POSTS.
5. TIE WIRE SHALL BE #9 GAUGE STEEL AND HOT-DIP GALVANIZED 1.2 OZ. PER SQUARE FOOT. TIES TO BE PLACED AT 16" O.C. AT ALL LINE POSTS AND DIAGONAL BRACING.
6. CONCRETE FOOTINGS TO HAVE A MINIMUM COMPRESSIVE STRENGTH OF 2500 PSI AT 28 DAYS.
7. LINE POST FOOTINGS SHOWN ON THIS DRAWING, FOOTINGS AT GATE AND END POSTS TO BE 12" DIA. X 3'-0" DEEP. ALL FOOTINGS TO BE CROWNED AT TOP FOR DRAINAGE.
8. GATE FRAME, POSTS AND BRACE SHALL BE AS PER CHAIN LINK FENCE STANDARD.

FENCE SELECTION CRITERIA

1. CHAIN LINK FENCING SHALL BE USED ONLY FOR MAINTENENACE OF EXISTING CHAIN LINK FENCES.
2. WELDED WIRE MESH FENCING SHALL BE USED FOR ALL RIGHT-OF-WAY FENCES.
3. TUBULAR STEEL FENCING WILL BE USED FOR PROPERTY LEASES AND STORAGE FACILITIES WHERE AESTHETICS ARE A MAJOR CONCERN AND AS DIRECTED BY SCRRA.
4. INTER-TRACK FENCING SHALL BE USED BETWEEN THE TRACKS AT ALL STATIONS.
5. CONCRETE BLOCK WALLS SHALL BE USED FOR COMMERCIAL, AND RESIDENTIAL DEVELOPMENTS. REMOVAL OF GRAFFITI ON BOTH SIDES OF THE WALL SHALL BE THE OWNER/ DEVELOPER'S RESPONSIBILITY.
6. TEMPORARY RAILING (TYPE K) WITH WELDED WIRE MESH FENCING SHALL BE USED FOR ALL PARKING LEASES. K-RAIL AND FENCE ANCHORS SHALL BE AS PER CALTRANS STANDARD PLANS T3 AND T4).
7. LANDSCAPE VINES SHALL NOT BE ALLOWED TO GROW ON THE FENCE UNLESS WRITTEN APPROVAL IS GRANTED BY SCRRA. IF LANDSCAPE VINES ARE ALLOWED TO GROW, THEY WILL BE TRIMMED REGULARLY SO THAT THEY WILL NOT EXTEND OVER THE WALL. SAFETY MEASURES REQUIRED BY SCRRA SHALL BE FOLLOWED IN THE TRIMMING OF THE VINES.
8. SIX-INCH OPENINGS AT REGULAR INTERVALS IN FENCES AND WALLS SHALL BE PROVIDED TO DRAIN WATER AWAY FROM TRACKS AND RAILROAD RIGHT-OF-WAY.

REV.	DATE	DESCRIPTION	DES.	ENG.
X	XX-XX-XX	REVISION	XX	XX

DRAWN BY: A. CARLOS DATE: 03/31/2011

ASSISTANT DIRECTOR: STANDARDS & DESIGN

DIRECTOR OF ENGINEERING AND CONSTRUCTION

SCRRA ENGINEERING STANDARDS ARE INTENDED FOR SCRRA APPROVED USES ONLY. FOR NON-SCRRA APPROVED USES:
SCRRA SHALL NOT BE RESPONSIBLE FOR THE ACCURACY OR COMPLETENESS OF THE DATA OR INFORMATION CONTAINED HEREIN. THE SELECTION AND USE OF THESE STANDARDS IS THE SOLE RESPONSIBILITY OF THE USER AND SHOULD NOT BE USED WITHOUT CONSULTING A REGISTERED PROFESSIONAL ENGINEER. ALL WARRANTIES AND REPRESENTATIONS OF ANY KIND ARE DISCLAIMED. ANYONE MAKING USE OF THIS INFORMATION AGREES THAT IT ASSUMES ALL LIABILITY ARISING FROM SUCH USE. NO PART OF THESE STANDARDS SHOULD BE REPRODUCED OR DISTRIBUTED IN ANY FORM OR BY ANY MEANS WITHOUT THE PRIOR WRITTEN PERMISSION OF SCRRA. ALL RIGHTS RESERVED.

METROLINK®

SOUTHERN CALIFORNIA REGIONAL RAIL AUTHORITY
ONE GATEWAY PLAZA, 12TH FLOOR, L. A., CA. 90012

ENGINEERING STANDARDS

RIGHT OF WAY FENCING
WELDED WIRE MESH FENCING

STANDARD 5105
SCALE: NTS
REVISION –
SHEET 1 OF 1
CADD FILE: ES5105

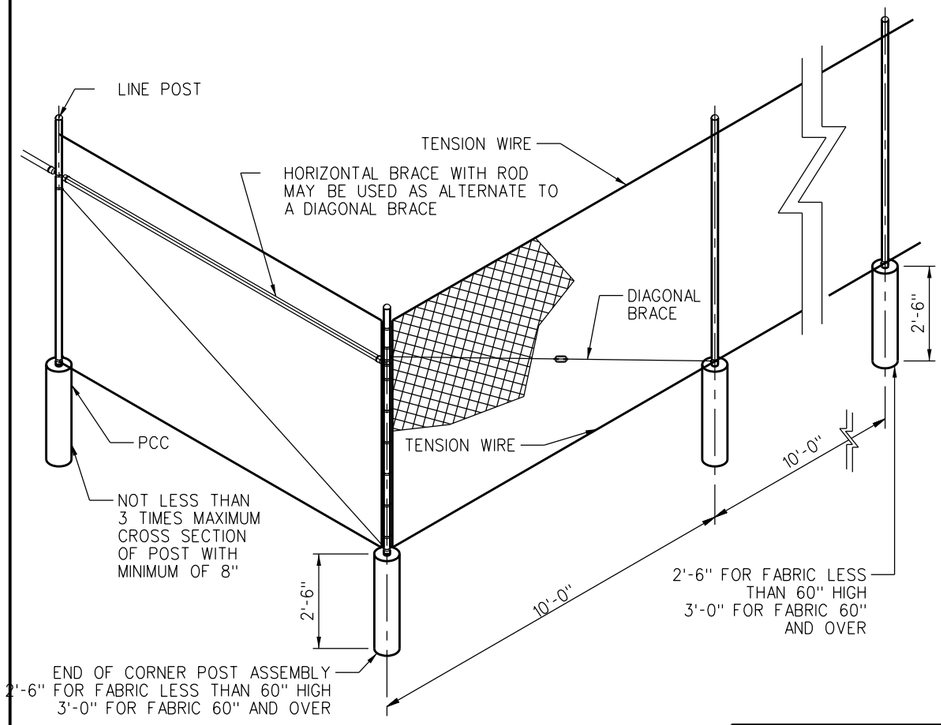

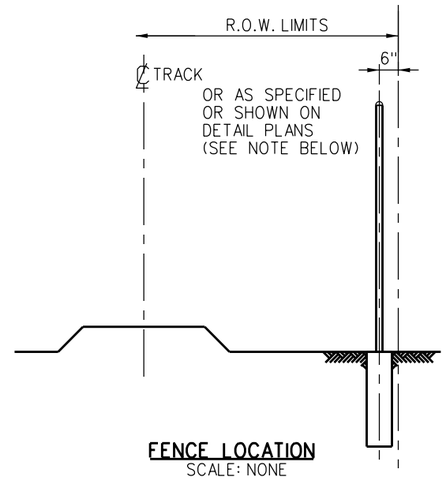

FENCE LOCATION
SCALE: NONE

NOTES:

1. THE TABLE BELOW SHOWS EXAMPLE OF POST AND BRACE SECTIONS WHICH MAY COMPLY WITH THE SPECIFICATIONS.
2. SECTIONS SHOWN IN THE TABLES MUST ALSO COMPLY WITH THE STRENGTH REQUIREMENTS AND OTHER PROVISIONS OF THE SPECIFICATIONS.
3. OTHER SECTIONS WHICH COMPLY WITH THE STRENGTH REQUIREMENTS AND OTHER PROVISIONS OF THE SPECIFICATIONS MAY BE USED ON APPROVAL OF SCRRA.
4. OPTIONS EXERCISED SHALL BE UNIFORM ON ANY ONE PROJECT.
5. DIMENSIONS SHOWN ARE NOMINAL.
6. WIRE GAGE TO BE 11 GA. FOR FENCES 6'-0" AND LESS AND 9 GA. FOR FENCES OVER 6'-0" AS DETERMINED BY FIELD CONDITIONS.
7. FOR ADDITIONAL INFORMATION REFER TO CAL TRANS STANDARD SPECIFICATIONS GENERAL PROVISIONS SECTION 80, RIGHT OF WAY AND TRAFFIC CONTROL FACILITIES - FENCING.
8. FENCE POSTS SHALL BE SET IN CONCRETE FOOTINGS INTO SUITABLE SOIL CONFORMING TO THE DETAILS SHOWN ON THIS DRAWING AND CROWNED AT THE TOP TO SHED WATER.
9. PORTLAND CEMENT CONCRETE FOR METAL POST FOOTINGS AND FOR DEADMEN SHALL BE PRODUCED FROM COMMERCIAL QUALITY AGGREGATES AND CEMENT AND SHALL CONTAIN NOT LESS THAN 275KG OF CEMENT PER CUBIC METER.
10. FENCE FABRIC SHALL BE WOVEN INTO 1" MESH.

FENCE SELECTION CRITERIA

1. CHAIN LINK FENCING SHALL BE USED ONLY FOR MAINTENENACE OF EXISTING CHAIN LINK FENCES.
2. WELDED WIRE MESH FENCING SHALL BE USED FOR ALL RIGHT-OF-WAY FENCES.
3. TUBULAR STEEL FENCING WILL BE USED FOR PROPERTY LEASES AND STORAGE FACILITIES WHERE AESTHETICS ARE A MAJOR CONCERN AND AS DIRECTED BY SCRRA.
4. INTER-TRACK FENCING SHALL BE USED BETWEEN THE TRACKS AT ALL STATIONS.
5. CONCRETE BLOCK WALLS SHALL BE USED FOR COMMERCIAL, AND RESIDENTIAL DEVELOPMENTS. REMOVAL OF GRAFFITI ON BOTH SIDES OF THE WALL SHALL BE THE OWNER/ DEVELOPER'S RESPONSIBILITY.
6. TEMPORARY RAILING (TYPE K) WITH WELDED WIRE MESH FENCING SHALL BE USED FOR ALL PARKING LEASES. K-RAIL AND FENCE ANCHORS SHALL BE AS PER CALTRANS STANDARD PLANS T3 AND T4).
7. LANDSCAPE VINES SHALL NOT BE ALLOWED TO GROW ON THE FENCE UNLESS WRITTEN APPROVAL IS GRANTED BY SCRRA. IF LANDSCAPE VINES ARE ALLOWED TO GROW, THEY WILL BE TRIMMED REGULARLY SO THAT THEY WILL NOT EXTEND OVER THE WALL. SAFETY MEASURES REQUIRED BY SCRRA SHALL BE FOLLOWED IN THE TRIMMING OF THE VINES.
8. SIX-INCH OPENINGS AT REGULAR INTERVALS IN FENCES AND WALLS SHALL BE PROVIDED TO DRAIN WATER AWAY FROM TRACKS AND RAILROAD RIGHT-OF-WAY.

TYPICAL MEMBER DIMENSIONING (SEE NOTES)

FENCE HEIGHT	LINE POSTS			END, LATCH & CORNER POSTS			BRACES			
	ROUND I.D.	"H"	ROLL FORMED	ROUND I.D.	ROLL FORMED		ROUND I.D.	"H"	ROLL FORMED	
6'-0" & LESS	1½"	1⅞" x 1⅝"	1⅞" x 1⅝"	2"	3½" x 3½"	2" x 1¾"	1¼"	1½" x 1 5/16"	1⅝" x 1¼"	1¾" x 1¼"
OVER 6'-0"	2"	2¼" x 2"	2" x 1¾"	2½"	3½" x 3½"	2½" x 2½"	1¼"	1½" x 1 5/16"	1⅝" x 1¼"	1¾" x 1¼"

FABRIC TYPES:

TYPE CL-4 = 48" FABRIC.
TYPE CL-6 = 72" FABRIC.

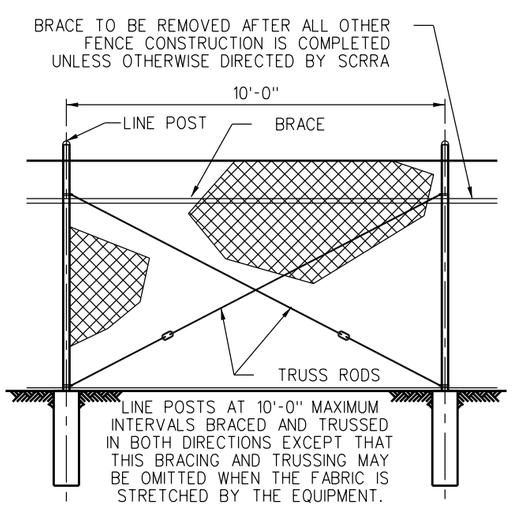

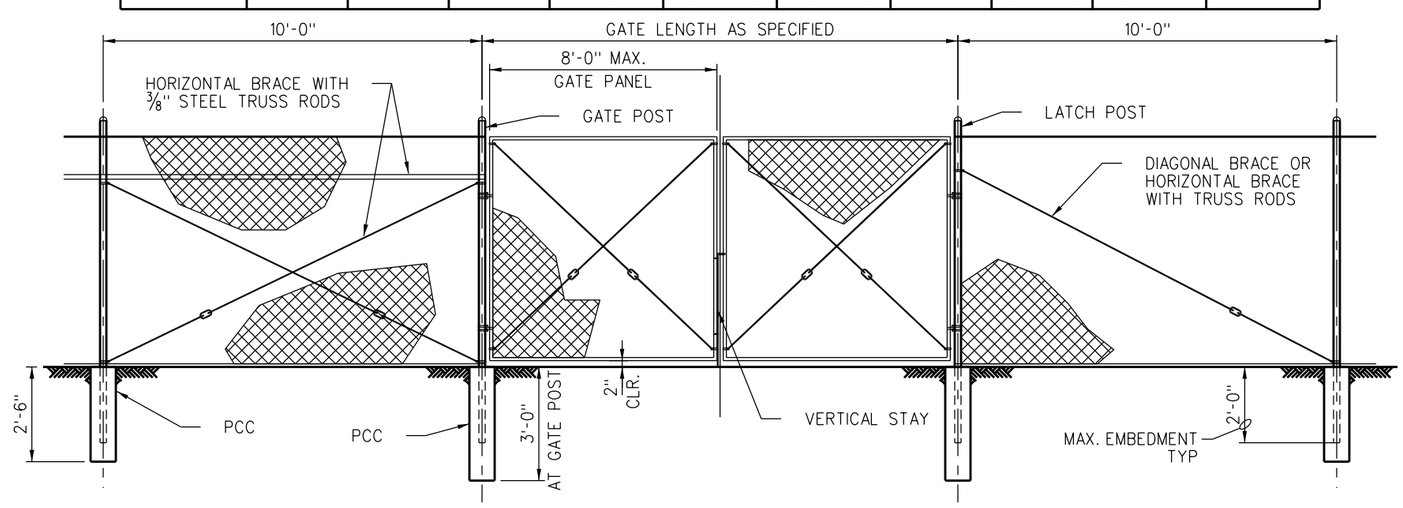

GATE POST 6'-0" AND LESS		
GATE WIDTHS	NOMINAL I.D.	WEIGHT PER FT.
UP THRU 6'	2½"	4.95
OVER 6' THRU 12'	4"	10.79
OVER 12' TO 18'	5"	14.62
OVER 18' TO 24' MAX.	6"	18.97
GATE POST OVER 6'-0"		
GATE WIDTHS	NOMINAL I.D.	WEIGHT PER FT.
UP THRU 6'	3"	7.58
OVER 6' THRU 12'	5"	14.62
OVER 12' TO 18'	6"	18.97
OVER 18' TO 24' MAX.	8"	28.55

ABOVE POST DIMENSIONS AND WEIGHTS ARE MINIMUMS. LARGER SIZES MAY BE USED ON APPROVAL OF SCRRA.

REV.	DATE	DESCRIPTION	DES.	ENG.
X	XX-XX-XX	REVISION	XX	XX

DRAWN BY: A. CARLOS DATE: 03/31/2011

ASSISTANT DIRECTOR: STANDARDS & DESIGN

DIRECTOR OF ENGINEERING AND CONSTRUCTION

SCRRA ENGINEERING STANDARDS ARE INTENDED FOR SCRRA APPROVED USES ONLY. FOR NON-SCRRA APPROVED USES:
SCRRA SHALL NOT BE RESPONSIBLE FOR THE ACCURACY OR COMPLETENESS OF THE DATA OR INFORMATION CONTAINED HEREIN. THE SELECTION AND USE OF THESE STANDARDS IS THE SOLE RESPONSIBILITY OF THE USER AND SHOULD NOT BE USED WITHOUT CONSULTING A REGISTERED PROFESSIONAL ENGINEER. ALL WARRANTIES AND REPRESENTATIONS OF ANY KIND ARE DISCLAIMED. ANYONE MAKING USE OF THIS INFORMATION AGREES THAT IT ASSUMES ALL LIABILITY ARISING FROM SUCH USE. NO PART OF THESE STANDARDS SHOULD BE REPRODUCED OR DISTRIBUTED IN ANY FORM OR BY ANY MEANS WITHOUT THE PRIOR WRITTEN PERMISSION OF SCRRA. ALL RIGHTS RESERVED.

METROLINK®
SOUTHERN CALIFORNIA REGIONAL RAIL AUTHORITY
ONE GATEWAY PLAZA, 12TH FLOOR, L. A., CA. 90012

ENGINEERING STANDARDS

RIGHT OF WAY FENCING
CHAIN LINK FENCE

STANDARD 5106
SCALE: ½" = 1'-0"
REVISION –
SHEET 1 OF 1
CADD FILE: ES5106

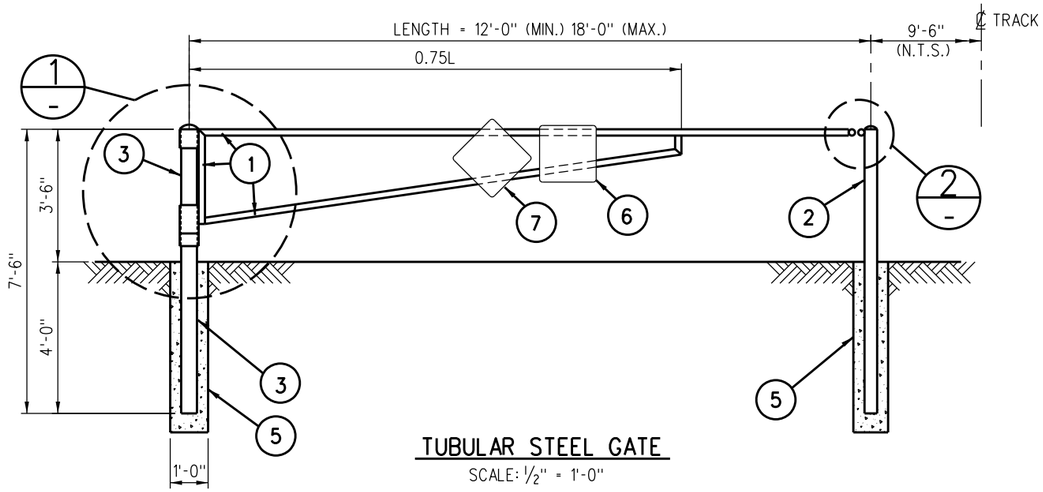

TUBULAR STEEL GATE

SCALE: 1/2" = 1'-0"

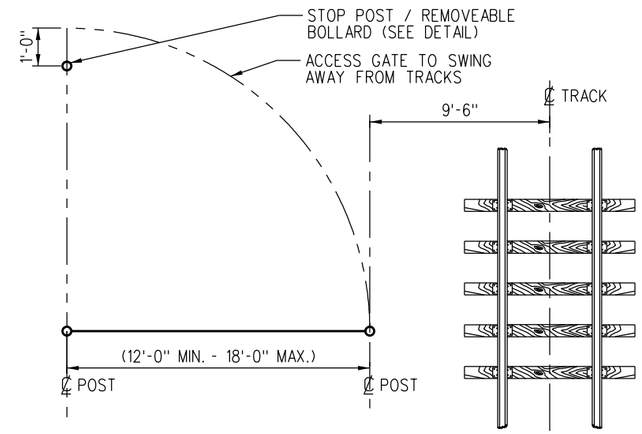

TYPICAL GATE LOCATION PLAN

SCALE: 1/4" = 1'-0"

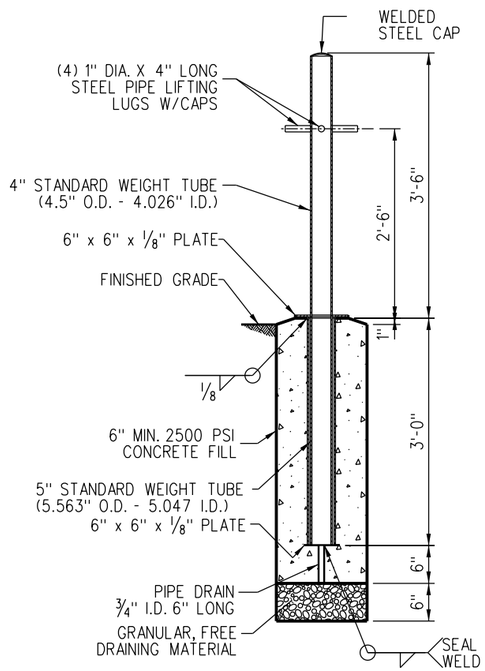

REMOVEABLE BOLLARD DETAIL

SCALE: 1" = 1'-0"

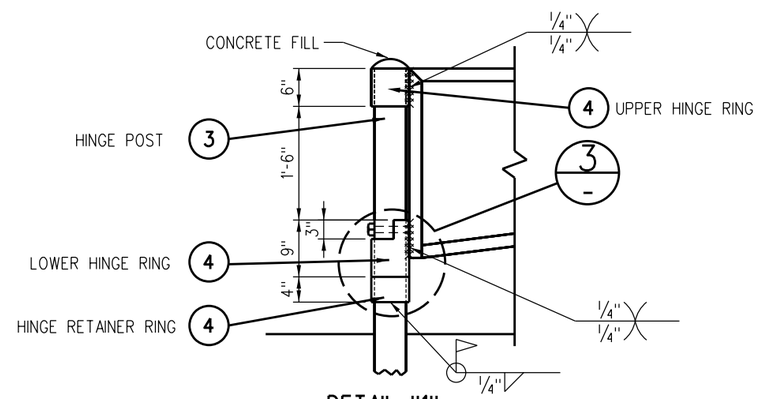

DETAIL "1"

SCALE: 1" = 1'-0"

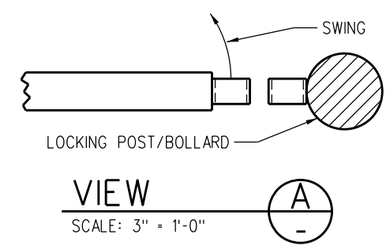

VIEW A

SCALE: 3" = 1'-0"

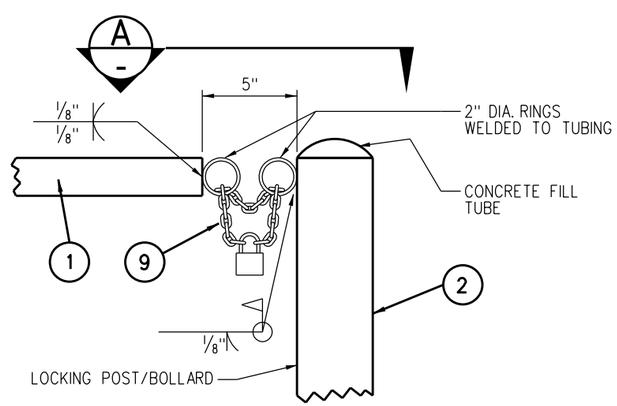

DETAIL "2"

SCALE: 3" = 1'-0"

NOTES:

1. EXISTING ELEMENTS OF RIGHT-OF-WAY SECURITY WILL BE INTEGRATED INTO THE LAYOUT TO OBTAIN EEFECTIVE DETERRENCE WITH MINIMUM OF NEW CONSRUCTION. BUILDINGS, WALLS, DITCHES, UTILITY POLES, FENCES, SIGNS WITH POSTS (AT LEAST SIX INCHES IN WIDTH), MONUMENTS, ABUTMENTS OR PERMANENT LANDSCAPING MORE THAN THREE FEET TALL ARE ALL ACCEPTABLE DETERRENTS. IF FENCE, WALL OR BUILDING IS WITHIN 12 FEET OF THE CENTERLINE OF TRACK, NO BARRIER IS REQUIRED.
2. SECURITY GATE TYPICAL LAYOUT PLAN ILLUSTRATES FOUR SITUATIONS, ONE IN EACH QUADRANT THAT CAN BE USED TO DENY ACCESS. SCRRA AUTHORIZED PERSONS MAY RECOMMEND OTHER ELEMENTS OF VEHICLE CONTROL TO FIT CONDITIONS.
3. SECURITY GATES WILL BE PLACED AT LEAST 25 FEET FROM THE ROADWAY TO ALLOW AUTHORIZED VEHICLES TO STOP CLEAR OF TRAFFIC TO OPEN/CLOSE LOCKED GATES. THIS DISTANCE SHALL BE ADJUSTED IN THE FIELD TO ACCOUNT FOR OBSTRUCTIONS, PEDESTRIAN FACILITIES AND SIGNAL HOUSE AS APPROVED BY SCRRA. THE TRACK SIDE OF THE PARKING AREA IS TO BE CLOSED OFF WITH BOLLARDS, K-RAIL, OR OTHER BARRIERS.
4. INSTALLATION OF BOLLARDS OR GATE POSTS MAY BE ADJUSTED TO AVOID CONFLICT WITH SCRRA SIGNAL OR OTHER UNDERGROUND UTILITIES. LOCATIONS OF UNDERGROUND UTILITIES MUST BE CLEARLY ESTABLISHED PRIOR TO ANY EXCAVATION.
5. BOLLARDS WILL BE SPACED 48" TO 66" ON CENTER AND EACH RUN OR LOCATION WILL BE UNIFORM. BOLLARDS AND K-RAIL WILL NOT IMPEAD PEDESTRIAN OR SIDEWALK TRAFFIC.
6. SECURITY GATE AND POSTS WILL BE SPRAY PAINTED "SAFETY YELLOW" WITH ONE PRIMER COAT AND ONE FINISH COAT OF WATER BORNE ACRYLIC GLOSS ENAMEL (RUST PREVENT ENAMEL GLOSS), OR APPROVED EQUAL.
7. APPROPRIATE REGIONAL NOTIFICATION CENTER [UNDERGROUND SERVICE ALERT (DIGALERT) AT (800) 227-2600], RAILWAY COMPANIES, AND UTILITY COMPANIES WILL BE NOTIFIED PRIOR TO PERFORMING ANY EXCAVATION CLOSE TO ANY UNDERGROUND PIPELINE, CONDUIT, DUCT, WIRE, OR OTHER STRUCTURE. SCRRA IS NOT A MEMBER OF DIGALERT, IT IS, THEREFORE, NECESSARY TO CALL SCRRA SIGNAL DEPARTMENT AT (909) 859-4105 OR (909) 859-4112 TO MARK SIGNAL AND COMMUNICATION CABLES AND CONDUITS.
8. INSTALLATION OF ELEMENTS MUST NOT BLOCK DRAINAGE FROM TRACK OR ALONG THE TRACK, THE "OVERHANGING" BOLLARD WILL BE USED TO SPAN DRAINAGE OR UNDERGROUND UTILITIES AND STILL MAINTAIN A GAP BETWEEN BOLLARDS OF NOT MORE THAN 66 INCHES. LOCAL GRADING OR OTHER WORK IS NEEDED TO DRAIN THE SECURED AREA, IT WILL BE CARRIED OUT AS PART OF THE INSTALLATION.
9. STOP BOLT WILL BE 1" IN DIAMETER BY 7" LONG. BOTH ENDS OF THE BOLT WILL BE WELDED TO HINGE POST THEN CUT AND GRIND THREADED END FLUSH TO HINGE POST SO AS NOT TO IMPEDE ROTATION OF LOWER HINGE RING.
10. THE REMOVEABLE BOLLARD WILL BE USED IF THE LOCATION OF THE BOLLARD WILL BLOCK SIGNAL EQUIPMENT FOR MAINTENANCE PURPOSES AND IF THE SECURITY GATE IS LESS THAN 12 FEET IN LENGTH.

LEGEND:

1. 2" STANDARD WEIGHT TUBE (OUTSIDE DIA. - 2.375" - INSIDE DIA. - 2.067")
2. 4" STANDARD WEIGHT TUBE (OUTSIDE DIA. - 4.5" - INSIDE DIA. - 4.026")
3. 5" STANDARD WEIGHT TUBE (OUTSIDE DIA. - 5.563", INSIDE DIA. - 5.047")
4. 6" EXTRA STRENGTH TUBE (OUTSIDE DIA. - 6.625", INSIDE DIA. - 5.761")
5. 6" MINIMUM 2500 PSI CONCRETE BACKFILL

LEGEND: (CONT.)

6. NO TRESPASSING SIGN PER METROLINK ENGINEERING STANDARD ES5214. (BOTH SIDES)
7. MODIFIED TYPE "OM1-3" (AS PER MUTCD) WARNING SIGN TO READ: "KEEP GATE LOCKED". (BOTH SIDES)
8. STOP BOLT
9. GRADE 70 HIGH TENSILE STEEL 3/4" APPROXIMATELY 2 FT. LONG CHAIN
10. S & G OR EQUAL ENVIRONMENTAL PADLOCK

REV.	DATE	DESCRIPTION	DES.	ENG.
A	11/15/11	REVISED LEGEND ITEM 6.	AC	NDP

DRAWN BY: A. CARLOS DATE: 03/31/2011

ASSISTANT DIRECTOR: STANDARDS & DESIGN

DIRECTOR OF ENGINEERING AND CONSTRUCTION

SCRRA ENGINEERING STANDARDS ARE INTENDED FOR SCRRA APPROVED USES ONLY. FOR NON-SCRRA APPROVED USES:
SCRRA SHALL NOT BE RESPONSIBLE FOR THE ACCURACY OR COMPLETENESS OF THE DATA OR INFORMATION CONTAINED HEREIN. THE SELECTION AND USE OF THESE STANDARDS IS THE SOLE RESPONSIBILITY OF THE USER AND SHOULD NOT BE USED WITHOUT CONSULTING A REGISTERED PROFESSIONAL ENGINEER. ALL WARRANTIES AND REPRESENTATIONS OF ANY KIND ARE DISCLAIMED. ANYONE MAKING USE OF THIS INFORMATION AGREES THAT IT ASSUMES ALL LIABILITY ARISING FROM SUCH USE. NO PART OF THESE STANDARDS SHOULD BE REPRODUCED OR DISTRIBUTED IN ANY FORM OR BY ANY MEANS WITHOUT THE PRIOR WRITTEN PERMISSION OF SCRRA. ALL RIGHTS RESERVED.

METROLINK®

SOUTHERN CALIFORNIA REGIONAL RAIL AUTHORITY
ONE GATEWAY PLAZA, 12TH FLOOR, L. A., CA. 90012

ENGINEERING STANDARDS

R.O.W. SECURITY ACCESS GATE DETAILS

STANDARD 5107
SCALE: AS NOTED
REVISION A SHEET 1 OF 2
CADD FILE: ES5107-01

NOTE:

1. FOR NOTES AND LEGEND SEE ES5107-01.
2. TO BE DETERMINED IN FIELD BY SCRRA.

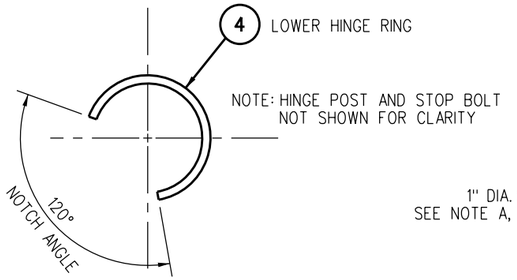

SECTION A
SCALE: 3" = 1'-0"

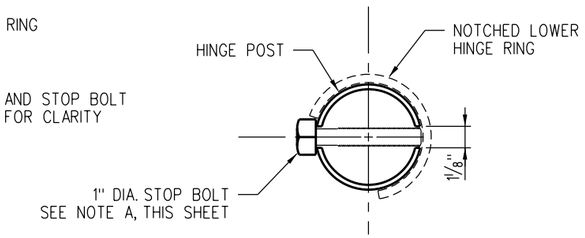

SECTION A
SCALE: 3" = 1'-0"

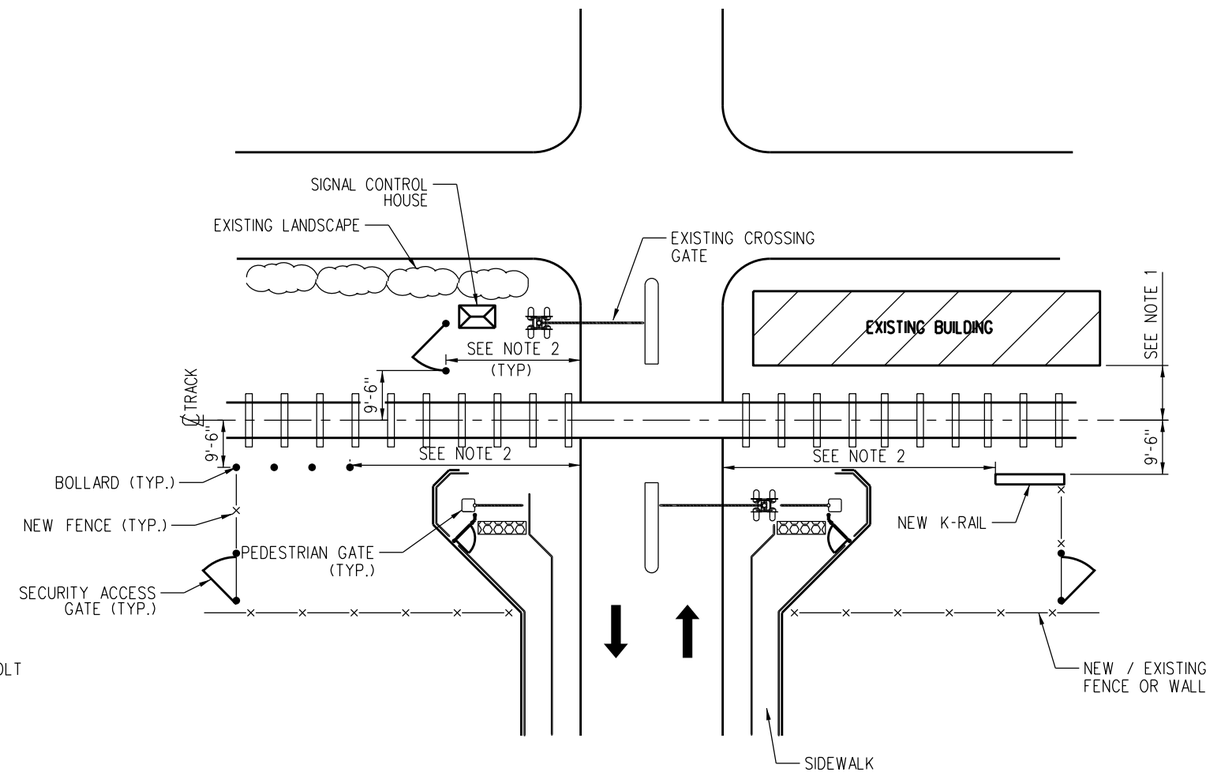

TYPICAL SECURITY GATE LAYOUT PLAN
SCALE: NONE

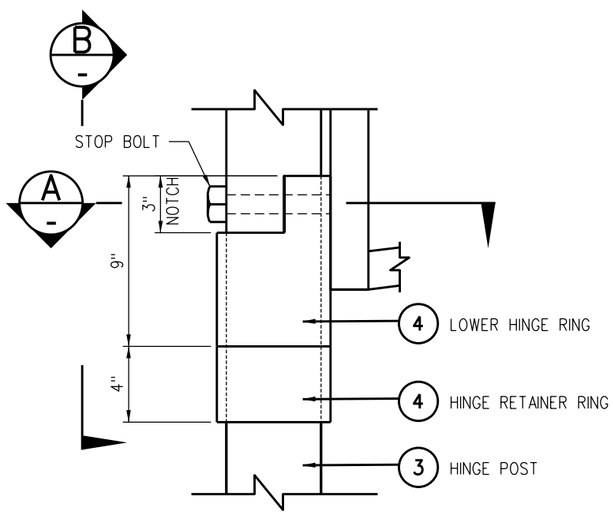

DETAIL 3
SCALE: 3" = 1'-0"

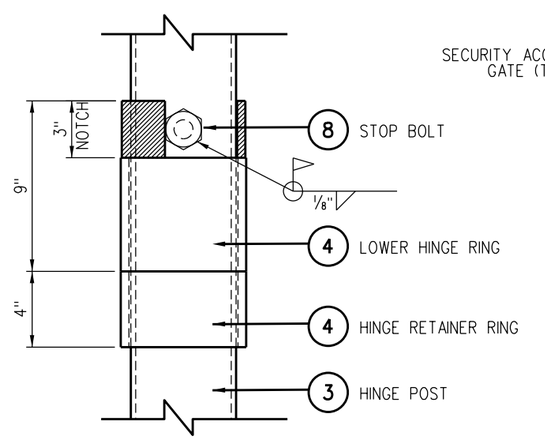

VIEW B
SCALE: 3" = 1'-0"

REV.	DATE	DESCRIPTION	DES.	ENG.
X	XX-XX-XX	REVISION	XX	XX

DRAWN BY: A. CARLOS DATE: 03/31/2011

ASSISTANT DIRECTOR: STANDARDS & DESIGN

DIRECTOR OF ENGINEERING AND CONSTRUCTION

SCRRA ENGINEERING STANDARDS ARE INTENDED FOR SCRRA APPROVED USES ONLY. FOR NON-SCRRA APPROVED USES:
SCRRA SHALL NOT BE RESPONSIBLE FOR THE ACCURACY OR COMPLETENESS OF THE DATA OR INFORMATION CONTAINED HEREIN. THE SELECTION AND USE OF THESE STANDARDS IS THE SOLE RESPONSIBILITY OF THE USER AND SHOULD NOT BE USED WITHOUT CONSULTING A REGISTERED PROFESSIONAL ENGINEER. ALL WARRANTIES AND REPRESENTATIONS OF ANY KIND ARE DISCLAIMED. ANYONE MAKING USE OF THIS INFORMATION AGREES THAT IT ASSUMES ALL LIABILITY ARISING FROM SUCH USE. NO PART OF THESE STANDARDS SHOULD BE REPRODUCED OR DISTRIBUTED IN ANY FORM OR BY ANY MEANS WITHOUT THE PRIOR WRITTEN PERMISSION OF SCRRA. ALL RIGHTS RESERVED.

METROLINK®
SOUTHERN CALIFORNIA REGIONAL RAIL AUTHORITY
ONE GATEWAY PLAZA, 12TH FLOOR, L. A., CA. 90012

ENGINEERING STANDARDS

R.O.W. SECURITY ACCESS GATE DETAILS

STANDARD 5107
SCALE: AS NOTED
REVISION –
SHEET 2 OF 2
CADD FILE: ES5107-02

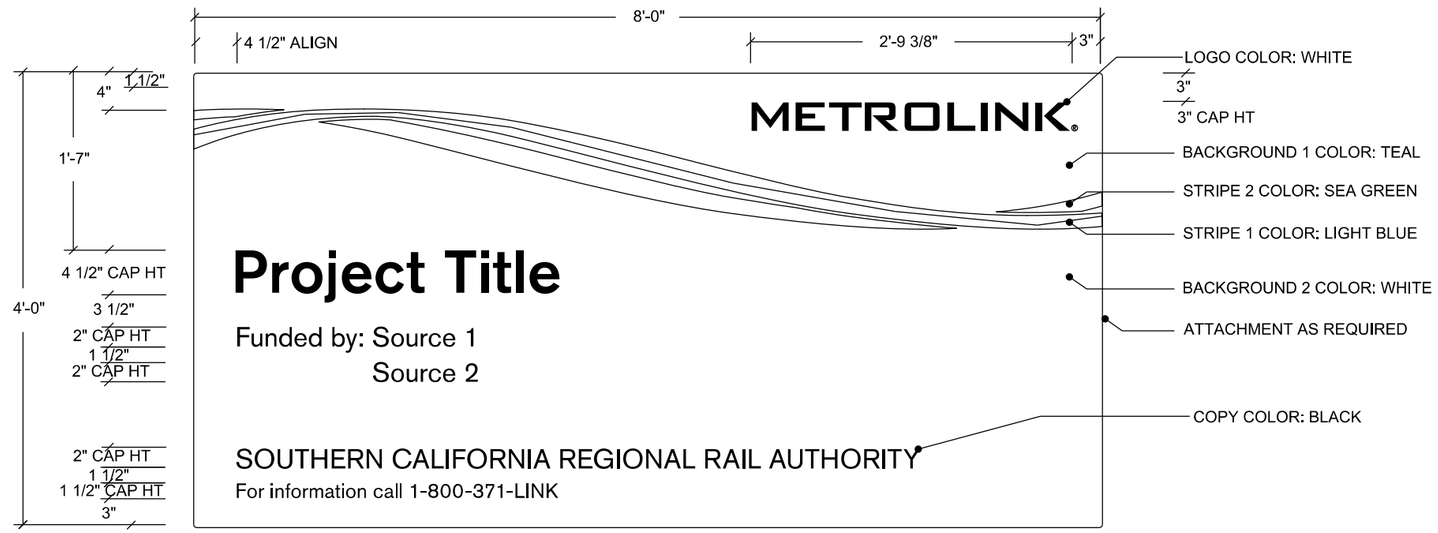

CONSTRUCTION SIGN DETAIL

NOTES:

1. SIGN CONTRACTOR SHALL ENGINEER FABRICATION & INSTALLATION OF SIGN STRUCTURE TO SATISFY ALL LOCAL CODES & WIND LOAD FACTORS. FIELD VERIFY SITE CONDITIONS PRIOR TO FABRICATION.
2. SIGN PANEL TO BE PAINTED DURAPLY OR MEDEX W/ SMOOTH-FINISHED EDGES & SEAMS.
3. METROLINK LOGO TO BE PROVIDED BY METROLINK. COLORS PER SIGNAGE STANDARDS.
4. LETTER STYLE SHALL BE AKZIDENZ GROTESK PER SCRRA STANDARD ES3301-02.
5. CONTRACTOR TO DETERMINE BEST SIGN MOUNTING APPLICATION PER SITE CONDITION.

REV.	DATE	DESCRIPTION	DES.	ENG.
X	XX-XX-XX	REVISION	XX	XX

DRAWN BY: A. CARLOS DATE: 03/31/2011

ASSISTANT DIRECTOR: STANDARDS & DESIGN

DIRECTOR OF ENGINEERING AND CONSTRUCTION

SCRRA ENGINEERING STANDARDS ARE INTENDED FOR SCRRA APPROVED USES ONLY. FOR NON-SCRRA APPROVED USES:
SCRRA SHALL NOT BE RESPONSIBLE FOR THE ACCURACY OR COMPLETENESS OF THE DATA OR INFORMATION CONTAINED HEREIN. THE SELECTION AND USE OF THESE STANDARDS IS THE SOLE RESPONSIBILITY OF THE USER AND SHOULD NOT BE USED WITHOUT CONSULTING A REGISTERED PROFESSIONAL ENGINEER. ALL WARRANTIES AND REPRESENTATIONS OF ANY KIND ARE DISCLAIMED. ANYONE MAKING USE OF THIS INFORMATION AGREES THAT IT ASSUMES ALL LIABILITY ARISING FROM SUCH USE. NO PART OF THESE STANDARDS SHOULD BE REPRODUCED OR DISTRIBUTED IN ANY FORM OR BY ANY MEANS WITHOUT THE PRIOR WRITTEN PERMISSION OF SCRRA. ALL RIGHTS RESERVED.

METROLINK®
SOUTHERN CALIFORNIA REGIONAL RAIL AUTHORITY
ONE GATEWAY PLAZA, 12TH FLOOR, L. A., CA. 90012

ENGINEERING STANDARDS

CONSTRUCTION PROJECT FEDERAL FUNDING IDENTIFICATION SIGNS

STANDARD: 5201
SCALE: 1" = 1'-0"
REVISION: –
SHEET: 1 OF 1
CADD FILE: ES5201

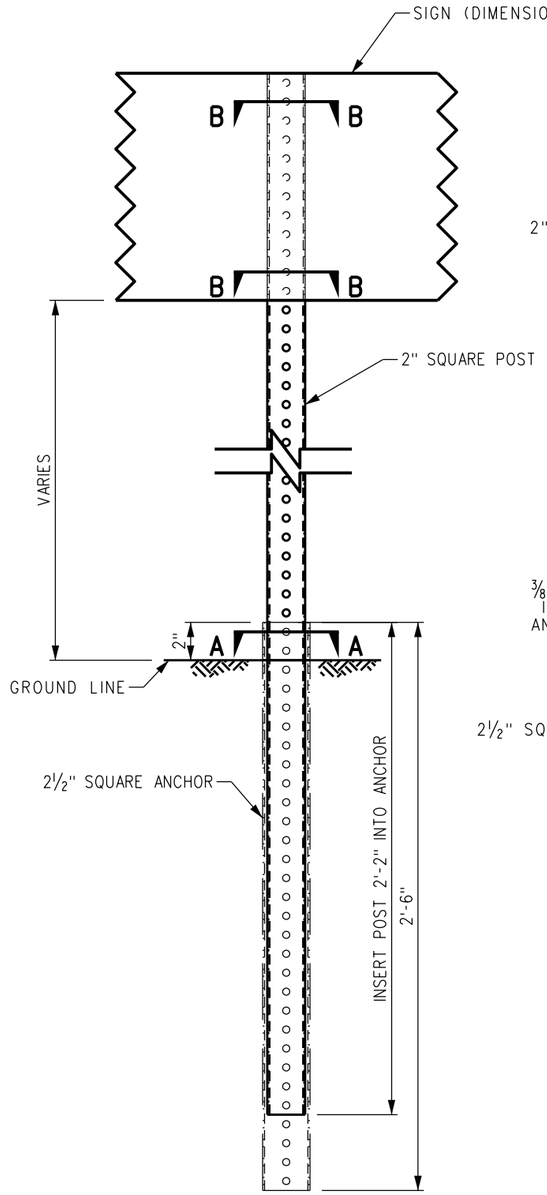

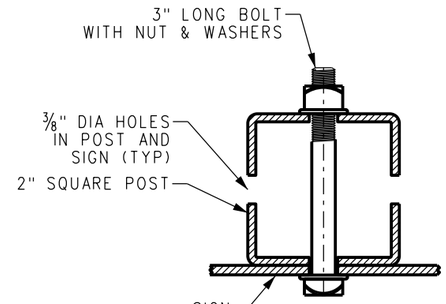

SECTION B-B
THRU SIGN AND POST

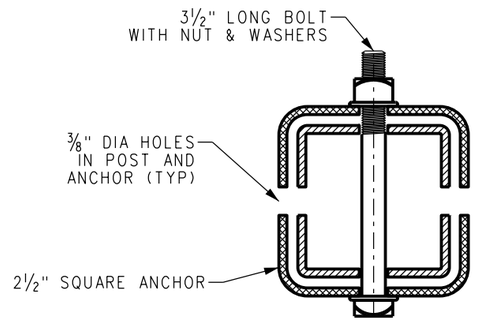

SECTION A-A
THRU POST AND ANCHOR

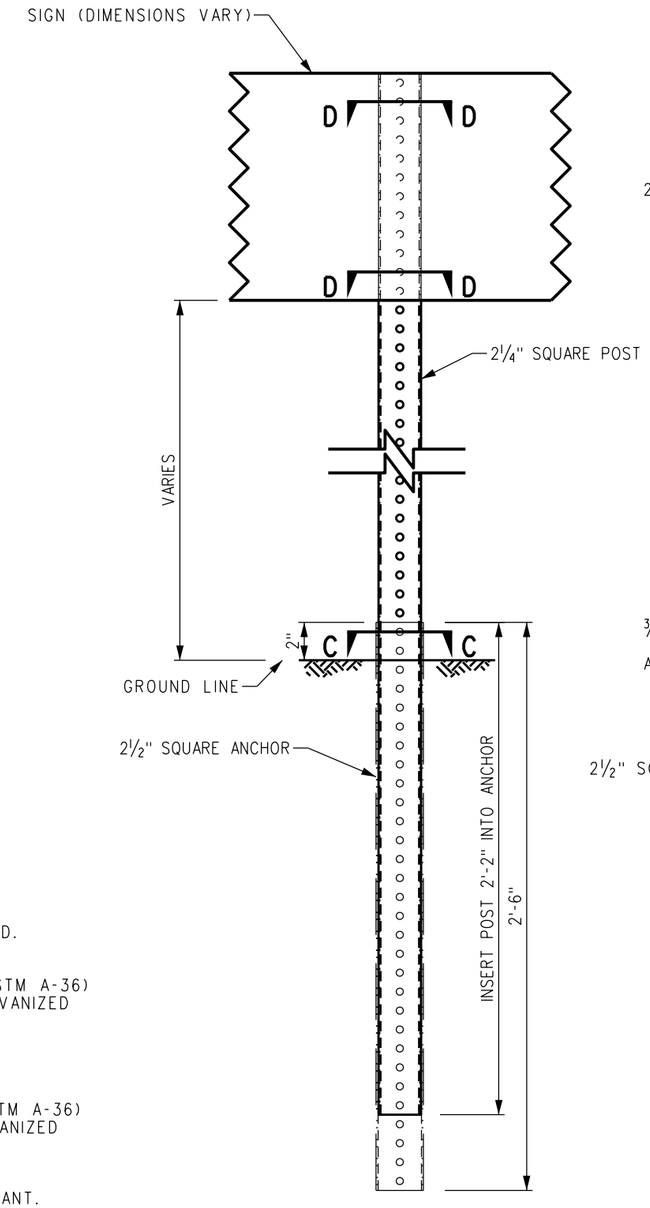

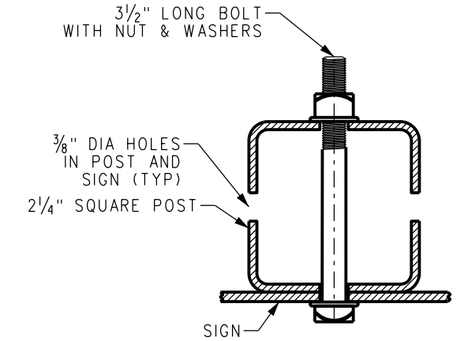

SECTION D-D
THRU SIGN AND POST

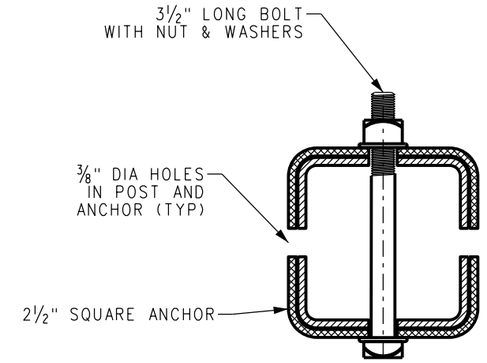

SECTION C-C
THRU POST AND ANCHOR

MATERIAL SPECIFICATIONS:

SIGNS: AS INDICATED ON INDIVIDUAL SIGN STANDARD.

POSTS:
12 GAGE (.105" THICK) SQUARE STEEL TUBE (ASTM A-36)
WITH ⅜" DIA. MOUNTING HOLES 1" O.C. ALL GALVANIZED
IN ACCORDANCE WITH ASTM A-386.
2" TUBE @ 2.42 LB/FT.
2¼" TUBE @ 2.77 LB/FT.

ANCHORS:
12 GAGE (.105" THICK) SQUARE STEEL TUBE (ASTM A-36)
WITH⅜" DIA. MOUNTING HOLES 1" O.C. ALL GALVANIZED
IN ACCORDANCE WITH ASTM A-386.
2½" TUBE @ 3.14 LB/FT.

HARDWARE: GALVANIZED ALUMINUM. VANDAL RESISTANT.
BOLTS: 5/16" DIAMETER CARRIAGE BOLTS, 2024-T4 ALLOY.
LENGTH: 3" OR 3½".
NUTS: TAMPER RESISTANT, ALCOA OR EQUAL.
WASHERS: FLAT. ⅜" I.D., ¾" O.D.

LOCATION: CL OF POST SHALL BE 9 TO 15 FT, MEASURED
PREPENDICULAR TO CL OF TRACK, FROM FIELD SIDE OF
NEAREST RAIL UNLESS OTHERWISE SPECIFIED ON
INDIVIDUAL SIGN STANDARD. INSTALLER SHALL AVOID
DAMAGING UNDERGROUND UTILITIES WHEN SETTING ANCHOR.

REV.	DATE	DESCRIPTION	DES.	ENG.
X	XX-XX-XX	REVISION	XX	XX

DRAWN BY: A. CARLOS DATE: 03/31/2011

ASSISTANT DIRECTOR: STANDARDS & DESIGN

DIRECTOR OF ENGINEERING AND CONSTRUCTION

SCRRA ENGINEERING STANDARDS ARE INTENDED FOR SCRRA APPROVED USES ONLY. FOR NON-SCRRA APPROVED USES:
SCRRA SHALL NOT BE RESPONSIBLE FOR THE ACCURACY OR COMPLETENESS OF THE DATA OR INFORMATION CONTAINED HEREIN. THE SELECTION AND USE OF THESE STANDARDS IS THE SOLE RESPONSIBILITY OF THE USER AND SHOULD NOT BE USED WITHOUT CONSULTING A REGISTERED PROFESSIONAL ENGINEER. ALL WARRANTIES AND REPRESENTATIONS OF ANY KIND ARE DISCLAIMED. ANYONE MAKING USE OF THIS INFORMATION AGREES THAT IT ASSUMES ALL LIABILITY ARISING FROM SUCH USE. NO PART OF THESE STANDARDS SHOULD BE REPRODUCED OR DISTRIBUTED IN ANY FORM OR BY ANY MEANS WITHOUT THE PRIOR WRITTEN PERMISSION OF SCRRA. ALL RIGHTS RESERVED.

METROLINK®
SOUTHERN CALIFORNIA REGIONAL RAIL AUTHORITY
ONE GATEWAY PLAZA, 12TH FLOOR, L. A., CA. 90012

ENGINEERING STANDARDS

DETAILS FOR INSTALLING SIGNS AT GRADE

STANDARD 5210
SCALE: NTS
REVISION –
SHEET 1 OF 1
CADD FILE: ES5210

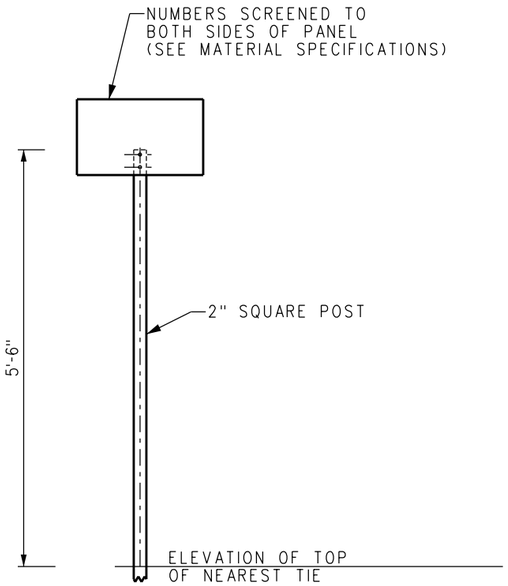

ANCHORED PER SCRRA ES5210

MILE POST

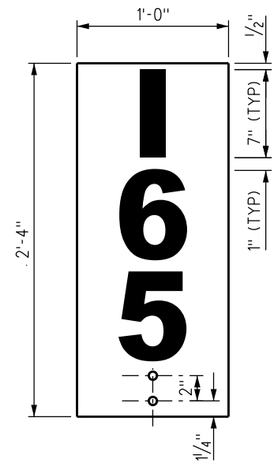

VERTICAL 3 CHARACTER SIGN

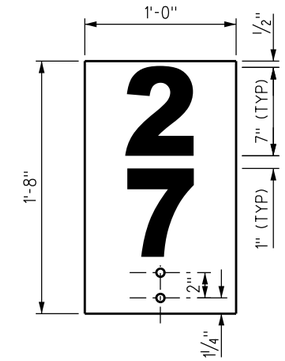

VERTICAL 2 CHARACTER SIGN

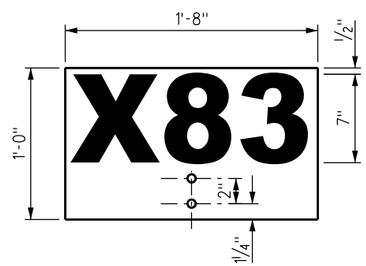

HORIZONTAL 3 CHARACTER SIGN

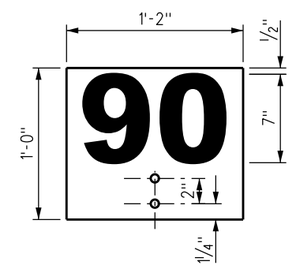

HORIZONTAL 2 CHARACTER SIGN

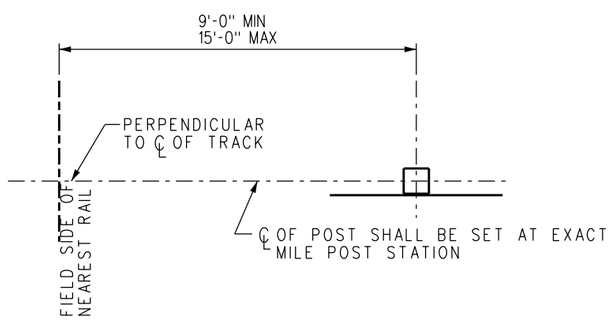

LOCATION PLAN

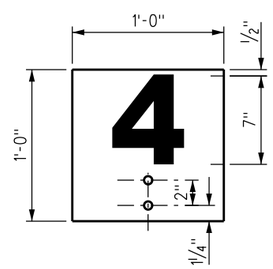

1 CHARACTER SIGN

BILL OF MATERIAL	
NUMBER REQUIRED	ITEM
	MILE POST
1	ALUMINUM PANEL (AREA VARIES WITH NO. OF REQ. CHARACTERS)
1	2" x 2" SQUARE POST (LENGTH VARIES WITH TERRAIN)
2	3" LONG BOLT WITH NUT AND WASHERS PER SCRRA ES5210
1	ANCHOR PER SCRRA ES5210

INSTALLATION NOTES

1. TO ALLOW MILE POSTS TO BE READ FROM BOTH DIRECTIONS, ONE DOUBLE-FACED ALUMINUM PANEL WITH WHITE REFLECTIVE SHEETING BACKGROUND AND BLACK PLASTIC NUMERALS SHALL BE MOUNTED AT RIGHT ANGLES TO THE TRACK AT EACH LOCATION.
2. THE POST SHALL BE SET PER THE LOCATION PLAN ON THIS SHEET. EXCEPTIONS SHALL REQUIRE THE APPROVAL OF SCRRA.
3. IN SINGLE TRACK TERRITORY, MILE POSTS SHALL BE SET ON RIGHT HAND SIDE OF THE TRACK AS ONE FACES IN THE DIRECTION OF INCREASING MILE POSTS. IN MULTIPLE TRACK TERRITORY MILE POSTS SHALL BE SET ON THE FIELD SIDE OF THE TRACK FARTHEST TO THE RIGHT.
4. IN MULTIPLE TRACK TERRITORY WHERE SPREAD TRACKS EXIST, THE LETTER "X" SHALL PRECEDE THE MILE POST NUMBERS ON THE NEWER LINE. AT THE OPTION OF SCRRA, WHERE THE DISTANCE SEPARATING THE TWO LINES IS NOT SUFFICIENT TO WARRANT SUCH DESIGNATION, THE LETTER "X" NEED NOT PRECEDE THE MILE POST NUMBERS ON THE NEWER LINE.
5. WHEN THE EXACT MILE POST STATION FALLS WITHIN THE LIMITS OF A BRIDGE, GRADE CROSSING OR OTHER FEATURE WHERE IT WOULD BE IMPRACTICAL TO LOCATE A SIGN, THE MILE POST SHALL INSTEAD BE SET AT THE END OF THE FEATURE NEAREST THE EXACT MILE POST STATION.
6. HORIZONTAL SIGNS ARE PREFERRED. VERTICAL SIGNS SHALL BE USED ONLY WHERE HORIZONTAL CLEARANCE IS RESTRICTED.

MATERIAL SPECIFICATIONS

SIGNS:
1/8" THICK MILL FINISH ALUMINUM PANEL, ALCOA 6016-T6 OR EQUAL.
PAINT ALL SIDES WITH LINEAR POLYURATHANE. COLOR FACE OF PANEL WITH ENGINEERING GRADE, PRESSURE SENSITIVE, RETRO-REFLECTIVE WHITE VINYL SHEETING. SILK SCREEN LEGEND WITH BLACK INK. FINISH WITH EXTERIOR GRADE PRESSURE SENSITIVE CLEAR MYLAR, 3M-1150 OR EQUAL.

POST, ANCHOR AND HARDWARE:
PER SCRRA ES5210.

TEXT STYLE:
"ARIAL BOLD" PER SCRRA ES1212, SIZE AS INDICATED.

REV.	DATE	DESCRIPTION	DES.	ENG.
X	XX-XX-XX	REVISION	XX	XX

DRAWN BY: A. CARLOS DATE: 03/31/2011

ASSISTANT DIRECTOR: STANDARDS & DESIGN

DIRECTOR OF ENGINEERING AND CONSTRUCTION

SCRRA ENGINEERING STANDARDS ARE INTENDED FOR SCRRA APPROVED USES ONLY. FOR NON-SCRRA APPROVED USES:
SCRRA SHALL NOT BE RESPONSIBLE FOR THE ACCURACY OR COMPLETENESS OF THE DATA OR INFORMATION CONTAINED HEREIN. THE SELECTION AND USE OF THESE STANDARDS IS THE SOLE RESPONSIBILITY OF THE USER AND SHOULD NOT BE USED WITHOUT CONSULTING A REGISTERED PROFESSIONAL ENGINEER. ALL WARRANTIES AND REPRESENTATIONS OF ANY KIND ARE DISCLAIMED. ANYONE MAKING USE OF THIS INFORMATION AGREES THAT IT ASSUMES ALL LIABILITY ARISING FROM SUCH USE. NO PART OF THESE STANDARDS SHOULD BE REPRODUCED OR DISTRIBUTED IN ANY FORM OR BY ANY MEANS WITHOUT THE PRIOR WRITTEN PERMISSION OF SCRRA. ALL RIGHTS RESERVED.

METROLINK
SOUTHERN CALIFORNIA REGIONAL RAIL AUTHORITY
ONE GATEWAY PLAZA, 12TH FLOOR, L. A., CA. 90012

ENGINEERING STANDARDS

MILE POST

STANDARD 5211
SCALE: NTS
REVISION -
SHEET 1 OF 1
CADD FILE: ES5211

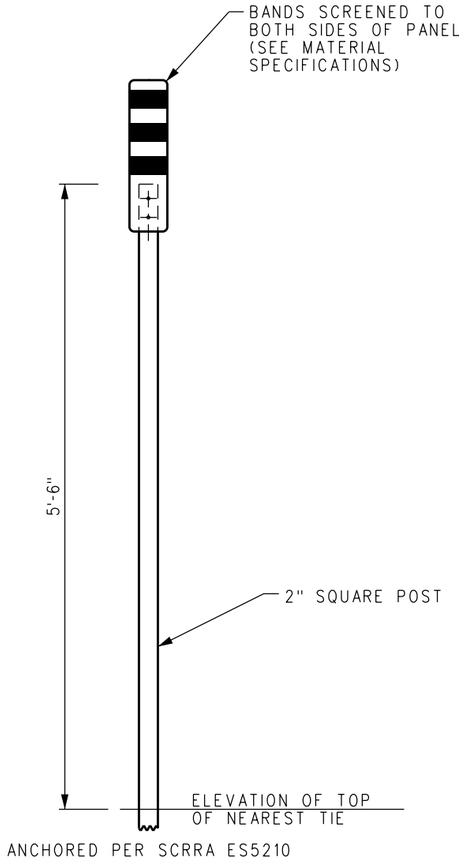

QUARTER MILE INCREMENT MARKER

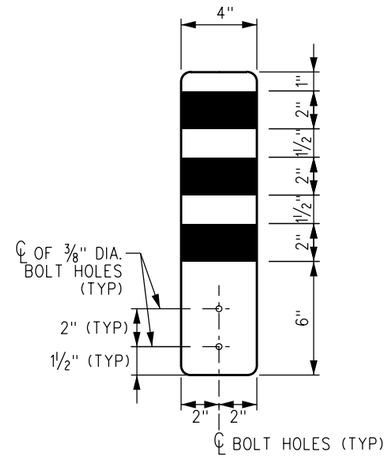

THREE-QUARTER MILE INCREMENT SIGN

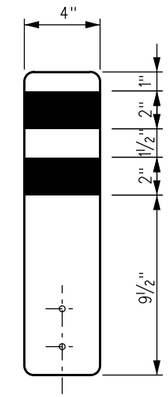

HALF-MILE INCREMENT SIGN

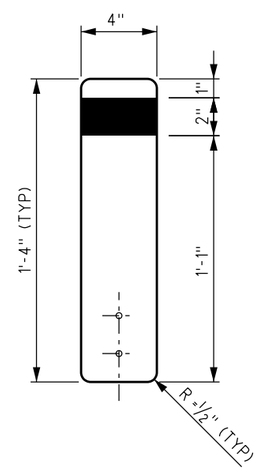

ONE-QUARTER MILE INCREMENT SIGN

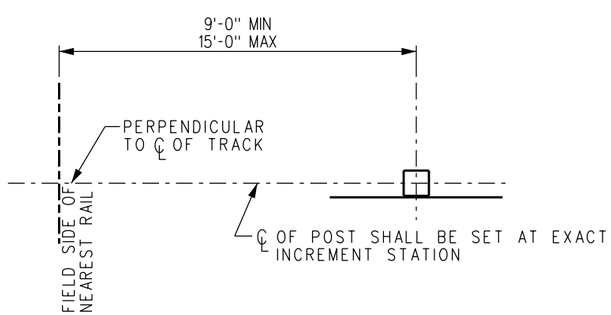

LOCATION PLAN

BILL OF MATERIAL	
NUMBER REQUIRED	ITEM
	QUARTER MILE INCREMENT MARKER
1	0.44 SQ. FT. ALUMINUM PANEL
1	2" x 2" SQUARE POST (LENGTH VARIES WITH TERRAIN)
2	3" LONG BOLT WITH NUT AND WASHERS PER SCRRA ES5210
1	ANCHOR PER SCRRA ES5210

INSTALLATION NOTES

1. QUARTER MILE INCREMENT SIGNS ALLOW TRAIN CREWS AND OTHERS TO ACCURATELY DETERMINE MILEPOST LOCATIONS BETWEEN WHOLE MILES AND DETERMINE TRACK BULLETIN LIMITS, TIMETABLE INSTRUCTIONS, AND OTHER ITEMS DESCRIBED IN TERMS OF MILEPOST LOCATION. EACH BAND REPRESENTS A QUARTER MILE INTERVAL.
2. TO ALLOW SIGNS TO BE READ FROM BOTH DIRECTIONS, ONE DOUBLE-FACED ALUMINUM PANEL WITH WHITE REFLECTIVE SHEETING BACKGROUND AND BLACK PLASTIC BANDS SHALL BE MOUNTED AT RIGHT ANGLES TO THE TRACK AT EACH LOCATION.
3. THE POST SHALL BE SET PER THE LOCATION PLAN ON THIS SHEET. EXCEPTIONS SHALL REQUIRE THE APPROVAL OF SCRRA.
4. IN SINGLE TRACK TERRITORY, MILE POSTS SHALL BE SET ON RIGHT HAND SIDE OF THE TRACK AS ONE FACES IN THE DIRECTION OF INCREASING MILE POSTS. IN MULTIPLE TRACK TERRITORY MARKERS SHALL BE SET ON THE FIELD SIDE OF THE TRACK FARTHEST TO THE RIGHT.
5. WHEN THE EXACT QUARTER MILE INCREMENT STATION FALLS WITHIN THE LIMITS OF A BRIDGE, GRADE CROSSING OR OTHER FEATURE WHERE IT WOULD BE IMPRACTICAL TO LOCATE A SIGN, THE MARKER SHALL INSTEAD BE SET AT THE END OF THE FEATURE NEAREST THE EXACT INCREMENT STATION.

MATERIAL SPECIFICATIONS

SIGNS:
⅛" THICK MILL FINISH ALUMINUM PANEL, ALCOA 6016-T6 OR EQUAL. PAINT ALL SIDES WITH LINEAR POLYURATHANE. COLOR FACE OF PANEL WITH ENGINEERING GRADE, PRESSURE SENSITIVE , RETRO-REFLECTIVE WHITE VINYL SHEETING. SILK SCREEN BANDS WITH BLACK INK. FINISH WITH EXTERIOR GRADE PRESSURE SENSITIVE CLEAR MYLAR, 3M-1150 OR EQUAL.

POST, ANCHOR AND HARDWARE:
PER SCRRA ES5210.

TEXT STYLE:
NONE.

REV.	DATE	DESCRIPTION	DES.	ENG.
X	XX-XX-XX	REVISION	XX	XX

DRAWN BY: A. CARLOS DATE: 03/31/2011

ASSISTANT DIRECTOR: STANDARDS & DESIGN

DIRECTOR OF ENGINEERING AND CONSTRUCTION

SCRRA ENGINEERING STANDARDS ARE INTENDED FOR SCRRA APPROVED USES ONLY. FOR NON-SCRRA APPROVED USES, SCRRA SHALL NOT BE RESPONSIBLE FOR THE ACCURACY OR COMPLETENESS OF THE DATA OR INFORMATION CONTAINED HEREIN. THE SELECTION AND USE OF THESE STANDARDS IS THE SOLE RESPONSIBILITY OF THE USER AND SHOULD NOT BE USED WITHOUT CONSULTING A REGISTERED PROFESSIONAL ENGINEER. ALL WARRANTIES AND REPRESENTATIONS OF ANY KIND ARE DISCLAIMED. ANYONE MAKING USE OF THIS INFORMATION AGREES THAT IT ASSUMES ALL LIABILITY ARISING FROM SUCH USE. NO PART OF THESE STANDARDS SHOULD BE REPRODUCED OR DISTRIBUTED IN ANY FORM OR BY ANY MEANS WITHOUT THE PRIOR WRITTEN PERMISSION OF SCRRA. ALL RIGHTS RESERVED.

METROLINK®
SOUTHERN CALIFORNIA REGIONAL RAIL AUTHORITY
ONE GATEWAY PLAZA, 12TH FLOOR, L. A., CA. 90012

ENGINEERING STANDARDS

QUARTER MILE INCREMENT MARKER

STANDARD 5212
SCALE: NTS
REVISION –
SHEET 1 OF 1
CADD FILE: ES5212

BILL OF MATERIAL	
NUMBER REQUIRED	ITEM
	PERMANENT SPEED SIGN
1	2.00 SQ. FT. ALUMINUM PANEL
1	2" x 2" SQUARE POST (LENGTH VARIES WITH TERRAIN)
2	3" LONG BOLT WITH NUT AND WASHERS PER SCRRA ES5210
1	ANCHOR PER SCRRA ES5210

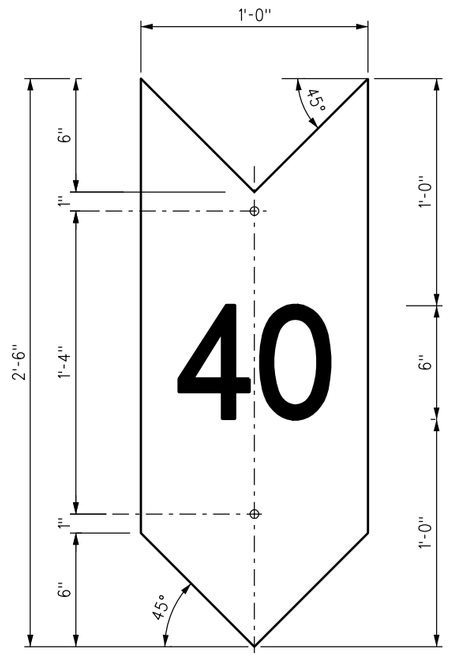

ONE SPEED SIGN

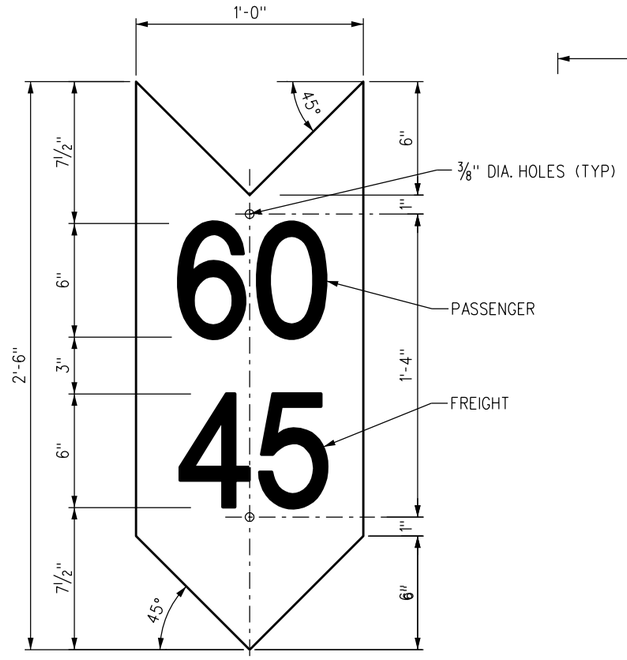

TWO SPEED SIGN

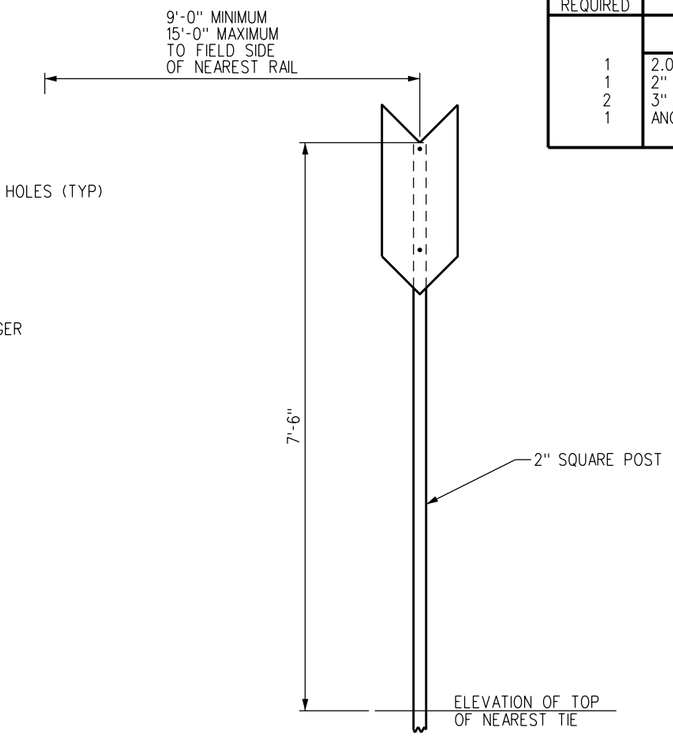

ANCHORED PER SCRRA ES5210

PERMANENT SPEED SIGN

INSTALLATION NOTES

1. ALL SIGNS SHALL BE PLACED ON RIGHT SIDE OF TRACK IN DIRECTION OF APPROACH TO SPEED CHANGE.
2. REDUCE SPEED SIGNS WILL BE LOCATED 2500 FEET IN ADVANCE OF THE RESTRICTED LOCATION AND WILL INDICATE THE MAXIMUM SPEED PERMITTED AS SHOWN IN THE CURRENT TIME TABLE. WHERE TWO SPEEDS ARE SHOWN, THE HIGHER SPEED APPLIES TO PASSENGER TRAINS AND THE LOWER SPEED TO FREIGHT TRAINS. WHERE ONE SPEED IS SHOWN, IT APPLIES TO ALL TRAINS.
3. INCREASE SPEED SIGNS WILL BE PLACED TO INDICATE WHERE SPEED OF TRAIN MAY BE INCREASED. THIS SIGN SHALL NOT BE PLACED WHERE THERE IS LESS THAN ONE HALF MILE BETWEEN THE END OF ONE SPEED RESTRICTION AND THE BEGINNING OF ANOTHER SPEED RESTRICTION.

MATERIAL SPECIFICATIONS

SIGNS:

1/8" THICK MILL FINISH ALUMINUM PANEL, ALCOA 6016-T6 OR EQUAL. PAINT ALL SIDES WITH LINEAR POLYURETHANE. COLOR FACE OF PANEL WITH DIAMOND GRADE, PRESSURE SENSITIVE, RETRO-REFLECTIVE YELLOW VINYL SHEETING. SILK SCREEN LEGEND WITH BLACK INK. FINISH WITH EXTERIOR GRADE PRESSURE SENSITIVE CLEAR MYLAR, 3M-1150 OR EQUAL.

POST, ANCHOR AND HARDWARE:
PER SCRRA ES5210.

TEXT STYLE:
"ARIAL BOLD" PER SCRRA ES1212, SIZE AS INDICATED.

REV.	DATE	DESCRIPTION	DES.	ENG.
X	XX-XX-XX	REVISION	XX	XX

DRAWN BY: A. CARLOS DATE: 03/31/2011

ASSISTANT DIRECTOR: STANDARDS & DESIGN

DIRECTOR OF ENGINEERING AND CONSTRUCTION

SCRRA ENGINEERING STANDARDS ARE INTENDED FOR SCRRA APPROVED USES ONLY. FOR NON-SCRRA APPROVED USES:
SCRRA SHALL NOT BE RESPONSIBLE FOR THE ACCURACY OR COMPLETENESS OF THE DATA OR INFORMATION CONTAINED HEREIN. THE SELECTION AND USE OF THESE STANDARDS IS THE SOLE RESPONSIBILITY OF THE USER AND SHOULD NOT BE USED WITHOUT CONSULTING A REGISTERED PROFESSIONAL ENGINEER. ALL WARRANTIES AND REPRESENTATIONS OF ANY KIND ARE DISCLAIMED. ANYONE MAKING USE OF THIS INFORMATION AGREES THAT IT ASSUMES ALL LIABILITY ARISING FROM SUCH USE. NO PART OF THESE STANDARDS SHOULD BE REPRODUCED OR DISTRIBUTED IN ANY FORM OR BY ANY MEANS WITHOUT THE PRIOR WRITTEN PERMISSION OF SCRRA. ALL RIGHTS RESERVED.

METROLINK®
SOUTHERN CALIFORNIA REGIONAL RAIL AUTHORITY
ONE GATEWAY PLAZA, 12TH FLOOR, L. A., CA. 90012

ENGINEERING STANDARDS

PERMANENT SPEED SIGNS

STANDARD 5213
SCALE: NTS
REVISION –
SHEET 1 OF 1
CADD FILE: ES5213

BILL OF MATERIAL	
NUMBER REQUIRED	ITEM
	WARNING SIGN ASSEMBLY
1	2.25 SQ. FT. ALUMINUM PANEL (SIGN "A")
2	2.25 SQ. FT. ALUMINUM PANEL (SIGN "B")
1	2" x 2" SQUARE POST (LENGTH VARIES WITH TERRAIN)
4	3" LONG BOLT WITH NUT AND WASHERS PER SCRRA ES5210
1	ANCHOR PER SCRRA ES5210

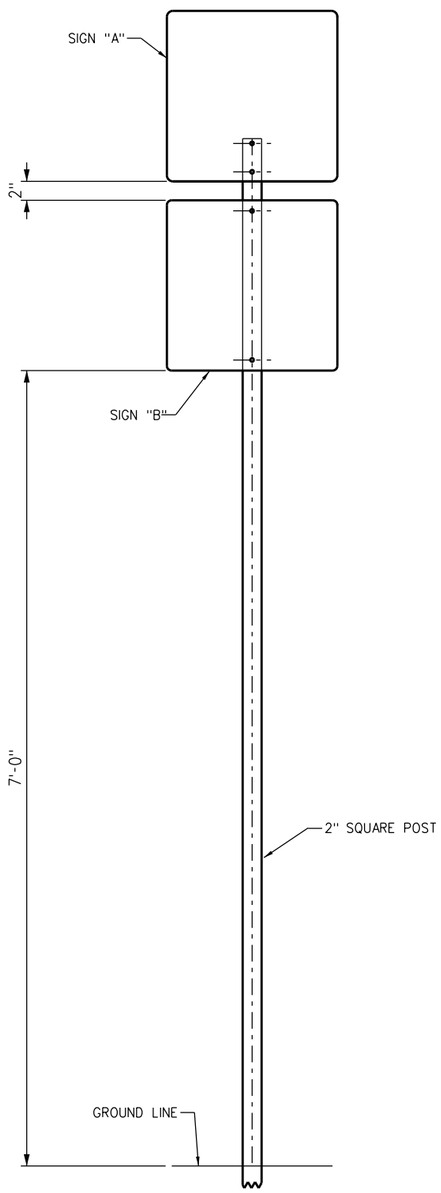

ANCHORED PER SCRRA ES5210

SIGN ELEVATION

SIGN "A" (DOUBLE SIDED)

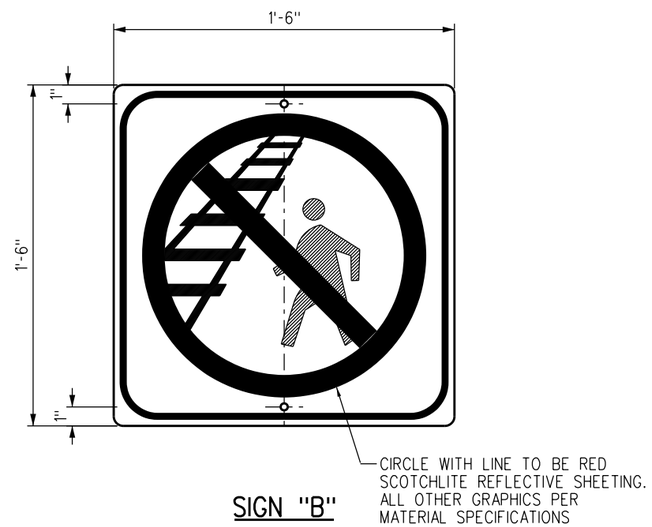

SIGN "B"

INSTALLATION NOTES

1. ORIENTATION OF SIGNS WILL BE COORDINATED WITH THE SCRRA.
2. SIGNS SHALL BE STAGGERED ALONG LENGTH OF CORRIDOR PER THE LOCATION PLAN ON THIS SHEET.
3. COMPLETE WARNING SIGN ASSEMBLY SHALL INCLUDE ONE DOUBLE-SIDED TYPE "A" SIGN AND TWO TYPE "B" SIGNS.

MATERIAL SPECIFICATIONS:

SIGNS:
1/8" THICK MILL FINISH ALUMINUM PANEL, ALCOA 6016-T6 OR EQUAL. PAINT ALL SIDES WITH LINEAR POLYURATHANE. COLOR FACE OF PANEL WITH ENGINEERING GRADE, PRESSURE SENSITIVE , RETRO-REFLECTIVE WHITE VINYL SHEETING. SILK SCREEN LEGEND WITH BLACK INK. FINISH WITH EXTERIOR GRADE PRESSURE SENSITIVE CLEAR MYLAR, 3M-1150 OR EQUAL.

POST, ANCHOR AND HARDWARE:
PER SCRRA ES5210.

TEXT STYLE:
"ARIAL BOLD" PER SCRRA ES1212, SIZE AS INDICATED.

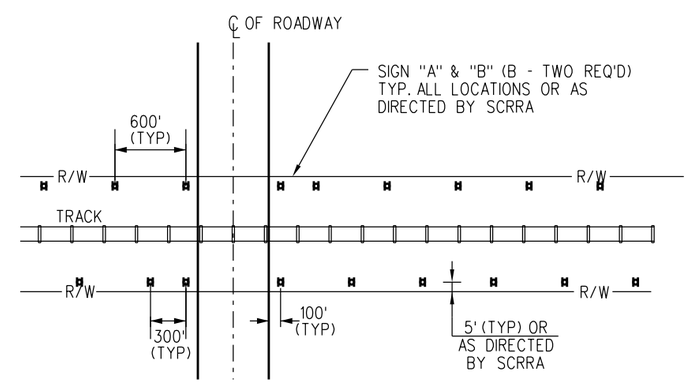

LOCATION PLAN

REV.	DATE	DESCRIPTION	DES.	ENG.
X	XX-XX-XX	REVISION	XX	XX

DRAWN BY: A. CARLOS DATE: 03/31/2011

ASSISTANT DIRECTOR: STANDARDS & DESIGN

DIRECTOR OF ENGINEERING AND CONSTRUCTION

SCRRA ENGINEERING STANDARDS ARE INTENDED FOR SCRRA APPROVED USES ONLY. FOR NON-SCRRA APPROVED USES, SCRRA SHALL NOT BE RESPONSIBLE FOR THE ACCURACY OR COMPLETENESS OF THE DATA OR INFORMATION CONTAINED HEREIN. THE SELECTION AND USE OF THESE STANDARDS IS THE SOLE RESPONSIBILITY OF THE USER AND SHOULD NOT BE USED WITHOUT CONSULTING A REGISTERED PROFESSIONAL ENGINEER. ALL WARRANTIES AND REPRESENTATIONS OF ANY KIND ARE DISCLAIMED. ANYONE MAKING USE OF THIS INFORMATION AGREES THAT IT ASSUMES ALL LIABILITY ARISING FROM SUCH USE. NO PART OF THESE STANDARDS SHOULD BE REPRODUCED OR DISTRIBUTED IN ANY FORM OR BY ANY MEANS WITHOUT THE PRIOR WRITTEN PERMISSION OF SCRRA. ALL RIGHTS RESERVED.

METROLINK®
SOUTHERN CALIFORNIA REGIONAL RAIL AUTHORITY
ONE GATEWAY PLAZA, 12TH FLOOR, L. A., CA. 90012

ENGINEERING STANDARDS

WARNING SIGNS

STANDARD: 5214
SCALE: NTS
REVISION: –
SHEET: 1 OF 1
CADD FILE: ES5214

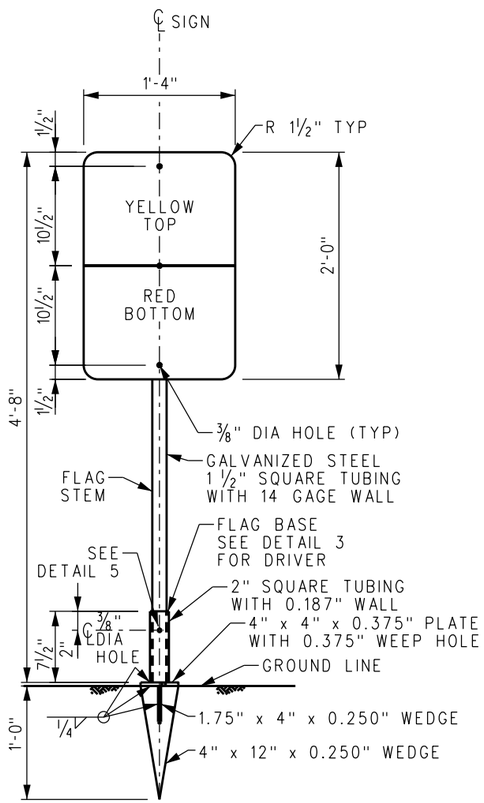

NOTE:

YELLOW-RED FLAG ILLUSTRATED. PURCHASE REQUISITIONS MUST SPECIFY COLOR(S) OF FLAG.

2 - PIECE FLAG HOLDER FLAG BASE, STEM WITH SIGN DETAIL 1

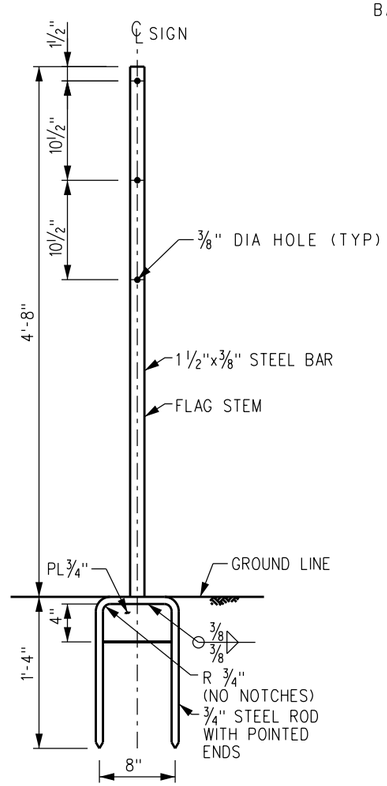

1 - PIECE FLAG HOLDER STEEL ROD FORK AND STEM WITHOUT SIGN DETAIL 2

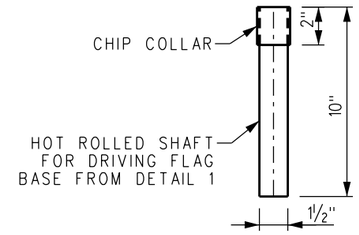

FLAG BASE DRIVER FOR 2-PIECE FLAG HOLDER DETAIL 3

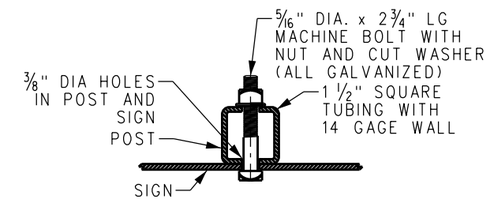

TYPICAL SECTION THRU SIGN AND POST DETAIL 4

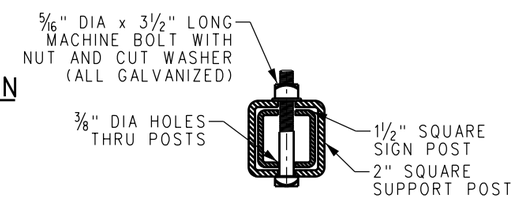

TYPICAL SECTION THRU POST AND BASE DETAIL 5

BILL OF MATERIAL	
NUMBER REQUIRED	ITEM
	2-PIECE FLAG HOLDER
1	2.67 SQ. FT. ALUMINUM PLATE
3	⅝" DIA X 2¾" LONG BOLT WITH NUT AND WASHERS
1	⅝" DIA X 3½" LONG BOLT WITH NUT AND WASHERS
1	1½" X 1½" X 56" LONG SQUARE POST (FLAG STEM)
1	FLAG BASE
1	FLAG BASE DRIVER (IF REQ'D)
	1-PIECE FLAG HOLDER
1	2.67 SQ. FT. ALUMINUM PLATE
3	⅝" DIA X 1½" LONG BOLT WITH NUT AND WASHERS
1	STEEL ROD FORK AND STEM

INSTALLATION NOTES

1. PURPOSE: TO ASSIST TRAIN CREWS AND OTHERS IN ACCURATELY DETERMINING LOCATIONS FOR SPEED RESTRICTIONS AND FORM B TRACK BULLETINS.
2. WHERE USED: AS SPECIFIED BY THE GENERAL CODE OPERATING RULES.
3. PLACEMENT: ALL SIGNS ON THIS PAGE ARE DISPLAYED TO THE FIELD SIDE OF THE TRACK, FOR THE APPROPRIATE DIRECTION OF TRAFFIC MOVEMENT. ACTUAL LOCATION MAY BE ADJUSTED SLIGHTLY TO AVOID OBSTRUCTIONS AND UTILITIES. CARE MUST BE USED IN PLACEMENT TO ENSURE SIGN DOES NOT OBSTRUCT WALKWAY, MAINTENANCE ROAD, DRAINAGE DITCH, SIDE TRACKS, ETC. IN ALL CASES PLACEMENT MUST CONFORM TO THE CLEARANCES SPECIFIED IN CPUC GO 26-0. WHEN INSTALLING 2-PIECE FLAG HOLDER, DRIVE FLAG BASE WITH FLAG BASE DRIVER ONLY. DO NOT STRIKE REFLECTIVE TAPE APPLIED TO FLAG BASE.

MATERIAL SPECIFICATIONS

SIGN:
⅛" THICK MILL FINISH ALUMINUM PANEL, ALCOA 6016-T6 OR EQUAL.

FINISH:
SIGN PLATE SHALL BE COATED WITH WIDE ANGLE SCOTCHLITE REFLECTIVE SHEETING AS FOLLOWS:
STOP FLAG - 3M RED 3932 HIGH INTENSITY PRISMATIC REFLECTIVE SHEETING - (ONE SIDE ONLY AND NATURAL FINISH ON BACK).
SLOW FLAG - YELLOW (ONE SIDE ONLY AND NATURAL FINISH ON BACK).
RESUME SPEED FLAG - GREEN (ONE SIDE ONLY AND NATURAL FINISH ON BACK).
YELLOW - RED FLAG - (ONE SIDE ONLY AND NATURAL FINISH ON BACK).
FLAG BASE SHALL BE COATED WITH WIDE ANGLE SCOTCHLITE REFLECTIVE WHITE SHEETING AT EXPOSED SECTION OF BASE.

LOCATION AND USE:
REFER TO RULE 5.4.

NOTES:
DISTANCE FROM FIELD SIDE OF NEAREST RAIL TO FLAG POST SHALL NOT BE LESS THAN 9 FEET NOR MORE THAN 15 FEET, EXCEPT AS PRESCRIBED BY RULE 5.4.

REV.	DATE	DESCRIPTION	DES.	ENG.
X	XX-XX-XX	REVISION	XX	XX

DRAWN BY: A. CARLOS DATE: 03/31/2011

ASSISTANT DIRECTOR: STANDARDS & DESIGN

DIRECTOR OF ENGINEERING AND CONSTRUCTION

SCRRA ENGINEERING STANDARDS ARE INTENDED FOR SCRRA APPROVED USES ONLY. FOR NON-SCRRA APPROVED USES:
SCRRA SHALL NOT BE RESPONSIBLE FOR THE ACCURACY OR COMPLETENESS OF THE DATA OR INFORMATION CONTAINED HEREIN. THE SELECTION AND USE OF THESE STANDARDS IS THE SOLE RESPONSIBILITY OF THE USER AND SHOULD NOT BE USED WITHOUT CONSULTING A REGISTERED PROFESSIONAL ENGINEER. ALL WARRANTIES AND REPRESENTATIONS OF ANY KIND ARE DISCLAIMED. ANYONE MAKING USE OF THIS INFORMATION AGREES THAT IT ASSUMES ALL LIABILITY ARISING FROM SUCH USE. NO PART OF THESE STANDARDS SHOULD BE REPRODUCED OR DISTRIBUTED IN ANY FORM OR BY ANY MEANS WITHOUT THE PRIOR WRITTEN PERMISSION OF SCRRA. ALL RIGHTS RESERVED.

METROLINK®
SOUTHERN CALIFORNIA REGIONAL RAIL AUTHORITY
ONE GATEWAY PLAZA, 12TH FLOOR, L. A., CA. 90012

ENGINEERING STANDARDS

STOP, SLOW AND RESUME SPEED FLAGS AND SIGNS

STANDARD 5215
SCALE: NTS
REVISION –
SHEET 1 OF 1
CADD FILE: ES5215

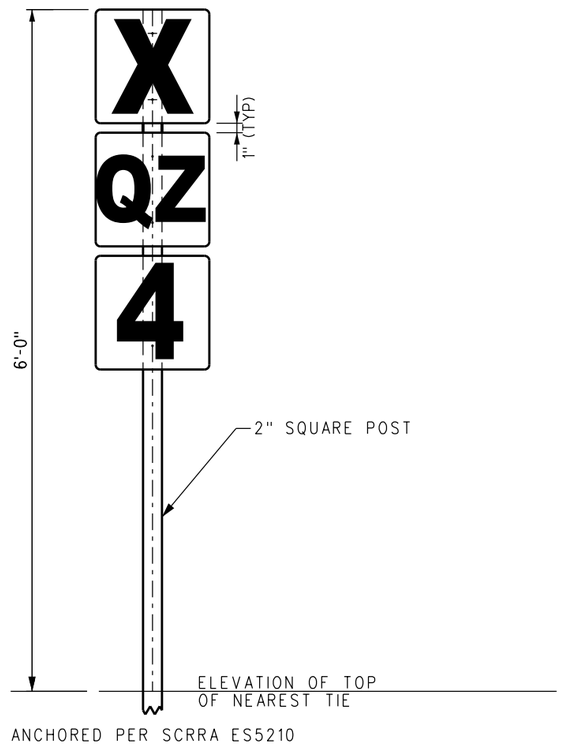

WHISTLING POINT SIGN

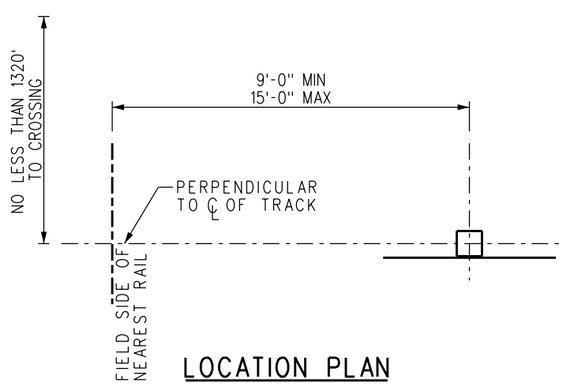

LOCATION PLAN

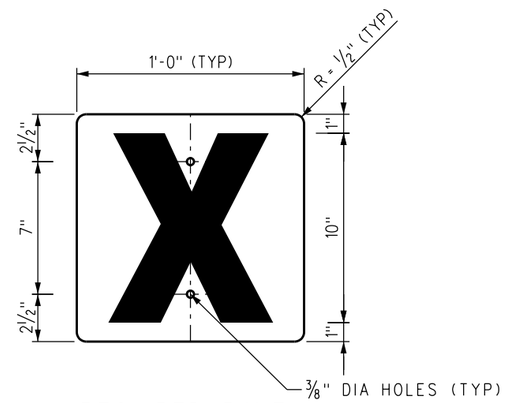

REQUIRED PANEL

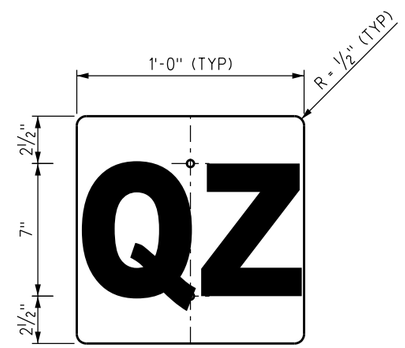

OPTIONAL PANEL QUIET ZONES

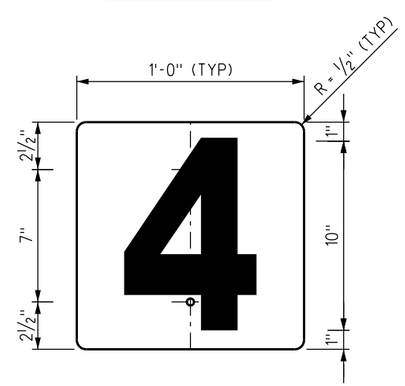

OPTIONAL PANEL FOR MULTIPLE CROSSINGS

BILL OF MATERIAL	
NUMBER REQUIRED	ITEM
	WHISTLING POINT SIGN
1	1 SQ. FT. ALUMINUM PANEL
1	1 SQ. FT. ALUMINUM PANEL (OPTIONAL FOR QUIET ZONE)
1	1 SQ. FT. ALUMINUM PANEL (OPTIONAL FOR MULTIPLE CROSSINGS)
1	2" x 2" SQUARE POST (LENGTH VARIES WITH TERRAIN)
2	3" LONG BOLT WITH NUT AND WASHERS PER SCRRA ES5210
2	3" LONG BOLT WITH NUT AND WASHERS PER SCRRA ES5210 (OPTIONAL FOR QUIET ZONE)
2	3" LONG BOLT WITH NUT AND WASHERS PER SCRRA ES5210 (OPTIONAL FOR MULTIPLE CROSSINGS)
1	ANCHOR PER SCRRA ES5210

INSTALLATION NOTES

1. SIGNS SHALL BE LOCATED ON THE RIGHT HAND SIDE AND SHALL FACE IN THE DIRECTION OF APPROACH.
2. THE POST SHALL BE SET PER THE LOCATION PLAN ON THIS SHEET. EXCEPTIONS SHALL REQUIRE THE APPROVAL OF SCRRA.
3. QUIET ZONE SIGN SHALL BE USED ONLY AT LOCATIONS THAT HAVE BEEN LEGISLATED AS QUIET ZONES.
4. WHERE THERE ARE MULTIPLE PUBLIC CROSSINGS NOT MORE THAN 1320' APART, THE SIGN IN ADVANCE OF THE FIRST CROSSING SHALL INCLUDE A SECOND PANEL DISPLAYING A NUMERAL WHICH REPRESENTS THE NUMBER OF CROSSINGS INVOLVED. WHISTLE SIGNAL UNDER PROVISIONS OF RULE 5.8.2 (11) MUST BE SOUNDED UNTIL THE ENGINE HAS PASSED THROUGH THE LAST CROSSING.

MATERIAL SPECIFICATIONS

SIGNS:
1/8" THICK MILL FINISH ALUMINUM PANEL, ALCOA 6016-T6 OR EQUAL. PAINT ALL SIDES WITH LINEAR POLYURATHANE. COLOR FACE OF PANEL WITH ENGINEERING GRADE, PRESSURE SENSITIVE, RETRO-REFLECTIVE WHITE VINYL SHEETING. SILK SCREEN LEGEND WITH BLACK INK. FINISH WITH EXTERIOR GRADE PRESSURE SENSITIVE CLEAR MYLAR, 3M-1150 OR EQUAL.

POST, ANCHOR AND HARDWARE:
PER SCRRA ES5210.

TEXT STYLE:
"ARIAL BOLD" PER SCRRA ES1212, SIZE AS INDICATED.

REV.	DATE	DESCRIPTION	DES.	ENG.
X	XX-XX-XX	REVISION	XX	XX

DRAWN BY: A. CARLOS DATE: 03/31/2011

ASSISTANT DIRECTOR: STANDARDS & DESIGN

DIRECTOR OF ENGINEERING AND CONSTRUCTION

SCRRA ENGINEERING STANDARDS ARE INTENDED FOR SCRRA APPROVED USES ONLY. FOR NON-SCRRA APPROVED USES, SCRRA SHALL NOT BE RESPONSIBLE FOR THE ACCURACY OR COMPLETENESS OF THE DATA OR INFORMATION CONTAINED HEREIN. THE SELECTION AND USE OF THESE STANDARDS IS THE SOLE RESPONSIBILITY OF THE USER AND SHOULD NOT BE USED WITHOUT CONSULTING A REGISTERED PROFESSIONAL ENGINEER. ALL WARRANTIES AND REPRESENTATIONS OF ANY KIND ARE DISCLAIMED. ANYONE MAKING USE OF THIS INFORMATION AGREES THAT IT ASSUMES ALL LIABILITY ARISING FROM SUCH USE. NO PART OF THESE STANDARDS SHOULD BE REPRODUCED OR DISTRIBUTED IN ANY FORM OR BY ANY MEANS WITHOUT THE PRIOR WRITTEN PERMISSION OF SCRRA. ALL RIGHTS RESERVED.

METROLINK®
SOUTHERN CALIFORNIA REGIONAL RAIL AUTHORITY
ONE GATEWAY PLAZA, 12TH FLOOR, L. A., CA. 90012

ENGINEERING STANDARDS

WHISTLING POINT /QUIET ZONE SIGN

STANDARD 5216
SCALE: NTS
REVISION –
SHEET 1 OF 1
CADD FILE: ES5216

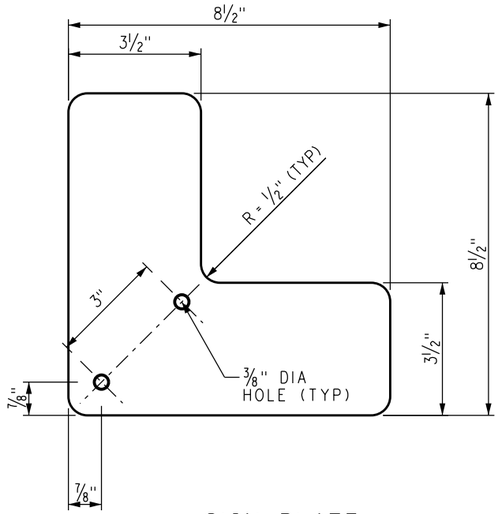

SIGN PLATE
DETAIL 1

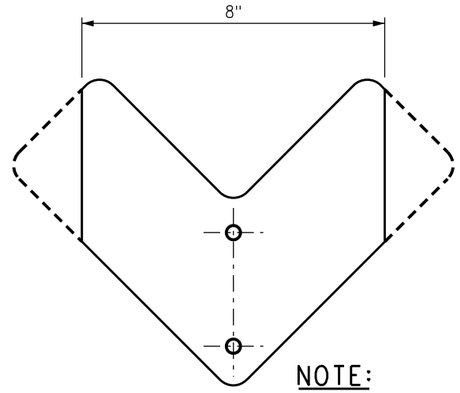

NOTE:
ALL OTHER DIMENSIONS
PER DETAIL 1.

OPTIONAL CUT
FOR LIMITED CLEARANCE
DETAIL 2

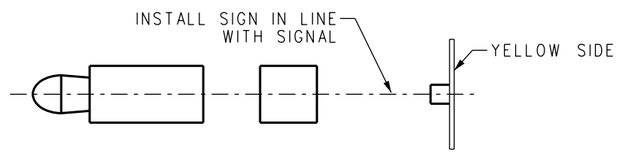

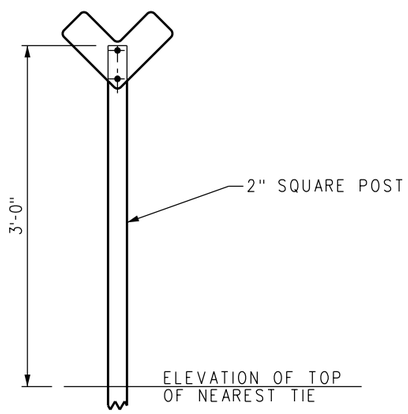

ANCHORED PER SCRRA ES5210

YARD LIMIT SIGN
DETAIL 3

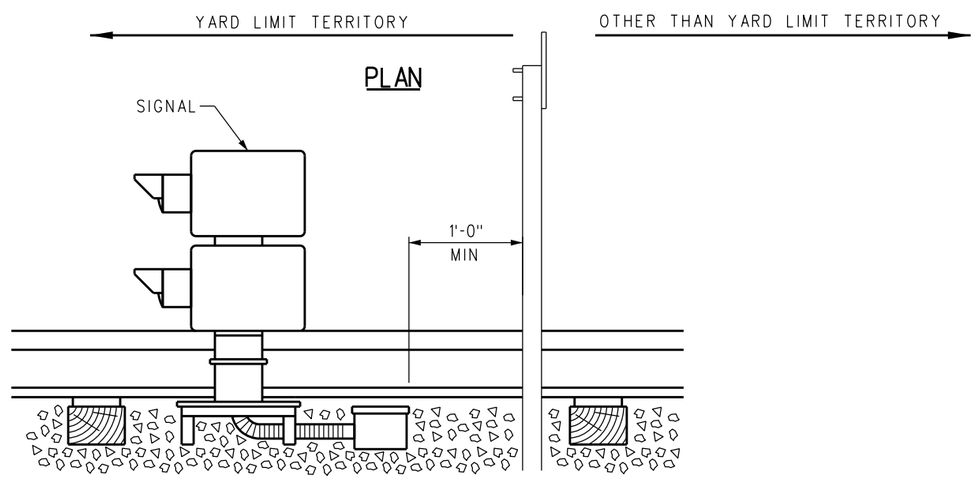

ELEVATION
INSTALLATION LOCATION
DETAIL 4

BILL OF MATERIAL	
NUMBER REQUIRED	ITEM
	YARD LIMIT SIGN FOR TERMINAL TRACKS
1	0.33 SQ. FT. ALUMINUM PANEL OR 0.27 SQ. FT. ALUMINUM PANEL (OPTIONAL CUT)
1	2" x 2" SQUARE POST (LENGTH VARIES WITH TERRAIN)
2	3" LONG BOLT WITH NUT AND WASHERS PER SCRRA ES5210
1	ANCHOR PER SCRRA ES5210

INSTALLATION NOTES

1. SIGN SHALL BE INSTALLED TO INDICATE LIMIT OF TERRITORY OPERATED UNDER RULE 6.13.
2. THE POST SHALL BE SET PER THE LOCATION PLAN ON THIS SHEET. EXCEPTIONS SHALL REQUIRE THE APPROVAL OF SCRRA.

MATERIAL SPECIFICATIONS

SIGNS:
⅛" THICK MILL FINISH ALUMINUM PANEL, ALCOA 6016-T6 OR EQUAL. PAINT ALL SIDES WITH LINEAR POLYURATHANE. COLOR FACE OF PANEL WITH ENGINEERING GRADE, PRESSURE SENSITIVE, RETRO-REFLECTIVE YELLOW VINYL SHEETING NO. 4280-A. FINISH WITH EXTERIOR GRADE PRESSURE SENSITIVE CLEAR MYLAR, 3M-1150 OR EQUAL.

POST, ANCHOR AND HARDWARE:
PER SCRRA ES5210.

TEXT STYLE:
NONE.

REV.	DATE	DESCRIPTION	DES.	ENG.
X	XX-XX-XX	REVISION	XX	XX

DRAWN BY: A. CARLOS DATE: 03/31/2011

ASSISTANT DIRECTOR: STANDARDS & DESIGN

DIRECTOR OF ENGINEERING AND CONSTRUCTION

SCRRA ENGINEERING STANDARDS ARE INTENDED FOR SCRRA APPROVED USES ONLY. FOR NON-SCRRA APPROVED USES:
SCRRA SHALL NOT BE RESPONSIBLE FOR THE ACCURACY OR COMPLETENESS OF THE DATA OR INFORMATION CONTAINED HEREIN. THE SELECTION AND USE OF THESE STANDARDS IS THE SOLE RESPONSIBILITY OF THE USER AND SHOULD NOT BE USED WITHOUT CONSULTING A REGISTERED PROFESSIONAL ENGINEER. ALL WARRANTIES AND REPRESENTATIONS OF ANY KIND ARE DISCLAIMED. ANYONE MAKING USE OF THIS INFORMATION AGREES THAT IT ASSUMES ALL LIABILITY ARISING FROM SUCH USE. NO PART OF THESE STANDARDS SHOULD BE REPRODUCED OR DISTRIBUTED IN ANY FORM OR BY ANY MEANS WITHOUT THE PRIOR WRITTEN PERMISSION OF SCRRA. ALL RIGHTS RESERVED.

METROLINK®
SOUTHERN CALIFORNIA REGIONAL RAIL AUTHORITY
ONE GATEWAY PLAZA, 12TH FLOOR, L. A., CA. 90012

ENGINEERING STANDARDS

YARD LIMIT SIGN FOR TERMINAL TRACKS

STANDARD 5217
SCALE: NTS
REVISION –
SHEET 1 OF 1
CADD FILE: ES5217

BILL OF MATERIAL	
NUMBER REQUIRED	ITEM
	CP LIMIT SIGN
1	ALUMINUM PANEL (AREA VARIES WITH NO. OF REQ. CHARACTERS)
1	2" x 2" SQUARE POST (LENGTH VARIES WITH TERRAIN)
3-5	3" LONG BOLT WITH NUT AND WASHERS PER SCRRA ES5210 (NO. VARIES WITH REQ. HEIGHT OF SIGN).
1	ANCHOR PER SCRRA ES5210

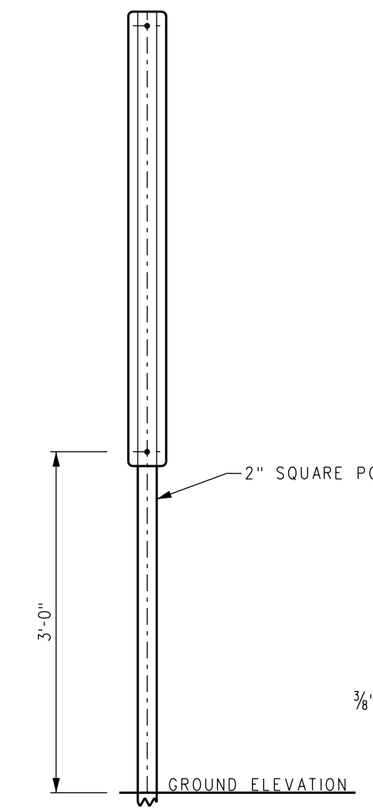

ANCHORED PER SCRRA ES5210

SIGN ELEVATION
DETAIL 1

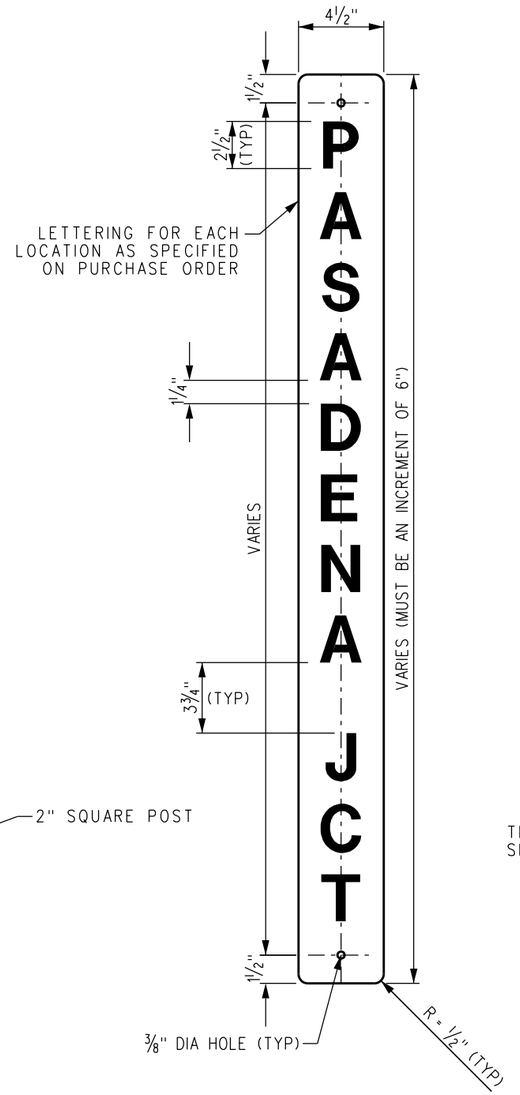

EXAMPLE SIGN
DETAIL 2

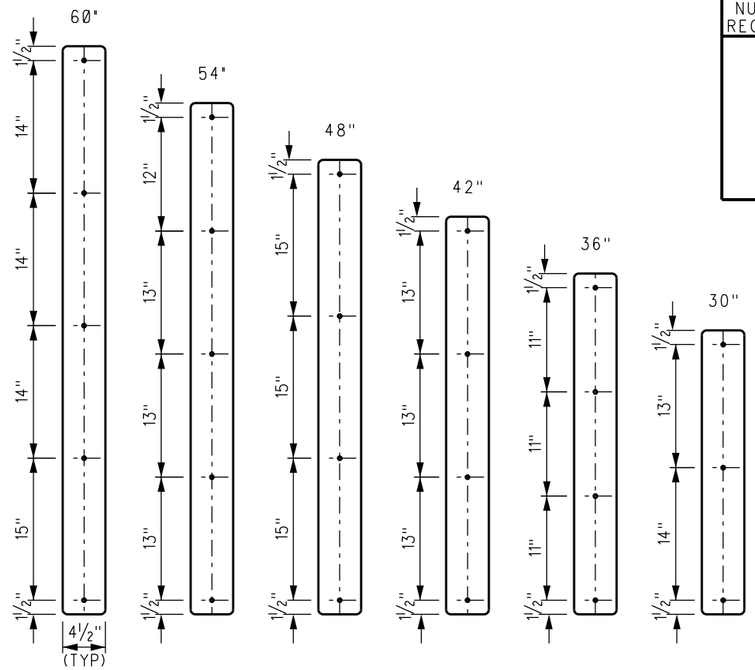

EXTRA BOLT HOLE EXAMPLES
DETAIL 4

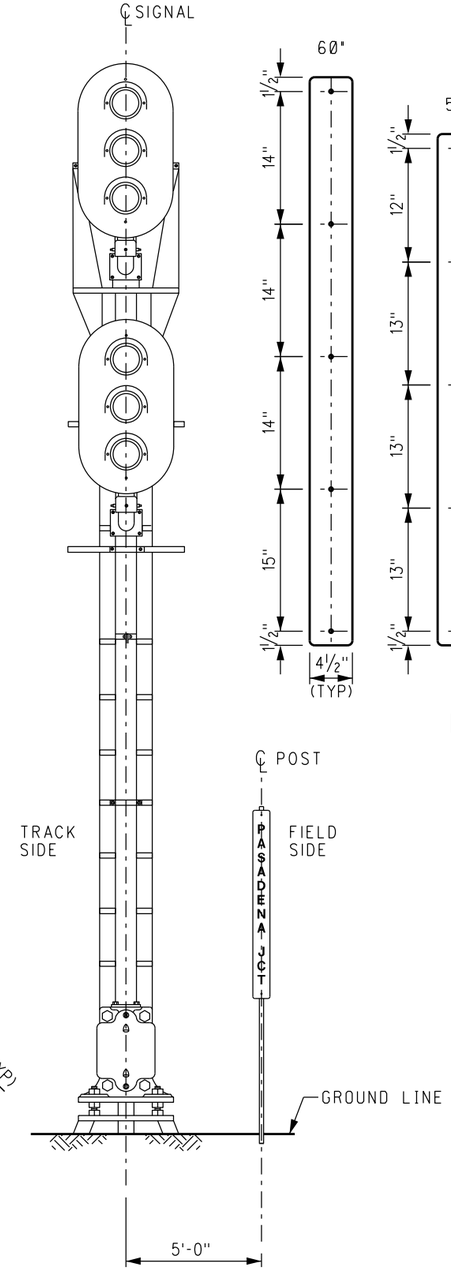

FRONT ELEVATION

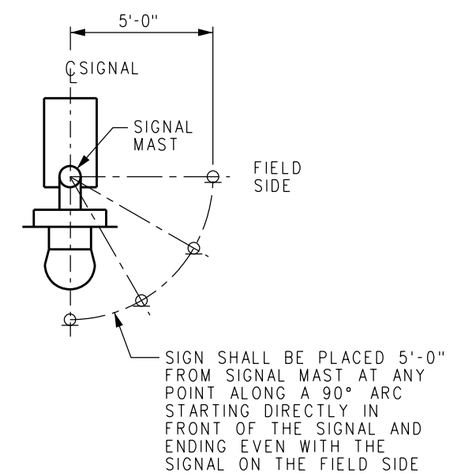

PLAN

TYPICAL INSTALLATION
DETAIL 3

INSTALLATION NOTES

1. SIGNS SHALL BE SET ADJACENT TO SIGNAL CONTROLLING ENTRANCE TO CONTROL POINTS AT LOCATIONS DESIGNATED BY THE SCRRA DIRECTOR OF ENGINEERING. THIS IS GENERALLY WHERE CONTROL POINTS ARE LESS THAN 1500 FEET APART.
2. SIGNS SHALL BE INSTALLED BY TRACK AND SIGNAL FORCES WORKING TOGETHER ONLY AFTER CONFIRMING THAT THE PROPOSED LOCATION IS CLEAR OF OBSTRUCTIONS OR UNDERGROUND UTILITIES.
3. SIGNS SHALL BE LOCATED AS CLOSE AS PRACTICABLE TO THE SIGNAL WHICH CONTROLS ENTRANCE TO THE CONTROL POINT. THE PREFERRED LOCATION IS SHOWN IN DETAIL 3. PLACEMENT MAY BE ALTERED WHERE REQUIRED BY FIELD CONDITIONS PROVIDED IT CLEARLY ESTABLISHES THE LIMIT OF THE CONTROL POINT. IN ALL CASES, PLACEMENT WILL CONFORM TO THE LATERAL CLEARANCES REQUIRED BY CALIFORNIA PUBLIC UTILITIES COMMISSION GENERAL ORDER 26D. (WHERE "DWARF SIGNALS" ARE USED, SIGN SHALL BE PLACED SO AS NOT TO OBSTRUCT THE SIGNALS).
4. SIGNS MORE THAN 24" TALL SHALL REQUIRE ADDITIONAL BOLTS NO LESS THAN 10" AND NO MORE THAN 15" APART. SEE DETAIL 4.

MATERIAL SPECIFICATIONS

SIGNS:
⅛" THICK MILL FINISH ALUMINUM PANEL, ALCOA 6016-T6 OR EQUAL. PAINT ALL SIDES WITH LINEAR POLYURATHANE. COLOR FACE OF PANEL WITH ENGINEERING GRADE, PRESSURE SENSITIVE, RETRO-REFLECTIVE WHITE VINYL SHEETING. SILK SCREEN LEGEND WITH BLACK INK. FINISH WITH EXTERIOR GRADE PRESSURE SENSITIVE CLEAR MYLAR, 3M-1150 OR EQUAL.

POST, ANCHOR AND HARDWARE:
PER SCRRA ES5210.

TEXT STYLE:
"ARIAL BOLD" PER SCRRA ES1212, SIZE AS INDICATED.

REV.	DATE	DESCRIPTION	DES.	ENG.
X	XX-XX-XX	REVISION	XX	XX

DRAWN BY: A. CARLOS DATE: 03/31/2011

ASSISTANT DIRECTOR: STANDARDS & DESIGN

DIRECTOR OF ENGINEERING AND CONSTRUCTION

SCRRA ENGINEERING STANDARDS ARE INTENDED FOR SCRRA APPROVED USES ONLY. FOR NON-SCRRA APPROVED USES:
SCRRA SHALL NOT BE RESPONSIBLE FOR THE ACCURACY OR COMPLETENESS OF THE DATA OR INFORMATION CONTAINED HEREIN. THE SELECTION AND USE OF THESE STANDARDS IS THE SOLE RESPONSIBILITY OF THE USER AND SHOULD NOT BE USED WITHOUT CONSULTING A REGISTERED PROFESSIONAL ENGINEER. ALL WARRANTIES AND REPRESENTATIONS OF ANY KIND ARE DISCLAIMED. ANYONE MAKING USE OF THIS INFORMATION AGREES THAT IT ASSUMES ALL LIABILITY ARISING FROM SUCH USE. NO PART OF THESE STANDARDS SHOULD BE REPRODUCED OR DISTRIBUTED IN ANY FORM OR BY ANY MEANS WITHOUT THE PRIOR WRITTEN PERMISSION OF SCRRA. ALL RIGHTS RESERVED.

METROLINK®
SOUTHERN CALIFORNIA REGIONAL RAIL AUTHORITY
ONE GATEWAY PLAZA, 12TH FLOOR, L. A., CA. 90012

ENGINEERING STANDARDS

CP LIMIT SIGN

STANDARD 5218
SCALE: NTS
REVISION –
SHEET 1 OF 1
CADD FILE: ES5218

BILL OF MATERIAL	
NUMBER REQUIRED	ITEM
	FLAG STANCHION
	ALL PARTS MADE FROM STEEL

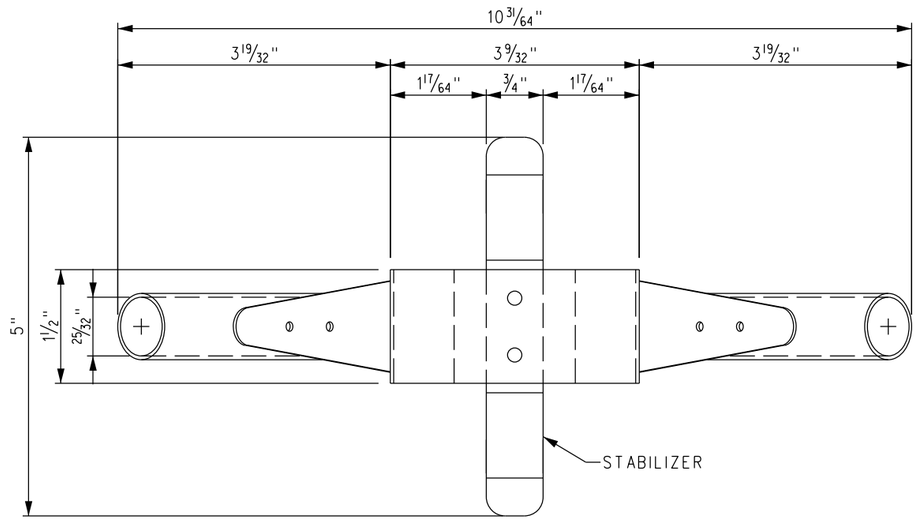

PLAN

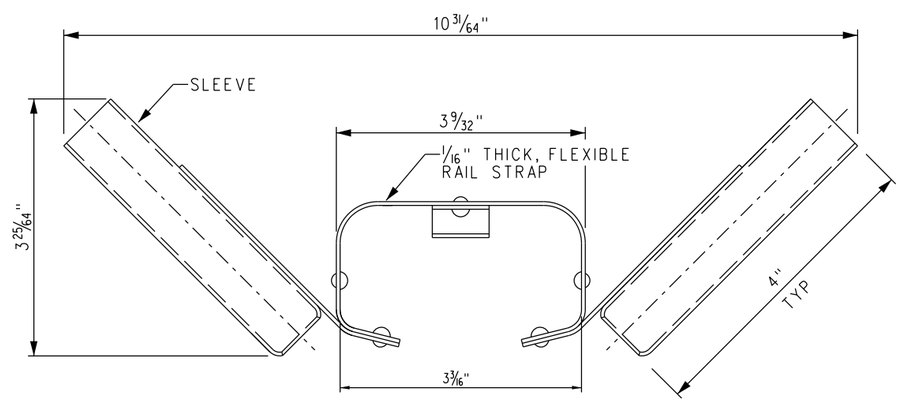

ELEVATION

REV.	DATE	DESCRIPTION	DES.	ENG.
X	XX-XX-XX	REVISION	XX	XX

DRAWN BY: A. CARLOS DATE: 03/31/2011

ASSISTANT DIRECTOR: STANDARDS & DESIGN

DIRECTOR OF ENGINEERING AND CONSTRUCTION

SCRRA ENGINEERING STANDARDS ARE INTENDED FOR SCRRA APPROVED USES ONLY. FOR NON-SCRRA APPROVED USES:
SCRRA SHALL NOT BE RESPONSIBLE FOR THE ACCURACY OR COMPLETENESS OF THE DATA OR INFORMATION CONTAINED HEREIN. THE SELECTION AND USE OF THESE STANDARDS IS THE SOLE RESPONSIBILITY OF THE USER AND SHOULD NOT BE USED WITHOUT CONSULTING A REGISTERED PROFESSIONAL ENGINEER. ALL WARRANTIES AND REPRESENTATIONS OF ANY KIND ARE DISCLAIMED. ANYONE MAKING USE OF THIS INFORMATION AGREES THAT IT ASSUMES ALL LIABILITY ARISING FROM SUCH USE. NO PART OF THESE STANDARDS SHOULD BE REPRODUCED OR DISTRIBUTED IN ANY FORM OR BY ANY MEANS WITHOUT THE PRIOR WRITTEN PERMISSION OF SCRRA. ALL RIGHTS RESERVED.

METROLINK®
SOUTHERN CALIFORNIA REGIONAL RAIL AUTHORITY
ONE GATEWAY PLAZA, 12TH FLOOR, L. A., CA. 90012

ENGINEERING STANDARDS

FLAG STANCHION

STANDARD 5219
SCALE: NTS
REVISION –
SHEET 1 OF 1
CADD FILE: ES5219

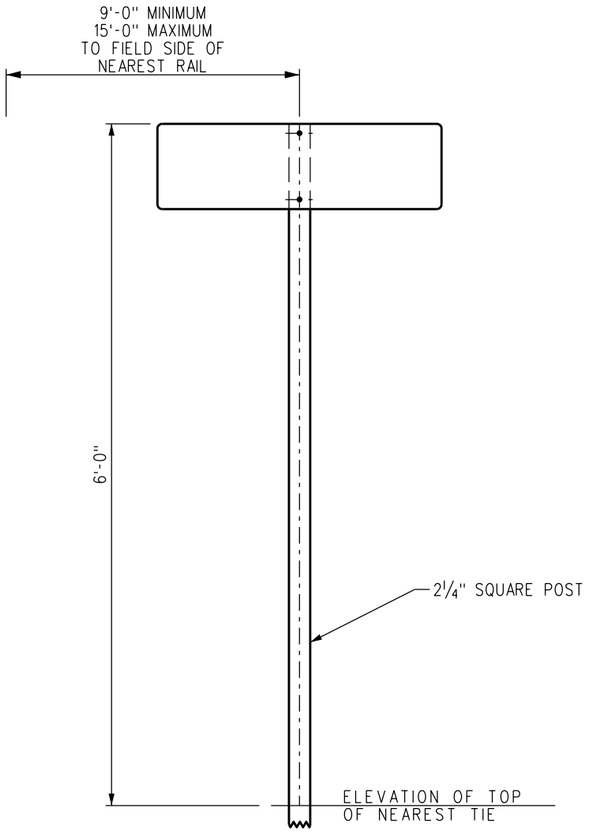

SINGLE POST MOUNT

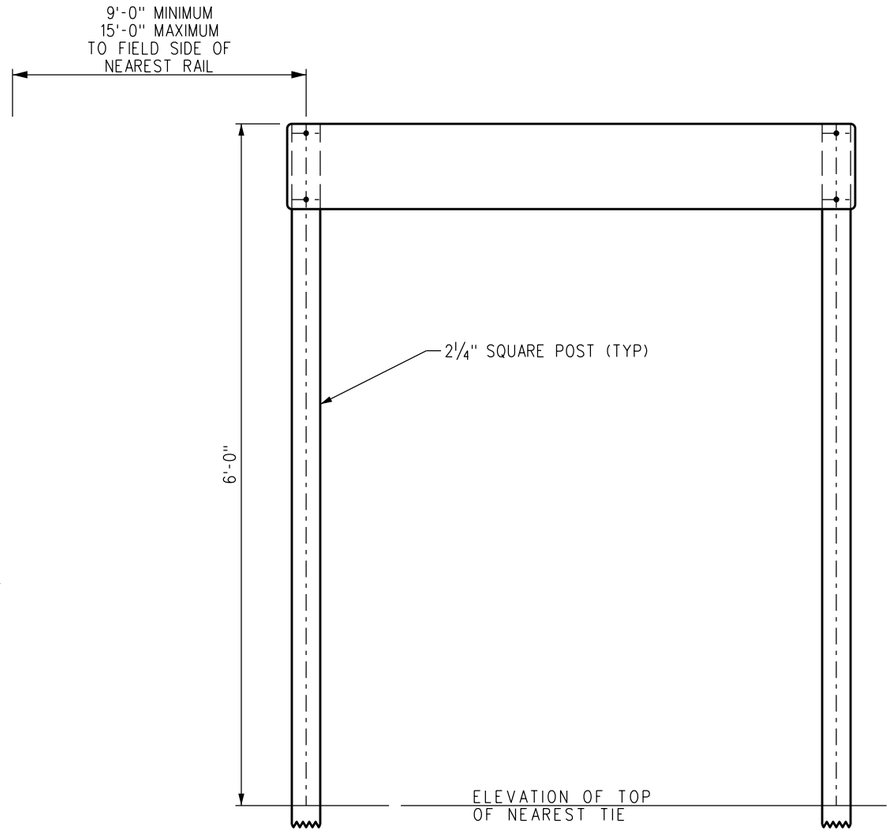

DUAL POST MOUNT

BILL OF MATERIAL	
NUMBER REQUIRED	ITEM
	SINGLE POST MOUNT STATION SIGN
1 OR 2	ALUMINUM PANEL (AREA VARIES WITH LENGTH OF STATION NAME)
1	2¼" x 2¼" SQUARE POST (LENGTH VARIES WITH TERRAIN)
2	3½" LONG BOLT WITH NUT AND WASHERS PER SCRRA ES5210
1	ANCHOR PER SCRRA ES5210
	DUAL POST MOUNT STATION SIGN
1 OR 2	ALUMINUM PANEL (AREA VARIES WITH LENGTH OF STATION NAME)
2	2¼" x 2¼" SQUARE POST (LENGTH VARIES WITH TERRAIN)
4	3½" LONG BOLT WITH NUT AND WASHERS PER SCRRA ES5210
2	ANCHOR PER SCRRA 5210

INSTALLATION NOTES

1. SIGNS SHALL BE PLACED AT ALL STATIONS AND BUSINESS TRACKS LISTED ON TIMETABLE SCHEDULE PAGE.
2. IN TWC TERRITORY, ONE SIGN IS REQUIRED AT EACH END OF SIDINGS IN PLAIN VIEW FROM APPROACHING TRAINS.
3. AT OTHER LOCATIONS IN TWC TERRITORY WHERE SIGNS ARE REQUIRED, SIGNS SHALL BE MOUNTED ON BOTH SIDES OF POST AT TIMETABLE STATION LOCATION.
4. IN OTHER THAN CTC OR TWC TERRITORY, SIGNS SHALL BE MOUNTED ON BOTH SIDES OF POST AND LOCATED AT TIMETABLE STATION LOCATION.
5. TO MINIMIZE THE LENGTH OF THE SIGN, ABBREVIATIONS THAT MAKE MEANING CLEAR MAY BE USED. REQUISITIONS FOR STATION SIGNS SHALL SPECIFY MOUNTING HARDWARE REQUIRED PER TYPICAL MOUNTING DETAILS.
6. STATION SIGN SHALL BE PLACED ON OPPOSITE SIDE OF SWITCH STAND 10'-0" AHEAD OF SWITCH POINTS.

MATERIAL SPECIFICATIONS

SIGNS:
⅛" THICK MILL FINISH ALUMINUM PANEL, ALCOA 6016-T6 OR EQUAL. PAINT ALL SIDES WITH LINEAR POLYURETHANE. COLOR FACE OF PANEL WITH ENGINEERING GRADE, PRESSURE SENSITIVE, RETRO-REFLECTIVE SILVER VINYL SHEETING. SILK SCREEN LEGEND WITH BLACK INK. FINISH WITH EXTERIOR GRADE PRESSURE SENSITIVE CLEAR MYLAR, 3M-1150 OR EQUAL.

POST, ANCHOR AND HARDWARE:
PER SCRRA ES5210.

TEXT STYLE:
"ARIAL BOLD" PER SCRRA ES1212, SIZE AS INDICATED.

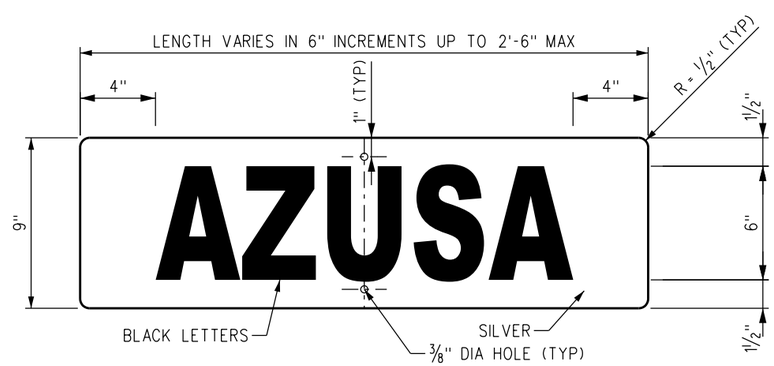

NARROW SIGN

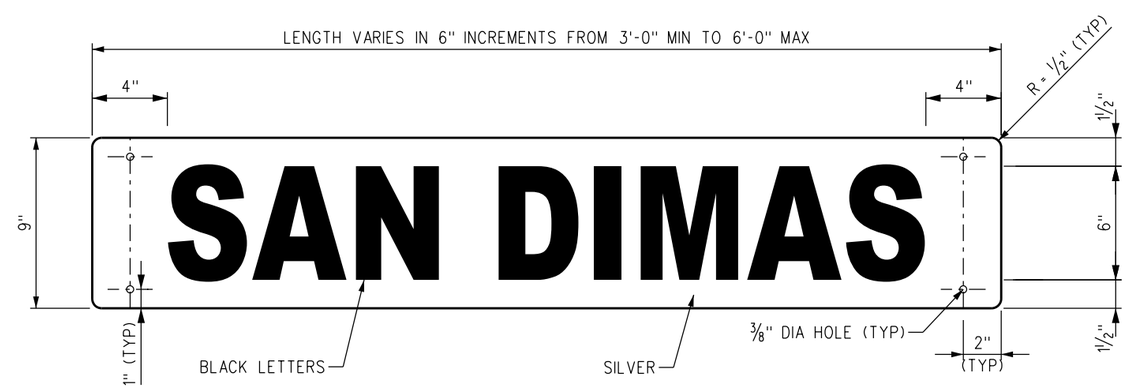

WIDE SIGN

REV.	DATE	DESCRIPTION	DES.	ENG.
X	XX-XX-XX	REVISION	XX	XX

DRAWN BY: A. CARLOS DATE: 03/31/2011

ASSISTANT DIRECTOR: STANDARDS & DESIGN

DIRECTOR OF ENGINEERING AND CONSTRUCTION

SCRRA ENGINEERING STANDARDS ARE INTENDED FOR SCRRA APPROVED USES ONLY. FOR NON-SCRRA APPROVED USES:
SCRRA SHALL NOT BE RESPONSIBLE FOR THE ACCURACY OR COMPLETENESS OF THE DATA OR INFORMATION CONTAINED HEREIN. THE SELECTION AND USE OF THESE STANDARDS IS THE SOLE RESPONSIBILITY OF THE USER AND SHOULD NOT BE USED WITHOUT CONSULTING A REGISTERED PROFESSIONAL ENGINEER. ALL WARRANTIES AND REPRESENTATIONS OF ANY KIND ARE DISCLAIMED. ANYONE MAKING USE OF THIS INFORMATION AGREES THAT IT ASSUMES ALL LIABILITY ARISING FROM SUCH USE. NO PART OF THESE STANDARDS SHOULD BE REPRODUCED OR DISTRIBUTED IN ANY FORM OR BY ANY MEANS WITHOUT THE PRIOR WRITTEN PERMISSION OF SCRRA. ALL RIGHTS RESERVED.

METROLINK®
SOUTHERN CALIFORNIA REGIONAL RAIL AUTHORITY
ONE GATEWAY PLAZA, 12TH FLOOR, L. A., CA. 90012

ENGINEERING STANDARDS

STATION SIGNS FOR OTHER THAN CTC TERRITORY

STANDARD 5222
SCALE: NTS
REVISION –
SHEET 1 OF 1
CADD FILE: ES5222

BILL OF MATERIAL	
NUMBER REQUIRED	ITEM
	MECHANICAL LIMIT SIGN
1	2.50 SQ. FT. ALUMINUM PANEL
1	2" x 2" SQUARE POST (LENGTH VARIES WITH TERRAIN)
2	3" LONG BOLT WITH NUT AND WASHERS PER SCRRA ES5210
1	ANCHOR PER SCRRA ES5210
	NO RIDE ZONE SIGN
1	2.25 SQ. FT. ALUMINUM PANEL
1	2" x 2" SQUARE POST (LENGTH VARIES WITH TERRAIN)
2	3" LONG BOLT WITH NUT AND WASHERS PER SCRRA ES5210
1	ANCHOR PER SCRRA ES5210

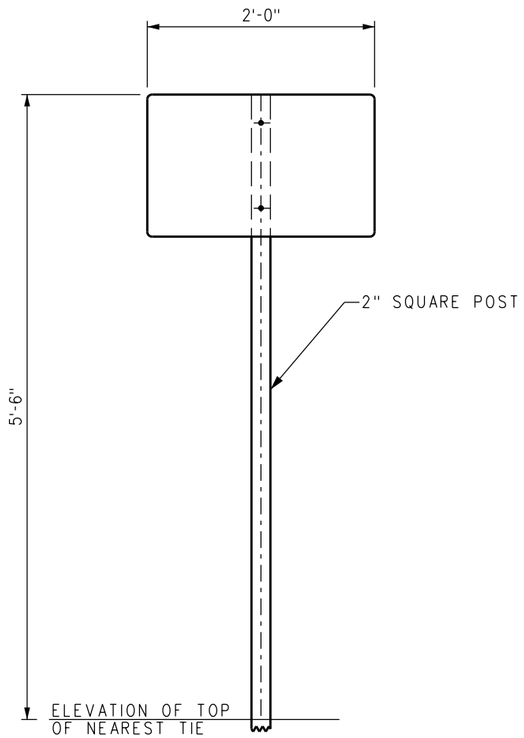

ANCHORED PER SCRRA ES5210

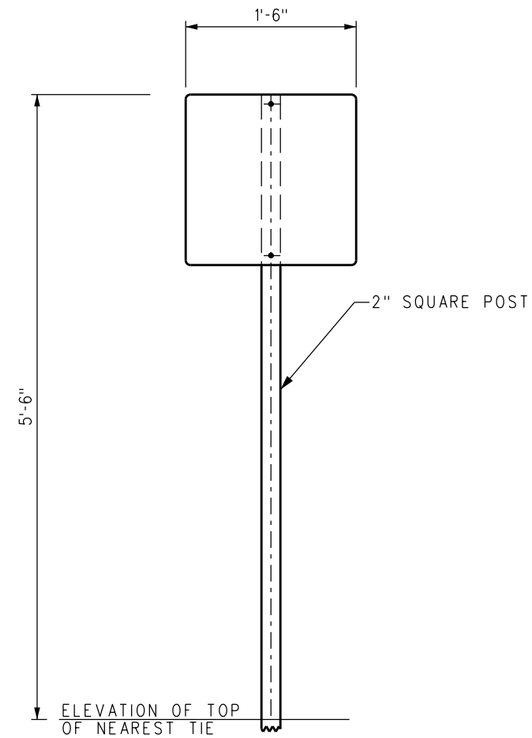

ANCHORED PER SCRRA ES5210

INSTALLATION NOTES

1. THE SIGNS SHALL BE SET PER THE LOCATION PLAN ON THIS SHEET. THE POST SHALL BE SET ON THE RIGHT HAND SIDE OF THE TRACK AS ONE FACES THE YARD. FACE OF THE SIGN SHALL BE SET FACING TRAINS APPROACHING THE YARD. SCRRA WILL DESIGNATE STATIONS AT WHICH SIGNS WILL BE USED AND THE DISTANCES THEY WILL BE SET OUTSIDE THE HEAD BLOCKS.

MATERIAL SPECIFICATIONS

SIGNS:
1/8" THICK MILL FINISH ALUMINUM PANEL, ALCOA 6016-T6 OR EQUAL. PAINT ALL SIDES WITH LINEAR POLYURATHANE. COLOR FACE OF PANEL WITH ENGINEERING GRADE, PRESSURE SENSITIVE, RETRO-REFLECTIVE WHITE VINYL SHEETING, SILK SCREEN LEGEND WITH BLACK INK. FINISH WITH EXTERIOR GRADE PRESSURE SENSITIVE CLEAR MYLAR, 3M-1150 OR EQUAL.

POST, ANCHOR AND HARDWARE:
PER SCRRA ES5210.

TEXT STYLE:
"ARIAL BOLD" PER SCRRA ES5210, SIZE AS INDICATED.

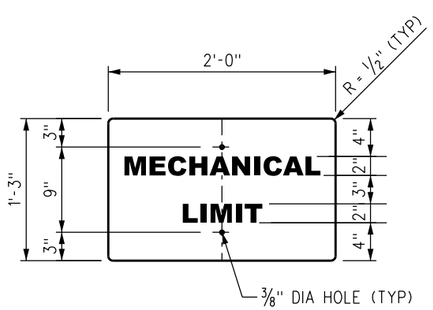

MECHANICAL LIMIT SIGN

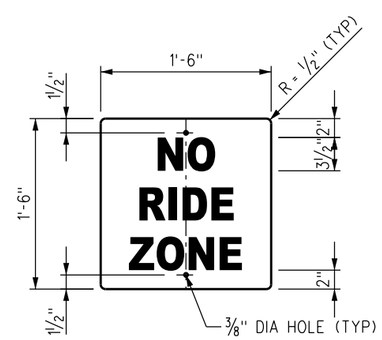

NO RIDE ZONE SIGN

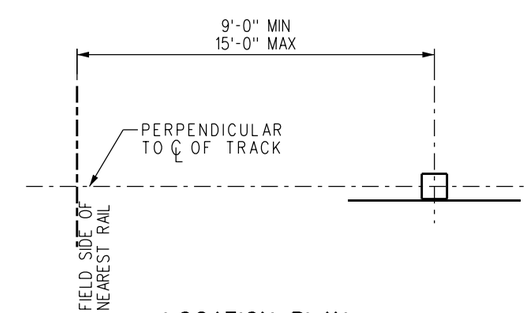

LOCATION PLAN

REV.	DATE	DESCRIPTION	DES.	ENG.
X	XX-XX-XX	REVISION	XX	XX

DRAWN BY: A. CARLOS DATE: 03/31/2011

ASSISTANT DIRECTOR: STANDARDS & DESIGN

DIRECTOR OF ENGINEERING AND CONSTRUCTION

SCRRA ENGINEERING STANDARDS ARE INTENDED FOR SCRRA APPROVED USES ONLY. FOR NON-SCRRA APPROVED USES:
SCRRA SHALL NOT BE RESPONSIBLE FOR THE ACCURACY OR COMPLETENESS OF THE DATA OR INFORMATION CONTAINED HEREIN. THE SELECTION AND USE OF THESE STANDARDS IS THE SOLE RESPONSIBILITY OF THE USER AND SHOULD NOT BE USED WITHOUT CONSULTING A REGISTERED PROFESSIONAL ENGINEER. ALL WARRANTIES AND REPRESENTATIONS OF ANY KIND ARE DISCLAIMED. ANYONE MAKING USE OF THIS INFORMATION AGREES THAT IT ASSUMES ALL LIABILITY ARISING FROM SUCH USE. NO PART OF THESE STANDARDS SHOULD BE REPRODUCED OR DISTRIBUTED IN ANY FORM OR BY ANY MEANS WITHOUT THE PRIOR WRITTEN PERMISSION OF SCRRA. ALL RIGHTS RESERVED.

METROLINK®
SOUTHERN CALIFORNIA REGIONAL RAIL AUTHORITY
ONE GATEWAY PLAZA, 12TH FLOOR, L. A., CA. 90012

ENGINEERING STANDARDS

MECHANICAL LIMIT AND
NO RIDE ZONE SIGNS

STANDARD 5223
SCALE: NTS
REVISION –
SHEET 1 OF 1
CADD FILE: ES5223

BILL OF MATERIAL	
NUMBER REQUIRED	ITEM
	WARNING PADDLE
1	1" DIA SCHEDULE 40 PVC (17" LONG, SLOTTED 3")
1	16" DIA 0.063" THICK ALUMINUM PLATE
2	1/4" X 20 X 1 1/4" HEX HEAD BOLT
2	1/4" X 20 NUT

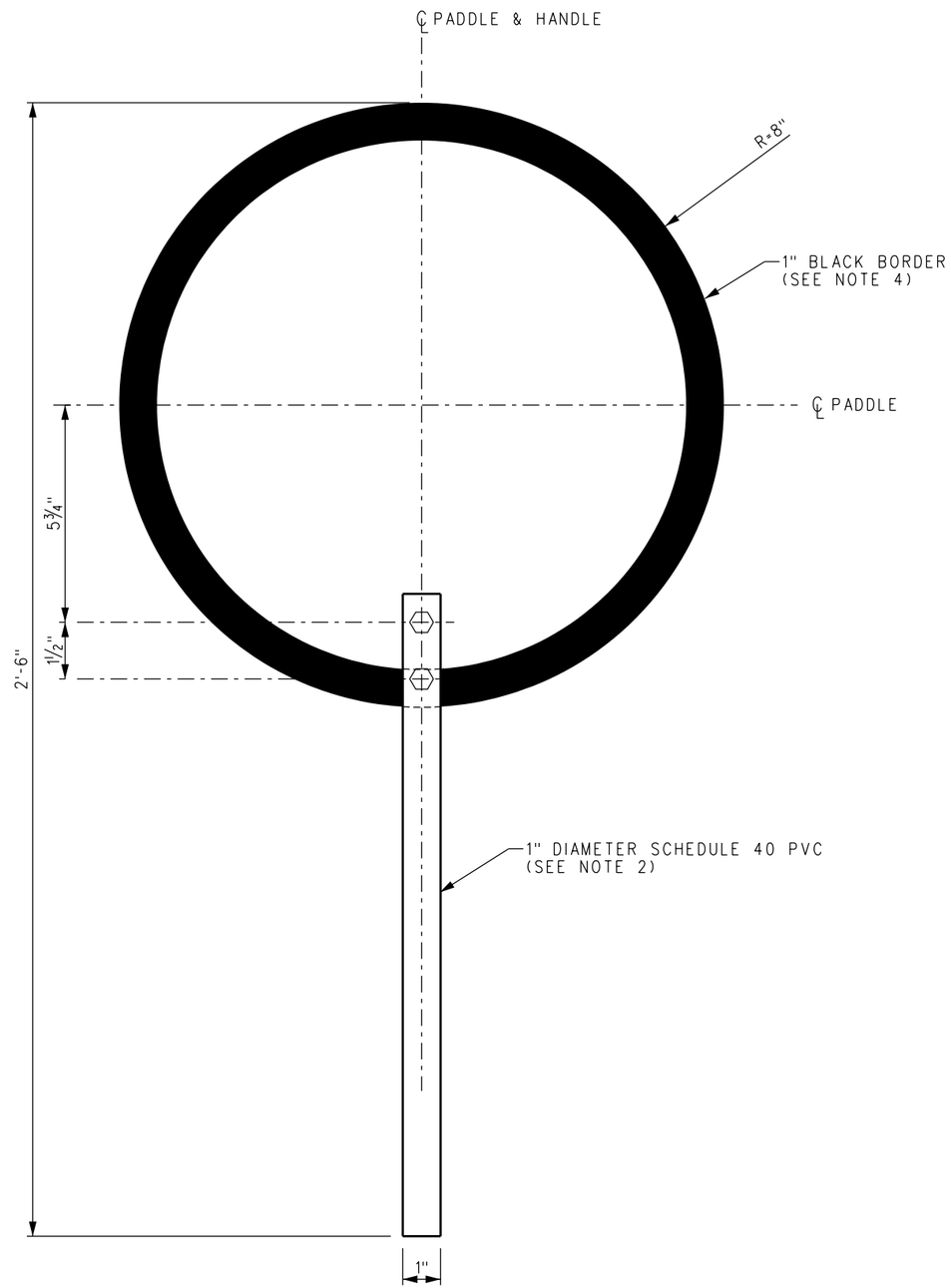

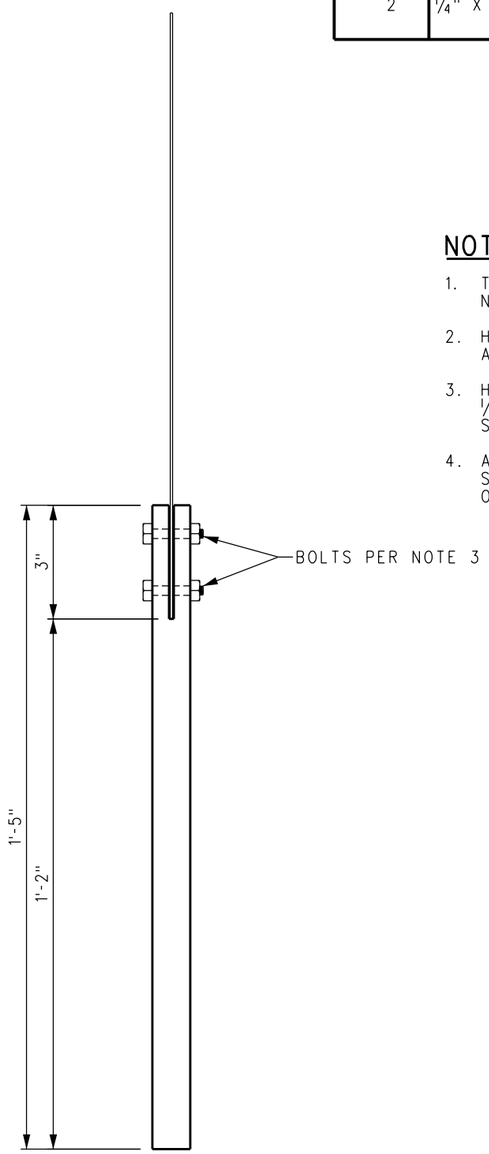

NOTES

1. TARGET PLATE SHALL BE .063 ALODINED ALUMINUM WITH NON-REFLECTIVE WHITE VINYL APPLIED TO BOTH SIDES.
2. HANDLE SHALL BE SCHEDULE 40 PVC SLOTTED TO ACCOMODATE TARGET PLATE.
3. HANDLE SHALL BE SECURED TO TARGET PLATE WITH TWO 1/4" X 20 X 1 1/4" PLATED HEX HEAD BOLTS. NUTS SHALL BE 1/4" X 20 ROUND BASE WELD NUTS.
4. A 1" BLACK BORDER SHALL BE SILK SCREENED TO BOTH SIDES OF TARGET PLATE WITH NO SPACE BETWEEN EDGE OF TARGET PLATE AND BORDER.

REV.	DATE	DESCRIPTION	DES.	ENG.
X	XX-XX-XX	REVISION	XX	XX

DRAWN BY: A. CARLOS DATE: 03/31/2011

ASSISTANT DIRECTOR: STANDARDS & DESIGN

DIRECTOR OF ENGINEERING AND CONSTRUCTION

SCRRA ENGINEERING STANDARDS ARE INTENDED FOR SCRRA APPROVED USES ONLY. FOR NON-SCRRA APPROVED USES:
SCRRA SHALL NOT BE RESPONSIBLE FOR THE ACCURACY OR COMPLETENESS OF THE DATA OR INFORMATION CONTAINED HEREIN. THE SELECTION AND USE OF THESE STANDARDS IS THE SOLE RESPONSIBILITY OF THE USER AND SHOULD NOT BE USED WITHOUT CONSULTING A REGISTERED PROFESSIONAL ENGINEER. ALL WARRANTIES AND REPRESENTATIONS OF ANY KIND ARE DISCLAIMED. ANYONE MAKING USE OF THIS INFORMATION AGREES THAT IT ASSUMES ALL LIABILITY ARISING FROM SUCH USE. NO PART OF THESE STANDARDS SHOULD BE REPRODUCED OR DISTRIBUTED IN ANY FORM OR BY ANY MEANS WITHOUT THE PRIOR WRITTEN PERMISSION OF SCRRA. ALL RIGHTS RESERVED.

METROLINK®
SOUTHERN CALIFORNIA REGIONAL RAIL AUTHORITY
ONE GATEWAY PLAZA, 12TH FLOOR, L. A., CA. 90012

ENGINEERING STANDARDS

WARNING PADDLE

STANDARD 5225
SCALE: NTS
REVISION –
SHEET 1 OF 1
CADD FILE: ES5225

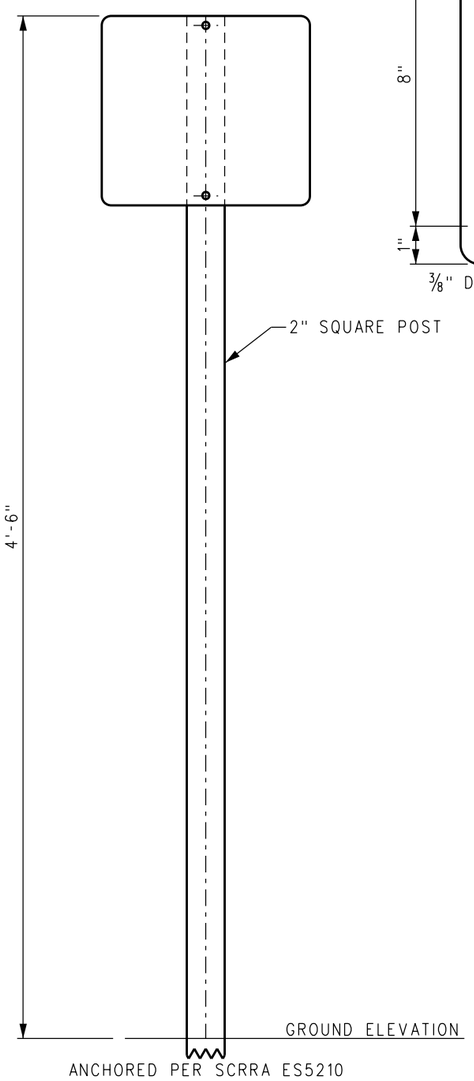

UNDERGROUND CABLE SIGN

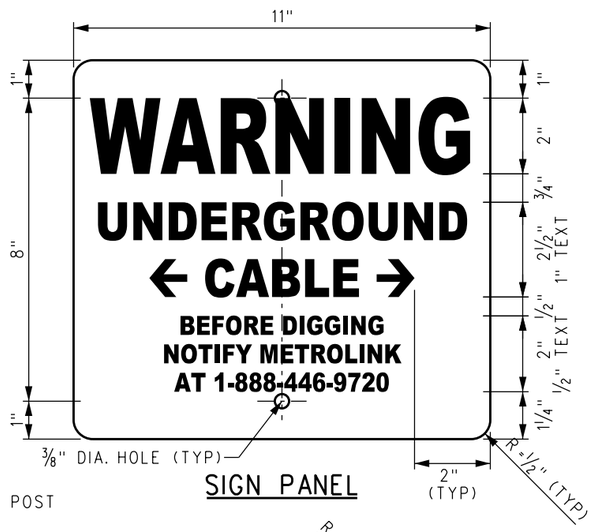

SIGN PANEL

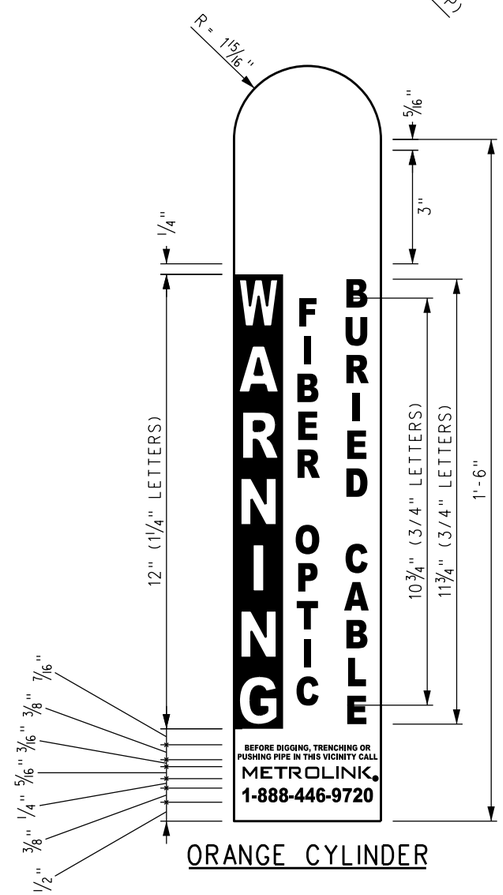

ORANGE CYLINDER

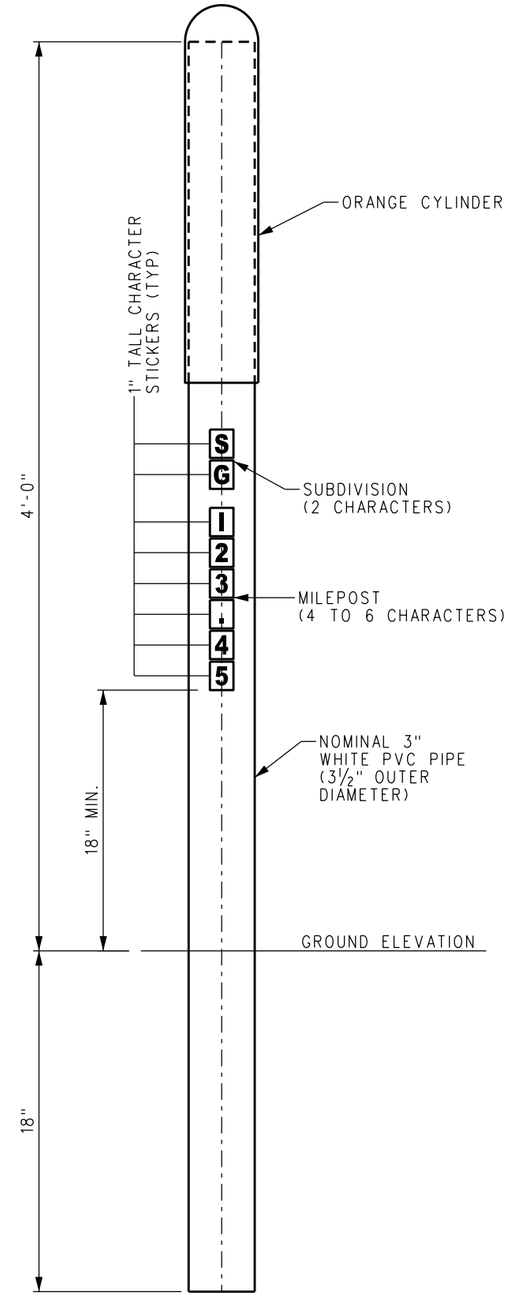

FIBER OPTIC CABLE MARKER

BILL OF MATERIAL	
NUMBER REQUIRED	ITEM
	UNDERGROUND CABLE SIGN
1	0.76 SQ. FT. ALUMINUM PANEL
1	2" x 2" x 78" LONG SQUARE POST (LENGTH VARIES WITH TERRAIN)
2	3" LONG BOLT WITH NUT AND WASHERS PER SCRRA ES5210
1	ANCHOR PER SCRRA ES5210
	FIBER OPTIC CABLE MARKER
1	NOMINAL 3" DIAMETER WHITE PVC PIPE, 66" LONG
1	REFLECTIVE ORANGE CYLINDER WITH BLACK LETTERING AS SHOWN ON THIS SHEET
6-8	1" TALL CHARACTER STICKERS WITH BLACK LETTERS OR NUMERALS ON REFLECTIVE ORANGE BACKGROUND (VARIES WITH MILEPOST)

INSTALLATION NOTES

1. SIGNS OR MARKERS SHALL BE PLACED ADJACENT TO ALL UNDERGROUND SIGNAL, COMMUNICATION AND ELECTRICAL CABLES.
2. SIGN FACE SHALL BE ORIENTED PARALLEL TO CABLE.
3. CL OF SIGN OR MARKER POST SHALL BE SET NO CLOSER THAN 9'-0" FROM THE FIELD SIDE OF THE NEAREST RAIL. EXCEPTIONS SHALL REQUIRE THE APPROVAL OF SCRRA. INSTALLER SHALL AVOID DAMAGING UNDERGROUND UTILITY.
4. SIGNS OR MARKERS SHALL BE PLACED:
   a. NO MORE THAN 500' APART
   b. AT EVERY SPLICE LOCATION
   c. AT EVERY POINT OF CHANGE OF DIRECTION
   d. ON EACH SIDE OF BORE OR BRIDGE ATTACHMENT
   e. WITHIN SIGHT OF MARKERS BEFORE AND AFTER.
   f. 1' OFFSET FROM THE UNDERGROUND RUNNING LINE WHEREVER POSSIBLE. THE ACTUAL OFFSET SHALL BE PERMANENTLY NOTED ON THE SIGN OR MARKER.
5. MARKERS SHALL BE INDIVIDUALLY NUMBERED AND SHOWN ON THE AS-BUILT DRAWINGS.

MATERIAL SPECIFICATIONS

SIGNS:
1/8" THICK MILL FINISH ALUMINUM PANEL, ALCOA 6016-T6 OR EQUAL. PAINT ALL SIDES WITH LINEAR POLYURATHANE. COLOR FACE OF PANEL WITH ENGINEERING GRADE, PRESSURE SENSITIVE, RETRO-REFLECTIVE ORANGE VINYL SHEETING. SILK SCREEN LEGEND WITH BLACK INK. FINISH WITH EXTERIOR GRADE PRESSURE SENSITIVE CLEAR MYLAR, 3M-1150 OR EQUAL.

POST, ANCHOR AND HARDWARE:
PER SCRRA ES5210.

TEXT STYLE:
"ARIAL BOLD" PER SCRRA ES1212, SIZE AS INDICATED.

MARKERS:
3 7/8" OUTER DIAMETER, 3 1/2" INNER DIAMETER PVC CYLINDER WITH ENGINEERING GRADE RETRO-REFLECTIVE ORANGE COATING. SILK SCREEN LEGEND WITH BLACK INK.

REV.	DATE	DESCRIPTION	DES.	ENG.
X	XX-XX-XX	REVISION	XX	XX

DRAWN BY: HDR DATE: 03/31/2011

ASSISTANT DIRECTOR: STANDARDS & DESIGN

DIRECTOR OF ENGINEERING AND CONSTRUCTION

SCRRA ENGINEERING STANDARDS ARE INTENDED FOR SCRRA APPROVED USES ONLY. FOR NON-SCRRA APPROVED USES:
SCRRA SHALL NOT BE RESPONSIBLE FOR THE ACCURACY OR COMPLETENESS OF THE DATA OR INFORMATION CONTAINED HEREIN. THE SELECTION AND USE OF THESE STANDARDS IS THE SOLE RESPONSIBILITY OF THE USER AND SHOULD NOT BE USED WITHOUT CONSULTING A REGISTERED PROFESSIONAL ENGINEER. ALL WARRANTIES AND REPRESENTATIONS OF ANY KIND ARE DISCLAIMED. ANYONE MAKING USE OF THIS INFORMATION AGREES THAT IT ASSUMES ALL LIABILITY ARISING FROM SUCH USE. NO PART OF THESE STANDARDS SHOULD BE REPRODUCED OR DISTRIBUTED IN ANY FORM OR BY ANY MEANS WITHOUT THE PRIOR WRITTEN PERMISSION OF SCRRA. ALL RIGHTS RESERVED.

METROLINK®
SOUTHERN CALIFORNIA REGIONAL RAIL AUTHORITY
ONE GATEWAY PLAZA, 12TH FLOOR, L. A., CA. 90012

ENGINEERING STANDARDS

UNDERGROUND CABLE SIGN AND FIBER OPTIC CABLE MARKER

STANDARD 5229
SCALE: NTS
REVISION –
SHEET 1 OF 1
CADD FILE: ES5229

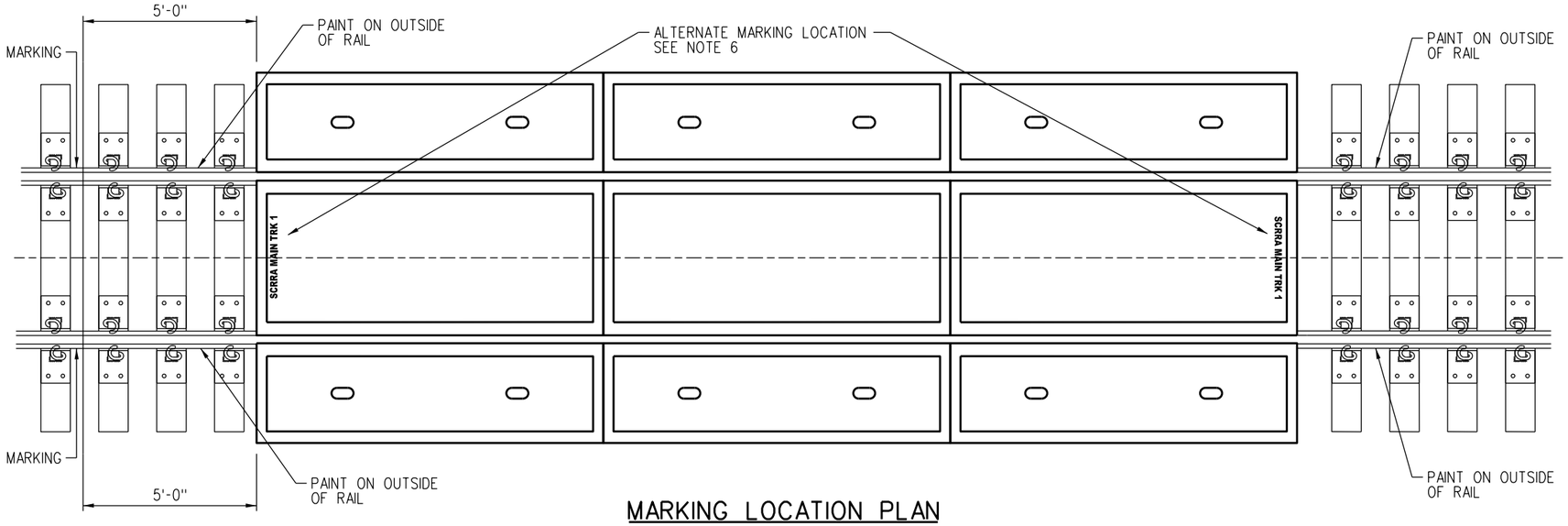

MARKING LOCATION PLAN

NOTES:

1. TRACK IDENTIFICATION MARKINGS TO BE UTILIZED AT ALL TRACK LOCATIONS WHERE CROSSINGS EXIST.
2. RAIL TO BE MARKED ON THE WEB WITH TEXT FACING THE FIELD SIDE OF THE TRACK. MARKING TO BE MADE 5'-0" FROM THE END OF THE CROSSING PANELS.
3. MARKING WILL MATCH WHAT THE TRACK IS DESIGNATED IN SCRRA TIMETABLE.
4. LOCATIONS WITH MULTIPLE MAIN LINE TRACKS SHALL BE MARKED WITH SCRRA MAIN TRK FOLLOWED BY THE TRACK NUMBER. EXAMPLE:SCRRA MAIN TRK 2.
5. SIDING, INDUSTRY AND YARD TRACKS WILL BE MARKED WITH THE MATCHING STENCIL.
6. IN LOCATIONS WHERE WEB OF RAIL IS BLOCKED FROM VIEW, THE IDENTIFICATION MARKING MAY BE MADE ON THE TOP SURFACE OF THE CROSSING PLANKS. TEXTS TO BE LOCATED ON THE OUTER EDGE READABLE WHEN FACING AWAY FROM THE CENTER OF THE CROSSING.
7. MARKING TO BE MADE USING 2¾" GOTHIC LETTERING STENCIL.
8. KRYLON OSHA SAFETY YELLOW SPRAY PAINT TO BE UTILIZED. KRYLON ITEM NUMBER K07094. PAINT CAN BE ORDERED USING THE E-PROCUREMENT NUMBER PROVIDED. BLACK PAINT MAY BE USED WHEN SUBSTRATE AND YELLOW PAINT IS DIFFICULT TO SEE.

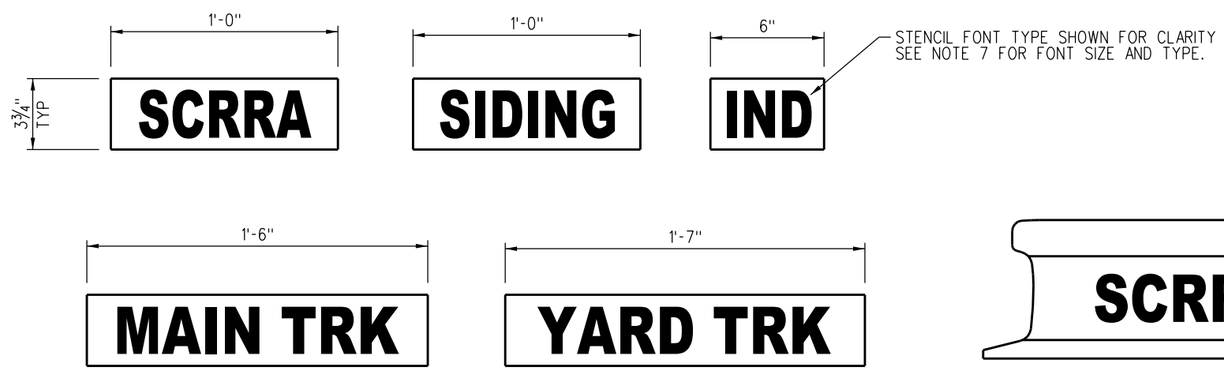

STENCIL OPTIONS

TYPICAL MARKING ON WEB OF RAIL

REV.	DATE	DESCRIPTION	DES.	ENG.
X	XX-XX-XX	REVISION	XX	XX

DRAWN BY: A. CARLOS DATE: 03/31/2011

ASSISTANT DIRECTOR: STANDARDS & DESIGN

DIRECTOR OF ENGINEERING AND CONSTRUCTION

SCRRA ENGINEERING STANDARDS ARE INTENDED FOR SCRRA APPROVED USES ONLY. FOR NON-SCRRA APPROVED USES:
SCRRA SHALL NOT BE RESPONSIBLE FOR THE ACCURACY OR COMPLETENESS OF THE DATA OR INFORMATION CONTAINED HEREIN. THE SELECTION AND USE OF THESE STANDARDS IS THE SOLE RESPONSIBILITY OF THE USER AND SHOULD NOT BE USED WITHOUT CONSULTING A REGISTERED PROFESSIONAL ENGINEER. ALL WARRANTIES AND REPRESENTATIONS OF ANY KIND ARE DISCLAIMED. ANYONE MAKING USE OF THIS INFORMATION AGREES THAT IT ASSUMES ALL LIABILITY ARISING FROM SUCH USE. NO PART OF THESE STANDARDS SHOULD BE REPRODUCED OR DISTRIBUTED IN ANY FORM OR BY ANY MEANS WITHOUT THE PRIOR WRITTEN PERMISSION OF SCRRA. ALL RIGHTS RESERVED.

METROLINK®
SOUTHERN CALIFORNIA REGIONAL RAIL AUTHORITY
ONE GATEWAY PLAZA, 12TH FLOOR, L. A., CA. 90012

ENGINEERING STANDARDS

MARKING FOR TRACK IDENTIFICATION

STANDARD 5230
SCALE: AS NOTED
REVISION –
SHEET 1 OF 1
CADD FILE: ES5230

DISCLAIMER

SCRRA Engineering Standards are intended for SCRRA approved uses only. FOR NON-SCRRA APPROVED USES: SCRRA and its member agencies, directors, officers, employees and/or agents shall not be responsible for the accuracy or completeness of the data or information contained herein. The selection and use of these standards, while designed in accordance with generally accepted engineering principles and practices, is the sole responsibility of the user and should not be used without consulting a registered professional engineer. All warranties and representations of any kind are disclaimed. Anyone making use of this information agrees that it assumes all liability arising from such use. No part of these standards should be reproduced or distributed in any form or by any means without the prior written permission of SCRRA. All rights reserved.

Since revisions or additions to the engineering standards may occur at any time, the user agrees to indemnify, defend, by counsel satisfactory to SCRRA and Member Agency, and hold harmless SCRRA, Member Agencies, and Operating Railroad, and their respective officers, commissioners, employees, agents, successors and assigns. ("Indemnitees"), and each of them to the maximum extent allowed by law, from and against all loss, liability, claims, demands, suits, liens, claims of lien, damages (including incidental consequential damages), costs and expenses (including, without limitation, any fines, penalties, judgments, actual litigation expenses and experts' and actual attorneys' fees), that are incurred by or asserted against Indemnitees arising out of or connected in any manner with the user's use of outdated engineering standards.

Updating the contents of the manual is a continued process, and revisions/replacements are issued periodically. Questions, comments, and proposed recommendations for changes may be sent to SCRRA at 279 E. Arrow Highway, Suite A, San Dimas, CA 91773.

METROLINK®

ENGINEERING STANDARDS FOR PRECAST/PRESTRESSED CONCRETE DOUBLE BOX BEAM BRIDGES

33" DOUBLE BOX BEAMS ON PRECAST CONCRETE CAPS WITH DRIVEN STEEL H-PILE FOUNDATIONS

DRAWING INDEX

1. TITLE SHEET — ES6001-01
2. DESIGN NOTES — ES6001-02
3. CONSTRUCTION NOTES AND HMA DETAILS — ES6001-03
4. GENERAL ARRANGEMENT — ES6001-04
5. SECTIONS AND DETAILS — ES6001-05
6. ANCHOR ROD AND BEARING PAD LAYOUT — ES6001-06
7. SINGLE ROW PILE BENTS (1 OF 4) — ES6001-07
8. SINGLE ROW PILE BENTS (2 OF 4) — ES6001-08
9. SINGLE ROW PILE BENTS (3 OF 4) — ES6001-09
10. SINGLE ROW PILE BENTS (4 OF 4) — ES6001-10
11. DOUBLE ROW PILE BENTS (1 OF 2) — ES6001-11
12. DOUBLE ROW PILE BENTS (2 OF 2) — ES6001-12
13. BENT DETAILS — ES6001-13
14. PRECAST CONCRETE MEMBERS (1 OF 3) — ES6001-14
15. PRECAST CONCRETE MEMBERS (2 OF 3) — ES6001-15
16. PRECAST CONCRETE MEMBERS (3 OF 3) — ES6001-16
17. STEEL DETAILS (1 OF 2) — ES6001-17
18. STEEL DETAILS (2 OF 2) — ES6001-18
19. REINFORCING STEEL DETAILS — ES6001-19
20. 33" PRECAST/PRESTRESSED CONCRETE DOUBLE BOX BEAMS (1 OF 3) — ES6001-20
21. 33" PRECAST/PRESTRESSED CONCRETE DOUBLE BOX BEAMS (2 OF 3) — ES6001-21
22. 33" PRECAST/PRESTRESSED CONCRETE DOUBLE BOX BEAMS (3 OF 3) — ES6001-22
23. SAMPLE GENERAL ARRANGEMENT — ES6001-23
24. SAMPLE END BENT SECTION AND PILE LAYOUT — ES6001-24
25. SAMPLE BENT SECTIONS — ES6001-25
26. SAMPLE BILL OF MATERIAL — ES6001-26

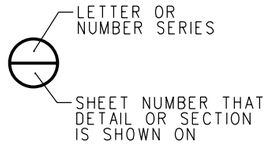

SHEET SHOWING SECTION OR DETAIL CUT

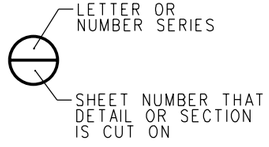

SHEET SHOWING SECTION OR DETAIL

SECTION OR DETAIL DESIGNATION

NOTE:

1. "_" INDICATES SECTION OR DETAIL IS CUT AND SHOWN ON THE SAME SHEET.

REV.	DATE	DESCRIPTION	DES.	ENG.
X	XX-XX-XX	REVISION	XX	XX

DRAWN BY: HDR DATE: 03/31/2011

ASSISTANT DIRECTOR: STANDARDS & DESIGN

DIRECTOR OF ENGINEERING AND CONSTRUCTION

SCRRA ENGINEERING STANDARDS ARE INTENDED FOR SCRRA APPROVED USES ONLY. FOR NON-SCRRA APPROVED USES: SCRRA SHALL NOT BE RESPONSIBLE FOR THE ACCURACY OR COMPLETENESS OF THE DATA OR INFORMATION CONTAINED HEREIN. THE SELECTION AND USE OF THESE STANDARDS IS THE SOLE RESPONSIBILITY OF THE USER AND SHOULD NOT BE USED WITHOUT CONSULTING A REGISTERED PROFESSIONAL ENGINEER. ALL WARRANTIES AND REPRESENTATIONS OF ANY KIND ARE DISCLAIMED. ANYONE MAKING USE OF THIS INFORMATION AGREES THAT IT ASSUMES ALL LIABILITY ARISING FROM SUCH USE. NO PART OF THESE STANDARDS SHOULD BE REPRODUCED OR DISTRIBUTED IN ANY FORM OR BY ANY MEANS WITHOUT THE PRIOR WRITTEN PERMISSION OF SCRRA. ALL RIGHTS RESERVED.

METROLINK®
SOUTHERN CALIFORNIA REGIONAL RAIL AUTHORITY
ONE GATEWAY PLAZA, 12TH FLOOR, L. A., CA. 90012

ENGINEERING STANDARDS

TITLE SHEET
PRECAST/PRESTRESSED CONCRETE DOUBLE BOX BEAM BRIDGES

STANDARD: 6001
SCALE: NTS
REVISION: –
SHEET: 1 OF 26
CADD FILE: ES6001–01

CONTROLLING DESIGN LOAD EFFECTS FOR PRECAST/PRESTRESSED CONCRETE DOUBLE BOX BEAM

				ESTIMATED PRESTRESSING									ALLOWABLE STRESSES									ULTIMATE CAPACITY			
				Design Bed Pretension	Elastic Shortening Loss	Total Long-term Prestress Loss	Initial Pretress	Final Prestress	Area of Prestressing Steel Provided	Initial Total Prestressing Force	Final Total Prestressing Force	Eccentricity of Total Prestressing Force from Centroid of Beam	Maximum Service Moments					Top Fiber Service Load Stresses		Bottom Fiber Service Load Stresses		Maximum Ultimate Moment Demand	Factored Moment Capacity	Maximum Ultimate Shear Demand	Factored Shear Capacity
													Dead	Live	Impact	Centrifugal	Total								
	NOMINAL SPAN	"BL"	"SL"	f_{pBed} (ksi)	Δf_{ES} (ksi)	Δf_{Total} (ksi)	f_{pi} (ksi)	f_{pf} (ksi)	A_p (in^2)	P_i (k)	P_f (k)	e_p (in)	M_D (k-ft)	M_L (k-ft)	M_I (k-ft)	M_{CF} (k-ft)	M_{Total} (k-ft)	Allowable (psi)	Calculated (psi)	Allowable (psi)	Calculated (psi)	M_u (k-ft)	$\varnothing M_n$ (k-ft)	V_u (k)	$\varnothing V_n$ (k)
	20'-2"	20'-0"	18'-11"	200.0	7.4	31.4	192.6	168.6	3.04	586	513	14.0	141	408	211	61	821	2400 C	599 C	0T	193 C	1730	2180	383	460
	22'-2"	22'-0"	20'-11"	200.0	8.4	33.6	191.6	166.4	3.47	665	577	14.0	174	495	244	74	987	2400 C	733 C	0T	163 C	2072	2419	413	464
	24'-2"	24'-0"	22'-11"	200.0	9.3	35.8	190.7	164.2	3.91	746	642	14.0	210	582	274	87	1153	2400 C	870 C	0T	131 C	2413	2656	440	467
	26'-2"	26'-0"	24'-11"	200.0	10.3	38.2	189.7	161.8	5.21	988	843	11.7	248	670	302	100	1320	2400 C	1112 C	0T	200 C	2755	3115	457	488
*	28'-0"	27'-10"	26'-9"	200.0	11.2	40.3	188.8	159.7	5.64	1065	901	11.9	286	750	326	113	1475	2400 C	1237 C	0T	173 C	3070	3343	474	497
	30'-2"	30'-0"	28'-11"	200.0	13.1	44.7	186.9	155.3	6.51	1217	1011	12.2	337	852	357	128	1674	2400 C	1380 C	0T	217 C	3472	3794	500	500
	32'-2"	32'-0"	30'-11"	200.0	14.0	46.6	186.0	153.4	6.94	1291	1065	12.3	385	952	385	143	1865	2400 C	1543 C	0T	150 C	3859	4016	517	517
*	33'-0"	32'-10"	31'-9"	200.0	14.1	48.4	185.9	151.6	8.25	1534	1251	10.9	406	993	397	149	1945	2400 C	1713 C	0T	269 C	4020	4418	526	526
	34'-2"	34'-0"	32'-11"	200.0	14.1	48.1	185.9	151.9	8.25	1534	1253	10.9	437	1051	412	158	2058	2400 C	1824 C	0T	165 C	4247	4418	537	537
*	35'-0"	34'-10"	33'-9"	200.0	14.0	49.2	186.0	150.8	8.68	1615	1309	10.9	459	1093	423	164	2139	3000 C	1905 C	0T	170 C	4409	4700	544	581

NOTES:
1. "BL" - OUT TO OUT BEAM LENGTH
   "SL" - SPAN LENGTH CENTER TO CENTER OF BEARINGS
2. * DENOTES STANDARD SPAN
3. FOR SERVICE LOAD STRESSES, "T" IS TENSION AND "C" IS COMPRESSION.
4. TABLE VALUES OF MAXIMUM SERVICE MOMENTS AND CALCULATED STRESSES ARE PROVIDED FOR THE LOCATION OF MAXIMUM SERVICE MOMENT ALONG THE LENGTH OF THE SPAN, TYPICALLY AT OR NEAR MIDSPAN.
5. TABLE VALUES OF MAXIMUM ULTIMATE MOMENT DEMAND AND FACTORED MOMENT CAPACITY ARE PROVIDED FOR THE LOCATION OF MAXIMUM ULTIMATE MOMENT ALONG THE LENGTH OF THE SPAN, TYPICALLY AT OR NEAR MIDSPAN. THESE VALUES MAY NOT REPRESENT THE CRITICAL CAPACITY TO DEMAND RATIO FOR MOMENT ALONG THE ENTIRE LENGTH OF THE SPAN.
6. TABLE VALUES OF MAXIMUM ULTIMATE SHEAR DEMAND AND FACTORED SHEAR CAPACITY ARE PROVIDED AT h/2 (16½") FROM CENTERLINE OF BEARING. THESE VALUES MAY NOT REPRESENT THE CRITICAL CAPACITY TO DEMAND RATIO FOR SHEAR ALONG THE ENTIRE LENGTH OF THE SPAN.

DESIGN NOTES:

1. PRECAST/PRESTRESSED CONCRETE DOUBLE BOX BEAM AND PRECAST CONCRETE CAP DESIGN HAVE BEEN PERFORMED IN ACCORDANCE WITH THE 2009 AMERICAN RAILWAY ENGINEERING AND MAINTENANCE-OF-WAY ASSOCIATION (AREMA) MANUAL FOR RAILWAY ENGINEERING, CHAPTER 8: CONCRETE STRUCTURES AND FOUNDATIONS, PART 2: REINFORCED CONCRETE DESIGN AND PART 17: PRESTRESSED CONCRETE.

2. BEARING DESIGN HAS BEEN PERFORMED FOR RAILROAD LOADING AND THERMAL EFFECTS IN ACCORDANCE WITH THE 2009 AREMA MANUAL FOR RAILWAY ENGINEERING, CHAPTER 15: STEEL STRUCTURES, PART 10: BEARING DESIGN, EXCEPT AS MODIFIED BELOW FOR RANDOM ORIENTED FIBER (ROF) REINFORCED ELASTOMERIC BEARING PADS. SITE SPECIFIC DESIGN VERIFICATION IS REQUIRED FOR SEISMIC EFFECTS.
   A. DESIGN OF ROF BEARING PADS AS PLAIN (UNREINFORCED), RECTANGULAR ELASTOMERIC BEARING PADS PER AREMA WITH MODIFICATIONS AS LISTED IN B THROUGH E.
   B. MODIFYING FACTOR, K=1.0
   C. ALLOWABLE COMPRESSIVE STRESS, $fa \leq 1000+100(S) \leq 1500$ psi
   D. ALLOWABLE COMPRESSIVE DEFLECTION, $\delta c \leq 0.15(T) \leq 0.2"$
   E. ALLOWABLE ROTATION, $L(\alpha_L) + W(\alpha_W) \leq 0.30(T) \leq 0.4"$
      WHERE "T" IS THE THICKNESS OF THE BEARING PAD.

3. HANDRAIL, STEEL GRATING WALKWAY AND ASSOCIATED SUPPORTS AND CONNECTIONS HAVE BEEN DESIGNED IN ACCORDANCE WITH THE 2009 AREMA MANUAL FOR RAILWAY ENGINEERING, CHAPTER 15: STEEL STRUCTURES, PART 1: DESIGN AND PART 8: MISCELLANEOUS.

4. PRECAST CONCRETE SUBSTRUCTURE COMPONENTS, CAST-IN-PLACE CONCRETE COLLARS, STEEL PILING AND BRACING, CONNECTIONS BETWEEN STEEL PILING AND CAPS AND CONNECTIONS BETWEEN DOUBLE BOX BEAMS AND CAPS ARE PREFERRED DETAILS FOR SUBSTRUCTURES SUPPORTING STANDARD DOUBLE BOX BEAM SUPERSTRUCTURES. DESIGN SHALL BE VERIFIED FOR RAILROAD LOADING AND SITE-SPECIFIC SEISMIC EFFECTS PER THE SCRRA DESIGN CRITERIA MANUAL AT EACH LOCATION PROPOSED FOR USE.

5. DESIGN OF STANDARD DOUBLE BOX BEAMS IS VALID FOR 6" MAXIMUM OFFSET OF CENTERLINE TRACK TO CENTERLINE OF LONGITUDINAL GAP BETWEEN ADJACENT BEAMS. THE 6" MAXIMUM OFFSET IS APPLICABLE FOR BOTH TANGENT AND CURVED TRACKS.

6. DESIGN OF STANDARD DOUBLE BOX BEAMS IS VALID FOR TIMBER TIES OR CONCRETE TIES WITH A MINIMUM LENGTH OF 8'-3" AND THE FOLLOWING DEPTHS OF MATERIAL FROM TOP OF BEAM TO BOTTOM OF TIE:
   A. 12" MINIMUM DEPTH BELOW TIE
   B. 16" MAXIMUM DEPTH BELOW TIE
   DEPTH BELOW THE TIE INCLUDES THE THICKNESS OF BALLAST AND HOT MIXED ASPHALT (HMA) PAVING, IF APPLICABLE (FOR EXAMPLE, 4" HMA AND 8" BALLAST WOULD MAKE UP 12" DEPTH BELOW THE TIE). THE THICKNESS OF BALLAST TO BE INCLUDED IN THE DEPTH BELOW THE TIE SHALL NOT BE LESS THAN 8".

7. FOR CURVED TRACK, DESIGN OF STANDARD DOUBLE BOX BEAMS IS VALID FOR THE RANGE OF TRAIN SPEED AND DEGREE OF CURVE SHOWN IN THE TABLE TITLED "MAXIMUM ALLOWABLE DEGREE OF CURVE FOR DESIGN SPEED", THIS SHEET.

8. PRECAST/PRESTRESSED CONCRETE DOUBLE BOX BEAM DESIGN LOADING (VALUES GIVEN FOR A SINGLE BEAM):
   A. DEAD LOAD, D:
      I. SELF-WEIGHT OF DOUBLE BOX BEAMS, Dsw = 1,390 LB/FT (NOT INCLUDING END DIAPHRAGMS)
      II. BALLAST, HMA AND TIES, Db (TOP OF BEAM TO TOP OF TIE):
         MINIMUM, 19" TOTAL DEPTH, Dbmin = 1,235 LB/FT
         MAXIMUM, 24" TOTAL DEPTH, Dbmax = 1,560 LB/FT
      III. TRACK (RAIL & OTM), Dt = 112 LB/FT
      IV. CURB, WALKWAY AND HANDRAIL, Dc = 185 LB/FT
   B. COOPER E-80 LIVE LOAD, L
   C. IMPACT, I, BASED ON SPAN LENGTH CENTER-TO-CENTER OF BEARINGS, "SL", EXPRESSED IN % OF L:
      FOR 14' < "SL" ≤ 127', $I = 225 / \sqrt{("SL")}$
   D. CENTRIFUGAL FORCE, CF, RESULTING IN A VERTICAL FORCE EQUAL TO 15% OF L

9. CONTROLLING LOADING EFFECTS FOR EACH LIMIT STATE INVESTIGATED ARE PROVIDED IN THE TABLE TITLED "CONTROLLING DESIGN LOAD EFFECTS FOR PRECAST/PRESTRESSED CONCRETE DOUBLE BOX BEAM", THIS SHEET.

10. REQUIRED COMPRESSIVE STRENGTHS OF CONCRETE AT RELEASE, f'ci, AND AT 28 DAYS, f'c, ARE PROVIDED FOR EACH DESIGN. MINIMUM f'ci SHALL BE 4000 PSI AT RELEASE AND MINIMUM f'c SHALL BE 6000 PSI AT 28 DAYS.

11. STRAND PATTERN FOR DOUBLE BOX BEAM CONSISTS OF 0.6" DIA. SEVEN-WIRE HIGH-STRENGTH LOW-RELAXATION STRANDS AT 2" MINIMUM SPACING. FABRICATORS MAY BE ALLOWED TO SUBSTITUTE AN ALTERNATE STRAND SIZE, SPACING AND/OR PATTERN THAT PROVIDES THE SAME TOTAL AREA OF PRESTRESSING STEEL AND THE SAME ECCENTRICITY OF PRESTRESSING FORCE FROM THE CENTROID OF THE BEAM CROSS-SECTION. SEE THE SPECIFICATIONS FOR ALTERNATE STRAND ARRANGEMENT SUBMITTAL REQUIREMENTS.

12. PRECAST/PRESTRESSED CONCRETE DOUBLE BOX BEAM DESIGNS ARE PROVIDED AT INCREMENTS OF OUT-TO-OUT BEAM LENGTH, "BL", BETWEEN 20' AND 35'. SPAN LENGTH CENTER-TO-CENTER OF BEARINGS, "SL" IS 1'-1" LESS THAN "BL" FOR DOUBLE BOX BEAMS. FOR ACTUAL VALUES OF "BL" BETWEEN THOSE LENGTHS PROVIDED, USE THE DESIGN FOR THE NEXT LARGER "BL" (FOR EXAMPLE, THE STANDARD 27'-10" OUT-TO-OUT BEAM LENGTH WOULD USE THE NUMBER OF STRANDS, STRAND PATTERN AND REQUIRED CONCRETE STRENGTHS FOR THE 28' DESIGN).

13. CALCULATIONS FOR DESIGN OF PRECAST/PRESTRESSED CONCRETE DOUBLE BOX BEAMS AND PRECAST CONCRETE CAPS HAVE BEEN SIGNED AND SEALED BY A LICENSED PROFESSIONAL CIVIL ENGINEER IN THE STATE OF CALIFORNIA AND ARE KEPT ON FILE AT SCRRA HEADQUARTERS.

MAXIMUM ALLOWABLE DEGREE OF CURVE FOR DESIGN SPEED

MAX DESIGN SPEED (mph)	ALLOWABLE DEGREE OF CURVE
20	14° 00'
25	13° 33'
30	13° 13'
35	11° 21'
40	8° 29'
45	6° 42'
50	5° 25'
60	3° 51'
70	2° 50'
80	2° 04'
90	1° 35'
100	1° 17'
110	1° 01'

NOTE:
ALLOWABLE DEGREE OF CURVE SHOWN IN THE TABLE MAY NOT BE A PRACTICAL DESIGN VALUE. VALUES BASED SOLELY ON THE CENTRIFUGAL FORCE REQUIRED TO PRODUCE AN INCREASE OF 15% VERTICAL LIVE LOAD ON BEAMS.

REV.	DATE	DESCRIPTION	DES.	ENG.
X	XX-XX-XX	REVISION	XX	XX

DRAWN BY: HDR DATE: 03/31/2011

ASSISTANT DIRECTOR: STANDARDS & DESIGN

DIRECTOR OF ENGINEERING AND CONSTRUCTION

SCRRA ENGINEERING STANDARDS ARE INTENDED FOR SCRRA APPROVED USES ONLY. FOR NON-SCRRA APPROVED USES:
SCRRA SHALL NOT BE RESPONSIBLE FOR THE ACCURACY OR COMPLETENESS OF THE DATA OR INFORMATION CONTAINED HEREIN. THE SELECTION AND USE OF THESE STANDARDS IS THE SOLE RESPONSIBILITY OF THE USER AND SHOULD NOT BE USED WITHOUT CONSULTING A REGISTERED PROFESSIONAL ENGINEER. ALL WARRANTIES AND REPRESENTATIONS OF ANY KIND ARE DISCLAIMED. ANYONE MAKING USE OF THIS INFORMATION AGREES THAT IT ASSUMES ALL LIABILITY ARISING FROM SUCH USE. NO PART OF THESE STANDARDS SHOULD BE REPRODUCED OR DISTRIBUTED IN ANY FORM OR BY ANY MEANS WITHOUT THE PRIOR WRITTEN PERMISSION OF SCRRA. ALL RIGHTS RESERVED.

METROLINK®
SOUTHERN CALIFORNIA REGIONAL RAIL AUTHORITY
ONE GATEWAY PLAZA, 12TH FLOOR, L. A., CA. 90012

ENGINEERING STANDARDS

DESIGN NOTES
PRECAST/PRESTRESSED CONCRETE
DOUBLE BOX BEAM BRIDGES

STANDARD 6001
SCALE: NTS
REVISION –
SHEET 2 OF 26
CADD FILE: ES6001-02

CONSTRUCTION NOTES:

PRECAST CONCRETE MEMBERS AND PRECAST/PRESTRESSED CONCRETE BEAMS:

PRECAST CONCRETE MEMBERS AND PRECAST/PRESTRESSED CONCRETE BEAMS SHALL MEET THE REQUIREMENTS OF SCRRA STANDARD SPECIFICATIONS SECTION 34 80 43: PRECAST AND PRESTRESSED CONCRETE FOR RAILROAD BRIDGES. MATERIALS SHALL NOT BE ORDERED AND FABRICATION SHALL NOT COMMENCE PRIOR TO ACCEPTANCE OF SHOP DRAWINGS BY SCRRA. MEMBERS AND BEAMS THAT DO NOT MEET THE REQUIRED SPECIFICATIONS WILL BE REJECTED. REJECTED MEMBERS AND BEAMS SHALL BE REPLACED BY THE CONTRACTOR AT NO ADDITIONAL COST TO SCRRA. MEMBERS AND BEAMS THAT HAVE BEEN DELIVERED AND ARE THEN REJECTED SHALL BE REMOVED FROM SCRRA PROPERTY AT NO ADDITIONAL COST TO SCRRA.

PILING:

STEEL BEARING PILES SHALL MEET THE REQUIREMENTS OF SCRRA STANDARD SPECIFICATIONS SECTION 34 80 21: PILING. PILES SHALL BE DRIVEN TO A MINIMUM ALLOWABLE COMPRESSIVE LOAD CAPACITY OF 150 TONS PER THE DYNAMIC FORMULA IN THE STANDARD SPECIFICATIONS OR TO PRACTICAL REFUSAL, IF POSSIBLE, WITHOUT DAMAGING THE PILES. MINIMUM PENETRATION SHALL BE 15 FEET BELOW NATURAL GROUND OR FINISHED GROUND LINE, WHICHEVER IS LOWER. PILES SHALL BE DRIVEN WITHIN 3" OF PLAN LOCATION AT CUTOFF, WITHIN 1/4" PER FOOT OF SPECIFIED BATTER LINE FOR BATTERED PILING AND WITHIN 1/4" PER FOOT OF VERTICAL FOR PLUMB PILING. PILES THAT DO NOT MEET THE REQUIRED TOLERANCES SHALL BE PULLED AND REDRIVEN OR CUTOFF AND REPLACED. CUTOFF PILES TO SPECIFIED ELEVATIONS AND PROPERLY PREPARE THE CUTOFF ENDS FOR WELDING. PILES SHALL NOT BE PULLED INTO POSITION FOR WELDING TO CAPS UNLESS OTHERWISE APPROVED BY SCRRA. A FULL PILE REPORT PER THE SPECIFICATIONS, INCLUDING DRIVING RECORDS AND ESTIMATED ALLOWABLE CAPACITIES FOR EACH PILE, SHALL BE PROVIDED TO SCRRA.

PLACING PRECAST CAPS:

PRECAST CAPS SHALL BE PLACED IN THE PROPER LOCATIONS AND SECURED PRIOR TO WELDING PILES TO PILE PLATES EMBEDDED IN CAPS. PROPER LOCATION OF PRECAST CAPS SHALL BE DETERMINED USING CONSTRUCTION SURVEYING WITH VERIFIED CONTROL AND CHECKED WITH TAPE MEASUREMENTS FROM A KNOWN REFERENCE POINT. AS-BUILT DIMENSIONS BETWEEN EMBEDDED PIPES IN EACH END OF BEAMS AND BETWEEN STEEL RODS (AR1) EMBEDDED IN CAPS IN ADJACENT BENTS SHALL BE CHECKED PRIOR TO WELDING PILES TO CAPS.

FIELD WELDING CAPS AND BRACING:

PILES SHALL BE WELDED TO PILE PLATES, FOLLOWED BY WELDING ANGLE BRACING TO THE INSIDE OF PILE FLANGES AS SHOWN ON THE DRAWINGS. WELDING SHALL MEET THE REQUIREMENTS OF AWS D1.5 BRIDGE WELDING CODE. WELDING SHALL BE ACCOMPLISHED USING THE SMAW OR FCAW PROCESS. WELDING ELECTRODES SHALL BE E7018 FOR SMAW OR E70T-5 FOR FCAW. WELDERS SHALL POSSESS VALID QUALIFICATIONS FOR THE TYPES OF WELDS AND WELDING POSITIONS REQUIRED.

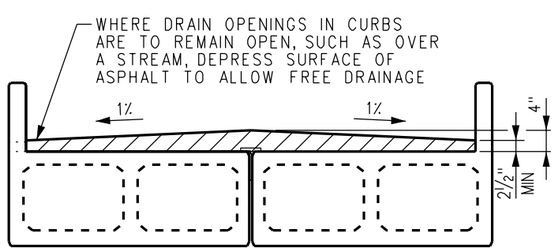

SECTION A
SCALE: NONE

NOTE:
HMA CROSS SLOPE SIMILAR ON BRIDGE APPROACH.

INSTALLING WING WALLS:

ADJOINING SURFACES OF END CAP AND WING WALL SHALL BE COATED WITH GROUT. WHILE GROUT IS STILL PLIABLE, POSITION WING WALL OVER THREADED RODS AND HOLD IN PLACE, ADD WASHER W1 AND HEX NUT TO BOLTS, TIGHTEN NUTS AND TACK WELD NUTS TO WASHER. REPAIR DAMAGED GALVANIZED SURFACES.

CAST-IN-PLACE CONCRETE:

ALL CONCRETE MATERIALS, PLACEMENT AND WORKMANSHIP SHALL CONFORM TO SCRRA STANDARD SPECIFICATIONS SECTION 34 80 41: STRUCTURAL CONCRETE FOR RAILROAD AND CIVIL WORKS. REINFORCING STEEL MATERIALS AND PLACEMENT SHALL CONFORM TO SCRRA STANDARD SPECIFICATIONS SECTION 34 80 42: REINFORCEMENT FOR RAILROAD AND CIVIL WORKS. MINIMUM 28-DAY CONCRETE COMPRESSIVE STRENGTH SHALL BE 4000 PSI. THE PORTION OF PILING TO BE ENCASED IN CONCRETE SHALL BE CLEANED OF ALL DIRT, OIL AND GREASE AND ALL LOOSE SCALE AND RUST BEFORE CONCRETE IS PLACED TO PROVIDE ADEQUATE BOND.

PAINTING:

PAINTING SHALL BE IN ACCORDANCE WITH SCRRA STANDARD SPECIFICATIONS SECTION 34 80 61: PAINTING AND PROTECTIVE COATINGS FOR BRIDGES. THE EXPOSED PORTION OF PILE PLATES, PILING BETWEEN THE PILE PLATES AND CONCRETE COLLARS OR GROUND LINE, ANGLE BRACING AND ANY OTHER NON-GALVANIZED EXPOSED STEEL SHALL BE CLEANED PER SSPC SP 6 "COMMERCIAL BLAST CLEAN" AND PAINTED USING SYSTEM #19.

INSTALLING BEARING PADS:

RANDOM ORIENTED FIBER ELASTOMERIC BEARING PADS SHALL MEET THE REQUIREMENTS OF SCRRA STANDARD SPECIFICATIONS SECTION 34 80 43: PRECAST AND PRESTRESSED CONCRETE FOR RAILROAD BRIDGES. BEARING PADS SHALL BE ADHERED TO PRECAST CAPS AND PRECAST/PRESTRESSED CONCRETE BEAMS USING AN ADHESIVE RECOMMENDED BY THE BEARING PAD MANUFACTURER AND APPROVED BY SCRRA. BEARING AREAS ON CAPS AND BEAMS SHALL BE ABRASIVE BLAST CLEANED TO REMOVE ALL FORM OIL AND CURING AGENTS AND SHALL BE CLEANED TO A DUST-FREE CONDITION. ONCE BEARING AREAS HAVE BEEN ADEQUATELY CLEANED, APPLY A LIGHT SEAL COAT OF ADHESIVE TO CONCRETE SURFACE AND ALLOW TO DRY. COAT CONTACT SURFACES OF CONCRETE AND BEARING PADS WITH ADHESIVE, PLACE PADS ON CONCRETE SURFACE AND HOLD IN THE PROPER LOCATION UNTIL THE ADHESIVE HAS ATTAINED INITIAL SET.

ERECTION OF BEAMS:

BEAMS SHALL BE SET IN THE PROPER LOCATION, TAKING CARE NOT TO DAMAGE CONCRETE MEMBERS. AFTER BEAMS HAVE BEEN SET IN FINAL POSITION, LIFTING LOOPS SHALL BE TORCHED OFF 1" BELOW DECK SURFACE AND REMAINING HOLES FILLED WITH EPOXY GROUT.

DECK PLATES:

DECK PLATES MAY BE ADJUSTED AND TRIMMED AS NEEDED TO PROVIDE A TIGHT FIT. DUE TO LOCAL CONDITIONS, DECK PLATES AT JOINTS MAY NEED TO BE WELDED. IF WELDING DECK PLATES IS REQUIRED, REMOVE SCALE AND REPAIR GALVANIZED SURFACES AFTER COOLING.

WALKWAYS:

SIDEWALK BRACKETS SHALL BE ERECTED PLUMB AND IN-LINE. FINISHED WALKWAY SURFACE SHALL BE EVEN, WITH ANY ABRUPT CHANGES IN ELEVATION LIMITED TO 1/4" OR LESS. ATTACH WALKWAY GRATING TO SIDEWALK BRACKETS AS SHOWN ON THE DRAWINGS. GRATING PANEL LAYOUT SHALL BE ADJUSTED TO MINIMIZE DISTANCE THAT PANELS EXTEND ACROSS BRIDGE JOINTS. TRIM GRATING AS REQUIRED AND REPAIR DAMAGED GALVANIZED SURFACES.

HANDRAIL:

HANDRAIL POSTS, BRACES AND STRUTS SHALL BE GALVANIZED 2"x2" 20F12 UNISTRUT "TELESPAR". CABLE RAILS SHALL BE 5/16" DIA, 7x19 GALVANIZED AIRCRAFT CABLE. INTERIOR HANDRAIL TERMINATIONS SHALL BE PROVIDED AT EVERY TWO SPANS. SAFETY CHAIN SHALL BE USED FOR RAILS BETWEEN INTERIOR CABLE TERMINATIONS. ATTACH HANDRAIL COMPONENTS AS SHOWN ON THE DRAWINGS. REPAIR DAMAGED GALVANIZED SURFACES.

SIGNAL CONDUIT:

A MINIMUM OF TWO SIGNAL CONDUITS SHALL BE PROVIDED INSIDE THE CURB LINE ON EACH SIDE OF THE BRIDGE. CONDUIT SHALL CONSIST OF 4" DIA GALVANIZED STEEL PIPE. CONDUIT BRACKETS SHALL BE USED TO HOLD CONDUIT IN PLACE AND SHALL BE PLACED TO MISS DECK PLATES AND SIDEWALK BRACKETS. SPACING OF CONDUIT BRACKETS SHALL NOT EXCEED 6 FEET. INSTALL CONDUIT BRACKETS USING ADHESIVE ANCHORS. ADHESIVE ANCHORS SHALL BE HILTI HVA SYSTEM OR APPROVED EQUAL. FIELD DRILL 7/16" DIA x 3 1/2" HOLE INTO CONCRETE CURB, INSTALL HVU ADHESIVE CAPSULE AND 3/8" DIA x 5" THREADED ROD PER MANUFACTURER'S INSTRUCTIONS. CONDUITS INSTALLED ON BRIDGES WITHOUT HMA SHALL BE RAISED 3/4" TO ALLOW FOR DECK DRAINAGE.

MISCELLANEOUS STEEL AND HARDWARE:

MISCELLANEOUS STEEL ITEMS SHALL BE FABRICATED IN ACCORDANCE WITH SCRRA STANDARD SPECIFICATIONS SECTION 34 80 52: METAL FABRICATIONS FOR RAILROAD BRIDGES. STEEL ACCESSORIES AND HARDWARE SHALL BE GALVANIZED (HOT DIP OR MECHANICALLY ZINC COATED) UNLESS NOTED OTHERWISE.

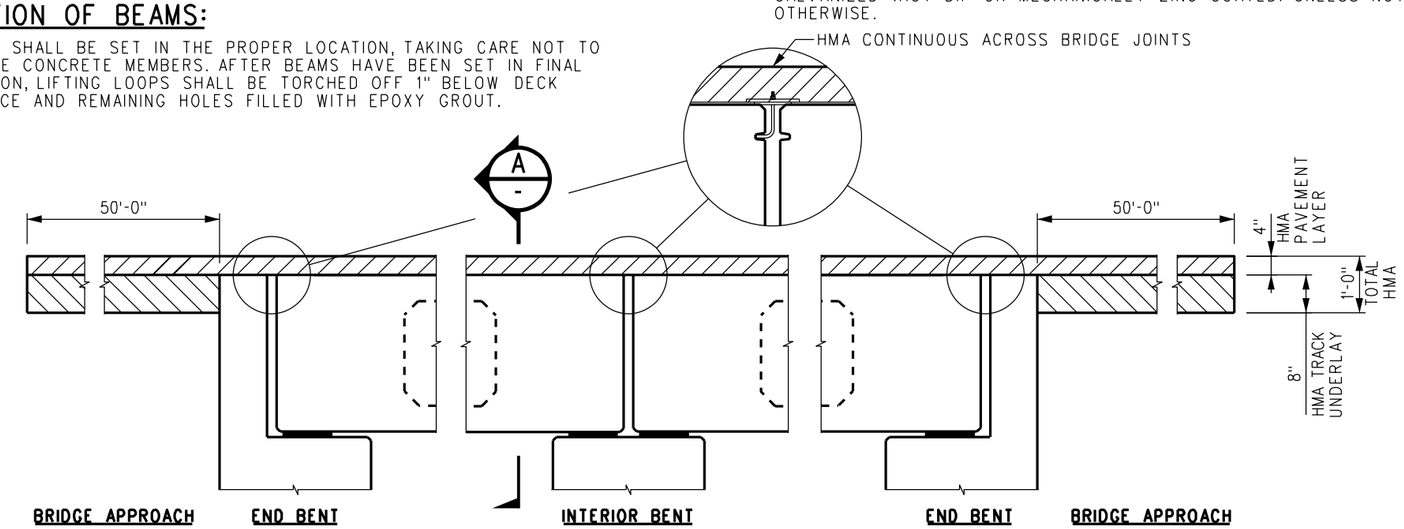

HMA DETAILS
SCALE: 1/2" = 1'-0"

REV.	DATE	DESCRIPTION	DES.	ENG.
X	XX-XX-XX	REVISION	XX	XX

DRAWN BY: A. CARLOS DATE: 03/31/2011

ASSISTANT DIRECTOR: STANDARDS & DESIGN

DIRECTOR OF ENGINEERING AND CONSTRUCTION

SCRRA ENGINEERING STANDARDS ARE INTENDED FOR SCRRA APPROVED USES ONLY. FOR NON-SCRRA APPROVED USES:
SCRRA SHALL NOT BE RESPONSIBLE FOR THE ACCURACY OR COMPLETENESS OF THE DATA OR INFORMATION CONTAINED HEREIN. THE SELECTION AND USE OF THESE STANDARDS IS THE SOLE RESPONSIBILITY OF THE USER AND SHOULD NOT BE USED WITHOUT CONSULTING A REGISTERED PROFESSIONAL ENGINEER. ALL WARRANTIES AND REPRESENTATIONS OF ANY KIND ARE DISCLAIMED. ANYONE MAKING USE OF THIS INFORMATION AGREES THAT IT ASSUMES ALL LIABILITY ARISING FROM SUCH USE. NO PART OF THESE STANDARDS SHOULD BE REPRODUCED OR DISTRIBUTED IN ANY FORM OR BY ANY MEANS WITHOUT THE PRIOR WRITTEN PERMISSION OF SCRRA. ALL RIGHTS RESERVED.

METROLINK®
SOUTHERN CALIFORNIA REGIONAL RAIL AUTHORITY
ONE GATEWAY PLAZA, 12TH FLOOR, L. A., CA. 90012

ENGINEERING STANDARDS

CONSTRUCTION NOTES AND HMA DETAILS
PRECAST/PRESTRESSED CONCRETE
DOUBLE BOX BEAM BRIDGES

STANDARD 6001
SCALE: AS NOTED
REVISION –
SHEET 3 OF 26
CADD FILE: ES6001-03

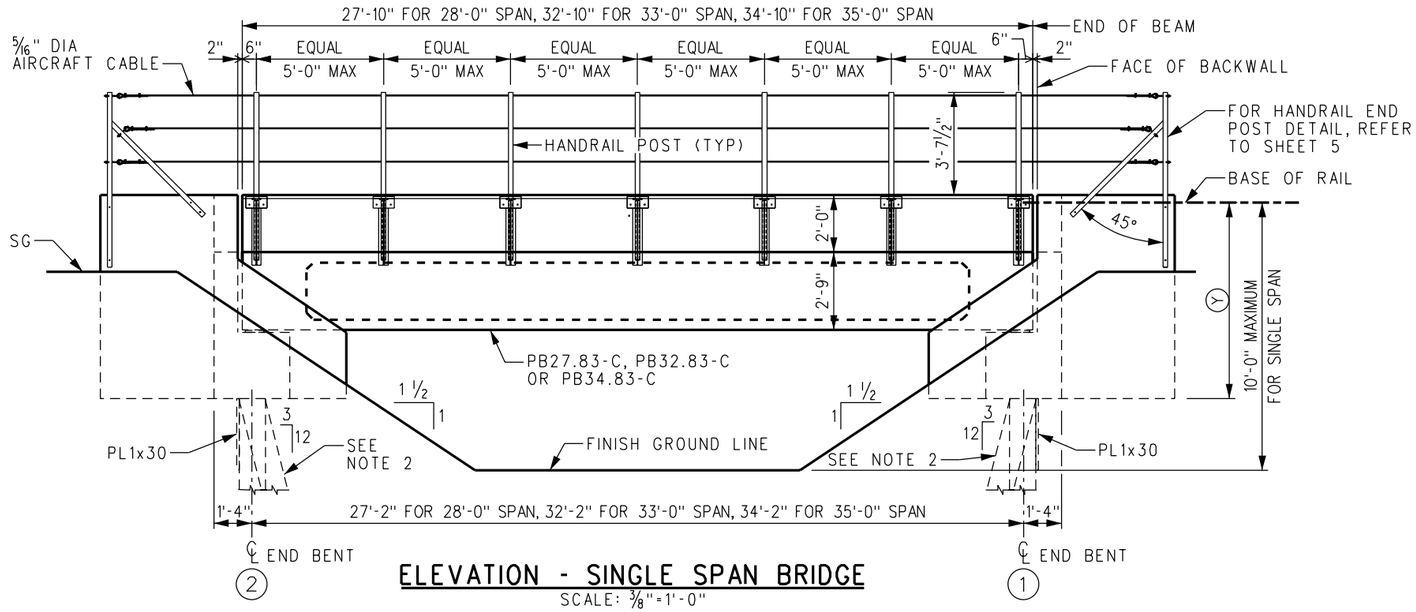

ELEVATION - SINGLE SPAN BRIDGE

SCALE: 3/8"=1'-0"

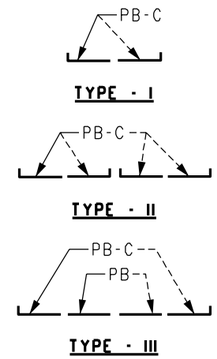

BEAM ARRANGEMENT DIAGRAMS

SCALE: NONE
PB DENOTES BEAM WITHOUT CURB.
PB-C DENOTES BEAM WITH CURB.

LIFTING WEIGHTS	
BEAM MARK	WEIGHT IN TONS
PB34.83-C	26.9
PB34.83	24.3
PB32.83-C	25.3
PB32.83	22.9
PB27.83-C	21.5
PB27.83	19.4

DOUBLE BENT REQUIREMENTS	
LINEAL FEET OF BRIDGE	MIN NO OF DOUBLE BENTS REQUIRED
UP TO 198'	NONE
199' TO 396'	ONE
397' TO 594'	TWO
595' TO 792'	THREE

NOTES:

1. "Y" IS THE DISTANCE FROM BASE OF RAIL TO PILE CUTOFF. FOR DESIGN ELEVATIONS, "Y" SHALL BE ESTABLISHED IN COORDINATION WITH SCRRA DIRECTOR OF ENGINEERING AND CONSTRUCTION.
2. WHEN NECESSARY TO CLEAR AN EXISTING PILE, PILES BATTERED IN THE DIRECTION OF THE TRACK MAY ALSO BE BATTERED SLIGHTLY IN THE DIRECTION NORMAL TO THE TRACK.

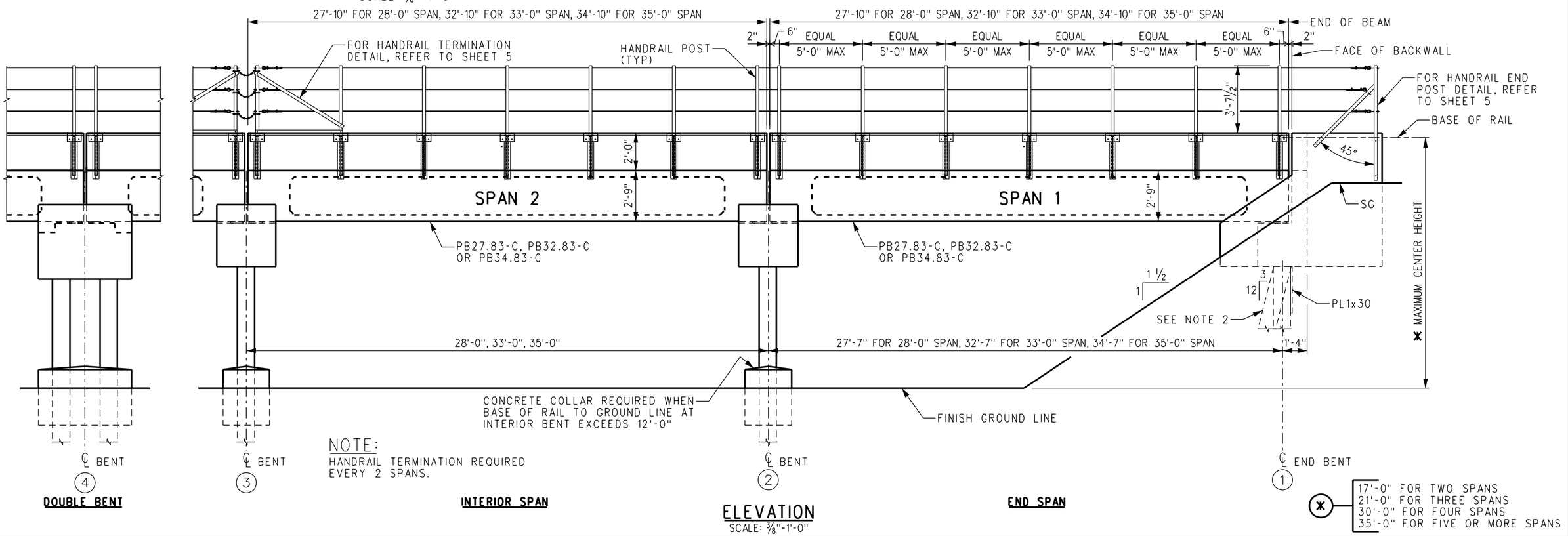

NOTE:
HANDRAIL TERMINATION REQUIRED EVERY 2 SPANS.

ELEVATION

SCALE: 3/8"=1'-0"

REV.	DATE	DESCRIPTION	DES.	ENG.
X	XX-XX-XX	REVISION	XX	XX

DRAWN BY: A. CARLOS DATE: 03/31/2011

ASSISTANT DIRECTOR: STANDARDS & DESIGN

DIRECTOR OF ENGINEERING AND CONSTRUCTION

SCRRA ENGINEERING STANDARDS ARE INTENDED FOR SCRRA APPROVED USES ONLY. FOR NON-SCRRA APPROVED USES: SCRRA SHALL NOT BE RESPONSIBLE FOR THE ACCURACY OR COMPLETENESS OF THE DATA OR INFORMATION CONTAINED HEREIN. THE SELECTION AND USE OF THESE STANDARDS IS THE SOLE RESPONSIBILITY OF THE USER AND SHOULD NOT BE USED WITHOUT CONSULTING A REGISTERED PROFESSIONAL ENGINEER. ALL WARRANTIES AND REPRESENTATIONS OF ANY KIND ARE DISCLAIMED. ANYONE MAKING USE OF THIS INFORMATION AGREES THAT IT ASSUMES ALL LIABILITY ARISING FROM SUCH USE. NO PART OF THESE STANDARDS SHOULD BE REPRODUCED OR DISTRIBUTED IN ANY FORM OR BY ANY MEANS WITHOUT THE PRIOR WRITTEN PERMISSION OF SCRRA. ALL RIGHTS RESERVED.

METROLINK®
SOUTHERN CALIFORNIA REGIONAL RAIL AUTHORITY
ONE GATEWAY PLAZA, 12TH FLOOR, L. A., CA. 90012

ENGINEERING STANDARDS

GENERAL ARRANGEMENT
PRECAST/PRESTRESSED CONCRETE
DOUBLE BOX BEAM BRIDGES

STANDARD 6001
SCALE: AS NOTED
REVISION –
SHEET 4 OF 26
CADD FILE: ES6001-04

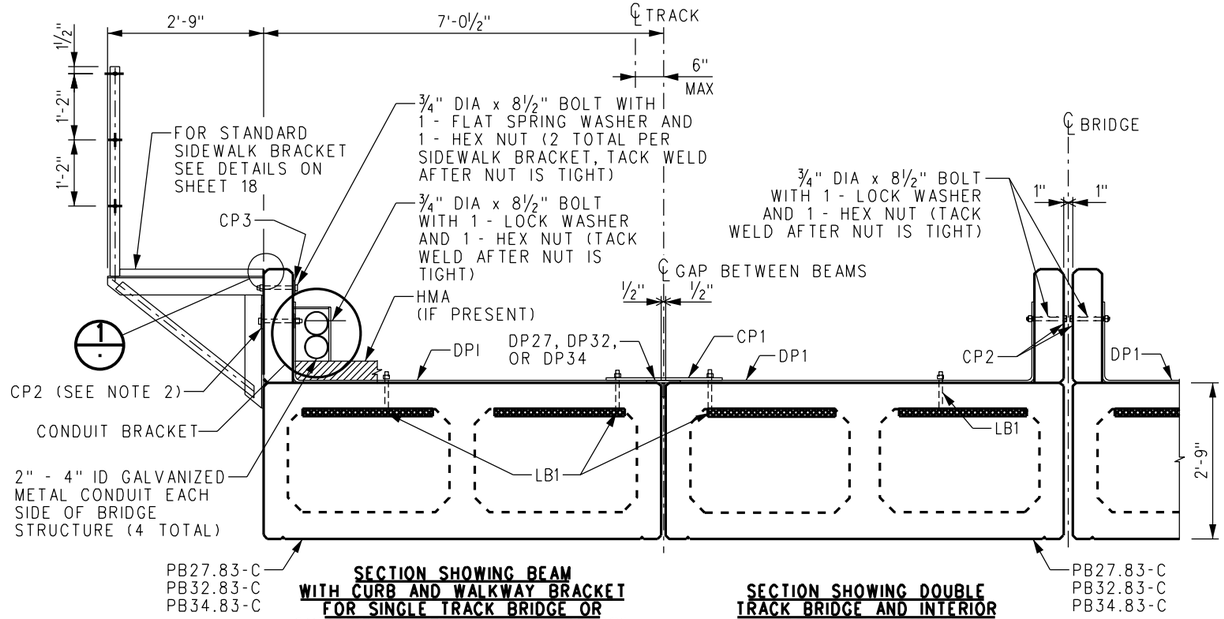

SECTION SHOWING BEAM WITH CURB AND WALKWAY BRACKET FOR SINGLE TRACK BRIDGE OR EXTERIOR OF DOUBLE TRACK BRIDGE

SECTION SHOWING DOUBLE TRACK BRIDGE AND INTERIOR BEAMS WITH CURBS

NOTES:

1. FOR LIFTING WEIGHTS, BENT REQUIREMENTS AND OTHER RELATED NOTES SEE SHEET 4.
2. AT END BENTS, SUBSTITUTE CURB ANGLE CA2 FOR CURB PLATE CP2.

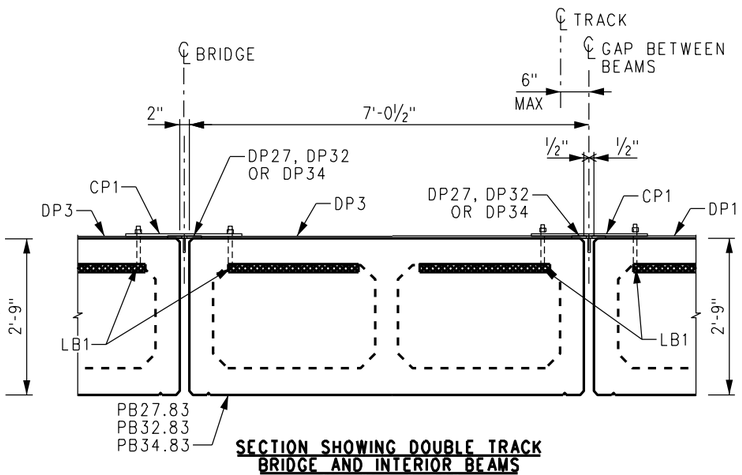

SECTION SHOWING DOUBLE TRACK BRIDGE AND INTERIOR BEAMS WITHOUT CURBS

TYPICAL PARTIAL SECTIONS

SCALE: ¾" = 1'-0"

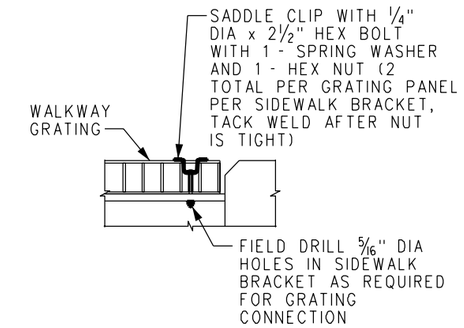

DETAIL 1

SCALE: NONE

CABLE INSTALLATION INSTRUCTIONS:

1. THREAD CABLE THROUGH ALL HANDRAIL POSTS AND EYEBOLTS ON ONE END HANDRAIL POST.
2. STRETCH CABLE, HANG A MINIMUM OF 10 LBS ON CABLE BETWEEN TWO POSTS, AND REMOVE SAG TO A MAXIMUM OF 2 INCHES.
3. TIGHTEN CLIPS AND EYEBOLTS AT REMAINING END HANDRAIL POST.
4. REMOVE WEIGHTS.

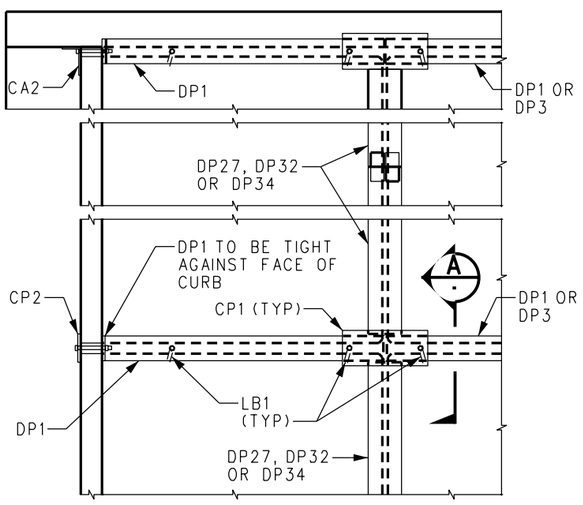

TYPICAL PLACEMENT OF DECK PLATES

SCALE: NONE

ASSEMBLE COMPLETE TRANSVERSE LINE OF DECK PLATES BY PLACING CP1'S AND LB1'S. TURN LEG OF LB1'S TO PERMIT PLACEMENT BETWEEN BEAMS OR BETWEEN BEAM AND PARAPET WALL AND THEN TURN LB1'S AS SHOWN AND TIGHTEN NUT. BURN OFF PROJECTING PORTION OF BOLT AFTER NUT IS TIGHT. TACK WELD NUTS.

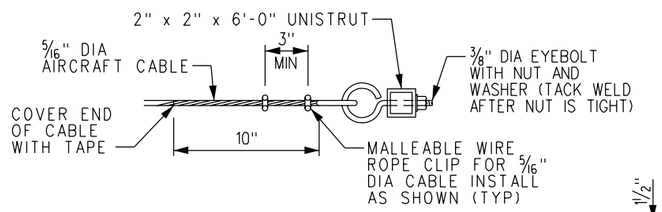

VIEW 2

SCALE: NONE

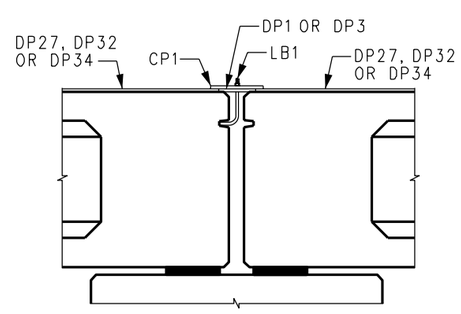

SECTION A

SCALE: NONE

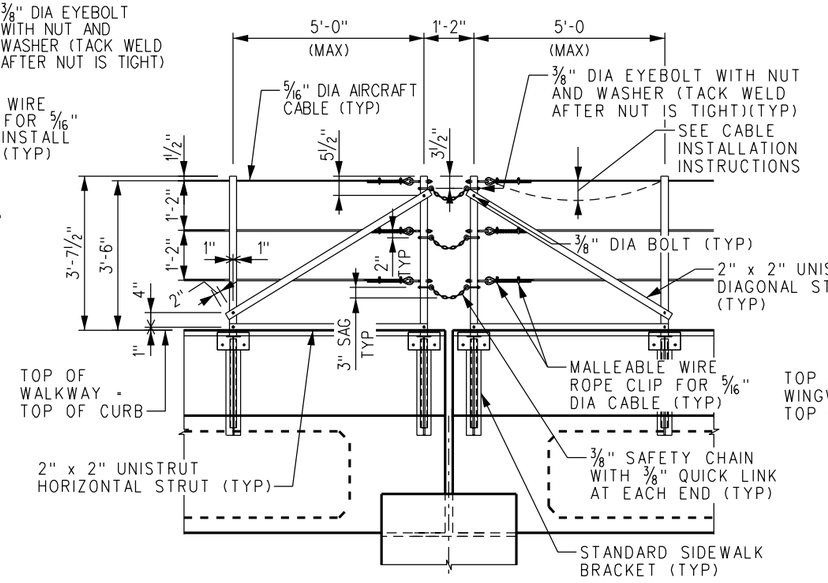

HANDRAIL TERMINATION DETAIL

SCALE: NONE

NOTE:

INSTALL SAFETY CHAIN WITH A 3" SAG.

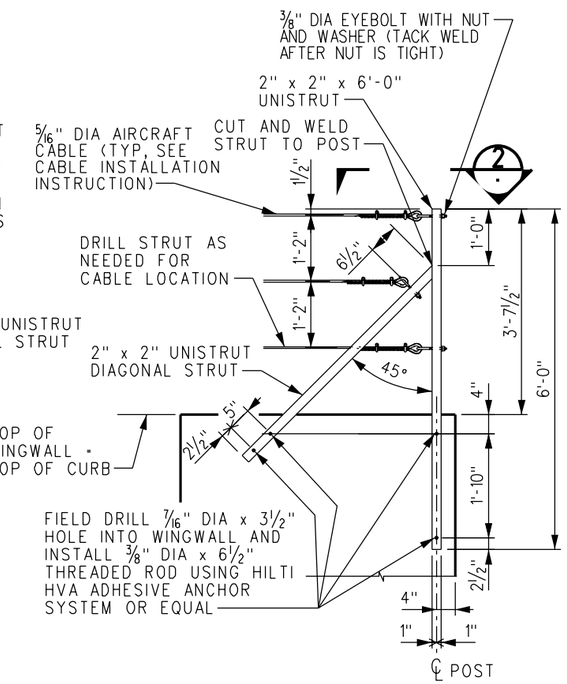

HANDRAIL END POST DETAIL

SCALE: ¾" = 1'-0"

REV.	DATE	DESCRIPTION	DES.	ENG.
X	XX-XX-XX	REVISION	XX	XX

DRAWN BY: A. CARLOS DATE: 03/31/2011

ASSISTANT DIRECTOR: STANDARDS & DESIGN

DIRECTOR OF ENGINEERING AND CONSTRUCTION

SCRRA ENGINEERING STANDARDS ARE INTENDED FOR SCRRA APPROVED USES ONLY. FOR NON-SCRRA APPROVED USES: SCRRA SHALL NOT BE RESPONSIBLE FOR THE ACCURACY OR COMPLETENESS OF THE DATA OR INFORMATION CONTAINED HEREIN. THE SELECTION AND USE OF THESE STANDARDS IS THE SOLE RESPONSIBILITY OF THE USER AND SHOULD NOT BE USED WITHOUT CONSULTING A REGISTERED PROFESSIONAL ENGINEER. ALL WARRANTIES AND REPRESENTATIONS OF ANY KIND ARE DISCLAIMED. ANYONE MAKING USE OF THIS INFORMATION AGREES THAT IT ASSUMES ALL LIABILITY ARISING FROM SUCH USE. NO PART OF THESE STANDARDS SHOULD BE REPRODUCED OR DISTRIBUTED IN ANY FORM OR BY ANY MEANS WITHOUT THE PRIOR WRITTEN PERMISSION OF SCRRA. ALL RIGHTS RESERVED.

METROLINK

SOUTHERN CALIFORNIA REGIONAL RAIL AUTHORITY
ONE GATEWAY PLAZA, 12TH FLOOR, L. A., CA. 90012

ENGINEERING STANDARDS

SECTIONS AND DETAILS
PRECAST/PRESTRESSED CONCRETE
DOUBLE BOX BEAM BRIDGES

STANDARD 6001
SCALE: AS NOTED
REVISION –
SHEET 5 OF 26
CADD FILE: ES6001-05

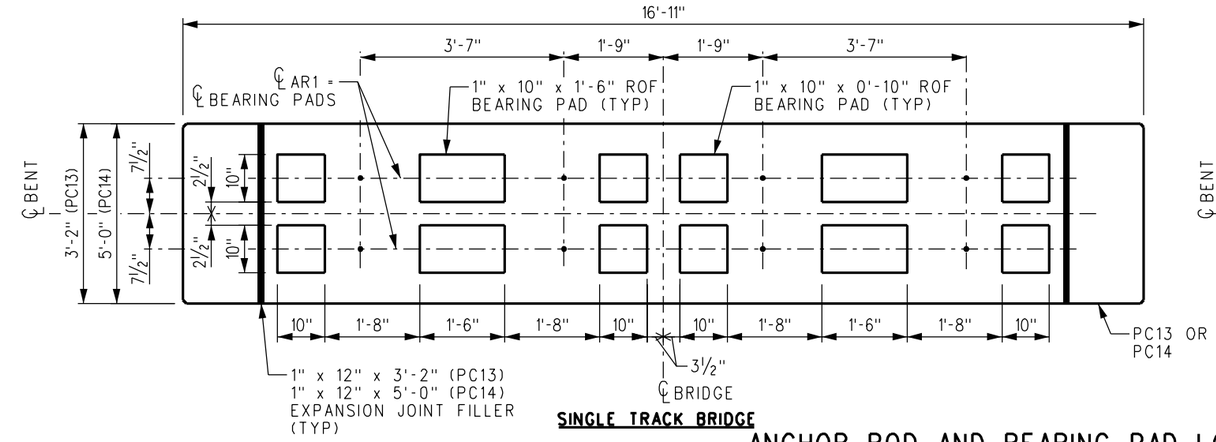

SINGLE TRACK BRIDGE

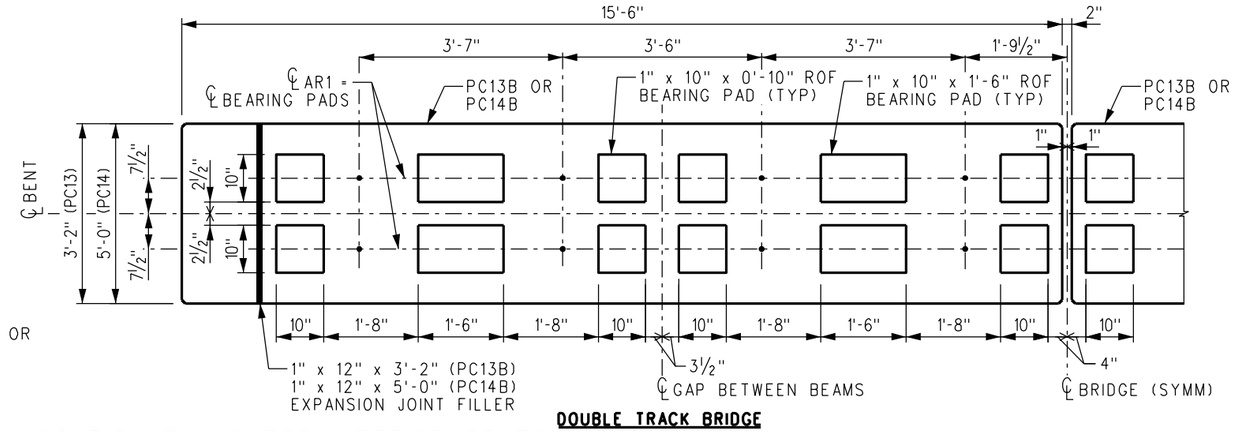

DOUBLE TRACK BRIDGE

ANCHOR ROD AND BEARING PAD LOCATION PLANS FOR INTERIOR BENTS

ANCHOR ROD AR1 MUST BE PLACED WITHIN ¼" OF PLAN LOCATION OR BEAMS WILL NOT FIT

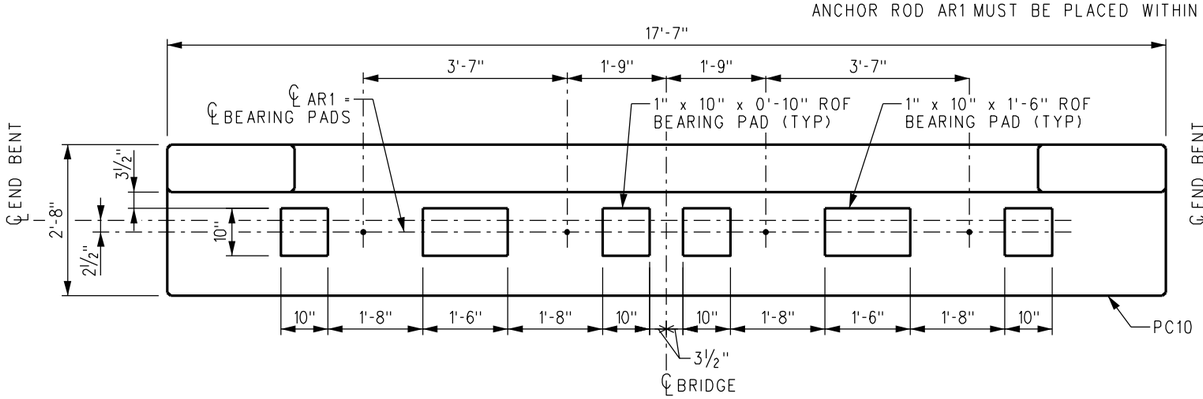

SINGLE TRACK BRIDGE

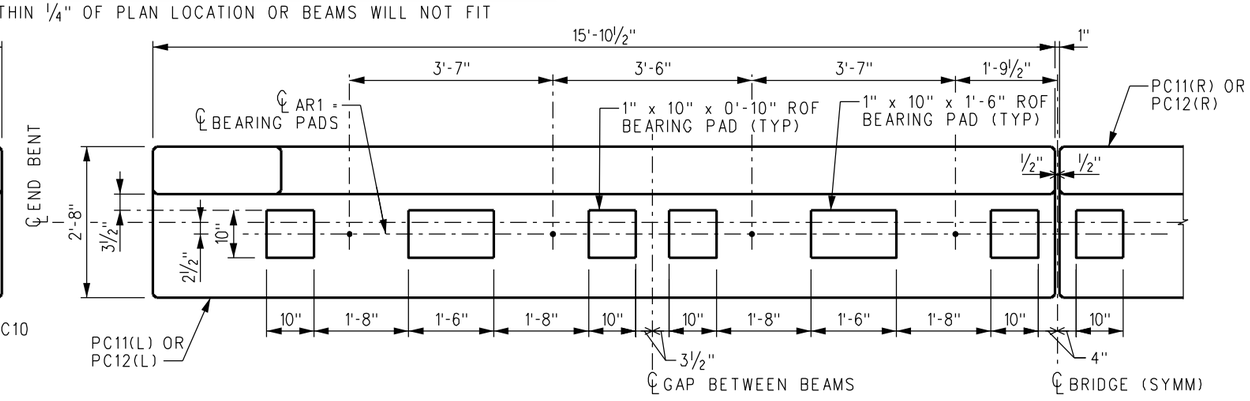

DOUBLE TRACK BRIDGE

ANCHOR ROD AND BEARING PAD LOCATION PLANS FOR END BENTS

ANCHOR ROD AR1 MUST BE PLACED WITHIN ¼" OF PLAN LOCATION OR BEAMS WILL NOT FIT

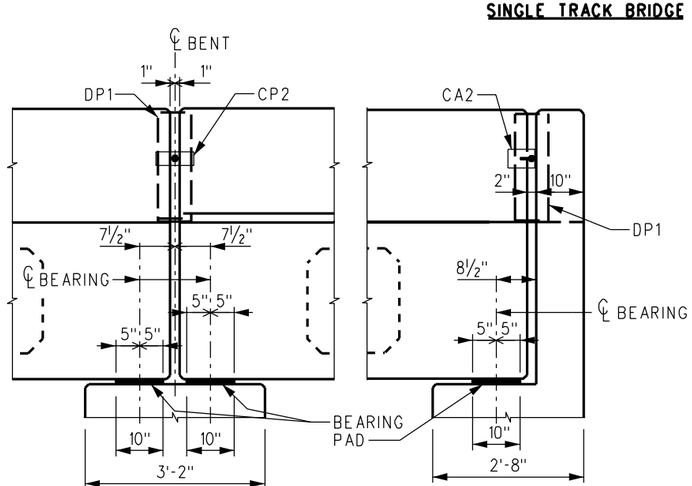

INTERIOR BENT **END BENT**

BEARING DETAILS

SCALE: ¾" = 1'-0"

NOTE:

HANDRAILS NOT SHOWN FOR CLARITY.

NOTES:

1. ROF = RANDOM ORIENTED FIBER
2. BEARING PADS AND EXPANSION JOINT FILLER ARE FIELD ATTACHED TO CAPS.

REV.	DATE	DESCRIPTION	DES.	ENG.
X	XX-XX-XX	REVISION	XX	XX

DRAWN BY: A. CARLOS DATE: 03/31/2011

ASSISTANT DIRECTOR: STANDARDS & DESIGN

DIRECTOR OF ENGINEERING AND CONSTRUCTION

SCRRA ENGINEERING STANDARDS ARE INTENDED FOR SCRRA APPROVED USES ONLY. FOR NON-SCRRA APPROVED USES: SCRRA SHALL NOT BE RESPONSIBLE FOR THE ACCURACY OR COMPLETENESS OF THE DATA OR INFORMATION CONTAINED HEREIN. THE SELECTION AND USE OF THESE STANDARDS IS THE SOLE RESPONSIBILITY OF THE USER AND SHOULD NOT BE USED WITHOUT CONSULTING A REGISTERED PROFESSIONAL ENGINEER. ALL WARRANTIES AND REPRESENTATIONS OF ANY KIND ARE DISCLAIMED. ANYONE MAKING USE OF THIS INFORMATION AGREES THAT IT ASSUMES ALL LIABILITY ARISING FROM SUCH USE. NO PART OF THESE STANDARDS SHOULD BE REPRODUCED OR DISTRIBUTED IN ANY FORM OR BY ANY MEANS WITHOUT THE PRIOR WRITTEN PERMISSION OF SCRRA. ALL RIGHTS RESERVED.

METROLINK®

SOUTHERN CALIFORNIA REGIONAL RAIL AUTHORITY
ONE GATEWAY PLAZA, 12TH FLOOR, L. A., CA. 90012

ENGINEERING STANDARDS

ANCHOR ROD AND BEARING PAD LAYOUT
PRECAST/PRESTRESSED CONCRETE
DOUBLE BOX BEAM BRIDGES

STANDARD 6001
SCALE: ¾" = 1'-0"
REVISION –
SHEET 6 OF 26
CADD FILE: ES6001-26

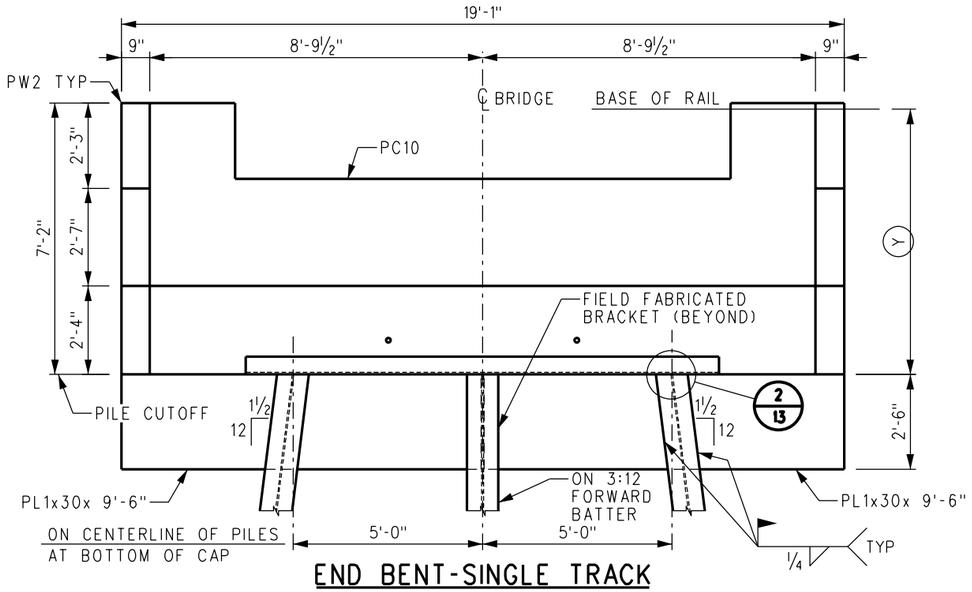

END BENT-SINGLE TRACK

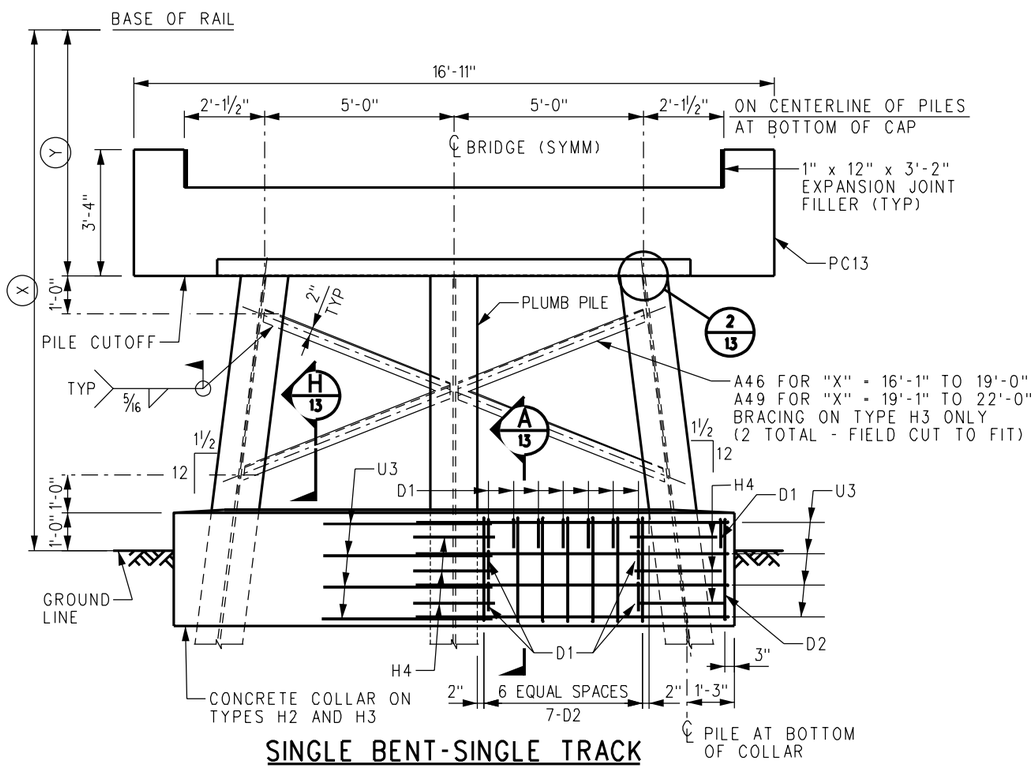

SINGLE BENT-SINGLE TRACK

TYPE H1 - "X" = UP TO 12'-0" (NO COLLAR OR BRACING)
TYPE H2 - "X" = 12'-1" TO 16'-0" (COLLAR, NO BRACING)
TYPE H3 - "X" = 16'-1" TO 22'-0" (COLLAR AND BRACING)

NOTES:

1. ALL PILES ARE HP14x117, ASTM A572 GRADE 50 STEEL BEARING PILES UNLESS OTHERWISE SPECIFIED BY THE ENGINEER.
2. ALL BRACING ANGLES TO BE CUT TO LENGTH AS REQUIRED.
3. AFTER PRECAST CONCRETE MEMBERS ARE SET, FILL RECESSES AT LIFT ANCHORS WITH EPOXY GROUT TO TOP OF SURROUNDING CONCRETE.
4. FOR "TYPICAL PILE SPLICE DETAIL", "WING WALL TO END CAP DETAILS" AND "HEAD OF BANK DETAILS" SEE SHEET 13.
5. THE FOLLOWING FORMULA WILL GIVE ESTIMATED QUANTITIES OF CONCRETE IN THE CONCRETE COLLARS IN CUBIC YARDS:
   BENTS H2, H3 AND H4 - 0.07 x "X" + 3.1
   WHERE "X" IS THE DISTANCE FROM BASE OF RAIL TO GROUND LINE IN FEET.
6. "Y" IS THE DISTANCE FROM BASE OF RAIL TO PILE CUTOFF. FOR DESIGN ELEVATIONS, "Y" SHALL BE ESTABLISHED IN COORDINATION WITH SCRRA DIRECTOR OF ENGINEERING AND CONSTRUCTION. FOR A TOTAL OF 12" DEPTH (BALLAST PLUS HMA) BELOW STANDARD CONCRETE TIES, "Y" = 6'-11" FOR SINGLE ROW PILE BENTS.

REINFORCING STEEL REQUIRED PER CONCRETE COLLAR

BENT TYPE			REINFORCING STEEL MARK
H2	H3	H4	
24	24	24	D1
16	16	16	D2
8	8	4	U3
-	-	4	U4
9	9	9	H4, #4 x 3'-0" (STRAIGHT)

ESTIMATED QUANTITIES PER COLLAR

BENT TYPE	REINFORCING STEEL (LBS)
H2	264
H3	264
H4	272

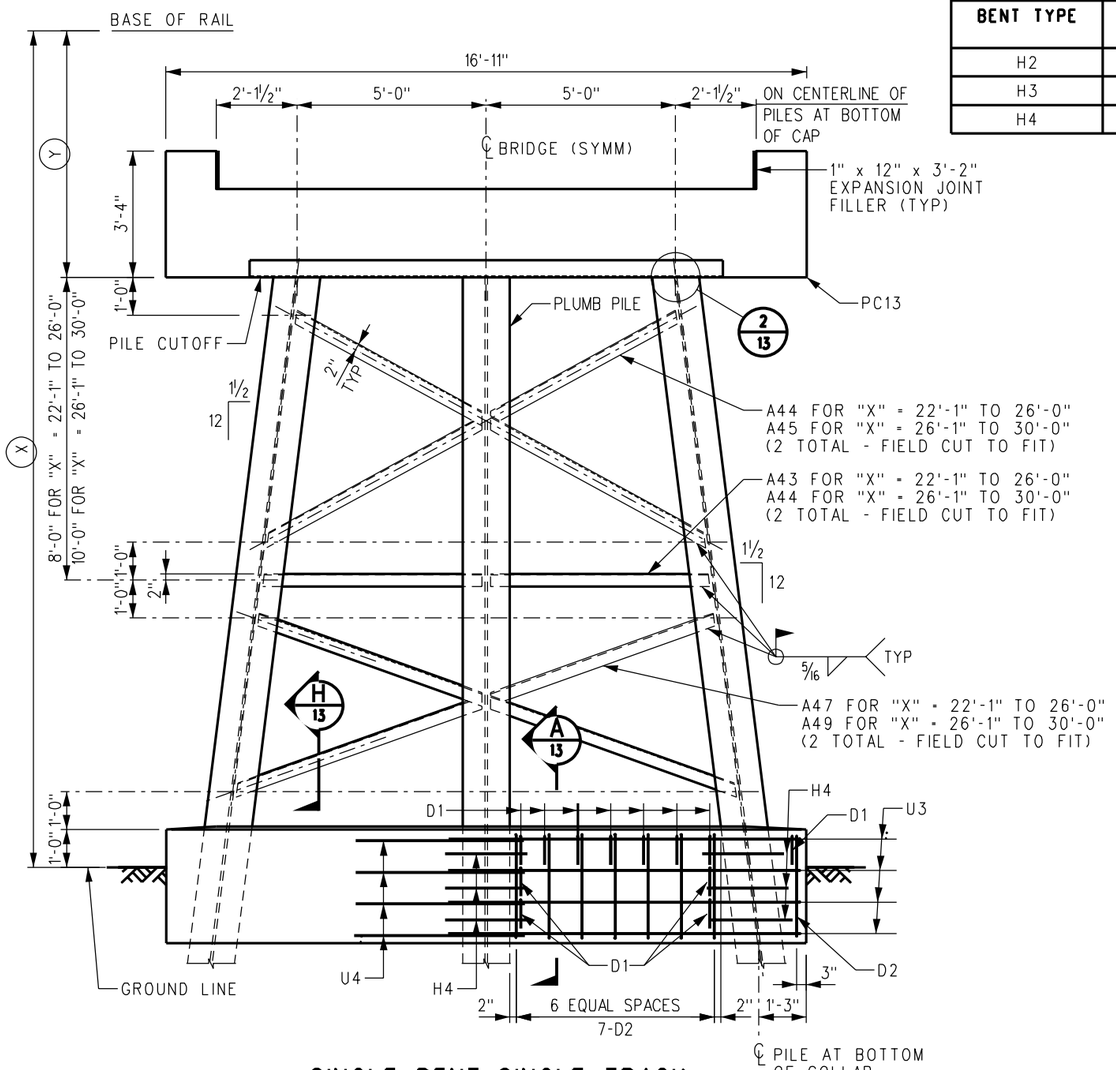

SINGLE BENT-SINGLE TRACK

TYPE H4 - "X" = 22'-1" TO 30'-0"

REV.	DATE	DESCRIPTION	DES.	ENG.
X	XX-XX-XX	REVISION	XX	XX

DRAWN BY: A. CARLOS DATE: 03/31/2011

ASSISTANT DIRECTOR: STANDARDS & DESIGN

DIRECTOR OF ENGINEERING AND CONSTRUCTION

SCRRA ENGINEERING STANDARDS ARE INTENDED FOR SCRRA APPROVED USES ONLY. FOR NON-SCRRA APPROVED USES:
SCRRA SHALL NOT BE RESPONSIBLE FOR THE ACCURACY OR COMPLETENESS OF THE DATA OR INFORMATION CONTAINED HEREIN. THE SELECTION AND USE OF THESE STANDARDS IS THE SOLE RESPONSIBILITY OF THE USER AND SHOULD NOT BE USED WITHOUT CONSULTING A REGISTERED PROFESSIONAL ENGINEER. ALL WARRANTIES AND REPRESENTATIONS OF ANY KIND ARE DISCLAIMED. ANYONE MAKING USE OF THIS INFORMATION AGREES THAT IT ASSUMES ALL LIABILITY ARISING FROM SUCH USE. NO PART OF THESE STANDARDS SHOULD BE REPRODUCED OR DISTRIBUTED IN ANY FORM OR BY ANY MEANS WITHOUT THE PRIOR WRITTEN PERMISSION OF SCRRA. ALL RIGHTS RESERVED.

METROLINK®
SOUTHERN CALIFORNIA REGIONAL RAIL AUTHORITY
ONE GATEWAY PLAZA, 12TH FLOOR, L. A., CA. 90012

ENGINEERING STANDARDS

SINGLE ROW PILE BENTS (1 OF 4)
PRECAST/PRESTRESSED CONCRETE
DOUBLE BOX BEAM BRIDGES

STANDARD 6001
SCALE: ½" = 1'-0"
REVISION –
SHEET 7 OF 26
CADD FILE: ES6001-07

NOTES:

1. ALL PILES ARE HP14x117, ASTM A572 GRADE 50 STEEL BEARING PILES UNLESS OTHERWISE SPECIFIED BY THE ENGINEER.
2. ALL BRACING ANGLES TO BE CUT TO LENGTH AS REQUIRED.
3. AFTER PRECAST CONCRETE MEMBERS ARE SET, FILL RECESSES AT LIFT ANCHORS WITH EPOXY GROUT TO TOP OF SURROUNDING CONCRETE.
4. FOR "TYPICAL PILE SPLICE DETAIL", "WING WALL TO END CAP DETAILS" AND "HEAD OF BANK DETAILS" SEE SHEET 13.
5. THE FOLLOWING FORMULA WILL GIVE ESTIMATED QUANTITIES OF CONCRETE IN THE CONCRETE COLLARS IN CUBIC YARDS;
   BENTS H6, H7 AND H8 - 0.07 x "X" + 3.1
   WHERE "X" IS THE DISTANCE FROM BASE OF RAIL TO GROUND LINE IN FEET.
6. "Y" IS THE DISTANCE FROM BASE OF RAIL TO PILE CUTOFF. FOR DESIGN ELEVATIONS, "Y" SHALL BE ESTABLISHED IN COORDINATION WITH SCRRA DIRECTOR OF ENGINEERING AND CONSTRUCTION. FOR A TOTAL OF 12" DEPTH (BALLAST PLUS HMA) BELOW STANDARD CONCRETE TIES, "Y" = 6'-11" FOR SINGLE ROW PILE BENTS.

ESTIMATED QUANTITIES PER COLLAR

BENT TYPE	REINFORCING STEEL (LBS)
H6	280
H7	280
H8	296

REINFORCING STEEL REQUIRED PER CONCRETE COLLAR

BENT TYPE			REINFORCING STEEL MARK
H6	H7	H8	
28	28	28	D1
16	16	16	D2
8	8	-	U3
-	-	8	U4
12	12	12	H4, #4 x 3'-0" (STRAIGHT)

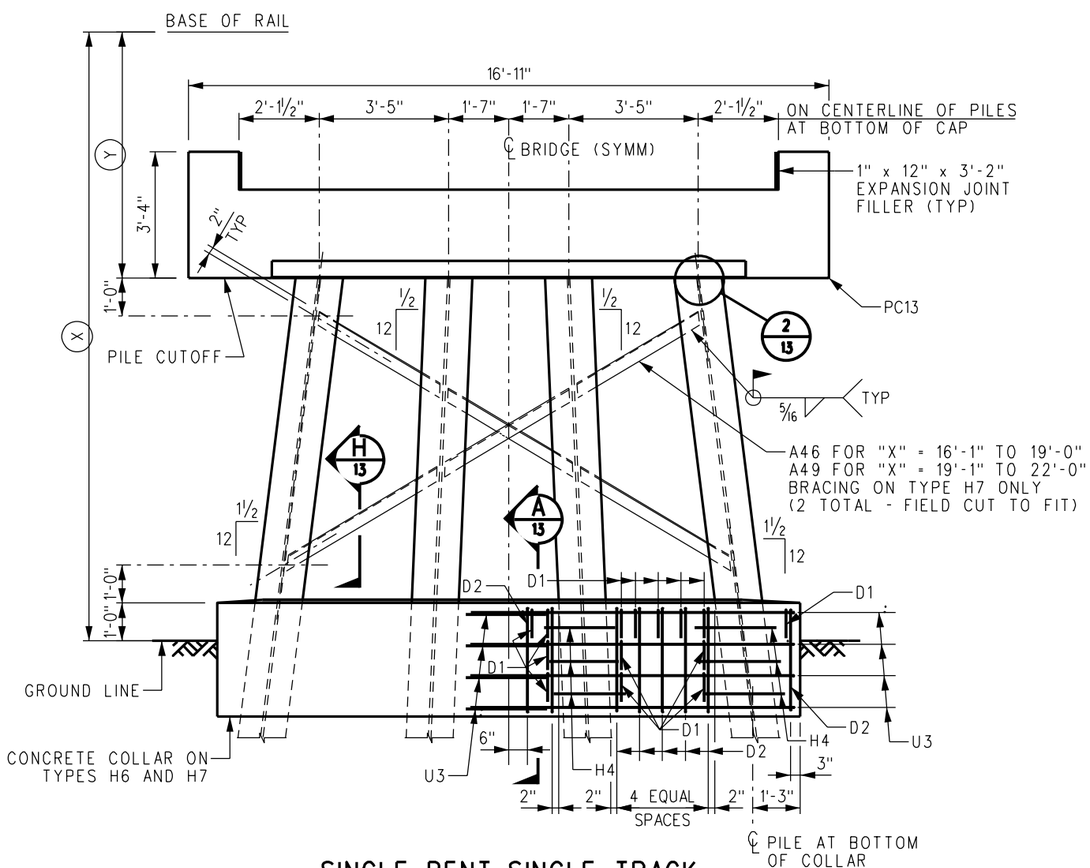

SINGLE BENT-SINGLE TRACK

TYPE H5 - "X" = UP TO 12'-0" (NO COLLAR OR BRACING)
TYPE H6 - "X" = 12'-1" TO 16'-0" (COLLAR, NO BRACING)
TYPE H7 - "X" = 16'-1" TO 22'-0" (COLLAR AND BRACING)

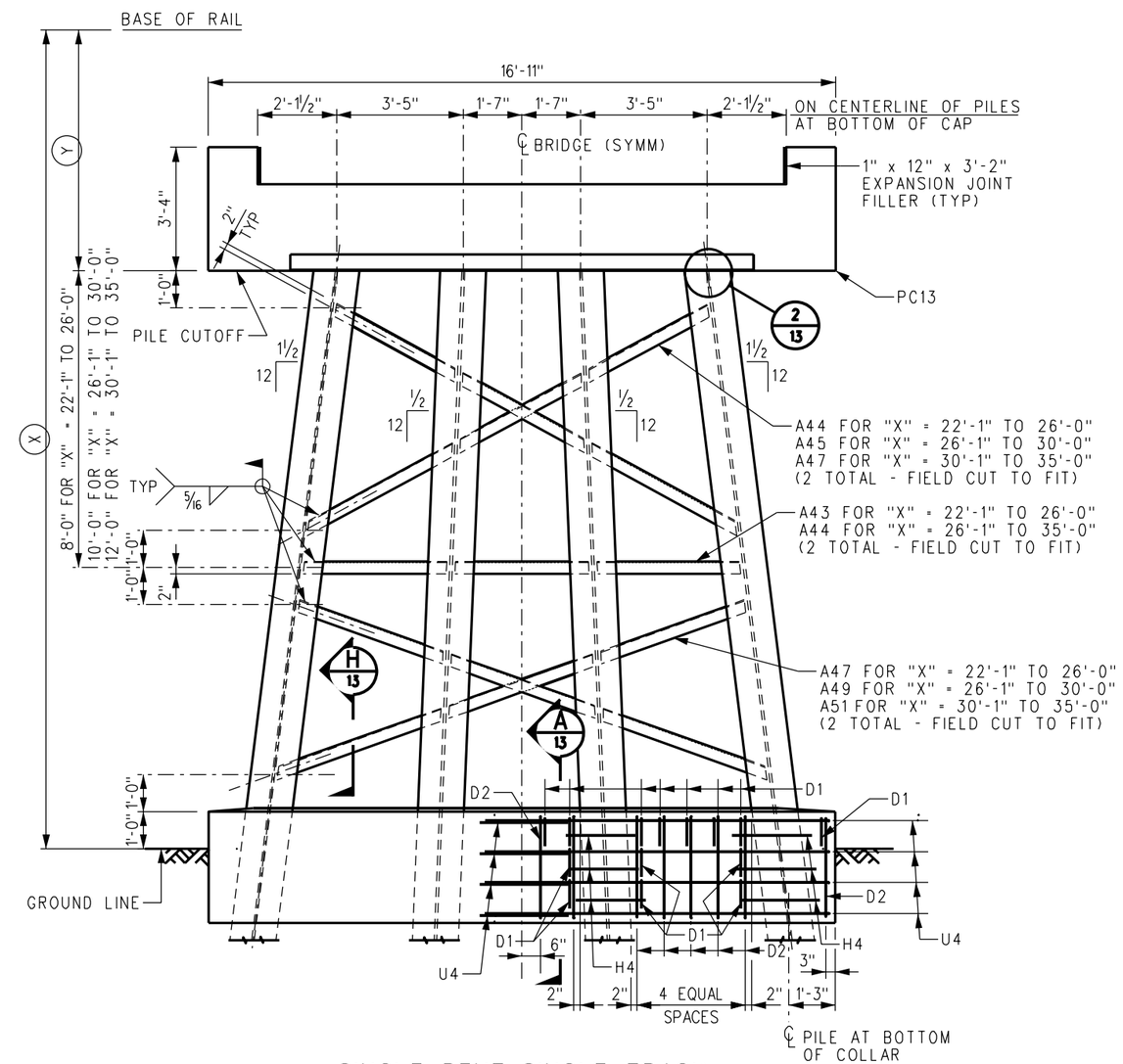

SINGLE BENT-SINGLE TRACK

TYPE H8 - "X" = 22'-1" TO 35'-0"

REV.	DATE	DESCRIPTION	DES.	ENG.
X	XX-XX-XX	REVISION	XX	XX

DRAWN BY: A. CARLOS DATE: 03/31/2011

ASSISTANT DIRECTOR: STANDARDS & DESIGN

DIRECTOR OF ENGINEERING AND CONSTRUCTION

SCRRA ENGINEERING STANDARDS ARE INTENDED FOR SCRRA APPROVED USES ONLY. FOR NON-SCRRA APPROVED USES: SCRRA SHALL NOT BE RESPONSIBLE FOR THE ACCURACY OR COMPLETENESS OF THE DATA OR INFORMATION CONTAINED HEREIN. THE SELECTION AND USE OF THESE STANDARDS IS THE SOLE RESPONSIBILITY OF THE USER AND SHOULD NOT BE USED WITHOUT CONSULTING A REGISTERED PROFESSIONAL ENGINEER. ALL WARRANTIES AND REPRESENTATIONS OF ANY KIND ARE DISCLAIMED. ANYONE MAKING USE OF THIS INFORMATION AGREES THAT IT ASSUMES ALL LIABILITY ARISING FROM SUCH USE. NO PART OF THESE STANDARDS SHOULD BE REPRODUCED OR DISTRIBUTED IN ANY FORM OR BY ANY MEANS WITHOUT THE PRIOR WRITTEN PERMISSION OF SCRRA. ALL RIGHTS RESERVED.

METROLINK
SOUTHERN CALIFORNIA REGIONAL RAIL AUTHORITY
ONE GATEWAY PLAZA, 12TH FLOOR, L. A., CA. 90012

ENGINEERING STANDARDS

SINGLE ROW PILE BENTS (2 OF 4)
PRECAST/PRESTRESSED CONCRETE
DOUBLE BOX BEAM BRIDGES

STANDARD 6001
SCALE: ½" = 1'-0"
REVISION –
SHEET 8 OF 26
CADD FILE: ES6001-08

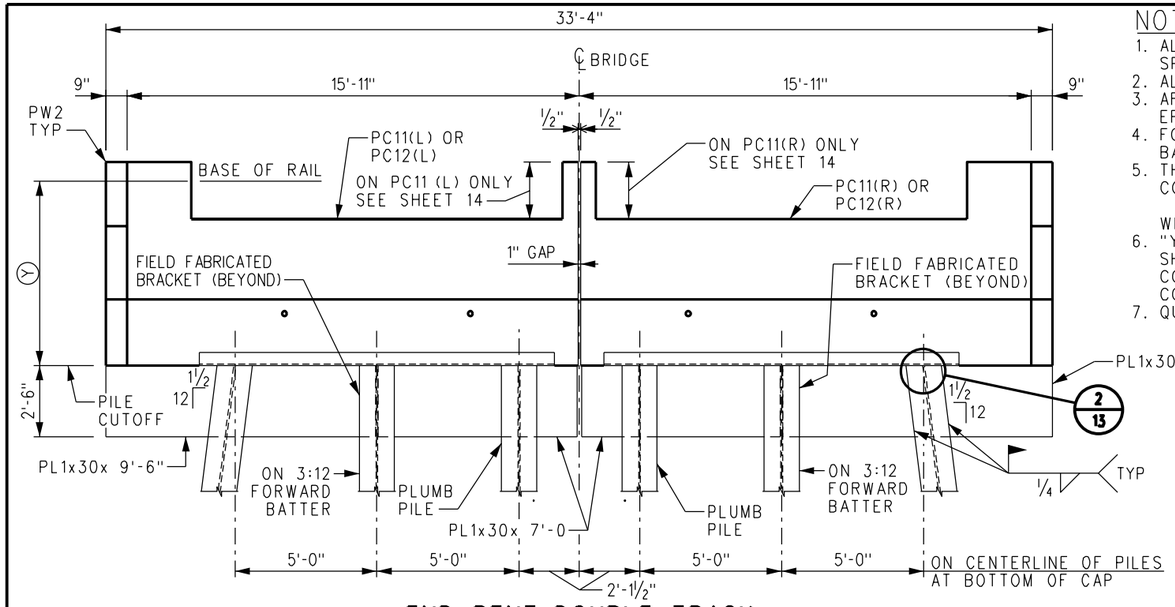

END BENT-DOUBLE TRACK

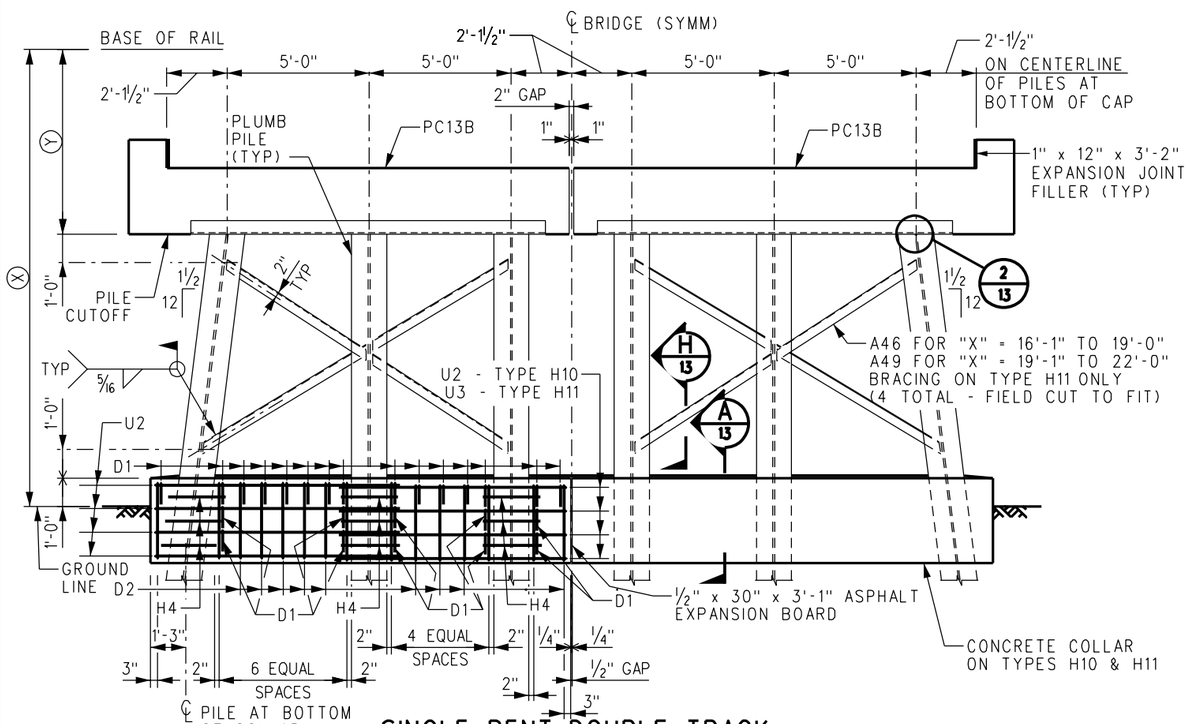

SINGLE BENT-DOUBLE TRACK

TYPE H9 - "X" = UP TO 12'-0" (NO COLLAR OR BRACING)
TYPE H10 - "X" = 12'-1" TO 16'-0" (COLLAR, NO BRACING)
TYPE H11 - "X" = 16'-1" TO 22'-0" (COLLAR AND BRACING)

NOTES:

1. ALL PILES ARE HP14x117, ASTM A572 GRADE 50 STEEL BEARING PILES UNLESS OTHERWISE SPECIFIED BY THE ENGINEER.
2. ALL BRACING ANGLES TO BE CUT TO LENGTH AS REQUIRED.
3. AFTER PRECAST CONCRETE MEMBERS ARE SET, FILL RECESSES AT LIFT ANCHORS WITH EPOXY GROUT TO TOP OF SURROUNDING CONCRETE.
4. FOR "TYPICAL PILE SPLICE DETAIL", "WING WALL TO END CAP DETAILS" AND "HEAD OF BANK DETAILS" SEE SHEET 13.
5. THE FOLLOWING FORMULA WILL GIVE ESTIMATED QUANTITIES OF CONCRETE IN THE CONCRETE COLLARS IN CUBIC YARDS:
   BENTS H10, H11 AND H12 - 0.07 x "X" + 7.1
   WHERE "X" IS THE DISTANCE FROM BASE OF RAIL TO GROUND LINE IN FEET.
6. "Y" IS THE DISTANCE FROM BASE OF RAIL TO PILE CUTOFF. FOR DESIGN ELEVATIONS, "Y" SHALL BE ESTABLISHED IN COORDINATION WITH SCRRA DIRECTOR OF ENGINEERING AND CONSTRUCTION. FOR A TOTAL OF 12" DEPTH (BALLAST PLUS HMA) BELOW STANDARD CONCRETE TIES, "Y" = 6'-11" FOR SINGLE ROW PILE BENTS.
7. QUANTITIES PROVIDED FOR CONCRETE COLLARS INCLUDE BOTH SIDES.

REINFORCING STEEL REQUIRED PER CONCRETE COLLAR

BENT TYPE			REINFORCING STEEL MARK
H10	H11	H12	
50	50	50	D1
30	30	30	D2
16	8	-	U2
-	8	16	U3
18	18	18	H4, #4 x 3'-0" (STRAIGHT)

ESTIMATED QUANTITIES PER COLLAR

BENT TYPE	REINFORCING STEEL (LBS)
H10	502
H11	513
H12	524

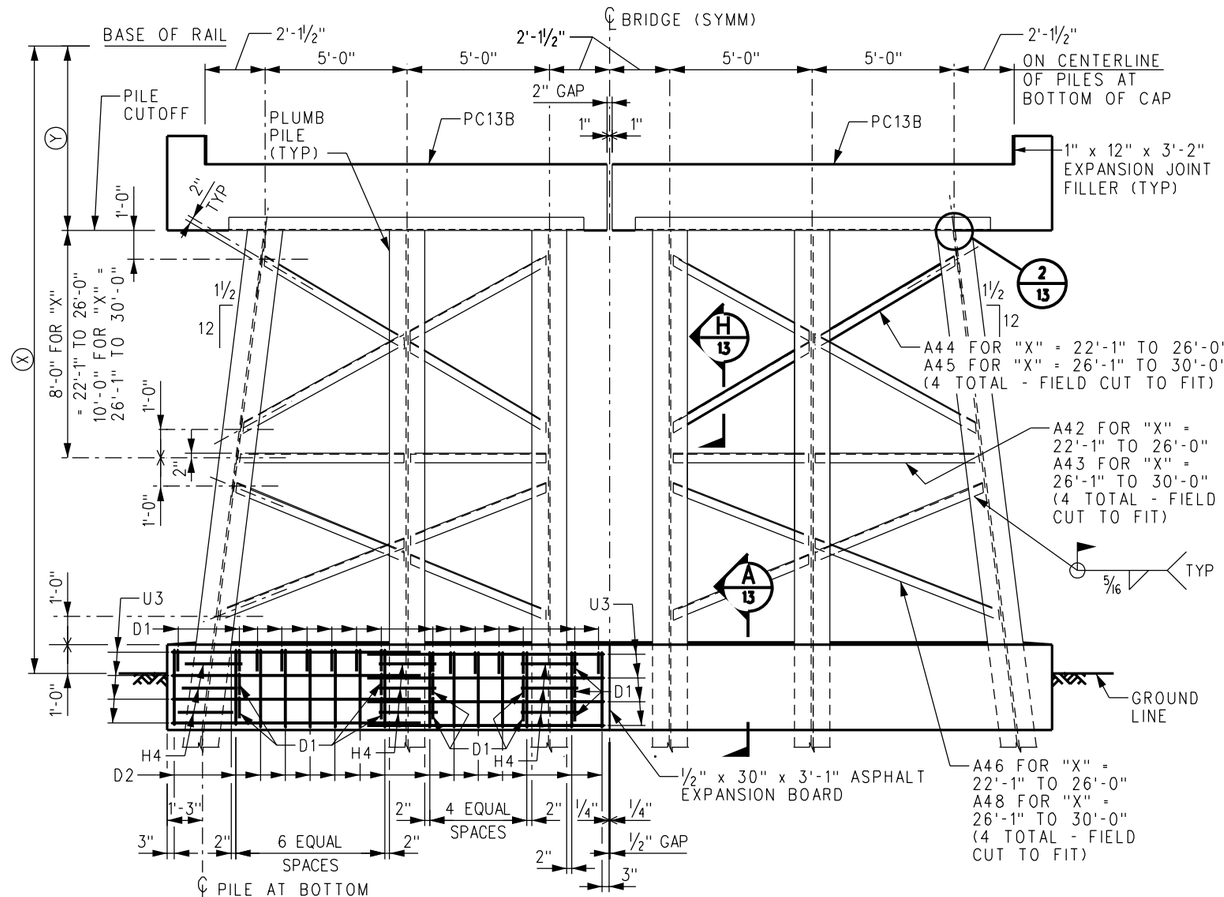

SINGLE BENT-DOUBLE TRACK

TYPE H12 - "X" 22'-1" TO 30'-0"

REV.	DATE	DESCRIPTION	DES.	ENG.
X	XX-XX-XX	REVISION	XX	XX

DRAWN BY: A. CARLOS DATE: 03/31/2011

ASSISTANT DIRECTOR: STANDARDS & DESIGN

DIRECTOR OF ENGINEERING AND CONSTRUCTION

SCRRA ENGINEERING STANDARDS ARE INTENDED FOR SCRRA APPROVED USES ONLY. FOR NON-SCRRA APPROVED USES: SCRRA SHALL NOT BE RESPONSIBLE FOR THE ACCURACY OR COMPLETENESS OF THE DATA OR INFORMATION CONTAINED HEREIN. THE SELECTION AND USE OF THESE STANDARDS IS THE SOLE RESPONSIBILITY OF THE USER AND SHOULD NOT BE USED WITHOUT CONSULTING A REGISTERED PROFESSIONAL ENGINEER. ALL WARRANTIES AND REPRESENTATIONS OF ANY KIND ARE DISCLAIMED. ANYONE MAKING USE OF THIS INFORMATION AGREES THAT IT ASSUMES ALL LIABILITY ARISING FROM SUCH USE. NO PART OF THESE STANDARDS SHOULD BE REPRODUCED OR DISTRIBUTED IN ANY FORM OR BY ANY MEANS WITHOUT THE PRIOR WRITTEN PERMISSION OF SCRRA. ALL RIGHTS RESERVED.

METROLINK®
SOUTHERN CALIFORNIA REGIONAL RAIL AUTHORITY
ONE GATEWAY PLAZA, 12TH FLOOR, L. A., CA. 90012

ENGINEERING STANDARDS

SINGLE ROW PILE BENTS (3 OF 4)
PRECAST/PRESTRESSED CONCRETE
DOUBLE BOX BEAM BRIDGES

STANDARD 6001
SCALE: ⅜" = 1'-0"
REVISION –
SHEET 9 OF 26
CADD FILE: ES6001-09

NOTES:

1. ALL PILES ARE HP14x117, ASTM A572 GRADE 50 STEEL BEARING PILES UNLESS OTHERWISE SPECIFIED BY THE ENGINEER.
2. ALL BRACING ANGLES TO BE CUT TO LENGTH AS REQUIRED.
3. AFTER PRECAST CONCRETE MEMBERS ARE SET, FILL RECESSES AT LIFT ANCHORS WITH EPOXY GROUT TO TOP OF SURROUNDING CONCRETE.
4. FOR "TYPICAL PILE SPLICE DETAIL", "WING WALL TO END CAP DETAILS" AND "HEAD OF BANK DETAILS" SEE SHEET 13.
5. THE FOLLOWING FORMULA WILL GIVE ESTIMATED QUANTITIES OF CONCRETE IN THE CONCRETE COLLARS IN CUBIC YARDS:
   BENTS H14, H15 AND H16 - 0.07 x "X" + 7.1
   WHERE "X" IS THE DISTANCE FROM BASE OF RAIL TO GROUND LINE IN FEET.
6. "Y" IS THE DISTANCE FROM BASE OF RAIL TO PILE CUTOFF. FOR DESIGN ELEVATIONS, "Y" SHALL BE ESTABLISHED IN COORDINATION WITH SCRRA DIRECTOR OF ENGINEERING AND CONSTRUCTION. FOR A TOTAL OF 12" DEPTH (BALLAST PLUS HMA) BELOW STANDARD CONCRETE TIES, "Y" = 6'-11" FOR SINGLE ROW PILE BENTS.
7. QUANTITIES PROVIDED FOR CONCRETE COLLARS INCLUDE BOTH SIDES.

REINFORCING STEEL REQUIRED PER CONCRETE COLLAR

BENT TYPE			REINFORCING STEEL MARK
H14	H15	H16	
56	56	58	D1
28	28	30	D2
16	8	-	U2
-	8	16	U3
24	24	24	H4, #4 x 3'-0" (STRAIGHT)

ESTIMATED QUANTITIES PER COLLAR

BENT TYPE	REINFORCING STEEL (LBS)
H14	519
H15	530
H16	555

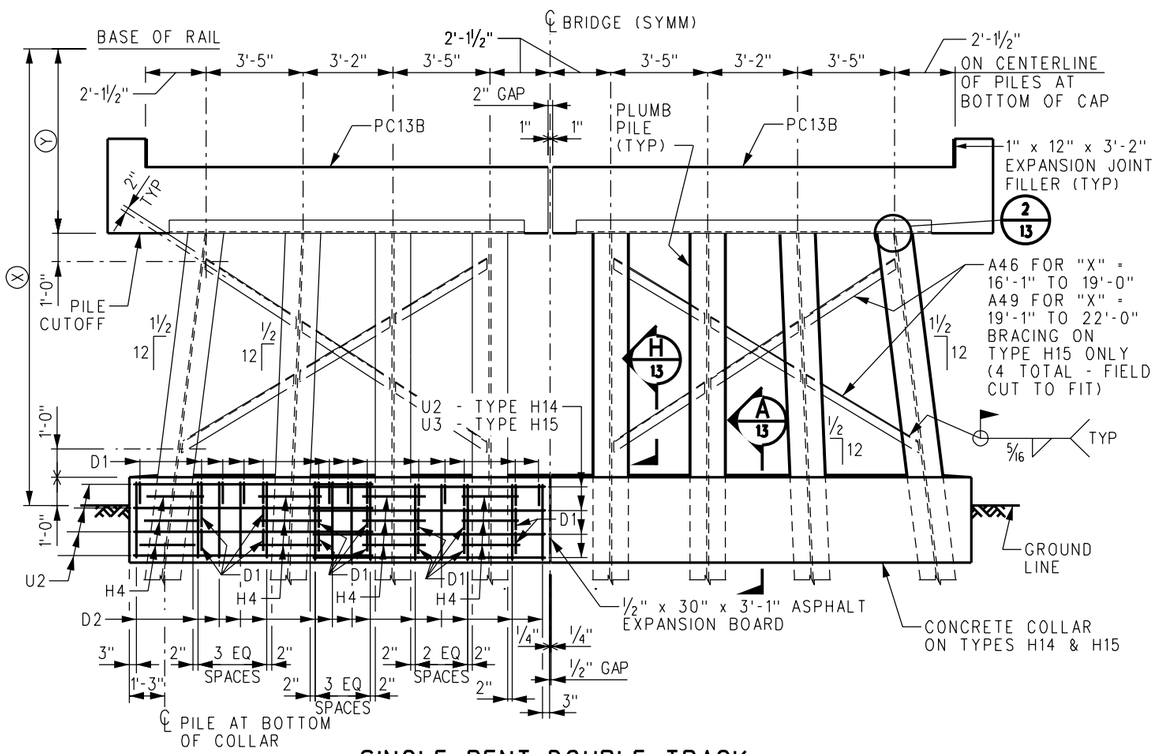

SINGLE BENT-DOUBLE TRACK

TYPE H13 - "X" = UP TO 12'-0" (NO COLLAR OR BRACING)
TYPE H14 - "X" = 12'-1" TO 16'-0" (COLLAR, NO BRACING)
TYPE H15 - "X" = 16'-1" TO 22'-0" (COLLAR AND BRACING)

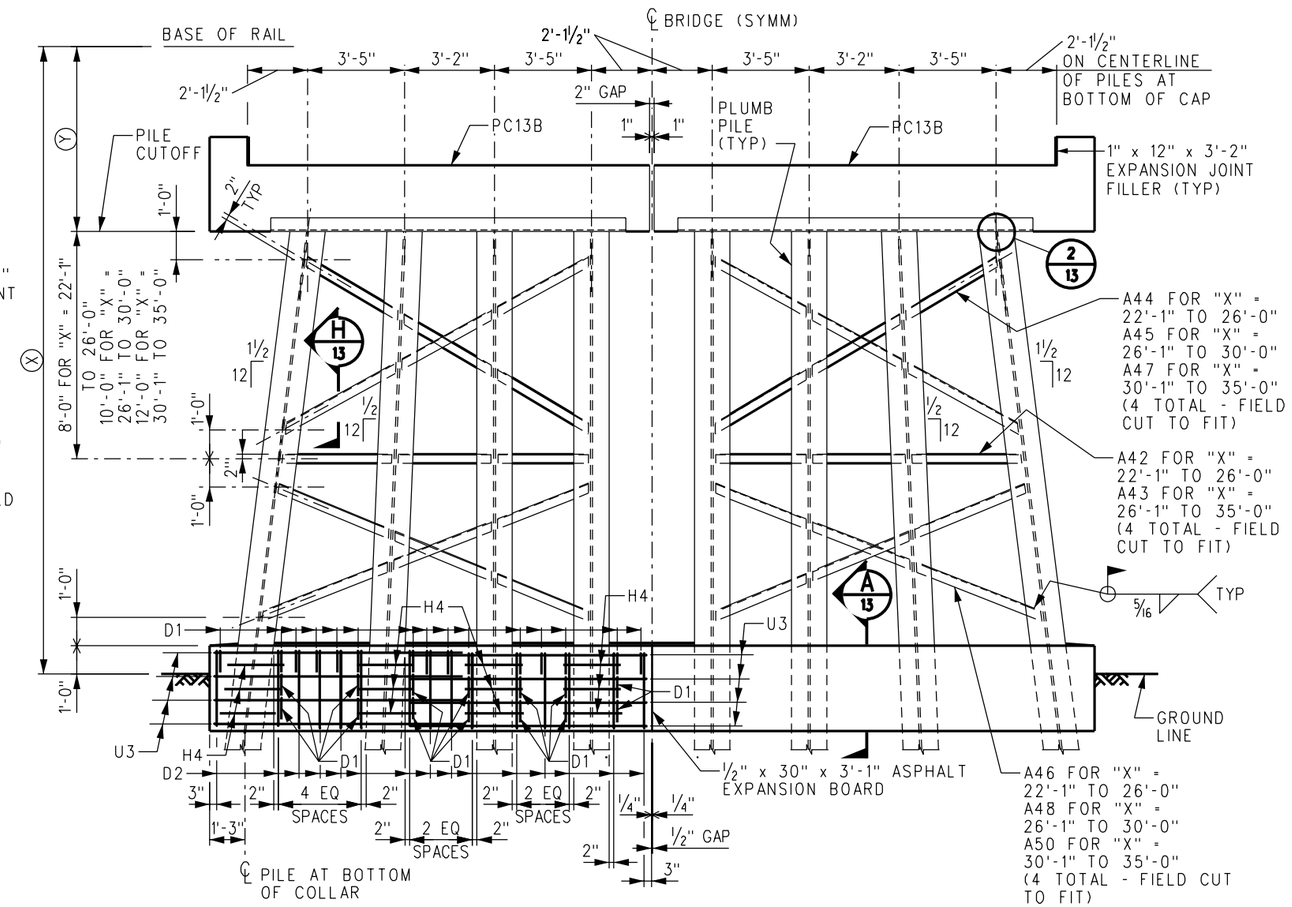

SINGLE BENT-DOUBLE TRACK

TYPE H16 - "X" = 22'-1" TO 35'-0"

X	XX-XX-XX	REVISION	XX	XX
REV.	DATE	DESCRIPTION	DES.	ENG.

DRAWN BY: A. CARLOS DATE: 03/31/2011

ASSISTANT DIRECTOR: STANDARDS & DESIGN

DIRECTOR OF ENGINEERING AND CONSTRUCTION

SCRRA ENGINEERING STANDARDS ARE INTENDED FOR SCRRA APPROVED USES ONLY. FOR NON-SCRRA APPROVED USES:
SCRRA SHALL NOT BE RESPONSIBLE FOR THE ACCURACY OR COMPLETENESS OF THE DATA OR INFORMATION CONTAINED HEREIN. THE SELECTION AND USE OF THESE STANDARDS IS THE SOLE RESPONSIBILITY OF THE USER AND SHOULD NOT BE USED WITHOUT CONSULTING A REGISTERED PROFESSIONAL ENGINEER. ALL WARRANTIES AND REPRESENTATIONS OF ANY KIND ARE DISCLAIMED. ANYONE MAKING USE OF THIS INFORMATION AGREES THAT IT ASSUMES ALL LIABILITY ARISING FROM SUCH USE. NO PART OF THESE STANDARDS SHOULD BE REPRODUCED OR DISTRIBUTED IN ANY FORM OR BY ANY MEANS WITHOUT THE PRIOR WRITTEN PERMISSION OF SCRRA. ALL RIGHTS RESERVED.

METROLINK®
SOUTHERN CALIFORNIA REGIONAL RAIL AUTHORITY
ONE GATEWAY PLAZA, 12TH FLOOR, L. A., CA. 90012

ENGINEERING STANDARDS

SINGLE ROW PILE BENTS (4 OF 4)
PRECAST/PRESTRESSED CONCRETE
DOUBLE BOX BEAM BRIDGES

STANDARD 6001
SCALE: ⅜" = 1'-0"
REVISION –
SHEET 10 OF 26
CADD FILE: ES6001-10

NOTES:

1. ALL PILES ARE HP14x117, ASTM GRADE 50 STEEL BEARING PILES UNLESS OTHERWISE SPECIFIED BY THE ENGINEER.
2. ALL BRACING ANGLES TO BE CUT TO LENGTH AS REQUIRED.
3. AFTER PRECAST CONCRETE MEMBERS ARE SET, FILL RECESSES AT LIFT ANCHORS WITH EPOXY GROUT TO TOP OF SURROUNDING CONCRETE.
4. FOR "TYPICAL PILE SPLICE DETAIL", "WING WALL TO END CAP DETAILS" AND "HEAD OF BANK DETAILS" SEE SHEET 13.
5. THE FOLLOWING FORMULA WILL GIVE ESTIMATED QUANTITIES OF CONCRETE IN THE CONCRETE COLLARS IN CUBIC YARDS:
   BENTS H18, H19 AND H20 - 0.143 x "X" + 6.4
   WHERE "X" IS THE DISTANCE FROM BASE OF RAIL TO GROUND LINE IN FEET.
6. "Y" IS THE DISTANCE FROM BASE OF RAIL TO PILE CUTOFF. FOR DESIGN ELEVATIONS, "Y" SHALL BE ESTABLISHED IN COORDINATION WITH SCRRA DIRECTOR OF ENGINEERING AND CONSTRUCTION. FOR A TOTAL OF 12" DEPTH (BALLAST PLUS HMA) BELOW STANDARD CONCRETE TIES, "Y" = 7'-7" FOR DOUBLE ROW PILE BENTS.

ESTIMATED QUANTITIES PER COLLAR		REINFORCING STEEL REQUIRED PER CONCRETE COLLAR			
BENT TYPE	REINFORCING STEEL (LBS)	BENT TYPE			REINFORCING STEEL MARK
		H18	H19	H20	
H18	457	24	24	24	D3
H19	457	16	16	16	D4
H20	473	16	16	8	U3
		-	-	8	U4
		18	18	18	H4, *4 x 3'-0" (STRAIGHT)

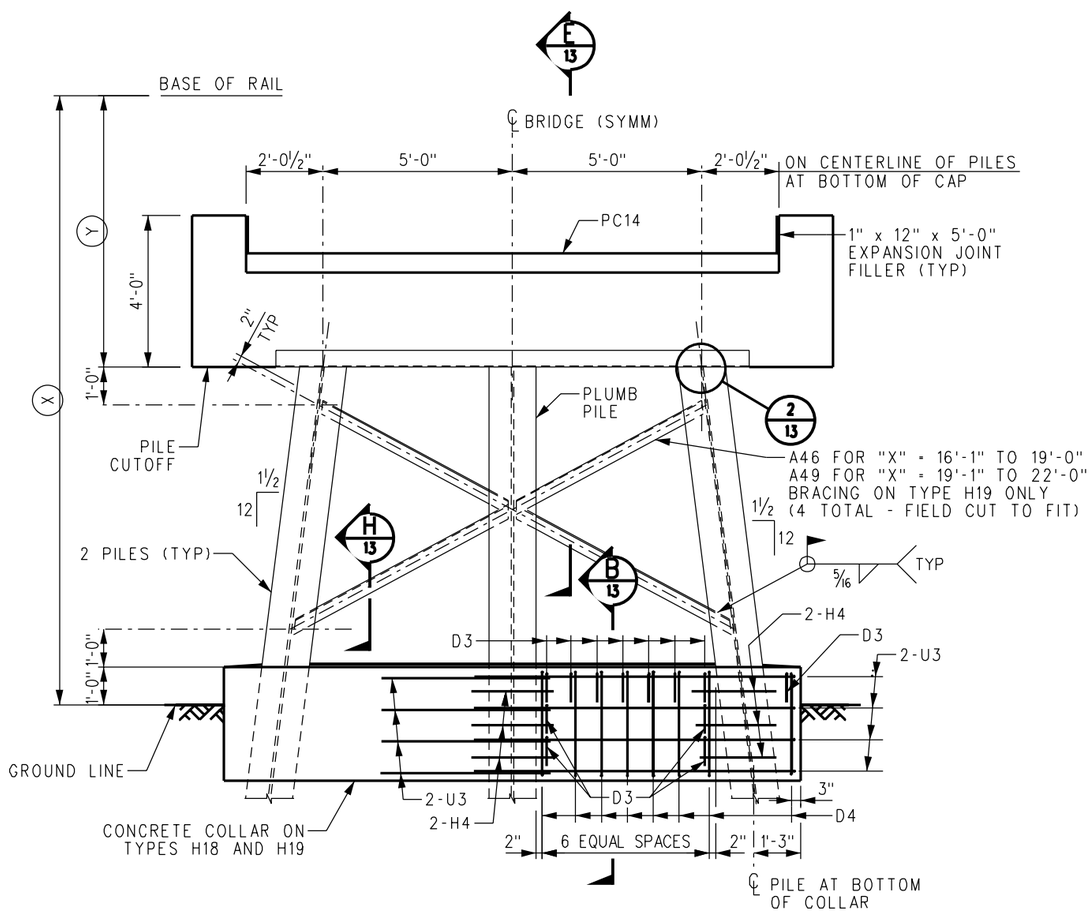

DOUBLE BENT - SINGLE TRACK

TYPE H17 - "X" = UP TO 12'-0" (NO COLLAR OR BRACING)
TYPE H18 - "X" = 12'-1" TO 16'-0" (COLLAR, NO BRACING)
TYPE H19 - "X" = 16'-1" TO 22'-0" (COLLAR AND BRACING)

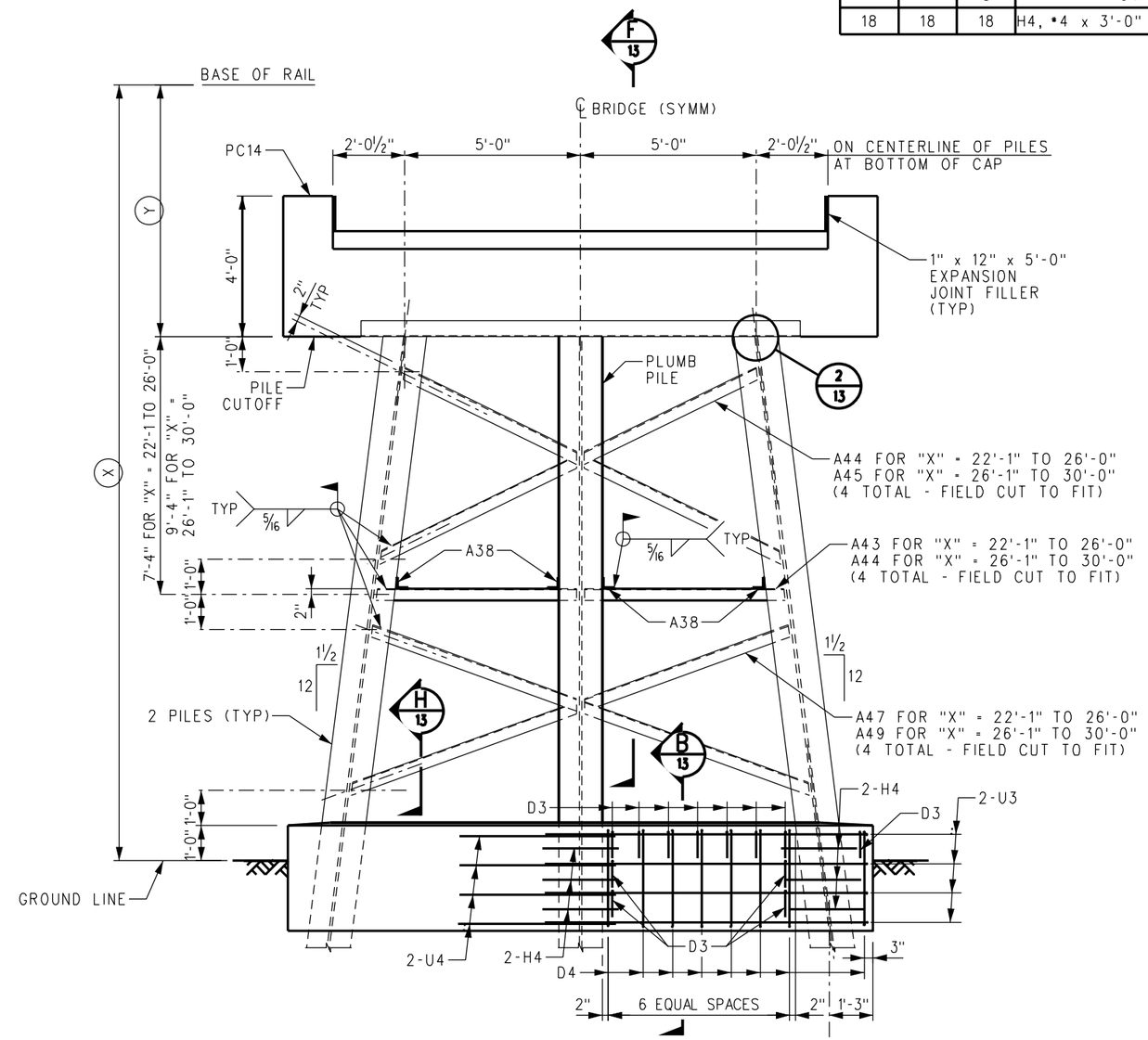

DOUBLE BENT-SINGLE TRACK

TYPE H20 - "X" = 22'-1" TO 30'-0"

REV.	DATE	DESCRIPTION	DES.	ENG.
X	XX-XX-XX	REVISION	XX	XX

DRAWN BY: A. CARLOS DATE: 03/31/2011

ASSISTANT DIRECTOR: STANDARDS & DESIGN

DIRECTOR OF ENGINEERING AND CONSTRUCTION

SCRRA ENGINEERING STANDARDS ARE INTENDED FOR SCRRA APPROVED USES ONLY. FOR NON-SCRRA APPROVED USES:
SCRRA SHALL NOT BE RESPONSIBLE FOR THE ACCURACY OR COMPLETENESS OF THE DATA OR INFORMATION CONTAINED HEREIN. THE SELECTION AND USE OF THESE STANDARDS IS THE SOLE RESPONSIBILITY OF THE USER AND SHOULD NOT BE USED WITHOUT CONSULTING A REGISTERED PROFESSIONAL ENGINEER. ALL WARRANTIES AND REPRESENTATIONS OF ANY KIND ARE DISCLAIMED. ANYONE MAKING USE OF THIS INFORMATION AGREES THAT IT ASSUMES ALL LIABILITY ARISING FROM SUCH USE. NO PART OF THESE STANDARDS SHOULD BE REPRODUCED OR DISTRIBUTED IN ANY FORM OR BY ANY MEANS WITHOUT THE PRIOR WRITTEN PERMISSION OF SCRRA. ALL RIGHTS RESERVED.

METROLINK®
SOUTHERN CALIFORNIA REGIONAL RAIL AUTHORITY
ONE GATEWAY PLAZA, 12TH FLOOR, L. A., CA. 90012

ENGINEERING STANDARDS

DOUBLE ROW PILE BENTS (1 OF 2)
PRECAST/PRESTRESSED CONCRETE
DOUBLE BOX BEAM BRIDGES

STANDARD 6001
SCALE: ½" = 1'-0"
REVISION –
SHEET 11 OF 26
CADD FILE: ES6001-11

NOTES:

1. ALL PILES ARE HP14x117, ASTM GRADE 50 STEEL BEARING PILES UNLESS OTHERWISE SPECIFIED BY THE ENGINEER.
2. ALL BRACING ANGLES TO BE CUT TO LENGTH AS REQUIRED.
3. AFTER PRECAST CONCRETE MEMBERS ARE SET, FILL RECESSES AT LIFT ANCHORS WITH EPOXY GROUT TO TOP OF SURROUNDING CONCRETE.
4. FOR "TYPICAL PILE SPLICE DETAIL" SEE SHEET 13.
   THE FOLLOWING FORMULA WILL GIVE ESTIMATED QUANTITIES OF CONCRETE IN THE
5. CONCRETE COLLARS IN CUBIC YARDS:
   BENTS H23, H24 AND H25 - 0.143 x "X" + 14.4
   WHERE "X" IS THE DISTANCE FROM BASE OF RAIL TO GROUND LINE IN FEET.
   "Y" IS THE DISTANCE FROM BASE OF RAIL TO PILE CUTOFF. FOR DESIGN ELEVATIONS, "Y"
6. SHALL BE ESTABLISHED IN COORDINATION WITH SCRRA DIRECTOR OF ENGINEERING AND CONSTRUCTION. FOR A TOTAL OF 12" DEPTH (BALLAST PLUS HMA) BELOW STANDARD CONCRETE TIES, "Y" = 7'-7" FOR DOUBLE ROW PILE BENTS.
   QUANTITIES PROVIDED FOR CONCRETE COLLARS INCLUDE BOTH SIDES.

ESTIMATED QUANTITIES PER COLLAR	
BENT TYPE	REINFORCING STEEL (LBS)
H23	867
H24	888
H25	910

REINFORCING STEEL REQUIRED PER CONCRETE COLLAR			
BENT TYPE			REINFORCING STEEL MARK
H23	H24	H25	
50	50	50	D3
30	30	30	D4
32	16	-	U2
-	16	32	U3
36	36	36	H4, #4 x 3'-0" (STRAIGHT)

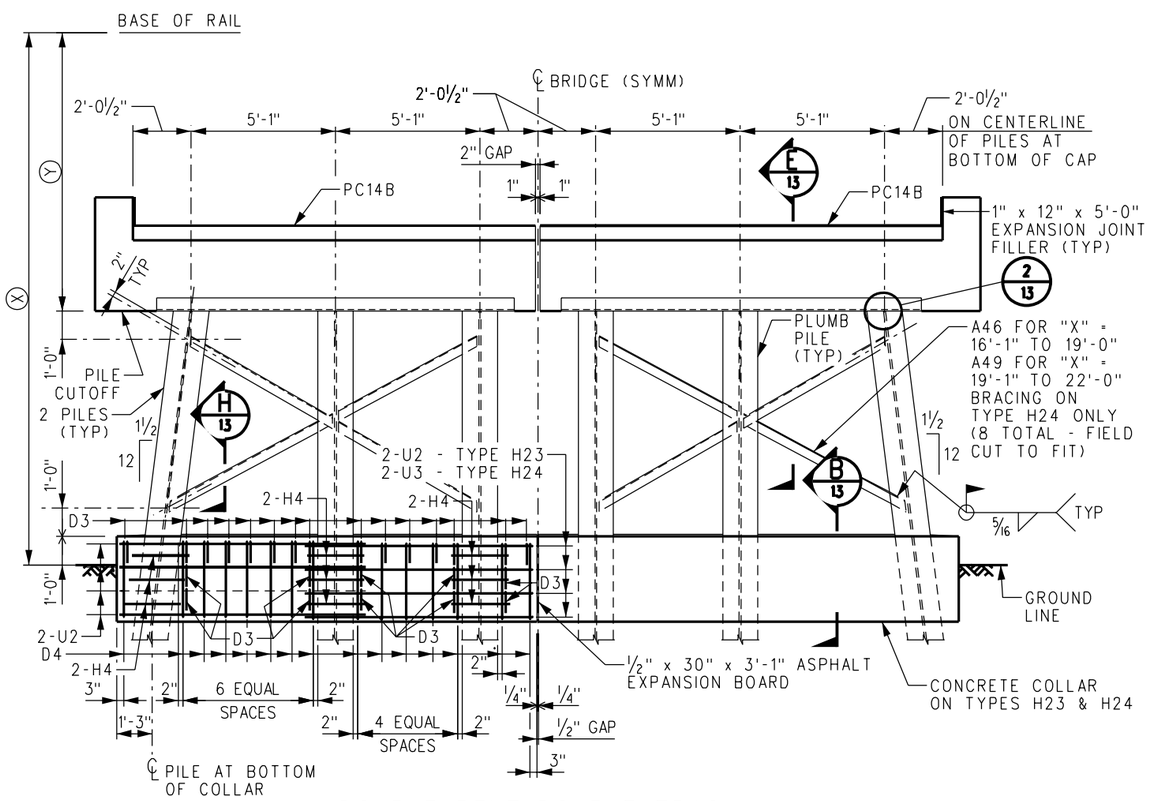

DOUBLE BENT-DOUBLE TRACK

TYPE H22 - "X" = UP TO 12'-0" (NO COLLAR OR BRACING)
TYPE H23 - "X" = 12'-1" TO 16'-0" (COLLAR, NO BRACING)
TYPE H24 - "X" = 16'-1" TO 22'-0" (COLLAR AND BRACING)

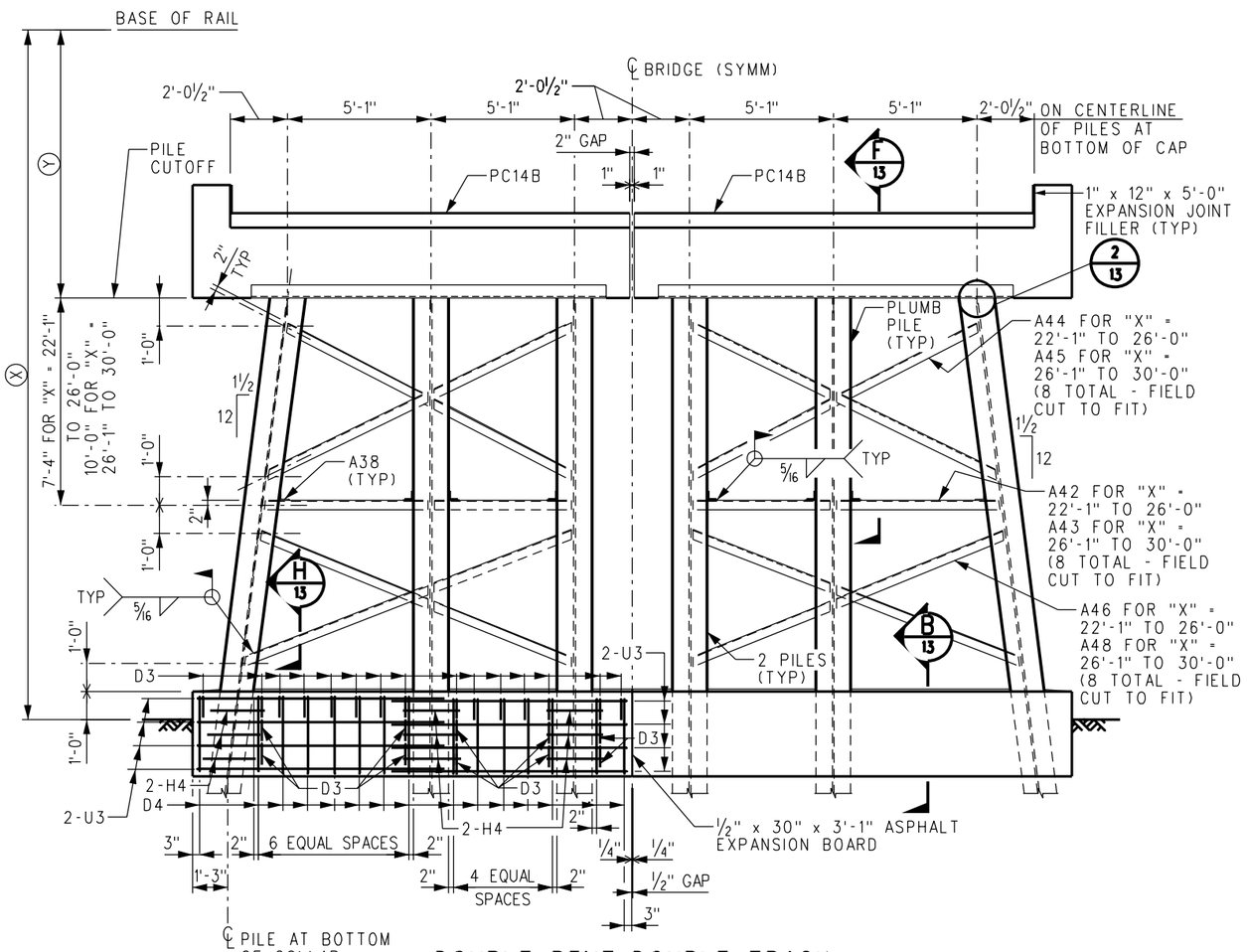

DOUBLE BENT-DOUBLE TRACK

TYPE H25 - "X" = 22'-1" TO 30'-0"

REV.	DATE	DESCRIPTION	DES.	ENG.
X	XX-XX-XX	REVISION	XX	XX

DRAWN BY: A. CARLOS DATE: 03/31/2011

ASSISTANT DIRECTOR: STANDARDS & DESIGN

DIRECTOR OF ENGINEERING AND CONSTRUCTION

SCRRA ENGINEERING STANDARDS ARE INTENDED FOR SCRRA APPROVED USES ONLY. FOR NON-SCRRA APPROVED USES: SCRRA SHALL NOT BE RESPONSIBLE FOR THE ACCURACY OR COMPLETENESS OF THE DATA OR INFORMATION CONTAINED HEREIN. THE SELECTION AND USE OF THESE STANDARDS IS THE SOLE RESPONSIBILITY OF THE USER AND SHOULD NOT BE USED WITHOUT CONSULTING A REGISTERED PROFESSIONAL ENGINEER. ALL WARRANTIES AND REPRESENTATIONS OF ANY KIND ARE DISCLAIMED. ANYONE MAKING USE OF THIS INFORMATION AGREES THAT IT ASSUMES ALL LIABILITY ARISING FROM SUCH USE. NO PART OF THESE STANDARDS SHOULD BE REPRODUCED OR DISTRIBUTED IN ANY FORM OR BY ANY MEANS WITHOUT THE PRIOR WRITTEN PERMISSION OF SCRRA. ALL RIGHTS RESERVED.

METROLINK®
SOUTHERN CALIFORNIA REGIONAL RAIL AUTHORITY
ONE GATEWAY PLAZA, 12TH FLOOR, L. A., CA. 90012

ENGINEERING STANDARDS

DOUBLE ROW PILE BENTS (2 OF 2)
PRECAST/PRESTRESSED CONCRETE
DOUBLE BOX BEAM BRIDGES

STANDARD 6001
SCALE: ⅜" = 1'-0"
REVISION –
SHEET 12 OF 26
CADD FILE: ES6001-12

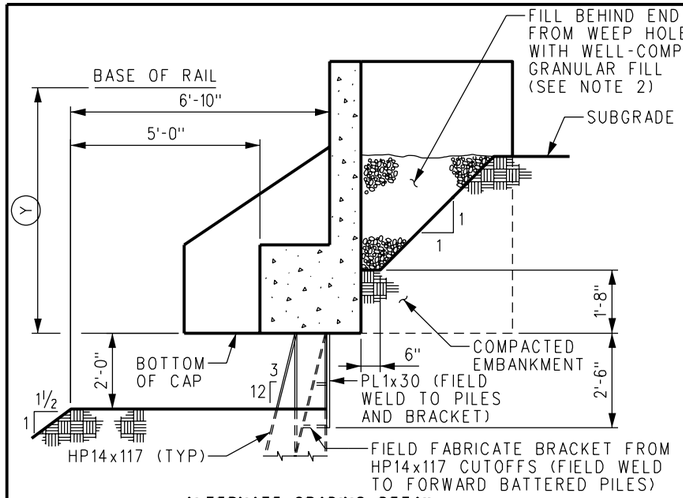

ALTERNATE GRADING DETAIL

DETAIL 7

SCALE: NONE

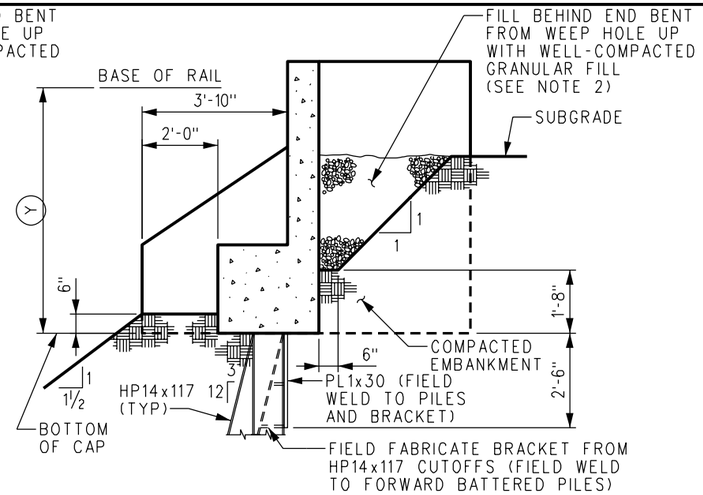

HEAD OF BANK DETAILS

DETAIL 7

SCALE: NONE

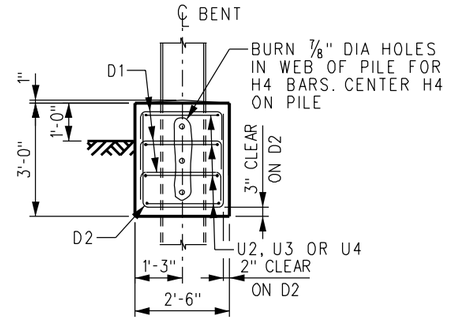

SECTION A7 A8 A9 A10

SCALE: ½"=1'-0"

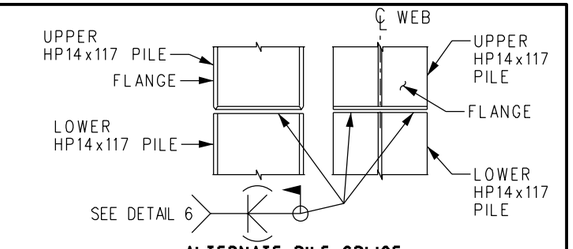

ALTERNATE PILE SPLICE

DETAIL 3

SCALE: 1"=1'-0"

ALTERNATE PILE SPLICING TO BE APPROVED BY ENGINEER

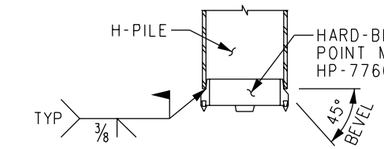

TYPICAL PILE POINT

TIP REINFORCEMENT INSTALLATION INSTRUCTIONS

1. FIT POINT ONTO SQUARE CUT PILE.
2. WELD POINT TO THE PILE IN EITHER FLAT OR VERTICAL POSITION, USING
3. E70XX ELECTRODES. FILL THE AREA ACROSS BOTH FLANGES WITH WELD.

DETAIL 4

SCALE: NONE

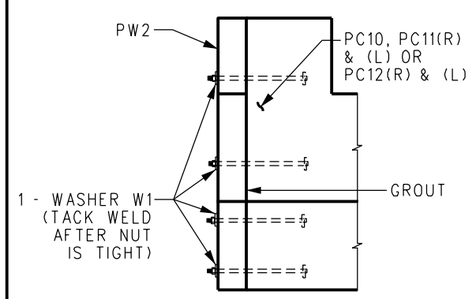

WING WALL TO END CAP DETAIL

DETAIL 1

SCALE: NONE

NOTES:

1. BEFORE BACKFILLING END BENTS APPLY A COATING OF PETROLATUM TO PILE PLATES, CONNECTION BARS, BACKWALL PLATES AND TOP 2'-6" OF PILES.
2. BACKFILL BEHIND END BENTS WITH FREE DRAINING MATERIAL TO THE LIMITS SHOWN ON THIS SHEET. MATERIAL SHALL MEET REQUIREMENTS OF ASTM C33 SPECIFICATION AND SHALL BE A WELL GRADED MIXTURE OF SAND AND GRAVEL WITH THE FOLLOWING GRADATIONS:
   100% PASSING THE 1" SIEVE
   60% PASSING THE #4 SIEVE
   5% PASSING THE #200 SIEVE, MAX
3. "Y" IS THE DISTANCE FROM BASE OF RAIL TO PILE CUTOFF. FOR DESIGN ELEVATIONS, "Y" SHALL BE ESTABLISHED IN COORDINATION WITH SCRRA DIRECTOR OF ENGINEERING AND CONSTRUCTION.

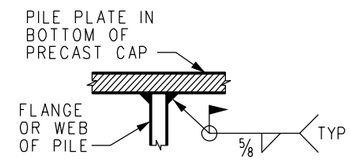

DETAIL AT TOP OF PILES

DETAIL 2 7 2 8 2 9 2 10 2 11 2 12

SCALE: NONE

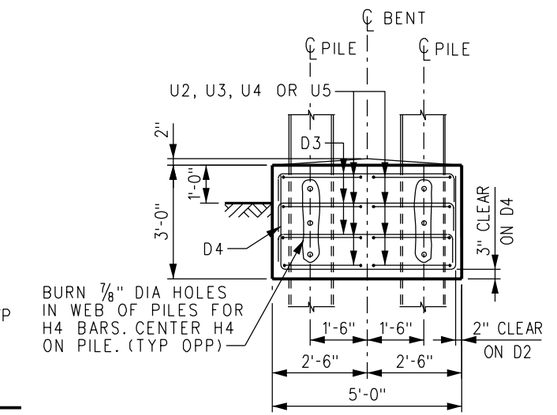

SECTION B11 B12

SCALE: ½"=1'-0"

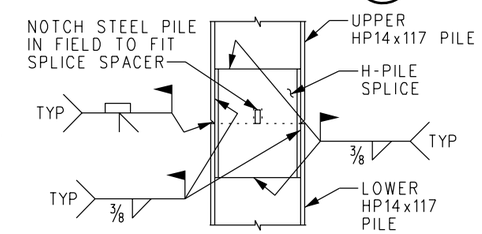

TYPICAL PILE SPLICE

NOTCH PILE WEB TO FIT AROUND SPACER PLATE

DETAIL 5

SCALE: NONE

PILE SPLICE FOR HP14x117 INSTALLATION INSTRUCTIONS:

1. NOTCH THE END OF UPPER LENGTH OF H-PILE (TO ACCOMMODATE THE SPLICE SPACER BAR).
2. FIT SPLICE OVER NOTCHED END OF UPPER H-PILE, AND WELD CORNERS.
3. PLACE THE UPPER SECTION AND SPLICER INTO POSITION ONTO THE LOWER SECTION.
4. WELD ALONG THE OUTSIDE OF THE WEB AND ALONG THE LOWER CORNERS OF THE SPLICE.
5. WELD JOINT BETWEEN UPPER AND LOWER PILE.

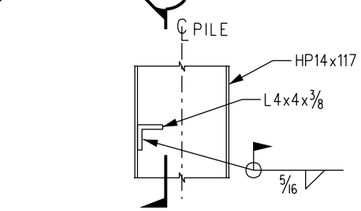

SECTION H7 H8 H9 H10 H11 H12

SCALE: 1"=1'-0"

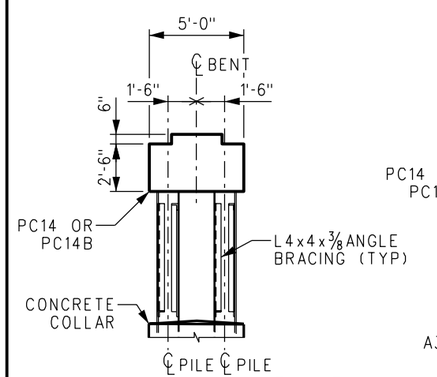

SECTION E11 E12

SCALE: NONE

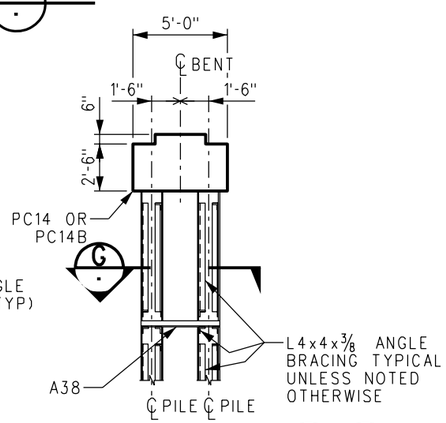

SECTION F11 F12

SCALE: NONE

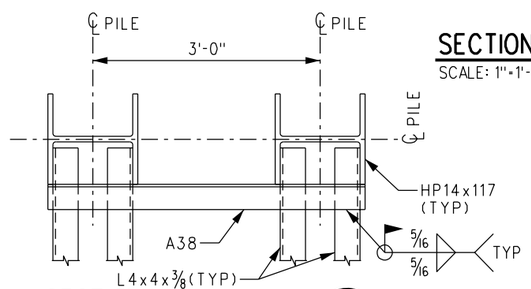

SECTION G

SCALE: 1"=1'-0"

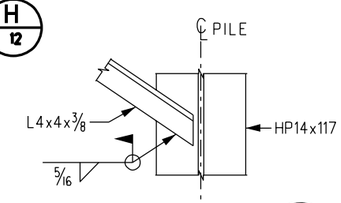

SECTION J

SCALE: 1"=1'-0"

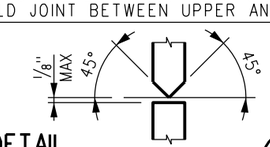

DETAIL 6

SCALE: NONE

REV.	DATE	DESCRIPTION	DES.	ENG.
X	XX-XX-XX	REVISION	XX	XX

DRAWN BY: A. CARLOS DATE: 03/31/2011

ASSISTANT DIRECTOR: STANDARDS & DESIGN

DIRECTOR OF ENGINEERING AND CONSTRUCTION

SCRRA ENGINEERING STANDARDS ARE INTENDED FOR SCRRA APPROVED USES ONLY. FOR NON-SCRRA APPROVED USES:
SCRRA SHALL NOT BE RESPONSIBLE FOR THE ACCURACY OR COMPLETENESS OF THE DATA OR INFORMATION CONTAINED HEREIN. THE SELECTION AND USE OF THESE STANDARDS IS THE SOLE RESPONSIBILITY OF THE USER AND SHOULD NOT BE USED WITHOUT CONSULTING A REGISTERED PROFESSIONAL ENGINEER. ALL WARRANTIES AND REPRESENTATIONS OF ANY KIND ARE DISCLAIMED. ANYONE MAKING USE OF THIS INFORMATION AGREES THAT IT ASSUMES ALL LIABILITY ARISING FROM SUCH USE. NO PART OF THESE STANDARDS SHOULD BE REPRODUCED OR DISTRIBUTED IN ANY FORM OR BY ANY MEANS WITHOUT THE PRIOR WRITTEN PERMISSION OF SCRRA. ALL RIGHTS RESERVED.

METROLINK

SOUTHERN CALIFORNIA REGIONAL RAIL AUTHORITY
ONE GATEWAY PLAZA, 12TH FLOOR, L. A., CA. 90012

ENGINEERING STANDARDS

BENT DETAILS
PRECAST/PRESTRESSED CONCRETE
DOUBLE BOX BEAM BRIDGES

STANDARD 6001
SCALE: AS NOTED
REVISION –
SHEET 13 OF 26
CADD FILE: ES6001-13

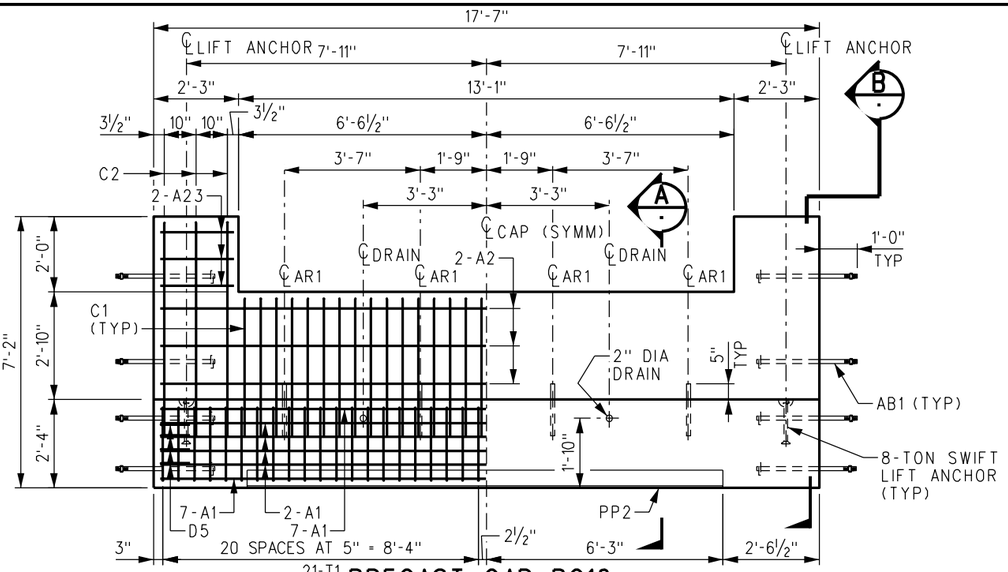

PRECAST CAP PC10

SCALE: ½"=1'-0
ESTIMATED LIFTING WEIGHT = 12.3 TONS
REQUIRED VOLUME OF CONCRETE = 5.8 CY
WEIGHT OF REINFORCING STEEL = 992 LBS

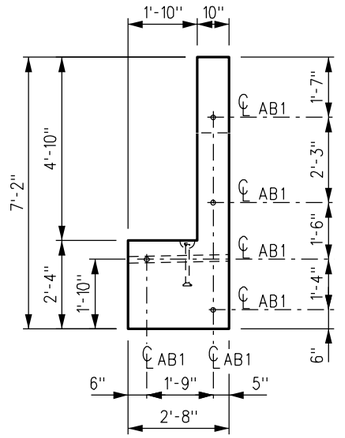

TYPICAL SIDE ELEVATION

SCALE: ½"=1'-0

REINFORCING SCHEDULE

REQUIRED PER PRECAST CAP					DESCRIPTION
PC10	PC11(R)	PC11(L)	PC12(R)	PC12(L)	
22	-	-	-	-	BAR A1, #5 x 17'-3" (STRAIGHT)
6	-	-	-	-	BAR A2, #4 x 17'-3" (STRAIGHT)
-	22	22	22	22	BAR A3, #5 x 15'-6" (STRAIGHT)
-	6	6	6	6	BAR A4, #4 x 15'-6" (STRAIGHT)
12	6	6	6	6	BAR A23, #4 x 1'-11" (STRAIGHT)
32	32	32	33	33	BAR C1, #4 x 7'-10" (SEE DETAIL, SHT 19)
6	4	4	3	3	BAR C2, #4 x 11'-10" (SEE DETAIL, SHT 19)
8	8	8	8	8	BAR D5, #4 x 3'-9" (SEE DETAIL, SHT 19)
42	38	38	38	38	BAR T1, #4 x 9'-10" (SEE DETAIL, SHT 19)

MISCELLANEOUS STEEL SCHEDULE

REQUIRED PER PRECAST CAP					DESCRIPTION
PC10	PC11(R)	PC11(L)	PC12(R)	PC12(L)	
8	4	4	4	4	ANCHOR BOLT AB1, (SEE DETAIL, SHT 18), GALV
4	4	4	4	4	ANCHOR ROD AR1, (SEE DETAIL, SHT 18), GALV
1	1	1	1	1	PILE PLATE PP2, (SEE DETAIL, SHT 18)

NOTES:

1. ALL CONCRETE, CONCRETE WORK AND PLACEMENT OF REINFORCEMENT SHALL BE IN ACCORDANCE WITH SCRRA STANDARD SPECIFICATIONS.
2. THE PORTION OF PILE PLATE PP2 TO BE IN CONTACT WITH CONCRETE SHALL BE CLEANED OF ALL DIRT, OIL AND GREASE AND ALL LOOSE SCALE AND RUST BEFORE CONCRETE IS PLACED.
3. THE ULTIMATE COMPRESSIVE STRENGTH OF CONCRETE SHALL BE NOT LESS THAN 4000 PSI IN 28 DAYS. MAXIMUM SIZE OF COARSE AGGREGATE SHALL BE ONE INCH.
4. MINIMUM CONCRETE COVER ON REINFORCEMENT SHALL BE TWO INCHES.
5. ALL EXPOSED EDGES OF CONCRETE MEMBERS SHALL BE CHAMFERED ¾".
6. CONCRETE MEMBERS SHALL NOT BE REMOVED FROM THE CASTING BED BEFORE THE CONCRETE REACHES A STRENGTH OF 2000 PSI.
7. ANCHOR ROD AR1 MUST BE PLACED WITHIN ¼" OF PLAN LOCATION OR BEAMS WILL NOT FIT.

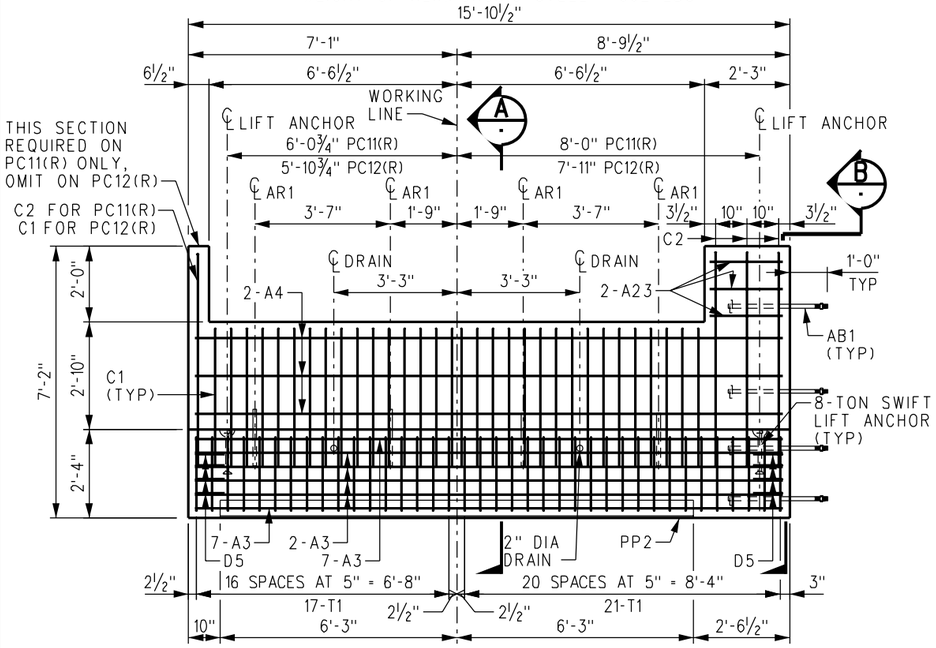

PRECAST CAP PC11(R)

SCALE: ½"=1'-0
ESTIMATED LIFTING WEIGHT = 11.0 TONS
REQUIRED VOLUME OF CONCRETE = 5.1 CY
WEIGHT OF REINFORCING STEEL = 895 LBS
(PRECAST CAP PC11(L) OPPOSITE HAND)

PRECAST CAP PC12(R)

SCALE: ½"=1'-0
ESTIMATED LIFTING WEIGHT = 10.9 TONS
REQUIRED VOLUME OF CONCRETE = 5.1 CY
WEIGHT OF REINFORCING STEEL = 892 LBS
(PRECAST CAP PC12(L) OPPOSITE HAND)

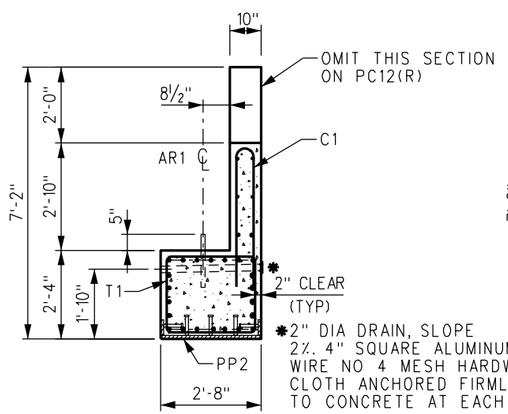

NOTE:

SEE SECTION B FOR BAR DESIGNATIONS NOT SHOWN.

SECTION A

SCALE: ½"=1'-0

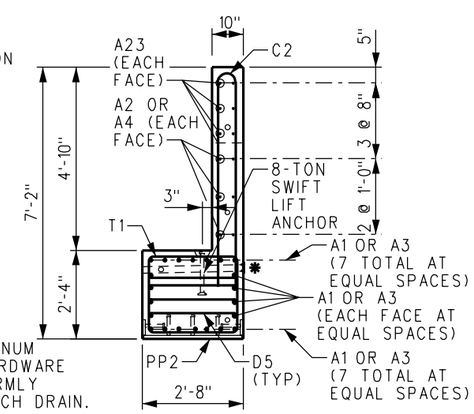

SECTION B

SCALE: ½"=1'-0

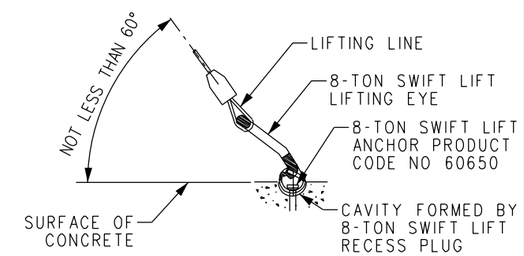

8-TON SWIFT LIFT RECESS PLUGS, ANCHORS AND LIFTING EYES ARE AVAILABLE FROM DAYTON RICHMOND CORPORATION, 9415 SORENSON AVE., SANTA FE SPRINGS, CALIFORNIA 90670, TELEPHONE (714) 522-3442. THE MATERIALS FOR THIS LIFTING SYSTEM ARE NOT INCLUDED IN THE BILL OF MATERIAL BUT ARE TO BE ORDERED AS REQUIRED.

LIFTING DETAIL

SCALE: NONE

REV.	DATE	DESCRIPTION	DES.	ENG.
X	XX-XX-XX	REVISION	XX	XX

DRAWN BY: A. CARLOS DATE: 03/31/2011

ASSISTANT DIRECTOR: STANDARDS & DESIGN

DIRECTOR OF ENGINEERING AND CONSTRUCTION

SCRRA ENGINEERING STANDARDS ARE INTENDED FOR SCRRA APPROVED USES ONLY. FOR NON-SCRRA APPROVED USES: SCRRA SHALL NOT BE RESPONSIBLE FOR THE ACCURACY OR COMPLETENESS OF THE DATA OR INFORMATION CONTAINED HEREIN. THE SELECTION AND USE OF THESE STANDARDS IS THE SOLE RESPONSIBILITY OF THE USER AND SHOULD NOT BE USED WITHOUT CONSULTING A REGISTERED PROFESSIONAL ENGINEER. ALL WARRANTIES AND REPRESENTATIONS OF ANY KIND ARE DISCLAIMED. ANYONE MAKING USE OF THIS INFORMATION AGREES THAT IT ASSUMES ALL LIABILITY ARISING FROM SUCH USE. NO PART OF THESE STANDARDS SHOULD BE REPRODUCED OR DISTRIBUTED IN ANY FORM OR BY ANY MEANS WITHOUT THE PRIOR WRITTEN PERMISSION OF SCRRA. ALL RIGHTS RESERVED.

METROLINK®
SOUTHERN CALIFORNIA REGIONAL RAIL AUTHORITY
ONE GATEWAY PLAZA, 12TH FLOOR, L. A., CA. 90012

ENGINEERING STANDARDS

PRECAST CONCRETE MEMBERS (1 OF 3)
PRECAST/PRESTRESSED CONCRETE
DOUBLE BOX BEAM BRIDGES

STANDARD 6001
SCALE: AS NOTED
REVISION –
SHEET 14 OF 26
CADD FILE: ES6001-14

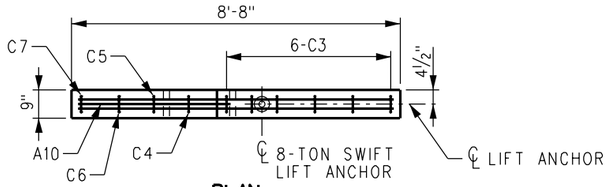

PLAN

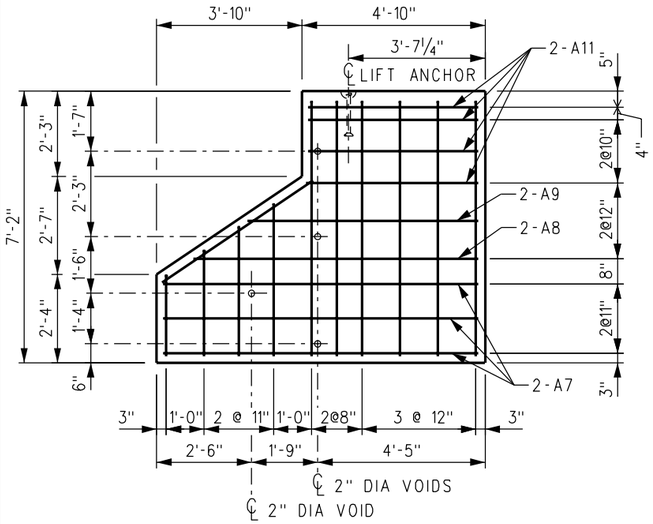

ELEVATION

PRECAST WING WALL PW2

SCALE: ½" = 1'-0"
ESTIMATED LIFTING WEIGHT = 2.7 TONS
REQUIRED VOLUME OF CONCRETE = 1.4 CY
WEIGHT OF REINFORCING STEEL = 153 LBS

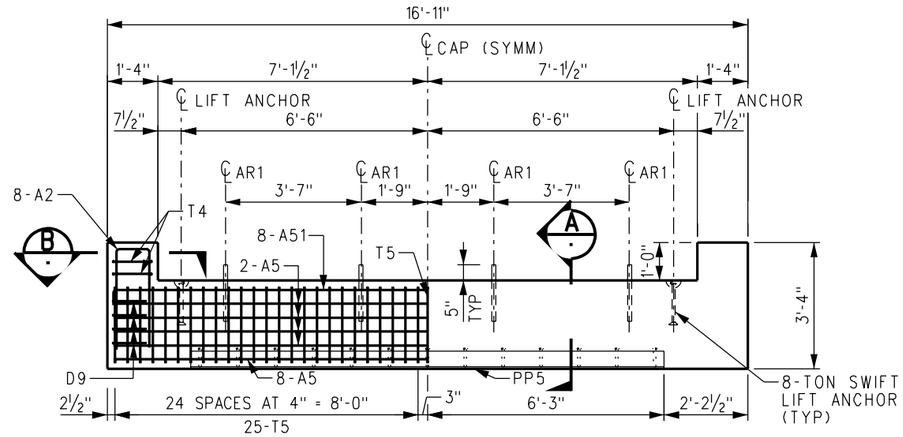

PRECAST CAP PC13

SCALE: ½" = 1'-0"
ESTIMATED LIFTING WEIGHT = 10.5 TONS
REQUIRED VOLUME OF CONCRETE = 4.8 CY
WEIGHT OF REINFORCING STEEL = 1186 LBS

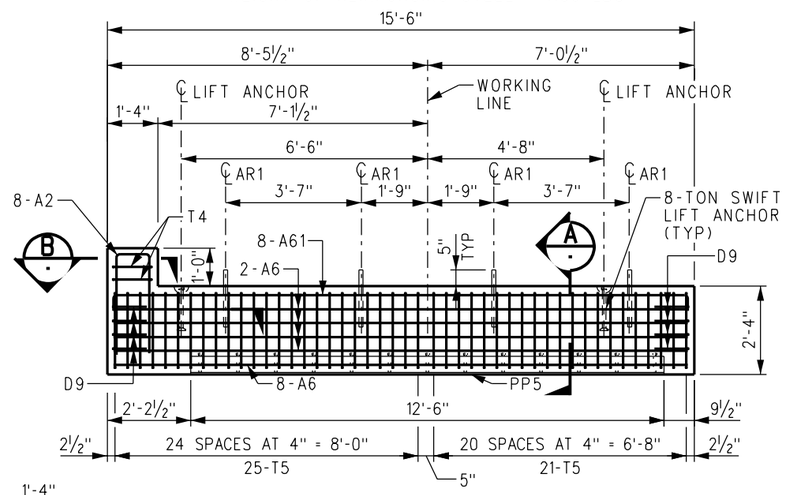

PRECAST CAP PC13B

SCALE: ½" = 1'-0"
ESTIMATED LIFTING WEIGHT = 9.4 TONS
REQUIRED VOLUME OF CONCRETE = 4.3 CY
WEIGHT OF REINFORCING STEEL = 1009 LBS

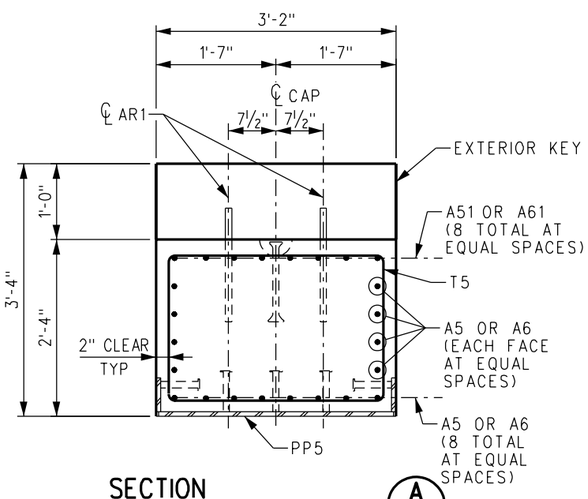

SECTION A
SCALE: 1"=1'-0

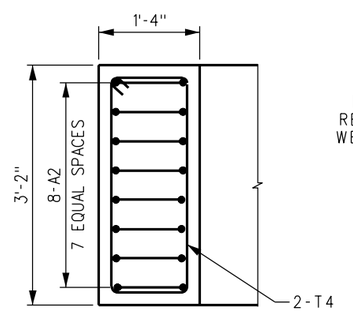

SECTION B
SCALE: 1"=1'-0

REINFORCING SCHEDULE

REQUIRED PER PRECAST CAP					DESCRIPTION
PC14	PC14B	PC13	PC13B	PW2	
26	-	16	-	-	BAR A5, #6 x 16'-7" (STRAIGHT)
-	26	-	16	-	BAR A6, #6 x 15'-2" (STRAIGHT)
-	-	-	-	6	BAR A7, #4 x 8'-4" (STRAIGHT)
-	-	-	-	2	BAR A8, #4 x 7'-7" (STRAIGHT)
-	-	-	-	2	BAR A9, #4 x 6'-1" (STRAIGHT)
-	-	-	-	1	BAR A10, #4 x 4'-9" (STRAIGHT)
-	-	-	-	8	BAR A11, #4 x 4'-6" (STRAIGHT)
28	14	-	-	8	BAR A12, #6 x 7'-0" (SEE DETAIL, SHT 19)
-	-	-	-	6	BAR C3, #4 x 14'-1" (SEE DETAIL, SHT 19)
-	-	-	-	1	BAR C4, #4 x 8'-5" (SEE DETAIL, SHT 19)
-	-	-	-	1	BAR C5, #4 x 7'-3" (SEE DETAIL, SHT 19)
-	-	-	-	1	BAR C6, #4 x 5'-11" (SEE DETAIL, SHT 19)
-	-	-	-	1	BAR C7, #4 x 4'-7" (SEE DETAIL, SHT 19)
8	8	-	-	-	BAR D3, #4 x 6'-1" (SEE DETAIL, SHT 19)
-	-	8	8	-	BAR D9, #4 x 4'-3" (SEE DETAIL, SHT 19)
-	-	51	46	-	BAR T5, #4 x 10'-10" (SEE DETAIL, SHT 19)
40	37	-	-	-	BAR T2, #4 x 12'-2" (SEE DETAIL, SHT 19)
40	37	-	-	-	BAR T3, #4 x 14'-10" (SEE DETAIL, SHT 19)
8	-	8	-	-	BAR A51, #6 x 17'-11" (SEE DETAIL, SHT 19)
-	8	-	8	-	BAR A61, #6 x 16'-6" (SEE DETAIL, SHT 19)
4	2	4	2	-	BAR T4, #5 x 8'-6" (SEE DETAIL, SHT 19)
-	-	16	8	-	BAR A2, #6 x 6'-0" (SEE DETAIL, SHT 19)

MISCELLANEOUS STEEL SCHEDULE

REQUIRED PER PRECAST CAP					DESCRIPTION
PC14	PC14B	PC13	PC13B	PW2	
8	8	8	8	-	ANCHOR ROD AR1 (SEE DETAIL, SHT 18), GALV
-	-	1	1	-	PILE PLATE PP5, (SEE DETAIL, SHT 18)
1	1	-	-	-	PILE PLATE PP3, (SEE DETAIL, SHT 18)

NOTES:

1. ALL CONCRETE, CONCRETE WORK AND PLACEMENT OF REINFORCEMENT SHALL BE IN ACCORDANCE WITH SCRRA STANDARD SPECIFICATIONS.
2. THE PORTION OF PILE PLATE PP3 OR PP5 TO BE IN CONTACT WITH CONCRETE SHALL BE CLEANED OF ALL DIRT, OIL AND GREASE AND ALL LOOSE SCALE AND RUST BEFORE CONCRETE IS PLACED.
3. THE ULTIMATE COMPRESSIVE STRENGTH OF CONCRETE SHALL BE NOT LESS THAN 4000 PSI IN 28 DAYS. MAXIMUM SIZE OF COARSE AGGREGATE SHALL BE ONE INCH.
4. MINIMUM CONCRETE COVER ON REINFORCEMENT SHALL BE TWO INCHES.
5. ALL EXPOSED EDGES OF CONCRETE MEMBERS SHALL BE CHAMFERED ¾".
6. CONCRETE MEMBERS SHALL NOT BE REMOVED FROM THE CASTING BED BEFORE THE CONCRETE REACHES A STRENGTH OF 2000 PSI.
7. ANCHOR ROD AR1 MUST BE PLACED WITHIN ¼" OF PLAN LOCATION OR BEAMS WILL NOT FIT.

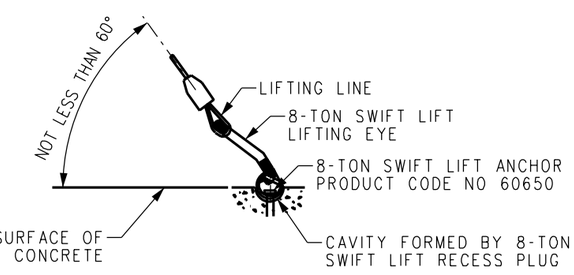

8-TON SWIFT LIFT RECESS PLUGS, ANCHORS AND LIFTING EYES ARE AVAILABLE FROM DAYTON RICHMOND CORPORATION, 9415 SORENSON AVE., SANTA FE SPRINGS, CALIFORNIA 90670, TELEPHONE (714) 522-3442. THE MATERIALS FOR THIS LIFTING SYSTEM ARE NOT INCLUDED IN THE BILL OF MATERIAL BUT ARE TO BE ORDERED AS REQUIRED.

LIFTING DETAIL

SCALE: NONE

REV.	DATE	DESCRIPTION	DES.	ENG.
X	XX-XX-XX	REVISION	XX	XX

DRAWN BY: A. CARLOS DATE: 03/31/2011

ASSISTANT DIRECTOR: STANDARDS & DESIGN

DIRECTOR OF ENGINEERING AND CONSTRUCTION

SCRRA ENGINEERING STANDARDS ARE INTENDED FOR SCRRA APPROVED USES ONLY. FOR NON-SCRRA APPROVED USES:
SCRRA SHALL NOT BE RESPONSIBLE FOR THE ACCURACY OR COMPLETENESS OF THE DATA OR INFORMATION CONTAINED HEREIN. THE SELECTION AND USE OF THESE STANDARDS IS THE SOLE RESPONSIBILITY OF THE USER AND SHOULD NOT BE USED WITHOUT CONSULTING A REGISTERED PROFESSIONAL ENGINEER. ALL WARRANTIES AND REPRESENTATIONS OF ANY KIND ARE DISCLAIMED. ANYONE MAKING USE OF THIS INFORMATION AGREES THAT IT ASSUMES ALL LIABILITY ARISING FROM SUCH USE. NO PART OF THESE STANDARDS SHOULD BE REPRODUCED OR DISTRIBUTED IN ANY FORM OR BY ANY MEANS WITHOUT THE PRIOR WRITTEN PERMISSION OF SCRRA. ALL RIGHTS RESERVED.

METROLINK®
SOUTHERN CALIFORNIA REGIONAL RAIL AUTHORITY
ONE GATEWAY PLAZA, 12TH FLOOR, L. A., CA. 90012

ENGINEERING STANDARDS

PRECAST CONCRETE MEMBERS (2 OF 3)
PRECAST/PRESTRESSED CONCRETE
DOUBLE BOX BEAM BRIDGES

STANDARD 6001
SCALE: AS NOTED
REVISION –
SHEET 15 OF 26
CADD FILE: ES6001-15

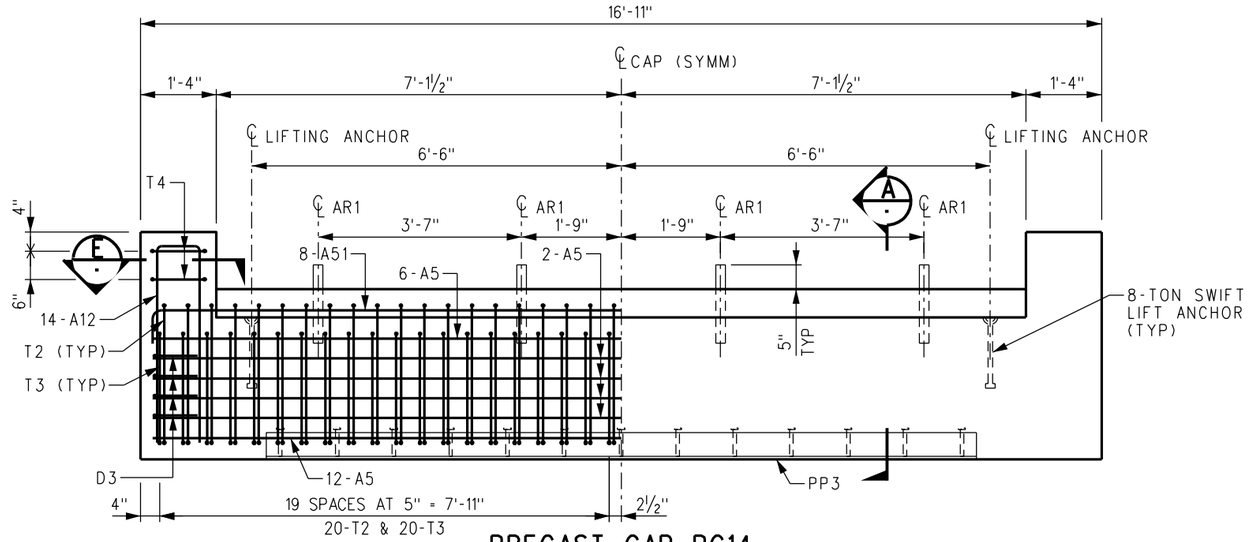

PRECAST CAP PC14

ESTIMATED LIFTING WEIGHT = 19.7 TONS
REQUIRED VOLUME OF CONCRETE = 9.3 CY
WEIGHT OF REINFORCING STEEL = 1947 LBS

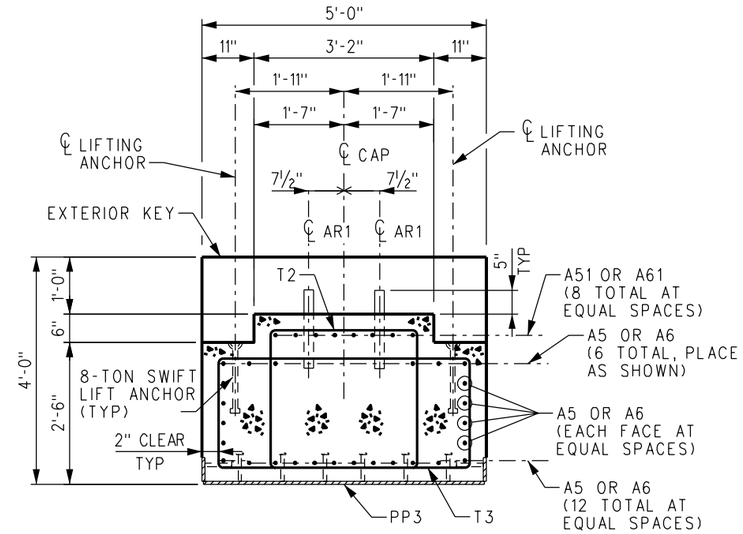

SECTION D

SCALE: 1"=1'-0

NOTES:

1. FOR NOTES, LIFTING DETAIL AND SCHEDULES SEE SHEET 15.
2. ANCHOR ROD AR1 MUST BE PLACED WITHIN ¼" OF PLAN LOCATION OR BEAMS WILL NOT FIT.

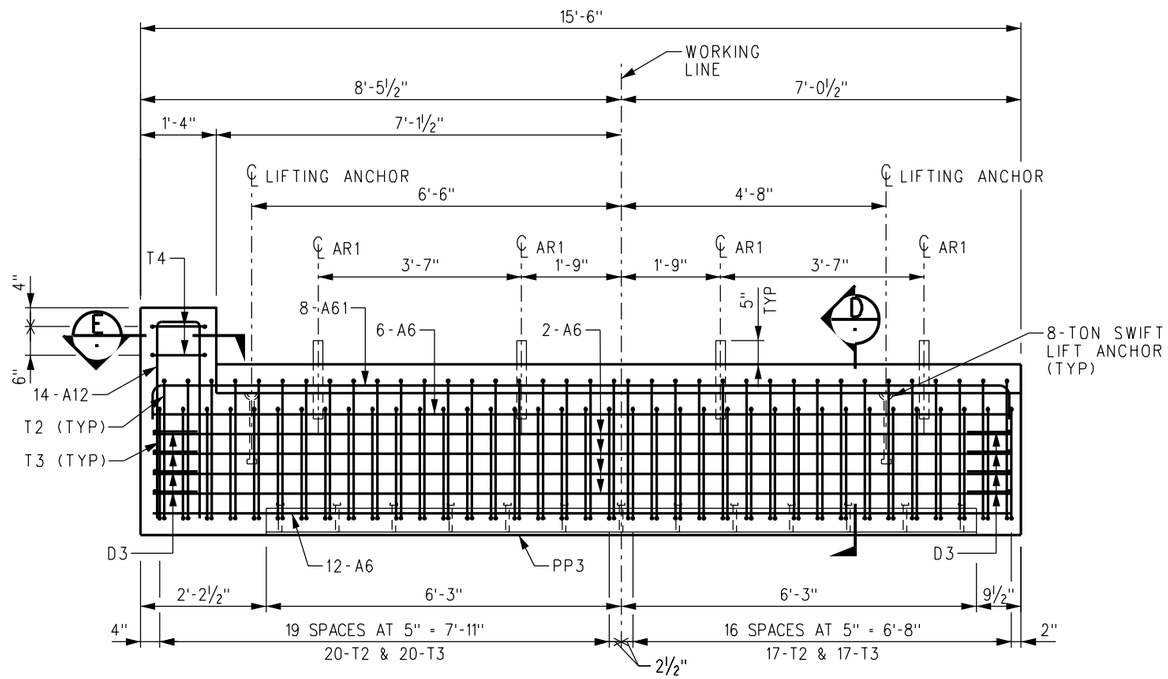

PRECAST CAP PC14B

ESTIMATED LIFTING WEIGHT = 17.6 TONS
REQUIRED VOLUME OF CONCRETE = 8.2 CY
WEIGHT OF REINFORCING STEEL = 1656 LBS

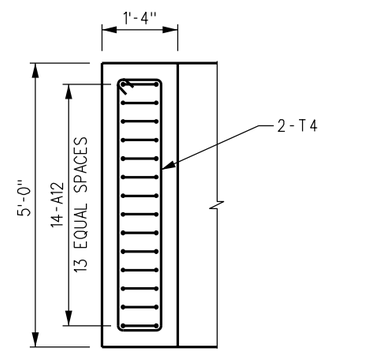

SECTION E

SCALE: 1"=1'-0

X	XX-XX-XX	REVISION	XX	XX
REV.	DATE	DESCRIPTION	DES.	ENG.

DRAWN BY: A. CARLOS DATE: 03/31/2011

ASSISTANT DIRECTOR: STANDARDS & DESIGN

DIRECTOR OF ENGINEERING AND CONSTRUCTION

SCRRA ENGINEERING STANDARDS ARE INTENDED FOR SCRRA APPROVED USES ONLY. FOR NON-SCRRA APPROVED USES: SCRRA SHALL NOT BE RESPONSIBLE FOR THE ACCURACY OR COMPLETENESS OF THE DATA OR INFORMATION CONTAINED HEREIN. THE SELECTION AND USE OF THESE STANDARDS IS THE SOLE RESPONSIBILITY OF THE USER AND SHOULD NOT BE USED WITHOUT CONSULTING A REGISTERED PROFESSIONAL ENGINEER. ALL WARRANTIES AND REPRESENTATIONS OF ANY KIND ARE DISCLAIMED. ANYONE MAKING USE OF THIS INFORMATION AGREES THAT IT ASSUMES ALL LIABILITY ARISING FROM SUCH USE. NO PART OF THESE STANDARDS SHOULD BE REPRODUCED OR DISTRIBUTED IN ANY FORM OR BY ANY MEANS WITHOUT THE PRIOR WRITTEN PERMISSION OF SCRRA. ALL RIGHTS RESERVED.

METROLINK®
SOUTHERN CALIFORNIA REGIONAL RAIL AUTHORITY
ONE GATEWAY PLAZA, 12TH FLOOR, L. A., CA. 90012

ENGINEERING STANDARDS

PRECAST CONCRETE MEMBERS (3 OF 3)
PRECAST/PRESTRESSED CONCRETE
DOUBLE BOX BEAM BRIDGES

STANDARD 6001
SCALE: ¾" = 1'-0"
REVISION –
SHEET 16 OF 26
CADD FILE: ES6001-16

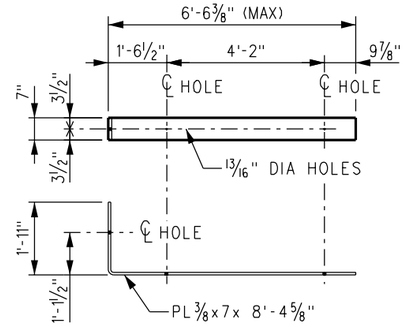

DECK PLATE DP1

SCALE: 1/2" = 1'-0"
WEIGHT = 74.9 LBS
GALVANIZE AFTER FABRICATION

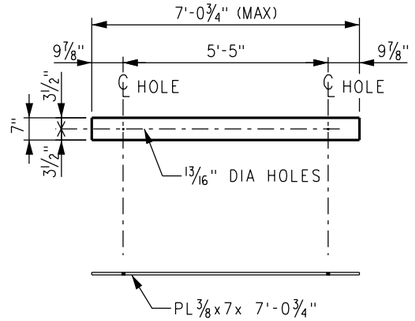

DECK PLATE DP3

SCALE: 1/2" = 1'-0"
WEIGHT = 63.1 LBS
GALVANIZE AFTER FABRICATION

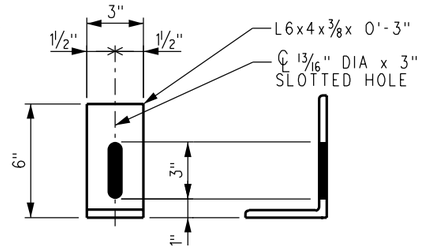

CURB ANGLE CA2

SCALE: 3" = 1'-0"
WEIGHT = 3.1 LBS
GALVANIZE AFTER FABRICATION

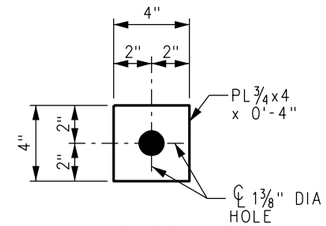

WASHER W1

SCALE: 3" = 1'-0"
WEIGHT = 3.4 LBS
GALVANIZE AFTER FABRICATION

MATERIAL NOTES:

1. STRUCTURAL STEEL BARS, STEEL PLATES AND ANGLES SHALL MEET THE REQUIREMENTS OF THE CURRENT ASTM DESIGNATION: A36.
2. SHEAR CONNECTOR STUDS SHALL MEET THE REQUIREMENTS OF SECTION 7 OF THE CURRENT AWS STRUCTURAL WELDING CODE D1.1 FOR GRADE 1020 SOLID FLUX FILLED HEADED STUDS.

SHOP NOTES:

1. FABRICATION AND ARC WELDING OF STRUCTURAL STEEL SHALL BE IN ACCORDANCE WITH SCRRA STANDARD SPECIFICATIONS.
2. GRIND EXPOSED WELDS SMOOTH.
3. OPEN HOLES: AS NOTED. - SHOP PAINT: NONE.
4. SHEAR CONNECTOR STUDS SHALL AUTOMATICALLY BE END WELDED WITH COMPLETE FUSION IN ACCORDANCE WITH APPENDIX VI OF THE CURRENT AWS STRUCTURAL WELDING CODE D1.1.
5. GALVANIZING: CP1, CP2, CP3, AR1, DP1, DP3, DP27, DP32, DP34, W1, AB1, LB1, CA2, CONDUIT BRACKET AND SIDEWALK BRACKET SHALL BE GALVANIZED AFTER FABRICATION IN ACCORDANCE WITH THE CURRENT ASTM DESIGNATION: A123 AND A153 AS APPLICABLE. AFTER GALVANIZING, ALL ELEMENTS SHALL BE FREE OF ABRASIONS, ROUGH OR SHARP EDGES, AND OTHER SURFACE DEFECTS.
6. NUTS SHALL BE TAPPED OVERSIZE TO FIT GALVANIZED THREADS AND BRUSHED AFTER GALVANIZING TO PERMIT ROTATION ON THE THREADED ROD.
7. AB1 AND LB1 SHALL BE SHIPPED WITH THE NUT ON THE THREADED ROD.

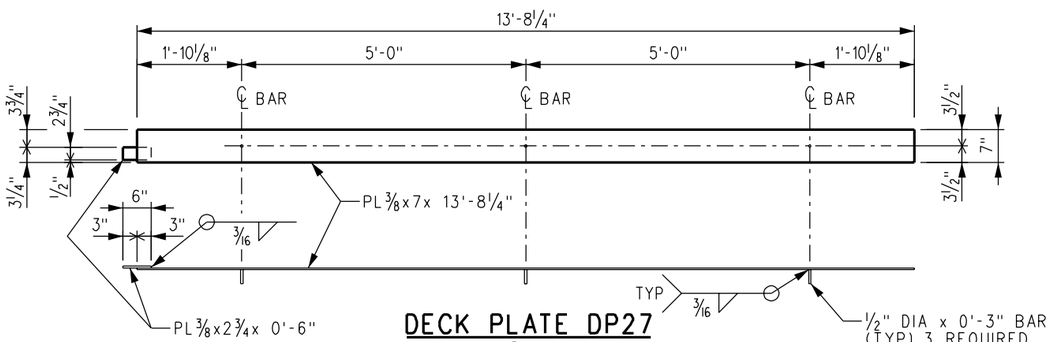

DECK PLATE DP27

SCALE: 3/4" = 1'-0"
WEIGHT = 124.5 LBS
GALVANIZE AFTER FABRICATION

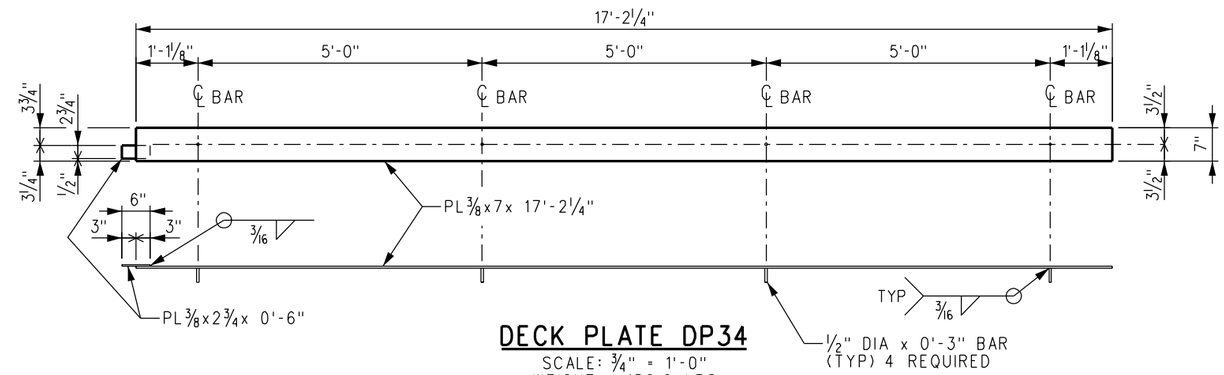

DECK PLATE DP34

SCALE: 3/4" = 1'-0"
WEIGHT = 156.0 LBS
GALVANIZE AFTER FABRICATION

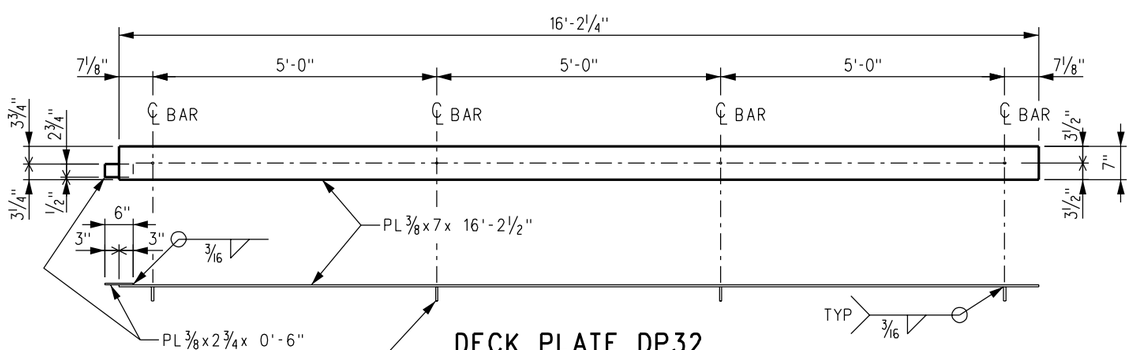

DECK PLATE DP32

SCALE: 3/4" = 1'-0"
WEIGHT = 147.2 LBS
GALVANIZE AFTER FABRICATION

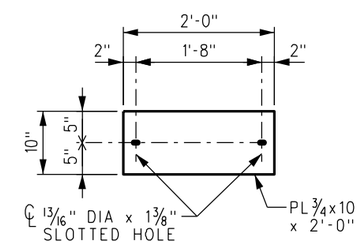

DECK PLATE CP1

SCALE: 1" = 1'-0"
WEIGHT = 51.0 LBS
GALVANIZE AFTER FABRICATION

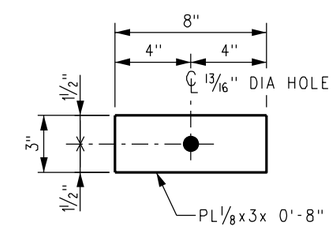

CURB PLATE CP2

SCALE: 3" = 1'-0"
WEIGHT = 1.0 LBS
GALVANIZE AFTER FABRICATION

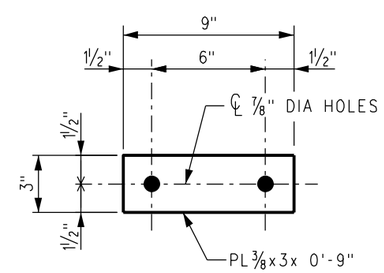

CURB PLATE CP3

SCALE: 3" = 1'-0"
WEIGHT = 2.9 LBS
GALVANIZE AFTER FABRICATION

REV.	DATE	DESCRIPTION	DES.	ENG.
X	XX-XX-XX	REVISION	XX	XX

DRAWN BY: A. CARLOS DATE: 03/31/2011

ASSISTANT DIRECTOR: STANDARDS & DESIGN

DIRECTOR OF ENGINEERING AND CONSTRUCTION

SCRRA ENGINEERING STANDARDS ARE INTENDED FOR SCRRA APPROVED USES ONLY. FOR NON-SCRRA APPROVED USES:
SCRRA SHALL NOT BE RESPONSIBLE FOR THE ACCURACY OR COMPLETENESS OF THE DATA OR INFORMATION CONTAINED HEREIN. THE SELECTION AND USE OF THESE STANDARDS IS THE SOLE RESPONSIBILITY OF THE USER AND SHOULD NOT BE USED WITHOUT CONSULTING A REGISTERED PROFESSIONAL ENGINEER. ALL WARRANTIES AND REPRESENTATIONS OF ANY KIND ARE DISCLAIMED. ANYONE MAKING USE OF THIS INFORMATION AGREES THAT IT ASSUMES ALL LIABILITY ARISING FROM SUCH USE. NO PART OF THESE STANDARDS SHOULD BE REPRODUCED OR DISTRIBUTED IN ANY FORM OR BY ANY MEANS WITHOUT THE PRIOR WRITTEN PERMISSION OF SCRRA. ALL RIGHTS RESERVED.

METROLINK®
SOUTHERN CALIFORNIA REGIONAL RAIL AUTHORITY
ONE GATEWAY PLAZA, 12TH FLOOR, L. A., CA. 90012

ENGINEERING STANDARDS

STEEL DETAILS (1 OF 2)
PRECAST/PRESTRESSED CONCRETE
DOUBLE BOX BEAM BRIDGES

STANDARD 6001
SCALE: AS NOTED
REVISION –
SHEET 17 OF 26
CADD FILE: ES6001-17

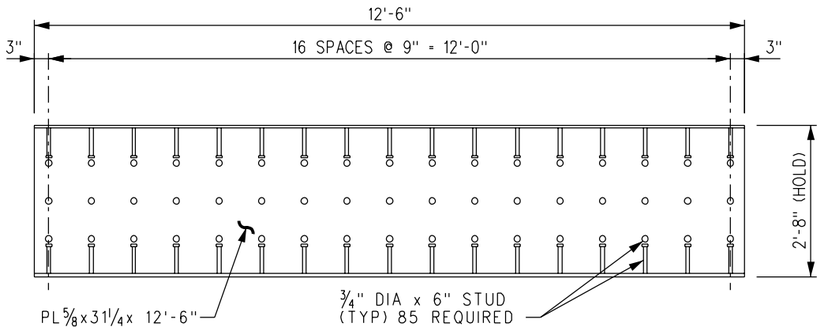

PILE PLATE PP2

SCALE: 1/2" = 1'-0"
WEIGHT = 1170 LBS

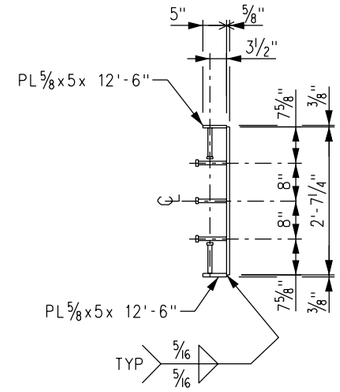

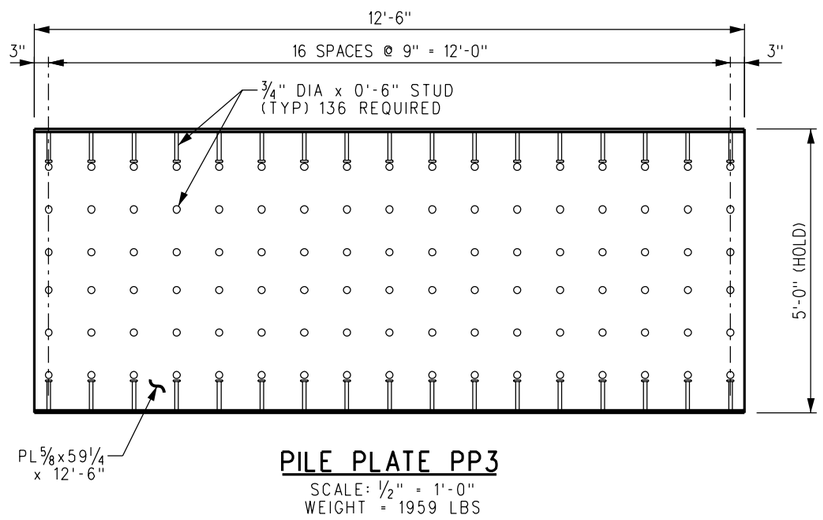

PILE PLATE PP3

SCALE: 1/2" = 1'-0"
WEIGHT = 1959 LBS

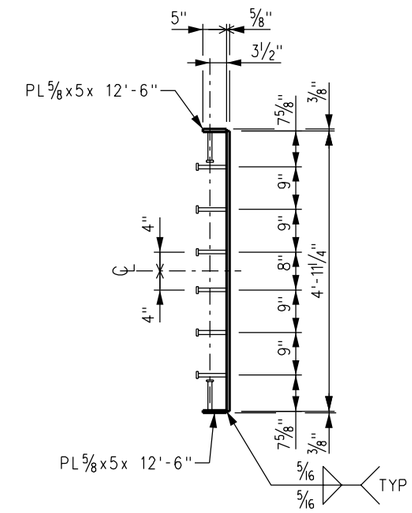

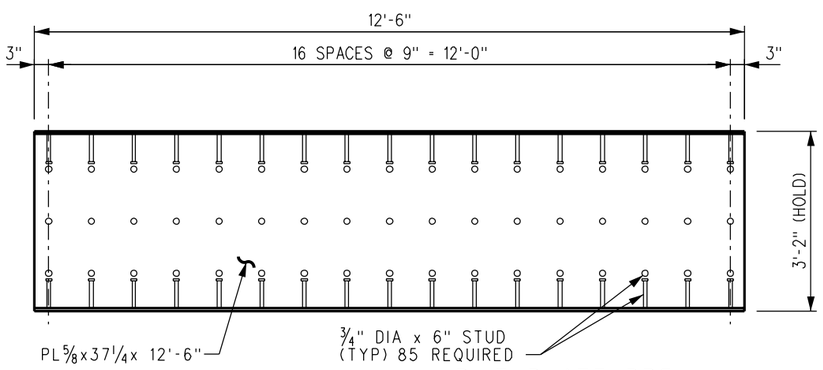

PILE PLATE PP5

SCALE: 1/2" = 1'-0"
WEIGHT = 1330 LBS

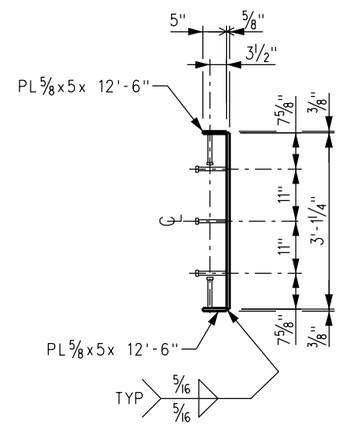

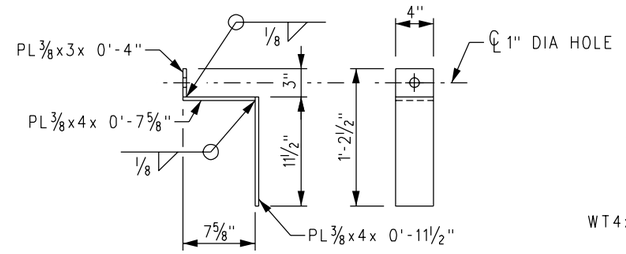

CONDUIT BRACKET

SCALE: 1 1/2" = 1'-0"
WEIGHT = 9.4 LBS
GALVANIZE AFTER FABRICATION

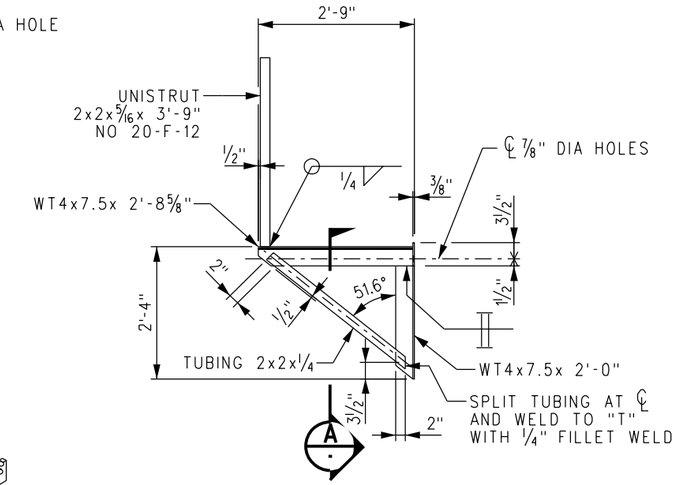

STANDARD SIDEWALK BRACKET

SCALE: 3/4" = 1'-0"
WEIGHT = 66 LBS
GALVANIZE AFTER FABRICATION

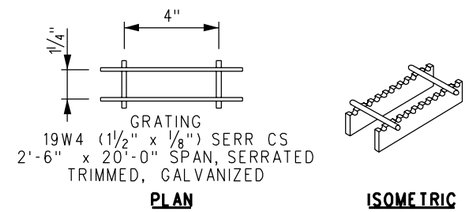

GRATING DETAIL

SCALE: NONE

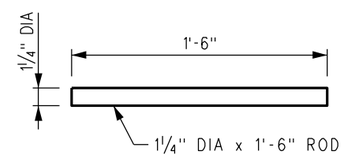

ANCHOR ROD AR1

SCALE: 1 1/2" = 1'-0"
WEIGHT = 6.3 LBS
GALVANIZE AFTER FABRICATION

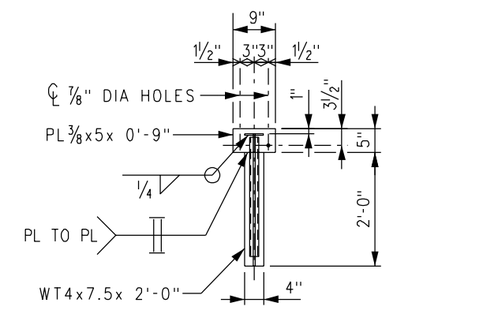

SECTION A

SCALE: 3/4"=1'-0

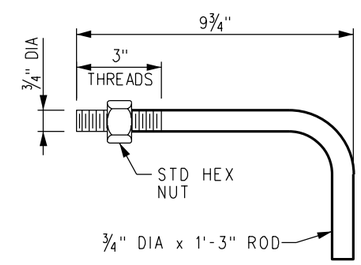

BOLT LB1

SCALE: 3" = 1'-0"
WEIGHT = 2.0 LBS
GALVANIZE AFTER FABRICATION

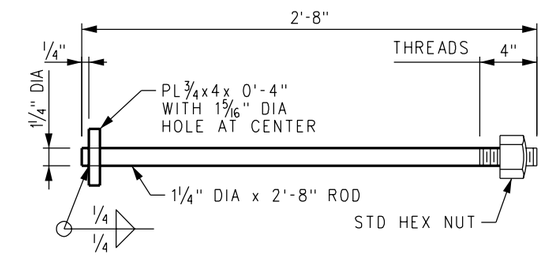

ANCHOR BOLT AB1

SCALE: 1 1/2" = 1'-0"
WEIGHT = 14.5 LBS
GALVANIZE AFTER FABRICATION

NOTE:
FOR MATERIAL NOTES AND SHOP NOTES, SEE SHEET 17.

REV.	DATE	DESCRIPTION	DES.	ENG.
X	XX-XX-XX	REVISION	XX	XX

DRAWN BY: A. CARLOS DATE: 03/31/2011

ASSISTANT DIRECTOR: STANDARDS & DESIGN

DIRECTOR OF ENGINEERING AND CONSTRUCTION

SCRRA ENGINEERING STANDARDS ARE INTENDED FOR SCRRA APPROVED USES ONLY. FOR NON-SCRRA APPROVED USES:
SCRRA SHALL NOT BE RESPONSIBLE FOR THE ACCURACY OR COMPLETENESS OF THE DATA OR INFORMATION CONTAINED HEREIN. THE SELECTION AND USE OF THESE STANDARDS IS THE SOLE RESPONSIBILITY OF THE USER AND SHOULD NOT BE USED WITHOUT CONSULTING A REGISTERED PROFESSIONAL ENGINEER. ALL WARRANTIES AND REPRESENTATIONS OF ANY KIND ARE DISCLAIMED. ANYONE MAKING USE OF THIS INFORMATION AGREES THAT IT ASSUMES ALL LIABILITY ARISING FROM SUCH USE. NO PART OF THESE STANDARDS SHOULD BE REPRODUCED OR DISTRIBUTED IN ANY FORM OR BY ANY MEANS WITHOUT THE PRIOR WRITTEN PERMISSION OF SCRRA. ALL RIGHTS RESERVED.

METROLINK®
SOUTHERN CALIFORNIA REGIONAL RAIL AUTHORITY
ONE GATEWAY PLAZA, 12TH FLOOR, L. A., CA. 90012

ENGINEERING STANDARDS

STEEL DETAILS (2 OF 2)
PRECAST/PRESTRESSED CONCRETE
DOUBLE BOX BEAM BRIDGES

STANDARD 6001
SCALE: AS NOTED
REVISION –
SHEET 18 OF 26
CADD FILE: ES6001-18

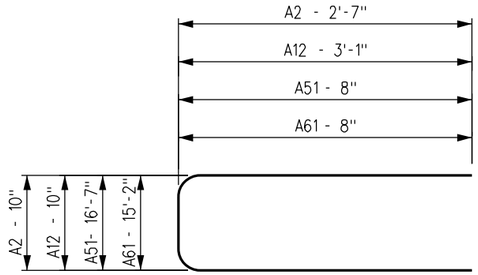

BAR A2, A12, A51 & A61
SCALE: 1½" = 1'-0"

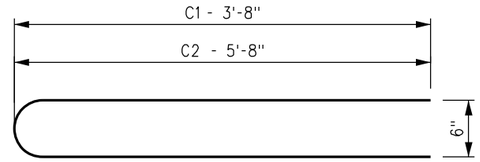

BARS C1 & C2
SCALE: 1½" = 1'-0"

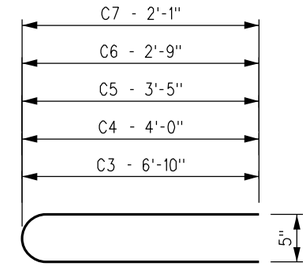

BARS C3 THRU C7
SCALE: 1½" = 1'-0"

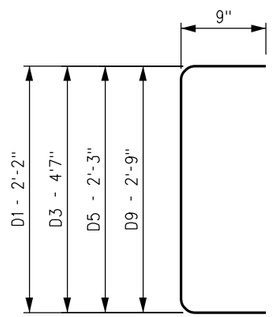

BAR D1, D3, D5 & D9
SCALE: 1½" = 1'-0"

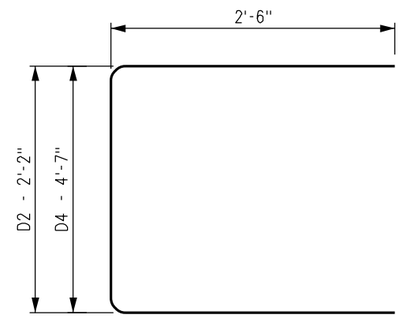

BAR D2 & D4
SCALE: 1½" = 1'-0"

BENT BAR SCHEDULE	
MARK	DESCRIPTION
A2	#6 x 6'-0"
A12	#6 x 7'-0"
A51	#6 x 17'-11"
A61	#6 x 16'-6"
C1	#4 x 7'-10"
C2	#4 x 11'-10"
C3	#4 x 14'-1"
C4	#4 x 8'-5"
C5	#4 x 7'-3"
C6	#4 x 5'-11"
C7	#4 x 4'-7"
D1	#4 x 3'-8"
D2	#4 x 7'-2"
D3	#4 x 6'-1"
D4	#4 x 9'-7"
D5	#4 x 3'-9"
D9	#4 x 4'-3"
T1	#4 x 9'-10"
T2	#4 x 12'-2"
T3	#4 x 14'-10"
T4	#5 x 8'-6"
T5	#4 x 10'-10"
U2	#4 x 18'-8"
U3	#4 x 20'-8"
U4	#4 x 23'-6"

NOTES:

1. ALL DIMENSIONS SHOWN ARE OUT TO OUT OF BARS.
2. BEND #4 BARS AROUND 3" DIA PIN (EXCEPT C1 THRU C7 BARS, WHICH SHALL BE BENT AROUND 5" DIA PIN FOR C1 AND C2 AND 4" DIA PIN FOR C3 THRU C7), #5 BARS AROUND 3¾" DIA PIN AND #6 BARS AROUND 4½" DIA PIN.
3. MILD STEEL REINFORCEMENT SHALL MEET THE REQUIREMENTS OF THE CURRENT ASTM DESIGNATION: A615, GRADE 60 OR A706.
4. FABRICATION OF REINFORCEMENT SHALL BE IN ACCORDANCE WITH CHAPTER 7 OF THE CURRENT CSRI MANUAL OF STANDARD PRACTICE.

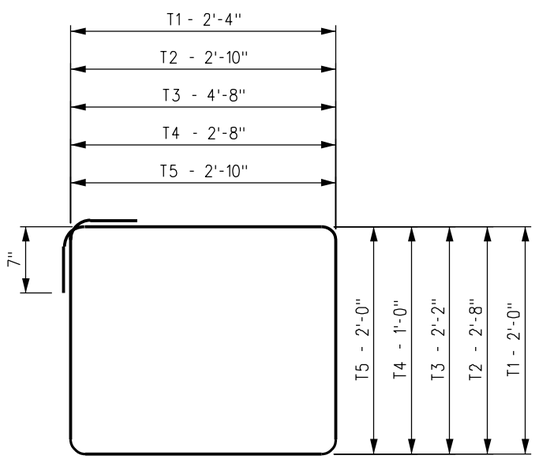

BARS T1, T2, T3, T4 & T5
SCALE: 1½" = 1'-0"

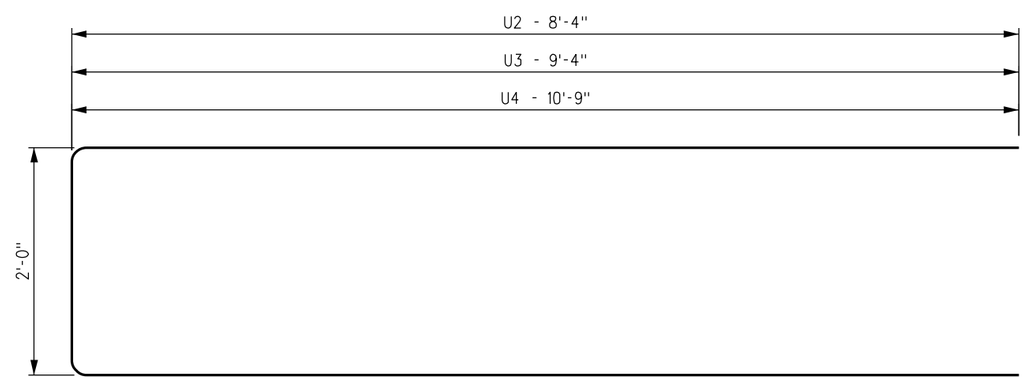

BARS U2, U3 & U4
SCALE: 1½" = 1'-0"

REV.	DATE	DESCRIPTION	DES.	ENG.
X	XX-XX-XX	REVISION	XX	XX

DRAWN BY: A. CARLOS DATE: 03/31/2011

ASSISTANT DIRECTOR: STANDARDS & DESIGN

DIRECTOR OF ENGINEERING AND CONSTRUCTION

SCRRA ENGINEERING STANDARDS ARE INTENDED FOR SCRRA APPROVED USES ONLY. FOR NON-SCRRA APPROVED USES:
SCRRA SHALL NOT BE RESPONSIBLE FOR THE ACCURACY OR COMPLETENESS OF THE DATA OR INFORMATION CONTAINED HEREIN. THE SELECTION AND USE OF THESE STANDARDS IS THE SOLE RESPONSIBILITY OF THE USER AND SHOULD NOT BE USED WITHOUT CONSULTING A REGISTERED PROFESSIONAL ENGINEER. ALL WARRANTIES AND REPRESENTATIONS OF ANY KIND ARE DISCLAIMED. ANYONE MAKING USE OF THIS INFORMATION AGREES THAT IT ASSUMES ALL LIABILITY ARISING FROM SUCH USE. NO PART OF THESE STANDARDS SHOULD BE REPRODUCED OR DISTRIBUTED IN ANY FORM OR BY ANY MEANS WITHOUT THE PRIOR WRITTEN PERMISSION OF SCRRA. ALL RIGHTS RESERVED.

METROLINK®
SOUTHERN CALIFORNIA REGIONAL RAIL AUTHORITY
ONE GATEWAY PLAZA, 12TH FLOOR, L. A., CA. 90012

ENGINEERING STANDARDS

REINFORCING STEEL DETAILS
PRECAST/PRESTRESSED CONCRETE
DOUBLE BOX BEAM BRIDGES

STANDARD 6001
SCALE: 1½" = 1'-0"
REVISION –
SHEET 19 OF 26
CADD FILE: ES66001-19

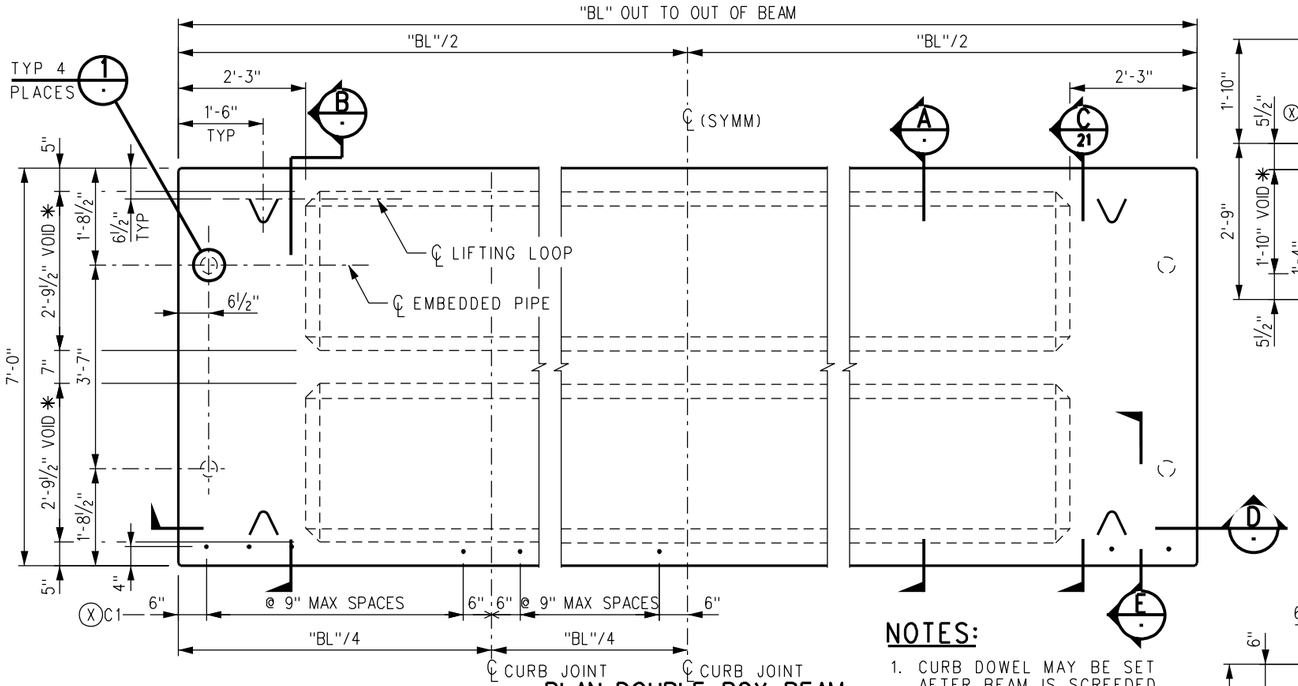

PLAN-DOUBLE BOX BEAM

SCALE: NONE

NOTES:

1. CURB DOWEL MAY BE SET AFTER BEAM IS SCREEDED. ADJUST AS REQUIRED TO MISS OTHER REINFORCEMENT.
2. CURB JOINT INCLUDES 2" x 6" DRAIN OPENING WITH ½" x 6" x 1'-9" ASPHALT EXPANSION BOARD IN CURB EXPANSION JOINT.

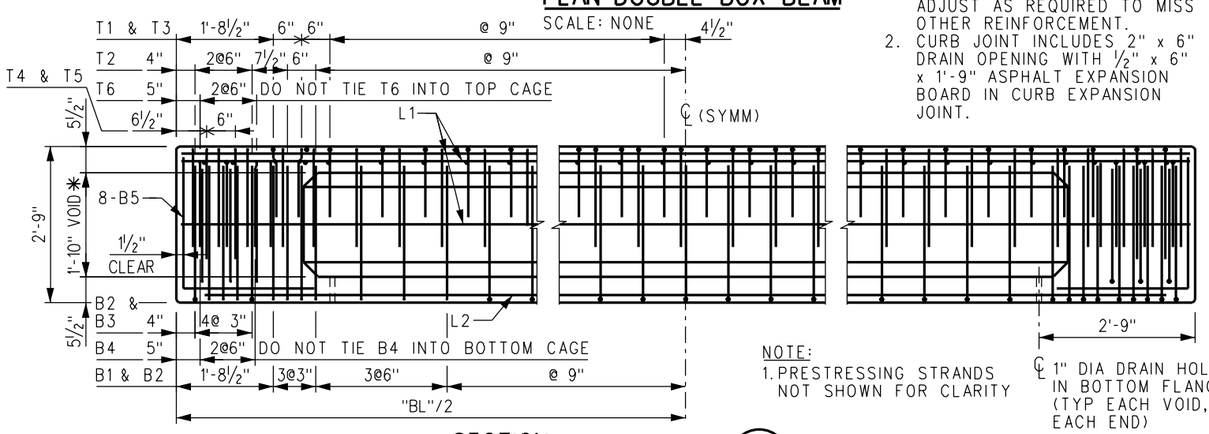

NOTE:
1. PRESTRESSING STRANDS NOT SHOWN FOR CLARITY

SECTION D

SCALE: NONE

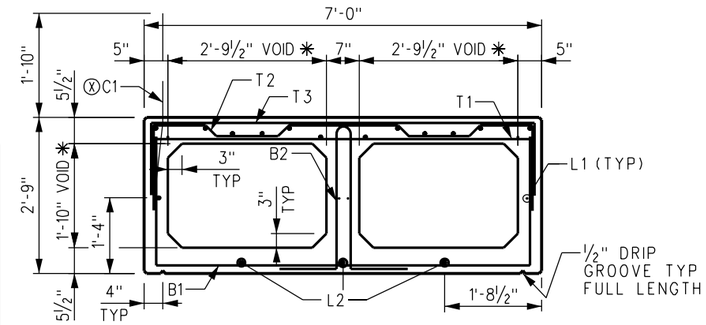

ⓧ REQUIRED FOR BEAM WITH CURB ONLY

✱ VOID DIMENSIONS SHOWN ARE MAXIMUM AND MUST NOT BE EXCEEDED AT ANY POINT INCLUDING SPLICES OF VOID FORMS

TOP OF BEAM TO BE GIVEN A STEEL TROWEL FINISH. ALL STEEL TO HAVE AT LEAST 1½" COVER UNLESS OTHERWISE NOTED. SEE SECTION "C" ON SHEET 21 FOR LOCATION OF PRESTRESSING STRANDS.

SECTION A

SCALE: ¾" = 1'-0"

SPECIAL NOTES TO FABRICATOR:

1. AN ALTERNATE STRAND PATTERN BETTER SUITED TO THE FABRICATOR'S FACILITIES THAT HAS THE SAME ECCENTRICITY AS THE PATTERN SHOWN ON THIS PLAN WILL BE CONSIDERED FOR APPROVAL UPON SUBMISSION BY THE MANUFACTURER OF COMPUTATIONS WITH THE DETAIL DRAWINGS.
2. L1 BARS MAY BE ADDED IN THE BEAM WALLS TO FACILITATE NON-PRESTRESSED REINFORCEMENT PLACEMENT, ONLY IF 1½" MINIMUM CLEARANCE CAN BE MAINTAINED BETWEEN THE L1 BARS AND THE PRESTRESSING STRANDS.
3. TACK WELDING OF REINFORCEMENT IS PROHIBITED.
4. IF REINFORCING BAR SUPPORTS ARE USED, THEY SHALL BE CLASS 1, PLASTIC PROTECTED, IN ACCORDANCE WITH CHAPTER 3 OF THE CURRENT CRSI MANUAL OF STANDARD PRACTICE.
5. MANUFACTURER SHALL BURN BACK PRESTRESSING STRANDS TO A DEPTH OF ONE INCH BELOW SURFACE OF CONCRETE ON ENDS OF BEAM. RESULTING RECESSES SHALL BE FILLED WITH EPOXY GROUT.

"BL"	"S"
27'-10"	4'-5⅝" (+)
32'-10"	4'-6⅝" (-)
34'-10"	4'-10"

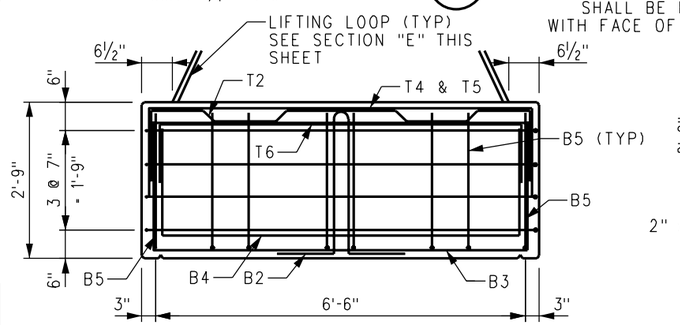

SECTION B

SCALE: ¾" = 1'-0"

BARS C1, L1 AND L2 NOT SHOWN DIMENSIONS AND DETAILS NOT SHOWN TO BE SAME AS SHOWN IN SECTION "A"
BARS B1, T1 AND T3 NOT USED AT ENDS OF BEAMS

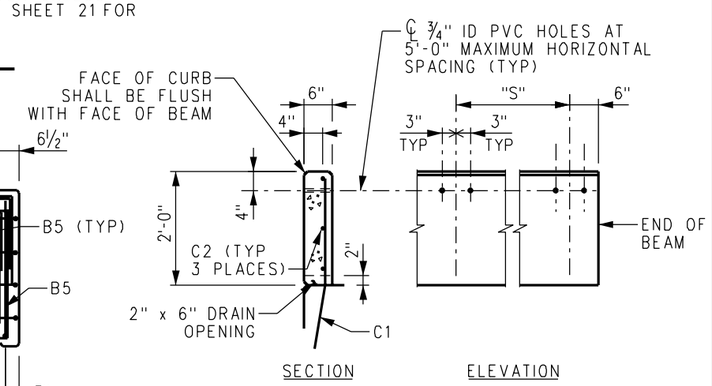

CURB DETAIL

SCALE: ¾" = 1'-0"

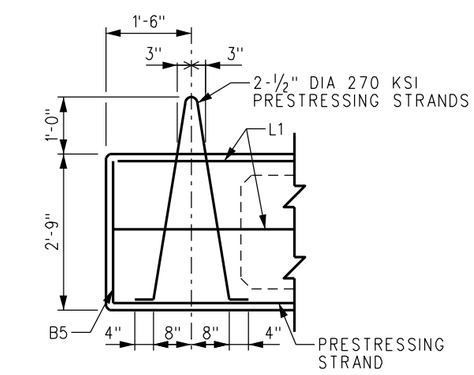

SECTION E

SCALE: ¾" = 1'-0"

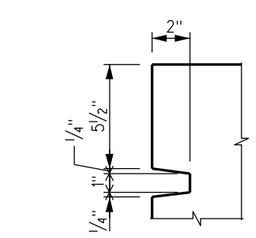

SECTION F

SCALE: 3" = 1'-0"

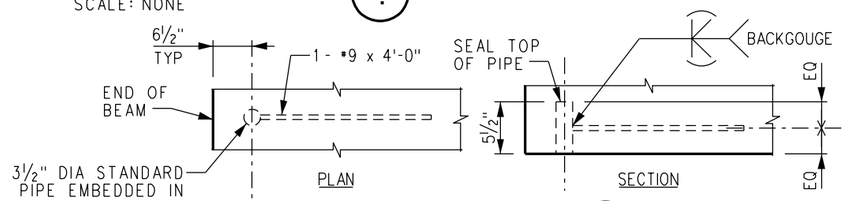

DETAIL 1

SCALE: 3" = 1'-0"

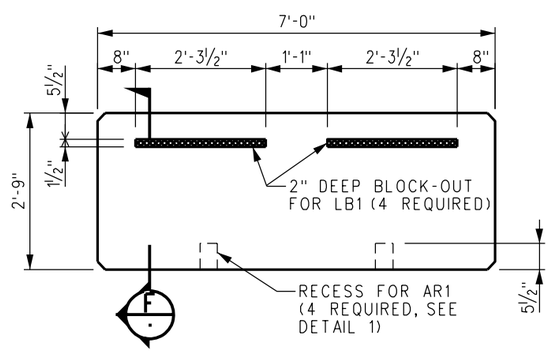

END VIEW-DOUBLE BOX BEAM

SCALE: ¾" = 1'-0"

REV.	DATE	DESCRIPTION	DES.	ENG.
X	XX-XX-XX	REVISION	XX	XX

DRAWN BY: A. CARLOS DATE: 03/31/2011

ASSISTANT DIRECTOR: STANDARDS & DESIGN

DIRECTOR OF ENGINEERING AND CONSTRUCTION

SCRRA ENGINEERING STANDARDS ARE INTENDED FOR SCRRA APPROVED USES ONLY. FOR NON-SCRRA APPROVED USES:
SCRRA SHALL NOT BE RESPONSIBLE FOR THE ACCURACY OR COMPLETENESS OF THE DATA OR INFORMATION CONTAINED HEREIN. THE SELECTION AND USE OF THESE STANDARDS IS THE SOLE RESPONSIBILITY OF THE USER AND SHOULD NOT BE USED WITHOUT CONSULTING A REGISTERED PROFESSIONAL ENGINEER. ALL WARRANTIES AND REPRESENTATIONS OF ANY KIND ARE DISCLAIMED. ANYONE MAKING USE OF THIS INFORMATION AGREES THAT IT ASSUMES ALL LIABILITY ARISING FROM SUCH USE. NO PART OF THESE STANDARDS SHOULD BE REPRODUCED OR DISTRIBUTED IN ANY FORM OR BY ANY MEANS WITHOUT THE PRIOR WRITTEN PERMISSION OF SCRRA. ALL RIGHTS RESERVED.

METROLINK®
SOUTHERN CALIFORNIA REGIONAL RAIL AUTHORITY
ONE GATEWAY PLAZA, 12TH FLOOR, L. A., CA. 90012

ENGINEERING STANDARDS
33" PRECAST/PRESTRESSED CONCRETE DOUBLE BOX BEAMS (1 OF 3)
PRECAST/PRESTRESSED CONCRETE DOUBLE BOX BEAM BRIDGES

STANDARD 6001
SCALE: AS NOTED
REVISION –
SHEET 20 OF 26
CADD FILE: ES6001-20

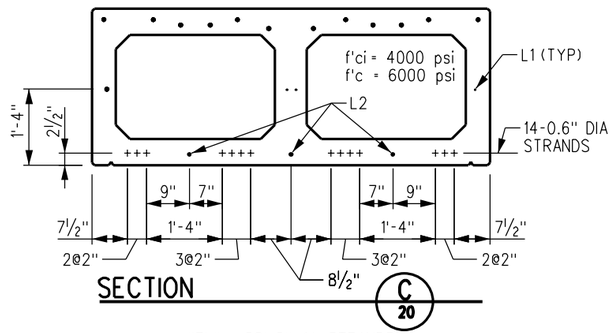

"BL" = 20'-0", 14 STRANDS

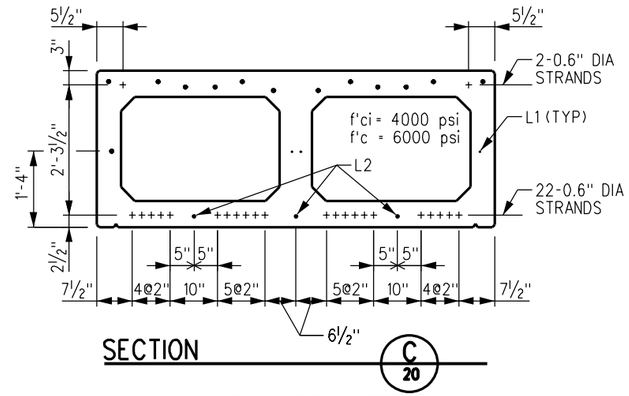

24'-0" < "BL" ≤ 26'-0", 24 STRANDS

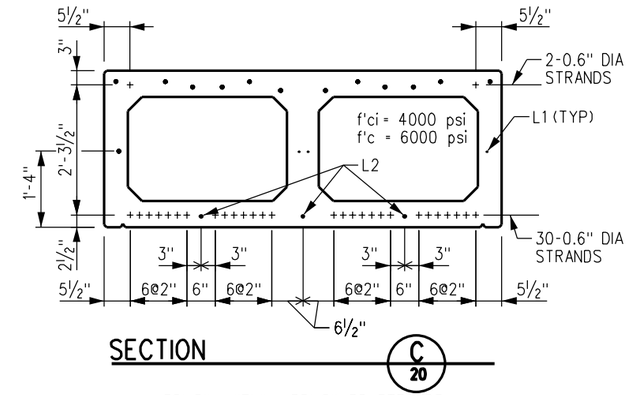

30'-0" < "BL" ≤ 32'-0", 32 STRANDS

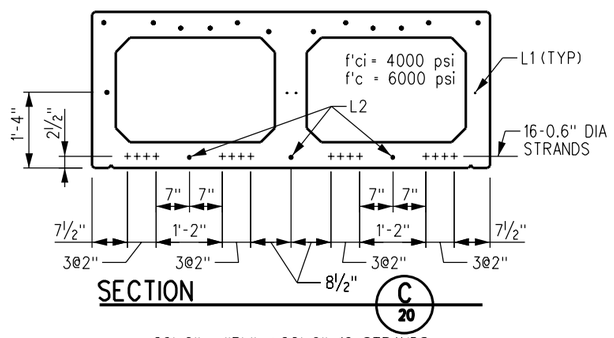

20'-0" < "BL" ≤ 22'-0", 16 STRANDS

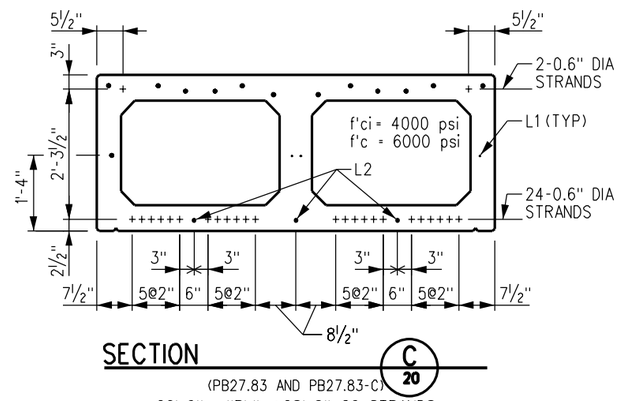

(PB27.83 AND PB27.83-C)

26'-0" < "BL" ≤ 28'-0", 26 STRANDS

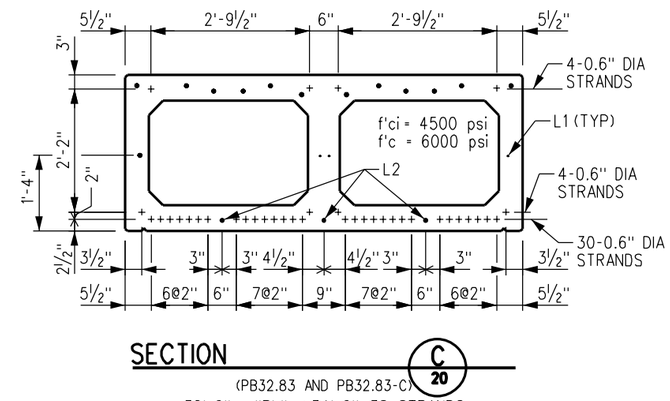

(PB32.83 AND PB32.83-C)

32'-0" < "BL" ≤ 34'-0", 38 STRANDS

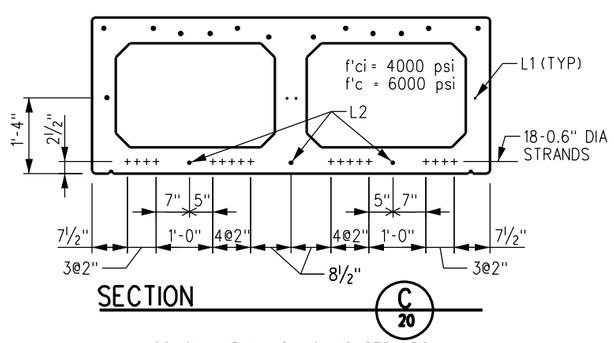

22'-0" < "BL" ≤ 24'-0", 18 STRANDS

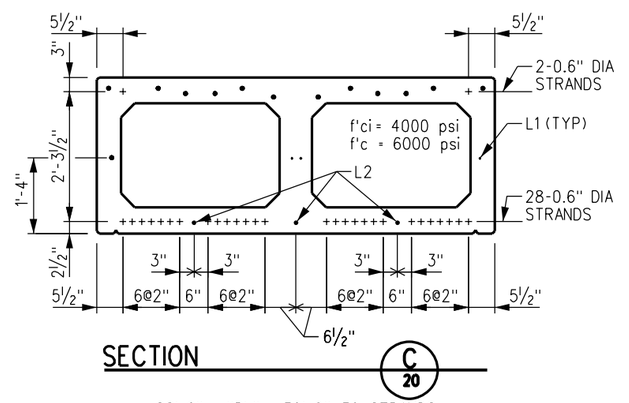

28'-0" < "BL" ≤ 30'-0", 30 STRANDS

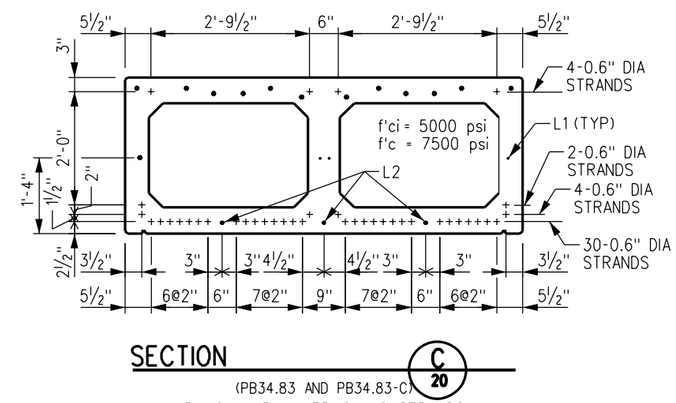

(PB34.83 AND PB34.83-C)

34'-0" < "BL" ≤ 35'-0", 40 STRANDS

REV.	DATE	DESCRIPTION	DES.	ENG.
X	XX-XX-XX	REVISION	XX	XX

DRAWN BY: A. CARLOS DATE: 03/31/2011

ASSISTANT DIRECTOR: STANDARDS & DESIGN

DIRECTOR OF ENGINEERING AND CONSTRUCTION

SCRRA ENGINEERING STANDARDS ARE INTENDED FOR SCRRA APPROVED USES ONLY. FOR NON-SCRRA APPROVED USES:
SCRRA SHALL NOT BE RESPONSIBLE FOR THE ACCURACY OR COMPLETENESS OF THE DATA OR INFORMATION CONTAINED HEREIN. THE SELECTION AND USE OF THESE STANDARDS IS THE SOLE RESPONSIBILITY OF THE USER AND SHOULD NOT BE USED WITHOUT CONSULTING A REGISTERED PROFESSIONAL ENGINEER. ALL WARRANTIES AND REPRESENTATIONS OF ANY KIND ARE DISCLAIMED. ANYONE MAKING USE OF THIS INFORMATION AGREES THAT IT ASSUMES ALL LIABILITY ARISING FROM SUCH USE. NO PART OF THESE STANDARDS SHOULD BE REPRODUCED OR DISTRIBUTED IN ANY FORM OR BY ANY MEANS WITHOUT THE PRIOR WRITTEN PERMISSION OF SCRRA. ALL RIGHTS RESERVED.

METROLINK®

SOUTHERN CALIFORNIA REGIONAL RAIL AUTHORITY
ONE GATEWAY PLAZA, 12TH FLOOR, L. A., CA. 90012

ENGINEERING STANDARDS

33" PRECAST/PRESTRESSED CONCRETE DOUBLE BOX BEAMS (2 OF 3)
PRECAST/PRESTRESSED CONCRETE DOUBLE BOX BEAM BRIDGES

STANDARD 6001
SCALE: ¾" = 1'-0"
REVISION –
SHEET 21 OF 26
CADD FILE: ES6001-21

BAR SCHEDULE	
MARK	DESCRIPTION
B1	#5 x 11'-5"
B2	#5 x 7'-4"
B3	#6 x 11'-5"
B4	#4 x 10'-2"
B5	#6 x 4'-8"
C1	#5 x 3'-9"
C2 (STRAIGHT)	#4 x "G"
L1 (STRAIGHT)	#4 x "F"
L2 (STRAIGHT)	#7 x "H"
T1 (STRAIGHT)	#4 x 6'-9"
T2	#5 x 9'-10"
T3	#4 x 9'-2"
T4 (STRAIGHT)	#6 x 6'-9"
T5	#6 x 10'-4"
T6	#4 x 9'-0"

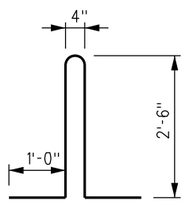

B2

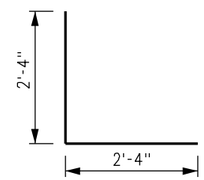

B5

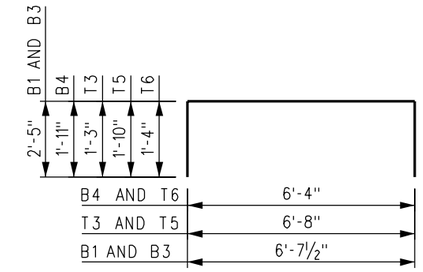

B1, B3, B4, T3, T5 & T6

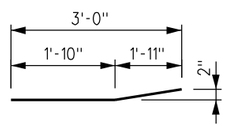

C1
EPOXY-COATED

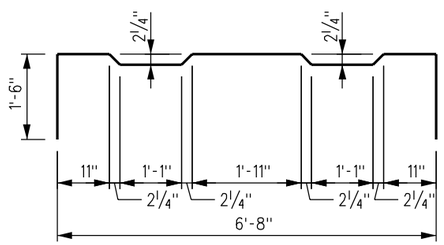

T2

QUANTITIES FOR STANDARD BEAMS		
BEAM MARK	REQUIRED VOLUME OF CONCRETE	WEIGHT OF MILD STEEL REINFORCING
PB34.83-C	14.9 CY	3356 LBS
PB34.83	13.6 CY	3106 LBS
PB32.83-C	14.1 CY	3195 LBS
PB32.83	12.9 CY	2961 LBS
PB27.83-C	12.2 CY	2810 LBS
PB27.83	11.2 CY	2614 LBS

NOTES:

1. ALL BAR DIMENSIONS ARE OUT TO OUT OF BARS. BEND #4 BARS AROUND 3" DIA PIN, #5 BARS AROUND 3¾" DIA PIN (EXCEPT BAR B2 WHICH SHALL BE BENT AROUND 2¾" DIA PIN) AND #6 BARS AROUND 4½" DIA PIN.
2. "F" = "BL" - 5"
   "G" = ("BL" - 20")/4
   "H" = "BL" - 18"

REV.	DATE	DESCRIPTION	DES.	ENG.
X	XX-XX-XX	REVISION	XX	XX

DRAWN BY: A. CARLOS DATE: 03/31/2011

ASSISTANT DIRECTOR: STANDARDS & DESIGN

DIRECTOR OF ENGINEERING AND CONSTRUCTION

SCRRA ENGINEERING STANDARDS ARE INTENDED FOR SCRRA APPROVED USES ONLY. FOR NON-SCRRA APPROVED USES:
SCRRA SHALL NOT BE RESPONSIBLE FOR THE ACCURACY OR COMPLETENESS OF THE DATA OR INFORMATION CONTAINED HEREIN. THE SELECTION AND USE OF THESE STANDARDS IS THE SOLE RESPONSIBILITY OF THE USER AND SHOULD NOT BE USED WITHOUT CONSULTING A REGISTERED PROFESSIONAL ENGINEER. ALL WARRANTIES AND REPRESENTATIONS OF ANY KIND ARE DISCLAIMED. ANYONE MAKING USE OF THIS INFORMATION AGREES THAT IT ASSUMES ALL LIABILITY ARISING FROM SUCH USE. NO PART OF THESE STANDARDS SHOULD BE REPRODUCED OR DISTRIBUTED IN ANY FORM OR BY ANY MEANS WITHOUT THE PRIOR WRITTEN PERMISSION OF SCRRA. ALL RIGHTS RESERVED.

METROLINK®
SOUTHERN CALIFORNIA REGIONAL RAIL AUTHORITY
ONE GATEWAY PLAZA, 12TH FLOOR, L. A., CA. 90012

ENGINEERING STANDARDS

33" PRECAST/PRESTRESSED CONCRETE
DOUBLE BOX BEAMS (3 OF 3)
PRECAST/PRESTRESSED CONCRETE
DOUBLE BOX BEAM BRIDGES

STANDARD 6001
SCALE: ¾" = 1'-0"
REVISION –
SHEET 22 OF 26
CADD FILE: ES6001-22

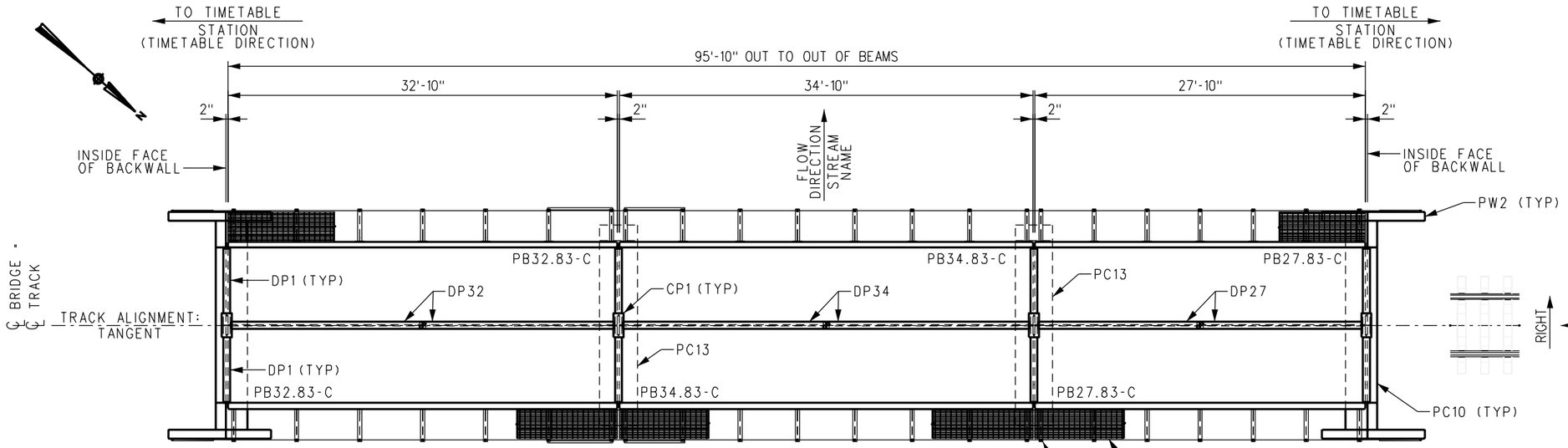

BEAM ARRANGEMENT TYPE - 1

PLAN

SCALE: 3/16" = 1'-0"

TABLE OF ELEVATIONS

BENT #	T/R EL	B/R EL	T/SEAT	PILE CUTOFF
1	100.61	100.00	95.42	93.08
2	100.67	100.06	95.48	93.14
3	100.74	100.13	95.55	93.21
4	100.80	100.19	95.61	93.27

ESTIMATED LIFTING WEIGHTS

PB34.83-C	26.9 TONS
PB32.83-C	25.3 TONS
PB27.83-C	21.5 TONS
PC10	12.3 TONS
PC13	10.5 TONS
PW2	2.7 TONS

DRAWING LIST

THIS SET	1	SAMPLE GENERAL ARRANGEMENT
	2	SAMPLE END BENT SECTION AND PILE LAYOUT
	3	SAMPLE BENT SECTIONS
	4	SAMPLE BILL OF MATERIAL
REF	ES6001 - PRECAST/PRESTRESSED CONCRETE DOUBLE BOX BEAM BRIDGES	

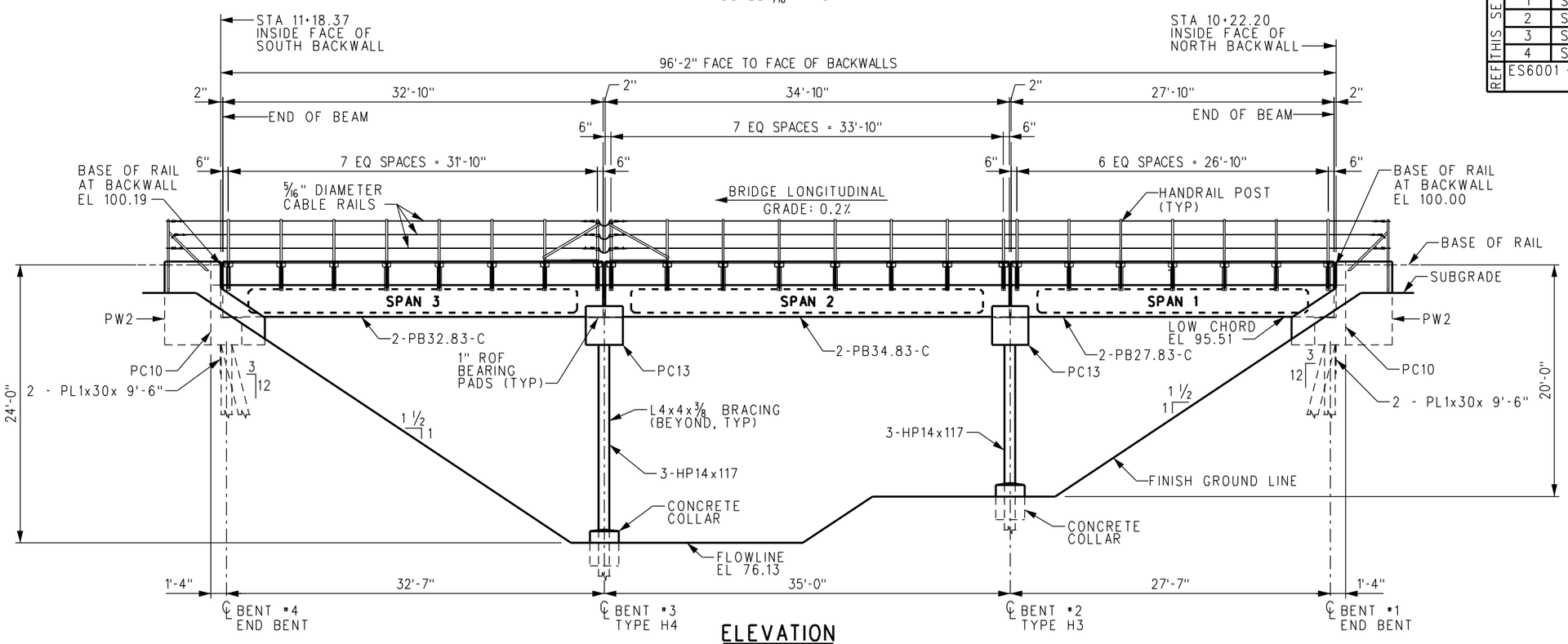

ELEVATION

SCALE: 3/16" = 1'-0"

REV.	DATE	DESCRIPTION	DES.	ENG.
X	XX-XX-XX	REVISION	XX	XX

DRAWN BY: HDR DATE: 03/31/2011

ASSISTANT DIRECTOR: STANDARDS & DESIGN

DIRECTOR OF ENGINEERING AND CONSTRUCTION

SCRRA ENGINEERING STANDARDS ARE INTENDED FOR SCRRA APPROVED USES ONLY. FOR NON-SCRRA APPROVED USES: SCRRA SHALL NOT BE RESPONSIBLE FOR THE ACCURACY OR COMPLETENESS OF THE DATA OR INFORMATION CONTAINED HEREIN. THE SELECTION AND USE OF THESE STANDARDS IS THE SOLE RESPONSIBILITY OF THE USER AND SHOULD NOT BE USED WITHOUT CONSULTING A REGISTERED PROFESSIONAL ENGINEER. ALL WARRANTIES AND REPRESENTATIONS OF ANY KIND ARE DISCLAIMED. ANYONE MAKING USE OF THIS INFORMATION AGREES THAT IT ASSUMES ALL LIABILITY ARISING FROM SUCH USE. NO PART OF THESE STANDARDS SHOULD BE REPRODUCED OR DISTRIBUTED IN ANY FORM OR BY ANY MEANS WITHOUT THE PRIOR WRITTEN PERMISSION OF SCRRA. ALL RIGHTS RESERVED.

METROLINK®

SOUTHERN CALIFORNIA REGIONAL RAIL AUTHORITY
ONE GATEWAY PLAZA, 12TH FLOOR, L. A., CA. 90012

ENGINEERING STANDARDS

SAMPLE GENERAL ARRANGEMENT
PRECAST/PRESTRESSED CONCRETE
DOUBLE BOX BEAM BRIDGES

STANDARD 6001
SCALE: AS NOTED
REVISION –
SHEET 23 OF 26
CADD FILE: ES6001-23

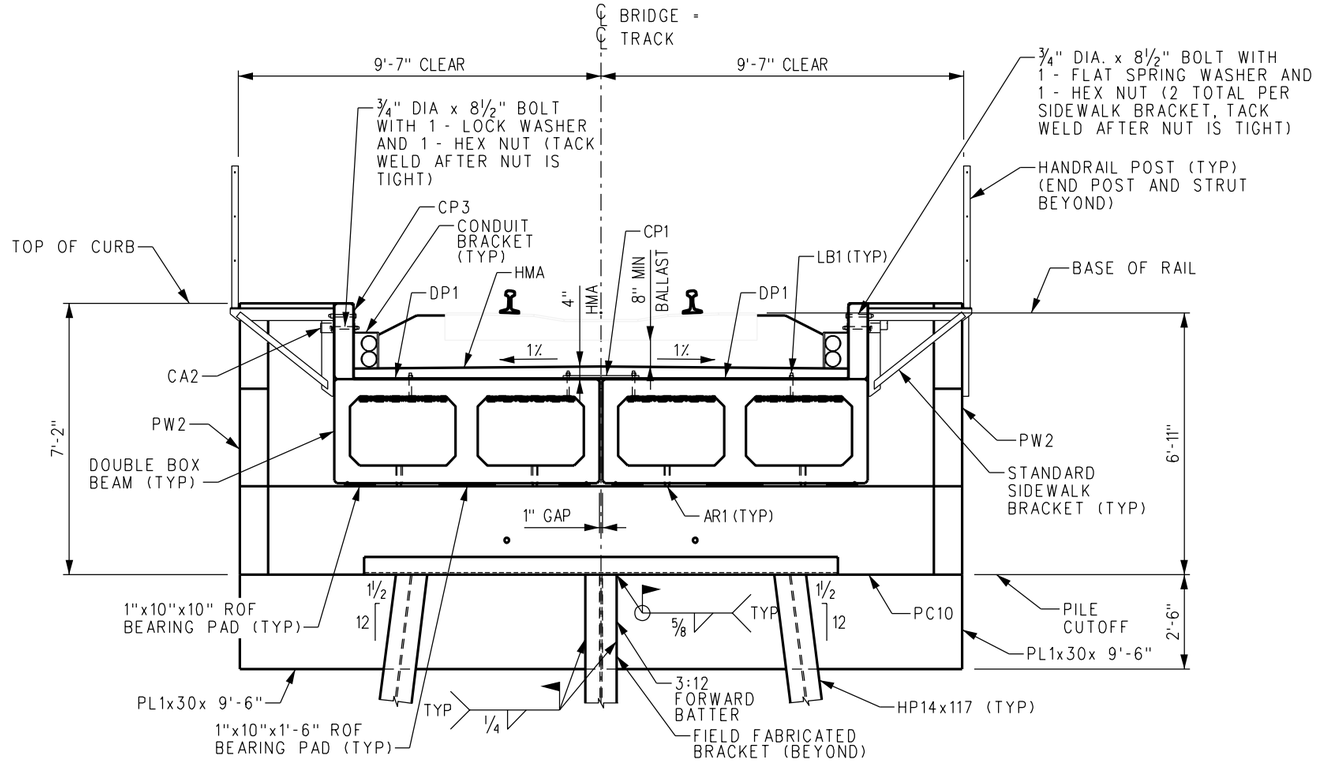

END BENT SECTION

SCALE: ½" = 1'-0"

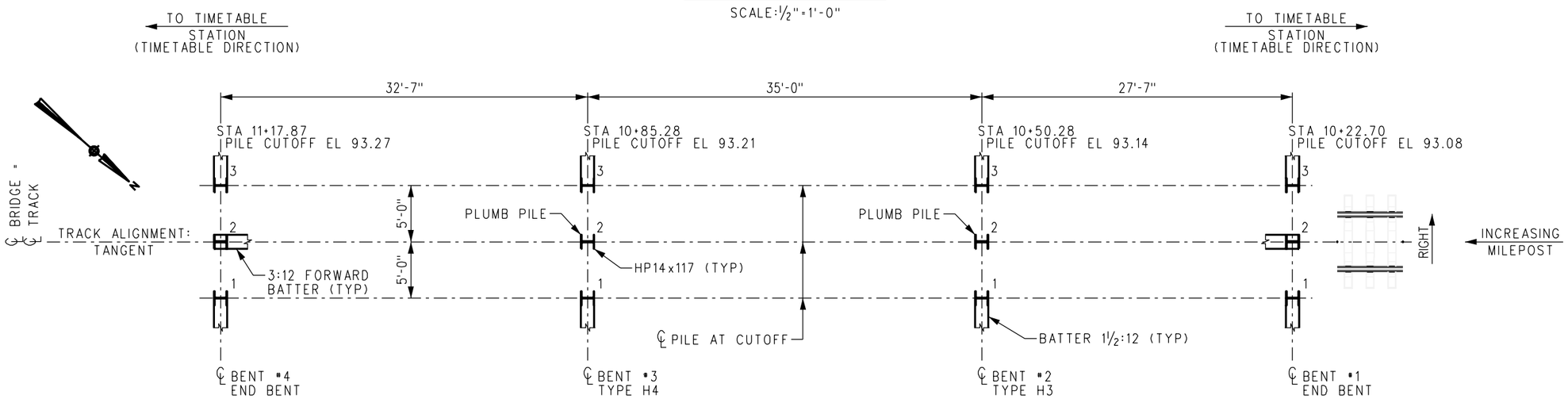

PILE LAYOUT

SCALE: 3/16" = 1'-0"

REV.	DATE	DESCRIPTION	DES.	ENG.
X	XX-XX-XX	REVISION	XX	XX

DRAWN BY: HDR DATE: 03/31/2011

ASSISTANT DIRECTOR: STANDARDS & DESIGN

DIRECTOR OF ENGINEERING AND CONSTRUCTION

SCRRA ENGINEERING STANDARDS ARE INTENDED FOR SCRRA APPROVED USES ONLY. FOR NON-SCRRA APPROVED USES:
SCRRA SHALL NOT BE RESPONSIBLE FOR THE ACCURACY OR COMPLETENESS OF THE DATA OR INFORMATION CONTAINED HEREIN. THE SELECTION AND USE OF THESE STANDARDS IS THE SOLE RESPONSIBILITY OF THE USER AND SHOULD NOT BE USED WITHOUT CONSULTING A REGISTERED PROFESSIONAL ENGINEER. ALL WARRANTIES AND REPRESENTATIONS OF ANY KIND ARE DISCLAIMED. ANYONE MAKING USE OF THIS INFORMATION AGREES THAT IT ASSUMES ALL LIABILITY ARISING FROM SUCH USE. NO PART OF THESE STANDARDS SHOULD BE REPRODUCED OR DISTRIBUTED IN ANY FORM OR BY ANY MEANS WITHOUT THE PRIOR WRITTEN PERMISSION OF SCRRA. ALL RIGHTS RESERVED.

METROLINK®
SOUTHERN CALIFORNIA REGIONAL RAIL AUTHORITY
ONE GATEWAY PLAZA, 12TH FLOOR, L. A., CA. 90012

ENGINEERING STANDARDS

SAMPLE END BENT SECTION AND PILE LAYOUT
PRECAST/PRESTRESSED CONCRETE
DOUBLE BOX BEAM BRIDGES

STANDARD 6001
SCALE: AS NOTED
REVISION –
SHEET 24 OF 26
CADD FILE: ES6001-24

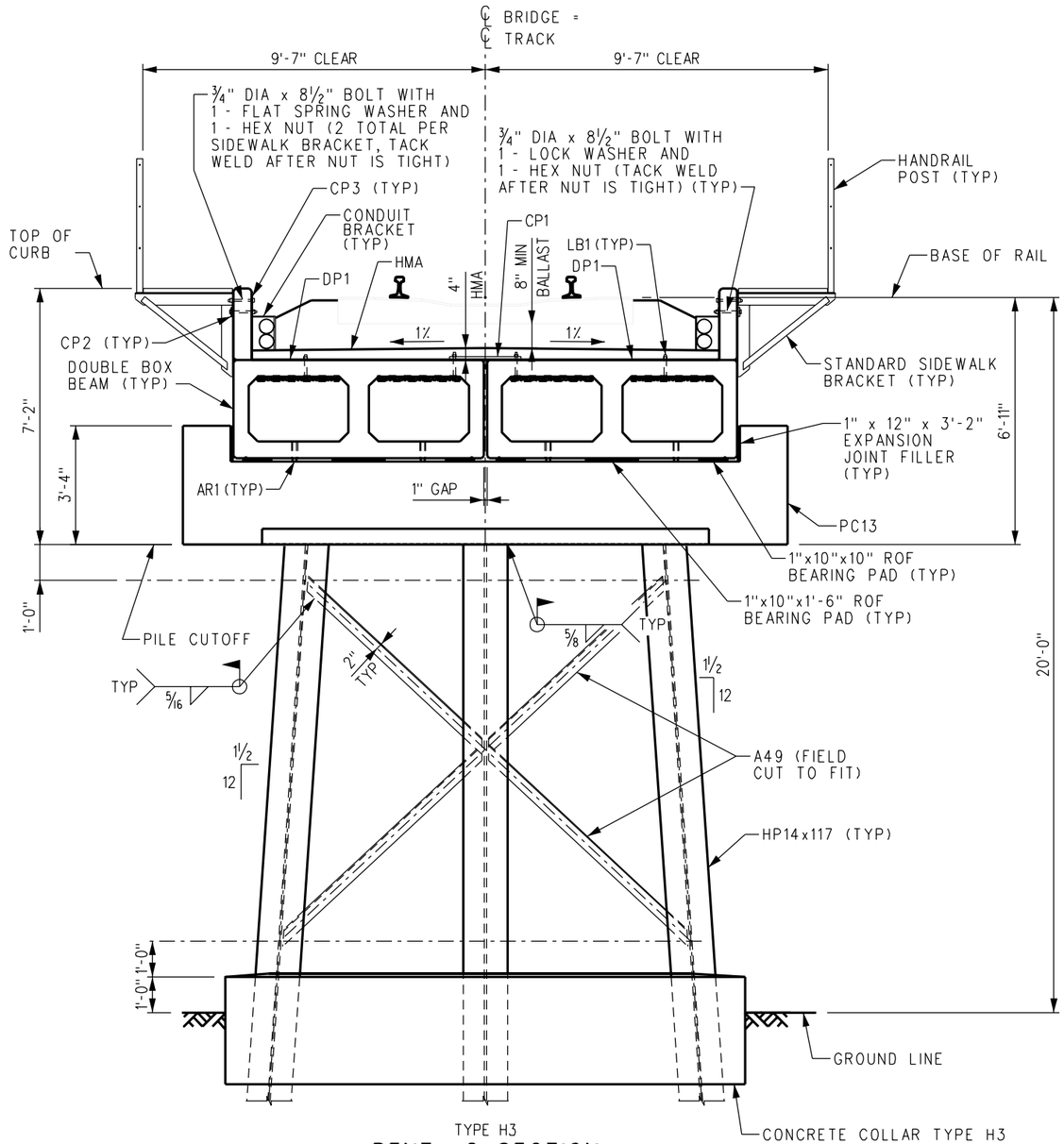

TYPE H3

BENT #2 SECTION

SCALE: ½" = 1'-0"

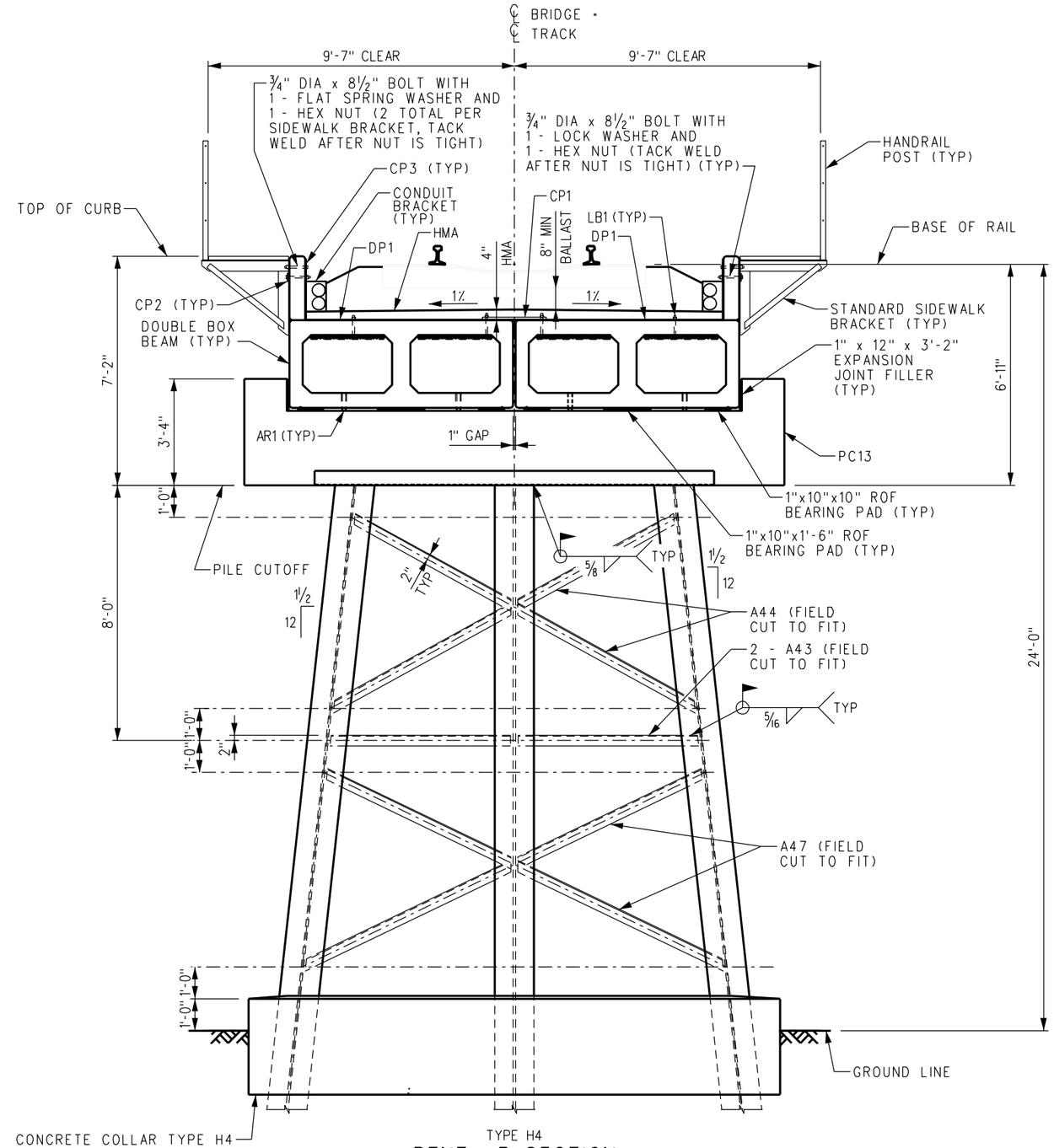

TYPE H4

BENT #3 SECTION

SCALE: ½" = 1'-0"

REV.	DATE	DESCRIPTION	DES.	ENG.
X	XX-XX-XX	REVISION	XX	XX

DRAWN BY: HDR DATE: 03/31/2011

ASSISTANT DIRECTOR: STANDARDS & DESIGN

DIRECTOR OF ENGINEERING AND CONSTRUCTION

SCRRA ENGINEERING STANDARDS ARE INTENDED FOR SCRRA APPROVED USES ONLY. FOR NON-SCRRA APPROVED USES: SCRRA SHALL NOT BE RESPONSIBLE FOR THE ACCURACY OR COMPLETENESS OF THE DATA OR INFORMATION CONTAINED HEREIN. THE SELECTION AND USE OF THESE STANDARDS IS THE SOLE RESPONSIBILITY OF THE USER AND SHOULD NOT BE USED WITHOUT CONSULTING A REGISTERED PROFESSIONAL ENGINEER. ALL WARRANTIES AND REPRESENTATIONS OF ANY KIND ARE DISCLAIMED. ANYONE MAKING USE OF THIS INFORMATION AGREES THAT IT ASSUMES ALL LIABILITY ARISING FROM SUCH USE. NO PART OF THESE STANDARDS SHOULD BE REPRODUCED OR DISTRIBUTED IN ANY FORM OR BY ANY MEANS WITHOUT THE PRIOR WRITTEN PERMISSION OF SCRRA. ALL RIGHTS RESERVED.

METROLINK®

SOUTHERN CALIFORNIA REGIONAL RAIL AUTHORITY
ONE GATEWAY PLAZA, 12TH FLOOR, L. A., CA. 90012

ENGINEERING STANDARDS

SAMPLE BENT SECTIONS
PRECAST/PRESTRESSED CONCRETE
DOUBLE BOX BEAM BRIDGES

STANDARD 6001
SCALE: AS NOTED
REVISION –
SHEET 25 OF 26
CADD FILE: ES6001-25

LIST OF STANDARD BRIDGE MATERIALS

DESCRIPTION
PILES
HP14x117 STEEL BEARING PILE
HP14x117 PILE SPLICER
TIP REINFORCEMENT HARD-BITE POINT MODEL HP-77600-B
MISCELLANEOUS STEEL
DECK PLATE CP1 (SEE DETAIL, SHEET 17)
DECK PLATE DP1 (SEE DETAIL, SHEET 17)
DECK PLATE DP3 (SEE DETAIL, SHEET 17)
DECK PLATE DP27 (SEE DETAIL, SHEET 17)
DECK PLATE DP32 (SEE DETAIL, SHEET 17)
DECK PLATE DP34 (SEE DETAIL, SHEET 17)
CURB PLATE CP2 (SEE DETAIL, SHEET 17)
CURB PLATE CP3 (SEE DETAIL, SHEET 17)
CURB ANGLE CA2 (SEE DETAIL, SHEET 17)
BOLT LB1 (SEE DETAIL, SHEET 17)
WASHER W1 (SEE DETAIL, SHEET 17)
CONDUIT BRACKET (SEE DETAIL, SHEET 18)
STANDARD SIDEWALK BRACKET (SEE DETAIL, SHEET 18)
BACKWALL PLATE, PL1x30x 7'-0" (PLAIN) (SEE DETAIL, SHEET 9)
BACKWALL PLATE, PL1x30x 9'-6" (PLAIN) (SEE DETAIL, SHEET 7 & 9)
UNISTRUT 2x2x5/16 NO 20-F-12 (SEE DETAIL, SHEET 5)
BRACING
ANGLE A38, 4x4x3/8x 5'-0 (PLAIN)
ANGLE A42, 4x4x3/8x 12'-0 (PLAIN)
ANGLE A43, 4x4x3/8x 13'-0 (PLAIN)
ANGLE A44, 4x4x3/8x 14'-0 (PLAIN)
ANGLE A45, 4x4x3/8x 15'-0 (PLAIN)
ANGLE A46, 4x4x3/8x 16'-0 (PLAIN)
ANGLE A47, 4x4x3/8x 17'-0 (PLAIN)
ANGLE A48, 4x4x3/8x 18'-0 (PLAIN)
ANGLE A49, 4x4x3/8x 19'-0 (PLAIN)
ANGLE A50, 4x4x3/8x 20'-0 (PLAIN)
ANGLE A51, 4x4x3/8x 21'-0 (PLAIN)
PRECAST CONCRETE MEMBERS
PRECAST CAP PC10 (SEE DETAILS, SHEET 14)
PRECAST CAP PC11(R) (SEE DETAILS, SHEET 14)
PRECAST CAP PC11(L) (SEE DETAILS, SHEET 14)
PRECAST CAP PC12(R) (SEE DETAILS, SHEET 14)
PRECAST CAP PC12(L) (SEE DETAILS, SHEET 14)
PRECAST CAP PC13 (SEE DETAILS, SHEET 15)
PRECAST CAP PC13B (SEE DETAILS, SHEET 15)
PRECAST CAP PC14 (SEE DETAILS, SHEET 16)
PRECAST CAP PC14B (SEE DETAILS, SHEET 16)
PRECAST WING WALL PW2 (SEE DETAILS, SHEET 15)

DESCRIPTION
PRECAST/PRESTRESSED CONCRETE BEAMS
PB27.83-C (33" DEEP, 26 STRANDS, WITH CURB)
PB27.83 (33" DEEP, 26 STRANDS)
PB32.83-C (33" DEEP, 38 STRANDS, WITH CURB)
PB32.83 (33" DEEP, 38 STRANDS)
PB34.83-C (33" DEEP, 40 STRANDS, WITH CURB)
PB34.83 (33" DEEP, 40 STRANDS)
CAST-IN-PLACE CONCRETE COLLARS
4000 PSI CONCRETE
REINFORCING STEEL
MISCELLANEOUS MATERIAL
STEEL GRATING 19W4 SERR CS (SEE DETAIL, SHEET 18)
5/16" DIAMETER AIRCRAFT CABLE (SEE DETAIL, SHEET 5)
4" DIA GALVANIZED STD STEEL PIPE (SEE DETAIL, SHEET 5)
3 1/2" HVU ADHESIVE CAPSULE
1" x 10" x 0'-10" ROF BEARING PAD (SEE DETAIL, SHEET 6)
1" x 10" x 1'-6" ROF BEARING PAD (SEE DETAIL, SHEET 6)
1" x 12" x 3'-2" EXPANSION JOINT FILLER (SEE DETAIL, SHEET 6)
1" x 12" x 5'-0" EXPANSION JOINT FILLER (SEE DETAIL, SHEET 6)
1/2" x 30" x 3'-1" EXPANSION JOINT FILLER (SEE DETAIL, SHEETS 9, 10, 12)
HMA PAVEMENT
HMA TRACK UNDERLAY
CHEMICAL MASTIC CM-15 METALLIC ALUMINUM COLOR PAINT
ADHESIVE FOR BEARING PADS
GROUT
EPOXY GROUT
PETROLATUM (SEE DETAIL, SHEET 13)
FREE-DRAINING GRANULAR FILL (SEE DETAIL, SHEET 13)
HARDWARE
3/4" DIA x 8 1/2" BOLT WITH 1 - FLAT SPRING WASHER AND 1 - HEX NUT (SEE DETAIL, SHEET 5)
3/4" DIA x 8 1/2" BOLT WITH 1 - LOCK WASHER AND 1 - HEX NUT (SEE DETAIL, SHEET 5)
3/8" DIA x 6 1/2" THREADED ROD (SEE DETAIL. SHEET 5)
3/8" DIA x 5" THREADED ROD (CONDUIT BRACKET ANCHORS)
SADDLE CLIP (SEE DETAIL, SHEET 5)
1/4" DIA x 2 1/2" HEX BOLT WITH 1 - SPRING WASHER AND 1 - HEX NUT (SEE DETAIL, SHEET 5)
3/8 DIA EYEBOLT, 3" LONG SHANK WITH 1" ID EYE, PLAIN PATTERN, DROP FORGED STEEL WITH 1 - FLAT WASHER AND 1 - HEX NUT (SEE DETAIL, SHEET 5)
MALLEABLE WIRE ROPE CLIP (GALV) WITH 2 ELASTIC LOCKNUTS (GALV) FOR 5/16" DIA CABLE(SEE DETAIL, SHEET 5)
3/8" SAFETY CHAIN (SEE DETAIL, SHEET 5)
3/8" QUICK LINK FOR 3/8" SAFETY CHAIN (SEE DETAIL, SHEET 5)

NOTE:
ROF = RANDOM ORIENTED FIBER

BILL OF MATERIAL

REQ'D	UNIT	DESCRIPTION
2	EA	PB34.83-C
2	EA	PB32.83-C
2	EA	PB27.83-C
24	EA	1"x10"x10" ROF BEARING PAD
12	EA	1"x10"x1'-6" ROF BEARING PAD
2	EA	PC10
4	EA	PW2
2	EA	PC13
4.5	CY	CONCRETE FOR COLLAR H3
4.8	CY	CONCRETE FOR COLLAR H4
1	LOT	REINFORCING STEEL FOR COLLAR H3
1	LOT	REINFORCING STEEL FOR COLLAR H4
12	EA	HP14x117 x 60'
12	EA	TIP REINFORCEMENT HARD BITE POINT MODEL HP-77600-B
16	EA	W1
2	EA	A49
2	EA	A44
2	EA	A43
2	EA	A47
2	EA	DP34
2	EA	DP32
2	EA	DP27
8	EA	DP1
4	EA	CP1
4	EA	CA2
4	EA	CP2
46	EA	CP3
89	LF	2"x2" UNISTRUT NO 20-F-12
16	EA	HANDRAIL END POST ANCHOR 3/8" DIA x 6 1/2" THREADED ROD
46	EA	SIDEWALK BRACKET
92	EA	SIDEWALK BRACKET BOLTS 3/4" DIA x 8 1/2"
4	EA	PL1x30x 9'-6"
8	EA	CURB PLATE BOLTS 3/4" DIA x 8 1/2"
10	EA	GRATING 19W4 (1 1/2" x 1/8") SERR CS 2'-6" x 20'-0" SPAN SERRATED TRIMMED, GALVANIZED
104	EA	TYPE F-9 SADDLE CLIP
104	EA	GRATING BOLTS 1/4" DIA x 2 1/2"
696	LF	5/16" DIAMETER AIRCRAFT CABLE (6-73' & 6-43' LENGTHS)
24	EA	3/8" DIA EYEBOLT WITH NUT AND WASHER
48	EA	MALLEABLE WIRE ROPE CLIP FOR 5/16" DIA CABLE
5	LF	3/8" SAFETY CHAIN
6	EA	3/8" QUICK LINK FOR 3/8" SAFETY CHAIN
16	EA	LB1
34	EA	CONDUIT BRACKET
34	EA	CONDUIT BRACKET ANCHOR 3/8" DIA x 5" THREADED ROD
34	EA	3 1/2" HILTI HVU ADHESIVE CAPSULE FOR 3/8" DIA HILTI HAS ROD OR EQUAL
392	LF	4" DIA GALVANIZED STD STEEL PIPE
4	EA	1" x 12" x 3'-2" EXPANSION JOINT FILLER
1	LOT	HMA PAVEMENT
1	LOT	HMA TRACK UNDERLAY
1	LOT	PAINT, CHEMICAL-MASTIC CM-15, METALLIC ALUMINUM COLOR
1	LOT	ADHESIVE FOR BEARING PADS
7.8	CY	FREE-DRAINING GRANULAR FILL
1	LOT	PETROLATUM
1	LOT	GROUT
1	LOT	EPOXY GROUT

ESTIMATED WEIGHT OF STEEL PILING: 84,240 LBS
ESTIMATED WEIGHT OF STEEL BRACING: 1,235 LBS
ESTIMATED WEIGHT OF STEEL BAR GRATING: 3,675 LBS
ESTIMATED WEIGHT OF MISCELLANEOUS STEEL: 9,315 LBS
(EXCLUDING BOLTS, NUTS AND WASHERS)
ESTIMATED WEIGHT OF REINFORCING STEEL: 540 LBS

REV.	DATE	DESCRIPTION	DES.	ENG.
X	XX-XX-XX	REVISION	XX	XX

DRAWN BY: HDR DATE: 03/31/2011

ASSISTANT DIRECTOR: STANDARDS & DESIGN

DIRECTOR OF ENGINEERING AND CONSTRUCTION

SCRRA ENGINEERING STANDARDS ARE INTENDED FOR SCRRA APPROVED USES ONLY. FOR NON-SCRRA APPROVED USES:
SCRRA SHALL NOT BE RESPONSIBLE FOR THE ACCURACY OR COMPLETENESS OF THE DATA OR INFORMATION CONTAINED HEREIN. THE SELECTION AND USE OF THESE STANDARDS IS THE SOLE RESPONSIBILITY OF THE USER AND SHOULD NOT BE USED WITHOUT CONSULTING A REGISTERED PROFESSIONAL ENGINEER. ALL WARRANTIES AND REPRESENTATIONS OF ANY KIND ARE DISCLAIMED. ANYONE MAKING USE OF THIS INFORMATION AGREES THAT IT ASSUMES ALL LIABILITY ARISING FROM SUCH USE. NO PART OF THESE STANDARDS SHOULD BE REPRODUCED OR DISTRIBUTED IN ANY FORM OR BY ANY MEANS WITHOUT THE PRIOR WRITTEN PERMISSION OF SCRRA. ALL RIGHTS RESERVED.

METROLINK®
SOUTHERN CALIFORNIA REGIONAL RAIL AUTHORITY
ONE GATEWAY PLAZA, 12TH FLOOR, L. A., CA. 90012

ENGINEERING STANDARDS

SAMPLE BILL OF MATERIAL
PRECAST/PRESTRESSED CONCRETE
DOUBLE BOX BEAM BRIDGES

STANDARD 6001
SCALE: NTS
REVISION –
SHEET 26 OF 26
CADD FILE: ES6001-26

METROLINK®

ENGINEERING STANDARDS FOR PRECAST/PRESTRESSED CONCRETE SLAB BEAM BRIDGES

12", 14", 16", 18" AND 20" SLAB BEAMS ON PRECAST CONCRETE CAPS WITH DRIVEN STEEL H-PILE FOUNDATIONS

DRAWING INDEX

1. TITLE SHEET — ES6002-01
2. DESIGN NOTES — ES6002-02
3. TABLE OF DESIGN LOAD EFFECTS — ES6002-03
4. CONSTRUCTION NOTES AND HMA DETAILS — ES6002-04
5. GENERAL ARRANGEMENT AND SECTIONS — ES6002-05
6. GENERAL DETAILS — ES6002-06
7. HANDRAIL DETAILS AND END BENTS — ES6002-07
8. INTERIOR PILE BENTS (1 OF 2) — ES6002-08
9. INTERIOR PILE BENTS (2 OF 2) — ES6002-09
10. BENT DETAILS — ES6002-10
11. PRECAST CONCRETE MEMBERS (1 OF 2) — ES6002-11
12. PRECAST CONCRETE MEMBERS (2 OF 2) — ES6002-12
13. STEEL DETAILS (1 OF 2) — ES6002-13
14. STEEL DETAILS (2 OF 2) — ES6002-14
15. REINFORCING STEEL DETAILS — ES6002-15
16. 12", 14", 16", 18" AND 20" PRECAST/PRESTRESSED CONCRETE SLAB BEAMS (1 OF 3) — ES6002-16
17. 12", 14", 16", 18" AND 20" PRECAST/PRESTRESSED CONCRETE SLAB BEAMS (2 OF 3) — ES6002-17
18. 12", 14", 16", 18" AND 20" PRECAST/PRESTRESSED CONCRETE SLAB BEAMS (3 OF 3) — ES6002-18
19. SAMPLE GENERAL ARRANGEMENT — ES6002-19
20. SAMPLE END BENT SECTION AND PILE LAYOUT — ES6002-20
21. SAMPLE BENT SECTIONS — ES6002-21
22. SAMPLE BILL OF MATERIAL — ES6002-22

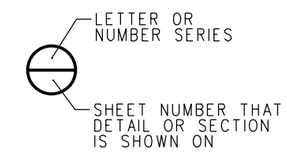

SHEET SHOWING SECTION OR DETAIL CUT

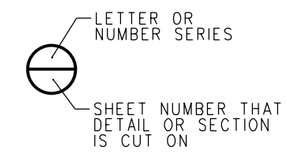

SHEET SHOWING SECTION OR DETAIL

SECTION OR DETAIL DESIGNATION

NOTE:

1. "_" INDICATES SECTION OR DETAIL IS CUT AND SHOWN ON THE SAME SHEET.

REV.	DATE	DESCRIPTION	DES.	ENG.
X	XX-XX-XX	REVISION	XX	XX

DRAWN BY: HDR DATE: 03/31/2011

ASSISTANT DIRECTOR: STANDARDS & DESIGN

DIRECTOR OF ENGINEERING AND CONSTRUCTION

SCRRA ENGINEERING STANDARDS ARE INTENDED FOR SCRRA APPROVED USES ONLY. FOR NON-SCRRA APPROVED USES:
SCRRA SHALL NOT BE RESPONSIBLE FOR THE ACCURACY OR COMPLETENESS OF THE DATA OR INFORMATION CONTAINED HEREIN. THE SELECTION AND USE OF THESE STANDARDS IS THE SOLE RESPONSIBILITY OF THE USER AND SHOULD NOT BE USED WITHOUT CONSULTING A REGISTERED PROFESSIONAL ENGINEER. ALL WARRANTIES AND REPRESENTATIONS OF ANY KIND ARE DISCLAIMED. ANYONE MAKING USE OF THIS INFORMATION AGREES THAT IT ASSUMES ALL LIABILITY ARISING FROM SUCH USE. NO PART OF THESE STANDARDS SHOULD BE REPRODUCED OR DISTRIBUTED IN ANY FORM OR BY ANY MEANS WITHOUT THE PRIOR WRITTEN PERMISSION OF SCRRA. ALL RIGHTS RESERVED.

METROLINK®
SOUTHERN CALIFORNIA REGIONAL RAIL AUTHORITY
ONE GATEWAY PLAZA, 12TH FLOOR, L. A., CA. 90012

ENGINEERING STANDARDS

TITLE SHEET
PRECAST/PRESTRESSED CONCRETE
SLAB BEAM BRIDGES

STANDARD 6002
SCALE: NTS
REVISION –
SHEET 1 OF 22
CADD FILE: ES6002–01

DESIGN NOTES:

1. PRECAST/PRESTRESSED CONCRETE SLAB BEAM AND PRECAST CONCRETE CAP DESIGNS HAVE BEEN PERFORMED IN ACCORDANCE WITH THE 2009 AMERICAN RAILWAY ENGINEERING AND MAINTENANCE-OF-WAY ASSOCIATION (AREMA) MANUAL FOR RAILWAY ENGINEERING, CHAPTER 8: CONCRETE STRUCTURES AND FOUNDATIONS, PART 2: REINFORCED CONCRETE DESIGN AND PART 17: PRESTRESSED CONCRETE.

2. BEARING DESIGN HAS BEEN PERFORMED FOR RAILROAD LOADING AND THERMAL EFFECTS IN ACCORDANCE WITH THE 2009 AREMA MANUAL FOR RAILWAY ENGINEERING, CHAPTER 15: STEEL STRUCTURES, PART 10: BEARING DESIGN, EXCEPT AS MODIFIED BELOW FOR RANDOM ORIENTED FIBER (ROF) REINFORCED ELASTOMERIC BEARING PADS. SITE SPECIFIC DESIGN VERIFICATION IS REQUIRED FOR SEISMIC EFFECTS.
   - A. DESIGN OF ROF BEARING PADS AS PLAIN (UNREINFORCED), RECTANGULAR ELASTOMERIC BEARING PADS PER AREMA WITH MODIFICATIONS AS LISTED IN B THROUGH E.
   - B. MODIFYING FACTOR, K=1.0
   - C. ALLOWABLE COMPRESSIVE STRESS, $f_a \leq 1000+100(S) \leq 1500$ psi
   - D. ALLOWABLE COMPRESSIVE DEFLECTION, $\delta_c \leq 0.15(T) \leq 0.2"$
   - E. ALLOWABLE ROTATION, $L(\alpha_L) + W(\alpha_W) \leq 0.30(T) \leq 0.4"$ WHERE "T" IS THE THICKNESS OF THE BEARING PAD.

3. HANDRAIL, STEEL GRATING WALKWAY AND ASSOCIATED SUPPORTS AND CONNECTIONS HAVE BEEN DESIGNED IN ACCORDANCE WITH THE 2009 AREMA MANUAL FOR RAILWAY ENGINEERING, CHAPTER 15: STEEL STRUCTURES, PART 1: DESIGN AND PART 8: MISCELLANEOUS.

4. PRECAST CONCRETE SUBSTRUCTURE COMPONENTS, CAST-IN-PLACE CONCRETE COLLARS, STEEL PILING AND BRACING, CONNECTIONS BETWEEN STEEL PILING AND CAPS AND CONNECTIONS BETWEEN SLAB BEAMS AND CAPS ARE PREFERRED DETAILS FOR SUBSTRUCTURES SUPPORTING STANDARD SLAB BEAM SUPERSTRUCTURES. DESIGN SHALL BE VERIFIED FOR RAILROAD LOADING AND SITE-SPECIFIC SEISMIC EFFECTS PER THE SCRRA DESIGN CRITERIA MANUAL AT EACH LOCATION PROPOSED FOR USE.

5. DESIGN OF STANDARD SLAB BEAMS IS VALID FOR TIMBER TIES OR CONCRETE TIES WITH A MINIMUM LENGTH OF 8'-3" AND THE FOLLOWING DEPTHS OF MATERIAL FROM TOP OF BEAM TO BOTTOM OF TIE:
   - A. 12" MINIMUM DEPTH BELOW TIE
   - B. 16" MAXIMUM DEPTH BELOW TIE

   DEPTH BELOW THE TIE INCLUDES THE THICKNESS OF BALLAST AND HOT MIXED ASPHALT (HMA) PAVING, IF APPLICABLE (FOR EXAMPLE, 4" HMA AND 8" BALLAST WOULD MAKE UP 12" DEPTH BELOW THE TIE). THE THICKNESS OF BALLAST TO BE INCLUDED IN THE DEPTH BELOW THE TIE SHALL NOT BE LESS THAN 8".

6. DESIGN OF STANDARD SLAB BEAMS IS VALID FOR 6" MAXIMUM OFFSET OF CENTERLINE TRACK TO CENTERLINE OF LONGITUDINAL GAP BETWEEN ADJACENT BEAMS. THE 6" MAXIMUM OFFSET IS APPLICABLE FOR BOTH TANGENT AND CURVED TRACKS.

7. FOR CURVED TRACK, DESIGN OF STANDARD SLAB BEAMS IS VALID FOR THE RANGE OF TRAIN SPEED AND DEGREE OF CURVE SHOWN IN THE TABLE TITLED "MAXIMUM ALLOWABLE DEGREE OF CURVE FOR DESIGN SPEED", THIS SHEET.

8. PRECAST/PRESTRESSED CONCRETE SLAB BEAM DESIGN LOADING (VALUES GIVEN FOR A SINGLE BEAM):
   - A. DEAD LOAD, D:
     - I. SELF-WEIGHT OF SLAB BEAMS, Dsw
       - 12" SLAB, Dsw12 = 1,050 LB/FT
       - 14" SLAB, Dsw14 = 1,225 LB/FT
       - 16" SLAB, Dsw16 = 1,400 LB/FT
       - 18" SLAB, Dsw18 = 1,575 LB/FT
       - 20" SLAB, Dsw20 = 1,750 LB/FT
     - II. BALLAST, HMA AND TIES, Db (TOP OF BEAM TO TOP OF TIE):
       - MINIMUM, 19" TOTAL DEPTH, Dbmin = 1,235 LB/FT
       - MAXIMUM, 24" TOTAL DEPTH, Dbmax = 1,560 LB/FT
     - III. TRACK (RAIL & OTM), Dt = 112 LB/FT
     - IV. CURB, WALKWAY AND HANDRAIL, Dc = 185 LB/FT
   - B. COOPER E-80 LIVE LOAD, L
   - C. IMPACT, I, BASED ON SPAN LENGTH CENTER-TO-CENTER OF BEARINGS, "SL", EXPRESSED IN % OF L:
     - I. FOR "SL" < 14', I = 60
     - II. FOR 14' < "SL" < 127', I = 225 / $\sqrt{(\text{"SL"})}$
   - D. CENTRIFUGAL FORCE, CF, RESULTING IN A VERTICAL FORCE EQUAL TO 15% OF L.

9. CONTROLLING LOADING EFFECTS FOR EACH LIMIT STATE INVESTIGATED ARE PROVIDED IN THE TABLE TITLED "CONTROLLING DESIGN LOAD EFFECTS FOR PRECAST/PRESTRESSED CONCRETE SLAB BEAMS", SHEET 3.

10. STRAND PATTERN FOR SLAB BEAMS CONSISTS OF ½" DIA. SEVEN-WIRE HIGH-STRENGTH LOW-RELAXATION STRANDS AT 2" MINIMUM SPACING. FABRICATORS MAY BE ALLOWED TO SUBSTITUTE AN ALTERNATE STRAND SIZE, SPACING AND/OR PATTERN THAT PROVIDES THE SAME TOTAL AREA OF PRESTRESSING STEEL AND THE SAME ECCENTRICITY OF PRESTRESSING FORCE FROM THE CENTROID OF THE BEAM CROSS-SECTION. STRANDS WITH NOMINAL DIAMETER GREATER THAN ½" SHALL NOT BE USED IN SLAB BEAMS. SEE THE SPECIFICATIONS FOR ALTERNATE STRAND ARRANGEMENT SUBMITTAL REQUIREMENTS.

11. REQUIRED COMPRESSIVE STRENGTHS OF CONCRETE AT RELEASE, f'ci, AND AT 28 DAYS, f'c, ARE PROVIDED FOR EACH DESIGN. MINIMUM f'ci SHALL BE 4000 PSI AT RELEASE AND MINIMUM f'c SHALL BE 6000 PSI AT 28 DAYS.

12. PRECAST/PRESTRESSED CONCRETE SLAB BEAM DESIGNS ARE PROVIDED AT EVEN 2' INCREMENTS OF OUT-TO-OUT BEAM LENGTH, "BL", BETWEEN 12' AND 22'. SPAN LENGTH CENTER-TO-CENTER OF BEARINGS, "SL" IS 10" LESS THAN "BL" FOR SLAB BEAMS. FOR ACTUAL VALUES OF "BL" BETWEEN THOSE LENGTHS PROVIDED, USE THE DESIGN FOR THE NEXT LARGER "BL" (FOR EXAMPLE, THE STANDARD 19'-11" OUT-TO-OUT LENGTH OF 20" SLAB BEAM WOULD USE THE NUMBER OF STRANDS, STRAND PATTERN AND REQUIRED CONCRETE STRENGTHS FOR THE 20' DESIGN FOR THE 20" SLAB BEAM).

13. CALCULATIONS FOR DESIGN OF PRECAST/PRESTRESSED CONCRETE SLAB BEAMS AND PRECAST CONCRETE CAPS HAVE BEEN SIGNED AND SEALED BY A LICENSED PROFESSIONAL CIVIL ENGINEER IN THE STATE OF CALIFORNIA AND ARE KEPT ON FILE AT SCRRA HEADQUARTERS.

MAXIMUM ALLOWABLE DEGREE OF CURVE FOR DESIGN SPEED

MAX DESIGN SPEED (mph)	ALLOWABLE DEGREE OF CURVE
20	14° 00'
25	14° 00'
30	13° 53'
35	12° 00'
40	8° 57'
45	7° 04'
50	5° 43'
60	4° 04'
70	3° 00'
80	2° 10'
90	1° 40'
100	1° 21'
110	1° 05'

NOTE:
ALLOWABLE DEGREE OF CURVE SHOWN IN THE TABLE MAY NOT BE A PRACTICAL DESIGN VALUE. VALUES BASED SOLELY ON THE CENTRIFUGAL FORCE REQUIRED TO PRODUCE AN INCREASE OF 15% VERTICAL LIVE LOAD ON BEAMS.

REV.	DATE	DESCRIPTION	DES.	ENG.
X	XX-XX-XX	REVISION	XX	XX

DRAWN BY: HDR DATE: 03/31/2011

ASSISTANT DIRECTOR: STANDARDS & DESIGN

DIRECTOR OF ENGINEERING AND CONSTRUCTION

SCRRA ENGINEERING STANDARDS ARE INTENDED FOR SCRRA APPROVED USES ONLY. FOR NON-SCRRA APPROVED USES: SCRRA SHALL NOT BE RESPONSIBLE FOR THE ACCURACY OR COMPLETENESS OF THE DATA OR INFORMATION CONTAINED HEREIN. THE SELECTION AND USE OF THESE STANDARDS IS THE SOLE RESPONSIBILITY OF THE USER AND SHOULD NOT BE USED WITHOUT CONSULTING A REGISTERED PROFESSIONAL ENGINEER. ALL WARRANTIES AND REPRESENTATIONS OF ANY KIND ARE DISCLAIMED. ANYONE MAKING USE OF THIS INFORMATION AGREES THAT IT ASSUMES ALL LIABILITY ARISING FROM SUCH USE. NO PART OF THESE STANDARDS SHOULD BE REPRODUCED OR DISTRIBUTED IN ANY FORM OR BY ANY MEANS WITHOUT THE PRIOR WRITTEN PERMISSION OF SCRRA. ALL RIGHTS RESERVED.

METROLINK®
SOUTHERN CALIFORNIA REGIONAL RAIL AUTHORITY
ONE GATEWAY PLAZA, 12TH FLOOR, L. A., CA. 90012

ENGINEERING STANDARDS

DESIGN NOTES
PRECAST/PRESTRESSED CONCRETE
SLAB BEAM BRIDGES

STANDARD 6002
SCALE: NTS
REVISION –
SHEET 2 OF 22
CADD FILE: ES6002-02

CONTROLLING DESIGN LOAD EFFECTS FOR PRECAST/PRESTRESSED CONCRETE SLAB BEAMS

				ESTIMATED PRESTRESSING									ALLOWABLE STRESSES									ULTIMATE CAPACITY			
													Maximum Service Moments					Top Fiber Service Load Stresses		Bottom Fiber Service Load Stresses					
													Dead	Live	Impact	Centrifugal	Total								
"D"	NOMINAL SPAN	"BL"	"SL"	Design Bed Pretension f_{pBed} (ksi)	Elastic Shortening Loss Δf_{ES} (ksi)	Total Long-term Prestress Loss Δf_{Total} (ksi)	Initial Pretress f_{pi} (ksi)	Final Prestress f_{pf} (ksi)	Area of Prestressing Steel Provided A_p (in^2)	Initial Total Prestressing Force P_i (k)	Final Total Prestressing Force P_f (k)	Eccentricity of Total Prestressing Force from Centroid of Beam e_p (in)	M_D (k-ft)	M_L (k-ft)	M_I (k-ft)	M_{CF} (k-ft)	M_{Total} (k-ft)	Allowable (psi)	Calculated (psi)	Allowable (psi)	Calculated (psi)	Maximum Ultimate Moment Demand M_u (k-ft)	Factored Moment Capacity $\varnothing M_n$ (k-ft)	Maximum Ultimate Shear Demand V_u (k)	Factored Shear Capacity $\varnothing V_n$ (k)
✱ 12"	12'-0"	11'-11"	11'-1"	200.0	13.6	49.9	186.4	150.1	8.26	1540	1240	2.2	44	146	88	22	300	4000C	1621C	0T	884C	639	1098	281	420
14"	12'-1"	12'-0"	11'-2"	200.0	11.9	43.4	188.1	156.6	6.73	1266	1054	3.1	48	149	89	22	308	2400C	1020C	0T	808C	655	1125	278	399
✱ 14"	14'-0"	13'-11"	13'-1"	200.0	12.8	47.6	187.3	152.5	8.26	1547	1260	3.0	66	213	128	32	439	3200C	1570C	0T	624C	930	1342	322	453
14"	16'-1"	16'-0"	15'-2"	200.0	13.3	49.9	186.7	150.1	9.18	1714	1378	2.9	88	282	163	42	575	3600C	2157C	0T	256C	1219	1473	355	475
16"	14'-1"	14'-0"	13'-2"	200.0	11.6	41.6	188.4	158.4	6.73	1268	1066	3.8	70	215	129	32	446	2400C	1116C	0T	508C	947	1391	319	467
✱ 16"	16'-0"	15'-11"	15'-1"	200.0	12.2	44.1	187.8	155.9	7.65	1437	1193	3.8	92	279	162	42	575	2400C	1502C	0T	326C	1215	1503	350	470
16"	18'-1"	18'-0"	17'-2"	200.0	12.4	45.3	187.6	154.7	8.26	1550	1278	3.8	119	348	189	52	708	2800C	1924C	0T	41C	1492	1632	388	488
18"	16'-1"	16'-0"	15'-2"	200.0	9.8	37.2	190.2	162.8	6.12	1164	996	4.6	98	282	163	42	585	2400C	1171C	0T	178C	1233	1538	352	514
✱ 18"	18'-0"	17'-11"	17'-1"	200.0	11.1	40.2	188.9	159.8	7.04	1330	1125	4.5	125	348	189	52	714	2400C	1448C	0T	84C	1490	1706	381	532
18"	20'-1"	20'-0"	19'-2"	200.0	12.2	43.9	187.8	156.1	8.87	1666	1385	4.2	154	419	215	63	851	2600C	1846C	0T	47C	1785	1974	418	556
20"	18'-1"	18'-0"	17'-2"	200.0	9.0	35.3	191.0	164.7	6.12	1169	1008	5.3	132	348	189	52	721	2400C	1167C	0T	62C	1510	1770	384	579
✱ 20"	20'-0"	19'-11"	19'-1"	200.0	9.8	37.9	190.2	162.1	7.65	1455	1240	4.8	160	416	214	62	852	2400C	1466C	0T	50C	1781	2037	412	612
20"	22'-1"	22'-0"	21'-2"	200.0	11.8	42.9	188.2	157.1	9.18	1728	1442	4.9	198	506	248	76	1028	2600C	1749C	0T	29C	2142	2374	443	629

NOTES:

1. "D" - DEPTH OF SLAB BEAM
   "BL" - OUT TO OUT BEAM LENGTH
   "SL" - SPAN LENGTH CENTER TO CENTER OF BEARINGS
2. ✱DENOTES STANDARD SPAN
3. FOR SERVICE LOAD STRESSES, "T" IS TENSION AND "C" IS COMPRESSION
4. TABLE VALUES OF MAXIMUM SERVICE MOMENTS AND CALCULATED STRESSES ARE PROVIDED FOR THE LOCATION OF MAXIMUM SERVICE MOMENT ALONG THE LENGTH OF THE SPAN, TYPICALLY AT OR NEAR MIDSPAN.
5. TABLE VALUES OF MAXIMUM ULTIMATE MOMENT DEMAND AND FACTORED MOMENT CAPACITY ARE PROVIDED FOR THE LOCATION OF MAXIMUM ULTIMATE MOMENT ALONG THE LENGTH OF THE SPAN, TYPICALLY AT OR NEAR MIDSPAN. THESE VALUES MAY NOT REPRESENT THE CRITICAL CAPACITY TO DEMAND RATIO FOR MOMENT ALONG THE ENTIRE LENGTH OF THE SPAN.
6. TABLE VALUES OF MAXIMUM ULTIMATE SHEAR DEMAND AND FACTORED SHEAR CAPACITY ARE PROVIDED AT "D"/2 FROM CENTERLINE OF BEARING. THESE VALUES MAY NOT REPRESENT THE CRITICAL CAPACITY TO DEMAND RATIO FOR SHEAR ALONG THE ENTIRE LENGTH OF THE SPAN.

REV.	DATE	DESCRIPTION	DES.	ENG.
X	XX-XX-XX	REVISION	XX	XX

DRAWN BY: HDR DATE: 03/31/2011

ASSISTANT DIRECTOR: STANDARDS & DESIGN

DIRECTOR OF ENGINEERING AND CONSTRUCTION

SCRRA ENGINEERING STANDARDS ARE INTENDED FOR SCRRA APPROVED USES ONLY. FOR NON-SCRRA APPROVED USES:
SCRRA SHALL NOT BE RESPONSIBLE FOR THE ACCURACY OR COMPLETENESS OF THE DATA OR INFORMATION CONTAINED HEREIN. THE SELECTION AND USE OF THESE STANDARDS IS THE SOLE RESPONSIBILITY OF THE USER AND SHOULD NOT BE USED WITHOUT CONSULTING A REGISTERED PROFESSIONAL ENGINEER. ALL WARRANTIES AND REPRESENTATIONS OF ANY KIND ARE DISCLAIMED. ANYONE MAKING USE OF THIS INFORMATION AGREES THAT IT ASSUMES ALL LIABILITY ARISING FROM SUCH USE. NO PART OF THESE STANDARDS SHOULD BE REPRODUCED OR DISTRIBUTED IN ANY FORM OR BY ANY MEANS WITHOUT THE PRIOR WRITTEN PERMISSION OF SCRRA. ALL RIGHTS RESERVED.

METROLINK®
SOUTHERN CALIFORNIA REGIONAL RAIL AUTHORITY
ONE GATEWAY PLAZA, 12TH FLOOR, L. A., CA. 90012

ENGINEERING STANDARDS

TABLE OF DESIGN LOAD EFFECTS
PRECAST/PRESTRESSED CONCRETE
SLAB BEAM BRIDGES

STANDARD 6002
SCALE: NTS
REVISION –
SHEET 3 OF 22
CADD FILE: ES6002-03

CONSTRUCTION NOTES:

PRECAST CONCRETE MEMBERS AND PRECAST/PRESTRESSED CONCRETE BEAMS:

PRECAST CONCRETE MEMBERS AND PRECAST/PRESTRESSED CONCRETE BEAMS SHALL MEET THE REQUIREMENTS OF SCRRA STANDARD SPECIFICATIONS SECTION 34 80 43: PRECAST AND PRESTRESSED CONCRETE FOR RAILROAD BRIDGES. MATERIALS SHALL NOT BE ORDERED AND FABRICATION SHALL NOT COMMENCE PRIOR TO ACCEPTANCE OF SHOP DRAWINGS BY SCRRA. MEMBERS AND BEAMS THAT DO NOT MEET THE REQUIRED SPECIFICATIONS WILL BE REJECTED. REJECTED MEMBERS AND BEAMS SHALL BE REPLACED BY THE CONTRACTOR AT NO ADDITIONAL COST TO SCRRA. MEMBERS AND BEAMS THAT HAVE BEEN DELIVERED AND ARE THEN REJECTED SHALL BE REMOVED FROM SCRRA PROPERTY AT NO ADDITIONAL COST TO SCRRA.

PILING:

STEEL BEARING PILES SHALL MEET THE REQUIREMENTS OF SCRRA STANDARD SPECIFICATIONS SECTION 34 80 21: PILING. PILES SHALL BE DRIVEN TO A MINIMUM ALLOWABLE COMPRESSIVE LOAD CAPACITY OF 150 TONS PER THE DYNAMIC FORMULA IN THE STANDARD SPECIFICATIONS OR TO PRACTICAL REFUSAL, IF POSSIBLE, WITHOUT DAMAGING THE PILES. MINIMUM PENETRATION SHALL BE 15 FEET BELOW NATURAL GROUND OR FINISHED GROUND LINE, WHICHEVER IS LOWER. PILES SHALL BE DRIVEN WITHIN 3" OF PLAN LOCATION AT CUTOFF, WITHIN 1/4" PER FOOT OF SPECIFIED BATTER LINE FOR BATTERED PILING AND WITHIN 1/4" PER FOOT OF VERTICAL FOR PLUMB PILING. PILES THAT DO NOT MEET THE REQUIRED TOLERANCES SHALL BE PULLED AND REDRIVEN OR CUTOFF AND REPLACED. CUTOFF PILES TO SPECIFIED ELEVATIONS AND PROPERLY PREPARE THE CUTOFF ENDS FOR WELDING. PILES SHALL NOT BE PULLED INTO POSITION FOR WELDING TO CAPS UNLESS OTHERWISE APPROVED BY SCRRA. A FULL PILE REPORT PER THE SPECIFICATIONS, INCLUDING DRIVING RECORDS AND ESTIMATED ALLOWABLE CAPACITIES FOR EACH PILE, SHALL BE PROVIDED TO SCRRA.

PLACING PRECAST CAPS:

PRECAST CAPS SHALL BE PLACED IN THE PROPER LOCATIONS AND SECURED PRIOR TO WELDING PILES TO PILE PLATES EMBEDDED IN CAPS. PROPER LOCATION OF PRECAST CAPS SHALL BE DETERMINED USING CONSTRUCTION SURVEYING WITH VERIFIED CONTROL AND CHECKED WITH TAPE MEASUREMENTS FROM A KNOWN REFERENCE POINT. AS-BUILT DIMENSIONS BETWEEN EMBEDDED PIPES IN EACH END OF BEAMS AND BETWEEN STEEL RODS (AR1) EMBEDDED IN CAPS IN ADJACENT BENTS SHALL BE CHECKED PRIOR TO WELDING PILES TO CAPS.

FIELD WELDING CAPS AND BRACING:

PILES SHALL BE WELDED TO PILE PLATES, FOLLOWED BY WELDING ANGLE BRACING TO THE INSIDE OF PILE FLANGES AS SHOWN ON THE DRAWINGS. WELDING SHALL MEET THE REQUIREMENTS OF AWS D1.5 BRIDGE WELDING CODE. WELDING SHALL BE ACCOMPLISHED USING THE SMAW OR FCAW PROCESS. WELDING ELECTRODES SHALL BE E7018 FOR SMAW OR E70T-5 FOR FCAW. WELDERS SHALL POSSESS VALID QUALIFICATIONS FOR THE TYPES OF WELDS AND WELDING POSITIONS REQUIRED.

INSTALLING WING WALLS:

ADJOINING SURFACES OF END CAP AND WING WALL SHALL BE COATED WITH GROUT. WHILE GROUT IS STILL PLIABLE, POSITION WING WALL OVER THREADED RODS AND HOLD IN PLACE, ADD WASHER W1 AND HEX NUT TO BOLTS, TIGHTEN NUTS AND TACK WELD NUTS TO WASHER. REPAIR DAMAGED GALVANIZED SURFACES.

CAST-IN-PLACE CONCRETE:

ALL CONCRETE MATERIALS, PLACEMENT AND WORKMANSHIP SHALL CONFORM TO SCRRA STANDARD SPECIFICATIONS SECTION 34 80 41: STRUCTURAL CONCRETE FOR RAILROAD AND CIVIL WORKS. REINFORCING STEEL MATERIALS AND PLACEMENT SHALL CONFORM TO SCRRA STANDARD SPECIFICATIONS SECTION 34 80 42: REINFORCEMENT FOR RAILROAD AND CIVIL WORKS. MINIMUM 28-DAY CONCRETE COMPRESSIVE STRENGTH SHALL BE 4000 PSI. THE PORTION OF PILING TO BE ENCASED IN CONCRETE SHALL BE CLEANED OF ALL DIRT, OIL AND GREASE AND ALL LOOSE SCALE AND RUST BEFORE CONCRETE IS PLACED TO PROVIDE ADEQUATE BOND.

PAINTING:

PAINTING SHALL BE IN ACCORDANCE WITH SCRRA STANDARD SPECIFICATIONS SECTION 34 80 61: PAINTING AND PROTECTIVE COATINGS FOR BRIDGES. THE EXPOSED PORTION OF PILE PLATES, PILING BETWEEN THE PILE PLATES AND CONCRETE COLLARS OR GROUND LINE, ANGLE BRACING AND ANY OTHER NON-GALVANIZED EXPOSED STEEL SHALL BE CLEANED PER SSPC SP 6 "COMMERCIAL BLAST CLEAN" AND PAINTED USING SYSTEM #19.

INSTALLING BEARING PADS:

RANDOM ORIENTED FIBER ELASTOMERIC BEARING PADS SHALL MEET THE REQUIREMENTS OF SCRRA STANDARD SPECIFICATIONS SECTION 34 80 43: PRECAST AND PRESTRESSED CONCRETE FOR RAILROAD BRIDGES. BEARING PADS SHALL BE ADHERED TO PRECAST CAPS AND PRECAST/PRESTRESSED CONCRETE BEAMS USING AN ADHESIVE RECOMMENDED BY THE BEARING PAD MANUFACTURER AND APPROVED BY SCRRA. BEARING AREAS ON CAPS AND BEAMS SHALL BE ABRASIVE BLAST CLEANED TO REMOVE ALL FORM OIL AND CURING AGENTS AND SHALL BE CLEANED TO A DUST-FREE CONDITION. ONCE BEARING AREAS HAVE BEEN ADEQUATELY CLEANED, APPLY A LIGHT SEAL COAT OF ADHESIVE TO CONCRETE SURFACE AND ALLOW TO DRY. COAT CONTACT SURFACES OF CONCRETE AND BEARING PADS WITH ADHESIVE, PLACE PADS ON CONCRETE SURFACE AND HOLD IN THE PROPER LOCATION UNTIL THE ADHESIVE HAS ATTAINED INITIAL SET.

ERECTION OF BEAMS:

BEAMS SHALL BE SET IN THE PROPER LOCATION, TAKING CARE NOT TO DAMAGE CONCRETE MEMBERS. AFTER BEAMS HAVE BEEN SET IN FINAL POSITION, FILL SWIFT LIFT CAVITIES WITH GREASE FLUSH TO TOP OF DECK.

DECK PLATES:

DECK PLATES MAY BE ADJUSTED AND TRIMMED AS NEEDED TO PROVIDE A TIGHT FIT. DUE TO LOCAL CONDITIONS, DECK PLATES AT JOINTS SHALL BE WELDED. REMOVE SCALE AND REPAIR GALVANIZED SURFACES AFTER COOLING.

WALKWAYS:

SIDEWALK BRACKETS SHALL BE ERECTED PLUMB AND IN-LINE. FINISHED WALKWAY SURFACE SHALL BE EVEN, WITH ANY ABRUPT CHANGES IN ELEVATION LIMITED TO 1/4" OR LESS. ATTACH WALKWAY GRATING TO SIDEWALK BRACKETS AS SHOWN ON THE DRAWINGS. GRATING PANEL LAYOUT SHALL BE ADJUSTED TO MINIMIZE DISTANCE THAT PANELS EXTEND ACROSS BRIDGE JOINTS. TRIM GRATING AS REQUIRED AND REPAIR DAMAGED GALVANIZED SURFACES.

HANDRAIL:

HANDRAIL POSTS, BRACES AND STRUTS SHALL BE GALVANIZED 2"x2" 20F12 UNISTRUT "TELESPAR". CABLE RAILS SHALL BE 5/16" DIA, 7x19 GALVANIZED AIRCRAFT CABLE. INTERIOR HANDRAIL TERMINATIONS SHALL BE PROVIDED AT EVERY TWO SPANS. SAFETY CHAIN SHALL BE USED FOR RAILS BETWEEN INTERIOR CABLE TERMINATIONS. ATTACH HANDRAIL COMPONENTS AS SHOWN ON THE DRAWINGS. REPAIR DAMAGED GALVANIZED SURFACES.

SIGNAL CONDUIT:

A MINIMUM OF TWO SIGNAL CONDUITS SHALL BE PROVIDED INSIDE THE CURB LINE ON EACH SIDE OF THE BRIDGE. CONDUIT SHALL CONSIST OF 4" DIA GALVANIZED STEEL PIPE. CONDUIT BRACKETS SHALL BE USED TO HOLD CONDUIT IN PLACE AND SHALL BE PLACED TO MISS DECK PLATES AND SIDEWALK BRACKETS. SPACING OF CONDUIT BRACKETS SHALL NOT EXCEED 6 FEET. INSTALL CONDUIT BRACKETS USING ADHESIVE ANCHORS. ADHESIVE ANCHORS SHALL BE HILTI HVA SYSTEM OR APPROVED EQUAL. FIELD DRILL 7/16" DIA x 3 1/2" HOLE INTO CONCRETE CURB, INSTALL HVU ADHESIVE CAPSULE AND 3/8" DIA x 5" THREADED ROD PER MANUFACTURER'S INSTRUCTIONS. CONDUITS INSTALLED ON BRIDGES WITHOUT HMA SHALL BE RAISED 3/4" TO ALLOW FOR DECK DRAINAGE.

MISCELLANEOUS STEEL AND HARDWARE:

MISCELLANEOUS STEEL ITEMS SHALL BE FABRICATED IN ACCORDANCE WITH SCRRA STANDARD SPECIFICATIONS SECTION 34 80 52: METAL FABRICATIONS FOR RAILROAD BRIDGES. STEEL ACCESSORIES AND HARDWARE SHALL BE GALVANIZED (HOT DIP OR MECHANICALLY ZINC COATED) UNLESS NOTED OTHERWISE.

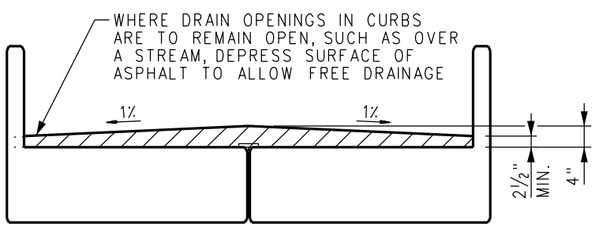

SECTION A
SCALE: NONE

NOTE:
HMA CROSS SLOPE SIMILAR ON BRIDGE APPROACH.

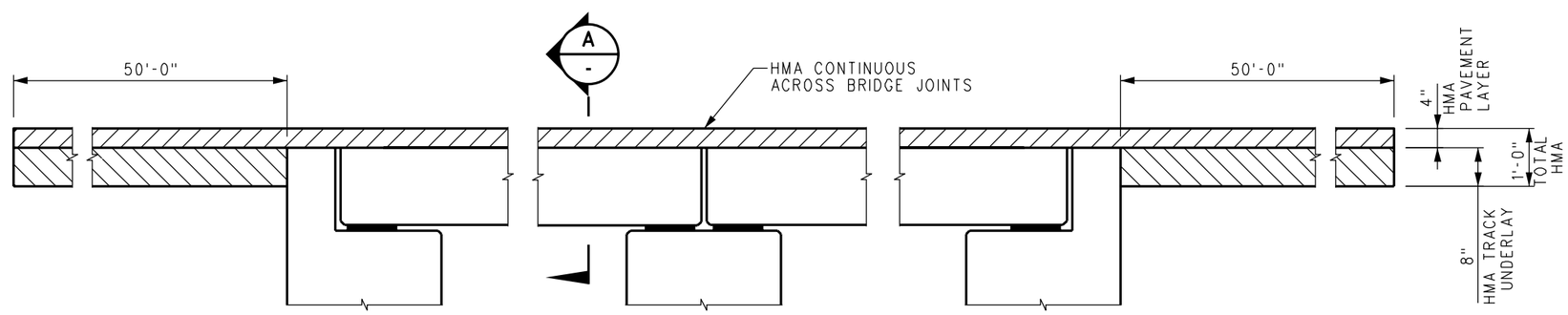

HMA DETAILS
SCALE: 1 1/2" = 1'-0"

REV.	DATE	DESCRIPTION	DES.	ENG.
X	XX-XX-XX	REVISION	XX	XX

DRAWN BY: A. CARLOS DATE: 03/31/2011

ASSISTANT DIRECTOR: STANDARDS & DESIGN

DIRECTOR OF ENGINEERING AND CONSTRUCTION

SCRRA ENGINEERING STANDARDS ARE INTENDED FOR SCRRA APPROVED USES ONLY. FOR NON-SCRRA APPROVED USES:
SCRRA SHALL NOT BE RESPONSIBLE FOR THE ACCURACY OR COMPLETENESS OF THE DATA OR INFORMATION CONTAINED HEREIN. THE SELECTION AND USE OF THESE STANDARDS IS THE SOLE RESPONSIBILITY OF THE USER AND SHOULD NOT BE USED WITHOUT CONSULTING A REGISTERED PROFESSIONAL ENGINEER. ALL WARRANTIES AND REPRESENTATIONS OF ANY KIND ARE DISCLAIMED. ANYONE MAKING USE OF THIS INFORMATION AGREES THAT IT ASSUMES ALL LIABILITY ARISING FROM SUCH USE. NO PART OF THESE STANDARDS SHOULD BE REPRODUCED OR DISTRIBUTED IN ANY FORM OR BY ANY MEANS WITHOUT THE PRIOR WRITTEN PERMISSION OF SCRRA. ALL RIGHTS RESERVED.

METROLINK®
SOUTHERN CALIFORNIA REGIONAL RAIL AUTHORITY
ONE GATEWAY PLAZA, 12TH FLOOR, L. A., CA. 90012

ENGINEERING STANDARDS

CONSTRUCTION NOTES AND HMA DETAILS
PRECAST/PRESTRESSED CONCRETE
SLAB BEAM BRIDGES

STANDARD 6002
SCALE: AS NOTED
REVISION –
SHEET 4 OF 22
CADD FILE: ES6002-04

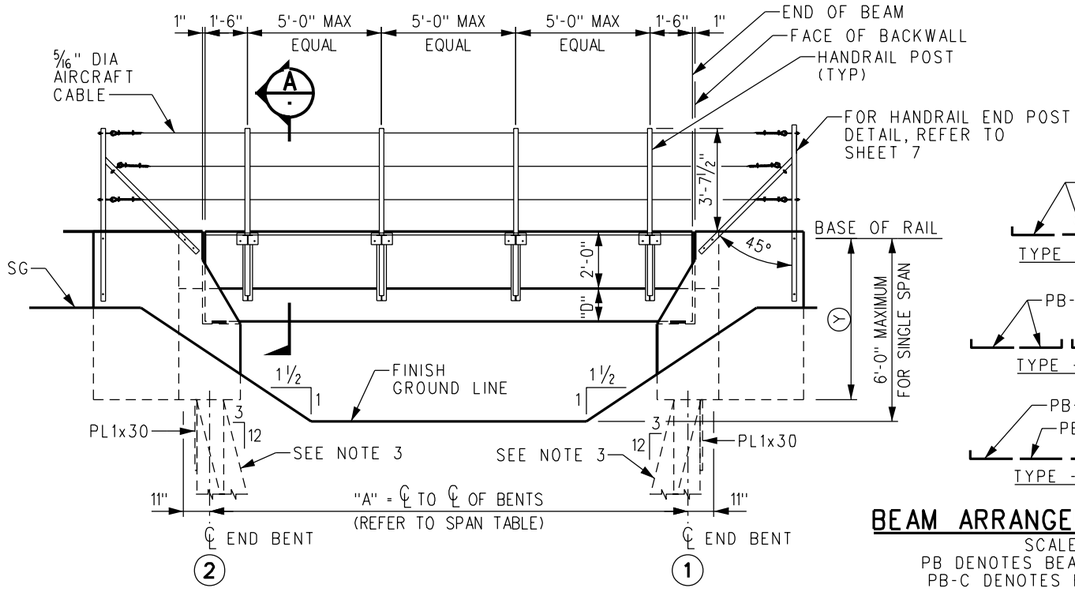

ELEVATION - SINGLE SPAN BRIDGE

SCALE: 3/8" = 1'-0"

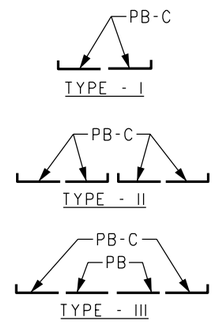

BEAM ARRANGEMENT DIAGRAMS

SCALE: NONE
PB DENOTES BEAM WITHOUT CURB.
PB-C DENOTES BEAM WITH CURB.

SPAN TABLE							
BEAM MARK	NOMINAL SPAN	"BL"	"SL"	"A"	"B"	"C"	"D"
PB11.92	12'-0"	11'-11"	11'-1"	11'-7"	12'-0"	11'-9 1/2"	12"
PB13.92	14'-0"	13'-11"	13'-1"	13'-7"	14'-0"	13'-9 1/2"	14"
PB15.92	16'-0"	15'-11"	15'-1"	15'-7"	16'-0"	15'-9 1/2"	16"
PB17.92	18'-0"	17'-11"	17'-1"	17'-7"	18'-0"	17'-9 1/2"	18"
PB19.92	20'-0"	19'-11"	19'-1"	19'-7"	20'-0"	19'-9 1/2"	20"

LIFTING WEIGHTS	
BEAM MARK	WEIGHT IN TONS
PB11.92-C	7.2
PB11.92	6.3
PB13.92-C	9.6
PB13.92	8.6
PB15.92-C	12.4
PB15.92	11.2
PB17.92-C	15.5
PB17.92	14.1
PB19.92-C	19.0
PB19.92	17.5

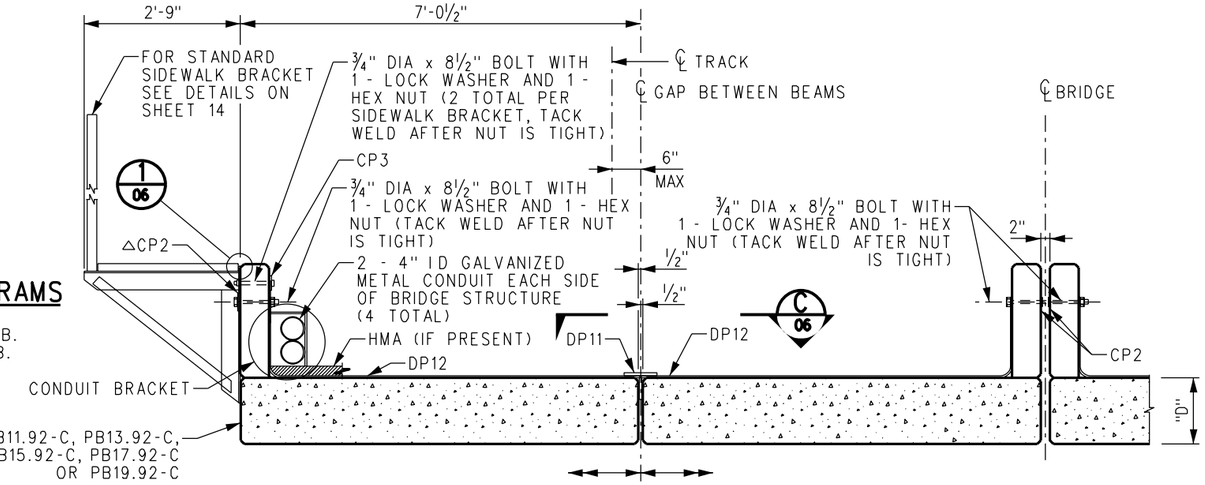

SECTION SHOWING BEAM WITH CURB AND WALKWAY BRACKET FOR SINGLE TRACK BRIDGE OR EXTERIOR OF DOUBLE TRACK BRIDGE

SECTION SHOWING DOUBLE TRACK BRIDGE AND INTERIOR BEAMS WITH CURBS

PARTIAL SECTION A

SCALE: 3/4"=1'-0

△ AT END BENTS, SUBSTITUTE CURB ANGLE CA3 FOR CURB PLATE CP2.

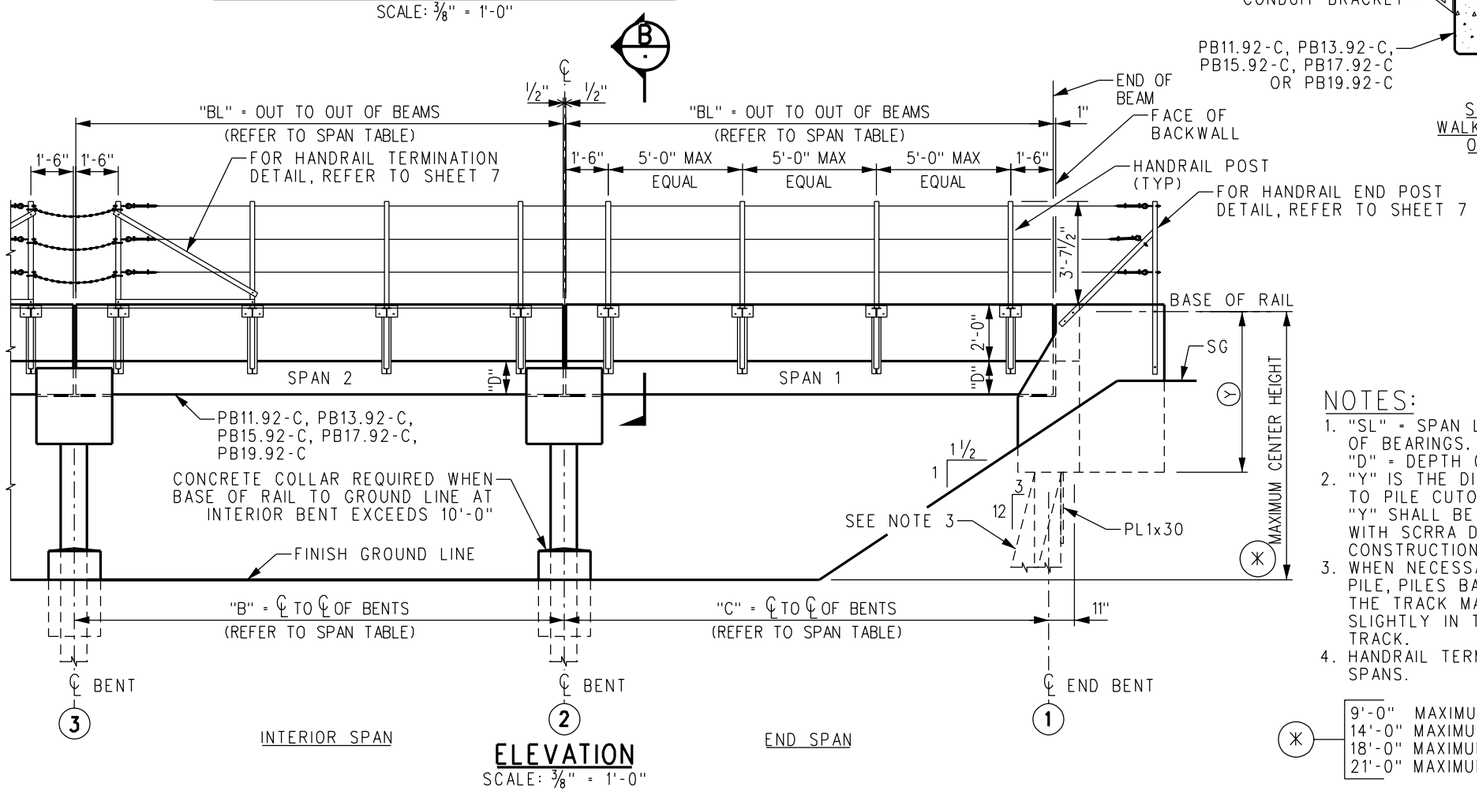

ELEVATION

SCALE: 3/8" = 1'-0"

NOTES:

1. "SL" = SPAN LENGTH CENTER TO CENTER OF BEARINGS.
   "D" = DEPTH OF SLAB BEAM
2. "Y" IS THE DISTANCE FROM BASE OF RAIL TO PILE CUTOFF. FOR DESIGN ELEVATIONS, "Y" SHALL BE ESTABLISHED IN COORDINATION WITH SCRRA DIRECTOR OF ENGINEERING AND CONSTRUCTION.
3. WHEN NECESSARY TO CLEAR AN EXISTING PILE, PILES BATTERED IN THE DIRECTION OF THE TRACK MAY ALSO BE BATTERED SLIGHTLY IN THE DIRECTION NORMAL TO THE TRACK.
4. HANDRAIL TERMINATION REQUIRED EVERY 2 SPANS.

✳
9'-0" MAXIMUM FOR TWO SPANS
14'-0" MAXIMUM FOR THREE SPANS
18'-0" MAXIMUM FOR FOUR SPANS
21'-0" MAXIMUM FOR FIVE OR MORE SPANS

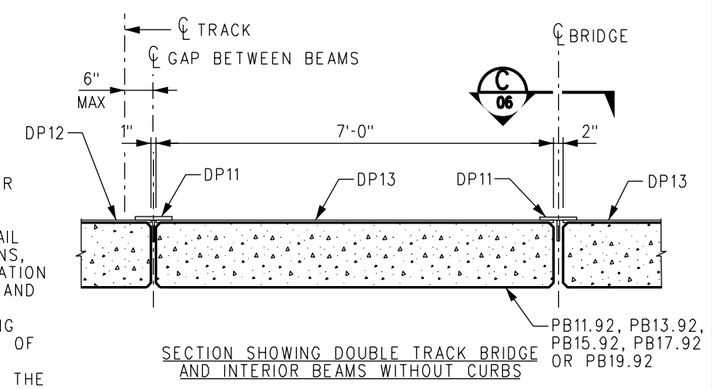

SECTION SHOWING DOUBLE TRACK BRIDGE AND INTERIOR BEAMS WITHOUT CURBS

PARTIAL SECTION B

SCALE: 3/4"=1'-0

REV.	DATE	DESCRIPTION	DES.	ENG.
X	XX-XX-XX	REVISION	XX	XX

DRAWN BY: A. CARLOS DATE: 03/31/2011

ASSISTANT DIRECTOR: STANDARDS & DESIGN

DIRECTOR OF ENGINEERING AND CONSTRUCTION

SCRRA ENGINEERING STANDARDS ARE INTENDED FOR SCRRA APPROVED USES ONLY. FOR NON-SCRRA APPROVED USES: SCRRA SHALL NOT BE RESPONSIBLE FOR THE ACCURACY OR COMPLETENESS OF THE DATA OR INFORMATION CONTAINED HEREIN. THE SELECTION AND USE OF THESE STANDARDS IS THE SOLE RESPONSIBILITY OF THE USER AND SHOULD NOT BE USED WITHOUT CONSULTING A REGISTERED PROFESSIONAL ENGINEER. ALL WARRANTIES AND REPRESENTATIONS OF ANY KIND ARE DISCLAIMED. ANYONE MAKING USE OF THIS INFORMATION AGREES THAT IT ASSUMES ALL LIABILITY ARISING FROM SUCH USE. NO PART OF THESE STANDARDS SHOULD BE REPRODUCED OR DISTRIBUTED IN ANY FORM OR BY ANY MEANS WITHOUT THE PRIOR WRITTEN PERMISSION OF SCRRA. ALL RIGHTS RESERVED.

METROLINK®
SOUTHERN CALIFORNIA REGIONAL RAIL AUTHORITY
ONE GATEWAY PLAZA, 12TH FLOOR, L. A., CA. 90012

ENGINEERING STANDARDS

GENERAL ARRANGEMENT AND SECTIONS
PRECAST/PRESTRESSED CONCRETE
SLAB BEAM BRIDGES

STANDARD 6002
SCALE: AS NOTED
REVISION –
SHEET 5 OF 22
CADD FILE: ES6002-05

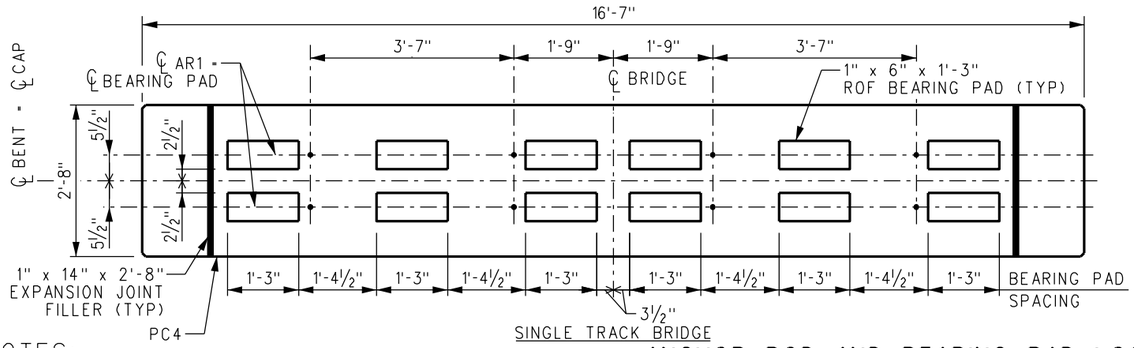

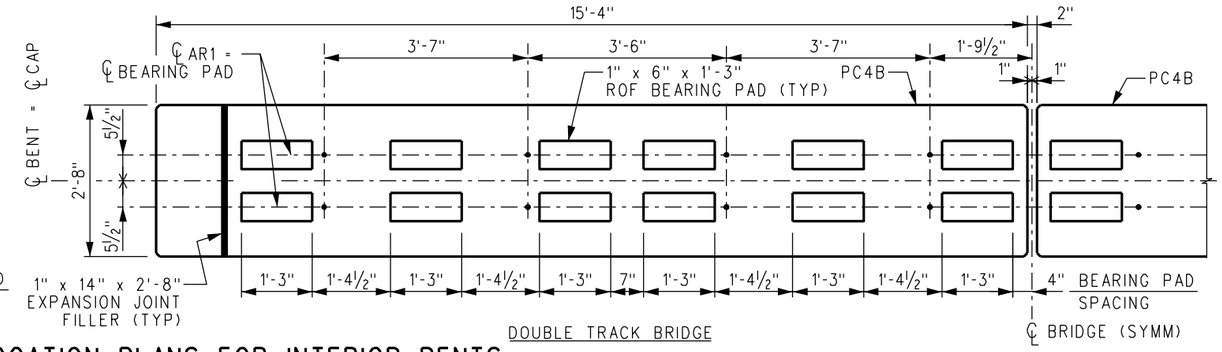

ANCHOR ROD AND BEARING PAD LOCATION PLANS FOR INTERIOR BENTS

SCALE: ¾" = 1'-0"

ANCHOR ROD AR1 MUST BE PLACED WITHIN ¼" OF PLAN LOCATION OR BEAMS WILL NOT FIT

NOTES:

1. ROF = RANDOM ORIENTED FIBER
2. BEARING PADS AND EXPANSION JOINT FILLER ARE FIELD ATTACHED TO CAPS.

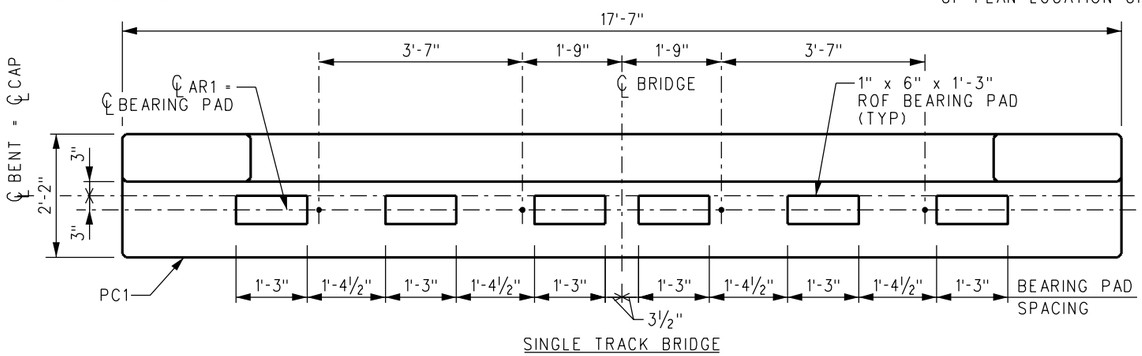

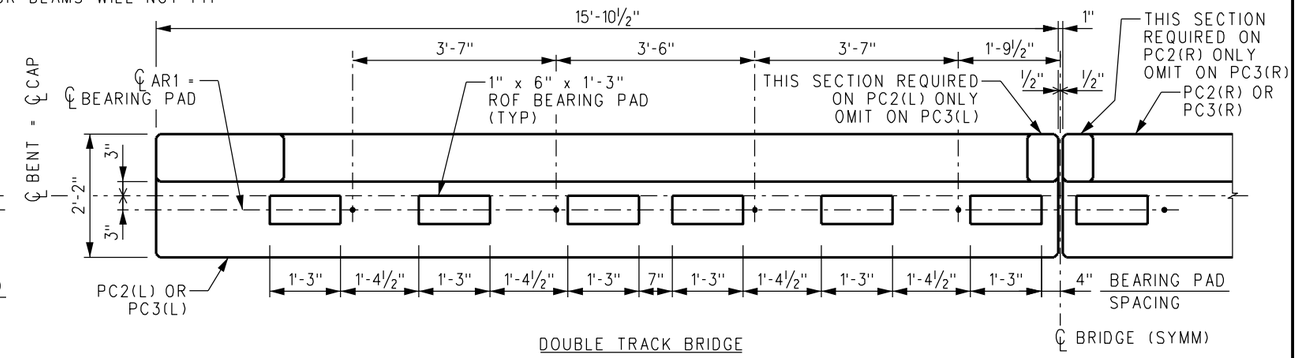

ANCHOR ROD AND BEARING PAD LOCATION PLANS FOR END BENTS

SCALE: ¾" = 1'-0"

ANCHOR ROD AR1 MUST BE PLACED WITHIN ¼" OF PLAN LOCATION OR BEAMS WILL NOT FIT

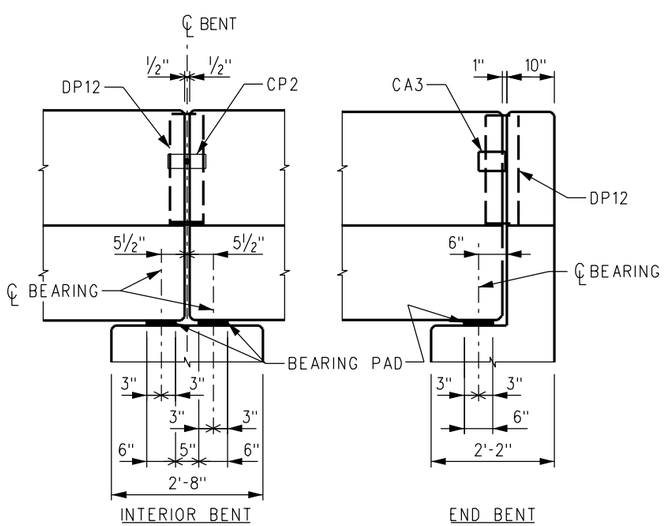

BEARING DETAILS

SCALE: ¾" = 1'-0"

HANDRAILS NOT SHOWN FOR CLARITY

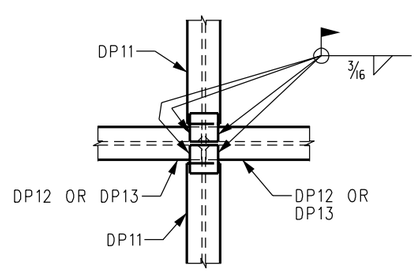

VIEW C/05

SCALE: ¾"=1'-0

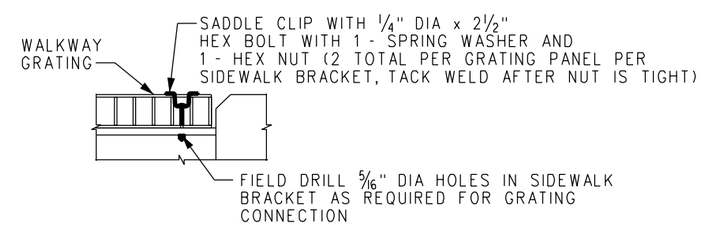

DETAIL 1/05

SCALE: NONE

REV.	DATE	DESCRIPTION	DES.	ENG.
X	XX-XX-XX	REVISION	XX	XX

DRAWN BY: A.CARLOS DATE: 03/31/2011

ASSISTANT DIRECTOR: STANDARDS & DESIGN

DIRECTOR OF ENGINEERING AND CONSTRUCTION

SCRRA ENGINEERING STANDARDS ARE INTENDED FOR SCRRA APPROVED USES ONLY. FOR NON-SCRRA APPROVED USES:
SCRRA SHALL NOT BE RESPONSIBLE FOR THE ACCURACY OR COMPLETENESS OF THE DATA OR INFORMATION CONTAINED HEREIN. THE SELECTION AND USE OF THESE STANDARDS IS THE SOLE RESPONSIBILITY OF THE USER AND SHOULD NOT BE USED WITHOUT CONSULTING A REGISTERED PROFESSIONAL ENGINEER. ALL WARRANTIES AND REPRESENTATIONS OF ANY KIND ARE DISCLAIMED. ANYONE MAKING USE OF THIS INFORMATION AGREES THAT IT ASSUMES ALL LIABILITY ARISING FROM SUCH USE. NO PART OF THESE STANDARDS SHOULD BE REPRODUCED OR DISTRIBUTED IN ANY FORM OR BY ANY MEANS WITHOUT THE PRIOR WRITTEN PERMISSION OF SCRRA. ALL RIGHTS RESERVED.

METROLINK®

SOUTHERN CALIFORNIA REGIONAL RAIL AUTHORITY
ONE GATEWAY PLAZA, 12TH FLOOR, L. A., CA. 90012

ENGINEERING STANDARDS

GENERAL DETAILS
PRECAST/PRESTRESSED CONCRETE
SLAB BEAM BRIDGES

STANDARD 6002
SCALE: AS NOTED
REVISION –
SHEET 6 OF 22
CADD FILE: ES6002-06

NOTE:
1. INSTALL SAFETY CHAIN WITH A 3" SAG.

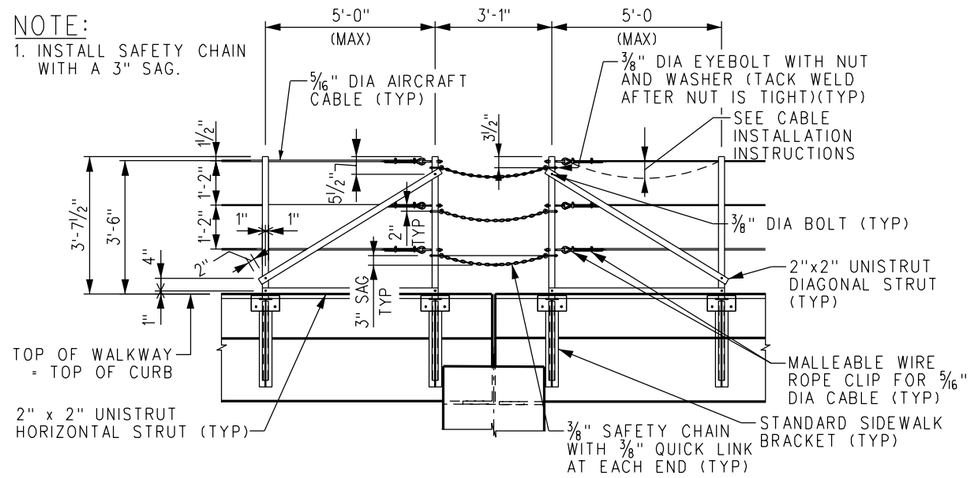

HANDRAIL TERMINATION DETAIL

SCALE: NONE

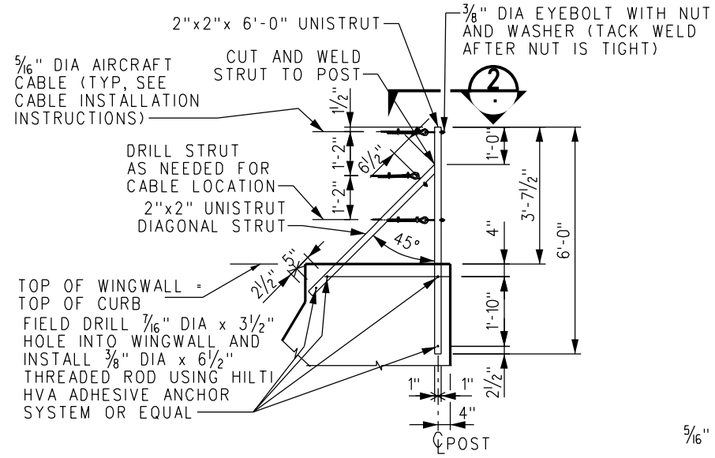

HANDRAIL END POST DETAILS

SCALE: 1/2" = 1'-0"

BASE OF RAIL TO PILE CUTOFF FOR SLABS			
SPAN LENGTH	"D"	END BENTS "Y"	INTERIOR BENTS "Y"
12'-0"	12"	5'-6"	4'-6"
14'-0"	14"	5'-8"	4'-8"
16'-0"	16"	5'-10"	4'-10"
18'-0"	18"	6'-0"	5'-0"
20'-0"	20"	6'-2"	5'-2"

NOTES:
1. TABLE "Y" VALUES FOR A TOTAL OF 12" DEPTH (BALLAST PLUS HMA) BELOW STANDARD CONCRETE TIES.
2. "D" = DEPTH OF SLAB BEAM

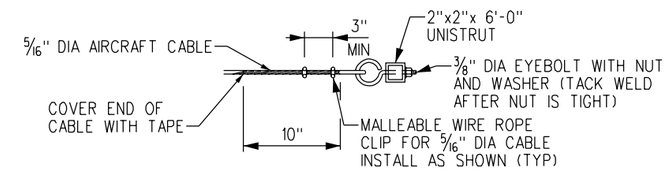

VIEW 2

SCALE: NONE

NOTES:
1. ALL PILES ARE HP14x117, ASTM A572 GRADE 50 STEEL BEARING PILES UNLESS OTHERWISE SPECIFIED BY THE ENGINEER.
2. AFTER PRECAST CONCRETE MEMBERS ARE SET, FILL RECESSES AT LIFT ANCHORS WITH EPOXY GROUT TO TOP OF SURROUNDING CONCRETE.
3. FOR "TYPICAL PILE SPLICE DETAIL" AND "WING WALL TO END CAP DETAILS" SEE SHEET 10.
4. "Y" IS THE DISTANCE FROM THE BASE OF RAIL TO PILE CUTOFF. FOR DESIGN ELEVATIONS, "Y" SHALL BE ESTABLISHED IN COORDINATION WITH SCRRA DIRECTOR OF ENGINEERING AND CONSTRUCTION. FOR A TOTAL OF 12" DEPTH (BALLAST PLUS HMA) BELOW STANDARD CONCRETE TIES, "Y" IS PROVIDED FOR STANDARD SLAB BEAM SPANS IN THE TABLE "BASE OF RAIL TO PILE CUTOFF FOR SLABS".

CABLE INSTALLATION INSTRUCTIONS:

1. THREAD CABLE THROUGH ALL HANDRAIL POSTS AND EYEBOLTS ON ONE END HANDRAIL POST.
2. STRETCH CABLE, HANG A MINIMUM OF 10 LBS ON CABLE BETWEEN TWO POSTS, AND REMOVE SAG TO A MAXIMUM OF 2 INCHES.
3. TIGHTEN CLIPS AND EYEBOLTS AT REMAINING END HANDRAIL POST.
4. REMOVE WEIGHTS.

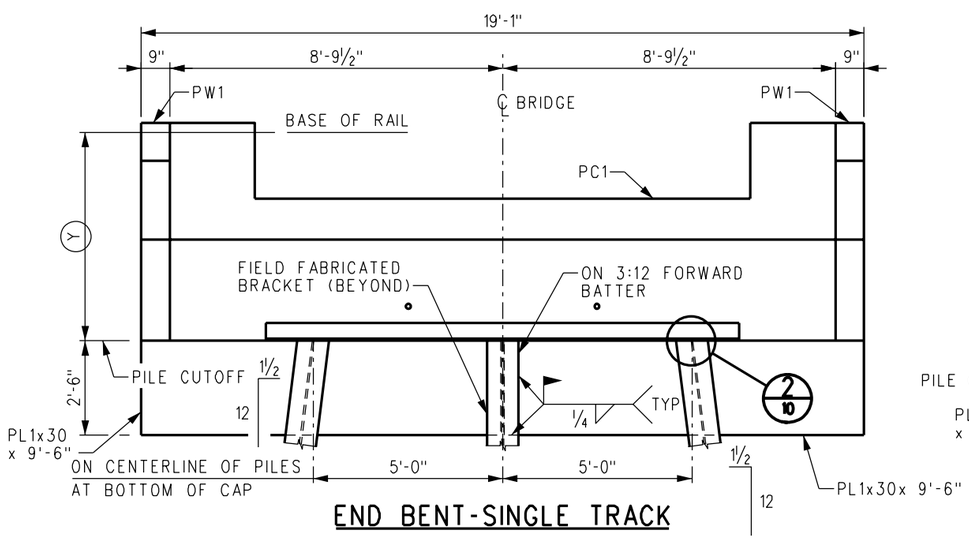

END BENT-SINGLE TRACK

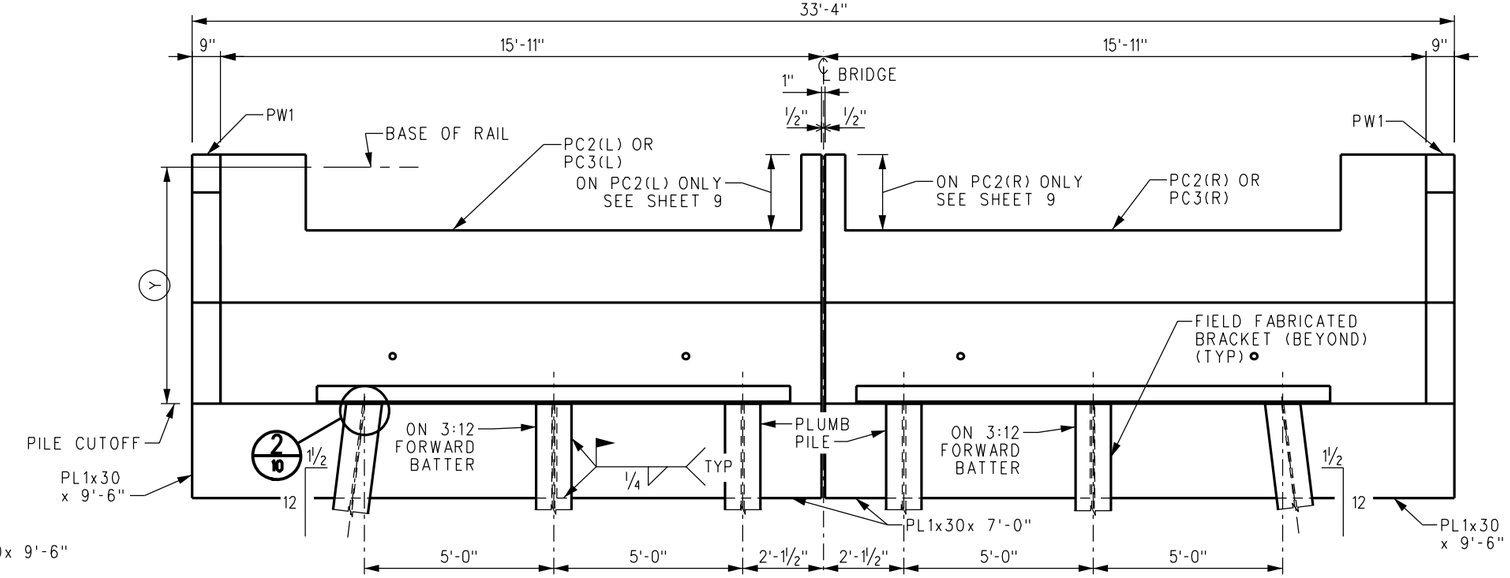

END BENT - DOUBLE TRACK

REV.	DATE	DESCRIPTION	DES.	ENG.
X	XX-XX-XX	REVISION	XX	XX

DRAWN BY: A. CARLOS DATE: 03/31/2011

ASSISTANT DIRECTOR: STANDARDS & DESIGN

DIRECTOR OF ENGINEERING AND CONSTRUCTION

SCRRA ENGINEERING STANDARDS ARE INTENDED FOR SCRRA APPROVED USES ONLY. FOR NON-SCRRA APPROVED USES:
SCRRA SHALL NOT BE RESPONSIBLE FOR THE ACCURACY OR COMPLETENESS OF THE DATA OR INFORMATION CONTAINED HEREIN. THE SELECTION AND USE OF THESE STANDARDS IS THE SOLE RESPONSIBILITY OF THE USER AND SHOULD NOT BE USED WITHOUT CONSULTING A REGISTERED PROFESSIONAL ENGINEER. ALL WARRANTIES AND REPRESENTATIONS OF ANY KIND ARE DISCLAIMED. ANYONE MAKING USE OF THIS INFORMATION AGREES THAT IT ASSUMES ALL LIABILITY ARISING FROM SUCH USE. NO PART OF THESE STANDARDS SHOULD BE REPRODUCED OR DISTRIBUTED IN ANY FORM OR BY ANY MEANS WITHOUT THE PRIOR WRITTEN PERMISSION OF SCRRA. ALL RIGHTS RESERVED.

METROLINK®
SOUTHERN CALIFORNIA REGIONAL RAIL AUTHORITY
ONE GATEWAY PLAZA, 12TH FLOOR, L. A., CA. 90012

ENGINEERING STANDARDS

HANDRAIL DETAILS AND END BENTS
PRECAST/PRESTRESSED CONCRETE
SLAB BEAM BRIDGES

STANDARD 6002
SCALE: 1/8" = 1'-0"
REVISION –
SHEET 7 OF 22
CADD FILE: ES6002-07

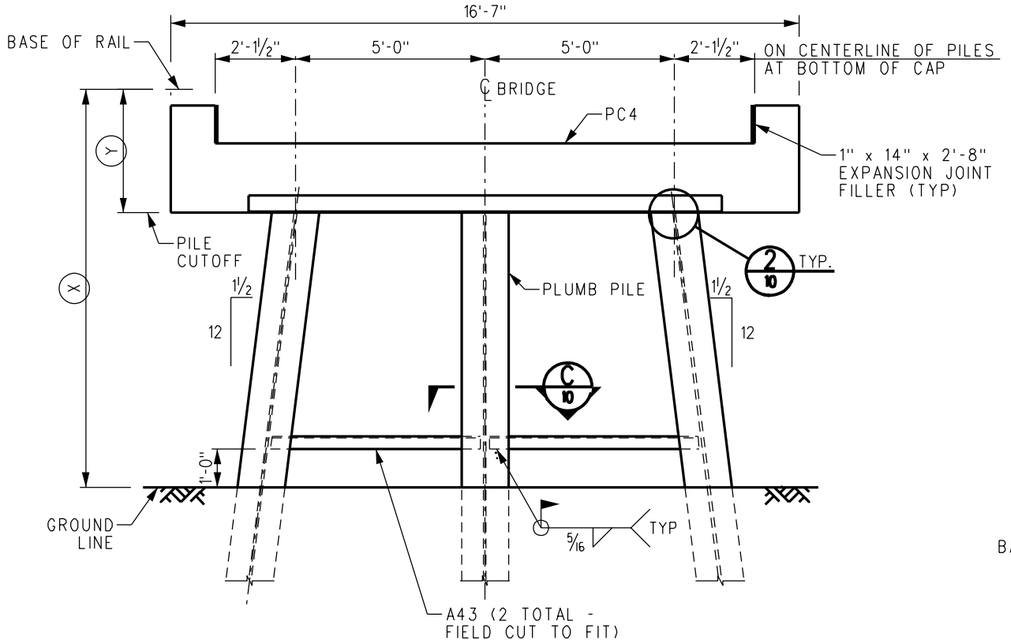

INTERIOR BENT-SINGLE TRACK

H1 - "X" = UP TO 10'-0"

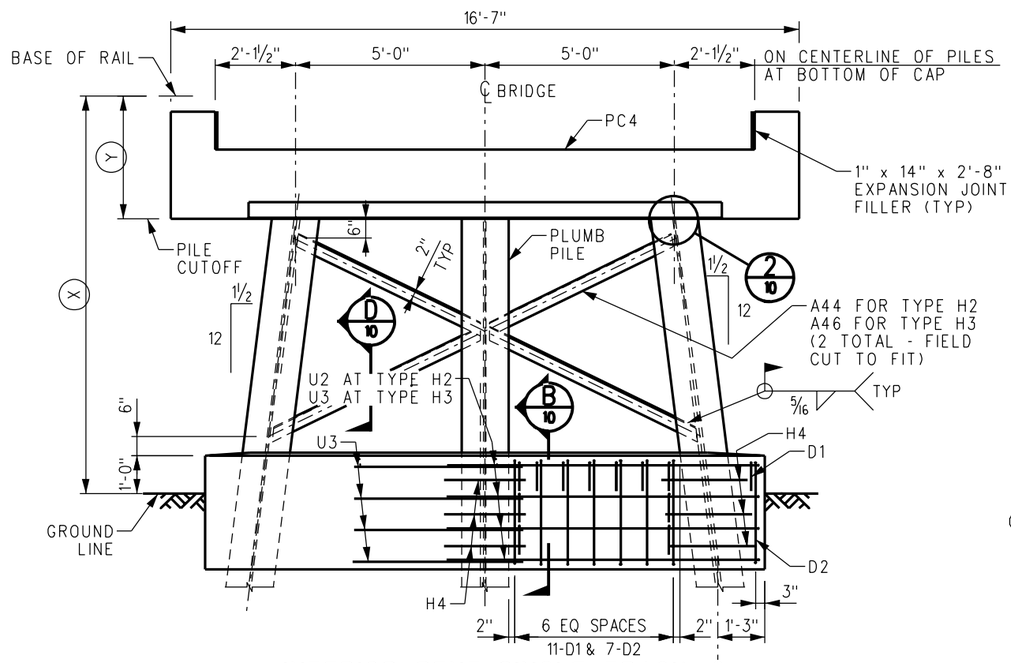

INTERIOR BENT-SINGLE TRACK

TYPE H2 - "X" = 10'-1" TO 13'-0"
TYPE H3 - "X" = 13'-1" TO 16'-0"

NOTES:

1. ALL PILES ARE HP14x117, ASTM A572 GRADE 50 STEEL BEARING PILES UNLESS OTHERWISE SPECIFIED BY THE ENGINEER.
2. ALL BRACING ANGLES TO BE CUT TO LENGTH AS REQUIRED.
3. AFTER PRECAST CONCRETE MEMBERS ARE SET, FILL RECESSES AT LIFT ANCHORS WITH EPOXY GROUT TO TOP OF SURROUNDING CONCRETE.
4. FOR "TYPICAL PILE SPLICE DETAIL" SEE SHEET 10.
5. THE FOLLOWING FORMULA WILL GIVE ESTIMATED QUANTITIES OF CONCRETE IN THE CONCRETE COLLARS IN CUBIC YARDS;
   BENTS H2, H3, H4 AND H5 - 0.07 x "X" + 3.3
   WHERE "X" IS THE DISTANCE FROM BASE OF RAIL TO GROUND LINE IN FEET.
6. "Y" IS THE DISTANCE FROM THE BASE OF RAIL TO PILE CUTOFF. FOR DESIGN ELEVATIONS, "Y" SHALL BE ESTABLISHED IN COORDINATION WITH SCRRA DIRECTOR OF ENGINEERING AND CONSTRUCTION. FOR A TOTAL OF 12" DEPTH (BALLAST PLUS HMA) BELOW STANDARD CONCRETE TIES, "Y" IS PROVIDED FOR STANDARD SLAB BEAM SPANS IN THE TABLE "BASE OF RAIL TO PILE CUTOFF FOR SLABS".

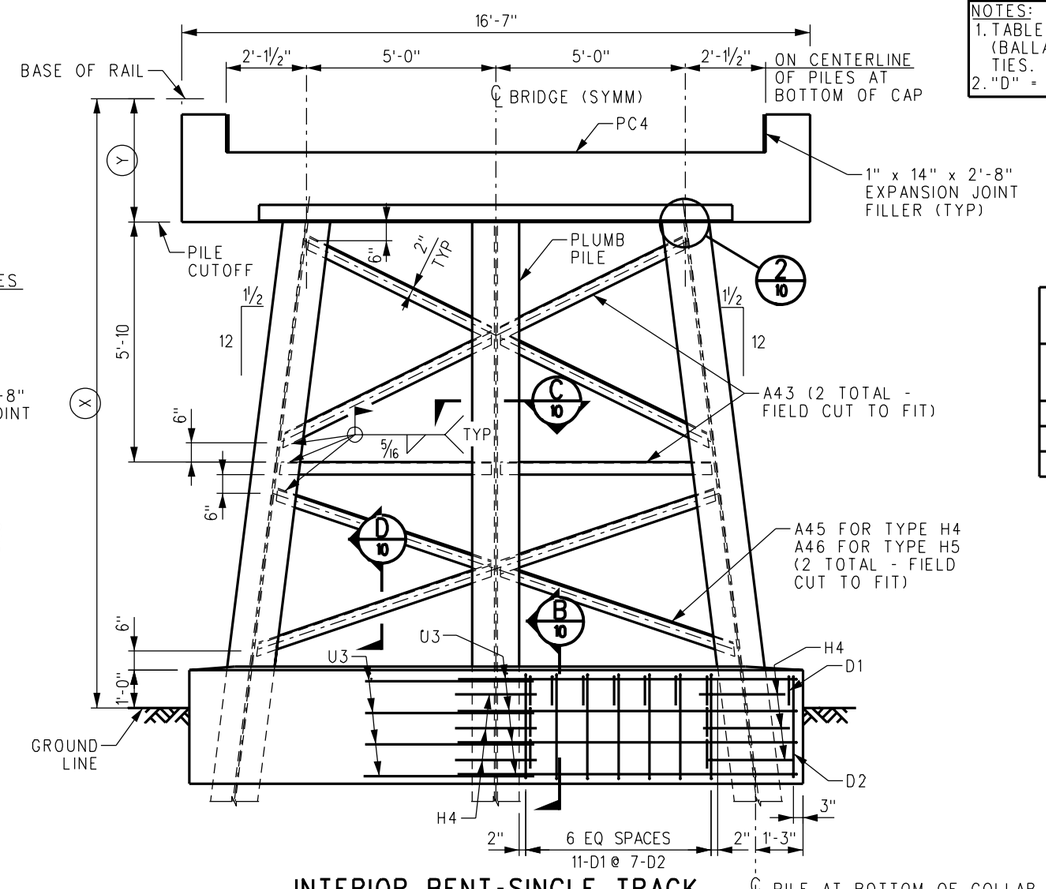

INTERIOR BENT-SINGLE TRACK

TYPE H4 - "X" = 16'-1" TO 18'-0"
TYPE H5 - "X" = 18'-1" TO 21'-0"

REINFORCING STEEL REQUIRED PER CONCRETE COLLAR

BENT TYPE			REINFORCING STEEL MARK
H2	H3	H4	
24	24	24	D1
16	16	16	D2
9	9	9	H4, #4 x 3'-0" (STRAIGHT)
4	-	-	U2
4	8	8	U3

BASE OF RAIL TO PILE CUTOFF FOR SLABS

SPAN LENGTH	"D"	END BENTS "Y"	INTERIOR BENTS "Y"
12'-0"	12"	5'-6"	4'-6"
14'-0"	14"	5'-8"	4'-8"
16'-0"	16"	5'-10"	4'-10"
18'-0"	18"	6'-0"	5'-0"
20'-0"	20"	6'-2"	5'-2"

NOTES:
1. TABLE "Y" VALUES FOR A TOTAL OF 12" DEPTH (BALLAST PLUS HMA) BELOW STANDARD CONCRETE TIES.
2. "D" = DEPTH OF SLAB BEAM

ESTIMATED QUANTITIES PER COLLAR

BENT TYPE	REINFORCING STEEL (LBS)
H2	259
H3	264
H4	264

REV.	DATE	DESCRIPTION	DES.	ENG.
X	XX-XX-XX	REVISION	XX	XX

DRAWN BY: A. CARLOS DATE: 03/31/2011

ASSISTANT DIRECTOR: STANDARDS & DESIGN

DIRECTOR OF ENGINEERING AND CONSTRUCTION

SCRRA ENGINEERING STANDARDS ARE INTENDED FOR SCRRA APPROVED USES ONLY. FOR NON-SCRRA APPROVED USES:
SCRRA SHALL NOT BE RESPONSIBLE FOR THE ACCURACY OR COMPLETENESS OF THE DATA OR INFORMATION CONTAINED HEREIN. THE SELECTION AND USE OF THESE STANDARDS IS THE SOLE RESPONSIBILITY OF THE USER AND SHOULD NOT BE USED WITHOUT CONSULTING A REGISTERED PROFESSIONAL ENGINEER. ALL WARRANTIES AND REPRESENTATIONS OF ANY KIND ARE DISCLAIMED. ANYONE MAKING USE OF THIS INFORMATION AGREES THAT IT ASSUMES ALL LIABILITY ARISING FROM SUCH USE. NO PART OF THESE STANDARDS SHOULD BE REPRODUCED OR DISTRIBUTED IN ANY FORM OR BY ANY MEANS WITHOUT THE PRIOR WRITTEN PERMISSION OF SCRRA. ALL RIGHTS RESERVED.

METROLINK®
SOUTHERN CALIFORNIA REGIONAL RAIL AUTHORITY
ONE GATEWAY PLAZA, 12TH FLOOR, L. A., CA. 90012

ENGINEERING STANDARDS

INTERIOR PILE BENTS (1 OF 2)
PRECAST/PRESTRESSED CONCRETE
SLAB BEAM BRIDGES

STANDARD 6002
SCALE: ½" = 1'-0"
REVISION –
SHEET 8 OF 22
CADD FILE: ES6002-08

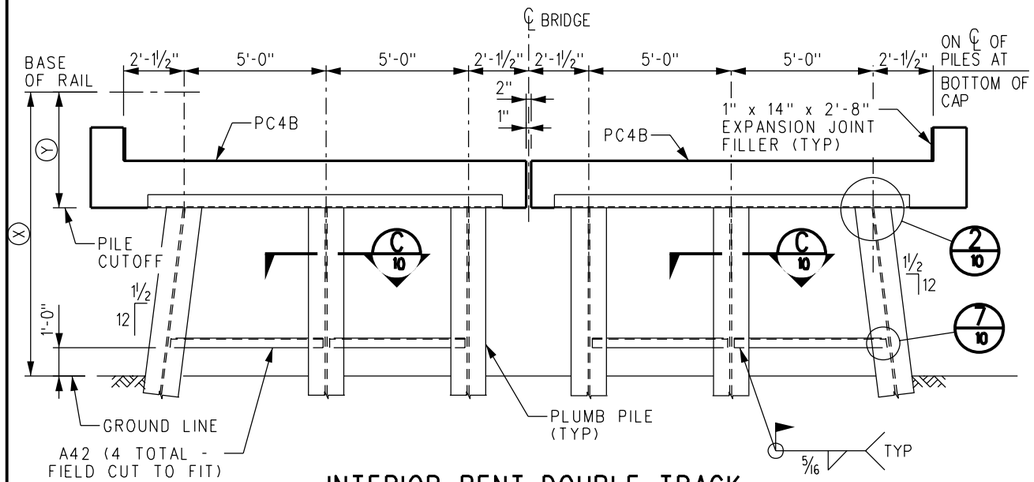

INTERIOR BENT-DOUBLE TRACK

TYPE H6 - "X" UP TO 10'-0"

NOTES:

1. ALL PILES ARE HP14x117, ASTM A572 GRADE 50 STEEL BEARING PILES UNLESS OTHERWISE SPECIFIED BY THE ENGINEER.
2. ALL BRACING ANGLES TO BE CUT TO LENGTH AS REQUIRED.
3. AFTER PRECAST CONCRETE MEMBERS ARE SET, FILL RECESSES AT LIFT ANCHORS WITH EPOXY GROUT TO TOP OF SURROUNDING CONCRETE.
4. FOR "TYPICAL PILE SPLICE DETAIL" AND "WING WALL TO END CAP DETAILS" SEE SHEET 10.
5. THE FOLLOWING FORMULA WILL GIVE ESTIMATED QUANTITIES OF CONCRETE IN THE CONCRETE COLLARS IN CUBIC YARDS;
   BENTS H7, H8 H9 AND H10 - 0.07 x "X" + 7.3
   WHERE "X" IS THE DISTANCE FROM BASE OF RAIL TO GROUND LINE IN FEET.
6. "Y" IS THE DISTANCE FROM THE BASE OF RAIL TO PILE CUTOFF. FOR DESIGN ELEVATIONS, "Y" SHALL BE ESTABLISHED IN COORDINATION WITH SCRRA DIRECTOR OF ENGINEERING AND CONSTRUCTION. FOR A TOTAL OF 12" DEPTH (BALLAST PLUS HMA) BELOW STANDARD CONCRETE TIES, "Y" IS PROVIDED FOR STANDARD SLAB BEAM SPANS IN THE TABLE "BASE OF RAIL TO PILE CUTOFF FOR SLABS".

BASE OF RAIL TO PILE CUTOFF FOR SLABS

SPAN LENGTH	"D"	END BENTS "Y"	INTERIOR BENTS "Y"
12'-0"	12"	5'-6"	4'-6"
14'-0"	14"	5'-8"	4'-8"
16'-0"	16"	5'-10"	4'-10"
18'-0"	18"	6'-0"	5'-0"
20'-0"	20"	6'-2"	5'-2"

NOTES:
1. TABLE "Y" VALUES FOR A TOTAL OF 12" DEPTH (BALLAST PLUS HMA) BELOW STANDARD CONCRETE TIES.
2. "D" = DEPTH OF SLAB BEAM

REINFORCING STEEL REQUIRED PER CONCRETE COLLAR

BENT TYPE				REINFORCING STEEL MARK
H7	H8	H9	H10	
50	50	52	52	D1
32	32	32	32	D2
18	18	18	18	H4, *4x3'-0" (STRAIGHT)
16	16	-	-	U1
-	-	16	16	U2

ESTIMATED QUANTITIES PER COLLAR

BENT TYPE	REINFORCING STEEL (LBS)
H7	497
H8	497
H9	517
H10	517

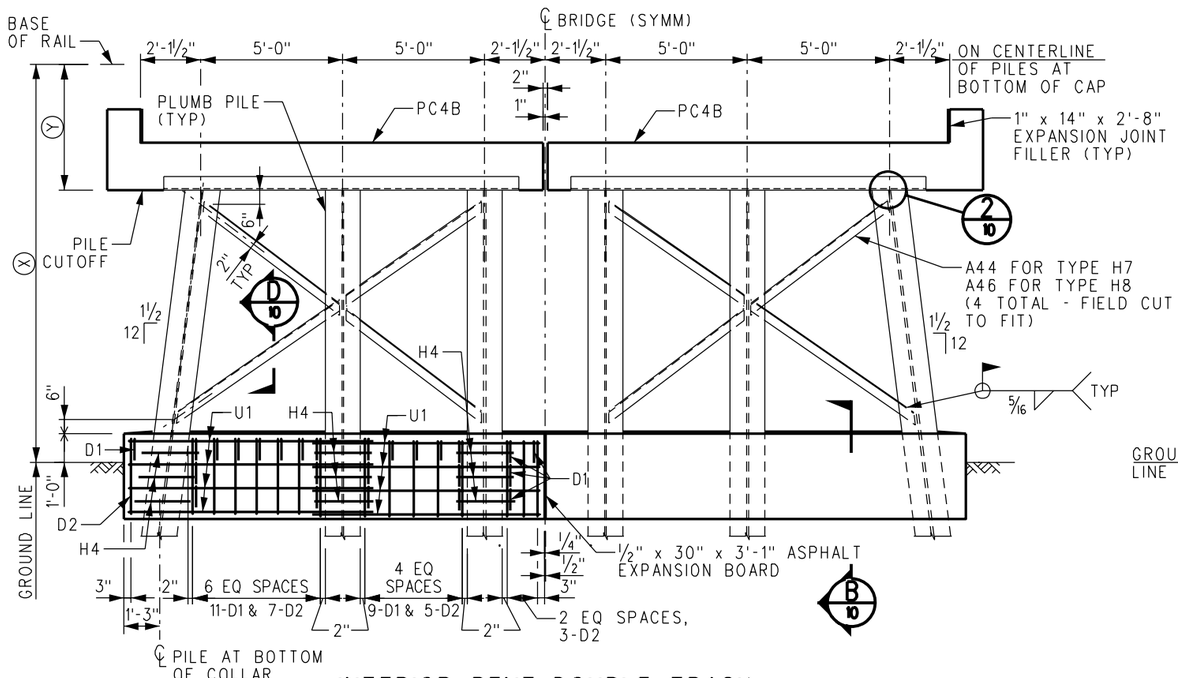

INTERIOR BENT-DOUBLE TRACK

TYPE H7 - "X" = 10'-1" TO 13'-0"
TYPE H8 - "X" = 13'-1" TO 16'-0"

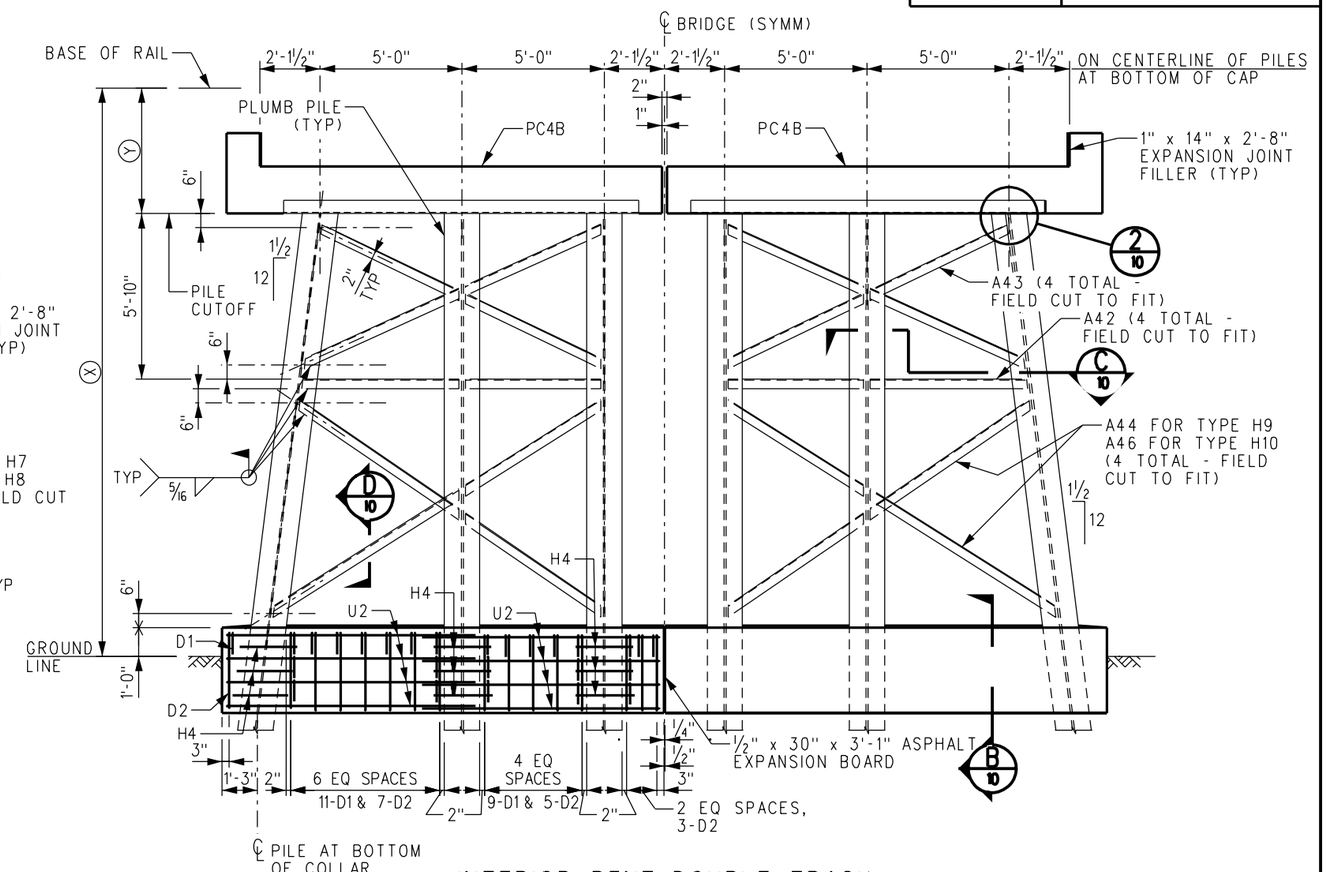

INTERIOR BENT-DOUBLE TRACK

TYPE H9 - "X" = 16'-1" TO 18'-0"
TYPE H10 - "X" = 18'-1" TO 21'-0"

REV.	DATE	DESCRIPTION	DES.	ENG.
X	XX-XX-XX	REVISION	XX	XX

DRAWN BY: A. CARLOS DATE: 03/31/2011

ASSISTANT DIRECTOR: STANDARDS & DESIGN

DIRECTOR OF ENGINEERING AND CONSTRUCTION

SCRRA ENGINEERING STANDARDS ARE INTENDED FOR SCRRA APPROVED USES ONLY. FOR NON-SCRRA APPROVED USES: SCRRA SHALL NOT BE RESPONSIBLE FOR THE ACCURACY OR COMPLETENESS OF THE DATA OR INFORMATION CONTAINED HEREIN. THE SELECTION AND USE OF THESE STANDARDS IS THE SOLE RESPONSIBILITY OF THE USER AND SHOULD NOT BE USED WITHOUT CONSULTING A REGISTERED PROFESSIONAL ENGINEER. ALL WARRANTIES AND REPRESENTATIONS OF ANY KIND ARE DISCLAIMED. ANYONE MAKING USE OF THIS INFORMATION AGREES THAT IT ASSUMES ALL LIABILITY ARISING FROM SUCH USE. NO PART OF THESE STANDARDS SHOULD BE REPRODUCED OR DISTRIBUTED IN ANY FORM OR BY ANY MEANS WITHOUT THE PRIOR WRITTEN PERMISSION OF SCRRA. ALL RIGHTS RESERVED.

METROLINK®
SOUTHERN CALIFORNIA REGIONAL RAIL AUTHORITY
ONE GATEWAY PLAZA, 12TH FLOOR, L. A., CA. 90012

ENGINEERING STANDARDS

INTERIOR PILE BENTS (2 OF 2)
PRECAST/PRESTRESSED CONCRETE
SLAB BEAM BRIDGES

STANDARD 6002
SCALE: 3/8" = 1'-0"
REVISION –
SHEET 9 OF 22
CADD FILE: ES6002-09

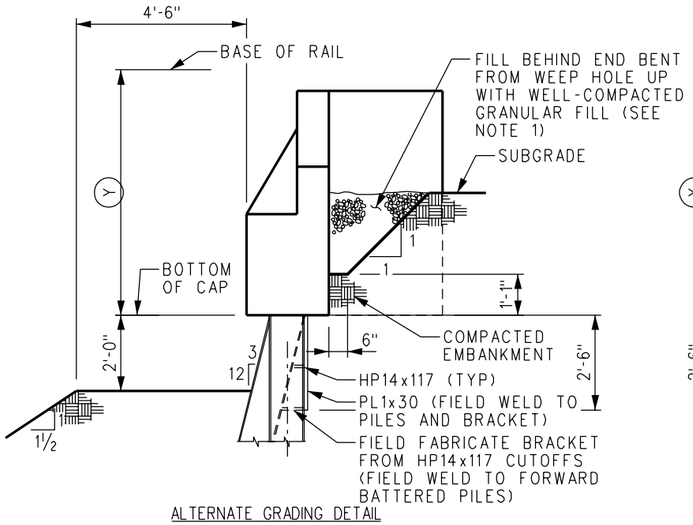

ALTERNATE GRADING DETAIL

DETAIL 8
SCALE: NONE

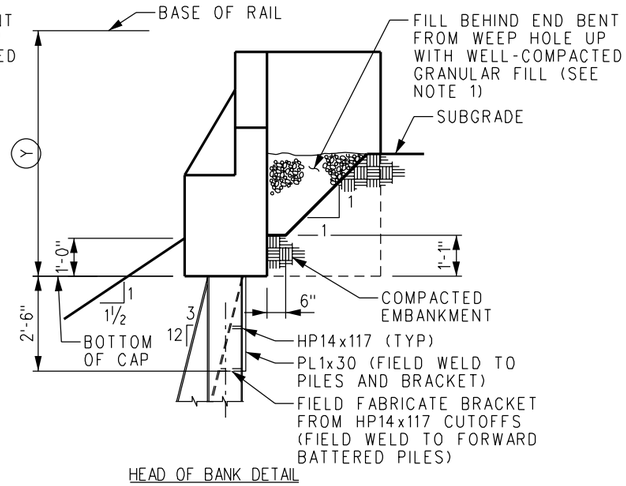

HEAD OF BANK DETAIL

DETAIL 8
SCALE: NONE

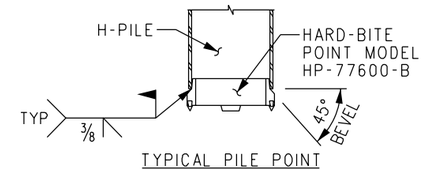

TYPICAL PILE POINT

TIP REINFORCEMENT
INSTALLATION INSTRUCTIONS
1. FIT POINT ONTO SQUARE CUT PILE.
2. WELD POINT TO THE PILE IN EITHER FLAT OR VERTICAL POSITION, USING
3. E70XX ELECTRODES.
FILL THE AREA ACROSS BOTH FLANGES WITH WELD.

ALTERNATE PILE SPLICING TO BE APPROVED BY ENGINEER.

DETAIL 4
SCALE: NONE

NOTES:

1. BEFORE BACKFILLING END BENTS APPLY A COATING OF PETROLATUM TO PILE PLATES, CONNECTION BARS, BACKWALL PLATES AND TOP 2'-6" OF PILES.
2. BACKFILL BEHIND END BENTS WITH FREE DRAINING MATERIAL TO THE LIMITS SHOWN ON THIS SHEET. MATERIAL SHALL MEET REQUIREMENTS OF ASTM C33 SPECIFICATION AND SHALL BE A WELL GRADED MIXTURE OF SAND AND GRAVEL WITH THE FOLLOWING GRADATIONS:
   100% PASSING THE 1" SIEVE
   60% PASSING THE #4 SIEVE
   5% PASSING #200 SIEVE, MAX
3. "Y" IS THE DISTANCE FROM THE BASE OF RAIL TO PILE CUTOFF. FOR DESIGN ELEVATIONS, "Y" SHALL BE ESTABLISHED IN COORDINATION WITH SCRRA DIRECTOR OF ENGINEERING AND CONSTRUCTION. FOR A TOTAL OF 12" DEPTH (BALLAST PLUS HMA) BELOW STANDARD CONCRETE TIES, "Y" IS PROVIDED FOR STANDARD SLAB BEAM SPANS IN THE TABLE "BASE OF RAIL TO PILE CUTOFF FOR SLABS" SHOWN ON SHEET 7.

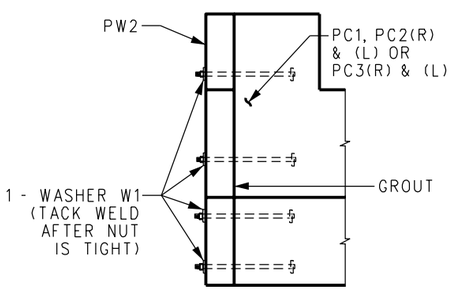

WING WALL TO END CAP DETAIL

DETAIL 1
SCALE: NONE

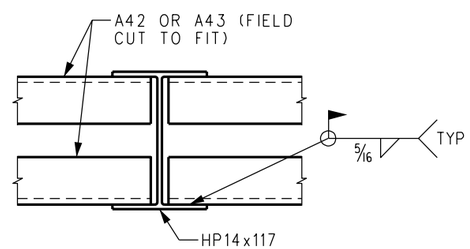

SECTION C 08 / C 09
SCALE: NONE

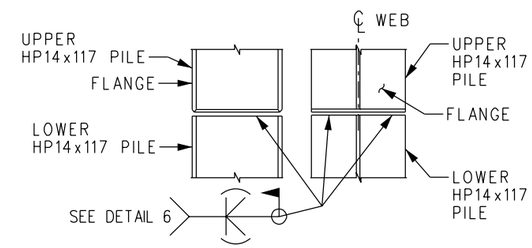

ALTERNATE PILE SPLICE

DETAIL 3
SCALE: 1"=1'-0"

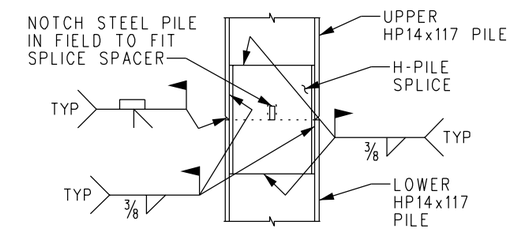

TYPICAL PILE SPLICE
NOTCH PILE WEB TO FIT AROUND SPACER PLATE

DETAIL 5
SCALE: NONE

PILE SPLICE FOR HP14x117
INSTALLATION INSTRUCTIONS:
1. NOTCH THE END OF UPPER LENGTH OF H-PILE (TO ACCOMMODATE THE SPLICE SPACER BAR).
2. FIT SPLICE OVER NOTCHED END OF UPPER H-PILE, AND WELD CORNERS.
3. PLACE THE UPPER SECTION AND SPLICER INTO POSITION ONTO THE LOWER SECTION.
4. WELD ALONG THE OUTSIDE OF THE WEB AND ALONG THE LOWER CORNERS OF THE SPLICE.
5. WELD JOINT BETWEEN UPPER AND LOWER PILE.

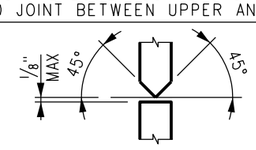

DETAIL 6
SCALE: NONE

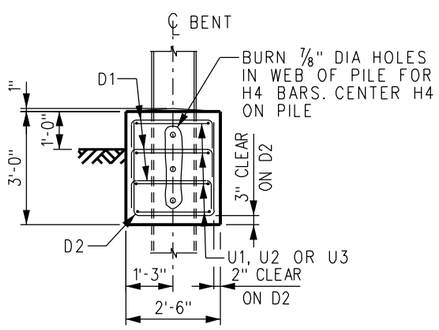

SECTION B 08 / B 09
SCALE: ½"=1'-0"

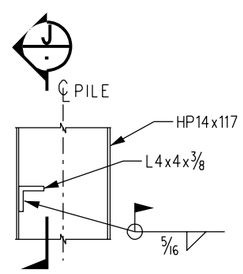

SECTION D 08 / D 09
SCALE: 1"=1'-0"

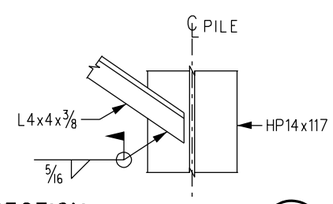

SECTION E
SCALE: 1"=1'-0"

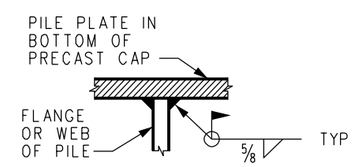

DETAIL AT TOP OF PILES

DETAIL 2 07 / 2 08 / 2 09
SCALE: NONE

REV.	DATE	DESCRIPTION	DES.	ENG.
X	XX-XX-XX	REVISION	XX	XX

DRAWN BY: A. CARLOS DATE: 03/31/2011

ASSISTANT DIRECTOR: STANDARDS & DESIGN

DIRECTOR OF ENGINEERING AND CONSTRUCTION

SCRRA ENGINEERING STANDARDS ARE INTENDED FOR SCRRA APPROVED USES ONLY. FOR NON-SCRRA APPROVED USES: SCRRA SHALL NOT BE RESPONSIBLE FOR THE ACCURACY OR COMPLETENESS OF THE DATA OR INFORMATION CONTAINED HEREIN. THE SELECTION AND USE OF THESE STANDARDS IS THE SOLE RESPONSIBILITY OF THE USER AND SHOULD NOT BE USED WITHOUT CONSULTING A REGISTERED PROFESSIONAL ENGINEER. ALL WARRANTIES AND REPRESENTATIONS OF ANY KIND ARE DISCLAIMED. ANYONE MAKING USE OF THIS INFORMATION AGREES THAT IT ASSUMES ALL LIABILITY ARISING FROM SUCH USE. NO PART OF THESE STANDARDS SHOULD BE REPRODUCED OR DISTRIBUTED IN ANY FORM OR BY ANY MEANS WITHOUT THE PRIOR WRITTEN PERMISSION OF SCRRA. ALL RIGHTS RESERVED.

METROLINK®
SOUTHERN CALIFORNIA REGIONAL RAIL AUTHORITY
ONE GATEWAY PLAZA, 12TH FLOOR, L. A., CA. 90012

ENGINEERING STANDARDS

BENT DETAILS
PRECAST/PRESTRESSED CONCRETE
SLAB BEAM BRIDGES

STANDARD 6002
SCALE: AS NOTED
REVISION –
SHEET 10 OF 22
CADD FILE: ES6002-10

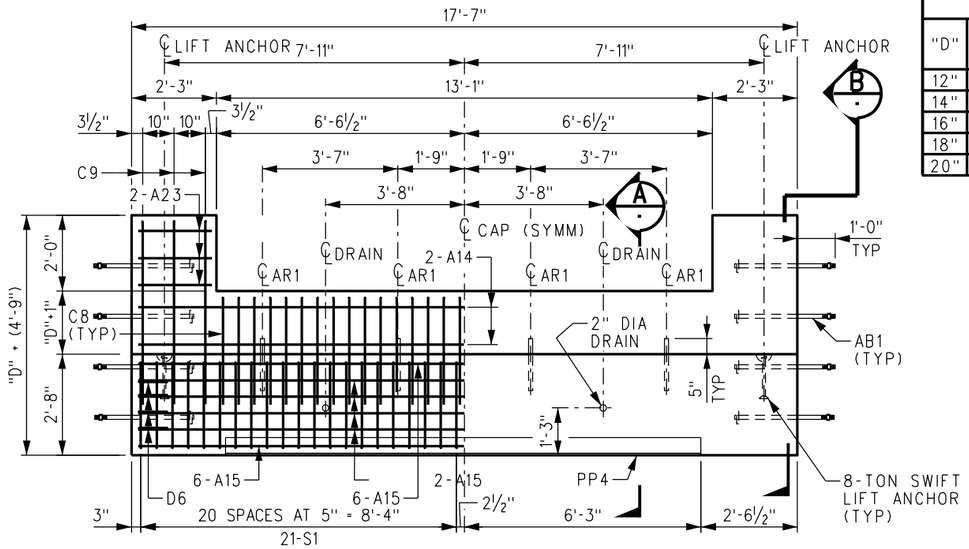

PRECAST CAP PC1

SCALE: ½"=1'-0
ESTIMATED LIFTING WEIGHT: SEE TABLE
REQUIRED VOLUME OF CONCRETE: SEE TABLE
WEIGHT OF REINFORCING STEEL = 1050 LBS

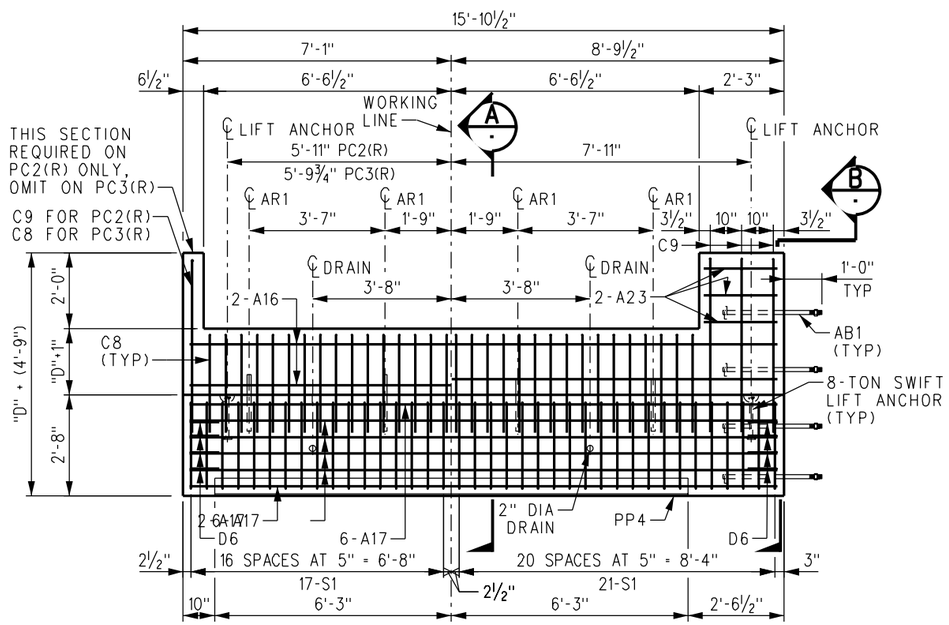

PRECAST CAP PC2(R)

SCALE: ½"=1'-0
ESTIMATED LIFTING WEIGHT: SEE TABLE
REQUIRED VOLUME OF CONCRETE: SEE TABLE
WEIGHT OF REINFORCING STEEL = 944 LBS
(PRECAST CAP PC2(L) OPPOSITE HAND)

PRECAST CAP PC3(R)

SCALE: ½"=1'-0
ESTIMATED LIFTING WEIGHT: SEE TABLE
REQUIRED VOLUME OF CONCRETE: SEE TABLE
WEIGHT OF REINFORCING STEEL = 941 LBS
(PRECAST CAP PC3(L) OPPOSITE HAND)

PRECAST CAP PC1

"D"	VOLUME OF CONCRETE	ESTIMATED WEIGHT
12"	4.0 CY	8.6 TONS
14"	4.2 CY	9.1 TONS
16"	4.4 CY	9.5 TONS
18"	4.7 CY	10.0 TONS
20"	4.9 CY	10.5 TONS

PRECAST CAP PC2(R) OR PC2(L)

"D"	VOLUME OF CONCRETE	ESTIMATED WEIGHT
12"	3.4 CY	7.4 TONS
14"	3.6 CY	7.9 TONS
16"	3.9 CY	8.4 TONS
18"	4.1 CY	8.8 TONS
20"	4.3 CY	9.3 TONS

PRECAST CAP PC3(R) OR PC3(L)

"D"	VOLUME OF CONCRETE	ESTIMATED WEIGHT
12"	3.4 CY	7.3 TONS
14"	3.6 CY	7.8 TONS
16"	3.8 CY	8.3 TONS
18"	4.1 CY	8.8 TONS
20"	4.3 CY	9.2 TONS

REINFORCING SCHEDULE

REQUIRED PER PRECAST CAP					DESCRIPTION
PC1	PC2(R)	PC2(L)	PC3(R)	PC3(L)	
4	-	-	-	-	BAR A14, #5 x 17'-3" (STRAIGHT)
20	-	-	-	-	BAR A15, #6 x 17'-3" (STRAIGHT)
-	4	4	4	4	BAR A16, #5 x 15'-6" (STRAIGHT)
-	20	20	20	20	BAR A17, #6 x 15'-6" (STRAIGHT)
12	6	6	6	6	BAR A23, #4 x 1'-11" (STRAIGHT)
32	32	32	33	33	BAR C8, #4 x 5'-8" (SEE DETAIL, SHEET 15)
6	4	4	3	3	BAR C9, #4 x 9'-8" (SEE DETAIL, SHEET 15)
8	8	8	8	8	BAR D6, #4 x 3'-3" (SEE DETAIL, SHEET 15)
42	38	38	38	38	BAR S1, #4 x 9'-6" (SEE DETAIL, SHEET 15)

MISCELLANEOUS STEEL SCHEDULE

REQUIRED PER PRECAST CAP					DESCRIPTION
PC1	PC2(R)	PC2(L)	PC3(R)	PC3(L)	
8	4	4	4	4	ANCHOR BOLT AB1, (SEE DETAIL, SHT 14), GALV
4	4	4	4	4	ANCHOR ROD AR1, (SEE DETAIL, SHT 14), GALV
1	1	1	1	1	PILE PLATE PP4, (SEE DETAIL, SHT 14)

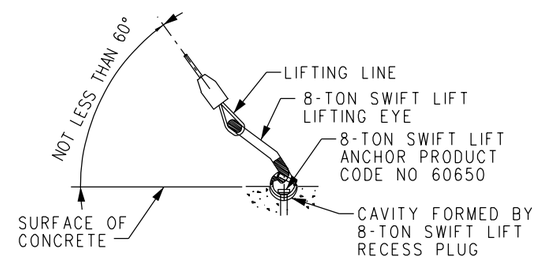

8-TON SWIFT LIFT RECESS PLUGS, ANCHORS AND LIFTING EYES ARE AVAILABLE FROM DAYTON RICHMOND CORP., 9415 SORENSON AVE., SANTA FE SPRINGS, CALIFORNIA 90670, TELEPHONE (714) 522-3442. THE MATERIALS FOR THIS LIFTING SYSTEM ARE NOT INCLUDED IN THE BILL OF MATERIAL BUT ARE TO BE ORDERED AS REQUIRED.

LIFTING DETAIL

SCALE: NONE

NOTES:

1. ALL CONCRETE, CONCRETE WORK AND PLACEMENT OF REINFORCEMENT SHALL BE IN ACCORDANCE WITH SCRRA STANDARD SPECIFICATIONS.
2. THE PORTION OF PILE PLATE PP4 IN CONTACT WITH CONCRETE SHALL BE CLEANED OF ALL DIRT, OIL AND GREASE AND ALL LOOSE SCALE AND RUST BEFORE CONCRETE IS PLACED.
3. THE ULTIMATE COMPRESSIVE STRENGTH OF CONCRETE SHALL NOT BE LESS THAN 4000 PSI IN 28 DAYS. MAXIMUM SIZE OF COARSE AGGREGATE SHALL BE ONE INCH.
4. MINIMUM CONCRETE COVER ON REINFORCEMENT SHALL BE TWO INCHES.
5. ALL EXPOSED EDGES OF CONCRETE MEMBERS SHALL BE CHAMFERED ¾".
6. CONCRETE MEMBERS SHALL NOT BE REMOVED FROM THE CASTING BED BEFORE THE CONCRETE REACHES A STRENGTH OF 2000 PSI.
7. "D" = DEPTH OF SLAB BEAM.
8. ANCHOR ROD AR1 MUST BE PLACED WITHIN ¼" OF PLAN LOCATION OR BEAMS WILL NOT FIT.

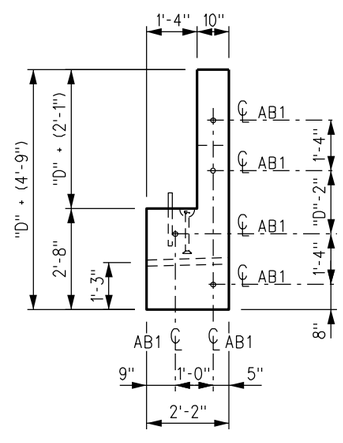

TYPICAL SIDE ELEVATION

SCALE: ½"=1'-0"

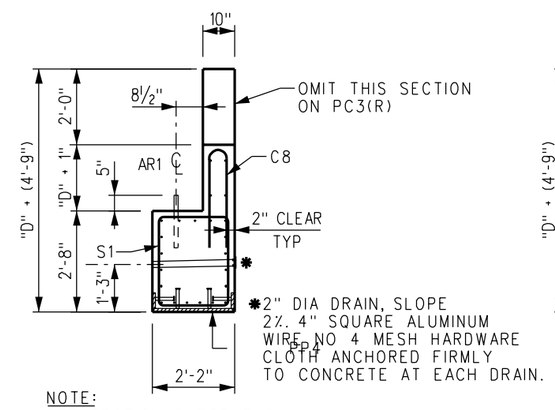

NOTE:
SEE SECTION B FOR BAR DESIGNATIONS NOT SHOWN.

SECTION A

SCALE: ½"=1'-0"

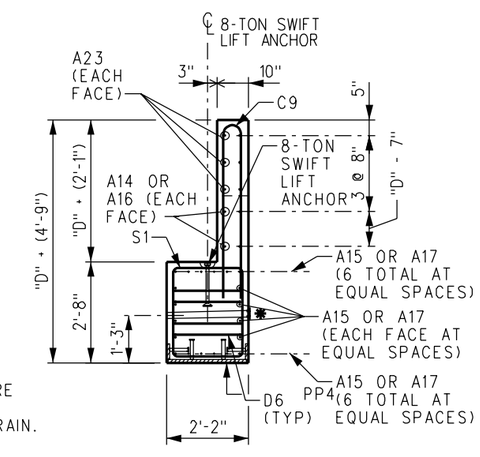

SECTION B

SCALE: ½"=1'-0"

REV.	DATE	DESCRIPTION	DES.	ENG.
X	XX-XX-XX	REVISION	XX	XX

DRAWN BY: A. CARLOS DATE: 03/31/2011

ASSISTANT DIRECTOR: STANDARDS & DESIGN

DIRECTOR OF ENGINEERING AND CONSTRUCTION

SCRRA ENGINEERING STANDARDS ARE INTENDED FOR SCRRA APPROVED USES ONLY. FOR NON-SCRRA APPROVED USES: SCRRA SHALL NOT BE RESPONSIBLE FOR THE ACCURACY OR COMPLETENESS OF THE DATA OR INFORMATION CONTAINED HEREIN. THE SELECTION AND USE OF THESE STANDARDS IS THE SOLE RESPONSIBILITY OF THE USER AND SHOULD NOT BE USED WITHOUT CONSULTING A REGISTERED PROFESSIONAL ENGINEER. ALL WARRANTIES AND REPRESENTATIONS OF ANY KIND ARE DISCLAIMED. ANYONE MAKING USE OF THIS INFORMATION AGREES THAT IT ASSUMES ALL LIABILITY ARISING FROM SUCH USE. NO PART OF THESE STANDARDS SHOULD BE REPRODUCED OR DISTRIBUTED IN ANY FORM OR BY ANY MEANS WITHOUT THE PRIOR WRITTEN PERMISSION OF SCRRA. ALL RIGHTS RESERVED.

METROLINK®
SOUTHERN CALIFORNIA REGIONAL RAIL AUTHORITY
ONE GATEWAY PLAZA, 12TH FLOOR, L. A., CA. 90012

ENGINEERING STANDARDS

PRECAST CONCRETE MEMBERS (1 OF 2)
PRECAST/PRESTRESSED CONCRETE
SLAB BEAM BRIDGES

STANDARD 6002
SCALE: AS NOTED
REVISION –
SHEET 11 OF 22
CADD FILE: ES6002-11

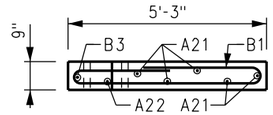

SECTION D

SCALE: 1½"=1'-0

PRECAST WING WALL PW1		
"D"	VOLUME OF CONCRETE	ESTIMATED WEIGHT
12"	0.76 CY	1.5 TONS
14"	0.78 CY	1.6 TONS
16"	0.81 CY	1.6 TONS
18"	0.83 CY	1.7 TONS
20"	0.85 CY	1.7 TONS

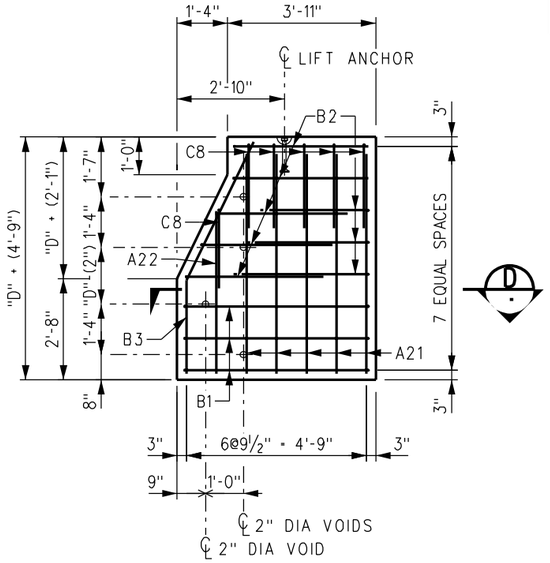

PRECAST WING WALL PW1

SCALE: ½" = 1'-0"
ESTIMATED LIFTING WEIGHT: SEE TABLE
REQUIRED VOLUME OF CONCRETE: SEE TABLE
WEIGHT OF REINFORCING STEEL = 127 LBS

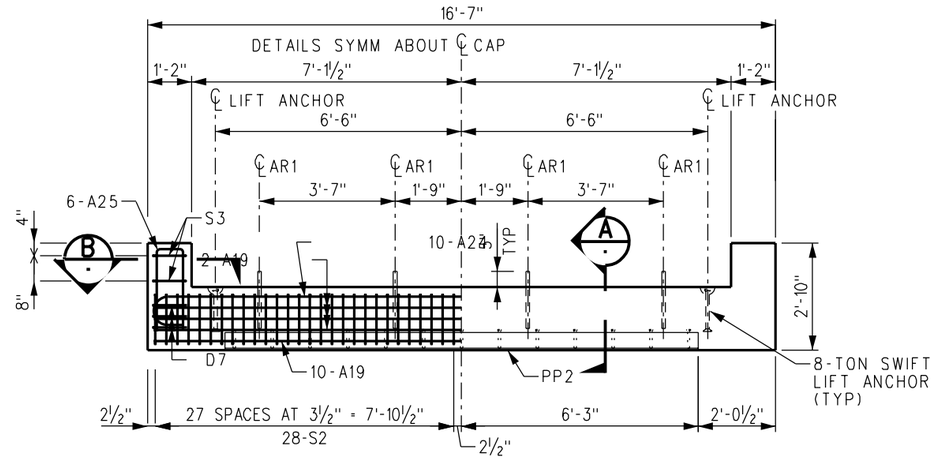

PRECAST CAP PC4

SCALE: ½" = 1'-0"
ESTIMATED LIFTING WEIGHT = 6.5 TONS
REQUIRED VOLUME OF CONCRETE = 2.9 CY
WEIGHT OF REINFORCING STEEL = 934 LBS

REINFORCING SCHEDULE

REQUIRED PER PRECAST CAP			DESCRIPTION
PC4	PC4B	PW1	
16	-	-	BAR A19, #5 x 16'-3" (STRAIGHT)
-	16	-	BAR A20, #5 x 15'-0" (STRAIGHT)
-	-	5	BAR A21, #4 x 5'-3" (STRAIGHT)
-	-	1	BAR A22, #4 x 3'-10" (STRAIGHT)
10	-	-	BAR A24, #5 x 18'-11" (SEE DETAIL, SHT 15)
12	6	-	BAR A25, #6 x 5'-8" (SEE DETAIL, SHT 15)
-	10	-	BAR A26, #5 x 17'-8" (SEE DETAIL, SHT 15)
-	-	3	BAR B1, #5 x 12'-10" (SEE DETAIL, SHT 15)
-	-	8	BAR B2, #4 x 7'-7" (SEE DETAIL, SHT 15)
-	-	1	BAR B3, #4 x 5'-2" (SEE DETAIL, SHT 15)
-	-	6	BAR C8, #4 x 5'-6" (SEE DETAIL, SHT 15)
6	6	-	BAR D7, #4 x 3'-9" (SEE DETAIL, SHT 15)
56	52	-	BAR S2, #4 x 8'-6" (SEE DETAIL, SHT 15)
4	2	-	BAR S3, #5 x 7'-2" (SEE DETAIL, SHT 15)

MISCELLANEOUS STEEL SCHEDULE

REQUIRED PER PRECAST CAP			DESCRIPTION
PC4	PC4B	PW1	
8	8	-	ANCHOR ROD AR1, (SEE DETAIL, SHT 14) GALV
1	1	-	PILE PLATE PP2, (SEE DETAIL, SHT 14)

NOTES:

1. ALL CONCRETE, CONCRETE WORK AND PLACEMENT OF REINFORCEMENT SHALL BE IN ACCORDANCE WITH SCRRA STANDARD SPECIFICATIONS.
2. THE PORTION OF PILE PLATE PP2 IN CONTACT WITH CONCRETE SHALL BE CLEANED OF ALL DIRT, OIL AND GREASE AND ALL LOOSE SCALE AND RUST BEFORE CONCRETE IS PLACED.
3. THE ULTIMATE COMPRESSIVE STRENGTH OF CONCRETE SHALL BE NOT LESS THAN 4000 PSI IN 28 DAYS. MAXIMUM SIZE OF COARSE AGGREGATE
4. SHALL BE ONE INCH.
5. MINIMUM CONCRETE COVER ON REINFORCEMENT SHALL BE TWO INCHES.
6. ALL EXPOSED EDGES OF CONCRETE MEMBERS SHALL BE CHAMFERED ¾". CONCRETE MEMBERS SHALL NOT BE REMOVED FROM THE CASTING BED
7. BEFORE THE CONCRETE REACHES A STRENGTH OF 2000 PSI. "D" = DEPTH OF SLAB BEAM. ANCHOR ROD AR1 MUST BE PLACED WITHIN ¼" OF PLAN LOCATION OR BEAMS WILL NOT FIT.

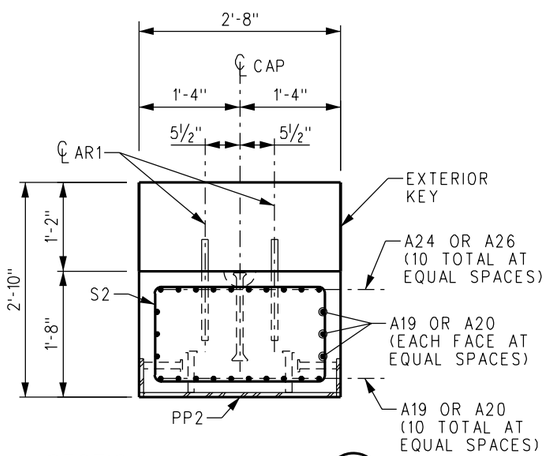

SECTION A

SCALE: 1"=1'-0

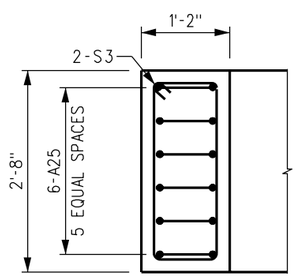

SECTION B

SCALE: 1"=1'-0

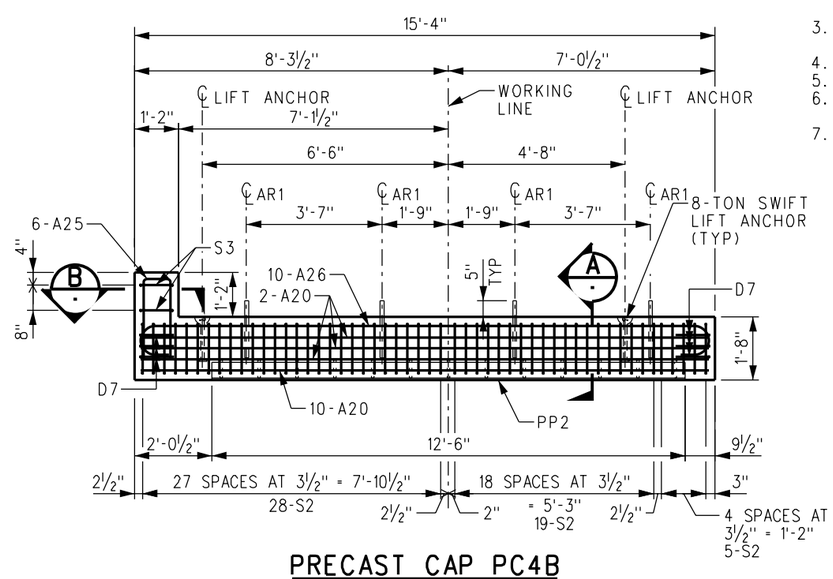

PRECAST CAP PC4B

SCALE: ½" = 1'-0"
ESTIMATED LIFTING WEIGHT = 5.8 TONS
REQUIRED VOLUME OF CONCRETE = 2.6 CY
WEIGHT OF REINFORCING STEEL = 811 LBS

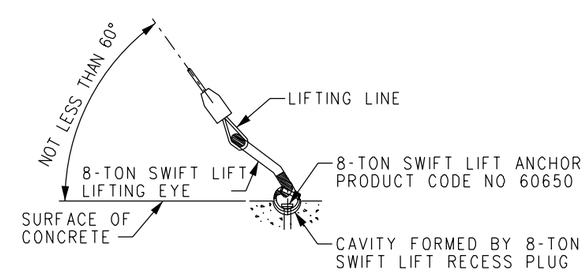

8-TON SWIFT LIFT RECESS PLUGS, ANCHORS AND LIFTING EYES ARE AVAILABLE FROM DAYTON RICHMOND CORP., 9415 SORENSON AVE., SANTA FE SPRINGS, CALIFORNIA 90670, TELEPHONE (714) 522-3442. THE MATERIALS FOR THIS LIFTING SYSTEM ARE NOT INCLUDED IN THE BILL OF MATERIAL BUT ARE TO BE ORDERED AS REQUIRED.

LIFTING DETAIL

SCALE: NONE

REV.	DATE	DESCRIPTION	DES.	ENG.
X	XX-XX-XX	REVISION	XX	XX

DRAWN BY: A. CARLOS DATE: 03/31/2011

ASSISTANT DIRECTOR: STANDARDS & DESIGN

DIRECTOR OF ENGINEERING AND CONSTRUCTION

SCRRA ENGINEERING STANDARDS ARE INTENDED FOR SCRRA APPROVED USES ONLY. FOR NON-SCRRA APPROVED USES: SCRRA SHALL NOT BE RESPONSIBLE FOR THE ACCURACY OR COMPLETENESS OF THE DATA OR INFORMATION CONTAINED HEREIN. THE SELECTION AND USE OF THESE STANDARDS IS THE SOLE RESPONSIBILITY OF THE USER AND SHOULD NOT BE USED WITHOUT CONSULTING A REGISTERED PROFESSIONAL ENGINEER. ALL WARRANTIES AND REPRESENTATIONS OF ANY KIND ARE DISCLAIMED. ANYONE MAKING USE OF THIS INFORMATION AGREES THAT IT ASSUMES ALL LIABILITY ARISING FROM SUCH USE. NO PART OF THESE STANDARDS SHOULD BE REPRODUCED OR DISTRIBUTED IN ANY FORM OR BY ANY MEANS WITHOUT THE PRIOR WRITTEN PERMISSION OF SCRRA. ALL RIGHTS RESERVED.

METROLINK®
SOUTHERN CALIFORNIA REGIONAL RAIL AUTHORITY
ONE GATEWAY PLAZA, 12TH FLOOR, L. A., CA. 90012

ENGINEERING STANDARDS

PRECAST CONCRETE MEMBERS (2 OF 2)
PRECAST/PRESTRESSED CONCRETE
SLAB BEAM BRIDGES

STANDARD 6002
SCALE: AS NOTED
REVISION –
SHEET 12 OF 22
CADD FILE: ES6002-12

DP11 LENGTHS FOR PB11.92 - PB19.92				
BEAM MARK	WEIGHT	"P"	"Q"	"R"
PB11.92	111 LBS	11'-11½"	11'-4"	4'-0"
PB13.92	129 LBS	13'-11½"	13'-4"	5'-0"
PB15.92	147 LBS	15'-11½"	15'-4"	6'-0"
PB17.92	165 LBS	17'-11½"	17'-4"	7'-0"
PB19.92	182 LBS	19'-11½"	19'-4"	8'-0"

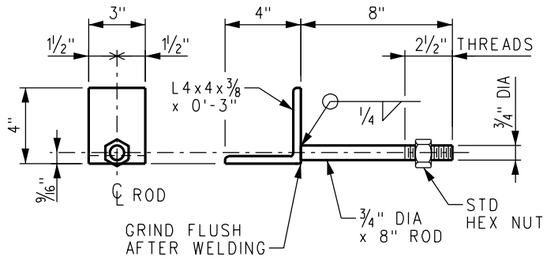

CURB ANGLE CA3

SCALE: 3" = 1'-0"
WEIGHT = 3.6 LBS
GALVANIZE AFTER FABRICATION

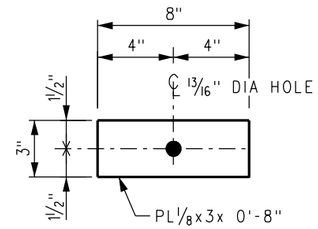

CURB PLATE CP2

SCALE: 3" = 1'-0"
WEIGHT = 1.0 LBS
GALVANIZE AFTER FABRICATION

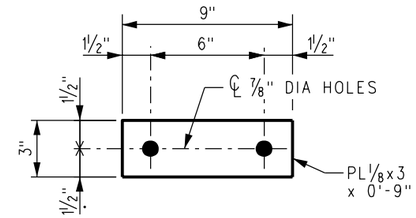

CURB PLATE CP3

SCALE: 3" = 1'-0"
WEIGHT = 2.9 LBS
GALVANIZE AFTER FABRICATION

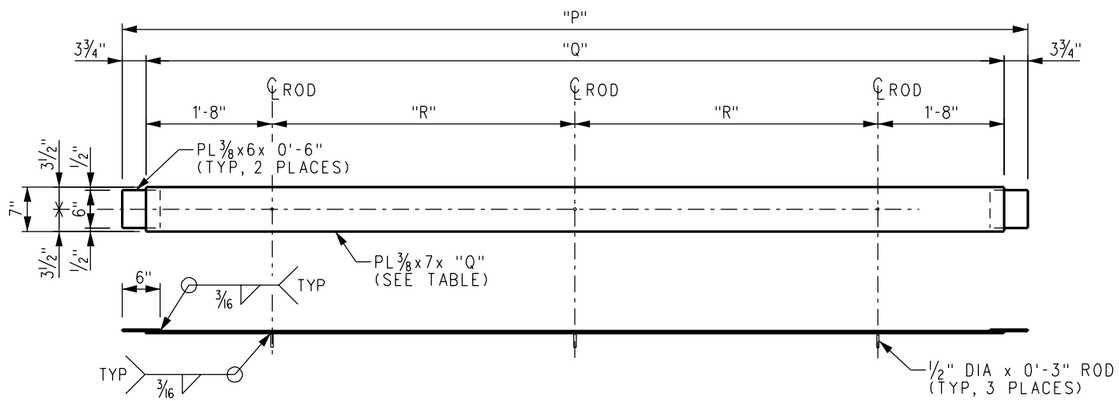

DECK PLATE DP11

SCALE: 1" = 1'-0"
WEIGHT: SEE TABLE
GALVANIZE AFTER FABRICATION

MATERIAL NOTES:

1. STRUCTURAL STEEL BARS, STEEL PLATES AND ANGLES SHALL MEET THE REQUIREMENTS OF THE CURRENT ASTM DESIGNATION: A36.
2. SHEAR CONNECTOR STUDS SHALL MEET THE REQUIREMENTS OF SECTION 7 OF THE CURRENT AWS STRUCTURAL WELDING CODE D1.1 FOR GRADE 1020 SOLID FLUX FILLED HEADED STUDS.

SHOP NOTES:

1. FABRICATION AND ARC WELDING OF STRUCTURAL STEEL SHALL BE IN ACCORDANCE WITH SCRRA STANDARD SPECIFICATIONS.
2. GRIND EXPOSED WELDS SMOOTH.
3. OPEN HOLES: AS NOTED. - SHOP PAINT: NONE.
4. SHEAR CONNECTOR STUDS SHALL BE AUTOMATICALLY END WELDED WITH COMPLETE FUSION IN ACCORDANCE WITH APPENDIX VI OF THE CURRENT AWS STRUCTURAL WELDING CODE D1.1.
5. GALVANIZING: AB1, AR1, CONDUIT BRACKET, SIDEWALK BRACKET, CA3, CP2, CP3, DP11, DP12, DP13 AND W1 SHALL BE GALVANIZED AFTER FABRICATION IN ACCORDANCE WITH THE CURRENT ASTM DESIGNATION: A123 AND A153 AS APPLICABLE. AFTER GALVANIZING, ALL ELEMENTS SHALL BE FREE OF ABRASIONS, ROUGH OR SHARP EDGES, AND OTHER SURFACE DEFECTS.
6. NUTS SHALL BE TAPPED OVERSIZE TO FIT GALVANIZED THREADS AND BRUSHED AFTER GALVANIZING TO PERMIT ROTATION ON THE THREADED ROD.
7. AB1 AND CA3 SHALL BE SHIPPED WITH THE NUT ON THE THREADED ROD.

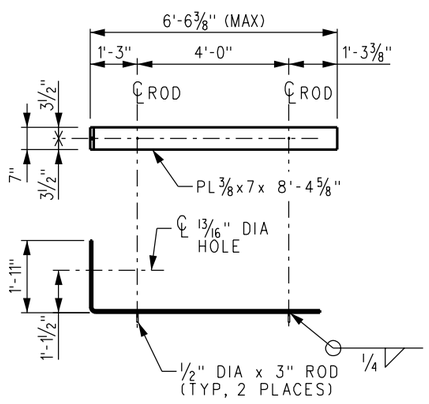

DECK PLATE DP12

SCALE: ½" = 1'-0"
WEIGHT = 75.2 LBS
GALVANIZE AFTER FABRICATION

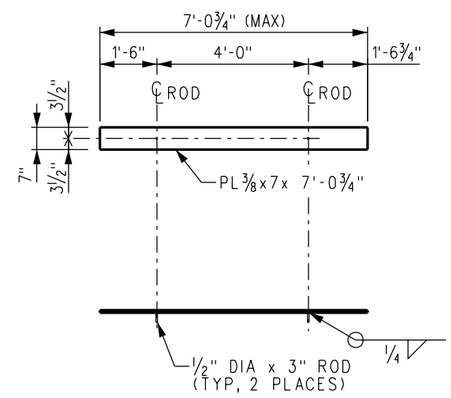

DECK PLATE DP13

SCALE: ½" = 1'-0"
WEIGHT = 63.4 LBS
GALVANIZE AFTER FABRICATION

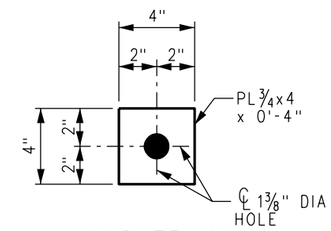

WASHER W1

SCALE: 3" = 1'-0"
WEIGHT = 3.4 LBS
GALVANIZE AFTER FABRICATION

REV.	DATE	DESCRIPTION	DES.	ENG.
X	XX-XX-XX	REVISION	XX	XX

DRAWN BY: A. CARLOS DATE: 03/31/2011

ASSISTANT DIRECTOR: STANDARDS & DESIGN

DIRECTOR OF ENGINEERING AND CONSTRUCTION

SCRRA ENGINEERING STANDARDS ARE INTENDED FOR SCRRA APPROVED USES ONLY. FOR NON-SCRRA APPROVED USES:
SCRRA SHALL NOT BE RESPONSIBLE FOR THE ACCURACY OR COMPLETENESS OF THE DATA OR INFORMATION CONTAINED HEREIN. THE SELECTION AND USE OF THESE STANDARDS IS THE SOLE RESPONSIBILITY OF THE USER AND SHOULD NOT BE USED WITHOUT CONSULTING A REGISTERED PROFESSIONAL ENGINEER. ALL WARRANTIES AND REPRESENTATIONS OF ANY KIND ARE DISCLAIMED. ANYONE MAKING USE OF THIS INFORMATION AGREES THAT IT ASSUMES ALL LIABILITY ARISING FROM SUCH USE. NO PART OF THESE STANDARDS SHOULD BE REPRODUCED OR DISTRIBUTED IN ANY FORM OR BY ANY MEANS WITHOUT THE PRIOR WRITTEN PERMISSION OF SCRRA. ALL RIGHTS RESERVED.

METROLINK®
SOUTHERN CALIFORNIA REGIONAL RAIL AUTHORITY
ONE GATEWAY PLAZA, 12TH FLOOR, L. A., CA. 90012

ENGINEERING STANDARDS

STEEL DETAILS (1 OF 2)
PRECAST/PRESTRESSED CONCRETE
SLAB BEAM BRIDGES

STANDARD 6002
SCALE: AS NOTED
REVISION –
SHEET 13 OF 22
CADD FILE: ES6002-13

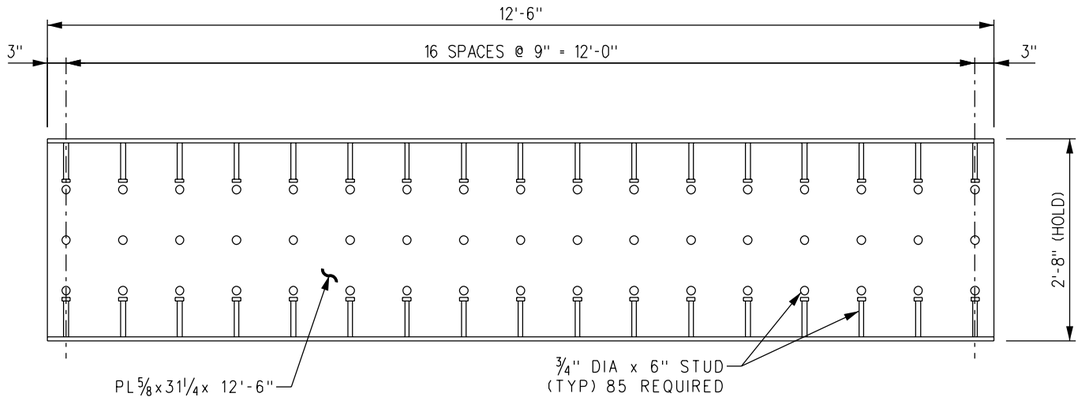

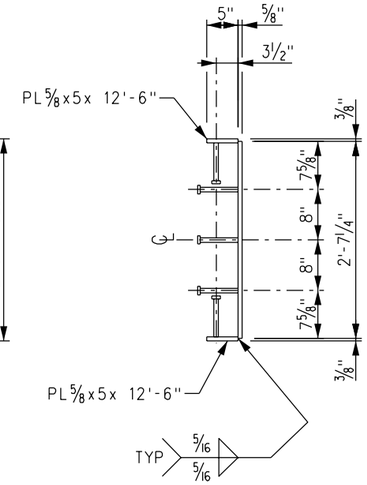

PILE PLATE PP2

SCALE: 1" = 1'-0"
WEIGHT = 1170 LBS

NOTE:
FOR MATERIAL NOTES AND SHOP NOTES, SEE SHEET 13.

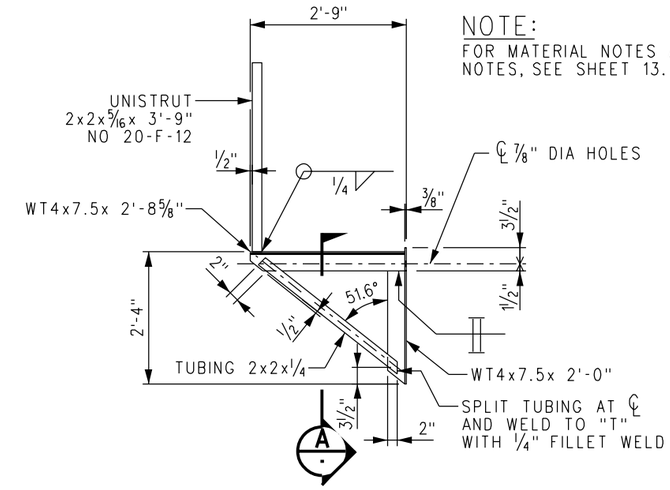

STANDARD SIDEWALK BRACKET

SCALE: 3/4" = 1'-0"
WEIGHT = 66 LBS
GALVANIZE AFTER FABRICATION

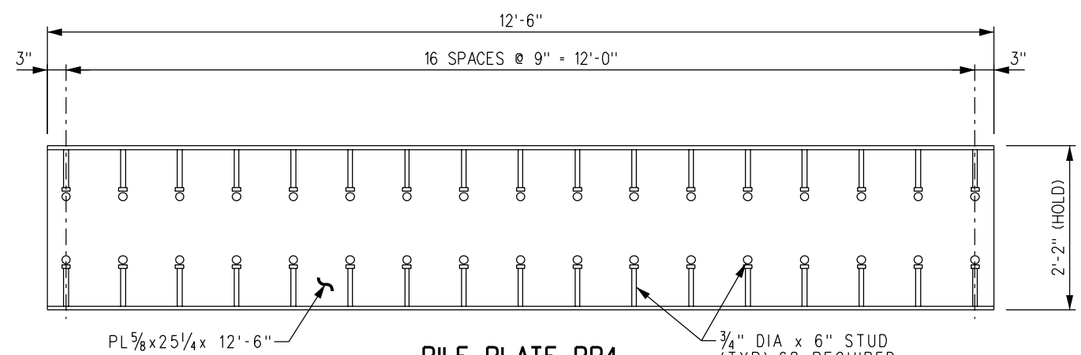

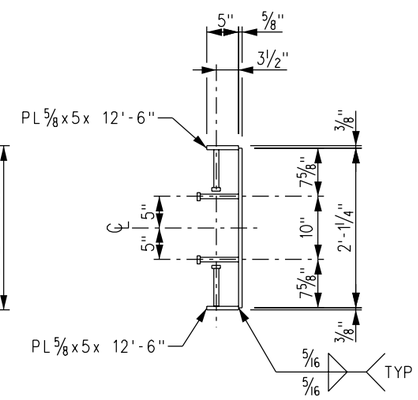

PILE PLATE PP4

SCALE: 1" = 1'-0"
WEIGHT = 996 LBS

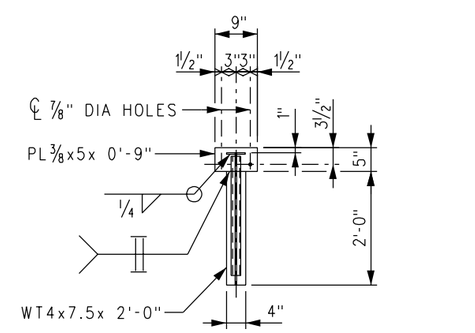

SECTION A

SCALE: 3/4"=1'-0

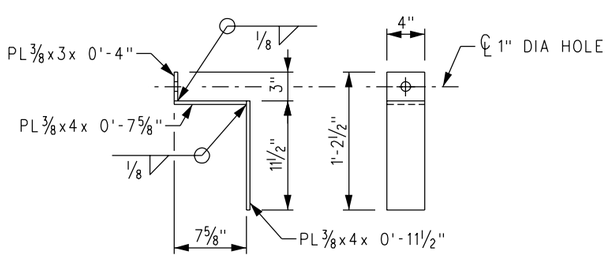

CONDUIT BRACKET

SCALE: 1 1/2" = 1'-0"
WEIGHT = 9.4 LBS
GALVANIZE AFTER FABRICATION

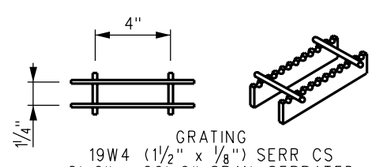

GRATING
19W4 (1 1/2" x 1/8") SERR CS
2'-6" x 20'-0" SPAN, SERRATED
TRIMMED, GALVANIZED

DETAIL 12

SCALE: 3"=1'-0

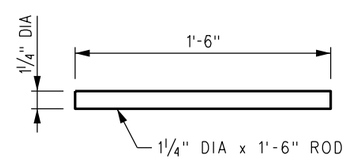

ANCHOR ROD AR1

SCALE: 1 1/2" = 1'-0"
WEIGHT = 6.3 LBS
GALVANIZE AFTER FABRICATION

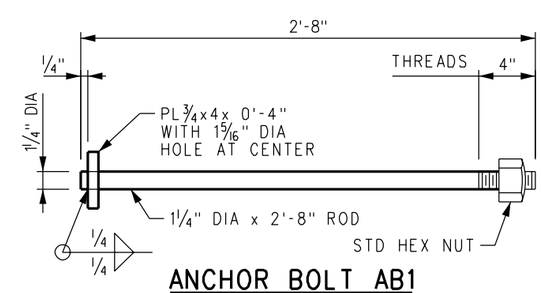

ANCHOR BOLT AB1

SCALE: 1 1/2" = 1'-0"
WEIGHT = 14.5 LBS
GALVANIZE AFTER FABRICATION

REV.	DATE	DESCRIPTION	DES.	ENG.
X	XX-XX-XX	REVISION	XX	XX

DRAWN BY: A. CARLOS DATE: 03/31/2011

ASSISTANT DIRECTOR: STANDARDS & DESIGN

DIRECTOR OF ENGINEERING AND CONSTRUCTION

SCRRA ENGINEERING STANDARDS ARE INTENDED FOR SCRRA APPROVED USES ONLY. FOR NON-SCRRA APPROVED USES: SCRRA SHALL NOT BE RESPONSIBLE FOR THE ACCURACY OR COMPLETENESS OF THE DATA OR INFORMATION CONTAINED HEREIN. THE SELECTION AND USE OF THESE STANDARDS IS THE SOLE RESPONSIBILITY OF THE USER AND SHOULD NOT BE USED WITHOUT CONSULTING A REGISTERED PROFESSIONAL ENGINEER. ALL WARRANTIES AND REPRESENTATIONS OF ANY KIND ARE DISCLAIMED. ANYONE MAKING USE OF THIS INFORMATION AGREES THAT IT ASSUMES ALL LIABILITY ARISING FROM SUCH USE. NO PART OF THESE STANDARDS SHOULD BE REPRODUCED OR DISTRIBUTED IN ANY FORM OR BY ANY MEANS WITHOUT THE PRIOR WRITTEN PERMISSION OF SCRRA. ALL RIGHTS RESERVED.

METROLINK®
SOUTHERN CALIFORNIA REGIONAL RAIL AUTHORITY
ONE GATEWAY PLAZA, 12TH FLOOR, L. A., CA. 90012

ENGINEERING STANDARDS

STEEL DETAILS (2 OF 2)
PRECAST/PRESTRESSED CONCRETE
SLAB BEAM BRIDGES

STANDARD 6002
SCALE: AS NOTED
REVISION –
SHEET 14 OF 22
CADD FILE: ES6002-14

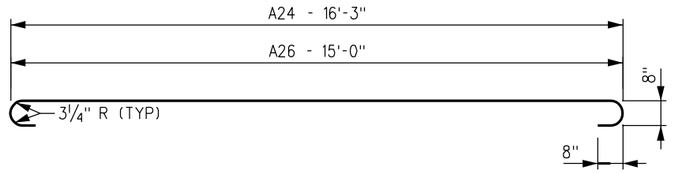

BARS A24 & A26

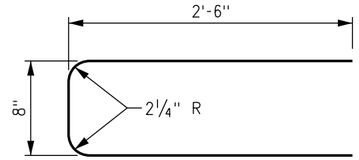

BAR A25

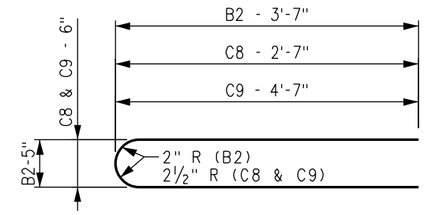

BARS B2, C8 & C9

BENT BAR SCHEDULE	
MARK	DESCRIPTION
A24	#5 x 18'-11"
A25	#6 x 5'-8"
A26	#5 x 17'-8"
B1	#5 x 12'-10"
B2	#4 x 7'-7"
B3	#4 x 5'-2"
C8	#4 x 5'-8"
C9	#4 x 9'-8"
D1	#4 x 3'-8"
D2	#4 x 7'-2"
D6	#4 x 3'-3"
D7	#4 x 3'-9"
S1	#4 x 9'-6"
S2	#4 x 8'-6"
S3	#5 x 7'-2"
U1	#4 x 17'-4"
U2	#4 x 18'-8"
U3	#4 x 20'-8"

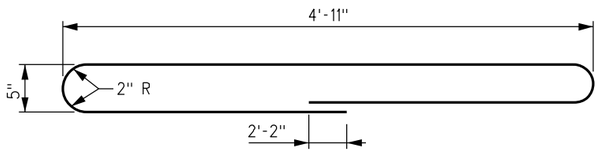

BAR B1

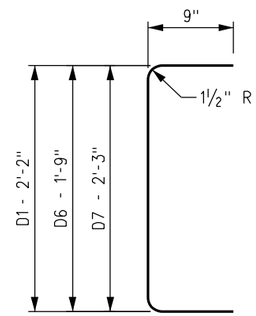

BARS D1, D6 & D7

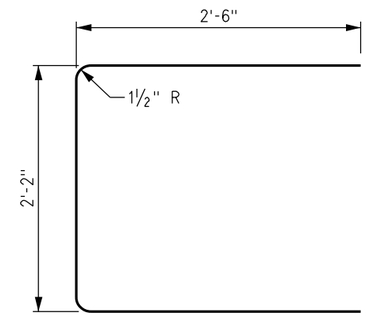

BAR D2

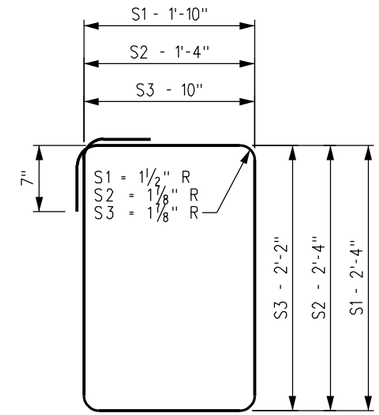

BARS S1, S2 & S3

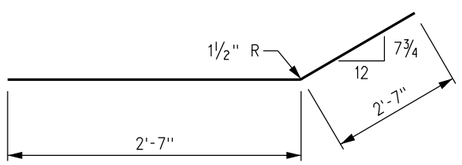

BAR B3

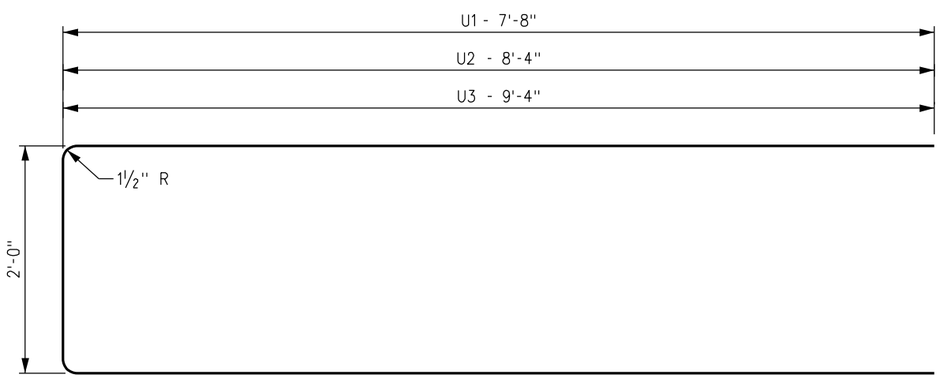

BARS U1, U2 & U3

NOTES:

1. ALL DIMENSIONS SHOWN ARE OUT TO OUT OF BARS.
2. BARS TO BE BENT PER RADIUS SHOWN.
3. MILD STEEL REINFORCEMENT SHALL MEET THE REQUIREMENTS OF THE CURRENT ASTM DESIGNATION: A615, GRADE 60 OR A706.
4. FABRICATION OF REINFORCEMENT SHALL BE IN ACCORDANCE WITH CHAPTER 7 OF THE CURRENT CSRI MANUAL OF STANDARD PRACTICE.

REV.	DATE	DESCRIPTION	DES.	ENG.
X	XX-XX-XX	REVISION	XX	XX

DRAWN BY: A. CARLOS DATE: 03/31/2011

ASSISTANT DIRECTOR: STANDARDS & DESIGN

DIRECTOR OF ENGINEERING AND CONSTRUCTION

SCRRA ENGINEERING STANDARDS ARE INTENDED FOR SCRRA APPROVED USES ONLY. FOR NON-SCRRA APPROVED USES:
SCRRA SHALL NOT BE RESPONSIBLE FOR THE ACCURACY OR COMPLETENESS OF THE DATA OR INFORMATION CONTAINED HEREIN. THE SELECTION AND USE OF THESE STANDARDS IS THE SOLE RESPONSIBILITY OF THE USER AND SHOULD NOT BE USED WITHOUT CONSULTING A REGISTERED PROFESSIONAL ENGINEER. ALL WARRANTIES AND REPRESENTATIONS OF ANY KIND ARE DISCLAIMED. ANYONE MAKING USE OF THIS INFORMATION AGREES THAT IT ASSUMES ALL LIABILITY ARISING FROM SUCH USE. NO PART OF THESE STANDARDS SHOULD BE REPRODUCED OR DISTRIBUTED IN ANY FORM OR BY ANY MEANS WITHOUT THE PRIOR WRITTEN PERMISSION OF SCRRA. ALL RIGHTS RESERVED.

METROLINK®
SOUTHERN CALIFORNIA REGIONAL RAIL AUTHORITY
ONE GATEWAY PLAZA, 12TH FLOOR, L. A., CA. 90012

ENGINEERING STANDARDS

REINFORCING STEEL DETAILS
PRECAST/PRESTRESSED CONCRETE
SLAB BEAM BRIDGES

STANDARD 6002
SCALE: 1 1/8" = 1'-0"
REVISION –
SHEET 15 OF 22
CADD FILE: ES6002-15

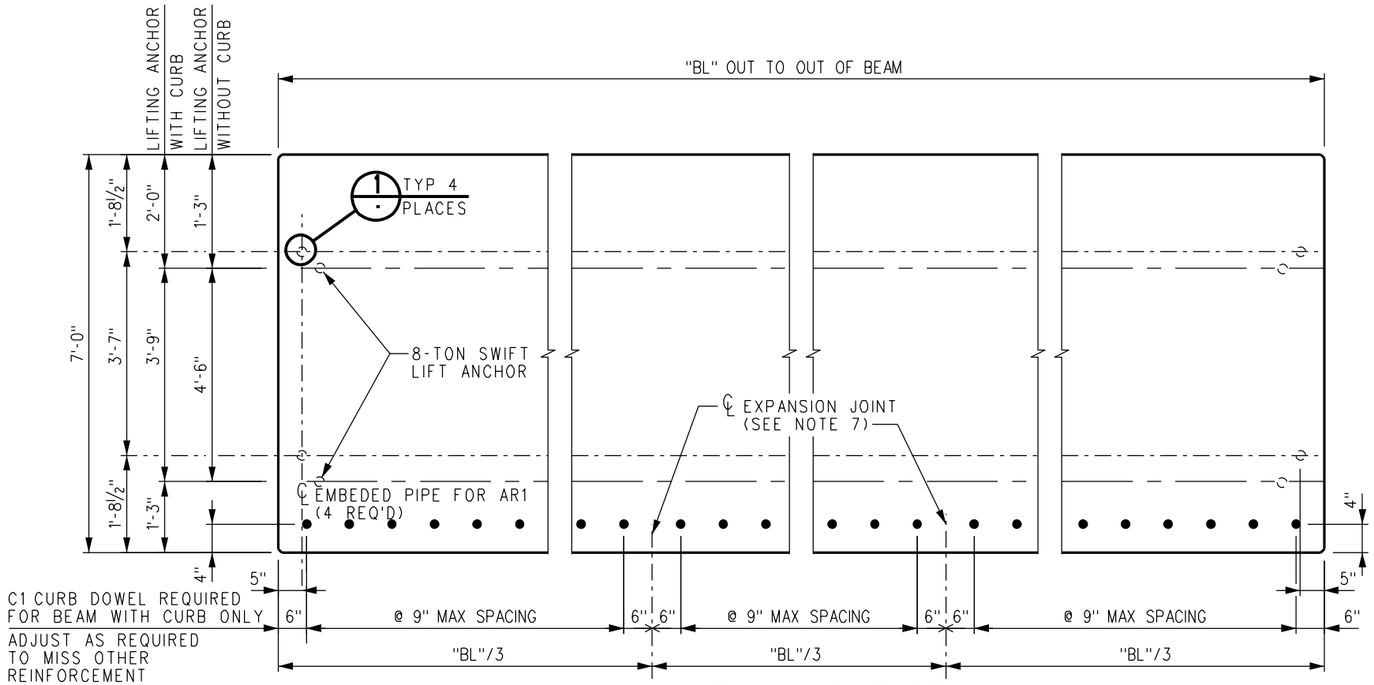

PLAN - SLAB BEAM

SCALE: ¾" 1'-0"

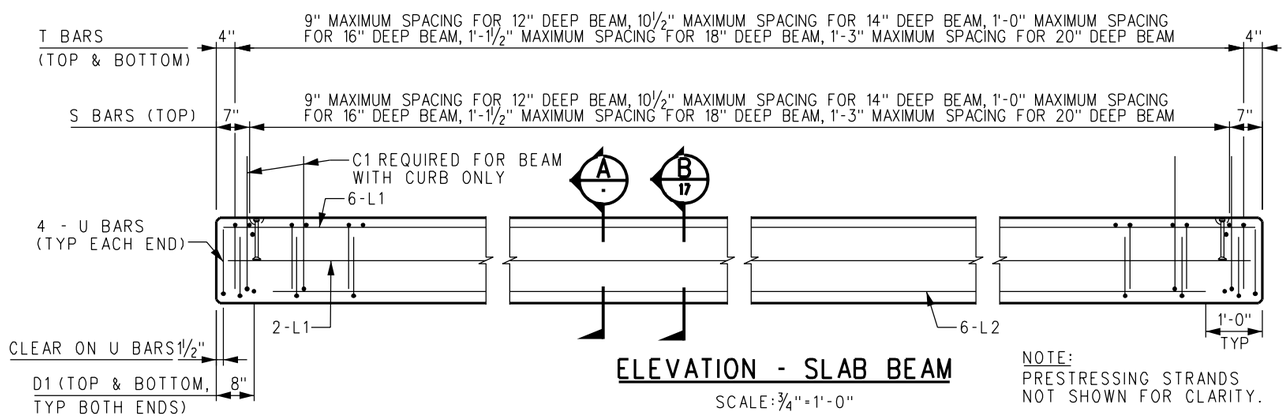

ELEVATION - SLAB BEAM

SCALE: ¾"=1'-0"

NOTE:
PRESTRESSING STRANDS NOT SHOWN FOR CLARITY.

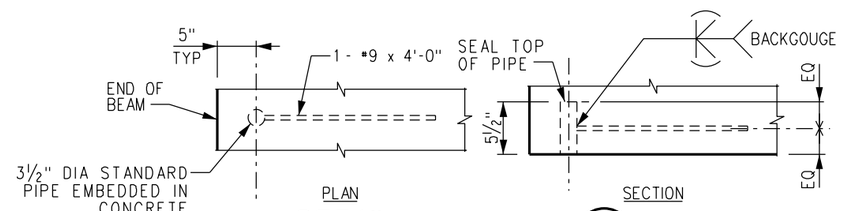

DETAIL 1

SCALE: NONE

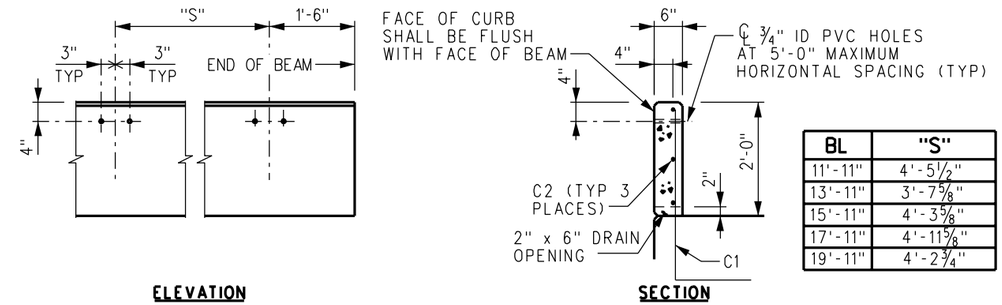

BL	"S"
11'-11"	4'-5½"
13'-11"	3'-7⅝"
15'-11"	4'-3⅝"
17'-11"	4'-11⅝"
19'-11"	4'-2¾"

DETAIL 2

SCALE: ¾"=1'-0

CURB DETAIL

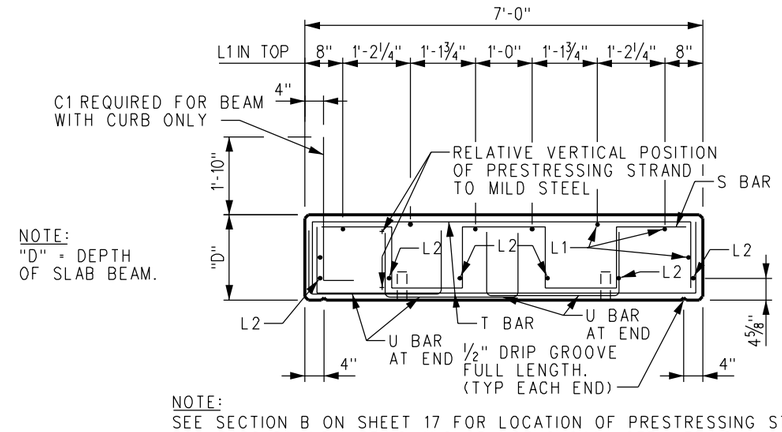

NOTE:
"D" = DEPTH OF SLAB BEAM.

NOTE:
SEE SECTION B ON SHEET 17 FOR LOCATION OF PRESTRESSING STRANDS. FOR BARS D1 AND LIFTING ANCHOR NOT SHOWN, SEE LIFTING ANCHOR DETAIL.

SECTION A

SCALE: ¾"=1'-0

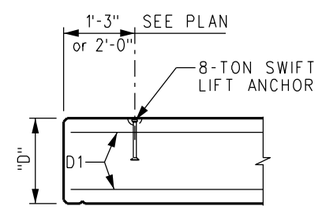

LIFTING ANCHOR DETAIL

SCALE: ¾"=1'-0"

NOTES:

1. AN ALTERNATE STRAND PATTERN BETTER SUITED TO THE FABRICATOR'S FACILITIES THAT HAS THE SAME ECCENTRICITY AS THE PATTERN SHOWN ON THIS PLAN WILL BE CONSIDERED FOR APPROVAL UPON SUBMISSION BY THE MANUFACTURER OF COMPUTATIONS WITH THE DETAIL DRAWINGS.
2. TACK WELDING OF REINFORCEMENT IS PROHIBITED.
3. IF REINFORCING BAR SUPPORTS ARE USED, THEY SHALL BE CLASS 1, PLASTIC PROTECTED, IN ACCORDANCE WITH CHAPTER 3 OF THE CURRENT CRSI MANUAL OF STANDARD PRACTICE.
4. MANUFACTURER SHALL BURN BACK PRESTRESSING STRANDS TO A DEPTH OF ONE INCH BELOW SURFACE OF CONCRETE ON ENDS OF BEAM. RESULTING RECESSES SHALL BE FILLED WITH EPOXY GROUT.
5. ALL CONCRETE FORMS SHALL BE FILLETED ¾" INCHES AT CORNERS AND EDGES.
6. CURB TO BE CAST ON PRESTRESSED BEAM AFTER STRANDS ARE DETENSIONED. BOND NEW CONCRETE TO PRESTRESSED BEAM BY COATING CONTACT AREA WITH SIKADUR HI-MOD, MADE BY SIKA CHEMICAL CORP., OR EQUAL. FRESH CONCRETE MUST BE PLACED WHILE BOND COAT IS STILL TACKY.
7. PREFORMED ½" x 6" ASPHALT EXPANSION BOARD TO BE PLACED AS TO DIVIDE CURB INTO THREE EQUAL SEGMENTS LEAVING ½" JOINTS. A 2" x 6" DRAIN OPENING SHALL BE FORMED AT THE CENTER OF EACH EXPANSION JOINT.
8. ALL STEEL TO HAVE A MINIMUM OF 1½" OF CONCRETE COVER. ALL CORNERS TO BE CHAMFERED ¾" OR TOOLED TO A RADIUS. TOP OF BEAM TO BE GIVEN A STEEL TROWEL FINISH.

REV.	DATE	DESCRIPTION	DES.	ENG.
X	XX-XX-XX	REVISION	XX	XX

DRAWN BY: A. CARLOS DATE: 03/31/2011

ASSISTANT DIRECTOR: STANDARDS & DESIGN

DIRECTOR OF ENGINEERING AND CONSTRUCTION

SCRRA ENGINEERING STANDARDS ARE INTENDED FOR SCRRA APPROVED USES ONLY. FOR NON-SCRRA APPROVED USES:
SCRRA SHALL NOT BE RESPONSIBLE FOR THE ACCURACY OR COMPLETENESS OF THE DATA OR INFORMATION CONTAINED HEREIN. THE SELECTION AND USE OF THESE STANDARDS IS THE SOLE RESPONSIBILITY OF THE USER AND SHOULD NOT BE USED WITHOUT CONSULTING A REGISTERED PROFESSIONAL ENGINEER. ALL WARRANTIES AND REPRESENTATIONS OF ANY KIND ARE DISCLAIMED. ANYONE MAKING USE OF THIS INFORMATION AGREES THAT IT ASSUMES ALL LIABILITY ARISING FROM SUCH USE. NO PART OF THESE STANDARDS SHOULD BE REPRODUCED OR DISTRIBUTED IN ANY FORM OR BY ANY MEANS WITHOUT THE PRIOR WRITTEN PERMISSION OF SCRRA. ALL RIGHTS RESERVED.

METROLINK®
SOUTHERN CALIFORNIA REGIONAL RAIL AUTHORITY
ONE GATEWAY PLAZA, 12TH FLOOR, L. A., CA. 90012

ENGINEERING STANDARDS

12", 14", 16", 18" AND 20" PRECAST/PRESTRESSED CONCRETE SLAB BEAMS (1 OF 3)
PRECAST/PRESTRESSED CONCRETE SLAB BEAM BRIDGES

STANDARD 6002
SCALE: AS NOTED
REVISION –
SHEET 16 OF 22
CADD FILE: ES6002-16

f'ci = 4500 psi
f'c = 6000 psi

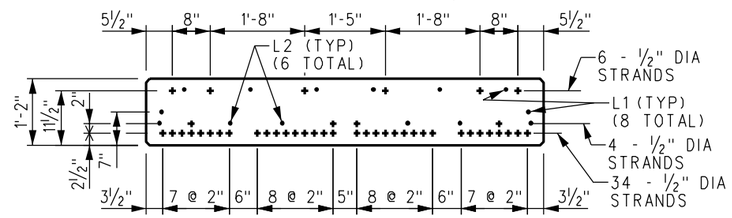

SECTION B/16

14" SLAB BEAM, "BL" = 12'-0", 44 STRANDS

f'ci = 4000 psi
f'c = 6000 psi

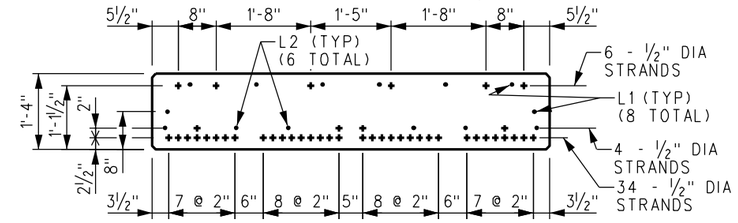

SECTION B/16

16" SLAB BEAM, "BL" = 14'-0", 44 STRANDS

f'ci = 5500 psi
f'c = 10000 psi

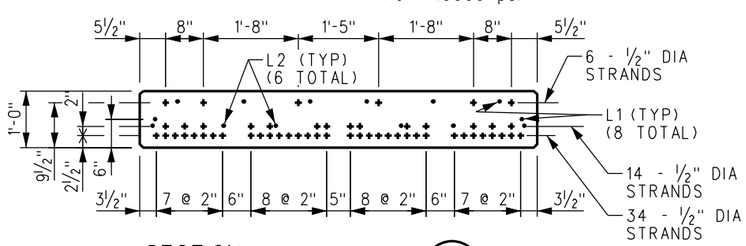

SECTION B/16
(PB11.92 AND PB11.92-C)

12" SLAB BEAM, 11'-6" < "BL" ≤ 12'-0", 54 STRANDS

f'ci = 5500 psi
f'c = 8000 psi

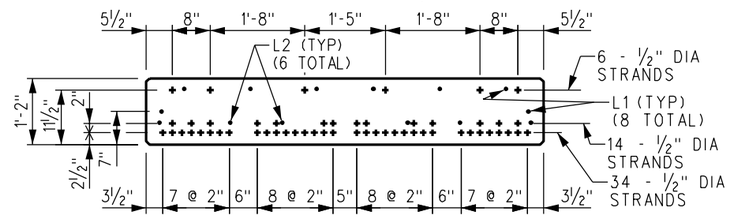

SECTION B/16
(PB13.92 AND PB13.92-C)

14" SLAB BEAM, 12'-0" < "BL" ≤ 14'-0", 54 STRANDS

f'ci = 4500 psi
f'c = 6000 psi

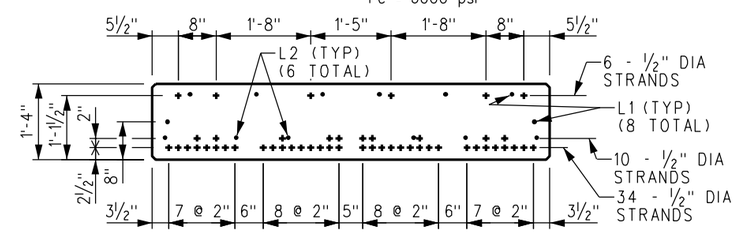

SECTION B/16
(PB15.92 AND PB15.92-C)

16" SLAB BEAM, 14'-0" < "BL" ≤ 16'-0", 50 STRANDS

QUANTITIES FOR STANDARD BEAMS				
NUMBER	"D"	"BL"	REQUIRED VOLUME OF CONCRETE	WEIGHT OF MILD STEEL REINFORCING
PB11.92	12"	11'-11"	3.1 CY	593 LBS
PB11.92-C	12"	11'-11"	3.5 CY	680 LBS
PB13.92	14"	13'-11"	4.2 CY	640 LBS
PB13.92-C	14"	13'-11"	4.7 CY	744 LBS
PB15.92	16"	15'-11"	5.5 CY	688 LBS
PB15.92-C	16"	15'-11"	6.1 CY	808 LBS
PB17.92	18"	17'-11"	7.0 CY	735 LBS
PB17.92-C	18"	17'-11"	7.6 CY	868 LBS
PB19.92	20"	19'-11"	8.6 CY	782 LBS
PB19.92-C	20"	19'-11"	9.3 CY	932 LBS

f'ci = 6000 psi
f'c = 9000 psi

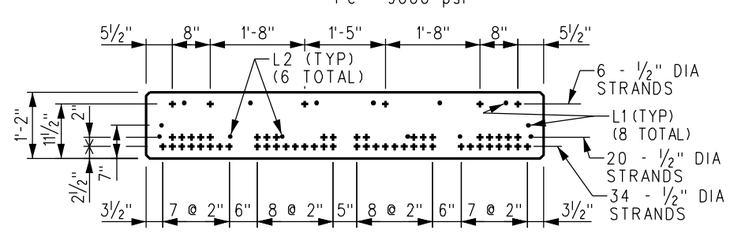

SECTION B/16

14" SLAB BEAM, 14'-0" < "BL" ≤ 16'-0", 60 STRANDS

f'ci = 5000 psi
f'c = 7000 psi

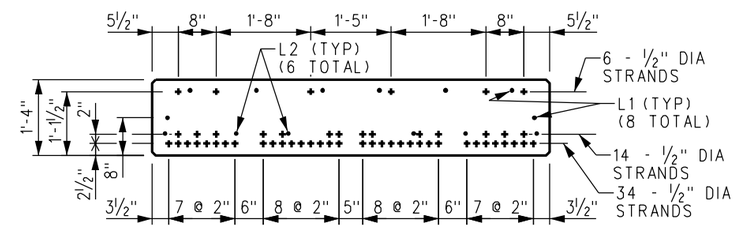

SECTION B/16

16" SLAB BEAM, 16'-0" < "BL" ≤ 18'-0", 54 STRANDS

X	XX-XX-XX	REVISION	XX	XX
REV.	DATE	DESCRIPTION	DES.	ENG.

DRAWN BY: HDR DATE: 03/31/2011

ASSISTANT DIRECTOR: STANDARDS & DESIGN

DIRECTOR OF ENGINEERING AND CONSTRUCTION

SCRRA ENGINEERING STANDARDS ARE INTENDED FOR SCRRA APPROVED USES ONLY. FOR NON-SCRRA APPROVED USES:
SCRRA SHALL NOT BE RESPONSIBLE FOR THE ACCURACY OR COMPLETENESS OF THE DATA OR INFORMATION CONTAINED HEREIN. THE SELECTION AND USE OF THESE STANDARDS IS THE SOLE RESPONSIBILITY OF THE USER AND SHOULD NOT BE USED WITHOUT CONSULTING A REGISTERED PROFESSIONAL ENGINEER. ALL WARRANTIES AND REPRESENTATIONS OF ANY KIND ARE DISCLAIMED. ANYONE MAKING USE OF THIS INFORMATION AGREES THAT IT ASSUMES ALL LIABILITY ARISING FROM SUCH USE. NO PART OF THESE STANDARDS SHOULD BE REPRODUCED OR DISTRIBUTED IN ANY FORM OR BY ANY MEANS WITHOUT THE PRIOR WRITTEN PERMISSION OF SCRRA. ALL RIGHTS RESERVED.

METROLINK®
SOUTHERN CALIFORNIA REGIONAL RAIL AUTHORITY
ONE GATEWAY PLAZA, 12TH FLOOR, L. A., CA. 90012

ENGINEERING STANDARDS

12", 14", 16", 18" AND 20" PRECAST/PRESTRESSED CONCRETE SLAB BEAMS (2 OF 3)
PRECAST/PRESTRESSED CONCRETE SLAB BEAM BRIDGES

STANDARD 6002
SCALE: ¾" = 1'-0"
REVISION –
SHEET 17 OF 22
CADD FILE: ES6002-17

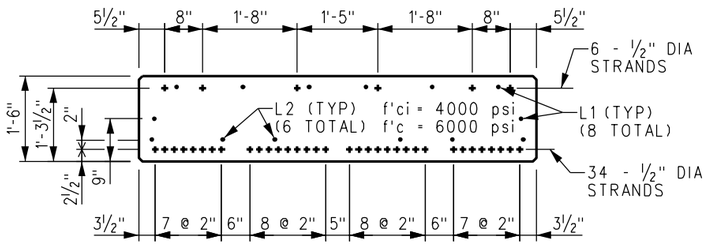

SECTION B/16
SCALE: ¾"=1'-0
18" SLAB BEAM, "BL" = 16'-0", 40 STRANDS

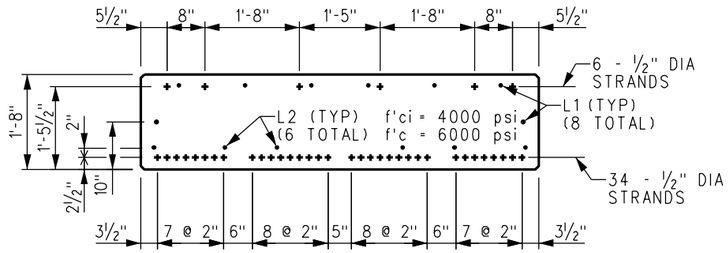

SECTION B/16
SCALE: ¾"=1'-0
20" SLAB BEAM, "BL" = 18'-0", 40 STRANDS

NOTES:

1. ALL BAR DIMENSIONS ARE OUT TO OUT OF BARS. BEND #4 BARS AROUND 3" DIA PIN, #5 BARS AROUND 3¾" DIA PIN AND #6 BARS AROUND 4½" DIA PIN.
2. BARS S12, T12 AND U12 ARE FOR 12" DEEP BEAM. BARS S14, T14 AND U14 ARE FOR 14" DEEP BEAM. BARS S16, T16 AND U16 ARE FOR 16" DEEP BEAM. BARS S18, T18 AND U18 ARE FOR 18" DEEP BEAM. BARS S20, T20 AND U20 ARE FOR 20" DEEP BEAM.
3. "F" = "BL" - 5"
   "G" = ("BL" - 15")/3
   "H" = "BL" - 24"

BAR SCHEDULE

MARK	DESCRIPTION
C1	#5 x 4'-0"
C2 (STRAIGHT)	#4 x "G"
D1 (STRAIGHT)	#8 x 6'-6"
L1 (STRAIGHT)	#5 x "F"
L2 (STRAIGHT)	#5 x "H"
S12	#4 x 9'-0"
S14	#4 x 9'-8"
S16	#4 x 10'-4"
S18	#4 x 11'-0"
S20	#4 x 11'-8"
T12	#4 x 8'-0"
T14	#4 x 8'-4"
T16	#4 x 8'-8"
T18	#4 x 9'-0"
T20	#4 x 9'-4"
U12	#6 x 3'-7"
U14	#6 x 3'-11"
U16	#6 x 4'-3"
U18	#6 x 4'-7"
U20	#6 x 4'-11"

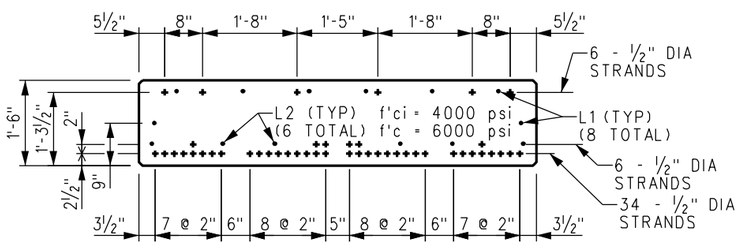

SECTION B/16
SCALE: ¾"=1'-0
(PB17.92 AND PB17.92-C)
18" SLAB BEAM, 16'-0" < "BL" ≤ 18'-0", 46 STRANDS

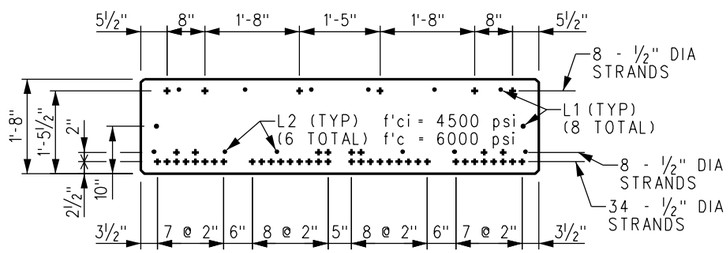

SECTION B/16
SCALE: ¾"=1'-0
(PB19.92 AND PB19.92-C)
20" SLAB BEAM, 18'-0" < "BL" ≤ 20'-0", 50 STRANDS

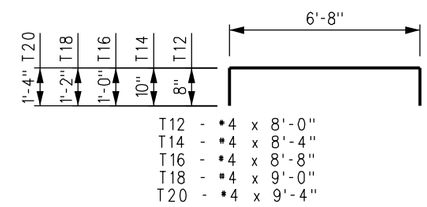

T12, T14, T16, T18 & T20
SCALE: ⅜" = 1'-0"

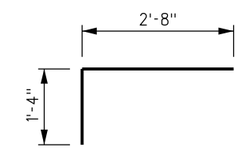

C1
SCALE: ¾" = 1'-0"
EPOXY COATED

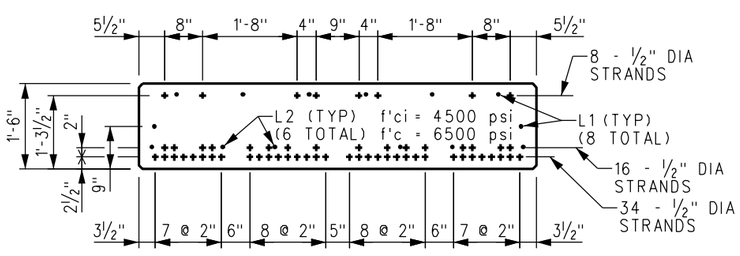

SECTION B/16
SCALE: ¾"=1'-0
18" SLAB BEAM, 18'-0" < "BL" ≤ 20'-0", 58 STRANDS

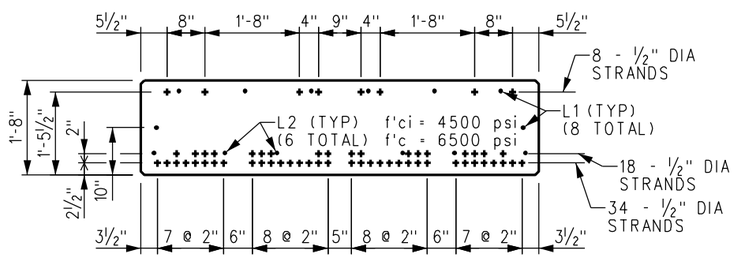

SECTION B/16
SCALE: ¾"=1'-0
20" SLAB BEAM, 20'-0" < "BL" ≤ 22'-0", 60 STRANDS

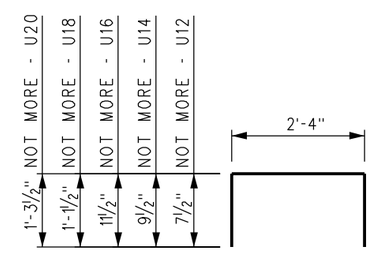

U12, U14, U16, U18 & U20
SCALE: ⅜" = 1'-0"

U12 - #6 x 3'-7"
U14 - #6 x 3'-11"
U16 - #6 x 4'-3"
U18 - #6 x 4'-7"
U20 - #6 x 4'-11"

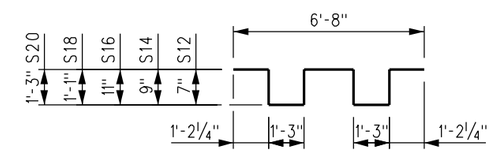

S12, S14, S16, S18 & S20
SCALE: ⅜" = 1'-0"

S12 - #4 x 9'-0"
S14 - #4 x 9'-8"
S16 - #4 x 10'-4"
S18 - #4 x 11'-0"
S20 - #4 x 11'-8"

REV.	DATE	DESCRIPTION	DES.	ENG.
X	XX-XX-XX	REVISION	XX	XX

DRAWN BY: HDR DATE: 03/31/2011

ASSISTANT DIRECTOR: STANDARDS & DESIGN

DIRECTOR OF ENGINEERING AND CONSTRUCTION

SCRRA ENGINEERING STANDARDS ARE INTENDED FOR SCRRA APPROVED USES ONLY. FOR NON-SCRRA APPROVED USES:
SCRRA SHALL NOT BE RESPONSIBLE FOR THE ACCURACY OR COMPLETENESS OF THE DATA OR INFORMATION CONTAINED HEREIN. THE SELECTION AND USE OF THESE STANDARDS IS THE SOLE RESPONSIBILITY OF THE USER AND SHOULD NOT BE USED WITHOUT CONSULTING A REGISTERED PROFESSIONAL ENGINEER. ALL WARRANTIES AND REPRESENTATIONS OF ANY KIND ARE DISCLAIMED. ANYONE MAKING USE OF THIS INFORMATION AGREES THAT IT ASSUMES ALL LIABILITY ARISING FROM SUCH USE. NO PART OF THESE STANDARDS SHOULD BE REPRODUCED OR DISTRIBUTED IN ANY FORM OR BY ANY MEANS WITHOUT THE PRIOR WRITTEN PERMISSION OF SCRRA. ALL RIGHTS RESERVED.

METROLINK
SOUTHERN CALIFORNIA REGIONAL RAIL AUTHORITY
ONE GATEWAY PLAZA, 12TH FLOOR, L. A., CA. 90012

ENGINEERING STANDARDS
12", 14", 16", 18" AND 20" PRECAST/PRESTRESSED CONCRETE SLAB BEAMS (3 OF 3)
PRECAST/PRESTRESSED CONCRETE SLAB BEAM BRIDGES

STANDARD 6002
SCALE: AS NOTED
REVISION –
SHEET 18 OF 22
CADD FILE: ES6002-18

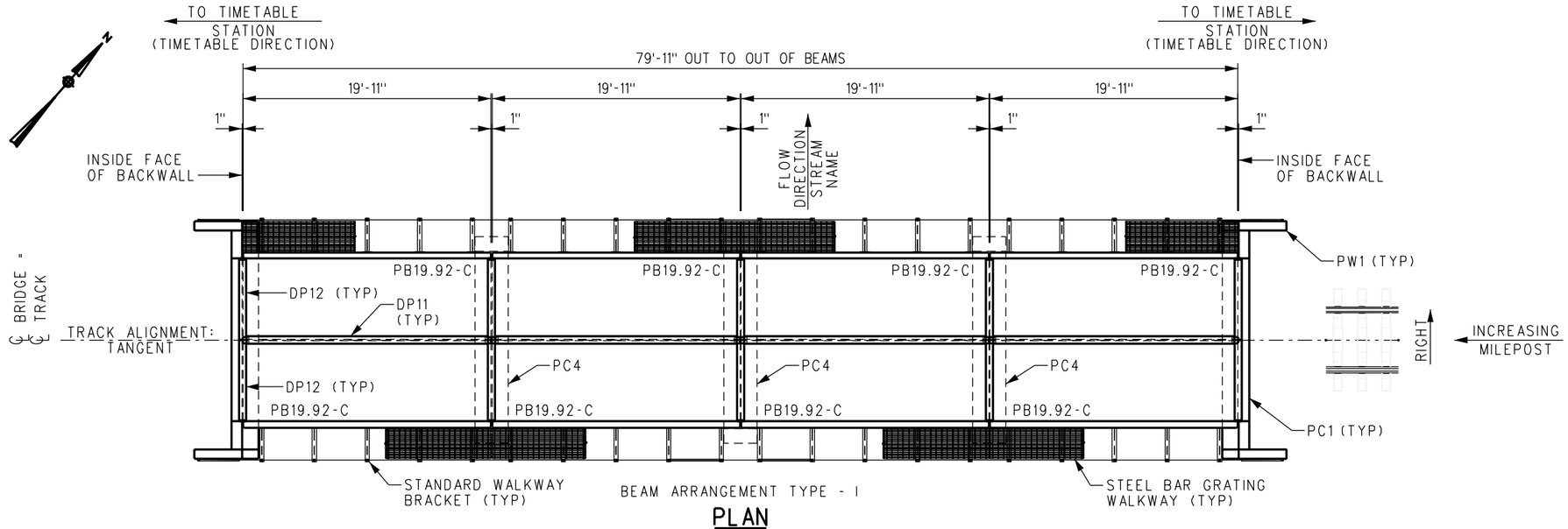

BEAM ARRANGEMENT TYPE - I

PLAN

SCALE: 3/16"=1'-0"

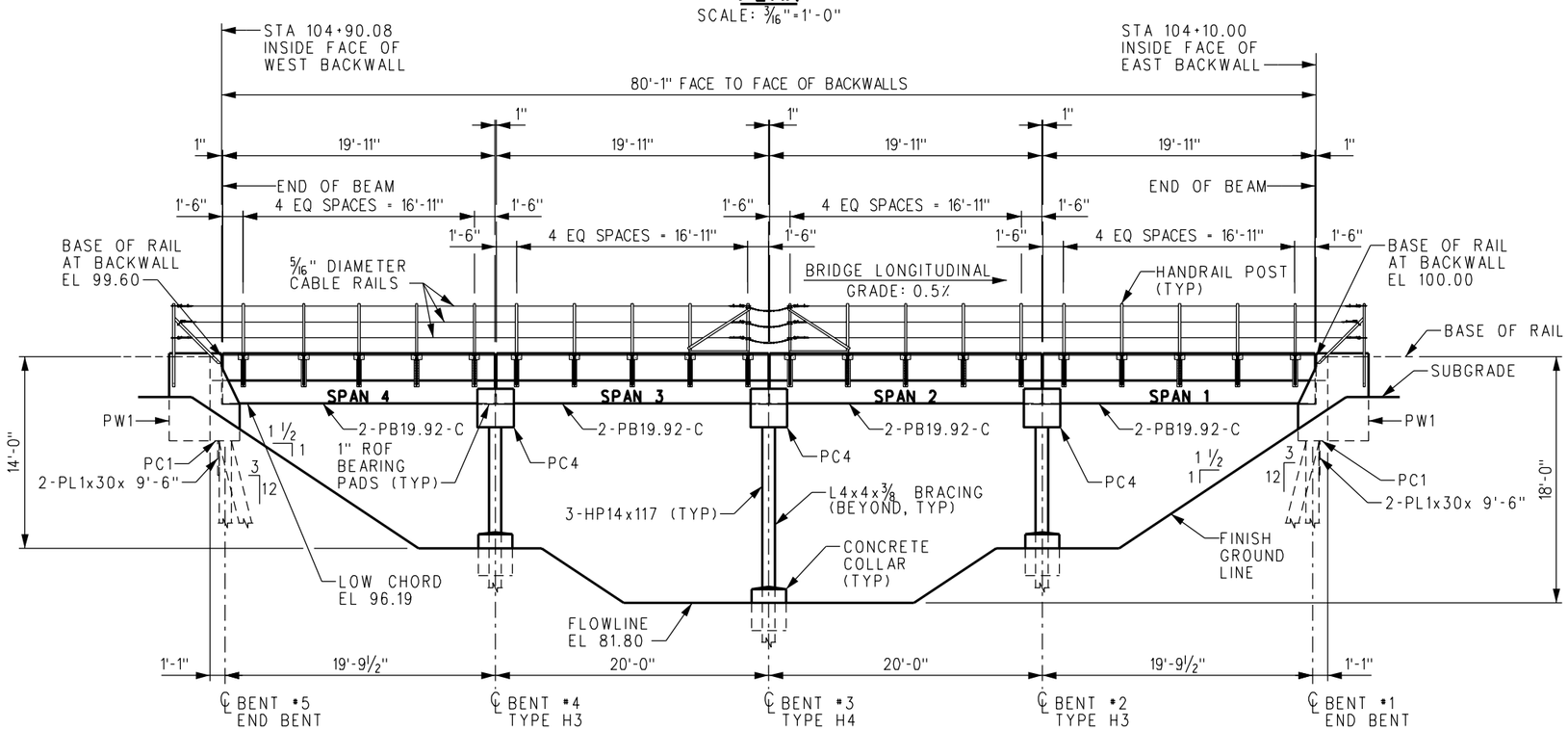

ELEVATION

SCALE: 3/16"=1'-0"

TABLE OF ELEVATIONS

BENT #	T/R EL	B/R EL	T/SEAT	PILE CUTOFF
1	100.59	100.00	96.50	93.83
2	100.49	99.90	96.40	94.73
3	100.39	99.80	96.30	94.63
4	100.29	99.70	96.20	94.53
5	100.19	99.60	96.10	93.43

ESTIMATED LIFTING WEIGHTS

PB19.92-C	19.0 TONS
PC1	10.5 TONS
PC4	6.5 TONS
PW1	1.7 TONS

DRAWING LIST

THIS SET	1	SAMPLE GENERAL ARRANGEMENT
	2	SAMPLE END BENT SECTION AND PILE LAYOUT
	3	SAMPLE BENT SECTIONS
	4	SAMPLE BILL OF MATERIAL
REF	ES6002 - PRECAST/PRESTRESSED CONCRETE SLAB BEAM BRIDGES	

SAMPLE SHEET 1 OF 4

REV.	DATE	DESCRIPTION	DES.	ENG.
X	XX-XX-XX	REVISION	XX	XX

DRAWN BY: HDR DATE: 03/31/2011

ASSISTANT DIRECTOR: STANDARDS & DESIGN

DIRECTOR OF ENGINEERING AND CONSTRUCTION

SCRRA ENGINEERING STANDARDS ARE INTENDED FOR SCRRA APPROVED USES ONLY. FOR NON-SCRRA APPROVED USES: SCRRA SHALL NOT BE RESPONSIBLE FOR THE ACCURACY OR COMPLETENESS OF THE DATA OR INFORMATION CONTAINED HEREIN. THE SELECTION AND USE OF THESE STANDARDS IS THE SOLE RESPONSIBILITY OF THE USER AND SHOULD NOT BE USED WITHOUT CONSULTING A REGISTERED PROFESSIONAL ENGINEER. ALL WARRANTIES AND REPRESENTATIONS OF ANY KIND ARE DISCLAIMED. ANYONE MAKING USE OF THIS INFORMATION AGREES THAT IT ASSUMES ALL LIABILITY ARISING FROM SUCH USE. NO PART OF THESE STANDARDS SHOULD BE REPRODUCED OR DISTRIBUTED IN ANY FORM OR BY ANY MEANS WITHOUT THE PRIOR WRITTEN PERMISSION OF SCRRA. ALL RIGHTS RESERVED.

METROLINK®

SOUTHERN CALIFORNIA REGIONAL RAIL AUTHORITY
ONE GATEWAY PLAZA, 12TH FLOOR, L. A., CA. 90012

ENGINEERING STANDARDS

SAMPLE GENERAL ARRANGEMENT
PRECAST/PRESTRESSED CONCRETE
SLAB BEAM BRIDGES

STANDARD 6002
SCALE: AS NOTED
REVISION –
SHEET 19 OF 22
CADD FILE: ES6002-19

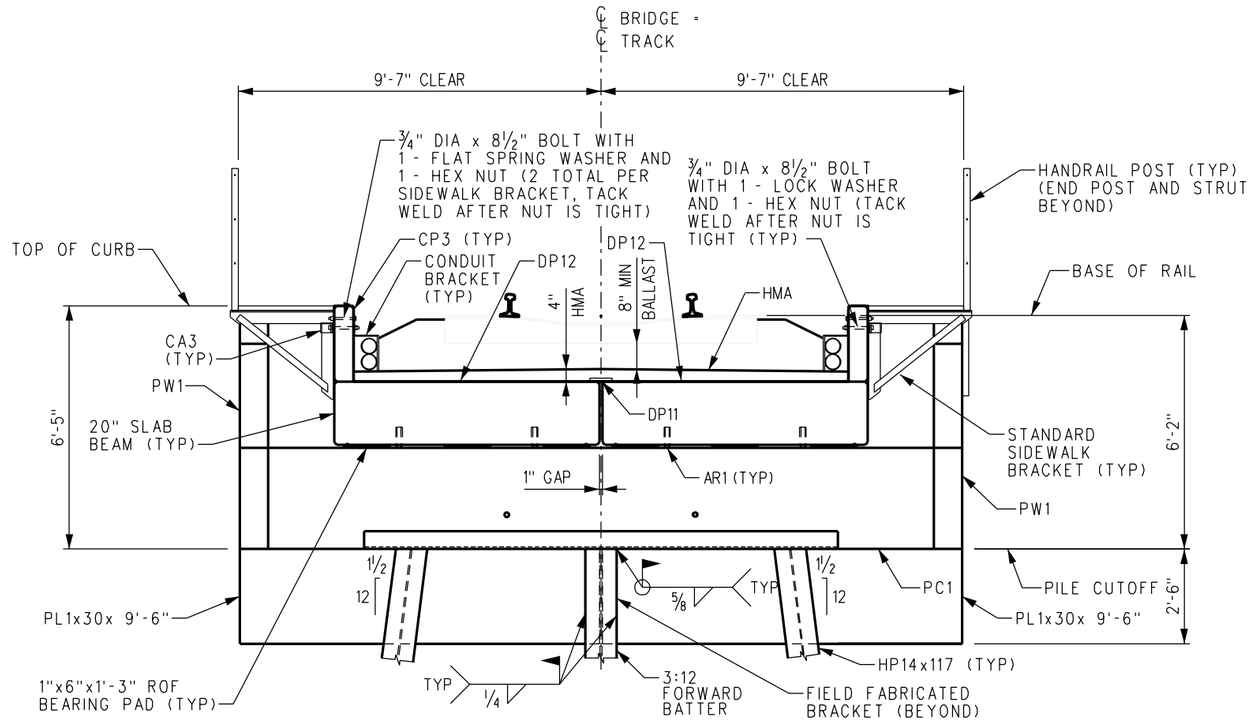

END BENT SECTION

SCALE: ½=1'-0"

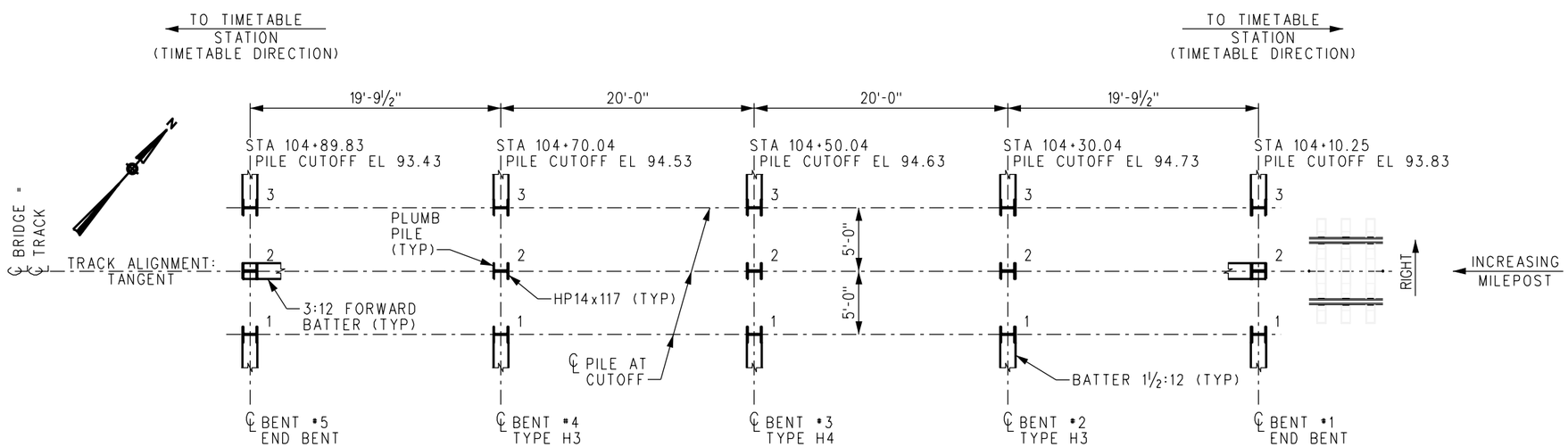

PILE LAYOUT

SCALE: 3/16=1'-0"

SAMPLE SHEET 2 OF 4

REV.	DATE	DESCRIPTION	DES.	ENG.
X	XX-XX-XX	REVISION	XX	XX

DRAWN BY: HDR DATE: 03/31/2011

ASSISTANT DIRECTOR: STANDARDS & DESIGN

DIRECTOR OF ENGINEERING AND CONSTRUCTION

SCRRA ENGINEERING STANDARDS ARE INTENDED FOR SCRRA APPROVED USES ONLY. FOR NON-SCRRA APPROVED USES: SCRRA SHALL NOT BE RESPONSIBLE FOR THE ACCURACY OR COMPLETENESS OF THE DATA OR INFORMATION CONTAINED HEREIN. THE SELECTION AND USE OF THESE STANDARDS IS THE SOLE RESPONSIBILITY OF THE USER AND SHOULD NOT BE USED WITHOUT CONSULTING A REGISTERED PROFESSIONAL ENGINEER. ALL WARRANTIES AND REPRESENTATIONS OF ANY KIND ARE DISCLAIMED. ANYONE MAKING USE OF THIS INFORMATION AGREES THAT IT ASSUMES ALL LIABILITY ARISING FROM SUCH USE. NO PART OF THESE STANDARDS SHOULD BE REPRODUCED OR DISTRIBUTED IN ANY FORM OR BY ANY MEANS WITHOUT THE PRIOR WRITTEN PERMISSION OF SCRRA. ALL RIGHTS RESERVED.

METROLINK®

SOUTHERN CALIFORNIA REGIONAL RAIL AUTHORITY
ONE GATEWAY PLAZA, 12TH FLOOR, L. A., CA. 90012

ENGINEERING STANDARDS

SAMPLE END BENT SECTION AND PILE LAYOUT
PRECAST/PRESTRESSED CONCRETE
SLAB BEAM BRIDGES

STANDARD 6002
SCALE: AS NOTED
REVISION –
SHEET 20 OF 22
CADD FILE: ES6002-20

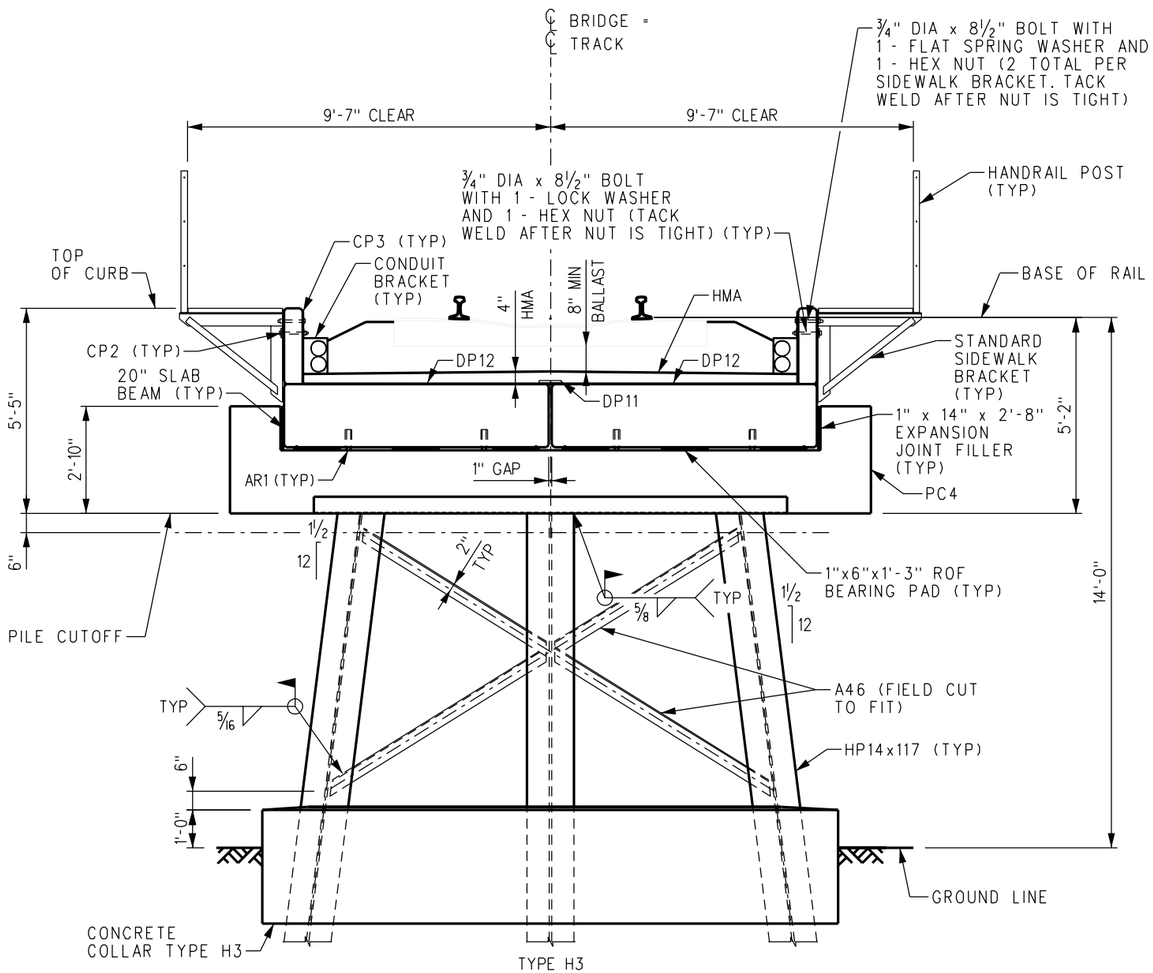

BENT #2 AND #4 SECTION

SCALE: ½"=1'-0"

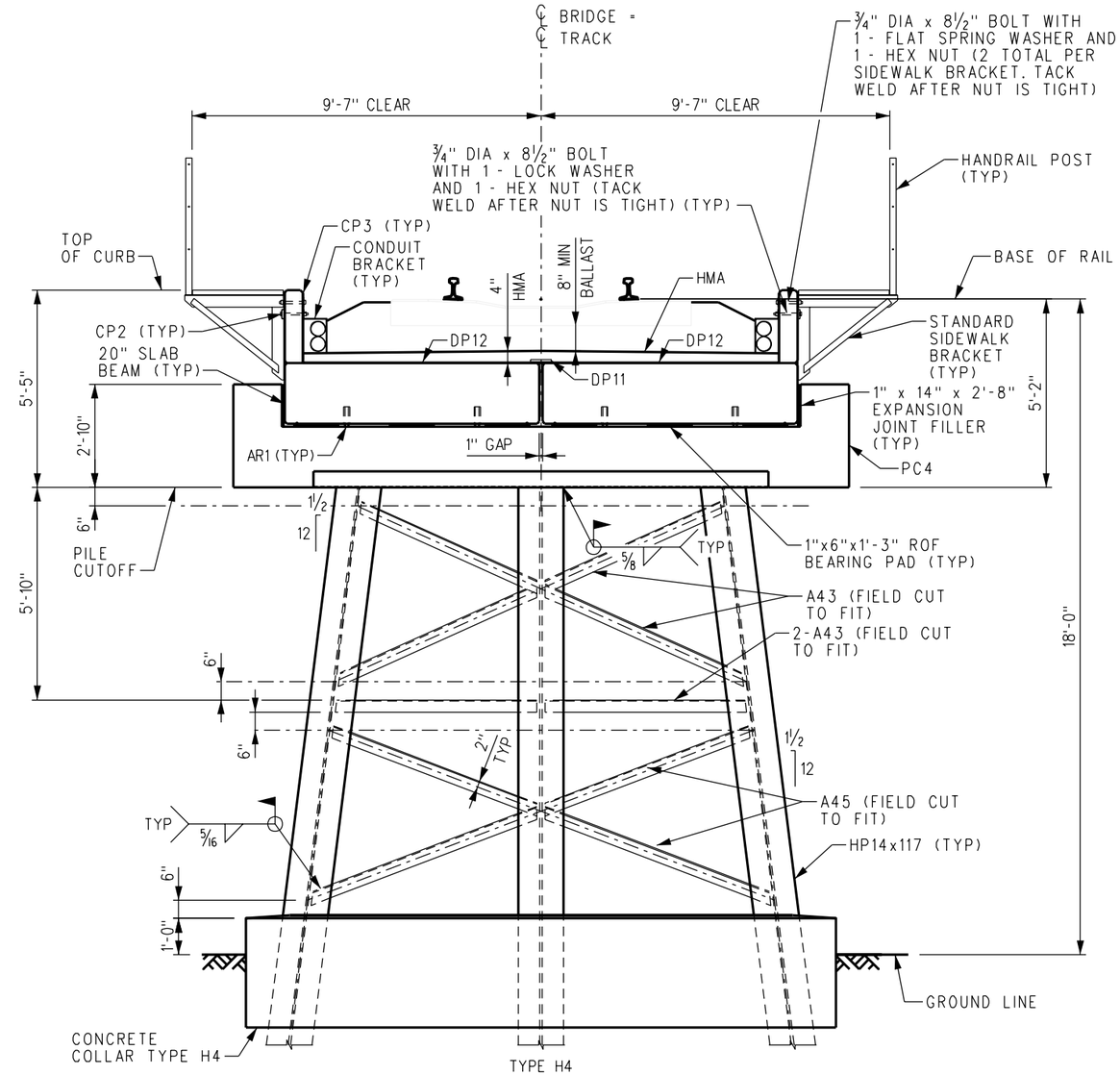

BENT #3 SECTION

SCALE: ½"=1'-0"

SAMPLE SHEET 3 OF 4

REV.	DATE	DESCRIPTION	DES.	ENG.
X	XX-XX-XX	REVISION	XX	XX

DRAWN BY: HDR DATE: 03/31/2011

ASSISTANT DIRECTOR: STANDARDS & DESIGN

DIRECTOR OF ENGINEERING AND CONSTRUCTION

SCRRA ENGINEERING STANDARDS ARE INTENDED FOR SCRRA APPROVED USES ONLY. FOR NON-SCRRA APPROVED USES:
SCRRA SHALL NOT BE RESPONSIBLE FOR THE ACCURACY OR COMPLETENESS OF THE DATA OR INFORMATION CONTAINED HEREIN. THE SELECTION AND USE OF THESE STANDARDS IS THE SOLE RESPONSIBILITY OF THE USER AND SHOULD NOT BE USED WITHOUT CONSULTING A REGISTERED PROFESSIONAL ENGINEER. ALL WARRANTIES AND REPRESENTATIONS OF ANY KIND ARE DISCLAIMED. ANYONE MAKING USE OF THIS INFORMATION AGREES THAT IT ASSUMES ALL LIABILITY ARISING FROM SUCH USE. NO PART OF THESE STANDARDS SHOULD BE REPRODUCED OR DISTRIBUTED IN ANY FORM OR BY ANY MEANS WITHOUT THE PRIOR WRITTEN PERMISSION OF SCRRA. ALL RIGHTS RESERVED.

METROLINK®
SOUTHERN CALIFORNIA REGIONAL RAIL AUTHORITY
ONE GATEWAY PLAZA, 12TH FLOOR, L. A., CA. 90012

ENGINEERING STANDARDS

SAMPLE BENT SECTIONS
PRECAST/PRESTRESSED CONCRETE
SLAB BEAM BRIDGES

STANDARD 6002
SCALE: AS NOTED
REVISION –
SHEET 21 OF 22
CADD FILE: ES6002-21

LIST OF STANDARD BRIDGE MATERIALS

PILES
HP14x117 STEEL BEARING PILE
HP14x117 PILE SPLICER
TIP REINFORCEMENT HARD-BITE POINT MODEL HP-77600-B
MISCELLANEOUS STEEL
DECK PLATE DP11 (SEE DETAIL, SHEET 13)
DECK PLATE DP12 (SEE DETAIL, SHEET 13)
DECK PLATE DP13 (SEE DETAIL, SHEET 13)
CURB PLATE CP2 (SEE DETAIL, SHEET 13)
CURB PLATE CP3 (SEE DETAIL, SHEET 13)
CURB ANGLE CA3 (SEE DETAIL, SHEET 13)
WASHER W1 (SEE DETAIL, SHEET 14)
CONDUIT BRACKET (SEE DETAIL, SHEET 14)
STANDARD SIDEWALK BRACKET (SEE DETAIL, SHEET 14)
UNISTRUT 2x2x5/16 NO 20-F-12 (SEE DETAIL, SHEET 7)
BACKWALL PLATE, PL1x30x 7'-0" ASTM A588, GR 50 (PLAIN) (SEE DETAIL, SHEET 7)
BACKWALL PLATE, PL1x30x 9'-6" ASTM A588, GR 50 (PLAIN) (SEE DETAIL, SHEET 7)
BRACING
ANGLE A42, 4x4x3/8x 12'-0 (PLAIN)
ANGLE A43, 4x4x3/8x 13'-0 (PLAIN)
ANGLE A44, 4x4x3/8x 14'-0 (PLAIN)
ANGLE A45, 4x4x3/8x 15'-0 (PLAIN)
ANGLE A46, 4x4x3/8x 16'-0 (PLAIN)
PRECAST CONCRETE MEMBERS
PRECAST CAP PC1 (SEE DETAILS, SHEET 11)
PRECAST CAP PC2(R) (SEE DETAILS, SHEET 11)
PRECAST CAP PC2(L) (SEE DETAILS, SHEET 11)
PRECAST CAP PC3(R) (SEE DETAILS, SHEET 11)
PRECAST CAP PC3(L) (SEE DETAILS, SHEET 11)
PRECAST CAP PC4 (SEE DETAILS, SHEET 12)
PRECAST CAP PC4B (SEE DETAILS, SHEET 12)
PRECAST WING WALL PW1 (SEE DETAILS, SHEET 12)
PRECAST/PRESTRESSED CONCRETE SLABS
PB11.92-C (12" DEEP, 54 STRANDS, WITH CURB)
PB11.92 (12" DEEP, 54 STRANDS)
PB13.92-C (14" DEEP, 54 STRANDS, WITH CURB)
PB13.92 (14" DEEP, 54 STRANDS)
PB15.92-C (16" DEEP, 50 STRANDS, WITH CURB)
PB15.92 (16" DEEP, 50 STRANDS)
PB17.92-C (18" DEEP, 46 STRANDS, WITH CURB)
PB17.92 (18" DEEP, 46 STRANDS)
PB19.92-C (20" DEEP, 50 STRANDS, WITH CURB)
PB19.92 (20" DEEP, 50 STRANDS)
CAST-IN-PLACE CONCRETE COLLARS
4000 PSI CONCRETE
REINFORCING STEEL

MISCELLANEOUS MATERIAL
STEEL GRATING 19W4 SERR CS (SEE DETAIL, SHEET 14)
5/16" DIAMETER AIRCRAFT CABLE (SEE DETAIL, SHEET 6)
4" DIA GALVANIZED STD STEEL PIPE (SEE DETAIL, SHEET 5)
3 1/2" HVU ADHESIVE CAPSULE
1" x 6" x 1'-3" ROF BEARING PAD (SEE DETAIL, SHEET 6)
1" x 14" x 2'-8" EXPANSION JOINT FILLER (SEE DETAIL, SHEET 6)
1/2" x 30" x 3'-1" EXPANSION JOINT FILLER (SEE DETAIL, SHEET 9)
HMA PAVEMENT
HMA TRACK UNDERLAY
CHEMICAL MASTIC CM-15 METALLIC ALUMINUM COLOR PAINT
ADHESIVE FOR BEARING PADS
GROUT
EPOXY GROUT
PETROLATUM (SEE DETAIL, SHEET 10)
FREE-DRAINING GRANULAR FILL (SEE DETAIL, SHEET 10)
HARDWARE
3/4" DIA x 8 1/2" BOLT WITH 1 - FLAT SPRING WASHER AND 1 - HEX NUT (SEE DETAIL, SHEET 5)
3/4" DIA x 8 1/2" BOLT WITH 1 - LOCK WASHER AND 1 - HEX NUT (SEE DETAIL, SHEET 5)
3/8" DIA x 6 1/2" THREADED ROD (SEE DETAIL, SHEET 7)
3/8" DIA x 5" THREADED ROD (CONDUIT BRACKET ANCHOR)
SADDLE CLIP (SEE DETAIL, SHEET 6)
1/4" DIA x 2 1/2" HEX BOLT WITH 1 - SPRING WASHER AND 1 - HEX NUT (SEE DETAIL, SHEET 6)
3/8" DIA EYEBOLT, 3" LONG SHANK WITH 1" ID EYE, PLAIN PATTERN, DROP FORGED STEEL WITH 1 - FLAT WASHER AND 1 - HEX NUT (SEE DETAIL, SHEET 7)
MALLEABLE WIRE ROPE CLIP (GALV) WITH 2 - ELASTIC LOCKNUTS (GALV) FOR 5/16" DIA CABLE (SEE DETAIL, SHEET 7)
3/8" SAFETY CHAIN (SEE DETAIL, SHEET 7)
3/8" QUICK LINK FOR 3/8" SAFETY CHAIN (SEE DETAIL, SHEET 7)

BILL OF MATERIAL

REQ'D	UNIT	DESCRIPTION
8	EA	PB19.92-C
2	EA	PC1
3	EA	PC4
4	EA	PW1
15.6	CY	CONCRETE FOR COLLAR H3 (7.8 CU YD EA)
8.1	CY	CONCRETE FOR COLLAR H4
2	LOT	REINFORCING STEEL FOR COLLAR H3
1	LOT	REINFORCING STEEL FOR COLLAR H4
30	EA	HP14x117x 40'-0"
15	EA	PIPE TIP FOR HP14x117
15	EA	PILE SPLICER FOR HP14x117
4	EA	A46
2	EA	A45
4	EA	A43
4	EA	DP11
10	EA	DP12
16	EA	W1
89	LF	2"x2" UNISTRUT NO 20-F-12
16	EA	HANDRAIL END POST ANCHOR 3/8" DIA x 6 1/2" THREADED ROD
40	EA	SIDEWALK BRACKET
80	EA	SIDEWALK BRACKET BOLTS 3/4" DIA x 8 1/2"
4	EA	PL1x30x 9'-6"
6	EA	CURB PLATE BOLTS 3/4" DIA x 8 1/2"
8	EA	GRATING 19W4 (1 1/2" x 1/8") SERR CS 2'-6" x 20'-0" SPAN SERRATED TRIMMED, GALVANIZED
80	EA	SADDLE CLIP
80	EA	GRATING BOLTS 1/4" DIA x 2 1/2"
600	LF	5/16" DIAMETER AIRCRAFT CABLE (12-LENGTHS OF 50' EA)
24	EA	3/8" DIA EYEBOLT WITH NUT AND WASHER
48	EA	MALLEABLE WIRE ROPE CLIP FOR 5/16" DIA CABLE
10	LF	3/8" SAFETY CHAIN
6	EA	3/8" QUICK LINK FOR 3/8" SAFETY CHAIN
4	EA	CA3
6	EA	CP2
40	EA	CP3
30	EA	CONDUIT BRACKET
30	EA	CONDUIT BRACKET ANCHOR 3/8" DIA x 5" THREADED ROD
30	EA	3 1/2" HILTI HVU ADHESIVE CAPSULE FOR 3/8" DIA HILTI HAS ROD OR EQUAL
327	LF	4" DIA GALVANIZED STD STEEL PIPE
48	EA	1" x 6" x 1'-3" ROF BEARING PAD
6	EA	1" x 14" x 2'-8" EXPANSION JOINT FILLER
1	LOT	HMA PAVEMENT
1	LOT	HMA TRACK UNDERLAY
1	LOT	PAINT, CHEMICAL-MASTIC CM-15, METALLIC ALUMINUM COLOR
1	LOT	ADHESIVE FOR BEARING PADS
1	LOT	GROUT
1	LOT	EPOXY GROUT
1	LOT	PETROLATUM
7.1	CY	FREE-DRAINING GRANULAR FILL

EST WEIGHT OF STEEL PILING: 140,400 LBS
EST WEIGHT OF STEEL BRACING: 1,435 LBS
EST WEIGHT OF BAR GRATING: 2,940 LBS
EST WEIGHT OF MISCELLANEOUS STEEL: 8,690 LBS
(EXCLUDING BOLTS, NUTS AND WASHERS)
EST WEIGHT OF REINFORCING STEEL: 795 LBS

NOTE:

ROF = RANDOM ORIENTED FIBER

SAMPLE SHEET 4 OF 4

REV.	DATE	DESCRIPTION	DES.	ENG.
X	XX-XX-XX	REVISION	XX	XX

DRAWN BY: HDR DATE: 03/31/2011

ASSISTANT DIRECTOR: STANDARDS & DESIGN

DIRECTOR OF ENGINEERING AND CONSTRUCTION

SCRRA ENGINEERING STANDARDS ARE INTENDED FOR SCRRA APPROVED USES ONLY. FOR NON-SCRRA APPROVED USES: SCRRA SHALL NOT BE RESPONSIBLE FOR THE ACCURACY OR COMPLETENESS OF THE DATA OR INFORMATION CONTAINED HEREIN. THE SELECTION AND USE OF THESE STANDARDS IS THE SOLE RESPONSIBILITY OF THE USER AND SHOULD NOT BE USED WITHOUT CONSULTING A REGISTERED PROFESSIONAL ENGINEER. ALL WARRANTIES AND REPRESENTATIONS OF ANY KIND ARE DISCLAIMED. ANYONE MAKING USE OF THIS INFORMATION AGREES THAT IT ASSUMES ALL LIABILITY ARISING FROM SUCH USE. NO PART OF THESE STANDARDS SHOULD BE REPRODUCED OR DISTRIBUTED IN ANY FORM OR BY ANY MEANS WITHOUT THE PRIOR WRITTEN PERMISSION OF SCRRA. ALL RIGHTS RESERVED.

METROLINK®
SOUTHERN CALIFORNIA REGIONAL RAIL AUTHORITY
ONE GATEWAY PLAZA, 12TH FLOOR, L. A., CA. 90012

ENGINEERING STANDARDS

SAMPLE BILL OF MATERIAL
PRECAST/PRESTRESSED CONCRETE
SLAB BEAM BRIDGES

STANDARD 6002
SCALE: NTS
REVISION –
SHEET 22 OF 22
CADD FILE: ESE6002-22

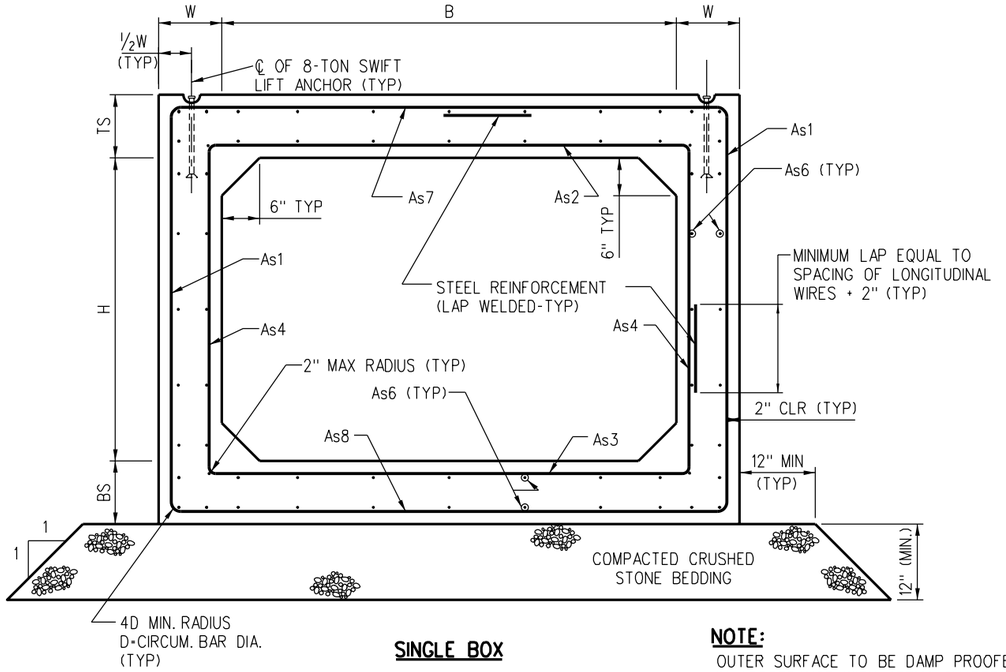

SINGLE BOX

NOTE:
OUTER SURFACE TO BE DAMP PROOFED IN ACCORDANCE WITH AREMA CHAPTER 29

NOTES:

A. SPECIFICATIONS
1. DESIGN: AREMA - 2004 SERVICE LOAD DESIGN
CULVERTS DESIGNED IN ACCORDANCE WITH SECTION 16, CHAPTER 8 OF AREMA MANUAL
2. LOAD COMBINATION: GROUP 1: D + L + I + E
WHERE D = DEAD LOAD, L = LIVE LOAD, I = IMPACT, E = EARTH LOAD

B. LOADINGS:
1. LIVE LOAD: COOPER E80 - DISTRIBUTION OF LIVE LOAD TO THE CULVERT SHALL BE IN ACCORDANCE WITH FIGURE 8-16-2, SECTION 16 CHAPTER 8 OF AREMA MANUAL.
2. IMPACT = 39.1%
3. DEAD LOAD - INCLUDES WEIGHT OF TRACK, BALLAST, AND FILL ON TOP SLAB OF THE STRUCTURE IN ADDITION TO THE BOX SELF WEIGHT.
4. LATERAL LOAD:
- EQUIVALENT FLUID PRESSURE OF 40 PCF.
- UNIFORM LATERAL SURCHARGE PRESSURE OF 570 PSF.
5. MATERIAL PROPERTIES:
- FC' = 5,000 PSI
- FY = 60,000 PSI
- N = 7

C. MATERIALS
1. ALL WELDED WIRE REINFORCEMENT SHALL CONFORM TO ASTM A497
- ALLOWABLE TENSILE STRESS OF 24,000 PSIFOR SERVICE LOAD DESIGN

B (ft)	ID	H (ft)	TS (in)	BS (in)	W (in)	As1 (in²/ft)	As2 (in²/ft)	As3 (in²/ft)	As4 (in²/ft)	As6 MIN * (in²/ft)	As7 (in²/ft)	As8 (in²/ft)	FLOW A (in2)	SELF WT (lbs/ft)	SEGMNT L (ft)
4	PC-SB42	2	8	8	8	0.40	0.40	0.40	0.30	0.30	0.40	0.40	1080	1542	8,6,4
	PC-SB43	3	8	8	8								1656	1742	8,6,4
	PC-SB44	4	8	8	8								2232	1942	8,6,4
6	PC-SB62	2	9	9	9	0.80	0.80	0.80	0.30	0.30	0.80	0.80	1656	2213	8,6,4
	PC-SB63	3	9	9	9								2520	2438	8,6,4
	PC-SB64	4	9	9	9								3384	2663	8,6,4
8	PC-SB82	2	12	12	12	0.93	0.93	0.93	0.30	0.30	0.93	0.93	2232	3675	4
	PC-SB83	3	12	12	12	0.93	0.93	1.20			0.93	0.93	3384	3975	4
	PC-SB84	4	12	12	12	0.80	1.20	1.20			1.20	0.80	4536	4275	4

* As6 IS CROSS WIRE SIZE WELDED TO ALL OTHER WIRE CALLOUT.

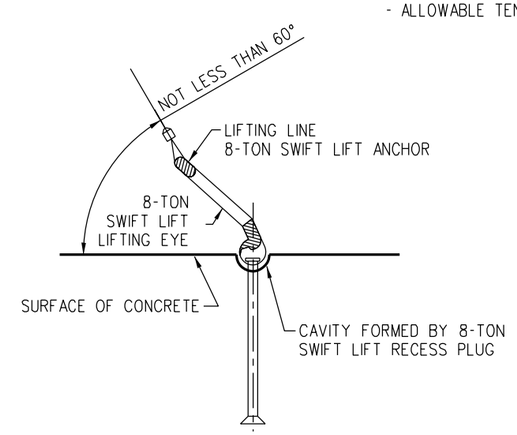

LIFTING DETAIL

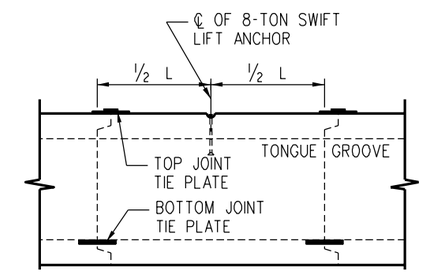

BOX SIDE ELEVATION

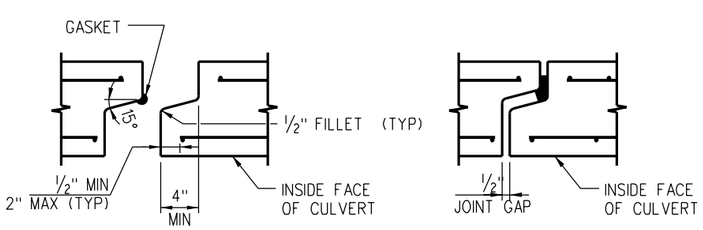

LONGITUDINAL JOINT DETAIL

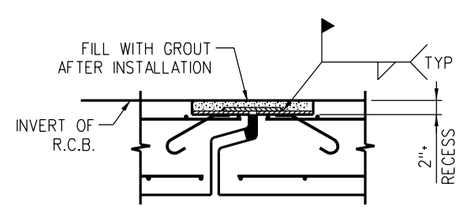

BOTTOM JOINT TIE PLATE

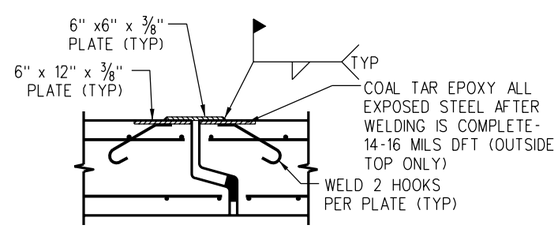

TOP JOINT TIE PLATE

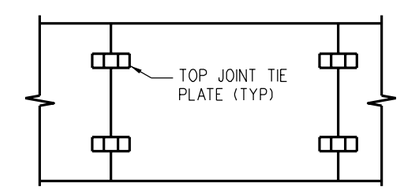

BOX PLAN VIEW

REV.	DATE	DESCRIPTION	DES.	ENG.
X	XX-XX-XX	REVISION	XX	XX

DRAWN BY: A. CARLOS DATE: 03/31/2011

ASSISTANT DIRECTOR: STANDARDS & DESIGN

DIRECTOR OF ENGINEERING AND CONSTRUCTION

SCRRA ENGINEERING STANDARDS ARE INTENDED FOR SCRRA APPROVED USES ONLY. FOR NON-SCRRA APPROVED USES:
SCRRA SHALL NOT BE RESPONSIBLE FOR THE ACCURACY OR COMPLETENESS OF THE DATA OR INFORMATION CONTAINED HEREIN. THE SELECTION AND USE OF THESE STANDARDS IS THE SOLE RESPONSIBILITY OF THE USER AND SHOULD NOT BE USED WITHOUT CONSULTING A REGISTERED PROFESSIONAL ENGINEER. ALL WARRANTIES AND REPRESENTATIONS OF ANY KIND ARE DISCLAIMED. ANYONE MAKING USE OF THIS INFORMATION AGREES THAT IT ASSUMES ALL LIABILITY ARISING FROM SUCH USE. NO PART OF THESE STANDARDS SHOULD BE REPRODUCED OR DISTRIBUTED IN ANY FORM OR BY ANY MEANS WITHOUT THE PRIOR WRITTEN PERMISSION OF SCRRA. ALL RIGHTS RESERVED.

METROLINK®
SOUTHERN CALIFORNIA REGIONAL RAIL AUTHORITY
ONE GATEWAY PLAZA, 12TH FLOOR, L. A., CA. 90012

ENGINEERING STANDARDS

GENERAL DETAILS
PRECAST CONCRETE
SINGLE BOX CULVERTS

STANDARD 6003
SCALE: NONE
REVISION –
SHEET 1 OF 4
CADD FILE: ES6003-01

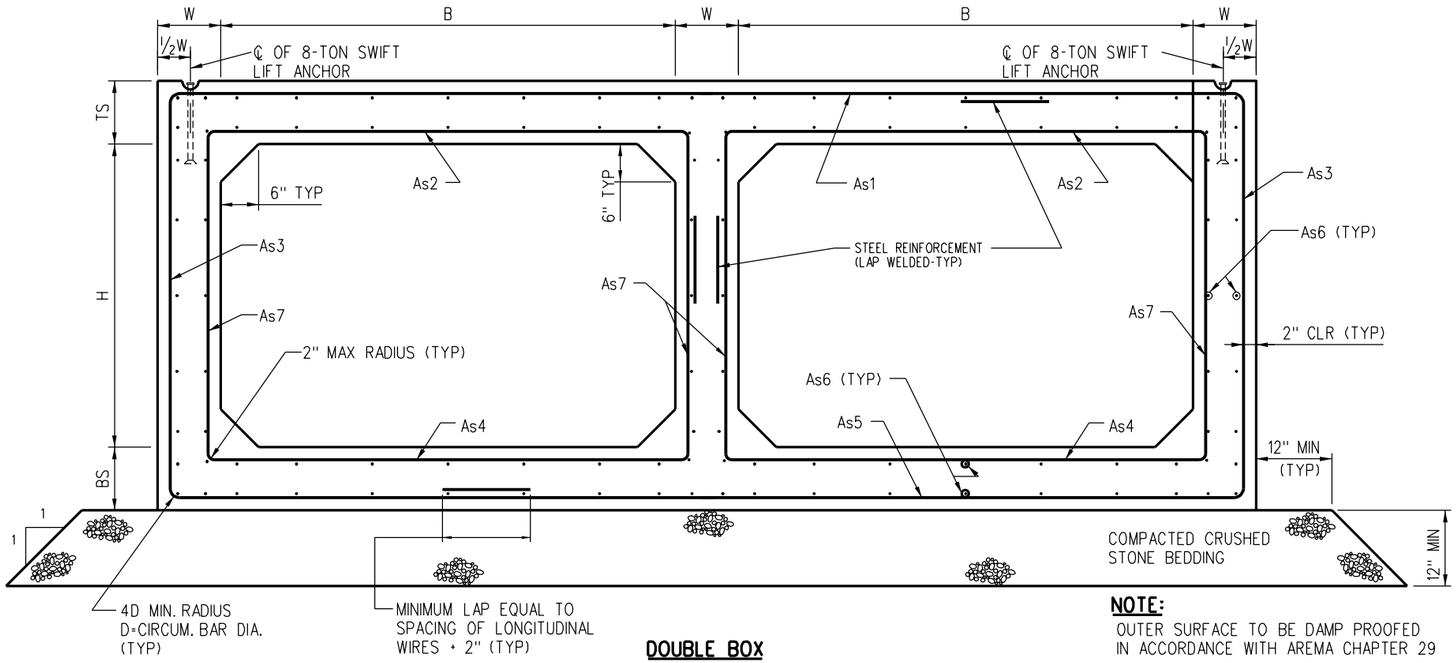

DOUBLE BOX

NOTE:
OUTER SURFACE TO BE DAMP PROOFED IN ACCORDANCE WITH AREMA CHAPTER 29

NOTES:

A. SPECIFICATIONS
1. DESIGN: AREMA - 2004 SERVICE LOAD DESIGN
CULVERTS DESIGNED IN ACCORDANCE WITH SECTION 16, CHAPTER 8 OF AREMA MANUAL
2. LOAD COMBINATION: GROUP 1: D + L + I + E
WHERE D = DEAD LOAD, L = LIVE LOAD, I = IMPACT, E = EARTH LOAD

B. LOADINGS:
1. LIVE LOAD: COOPER E80 - DISTRIBUTION OF LIVE LOAD TO THE CULVERT SHALL BE IN ACCORDANCE WITH FIGURE 8-16-2, SECTION 16 CHAPTER 8 OF AREMA MANUAL.
2. IMPACT = 39.1%
3. DEAD LOAD - INCLUDES WEIGHT OF TRACK, BALLAST, AND FILL ON TOP SLAB OF THE STRUCTURE IN ADDITION TO THE BOX SELF WEIGHT.
4. LATERAL LOAD:
- EQUIVALENT FLUID PRESSURE OF 40 PCF.
- UNIFORM LATERAL SURCHARGE PRESSURE OF 570 PSF.
5. MATERIAL PROPERTIES:
- FC' = 5,000 PSI
- FY = 60,000 PSI
- N = 7

C. MATERIALS
1. ALL WELDED WIRE REINFORCEMENT SHALL CONFORM TO ASTM A497
- ALLOWABLE TENSILE STRESS OF 24,000 PSIFOR SERVICE LOAD DESIGN

B (ft)	ID	H (ft)	TS (in)	BS (in)	W (in)	As1 (in²/ft)	As2 (in²/ft)	As3 (in²/ft)	As4 (in²/ft)	As5 (in²/ft)	As6 MIN * (in²/ft)	As7 (in²/ft)	FLOW A (in2)	SELF WT (lbs/ft)	SEGMNT L (ft)
5	PC-DB52	2	8	8	8	0.93	0.60	0.60	0.60	0.93	0.30	0.30	2736	3150	6.4
	PC-DB53	3	8	8	8								4176	3450	6.4
	PC-DB54	4	8	8	8								5616	3750	6.4
6	PC-DB62	2	10	10	10	1.20	0.60	0.60	0.60	1.20	0.30	0.30	3312	4525	4
	PC-DB63	3	10	10	10								5040	4900	4
	PC-DB64	4	10	10	10								6768	5275	4
7	PC-DB72	2	11	11	11	1.58	0.93	0.60	0.93	1.20	0.30	0.30	3888	5581	3
	PC-DB73	3	11	11	11								5904	5994	3
	PC-DB74	4	11	11	11								7920	6406	3
8	PC-DB82	2	12	12	12	1.58	0.93	0.60	0.93	1.58	0.30	0.30	4464	6750	3
	PC-DB83	3	12	12	12								6768	7200	3
	PC-DB84	4	12	12	12								9072	7650	3

* As6 IS CROSS WIRE SIZE WELDED TO ALL OTHER WIRE CALLOUT.

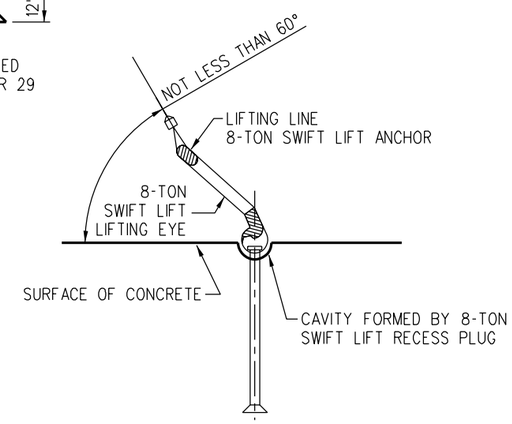

LIFTING DETAIL

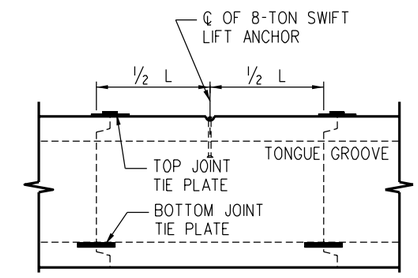

BOX SIDE ELEVATION

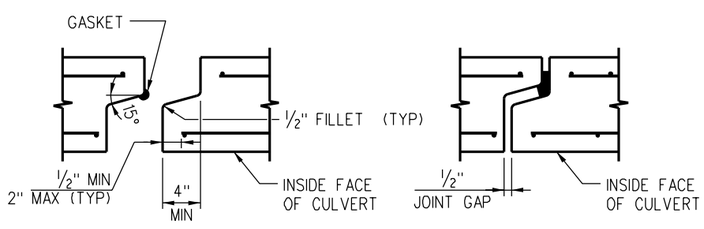

LONGITUDINAL JOINT DETAIL

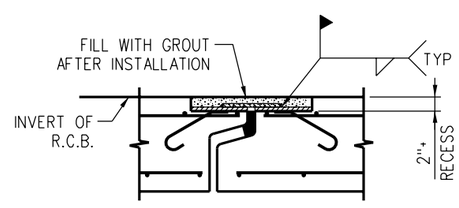

BOTTOM JOINT TIE PLATE

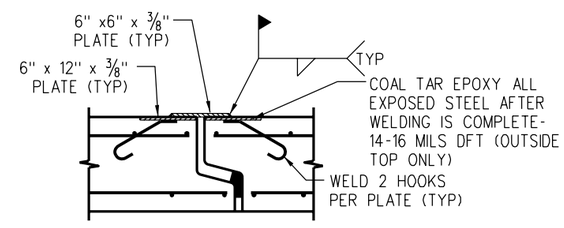

TOP JOINT TIE PLATE

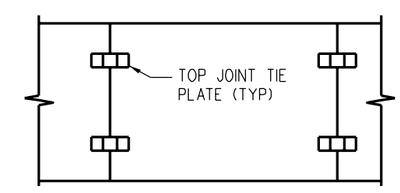

BOX PLAN VIEW

REV.	DATE	DESCRIPTION	DES.	ENG.
X	XX-XX-XX	REVISION	XX	XX

DRAWN BY: A. CARLOS DATE: 03/31/2011

ASSISTANT DIRECTOR: STANDARDS & DESIGN

DIRECTOR OF ENGINEERING AND CONSTRUCTION

SCRRA ENGINEERING STANDARDS ARE INTENDED FOR SCRRA APPROVED USES ONLY. FOR NON-SCRRA APPROVED USES: SCRRA SHALL NOT BE RESPONSIBLE FOR THE ACCURACY OR COMPLETENESS OF THE DATA OR INFORMATION CONTAINED HEREIN. THE SELECTION AND USE OF THESE STANDARDS IS THE SOLE RESPONSIBILITY OF THE USER AND SHOULD NOT BE USED WITHOUT CONSULTING A REGISTERED PROFESSIONAL ENGINEER. ALL WARRANTIES AND REPRESENTATIONS OF ANY KIND ARE DISCLAIMED. ANYONE MAKING USE OF THIS INFORMATION AGREES THAT IT ASSUMES ALL LIABILITY ARISING FROM SUCH USE. NO PART OF THESE STANDARDS SHOULD BE REPRODUCED OR DISTRIBUTED IN ANY FORM OR BY ANY MEANS WITHOUT THE PRIOR WRITTEN PERMISSION OF SCRRA. ALL RIGHTS RESERVED.

METROLINK®
SOUTHERN CALIFORNIA REGIONAL RAIL AUTHORITY
ONE GATEWAY PLAZA, 12TH FLOOR, L. A., CA. 90012

ENGINEERING STANDARDS

GENERAL DETAILS
PRECAST CONCRETE
DOUBLE BOX CULVERTS

STANDARD 6003
SCALE: NONE
REVISION –
SHEET 2 OF 4
CADD FILE: ES6003-02

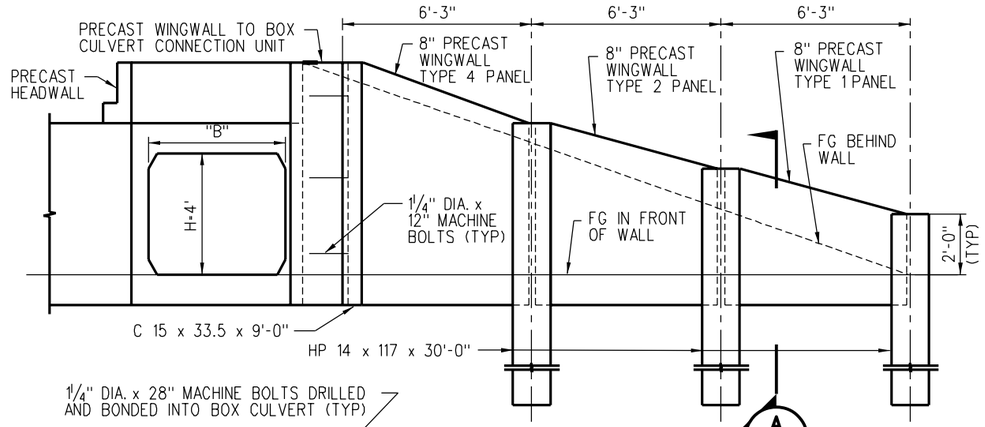

ELEVATION - BOX H = 4'

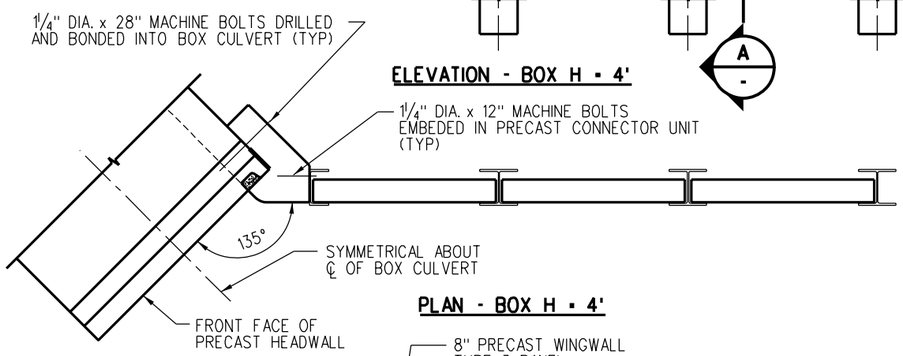

PLAN - BOX H = 4'

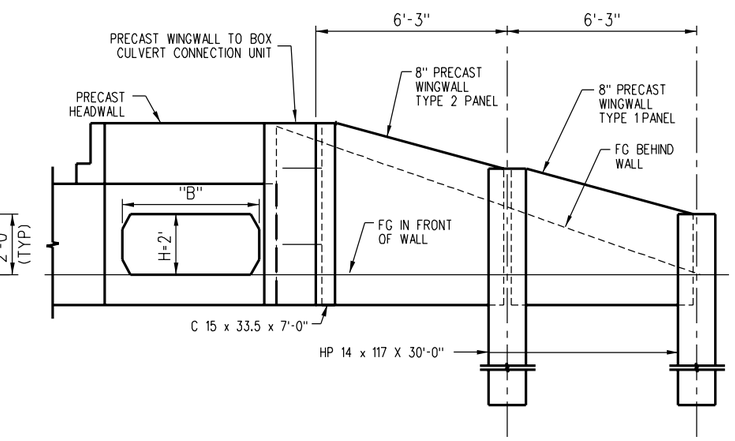

ELEVATION - BOX H = 2'

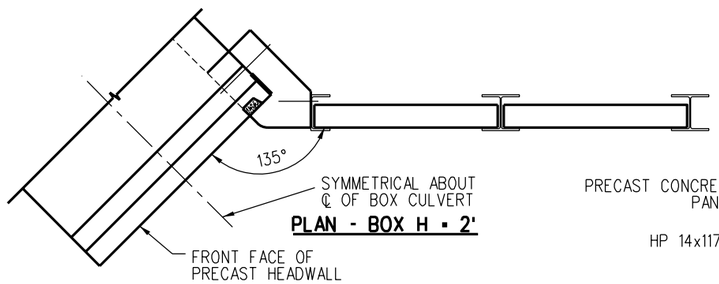

PLAN - BOX H = 2'

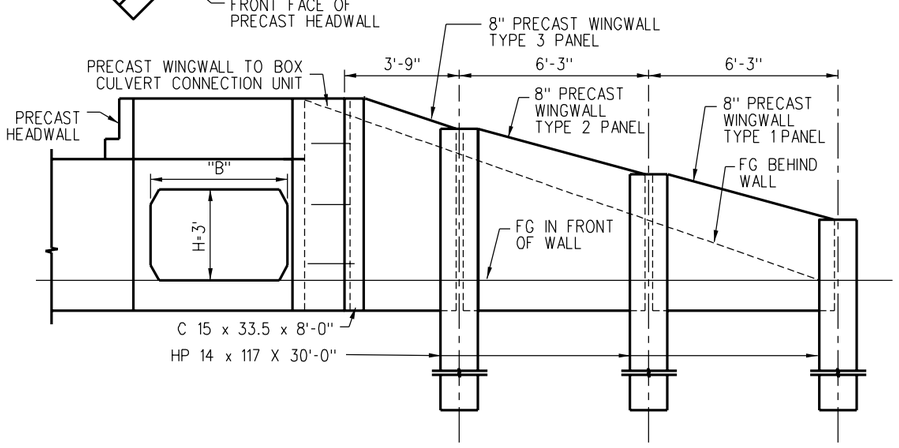

ELEVATION - BOX H = 3'

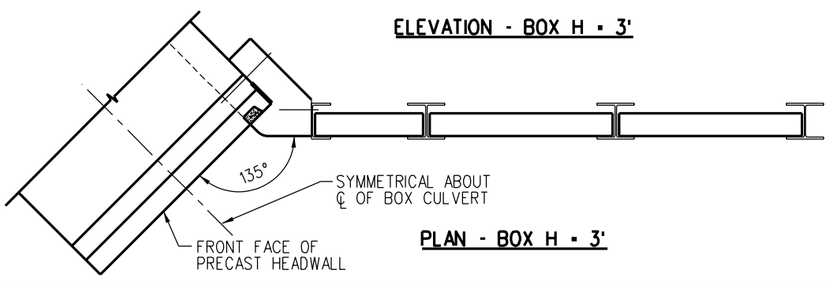

PLAN - BOX H = 3'

HEADWALL DIMENSIONS					
	BOX "B"	L	m	# OF BOLTS	s
SINGLE BOX	4'-0"	5'-4"	1'-4"	2	-
	6'-0"	7'-6"	1'-6"	2	-
	8'-0"	10'-0"	1'-8"	2	-
DOUBLE BOX	5'-0"	12'-0"	1'-4"	2	-
	6'-0"	14'-6"	1'-6"	4	4'-9"
	7'-0"	16'-9"	1'-8"	4	5'-9"
	8'-0"	19'-0"	1'-8"	4	6'-8"

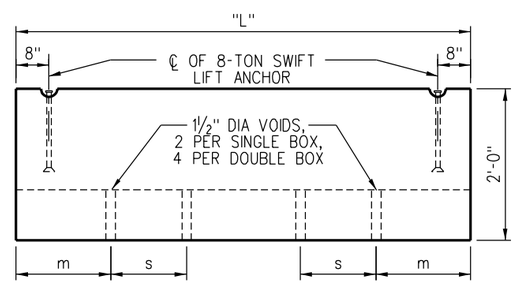

PRECAST HEADWALL-FRONT VIEW

NOTES:

A. SPECIFICATIONS
1. DESIGN: AREMA - 2004 SERVICE LOAD DESIGN
WINGWALL AND HEAD WALL DESIGNED IN ACCORDANCE WITH SECTION 16, CHAPTER 8 OF AREMA MANUAL
2. LOAD COMBINATION: GROUP 1: D + L + I + E
WHERE D = DEAD LOAD, L = LIVE LOAD, E = EARTH LOAD, I = IMPACT

B. LOADINGS:
1. LATERAL LOAD:
- EQUIVALENT FLUID PRESSURE OF 40 PCF.
- UNIFORM LATERAL SURCHARGE PRESSURE OF 570 PSF.
2. MATERIAL PROPERTIES:
- F'C = 4,000 PSI
- FY = 60,000 PSI (REINFORCEMENT)
- N = 7

C. MATERIALS
1. ALL WELDED WIRE REINFORCEMENT SHALL CONFORM TO ASTM A497.
- ALLOWABLE TENSILE STRESS OF 24,000 PSI FOR SERVICE LOAD DESIGN.
2. CONCRETE
- ALL EXPOSED EDGES OF CONCRETE SHALL BE CHAMFERED ¾".
- ALL REINFORCING STEEL SHALL HAVE A MINIMUM 2" COVER.
3. STEEL
- STRUCTURAL STEEL ASTM A572 GRADE 50.
- DEBURR ALL EDGES.
- PAINT EXPOSED PILES WITH ONE PRIME AND ONE FINISH COAT BRIDGE PAINT. PAINT TO EXTEND AT LEAST ONE FOOT BELOW FINISHED GROUND LINE.
- ALL BOLTS SHALL BE A307 GALVANIZED STEEL WITH 2 GALVANIZED WASHERS.
4. PILE DESIGN IS BASED UPON SATURATED SAND WITH COEFFICIENT OF FRICTION - 30°.
- PILES MUST BE DRIVEN CAREFULLY SO THAT ALL ARE PLUMB AND ALIGNED SO THAT THE PRECAST CONCRETE WINGWALL CAN BEAR EVENLY ON FLANGES OF EACH PILE.

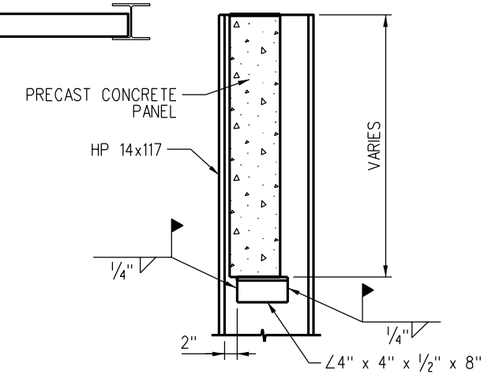

SECTION A

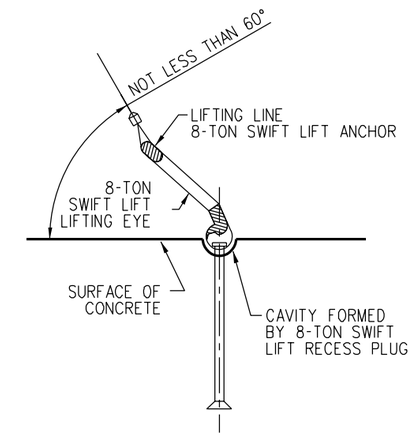

LIFTING DETAIL

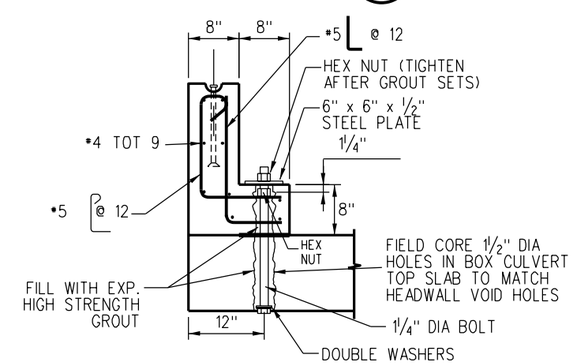

HEADWALL SECTION

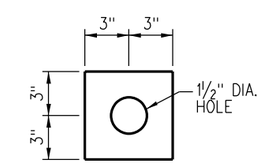

6" x 6" x ½" STEEL PLATE (GALVANIZED)

FOR PANEL AND CULVERT END UNIT DETAILS SEE "STANDARD PRECAST CONCRETE HEADWALL AND WINGWALL DETAILS SHEET 2"

REV.	DATE	DESCRIPTION	DES.	ENG.
X	XX-XX-XX	REVISION	XX	XX

DRAWN BY: A. CARLOS DATE: 03/31/2011

ASSISTANT DIRECTOR: STANDARDS & DESIGN

DIRECTOR OF ENGINEERING AND CONSTRUCTION

SCRRA ENGINEERING STANDARDS ARE INTENDED FOR SCRRA APPROVED USES ONLY. FOR NON-SCRRA APPROVED USES:
SCRRA SHALL NOT BE RESPONSIBLE FOR THE ACCURACY OR COMPLETENESS OF THE DATA OR INFORMATION CONTAINED HEREIN. THE SELECTION AND USE OF THESE STANDARDS IS THE SOLE RESPONSIBILITY OF THE USER AND SHOULD NOT BE USED WITHOUT CONSULTING A REGISTERED PROFESSIONAL ENGINEER. ALL WARRANTIES AND REPRESENTATIONS OF ANY KIND ARE DISCLAIMED. ANYONE MAKING USE OF THIS INFORMATION AGREES THAT IT ASSUMES ALL LIABILITY ARISING FROM SUCH USE. NO PART OF THESE STANDARDS SHOULD BE REPRODUCED OR DISTRIBUTED IN ANY FORM OR BY ANY MEANS WITHOUT THE PRIOR WRITTEN PERMISSION OF SCRRA. ALL RIGHTS RESERVED.

METROLINK®
SOUTHERN CALIFORNIA REGIONAL RAIL AUTHORITY
ONE GATEWAY PLAZA, 12TH FLOOR, L. A., CA. 90012

ENGINEERING STANDARDS

GENERAL DETAILS
PRECAST CONCRETE
HEADWALL AND WINGWALL

STANDARD 6003
SCALE: NONE
REVISION –
SHEET 3 OF 4
CADD FILE: ES6003-03

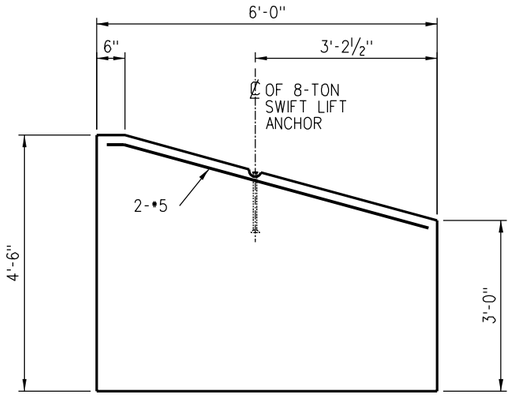

PANEL 1 ELEVATION

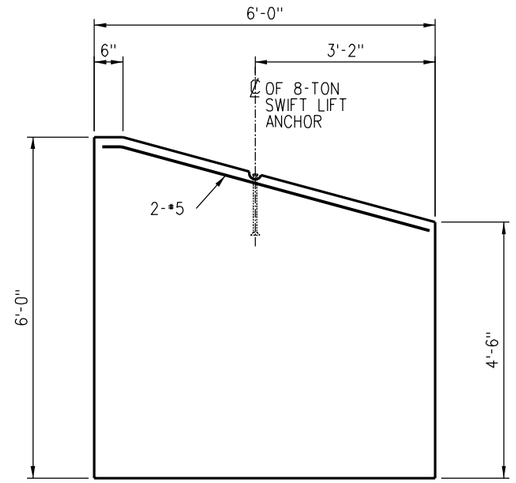

PANEL 2 ELEVATION

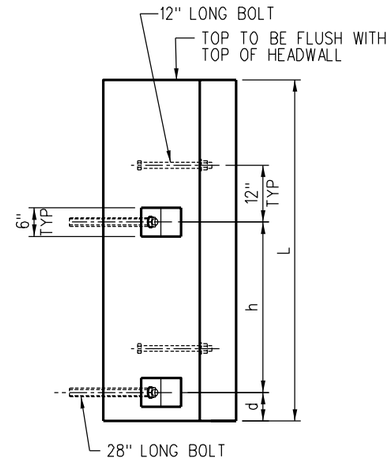

H=2'&3' BOX CULVERT CONNECTION UNIT

NOTES:

A. SPECIFICATIONS
1. DESIGN: AREMA - 2004 SERVICE LOAD DESIGN
WINGWALL AND HEAD WALL DESIGNED IN ACCORDANCE WITH SECTION 16, CHAPTER 8 OF AREMA MANUAL
2. LOAD COMBINATION: GROUP 1: D + L + I + E
WHERE D = DEAD LOAD, L = LIVE LOAD, E = EARTH LOAD, I = IMPACT

B. LOADINGS:
1. LATERAL LOAD:
- EQUIVALENT FLUID PRESSURE OF 40 PCF.
- UNIFORM LATERAL SURCHARGE PRESSURE OF 570 PSF.
2. MATERIAL PROPERTIES:
- F'C = 4,000 PSI
- FY = 60,000 PSI (REINFORCEMENT)
- N = 7

C. MATERIALS
1. ALL WELDED WIRE REINFORCEMENT SHALL CONFORM TO ASTM A497.
- ALLOWABLE TENSILE STRESS OF 24,000 PSIFOR SERVICE LOAD DESIGN.
2. CONCRETE
- ALL EXPOSED EDGES OF CONCRETE SHALL BE CHAMFERED3"4".
- ALL REINFORCING STEEL SHALL HAVE A MINIMUM 2" COVER.
3. STEEL
- STRUCTURAL STEEL ASTM A572 GRADE 50.
- DEBURR ALL EDGES.
- PAINT EXPOSED PILES WITH ONE PRIME AND ONE FINISH COAT BRIDGE PAINT. PAINT TO EXTEND AT LEAST ONE FOOT BELOW FINISHED GROUND LINE.
- ALL BOLTS SHALL BE A307 GALVANIZED STEEL WITH 2 GALVANIZED WASHERS.
4. PILE DESIGN IS BASED UPON SATURATED SAND WITH COEFFICIENT OF FRICTION - 30°.
- PILES MUST BE DRIVEN CAREFULLY SO THAT ALL ARE PLUMB AND ALIGNED SO THAT THE PRECAST CONCRETE WINGWALL CAN BEAR EVENLY ON FLANGES OF EACH PILE.

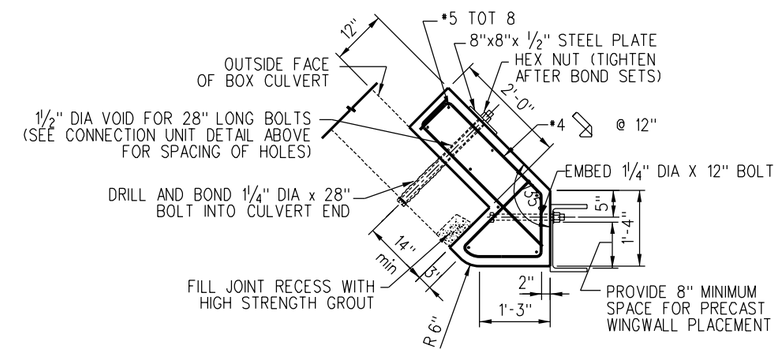

BOX CULVERT CONNECTION UNIT DETAIL

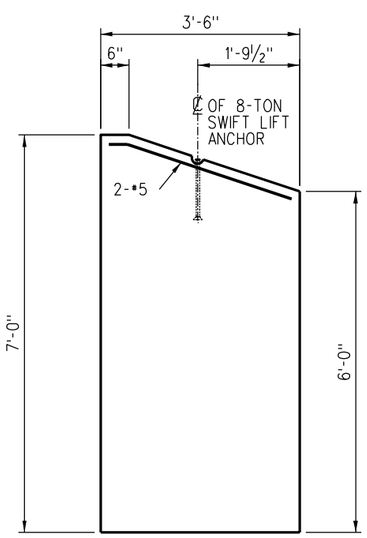

PANEL 3 ELEVATION

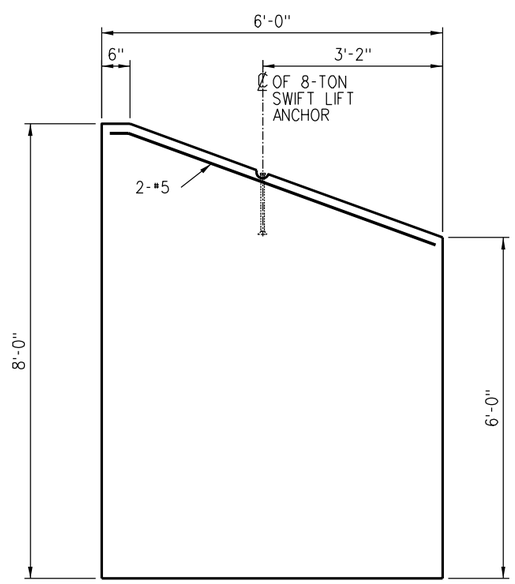

PANEL 4 ELEVATION

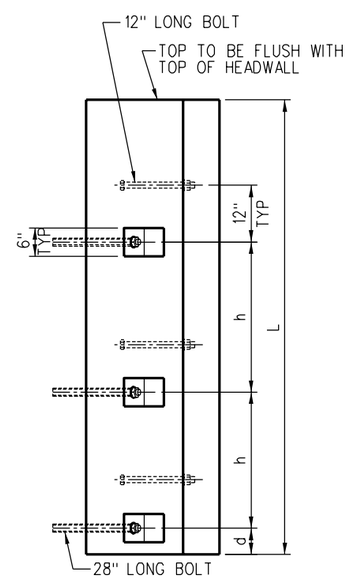

H=4' BOX CULVERT CONNECTION UNIT

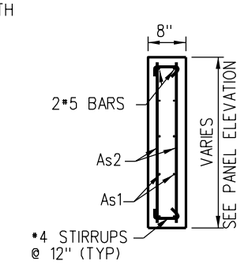

TYPICAL PANEL SECTION

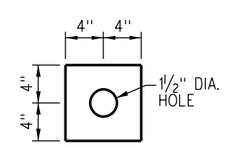

8" x 8" x ½" STEEL PLATE (GALVANIZED)

BOX CULVERT CONNECTION UNIT DIMENSIONS					
BOX "H"	BOX "B"	L	d	# OF 28" BOLTS	h
	4'-0"	5'-4"	4"	2	2'-8"
2'-0"	6'-0"	5'-6"	5"	2	2'-10"
	8'-0"	6'-0"	6"	2	3'-0"
	4'-0"	6'-4"	4"	2	3'-8"
3'-0"	6'-0"	6'-6"	5"	2	3'-10"
	8'-0"	7'-0"	6"	2	4'-0"
	4'-0"	7'-4"	4"	3	2'-3"
4'-0"	6'-0"	7'-6"	5"	3	2'-4"
	8'-0"	8'-0"	6"	3	2'-6"

PANEL REINFORCEMENT		
PANEL	As1 (in2/ft)	As2 (in2/ft)
1	0.40	0.30
2	0.40	0.30
3	0.30	0.30
4	0.40	0.30

REV.	DATE	DESCRIPTION	DES.	ENG.
X	XX-XX-XX	REVISION	XX	XX

DRAWN BY: A. CARLOS DATE: 03/31/2011

ASSISTANT DIRECTOR: STANDARDS & DESIGN

DIRECTOR OF ENGINEERING AND CONSTRUCTION

SCRRA ENGINEERING STANDARDS ARE INTENDED FOR SCRRA APPROVED USES ONLY. FOR NON-SCRRA APPROVED USES: SCRRA SHALL NOT BE RESPONSIBLE FOR THE ACCURACY OR COMPLETENESS OF THE DATA OR INFORMATION CONTAINED HEREIN. THE SELECTION AND USE OF THESE STANDARDS IS THE SOLE RESPONSIBILITY OF THE USER AND SHOULD NOT BE USED WITHOUT CONSULTING A REGISTERED PROFESSIONAL ENGINEER. ALL WARRANTIES AND REPRESENTATIONS OF ANY KIND ARE DISCLAIMED. ANYONE MAKING USE OF THIS INFORMATION AGREES THAT IT ASSUMES ALL LIABILITY ARISING FROM SUCH USE. NO PART OF THESE STANDARDS SHOULD BE REPRODUCED OR DISTRIBUTED IN ANY FORM OR BY ANY MEANS WITHOUT THE PRIOR WRITTEN PERMISSION OF SCRRA. ALL RIGHTS RESERVED.

METROLINK®
SOUTHERN CALIFORNIA REGIONAL RAIL AUTHORITY
ONE GATEWAY PLAZA, 12TH FLOOR, L. A., CA. 90012

ENGINEERING STANDARDS

GENERAL DETAILS
PRECAST CONCRETE
HEADWALL AND WINGWALL

STANDARD 6003
SCALE: NONE
REVISION –
SHEET 4 OF 4
CADD FILE: ES6003-04

	BILL OF MATERIAL
	ITEM
	BRIDGE, TRESTLE AND CULVERT NUMBER MARKER
1	0.25 SQ. FT. ALUMINUM PANEL
1	2" x 2" SQUARE POST (LENGTH VARIES WITH TERRAIN)
2	3" LONG BOLT WITH NUT AND WASHERS PER SCRRA ES5210
1	ANCHOR PER SCRRA ES5210

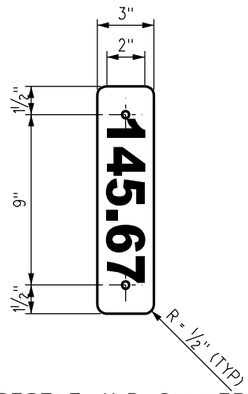

BRIDGE, TRESTLE AND CULVERT MARKER

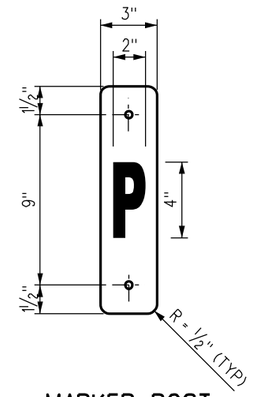

MARKER POST

INSTALLATION NOTES

1. BRIDGE AND TRESTLE MARKER SHALL BE SET ON FIELD SIDE OF OUTSIDE TRACK AND USED ONLY AT SUCH LOCATIONS AS APPROVED BY SCRRA.
2. CULVERT MARKER SHALL BE INSTALLED AT LOCATIONS WHERE HEADWALL, PORTAL OR CULVERT OPENING IS NOT VISIBLE FROM THE TRACK (SUCH AS CULVERTS IN HIGH FILLS). MARKER SHALL BE PLACED ON RIGHT HAND SIDE WHEN FACING IN THE DIRECTION OF INCREASING MILE POSTS.
3. MARKER POST SHALL BE USED TO INDICATE STRUCTURES PROTECTED BY HIGH WATER DETECTOR. MARKERS SHALL BE PLACED AT EACH END OF STRUCTURE. WHERE STRUCTURE HAS HANDRAIL, MARKER MAY BE PLACED ON ENDPOST OF HANDRAIL.

MATERIAL SPECIFICATIONS

SIGNS:
$^{1}/_{8}$" THICK MILL FINISH ALUMINUM PANEL, ALCOA 6016-T6 OR EQUAL.
PAINT ALL SIDES WITH LINEAR POLYURATHANE. COLOR FACE OF PANEL WITH ENGINEERING GRADE, PRESSURE SENSITIVE , RETRO-REFLECTIVE WHITE VINYL SHEETING. SILK SCREEN LEGEND WITH BLACK INK. FINISH WITH EXTERIOR GRADE PRESSURE SENSITIVE CLEAR MYLAR, 3M-1150 OR EQUAL.

POST, ANCHOR AND HARDWARE:
PER SCRRA ES5210.

TEXT STYLE:
"ARIAL BOLD" PER SCRRA ES1212, SIZE AS INDICATED.

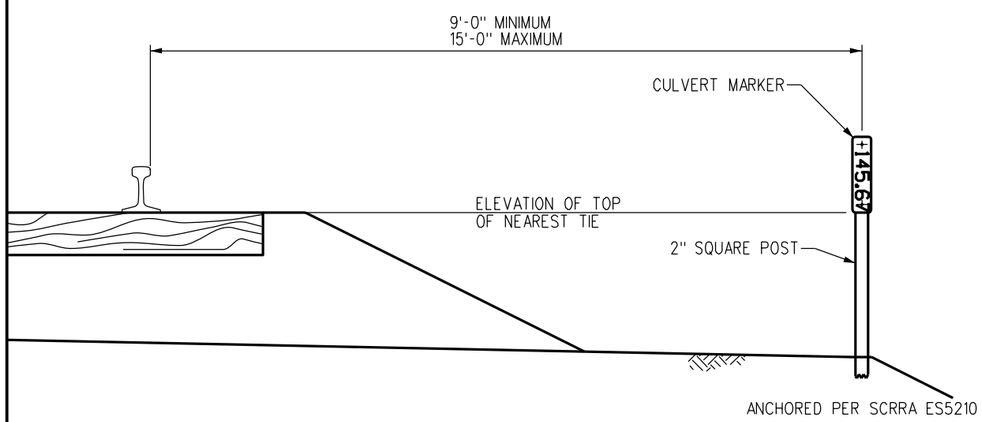

LOCATION PLAN
(ELEVATION VIEW)

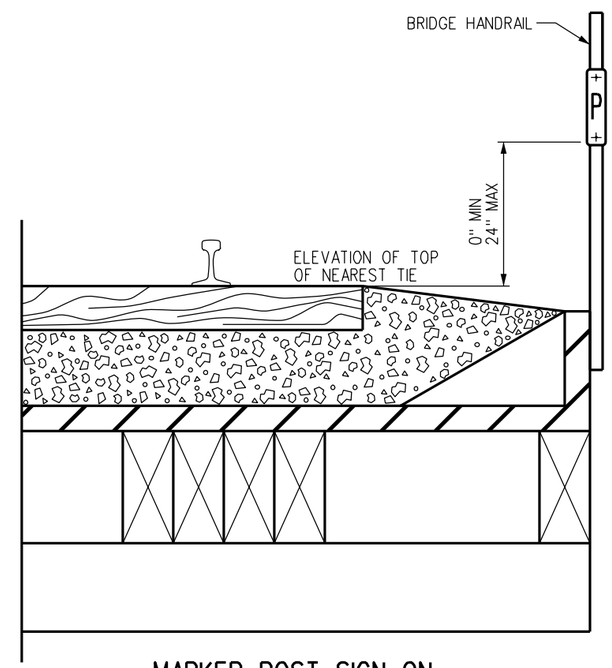

MARKER POST SIGN ON
BRIDGE HANDRAIL

REV.	DATE	DESCRIPTION	DES.	ENG.
X	XX-XX-XX	REVISION	XX	XX

DRAWN BY: A. CARLOS DATE: 03/31/2011

ASSISTANT DIRECTOR: STANDARDS & DESIGN

DIRECTOR OF ENGINEERING AND CONSTRUCTION

SCRRA ENGINEERING STANDARDS ARE INTENDED FOR SCRRA APPROVED USES ONLY. FOR NON-SCRRA APPROVED USES:
SCRRA SHALL NOT BE RESPONSIBLE FOR THE ACCURACY OR COMPLETENESS OF THE DATA OR INFORMATION CONTAINED HEREIN. THE SELECTION AND USE OF THESE STANDARDS IS THE SOLE RESPONSIBILITY OF THE USER AND SHOULD NOT BE USED WITHOUT CONSULTING A REGISTERED PROFESSIONAL ENGINEER. ALL WARRANTIES AND REPRESENTATIONS OF ANY KIND ARE DISCLAIMED. ANYONE MAKING USE OF THIS INFORMATION AGREES THAT IT ASSUMES ALL LIABILITY ARISING FROM SUCH USE. NO PART OF THESE STANDARDS SHOULD BE REPRODUCED OR DISTRIBUTED IN ANY FORM OR BY ANY MEANS WITHOUT THE PRIOR WRITTEN PERMISSION OF SCRRA. ALL RIGHTS RESERVED.

METROLINK®
SOUTHERN CALIFORNIA REGIONAL RAIL AUTHORITY
ONE GATEWAY PLAZA, 12TH FLOOR, L. A., CA. 90012

ENGINEERING STANDARDS

BRIDGE, TRESTLE AND CULVERT NUMBER MARKER

STANDARD 6101
SCALE: NTS
REVISION –
SHEET 1 OF 1
CADD FILE: ES6101

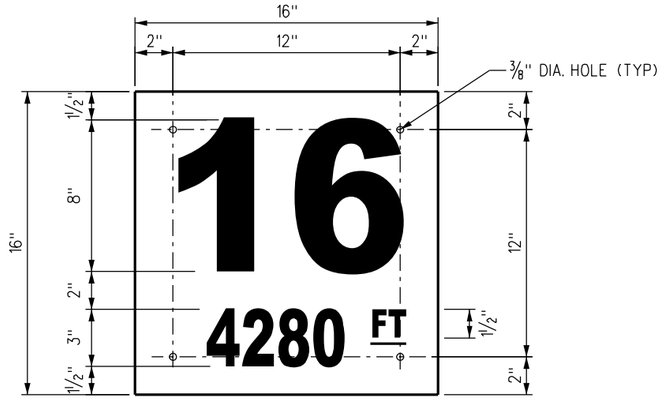

TUNNEL PORTAL SIGN

MATERIAL SPECIFICATIONS:

SIGN:
1/8" THICK MILL FINISH ALUMINUM PANEL, ALCOA 6016-T6 OR EQUAL.
PAINT ALL SIDES WITH LINEAR POLYURATHANE. COLOR FACE OF PANEL WITH ENGINEERING GRADE, PRESSURE SENSITIVE , RETRO-REFLECTIVE WHITE VINYL SHEETING. SILK SCREEN LEGEND WITH BLACK INK. FINISH WITH EXTERIOR GRADE PRESSURE SENSITIVE CLEAR MYLAR, 3M-1150 OR EQUAL.

TEXT STYLE:
"ARIAL BOLD" PER SCRRA ES1212. SIZE AS INDICATED.

HARDWARE:
ALL HARDWARE SHALL BE VANDAL RESISTANT.
BOLTS: 5/16" X 2" LONG EXPANSION BOLTS

BILL OF MATERIAL

NUMBER REQUIRED	ITEM
	TUNNEL NUMBERS
1	1.78 SQ. FT. ALUMINUM PANEL
4	5/16" X 2" LONG ALUMINUM EXPANSION BOLT

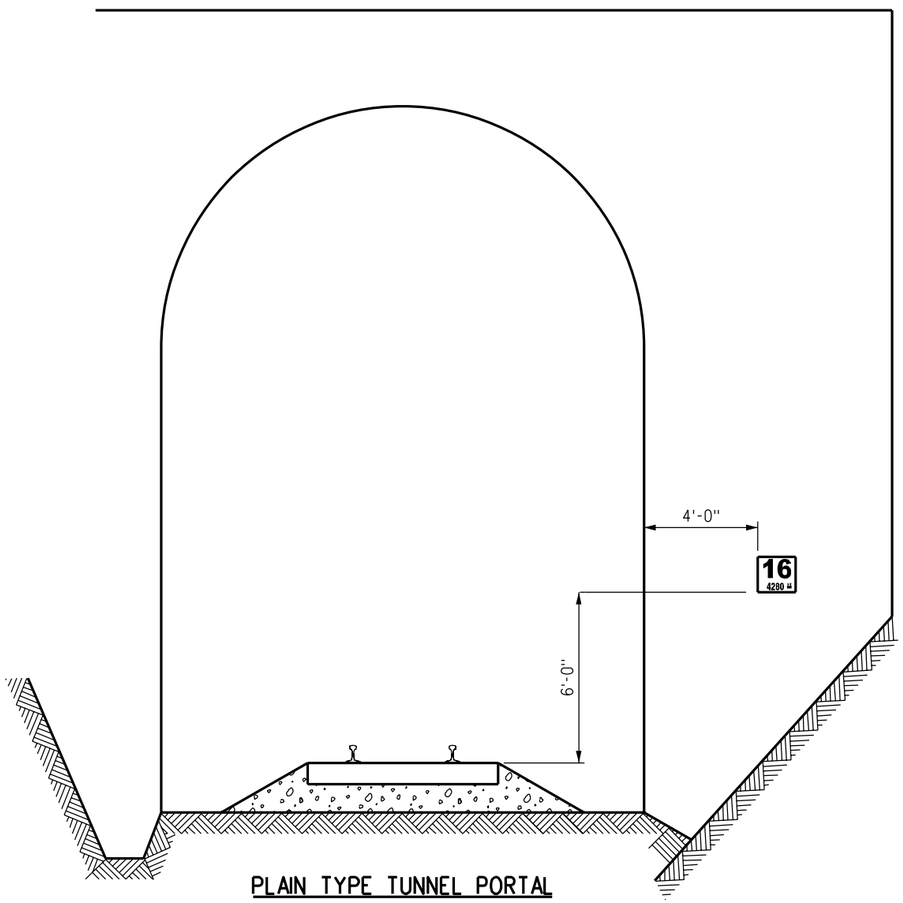

PLAIN TYPE TUNNEL PORTAL

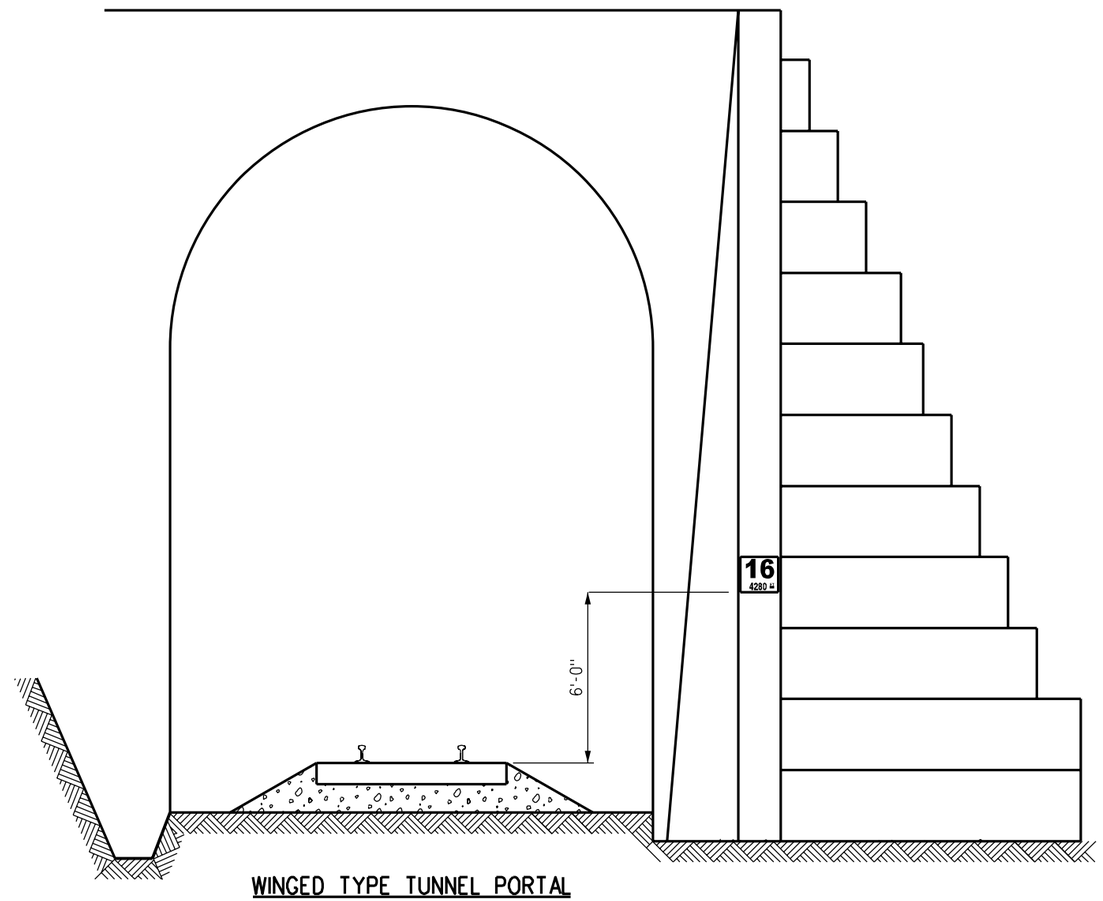

WINGED TYPE TUNNEL PORTAL

REV.	DATE	DESCRIPTION	DES.	ENG.
X	XX-XX-XX	REVISION	XX	XX

DRAWN BY: A. CARLOS DATE: 03/31/2011

ASSISTANT DIRECTOR: STANDARDS & DESIGN

DIRECTOR OF ENGINEERING AND CONSTRUCTION

SCRRA ENGINEERING STANDARDS ARE INTENDED FOR SCRRA APPROVED USES ONLY. FOR NON-SCRRA APPROVED USES:
SCRRA SHALL NOT BE RESPONSIBLE FOR THE ACCURACY OR COMPLETENESS OF THE DATA OR INFORMATION CONTAINED HEREIN. THE SELECTION AND USE OF THESE STANDARDS IS THE SOLE RESPONSIBILITY OF THE USER AND SHOULD NOT BE USED WITHOUT CONSULTING A REGISTERED PROFESSIONAL ENGINEER. ALL WARRANTIES AND REPRESENTATIONS OF ANY KIND ARE DISCLAIMED. ANYONE MAKING USE OF THIS INFORMATION AGREES THAT IT ASSUMES ALL LIABILITY ARISING FROM SUCH USE. NO PART OF THESE STANDARDS SHOULD BE REPRODUCED OR DISTRIBUTED IN ANY FORM OR BY ANY MEANS WITHOUT THE PRIOR WRITTEN PERMISSION OF SCRRA. ALL RIGHTS RESERVED.

METROLINK®
SOUTHERN CALIFORNIA REGIONAL RAIL AUTHORITY
ONE GATEWAY PLAZA, 12TH FLOOR, L. A., CA. 90012

ENGINEERING STANDARDS

TUNNEL NUMBERS

STANDARD 6102
SCALE: NTS
REVISION –
SHEET 1 OF 1
CADD FILE: ES6102

BILL OF MATERIAL	
NUMBER REQUIRED	ITEM
	BEGIN CHANNEL SIGN
1	3.00 SQ. FT. ALUMINUM PANEL
1	2" x 2" SQUARE POST (LENGTH VARIES WITH TERRAIN)
2	3" LONG BOLT WITH NUT AND WASHERS PER SCRRA ES5210
1	ANCHOR PER SCRRA ES5210

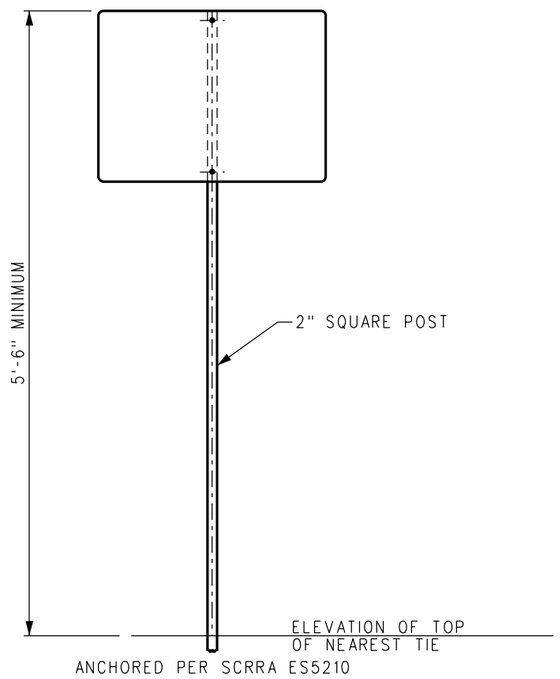

BEGIN CHANNEL SIGN

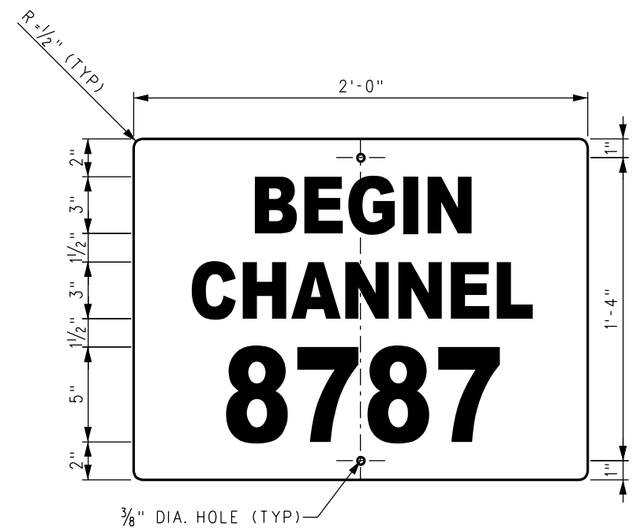

SIGN PANEL

INSTALLATION NOTES

1. SIGNS SHALL BE LOCATED ON THE RIGHT HAND SIDE AND SHALL FACE IN THE DIRECTION OF APPROACH.
2. THE POST SHALL BE SET PER THE LOCATION PLAN ON THIS SHEET. EXCEPTIONS SHALL REQUIRE THE APPROVAL OF SCRRA.

MATERIAL SPECIFICATIONS

SIGNS:
1/8" THICK MILL FINISH ALUMINUM PANEL, ALCOA 6016-T6 OR EQUAL. PAINT ALL SIDES WITH LINEAR POLYURATHANE. COLOR FACE OF PANEL WITH ENGINEERING GRADE, PRESSURE SENSITIVE, RETRO-REFLECTIVE WHITE VINYL SHEETING. SILK SCREEN LEGEND WITH BLACK INK. FINISH WITH EXTERIOR GRADE PRESSURE SENSITIVE CLEAR MYLAR, 3M-1150 OR EQUAL.

POST, ANCHOR AND HARDWARE:
PER SCRRA ES5210.

TEXT STYLE:
"ARIAL BOLD" PER SCRRA ES1212, SIZE AS INDICATED.

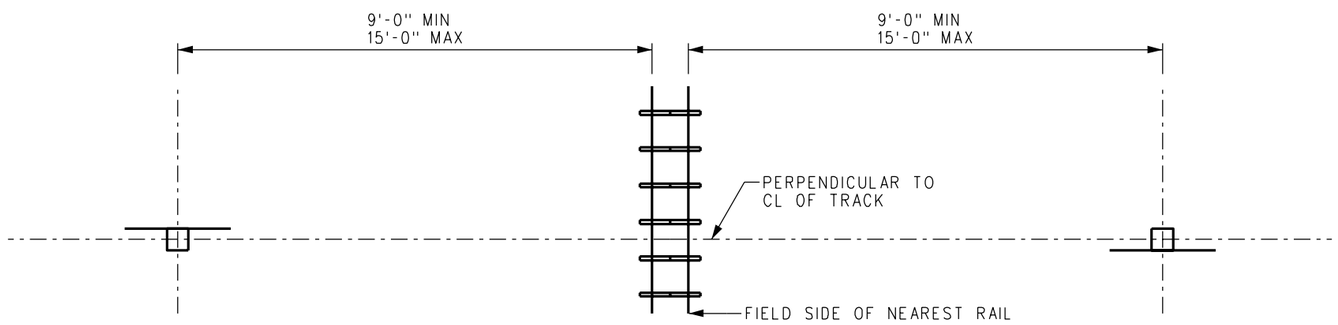

LOCATION PLAN

REV.	DATE	DESCRIPTION	DES.	ENG.
X	XX-XX-XX	REVISION	XX	XX

DRAWN BY: HDR DATE: 03/31/2011

ASSISTANT DIRECTOR: STANDARDS & DESIGN

DIRECTOR OF ENGINEERING AND CONSTRUCTION

SCRRA ENGINEERING STANDARDS ARE INTENDED FOR SCRRA APPROVED USES ONLY. FOR NON-SCRRA APPROVED USES:
SCRRA SHALL NOT BE RESPONSIBLE FOR THE ACCURACY OR COMPLETENESS OF THE DATA OR INFORMATION CONTAINED HEREIN. THE SELECTION AND USE OF THESE STANDARDS IS THE SOLE RESPONSIBILITY OF THE USER AND SHOULD NOT BE USED WITHOUT CONSULTING A REGISTERED PROFESSIONAL ENGINEER. ALL WARRANTIES AND REPRESENTATIONS OF ANY KIND ARE DISCLAIMED. ANYONE MAKING USE OF THIS INFORMATION AGREES THAT IT ASSUMES ALL LIABILITY ARISING FROM SUCH USE. NO PART OF THESE STANDARDS SHOULD BE REPRODUCED OR DISTRIBUTED IN ANY FORM OR BY ANY MEANS WITHOUT THE PRIOR WRITTEN PERMISSION OF SCRRA. ALL RIGHTS RESERVED.

METROLINK®
SOUTHERN CALIFORNIA REGIONAL RAIL AUTHORITY
ONE GATEWAY PLAZA, 12TH FLOOR, L. A., CA. 90012

ENGINEERING STANDARDS

BEGIN CHANNEL SIGN

STANDARD 6103
SCALE: NTS
REVISION –
SHEET 1 OF 1
CADD FILE: ES6103

GENERAL NOTES:

1. ALL WORK REQUIREMENTS SHOWN ON THESE DRAWINGS SHALL BE ACCOMPLISHED AS SPECIFIED IN THE MOST CURRENT AMERICAN RAILWAY ENGINEERING AND MAINTENANCE-OF-WAY ASSOCIATION (AREMA) MANUAL FOR RAILWAY ENGINEERING AND SCRRA STANDARD SPECIFICATIONS.
2. CAST-IN-PLACE CONCRETE HAS BEEN DESIGNED IN ACCORDANCE WITH THE AREMA MANUAL, CHAPTER 8 - CONCRETE STRUCTURES AND FOUNDATIONS.
3. TYPE A HEADWALLS HAVE BEEN DESIGNED FOR ACTIVE EARTH PRESSURE AND E-80 RAILROAD LIVE LOAD SURCHARGE AT NO CLOSER THAN 12'-0" FROM THE CENTERLINE OF THE NEAREST TRACK TO THE BACK FACE OF THE HEADWALL.

HANDRAIL POLICY:

PROVIDE HANDRAIL FOR HEADWALLS PER SHEETS ES6330-01 AND ES6330-02 IF IT MEETS EITHER OF THE FOLLOWING CRITERIA:

1. HEADWALL HEIGHT (H) IS EQUAL TO OR GREATER THAN 6'-0".
2. FOR HEADWALLS OF ANY HEIGHT, THE BACK FACE OF THE HEADWALL IS AT THE SHOULDER POINT, WHICH IS THE LOCATION WHERE THE SUBGRADE MEETS THE SIDE SLOPE.

NOTES:

1. CSP = CORRUGATED STEEL PIPE
   SPP = STRUCTURAL PLATE PIPE
   SSP = SMOOTH STEEL PIPE
2. TYPE A HEADWALLS FOR STEEL PIPE CULVERTS UP TO 72" DIAMETER INCLUDE TYPE A-1 HEADWALLS FOR A SINGLE PIPE, TYPE A-2 HEADWALLS FOR TWO PIPES, TYPE A-3 HEADWALLS FOR THREE PIPES AND TYPE A-M HEADWALLS FOR MULTIPLE PIPES.

CAST-IN-PLACE CONCRETE NOTES:

CONCRETE:

1. ALL CONCRETE MATERIAL, PLACEMENT AND WORKMANSHIP SHALL BE IN ACCORDANCE WITH SCRRA STANDARD SPECIFICATION 34 80 43. PRECAST PRESTRESSED CONCRETE FOR RAILROAD BRIDGES.
2. COMPRESSIVE STRENGTH - 4000 LB. PER SQUARE INCH AT 28 DAYS.
3. EXPOSED SURFACES SHALL BE FORMED IN A MANNER THAT WILL PRODUCE A SMOOTH AND UNIFORM APPEARANCE WITHOUT RUBBING OR PLASTERING. EXPOSED EDGES OF 90 DEGREES OR LESS ARE TO BE CHAMFERED 3/4" X 3/4". TOP SURFACE TO HAVE A SMOOTH FINISH, FREE OF ALL FLOAT OR TROWEL MARKS.
4. CONCRETE SHALL BE PROPORTIONED SUCH THAT THE WATER - CEMENT RATIO (BY WEIGHT) DOES NOT EXCEED 0.45. CONCRETE MUST CONTAIN A MINIMUM OF 6 1/2 SACKS OF CEMENT PER CUBIC YARD OF CONCRETE.
5. CEMENT SHALL BE TYPE I, TYPE II OR TYPE III PORTLAND CEMENT.
6. AGGREGATES SHALL BE GRADED IN ACCORDANCE WITH ASTM C33.
7. COARSE AGGREGATE SHALL BE SIZE NO. 67.
8. FINE AGGREGATE SHALL BE NATURAL SAND.
9. AIR CONTENT SHALL BE BETWEEN 5% AND 7% (BY VOLUME).
10. ADMIXTURES SHALL NOT BE USED WITHOUT APPROVAL BY THE RAILROAD.
11. CURING SHALL BE ACCOMPLISHED BY WET CURING OR MEMBRANE CURING COMPOUND. MEMBRANE CURING COMPOUND SHALL CONFORM TO ASTM C309 TYPE 2.

REINFORCING STEEL:

1. REINFORCING STEEL SHALL BE DEFORMED, NEW BILLET BARS PER CURRENT ASTM A615 SPECIFICATIONS AND MEET GRADE 60 REQUIREMENTS.
2. FABRICATION OF REINFORCING STEEL SHALL BE PER CHAPTER 7 OF THE CRSI MANUAL OF STANDARD PRACTICE. DIMENSIONS OF BENDING DETAILS ARE OUT TO OUT OF BAR.
3. REINFORCING STEEL IS TO BE BLOCKED AND TIED TO PROPER LOCATION AND SECURELY WIRED AGAINST DISPLACEMENT. TIE WIRES ARE TO BE INSTALLED AT EVERY OTHER BAR INTERSECTION SO THAT AT LEAST FIFTY PERCENT OF THE INTERSECTIONS ARE TIED. TACK WELDING OF REINFORCING IS PROHIBITED. MINIMUM CONCRETE COVER ON REINFORCING NOT OTHERWISE NOTED SHALL MEET CURRENT AREMA MANUAL FOR RAILWAY ENGINEERING REQUIREMENTS.

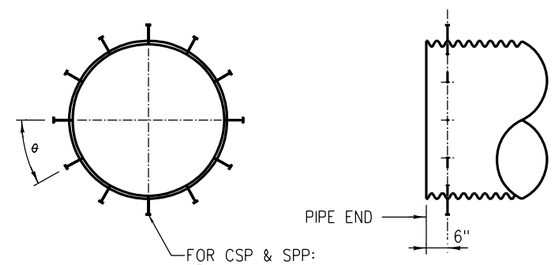

FOR CSP & SPP:
3/4" DIA. x 6" HEX HEAD GALV. ANCHOR BOLT w/2 GALV. NUTS (TYP.)

FOR SSP:
3/4" DIA x 8" WELDED STUD (TYP.)

INSTALL AFTER PIPE IS IN PLACE

END ANCHOR LOCATION DETAIL
SCALE: NONE

END ANCHOR DATA

PIPE DIAMETER	ANGLE θ	NO. OF ANCHORS
12" TO 36"	90°	4
37" TO 60"	45°	8
61" TO 72"	30°	12

NOTE:
END ANCHORS SHALL BE USED FOR ALL STEEL PIPE CULVERTS.

CONCRETE HEADWALL TABLE
FOR COMMON PIPE SIZES

MAXIMUM DIAMETER OF STEEL PIPE (D)	TYPE A HEADWALL
24"	H = 3'-6"
30"	H = 4'-0"
36"	H = 4'-6"
48"	H = 5'-6"
60"	H = 6'-6"
72"	H = 7'-6"

REV.	DATE	DESCRIPTION	DES.	ENG.
X	XX-XX-XX	REVISION	XX	XX

DRAWN BY: SCRRA DATE: 03/31/2011

ASSISTANT DIRECTOR: STANDARDS & DESIGN

DIRECTOR OF ENGINEERING AND CONSTRUCTION

SCRRA ENGINEERING STANDARDS ARE INTENDED FOR SCRRA APPROVED USES ONLY. FOR NON-SCRRA APPROVED USES:
SCRRA SHALL NOT BE RESPONSIBLE FOR THE ACCURACY OR COMPLETENESS OF THE DATA OR INFORMATION CONTAINED HEREIN. THE SELECTION AND USE OF THESE STANDARDS IS THE SOLE RESPONSIBILITY OF THE USER AND SHOULD NOT BE USED WITHOUT CONSULTING A REGISTERED PROFESSIONAL ENGINEER. ALL WARRANTIES AND REPRESENTATIONS OF ANY KIND ARE DISCLAIMED. ANYONE MAKING USE OF THIS INFORMATION AGREES THAT IT ASSUMES ALL LIABILITY ARISING FROM SUCH USE. NO PART OF THESE STANDARDS SHOULD BE REPRODUCED OR DISTRIBUTED IN ANY FORM OR BY ANY MEANS WITHOUT THE PRIOR WRITTEN PERMISSION OF SCRRA. ALL RIGHTS RESERVED.

METROLINK®
SOUTHERN CALIFORNIA REGIONAL RAIL AUTHORITY
ONE GATEWAY PLAZA, 12TH FLOOR, L. A., CA. 90012

ENGINEERING STANDARDS

END TREATMENTS FOR PIPE CULVERTS
GENERAL NOTES

STANDARD 6301
SCALE: NONE
REVISION –
SHEET 1 OF 1
CADD FILE: ES6301

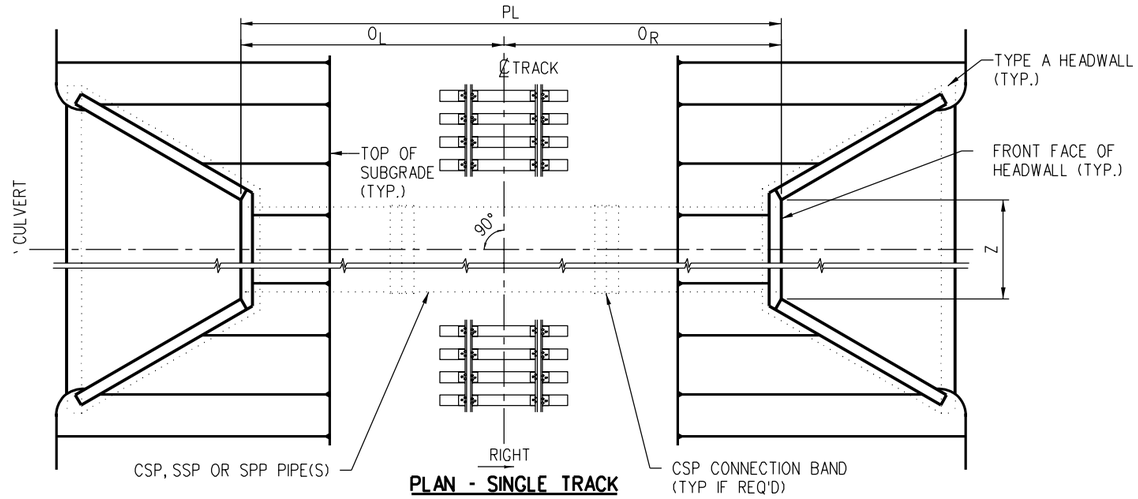

PLAN - SINGLE TRACK

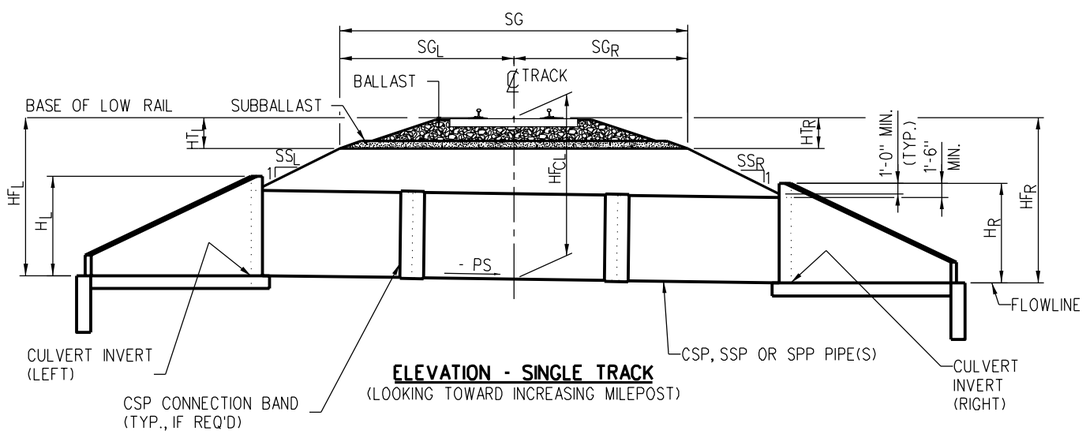

ELEVATION - SINGLE TRACK
(LOOKING TOWARD INCREASING MILEPOST)

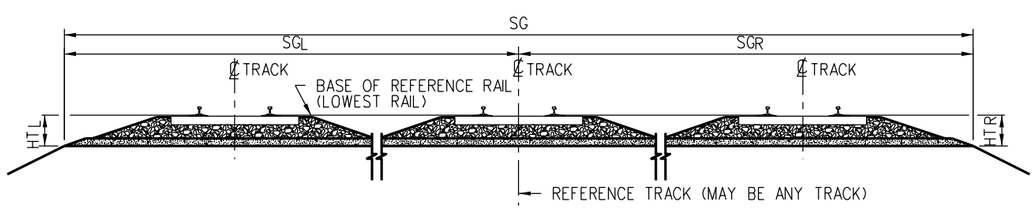

MULTIPLE TRACK DIAGRAM
(LOOKING TOWARD INCREASING MILEPOST)

KEY:

PL	= PIPE LENGTH
OL	= OFFSET LEFT
OR	= OFFSET RIGHT
PS	= PIPE SLOPE (RISE/RUN) LEFT TO RIGHT (+ UP, - DOWN)
HTL	= BASE OF LOW RAIL TO TOP OF SUBGRADE LEFT EDGE
HTR	= BASE OF LOW RAIL TO TOP OF SUBGRADE RIGHT EDGE
$HFCL$	= HEIGHT - BASE OF LOW RAIL TO FLOWLINE AT CENTERLINE OF TRACK
HFL	= HEIGHT - BASE OF LOW RAIL TO INVERT LEFT OF TRACK
HFR	= HEIGHT - BASE OF LOW RAIL TO INVERT RIGHT OF TRACK
$HFAVG$	= AVERAGE HEIGHT - BASE OF LOW RAIL TO FLOWLINE
H	= HEIGHT OF HEADWALL
HL	= HEIGHT OF HEADWALL LEFT OF TRACK
HR	= HEIGHT OF HEADWALL RIGHT OF TRACK
SG	= WIDTH OF SUBGRADE (24'-0" MINIMUM)
SGL	= WIDTH OF SUBGRADE LEFT OF ℄ TRACK (12'-0" MINIMUM)
SGR	= WIDTH OF SUBGRADE RIGHT OF ℄ TRACK (12'-0" MINIMUM)
SSL	= SIDE SLOPE LEFT OF TRACK (RUN PER FOOT OF RISE)
SSR	= SIDE SLOPE RIGHT OF TRACK (RUN PER FOOT OF RISE)
Z	= WIDTH OF THE FRONT FACE OF THE HEADWALL

CULVERT LENGTH EQUATION (TYPE A HEADWALLS

$$PL = OL + OR \geq SG + 2'$$

$$OL = SGL + SSL \times (HFL - HTL - HL + 1') + 1'$$

$$OR = SGR + SSR \times (HFR - HTR - HR + 1') + 1'$$

$$HFL = HFCL + \frac{PS \times [SGL - SSL \times (HTL + HL - 1') + 1']}{[1 - (PS \times SSL)]}$$

$$HFR = HFCL - \frac{PS \times [SGR - SSR \times (HTR + HR - 1') + 1']}{[1 + (PS \times SSR)]}$$

$$SG = SGL + SGR$$

$$HF\ AVG = (HFL + HFR) / 2$$

NOTE:

EQUATIONS REQUIRE DIMENSIONS TO BE IN FEET.

NOTES:

1. CSP = CORRUGATED STEEL PIPE
   SPP = STRUCTURAL PLATE PIPE
   SSP = SMOOTH STEEL PIPE
2. TYPE A HEADWALLS FOR STEEL PIPE CULVERTS UP TO 72" DIAMETER INCLUDE TYPE A-1 HEADWALLS FOR A SINGLE PIPE, TYPE A-2 HEADWALLS FOR TWO PIPES, TYPE A-3 HEADWALLS FOR THREE PIPES AND TYPE A-M HEADWALLS FOR MULTIPLE PIPES.

REV.	DATE	DESCRIPTION	DES.	ENG.
X	XX-XX-XX	REVISION	XX	XX

DRAWN BY: SCRRA DATE: 03/31/2011

ASSISTANT DIRECTOR: STANDARDS & DESIGN

DIRECTOR OF ENGINEERING AND CONSTRUCTION

SCRRA ENGINEERING STANDARDS ARE INTENDED FOR SCRRA APPROVED USES ONLY. FOR NON-SCRRA APPROVED USES: SCRRA SHALL NOT BE RESPONSIBLE FOR THE ACCURACY OR COMPLETENESS OF THE DATA OR INFORMATION CONTAINED HEREIN. THE SELECTION AND USE OF THESE STANDARDS IS THE SOLE RESPONSIBILITY OF THE USER AND SHOULD NOT BE USED WITHOUT CONSULTING A REGISTERED PROFESSIONAL ENGINEER. ALL WARRANTIES AND REPRESENTATIONS OF ANY KIND ARE DISCLAIMED. ANYONE MAKING USE OF THIS INFORMATION AGREES THAT IT ASSUMES ALL LIABILITY ARISING FROM SUCH USE. NO PART OF THESE STANDARDS SHOULD BE REPRODUCED OR DISTRIBUTED IN ANY FORM OR BY ANY MEANS WITHOUT THE PRIOR WRITTEN PERMISSION OF SCRRA. ALL RIGHTS RESERVED.

METROLINK®
SOUTHERN CALIFORNIA REGIONAL RAIL AUTHORITY
ONE GATEWAY PLAZA, 12TH FLOOR, L. A., CA. 90012

ENGINEERING STANDARDS

GENERAL ARRANGEMENT FOR TYPE A HEADWALLS

STANDARD 6302
SCALE: NONE
REVISION –
SHEET 1 OF 2
CADD FILE: ES6302-01

CULVERT PIPE LENGTHS, PL (FT) FOR TYPE A HEADWALLS

H = 3'-6" D= 24"	H = 4'-6" D= 24" TO 36"	H = 5'-6" D= 24" TO 48"	H = 6'-6" D=24" TO 60"	H = 7'-6" D=24" TO 72"	SINGLE TRACK SIDE SLOPE			15' TRACK CENTERS SIDE SLOPE			20' TRACK CENTERS SIDE SLOPE		
HF AVG (FT)	HF AVG (FT)	HF AVG (FT)	HF AVG (FT)	HF AVG (FT)	1.5:1	2.0:1	3.0:1	1.5:1	2.0:1	3.0:1	1.5:1	2.0:1	3.0:1
4	5	6	7	8	32	32	32	48	48	48	54	54	54
5	6	7	8	9	34	34	36	50	50	50	56	56	56
6	7	8	9	10	38	38	42	52	54	56	58	60	62
7	8	9	10	11	40	42	48	56	58	62	62	64	68
8	9	10	11	12	44	46	54	58	62	68	64	68	74
9	10	11	12	13	46	50	60	62	66	74	68	72	80
10	11	12	13	14	50	54	66	64	70	80	70	76	86
11	12	13	14	15	52	58	72	68	74	86	74	80	92
12	13	14	15	16	56	62	78	70	78	92	76	84	98
13	14	15	16	17	58	66	84	74	82	98	80	88	104
14	15	16	17	18	62	70	90	76	86	104	82	92	110
15	16	17	18	19	64	74	96	80	90	110	86	96	116
16	17	18	19	20	68	78	102	82	94	116	88	100	122
17	18	19	20	21	70	82	108	86	98	122	92	104	128
18	19	20	21	22	74	86	114	88	102	128	94	108	134
19	20	21	22	23	76	90	120	92	106	134	98	112	140
20	21	22	23	24	80	94	126	94	110	140	100	116	146

CULVERT PIPE LENGTHS, PL (FT) FOR TYPE A HEADWALLS

H = 4'-0" D= 24" TO 30"	SINGLE TRACK SIDE SLOPE			15' TRACK CENTERS SIDE SLOPE			20' TRACK CENTERS SIDE SLOPE		
HF AVG (FT)	1.5:1	2.0:1	3.0:1	1.5:1	2.0:1	3.0:1	1.5:1	2.0:1	3.0:1
5	32	32	32	48	48	48	54	54	54
6	36	36	38	50	52	54	56	58	60
7	38	40	44	54	56	60	60	62	66
8	42	44	50	56	60	66	62	66	72
9	44	48	56	60	64	72	66	70	78
10	48	52	62	62	68	78	68	74	84
11	50	56	68	66	72	84	72	78	90
12	54	60	74	68	76	90	74	82	96
13	56	64	80	72	80	96	78	86	102
14	60	68	86	74	84	102	80	90	108
15	62	72	92	78	88	108	84	94	114
16	66	76	98	80	92	114	86	98	120
17	68	80	104	84	96	120	90	102	126
18	72	84	110	86	100	126	92	106	132
19	74	88	116	90	104	132	96	110	138
20	78	92	122	92	108	138	98	114	144
21	80	96	128	96	112	144	102	118	150

NOTES:

1. TABLES ASSUME 15'-0" SHOULDER FOR SINGLE TRACK AND 15' TRACK CENTERS, 15'-6" SHOULDER FOR 20' TRACK CENTERS.
2. ADD 10' TO PIPE LENGTH FOR EACH ACCESS ROAD.
3. LENGTHS SHOWN ARE FOR STANDARD CROSS SECTIONS FOR TANGENT TRACK. ADD 2' TO PIPE LENGTH (TO OUTSIDE OF CURVE) IF SUPERELEVATION IS 2" OR GREATER.
4. STANDARD CROSS SECTION INCLUDES 2" CROWN, 6" SUBBALLAST, AND 1'-4" BALLAST (INCLUDING TIE). TOTAL BASE OF RAIL TO SUBGRADE OF 2'-0".
5. TYPE A HEADWALLS FOR STEEL PIPE CULVERTS UP TO 72" DIAMETER INCLUDE TYPE A-1 HEADWALLS FOR A SINGLE PIPE, TYPE A-2 HEADWALLS FOR TWO PIPES, TYPE A-3 HEADWALLS FOR THREE PIPES AND TYPE A-M HEADWALLS FOR MULTIPLE PIPES.

REV.	DATE	DESCRIPTION	DES.	ENG.
X	XX-XX-XX	REVISION	XX	XX

DRAWN BY: SCRRA DATE: 03/31/2011

ASSISTANT DIRECTOR: STANDARDS & DESIGN

DIRECTOR OF ENGINEERING AND CONSTRUCTION

SCRRA ENGINEERING STANDARDS ARE INTENDED FOR SCRRA APPROVED USES ONLY. FOR NON-SCRRA APPROVED USES: SCRRA SHALL NOT BE RESPONSIBLE FOR THE ACCURACY OR COMPLETENESS OF THE DATA OR INFORMATION CONTAINED HEREIN. THE SELECTION AND USE OF THESE STANDARDS IS THE SOLE RESPONSIBILITY OF THE USER AND SHOULD NOT BE USED WITHOUT CONSULTING A REGISTERED PROFESSIONAL ENGINEER. ALL WARRANTIES AND REPRESENTATIONS OF ANY KIND ARE DISCLAIMED. ANYONE MAKING USE OF THIS INFORMATION AGREES THAT IT ASSUMES ALL LIABILITY ARISING FROM SUCH USE. NO PART OF THESE STANDARDS SHOULD BE REPRODUCED OR DISTRIBUTED IN ANY FORM OR BY ANY MEANS WITHOUT THE PRIOR WRITTEN PERMISSION OF SCRRA. ALL RIGHTS RESERVED.

METROLINK®

SOUTHERN CALIFORNIA REGIONAL RAIL AUTHORITY
ONE GATEWAY PLAZA, 12TH FLOOR, L. A., CA. 90012

ENGINEERING STANDARDS

CULVERT PIPE LENGTHS
FOR TYPE A HEADWALLS

STANDARD 6302
SCALE: NONE
REVISION –
SHEET 2 OF 2
CADD FILE: ES6302-02

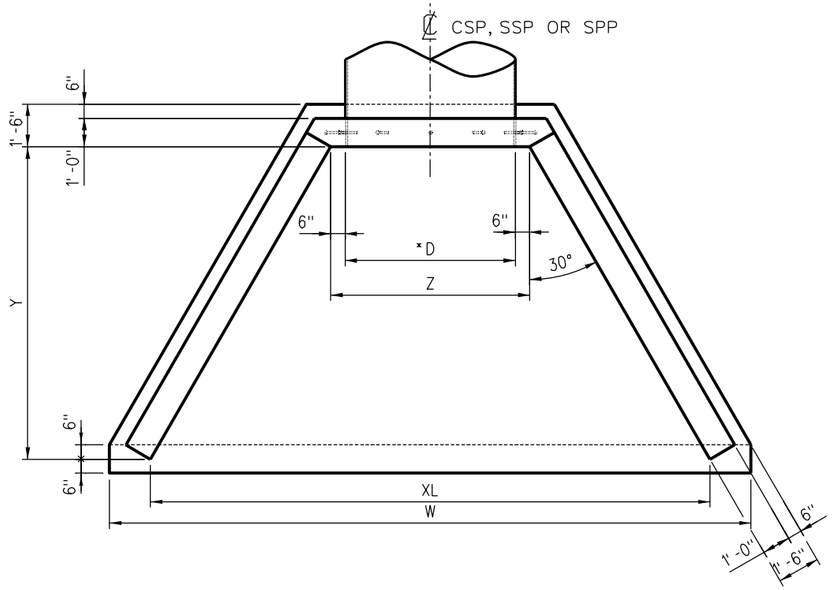

FRAMING PLAN
SCALE: ½"=1'-0"
(72" DIA. PIPE SHOWN)

TYPE A-1 HEADWALL DIMENSIONS SIDE SLOPE = 2:1					
H	* D	W	XL	Z	Y
3'-6"	24"	9'-4¼"	6'-5⅝"	3'-0"	3'-0"
4'-0"	30"	11'-0⅛"	8'-1⅜"	3'-6"	4'-0"
4'-6"	36"	12'-7⅞"	9'-9¼"	4'-0"	5'-0"
5'-6"	48"	15'-11⅝"	13'-1"	5'-0"	7'-0"
6'-6"	60"	19'-3⅜"	16'-4¾"	6'-0"	9'-0"
7'-6"	72"	22'-7"	19'-8⅜"	7'-0"	11'-0"

*** NOTE:**

FOR SSP, D = OUTSIDE PIPE DIAMETER
FOR CSP & SPP, D = INSIDE PIPE DIAMETER

NOTES:

1. EQUATIONS REQUIRE VARIABLES TO BE IN INCHES.
2. D = PIPE DIAMETER (INCHES)
   SS = SIDE SLOPE (RUN PER UNIT OF RISE)
3. Y = SS x (H - 24)
4. Z = D + 12
5. XL = Z + (1.155 x Y)
6. W = XL + 34.641
7. ROUND DIMENSIONS TO THE NEAREST ⅛".

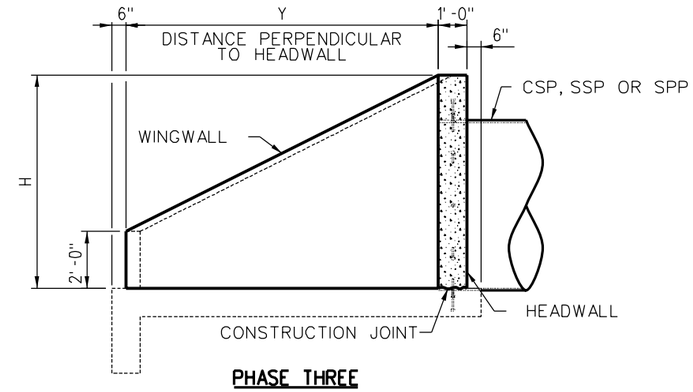

PHASE THREE

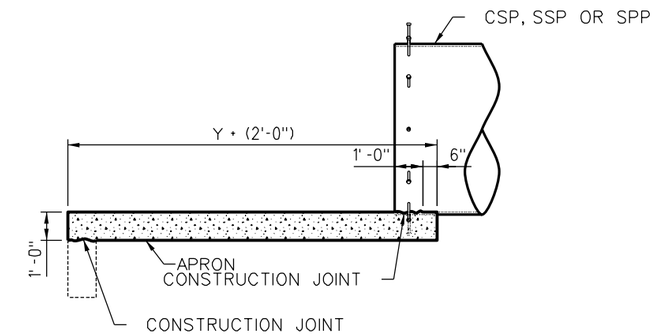

PHASE TWO

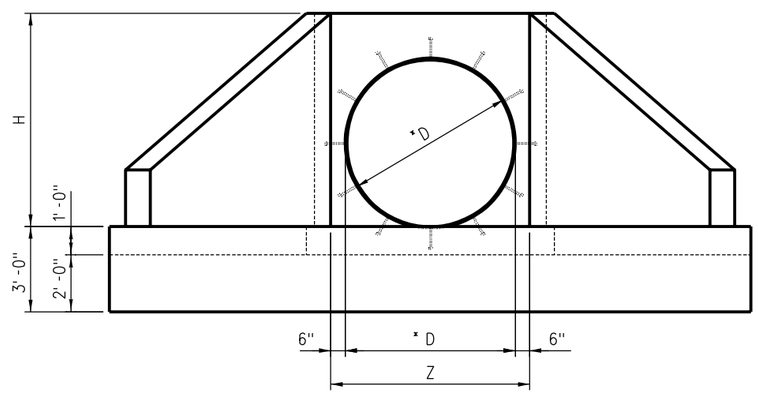

FRAMING ELEVATION
SCALE: ½"=1'-0"
(72" DIA. PIPE SHOWN)

NOTES:

1. FOR CONCRETE SPECIFICATIONS, SEE SHEET ES6301 AND SCRRA STANDARD SPECIFICATIONS
2. FOR PIPE BEDDING SPECIFICATIONS, SEE SCRRA STANDARDS SPECIFICATIONS 34 80 12, CULVERT AND DRAINAGE PIPE

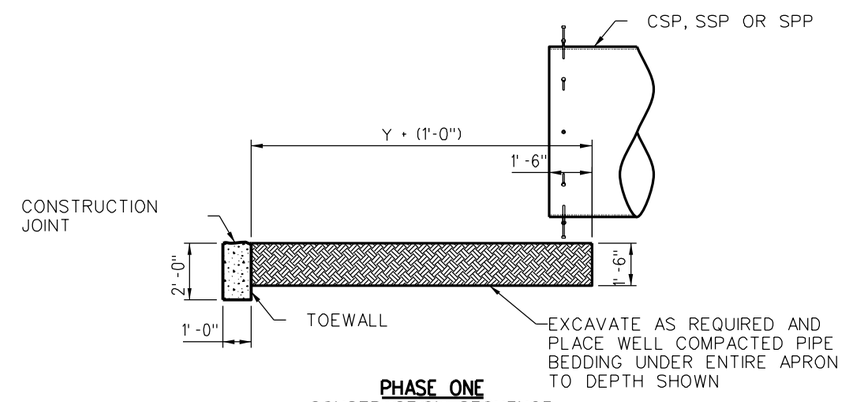

PHASE ONE
CONSTRUCTION SEQUENCE
SCALE: ½"=1'-0"
(LOOKING PERPENDICULAR TO `PIPE)
(72" DIA. PIPE SHOWN)

REV.	DATE	DESCRIPTION	DES.	ENG.
X	XX-XX-XX	REVISION	XX	XX

DRAWN BY: SCRRA DATE: 03/31/2011

ASSISTANT DIRECTOR: STANDARDS & DESIGN

DIRECTOR OF ENGINEERING AND CONSTRUCTION

SCRRA ENGINEERING STANDARDS ARE INTENDED FOR SCRRA APPROVED USES ONLY. FOR NON-SCRRA APPROVED USES:
SCRRA SHALL NOT BE RESPONSIBLE FOR THE ACCURACY OR COMPLETENESS OF THE DATA OR INFORMATION CONTAINED HEREIN. THE SELECTION AND USE OF THESE STANDARDS IS THE SOLE RESPONSIBILITY OF THE USER AND SHOULD NOT BE USED WITHOUT CONSULTING A REGISTERED PROFESSIONAL ENGINEER. ALL WARRANTIES AND REPRESENTATIONS OF ANY KIND ARE DISCLAIMED. ANYONE MAKING USE OF THIS INFORMATION AGREES THAT IT ASSUMES ALL LIABILITY ARISING FROM SUCH USE. NO PART OF THESE STANDARDS SHOULD BE REPRODUCED OR DISTRIBUTED IN ANY FORM OR BY ANY MEANS WITHOUT THE PRIOR WRITTEN PERMISSION OF SCRRA. ALL RIGHTS RESERVED.

METROLINK®
SOUTHERN CALIFORNIA REGIONAL RAIL AUTHORITY
ONE GATEWAY PLAZA, 12TH FLOOR, L. A., CA. 90012

ENGINEERING STANDARDS

TYPE A-1 HEADWALL
FRAMING DETAILS

STANDARD 6304
SCALE: NONE
REVISION –
SHEET 1 OF 3
CADD FILE: ES6304-01

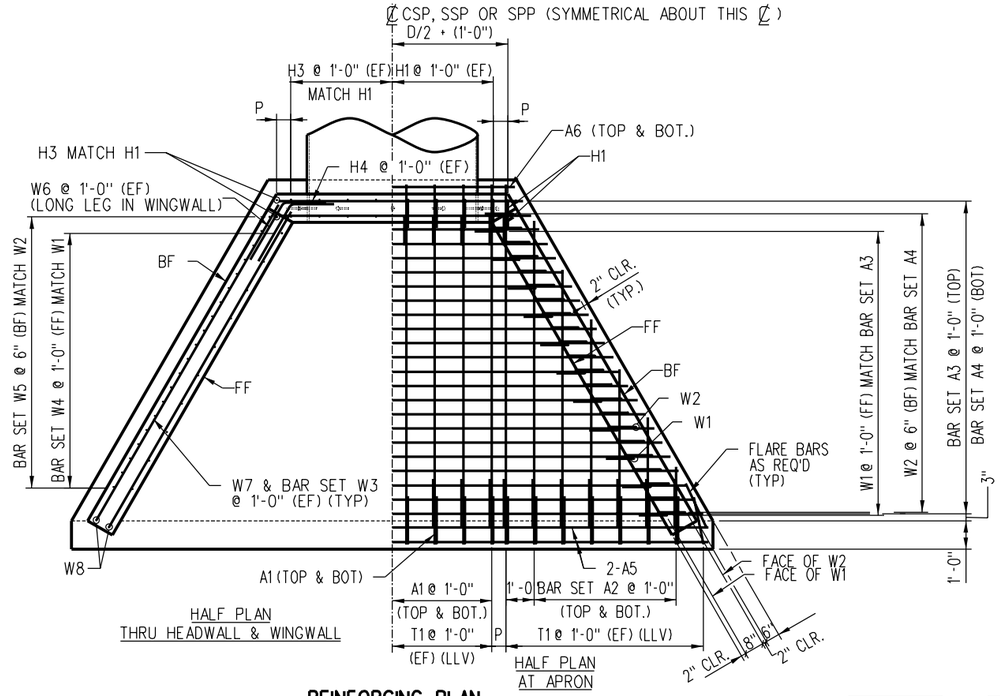

HALF PLAN
THRU HEADWALL & WINGWALL

HALF PLAN
AT APRON

REINFORCING PLAN
(72" DIA. PIPE SHOWN)

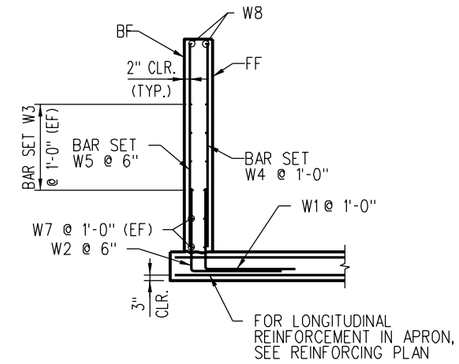

WINGWALL SECTION

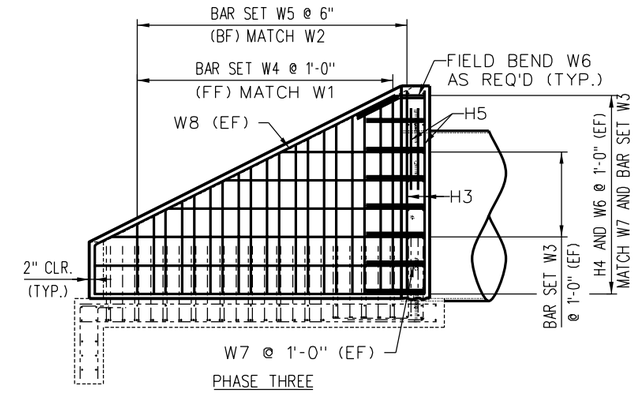

PHASE THREE

H	P
3'-6"	6"
4'-0"	9"
4'-6"	6"
5'-6"	6"
6'-6"	6"
7'-6"	6"

NOTES:

1. REINFORCING CALLOUT CONVENTION:

   A - APRON BARS
   H - HEADWALL BARS
   T - TOEWALL BARS
   W - WINGWALL BARS

2. A2 AND W3 CAN BE EITHER SINGLE BAR OR BAR SET. W3 NOT REQUIRED IN 3'-6" HEADWALL.
3. EQUATIONS REQUIRE VARIABLES TO BE IN INCHES.
4. M = Z / 12 (ROUND M DOWN TO NEAREST INTEGER)
5. P = (Z / 2) - (6 x M) + 6 (ROUND P TO NEAREST 1/4")

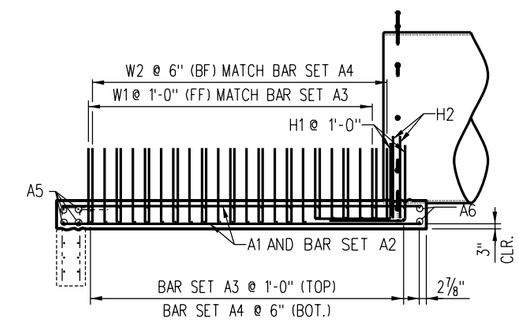

PHASE TWO

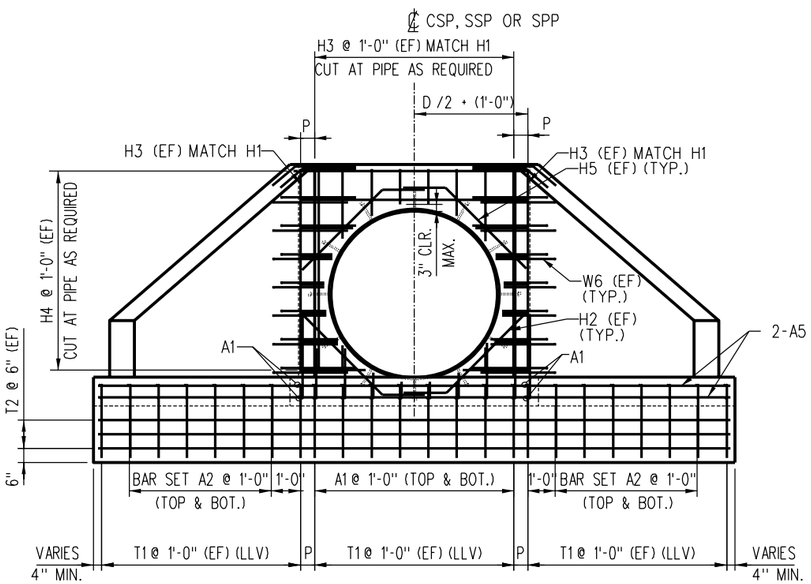

REINFORCING ELEVATION
(72" DIA. PIPE SHOWN)

NOTE:

BF = BACK FACE
EF = EACH FACE
FF = FRONT FACE
LLV = LONG LEG VERTICAL

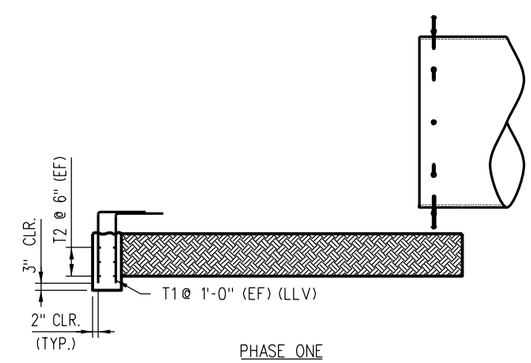

PHASE ONE

CONSTRUCTION SEQUENCE
(LOOKING PERPENDICULAR TO PIPE)
(72" DIA. PIPE SHOWN)

REV.	DATE	DESCRIPTION	DES.	ENG.
X	XX-XX-XX	REVISION	XX	XX

DRAWN BY: SCRRA DATE: 03/31/2011

ASSISTANT DIRECTOR: STANDARDS & DESIGN

DIRECTOR OF ENGINEERING AND CONSTRUCTION

SCRRA ENGINEERING STANDARDS ARE INTENDED FOR SCRRA APPROVED USES ONLY. FOR NON-SCRRA APPROVED USES: SCRRA SHALL NOT BE RESPONSIBLE FOR THE ACCURACY OR COMPLETENESS OF THE DATA OR INFORMATION CONTAINED HEREIN. THE SELECTION AND USE OF THESE STANDARDS IS THE SOLE RESPONSIBILITY OF THE USER AND SHOULD NOT BE USED WITHOUT CONSULTING A REGISTERED PROFESSIONAL ENGINEER. ALL WARRANTIES AND REPRESENTATIONS OF ANY KIND ARE DISCLAIMED. ANYONE MAKING USE OF THIS INFORMATION AGREES THAT IT ASSUMES ALL LIABILITY ARISING FROM SUCH USE. NO PART OF THESE STANDARDS SHOULD BE REPRODUCED OR DISTRIBUTED IN ANY FORM OR BY ANY MEANS WITHOUT THE PRIOR WRITTEN PERMISSION OF SCRRA. ALL RIGHTS RESERVED.

METROLINK®
SOUTHERN CALIFORNIA REGIONAL RAIL AUTHORITY
ONE GATEWAY PLAZA, 12TH FLOOR, L. A., CA. 90012

ENGINEERING STANDARDS

TYPE A-1 HEADWALL
REINFORCING DETAILS

STANDARD 6304
SCALE: NONE
REVISION –
SHEET 2 OF 3
CADD FILE: ES6304-02

REINFORCING SCHEDULE - 3'-6" HEADWALL

PIPE DIAMETER = 24" SIDE SLOPE = 2:1

	BAR DESIGNATION	TOTAL	MARK	SIZE	LENGTH	SHAPE
PHASE 1	T1	20	C403b	#4	4'-3"	
	T2	6	C900	#4	9'-0"	
PHASE 2	A1	12	D408	#5	4'-8"	
	A2	4	D304	#5	3'-4"	
	A5	4	D900	#5	9'-0"	
	A6	2	D407	#5	4'-7"	
	H1	12	D504b	#5	5'-4"	
	H2	4	D309b	#5	3'-9"	
	W1	6	C504b	#4	5'-4"	
	W2	12	D504b	#5	5'-4"	
PHASE 3	H3	12	D303	#5	3'-3"	
	H4	8	D400	#5	4'-0"	
	H5	4	D309b	#5	3'-9"	
	W6	16	D310b	#5	3'-10"	
	W7	8	D308	#5	3'-8"	
	W8	4	D505b	#5	5'-5"	

SET LIST

	BAR DESIGNATION	MARK	SIZE	MIN. LENGTH	MAX. LENGTH	INCREMENT	NO.OF BARS/SET	NO.OF SETS	SHAPE
PHASE 2	A3	D502-D808	#5	5'-2"	8'-8"	1'-1 1/8"(-)	4	1	
	A4	D502-D808	#5	5'-2"	8'-8"	6 15/16"(-)	7	1	
PHASE 3	W4	C206-C300	#4	2'-6"	3'-0"	6"	2	2	
	W5	D204-D301	#5	2'-4"	3'-1"	3"	4	2	

BENDING DIAGRAM

(DIMENSIONS ARE OUT TO OUT)

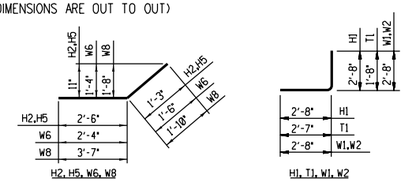

EST. WT. OF REINFORCING STEEL = 700 LB.

REINFORCING SCHEDULE - 4'-0" HEADWALL

PIPE DIAMETER = 30" SIDE SLOPE = 2:1

	BAR DESIGNATION	TOTAL	MARK	SIZE	LENGTH	SHAPE
PHASE 1	T1	24	C403b	#4	4'-3"	
	T2	6	C1008	#4	10'-8"	
PHASE 2	A1	12	D508	#5	5'-8"	
	A5	4	D1008	#5	10'-8"	
	A6	2	D501	#5	5'-1"	
	H1	12	D504b	#5	5'-4"	
	H2	4	D400b	#5	4'-0"	
	W1	8	C504b	#4	5'-4"	
	W2	16	D504b	#5	5'-4"	
PHASE 3	H3	12	D309	#5	3'-9"	
	H4	10	D406	#5	4'-6"	
	H5	4	D400b	#5	4'-0"	
	W3	4	C400	#4	4'-0"	
	W6	20	D310b	#5	3'-10"	
	W7	8	D410	#5	4'-10"	
	W8	4	D608b	#5	6'-8"	

SET LIST

	BAR DESIGNATION	MARK	SIZE	MIN. LENGTH	MAX. LENGTH	INCREMENT	NO.OF BARS/SET	NO.OF SETS	SHAPE
PHASE 2	A2	D208-D404	#5	2'-8"	4'-4"	1'-8 13/16"(-)	2	4	
	A3	D508-D1004	#5	5'-8"	10'-4"	1'-1 1/8"(-)	5	1	
	A4	D508-D1004	#5	5'-8"	10'-4"	6 15/16"(-)	9	1	
PHASE 3	W4	C206-C306	#4	2'-6"	3'-6"	6"	3	2	
	W5	D204-D307	#5	2'-4"	3'-7"	3"	6	2	

BENDING DIAGRAM

(DIMENSIONS ARE OUT TO OUT)

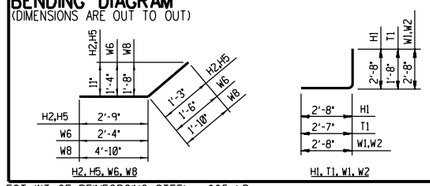

EST. WT. OF REINFORCING STEEL = 905 LB.

REINFORCING SCHEDULE - 4'-6" HEADWALL

PIPE DIAMETER = 36" SIDE SLOPE = 2:1

	BAR DESIGNATION	TOTAL	MARK	SIZE	LENGTH	SHAPE
PHASE 1	T1	26	C403b	#4	4'-3"	
	T2	6	C1203	#4	12'-3"	
PHASE 2	A1	14	D608	#5	6'-8"	
	A5	4	D1203	#5	12'-3"	
	A6	2	D507	#5	5'-7"	
	H1	14	D504b	#5	5'-4"	
	H2	4	D403b	#5	4'-3"	
	W1	10	C504b	#4	5'-4"	
	W2	20	D504b	#5	5'-4"	
PHASE 3	H3	14	D403	#5	4'-3"	
	H4	10	D500	#5	5'-0"	
	H5	4	D403b	#5	4'-3"	
	W3	4	C502	#4	5'-2"	
	W6	20	D310b	#5	3'-10"	
	W7	8	D511	#5	5'-11"	
	W8	4	D800b	#5	8'-0"	

SET LIST

	BAR DESIGNATION	MARK	SIZE	MIN. LENGTH	MAX. LENGTH	INCREMENT	NO.OF BARS/SET	NO.OF SETS	SHAPE
PHASE 2	A2	D308-D504	#5	3'-8"	5'-4"	1'-8 13/16"(-)	2	4	
	A3	D602-D1111	#5	6'-2"	11'-11"	1'-1 1/8"(-)	6	1	
	A4	D602-D1111	#5	6'-2"	11'-11"	6 15/16"(-)	11	1	
PHASE 3	W4	C206-C400	#4	2'-6"	4'-0"	6"	4	2	
	W5	D204-D401	#5	2'-4"	4'-1"	3"	8	2	

BENDING DIAGRAM

(DIMENSIONS ARE OUT TO OUT)

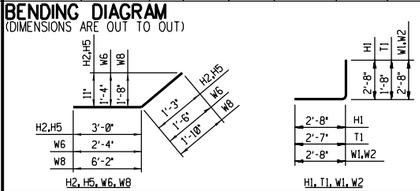

EST. WT. OF REINFORCING STEEL = 1,105 LB.

REINFORCING SCHEDULE - 5'-6" HEADWALL

PIPE DIAMETER = 48" SIDE SLOPE = 2:1

	BAR DESIGNATION	TOTAL	MARK	SIZE	LENGTH	SHAPE
PHASE 1	T1	32	C403b	#4	4'-3"	
	T2	6	C1507	#4	15'-7"	
PHASE 2	A1	16	D808	#5	8'-8"	
	A5	4	D1507	#5	15'-7"	
	A6	2	D607	#5	6'-7"	
	H1	16	D504b	#5	5'-4"	
	H2	4	D409b	#5	4'-9"	
	W1	14	C504b	#4	5'-4"	
	W2	28	D504b	#5	5'-4"	
PHASE 3	H3	16	D503	#5	5'-3"	
	H4	12	D600	#5	6'-0"	
	H5	4	D409b	#5	4'-9"	
	W6	24	D310b	#5	3'-10"	
	W7	8	D803	#5	8'-3"	
	W8	4	D1006b	#5	10'-6"	

SET LIST

	BAR DESIGNATION	MARK	SIZE	MIN. LENGTH	MAX. LENGTH	INCREMENT	NO.OF BARS/SET	NO.OF SETS	SHAPE
PHASE 2	A2	D311-D704	#5	3'-11"	7'-4"	1'-8 13/16"(-)	3	4	
	A3	D702-D1503	#5	7'-2"	15'-3"	1'-1 1/8"(-)	8	1	
	A4	D702-D1503	#5	7'-2"	15'-3"	6 15/16"(-)	15	1	
PHASE 3	W3	C502-C705	#4	5'-2"	7'-5"	2'-3 11/16"(+)	2	4	
	W4	C206-C500	#4	2'-6"	5'-0"	6"	6	2	
	W5	D204-D501	#5	2'-4"	5'-1"	3"	12	2	

BENDING DIAGRAM

(DIMENSIONS ARE OUT TO OUT)

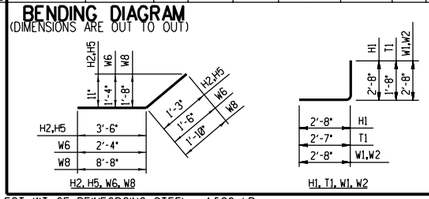

EST. WT. OF REINFORCING STEEL = 1,580 LB.

REINFORCING SCHEDULE - 6'-6" HEADWALL

PIPE DIAMETER = 60" SIDE SLOPE = 2:1

	BAR DESIGNATION	TOTAL	MARK	SIZE	LENGTH	SHAPE
PHASE 1	T1	42	C403b	#4	4'-3"	
	T2	6	C1811	#4	18'-11"	
PHASE 2	A1	18	D1008	#5	10'-8"	
	A5	4	D1811	#5	18'-11"	
	A6	2	D707	#5	7'-7"	
	H1	18	D504b	#5	5'-4"	
	H2	4	D503b	#5	5'-3"	
	W1	18	C504b	#4	5'-4"	
	W2	36	D504b	#5	5'-4"	
PHASE 3	H3	18	D603	#5	6'-3"	
	H4	14	D700	#5	7'-0"	
	H5	4	D503b	#5	5'-3"	
	W6	28	D310b	#5	3'-10"	
	W7	8	D1007	#5	10'-7"	
	W8	4	D1300b	#5	13'-0"	

SET LIST

	BAR DESIGNATION	MARK	SIZE	MIN. LENGTH	MAX. LENGTH	INCREMENT	NO.OF BARS/SET	NO.OF SETS	SHAPE
PHASE 2	A2	D205-D904	#5	2'-5"	9'-4"	1'-8 13/16"(-)	5	4	
	A3	D802-D1807	#5	8'-2"	18'-7"	1'-1 1/8"(-)	10	1	
	A4	D802-D1807	#5	8'-2"	18'-7"	6 15/16"(-)	19	1	
PHASE 3	W3	C502-C909	#4	5'-2"	9'-9"	2'-3 11/16"(+)	3	4	
	W4	C206-C600	#4	2'-6"	6'-0"	6"	8	2	
	W5	D204-D601	#5	2'-4"	6'-1"	3"	16	2	

BENDING DIAGRAM

(DIMENSIONS ARE OUT TO OUT)

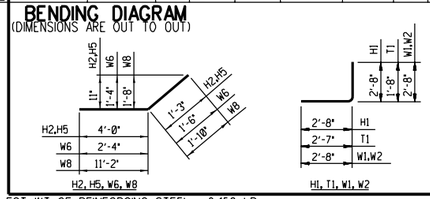

EST. WT. OF REINFORCING STEEL = 2,150 LB.

REINFORCING SCHEDULE - 7'-6" HEADWALL

PIPE DIAMETER = 72" SIDE SLOPE = 2:1

	BAR DESIGNATION	TOTAL	MARK	SIZE	LENGTH	SHAPE
PHASE 1	T1	48	C403b	#4	4'-3"	
	T2	6	C2203	#4	22'-3"	
PHASE 2	A1	20	D1208	#5	12'-8"	
	A5	4	D2203	#5	22'-3"	
	A6	2	D807	#5	8'-7"	
	H1	20	D504b	#5	5'-4"	
	H2	4	D509b	#5	5'-9"	
	W1	22	C504b	#4	5'-4"	
	W2	44	D504b	#5	5'-4"	
PHASE 3	H3	20	D703	#5	7'-3"	
	H4	16	D800	#5	8'-0"	
	H5	4	D509b	#5	5'-9"	
	W6	32	D310b	#5	3'-10"	
	W7	8	D1211	#5	12'-11"	
	W8	4	D1506b	#5	15'-6"	

SET LIST

	BAR DESIGNATION	MARK	SIZE	MIN. LENGTH	MAX. LENGTH	INCREMENT	NO.OF BARS/SET	NO.OF SETS	SHAPE
PHASE 2	A2	D208-D1104	#5	2'-8"	11'-4"	1'-8 13/16"(-)	6	4	
	A3	D902-D2111	#5	9'-2"	21'-11"	1'-1 1/8"(-)	12	1	
	A4	D902-D2111	#5	9'-2"	21'-11"	6 15/16"(-)	23	1	
PHASE 3	W3	C502-C1201	#4	5'-2"	12'-1"	2'-3 11/16"(+)	4	4	
	W4	C206-C700	#4	2'-6"	7'-0"	6"	10	2	
	W5	D204-D701	#5	2'-4"	7'-1"	3"	20	2	

BENDING DIAGRAM

(DIMENSIONS ARE OUT TO OUT)

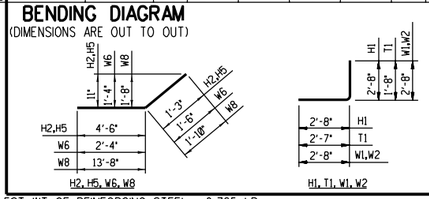

EST. WT. OF REINFORCING STEEL = 2,765 LB.

CONCRETE QUANTITIES

H	TOEWALL CU. YD.	APRON CU. YD.	HEADWALL & WINGWALLS CU. YD.	TOTAL CU. YD.
3'-6"	0.7	1.4	1.3	3.4
4'-0"	0.9	2.0	1.8	4.7
4'-6"	1.0	2.6	2.3	5.9
5'-6"	1.2	4.0	3.5	8.7
6'-6"	1.5	5.8	5.0	12.3
7'-6"	1.7	7.8	6.8	16.3

NOTES:

1. QUANTITIES ARE FOR ONE HEADWALL ONLY.
2. BAR DESIGNATIONS CONSIST OF BAR SIZE & LENGTH FOLLOWED BY THE LETTER "b" IF BENT. BAR SIZES ARE REPRESENTED BY THE LETTERS A THROUGH L CORRESPONDING TO BAR SIZE #2 THROUGH #18. BAR LENGTHS ARE GIVEN IN FEET AND INCHES; THE LAST TWO DIGITS ARE INCHES.
3. CONCRETE VOLUME FOR HEADWALL ASSUMES SOLID WALL WITHOUT A PIPE. TO DETERMINE REQUIRED CONCRETE QUANTITY, SUBTRACT THE APPLICABLE PIPE VOLUME AS FOLLOWS:

   24" DIA. = 0.11 CU. YD.
   30" DIA. = 0.18 CU. YD.
   36" DIA. = 0.26 CU. YD.
   48" DIA. = 0.46 CU. YD.
   60" DIA. = 0.72 CU. YD.
   72" DIA. = 1.04 CU. YD.

REINFORCING BAR LEGEND:

A - APRON BARS
H - HEADWALL BARS
T - TOEWALL BARS
W - WINGWALL BARS

A2 AND W3 CAN BE EITHER SINGLE BAR OR BAR SET.
W3 NOT REQUIRED IN 3'-6" HEADWALL.

REV.	DATE	DESCRIPTION	DES.	ENG.
X	XX-XX-XX	REVISION	XX	XX

DRAWN BY: SCRRA DATE: 03/31/2011

ASSISTANT DIRECTOR: STANDARDS & DESIGN

DIRECTOR OF ENGINEERING AND CONSTRUCTION

SCRRA ENGINEERING STANDARDS ARE INTENDED FOR SCRRA APPROVED USES ONLY. FOR NON-SCRRA APPROVED USES: SCRRA SHALL NOT BE RESPONSIBLE FOR THE ACCURACY OR COMPLETENESS OF THE DATA OR INFORMATION CONTAINED HEREIN. THE SELECTION AND USE OF THESE STANDARDS IS THE SOLE RESPONSIBILITY OF THE USER AND SHOULD NOT BE USED WITHOUT CONSULTING A REGISTERED PROFESSIONAL ENGINEER. ALL WARRANTIES AND REPRESENTATIONS OF ANY KIND ARE DISCLAIMED. ANYONE MAKING USE OF THIS INFORMATION AGREES THAT IT ASSUMES ALL LIABILITY ARISING FROM SUCH USE. NO PART OF THESE STANDARDS SHOULD BE REPRODUCED OR DISTRIBUTED IN ANY FORM OR BY ANY MEANS WITHOUT THE PRIOR WRITTEN PERMISSION OF SCRRA. ALL RIGHTS RESERVED.

METROLINK®
SOUTHERN CALIFORNIA REGIONAL RAIL AUTHORITY
ONE GATEWAY PLAZA, 12TH FLOOR, L. A., CA. 90012

ENGINEERING STANDARDS

TYPE A-1 HEADWALL
REINFORCING SCHEDULE

STANDARD 6304
SCALE: NONE
REVISION –
SHEET 3 OF 3
CADD FILE: ES6304-03

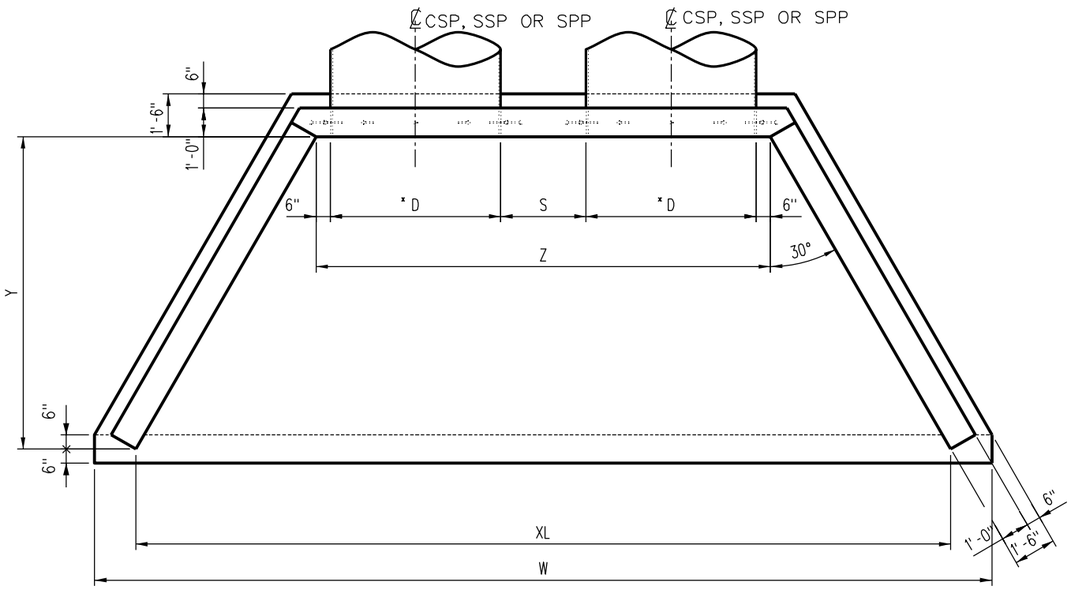

FRAMING PLAN
(72" DIA. PIPES SHOWN)

TYPE A-2 HEADWALL DIMENSIONS SIDE SLOPE = 2:1						
H	*D	S	W	XL	Z	Y
3'-6"	24"	12"	12'-4 1/4"	9'-5 5/8"	6'-0"	3'-0"
4'-0"	30"	15"	14'-9 1/8"	11'-10 3/8"	7'-3"	4'-0"
4'-6"	36"	18"	17'-1 7/8"	14'-3 1/4"	8'-6"	5'-0"
5'-6"	48"	24"	21'-11 5/8"	19'-1"	11'-0"	7'-0"
6'-6"	60"	30"	26'-9 3/8"	23'-10 3/4"	13'-6"	9'-0"
7'-6"	72"	36"	31'-7"	28'-8 3/8"	16'-0"	11'-0"

* FOR SSP, D = OUTSIDE PIPE DIAMETER
FOR CSP & SPP, D = INSIDE PIPE DIAMETER

NOTES:

1. EQUATIONS REQUIRE VARIABLES TO BE IN INCHES.
2. D = PIPE DIAMETER (INCHES)
   S = SPACING BETWEEN ADJACENT PIPES (INCHES)
   SS = SIDE SLOPE (RUN PER UNIT OF RISE)
3. Y = SS x (H - 24)
4. Z = (2 x D) + S + 12
5. XL = Z + (1.155 x Y)
6. W = XL + 34.641
7. ROUND DIMENSIONS TO THE NEAREST 1/8".

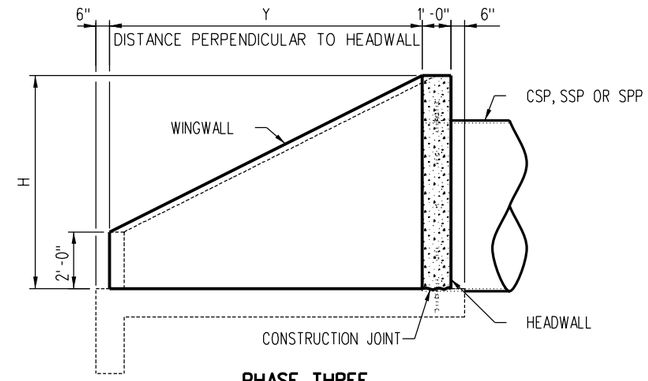

PHASE THREE

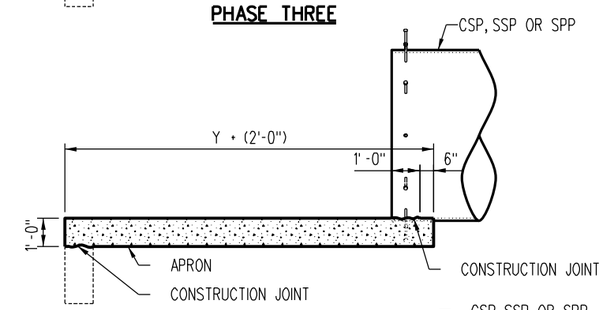

PHASE TWO

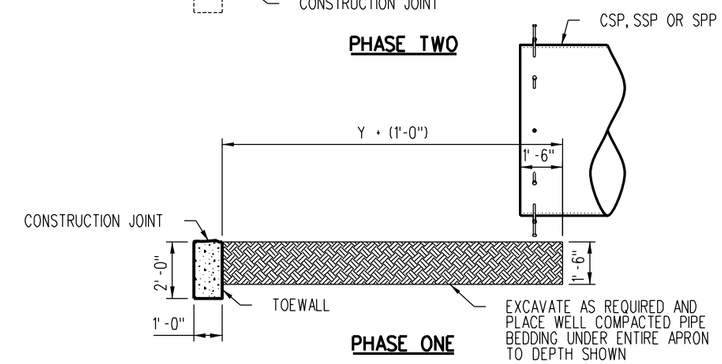

PHASE ONE

CONSTRUCTION SEQUENCE
(LOOKING PERPENDICULAR TO ` PIPE)
(72" DIA. PIPE SHOWN)

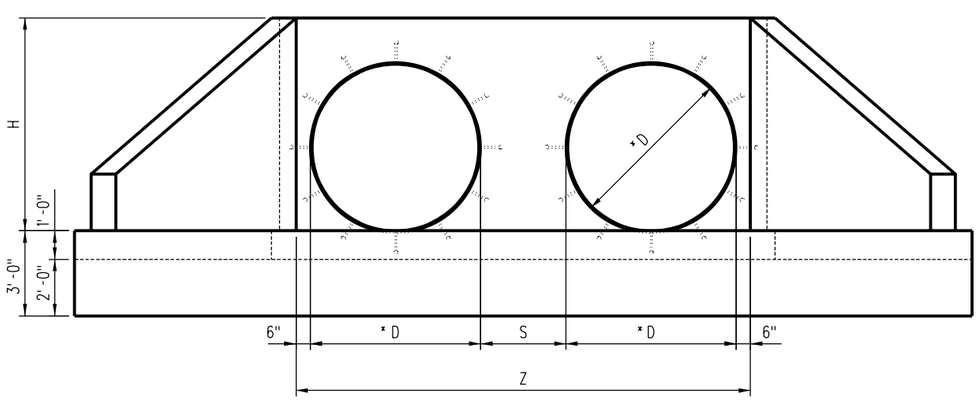

FRAMING ELEVATION
(72" DIA. PIPES SHOWN)

NOTES:

1. FOR CONCRETE SPECIFICATIONS, SEE SHEET ES6301 AND SCRRA STANDARDS SPECIFICATIONS.
2. FOR PIPE BEDDING SPECIFICATIONS, SEE SCRRA STANDARD SPECIFICATION 34 80 12, CULVERT AND DRAINAGE PIPE.

REV.	DATE	DESCRIPTION	DES.	ENG.
X	XX-XX-XX	REVISION	XX	XX

DRAWN BY: SCRRA DATE: 03/31/2011

ASSISTANT DIRECTOR: STANDARDS & DESIGN

DIRECTOR OF ENGINEERING AND CONSTRUCTION

SCRRA ENGINEERING STANDARDS ARE INTENDED FOR SCRRA APPROVED USES ONLY. FOR NON-SCRRA APPROVED USES: SCRRA SHALL NOT BE RESPONSIBLE FOR THE ACCURACY OR COMPLETENESS OF THE DATA OR INFORMATION CONTAINED HEREIN. THE SELECTION AND USE OF THESE STANDARDS IS THE SOLE RESPONSIBILITY OF THE USER AND SHOULD NOT BE USED WITHOUT CONSULTING A REGISTERED PROFESSIONAL ENGINEER. ALL WARRANTIES AND REPRESENTATIONS OF ANY KIND ARE DISCLAIMED. ANYONE MAKING USE OF THIS INFORMATION AGREES THAT IT ASSUMES ALL LIABILITY ARISING FROM SUCH USE. NO PART OF THESE STANDARDS SHOULD BE REPRODUCED OR DISTRIBUTED IN ANY FORM OR BY ANY MEANS WITHOUT THE PRIOR WRITTEN PERMISSION OF SCRRA. ALL RIGHTS RESERVED.

METROLINK®
SOUTHERN CALIFORNIA REGIONAL RAIL AUTHORITY
ONE GATEWAY PLAZA, 12TH FLOOR, L. A., CA. 90012

ENGINEERING STANDARDS

TYPE A-2 HEADWALL
FRAMING DETAILS

STANDARD 6306
SCALE: NONE
REVISION –
SHEET 1 OF 3
CADD FILE: ES6306-01

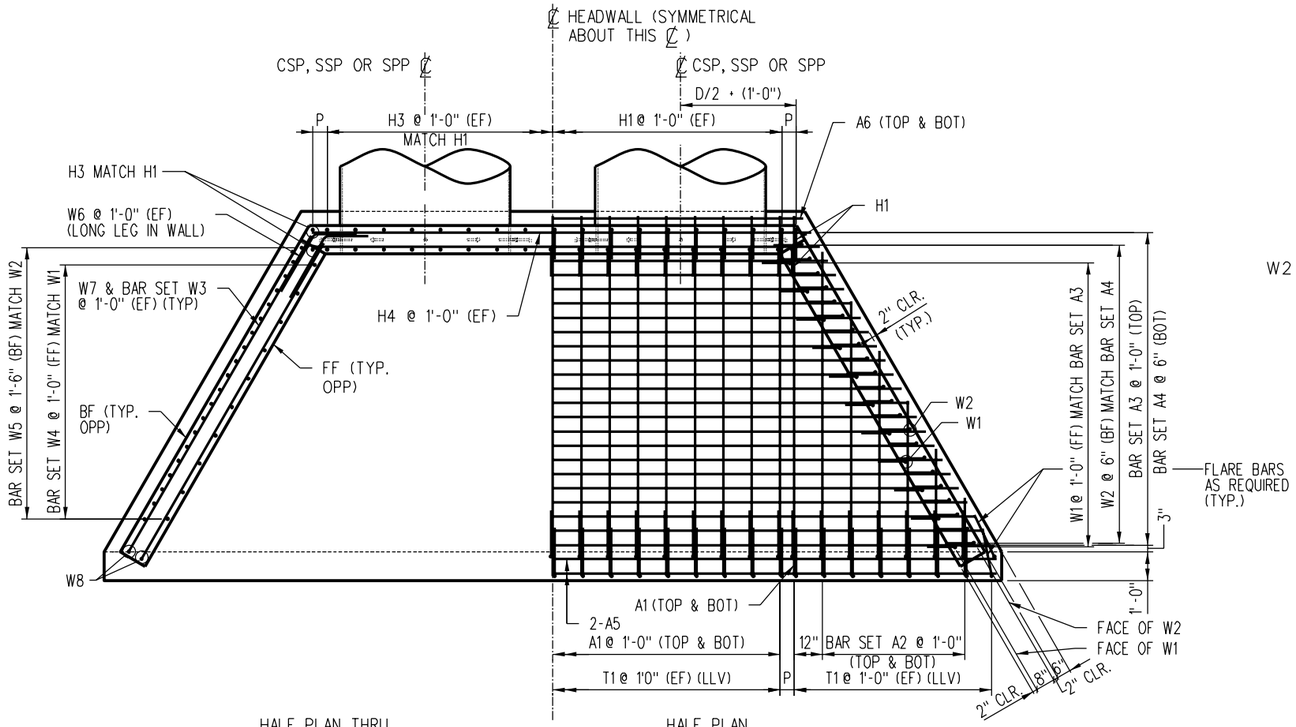

REINFORCING PLAN
(72" DIA. PIPES SHOWN)

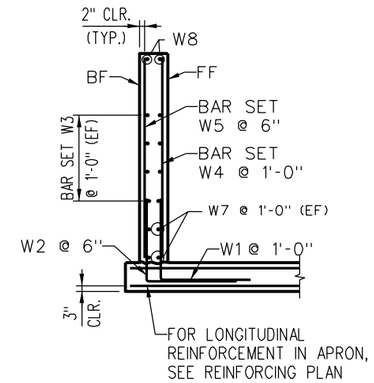

WINGWALL SECTION

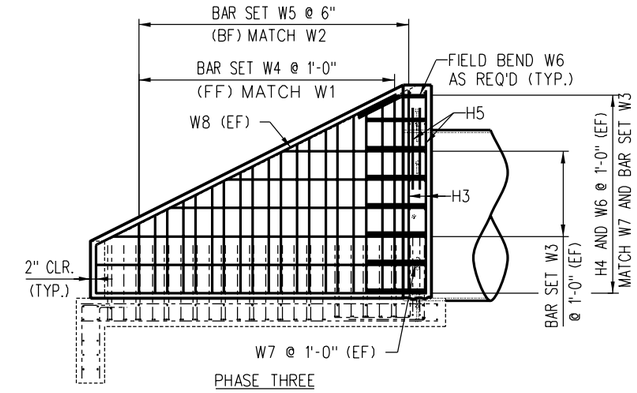

PHASE THREE

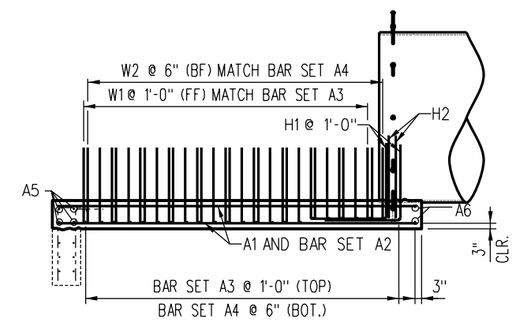

PHASE TWO

NOTE:

BF = BACK FACE
EF = EACH FACE
FF = FRONT FACE
LLV = LONG LEG VERTICAL

H	P
3'-6"	6"
4'-0"	7"
4'-6"	9"
5'-6"	6"
6'-6"	9"
7'-6"	6"

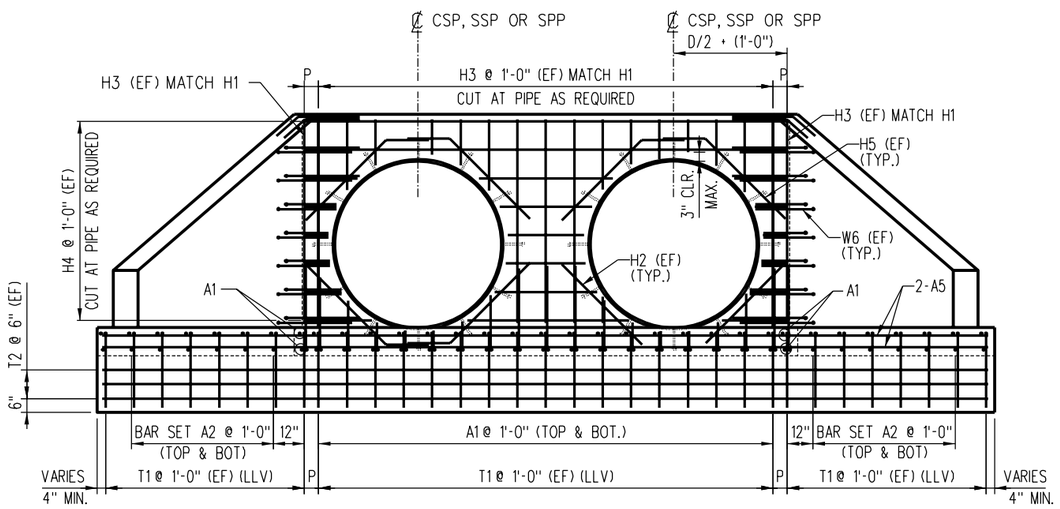

REINFORCING ELEVATION
(72" DIA. PIPES SHOWN)

NOTES:

1. REINFORCING CALLOUT CONVENTION:

   A - APRON BARS
   H - HEADWALL BARS
   T - TOEWALL BARS
   W - WINGWALL BARS

2. A2 AND W3 CAN BE EITHER SINGLE BAR OR BAR SET. W3 NOT REQUIRED IN 3'-6" HEADWALL.
3. EQUATIONS REQUIRE VARIABLES TO BE IN INCHES.
4. M = Z / 12 (ROUND M DOWN TO NEAREST INTEGER)
5. P = (Z / 2) - (6 x M) + 6 (ROUND P TO NEAREST 1/4")

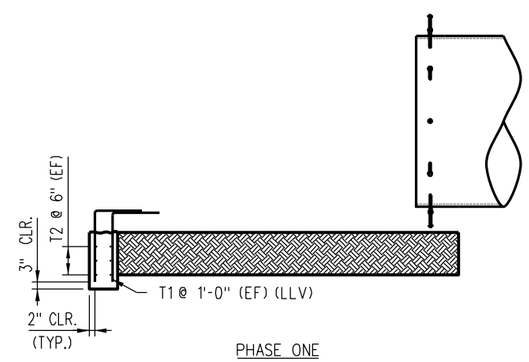

PHASE ONE

CONSTRUCTION SEQUENCE
(LOOKING PERPENDICULAR TO PIPE)
(72" DIA. PIPE SHOWN)

REV.	DATE	DESCRIPTION	DES.	ENG.
X	XX-XX-XX	REVISION	XX	XX

DRAWN BY: SCRRA DATE: 03/31/2011

ASSISTANT DIRECTOR: STANDARDS & DESIGN

DIRECTOR OF ENGINEERING AND CONSTRUCTION

SCRRA ENGINEERING STANDARDS ARE INTENDED FOR SCRRA APPROVED USES ONLY. FOR NON-SCRRA APPROVED USES:
SCRRA SHALL NOT BE RESPONSIBLE FOR THE ACCURACY OR COMPLETENESS OF THE DATA OR INFORMATION CONTAINED HEREIN. THE SELECTION AND USE OF THESE STANDARDS IS THE SOLE RESPONSIBILITY OF THE USER AND SHOULD NOT BE USED WITHOUT CONSULTING A REGISTERED PROFESSIONAL ENGINEER. ALL WARRANTIES AND REPRESENTATIONS OF ANY KIND ARE DISCLAIMED. ANYONE MAKING USE OF THIS INFORMATION AGREES THAT IT ASSUMES ALL LIABILITY ARISING FROM SUCH USE. NO PART OF THESE STANDARDS SHOULD BE REPRODUCED OR DISTRIBUTED IN ANY FORM OR BY ANY MEANS WITHOUT THE PRIOR WRITTEN PERMISSION OF SCRRA. ALL RIGHTS RESERVED.

METROLINK®
SOUTHERN CALIFORNIA REGIONAL RAIL AUTHORITY
ONE GATEWAY PLAZA, 12TH FLOOR, L. A., CA. 90012

ENGINEERING STANDARDS

TYPE A-2 HEADWALL
REINFORCING DETAILS

STANDARD 6306
SCALE: NONE
REVISION –
SHEET 2 OF 3
CADD FILE: ES6306-02

REINFORCING SCHEDULE - 3'-6" HEADWALL

PIPE DIAMETER = 24" SIDE SLOPE = 2:1

	BAR DESIGNATION	TOTAL	MARK	SIZE	LENGTH	SHAPE
PHASE 1	T1	26	C403B	#4	4'-3"	
	T2	6	C1200	#4	12'-0"	
PHASE 2	A1	18	D408	#5	4'-8"	
	A2	4	D304	#5	3'-4"	
	A5	4	D1200	#5	12'-0"	
	A6	2	D707	#5	7'-7"	
	H1	18	D504B	#5	5'-4"	
	H2	8	D309B	#5	3'-9"	
	W1	6	C504B	#4	5'-4"	
	W2	12	D504B	#5	5'-4"	
PHASE 3	H3	18	D303	#5	3'-3"	
	H4	8	D700	#5	7'-0"	
	H5	8	D309B	#5	3'-9"	
	W6	16	D310B	#5	3'-10"	
	W7	8	D308	#5	3'-8"	
	W8	4	D505B	#5	5'-5"	

SET LIST

	BAR DESIGNATION	MARK	SIZE	MIN. LENGTH	MAX. LENGTH	INCREMENT	NO.OF BARS/SET	NO.OF SETS	SHAPE
PHASE 2	A3	D802-D1108	#5	8'-2"	11'-8"	1'-1 1/8"(-)	4	1	
	A4	D802-D1108	#5	8'-2"	11'-8"	6 15/16"(-)	7	1	
PHASE 3	W4	C206-C300	#4	2'-6"	3'-0"	6"	2	2	
	W5	D204-D301	#5	2'-4"	3'-1"	3"	4	2	

BENDING DIAGRAM

(DIMENSIONS ARE OUT TO OUT)

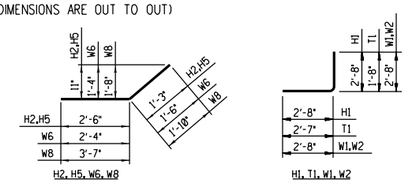

EST. WT. OF REINFORCING STEEL = 925 LB.

REINFORCING SCHEDULE - 4'-0" HEADWALL

PIPE DIAMETER = 30" SIDE SLOPE = 2:1

	BAR DESIGNATION	TOTAL	MARK	SIZE	LENGTH	SHAPE
PHASE 1	T1	32	C403B	#4	4'-3"	
	T2	6	C1405	#4	14'-5"	
PHASE 2	A1	20	D508	#5	5'-8"	
	A5	4	D1405	#5	14'-5"	
	A6	2	D810	#5	8'-10"	
	H1	20	D504B	#5	5'-4"	
	H2	8	D400B	#5	4'-0"	
	W1	8	C504B	#4	5'-4"	
	W2	16	D504B	#5	5'-4"	
PHASE 3	H3	20	D309	#5	3'-9"	
	H4	10	D803	#5	8'-3"	
	H5	8	D400B	#5	4'-0"	
	W3	4	C400	#4	4'-0"	
	W6	20	D310B	#5	3'-10"	
	W7	8	D410	#5	4'-10"	
	W8	4	D608B	#5	6'-8"	

SET LIST

	BAR DESIGNATION	MARK	SIZE	MIN. LENGTH	MAX. LENGTH	INCREMENT	NO.OF BARS/SET	NO.OF SETS	SHAPE
PHASE 2	A2	D208-D404	#5	2'-8"	4'-4"	1'-8 13/16"(-)	2	4	
	A3	D905-D1401	#5	9'-5"	14'-1"	1'-1 7/8"(-)	5	1	
	A4	D905-D1401	#5	9'-5"	14'-1"	6 15/16"(-)	9	1	
PHASE 3	W4	C206-C306	#4	2'-6"	3'-6"	6"	3	2	
	W5	D204-D307	#5	2'-4"	3'-7"	3"	6	2	

BENDING DIAGRAM

(DIMENSIONS ARE OUT TO OUT)

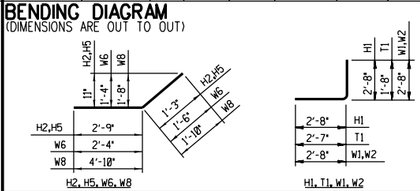

EST. WT. OF REINFORCING STEEL = 1,215LB.

REINFORCING SCHEDULE - 4'-6" HEADWALL

PIPE DIAMETER = 36" SIDE SLOPE = 2:1

	BAR DESIGNATION	TOTAL	MARK	SIZE	LENGTH	SHAPE
PHASE 1	T1	34	C403B	#4	4'-3"	
	T2	6	C1609	#4	16'-9"	
PHASE 2	A1	22	D608	#5	6'-8"	
	A5	4	D1609	#5	16'-9"	
	A6	2	D1001	#5	10'-1"	
	H1	22	D504B	#5	5'-4"	
	H2	8	D403B	#5	4'-3"	
	W1	10	C504B	#4	5'-4"	
	W2	20	D504B	#5	5'-4"	
PHASE 3	H3	22	D403	#5	4'-3"	
	H4	10	D906	#5	9'-6"	
	H5	8	D403B	#5	4'-3"	
	W3	4	C502	#4	5'-2"	
	W6	20	D310B	#5	3'-10"	
	W7	8	D511	#5	5'-11"	
	W8	4	D800B	#5	8'-0"	

SET LIST

	BAR DESIGNATION	MARK	SIZE	MIN. LENGTH	MAX. LENGTH	INCREMENT	NO.OF BARS/SET	NO.OF SETS	SHAPE
PHASE 2	A2	D308-D504	#5	3'-8"	5'-4"	1'-8 13/16"(-)	2	4	
	A3	D1008-D1605	#5	10'-8"	16'-5"	1'-1 7/8"(-)	6	1	
	A4	D1008-D1605	#5	10'-8"	16'-5"	6 15/16"(-)	11	1	
PHASE 3	W4	C206-C400	#4	2'-6"	4'-0"	6"	4	2	
	W5	D204-D401	#5	2'-4"	4'-1"	3"	8	2	

BENDING DIAGRAM

(DIMENSIONS ARE OUT TO OUT)

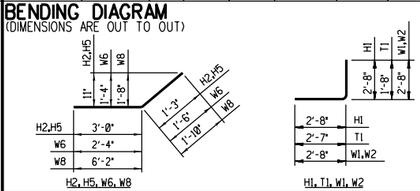

EST. WT. OF REINFORCING STEEL = 1,470 LB.

REINFORCING SCHEDULE - 5'-6" HEADWALL

PIPE DIAMETER = 48" SIDE SLOPE = 2:1

	BAR DESIGNATION	TOTAL	MARK	SIZE	LENGTH	SHAPE
PHASE 1	T1	44	C403B	#4	4'-3"	
	T2	6	C2107	#4	21'-7"	
PHASE 2	A1	28	D808	#5	8'-8"	
	A5	4	D2107	#5	21'-7"	
	A6	2	D1207	#5	12'-7"	
	H1	28	D504B	#5	5'-4"	
	H2	8	D409B	#5	4'-9"	
	W1	14	C504B	#4	5'-4"	
	W2	28	D504B	#5	5'-4"	
PHASE 3	H3	28	D503	#5	5'-3"	
	H4	12	D1200	#5	12'-0"	
	H5	8	D409B	#5	4'-9"	
	W6	24	D310B	#5	3'-10"	
	W7	8	D803	#5	8'-3"	
	W8	4	D1006B	#5	10'-6"	

SET LIST

	BAR DESIGNATION	MARK	SIZE	MIN. LENGTH	MAX. LENGTH	INCREMENT	NO.OF BARS/SET	NO.OF SETS	SHAPE
PHASE 2	A2	D311-D704	#5	3'-11"	7'-4"	1'-8 13/16"(-)	3	4	
	A3	D1302-D2103	#5	13'-2"	21'-3"	1'-1 7/8"(-)	8	1	
	A4	D1302-D2103	#5	13'-2"	21'-3"	6 15/16"(-)	15	1	
PHASE 3	W3	C502-C705	#4	5'-2"	7'-5"	2'-3 11/16"(+)	2	4	
	W4	C206-C500	#4	2'-6"	5'-0"	6"	6	2	
	W5	D204-D501	#5	2'-4"	5'-1"	3"	12	2	

BENDING DIAGRAM

(DIMENSIONS ARE OUT TO OUT)

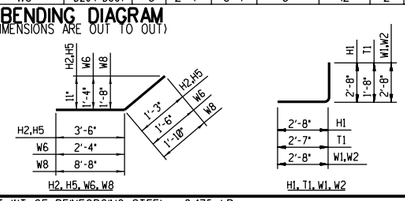

EST. WT. OF REINFORCING STEEL = 2,175 LB.

REINFORCING SCHEDULE - 6'-6" HEADWALL

PIPE DIAMETER = 60" SIDE SLOPE = 2:1

	BAR DESIGNATION	TOTAL	MARK	SIZE	LENGTH	SHAPE
PHASE 1	T1	56	C403B	#4	4'-3"	
	T2	6	C2605	#4	26'-5"	
PHASE 2	A1	32	D1008	#5	10'-8"	
	A5	4	C2605	#5	26'-5"	
	A6	2	D1501	#5	15'-1"	
	H1	32	D504B	#5	5'-4"	
	H2	8	D503B	#5	5'-3"	
	W1	18	C504B	#4	5'-4"	
	W2	36	D504B	#5	5'-4"	
PHASE 3	H3	32	D603	#5	6'-3"	
	H4	14	D1406	#5	14'-6"	
	H5	8	D503B	#5	5'-3"	
	W6	28	D310B	#5	3'-10"	
	W7	8	D1007	#5	10'-7"	
	W8	4	D1300B	#5	13'-0"	

SET LIST

	BAR DESIGNATION	MARK	SIZE	MIN. LENGTH	MAX. LENGTH	INCREMENT	NO.OF BARS/SET	NO.OF SETS	SHAPE
PHASE 2	A2	D205-D904	#5	2'-5"	9'-4"	1'-8 13/16"(-)	5	4	
	A3	D1508-D2601	#5	15'-8"	26'-1"	1'-1 7/8"(-)	10	1	
	A4	D1508-D2601	#5	15'-8"	26'-1"	6 15/16"(-)	19	1	
PHASE 3	W3	C502-C909	#4	5'-2"	9'-9"	2'-3 11/16"(+)	3	4	
	W4	C206-C600	#4	2'-6"	6'-0"	6"	8	2	
	W5	D204-D601	#5	2'-4"	6'-1"	3"	16	2	

BENDING DIAGRAM

(DIMENSIONS ARE OUT TO OUT)

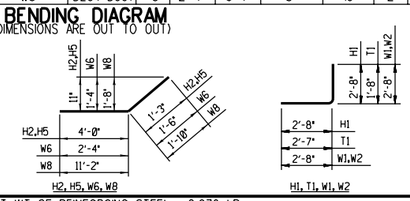

EST. WT. OF REINFORCING STEEL = 2,970 LB.

REINFORCING SCHEDULE - 7'-6" HEADWALL

PIPE DIAMETER = 72" SIDE SLOPE = 2:1

	BAR DESIGNATION	TOTAL	MARK	SIZE	LENGTH	SHAPE
PHASE 1	T1	66	C403B	#4	4'-3"	
	T2	6	C3103	#4	31'-3"	
PHASE 2	A1	38	D1208	#5	12'-8"	
	A5	4	D3103	#5	31'-3"	
	A6	2	D1707	#5	17'-7"	
	H1	38	D504B	#5	5'-4"	
	H2	8	D509B	#5	5'-9"	
	W1	22	C504B	#4	5'-4"	
	W2	44	D504B	#5	5'-4"	
PHASE 3	H3	38	D703	#5	7'-3"	
	H4	16	D1700	#5	17'-0"	
	H5	8	D509B	#5	5'-9"	
	W6	32	D310B	#5	3'-10"	
	W7	8	D1211	#5	12'-11"	
	W8	4	D1506B	#5	15'-6"	

SET LIST

	BAR DESIGNATION	MARK	SIZE	MIN. LENGTH	MAX. LENGTH	NCREMENT	NO.OF BARS/SET	NO.OF SETS	SHAPE
PHASE 2	A2	D208-D1104	#5	2'-8"	11'-4"	1'-8 13/16"(-)	6	4	
	A3	D1802-D3011	#5	18'-2"	30'-11"	1'-1 7/8"(-)	12	1	
	A4	D1802-D3011	#5	18'-2"	30'-11"	6 15/16"(-)	23	1	
PHASE 3	W3	C502-C1201	#4	5'-2"	12'-1"	2'-3 11/16"(+)	4	4	
	W4	C206-C700	#4	2'-6"	7'-0"	6"	10	2	
	W5	D204-D701	#5	2'-4"	7'-1"	3"	20	2	

BENDING DIAGRAM

(DIMENSIONS ARE OUT TO OUT)

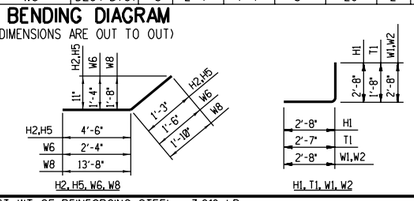

EST. WT. OF REINFORCING STEEL = 3,910 LB.

CONCRETE QUANTITIES

H	TOEWALL CU. YD.	APRON CU. YD.	HEADWALL & WINGWALLS CU. YD.	TOTAL CU. YD.
3'-6"	1.0	2.0	1.7	4.7
4'-0"	1.1	2.8	2.3	6.2
4'-6"	1.3	3.7	3.0	8.0
5'-6"	1.7	6.0	4.8	12.5
6'-6"	2.0	8.8	6.8	17.6
7'-6"	2.4	12.2	9.3	23.9

NOTES:

1. QUANTITIES ARE FOR ONE HEADWALL ONLY.
2. BAR DESIGNATIONS CONSIST OF BAR SIZE & LENGTH FOLLOWED BY THE LETTER "B" IF BENT. BAR SIZES ARE REPRESENTED BY THE LETTERS A THROUGH L CORRESPONDING TO BAR SIZE #2 THROUGH #18. BAR LENGTHS ARE GIVEN IN FEET AND INCHES; THE LAST TWO DIGITS ARE INCHES.
3. CONCRETE VOLUME FOR HEADWALL ASSUMES SOLID WALL WITHOUT A PIPE. TO DETERMINE REQUIRED CONCRETE QUANTITY, SUBTRACT THE APPLICABLE PIPE VOLUME AS FOLLOWS:

   24" DIA. = 0.11 CU. YD.
   30" DIA. = 0.18 CU. YD.
   36" DIA. = 0.26 CU. YD.
   48" DIA. = 0.46 CU. YD.
   60" DIA. = 0.72 CU. YD.
   72" DIA. = 1.04 CU. YD.

REINFORCING BAR LEGEND:

A - APRON BARS
H - HEADWALL BARS
T - TOEWALL BARS
W - WINGWALL BARS

A2 AND W3 CAN BE EITHER SINGLE BAR OR BAR SET.
W3 NOT REQUIRED IN 3'-6" HEADWALL.

REV.	DATE	DESCRIPTION	DES.	ENG.
X	XX-XX-XX	REVISION	XX	XX

DRAWN BY: SCRRA DATE: 03/31/2011

ASSISTANT DIRECTOR: STANDARDS & DESIGN

DIRECTOR OF ENGINEERING AND CONSTRUCTION

SCRRA ENGINEERING STANDARDS ARE INTENDED FOR SCRRA APPROVED USES ONLY. FOR NON-SCRRA APPROVED USES: SCRRA SHALL NOT BE RESPONSIBLE FOR THE ACCURACY OR COMPLETENESS OF THE DATA OR INFORMATION CONTAINED HEREIN. THE SELECTION AND USE OF THESE STANDARDS IS THE SOLE RESPONSIBILITY OF THE USER AND SHOULD NOT BE USED WITHOUT CONSULTING A REGISTERED PROFESSIONAL ENGINEER. ALL WARRANTIES AND REPRESENTATIONS OF ANY KIND ARE DISCLAIMED. ANYONE MAKING USE OF THIS INFORMATION AGREES THAT IT ASSUMES ALL LIABILITY ARISING FROM SUCH USE. NO PART OF THESE STANDARDS SHOULD BE REPRODUCED OR DISTRIBUTED IN ANY FORM OR BY ANY MEANS WITHOUT THE PRIOR WRITTEN PERMISSION OF SCRRA. ALL RIGHTS RESERVED.

METROLINK®
SOUTHERN CALIFORNIA REGIONAL RAIL AUTHORITY
ONE GATEWAY PLAZA, 12TH FLOOR, L. A., CA. 90012

ENGINEERING STANDARDS

TYPE A-2 HEADWALL
REINFORCING SCHEDULE

STANDARD 6306
SCALE: NONE
REVISION –
SHEET 3 OF 3
CADD FILE: ES6306-03

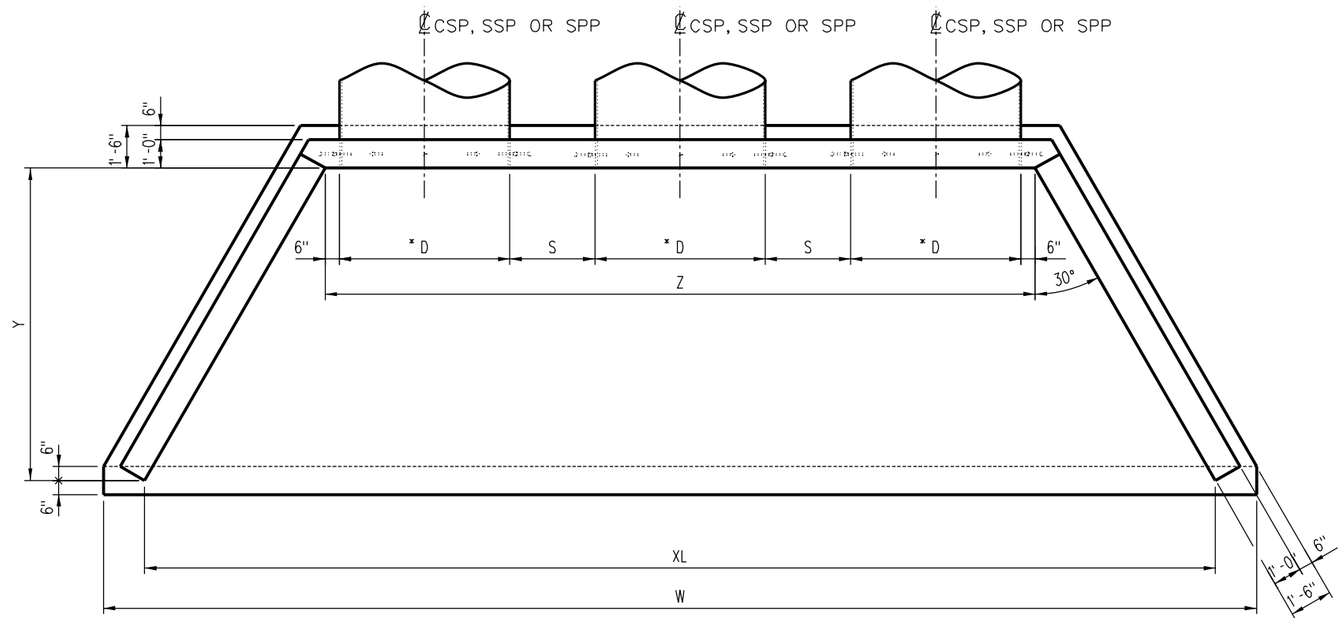

FRAMING PLAN
(72" DIA. PIPES SHOWN)

TYPE A-3 HEADWALL DIMENSIONS						
SIDE SLOPE = 2:1						
H	*D	S	W	XL	Z	Y
3'-6"	24"	12"	15'-4 1/4"	12'-5 5/8"	9'-0"	3'-0"
4'-0"	30"	15"	18'-6 1/8"	15'-7 3/8"	11'-0"	4'-0"
4'-6"	36"	18"	21'-7 7/8"	18'-9 1/4"	13'-0"	5'-0"
5'-6"	48"	24"	27'-11 5/8"	25'-1"	17'-0"	7'-0"
6'-6"	60"	30"	34'-3 3/8"	31'-4 3/4"	21'-0"	9'-0"
7'-6"	72"	36"	40'-7"	37'-8 3/8"	25'-0"	11'-0"
* FOR SSP, D = OUTSIDE PIPE DIAMETER FOR CSP & SPP, D = INSIDE PIPE DIAMETER						

NOTES:

1. EQUATIONS REQUIRE VARIABLES TO BE IN INCHES.
2. D = PIPE DIAMETER (INCHES)
   S = SPACING BETWEEN ADJACENT PIPES (INCHES)
   SS = SIDE SLOPE (RUN PER UNIT OF RISE)
3. Y = SS x (H - 24)
4. Z = (2 x D) + S + 12
5. XL = Z + (1.155 x Y)
6. W = XL + 34.641
7. ROUND DIMENSIONS TO THE NEAREST 1/8".

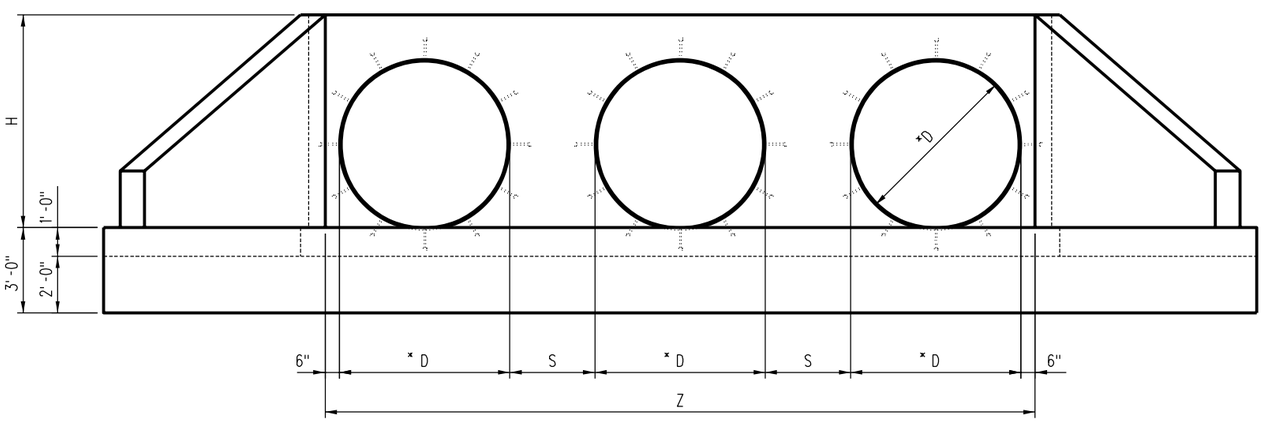

FRAMING ELEVATION
(72" DIA. PIPES SHOWN)

NOTES:

1. FOR CONCRETE SPECIFICATIONS, SEE SHEET ES6301 AND SCRRA STANDARD SPECIFICATIONS.
2. FOR PIPE BEDDING SPECIFICATIONS, SEE SCRRA STANDARD SPECIFICATION 34 80 12, CULVERT AND DRAINAGE PIPE.

REV.	DATE	DESCRIPTION	DES.	ENG.
X	XX-XX-XX	REVISION	XX	XX

DRAWN BY: SCRRA DATE: 03/31/2011

ASSISTANT DIRECTOR: STANDARDS & DESIGN

DIRECTOR OF ENGINEERING AND CONSTRUCTION

SCRRA ENGINEERING STANDARDS ARE INTENDED FOR SCRRA APPROVED USES ONLY. FOR NON-SCRRA APPROVED USES: SCRRA SHALL NOT BE RESPONSIBLE FOR THE ACCURACY OR COMPLETENESS OF THE DATA OR INFORMATION CONTAINED HEREIN. THE SELECTION AND USE OF THESE STANDARDS IS THE SOLE RESPONSIBILITY OF THE USER AND SHOULD NOT BE USED WITHOUT CONSULTING A REGISTERED PROFESSIONAL ENGINEER. ALL WARRANTIES AND REPRESENTATIONS OF ANY KIND ARE DISCLAIMED. ANYONE MAKING USE OF THIS INFORMATION AGREES THAT IT ASSUMES ALL LIABILITY ARISING FROM SUCH USE. NO PART OF THESE STANDARDS SHOULD BE REPRODUCED OR DISTRIBUTED IN ANY FORM OR BY ANY MEANS WITHOUT THE PRIOR WRITTEN PERMISSION OF SCRRA. ALL RIGHTS RESERVED.

METROLINK®
SOUTHERN CALIFORNIA REGIONAL RAIL AUTHORITY
ONE GATEWAY PLAZA, 12TH FLOOR, L. A., CA. 90012

ENGINEERING STANDARDS

TYPE A-3 HEADWALL
FRAMING DETAILS

STANDARD 6308
SCALE: NONE
REVISION –
SHEET 1 OF 4
CADD FILE: ES6308-01

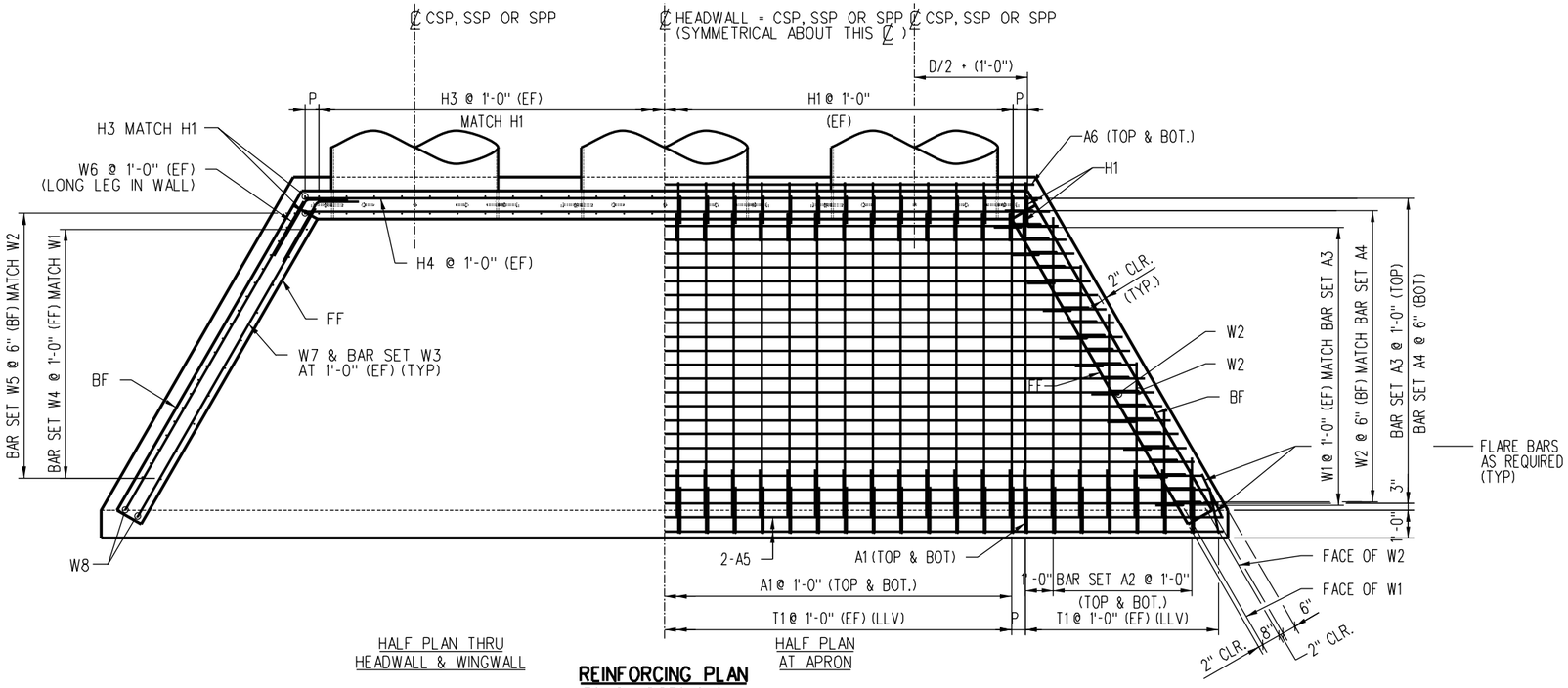

REINFORCING PLAN
(72" DIA. PIPES SHOWN)

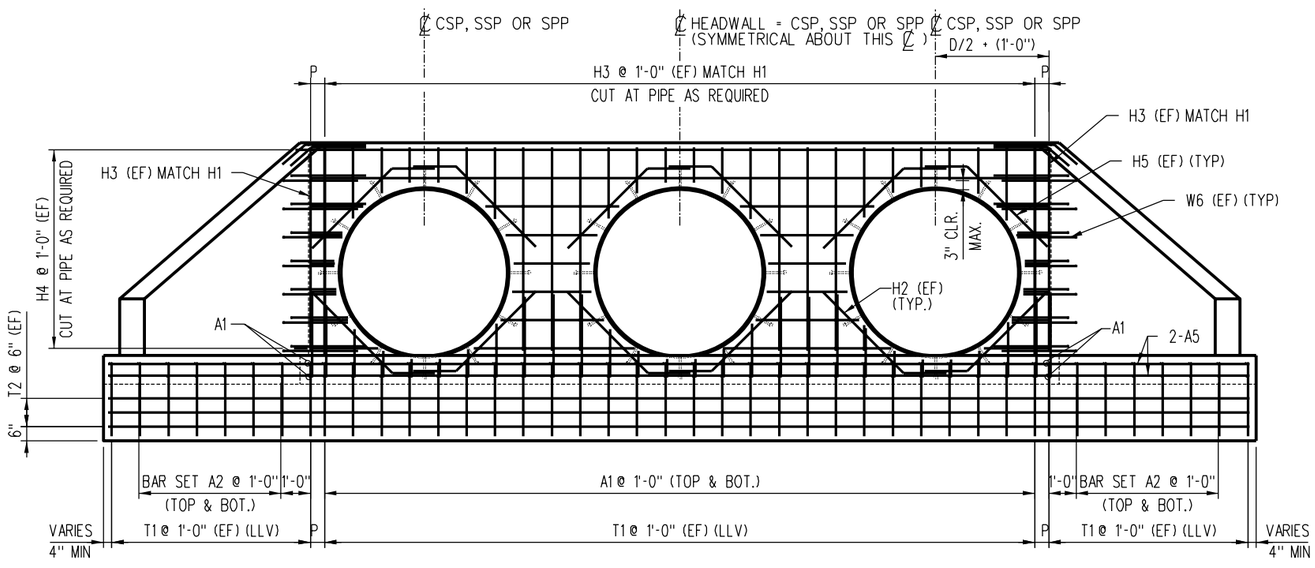

REINFORCING ELEVATION
(72" DIA. PIPES SHOWN)

NOTE:

BF = BACK FACE
EF = EACH FACE
FF = FRONT FACE
LLV = LONG LEG VERTICAL

H	P
3'-6"	6"
4'-0"	6"
4'-6"	6"
5'-6"	6"
6'-6"	6"
7'-6"	6"

NOTES:

1. REINFORCING CALLOUT CONVENTION:

   A - APRON BARS
   H - HEADWALL BARS
   T - TOEWALL BARS
   W - WINGWALL BARS

2. A2 AND W3 CAN BE EITHER SINGLE BAR OR BAR SET. W3 NOT REQUIRED IN 3'-6" HEADWALL.
3. EQUATIONS REQUIRE VARIABLES TO BE IN INCHES.
4. M = Z / 12 (ROUND M DOWN TO NEAREST INTEGER)
5. P = (Z / 2) - (6 x M) + 6 (ROUND P TO NEAREST 1/4")

REV.	DATE	DESCRIPTION	DES.	ENG.
X	XX-XX-XX	REVISION	XX	XX

DRAWN BY: SCRRA DATE: 03/31/2011

ASSISTANT DIRECTOR: STANDARDS & DESIGN

DIRECTOR OF ENGINEERING AND CONSTRUCTION

SCRRA ENGINEERING STANDARDS ARE INTENDED FOR SCRRA APPROVED USES ONLY. FOR NON-SCRRA APPROVED USES:
SCRRA SHALL NOT BE RESPONSIBLE FOR THE ACCURACY OR COMPLETENESS OF THE DATA OR INFORMATION CONTAINED HEREIN. THE SELECTION AND USE OF THESE STANDARDS IS THE SOLE RESPONSIBILITY OF THE USER AND SHOULD NOT BE USED WITHOUT CONSULTING A REGISTERED PROFESSIONAL ENGINEER. ALL WARRANTIES AND REPRESENTATIONS OF ANY KIND ARE DISCLAIMED. ANYONE MAKING USE OF THIS INFORMATION AGREES THAT IT ASSUMES ALL LIABILITY ARISING FROM SUCH USE. NO PART OF THESE STANDARDS SHOULD BE REPRODUCED OR DISTRIBUTED IN ANY FORM OR BY ANY MEANS WITHOUT THE PRIOR WRITTEN PERMISSION OF SCRRA. ALL RIGHTS RESERVED.

METROLINK®
SOUTHERN CALIFORNIA REGIONAL RAIL AUTHORITY
ONE GATEWAY PLAZA, 12TH FLOOR, L. A., CA. 90012

ENGINEERING STANDARDS

TYPE A-3 HEADWALL
REINFORCING DETAILS

STANDARD: 6308
SCALE: NONE
REVISION: –
SHEET: 2 OF 4
CADD FILE: ES6308-02

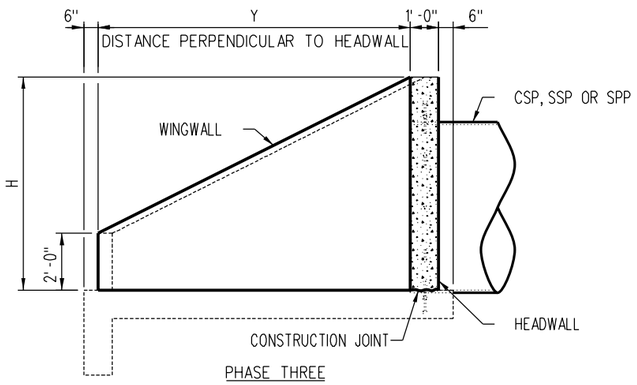

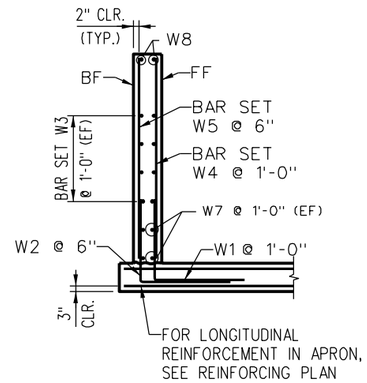

WINGWALL SECTION

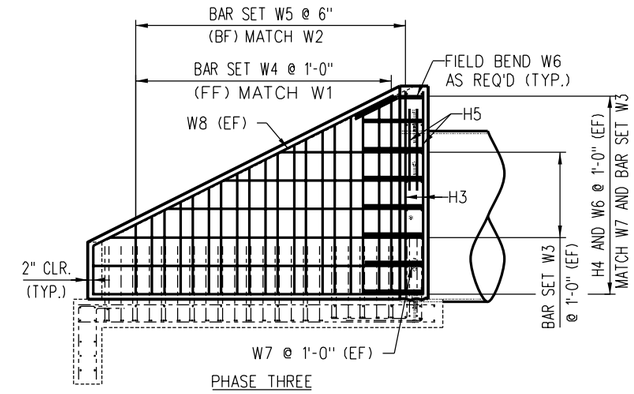

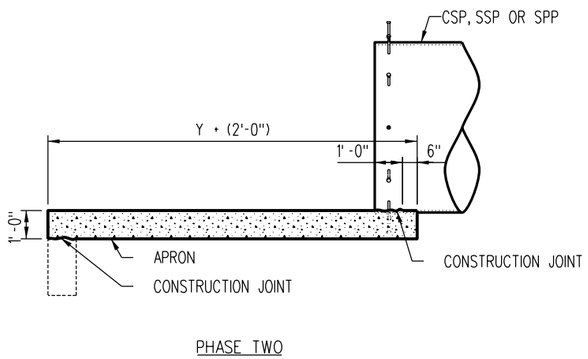

NOTE:

BF - BACK FACE
EF - EACH FACE
FF - FRONT FACE
LLV - LONG LEG VERTICAL

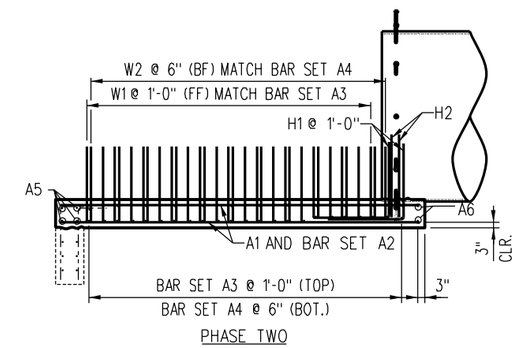

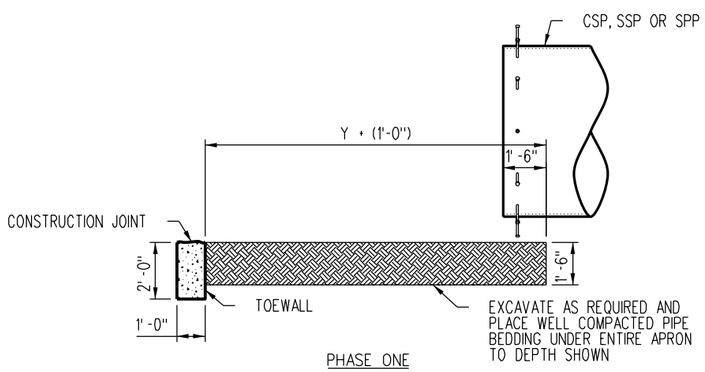

NOTE:

1. FOR CONCRETE SPECIFICATIONS, SEE SHEET ES6301 AND SCRRA STANDARD SPECIFICATIONS.
2. FOR PIPE BEDDING SPECIFICATIONS, SEE SCRRA STANDARD SPECIFICATION 34 80 12, CULVERT AND DRAINAGE PIPE.

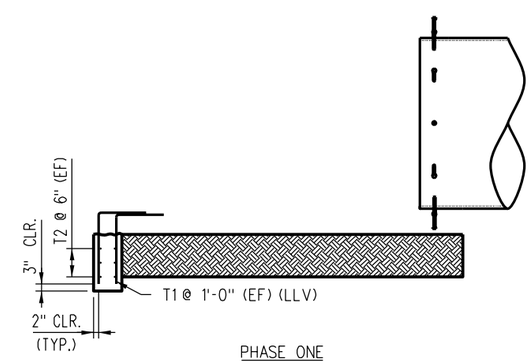

CONSTRUCTION SEQUENCE - FRAMING

(LOOKING PERPENDICULAR TO 'PIPE)
(72" DIA. PIPE SHOWN)

CONSTRUCTION SEQUENCE - REINFORCING

(LOOKING PERPENDICULAR TO PIPE)
(72" DIA. PIPE SHOWN)

REV.	DATE	DESCRIPTION	DES.	ENG.
X	XX-XX-XX	REVISION	XX	XX

DRAWN BY: SCRRA DATE: 03/31/2011

ASSISTANT DIRECTOR: STANDARDS & DESIGN

DIRECTOR OF ENGINEERING AND CONSTRUCTION

SCRRA ENGINEERING STANDARDS ARE INTENDED FOR SCRRA APPROVED USES ONLY. FOR NON-SCRRA APPROVED USES: SCRRA SHALL NOT BE RESPONSIBLE FOR THE ACCURACY OR COMPLETENESS OF THE DATA OR INFORMATION CONTAINED HEREIN. THE SELECTION AND USE OF THESE STANDARDS IS THE SOLE RESPONSIBILITY OF THE USER AND SHOULD NOT BE USED WITHOUT CONSULTING A REGISTERED PROFESSIONAL ENGINEER. ALL WARRANTIES AND REPRESENTATIONS OF ANY KIND ARE DISCLAIMED. ANYONE MAKING USE OF THIS INFORMATION AGREES THAT IT ASSUMES ALL LIABILITY ARISING FROM SUCH USE. NO PART OF THESE STANDARDS SHOULD BE REPRODUCED OR DISTRIBUTED IN ANY FORM OR BY ANY MEANS WITHOUT THE PRIOR WRITTEN PERMISSION OF SCRRA. ALL RIGHTS RESERVED.

METROLINK®
SOUTHERN CALIFORNIA REGIONAL RAIL AUTHORITY
ONE GATEWAY PLAZA, 12TH FLOOR, L. A., CA. 90012

ENGINEERING STANDARDS

TYPE A-3 HEADWALL
CONSTRUCTION SEQUENCE

STANDARD 6308
SCALE: NONE
REVISION –
SHEET 3 OF 4
CADD FILE: ES6308-03

REINFORCING SCHEDULE - 3'-6" HEADWALL

PIPE DIAMETER = 24" SIDE SLOPE = 2:1

	BAR DESIGNATION	TOTAL	MARK	SIZE	LENGTH	SHAPE
PHASE 1	T1	32	C403B	#4	4'-3"	
	T2	6	C1500	#4	15'-0"	
PHASE 2	A1	24	D408	#5	4'-8"	
	A2	4	D304	#5	3'-4"	
	A5	4	D1500	#5	15'-0"	
	A6	2	D1007	#5	10'-7"	
	H1	24	D504B	#5	5'-4"	
	H2	12	D309B	#5	3'-9"	
	W1	6	C504B	#4	5'-4"	
	W2	12	D504B	#5	5'-4"	
PHASE 3	H3	24	D303	#5	3'-3"	
	H4	8	D1000	#5	10'-0"	
	H5	12	D309B	#5	3'-9"	
	W6	16	D310B	#5	3'-10"	
	W7	8	D308	#5	3'-8"	
	W8	4	D505B	#5	5'-5"	

SET LIST

	BAR DESIGNATION	MARK	SIZE	MIN. LENGTH	MAX. LENGTH	INCREMENT	NO.OF BARS/SET	NO.OF SETS	SHAPE
PHASE 2	A3	D1102-D1408	#5	11'-2"	14'-8"	1'-1 1/8"(-)	4	1	
	A4	D1102-D1408	#5	11'-2"	14'-8"	6 15/16"(-)	7	1	
PHASE 3	W4	C206-C300	#4	2'-6"	3'-0"	6"	2	2	
	W5	D204-D301	#5	2'-4"	3'-1"	3"	4	2	

BENDING DIAGRAM

(DIMENSIONS ARE OUT TO OUT)

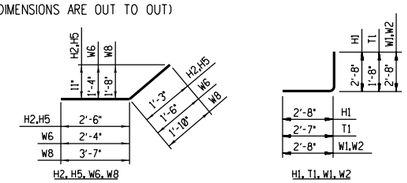

EST. WT. OF REINFORCING STEEL = 1,145 LB.

REINFORCING SCHEDULE - 4'-0" HEADWALL

PIPE DIAMETER = 30" SIDE SLOPE = 2:1

	BAR DESIGNATION	TOTAL	MARK	SIZE	LENGTH	SHAPE
PHASE 1	T1	40	C403B	#4	4'-3"	
	T2	6	C1802	#4	18'-2"	
PHASE 2	A1	28	D508	#5	5'-8"	
	A5	4	D1802	#5	18'-2"	
	A6	2	D1207	#5	12'-7"	
	H1	20	D504B	#5	5'-4"	
	H2	12	D400B	#5	4'-0"	
	W1	8	C504B	#4	5'-4"	
	W2	16	D504B	#5	5'-4"	
PHASE 3	H3	28	D309	#5	3'-9"	
	H4	10	D1200	#5	12'-0"	
	H5	12	D400B	#5	4'-0"	
	W3	4	C400	#4	4'-0"	
	W6	20	D310B	#5	3'-10"	
	W7	8	D410	#5	4'-10"	
	W8	4	D608B	#5	6'-8"	

SET LIST

	BAR DESIGNATION	MARK	SIZE	MIN. LENGTH	MAX. LENGTH	INCREMENT	NO.OF BARS/SET	NO.OF SETS	SHAPE
PHASE 2	A2	D208-D404	#5	2'-8"	4'-4"	1'-8 13/16"(-)	2	4	
	A3	D1302-D1710	#5	13'-2"	17'-10"	1'-1 1/8"(-)	5	1	
	A4	D1302-D1710	#5	13'-2"	17'-10"	6 15/16"(-)	9	1	
PHASE 3	W4	C206-C306	#4	2'-6"	3'-6"	6"	3	2	
	W5	D204-D307	#5	2'-4"	3'-7"	3"	6	2	

BENDING DIAGRAM

(DIMENSIONS ARE OUT TO OUT)

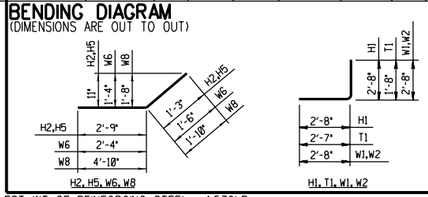

EST. WT. OF REINFORCING STEEL = 1,530LB.

REINFORCING SCHEDULE - 4'-6" HEADWALL

PIPE DIAMETER = 36" SIDE SLOPE = 2:1

	BAR DESIGNATION	TOTAL	MARK	SIZE	LENGTH	SHAPE
PHASE 1	T1	44	C403B	#4	4'-3"	
	T2	6	C2103	#4	21'-3"	
PHASE 2	A1	32	D608	#5	6'-8"	
	A5	4	D2103	#5	21'-3"	
	A6	2	D1407	#5	14'-7"	
	H1	32	D504B	#5	5'-4"	
	H2	12	D403B	#5	4'-3"	
	W1	10	C504B	#4	5'-4"	
	W2	20	D504B	#5	5'-4"	
PHASE 3	H3	32	D403	#5	4'-3"	
	H4	10	D1400	#5	14'-0"	
	H5	12	D403B	#5	4'-3"	
	W3	4	C502	#4	5'-2"	
	W6	20	D310B	#5	3'-10"	
	W7	8	D511	#5	5'-11"	
	W8	4	D800B	#5	8'-0"	

SET LIST

	BAR DESIGNATION	MARK	SIZE	MIN. LENGTH	MAX. LENGTH	INCREMENT	NO.OF BARS/SET	NO.OF SETS	SHAPE
PHASE 2	A2	D308-D504	#5	3'-8"	5'-4"	1'-8 13/16"(-)	2	4	
	A3	D1502-D2011	#5	15'-2"	20'-11"	1'-1 1/8"(-)	6	1	
	A4	D1502-D2011	#5	15'-2"	20'-11"	6 15/16"(-)	11	1	
PHASE 3	W4	C206-C400	#4	2'-6"	4'-0"	6"	4	2	
	W5	D204-D401	#5	2'-4"	4'-1"	3"	8	2	

BENDING DIAGRAM

(DIMENSIONS ARE OUT TO OUT)

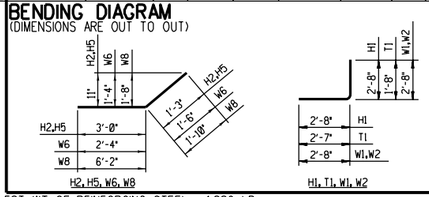

EST. WT. OF REINFORCING STEEL = 1,880 LB.

REINFORCING SCHEDULE - 5'-6" HEADWALL

PIPE DIAMETER = 48" SIDE SLOPE = 2:1

	BAR DESIGNATION	TOTAL	MARK	SIZE	LENGTH	SHAPE
PHASE 1	T1	56	C403B	#4	4'-3"	
	T2	6	C2707	#4	27'-7"	
PHASE 2	A1	40	D808	#5	8'-8"	
	A5	4	D2707	#5	27'-7"	
	A6	2	D1807	#5	18'-7"	
	H1	40	D504B	#5	5'-4"	
	H2	12	D409B	#5	4'-9"	
	W1	14	C504B	#4	5'-4"	
	W2	28	D504B	#5	5'-4"	
PHASE 3	H3	40	D503	#5	5'-3"	
	H4	12	D1800	#5	18'-0"	
	H5	12	D409B	#5	4'-9"	
	W6	24	D310B	#5	3'-10"	
	W7	8	D803	#5	8'-3"	
	W8	4	D1006B	#5	10'-6"	

SET LIST

	BAR DESIGNATION	MARK	SIZE	MIN. LENGTH	MAX. LENGTH	INCREMENT	NO.OF BARS/SET	NO.OF SETS	SHAPE
PHASE 2	A2	D311-D704	#5	3'-11"	7'-4"	1'-8 13/16"(-)	3	4	
	A3	D1902-D2703	#5	19'-2"	27'-3"	1'-1 1/8"(-)	8	1	
	A4	D1902-D2703	#5	19'-2"	27'-3"	6 15/16"(-)	15	1	
PHASE 3	W3	C502-C705	#4	5'-2"	7'-5"	2'-3 11/16"(+)	2	4	
	W4	C206-C500	#4	2'-6"	5'-0"	6"	6	2	
	W5	D204-D501	#5	2'-4"	5'-1"	3"	12	2	

BENDING DIAGRAM

(DIMENSIONS ARE OUT TO OUT)

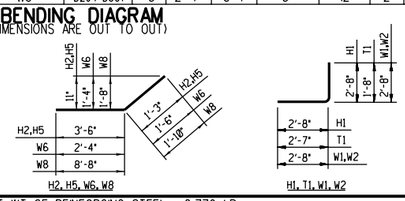

EST. WT. OF REINFORCING STEEL = 2,770 LB.

REINFORCING SCHEDULE - 6'-6" HEADWALL

PIPE DIAMETER = 60" SIDE SLOPE = 2:1

	BAR DESIGNATION	TOTAL	MARK	SIZE	LENGTH	SHAPE
PHASE 1	T1	72	C403B	#4	4'-3"	
	T2	6	C3311	#4	33'-11"	
PHASE 2	A1	48	D1008	#5	10'-8"	
	A5	4	C3311	#5	33'-11"	
	A6	2	D2207	#5	22'-7"	
	H1	48	D504B	#5	5'-4"	
	H2	12	D503B	#5	5'-3"	
	W1	18	C504B	#4	5'-4"	
	W2	36	D504B	#5	5'-4"	
PHASE 3	H3	48	D603	#5	6'-3"	
	H4	14	D2200	#5	22'-0"	
	H5	12	D503B	#5	5'-3"	
	W6	28	D310B	#5	3'-10"	
	W7	8	D1007	#5	10'-7"	
	W8	4	D1300B	#5	13'-0"	

SET LIST

	BAR DESIGNATION	MARK	SIZE	MIN. LENGTH	MAX. LENGTH	INCREMENT	NO.OF BARS/SET	NO.OF SETS	SHAPE
PHASE 2	A2	D205-D904	#5	2'-5"	9'-4"	1'-8 13/16"(-)	5	4	
	A3	D2302-D3307	#5	23'-2"	33'-7"	1'-1 1/8"(-)	10	1	
	A4	D2302-D3307	#5	23'-2"	33'-7"	6 15/16"(-)	19	1	
PHASE 3	W3	C502-C909	#4	5'-2"	9'-9"	2'-3 11/16"(+)	3	4	
	W4	C206-C600	#4	2'-6"	6'-0"	6"	8	2	
	W5	D204-D601	#5	2'-4"	6'-1"	3"	16	2	

BENDING DIAGRAM

(DIMENSIONS ARE OUT TO OUT)

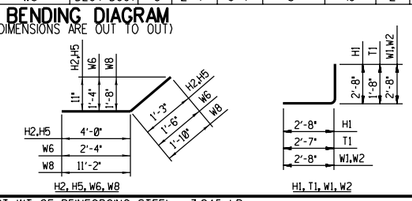

EST. WT. OF REINFORCING STEEL = 3,845 LB.

REINFORCING SCHEDULE - 7'-6" HEADWALL

PIPE DIAMETER = 72" SIDE SLOPE = 2:1

	BAR DESIGNATION	TOTAL	MARK	SIZE	LENGTH	SHAPE
PHASE 1	T1	84	C403B	#4	4'-3"	
	T2	6	C4003	#4	40'-3"	
PHASE 2	A1	56	D1208	#5	12'-8"	
	A5	4	D4003	#5	40'-3"	
	A6	2	D2607	#5	26'-7"	
	H1	56	D504B	#5	5'-4"	
	H2	12	D509B	#5	5'-9"	
	W1	22	C504B	#4	5'-4"	
	W2	44	D504B	#5	5'-4"	
PHASE 3	H3	56	D703	#5	7'-3"	
	H4	16	D2600	#5	26'-0"	
	H5	12	D509B	#5	5'-9"	
	W6	32	D310B	#5	3'-10"	
	W7	8	D1211	#5	12'-11"	
	W8	4	D1506B	#5	15'-6"	

SET LIST

	BAR DESIGNATION	MARK	SIZE	MIN. LENGTH	MAX. LENGTH	NCREMENT	NO.OF BARS/SET	NO.OF SETS	SHAPE
PHASE 2	A2	D208-D1104	#5	2'-8"	11'-4"	1'-8 13/16"(-)	6	4	
	A3	D2702-D3911	#5	27'-2"	39'-11"	1'-1 1/8"(-)	12	1	
	A4	D2702-D3911	#5	27'-2"	39'-11"	6 15/16"(-)	23	1	
PHASE 3	W3	C502-C1201	#4	5'-2"	12'-1"	2'-3 11/16"(+)	4	4	
	W4	C206-C700	#4	2'-6"	7'-0"	6"	10	2	
	W5	D204-D701	#5	2'-4"	7'-1"	3"	20	2	

BENDING DIAGRAM

(DIMENSIONS ARE OUT TO OUT)

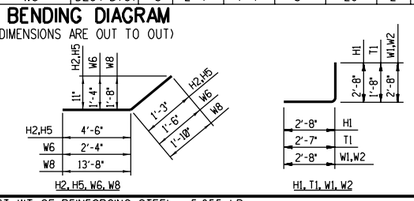

EST. WT. OF REINFORCING STEEL = 5,055 LB.

CONCRETE QUANTITIES

H	TOEWALL CU. YD.	APRON CU. YD.	HEADWALL & WINGWALLS CU. YD.	TOTAL CU. YD.
3'-6"	1.2	2.6	2.1	5.9
4'-0"	1.4	3.6	2.9	7.9
4'-6"	1.7	4.9	3.8	10.4
5'-6"	2.1	8.0	6.0	16.1
6'-6"	2.6	11.9	8.7	23.2
7'-6"	3.1	16.5	11.8	31.4

NOTES:

1. QUANTITIES ARE FOR ONE HEADWALL ONLY.
2. BAR DESIGNATIONS CONSIST OF BAR SIZE & LENGTH FOLLOWED BY THE LETTER "B" IF BENT. BAR SIZES ARE REPRESENTED BY THE LETTERS A THROUGH L CORRESPONDING TO BAR SIZE #2 THROUGH #18. BAR LENGTHS ARE GIVEN IN FEET AND INCHES; THE LAST TWO DIGITS ARE INCHES.
3. CONCRETE VOLUME FOR HEADWALL ASSUMES SOLID WALL WITHOUT A PIPE. TO DETERMINE REQUIRED CONCRETE QUANTITY, SUBTRACT THE APPLICABLE PIPE VOLUME AS FOLLOWS:

   24" DIA. = 0.11 CU. YD.
   30" DIA. = 0.18 CU. YD.
   36" DIA. = 0.26 CU. YD.
   48" DIA. = 0.46 CU. YD.
   60" DIA. = 0.72 CU. YD.
   72" DIA. = 1.04 CU. YD.

REINFORCING BAR LEGEND:

A - APRON BARS
H - HEADWALL BARS
T - TOEWALL BARS
W - WINGWALL BARS

A2 AND W3 CAN BE EITHER SINGLE BAR OR BAR SET.
W3 NOT REQUIRED IN 3'-6" HEADWALL.

REV.	DATE	DESCRIPTION	DES.	ENG.
X	XX-XX-XX	REVISION	XX	XX

DRAWN BY: SCRRA DATE: 03/31/2011

ASSISTANT DIRECTOR: STANDARDS & DESIGN

DIRECTOR OF ENGINEERING AND CONSTRUCTION

SCRRA ENGINEERING STANDARDS ARE INTENDED FOR SCRRA APPROVED USES ONLY. FOR NON-SCRRA APPROVED USES: SCRRA SHALL NOT BE RESPONSIBLE FOR THE ACCURACY OR COMPLETENESS OF THE DATA OR INFORMATION CONTAINED HEREIN. THE SELECTION AND USE OF THESE STANDARDS IS THE SOLE RESPONSIBILITY OF THE USER AND SHOULD NOT BE USED WITHOUT CONSULTING A REGISTERED PROFESSIONAL ENGINEER. ALL WARRANTIES AND REPRESENTATIONS OF ANY KIND ARE DISCLAIMED. ANYONE MAKING USE OF THIS INFORMATION AGREES THAT IT ASSUMES ALL LIABILITY ARISING FROM SUCH USE. NO PART OF THESE STANDARDS SHOULD BE REPRODUCED OR DISTRIBUTED IN ANY FORM OR BY ANY MEANS WITHOUT THE PRIOR WRITTEN PERMISSION OF SCRRA. ALL RIGHTS RESERVED.

METROLINK®
SOUTHERN CALIFORNIA REGIONAL RAIL AUTHORITY
ONE GATEWAY PLAZA, 12TH FLOOR, L. A., CA. 90012

ENGINEERING STANDARDS

TYPE A-3 HEADWALL
REINFORCING SCHEDULE

STANDARD 6308
SCALE: NONE
REVISION –
SHEET 4 OF 4
CADD FILE: ES6308-04

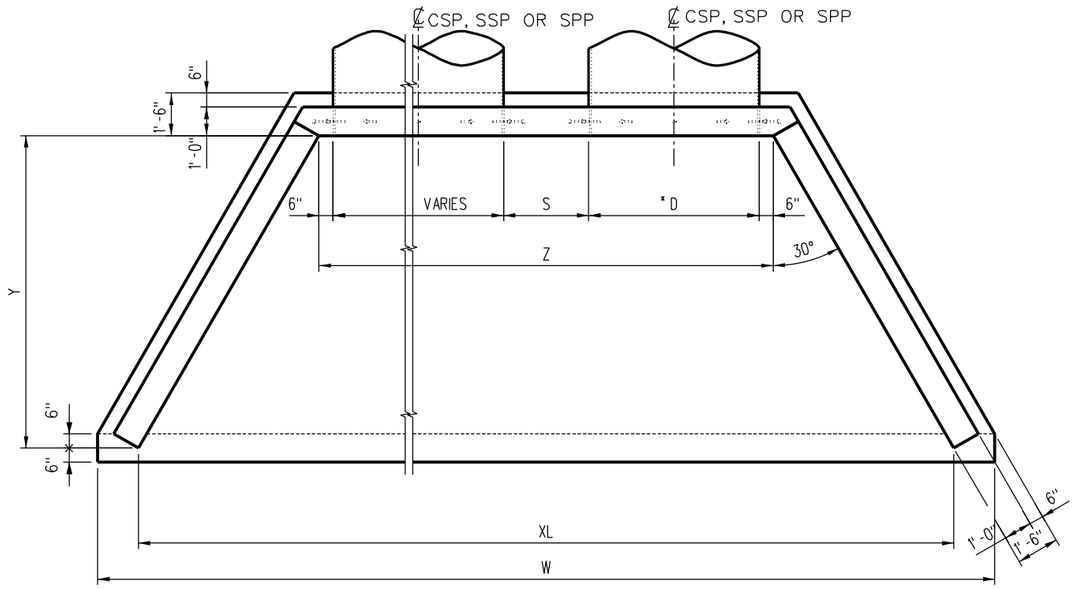

FRAMING PLAN
(72" DIA. PIPES SHOWN)

NOTES:

1. EQUATIONS REQUIRE VARIABLES TO BE IN INCHES.
2. D = PIPE DIAMETER (INCHES)
   N = NUMBER OF PIPES
   S = SPACING BETWEEN ADJACENT PIPES (INCHES)
   SS = SIDE SLOPE (RUN PER UNIT OF RISE)
3. Y = SS x (H - 24)
4. Z = (2 x D) + S + 12
5. XL = Z + (1.155 x Y)
6. W = XL + 34.641
7. ROUND DIMENSIONS TO THE NEAREST 1/8".

NOTES:

1. FOR CONCRETE SPECIFICATIONS, SEE SHEET ES6301 AND SCRRA STANDARD SPECIFICATIONS.
2. FOR PIPE BEDDING SPECIFICATIONS, SEE SCRRA STANDARD SPECIFICATION 34 80 12, CULVERT AND DRAINAGE PIPE.

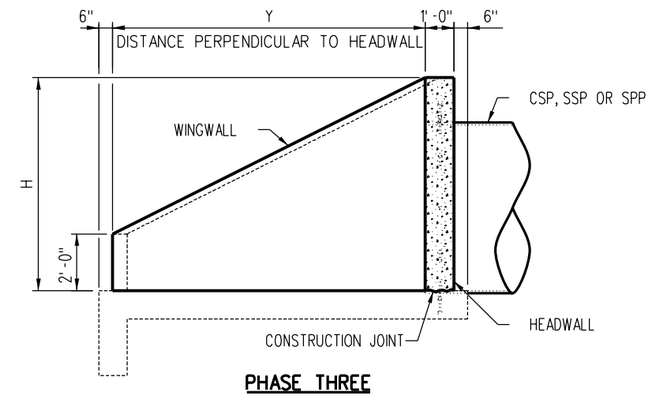

PHASE THREE

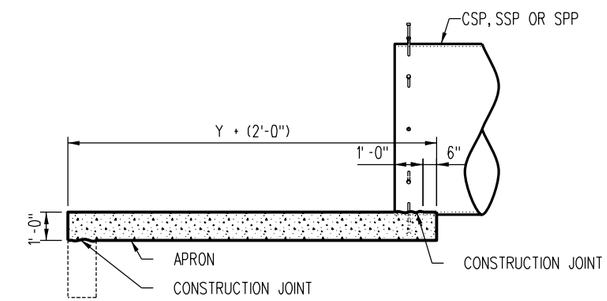

PHASE TWO

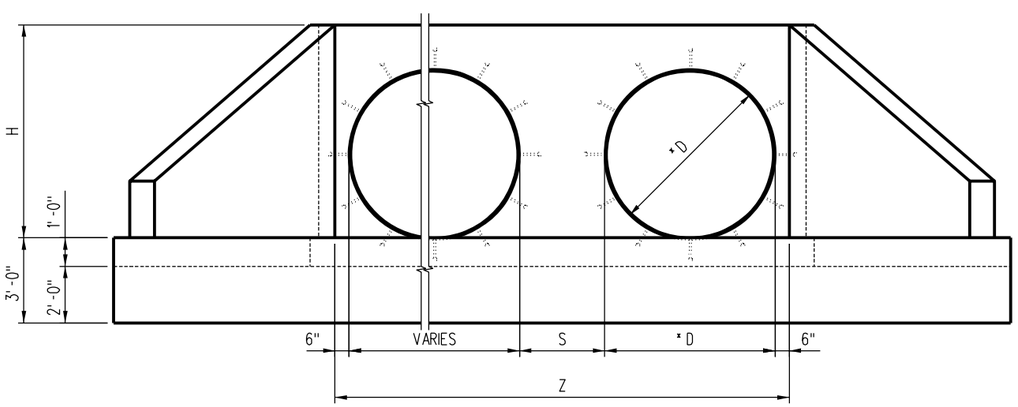

FRAMING ELEVATION
(72" DIA. PIPES SHOWN)

TYPE A-M HEADWALL DIMENSIONS
SIDE SLOPE = 2:1

H	*D	Y
3'-6"	24"	3'-0"
4'-0"	30"	4'-0"
4'-6"	36"	5'-0"
5'-6"	48"	7'-0"
6'-6"	60"	9'-0"
7'-6"	72"	11'-0"

* FOR SSP, D = OUTSIDE PIPE DIAMETER FOR CSP & SPP, D = INSIDE PIPE DIAMETER

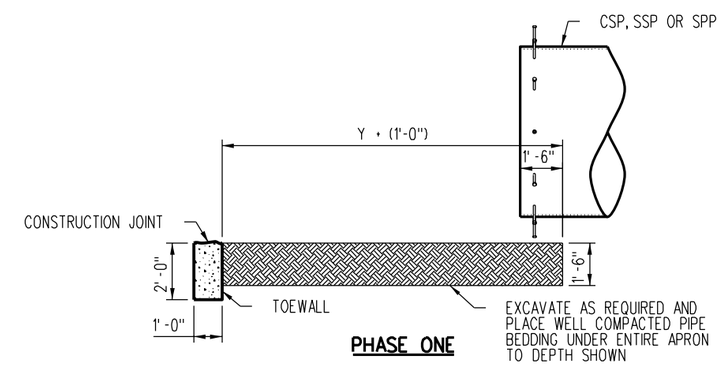

PHASE ONE

CONSTRUCTION SEQUENCE
(LOOKING PERPENDICULAR TO ' PIPE)
(72" DIA. PIPE SHOWN)

REV.	DATE	DESCRIPTION	DES.	ENG.
X	XX-XX-XX	REVISION	XX	XX

DRAWN BY: SCRRA DATE: 03/31/2011

ASSISTANT DIRECTOR: STANDARDS & DESIGN

DIRECTOR OF ENGINEERING AND CONSTRUCTION

SCRRA ENGINEERING STANDARDS ARE INTENDED FOR SCRRA APPROVED USES ONLY. FOR NON-SCRRA APPROVED USES: SCRRA SHALL NOT BE RESPONSIBLE FOR THE ACCURACY OR COMPLETENESS OF THE DATA OR INFORMATION CONTAINED HEREIN. THE SELECTION AND USE OF THESE STANDARDS IS THE SOLE RESPONSIBILITY OF THE USER AND SHOULD NOT BE USED WITHOUT CONSULTING A REGISTERED PROFESSIONAL ENGINEER. ALL WARRANTIES AND REPRESENTATIONS OF ANY KIND ARE DISCLAIMED. ANYONE MAKING USE OF THIS INFORMATION AGREES THAT IT ASSUMES ALL LIABILITY ARISING FROM SUCH USE. NO PART OF THESE STANDARDS SHOULD BE REPRODUCED OR DISTRIBUTED IN ANY FORM OR BY ANY MEANS WITHOUT THE PRIOR WRITTEN PERMISSION OF SCRRA. ALL RIGHTS RESERVED.

METROLINK®
SOUTHERN CALIFORNIA REGIONAL RAIL AUTHORITY
ONE GATEWAY PLAZA, 12TH FLOOR, L. A., CA. 90012

ENGINEERING STANDARDS

TYPE A-M HEADWALL
FRAMING DETAILS

STANDARD 6310
SCALE: NONE
REVISION –
SHEET 1 OF 3
CADD FILE: ES6310-01

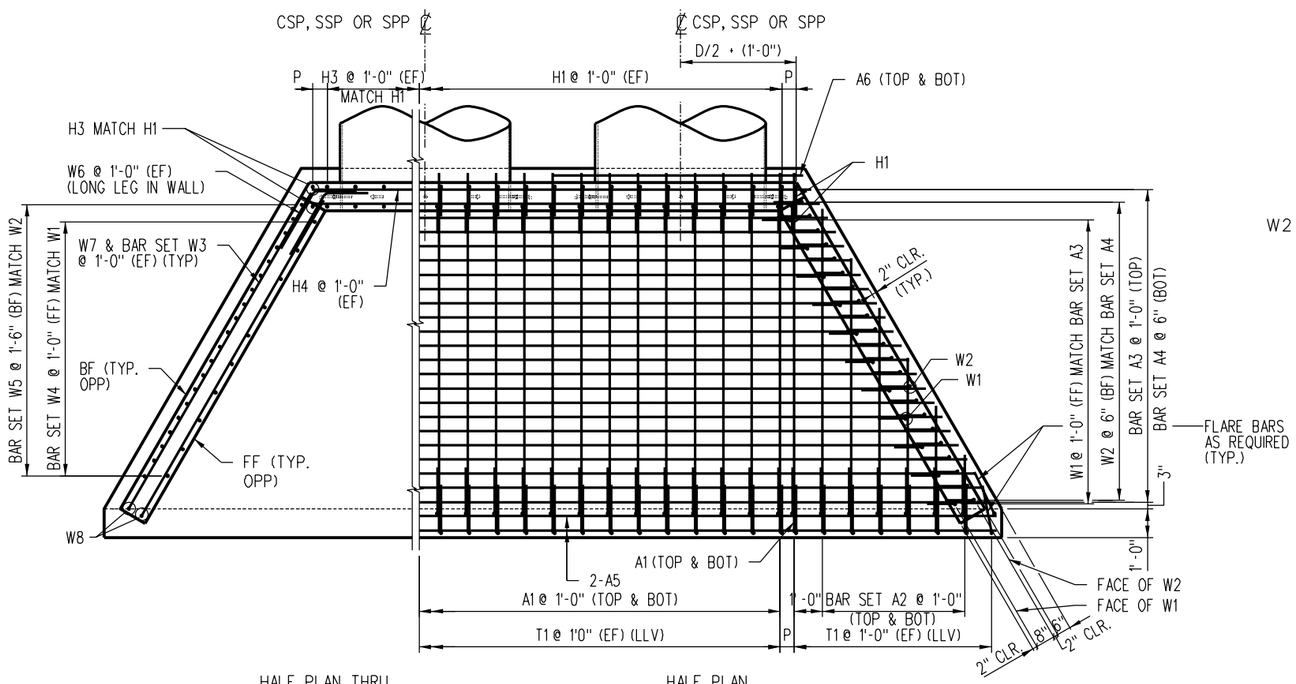

HALF PLAN THRU HEADWALL & WINGWALL

HALF PLAN AT APRON

REINFORCING PLAN
(72" DIA. PIPES SHOWN)

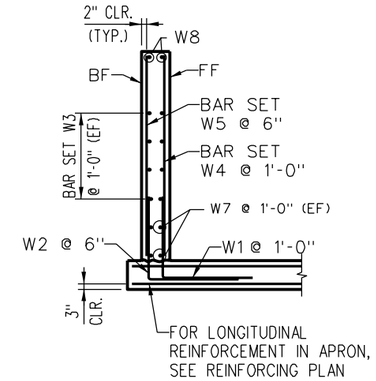

WINGWALL SECTION

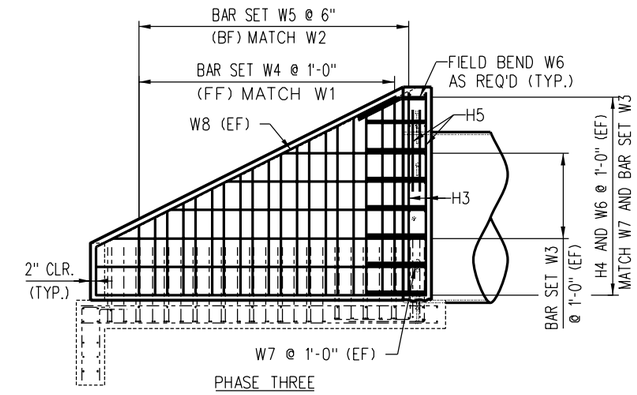

PHASE THREE

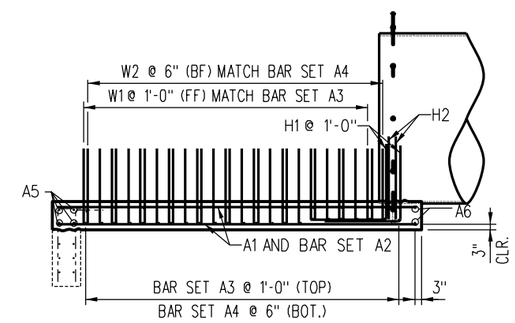

PHASE TWO

NOTE:

BF = BACK FACE
EF = EACH FACE
FF = FRONT FACE
LLV = LONG LEG VERTICAL

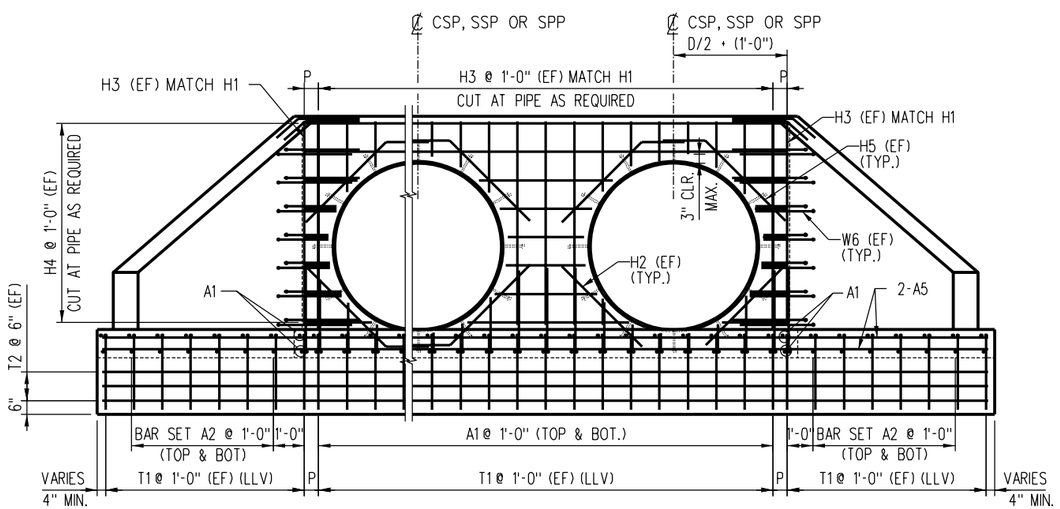

REINFORCING ELEVATION
(72" DIA. PIPES SHOWN)

NOTES:

1. REINFORCING CALLOUT CONVENTION:

   A - APRON BARS
   H - HEADWALL BARS
   T - TOEWALL BARS
   W - WINGWALL BARS

2. A2 AND W3 CAN BE EITHER SINGLE BAR OR BAR SET. W3 NOT REQUIRED IN 3'-6" HEADWALL.

3. EQUATIONS REQUIRE VARIABLES TO BE IN INCHES.

4. M = Z / 12 (ROUND M DOWN TO NEAREST INTEGER)

5. P = (Z / 2) - (6 x M) + 6 (ROUND P TO NEAREST 1/4")

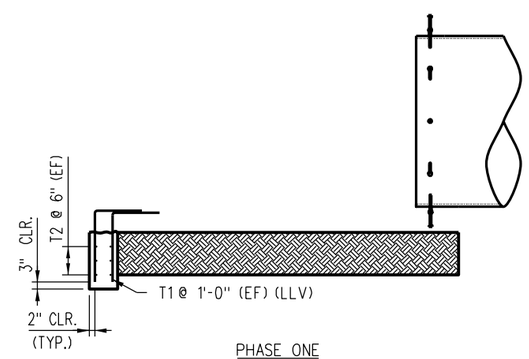

PHASE ONE

CONSTRUCTION SEQUENCE
(LOOKING PERPENDICULAR TO PIPE)
(72" DIA. PIPE SHOWN)

REV.	DATE	DESCRIPTION	DES.	ENG.
X	XX-XX-XX	REVISION	XX	XX

DRAWN BY: SCRRA DATE: 03/31/2011

ASSISTANT DIRECTOR: STANDARDS & DESIGN

DIRECTOR OF ENGINEERING AND CONSTRUCTION

SCRRA ENGINEERING STANDARDS ARE INTENDED FOR SCRRA APPROVED USES ONLY. FOR NON-SCRRA APPROVED USES: SCRRA SHALL NOT BE RESPONSIBLE FOR THE ACCURACY OR COMPLETENESS OF THE DATA OR INFORMATION CONTAINED HEREIN. THE SELECTION AND USE OF THESE STANDARDS IS THE SOLE RESPONSIBILITY OF THE USER AND SHOULD NOT BE USED WITHOUT CONSULTING A REGISTERED PROFESSIONAL ENGINEER. ALL WARRANTIES AND REPRESENTATIONS OF ANY KIND ARE DISCLAIMED. ANYONE MAKING USE OF THIS INFORMATION AGREES THAT IT ASSUMES ALL LIABILITY ARISING FROM SUCH USE. NO PART OF THESE STANDARDS SHOULD BE REPRODUCED OR DISTRIBUTED IN ANY FORM OR BY ANY MEANS WITHOUT THE PRIOR WRITTEN PERMISSION OF SCRRA. ALL RIGHTS RESERVED.

METROLINK®
SOUTHERN CALIFORNIA REGIONAL RAIL AUTHORITY
ONE GATEWAY PLAZA, 12TH FLOOR, L. A., CA. 90012

ENGINEERING STANDARDS

TYPE A–M HEADWALL
REINFORCING DETAILS

STANDARD: 6310
SCALE: NONE
REVISION: –
SHEET: 2 OF 3
CADD FILE: ES6310–02

REINFORCING SCHEDULE - 3'-6" HEADWALL

PIPE DIAMETER = 24" SIDE SLOPE = 2:1

	BAR DESIGNATION	TOTAL	MARK	SIZE	LENGTH	SHAPE
PHASE 1	T1	A	C403B	#4	4'-3"	
	T2	6		#4	Q	
PHASE 2	A1	B	D408	#5	4'-8"	
	A2	4	D304	#5	3'-4"	
	A5	4		#5	Q	
	A6	2		#5	R	
	H1	B	D504B	#5	5'-4"	
	H2	E	D309B	#5	3'-9"	
	W1	6	C504B	#4	5'-4"	
	W2	12	D504B	#5	5'-4"	
PHASE 3	H3	B	D303	#5	3'-3"	
	H4	8		#5	T	
	H5	E	D309B	#5	3'-9"	
	W6	16	D310B	#5	3'-10"	
	W7	8	D308	#5	3'-8"	
	W8	4	D505B	#5	5'-5"	

SET LIST

	BAR DESIGNATION	MARK	SIZE	MIN. LENGTH	MAX. LENGTH	INCREMENT	NO.OF BARS/SET	NO.OF SETS	SHAPE
PHASE 2	A3		#5	U	V	1'-1 7/8"(-)	4	1	
	A4		#5	U	V	6 15/16"(-)	7	1	
PHASE 3	W4	C206-C300	#4	2'-6"	3'-0"	6"	2	2	
	W5	D204-D301	#5	2'-4"	3'-1"	3"	4	2	

BENDING DIAGRAM

(DIMENSIONS ARE OUT TO OUT)

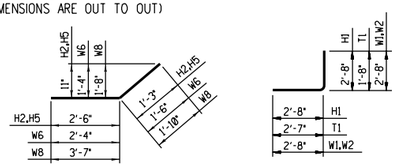

EST. WT. OF REINFORCING STEEL = 477.47 + (5.28 X Z) + (31.29 X N) LB.

REINFORCING SCHEDULE - 4'-0" HEADWALL

PIPE DIAMETER = 30" SIDE SLOPE = 2:1

	BAR DESIGNATION	TOTAL	MARK	SIZE	LENGTH	SHAPE
PHASE 1	T1	A	C403B	#4	4'-3"	
	T2	6		#4	Q	
PHASE 2	A1	B	D508	#5	5'-8"	
	A5	4		#5	Q	
	A6	2		#5	R	
	H1	B	D504B	#5	5'-4"	
	H2	E	D400B	#5	4'-0"	
	W1	8	C504B	#4	5'-4"	
	W2	16	D504B	#5	5'-4"	
PHASE 3	H3	B	D309	#5	3'-9"	
	H4	10		#5	T	
	H5	E	D400B	#5	4'-0"	
	W3	4	C400	#4	4'-0"	
	W6	20	D310B	#5	3'-10"	
	W7	8	D410	#5	4'-10"	
	W8	4	D608B	#5	6'-8"	

SET LIST

	BAR DESIGNATION	MARK	SIZE	MIN. LENGTH	MAX. LENGTH	INCREMENT	NO.OF BARS/SET	NO.OF SETS	SHAPE
PHASE 2	A2	D208-D404	#5	2'-8"	4'-4"	1'-8 13/16"(-)	2	4	
	A3		#5	U	V	1'-1 7/8"(-)	5	1	
	A4		#5	U	V	6 15/16"(-)	9	1	
PHASE 3	W4	C206-C306	#4	2'-6"	3'-6"	6"	3	2	
	W5	D204-D307	#5	2'-4"	3'-7"	3"	6	2	

BENDING DIAGRAM

(DIMENSIONS ARE OUT TO OUT)

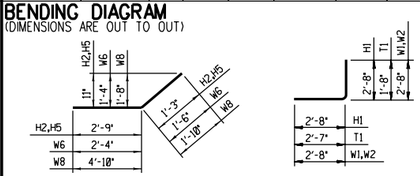

EST. WT. OF REINFORCING STEEL = 636.02 + (5.98 X Z) + (33.38 X N) LB.

REINFORCING SCHEDULE - 4'-6" HEADWALL

PIPE DIAMETER = 36" SIDE SLOPE = 2:1

	BAR DESIGNATION	TOTAL	MARK	SIZE	LENGTH	SHAPE
PHASE 1	T1	A	C403B	#4	4'-3"	
	T2	6		#4	Q	
PHASE 2	A1	B	D608	#5	6'-8"	
	A5	4		#5	Q	
	A6	2		#5	R	
	H1	B	D504B	#5	5'-4"	
	H2	E	D403B	#5	4'-3"	
	W1	10	C504B	#4	5'-4"	
	W2	20	D504B	#5	5'-4"	
PHASE 3	H3	B	D403	#5	4'-3"	
	H4	10		#5	T	
	H5	E	D403B	#5	4'-3"	
	W3	4	C502	#4	5'-2"	
	W6	20	D310B	#5	3'-10"	
	W7	8	D511	#5	5'-11"	
	W8	4	D800B	#5	8'-0"	

SET LIST

	BAR DESIGNATION	MARK	SIZE	MIN. LENGTH	MAX. LENGTH	INCREMENT	NO.OF BARS/SET	NO.OF SETS	SHAPE
PHASE 2	A2	D308-D504	#5	3'-8"	5'-4"	1'-8 13/16"(-)	2	4	
	A3		#5	U	V	1'-1 7/8"(-)	6	1	
	A4		#5	U	V	6 15/16"(-)	11	1	
PHASE 3	W4	C206-C400	#4	2'-6"	4'-0"	6"	4	2	
	W5	D204-D401	#5	2'-4"	4'-1"	3"	8	2	

BENDING DIAGRAM

(DIMENSIONS ARE OUT TO OUT)

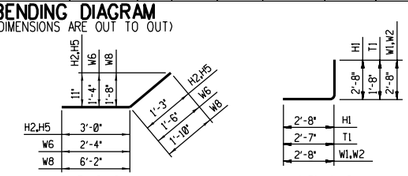

EST. WT. OF REINFORCING STEEL = 755.26 + (6.50 X Z) + (35.46 X N) LB.

REINFORCING SCHEDULE - 5'-6" HEADWALL

PIPE DIAMETER = 48" SIDE SLOPE = 2:1

	BAR DESIGNATION	TOTAL	MARK	SIZE	LENGTH	SHAPE
PHASE 1	T1	A	C403B	#4	4'-3"	
	T2	6		#4	Q	
PHASE 2	A1	B	D808	#5	8'-8"	
	A5	4		#5	Q	
	A6	2		#5	R	
	H1	B	D504B	#5	5'-4"	
	H2	E	D409B	#5	4'-9"	
	W1	14	C504B	#4	5'-4"	
	W2	28	D504B	#5	5'-4"	
PHASE 3	H3	B	D503	#5	5'-3"	
	H4	12		#5	T	
	H5	E	D409B	#5	4'-9"	
	W6	24	D310B	#5	3'-10"	
	W7	8	D803	#5	8'-3"	
	W8	4	D1006B	#5	10'-6"	

SET LIST

	BAR DESIGNATION	MARK	SIZE	MIN. LENGTH	MAX. LENGTH	INCREMENT	NO.OF BARS/SET	NO.OF SETS	SHAPE
PHASE 2	A2	D311-D704	#5	3'-11"	7'-4"	1'-8 13/16"(-)	3	4	
	A3		#5	U	V	1'-1 7/8"(-)	8	1	
	A4		#5	U	V	6 15/16"(-)	15	1	
PHASE 3	W3	C502-C705	#4	5'-2"	7'-5"	2'-3 11/16"(+)	2	4	
	W4	C206-C500	#4	2'-6"	5'-0"	6"	6	2	
	W5	D204-D501	#5	2'-4"	5'-1"	3"	12	2	

BENDING DIAGRAM

(DIMENSIONS ARE OUT TO OUT)

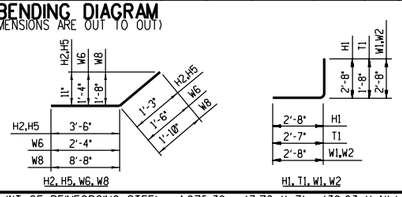

EST. WT. OF REINFORCING STEEL = 1,075.39 + (7.72 X Z) + (39.63 X N) LB.

REINFORCING SCHEDULE - 6'-6" HEADWALL

PIPE DIAMETER = 60" SIDE SLOPE = 2:1

	BAR DESIGNATION	TOTAL	MARK	SIZE	LENGTH	SHAPE
PHASE 1	T1	A	C403B	#4	4'-3"	
	T2	6		#4	Q	
PHASE 2	A1	B	D1008	#5	10'-8"	
	A5	4		#5	Q	
	A6	2		#5	R	
	H1	B	D504B	#5	5'-4"	
	H2	E	D503B	#5	5'-3"	
	W1	18	C504B	#4	5'-4"	
	W2	36	D504B	#5	5'-4"	
PHASE 3	H3	B	D603	#5	6'-3"	
	H4	14		#5	T	
	H5	E	D503B	#5	5'-3"	
	W6	28	D310B	#5	3'-10"	
	W7	8	D1007	#5	10'-7"	
	W8	4	D1300B	#5	13'-0"	

SET LIST

	BAR DESIGNATION	MARK	SIZE	MIN. LENGTH	MAX. LENGTH	INCREMENT	NO.OF BARS/SET	NO.OF SETS	SHAPE
PHASE 2	A2	D205-D904	#5	2'-5"	9'-4"	1'-8 13/16"(-)	5	4	
	A3		#5	U	V	1'-1 7/8"(-)	10	1	
	A4		#5	U	V	6 15/16"(-)	19	1	
PHASE 3	W3	C502-C909	#4	5'-2"	9'-9"	2'-3 11/16"(+)	3	4	
	W4	C206-C600	#4	2'-6"	6'-0"	6"	8	2	
	W5	D204-D601	#5	2'-4"	6'-1"	3"	16	2	

BENDING DIAGRAM

(DIMENSIONS ARE OUT TO OUT)

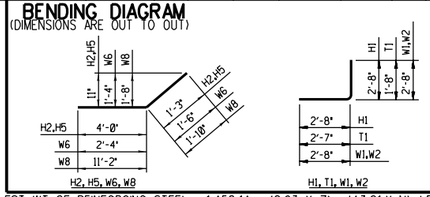

EST. WT. OF REINFORCING STEEL = 1,458.14 + (8.93 X Z) + (43.81 X N) LB.

REINFORCING SCHEDULE - 7'-6" HEADWALL

PIPE DIAMETER = 72" SIDE SLOPE = 2:1

	BAR DESIGNATION	TOTAL	MARK	SIZE	LENGTH	SHAPE
PHASE 1	T1	A	C403B	#4	4'-3"	
	T2	6		#4	Q	
PHASE 2	A1	B	D1208	#5	12'-8"	
	A5	4		#5	Q	
	A6	2		#5	R	
	H1	B	D504B	#5	5'-4"	
	H2	E	D509B	#5	5'-9"	
	W1	22	C504B	#4	5'-4"	
	W2	44	D504B	#5	5'-4"	
PHASE 3	H3	B	D703	#5	7'-3"	
	H4	16		#5	T	
	H5	E	D509B	#5	5'-9"	
	W6	32	D310B	#5	3'-10"	
	W7	8	D1211	#5	12'-11"	
	W8	4	D1506B	#5	15'-6"	

SET LIST

	BAR DESIGNATION	MARK	SIZE	MIN. LENGTH	MAX. LENGTH	INCREMENT	NO.OF BARS/SET	NO.OF SETS	SHAPE
PHASE 2	A2	D208-D1104	#5	2'-8"	11'-4"	1'-8 13/16"(-)	6	4	
	A3		#5	U	V	1'-1 7/8"(-)	12	1	
	A4		#5	U	V	6 15/16"(-)	23	1	
PHASE 3	W3	C502-C1201	#4	5'-2"	12'-1"	2'-3 11/16"(+)	4	4	
	W4	C206-C700	#4	2'-6"	7'-0"	6"	10	2	
	W5	D204-D701	#5	2'-4"	7'-1"	3"	20	2	

BENDING DIAGRAM

(DIMENSIONS ARE OUT TO OUT)

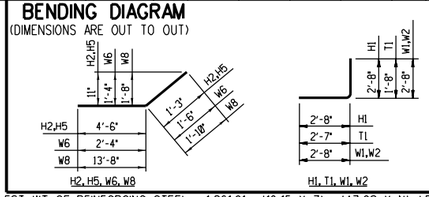

EST. WT. OF REINFORCING STEEL = 1,861.91 + (10.15 X Z) + (47.98 X N) LB.

CONCRETE QUANTITIES

H	TOEWALL CU. YD.	APRON CU. YD.	HEADWALL & WINGWALLS CU. YD.	TOTAL CU. YD.
3'-6"	0.471 +(0.006 x Z)	0.834 + (0.016 x Z)	0.856 + (0.011 x Z)	2.17 + (0.033 x Z)
4'-0"	0.556 +(0.006 x Z)	1.134 + (0.019 x Z)	1.198 + (0.012 x Z)	2.89 + (0.037 x Z)
4'-6"	0.642 +(0.006 x Z)	1.476 + (0.022 x Z)	1.583 + (0.014 x Z)	3.70 + (0.042 x Z)
5'-6"	0.813 +(0.006 x Z)	2.289 + (0.028 x Z)	2.481 + (0.017 x Z)	5.59 + (0.051 x Z)
6'-6"	0.984 +(0.006 x Z)	3.272 + (0.034 x Z)	3.550 + (0.020 x Z)	7.81 + (0.060 x Z)
7'-6"	1.155 +(0.006 x Z)	4.427 + (0.040 x Z)	4.790 + (0.023 x Z)	10.38 + (0.069 x Z)

EQUATIONS FOR VARIABLES:

D = PIPE DIAMETER (INCHES)
N = NUMBER OF PIPES
S = SPACING BETWEEN ADJACENT PIPES (INCHES)
SS = SIDE SLOPE (RUN PER FOOT OF RISE)

HEADWALL DIMENSIONS

Y = SS x (H - 24)
Z = ΣD + ΣS + 12
= (N x D) + [S x (N - 1)] + 12 (FOR CONSTANT D AND S)
XL = Z + (1.155 x Y)
W = XL + 34.641
DIMENSIONS ARE IN INCHES.
ROUND DIMENSIONS TO NEAREST 1/8".

TOTAL NUMBER OF BARS

A = (2 x M) + (4 x TB) + 10
B = (2 x M) + 6
E = 4 x N
M = Z / 12
TB = [(W - Z) / 24] - 1.510
ROUND NUMBER OF BARS DOWN TO NEAREST INTEGER.

LENGTH OF BARS

Q = W - 4
R = Z + 19.63
T = Z + 12.63
U = Z + 26.556
V = W - 8.083
BAR LENGTHS ARE IN INCHES.
ROUND BAR LENGTHS DOWN TO NEAREST WHOLE INCH.

FOR VALUES OF H, D AND Y, SEE FRAMING DETAILS, SHEET NO. AM1.

REINFORCING BAR LEGEND:

A - APRON BARS
H - HEADWALL BARS
T - TOEWALL BARS
W - WINGWALL BARS

A2 AND W3 CAN BE EITHER SINGLE BAR OR BAR SET.
W3 NOT REQUIRED IN 3'-6" HEADWALL.

NOTES:

1. QUANTITIES ARE FOR ONE HEADWALL ONLY.
2. BAR DESIGNATIONS CONSIST OF BAR SIZE & LENGTH FOLLOWED BY THE LETTER "B" IF BENT. BAR SIZES ARE REPRESENTED BY THE LETTERS A THROUGH L CORRESPONDING TO BAR SIZE #2 THROUGH #18. BAR LENGTHS ARE GIVEN IN FEET AND INCHES; THE LAST TWO DIGITS ARE INCHES.
3. CONCRETE VOLUME FOR HEADWALL ASSUMES SOLID WALL WITHOUT A PIPE. TO DETERMINE REQUIRED CONCRETE QUANTITY, SUBTRACT THE APPLICABLE PIPE VOLUME AS FOLLOWS:

24" DIA. = 0.11 CU. YD.
30" DIA. = 0.18 CU. YD.
36" DIA. = 0.26 CU. YD.
48" DIA. = 0.46 CU. YD.
60" DIA. = 0.72 CU. YD.
72" DIA. = 1.04 CU. YD.

REV.	DATE	DESCRIPTION	DES.	ENG.
X	XX-XX-XX	REVISION	XX	XX

DRAWN BY: SCRRA DATE: 03/31/2011

ASSISTANT DIRECTOR: STANDARDS & DESIGN

DIRECTOR OF ENGINEERING AND CONSTRUCTION

SCRRA ENGINEERING STANDARDS ARE INTENDED FOR SCRRA APPROVED USES ONLY. FOR NON-SCRRA APPROVED USES: SCRRA SHALL NOT BE RESPONSIBLE FOR THE ACCURACY OR COMPLETENESS OF THE DATA OR INFORMATION CONTAINED HEREIN. THE SELECTION AND USE OF THESE STANDARDS IS THE SOLE RESPONSIBILITY OF THE USER AND SHOULD NOT BE USED WITHOUT CONSULTING A REGISTERED PROFESSIONAL ENGINEER. ALL WARRANTIES AND REPRESENTATIONS OF ANY KIND ARE DISCLAIMED. ANYONE MAKING USE OF THIS INFORMATION AGREES THAT IT ASSUMES ALL LIABILITY ARISING FROM SUCH USE. NO PART OF THESE STANDARDS SHOULD BE REPRODUCED OR DISTRIBUTED IN ANY FORM OR BY ANY MEANS WITHOUT THE PRIOR WRITTEN PERMISSION OF SCRRA. ALL RIGHTS RESERVED.

METROLINK®
SOUTHERN CALIFORNIA REGIONAL RAIL AUTHORITY
ONE GATEWAY PLAZA, 12TH FLOOR, L. A., CA. 90012

ENGINEERING STANDARDS

TYPE A-M HEADWALL
REINFORCING SCHEDULE

STANDARD 6310
SCALE: NONE
REVISION –
SHEET 3 OF 3
CADD FILE: ES6310-03

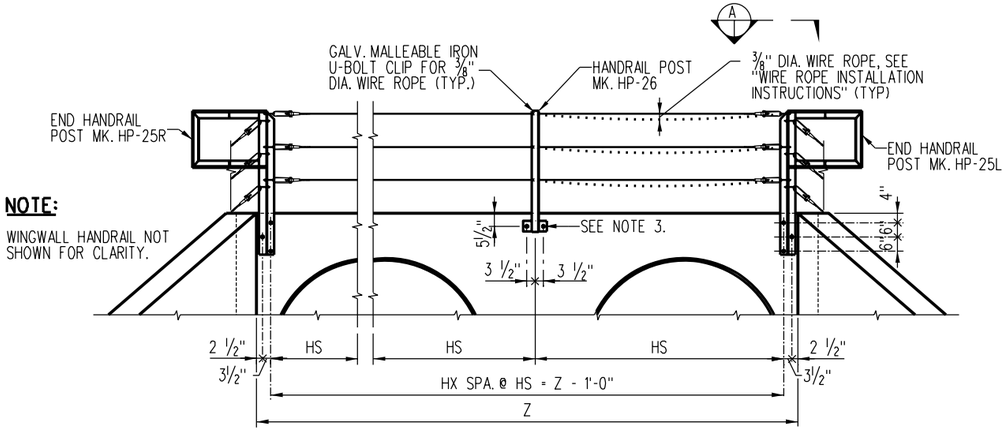

NOTE:

WINGWALL HANDRAIL NOT SHOWN FOR CLARITY.

HEADWALL HANDRAIL LAYOUT

SCALE: 1/2"=1'-0"

WINGWALL HANDRAIL LAYOUT

SCALE: 1/2"=1'-0"

(LOOKING PERPENDICULAR TO FACE OF WINGWALL)

HEADWALL NOTES:

1. VARIABLE "Z" IS AS DEFINED BY HEADWALL FRAMING DETAILS.
2. HX = NUMBER OF HANDRAIL SPACES ON HEADWALL
   = (Z - 12) / 120 (ROUND UP TO NEXT WHOLE NUMBER)
3. HS = HANDRAIL SPACING ON HEADWALL (INCHES)
   = (Z - 12) / HX
4. HRL = WIRE ROPE LENGTH FOR HEADWALL (INCHES)
   = Z + 60 (ROUND UP TO NEXT WHOLE NUMBER)
5. BL = BOLT LENGTH
   = 14" (TYPE A-1, A-2, A-3 AND A-M)
   = 17" (TYPE D-1, D-M)

WINGWALL NOTES:

1. VARIABLE "Y" IS AS DEFINED BY HEADWALL FRAMING DETAILS.
2. LW = LENGTH OF WINGWALL (INCHES)
   = 1.155 x Y
3. WX = NUMBER OF HANDRAIL SPACES ON WINGWALL
   = (LW - 12) / 120 (ROUND UP TO NEXT WHOLE NUMBER)
4. WS = HANDRAIL SPACING ON WINGWALL (INCHES)
   = (LW - 12) / WX
5. WRL = WIRE ROPE LENGTH FOR WINGWALL (INCHES)
   = (1.09 x LW) + 60 (ROUND UP TO NEXT WHOLE NUMBER)
6. BL = BOLT LENGTH
   = 14" (TYPE A-1, A-2, A-3 AND A-M)
   = 17" (TYPE D-1, D-M)

WIRE ROPE INSTALLATION INSTRUCTIONS:

1. THREAD WIRE ROPE THROUGH ALL CLIPS AND BARREL ANCHORS AND SEAT RETAINING WEDGES ON ONE END HANDRAIL POST.
2. STRETCH WIRE ROPE, HANG A MINIMUM OF 10 LB. ON CABLE BETWEEN TWO POSTS AND REMOVE ALL SAG TO A MAXIMUM OF 2 INCHES.
3. SEAT RETAINING WEDGES AT REMAINING END HANDRAIL POST.
4. REMOVE WEIGHTS.
5. TIGHTEN CLIPS AT INTERMEDIATE POSTS.
6. CUT & REMOVE EXCESS WIRE ROPE, COAT CUT PORTIONS OF WIRE ROPE WITH COLD GALVANIZING COMPOUND.

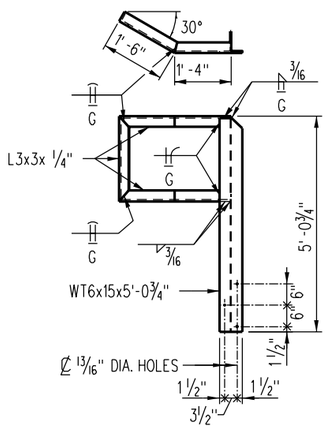

HANDRAIL POST MK. HP-25L

SCALE: 3/4"=1'-0"

EST. WT. = 113 LB. EACH
GALVANIZE AFTER FABRICATION

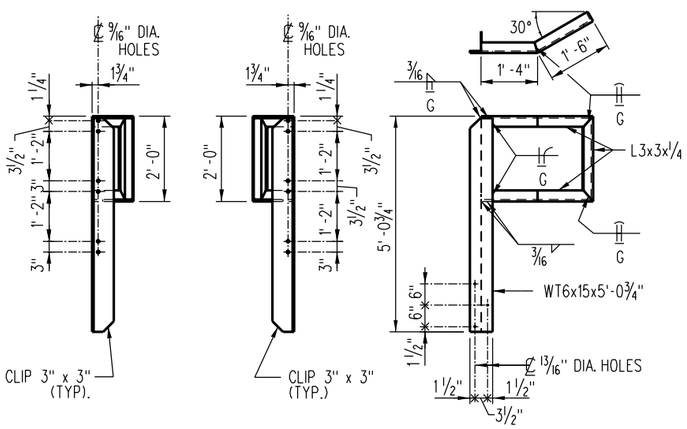

HANDRAIL POST MK. HP-25R

SCALE: 3/4"=1'-0"

EST. WT. = 113 LB. EACH
GALVANIZE AFTER FABRICATION

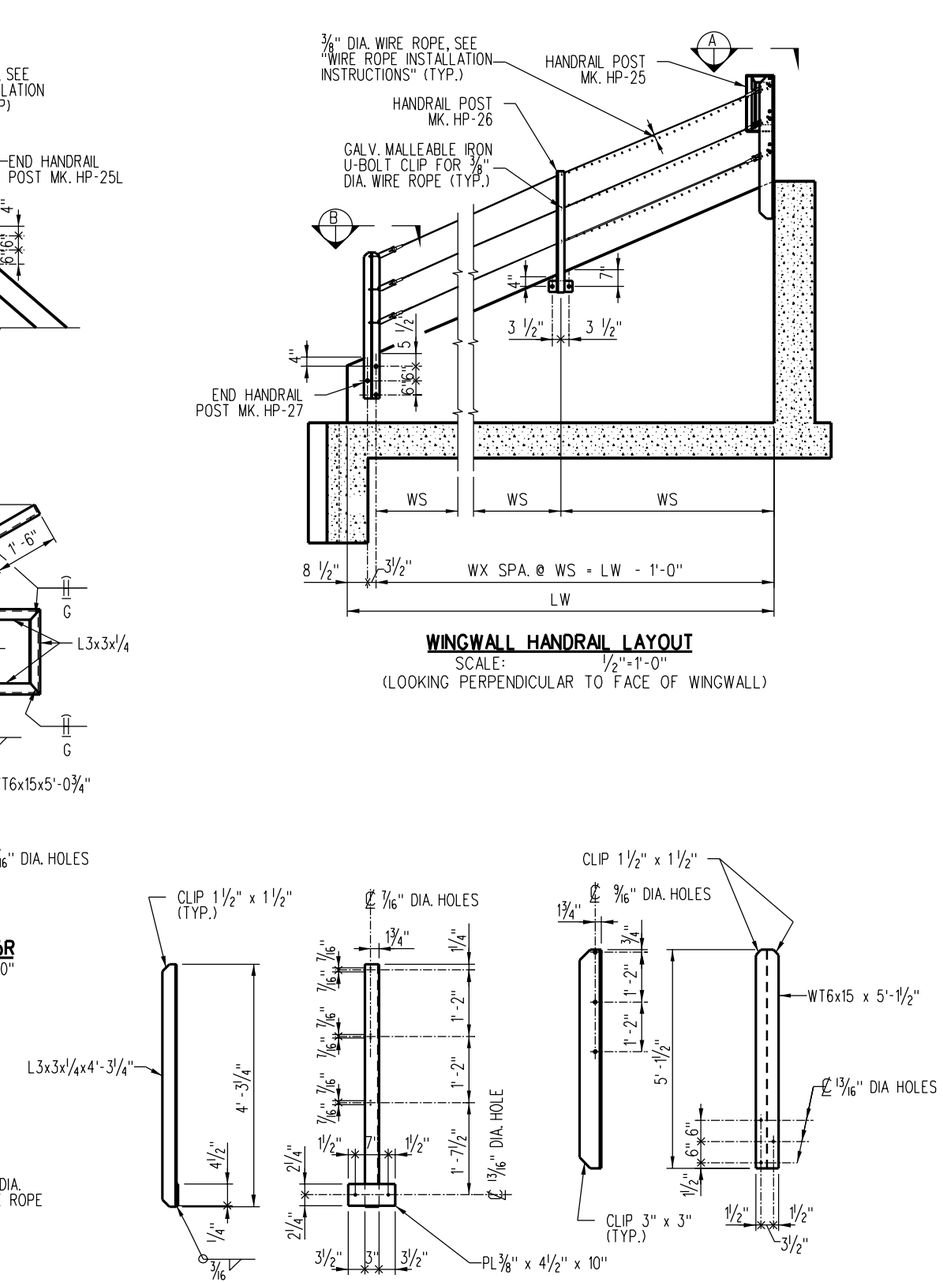

HANDRAIL POST MK. HP-26

SCALE: 1"=1'-0"

EST. WT. = 25.7 LB. EACH
GALVANIZE AFTER FABRICATION

HANDRAIL POST MK. HP-27

SCALE: 3/4"=1'-0"

EST. WT. = 76.9 LB. EACH
GALVANIZE AFTER FABRICATION

STEEL SPECIFICATIONS:

DESIGN AND WORKMANSHIP - PER CURRENT AREMA MANUAL FOR RAILWAY ENGINEERING.
MISCELLANEOUS STEEL - PER CURRENT ASTM A36 SPECIFICATIONS UNLESS OTHERWISE NOTED.
STEEL COATING - PICKLE PER SSPC NO. 8 AND HOT-DIPPED GALVANIZED PER CURRENT ASTM A123.
COATING WEIGHT 2.3 OZ. PER SQ. FT. BOLTS AND NUTS TO BE ZINC COATED.
WELDING - SAW OR SMAW PROCESS PER CURRENT AREMA MANUAL FOR RAILROAD ENGINEERING AND AWS D1.1 STRUCTURAL WELDING CODE.

NOTES:

1. FOR HANDRAIL POLICY, SEE SHEET ES6301.
2. FIELD DRILL OR CAST 7/8" DIA. HOLE AND INSTALL 3/4" DIA. x BL A307 BOLT WITH WASHER AND LOCKNUT (TYP.)

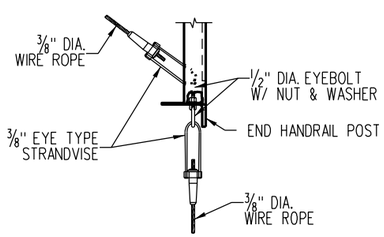

VIEW A
SCALE: 1 1/2"=1'-0"

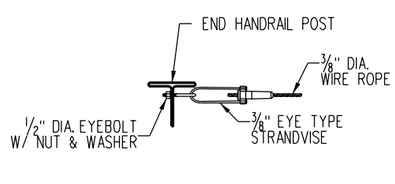

VIEW B
SCALE: 1 1/2"=1'-0"

X	XX-XX-XX	REVISION	XX	XX
REV.	DATE	DESCRIPTION	DES.	ENG.

DRAWN BY: SCRRA DATE: 03/31/2011

ASSISTANT DIRECTOR: STANDARDS & DESIGN

DIRECTOR OF ENGINEERING AND CONSTRUCTION

SCRRA ENGINEERING STANDARDS ARE INTENDED FOR SCRRA APPROVED USES ONLY. FOR NON-SCRRA APPROVED USES:
SCRRA SHALL NOT BE RESPONSIBLE FOR THE ACCURACY OR COMPLETENESS OF THE DATA OR INFORMATION CONTAINED HEREIN. THE SELECTION AND USE OF THESE STANDARDS IS THE SOLE RESPONSIBILITY OF THE USER AND SHOULD NOT BE USED WITHOUT CONSULTING A REGISTERED PROFESSIONAL ENGINEER. ALL WARRANTIES AND REPRESENTATIONS OF ANY KIND ARE DISCLAIMED. ANYONE MAKING USE OF THIS INFORMATION AGREES THAT IT ASSUMES ALL LIABILITY ARISING FROM SUCH USE. NO PART OF THESE STANDARDS SHOULD BE REPRODUCED OR DISTRIBUTED IN ANY FORM OR BY ANY MEANS WITHOUT THE PRIOR WRITTEN PERMISSION OF SCRRA. ALL RIGHTS RESERVED.

METROLINK®
SOUTHERN CALIFORNIA REGIONAL RAIL AUTHORITY
ONE GATEWAY PLAZA, 12TH FLOOR, L. A., CA. 90012

ENGINEERING STANDARDS

HANDRAIL LAYOUT AND DETAILS

STANDARD 6330
SCALE: AS NOTED
REVISION –
SHEET 1 OF 1
CADD FILE: ES6330

TABLE 1 - ROUND SMOOTH STEEL PIPE (SSP)					
OUTSIDE PIPE DIAMETER	THICKNESS (IN.)	WEIGHT (LB./FT.)	COVER *		20'-0" LENGTH
			MIN. (FT.)	MAX (FT.)	WEIGHT (LB.)
12"	3/16	24	1'-6"	18'-0"	480
18"	1/4	48	1'-6"	18'-0"	960
21"	5/16	69	1'-6"	18'-0"	1,380
24"	5/16	80	1'-6"	18'-0"	1,600
30"	3/8	119	1'-6"	18'-0"	2,380
36"	1/2	190	1'-6"	18'-0"	3,800
42"	1/2	222	1'-6"	18'-0"	4,440
48"	5/8	317	1'-6"	18'-0"	6,340
60"	3/4	475	1'-6"	18'-0"	9,500
72"	7/8	666	1'-6"	18'-0"	13,320
* COVER TO BE MEASURED FROM BASE OF RAIL TO TOP OF PIPE					

TABLE 2 - ROUND CORRUGATED STEEL PIPE (CSP)							
INSIDE PIPE DIAMETER	GAGE	THICKNESS (IN.)	WEIGHT (LB./FT.)	COVER *		20'-0" LENGTH	CONNECTING BANDS
				MIN. (FT.)	MAX. (FT.)	WEIGHT (LB.)	GAGE
12"	14	0.079	12	1'-6"	18'-0"	240	16
18"	14	0.079	18	1'-6"	18'-0"	360	16
21"	14	0.079	21	1'-6"	18'-0"	420	16
24"	14	0.079	24	1'-6"	18'-0"	480	16
30"	14	0.079	30	1'-6"	18'-0"	600	16
36"	14	0.079	41	2'-6"	18'-0"	820	16
42"	14	0.079	47	2'-6"	18'-0"	940	16
48"	12	0.109	74	2'-6"	18'-0"	1,480	14
60"	12	0.109	92	2'-6"	18'-0"	1,840	14
72"	10	0.138	140	3'-6"	18'-0"	2,800	12
* COVER TO BE MEASURED FROM BASE OF RAIL TO TOP OF PIPE							

CONSTRUCTION NOTES

GENERAL:

THESE STRUCTURES ARE DESIGNED FOR COOPER E80 LIVE LOAD WITH IMPACT, AND COVER AS SHOWN IN TABLE 1 AND TABLE 2.

TABLE 1 INDICATES THE MINIMUM REQUIRED THICKNESS FOR STRUCTURAL STABILITY.

INSTALLATION:

INSTALLATION OF SMOOTH STEEL PIPE (SSP) SHALL CONFORM TO THE CURRENT AMERICAN RAILWAY ENGINEERING AND MAINTENANCE-OF-WAY ASSOCIATION (AREMA) MANUAL FOR RAILWAY ENGINEERING, CHAPTER 1, PART 4. CULVERT LENGTHS ARE TO BE BASED ON STANDARD MAINLINE ROADBED SECTIONS.

MATERIALS:

PIPE SHALL BE IN ACCORDANCE WITH ASTM INTERNATIONAL A139. PIPE TO BE GRADE B AND STEEL SHALL HAVE A MINIMUM YIELD STRENGTH OF 35 KSI. A HYDROSTATIC TEST IS NOT REQUIRED.

SMOOTH STEEL PIPE SHALL HAVE A WELDED STRAIGHT LONGITUDINAL SEAM. THE ENDS OF EACH SECTION OF PIPE SHALL BE SQUARE CUT. ONE END SHALL BE SUITABLY BEVELED FOR FIELD WELDING SECTIONS TOGETHER.

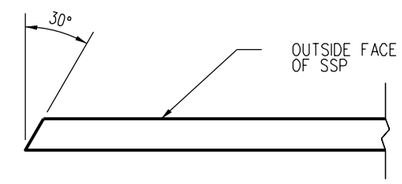

PIPE END BEVEL DETAIL

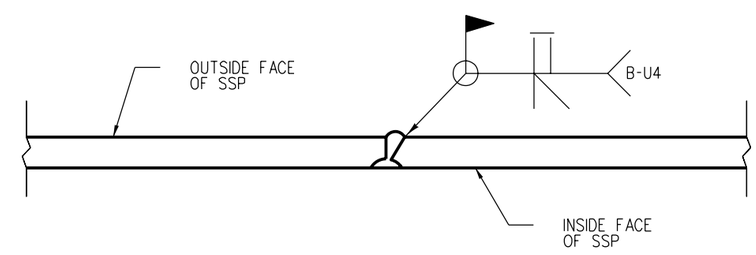

PIPE END WELD DETAIL

REV.	DATE	DESCRIPTION	DES.	ENG.
X	XX-XX-XX	REVISION	XX	XX

DRAWN BY: SCRRA DATE: 03/31/2011

ASSISTANT DIRECTOR: STANDARDS & DESIGN

DIRECTOR OF ENGINEERING AND CONSTRUCTION

SCRRA ENGINEERING STANDARDS ARE INTENDED FOR SCRRA APPROVED USES ONLY. FOR NON-SCRRA APPROVED USES:
SCRRA SHALL NOT BE RESPONSIBLE FOR THE ACCURACY OR COMPLETENESS OF THE DATA OR INFORMATION CONTAINED HEREIN. THE SELECTION AND USE OF THESE STANDARDS IS THE SOLE RESPONSIBILITY OF THE USER AND SHOULD NOT BE USED WITHOUT CONSULTING A REGISTERED PROFESSIONAL ENGINEER. ALL WARRANTIES AND REPRESENTATIONS OF ANY KIND ARE DISCLAIMED. ANYONE MAKING USE OF THIS INFORMATION AGREES THAT IT ASSUMES ALL LIABILITY ARISING FROM SUCH USE. NO PART OF THESE STANDARDS SHOULD BE REPRODUCED OR DISTRIBUTED IN ANY FORM OR BY ANY MEANS WITHOUT THE PRIOR WRITTEN PERMISSION OF SCRRA. ALL RIGHTS RESERVED.

METROLINK®
SOUTHERN CALIFORNIA REGIONAL RAIL AUTHORITY
ONE GATEWAY PLAZA, 12TH FLOOR, L. A., CA. 90012

ENGINEERING STANDARDS

CONSTRUCTION NOTES AND TABLE FOR SMOOTH AND CORRUGATED STEEL PIPE CULVERTS

STANDARD 6340
SCALE: NONE
REVISION –
SHEET 1 OF 1
CADD FILE: ES6340

DISCLAIMER

SCRRA Engineering Standards are intended for SCRRA approved uses only. FOR NON-SCRRA APPROVED USES: SCRRA and its member agencies, directors, officers, employees and/or agents shall not be responsible for the accuracy or completeness of the data or information contained herein. The selection and use of these standards, while designed in accordance with generally accepted engineering principles and practices, is the sole responsibility of the user and should not be used without consulting a registered professional engineer. All warranties and representations of any kind are disclaimed. Anyone making use of this information agrees that it assumes all liability arising from such use. No part of these standards should be reproduced or distributed in any form or by any means without the prior written permission of SCRRA. All rights reserved.

Since revisions or additions to the engineering standards may occur at any time, the user agrees to indemnify, defend, by counsel satisfactory to SCRRA and Member Agency, and hold harmless SCRRA, Member Agencies, and Operating Railroad, and their respective officers, commissioners, employees, agents, successors and assigns. ("Indemnitees"), and each of them to the maximum extent allowed by law, from and against all loss, liability, claims, demands, suits, liens, claims of lien, damages (including incidental consequential damages), costs and expenses (including, without limitation, any fines, penalties, judgments, actual litigation expenses and experts' and actual attorneys' fees), that are incurred by or asserted against Indemnitees arising out of or connected in any manner with the user's use of outdated engineering standards.

Updating the contents of the manual is a continued process, and revisions/replacements are issued periodically. Questions, comments, and proposed recommendations for changes may be sent to SCRRA at 279 E. Arrow Highway, Suite A, San Dimas, CA 91773.

NOTES:

1. SIDE BARRIERS SHALL BE MAINTAINED IN PLACE EXCEPT MAY BE REMOVED WHEN ROLLING STOCK IS ON THE PIT TRACK. BARRIERS ARE TO BE REPLACED BEFORE ROLLING STOCK IS REMOVED FROM THE PIT TRACK.
2. WALKWAYS SHALL BE MAINTAINED AND KEPT FREE FROM VEGETATION.
3. IF PHYSICAL CONDITIONS REQUIRE THE MINIMUM REQUIRED WALKWAY WIDTH FOR NO. 1 TYPE WALKWAYS MAY BE REDUCED TO 2' MINIMUM UPON APPROVAL OF THE SCRRA DIRECTOR OF ENGINEERING & CONSTRUCTION.
4. FOR DETAILS OF STANDARD ROADBED SECTIONS REFER TO ES2001 & ES2002.
5. BALLAST SHOULDER SHALL BE 9" FOR TIES 9'-0" OR GREATER IN LENGTH AND SHALL BE 12" FOR TIES LESS THAN 9'-0" IN LENGTH.

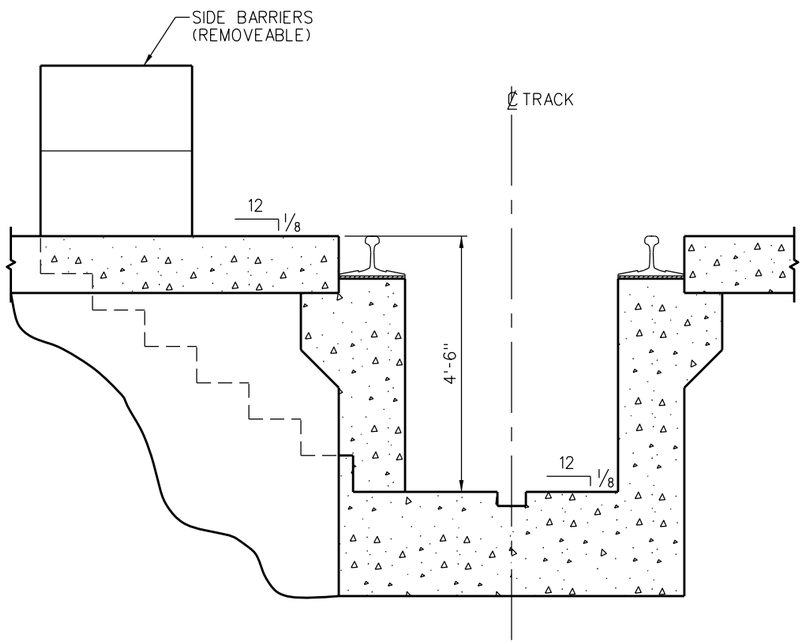

DROP PITS

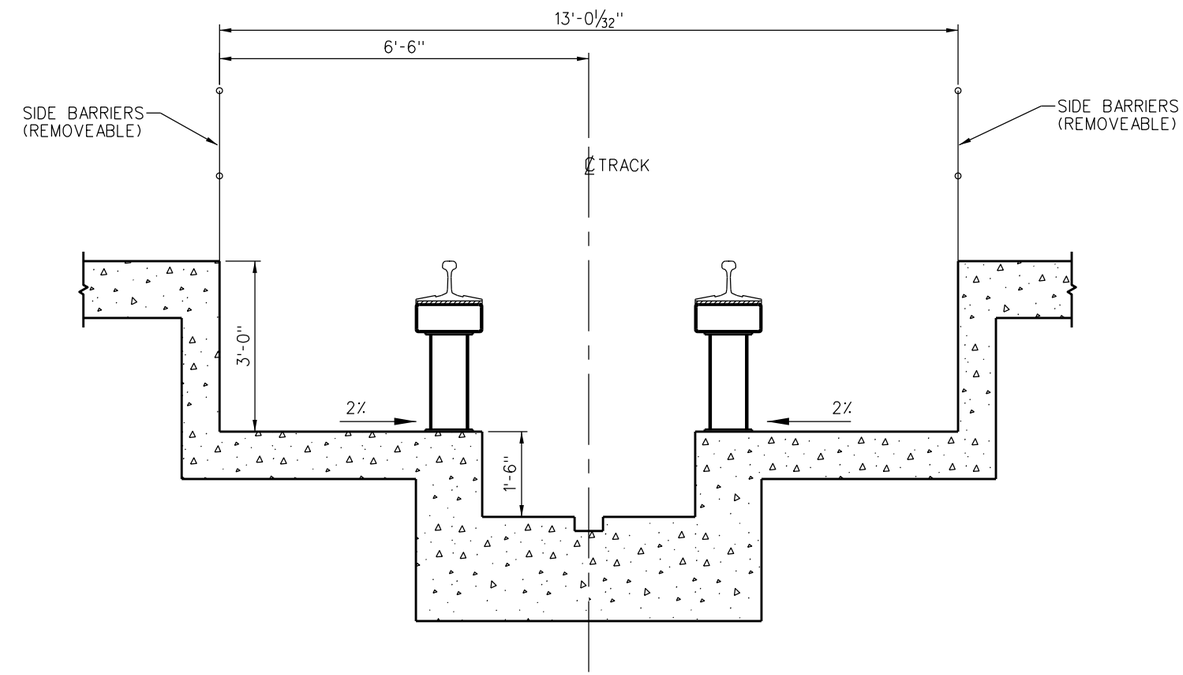

INSPECTION PITS

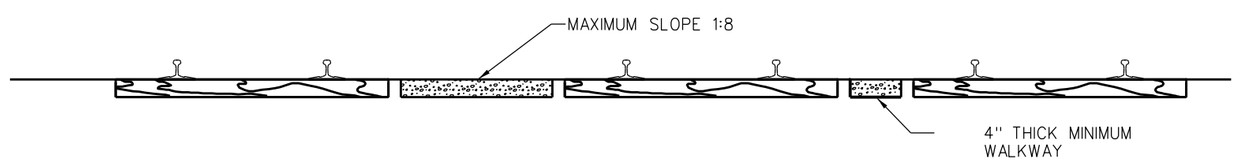

TYPICAL YARD TRACKS AT ENTRANCES TO BUILDINGS

REV.	DATE	DESCRIPTION	DES.	ENG.
X	XX-XX-XX	REVISION	XX	XX

DRAWN BY: A. CARLOS DATE: 03/31/2011

ASSISTANT DIRECTOR: STANDARDS & DESIGN

DIRECTOR OF ENGINEERING AND CONSTRUCTION

SCRRA ENGINEERING STANDARDS ARE INTENDED FOR SCRRA APPROVED USES ONLY. FOR NON-SCRRA APPROVED USES:
SCRRA SHALL NOT BE RESPONSIBLE FOR THE ACCURACY OR COMPLETENESS OF THE DATA OR INFORMATION CONTAINED HEREIN. THE SELECTION AND USE OF THESE STANDARDS IS THE SOLE RESPONSIBILITY OF THE USER AND SHOULD NOT BE USED WITHOUT CONSULTING A REGISTERED PROFESSIONAL ENGINEER. ALL WARRANTIES AND REPRESENTATIONS OF ANY KIND ARE DISCLAIMED. ANYONE MAKING USE OF THIS INFORMATION AGREES THAT IT ASSUMES ALL LIABILITY ARISING FROM SUCH USE. NO PART OF THESE STANDARDS SHOULD BE REPRODUCED OR DISTRIBUTED IN ANY FORM OR BY ANY MEANS WITHOUT THE PRIOR WRITTEN PERMISSION OF SCRRA. ALL RIGHTS RESERVED.

METROLINK®
SOUTHERN CALIFORNIA REGIONAL RAIL AUTHORITY
ONE GATEWAY PLAZA, 12TH FLOOR, L. A., CA. 90012

ENGINEERING STANDARDS

WALKWAY CLEARANCE FOR FACILITIES WITH UNDER TRACK PITS

STANDARD: 7001
SCALE: NONE
REVISION: –
SHEET: 1 OF 2
CADD FILE: ES7001-01

NOTES:

1. IN ALL CASES LATERAL CLEARANCE AND TRACK SPACING WILL MATCH CPUC G.O. 26-D EXCEPT ES7001 AND INSPECTION PITS.
2. WALKWAYS SHALL BE MAINTAINED AND KEPT FREE FROM VEGETATION.
3. IF PHYSICAL CONDITIONS REQUIRE, THE MINIMUM REQUIRED WALKWAY WIDTH FOR NO. 1 TYPE WALKWAYS MAY BE REDUCED TO 2' MINIMUM UPON APPROVAL OF THE SCRRA DIRECTOR OF ENGINEERING & CONSTRUCTION.
4. FOR DETAILS OF SCRRA STANDARD ROADBED SECTIONS REFER TO ES2001 & ES2002.
5. BALLAST SHOUDER SHALL BE 9" FOR TIES 9'-0" OR GREATER IN LENGTH AND SHALL BE 12" FOR TIES LESS THAN 9'0" IN LENGTH.
6. WHERE PAVING IS USED WITH IN THE WALKWAY AREAS IT SHALL CONFORM TO THE DIMENSIONS AND SLOPES SHOWN FOR CRUSHED ROCK WALKWAYS.
7. ROCKWAY ROCK SHALL BE CRUSHED ROCK IN COFORMANCE WITH AREMA STANDARDS.

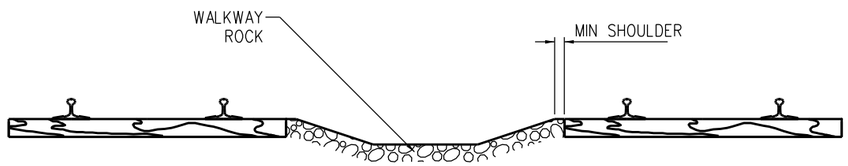

TYPICAL TRACK CONFIGURATION STORAGE TRACKS

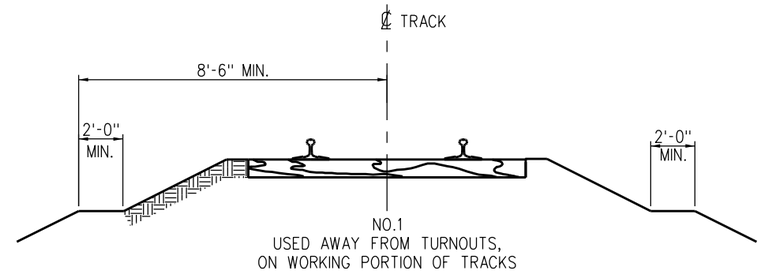

GENERAL WALKWAY PER CALIFORNIA P.U.C. STANDARD 1

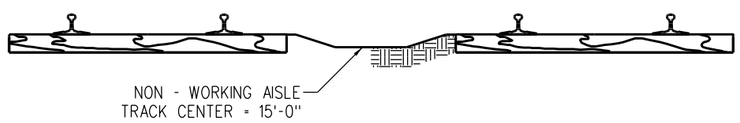

TYPICAL TRACK CONFIGURATION STORAGE TRACKS

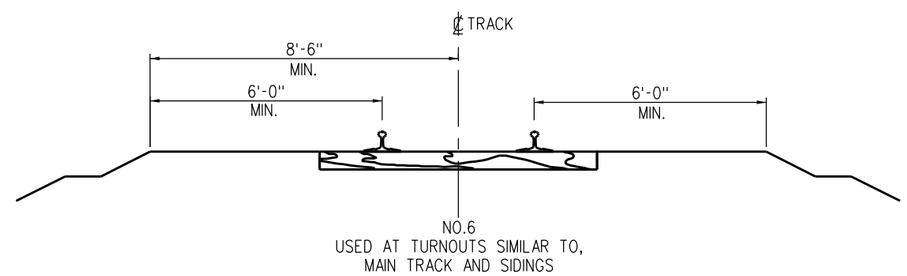

WALKWAY AT TURNOUTS AND CAR SPOTS PER C.P.U.C. STANDARD 6

REV.	DATE	DESCRIPTION	DES.	ENG.
X	XX-XX-XX	REVISION	XX	XX

DRAWN BY: A. CARLOS DATE: 03/31/2011

ASSISTANT DIRECTOR: STANDARDS & DESIGN

DIRECTOR OF ENGINEERING AND CONSTRUCTION

SCRRA ENGINEERING STANDARDS ARE INTENDED FOR SCRRA APPROVED USES ONLY. FOR NON-SCRRA APPROVED USES:
SCRRA SHALL NOT BE RESPONSIBLE FOR THE ACCURACY OR COMPLETENESS OF THE DATA OR INFORMATION CONTAINED HEREIN. THE SELECTION AND USE OF THESE STANDARDS IS THE SOLE RESPONSIBILITY OF THE USER AND SHOULD NOT BE USED WITHOUT CONSULTING A REGISTERED PROFESSIONAL ENGINEER. ALL WARRANTIES AND REPRESENTATIONS OF ANY KIND ARE DISCLAIMED. ANYONE MAKING USE OF THIS INFORMATION AGREES THAT IT ASSUMES ALL LIABILITY ARISING FROM SUCH USE. NO PART OF THESE STANDARDS SHOULD BE REPRODUCED OR DISTRIBUTED IN ANY FORM OR BY ANY MEANS WITHOUT THE PRIOR WRITTEN PERMISSION OF SCRRA. ALL RIGHTS RESERVED.

METROLINK®
SOUTHERN CALIFORNIA REGIONAL RAIL AUTHORITY
ONE GATEWAY PLAZA, 12TH FLOOR, L. A., CA. 90012

ENGINEERING STANDARDS

WALKWAY CLEARANCE FOR FACILITIES WITHOUT UNDER - TRACK PITS

STANDARD: 7001
SCALE: NONE
REVISION: –
SHEET: 2 OF 2
CADD FILE: ES7001-02

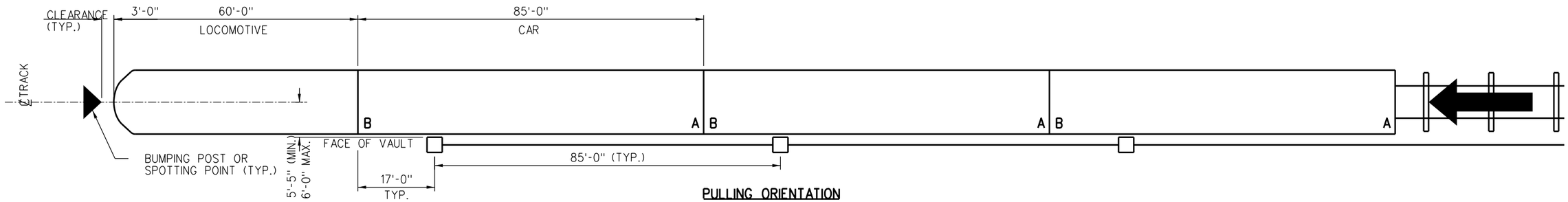

PULLING ORIENTATION

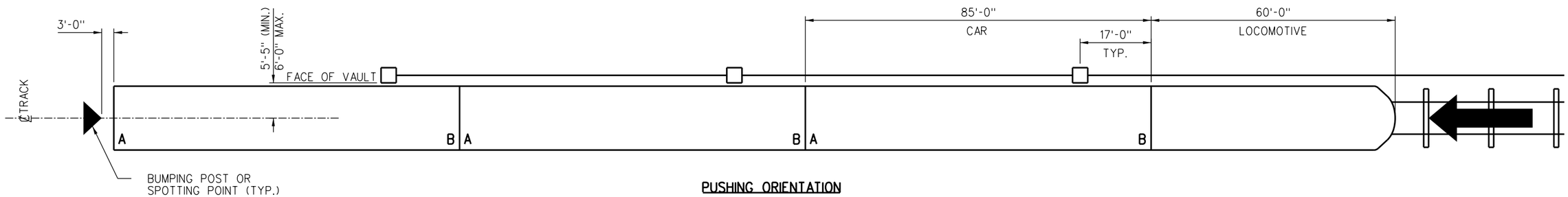

PUSHING ORIENTATION

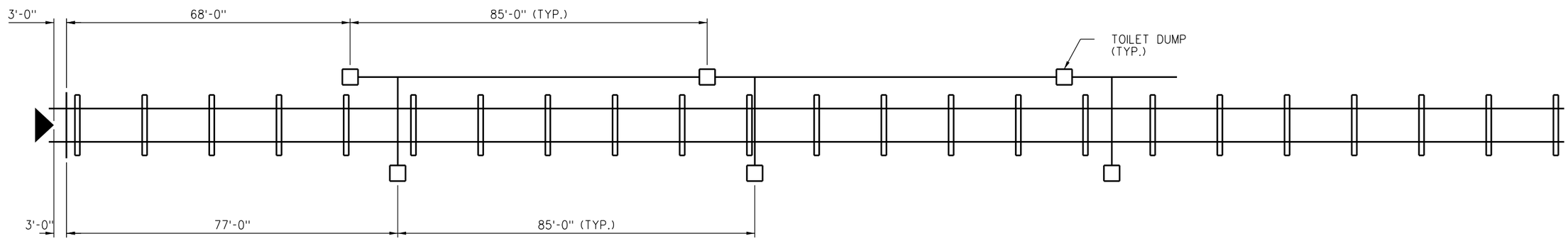

COMBINED PUSHING & PULLING

NOTES:

1. THE "B" END OF CARS IS ALWAYS ON THE LOCOMOTIVE SIDE.
2. THIS ASSUMES SPOTTING TRAINS AT THE SAME LOCATION FOR BOTH PUSHING AND PULLING ORIENTATION.
3. LAYOUT FOR MULTIPLE TRACKS CAN BE MODIFIED TO MINIMIZE THE NUMBER OF TOILET DUMPS.

REV.	DATE	DESCRIPTION	DES.	ENG.
X	XX-XX-XX	REVISION	XX	XX

DRAWN BY: A. CARLOS DATE: 03/31/2011

ASSISTANT DIRECTOR: STANDARDS & DESIGN

DIRECTOR OF ENGINEERING AND CONSTRUCTION

SCRRA ENGINEERING STANDARDS ARE INTENDED FOR SCRRA APPROVED USES ONLY. FOR NON-SCRRA APPROVED USES, SCRRA SHALL NOT BE RESPONSIBLE FOR THE ACCURACY OR COMPLETENESS OF THE DATA OR INFORMATION CONTAINED HEREIN. THE SELECTION AND USE OF THESE STANDARDS IS THE SOLE RESPONSIBILITY OF THE USER AND SHOULD NOT BE USED WITHOUT CONSULTING A REGISTERED PROFESSIONAL ENGINEER. ALL WARRANTIES AND REPRESENTATIONS OF ANY KIND ARE DISCLAIMED. ANYONE MAKING USE OF THIS INFORMATION AGREES THAT IT ASSUMES ALL LIABILITY ARISING FROM SUCH USE. NO PART OF THESE STANDARDS SHOULD BE REPRODUCED OR DISTRIBUTED IN ANY FORM OR BY ANY MEANS WITHOUT THE PRIOR WRITTEN PERMISSION OF SCRRA. ALL RIGHTS RESERVED.

METROLINK®

SOUTHERN CALIFORNIA REGIONAL RAIL AUTHORITY
ONE GATEWAY PLAZA, 12TH FLOOR, L. A., CA. 90012

ENGINEERING STANDARDS

DUMP STATION LAYOUT

STANDARD: 7101
SCALE: NONE
REVISION: –
SHEET: 1 OF 3
CADD FILE: ES7101-01

NOTES:

1. FOR DUMP STATION VAULT LID SEE DRAWING ES7102.
2. THE ULTIMATE COMPRESSIVE STRENGTH OF CONCRETE SHALL BE NOT LESS THAN 5000 PSIIN 28 DAYS.
3. STEEL FRAME TO BE HOT DIP GALVANIZED.
4. VAULT BOTTOM TO BE POURED CONCRETE WITH SMOOTH FINISH.
5. FILL JOINT BETEEN PERIMETER OF DUMP LID AND STEEL FRAME OF DUMP VAULT WITH APPROVED EPOXY CAULK.

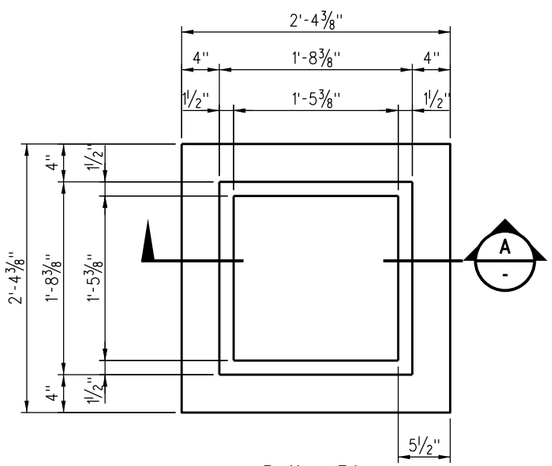

PLAN VIEW

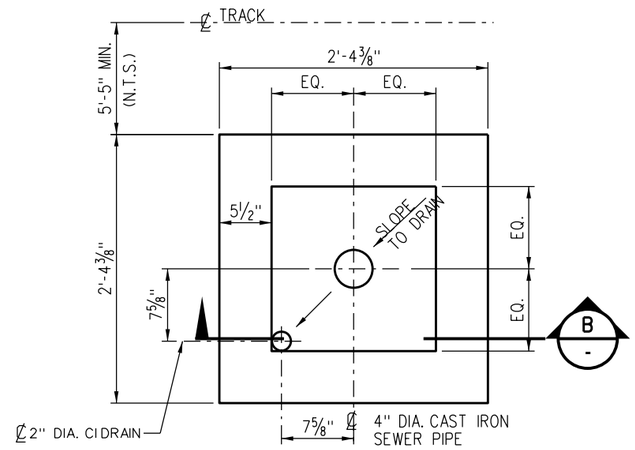

PLAN AT DRAIN

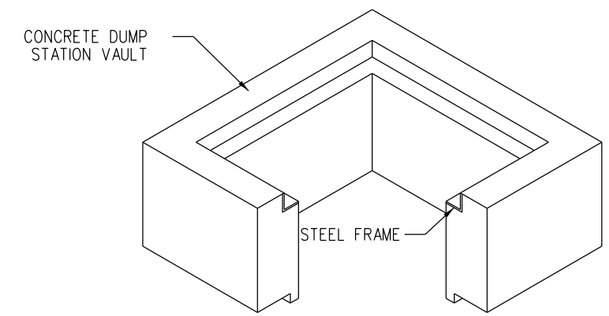

ISOMETRIC VIEW

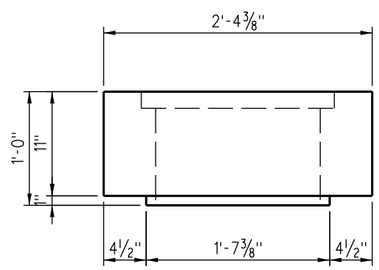

ELEVATION

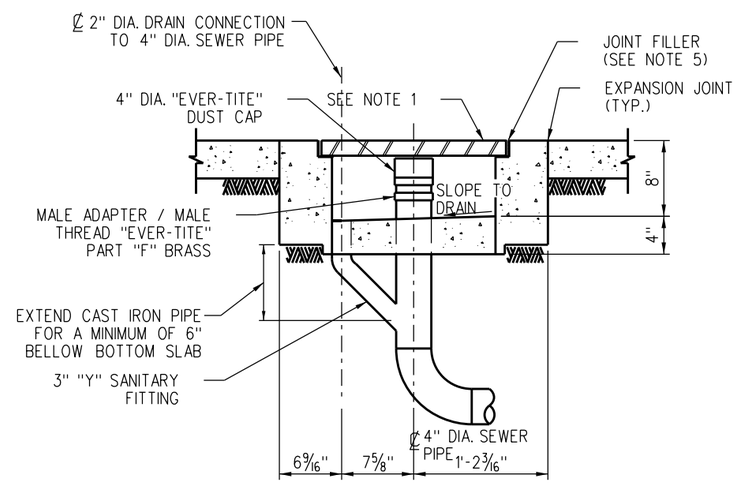

SECTION B
SCALE: 1 1/2" = 1'-0"

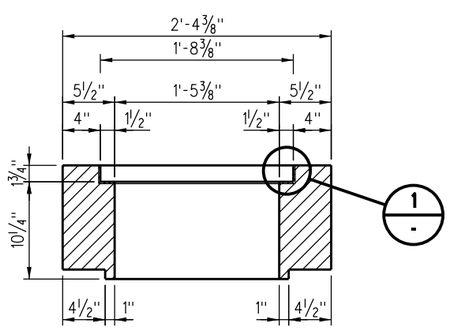

SECTION A
SCALE: 1 1/2" = 1'-0"

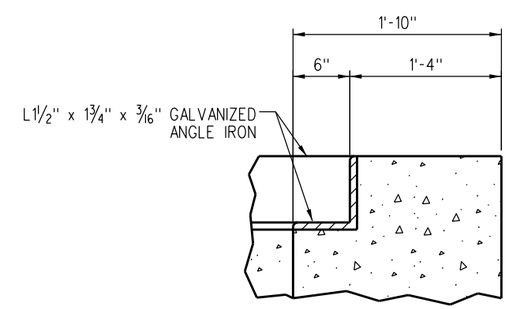

DETAIL 1
SCALE: 6" = 1'-0"

REV.	DATE	DESCRIPTION	DES.	ENG.
X	XX-XX-XX	REVISION	XX	XX

DRAWN BY: A. CARLOS DATE: 03/31/2011

ASSISTANT DIRECTOR: STANDARDS & DESIGN

DIRECTOR OF ENGINEERING AND CONSTRUCTION

SCRRA ENGINEERING STANDARDS ARE INTENDED FOR SCRRA APPROVED USES ONLY. FOR NON-SCRRA APPROVED USES: SCRRA SHALL NOT BE RESPONSIBLE FOR THE ACCURACY OR COMPLETENESS OF THE DATA OR INFORMATION CONTAINED HEREIN. THE SELECTION AND USE OF THESE STANDARDS IS THE SOLE RESPONSIBILITY OF THE USER AND SHOULD NOT BE USED WITHOUT CONSULTING A REGISTERED PROFESSIONAL ENGINEER. ALL WARRANTIES AND REPRESENTATIONS OF ANY KIND ARE DISCLAIMED. ANYONE MAKING USE OF THIS INFORMATION AGREES THAT IT ASSUMES ALL LIABILITY ARISING FROM SUCH USE. NO PART OF THESE STANDARDS SHOULD BE REPRODUCED OR DISTRIBUTED IN ANY FORM OR BY ANY MEANS WITHOUT THE PRIOR WRITTEN PERMISSION OF SCRRA. ALL RIGHTS RESERVED.

METROLINK®
SOUTHERN CALIFORNIA REGIONAL RAIL AUTHORITY
ONE GATEWAY PLAZA, 12TH FLOOR, L. A., CA. 90012

ENGINEERING STANDARDS

DUMP STATION VAULT DETAILS

STANDARD 7101
SCALE: AS NOTED
REVISION –
SHEET 2 OF 3
CADD FILE: ES7101-02

NOTE:
ALL ALUMINUM TO BE 6061-T6

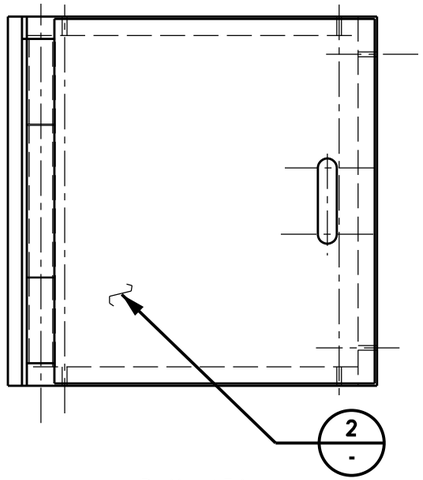

PLAN VIEW
ASSEMBLY

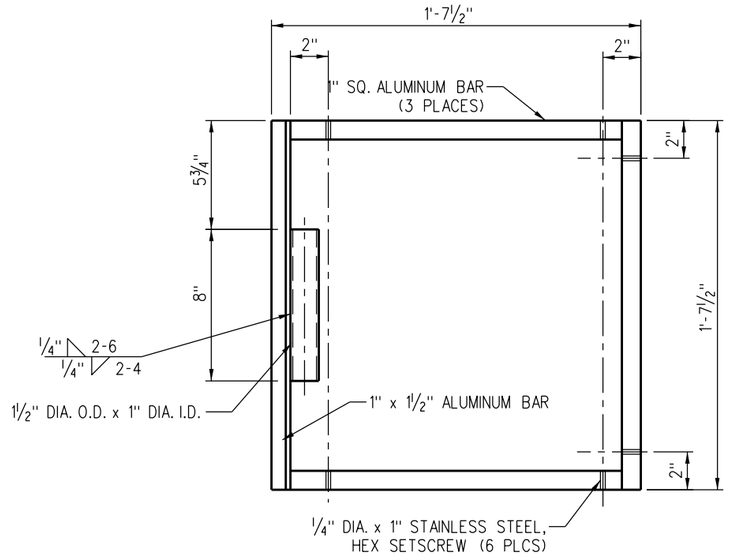

PLAN VIEW
FRAME

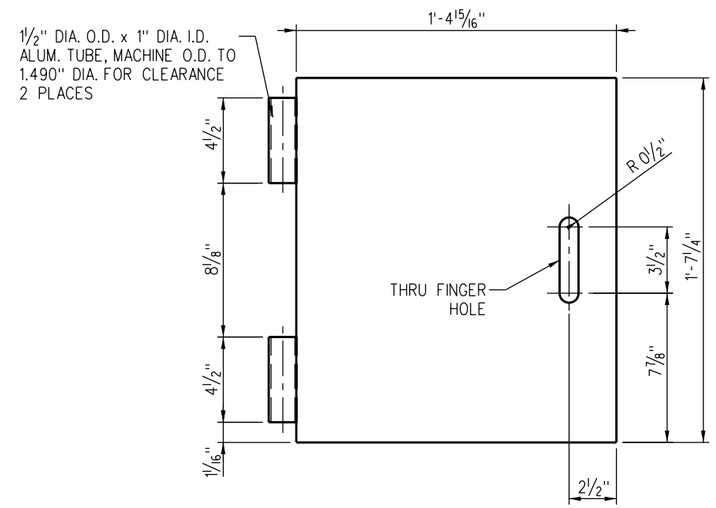

PLAN VIEW
LID / COVER

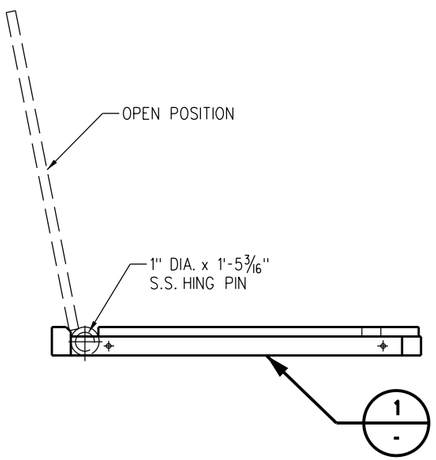

ELEVATION

SEWER DUMP LID
ASSEMBLY DETAIL

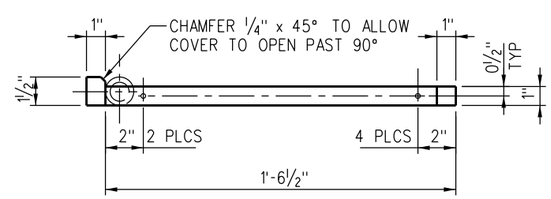

SIDE VIEW

ALUMINUM FRAME

DETAIL 1 -

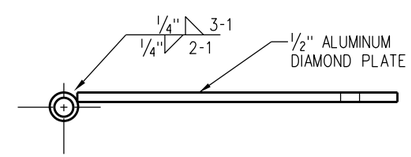

SIDE VIEW

ALUMINUM COVER

DETAIL 2 -

REV.	DATE	DESCRIPTION	DES.	ENG.
X	XX-XX-XX	REVISION	XX	XX

DRAWN BY: A. CARLOS DATE: 03/31/2011

ASSISTANT DIRECTOR: STANDARDS & DESIGN

DIRECTOR OF ENGINEERING AND CONSTRUCTION

SCRRA ENGINEERING STANDARDS ARE INTENDED FOR SCRRA APPROVED USES ONLY. FOR NON-SCRRA APPROVED USES:
SCRRA SHALL NOT BE RESPONSIBLE FOR THE ACCURACY OR COMPLETENESS OF THE DATA OR INFORMATION CONTAINED HEREIN. THE SELECTION AND USE OF THESE STANDARDS IS THE SOLE RESPONSIBILITY OF THE USER AND SHOULD NOT BE USED WITHOUT CONSULTING A REGISTERED PROFESSIONAL ENGINEER. ALL WARRANTIES AND REPRESENTATIONS OF ANY KIND ARE DISCLAIMED. ANYONE MAKING USE OF THIS INFORMATION AGREES THAT IT ASSUMES ALL LIABILITY ARISING FROM SUCH USE. NO PART OF THESE STANDARDS SHOULD BE REPRODUCED OR DISTRIBUTED IN ANY FORM OR BY ANY MEANS WITHOUT THE PRIOR WRITTEN PERMISSION OF SCRRA. ALL RIGHTS RESERVED.

METROLINK®
SOUTHERN CALIFORNIA REGIONAL RAIL AUTHORITY
ONE GATEWAY PLAZA, 12TH FLOOR, L. A., CA. 90012

ENGINEERING STANDARDS

DUMP STATION VAULT
ALUMINUM LID DETAILS

STANDARD 7101
SCALE: 3" = 1'-0"
REVISION –
SHEET 3 OF 3
CADD FILE: ES7101-03

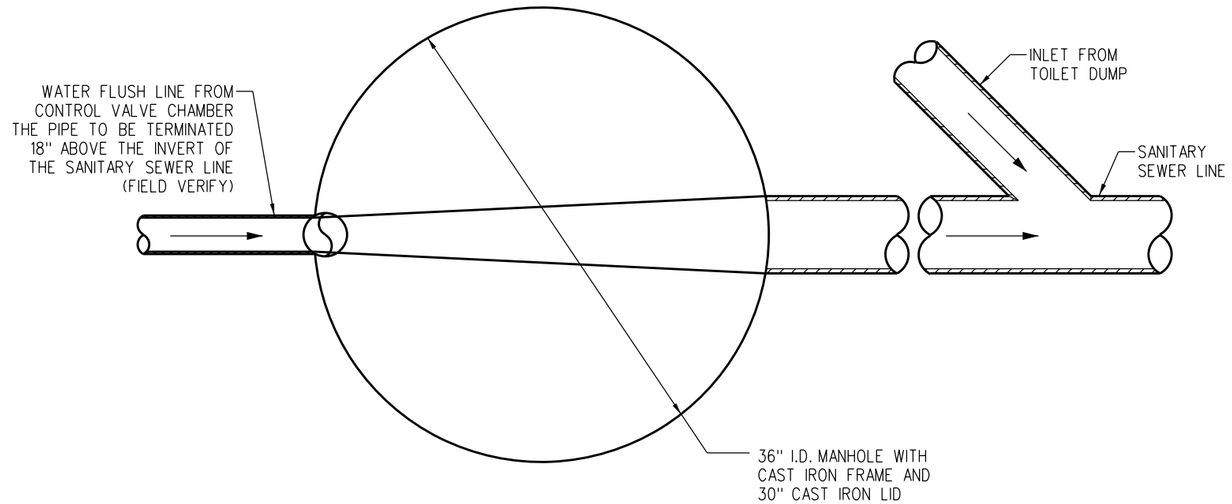

PLAN
FLUSHING MANHOLE

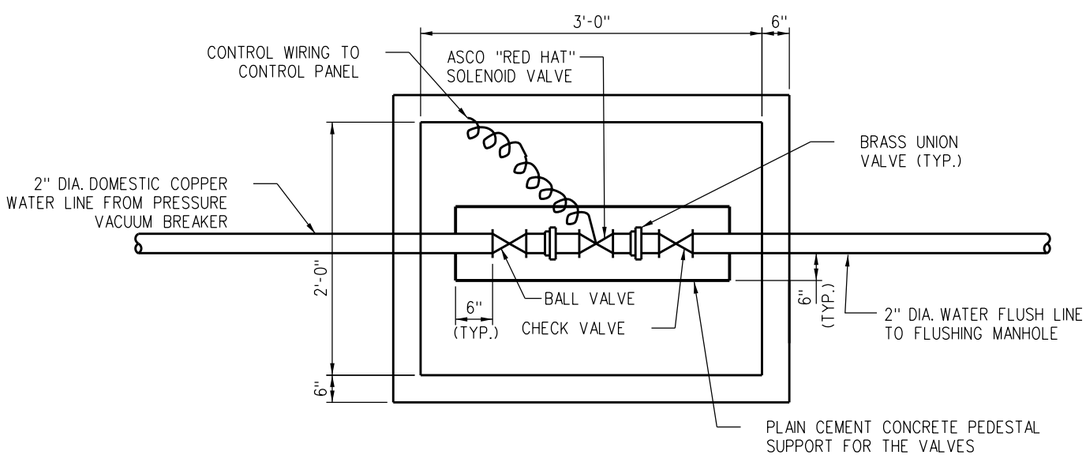

PLAN
FLUSHING CONTROL VALVE BOX CHAMBER

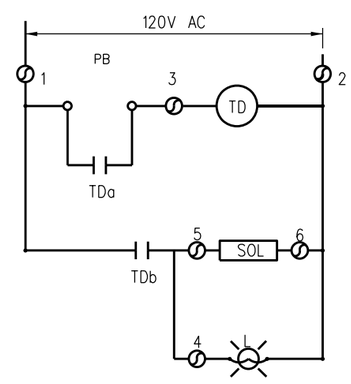

SCHEMATIC DIAGRAM FOR
SOLENOID VALVE CONTROL

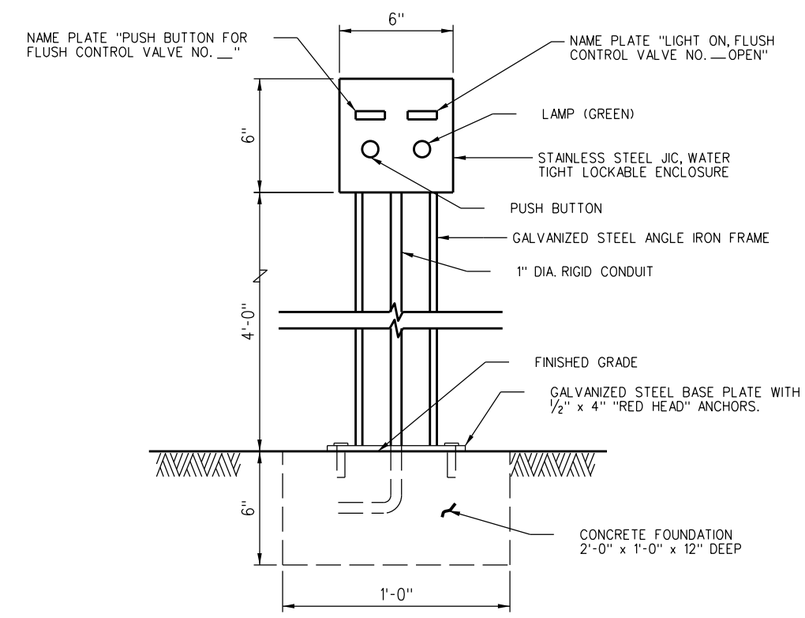

FLUSHING MANHOLE
CONTROL PANEL LAYOUT

REV.	DATE	DESCRIPTION	DES.	ENG.
X	XX-XX-XX	REVISION	XX	XX

DRAWN BY: A. CARLOS DATE: 03/31/2011

ASSISTANT DIRECTOR: STANDARDS & DESIGN

DIRECTOR OF ENGINEERING AND CONSTRUCTION

SCRRA ENGINEERING STANDARDS ARE INTENDED FOR SCRRA APPROVED USES ONLY. FOR NON-SCRRA APPROVED USES:
SCRRA SHALL NOT BE RESPONSIBLE FOR THE ACCURACY OR COMPLETENESS OF THE DATA OR INFORMATION CONTAINED HEREIN. THE SELECTION AND USE OF THESE STANDARDS IS THE SOLE RESPONSIBILITY OF THE USER AND SHOULD NOT BE USED WITHOUT CONSULTING A REGISTERED PROFESSIONAL ENGINEER. ALL WARRANTIES AND REPRESENTATIONS OF ANY KIND ARE DISCLAIMED. ANYONE MAKING USE OF THIS INFORMATION AGREES THAT IT ASSUMES ALL LIABILITY ARISING FROM SUCH USE. NO PART OF THESE STANDARDS SHOULD BE REPRODUCED OR DISTRIBUTED IN ANY FORM OR BY ANY MEANS WITHOUT THE PRIOR WRITTEN PERMISSION OF SCRRA. ALL RIGHTS RESERVED.

METROLINK®
SOUTHERN CALIFORNIA REGIONAL RAIL AUTHORITY
ONE GATEWAY PLAZA, 12TH FLOOR, L. A., CA. 90012

ENGINEERING STANDARDS

FLUSHING MANHOLE DETAILS

STANDARD: 7102
SCALE: NONE
REVISION: –
SHEET: 1 OF 1
CADD FILE: ES7102

NOTES:

1. 4" SQUARE TUBE WILL BE SCHEDULE 40 STEEL TUBE.
2. 4" SQUARE TUBE TO BE PAINTED SAFETY YELLOW.
3. 4" SQUARE TUBE WILL BE 72" LONG IF WALL MOUNT HOSE RACK IS ON THE OPPOSITE SIDE OF WATER SUPPLY LINE AND 84" LONG IF WALL MOUNT HOSE RACK IS ON THE SAME SIDE OF WATER SUPPLY LINE.

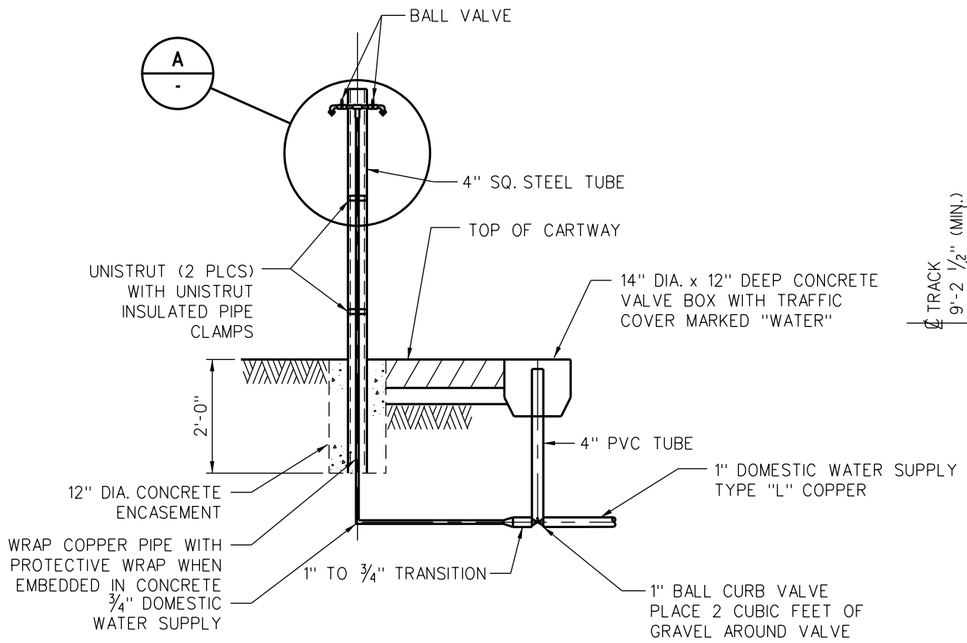

ELEVATION
POTABLE WATER SUPPLY

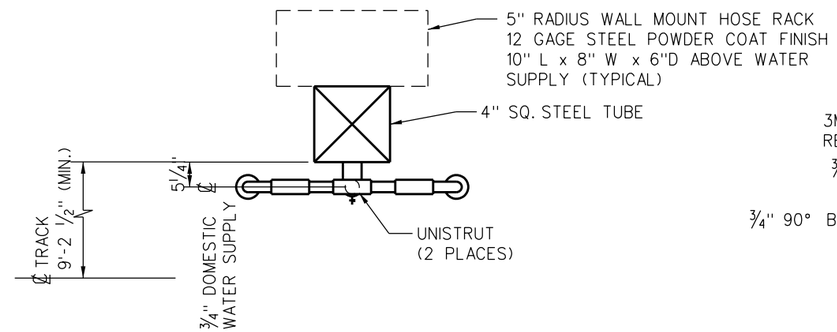

PLAN AT TOP OF
72" LONG STEEL TUBE

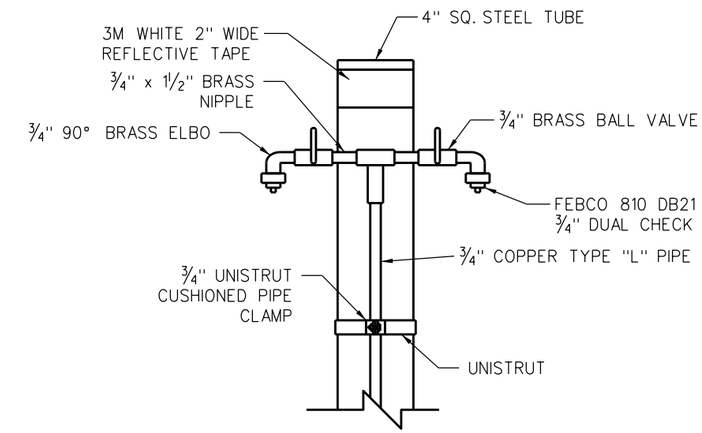

DETAIL "A"

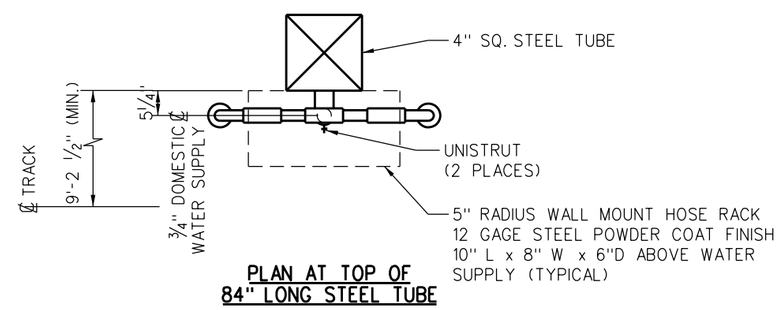

PLAN AT TOP OF
84" LONG STEEL TUBE

REV.	DATE	DESCRIPTION	DES.	ENG.
X	XX-XX-XX	REVISION	XX	XX

DRAWN BY: A. CARLOS DATE: 03/31/2011

ASSISTANT DIRECTOR: STANDARDS & DESIGN

DIRECTOR OF ENGINEERING AND CONSTRUCTION

SCRRA ENGINEERING STANDARDS ARE INTENDED FOR SCRRA APPROVED USES ONLY. FOR NON-SCRRA APPROVED USES:
SCRRA SHALL NOT BE RESPONSIBLE FOR THE ACCURACY OR COMPLETENESS OF THE DATA OR INFORMATION CONTAINED HEREIN. THE SELECTION AND USE OF THESE STANDARDS IS THE SOLE RESPONSIBILITY OF THE USER AND SHOULD NOT BE USED WITHOUT CONSULTING A REGISTERED PROFESSIONAL ENGINEER. ALL WARRANTIES AND REPRESENTATIONS OF ANY KIND ARE DISCLAIMED. ANYONE MAKING USE OF THIS INFORMATION AGREES THAT IT ASSUMES ALL LIABILITY ARISING FROM SUCH USE. NO PART OF THESE STANDARDS SHOULD BE REPRODUCED OR DISTRIBUTED IN ANY FORM OR BY ANY MEANS WITHOUT THE PRIOR WRITTEN PERMISSION OF SCRRA. ALL RIGHTS RESERVED.

METROLINK®
SOUTHERN CALIFORNIA REGIONAL RAIL AUTHORITY
ONE GATEWAY PLAZA, 12TH FLOOR, L. A., CA. 90012

ENGINEERING STANDARDS

POTABLE WATER STATION

STANDARD: 7103
SCALE: NONE
REVISION: –
SHEET: 1 OF 1
CADD FILE: ES7103

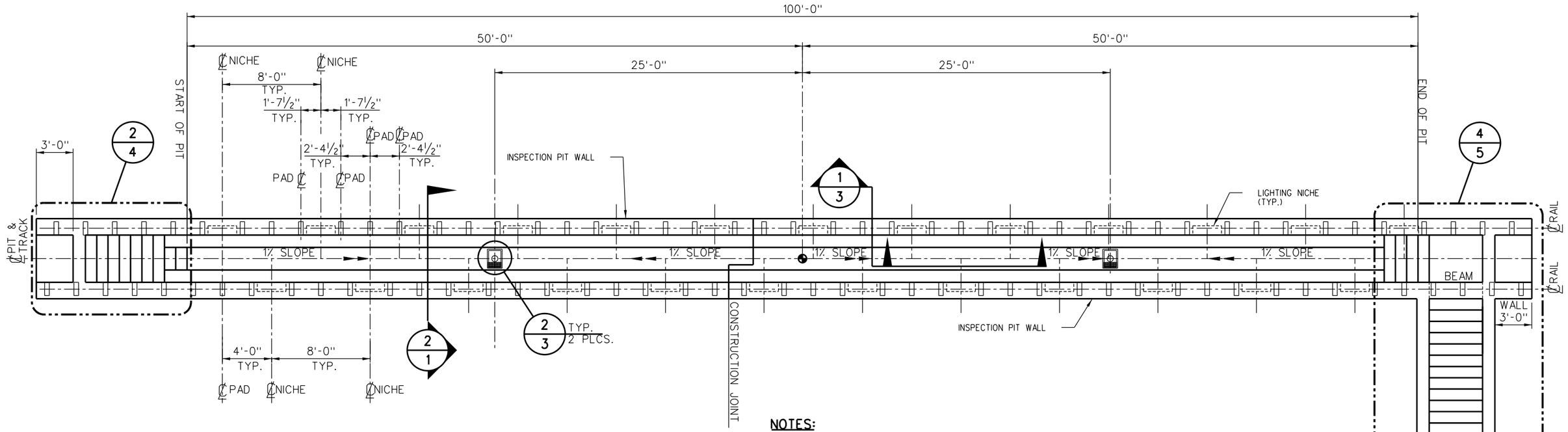

NOTES:

1. LOCATION OF RAIL PADS AND LIGHTING NICHES WILL BE DETERMINED BY RAIL TIE CONFIGURATION LEADING INTO INSPECTION PIT.
2. DIMENSIONS SHOWN ARE FOR A STANDARD INSPECTION PIT, ACTUAL DIMENSIONS TO BE DETERMINED BY ENGINEER.
3. INSPECTION PIT DESIGN BASED ON SOIL BEARING PRESSURE OF 2250 PSF TO 3500 PSF, SITE SPECIFIC CONDITIONS SHOULD BE VERIFIED AND DESIGN ADJUSTED ACCORDINGLY
4. CONCRETE SHALL BE NORMAL WEIGHT - 145 LBS./CU. FT. AND SHALL HAVE A MINIMUM COMPRESSIVE STRENGTH AT 28 DAYS OF 3000 PSIFOR ALL CONCRETE, UNLESS NOTED OTHERWISE.
5. MIXING AND PLACING OF ALL CONCRETE AND SELECTION OF MATERIALS SHALL BE IN ACCORDANCE WITH THE APPLICABLE CODE AND ACI STANDARDS. CEMENT SHALL BE TYPE II CONFORMING TO ASTM C150. WATER FOR MIXING AND CURING SHALL BE FRESH, CLEAN AND POTABLE. CONTINUOUS INSPECTION IS REQUIRED FOR ALL CONCRETE WORK. WATER CEMENT RATION NOT TO EXCEED 0.50.
6. PROPORTIONS OF AGGREGATE TO CEMENT SHALL BE SUCH AS TO PRODUCE A DENSE WORKABLE MIX WHICH CAN BE PLACED WITHOUT SEGREGATION OR EXCESS FREE SURFACE WATER. REFER TO SCRRA STANDARDS AND SPECIFICATIONS FOR AGGREGATES AND PROPORTIONS MIX DESIGNS SHALL BE SUBMITTED TO THE ENGINEER FOR APPROVAL PRIOR TO USE.
7. REINFORCING STEEL SHALL BE DEFORMED STEEL CONFORMING TO THE REQUIREMENTS OF ASTM A615, GRADE 60. REINFORCING STEEL TO BE WELDED SHALL CONFORM TO REQUIREMENTS OF ASTM A706, GRADE 60, UNLESS NOTED OTHERWISE.
8. REINFORCING BARS SHALL BE SPLICED AS SHOWN ON DRAWINGS. ANY ADDITIONAL SPLICING SHALL REQUIRE PRIOR APPROVAL FROM THE ENGINEER OF RECORD.
9. REINFORCING STEEL SHALL HAVE A MINIMUM PROTECTIVE COVERING CONCRETE AS FOLLOWS:

   A) CONCRETE PLACED DIRECTLY AGAINST EARTH _____ 3"

   B) CONCRETE PLACED AGAINST FORMS BUT EXPOSED TO EARTH OR WEATHER:
      BARS LARGER THAN NO. 5 _____ 2"
      NO. 5 AND SMALLER _____ 1½"

   C) CONCRETE PLACED AGAINST FORMS BUT NOT EXPOSED DIRECTLY TO EARTH OR WEATHER:
      SLABS AND WALLS _____ 1"
      ALL OTHERS _____ As per ACI 318-89
10. ALL BARS SHALL BE CLEAN OF RUST, GREASE AND OTHER MATERIALS LIKELY TO IMPAIR BOND. ALL BENDS SHALL BE MADE COLD.

REV.	DATE	DESCRIPTION	DES.	ENG.
X	XX-XX-XX	REVISION	XX	XX

DRAWN BY: A. CARLOS DATE: 03/31/2011

ASSISTANT DIRECTOR: STANDARDS & DESIGN

DIRECTOR OF ENGINEERING AND CONSTRUCTION

SCRRA ENGINEERING STANDARDS ARE INTENDED FOR SCRRA APPROVED USES ONLY. FOR NON-SCRRA APPROVED USES:
SCRRA SHALL NOT BE RESPONSIBLE FOR THE ACCURACY OR COMPLETENESS OF THE DATA OR INFORMATION CONTAINED HEREIN. THE SELECTION AND USE OF THESE STANDARDS IS THE SOLE RESPONSIBILITY OF THE USER AND SHOULD NOT BE USED WITHOUT CONSULTING A REGISTERED PROFESSIONAL ENGINEER. ALL WARRANTIES AND REPRESENTATIONS OF ANY KIND ARE DISCLAIMED. ANYONE MAKING USE OF THIS INFORMATION AGREES THAT IT ASSUMES ALL LIABILITY ARISING FROM SUCH USE. NO PART OF THESE STANDARDS SHOULD BE REPRODUCED OR DISTRIBUTED IN ANY FORM OR BY ANY MEANS WITHOUT THE PRIOR WRITTEN PERMISSION OF SCRRA. ALL RIGHTS RESERVED.

METROLINK®
SOUTHERN CALIFORNIA REGIONAL RAIL AUTHORITY
ONE GATEWAY PLAZA, 12TH FLOOR, L. A., CA. 90012

ENGINEERING STANDARDS

TYPICAL INSPECTION PIT PLAN

STANDARD 7104
SCALE: ¼" = 1'-0"
REVISION –
SHEET 1 OF 5
CADD FILE: ES7104-01

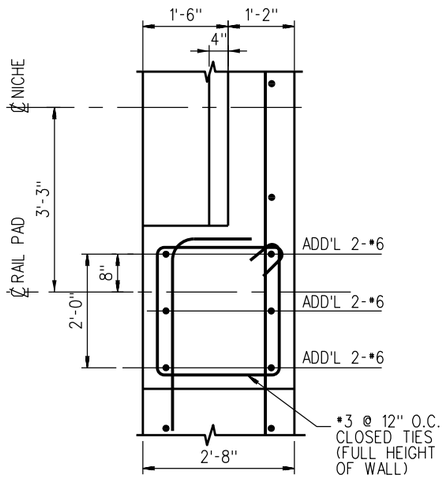

TYPICAL SECTION THRU LIGHTING NICHE TRANSITION (2 / -)
SCALE: 1½" = 1'-0"

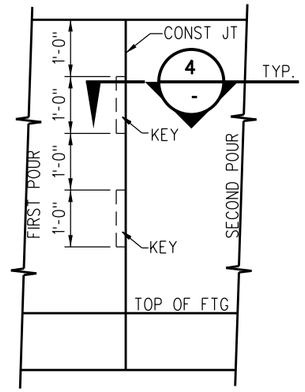

SECTION VIEW AT CONSTRUCTION JOINT (3 / ES7104-01)
SCALE: 1½" = 1'-0"

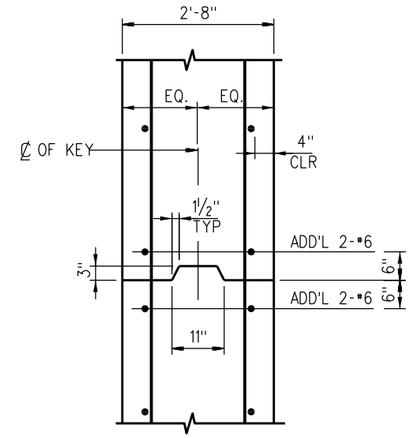

SECTION VIEW AT CONSTRUCTION JOINT (4 / -)
SCALE: 1½" = 1'-0"

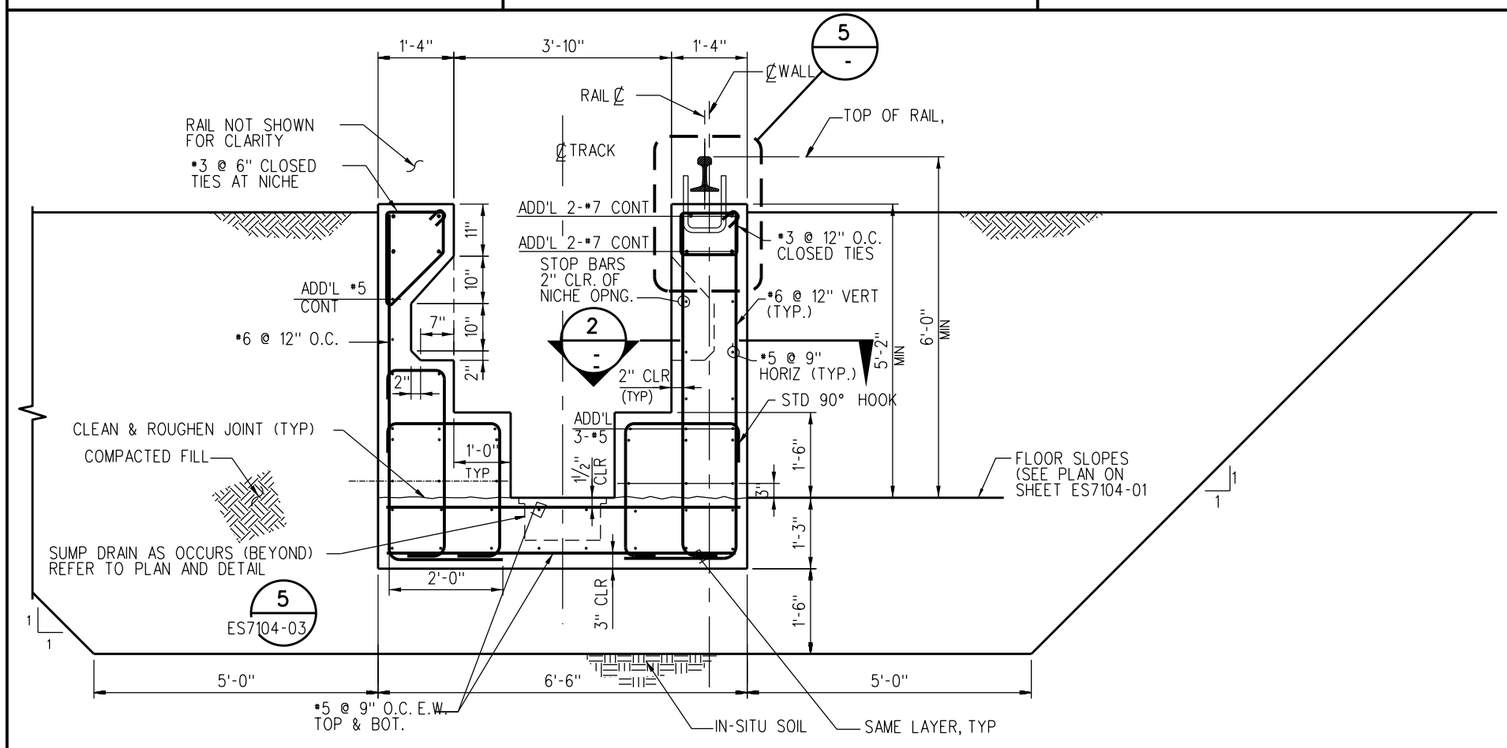

TYPICAL SECTION THRU PIT (1 / ES7104-01)
SCALE: ¾" = 1'-0"

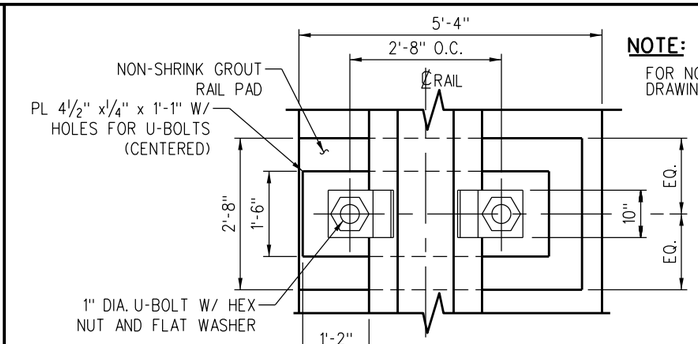

NOTE:
FOR NOTES SEE DRAWING ES7104-01.

PLAN C

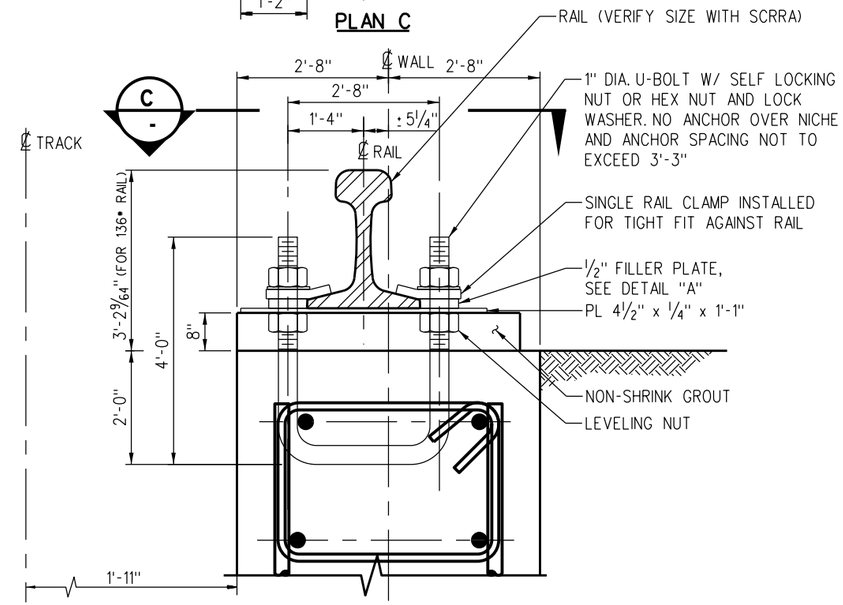

SECTION B

NOTE:
ROTATE PLATE DURING RAIL INSTALLATION TO ESTABLISH DESIGN TRACK ALIGNMENT AND GAUGE.

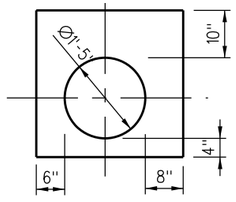

½" FILLER PLATE
DETAIL A

RAIL DIRECT FIXATION DETAILS (5 / ES7104-01)
SCALE: FULL

REV.	DATE	DESCRIPTION	DES.	ENG.
X	XX-XX-XX	REVISION	XX	XX

DRAWN BY: A. CARLOS DATE: 03/31/2011

ASSISTANT DIRECTOR: STANDARDS & DESIGN

DIRECTOR OF ENGINEERING AND CONSTRUCTION

SCRRA ENGINEERING STANDARDS ARE INTENDED FOR SCRRA APPROVED USES ONLY. FOR NON-SCRRA APPROVED USES:
SCRRA SHALL NOT BE RESPONSIBLE FOR THE ACCURACY OR COMPLETENESS OF THE DATA OR INFORMATION CONTAINED HEREIN. THE SELECTION AND USE OF THESE STANDARDS IS THE SOLE RESPONSIBILITY OF THE USER AND SHOULD NOT BE USED WITHOUT CONSULTING A REGISTERED PROFESSIONAL ENGINEER. ALL WARRANTIES AND REPRESENTATIONS OF ANY KIND ARE DISCLAIMED. ANYONE MAKING USE OF THIS INFORMATION AGREES THAT IT ASSUMES ALL LIABILITY ARISING FROM SUCH USE. NO PART OF THESE STANDARDS SHOULD BE REPRODUCED OR DISTRIBUTED IN ANY FORM OR BY ANY MEANS WITHOUT THE PRIOR WRITTEN PERMISSION OF SCRRA. ALL RIGHTS RESERVED.

METROLINK®
SOUTHERN CALIFORNIA REGIONAL RAIL AUTHORITY
ONE GATEWAY PLAZA, 12TH FLOOR, L. A., CA. 90012

ENGINEERING STANDARDS

INSPECTION PIT
SECTION AND DETAILS

STANDARD 7104
SCALE: AS NOTED
REVISION –
SHEET 2 OF 5
CADD FILE: ES7104-02

NOTE:
FOR NOTES SEE DRAWING ES7104-01.

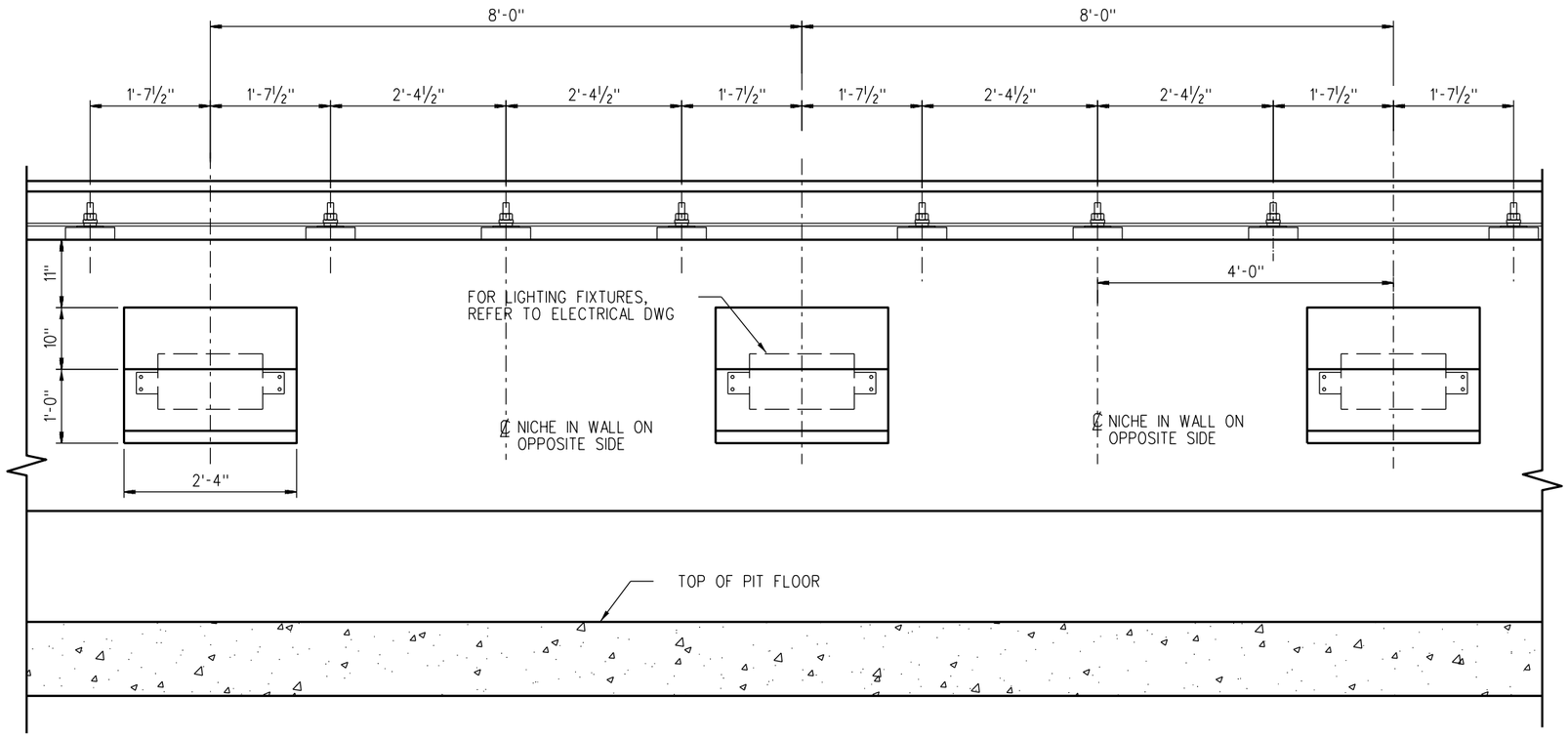

INSPECTION PIT PARTIAL ELEVATION (1 / ES7104-01)
SCALE: 1" = 1'-0"

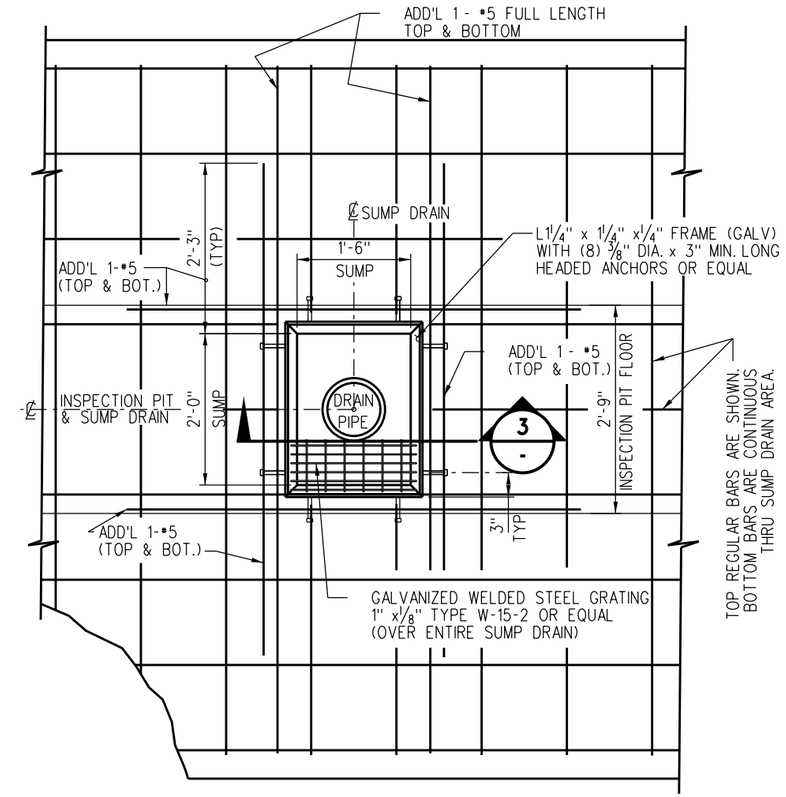

PLAN - SUMP DRAIN (2 / -)
SCALE: 1½" = 1'-0"

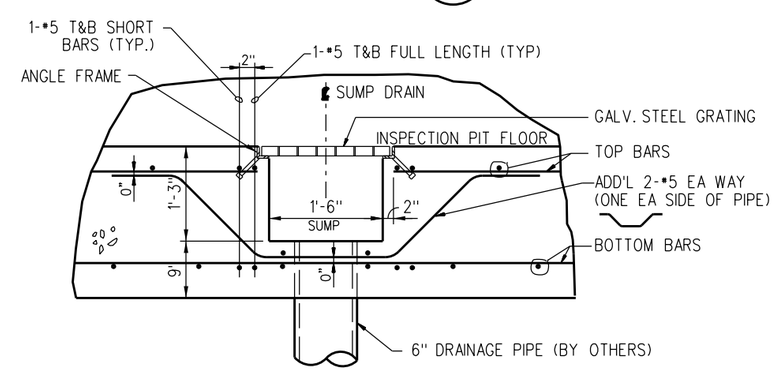

SECTION THRU SUMP DRAIN (3 / -)
SCALE: 1½" = 1'-0"

REV.	DATE	DESCRIPTION	DES.	ENG.
X	XX-XX-XX	REVISION	XX	XX

DRAWN BY: A. CARLOS DATE: 03/31/2011

ASSISTANT DIRECTOR: STANDARDS & DESIGN

DIRECTOR OF ENGINEERING AND CONSTRUCTION

SCRRA ENGINEERING STANDARDS ARE INTENDED FOR SCRRA APPROVED USES ONLY. FOR NON-SCRRA APPROVED USES:
SCRRA SHALL NOT BE RESPONSIBLE FOR THE ACCURACY OR COMPLETENESS OF THE DATA OR INFORMATION CONTAINED HEREIN. THE SELECTION AND USE OF THESE STANDARDS IS THE SOLE RESPONSIBILITY OF THE USER AND SHOULD NOT BE USED WITHOUT CONSULTING A REGISTERED PROFESSIONAL ENGINEER. ALL WARRANTIES AND REPRESENTATIONS OF ANY KIND ARE DISCLAIMED. ANYONE MAKING USE OF THIS INFORMATION AGREES THAT IT ASSUMES ALL LIABILITY ARISING FROM SUCH USE. NO PART OF THESE STANDARDS SHOULD BE REPRODUCED OR DISTRIBUTED IN ANY FORM OR BY ANY MEANS WITHOUT THE PRIOR WRITTEN PERMISSION OF SCRRA. ALL RIGHTS RESERVED.

METROLINK®
SOUTHERN CALIFORNIA REGIONAL RAIL AUTHORITY
ONE GATEWAY PLAZA, 12TH FLOOR, L. A., CA. 90012

ENGINEERING STANDARDS

INSPECTION PIT
PARTIAL ELEVATION

STANDARD 7104
SCALE: AS NOTED
REVISION –
SHEET 3 OF 5
CADD FILE: ES7104-03

NOTE:

FOR NOTES SEE DRAWING ES7104-01.

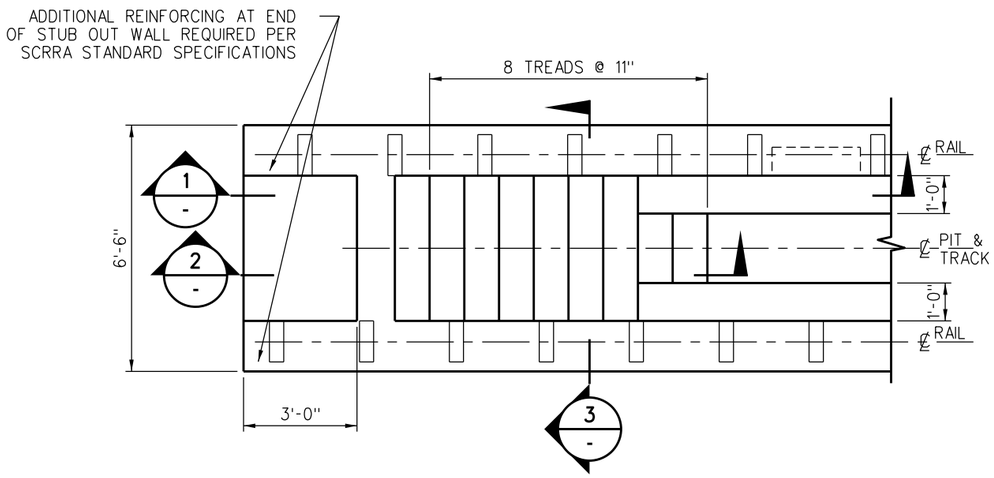

STAIR #1 PLAN (2 / ES7104-01)

SCALE: 1" = 1'-0"

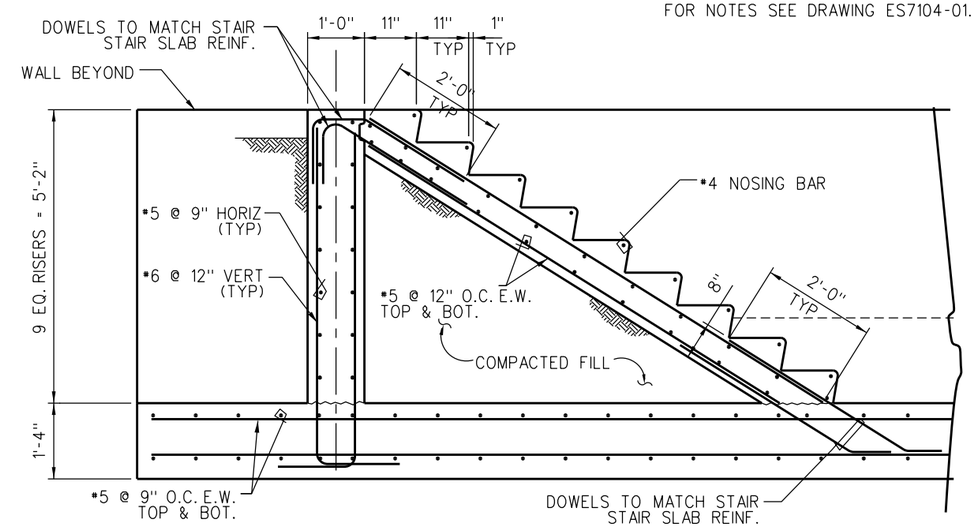

STAIR & END WALL SECTION (2 / -)

SCALE: 3/4" = 1'-0"

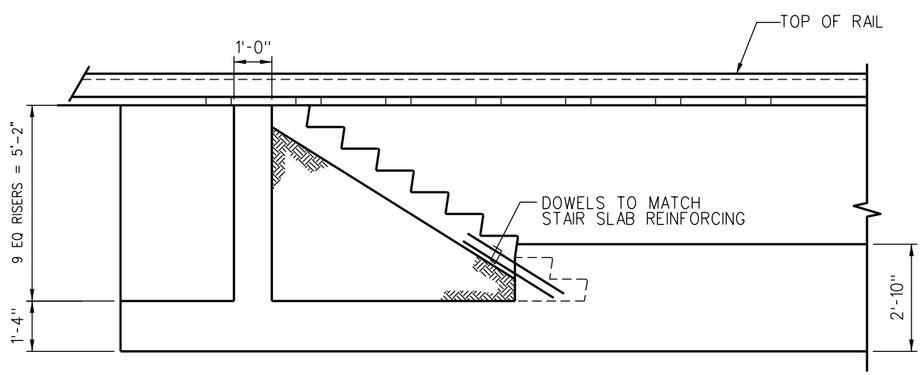

WALL SECTION (1 / -)

SCALE: 1/2" = 1'-0"

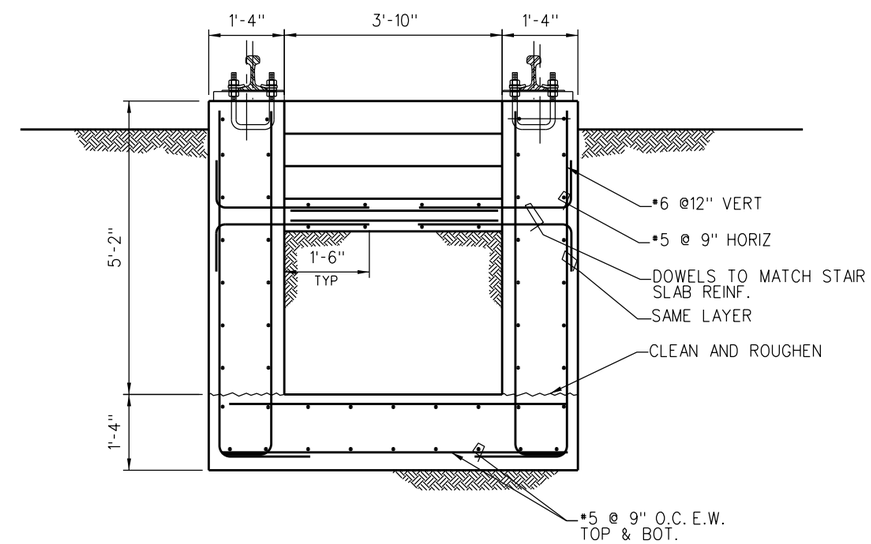

WALL SECTION (3 / -)

SCALE: 3/4" = 1'-0"

REV.	DATE	DESCRIPTION	DES.	ENG.
X	XX-XX-XX	REVISION	XX	XX

DRAWN BY: A. CARLOS DATE: 03/31/2011

ASSISTANT DIRECTOR: STANDARDS & DESIGN

DIRECTOR OF ENGINEERING AND CONSTRUCTION

SCRRA ENGINEERING STANDARDS ARE INTENDED FOR SCRRA APPROVED USES ONLY. FOR NON-SCRRA APPROVED USES:
SCRRA SHALL NOT BE RESPONSIBLE FOR THE ACCURACY OR COMPLETENESS OF THE DATA OR INFORMATION CONTAINED HEREIN. THE SELECTION AND USE OF THESE STANDARDS IS THE SOLE RESPONSIBILITY OF THE USER AND SHOULD NOT BE USED WITHOUT CONSULTING A REGISTERED PROFESSIONAL ENGINEER. ALL WARRANTIES AND REPRESENTATIONS OF ANY KIND ARE DISCLAIMED. ANYONE MAKING USE OF THIS INFORMATION AGREES THAT IT ASSUMES ALL LIABILITY ARISING FROM SUCH USE. NO PART OF THESE STANDARDS SHOULD BE REPRODUCED OR DISTRIBUTED IN ANY FORM OR BY ANY MEANS WITHOUT THE PRIOR WRITTEN PERMISSION OF SCRRA. ALL RIGHTS RESERVED.

METROLINK®

SOUTHERN CALIFORNIA REGIONAL RAIL AUTHORITY
ONE GATEWAY PLAZA, 12TH FLOOR, L. A., CA. 90012

ENGINEERING STANDARDS

INSPECTION PIT
STAIR PLAN AND SECTION

STANDARD 7104
SCALE: AS NOTED
REVISION –
SHEET 4 OF 5
CADD FILE: ES7104-04

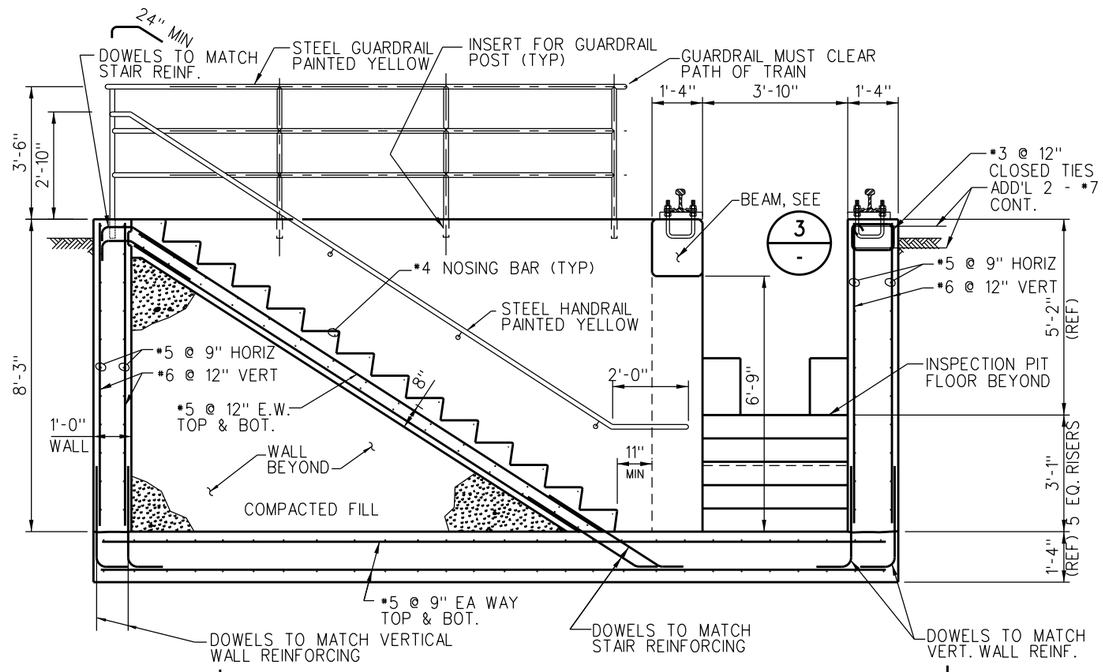

STAIR #2 SECTION 1/-
SCALE: 1/2" = 1'-0"

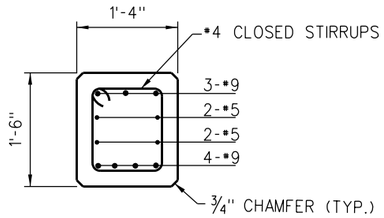

BEAM SECTION 3/-
SCALE: 1" = 1'-0"

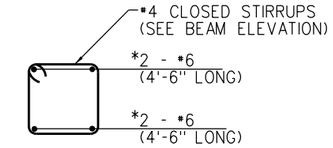

* PLACE ADD'L #6 VERT'S AS REQD TO CLEAR HORIZ. BARS WHICH ARE INSIDE OF 1'-4" WIDE WALL

ADD'L VERT. BARS & TIES 4/-
SCALE: 1" = 1'-0"

NOTE:
FOR NOTES SEE DRAWING ES7104-01.

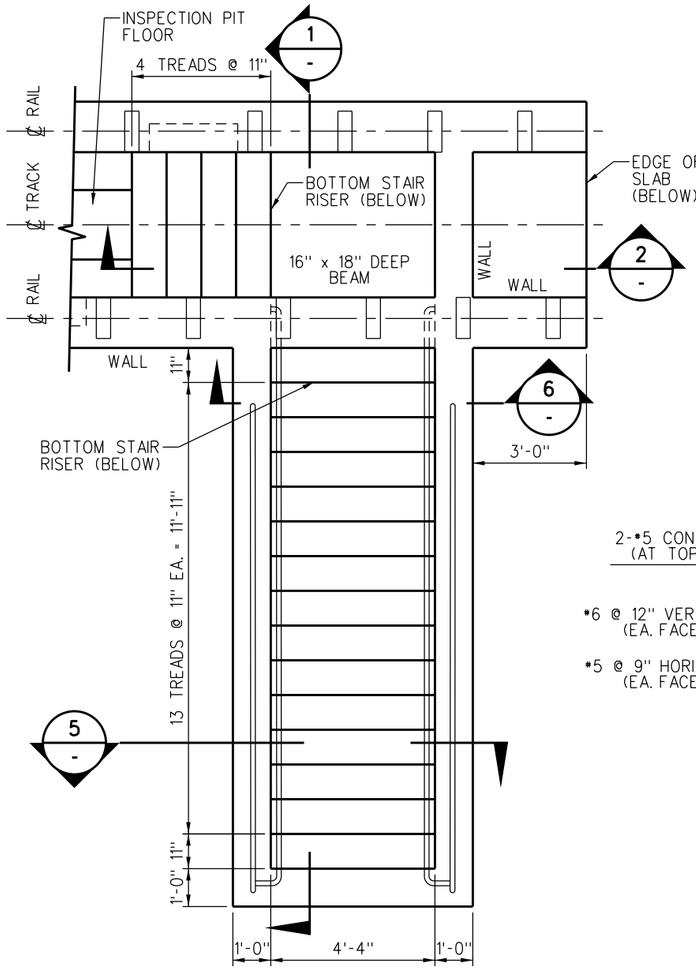

PLAN AT STAIR #2 4/ES7104-01
SCALE: 1/2" = 1'-0"

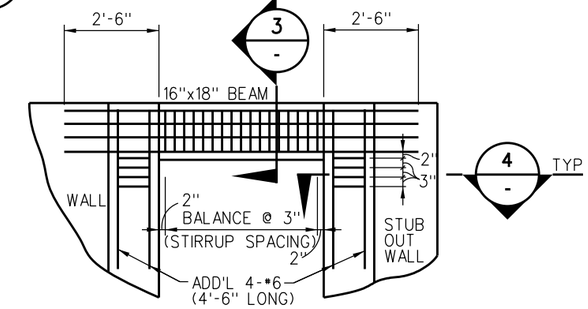

BEAM ELEVATION 6/-
SCALE: 1/2" = 1'-0"

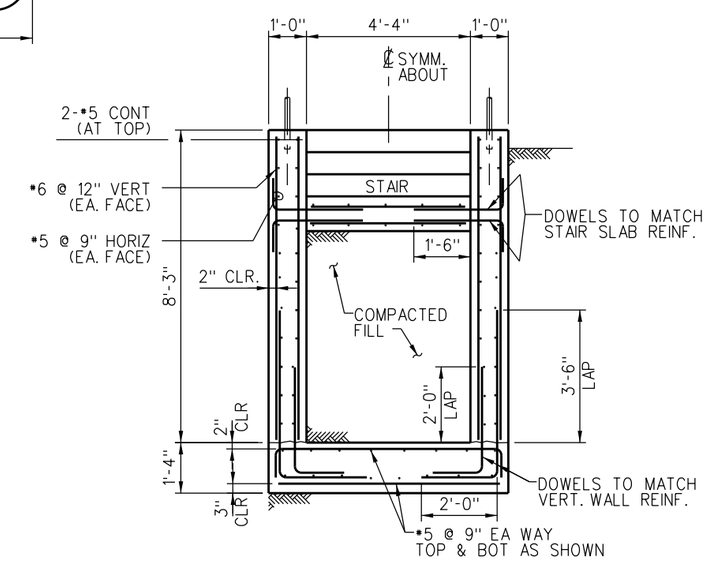

STAIR #2 SECTION 5/-
SCALE: 1/2" = 1'-0"

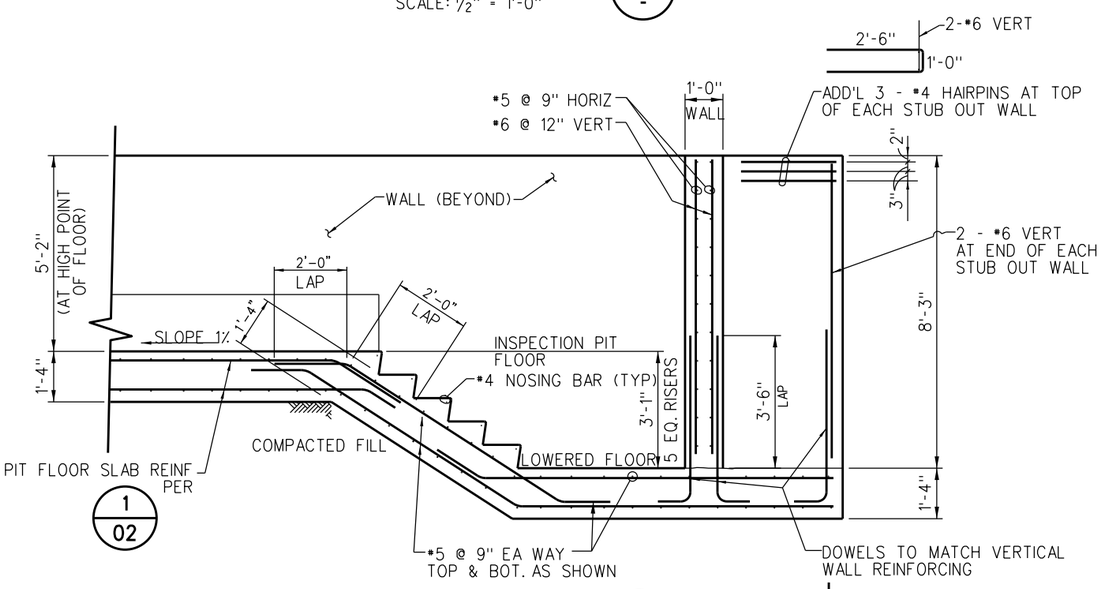

SECTION 2/-
SCALE: 1/2" = 1'-0"

REV.	DATE	DESCRIPTION	DES.	ENG.
X	XX-XX-XX	REVISION	XX	XX

DRAWN BY: A. CARLOS DATE: 03/31/2011

ASSISTANT DIRECTOR: STANDARDS & DESIGN

DIRECTOR OF ENGINEERING AND CONSTRUCTION

SCRRA ENGINEERING STANDARDS ARE INTENDED FOR SCRRA APPROVED USES ONLY. FOR NON-SCRRA APPROVED USES:
SCRRA SHALL NOT BE RESPONSIBLE FOR THE ACCURACY OR COMPLETENESS OF THE DATA OR INFORMATION CONTAINED HEREIN. THE SELECTION AND USE OF THESE STANDARDS IS THE SOLE RESPONSIBILITY OF THE USER AND SHOULD NOT BE USED WITHOUT CONSULTING A REGISTERED PROFESSIONAL ENGINEER. ALL WARRANTIES AND REPRESENTATIONS OF ANY KIND ARE DISCLAIMED. ANYONE MAKING USE OF THIS INFORMATION AGREES THAT IT ASSUMES ALL LIABILITY ARISING FROM SUCH USE. NO PART OF THESE STANDARDS SHOULD BE REPRODUCED OR DISTRIBUTED IN ANY FORM OR BY ANY MEANS WITHOUT THE PRIOR WRITTEN PERMISSION OF SCRRA. ALL RIGHTS RESERVED.

METROLINK®
SOUTHERN CALIFORNIA REGIONAL RAIL AUTHORITY
ONE GATEWAY PLAZA, 12TH FLOOR, L. A., CA. 90012

ENGINEERING STANDARDS

INSPECTION PIT
STAIR PLAN, SECTIONS AND DETAILS

STANDARD 7104
SCALE: AS NOTED
REVISION –
SHEET 5 OF 5
CADD FILE: ES7104–05

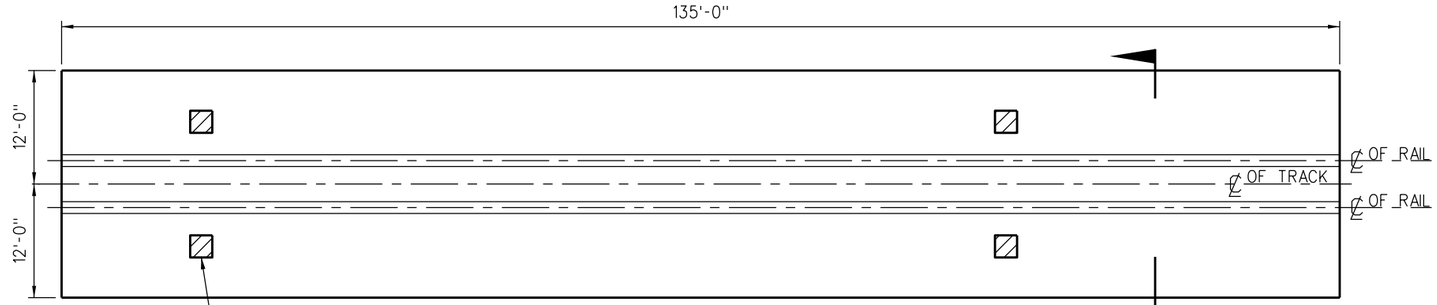

WHEN SPECIFIED, TOILET DUMP (TYP.) PER SCRRA ENGINEERING STANDARDS ES7101 & ES7102 TO BE LOCATED ON JACKING PAD PER ES7104.

JACKING PAD PLAN
SCALE: 1/8" = 1'-0"

1 / -

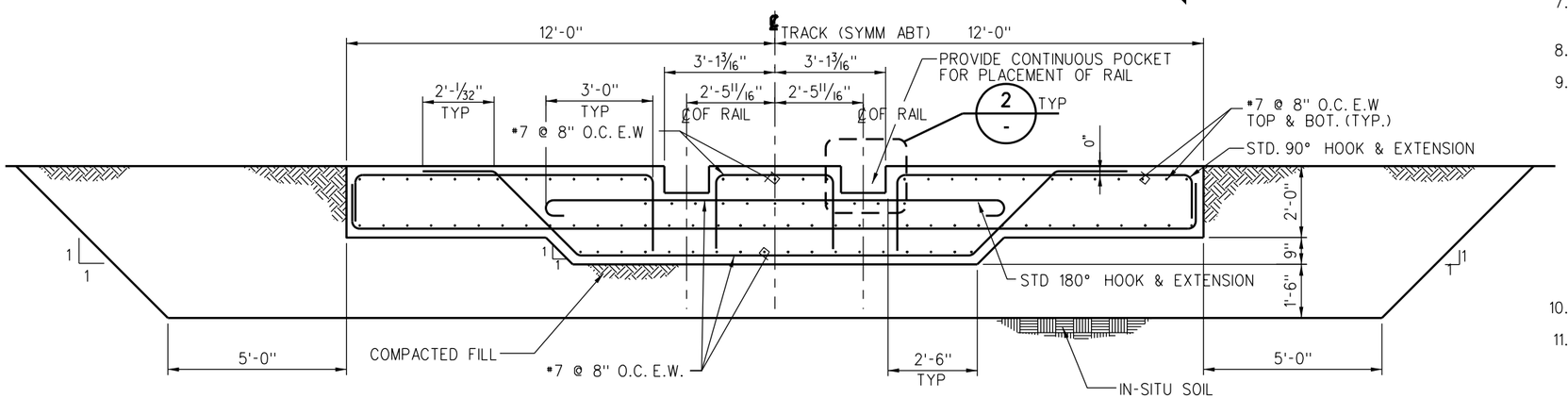

SECTION 1 / -
SCALE: 1/2" = 1'-0"

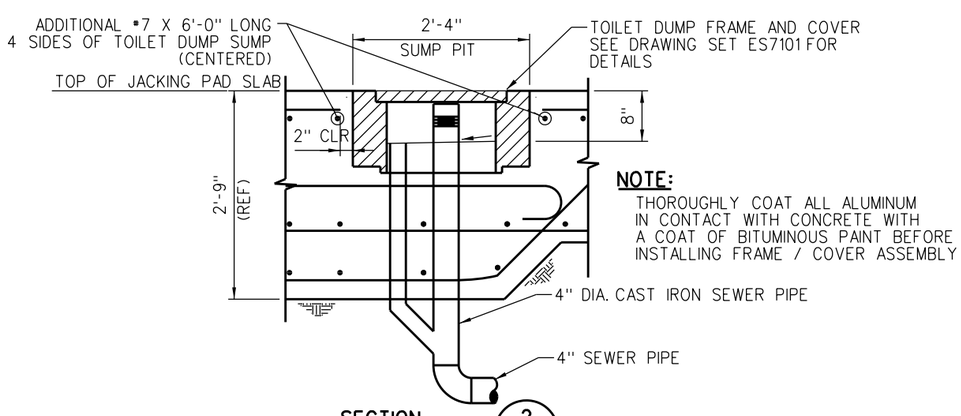

NOTE:
THOROUGHLY COAT ALL ALUMINUM IN CONTACT WITH CONCRETE WITH A COAT OF BITUMINOUS PAINT BEFORE INSTALLING FRAME / COVER ASSEMBLY

SECTION 2 / -
SCALE: 1" = 1'-0"

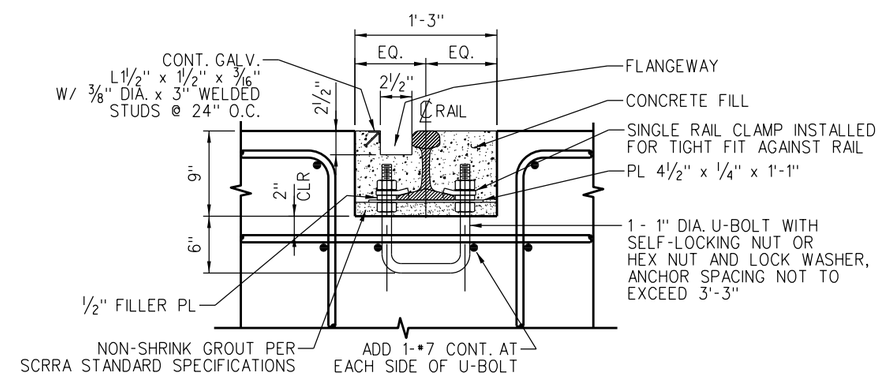

DETAIL A / -
SCALE: 1 1/2" = 1'-0"

NOTES:

1. TOILET DUMPS SHOWN FOR REFERENCE ONLY. EXACT LOCATIONS TO BE DETERMINED BY SCRRA ENGINEERING STANDARD ES7104.
2. DIMENSIONS SHOWN ARE FOR A STANDARD JACKING PAD, ACTUAL DIMENSIONS TO BE DETERMINED BY ENGINEERING CONTRACTOR.
3. JACKING PAD DESIGN BASED ON SOIL BEARING PRESSURE OF 2250 PSF TO 3500 PSF, SITE SPECIFIC CONDITIONS SHOULD BE VERIFIED AND DESIGN ADJUSTED ACCORDINGLY.
4. CONCRETE SHALL BE NORMAL WEIGHT-145 LBS./CU. FT. AND SHALL HAVE A MINIMUM COMPRESSIVE STRENGTH AT 28 DAYS OF 3000 PSI FOR ALL CONCRETE.
5. MIXING AND PLACING OF ALL CONCRETE AND SELECTION OF MATERIALS SHALL BE IN ACCORDANCE WITH THE APPLICABLE CODE AND ACI STANDARDS. CEMENT SHALL BE TYPE II CONFORMING TO ASTM C150. WATER FOR MIXING AND CURING SHALL BE FRESH, CLEAN AND POTABLE. CONTINUOUS INSPECTION IS REQUIRED FOR ALL CONCRETE WORK. WATER CEMENT RATION NOT MORE THAN 0.50.
6. PROPORTIONS OF AGGREGATE TO CEMENT SHALL BE SUCH AS TO PRODUCE A DENSE WORKABLE MIX WHICH CAN BE PLACED WITHOUT SEGREGATION OR EXCESS FREE SURFACE WATER. REFER TO SCRRA STANDARDS AND SPECIFICATIONS FOR AGGREGATES AND PROPORTIONS. MIX DESIGNS SHALL BE SUBMITTED TO THE ENGINEER FOR APPROVAL PRIOR TO USE.
7. REINFORCING STEEL SHALL BE DEFORMED STEEL CONFORMING TO THE REQUIREMENTS OF ASTM A615, GRADE 60. REINFORCING STEEL TO BE WELDED SHALL CONFORM TO REQUIREMENTS OF ASTM A706, GRADE 60.
8. REINFORCING BARS SHALL BE SPLICED AS SHOWN ON DRAWINGS. ANY ADDITIONAL SPLICING SHALL REQUIRE PRIOR APPROVAL FROM THE ENGINEER OF RECORD.
9. REINFORCING STEEL SHALL HAVE A MINIMUM PROTECTIVE COVERING CONCRETE AS FOLLOWS:

   A) CONCRETE PLACED DIRECTLY AGAINST EARTH ——— 3"

   B) CONCRETE PLACED AGAINST FORMS BUT EXPOSED TO EARTH AND WEATHER:
      BARS LARGER THAN No. 5 ——— 2"
      No. 5 AND SMALLER ——— 1 1/2"

   C) CONCRETE PLACED AGAINST FORMS BUT NOT EXPOSED DIRECTLY TO EARTH OR WEATHER:
      SLABS AND WALLS ——— 1"
      ALL OTHERS ——— As per ACI 318-89
10. ALL BARS SHALL BE CLEAN OF RUST, GREASE AND OTHER MATERIALS LIKELY TO IMPAIR BOND. ALL BENDS SHALL BE MADE COLD.
11. FOR DETAILS OF RAIL FIXATION, REFER TO DETAIL 5 ON DRAWING ES7106-02.

REV.	DATE	DESCRIPTION	DES.	ENG.
X	XX-XX-XX	REVISION	XX	XX

DRAWN BY: A. CARLOS DATE: 03/31/2011

ASSISTANT DIRECTOR: STANDARDS & DESIGN

DIRECTOR OF ENGINEERING AND CONSTRUCTION

SCRRA ENGINEERING STANDARDS ARE INTENDED FOR SCRRA APPROVED USES ONLY. FOR NON-SCRRA APPROVED USES:
SCRRA SHALL NOT BE RESPONSIBLE FOR THE ACCURACY OR COMPLETENESS OF THE DATA OR INFORMATION CONTAINED HEREIN. THE SELECTION AND USE OF THESE STANDARDS IS THE SOLE RESPONSIBILITY OF THE USER AND SHOULD NOT BE USED WITHOUT CONSULTING A REGISTERED PROFESSIONAL ENGINEER. ALL WARRANTIES AND REPRESENTATIONS OF ANY KIND ARE DISCLAIMED. ANYONE MAKING USE OF THIS INFORMATION AGREES THAT IT ASSUMES ALL LIABILITY ARISING FROM SUCH USE. NO PART OF THESE STANDARDS SHOULD BE REPRODUCED OR DISTRIBUTED IN ANY FORM OR BY ANY MEANS WITHOUT THE PRIOR WRITTEN PERMISSION OF SCRRA. ALL RIGHTS RESERVED.

METROLINK®
SOUTHERN CALIFORNIA REGIONAL RAIL AUTHORITY
ONE GATEWAY PLAZA, 12TH FLOOR, L. A., CA. 90012

ENGINEERING STANDARDS

JACKING PAD
PLAN, SECTIONS AND DETAILS

STANDARD 7105
SCALE: AS NOTED
REVISION –
SHEET 1 OF 1
CADD FILE: ES7105

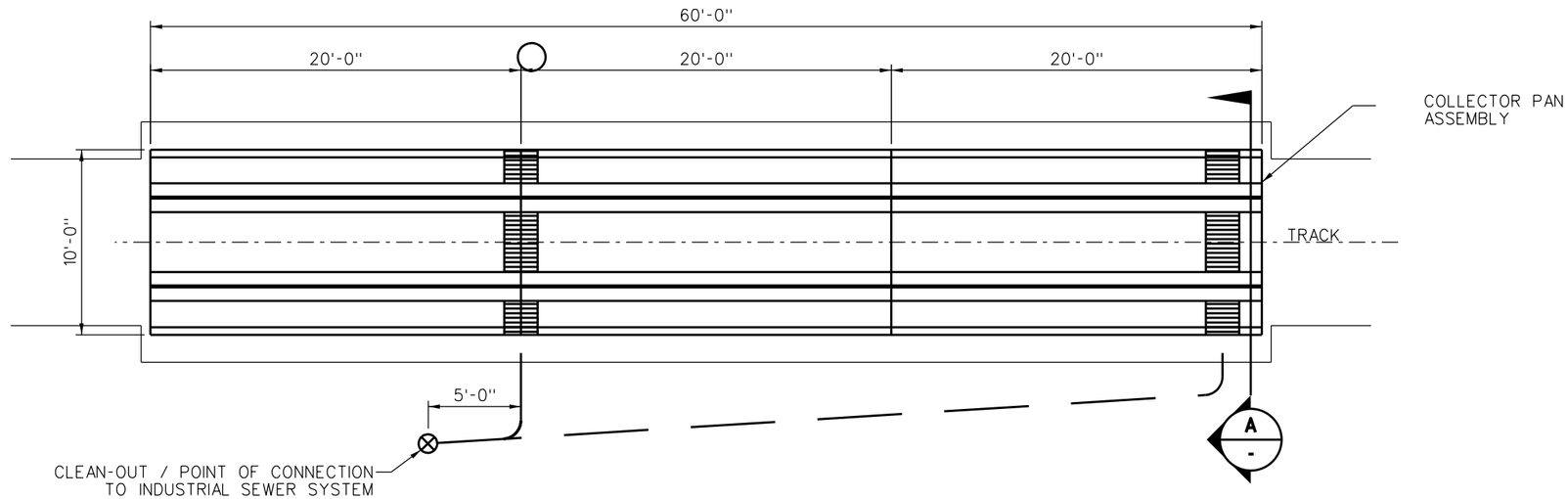

PLAN AT OIL DRIP COLLECTOR PANS
SCALE: 1/4" = 1'-0"

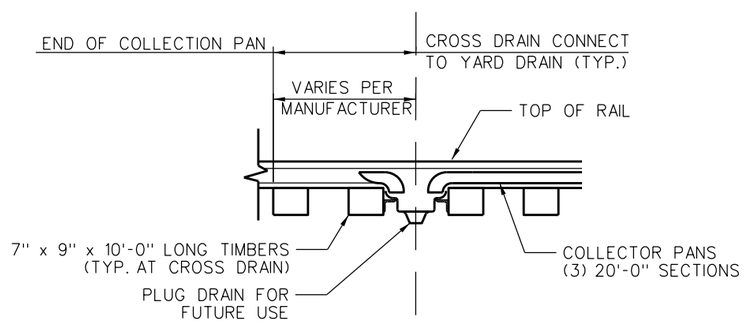

SIDE VIEW AT OIL DRIP COLLECTOR PAN
SCALE: 1" = 1'-0"

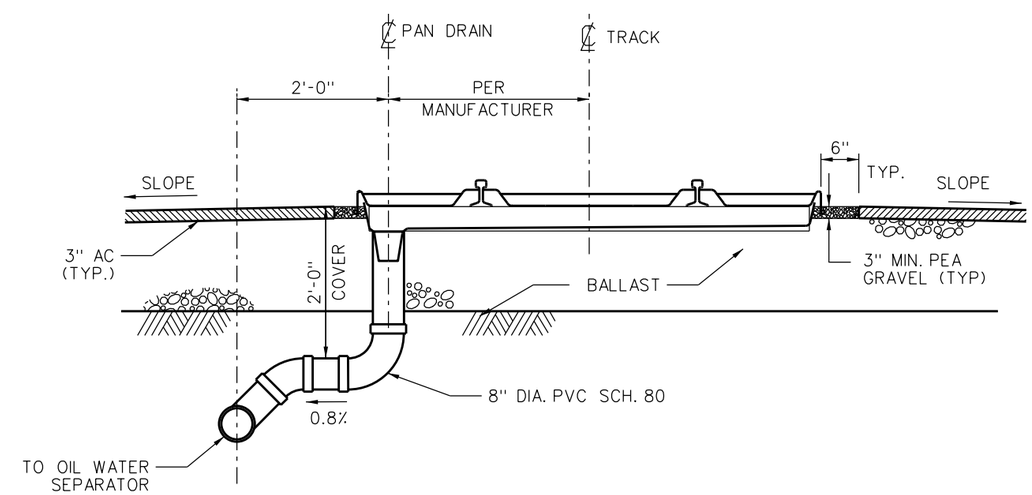

SECTION A / -
SCALE: 1" = 1'-0"

REV.	DATE	DESCRIPTION	DES.	ENG.
X	XX-XX-XX	REVISION	XX	XX

DRAWN BY: A. CARLOS DATE: 03/31/2011

ASSISTANT DIRECTOR: STANDARDS & DESIGN

DIRECTOR OF ENGINEERING AND CONSTRUCTION

SCRRA ENGINEERING STANDARDS ARE INTENDED FOR SCRRA APPROVED USES ONLY. FOR NON-SCRRA APPROVED USES:
SCRRA SHALL NOT BE RESPONSIBLE FOR THE ACCURACY OR COMPLETENESS OF THE DATA OR INFORMATION CONTAINED HEREIN. THE SELECTION AND USE OF THESE STANDARDS IS THE SOLE RESPONSIBILITY OF THE USER AND SHOULD NOT BE USED WITHOUT CONSULTING A REGISTERED PROFESSIONAL ENGINEER. ALL WARRANTIES AND REPRESENTATIONS OF ANY KIND ARE DISCLAIMED. ANYONE MAKING USE OF THIS INFORMATION AGREES THAT IT ASSUMES ALL LIABILITY ARISING FROM SUCH USE. NO PART OF THESE STANDARDS SHOULD BE REPRODUCED OR DISTRIBUTED IN ANY FORM OR BY ANY MEANS WITHOUT THE PRIOR WRITTEN PERMISSION OF SCRRA. ALL RIGHTS RESERVED.

METROLINK®
SOUTHERN CALIFORNIA REGIONAL RAIL AUTHORITY
ONE GATEWAY PLAZA, 12TH FLOOR, L. A., CA. 90012

ENGINEERING STANDARDS

OIL DRIP COLLECTOR PANS
PLAN, ELEVATION AND SECTION

STANDARD 7109
SCALE: AS NOTED
REVISION –
SHEET 1 OF 1
CADD FILE: ES7109

NOTES:

1. DEPTH OF ASPHALT CONCRETE TO BE DETERMINED BASED ON SITE SPECIFIC SOIL CONDITIONS.
2. SIZE OF STORM DRAIN AND SANITARY SEWER SYSTEMS ARE TO BE DETERMINED BASED ON SITE SPECIFIC CONDITIONS.
3. LOCATIONS OF STORM DRAINS AND SLOPE FOR ROADWAYS TO BE DETERMINED BASED ON SITE SPECIFIC CONDITIONS.

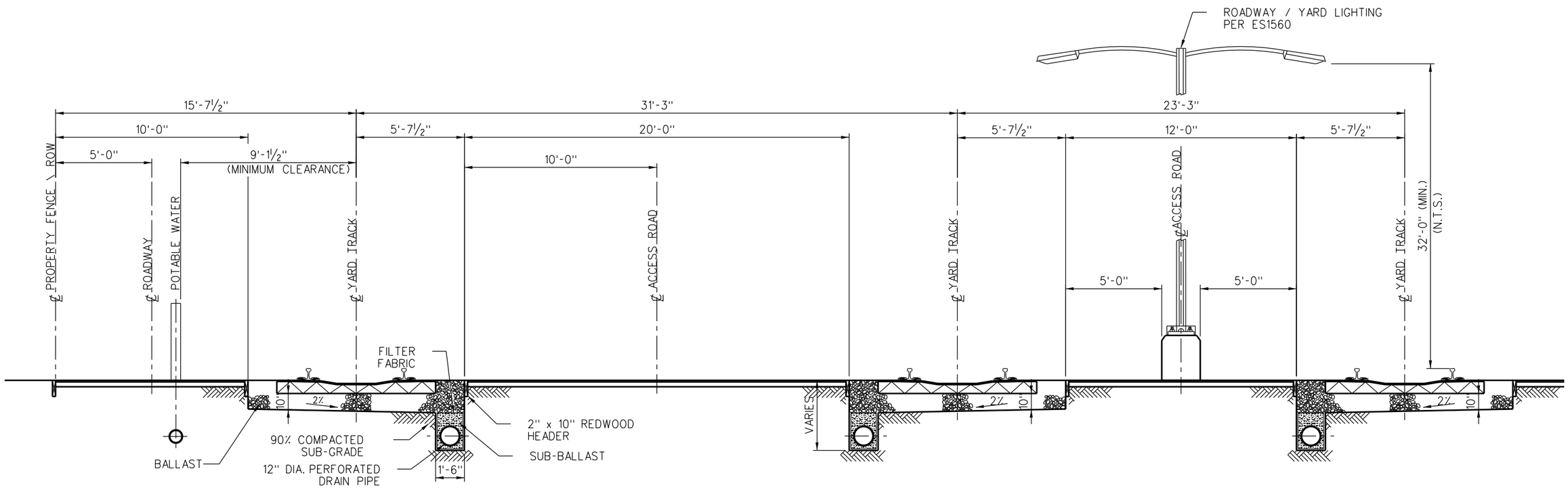

ROADWAY SECTION

REV.	DATE	DESCRIPTION	DES.	ENG.
X	XX-XX-XX	REVISION	XX	XX

DRAWN BY: A. CARLOS DATE: 03/31/2011

ASSISTANT DIRECTOR: STANDARDS & DESIGN

DIRECTOR OF ENGINEERING AND CONSTRUCTION

SCRRA ENGINEERING STANDARDS ARE INTENDED FOR SCRRA APPROVED USES ONLY. FOR NON-SCRRA APPROVED USES:
SCRRA SHALL NOT BE RESPONSIBLE FOR THE ACCURACY OR COMPLETENESS OF THE DATA OR INFORMATION CONTAINED HEREIN. THE SELECTION AND USE OF THESE STANDARDS IS THE SOLE RESPONSIBILITY OF THE USER AND SHOULD NOT BE USED WITHOUT CONSULTING A REGISTERED PROFESSIONAL ENGINEER. ALL WARRANTIES AND REPRESENTATIONS OF ANY KIND ARE DISCLAIMED. ANYONE MAKING USE OF THIS INFORMATION AGREES THAT IT ASSUMES ALL LIABILITY ARISING FROM SUCH USE. NO PART OF THESE STANDARDS SHOULD BE REPRODUCED OR DISTRIBUTED IN ANY FORM OR BY ANY MEANS WITHOUT THE PRIOR WRITTEN PERMISSION OF SCRRA. ALL RIGHTS RESERVED.

METROLINK®

SOUTHERN CALIFORNIA REGIONAL RAIL AUTHORITY
ONE GATEWAY PLAZA, 12TH FLOOR, L. A., CA. 90012

ENGINEERING STANDARDS

TRACK SPACING
AT MAINTENANCE FACILITIES

STANDARD 7110
SCALE: ⅜" = 1'-0"
REVISION –
SHEET 1 OF 1
CADD FILE: ES7110

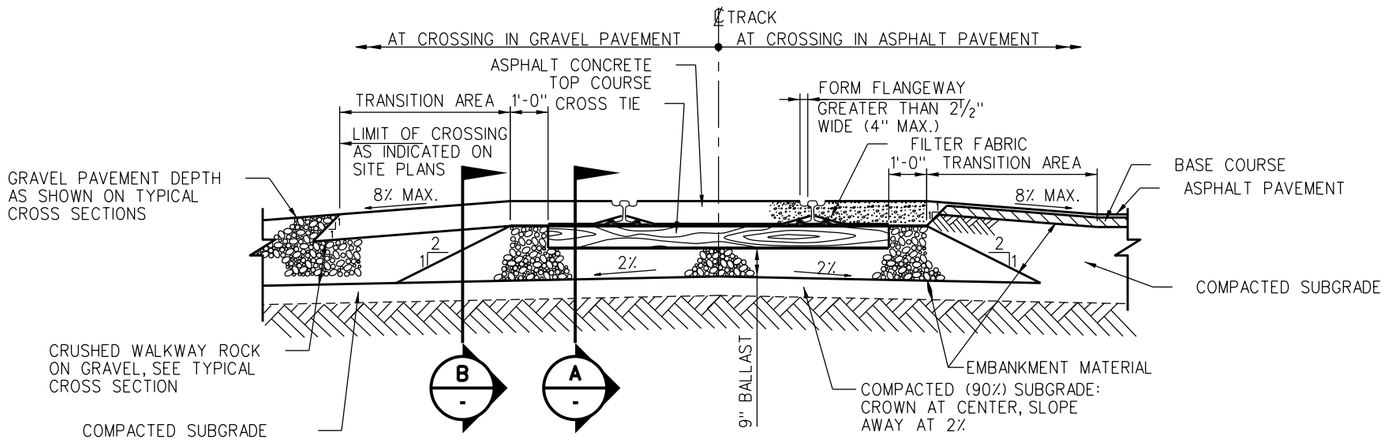

ASPHALT GRADE CROSSING

SCALE: ½" = 1'-0"

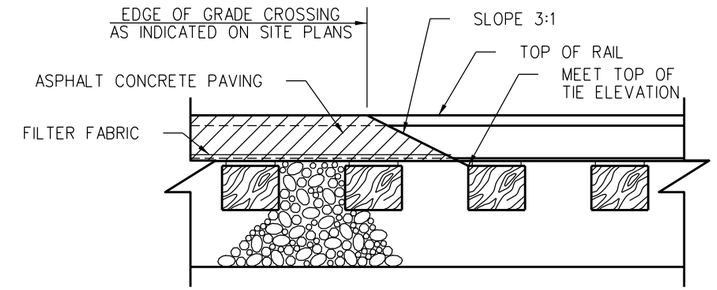

SECTION "A"
CROSSING END DETAIL

SCALE: 1" = 1'-0"

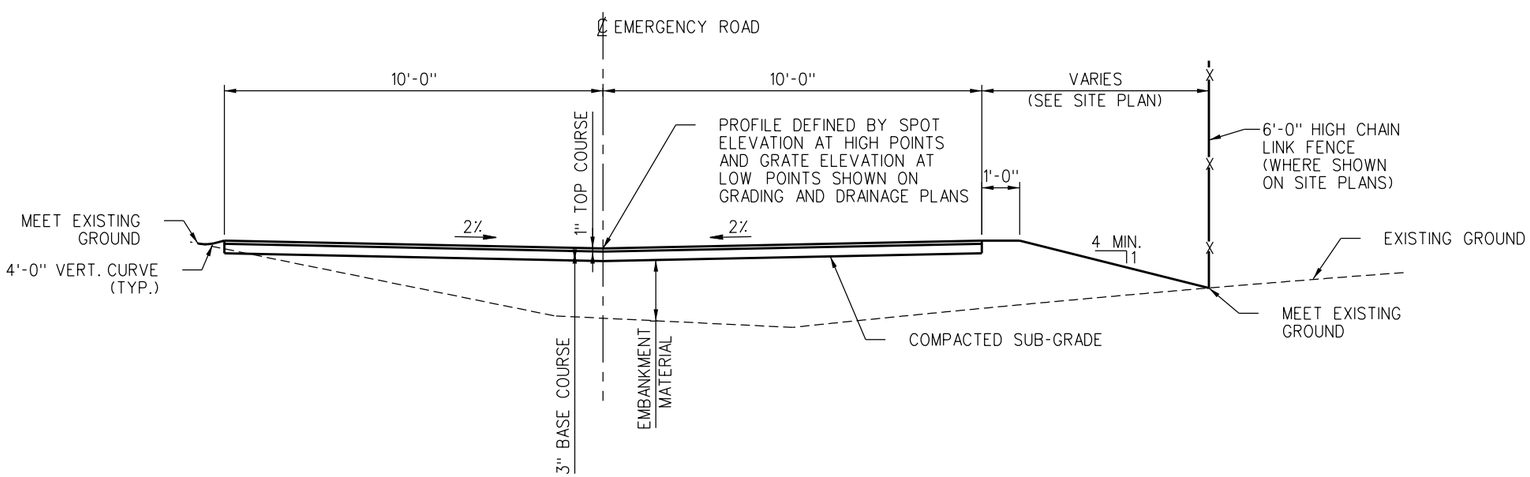

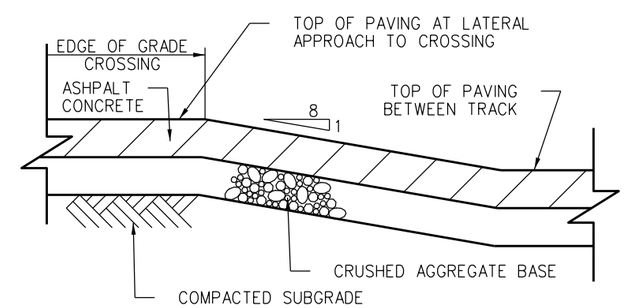

SECTION "B"
CROSSING TRANSITION DETAIL

SCALE: 1" = 1'-0"

REV.	DATE	DESCRIPTION	DES.	ENG.
X	XX-XX-XX	REVISION	XX	XX

DRAWN BY: A. CARLOS DATE: 03/31/2011

ASSISTANT DIRECTOR: STANDARDS & DESIGN

DIRECTOR OF ENGINEERING AND CONSTRUCTION

SCRRA ENGINEERING STANDARDS ARE INTENDED FOR SCRRA APPROVED USES ONLY. FOR NON-SCRRA APPROVED USES:
SCRRA SHALL NOT BE RESPONSIBLE FOR THE ACCURACY OR COMPLETENESS OF THE DATA OR INFORMATION CONTAINED HEREIN. THE SELECTION AND USE OF THESE STANDARDS IS THE SOLE RESPONSIBILITY OF THE USER AND SHOULD NOT BE USED WITHOUT CONSULTING A REGISTERED PROFESSIONAL ENGINEER. ALL WARRANTIES AND REPRESENTATIONS OF ANY KIND ARE DISCLAIMED. ANYONE MAKING USE OF THIS INFORMATION AGREES THAT IT ASSUMES ALL LIABILITY ARISING FROM SUCH USE. NO PART OF THESE STANDARDS SHOULD BE REPRODUCED OR DISTRIBUTED IN ANY FORM OR BY ANY MEANS WITHOUT THE PRIOR WRITTEN PERMISSION OF SCRRA. ALL RIGHTS RESERVED.

METROLINK®

SOUTHERN CALIFORNIA REGIONAL RAIL AUTHORITY
ONE GATEWAY PLAZA, 12TH FLOOR, L. A., CA. 90012

ENGINEERING STANDARDS

ROADWAY DETAILS
AT MAINTENANCE FACILITIES

STANDARD: 7111
SCALE: AS NOTED
REVISION: –
SHEET: 1 OF 1
CADD FILE: ES7111

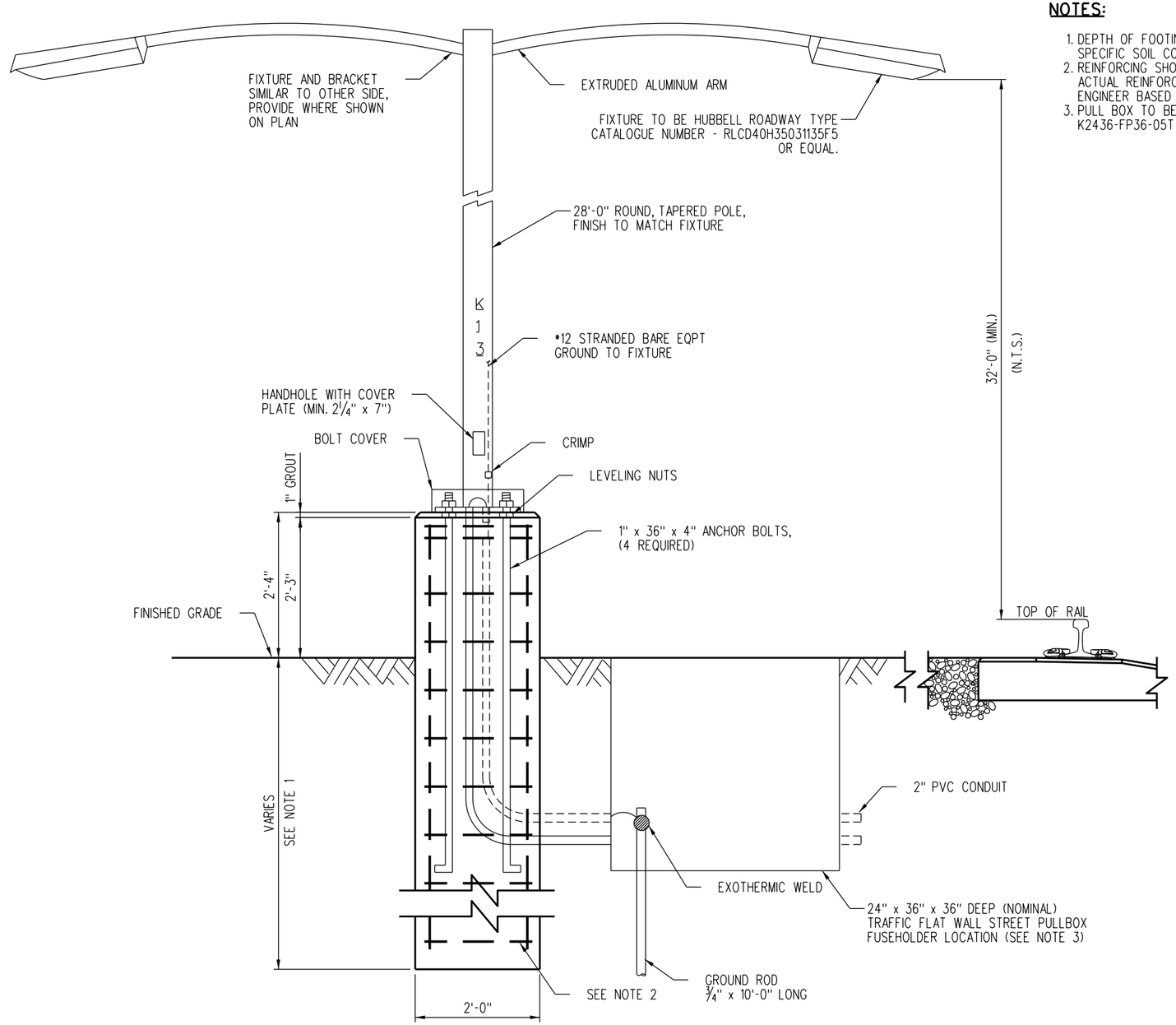

NOTES:

1. DEPTH OF FOOTING TO BE DETERMINED BASE ON SITE SPECIFIC SOIL CONDITIONS.
2. REINFORCING SHOWN FOR AESTHETIC PURPOSES ONLY. ACTUAL REINFORCING TO BE DETERMINED BY STRUCTURAL ENGINEER BASED ON SITE SPECIFIC CONDITIONS.
3. PULL BOX TO BE JENSEN PRECAST MODEL NUMBER K2436-FP36-05T OR EQUAL.

REV.	DATE	DESCRIPTION	DES.	ENG.
X	XX-XX-XX	REVISION	XX	XX

DRAWN BY: A. CARLOS DATE: 03/31/2011

ASSISTANT DIRECTOR: STANDARDS & DESIGN

DIRECTOR OF ENGINEERING AND CONSTRUCTION

SCRRA ENGINEERING STANDARDS ARE INTENDED FOR SCRRA APPROVED USES ONLY. FOR NON-SCRRA APPROVED USES:
SCRRA SHALL NOT BE RESPONSIBLE FOR THE ACCURACY OR COMPLETENESS OF THE DATA OR INFORMATION CONTAINED HEREIN. THE SELECTION AND USE OF THESE STANDARDS IS THE SOLE RESPONSIBILITY OF THE USER AND SHOULD NOT BE USED WITHOUT CONSULTING A REGISTERED PROFESSIONAL ENGINEER. ALL WARRANTIES AND REPRESENTATIONS OF ANY KIND ARE DISCLAIMED. ANYONE MAKING USE OF THIS INFORMATION AGREES THAT IT ASSUMES ALL LIABILITY ARISING FROM SUCH USE. NO PART OF THESE STANDARDS SHOULD BE REPRODUCED OR DISTRIBUTED IN ANY FORM OR BY ANY MEANS WITHOUT THE PRIOR WRITTEN PERMISSION OF SCRRA. ALL RIGHTS RESERVED.

METROLINK®
SOUTHERN CALIFORNIA REGIONAL RAIL AUTHORITY
ONE GATEWAY PLAZA, 12TH FLOOR, L. A., CA. 90012

ENGINEERING STANDARDS

LIGHTING AT MAINTENANCE FACILITIES
FOUNDATION AND FIXTURE

STANDARD 7112
SCALE: 1" = 1'-0"
REVISION –
SHEET 1 OF 1
CADD FILE: ES7112

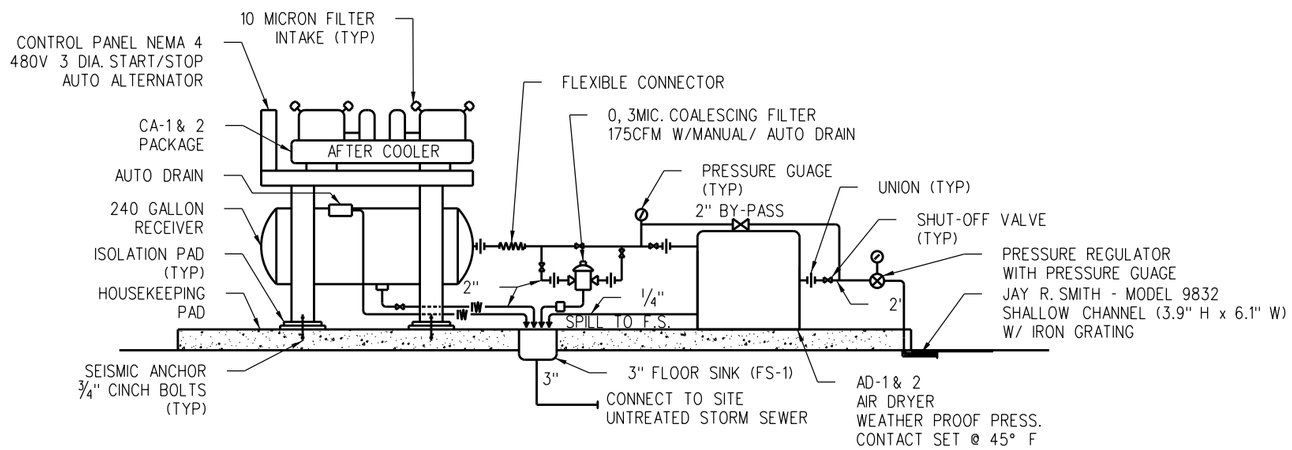

AIR COMPRESSOR/DRYER DETAIL

AIR COMPRESSOR SCHEDULE

UNIT NO.	LOCATION	MFR.	COMPRESSOR						MOTOR				RECEIVER	REMARKS
			MAKE MODEL	DELIV. CFM	MAX. PSI	CUT IN PSI	CUT OUT PSI	RPM	HP	VOLTS	PHASE	CYCLE	CAPACITY GAL.	
CA-1	OUTSIDE (DUPLEX)	INGERSOL RAND TYPE 30	2000X 20/A20	72 EA.	175	145	150	670	20 EA.	480	3	60	240	NEMA 4 STARTER
CA-2	OUTSIDE (SIMPLEX)	INGERSOL RAND TYPE 30	2545	35 EA.	175	140	145	1050	10 EA.	480	3	60	240	NEMA 4 STARTER

AIR DRYER SCHEDULE

UNIT NO.	LOCATION	MFR	MAKE MODEL	TYPE	SCFM	MOTOR				REMARKS
						HP	VOLTS	PHASE	CYCLE	
AD-1	OUTSIDE	ZEKS HEATSINK	150HSE	REFRIGERATED DRYING	150	¾ HP, 1KW	115	1	60	FOR OUTSIDE USE
AD-2	OUTSIDE	ZEKS HEATSINK	75HSB	REFRIGERATED DRYING	75	¾ HP, 0.8KW	115	1	60	FOR OUTSIDE USE

NOTE:

CONTRACTOR TO PROVIDE ADDITIONAL PIPING SUPPORTS AS NEEDED.

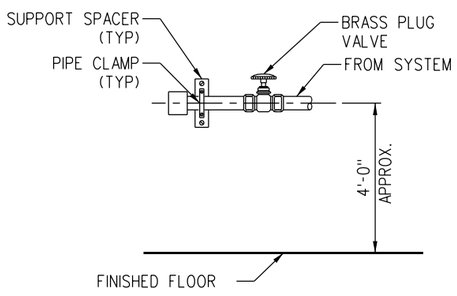

AIR COMPRESSOR OUTLET (AO-3)

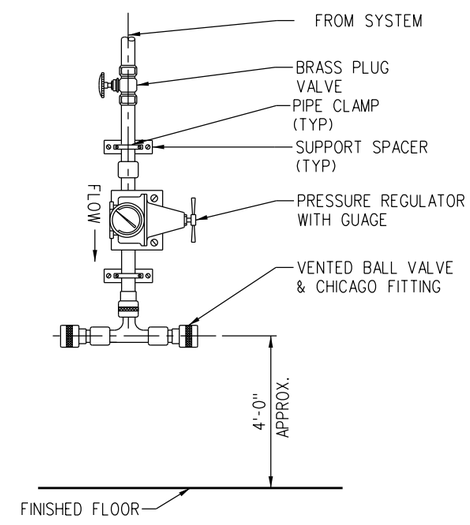

AIR COMPRESSOR OUTLET (AO-2)

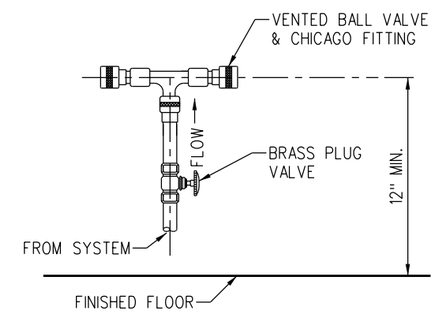

AIR COMPRESSOR OUTLET (AO-1)

REV.	DATE	DESCRIPTION	DES.	ENG.
X	XX-XX-XX	REVISION	XX	XX

DRAWN BY: A. CARLOS DATE: 03/31/2011

ASSISTANT DIRECTOR: STANDARDS & DESIGN

DIRECTOR OF ENGINEERING AND CONSTRUCTION

SCRRA ENGINEERING STANDARDS ARE INTENDED FOR SCRRA APPROVED USES ONLY. FOR NON-SCRRA APPROVED USES:
SCRRA SHALL NOT BE RESPONSIBLE FOR THE ACCURACY OR COMPLETENESS OF THE DATA OR INFORMATION CONTAINED HEREIN. THE SELECTION AND USE OF THESE STANDARDS IS THE SOLE RESPONSIBILITY OF THE USER AND SHOULD NOT BE USED WITHOUT CONSULTING A REGISTERED PROFESSIONAL ENGINEER. ALL WARRANTIES AND REPRESENTATIONS OF ANY KIND ARE DISCLAIMED. ANYONE MAKING USE OF THIS INFORMATION AGREES THAT IT ASSUMES ALL LIABILITY ARISING FROM SUCH USE. NO PART OF THESE STANDARDS SHOULD BE REPRODUCED OR DISTRIBUTED IN ANY FORM OR BY ANY MEANS WITHOUT THE PRIOR WRITTEN PERMISSION OF SCRRA. ALL RIGHTS RESERVED.

METROLINK®
SOUTHERN CALIFORNIA REGIONAL RAIL AUTHORITY
ONE GATEWAY PLAZA, 12TH FLOOR, L. A., CA. 90012

ENGINEERING STANDARDS

COMPRESSED AIR PLUMBING SCHEDULE AND DETAILS

STANDARD 7201
SCALE: NONE
REVISION –
SHEET 1 OF 2
CADD FILE: ES7201-01

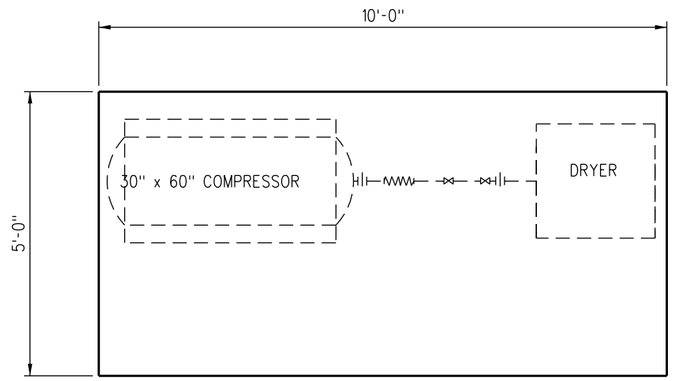

PLAN AT SIMPLEX COMPRESSOR FOUNDATION

NOTES:

1. CONTRACTOR TO SUBMIT PAD DETAILS PER SCRRA STANDARD SPECIFICATIONS.
2. FOUNDATION BOLTS SHOULD PROJECT THRU NUTS AT LEAST ½" TO ALLOW FOR LEVELING.

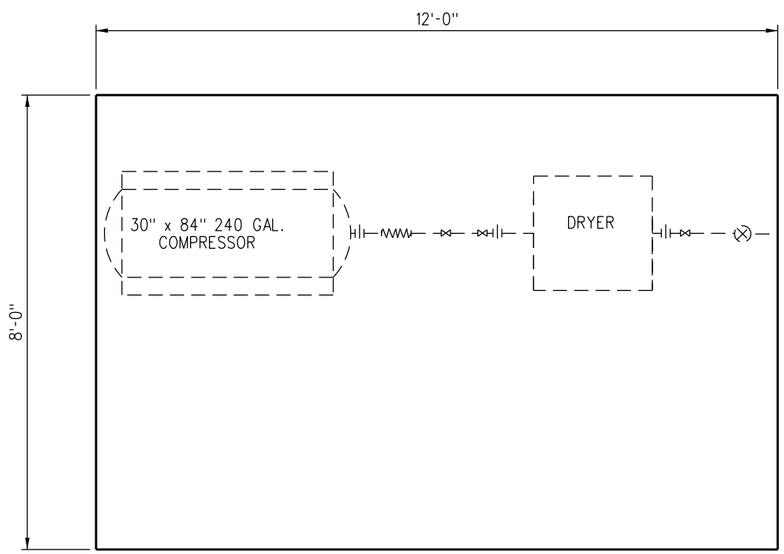

PLAN AT COMPRESSOR FOUNDATION

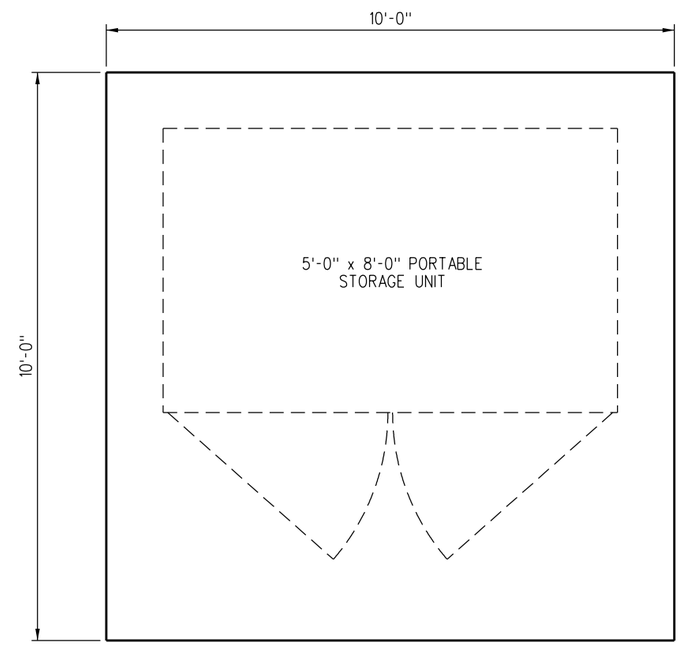

FOUNDATION PLAN

REV.	DATE	DESCRIPTION	DES.	ENG.
X	XX-XX-XX	REVISION	XX	XX

DRAWN BY: A. CARLOS DATE: 03/31/2011

ASSISTANT DIRECTOR: STANDARDS & DESIGN

DIRECTOR OF ENGINEERING AND CONSTRUCTION

SCRRA ENGINEERING STANDARDS ARE INTENDED FOR SCRRA APPROVED USES ONLY. FOR NON-SCRRA APPROVED USES:
SCRRA SHALL NOT BE RESPONSIBLE FOR THE ACCURACY OR COMPLETENESS OF THE DATA OR INFORMATION CONTAINED HEREIN. THE SELECTION AND USE OF THESE STANDARDS IS THE SOLE RESPONSIBILITY OF THE USER AND SHOULD NOT BE USED WITHOUT CONSULTING A REGISTERED PROFESSIONAL ENGINEER. ALL WARRANTIES AND REPRESENTATIONS OF ANY KIND ARE DISCLAIMED. ANYONE MAKING USE OF THIS INFORMATION AGREES THAT IT ASSUMES ALL LIABILITY ARISING FROM SUCH USE. NO PART OF THESE STANDARDS SHOULD BE REPRODUCED OR DISTRIBUTED IN ANY FORM OR BY ANY MEANS WITHOUT THE PRIOR WRITTEN PERMISSION OF SCRRA. ALL RIGHTS RESERVED.

METROLINK®

SOUTHERN CALIFORNIA REGIONAL RAIL AUTHORITY
ONE GATEWAY PLAZA, 12TH FLOOR, L. A., CA. 90012

ENGINEERING STANDARDS

MISCELLANEOUS EQUIPMENT FOUNDATIONS

STANDARD: 7201
SCALE: ¾" = 1'-0"
REVISION: –
SHEET: 2 OF 2
CADD FILE: ES7201-02

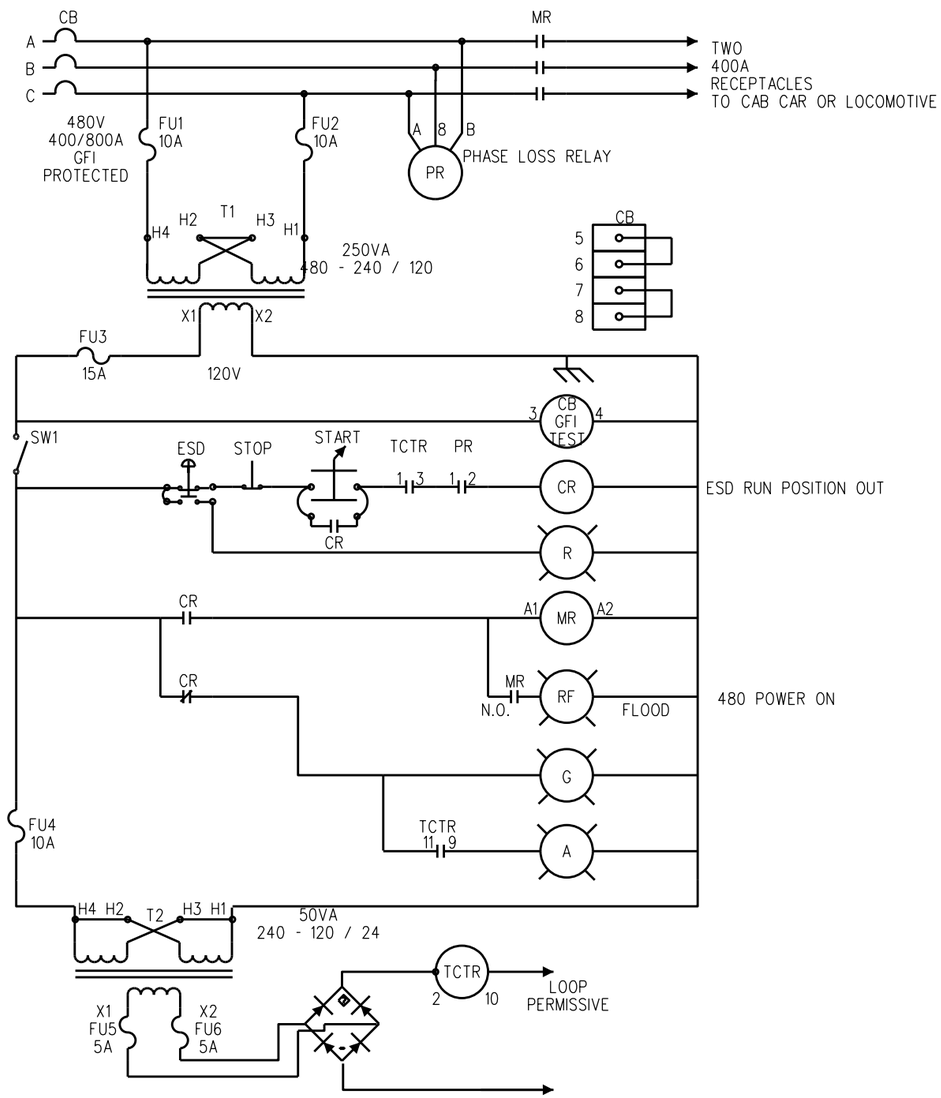

REV.	DATE	DESCRIPTION	DES.	ENG.
X	XX-XX-XX	REVISION	XX	XX

DRAWN BY: A. CARLOS DATE: 03/31/2011

ASSISTANT DIRECTOR: STANDARDS & DESIGN

DIRECTOR OF ENGINEERING AND CONSTRUCTION

SCRRA ENGINEERING STANDARDS ARE INTENDED FOR SCRRA APPROVED USES ONLY. FOR NON-SCRRA APPROVED USES:
SCRRA SHALL NOT BE RESPONSIBLE FOR THE ACCURACY OR COMPLETENESS OF THE DATA OR INFORMATION CONTAINED HEREIN. THE SELECTION AND USE OF THESE STANDARDS IS THE SOLE RESPONSIBILITY OF THE USER AND SHOULD NOT BE USED WITHOUT CONSULTING A REGISTERED PROFESSIONAL ENGINEER. ALL WARRANTIES AND REPRESENTATIONS OF ANY KIND ARE DISCLAIMED. ANYONE MAKING USE OF THIS INFORMATION AGREES THAT IT ASSUMES ALL LIABILITY ARISING FROM SUCH USE. NO PART OF THESE STANDARDS SHOULD BE REPRODUCED OR DISTRIBUTED IN ANY FORM OR BY ANY MEANS WITHOUT THE PRIOR WRITTEN PERMISSION OF SCRRA. ALL RIGHTS RESERVED.

METROLINK®

SOUTHERN CALIFORNIA REGIONAL RAIL AUTHORITY
ONE GATEWAY PLAZA, 12TH FLOOR, L. A., CA. 90012

ENGINEERING STANDARDS

GROUND POWER SYSTEM
TYPICAL 600A PANEL
SCHEMATIC

STANDARD 7301
SCALE: NONE
REVISION –
SHEET 1 OF 2
CADD FILE: ES7301-01

WAYSIDE POWER CABINET OPERATION:

WITH TWO WAYSIDE POWER JUMPER CABLES CONNECTED TO THE CABCAR OR LOCOMOTIVE:

1. MOVE THE EMERGENCY STOP BUTTON ON THE FRONT OF THE PANEL TO THE RUN POSITION (OUT).
2. MOVE THE CONTROL CIRCUIT KNIFE SWITCH LOCATED ON THE SIDE OF THE WAYSIDE POWER PANEL TO THE CONNECTED POSITION.
3. THE AMBER LIGHT OF THE WAYSIDE POWER CABINET WILL ILLUMINATE WHEN THERE IS CONTINUITY IN THE TRAINLINE CIRCUIT.
4. WHEN TRAINLINE IS ESTABLISHED ENERGIZED THE 480 VOLT POWER TO THE EQUIPMENT BY KEYING ON THE KEY SWITCH LOCATED ON THE FRONT OF THE WAYSIDE POWER CABINET.
5. WHEN THE 480 VOLT POWER IS ENERGIZED, THE RED LIGHT ON TOP OF THE WAYSIDE POWER PANEL WILL ILLUMINATE, THE AMBER TRAINLINE LIGHT WILL GO OUT, THE RED PUSH BUTTON ABOVE THE KEY SWITCH WILL ILLUMINATE.
6. TO SHUT DOWN THE 480 VOLT POWER, PUSH THE RED STOP BUTTON LOCATED ABOVE THE KEY SWITCH.
7. PHASING FOR WAYSIDE POWER SHALL BE SET FOR COUNTER CLOCKWISE.

BILL OF MATERIAL

QTY	ITEM DESCRIPTION	LEGEND
1	CIRCUIT BREAKER, 3 POLE, 600A, 480 VAC, ELECTRONIC TRIP	CB
1	CONTACTOR, IEC, 3 POLE, 630A, 480 VAC, COIL VOLTAGE 120 VAC	M
2	LUG KIT, 2 x 2 600 MCM	M
1	SAFETY SWITCH, 2 POLE, 30A, 240 VAC, NEMA 3R	SW1
1	DOOR MOUNTED OPERATING MECHANISMS	CB
1	CONTROL TRANSFORMER, 120/24 V	T2
1	CONTROL TRANSFORMER, 480/120-240 V	T1
1	KEY OPERATED SELECTOR SWITCH, 3 POSITION, SPRING RETURN TO CENTER	START
1	PUSH BUTTON OPERATOR	ESD
1	PILOT LIGHT, AMBER, 120 VAC	A
1	PUSH BUTTON, ILLUMINATED, RED, 120 VAC	G, STOP
1	CONTACT BLOCK, 1 N.C.	ESD
1	CONTACT BLOCK 1 N.O.	ESD

BILL OF MATERIAL (CONT.)

QTY	ITEM DESCRIPTION	LEGEND
1	CONTACT BLOCK, 1 N.O. & N.C.	POWER ON
1	MUSHROOM HEAD, RED, JUMBO	ESD
1	RELAY, 3 POLE, 2 N.O. & 1 N.C., 120 VAC COIL	CR
1	RELAY SOCKET	PR
1	RELAY SOCKET	TCTR
1	RELAY, 24 VDC, 3 POLE, 11 PIN	TCTR
1	RELAY, PHASE LOSS/ UNDER VOLTAGE, 480 VAC	PR
1	GROUND BAR	
4	NAMEPLATE, LARGE NEMA DEVICE	
3	NAMEPLATE, 3" x 4", RED WHITE LETTERS	
1	ENCLOSURE, NEMA 4½", 2 DOOR, LOCKABLE HANDLE	
1	BACK PANEL	
1	PENANT FIXTURE	
2	HOUSING & CABLE ASSEMBLY - PYLE NATIONAL PART No. RPC1736SE1794 OR EQUAL	

BILL OF MATERIAL (CONT.)

QTY	ITEM DESCRIPTION	LEGEND
1	MOUNTING HOOD	
1	MEYERS HUB, ½"	RF
1	CONDUIT NIPPLE, CLOSE x ½"	
2	LOCK NUT, ½"	
2	BUSHING INSULATING, ½"	
2	CONNECTOR	
2	CONNECTOR	
1	FUSES, TRM-10	F4
1	FUSES, TRM-15	F3
2	FUSES, ATMR-5	F5 & F6
2	FUSES, ATMR-10	F1 & F2
1	TERMINAL BLOCK, 10 POLE, 30 A	
1	CABLE, WELDING, 4/0	

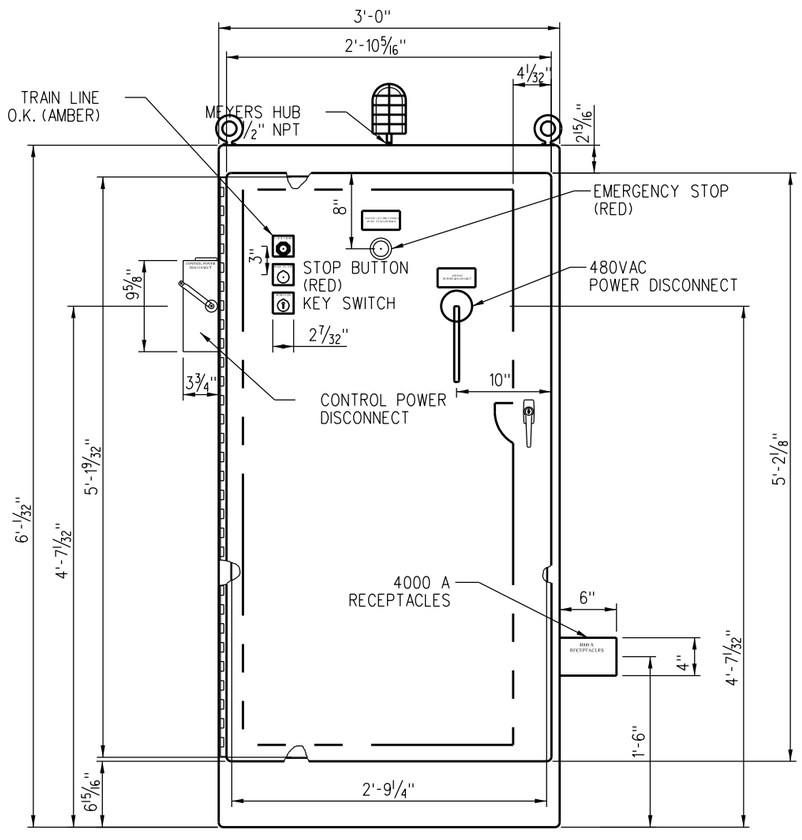

PANEL DOOR LAYOUT

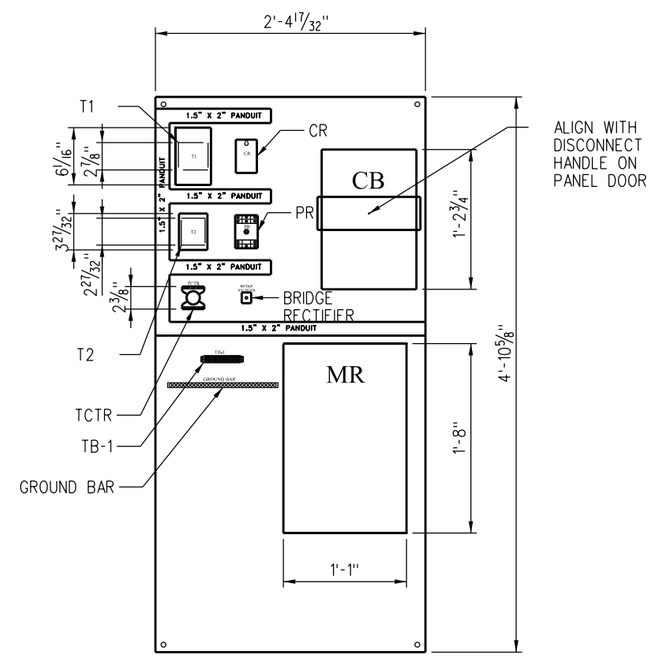

BACK PANEL LAYOUT

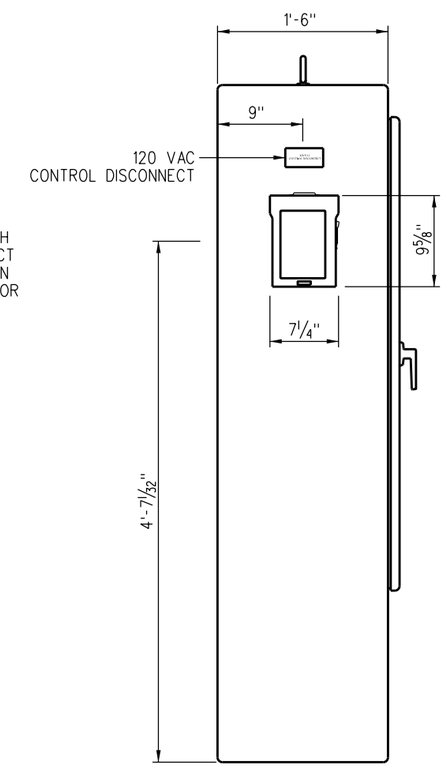

LEFT SIDE PANEL LAYOUT

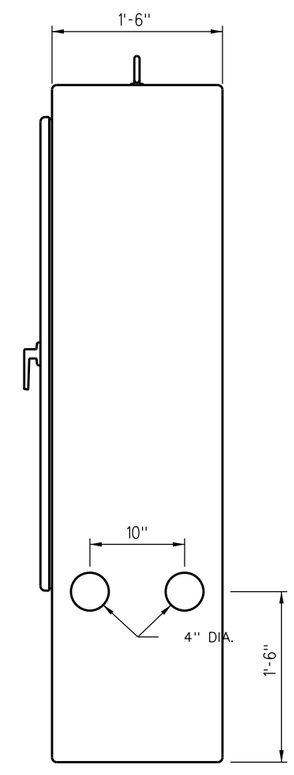

RIGHT SIDE PANEL LAYOUT

REV.	DATE	DESCRIPTION	DES.	ENG.
X	XX-XX-XX	REVISION	XX	XX

DRAWN BY: A. CARLOS DATE: 03/31/2011

ASSISTANT DIRECTOR: STANDARDS & DESIGN

DIRECTOR OF ENGINEERING AND CONSTRUCTION

SCRRA ENGINEERING STANDARDS ARE INTENDED FOR SCRRA APPROVED USES ONLY. FOR NON-SCRRA APPROVED USES, SCRRA SHALL NOT BE RESPONSIBLE FOR THE ACCURACY OR COMPLETENESS OF THE DATA OR INFORMATION CONTAINED HEREIN. THE SELECTION AND USE OF THESE STANDARDS IS THE SOLE RESPONSIBILITY OF THE USER AND SHOULD NOT BE USED WITHOUT CONSULTING A REGISTERED PROFESSIONAL ENGINEER. ALL WARRANTIES AND REPRESENTATIONS OF ANY KIND ARE DISCLAIMED. ANYONE MAKING USE OF THIS INFORMATION AGREES THAT IT ASSUMES ALL LIABILITY ARISING FROM SUCH USE. NO PART OF THESE STANDARDS SHOULD BE REPRODUCED OR DISTRIBUTED IN ANY FORM OR BY ANY MEANS WITHOUT THE PRIOR WRITTEN PERMISSION OF SCRRA. ALL RIGHTS RESERVED.

METROLINK®

SOUTHERN CALIFORNIA REGIONAL RAIL AUTHORITY
ONE GATEWAY PLAZA, 12TH FLOOR, L. A., CA. 90012

ENGINEERING STANDARDS

GROUND POWER SYSTEM
PANEL LAYOUTS

STANDARD 7301
SCALE: 1½" = 1'-0"
REVISION –
SHEET 2 OF 2
CADD FILE: ES7301-02

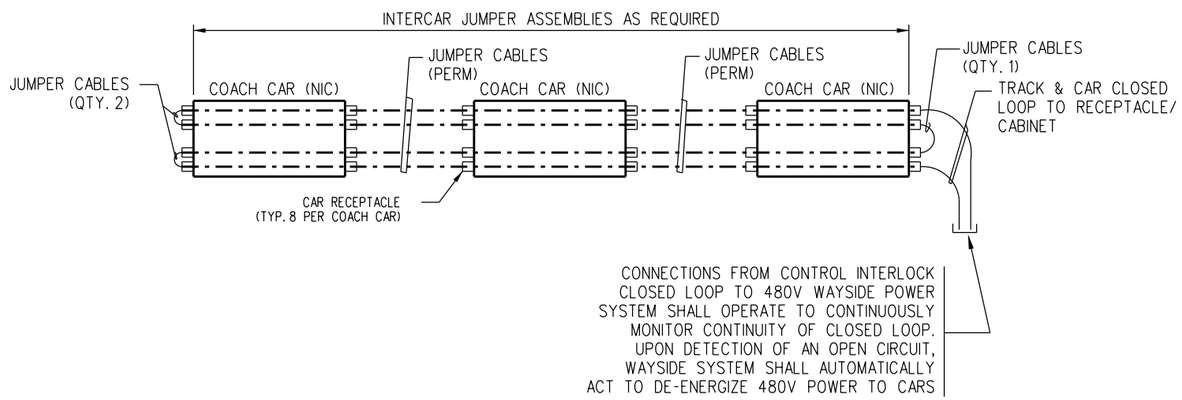

PLAN VIEW - CONTROL INTERLOCK SCHEME FOR 480V STANDBY POWER

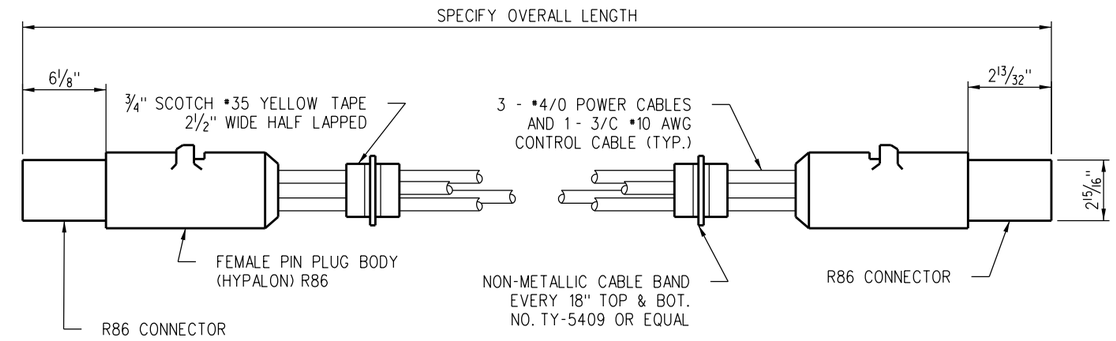

480-VOLT CORDSET

QUANTITY REQ'D.-2 FOR EACH 480-VOLT WAYSIDE POWER RECEPTACLE BOX OUTLET

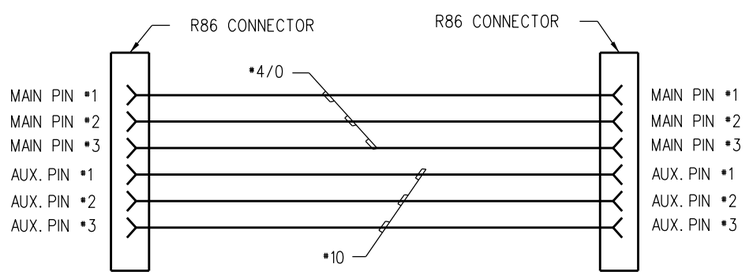

480-VOLT CORDSET SCHEMATIC

480-VOLT OUTLET PIN UTILIZATIONS

PIN	CONNECTION AT RECEPTACLE	CAR CONNECTION	FUNCTION
MAIN #1	'A' PHASE OF 480V FEEDER	480-V 'A' BUS	480-V POWER
MAIN #2	'B' PHASE OF 480V FEEDER	480-V 'B' BUS	480-V POWER
MAIN #3	'C' PHASE OF 480V FEEDER	480-V 'C' BUS	480-V POWER
AUX. #1	CONTROL INTERLOCK SYSTEM RELAY (S)	AUX. #1 PIN OF RECEPTACLE AT OPPOSITE END OF CAR	CONTROL CLOSED LOOP INTERLOCK
AUX. #2	GROUND	CHASIS GROUND	GROUNDING
AUX. #3			

REV.	DATE	DESCRIPTION	DES.	ENG.
X	XX-XX-XX	REVISION	XX	XX

DRAWN BY: A. CARLOS DATE: 03/31/2011

ASSISTANT DIRECTOR: STANDARDS & DESIGN

DIRECTOR OF ENGINEERING AND CONSTRUCTION

SCRRA ENGINEERING STANDARDS ARE INTENDED FOR SCRRA APPROVED USES ONLY. FOR NON-SCRRA APPROVED USES:
SCRRA SHALL NOT BE RESPONSIBLE FOR THE ACCURACY OR COMPLETENESS OF THE DATA OR INFORMATION CONTAINED HEREIN. THE SELECTION AND USE OF THESE STANDARDS IS THE SOLE RESPONSIBILITY OF THE USER AND SHOULD NOT BE USED WITHOUT CONSULTING A REGISTERED PROFESSIONAL ENGINEER. ALL WARRANTIES AND REPRESENTATIONS OF ANY KIND ARE DISCLAIMED. ANYONE MAKING USE OF THIS INFORMATION AGREES THAT IT ASSUMES ALL LIABILITY ARISING FROM SUCH USE. NO PART OF THESE STANDARDS SHOULD BE REPRODUCED OR DISTRIBUTED IN ANY FORM OR BY ANY MEANS WITHOUT THE PRIOR WRITTEN PERMISSION OF SCRRA. ALL RIGHTS RESERVED.

METROLINK®
SOUTHERN CALIFORNIA REGIONAL RAIL AUTHORITY
ONE GATEWAY PLAZA, 12TH FLOOR, L. A., CA. 90012

ENGINEERING STANDARDS

480V WAYSIDE POWER CORDSET DETAILS

STANDARD 7302
SCALE: NONE
REVISION –
SHEET 1 OF 1
CADD FILE: ES7302

AVERAGE GRADE	SPEED IN MPH												AVERAGE GRADE
	15	20	25	30	35	40	45	50	55	60	65	70	
3.0	437	712	1056	1471	1955	2511	3136	3834	4601	5441	6350	7332	3.0
2.9	446	724	1070	1487	1974	2532	3159	3859	4628	5469	6380	7364	2.9
2.8	456	737	1085	1505	1994	2554	3184	3886	4657	5501	6414	7399	2.8
2.7	467	751	1102	1525	2016	2579	3211	3916	4689	5535	6451	7438	2.7
2.6	479	766	1120	1546	2040	2606	3241	3948	4724	5573	6491	7481	2.6
2.5	492	782	1140	1569	2067	2636	3274	3984	4763	5615	6535	7529	2.5
2.4	506	800	1162	1594	2095	2668	3309	4023	4805	5660	6584	7581	2.4
2.3	521	819	1185	1622	2127	2703	3348	4066	4852	5710	6638	7638	2.3
2.2	537	840	1211	1652	2161	2742	3391	4112	4903	5765	6697	7701	2.2
2.1	554	863	1239	1685	2199	2784	3438	4164	4959	5825	6761	7770	2.1
2.0	573	888	1269	1720	2239	2830	3489	4220	5020	5892	6833	7846	2.0
1.9	594	914	1301	1759	2284	2880	3545	4282	5087	5964	6911	7929	1.9
1.8	616	943	1337	1801	2333	2935	3606	4349	5161	6044	6997	8021	1.8
1.7	640	975	1376	1847	2386	2995	3674	4423	5241	6132	7091	8122	1.7
1.6	666	1009	1418	1897	2444	3061	3747	4504	5330	6228	7194	8233	1.6
1.5	693	1046	1464	1951	2507	3133	3827	4593	5427	6333	7308	8355	1.5
1.4	724	1086	1513	2011	2576	3211	3915	4690	5534	6449	7433	8489	1.4
1.3	756	1129	1568	2076	2651	3297	4011	4797	5651	6576	7571	8637	1.3
1.2	792	1176	1626	2146	2733	3391	4116	4913	5779	6716	7722	8799	1.2
1.1	830	1227	1690	2223	2823	3493	4232	5041	5919	6869	7888	8978	1.1
1.0	871	1283	1760	2307	2920	3605	4358	5181	6074	7037	8070	9174	1.0
0.9	916	1343	1835	2398	3027	3727	4495	5335	6243	7222	8270	9390	0.9
0.8	964	1408	1918	2497	3144	3861	4646	5503	6428	7425	8490	9627	0.8
0.7	1016	1479	2007	2605	3271	4007	4811	5687	6631	7647	8732	9888	0.7
0.6	1073	1555	2104	2723	3409	4166	4992	5889	6854	7891	8997	10175	0.6
0.5	1134	1638	2210	2851	3561	4341	5190	6110	7099	8159	9289	10491	0.5
0.4	1199	1728	2324	2991	3726	4531	5406	6352	7367	8454	9610	10838	0.4
0.3	1271	1826	2449	3143	3906	4740	5643	6617	7661	8777	9962	11219	0.3
0.2	1348	1932	2585	3309	4102	4967	5902	6908	7983	9131	10349	11639	0.2
0.1	1431	2047	2733	3490	4317	5216	6185	7226	8337	9521	10774	12100	0.1
0.0%	1521	2172	2893	3687	4551	5488	6495	7575	8725	9948	11241	12607	0.0%

D = DISTANCE REQUIRED FOR SAFE BRAKING
TB = TONS PER OPERATIVE BRAKE [143]
Vo = INITIAL VELOCITY AT BEGINNING OF BRAKING
G = AVERAGE GRADE IN PERCENT

FORMULA:

$$\text{DISTANCE} = 0.01TBVo^2 + (80Vo)^{1-(GTB/1300)}$$

NOTE:

1. DEVIATION FROM THIS STANDARD SHALL BE APPROVED BY SCRRA MANAGER OF C&S ENGINEERING OR DESIGNATE.

REVISIONS				
-	-	-	-	-
REV.	DATE	DESCRIPTION	DES.	ENG.

FINAL REVIEW BY: C&SDRC DATE: 11/21/08

APPROVED BY

Dan C. Guerrero
MANAGER, COMMUNICATIONS AND SIGNALS ENGINEERING

Darrell V. Maxey
DIRECTOR, ENGINEERING AND CONSTRUCTION

THE SOUTHERN CALIFORNIA REGIONAL RAIL AUTHORITY OR IT'S OFFICERS OR AGENTS SHALL NOT BE RESPONSIBLE FOR THE ACCURACY OR COMPLETENESS OF THIS PLAN SHEET

METROLINK
SOUTHERN CALIFORNIA REGIONAL RAIL AUTHORITY
700 SOUTH FLOWER STREET
LOS ANGELES, CALIFORNIA 90017

ENGINEERING STANDARDS

MINIMUM BRAKING DISTANCE
TABLE FOR FREIGHT TRAINS
ASCENDING – 143 TPOB

STANDARD 8000
SCALE: NONE
REVISION –
SHEET 1 OF 2
CADD FILE: ES8000-01

AVERAGE GRADE	SPEED IN MPH												AVERAGE GRADE
	15	20	25	30	35	40	45	50	55	60	65	70	
0.0%	1521	2172	2893	3687	4551	5488	6495	7575	8725	9948	11241	12607	0.0%
-0.1	1618	2307	3067	3902	4806	5785	6834	7957	9150	10417	11754	13165	-0.1
-0.2	1724	2454	3257	4135	5085	6110	7206	8376	9617	10932	12318	13778	-0.2
-0.3	1837	2613	3463	4390	5389	6465	7612	8834	10128	11497	12938	14452	-0.3
-0.4	1960	2786	3687	4667	5721	6852	8057	9337	10690	12118	13618	15194	-0.4
-0.5	2093	2973	3931	4969	6084	7276	8543	9887	11305	12799	14366	16009	-0.5
-0.6	2237	3176	4196	5298	6479	7739	9075	10490	11980	13547	15188	16905	-0.6
-0.7	2392	3396	4484	5657	6910	8245	9658	11151	12720	14367	16090	17891	-0.7
-0.8	2560	3635	4797	6048	7381	8798	10295	11874	13531	15268	17082	18975	-0.8
-0.9	2742	3893	5138	6473	7895	9403	10993	12667	14421	16257	18172	20167	-0.9
-1.0	2939	4174	5508	6937	8455	10063	11756	13536	15397	17343	19369	21478	-1.0
-1.1	3151	4479	5910	7442	9067	10785	12592	14487	16468	18535	20684	22919	-1.1
-1.2	3380	4809	6348	7992	9734	11574	13505	15530	17641	19843	22130	24503	-1.2
-1.3	3629	5167	6823	8591	10463	12436	14506	16671	18929	21279	23717	26246	-1.3
-1.4	3897	5556	7340	9244	11257	13378	15600	17923	20341	22855	25462	28162	-1.4
-1.5	4187	5977	7903	9956	12125	14408	16797	19293	21889	24586	27379	30269	-1.5
-1.6	4500	6434	8514	10730	13071	15533	18108	20795	23587	26485	29484	32585	-1.6
-1.7	4839	6930	9179	11575	14104	16763	19542	22439	25449	28571	31798	35132	-1.7
-1.8	5206	7467	9901	12494	15231	18107	21111	24242	27491	30859	34340	37933	-1.8
-1.9	5602	8050	10687	13496	16461	19575	22828	26216	29731	33372	37133	41013	-1.9
-2.0	6031	8682	11541	14587	17803	21180	24707	28379	32187	36130	40201	44400	-2.0
-2.1	6494	9368	12469	15776	19268	22934	26763	30748	34881	39158	43573	48124	-2.1
-2.2	6994	10111	13479	17071	20866	24851	29012	33344	37835	42482	47277	52219	-2.2
-2.3	7536	10918	14576	18482	22610	26946	31474	36187	41074	46130	51347	56721	-2.3
-2.4	8121	11792	15770	20019	24513	29235	34168	39303	44627	50135	55818	61672	-2.4
-2.5	8753	12741	17067	21694	26590	31737	37115	42716	48523	54532	60731	67116	-2.5
-2.6	9437	13770	18477	23518	28856	34471	40341	46454	52796	59358	66128	73102	-2.6
-2.7	10177	14885	20011	25505	31329	37459	43871	50551	57482	64655	72058	79684	-2.7
-2.8	10976	16095	21678	27670	34027	40724	47733	55038	62621	70471	78573	86922	-2.8
-2.9	11841	17408	23490	30028	36972	44292	51959	59954	68256	76854	85732	94881	-2.9
-3.0	12775	18831	25461	32597	40185	48192	56584	65340	74437	83862	93597	103632	-3.0

D = DISTANCE REQUIRED FOR SAFE BRAKING
TB = TONS PER OPERATIVE BRAKE [143]
Vo = INITIAL VELOCITY AT BEGINNING OF BRAKING
G = AVERAGE GRADE IN PERCENT

FORMULA:

$$\text{DISTANCE} = 0.01TBVo^2 + (80Vo)^{1-(GTB/1300)}$$

NOTE:

1. DEVIATION FROM THIS STANDARD SHALL BE APPROVED BY SCRRA MANAGER OF C&S ENGINEERING OR DESIGNATE.

REVISIONS				
REV.	DATE	DESCRIPTION	DES.	ENG.
-	-	-	-	-

FINAL REVIEW BY: C&SDRC DATE: 11/21/08

APPROVED BY

Dan C. Guerrero
MANAGER, COMMUNICATIONS AND SIGNALS ENGINEERING

Darrell V. Maxey
DIRECTOR, ENGINEERING AND CONSTRUCTION

THE SOUTHERN CALIFORNIA REGIONAL RAIL AUTHORITY OR IT'S OFFICERS OR AGENTS SHALL NOT BE RESPONSIBLE FOR THE ACCURACY OR COMPLETENESS OF THIS PLAN SHEET

METROLINK
SOUTHERN CALIFORNIA REGIONAL RAIL AUTHORITY
700 SOUTH FLOWER STREET
LOS ANGELES, CALIFORNIA 90017

ENGINEERING STANDARDS

MINIMUM BRAKING DISTANCE
TABLE FOR FREIGHT TRAINS
DESCENDING – 143 TPOB

STANDARD: 8000
SCALE: NONE
REVISION: –
SHEET: 2 OF 2
CADD FILE: ES8000-02

FREIGHT TRAIN REDUCING DISTANCES

GRADE	VELOCITY AT ORIGIN (Vo)																				GRADE
	REDUCTION TO 40 M.P.H.						REDUCTION TO 45 M.P.H.					REDUCTION TO 50 M.P.H.				REDUCTION TO 55 M.P.H.			REDUCTION TO 60 M.P.H.		
	45	50	55	60	65	70	50	55	60	65	70	55	60	65	70	60	65	70	65	70	
2	2775	3506	4306	5178	6118	7132	3348	4148	5019	5960	6973	3977	4848	5789	6802	4665	5606	6619	5410	6424	2
1.9	2788	3525	4330	5207	6154	7172	3355	4161	5038	5984	7003	3977	4855	5801	6820	4658	5604	6623	5394	6413	1.9
1.8	2804	3547	4358	5242	6194	7219	3366	4177	5061	6013	7037	3981	4864	5816	6841	4653	5605	6630	5379	6404	1.8
1.7	2823	3573	4391	5281	6240	7272	3379	4197	5087	6046	7078	3986	4877	5836	6867	4650	5609	6640	5366	6397	1.7
1.6	2846	3603	4429	5326	6293	7332	3395	4221	5119	6086	7124	3995	4893	5860	6898	4649	5616	6655	5355	6394	1.6
1.5	2872	3638	4472	5378	6353	7400	3415	4250	5156	6131	7178	4008	4914	5889	6936	4652	5627	6674	5347	6394	1.5
1.4	2902	3677	4521	5436	6421	7477	3440	4284	5199	6183	7239	4024	4940	5924	6980	4659	5643	6699	5341	6397	1.4
1.3	2938	3723	4577	5503	6497	7564	3469	4323	5249	6243	7309	4045	4971	5965	7032	4670	5664	6730	5340	6406	1.3
1.2	2979	3776	4641	5578	6584	7662	3504	4369	5306	6312	7390	4071	5008	6014	7092	4685	5691	6769	5343	6420	1.2
1.1	3026	3835	4713	5663	6682	7772	3544	4423	5372	6391	7481	4103	5053	6072	7162	4706	5725	6815	5350	6441	1.1
1	3079	3903	4795	5759	6792	7896	3592	4484	5448	6480	7585	4142	5106	6139	7243	4734	5766	6871	5364	6468	1
0.9	3141	3980	4888	5867	6915	8035	3647	4555	5534	6582	7702	4189	5168	6216	7336	4769	5817	6937	5385	6504	0.9
0.8	3210	4067	4992	5989	7054	8191	3711	4636	5633	6698	7835	4244	5240	6306	7443	4812	5877	7014	5413	6550	0.8
0.7	3289	4165	5109	6125	7210	8366	3784	4729	5744	6829	7985	4308	5324	6409	7565	4864	5949	7105	5450	6607	0.7
0.6	3379	4275	5241	6278	7384	8562	3868	4834	5871	6977	8155	4384	5421	6527	7704	4927	6033	7211	5498	6675	0.6
0.5	3479	4400	5389	6449	7579	8781	3965	4953	6014	7144	8345	4471	5532	6661	7863	5003	6132	7334	5557	6758	0.5
0.4	3593	4539	5554	6641	7797	9025	4074	5089	6176	7332	8560	4572	5659	6815	8043	5092	6248	7476	5629	6857	0.4
0.3	3721	4696	5740	6855	8040	9298	4198	5242	6358	7543	8800	4689	5805	6990	8247	5196	6381	7638	5717	6975	0.3
0.2	3865	4871	5947	7095	8312	9602	4340	5415	6563	7780	9070	4823	5971	7188	8478	5318	6535	7825	5822	7112	0.2
0.1	4026	5068	6179	7362	8615	9941	4499	5610	6794	8047	9373	4976	6159	7412	8738	5459	6712	8038	5947	7273	0.1
0	4207	5287	6437	7660	8953	10319	4679	5829	7052	8345	9711	5150	6373	7666	9032	5622	6915	8281	6093	7459	0
-0.1	4409	5532	6725	7992	9329	10740	4882	6076	7342	8679	10090	5348	6615	7952	9363	5810	7147	8558	6264	7675	-0.1
-0.2	4635	5805	7046	8361	9748	11207	5111	6352	7667	9053	10513	5573	6888	8275	9734	6025	7411	8871	6463	7923	-0.2
-0.3	4887	6110	7404	8773	10213	11728	5368	6662	8030	9471	10985	5828	7197	8637	10152	6271	7712	9226	6694	8209	-0.3
-0.4	5169	6449	7802	9230	10730	12306	5656	7008	8437	9937	11513	6116	7544	9045	10620	6552	8052	9628	6960	8535	-0.4
-0.5	5482	6826	8244	9738	11305	12948	5978	7396	8890	10457	12100	6441	7935	9502	11145	6871	8438	10081	7265	8908	-0.5
-0.6	5831	7245	8735	10302	11943	13661	6340	7829	9396	11037	12755	6807	8374	10015	11733	7233	8874	10592	7615	9333	-0.6
-0.7	6219	7712	9280	10928	12651	14452	6744	8313	9960	11683	13484	7218	8866	10589	12390	7643	9366	11167	8015	9815	-0.7
-0.8	6650	8229	9886	11623	13437	15330	7195	8852	10589	12403	14296	7680	9417	11231	13124	8107	9921	11814	8470	10363	-0.8
-0.9	7129	8803	10557	12393	14308	16303	7698	9452	11288	13203	15198	8199	10035	11949	13945	8630	10545	12540	8987	10983	-0.9
-1	7661	9440	11302	13247	15274	17382	8260	10121	12067	14093	16202	8779	10725	12751	14860	9220	11246	13355	9574	11683	-1
-1.1	8251	10146	12127	14194	16343	18578	8885	10865	12932	15082	17317	9430	11497	13646	15881	9883	12033	14267	10239	12473	-1.1
-1.2	8904	10928	13040	15242	17528	19902	9581	11693	13894	16181	18555	10156	12358	14644	17018	10629	12915	15289	10990	13364	-1.2
-1.3	9629	11794	14052	16402	18840	21369	10355	12612	14963	17401	19929	10968	13318	15757	18285	11465	13904	16432	11838	14366	-1.3
-1.4	10431	12753	15171	17686	20292	22992	11216	13634	16148	18755	21455	11875	14389	16996	19696	12404	15010	17710	12793	15493	-1.4
-1.5	11318	13814	16410	19107	21899	24789	12172	14767	17464	20257	23147	12885	15582	18375	21265	13454	16247	19137	13868	16758	-1.5
-1.6	12300	14987	17779	20678	23677	26777	13233	16025	18923	21922	25023	14011	16910	19909	23010	14630	17629	20730	15077	18177	-1.6
-1.7	13386	16284	19293	22415	25642	28977	14410	17420	20541	23769	27103	15265	18387	21614	24949	15944	19171	22506	16433	19767	-1.7
-1.8	14586	17717	20966	24335	27815	31408	15716	18965	22334	25814	29408	16661	20029	23509	27103	17412	20892	24486	17954	21548	-1.8
-1.9	15912	19300	22815	26456	30217	34097	17163	20678	24319	28080	31960	18212	21854	25614	29495	19050	22810	26691	19659	23539	-1.9
-2	17376	21048	24856	28800	32871	37069	18766	22574	26518	30589	34787	19937	23880	27951	32150	20876	24947	29146	21566	25765	-2

ASCENDING

DESCENDING

Vo = INITIAL VELOCITY AT BEGINNING OF BRAKING
Vf = FINAL VELOCITY AT END OF BRAKING [XX]
G = AVERAGE GRADE IN PERCENT

D = DISTANCE REQUIRED FOR SAFE BRAKING
TB = TONS PER OPERATIVE BRAKE [143]
FORMULA:

$$\text{DISTANCE} = 0.01TBV_o^2 + (80V_o)^{1-(GTB/1300)} - (0.01TBV_f^2)^{1-(GTB/1900)}$$

REVISIONS				
REV.	DATE	DESCRIPTION	DES.	ENG.
-	-	-	-	-

FINAL REVIEW BY: C&SDRC DATE: 11/21/08

APPROVED BY

Dan C. Guerrero
MANAGER, COMMUNICATIONS AND SIGNALS ENGINEERING

Darrell V. Maxey
DIRECTOR, ENGINEERING AND CONSTRUCTION

THE SOUTHERN CALIFORNIA REGIONAL RAIL AUTHORITY OR IT'S OFFICERS OR AGENTS SHALL NOT BE RESPONSIBLE FOR THE ACCURACY OR COMPLETENESS OF THIS PLAN SHEET

METROLINK
SOUTHERN CALIFORNIA REGIONAL RAIL AUTHORITY
700 SOUTH FLOWER STREET
LOS ANGELES, CALIFORNIA 90017

ENGINEERING STANDARDS

FREIGHT TRAIN REDUCING DISTANCES

STANDARD: 8005
SCALE: NONE
REVISION: –
SHEET: 1 OF 4
CADD FILE: ES8005-01

FREIGHT TRAIN REDUCING DISTANCES

GRADE	VELOCITY AT ORIGIN (Vo)															GRADE
	REDUCTION TO 30 M.P.H.								REDUCTION TO 35 M.P.H.							
	35	40	45	50	55	60	65	70	40	45	50	55	60	65	70	
2	1801	2392	3051	3782	4582	5454	6395	7408	2261	2920	3651	4451	5322	6263	7276	2
1.9	1822	2418	3083	3819	4625	5502	6448	7467	2278	2943	3680	4485	5362	6309	7327	1.9
1.8	1845	2447	3119	3861	4673	5556	6509	7533	2298	2970	3712	4524	5407	6360	7384	1.8
1.7	1871	2481	3159	3908	4727	5617	6576	7607	2322	3000	3749	4568	5458	6417	7448	1.7
1.6	1900	2518	3204	3961	4787	5684	6651	7690	2348	3034	3792	4617	5515	6482	7520	1.6
1.5	1933	2559	3254	4019	4854	5760	6735	7782	2379	3073	3839	4673	5579	6554	7601	1.5
1.4	1970	2606	3310	4085	4929	5844	6828	7884	2414	3118	3893	4736	5652	6636	7692	1.4
1.3	2012	2658	3372	4158	5012	5938	6932	7998	2453	3168	3953	4807	5733	6727	7793	1.3
1.2	2059	2717	3442	4239	5105	6042	7048	8125	2498	3224	4021	4886	5824	6829	7907	1.2
1.1	2111	2782	3520	4330	5208	6158	7176	8266	2549	3288	4097	4975	5925	6944	8034	1.1
1	2170	2854	3607	4430	5323	6286	7319	8423	2606	3359	4183	5075	6039	7071	8176	1
0.9	2235	2935	3703	4542	5450	6430	7478	8598	2671	3439	4279	5186	6166	7214	8334	0.9
0.8	2307	3025	3810	4667	5592	6588	7654	8791	2744	3529	4386	5311	6307	7373	8510	0.8
0.7	2388	3124	3929	4804	5749	6765	7849	9006	2825	3629	4505	5449	6465	7550	8706	0.7
0.6	2478	3235	4060	4957	5923	6960	8066	9244	2916	3742	4639	5604	6641	7747	8925	0.6
0.5	2578	3358	4207	5127	6116	7176	8306	9508	3018	3867	4787	5776	6837	7966	9168	0.5
0.4	2688	3494	4368	5315	6329	7416	8572	9800	3132	4007	4953	5968	7055	8211	9439	0.4
0.3	2811	3645	4548	5522	6566	7682	8867	10124	3260	4163	5137	6181	7297	8482	9739	0.3
0.2	2947	3812	4746	5752	6828	7976	9193	10483	3402	4336	5342	6418	7566	8783	10073	0.2
0.1	3097	3997	4965	6007	7118	8301	9554	10880	3560	4529	5570	6681	7865	9118	10444	0.1
0	3264	4201	5208	6288	7438	8661	9954	11320	3736	4743	5823	6973	8196	9489	10855	0
-0.1	3448	4427	5476	6599	7792	9059	10396	11806	3932	4981	6104	7297	8564	9901	11312	-0.1
-0.2	3652	4676	5772	6942	8183	9499	10885	12344	4150	5245	6416	7657	8972	10358	11818	-0.2
-0.3	3877	4952	6099	7321	8616	9984	11425	12939	4391	5538	6761	8055	9424	10864	12379	-0.3
-0.4	4125	5256	6460	7740	9093	10521	12022	13597	4659	5863	7143	8496	9924	11425	13000	-0.4
-0.5	4399	5591	6858	8202	9620	11114	12681	14324	4956	6223	7567	8985	10479	12046	13689	-0.5
-0.6	4701	5961	7297	8712	10201	11768	13409	15127	5285	6621	8036	9525	11092	12733	14451	-0.6
-0.7	5034	6369	7781	9274	10843	12491	14214	16015	5649	7062	8554	10123	11771	13494	15295	-0.7
-0.8	5400	6818	8315	9894	11550	13288	15101	16995	6052	7549	9128	10785	12522	14336	16229	-0.8
-0.9	5804	7312	8903	10577	12331	14167	16081	18077	6498	8088	9762	11516	13352	15267	17262	-0.9
-1	6249	7857	9550	11330	13191	15137	17163	19272	6990	8683	10462	12324	14270	16296	18405	-1
-1.1	6739	8457	10263	12159	14139	16206	18356	20591	7534	9341	11236	13217	15284	17433	19668	-1.1
-1.2	7277	9117	11048	13072	15184	17386	19672	22046	8135	10067	12091	14203	16404	18691	21065	-1.2
-1.3	7870	9843	11912	14078	16336	18686	21124	23653	8798	10868	13034	15291	17641	20080	22608	-1.3
-1.4	8521	10642	12863	15186	17604	20119	22725	25425	9530	11752	14075	16493	19007	21614	24314	-1.4
-1.5	9237	11520	13909	16405	19001	21698	24490	27380	10337	12727	15223	17819	20515	23308	26198	-1.5
-1.6	10023	12485	15060	17746	20539	23437	26436	29537	11227	13802	16489	19281	22180	25179	28279	-1.6
-1.7	10887	13546	16325	19223	22232	25354	28581	31916	12208	14987	17885	20894	24016	27243	30578	-1.7
-1.8	11836	14712	17716	20847	24096	27464	30945	34538	13289	16293	19423	22673	26041	29522	33115	-1.8
-1.9	12878	15992	19245	22633	26148	29789	33550	37430	14479	17731	21119	24634	28275	32036	35917	-1.9
-2	14022	17399	20925	24597	28406	32349	36420	40619	15789	19315	22987	26796	30739	34810	39009	-2

ASCENDING

DESCENDING

Vo = INITIAL VELOCITY AT BEGINNING OF BRAKING
Vf = FINAL VELOCITY AT END OF BRAKING [XX]
G = AVERAGE GRADE IN PERCENT

D = DISTANCE REQUIRED FOR SAFE BRAKING
TB = TONS PER OPERATIVE BRAKE [143]
FORMULA:

$$\text{DISTANCE} = 0.01TBV_o^2 + (80V_o)^{1-(GTB/1300)} - (0.01TBV_f^2)^{1-(GTB/1900)}$$

REVISIONS				
REV.	DATE	DESCRIPTION	DES.	ENG.
-	-	-	-	-

FINAL REVIEW BY: C&SDRC DATE: 11/21/08

APPROVED BY

Dan C. Guerrero
MANAGER, COMMUNICATIONS AND SIGNALS ENGINEERING

Darrell V. Maxey
DIRECTOR, ENGINEERING AND CONSTRUCTION

THE SOUTHERN CALIFORNIA REGIONAL RAIL AUTHORITY OR IT'S OFFICERS OR AGENTS SHALL NOT BE RESPONSIBLE FOR THE ACCURACY OR COMPLETENESS OF THIS PLAN SHEET

METROLINK
SOUTHERN CALIFORNIA REGIONAL RAIL AUTHORITY
700 SOUTH FLOWER STREET
LOS ANGELES, CALIFORNIA 90017

ENGINEERING STANDARDS

FREIGHT TRAIN REDUCING DISTANCES

STANDARD 8005
SCALE:
REVISION SHEET 2 OF 4
CADD FILE: ES8005-02

FREIGHT TRAIN REDUCING DISTANCES

ASCENDING ↑ / DESCENDING ↓

GRADE	VELOCITY AT ORIGIN (Vo)																			GRADE
	REDUCTION TO 20 M.P.H.										REDUCTION TO 25 M.P.H.									
	25	30	35	40	45	50	55	60	65	70	30	35	40	45	50	55	60	65	70	
2	**1049**	**1500**	**2019**	**2610**	**3269**	**4000**	**4800**	**5672**	**6613**	**7626**	**1399**	**1918**	**2509**	**3168**	**3899**	**4699**	**5570**	**6511**	**7524**	**2**
1.9	1071	1528	2053	2650	3314	4051	4856	5734	6680	7698	1421	1946	2542	3207	3943	4749	5626	6572	7591	1.9
1.8	1095	1559	2091	2693	3364	4107	4919	5802	6754	7779	1445	1977	2579	3251	3993	4805	5688	6641	7665	1.8
1.7	1122	1593	2132	2742	3420	4169	4988	5878	6837	7868	1472	2011	2621	3299	4049	4867	5757	6716	7747	1.7
1.6	1152	1631	2177	2795	3481	4238	5064	5962	6928	7967	1503	2049	2667	3353	4110	4936	5833	6800	7839	1.6
1.5	**1184**	**1672**	**2227**	**2854**	**3548**	**4314**	**5148**	**6054**	**7029**	**8076**	**1536**	**2092**	**2718**	**3412**	**4178**	**5012**	**5918**	**6893**	**7940**	**1.5**
1.4	1220	1718	2283	2918	3622	4397	5241	6156	7140	8196	1574	2139	2775	3478	4253	5097	6012	6997	8053	1.4
1.3	1260	1768	2344	2990	3704	4489	5343	6269	7263	8330	1616	2191	2837	3552	4337	5191	6117	7111	8177	1.3
1.2	1304	1824	2411	3068	3794	4591	5456	6394	7399	8477	1662	2249	2907	3633	4430	5295	6232	7238	8316	1.2
1.1	1352	1885	2484	3155	3893	4703	5581	6531	7549	8640	1714	2313	2984	3722	4532	5410	6360	7378	8469	1.1
1	**1405**	**1952**	**2566**	**3250**	**4003**	**4827**	**5719**	**6683**	**7715**	**8819**	**1771**	**2385**	**3069**	**3822**	**4645**	**5538**	**6501**	**7534**	**8638**	**1**
0.9	1463	2026	2655	3355	4123	4963	5871	6850	7898	9018	1834	2463	3163	3931	4771	5679	6658	7706	8826	0.9
0.8	1527	2107	2753	3471	4256	5113	6038	7034	8100	9237	1903	2550	3267	4053	4909	5834	6831	7896	9034	0.8
0.7	1598	2196	2861	3598	4402	5278	6222	7238	8322	9479	1980	2646	3382	4187	5062	6006	7022	8107	9263	0.7
0.6	1675	2293	2980	3737	4563	5459	6425	7462	8568	9746	2065	2752	3509	4334	5231	6197	7234	8340	9518	0.6
0.5	**1759**	**2401**	**3110**	**3890**	**4739**	**5659**	**6648**	**7709**	**8839**	**10040**	**2159**	**2868**	**3649**	**4498**	**5418**	**6407**	**7467**	**8597**	**9799**	**0.5**
0.4	1852	2519	3253	4059	4933	5879	6894	7981	9137	10365	2263	2997	3803	4677	5624	6638	7725	8881	10109	0.4
0.3	1954	2648	3410	4244	5147	6122	7165	8281	9466	10723	2377	3139	3973	4876	5851	6894	8010	9195	10452	0.3
0.2	2065	2789	3583	4448	5382	6388	7464	8612	9829	11119	2502	3296	4161	5095	6101	7177	8325	9542	10832	0.2
0.1	2187	2945	3772	4671	5640	6681	7792	8975	10229	11555	2641	3468	4367	5336	6377	7488	8671	9925	11251	0.1
0	**2321**	**3115**	**3979**	**4916**	**5923**	**7003**	**8153**	**9376**	**10669**	**12035**	**2793**	**3657**	**4594**	**5601**	**6681**	**7831**	**9054**	**10347**	**11713**	**0**
-0.1	2467	3302	4206	5185	6234	7357	8550	9817	11154	12565	2961	3866	4844	5894	7016	8210	9476	10814	12224	-0.1
-0.2	2628	3506	4456	5480	6576	7746	8987	10303	11689	13149	3145	4095	5120	6216	7386	8627	9942	11328	12788	-0.2
-0.3	2803	3730	4729	5804	6952	8174	9468	10837	12277	13792	3348	4347	5423	6570	7792	9086	10455	11896	13410	-0.3
-0.4	2995	3975	5029	6160	7364	8644	9997	11425	12926	14501	3571	4625	5756	6960	8240	9593	11021	12522	14097	-0.4
-0.5	**3205**	**4243**	**5357**	**6550**	**7817**	**9161**	**10578**	**12072**	**13640**	**15283**	**3815**	**4929**	**6122**	**7389**	**8733**	**10151**	**11645**	**13212**	**14855**	**-0.5**
-0.6	3434	4537	5717	6977	8313	9728	11218	12785	14426	16144	4084	5264	6524	7861	9275	10765	12332	13973	15691	-0.6
-0.7	3685	4858	6111	7446	8859	10351	11920	13568	15291	17092	4379	5632	6967	8379	9872	11441	13089	14812	16613	-0.7
-0.8	3959	5209	6543	7960	9457	11036	12693	14430	16244	18137	4702	6035	7453	8950	10529	12186	13923	15736	17630	-0.8
-0.9	4258	5594	7015	8523	10114	11788	13542	15378	17292	19288	5057	6478	7987	9577	11251	13005	14841	16756	18751	-0.9
-1	**4585**	**6014**	**7533**	**9141**	**10834**	**12613**	**14475**	**16420**	**18447**	**20555**	**5446**	**6965**	**8573**	**10266**	**12045**	**13907**	**15852**	**17878**	**19987**	**-1**
-1.1	4943	6474	8099	9818	11624	13520	15500	17567	19717	21951	5873	7498	9216	11023	12918	14899	16966	19116	21350	-1.1
-1.2	5333	6977	8719	10559	12491	14515	16627	18828	21115	23488	6341	8083	9923	11854	13878	15990	18192	20478	22852	-1.2
-1.3	5759	7527	9398	11372	13441	15607	17864	20214	22653	25181	6854	8725	10698	12768	14934	17191	19541	21980	24508	-1.3
-1.4	6224	8128	10141	12262	14483	16806	19224	21739	24345	27045	7415	9429	11549	13771	16094	18512	21026	23633	26333	-1.4
-1.5	**6731**	**8784**	**10953**	**13237**	**15626**	**18122**	**20718**	**23414**	**26207**	**29097**	**8031**	**10200**	**12483**	**14873**	**17368**	**19964**	**22661**	**25454**	**28344**	**-1.5**
-1.6	7285	9502	11843	14304	16879	19566	22358	25257	28256	31356	8705	11045	13507	16082	18769	21561	24459	27459	30559	-1.6
-1.7	7890	10286	12815	15474	18253	21151	24160	27282	30509	33844	9442	11972	14631	17410	20307	23317	26438	29666	33000	-1.7
-1.8	8549	11142	13879	16755	19759	22890	26139	29508	32988	36581	10250	12987	15863	18867	21998	25247	28615	32096	35689	-1.8
-1.9	9269	12078	15043	18157	21410	24798	28313	31954	35715	39595	11134	14099	17213	20466	23854	27369	31010	34771	38652	-1.9
-2	**10053**	**13100**	**16316**	**19693**	**23219**	**26891**	**30699**	**34643**	**38714**	**42912**	**12101**	**15317**	**18695**	**22221**	**25893**	**29701**	**33645**	**37716**	**41914**	**-2**

Vo = INITIAL VELOCITY AT BEGINNING OF BRAKING
Vf = FINAL VELOCITY AT END OF BRAKING [XX]
G = AVERAGE GRADE IN PERCENT

D = DISTANCE REQUIRED FOR SAFE BRAKING
TB = TONS PER OPERATIVE BRAKE [143]
FORMULA:

$$\text{DISTANCE} = 0.01TBV_o^2 + (80V_o)^{1-(GTB/1300)} - (0.01TBV_f^2)^{1-(GTB/1900)}$$

REVISIONS				
REV.	DATE	DESCRIPTION	DES.	ENG.

FINAL REVIEW BY: C&SDRC DATE: 11/21/08

APPROVED BY

Dan C. Guerrero
MANAGER, COMMUNICATIONS AND SIGNALS ENGINEERING

Darrell V. Maxey
DIRECTOR, ENGINEERING AND CONSTRUCTION

THE SOUTHERN CALIFORNIA REGIONAL RAIL AUTHORITY OR IT'S OFFICERS OR AGENTS SHALL NOT BE RESPONSIBLE FOR THE ACCURACY OR COMPLETENESS OF THIS PLAN SHEET

METROLINK
SOUTHERN CALIFORNIA REGIONAL RAIL AUTHORITY
700 SOUTH FLOWER STREET
LOS ANGELES, CALIFORNIA 90017

ENGINEERING STANDARDS

FREIGHT TRAIN REDUCING DISTANCES

STANDARD 8005
SCALE:
REVISION
SHEET 3 OF 4
CADD FILE: ES8005-03

FREIGHT TRAIN REDUCING DISTANCES

VELOCITY AT ORIGIN (Vo)

GRADE	REDUCTION TO 10 M.P.H.												REDUCTION TO 15 M.P.H.											GRADE
	15	20	25	30	35	40	45	50	55	60	65	70	20	25	30	35	40	45	50	55	60	65	70	
2	505	820	1201	1652	2172	2762	3421	4152	4952	5824	6765	7778	753	1134	1585	2104	2695	3354	4085	4885	5757	6698	7711	2
1.9	523	844	1231	1688	2214	2810	3475	4211	5017	5894	6840	7859	773	1161	1618	2143	2739	3404	4141	4946	5823	6770	7788	1.9
1.8	543	870	1264	1728	2260	2862	3533	4276	5088	5971	6924	7948	796	1190	1654	2185	2788	3459	4202	5014	5897	6849	7874	1.8
1.7	564	899	1300	1771	2310	2920	3598	4347	5166	6056	7015	8046	821	1222	1693	2232	2842	3520	4269	5088	5978	6937	7968	1.7
1.6	587	930	1339	1818	2365	2982	3668	4426	5251	6149	7116	8154	848	1257	1736	2283	2901	3586	4344	5170	6067	7034	8073	1.6
1.5	612	964	1382	1870	2425	3051	3746	4511	5346	6252	7227	8273	878	1296	1784	2339	2965	3660	4425	5260	6166	7141	8187	1.5
1.4	639	1001	1429	1926	2491	3127	3830	4605	5449	6364	7349	8405	911	1338	1836	2401	3036	3740	4515	5359	6274	7258	8314	1.4
1.3	668	1041	1480	1988	2563	3209	3923	4709	5563	6488	7483	8549	946	1385	1893	2468	3114	3828	4614	5468	6393	7388	8454	1.3
1.2	700	1085	1535	2055	2642	3299	4025	4822	5687	6625	7630	8708	985	1435	1955	2542	3200	3925	4722	5588	6525	7531	8608	1.2
1.1	735	1132	1595	2128	2728	3398	4137	4946	5825	6774	7793	8883	1028	1491	2023	2623	3294	4032	4842	5720	6670	7688	8778	1.1
1	773	1184	1661	2208	2822	3507	4259	5083	5975	6939	7971	9076	1074	1551	2098	2712	3397	4149	4973	5865	6829	7861	8966	1
0.9	814	1241	1733	2295	2925	3625	4393	5233	6140	7120	8168	9288	1125	1618	2180	2810	3510	4278	5117	6025	7004	8052	9172	0.9
0.8	858	1302	1812	2391	3037	3755	4540	5397	6322	7319	8384	9521	1181	1690	2270	2916	3634	4419	5276	6201	7197	8263	9400	0.8
0.7	906	1368	1897	2495	3160	3897	4701	5577	6521	7537	8622	9778	1241	1770	2368	3033	3770	4574	5450	6394	7410	8494	9651	0.7
0.6	958	1441	1990	2609	3295	4052	4878	5775	6740	7777	8883	10061	1307	1856	2475	3161	3919	4744	5641	6606	7643	8749	9927	0.6
0.5	1015	1520	2091	2733	3442	4222	5071	5991	6980	8041	9170	10372	1379	1951	2592	3302	4082	4931	5851	6840	7901	9030	10232	0.5
0.4	1076	1605	2201	2868	3602	4408	5283	6229	7244	8331	9486	10714	1458	2054	2721	3455	4261	5135	6082	7096	8183	9339	10567	0.4
0.3	1143	1698	2321	3016	3778	4612	5515	6489	7533	8649	9834	11091	1544	2167	2861	3623	4457	5360	6335	7379	8494	9679	10937	0.3
0.2	1215	1800	2452	3177	3970	4835	5769	6775	7851	8999	10216	11506	1637	2290	3014	3807	4672	5607	6613	7688	8836	10054	11344	0.2
0.1	1293	1910	2595	3352	4179	5078	6047	7088	8199	9383	10636	11962	1739	2425	3182	4009	4908	5877	6918	8029	9213	10466	11792	0.1
0	1378	2029	2750	3544	4408	5345	6352	7432	8582	9805	11098	12464	1850	2571	3365	4229	5166	6173	7253	8403	9626	10919	12285	0
-0.1	1470	2159	2919	3753	4658	5637	6686	7809	9002	10269	11606	13016	1971	2731	3565	4470	5449	6498	7621	8814	10081	11418	12829	-0.1
-0.2	1569	2300	3103	3981	4931	5956	7052	8222	9463	10778	12164	13624	2103	2906	3784	4734	5759	6855	8025	9266	10581	11967	13427	-0.2
-0.3	1677	2453	3303	4230	5229	6305	7452	7674	9968	11337	12778	14292	2247	3097	4023	5023	6098	7245	8468	9762	11131	12571	14086	-0.3
-0.4	1794	2620	3521	4501	5555	6686	7891	9171	10523	11952	13452	15028	2403	3304	4284	5339	6469	7674	8954	10307	11735	13235	14811	-0.4
-0.5	1921	2800	3759	4797	5911	7104	8371	9715	11132	12626	14194	15837	2573	3531	4569	5684	6876	8143	9487	10905	12399	13966	15609	-0.5
-0.6	2058	2997	4017	5120	6300	7560	8897	10311	11801	13368	15009	16727	2758	3778	4881	6061	7322	8658	10072	11562	13129	14770	16488	-0.6
-0.7	2207	3210	4298	5471	6725	8060	9472	10965	12534	14182	15905	17706	2960	4048	5221	6474	7809	9222	10714	12283	13931	15654	17455	-0.7
-0.8	2368	3442	4604	5855	7188	8606	10103	11681	13338	15075	16889	18782	3179	4342	5592	6925	8343	9840	11419	13076	14813	16627	18520	-0.8
-0.9	2542	3693	4937	6273	7695	9203	10793	12467	14221	16057	17972	19967	3418	4662	5997	7419	8927	10517	12191	13945	15781	17696	19691	-0.9
-1	2731	3966	5300	6729	8247	9856	11549	13328	15189	17135	19161	21270	3677	5011	6440	7958	9566	11259	13039	14900	16846	18872	20981	-1
-1.1	2935	4263	5694	7226	8851	10569	12376	14271	16252	18319	20469	22703	3960	5391	6923	8548	10266	12073	13968	15949	18016	20165	22400	-1.1
-1.2	3157	4585	6124	7768	9510	11350	13282	15306	17418	19619	21906	24280	4267	5806	7450	9192	11032	12963	14988	17099	19301	21588	23961	-1.2
-1.3	3396	4935	6591	8359	10230	12204	14273	16439	18696	21047	23485	26013	4601	6257	8025	9897	11870	13940	16105	18363	20713	23151	25680	-1.3
-1.4	3656	5314	7099	9003	11016	13137	15359	17681	20099	22614	25221	27921	4965	6749	8653	10666	12787	15009	17331	19749	22264	24871	27571	-1.4
-1.5	3936	5727	7652	9705	11874	14158	16547	19043	21639	24335	27128	30018	5360	7285	9338	11507	13790	16180	18676	21272	23968	26761	29651	-1.5
-1.6	4240	6174	8254	10470	12811	15273	17848	20535	23327	26225	29224	32325	5789	7869	10086	12426	14888	17463	20150	22942	25840	28839	31940	-1.6
-1.7	4570	6660	8909	11305	13834	16493	19272	22170	25179	28301	31528	34863	6256	8505	10901	13431	16089	18868	21766	24776	27897	31125	34459	-1.7
-1.8	4926	7187	9621	12214	14951	17827	20831	23961	27211	30579	34060	37653	6764	9198	11791	14528	17403	20407	23538	26788	30156	33637	37230	-1.8
-1.9	5311	7759	10396	13205	16170	19284	22537	25925	29440	33081	36842	40723	7315	9952	12761	15726	18841	22093	25481	28996	32637	36398	40279	-1.9
-2	5729	8380	11239	14285	17501	20878	24405	28077	31885	35829	39900	44098	7915	10773	13820	17036	20413	23939	27611	31420	35363	39434	43633	-2

ASCENDING ↑ / DESCENDING ↓

Vo = INITIAL VELOCITY AT BEGINNING OF BRAKING
Vf = FINAL VELOCITY AT END OF BRAKING [XX]
G = AVERAGE GRADE IN PERCENT

D = DISTANCE REQUIRED FOR SAFE BRAKING
TB = TONS PER OPERATIVE BRAKE [143]
FORMULA:

$$\text{DISTANCE} = 0.01TBV_o^2 + (80V_o)^{1-(GTB/1300)} - (0.01TBV_f^2)^{1-(GTB/1900)}$$

REVISIONS				
-	-	-	-	-
REV.	DATE	DESCRIPTION	DES.	ENG.

FINAL REVIEW BY: C&SDRC DATE: 11/21/08
APPROVED BY
Dan C. Guerrero
MANAGER, COMMUNICATIONS AND SIGNALS ENGINEERING
Darrell V. Maxey
DIRECTOR, ENGINEERING AND CONSTRUCTION

THE SOUTHERN CALIFORNIA REGIONAL RAIL AUTHORITY OR IT'S OFFICERS OR AGENTS SHALL NOT BE RESPONSIBLE FOR THE ACCURACY OR COMPLETENESS OF THIS PLAN SHEET

METROLINK
SOUTHERN CALIFORNIA REGIONAL RAIL AUTHORITY
700 SOUTH FLOWER STREET
LOS ANGELES, CALIFORNIA 90017

ENGINEERING STANDARDS

FREIGHT TRAIN REDUCING DISTANCES

STANDARD 8005
SCALE: NONE
REVISION
SHEET 4 OF 4
CADD FILE: ES8005-04

PASSENGER TRAIN DISTANCE IN FEET VS. SPEED IN M.P.H.

SPEED	DISTANCE IN FEET				SPEED	DISTANCE IN FEET				SPEED	DISTANCE IN FEET			
MPH	⑤ STOP	⑥ IRED	⑦ FRED	⑧ APER	MPH	⑤ STOP	⑥ IRED	⑦ FRED	⑧ APER	MPH	⑤ STOP	⑥ IRED	⑦ FRED	⑧ APER
0	0	0	0	0										
1	13	12	1	1	51	2766	2549	1951	1734	101	9685	8835	7651	6800
2	27	26	3	3	52	2863	2638	2028	1802	102	9866	8999	7803	6935
3	43	42	7	6	53	2962	2728	2107	1872	103	10049	9165	7957	7072
4	60	59	12	11	54	3063	2820	2187	1944	104	10233	9332	8112	7210
5	79	77	19	17	55	3166	2914	2269	2016	105	10419	9500	8269	7349
6	100	97	27	24	56	3270	3009	2352	2090	106	10606	9670	8427	7490
7	123	119	37	33	57	3376	3105	2437	2166	107	10796	9842	8587	7632
8	147	142	48	43	58	3484	3203	2523	2242	108	10986	10015	8748	7775
9	173	166	61	54	59	3593	3303	2611	2320	109	11179	10189	8911	7920
10	201	192	75	67	60	3704	3404	2700	2400	110	11373	10365	9075	8066
11	230	220	91	81	61	3816	3506	2791	2480	111	11569	10543	9241	8213
12	261	249	108	96	62	3930	3610	2883	2562	112	11767	10722	9408	8362
13	293	279	127	113	63	4046	3716	2977	2646	113	11966	10902	9577	8512
14	328	311	147	131	64	4164	3823	3072	2730	114	12167	11084	9747	8663
15	363	345	169	150	65	4283	3931	3169	2816	115	12369	11268	9919	8816
16	401	380	192	171	66	4404	4041	3267	2904	116	12574	11453	10092	8970
17	440	416	217	193	67	4527	4153	3367	2992	117	12779	11639	10267	9125
18	481	454	243	216	68	4651	4266	3468	3082	118	12987	11827	10443	9282
19	524	494	271	241	69	4777	4380	3571	3174	119	13196	12017	10621	9440
20	568	535	300	267	70	4904	4496	3675	3266	120	13407	12208	10800	9599
21	614	577	331	294	71	5033	4614	3781	3360	121	13620	12400	10981	9760
22	661	621	363	323	72	5164	4733	3888	3456	122	13834	12594	11163	9922
23	711	667	397	353	73	5297	4853	3997	3552	123	14050	12790	11347	10085
24	762	714	432	384	74	5431	4975	4107	3650	124	14267	12987	11532	10250
25	814	762	469	417	75	5567	5098	4219	3750	125	14487	13185	11719	10416
26	868	812	507	451	76	5705	5223	4332	3850	126	14707	13385	11907	10583
27	924	863	547	486	77	5844	5350	4447	3952	127	14930	13586	12097	10752
28	982	916	588	523	78	5985	5478	4563	4056	128	15154	13789	12288	10922
29	1041	971	631	561	79	6127	5607	4681	4160	129	15380	13994	12481	11093
30	1102	1027	675	600	80	6272	5738	4800	4266	130	15608	14200	12675	11266
31	1164	1084	721	641	81	6417	5871	4921	4374	131	15837	14407	12871	11440
32	1229	1143	768	683	82	6565	6005	5043	4482	132	16068	14616	13068	11615
33	1295	1204	817	726	83	6714	6140	5167	4592	133	16300	14827	13267	11791
34	1362	1266	867	771	84	6865	6277	5292	4704	134	16535	15039	13467	11969
35	1431	1329	919	817	85	7018	6416	5419	4816	135	16770	15252	13669	12149
36	1502	1394	972	864	86	7172	6556	5547	4930	136	17008	15467	13872	12329
37	1575	1461	1027	913	87	7328	6697	5677	5045	137	17247	15684	14077	12511
38	1649	1529	1083	963	88	7485	6840	5808	5162	138	17488	15902	14283	12695
39	1725	1598	1141	1014	89	7654	6985	5941	5280	139	17731	16121	14491	12879
40	1802	1669	1200	1067	90	7805	7131	6075	5399	140	17975	16342	14700	13065
41	1882	1742	1261	1121	91	7968	7278	6211	5520	141	18221	16565	14911	13253
42	1963	1816	1323	1176	92	8132	7427	6348	5642	142	18468	16789	15123	13441
43	2045	1891	1387	1233	93	8298	7578	6487	5765	143	18718	17014	15337	13631
44	2129	1968	1452	1291	94	8466	7730	6627	5890	144	18968	17241	15552	13823
45	2215	2047	1519	1350	95	8635	7883	6769	6016	145	19221	17470	15769	14015
46	2303	2127	1587	1411	96	8806	8038	6912	6143	146	19475	17700	15987	14209
47	2392	2208	1657	1473	97	8978	8195	7057	6272	147	19731	17931	16207	14405
48	2483	2291	1728	1536	98	9153	8353	7203	6402	148	19989	18164	16428	14601
49	2576	2376	1801	1601	99	9328	8512	7351	6533	149	20248	18399	16651	14799
50	2670	2462	1875	1666	100	9506	8673	7500	6666	150	20509	18634	16875	14998

FOR STOPPING DISTANCES:

A) SELECT MAXIMUM AUTHORIZED SPEED (OR INITIAL SPEED) IN MPH COLUMN.

B) READ DISTANCE TO STOP ON SAME LINE IN COLUMN 5.

FOR REDUCING DISTANCES:

A) SELECT MAXIMUM AUTHORIZED SPEED (OR INITIAL SPEED) IN MPH COLUMN.

B) READ DISTANCE ON SAME LINE IN COLUMN 6 & 7.

C) SUBTRACT DISTANCE DERIVED FROM COLUMN 7 FROM DISTANCE DERIVED FROM COLUMN 6 ; THIS IS THE REDUCING DISTANCE.*

NOTES:

1) "*" INDICATES THAT ACTUAL BRAKING TESTS WERE NOT PERFORMED ON THIS DATA* FOR INFORMATION ONLY*

2) EQUATIONS FOR CALCULATIONS:

⑤ STOPPING DISTANCE:

$$D_{STOP} = 0{\cdot}83333V_1^2 + 11{\cdot}73V_1$$

⑥-⑦ REDUCING DISTANCE:

$$D_{RED} = D_{IRED} - D_{FRED}$$

$$= 0{\cdot}7500(V_1^2 - V_F^2) + 11{\cdot}73V_1$$

LEGEND:

STOP = DISTANCE TO STOP
IRED = INITIAL REDUCTION SPEED
FRED = FINAL REDUCTION SPEED
APER = AVERAGE PERFORMANCE REDUCTION

NOTE:

1. DEVIATION FROM THIS STANDARD SHALL BE APPROVED BY SCRRA MANAGER OF C&S ENGINEERING OR DESIGNATE.

REVISIONS				
-	-	-	-	-
REV.	DATE	DESCRIPTION	DES.	ENG.

FINAL REVIEW BY: C&SDRC DATE: 11/21/08

APPROVED BY

Dan C. Guerrero
MANAGER, COMMUNICATIONS AND SIGNALS ENGINEERING

Darrell V. Maxey
DIRECTOR, ENGINEERING AND CONSTRUCTION

THE SOUTHERN CALIFORNIA REGIONAL RAIL AUTHORITY OR IT'S OFFICERS OR AGENTS SHALL NOT BE RESPONSIBLE FOR THE ACCURACY OR COMPLETENESS OF THIS PLAN SHEET

METROLINK
SOUTHERN CALIFORNIA REGIONAL RAIL AUTHORITY
700 SOUTH FLOWER STREET
LOS ANGELES, CALIFORNIA 90017

ENGINEERING STANDARDS

PASSENGER TRAIN BRAKING AND REDUCING DISTANCES USING EQUIVALENT LEVEL TRACK METHOD

STANDARD 8010
SCALE: NONE
REVISION –
SHEET 1 OF 1
CADD FILE: ES8010

SPEED	FT/S	20	21	22	23	24	25	26	27	28	29	30	31	32	33	34	35	36	37	38	39	40	41	42	43	44	45	46	47	48	49	50	FT/S	SPEED
10	14.67	293	308	323	337	352	367	381	396	411	425	440	455	469	484	499	513	528	543	557	572	587	601	616	631	645	660	675	689	704	719	733	14.67	10
11	16.13	323	339	355	371	387	403	419	436	452	468	484	500	516	532	549	565	581	597	613	629	645	661	678	694	710	726	742	758	774	791	807	16.13	11
12	17.60	352	370	387	405	422	440	458	475	493	510	528	546	563	581	598	616	634	651	669	686	704	722	739	757	774	792	810	827	845	862	880	17.60	12
13	19.07	381	400	419	439	458	477	496	515	534	553	572	591	610	629	648	667	686	705	725	744	763	782	801	820	839	858	877	896	915	934	953	19.07	13
14	20.53	411	431	452	472	493	513	534	554	575	595	616	637	657	678	698	719	739	760	780	801	821	842	862	883	903	924	945	965	986	1006	1027	20.53	14
15	22.00	440	462	484	506	528	550	572	594	616	638	660	682	704	726	748	770	792	814	836	858	880	902	924	946	968	990	1012	1034	1056	1078	1100	22.00	15
16	23.47	469	493	516	540	563	587	610	634	657	681	704	727	751	774	798	821	845	868	892	915	939	962	986	1009	1033	1056	1079	1103	1126	1150	1173	23.47	16
17	24.93	499	524	549	573	598	623	648	673	698	723	748	773	798	823	848	873	898	923	947	972	997	1022	1047	1072	1097	1122	1147	1172	1197	1222	1247	24.93	17
18	26.40	528	554	581	607	634	660	686	713	739	766	792	818	845	871	898	924	950	977	1003	1030	1056	1082	1109	1135	1162	1188	1214	1241	1267	1294	1320	26.40	18
19	27.87	557	585	613	641	669	697	725	752	780	808	836	864	892	920	947	975	1003	1031	1059	1087	1115	1143	1170	1198	1226	1254	1282	1310	1338	1365	1393	27.87	19
20	29.33	587	616	645	675	704	733	763	792	821	851	880	909	939	968	997	1027	1056	1085	1115	1144	1173	1203	1232	1261	1291	1320	1349	1379	1408	1437	1467	29.33	20
21	30.80	616	647	678	708	739	770	801	832	862	893	924	955	986	1016	1047	1078	1109	1140	1170	1201	1232	1263	1294	1324	1355	1386	1417	1448	1478	1509	1540	30.80	21
22	32.27	645	678	710	742	774	807	839	871	903	936	968	1000	1033	1065	1097	1129	1162	1194	1226	1258	1291	1323	1355	1387	1420	1452	1484	1517	1549	1581	1613	32.27	22
23	33.73	675	708	742	776	810	843	877	911	945	978	1012	1046	1079	1113	1147	1181	1214	1248	1282	1316	1349	1383	1417	1451	1484	1518	1552	1585	1619	1653	1687	33.73	23
24	35.20	704	739	774	810	845	880	915	950	986	1021	1056	1091	1126	1162	1197	1232	1267	1302	1338	1373	1408	1443	1478	1514	1549	1584	1619	1654	1690	1725	1760	35.20	24
25	36.67	733	770	807	843	880	917	953	990	1027	1063	1100	1137	1173	1210	1247	1283	1320	1357	1393	1430	1467	1503	1540	1577	1613	1650	1687	1723	1760	1797	1833	36.67	25
26	38.13	763	801	839	877	915	953	991	1030	1068	1106	1144	1182	1220	1258	1297	1335	1373	1411	1449	1487	1525	1563	1602	1640	1678	1716	1754	1792	1830	1869	1907	38.13	26
27	39.60	792	832	871	911	950	990	1030	1069	1109	1148	1188	1228	1267	1307	1346	1386	1426	1465	1505	1544	1584	1624	1663	1703	1742	1782	1822	1861	1901	1940	1980	39.60	27
28	41.07	821	862	903	945	986	1027	1068	1109	1150	1191	1232	1273	1314	1355	1396	1437	1478	1519	1561	1602	1643	1684	1725	1766	1807	1848	1889	1930	1971	2012	2053	41.07	28
29	42.53	851	893	936	978	1021	1063	1106	1148	1191	1233	1276	1319	1361	1404	1446	1489	1531	1574	1616	1659	1701	1744	1786	1829	1871	1914	1957	1999	2042	2084	2127	42.53	29
30	44.00	880	924	968	1012	1056	1100	1144	1188	1232	1276	1320	1364	1408	1452	1496	1540	1584	1628	1672	1716	1760	1804	1848	1892	1936	1980	2024	2068	2112	2156	2200	44.00	30
31	45.47	909	955	1000	1046	1091	1137	1182	1228	1273	1319	1364	1409	1455	1500	1546	1591	1637	1682	1728	1773	1819	1864	1910	1955	2001	2046	2091	2137	2182	2228	2273	45.47	31
32	46.93	939	986	1033	1079	1126	1173	1220	1267	1314	1361	1408	1455	1502	1549	1596	1643	1690	1737	1783	1830	1877	1924	1971	2018	2065	2112	2159	2206	2253	2300	2347	46.93	32
33	48.40	968	1016	1065	1113	1162	1210	1258	1307	1355	1404	1452	1500	1549	1597	1646	1694	1742	1791	1839	1888	1936	1984	2033	2081	2130	2178	2226	2275	2323	2372	2420	48.40	33
34	49.87	997	1047	1097	1147	1197	1247	1297	1346	1396	1446	1496	1546	1596	1646	1695	1745	1795	1845	1895	1945	1995	2045	2094	2144	2194	2244	2294	2344	2394	2443	2493	49.87	34
35	51.33	1027	1078	1129	1181	1232	1283	1335	1386	1437	1489	1540	1591	1643	1694	1745	1797	1848	1899	1951	2002	2053	2105	2156	2207	2259	2310	2361	2413	2464	2515	2567	51.33	35
36	52.80	1056	1109	1162	1214	1267	1320	1373	1426	1478	1531	1584	1637	1690	1742	1795	1848	1901	1954	2006	2059	2112	2165	2218	2270	2323	2376	2429	2482	2534	2587	2640	52.80	36
37	54.27	1085	1140	1194	1248	1302	1357	1411	1465	1519	1574	1628	1682	1737	1791	1845	1899	1954	2008	2062	2116	2171	2225	2279	2333	2388	2442	2496	2551	2605	2659	2713	54.27	37
38	55.73	1115	1170	1226	1282	1338	1393	1449	1505	1561	1616	1672	1728	1783	1839	1895	1951	2006	2062	2118	2174	2229	2285	2341	2397	2452	2508	2564	2619	2675	2731	2787	55.73	38
39	57.20	1144	1201	1258	1316	1373	1430	1487	1544	1602	1659	1716	1773	1830	1888	1945	2002	2059	2116	2174	2231	2288	2345	2402	2460	2517	2574	2631	2688	2746	2803	2860	57.20	39
40	58.67	1173	1232	1291	1349	1408	1467	1525	1584	1643	1701	1760	1819	1877	1936	1995	2053	2112	2171	2229	2288	2347	2405	2464	2523	2581	2640	2699	2757	2816	2875	2933	58.67	40
41	60.13	1203	1263	1323	1383	1443	1503	1563	1624	1684	1744	1804	1864	1924	1984	2045	2105	2165	2225	2285	2345	2405	2465	2526	2586	2646	2706	2766	2826	2886	2947	3007	60.13	41
42	61.60	1232	1294	1355	1417	1478	1540	1602	1663	1725	1786	1848	1910	1971	2033	2094	2156	2218	2279	2341	2402	2464	2526	2587	2649	2710	2772	2834	2895	2957	3018	3080	61.60	42
43	63.07	1261	1324	1387	1451	1514	1577	1640	1703	1766	1829	1892	1955	2018	2081	2144	2207	2270	2333	2397	2460	2523	2586	2649	2712	2775	2838	2901	2964	3027	3090	3153	63.07	43
44	64.53	1291	1355	1420	1484	1549	1613	1678	1742	1807	1871	1936	2001	2065	2130	2194	2259	2323	2388	2452	2517	2581	2646	2710	2775	2839	2904	2969	3033	3098	3162	3227	64.53	44
45	66.00	1320	1386	1452	1518	1584	1650	1716	1782	1848	1914	1980	2046	2112	2178	2244	2310	2376	2442	2508	2574	2640	2706	2772	2838	2904	2970	3036	3102	3168	3234	3300	66.00	45
46	67.47	1349	1417	1484	1552	1619	1687	1754	1822	1889	1957	2024	2091	2159	2226	2294	2361	2429	2496	2564	2631	2699	2766	2834	2901	2969	3036	3103	3171	3238	3306	3373	67.47	46
47	68.93	1379	1448	1517	1585	1654	1723	1792	1861	1930	1999	2068	2137	2206	2275	2344	2413	2482	2551	2619	2688	2757	2826	2895	2964	3033	3102	3171	3240	3309	3378	3447	68.93	47
48	70.40	1408	1478	1549	1619	1690	1760	1830	1901	1971	2042	2112	2182	2253	2323	2394	2464	2534	2605	2675	2746	2816	2886	2957	3027	3098	3168	3238	3309	3379	3450	3520	70.40	48
49	71.87	1437	1509	1581	1653	1725	1797	1869	1940	2012	2084	2156	2228	2300	2372	2443	2515	2587	2659	2731	2803	2875	2947	3018	3090	3162	3234	3306	3378	3450	3521	3593	71.87	49
50	73.33	1467	1540	1613	1687	1760	1833	1907	1980	2053	2127	2200	2273	2347	2420	2493	2567	2640	2713	2787	2860	2933	3007	3080	3153	3227	3300	3373	3447	3520	3593	3667	73.33	50
51	74.80	1496	1571	1646	1720	1795	1870	1945	2020	2094	2169	2244	2319	2394	2468	2543	2618	2693	2768	2842	2917	2992	3067	3142	3216	3291	3366	3441	3516	3590	3665	3740	74.80	51
52	76.27	1525	1602	1678	1754	1830	1907	1983	2059	2135	2212	2288	2364	2441	2517	2593	2669	2746	2822	2898	2974	3051	3127	3203	3279	3356	3432	3508	3585	3661	3737	3813	76.27	52
53	77.73	1555	1632	1710	1788	1866	1943	2021	2099	2177	2254	2332	2410	2487	2565	2643	2721	2798	2876	2954	3032	3109	3187	3265	3343	3420	3498	3576	3653	3731	3809	3887	77.73	53
54	79.20	1584	1663	1742	1822	1901	1980	2059	2138	2218	2297	2376	2455	2534	2614	2693	2772	2851	2930	3010	3089	3168	3247	3326	3406	3485	3564	3643	3722	3802	3881	3960	79.20	54
55	80.67	1613	1694	1775	1855	1936	2017	2097	2178	2259	2339	2420	2501	2581	2662	2743	2823	2904	2985	3065	3146	3227	3307	3388	3469	3549	3630	3711	3791	3872	3953	4033	80.67	55

REVISIONS				
-	-	-	-	-
REV.	DATE	DESCRIPTION	DES.	ENG.

FINAL REVIEW BY: C&SDRC DATE: 11/21/08

APPROVED BY

Dan C. Guerrero
MANAGER, COMMUNICATIONS AND SIGNALS ENGINEERING

Darrell V. Maxey
DIRECTOR, ENGINEERING AND CONSTRUCTION

THE SOUTHERN CALIFORNIA REGIONAL RAIL AUTHORITY OR IT'S OFFICERS OR AGENTS SHALL NOT BE RESPONSIBLE FOR THE ACCURACY OR COMPLETENESS OF THIS PLAN SHEET

METROLINK
SOUTHERN CALIFORNIA REGIONAL RAIL AUTHORITY
700 SOUTH FLOWER STREET
LOS ANGELES, CALIFORNIA 90017

ENGINEERING STANDARDS

SPEED – TIME – DISTANCE CHART

STANDARD 8020
SCALE: NONE
REVISION –
SHEET 1 OF 2
CADD FILE: ES8020–01

SPEED	FT/S	20	21	22	23	24	25	26	27	28	29	30	31	32	33	34	35	36	37	38	39	40	41	42	43	44	45	46	47	48	49	50	FT/S	SPEED
56	82.13	1643	1725	1807	1889	1971	2053	2135	2218	2300	2382	2464	2546	2628	2710	2793	2875	2957	3039	3121	3203	3285	3367	3450	3532	3614	3696	3778	3860	3942	4025	4107	82.13	56
57	83.60	1672	1756	1839	1923	2006	2090	2174	2257	2341	2424	2508	2592	2675	2759	2842	2926	3010	3093	3177	3260	3344	3428	3511	3595	3678	3762	3846	3929	4013	4096	4180	83.60	57
58	85.07	1701	1786	1871	1957	2042	2127	2212	2297	2382	2467	2552	2637	2722	2807	2892	2977	3062	3147	3233	3318	3403	3488	3573	3658	3743	3828	3913	3998	4083	4168	4253	85.07	58
59	86.53	1731	1817	1904	1990	2077	2163	2250	2336	2423	2509	2596	2683	2769	2856	2942	3029	3115	3202	3288	3375	3461	3548	3634	3721	3807	3894	3981	4067	4154	4240	4327	86.53	59
60	88.00	1760	1848	1936	2024	2112	2200	2288	2376	2464	2552	2640	2728	2816	2904	2992	3080	3168	3256	3344	3432	3520	3608	3696	3784	3872	3960	4048	4136	4224	4312	4400	88.00	60
61	89.47	1789	1879	1968	2058	2147	2237	2326	2416	2505	2595	2684	2773	2863	2952	3042	3131	3221	3310	3400	3489	3579	3668	3758	3847	3937	4026	4115	4205	4294	4384	4473	89.47	61
62	90.93	1819	1910	2001	2091	2182	2273	2364	2455	2546	2637	2728	2819	2910	3001	3092	3183	3274	3365	3455	3546	3637	3728	3819	3910	4001	4092	4183	4274	4365	4456	4547	90.93	62
63	92.40	1848	1940	2033	2125	2218	2310	2402	2495	2587	2680	2772	2864	2957	3049	3142	3234	3326	3419	3511	3604	3696	3788	3881	3973	4066	4158	4250	4343	4435	4528	4620	92.40	63
64	93.87	1877	1971	2065	2159	2253	2347	2441	2534	2628	2722	2816	2910	3004	3098	3191	3285	3379	3473	3567	3661	3755	3849	3942	4036	4130	4224	4318	4412	4506	4599	4693	93.87	64
65	95.33	1907	2002	2097	2193	2288	2383	2479	2574	2669	2765	2860	2955	3051	3146	3241	3337	3432	3527	3623	3718	3813	3909	4004	4099	4195	4290	4385	4481	4576	4671	4767	95.33	65
66	96.80	1936	2033	2130	2226	2323	2420	2517	2614	2710	2807	2904	3001	3098	3194	3291	3388	3485	3582	3678	3775	3872	3969	4066	4162	4259	4356	4453	4550	4646	4743	4840	96.80	66
67	98.27	1965	2064	2162	2260	2358	2457	2555	2653	2751	2850	2948	3046	3145	3243	3341	3439	3538	3636	3734	3832	3931	4029	4127	4225	4324	4422	4520	4619	4717	4815	4913	98.27	67
68	99.73	1995	2094	2194	2294	2394	2493	2593	2693	2793	2892	2992	3092	3191	3291	3391	3491	3590	3690	3790	3890	3989	4089	4189	4289	4388	4488	4588	4687	4787	4887	4987	99.73	68
69	101.20	2024	2125	2226	2328	2429	2530	2631	2732	2834	2935	3036	3137	3238	3340	3441	3542	3643	3744	3846	3947	4048	4149	4250	4352	4453	4554	4655	4756	4858	4959	5060	101.20	69
70	102.67	2053	2156	2259	2361	2464	2567	2669	2772	2875	2977	3080	3183	3285	3388	3491	3593	3696	3799	3901	4004	4107	4209	4312	4415	4517	4620	4723	4825	4928	5031	5133	102.67	70
71	104.13	2083	2187	2291	2395	2499	2603	2707	2812	2916	3020	3124	3228	3332	3436	3541	3645	3749	3853	3957	4061	4165	4269	4374	4478	4582	4686	4790	4894	4998	5103	5207	104.13	71
72	105.60	2112	2218	2323	2429	2534	2640	2746	2851	2957	3062	3168	3274	3379	3485	3590	3696	3802	3907	4013	4118	4224	4330	4435	4541	4646	4752	4858	4963	5069	5174	5280	105.60	72
73	107.07	2141	2248	2355	2463	2570	2677	2784	2891	2998	3105	3212	3319	3426	3533	3640	3747	3854	3961	4069	4176	4283	4390	4497	4604	4711	4818	4925	5032	5139	5246	5353	107.07	73
74	108.53	2171	2279	2388	2496	2605	2713	2822	2930	3039	3147	3256	3365	3473	3582	3690	3799	3907	4016	4124	4233	4341	4450	4558	4667	4775	4884	4993	5101	5210	5318	5427	108.53	74
75	110.00	2200	2310	2420	2530	2640	2750	2860	2970	3080	3190	3300	3410	3520	3630	3740	3850	3960	4070	4180	4290	4400	4510	4620	4730	4840	4950	5060	5170	5280	5390	5500	110.00	75
76	111.47	2229	2341	2452	2564	2675	2787	2898	3010	3121	3233	3344	3455	3567	3678	3790	3901	4013	4124	4236	4347	4459	4570	4682	4793	4905	5016	5127	5239	5350	5462	5573	111.47	76
77	112.93	2259	2372	2485	2597	2710	2823	2936	3049	3162	3275	3388	3501	3614	3727	3840	3953	4066	4179	4291	4404	4517	4630	4743	4856	4969	5082	5195	5308	5421	5534	5647	112.93	77
78	114.40	2288	2402	2517	2631	2746	2860	2974	3089	3203	3318	3432	3546	3661	3775	3890	4004	4118	4233	4347	4462	4576	4690	4805	4919	5034	5148	5262	5377	5491	5606	5720	114.40	78
79	115.87	2317	2433	2549	2665	2781	2897	3013	3128	3244	3360	3476	3592	3708	3824	3939	4055	4171	4287	4403	4519	4635	4751	4866	4982	5098	5214	5330	5446	5562	5677	5793	115.87	79
80	117.33	2347	2464	2581	2699	2816	2933	3051	3168	3285	3403	3520	3637	3755	3872	3989	4107	4224	4341	4459	4576	4693	4811	4928	5045	5163	5280	5397	5515	5632	5749	5867	117.33	80
81	118.80	2376	2495	2614	2732	2851	2970	3089	3208	3326	3445	3564	3683	3802	3920	4039	4158	4277	4396	4514	4633	4752	4871	4990	5108	5227	5346	5465	5584	5702	5821	5940	118.80	81
82	120.27	2405	2526	2646	2766	2886	3007	3127	3247	3367	3488	3608	3728	3849	3969	4089	4209	4330	4450	4570	4690	4811	4931	5051	5171	5292	5412	5532	5653	5773	5893	6013	120.27	82
83	121.73	2435	2556	2678	2800	2922	3043	3165	3287	3409	3530	3652	3774	3895	4017	4139	4261	4382	4504	4626	4748	4869	4991	5113	5235	5356	5478	5600	5721	5843	5965	6087	121.73	83
84	123.20	2464	2587	2710	2834	2957	3080	3203	3326	3450	3573	3696	3819	3942	4066	4189	4312	4435	4558	4682	4805	4928	5051	5174	5298	5421	5544	5667	5790	5914	6037	6160	123.20	84
85	124.67	2493	2618	2743	2867	2992	3117	3241	3366	3491	3615	3740	3865	3989	4114	4239	4363	4488	4613	4737	4862	4987	5111	5236	5361	5485	5610	5735	5859	5984	6109	6233	124.67	85
86	126.13	2523	2649	2775	2901	3027	3153	3279	3406	3532	3658	3784	3910	4036	4162	4289	4415	4541	4667	4793	4919	5045	5171	5298	5424	5550	5676	5802	5928	6054	6181	6307	126.13	86
87	127.60	2552	2680	2807	2935	3062	3190	3318	3445	3573	3700	3828	3956	4083	4211	4338	4466	4594	4721	4849	4976	5104	5232	5359	5487	5614	5742	5870	5997	6125	6252	6380	127.60	87
88	129.07	2581	2710	2839	2969	3098	3227	3356	3485	3614	3743	3872	4001	4130	4259	4388	4517	4646	4775	4905	5034	5163	5292	5421	5550	5679	5808	5937	6066	6195	6324	6453	129.07	88
89	130.53	2611	2741	2872	3002	3133	3263	3394	3524	3655	3785	3916	4047	4177	4308	4438	4569	4699	4830	4960	5091	5221	5352	5482	5613	5743	5874	6005	6135	6266	6396	6527	130.53	89
90	132.00	2640	2772	2904	3036	3168	3300	3432	3564	3696	3828	3960	4092	4224	4356	4488	4620	4752	4884	5016	5148	5280	5412	5544	5676	5808	5940	6072	6204	6336	6468	6600	132.00	90
91	133.47	2669	2803	2936	3070	3203	3337	3470	3604	3737	3871	4004	4137	4271	4404	4538	4671	4805	4938	5072	5205	5339	5472	5606	5739	5873	6006	6139	6273	6406	6540	6673	133.47	91
92	134.93	2699	2834	2969	3103	3238	3373	3508	3643	3778	3913	4048	4183	4318	4453	4588	4723	4858	4993	5127	5262	5397	5532	5667	5802	5937	6072	6207	6342	6477	6612	6747	134.93	92
93	136.40	2728	2864	3001	3137	3274	3410	3546	3683	3819	3956	4092	4228	4365	4501	4638	4774	4910	5047	5183	5320	5456	5592	5729	5865	6002	6138	6274	6411	6547	6684	6820	136.40	93
94	137.87	2757	2895	3033	3171	3309	3447	3585	3722	3860	3998	4136	4274	4412	4550	4687	4825	4963	5101	5239	5377	5515	5653	5790	5928	6066	6204	6342	6480	6618	6755	6893	137.87	94
95	139.33	2787	2926	3065	3205	3344	3483	3623	3762	3901	4041	4180	4319	4459	4598	4737	4877	5016	5155	5295	5434	5573	5713	5852	5991	6131	6270	6409	6549	6688	6827	6967	139.33	95
96																																		
97																																		
98																																		
99																																		
100																																		

REVISIONS				
-	-	-	-	-
REV.	DATE	DESCRIPTION	DES.	ENG.

FINAL REVIEW BY: C&SDRC DATE: 11/21/08

APPROVED BY

Dan C. Guerrero

MANAGER, COMMUNICATIONS AND SIGNALS ENGINEERING

Darrell V. Maxey

DIRECTOR, ENGINEERING AND CONSTRUCTION

THE SOUTHERN CALIFORNIA REGIONAL RAIL AUTHORITY OR IT'S OFFICERS OR AGENTS SHALL NOT BE RESPONSIBLE FOR THE ACCURACY OR COMPLETENESS OF THIS PLAN SHEET

METROLINK

SOUTHERN CALIFORNIA REGIONAL RAIL AUTHORITY
700 SOUTH FLOWER STREET
LOS ANGELES, CALIFORNIA 90017

ENGINEERING STANDARDS

SPEED – TIME – DISTANCE CHART

STANDARD 8020

SCALE: NONE

REVISION –

SHEET 2 OF 2

CADD FILE: ES8020–02

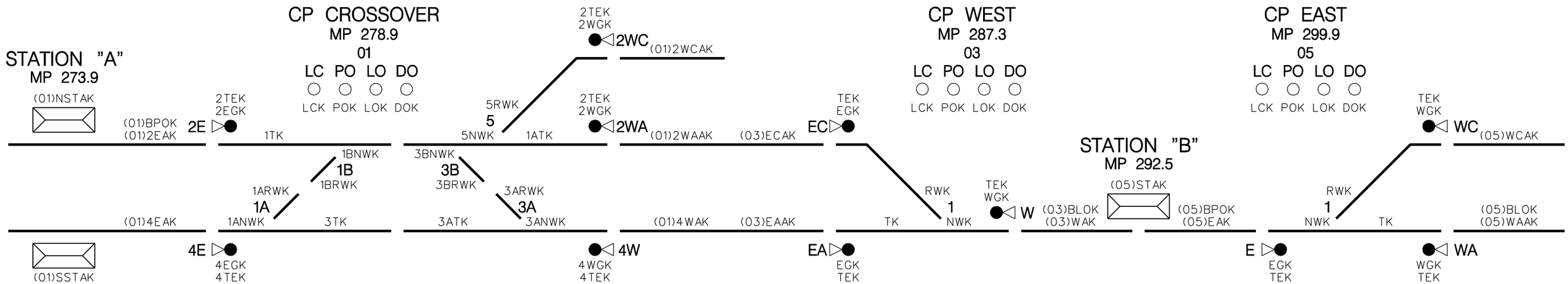

CODE LINE No.

LOCATION (CONTROL POINT)	LOC. No.	WORD	CONTROL BITS 1	2	3	4	5	6	7	8	WORD	INDICATION BITS 1	2	3	4	5	6	7	8
CP CROSSOVER MP 278.9	01	1	1ANWS	1ARWS	1BNWS	1BRWS	3ANWS	3ARWS	3BNWS	3BRWS	1	1ANWK	1ARWK	1BNWK	1BRWK	3ANWK	3ARWK	3BNWK	3BRWK
		2	5NWS	5RWS	2EGHS	2WGHS	4EGHS	4WGHS			2	5NWK	5RWK	2EGK	2WGK	4EGK	4WGK	2TEK	4TEK
											3	1TK	1ATK	3TK	3ATK	2EAK	4EAK	2WAAK	2WCAK
											4	4WAK	NSTAK	SSTAK	LCK	DOK	POK	LOK	BPOK
											5	BLOK							
CP WEST MP 287.3	03	1	NWS	RWS	EGHS	WGHS					1	NWK	RWK	EGK	WGK	TK	TEK	EAAK	ECAK
											2	WAK	LCK	DOK	POK	LOK	BPOK	BLOK	
CP EAST MP 299.9	05	1	NWS	RWS	EGHS	WGHS					1	NWK	RWK	EGK	WGK	TK	TEK	EAK	WAAK
											2	WCAK	STAK	LCK	DOK	POK	LOK	BPOK	BLOK

LEGEND

CONTROL BITS:

1. NWS = SWITCH NORMAL CONTROL
2. RWS = SWITCH REVERSE CONTROL
3. EGHS = EAST SIGNAL CLEAR CONTROL
4. WGHS = WEST SIGNAL CLEAR CONTROL

INDICATION BITS:

1. NWK = SWITCH NORMAL
2. RWK = SWITCH REVERSE
3. EGK = EAST SIGNAL CLEAR
4. WGK = WEST SIGNAL CLEAR
5. TK = DETECTOR TRACK
6. TEK = SIGNALS IN TIME
7. EAK = APPROACH TO SIGNAL "E"
8. EAAK = APPROACH TO SIGNA "EA"
9. ECAK = APPROACH TO SIGNAL "EC"
10. WAK = APPROACH TO SIGNAL "W"
11. WAAK = APPROACH TO SIGNAL "WA"
12. WCAK = APPROACH TO SIGNAL "WC"
13. STAK = TRAIN IN STATION
14. LCK = LOCAL CONTROL
15. DOK = DOOR OPEN (ILLEGAL ENTRY)
16. POK = POWER OFF
17. LOK = SIGNAL LIGHT OUT (DARK SIGNAL)
18. BPOK = BLOCK POWER OFF INDICATION
19. BLOK = BLOCK LIGHT OUT INDICATION

NOTES:

1. BITS SHALL BE ASSIGNED IN PRIORITY ORDER AS DESIGNATED IN THE LEGEND OF THIS DRAWING. THERE SHALL NOT BE ANY UNUSED BITS UNLESS THEY OCCUR AT THE END OF A WORD.
2. BLOCK POWER OFF INDICATIONS (BPOK) SHOULD BE ASSIGNED TO THE NEAREST CONTROL POINT TO THE EAST, AND BLOCK LIGHT OUT INDICATIONS (BLOK) SHOULD BE ASSIGNED TO THE NEAREST CONTROL POINT TO THE WEST.
3. DEVIATION FROM THIS STANDARD SHALL BE APPROVED BY C&S MANAGER OF ENGINEERING OR DESIGNATE.

REVISIONS				
-	-	-	-	-
REV.	DATE	DESCRIPTION	DES.	ENG.

FINAL REVIEW BY: C&SDRC DATE: 11/21/08

APPROVED BY

Dan C. Guerrero
MANAGER, COMMUNICATIONS AND SIGNALS ENGINEERING

Darrell V. Maxey
DIRECTOR, ENGINEERING AND CONSTRUCTION

THE SOUTHERN CALIFORNIA REGIONAL RAIL AUTHORITY OR IT'S OFFICERS OR AGENTS SHALL NOT BE RESPONSIBLE FOR THE ACCURACY OR COMPLETENESS OF THIS PLAN SHEET

METROLINK
SOUTHERN CALIFORNIA REGIONAL RAIL AUTHORITY
700 SOUTH FLOWER STREET
LOS ANGELES, CALIFORNIA 90017

ENGINEERING STANDARDS

STANDARD BIT ASSIGNMENTS

STANDARD: 8030
SCALE: NONE
REVISION: –
SHEET: 1 OF 1
CADD FILE: ES8030

TRACK CIRCUITS

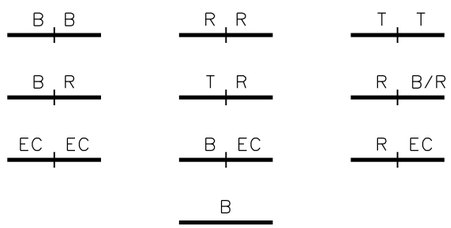

B/R - TRACK BATTERY WITH FLOATER RELAY LOCATION
EC - ELECTRONICALLY CODED
T - TRACK TRANSFORMER LOCATION
R - TRACK RELAY LOCATION
B - TRACK BATTERY LOCATION, (B W/O JOINT INDICATES CENTER FEED BATTERY LOCATION)

INSULATED RAIL JOINTS

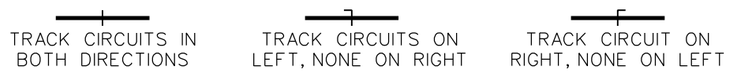

BRIDGES AND TUNNELS

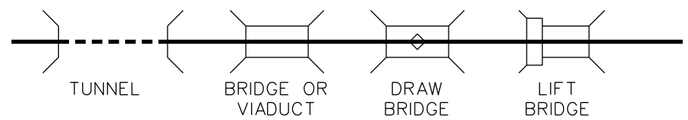

STATION

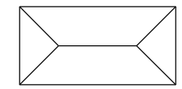

MILE POST

POLE LINE

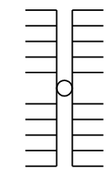

FOR CIRCUIT PLANS

PROFILE (GRADE)

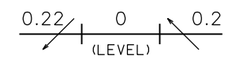

INTERMITTENT INDUCTIVE TRAIN STOP

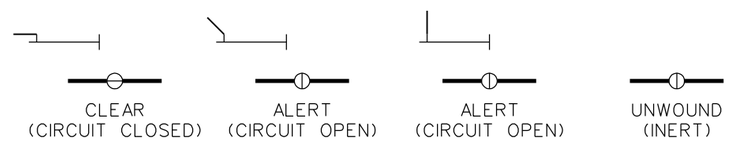

DETECTORS

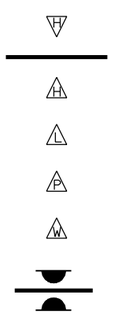

TRACK INSTRUMENT

OVERLAY CIRCUIT

INSTRUMENT ENCLOSURES

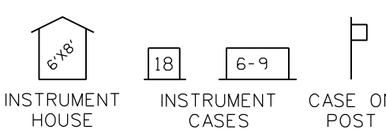

BATTERY HOUSINGS

NOTE:

1. NUMERALS IN INSTRUMENT ENCLOSURES AND BATTERY HOUSINGS INDICATE SIZE OR CAPACITY OF UNIT.

REVISIONS				
-	-	-	-	-
REV.	DATE	DESCRIPTION	DES.	ENG.

FINAL REVIEW BY: C&SDRC DATE: 11/21/08

APPROVED BY

Dan C. Guerrero
MANAGER, COMMUNICATIONS AND SIGNALS ENGINEERING

Darrell V. Maxey
DIRECTOR, ENGINEERING AND CONSTRUCTION

THE SOUTHERN CALIFORNIA REGIONAL RAIL AUTHORITY OR IT'S OFFICERS OR AGENTS SHALL NOT BE RESPONSIBLE FOR THE ACCURACY OR COMPLETENESS OF THIS PLAN SHEET

METROLINK
SOUTHERN CALIFORNIA REGIONAL RAIL AUTHORITY
700 SOUTH FLOWER STREET
LOS ANGELES, CALIFORNIA 90017

ENGINEERING STANDARDS

CIRCUIT PLAN SYMBOLS

STANDARD: 8100
SCALE: NONE
REVISION: –
SHEET: 1 OF 1
CADD FILE: ES8100

MISCELLANEOUS COMPONENTS

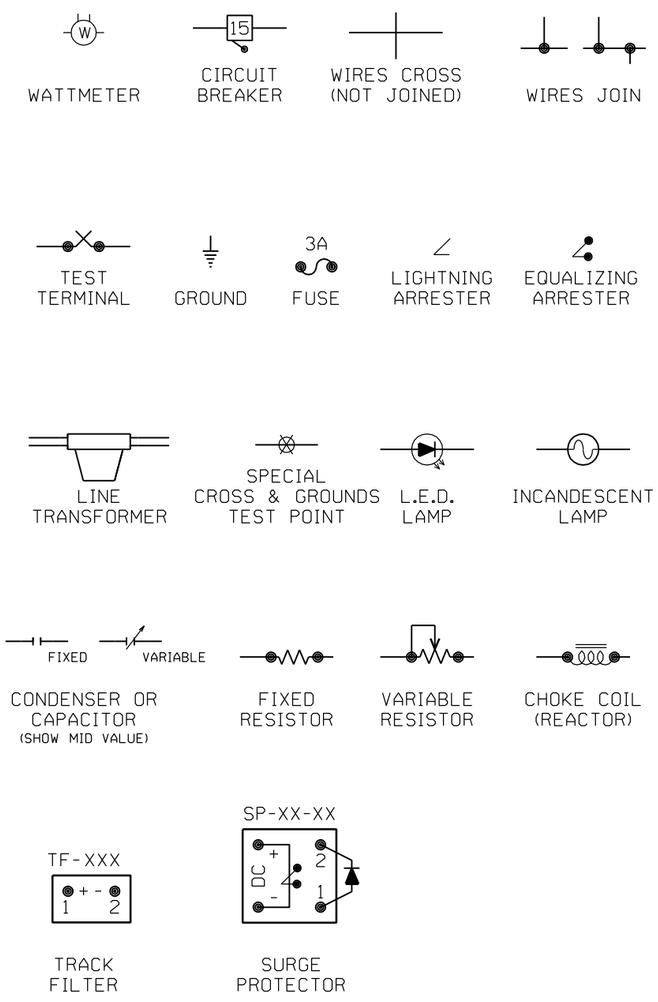

BATTERIES

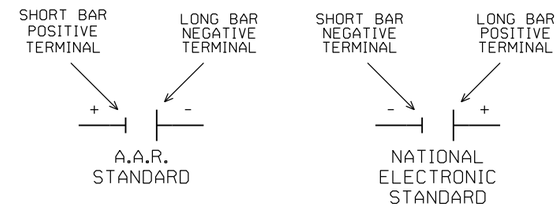

NOTE: THE NATIONAL ELECTRONIC STANDARD IS SHOWN HERE TO ACQUAINT OUR PERSONNEL WITH THE SYMBOL USED BY OTHER INDUSTRIES AND IS NOT FOR USE ON SIGNAL CIRCUIT PLANS.

TRANSFORMERS

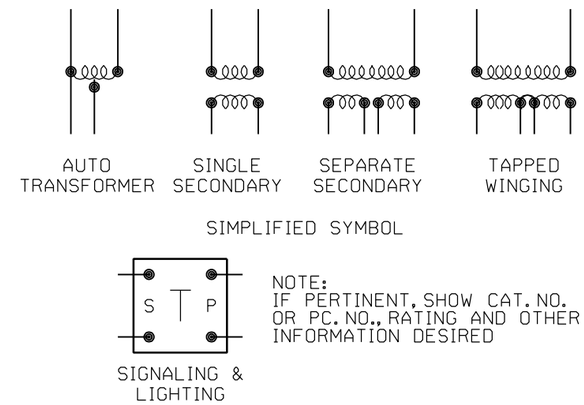

NOTE:
IF PERTINENT, SHOW CAT. NO. OR PC. NO., RATING AND OTHER INFORMATION DESIRED

CIRCUIT ARRANGEMENTS

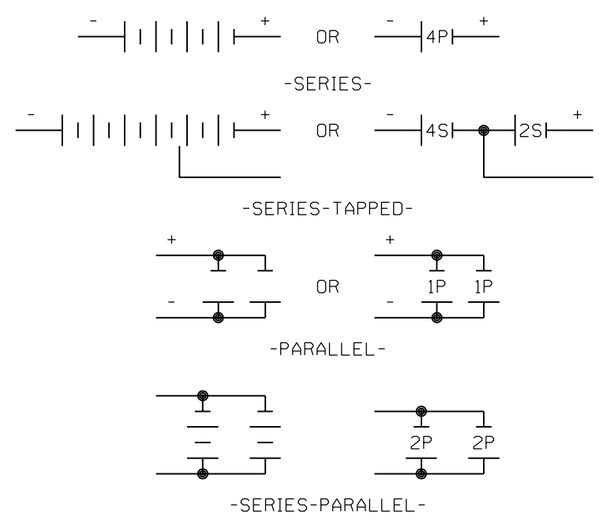

D-DRY CELLS
P-PRIMARY CELLS
S-LEAD STORAGE CELLS
N-NICKEL-IRON OR NICKEL-CADMIUM STORAGE CELLS

RECTIFIER (FULL WAVE)

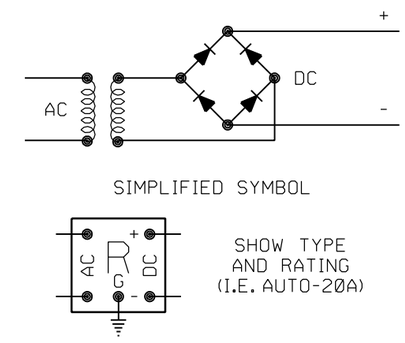

SHOW TYPE AND RATING (I.E. AUTO-20A)

DEVICES USED WITH RECTIFIERS

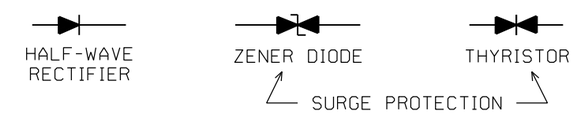

REVISIONS				
REV.	DATE	DESCRIPTION	DES.	ENG.
-	-	-	-	-

FINAL REVIEW BY: C&SDRC DATE: 11/21/08

APPROVED BY

Dan C. Guerrero
MANAGER, COMMUNICATIONS AND SIGNALS ENGINEERING

Darrell V. Maxey
DIRECTOR, ENGINEERING AND CONSTRUCTION

THE SOUTHERN CALIFORNIA REGIONAL RAIL AUTHORITY OR IT'S OFFICERS OR AGENTS SHALL NOT BE RESPONSIBLE FOR THE ACCURACY OR COMPLETENESS OF THIS PLAN SHEET

METROLINK
SOUTHERN CALIFORNIA REGIONAL RAIL AUTHORITY
700 SOUTH FLOWER STREET
LOS ANGELES, CALIFORNIA 90017

ENGINEERING STANDARDS

COMPONENT SYMBOLS

STANDARD: 8105
SCALE: NONE
REVISION: –
SHEET: 1 OF 1
CADD FILE: ES8105

SHELF RELAYS

- D.C. NEUTRAL RELAY-ORDINARY RELEASE
- D.C. NEUTRAL RELAY-SLOW RELEASE
- D.C. NEUTRAL INTERLOCKING RELAY
- D.C. POLARIZED RELAY
- + D.C. POLARITY BIASED NEUTRAL RELAY-ARROW DENOTES DIRECTION OF CURRENT TO OPERATE RELAY
- D.C. FLASHER RELAY
- D.C. TIME ELEMENT RELAY
- A.C.-D.C. RELAY (FOR USE IN SERIES WITH LIGHT)
- A.C. RELAY-ONE ENERGIZING CIRCUIT TYPE

VITAL PLUG-IN RELAYS

- D.C. NEUTRAL RELAY
- D.C. BIASED NEUTRAL RELAY
- 3B 3A 3C 3D SWITCH OVERLOAD RELAY

NON-VITAL RELAYS

- NV NON-VITAL DC NEUTRAL RELAY
- NV NON-VITAL AC RELAY

RELAY TAB NO.	RELAY DESCRIPTION	GRS	SAFETRAN
1	RELAY, 0.5 OHM, BIASED DC TRACK	A62-654	400512
2	RELAY 4 OHM, BIASED DC TRACK	A62-682	400007
3	RELAY, 500 OHM, BIASED NEUTRAL	A62-125	400500
4	RELAY, FLASHER W/FLASHER MODULE: 50FPM	A62-673	400700-7X
5	RELAY, POWER TRANSFER	A62-579	400801-X
7	RELAY, LIGHT OUT	A62-211	400302-X
9	RELAY, SWITCH MOTOR CONTROL	A62-429	400520
10	RELAY, TIMER W/FILTER	A62-627	451000-X
11	RELAY, SWITCH OVERLOAD - GRS A62-431	A62-431	400605
13	RELAY, SERIES LINE	A62-557	400028
14	RELAY, NEUTRAL REGULAR RELEASE	A62-262	400000
15	RELAY, 350 OHM, NEUTRAL REGULAR RELEASE	A62-309	400027
16	RELAY, 350 OHM, BIASED NEUTRAL, TYPE B2	A62-145	450501
17	RELAY, 350 OHM, BIASED NEUTRAL, TYPE B2	A62-150	450500
18	RELAY, SOCKET MOUNT, 10A, 120VAC, 2250 OHM	SCRRA P/N 27-Z015-L-2220	

✳✳ - SEE STANDARD DRAWING ES8120 FOR RELAY CONTACT ARRANGEMENTS

SHELF RELAY DETAILS

RELAY RESISTANCE TO BE SHOWN IN BOX

NUMBER OF FRONT & BACK CONTACTS TO BE SHOWN TO THE SIDE

500 4 OR 500 2

PLUG-IN RELAY DETAILS

3 ← RELAY TAB NUMBER

500 1E 3E ← RELAY COIL RESISTANCE

← CONTROL WIRE CONNECTION POINT

REVISIONS				
REV.	DATE	DESCRIPTION	DES.	ENG.
-	-	-	-	-

FINAL REVIEW BY: C&SDRC DATE: 11/21/08

APPROVED BY

Dan C. Guerrero
MANAGER, COMMUNICATIONS AND SIGNALS ENGINEERING

Darrell V. Maxey
DIRECTOR, ENGINEERING AND CONSTRUCTION

THE SOUTHERN CALIFORNIA REGIONAL RAIL AUTHORITY OR IT'S OFFICERS OR AGENTS SHALL NOT BE RESPONSIBLE FOR THE ACCURACY OR COMPLETENESS OF THIS PLAN SHEET

METROLINK
SOUTHERN CALIFORNIA REGIONAL RAIL AUTHORITY
700 SOUTH FLOWER STREET
LOS ANGELES, CALIFORNIA 90017

ENGINEERING STANDARDS

SHELF AND VITAL RELAY SYMBOLS

STANDARD: 8110
SCALE: NONE
REVISION: –
SHEET: 1 OF 1
CADD FILE: ES8110

RELAY CONTACTS WITH SPECIAL CHARACTERISTICS

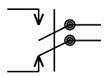
INDEPENDENT FRONT AND BACK CONTACTS

MAGNETIC BLOW-OUT

HIGH CURRENT (HEAVY DUTY) FRONT CONTACT

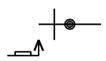
HIGH CURRENT (HEAVY DUTY) BACK CONTACT

PUSH BUTTON-PUSH TO OPEN

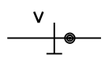
PUSH BUTTON-PUSH TO CLOSE

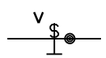
SPRING RETURN PUSH BUTTON

SWITCH LOCK CONTACT-CLOSED

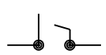
SWITCH LOCK CONTACT-OPEN

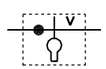
KEY CIRCUIT CONTROLLER-NORMAL OPEN

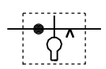
KEY CIRCUIT CONTROLLER-NORMAL CLOSED

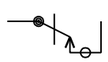
CHECKING CONTACT OF TIME ELEMENT RELAY USED TO CHECK THE RELAY NORMAL

RELAY CONTACTS TWO POSITION RELAYS

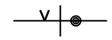
FRONT CONTACT
RELAY NORMALLY ENERGIZED

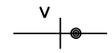
FRONT CONTACT
RELAY NORMALLY DE-ENERGIZED

BACK CONTACT
RELAY NORMALLY ENERGIZED

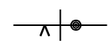
BACK CONTACT
RELAY NORMALLY DE-ENERGIZED

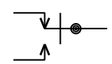
FRONT AND BACK CONTACT
RELAY NORMALLY ENERGIZED

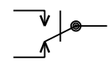
FRONT AND BACK CONTACT
RELAY NORMALLY DE-ENERGIZED

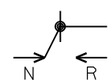

POLAR STICK RELAY (KP)
RELAY NORMAL

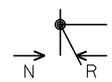

POLAR STICK RELAY (KP)
RELAY REVERSE

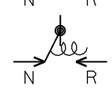

POLAR BIASED RELAY (KP)
RELAY NORMAL (DE-ENERGIZED)

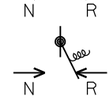

POLAR BIASED RELAY (KP)
RELAY NORMAL (ENERGIZED)

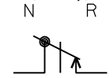
FLASHER RELAY

RELAY CONTACTS THREE POSITION RELAYS

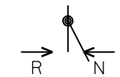

D.C. POLAR RELAY CONTACT
RELAY NORMAL

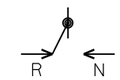

D.C. POLAR RELAY CONTACT
RELAY REVERSE

TYPICAL CIRCUIT

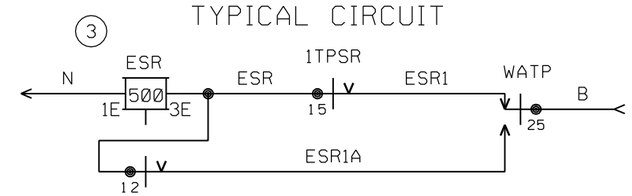

REVISIONS				
-	-	-	-	-
REV.	DATE	DESCRIPTION	DES.	ENG.

FINAL REVIEW BY: C&SDRC DATE: 11/21/08

APPROVED BY

Dan C. Guerrero
MANAGER, COMMUNICATIONS AND SIGNALS ENGINEERING

Darrell V. Maxey
DIRECTOR, ENGINEERING AND CONSTRUCTION

THE SOUTHERN CALIFORNIA REGIONAL RAIL AUTHORITY OR IT'S OFFICERS OR AGENTS SHALL NOT BE RESPONSIBLE FOR THE ACCURACY OR COMPLETENESS OF THIS PLAN SHEET

METROLINK
SOUTHERN CALIFORNIA REGIONAL RAIL AUTHORITY
700 SOUTH FLOWER STREET
LOS ANGELES, CALIFORNIA 90017

ENGINEERING STANDARDS

RELAY CONTACT SYMBOLS

STANDARD: 8115
SCALE: NONE
REVISION: –
SHEET: 1 OF 1
CADD FILE: ES8115

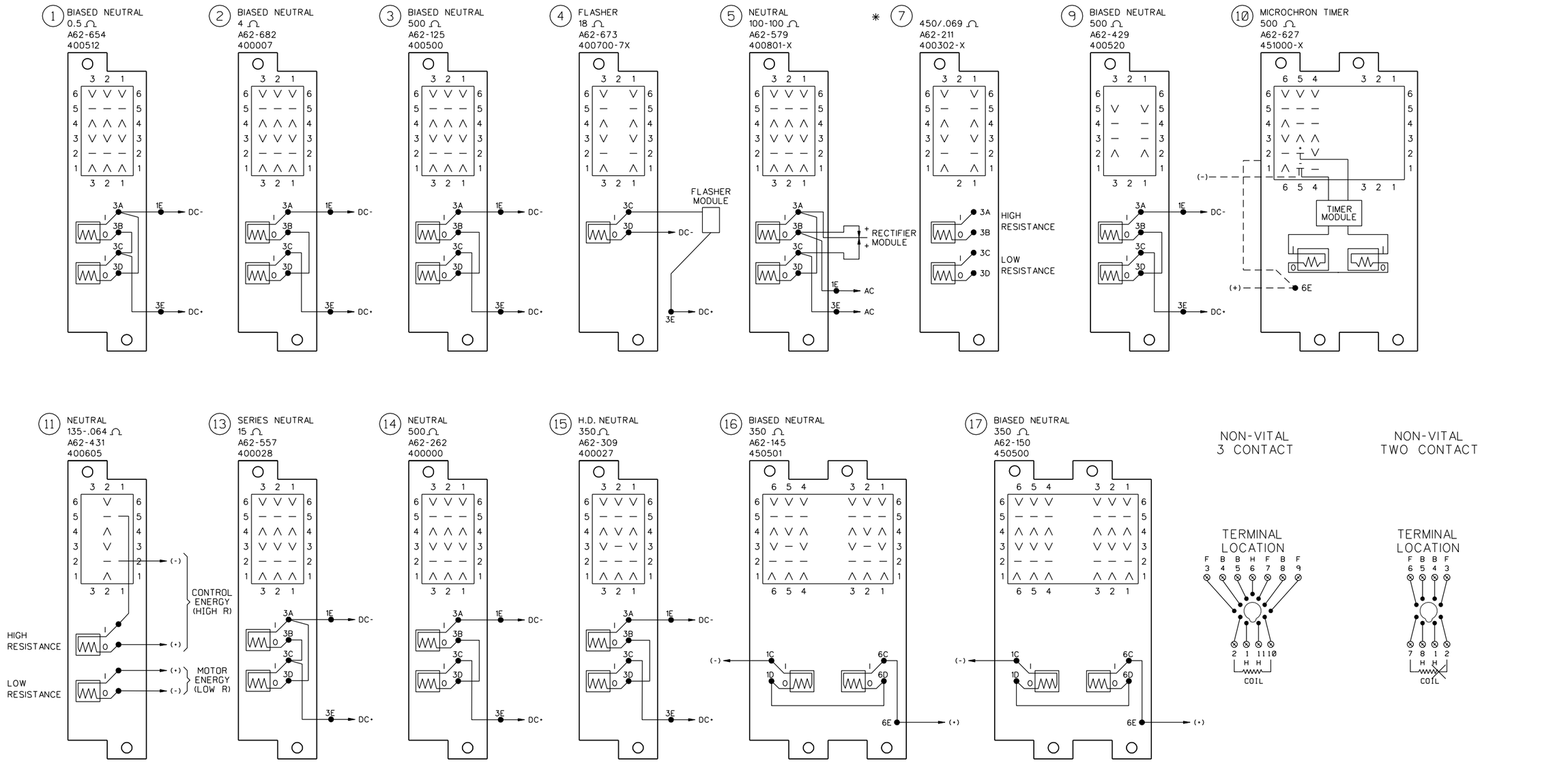

* = LIGHT RELAY DIODE
5 A, 1000 PIV
SUGGESTED MR760
MOTOROLA 6 A, 1000 PIV

G.R.S B1 & B2/SAFETRAN ST1 & ST2
RELAY BASE COIL AND JUMPER
WIRING AND CONTACT ARRANGEMENT.

REVISIONS				
-	-	-	-	-
REV.	DATE	DESCRIPTION	DES.	ENG.

FINAL REVIEW BY: C&SDRC DATE: 11/21/08

APPROVED BY

Dan C. Guerrero
MANAGER, COMMUNICATIONS AND SIGNALS ENGINEERING

Darrell V. Maxey
DIRECTOR, ENGINEERING AND CONSTRUCTION

THE SOUTHERN CALIFORNIA REGIONAL RAIL AUTHORITY OR IT'S OFFICERS OR AGENTS SHALL NOT BE RESPONSIBLE FOR THE ACCURACY OR COMPLETENESS OF THIS PLAN SHEET

METROLINK
SOUTHERN CALIFORNIA REGIONAL RAIL AUTHORITY
700 SOUTH FLOWER STREET
LOS ANGELES, CALIFORNIA 90017

ENGINEERING STANDARDS

PLUG-IN RELAY BASE
COIL & JUMPER WIRING
WITH CONTACT ARRANGEMENT

STANDARD: 8120
SCALE: NONE
REVISION: –
SHEET: 1 OF 1
CADD FILE: ES8120

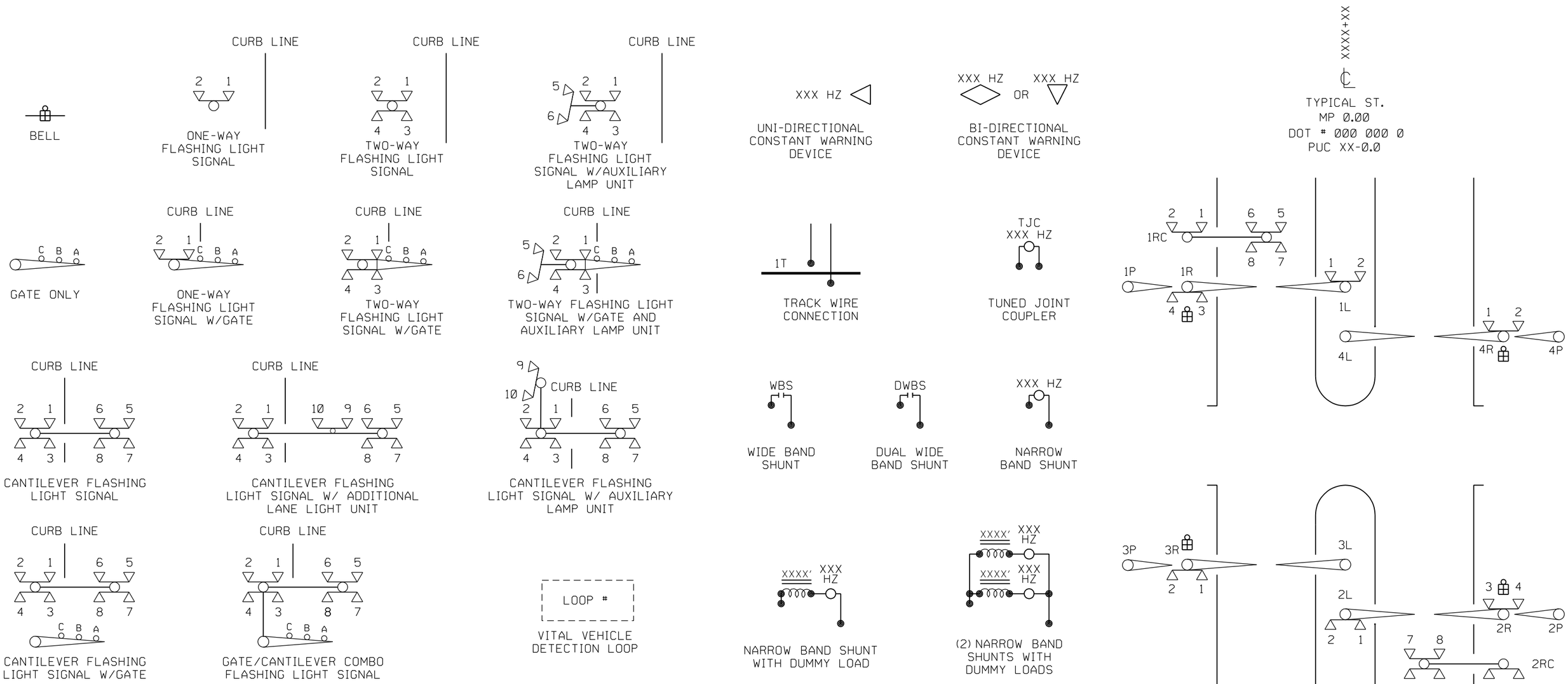

NOTE: ODD NUMBER LAMPS ARE STREET-SIDE

REVISIONS				
-	-	-	-	-
REV.	DATE	DESCRIPTION	DES.	ENG.

FINAL REVIEW BY: C&SDRC DATE: 11/21/08

APPROVED BY

Dan C. Guerrero
MANAGER, COMMUNICATIONS AND SIGNALS ENGINEERING

Darrell V. Maxey
DIRECTOR, ENGINEERING AND CONSTRUCTION

THE SOUTHERN CALIFORNIA REGIONAL RAIL AUTHORITY OR IT'S OFFICERS OR AGENTS SHALL NOT BE RESPONSIBLE FOR THE ACCURACY OR COMPLETENESS OF THIS PLAN SHEET

METROLINK
SOUTHERN CALIFORNIA REGIONAL RAIL AUTHORITY
700 SOUTH FLOWER STREET
LOS ANGELES, CALIFORNIA 90017

ENGINEERING STANDARDS

GRADE CROSSING SYMBOLS

STANDARD: 8125
SCALE: NONE
REVISION: –
SHEET: 1 OF 1
CADD FILE: ES8125

SEARCHLIGHT SIGNAL CONTACTS AND TERMINAL POST NUMBERING

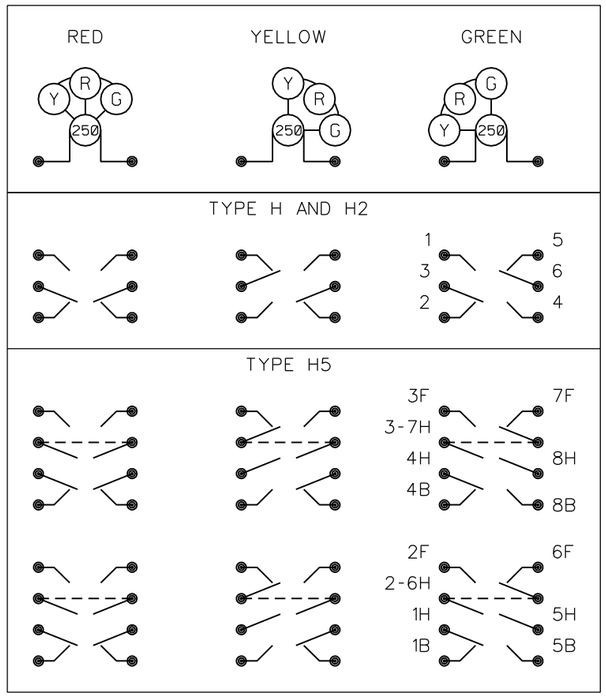

WAYSIDE SIGNAL SYMBOLS

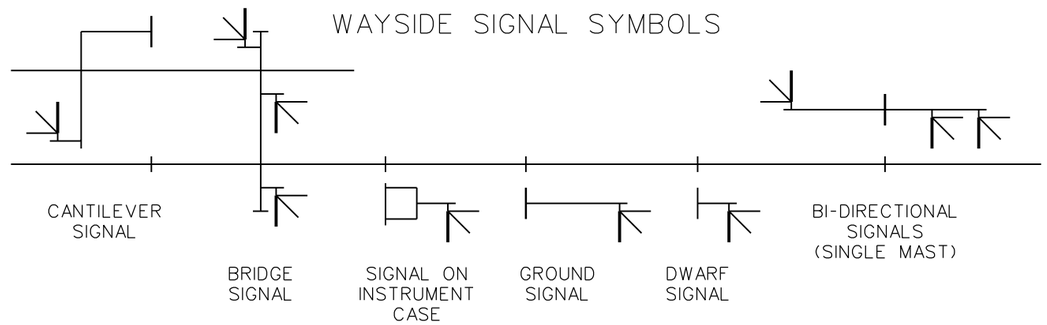

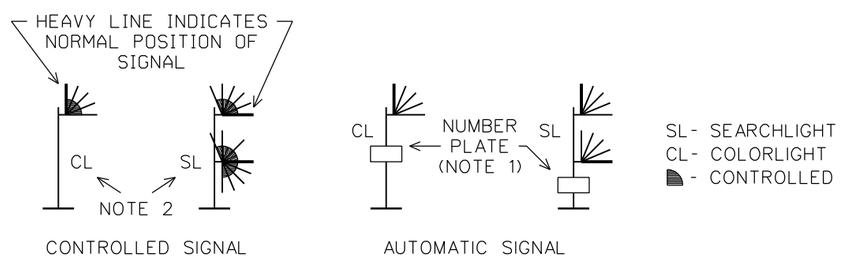

EXAMPLE:

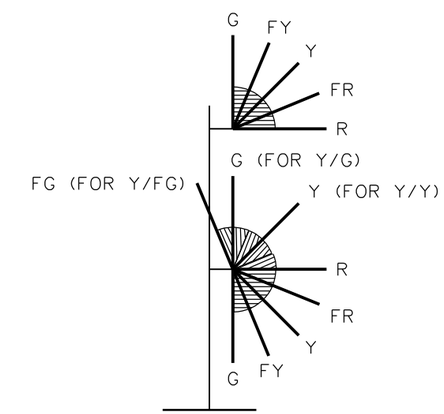

HOME SIGNAL WITH
G/R, Y/FG, Y/G, Y/Y, FY/R, Y/FR, Y/R,
R/G, R/FY, R/Y, FR/R, R/FR, R/R,
ASPECTS

NOTES:

1. NUMBER PLATE ON SIGNAL SYMBOL IS OPTIONAL.
2. CL AND SL DESIGNATIONS USED ONLY WHEN MORE THAN ONE TYPE OF SIGNAL IS SHOWN ON A DRAWING, OTHERWISE ALL SIGNALS ARE COLORLIGHT.

REVISIONS				
-	-	-	-	-
REV.	DATE	DESCRIPTION	DES.	ENG.

FINAL REVIEW BY: C&SDRC DATE: 11/21/08

APPROVED BY

Dan C. Guerrero
MANAGER, COMMUNICATIONS AND SIGNALS ENGINEERING

Darrell V. Maxey
DIRECTOR, ENGINEERING AND CONSTRUCTION

THE SOUTHERN CALIFORNIA REGIONAL RAIL AUTHORITY OR IT'S OFFICERS OR AGENTS SHALL NOT BE RESPONSIBLE FOR THE ACCURACY OR COMPLETENESS OF THIS PLAN SHEET

METROLINK
SOUTHERN CALIFORNIA REGIONAL RAIL AUTHORITY
700 SOUTH FLOWER STREET
LOS ANGELES, CALIFORNIA 90017

ENGINEERING STANDARDS

WAYSIDE SIGNAL SYMBOLS

STANDARD 8130
SCALE: NONE
REVISION –
SHEET 1 OF 1
CADD FILE: ES8130

LINE PLAN

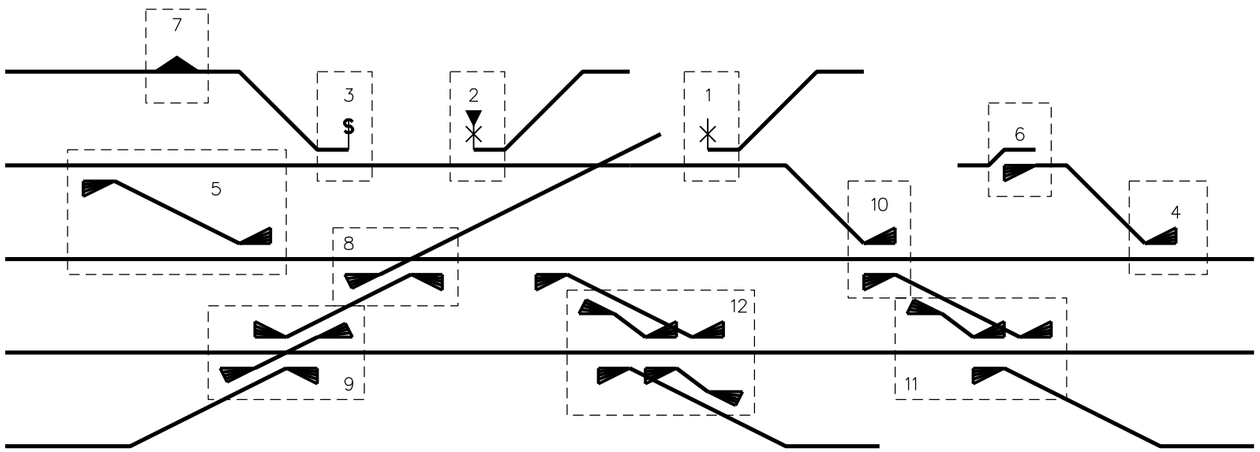

1. HAND THROW SWITCH WITH SWCC
2. ELECTRIC SWITCH LOCK WITH SWCC
3. SPRING SWITCH
4. TURNOUT
5. CROSSOVER
6. SWITCH POINT DERAIL
7. LIFT TYPE DERAIL
8. SINGLE SLIP SWITCH WITH RIGID FROG
9. DOUBLE SLIP SWITCH WITH RIGID FROG
10. MOVEABLE POINT FROG (M.P.F.)
11. SINGLE SLIP SWITCH WITH M.P.F.
12. DOUBLE SLIP SWITCH WITH M.P.F.

INTERLOCKED SWITCHES AND DERAILS

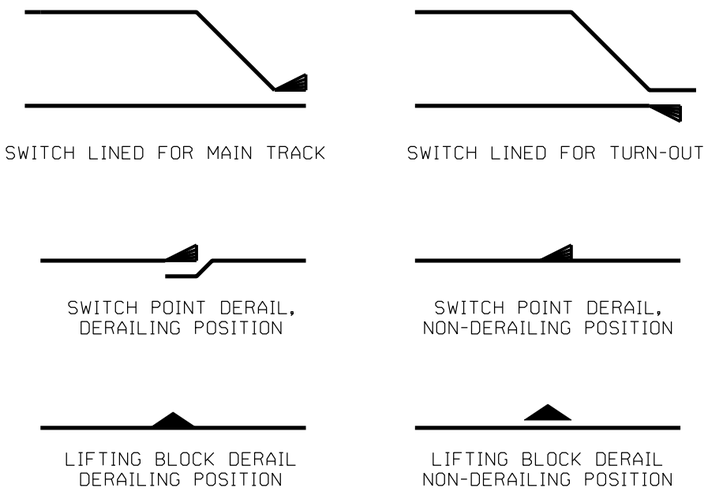

HAND-OPERATED TURNOUTS

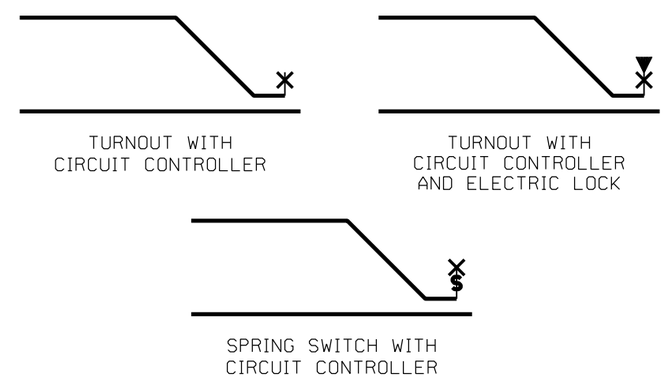

REVISIONS				
-	-	-	-	-
REV.	DATE	DESCRIPTION	DES.	ENG.

FINAL REVIEW BY: C&SDRC DATE: 11/21/08

APPROVED BY

Dan C. Guerrero

MANAGER, COMMUNICATIONS AND SIGNALS ENGINEERING

Darrell V. Maxey

DIRECTOR, ENGINEERING AND CONSTRUCTION

THE SOUTHERN CALIFORNIA REGIONAL RAIL AUTHORITY OR IT'S OFFICERS OR AGENTS SHALL NOT BE RESPONSIBLE FOR THE ACCURACY OR COMPLETENESS OF THIS PLAN SHEET

METROLINK

SOUTHERN CALIFORNIA REGIONAL RAIL AUTHORITY
700 SOUTH FLOWER STREET
LOS ANGELES, CALIFORNIA 90017

ENGINEERING STANDARDS

SWITCH AND DERAIL SYMBOLS

STANDARD: 8135
SCALE: NONE
REVISION: –
SHEET: 1 OF 1
CADD FILE: ES8135

NWPR ONLY

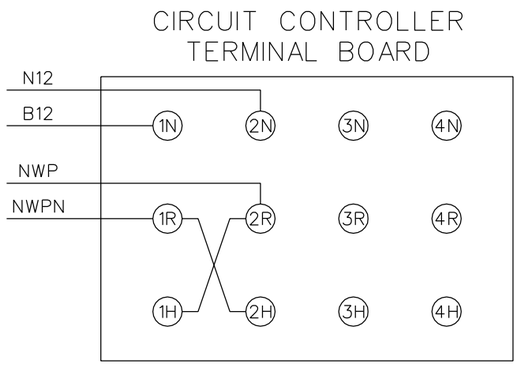

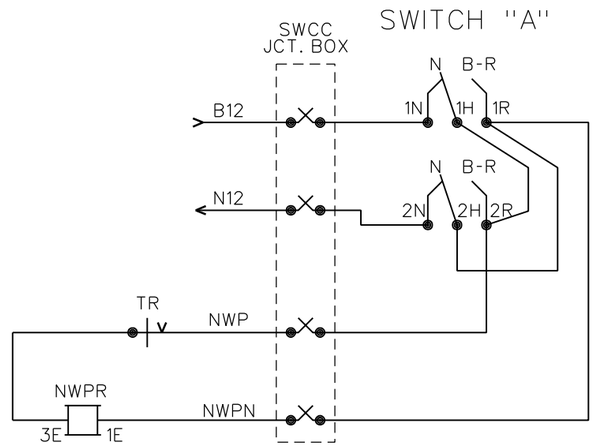

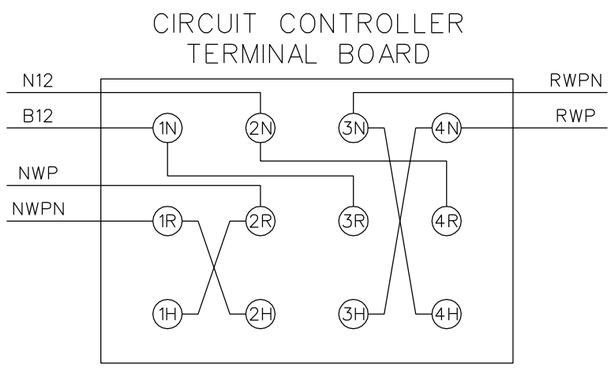

NWPR & RWPR

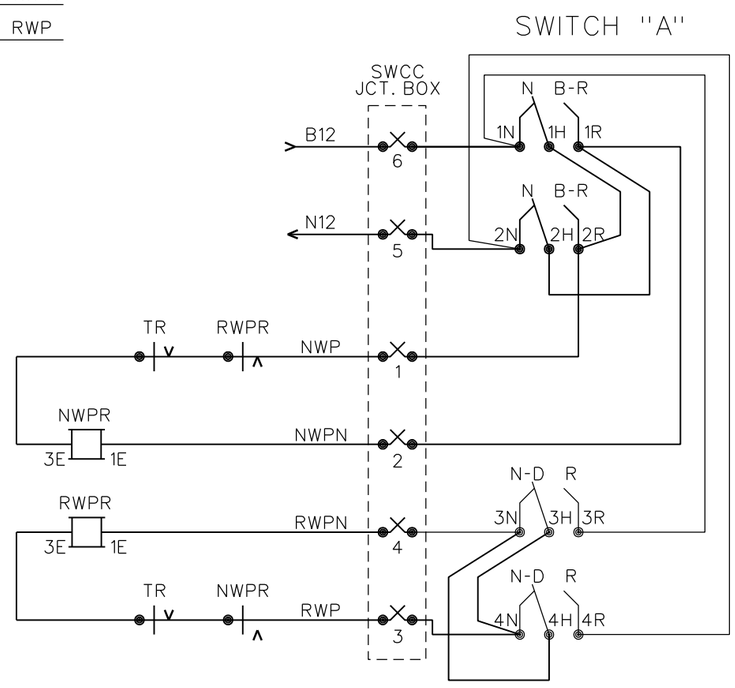

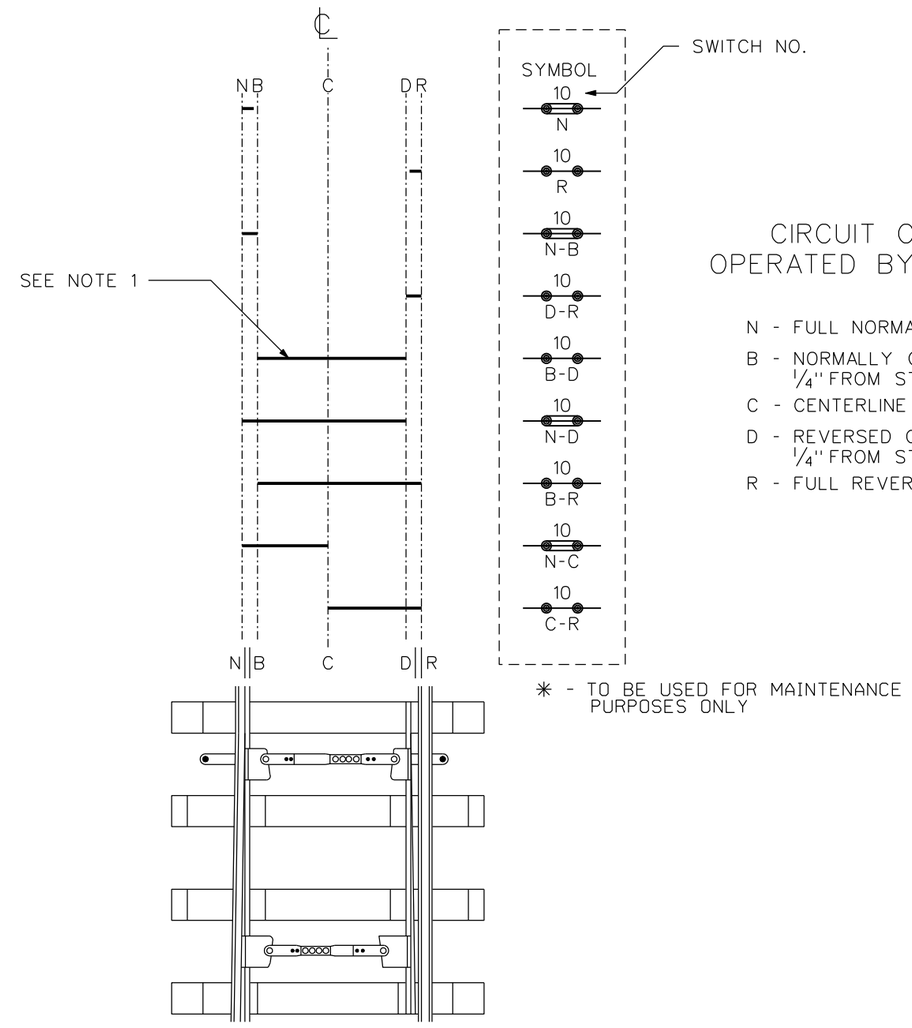

CIRCUIT CONTROLLERS OPERATED BY SWITCH POINTS

N - FULL NORMAL POSITION OF SWITCH

B - NORMALLY CLOSED SWITCH POINT 1/4" FROM STOCK RAIL

C - CENTERLINE OF SWITCH

D - REVERSED CLOSED SWITCH POINT 1/4" FROM STOCK RAIL

R - FULL REVERSE POSITION OF SWITCH

✳ - TO BE USED FOR MAINTENANCE PURPOSES ONLY

NOTES:

1. HEAVY HORIZONTAL LINES INDICATE POSITION OF THROW OF SWITCH THROUGH WHICH CONTACT IS CLOSED.
2. NORMAL POSITION OF SWITCH IS FOR MAIN TRACK.

REVISIONS				
-	-	-	-	-
REV.	DATE	DESCRIPTION	DES.	ENG.

FINAL REVIEW BY: C&SDRC DATE: 11/21/08

APPROVED BY

Dan C. Guerrero
MANAGER, COMMUNICATIONS AND SIGNALS ENGINEERING

Darrell V. Maxey
DIRECTOR, ENGINEERING AND CONSTRUCTION

THE SOUTHERN CALIFORNIA REGIONAL RAIL AUTHORITY OR IT'S OFFICERS OR AGENTS SHALL NOT BE RESPONSIBLE FOR THE ACCURACY OR COMPLETENESS OF THIS PLAN SHEET

METROLINK
SOUTHERN CALIFORNIA REGIONAL RAIL AUTHORITY
700 SOUTH FLOWER STREET
LOS ANGELES, CALIFORNIA 90017

ENGINEERING STANDARDS

CIRCUIT CONTROLLER CONTACT SYMBOLS

STANDARD: 8140
SCALE: NONE
REVISION: –
SHEET: 1 OF 1
CADD FILE: ES8140

OHMS LAW

R=OHMS I=AMPS

E=VOLTS P=WATTS

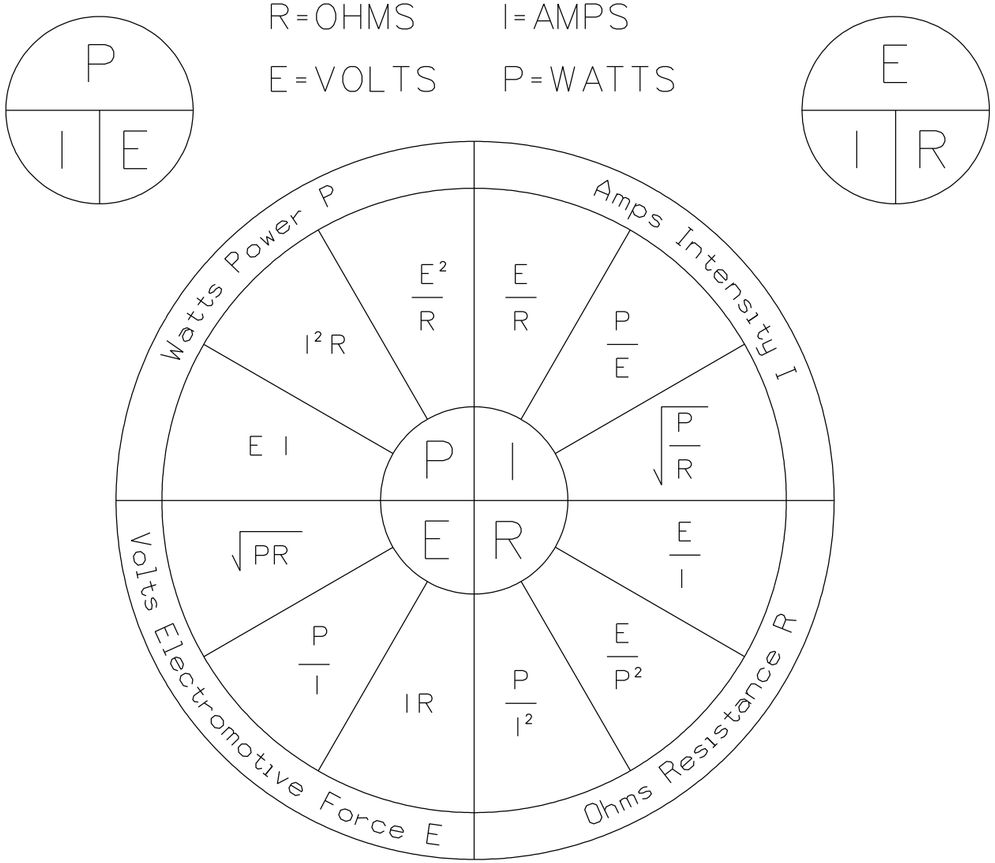

RULES FOR SERIES D-C CIRCUITS

1. THE SAME CURRENT FLOWS THROUGH EACH PART OF A SERIES CIRCUIT.
2. THE TOTAL RESISTANCE OF A SERIES CIRCUIT IS EQUAL TO THE SUM OF IDIVIDUAL RESISTANCES.
3. THE TOTAL VOLTAGE ACROSS A SERIES CIRCUIT IS EQUAL TO THE SUM OF THE INDIVIDUAL VOLTAGE DROPS.
4. THE VOLTAGE DROP ACROSS A RESISTOR IN A SERIES CIRCUIT IS PROPORTIONAL TO THE SIZE OF THE RESISTOR.
5. THE TOTAL POWER DISSIPATED IN A SERIES CIRCUIT IS EQUAL TO THE SUM OF THE INDIVIDUAL POWER DISSIPATIONS.

RULES FOR PARALLEL D-C CIRCUITS

1. THE SAME VOLTAGE EXISTS ACROSS EACH BRANCH OF A PARALLEL IS EQUAL TO THE SOURCE VOLTAGE.
2. THE CURRENT THROUGH A BRANCH OF A PARALLEL NETWORK IS INVERSELY PROPORTIONAL TO THE AMOUNT OF RESISTANCE OF THE BRANCH.
3. THE TOTAL CURRENT OF A PARALLEL CIRCUIT IS EQUAL TO THE SUM OF THE CURRENTS OF THE INDIVIDUAL BRANCHES OF THE CIRCUIT.
4. THE TOTAL RESISTANCE OF A PARALLEL CIRCUIT IS EQUAL TO THE RECIPROCAL OF THE SUM OF THE RECIPROCALS OF THE INDIVIDUAL RESISTANCES OF THE CIRCUIT.
5. THE TOTAL POWER CONSUMED IN A PARALLEL CIRCUIT IS EQUAL TO THE SUM OF THE POWER CONSUMPTION OF THE INDIVIDUAL RESISTANCES.

REVISIONS				
-	-	-	-	-
REV.	DATE	DESCRIPTION	DES.	ENG.

FINAL REVIEW BY: C&SDRC DATE: 11/21/08

APPROVED BY

Dan C. Guerrero
MANAGER, COMMUNICATIONS AND SIGNALS ENGINEERING

Darrell V. Maxey
DIRECTOR, ENGINEERING AND CONSTRUCTION

THE SOUTHERN CALIFORNIA REGIONAL RAIL AUTHORITY OR IT'S OFFICERS OR AGENTS SHALL NOT BE RESPONSIBLE FOR THE ACCURACY OR COMPLETENESS OF THIS PLAN SHEET

METROLINK
SOUTHERN CALIFORNIA REGIONAL RAIL AUTHORITY
700 SOUTH FLOWER STREET
LOS ANGELES, CALIFORNIA 90017

ENGINEERING STANDARDS

OHMS LAW

STANDARD 8145

SCALE: NONE

REVISION –

SHEET 1 OF 1

CADD FILE: ES8145

SCREWLESS CAGE CLAMP TERMINAL DETAIL

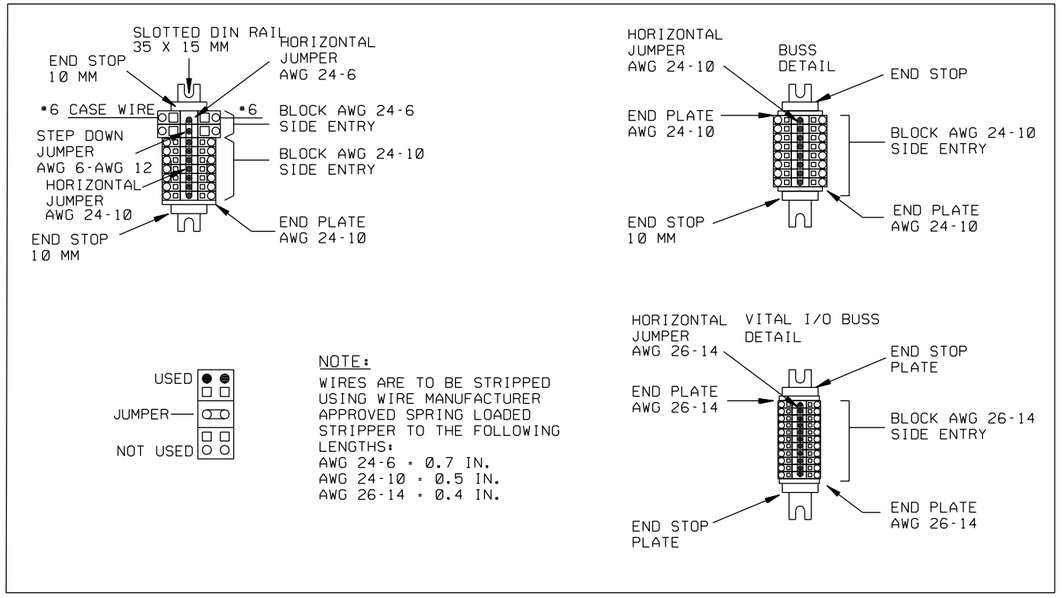

DETAIL A

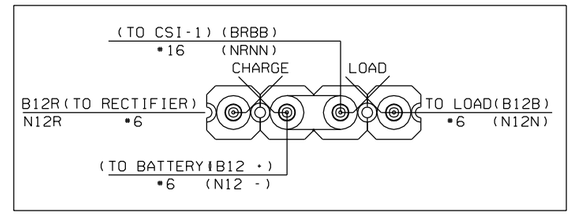

DETAIL B

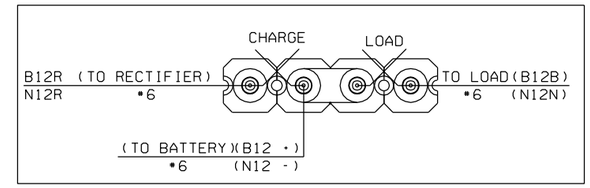

LOCATION LEGENDS

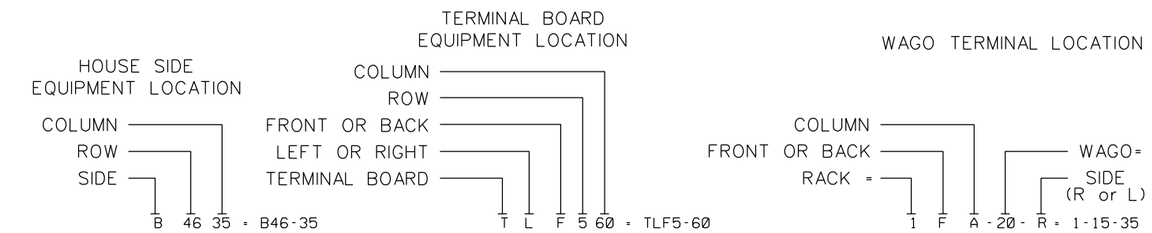

WIRE TAGS

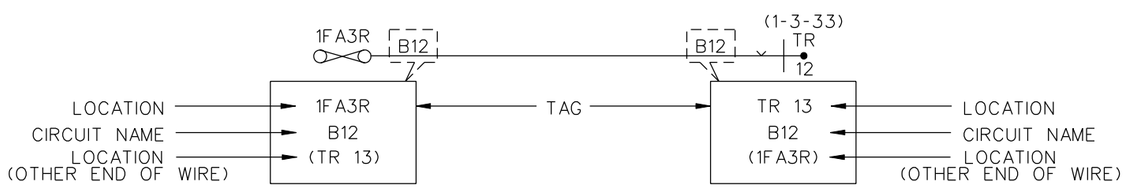

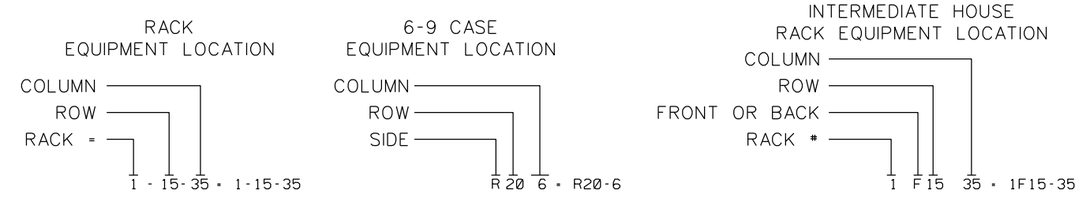

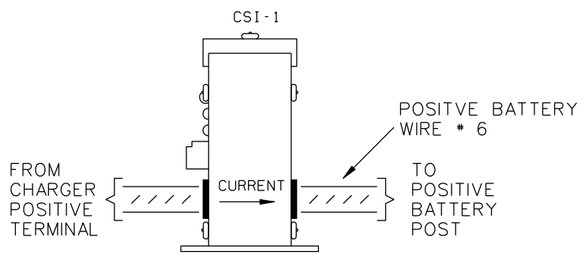

NOTES:

- = CLEARVIEW ARRESTOR
- = HEAVY DUTY EQUALIZER
- = INSULATED TEST TERMINAL
- = TERMINAL BLOCK
- = TERMINAL BLOCK
- = DRILL 1/2-INCH HOLE AND FINISH EDGES FOR CASE WIRE AND CABLE CONDUCTORS
- = DRILL 1-1/4 INCH HOLE AND FINISH EDGES FOR TRACK WIRE
- = ADJUSTABLE RESISTANCE
- = TWISTED WIRE
- = TEST POINTS FOR XGNDS.
- = COIL PER I-324
- = DV4 OR EQUAL

NOTE:

1. UNLESS NOTED ON CIRCUIT PLANS, WIRES TO BE #14 AWG FLEX. ALL GROUND WIRES TO BE #6 AWG SOFT DRAWN COPPER. WIRES TO BATTERIES TO BE #6 AWG FLEX CASE WIRE.

REVISIONS				
REV.	DATE	DESCRIPTION	DES.	ENG.
-	-	-	-	-

FINAL REVIEW BY: C&SDRC DATE: 11/21/08

APPROVED BY

Dan C. Guerrero
MANAGER, COMMUNICATIONS AND SIGNALS ENGINEERING

Darrell V. Maxey
DIRECTOR, ENGINEERING AND CONSTRUCTION

THE SOUTHERN CALIFORNIA REGIONAL RAIL AUTHORITY OR IT'S OFFICERS OR AGENTS SHALL NOT BE RESPONSIBLE FOR THE ACCURACY OR COMPLETENESS OF THIS PLAN SHEET

METROLINK
SOUTHERN CALIFORNIA REGIONAL RAIL AUTHORITY
700 SOUTH FLOWER STREET
LOS ANGELES, CALIFORNIA 90017

ENGINEERING STANDARDS

WAGO AND BOARD WIRING DETAILS

STANDARD: 8150
SCALE: NONE
REVISION: –
SHEET: 1 OF 1
CADD FILE: ES8150

CASE DIMENSIONS

41"W x 74 3/4"H x 24"D - OPTION A
31"W X 61 3/4"H X 24"D - OPTION B

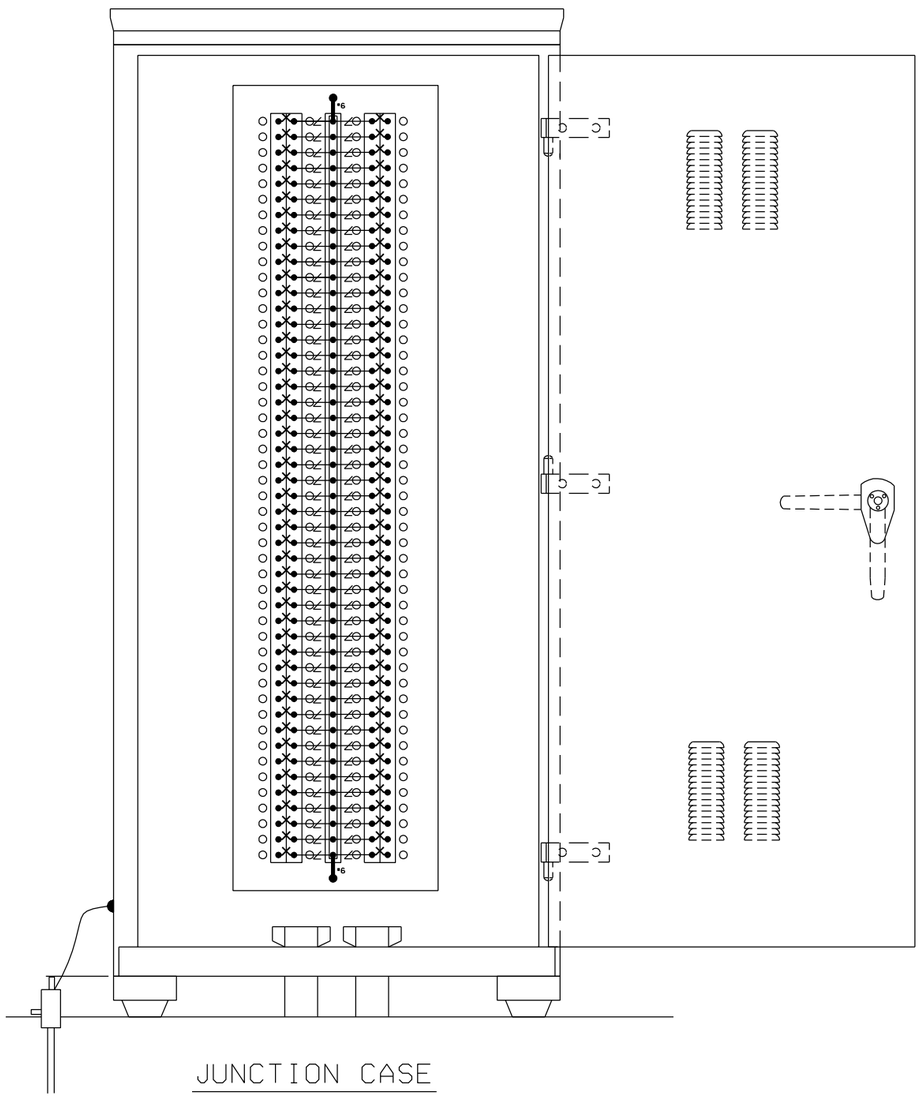

JUNCTION CASE

NOTE:

INSTALL AND COMPACT A LAYER OF SMALL AGGREGATE STONE. MINIMUM 4' AROUND CASE.

TERMINAL BOARD DETAIL

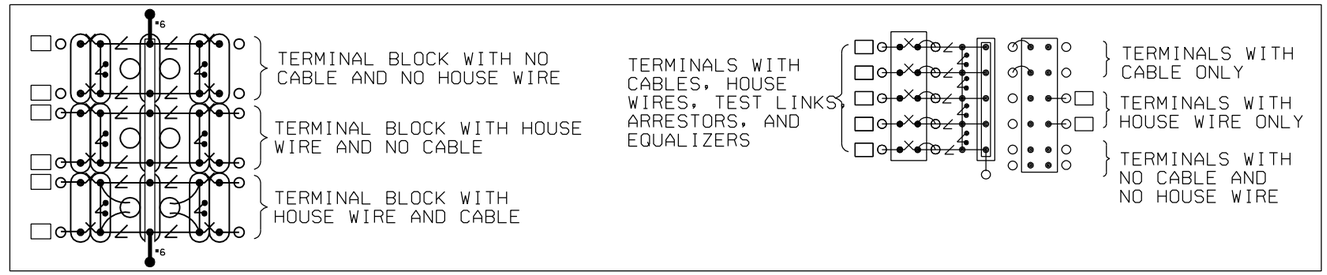

NOTES:

1. CASE OPTION SIZE TO BE DETERMINED BY THE ENGINEER. CASE SHALL BE EQUIPPED WITH A PLYWOOD BACKBOARD SETUP WITH A MINIMUM OF 48 - 2 POST TERMINALS ARRANGED AS OUTLINED IN THE TERMINAL BOARD DETAIL ABOVE AND DISPLAYED IN THE CASE.
2. INSULATION ON SOLID CONDUCTORS SHALL BE REMOVED AND THE EXPOSED BARE WIRE THOROUGHLY CLEANED TO PROVIDE HIGH CONDUCTIVITY, TAKING CARE NOT TO NICK OR DAMAGE WIRE.
3. THE BARE WIRE SHALL BE FORMED TO PRODUCE AN EYELET WHICH SHALL BE PLACED OVER THE BINDING POST. THE EYELET SHALL BE SIZED TO PROVIDE A TIGHT FITTING LOOP AROUND THE POST BUT LOOSE ENOUGH TO EASILY SLIDE ON AND OFF.
4. INSULATION ON FLEX CONDUCTORS SHALL BE REMOVED USING A SPRING LOADED STRIPPNG TOOL RECOMMENDED BY THE MANUFACTURER OF THE WIRE AND THE EXPOSED BARE WIRE THOROUGHLY CLEANED TO PROVIDE HIGH CONDUCTIVITY.
5. EYELET SHALL BE ATTACHED TO FLEX CONDUCTORS. ONLY SCRRA APPROVED EYELET SHALL BE UTILIZED. A COMPRESSION TOOL RECOMMENDED BY THE MANUFACTURER OF THE EYELET SHALL BE USED TO ATTACH THE EYELET.
6. A FLAT WASHER SHALL BE PLACED ON THE BINDING POST. THE EYELET SHALL THEN BE PLACED ON THE POST FOLLOWED BY ANOTHER FLAT WASHER. IF APPLICABLE THE SECOND EYELET SHALL BE PLACED ON THE POST FOLLOWED BY A FLAT WASHER. A NUT SHALL BE APPLIED AND SECURELY THIGHTENED WITH A TERMINAL WRENCH.
7. AN INSULATED TEST LINK SHALL BE INSTALLED ONCE THE SOLID CONDUCTORS AND EYELETS ARE ATTACHED. THE TEST LINK SHALL BE SECURED USING ONE FLAT AND ONE CROWN NUT AND THE CIRCUIT "CLOSED" BY APPLYING THE BRASS NUT.
8. FLEX CONDUCTORS SHALL BE TAGGED USING SCRRA APPROVED TAGS.
9. WHERE POSSIBLE, SPARE SOLID CABLE CONDUCTORS SHALL BE ATTACHED TO SPARE BINDING POSTS. NO MORE THAN ONE SOLID CONDUCTOR SHALL BE SECURED TO A POST.

REVISIONS				
-	-	-	-	-
REV.	DATE	DESCRIPTION	DES.	ENG.

FINAL REVIEW BY: C&SDRC DATE: 11/21/08

APPROVED BY

Dan C. Guerrero
MANAGER, COMMUNICATIONS AND SIGNALS ENGINEERING

Darrell V. Maxey
DIRECTOR, ENGINEERING AND CONSTRUCTION

THE SOUTHERN CALIFORNIA REGIONAL RAIL AUTHORITY OR IT'S OFFICERS OR AGENTS SHALL NOT BE RESPONSIBLE FOR THE ACCURACY OR COMPLETENESS OF THIS PLAN SHEET

METROLINK
SOUTHERN CALIFORNIA REGIONAL RAIL AUTHORITY
700 SOUTH FLOWER STREET
LOS ANGELES, CALIFORNIA 90017

ENGINEERING STANDARDS

CABLE JUNCTION CASE WIRING DETAILS

STANDARD: 8155
SCALE: NONE
REVISION: –
SHEET: 1 OF 1
CADD FILE: ES8155

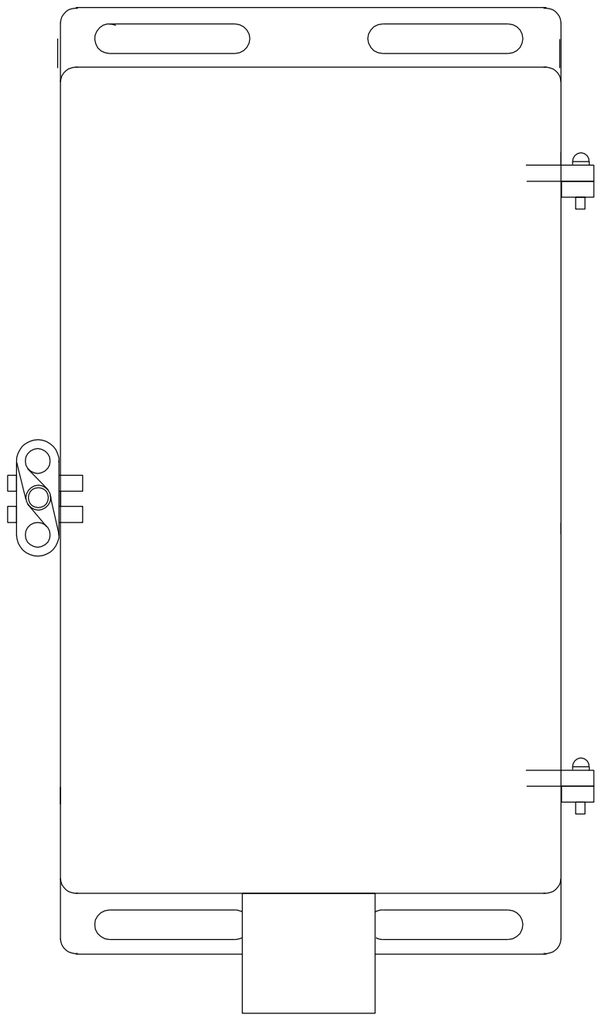

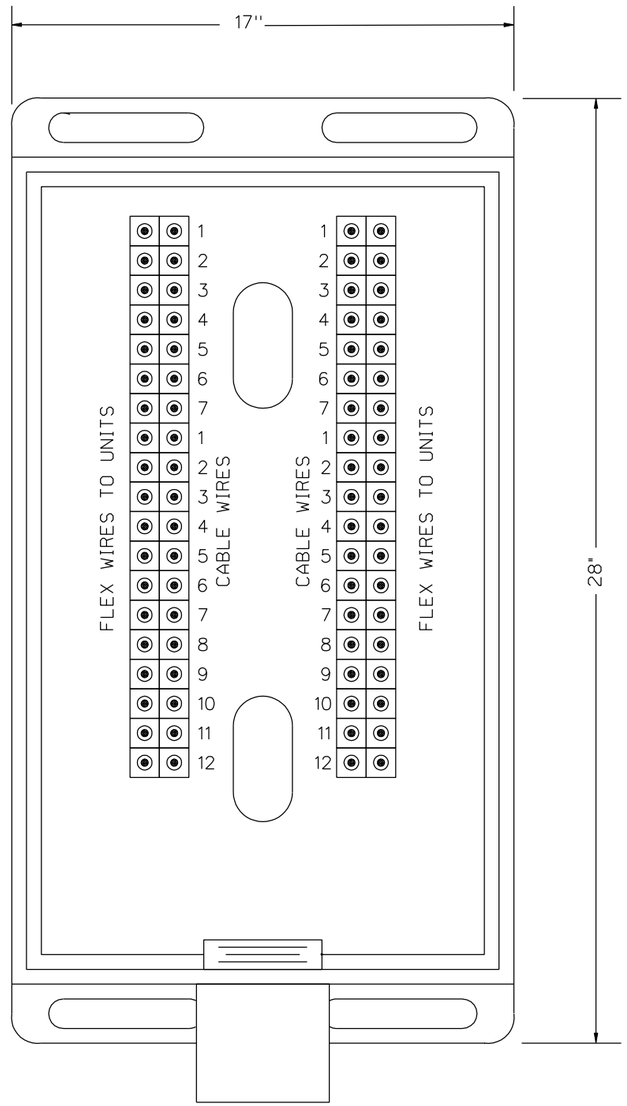

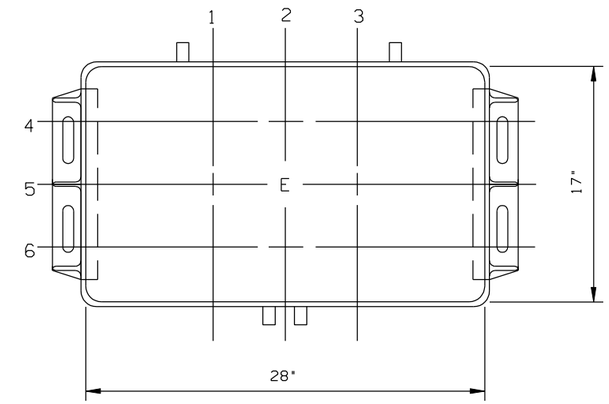

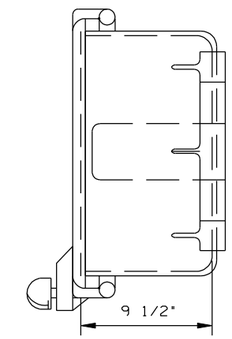

NOTES:

1. TERMINAL BOX SHALL BE ALUMINUM MEASURING 17"W X 28"L 9½"D.
2. INSULATED TEST TERMINALS, AS SHOWN IN ES8205 SHALL BE INSTALLED BETWEEN FLEX CONDUCTOR AND CABLE CONDUCTOR.
3. ALL CONDUCTORS SHALL BE IDENTIFIED WITH SLEEVE TYPE TAGS. TAGS SHALL DISPLAY NOMENCLATURE AS SHOWN ON CIRCUIT DRAWING AND DETAILED ON ES8150.
4. EACH SPARE CABLE CONDUCTOR SHALL BE TERMINATED ON AN AREMA C&S MANUAL PART 14.1.5 TERMINAL AND LOCKED DOWN TIGHTLY WITH TWO TERMINAL NUTS.
5. TERMINALS NOT USED WILL BE EQUIPPED WITH TWO WASHERS AND TWO CROWN NUTS.
6. CABLE ENTRANCE SHALL BE SEALED TO PREVENT ACCESS BY RODENTS AND OTHER PESTS.
7. CONDUCTORS ARE LANDED IN NUMERICAL ORDER WITH ONE ON TOP.

REVISIONS

REV.	DATE	DESCRIPTION	DES.	ENG.
-	-	-	-	-

FINAL REVIEW BY: C&SDRC DATE: 11/21/08

APPROVED BY

Dan C. Guerrero
MANAGER, COMMUNICATIONS AND SIGNALS ENGINEERING

Darrell V. Maxey
DIRECTOR, ENGINEERING AND CONSTRUCTION

THE SOUTHERN CALIFORNIA REGIONAL RAIL AUTHORITY OR IT'S OFFICERS OR AGENTS SHALL NOT BE RESPONSIBLE FOR THE ACCURACY OR COMPLETENESS OF THIS PLAN SHEET

METROLINK
SOUTHERN CALIFORNIA REGIONAL RAIL AUTHORITY
700 SOUTH FLOWER STREET
LOS ANGELES, CALIFORNIA 90017

ENGINEERING STANDARDS

TYPICAL SIGNAL TERMINAL BOX

STANDARD: 8205
SCALE: NONE
REVISION: –
SHEET: 1 OF 1
CADD FILE: ES8205

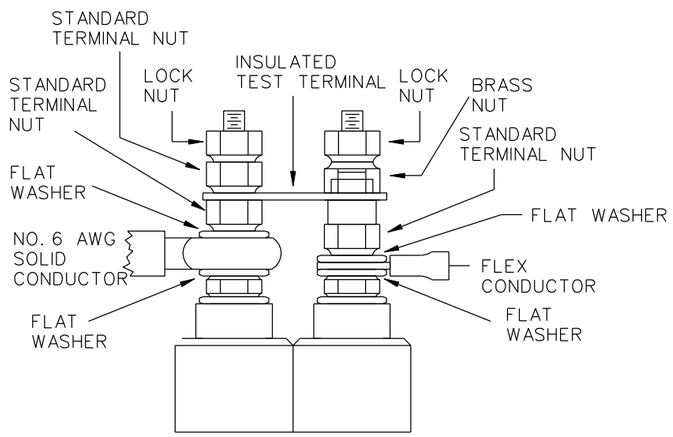

AAR TERMINAL WITH 1⅝" STUDS

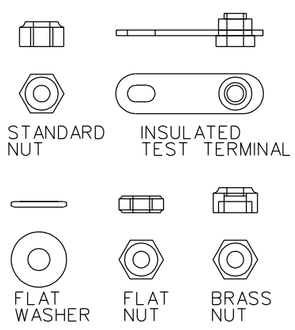

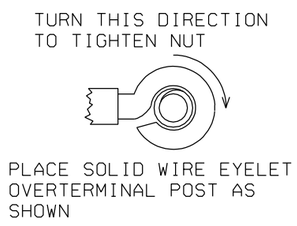

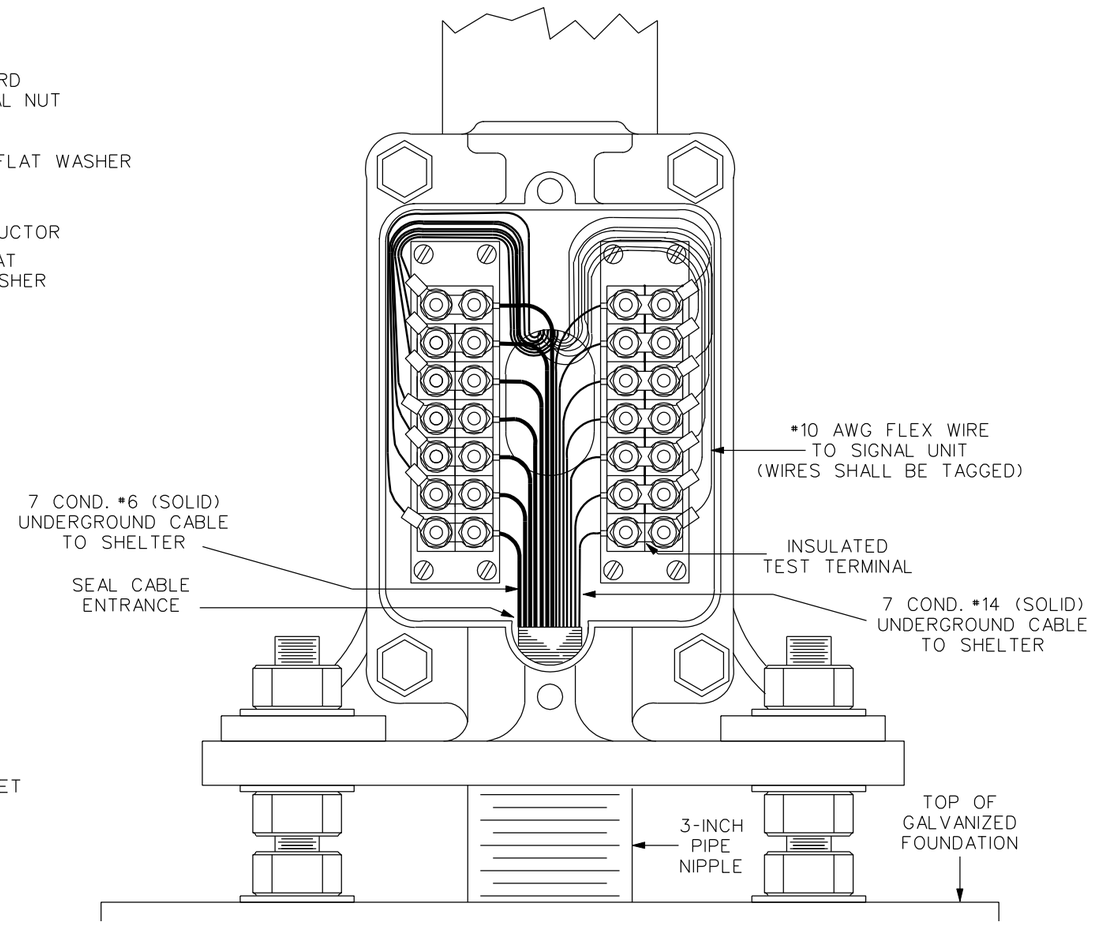

NOTES:

1. WHEN SMALLER SIZED SOLID CONDUCTORS ARE REQUIRED, FLAT NUT AND STANDARD NUTS WILL EXCHANGE POSITIONS.
2. INSULATION ON SOLID CONDUCTORS SHALL BE REMOVED AND THE EXPOSED BARE WIRE THOROUGHLY CLEANED TO PROVIDE HIGH CONDUCTIVITY, TAKING CARE NOT TO DAMAGE WIRE.
3. THE BARE WIRE SHALL BE FORMED TO PRODUCE AN EYELET WHICH SHALL BE PLACED OVER THE BINDING POST. THE EYELET SHALL BE SIZED TO PROVIDE A TIGHT FITTING LOOP AROUND THE POST BUT LOOSE ENOUGH TO EASILY SLIDE ON AND OFF.
4. INSULATION ON FLEX CONDUCTORS SHALL BE REMOVED AND THE EXPOSED BARE WIRE THOROUGHLY CLEANED TO PROVIDE HIGH CONDUCTIVITY.
5. TERMINALS SHALL BE ATTACHED TO FLEX CONDUCTORS. ONLY SCRRA APPROVED TERMINALS SHALL BE UTILIZED. A COMPRESSION TOOL RECOMMENDED BY THE MANUFACTURER OF THE TERMINAL SHALL BE USED TO ATTACH THE TERMINAL.
6. A FLAT WASHER SHALL BE PLACED ON THE BINDING POST. THE TERMINAL SHALL THEN BE PLACED ON THE POST FOLLOWED BY ANOTHER FLAT WASHER. IF APPLICABLE PLACE THE SECOND TERMINAL SHALL BE ON THE POST FOLLOWED BY A FLAT WASHER. A NUT SHALL BE APPLIED AND SECURELY TIGHTENED WITH A TERMINAL WRENCH.
7. AN INSULATED TEST TERMINAL SHALL BE INSTALLED ONCE THE SOLID CONDUCTORS AND TERMINALS ARE ATTACHED. THE TEST TERMINAL SHALL BE SECURED WITH A SINGLE TERMINAL NUT AND THE CIRCUIT "CLOSED" BY APPLYING THE BRASS NUT. A STANDARD NUT SHALL BE PLACED ON EACH TERMINAL POST TO LOCK DOWN THE INSULATED TEST TERMINAL NUTS.
8. FLEX CONDUCTORS SHALL BE TAGGED USING SCRRA APPROVED TAGS.
9. WHERE POSSIBLE, SPARE SOLID CABLE CONDUCTORS SHALL BE ATTACHED TO SPARE BINDING POSTS. NOT MORE THAN ONE SOLID CONDUCTOR SHALL BE SECURED TO A POST.
10. CONDUCTORS ARE LANDED IN NUMERICAL ORDER WITH NUMBER ONE ON TOP.

REVISIONS				
-	-	-	-	-
REV.	DATE	DESCRIPTION	DES.	ENG.

FINAL REVIEW BY: C&SDRC DATE: 11/21/08

APPROVED BY

Dan C. Guerrero

MANAGER, COMMUNICATIONS AND SIGNALS ENGINEERING

Darrell V. Maxey

DIRECTOR, ENGINEERING AND CONSTRUCTION

THE SOUTHERN CALIFORNIA REGIONAL RAIL AUTHORITY OR IT'S OFFICERS OR AGENTS SHALL NOT BE RESPONSIBLE FOR THE ACCURACY OR COMPLETENESS OF THIS PLAN SHEET

METROLINK
SOUTHERN CALIFORNIA REGIONAL RAIL AUTHORITY
700 SOUTH FLOWER STREET
LOS ANGELES, CALIFORNIA 90017

ENGINEERING STANDARDS

CABLE TERMINATION

STANDARD 8210

SCALE: NONE

REVISION –

SHEET 1 OF 2

CADD FILE: ES8210-01

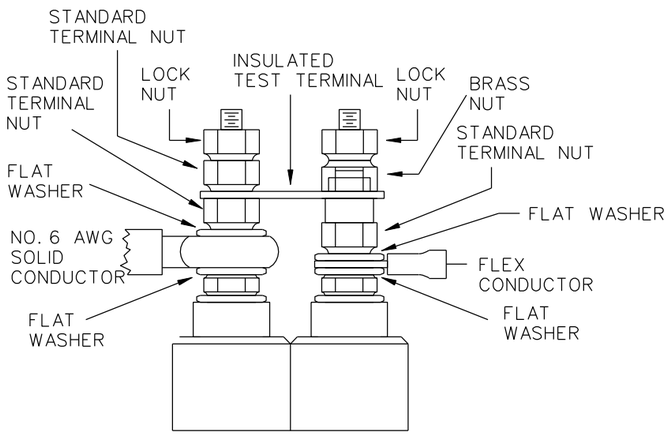

AAR TERMINAL WITH 1⅝" STUDS

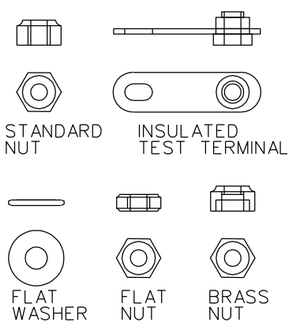

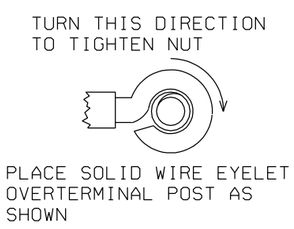

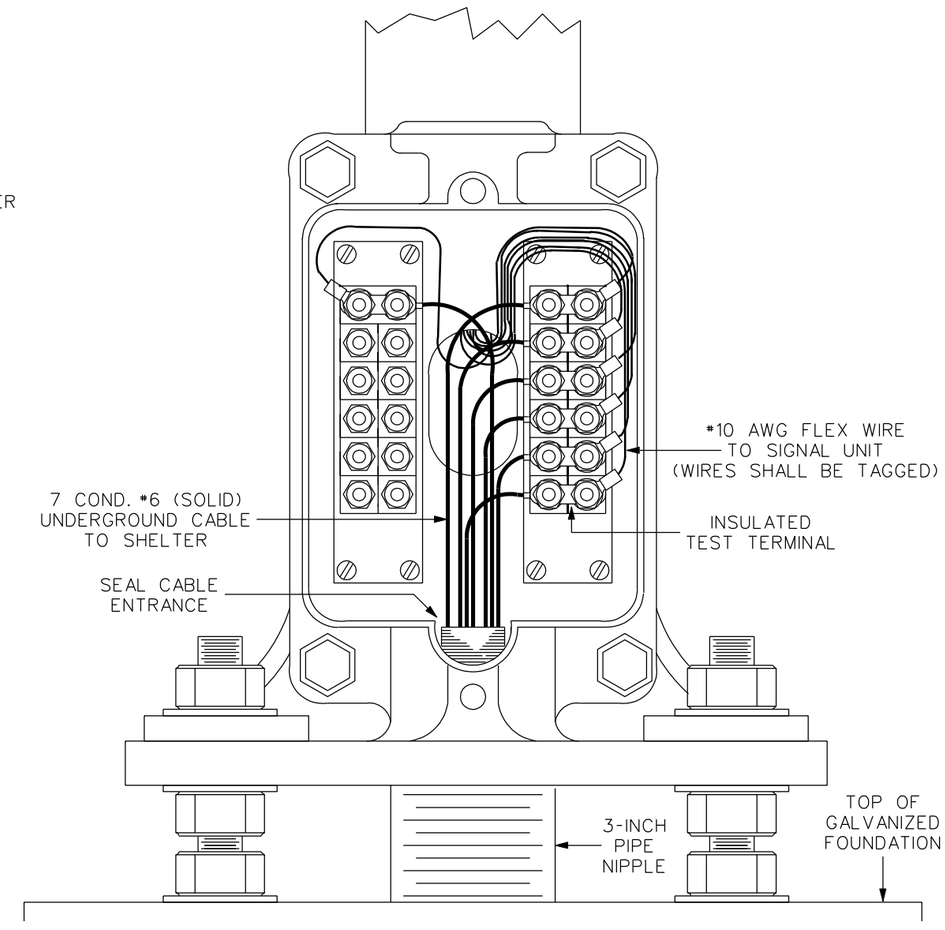

NOTES:

1. WHEN SMALLER SIZED SOLID CONDUCTORS ARE REQUIRED, FLAT NUT AND STANDARD NUTS WILL EXCHANGE POSITIONS.
2. INSULATION ON SOLID CONDUCTORS SHALL BE REMOVED AND THE EXPOSED BARE WIRE THOROUGHLY CLEANED TO PROVIDE HIGH CONDUCTIVITY, TAKING CARE NOT TO DAMAGE WIRE.
3. THE BARE WIRE SHALL BE FORMED TO PRODUCE AN EYELET WHICH SHALL BE PLACED OVER THE BINDING POST. THE EYELET SHALL BE SIZED TO PROVIDE A TIGHT FITTING LOOP AROUND THE POST BUT LOOSE ENOUGH TO EASILY SLIDE ON AND OFF.
5. INSULATION ON FLEX CONDUCTORS SHALL BE REMOVED AND THE EXPOSED BARE WIRE THOROUGHLY CLEANED TO PROVIDE HIGH CONDUCTIVITY.
6. TERMINALS SHALL BE ATTACHED TO FLEX CONDUCTORS. ONLY SCRRA APPROVED TERMINALS SHALL BE UTILIZED. A COMPRESSION TOOL RECOMMENDED BY THE MANUFACTURER OF THE TERMINAL SHALL BE USED TO ATTACH THE TERMINAL.
7. A FLAT WASHER SHALL BE PLACED ON THE BINDING POST. THE TERMINAL SHALL THEN BE PLACED ON THE POST FOLLOWED BY ANOTHER FLAT WASHER. IF APPLICABLE PLACE THE SECOND TERMINAL SHALL BE ON THE POST FOLLOWED BY A FLAT WASHER. A NUT SHALL BE APPLIED AND SECURELY TIGHTENED WITH A TERMINAL WRENCH.
8. AN INSULATED TEST TERMINAL SHALL BE INSTALLED ONCE THE SOLID CONDUCTORS AND TERMINALS ARE ATTACHED. THE TEST TERMINAL SHALL BE SECURED WITH A SINGLE TERMINAL NUT AND THE CIRCUIT "CLOSED" BY APPLYING THE BRASS NUT. A STANDARD NUT SHALL BE PLACED ON EACH TERMINAL POST TO LOCK DOWN THE INSULATED TEST TERMINAL NUTS.
9. FLEX CONDUCTORS SHALL BE TAGGED USING SCRRA APPROVED TAGS.
10. WHERE POSSIBLE, SPARE SOLID CABLE CONDUCTORS SHALL BE ATTACHED TO SPARE BINDING POSTS. NOT MORE THAN ONE SOLID CONDUCTOR SHALL BE SECURED TO A POST.
11. CONDUCTORS ARE LANDED IN NUMERICAL ORDER WITH NUMBER ONE ON TOP.

THIS DRAWING TO BE USED FOR MAINTENANCE PURPOSES ONLY

REVISIONS				
-	-	-	-	-
REV.	DATE	DESCRIPTION	DES.	ENG.

FINAL REVIEW BY: C&SDRC DATE: 11/21/08

APPROVED BY

Dan C. Guerrero
MANAGER, COMMUNICATIONS AND SIGNALS ENGINEERING

Darrell V. Maxey
DIRECTOR, ENGINEERING AND CONSTRUCTION

THE SOUTHERN CALIFORNIA REGIONAL RAIL AUTHORITY OR IT'S OFFICERS OR AGENTS SHALL NOT BE RESPONSIBLE FOR THE ACCURACY OR COMPLETENESS OF THIS PLAN SHEET

METROLINK
SOUTHERN CALIFORNIA REGIONAL RAIL AUTHORITY
700 SOUTH FLOWER STREET
LOS ANGELES, CALIFORNIA 90017

ENGINEERING STANDARDS

CABLE TERMINATION

STANDARD 8210
SCALE: NONE
REVISION –
SHEET 2 OF 2
CADD FILE: ES8210-02

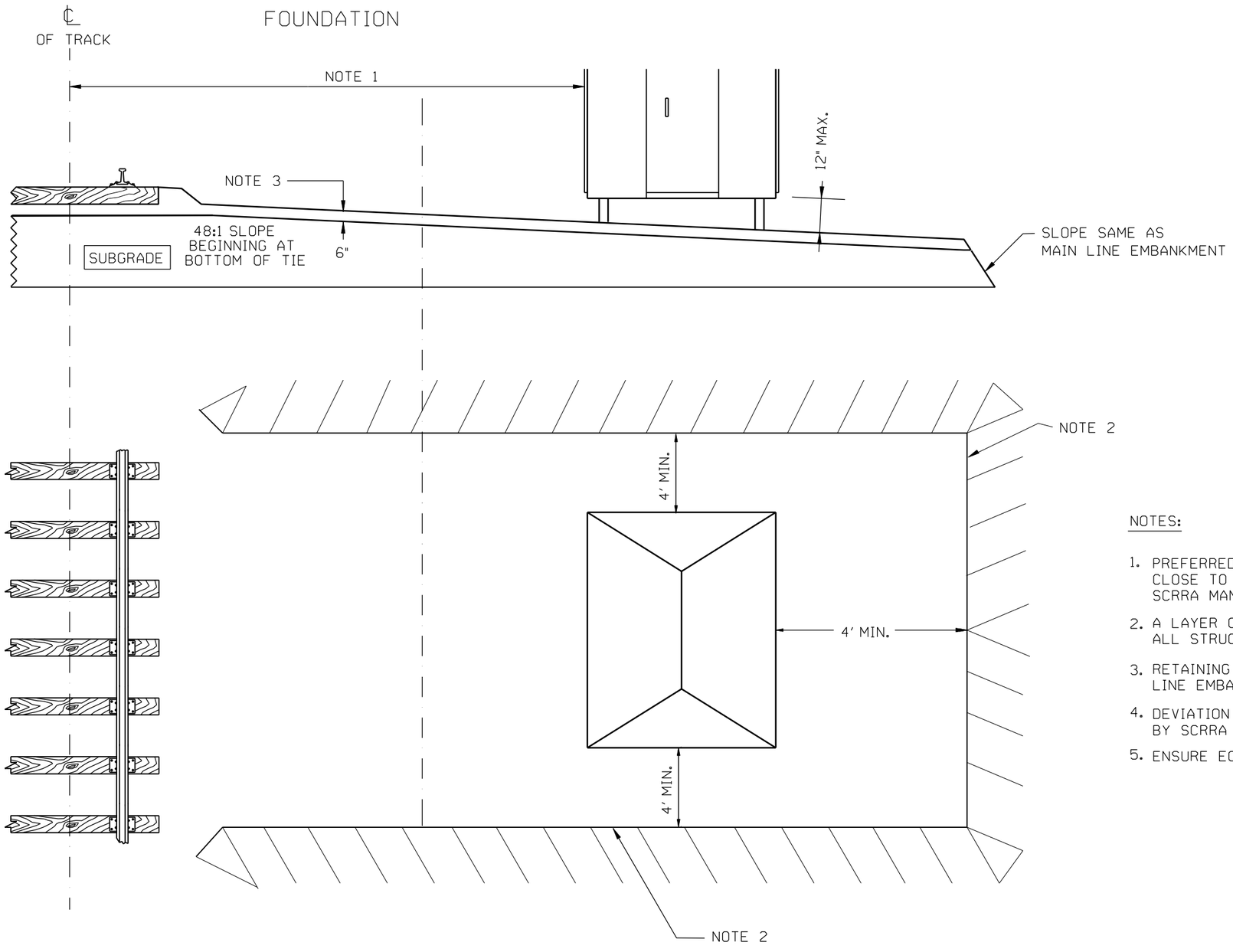

NOTES:

1. PREFERRED LOCATION FOR WAYSIDE SIGNAL SHELTER TO BE AS CLOSE TO RIGHT OF WAY LINE AS PRACTICAL OR AS DIRECTED BY SCRRA MANAGER OF C&S OR DESIGNATE.
2. A LAYER OF CRUSHED STONE, ¾" X ¼", SHALL BE PLACED AROUND ALL STRUCTURES A MINIMUM DISTANCE OF 4'.
3. RETAINING WALL IS REQUIRED WHERE A SLOPE EQUAL TO THE MAIN LINE EMBANKMENT CANNOT BE MAINTAINED.
4. DEVIATION FROM THIS STANDARD SHALL BE APPROVED BY SCRRA MANAGER OF C&S ENGINEERING OR DESIGNATE.
5. ENSURE EQUIPMENT IS PLACED WITHIN PROPERTY BOUNDARY.

REVISIONS				
-	-	-	-	-
REV.	DATE	DESCRIPTION	DES.	ENG.

FINAL REVIEW BY: C&SDRC DATE: 11/21/08

APPROVED BY

Dan C. Guerrero
MANAGER, COMMUNICATIONS AND SIGNALS ENGINEERING

Darrell V. Maxey
DIRECTOR, ENGINEERING AND CONSTRUCTION

THE SOUTHERN CALIFORNIA REGIONAL RAIL AUTHORITY OR IT'S OFFICERS OR AGENTS SHALL NOT BE RESPONSIBLE FOR THE ACCURACY OR COMPLETENESS OF THIS PLAN SHEET

METROLINK
SOUTHERN CALIFORNIA REGIONAL RAIL AUTHORITY
700 SOUTH FLOWER STREET
LOS ANGELES, CALIFORNIA 90017

ENGINEERING STANDARDS

PLACEMENT OF INSTRUMENT ENCLOSURE

STANDARD 8215
SCALE: NONE
REVISION –
SHEET 1 OF 2
CADD FILE: ES8215-01

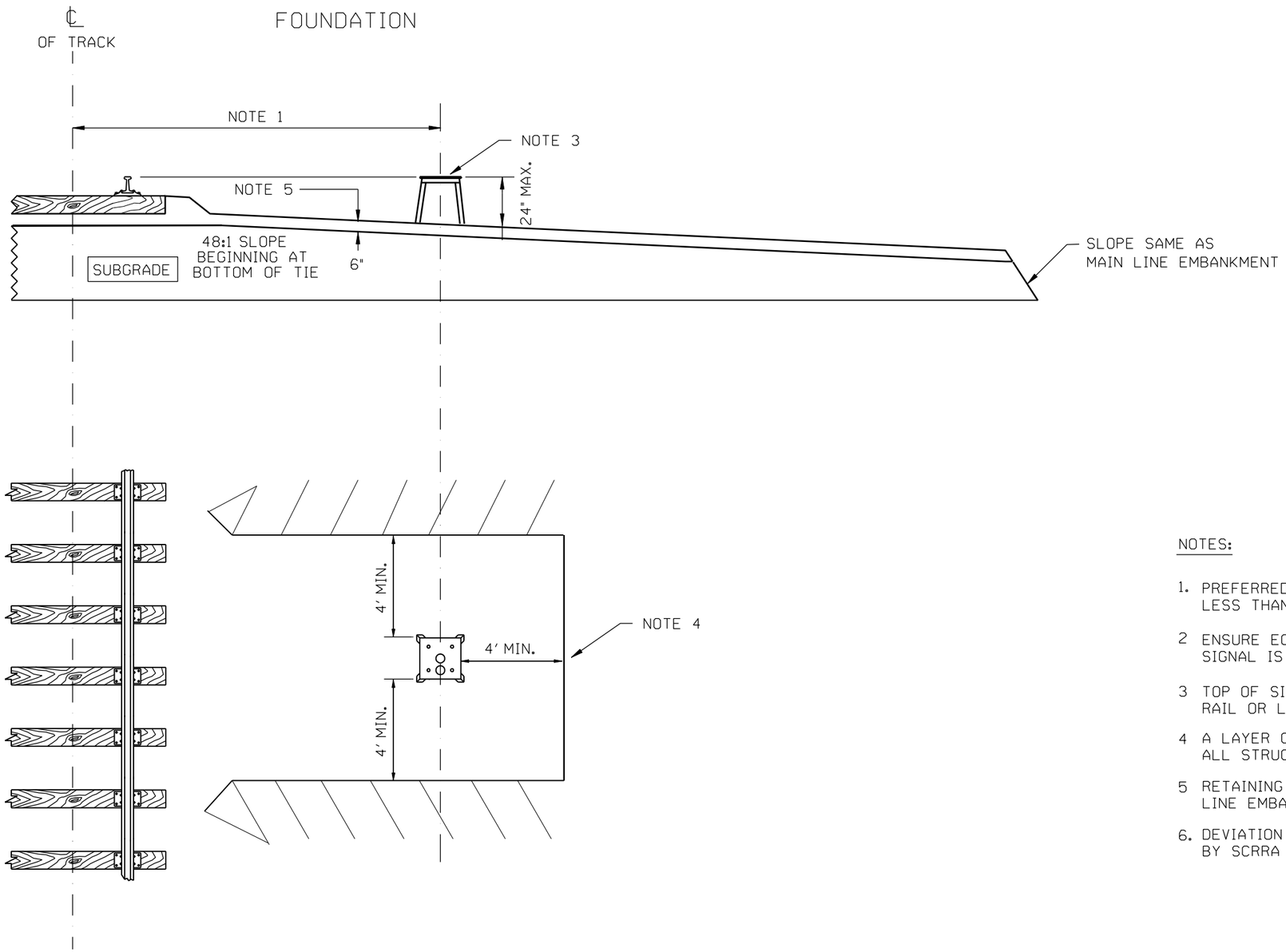

NOTES:

1. PREFERRED DISTANCE IS 15'. SIGNALS SHALL NOT BE PLACED LESS THAN 15'.
2. ENSURE EQUIPMENT IS PLACED WITHIN PROPERTY BOUNDARY AND SIGNAL IS EASILY VIEWED FROM A PREFERRED DISTANCE OF 2000'.
3. TOP OF SIGNAL FOUNDATION SHALL NOT BE HIGHER THAN TOP OF RAIL OR LOWER THAN BASE OF RAIL.
4. A LAYER OF CRUSHED STONE, ¾" X ¼", SHALL BE PLACED AROUND ALL STRUCTURES A MINIMUM DISTANCE OF 4'.
5. RETAINING WALL IS REQUIRED WHERE A SLOPE EQUAL TO THE MAIN LINE EMBANKMENT CANNOT BE MAINTAINED.
6. DEVIATION FROM THIS STANDARD SHALL BE APPROVED BY SCRRA MANAGER OF C&S ENGINEERING OR DESIGNATE.

REVISIONS				
-	-	-	-	-
REV.	DATE	DESCRIPTION	DES.	ENG.

FINAL REVIEW BY: C&SDRC DATE: 11/21/08

APPROVED BY

Dan C. Guerrero
MANAGER, COMMUNICATIONS AND SIGNALS ENGINEERING

Darrell V. Maxey
DIRECTOR, ENGINEERING AND CONSTRUCTION

THE SOUTHERN CALIFORNIA REGIONAL RAIL AUTHORITY OR IT'S OFFICERS OR AGENTS SHALL NOT BE RESPONSIBLE FOR THE ACCURACY OR COMPLETENESS OF THIS PLAN SHEET

METROLINK
SOUTHERN CALIFORNIA REGIONAL RAIL AUTHORITY
700 SOUTH FLOWER STREET
LOS ANGELES, CALIFORNIA 90017

ENGINEERING STANDARDS

PLACEMENT OF SIGNAL FOUNDATION

STANDARD: 8215
SCALE: NONE
REVISION: –
SHEET: 2 OF 2
CADD FILE: ES8215–02

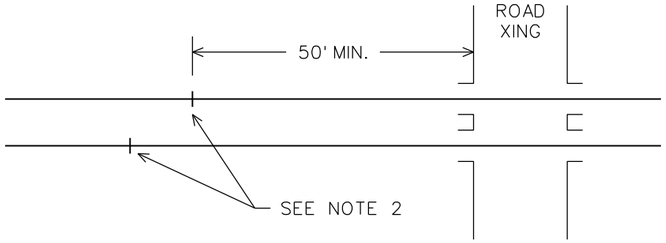

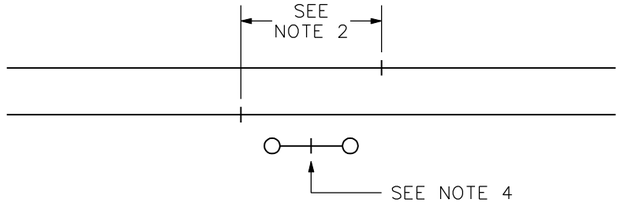

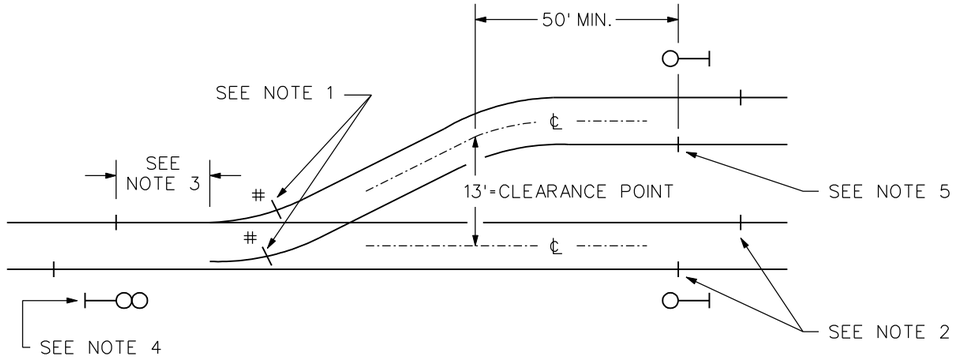

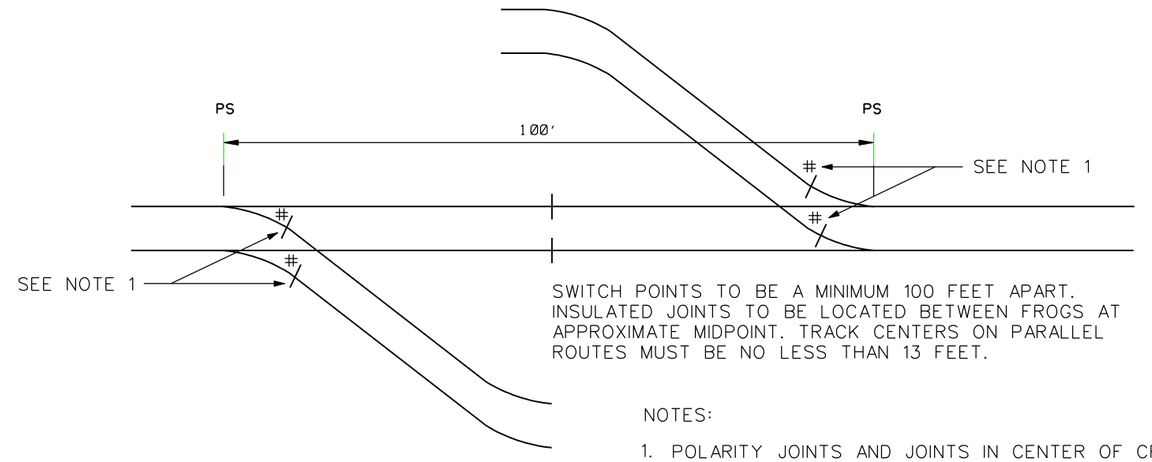

SWITCH POINTS TO BE A MINIMUM 100 FEET APART. INSULATED JOINTS TO BE LOCATED BETWEEN FROGS AT APPROXIMATE MIDPOINT. TRACK CENTERS ON PARALLEL ROUTES MUST BE NO LESS THAN 13 FEET.

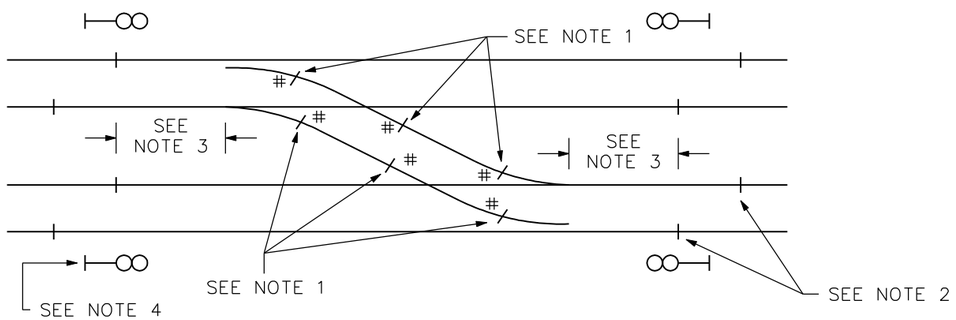

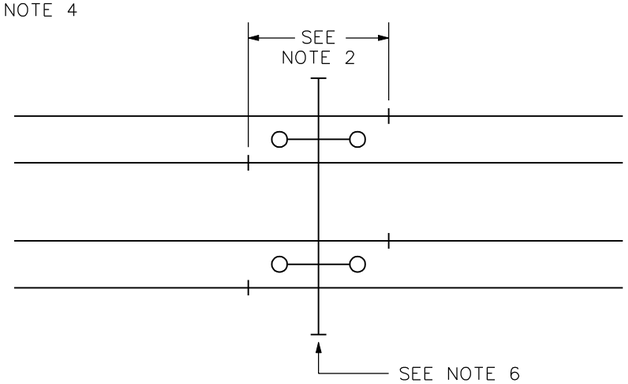

NOTES:

1. POLARITY JOINTS AND JOINTS IN CENTER OF CROSSOVER SHALL HAVE A MAXIMUM STAGGER OF 4'-6".
2. DISTANCE MEASURED BETWEEN END POST OF INSULATED JOINTS EXCEPT POLARITY JOINTS SHALL BE A MINIMUM OF 6'-6" AND A MAXIMUM OF 10'-0" (FRA REGULATIONS ALLOW 19'-6" STAGGER BUT ABOVE STANDARD SHALL BE USED FOR NEW WORK).
3. DISTANCE FROM POINT OF SWITCH TO FIRST INSULATED JOINT SHALL BE APPROXIMATELY 50 FEET. IN NO CASE SHALL THIS DISTANCE BE LESS THAN 20 FEET. INSTALLATIONS LESS THAN 50 FEET MUST BE APPROVED BY SCRRA MANAGER OF C&S ENGINEERING.
4. SIGNAL SHALL BE CENTERED BETWEEN INSULATED JOINTS.
5. INSULATED JOINT SHALL BE PLACED APPROXIMATELY 50' BEYOND CLEARANCE POINT (13' CENTERS). EXCEPT WHERE THE CLEAR POINT IS ON TANGENT TRACK PARALLEL TO THE MAIN TRACK, IN WHICH CASE INSULATED JOINTS MAY BE PLACED AT CLEARANCE POINT PLUS 15'.
6. CANTILEVER AND BRIDGE MAST SHALL BE CENTERED BETWEEN INSULATED JOINTS.
7. DEVIATION FROM THIS STANDARD SHALL BE APPROVED BY SCRRA MANAGER OF C&S ENGINEERING OR DESIGNATE.

REVISIONS				
-	-	-	-	-
REV.	DATE	DESCRIPTION	DES.	ENG.

FINAL REVIEW BY: C&SDRC DATE: 11/21/08

APPROVED BY

Dan C. Guerrero
MANAGER, COMMUNICATIONS AND SIGNALS ENGINEERING

Darrell V. Maxey
DIRECTOR, ENGINEERING AND CONSTRUCTION

THE SOUTHERN CALIFORNIA REGIONAL RAIL AUTHORITY OR IT'S OFFICERS OR AGENTS SHALL NOT BE RESPONSIBLE FOR THE ACCURACY OR COMPLETENESS OF THIS PLAN SHEET

METROLINK
SOUTHERN CALIFORNIA REGIONAL RAIL AUTHORITY
700 SOUTH FLOWER STREET
LOS ANGELES, CALIFORNIA 90017

ENGINEERING STANDARDS

PLACEMENT OF INSULATED JOINTS

STANDARD: 8220
SCALE: NONE
REVISION: –
SHEET: 1 OF 1
CADD FILE: ES8220

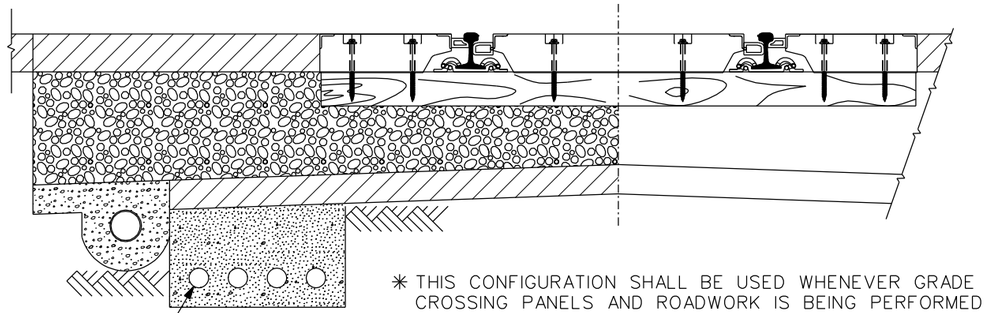

CONDUIT THROUGH ROADWAY

TO BE USED BY CIVIL CONTRACTOR

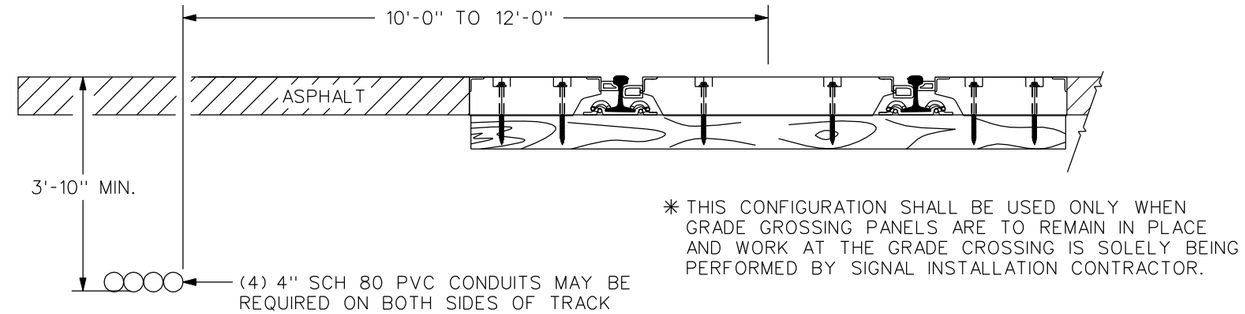

CONDUIT THROUGH ROADWAY

TO BE USED BY SIGNAL INSTALLATION CONTRACTOR

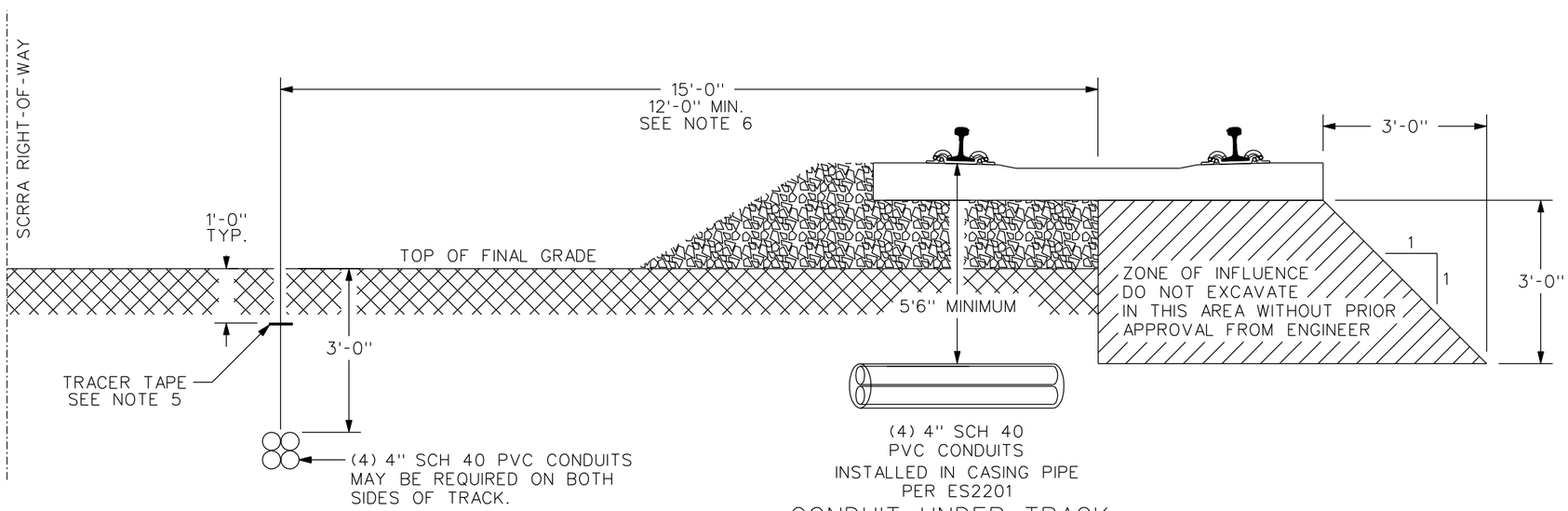

CONDUIT PARALLEL TO TRACK

CONDUIT UNDER TRACK

NOTES:

1. IN GENERAL, ALL COMMUNICATIONS AND SIGNALS CONDUIT SHALL BE BURIED AT A MINIMUM DEPTH OF 3'-0".
2. ALL CONDUITS SHALL BE 4" SCH 40 PVC UNLESS OTHERWISE SPECIFIED.
3. PLACE AND COMPACT INITIAL LIFTS IN SIX (6) INCH LAYERS MAXIMUM UNCOMPACTED THICKNESS UNTIL 12 INCHES OVER PIPE. SUBSEQUENT LIFTS MAY BE UP TO 12 INCHES IN DEPTH PRIOR TO COMPACTION. BRING UP UNIFORMLY ON BOTH SIDES OF PIPE.
4. COMPACTION FOR UNDERGROUND FACILITIES AND ASSOCIATED STRUCTURES SHALL BE AT LEAST 95 PERCENT OF THE MAXIMUM DENSITY AS DETERMINED BY ASTM D1557.
5. TRACER TAPE (DETECTION TAPE) SHALL BE PLACED 1'-0" BELOW TOP OF FINAL GRADE. TRACER TAPE SHALL BE LOCATED DIRECTLY ABOVE UNDERGROUND FACILITIES.
6. WHEN PLACING CONDUIT PARALLEL TO TRACK, CONDUIT BANK MAY BE INSTALLED WITHIN 1'-0" OF THE SCRRA RIGHT-OF-WAY LINE. THIS SHALL BE APPROVED BY THE ENGINEER PRIOR TO INSTALLATION.
7. BEFORE DIGGING, TRENCHING, PUSHING PIPE OR BORING, ALL UTILITIES IN THE VICINITY SHALL BE LOCATED IN AN EFFORT TO AVOID DAMAGE TO EXISTING UTILITIES.
8. DEVIATION FROM THIS STANDARD SHALL BE APPROVED BY SCRRA MANAGER OF C&S ENGINEERING OR DESIGNATE.

REVISIONS				
-	-	-	-	-
REV.	DATE	DESCRIPTION	DES.	ENG.

FINAL REVIEW BY: C&SDRC DATE: 11/21/08

APPROVED BY

Dan C. Guerrero
MANAGER, COMMUNICATIONS AND SIGNALS ENGINEERING

Darrell V. Maxey
DIRECTOR, ENGINEERING AND CONSTRUCTION

THE SOUTHERN CALIFORNIA REGIONAL RAIL AUTHORITY OR IT'S OFFICERS OR AGENTS SHALL NOT BE RESPONSIBLE FOR THE ACCURACY OR COMPLETENESS OF THIS PLAN SHEET

METROLINK
SOUTHERN CALIFORNIA REGIONAL RAIL AUTHORITY
700 SOUTH FLOWER STREET
LOS ANGELES, CALIFORNIA 90017

ENGINEERING STANDARDS

CONDUIT INSTALLATION

STANDARD: 8223
SCALE: NONE
REVISION: –
SHEET: 1 OF 1
CADD FILE: ES8223-01

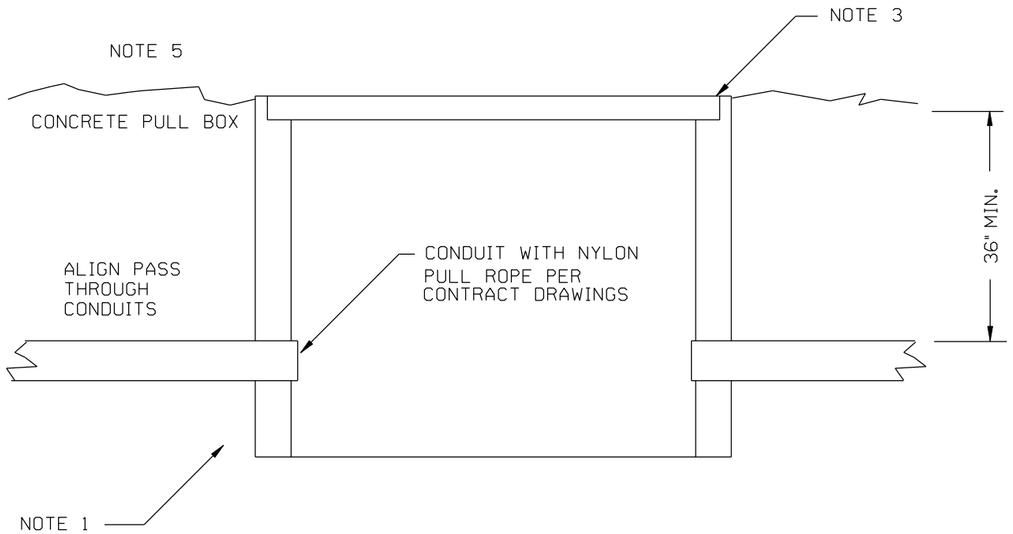

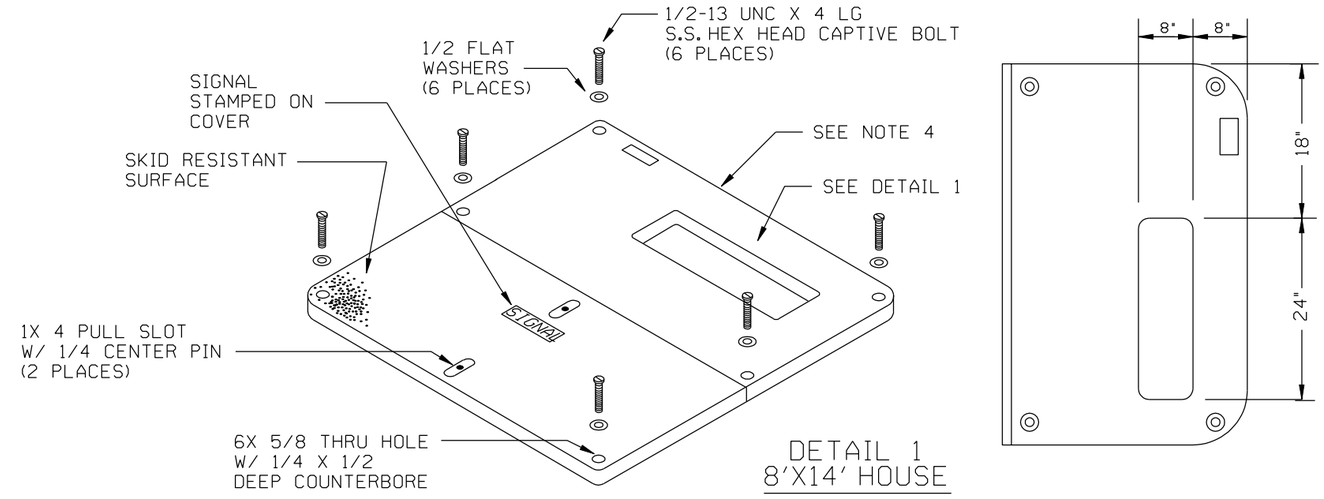

DETAIL 1
8'X14' HOUSE

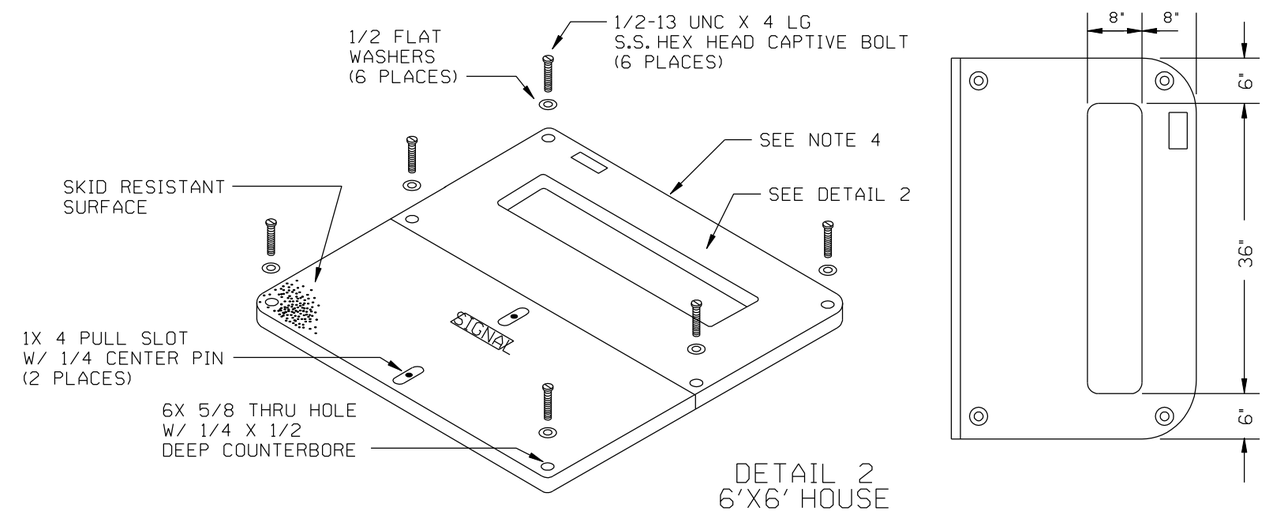

DETAIL 2
6'X6' HOUSE

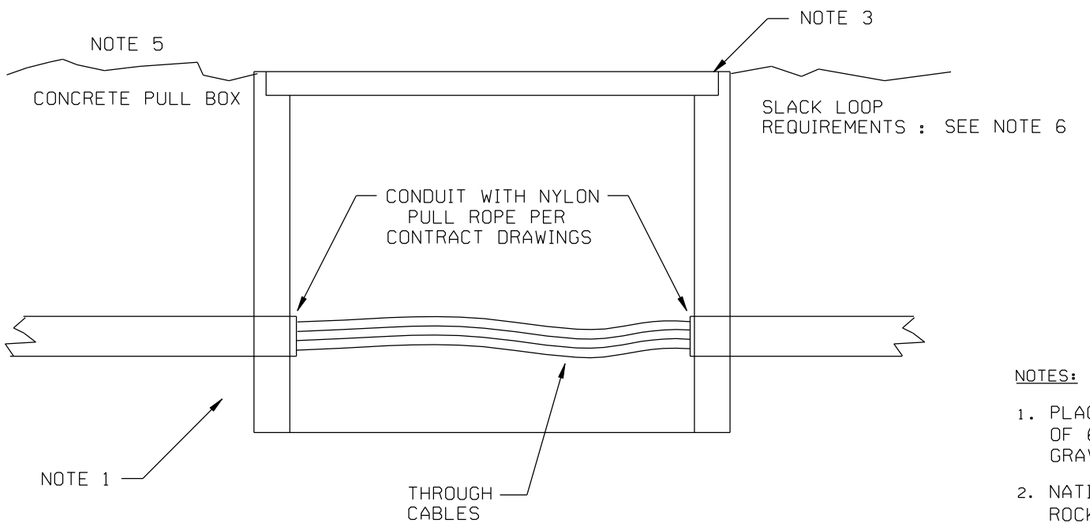

NOTES:

1. PLACE A LAYER OF GRAVEL SUITABLE FOR DRAINAGE AT A MINIMUM OF 6" BELOW AND EXTENDING 12" FROM EACH SIDE OF THE PULL BOX. GRAVEL SHALL BE COMPACTED PRIOR TO PLACEMENT OF PULL BOX.
2. NATIVE MATERIAL SHALL BE USED FOR BACKFILLING CONDUIT. ROCK AND DEBRIS LARGER THAN 3 INCHES IN DIAMENTER SHALL BE REMOVED. BACKFILL COMPACTION SHALL BE 95 PERCENT IN 8" LIFTS.
3. PULL BOX SHALL BE DESIGNED FOR H-20-44 BRIDGE LOADING AND EQUIPPED WITH COVER DESIGNED FOR VEHICULAR TRAFFIC. MINIMUM NOMINAL SIZE OF PULL BOX SHALL BE 2' X 3'. LARGER PULL BOXES SHALL BE FURNISHED WHERE MINIMUM BEND RADIUS OF CABLE IS A FACTOR. TOP OF PULL BOX SHALL BE LEVEL WITH FINAL GRADE.
4. FOR CONTROL POINT, OR CROSSING, INSTRUMENT HOUSE THIS COVER ASSEMBLY IS TO BE USED WITH A 4'X4' PULL BOX WITH "NOTE 3" DESIGN SPECS. COVER IS DESIGNED WITH AN OPENING FOR THE INSTRUMENT HOUSE CABLE CHUTE. THE SIDE OF THE COVER WITH THE CABLE CHUTE OPENING IS RATED FOR PEDESTRIAN TRAFFIC ONLY.
5. ALL PULL BOXES ARE TO BE PROTECTED FROM DAMAGE UNTIL FINAL PLACEMENT IN SERVICE.
6. 3' TO 5' SLACK LOOP REQUIRED AT HOUSE PULL BOX AND AT LAST PULL BOX BEFORE EXITING FOR FIELD EQUIPMENT, SLACK LOOP NOT REQUIRED FOR THROUGH CABLES.

REVISIONS				
-	-	-	-	-
REV.	DATE	DESCRIPTION	DES.	ENG.

FINAL REVIEW BY: C&SDRC DATE: 11/21/08

APPROVED BY

Dan C. Guerrero
MANAGER, COMMUNICATIONS AND SIGNALS ENGINEERING

Darrell V. Maxey
DIRECTOR, ENGINEERING AND CONSTRUCTION

THE SOUTHERN CALIFORNIA REGIONAL RAIL AUTHORITY OR IT'S OFFICERS OR AGENTS SHALL NOT BE RESPONSIBLE FOR THE ACCURACY OR COMPLETENESS OF THIS PLAN SHEET

METROLINK
SOUTHERN CALIFORNIA REGIONAL RAIL AUTHORITY
700 SOUTH FLOWER STREET
LOS ANGELES, CALIFORNIA 90017

ENGINEERING STANDARDS

PLACEMENT OF PULL BOXES AND CONDUIT
(INFLUENCE STANDARD)

STANDARD 8225
SCALE: NONE
REVISION –
SHEET 1 OF 2
CADD FILE: ES8225 – 01

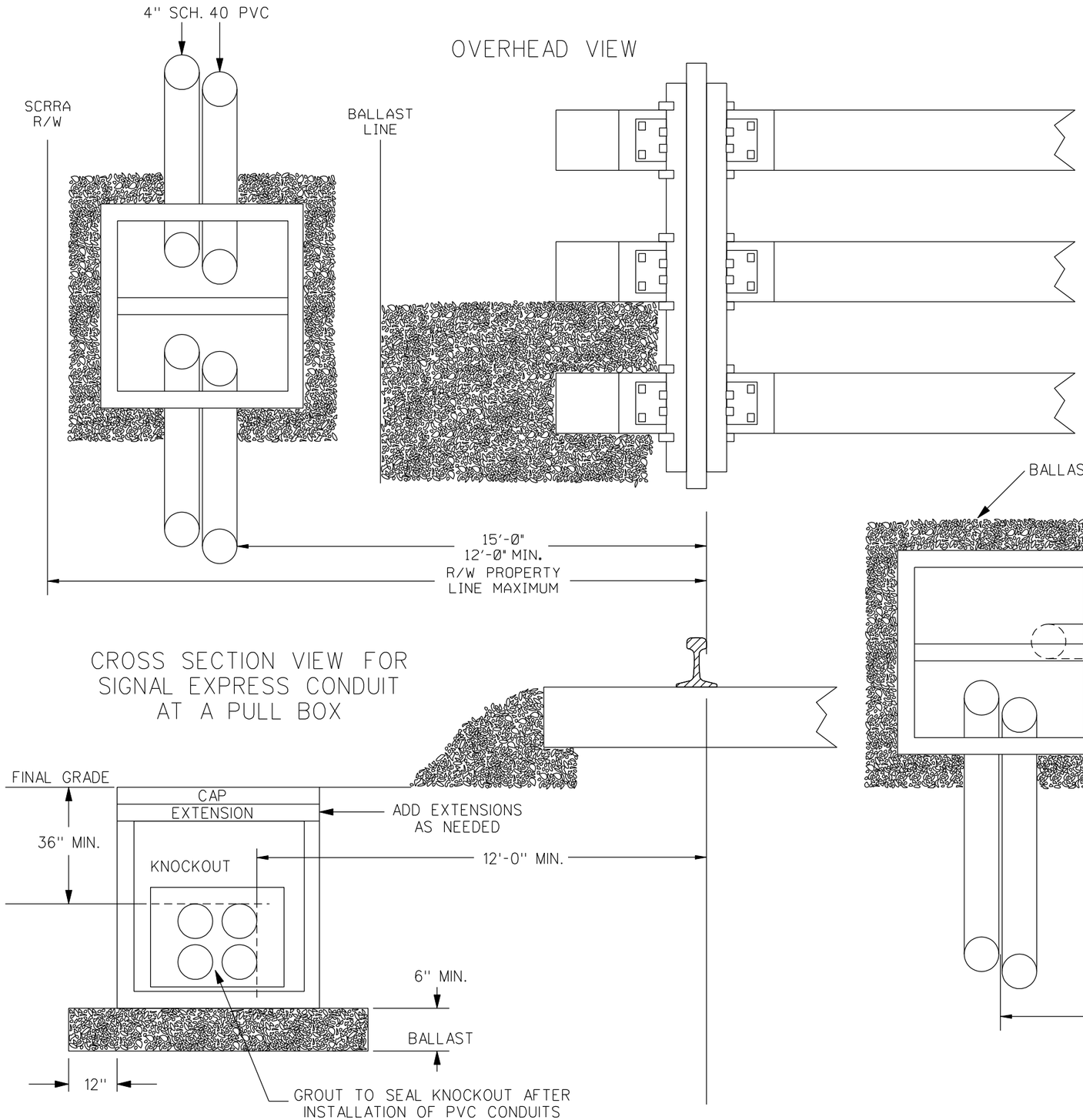

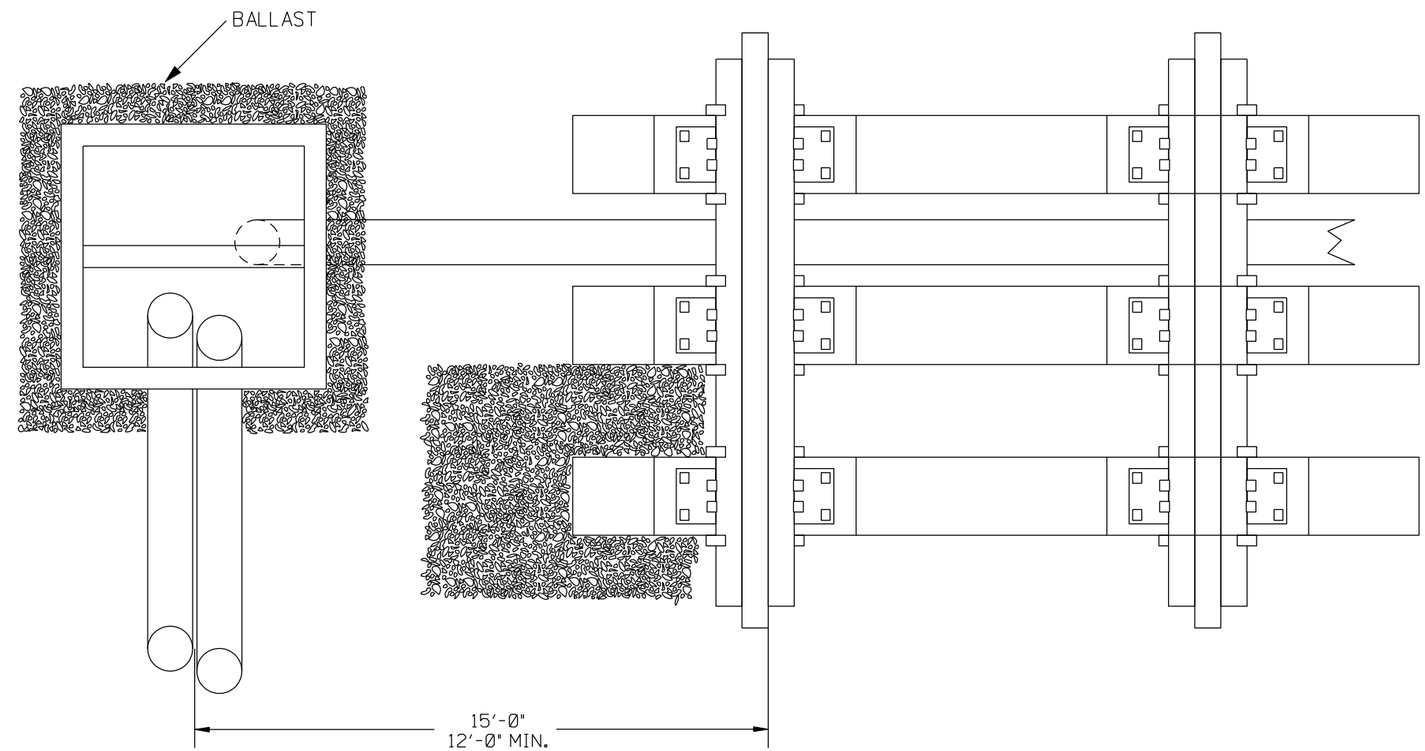

NOTE:

1. DEVIATION FROM THIS TYPICAL TO BE APPROVED BY SCCRA MANAGER, C&S ENGINEERING, OR DESIGNATE.

REVISIONS				
-	-	-	-	-
REV.	DATE	DESCRIPTION	DES.	ENG.

FINAL REVIEW BY: C&SDRC DATE: 11/21/08

APPROVED BY

Dan C. Guerrero
MANAGER, COMMUNICATIONS AND SIGNALS ENGINEERING

Darrell V. Maxey
DIRECTOR, ENGINEERING AND CONSTRUCTION

THE SOUTHERN CALIFORNIA REGIONAL RAIL AUTHORITY OR IT'S OFFICERS OR AGENTS SHALL NOT BE RESPONSIBLE FOR THE ACCURACY OR COMPLETENESS OF THIS PLAN SHEET

METROLINK
SOUTHERN CALIFORNIA REGIONAL RAIL AUTHORITY
700 SOUTH FLOWER STREET
LOS ANGELES, CALIFORNIA 90017

ENGINEERING STANDARDS

TYPICAL CONDUIT LAYOUT FOR PULL BOX

STANDARD: 8225
SCALE: NONE
REVISION: –
SHEET: 2 OF 2
CADD FILE: ES8225 – 02

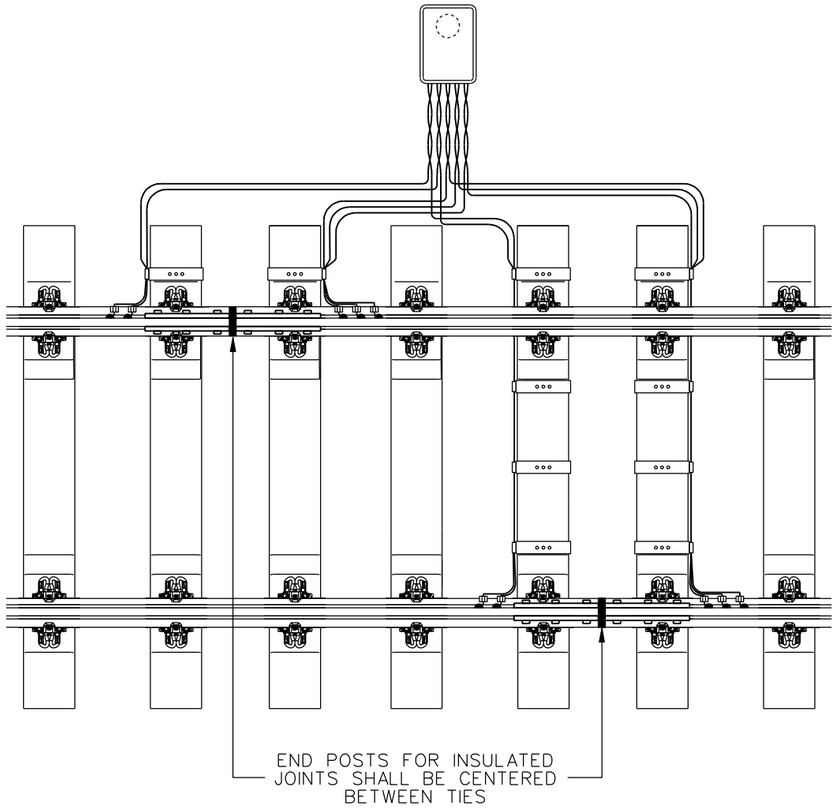

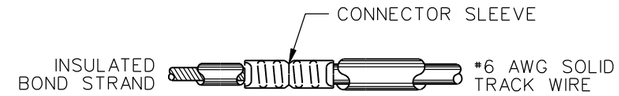

1. USE NICOPRESS TOOL TO COMPRESS CONNECTOR SLEEVE.
2. USE HIGH VOLTAGE ELECTRICAL TAPE TO INSULATE COMPRESSED SLEEVE.
3. USE SCOTCH-COAT TO SEAL EACH INDIVIDUAL SPLICE.

DETAIL A - PULL BOX SPLICE

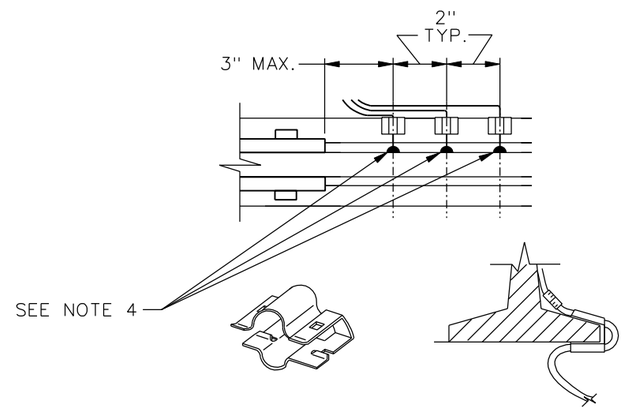

DETAIL B - RETAINING CLIPS

USE TO SECURE BOND STRAND TO TIE

WOOD TIE APPLICATION	CONCRETE TIE APPLICATION
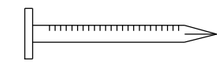 1-INCH GALVANIZED ROOFING NAIL (TIMBER TIE APPLICATION)	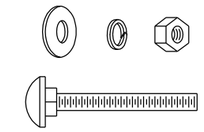 1/4-INCH CARRIAGE BOLT, FLAT WASHER, LOCK WASHER, NUT
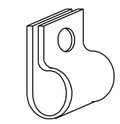 WIRE CLAMP	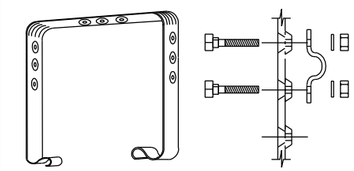 CONCRETE TIE STRAP

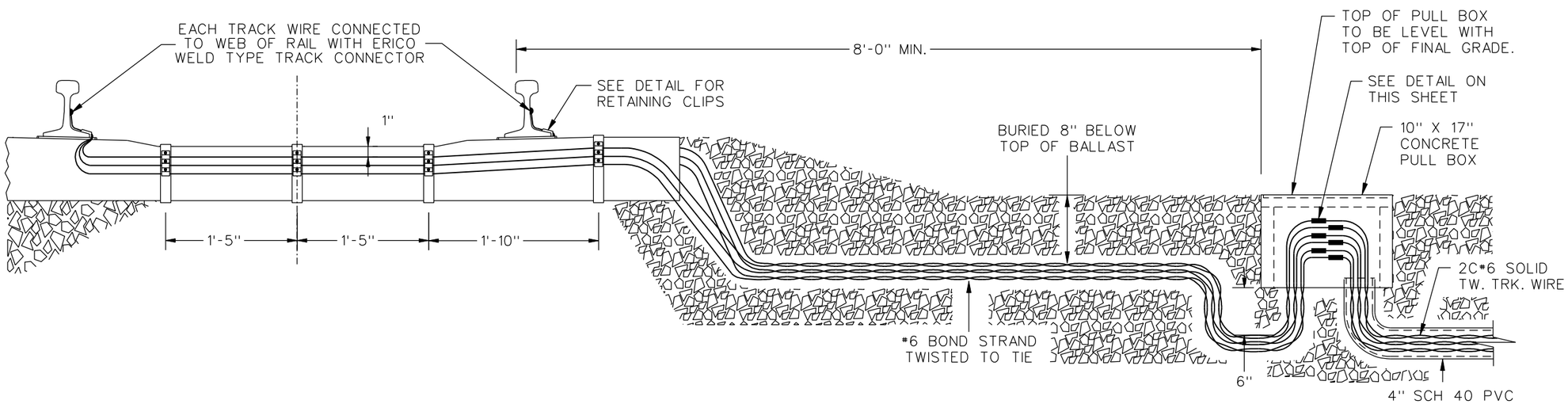

NOTES:

1. INSULATED JOINT END POST SHALL BE CENTERED BETWEEN TIES.
2. SPLICE SOLID TRACK WIRE TO BOND STRAND USING A COMPRESSION SLEEVE. MATERIALS USED TO SEAL SPLICE SHALL PROVIDE, AT A MINIMUM, THE SAME INSULATING QUALITIES AS THE WIRES BEING SPLICED.
3. CONTRACTOR SHALL BOND TRACK WIRES FOR ELECTROCODE AND DC TRACK CIRCUITS PRIOR TO BONDING ANY OTHER TRACK WIRES. THIS IS TO ENSURE THAT WAYSIDE SIGNAL CIRCUITS ARE AS CLOSE TO THE INSULATED JOINTS AS POSSIBLE.
4. A SLACK COIL SHALL BE PROVIDED IN EACH SOLID CONDUCTOR OF SUFFICIENT LENGTH TO ALLOW THE SPLICE TO BE PULLED ABOVE THE TOP OF PULL BOX.
5. WIRES SHALL FOLLOW THE CONTOUR OF TIE AND RAIL WITH NO EXCESS SLACK.
6. DEVIATION FROM THIS STANDARD SHALL BE APPROVED BY SCRRA MANAGER OF C&S ENGINEERING OR DESIGNATE.
7. WHERE THE PULL BOX IS IN THE TRAVELED RIGHT OF WAY IT MUST BE DESIGNED AND INSTALLED FOR H-20-44 BRIDGE LOADING AND EQUIPPED WITH A COVER DESIGNED FOR VEHICULAR TRAFFIC.
8. WELD TYPE TRACK CONNECTIONS ARE TO BE INSTALLED PER MANUFACTURER'S RECOMENDATION.
9. WHERE POSSIBLE, ALL TRACK WIRES SHALL BE INSTALLED IN SUCH A MANNER THEY CAN BE VISUALLY INSPECTED FROM THE FIELD SIDE OF THE TRACK.

REVISIONS				
REV.	DATE	DESCRIPTION	DES.	ENG.
-	-	-	-	-

FINAL REVIEW BY: C&SDRC DATE: 11/21/08

APPROVED BY

Dan C. Guerrero
MANAGER, COMMUNICATIONS AND SIGNALS ENGINEERING

Darrell V. Maxey
DIRECTOR, ENGINEERING AND CONSTRUCTION

THE SOUTHERN CALIFORNIA REGIONAL RAIL AUTHORITY OR IT'S OFFICERS OR AGENTS SHALL NOT BE RESPONSIBLE FOR THE ACCURACY OR COMPLETENESS OF THIS PLAN SHEET

METROLINK
SOUTHERN CALIFORNIA REGIONAL RAIL AUTHORITY
700 SOUTH FLOWER STREET
LOS ANGELES, CALIFORNIA 90017

ENGINEERING STANDARDS

TRACK WIRE INSTALLATION

STANDARD: 8230
SCALE: NONE
REVISION: –
SHEET: 1 OF 1
CADD FILE: ES8230

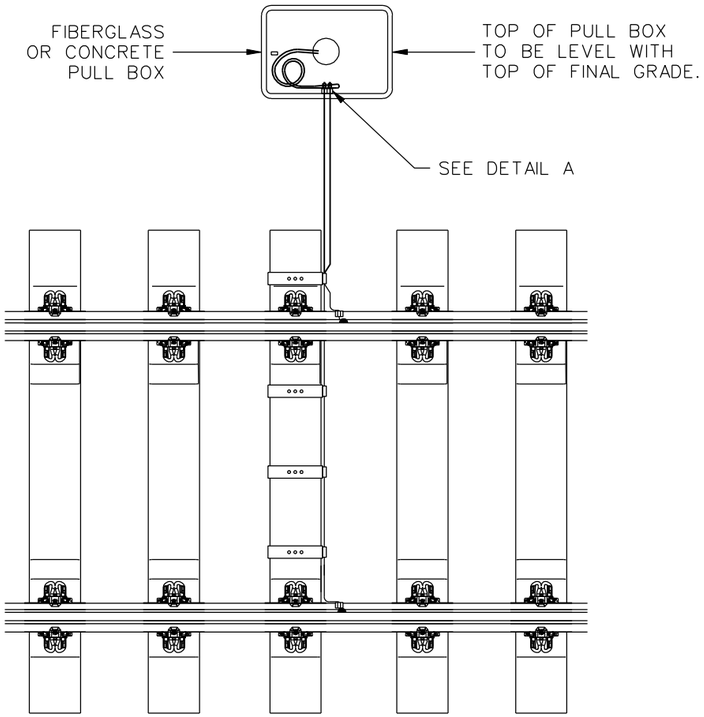

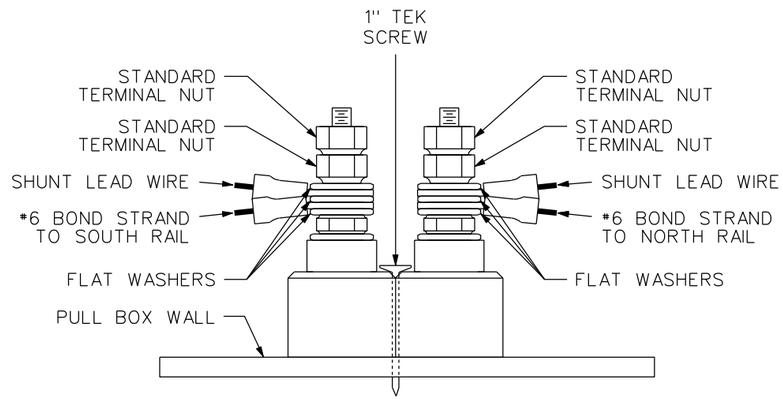

DETAIL A

USE TO SECURE BOND STRAND TO TIE

WOOD TIE APPLICATION	CONCRETE TIE APPLICATION
1-INCH GALVANIZED ROOFING NAIL (TIMBER TIE APPLICATION) 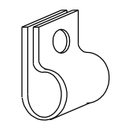 WIRE CLAMP	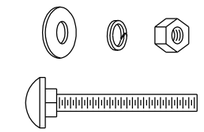 1/4-INCH CARRIAGE BOLT, FLAT WASHER, LOCK WASHER, NUT 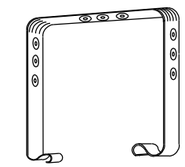 CONCRETE TIE STRAP

NOTES:

1. MOUNT THE TWO POST AAR TERMINAL BLOCK 4" TO 6" FROM THE TOP OF PULL BOX, CENTERED ON THE SIDE AS SHOWN IN THIS DRAWING.
2. DEVIATION FROM THIS STANDARD SHALL BE APPROVED BY SCRRA MANAGER OF C&S ENGINEERING OR DESIGNATE.
3. WHERE THE PULL BOX IS IN THE TRAVELED RIGHT OF WAY IT MUST BE DESIGNED AND INSTALLED FOR H-20-44 BRIDGE LOADING AND EQUIPPED WITH A COVER DESIGNED FOR VEHICULAR TRAFFIC.
4. WELD TYPE TRACK CONNECTIONS ARE TO BE INSTALLED PER MANUFACTURER'S RECOMMENDATIONS.
5. PLACE A LAYER OF GRAVEL SUITABLE FOR DRAINAGE AT A MINIMUM OF 6" BELOW AND EXTENDING 12" FROM EACH SIDE OF THE PULL BOX. GRAVEL SHALL BE COMPACTED PRIOR TO PLACEMENT OF PULL BOX.
6. WHERE POSSIBLE, ALL TRACK WIRES SHALL BE INSTALLED IN SUCH A MANNER THEY CAN BE VISUALLY INSPECTED FROM THE FIELD SIDE OF THE TRACK.

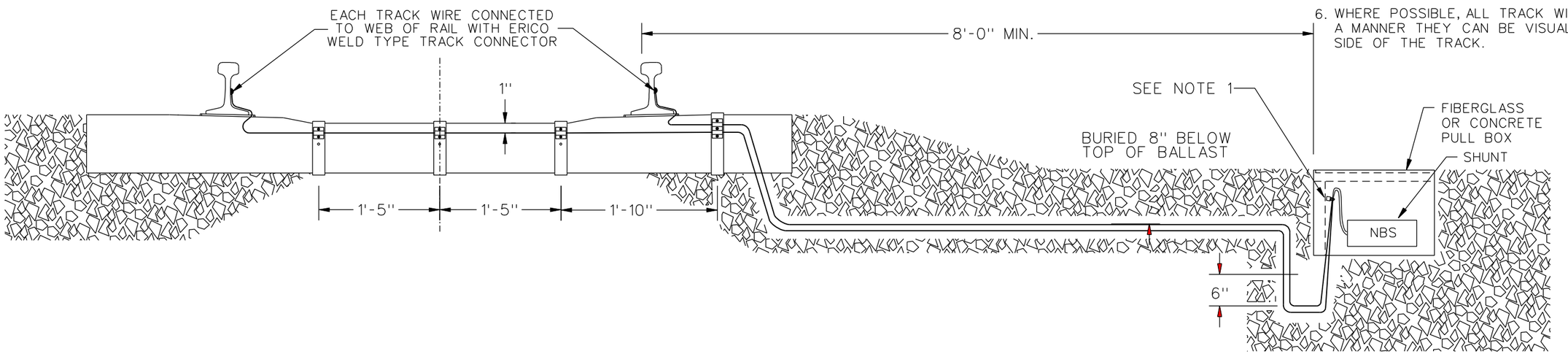

REVISIONS				
REV.	DATE	DESCRIPTION	DES.	ENG.
-	-	-	-	-

FINAL REVIEW BY: C&SDRC DATE: 11/21/08

APPROVED BY

Dan C. Guerrero
MANAGER, COMMUNICATIONS AND SIGNALS ENGINEERING

Darrell V. Maxey
DIRECTOR, ENGINEERING AND CONSTRUCTION

THE SOUTHERN CALIFORNIA REGIONAL RAIL AUTHORITY OR IT'S OFFICERS OR AGENTS SHALL NOT BE RESPONSIBLE FOR THE ACCURACY OR COMPLETENESS OF THIS PLAN SHEET

METROLINK
SOUTHERN CALIFORNIA REGIONAL RAIL AUTHORITY
700 SOUTH FLOWER STREET
LOS ANGELES, CALIFORNIA 90017

ENGINEERING STANDARDS

TERMINATION SHUNT INSTALLATION

STANDARD: 8235
SCALE: NONE
REVISION: –
SHEET: 1 OF 1
CADD FILE: ES8235

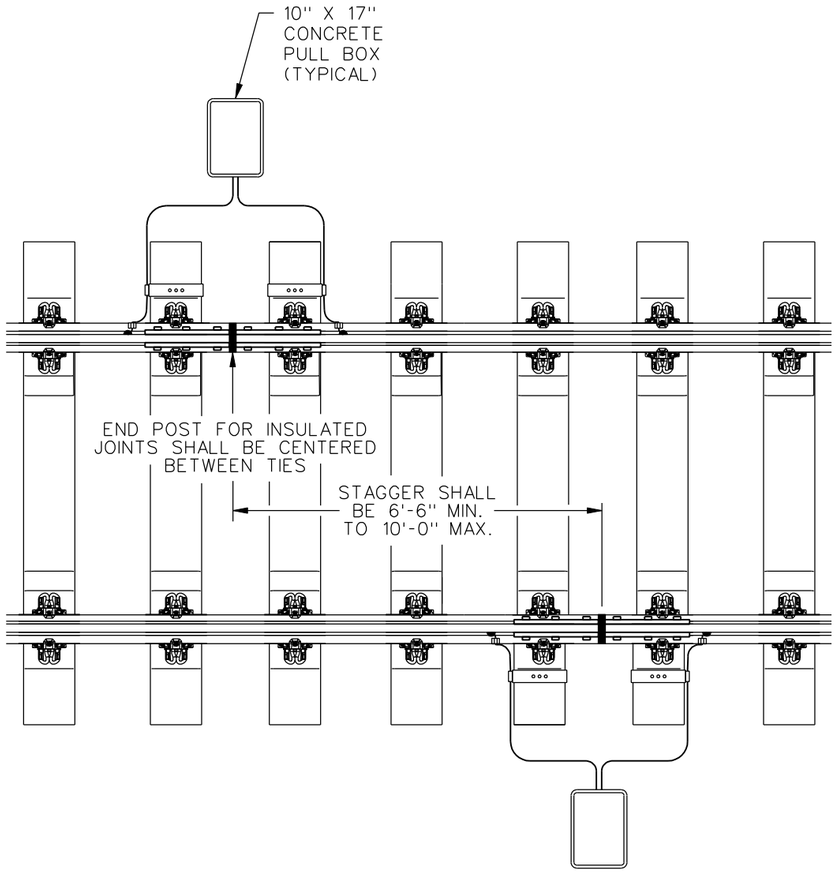

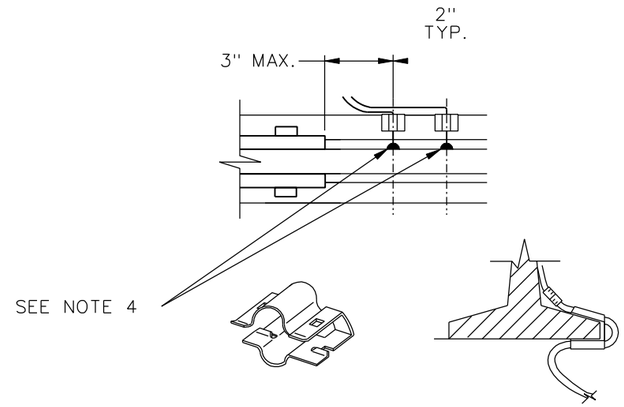

DETAIL B - RETAINING CLIPS

USE TO SECURE LEADS TO TIE

WOOD TIE APPLICATION	CONCRETE TIE APPLICATION
1-INCH GALVANIZED ROOFING NAIL (TIMBER TIE APPLICATION)	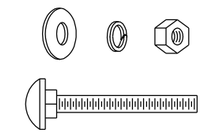 1/4-INCH CARRIAGE BOLT, FLAT WASHER, LOCK WASHER, NUT
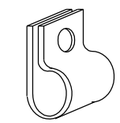 WIRE CLAMP	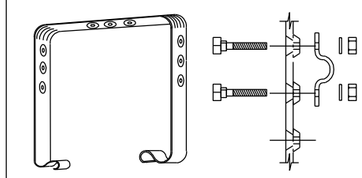 CONCRETE TIE STRAP

NOTES:

1. INSULATED JOINTS SHALL BE STAGGERED A MINIMUN OF 6'-6" TO A MAXIMUM OF 10'-0" MEASURED FROM END POST TO END POST.
2. INSULATED JOINT END POST SHALL BE CENTERED BETWEEN TIES.
3. CONTRACTOR SHALL BOND TRACK WIRES FOR ELECTROCODE AND DC TRACK CIRCUITS PRIOR TO BONDING ANY OTHER TRACK WIRES. THIS IS TO ENSURE THAT WAYSIDE SIGNAL CIRCUITS ARE AS CLOSE TO THE INSULATED JOINTS AS POSSIBLE.
4. A SLACK COIL SHALL BE PROVIDED IN EACH LEAD OF SUFFICIENT LENGTH TO ALLOW THE TJC OR WBS TO BE PULLED ABOVE THE TOP OF PULL BOX.
5. WIRES SHALL FOLLOW THE CONTOUR OF TIE AND RAIL WITH NO EXCESS SLACK.
6. DEVIATION FROM THIS STANDARD SHALL BE APPROVED BY SCRRA MANAGER OF SIGNALS AND COMMUNICATIONS OR DESIGNATE.
7. WHERE POSSIBLE, ALL TRACK WIRES SHALL BE INSTALLED IN SUCH A MANNER THEY CAN BE VISUALLY INSPECTED FROM THE FIELD SIDE OF THE TRACK.

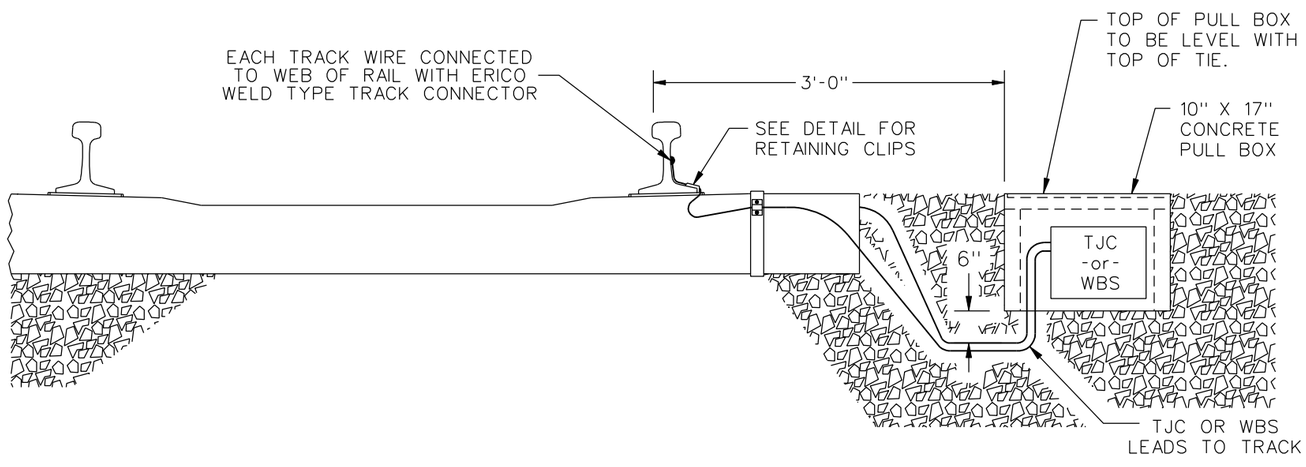

REVISIONS				
-	-	-	-	-
REV.	DATE	DESCRIPTION	DES.	ENG.

FINAL REVIEW BY: C&SDRC DATE: 11/21/08

APPROVED BY

Dan C. Guerrero

MANAGER, COMMUNICATIONS AND SIGNALS ENGINEERING

Darrell V. Maxey

DIRECTOR, ENGINEERING AND CONSTRUCTION

THE SOUTHERN CALIFORNIA REGIONAL RAIL AUTHORITY OR IT'S OFFICERS OR AGENTS SHALL NOT BE RESPONSIBLE FOR THE ACCURACY OR COMPLETENESS OF THIS PLAN SHEET

METROLINK
SOUTHERN CALIFORNIA REGIONAL RAIL AUTHORITY
700 SOUTH FLOWER STREET
LOS ANGELES, CALIFORNIA 90017

ENGINEERING STANDARDS

TUNED JOINT COUPLER (TJC) AND
WIDE BAND SHUNT (WBS) INSTALLATION

STANDARD: 8237
SCALE: NONE
REVISION: –
SHEET: 1 OF 1
CADD FILE: ES8237

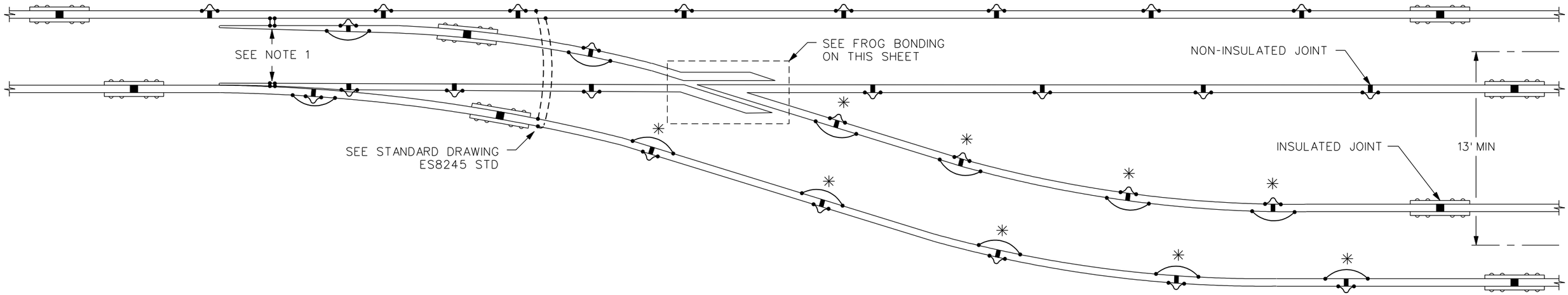

RECOMMENDED BONDING FOR TYPICAL FROGS

(A) = WELDED BOND

(B) = BOND IN WEB OF RAIL SHOULD BE PLACED AS CLOSE TO BODY OF FROG AS PRACTICABLE

(C) = BOND IN WEB OF RAIL

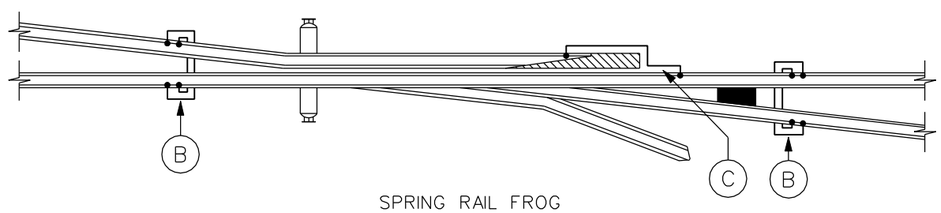

SPRING RAIL FROG

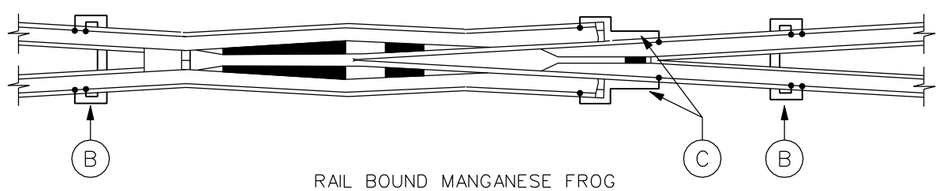

RAIL BOUND MANGANESE FROG

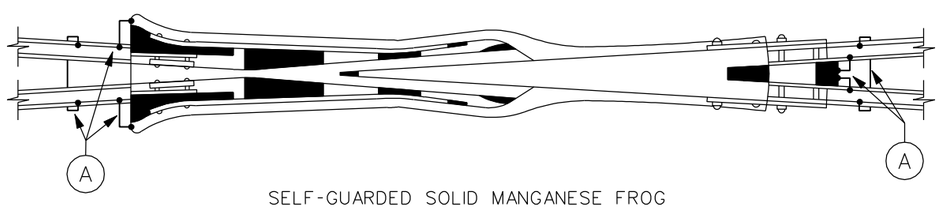

SELF-GUARDED SOLID MANGANESE FROG

JOINT BONDING

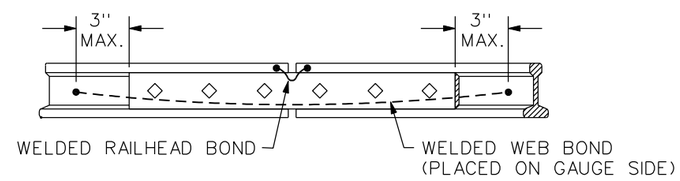

SWITCHES WITH HEEL BLOCKS FLOATING

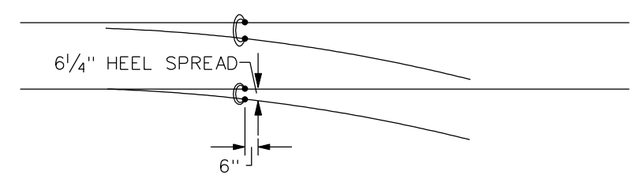

SWITCHES WITH HEEL BLOCKS

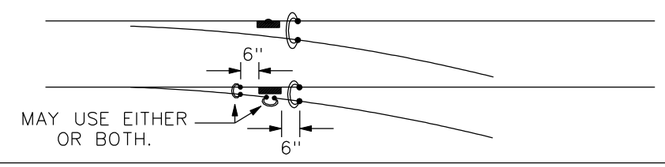

NOTES:

1. ALL FROG BONDS AND BONDS LOCATED AT THE SWITCH POINTS SHALL BE APPLIED TO THE WEB OF RAIL. THESE BONDS SHALL BE 12" LONG AND SHALL BE OF THE WELDED TYPE.
2. TURNOUTS ARE TO BE DOUBLE BONDED USING ONE WEB TYPE BOND AND ONE RAILHEAD BOND, WITH EXCEPTION TO JOINTS MARKED WITH AN ✳. THESE JOINTS ONLY REQUIRE RAILHEAD BOND WHEN TURNOUT TERMINATES IN A TRACK RELAY.
3. ALL RAILHEAD BONDS AND WEB BONDS SHALL BE OF THE WELDED TYPE.
4. ALL WELDED BONDS ARE TO BE INSTALLED PER MANUFACTURER'S RECOMENDATIONS.
5. ALL PULL BOXES ARE TO BE PROTECTED FROM DAMAGE UNTIL FINAL PLACEMENT IN SERVICE.

REVISIONS				
-	-	-	-	-
REV.	DATE	DESCRIPTION	DES.	ENG.

FINAL REVIEW BY: C&SDRC DATE: 11/21/08

APPROVED BY

Dan C. Guerrero
MANAGER, COMMUNICATIONS AND SIGNALS ENGINEERING

Darrell V. Maxey
DIRECTOR, ENGINEERING AND CONSTRUCTION

THE SOUTHERN CALIFORNIA REGIONAL RAIL AUTHORITY OR IT'S OFFICERS OR AGENTS SHALL NOT BE RESPONSIBLE FOR THE ACCURACY OR COMPLETENESS OF THIS PLAN SHEET

METROLINK
SOUTHERN CALIFORNIA REGIONAL RAIL AUTHORITY
700 SOUTH FLOWER STREET
LOS ANGELES, CALIFORNIA 90017

ENGINEERING STANDARDS

RAIL AND FROG BONDING DETAILS

STANDARD 8240
SCALE: NONE
REVISION
SHEET 1 OF 1
CADD FILE: ES8240

FOULING BRIDLE CONFIGURATION

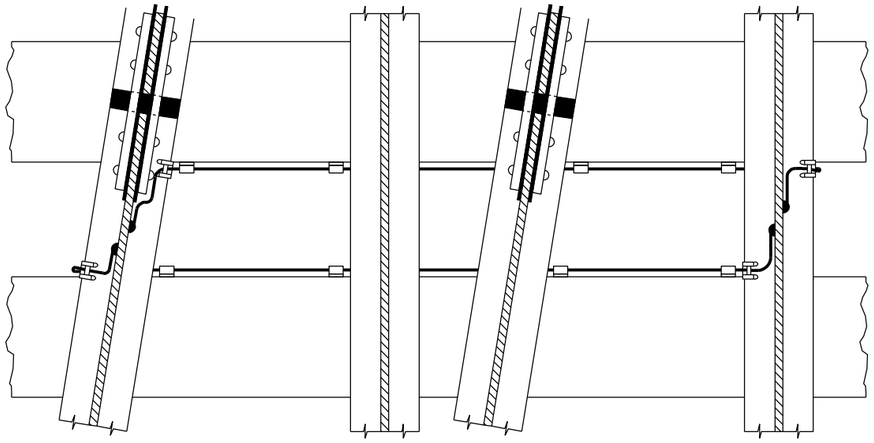

METHOD A: (TOP VIEW)
FOULING BRIDLES LOCATED IN SAME CRIB

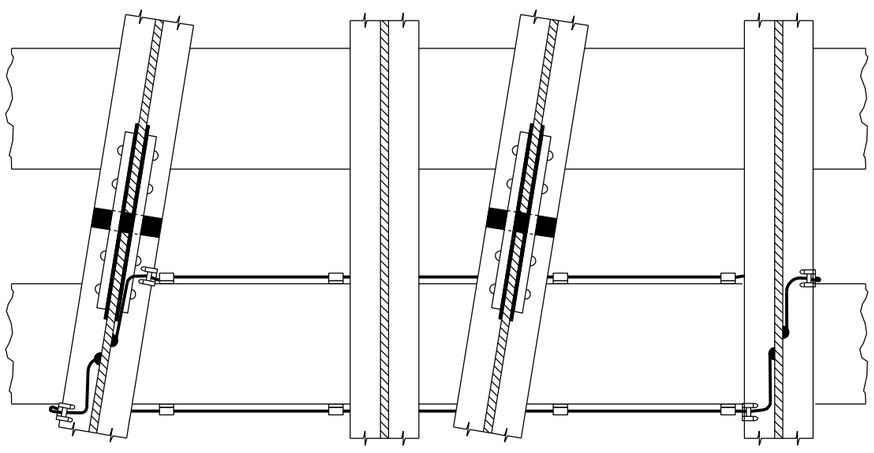

METHOD B: (TOP VIEW)
FOULING BRIDLES LOCATED ON SAME TIE

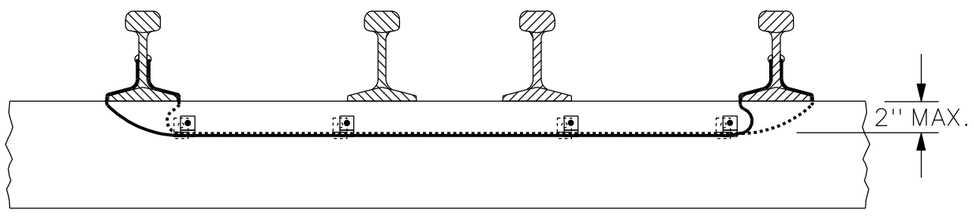

FRONT VIEW

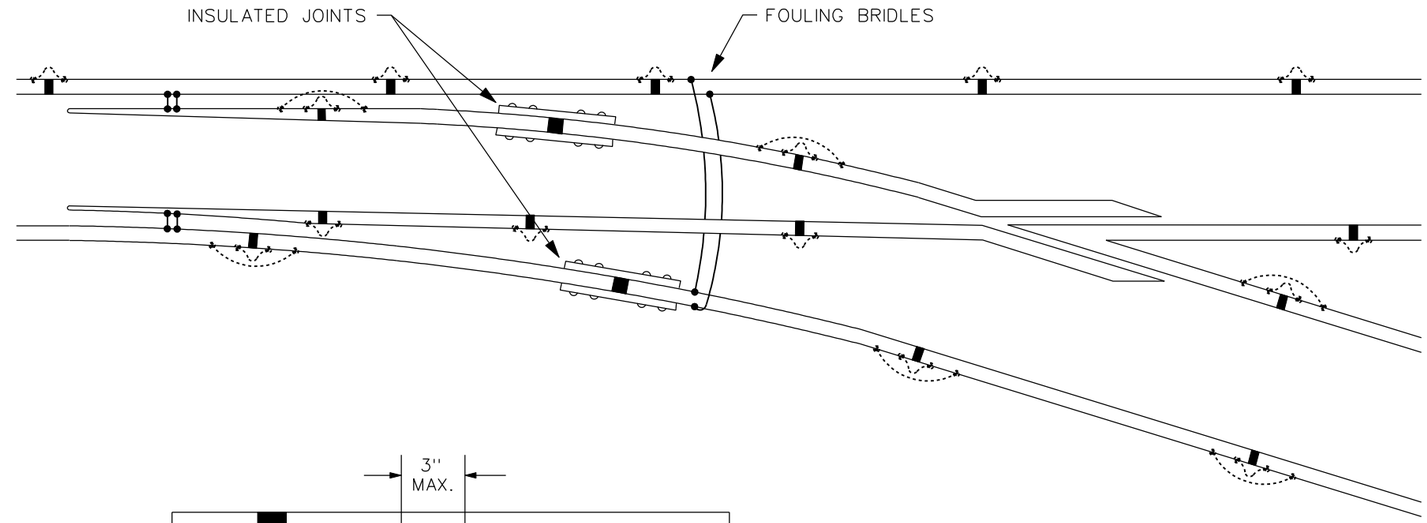

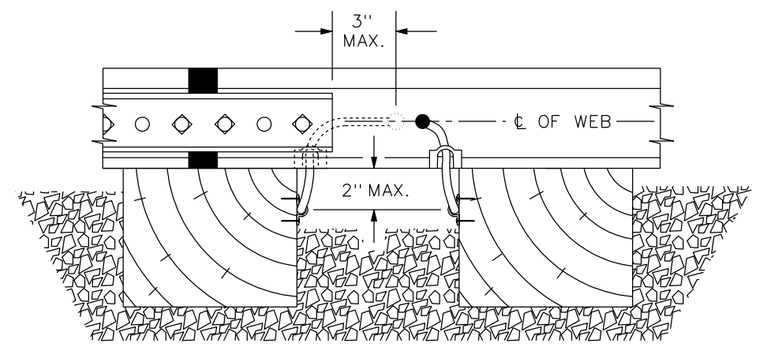

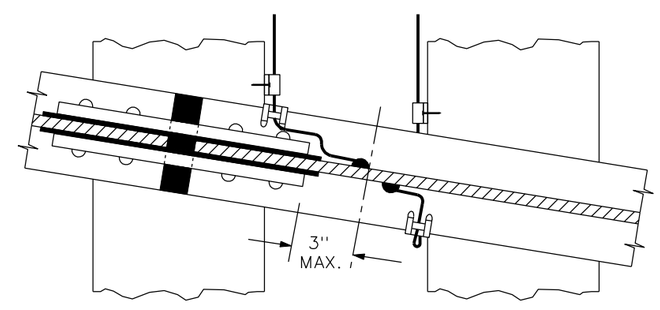

DETAIL VIEW

NOTES:

1. LOCATE FOULING BRIDLES AS NEAR TO TURNOUT INSULATED JOINT AS POSSIBLE.
2. FOULING BRIDLES SHALL BE INSTALLED USING METHOD "A" OR METHOD "B", AS SHOWN IN THIS STANDARD DRAWING. USE TWO STRANDED INSULATED TRACK WIRES INSTALLED WITH A WELDED WEB BOND.
3. FOULING BRIDLES SHALL BE MAINTAINED FREE OF SPLICES AND SHALL BE EXPOSED FOR VISUAL INSPECTION.
4. AVOID PLACING FOULING BRIDLES WHERE THEY MAY COME IN CONTACT WITH RAIL ANCHORS.
5. USE INSULATED WIRE CLAMPS FOR FASTENING FOULING BRIDLES TO WOOD TIES. AVOID DRIVING NAILS WHERE CONTACT MAY BE MADE WITH TRACK SPIKES OR ANCHORS.
6. ALL WELDED TRACK CONNECTIONS ARE TO BE INSTALLED PER MANUFACTURER'S RECOMENDATION.

REVISIONS				
-	-	-	-	-
REV.	DATE	DESCRIPTION	DES.	ENG.

FINAL REVIEW BY: C&SDRC DATE: 11/21/08

APPROVED BY

Dan C. Guerrero
MANAGER, COMMUNICATIONS AND SIGNALS ENGINEERING

Darrell V. Maxey
DIRECTOR, ENGINEERING AND CONSTRUCTION

THE SOUTHERN CALIFORNIA REGIONAL RAIL AUTHORITY OR IT'S OFFICERS OR AGENTS SHALL NOT BE RESPONSIBLE FOR THE ACCURACY OR COMPLETENESS OF THIS PLAN SHEET

METROLINK
SOUTHERN CALIFORNIA REGIONAL RAIL AUTHORITY
700 SOUTH FLOWER STREET
LOS ANGELES, CALIFORNIA 90017

ENGINEERING STANDARDS

PLACEMENT OF FOULING BRIDLES

STANDARD 8245
SCALE: NONE
REVISION –
SHEET 1 OF 1
CADD FILE: ES8245

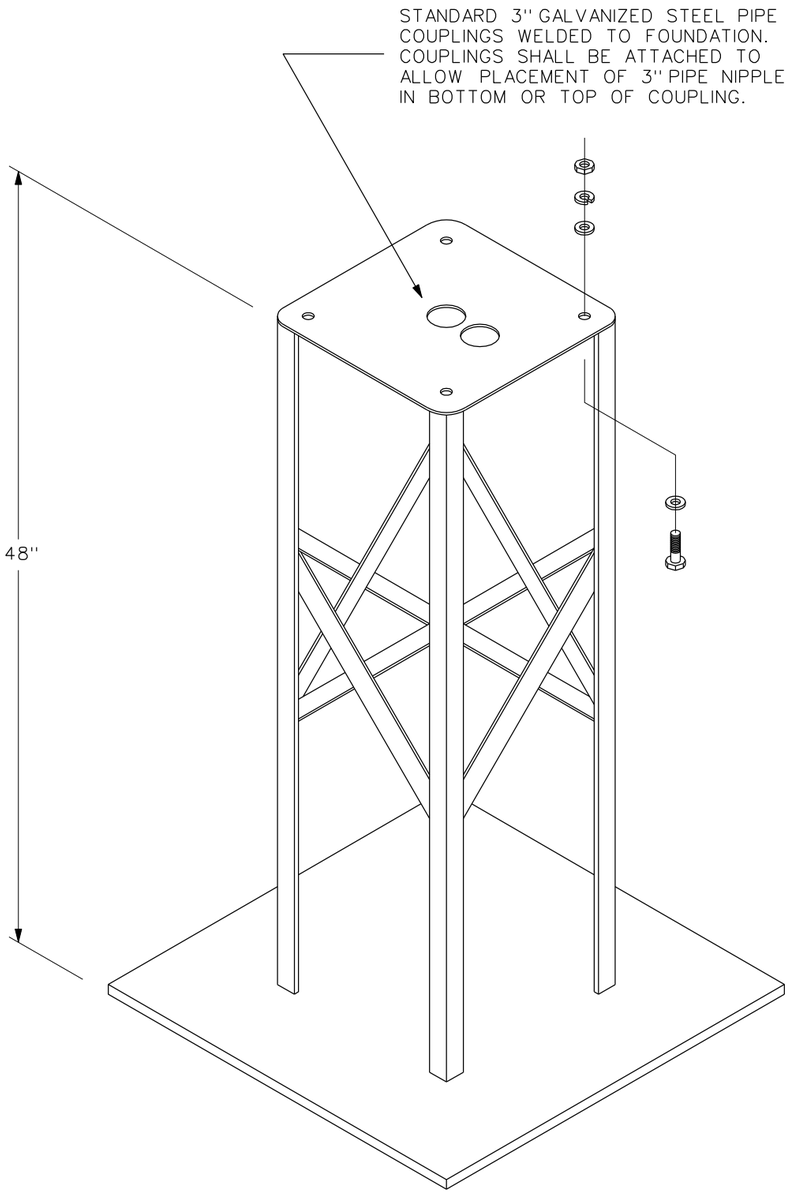

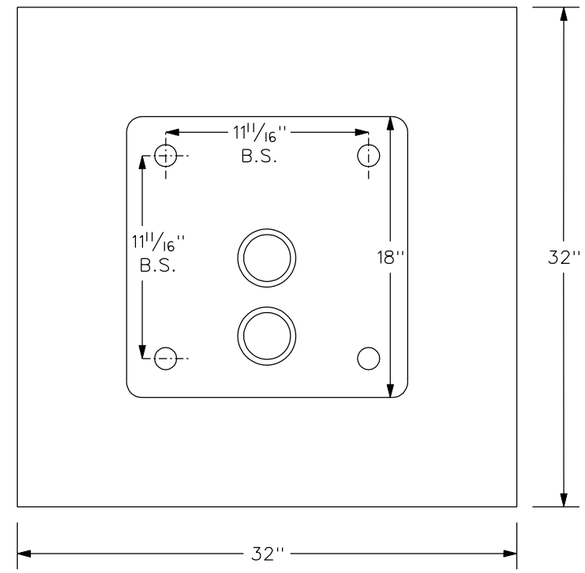

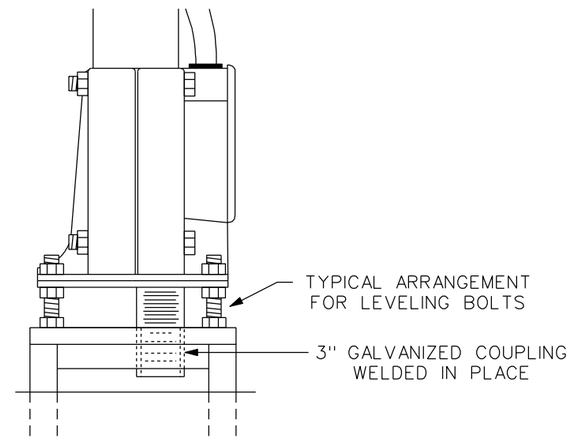

NOTES:

1. FOUNDATIONS TO BE HOT DIPPED GALVANIZED.
2. FURNISHED WITH 4 EA 1" X 8" BOLTS WITH HEX HEADS, 12 NUTS AND 16 FLAT WASHERS.
3. BOLTS TO BE THREADED TO ALLOW FOR LEVELING
4. BOLTS, WASHERS AND NUTS SHALL BE CADMIUM STEEL AND SHALL BE PACKAGED SEPARATELY IN A WATER TIGHT CONTAINER SECURELY ATTACHED TO THE FOUNDATION.

REVISIONS				
-	-	-	-	-
REV.	DATE	DESCRIPTION	DES.	ENG.

FINAL REVIEW BY: C&SDRC DATE: 11/21/08

APPROVED BY

Dan C. Guerrero
MANAGER, COMMUNICATIONS AND SIGNALS ENGINEERING

Darrell V. Maxey
DIRECTOR, ENGINEERING AND CONSTRUCTION

THE SOUTHERN CALIFORNIA REGIONAL RAIL AUTHORITY OR IT'S OFFICERS OR AGENTS SHALL NOT BE RESPONSIBLE FOR THE ACCURACY OR COMPLETENESS OF THIS PLAN SHEET

METROLINK

SOUTHERN CALIFORNIA REGIONAL RAIL AUTHORITY
700 SOUTH FLOWER STREET
LOS ANGELES, CALIFORNIA 90017

ENGINEERING STANDARDS

FOUNDATION FOR
PED GATE WITH STUBMAST

STANDARD: 8250
SCALE: NONE
REVISION: –
SHEET: 1 OF 1
CADD FILE: ES8250

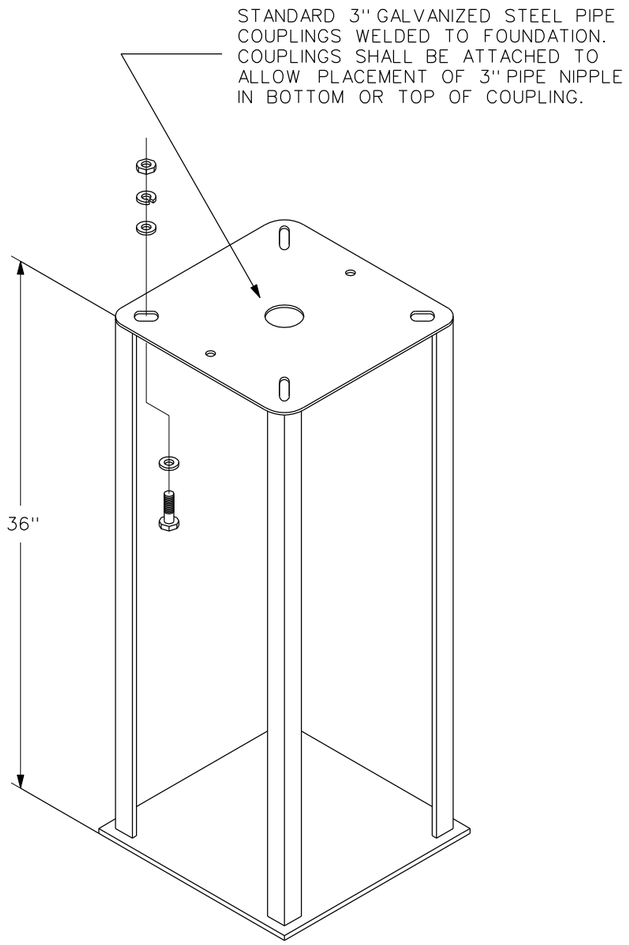

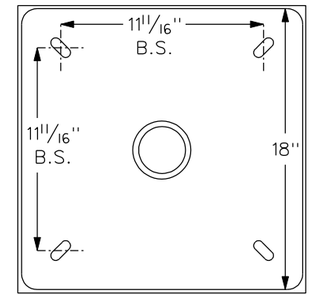

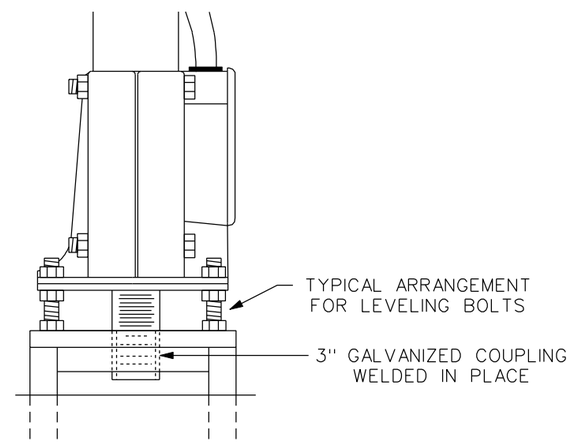

NOTES:

1. FOUNDATIONS TO BE HOT DIPPED GALVANIZED.
2. FURNISHED WITH 4 EA 1" X 8" BOLTS WITH HEX HEADS, 12 NUTS AND 16 FLAT WASHERS.
3. BOLTS TO BE THREADED TO ALLOW FOR LEVELING
4. BOLTS, WASHERS AND NUTS SHALL BE CADMIUM STEEL AND SHALL BE PACKAGED SEPARATELY IN A WATER TIGHT CONTAINER SECURELY ATTACHED TO THE FOUNDATION.

REVISIONS				
-	-	-	-	-
REV.	DATE	DESCRIPTION	DES.	ENG.

FINAL REVIEW BY: C&SDRC DATE: 11/21/08

APPROVED BY

Dan C. Guerrero

MANAGER, COMMUNICATIONS AND SIGNALS ENGINEERING

Darrell V. Maxey

DIRECTOR, ENGINEERING AND CONSTRUCTION

THE SOUTHERN CALIFORNIA REGIONAL RAIL AUTHORITY OR IT'S OFFICERS OR AGENTS SHALL NOT BE RESPONSIBLE FOR THE ACCURACY OR COMPLETENESS OF THIS PLAN SHEET

METROLINK

SOUTHERN CALIFORNIA REGIONAL RAIL AUTHORITY
700 SOUTH FLOWER STREET
LOS ANGELES, CALIFORNIA 90017

ENGINEERING STANDARDS

FOUNDATION FOR
DWARF SIGNAL WITH STUBMAST

STANDARD: 8253
SCALE: NONE
REVISION: –
SHEET: 1 OF 1
CADD FILE: ES8253

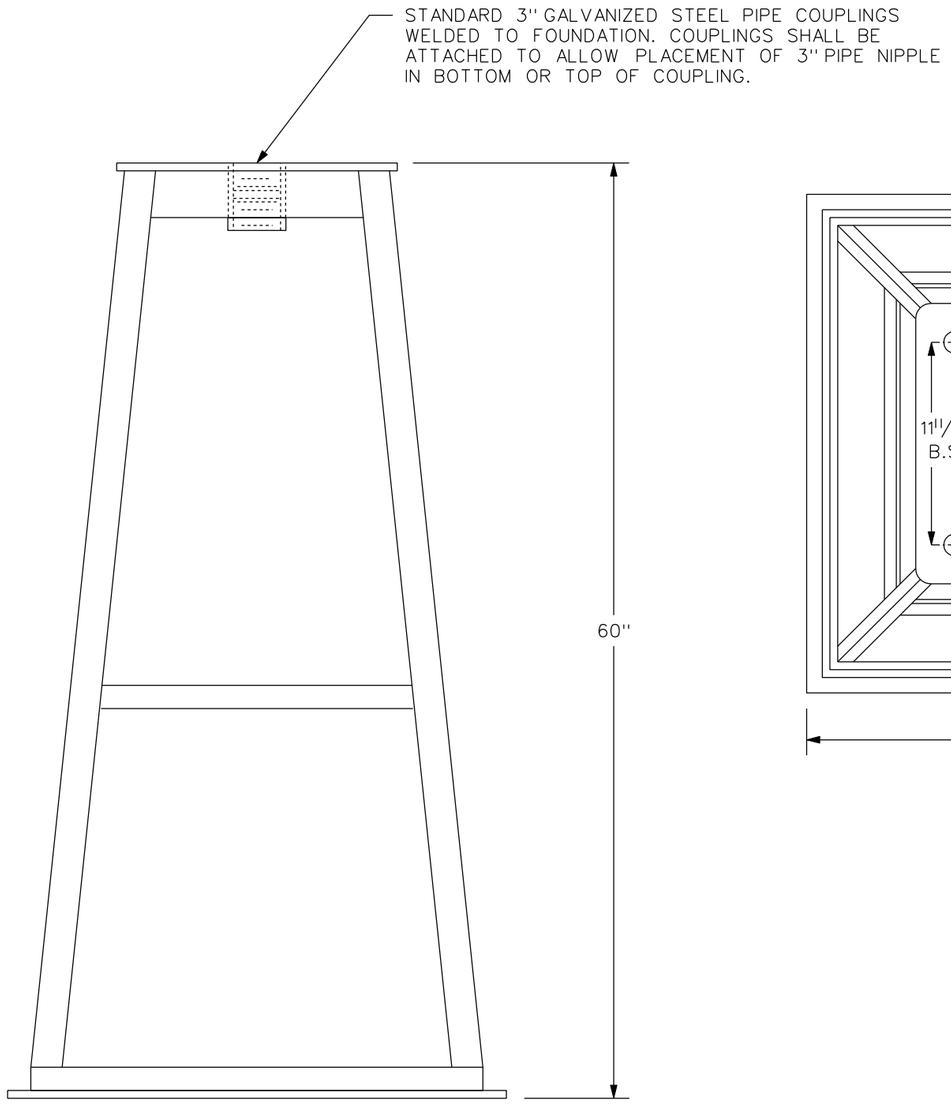

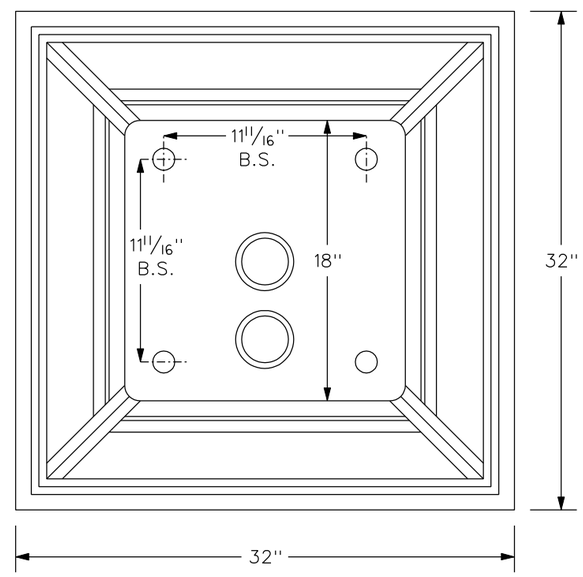

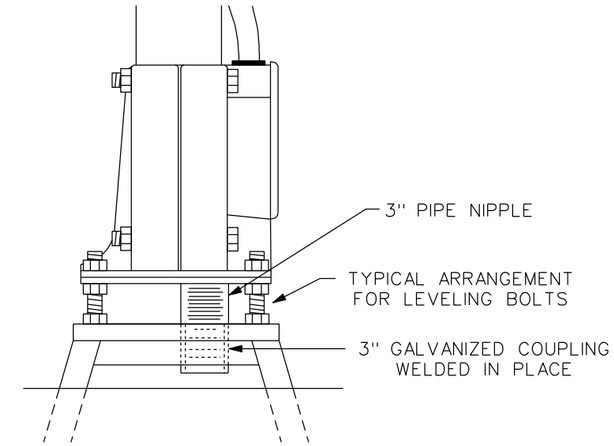

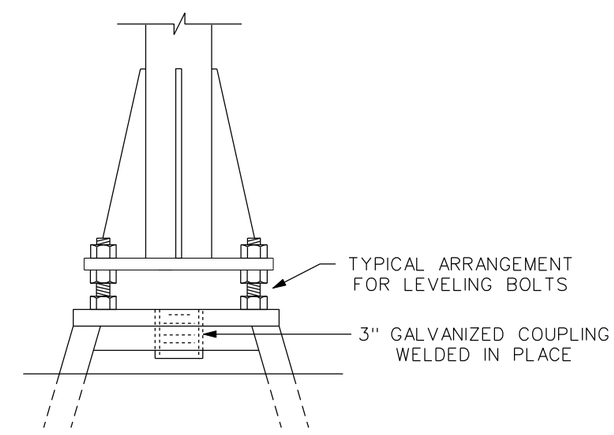

NOTES:

1. FOUNDATIONS TO BE HOT DIPPED GALVANIZED.
2. FURNISHED WITH 4 EA 1" X 8" BOLTS WITH HEX HEADS, 12 NUTS AND 16 FLAT WASHERS.
3. BOLTS TO BE THREADED TO ALLOW FOR LEVELING
4. BOLTS, WASHERS AND NUTS SHALL BE CADMIUM STEEL AND SHALL BE PACKAGED SEPARATELY IN A WATER TIGHT CONTAINER SECURELY ATTACHED TO THE FOUNDATION.
5. DEVIATION FROM THIS STANDARD SHALL BE APPROVED BY SCRRA MANAGER OF C&S ENGINEERING OR DESIGNATE.

REVISIONS				
-	-	-	-	-
REV.	DATE	DESCRIPTION	DES.	ENG.

FINAL REVIEW BY: C&SDRC DATE: 11/21/08

APPROVED BY

Dan C. Guerrero

MANAGER, COMMUNICATIONS AND SIGNALS ENGINEERING

Darrell V. Maxey

DIRECTOR, ENGINEERING AND CONSTRUCTION

THE SOUTHERN CALIFORNIA REGIONAL RAIL AUTHORITY OR IT'S OFFICERS OR AGENTS SHALL NOT BE RESPONSIBLE FOR THE ACCURACY OR COMPLETENESS OF THIS PLAN SHEET

METROLINK

SOUTHERN CALIFORNIA REGIONAL RAIL AUTHORITY
700 SOUTH FLOWER STREET
LOS ANGELES, CALIFORNIA 90017

ENGINEERING STANDARDS

FOUNDATION FOR GROUND SIGNAL, GATE, & FLASHER MAST

STANDARD: 8255

SCALE: NONE

REVISION: –

SHEET: 1 OF 1

CADD FILE: ES8255

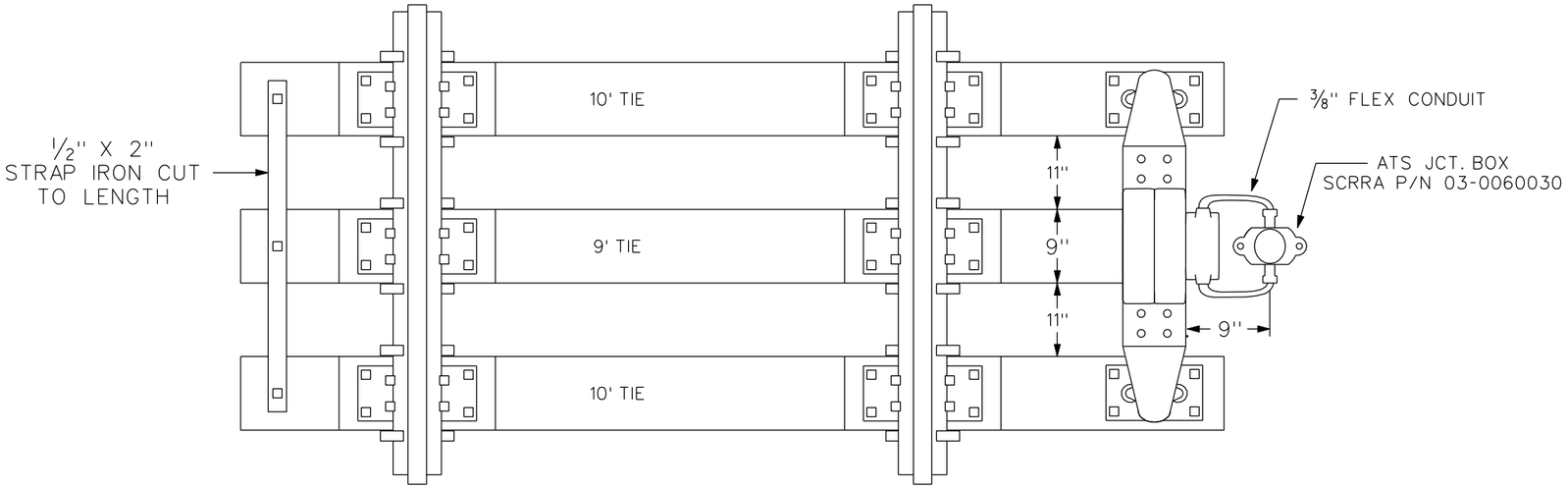

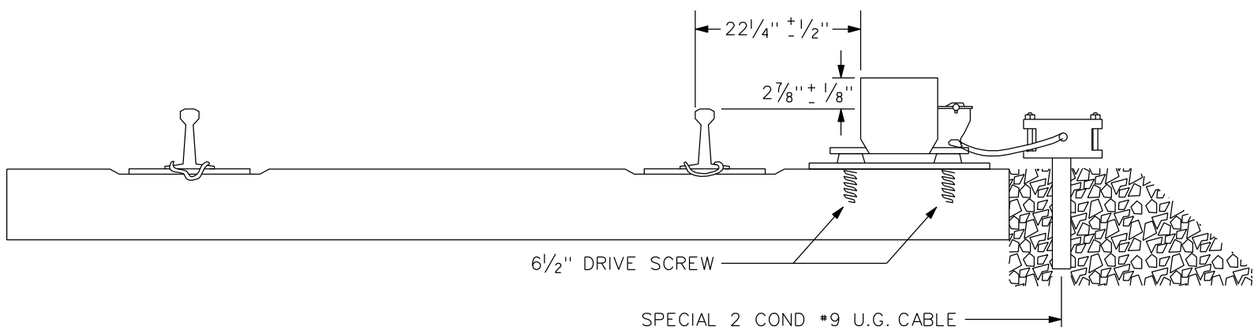

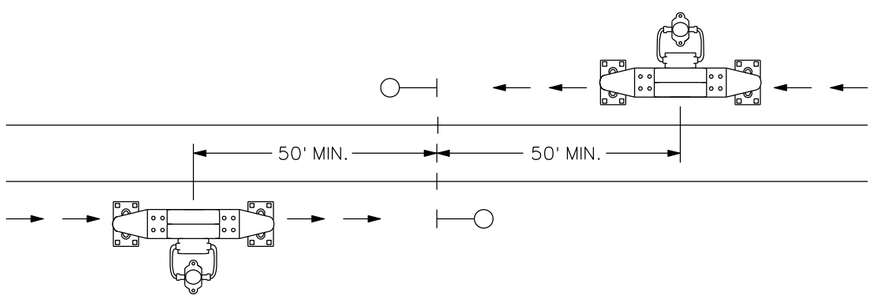

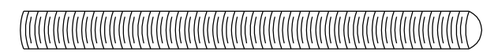

THREADED ROD

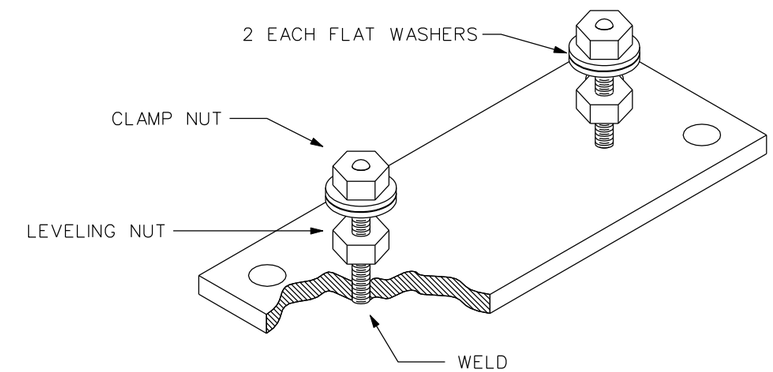

ASSEMBLED UNIT

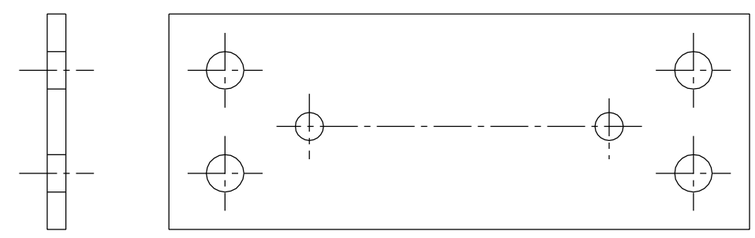

INDUCTOR BASE PLATE
SAE 1020 STEEL
SCRRA P/N 03-0060003

NOTE:

1. ALL ATS INDUCTORS WHEN INSTALLED ARE TO BE GAUGED WITH A STANDARD ATS GAUGE, AND MONTHLY THEREAFTER.
2. DEVIATION FROM THIS STANDARD SHALL BE APPROVED BY SCRRA MANAGER OF C&S ENGINEERING OR DESIGNATE.

REVISIONS				
-	-	-	-	-
REV.	DATE	DESCRIPTION	DES.	ENG.

FINAL REVIEW BY: C&SDRC DATE: 11/21/08

APPROVED BY

Dan C. Guerrero
MANAGER, COMMUNICATIONS AND SIGNALS ENGINEERING

Darrell V. Maxey
DIRECTOR, ENGINEERING AND CONSTRUCTION

THE SOUTHERN CALIFORNIA REGIONAL RAIL AUTHORITY OR IT'S OFFICERS OR AGENTS SHALL NOT BE RESPONSIBLE FOR THE ACCURACY OR COMPLETENESS OF THIS PLAN SHEET

METROLINK
SOUTHERN CALIFORNIA REGIONAL RAIL AUTHORITY
700 SOUTH FLOWER STREET
LOS ANGELES, CALIFORNIA 90017

ENGINEERING STANDARDS

AUTOMATIC TRAIN STOP
(ATS) INDUCTOR LAYOUT

STANDARD: 8260
SCALE: NONE
REVISION: –
SHEET: 1 OF 3
CADD FILE: ES8260-01

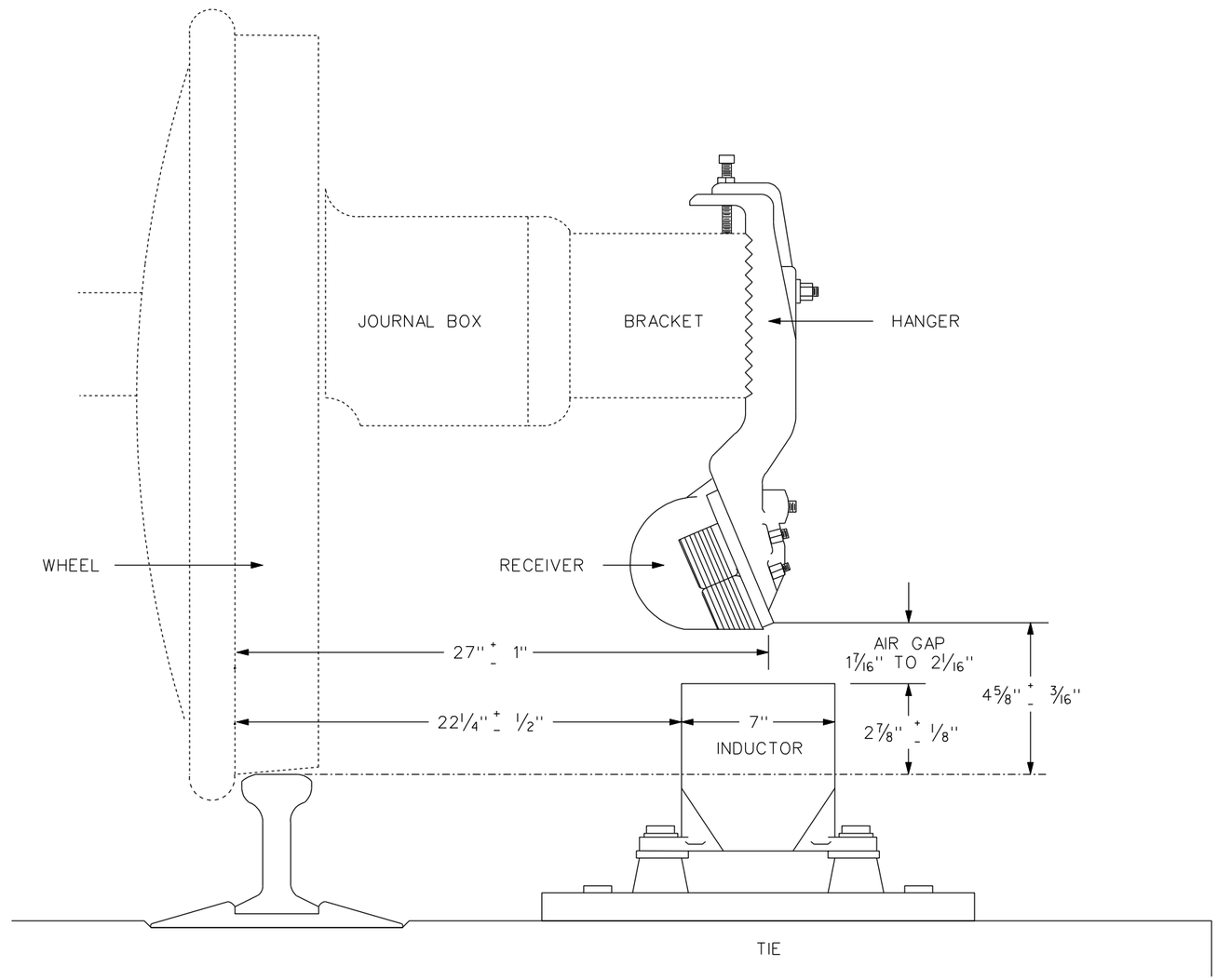

AUTOMATIC TRAIN STOP LOCOMOTIVE RECEIVER AND WAYSIDE INDUCTOR

NOTE:

1. DEVIATION FROM THIS STANDARD SHALL BE APPROVED BY SCRRA MANAGER OF C&S ENGINEERING OR DESIGNATE.

REVISIONS				
-	-	-	-	-
REV.	DATE	DESCRIPTION	DES.	ENG.

FINAL REVIEW BY: C&SDRC DATE: 11/21/08

APPROVED BY

Dan C. Guerrero
MANAGER, COMMUNICATIONS AND SIGNALS ENGINEERING

Darrell V. Maxey
DIRECTOR, ENGINEERING AND CONSTRUCTION

THE SOUTHERN CALIFORNIA REGIONAL RAIL AUTHORITY OR IT'S OFFICERS OR AGENTS SHALL NOT BE RESPONSIBLE FOR THE ACCURACY OR COMPLETENESS OF THIS PLAN SHEET

METROLINK
SOUTHERN CALIFORNIA REGIONAL RAIL AUTHORITY
700 SOUTH FLOWER STREET
LOS ANGELES, CALIFORNIA 90017

ENGINEERING STANDARDS

AUTOMATIC TRAIN STOP (ATS)
PLACEMENT REQUIREMENTS

STANDARD 8260
SCALE: NONE
REVISION –
SHEET 2 OF 3
CADD FILE: ES8260-02

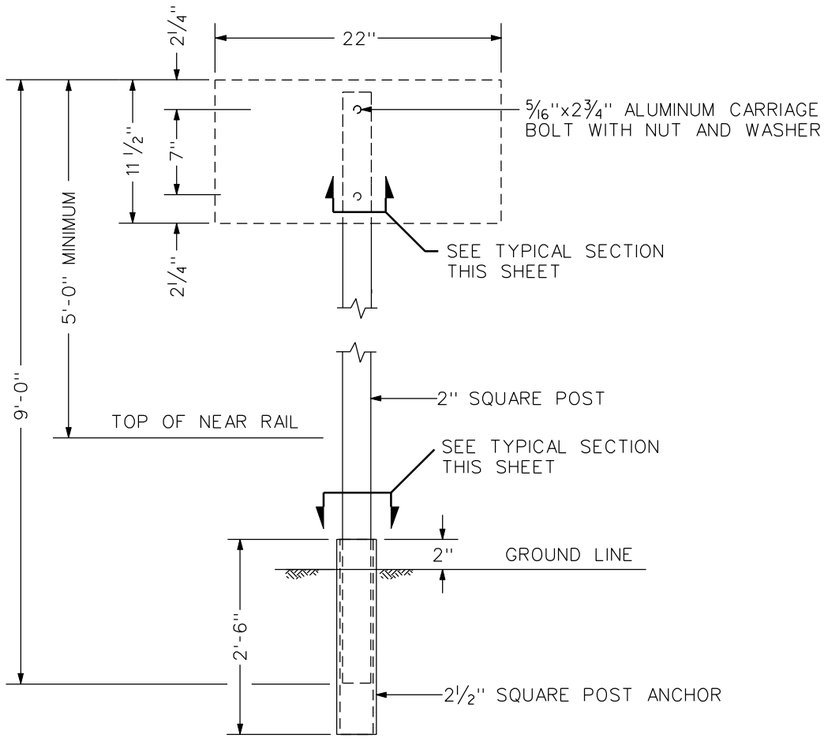

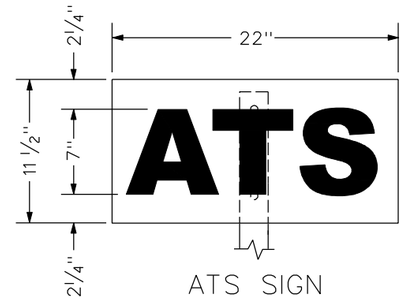

ATS SIGN

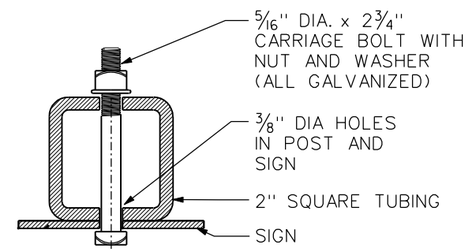

TYPICAL SECTION
THRU SIGN AND POST

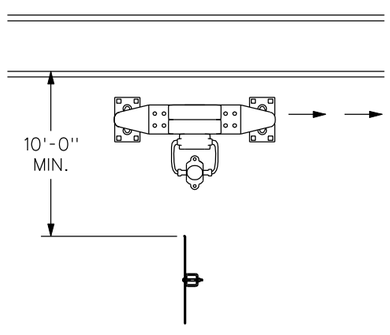

ALL SIGNS TO BE PLACED ON THE RIGHT SIDE OF THE TRACK IN THE DIRECTION OF APPROACH TO ATS LOCATION, WITH THE NEAREST POINT OF SIGN TO BE A MINIMUM OF TEN FEET (10'-0") FROM THE GAUGE SIDE OF THE NEAREST RAIL. SIGNS WILL BE PLACED ON THE OUTSIDE OF EACH TRACK.

INSTALLATION PLAN

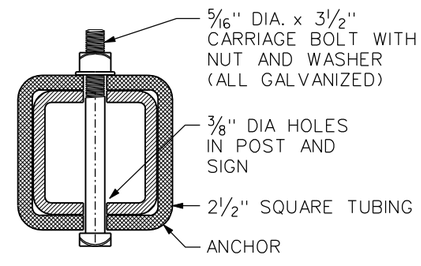

TYPICAL SECTION
THRU POST AND ANCHOR

BILL OF MATERIAL
ATS SIGN - COMPLETE

QTY	ITEM
1	ATS SIGN PER SCRRA STANDARD SPECIFICATIONS 05-3260510-0
1	2" x 2" x 9'-0" LONG SQUARE POST
1	2½" x 2½" x 30" LONG SQUARE POST ANCHOR
2	5/16" X 2¾" CARRIAGE BOLTS WITH NUTS AND WASHERS (GALVANIZED) PER SPECIFICATIONS BELOW
2	5/16" X 3½" " CARRIAGE BOLTS WITH NUTS AND WASHERS (GALVANIZED) PER SPECIFICATIONS BELOW

SIGNS:

⅛" THICK MILL FINISH ALUMINUM PANEL, ALCOA 6016-T6 OR EQUAL. PAINT ALL SIDES WITH LINEAR POLYURETHANE. COLOR FACE OF PANEL WITH ENGINEERING GRADE PRESSURE SENSITIVE, RETRO-REFLECTIVE YELLOW VINYL SHEETING. SILK SCREEN LEGEND WITH BLACK INK. FINISH WITH EXTERIOR GRADE PRESSURE SENSITIVE CLEAR MYLAR, 3M-1150 OR EQUAL.

STEEL POSTS:

12 GAGE (.105 THICK) 2.42 LBS. PER LINEAL FOOT 2" SQUARE STEEL POST (ATSM A-36) WITH ⅜" DIA. KNOCKOUT HOLES. ALL GALVANIZED IN ACCORDANCE WITH ATSM A-386.

ANCHORS:

12 GAGE (.105 THICK) 2.42 LBS. PER LINEAR FOOT 2½" SQUARE STEEL POST (ATSM A-36) WITH ⅜" DIA. KNOCKOUT HOLES. ALL GALVANIZED IN ACCORDANCE WITH ATSM A-386.

TEXT STYLE:

TEXT TO BE "ARIAL BOLD" PER SCRRA STANDARD ES4200. SIZE AS INDICATED ON THIS DRAWING.

HARDWARE:

ALL HARDWARE TO BE VANDAL RESISTANT.
BOLTS: 5/16" x 2¾" LONG ALUMINUM CARRIAGE BOLTS, 2024-T4 ALLOY. (FOR SIGN)
BOLTS: 5/16" x 3½" LONG ALUMINUM CARRIAGE BOLTS, 2024-T4 ALLOY. (FOR ANCHOR)
NUTS: TAMPER RESISTANT, ALCOA OR APPROVED EQUAL.
WASHERS: PLAIN, FLAT ALUMINUM WASHERS.

REVISIONS				
REV.	DATE	DESCRIPTION	DES.	ENG.
-	-	-	-	-

FINAL REVIEW BY: C&SDRC DATE: 11/21/08

APPROVED BY

Dan C. Guerrero
MANAGER, COMMUNICATIONS AND SIGNALS ENGINEERING

Darrell V. Maxey
DIRECTOR, ENGINEERING AND CONSTRUCTION

THE SOUTHERN CALIFORNIA REGIONAL RAIL AUTHORITY OR IT'S OFFICERS OR AGENTS SHALL NOT BE RESPONSIBLE FOR THE ACCURACY OR COMPLETENESS OF THIS PLAN SHEET

METROLINK
SOUTHERN CALIFORNIA REGIONAL RAIL AUTHORITY
700 SOUTH FLOWER STREET
LOS ANGELES, CALIFORNIA 90017

ENGINEERING STANDARDS

STANDARD AUTOMATIC TRAIN STOP SIGN
FOR USE AT INERT ATS LOCATIONS

STANDARD: 8260
SCALE: NONE
REVISION: –
SHEET: 3 OF 3
CADD FILE: ES8260-03

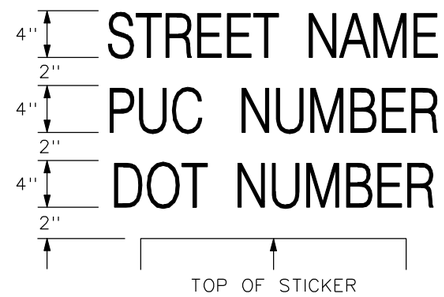

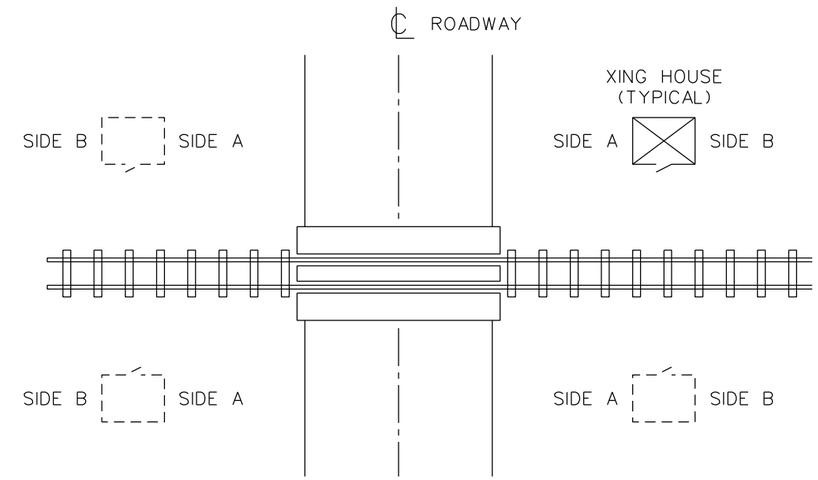

SIDE A

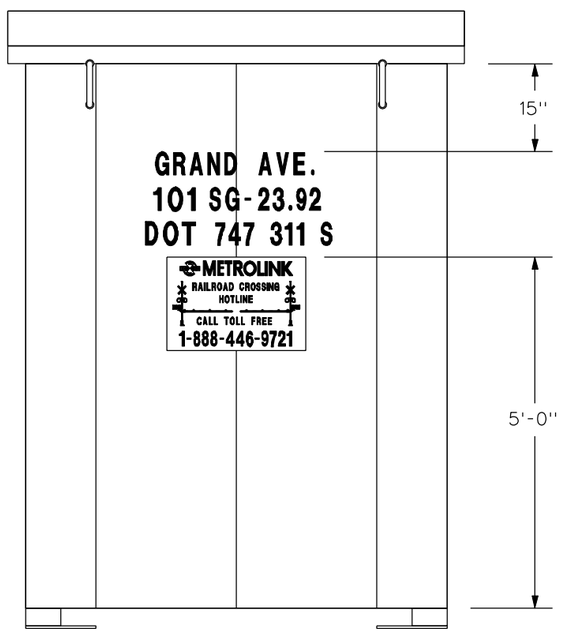

SIDE B

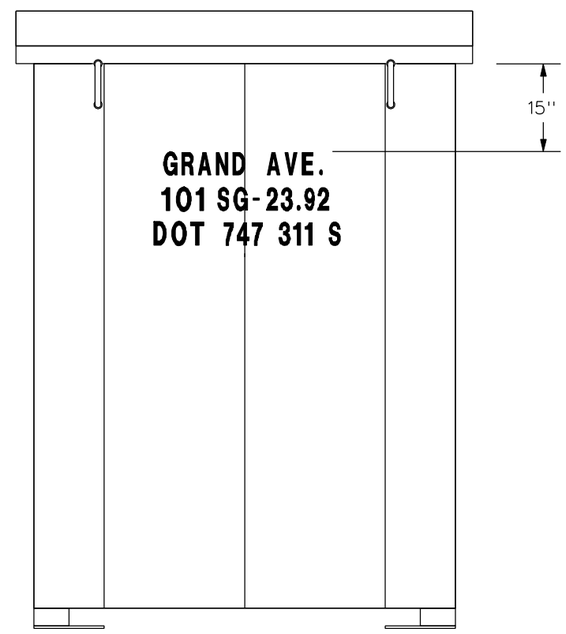

NOTES:

1. DEVIATION FROM THIS STANDARD SHALL BE AUTHORIZED BY SCRRA MANAGER OF C&S ENGINEERING OR DESIGNATE.
2. LEGEND TO BE 4" BLACK LETTERS, CENTERED ON THE SIDE OF INSTRUMENT ENCLOSURE.
3. NOTIFICATION SIGN MAY BE INSTALLED ON A MAST IN A LOCATION VISIBLE FROM THE CROSSING

REVISIONS				
-	-	-	-	-
REV.	DATE	DESCRIPTION	DES.	ENG.

FINAL REVIEW BY: C&SDRC DATE: 11/21/08

APPROVED BY

Dan C. Guerrero
MANAGER, COMMUNICATIONS AND SIGNALS ENGINEERING

Darrell V. Maxey
DIRECTOR, ENGINEERING AND CONSTRUCTION

THE SOUTHERN CALIFORNIA REGIONAL RAIL AUTHORITY OR IT'S OFFICERS OR AGENTS SHALL NOT BE RESPONSIBLE FOR THE ACCURACY OR COMPLETENESS OF THIS PLAN SHEET

METROLINK
SOUTHERN CALIFORNIA REGIONAL RAIL AUTHORITY
700 SOUTH FLOWER STREET
LOS ANGELES, CALIFORNIA 90017

ENGINEERING STANDARDS

TYPICAL LEGEND FOR
HIGHWAY–RAIL GRADE CROSSING
INSTRUMENT ENCLOSURE

STANDARD 8270
SCALE: NONE
REVISION –
SHEET 1 OF 1
CADD FILE: ES8270–01

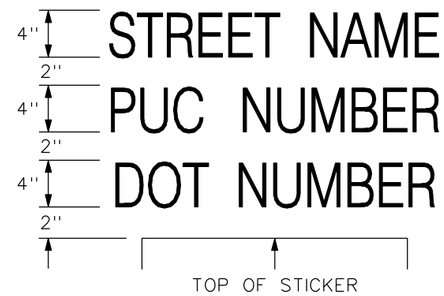

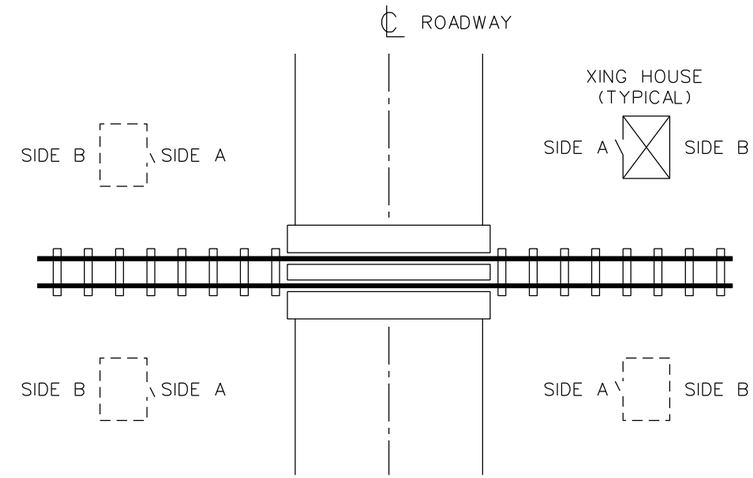

SIDE A

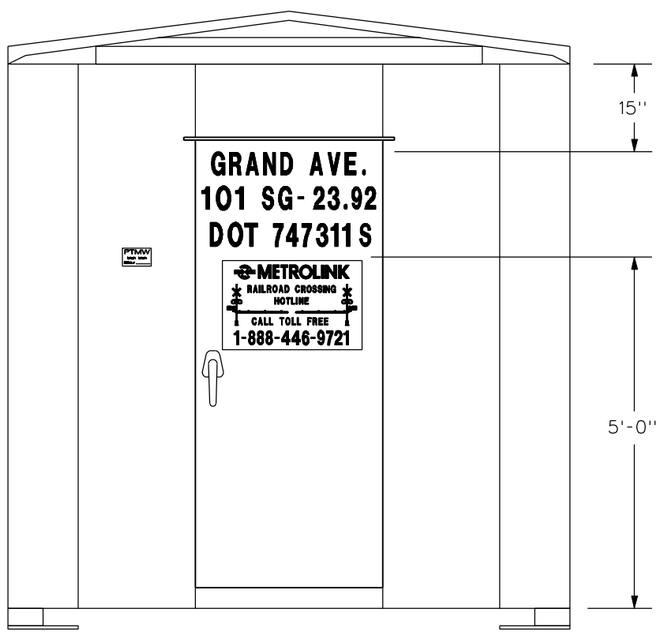

SIDE B

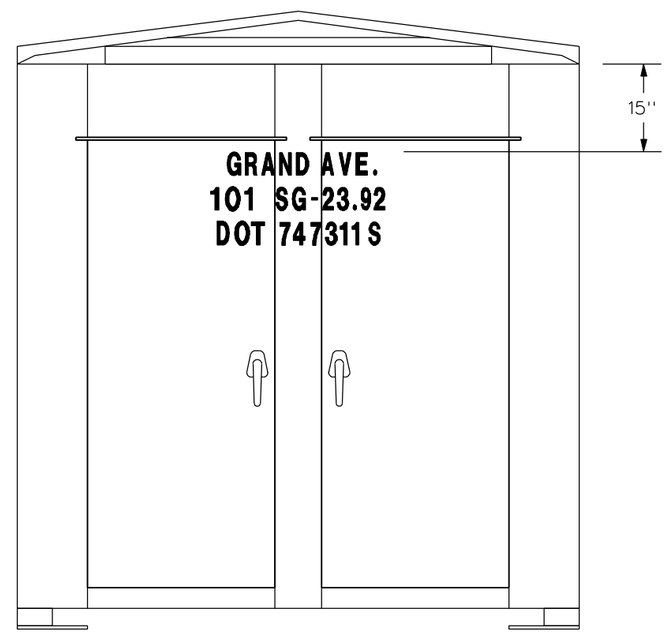

NOTES:

1. DEVIATION FROM THIS STANDARD SHALL BE AUTHORIZED BY SCRRA MANAGER OF C&S ENGINEERING OR DESIGNATE.
2. LEGEND TO BE 4" BLACK LETTERS, CENTERED ON THE SIDE OF INSTRUMENT ENCLOSURE.
3. NOTIFICATION SIGN MAY BE INSTALLED ON A MAST IN A LOCATION VISIBLE FROM THE CROSSING

REVISIONS				
-	-	-	-	-
REV.	DATE	DESCRIPTION	DES.	ENG.

FINAL REVIEW BY: C&SDRC DATE: 11/21/08

APPROVED BY

Dan C. Guerrero

MANAGER, COMMUNICATIONS AND SIGNALS ENGINEERING

Darrell V. Maxey

DIRECTOR, ENGINEERING AND CONSTRUCTION

THE SOUTHERN CALIFORNIA REGIONAL RAIL AUTHORITY OR IT'S OFFICERS OR AGENTS SHALL NOT BE RESPONSIBLE FOR THE ACCURACY OR COMPLETENESS OF THIS PLAN SHEET

METROLINK

SOUTHERN CALIFORNIA REGIONAL RAIL AUTHORITY
700 SOUTH FLOWER STREET
LOS ANGELES, CALIFORNIA 90017

ENGINEERING STANDARDS

TYPICAL LEGEND FOR
HIGHWAY-RAIL GRADE CROSSING
INSTRUMENT ENCLOSURE

STANDARD: 8270

SCALE: NONE

REVISION: – SHEET: 1 OF 1

CADD FILE: ES8270-02

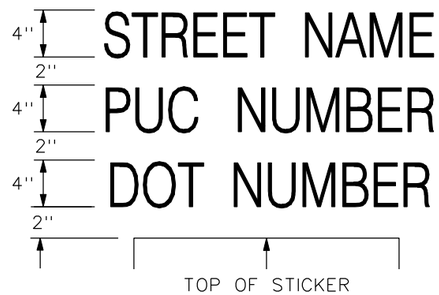

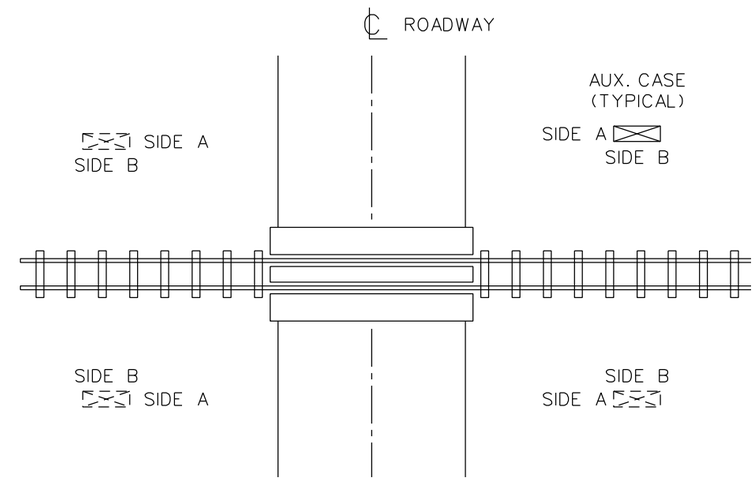

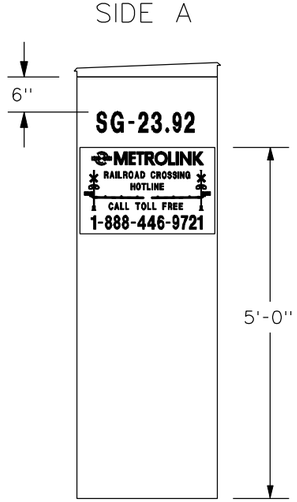

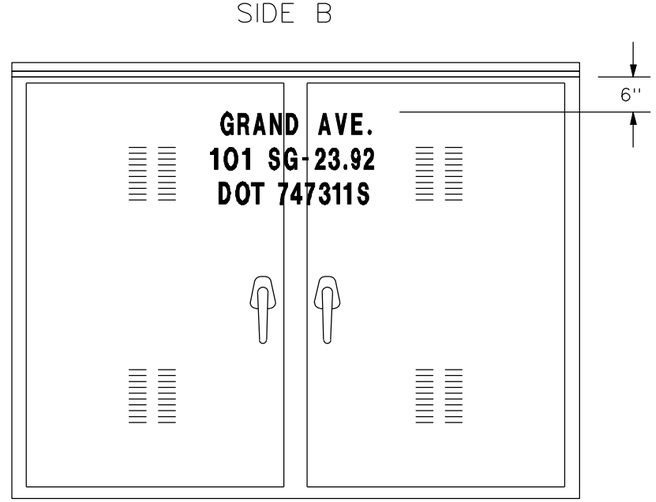

NOTES:

1. DEVIATION FROM THIS STANDARD SHALL BE AUTHORIZED BY SCRRA MANAGER OF C&S ENGINEERING OR DESIGNATE.
2. LEGEND TO BE 4" BLACK LETTERS, CENTERED ON THE FRONT OF AUXILIARY CASE.
3. NOTIFICATION SIGN MAY BE INSTALLED ON A MAST IN A LOCATION VISIBLE FROM THE CROSSING

REVISIONS				
-	-	-	-	-
REV.	DATE	DESCRIPTION	DES.	ENG.

FINAL REVIEW BY: C&SDRC DATE: 11/21/08

APPROVED BY

Dan C. Guerrero
MANAGER, COMMUNICATIONS AND SIGNALS ENGINEERING

Darrell V. Maxey
DIRECTOR, ENGINEERING AND CONSTRUCTION

THE SOUTHERN CALIFORNIA REGIONAL RAIL AUTHORITY OR IT'S OFFICERS OR AGENTS SHALL NOT BE RESPONSIBLE FOR THE ACCURACY OR COMPLETENESS OF THIS PLAN SHEET

METROLINK
SOUTHERN CALIFORNIA REGIONAL RAIL AUTHORITY
700 SOUTH FLOWER STREET
LOS ANGELES, CALIFORNIA 90017

ENGINEERING STANDARDS

TYPICAL LEGEND FOR
HIGHWAY–RAIL GRADE CROSSING
INSTRUMENT ENCLOSURE

STANDARD 8270
SCALE: NONE
REVISION –
SHEET 1 OF 1
CADD FILE: ES8270–03

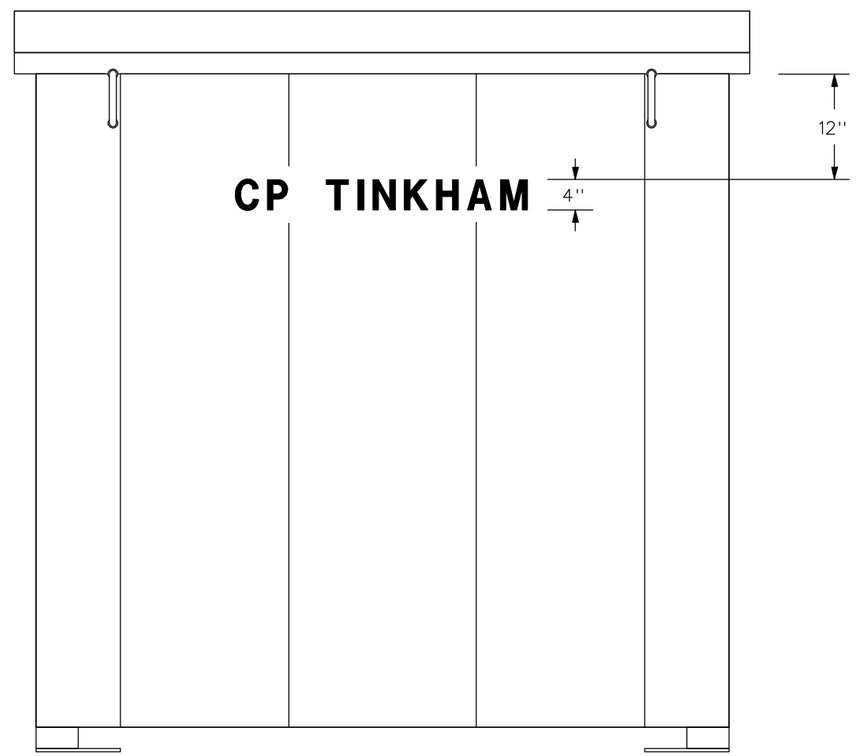

NOTES:

1. STENCIL LEGEND ON BOTH SIDES OF HOUSING TO BE VISIBLE TO TRAINS TRAVELING IN EITHER DIRECTION.

2. LEGEND TO BE BLACK LETTERS 4'' HIGH, CENTERED ON SIDE OF BUNGALOW.

REVISIONS				
-	-	-	-	-
REV.	DATE	DESCRIPTION	DES.	ENG.

FINAL REVIEW BY: C&SDRC DATE: 11/21/08

APPROVED BY

Dan C. Guerrero

MANAGER, COMMUNICATIONS AND SIGNALS ENGINEERING

Darrell V. Maxey

DIRECTOR, ENGINEERING AND CONSTRUCTION

THE SOUTHERN CALIFORNIA REGIONAL RAIL AUTHORITY OR IT'S OFFICERS OR AGENTS SHALL NOT BE RESPONSIBLE FOR THE ACCURACY OR COMPLETENESS OF THIS PLAN SHEET

METROLINK

SOUTHERN CALIFORNIA REGIONAL RAIL AUTHORITY
700 SOUTH FLOWER STREET
LOS ANGELES, CALIFORNIA 90017

ENGINEERING STANDARDS

TYPICAL LEGEND FOR
CONTROL POINT INSTRUMENT ENCLOSURE

STANDARD: 8271

SCALE: NONE

REVISION: –

SHEET: 1 OF 1

CADD FILE: ES8271

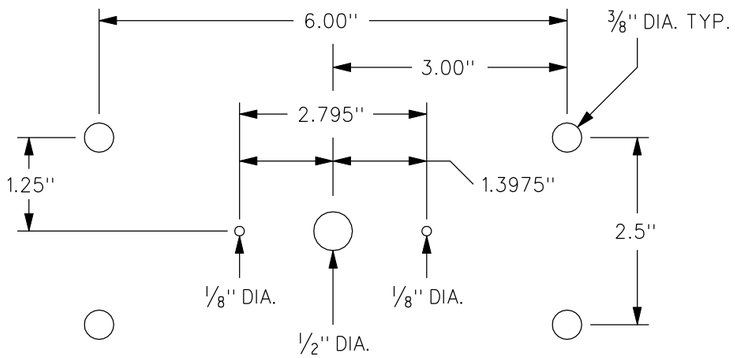

DRILLING SPECIFICATIONS

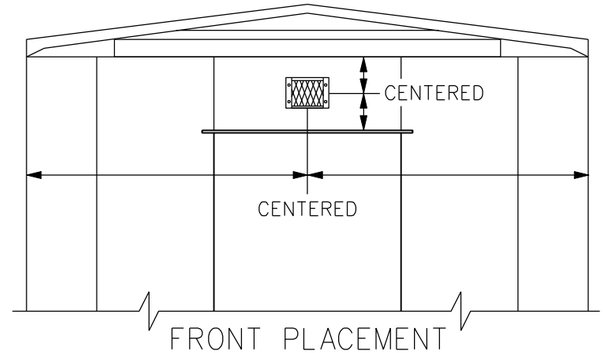

FRONT PLACEMENT

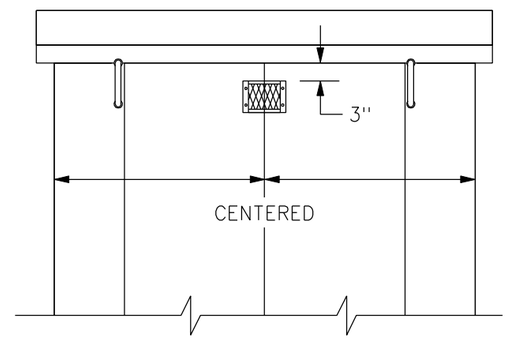

SIDE PLACEMENT

BILL OF MATERIAL - POWER OFF INDICATION LIGHT (POE)

REF	QTY	METROLINK PART NUMBER	ITEM
1	1	03-2000100-0	LIGHT, POKE (POWER OFF INDICATION LIGHT) S&C P/N 120-10
2	1	03-2000101-0	CAGE, PROTECTIVE 5" X 5" X 5"
3	1	03-3022220-0	RELAY, SOCKET MOUNT 10A, 120VAC, 2250 OHM COIL, (DAYTON 5YP78)
4	1	03-3022202-0	BASE, RELAY 11 PIN
5	1	03-2220993-0	GROMMIT, RUBBER 3/8" x 1/8"
6	4	03-0260010-0	BOLT, 1/4-20 X 2" HEX HEAD CAP PLATED
7	4	03-2400010-0	NUT, 1/4-20 HEX PLATED
8	4	03-2400021-0	NUT, 1/4-20 HEX NYLOX PLATED
9	8	03-3821000-0	WASHER, 1/4" FLAT STAINLESS STEEL
10	1	03-3231042-0	SILICONE, RTV SEALANT (BLUE)
11	20ft	03-3860010-0	WIRE, 2C#14 AWG TWISTED RED & BLACK
12	6	03-0811111-0	TERMINAL, SPADE #16-14 AWG #6 STUD
13	4	03-3810016-0	TERMINAL, RING #16-14 AWG 1/4" STUD
14	2	03-0800280-0	TERMINAL, VINYL DISCONNECT BULLET, MALE #16-14 AWG
15	2	03-0800281-0	TERMINAL, VINYL DISCONNECT BULLET, FEMALE #16-14 AWG

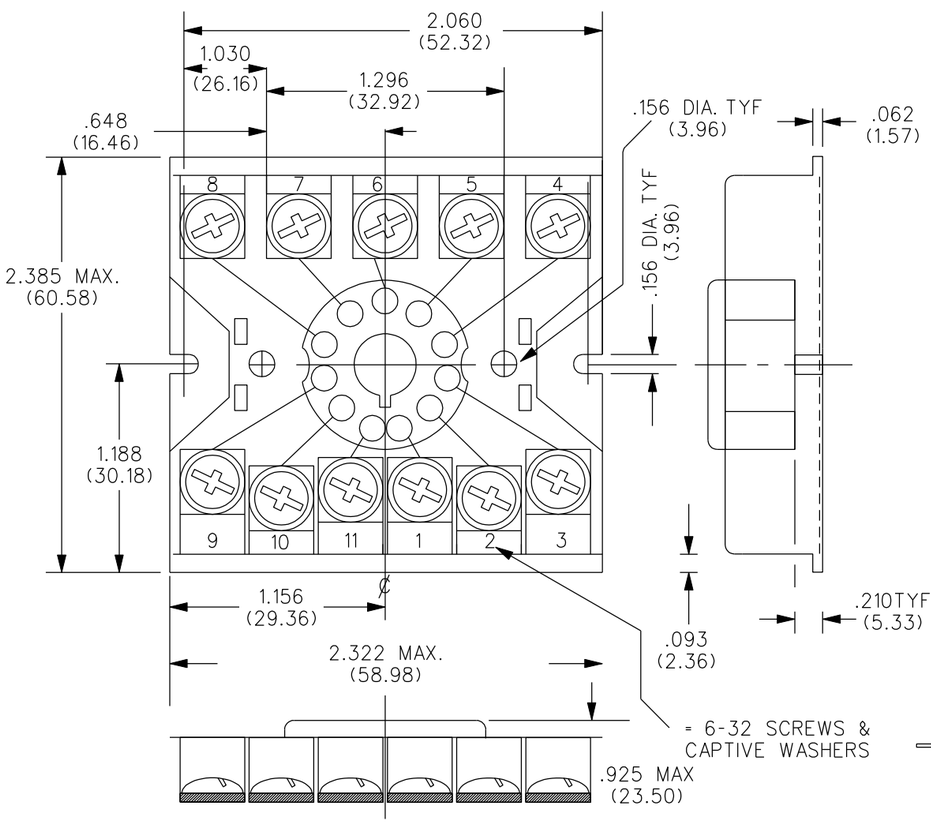

RELAY SOCKET DETAIL

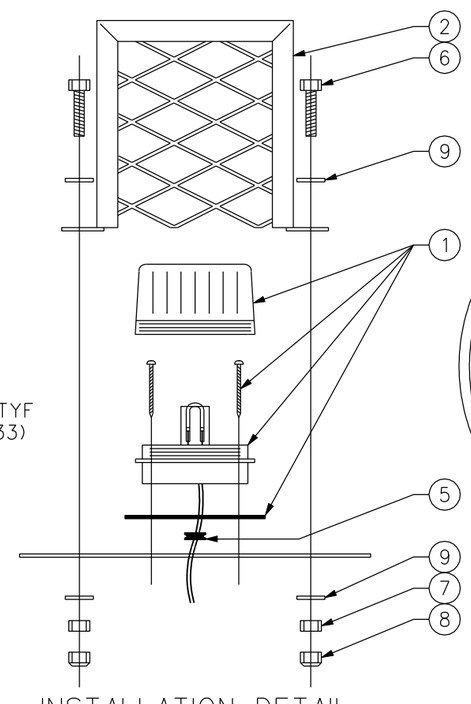

INSTALLATION DETAIL

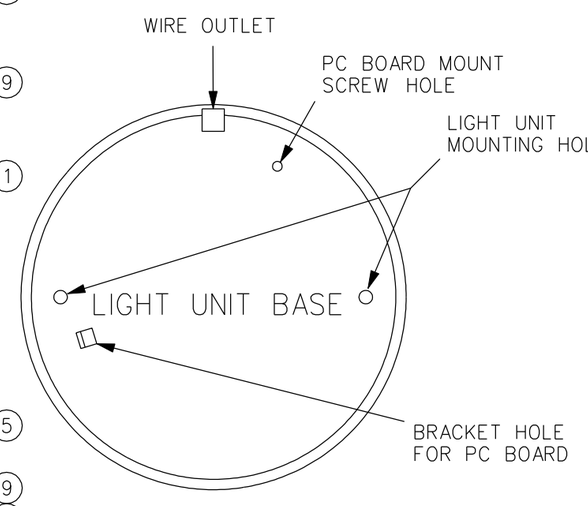

ADDITIONAL SEALING
WITH RTV SEALANT

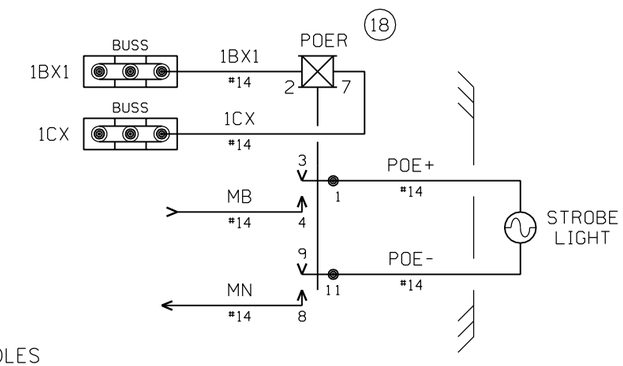

TYPICAL CIRCUIT DIAGRAM

NOTES:

1. POWER OFF LIGHT SHALL BE LOCATED ON THE SIDE OF THE INSTRUMENT ENCLOSURE WHICH FACES THE TRACK.
2. HOLES DRILLED THROUGH THE INSTRUMENT ENCLOSURE SHALL BE SEALED WITH RTV SILICONE SEALANT.
3. THE DOME OF THE LIGHT UNIT SHALL BE SEALED TO THE BASE BY APPLYING A LAYER OF PETROLEUM JELLY ON THE THREADS PRIOR TO INSTALLING.
4. DEVIATION FROM THIS STANDARD SHALL BE APPROVED BY SCRRA MANAGER C&S ENGINEERING OR DESIGNATE.

REVISIONS				
REV.	DATE	DESCRIPTION	DES.	ENG.
-	-	-	-	-

FINAL REVIEW BY: C&SDRC DATE: 11/21/08

APPROVED BY

Dan C. Guerrero
MANAGER, COMMUNICATIONS AND SIGNALS ENGINEERING

Darrell V. Maxey
DIRECTOR, ENGINEERING AND CONSTRUCTION

THE SOUTHERN CALIFORNIA REGIONAL RAIL AUTHORITY OR IT'S OFFICERS OR AGENTS SHALL NOT BE RESPONSIBLE FOR THE ACCURACY OR COMPLETENESS OF THIS PLAN SHEET

METROLINK
SOUTHERN CALIFORNIA REGIONAL RAIL AUTHORITY
700 SOUTH FLOWER STREET
LOS ANGELES, CALIFORNIA 90017

ENGINEERING STANDARDS

TYPICAL POWER OFF INDICATION LIGHT

STANDARD: 8275
SCALE: NONE
REVISION: –
SHEET: 1 OF 1
CADD FILE: ES8275

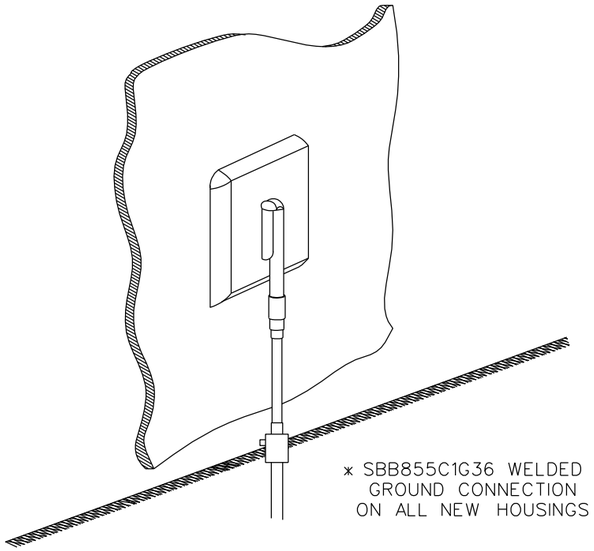

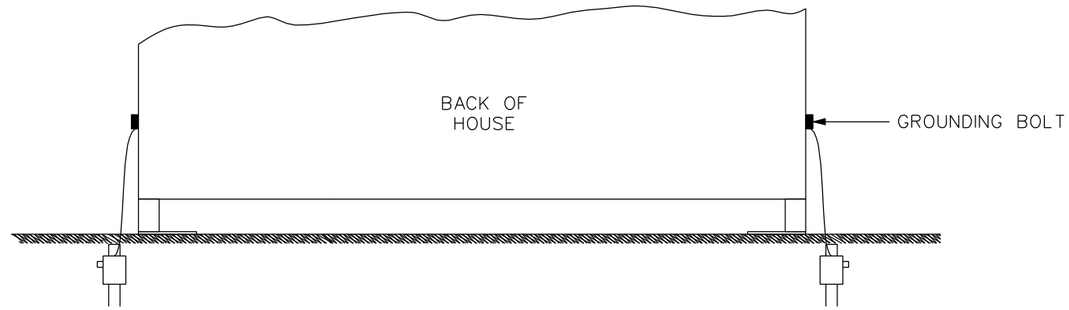

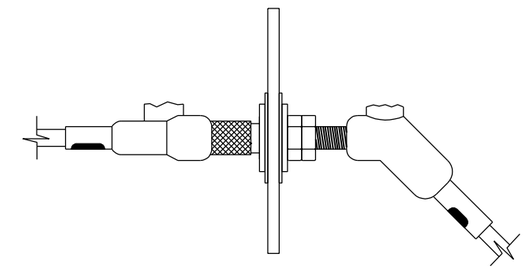

AT EQUIPMENT SHELTERS, DRIVE FOUR GROUND RODS INTO THE GROUND, ONE NEAR EACH CORNER OF THE STRUCTURE. AT EQUIPMENT CASES, DRIVE TWO GROUND RODS INTO THE GROUND, AT OPPOSITE CORNERS OF THE STRUCTURE. THE GROUND RODS SHALL BE A MINIMUM OF 6 FEET APART AND SHALL BE DRIVEN BELOW GROUND LEVEL. DIG A 12 INCH DEEP TRENCH BETWEEN GROUND RODS. ELECTRICALLY CONNECT EACH GROUND ROD USING A NO. 2 AWG BARE STRANDED COPPER CABLE, WELDED USING "CADWELD" OR AN EQUIVALENT THERMAL PROCESS. COAT CADWELD CONNECTIONS WITH EPOXY RESIN. PLACE THE GROUND WIRES IN THE BOTTOM OF THE TRENCH. BACKFILL TRENCH, RETURNING THE SOIL REMOVED DURING CONSTRUCTION OF TRENCH.

CADWELD SHELTER'S COPPER GROUND CABLES TO THE GROUND RODS.

GROUND RESISTANCE, AS MEASURED BY THE "FALL OF POTENTIAL" METHOD, SHALL NOT EXCEED 15 OHMS.

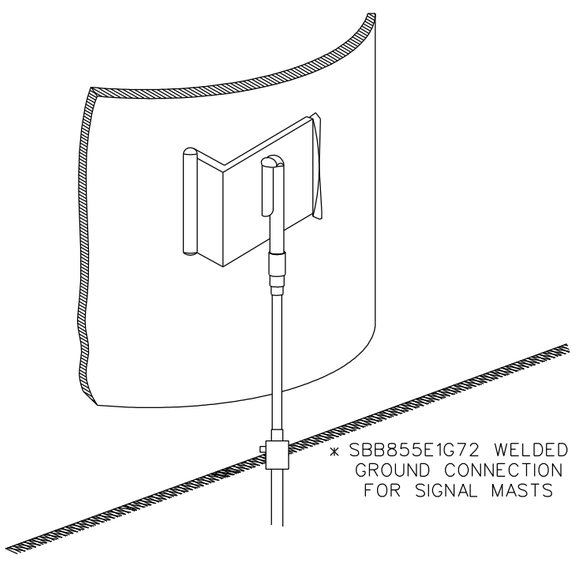

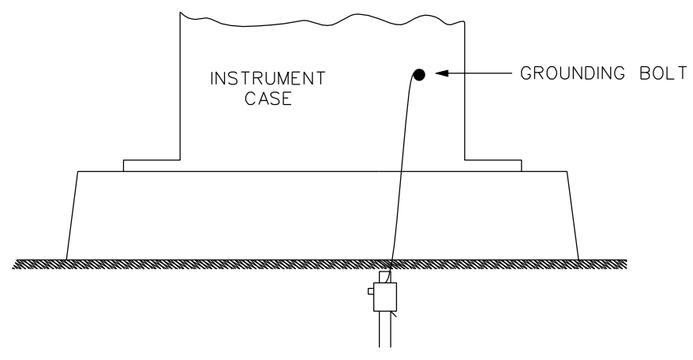

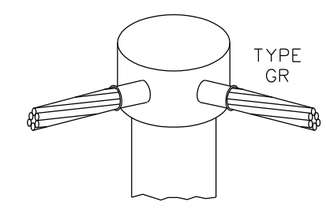

*SBGR1181 CALDWELD ONE
SHOT GROUND ROD CONNECTION

NOTES:

1. ALL NEW SIGNAL ENCLOSURES ARE EQUIPPED WITH GROUNDING PIGTAILS, #6 AWG SOLID COPPER, 48" LONG, WELDED TO THE FLOOR FRAME AT EACH CORNER.
2. ALL EXISTING SIGNAL ENCLOSURES TO BE GROUNDED WITH THE METHOD SHOWN IN THIS STANDARD. IF ADDITIONAL GROUNDING IS REQUIRED, ADD SURFACE OF GROUND AND CONNECT TO MAIN ROD WITH #6 BARE COPPER WIRE.
3. DO NOT MAKE ANY SHARP BENDS IN THE GROUND WIRE.
4. ERICO PRODUCTS OR APPROVED EQUAL.

REVISIONS				
-	-	-	-	-
REV.	DATE	DESCRIPTION	DES.	ENG.

FINAL REVIEW BY: C&SDRC DATE: 11/21/08

APPROVED BY

Dan C. Guerrero
MANAGER, COMMUNICATIONS AND SIGNALS ENGINEERING

Darrell V. Maxey
DIRECTOR, ENGINEERING AND CONSTRUCTION

THE SOUTHERN CALIFORNIA REGIONAL RAIL AUTHORITY OR IT'S OFFICERS OR AGENTS SHALL NOT BE RESPONSIBLE FOR THE ACCURACY OR COMPLETENESS OF THIS PLAN SHEET

METROLINK
SOUTHERN CALIFORNIA REGIONAL RAIL AUTHORITY
700 SOUTH FLOWER STREET
LOS ANGELES, CALIFORNIA 90017

ENGINEERING STANDARDS

GROUNDING DETAILS

STANDARD: 8280
SCALE: NONE
REVISION: –
SHEET: 1 OF 1
CADD FILE: ES8280

BILL OF MATERIAL
BEGIN/END CIRCUIT SIGN - COMPLETE

QTY	ITEM
1	BEGIN/END CIRCUIT SIGN PER SCRRA STANDARD SPECIFICATIONS
1	2" x 2" x 9'-0" LONG SQUARE POST
1	2½" x 2½" x 30" LONG SQUARE POST ANCHOR
2	5/16" X 2¾" CARRIAGE BOLTS WITH NUTS AND WASHERS (GALVANIZED) PER SPECIFICATIONS BELOW
2	5/16" X 3½" " CARRIAGE BOLTS WITH NUTS AND WASHERS (GALVANIZED) PER SPECIFICATIONS BELOW

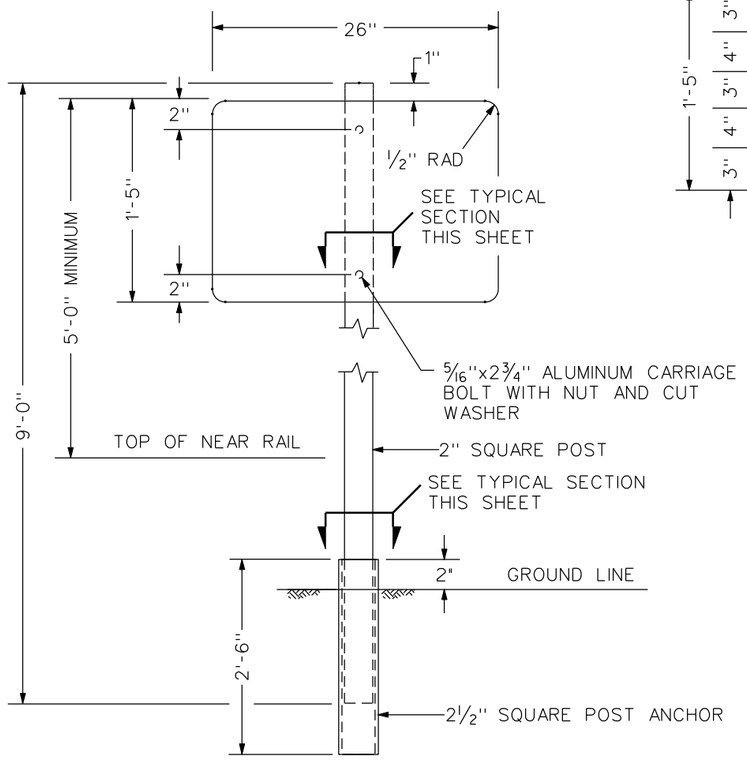

INSTALLATION PLAN

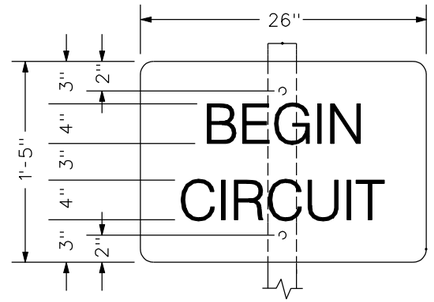

BEGIN CIRCUIT SIGN

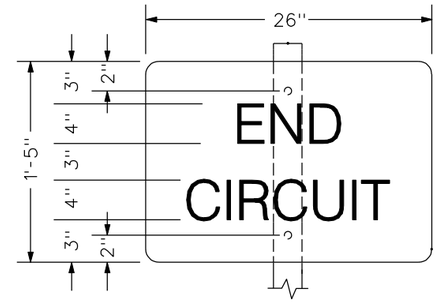

END CIRCUIT SIGN

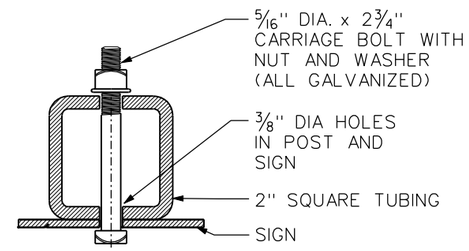

TYPICAL SECTION
THRU SIGN AND POST

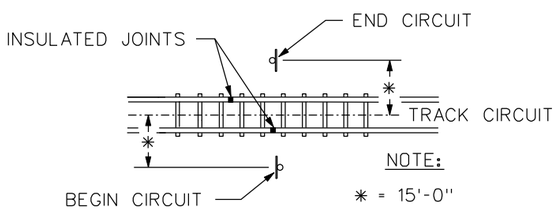

LOCATION PLAN

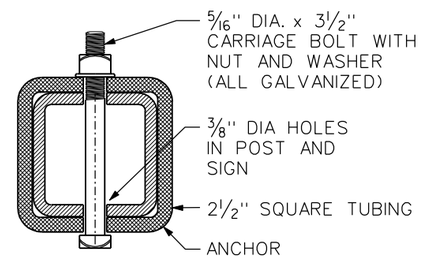

TYPICAL SECTION
THRU POST AND ANCHOR

SIGNS:

1/8" THICK MILL FINISH ALUMINUM PANEL, ALCOA 6016-T6 OR EQUAL. PAINT ALL SIDES WITH LINEAR POLYURETHANE. COLOR FACE OF PANEL WITH ENGINEERING GRADE PRESSURE SENSITIVE, RETRO-REFLECTIVE WHITE VINYL SHEETING. SILK SCREEN LEGEND WITH BLACK INK. FINISH WITH EXTERIOR GRADE PRESSURE SENSITIVE CLEAR MYLAR, 3M-1150 OR EQUAL.

STEEL POSTS:

12 GAGE (.105 THICK) 2.42 LBS. PER LINEAL FOOT 2" SQUARE STEEL POST (ATSM A-36) WITH 3/8" DIA. KNOCKOUT HOLES. ALL GALVANIZED IN ACCORDANCE WITH ATSM A-386.

ANCHORS:

12 GAGE (.105 THICK) 2.42 LBS. PER LINEAR FOOT 2½" SQUARE STEEL POST (ATSM A-36) WITH 3/8" DIA. KNOCKOUT HOLES. ALL GALVANIZED IN ACCORDANCE WITH ATSM A-386.

TEXT STYLE:

TEXT TO BE "ARIAL BOLD" PER SCRRA STANDARD ES4200. SIZE AS INDICATED ON THIS DRAWING.

HARDWARE:

ALL HARDWARE TO BE VANDAL RESISTANT.
BOLTS: 5/16" x 2¾" LONG ALUMINUM CARRIAGE BOLTS, 2024-T4 ALLOY. (FOR SIGN)
BOLTS: 5/16" x 3½" LONG ALUMINUM CARRIAGE BOLTS, 2024-T4 ALLOY. (FOR ANCHOR)
NUTS: TAMPER RESISTANT, ALCOA OR APPROVED EQUAL.
WASHERS: PLAIN, FLAT ALUMINUM WASHERS.

REFERENCE ONLY

REVISIONS				
-	-	-	-	-
REV.	DATE	DESCRIPTION	DES.	ENG.

FINAL REVIEW BY: C&SDRC DATE: 11/21/08

APPROVED BY

Dan C. Guerrero
MANAGER, COMMUNICATIONS AND SIGNALS ENGINEERING

Darrell V. Maxey
DIRECTOR, ENGINEERING AND CONSTRUCTION

THE SOUTHERN CALIFORNIA REGIONAL RAIL AUTHORITY OR IT'S OFFICERS OR AGENTS SHALL NOT BE RESPONSIBLE FOR THE ACCURACY OR COMPLETENESS OF THIS PLAN SHEET

METROLINK
SOUTHERN CALIFORNIA REGIONAL RAIL AUTHORITY
700 SOUTH FLOWER STREET
LOS ANGELES, CALIFORNIA 90017

ENGINEERING STANDARDS

STANDARD SIGNS
BEGIN CIRCUIT, END CIRCUIT

STANDARD: 8290
SCALE: NONE
REVISION: –
SHEET: 1 OF 1
CADD FILE: ES8290

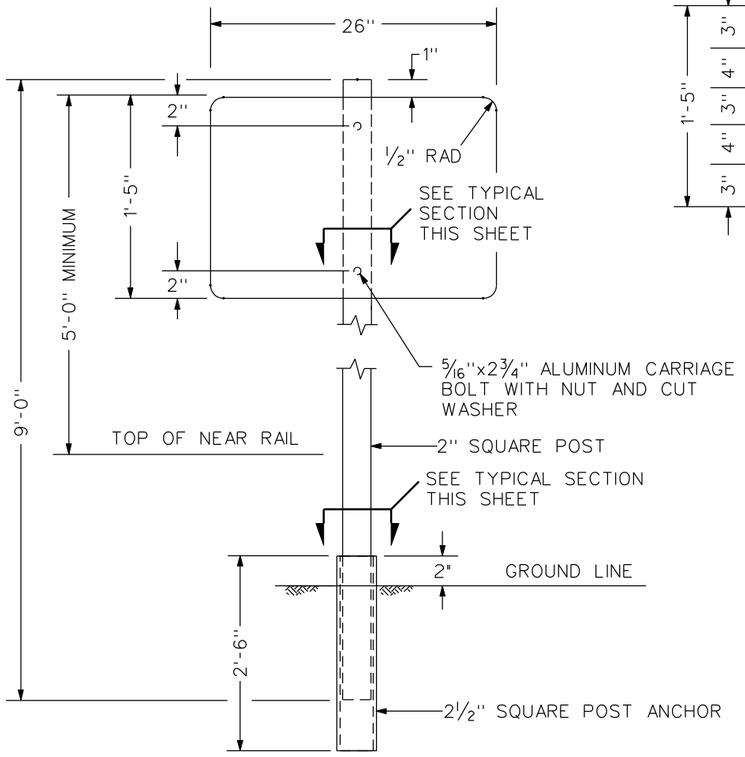

INSTALLATION PLAN

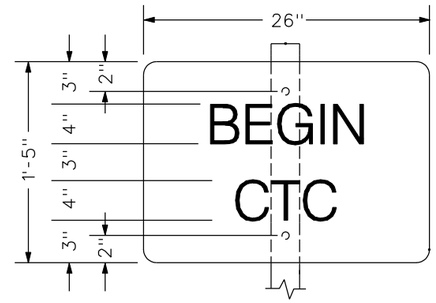

BEGIN CTC SIGN

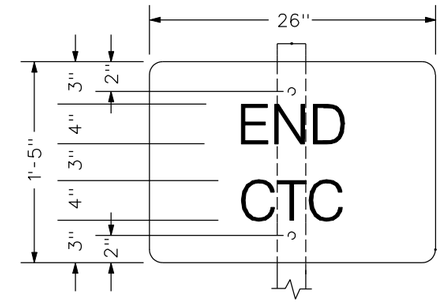

END CTC SIGN

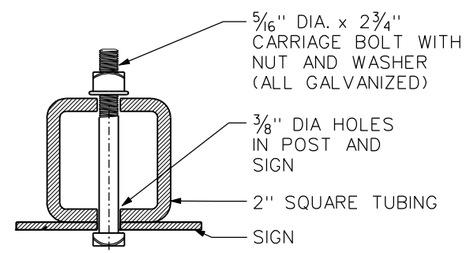

TYPICAL SECTION
THRU SIGN AND POST

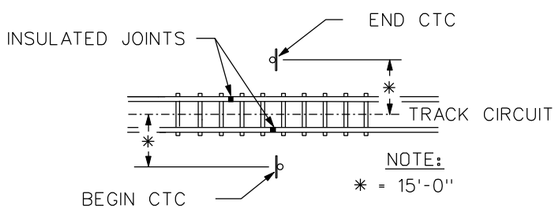

LOCATION PLAN

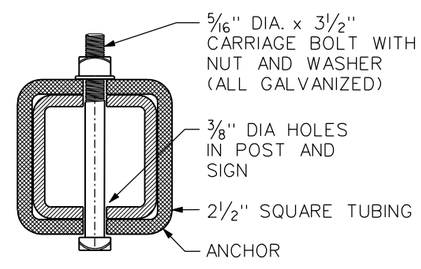

TYPICAL SECTION
THRU POST AND ANCHOR

BILL OF MATERIAL
BEGIN/END CTC SIGN - COMPLETE

QTY	ITEM
1	BEGIN/END CTC SIGN PER SCRRA STANDARD SPECIFICATIONS 05-3267011-0/05-3267012-0
1	2" x 2" x 9'-0" LONG SQUARE POST
1	2 1/2" x 2 1/2" x 30" LONG SQUARE POST ANCHOR
2	5/16" X 2 3/4" CARRIAGE BOLTS WITH NUTS AND WASHERS (GALVANIZED) PER SPECIFICATIONS BELOW
2	5/16" X 3 1/2" " CARRIAGE BOLTS WITH NUTS AND WASHERS (GALVANIZED) PER SPECIFICATIONS BELOW

SIGNS:

1/8" THICK MILL FINISH ALUMINUM PANEL, ALCOA 6016-T6 OR EQUAL. PAINT ALL SIDES WITH LINEAR POLYURETHANE. COLOR FACE OF PANEL WITH ENGINEERING GRADE PRESSURE SENSITIVE, RETRO-REFLECTIVE WHITE VINYL SHEETING. SILK SCREEN LEGEND WITH BLACK INK. FINISH WITH EXTERIOR GRADE PRESSURE SENSITIVE CLEAR MYLAR, 3M-1150 OR EQUAL.

STEEL POSTS:

12 GAGE (.105 THICK) 2.42 LBS. PER LINEAL FOOT 2" SQUARE STEEL POST (ATSM A-36) WITH 3/8" DIA. KNOCKOUT HOLES. ALL GALVANIZED IN ACCORDANCE WITH ATSM A-386.

ANCHORS:

12 GAGE (.105 THICK) 2.42 LBS. PER LINEAR FOOT 2 1/2" SQUARE STEEL POST (ATSM A-36) WITH 3/8" DIA. KNOCKOUT HOLES. ALL GALVANIZED IN ACCORDANCE WITH ATSM A-386.

TEXT STYLE:

TEXT TO BE "ARIAL BOLD" PER SCRRA STANDARD ES4200. SIZE AS INDICATED ON THIS DRAWING.

HARDWARE:

ALL HARDWARE TO BE VANDAL RESISTANT.
BOLTS: 5/16" x 2 3/4" LONG ALUMINUM CARRIAGE BOLTS, 2024-T4 ALLOY. (FOR SIGN)
BOLTS: 5/16" x 3 1/2" LONG ALUMINUM CARRIAGE BOLTS, 2024-T4 ALLOY. (FOR ANCHOR)
NUTS: TAMPER RESISTANT, ALCOA OR APPROVED EQUAL.
WASHERS: PLAIN, FLAT ALUMINUM WASHERS.

REVISIONS				
REV.	DATE	DESCRIPTION	DES.	ENG.
-	-	-	-	-

FINAL REVIEW BY: C&SDRC DATE: 11/21/08
APPROVED BY
Dan C. Guerrero
MANAGER, COMMUNICATIONS AND SIGNALS ENGINEERING
Darrell V. Maxey
DIRECTOR, ENGINEERING AND CONSTRUCTION

THE SOUTHERN CALIFORNIA REGIONAL RAIL AUTHORITY OR IT'S OFFICERS OR AGENTS SHALL NOT BE RESPONSIBLE FOR THE ACCURACY OR COMPLETENESS OF THIS PLAN SHEET

METROLINK
SOUTHERN CALIFORNIA REGIONAL RAIL AUTHORITY
700 SOUTH FLOWER STREET
LOS ANGELES, CALIFORNIA 90017

ENGINEERING STANDARDS

STANDARD SIGNS
BEGIN CTC, END CTC

STANDARD: 8291
SCALE: NONE
REVISION: –
SHEET: 1 OF 1
CADD FILE: ES8291

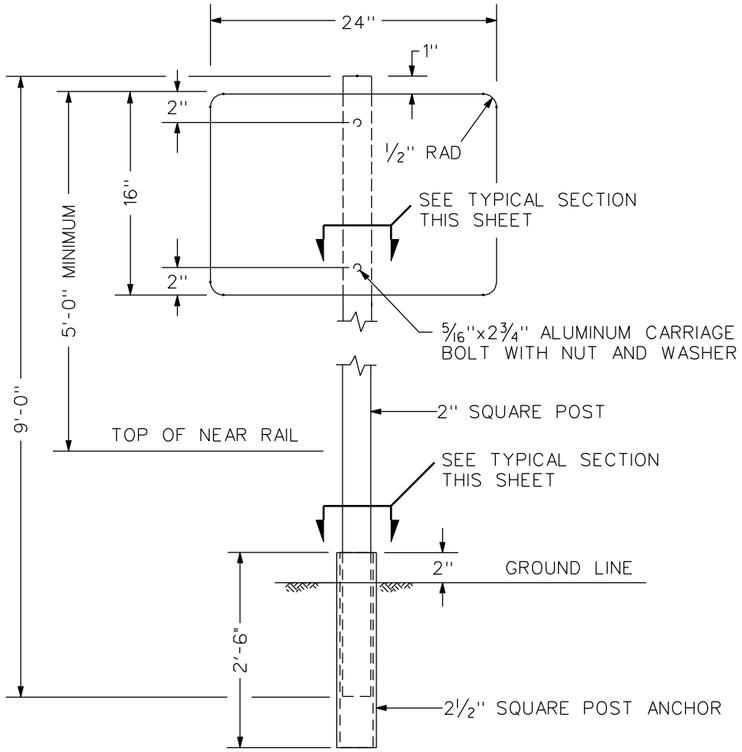

INSTALLATION PLAN

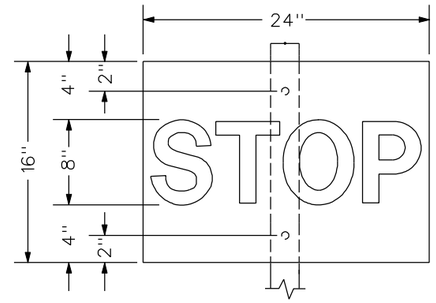

STOP SIGN

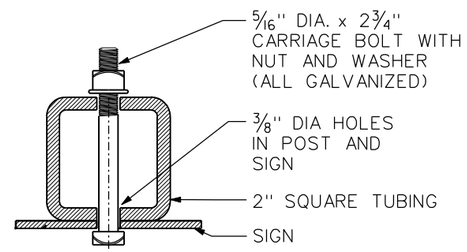

TYPICAL SECTION
THRU SIGN AND POST

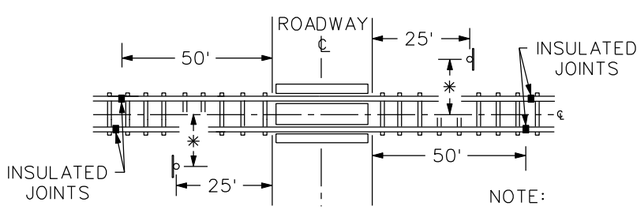

LOCATION PLAN

NOTE:
* = 15'

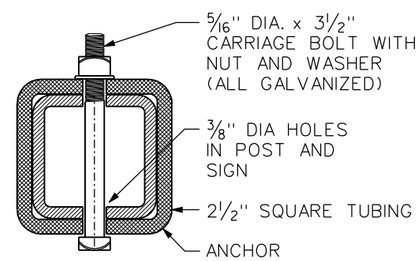

TYPICAL SECTION
THRU POST AND ANCHOR

BILL OF MATERIAL
STOP SIGN - COMPLETE

QTY	ITEM
1	STOP SIGN PER SCRRA STANDARD SPECIFICATIONS 05-3267026-0
1	2" x 2" x 9'-0" LONG SQUARE POST
1	2 1/2" x 2 1/2" x 30" LONG SQUARE POST ANCHOR
2	5/16" X 2 3/4" CARRIAGE BOLTS WITH NUTS AND WASHERS (GALVANIZED) PER SPECIFICATIONS BELOW
2	5/16" X 3 1/2" " CARRIAGE BOLTS WITH NUTS AND WASHERS (GALVANIZED) PER SPECIFICATIONS BELOW

SIGNS:

1/8" THICK MILL FINISH ALUMINUM PANEL, ALCOA 6016-T6 OR EQUAL. PAINT ALL SIDES WITH LINEAR POLYURETHANE. COLOR FACE OF PANEL WITH ENGINEERING GRADE PRESSURE SENSITIVE, RETRO-REFLECTIVE RED VINYL SHEETING. SILK SCREEN LEGEND WITH WHITE INK. FINISH WITH EXTERIOR GRADE PRESSURE SENSITIVE CLEAR MYLAR, 3M-1150 OR EQUAL.

STEEL POSTS:

12 GAGE (.105 THICK) 2.42 LBS. PER LINEAL FOOT 2" SQUARE STEEL POST (ATSM A-36) WITH 3/8" DIA. KNOCKOUT HOLES. ALL GALVANIZED IN ACCORDANCE WITH ATSM A-386.

ANCHORS:

12 GAGE (.105 THICK) 2.42 LBS. PER LINEAR FOOT 2 1/2" SQUARE STEEL POST (ATSM A-36) WITH 3/8" DIA. KNOCKOUT HOLES. ALL GALVANIZED IN ACCORDANCE WITH ATSM A-386.

TEXT STYLE:

TEXT TO BE "ARIAL BOLD" PER SCRRA STANDARD ES4200. SIZE AS INDICATED ON THIS DRAWING.

HARDWARE:

ALL HARDWARE TO BE VANDAL RESISTANT.
BOLTS: 5/16" x 2 3/4" LONG ALUMINUM CARRIAGE BOLTS, 2024-T4 ALLOY. (FOR SIGN)
BOLTS: 5/16" x 3 1/2" LONG ALUMINUM CARRIAGE BOLTS, 2024-T4 ALLOY. (FOR ANCHOR)
NUTS: TAMPER RESISTANT, ALCOA OR APPROVED EQUAL.
WASHERS: PLAIN, FLAT ALUMINUM WASHERS.

REVISIONS				
-	-	-	-	-
REV.	DATE	DESCRIPTION	DES.	ENG.

FINAL REVIEW BY: C&SDRC DATE: 11/21/08
APPROVED BY
Dan C. Guerrero
MANAGER, COMMUNICATIONS AND SIGNALS ENGINEERING
Darrell V. Maxey
DIRECTOR, ENGINEERING AND CONSTRUCTION

THE SOUTHERN CALIFORNIA REGIONAL RAIL AUTHORITY OR IT'S OFFICERS OR AGENTS SHALL NOT BE RESPONSIBLE FOR THE ACCURACY OR COMPLETENESS OF THIS PLAN SHEET

METROLINK
SOUTHERN CALIFORNIA REGIONAL RAIL AUTHORITY
700 SOUTH FLOWER STREET
LOS ANGELES, CALIFORNIA 90017

ENGINEERING STANDARDS

STANDARD WAYSIDE
STOP SIGN

STANDARD: 8292
SCALE: NONE
REVISION: –
SHEET: 1 OF 1
CADD FILE: ES8292

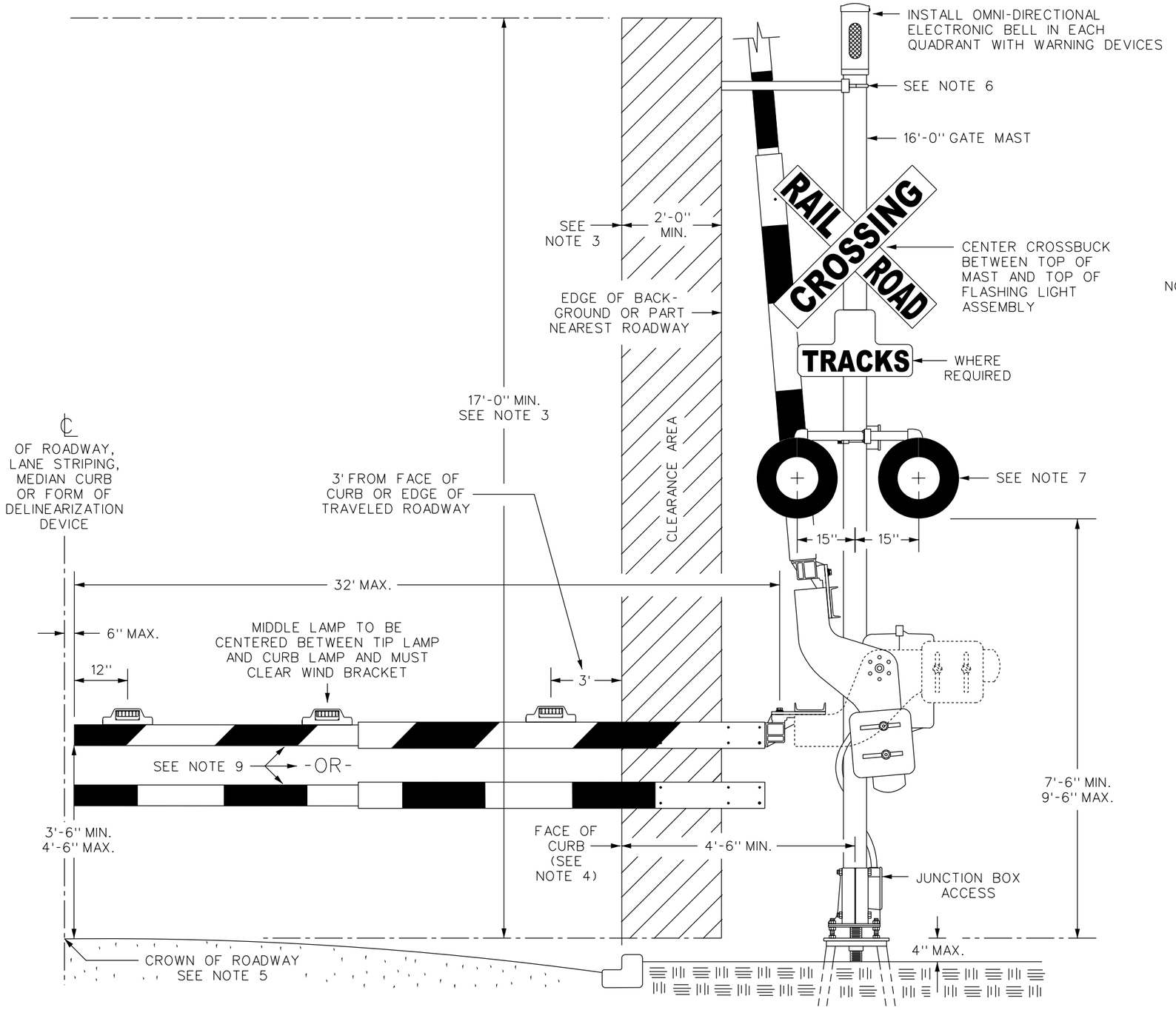

NOTES:

1. THIS STANDARD SHALL APPLY TO ALL NEW CONSTRUCTION FOR GRADE CROSSING WARNING DEVICES EQUIPPED WITH FLASHING LIGHT SIGNALS WITH OR WITHOUT GATES.
2. REFER TO STANDARD DRAWINGS ES8350 THRU ES8390 FOR INFORMATION REGARDING PLACEMENT OF WARNING DEVICES.
3. TYPICAL MINIMUM CLEARANCE IS 2' FROM FACE OF CURB TO CLOSEST PART OF SIGNAL, WINDGUARD OR GATE ARM IN THE UPRIGHT POSITION FOR A DISTANCE OF 17' ABOVE THE ROADWAY.
4. WHERE THERE IS NO CURB, A MINIMUM HORIZONTAL CLEARANCE OF 2' FROM EDGE OF A PAVED OR SURFACED SHOULDER SHALL BE PROVIDED WITH A MINIMUM CLEARANCE OF 6' FROM THE EDGE OF TRAVELED ROADWAY.
5. TOP OF FOUNDATION TO BE NO MORE THAN 4" ABOVE SURFACE OF THE GROUND. PROPER DRAINAGE SHOULD BE PROVIDED SO THAT THE ELECTRICAL CONNECTION JUNCTION BOX CAN NOT BE COMPROMISED BY RETAINED WATER.
6. TYPICAL GATE MAST SHALL BE 16'-0" TALL, ALTHOUGH AN 18'-0" GATE MAST MAY BE USED TO PROVIDE MINIMUM CLEARANCE FOR AN ADJUSTABLE WIND SUPPORT THAT IS EXTENDED INTO THE CLEARANCE ENVELOPE. THIS DEVIATION SHALL BE APPROVED BY SCRRA MANAGER OF SIGNALS AND COMMUNICATIONS OR DESIGNATE.
7. ALTERNATING RED FLASHING LIGHT UNITS, WHERE NEEDED SHALL BE 12" L.E.D. TYPE UNITS WITH 24" BACKGROUNDS.
8. ALL PARTS SHALL BE ALUMINUM IN COLOR EXCEPT FOR VISORS AND BACKGROUNDS WHICH SHALL BE FLAT BLACK IN COLOR.
9. GATE ARM STRIPING MAY BE VERTICAL OR 45° DIAGONAL. THIS SHALL BE DETERMINED BY SCRRA MANAGER OF C&S ENGINEERING OR DESIGNATE.
10. GATE ARM LAMPS SHALL BE L.E.D. TYPE UNITS. REFER TO STANDARD DRAWING ES8450-1, "TYPICAL L.E.D. GATE ARM LAMP COMPLETE WITH HARDWARE".
11. DEVIATION FROM THIS STANDARD SHALL BE APPROVED BY SCRRA MANAGER OF C&S ENGINEERING OR DESIGNATE.
12. GATE ARM PLACEMENT AND LAMP PLACEMENT IS REFERENCED TO CROWN OF ROADWAY.
13. INSTALL SHEAR BOLTS PER MANUFACTURER INSTRUCTIONS.

REVISIONS				
REV.	DATE	DESCRIPTION	DES.	ENG.
-	-	-	-	-

FINAL REVIEW BY: C&SDRC DATE: 11/21/08

APPROVED BY

Dan C. Guerrero
MANAGER, COMMUNICATIONS AND SIGNALS ENGINEERING

Darrell V. Maxey
DIRECTOR, ENGINEERING AND CONSTRUCTION

THE SOUTHERN CALIFORNIA REGIONAL RAIL AUTHORITY OR IT'S OFFICERS OR AGENTS SHALL NOT BE RESPONSIBLE FOR THE ACCURACY OR COMPLETENESS OF THIS PLAN SHEET

METROLINK
SOUTHERN CALIFORNIA REGIONAL RAIL AUTHORITY
700 SOUTH FLOWER STREET
LOS ANGELES, CALIFORNIA 90017

ENGINEERING STANDARDS

FLASHING LIGHT SIGNAL ASSEMBLY WITH OR WITHOUT GATE

STANDARD: 8300
SCALE: NONE
REVISION: –
SHEET: 1 OF 1
CADD FILE: ES8300

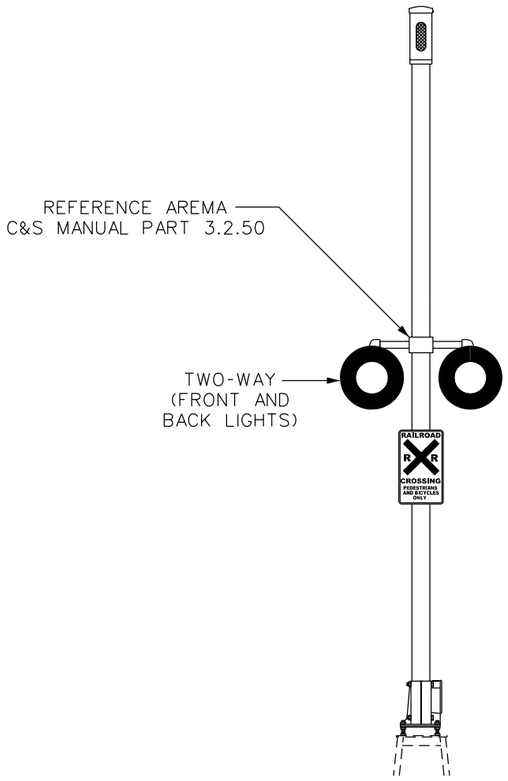

CPUC STANDARD NO. 8

FLASHING LIGHT SIGNALS
* PEDESTRIAN CROSSING APPLICATION *

04-3815050-0
INCLUDES: 16'-0" MAST W/ JCT. BOX 2-WAY LED FLASHER ASSY CROSSBUCKS PED XING SIGN ELECTRONIC BELL HARDWARE

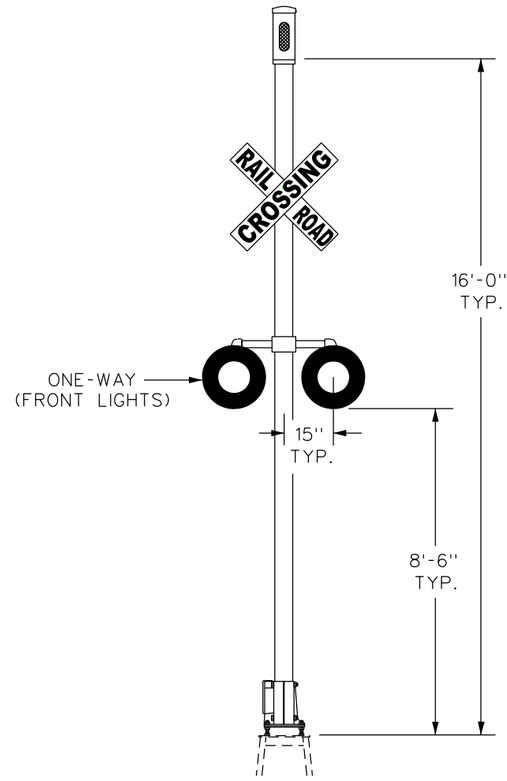

CPUC STANDARD NO. 8

FLASHING LIGHT SIGNALS
* MEDIAN APPLICATION *

04-3815051-0
INCLUDES: 16'-0" MAST W/ JCT. BOX 1-WAY LED FLASHER ASSY CROSSBUCKS ELECTRONIC BELL HARDWARE

NOTES:

1. FLASHING LIGHT SIGNAL UNITS SHALL BE 12" L.E.D. TYPE DESIGNED TO OPERATE WITH A SOLID STATE CROSSING CONTROLLER AND SHALL CONFORM TO AREMA C&S MANUAL RECOMMENDATIONS.

2 1-WAY AND 2-WAY LED FLASHER ASSEMBLIES SHALL INCLUDE JUNCTION BOX CROSS ARM AND LAMP MOUNTING BRACKETS PER AREMA C&S MANUAL PART 3.2.50, 12" LED LAMP UNITS, 24" STEEL BACKGROUNDS, STEEL HOODS AND ALL ASSOCIATED HARDWARE.

3 THE DIMENSIONS SHOWN ARE TYPICAL.

REVISIONS				
-	-	-	-	-
REV.	DATE	DESCRIPTION	DES.	ENG.

FINAL REVIEW BY: C&SDRC DATE: 11/21/08

APPROVED BY

Dan C. Guerrero
MANAGER, COMMUNICATIONS AND SIGNALS ENGINEERING

Darrell V. Maxey
DIRECTOR, ENGINEERING AND CONSTRUCTION

THE SOUTHERN CALIFORNIA REGIONAL RAIL AUTHORITY OR IT'S OFFICERS OR AGENTS SHALL NOT BE RESPONSIBLE FOR THE ACCURACY OR COMPLETENESS OF THIS PLAN SHEET

METROLINK
SOUTHERN CALIFORNIA REGIONAL RAIL AUTHORITY
700 SOUTH FLOWER STREET
LOS ANGELES, CALIFORNIA 90017

ENGINEERING STANDARDS

FLASHING LIGHT SIGNALS
CONFIGURATIONS (CPUC No. 8)

STANDARD: 8305
SCALE: NONE
REVISION: –
SHEET: 1 OF 1
CADD FILE: ES8305

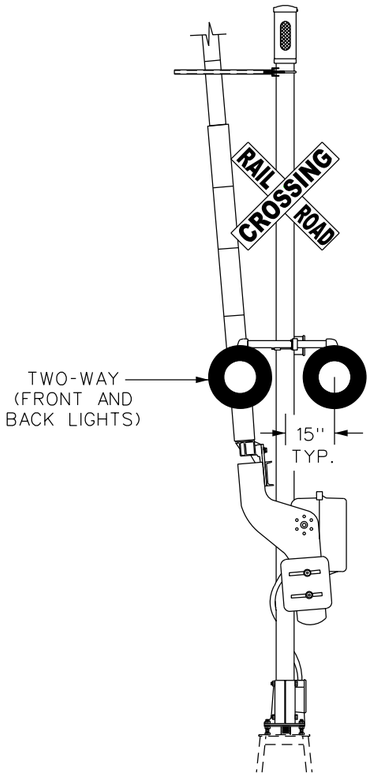

CPUC STANDARD NO. 9

FLASHING LIGHT SIGNALS
WITH GATE ASSEMBLY.
TWO-WAY FLASHER APPLICATION

04-3815000-0
INCLUDES: 16'-0'' MAST W/ JCT. BOX 2-WAY LED FLASHER ASSY COMPLETE GATE ASSY ELECTRONIC BELL CROSSBUCKS WIND SUPPORT BRACKET HARDWARE

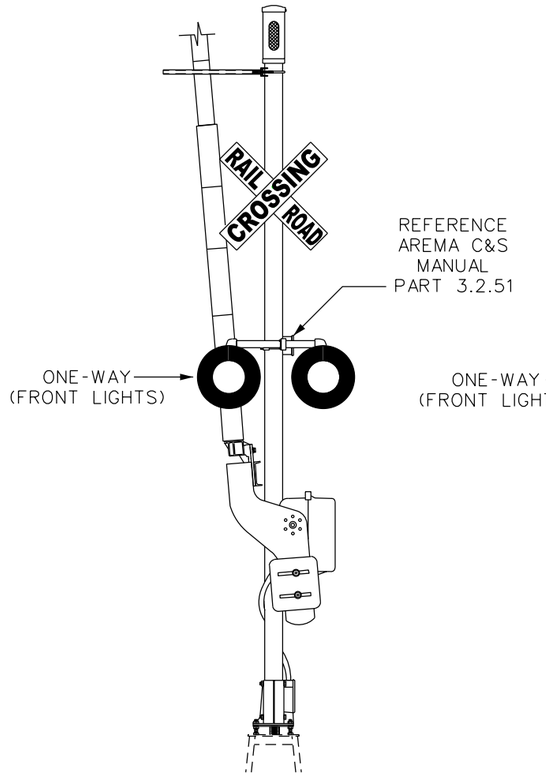

CPUC STANDARD NO. 9

FLASHING LIGHT SIGNALS
WITH GATE ASSEMBLY.
ONE-WAY FLASHER APPLICATION

04-3815001-0
INCLUDES: 16'-0'' MAST W/ JCT. BOX 1-WAY LED FLASHER ASSY COMPLETE GATE ASSY ELECTRONIC BELL CROSSBUCKS WIND SUPPORT BRACKET HARDWARE

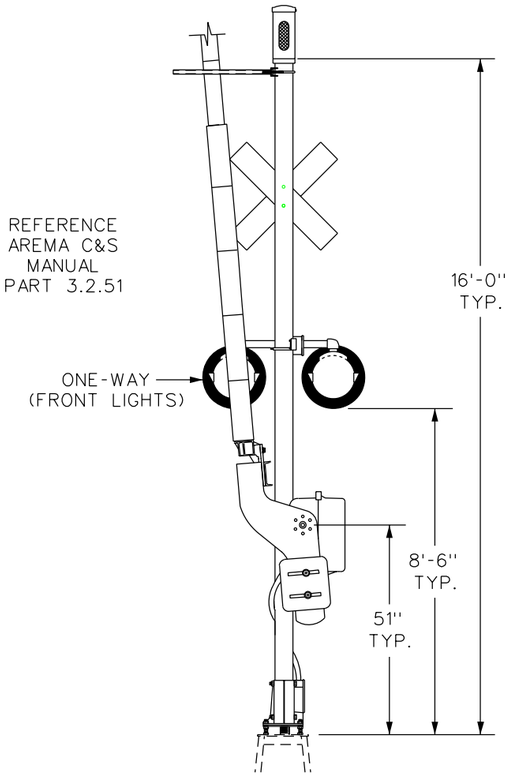

CPUC STANDARD NO. 9-E

FLASHING LIGHT SIGNALS
WITH EXIT GATE ASSEMBLY
ONE-WAY FLASHER APPLICATION

04-3815009-0
INCLUDES: 16'-0'' MAST W/ JCT. BOX 1-WAY LED FLASHER ASSY COMPLETE EXIT GATE ASSY ELECTRONIC BELL WIND SUPPORT BRACKET HARDWARE

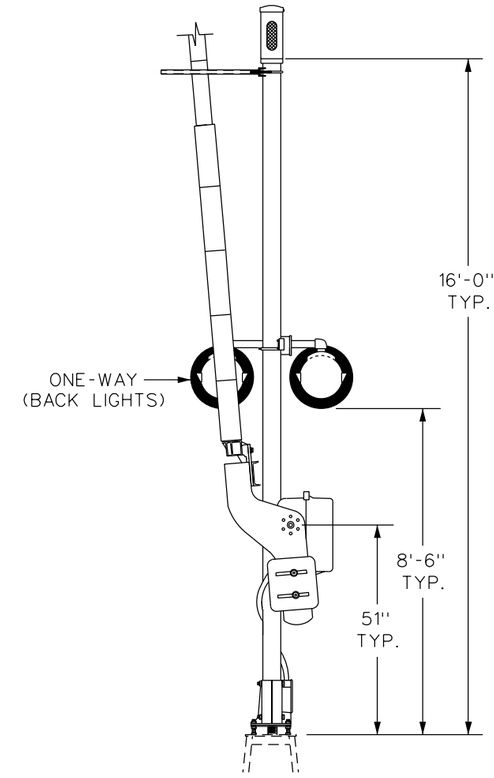

CPUC STANDARD NO. 9-A

GATE AND FLASHER ASSEMBLY
USED WITH CANTILEVER
FLASHING LIGHT SIGNALS.

04-3815003-0
INCLUDES: 16'-0'' MAST W/ JCT. BOX 1-WAY LED FLASHER ASSY COMPLETE GATE ASSY ELECTRONIC BELL WIND SUPPORT BRACKET HARDWARE

NOTES:

1. FLASHING LIGHT SIGNAL UNITS SHALL BE 12'' L.E.D. TYPE DESIGNED TO OPERATE WITH A SOLID STATE CROSSING CONTROLLER AND SHALL CONFORM TO AREMA C&S MANUAL RECOMMENDATIONS.
2. 1-WAY OR 2-WAY LED FLASHER ASSEMBLIES SHALL INCLUDE JUNCTION BOX CROSS ARM ASSEMBLY AND LAMP MOUNTING BRACKETS PER AREMA C&S MANUAL PART 3.2.51, 12'' L.E.D. LAMP UNITS, 24'' STEEL BACKGROUNDS, STEEL HOODS AND ALL ASSOCIATED HARDWARE.
3. COMPLETE GATE ASSEMBLIES SHALL INCLUDE GATE MECHANISM, LEFT AND RIGHT COUNTERWEIGHT SUPPORT ARMS, (4) 50LB AND (2) 25LB COUNTER-WEIGHTS AND RETAINER BRACKETS, TYPE B CONVERSION BRACKET, BREAKAWAY GATE ARM ADAPTER, 3 SHEAR PINS, KING PIN ASSEMBLY, 8'-0'' LONG LIQUID TIGHT FLEX CONDUIT AND CONNECTORS, AND ALL ASSOCIATED HARDWARE.
4. THE DIMENSIONS SHOWN ARE TYPICAL.

REVISIONS				
-	-	-	-	-
REV.	DATE	DESCRIPTION	DES.	ENG.

FINAL REVIEW BY: C&SDRC DATE: 11/21/08

APPROVED BY

Dan C. Guerrero
MANAGER, COMMUNICATIONS AND SIGNALS ENGINEERING

Darrell V. Maxey
DIRECTOR, ENGINEERING AND CONSTRUCTION

THE SOUTHERN CALIFORNIA REGIONAL RAIL AUTHORITY OR IT'S OFFICERS OR AGENTS SHALL NOT BE RESPONSIBLE FOR THE ACCURACY OR COMPLETENESS OF THIS PLAN SHEET

METROLINK

SOUTHERN CALIFORNIA REGIONAL RAIL AUTHORITY
700 SOUTH FLOWER STREET
LOS ANGELES, CALIFORNIA 90017

ENGINEERING STANDARDS

FLASHING LIGHT SIGNALS
WITH GATE CONFIGURATIONS
(CPUC No. 9, 9–A, AND 9–E)

STANDARD: 8306
SCALE: NONE
REVISION: –
SHEET: 1 OF 1
CADD FILE: ES8306

EXAMPLE OF PEDESTRIAN TREATMENT AT GRADE CROSSING WITH ENTRANCE GATE ONLY

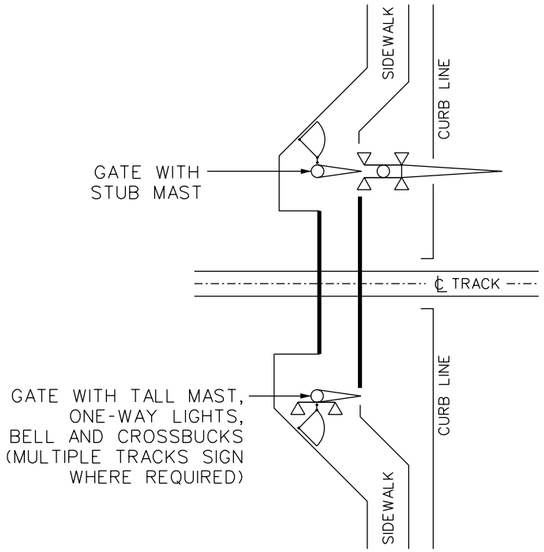

EXAMPLE OF PEDESTRIAN TREATMENT AT GRADE CROSSING WITH ENTRANCE AND EXIT GATE

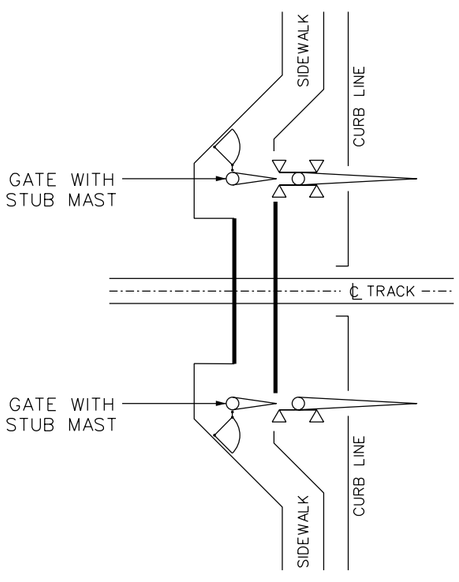

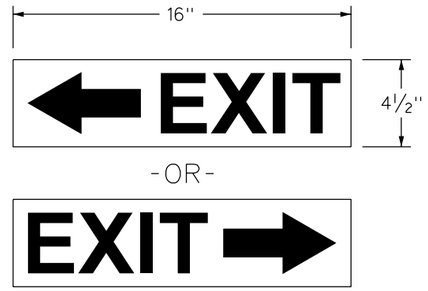

EXIT DECAL SHALL BE ENGINEERING GRADE RETROREFLECTIVE MATERIAL, WHITE WITH 3½" BLACK ARIAL BOLD LETTERS AND ARROW

EXIT DECAL

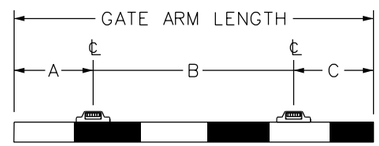

GATE ARM LENGTH	DIM. "A"	DIM. "B"	DIM. "C"
4'-0"	1'-0"	2'-0"	1'-0"
4'-6"	1'-1½"	2'-3"	1'-1½"
5'-0"	1'-3"	2'-6"	1'-3"
5'-6"	1'-4½"	2'-9"	1'-4½"
6'-0"	1'-6"	3'-0"	1'-6"
6'-6"	1'-7½"	3'-3"	1'-7½"
7'-0"	1'-9"	3'-6"	1'-9"
7'-6"	1'-10½"	3'-9"	1'-10½"
8'-0"	2'-0"	4'-0"	2'-0"

GATE ARM LAMP SPACING AND PLACEMENT

THIS TYPICAL ASSEMBLY SHALL BE USED IN QUADRANTS THAT DO NOT HAVE ROADWAY WARNING DEVICES INSTALLED.

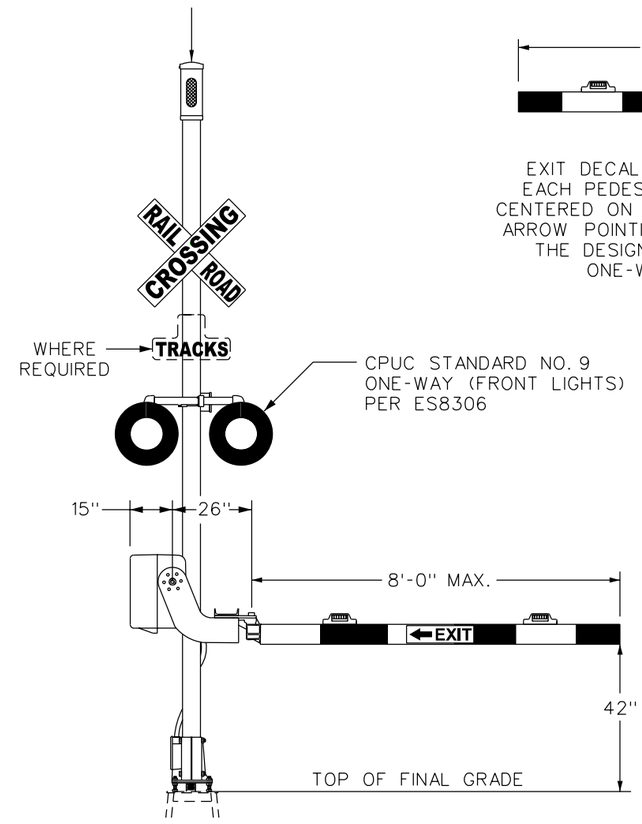

PEDESTRIAN GATE ASSEMBLY FOR "OFF-QUADRANT" APPLICATIONS

04-3815008-0
INCLUDES: 16'-0" MAST W/JCT. BOX 8'-0" FIBERGLASS GATE ARM ✳ TWO L.E.D. GATE ARM LAMPS ✳ COMPLETE GATE ASSY ELECTRONIC BELL CROSSBUCKS HARDWARE

✳ ORDERED SEPARATELY

THIS TYPICAL ASSEMBLY SHALL BE USED IN QUADRANTS THAT HAVE ROADWAY WARNING DEVICES INSTALLED.

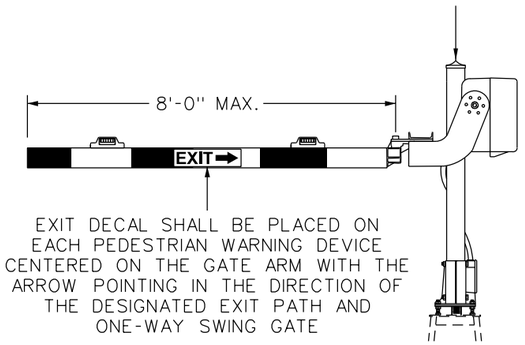

EXIT DECAL SHALL BE PLACED ON EACH PEDESTRIAN WARNING DEVICE CENTERED ON THE GATE ARM WITH THE ARROW POINTING IN THE DIRECTION OF THE DESIGNATED EXIT PATH AND ONE-WAY SWING GATE

PED GATE WITH STUB MAST

04-3815007-0
INCLUDES: STUB MAST W/JCT. BOX 8'-0" FIBERGLASS GATE ARM ✳ TWO L.E.D. GATE ARM LAMPS ✳ COMPLETE GATE ASSY HARDWARE

✳ ORDERED SEPARATELY

NOTES:

1. REFER TO ENGINEERING STANDARDS ES4011 THRU ES4021 FOR INFORMATION REGARDING SPECIFIC CONFIGURATIONS OF PEDESTRIAN TREATMENTS AT VEHICLE CROSSINGS.
2. ORIENTATION OF GATE ARM AND MECHANISM WILL VARY DEPENDING ON SITE SPECIFIC REQUIREMENTS. ORIENTATION AS SHOWN IN THIS STANDARD ARE FOR ILLUSTRATION PURPOSES ONLY.
3. COMPLETE GATE ASSEMBLIES SHALL INCLUDE GATE MECHANISM, LEFT AND RIGHT SUPPORT ARMS, TYPE B CONVERSION BRACKET, BREAK-AWAY GATE ARM ADAPTER, 3 SHEAR PINS, KING PIN ASSEMBLY, 8'-0" LONG LIQUID TIGHT FLEX CONDUIT AND CONNECTORS, AND ALL ASSOCIATED HARDWARE.
4. DEVIATION FROM THIS STANDARD SHALL BE APPROVED BY MANAGER, C&S ENGINEERING OR DESIGNATE.

REVISIONS

REV.	DATE	DESCRIPTION	DES.	ENG.
1	10-05-10	ADD ONE-WAY LIGHTS TO SIGNAL MAST, GATE ARM STRIPING	AC	DG

FINAL REVIEW BY: C&SDRC DATE: 11/21/08

APPROVED BY

Dan C. Guerrero

MANAGER, COMMUNICATIONS AND SIGNALS ENGINEERING

DIRECTOR, ENGINEERING AND CONSTRUCTION

THE SOUTHERN CALIFORNIA REGIONAL RAIL AUTHORITY OR IT'S OFFICERS OR AGENTS SHALL NOT BE RESPONSIBLE FOR THE ACCURACY OR COMPLETENESS OF THIS PLAN SHEET

METROLINK
SOUTHERN CALIFORNIA REGIONAL RAIL AUTHORITY
700 SOUTH FLOWER STREET
LOS ANGELES, CALIFORNIA 90017

ENGINEERING STANDARDS

TYPICAL GATE ASSEMBLIES FOR PEDESTRIAN TREATMENTS AT VEHICLE CROSSINGS

STANDARD 8308
SCALE: NONE
REVISION 1 SHEET 1 OF 1
CADD FILE: ES8308

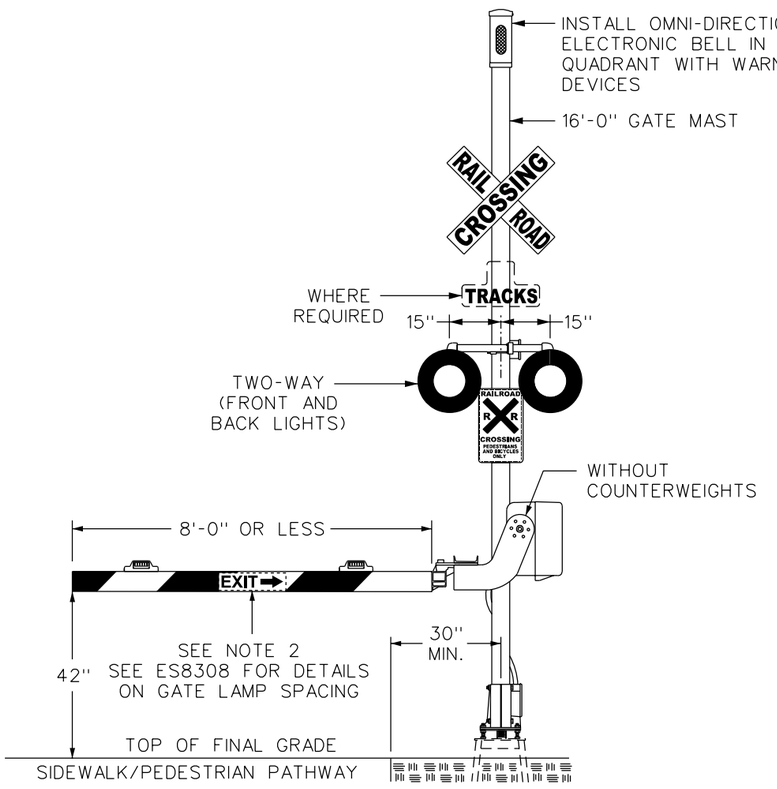

PEDESTRIAN FLASHING LIGHT SIGNALS WITH GATE ASSEMBLY
* FOR GATE ARMS UP TO 8'-0" LONG *

04-3815010-0
INCLUDES: 16'-0" MAST W/ JCT. BOX 2-WAY LED FLASHER ASSY COMPLETE GATE ASSY 8'-0" FIBERGLASS GATE ARM ✳ TWO L.E.D. GATE ARM LAMPS ✳ ELECTRONIC BELL CROSSBUCKS PED XING SIGN HARDWARE

✳ ORDERED SEPARATELY

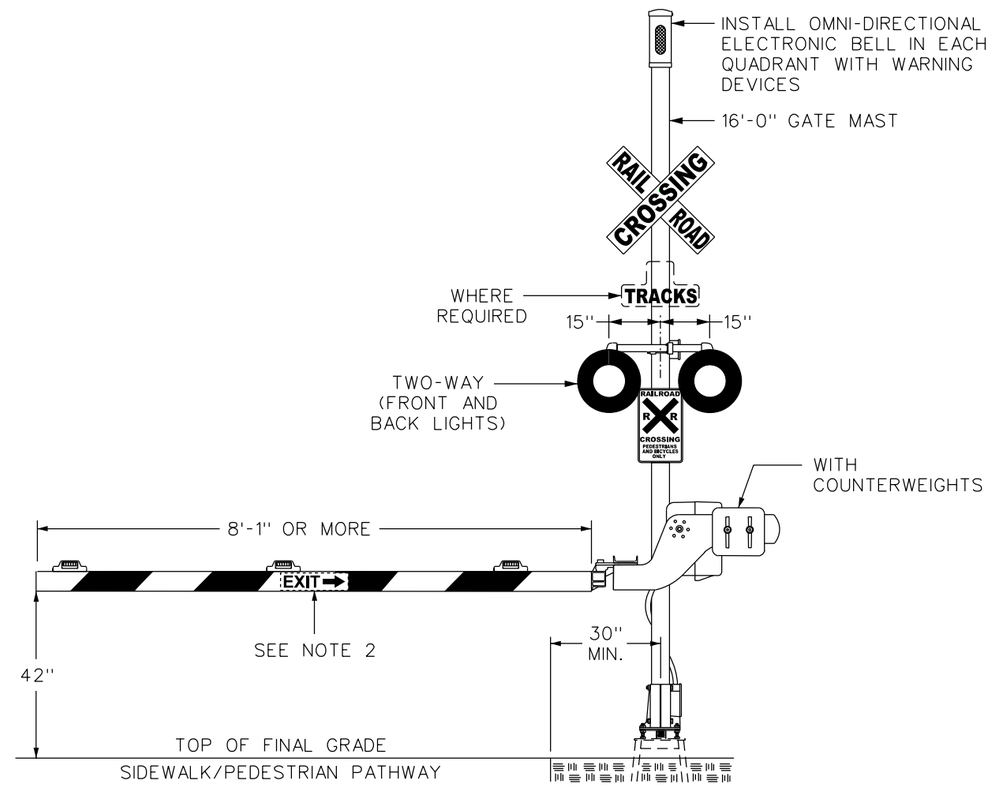

PEDESTRIAN FLASHING LIGHT SIGNALS WITH GATE ASSEMBLY
* FOR GATE ARMS 8'-1" OR LONGER *

04-3815003-0
INCLUDES: 16'-0" MAST W/ JCT. BOX 2-WAY LED FLASHER ASSY COMPLETE GATE ASSY 8'-0" FIBERGLASS GATE ARM ✳ L.E.D. GATE ARM LAMP KIT ✳ ELECTRONIC BELL CROSSBUCKS PED XING SIGN HARDWARE

✳ ORDERED SEPARATELY

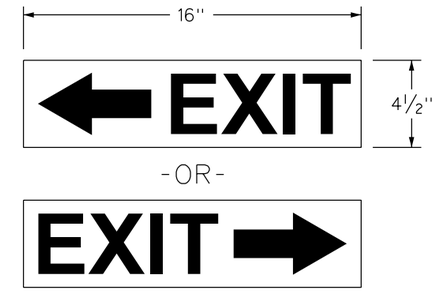

EXIT DECAL SHALL BE ENGINEERING GRADE RETROREFLECTIVE MATERIAL, WHITE WITH 3½" BLACK ARIAL BOLD LETTERS AND ARROW

EXIT DECAL

NOTES:

1. THIS CONFIGURATION SHALL BE USED AT PEDESTRIAN CROSSINGS THAT ARE NOT LOCATED ADJACENT TO A HIGHWAY-RAIL GRADE CROSSING.
2. WHEN PEDESTRIAN PATHWAY IS EQUIPPED WITH AN EXIT PATH AND ONE-WAY SWING GATE, AN EXIT DECAL SHALL BE PLACED ON EACH PEDESTRIAN WARNING DEVICE CENTERED ON THE GATE ARM WITH THE ARROW POINTING IN THE DIRECTION OF THE DESIGNATED EXIT PATH AND ONE-WAY SWING GATE
3. REFER TO ENGINEERING STANDARD ES8390 FOR INFORMATION REGARDING PLACEMENT OF PEDESTRIAN AND BICYCLE ONLY WARNING DEVICES.
4. LIGHT ASSEMBLIES SHALL BE PLACED SO AS TO NOT INTERFERE WITH GATE ARM MOVEMENT.
5. FLASHING LIGHT SIGNAL UNITS SHALL BE 12" L.E.D. TYPE DESIGNED TO OPERATE WITH A SOLID STATE CROSSING CONTROLLER AND SHALL CONFORM TO AREMA C&S MANUAL RECOMMENDATIONS.
6. 1-WAY OR 2-WAY LED FLASHER ASSEMBLIES SHALL INCLUDE JUNCTION BOX CROSS ARM ASSEMBLY AND LAMP MOUNTING BRACKETS PER AREMA C&S MANUAL PART 3.2.51, 12" L.E.D. LAMP UNITS, 24" STEEL BACKGROUNDS, STEEL HOODS AND ALL ASSOCIATED HARDWARE.
7. COMPLETE GATE ASSEMBLIES SHALL INCLUDE GATE MECHANISM, LEFT AND RIGHT SUPPORT ARMS (WITH OR WITHOUT COUNTERWEIGHT SUPPORT DEPENDING ON CONFIGURATION), (4) 50LB AND (2) 25LB COUNTERWEIGHTS AND RETAINER BRACKETS (IF REQUIRED), TYPE B CONVERSION BRACKET, BREAKAWAY GATE ARM ADAPTER, 3 SHEAR PINS, KING PIN ASSEMBLY, 8'-0" LONG LIQUID TIGHT FLEX CONDUIT AND CONNECTORS, AND ALL ASSOCIATED HARDWARE.
8. THE DIMENSIONS SHOWN ARE TYPICAL.

REVISIONS				
-	-	-	-	-
REV.	DATE	DESCRIPTION	DES.	ENG.

FINAL REVIEW BY: C&SDRC DATE: 11/21/08

APPROVED BY

Dan C. Guerrero
MANAGER, COMMUNICATIONS AND SIGNALS ENGINEERING

Darrell V. Maxey
DIRECTOR, ENGINEERING AND CONSTRUCTION

THE SOUTHERN CALIFORNIA REGIONAL RAIL AUTHORITY OR IT'S OFFICERS OR AGENTS SHALL NOT BE RESPONSIBLE FOR THE ACCURACY OR COMPLETENESS OF THIS PLAN SHEET

METROLINK
SOUTHERN CALIFORNIA REGIONAL RAIL AUTHORITY
700 SOUTH FLOWER STREET
LOS ANGELES, CALIFORNIA 90017

ENGINEERING STANDARDS

TYPICAL GATE ASSEMBLY
FOR PEDESTRIAN AND BICYCLE
ONLY CROSSINGS

STANDARD: 8309
SCALE: NONE
REVISION: –
SHEET: 1 OF 1
CADD FILE: ES8309

CPUC STANDARD NO. 9-A

CANTILEVER FLASHING
LIGHT SIGNALS
10' TO 30' ARM LENGTH

04-3815100-0

INCLUDES:
MAIN MAST
CANTILEVER ARM MAST
POLE-MOUNTED JCT BOX
1-WAY LED FLASHER ASSY
2-WAY LED FLASHER ASSY
CROSSBUCKS (MAIN MAST)
CROSSBUCKS (JURY MAST)
LADDER AND GUARD
HARDWARE

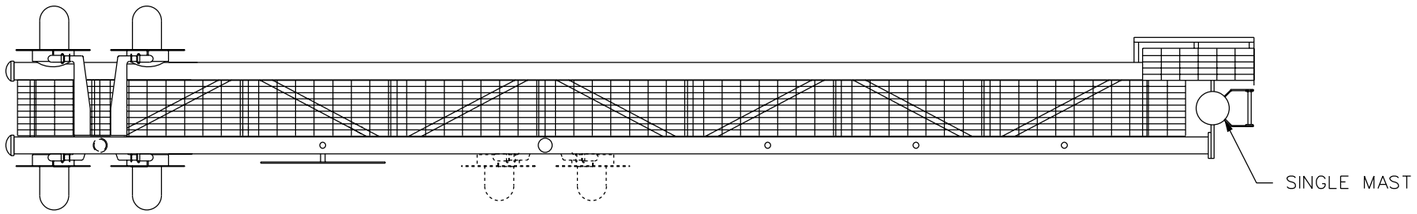

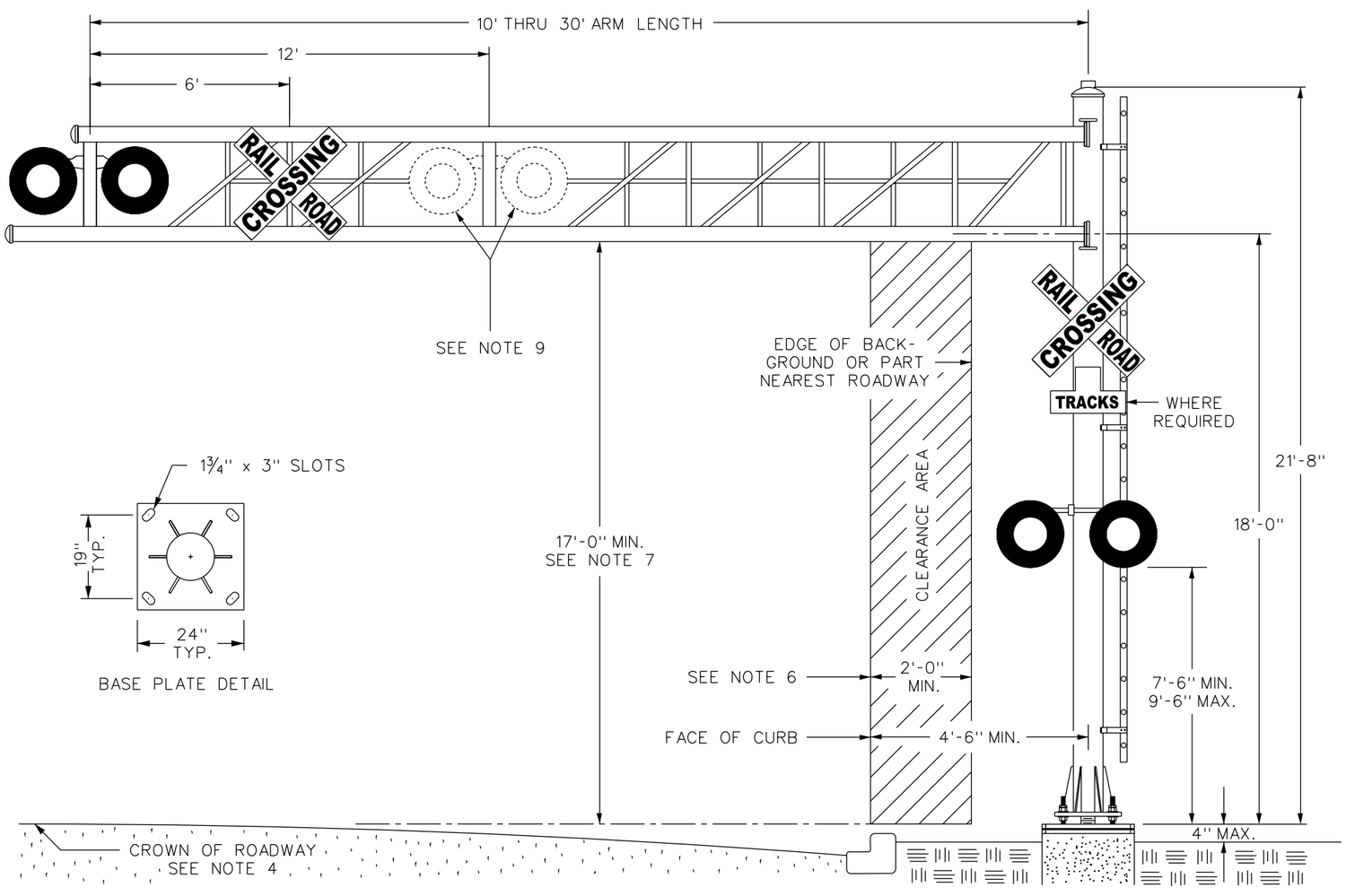

BASE PLATE DETAIL

NOTES:

1. THIS STANDARD SHALL APPLY TO ALL NEW CONSTRUCTION FOR GRADE CROSSING WARNING DEVICES EQUIPPED WITH CANTILEVER FLASHING LIGHT SIGNALS.
2. REFER TO STANDARD DRAWINGS ES8360, ES8365, ES8380 & ES8385 FOR INFORMATION REGARDING CANTILEVER PLACEMENT.
3. WHERE THERE IS NO CURB, A MINIMUM HORIZONTAL CLEARANCE OF 2' FROM EDGE OF A PAVED OR SURFACED SHOULDER SHALL BE PROVIDED WITH A MINIMUM CLEARANCE OF 6' FROM THE EDGE OF TRAVELED ROADWAY.
4. TOP OF FOUNDATION TO BE NO MORE THAN 4" ABOVE SURFACE OF THE GROUND. PROPER DRAINAGE SHOULD BE PROVIDED SO THAT THE ELECTRICAL CONNECTION JUNCTION BOX CAN NOT BE COMPROMISED BY RETAINED WATER.
5. FOUNDATION BOLTS TO EXTEND A MINIMUM OF 8" ABOVE THE TOP OF CONCRETE FOUNDATION.
6. TYPICAL MINIMUM CLEARANCE IS 2' FROM FACE OF CURB TO CLOSEST PART OF SIGNAL HOOD OR BACKGROUND.
7. MINIMUM CLEARANCE FROM CROWN OF ROAD TO CLOSEST PART OF CANTILEVER IS 17'-0".
8. ALTERNATING RED FLASHING LIGHT UNITS TO BE 12" L.E.D. OR INCANDESCENT TYPE UNIT, WITH 24" BACKGROUNDS.
9. ALL PARTS SHALL BE ALUMINUM IN COLOR EXCEPT FOR VISORS AND BACKGROUNDS WHICH SHALL BE FLAT BLACK IN COLOR.
10. ADDITIONAL MAIN MAST LIGHTS AND LANE LIGHTS SHALL BE INSTALLED WHERE APPLICABLE.
11. SUPPORTS 500 LBS. LIVE LOAD AT THE END OF CANTILEVER ARM.
12. REFER TO STANDARD DRAWING ES8330 FOR FOUNDATION DETAILS.
13. DEVIATION FROM THIS STANDARD SHALL BE APPROVED BY SCRRA MANAGER OF C&S ENGINEERING OR DESIGNATE.
14. GATE ARM PLACEMENT AND LAMP PLACEMENT IS REFERENCED TO CROWN OF ROADWAY.

REVISIONS				
REV.	DATE	DESCRIPTION	DES.	ENG.
-	-	-	-	-

FINAL REVIEW BY: C&SDRC DATE: 11/21/08

APPROVED BY

Dan C. Guerrero
MANAGER, COMMUNICATIONS AND SIGNALS ENGINEERING

Darrell V. Maxey
DIRECTOR, ENGINEERING AND CONSTRUCTION

THE SOUTHERN CALIFORNIA REGIONAL RAIL AUTHORITY OR IT'S OFFICERS OR AGENTS SHALL NOT BE RESPONSIBLE FOR THE ACCURACY OR COMPLETENESS OF THIS PLAN SHEET

METROLINK
SOUTHERN CALIFORNIA REGIONAL RAIL AUTHORITY
700 SOUTH FLOWER STREET
LOS ANGELES, CALIFORNIA 90017

ENGINEERING STANDARDS

SINGLE MAST CROSSING CANTILEVER ASSEMBLY
10' THRU 30' ARM LENGTH

STANDARD 8320
SCALE: NONE
REVISION –
SHEET 1 OF 2
CADD FILE: ES8320-01

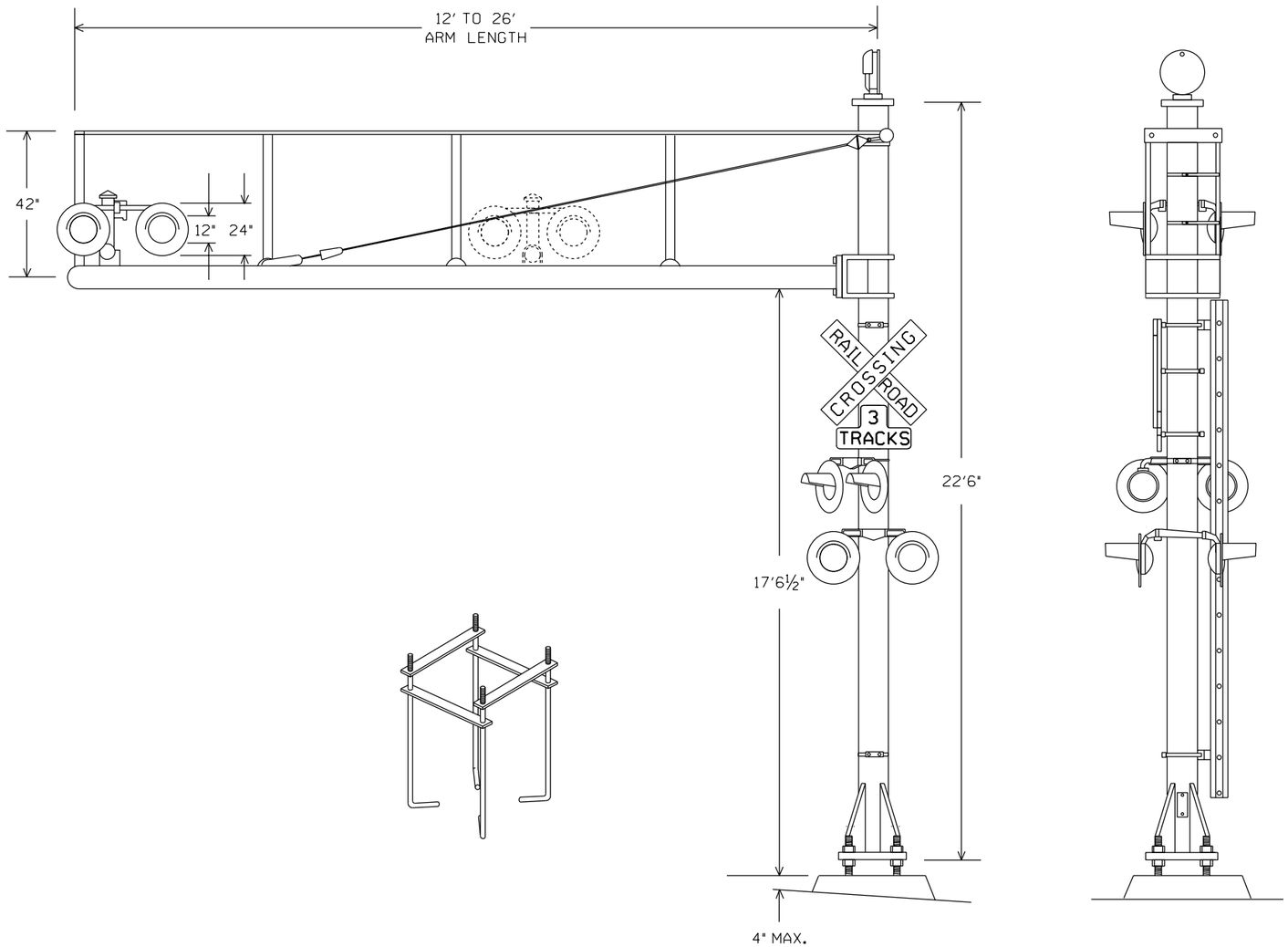

NOTES:

1. TOP OF FOUNDATION TO BE LEVEL WITH CROWN OF ROAD, MAXIMUM 4 INCHES ABOVE TOP OF GROUND LEVEL.
2. FOUNDATION BOLTS TO EXTEND A MINIMUM OF 8 INCHES ABOVE TOP OF CONCRETE FOUNDATION.
3. LANE LIGHTS AND ADDITIONAL MAIN MAST LIGHTS TO BE INSTALLED WHEN SHOWN ON LAYOUT DRAWING.
4. TRACK SIGN TO BE USED WHEN TWO OR MORE TRACKS CROSS STREET.
5. FOUNDATION TO MEET OR EXCEED CANTILEVER MANUFACTURER'S RECOMMENDATIONS.

THIS DRAWING TO BE USED FOR MAINTENANCE PURPOSES ONLY

REVISIONS				
-	-	-	-	-
REV.	DATE	DESCRIPTION	DES.	ENG.

FINAL REVIEW BY: C&SDRC DATE: 11/21/08

APPROVED BY

Dan C. Guerrero

MANAGER, COMMUNICATIONS AND SIGNALS ENGINEERING

Darrell V. Maxey

DIRECTOR, ENGINEERING AND CONSTRUCTION

THE SOUTHERN CALIFORNIA REGIONAL RAIL AUTHORITY OR IT'S OFFICERS OR AGENTS SHALL NOT BE RESPONSIBLE FOR THE ACCURACY OR COMPLETENESS OF THIS PLAN SHEET

METROLINK

SOUTHERN CALIFORNIA REGIONAL RAIL AUTHORITY
700 SOUTH FLOWER STREET
LOS ANGELES, CALIFORNIA 90017

ENGINEERING STANDARDS

MODEL W WALKOUT
CANTILEVER SIGNAL

STANDARD: 8320

SCALE: NONE

REVISION: –

SHEET: 2 OF 2

CADD FILE: ES8320–02

CPUC STANDARD NO. 9-A

CANTILEVER FLASHING
LIGHT SIGNALS
30' TO 40' ARM LENGTH

04-3815150-0

INCLUDES:
MAIN MAST (DOUBLE)
CANTILEVER ARM MAST
POLE-MOUNTED JCT BOX
1-WAY LED FLASHER ASSY
2-WAY LED FLASHER ASSY
CROSSBUCKS (MAIN MAST)
CROSSBUCKS (JURY MAST)
LADDER AND GUARD
HARDWARE

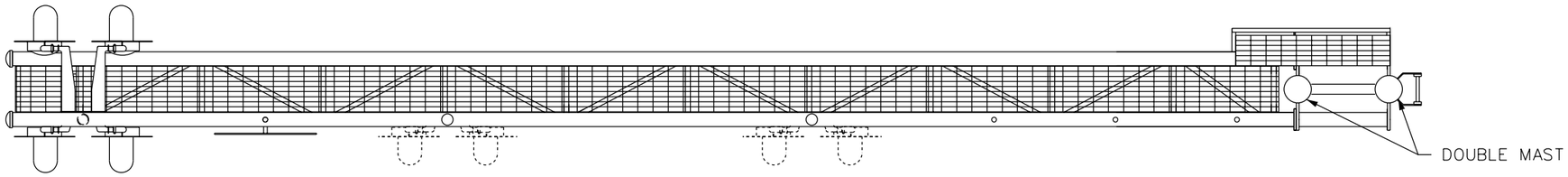

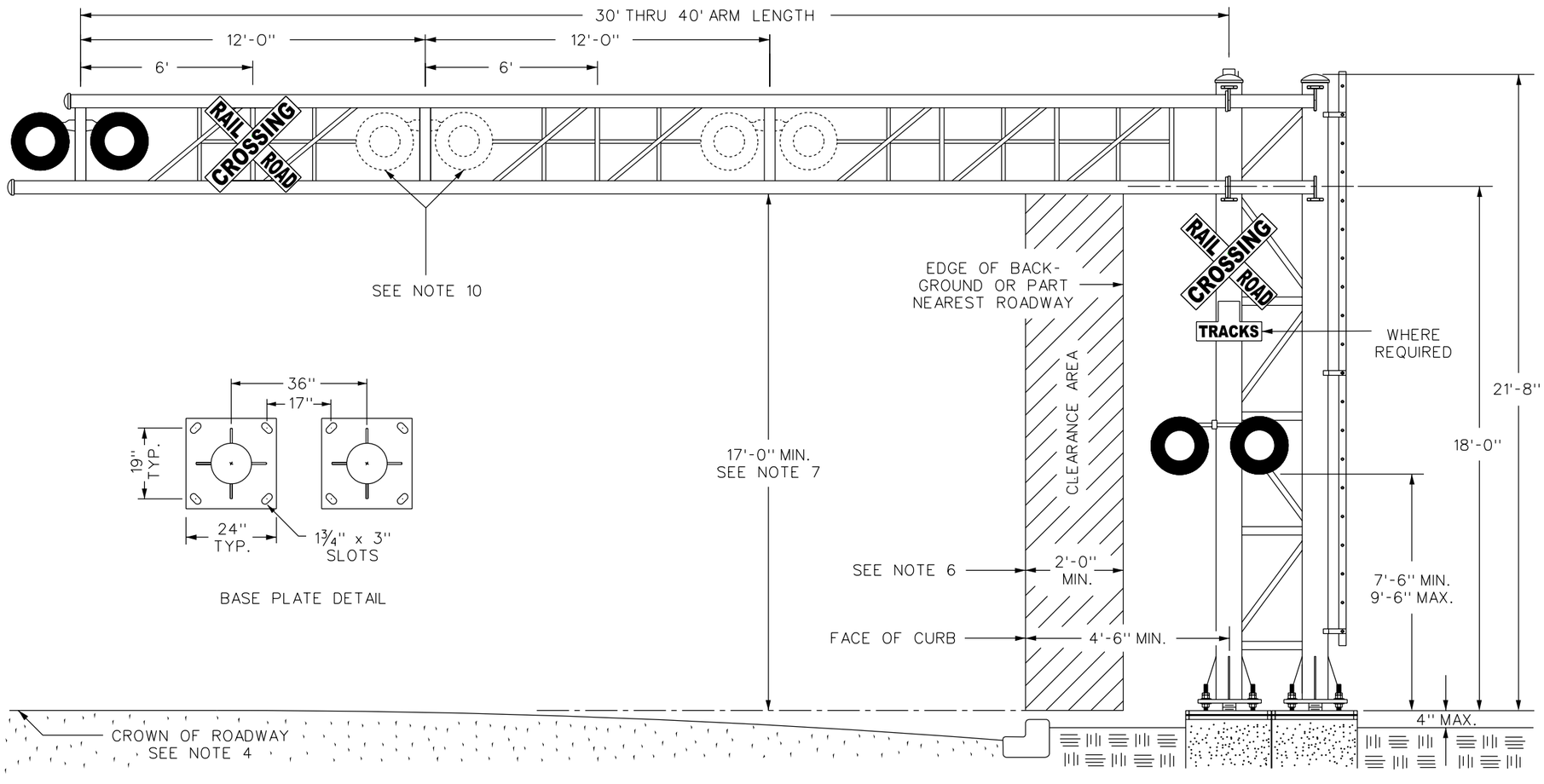

BASE PLATE DETAIL

NOTES:

1. THIS STANDARD SHALL APPLY TO ALL NEW CONSTRUCTION FOR GRADE CROSSING WARNING DEVICES EQUIPPED WITH CANTILEVER FLASHING LIGHT SIGNALS.
2. REFER TO STANDARD DRAWINGS ES8360, ES8365, ES8380, & ES8385 FOR INFORMATION REGARDING CANTILEVER PLACEMENT.
3. WHERE THERE IS NO CURB, A MINIMUM HORIZONTAL CLEARANCE OF 2' FROM EDGE OF A PAVED OR SURFACED SHOULDER SHALL BE PROVIDED WITH A MINIMUM CLEARANCE OF 6' FROM THE EDGE OF TRAVELED ROADWAY.
4. TOP OF FOUNDATION TO BE NO MORE THAN 4" ABOVE SURFACE OF THE GROUND. PROPER DRAINAGE SHOULD BE PROVIDED SO THAT THE ELECTRICAL CONNECTION JUNCTION BOX CAN NOT BE COMPROMISED BY RETAINED WATER.
5. FOUNDATION BOLTS TO EXTEND A MINIMUM OF 8" ABOVE THE TOP OF CONCRETE FOUNDATION.
6. TYPICAL MINIMUM CLEARANCE IS 2' FROM FACE OF CURB TO CLOSEST PART OF SIGNAL HOOD OR BACKGROUND.
7. MINIMUM CLEARANCE FROM CROWN OF ROAD TO CLOSEST PART OF CANTILEVER IS 17'-0".
8. ALTERNATING RED FLASHING LIGHT UNITS TO BE 12" L.E.D. OR INCANDESCENT TYPE UNITS, WITH 24" BACKGROUNDS.
9. ALL PARTS SHALL BE ALUMINUM IN COLOR EXCEPT FOR VISORS AND BACKGROUNDS WHICH SHALL BE FLAT BLACK IN COLOR.
10. ADDITIONAL MAIN MAST LIGHTS AND LANE LIGHTS SHALL BE INSTALLED WHERE APPLICABLE.
11. SUPPORTS 500 LBS. LIVE LOAD AT THE END OF CANTILEVER ARM.
12. REFER TO STANDARD DRAWING ES8330 FOR FOUNDATION DETAILS.
13. DEVIATION FROM THIS STANDARD SHALL BE APPROVED BY SCRRA MANAGER OF C&S ENGINEERING OR DESIGNATE.
14. GATE ARM PLACEMENT AND LAMP PLACEMENT IS REFERENCED TO CROWN OF ROADWAY.

REVISIONS				
REV.	DATE	DESCRIPTION	DES.	ENG.
-	-	-	-	-

FINAL REVIEW BY: C&SDRC DATE: 11/21/08
APPROVED BY
Dan C. Guerrero
MANAGER, COMMUNICATIONS AND SIGNALS ENGINEERING
Darrell V. Maxey
DIRECTOR, ENGINEERING AND CONSTRUCTION

THE SOUTHERN CALIFORNIA REGIONAL RAIL AUTHORITY OR IT'S OFFICERS OR AGENTS SHALL NOT BE RESPONSIBLE FOR THE ACCURACY OR COMPLETENESS OF THIS PLAN SHEET

METROLINK
SOUTHERN CALIFORNIA REGIONAL RAIL AUTHORITY
700 SOUTH FLOWER STREET
LOS ANGELES, CALIFORNIA 90017

ENGINEERING STANDARDS

DOUBLE MAST CROSSING CANTILEVER ASSEMBLY
30' THRU 40' ARM LENGTH

STANDARD: 8325
SCALE: NONE
REVISION: –
SHEET: 1 OF 2
CADD FILE: ES8325–01

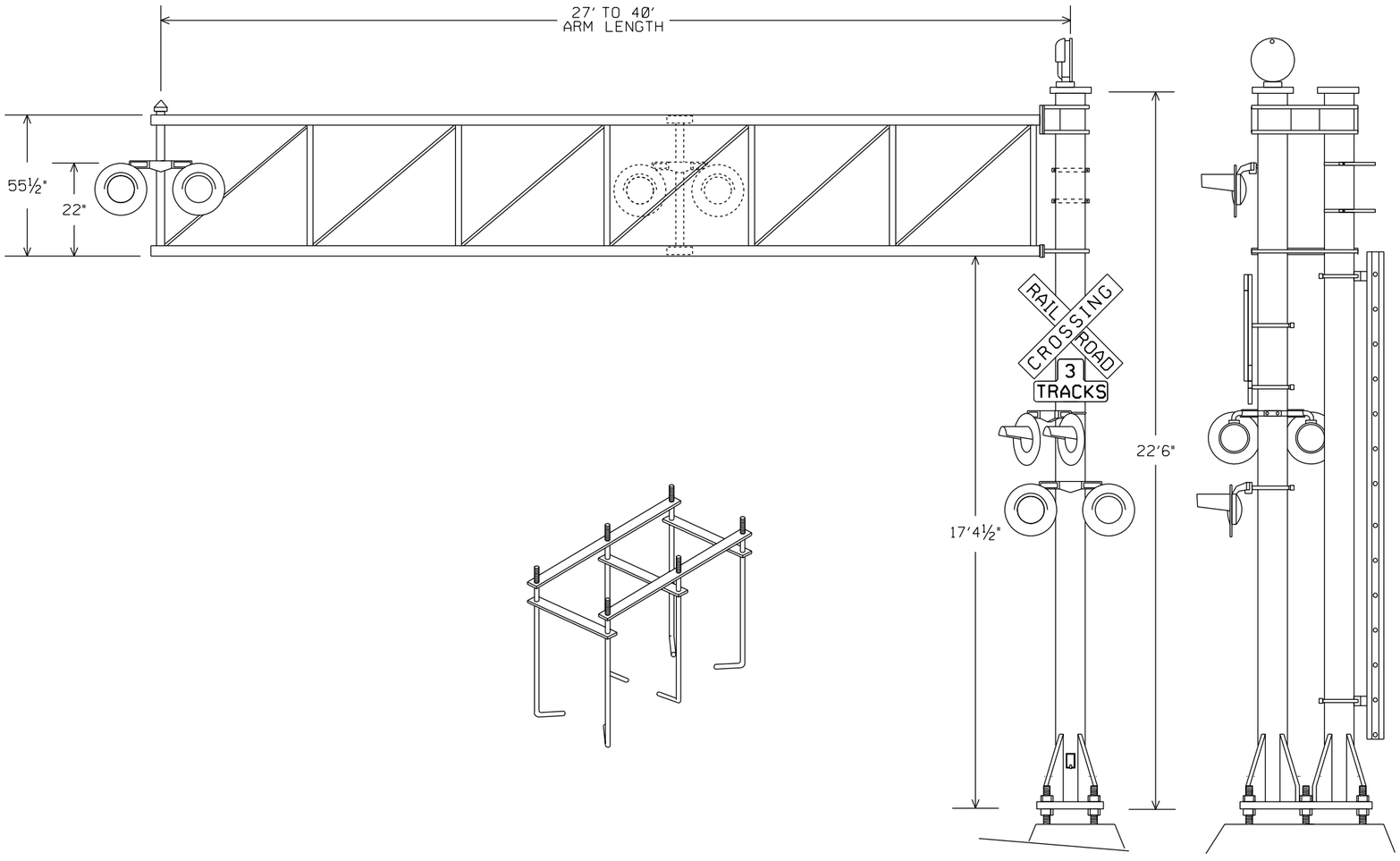

NOTES:

1. TOP OF FOUNDATION TO BE LEVEL WITH CROWN OF ROAD, MAXIMUM 4 INCHES ABOVE TOP OF GROUND LEVEL.
2. FOUNDATION BOLTS TO EXTEND A MINIMUM OF 8 INCHES ABOVE TOP OF CONCRETE FOUNDATION.
3. LANE LIGHTS AND ADDITIONAL MAIN MAST LIGHTS TO BE INSTALLED WHEN SHOWN ON LAYOUT DRAWING.
4. TRACK SIGN TO BE USED WHEN TWO OR MORE TRACKS CROSS STREET.
5. FOUNDATION TO MEET OR EXCEED CANTILEVER MANUFACTURER'S RECOMMENDATIONS.

THIS DRAWING TO BE USED FOR MAINTENANCE PURPOSES ONLY

REVISIONS				
-	-	-	-	-
REV.	DATE	DESCRIPTION	DES.	ENG.

FINAL REVIEW BY: C&SDRC DATE: 11/21/08

APPROVED BY

Dan C. Guerrero
MANAGER, COMMUNICATIONS AND SIGNALS ENGINEERING

Darrell V. Maxey
DIRECTOR, ENGINEERING AND CONSTRUCTION

THE SOUTHERN CALIFORNIA REGIONAL RAIL AUTHORITY OR IT'S OFFICERS OR AGENTS SHALL NOT BE RESPONSIBLE FOR THE ACCURACY OR COMPLETENESS OF THIS PLAN SHEET

METROLINK
SOUTHERN CALIFORNIA REGIONAL RAIL AUTHORITY
700 SOUTH FLOWER STREET
LOS ANGELES, CALIFORNIA 90017

ENGINEERING STANDARDS

MODEL WNR WALKOUT
CANTILEVER SIGNAL

STANDARD: 8325
SCALE: NONE
REVISION: –
SHEET: 2 OF 2
CADD FILE: ES8325-02

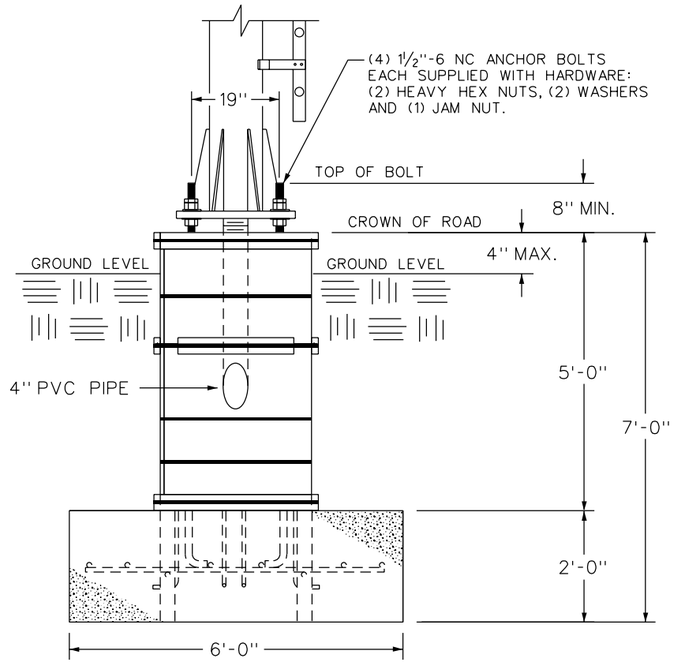

LEAVE-IN-PLACE FOUNDATION FOR
TYPICAL SINGLE MAST CROSSING CANTILEVER
(REFERENCE STANDARD DRAWING ES8320-01)
(BASE DIM. 6'-0"L x 6'-0"W)

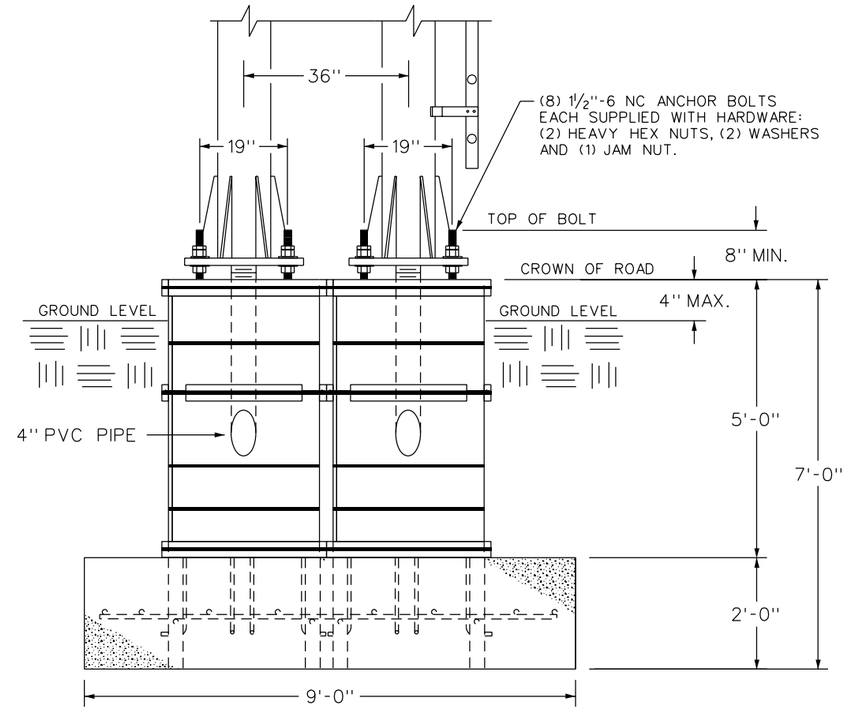

LEAVE-IN-PLACE FOUNDATION FOR
TYPICAL DOUBLE MAST CROSSING CANTILEVER
(REFERENCE STANDARD DRAWING ES8325-01)
(BASE DIM. 9'-0"L x 6'-0"W)

INSTALLATION:

1. THE DESIGN AND SIZE OF THIS FORM IS BASED ON PREVAILING SOIL BEING CAPABLE OF SUPPORTING 4000 psf.
2. EXCAVATE HOLE TO DESIRED SIZE AND DEPTH, THEN COMPACT THE BOTTOM OF HOLE.
3. LOWER FOUNDATION FORM IN PLACE AND LEVEL TOP OF COLUMN TO DESIRED LEVEL ABOVE THE GROUND.
4. USE 4000 PSI MINIMUM STRENGTH CONCRETE.
5. POUR BOTTOM SECTION OF FOUNDATION UP TO BOTTOM OF COLUMN. VIBRATE AND LEVEL CONCRETE. BACKFILL AROUND COLUMN AFTER BOTTOM HAS SET UP.
6. POUR COLUMN IN 2" LIFTS, VIBRATING EACH LIFT THOROUGHLY. TROWEL AND FINISH TOP OF COLUMN.

NOTES:

1. TOP OF FOUNDATION TO BE AT THE SAME ELEVATION AS THE CROWN OF THE ROADWAY, WITH OR WITHOUT CURB AND NO MORE THAN 4" ABOVE SURFACE OF THE GROUND.
2. PROPER DRAINAGE SHOULD BE PROVIDED SO THAT ELECTRICAL CONNECTION JUNCTION BOX WILL BE FREE OF RETAINED WATER.
3. ON CANTILEVER FOUNDATIONS, FOUNDATION BOLTS TO EXTEND A MINIMUM OF 8" ABOVE THE TOP OF CONCRETE FOUNDATION.
4. DEVIATION FROM THIS STANDARD SHALL BE APPROVED BY SCRRA MANAGER OF C&S ENGINEERING OR DESIGNATE.
5. FOUNDATION TO BE SIZED PER MANUFACTURER'S RECOMMENDATIONS.

REVISIONS				
-	-	-	-	-
REV.	DATE	DESCRIPTION	DES.	ENG.

FINAL REVIEW BY: C&SDRC DATE: 11/21/08

APPROVED BY

Dan C. Guerrero
MANAGER, COMMUNICATIONS AND SIGNALS ENGINEERING

Darrell V. Maxey
DIRECTOR, ENGINEERING AND CONSTRUCTION

THE SOUTHERN CALIFORNIA REGIONAL RAIL AUTHORITY OR IT'S OFFICERS OR AGENTS SHALL NOT BE RESPONSIBLE FOR THE ACCURACY OR COMPLETENESS OF THIS PLAN SHEET

METROLINK
SOUTHERN CALIFORNIA REGIONAL RAIL AUTHORITY
700 SOUTH FLOWER STREET
LOS ANGELES, CALIFORNIA 90017

ENGINEERING STANDARDS

FOUNDATIONS FOR CANTILEVER ASSEMBLIES

STANDARD: 8330
SCALE: NONE
REVISION: –
SHEET: 1 OF 1
CADD FILE: ES8330

FLASHING LIGHT SIGNALS WITH ENTRANCE GATES:

ONE OR MORE TRACKS,
TWO-WAY VEHICULAR TRAFFIC,
ONE LANE EACH WAY.

RIGHT ANGLE CROSSING

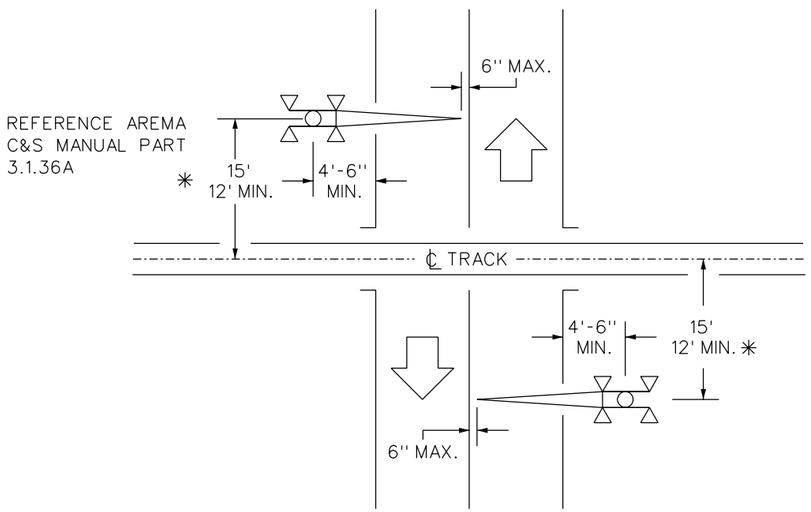

ACUTE ANGLE CROSSING

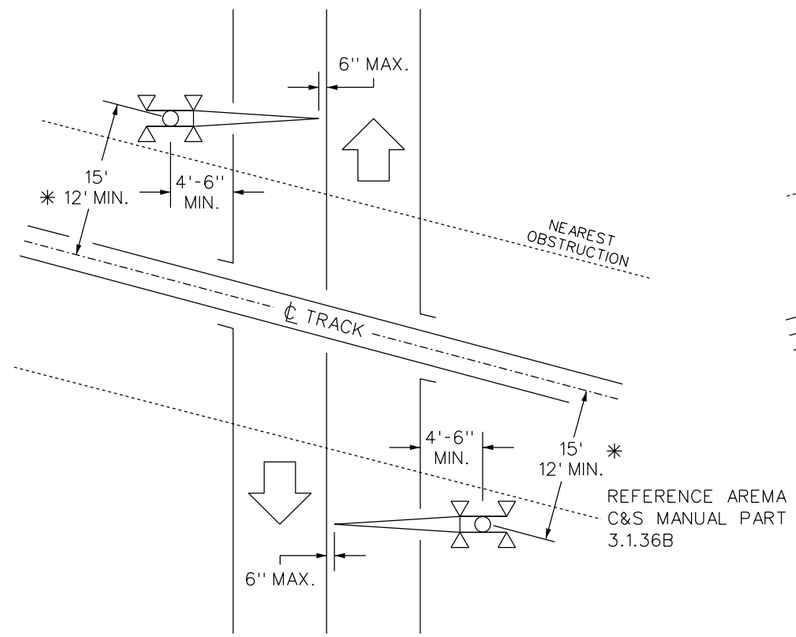

OBTUSE ANGLE CROSSING

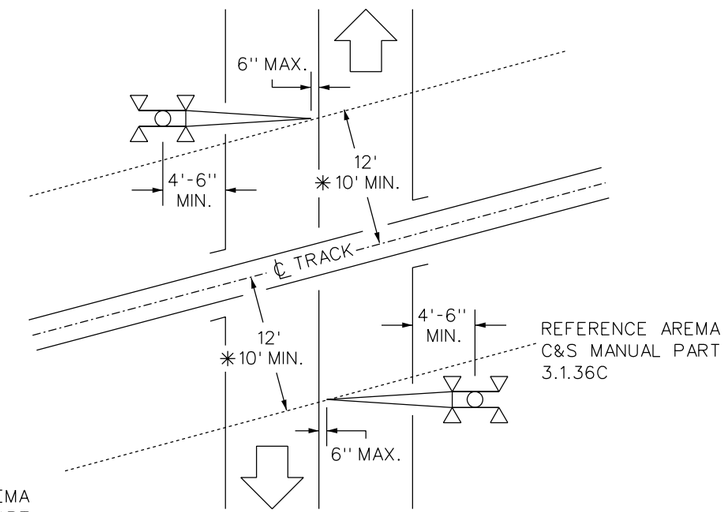

✳ USE OF MINIMUM DIMENSIONS SHALL BE AUTHORIZED BY SCRRA MANAGER OF C&S ENGINEERING OR DESIGNATE.

NOTES:

1. TYPICAL LOCATION PLAN MAY VARY AS CONDITIONS REQUIRE.
2. ALL DIMENSIONS ARE SHOWN IN FEET AND INCHES.
3. ROADWAY GATE ARM LENGTH SHALL NOT EXCEED 32' MEASURED FROM THE CENTER OF KINGPIN TO THE TIP OF GATE ARM.
4. SEE STANDARD DRAWINGS ES8300 THROUGH ES8308 FOR ADDITIONAL INFORMATION.
5. DEVIATION FROM THIS STANDARD SHALL BE APPROVED BY SCRRA MANAGER OF C&S ENGINEERING OR DESIGNATE.

REVISIONS

REV.	DATE	DESCRIPTION	DES.	ENG.
1	-	-	-	-

FINAL REVIEW BY: C&SDRC DATE: 11/21/08

APPROVED BY

Dan C. Guerrero
MANAGER, COMMUNICATIONS AND SIGNALS ENGINEERING

Darrell V. Maxey
DIRECTOR, ENGINEERING AND CONSTRUCTION

THE SOUTHERN CALIFORNIA REGIONAL RAIL AUTHORITY OR IT'S OFFICERS OR AGENTS SHALL NOT BE RESPONSIBLE FOR THE ACCURACY OR COMPLETENESS OF THIS PLAN SHEET

METROLINK
SOUTHERN CALIFORNIA REGIONAL RAIL AUTHORITY
700 SOUTH FLOWER STREET
LOS ANGELES, CALIFORNIA 90017

ENGINEERING STANDARDS

LOCATION PLAN
FLASHING LIGHT SIGNALS
WITH ENTRANCE GATES

STANDARD 8350
SCALE: NONE
REVISION –
SHEET 1 OF 2
CADD FILE: ES8350–01

FLASHING LIGHT SIGNALS WITH ENTRANCE GATES

INSTRUMENT ENCLOSURE, PULL BOX AND CONDUIT CONFIGURATION

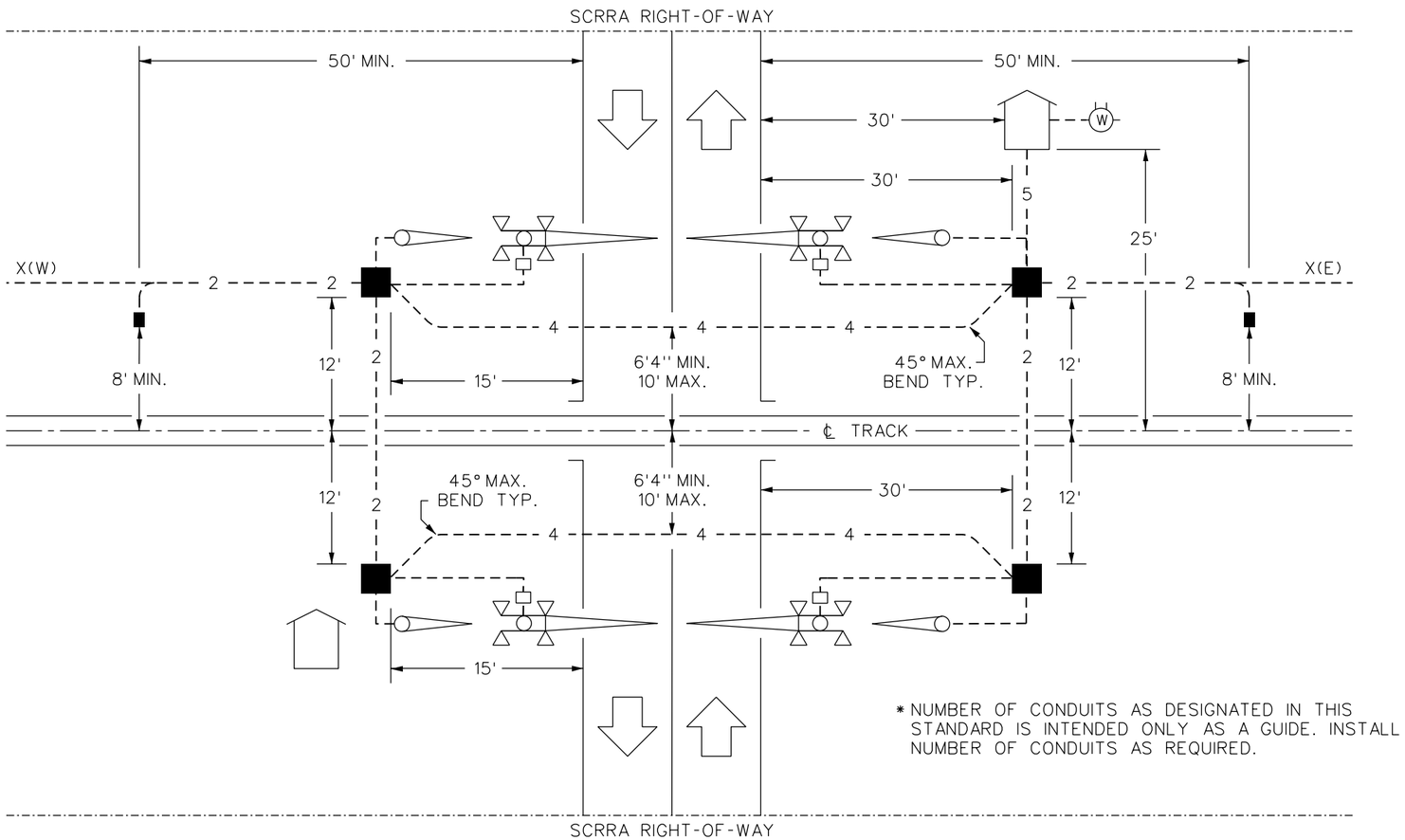

* NUMBER OF CONDUITS AS DESIGNATED IN THIS STANDARD IS INTENDED ONLY AS A GUIDE. INSTALL NUMBER OF CONDUITS AS REQUIRED.

LEGEND

- ■ – 10'' x 17'' x 12'' CONCRETE PULL BOX
- □ – 24'' x 18'' x 13'' FIBERGLASS PULL BOX
- ■ – 4' x 4' x 4' CONCRETE PULL BOX
- --N-- – MULTIPLE CONDUITS (N=NUMBER OF CONDUITS)
- ---- – SINGLE CONDUIT
- (W) – METER SERVICE
- 8X6 – 8X6 CROSSING HOUSE

NOTES:

1. INSTRUMENT ENCLOSURE LOCATION IS TYPICAL, MAY BE LOCATED IN ANY NEUTRAL QUADRANT.
2. ALL CONDUITS SHALL BE 4'' SCHEDULE 40 PVC UNLESS OTHERWISE SPECIFIED.
3. A MINIMUM OF 4 CONDUITS SHALL BE MAINTAINED UNDERNEATH THE ROADWAY ON BOTH SIDES OF TRACK AFTER INITIAL INSTALLATION.
4. SPARE CONDUITS SHALL BE INSTALLED COMPLETELY FROM ONE 4' X 4' X 4' PULL BOX TO THE OTHER 4' X 4' X 4' PULL BOX.
5. INSTALL EXPRESS CONDUIT WHERE APPLICABLE. NUMBER OF CONDUITS TO BE DETERMINED BY SCRRA SIGNALS AND COMMUNICATIONS PROJECT MANAGER.
6. ALL CONDUIT SHALL BE BURIED A MINIMUM OF 36'' BELOW TOP OF FINAL GRADE.
7. INSTALL CABLE AND TRACK WIRE AS SPECIFIED BY SIGNAL CIRCUIT PLANS.
8. 24'' X 18'' X 13'' PULL BOXES SHOULD BE PLACED DIRECTLY BESIDE THE SIGNAL MAST AT A MINIMUM DISTANCE OF 3'-0''.
9. DEVIATION FROM THIS STANDARD SHALL BE APPROVED BY SCRRA MANAGER OF C&S ENGINEERING OR DESIGNATE.

REVISIONS				
-	-	-	-	-
REV.	DATE	DESCRIPTION	DES.	ENG.

FINAL REVIEW BY: C&SDRC DATE: 11/21/08

APPROVED BY

Dan C. Guerrero
MANAGER, COMMUNICATIONS AND SIGNALS ENGINEERING

Darrell V. Maxey
DIRECTOR, ENGINEERING AND CONSTRUCTION

THE SOUTHERN CALIFORNIA REGIONAL RAIL AUTHORITY OR IT'S OFFICERS OR AGENTS SHALL NOT BE RESPONSIBLE FOR THE ACCURACY OR COMPLETENESS OF THIS PLAN SHEET

METROLINK

SOUTHERN CALIFORNIA REGIONAL RAIL AUTHORITY
700 SOUTH FLOWER STREET
LOS ANGELES, CALIFORNIA 90017

ENGINEERING STANDARDS

LOCATION PLAN
FLASHING LIGHT SIGNALS
WITH ENTRANCE GATES, GATES, EXIT GATES, PED GATES
(INSTRUMENT ENCLOSURE, PULL BOX AND CONDUIT LAYOUT)

STANDARD: 8350
SCALE: NONE
REVISION: –
SHEET: 2 OF 2
CADD FILE: ES8350–02

FLASHING LIGHT SIGNALS WITH ENTRANCE AND EXIT GATES:

ONE OR MORE TRACKS,
TWO-WAY VEHICULAR TRAFFIC,
ONE LANE EACH WAY.

RIGHT ANGLE CROSSING

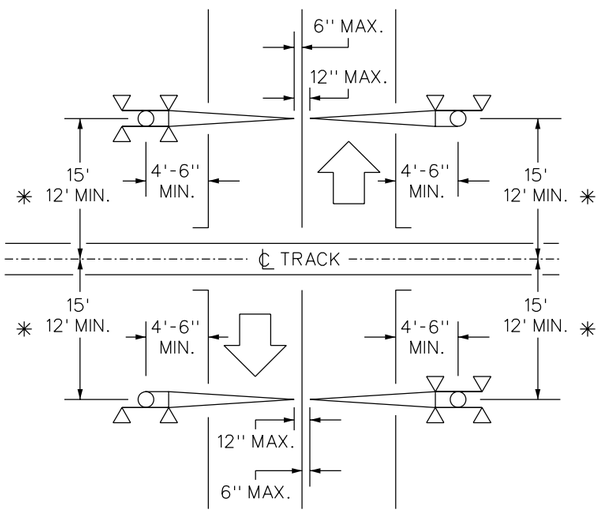

ANGLED CROSSING
GATES PARALLEL TO TRACK

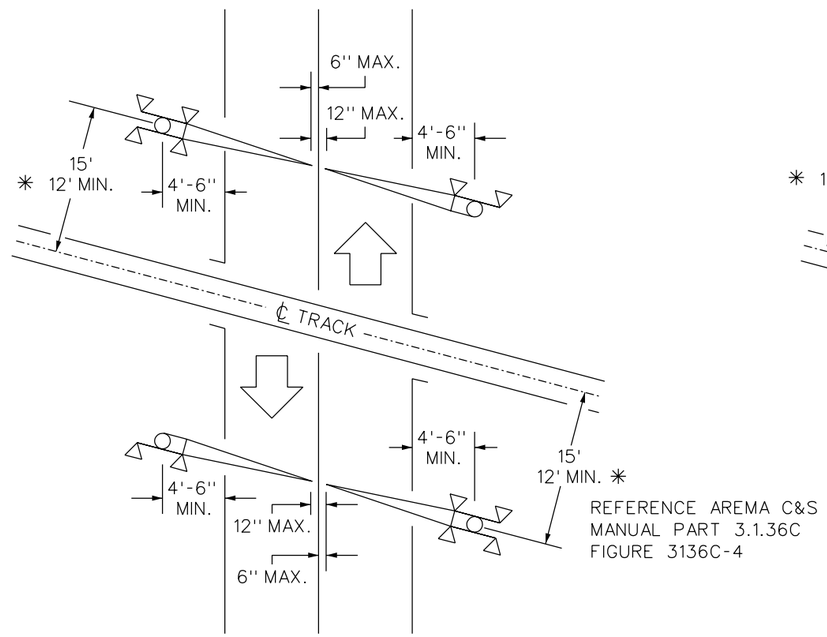

REFERENCE AREMA C&S
MANUAL PART 3.1.36C
FIGURE 3136C-4

ANGLED CROSSING
GATES PERPENDICULAR TO ROADWAY

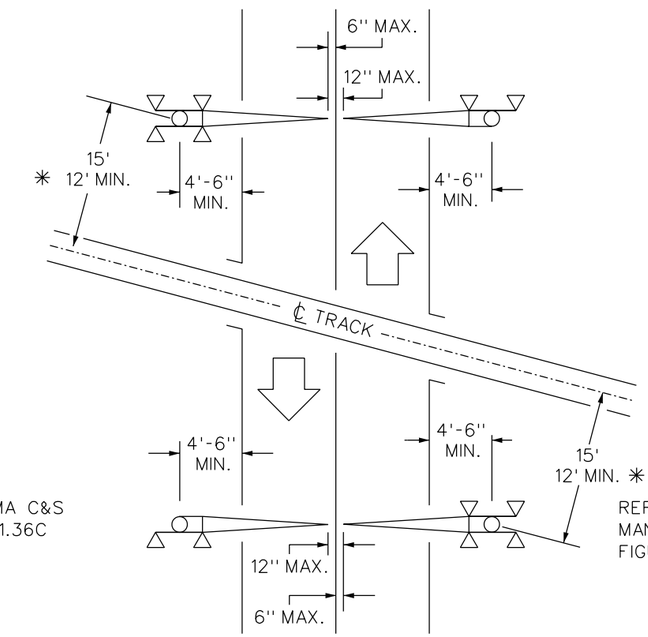

REFERENCE AREMA C&S
MANUAL PART 3.1.36C
FIGURE 3136C-2

✳ USE OF MINIMUM DIMENSIONS SHALL BE AUTHORIZED BY SCRRA MANAGER OF C&S ENGINEERING OR DESIGNATE.

NOTES:

1. TYPICAL LOCATION PLAN MAY VARY AS CONDITIONS REQUIRE.
2. ALL DIMENSIONS ARE SHOWN IN FEET AND INCHES.
3. ROADWAY GATE ARM LENGTH SHALL NOT EXCEED 32' MEASURED FROM THE CENTER OF KINGPIN TO THE TIP OF GATE ARM.
4. SEE STANDARD DRAWINGS ES8300 THROUGH ES8308 FOR ADDITIONAL INFORMATION.
5. DEVIATION FROM THIS STANDARD SHALL BE APPROVED BY SCRRA MANAGER OF C&S ENGINEERING OR DESIGNATE.

REVISIONS				
-	-	-	-	-
REV.	DATE	DESCRIPTION	DES.	ENG.

FINAL REVIEW BY: C&SDRC DATE: 11/21/08

APPROVED BY

Dan C. Guerrero
MANAGER, COMMUNICATIONS AND SIGNALS ENGINEERING

Darrell V. Maxey
DIRECTOR, ENGINEERING AND CONSTRUCTION

THE SOUTHERN CALIFORNIA REGIONAL RAIL AUTHORITY OR IT'S OFFICERS OR AGENTS SHALL NOT BE RESPONSIBLE FOR THE ACCURACY OR COMPLETENESS OF THIS PLAN SHEET

METROLINK
SOUTHERN CALIFORNIA REGIONAL RAIL AUTHORITY
700 SOUTH FLOWER STREET
LOS ANGELES, CALIFORNIA 90017

ENGINEERING STANDARDS

TYPICAL LOCATION PLAN
FLASHING LIGHT SIGNALS WITH
ENTRANCE AND EXIT GATES

STANDARD: 8355
SCALE: NONE
REVISION: –
SHEET: 1 OF 1
CADD FILE: ES8355

CANTILEVER FLASHERS WITH ENTRANCE GATES:

ONE OR MORE TRACKS,
TWO-WAY VEHICULAR TRAFFIC,
TWO LANES EACH WAY.

RIGHT ANGLE CROSSING

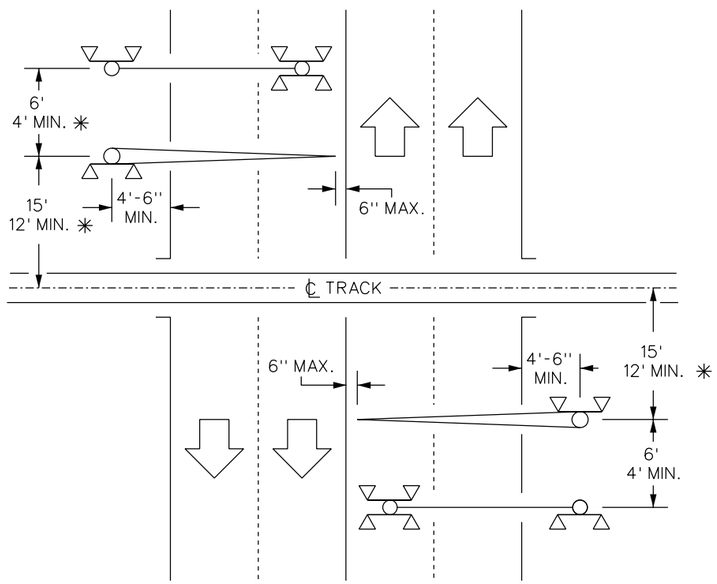

ACUTE ANGLE CROSSING

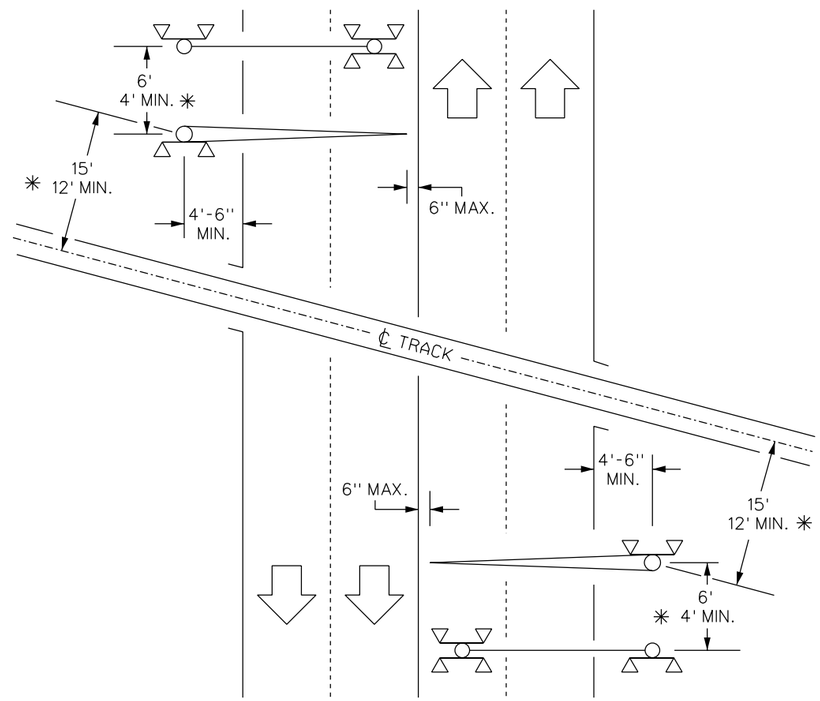

OBTUSE ANGLE CROSSING

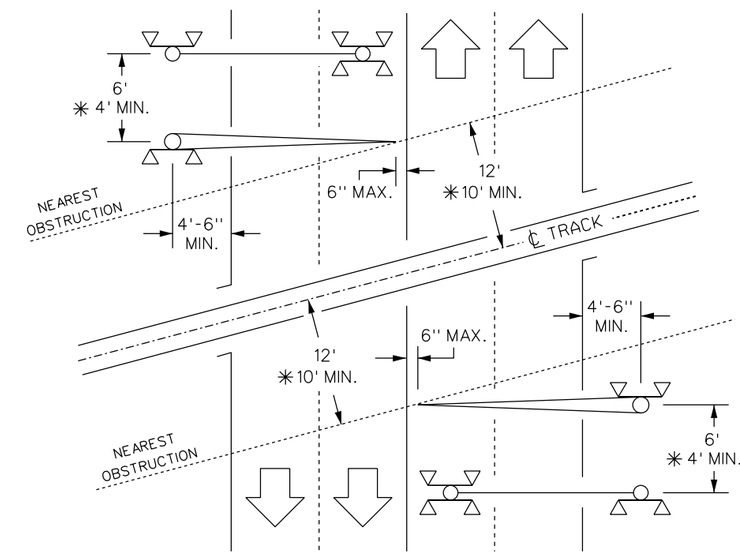

✳ USE OF MINIMUM DIMENSIONS SHALL BE AUTHORIZED BY SCRRA MANAGER OF C&S ENGINEERING OR DESIGNATE.

NOTES:

1. TYPICAL LOCATION PLAN MAY VARY AS CONDITIONS REQUIRE.
2. ALL DIMENSIONS ARE SHOWN IN FEET AND INCHES.
3. ROADWAY GATE ARM LENGTH SHALL NOT EXCEED 32' MEASURED FROM THE CENTER OF KINGPIN TO THE TIP OF GATE ARM.
4. SEE STANDARD DRAWINGS ES8300 THROUGH ES8308 FOR ADDITIONAL INFORMATION.
5. DEVIATION FROM THIS STANDARD SHALL BE APPROVED BY SCRRA MANAGER OF C&S ENGINEERING OR DESIGNATE.

REVISIONS				
-	-	-	-	-
REV.	DATE	DESCRIPTION	DES.	ENG.

FINAL REVIEW BY: C&SDRC DATE: 11/21/08

APPROVED BY

Dan C. Guerrero
MANAGER, COMMUNICATIONS AND SIGNALS ENGINEERING

Darrell V. Maxey
DIRECTOR, ENGINEERING AND CONSTRUCTION

THE SOUTHERN CALIFORNIA REGIONAL RAIL AUTHORITY OR IT'S OFFICERS OR AGENTS SHALL NOT BE RESPONSIBLE FOR THE ACCURACY OR COMPLETENESS OF THIS PLAN SHEET

METROLINK
SOUTHERN CALIFORNIA REGIONAL RAIL AUTHORITY
700 SOUTH FLOWER STREET
LOS ANGELES, CALIFORNIA 90017

ENGINEERING STANDARDS

TYPICAL LOCATION PLAN
CANTILEVER FLASHERS WITH ENTRANCE GATES

STANDARD: 8360
SCALE: NONE
REVISION: –
SHEET: 1 OF 1
CADD FILE: ES8360

CANTILEVER FLASHERS WITH ENTRANCE AND EXIT GATES:

ONE OR MORE TRACKS,
TWO-WAY VEHICULAR TRAFFIC,
TWO LANES EACH WAY.

RIGHT ANGLE CROSSING

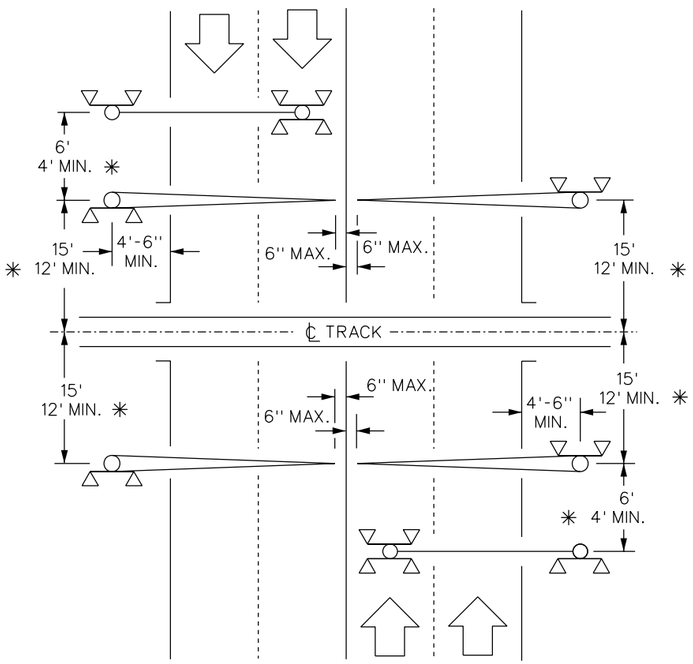

ACUTE ANGLE CROSSING

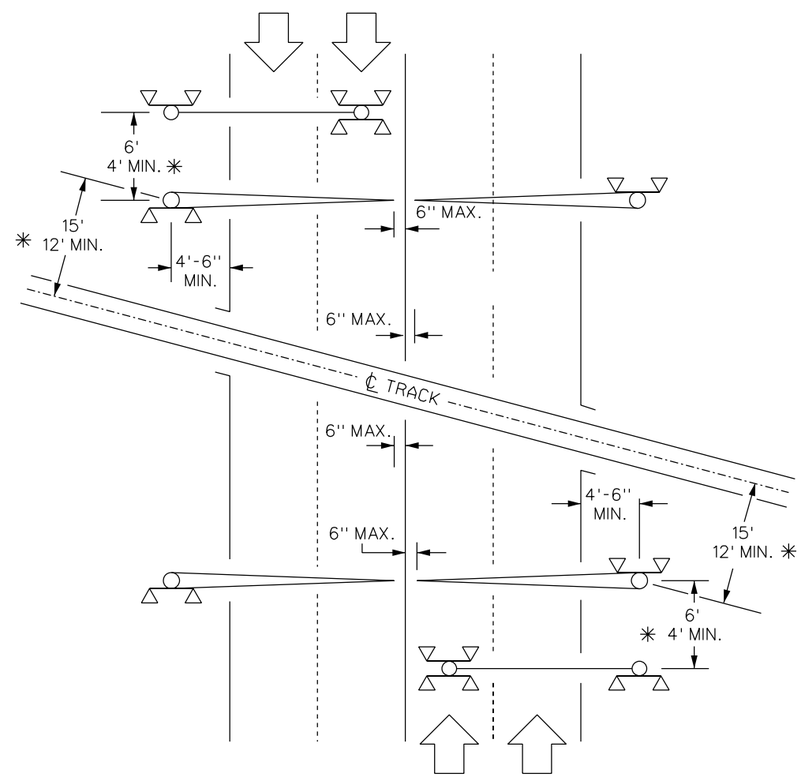

OBTUSE ANGLE CROSSING

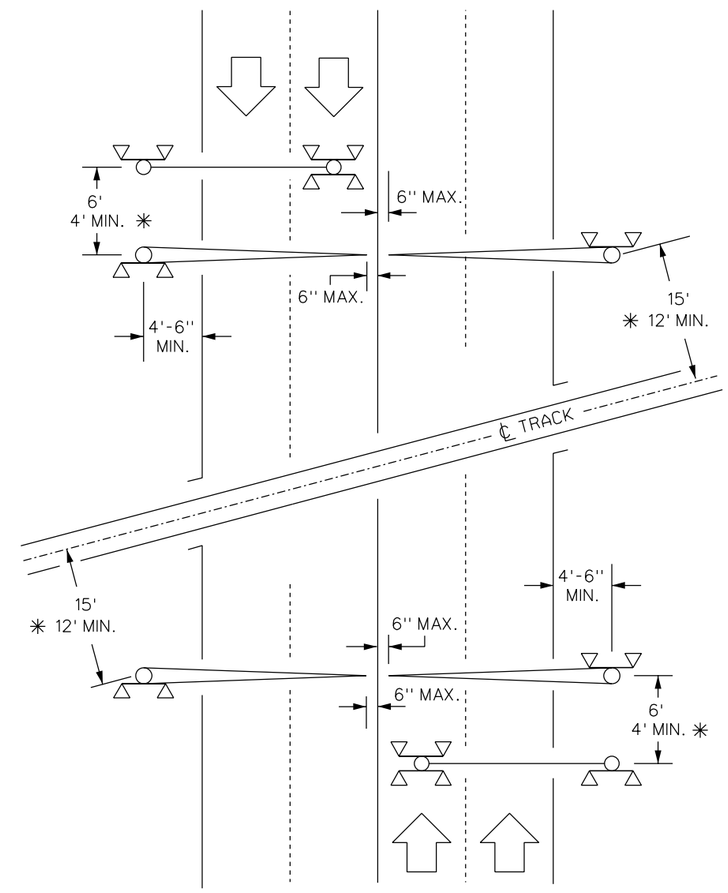

✳ USE OF MINIMUM DIMENSIONS SHALL BE AUTHORIZED BY SCRRA MANAGER OF C&S ENGINEERING OR DESIGNATE.

NOTES:

1. TYPICAL LOCATION PLAN MAY VARY AS CONDITIONS REQUIRE.
2. ALL DIMENSIONS ARE SHOWN IN FEET AND INCHES.
3. ROADWAY GATE ARM LENGTH SHALL NOT EXCEED 32' MEASURED FROM THE CENTER OF KINGPIN TO THE TIP OF GATE ARM.
4. SEE STANDARD DRAWINGS ES8300 THROUGH ES8308 FOR ADDITIONAL INFORMATION.
5. DEVIATION FROM THIS STANDARD SHALL BE APPROVED BY SCRRA MANAGER OF C&S ENGINEERING OR DESIGNATE.

REVISIONS				
-	-	-	-	-
REV.	DATE	DESCRIPTION	DES.	ENG.

FINAL REVIEW BY: C&SDRC DATE: 11/21/08

APPROVED BY

Dan C. Guerrero
MANAGER, COMMUNICATIONS AND SIGNALS ENGINEERING

Darrell V. Maxey
DIRECTOR, ENGINEERING AND CONSTRUCTION

THE SOUTHERN CALIFORNIA REGIONAL RAIL AUTHORITY OR IT'S OFFICERS OR AGENTS SHALL NOT BE RESPONSIBLE FOR THE ACCURACY OR COMPLETENESS OF THIS PLAN SHEET

METROLINK
SOUTHERN CALIFORNIA REGIONAL RAIL AUTHORITY
700 SOUTH FLOWER STREET
LOS ANGELES, CALIFORNIA 90017

ENGINEERING STANDARDS

TYPICAL LOCATION PLAN
CANTILEVER FLASHERS WITH ENTRANCE
AND EXIT GATES

STANDARD 8365
SCALE: NONE
REVISION –
SHEET 1 OF 1
CADD FILE: ES8365

FLASHING LIGHT SIGNALS WITH GATES AND MEDIAN:

ONE OR MORE TRACKS,
TWO-WAY VEHICULAR TRAFFIC,
TWO LANES EACH WAY
WITH MEDIAN.

RIGHT ANGLE CROSSING

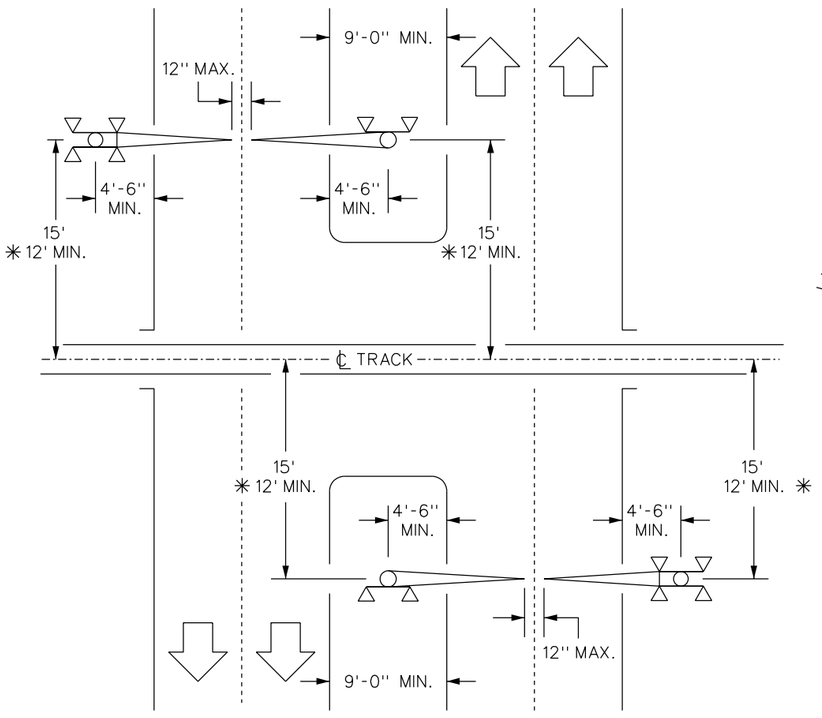

ACUTE ANGLE CROSSING

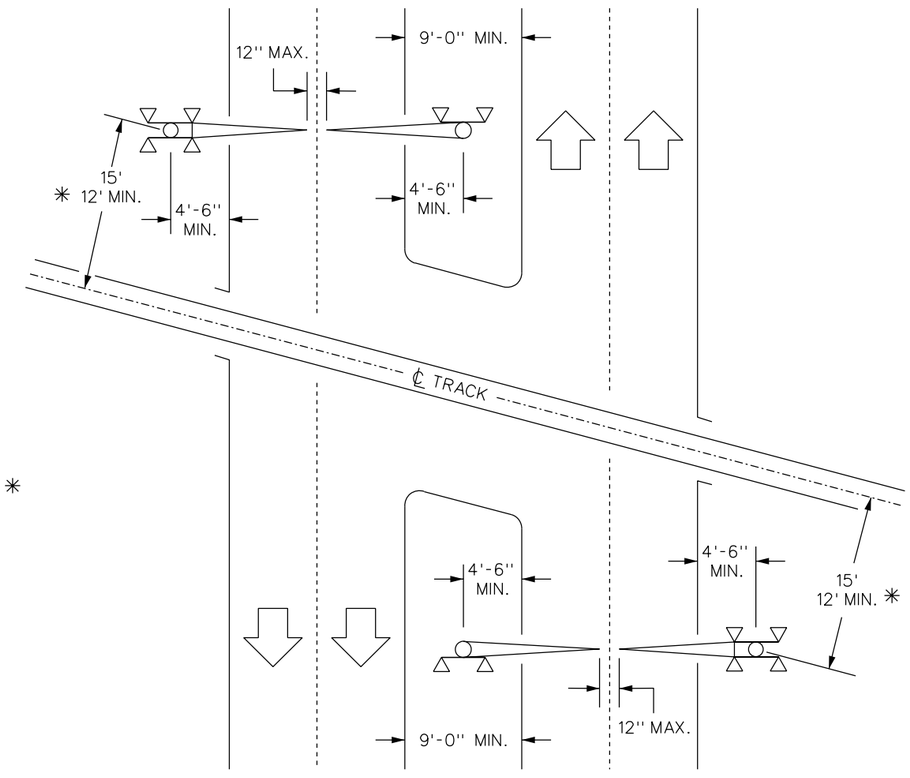

OBTUSE ANGLE CROSSING

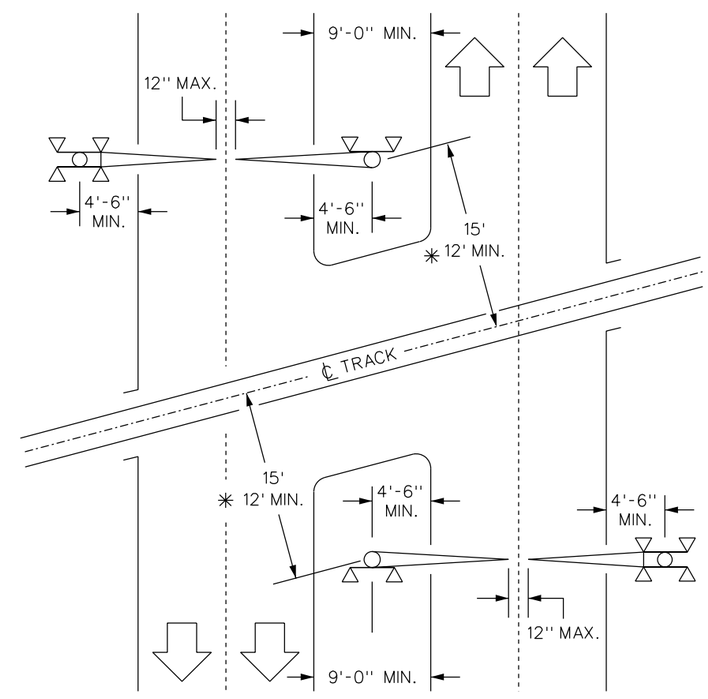

✳ USE OF MINIMUM DIMENSIONS SHALL BE AUTHORIZED BY SCRRA MANAGER OF C&S ENGINEERING OR DESIGNATE.

NOTES:

1. TYPICAL LOCATION PLAN MAY VARY AS CONDITIONS REQUIRE.
2. ALL DIMENSIONS ARE SHOWN IN FEET AND INCHES.
3. ADDITIONAL MEDIAN WIDTH MAY BE REQUIRED TO PROVIDE CLEARANCE FOR 24" BACKROUNDS, WINDGUARD OR GATE COUNTERWEIGHTS.
4. BACKLIGHTS MAY BE ADDED AS CONDITIONS REQUIRE.
5. GATE ARM LENGTH SHALL NOT EXCEED 32' MEASURED FROM THE CENTER OF KINGPIN TO THE TIP OF GATE ARM.
6. SEE STANDARD DRAWINGS ES8300 TO ES8308 FOR ADDITIONAL INFORMATION.
7. DEVIATION FROM THIS STANDARD SHALL BE APPROVED BY SCRRA MANAGER OF C&S ENGINEERING OR DESIGNATE.

REVISIONS				
-	-	-	-	-
REV.	DATE	DESCRIPTION	DES.	ENG.

FINAL REVIEW BY: C&SDRC DATE: 11/21/08

APPROVED BY

Dan C. Guerrero
MANAGER, COMMUNICATIONS AND SIGNALS ENGINEERING

Darrell V. Maxey
DIRECTOR, ENGINEERING AND CONSTRUCTION

THE SOUTHERN CALIFORNIA REGIONAL RAIL AUTHORITY OR IT'S OFFICERS OR AGENTS SHALL NOT BE RESPONSIBLE FOR THE ACCURACY OR COMPLETENESS OF THIS PLAN SHEET

METROLINK
SOUTHERN CALIFORNIA REGIONAL RAIL AUTHORITY
700 SOUTH FLOWER STREET
LOS ANGELES, CALIFORNIA 90017

ENGINEERING STANDARDS

TYPICAL LOCATION PLAN
FLASHING LIGHT SIGNALS WITH GATES AND MEDIAN

STANDARD 8370
SCALE: NONE
REVISION –
SHEET 1 OF 1
CADD FILE: ES8370

FLASHING LIGHT SIGNALS WITH ENTRANCE AND EXIT GATES AND MEDIAN:

ONE OR MORE TRACKS,
TWO-WAY VEHICULAR TRAFFIC,
TWO LANES EACH WAY
WITH MEDIAN.

RIGHT ANGLE CROSSING

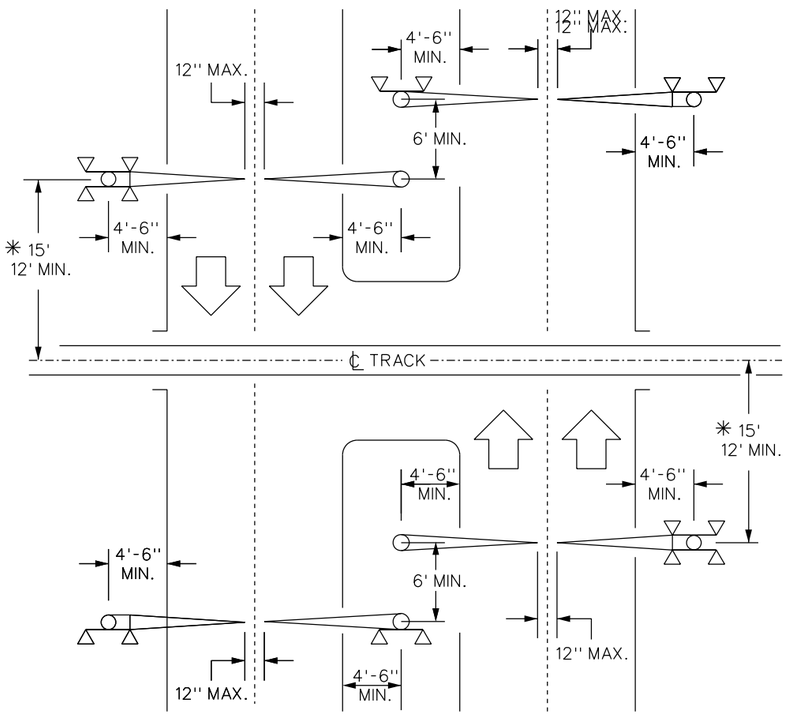

ACUTE ANGLE CROSSING

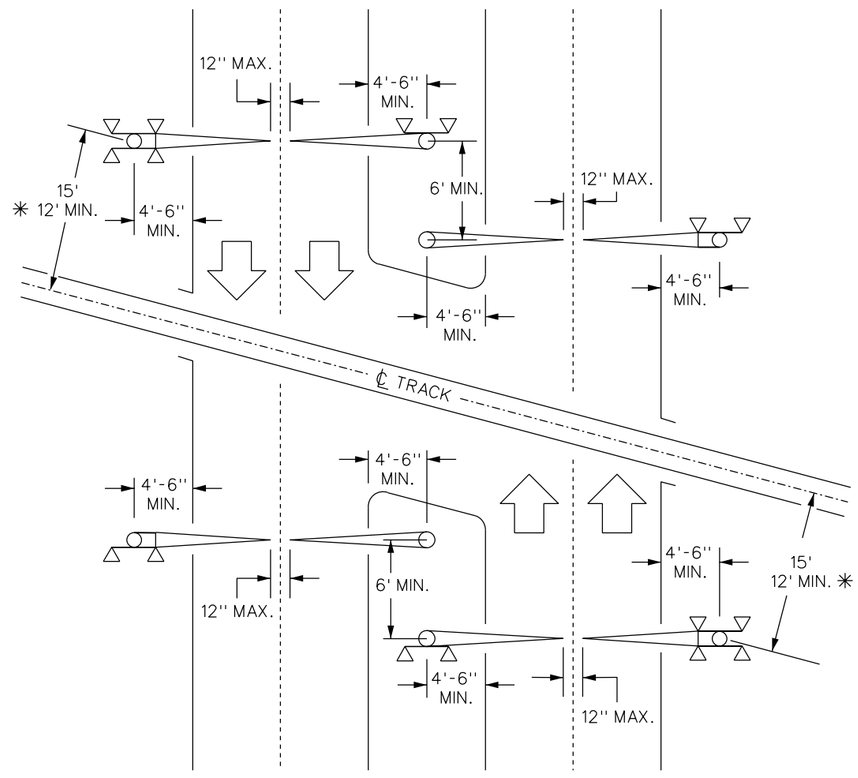

OBTUSE ANGLE CROSSING

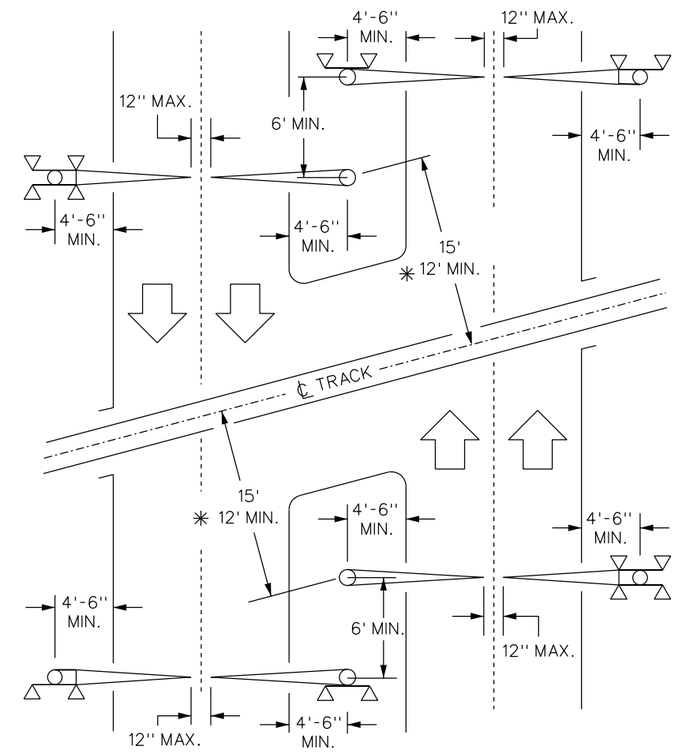

✳ USE OF MINIMUM DIMENSIONS SHALL BE AUTHORIZED BY SCRRA MANAGER OF C&S ENGINEERING OR DESIGNATE.

NOTES:

1. TYPICAL LOCATION PLAN MAY VARY AS CONDITIONS REQUIRE.
2. ALL DIMENSIONS ARE SHOWN IN FEET AND INCHES.
3. ADDITIONAL MEDIAN WIDTH MAY BE REQUIRED TO PROVIDE CLEARANCE FOR 24'' BACKROUNDS, WINDGUARD OR GATE COUNTERWEIGHTS.
4. BACKLIGHTS MAY BE ADDED AS CONDITIONS REQUIRE.
5. ROADWAY GATE ARM LENGTH SHALL NOT EXCEED 32' MEASURED FROM THE CENTER OF KINGPIN TO THE TIP OF GATE ARM.
6. SEE STANDARD DRAWINGS ES8300 THROUGH ES8308 FOR ADDITIONAL INFORMATION.
7. WHERE BOTH ENTRANCE GATES AND EXIT GATES ARE ALIGNED ON A MEDIAN, FRONT LIGHTS SHALL BE INSTALLED ON THE ASSEMBLY CLOSEST TO TRAFFIC APPROACHING IN THE LAWFUL DIRECTION.
8. DEVIATION FROM THIS STANDARD SHALL BE APPROVED BY SCRRA MANAGER OF C&S ENGINEERING OR DESIGNATE.

REVISIONS				
REV.	DATE	DESCRIPTION	DES.	ENG.
-	-	-	-	-

FINAL REVIEW BY: C&SDRC DATE: 11/21/08

APPROVED BY

Dan C. Guerrero
MANAGER, COMMUNICATIONS AND SIGNALS ENGINEERING

Darrell V. Maxey
DIRECTOR, ENGINEERING AND CONSTRUCTION

THE SOUTHERN CALIFORNIA REGIONAL RAIL AUTHORITY OR IT'S OFFICERS OR AGENTS SHALL NOT BE RESPONSIBLE FOR THE ACCURACY OR COMPLETENESS OF THIS PLAN SHEET

METROLINK
SOUTHERN CALIFORNIA REGIONAL RAIL AUTHORITY
700 SOUTH FLOWER STREET
LOS ANGELES, CALIFORNIA 90017

ENGINEERING STANDARDS

TYPICAL LOCATION PLAN
FLASHING LIGHT SIGNALS WITH ENTRANCE
AND EXIT GATES AND MEDIAN

STANDARD: 8375
SCALE: NONE
REVISION: –
SHEET: 1 OF 1
CADD FILE: ES8375

CANTILEVER FLASHERS WITH ENTRANCE GATES AND MEDIAN:

ONE OR MORE TRACKS,
TWO-WAY VEHICULAR TRAFFIC,
THREE OR MORE LANES
EACH WAY WITH MEDAN.

RIGHT ANGLE CROSSING

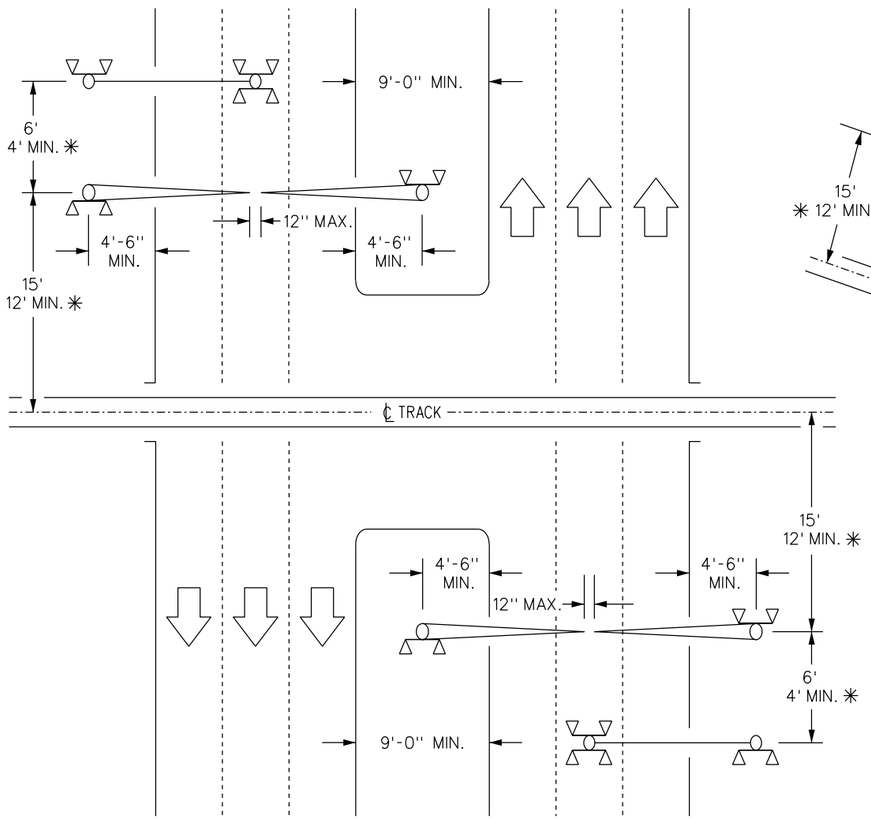

ACUTE ANGLE CROSSING

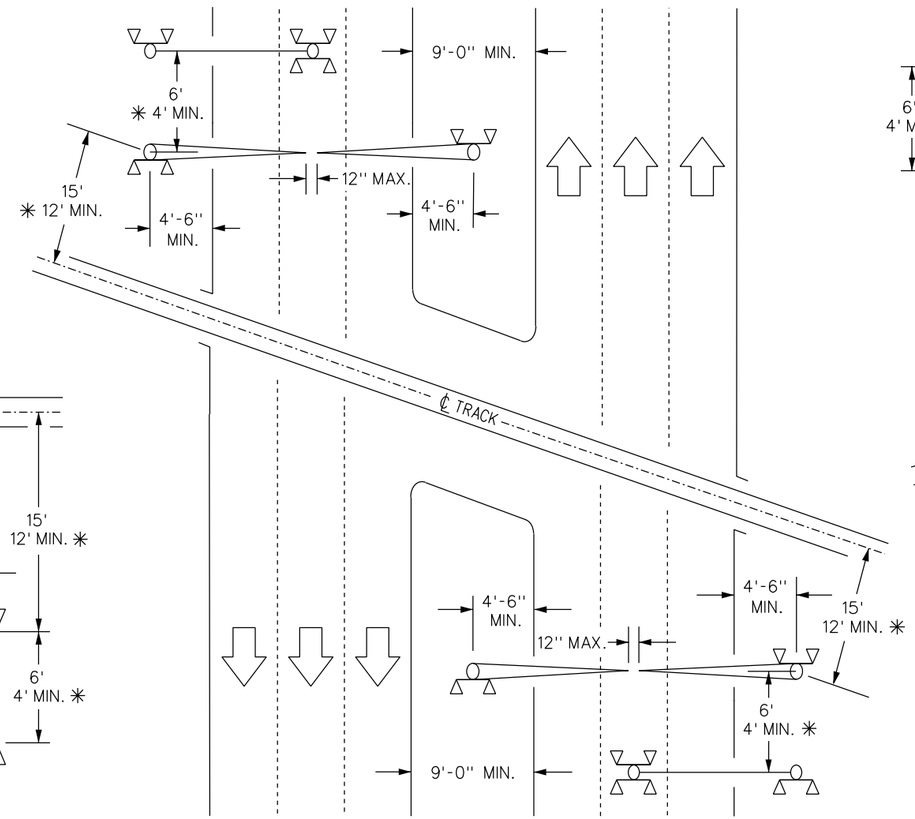

OBTUSE ANGLE CROSSING

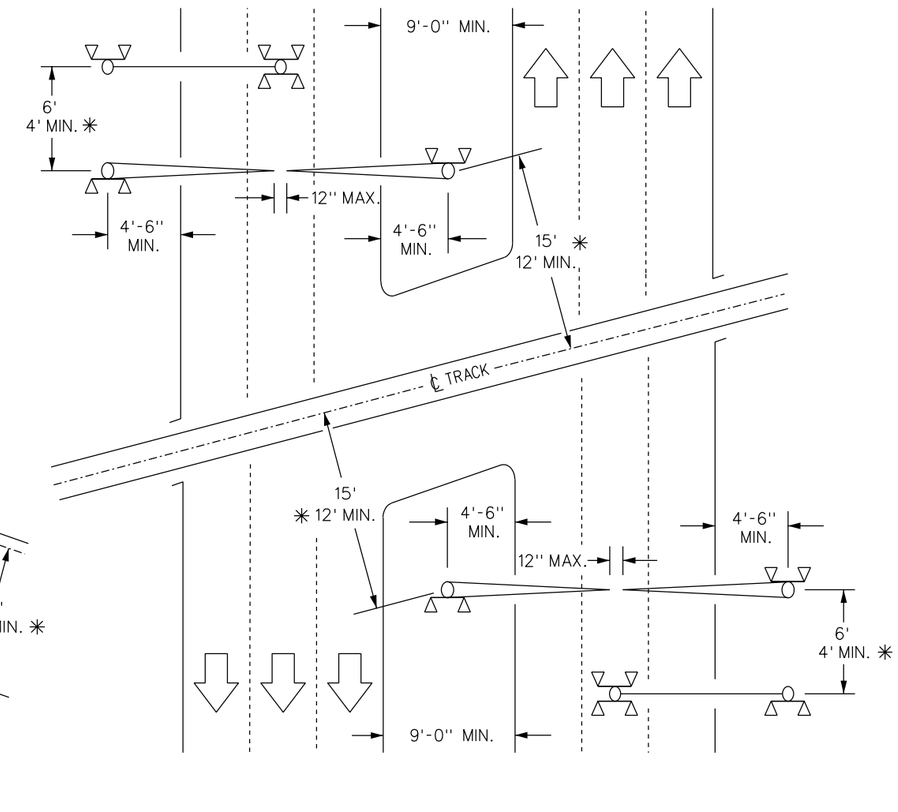

NOTES:

1. TYPICAL LOCATION PLAN MAY VARY AS CONDITIONS REQUIRE.
2. ALL DIMENSIONS ARE SHOWN IN FEET AND INCHES.
3. ADDITIONAL MEDIAN WIDTH MAY BE REQUIRED TO PROVIDE CLEARANCE FOR 24" BACKROUNDS, WINDGUARD OR GATE COUNTERWEIGHTS.
4. ROADWAY GATE ARM LENGTH SHALL NOT EXCEED 32' MEASURED FROM THE CENTER OF KINGPIN TO THE TIP OF GATE ARM.
5. SEE STANDARD DRAWINGS CS2000, CS2030 AND CS2040 FOR ADDITIONAL INFORMATION.
6. DEVIATION FROM THIS STANDARD SHALL BE APPROVED BY SCRRA MANAGER OF C&S ENGINEEING OR DESIGNATE.

REVISIONS				
-	-	-	-	-
REV.	DATE	DESCRIPTION	DES.	ENG.

FINAL REVIEW BY: C&SDRC DATE: 11/21/08

APPROVED BY

Dan C. Guerrero
MANAGER, COMMUNICATIONS AND SIGNALS ENGINEERING

Darrell V. Maxey
DIRECTOR, ENGINEERING AND CONSTRUCTION

THE SOUTHERN CALIFORNIA REGIONAL RAIL AUTHORITY OR IT'S OFFICERS OR AGENTS SHALL NOT BE RESPONSIBLE FOR THE ACCURACY OR COMPLETENESS OF THIS PLAN SHEET

METROLINK
SOUTHERN CALIFORNIA REGIONAL RAIL AUTHORITY
700 SOUTH FLOWER STREET
LOS ANGELES, CALIFORNIA 90017

ENGINEERING STANDARDS

TYPICAL LOCATION PLAN
CANTILEVER FLASHERS WITH ENTRANCE GATES
AND MEDIAN

STANDARD 8380
SCALE: NONE
REVISION –
SHEET 1 OF 1
CADD FILE: ES8380

CANTILEVER FLASHERS WITH ENTRANCE AND EXIT GATES AND MEDIAN:

ONE OR MORE TRACKS,
TWO-WAY VEHICULAR TRAFFIC,
THREE OR MORE LANES
EACH WAY WITH MEDAN.

RIGHT ANGLE CROSSING

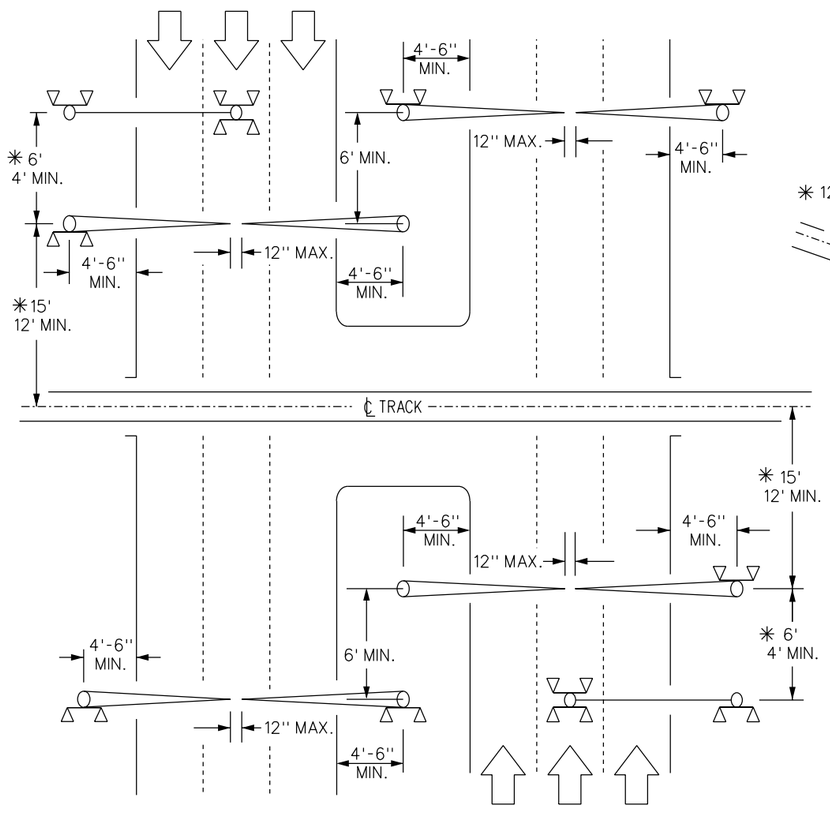

ACUTE ANGLE CROSSING

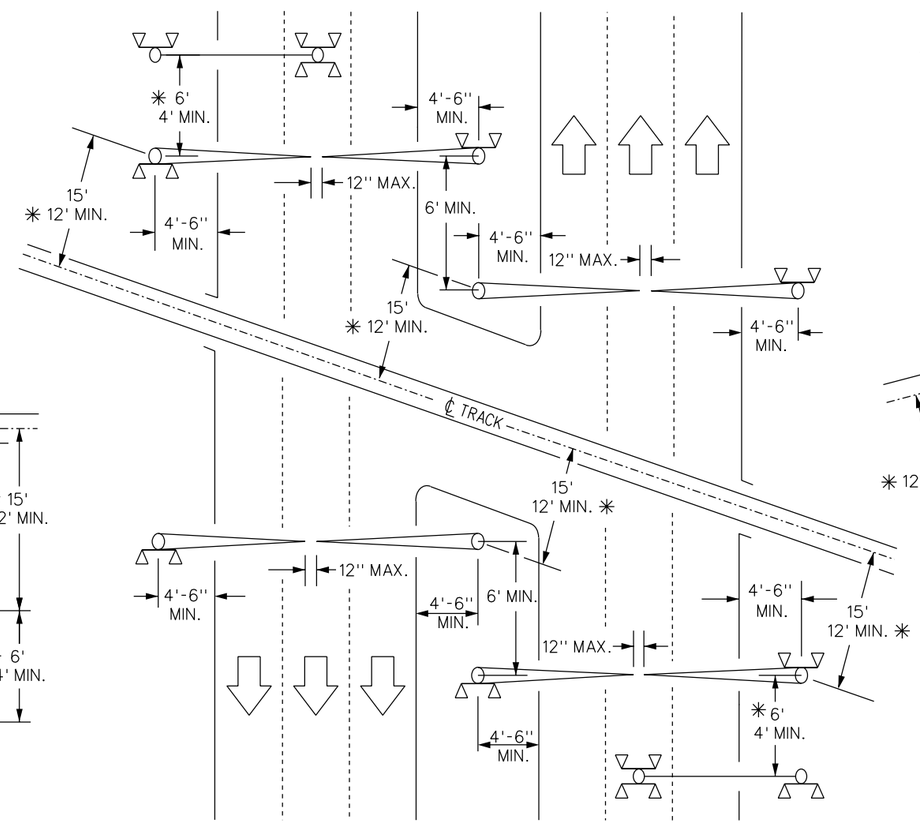

OBTUSE ANGLE CROSSING

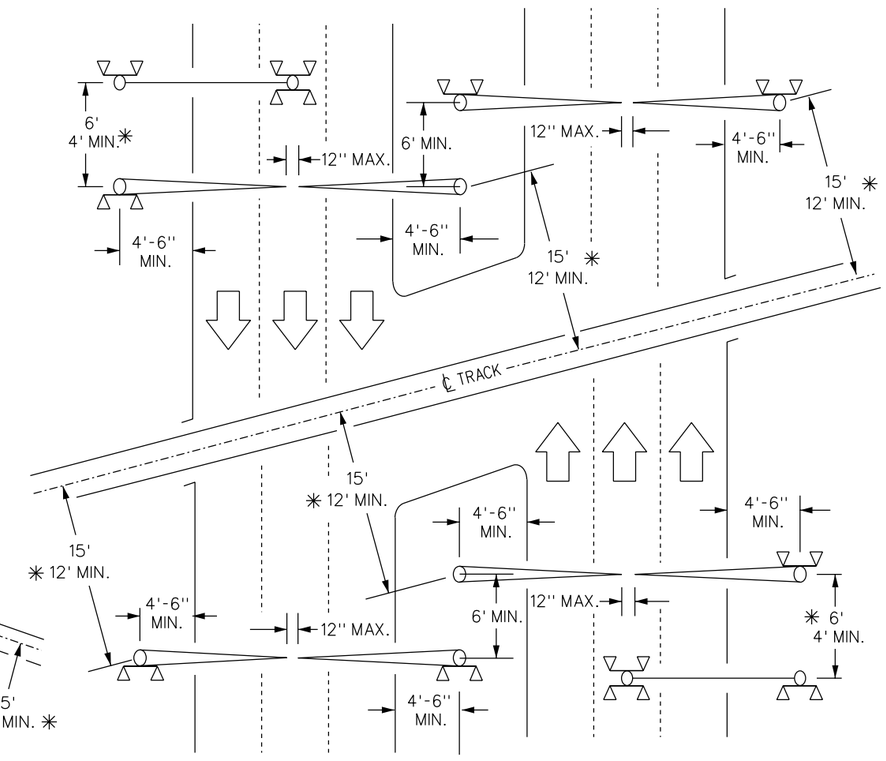

✳ USE OF MINIMUM DIMENSIONS SHALL BE AUTHORIZED BY SCRRA MANAGER OF C&S ENGINEERING OR DESIGNATE.

NOTES:

1. TYPICAL LOCATION PLAN MAY VARY AS CONDITIONS REQUIRE.
2. ALL DIMENSIONS ARE SHOWN IN FEET AND INCHES.
3. ADDITIONAL MEDIAN WIDTH MAY BE REQUIRED TO PROVIDE CLEARANCE FOR 24" BACKROUNDS, WINDGUARD OR GATE COUNTERWEIGHTS.
4. ROADWAY GATE ARM LENGTH SHALL NOT EXCEED 32' MEASURED FROM THE CENTER OF KINGPIN TO THE TIP OF GATE ARM.
5. SEE STANDARD DRAWINGS ES8300 THROUGH ES8308, ES8320 & ES8325 FOR ADDITIONAL INFORMATION.
6. WHERE BOTH ENTRANCE GATES AND EXIT GATES ARE ALIGNED ON A MEDIAN, FRONT LIGHTS SHALL BE INSTALLED ON THE ASSEMBLY CLOSEST TO TRAFFIC APPROACHING IN THE LAWFUL DIRECTION.
7. DEVIATION FROM THIS STANDARD SHALL BE APPROVED BY SCRRA MANAGER OF C&S ENGINEEING OR DESIGNATE.

REVISIONS				
-	-	-	-	-
REV.	DATE	DESCRIPTION	DES.	ENG.

FINAL REVIEW BY: C&SDRC DATE: 11/21/08

APPROVED BY

Dan C. Guerrero
MANAGER, COMMUNICATIONS AND SIGNALS ENGINEERING

Darrell V. Maxey
DIRECTOR, ENGINEERING AND CONSTRUCTION

THE SOUTHERN CALIFORNIA REGIONAL RAIL AUTHORITY OR IT'S OFFICERS OR AGENTS SHALL NOT BE RESPONSIBLE FOR THE ACCURACY OR COMPLETENESS OF THIS PLAN SHEET

METROLINK
SOUTHERN CALIFORNIA REGIONAL RAIL AUTHORITY
700 SOUTH FLOWER STREET
LOS ANGELES, CALIFORNIA 90017

ENGINEERING STANDARDS

TYPICAL LOCATION PLAN
CANTILEVER FLASHERS WITH ENTRANCE
AND EXIT GATES AND MEDIAN

STANDARD 8385
SCALE: NONE
REVISION –
SHEET 1 OF 1
CADD FILE: ES8385

PED FLASHING LIGHT SIGNALS WITH GATES:

ONE OR MORE TRACKS,
TWO-WAY PEDESTRIAN TRAFFIC,

RIGHT ANGLE CROSSING

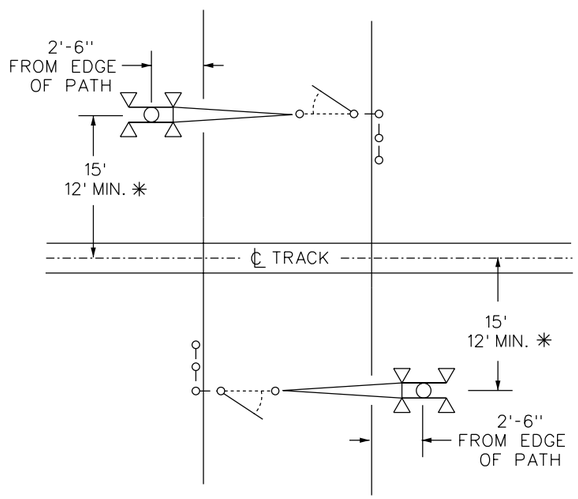

STATION-END OF
PLATFORM APPLICATION

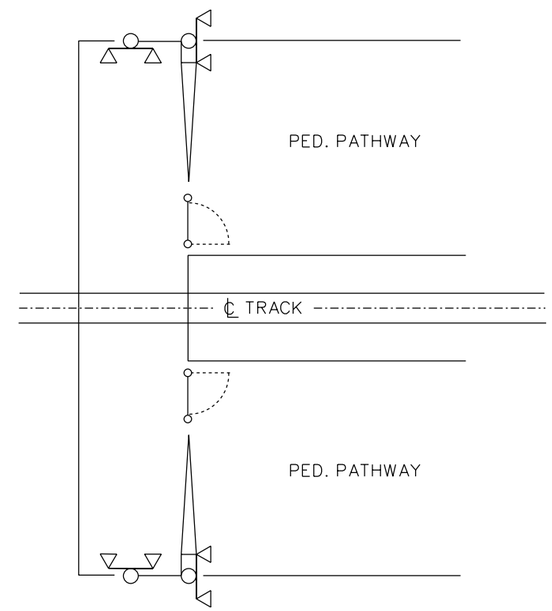

✳ USE OF MINIMUM DIMENSIONS SHALL BE AUTHORIZED BY SCRRA MANAGER OF C&S ENGINEERING OR DESIGNATE.

NOTES:

1. TYPICAL LOCATION PLAN MAY VARY AS CONDITIONS REQUIRE.
2. ALL DIMENSIONS ARE SHOWN IN FEET AND INCHES.
3. GATE ARM LENGTH SHALL NOT EXCEED 8' MEASURED FROM THE CENTER OF KINGPIN TO THE TIP OF GATE ARM WITHOUT COUNTERWEIGHTS.
4. SEE STANDARD DRAWING ES8395 FOR ADDITIONAL INFORMATION.
5. DEVIATION FROM THIS STANDARD SHALL BE APPROVED BY SCRRA MANAGER OF C&S ENGINEERING OR DESIGNATE.
6. PEDESTRIAN GATE CONFIGURATIONS MUST HAVE CHANNELIZATION AND EXIT SWING GATES.
7. DISTANCE BETWEEN TIP OF GATE ARM AND POST TO BE BETWEEN $4\frac{1}{2}$IN. AND 5 IN. GATE TIP MUST BE FREE OF BURRS AND SHARP EDGES.

REVISIONS				
-	-	-	-	-
REV.	DATE	DESCRIPTION	DES.	ENG.

FINAL REVIEW BY: C&SDRC DATE: 11/21/08

APPROVED BY

Dan C. Guerrero
MANAGER, COMMUNICATIONS AND SIGNALS ENGINEERING

Darrell V. Maxey
DIRECTOR, ENGINEERING AND CONSTRUCTION

THE SOUTHERN CALIFORNIA REGIONAL RAIL AUTHORITY OR IT'S OFFICERS OR AGENTS SHALL NOT BE RESPONSIBLE FOR THE ACCURACY OR COMPLETENESS OF THIS PLAN SHEET

METROLINK
SOUTHERN CALIFORNIA REGIONAL RAIL AUTHORITY
700 SOUTH FLOWER STREET
LOS ANGELES, CALIFORNIA 90017

ENGINEERING STANDARDS

TYPICAL LOCATION PLAN
PEDESTRIAN FLASHING LIGHT SIGNALS WITH GATES
CROSSING CONFIGURATION

STANDARD 8390
SCALE: NONE
REVISION –
SHEET 1 OF 1
CADD FILE: ES8390

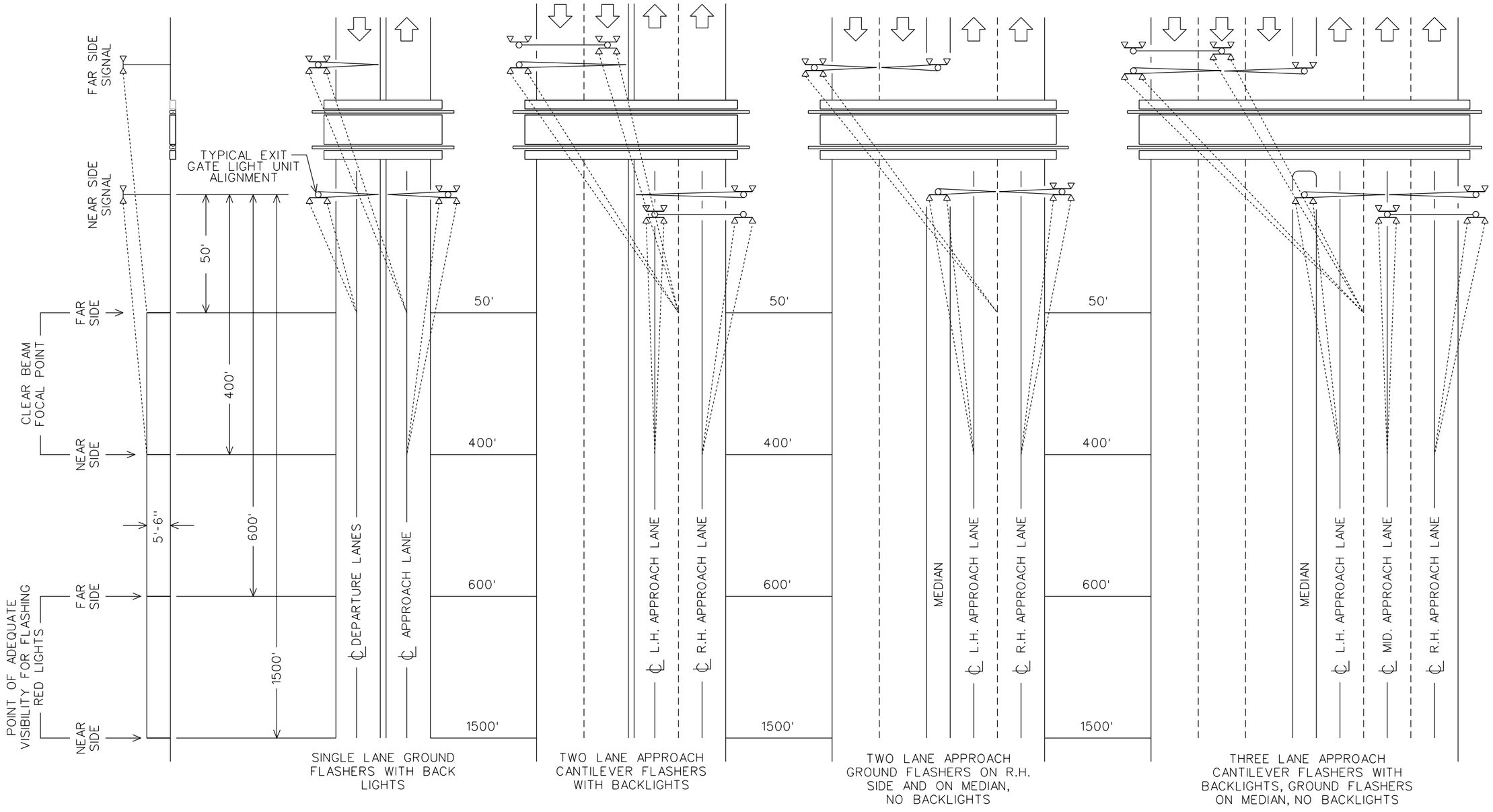

LEGEND:

BACK LIGHTS / FRONT LIGHTS	CANTI-LEVER LIGHTS / FRONT LIGHTS	FRONT LIGHTS
CURB GATE	CANTILEVER	MEDIAN GATE

NOTES:

1. LENS DEGREES AS FOLLOWS:
   FRONT LIGHTS = 30°-15°
   BACK LIGHTS = 70°
   CANTILEVER ARM LIGHTS = 20°-32°
2. ON L.E.D. SIGNALS, THE DEGREE OF LENS IS NOT NEEDED.
3. WHERE THERE ARE THREE LANES OR MORE, BACK LIGHTS SHALL BE REQUIRED IN MEDIAN. WHERE THERE ARE TWO LANES, BACK LIGHTS IN MEDIAN SHALL BE APPROVED ON A CASE BY CASE BASIS, TO BE DETERMINED BY A SITE SURVEY.
4. DEVIATION FROM THIS STANDARD SHALL BE APPROVED BY SCRRA MANAGER OF C&S ENGINEERING OR DESIGNATE.

REVISIONS				
REV.	DATE	DESCRIPTION	DES.	ENG.
-	-	-	-	-

FINAL REVIEW BY: C&SDRC DATE: 11/21/08

APPROVED BY

Dan C. Guerrero
MANAGER, COMMUNICATIONS AND SIGNALS ENGINEERING

Darrell V. Maxey
DIRECTOR, ENGINEERING AND CONSTRUCTION

THE SOUTHERN CALIFORNIA REGIONAL RAIL AUTHORITY OR IT'S OFFICERS OR AGENTS SHALL NOT BE RESPONSIBLE FOR THE ACCURACY OR COMPLETENESS OF THIS PLAN SHEET

METROLINK
SOUTHERN CALIFORNIA REGIONAL RAIL AUTHORITY
700 SOUTH FLOWER STREET
LOS ANGELES, CALIFORNIA 90017

ENGINEERING STANDARDS

TYPICAL LIGHT UNIT ALIGNMENT
FOR FLASHING LIGHT SIGNALS
AT GRADE CROSSING

STANDARD: 8400
SCALE: NONE
REVISION: –
SHEET: 1 OF 1
CADD FILE: ES8400

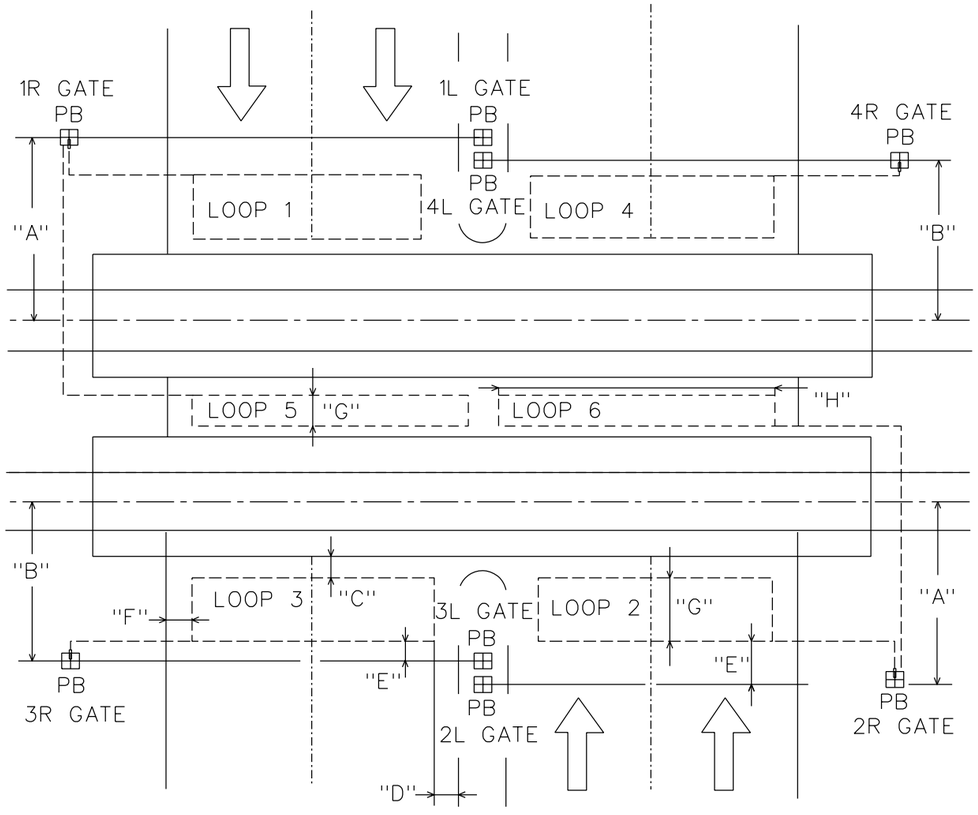

TYPICAL LOOP LAYOUT DIMENSIONS

1. LOOPS TO BE INSTALLED PER MANUFACTURER'S RECOMMENDATIONS.
2. "A" - TYPICALLY 15' TO MAINTAIN DIMENSIONS "G" AND "E" MAY BE REDUCED IF ENTRANCE GATED CANNOT BE RELOCATED.
3. "B" - TYPICALLY 15' MAY BE REDUCED IF EXIT GATES CANNOT BE RELOCATED. (SEE "E").
4. "C" - TYPICALLY 12", MAY VARY FROM 6" TO 12" DEPENDING ON PAVEMENT QUALITY.
5. "D" - TYPICALLY 2' FROM EDGE OF TRAVELED WAY OR LANE LNE.
6. "E" - 3'-3½' RECOMMENDED TO AVOID LOOP ACTIVATION WHEN A VEHICLE CROWDS UNDER AN ENTRANCE GATE. DIMENSION MAY BE REDUCED IF GATES CANNOT BE RELOCATED IN ORDER TO MAINTAIN THE 5' MINIMUM REFERENCED IN DIMENSION "G".
7. "F" - TYPICALLY 2' FROM LOOP TO EDGE OF TRAVELED WAY, SIMILAR TO DIMENSION "D", MAY BE INCREASED UP TO 5' WHERE IMPROVED SHOULDER OR OTHER EXISTS OR FURTHER AS DETERMINED BY DIAGNOSTIC REVIEW.
8. "G" - MAXIMUM LOOP WIDTH SHALL NOT EXCEED 8'. MINIMUM LOOP WIDTH OF ENTRANCE AND EXIT LOOPS TYPICALLY NOT TO BE LESS THAN 5'. LOOPS BETWEEN TRACKS SHALL NOT BE LESS THAN 3' WIDE.
9. "H" - MAXIMUM LOOP LENGTH 28'-6".
10. "I" - MAXIMUM 13' BETWEEN LOOPS IN THE SAME LANE.

NOTES:

1). TOTAL AREA OF LOOP SHALL NOT EXCEED 144 SQ. FT.
(EX. 8' MAX WIDTH X 18' = 144 SQ. FT.
(EX. 6' X 24' = 144 SQ. FT.

2). WHILE LOOPS MAY COVER MULTIPLE LANES. THEY SHALL NOT COVER PARTIAL LANES.

3). VEHICLE DETECTION LOOPS SHALL BE PRE-FORMED, VITAL WATER REPELLENT, WITH AN INTEGRAL CHECK LOOP SUCH AS THAT MANUFACTURED BY RENO A&E.

4). SAW-CUTTING PAVEMENT FOR LOOP INSTALLATION SHALL BE AVOIDED.

REVISIONS				
-	-	-	-	-
REV.	DATE	DESCRIPTION	DES.	ENG.

FINAL REVIEW BY: C&SDRC DATE: 11/21/08

APPROVED BY

Dan C. Guerrero

MANAGER, COMMUNICATIONS AND SIGNALS ENGINEERING

Darrell V. Maxey

DIRECTOR, ENGINEERING AND CONSTRUCTION

THE SOUTHERN CALIFORNIA REGIONAL RAIL AUTHORITY OR IT'S OFFICERS OR AGENTS SHALL NOT BE RESPONSIBLE FOR THE ACCURACY OR COMPLETENESS OF THIS PLAN SHEET

METROLINK

SOUTHERN CALIFORNIA REGIONAL RAIL AUTHORITY
700 SOUTH FLOWER STREET
LOS ANGELES, CALIFORNIA 90017

ENGINEERING STANDARDS

VITAL
PLACEMENT FOR INDUCTIVE LOOPS
USED WITH EXIT GATES

STANDARD: 8405
SCALE: NONE
REVISION: –
SHEET: 1 OF 1
CADD FILE: ES8405

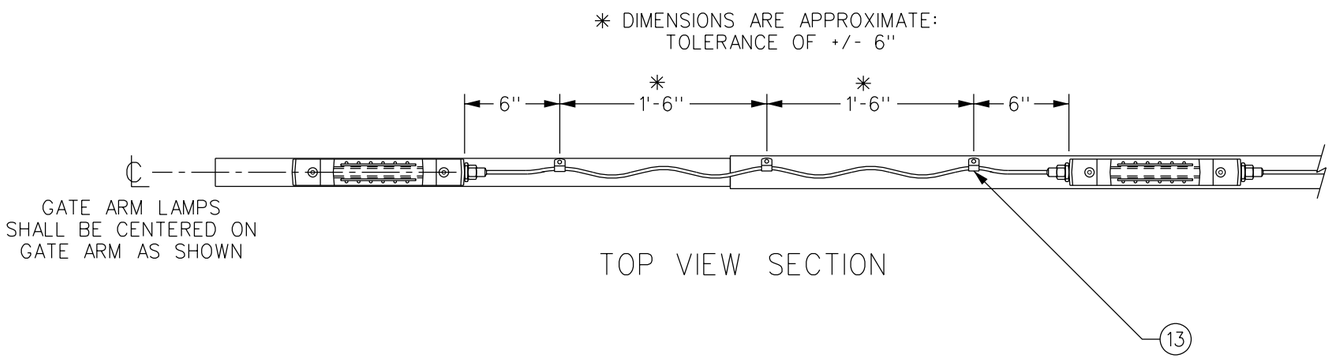

TOP VIEW SECTION

BILL OF MATERIAL 04-3813200-0

L.E.D. GATE ARM LAMP KIT COMPLETE WITH PLUG-IN CORDS AND MOUNTING HARDWARE

REF	QTY	METROLINK PART NUMBER	ITEM
1	3	N/A	L.E.D. GATE ARM LAMP HOUSING
2	3	N/A	L.E.D. GATE ARM LAMP BASE PLATE
3	6	N/A	L.E.D. GATE ARM LAMP BOARD ASSEMBLY
4	12	N/A	L.E.D. GATE ARM LAMP BOARD SUPPORT
5	1	04-3813206-0	L.E.D. GATE ARM LAMP STRAIGHT PLUG-IN CORD
6	2	04-3813207-0	L.E.D. GATE ARM LAMP COILED PLUG-IN CORD
7	5	N/A	L.E.D. GATE ARM LAMP CONNECTOR WITH PIGTAIL
8	5	N/A	L.E.D. GATE ARM LAMP 1/2" EXTERNAL LOCK WASHER
9	5	N/A	L.E.D. GATE ARM LAMP 1/2"-20 UNF JAM NUT
10	9	N/A	L.E.D. GATE ARM LAMP WIRE NUT
11	1	N/A	L.E.D. GATE ARM LAMP SNAP-IN PLUG
12	26	N/A	L.E.D. GATE ARM LAMP 5/16" X 1 1/4" LG. WASHER HEAD TEK SCREW
13	20	N/A	L.E.D. GATE ARM LAMP 3/8" CABLE CLAMP

NOTE: L.E.D. GATE ARM LAMP REPLACEMENT KITS CAN BE ORDERED USING SCRRA P/N 04-3813201-0. THESE KITS COME WITH L.E.D. CURB LAMP, MID LAMP AND TIP LAMP COMPLETE WITH NO MOUNTING HARDWARE OR PLUG-IN CORDS .

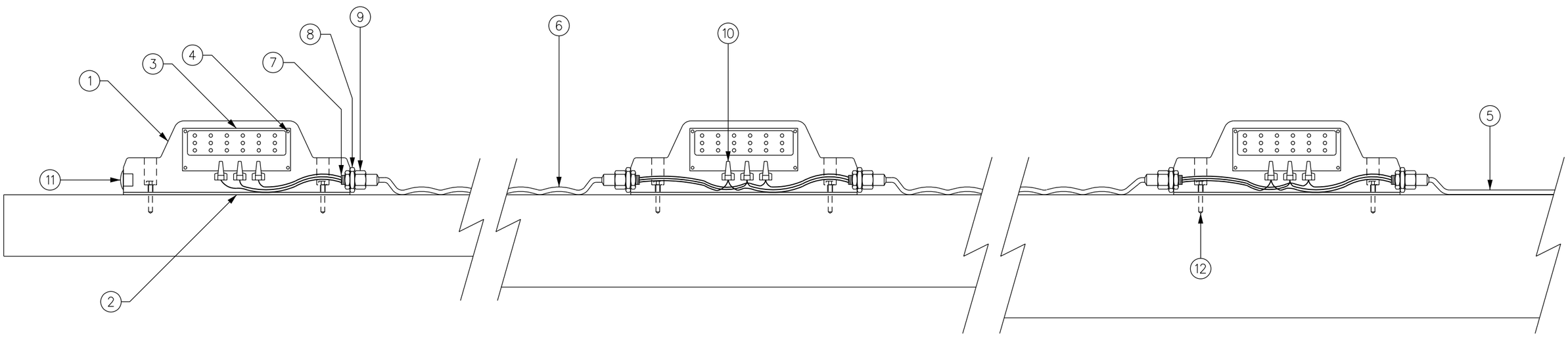

NOTES:

1. REFER TO STANDARD DRAWING ES8450-02 FOR L.E.D. LAMP SPECIFICATIONS.
2. REFER TO STANDARD DRAWING ES8300 FOR ADDITIONAL INFORMATION REGARDING L.E.D. LAMP PLACEMENT REQUIREMENTS ON GATE ARM.

REVISIONS				
-	-	-	-	-
REV.	DATE	DESCRIPTION	DES.	ENG.

FINAL REVIEW BY: C&SDRC DATE: 11/21/08

APPROVED BY

Dan C. Guerrero
MANAGER, COMMUNICATIONS AND SIGNALS ENGINEERING

Darrell V. Maxey
DIRECTOR, ENGINEERING AND CONSTRUCTION

THE SOUTHERN CALIFORNIA REGIONAL RAIL AUTHORITY OR IT'S OFFICERS OR AGENTS SHALL NOT BE RESPONSIBLE FOR THE ACCURACY OR COMPLETENESS OF THIS PLAN SHEET

METROLINK
SOUTHERN CALIFORNIA REGIONAL RAIL AUTHORITY
700 SOUTH FLOWER STREET
LOS ANGELES, CALIFORNIA 90017

ENGINEERING STANDARDS

TYPICAL L.E.D. GATE ARM LAMP
COMPLETE WITH HARDWARE

STANDARD 8450
SCALE: NONE
REVISION –
SHEET 1 OF 3
CADD FILE: ES8450–01

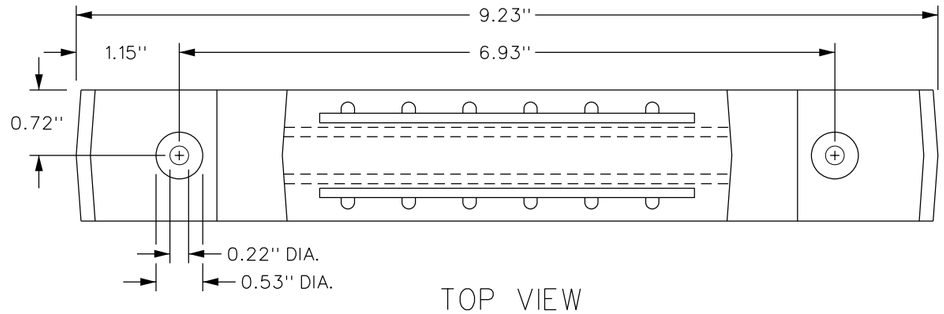

TOP VIEW

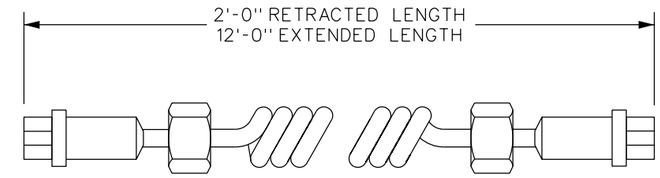

COILED PLUG-IN CORD

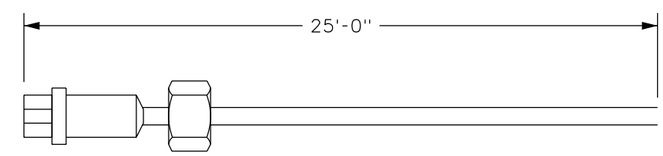

STRAIGHT PLUG-IN CORD

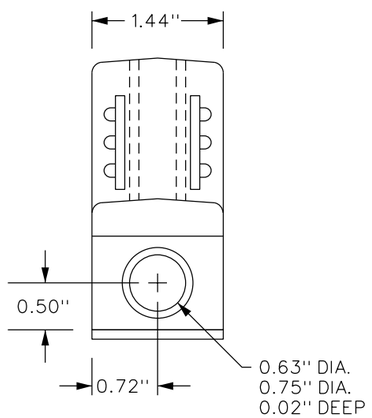

SIDE VIEW

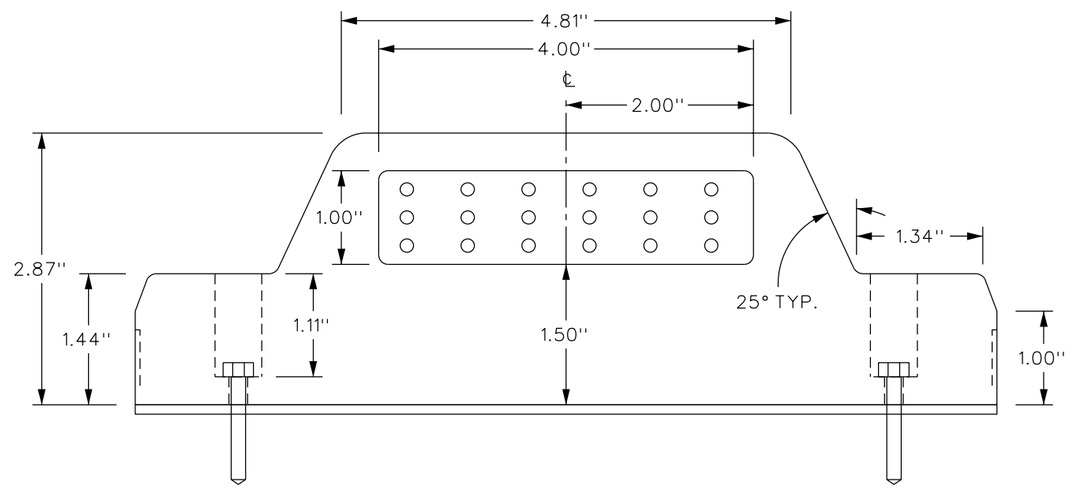

PLAN VIEW

OPERATING SPECIFICATIONS

OPERATING VOLTAGE	8.5V DC/AC - 12V DC/AC
MINIMUM FORWARD CURRENT	10mA
RECOMMENDED OPERATING VOLTAGE	10V DC
TYPICAL MAX CURRENT DRAW (AT 10V DC)	0.35a
TYPICAL MAX POWER CONSUMPTION (AT 10V DC PER LIGHT)	3.5W
DOMINANT WAVELENGTH	.629nm (RED)

PERFORMANCE STANDARDS

VIBRATION (X, Y AND Z AXIS)	A.R.E.M.A. 2006, MIL-STD 810F
OPERATING TEMPERATURE	-40° C to 70° C
IP RATING	IP 65
ELECTRONIC NOISE	A.R.E.M.A. 2006
STORAGE TEMPERATURE	-40° C to 85° C

NOTE:

1. LED GATE LIGHT UNIT SHALL BE ENCASED IN AN IMPACT RESISTANT, NON-COLORED, TRANSPARENT PLASTIC HOUSING.
2. LIGHT EMITTING DIODES SHALL BE RED IN COLOR, AND SHOULD HAVE A MINIMUM OF 18 INDIVIDUAL DIODES ON EACH SIDE OF LIGHT UNIT.
3. GATE ARM LIGHT SHALL BE EQUIPPED WITH QUICK CONNECT FEATURES AND SHALL NOT REQUIRE ANY FIELD WIRING WITHIN THE LIGHT UNIT.
4. GATE ARM LAMP UNIT SHALL BE IN ACCORDANCE WITH A.R.E.M.A. C&S MANUAL PART 3.2.40.

REVISIONS				
-	-	-	-	-
REV.	DATE	DESCRIPTION	DES.	ENG.

FINAL REVIEW BY: C&SDRC DATE: 11/21/08

APPROVED BY

Dan C. Guerrero
MANAGER, COMMUNICATIONS AND SIGNALS ENGINEERING

Darrell V. Maxey
DIRECTOR, ENGINEERING AND CONSTRUCTION

THE SOUTHERN CALIFORNIA REGIONAL RAIL AUTHORITY OR IT'S OFFICERS OR AGENTS SHALL NOT BE RESPONSIBLE FOR THE ACCURACY OR COMPLETENESS OF THIS PLAN SHEET

METROLINK
SOUTHERN CALIFORNIA REGIONAL RAIL AUTHORITY
700 SOUTH FLOWER STREET
LOS ANGELES, CALIFORNIA 90017

ENGINEERING STANDARDS

TYPICAL L.E.D. GATE ARM LAMP SPECIFICATIONS

STANDARD: 8450
SCALE: NONE
REVISION: –
SHEET: 2 OF 3
CADD FILE: ES8450–02

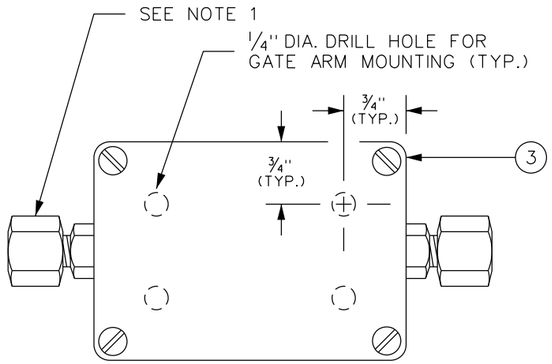

JUNCTION BOX

QTY	DESCRIPTION
1	JUNCTION BOX
1	COVER
1	COVER GASKET
4	COVER MOUNTING SCREWS
2	FITTINGS - SEE NOTE 1

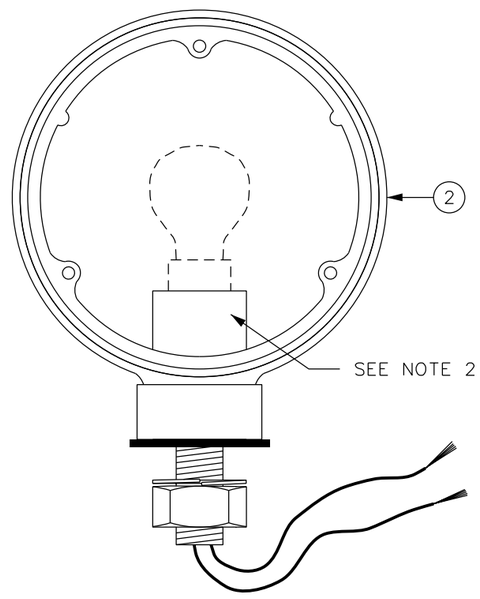

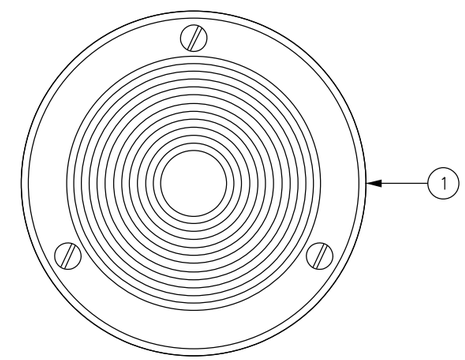

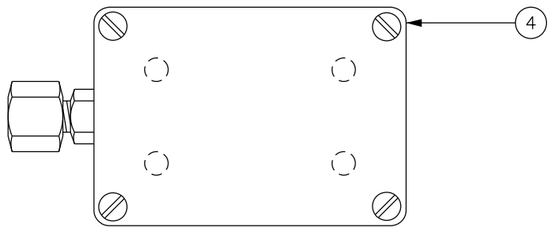

JUNCTION BOX (TIP LAMP)

QTY	DESCRIPTION
1	JUNCTION BOX
1	JUNCTION BOX COVER
1	COVER GASKET
4	COVER MOUNTING SCREWS
1	FITTING - SEE NOTE 1

4" LAMP HEAD
(BULB NOT INCLUDED)

QTY	DESCRIPTION
1	LAMP HEAD
1	BAYONET BASE
1	NUT
1	LOCK WASHER
1	RUBBER GASKET

4" LENS REPLACEMENT KIT

QTY	DESCRIPTION
1	RED LENS (DOT IPST 88)
1	GASKET
3	MOUNTING SCREWS

BILL OF MATERIAL 04-3813137-0
4" GATE ARM LAMP COMPLETE

REF	QTY	METROLINK PART NUMBER	ITEM
1	2	03-3270065-0	4" LENS REPLACEMENT KIT
2	1	04-3813140-0	4" LAMP HEAD - (BULB NOT INCLUDED)
3	1	04-3813135-0	JUNCTION BOX WITH COVER AND FITTINGS

BILL OF MATERIAL 04-3813138-0
4" GATE ARM TIP LAMP COMPLETE

REF	QTY	METROLINK PART NUMBER	ITEM
1	2	03-3270065-0	4" LENS REPLACEMENT KIT
2	1	04-3813140-0	4" LAMP HEAD - (BULB NOT INCLUDED)
4	1	04-3813136-0	JUNCTION BOX WITH COVER AND FITTINGS (TIP LAMP)

NOTE:

1. FITTINGS SHALL ACCOMMODATE 3 COND. #14 GAUGE SJO CABLE (TYP.). SCRRA PART NUMBER FOR 3C#14 SJO CABLE IS Z045-L-0031
2. GATE ARM LAMP UNIT SHALL BE IN ACCORDANCE WITH A.R.E.M.A. C&S MANUAL PART 3.2.40.

THIS DRAWING TO BE USED FOR MAINTENANCE PURPOSES ONLY

REVISIONS				
REV.	DATE	DESCRIPTION	DES.	ENG.

FINAL REVIEW BY: C&SDRC DATE: 11/21/08
APPROVED BY
Dan C. Guerrero
MANAGER, COMMUNICATIONS AND SIGNALS ENGINEERING
Darrell V. Maxey
DIRECTOR, ENGINEERING AND CONSTRUCTION

THE SOUTHERN CALIFORNIA REGIONAL RAIL AUTHORITY OR IT'S OFFICERS OR AGENTS SHALL NOT BE RESPONSIBLE FOR THE ACCURACY OR COMPLETENESS OF THIS PLAN SHEET

METROLINK
SOUTHERN CALIFORNIA REGIONAL RAIL AUTHORITY
700 SOUTH FLOWER STREET
LOS ANGELES, CALIFORNIA 90017

ENGINEERING STANDARDS

TYPICAL 4" GATE ARM LAMP
COMPLETE WITH HARDWARE

STANDARD 8450
SCALE: NONE
REVISION 1 SHEET 3 OF 3
CADD FILE: ES8450-03

REF	METROLINK PART NUMBER	ITEM
1	04-3813066-0	ARM, GATE 9'-6" FIBER REINFORCED POLYGLASS TIP SECTION W/ VERTICAL STRIPING
2	04-3813067-0	ARM, GATE 12'-0" FIBER REINFORCED POLYGLASS TIP SECTION W/ VERTICAL STRIPING

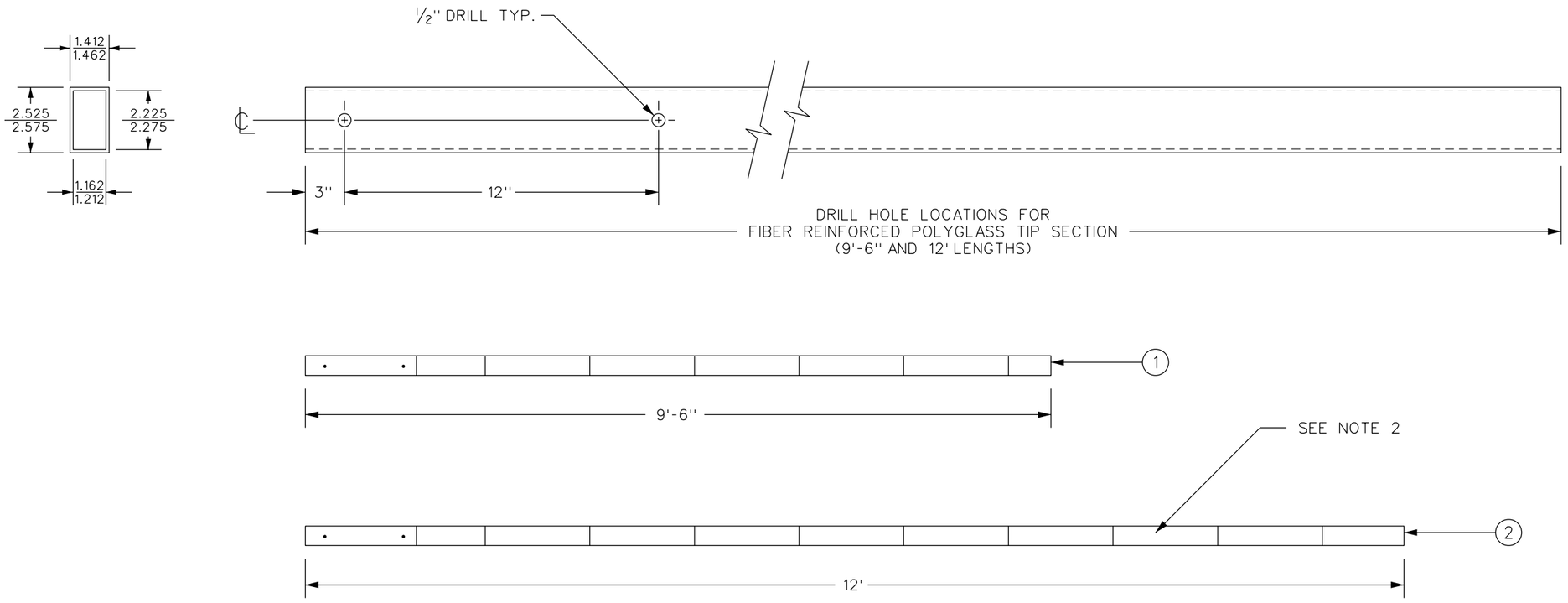

NOTES:

1. ALL DIMENSIONS ARE SHOWN IN INCHES.
2. RETROREFLECTIVE MATERIAL SHALL BE HIGH INTENSITY GRADE WITH VERTICAL STRIPES ALTERNATELY RED AND WHITE AT 16" INTERVALS MEASURED HORIZONTALLY.
3. GATE ARMS SHALL BE FULLY REFLECTORIZED ON BOTH SIDES.
4. RETROREFLECTIVE MATERIAL SHALL NOT INTERFERE WITH THE TELESCOPING FUNCTION OF THE GATE ARMS.
5. REFER TO A.R.E.M.A. C&S MANUAL PART 3.2.25 FOR ADDITIONAL INFORMATION.

REV.	DATE	DESCRIPTION	DES.	ENG.
-	-	-	-	-

REVISIONS

FINAL REVIEW BY: C&SDRC DATE: 11/21/08

APPROVED BY

Dan C. Guerrero
MANAGER, COMMUNICATIONS AND SIGNALS ENGINEERING

Darrell V. Maxey
DIRECTOR, ENGINEERING AND CONSTRUCTION

THE SOUTHERN CALIFORNIA REGIONAL RAIL AUTHORITY OR IT'S OFFICERS OR AGENTS SHALL NOT BE RESPONSIBLE FOR THE ACCURACY OR COMPLETENESS OF THIS PLAN SHEET

METROLINK
SOUTHERN CALIFORNIA REGIONAL RAIL AUTHORITY
700 SOUTH FLOWER STREET
LOS ANGELES, CALIFORNIA 90017

ENGINEERING STANDARDS

TYPICAL FIBER REINFORCED POLYGLASS
GATE ARM TIP SECTION WITH VERTICAL STRIPING

STANDARD: 8460
SCALE: NONE
REVISION: –
SHEET: 1 OF 2
CADD FILE: ES8460-01

REF	METROLINK PART NUMBER	ITEM
1	04-3813047-0	ARM, GATE 9'-6" FIBER REINFORCED POLYGLASS TIP SECTION W/ 45° DIAGONAL STRIPING
2	04-3813048-0	ARM, GATE 12'-0" FIBER REINFORCED POLYGLASS TIP SECTION W/ 45° DIAGONAL STRIPING

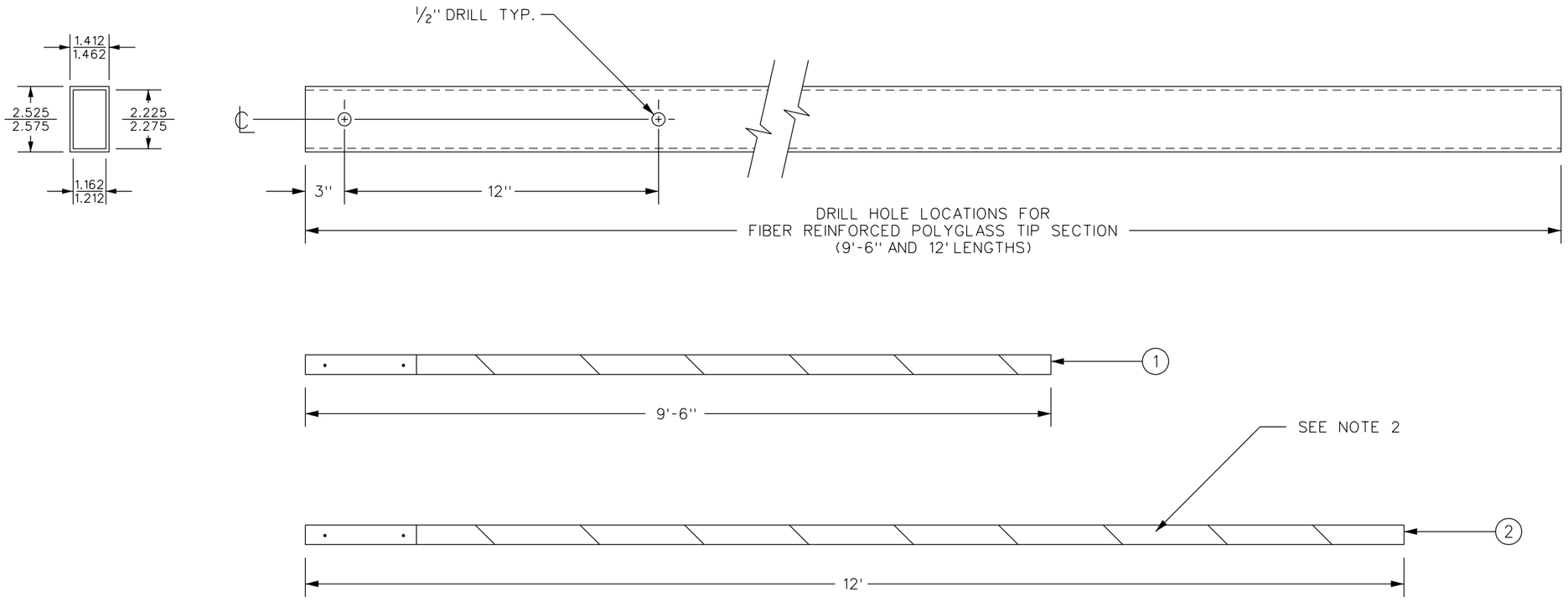

NOTES:

1. ALL DIMENSIONS ARE SHOWN IN INCHES.
2. RETROREFLECTIVE MATERIAL SHALL BE HIGH INTENSITY GRADE WITH 45° DIAGONAL STRIPES ALTERNATELY RED AND WHITE AT 16" INTERVALS MEASURED HORIZONTALLY.
3. GATE ARMS SHALL BE FULLY REFLECTORIZED ON BOTH SIDES.
4. RETROREFLECTIVE MATERIAL SHALL NOT INTERFERE WITH THE TELESCOPING FUNCTION OF THE GATE ARMS.
5. REFER TO A.R.E.M.A. C&S MANUAL PART 3.2.25 FOR ADDITIONAL INFORMATION.

REVISIONS				
1	-	-	-	-
REV.	DATE	DESCRIPTION	DES.	ENG.

FINAL REVIEW BY: C&SDRC DATE: 11/21/08

APPROVED BY

Dan C. Guerrero

MANAGER, COMMUNICATIONS AND SIGNALS ENGINEERING

Darrell V. Maxey

DIRECTOR, ENGINEERING AND CONSTRUCTION

THE SOUTHERN CALIFORNIA REGIONAL RAIL AUTHORITY OR IT'S OFFICERS OR AGENTS SHALL NOT BE RESPONSIBLE FOR THE ACCURACY OR COMPLETENESS OF THIS PLAN SHEET

METROLINK

SOUTHERN CALIFORNIA REGIONAL RAIL AUTHORITY
700 SOUTH FLOWER STREET
LOS ANGELES, CALIFORNIA 90017

ENGINEERING STANDARDS

TYPICAL FIBER REINFORCED POLYGLASS
GATE ARM TIP SECTION WITH 45° DIAGONAL STRIPING

STANDARD: 8460
SCALE: NONE
REVISION: 1
SHEET: 2 OF 2
CADD FILE: ES8460-02

REF	METROLINK PART NUMBER	ITEM
1	04-3813068-0	ARM, GATE 9'-6" FIBER REINFORCED POLYGLASS MID SECTION W/ VERTICAL STRIPING
2	04-3813069-0	ARM, GATE 16'-0" FIBER REINFORCED POLYGLASS MID SECTION W/ VERTICAL STRIPING

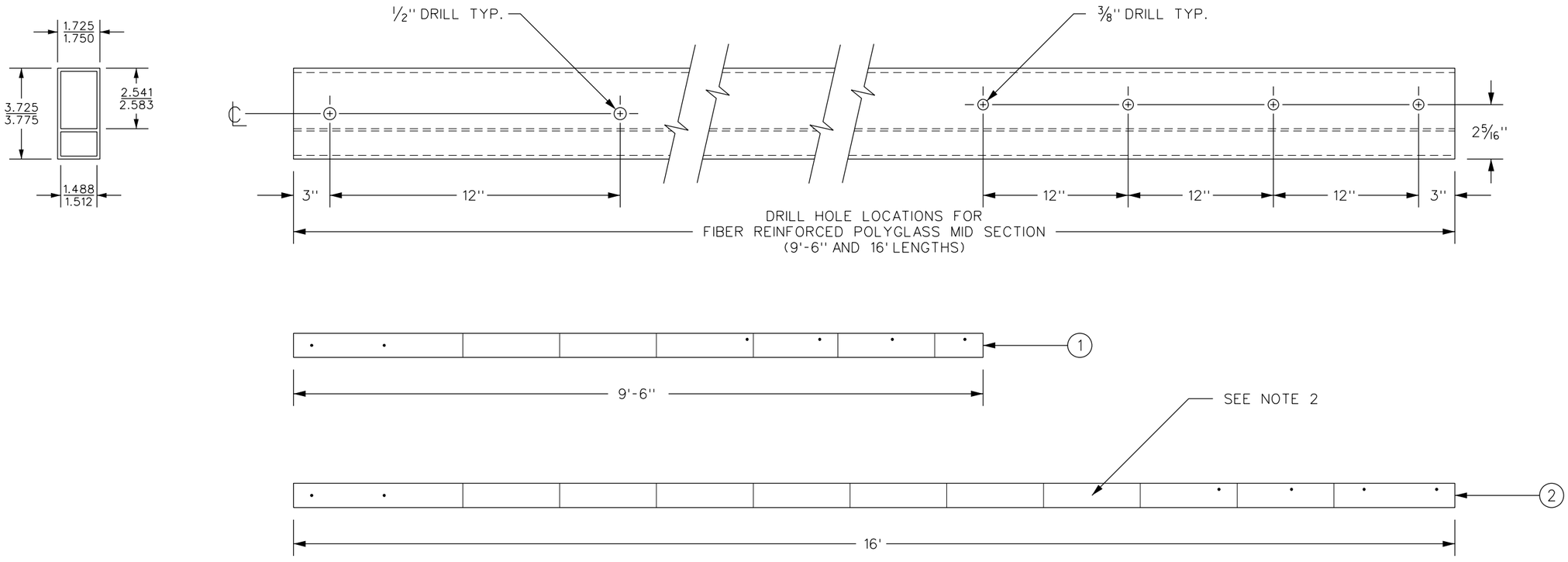

NOTES:

1. ALL DIMENSIONS ARE SHOWN IN INCHES.
2. RETROREFLECTIVE MATERIAL SHALL BE HIGH INTENSITY GRADE WITH VERTICAL STRIPES ALTERNATELY RED AND WHITE AT 16" INTERVALS MEASURED HORIZONTALLY.
3. GATE ARMS SHALL BE FULLY REFLECTORIZED ON BOTH SIDES.
4. RETROREFLECTIVE MATERIAL SHALL NOT INTERFERE WITH THE TELESCOPING FUNCTION OF THE GATE ARMS.
5. REFER TO A.R.E.M.A. C&S MANUAL PART 3.2.25 FOR ADDITIONAL INFORMATION.

REVISIONS				
-	-	-	-	-
REV.	DATE	DESCRIPTION	DES.	ENG.

FINAL REVIEW BY: C&SDRC DATE: 11/21/08

APPROVED BY

Dan C. Guerrero

MANAGER, COMMUNICATIONS AND SIGNALS ENGINEERING

Darrell V. Maxey

DIRECTOR, ENGINEERING AND CONSTRUCTION

THE SOUTHERN CALIFORNIA REGIONAL RAIL AUTHORITY OR IT'S OFFICERS OR AGENTS SHALL NOT BE RESPONSIBLE FOR THE ACCURACY OR COMPLETENESS OF THIS PLAN SHEET

METROLINK

SOUTHERN CALIFORNIA REGIONAL RAIL AUTHORITY
700 SOUTH FLOWER STREET
LOS ANGELES, CALIFORNIA 90017

ENGINEERING STANDARDS

TYPICAL FIBER REINFORCED POLYGLASS
GATE ARM MID SECTION WITH VERTICAL STRIPING

STANDARD 8461

SCALE: NONE

REVISION –

SHEET 1 OF 2

CADD FILE: ES8461-01

REF	METROLINK PART NUMBER	ITEM
1	04-3813046-0	ARM, GATE 9'-6" FIBER REINFORCED POLYGLASS MID SECTION W/ 45° DIAGONAL STRIPING
2	04-3813044-0	ARM, GATE 16'-0" FIBER REINFORCED POLYGLASS MID SECTION W/ 45° DIAGONAL STRIPING

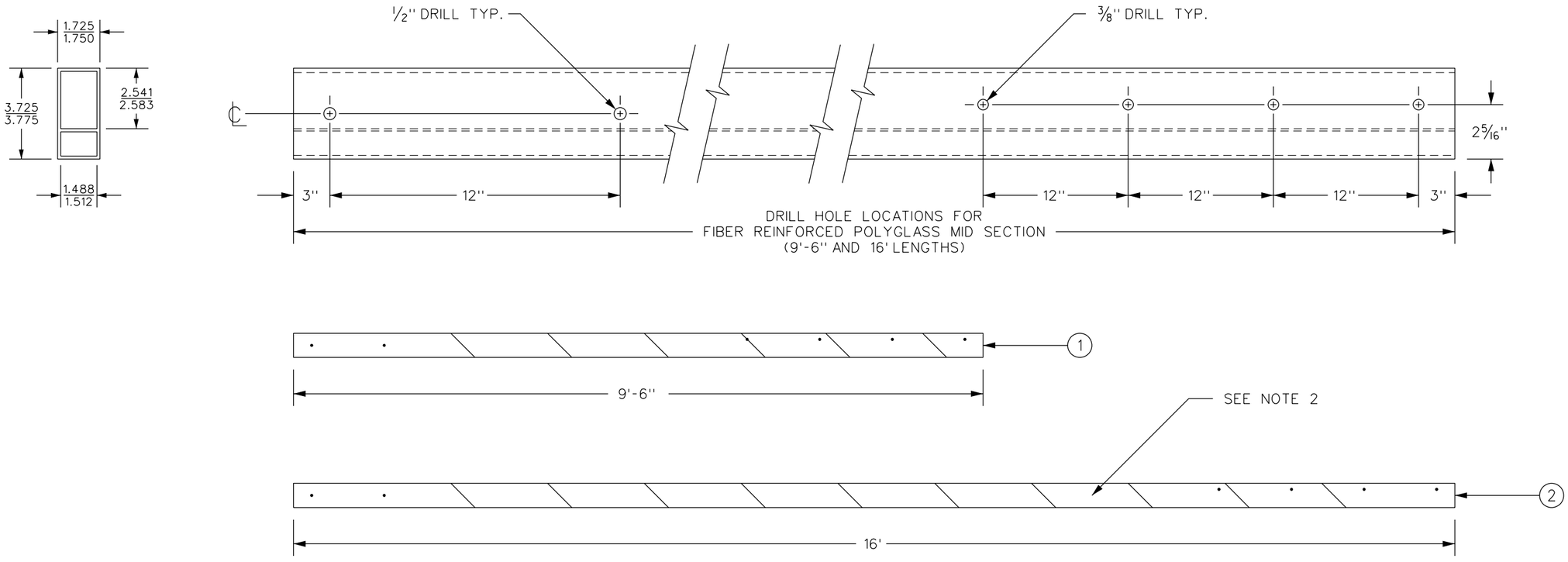

NOTES:

1. ALL DIMENSIONS ARE SHOWN IN INCHES.
2. RETROREFLECTIVE MATERIAL SHALL BE HIGH INTENSITY GRADE WITH 45° DIAGONAL STRIPES ALTERNATELY RED AND WHITE AT 16" INTERVALS MEASURED HORIZONTALLY.
3. GATE ARMS SHALL BE FULLY REFLECTORIZED ON BOTH SIDES.
4. RETROREFLECTIVE MATERIAL SHALL NOT INTERFERE WITH THE TELESCOPING FUNCTION OF THE GATE ARMS.
5. REFER TO A.R.E.M.A. C&S MANUAL PART 3.2.25 FOR ADDITIONAL INFORMATION.

REVISIONS				
1	-	-	RMM	RMM
REV.	DATE	DESCRIPTION	DES.	ENG.

FINAL REVIEW BY: C&SDRC DATE: 11/21/08

APPROVED BY

Dan C. Guerrero
MANAGER, COMMUNICATIONS AND SIGNALS ENGINEERING

Darrell V. Maxey
DIRECTOR, ENGINEERING AND CONSTRUCTION

THE SOUTHERN CALIFORNIA REGIONAL RAIL AUTHORITY OR IT'S OFFICERS OR AGENTS SHALL NOT BE RESPONSIBLE FOR THE ACCURACY OR COMPLETENESS OF THIS PLAN SHEET

METROLINK
SOUTHERN CALIFORNIA REGIONAL RAIL AUTHORITY
700 SOUTH FLOWER STREET
LOS ANGELES, CALIFORNIA 90017

ENGINEERING STANDARDS

TYPICAL FIBER REINFORCED POLYGLASS
GATE ARM MID SECTION WITH 45° DIAGONAL STRIPING

STANDARD: 8461
SCALE: NONE
REVISION: 1
SHEET: 2 OF 2
CADD FILE: ES8461-02

REF	METROLINK PART NUMBER	ITEM
1	04-3813070-0	ARM, GATE 8'-5" ALUMINUM BASE SECTION W/ VERTICAL STRIPING
2	04-3813071-0	ARM, GATE 16'-0" ALUMINUM BASE SECTION W/ VERTICAL STRIPING
3	04-3810035-0	ARM, GATE 2'-0" ALUMINUM SLEEVE

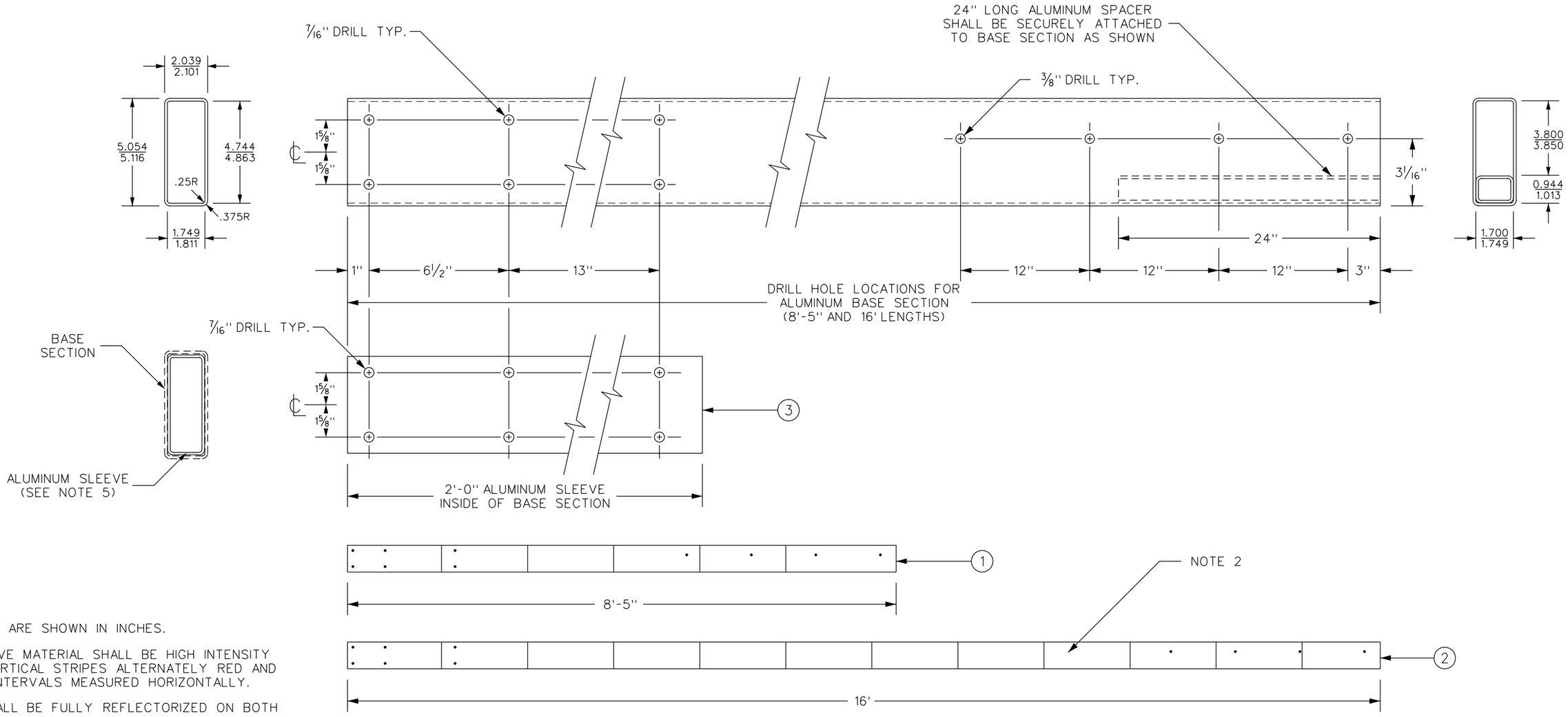

NOTES:

1. ALL DIMENSIONS ARE SHOWN IN INCHES.
2. RETROREFLECTIVE MATERIAL SHALL BE HIGH INTENSITY GRADE WITH VERTICAL STRIPES ALTERNATELY RED AND WHITE AT 16" INTERVALS MEASURED HORIZONTALLY.
3. GATE ARMS SHALL BE FULLY REFLECTORIZED ON BOTH SIDES.
4. RETROREFLECTIVE MATERIAL SHALL NOT INTERFERE WITH THE TELESCOPING FUNCTION OF THE GATE ARMS.
5. 2'-0" ALUMINUM SLEEVE TO BE COMPATIBLE WITH A.R.E.M.A. C&S MANUAL PART 3.2.21 (BREAKAWAY GATE ARM ADAPTER).
6. REFER TO A.R.E.M.A. C&S MANUAL PART 3.2.25 FOR ADDITIONAL INFORMATION.

REV.	DATE	DESCRIPTION	DES.	ENG.
-	-	-	-	-

REVISIONS

FINAL REVIEW BY: C&SDRC DATE: 11/21/08

APPROVED BY

Dan C. Guerrero
MANAGER, COMMUNICATIONS AND SIGNALS ENGINEERING

Darrell V. Maxey
DIRECTOR, ENGINEERING AND CONSTRUCTION

THE SOUTHERN CALIFORNIA REGIONAL RAIL AUTHORITY OR IT'S OFFICERS OR AGENTS SHALL NOT BE RESPONSIBLE FOR THE ACCURACY OR COMPLETENESS OF THIS PLAN SHEET

METROLINK
SOUTHERN CALIFORNIA REGIONAL RAIL AUTHORITY
700 SOUTH FLOWER STREET
LOS ANGELES, CALIFORNIA 90017

ENGINEERING STANDARDS

TYPICAL GATE ARM
ALUMINUM BASE SECTION
WITH VERTICAL STRIPING

STANDARD: 8462
SCALE: NONE
REVISION: –
SHEET: 1 OF 2
CADD FILE: ES8462-01

REF	METROLINK PART NUMBER	ITEM
1	04-3813041-0	ARM, GATE 8'-5" ALUMINUM BASE SECTION W/ 45° DIAGONAL STRIPING
2	04-3813040-0	ARM, GATE 16'-0" ALUMINUM BASE SECTION W/ 45° DIAGONAL STRIPING
3	04-3810035-0	ARM, GATE 2'-0" ALUMINUM SLEEVE

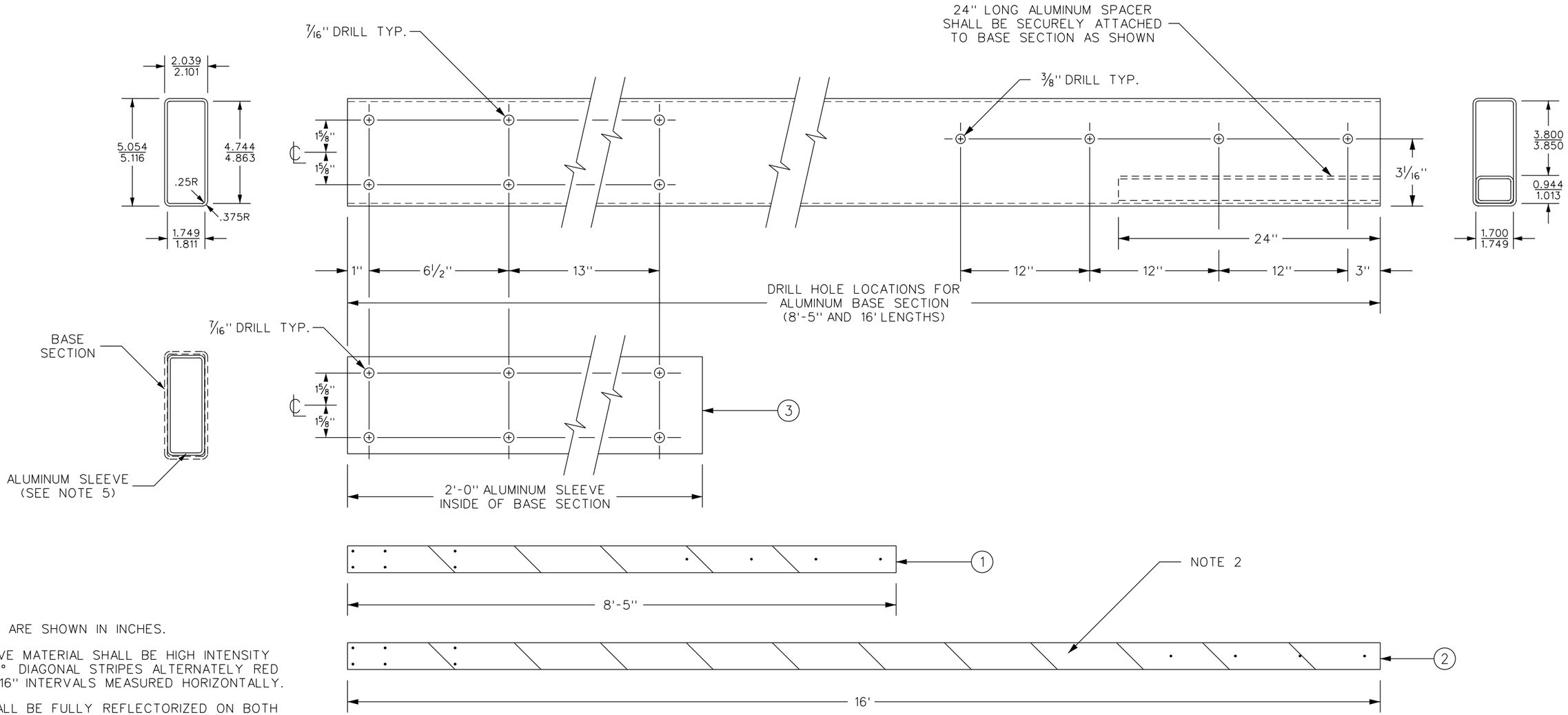

NOTES:

1. ALL DIMENSIONS ARE SHOWN IN INCHES.
2. RETROREFLECTIVE MATERIAL SHALL BE HIGH INTENSITY GRADE WITH 45° DIAGONAL STRIPES ALTERNATELY RED AND WHITE AT 16" INTERVALS MEASURED HORIZONTALLY.
3. GATE ARMS SHALL BE FULLY REFLECTORIZED ON BOTH SIDES.
4. RETROREFLECTIVE MATERIAL SHALL NOT INTERFERE WITH THE TELESCOPING FUNCTION OF THE GATE ARMS.
5. 2'-0" ALUMINUM SLEEVE TO BE COMPATIBLE WITH A.R.E.M.A. C&S MANUAL PART 3.2.21 (BREAKAWAY GATE ARM ADAPTER).
6. REFER TO A.R.E.M.A. C&S MANUAL PART 3.2.25 FOR ADDITIONAL INFORMATION.

REVISIONS				
1	-	-	-	-
REV.	DATE	DESCRIPTION	DES.	ENG.

FINAL REVIEW BY: C&SDRC DATE: 11/21/08

APPROVED BY

Dan C. Guerrero
MANAGER, COMMUNICATIONS AND SIGNALS ENGINEERING

Darrell V. Maxey
DIRECTOR, ENGINEERING AND CONSTRUCTION

THE SOUTHERN CALIFORNIA REGIONAL RAIL AUTHORITY OR IT'S OFFICERS OR AGENTS SHALL NOT BE RESPONSIBLE FOR THE ACCURACY OR COMPLETENESS OF THIS PLAN SHEET

METROLINK
SOUTHERN CALIFORNIA REGIONAL RAIL AUTHORITY
700 SOUTH FLOWER STREET
LOS ANGELES, CALIFORNIA 90017

ENGINEERING STANDARDS

TYPICAL GATE ARM
ALUMINUM BASE SECTION
WITH 45° DIAGONAL STRIPING

STANDARD: 8462
SCALE: NONE
REVISION: 1
SHEET: 2 OF 2
CADD FILE: ES8462-02

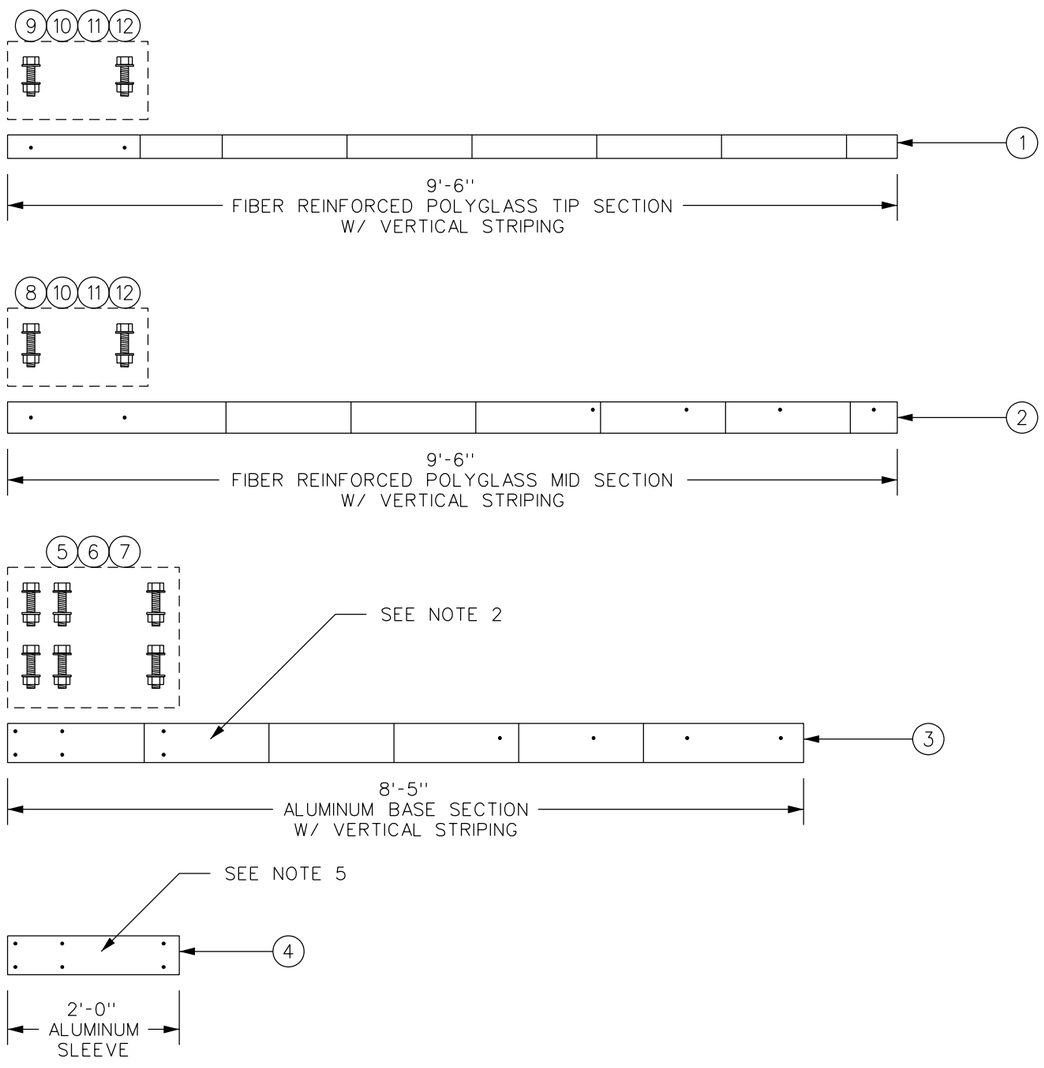

BILL OF MATERIAL 04-3810033-0

26' HIGH WIND GATE ARM KIT WITH VERTICAL STRIPING

REF	QTY	METROLINK PART NUMBER	ITEM
1	1	04-3813066-0	ARM, GATE 9'-6" FIBER REINFORCED POLYGLASS TIP SECTION W/ VERTICAL STRIPING
2	1	04-3813068-0	ARM, GATE 9'-6" FIBER REINFORCED POLYGLASS MID SECTION W/ VERTICAL STRIPING
3	1	04-3813070-0	ARM, GATE 8'-5" ALUMINUM BASE SECTION W/ VERTICAL STRIPING
4	1	04-3810035-0	ARM, GATE 2'-0" ALUMINUM SLEEVE
5	6	N/A	CAP SCREW 3/8- 16 X 2 3/4" S.S.
6	12	N/A	FLAT WASHER 3/8" S.S.
7	6	N/A	LOCK NUT 3/8- 16 S.S.
8	2	N/A	CAP SCREW 5/16- 18 X 2 3/4" S.S.
9	2	N/A	CAP SCREW 5/16- 18 X 2 1/2" S.S.
10	8	N/A	FLAT WASHER 5/16" S.S.
11	4	N/A	LOCK NUT 5/16- 18 S.S.
12	8	N/A	POLYETHENE WASHER 5/16" X 1" X 0.30"

NOTES:

1. ALL DIMENSIONS ARE SHOWN IN INCHES.
2. RETROREFLECTIVE MATERIAL SHALL BE HIGH INTENSITY GRADE WITH VERTICAL STRIPES ALTERNATELY RED AND WHITE AT 16" INTERVALS MEASURED HORIZONTALLY.
3. GATE ARMS SHALL BE FULLY REFLECTORIZED ON BOTH SIDES.
4. RETROREFLECTIVE MATERIAL SHALL NOT INTERFERE WITH THE TELESCOPING FUNCTION OF THE GATE ARMS.
5. 2'-0" ALUMINUM SLEEVE TO BE COMPATIBLE WITH A.R.E.M.A. C&S MANUAL PART 3.2.21 (BREAKAWAY GATE ARM ADAPTER).
6. REFER TO A.R.E.M.A. C&S MANUAL PART 3.2.25 FOR ADDITIONAL INFORMATION.

REVISIONS				
-	-	-	-	-
REV.	DATE	DESCRIPTION	DES.	ENG.

FINAL REVIEW BY: C&SDRC DATE: 11/21/08

APPROVED BY

Dan C. Guerrero

MANAGER, COMMUNICATIONS AND SIGNALS ENGINEERING

Darrell V. Maxey

DIRECTOR, ENGINEERING AND CONSTRUCTION

THE SOUTHERN CALIFORNIA REGIONAL RAIL AUTHORITY OR IT'S OFFICERS OR AGENTS SHALL NOT BE RESPONSIBLE FOR THE ACCURACY OR COMPLETENESS OF THIS PLAN SHEET

METROLINK

SOUTHERN CALIFORNIA REGIONAL RAIL AUTHORITY
700 SOUTH FLOWER STREET
LOS ANGELES, CALIFORNIA 90017

ENGINEERING STANDARDS

TYPICAL 26' HIGH WIND
GATE ARM KIT WITH
VERTICAL STRIPING

STANDARD: 8465
SCALE: NONE
REVISION: –
SHEET: 1 OF 2
CADD FILE: ES8465-01

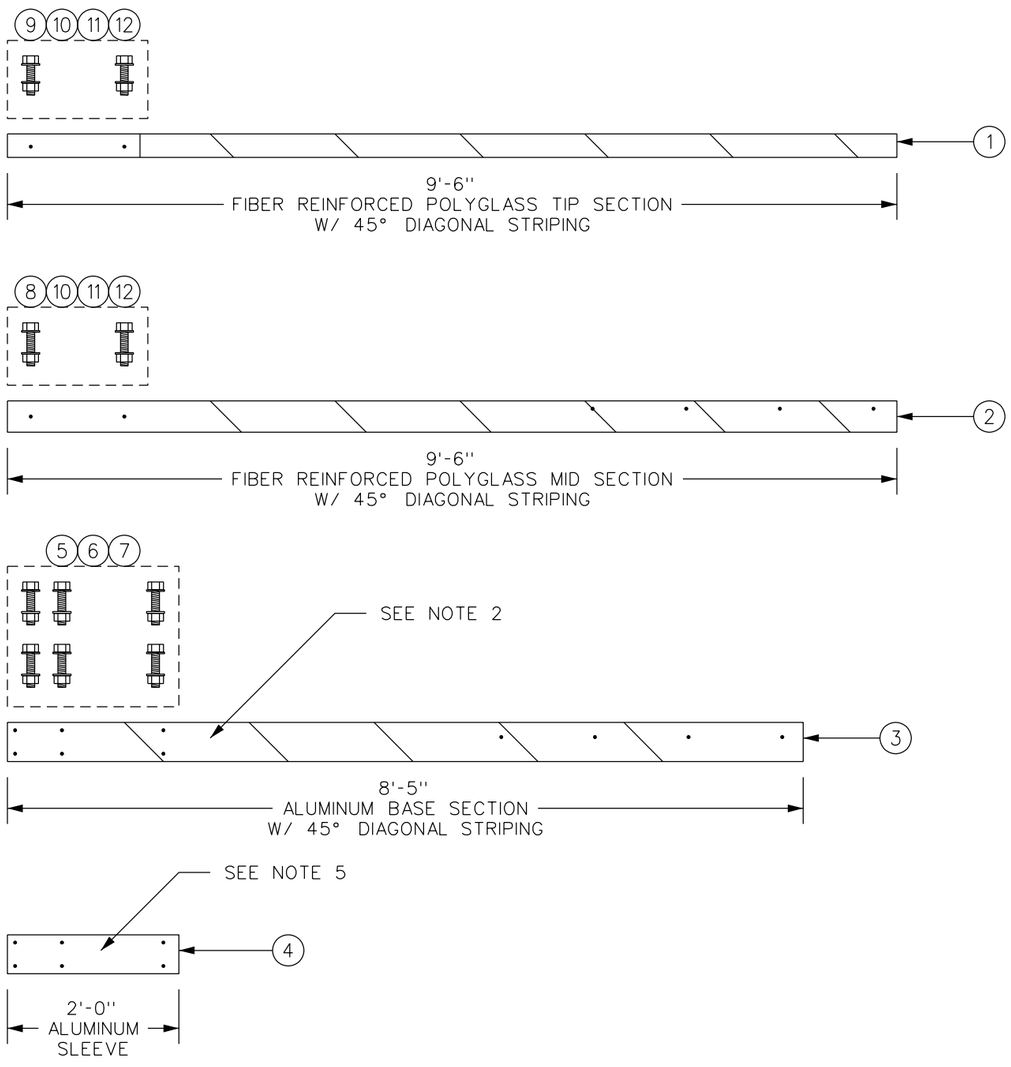

BILL OF MATERIAL 04-3810032-0

26' HIGH WIND GATE ARM KIT WITH 45° DIAGONAL STRIPING

REF	QTY	METROLINK PART NUMBER	ITEM
1	1	04-3813047-0	ARM, GATE 9'-6" FIBER REINFORCED POLYGLASS TIP SECTION W/ 45° DIAGONAL STRIPING
2	1	04-3813046-0	ARM, GATE 9'-6" FIBER REINFORCED POLYGLASS MID SECTION W/ 45° DIAGONAL STRIPING
3	1	04-3813041-0	ARM, GATE 8'-5" ALUMINUM BASE SECTION W/ 45° DIAGONAL STRIPING
4	1	04-3810035-0	ARM, GATE 2'-0" ALUMINUM SLEEVE
5	6	N/A	CAP SCREW 3/8- 16 X 2 3/4" S.S.
6	12	N/A	FLAT WASHER 3/8" S.S.
7	6	N/A	LOCK NUT 3/8- 16 S.S.
8	2	N/A	CAP SCREW 5/16- 18 X 2 3/4" S.S.
9	2	N/A	CAP SCREW 5/16- 18 X 2 1/2" S.S.
10	8	N/A	FLAT WASHER 5/16" S.S.
11	4	N/A	LOCK NUT 5/16- 18 S.S.
12	8	N/A	POLYETHENE WASHER 5/16" X 1" X 0.30"

NOTES:

1. ALL DIMENSIONS ARE SHOWN IN INCHES.
2. RETROREFLECTIVE MATERIAL SHALL BE HIGH INTENSITY GRADE WITH 45° DIAGONAL STRIPES ALTERNATELY RED AND WHITE AT 16" INTERVALS MEASURED HORIZONTALLY.
3. GATE ARMS SHALL BE FULLY REFLECTORIZED ON BOTH SIDES.
4. RETROREFLECTIVE MATERIAL SHALL NOT INTERFERE WITH THE TELESCOPING FUNCTION OF THE GATE ARMS.
5. 2'-0" ALUMINUM SLEEVE TO BE COMPATIBLE WITH A.R.E.M.A. C&S MANUAL PART 3.2.21 (BREAKAWAY GATE ARM ADAPTER).
6. REFER TO A.R.E.M.A. C&S MANUAL PART 3.2.25 FOR ADDITIONAL INFORMATION.

REVISIONS				
1	-	-	-	-
REV.	DATE	DESCRIPTION	DES.	ENG.

FINAL REVIEW BY: C&SDRC DATE: 11/21/08

APPROVED BY

Dan C. Guerrero

MANAGER, COMMUNICATIONS AND SIGNALS ENGINEERING

Darrell V. Maxey

DIRECTOR, ENGINEERING AND CONSTRUCTION

THE SOUTHERN CALIFORNIA REGIONAL RAIL AUTHORITY OR IT'S OFFICERS OR AGENTS SHALL NOT BE RESPONSIBLE FOR THE ACCURACY OR COMPLETENESS OF THIS PLAN SHEET

METROLINK

SOUTHERN CALIFORNIA REGIONAL RAIL AUTHORITY
700 SOUTH FLOWER STREET
LOS ANGELES, CALIFORNIA 90017

ENGINEERING STANDARDS

TYPICAL 26' HIGH WIND
GATE ARM KIT WITH
45° DIAGONAL STRIPING

STANDARD 8465

SCALE: NONE

REVISION 1 SHEET 2 OF 2

CADD FILE: ES8465-02

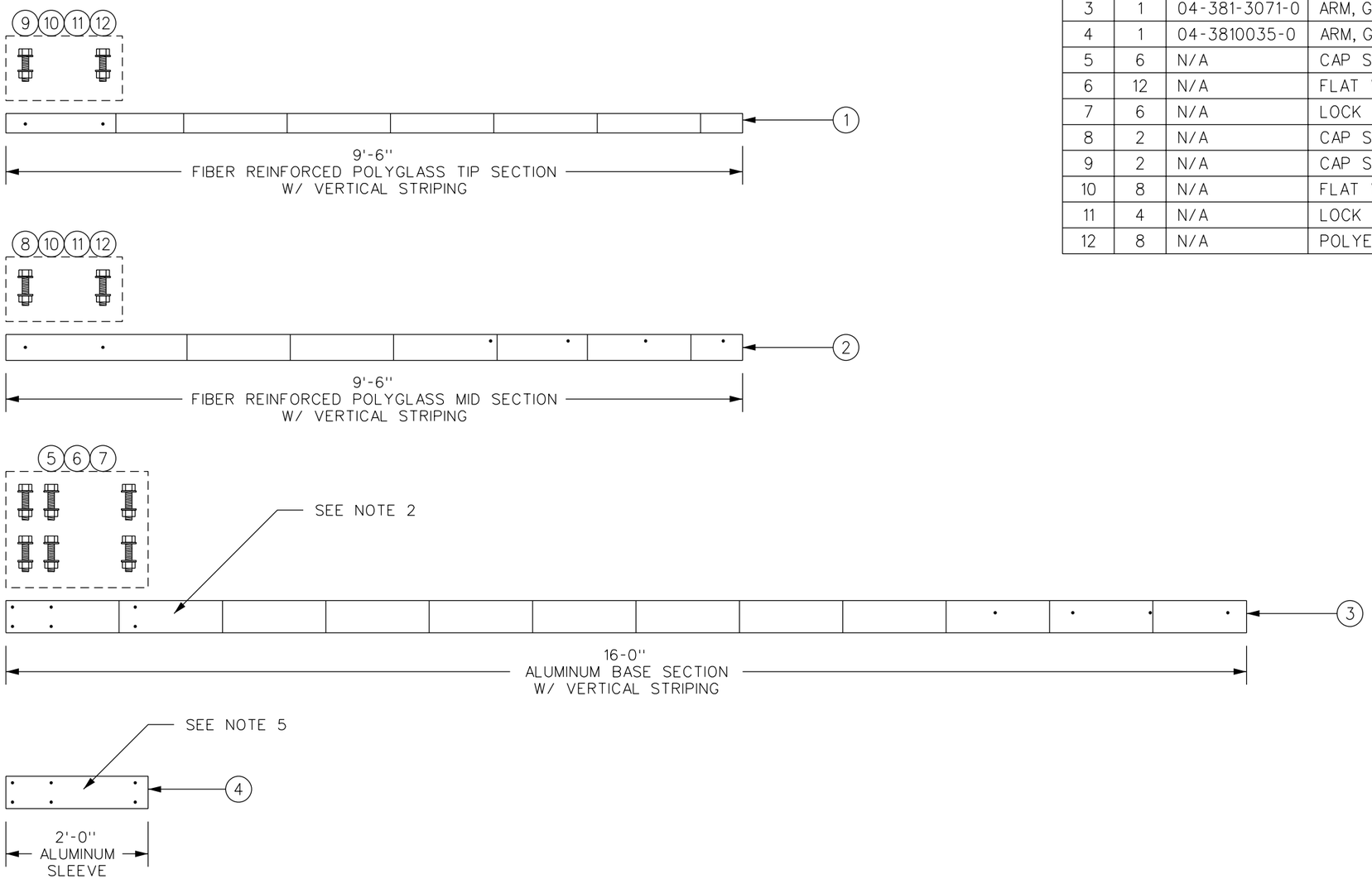

BILL OF MATERIAL 04-3810041-0

32' HIGH WIND GATE ARM KIT WITH VERTICAL STRIPING

REF	QTY	METROLINK PART NUMBER	ITEM
1	1	04-3813066-0	ARM, GATE 9'-6" FIBER REINFORCED POLYGLASS TIP SECTION W/ VERTICAL STRIPING
2	1	04-3813068-0	ARM, GATE 9'-6" FIBER REINFORCED POLYGLASS MID SECTION W/ VERTICAL STRIPING
3	1	04-381-3071-0	ARM, GATE 16'-0" ALUMINUM BASE SECTION W/ VERTICAL STRIPING
4	1	04-3810035-0	ARM, GATE 2'-0" ALUMINUM SLEEVE
5	6	N/A	CAP SCREW 3/8- 16 X 2 3/4" S.S.
6	12	N/A	FLAT WASHER 3/8" S.S.
7	6	N/A	LOCK NUT 3/8- 16 S.S.
8	2	N/A	CAP SCREW 5/16- 18 X 2 3/4" S.S.
9	2	N/A	CAP SCREW 5/16- 18 X 2 1/2" S.S.
10	8	N/A	FLAT WASHER 5/16" S.S.
11	4	N/A	LOCK NUT 5/16- 18 S.S.
12	8	N/A	POLYETHENE WASHER 5/16" X 1" X 0.30"

NOTES:

1. ALL DIMENSIONS ARE SHOWN IN INCHES.
2. RETROREFLECTIVE MATERIAL SHALL BE HIGH INTENSITY GRADE WITH VERTICAL STRIPES ALTERNATELY RED AND WHITE AT 16" INTERVALS MEASURED HORIZONTALLY.
3. GATE ARMS SHALL BE FULLY REFLECTORIZED ON BOTH SIDES.
4. RETROREFLECTIVE MATERIAL SHALL NOT INTERFERE WITH THE TELESCOPING FUNCTION OF THE GATE ARMS.
5. 2'-0" ALUMINUM SLEEVE TO BE COMPATIBLE WITH A.R.E.M.A. C&S MANUAL PART 3.2.21 (BREAKAWAY GATE ARM ADAPTER).
6. REFER TO A.R.E.M.A. C&S MANUAL PART 3.2.25 FOR ADDITIONAL INFORMATION.
7. GATE ARM LENGTH SHALL NOT EXCEED 32' MEASURED FROM THE CENTER OF KING PIN TO THE TIP OF GATE ARM. WHEN USING THIS GATE ARM KIT, THE TIP SECTION SHALL BE CUT TO A SHORTER LENGTH.

REVISIONS				
-	-	-	-	-
REV.	DATE	DESCRIPTION	DES.	ENG.

FINAL REVIEW BY: C&SDRC DATE: 11/21/08

APPROVED BY

Dan C. Guerrero
MANAGER, COMMUNICATIONS AND SIGNALS ENGINEERING

Darrell V. Maxey
DIRECTOR, ENGINEERING AND CONSTRUCTION

THE SOUTHERN CALIFORNIA REGIONAL RAIL AUTHORITY OR IT'S OFFICERS OR AGENTS SHALL NOT BE RESPONSIBLE FOR THE ACCURACY OR COMPLETENESS OF THIS PLAN SHEET

METROLINK
SOUTHERN CALIFORNIA REGIONAL RAIL AUTHORITY
700 SOUTH FLOWER STREET
LOS ANGELES, CALIFORNIA 90017

ENGINEERING STANDARDS

TYPICAL 32' HIGH WIND GATE ARM KIT WITH VERTICAL STRIPING

STANDARD: 8466
SCALE: NONE
REVISION: –
SHEET: 1 OF 2
CADD FILE: ES8466–01

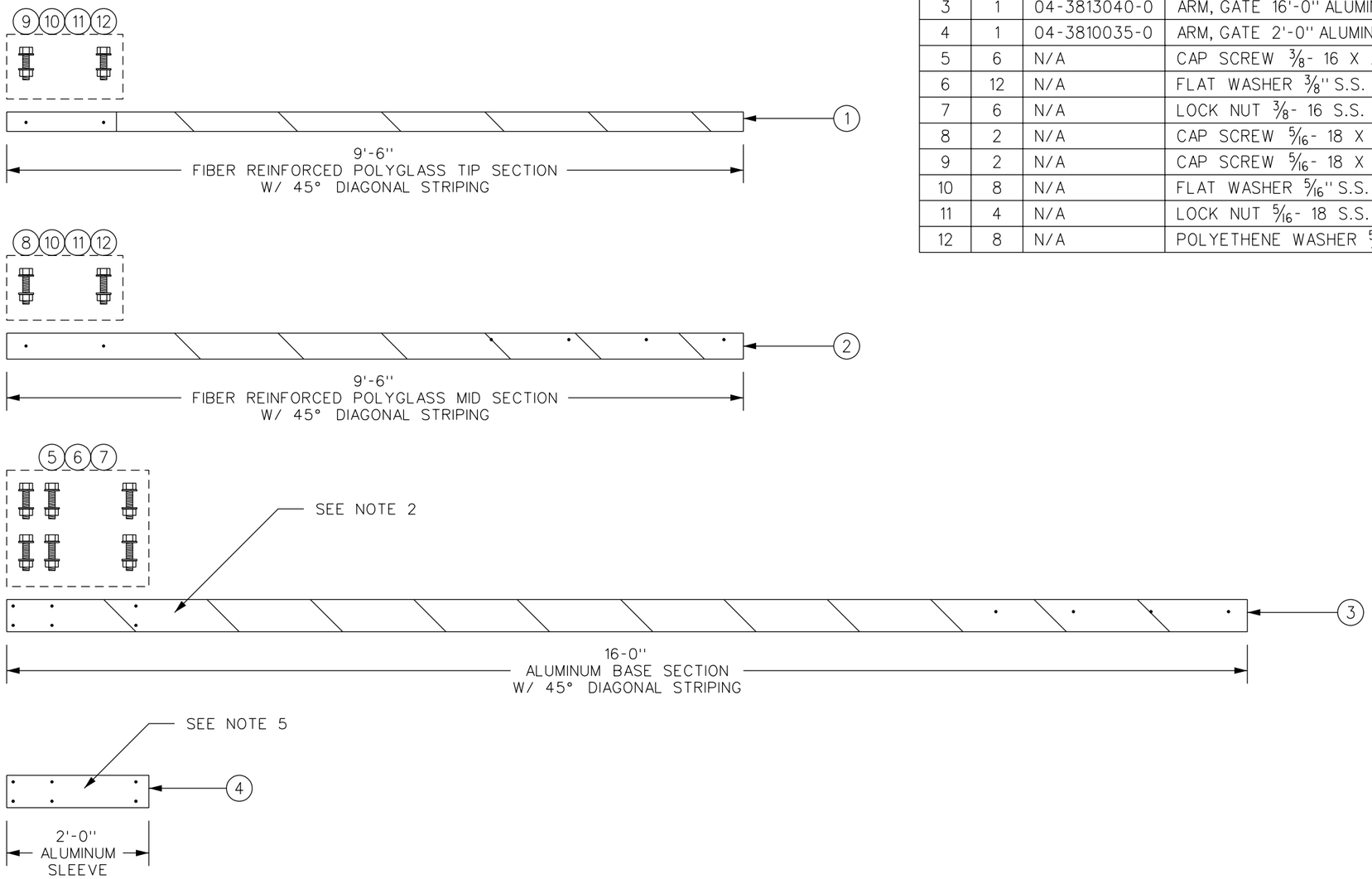

BILL OF MATERIAL 04-3810040-0

32' HIGH WIND GATE ARM KIT WITH 45° DIAGONAL STRIPING

REF	QTY	METROLINK PART NUMBER	ITEM
1	1	04-3813047-0	ARM, GATE 9'-6" FIBER REINFORCED POLYGLASS TIP SECTION W/ 45° DIAGONAL STRIPING
2	1	04-3813046-0	ARM, GATE 9'-6" FIBER REINFORCED POLYGLASS MID SECTION W/ 45° DIAGONAL STRIPING
3	1	04-3813040-0	ARM, GATE 16'-0" ALUMINUM BASE SECTION W/ 45° DIAGONAL STRIPING
4	1	04-3810035-0	ARM, GATE 2'-0" ALUMINUM SLEEVE
5	6	N/A	CAP SCREW 3/8- 16 X 2 3/4" S.S.
6	12	N/A	FLAT WASHER 3/8" S.S.
7	6	N/A	LOCK NUT 3/8- 16 S.S.
8	2	N/A	CAP SCREW 5/16- 18 X 2 3/4" S.S.
9	2	N/A	CAP SCREW 5/16- 18 X 2 1/2" S.S.
10	8	N/A	FLAT WASHER 5/16" S.S.
11	4	N/A	LOCK NUT 5/16- 18 S.S.
12	8	N/A	POLYETHENE WASHER 5/16" X 1" X 0.30"

NOTES:

1. ALL DIMENSIONS ARE SHOWN IN INCHES.
2. RETROREFLECTIVE MATERIAL SHALL BE HIGH INTENSITY GRADE WITH 45° DIAGONAL STRIPES ALTERNATELY RED AND WHITE AT 16" INTERVALS MEASURED HORIZONTALLY.
3. GATE ARMS SHALL BE FULLY REFLECTORIZED ON BOTH SIDES.
4. RETROREFLECTIVE MATERIAL SHALL NOT INTERFERE WITH THE TELESCOPING FUNCTION OF THE GATE ARMS.
5. 2'-0" ALUMINUM SLEEVE TO BE COMPATIBLE WITH A.R.E.M.A. C&S MANUAL PART 3.2.21 (BREAKAWAY GATE ARM ADAPTER).
6. REFER TO A.R.E.M.A. C&S MANUAL PART 3.2.25 FOR ADDITIONAL INFORMATION.
7. GATE ARM LENGTH SHALL NOT EXCEED 32' MEASURED FROM THE CENTER OF KING PIN TO THE TIP OF GATE ARM. WHEN USING THIS GATE ARM KIT, THE TIP SECTION SHALL BE CUT TO A SHORTER LENGTH.

REVISIONS

REV.	DATE	DESCRIPTION	DES.	ENG.
1	-	-	-	-

FINAL REVIEW BY: C&SDRC DATE: 11/21/08

APPROVED BY

Dan C. Guerrero
MANAGER, COMMUNICATIONS AND SIGNALS ENGINEERING

Darrell V. Maxey
DIRECTOR, ENGINEERING AND CONSTRUCTION

THE SOUTHERN CALIFORNIA REGIONAL RAIL AUTHORITY OR IT'S OFFICERS OR AGENTS SHALL NOT BE RESPONSIBLE FOR THE ACCURACY OR COMPLETENESS OF THIS PLAN SHEET

METROLINK
SOUTHERN CALIFORNIA REGIONAL RAIL AUTHORITY
700 SOUTH FLOWER STREET
LOS ANGELES, CALIFORNIA 90017

ENGINEERING STANDARDS

TYPICAL 32' HIGH WIND
GATE ARM KIT WITH
45° DIAGONAL STRIPING

STANDARD 8466
SCALE: NONE
REVISION 1
SHEET 2 OF 2
CADD FILE: ES8466-02

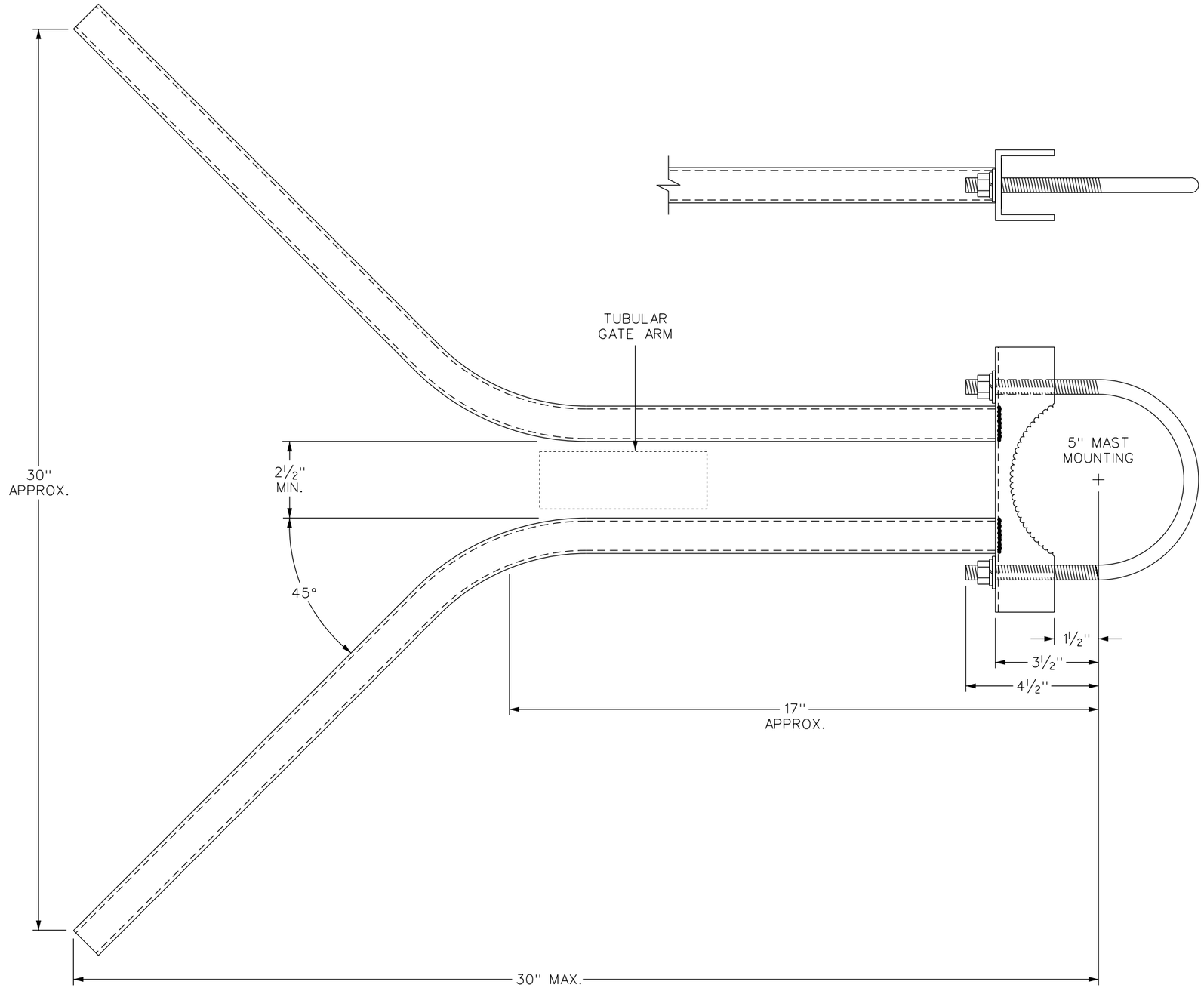

NOTES:

1. WIND SUPPORT SHALL BE NATIONAL ELECTRIC GATE CO. PART NO. WIG 191036-MET, OR APPROVED EQUAL.
2. WHERE INDICATED, DIMENSIONS SHOWN ARE APPROXIMATE. WIND SUPPORT LENGTH NOT TO EXCEED 30" FROM CENTER OF 5" MAST TO TIP OF BRACKET.

REVISIONS				
-	-	-	-	-
REV.	DATE	DESCRIPTION	DES.	ENG.

FINAL REVIEW BY: C&SDRC DATE: 11/21/08

APPROVED BY

Dan C. Guerrero
MANAGER, COMMUNICATIONS AND SIGNALS ENGINEERING

Darrell V. Maxey
DIRECTOR, ENGINEERING AND CONSTRUCTION

THE SOUTHERN CALIFORNIA REGIONAL RAIL AUTHORITY OR IT'S OFFICERS OR AGENTS SHALL NOT BE RESPONSIBLE FOR THE ACCURACY OR COMPLETENESS OF THIS PLAN SHEET

METROLINK
SOUTHERN CALIFORNIA REGIONAL RAIL AUTHORITY
700 SOUTH FLOWER STREET
LOS ANGELES, CALIFORNIA 90017

ENGINEERING STANDARDS

TYPICAL WIND SUPPORT

STANDARD: 8470
SCALE: NONE
REVISION: –
SHEET: 1 OF 2
CADD FILE: ES8470–01

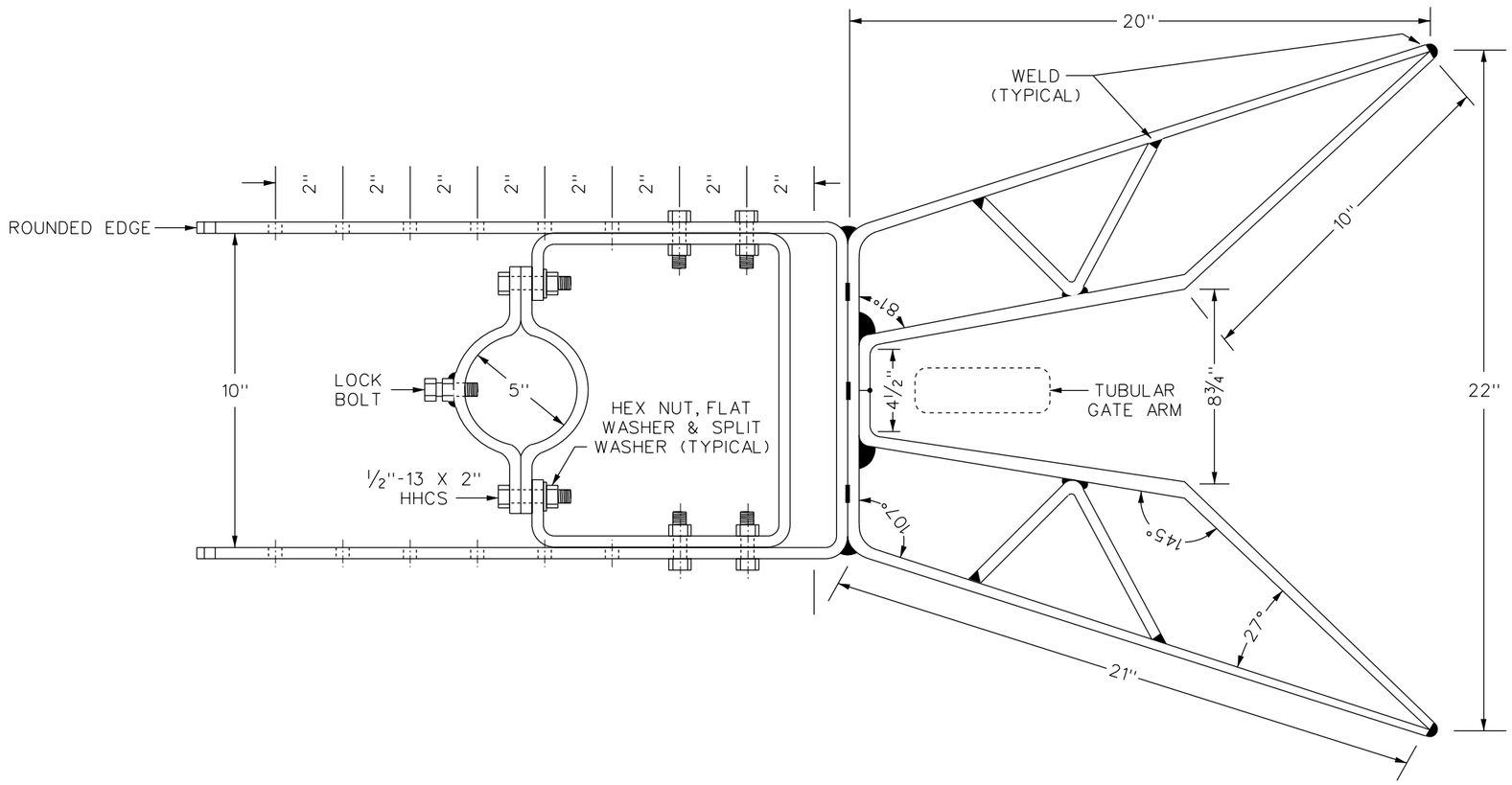

NOTES:

1. WHEN INSTALLED, WIND SUPPORT SHALL BE ADJUSTED TO IT'S SHORTEST LENGTH AS SHOWN IN THIS STANDARD DRAWING. THE PURPOSE OF THIS IS TO PREVENT THE WIND SUPPORT FROM EXTENDING INTO THE CLEARANCE ENVELOPE, AS SHOWN ON STANDARD DRAWING ES8300.
2. WHEN IT IS NECESSARY TO EXTEND THE WIND SUPPORT BEYOND IT'S SHORTEST LENGTH DUE TO AN OVER HEAD OBSTRUCTION, REFER TO STANDARD DRAWING ES8300 FOR INSTRUCTIONS ON USING AN EXTENDED WIND SUPPORT.
3. ALL HARDWARE TO BE 1/2"-13 X 1 1/2", EXCEPT WHERE NOTED OTHERWISE.
4. 1/4" X 2" FLAT BAR ALUMINUM 6061-T6, 6063-T5 OR MATERIAL OF EQUIVALENT TENSILE STRENGTH AND CORROSION RESISTANCE.

THIS DRAWING TO BE USED FOR MAINTENANCE PURPOSES ONLY

REVISIONS				
-	-	-	-	-
REV.	DATE	DESCRIPTION	DES.	ENG.

FINAL REVIEW BY: C&SDRC DATE: 11/21/08

APPROVED BY

Dan C. Guerrero

MANAGER, COMMUNICATIONS AND SIGNALS ENGINEERING

Darrell V. Maxey

DIRECTOR, ENGINEERING AND CONSTRUCTION

THE SOUTHERN CALIFORNIA REGIONAL RAIL AUTHORITY OR IT'S OFFICERS OR AGENTS SHALL NOT BE RESPONSIBLE FOR THE ACCURACY OR COMPLETENESS OF THIS PLAN SHEET

METROLINK
SOUTHERN CALIFORNIA REGIONAL RAIL AUTHORITY
700 SOUTH FLOWER STREET
LOS ANGELES, CALIFORNIA 90017

ENGINEERING STANDARDS

TYPICAL WIND SUPPORT

STANDARD 8470

SCALE: NONE

REVISION –

SHEET 2 OF 2

CADD FILE: ES8470-02

SCRRA P/N 03-3271051-0

GROUND SIGNAL WITH ONE PLATFORM LADDER ASSEMBLY

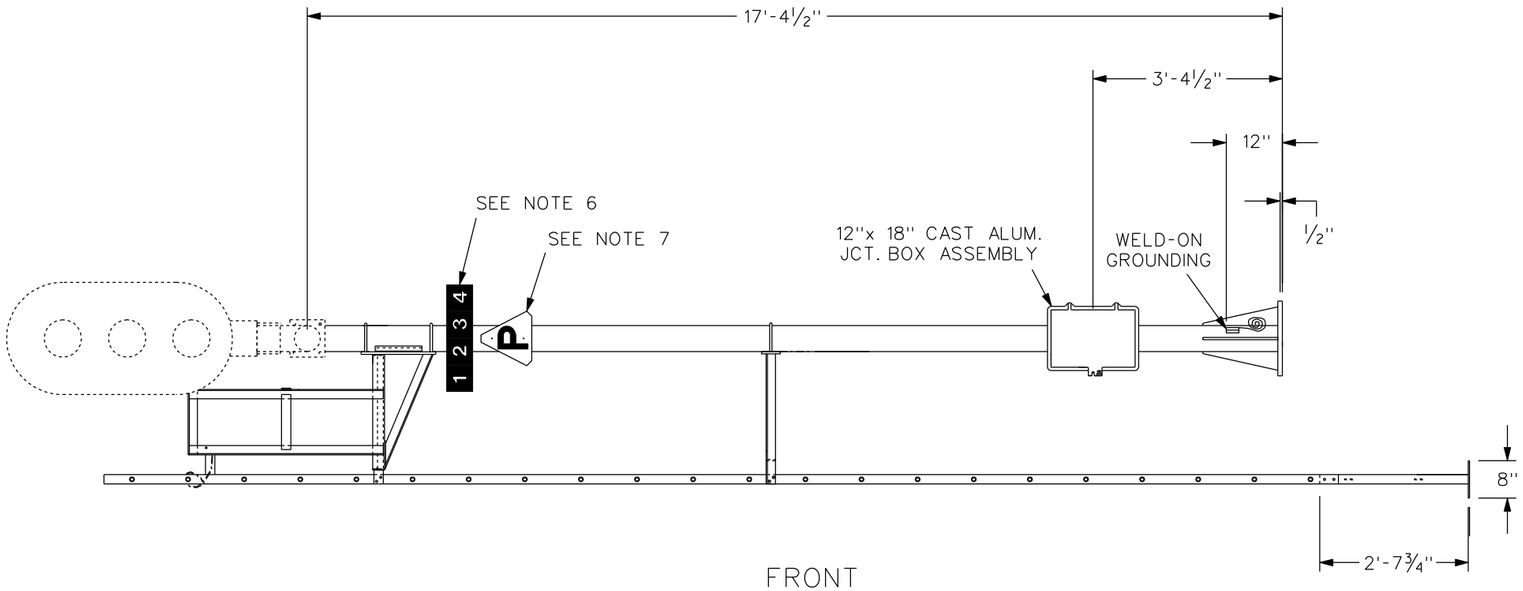

FRONT

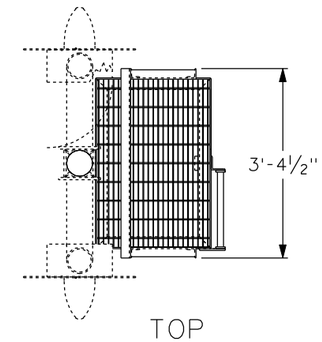

TOP

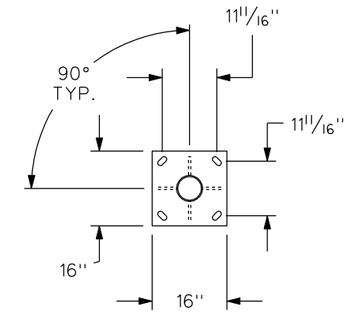

BOTTOM

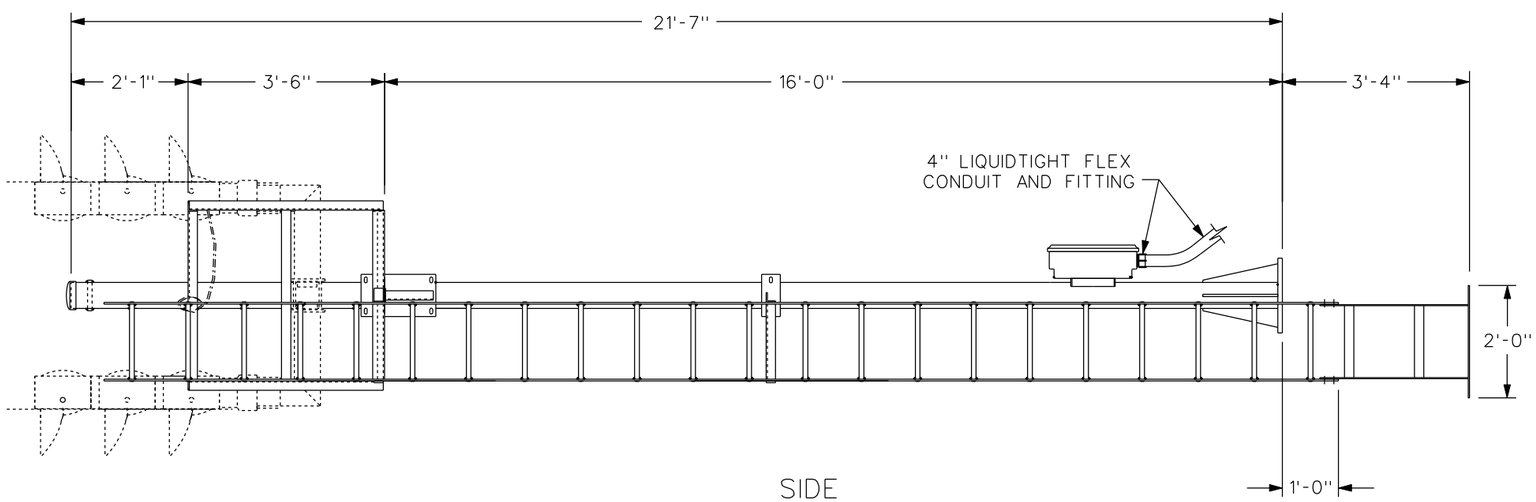

SIDE

NOTES:

1. L.E.D. COLORLIGHT SIGNAL UNIT SHALL BE ORDERED SEPARATELY. REFER TO SCRRA ENGINEERING STANDARD CS8525 FOR INFORMATION REGARDING COLORLIGHT SIGNAL UNITS.
2. CONFIGURATION AND NUMBER OF SIGNAL HEADS SHALL BE DETERMINED BY SITE SPECIFIC REQUIREMENTS.
3. 3 ASPECT, COLORLIGHT SIGNAL HEADS EQUIPPED WITH L.E.D. LAMP UNITS SHALL BE USED FOR ALL NEW INSTALLATIONS.
4. TWO (2) HINGED FLAT PLATES SHALL BE FITTED TO PREVENT UNAUTHORIZED ACCESS TO BOTH SIDES OF THE LADDER. THEY SHALL BE LOCKED IN PLACE BY A SIGNAL PADLOCK AND HASP ARRANGEMENT INTENDED FOR THIS PURPOSE.
5. JUNCTION BOX ASSEMBLY SHALL BE LOCATED DIRECTLY BENEATH SIGNAL HEADS AS SHOWN IN THIS STANDARD.
6. NUMBER PLATES SHALL ONLY BE USED ON INTERMEDIATE SIGNALS, AND SHALL NOT BE USED ON CONTROLLED SIGNALS.
7. "P" PLATES SHALL ONLY BE USED ON PROTECTIVE SIGNALS AS DESIGNATED BY CIRCUIT PLANS.
8. DIMENSIONS SHOWN ARE APPROXIMATE. INSTALLATION SHALL BE AS SPECIFIED BY THE MANUFACTURER.
9. DEVIATION FROM THIS STANDARD SHALL BE APPROVED BY SCRRA MANAGER OF C&S ENGINEERING OR DESIGNATE.

REVISIONS				
-	-	-	-	-
REV.	DATE	DESCRIPTION	DES.	ENG.

FINAL REVIEW BY: C&SDRC DATE: 11/21/08

APPROVED BY

Dan C. Guerrero

MANAGER, COMMUNICATIONS AND SIGNALS ENGINEERING

Darrell V. Maxey

DIRECTOR, ENGINEERING AND CONSTRUCTION

THE SOUTHERN CALIFORNIA REGIONAL RAIL AUTHORITY OR IT'S OFFICERS OR AGENTS SHALL NOT BE RESPONSIBLE FOR THE ACCURACY OR COMPLETENESS OF THIS PLAN SHEET

METROLINK

SOUTHERN CALIFORNIA REGIONAL RAIL AUTHORITY
700 SOUTH FLOWER STREET
LOS ANGELES, CALIFORNIA 90017

ENGINEERING STANDARDS

TYPICAL GROUND SIGNAL WITH
ONE PLATFORM LADDER ASSEMBLY

STANDARD: 8500

SCALE: NONE

REVISION: -

SHEET: 1 OF 5

CADD FILE: ES8500-01

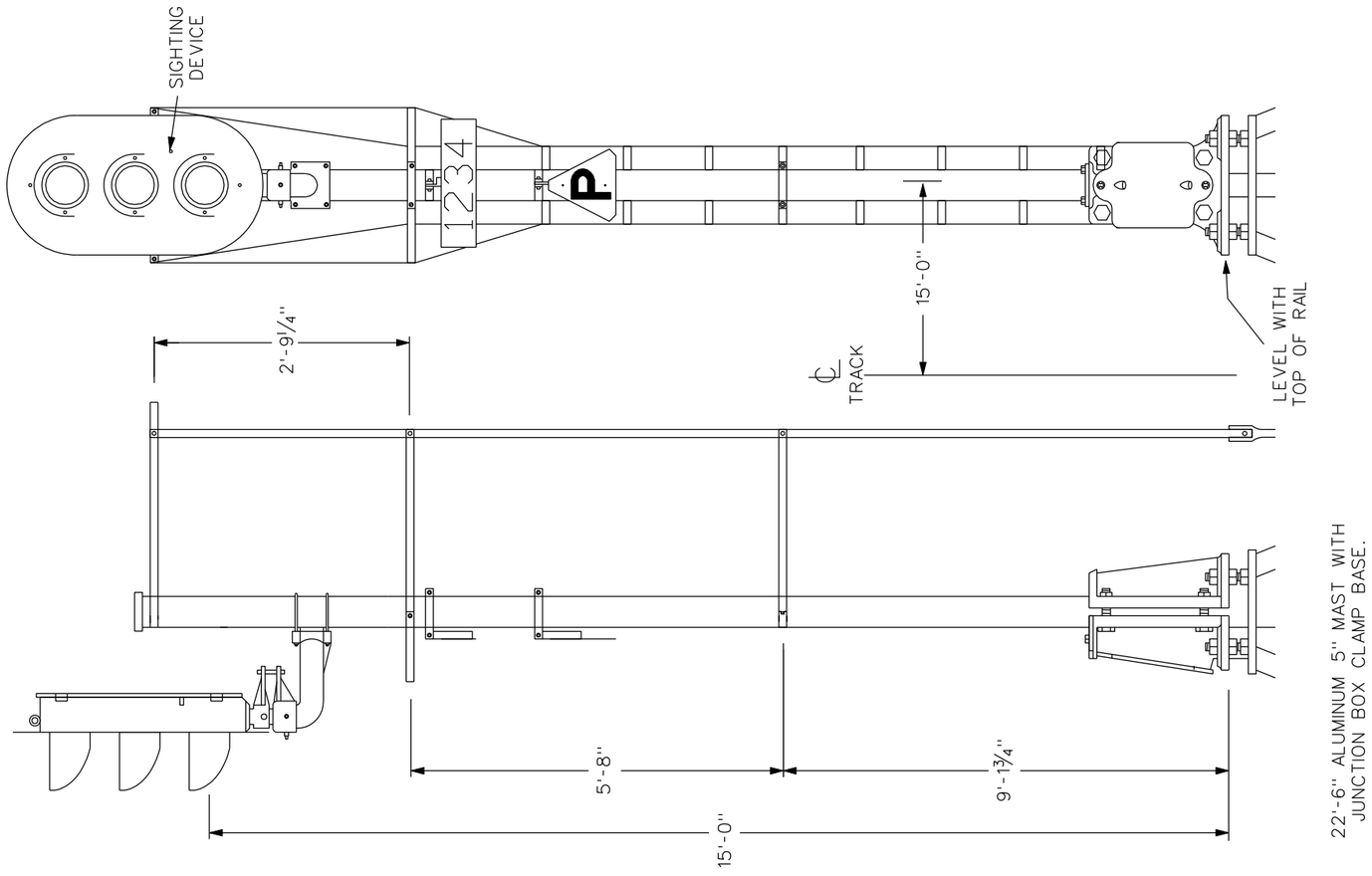

NOTES:

1. WHERE CLEARANCES ARE NOT A FACTOR, SIGNALS SHALL BE PLACED 15'-0" FROM CENTER OF TRACK.
2. ONLY 10 VOLT 25 WATT LAMP TO BE USED IN SIGNALS.
3. JUNCTION BOX ASSEMBLY SHALL BE LOCATED DIRECTLY BENEATH SIGNAL HEADS AS SHOWN IN THIS STANDARD.
4. NUMBER PLATES SHALL ONLY BE USED ON INTERMEDIATE SIGNALS, AND SHALL NOT BE USED ON CONTROLLED SIGNALS.
5. "P" PLATES SHALL ONLY BE USED ON PROTECTIVE SIGNALS AS DESIGNATED BY CIRCUIT PLANS.

THIS DRAWING TO BE USED FOR MAINTENANCE PURPOSES ONLY

REVISIONS				
-	-	-	-	-
REV.	DATE	DESCRIPTION	DES.	ENG.

FINAL REVIEW BY: C&SDRC DATE: 11/21/08

APPROVED BY

Dan C. Guerrero
MANAGER, COMMUNICATIONS AND SIGNALS ENGINEERING

Darrell V. Maxey
DIRECTOR, ENGINEERING AND CONSTRUCTION

THE SOUTHERN CALIFORNIA REGIONAL RAIL AUTHORITY OR IT'S OFFICERS OR AGENTS SHALL NOT BE RESPONSIBLE FOR THE ACCURACY OR COMPLETENESS OF THIS PLAN SHEET

METROLINK
SOUTHERN CALIFORNIA REGIONAL RAIL AUTHORITY
700 SOUTH FLOWER STREET
LOS ANGELES, CALIFORNIA 90017

ENGINEERING STANDARDS

TYPICAL GROUND SIGNAL WITH
ONE PLATFORM LADDER ASSEMBLY
(17'–0" MAST; SINGLE UNIT COLORLIGHT)

STANDARD 8500
SCALE: NONE
REVISION –
SHEET 2 OF 5
CADD FILE: ES8500–02

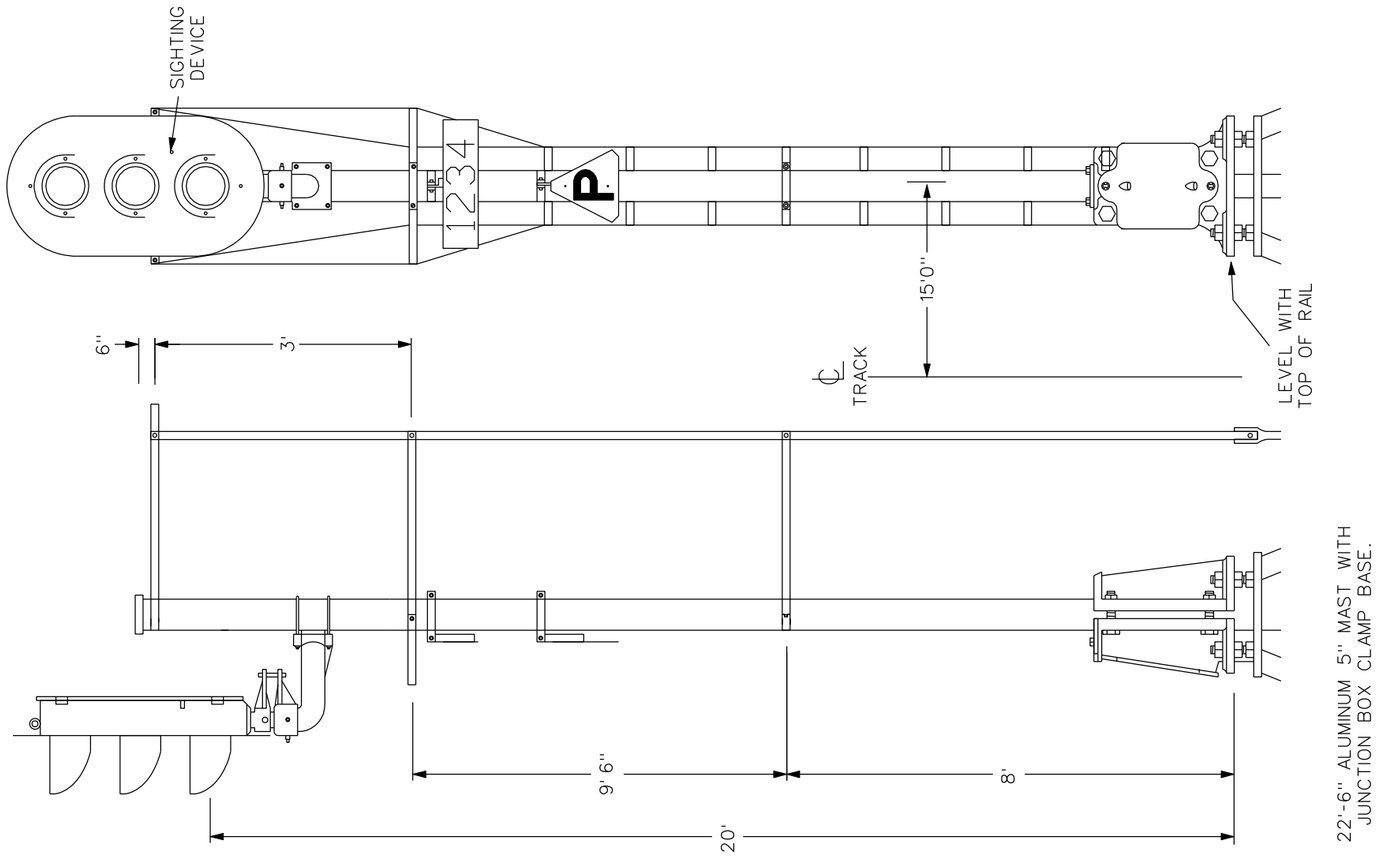

NOTES:

1. WHERE CLEARANCES ARE NOT A FACTOR, SIGNALS SHALL BE PLACED 15'-0" FROM CENTER OF TRACK.
2. ONLY 10 VOLT 25 WATT LAMP TO BE USED IN SIGNALS.
3. JUNCTION BOX ASSEMBLY SHALL BE LOCATED DIRECTLY BENEATH SIGNAL HEADS AS SHOWN IN THIS STANDARD.
4. NUMBER PLATES SHALL ONLY BE USED ON INTERMEDIATE SIGNALS, AND SHALL NOT BE USED ON CONTROLLED SIGNALS.
5. "P" PLATES SHALL ONLY BE USED ON PROTECTIVE SIGNALS AS DESIGNATED BY CIRCUIT PLANS.

THIS DRAWING TO BE USED FOR MAINTENANCE PURPOSES ONLY

REVISIONS				
-	-	-	-	-
REV.	DATE	DESCRIPTION	DES.	ENG.

FINAL REVIEW BY: C&SDRC DATE: 11/21/08

APPROVED BY

Dan C. Guerrero
MANAGER, COMMUNICATIONS AND SIGNALS ENGINEERING

Darrell V. Maxey
DIRECTOR, ENGINEERING AND CONSTRUCTION

THE SOUTHERN CALIFORNIA REGIONAL RAIL AUTHORITY OR IT'S OFFICERS OR AGENTS SHALL NOT BE RESPONSIBLE FOR THE ACCURACY OR COMPLETENESS OF THIS PLAN SHEET

METROLINK
SOUTHERN CALIFORNIA REGIONAL RAIL AUTHORITY
700 SOUTH FLOWER STREET
LOS ANGELES, CALIFORNIA 90017

ENGINEERING STANDARDS

TYPICAL GROUND SIGNAL WITH
ONE PLATFORM LADDER ASSEMBLY
(22'-6" MAST; SINGLE UNIT COLORLIGHT)

STANDARD 8500
SCALE: NONE
REVISION –
SHEET 3 OF 5
CADD FILE: ES8500-03

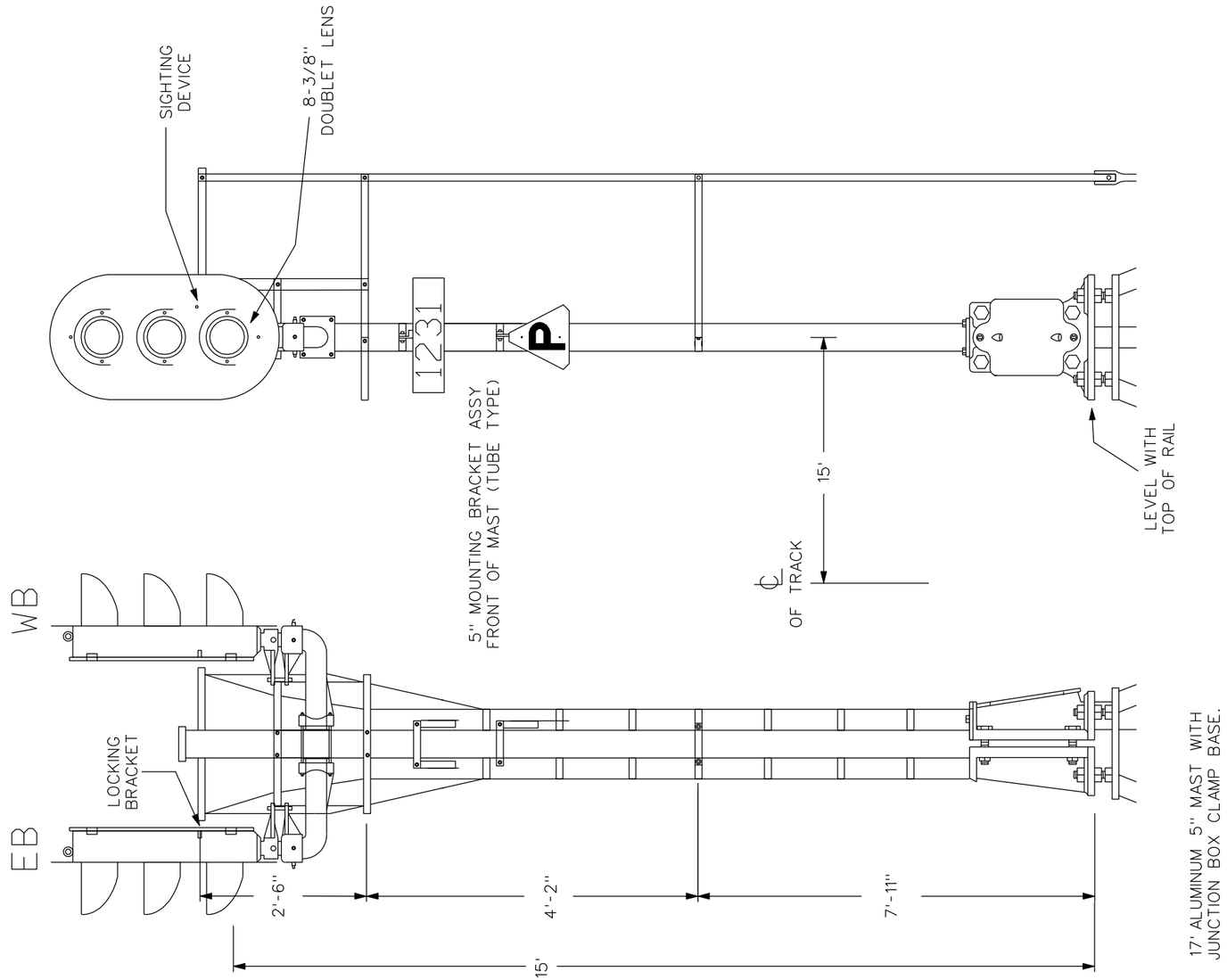

NOTES:

1. WHERE CLEARANCES ARE NOT A FACTOR, SIGNALS SHALL BE PLACED 15'-0" FROM CENTER OF TRACK.
2. ONLY 10 VOLT 25 WATT LAMP TO BE USED IN SIGNALS.
3. JUNCTION BOX ASSEMBLY SHALL BE LOCATED DIRECTLY BENEATH SIGNAL HEADS AS SHOWN IN THIS STANDARD.
4. NUMBER PLATES SHALL ONLY BE USED ON INTERMEDIATE SIGNALS, AND SHALL NOT BE USED ON CONTROLLED SIGNALS.
5. "P" PLATES SHALL ONLY BE USED ON PROTECTIVE SIGNALS AS DESIGNATED BY CIRCUIT PLANS.

THIS DRAWING TO BE USED FOR MAINTENANCE PURPOSES ONLY

REVISIONS				
-	-	-	-	-
REV.	DATE	DESCRIPTION	DES.	ENG.

FINAL REVIEW BY: C&SDRC DATE: 11/21/08

APPROVED BY

Dan C. Guerrero
MANAGER, COMMUNICATIONS AND SIGNALS ENGINEERING

Darrell V. Maxey
DIRECTOR, ENGINEERING AND CONSTRUCTION

THE SOUTHERN CALIFORNIA REGIONAL RAIL AUTHORITY OR IT'S OFFICERS OR AGENTS SHALL NOT BE RESPONSIBLE FOR THE ACCURACY OR COMPLETENESS OF THIS PLAN SHEET

METROLINK
SOUTHERN CALIFORNIA REGIONAL RAIL AUTHORITY
700 SOUTH FLOWER STREET
LOS ANGELES, CALIFORNIA 90017

ENGINEERING STANDARDS

TYPICAL GROUND SIGNAL WITH
ONE PLATFORM LADDER ASSEMBLY
17'-0" MAST; BI-DIRECTIONAL COLORLIGHT

STANDARD: 8500
SCALE: NONE
REVISION: -
SHEET: 4 OF 5
CADD FILE: ES8500-04

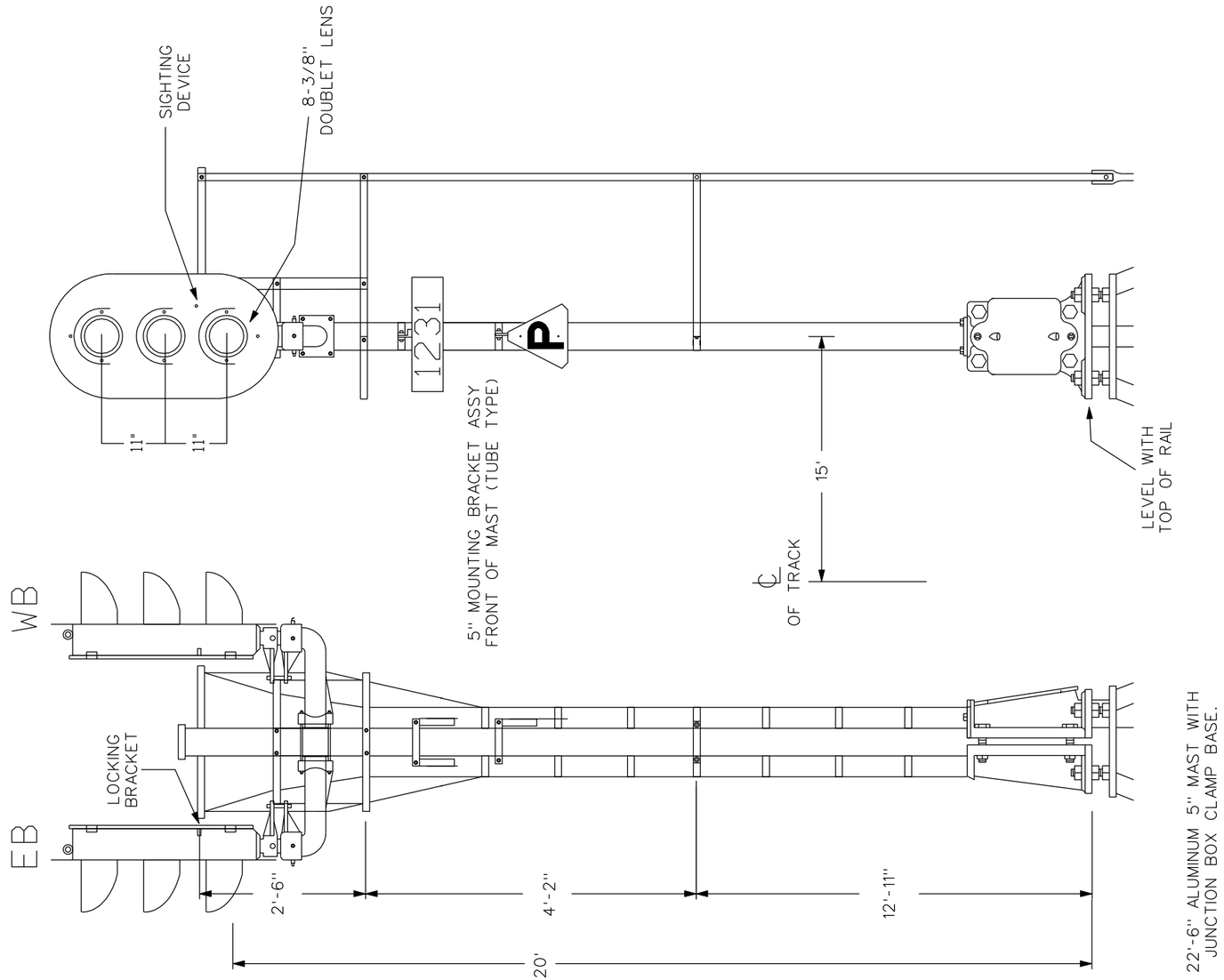

NOTES:

1. WHERE CLEARANCES ARE NOT A FACTOR, SIGNALS SHALL BE PLACED 15'-0" FROM CENTER OF TRACK.
2. ONLY 10 VOLT 25 WATT LAMP TO BE USED IN SIGNALS.
3. JUNCTION BOX ASSEMBLY SHALL BE LOCATED DIRECTLY BENEATH SIGNAL HEADS AS SHOWN IN THIS STANDARD.
4. NUMBER PLATES SHALL ONLY BE USED ON INTERMEDIATE SIGNALS, AND SHALL NOT BE USED ON CONTROLLED SIGNALS.
5. "P" PLATES SHALL ONLY BE USED ON PROTECTIVE SIGNALS AS DESIGNATED BY CIRCUIT PLANS.

THIS DRAWING TO BE USED FOR MAINTENANCE PURPOSES ONLY

REVISIONS				
-	-	-	-	-
REV.	DATE	DESCRIPTION	DES.	ENG.

FINAL REVIEW BY: C&SDRC DATE: 11/21/08

APPROVED BY

Dan C. Guerrero
MANAGER, COMMUNICATIONS AND SIGNALS ENGINEERING

Darrell V. Maxey
DIRECTOR, ENGINEERING AND CONSTRUCTION

THE SOUTHERN CALIFORNIA REGIONAL RAIL AUTHORITY OR IT'S OFFICERS OR AGENTS SHALL NOT BE RESPONSIBLE FOR THE ACCURACY OR COMPLETENESS OF THIS PLAN SHEET

METROLINK
SOUTHERN CALIFORNIA REGIONAL RAIL AUTHORITY
700 SOUTH FLOWER STREET
LOS ANGELES, CALIFORNIA 90017

ENGINEERING STANDARDS

TYPICAL GROUND SIGNAL WITH
ONE PLATFORM LADDER ASSEMBLY
(22'-6" MAST; BI-DIRECTIONAL COLORLIGHT)

STANDARD: 8500
SCALE: NONE
REVISION: -
SHEET: 5 OF 5
CADD FILE: ES8500-05

SCRRA P/N 03-3271010-0

GROUND SIGNAL WITH TWO PLATFORM LADDER ASSEMBLY

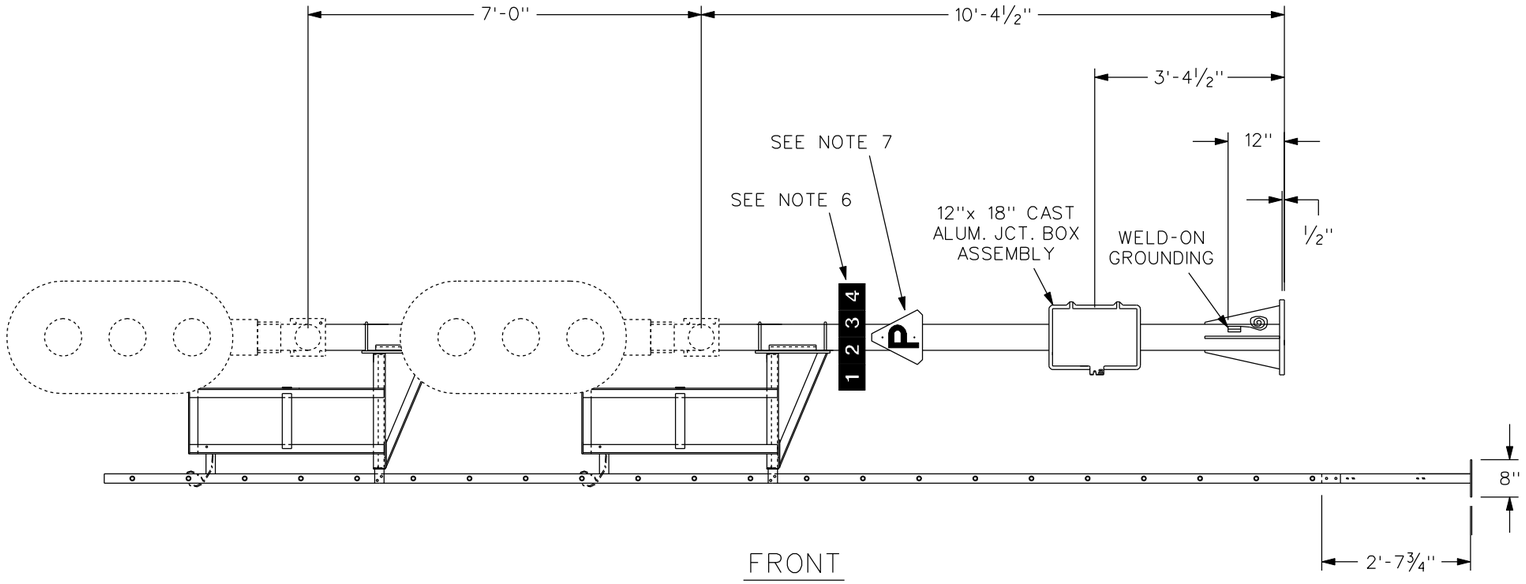

FRONT

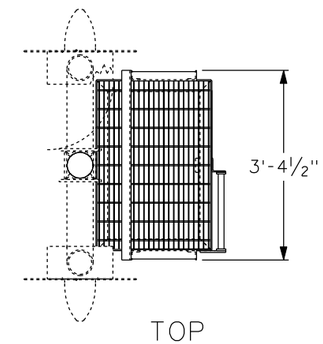

TOP

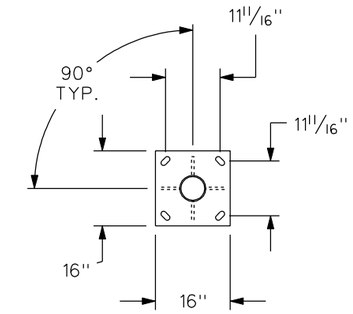

BOTTOM

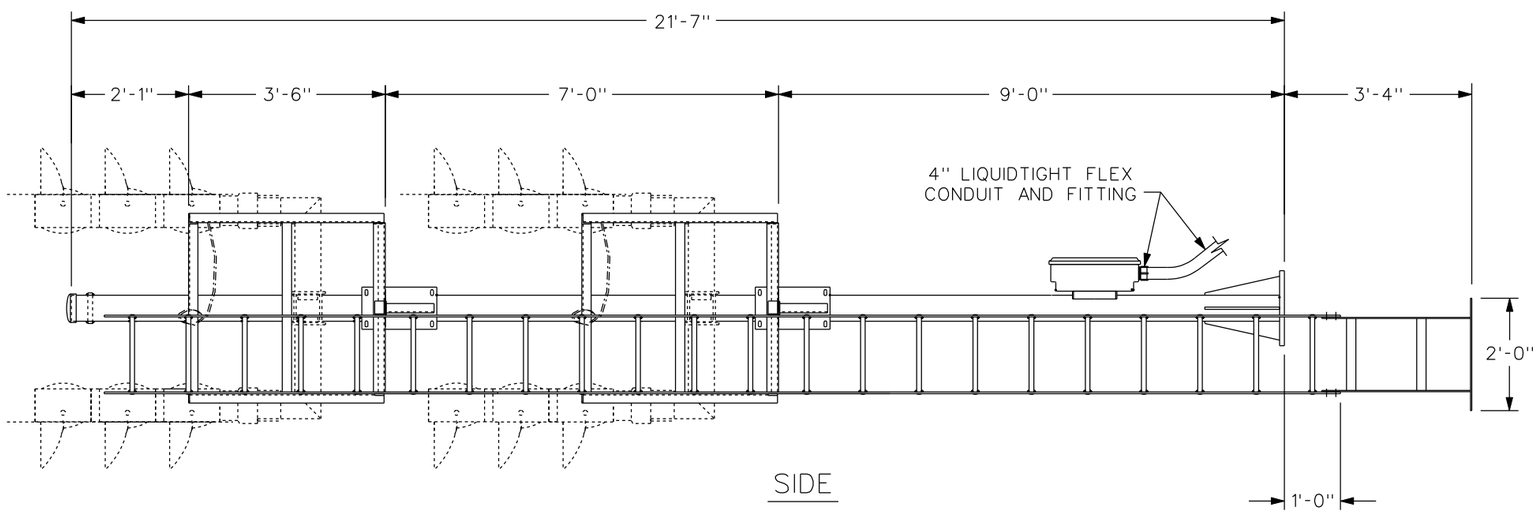

SIDE

NOTES:

1. L.E.D. COLORLIGHT SIGNAL UNIT SHALL BE ORDERED SEPARATELY. REFER TO SCRRA ENGINEERING STANDARD CS8525 FOR INFORMATION REGARDING COLORLIGHT SIGNAL UNITS.
2. CONFIGURATION AND NUMBER OF SIGNAL HEADS SHALL BE DETERMINED BY SITE SPECIFIC REQUIREMENTS.
3. 3 ASPECT, COLORLIGHT SIGNAL HEADS EQUIPPED WITH L.E.D. LAMP UNITS SHALL BE USED FOR ALL NEW INSTALLATIONS.
4. TWO (2) HINGED FLAT PLATES SHALL BE FITTED TO PREVENT UNAUTHORIZED ACCESS TO BOTH SIDES OF THE LADDER. THEY SHALL BE LOCKED IN PLACE BY A SIGNAL PADLOCK AND HASP ARRANGEMENT INTENDED FOR THIS PURPOSE.
5. JUNCTION BOX ASSEMBLY SHALL BE LOCATED DIRECTLY BENEATH SIGNAL HEADS AS SHOWN IN THIS STANDARD.
6. NUMBER PLATES SHALL ONLY BE USED ON INTERMEDIATE SIGNALS, AND SHALL NOT BE USED ON CONTROLLED SIGNALS.
7. "P" PLATES SHALL ONLY BE USED ON PROTECTIVE SIGNALS AS DESIGNATED BY CIRCUIT PLANS.
8. DIMENSIONS SHOWN ARE APPROXIMATE. INSTALLATION SHALL BE AS SPECIFIED BY THE MANUFACTURER.
9. DEVIATION FROM THIS STANDARD SHALL BE APPROVED BY SCRRA MANAGER OF C&S ENGINEERING OR DESIGNATE.
10. INSTALL BLANK COVER PLATE FOR UNUSED LAMP UNITS.

REVISIONS				
-	-	-	-	-
REV.	DATE	DESCRIPTION	DES.	ENG.

FINAL REVIEW BY: C&SDRC DATE: 11/21/08

APPROVED BY

Dan C. Guerrero

MANAGER, COMMUNICATIONS AND SIGNALS ENGINEERING

Darrell V. Maxey

DIRECTOR, ENGINEERING AND CONSTRUCTION

THE SOUTHERN CALIFORNIA REGIONAL RAIL AUTHORITY OR IT'S OFFICERS OR AGENTS SHALL NOT BE RESPONSIBLE FOR THE ACCURACY OR COMPLETENESS OF THIS PLAN SHEET

METROLINK

SOUTHERN CALIFORNIA REGIONAL RAIL AUTHORITY
700 SOUTH FLOWER STREET
LOS ANGELES, CALIFORNIA 90017

ENGINEERING STANDARDS

TYPICAL GROUND SIGNAL WITH TWO PLATFORM LADDER ASSEMBLY

STANDARD: 8505

SCALE: NONE

REVISION: –

SHEET: 1 OF 3

CADD FILE: ES8505-01

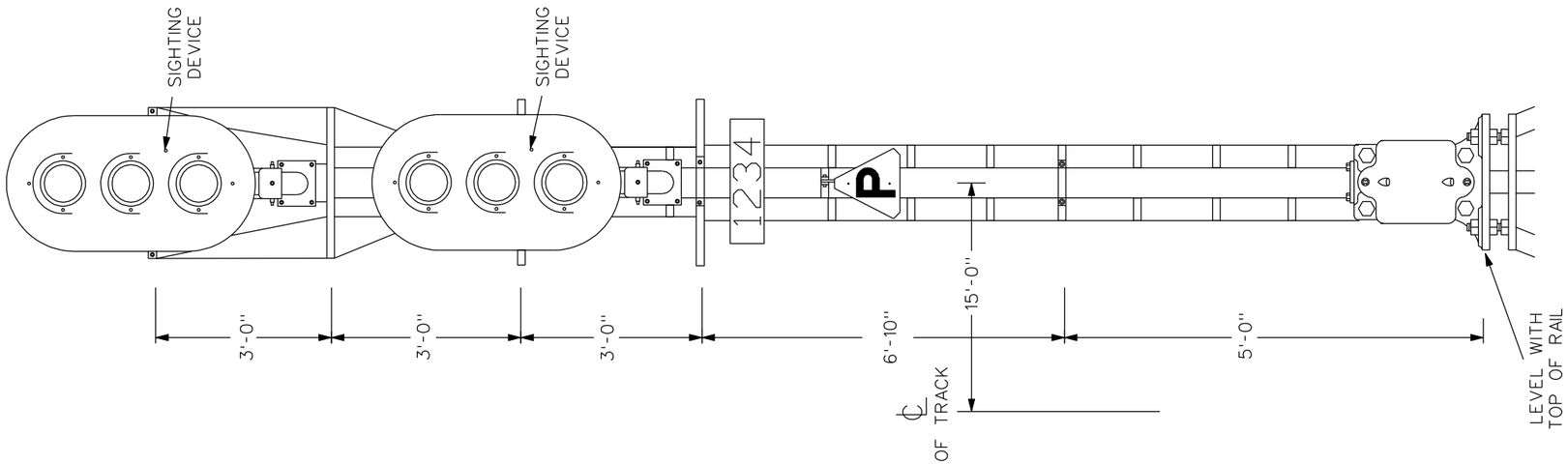

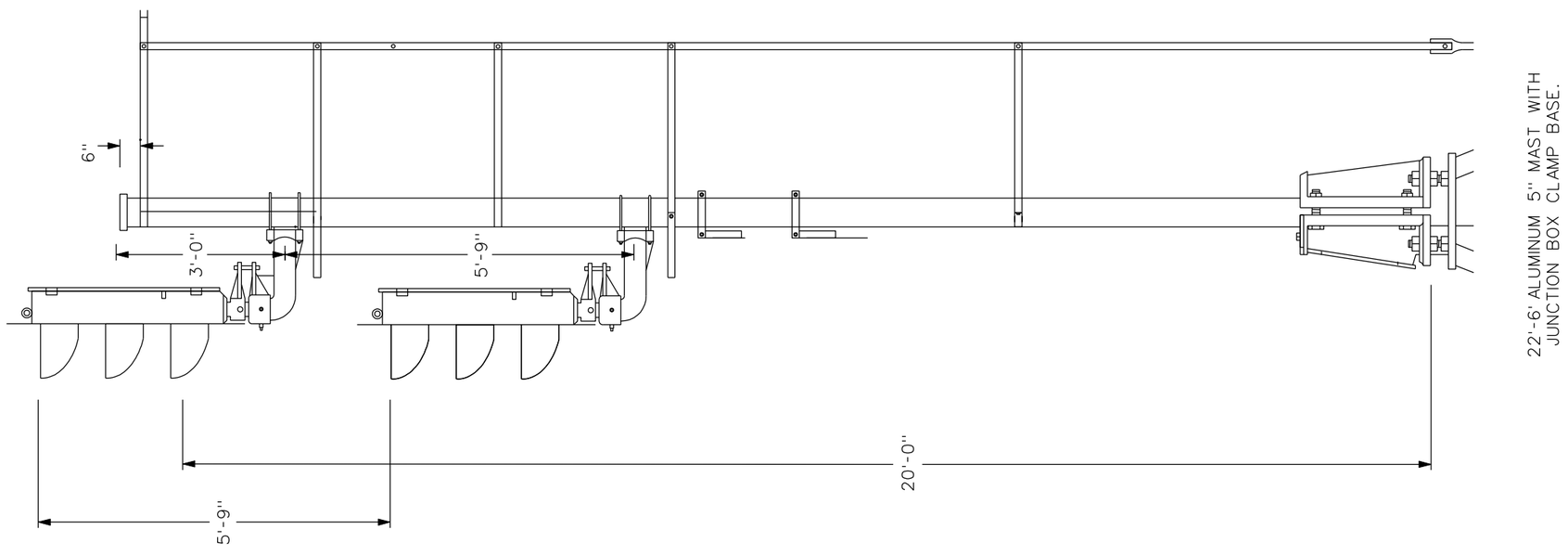

NOTES:

1. WHERE CLEARANCES ARE NOT A FACTOR, SIGNALS SHALL BE PLACED 15'-0" FROM CENTER OF TRACK.
2. ONLY 10 VOLT 25 WATT LAMP TO BE USED IN SIGNALS.
3. JUNCTION BOX ASSEMBLY SHALL BE LOCATED DIRECTLY BENEATH SIGNAL HEADS AS SHOWN IN THIS STANDARD.
4. NUMBER PLATES SHALL ONLY BE USED ON INTERMEDIATE SIGNALS, AND SHALL NOT BE USED ON CONTROLLED SIGNALS.
5. "P" PLATES SHALL ONLY BE USED ON PROTECTIVE SIGNALS AS DESIGNATED BY CIRCUIT PLANS.

THIS DRAWING TO BE USED FOR MAINTENANCE PURPOSES ONLY

REVISIONS				
-	-	-	-	-
REV.	DATE	DESCRIPTION	DES.	ENG.

FINAL REVIEW BY: C&SDRC DATE: 11/21/08

APPROVED BY

Dan C. Guerrero
MANAGER, COMMUNICATIONS AND SIGNALS ENGINEERING

Darrell V. Maxey
DIRECTOR, ENGINEERING AND CONSTRUCTION

THE SOUTHERN CALIFORNIA REGIONAL RAIL AUTHORITY OR IT'S OFFICERS OR AGENTS SHALL NOT BE RESPONSIBLE FOR THE ACCURACY OR COMPLETENESS OF THIS PLAN SHEET

METROLINK
SOUTHERN CALIFORNIA REGIONAL RAIL AUTHORITY
700 SOUTH FLOWER STREET
LOS ANGELES, CALIFORNIA 90017

ENGINEERING STANDARDS

TYPICAL GROUND SIGNAL WITH
TWO PLATFORM LADDER ASSEMBLY
(22'-6" MAST; DOUBLE UNIT COLORLIGHT)

STANDARD: 8505
SCALE: NONE
REVISION: –
SHEET: 2 OF 3
CADD FILE: ES8505-02

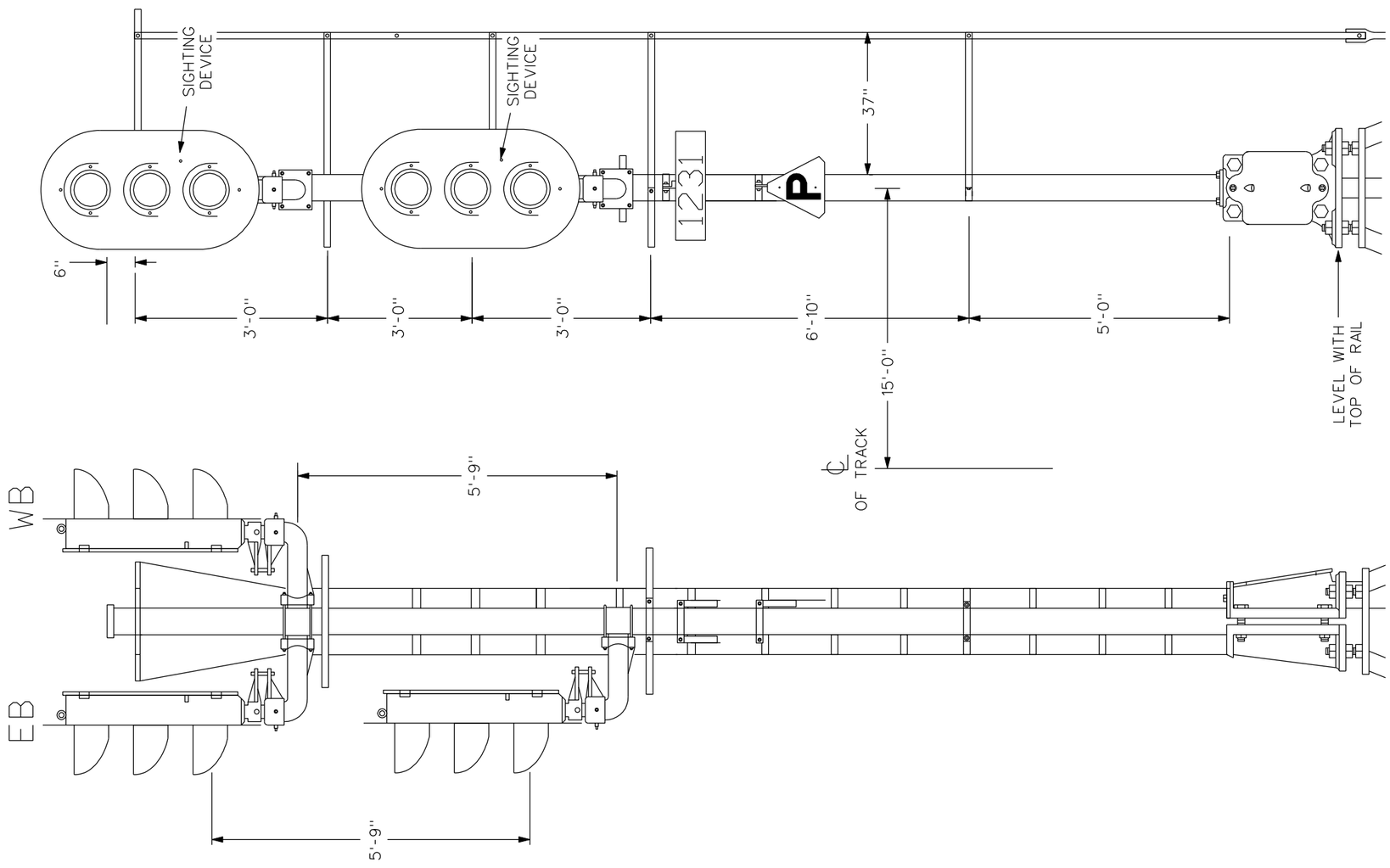

NOTES:

1. WHERE CLEARANCES ARE NOT A FACTOR, SIGNALS SHALL BE PLACED 15'-0" FROM CENTER OF TRACK.
2. ONLY 10 VOLT 25 WATT LAMP TO BE USED IN SIGNALS.
3. JUNCTION BOX ASSEMBLY SHALL BE LOCATED DIRECTLY BENEATH SIGNAL HEADS AS SHOWN IN THIS STANDARD.
4. NUMBER PLATES SHALL ONLY BE USED ON INTERMEDIATE SIGNALS, AND SHALL NOT BE USED ON CONTROLLED SIGNALS.
5. "P" PLATES SHALL ONLY BE USED ON PROTECTIVE SIGNALS AS DESIGNATED BY CIRCUIT PLANS.

THIS DRAWING TO BE USED FOR MAINTENANCE PURPOSES ONLY

REVISIONS				
-	-	-	-	-
REV.	DATE	DESCRIPTION	DES.	ENG.

FINAL REVIEW BY: C&SDRC DATE: 11/21/08

APPROVED BY

Dan C. Guerrero
MANAGER, COMMUNICATIONS AND SIGNALS ENGINEERING

Darrell V. Maxey
DIRECTOR, ENGINEERING AND CONSTRUCTION

THE SOUTHERN CALIFORNIA REGIONAL RAIL AUTHORITY OR IT'S OFFICERS OR AGENTS SHALL NOT BE RESPONSIBLE FOR THE ACCURACY OR COMPLETENESS OF THIS PLAN SHEET

METROLINK
SOUTHERN CALIFORNIA REGIONAL RAIL AUTHORITY
700 SOUTH FLOWER STREET
LOS ANGELES, CALIFORNIA 90017

ENGINEERING STANDARDS

TYPICAL GROUND SIGNAL WITH
TWO PLATFORM LADDER ASSEMBLY
(22'-6" MAST; BI-DIRECTIONAL
COLORLIGHT WITH SECOND UNIT)

STANDARD: 8505
SCALE: NONE
REVISION: -
SHEET: 3 OF 3
CADD FILE: ES8505-03

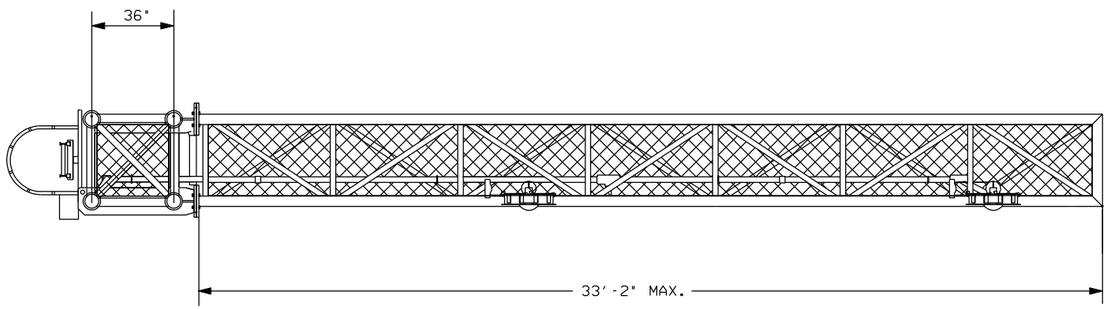

TOP VIEW

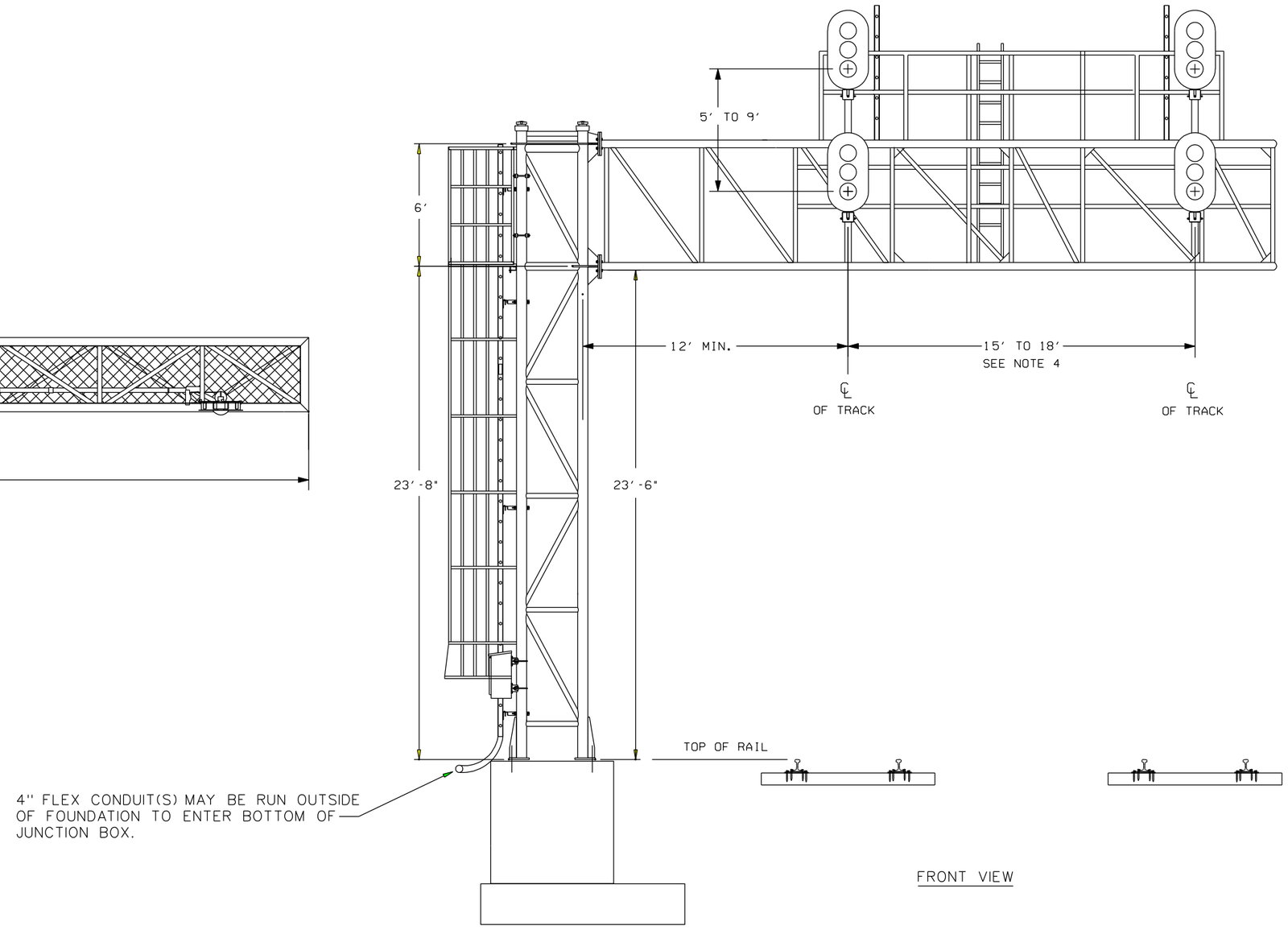

FRONT VIEW

NOTES:

1. BASE OF BRIDGE MAST TO BE LEVEL WITH TOP OF HIGHEST RAIL.
2. 41" X 73¾"X 24" FREE STANDING POWER COATED STEEL JUNCTION CASE REQUIRED WHERE MAST MOUNTED JUNCTION CASE DOES NOT HAVE SUFFICIENT CAPACITY.
3. BRIDGE LADDERS AND CAGES SHALL MEET ALL OSHA REQUIREMENTS.
4. SPACING OF BRIDGE MOUNTED SIGNALS VARIES PER LOCATION AND WILL BE DETERMINED BASED ON ENGINEERING DESIGN.

FOOTING REQUIREMENTS:

1. A LAYER OF CRUSHED STONE, ¾" X¼", SHALL BE PLACED AROUND STRUCTURE A MINIMUM DISTANCE OF 4 FEET.

REVISIONS				
-	-	-	-	-
REV.	DATE	DESCRIPTION	DES.	ENG.

FINAL REVIEW BY: C&SDRC DATE: 11/21/08

APPROVED BY

Dan C. Guerrero
MANAGER, COMMUNICATIONS AND SIGNALS ENGINEERING

Darrell V. Maxey
DIRECTOR, ENGINEERING AND CONSTRUCTION

THE SOUTHERN CALIFORNIA REGIONAL RAIL AUTHORITY OR IT'S OFFICERS OR AGENTS SHALL NOT BE RESPONSIBLE FOR THE ACCURACY OR COMPLETENESS OF THIS PLAN SHEET

METROLINK
SOUTHERN CALIFORNIA REGIONAL RAIL AUTHORITY
700 SOUTH FLOWER STREET
LOS ANGELES, CALIFORNIA 90017

ENGINEERING STANDARDS

WAYSIDE SIGNAL CANTILEVER STRUCTURE

STANDARD: 8510
SCALE: NONE
REVISION: –
SHEET: 1 OF 1
CADD FILE: ES8510

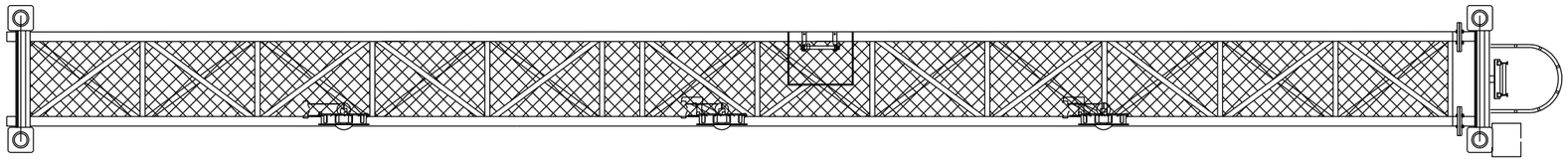

TOP VIEW

NOTES:

1. BASE OF BRIDGE MAST TO BE LEVEL WITH TOP OF HIGHEST RAIL.
2. 41" X 73¾"X 24" FREE STANDING POWER COATED STEEL JUNCTION CASE REQUIRED WHERE MAST MOUNTED JUNCTION CASE DOES NOT HAVE SUFFICIENT CAPACITY.
3. BRIDGE LADDERS AND CAGES SHALL MEET ALL OSHA REQUIREMENTS.
4. SPACING OF BRIDGE MOUNTED SIGNALS VARIES PER LOCATION AND WILL BE DETERMINED BASED ON ENGINEERING DESIGN.

FOOTING REQUIREMENTS:

1. A LAYER OF CRUSHED STONE,¾" X¼", SHALL BE PLACED AROUND STRUCTURE A MINIMUM DISTANCE OF 4 FEET.

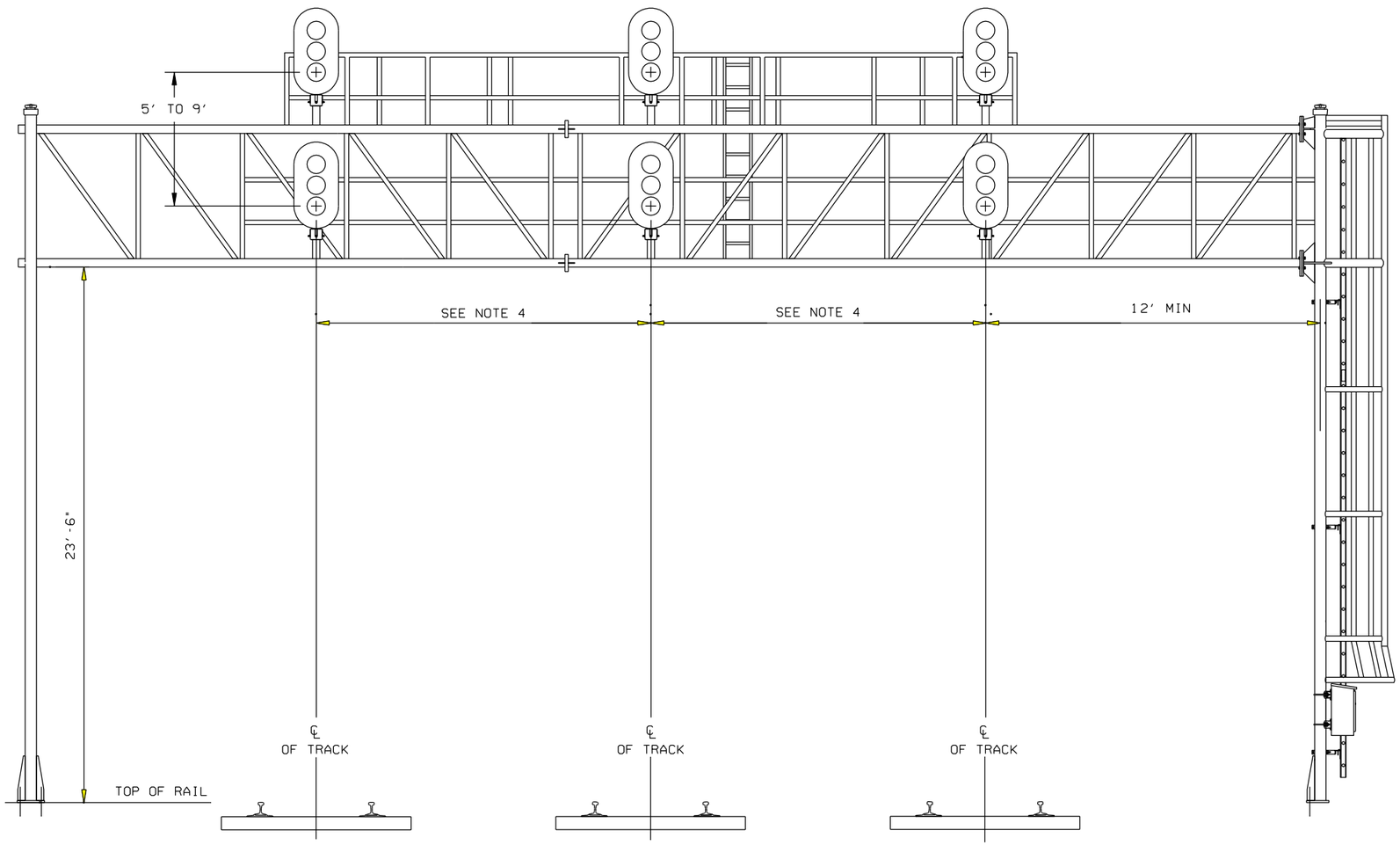

FRONT VIEW

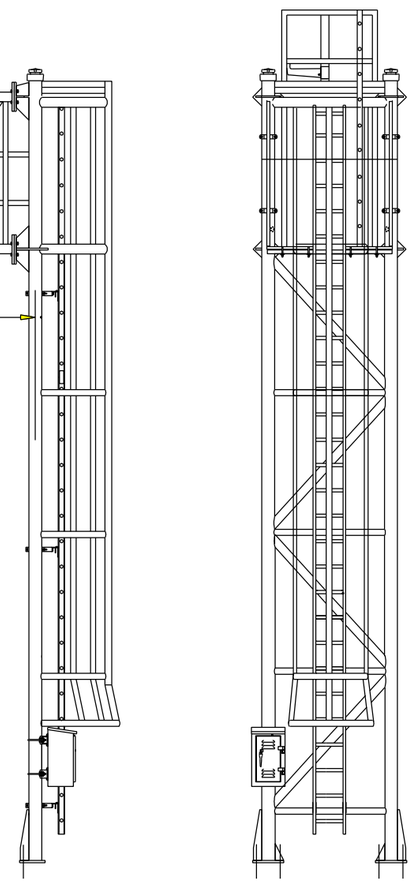

SIDE VIEW

REVISIONS				
-	-	-	-	-
REV.	DATE	DESCRIPTION	DES.	ENG.

FINAL REVIEW BY: C&SDRC DATE: 11/21/08

APPROVED BY

Dan C. Guerrero

MANAGER, COMMUNICATIONS AND SIGNALS ENGINEERING

Darrell V. Maxey

DIRECTOR, ENGINEERING AND CONSTRUCTION

THE SOUTHERN CALIFORNIA REGIONAL RAIL AUTHORITY OR IT'S OFFICERS OR AGENTS SHALL NOT BE RESPONSIBLE FOR THE ACCURACY OR COMPLETENESS OF THIS PLAN SHEET

METROLINK

SOUTHERN CALIFORNIA REGIONAL RAIL AUTHORITY
700 SOUTH FLOWER STREET
LOS ANGELES, CALIFORNIA 90017

ENGINEERING STANDARDS

WAYSIDE SIGNAL BRIDGE STRUCTURE

STANDARD: 8515

SCALE: NONE

REVISION: – SHEET: 1 OF 1

CADD FILE: ES8515

SCRRA P/N 03-3271050-0

DWARF SIGNAL ASSEMBLY

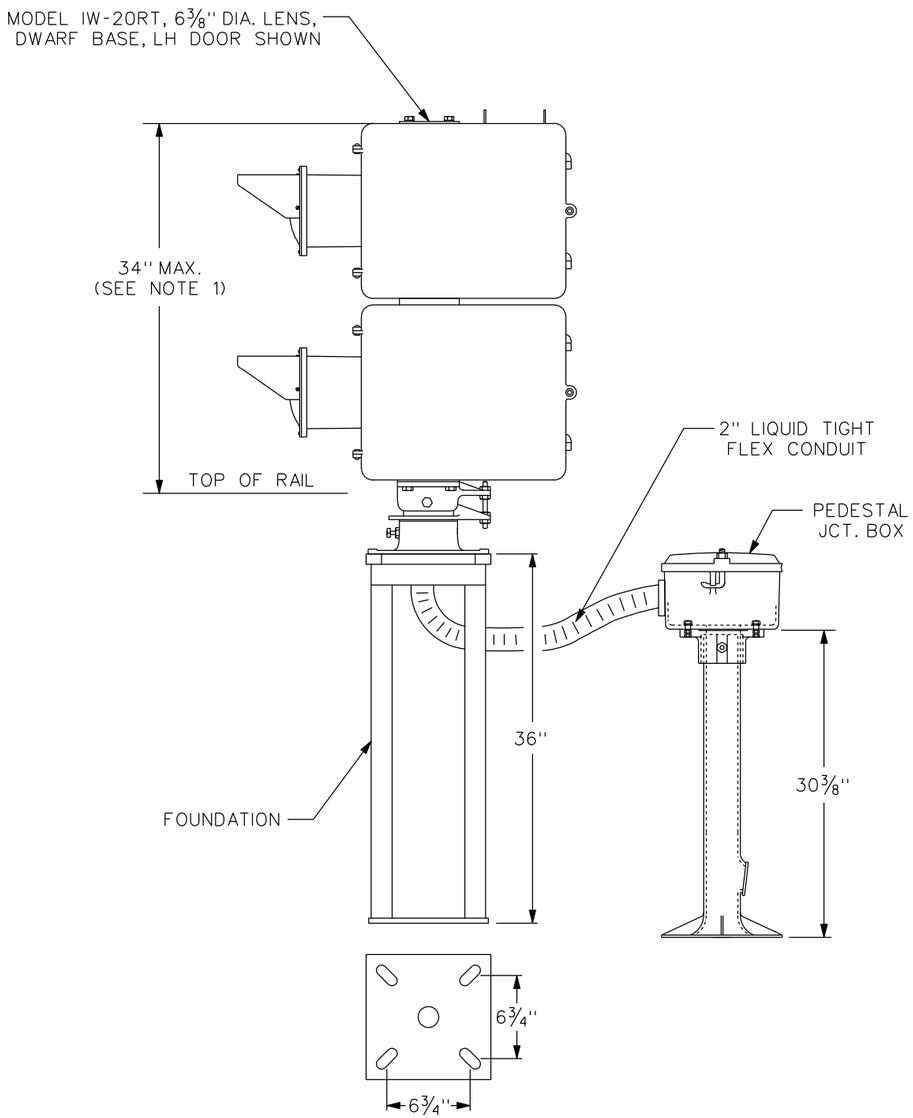

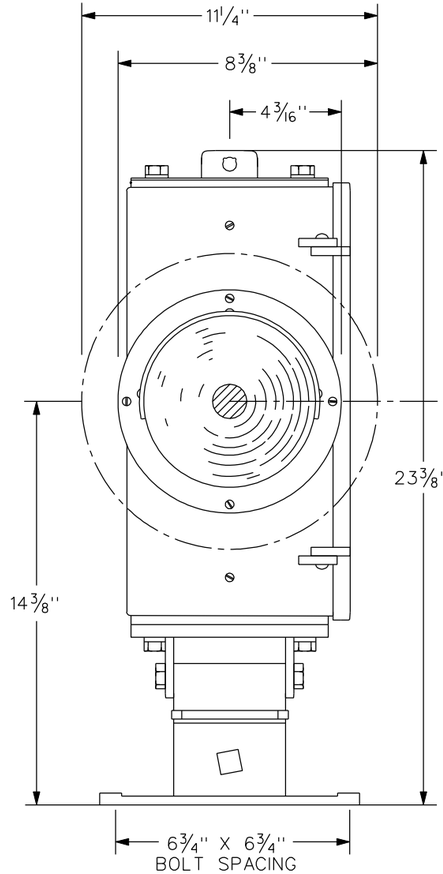

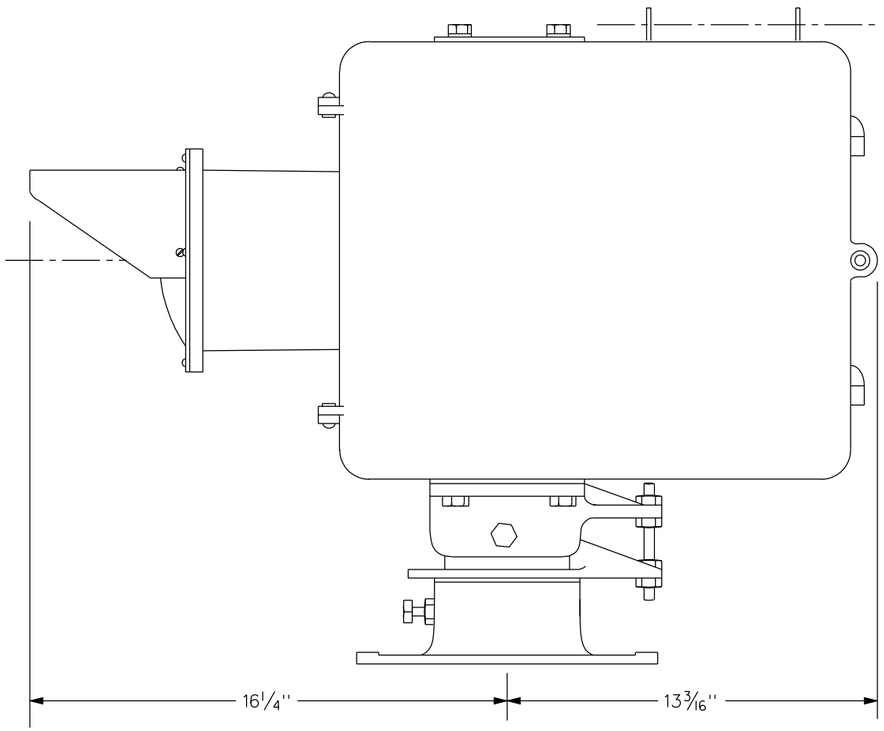

NOTES:

1. THE VERTICAL HEIGHT OF A DWARF SIGNAL SHALL NOT BE GREATER THAN 34" ABOVE THE TOP OF ANY ADJACENT RAIL.
2. NO PORTION OF THE DWARF SIGNAL SHALL BE WITHIN 6'-0" OF THE CENTERLINE OF EITHER TRACK WHEN TRACK SEPARATION IS 14'-0".
3. FOUNDATION SHALL BE CONSTRUCTED OF GALVANIZED STEEL.
4. DWARF SIGNAL ASSEMBLY SHALL INCLUDE TWO SIGNAL UNITS, MOUNTING BASE, PEDESTAL JUNCTION BOX, FOUNDATION, LIQUID TIGHT FLEX CONDUIT AND HARDWARE.
5. DEVIATION FROM THIS STANDARD SHALL BE APPROVED BY SCRRA MANAGER OF C&S ENGINEERING OR DESIGNATE.

REVISIONS				
-	-	-	-	-
REV.	DATE	DESCRIPTION	DES.	ENG.

FINAL REVIEW BY: C&SDRC DATE: 11/21/08

APPROVED BY

Dan C. Guerrero

MANAGER, COMMUNICATIONS AND SIGNALS ENGINEERING

Darrell V. Maxey

DIRECTOR, ENGINEERING AND CONSTRUCTION

THE SOUTHERN CALIFORNIA REGIONAL RAIL AUTHORITY OR IT'S OFFICERS OR AGENTS SHALL NOT BE RESPONSIBLE FOR THE ACCURACY OR COMPLETENESS OF THIS PLAN SHEET

METROLINK

SOUTHERN CALIFORNIA REGIONAL RAIL AUTHORITY
700 SOUTH FLOWER STREET
LOS ANGELES, CALIFORNIA 90017

ENGINEERING STANDARDS

TYPICAL DWARF SIGNAL ASSEMBLY

STANDARD: 8520

SCALE: NONE

REVISION: – SHEET: 1 OF 1

CADD FILE: ES8520

SCRRA P/N 03-3271901-0

L.E.D. COLORLIGHT SIGNAL UNIT

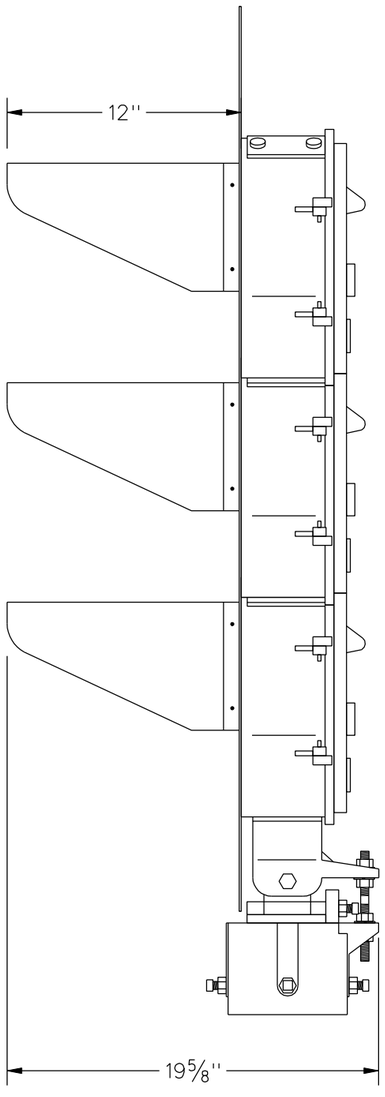

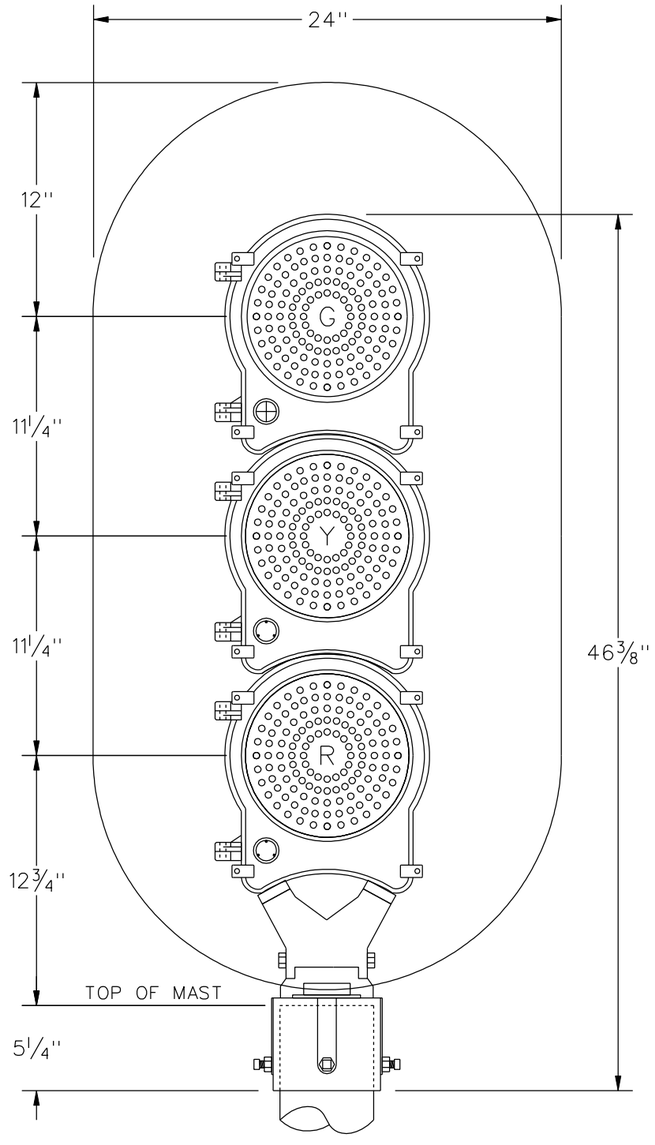

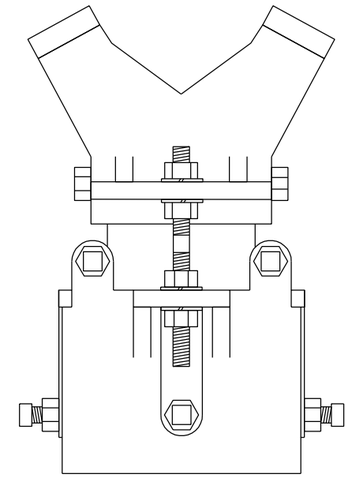

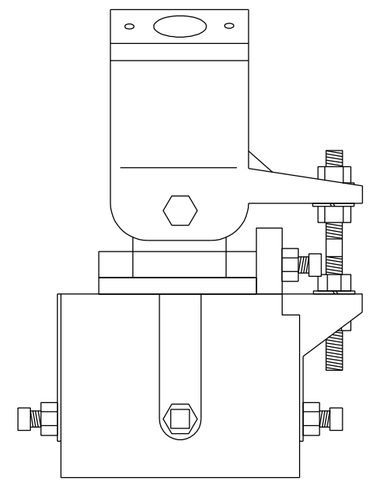

ADJUSTABLE BRACKET

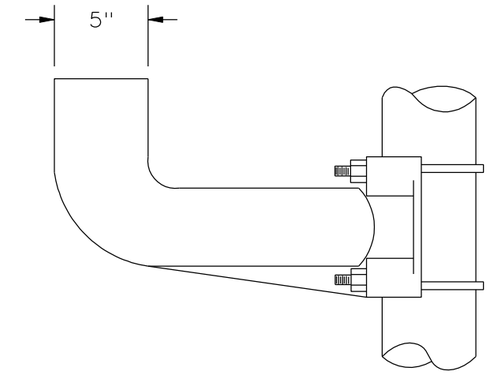

TUBE TYPE SINGLE BRACKET

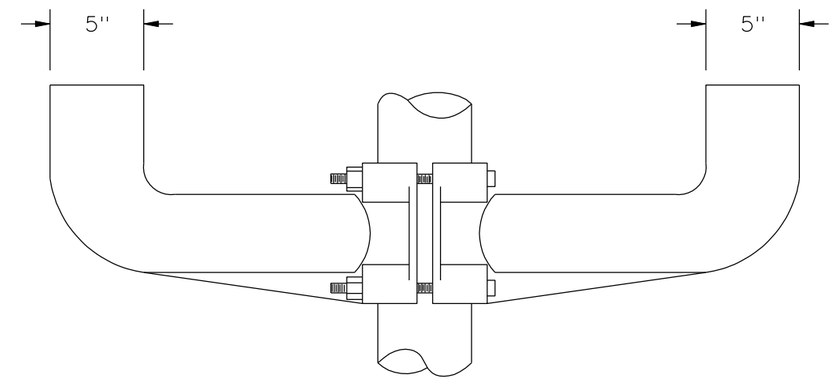

TUBE TYPE DOUBLE BRACKET

NOTES:

1. COLORLIGHT SIGNAL UNIT ASSEMBLY SHALL INCLUDE 3 L.E.D. LAMP UNITS (G/Y/R), 3 HOODS, BACKGROUND, ADJUSTABLE BRACKET, MOUNTING BRACKETS AND APPROPRIATE MOUNTING HARDWARE.
2. SIGNAL UNIT SHALL BE DESIGNED TO ALLOW REMOVAL OF LAMP UNITS FROM THE REAR.
3. L.E.D. LAMP UNITS SHALL MEET ALL REQUIREMENTS OF AREMA SIGNAL MANUAL PART 7.1.5.
4. COLORLIGHT SIGNAL ASSEMBLY SHOWN IS SAFETRAN MODEL CLS-20R.
5. DEVIATION FROM THIS STANDARD DRAWING SHALL BE APPROVED BY SCRRA MANAGER OF C&S ENGINEERING OR DESIGNATE.
6. INSTALL BLANK COVER PLATE FOR UNUSED LAMP UNITS.

REVISIONS				
-	-	-	-	-
REV.	DATE	DESCRIPTION	DES.	ENG.

FINAL REVIEW BY: C&SDRC DATE: 11/21/08

APPROVED BY

Dan C. Guerrero
MANAGER, COMMUNICATIONS AND SIGNALS ENGINEERING

Darrell V. Maxey
DIRECTOR, ENGINEERING AND CONSTRUCTION

THE SOUTHERN CALIFORNIA REGIONAL RAIL AUTHORITY OR IT'S OFFICERS OR AGENTS SHALL NOT BE RESPONSIBLE FOR THE ACCURACY OR COMPLETENESS OF THIS PLAN SHEET

METROLINK

SOUTHERN CALIFORNIA REGIONAL RAIL AUTHORITY
700 SOUTH FLOWER STREET
LOS ANGELES, CALIFORNIA 90017

ENGINEERING STANDARDS

TYPICAL L.E.D. COLOR LIGHT SIGNAL UNIT

STANDARD: 8525
SCALE: NONE
REVISION: –
SHEET: 1 OF 2
CADD FILE: ES8525-01

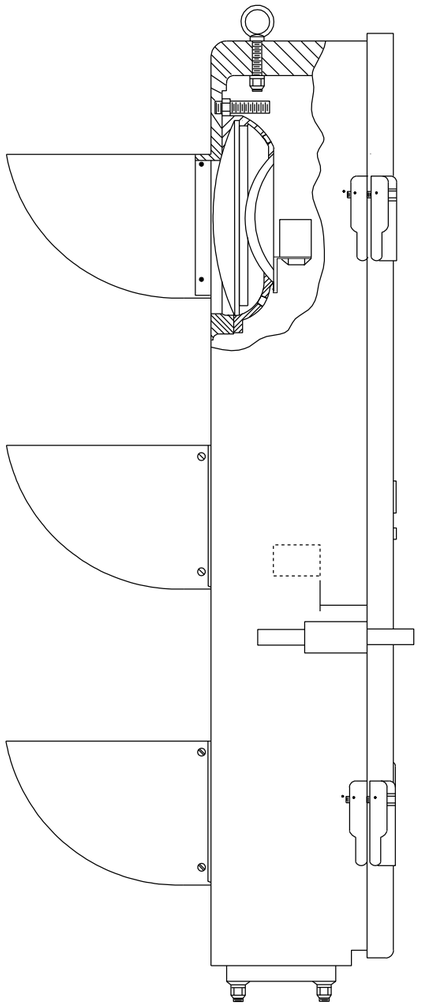

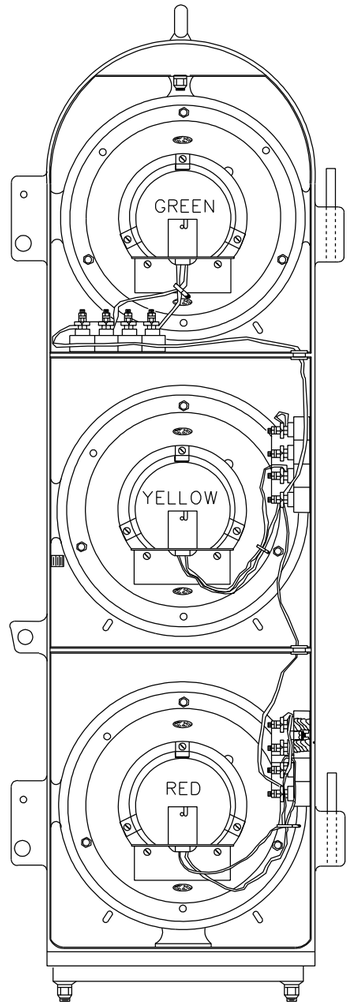

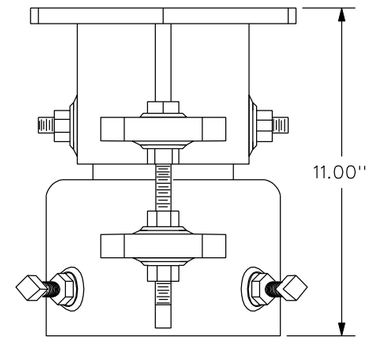

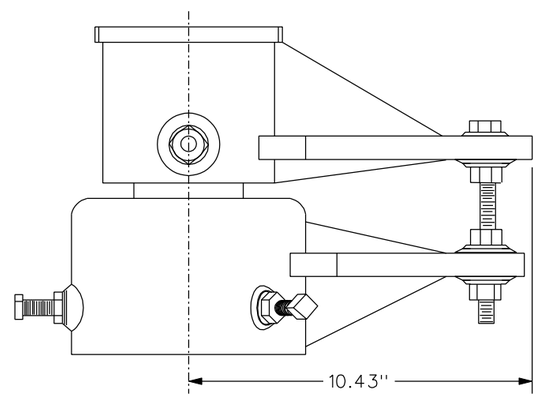

ADJUSTABLE BRACKET

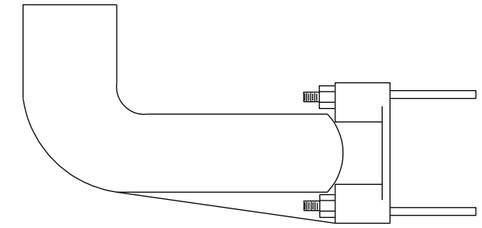

TUBE TYPE SINGLE BRACKET

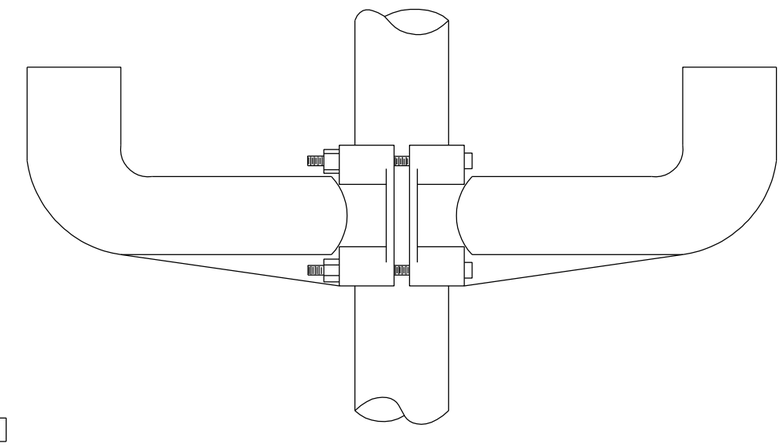

TUBE TYPE DOUBLE BRACKET

NOTES:

1. SIGNAL UNIT SHALL BE DESIGNED TO ALLOW REMOVAL OF LAMP UNITS FROM THE REAR.
2. EACH INCANDESCENT COLOR LIGHT SIGNAL UNIT SHALL BE EQUIPPED WITH 3 ADJUSTABLE RESISTORS; 1 EA FOR GREEN, YELLOW AND RED LAMP UNITS.
3. 10 VOLT 25 WATT BULBS SHALL BE FURNISHED WITH EACH LAMP UNIT. BULBS SHALL BE PACKAGED SEPARATELY.
4. COLORLIGHT SIGNAL ASSEMBLY SHOWN IS GRS MODEL "SENTINEL" TYPE SIGNAL HEAD.
5. DEVIATION FROM THIS STANDARD DRAWING SHALL BE APPROVED BY SCRRA MANAGER OF C&S ENGINEERING OR DESIGNATE.

THIS DRAWING TO BE USED FOR MAINTENANCE PURPOSES ONLY

REVISIONS				
-	-	-	-	-
REV.	DATE	DESCRIPTION	DES.	ENG.

FINAL REVIEW BY: C&SDRC DATE: 11/21/08

APPROVED BY

Dan C. Guerrero
MANAGER, COMMUNICATIONS AND SIGNALS ENGINEERING

Darrell V. Maxey
DIRECTOR, ENGINEERING AND CONSTRUCTION

THE SOUTHERN CALIFORNIA REGIONAL RAIL AUTHORITY OR IT'S OFFICERS OR AGENTS SHALL NOT BE RESPONSIBLE FOR THE ACCURACY OR COMPLETENESS OF THIS PLAN SHEET

METROLINK
SOUTHERN CALIFORNIA REGIONAL RAIL AUTHORITY
700 SOUTH FLOWER STREET
LOS ANGELES, CALIFORNIA 90017

ENGINEERING STANDARDS

TYPICAL INCANDESCENT COLOR LIGHT SIGNAL UNIT

STANDARD: 8525
SCALE: NONE
REVISION: –
SHEET: 2 OF 2
CADD FILE: ES8525-02

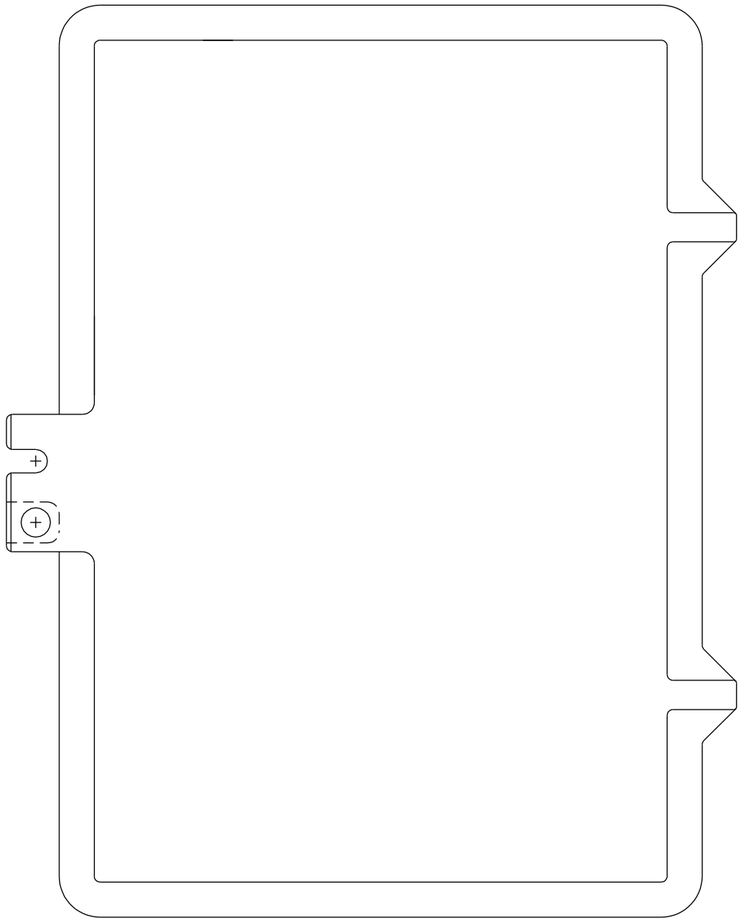

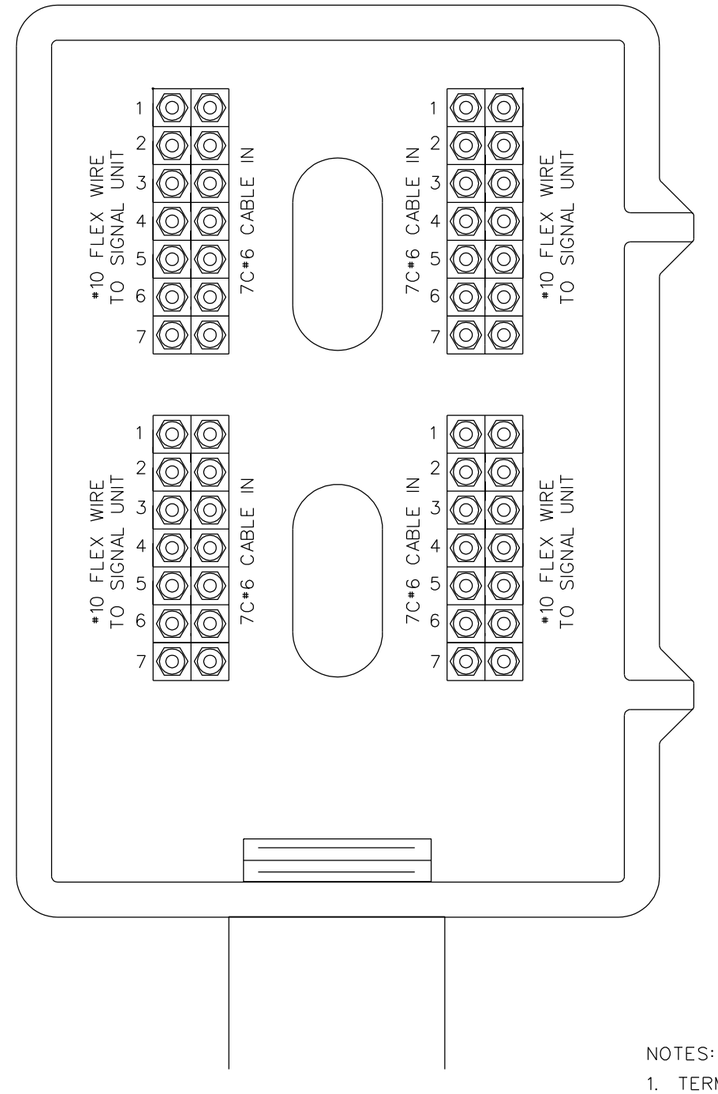

NOTES:

1. TERMINAL BOX SHALL BE SAFETRAN MODEL 092494-BX OR APPROVED EQUAL.
2. 28 INSULATED AAR TEST TERMINALS, COMPLETE WITH AAR NUTS AND WASHERS SHALL BE FURNISHED WITH EACH GROUND SIGNAL JUNCTION BOX.
3. JUNCTION SHALL BE SECURELY ATTACHED TO SIGNAL MAST.
4. CONDUCTORS SHALL BE LANDED WITH THE LOWEST NUMBER AT THE TOP.

REVISIONS				
-	-	-	-	-
REV.	DATE	DESCRIPTION	DES.	ENG.

FINAL REVIEW BY: C&SDRC DATE: 11/21/08

APPROVED BY

Dan C. Guerrero

MANAGER, COMMUNICATIONS AND SIGNALS ENGINEERING

Darrell V. Maxey

DIRECTOR, ENGINEERING AND CONSTRUCTION

THE SOUTHERN CALIFORNIA REGIONAL RAIL AUTHORITY OR IT'S OFFICERS OR AGENTS SHALL NOT BE RESPONSIBLE FOR THE ACCURACY OR COMPLETENESS OF THIS PLAN SHEET

METROLINK

SOUTHERN CALIFORNIA REGIONAL RAIL AUTHORITY
700 SOUTH FLOWER STREET
LOS ANGELES, CALIFORNIA 90017

ENGINEERING STANDARDS

TYPICAL GROUND SIGNAL JUNCTION BOX

STANDARD: 8530

SCALE: NONE

REVISION: -

SHEET: 1 OF 1

CADD FILE: ES8530

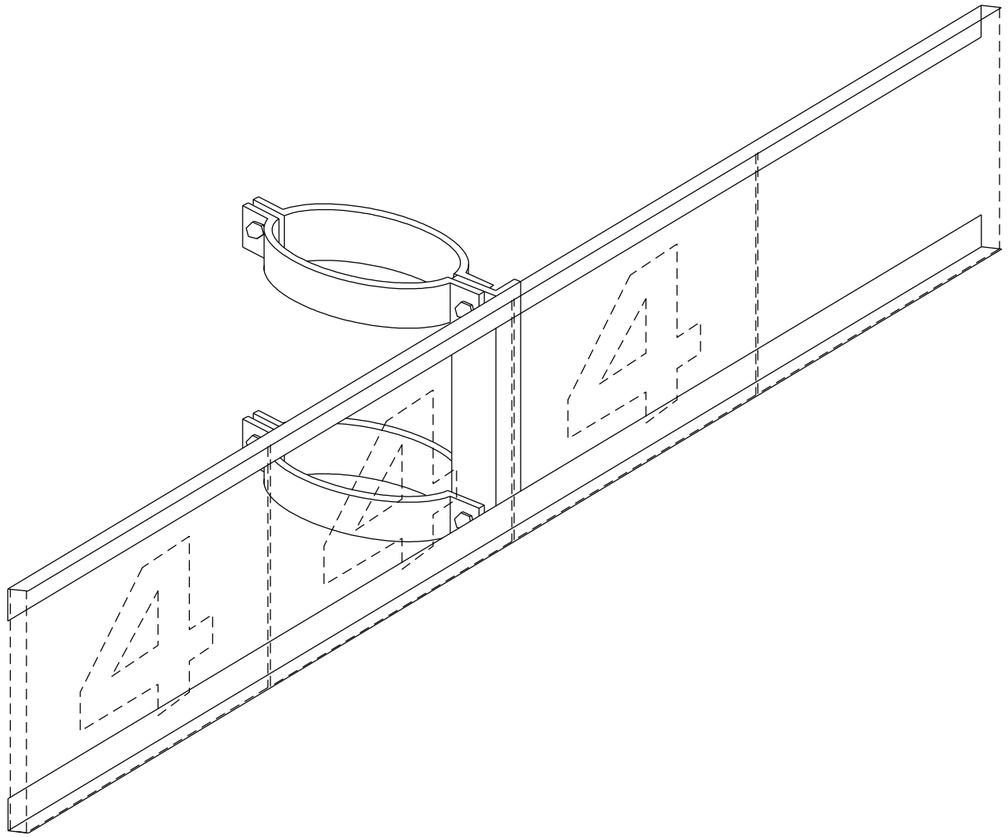

NUMBER PLATES & MOUNTING BRACKET

NOTES:

1. UNITYPE FRAMES ARE MADE OF ALUMINUM OR STEEL AND ARE COMPLETE WITH ALL HARDWARE REQUIRED FOR MOUNTING TO 5" MAST.
2. ALL NUMBER AND LETTER PLATES ARE TO BE WHITE IMAGE ON BLACK BACKGROUND.
3. MOUNTING BRACKETS WILL BE FOR MOUNTING TO 5" MAST.
4. SAFETRAN PART # 036117-584 - NUMBER SEQUENCE.
5. DEVIATION FROM THIS STANDARD SHALL BE APPROVED BY SCRRA MANAGER OF C&S ENGINEERING OR DESIGNATE.

REVISIONS				
-	-	-	-	-
REV.	DATE	DESCRIPTION	DES.	ENG.

FINAL REVIEW BY: C&SDRC DATE: 11/21/08

APPROVED BY

Dan C. Guerrero

MANAGER, COMMUNICATIONS AND SIGNALS ENGINEERING

Darrell V. Maxey

DIRECTOR, ENGINEERING AND CONSTRUCTION

THE SOUTHERN CALIFORNIA REGIONAL RAIL AUTHORITY OR IT'S OFFICERS OR AGENTS SHALL NOT BE RESPONSIBLE FOR THE ACCURACY OR COMPLETENESS OF THIS PLAN SHEET

METROLINK

SOUTHERN CALIFORNIA REGIONAL RAIL AUTHORITY
700 SOUTH FLOWER STREET
LOS ANGELES, CALIFORNIA 90017

ENGINEERING STANDARDS

TYPICAL SIGNAL NUMBER PLATE
FOR USE AT INTERMEDIATE
SIGNAL LOCATIONS

STANDARD: 8540

SCALE: NONE

REVISION: –

SHEET: 1 OF 1

CADD FILE: ES8540

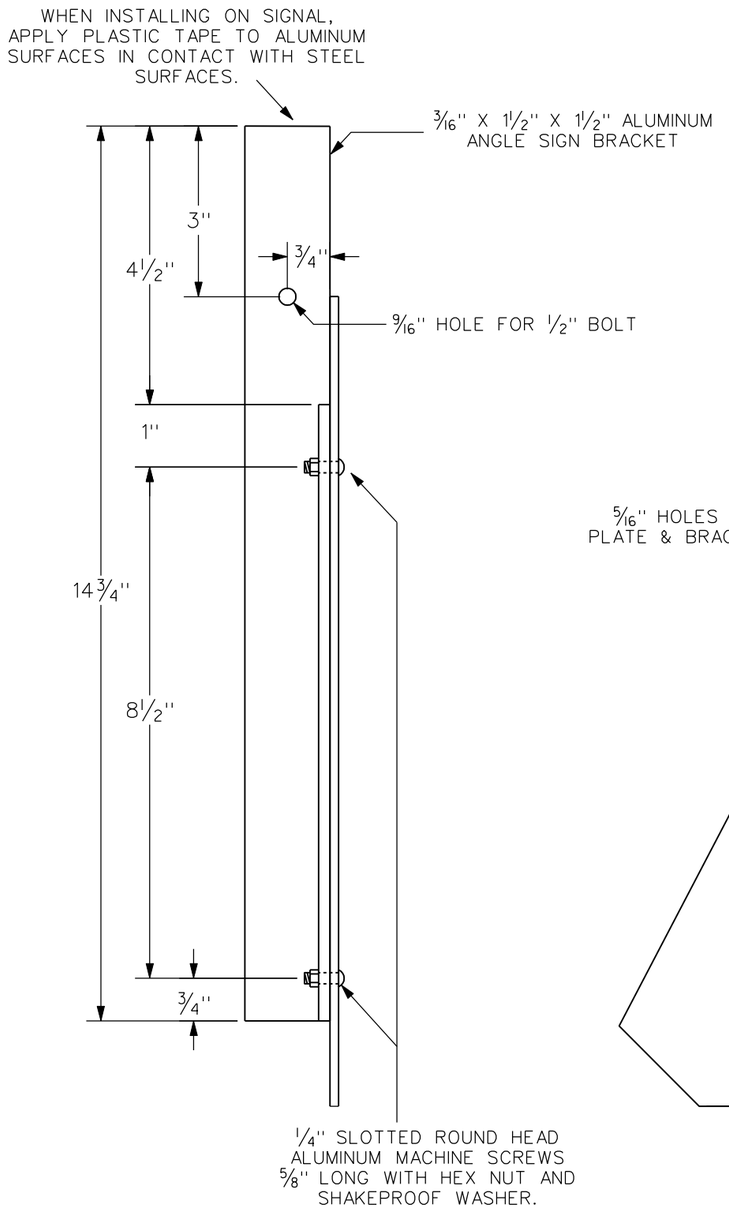

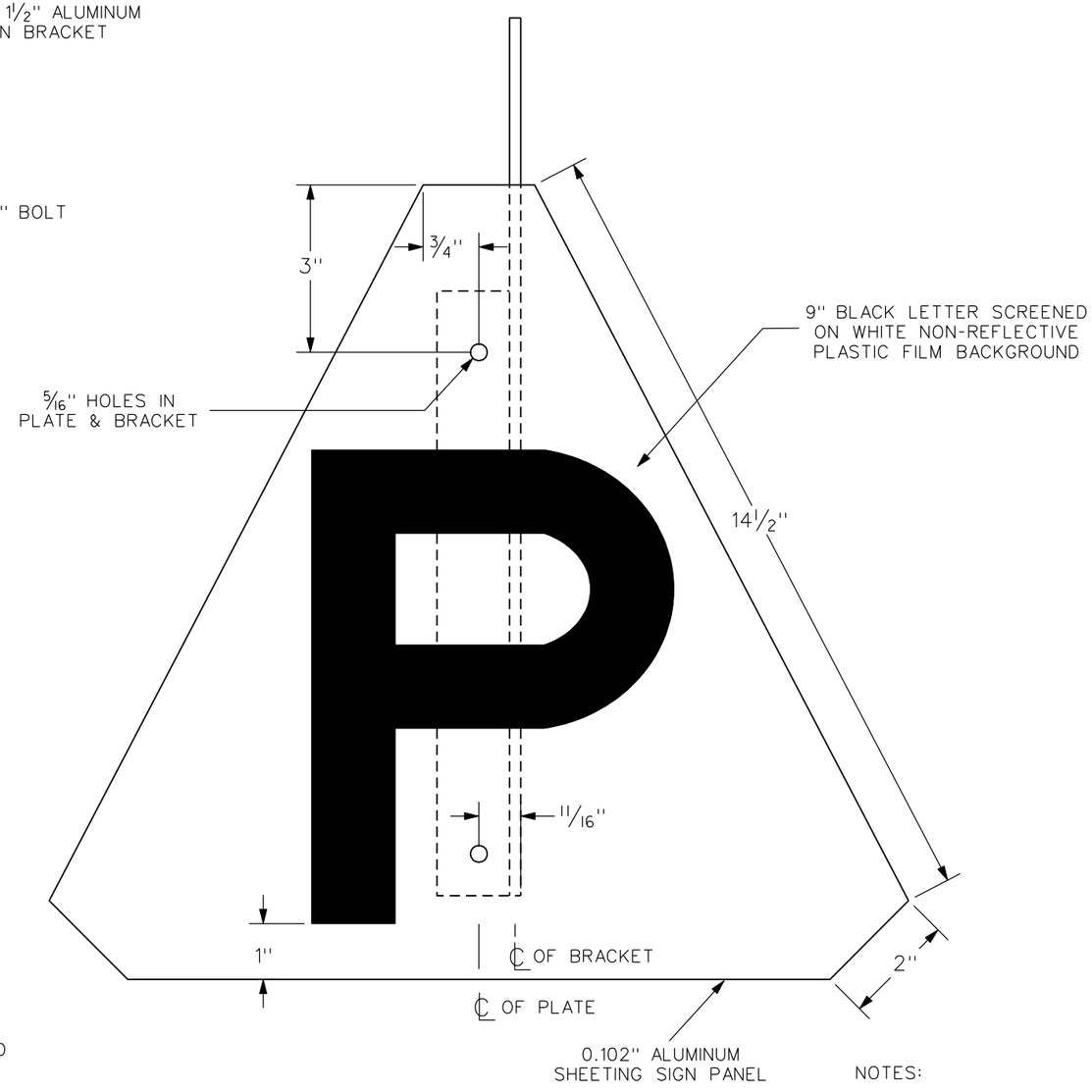

NOTES:

1. DEVIATION FROM THIS STANDARD SHALL BE APPROVED BY SCRRA MANAGER OF C&S ENGINEERING OR DESIGNATE.

REVISIONS				
-	-	-	-	-
REV.	DATE	DESCRIPTION	DES.	ENG.

FINAL REVIEW BY: C&SDRC DATE: 11/21/08

APPROVED BY

Dan C. Guerrero
MANAGER, COMMUNICATIONS AND SIGNALS ENGINEERING

Darrell V. Maxey
DIRECTOR, ENGINEERING AND CONSTRUCTION

THE SOUTHERN CALIFORNIA REGIONAL RAIL AUTHORITY OR IT'S OFFICERS OR AGENTS SHALL NOT BE RESPONSIBLE FOR THE ACCURACY OR COMPLETENESS OF THIS PLAN SHEET

METROLINK
SOUTHERN CALIFORNIA REGIONAL RAIL AUTHORITY
700 SOUTH FLOWER STREET
LOS ANGELES, CALIFORNIA 90017

ENGINEERING STANDARDS

TYPICAL "P" SIGN
FOR USE AT PROTECTIVE
SIGNAL LOCATIONS

STANDARD: 8545
SCALE: NONE
REVISION: –
SHEET: 1 OF 1
CADD FILE: ES8545

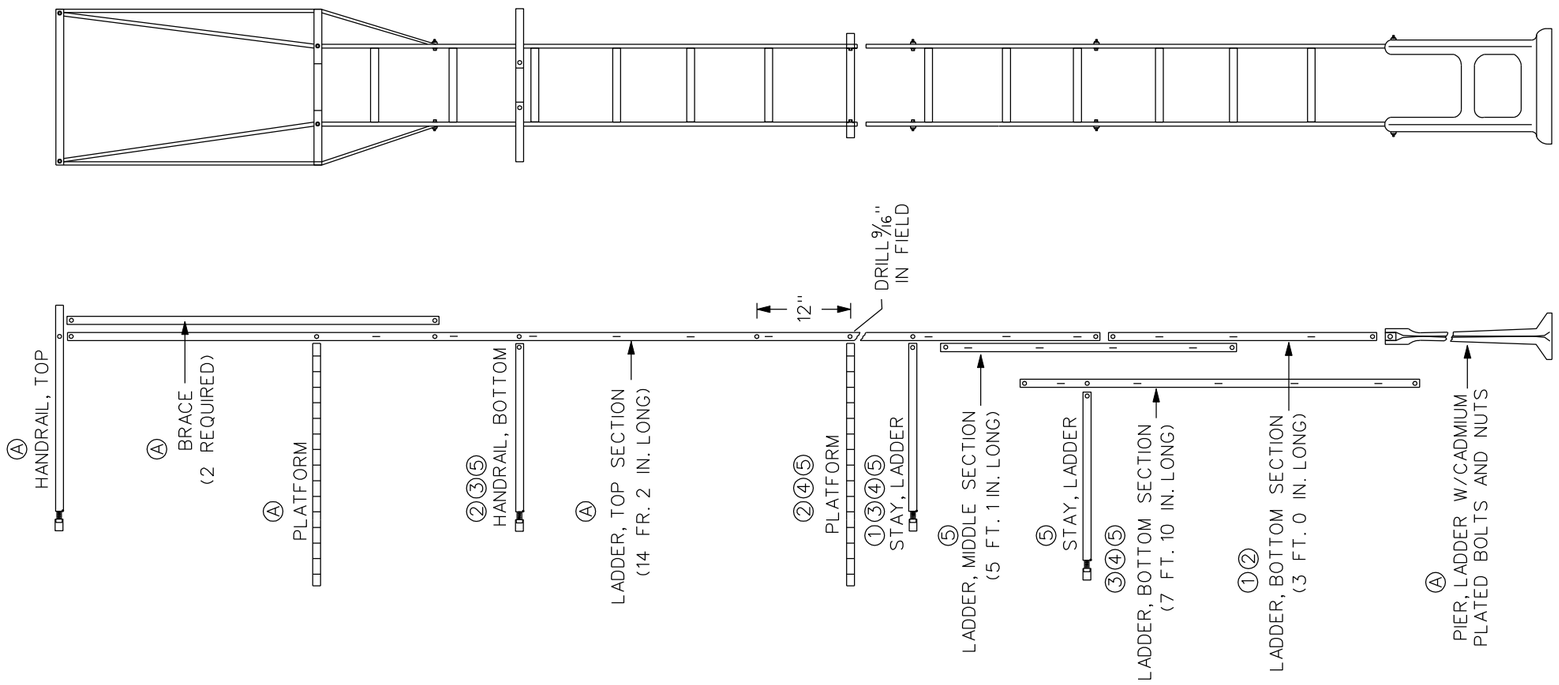

NOTES:

1. ORDER ITEMS MARKED "A" FOR ALL LADDER ORDERS WHERE COMPLETE LADDER IS REQUIRED. ORDER ADDITIONAL ITEMS BELOW AS LISTED FOR SIGNAL HEIGHT AND TYPE.

   1. ORDER FOR 17' SINGLE UNIT SIGNAL
   2. ORDER FOR 17' DOUBLE UNIT SIGNAL
   3. ORDER FOR 22' SINGLE UNIT SIGNAL
   4. ORDER FOR 22' DOUBLE UNIT SIGNAL

2. 22' SINGLE UNIT SIGNAL WILL REQUIRE TWO LADDER STAYS (*) PC. UN128591 WHEN ORDERING COMPLETE LADDER.

3. BOLTS SQUARE HEAD MACHINE, WITH NUTS (GALVANIZED) 1/2" X 1-1/4". PLATFORMS AND STAYS TO BE FURNISHED COMPLETE WITH C-CLAMP AND BOLTS FOR FASTENING TO SIGNAL MAST.

4. ALL SIGNAL LADDERS SHALL BE HOT DIPPED GALVANIZED OR ALUMINUM.

THIS DRAWING TO BE USED FOR MAINTENANCE PURPOSES ONLY

REVISIONS				
-	-	-	-	-
REV.	DATE	DESCRIPTION	DES.	ENG.

FINAL REVIEW BY: C&SDRC DATE: 11/21/08

APPROVED BY

Dan C. Guerrero

MANAGER, COMMUNICATIONS AND SIGNALS ENGINEERING

Darrell V. Maxey

DIRECTOR, ENGINEERING AND CONSTRUCTION

THE SOUTHERN CALIFORNIA REGIONAL RAIL AUTHORITY OR IT'S OFFICERS OR AGENTS SHALL NOT BE RESPONSIBLE FOR THE ACCURACY OR COMPLETENESS OF THIS PLAN SHEET

METROLINK

SOUTHERN CALIFORNIA REGIONAL RAIL AUTHORITY
700 SOUTH FLOWER STREET
LOS ANGELES, CALIFORNIA 90017

ENGINEERING STANDARDS

TYPICAL GALVANIZED
SIGNAL LADDER (MO)

STANDARD: 8570
SCALE: NONE
REVISION: –
SHEET: 1 OF 1
CADD FILE: ES8570

SCRRA P/N 03-3339004-0
LEFT HAND M23A-E DUAL CONTROL SWITCH MACHINE

SCRRA P/N 03-3339017-0
RIGHT HAND M23A-E DUAL CONTROL SWITCH MACHINE

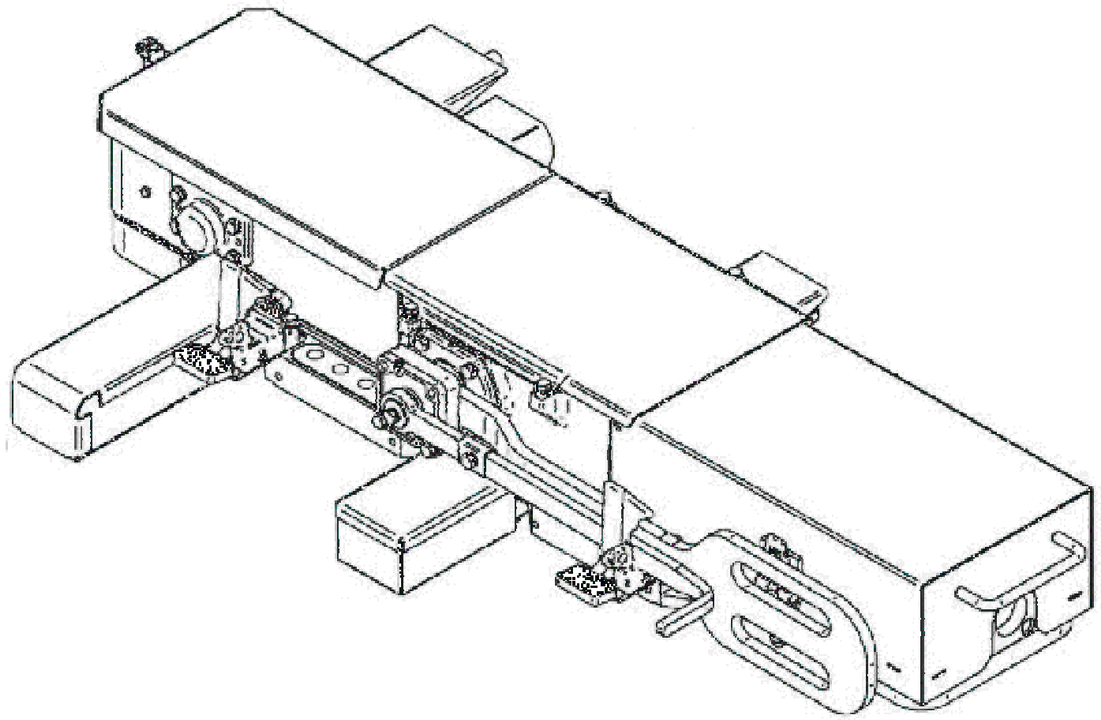

M23A-E DUAL CONTROL SWITCH MACHINE

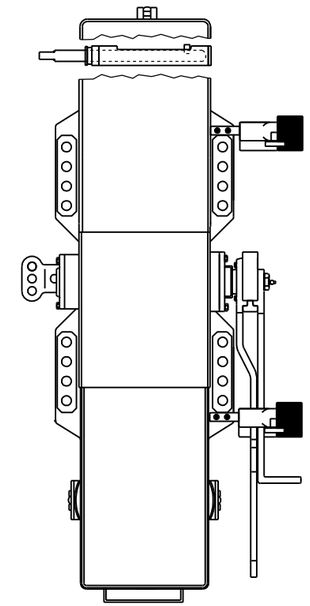

LEFT HAND
03-3339004-0

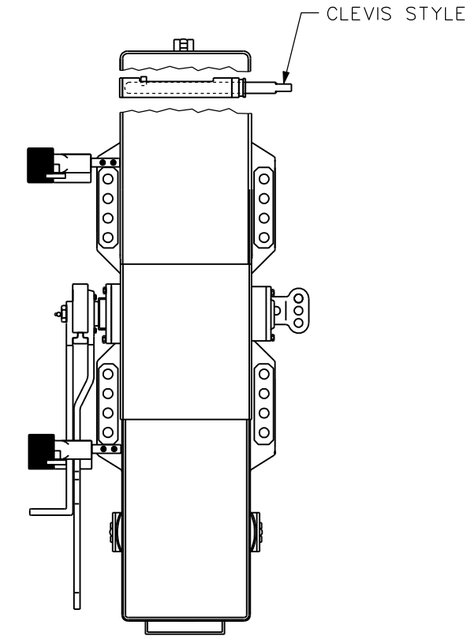

RIGHT HAND
03-3339017-0

NOTES:

1. M23A-E DUAL CONTROL SWITCH MACHINE SHALL BE EQUIPPED WITH PERMANENT MAGNET MOTOR, 2 WIRE MOTOR CONTROL, HIGH VOLTAGE (110V) UNIT WITH 189:1 GEAR RATIO.
2. REFERENCE UNION SWITCH AND SIGNAL DOCUMENT SM 9428 FOR MORE INFORMATION REGARDING M23A-E DUAL CONTROL SWITCH MACHINE.
3. M23A-E DUAL CONTROL SWITCH MACHINE SHALL BE SUPPLIED AS SHOWN WITH 2 MOUNTED LEVER LATCH STANDS, 1 MOUNTED SWITCH OPERATING LUG AND 1 INTERNAL POINT DETECTOR BAR.
4. M23A-E DUAL CONTROL SWITCH MACHINE SHALL BE IN ACCORDANCE WITH AREMA C&S MANUAL PART 12.2.
5. DEVIATION FROM THIS STANDARD SHALL BE APPROVED BY SCRRA MANAGER OF C&S ENGINEERING OR DESIGNATE.

REVISIONS				
-	-	-	-	-
REV.	DATE	DESCRIPTION	DES.	ENG.

FINAL REVIEW BY: C&SDRC DATE: 11/21/08

APPROVED BY

Dan C. Guerrero
MANAGER, COMMUNICATIONS AND SIGNALS ENGINEERING

Darrell V. Maxey
DIRECTOR, ENGINEERING AND CONSTRUCTION

THE SOUTHERN CALIFORNIA REGIONAL RAIL AUTHORITY OR IT'S OFFICERS OR AGENTS SHALL NOT BE RESPONSIBLE FOR THE ACCURACY OR COMPLETENESS OF THIS PLAN SHEET

METROLINK
SOUTHERN CALIFORNIA REGIONAL RAIL AUTHORITY
700 SOUTH FLOWER STREET
LOS ANGELES, CALIFORNIA 90017

ENGINEERING STANDARDS

M23A-E POWER SWITCH MACHINE

STANDARD: 8600
SCALE: NONE
REVISION: –
SHEET: 1 OF 1
CADD FILE: ES8600

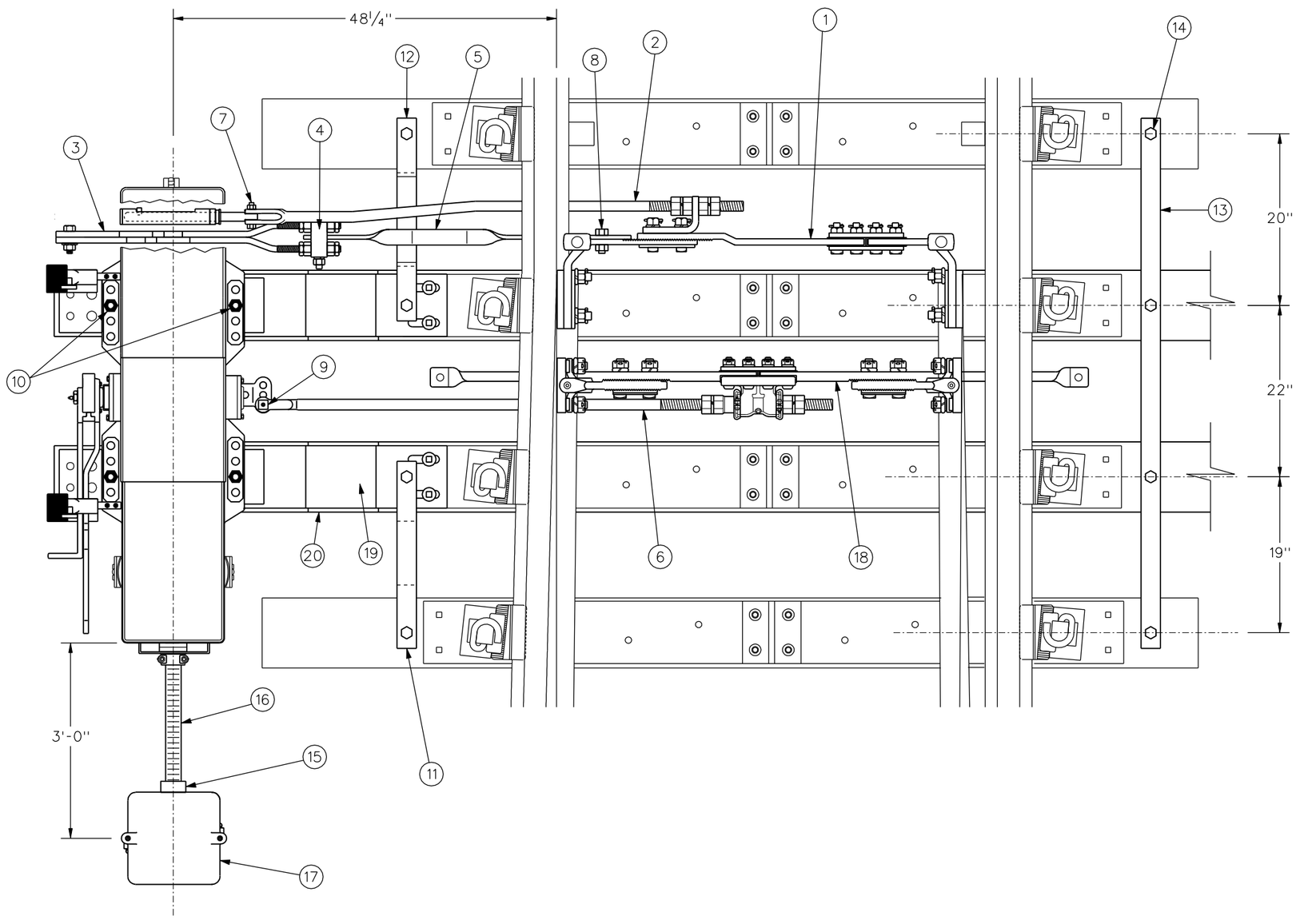

BILL OF MATERIAL

M23A-E DUAL CONTROL SWITCH LAYOUT FOR #8, #10 & #14 R.H. TURNOUTS

ITEM	QTY	SCRRA P/N	DESCRIPTION
1	1	03-3030141-0	ROD, MF INSULATED FRONT
2	1	03-3030152-0	ROD, POINT DETECTOR CONNECTING
3	1	03-3033016-0	ROD, ADJUSTABLE LOCK (INTERNAL)
4	1	03-3333015-0	LUG, LOCK ROD (BINOCULARS)
5	1	03-3030150-0	ROD, LOCK ROD CONNECTING (TWISTY ROD)
6	1	03-3033018-0	ROD, SWITCH OPERATING
7	1	03-0263024-0	BOLT, ASSEMBLY ⅝"-11 X 2⅝"
8	1	03-0263049-0	BOLT, ASSEMBLY 1"-8 X 2¾" DRILLED AT 2½"
9	1	03-2225225-0	PIN, OPERATING BAR CONNECTING
10	4	03-3333085-0	ASSEMBLY, HEADLOCK BOLT ⅞"-9 X 16"
11	1	03-2223206-0	STRAP, TIE 23" WITH ANGLED OFFSET
12	1	03-2223207-0	STRAP, TIE 24" WITH VERTICAL OFFSET
13	1	03-2223209-0	STRAP, TIE 65"
14	8	03-2223003-0	SCREW, ¾" X 6" LAG
15	1	03-0500051-0	BUSHING, REDUCER, PVC, 2"-1½"
16	4 FT	03-0500405-0	CONDUIT, 2" FLEX LIQUIDTIGHT
17	1	03-3330002-0	BOX, PEDESTAL JUNCTION (SWITCH 36 TERMINAL)
	1 GAL	03-2031027-0	GREASE, SPECIAL "M" LINE SWITCH MACHINE

SUPPLEMENTAL BILL OF MATERIAL

TO BE ORDERED WHEN REHABILITATING AN EXISTING SWITCH (SEE NOTE 3)

18	1	03-3030146-0	ROD, #1 SMJ INSULATED WITH BASKET
19	2	03-2861011-0	PLATE, UNIVERSAL EXTENSION
20	2	03-3401000-0	TIE, DAPPED SWITCH 9" X 10" X 14'

NOTES:

1. APPLICATIONS FOR THIS DUAL CONTROL SWITCH LAYOUT ARE FOR RIGHT HAND #8, #10 OR #14 TURNOUTS.
2. DUAL CONTROL SWITCH MACHINE AND ACCESSORIES ARE NOT INCLUDED WITH SWITCH LAYOUT PACKAGE. REFER TO SCRRA ENGINEERING STANDARD ES8600 FOR ADDITIONAL INFORMATION.
3. SUPPLEMENTAL BILL OF MATERIAL SHALL ONLY BE ORDERED WHEN REHABILITATING AN EXISTING SWITCH INSTALLATION. FOR ALL NEW INSTALLATIONS, ITEMS LISTED IN THE SUPPLEMENTAL BILL OF MATERIAL SHALL BE SUPPLIED BY SCRRA TRACK AND STRUCTURES DIVISION.
4. REFER TO SECTION 3 OF THE "METROLINK INSTRUCTIONS GOVERNING INSTALLATION, MAINTENANCE, INSPECTION AND TESTING OF SIGNAL APPARATUS AND SIGNAL SYSTEMS" MANUAL FOR ADDITIONAL INFORMATION.
5. FOR INFORMATION REGARDING TURNOUT SPECIFICATIONS, REFER TO SCRRA ENGINEERING STANDARDS ES5300, ES5500 AND ES5600.
6. TIE SPACING AS SHOWN IN THIS STANDARD IS NOMINAL FOR DUAL CONTROL SWITCH INSTALLATIONS.
7. DEVIATION FROM THIS STANDARD SHALL BE APPROVED BY SCRRA MANAGER OF C&S ENGINEERING OR DESIGNATE.

REVISIONS				
-	-	-	-	-
REV.	DATE	DESCRIPTION	DES.	ENG.

FINAL REVIEW BY: C&SDRC DATE: 11/21/08

APPROVED BY

Dan C. Guerrero
MANAGER, COMMUNICATIONS AND SIGNALS ENGINEERING

Darrell V. Maxey
DIRECTOR, ENGINEERING AND CONSTRUCTION

THE SOUTHERN CALIFORNIA REGIONAL RAIL AUTHORITY OR IT'S OFFICERS OR AGENTS SHALL NOT BE RESPONSIBLE FOR THE ACCURACY OR COMPLETENESS OF THIS PLAN SHEET

METROLINK
SOUTHERN CALIFORNIA REGIONAL RAIL AUTHORITY
700 SOUTH FLOWER STREET
LOS ANGELES, CALIFORNIA 90017

ENGINEERING STANDARDS

M23A-E DUAL CONTROL SWITCH LAYOUT
FOR No. 8, No. 10 & No. 14
RIGHT HAND TURNOUTS

STANDARD: 8605
SCALE: NONE
REVISION: –
SHEET: 1 OF 2
CADD FILE: ES8605-01

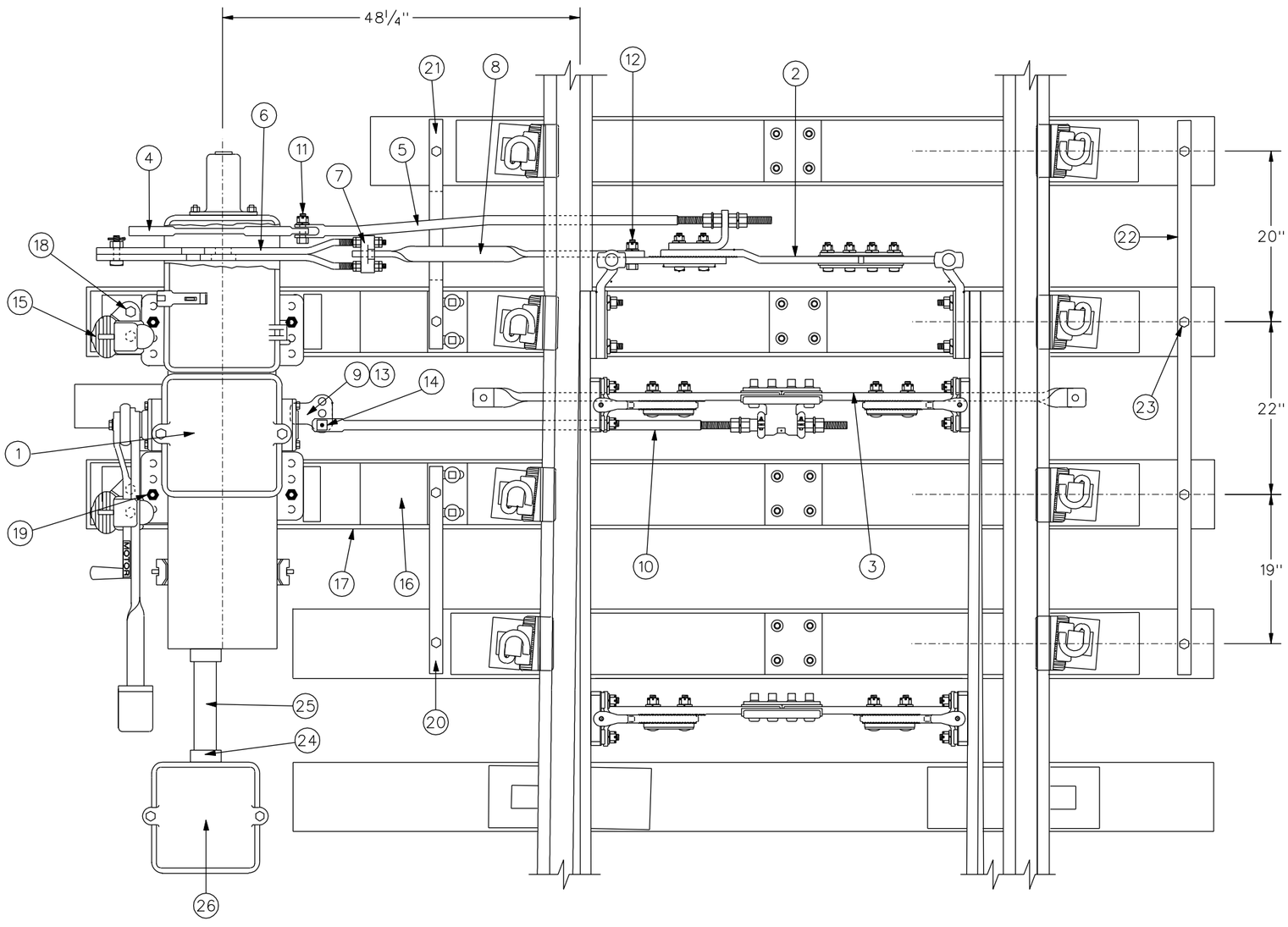

BILL OF MATERIAL

M23-A DUAL CONTROL SWITCH LAYOUT FOR #8, #10 & #14 R.H. TURNOUTS

ITEM	SCRRA P/N	DESCRIPTION
1	SEE NOTE 2	MACHINE, SWITCH M23-A
2	03-3030141-0	ROD, MF INSULATED FRONT
3	03-3030146-0	ROD, #1 SMJ INSULATED WITH BASKET
4	03-3030115-0	BAR, POINT DETECTOR (INTERNAL)
5	03-3030152-0	ROD, POINT DETECTOR CONNECTING
6	03-3033016-0	ROD, ADJUSTABLE LOCK (INTERNAL)
7	03-3333015-0	LUG, LOCK ROD (BINOCULARS)
8	03-3030150-0	ROD, LOCK ROD CONNECTING (TWISTY ROD)
9	03-3335200-0	LUG, OPERATING ROD CONNECTION (BEAR CLAW)
10	03-3033018-0	ROD, SWITCH OPERATING
11	03-0263024-0	BOLT, ASSEMBLY ⅝"-11 X 2⅝"
12	03-0263049-0	BOLT, ASSEMBLY 1"-8 X 2¾" DRILLED AT 2½"
13	03-0265210-0	BOLT, ASSEMBLY ⅞"-9 X 3"
14	03-2225225-0	PIN, OPERATING BAR CONNECTING
15	03-3337100-0	STAND, UNIVERSAL LEVER LATCH
16	03-2861011-0	PLATE, UNIVERSAL EXTENSION
17	03-3401000-0	TIE, DAPPED SWITCH 9" X 10" X 14'
18	03-3333081-0	ASSEMBLY, HEADLOCK BOLT ¾"-10 X 11"
19	03-3333085-0	ASSEMBLY, HEADLOCK BOLT ⅞"-9 X 16"
20	03-2223206-0	STRAP, TIE 23" WITH ANGLED OFFSET
21	03-2223207-0	STRAP, TIE 24" WITH VERTICAL OFFSET
22	03-2223209-0	STRAP, TIE 65"
23	03-2223003-0	SCREW, ¾" X 6" LAG
24	03-0500460-0	CONNECTOR, 2" STRAIGHT LIQUIDTIGHT
25	03-0500405-0	CONDUIT, 2" FLEX LIQUIDTIGHT
26	03-3330002-0	BOX, PEDESTAL JUNCTION (SWITCH 36 TERMINAL)

NOTES:

1. APPLICATIONS FOR THIS DUAL CONTROL SWITCH LAYOUT ARE FOR RIGHT HAND #8, #10 OR #14 TURNOUTS.
2. DUAL CONTROL SWITCH MACHINE REPLACEMENT REQUIREMENTS SHALL BE DEFINED BY RIGHT OR LEFT HAND, 3 OR 5 WIRE MOTOR CONTROL, AND HIGH OR LOW VOLTAGE. PART NUMBERS FOR APPROPRIATE SWITCH ARE AVAILABLE BY INVENTORY WAREHOUSE MANAGER.
3. REFER TO SECTION 3 OF THE "METROLINK INSTRUCTIONS GOVERNING INSTALLATION, MAINTENANCE, INSPECTION, AND TESTING OF SIGNAL APPARATUS AND SIGNAL SYSTEMS" MANUAL FOR ADDITIONAL INFORMATION.
4. TIE SPACING AS SHOWN IN THIS STANDARD IS NOMINAL FOR DUAL CONTROL SWITCH INSTALLATIONS.
5. DEVIATION FROM THIS STANDARD SHALL BE APPROVED BY SCRRA MANAGER OF C&S ENGINEERING OR DESIGNATE.

THIS DRAWING TO BE USED FOR MAINTENANCE PURPOSES ONLY

REVISIONS				
-	-	-	-	-
REV.	DATE	DESCRIPTION	DES.	ENG.

FINAL REVIEW BY: C&SDRC DATE: 11/21/08

APPROVED BY

Dan C. Guerrero
MANAGER, COMMUNICATIONS AND SIGNALS ENGINEERING

Darrell V. Maxey
DIRECTOR, ENGINEERING AND CONSTRUCTION

THE SOUTHERN CALIFORNIA REGIONAL RAIL AUTHORITY OR IT'S OFFICERS OR AGENTS SHALL NOT BE RESPONSIBLE FOR THE ACCURACY OR COMPLETENESS OF THIS PLAN SHEET

METROLINK
SOUTHERN CALIFORNIA REGIONAL RAIL AUTHORITY
700 SOUTH FLOWER STREET
LOS ANGELES, CALIFORNIA 90017

ENGINEERING STANDARDS

M23-A DUAL CONTROL SWITCH LAYOUT
FOR No.8, No. 10 & No. 14
RIGHT HAND TURNOUTS

STANDARD: 8605
SCALE: NONE
REVISION: –
SHEET: 2 OF 2
CADD FILE: ES8605-02

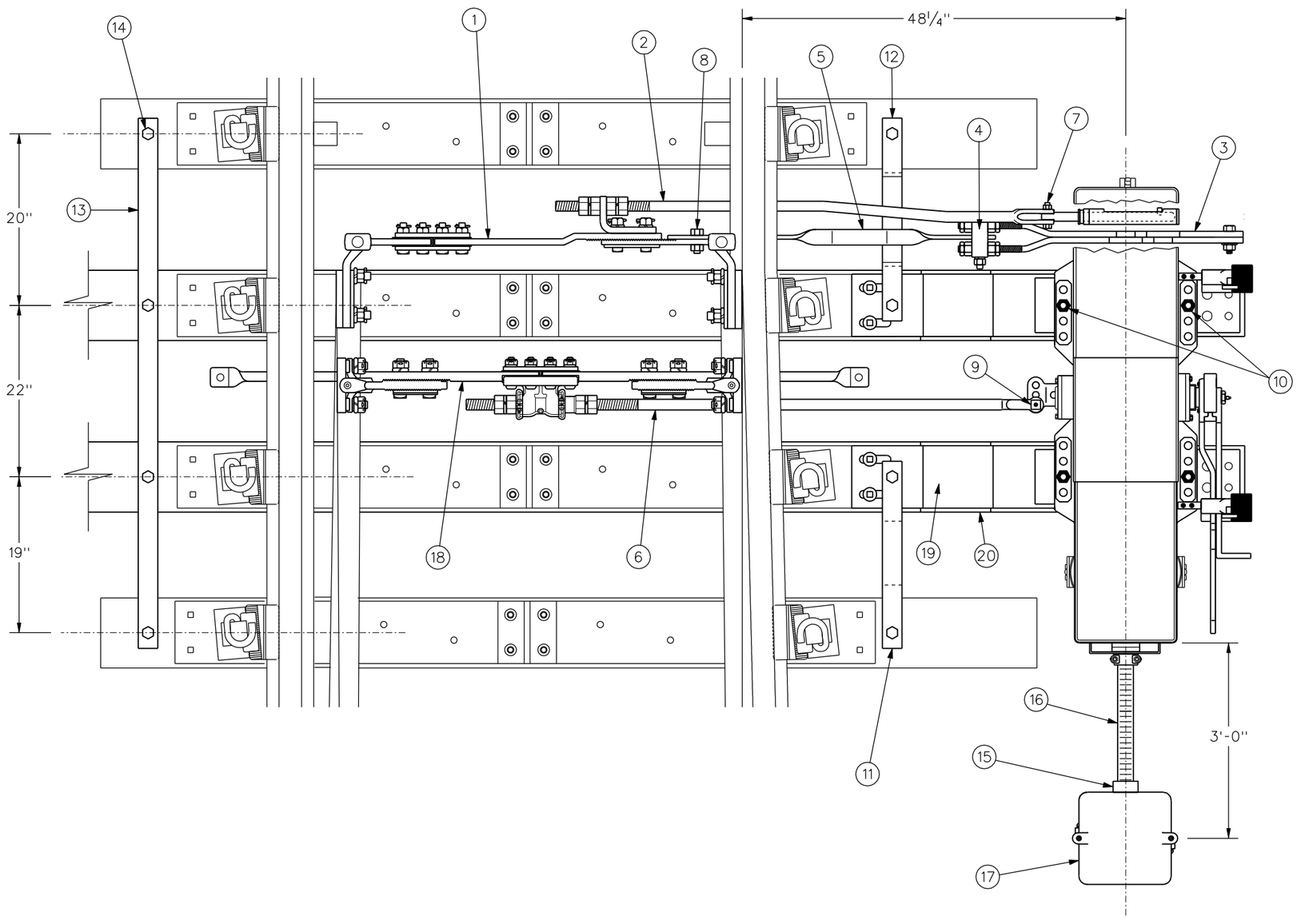

BILL OF MATERIAL

M23A-E DUAL CONTROL SWITCH LAYOUT FOR #8, #10 & #14 L.H. TURNOUTS

ITEM	QTY	SCRRA P/N	DESCRIPTION
1	1	03-3030140-0	ROD, MF INSULATED FRONT
2	1	03-3030152-0	ROD, POINT DETECTOR CONNECTING
3	1	03-3033016-0	ROD, ADJUSTABLE LOCK (INTERNAL)
4	1	03-3333015-0	LUG, LOCK ROD (BINOCULARS)
5	1	03-3030150-0	ROD, LOCK ROD CONNECTING (TWISTY ROD)
6	1	03-3033018-0	ROD, SWITCH OPERATING
7	1	03-0263024-0	BOLT, ASSEMBLY ⅝"-11 X 2⅝"
8	1	03-0263049-0	BOLT, ASSEMBLY 1"-8 X 2¾" DRILLED AT 2½"
9	1	03-2225225-0	PIN, OPERATING BAR CONNECTING
10	4	03-3333085-0	ASSEMBLY, HEADLOCK BOLT ⅞"-9 X 16"
11	1	03-2223206-0	STRAP, TIE 23" WITH ANGLED OFFSET
12	1	03-2223207-0	STRAP, TIE 24" WITH VERTICAL OFFSET
13	1	03-2223209-0	STRAP, TIE 65"
14	8	03-2223003-0	SCREW, ¾" X 6" LAG
15	1	03-0500051-0	BUSHING, REDUCER, PVC, 2"-1½"
16	4 FT	03-0500405-0	CONDUIT, 2" FLEX LIQUIDTIGHT
17	1	03-3330002-0	BOX, PEDESTAL JUNCTION (SWITCH 36 TERMINAL)
	1 GAL	03-2031027-0	GREASE, SPECIAL "M" LINE SWITCH MACHINE

SUPPLEMENTAL BILL OF MATERIAL

TO BE ORDERED WHEN REHABILITATING AN EXISTING SWITCH (SEE NOTE 3)

18	1	03-3030146-0	ROD, #1 SMJ INSULATED WITH BASKET
19	2	03-2861011-0	PLATE, UNIVERSAL EXTENSION
20	2	03-3401000-0	TIE, DAPPED SWITCH 9" X 10" X 14'

NOTES:

1. APPLICATIONS FOR THIS DUAL CONTROL SWITCH LAYOUT ARE FOR LEFT HAND #8, #10 OR #14 TURNOUTS.
2. DUAL CONTROL SWITCH MACHINE AND ACCESSORIES ARE NOT INCLUDED WITH SWITCH LAYOUT PACKAGE. REFER TO SCRRA ENGINEERING STANDARD ES8600 FOR ADDITIONAL INFORMATION.
3. SUPPLEMENTAL BILL OF MATERIAL SHALL ONLY BE ORDERED WHEN REHABILITATING AN EXISTING SWITCH INSTALLATION. FOR ALL NEW INSTALLATIONS, ITEMS LISTED IN THE SUPPLEMENTAL BILL OF MATERIAL SHALL BE SUPPLIED BY SCRRA TRACK AND STRUCTURES DIVISION.
4. REFER TO SECTION 3 OF THE "METROLINK INSTRUCTIONS GOVERNING INSTALLATION, MAINTENANCE, INSPECTION AND TESTING OF SIGNAL APPARATUS AND SIGNAL SYSTEMS" MANUAL FOR ADDITIONAL INFORMATION.
5. FOR INFORMATION REGARDING TURNOUT SPECIFICATIONS, REFER TO SCRRA ENGINEERING STANDARDS ES5300, ES5500 AND ES5600.
6. TIE SPACING AS SHOWN IN THIS STANDARD IS NOMINAL FOR DUAL CONTROL SWITCH INSTALLATIONS.
7. DEVIATION FROM THIS STANDARD SHALL BE APPROVED BY SCRRA MANAGER OF C&S ENGINEERING OR DESIGNATE.

REVISIONS				
-	-	-	-	-
REV.	DATE	DESCRIPTION	DES.	ENG.

FINAL REVIEW BY: C&SDRC DATE: 11/21/08

APPROVED BY

Dan C. Guerrero
MANAGER, COMMUNICATIONS AND SIGNALS ENGINEERING

Darrell V. Maxey
DIRECTOR, ENGINEERING AND CONSTRUCTION

THE SOUTHERN CALIFORNIA REGIONAL RAIL AUTHORITY OR IT'S OFFICERS OR AGENTS SHALL NOT BE RESPONSIBLE FOR THE ACCURACY OR COMPLETENESS OF THIS PLAN SHEET

METROLINK
SOUTHERN CALIFORNIA REGIONAL RAIL AUTHORITY
700 SOUTH FLOWER STREET
LOS ANGELES, CALIFORNIA 90017

ENGINEERING STANDARDS

M23A-E DUAL CONTROL SWITCH LAYOUT
FOR No. 8, No. 10 & No. 14
LEFT HAND TURNOUTS

STANDARD: 8610
SCALE: NONE
REVISION: –
SHEET: 1 OF 2
CADD FILE: ES8610-01

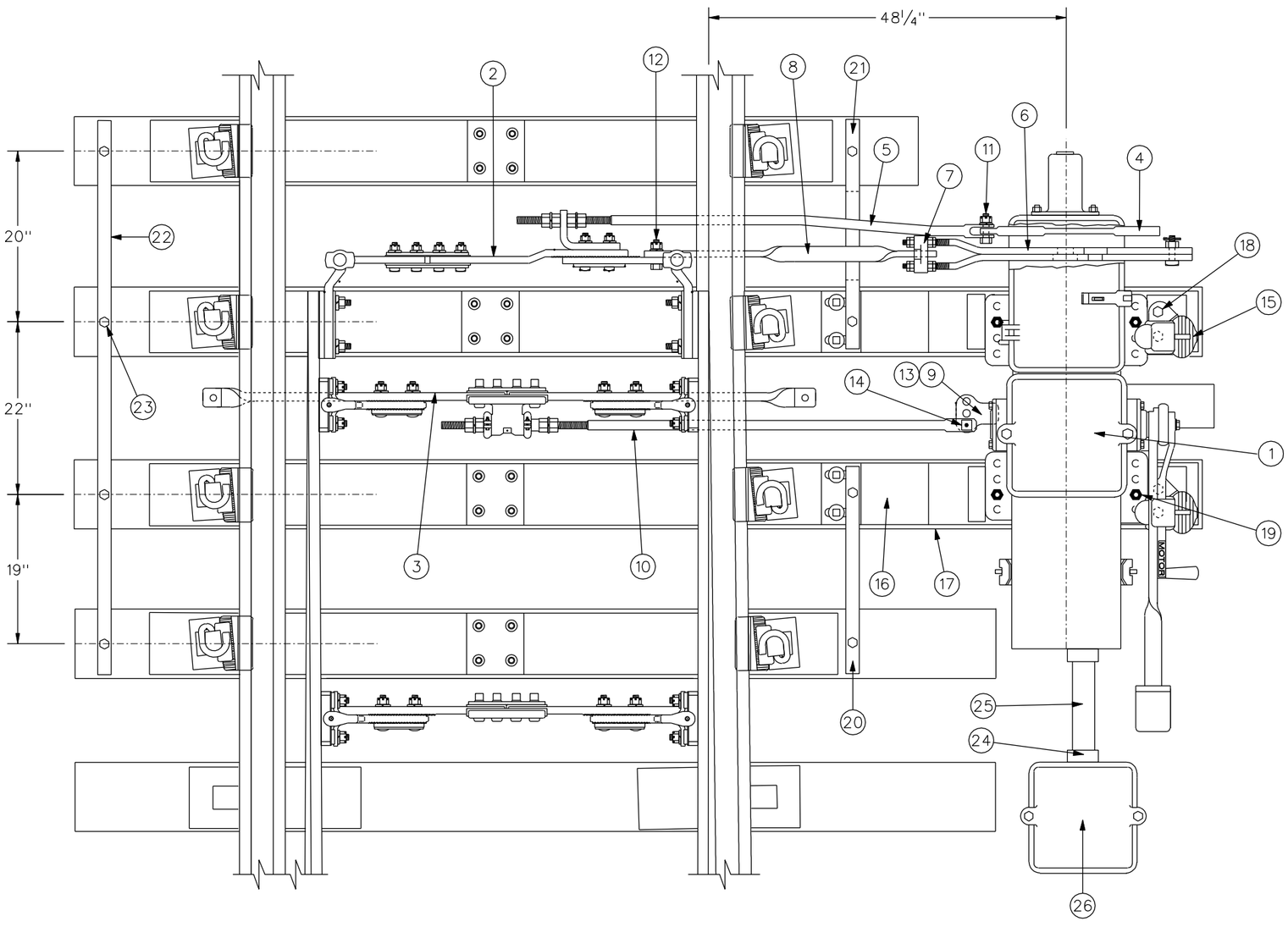

BILL OF MATERIAL

M23-A DUAL CONTROL SWITCH LAYOUT FOR #8, #10 & #14 L. H. TURNOUTS

ITEM	SCRRA P/N	DESCRIPTION
1	SEE NOTE 2	MACHINE, SWITCH M23-A
2	03-3030140-0	ROD, MF INSULATED FRONT
3	03-3030146-0	ROD, #1 SMJ INSULATED WITH BASKET
4	03-3030115-0	BAR, POINT DETECTOR (INTERNAL)
5	03-3030152-0	ROD, POINT DETECTOR CONNECTING
6	03-3033016-0	ROD, ADJUSTABLE LOCK (INTERNAL)
7	03-3333015-0	LUG, LOCK ROD (BINOCULARS)
8	03-3030150-0	ROD, LOCK ROD CONNECTING (TWISTY ROD)
9	03-3335200-0	LUG, OPERATING ROD CONNECTION (BEAR CLAW)
10	03-3033018-0	ROD, SWITCH OPERATING
11	03-0263024-0	BOLT, ASSEMBLY ⅝"-11 X 2⅝"
12	03-0263049-0	BOLT, ASSEMBLY 1"-8 X 2¾" DRILLED AT 2½"
13	03-0265210-0	BOLT, ASSEMBLY ⅞"-9 X 3"
14	03-2225225-0	PIN, OPERATING BAR CONNECTING
15	03-3337100-0	STAND, UNIVERSAL LEVER LATCH
16	03-2861011-0	PLATE, UNIVERSAL EXTENSION
17	03-3401000-0	TIE, DAPPED SWITCH 9" X 10" X 14'
18	03-3333081-0	ASSEMBLY, HEADLOCK BOLT ¾"-10 X 11"
19	03-3333085-0	ASSEMBLY, HEADLOCK BOLT ⅞"-9 X 16"
20	03-2223206-0	STRAP, TIE 23" WITH ANGLED OFFSET
21	03-2223207-0	STRAP, TIE 24" WITH VERTICAL OFFSET
22	03-2223209-0	STRAP, TIE 65"
23	03-2223003-0	SCREW, ¾" X 6" LAG
24	03-0500460-0	CONNECTOR, 2" STRAIGHT LIQUIDTIGHT
25	03-0500405-0	CONDUIT, 2" FLEX LIQUIDTIGHT
26	03-3330002-0	BOX, PEDESTAL JUNCTION (SWITCH 36 TERMINAL)

NOTES:

1. APPLICATIONS FOR THIS DUAL CONTROL SWITCH LAYOUT ARE FOR LEFT HAND #8, #10 OR #14 TURNOUTS.
2. DUAL CONTROL SWITCH MACHINE REPLACEMENT REQUIREMENTS SHALL BE DEFINED BY RIGHT OR LEFT HAND, 3 OR 5 WIRE MOTOR CONTROL, AND HIGH OR LOW VOLTAGE. PART NUMBERS FOR APPROPRIATE SWITCH ARE AVAILABLE BY INVENTORY WAREHOUSE MANAGER.
3. REFER TO SECTION 3 OF THE "METROLINK INSTRUCTIONS GOVERNING INSTALLATION, MAINTENANCE, INSPECTION AND TESTING OF SIGNAL APPARATUS AND SIGNAL SYSTEMS" MANUAL FOR ADDITIONAL INFORMATION.
4. TIE SPACING AS SHOWN IN THIS STANDARD IS NOMINAL FOR DUAL CONTROL SWITCH INSTALLATIONS.
5. DEVIATION FROM THIS STANDARD SHALL BE APPROVED BY SCRRA MANAGER OF C&S ENGINEERING OR DESIGNATE.

THIS DRAWING TO BE USED FOR MAINTENANCE PURPOSES ONLY

REVISIONS				
-	-	-	-	-
REV.	DATE	DESCRIPTION	DES.	ENG.

FINAL REVIEW BY: C&SDRC DATE: 11/21/08

APPROVED BY

Dan C. Guerrero
MANAGER, COMMUNICATIONS AND SIGNALS ENGINEERING

Darrell V. Maxey
DIRECTOR, ENGINEERING AND CONSTRUCTION

THE SOUTHERN CALIFORNIA REGIONAL RAIL AUTHORITY OR IT'S OFFICERS OR AGENTS SHALL NOT BE RESPONSIBLE FOR THE ACCURACY OR COMPLETENESS OF THIS PLAN SHEET

METROLINK
SOUTHERN CALIFORNIA REGIONAL RAIL AUTHORITY
700 SOUTH FLOWER STREET
LOS ANGELES, CALIFORNIA 90017

ENGINEERING STANDARDS

M23-A DUAL CONTROL SWITCH LAYOUT
FOR No.8, No. 10 & No. 14
LEFT HAND TURNOUTS

STANDARD 8610
SCALE: NONE
REVISION
SHEET 2 OF 2
CADD FILE: ES8610-02

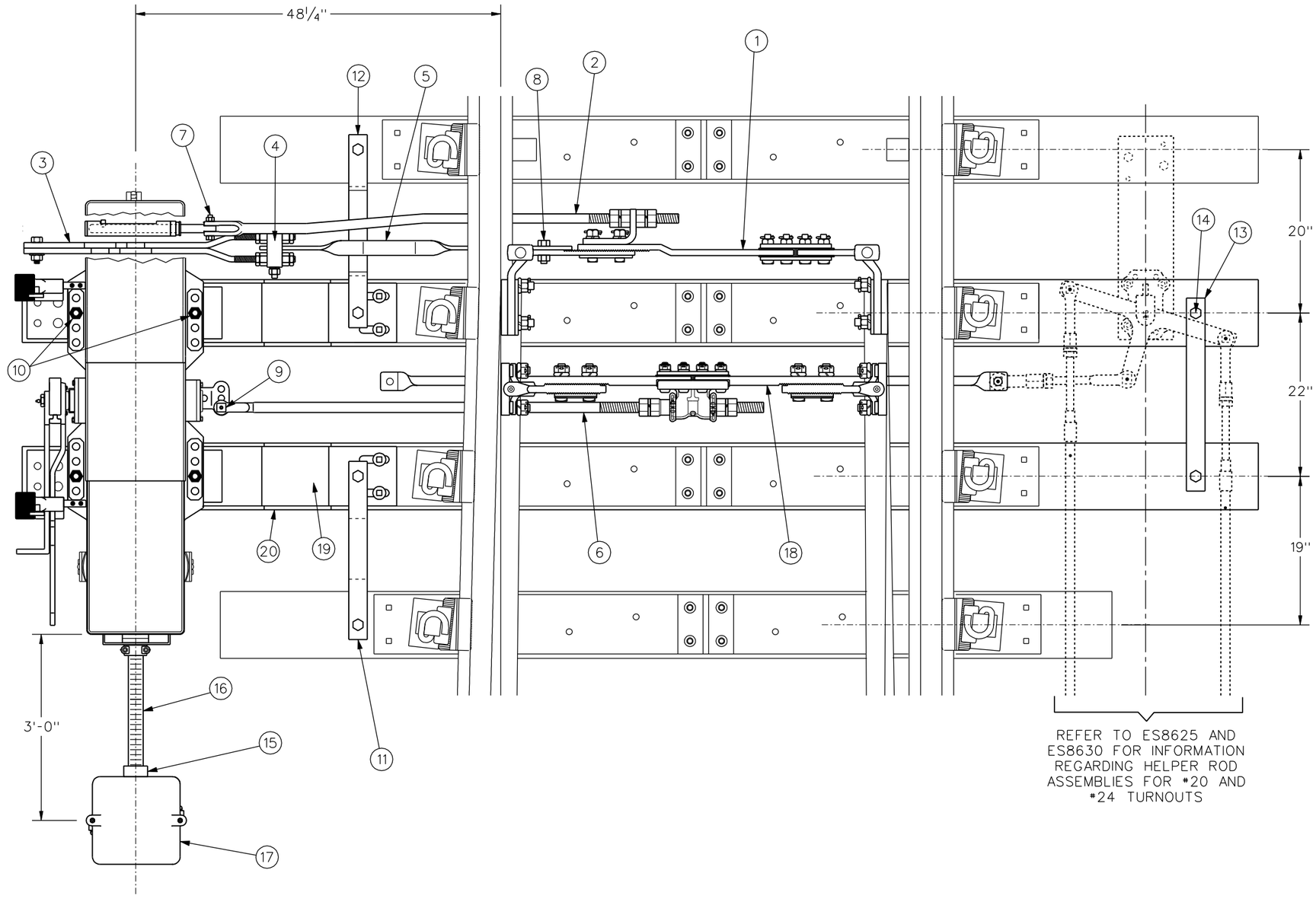

BILL OF MATERIAL

M23A-E DUAL CONTROL SWITCH LAYOUT FOR #20 & #24 R.H. TURNOUTS

ITEM	QTY	SCRRA P/N	DESCRIPTION
1	1	03-3030191-0	ROD, MF INSULATED FRONT
2	1	03-3030152-0	ROD, POINT DETECTOR CONNECTING
3	1	03-3033016-0	ROD, ADJUSTABLE LOCK (INTERNAL)
4	1	03-3333015-0	LUG, LOCK ROD (BINOCULARS)
5	1	03-3030150-0	ROD, LOCK ROD CONNECTING (TWISTY ROD)
6	1	03-3033018-0	ROD, SWITCH OPERATING
7	1	03-0263024-0	BOLT, ASSEMBLY ⅝"-11 X 2⅝"
8	1	03-0263049-0	BOLT, ASSEMBLY 1"-8 X 2¾" DRILLED AT 2½"
9	1	03-2225225-0	PIN, OPERATING BAR CONNECTING
10	4	03-3333085-0	ASSEMBLY, HEADLOCK BOLT ⅞"-9 X 16"
11	1	03-2223206-0	STRAP, TIE 23" WITH ANGLED OFFSET
12	1	03-2223207-0	STRAP, TIE 24" WITH VERTICAL OFFSET
13	1	03-2223208-0	STRAP, TIE 26"
14	6	03-2223003-0	SCREW, ¾" X 6" LAG
15	1	03-0500051-0	BUSHING, REDUCER, PVC, 2"-1½"
16	4 FT	03-0500405-0	CONDUIT, 2" FLEX LIQUIDTIGHT
17	1	03-3330002-0	BOX, PEDESTAL JUNCTION (SWITCH 36 TERMINAL)
	1 GAL	03-2031027-0	GREASE, SPECIAL "M" LINE SWITCH MACHINE

SUPPLEMENTAL BILL OF MATERIAL

TO BE ORDERED WHEN REHABILITATING AN EXISTING SWITCH (SEE NOTE 3)

18	1	03-3030145-0	ROD, #1 SMJ INSULATED WITH BASKET
19	2	03-2861011-0	PLATE, UNIVERSAL EXTENSION
20	2	03-3401001-0	TIE, DAPPED SWITCH 9" X 10" X 16'

NOTES:

1. APPLICATIONS FOR THIS DUAL CONTROL SWITCH LAYOUT ARE FOR RIGHT HAND #20 OR #24 TURNOUTS.
2. DUAL CONTROL SWITCH MACHINE AND ACCESSORIES ARE NOT INCLUDED WITH SWITCH LAYOUT PACKAGE. REFER TO SCRRA ENGINEERING STANDARD CS8600 FOR ADDITIONAL INFORMATION.
3. SUPPLEMENTAL BILL OF MATERIAL SHALL ONLY BE ORDERED WHEN REHABILITATING AN EXISTING SWITCH INSTALLATION. FOR ALL NEW INSTALLATIONS, ITEMS LISTED IN THE SUPPLEMENTAL BILL OF MATERIAL SHALL BE SUPPLIED BY SCRRA TRACK AND STRUCTURES DIVISION.
4. REFER TO SECTION 3 OF THE "METROLINK INSTRUCTIONS GOVERNING INSTALLATION, MAINTENANCE, INSPECTION AND TESTING OF SIGNAL APPARATUS AND SIGNAL SYSTEMS" MANUAL FOR ADDITIONAL INFORMATION.
5. FOR INFORMATION REGARDING TURNOUT SPECIFICATIONS, REFER TO SCRRA ENGINEERING STANDARDS ES5700 AND ES5800.
6. TIE SPACING AS SHOWN IN THIS STANDARD IS NOMINAL FOR DUAL CONTROL SWITCH INSTALLATIONS.
7. DEVIATION FROM THIS STANDARD SHALL BE APPROVED BY SCRRA MANAGER OF C&S ENGINEERING OR DESIGNATE.

REVISIONS				
-	-	-	-	-
REV.	DATE	DESCRIPTION	DES.	ENG.

FINAL REVIEW BY: C&SDRC DATE: 11/21/08

APPROVED BY

Dan C. Guerrero
MANAGER, COMMUNICATIONS AND SIGNALS ENGINEERING

Darrell V. Maxey
DIRECTOR, ENGINEERING AND CONSTRUCTION

THE SOUTHERN CALIFORNIA REGIONAL RAIL AUTHORITY OR IT'S OFFICERS OR AGENTS SHALL NOT BE RESPONSIBLE FOR THE ACCURACY OR COMPLETENESS OF THIS PLAN SHEET

METROLINK
SOUTHERN CALIFORNIA REGIONAL RAIL AUTHORITY
700 SOUTH FLOWER STREET
LOS ANGELES, CALIFORNIA 90017

ENGINEERING STANDARDS

M23A-E DUAL CONTROL SWITCH LAYOUT
FOR No. 20 & No. 24
RIGHT HAND TURNOUTS

STANDARD 8615
SCALE: NONE
REVISION –
SHEET 1 OF 2
CADD FILE: ES8615-01

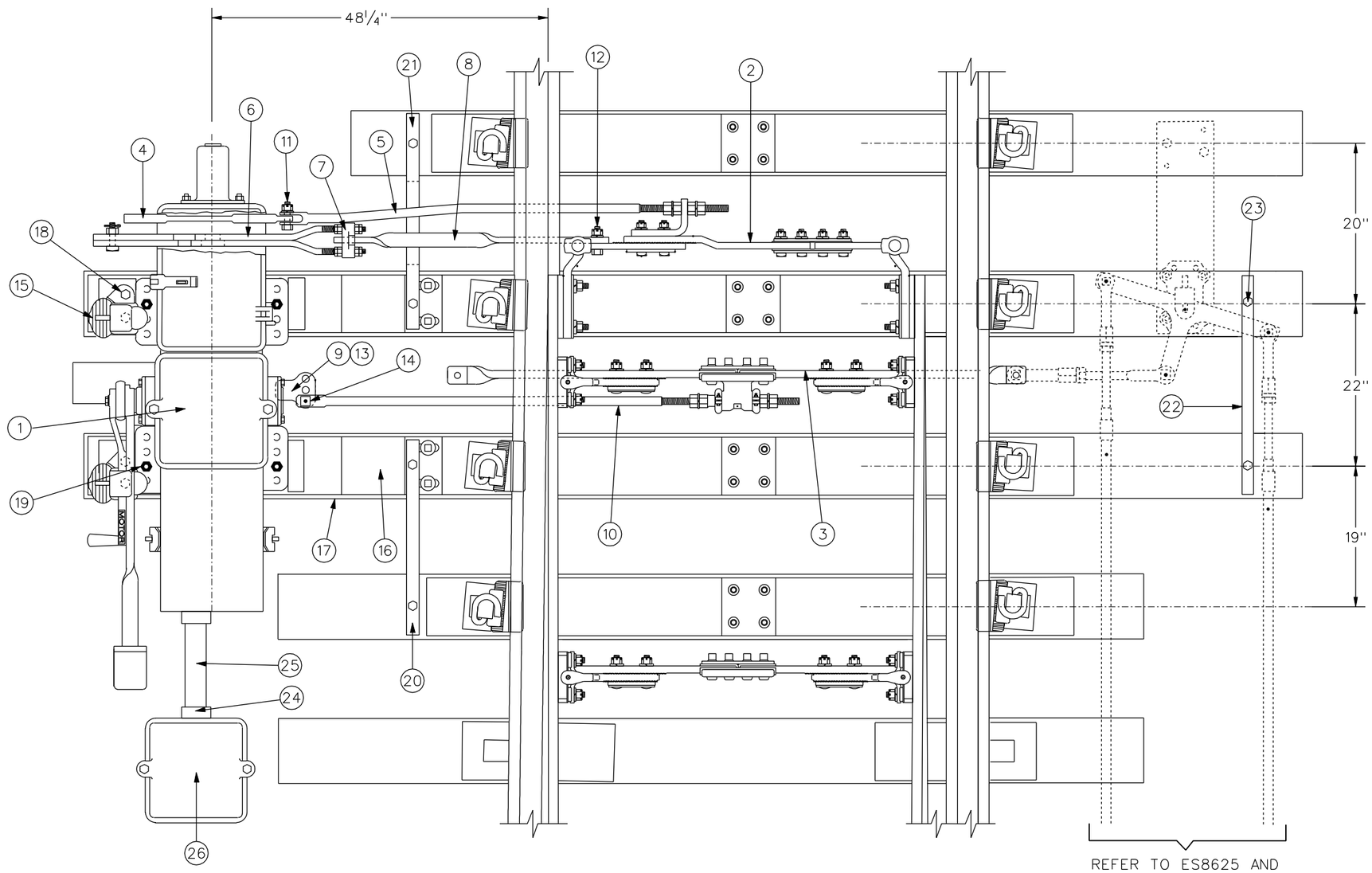

BILL OF MATERIAL

M23-A DUAL CONTROL SWITCH LAYOUT FOR #20 & #24 R.H. TURNOUTS

ITEM	SCRRA P/N	DESCRIPTION
1	SEE NOTE 2	MACHINE, SWITCH M23-A
2	03-3030191-0	ROD, MF INSULATED FRONT
3	03-3030145-0	ROD, #1 SMJ INSULATED WITH BASKET
4	03-3030115-0	BAR, POINT DETECTOR (INTERNAL)
5	03-3030152-0	ROD, POINT DETECTOR CONNECTING
6	03-3033016-0	ROD, ADJUSTABLE LOCK (INTERNAL)
7	03-3333015-0	LUG, LOCK ROD (BINOCULARS)
8	03-3030150-0	ROD, LOCK ROD CONNECTING (TWISTY ROD)
9	03-3335200-0	LUG, OPERATING ROD CONNECTION (BEAR CLAW)
10	03-3033018-0	ROD, SWITCH OPERATING
11	03-0263024-0	BOLT, ASSEMBLY ⅝"-11 X 2⅝"
12	03-0263049-0	BOLT, ASSEMBLY 1"-8 X 2¾" DRILLED AT 2½"
13	03-0265210-0	BOLT, ASSEMBLY ⅞"-9 X 3"
14	03-2225225-0	PIN, OPERATING BAR CONNECTING
15	03-3337100-0	STAND, UNIVERSAL LEVER LATCH
16	03-2861011-0	PLATE, UNIVERSAL EXTENSION
17	03-3401001-0	TIE, DAPPED SWITCH 9" X 10" X 16'
18	03-3333081-0	ASSEMBLY, HEADLOCK BOLT ¾"-10 X 11"
19	03-3333085-0	ASSEMBLY, HEADLOCK BOLT ⅞"-9 X 16"
20	03-2223206-0	STRAP, TIE 23" WITH ANGLED OFFSET
21	03-2223207-0	STRAP, TIE 24" WITH VERTICAL OFFSET
22	03-2223208-0	STRAP, TIE 26"
23	03-2223003-0	SCREW, ¾" X 6" LAG
24	03-0500460-0	CONNECTOR, 2" STRAIGHT LIQUIDTIGHT
25	03-0500405-0	CONDUIT, 2" FLEX LIQUIDTIGHT
26	03-3330002-0	BOX, PEDESTAL JUNCTION (SWITCH 36 TERMINAL)

NOTES:

1. APPLICATIONS FOR THIS DUAL CONTROL SWITCH LAYOUT ARE FOR RIGHT HAND #20 OR #24 TURNOUTS.
2. DUAL CONTROL SWITCH MACHINE REPLACEMENT REQUIREMENTS SHALL BE DEFINED BY RIGHT OR LEFT HAND, 3 OR 5 WIRE MOTOR CONTROL, AND HIGH OR LOW VOLTAGE. PART NUMBERS FOR APPROPRIATE SWITCH ARE AVAILABLE BY INVENTORY WAREHOUSE MANAGER.
3. REFER TO SECTION 3 OF THE "METROLINK INSTRUCTIONS GOVERNING INSTALLATION, MAINTENANCE, INSPECTION AND TESTING OF SIGNAL APPARATUS AND SIGNAL SYSTEMS" MANUAL FOR ADDITIONAL INFORMATION.
4. TIE SPACING AS SHOWN IN THIS STANDARD IS NOMINAL FOR POWER SWITCH INSTALLATIONS.
5. DEVIATION FROM THIS STANDARD SHALL BE APPROVED BY SCRRA MANAGER OF C&S ENGINEERING OR DESIGNATE.

THIS DRAWING TO BE USED FOR MAINTENANCE PURPOSES ONLY

REVISIONS				
REV.	DATE	DESCRIPTION	DES.	ENG.
-	-	-	-	-

FINAL REVIEW BY: C&SDRC DATE: 11/21/08

APPROVED BY

Dan C. Guerrero
MANAGER, COMMUNICATIONS AND SIGNALS ENGINEERING

Darrell V. Maxey
DIRECTOR, ENGINEERING AND CONSTRUCTION

THE SOUTHERN CALIFORNIA REGIONAL RAIL AUTHORITY OR IT'S OFFICERS OR AGENTS SHALL NOT BE RESPONSIBLE FOR THE ACCURACY OR COMPLETENESS OF THIS PLAN SHEET

METROLINK
SOUTHERN CALIFORNIA REGIONAL RAIL AUTHORITY
700 SOUTH FLOWER STREET
LOS ANGELES, CALIFORNIA 90017

ENGINEERING STANDARDS

M23-A DUAL CONTROL SWITCH LAYOUT
FOR No. 20 & No. 24
RIGHT HAND TURNOUTS

STANDARD: 8615
SCALE: NONE
REVISION
SHEET: 2 OF 2
CADD FILE: ES8615-02

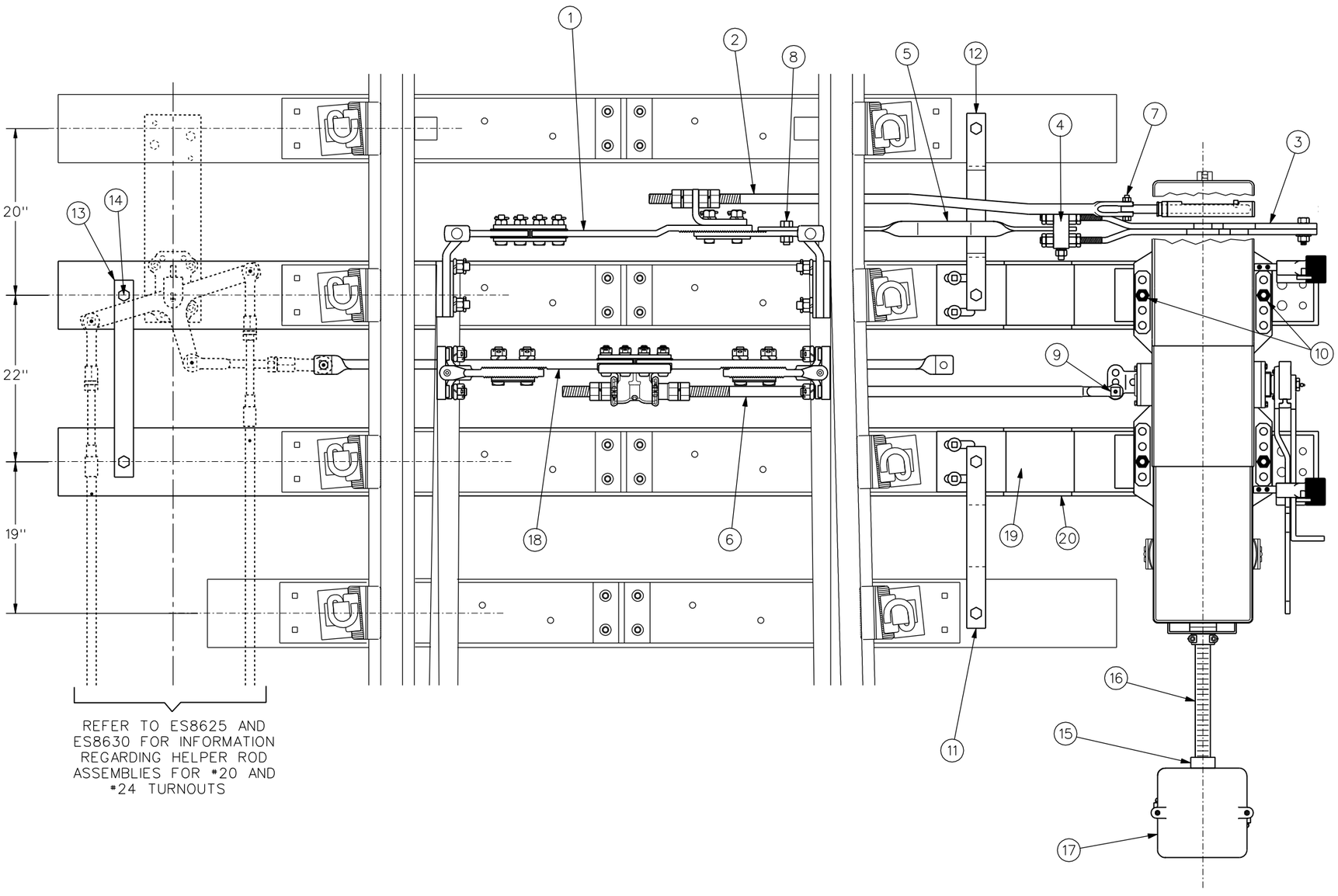

BILL OF MATERIAL

M23A-E DUAL CONTROL SWITCH LAYOUT FOR #20 & #24 L. H. TURNOUTS

ITEM	QTY	SCRRA P/N	DESCRIPTION
1	1	03-3030190-0	ROD, MF INSULATED FRONT
2	1	03-3030152-0	ROD, POINT DETECTOR CONNECTING
3	1	03-3033016-0	ROD, ADJUSTABLE LOCK (INTERNAL)
4	1	03-3333015-0	LUG, LOCK ROD (BINOCULARS)
5	1	03-3030150-0	ROD, LOCK ROD CONNECTING (TWISTY ROD)
6	1	03-3033018-0	ROD, SWITCH OPERATING
7	1	03-0263024-0	BOLT, ASSEMBLY 5/8"-11 X 2 5/8"
8	1	03-0263049-0	BOLT, ASSEMBLY 1"-8 X 2 3/4" DRILLED AT 2 1/2"
9	1	03-2225225-0	PIN, OPERATING BAR CONNECTING
10	4	03-3333085-0	ASSEMBLY, HEADLOCK BOLT 7/8"-9 X 16"
11	1	03-2223206-0	STRAP, TIE 23" WITH ANGLED OFFSET
12	1	03-2223207-0	STRAP, TIE 24" WITH VERTICAL OFFSET
13	1	03-2223208-0	STRAP, TIE 26"
14	6	03-2223003-0	SCREW, 3/4" X 6" LAG
15	1	03-0500051-0	BUSHING, REDUCER, PVC, 2"-1 1/2"
16	4 FT	03-0500405-0	CONDUIT, 2" FLEX LIQUIDTIGHT
17	1	03-3330002-0	BOX, PEDESTAL JUNCTION (SWITCH 36 TERMINAL)
	1 GAL	03-2031027-0	GREASE, SPECIAL "M" LINE SWITCH MACHINE

SUPPLEMENTAL BILL OF MATERIAL

TO BE ORDERED WHEN REHABILITATING AN EXISTING SWITCH (SEE NOTE 3)

18	1	03-3030145-0	ROD, #1 SMJ INSULATED WITH BASKET
19	2	03-2861011-0	PLATE, UNIVERSAL EXTENSION
20	2	03-3401001-0	TIE, DAPPED SWITCH 9" X 10" X 16'

NOTES:

1. APPLICATIONS FOR THIS DUAL CONTROL SWITCH LAYOUT ARE FOR LEFT HAND #20 AND #24 TURNOUTS.
2. DUAL CONTROL SWITCH MACHINE AND ACCESSORIES ARE NOT INCLUDED WITH SWITCH LAYOUT PACKAGE. REFER TO SCRRA ENGINEERING STANDARD ES8600 FOR ADDITIONAL INFORMATION.
3. SUPPLEMENTAL BILL OF MATERIAL SHALL ONLY BE ORDERED WHEN REHABILITATING AN EXISTING SWITCH INSTALLATION. FOR ALL NEW INSTALLATIONS, ITEMS LISTED IN THE SUPPLEMENTAL BILL OF MATERIAL SHALL BE SUPPLIED BY SCRRA TRACK AND STRUCTURES DIVISION.
4. REFER TO SECTION 3 OF THE "METROLINK INSTRUCTIONS GOVERNING INSTALLATION, MAINTENANCE, INSPECTION AND TESTING OF SIGNAL APPARATUS AND SIGNAL SYSTEMS" MANUAL FOR ADDITIONAL INFORMATION.
5. FOR INFORMATION REGARDING TURNOUT SPECIFICATIONS, REFER TO SCRRA ENGINEERING STANDARDS ES5700 AND ES5800.
6. TIE SPACING AS SHOWN IN THIS STANDARD IS NOMINAL FOR DUAL CONTROL SWITCH INSTALLATIONS.
7. DEVIATION FROM THIS STANDARD SHALL BE APPROVED BY SCCRA MANAGER OF C&S ENGINEERING OR DESIGNATE.

REVISIONS				
-	-	-	-	-
REV.	DATE	DESCRIPTION	DES.	ENG.

FINAL REVIEW BY: C&SDRC DATE: 11/21/08

APPROVED BY

Dan C. Guerrero
MANAGER, COMMUNICATIONS AND SIGNALS ENGINEERING

Darrell V. Maxey
DIRECTOR, ENGINEERING AND CONSTRUCTION

THE SOUTHERN CALIFORNIA REGIONAL RAIL AUTHORITY OR IT'S OFFICERS OR AGENTS SHALL NOT BE RESPONSIBLE FOR THE ACCURACY OR COMPLETENESS OF THIS PLAN SHEET

METROLINK
SOUTHERN CALIFORNIA REGIONAL RAIL AUTHORITY
700 SOUTH FLOWER STREET
LOS ANGELES, CALIFORNIA 90017

ENGINEERING STANDARDS

M23A-E DUAL CONTROL SWITCH LAYOUT
FOR No. 20 & No. 24
LEFT HAND TURNOUTS

STANDARD 8620
SCALE: NONE
REVISION –
SHEET 1 OF 2
CADD FILE: ES8620-01

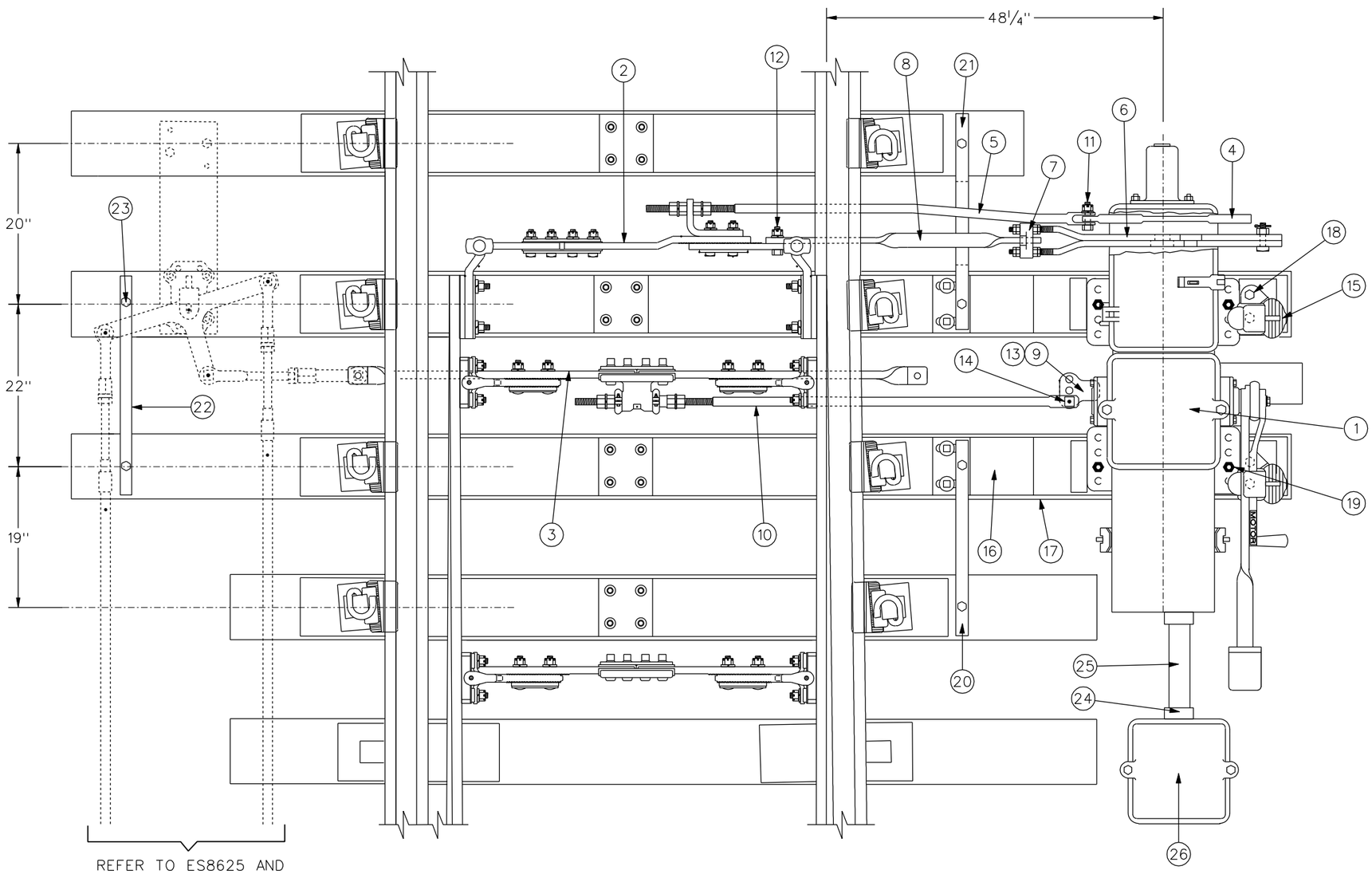

REFER TO ES8625 AND ES8630 FOR INFORMATION REGARDING HELPER ROD ASSEMBLIES FOR #20 AND #24 TURNOUTS

BILL OF MATERIAL

M23-A DUAL CONTROL SWITCH LAYOUT FOR #20 & #24 L.H. TURNOUTS

ITEM	SCRRA P/N	DESCRIPTION
1	SEE NOTE 2	MACHINE, SWITCH M23-A
2	03-3030190-0	ROD, MF INSULATED FRONT
3	03-3030145-0	ROD, #1 SMJ INSULATED WITH BASKET
4	03-3030115-0	BAR, POINT DETECTOR (INTERNAL)
5	03-3030152-0	ROD, POINT DETECTOR CONNECTING
6	03-3033016-0	ROD, ADJUSTABLE LOCK (INTERNAL)
7	03-3333015-0	LUG, LOCK ROD (BINOCULARS)
8	03-3030150-0	ROD, LOCK ROD CONNECTING (TWISTY ROD)
9	03-3335200-0	LUG, OPERATING ROD CONNECTION (BEAR CLAW)
10	03-3033018-0	ROD, SWITCH OPERATING
11	03-0263024-0	BOLT, ASSEMBLY 5/8"-11 X 2 5/8"
12	03-0263049-0	BOLT, ASSEMBLY 1"-8 X 2 3/4" DRILLED AT 2 1/2"
13	03-0265210-0	BOLT, ASSEMBLY 7/8"-9 X 3"
14	03-2225225-0	PIN, OPERATING BAR CONNECTING
15	03-3337100-0	STAND, UNIVERSAL LEVER LATCH
16	03-2861011-0	PLATE, UNIVERSAL EXTENSION
17	03-3401001-0	TIE, DAPPED SWITCH 9" X 10" X 16'
18	03-3333081-0	ASSEMBLY, HEADLOCK BOLT 3/4"-10 X 11"
19	03-3333085-0	ASSEMBLY, HEADLOCK BOLT 7/8"-9 X 16"
20	03-2223206-0	STRAP, TIE 23"WITH ANGLED OFFSET
21	03-2223207-0	STRAP, TIE 24" WITH VERTICAL OFFSET
22	03-2223208-0	STRAP, TIE 26"
23	03-2223003-0	SCREW, 3/4" X 6" LAG
24	03-0500460-0	CONNECTOR, 2" STRAIGHT LIQUIDTIGHT
25	03-0500405-0	CONDUIT, 2" FLEX LIQUIDTIGHT
26	03-3330002-0	BOX, PEDESTAL JUNCTION (SWITCH 36 TERMINAL)

NOTES:

1. APPLICATIONS FOR THIS DUAL CONTROL SWITCH LAYOUT ARE FOR LEFT HAND #20 OR #24 TURNOUTS.
2. DUAL CONTROL SWITCH MACHINE REPLACEMENT REQUIREMENTS SHALL BE DEFINED BY RIGHT OR LEFT HAND, 3 OR 5 WIRE MOTOR CONTROL, AND HIGH OR LOW VOLTAGE. PART NUMBERS FOR APPROPRIATE SWITCH ARE AVAILABLE BY INVENTORY WAREHOUSE MANAGER.
3. REFER TO SECTION 3 OF THE "METROLINK INSTRUCTIONS GOVERNING INSTALLATION, MAINTENANCE, INSPECTION AND TESTING OF SIGNAL APPARATUS AND SIGNAL SYSTEMS" MANUAL FOR ADDITIONAL INFORMATION.
4. TIE SPACING AS SHOWN IN THIS STANDARD IS NOMINAL FOR POWER SWITCH INSTALLATIONS.
5. DEVIATION FROM THIS STANDARD SHALL BE APPROVED BY SCRRA MANAGER OF C&S ENGINEERING OR DESIGNATE.

THIS DRAWING TO BE USED FOR MAINTENANCE PURPOSES ONLY

REVISIONS				
-	-	-	-	-
REV.	DATE	DESCRIPTION	DES.	ENG.

FINAL REVIEW BY: C&SDRC DATE: 11/21/08

APPROVED BY

Dan C. Guerrero
MANAGER, COMMUNICATIONS AND SIGNALS ENGINEERING

Darrell V. Maxey
DIRECTOR, ENGINEERING AND CONSTRUCTION

THE SOUTHERN CALIFORNIA REGIONAL RAIL AUTHORITY OR IT'S OFFICERS OR AGENTS SHALL NOT BE RESPONSIBLE FOR THE ACCURACY OR COMPLETENESS OF THIS PLAN SHEET

METROLINK
SOUTHERN CALIFORNIA REGIONAL RAIL AUTHORITY
700 SOUTH FLOWER STREET
LOS ANGELES, CALIFORNIA 90017

ENGINEERING STANDARDS

M23-A DUAL CONTROL SWITCH LAYOUT
FOR No. 20 & No. 24
LEFT HAND TURNOUTS

STANDARD 8620
SCALE: NONE
REVISION
SHEET 2 OF 2
CADD FILE: ES8620-02

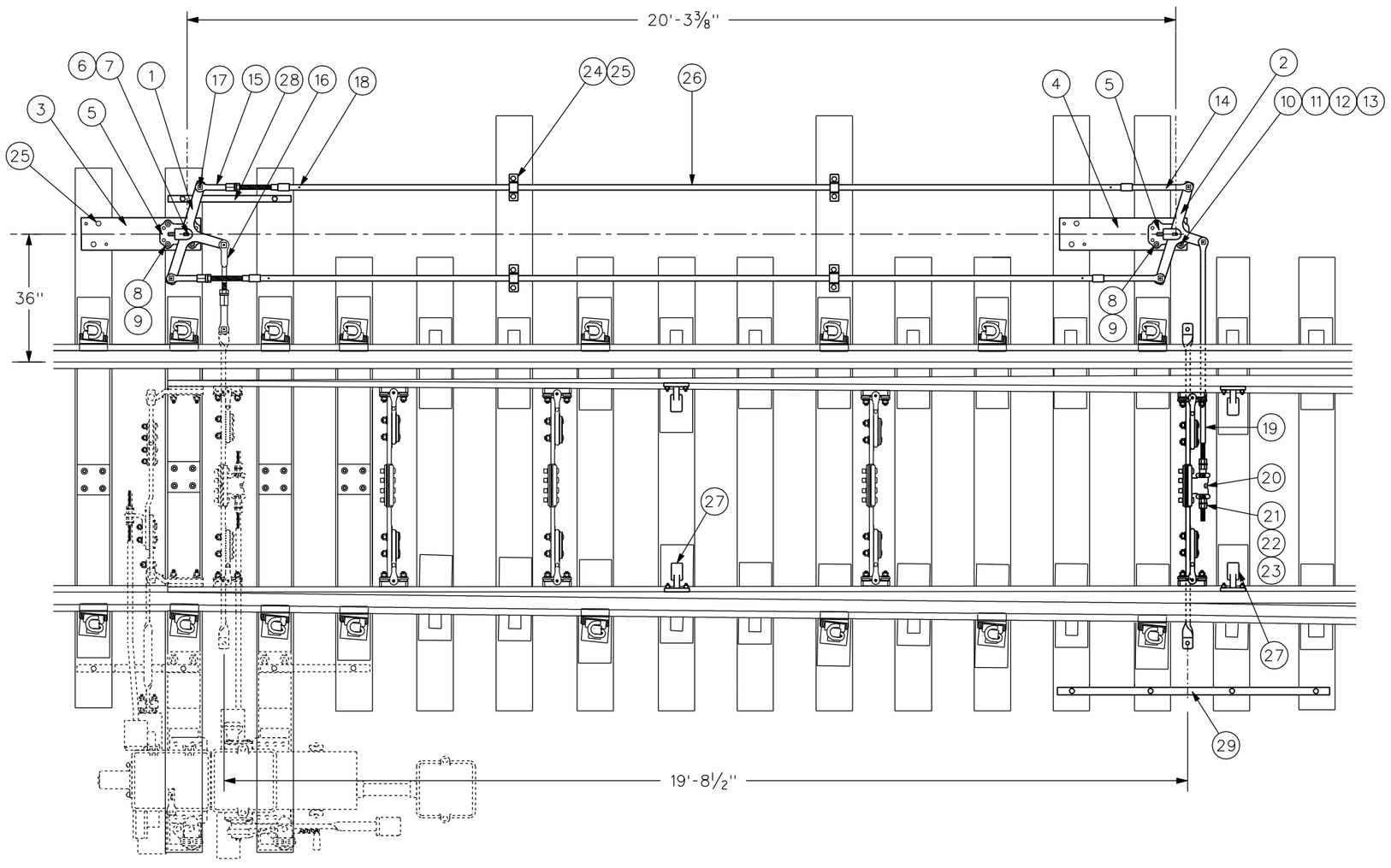

BILL OF MATERIAL

HELPER ROD ASSEMBLY FOR #20 T.O.

ITEM	QTY	SCRRA P/N	DESCRIPTION
1	1	03-3333101-0	CRANK, 3 ARM, STAGE 1
2	1	03-3333102-0	CRANK, 3 ARM, STAGE 2
3	1	03-3333111-0	CRANK PLATE, STAGE 1
4	1	03-3333112-0	CRANK PLATE, STAGE 2
5	2	03-3333115-0	CRANK STAND BASE
6	2	03-3333116-0	CRANK STAND PIN
7	2	03-3333117-0	COTTER PIN
8	2	03-3333092-0	STUD, ¾x 13" w/3" 3/4-10 THREAD BOTH ENDS
9	4	03-2405201-0	ASSEMBLY, GRIP NUT & WASHER ¾" HEADLOCK
10	4	03-0263070-0	BOLT, HEX HEAD ¾"-10 X 2½" (G-5)
11	8	03-3333053-0	NUT, HEX ¾" -10 (G-5)
12	8	03-3823051-0	WASHER, FLAT ¾" (G-5)
13	8	03-3333052-0	WASHER, LOCK ¾" (G-5)
14	2	03-3033012-0	SOLID JAW
15	2	03-3033013-0	SCREW JAW ASSEMBLY
16	1	03-3333011-0	ADJUSTABLE LINK
17	7	03-2225220-0	CONNECTING PIN
18	4	03-3333002-0	RIVET, ¼" X 1 1/2, ROUND, STEEL
19	1	03-3033125-0	ROD OPERATING - NO. 5 HELPER
20	1	03-3330148-0	SWITCH POINT ADJUSTER
21	2	03-3333130-0	CONE NUT, SWITCH POINT ADJUSTER
22	5	03-3333131-0	NUT, 1¼- 7, HEAVY HEX, JAMB
23	5	03-3333132-0	LOCK WASHER, 1¼" HEAVY
24	4	03-2853150-0	ROLLER BRACKET
25	18	03-2223003-0	¾ X 6 LG LAG BOLT
26	2	03-3332020-0	PIPE - SCHEDULE 80 X 212⅞" LG
27	2	03-3332010-0	SWITCH POINT ROLLER
28	1	03-3333006-0	STRAP, TIE 2'
29	1	03-3333007-0	STRAP, TIE 6'

NOTES:

1. HELPER ROD ASSEMBLY COMPONENTS SHALL MEET THE REQUIREMENTS OF AREMA C&S MANUAL PART 13 WHERE APPLICABLE.
2. FOR NEW TURNOUT AND/OR CROSSOVER INSTALLATIONS, HELPER ROD ASSEMBLIES SHALL BE PROVIDED BY SCRRA M.O.W. DIVISION.
3. FOR EXISTING TURNOUT AND/OR CROSSOVER INSTALLATIONS, HELPER ROD ASSEMBLIES SHALL BE PROVIDED BY SCRRA SIGNALS AND COMMUNICATIONS DIVISION.
4. DEVIATION FROM THIS STANDARD SHALL BE APPROVED BY SCRRA MANAGER OF C&S ENGINEERING OR DESIGNATE.

REVISIONS				
-	-	-	-	-
REV.	DATE	DESCRIPTION	DES.	ENG.

FINAL REVIEW BY: C&SDRC DATE: 11/21/08

APPROVED BY

Dan C. Guerrero
MANAGER, COMMUNICATIONS AND SIGNALS ENGINEERING

Darrell V. Maxey
DIRECTOR, ENGINEERING AND CONSTRUCTION

THE SOUTHERN CALIFORNIA REGIONAL RAIL AUTHORITY OR IT'S OFFICERS OR AGENTS SHALL NOT BE RESPONSIBLE FOR THE ACCURACY OR COMPLETENESS OF THIS PLAN SHEET

METROLINK
SOUTHERN CALIFORNIA REGIONAL RAIL AUTHORITY
700 SOUTH FLOWER STREET
LOS ANGELES, CALIFORNIA 90017

ENGINEERING STANDARDS

PUSH-PULL HELPER ROD ASSEMBLY
FOR No. 20 RIGHT OR LEFT
HAND TURNOUTS

STANDARD 8625
SCALE: NONE
REVISION –
SHEET 1 OF 1
CADD FILE: ES8625

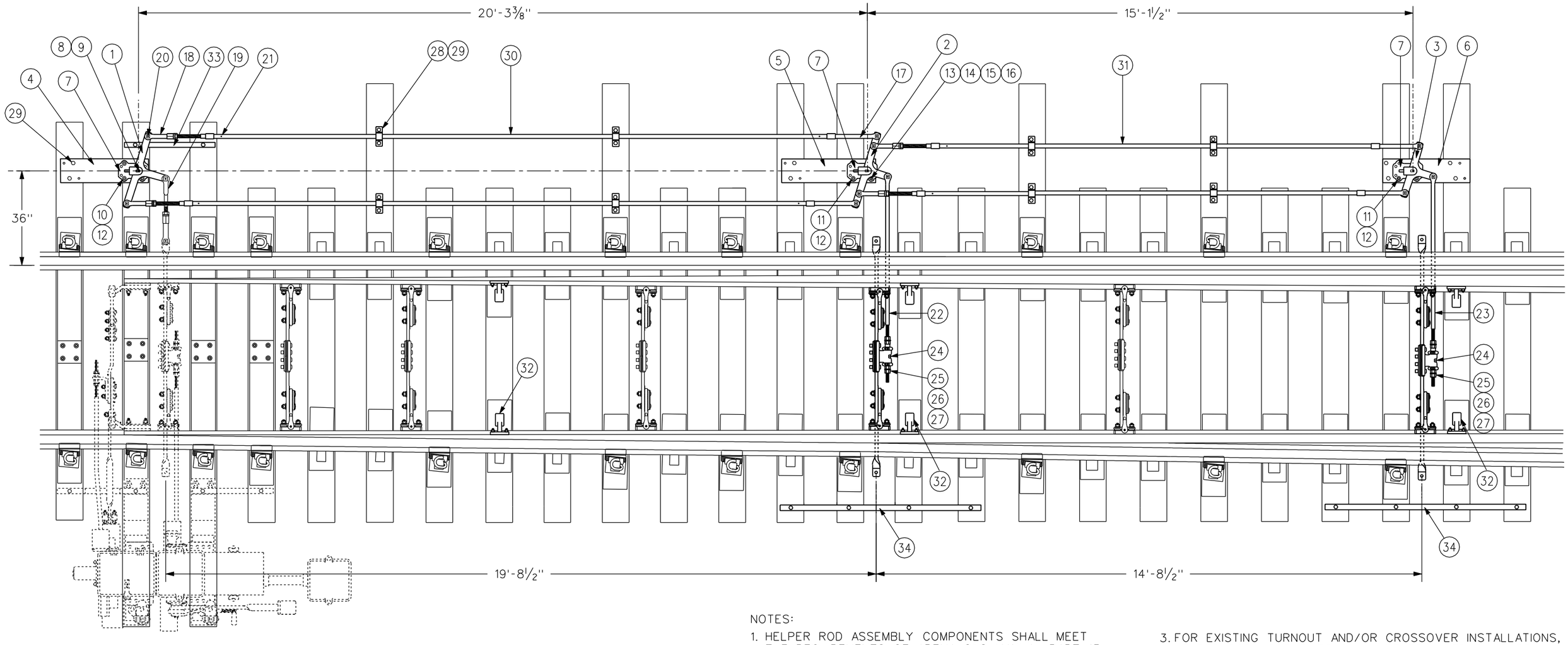

NOTES:

1. HELPER ROD ASSEMBLY COMPONENTS SHALL MEET THE REQUIREMENTS OF AREMA C&S MANUAL PART 13 WHERE APPLICABLE.
2. FOR NEW TURNOUT AND/OR CROSSOVER INSTALLATIONS, HELPER ROD ASSEMBLIES SHALL BE PROVIDED BY SCRRA TRACK AND STRUCTURES DIVISION.
3. FOR EXISTING TURNOUT AND/OR CROSSOVER INSTALLATIONS, HELPER ROD ASSEMBLIES SHALL BE PROVIDED BY SCRRA SIGNALS AND COMMUNICATIONS DIVISION.
4. DEVIATION FROM THIS STANDARD SHALL BE APPROVED BY SCRRA MANAGER OF C&S ENGINEERING OR DESIGNATE.

BILL OF MATERIAL

HELPER ROD ASSEMBLY FOR #24 T.O.

ITEM	QTY	SCRRA P/N	DESCRIPTION
1	1	03-3333101-0	CRANK, 3 ARM, STAGE 1
2	1	03-3333102-0	CRANK, 3 ARM, STAGE 2
3	1	03-3333103-0	CRANK, 3 ARM, STAGE 3
4	1	03-3333111-0	CRANK PLATE, STAGE 1
5	1	03-3333112-0	CRANK PLATE, STAGE 2
6	1	03-3333113-0	CRANK PLATE, STAGE 3
7	3	03-3333115-0	CRANK STAND BASE
8	3	03-3333116-0	CRANK STAND PIN
9	3	03-3333117-0	COTTER PIN
10	2	03-3333092-0	STUD, ¾x 13" w/3" 3/4-10 THREAD
11	4	03-3333093-0	STUD, ¾x 16" w/3" 3/4-10 THREAD
12	6	03-0245201-0	GRIP NUT & WASHER ¾" HEADLOCK
13	6	03-0263070-0	BOLT, HEX HEAD ¾"-10 X 2½"
14	12	03-3333053-0	NUT, HEX ¾"-10 (G-5)
15	12	03-3823051-0	WASHER, FLAT ¾" (G-5)
16	12	03-3333052-0	WASHER, LOCK ¾" (G-5)
17	4	03-3033012-0	SOLID JAW
18	4	03-3033013-0	SCREW JAW ASSEMBLY
19	1	03-3333011-0	ADJUSTABLE LINK
20	12	03-2225220-0	CONNECTING PIN
21	8	03-3333002-0	RIVET, ¼" X 1 1/2, ROUND, STEEL
22	1	03-3033125-0	ROD OPERATING - NO. 5 HELPER
23	1	03-3333127-0	ROD OPERATING - NO. 7 HELPER
24	2	03-3330148-0	SWITCH POINT ADJUSTER
25	4	03-3333130-0	CONE NUT, SWITCH POINT ADJUSTER
26	9	03-3333131-0	NUT, 1¼- 7, HEAVY HEX, JAMB
27	9	03-3333132-0	LOCK WASHER, 1¼" HEAVY
28	8	03-2853150-0	ROLLER BRACKET
29	32	03-2223003-0	¾ X 6 LG LAG BOLT
30	2	03-3332010-0	PIPE - SCHEDULE 80 X 212⅞" LG
31	2	03-3332011-0	PIPE - SCHEDULE 80 X 148⅞" LG
32	6	03-3332010-0	SWITCH POINT ROLLER (FRONT)
33	1	03-3333006-0	STRAP, TIE 2'
34	2	03-3333007-0	STRAP, TIE 6'

REVISIONS				
-	-	-	-	-
REV.	DATE	DESCRIPTION	DES.	ENG.

FINAL REVIEW BY: C&SDRC DATE: 11/21/08

APPROVED BY

Dan C. Guerrero
MANAGER, COMMUNICATIONS AND SIGNALS ENGINEERING

Darrell V. Maxey
DIRECTOR, ENGINEERING AND CONSTRUCTION

THE SOUTHERN CALIFORNIA REGIONAL RAIL AUTHORITY OR IT'S OFFICERS OR AGENTS SHALL NOT BE RESPONSIBLE FOR THE ACCURACY OR COMPLETENESS OF THIS PLAN SHEET

METROLINK
SOUTHERN CALIFORNIA REGIONAL RAIL AUTHORITY
700 SOUTH FLOWER STREET
LOS ANGELES, CALIFORNIA 90017

ENGINEERING STANDARDS

PUSH-PULL HELPER ROD ASSEMBLY
FOR No. 24 RIGHT OR LEFT
HAND TURNOUTS

STANDARD: 8630
SCALE: NONE
REVISION: –
SHEET: 1 OF 1
CADD FILE: ES8630

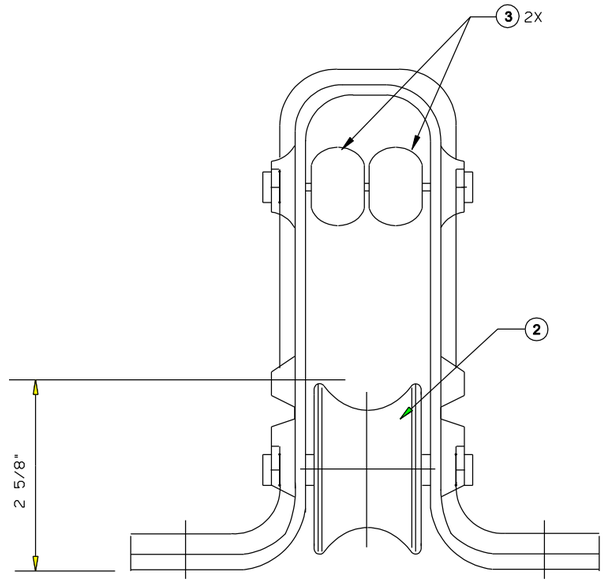

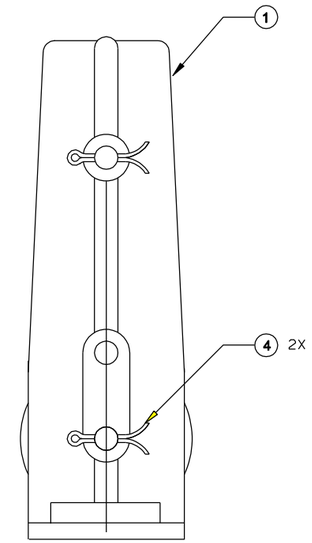

NOTES:

1. PIPE CARRIER STAND
2. PIPE CARRIER ROLLER (LOWER)
3. PIPE CARRIER ROLLER (UPPER)
4. COTTER PIN FOR ROLLERS

PIPE GUIDE

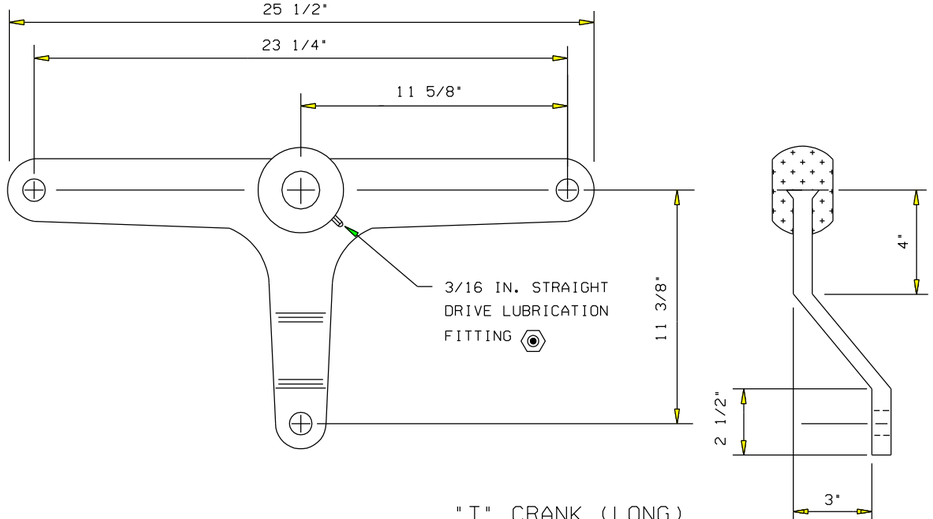

NOTES:

1. DRILL & REAM FOR 7/8" PIN MANUFACTURER OF HELPER ROD ASSEMBLY TO DETERMINE FINAL DIMENSIONS.

"T" CRANK (LONG)

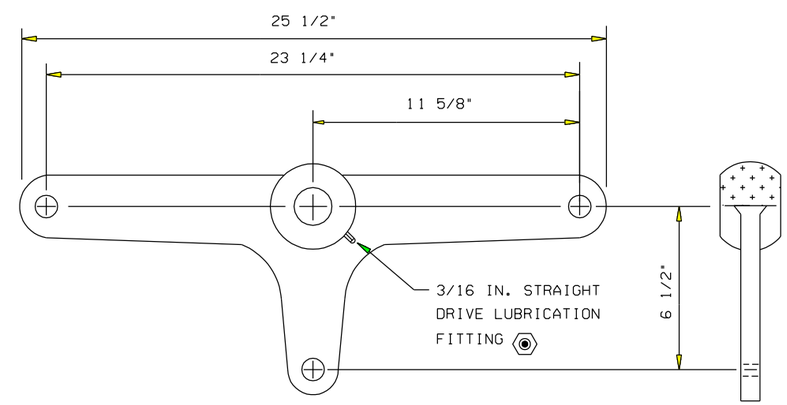

"T" CRANK (SHORT)

NOTES:

1. DRILL & REAM FOR 7/8" PIN MANUFACTURER OF HELPER ROD ASSEMBLY TO DETERMINE FINAL DIMENSIONS.

REVISIONS				
-	-	-	-	-
REV.	DATE	DESCRIPTION	DES.	ENG.

FINAL REVIEW BY: C&SDRC DATE: 11/21/08

APPROVED BY

Dan C. Guerrero
MANAGER, COMMUNICATIONS AND SIGNALS ENGINEERING

Darrell V. Maxey
DIRECTOR, ENGINEERING AND CONSTRUCTION

THE SOUTHERN CALIFORNIA REGIONAL RAIL AUTHORITY OR IT'S OFFICERS OR AGENTS SHALL NOT BE RESPONSIBLE FOR THE ACCURACY OR COMPLETENESS OF THIS PLAN SHEET

METROLINK
SOUTHERN CALIFORNIA REGIONAL RAIL AUTHORITY
700 SOUTH FLOWER STREET
LOS ANGELES, CALIFORNIA 90017

ENGINEERING STANDARDS

PUSH-PULL HELPER ROD ASSEMBLY DETAILS
"T" CRANK & PIPE GUIDE AUX CONNECTION

STANDARD: 8635
SCALE: NONE
REVISION: –
SHEET: 1 OF 2
CADD FILE: ES8635-01

SCREW JAW

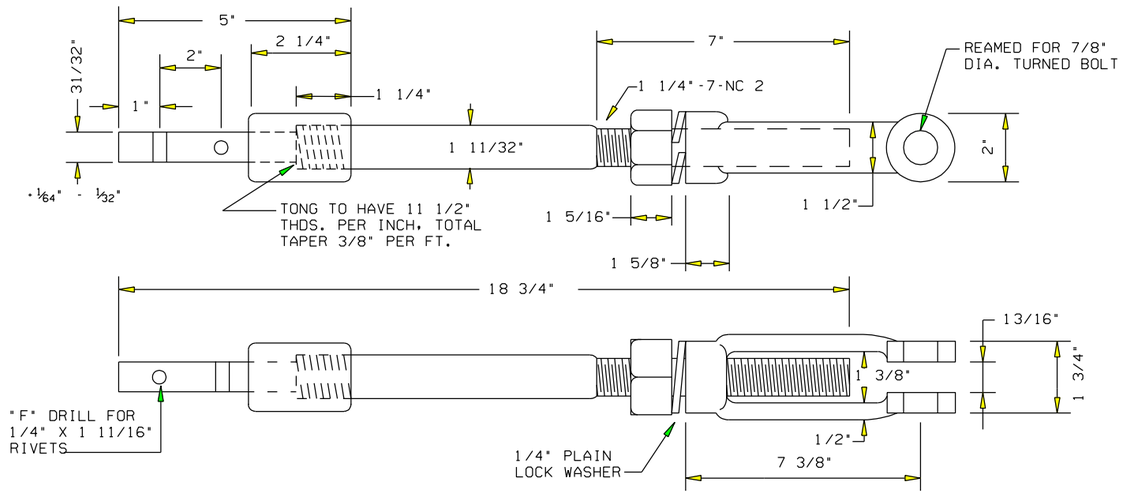

ADJUSTABLE LINK

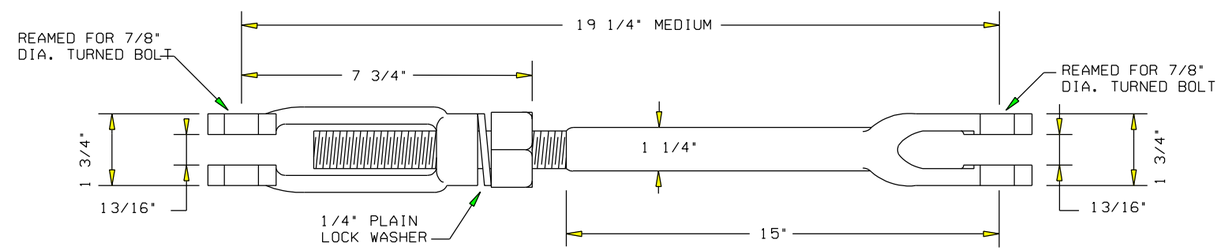

SOLID JAW

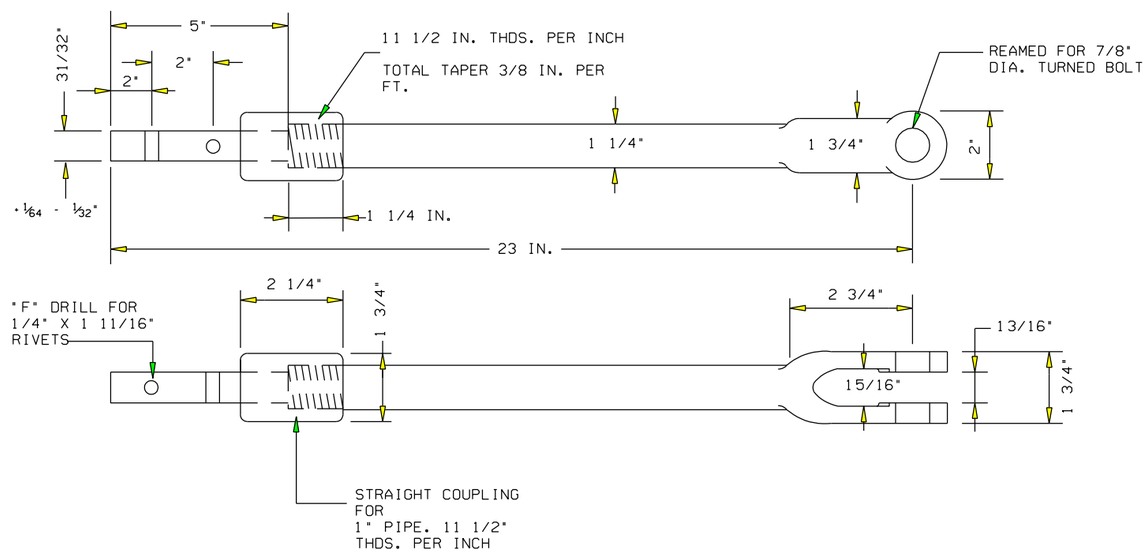

NOTES:

1. GALVANIZED 1" PIPE SHALL BE SECURED TO SCREW JAW AND SOLID JAW WITH A MINIMUM OF TWO RIVETS.

INFORMATION ONLY

REVISIONS				
REV.	DATE	DESCRIPTION	DES.	ENG.
-	-	-	-	-

FINAL REVIEW BY: C&SDRC DATE: 11/21/08

APPROVED BY

Dan C. Guerrero
MANAGER, COMMUNICATIONS AND SIGNALS ENGINEERING

Darrell V. Maxey
DIRECTOR, ENGINEERING AND CONSTRUCTION

THE SOUTHERN CALIFORNIA REGIONAL RAIL AUTHORITY OR IT'S OFFICERS OR AGENTS SHALL NOT BE RESPONSIBLE FOR THE ACCURACY OR COMPLETENESS OF THIS PLAN SHEET

METROLINK
SOUTHERN CALIFORNIA REGIONAL RAIL AUTHORITY
700 SOUTH FLOWER STREET
LOS ANGELES, CALIFORNIA 90017

ENGINEERING STANDARDS

PUSH-PULL HELPER ROD ASSEMBLY DETAILS
SCREW JAW, SOLID JAW, & ADJUSTABLE LINK

STANDARD: 8635
SCALE: NONE
REVISION: –
SHEET: 2 OF 2
CADD FILE: ES8635-02

BILL OF MATERIAL 03-3030140-0

LEFT HAND FRONT ROD ASSEMBLY FOR #8, #10 & #14 T.O.'s

BILL OF MATERIAL 03-3030141-0

RIGHT HAND FRONT ROD ASSEMBLY FOR #8, #10 & #14 T.O.'s

ITEM	QTY	DESCRIPTION
1	1	LH POINT CLIP
2	1	RH POINT CLIP
3	2	POINT CLIP SHIM, 1/4" X 2 1/2" X 8"
4	2	POINT CLIP SHIM, 3/4" X 2 1/2" X 8"
5	1	PLAIN SWIVEL ROD
6	1	SERRATED SWIVEL ROD
7	1	SERRATED OFFSET ROD
8	1	POINT DETECTOR ROD BRACKET
9	2	INDUCTION HARDENED AND GROUND STEEL PIN
10	2	RAILITE BEARING
11	2	OILITE BEARING
12	2	SPLICE PLATE, 1/2" X 2 1/2" X 9 1/2"
13	1	SPLICE PLATE, 1/4" X 2 1/2" X 7"
14	4	BOLT, 1"-8 X 5¾" LG THIN SQ HD DR @ 5¼"
15	2	BOLT, 3/4"-10 X 3 3/4" LG SQ HD DR @ 3 5/16"
16	4	BOLT, 3/4"-10 X 3" LG SQ HD DR @ 2 5/8"
17	4	NUT, 1"-8 HVY HEX SLOTTED
18	6	NUT, 3/4"-10 HEAVY HEX SLOTTED
19	4	LOCK WASHER 1" HEAVY SPLIT
20	2	LOCK WASHER 3/4" HEAVY SPLIT
21	10	COTTER PIN, 1/4" X 1 1/2" LG
22	2	INSULATION, "U" CHANNEL
23	4	INSULATION, BUSHING

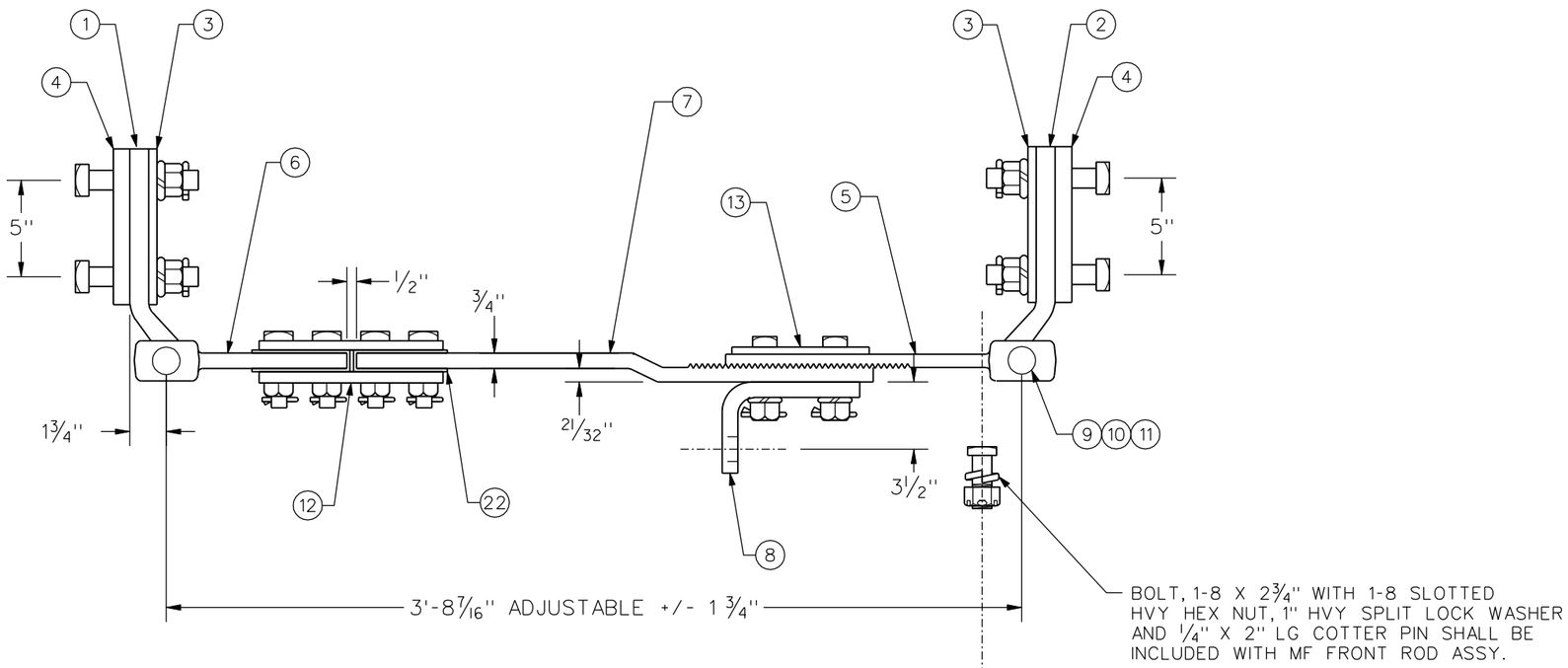

TOP VIEW

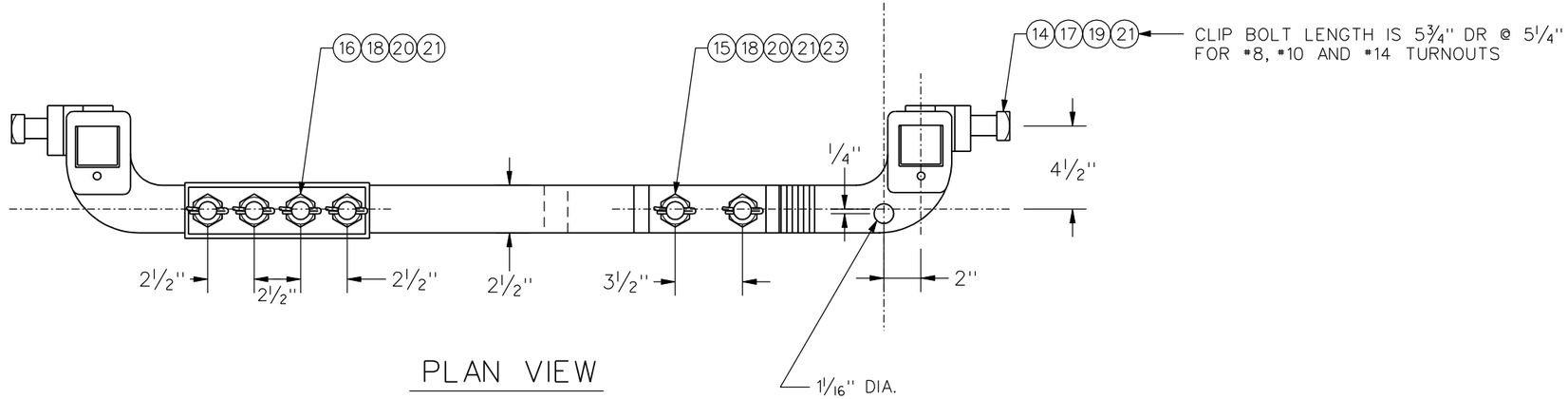

PLAN VIEW

NOTES:

1. FRONT ROD AS SHOWN IN THIS STANDARD IS FOR RIGHT HAND SWITCH APPLICATIONS. FOR LEFT HAND SWITCH APPLICATIONS, FRONT ROD SHALL BE OPPOSITE.
2. RACOR TYPE MF INSULATED FRONT ROD SHALL CONFORM TO ALL APPLICABLE PARTS OF THE AREMA C&S MANUAL.
3. DEVIATION FROM THIS STANDARD SHALL BE APPROVED BY SCRRA MANAGER OF C&S ENGINEERING OR DESIGNATE.

REVISIONS				
-	-	-	-	-
REV.	DATE	DESCRIPTION	DES.	ENG.

FINAL REVIEW BY: C&SDRC DATE: 11/21/08

APPROVED BY

Dan C. Guerrero
MANAGER, COMMUNICATIONS AND SIGNALS ENGINEERING

Darrell V. Maxey
DIRECTOR, ENGINEERING AND CONSTRUCTION

THE SOUTHERN CALIFORNIA REGIONAL RAIL AUTHORITY OR IT'S OFFICERS OR AGENTS SHALL NOT BE RESPONSIBLE FOR THE ACCURACY OR COMPLETENESS OF THIS PLAN SHEET

METROLINK

SOUTHERN CALIFORNIA REGIONAL RAIL AUTHORITY
700 SOUTH FLOWER STREET
LOS ANGELES, CALIFORNIA 90017

ENGINEERING STANDARDS

TYPICAL LEFT OR RIGHT HAND
RACOR TYPE "MF" INSULATED "FRONT" ROD
FOR USE ON No. 8, No. 10 & No. 14 TURNOUTS

STANDARD: 8650
SCALE: NONE
REVISION: –
SHEET: 1 OF 1
CADD FILE: ES8650

BILL OF MATERIAL 03-3030190-0

LEFT HAND FRONT ROD ASSEMBLY FOR #20 & #24 T.O.'s

BILL OF MATERIAL 03-3030191-0

RIGHT HAND FRONT ROD ASSEMBLY FOR #20 & #24 T.O.'s

ITEM	QTY	DESCRIPTION
1	1	LH POINT CLIP
2	1	RH POINT CLIP
3	2	POINT CLIP SHIM, 1/4" X 2 1/2" X 8"
4	2	POINT CLIP SHIM, 3/4" X 2 1/2" X 8"
5	1	PLAIN SWIVEL ROD
6	1	SERRATED SWIVEL ROD
7	1	SERRATED OFFSET ROD
8	1	POINT DETECTOR ROD BRACKET
9	2	INDUCTION HARDENED AND GROUND STEEL PIN
10	2	RAILITE BEARING
11	2	OILITE BEARING
12	2	SPLICE PLATE, 1/2" X 2 1/2" X 9 1/2"
13	1	SPLICE PLATE, 1/4" X 2 1/2" X 7"
14	4	BOLT, 1"-8 X 5 3/4" LG THIN SQ HD DR @ 5 1/4"
15	2	BOLT, 3/4"-10 X 3 3/4" LG SQ HD DR @ 3 5/16"
16	4	BOLT, 3/4"-10 X 3" LG SQ HD DR @ 2 5/8"
17	4	NUT, 1"-8 HVY HEX SLOTTED
18	6	NUT, 3/4"-10 HEAVY HEX SLOTTED
19	4	LOCK WASHER 1" HEAVY SPLIT
20	2	LOCK WASHER 3/4" HEAVY SPLIT
21	10	COTTER PIN, 1/4" X 1 1/2" LG
22	2	INSULATION, "U" CHANNEL
23	4	INSULATION, BUSHING

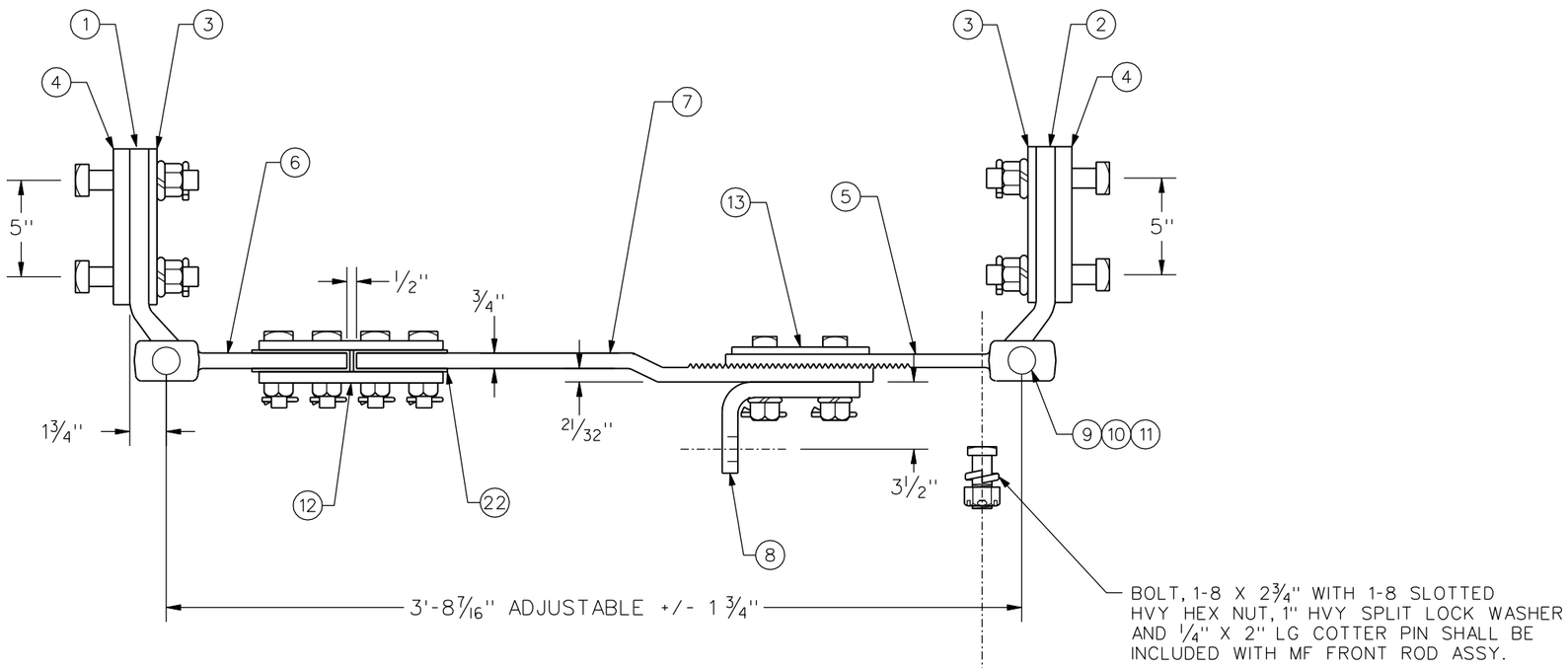

TOP VIEW

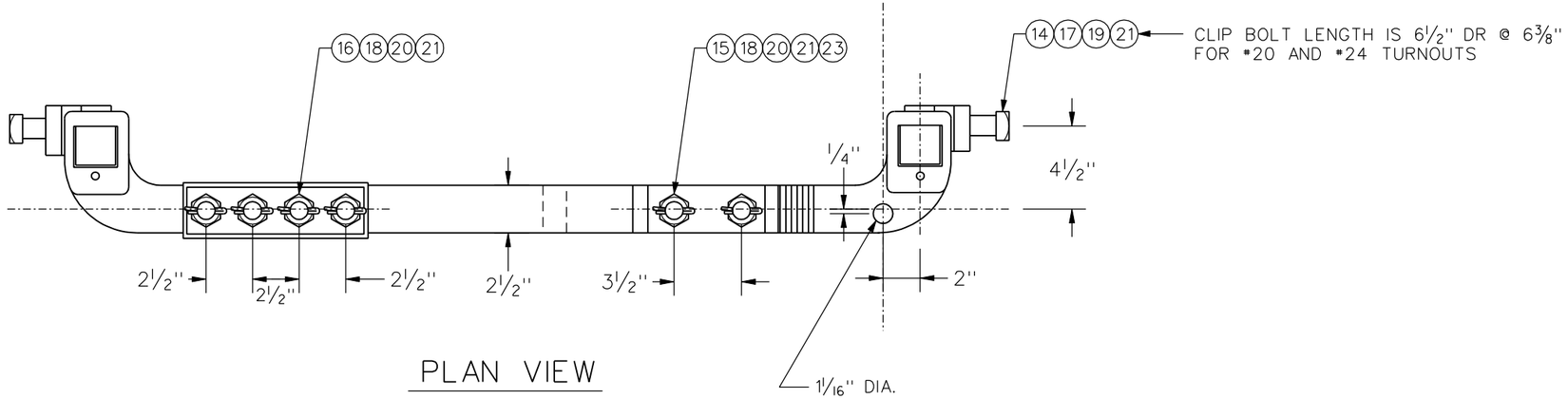

PLAN VIEW

NOTES:

1. FRONT ROD AS SHOWN IN THIS STANDARD IS FOR RIGHT HAND SWITCH APPLICATIONS. FOR LEFT HAND SWITCH APPLICATIONS, FRONT ROD SHALL BE OPPOSITE.
2. RACOR TYPE MF INSULATED FRONT ROD SHALL CONFORM TO ALL APPLICABLE PARTS OF THE AREMA C&S MANUAL.
3. DEVIATION FROM THIS STANDARD SHALL BE APPROVED BY SCRRA MANAGER OF C&S ENGINEERING OR DESIGNATE.

REVISIONS				
-	-	-	-	-
REV.	DATE	DESCRIPTION	DES.	ENG.

FINAL REVIEW BY: C&SDRC DATE: 11/21/08

APPROVED BY

Dan C. Guerrero
MANAGER, COMMUNICATIONS AND SIGNALS ENGINEERING

Darrell V. Maxey
DIRECTOR, ENGINEERING AND CONSTRUCTION

THE SOUTHERN CALIFORNIA REGIONAL RAIL AUTHORITY OR IT'S OFFICERS OR AGENTS SHALL NOT BE RESPONSIBLE FOR THE ACCURACY OR COMPLETENESS OF THIS PLAN SHEET

METROLINK

SOUTHERN CALIFORNIA REGIONAL RAIL AUTHORITY
700 SOUTH FLOWER STREET
LOS ANGELES, CALIFORNIA 90017

ENGINEERING STANDARDS

TYPICAL LEFT OR RIGHT HAND
RACOR TYPE "MF" INSULATED "FRONT" ROD
FOR USE ON No. 20 & No. 24 TURNOUTS

STANDARD: 8655
SCALE: NONE
REVISION: –
SHEET: 1 OF 1
CADD FILE: ES8655

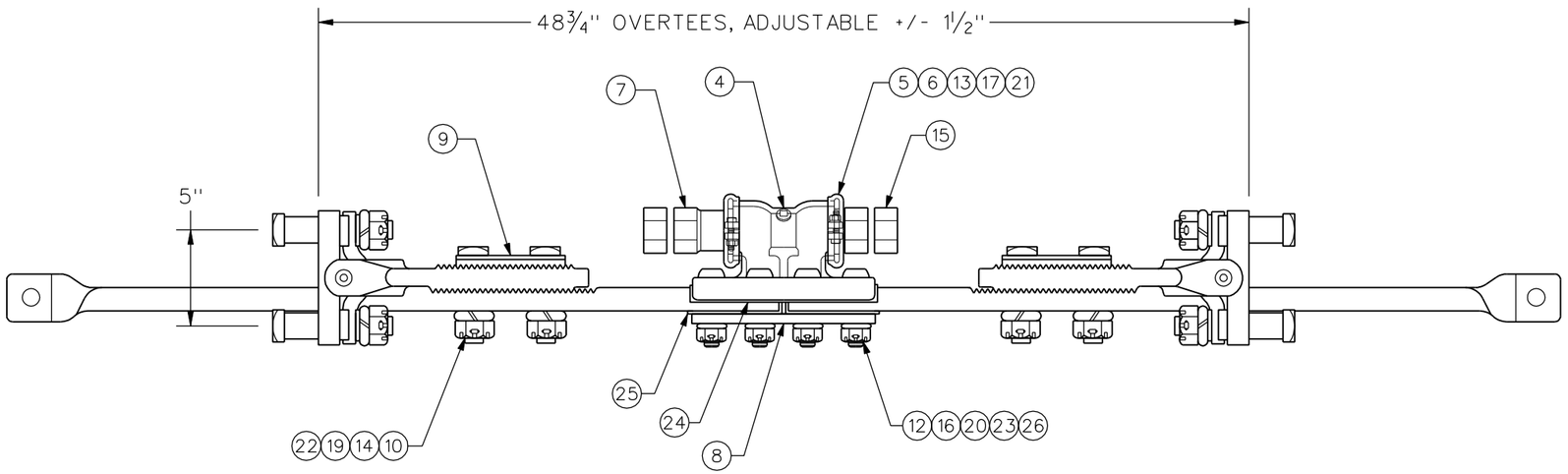

TOP VIEW

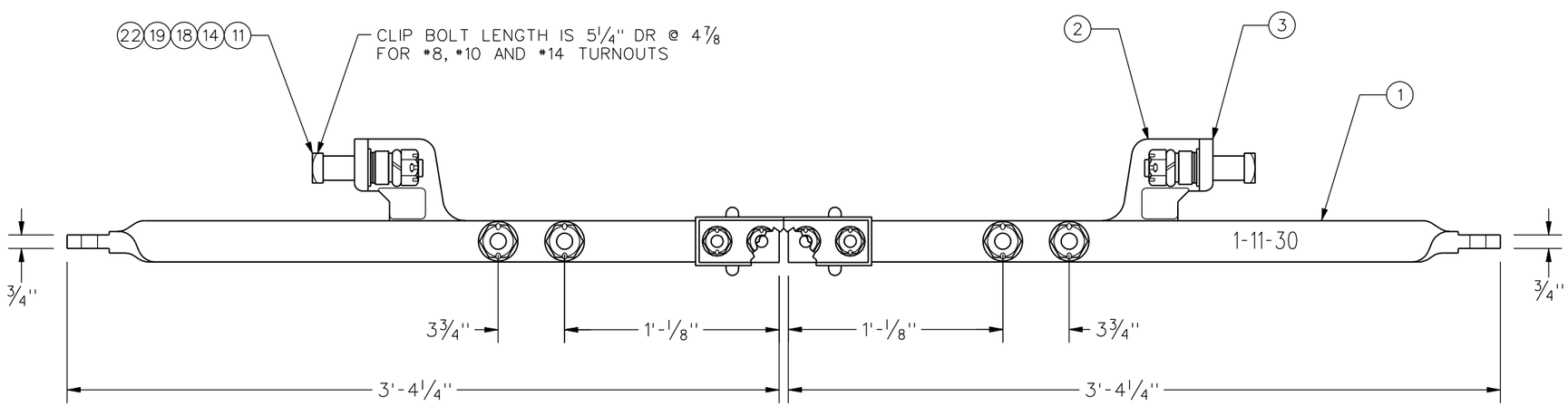

PLAN VIEW

BILL OF MATERIAL 03-3030146-0

BASKET ROD ASSEMBLY FOR #8, #10 & #14 T.O.'s

ITEM	QTY	DESCRIPTION
1	2	VERTICAL BAR, TWISTED END
2	2	ADJUSTABLE BEARING CLIP
3	2	BEARING PLATE SUB-ASSEMBLY
4	1	ADJUSTABLE BRACKET
5	2	DUST RING WASHER
6	4	ADJUSTABLE BRACKET CLAMP
7	2	ADJUSTING SLEEVE NUT
8	1	SPLICE PLATE
9	2	HEAD LOCK WASHER
10	4	BOLT, 1-8 X 4 1/2" LG SQ HD DR @ 4 1/16"
11	4	BOLT, 1-8 X 5¼" LG THIN SQ HD DR @ 4⅞"
12	4	BOLT, 3/4-10 X 4 1/2" LG SQ HD DR @ 3 15/16"
13	4	BOLT, 5/16-18 X 1 1/2" LG HEX HD
14	8	NUT, 1-8 HVY SLOTTED HEX
15	2	NUT, 1 1/4-7 HEAVY HEX
16	4	NUT, 3/4-10 HVY HEX HD SLOTTED
17	4	NUT 5/16-18 HEAVY HEX WITH NYLOC
18	4	FLAT WASHER 1" F-436 HARDENED
19	8	LOCK WASHER 1" HEAVY SLPIT
20	4	LOCK WASHER 3/4" HEAVY SPLIT
21	4	LOCK WASHER 5/16" MEDIUM SPLIT
22	8	COTTER PIN, 1/4 X 2" LG
23	4	COTTER PIN, 3/16 X 1 3/4" LG
24	1	INSULATION, L-SHAPE
25	1	INSULATION, C-CHANNEL
26	4	INSULATION, BUSHING

NOTES:

1. ADJUSTMENT BRACKET (BASKET) SHALL BE IN ACCORDANCE WITH AREMA SIGNAL MANUAL PART 12.1.17.

2. FOR DETAILED SPECIFICATION INFORMATION, REFER TO THE FOLLOWING SCRRA ENGINEERING STANDARDS:

   ES5300-13 AND ES5300-14
   ES5400-13 AND ES5400-14
   ES5500-13 AND ES5500-14
   ES5600-13 AND ES5600-14

3. DEVIATION FROM THIS STANDARD SHALL BE APPROVED BY SCRRA MANAGER OF C&S ENGINEERING OR DESIGNATE.

REVISIONS				
-	-	-	-	-
REV.	DATE	DESCRIPTION	DES.	ENG.

FINAL REVIEW BY: C&SDRC DATE: 11/21/08

APPROVED BY

Dan C. Guerrero
MANAGER, COMMUNICATIONS AND SIGNALS ENGINEERING

Darrell V. Maxey
DIRECTOR, ENGINEERING AND CONSTRUCTION

THE SOUTHERN CALIFORNIA REGIONAL RAIL AUTHORITY OR IT'S OFFICERS OR AGENTS SHALL NOT BE RESPONSIBLE FOR THE ACCURACY OR COMPLETENESS OF THIS PLAN SHEET

METROLINK
SOUTHERN CALIFORNIA REGIONAL RAIL AUTHORITY
700 SOUTH FLOWER STREET
LOS ANGELES, CALIFORNIA 90017

ENGINEERING STANDARDS

TYPICAL RACOR TYPE "SMJ"
No. 1 INSULATED "BASKET" ROD
FOR USE ON No. 8, No. 10 & No. 14 TURNOUTS

STANDARD 8660
SCALE: NONE
REVISION –
SHEET 1 OF 1
CADD FILE: ES8660

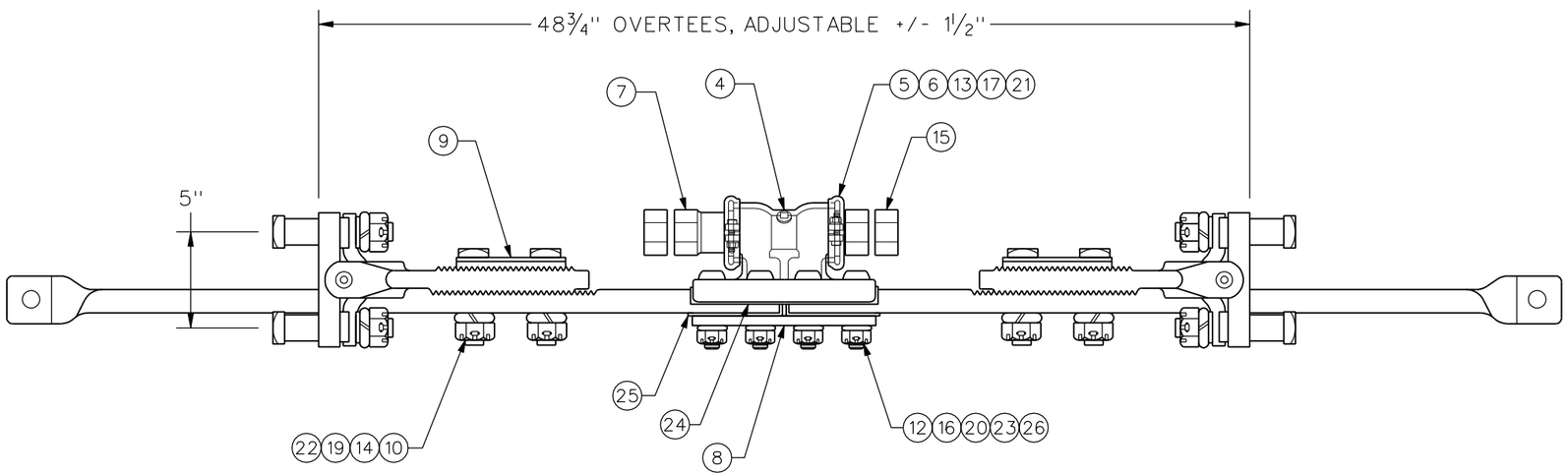

TOP VIEW

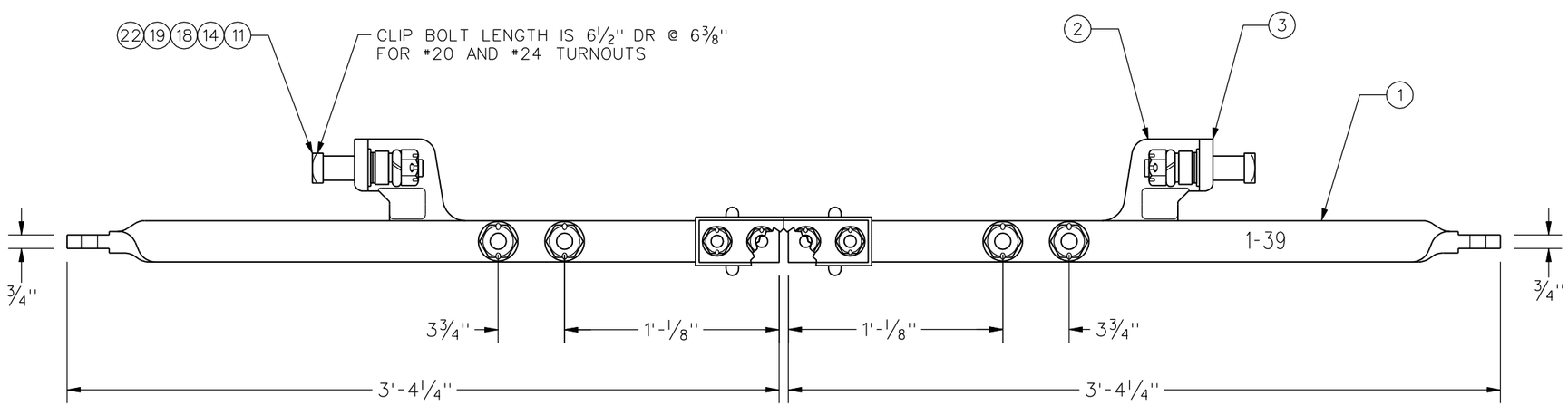

PLAN VIEW

BILL OF MATERIAL 03-3030145-0

BASKET ROD ASSEMBLY FOR #20 & #24 T.O.'s

ITEM	QTY	DESCRIPTION
1	2	VERTICAL BAR, TWISTED END
2	2	ADJUSTABLE BEARING CLIP
3	2	BEARING PLATE SUB-ASSEMBLY
4	1	ADJUSTABLE BRACKET
5	2	DUST RING WASHER
6	4	ADJUSTABLE BRACKET CLAMP
7	2	ADJUSTING SLEEVE NUT
8	1	SPLICE PLATE
9	2	HEAD LOCK WASHER
10	4	BOLT, 1-8 X 4 1/2" LG SQ HD DR @ 4 1/16"
11	4	BOLT, 1-8 X 6½" LG THIN SQ HD DR @ 6⅜"
12	4	BOLT, 3/4-10 X 4 1/2" LG SQ HD DR @ 3 15/16"
13	4	BOLT, 5/16-18 X 1 1/2" LG HEX HD
14	8	NUT, 1-8 HVY SLOTTED HEX
15	2	NUT, 1 1/4-7 HEAVY HEX
16	4	NUT, 3/4-10 HVY HEX HD SLOTTED
17	4	NUT 5/16-18 HEAVY HEX WITH NYLOC
18	4	FLAT WASHER 1" F-436 HARDENED
19	8	LOCK WASHER 1" HEAVY SLPIT
20	4	LOCK WASHER 3/4" HEAVY SPLIT
21	4	LOCK WASHER 5/16" MEDIUM SPLIT
22	8	COTTER PIN, 1/4 X 2" LG
23	4	COTTER PIN, 3/16 X 1 3/4" LG
24	1	INSULATION, L-SHAPE
25	1	INSULATION, C-CHANNEL
26	4	INSULATION, BUSHING

NOTES:

1. ADJUSTMENT BRACKET (BASKET) SHALL BE IN ACCORDANCE WITH AREMA SIGNAL MANUAL PART 12.1.17.
2. FOR DETAILED SPECIFICATION INFORMATION, REFER TO THE FOLLOWING SCRRA ENGINEERING STANDARDS:

   ES5300-13 AND ES5300-14
   ES5400-13 AND ES5400-14
   ES5500-13 AND ES5500-14
   ES5600-13 AND ES5600-14

3. DEVIATION FROM THIS STANDARD SHALL BE APPROVED BY SCRRA MANAGER OF C&S ENGINEERING OR DESIGNATE.

REVISIONS				
-	-	-	-	-
REV.	DATE	DESCRIPTION	DES.	ENG.

FINAL REVIEW BY: C&SDRC DATE: 11/21/08

APPROVED BY

Dan C. Guerrero
MANAGER, COMMUNICATIONS AND SIGNALS ENGINEERING

Darrell V. Maxey
DIRECTOR, ENGINEERING AND CONSTRUCTION

THE SOUTHERN CALIFORNIA REGIONAL RAIL AUTHORITY OR IT'S OFFICERS OR AGENTS SHALL NOT BE RESPONSIBLE FOR THE ACCURACY OR COMPLETENESS OF THIS PLAN SHEET

METROLINK
SOUTHERN CALIFORNIA REGIONAL RAIL AUTHORITY
700 SOUTH FLOWER STREET
LOS ANGELES, CALIFORNIA 90017

ENGINEERING STANDARDS

TYPICAL RACOR TYPE "SMJ"
No. 1 INSULATED "BASKET" ROD
FOR USE ON No. 20 & No. 24 TURNOUTS

STANDARD: 8665
SCALE: NONE
REVISION: –
SHEET: 1 OF 1
CADD FILE: ES8665

SCRRA P/N 03-3030115-0

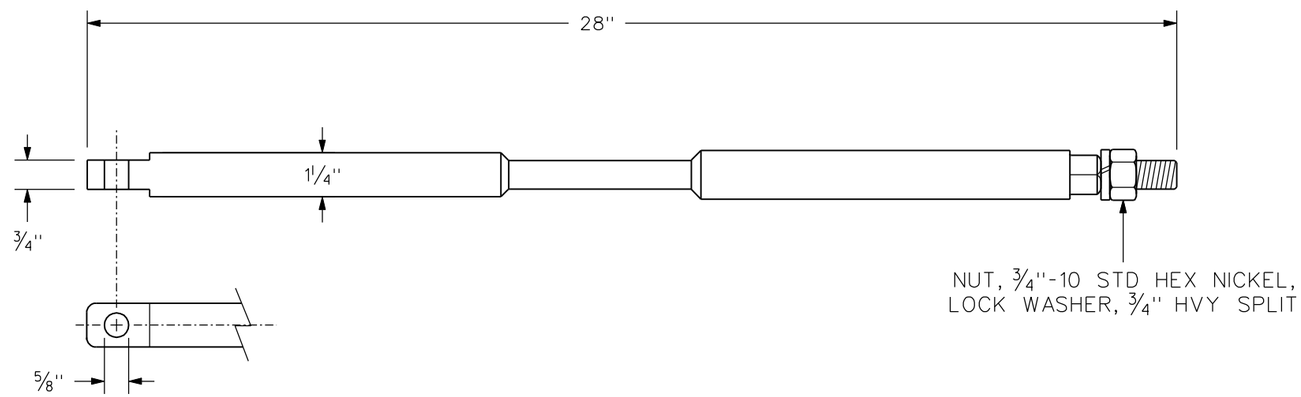

NOTES:

1. INTERNAL POINT DETECTOR BAR SHALL ACCOMODATE 3⅞" TO 6" SWITCH POINT STROKE.
2. THE INTERNAL POINT DETECTOR BAR, AS SHOWN IN THIS STANDARD, IS DESIGNED FOR USE ON UNION SWITCH AND SIGNAL M23-A POWER SWITCH MACHINES.
3. DEVIATION FROM THIS STANDARD SHALL BE APPROVED BY SCRRA MANAGER OF C&S ENGINEERING OR DESIGNATE.

THIS DRAWING TO BE USED FOR MAINTENANCE PURPOSES ONLY

REVISIONS				
-	-	-	-	-
REV.	DATE	DESCRIPTION	DES.	ENG.

FINAL REVIEW BY: C&SDRC DATE: 11/21/08

APPROVED BY

Dan C. Guerrero

MANAGER, COMMUNICATIONS AND SIGNALS ENGINEERING

Darrell V. Maxey

DIRECTOR, ENGINEERING AND CONSTRUCTION

THE SOUTHERN CALIFORNIA REGIONAL RAIL AUTHORITY OR IT'S OFFICERS OR AGENTS SHALL NOT BE RESPONSIBLE FOR THE ACCURACY OR COMPLETENESS OF THIS PLAN SHEET

METROLINK

SOUTHERN CALIFORNIA REGIONAL RAIL AUTHORITY
700 SOUTH FLOWER STREET
LOS ANGELES, CALIFORNIA 90017

ENGINEERING STANDARDS

INTERNAL POINT DETECTOR BAR
FOR M23-A POWER SWITCH MACHINE

STANDARD: 8700
SCALE: NONE
REVISION: –
SHEET: 1 OF 1
CADD FILE: ES8700

SCRRA P/N 03-3030152-0

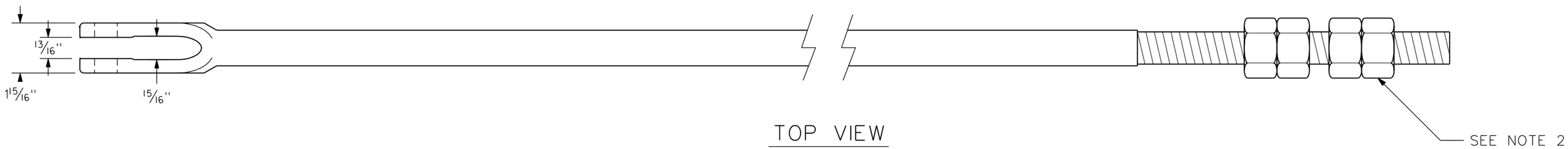

TOP VIEW

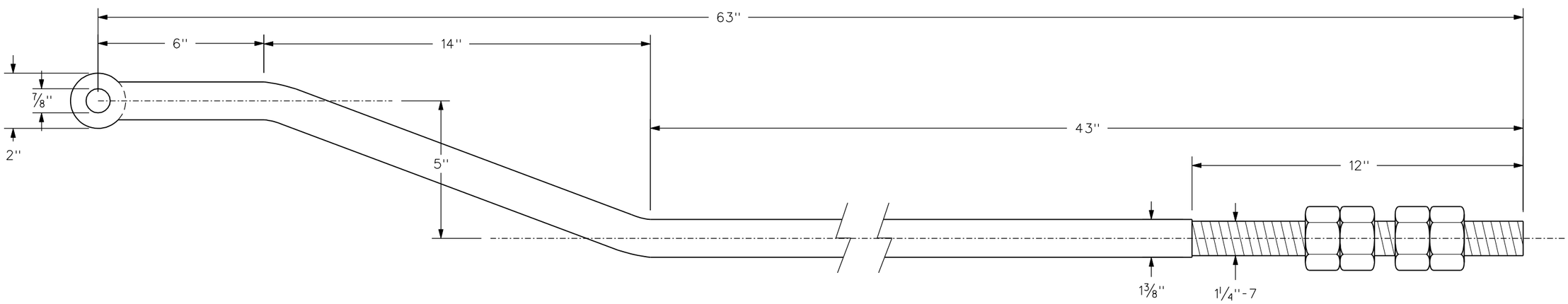

PLAN VIEW

NOTES:

1. POINT DETECTOR CONNECTING ROD SHALL BE US&S P/N N4514148404 OR APPROVED EQUAL.
2. EACH ASSEMBLY SHALL BE FURNISHED WITH 4EA 1 1/4"-7 HVY HEX NUTS.
3. WHERE IT DOES NOT CONFLICT WITH THIS STANDARD, POINT DETECTOR CONNECTING ROD SHALL BE IN ACCORDANCE WITH ALL APPLICABLE AREMA C&S MANUAL PARTS.
4. DEVIATION FROM THIS STANDARD SHALL BE APPROVED BY SCRRA MANAGER OF C&S ENGINEERING OR DESIGNATE.

REVISIONS				
-	-	-	-	-
REV.	DATE	DESCRIPTION	DES.	ENG.

FINAL REVIEW BY: C&SDRC DATE: 11/21/08

APPROVED BY

Dan C. Guerrero
MANAGER, COMMUNICATIONS AND SIGNALS ENGINEERING

Darrell V. Maxey
DIRECTOR, ENGINEERING AND CONSTRUCTION

THE SOUTHERN CALIFORNIA REGIONAL RAIL AUTHORITY OR IT'S OFFICERS OR AGENTS SHALL NOT BE RESPONSIBLE FOR THE ACCURACY OR COMPLETENESS OF THIS PLAN SHEET

METROLINK
SOUTHERN CALIFORNIA REGIONAL RAIL AUTHORITY
700 SOUTH FLOWER STREET
LOS ANGELES, CALIFORNIA 90017

ENGINEERING STANDARDS

POINT DETECTOR CONNECTING ROD
FOR DUAL CONTROL SWITCH APPLICATIONS

STANDARD: 8705
SCALE: NONE
REVISION: –
SHEET: 1 OF 1
CADD FILE: ES8705

SCRRA P/N 03-3033016-0

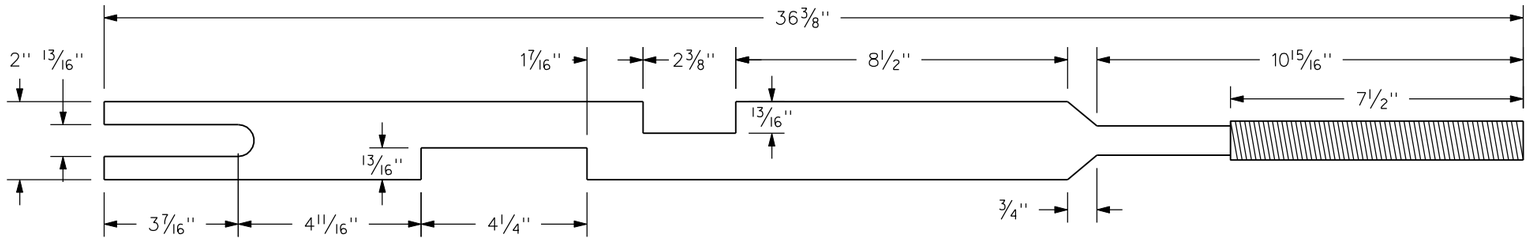

NARROW NOTCH TOWARD THREADED END

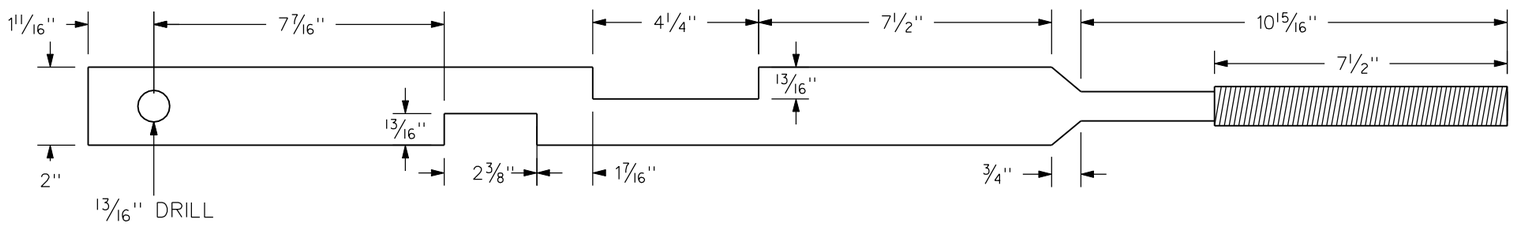

WIDE NOTCH TOWARD THREADED END

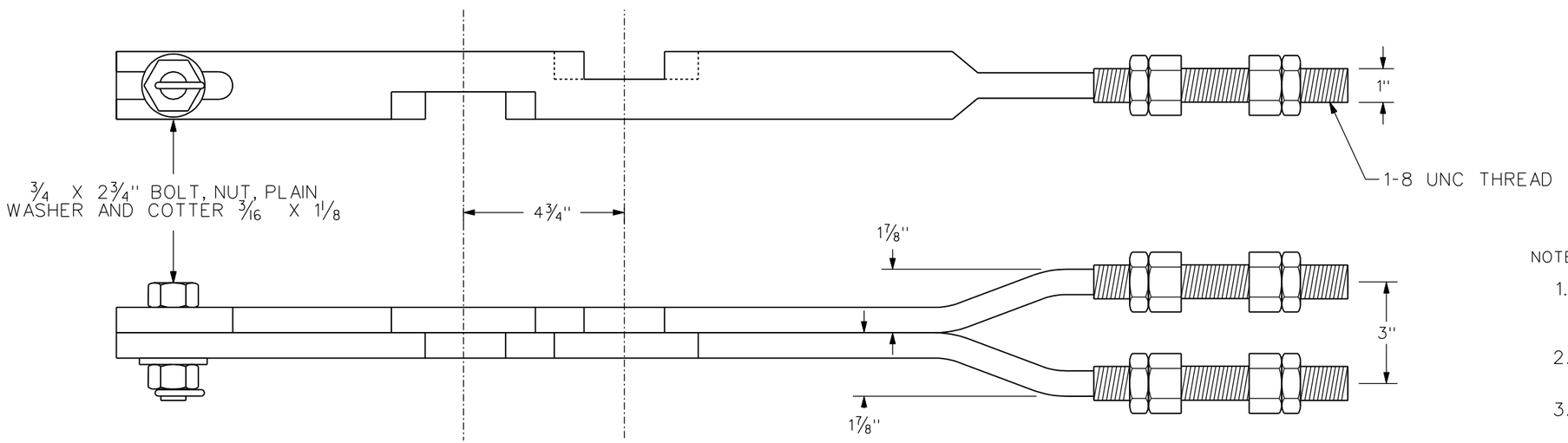

COMPLETE ASSEMBLY

NOTES:

1. WHERE IT DOES NOT CONFLICT WITH THIS STANDARD, INTERNAL LOCK ROD ASSEMBLY SHALL BE IN ACCORDANCE WITH AREMA C&S MANUAL PART 12.2.16.
2. INTERNAL LOCK ROD ASSEMBLY MAY BE USED ON BOTH M23-A AND M23-E POWER SWITCH MACHINES.
3. DOUBLE SLIP SWITCH TURNOUTS REQUIRE CUSTOM INTERNAL LOCK ROD ASSEMBLY.
4. DEVIATION FROM THIS STANDARD SHALL BE APPROVED BY SCRRA MANAGER OF C&S ENGINEERING OR DESIGNATE.

REVISIONS				
REV.	DATE	DESCRIPTION	DES.	ENG.
-	-	-	-	-

FINAL REVIEW BY: C&SDRC DATE: 11/21/08

APPROVED BY

Dan C. Guerrero
MANAGER, COMMUNICATIONS AND SIGNALS ENGINEERING

Darrell V. Maxey
DIRECTOR, ENGINEERING AND CONSTRUCTION

THE SOUTHERN CALIFORNIA REGIONAL RAIL AUTHORITY OR IT'S OFFICERS OR AGENTS SHALL NOT BE RESPONSIBLE FOR THE ACCURACY OR COMPLETENESS OF THIS PLAN SHEET

METROLINK
SOUTHERN CALIFORNIA REGIONAL RAIL AUTHORITY
700 SOUTH FLOWER STREET
LOS ANGELES, CALIFORNIA 90017

ENGINEERING STANDARDS

INTERNAL LOCK ROD ASSEMBLY

STANDARD: 8710
SCALE: NONE
REVISION: –
SHEET: 1 OF 1
CADD FILE: ES8710

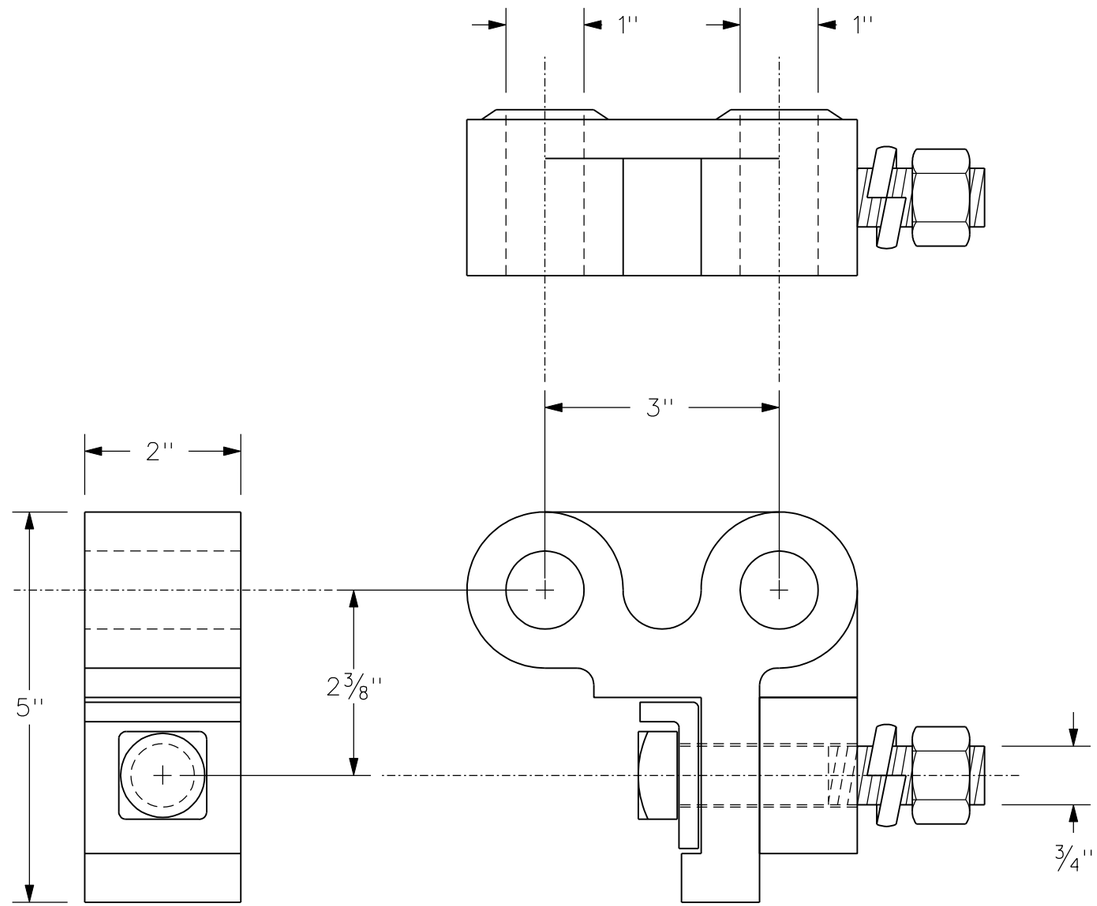

NOTES:

1. LOCK ROD DROP LUG SHALL BE US&S P/N N123471 OR APPROVED EQUAL.
2. WHERE IT DOES NOT CONFLICT WITH THIS STANDARD, LOCK ROD DROP LUG ASSEMBLY (BINOCULAR) SHALL BE IN ACCORDANCE WITH APPLICABLE AREMA C&S MANUAL PARTS.
3. DEVIATION FROM THIS STANDARD SHALL BE APPROVED BY SCRRA MANAGER C&S ENGINEERING OR DESIGNATE.

REVISIONS				
-	-	-	-	-
REV.	DATE	DESCRIPTION	DES.	ENG.

FINAL REVIEW BY: C&SDRC DATE: 11/21/08

APPROVED BY

Dan C. Guerrero
MANAGER, COMMUNICATIONS AND SIGNALS ENGINEERING

Darrell V. Maxey
DIRECTOR, ENGINEERING AND CONSTRUCTION

THE SOUTHERN CALIFORNIA REGIONAL RAIL AUTHORITY OR IT'S OFFICERS OR AGENTS SHALL NOT BE RESPONSIBLE FOR THE ACCURACY OR COMPLETENESS OF THIS PLAN SHEET

METROLINK
SOUTHERN CALIFORNIA REGIONAL RAIL AUTHORITY
700 SOUTH FLOWER STREET
LOS ANGELES, CALIFORNIA 90017

ENGINEERING STANDARDS

LOCK ROD DROP LUG

STANDARD: 8715
SCALE: NONE
REVISION: –
SHEET: 1 OF 1
CADD FILE: ES8715

SCRRA P/N 03-3030150-0

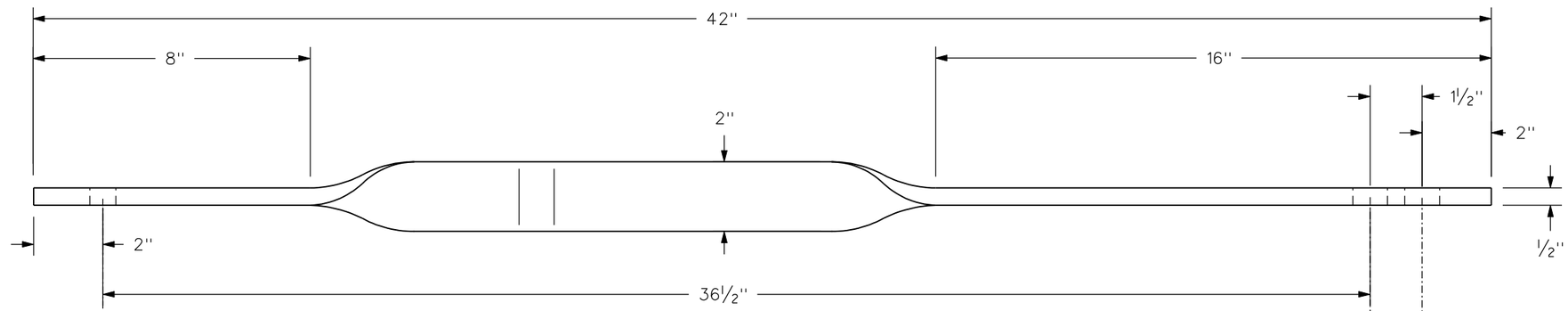

TOP VIEW

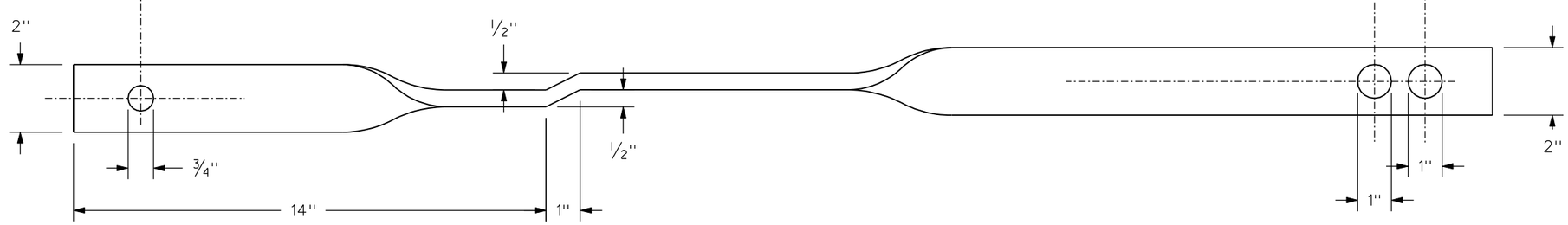

PLAN VIEW

NOTES:

1. LOCK ROD CONNECTING ROD SHALL BE US&S P/N M4515070-901 OR APPROVED EQUAL.
2. WHERE IT DOES NOT CONFLICT WITH THIS STANDARD, LOCK ROD CONNECTING ROD SHALL BE IN ACCORDANCE WITH ALL APPLICABLE AREMA C&S MANUAL PARTS.
3. DEVIATION FROM THIS STANDARD SHALL BE APPROVED BY SCRRA MANAGER OF C&S ENGINEERING OR DESIGNATE.

REVISIONS				
-	-	-	-	-
REV.	DATE	DESCRIPTION	DES.	ENG.

FINAL REVIEW BY: C&SDRC DATE: 11/21/08

APPROVED BY

Dan C. Guerrero
MANAGER, COMMUNICATIONS AND SIGNALS ENGINEERING

Darrell V. Maxey
DIRECTOR, ENGINEERING AND CONSTRUCTION

THE SOUTHERN CALIFORNIA REGIONAL RAIL AUTHORITY OR IT'S OFFICERS OR AGENTS SHALL NOT BE RESPONSIBLE FOR THE ACCURACY OR COMPLETENESS OF THIS PLAN SHEET

METROLINK
SOUTHERN CALIFORNIA REGIONAL RAIL AUTHORITY
700 SOUTH FLOWER STREET
LOS ANGELES, CALIFORNIA 90017

ENGINEERING STANDARDS

LOCK ROD CONNECTING ROD

STANDARD: 8720
SCALE: NONE
REVISION: –
SHEET: 1 OF 1
CADD FILE: ES8720

SCRRA P/N 03-3335200-0

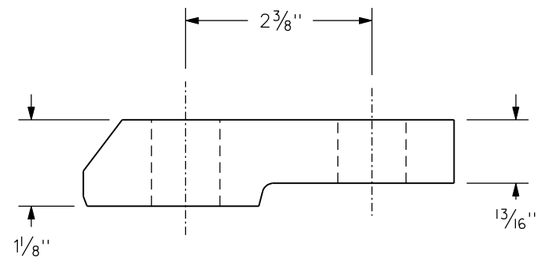

PLAN VIEW

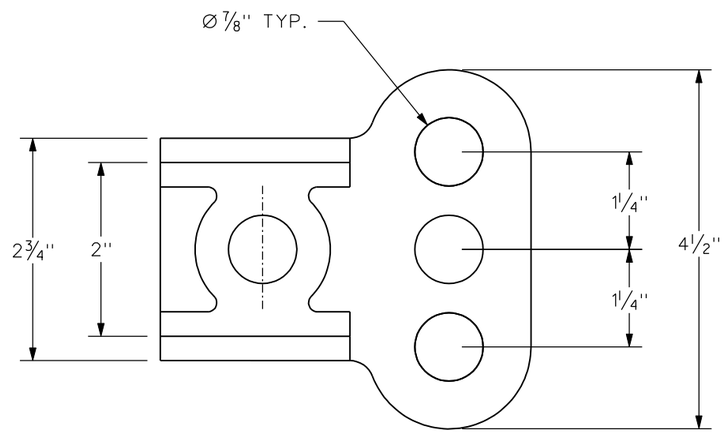

BOTTOM VIEW

NOTES:

1. SWITCH OPERATING LUG SHALL BE US&S P/N M146443 OR APPROVED EQUAL.
2. WHERE IT DOES NOT CONFLICT WITH THIS STANDARD, SWITCH OPERATING LUG (BEAR CLAW) SHALL BE IN ACCORDANCE WITH ALL APPLICABLE AREMA C&S MANUAL PARTS.
3. DEVIATION FROM THIS STANDARD SHALL BE APPROVED BY SCRRA MANAGER C&S ENGINEERING OR DESIGNATE.

REVISIONS				
-	-	-	-	-
REV.	DATE	DESCRIPTION	DES.	ENG.

FINAL REVIEW BY: C&SDRC DATE: 11/21/08

APPROVED BY

Dan C. Guerrero

MANAGER, COMMUNICATIONS AND SIGNALS ENGINEERING

Darrell V. Maxey

DIRECTOR, ENGINEERING AND CONSTRUCTION

THE SOUTHERN CALIFORNIA REGIONAL RAIL AUTHORITY OR IT'S OFFICERS OR AGENTS SHALL NOT BE RESPONSIBLE FOR THE ACCURACY OR COMPLETENESS OF THIS PLAN SHEET

METROLINK

SOUTHERN CALIFORNIA REGIONAL RAIL AUTHORITY
700 SOUTH FLOWER STREET
LOS ANGELES, CALIFORNIA 90017

ENGINEERING STANDARDS

SWITCH OPERATING LUG (BEAR CLAW)

STANDARD: 8725

SCALE: NONE

REVISION: –

SHEET: 1 OF 1

CADD FILE: ES8725

SCRRA P/N 03-3033018-0

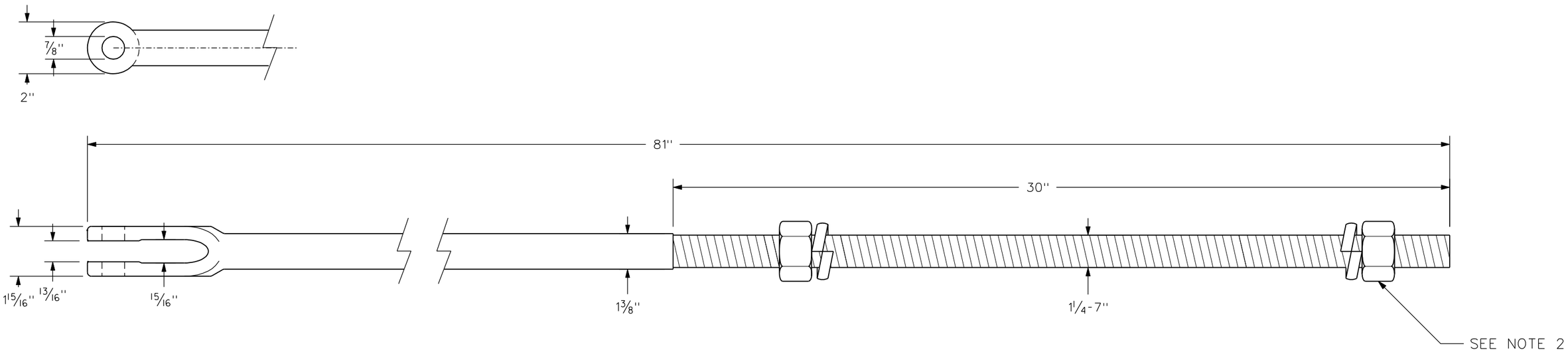

TOP VIEW

NOTES:

1. SWITCH OPERATING ROD SHALL BE US&S P/N N299473-008 OR APPROVED EQUAL.
2. EACH ASSEMBLY SHALL BE FURNISHED WITH 2 EA 1 1/4"-7 HVY HEX NUTS AND 2 EA 1 1/4" X 1/4" SPRING WASHERS.
3. WHERE IT DOES NOT CONFLICT WITH THIS STANDARD, SWITCH OPERATING ROD SHALL BE IN ACCORDANCE WITH ALL APPLICABLE AREMA C&S MANUAL PARTS.
4. DEVIATION FROM THIS STANDARD SHALL BE APPROVED BY SCRRA MANAGER OF C&S ENGINEERING OR DESIGNATE.

REVISIONS				
-	-	-	-	-
REV.	DATE	DESCRIPTION	DES.	ENG.

FINAL REVIEW BY: C&SDRC DATE: 11/21/08

APPROVED BY

Dan C. Guerrero

MANAGER, COMMUNICATIONS AND SIGNALS ENGINEERING

Darrell V. Maxey

DIRECTOR, ENGINEERING AND CONSTRUCTION

THE SOUTHERN CALIFORNIA REGIONAL RAIL AUTHORITY OR IT'S OFFICERS OR AGENTS SHALL NOT BE RESPONSIBLE FOR THE ACCURACY OR COMPLETENESS OF THIS PLAN SHEET

METROLINK

SOUTHERN CALIFORNIA REGIONAL RAIL AUTHORITY
700 SOUTH FLOWER STREET
LOS ANGELES, CALIFORNIA 90017

ENGINEERING STANDARDS

SWITCH OPERATING ROD FOR DUAL CONTROL SWITCH APPLICATIONS

STANDARD: 8730

SCALE: NONE

REVISION: – SHEET: 1 OF 1

CADD FILE: ES8730

SCRRA P/N 03-2861011-0

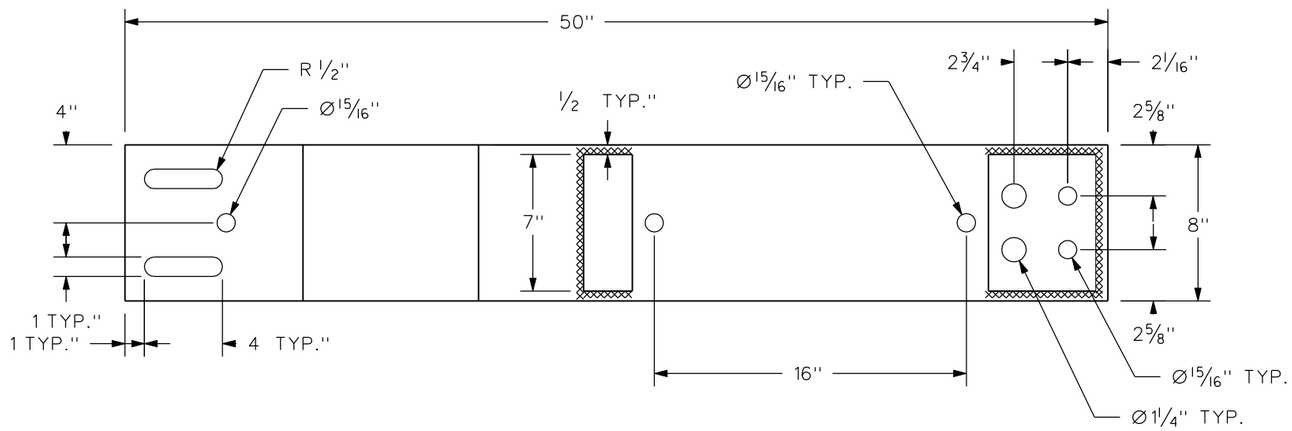

TOP VIEW

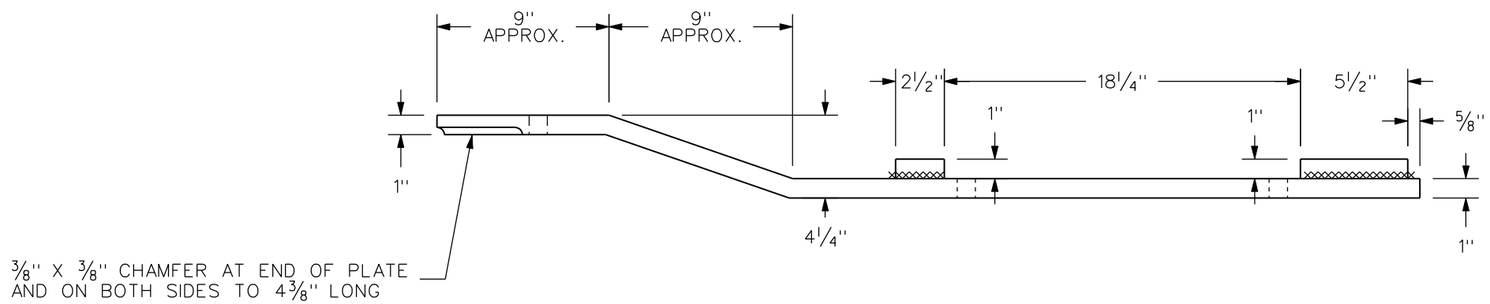

PLAN VIEW

NOTES:

1. MATERIAL SHALL BE MILLED ROLLED STEEL IN ACCORDANCE WITH AREMA C&S MANUAL PART 15.
2. REFER TO SCRRA ES5600-15 FOR DETAILED SPECIFICATION INFORMATION.
3. DEVIATION FROM THIS STANDARD SHALL BE APPROVED BY SCRRA MANAGER OF C&S ENGINEERING OR DESIGNATE.

REVISIONS				
-	-	-	-	-
REV.	DATE	DESCRIPTION	DES.	ENG.

FINAL REVIEW BY: C&SDRC DATE: 11/21/08

APPROVED BY

Dan C. Guerrero

MANAGER, COMMUNICATIONS AND SIGNALS ENGINEERING

Darrell V. Maxey

DIRECTOR, ENGINEERING AND CONSTRUCTION

THE SOUTHERN CALIFORNIA REGIONAL RAIL AUTHORITY OR IT'S OFFICERS OR AGENTS SHALL NOT BE RESPONSIBLE FOR THE ACCURACY OR COMPLETENESS OF THIS PLAN SHEET

METROLINK

SOUTHERN CALIFORNIA REGIONAL RAIL AUTHORITY
700 SOUTH FLOWER STREET
LOS ANGELES, CALIFORNIA 90017

ENGINEERING STANDARDS

UNIVERSAL EXTENSION PLATE
FOR 14'-0" DAPPED HEADBLOCK TIE

STANDARD: 8735

SCALE: NONE

REVISION: –

SHEET: 1 OF 1

CADD FILE: ES8735

SCRRA P/N 03-3401000-0
FOR 14'-0" LONG DAPPED HEADBLOCK TIE

SCRRA P/N 03-3401001-0
FOR 16'-0" LONG DAPPED HEADBLOCK TIE

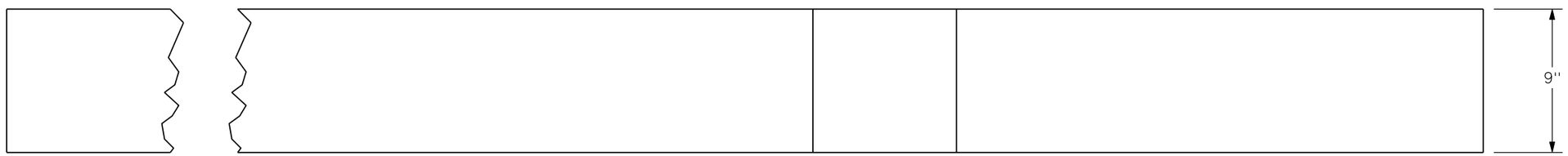

TOP VIEW

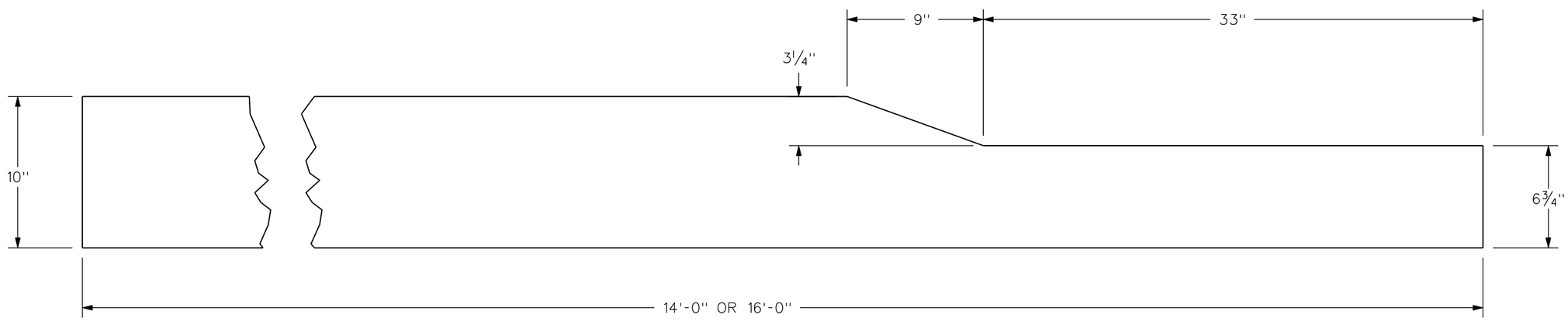

PLAN VIEW

NOTES:

1. TIES SHALL BE MADE OF DOUGLAS FIR OR GUM AND TREATED AFTER FRAMING.
2. DEVIATION FROM THIS STANDARD SHALL BE APPROVED BY SCRRA MANAGER OF C&S ENGINEERING OR DESIGNATE.

REVISIONS				
-	-	-	-	-
REV.	DATE	DESCRIPTION	DES.	ENG.

FINAL REVIEW BY: C&SDRC DATE: 11/21/08

APPROVED BY

Dan C. Guerrero
MANAGER, COMMUNICATIONS AND SIGNALS ENGINEERING

Darrell V. Maxey
DIRECTOR, ENGINEERING AND CONSTRUCTION

THE SOUTHERN CALIFORNIA REGIONAL RAIL AUTHORITY OR IT'S OFFICERS OR AGENTS SHALL NOT BE RESPONSIBLE FOR THE ACCURACY OR COMPLETENESS OF THIS PLAN SHEET

METROLINK
SOUTHERN CALIFORNIA REGIONAL RAIL AUTHORITY
700 SOUTH FLOWER STREET
LOS ANGELES, CALIFORNIA 90017

ENGINEERING STANDARDS

14'-0" OR 16'-0" DAPPED HEADBLOCK TIE

STANDARD: 8740
SCALE: NONE
REVISION: –
SHEET: 1 OF 1
CADD FILE: ES8740

SCRRA P/N 03-2223206-0 TIE STRAP - 23" WITH ANGLED OFFSET
SCRRA P/N 03-2223207-0 TIE STRAP - 24" WITH VERTICAL OFFSET
SCRRA P/N 03-2223208-0 TIE STRAP - 26"
SCRRA P/N 03-2223209-0 TIE STRAP - 65"

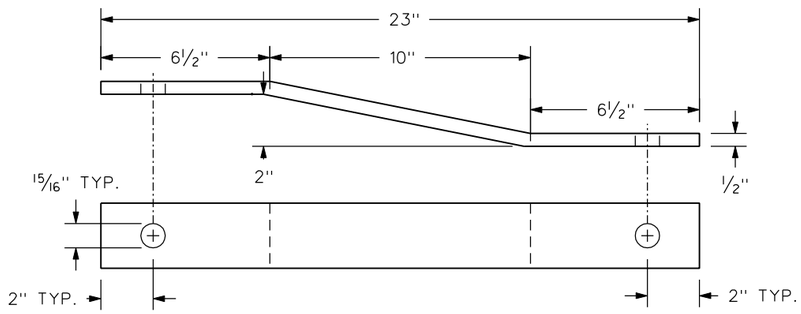

TIE STRAP - 23" WITH ANGLED OFFSET

SCRRA P/N 27-Z065-M-3206

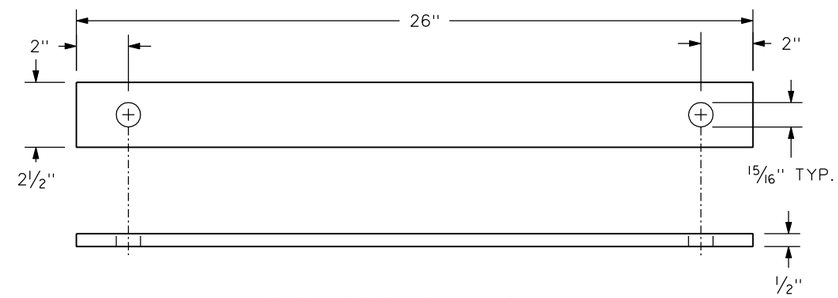

TIE STRAP - 26"

SCRRA P/N 27-Z065-M-3208

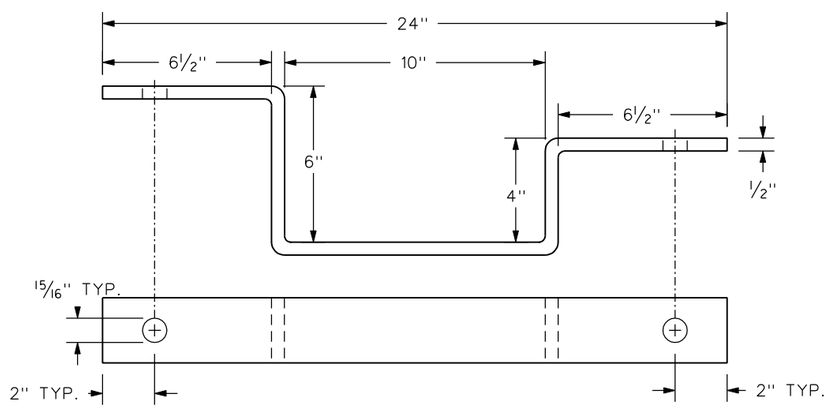

TIE STRAP - 24" WITH VERTICAL OFFSET

SCRRA P/N 27-Z065-M-3207

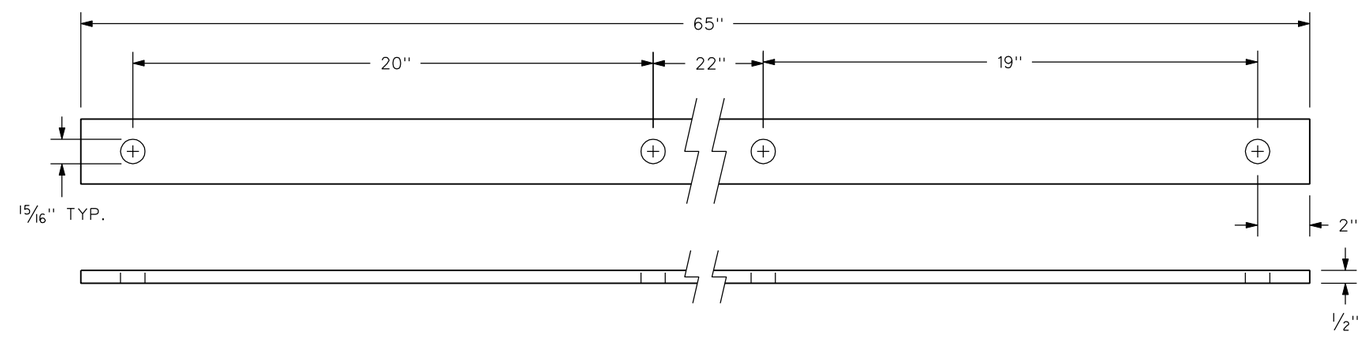

TIE STRAP - 65"

SCRRA P/N 27-Z065-M-3209

NOTES:

1. MATERIAL SHALL BE MILLED ROLLED STEEL IN ACCORDANCE WITH AREMA C&S MANUAL PART 15.
2. DEVIATION FROM THIS STANDARD SHALL BE APPROVED BY SCRRA MANAGER OF C&S ENGINEERING OR DESIGNATE.

REVISIONS				
-	-	-	-	-
REV.	DATE	DESCRIPTION	DES.	ENG.

FINAL REVIEW BY: C&SDRC DATE: 11/21/08

APPROVED BY

Dan C. Guerrero

MANAGER, COMMUNICATIONS AND SIGNALS ENGINEERING

Darrell V. Maxey

DIRECTOR, ENGINEERING AND CONSTRUCTION

THE SOUTHERN CALIFORNIA REGIONAL RAIL AUTHORITY OR IT'S OFFICERS OR AGENTS SHALL NOT BE RESPONSIBLE FOR THE ACCURACY OR COMPLETENESS OF THIS PLAN SHEET

METROLINK

SOUTHERN CALIFORNIA REGIONAL RAIL AUTHORITY
700 SOUTH FLOWER STREET
LOS ANGELES, CALIFORNIA 90017

ENGINEERING STANDARDS

VARIOUS TIE STRAPS FOR DUAL CONTROL SWITCH LAYOUT APPLICATIONS

STANDARD: 8750

SCALE: NONE

REVISION: – SHEET: 1 OF 1

CADD FILE: ES8750

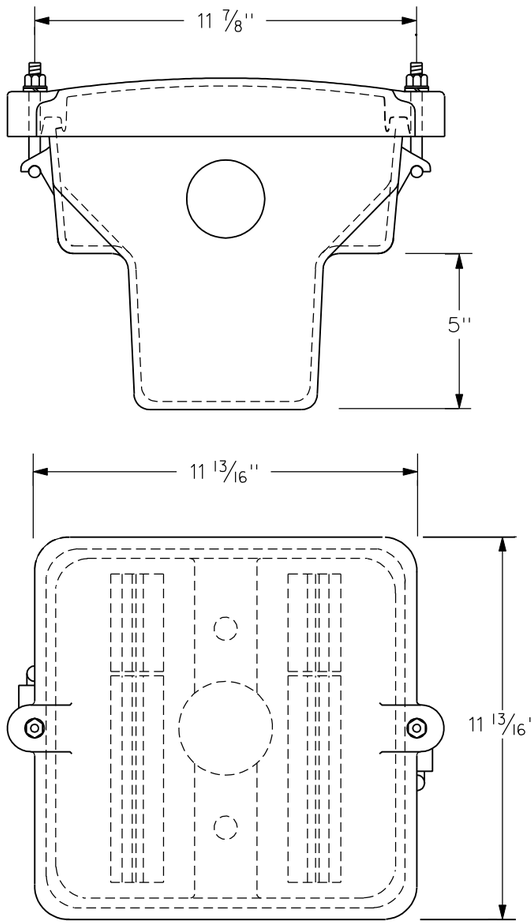

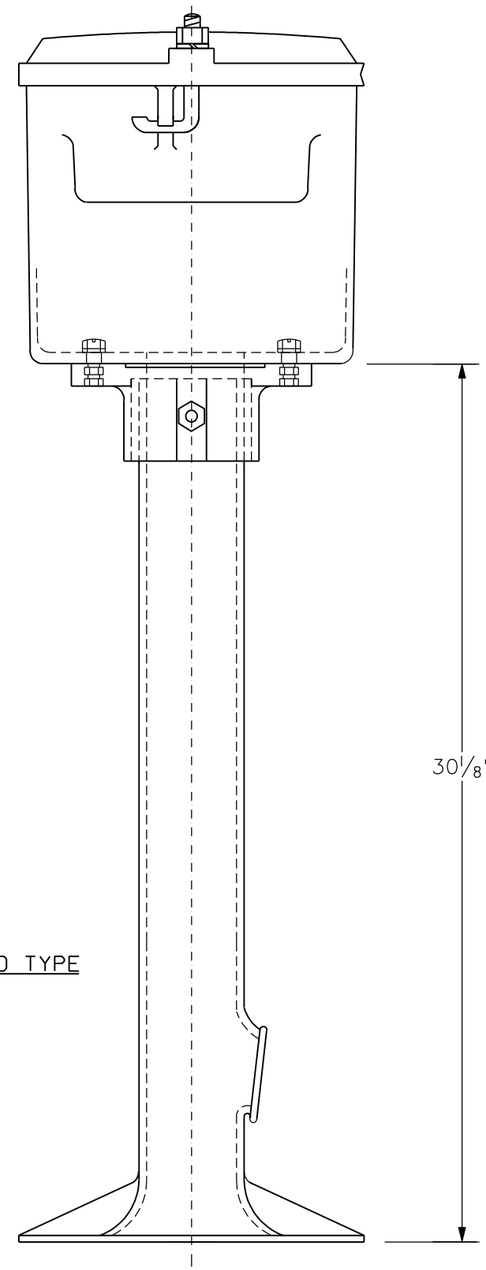

STANDARD TYPE

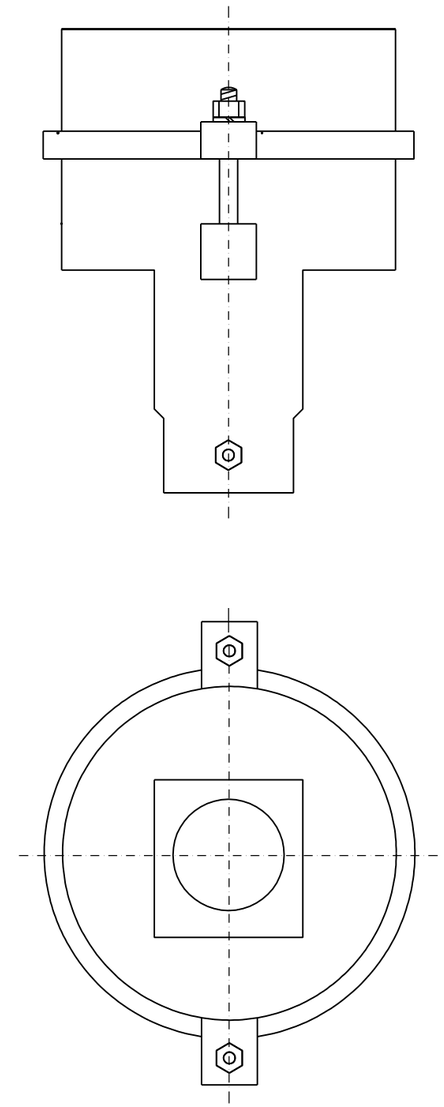

ALTERNATE TYPE

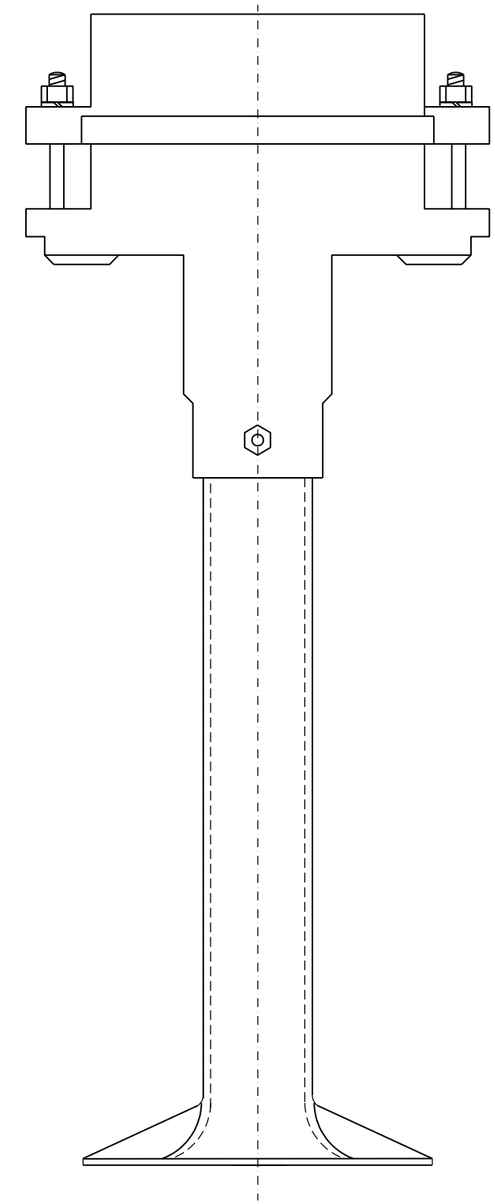

NOTES:

1. STANDARD JUNCTION BOX TO CONTAIN A MINIMUM OF 36 AAR TERMINALS.
2. ALTERNATE JUNCTION BOX TO CONTAIN A MINIMUM OF 12 AREMA C&S MANUAL PART 14.1.5 TERMINAL - TO BE USED ON NEW INSTALLATIONS ONLY WITH APPROVAL OF THE ENGINEER.
3. ONLY ONE SOLID WIRE PER TERMINAL INCLUDING SPARES.
4. HMAC INSTALLATION - PEDESTAL MODIFICATION. TOP OF BOX LID LEVEL WITH TOP OF TIE.
5. GALVANIZED RIGID STEEL (GRS) MAY BE USED IN LIEU OF PEDESTAL AS PART OF A CONDUIT AND PULL BOX INSTALLATION.
6. DEVIATION FROM THIS STANDARD SHALL BE APPROVED BY SCRRA MANAGER OF C&S ENGINEERING OR DESIGNATE.

REVISIONS				
-	-	-	-	-
REV.	DATE	DESCRIPTION	DES.	ENG.

FINAL REVIEW BY: C&SDRC DATE: 11/21/08

APPROVED BY

Dan C. Guerrero
MANAGER, COMMUNICATIONS AND SIGNALS ENGINEERING

Darrell V. Maxey
DIRECTOR, ENGINEERING AND CONSTRUCTION

THE SOUTHERN CALIFORNIA REGIONAL RAIL AUTHORITY OR IT'S OFFICERS OR AGENTS SHALL NOT BE RESPONSIBLE FOR THE ACCURACY OR COMPLETENESS OF THIS PLAN SHEET

METROLINK
SOUTHERN CALIFORNIA REGIONAL RAIL AUTHORITY
700 SOUTH FLOWER STREET
LOS ANGELES, CALIFORNIA 90017

ENGINEERING STANDARDS

TYPICAL PEDESTAL JUNCTION BOX

STANDARD: 8755
SCALE: NONE
REVISION: –
SHEET: 1 OF 1
CADD FILE: ES8755

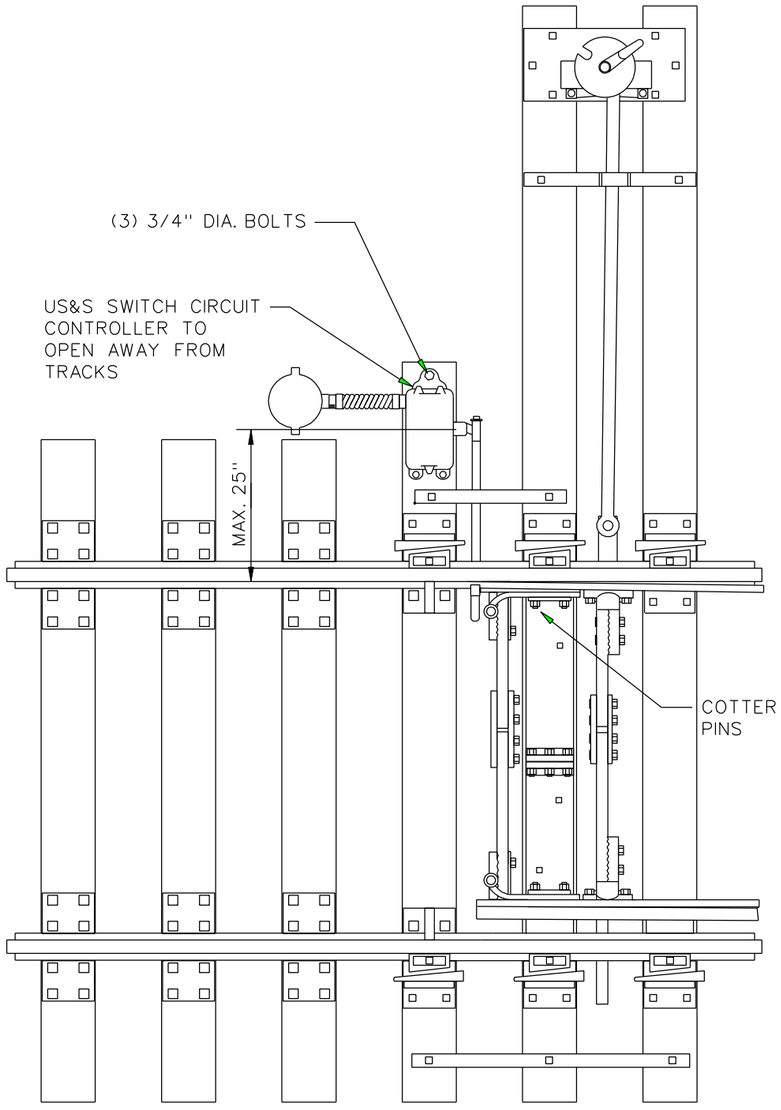

NEAR POINT NORMALLY CLOSED

NOTES:

1. TOP OF JUNCTION BOX LID TO BE LEVEL WITH TOP OF TIE.
2. SWITCH CIRCUIT CONTROLLER TO BE EQUIPPED WITH RETURN INTERNAL OR EXTERNAL SPRING.
3. U-5 BOX TO BE MOUNTED ON A 10' TIE & TO OPEN AWAY FROM TRACK.
4. THE CENTER LINE OF THE CRANK SHAFT IS A MAXIMUM 25" FROM THE GAGE OF THE RAIL.
5. FLEX CONDUIT BETWEEN JUNCTION BOX AND SWITCH CIRCUIT CONTROLLER TO BE 18" TO 24" AND CONTAIN A STEEL CORE.
6. FLEX CONDUIT TO BE ROUTED SO IT DOES NOT INTERFERE WITH ROD MOVEMENT.
7. SEE TRACK STANDARDS FOR PROPER TIE LENGTH & SPACING.
8. LAYOUT BASED ON USE OF HIGH SWITCH STAND. CONTRACTOR TO MAKE ADJUSTMENTS BASED ON SWITCH STAND USED.
9. WITH THE OPERATING CRANK POINTING VERTICALLY DOWNWARD AND THE SWITCH POINTS IN MID-POSITION. MARK THE LOCATION OF THE CONTROLLER BOX MOUNTING HOLES AND RAIL.
10. PLACE 3/4" DIA. BOLTS THROUGH TIE. HEAD OF BOLT WILL BE SECURED WITH BRIDGE WASHER AT BOTTOM OF TIE.
11. INSTALL OPERATING ROD ON POINT LUG AND OPERATING CRANK WITH THE SWITCH POINTS IN MID-POSITION.
12. CENTER SCREW JAW ON THREADED PORTION OF POINT DETECTOR ROD.
13. ALLOW AMPLE CLEARANCE BETWEEN THE SIDE OF THE HEAD BLOCK TIE AND THE 3/4" OR 13/32" BALL STUD TO INSURE FREE MOVEMENT.

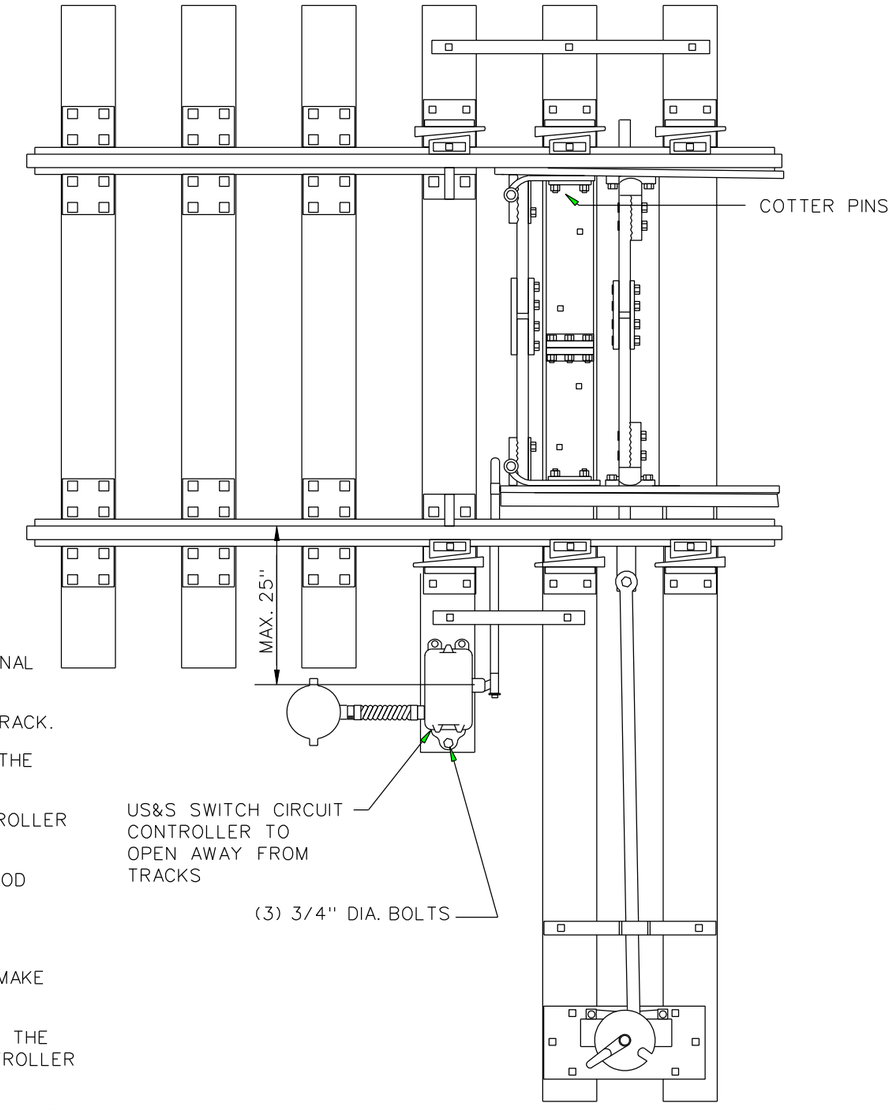

FAR POINT NORMALLY CLOSED

REVISIONS				
-	-	-	-	-
REV.	DATE	DESCRIPTION	DES.	ENG.

FINAL REVIEW BY: C&SDRC DATE: 11/21/08

APPROVED BY

Dan C. Guerrero
MANAGER, COMMUNICATIONS AND SIGNALS ENGINEERING

Darrell V. Maxey
DIRECTOR, ENGINEERING AND CONSTRUCTION

THE SOUTHERN CALIFORNIA REGIONAL RAIL AUTHORITY OR IT'S OFFICERS OR AGENTS SHALL NOT BE RESPONSIBLE FOR THE ACCURACY OR COMPLETENESS OF THIS PLAN SHEET

METROLINK
SOUTHERN CALIFORNIA REGIONAL RAIL AUTHORITY
700 SOUTH FLOWER STREET
LOS ANGELES, CALIFORNIA 90017

ENGINEERING STANDARDS

CIRCUIT CONTROLLER PLACEMENT AT HAND THROW SWITCHES

STANDARD: 8760
SCALE: NONE
REVISION: –
SHEET: 1 OF 1
CADD FILE: ES8760

50/51 SWITCH STAND

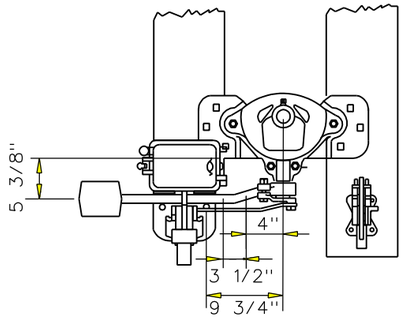

FIGURE A - LAYOUT OF LOCK ON SWITCH STAND

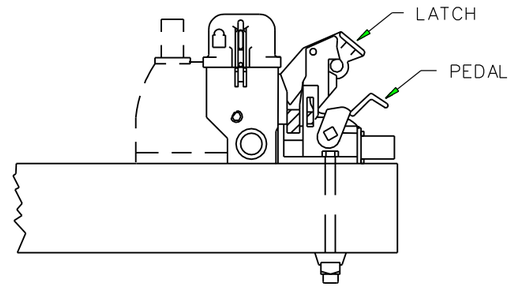

FIGURE B - INSTALLATION OF LOCK ON SWITCH STAND

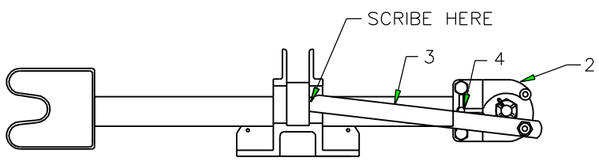

FIGURE C - LATCH ROD ARRANGEMENT

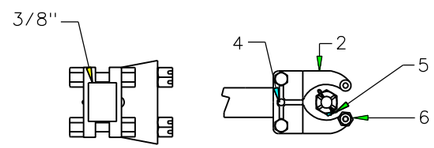

FIGURE D - PIN THROUGH CLAMP & LEVER

NOTES:

1. BOLT CLAMP 2 TO SWITCH LEVER, FIGURES A AND D.
2. USING A 3/8" DRILL, DRILL THROUGH CLAMP AND LEVER AND INSTALL RIVET 4, FIGURE D.
3. NO TIE DAPPING, FIGURE B.
4. INSTALL CABLE ENTRANCE ADAPTERS AND VENTILATORS BEFORE BOLTING LOCK IN PLACE. SECURE LOCK ON TIE WITH RODS, GRIP WASHER, NUTS, AND LOCK WASHERS.
5. TO ASSEMBLE LATCH ROD FIGURE C-3, PLACE SWITCH LEVER IN LOCKED-UP POSITION, FIGURE A. PRESS PEDAL DOWN AND INSERT LATCH ROD THROUGH RECTANGULAR HOLE IN LOCK STAND. INSERT STUD 6 FIGURE D, THROUGH PIVOT HOLE IN LATCH ROD AND TEMPORARILY SECURE IT TO CLAMP. DEPRESS LATCH AS FAR AS IT WILL GO AND HOLD IT IN POSITION. SCRIBE ACROSS FACE OF LATCH ROD NEXT TO PEDAL CASTING FIGURE C. REMOVE STUD AND LATCH ROD. CUT OFF LATCH ROD 1/32" SHORT OF SCRIBE MARK.
6. FOR ADJUSTABLE LATCH ROD FOLLOW PREVIOUS PROCEDURE, EXCEPT ADJUST LATCH ROD IN 1/8" INCREMENTS INSTEAD OF CUTTING.
7. IN FINAL ASSEMBLY. TIGHTEN STUD 6 FIGURE D, WITH A WRENCH TO SECURE LATCH ROD TO CLAMP. DRILL THROUGH CLAMP AND STUD WITH A 1/8" DRILL. INSERT PIN 5, FIGURE D.

MERIDIAN (RACOR) SWITCH STAND

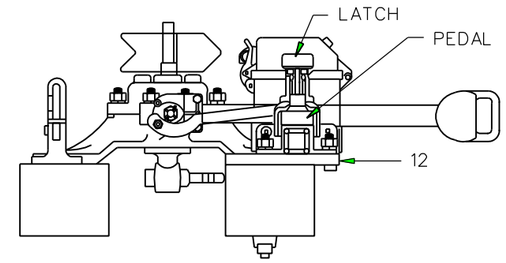

FIGURE A - INSTALLATION OF LOCK ON SWITCH STAND

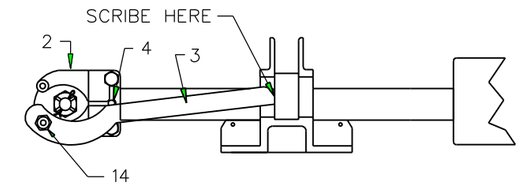

FIGURE B - LATCH ROD ARRANGEMENT

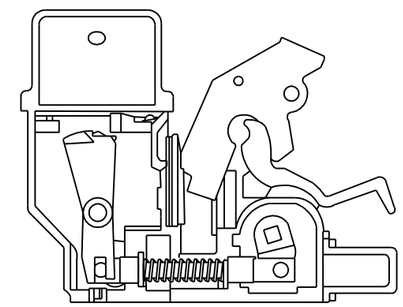

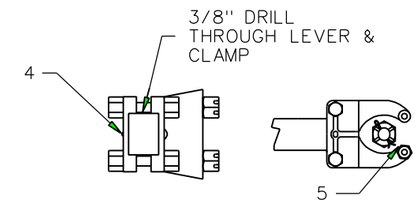

FIGURE C - PIN THROUGH CLAMP & LEVER

NOTES:

1. BOLT CLAMP 2 FIGURE B, TO SWITCH LEVER FIGURE C.
2. USING A 3/8" DRILL, DRILL THROUGH CLAMP AND LEVER AND INSTALL RIVET 4 FIGURE C.
3. INSTALL CABLE ENTRANCE ADAPTERS AND VENTILATORS BEFORE BOLTING LOCK IN PLACE. SECURE LOCK ON TIE AND SUPPORTING PLATE 12 WITH THREADED ROD, BOLT, NUTS, AND WASHERS FIGURE A.
4. TO ASSEMBLE LATCH ROD FIGURE B-3, PLACE SWITCH LEVER IN LOCKED-UP POSITION, FIGURE B. PRESS PEDAL DOWN AND INSERT LATCH ROD THROUGH RECTANGULAR HOLE IN LOCK STAND. INSERT STUD BOLT 14 THROUGH PIVOT HOLE IN LATCH ROD AND TEMPORARILY SECURE IT TO CLAMP. DEPRESS LATCH AS FAR AS IT WILL GO AND HOLD IT IN THIS POSITION. SCRIBE ACROSS FACE OF LATCH ROD NEXT TO PEDAL CASTING. REMOVE STUD AND LATCH ROD. CUT OFF LATCH ROD 1/32" SHORT OF SCRIBE MARK.
5. IN FINAL ASSEMBLY, TIGHTEN STUD FIGURE B-14 WITH A WRENCH TO SECURE LATCH ROD TO CLAMP. DRILL THROUGH CLAMP AND STUD WITH A 1/8" DRILL. INSERT PIN 5. FIGURE C.

REVISIONS				
REV.	DATE	DESCRIPTION	DES.	ENG.
-	-	-	-	-

FINAL REVIEW BY: C&SDRC DATE: 11/21/08

APPROVED BY

Dan C. Guerrero
MANAGER, COMMUNICATIONS AND SIGNALS ENGINEERING

Darrell V. Maxey
DIRECTOR, ENGINEERING AND CONSTRUCTION

THE SOUTHERN CALIFORNIA REGIONAL RAIL AUTHORITY OR IT'S OFFICERS OR AGENTS SHALL NOT BE RESPONSIBLE FOR THE ACCURACY OR COMPLETENESS OF THIS PLAN SHEET

METROLINK
SOUTHERN CALIFORNIA REGIONAL RAIL AUTHORITY
700 SOUTH FLOWER STREET
LOS ANGELES, CALIFORNIA 90017

ENGINEERING STANDARDS

ELECTRIC SWITCH LOCK
MODEL 10A

STANDARD: 8765
SCALE: NONE
REVISION: –
SHEET: 1 OF 1
CADD FILE: ES8765

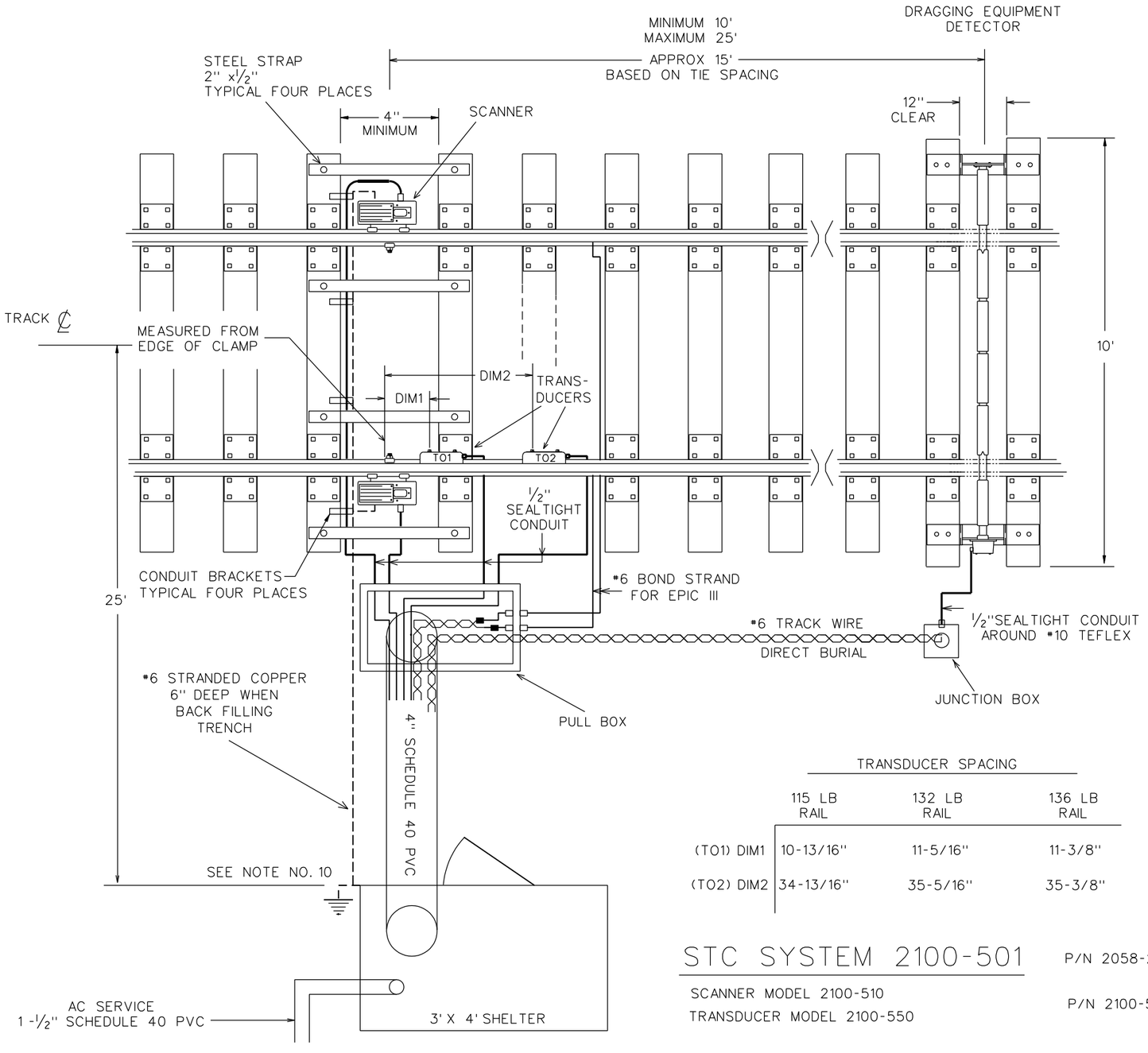

TRANSDUCER SPACING

	115 LB RAIL	132 LB RAIL	136 LB RAIL
(TO1) DIM1	10-13/16"	11-5/16"	11-3/8"
(TO2) DIM2	34-13/16"	35-5/16"	35-3/8"

STC SYSTEM 2100-501

SCANNER MODEL 2100-510

TRANSDUCER MODEL 2100-550

P/N 2058-260 SCANNER CABLE 65 FT LONG TERMINATED ONE END INTO PLUG

P/N 2100-550 SINGLE ELEMENT TRANSDUCER WITH 100 FT CABLE

NOTES:

1. DETECTOR SHOULD BE LOCATED ON TANGENT TRACK IN AN AREA THAT DOES NOT NORMALLY REQUIRE HEAVY BRAKING BY TRAINS TO BE SCANNED. WHILE THIS IS NOT ABSOLUTELY ESSENTIAL FOR OPERATION OF THE SYSTEM, IT WILL RESULT IN BETTER OPERATION.
2. LOCATE THE DETECTOR AT LEAST TWO HUNDRED (200) FEET FROM THE NEAREST ROAD CROSSING. THIS WILL ALLOW THE RAIL CARS TIME ENOUGH TO SETTLE DOWN IN CASE TRACK THROUGH THE CROSSING IS ROUGH.
3. DO NOT LOCATE THE INSTALLATION ADJACENT TO RAIL JOINTS.
4. DIRECTION OF SCAN SHOULD BE DETERMINED PRIOR TO FINAL LOCATION LAYOUT. THIS STANDARD REPRESENTS A DIRECTION OF SCAN FROM LEFT TO RIGHT. IF TRACK RUNS FROM NORTH TO SOUTH, SCANNERS SHOULD BE POINTED TOWARD THE NORTH. IF TRACK RUNS FROM EAST TO WEST, SCANNERS SHOULD BE POINTED TOWARD THE EAST.
5. INSPECT THE TIES AND TIE PLATES IN THE AREA WHERE THE SCANNERS WILL BE INSTALLED. TIES SHOULD BE IN GOOD CONDITION, WELL TAMPED AND MUST BE SPACED FOURTEEN (14) INCHES CLEAR MINIMUM BETWEEN TIES WHERE THE SCANNERS ARE MOUNTED. 1:40 CANTED TIE PLATES SHOULD BE USED SINCE THE RAIL MOUNTS SUPPLIED ARE PROVIDED WITH 1:40 COMPENSATING SPACER BLOCKS. IN THE EVENT THE TIE PLATES ARE NOT 1:40 CANTED, EITHER ORDER STANDARD SPACER BLOCKS OR INSTALL SHIM WASHERS TO CANCEL OUT THE 1:40 CANT COMPENSATION.
6. IT IS IMPORTANT THAT THE SCANNERS BE SQUARED WITH EACH OTHER AND DIRECTLY OPPOSITE EACH OTHER.
7. FOR INSTALLATION OF TRANSDUCERS, USE MANUFACTURER'S SUPPLIED DRILLING TEMPLATE.
8. TO MAINTAIN A TIGHT GAUGE OF 56 1/8 INCHES, RAIL ANCHORS ARE TO BE APPLIED ON BOTH SIDES OF ALL TIES FOR ONE HUNDRED (100) FEET IN EITHER DIRECTION FROM THE SCANNER.
9. SEE CS8280 STANDARD FOR GROUNDING INSTRUCTIONS.
10. SIGNAL DEPARTMENT PULL BOX MEASURES 24"W X 36"L X 18"D. TOP OF BOX TO BE LEVEL WITH BALLAST.
11. TIES FOR DRAGGING EQUIPMENT DETECTOR SHALL BE 10 FEET LONG AND SET IN SUCH A WAY AS TO PROTECT BOTH ENDS OF THE DETECTOR.

REVISIONS				
REV.	DATE	DESCRIPTION	DES.	ENG.
-	-	-	-	-

FINAL REVIEW BY: C&SDRC DATE: 11/21/08

APPROVED BY

Dan C. Guerrero
MANAGER, COMMUNICATIONS AND SIGNALS ENGINEERING

Darrell V. Maxey
DIRECTOR, ENGINEERING AND CONSTRUCTION

THE SOUTHERN CALIFORNIA REGIONAL RAIL AUTHORITY OR IT'S OFFICERS OR AGENTS SHALL NOT BE RESPONSIBLE FOR THE ACCURACY OR COMPLETENESS OF THIS PLAN SHEET

METROLINK
SOUTHERN CALIFORNIA REGIONAL RAIL AUTHORITY
700 SOUTH FLOWER STREET
LOS ANGELES, CALIFORNIA 90017

ENGINEERING STANDARDS

HOT BEARING DETECTOR LAYOUT

STANDARD 8800
SCALE: NONE
REVISION –
SHEET 1 OF 1
CADD FILE: ES8800

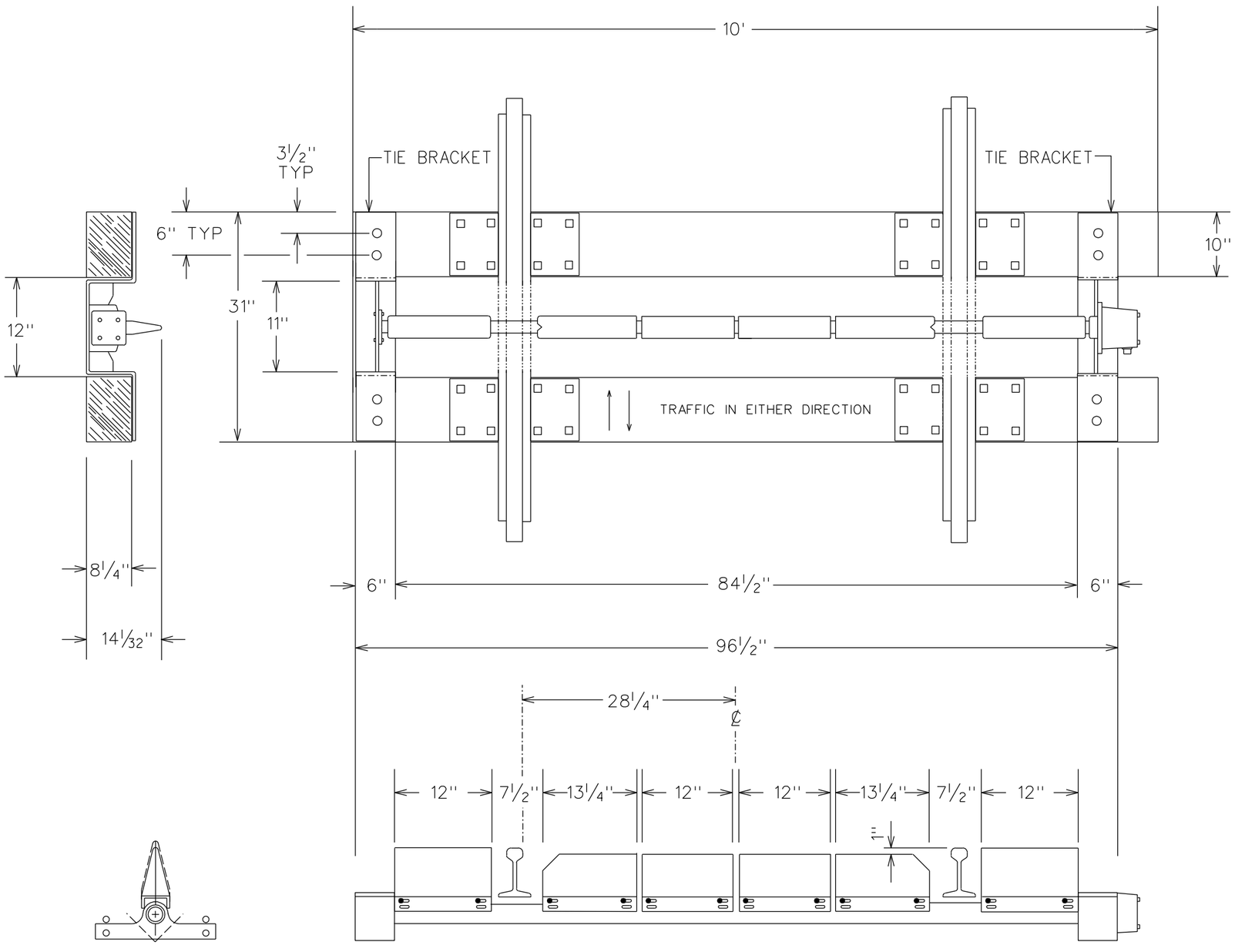

NOTES:

1. THE DRAGGING EQUIPMENT DETECTOR SHOULD BE MOUNTED ON 10 FOOT LONG WOOD TIES. THE TIES SHOULD BE LEVEL WITH EACH OTHER AND SPACED 12 INCHES FROM INSIDE EDGE TO INSIDE EDGE.

2. THE TIE BRACKETS SHOULD BE (MOUNTED AT 90 DEGREE ANGLES ACROSS THE TIE) PERPENDICULAR TO THE SIDES OF THE TIE BEFORE BEING BOLTED IN PLACE.

3. THE DETECTOR SHOULD BE MOUNTED ON THE TIE BRACKETS SO THAT THE FINISHED INSTALLATION IS ONE INCH BELOW TOP OF RAIL AND CENTERED BETWEEN THE RAILS.

4. MEASURE FOR PROPER ALIGNMENT ACROSS THE RAILS Ⓐ. ALIGNMENT ACROSS THE RAILS CAN BE DETERMINED BY MEASURING FROM THE CENTERLINE Ⓑ TO THE OUTSIDE EDGE OF THE PIVOT BEARING ENDS AND CENTER BEARING END OF THE EQUIPMENT.

- MAKE ALIGNMENT ADJUSTMENTS BEFORE DRILLING HOLES IN THE TIES.

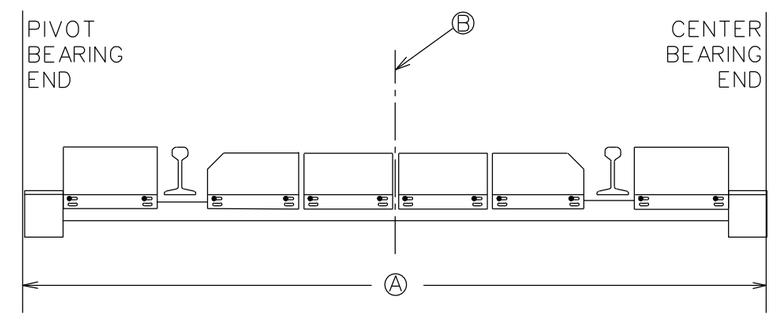

REVISIONS				
-	-	-	-	-
REV.	DATE	DESCRIPTION	DES.	ENG.

FINAL REVIEW BY: C&SDRC DATE: 11/21/08

APPROVED BY

Dan C. Guerrero
MANAGER, COMMUNICATIONS AND SIGNALS ENGINEERING

Darrell V. Maxey
DIRECTOR, ENGINEERING AND CONSTRUCTION

THE SOUTHERN CALIFORNIA REGIONAL RAIL AUTHORITY OR IT'S OFFICERS OR AGENTS SHALL NOT BE RESPONSIBLE FOR THE ACCURACY OR COMPLETENESS OF THIS PLAN SHEET

METROLINK
SOUTHERN CALIFORNIA REGIONAL RAIL AUTHORITY
700 SOUTH FLOWER STREET
LOS ANGELES, CALIFORNIA 90017

ENGINEERING STANDARDS

DRAGGING EQUIPMENT DETECTOR LAYOUT

STANDARD: 8810
SCALE: NONE
REVISION: –
SHEET: 1 OF 1
CADD FILE: ES8810

CIRCUITS IN
INSTRUMENT CASE

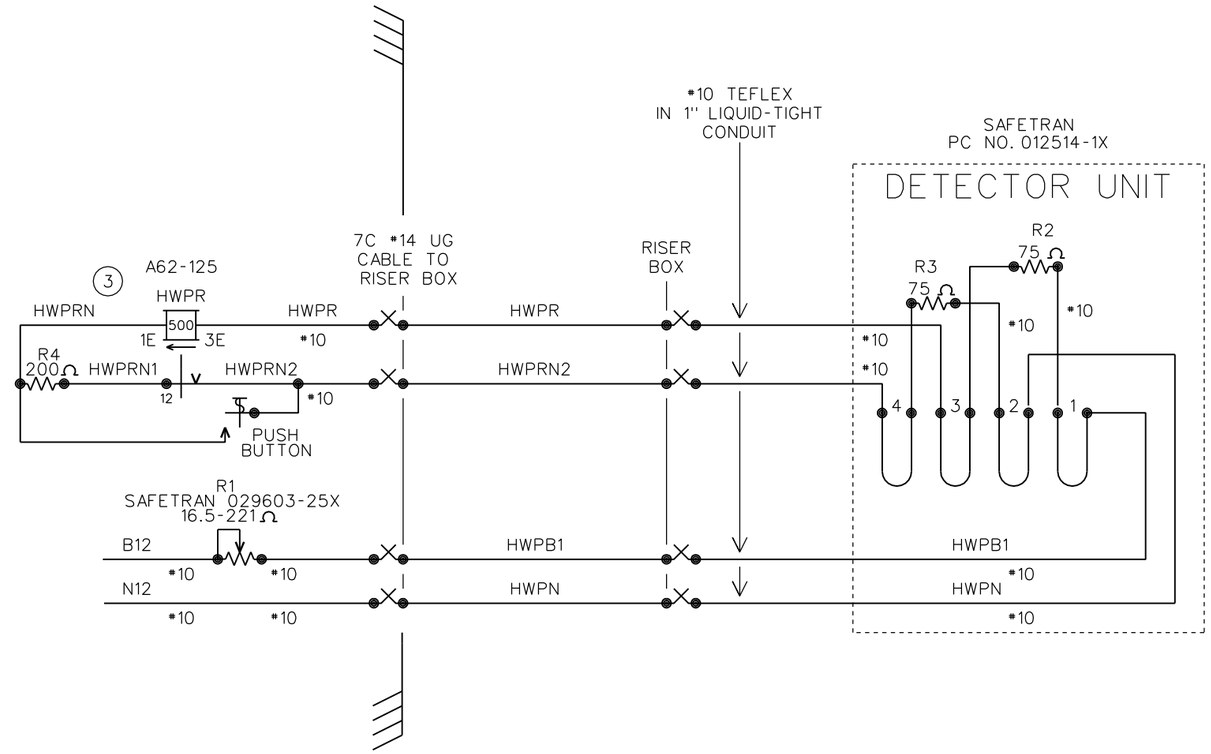

NOTE:

RESISTORS R1, R2, R3 & R4 ARE SHIPPED FROM SAFETRAN WITH THE HARDWARE PACKAGE

REVISIONS				
-	-	-	-	-
REV.	DATE	DESCRIPTION	DES.	ENG.

FINAL REVIEW BY: C&SDRC DATE: 11/21/08

APPROVED BY

Dan C. Guerrero

MANAGER, COMMUNICATIONS AND SIGNALS ENGINEERING

Darrell V. Maxey

DIRECTOR, ENGINEERING AND CONSTRUCTION

THE SOUTHERN CALIFORNIA REGIONAL RAIL AUTHORITY OR IT'S OFFICERS OR AGENTS SHALL NOT BE RESPONSIBLE FOR THE ACCURACY OR COMPLETENESS OF THIS PLAN SHEET

METROLINK

SOUTHERN CALIFORNIA REGIONAL RAIL AUTHORITY
700 SOUTH FLOWER STREET
LOS ANGELES, CALIFORNIA 90017

ENGINEERING STANDARDS

HIGH WATER DETECTOR LAYOUT
LINE CONNECTION

STANDARD: 8820
SCALE: NONE
REVISION: –
SHEET: 1 OF 1
CADD FILE: ES8820

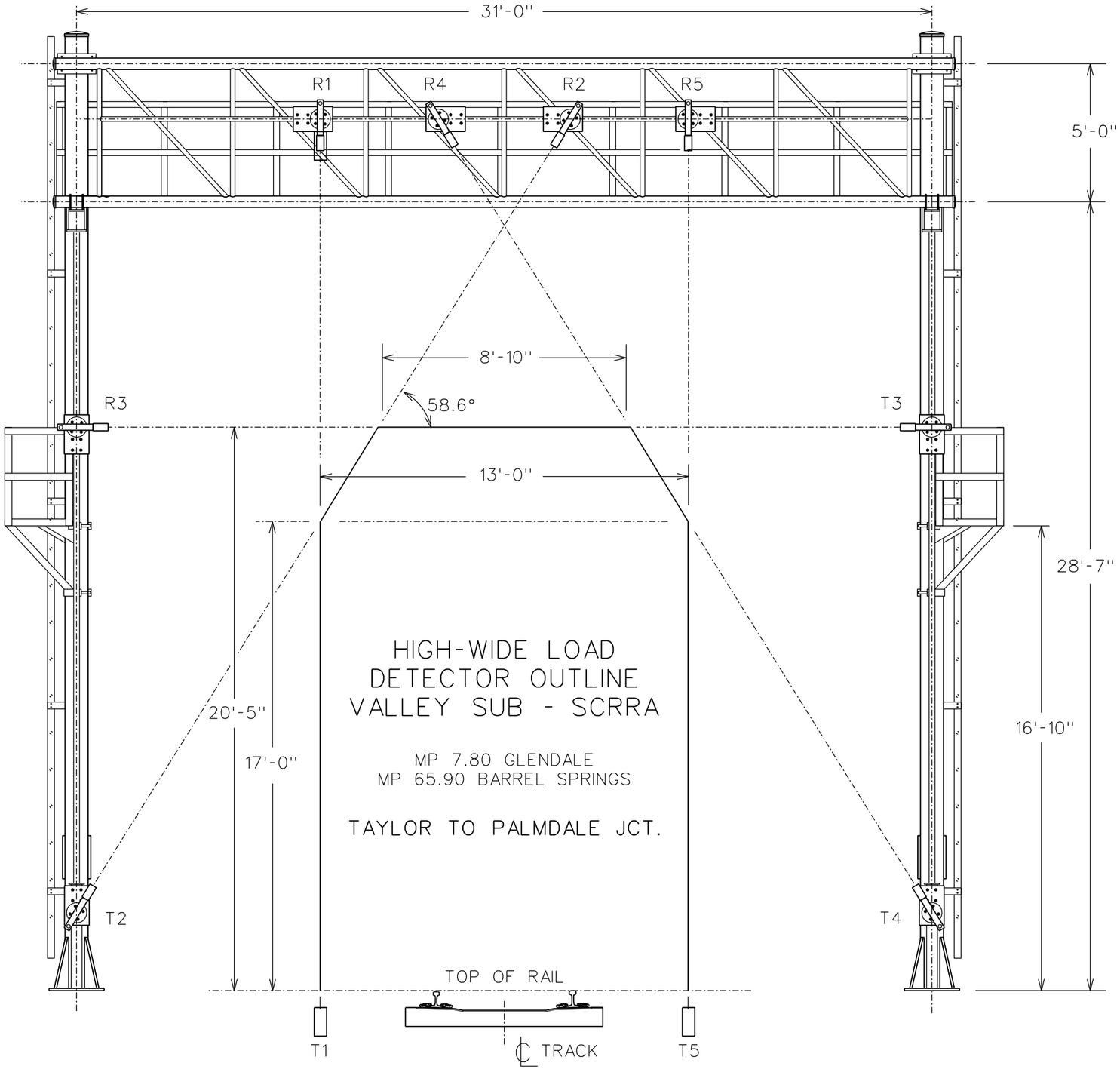

NOTES:

1. DEVIATION FROM THIS STANDARD SHALL BE APPROVED BY SCRRA MANAGER OF C&S ENGINEERING OR DESIGNATE.

REVISIONS				
-	-	-	-	-
REV.	DATE	DESCRIPTION	DES.	ENG.

FINAL REVIEW BY: C&SDRC DATE: 11/21/08

APPROVED BY

Dan C. Guerrero

MANAGER, COMMUNICATIONS AND SIGNALS ENGINEERING

Darrell V. Maxey

DIRECTOR, ENGINEERING AND CONSTRUCTION

THE SOUTHERN CALIFORNIA REGIONAL RAIL AUTHORITY OR IT'S OFFICERS OR AGENTS SHALL NOT BE RESPONSIBLE FOR THE ACCURACY OR COMPLETENESS OF THIS PLAN SHEET

METROLINK

SOUTHERN CALIFORNIA REGIONAL RAIL AUTHORITY
700 SOUTH FLOWER STREET
LOS ANGELES, CALIFORNIA 90017

ENGINEERING STANDARDS

HIGH-WIDE LOAD DETECTOR LAYOUT
VALLEY SUBDIVISION

STANDARD: 8830

SCALE: NONE

REVISION: –

SHEET: 1 OF 1

CADD FILE: ES8830

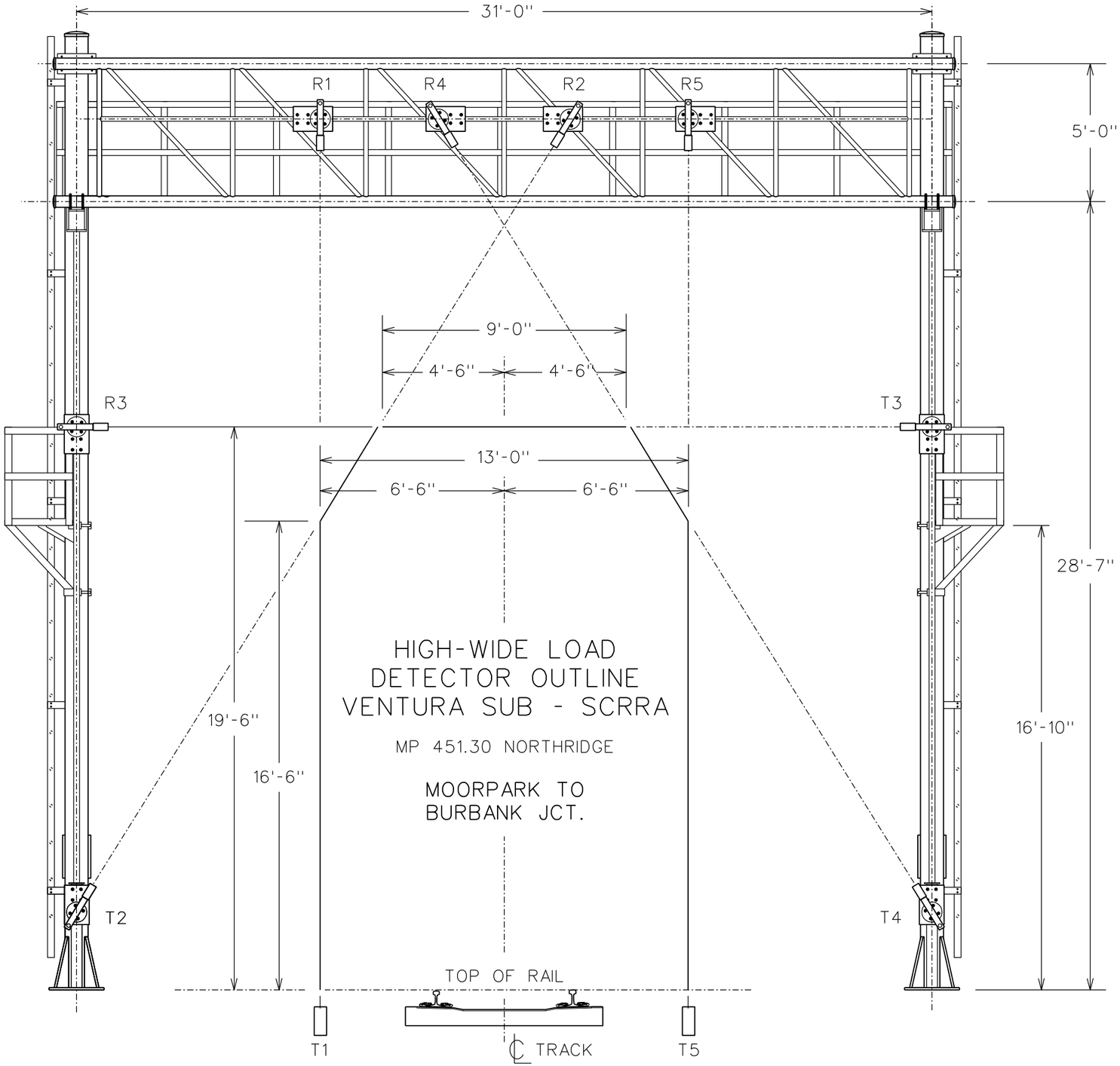

NOTES:

1. DEVIATION FROM THIS STANDARD SHALL BE APPROVED BY SCRRA MANAGER OF C&S ENGINEERING OR DESIGNATE.

REVISIONS				
-	-	-	-	-
REV.	DATE	DESCRIPTION	DES.	ENG.

FINAL REVIEW BY: C&SDRC DATE: 11/21/08

APPROVED BY

Dan C. Guerrero
MANAGER, COMMUNICATIONS AND SIGNALS ENGINEERING

Darrell V. Maxey
DIRECTOR, ENGINEERING AND CONSTRUCTION

THE SOUTHERN CALIFORNIA REGIONAL RAIL AUTHORITY OR IT'S OFFICERS OR AGENTS SHALL NOT BE RESPONSIBLE FOR THE ACCURACY OR COMPLETENESS OF THIS PLAN SHEET

METROLINK

SOUTHERN CALIFORNIA REGIONAL RAIL AUTHORITY
700 SOUTH FLOWER STREET
LOS ANGELES, CALIFORNIA 90017

ENGINEERING STANDARDS

HIGH-WIDE LOAD DETECTOR LAYOUT
VENTURA SUBDIVISION

STANDARD: 8831
SCALE: NONE
REVISION: –
SHEET: 1 OF 1
CADD FILE: ES8831

SOUTHERN CALIFORNIA REGIONAL RAIL AUTHORITY

METROLINK

– TRACK CHARTS –

CONTENTS

VALLEY AND RIVER SUBDIVISIONS ..... PAGES 1 – 27
RIVER SUBDIVISION ..... PAGES 1 – 3
RIVER SUBDIVISION (WEST BANK LINE) ..... PAGES 1 – 2
RIVER SUBDIVISION (EAST BANK LINE) ..... PAGES 1 – 3
VENTURA SUBDIVISION ..... PAGES 1 – 13
MONTALVO SUBDIVISION ..... PAGES 1 – 2
SAN GABRIEL SUBDIVISION ..... PAGES 1 – 19
ORANGE SUBDIVISION ..... PAGES 1 – 15
OLIVE SUBDIVISION ..... PAGES 1 – 2
PASADENA SUBDIVISION ..... PAGES 1 – 7
RIVERSIDE LAYOVER ..... PAGES 1 – 2

TO MAKE REVISIONS, PLEASE CONTACT:

DIRECTOR OF ENGINEERING & CONSTRUCTION
METROLINK
(213) 452-0250

LAST REVISION
MAY 2008

ABBREVIATIONS AND LEGEND

ABBREVIATIONS

BRIDGES

BD	BALLAST DECK
BDT	BALLAST DECK TRESSLE
CW	CONCRETE WALKWAY
DBL	DOUBLE
PCD	PRECAST CONCRETE DECK
PCDBG	PRESTRESSED CONCRETE DOUBLE BOX GIRDER
PCG	PRESTRESSED CONCRETE GIRDER
PCQB	PRESTRESSED CONCRETE QUAD BOX
PCSBG	PRESTRESSED CONCRETE SINGLE BOX GIRDER
PCSG	PRESTRESSED CONCRETE SLAB GIRDER
PIP	POURED IN PLACE CONCRETE
SBG	STEEL BOX GIRDER
SG	STEEL GIRDER
SPD	STEEL PLATE DECK
SPG	STEEL PLATE GIRDER
STG	STEEL THROUGH GIRDER
SW	STEEL WALKWAY
WD	WOOD DECK

CULVERTS

CA	CONCRETE ARCH
CIP	CAST IRON PIPE
CMA	CORRUGATED METAL ARCH
CMP	CORRUGATED METAL PIPE
CMPA	CORRUGATED METAL PIPE ARCH
CP	CONCRETE PIPE
LP	LINEAR PLATE
ORCP	OVAL REINFORCED CONCRETE PIPE
RCA	REINFORCED CONCRETE ARCH
RCB	REINFORCED CONCRETE BOX
RCP	REINFORCED CONCRETE PIPE
RCS	REINFORCED CONCRETE SPAN
RT	RAIL TOP
SVP	STAVE PIPE
VCP	VITRIFIED CLAY PIPE
WB	WOOD BOX
WBC	WOOD BOX CULVERT
WP	WOOD PIPE

SIGNAL

ABS	AUTOMATIC BLOCK SIGNAL SYSTEM
CP	CONTROL POINT
CTC	CENTRALIZED TRAFFIC CONTROL
FLS	FLASHING LIGHT SIGNAL

TRACK

C	CONCRETE TIES
CR	CRUSHED ROCK
FAST	FASTCLIP PANDROL
HH	HEAD HARDENED RAIL
JJ	JOINTED RAIL
LH	LEFT HANDED
MCKAY	MCKAY RAIL CLIPS
ML	MAIN LINE
MP	MILEPOST
MT	MAIN TRACK
PAN	PANDROL CLIPS ON WOOD TIES
PS	POWER SWITCH
R	RAIL YEAR MANUFACTURED
RH	RIGHT HANDED
SH	SECONDHAND RAIL
SL	SKIN LIFT
UNK	UNKNOWN
W	WOOD TIES

MISCELLANEOUS

BNSF	BNSF RAILWAY COMPANY
DOT	DEPARTMENT OF TRANSPORTATION (CALTRANS)
FWY	FREEWAY
LAUS	LOS ANGELES UNION STATION
MO	MONTALVO SUBDIVISION
OH	OVERHEAD
OL	OLIVE SUBDIVISION
OP	OVERPASS
OR	ORANGE SUBDIVISION
PA	PASADENA SUBDIVISION
PUC	PUBLIC UTILITIES COMMISSION
RD	ROAD
RI	RIVER SUBDIVISION
SCAX	FEDERAL RAILROAD ASSOCIATION DESIGNATION FOR SCRRA
SCRRA	SOUTHERN CALIFORNIA REGIONAL RAIL AUTHORITY
SG	SAN GABRIEL SUBDIVISION
SPT	SOUTHERN PACIFIC TRANSPORTATION COMPANY
ST	STREET
UP	UNDERPASS
UPRR	UNION PACIFIC RAILROAD
VE	VENTURA SUBDIVISION
VY	VALLEY SUBDIVISION
XING	CROSSING

LEGEND

	SCRRA MAIN TRACK CHARTED
	OTHER SCRRA TRACK
	NON SCRRA TRACK
S	SPRING SWITCHES
3859'	SIDING LENGTH BETWEEN FOULING POINTS
70 45	WESTBOUND SPEED SIGN
	FREIGHT MAX MPH
	LOCATION OF SIGN
	PASSENGER MAX MPH
( )	ALL PARENTHESIS SHOW OLD SPT, PUC OR ATSF DESIGNATION
	FOR EXAMPLE:
(419)	SUPERSEDED SPT MILEPOST (419)
(419.20)	SPT NAME OF CULVERT ON VAL MAP [NOT NECESSARILY BUILT AT EXACTLY MP 419.20]
(B-477.1)	SUPERSEDED PUC NAME OF PUBLIC ROAD XING [NOT NECESSARILY EXACT MILEPOST OF ROAD]
	SIGNAL FOR TRAIN TRAVELING WEST
	SIGNAL FOR TRAIN TRAVELING EAST
	LOCATION OF SIGNAL MAST
SCRRA	CONDUIT RUN (CALLOUT SIGNIFIES TYPE)
XXX	FIBER OPTIC CONDUIT (VARIOUS PROVIDERS)
26"G	GAS PIPELINE
48"W	WATER PIPELINE
	CITY LIMIT
X	FLS & CROSSING GATE
X	FLS ONLY
	CROSSING
	UNDERPASS
	DRAINAGE CHANNEL
	CULVERT
	TUNNEL
55#	HIGH WIND RESTRICTION FOR FREIGHT

REV 5/08

ABBREVITATIONS AND LEGEND (CONT.)

CURVES

LENGTH SPIRAL	SHOWN TO NEAREST FOOT
LENGTH CURVE	SHOWN TO NEAREST FOOT
SUPERELEVATION	AUTHORIZED INCHES
X	INFORMATION NEEDED
DEGREE CURVE	SHOWN BY RECORD

MILE POSTS FOR BRIDGES & CULVERTS SHOWN AT CENTERLINE OF TRACK AND:

CENTERLINE OF GRADE XINGS, STATION PLATFORMS, AND PIPE CULVERTS
FACE OF RR EAST ABUTMENT OF ALL BRIDGES SUPPORTING TRACK
FACE OF RR EAST ABUTMENT OF ROAD UNDERPASS
RR EAST FACE OF ROAD OVERPASS [i.e. SIDE TOWARD LAUS]

DETECTORS

POINTING TO TRACK PROTECTED

D	DRAGGING EQUIPMENT
H	HOT BOX
L	HIGH WIDE LOAD
W	HIGH WATER
X S X	SLIDE FENCE
X	FENCE SIDE OF TRACK

SCALE

1" = 2000'	HORIZ PARALLEL TO MT
1" = 200'	VERTICAL PROFILE
	PERPENDICULAR TO MT SHOWN NOT TO SCALE

PUBLIC UTILITIES COMMISSION NUMBERING

SCRRA MAINTAINED PUBLIC CROSSINGS ON MAIN TRACK WERE RENUMBERED APRIL 1995. SPT MAINTAINED PUBLIC CROSSINGS AND SPUR TRACK CROSSINGS WERE NOT RENUMBERED. THESE NEW PUC NUMBERS ALL START WITH "101", BUT THIS PREFIX IS NOT SHOWN ON THE CHARTS FOR BREVITY. FOR EXAMPLE, 101 VY-8.71 IS THE FULL PUC NUMBER FOR GRANDVIEW AVE. IN THIS EXAMPLE 8.71 IS THE MILEPOST AND NO SUFFIX INDICATES THIS IS A GRADE CROSSING. SUFFIX "A" STANDS FOR ROAD CROSSING ABOVE THE TRACK. SUFFIX "B" INDICATES ROAD CROSSINGS BELOW THE TRACK. SUFFIX "D" IS USED FOR PEDESTRIAN CROSSINGS AND SUFFIX "X" INDICATES PRIVATE CROSSINGS.

TRACK DIRECTION

MONTALVO SUB	- WEST IS AWAY FROM LAUS
OLIVE SUB	- WEST IS ATWOOD TO CP MAPLE
ORANGE SUB	- WEST IS COUNTY LINE TO FULLERTON JCT.
PASADENA SUB	- WEST IS CP CAMBRIDGE TO ARCADIA
RIVER CORRIDOR	- FOR VALLEY AND VENTURA TRAINS EAST IS TOWARD LAUS. FOR ALL OTHER TRAINS EAST IS AWAY FROM LAUS
SAN GABRIEL SUB	- WEST IS SAN BERNARDINO TO LOS ANGELES
VALLEY SUB	- WEST IS LOS ANGELES TO LANCASTER
VENTURA SUB	- WEST IS BURBANK JCT TO MOORPARK

METROLINK

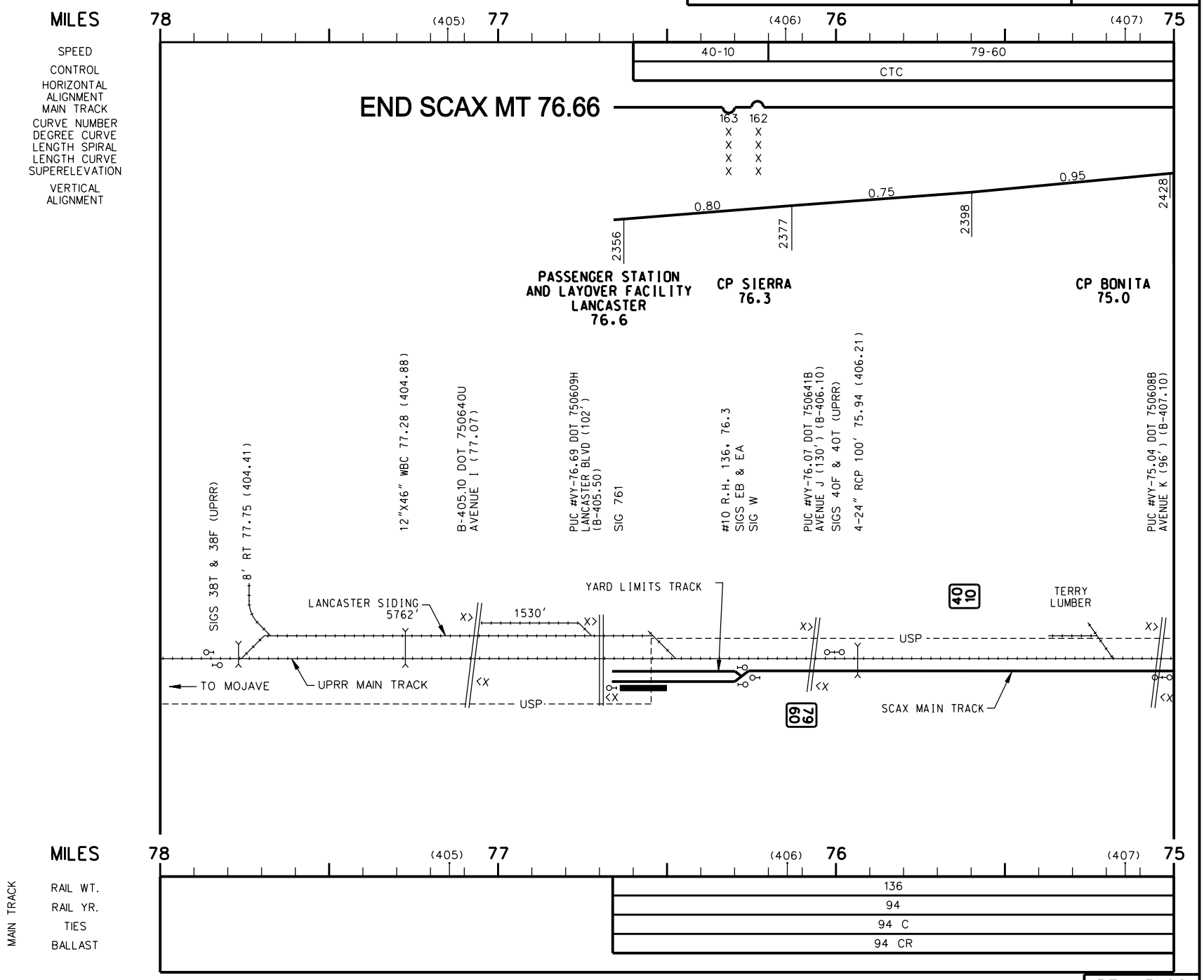
MILES
78
(405)
77
(406)
76
(407)
75
SPEED
40-10
79-60
CONTROL
CTC
HORIZONTAL ALIGNMENT
MAIN TRACK
CURVE NUMBER
163
162
DEGREE CURVE
LENGTH SPIRAL
LENGTH CURVE
SUPERELEVATION
0.80
0.75
0.95
VERTICAL ALIGNMENT
2356
2377
2398
2428
END SCAX MT 76.66
PASSENGER STATION AND LAYOVER FACILITY LANCASTER 76.6
CP SIERRA 76.3
CP BONITA 75.0
SIGS 38T & 38F (UPRR)
8' RT 77.75 (404.41)
12"X46" WBC 77.28 (404.88)
B-405.10 DOT 750640U AVENUE I (77.07)
PUC #VY-76.69 DOT 750609H LANCASTER BLVD (102') (B-405.50)
SIG 761
#10 R.H. 136. 76.3
SIGS EB & EA
SIG W
PUC #VY-76.07 DOT 750641B AVENUE J (130') (B-406.10)
SIGS 4OF & 4OT (UPRR)
4-24" RCP 100' 75.94 (406.21)
PUC #VY-75.04 DOT 750608B AVENUE K (96') (B-407.10)
LANCASTER SIDING 5762'
1530'
YARD LIMITS TRACK
40 10
TERRY LUMBER
USP
TO MOJAVE
UPRR MAIN TRACK
USP
79 60
SCAX MAIN TRACK
MILES
78
(405)
77
(406)
76
(407)
75
MAIN TRACK
RAIL WT.
136
RAIL YR.
94
TIES
94 C
BALLAST
94 CR

METROLINK

VALLEY SUBDIVISION

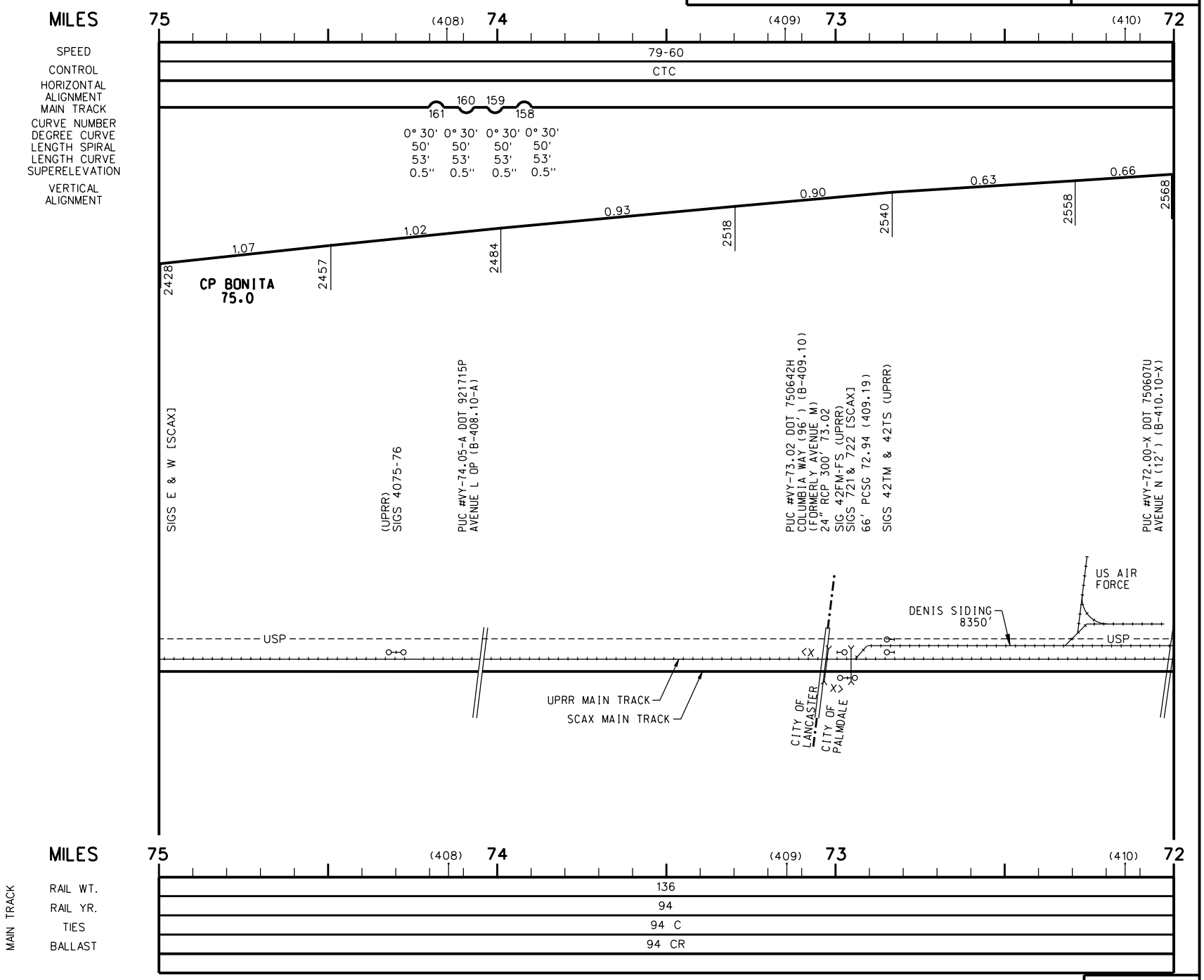

REV 5-08

METROLINK

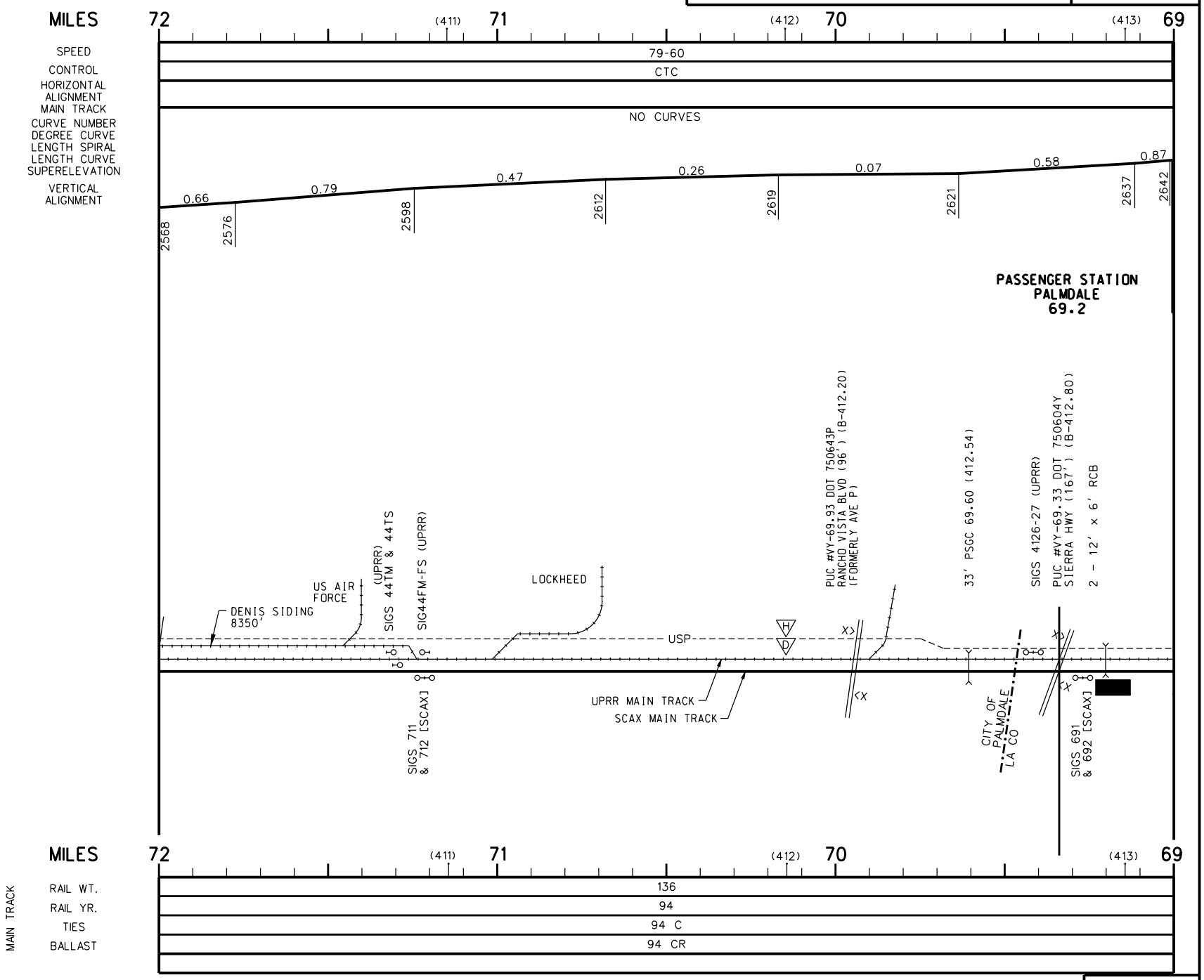
MILES
72
(411)
71
(412)
70
(413)
69
SPEED
79-60
CONTROL
CTC
HORIZONTAL ALIGNMENT MAIN TRACK
NO CURVES
CURVE NUMBER
DEGREE CURVE
LENGTH SPIRAL
LENGTH CURVE
SUPERELEVATION
VERTICAL ALIGNMENT
0.66
0.79
0.47
0.26
0.07
0.58
0.87
2568
2576
2598
2612
2619
2621
2637
2642
PASSENGER STATION
PALMDALE
69.2
DENIS SIDING
8350'
US AIR FORCE
(UPRR)
SIGS 44TM & 44TS
SIG44FM-FS (UPRR)
LOCKHEED
PUC #VY-69.93 DOT 750643P
RANCHO VISTA BLVD (96') (B-412.20)
(FORMERLY AVE P)
33' PSGC 69.60 (412.54)
SIGS 4126-27 (UPRR)
PUC #VY-69.33 DOT 750604Y
SIERRA HWY (167') (B-412.80)
2 - 12' x 6' RCB
USP
H
D
UPRR MAIN TRACK
SCAX MAIN TRACK
SIGS 711
& 712 [SCAX]
CITY OF
PALMDALE
LA CO
SIGS 691
& 692 [SCAX]
MAIN TRACK
RAIL WT.
136
RAIL YR.
94
TIES
94 C
BALLAST
94 CR

METROLINK

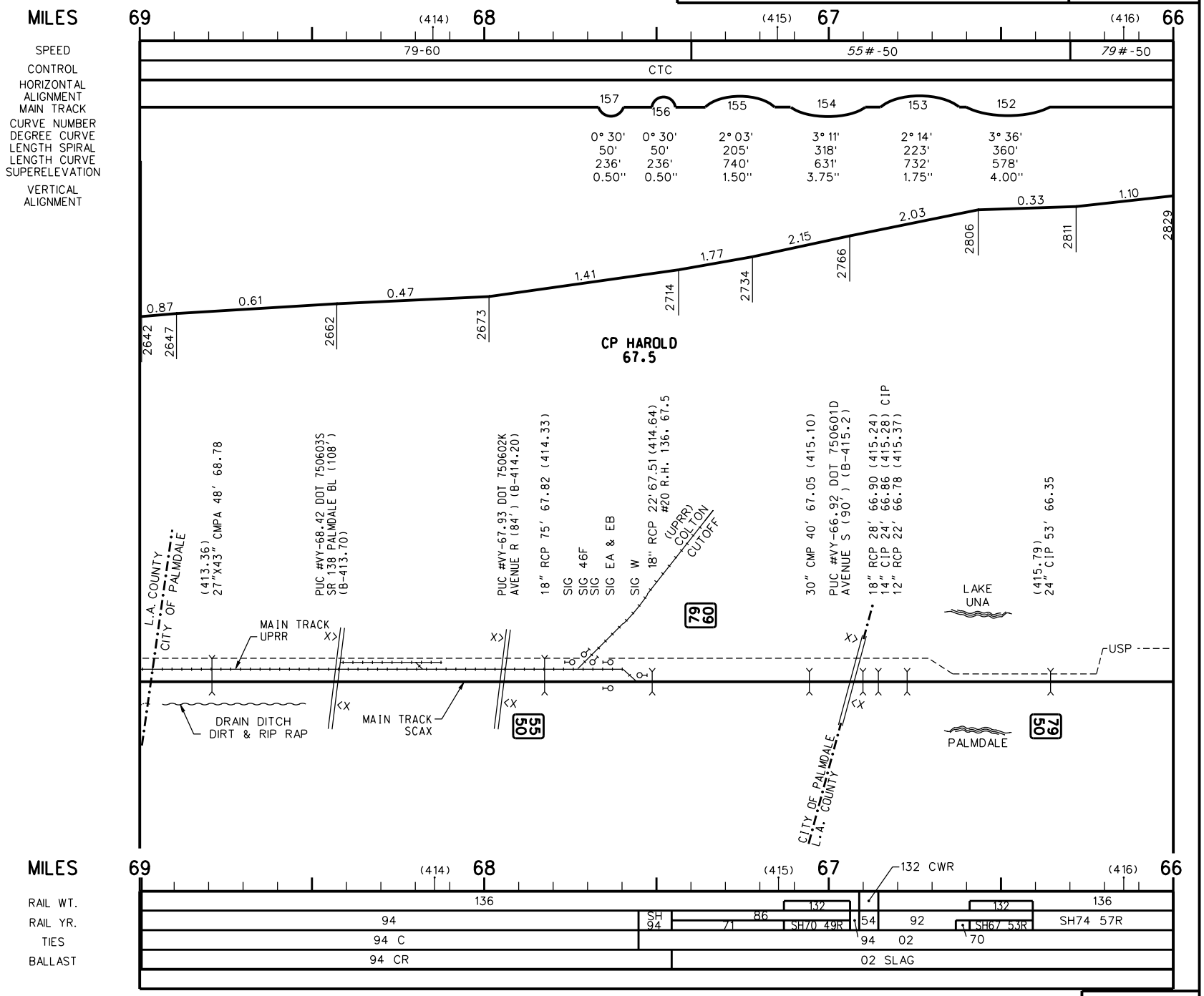
MILES
69
(414)
68
(415)
67
(416)
66
SPEED
79-60
55#-50
79#-50
CONTROL
CTC
HORIZONTAL ALIGNMENT MAIN TRACK
CURVE NUMBER
DEGREE CURVE
LENGTH SPIRAL
LENGTH CURVE
SUPERELEVATION
157
156
155
154
153
152
0° 30' 50' 236' 0.50"
0° 30' 50' 236' 0.50"
2° 03' 205' 740' 1.50"
3° 11' 318' 631' 3.75"
2° 14' 223' 732' 1.75"
3° 36' 360' 578' 4.00"
VERTICAL ALIGNMENT
0.87
0.61
0.47
1.41
1.77
2.15
2.03
0.33
1.10
2642
2647
2662
2673
2714
2734
2766
2806
2811
2829
CP HAROLD
67.5
L.A. COUNTY
CITY OF PALMDALE
(413.36)
27"X43" CMPA 48' 68.78
PUC #VY-68.42 DOT 750603S
SR 138 PALMDALE BL (108')
(B-413.70)
PUC #VY-67.93 DOT 750602K
AVENUE R (84') (B-414.20)
18" RCP 75' 67.82 (414.33)
SIG
SIG 46F
SIG EA & EB
SIG W
18" RCP 22' 67.51 (414.64)
#20 R.H. 136. 67.5
(UPRR)
COLTON
CUTOFF
30" CMP 40' 67.05 (415.10)
PUC #VY-66.92 DOT 750601D
AVENUE S (90') (B-415.2)
18" RCP 28' 66.90 (415.24)
14" CIP 24' 66.86 (415.28) CIP
12" RCP 22' 66.78 (415.37)
LAKE
UNA
(415.79)
24" CIP 53' 66.35
MAIN TRACK
UPRR
USP
DRAIN DITCH
DIRT & RIP RAP
MAIN TRACK
SCAX
55
50
79
60
79
50
PALMDALE
CITY OF PALMDALE
L.A. COUNTY
MILES
69
(414)
68
(415)
67
132 CWR
(416)
66
MAIN TRACK
RAIL WT.
RAIL YR.
TIES
BALLAST
136
94
SH 94
86
71
132
SH70 49R
54
92
132
SH67 53R
136
SH74 57R
94 C
94
02
70
94 CR
02 SLAG

METROLINK

VALLEY SUBDIVISION

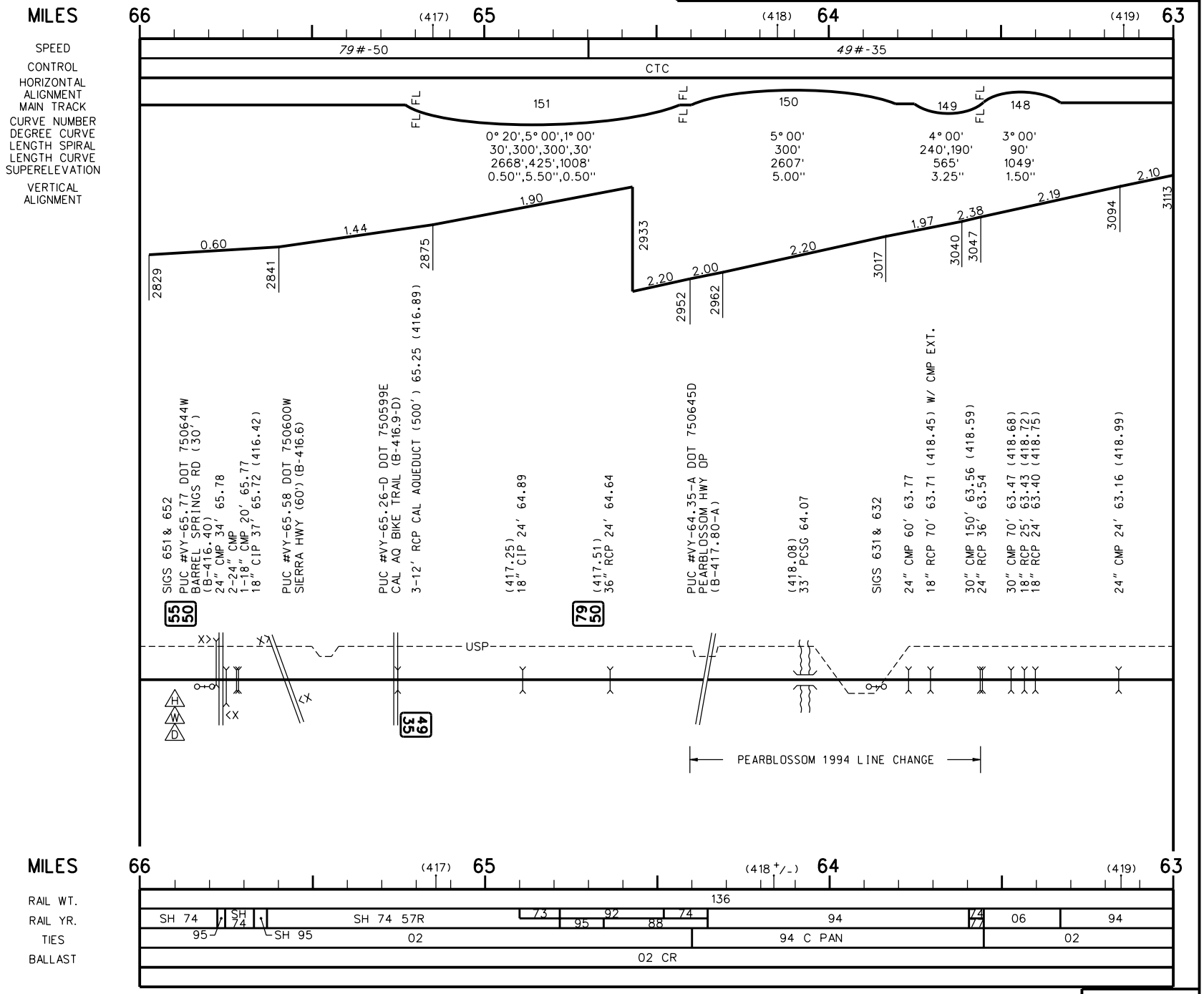

REV 5-08

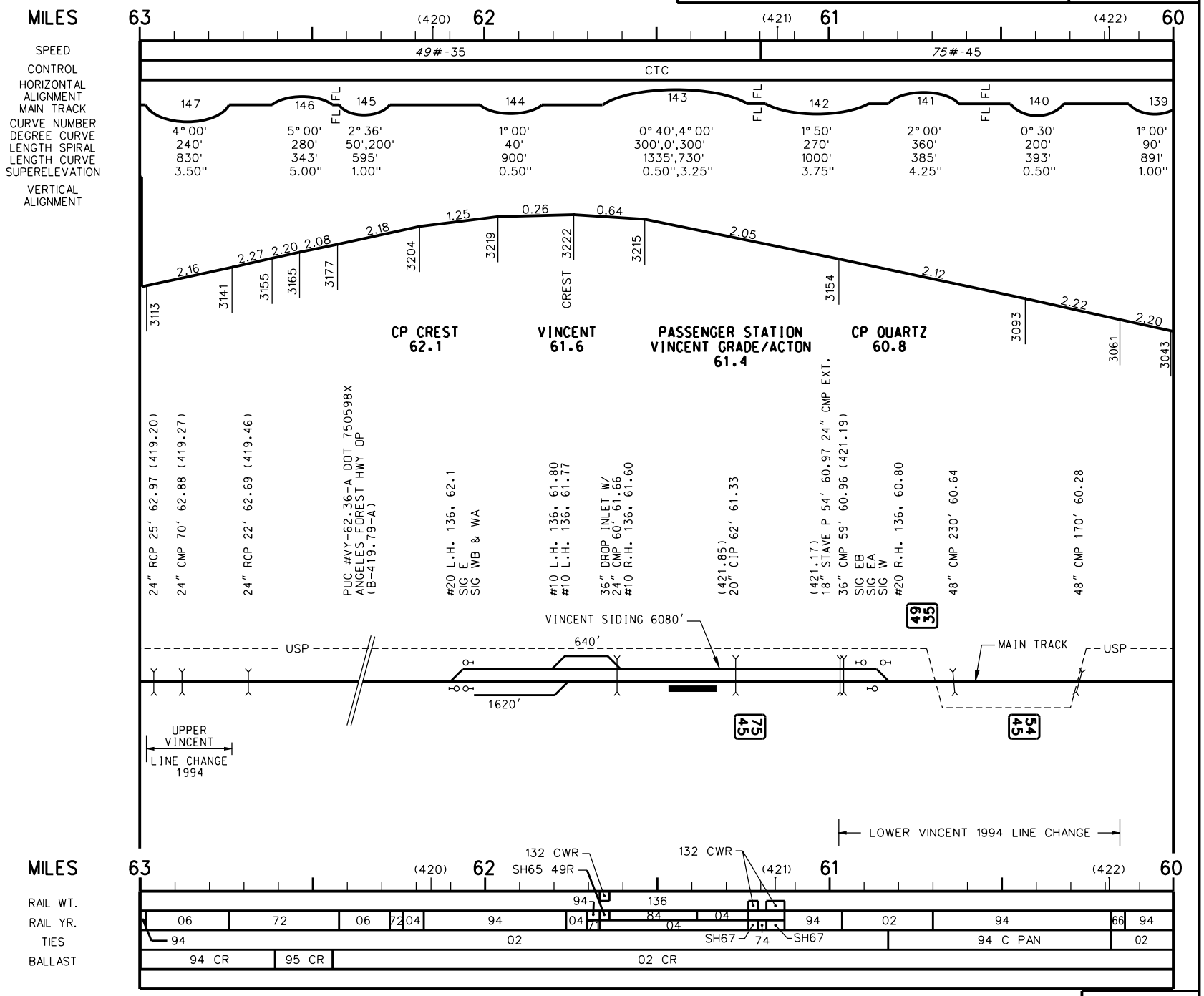
MILES
63
(420)
62
(421)
61
(422)
60
SPEED
49#-35
75#-45
CONTROL
CTC
HORIZONTAL ALIGNMENT MAIN TRACK
CURVE NUMBER
DEGREE CURVE
LENGTH SPIRAL
LENGTH CURVE
SUPERELEVATION
147 4° 00' 240' 830' 3.50"
146 5° 00' 280' 343' 5.00"
FL FL
145 2° 36' 50',200' 595' 1.00"
144 1° 00' 40' 900' 0.50"
143 0° 40',4° 00' 300',0',300' 1335',730' 0.50",3.25"
FL FL
142 1° 50' 270' 1000' 3.75"
141 2° 00' 360' 385' 4.25"
FL FL
140 0° 30' 200' 393' 0.50"
139 1° 00' 90' 891' 1.00"
VERTICAL ALIGNMENT
2.16 2.27 2.20 2.08 2.18 1.25 0.26 0.64 2.05 2.12 2.22 2.20
3113 3141 3155 3165 3177 3204 3219 3222 CREST 3215 3154 3093 3061 3043
CP CREST 62.1
VINCENT 61.6
PASSENGER STATION VINCENT GRADE/ACTON 61.4
CP QUARTZ 60.8
24" RCP 25' 62.97 (419.20)
24" CMP 70' 62.88 (419.27)
24" RCP 22' 62.69 (419.46)
PUC #VY-62.36-A DOT 750598X ANGELES FOREST HWY OP (B-419.79-A)
#20 L.H. 136. 62.1 SIG E SIG WB & WA
#10 L.H. 136. 61.80 #10 L.H. 136. 61.77
36" DROP INLET W/ 24" CMP 60' 61.66 #10 R.H. 136. 61.60
(421.85) 20" CIP 62' 61.33
(421.17) 18" STAVE P 54' 60.97 24" CMP EXT.
36" CMP 59' 60.96 (421.19) SIG EB SIG EA SIG W
#20 R.H. 136. 60.80
48" CMP 230' 60.64
48" CMP 170' 60.28
49 35
VINCENT SIDING 6080'
640'
USP
MAIN TRACK
USP
1620'
75 45
54 45
UPPER VINCENT
LINE CHANGE 1994
LOWER VINCENT 1994 LINE CHANGE
MILES
63
(420)
62
(421)
61
(422)
60
132 CWR
SH65 49R
132 CWR
MAIN TRACK
RAIL WT.
RAIL YR.
TIES
BALLAST
94 136
06 72 06 72 04 94 04 71 84 04 04 94 02 94 66 94
94 02 SH67 74 SH67 94 C PAN 02
94 CR 95 CR 02 CR

METROLINK

VALLEY SUBDIVISION

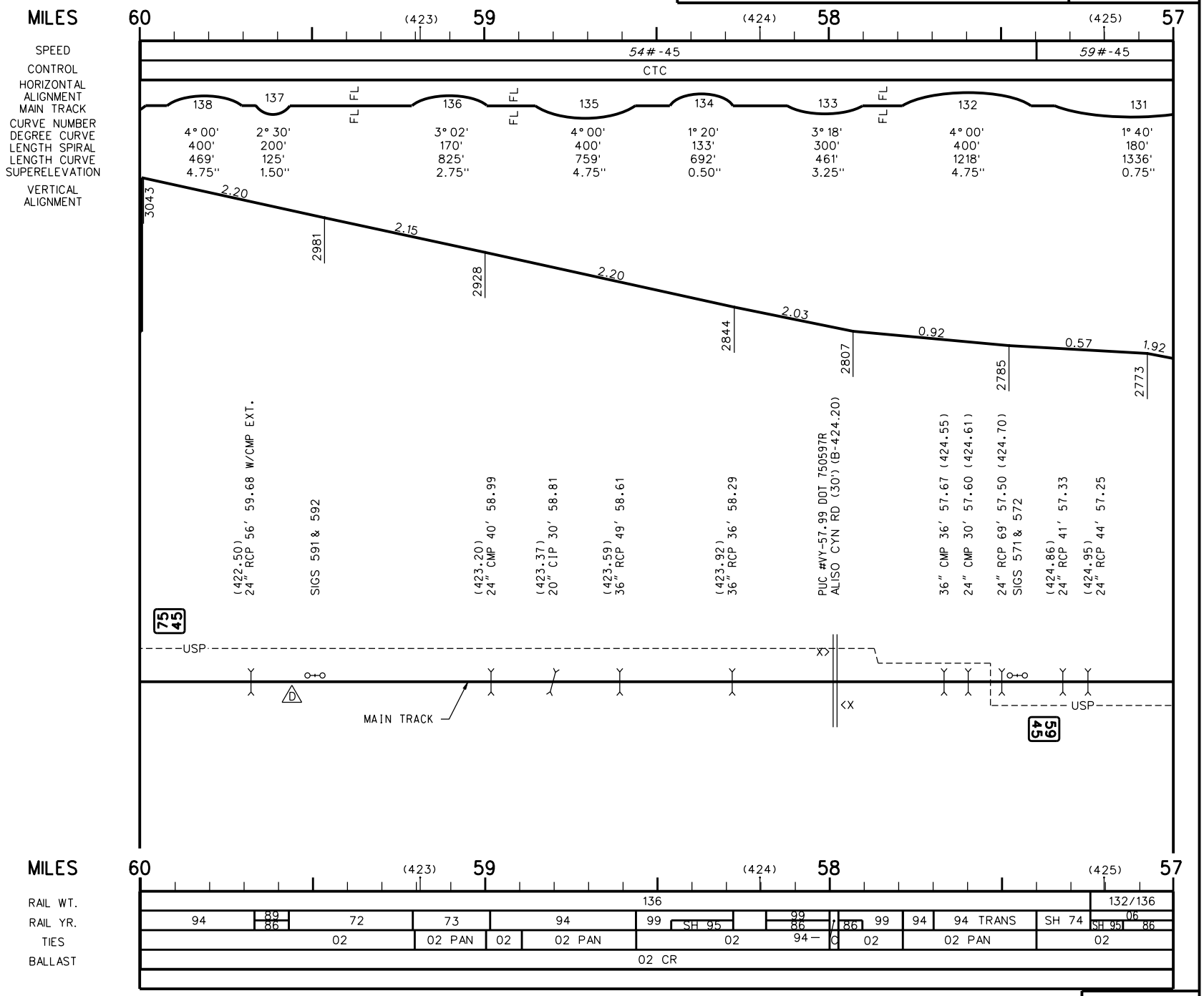

REV 5-08

METROLINK

VALLEY SUBDIVISION

MILES 57 (426) 56 (427) 55 (428) 54

SPEED: 59#-45 | 47#-35 | 50#-35 | 39#-25 EAST ONLY

CONTROL: CTC

HORIZONTAL ALIGNMENT MAIN TRACK

CURVE NUMBER	130	129	128	127	FL	126	125	124	FL	123	122	FL
DEGREE CURVE	2° 30'	3° 01'	4° 00'	5° 04'		4° 00'	4° 00'	2° 00'		4° 00'	2° 00'	
LENGTH SPIRAL	170'	220'	240'	260'		190'	190'	60'		250'	60'	
LENGTH CURVE	853'	1299'	145'	958'		402'	483'	69'		515'	332'	
SUPERELEVATION	2.50"	3.75"	3.25"	4.25"		3.50"	3.50"	0.50"		4.00"	0.50"	

VERTICAL ALIGNMENT

2465 — 1.92 — 2723 — 1.03 — 2693 — 1.47 — 2683 — 1.24 — 2663 — 1.60 — 2604 — 1.00 — 2589 — 1.98 — 2553 — 2.13 — 2533 — 1.74 — 2523

70' PCSG 56.22 (425.97)
PUC #VY-56.18 DOT 750596J
CROWN VALLEY RD (30') (B-426.0)
18" x 30' CMP 56.06 (426.14)
12" VCP 41' 55.91 (426.29)
3'X4' WB 28' 55.75 (426.45)
24" CMP 70' 55.57 (426.64) 18" EXT.
12" CP 40' 55.51 (426.70) W/18" CMP EXT.
12" STEEL PIPE 47' 55.42 (426.79) W/RCP EXT.
12" CIP 38' 55.32 (426.9)
8' RT BD 55.19 (427.02)
SIGS 551 & 552
3-24" CMP 51' 54.98 (427.23)
30" x 30' CMP 54.84 (427.38)
30" x 40' CMP 54.75 (427.46)
PUC #VY-54.67-B DOT 914505H
CROWN VALLEY RD UP (427.5)
90' STG (SKEWED)
60" CMP 81' 54.40
PUC #VY-54.39 DOT 750875E
THOUSAND TRAILS RD (48') (427.8)
24" CMP 30' 54.28 (428.00)
18" SVP 54.17 (428.11)
12" VCP 25' 54.13 (428.15)
8' RT BD 54.05 (428.23)

54 45 — MAIN TRACK — USP — 47 35 — 59 45 — 50 35 — 47 35 — 36 25 — 50 35 — USP — SIG E

RAVENNA LINE CHANGE 1994

MILES 57 (426) 56 (427) 55 (428) 54

MAIN TRACK

RAIL WT.	136	136 CWR																
RAIL YR.	08 / 86	74 / 74	66 / 66 / 74	94	99	94	94 TRANS	99 / 94	94 TRANS	94	87 / 99	94	89	02
TIES	02						94 C	02	94 C PAN	94 C	02 C PAN	94 C	02 FAST	
BALLAST	99 CR					94 C PAN			02 CR					

REV 5-08

METROLINK

MILES 54 (429) 53 (430) 52 (431) 51

SPEED: 39#-25 | 28#-25 | 35#-30 | 40#-30 | 45#-30

CONTROL: CTC

HORIZONTAL ALIGNMENT MAIN TRACK

CURVE NUMBER	121	120A	120	119	118	117	116	115	114	113	112	111	110	109
								FL	FL				FL	
DEGREE CURVE	6° 00'	2° 00'	6° 00'	5° 00'	6° 00'	2° 30',10° 00'	10° 00'	6° 00'	6° 00'		3° 00'	5° 00'	4° 30'	2° 30'
LENGTH SPIRAL	180'	40'	240'	200'	190'	60',0',150'	150'	80'	150'		60'	200'	180'	60'
LENGTH CURVE	341'	45'	763'	653'	203'	742',223'	430'	92'	183'		156'	1096'	414'	599'
SUPERELEVATION	3.00"	0.50"	3.00"	2.00"	3.00"	0.50",2.00"	2.00"	1.25"	2.00"	113	0.50"	3.50"	2.75"	0.50"

5° 00',6° 00',5° 00'
140',70',70',140'
421',202',415'
2.00",3.25",2.00"

VERTICAL ALIGNMENT

2523 — 1.74 — 2496 — 1.43 — 2475 — 1.48 — 2433 — 2.04 — 2399 — 1.91 — 2338 — 0.53 — 2322 — 1.93 — 2281

CP KOCIAN 53.9

CP RAVENNA 52.35

#14 L.H. 136. 53.9
SIGS WA & WB

2'X2' WB 50' 53.84 (428.45)

36" CMP 50' 53.73 (428.55)

18" CIP 66' 53.61 (428.67)

PUC #VY-53.52 DOT 750874X
BOOTLEGGER CYN RD (30')(B-428.78)

#10 L.H. 112. 53.5

36" CIP 67' 53.29 (429.01) RCP EXT.

36" CIP 68' 53.24 (429.06) RCP EXT.

18" CIP 52' 52.99 (429.30) VCP EXT.

18" CIP & RCP 43' 52.92 (429.38)

PUC #VY-52.89-X DOT 750873R
POLSA ROSSA RANCH PVT XING (20')
(B-429.40-X)

2-60" CMP 60' 52.73 (429.57)

6' RT BD 52.66 (429.64)

18" CIP 40' 52.59 (429.71) 24" CMP EXT.

SIG EA & EB

#14 R.H. 136. 52.5
24" CP 60' 52.44
(429.86) CMP EXT.

24" CIP 63' 52.38 (429.93) CMP EXT.

SIG W

24" CIP 47' 52.32 (429.98) CMP EXT.

18" RCP 50' 52.21 (429.79) 24" CIP EXT.

24" CMP 50' 52.06 (430.22)

PUC #VY-52.04-A DOT 750871C
SOLEDAD CYN RD OP (B-430.28-A)

36" CP 78' 51.97 (430.34) CMP EXT.
1' x 2' WB 51.93 (430.37) 12" VCP EXT.

16" CIP 90' 51.90 (430.41) CMP EXT.
SIGS 511 & 512
16" CIP 70' 51.83 (430.48) CMP EXT.

24" CP & CMP EXT. 72' 51.72 (430.59)
PUC #VY-51.63-X DOT 750870V
S.C. EDISON PVT XING (30')
(B-430.60-X)

8' CA W/CMP 168' 51.58 (430.73)

36" CP 74' 51.35 (430.98) CMP EXT.

PUC #VY-51.16-X DOT 750876L
YOUNGS CYN PVT XING (13')
(B-431.20-X)

10' CA 64' 51.07 (431.26)

WILDLIFE REFUGE
SANTA CLARA RIVER

RAVENNA SIDING
6760'

USP

MAIN TRACK

39 25 | 28 25 | 35 30 | 40 30 | 45 30 | 35 30 | 40 30 | 35 30 | 29 25

MILES 54 (429) 53 (430) 52 (431) 51

MAIN TRACK

RAIL WT.: 136 CWR | SH 94

RAIL YR.: 02 | 89 87 | 94 | SH 90 | 06 | N 94 | 04 | 97 06 | 74 | 89 06 | 86 94 | 94 | 99 88 | 86 | 71 77 | SH 90 | 82 | 83

TIES: FAST | 02 | C 02 | 02 PAN | 97 C PAN | 02

BALLAST: 02 CR | 97 CR | 02 CR | 99 CR | 02 CR

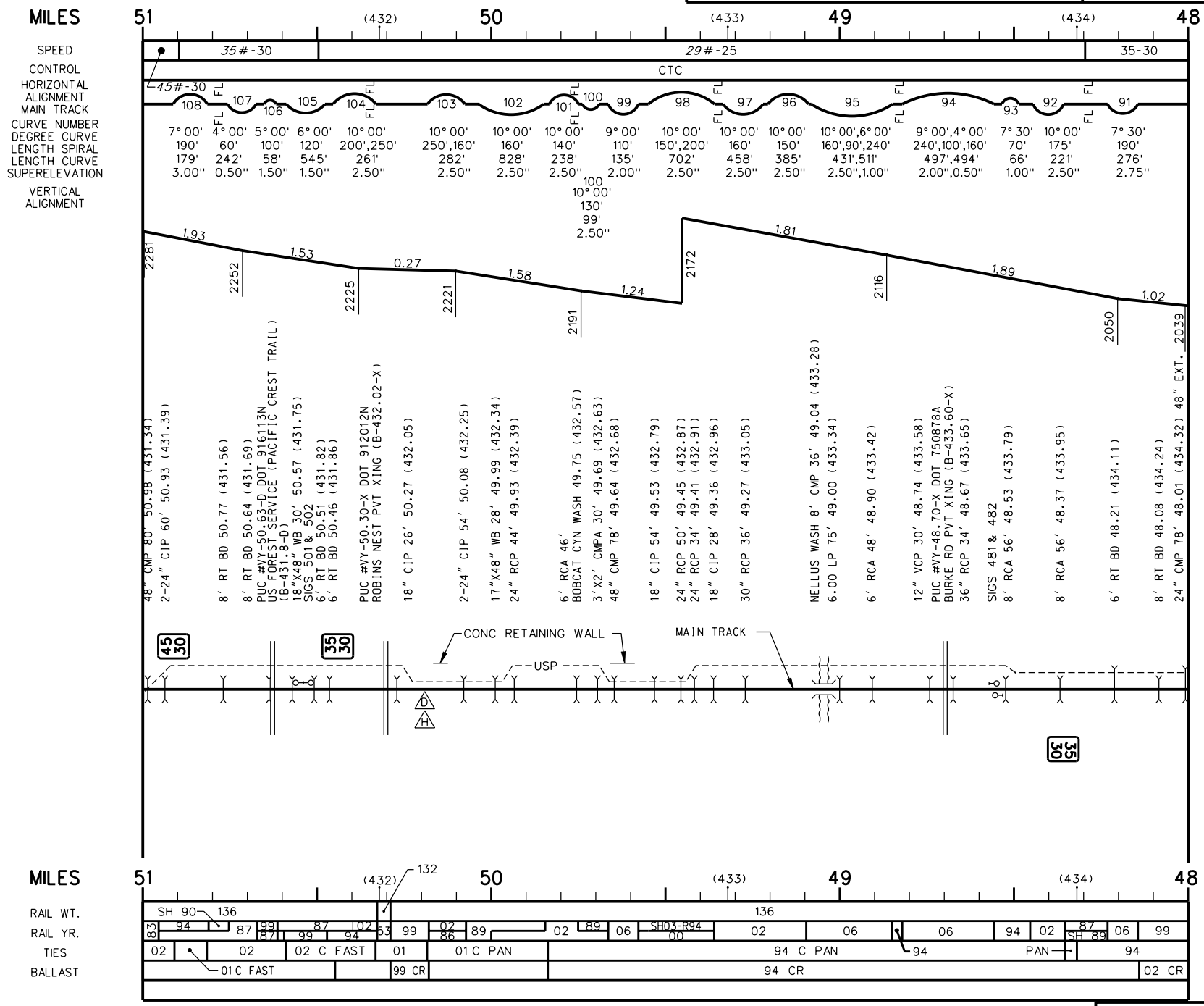
MILES
51
(432)
50
(433)
49
(434)
48
SPEED
35#-30
29#-25
35-30
CONTROL
CTC
HORIZONTAL ALIGNMENT
45#-30
MAIN TRACK
CURVE NUMBER
DEGREE CURVE
LENGTH SPIRAL
LENGTH CURVE
SUPERELEVATION
108 7° 00' 190' 179' 3.00"
107 4° 00' 60' 242' 0.50"
106 5° 00' 100' 58' 1.50"
105 6° 00' 120' 545' 1.50"
104 10° 00' 200',250' 261' 2.50"
103 10° 00' 250',160' 282' 2.50"
102 10° 00' 160' 828' 2.50"
101 10° 00' 140' 238' 2.50"
100 10° 00' 130' 99' 2.50"
99 9° 00' 110' 135' 2.00"
98 10° 00' 150',200' 702' 2.50"
97 10° 00' 160' 458' 2.50"
96 10° 00' 150' 385' 2.50"
95 10° 00',6° 00' 160',90',240' 431',511' 2.50",1.00"
94 9° 00',4° 00' 240',100',160' 497',494' 2.00",0.50"
93 7° 30' 70' 66' 1.00"
92 10° 00' 175' 221' 2.50"
91 7° 30' 190' 276' 2.75"
VERTICAL ALIGNMENT
2281 1.93 2252 1.53 2225 0.27 2221 1.58 2191 1.24 2172 1.81 2116 1.89 2050 1.02 2039
48" CMP 80' 50.98 (431.34)
2-24" CIP 60' 50.93 (431.39)
8' RT BD 50.77 (431.56)
8' RT BD 50.64 (431.69)
PUC #VY-50.63-D DOT 916113N
US FOREST SERVICE (PACIFIC CREST TRAIL)
(B-431.8-D)
18"X48" WB 30' 50.57 (431.75)
SIGS 501 & 502
6' RT BD 50.51 (431.82)
6' RT BD 50.46 (431.86)
PUC #VY-50.30-X DOT 912012N
ROBINS NEST PVT XING (B-432.02-X)
18" CIP 26' 50.27 (432.05)
2-24" CIP 54' 50.08 (432.25)
17"X48" WB 28' 49.99 (432.34)
24" RCP 44' 49.93 (432.39)
6' RCA 46'
BOBCAT CYN WASH 49.75 (432.57)
3'X2' CMPA 30' 49.69 (432.63)
48" CMP 78' 49.64 (432.68)
18" CIP 54' 49.53 (432.79)
24" RCP 50' 49.45 (432.87)
24" RCP 34' 49.41 (432.91)
18" CIP 28' 49.36 (432.96)
30" RCP 36' 49.27 (433.05)
NELLUS WASH 8' CMP 36' 49.04 (433.28)
6.00 LP 75' 49.00 (433.34)
6' RCA 48' 48.90 (433.42)
12" VCP 30' 48.74 (433.58)
PUC #VY-48.70-X DOT 750878A
BURKE RD PVT XING (B-433.60-X)
36" RCP 34' 48.67 (433.65)
SIGS 481 & 482
8' RCA 56' 48.53 (433.79)
8' RCA 56' 48.37 (433.95)
6' RT BD 48.21 (434.11)
8' RT BD 48.08 (434.24)
24" CMP 78' 48.01 (434.32) 48" EXT.
45 30
35 30
CONC RETAINING WALL
USP
MAIN TRACK
D
H
35 30
MILES
51
(432)
132
50
(433)
49
(434)
48
MAIN TRACK
RAIL WT.
RAIL YR.
TIES
BALLAST
SH 90
136
83 94 87 99 87 99 94 102 53 99 02 86 89 02 89 06 SH03-R94 00 02 06 06 94 02 87 SH 89 06 99
02 02 02 C FAST 01 01 C PAN 94 C PAN 94 PAN 94
01 C FAST 99 CR 94 CR 02 CR

METROLINK

VALLEY SUBDIVISION

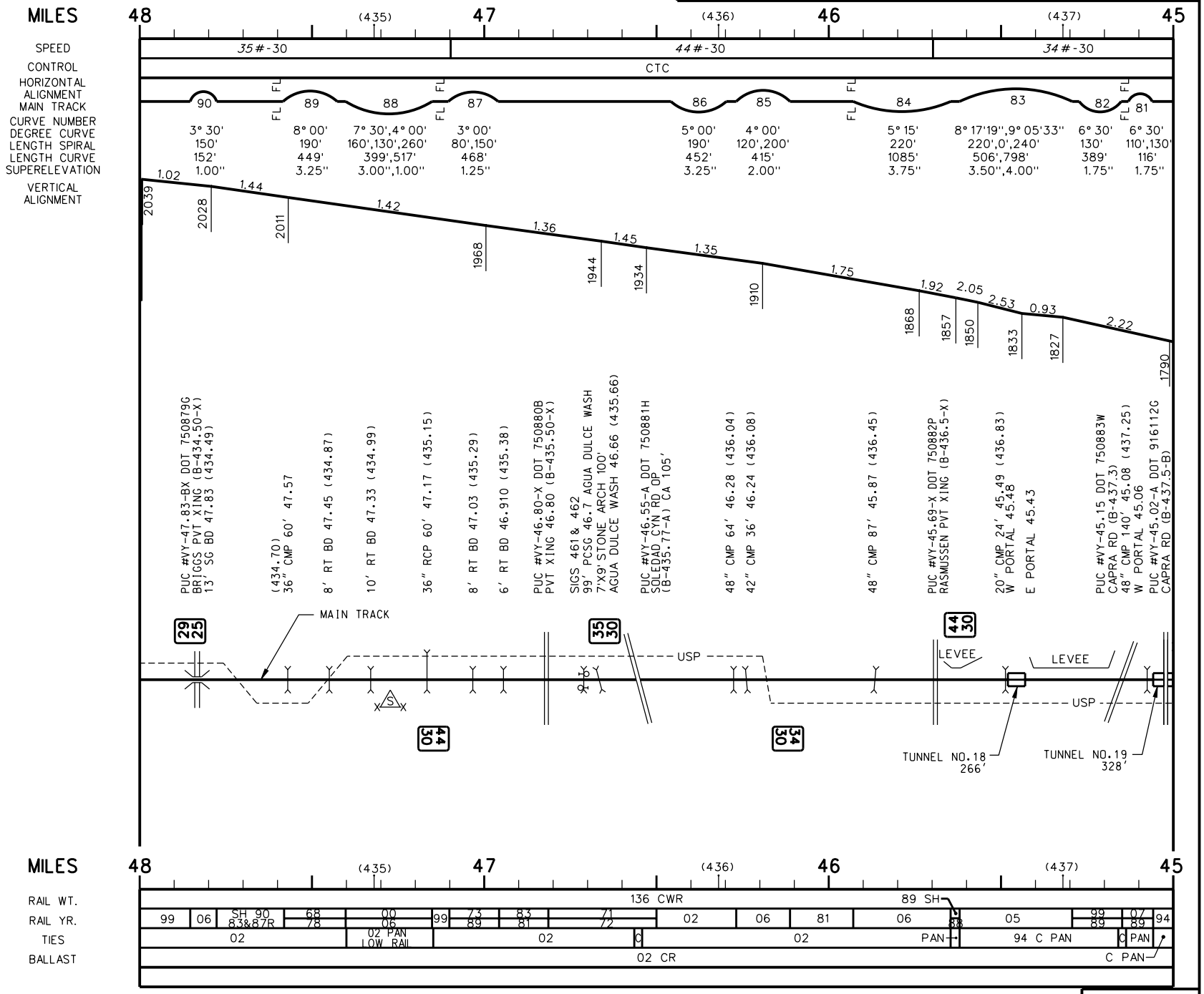

REV 5-08

METROLINK

MILES: 45 (438) 44 (439) 43 (440) 42

SPEED: 34# - 30 | 39# - 30 | 55# - 45

CONTROL: CTC

HORIZONTAL ALIGNMENT MAIN TRACK

CURVE NUMBER	80	79	78	77	76	75	74	73	72	71	70	69
DEGREE CURVE	1° 00'	4° 00'	9° 00'	4° 00',8° 00'	3° 12'	2° 01'	6° 00'	6° 00',6° 15'	5° 00'	4° 00'	4° 00'	4° 00'
LENGTH SPIRAL	60'	60'	220'	60',100',200'	60'	60'	180'	330',0',180'	150'	200',320'	300'	300'
LENGTH CURVE	153'	359'	229'	297',108'	240'	873'	239'	1175',110'	358'	1142'	696'	891'
SUPERELEVATION	0.50''	0.50''	3.50''	0.50'',3.25''	0.75''	0.50''	3.00''	3.25''	2.00''	4.75''	4.75''	4.75''

VERTICAL ALIGNMENT

1790 — 1.60 — 1741 — 1.83 — 1717 — 0.50 — 1711 — 1.52 — 1693 — 0.08 — 1691 — 0.73 — 1684 — 1.02 — 1660 — 0.97 — 1631

CP SOLEDAD 44.25

CP LANG 43.1

E PORTAL 45.00
83' & 90' STG 174'
SANTA CLARA R 44.94 (437.49)
(OPEN DECK)

10' RT BD 44.38 (438.08)

SIG E
SIGS WA & WB
#14 L.H. 136. 44.2
18"X48" WB 30' 44.16 (438.30)

#10 L.H. 110. 43.98
60' PCSG CONC 43.96 (438.49)
BEE CANYON

35' PCSG 43.65 (438.81)
PUC #VY-43.62 DOT 750886S
LANG STATION RD (B-438.8)

24" CIP & CP 39' 43.55 (438.91)
60" CMP 52' 43.52 (438.94)
36" RCP 45' 43.47 (438.99)

18" CIP 45' 43.40 (439.06)
16" CIP 40' 43.34 (439.12)
16" CIP 50' 43.29 (439.17)

SIGS EA & EB

24" CIP 28' 43.15 (439.36)
SIG W
#14 R.H. 136. 43.1

30" CMP 120' 43.00 (439.48)

4'X6' CA W/CMP EXT.
160' 42.85 (439.66)

48" CMP 92' 42.56 (439.89)

24" CMP 140' 42.46 (439.99)

24" CMP 80' 42.17 (440.28)

24" CMP 80' 42.06 (440.39)

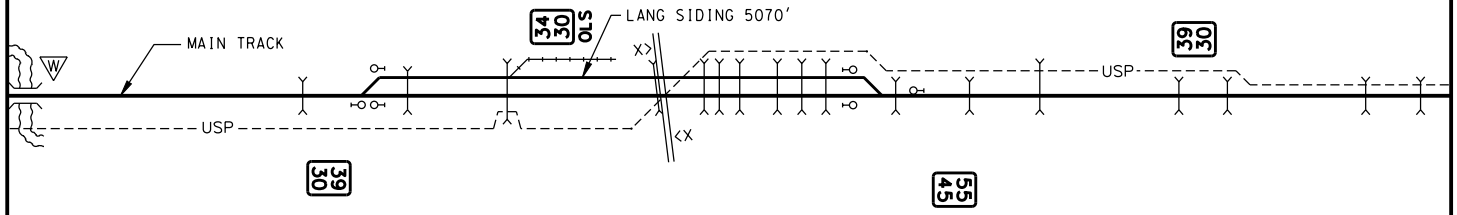

MILES: 45 (438) 44 (439) 43 (440) 42

MAIN TRACK

RAIL WT.	136																							
RAIL YR.	66	94	06	94	00 94		06	87	04	94			02 71	00	94 07	88 77	74	74 07	74	83 75	71			
TIES	02	94 C PAN				02					C	02	94			02 SH 67								
BALLAST	02 CR																							

METROLINK

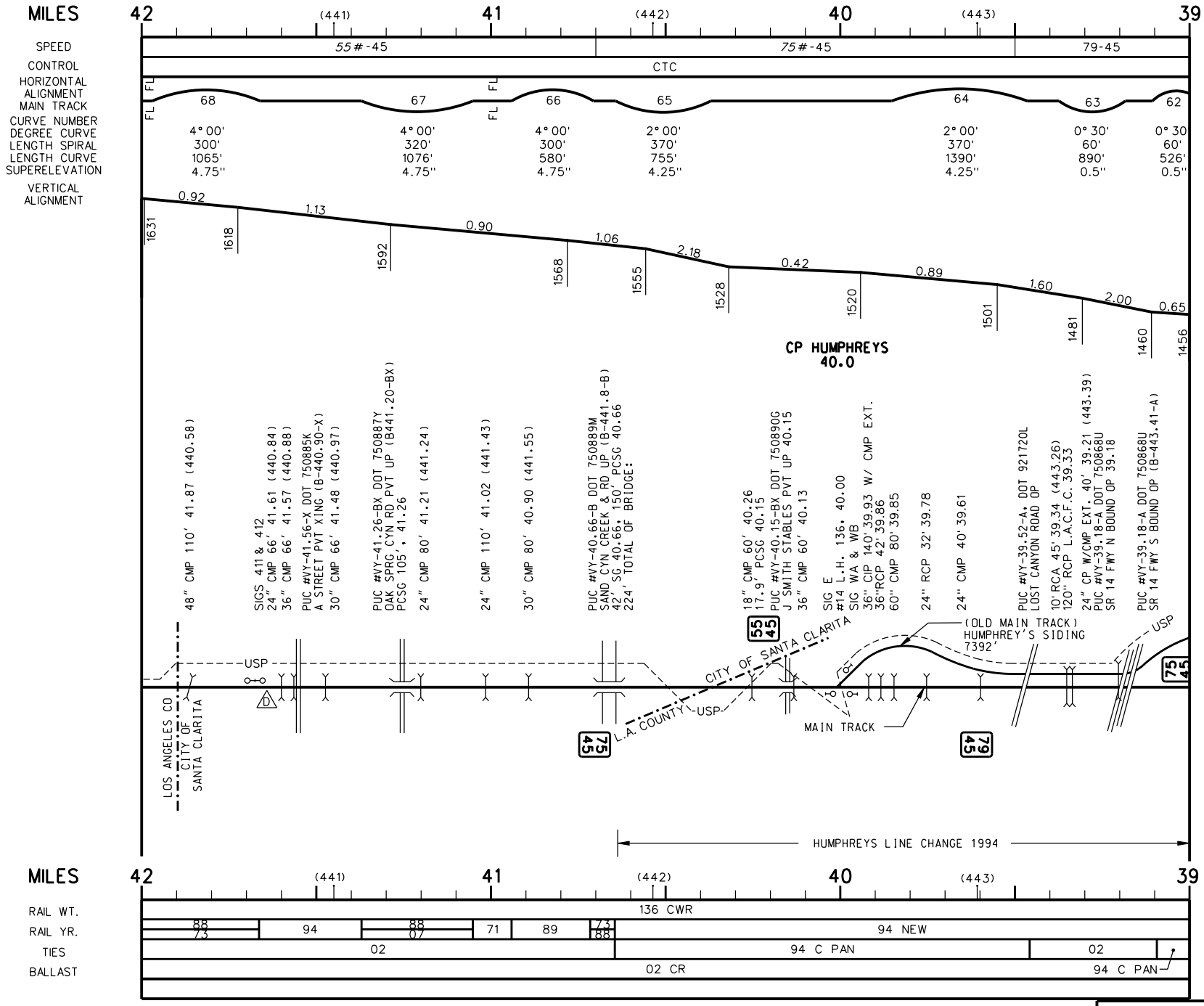
MILES
42
(441)
41
(442)
40
(443)
39
SPEED
55#-45
75#-45
79-45
CONTROL
CTC
HORIZONTAL ALIGNMENT MAIN TRACK
FL
68
67
66
65
64
63
62
CURVE NUMBER
DEGREE CURVE
LENGTH SPIRAL
LENGTH CURVE
SUPERELEVATION
4° 00' 300' 1065' 4.75"
4° 00' 320' 1076' 4.75"
4° 00' 300' 580' 4.75"
2° 00' 370' 755' 4.25"
2° 00' 370' 1390' 4.25"
0° 30' 60' 890' 0.5"
0° 30 60' 526' 0.5"
VERTICAL ALIGNMENT
0.92
1.13
0.90
1.06
2.18
0.42
0.89
1.60
2.00
0.65
1631
1618
1592
1568
1555
1528
1520
1501
1481
1460
1456
CP HUMPHREYS
40.0
48" CMP 110' 41.87 (440.58)
SIGS 411 & 412
24" CMP 66' 41.61 (440.84)
36" CMP 66' 41.57 (440.88)
PUC #VY-41.56-X DOT 750885K
A STREET PVT XING (B-440.90-X)
30" CMP 66' 41.48 (440.97)
PUC #VY-41.26-BX DOT 750887Y
OAK SPRG CYN RD PVT UP (B441.20-BX)
PCSG 105', 41.26
24" CMP 80' 41.21 (441.24)
24" CMP 110' 41.02 (441.43)
30" CMP 80' 40.90 (441.55)
PUC #VY-40.66-B DOT 750889M
SAND CYN CREEK & RD UP (B-441.8-B)
42' SG 40.66, 150' PCSG 40.66
224' TOTAL OF BRIDGE:
18" CMP 60' 40.26
17.9' PCSG 40.15
PUC #VY-40.15-BX DOT 750890G
J SMITH STABLES PVT UP 40.15
36" CMP 60' 40.13
SIG E
#14 L.H. 136. 40.00
SIG WA & WB
36" CIP 140' 39.93 W/ CMP EXT.
36"RCP 42' 39.86
60" CMP 80' 39.85
24" RCP 32' 39.78
24" CMP 40' 39.61
PUC #VY-39.52-A. DOT 921720L
LOST CANYON ROAD OP
10'RCA 45' 39.34 (443.26)
120" RCP L.A.C.F.C. 39.33
24" CP W/CMP EXT. 40' 39.21 (443.39)
PUC #VY-39.18-A DOT 750868U
SR 14 FWY N BOUND OP 39.18
PUC #VY-39.18-A DOT 750868U
SR 14 FWY S BOUND OP (B-443.41-A)
55
45
75
45
(OLD MAIN TRACK)
HUMPHREY'S SIDING
7392'
USP
CITY OF SANTA CLARITA
L.A. COUNTY
MAIN TRACK
LOS ANGELES CO
CITY OF SANTA CLARITA
HUMPHREYS LINE CHANGE 1994
MILES
42
(441)
41
(442)
40
(443)
39
MAIN TRACK
RAIL WT.
136 CWR
RAIL YR.
88 73
94
88 07
71
89
73 88
94 NEW
TIES
02
94 C PAN
02
BALLAST
02 CR
94 C PAN

METROLINK

MILES 39 (444 +/-) 38 (445 +/-) 37 (446 +/-) 36

SPEED: 79-45 | 55#-45 | 70#-45

CONTROL: CTC

HORIZONTAL ALIGNMENT MAIN TRACK

CURVE NUMBER	62	61	60	59
DEGREE CURVE	0° 30'	2° 00'	2° 00'	2° 20',1° 30'
LENGTH SPIRAL	60'	60',260'-180'	260',320'	340',150',180'
LENGTH CURVE	526'	2429'	69'	1870,X'
SUPERELEVATION	0.5"	0.62"	3.25"	4.50",2.25"

FL FL

VERTICAL ALIGNMENT

0.65 1.50 0.51 1.30 0.36 1.42 1.75 1.15

1456 1444 1429 1423 1400 1387 1368 1318 1291

CP HONBY 38.6

PASSENGER STATION VIA PRINCESSA 37.9

(443.76) 48" RCP 100' 38.83
PVT UP DOT 750867M
17.8' RC BD & 2-36"X60' RCP 38.76
60" CMP 60' 38.68
18" CIP 50' 38.64
SIG EA & EB
#14 R.H. 136. 38.59
PUC #VY-38.59 DOT 750866F
CANYON PARK BL (B-444.05)
SIG W
WASH RCS 60' 38.43 (444.22)
PUC #VY-38.41-A DOT 750891N
SIERRA HWY (B-444.20-A) WEST OP
SIERRA HWY EAST OP 38.405
SIG 382
#10 R.H. 136. 38.05
24" RCP 72' 37.95 (444.59)
3-8'X8' RCB 600' 37.78 (444.76)
PUC #VY37.78-X DOT 750892V
PVT XING 37.78 (B-444.7-X)
24" RCP 56' 37.75 (444.78)
24" RCP 76' 37.68 (444.86)
24" RCP 82' 37.62 (444.92)
PUC #VY-37.55-A DOT 914500Y
WHITES CYN RD OP (B-445.2-A)
30" RCP 72' 37.52 (445.02)
30" RCP 72' 37.49 (445.04)
30" RCP 56' 37.36 (445.18)
24" RCP 63' 37.19 (445.35)
24" RCP 76' 37.12 (445.41)
SIGS 371 & 372
132' PCSG - 36.98 PENLON
PUC #VY-36.98-B DOT 922852A
PENLON COURT
2-84" RCP 69' 36.92 (445.61)
24" RCP 93' 36.85 (445.69)
PUC #VY-36.34 DOT 914504B
RAINBOW GLEN DR (B-446.5)

79 45 OLS

55 45

USP

CITY OF SANTA

LOS ANGELES

COUNTY

CLARITA

55 45

70 45

MAIN TRACK

(OLD MAIN TRACK)
HUMPHREY'S SIDING
7392'

HUMPHREYS LINE CHANGE 1994

WHITES CANYON ROAD LINE CHANGE 1991

HONBY LINE CHANGE 1994

MAIN TRACK

MILES 39 (444) 38 (445) 37 (446) 36

RAIL WT.	136					
RAIL YR.	94	91		94	SH94 / 81-90R	94
TIES	94 C PAN	02	91	94 C PAN		94
BALLAST	94 CR		91 CR ROCK	94 CR		

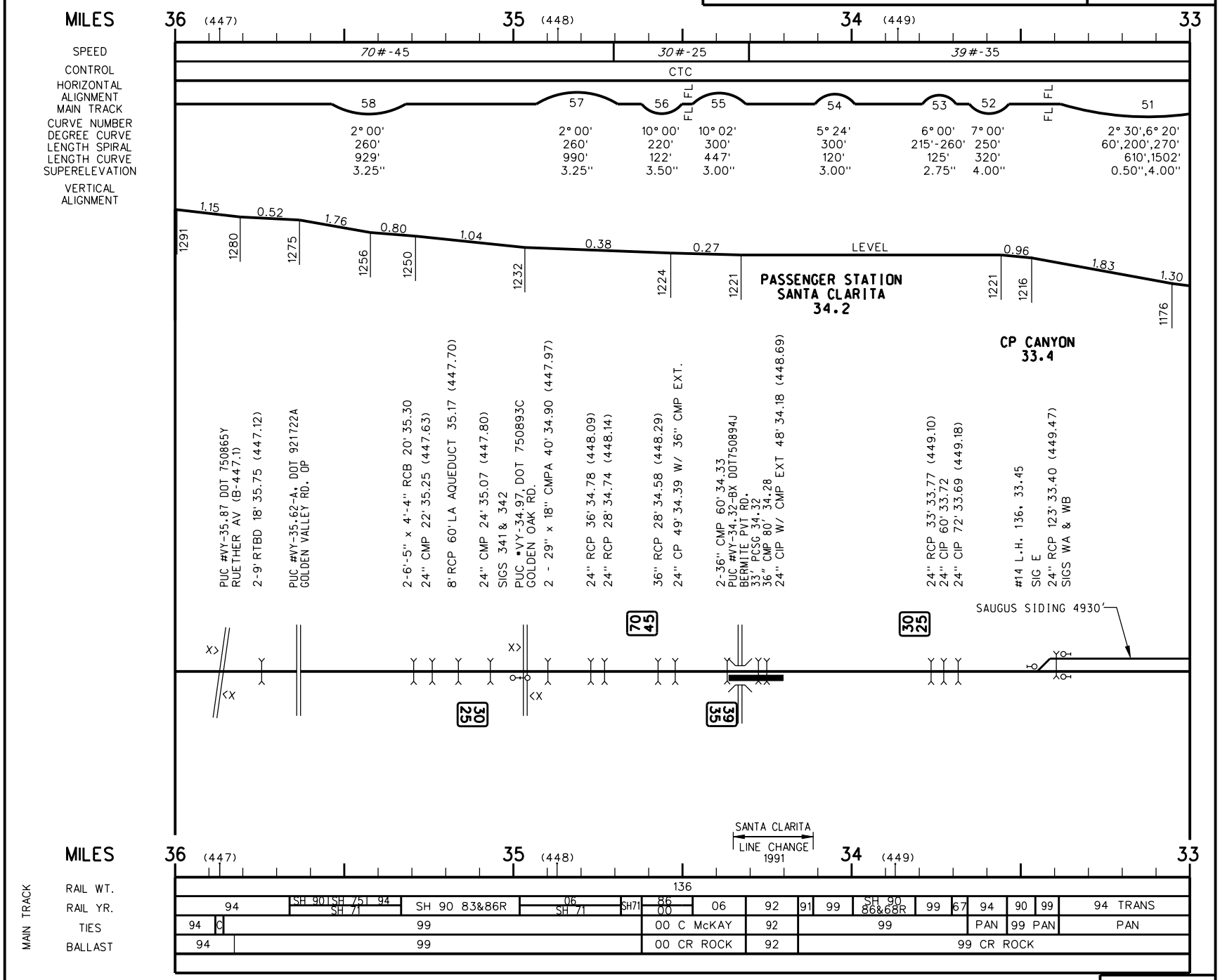
MILES
36 (447) 35 (448) 34 (449) 33
SPEED
70#-45
30#-25
39#-35
CONTROL
CTC
HORIZONTAL ALIGNMENT
MAIN TRACK
CURVE NUMBER
DEGREE CURVE
LENGTH SPIRAL
LENGTH CURVE
SUPERELEVATION
58 2° 00' 260' 929' 3.25"
57 2° 00' 260' 990' 3.25"
56 10° 00' 220' 122' 3.50"
FL FL
55 10° 02' 300' 447' 3.00"
54 5° 24' 300' 120' 3.00"
53 6° 00' 215'-260' 125' 2.75"
52 7° 00' 250' 320' 4.00"
FL FL
51 2° 30',6° 20' 60',200',270' 610',1502' 0.50",4.00"
VERTICAL ALIGNMENT
1.15 0.52 1.76 0.80 1.04 0.38 0.27 LEVEL 0.96 1.83 1.30
1291 1280 1275 1256 1250 1232 1224 1221 1221 1216 1176
PASSENGER STATION
SANTA CLARITA
34.2
CP CANYON
33.4
PUC #VY-35.87 DOT 750865Y
RUETHER AV (B-447.1)
2-9' RTBD 18' 35.75 (447.12)
PUC #VY-35.62-A, DOT 921722A
GOLDEN VALLEY RD. OP
2-6'-5" x 4'-4" RCB 20' 35.30
24" CMP 22' 35.25 (447.63)
8' RCP 60' LA AQUEDUCT 35.17 (447.70)
24" CMP 24' 35.07 (447.80)
SIGS 341 & 342
PUC #VY-34.97, DOT 750893C
GOLDEN OAK RD.
2 - 29" x 18" CMPA 40' 34.90 (447.97)
24" RCP 36' 34.78 (448.09)
24" RCP 28' 34.74 (448.14)
36" RCP 28' 34.58 (448.29)
24" CP 49' 34.39 W/ 36" CMP EXT.
2-36" CMP 60' 34.33
PUC #VY-34.32-BX DOT750894J
BERMITE PVT RD.
33' PCSG 34.32
36" CMP 80' 34.28
24" CIP W/ CMP EXT 48' 34.18 (448.69)
24" RCP 33' 33.77 (449.10)
24" CIP 60' 33.72
24" CIP 72' 33.69 (449.18)
#14 L.H. 136. 33.45
SIG E
24" RCP 123' 33.40 (449.47)
SIGS WA & WB
SAUGUS SIDING 4930'
70 45
30 25
30 25
36 35
SANTA CLARITA
LINE CHANGE
1991
MILES
36 (447) 35 (448) 34 (449) 33
MAIN TRACK
RAIL WT.
RAIL YR.
TIES
BALLAST
136
94 | SH 90 | SH 75 | 94 SH 71 | SH 90 83&86R | 06 SH 71 | SH71 | 86 00 | 06 | 92 | 91 | 99 | SH 90 86&68R | 99 | 67 | 94 | 90 | 99 | 94 TRANS
94 | C | 99 | 00 C McKAY | 92 | 99 | PAN | 99 PAN | PAN
94 | 99 | 00 CR ROCK | 92 | 99 CR ROCK

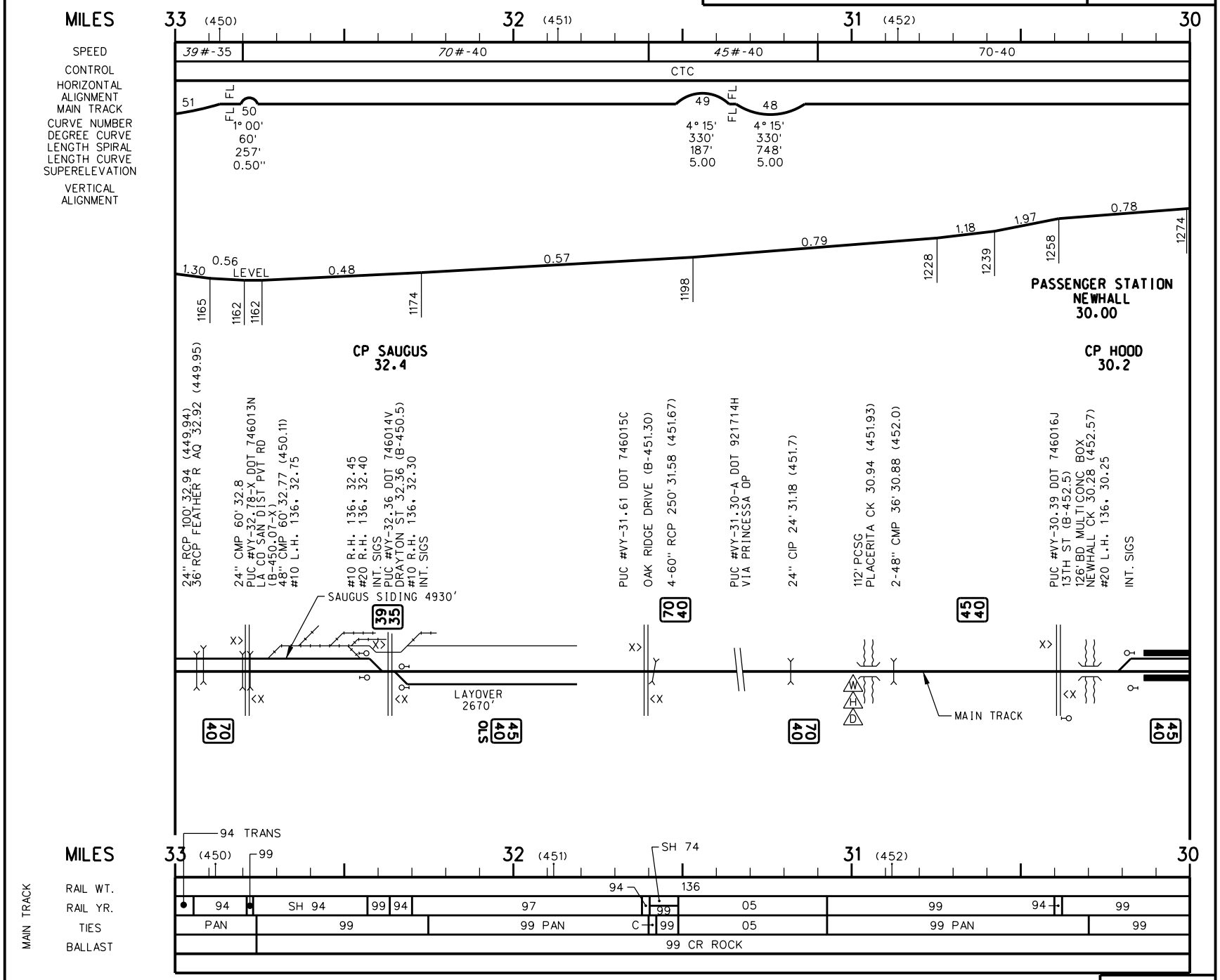
METROLINK
MILES
33 (450)
32 (451)
31 (452)
30
SPEED
39#-35
70#-40
45#-40
70-40
CONTROL
CTC
HORIZONTAL ALIGNMENT
MAIN TRACK
CURVE NUMBER
DEGREE CURVE
LENGTH SPIRAL
LENGTH CURVE
SUPERELEVATION
51
FL
50
1° 00'
60'
257'
0.50"
49
4° 15'
330'
187'
5.00
48
4° 15'
330'
748'
5.00
VERTICAL ALIGNMENT
1.30
0.56
LEVEL
0.48
0.57
0.79
1.18
1.97
0.78
1165
1162
1162
1174
1198
1228
1239
1258
1274
PASSENGER STATION
NEWHALL
30.00
CP SAUGUS
32.4
CP HOOD
30.2
24" RCP 100' 32.94 (449.94)
36" RCP FEATHER R AQ 32.92 (449.95)
24" CMP 60' 32.8
PUC #VY-32.78-X DOT 746013N
LA CO SAN DIST PVT RD
(B-450.07-X)
48" CMP 60' 32.77 (450.11)
#10 L.H. 136. 32.75
#10 R.H. 136. 32.45
#20 R.H. 136. 32.40
INT. SIGS
PUC #VY-32.36 DOT 746014V
DRAYTON ST 32.36 (B-450.5)
#10 R.H. 136. 32.30
INT. SIGS
SAUGUS SIDING 4930'
39
35
PUC #VY-31.61 DOT 746015C
OAK RIDGE DRIVE (B-451.30)
4-60" RCP 250' 31.58 (451.67)
70
40
PUC #VY-31.30-A DOT 921714H
VIA PRINCESSA OP
24" CIP 24' 31.18 (451.7)
112' PCSG
PLACERITA CK 30.94 (451.93)
2-48" CMP 36' 30.88 (452.0)
45
40
PUC #VY-30.39 DOT 746016J
13TH ST (B-452.5)
126' BD MULTI CONC BOX
NEWHALL CK 30.28 (452.57)
#20 L.H. 136. 30.25
INT. SIGS
X>
<X
LAYOVER
2670'
OLS
MAIN TRACK
W
T
D
94 TRANS
99
SH 74
MAIN TRACK
MILES
RAIL WT.
RAIL YR.
TIES
BALLAST
94
SH 94
99
94
97
99
05
99
94
99
PAN
99
99 PAN
C
99
05
99 PAN
99
99 CR ROCK
136

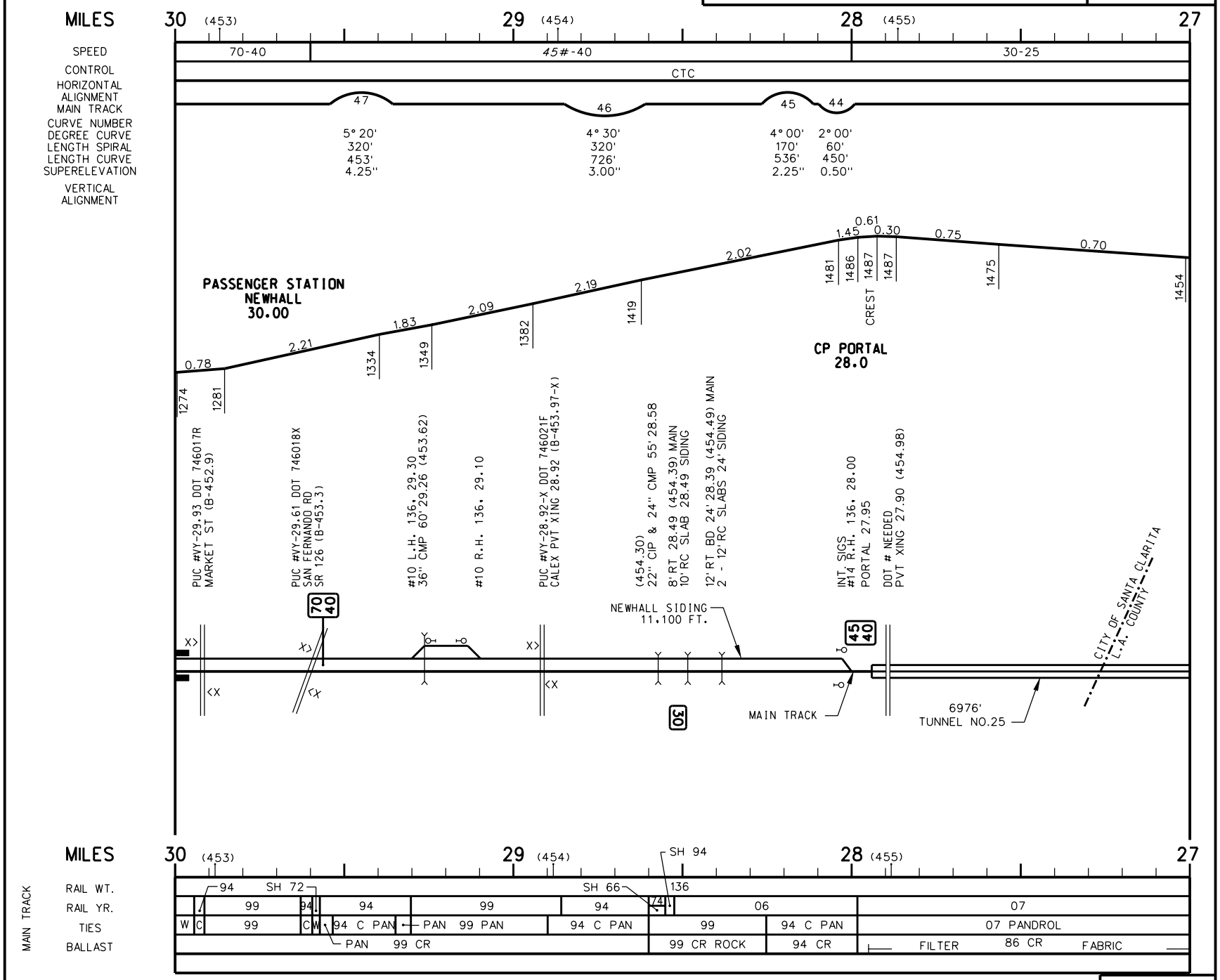
MILES
30 (453)
29 (454)
28 (455)
27
SPEED
70-40
45#-40
30-25
CONTROL
CTC
HORIZONTAL ALIGNMENT MAIN TRACK
CURVE NUMBER
DEGREE CURVE
LENGTH SPIRAL
LENGTH CURVE
SUPERELEVATION
47
5° 20'
320'
453'
4.25"
46
4° 30'
320'
726'
3.00"
45
4° 00'
170'
536'
2.25"
44
2° 00'
60'
450'
0.50"
VERTICAL ALIGNMENT
0.78
2.21
1.83
2.09
2.19
2.02
1.45
0.61
0.30
0.75
0.70
1274
1281
1334
1349
1382
1419
1481
1486
1487
CREST
1487
1475
1454
PASSENGER STATION
NEWHALL
30.00
CP PORTAL
28.0
PUC #VY-29.93 DOT 746017R
MARKET ST (B-452.9)
PUC #VY-29.61 DOT 746018X
SAN FERNANDO RD
SR 126 (B-453.3)
#10 L.H. 136, 29.30
36" CMP 60'29.26 (453.62)
#10 R.H. 136, 29.10
PUC #VY-28.92-X DOT 746021F
CALEX PVT XING 28.92 (B-453.97-X)
(454.30)
22" CIP & 24" CMP 55' 28.58
8' RT 28.49 (454.39) MAIN
10' RC SLAB 28.49 SIDING
12' RT BD 24' 28.39 (454.49) MAIN
2 - 12' RC SLABS 24' SIDING
INT. SIGS
#14 R.H. 136, 28.00
PORTAL 27.95
DOT # NEEDED
PVT XING 27.90 (454.98)
70
40
NEWHALL SIDING
11,100 FT.
45
40
30
MAIN TRACK
6976'
TUNNEL NO.25
CITY OF SANTA CLARITA
L.A. COUNTY
MILES
30 (453)
29 (454)
SH 94
28 (455)
27
MAIN TRACK
RAIL WT.
RAIL YR.
TIES
BALLAST
94
SH 72
SH 66
136
99
94
94
99
94
74
06
07
W
C
99
C
W
94 C PAN
PAN 99 PAN
94 C PAN
99
94 C PAN
07 PANDROL
PAN 99 CR
99 CR ROCK
94 CR
FILTER
86 CR
FABRIC

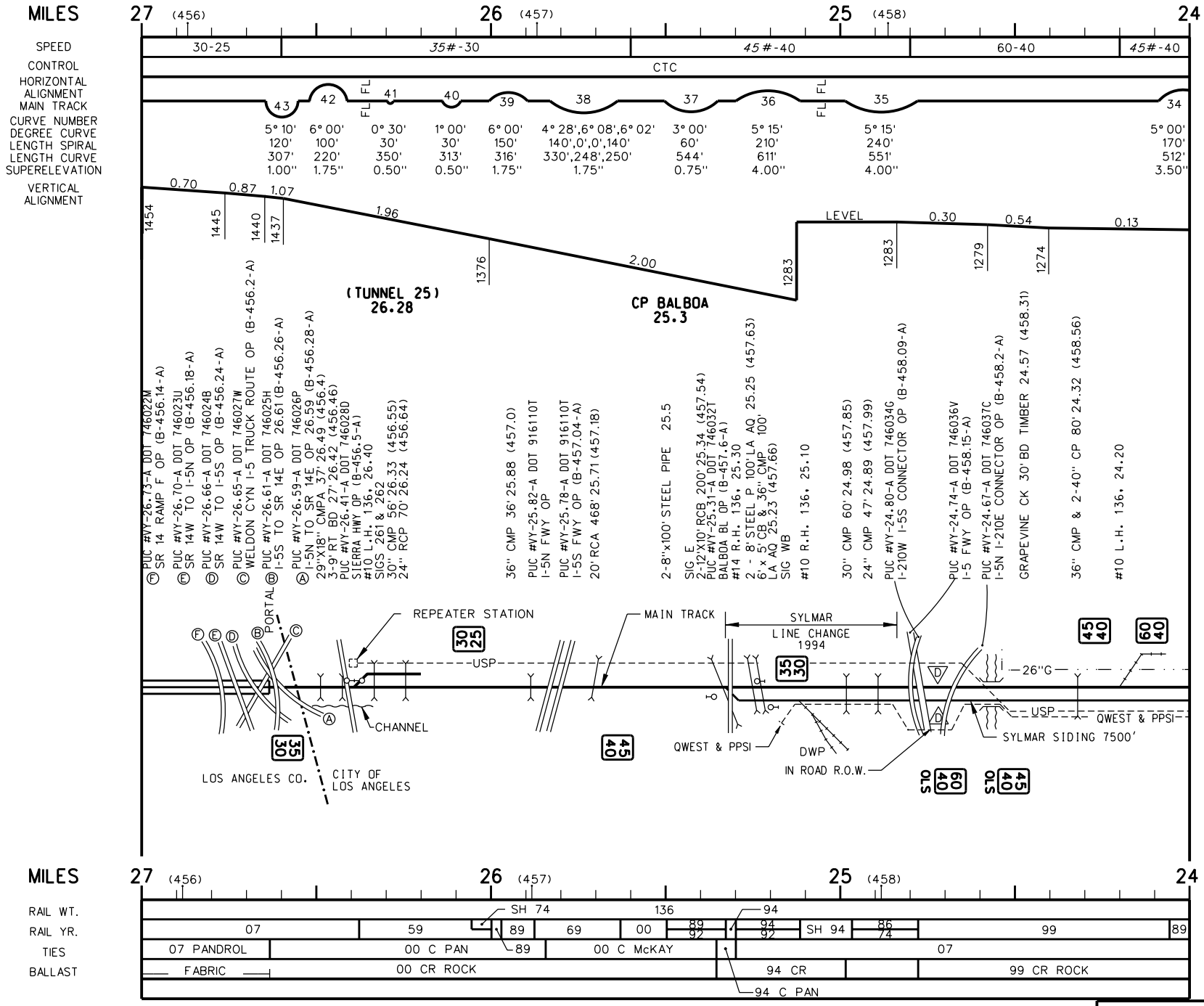
MILES
27 (456)
26 (457)
25 (458)
24
SPEED
30-25
35#-30
45#-40
60-40
45#-40
CONTROL
CTC
HORIZONTAL ALIGNMENT
MAIN TRACK
CURVE NUMBER
DEGREE CURVE
LENGTH SPIRAL
LENGTH CURVE
SUPERELEVATION
43 42 41 40 39 38 37 36 35 34
FL FL FL FL
5° 10' 120' 307' 1.00"
6° 00' 100' 220' 1.75"
0° 30' 30' 350' 0.50"
1° 00' 30' 313' 0.50"
6° 00' 150' 316' 1.75"
4° 28',6° 08',6° 02' 140',0',0',140' 330',248',250' 1.75"
3° 00' 60' 544' 0.75"
5° 15' 210' 611' 4.00"
5° 15' 240' 551' 4.00"
5° 00' 170' 512' 3.50"
VERTICAL ALIGNMENT
0.70 0.87 1.07 1.96 2.00 LEVEL 0.30 0.54 0.13
1454 1445 1440 1437 1376 1283 1283 1279 1274
(TUNNEL 25) 26.28
CP BALBOA 25.3
Ⓕ PUC #VY-26.73-A DOT 746022M SR 14 RAMP F OP (B-456.14-A)
Ⓔ PUC #VY-26.70-A DOT 746023U SR 14W TO I-5N OP (B-456.18-A)
Ⓓ PUC #VY-26.66-A DOT 746024B SR 14W TO I-5S OP (B-456.24-A)
Ⓒ PUC #VY-26.65-A DOT 746027W WELDON CYN I-5 TRUCK ROUTE OP (B-456.2-A)
Ⓑ PUC #VY-26.61-A DOT 746025H I-5S TO SR 14E OP 26.61 (B-456.26-A)
Ⓐ PUC #VY-26.59-A DOT 746026P I-5N TO SR 14E OP 26.59 (B-456.28-A)
29"X18" CMPA 37' 26.49 (456.4)
3-9' RT BD 27' 26.42 (456.46)
PUC #VY-26.41-A DOT 746028D SIERRA HWY OP (B-456.5-A)
#10 L.H. 136. 26.40
SIGS 261 & 262
30" CMP 56' 26.33 (456.55)
24" RCP 70' 26.24 (456.64)
36" CMP 36' 25.88 (457.0)
PUC #VY-25.82-A DOT 916110T I-5N FWY OP
PUC #VY-25.78-A DOT 916110T I-5S FWY OP (B-457.04-A)
20' RCA 468' 25.71 (457.18)
2-8"x100' STEEL PIPE 25.5
SIG E
2-12'X10' RCB 200' 25.34 (457.54)
PUC #VY-25.31-A DOT 746032T BALBOA BL OP (B-457.6-A)
#14 R.H. 136. 25.30
2 - 8' STEEL P 100' LA AQ 25.25 (457.63)
6' x 5' CB & 36" CMP 100' LA AQ 25.23 (457.66)
SIG WB
#10 R.H. 136. 25.10
30" CMP 60' 24.98 (457.85)
24" CMP 47' 24.89 (457.99)
PUC #VY-24.80-A DOT 746034G I-210W I-5S CONNECTOR OP (B-458.09-A)
PUC #VY-24.74-A DOT 746036V I-5 FWY OP (B-458.15-A)
PUC #VY-24.67-A DOT 746037C I-5N I-210E CONNECTOR OP (B-458.2-A)
GRAPEVINE CK 30' BD TIMBER 24.57 (458.31)
36" CMP & 2-40" CP 80' 24.32 (458.56)
#10 L.H. 136. 24.20
PORTAL
REPEATER STATION
MAIN TRACK
SYLMAR LINE CHANGE 1994
USP
26"G
QWEST & PPSI
SYLMAR SIDING 7500'
CHANNEL
QWEST & PPSI
DWP
IN ROAD R.O.W.
LOS ANGELES CO.
CITY OF LOS ANGELES
30 25
35 30
45 40
60 40
60 40 OLS
45 40 OLS
MILES
27 (456)
26 (457)
25 (458)
24
MAIN TRACK
RAIL WT.
RAIL YR.
TIES
BALLAST
SH 74
136
94
07
59
89
69
00
89 92
94 92
SH 94
86 74
99
89
07 PANDROL
00 C PAN
89
00 C McKAY
07
FABRIC
00 CR ROCK
94 CR
99 CR ROCK
94 C PAN

METROLINK

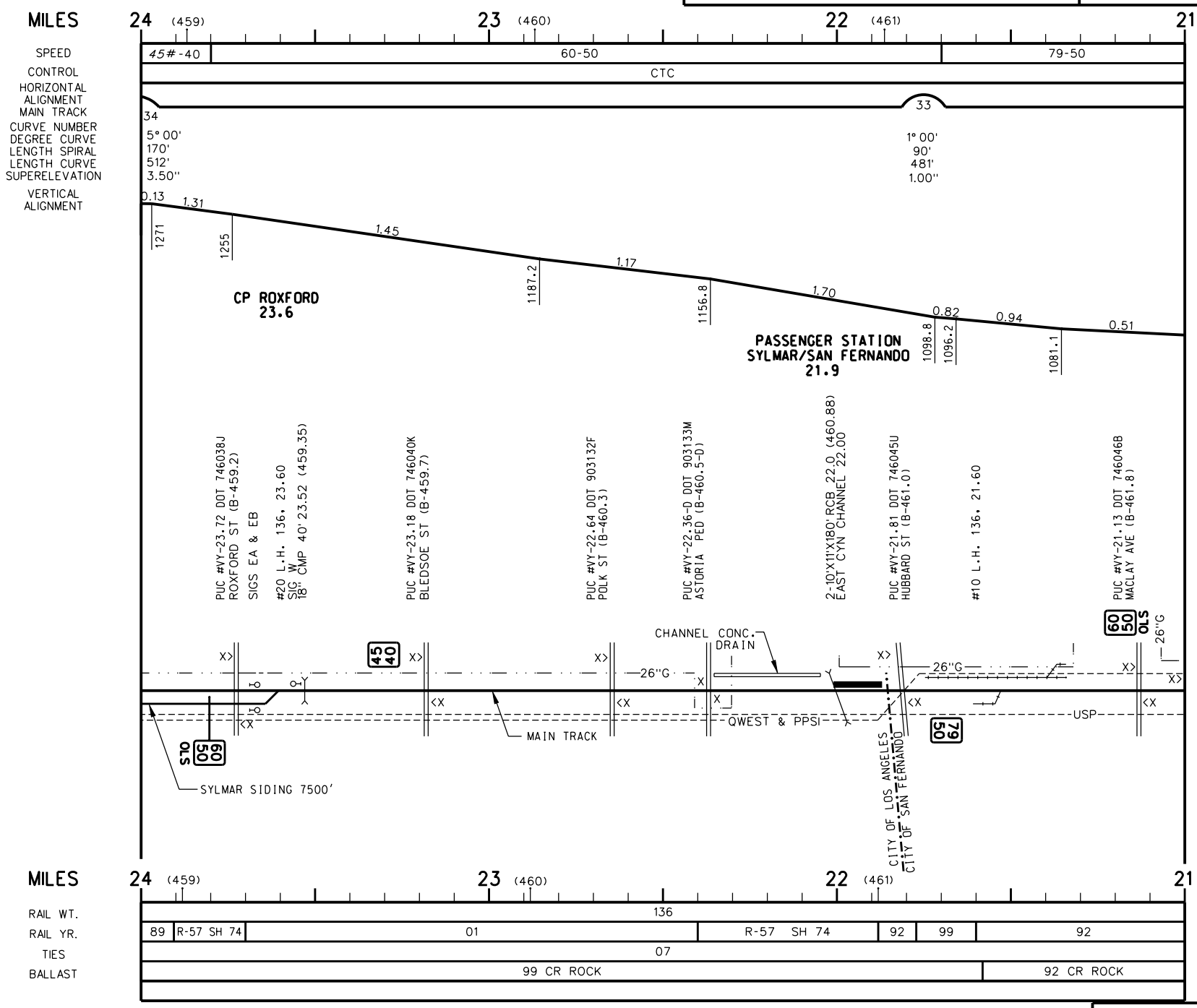
MILES
24 (459)
23 (460)
22 (461)
21
SPEED
45#-40
60-50
79-50
CONTROL
CTC
HORIZONTAL ALIGNMENT MAIN TRACK
34
33
CURVE NUMBER
DEGREE CURVE
LENGTH SPIRAL
LENGTH CURVE
SUPERELEVATION
5° 00'
170'
512'
3.50"
1° 00'
90'
481'
1.00"
VERTICAL ALIGNMENT
0.13
1.31
1.45
1.17
1.70
0.82
0.94
0.51
1271
1255
1187.2
1156.8
1098.8
1096.2
1081.1
CP ROXFORD
23.6
PASSENGER STATION
SYLMAR/SAN FERNANDO
21.9
PUC #VY-23.72 DOT 746038J
ROXFORD ST (B-459.2)
SIGS EA & EB
#20 L.H. 136. 23.60
SIG W
18" CMP 40' 23.52 (459.35)
PUC #VY-23.18 DOT 746040K
BLEDSOE ST (B-459.7)
PUC #VY-22.64 DOT 903132F
POLK ST (B-460.3)
PUC #VY-22.36-D DOT 903133M
ASTORIA PED (B-460.5-D)
2-10'X11'X180' RCB 22.0 (460.88)
EAST CYN CHANNEL 22.00
PUC #VY-21.81 DOT 746045U
HUBBARD ST (B-461.0)
#10 L.H. 136. 21.60
PUC #VY-21.13 DOT 746046B
MACLAY AVE (B-461.8)
CHANNEL CONC. DRAIN
26"G
45 40
60 50 OLS
60 50 OLS
79 50
QWEST & PPSI
USP
MAIN TRACK
SYLMAR SIDING 7500'
CITY OF LOS ANGELES
CITY OF SAN FERNANDO
MILES
24 (459)
23 (460)
22 (461)
21
MAIN TRACK
RAIL WT.
136
RAIL YR.
89
R-57 SH 74
01
R-57 SH 74
92
99
92
TIES
07
BALLAST
99 CR ROCK
92 CR ROCK

METROLINK

MILES 21 (462) 20 (463) 19 (464) 18

SPEED: 79-50

CONTROL: CTC

HORIZONTAL ALIGNMENT MAIN TRACK: NO CURVES

CURVE NUMBER
DEGREE CURVE
LENGTH SPIRAL
LENGTH CURVE
SUPERELEVATION

VERTICAL ALIGNMENT

0.51 0.64 0.76 0.56 0.64 0.71 0.88 1.36 1.41

1071 1065 1054 1045 1036 1014 993 944 927

PUC #VY-20.99 DOT 746047H BRAND BL 20.99 (B-461.9)

SIGS 201 & 202
PUC #VY-20.81 DOT 746048P JESSIE / WOLFSKILL ST 20.81 (B-462.0)

SAN FERNANDO
LOS ANGELES

PACOIMA WASH 141' STG 20.54 (462.32)

#10 R.H. 136. 20.20
PUC #VY-20.08-A DOT 914503U SR 118 FWY OP (B-462.78-A)

PUC #VY-20.05 DOT 746050R PAXTON ST (B-462.8)

PUC #VY-19.51 DOT 746052E VAN NUYS BL (B-463.4)

6' RT BD 19.42 (463.46)

PUC #VY-19.23 DOT 746053L PIERCE ST (B-463.6)

SIGS 191 & 192

24" CIP 20' 18.95 (463.91)

13" x 21" CMPA 20' 18.44 (464.43)

PUC #VY-18.41 DOT 746054T OSBORNE ST (B-464.5)

CONC DRAIN CHANNEL

26"G

26"G

26"G

CITY OF
CITY OF

USP

QWEST & PPSI

USP

MAIN TRACK

MAIN TRACK

MILES 21 (462) 20 (463) 19 (464) 18

RAIL WT.: 136

RAIL YR.: 92

TIES: 07

BALLAST: 92 CR ROCK

METROLINK

MILES 18 (465) 17 (466) 16 (467) 15

SPEED: 79-50

CONTROL: CTC

HORIZONTAL ALIGNMENT MAIN TRACK

CURVE NUMBER	32C	32B	32A	31
DEGREE CURVE	0° 30'	0° 30'	1° 00'	0° 53'
LENGTH SPIRAL	30'	30'	230'	140'
LENGTH CURVE	123'	123'	214'	414'
SUPERELEVATION	0.00	0.00	2.00	1.25

VERTICAL ALIGNMENT

0.76 927 | 0.43 923 | 0.31 918 | 0.16 917 | 0.34 916 | 1.00 915 | 912 | 0.61 | 0.75 892 | 888 | 0.39 883 | 0.88 877 | 0.85 | 1.61 861 | 848 | 0.90 | 0.95 816 | 813

CP McGINLEY 15.5

CP SHELDON 17.0

CP TUXFORD 16.05

PASSENGER STATION SUN VALLEY 15.4

3-8'X4'X300' RCB LACFC 17.98

PUC #VY-17.87 DOT 746055A BRANFORD ST (B-465.0)

2 - 60" CMP 74'17.53 (465.35)
108" CMP 200'17.50 (465.37)
TUJUNGA WASH 66' STG BD 17.46 (465.40)

#10 R.H. 136. 17.15
#14 L.H. 136. 17.10
PUC #VY-17.05 DOT 746057N SHELDON ST (B-465.7)

SIGS 171 & 172
#24 L.H. 136. 16.95

24" CIP 40'16.79 (466.09)

42" CMP 55'16.29 (466.59)

PUC #VY-15.95-B DOT 746059C TUXFORD ST UP (B-466.9-B)
2 - 100' STG BD

PUC #VY-15.85-A DOT 746060W I-5 FWY OP (SUN VALLEY OH) (B-467.0-A)

PUC #VY-15.68 DOT 746061D PENROSE ST (B-467.2)
#20 R.H. 136. 15.60

PUC #VY-15.50-D DOT 922845P SUN VALLEY STATION PED XING

SIGS 151 & 152
PUC #VY-15.06 DOT 746064Y SUNLAND BL (B-467.8)

VULCAN SIDING

SUN VALLEY SIDING 6100'

26"G

USP

QWEST & PPSI

MAIN TRACK

SIDING

RAIL WT.	136
RAIL YR.	92
TIES	99
BALLAST	92 CR ROCK

MAIN TRACK

MILES 18 (465) 17 (466) 16 (467) 15

RAIL WT.	136		
RAIL YR.	92	03	92
TIES	07		
BALLAST			

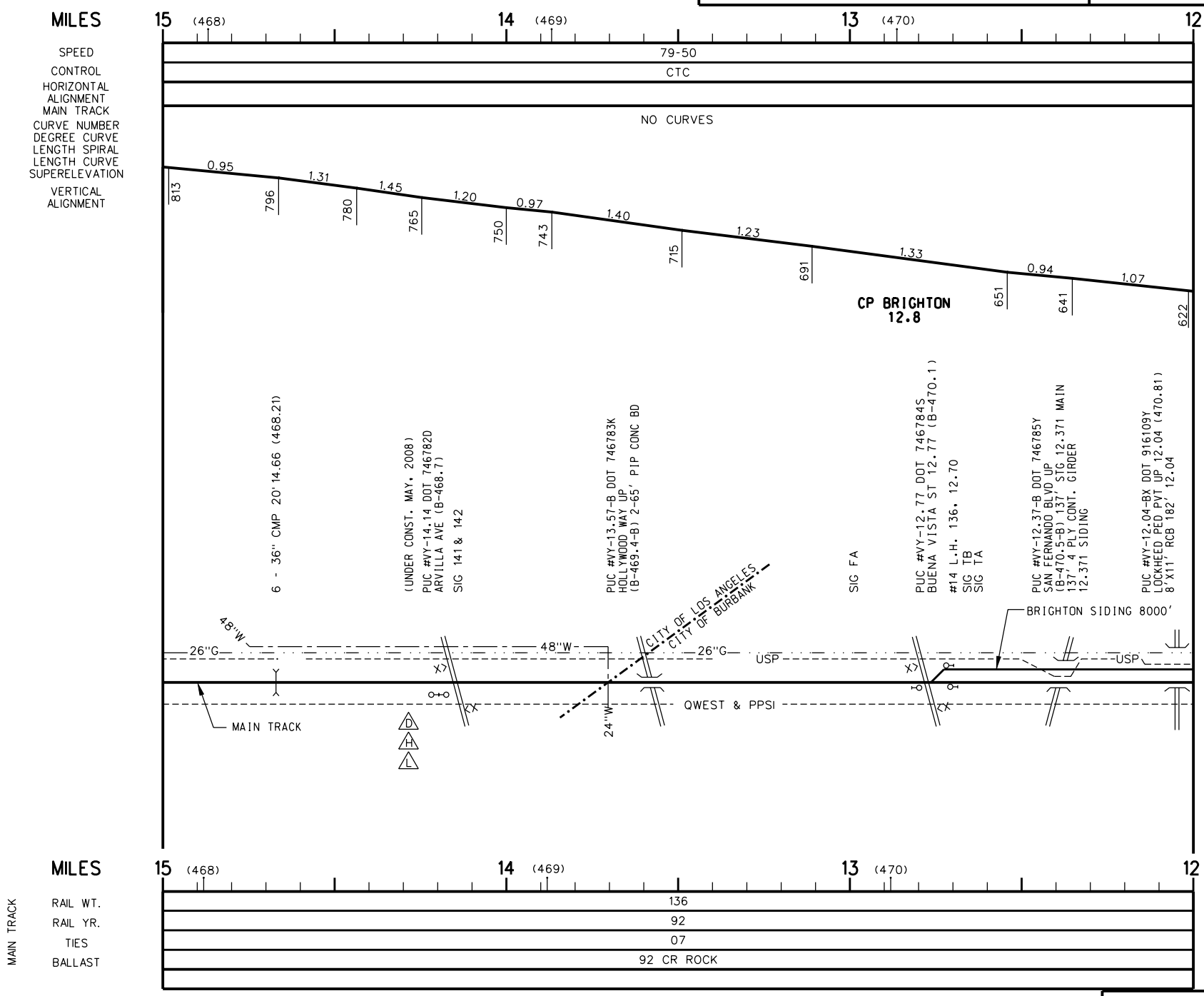
MILES
15 (468) 14 (469) 13 (470) 12
SPEED
79-50
CONTROL
CTC
HORIZONTAL ALIGNMENT
MAIN TRACK
CURVE NUMBER
DEGREE CURVE
LENGTH SPIRAL
LENGTH CURVE
SUPERELEVATION
NO CURVES
VERTICAL ALIGNMENT
0.95 1.31 1.45 1.20 0.97 1.40 1.23 1.33 0.94 1.07
813 796 780 765 750 743 715 691 651 641 622
CP BRIGHTON
12.8
6 - 36" CMP 20'14.66 (468.21)
(UNDER CONST. MAY, 2008)
PUC #VY-14.14 DOT 746782D
ARVILLA AVE (B-468.7)
SIG 141 & 142
PUC #VY-13.57-B DOT 746783K
HOLLYWOOD WAY UP
(B-469.4-B) 2-65' PIP CONC BD
CITY OF LOS ANGELES
CITY OF BURBANK
SIG FA
PUC #VY-12.77 DOT 746784S
BUENA VISTA ST 12.77 (B-470.1)
#14 L.H. 136. 12.70
SIG TB
SIG TA
PUC #VY-12.37-B DOT 746785Y
SAN FERNANDO BLVD UP
(B-470.5-B) 137' STG 12.371 MAIN
137' 4 PLY CONT. GIRDER
12.371 SIDING
PUC #VY-12.04-BX DOT 916109Y
LOCKHEED PED PVT UP 12.04 (470.81)
8'X11' RCB 182' 12.04
BRIGHTON SIDING 8000'
48"W
26"G
48"W
26"G
USP
USP
QWEST & PPSI
24"W
MAIN TRACK
D
H
L
MILES
15 (468) 14 (469) 13 (470) 12
MAIN TRACK
RAIL WT.
136
RAIL YR.
92
TIES
07
BALLAST
92 CR ROCK

METROLINK

MILES 12 (471) 11 (472) 10 (473) 9

SPEED: 79-50 | 79-55

CONTROL: CTC | 2MT-CTC

HORIZONTAL ALIGNMENT MAIN TRACK — CURVE NUMBER / DEGREE CURVE / LENGTH SPIRAL / LENGTH CURVE / SUPERELEVATION

Curve	Degree	Length Spiral	Length Curve	Superelevation
30	0° 20'	0'	2250'	0.50"
29	0° 30'	0'	X	0.10"
28	0° 27'19"	40'	670'	0.50"
27	0° 20',0° 45'	0',34',60'	2510',303'	1.70", 1.20"
26	0° 20'	0'	300'	0.70"
25	0° 20'	X	X	0.50"
24	0° 30'	40'	173'	0.60"
23	0° 30'	X	X	0.50"
22	0° 30'	X	X	0.90"

TRACK #2 RELOCATION 1993

VERTICAL ALIGNMENT: 622 — 1.07 — 598 — 0.87 — 581 — 0.80 — 557 — 0.95 — 512 — 0.59 — 506 — 0.69 — 501 — 0.91 — 481

CP BURBANK JCT. 11.4

PASSENGER STATION BURBANK 10.8

CP OLIVE 11.13

CP ALLEN 9.8

VENTURA SUB TO MOORPARK SEE PAGE 13 VENTURA SUB TRACK CHARTS SCAX VENTURA SUB BEGINS M.P. 11.473

3-#20 L.H. 136. 11.5
2-#20 R.H. 136. 11.5
PUC #VY-11.37-A DOT 746786F
BURBANK BL OP (B-471.5-A)

#10 R.H. 136. 11.35

SIG 4W
SIG 4W
SIGS TBB & TAA
30' x 14.50'X30'RCB 11.27
6' x 2' x 120'RCB 11.09
#14 R.H. 136. 11.10

PUC #VY-10.95-A DOT 746787M
MAGNOLIA BL OP (B-472.1-A)
36"X22" CMPA 96'10.89 (472.00)

PUC #VY-10.72-A DOT 746788U
OLIVE AV OP (B-472.2-A)
8' RT BD C 10.63 (472.25)

PUC #VY-10.37-A DOT 746791C
I-5 FWY (PROVIDENCIA OH)
OP (B-472.5-A)
4'X6' RCB 63'10.36 (472.53)

PUC #VY-10.03-B DOT 746792J
ALAMEDA AVE UP
(B-472.81-B) 78' PIP CONC BD

2-#24 L.H. 136. 9.80
2-#24 R.H. 136. 9.80
CITY OF BURBANK
CITY OF GLENDALE

PUC #VY-9.45-A DOT 746794X
(B-473.4-A)
WESTERN AV OP 9.45

PUC #VY-9.16 DOT 746795E
(B-473.8)
SONORA AV 9.16

BRIGHTON SIDING 8000'

SIG 2E — SIG 2W — SIG FA-B — 79 50 — 90" S.D. — SIG 2E — SIG 2W

USP — 26"G — 26"G — PPSI — TRACK #1

SCRRA — USP — SCRRA — USP — SP FIBER — QWEST — TRACK #2

SIG 4E — 79 55 — UP BURBANK — 40 35 — SIG 4E — SIG 4W

MILES 12 (471) 11 (472) 10 (473) 9

MAIN TRACK #1

RAIL WT.	136 CWR
RAIL YR.	92 | 96 | SH 94 | 92 | SH 94
TIES	07 | 07 PANDROL
BALLAST	92 CR ROCK | 94 CR ROCK

MAIN TRACK #2

RAIL WT.	136
RAIL YR.	96 | 94 | 01 | 94
TIES	94 | 00
BALLAST	85 CR ROCK

END 2 MAIN TRACKS 11.469

METROLINK

MILES 9 (474) 8 (475) 7 (476) 6

SPEED: 79-55

CONTROL: 2MT-CTC

HORIZONTAL ALIGNMENT MAIN TRACK #1
CURVE NUMBER: 21
DEGREE CURVE: 0° 40',0° 18'
LENGTH SPIRAL: 0'
LENGTH CURVE: 4800',340'
SUPERELEVATION: 1.10"

TRACK #2 RELOCATIONS 1993, 1997

MAIN TRACK #2
CURVE NUMBER: 21 | 20 | 19
DEGREE CURVE: 0° 40',0° 18' | 0° 24'47" | 0° 50'
LENGTH SPIRAL: 0' | 80',80' | 80'
LENGTH CURVE: 4800',340' | 0' | 35'
SUPERELEVATION: 1.20", 0.40" | 0.50" | 1.00"

VERTICAL ALIGNMENT: 0.91, 0.17, 0.05, -0.08, 0.04, 0.45, 0.62, 0.19, 0.71

481, 471, 467, 466 SAG, 468 CREST, 467.5, 458, 445, 441, 438

CP CURRIER 6.4

PUC #VY-8.71 DOT 746796L GRANDVIEW AV 8.71 (B-474.2)
8' RT BDT 8.41
VERDUGO WASH 95' SPG BD 8.12 (474.74)
PUC #VY-8.03-A DOT 746800Y SR 134W (L.A. RIVER OH) OP
PUC #VY-8.03-A DOT 746800Y SR 134E (L.A. RIVER OH) OP (B-474.85-A)
OFFRAMP SR134E OP 8.02
PUC #VY-7.99 DOT 746804B DORAN ST (B-474.8)
SIGS 71&72 SIGS 73 & 74
SIG [752] 2-30" RCP 60' 7.63 (475.26) #10 L.H. 136. 7.60
PUC #VY-7.51 DOT 746805H BROADWAY/BRAZIL ST (B-475.4)
PUC #VY-7.14-B DOT 746808D COLORADO ST UP (B-475.7-B) 190' SG. PCD 2'X4'X95' RCB 6.032
PUC #VY-6.51 DOT 746812T CHEVY CHASE DR (B-476.4) 2-#20 L.H. 136. 6.50 2-#20 R.H. 136. 6.50 #14 R.H. 136. 6.30 SIG 2E & 4E 2 - 18" CP & CMP 50' 6.310
SIG 2W & 4WA
2'x4'x95' RCB 6.032
PUC #VY-6.03-B DOT 746813A LOS FELIZ BL UP (B-476.8-B) 104' BD

26"G — QWEST & PPSI — USP — SCRRA — SP FIBER — PPSI — TRACK #1 — TRACK #2

MILES 9 (474) 8 (475) 7 (476) 6

MAIN TRACK #1

RAIL WT.	136	119
RAIL YR.	94	SH 94 R-56
TIES	SH 94	07 PANDROL
BALLAST	94 CR ROCK	85 SLAG

MAIN TRACK #2

RAIL WT.	136	
RAIL YR.	94	81
TIES	00 PAN	
BALLAST	94 CR ROCK	

METROLINK

MILES: 6 (477) 5 (478) 4 (479) 3

SPEED: 79-55 | 60# -40 | 50-40

CONTROL: 2MT-CTC | 3MT-CTC

HORIZONTAL ALIGNMENT
MAIN TRACK #2/1

CURVE NUMBER	17	16	15	14	13	12	11
DEGREE CURVE	0° 30'	2° 30'	2° 30'	2° 30'	2° 30'	2° 31'40"	2° 30'
LENGTH SPIRAL	0'	310'	310'	310'	310'	310'	240'
LENGTH CURVE	4167'	599'	291'	472'	394'	812'	898'
SUPERELEVATION	1.20"	3.00"	3.00"	3.00"	3.00"	2.00"	2.00"

TRACK #1 TRACK #2

MAIN TRACK #4/2

CURVE NUMBER	17	16	15	14	13	12	11
DEGREE CURVE	0° 30'	2° 30'	2° 30'	2° 30'	2° 30'	2° 29'40"	2° 30'
LENGTH SPIRAL	0'	310'	310'	310'	310'	230',275'	300'
LENGTH CURVE	X	574'	291'	472'	394'	885'	838'
SUPERELEVATION	1.10"	3.00"	3.00"	3.00"	3.00"	2.00"	2.00"

TRACK #2 TRACK #4

1993 LINE CHANGE IS SHOWN FROM BC CURVE 3 THROUGH EC CURVE 16 BOTH TRACKS

VERTICAL ALIGNMENT

0.71 0.43 0.27 1.09 0.95 0.58 0.85 0.57 0.42 0.55 0.16 0.25 0.20 0.25 0.38

438 434.5 427.6 425.2 391.8 384.3 382.2 375 370.4 363.9 359.5 358.1 356.9 355.6 350.2

3.5

VALLEY SUBDIVISION | RIVER SUBDIVISION

PASSENGER STATION GLENDALE 5.8

CP FLETCHER 4.8

(UPRR TAYLOR YARD)

CP TAYLOR 3.5

CP ORMISTON 3.3

24" RCP 100' 5.8
24" CMP 96' 5.57
PUC #VY-5.55-B DOT 746814G BRAND BL UP 206' STEEL (B-477.3-B) 104' SG BD
SIG [541] #10 L.H. 119. 5.40
SIGS 41, 42, 43, 44 36" RCP 170' 4.782
#14 L.H. 136. 4.80 PUC #VY-4.78-B DOT 746815N FLETCHER DR UP (B-478.1-B) 63' BD STEEL
PUC #VY-4.65-A DOT 746816V SR 2 GLENDALE FWY OP (B-478.2-A)
SYCAMORE WASH 4.45 15' RCB LACFC (478.41)
SIGS 2E & 4E
2-#20 R.H. 136. 3.50 2-#20 L.H. 136. 3.50 SIGS 2W & 4W TAYLOR ACCESS PVT UP 3.35 (B-479.55-X) PUC #RI-3.35-BX 136' BD CONC DOT 914502M
SIGS 4EA & 4EB SIG 2E
3-#20 L.H. 136. 3.10 1-#10 L.H. 136. 3.10 SIGS 2W & 6W & 4W

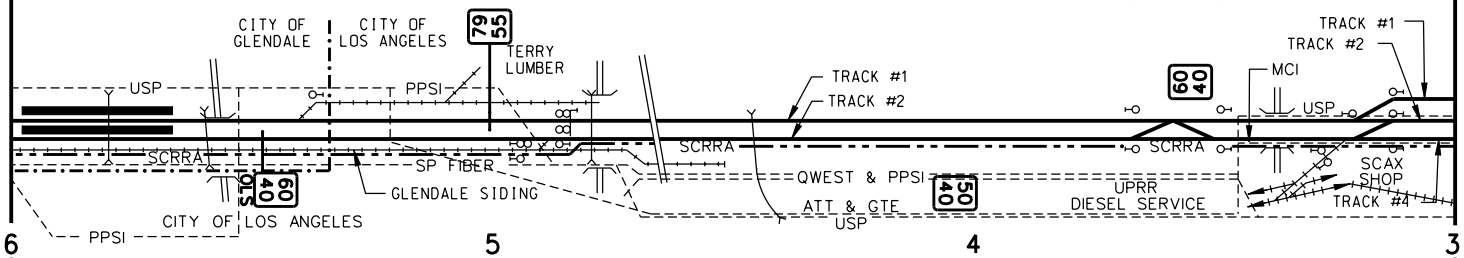

MILES: 6 (477) 5 (478) 4 (479 ½) 3

MAIN TRACK #2/1

RAIL WT.	119	136 CWR					
RAIL YR.	69	SH 94	SH 92 (59)	02	02	59 00	
TIES	07 PANDROL		00				
BALLAST	94 CR ROCK		92 CR ROCK				

MAIN TRACK #4/2

RAIL WT.	136						
RAIL YR.	81	94	58	SH92 (59)	02	59 00	94
TIES	00			00			00 C
BALLAST	94 CR ROCK			92 CR ROCK			

METROLINK

MILES 3 (480) 2 (481) 1 (482) 0

SPEED	50-40	50-40	50-20	30-20 MT3 / 25-20 MT4	15-10
CONTROL		3MT-CTC	2MT - CTC		CTC / RULE 6.28

HORIZONTAL ALIGNMENT MAIN TRACK #3/2

CURVE NUMBER	11	10	9	8	7	6	5	4	3	2	1
DEGREE CURVE	2° 30'	2° 10'	2° 30'	2° 41'	1° 8'	1° 14'	2° 11'	0° 28'	6° 0'	X	9° 14'15",9°
LENGTH SPIRAL	240'	210'	180'	180'	40'	60'	120'	40',60'	X,169'	X	69',60'
LENGTH CURVE	898'	2158'	210'	433'	302'	134'	89'	16'	X	X	X
SUPERELEVATION	2.00"	2.00"	2.00"	X	X	X	X	X	X	X	X

TRACK •2 — TRACK •3 — TRACK •2 ← → TRACK •3 — TRACK •4 — FL

MAIN TRACK #4

CURVE NUMBER	11	10	9	8	7	6	5	4	3	2
DEGREE CURVE	2° 30'	2° 20'	2° 30'	2° 41'	1° 8'	1° 14'	2° 11'	0° 28'	6° 0'	X
LENGTH SPIRAL	300'	210'	180'	180'	40'	60'	120'	40'	X,148'	X
LENGTH CURVE	838'	2158'	210'	433'	303'	154'	89'	16'	856'	X
SUPERELEVATION	2.00"	2.00"	2.00"	X	X	X	X	X	X	X

VERTICAL ALIGNMENT

0.29 0.44 0.60 0.00 0.35 1.00 0.70 0.20 0.38 0.66 0.20 0.15 0.50 0.24 0.18 0.22 0.00

347.8 345.7 336 330.1 330.1 327.8 318.1 311.4 309.3 308.6 301.6 299.6 300.2 298.4 295.8 292.8 292 292

LAUS UNION STATION 0.0

FOR TURNOUT INFO SEE TURNOUT DATA SHEET AT END OF SEGMENT

CP DAYTON 2.2 / 480.7

CP CAPITOL 1.6

CP CHAVEZ 1.0

CP W. DIAMOND CP MISSION 0.8

CP TERMINAL 0.5

INT SIG 4E
PUC #RI-2.27-X DOT 914501F
FIRE ACCESS RD PVT 2.27
INT SIG 6EA
INT SIG 6EA
PUC #RI-2.21-A DOT 746821S
I-5 FWY OP (B-480.6-A)
INT SIG 6EB
PUC #RI-2.11-A DOT 746822Y
RIVERSIDE DR OP (B-480.7-A)
INT SIGS 4WA, 6W, 360' 2.03
LA RIVER SBG
INT SIGS
2W,4WB
PUC #RI-2.00-A DOT 747489R
PASADENA FWY I-110 S OP
(BG-480.83-A)
PUC #RI-1.99-A DOT 747490K
PASADENA FWY I-110 N OP
(BG-480.85-A)
INT SIGS 2E, 4E
18" x 64' RCP 1.570
PUC #RI-1.56-AT, DOT 922842U
METRO GOLD LINE OH
(481.2) (81.2)
INT SIGS 2W, 4WA
INT SIG 4WB
PUC #RI-1.46-A DOT 027605P
N BROADWAY OP (2-139.3-A)
PUC #RI-1.36-A DOT 027606W
N SPRING ST OP (2-139.5-A)
PUC #RI-1.17 DOT 02760D
N MAIN ST (2-139.6)
INT SIG 2E, 4E RI-1.11-X
PUC #RI-1.11-X DOT 027608K
DWP PVT XING (2-139.71)
100' THRU RIVITED
TRUSS 0.810
INT SIG 4WB
INT SIG 2WB
300' STG 0.810
100' STG 0.805
INT SIG 2WA, 4WA
100' SPG 0.800
SIG
PUC #RI-0.37-B DOT 746826B
VIGNES ST UP
(B-482.54-B)
PUC #RI-0.19-B DOT 746827H
CESAR CHAVEZ AVE UP
(B-482.71-B)

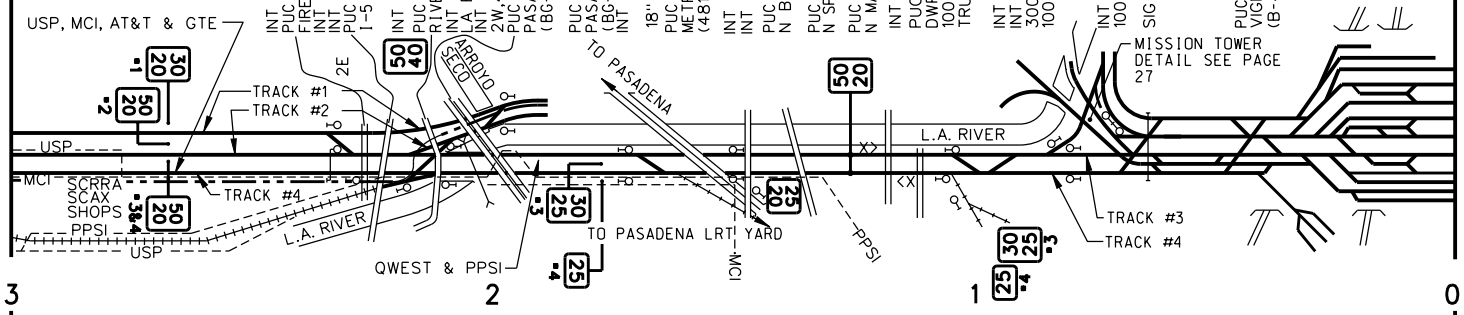

MILES 3 2 1 0

RAIL WT.	136				136 ALL 5 LEADS	VARIOUS
RAIL YR.	SH 92 (59)	94	00	94	94	(13 TRACKS)
TIES	92	94 CONC	00 C	94 C	C	VARIOUS
BALLAST	92 CR ROCK	94 CR ROCK	00 CR	94 CR ROCK	(WOOD SW TIES)	

MAIN TRACK #4/2 MAIN TRACK #2/1

RAIL WT.	136	136	119
RAIL YR.	SH94 (59)	00	79
TIES	94 C-1	00 C	01
BALLAST	94 CR ROCK	00 CR	79 CR ROCK

NOTE:

SEE RIVER (EAST BANK) SUB TRACK CHART FOR TRACKS #1 AND #2

METROLINK

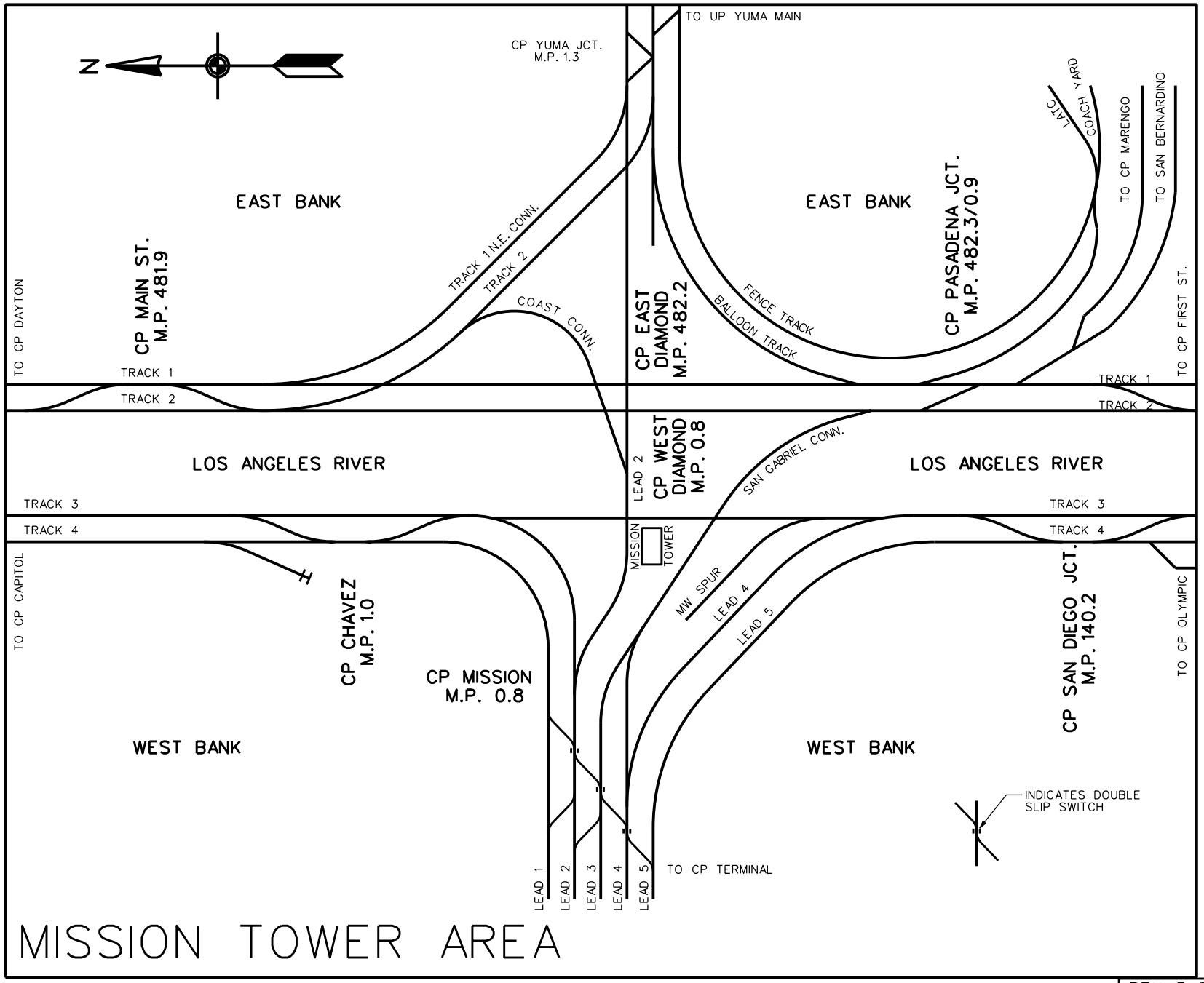

MISSION TOWER AREA

METROLINK

RIVER SUBDIVISION

CP Taylor
MP 3.50

to

LAUS
MP 0.0

DRAWN MAY 3, 1995
TO MAKE REVISIONS, PLEASE CONTACT:

DIRECTOR OF ENGINEERING AND CONSTRUCTION
METROLINK
(213) 452-0250

LAST REVISION
MAY 2008

METROLINK

MILES

SPEED

CONTROL

HORIZONTAL ALIGNMENT

MAIN TRACK #2/1

CURVE NUMBER
DEGREE CURVE
LENGTH SPIRAL
LENGTH CURVE
SUPERELEVATION

MAIN TRACK #4/2

CURVE NUMBER
DEGREE CURVE
LENGTH SPIRAL
LENGTH CURVE
SUPERELEVATION

VERTICAL ALIGNMENT

6 (477) 5 (478) 4 (479) 3

60 # -40 | 50-40

3MT-CTC

	13	12		11
	2° 30'	2° 31'40"	TRACK #1 / TRACK #2	2° 30'
	310'	310'		240'
	394'	812'		898'
	3.00"	2.00"		2.00"

	13	12		11
	2° 30'	2° 29'40"	TRACK #2 / TRACK #4	2° 30'
	310'	230',275'		300'
	394'	885'		838'
	3.00"	2.00"		2.00"

3.5

VALLEY SUBDIVISION | RIVER SUBDIVISION

0.55 0.16 0.25 0.20 0.25 0.38

359.5 358.1 356.9 355.6 350.2

(UPRR TAYLOR YARD)

CP ORMISTON 3.3

CP TAYLOR 3.5

SIGS 2E & 4E
2-#20 R.H. 136. 3.50
2-#20 L.H. 136. 3.50
SIGS 2W & 4W
TAYLOR ACCESS PVT UP 3.35
(B-479.55-X)
PUC #RI-3.35-BX 136' BD CONC
DOT 914502M
SIGS 4EA & 4EB
SIG 2E
3-#20 L.H. 136. 3.10
1-#10 L.H. 136. 3.10
SIGS 2W & 6W & 4W

SEE VALLEY SUBDIVISION
FOR CONTINUATION

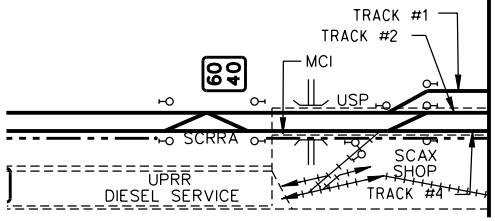

4 3

(479 ½)

136 CWR

02 | 59 00

00

92 CR ROCK

02 | 59 00 | 94

00 | 00 C

92 CR ROCK

MILES

RAIL WT.
RAIL YR.
GRIND
TIES
BALLAST

MAIN TRACK #2/1

RAIL WT.
RAIL YR.
GRIND
TIES
BALLAST

MAIN TRACK #4/2

METROLINK

MILES 3 (480) 2 (481) 1 (482) 0

SPEED	50-40	50-40	50-20	30-20 MT3 / 25-20 MT4	15-10
CONTROL		3MT-CTC	2MT - CTC		CTC / RULE 6.28

HORIZONTAL ALIGNMENT

MAIN TRACK #3/2

CURVE NUMBER	11	10	9	8	7	6	5	4	3	2	1
DEGREE CURVE	2° 30'	2° 10'	2° 30'	2° 41'	1° 8'	1° 14'	2° 11'	0° 28'	6° 0'	X	9° 14'15",9°
LENGTH SPIRAL	240'	210'	180'	180'	40'	60'	120'	40',60'	X,169'	X	69',60'
LENGTH CURVE	898'	2158'	210'	433'	302'	134'	89'	16'	X	X	X
SUPERELEVATION	2.00"	2.00"	2.00"	X	X	X	X	X	X	X	X

TRACK #2 — TRACK #3

MAIN TRACK #4

CURVE NUMBER	11	10	9	8	7	6	5	4	3	2
DEGREE CURVE	2° 30'	2° 20'	2° 30'	2° 41'	1° 8'	1° 14'	2° 11'	0° 28'	6° 0'	X
LENGTH SPIRAL	300'	210'	180'	180'	40'	60'	120'	40'	X,148'	X
LENGTH CURVE	838'	2158'	210'	433'	303'	154'	89'	16'	856'	X
SUPERELEVATION	2.00"	2.00"	2.00"	X	X	X	X	X	X	X

TRACK #2 — TRACK #3 — TRACK #4

LAUS UNION STATION 0.0

VERTICAL ALIGNMENT

0.29 0.44 0.60 0.00 0.35 1.00 0.70 0.20 0.38 0.66 0.20 0.15 0.50 0.24 0.18 0.22 0.00

347.8 345.7 336 330.1 330.1 327.8 318.1 311.4 309.3 308.6 301.6 299.6 300.2 298.4 295.8 292.8 292 292

FOR TURNOUT INFO SEE TURNOUT DATA SHEET AT END OF SEGMENT

CP DAYTON 2.2 / 480.7

CP CAPITOL 1.6

CP CHAVEZ 1.0

CP W. DIAMOND

CP MISSION 0.8

CP TERMINAL 0.5

INT SIG 4E
PUC #RI-2.27-X DOT 914501F
FIRE ACCESS RD PVT 2.27

INT SIG 6EA
INT SIG
PUC #RI-2.21-A DOT 746821S
I-5 FWY OP (B-480.6-A)

INT SIG 6EB
PUC #RI-2.11-A DOT 746822Y
RIVERSIDE DR OP (B-480.7-A)
INT SIGS 4WA, 6W
LA RIVER SBG 360' 2.03
INT SIGS 2W,4WB
PUC #RI-2.00-A DOT 747489R
PASADENA FWY I-110 S OP
(BG-480.83-A)

PUC #RI-1.99-A DOT 747490K
PASADENA FWY I-110 N OP
(BG-480.85-A)
INT SIGS 2E,4E

18" x 64' RCP 1.570
PUC #RI-1.56-AT, DOT 922842U
METRO GOLD LINE OH
(481.2) (81.2)

INT SIGS 2W, 4WA
INT SIG 4WB
PUC #RI-1.46-A DOT 027605P
N BROADWAY OP (2-139.3-A)

PUC #RI-1.36-A DOT 027606W
N SPRING ST OP (2-139.5-A)
PUC #RI-1.17 DOT 027600
N MAIN ST (2-139.6)

INT SIG 2E, 4E RI-1.11-X
PUC #RI-1.11-X DOT 027608K
DWP PVT XING (2-139.71)
100' THRU RIVITED
TRUSS 0.810

INT SIG 4WB
INT SIG 2WB
300' STG 0.810
100' STG 0.805

INT SIG 2WA, 4WA
100' SPG 0.800
SIG

PUC #RI-0.37-B DOT 746826B
VIGNES ST UP
(B-482.54-B)

PUC #RI-0.19-B DOT 746827H
CESAR CHAVEZ AVE UP
(B-482.71-B)

USP, MCI, AT&T & GTE
TRACK #1
TRACK #2
TRACK #4
TRACK #3
TRACK #4
USP
MCI
SCRRA
SCAX
SHOPS
PPSI
USP
L.A. RIVER
ARROYO SECO
TO PASADENA
TO PASADENA LRT YARD
QWEST & PPSI
MCI
PPSI
L.A. RIVER
MISSION TOWER DETAIL SEE PAGE 27

MILES 3 2 1 0

RAIL WT.	136				136 ALL 5 LEADS	VARIOUS
RAIL YR.	SH 92 (59)	94	00	94	94	(13 TRACKS)
GRIND	92	94 CONC	00 C	94 C	C	VARIOUS
TIES	92 CR ROCK	94 CR ROCK	00 CR	94 CR ROCK	(WOOD SW TIES)	
BALLAST						

MAIN TRACK #4/2 MAIN TRACK #2/1

RAIL WT.	136	136	119
RAIL YR.	SH94 (59)	00	79
GRIND	94 C-1	00 C	01
TIES	94 CR ROCK	00 CR	79 CR ROCK
BALLAST			

NOTE:

SEE RIVER (EAST BANK) SUB TRACK CHART FOR TRACKS #1 AND #2

METROLINK

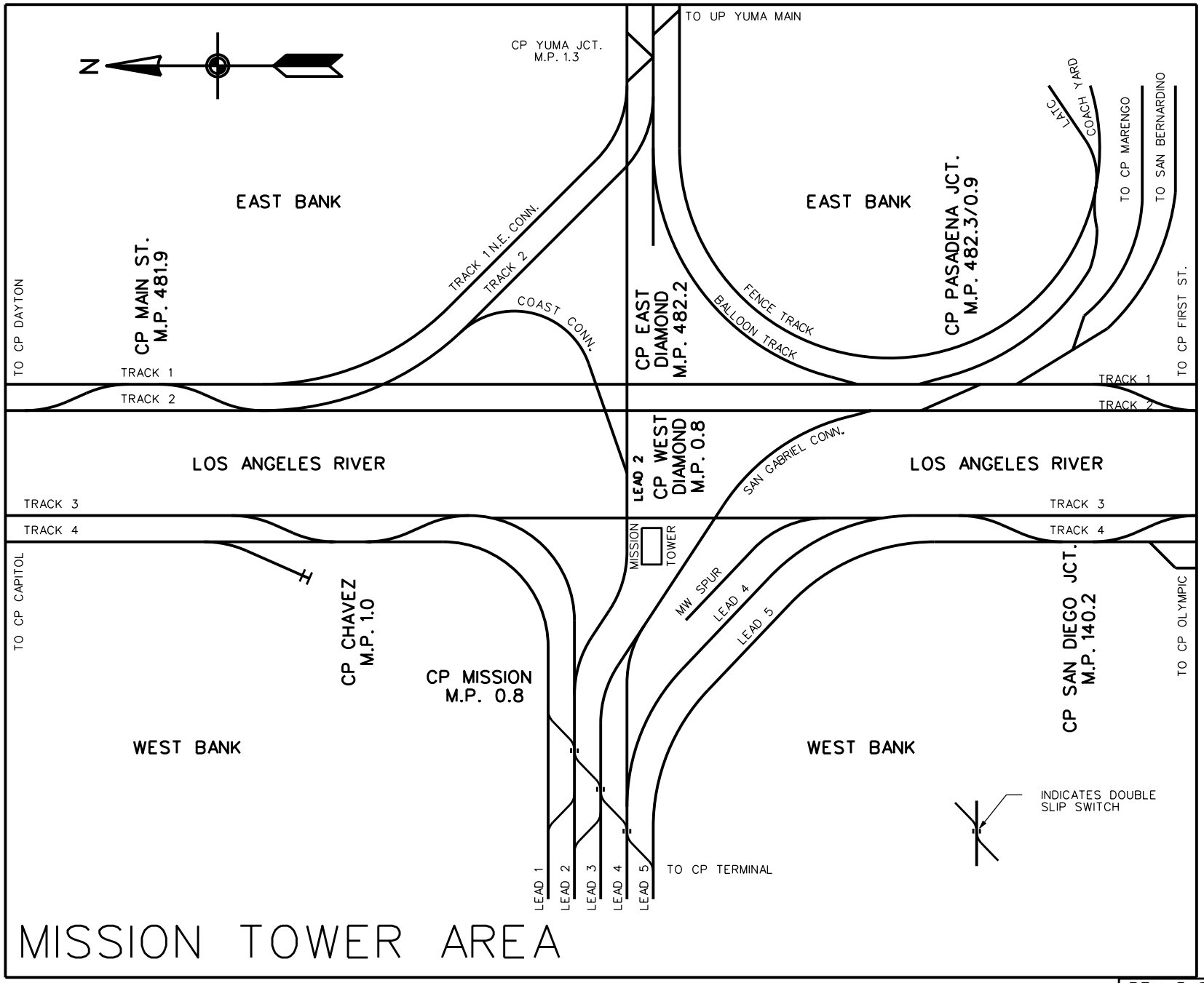

MISSION TOWER AREA

METROLINK

River Subdivision - West Bank Line

CP SAN DIEGO JCT.
MP 140.2

to

BNSF SAN BERNARDINO
SUBDIVISION
MP 144.00

DRAWN NOVEMBER 1998
TO MAKE REVISIONS, PLEASE CONTACT:

DIRECTOR OF ENGINEERING AND CONSTRUCTION
METROLINK
(213) 452-0250

LAST REVISION
MAY 2008

METROLINK

RIVER SUBDIVISION (WEST BANK)

MILES 140 141 142 143

SPEED	15-10 / 35#-25 / 45#-25 / 79-40 / 44#-25
CONTROL	2MT-CTC
HORIZONTAL ALIGNMENT TRACKS 1 AND 2	
CURVE NUMBER	69 / 68 / 67 / 66
DEGREE CURVE	6°05' / 6°33'/5°56'/6°33' / 6°00' / 4°30'
LENGTH SPIRAL	- / 140' / 176' / 313'
LENGTH CURVE	- / 293'/140'/151' / 243' / 205'
SUPERELEVATION	- / 2" / 3" / 3"

VERTICAL ALIGNMENT

0.00% 0.83% 0.53% 0.12% 0.16% 0.62% 0.00% 0.66% 0.46% 0.36% 0.37% 0.34% 0.13% 0.08%

298.2 275.8 262.3 260.8 259.4 252.6 252.6 245.1 242.4 238.0 233.6 230.6

CP OLYMPIC
M.P. 142.6

CP SAN DIEGO JCT
M.P. 140.2

SIG 2EB
SIG 2EC
PVT XING
SIG 2EA
#14 R.H. & L.H. #136, MP 140.2 (TRACK 3)
SIG 4E
SIG 2W
SIG 4WA, 4WB
#14 2-R.H., 1-L.H. 136, MP 140.2 (TRACK 4)
PUC #RI-140.50-A DOT 027620S CESAR CHAVEZ AVE. (FORMER MACY STREET) (2-140.5-A)
101 FWY DIAMOND LANE 140.69
PUC #RI-140.70-A DOT 027621Y US 101 OP (2-140.7-A)
#10 R.H. 136, MP 140.8 (TRACK4)
PUC #RI-141.10-A DOT 027622R 1 ST STREET OP (2-141.1-A)
PUC #RI-141.50-A DOT 027623M 4TH STREET (2-141.5-A) CANT. SIGS 1411, 1412, 1413, 1414
PUC #RI-141.70-A DOT 027624U 6TH STREET/WHITTIER BLVD (2-141.7-A)
PUC #RI-142.00-A DOT 027625B 7TH STREET (2-142.0-A)
PUC #RI-142.40-A DOT 027626H SANTA MONICA FWY (2-142.4-A)
#20 R.H. 136, MP 142.6 (TRACK 3)
#20 R.H. 136, MP 142.6 (TRACK 4)
#10 R.H. 136, MP 142.6 (TRACK 4)
#14 L.H. 136, MP 142.6 (TRACK 4)
PUC #RI-142.70-A DOT 027627P OLYMPIC BLVD (2-142.7-A)
#20 L.H. 136, MP 142.6 (TRACK 4)
#20 L.H. 136, MP 142.6 (TRACK 3)
REDONDO JUNCTION FLYOVER 214.41' PC 143.13

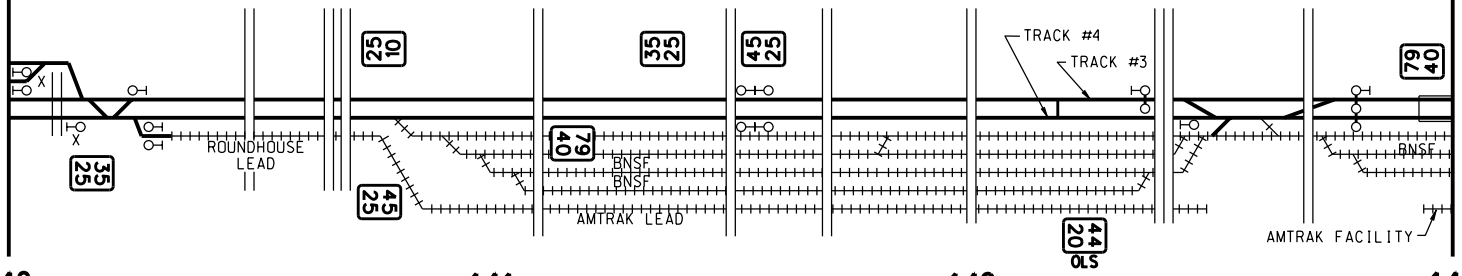

MILES 140 141 142 143

MAIN TRACK #3									
RAIL WT.	136		119	136	119	136	119	136	136
RAIL YR.	1984	84 TRANS	1984			98	84	98	01
TIES	98 E CLIP C	98 C FAST	98	98 FASTC	01				01 C
BALLAST	2001 CR ROCK								01 McKay

MAIN TRACK #4								
RAIL WT.	136	119	136		119	136		136
RAIL YR.	98		1998					01
TIES	98 E CLIP C	FASTCLIP	PAN	98 C FAST	98 PANDROL			01 C
BALLAST	1998 CR ROCK							01 McKay

REV. 5-08

METROLINK

MILES 143 144 145 146

SPEED: 44#-20

CONTROL: 2MT-CTC

HORIZONTAL ALIGNMENT TRACKS 1 AND 2: FL FL FL FL

CURVE NUMBER	65	64	63
DEGREE CURVE	2°30′	5°30′	2°00′
LENGTH SPIRAL	393.69′	228.71′	200.55′
LENGTH CURVE	350.07′	1240.39′	662.59′
SUPERELEVATION	1-3/4″	4″	1 3/4″
	0.08%		

VERTICAL ALIGNMENT: 2.97% 0.10% 3.00%

232.3 264.4 265.7 217.5

(JCT. BNSF)
(SAN BERNARDINO SUB.)
(M.P. 144.00

214.41 PSPC 143.13
150.91 SPD 143.17
107.66' STG 143.2
490.66' SPD 143.23
UPRR TRACK 1 & 2
490' DECK TRUSS 143.30
WASHINGTON STREET
153.66' DPG 143.32
L.A. RIVER
489.5' PC 143.35
REDONDO JUNCTION FLYOVER
4898 FT
115.91' SPD 143.38
300.9' PC 143.4
SOTO STREET UP

BNSF HOBART YARD

BNSF MAIN 1
BNSF MAIN 2
BNSF MAIN 3
BNSF MAIN 4

BNSF

MILES 143 144 145 146

MAIN TRACK #3	RAIL WT.	136
	RAIL YR.	01
	TIES	01 C
	BALLAST	McKay
MAIN TRACK #4	RAIL WT.	136
	RAIL YR.	01
	TIES	01 C
	BALLAST	McKay

METROLINK

River Subdivision - East Bank Line

CP DAYTON MP 480.7 to CP NINTH STREET MP 484.9

DRAWN OCTOBER 1998
TO MAKE REVISIONS, PLEASE CONTACT:

DIRECTOR OF ENGINEERING AND CONSTRUCTION
METROLINK
(213) 452-0250

LAST REVISION
MAY 2008

METROLINK

RIVER SUBDIVISION (EAST BANK)

MILES 480 481 482 483

SPEED: 30-20 | 30-20 | 15-15 | 27*-20

CONTROL: 2MT-CTC

HORIZONTAL ALIGNMENT TRACKS 1 AND 2 — CURVE NUMBER / DEGREE CURVE / LENGTH SPIRAL / LENGTH CURVE / SUPERELEVATION

TRACK #1

Curve Number	Degree Curve	Length Spiral	Length Curve	Superelevation
29	-	-	-	-
30	4°45′,0°15′	110′,60′,0′	233′,85′	-
32	0°40′	0′	140′	-
34	1°00′	0′	140′	-
35	-	-	-	-
36	-	-	-	-
37	-	-	-	-
38	-	-	-	-
39	-	-	-	-
40	5°04′,7°40′	190′,0′,70′	501′,172′	1 1/2″
41	2°00′,4°30′	0′	68′,100′	1 ″
42	8°00′	20′,60′	85′	1 1/4″
43	9°00′	250′,130′	102′	1 1/2″

TRACK #2

Curve Number	Degree Curve	Length Spiral	Length Curve	Superelevation
29	2°20′,7°15′,1°50′,5°10′	0′,0′,0′,0′,80′	140′,135′,122′,185′	-
30	4°55′	130′,60′	210′	-
32	0°30′	0′	108′	-
34	0°40′	0′	124′	-
35	3°12′	-	-	1/4″
36	4°27′	-	-	1/4″
37	4°00′	-	-	1/4″
38	1°50′	-	-	1/4″
39	5°08′	-	-	1/2″
40 + 41	4°50′,7°40′,1°00′,5°50′	110′,30′,30′,30′,0′	526′,212′,78′,57′	1 1/2″,1 1/2″, 1″,1″
42	9°40′,3°30′	30′,0′,20′	59′,70′	1 1/2″
43	8°40′,5°00′	130′,0′,60′	117′,85′	1 1/2″

VERTICAL ALIGNMENT: -1.21% | +0.04% | 0.00% | -0.08% | -0.47% | -0.10% | -0.80% | -0.50%

TERRITORY COST CODE 200404 | TERRITORY COST CODE 200403

CP DAYTON
M.P. 480.7 / 2.2

CP MAIN ST.
M.P. 481.9

CP EAST DIAMOND
M.P. 482.2

CP PASADENA JCT
M.P. 482.30

FOR TURNOUT INFO SEE TURNOUT DATA SHEET AT END OF SEGMENT

RIVERSIDE DR. OVERPASS 480.72
PUC #B-480.7-A, DOT 746822Y
PASADENA FWY HWY 110 S OP
PUC #RI-480.80-A, DOT 746824M
PASADENA FWY HWY 110 N OP
240′ STG (SKEWED) 480.82
ARROYO SEC. BR 480.84
256′ BDSTG
I SIGS
PUC #RI-481.15-AT DOT 922843B
METRO GOLD LINE OVERPASS
SIGS 4811, 4812, 4813, 4814
PUC #RI-481-36-A, DOT 811043H
NORTH BROADWAY OP
PUC #RI-481.44-A, DOT 811042B
NORTH SPRING OP
2′ x 77′ CMP 481.41
ALBION STREET
PUC #RI-481.70,
DOT 811040M
NORTH MAIN STREET
I SIGS
I SIGS
I SIGS
UPRR YUMA MAIN
I SIGS
I SIGS
18″ x 150′ CIP 482.40
18″ x 70′ CMP 482.58
PUC #RI-482.59-A DOT 811255L
CESAR CHAVEZ AVE. OP
(FORMER MACY STREET)
101 FWY DIAMOND LANE 482.73
PUC #RI-482.74-A DOT 811254E
I-10/101 FWY OP
I SIGS

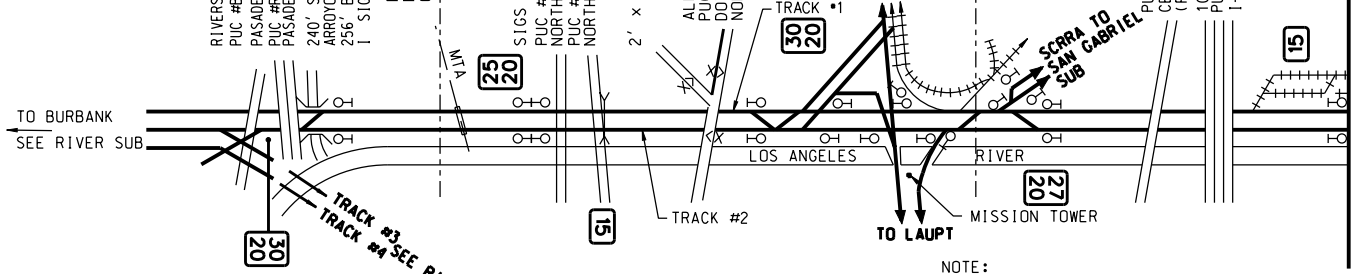

NOTE:
NOT ALL SIGNALS SHOWN

MILES 480 481 482 (-1) 483

MAIN TRACK #1

RAIL WT.	136			136		133	133	136	133	133	133	133	
RAIL YR.	REFER TO VALLEY SUB ←	93	92	00	02		00		04	65	66	98	98
TIES	TRACK 1	C	W	00 WOOD	98 W	98 WOOD		98 C	93 WOOD			93 WOOD	93 W
BALLAST				00 CR ROCK		00 WOOD		93 CR ROCK				93	93

MAIN TRACK #2

RAIL WT.	136	136	136	136		133	133	136	133	133	133	133	
RAIL YR.	93	72	SH 69	98		66	U	04	65	66	98	98	
TIES	TRACK 2 W C W C W	00 WOOD		98 W	98 WOOD		98 C	93 WOOD			93 WOOD	93 W	
BALLAST		85 CR ROCK			00 WOOD		93 CR ROCK				93 CR ROCK	93	

METROLINK

MILES 483 484 485 486

SPEED: 27•-20 | 70-30 | 30-20

CONTROL: 2MT-CTC

HORIZONTAL ALIGNMENT TRACKS 1 AND 2 CURVE NUMBER DEGREE CURVE LENGTH SPIRAL LENGTH CURVE SUPERELEVATION

TRACK #1

44	45	46
8°20′	-	-
100′•70′	-	-
258′	-	-
2 1/4″	-	-

TRACK #2

44	45	46
8°10′	3°22′•3°27′	7°30′
70′•90′	-	-
235′	-	-
2 1/4″	1″	2″

VERTICAL ALIGNMENT: -0.48% -0.39% -0.80% -0.24% +0.61% -0.16% +0.19% -0.90%

TERRITORY COST CODE 200403 | TERRITORY COST CODE 200404

CP FIRST ST M.P. 483.1

CP NINTH ST M.P. 484.9

SOTO ST. JCT. (JCT. UPRR) 485.2 LOS ANGELES SUB.

PUC #RI-483.10-A. DOT 811229W
1ST STREET OP I SIGS
27 20
PUC #RI-483.54-A DOT 811240W
4TH STREET OP I SIGS
PUC #RI-483.77-A DOT 811256T
6TH ST/WHITTIER BLVD OP I SIGS
I SIGS483.90
PUC #RI-484.04-A DOT 811257A
7TH STREET OP
I-10 FWY 484.35
PUC #RI-484.40-A DOT 811269U
SANTA MONICA FWY OP
I SIGS
PUC #RI-484.67-A DOT 811123W
OLYMPIC BLVD OP
18″ CMP 484.701
8′Wx9′H RCA 58′ 484.83
(1.72) I SIGS
70 30
PUC #3-2.1-B
SOTO STREET OP
I SIGS
485.18
100′ STG 485.2

TRACK #1
TRACK #2
LOS ANGELES RIVER
70 30
30 20
UPRR
TO ALAMEDA CORRIDOR

MILES 483 (0) 484 (1) 485 (2) 486

MAIN TRACK •1									
RAIL WT.	133	133	133	136	133 HH	136	131		
RAIL YR.	98	01	98	93	98	01	44		
TIES	98 W	93 WOOD							
BALLAST	93 CR ROCK								

MAIN TRACK •2									
RAIL WT.	133	133	133 SH	136	136	133			
RAIL YR.	66	00	00 R-48	93	01	67			
TIES	98 W	01 WOOD		98					
BALLAST	01 CR ROCK								

METROLINK

MILES	481.5	482	482.5
SPEED		10	
CONTROL		CTX	

MILES	0.5	1 (483)	1.5
SPEED		15-10	
CONTROL		CTX	

HORIZONTAL ALIGNMENT TRACK •1 NE CONNECTION

CURVE NUMBER	1
DEGREE CURVE	9° 29',10° 28'24"
LENGTH SPIRAL	0'
LENGTH CURVE	330',703'
SUPERELEVATION	0"

TRACK •1 NE CONNECTION

HORIZONTAL ALIGNMENT TRACK •2 NE CONNECTION

CURVE NUMBER	1
DEGREE CURVE	8° 30',10° 12'43"
LENGTH SPIRAL	0'
LENGTH CURVE	319',760'
SUPERELEVATION	0"

TRACK •2 NE CONNECTION

HORIZONTAL ALIGNMENT •2 LEAD TRACK •1 TRACK

CURVE NUMBER	X	X	X
DEGREE CURVE	-	-	-
LENGTH SPIRAL	-	-	-
LENGTH CURVE	-	-	-
SUPERELEVATION	-	-	-

2 LEAD TRACK — TRACK •1

HORIZONTAL ALIGNMENT •2 TRACK

CURVE NUMBER	X
DEGREE CURVE	-
LENGTH SPIRAL	-
LENGTH CURVE	-
SUPERELEVATION	-

TRACK •2

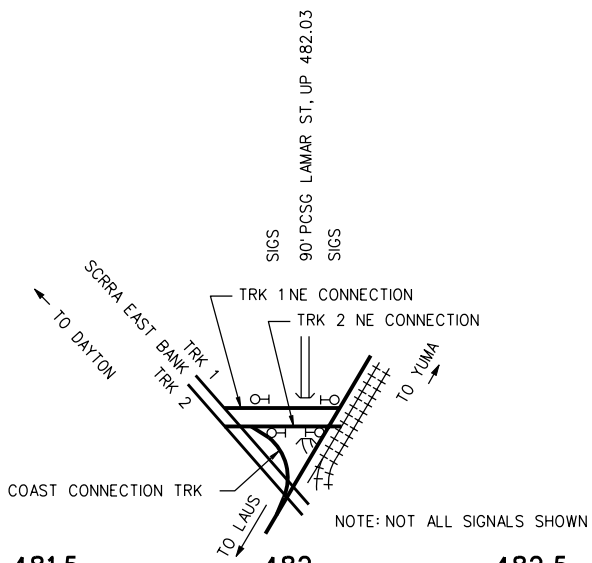

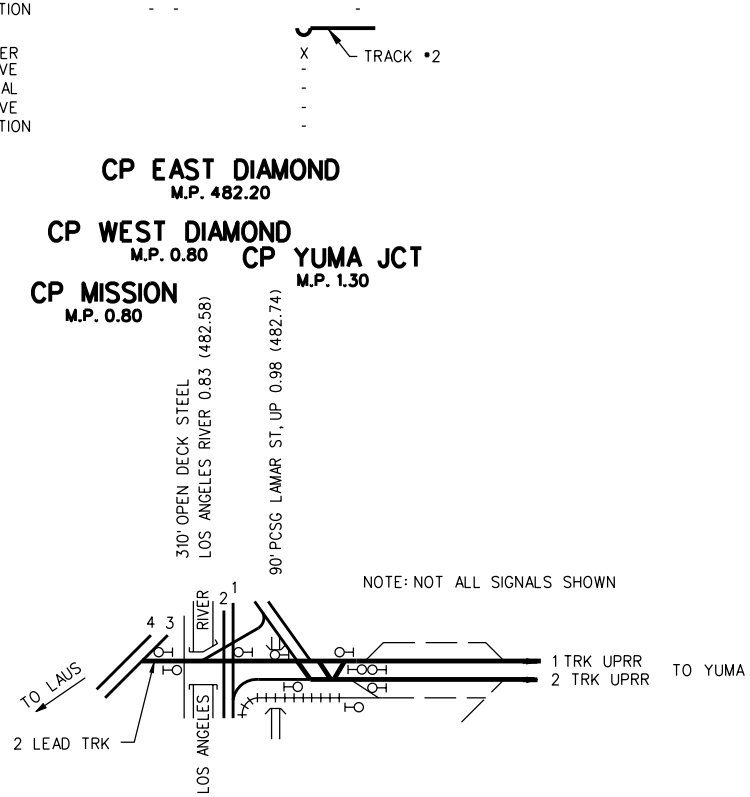

MILES	481.5	482	482.5
TRACK •1 NE CONNECTION — RAIL WT.		136 CWR	
RAIL YR.		88?	136J
TIES		WOOD	
BALLAST		CR ROCK	
TRACK •2 NE CONNECTION — RAIL WT.		136J 136J	
RAIL YR.		94 56?	
TIES		WOOD	
BALLAST		CR ROCK	

MILES	0.5	136	1 (483)	1.5
•2 LEAD TRACK •1 TRACK — RAIL WT.		136	112 132	
RAIL YR.		94	UNK UNK	
TIES		04	WOOD	
BALLAST		CR ROCK		
•2 TRACK — RAIL WT.			132 136	
RAIL YR.			55 96	
TIES			WOOD	
BALLAST			CR ROCK	

METROLINK

Ventura Subdivision

CP LAS POSAS to BURBANK JCT.
MP 426.4 MP 462.6

TO MAKE REVISIONS, PLEASE CONTACT:

DIRECTOR OF ENGINEERING AND CONSTRUCTION
METROLINK
(213) 452-0250

LAST REVISION
MAY 2008

METROLINK

VENTURA SUBDIVISION

MILES 426 427 428 429

SPEED: 70-60; 53#-48

CONTROL: CTC (UPRR); CTC

HORIZONTAL ALIGNMENT MAIN TRACK

CURVE NUMBER / DEGREE CURVE / LENGTH SPIRAL / LENGTH CURVE / SUPERELEVATION

Curve	Degree Curve	Length Spiral	Length Curve	Superelevation
204	02°00'00"	369'	369'	X"
205	02°00'00"	480'	300'	4.00"
206	01°00'00"	240'	240'	1.00"

← TO SANTA BARBARA

VERTICAL ALIGNMENT: .50 .70 1.0 .92 .26 .97 .93 .97 1.0 .97 .36 0.0

472.0 507.0 525.0 537.8 539.3 541.4 546.3 548.3 568.0 572.8 575.0 575.0

TO BURBANK

CP LAS POSAS 426.4 (JCT. UP SANTA BARBARA SUB MP 423.1)

UPRR COAST SUBDIVISION

SCRRA VENTURA SUBDIVISION

PASSENGER STATION MOORPARK 427.1

CP COLONIA 427.6

#20 R.H. 136, MP 426.4
PUC #VE-426.50-X
HITCH RANCH PRIVATE XING (24')
DOT #745900A

SCRRA MAINTENANCE LIMIT IS AT INSULATED JOINTS AT WEST END OF SWITCH

#10 L.H. 136, MP 427.00 (SIDING)
PUC #VE-427.00, DOT 745901G
MOORPARK AVE (57')

PUC #VE-427.40, DOT 745902N
SPRING ST. (85')

#20 L.H. 136, MP 427.45

ARROYO SIMI. 1ST XING. 427.70
210' SG

PUC #VE-427.92-A 118 FWY WEST
427.94 118 FWY EAST DOT 921716W
RDN.R. FWY CA HWY 23/118 OP
REINF. CONC.

ARROYO SIMI. 2ND XING. 428.15
210' SG

PUC #VE-428.40, DOT 745903V
AVENIDA COLONIA PL. (85')
24" CIP 21', 428.44

ARROYO SIMI. 3RD XING. 428.63
150' STG, 60' PCD

USP
MCI
AT&T

QWEST LEVEL 3
MOORPARK SIDING - 4606 FT.

(612FT)
(595FT)
(583FT)
(608FT)

METROLINK LAYOVER YARD (LAYOVER CAPACITIES)

QWEST LEVEL 3

MAIN TRACK

QWEST LEVEL 3

53 48

MILES 426 427 428 429

SH86 R-52

136

MAIN TRACK #1

RAIL WT.	132		136				136	132	136	132	
RAIL YR.	SH86	81 SH72	03	04		06 PAN	04	SH86	SH74	SH86	
TIES			00				00 (EXCEPT BRIDGES)				
BALLAST			CR ROCK								

06 PAN

SIDING

RAIL WT.	136-132
RAIL YR.	01-03 R52-55
TIES	00 WOOD
BALLAST	

REV.5-08

METROLINK

VENTURA SUBDIVISION

MILES 429 430 431 432

SPEED: 53#-48 | 73# 60 | 70# 60

CONTROL: CTC

HORIZONTAL ALIGNMENT MAIN TRACK

FL FL

CURVE NUMBER / DEGREE CURVE / LENGTH SPIRAL / LENGTH CURVE / SUPERELEVATION

207	208	209	210	211
04°00'00"	02°00'00"	02°00'00"	02°00'00"	02°30'00"
460'	360'	360'	360'	400'
900'	600'	300'	1360'	1360'
4.75"	4.00"	4.00"	4.00"	5.00"

VERTICAL ALIGNMENT

1.0 .52 .92 .84 .92 1.0 .97 .93 .97 1.0 .97 .93 .97 1.0 .97 .93 1.0 .97 1.0 .96

592.0 598.0 602.2 610.7 614.9 622.2 624.2 630.5 632.5 643.7 645.7 651.0 653.0 689.2 691.2 708.7 710.7 711.5 717.4 720.0

TO MOORPARK

CP MADERA
MP 431.1

TO BURBANK

1-36'X60' CIP 429.03
2-48"X60' CMP 429.03

ARROYO SIMI, 4TH XING, 429.26
150' STG, 60' PCD

PUC #VE-429.60, DOT 745904C
ARROYO DR. (60')
SIGNALS 4295-4296

48" CMP & CIP 60', 429.88

36" CIP 80' 430.23 48"CMP EXT.

CITY OF MOORPARK
CITY OF SIMI VALLEY

36" CMP 105', 430.36

36" CIP 85', 430.59

8' STONE ARCH, 95' 430.76
W/ CMP LINER PLATE

PUC #VE-430.90, DOT 745906R
QUIMISA DR (40')

ALAMOS CANYON WASH
42' BDT, 431.09
#20 L.H. 136, MP 431.1

84" CMP 73' 431.29

48" CIP & CMP 60', 431.42

72" CIP & CMP 90', 431.57

36" CIP 50' 431.73

10'X50' STONE ARCH, 431.90
10'x 8' RCB BUILT UNDER ARCH

70 60 | 53 48 | 73 60 | 73 60 | 70 60

MAIN TRACK

USP
MCI
AT&T

QWEST

QWEST
LEVEL 3

LEVEL 3

LEVEL 3

STRATHERN SIDING - 8400 FT.

QWEST
LEVEL 3

MILES 429 430 431 432

MAIN TRACK #1

RAIL WT.	136								136
RAIL YR.	06 PAN	83	SH86 R-52	04	06 PAN	06 PAN	92	03	
TIES	00	98 C FASTCLIP	00				00 NORFAST	00 PAN	00 NORFAST
BALLAST									

SH86 R51-55

SIDING

RAIL WT.	136
RAIL YR.	SH03 R84
TIES	91
BALLAST	

REV. 5-08

METROLINK

VENTURA SUBDIVISION

MILES 432 433 434 435

SPEED: 70#60 | 73# 60 | 79-60

CONTROL: CTC

HORIZONTAL ALIGNMENT MAIN TRACK

CURVE NUMBER	211	212	213	214
DEGREE CURVE	02°30'00"	02°00'00"	02°00'00"	02°00'00"
LENGTH SPIRAL	400'	380'	360'	360'
LENGTH CURVE	1360'	1050'	300'	300'
SUPERELEVATION	5.00"	5.00"	4.00"	4.00"

VERTICAL ALIGNMENT

.91 .96 1.0 .97 .93 .97 1.0 .97 .93 .97 1.0 .97 .93 .97 1.0

733.2 735.8 752.5 754.5 765.4 767.4 785.5 787.5 791.5 793.6 836.4 838.4 844.5 846.6

TO BURBANK

STRATHEARN 432.1
TO MOORPARK

CP STRATHEARN MP 432.9

PUC #VE-432.20-A DOT 903185E MADERA RD OP
24" CIP 92', 432.24
48' CMP 83' (CS-341), 432.421
18" CIP 75', 432.51
48" CMP & CIP 83' 432.651
58"x 36" x 55' CMPA 432.74
#20 R.H. 136, MP 432.9
10' x 16' RCB 433.08 VENTURA COUNTY FLOOD CONTROL
PUC #VE-433.30, DOT 745909L FIRST ST (120')
18" CMP 40', 433.31
8' BD (CS-1605), 433.57
6' RT BD, 434.12
8' RCP 200', 434.35
PUC #VE-434.30, DOT 745910F ERRINGER RD (102')

70 60 73 60 73 60 79 60

USP
MCI
AT&T

MAIN TRACK

QWEST LEVEL 3

STRATHERN SIDING - 8400 FT.

QWEST LEVEL 3

QWEST LEVEL 3

MILES 432 433 434 435

136

MAIN TRACK #1									
RAIL WT.	136					132	136	132	
RAIL YR.	03			92	SH84	07	SH84 R51-55	84	SH84 R51-55
TIES	NF	00 PAN	00 NORFAST	00 PAN		07	00		
BALLAST									

SIDING	
RAIL WT.	136
RAIL YR.	SH03 R84
TIES	91
BALLAST	

REV. 5-08

METROLINK

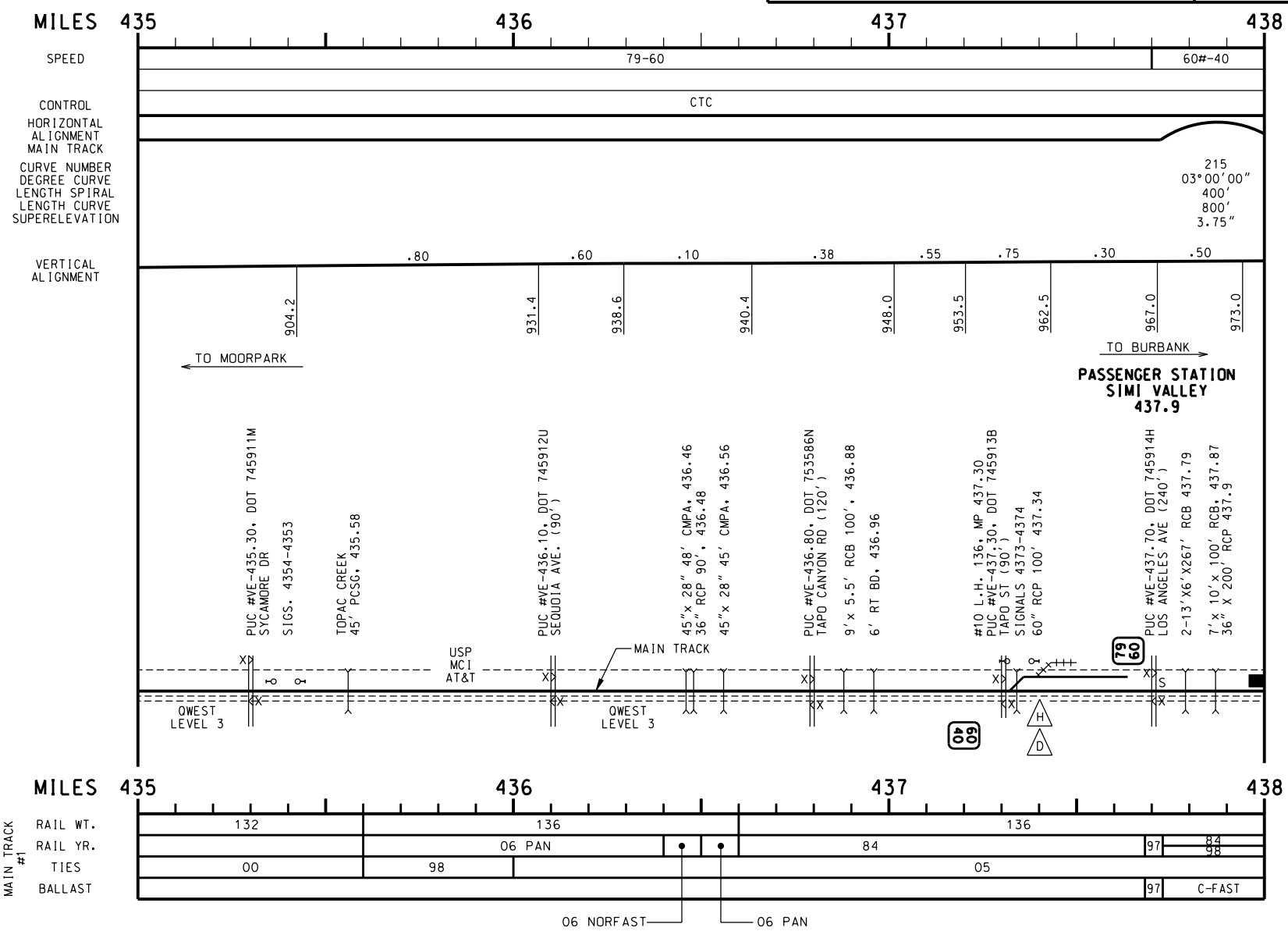
MILES 435 436 437 438
SPEED
79-60
60#-40
CONTROL
CTC
HORIZONTAL ALIGNMENT MAIN TRACK
CURVE NUMBER
DEGREE CURVE
LENGTH SPIRAL
LENGTH CURVE
SUPERELEVATION
215
03°00'00"
400'
800'
3.75"
VERTICAL ALIGNMENT
.80 .60 .10 .38 .55 .75 .30 .50
904.2
931.4
938.6
940.4
948.0
953.5
962.5
967.0
973.0
TO MOORPARK
TO BURBANK
PASSENGER STATION
SIMI VALLEY
437.9
PUC #VE-435.30, DOT 745911M
SYCAMORE DR
SIGS. 4354-4353
TOPAC CREEK
45' PCSG. 435.58
PUC #VE-436.10, DOT 745912U
SEQUOIA AVE. (90')
45"x 28" 48' CMPA, 436.46
36" RCP 90', 436.48
45"x 28" 45' CMPA, 436.56
PUC #VE-436.80, DOT 753586N
TAPO CANYON RD (120')
9'x 5.5' RCB 100', 436.88
6' RT BD, 436.96
#10 L.H. 136, MP 437.30
PUC #VE-437.30, DOT 745913B
TAPO ST (90')
SIGNALS 4373-4374
60" RCP 100' 437.34
PUC #VE-437.70, DOT 745914H
LOS ANGELES AVE (240')
2-13'X6'X267' RCB 437.79
7'x 10'x 100' RCB, 437.87
36" X 200' RCP 437.9
USP
MCI
AT&T
MAIN TRACK
QWEST
LEVEL 3
QWEST
LEVEL 3
79
60
60
40
H
D
S
MILES 435 436 437 438
MAIN TRACK #1
RAIL WT.
132
136
136
RAIL YR.
06 PAN
84
97
84
98
TIES
00
98
05
BALLAST
97
C-FAST
06 NORFAST
06 PAN

METROLINK

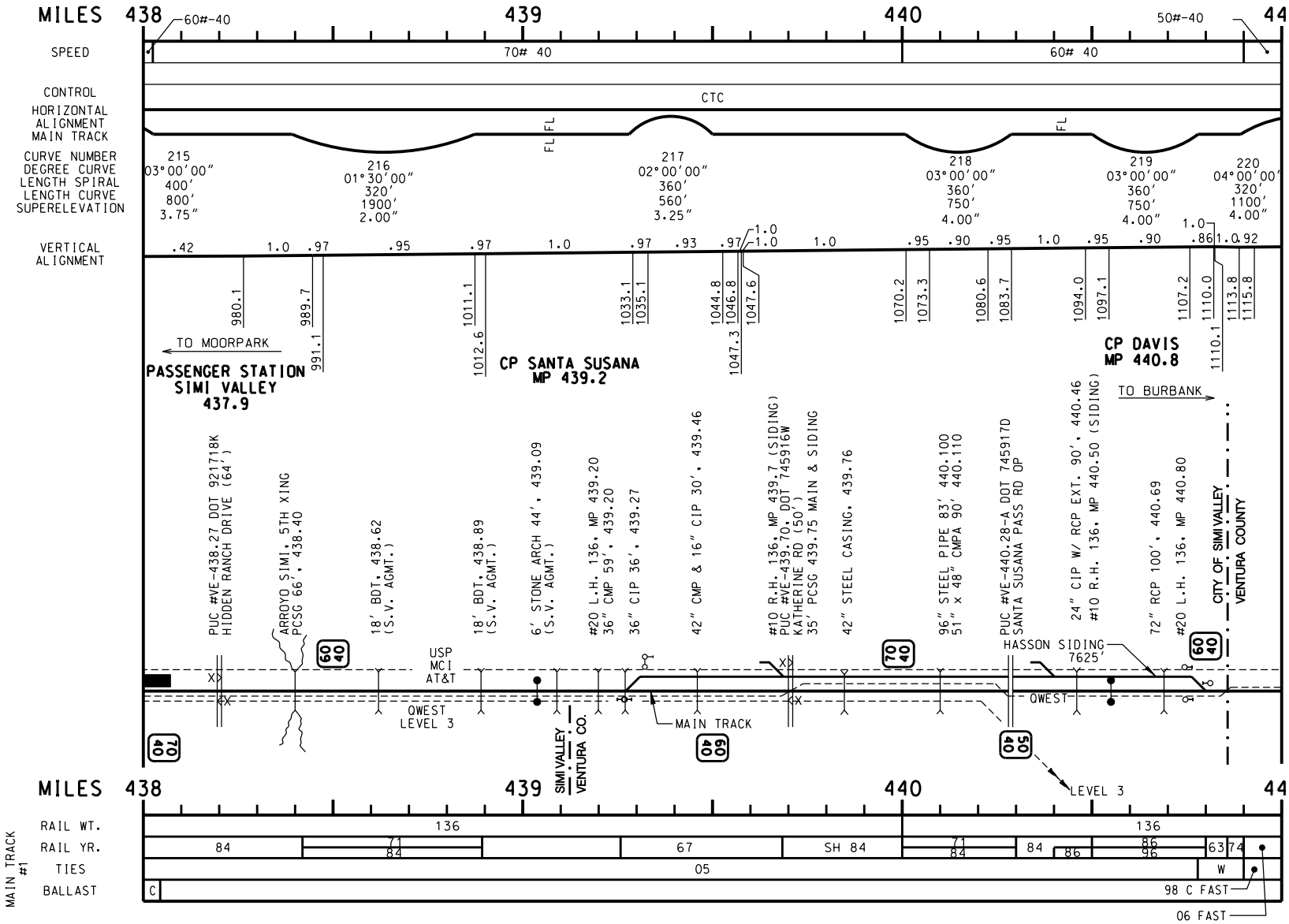

MILES 438 439 440 441

MAIN TRACK #1

RAIL WT.	136 / 136
RAIL YR.	84 / 71 84 / 67 / SH 84 / 71 84 / 84 / 86 / 86 96 / 63 74
TIES	05 / W
BALLAST	C / 98 C FAST / 06 FAST

SIDING

RAIL WT.	136	136
RAIL YR.	02	SH 93 R 57
TIES	02 C FAST	93 C (MC KAY)
BALLAST		

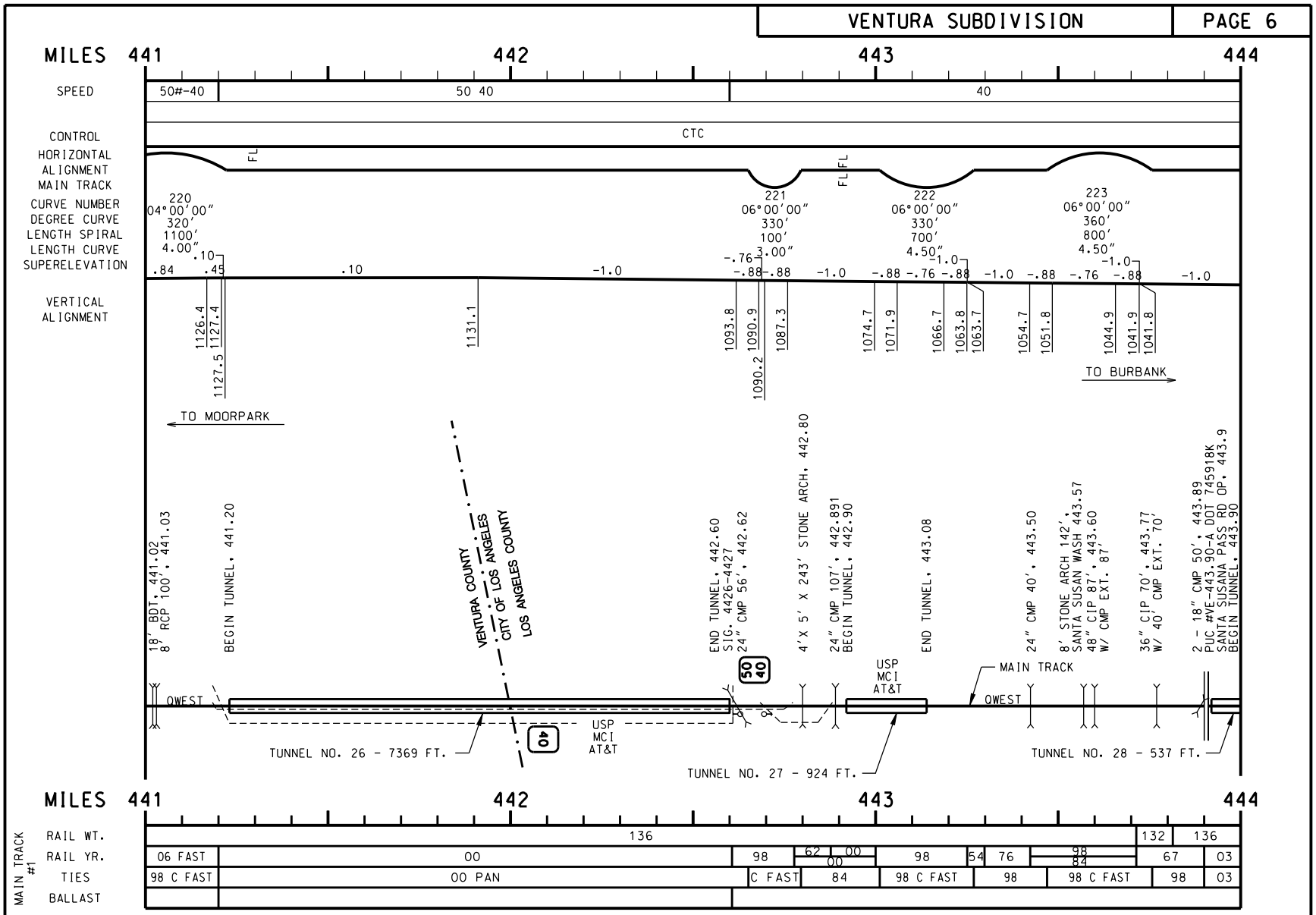
MILES 441 442 443 444
SPEED
50#-40
50 40
40
CONTROL
CTC
HORIZONTAL ALIGNMENT MAIN TRACK
FL
CURVE NUMBER
DEGREE CURVE
LENGTH SPIRAL
LENGTH CURVE
SUPERELEVATION
220
04°00'00"
320'
1100'
4.00"
221
06°00'00"
330'
100'
3.00"
222
06°00'00"
330'
700'
4.50"
223
06°00'00"
360'
800'
4.50"
VERTICAL ALIGNMENT
1126.4
1127.4
1127.5
1131.1
1093.8
1090.9
1090.2
1087.3
1074.7
1071.9
1066.7
1063.8
1063.7
1054.7
1051.8
1044.9
1041.9
1041.8
TO MOORPARK
TO BURBANK
18" BDT, 441.02
8' RCP 100', 441.03
BEGIN TUNNEL, 441.20
VENTURA COUNTY
CITY OF LOS ANGELES
LOS ANGELES COUNTY
END TUNNEL, 442.60
SIG. 4426-4427
24" CMP 56', 442.62
4'X 5' X 243' STONE ARCH, 442.80
24" CMP 107', 442.891
BEGIN TUNNEL, 442.90
END TUNNEL, 443.08
24" CMP 40', 443.50
8' STONE ARCH 142',
SANTA SUSAN WASH 443.57
48" CIP 87', 443.60
W/ CMP EXT. 87'
36" CIP 70', 443.77
W/ 40' CMP EXT. 70'
2 - 18" CMP 50', 443.89
PUC #VE-443.90-A DOT 745918K
SANTA SUSANA PASS RD OP, 443.9
BEGIN TUNNEL, 443.90
50
40
USP
MCI
AT&T
MAIN TRACK
QWEST
TUNNEL NO. 26 - 7369 FT.
TUNNEL NO. 27 - 924 FT.
TUNNEL NO. 28 - 537 FT.
MILES 441 442 443 444
MAIN TRACK #1
RAIL WT.
RAIL YR.
TIES
BALLAST
136
132
136
06 FAST
00
98
62
00
00
98
54
76
98
84
67
03
98 C FAST
00 PAN
C FAST
84
98 C FAST
98
98 C FAST
98
03

REV. 5-08

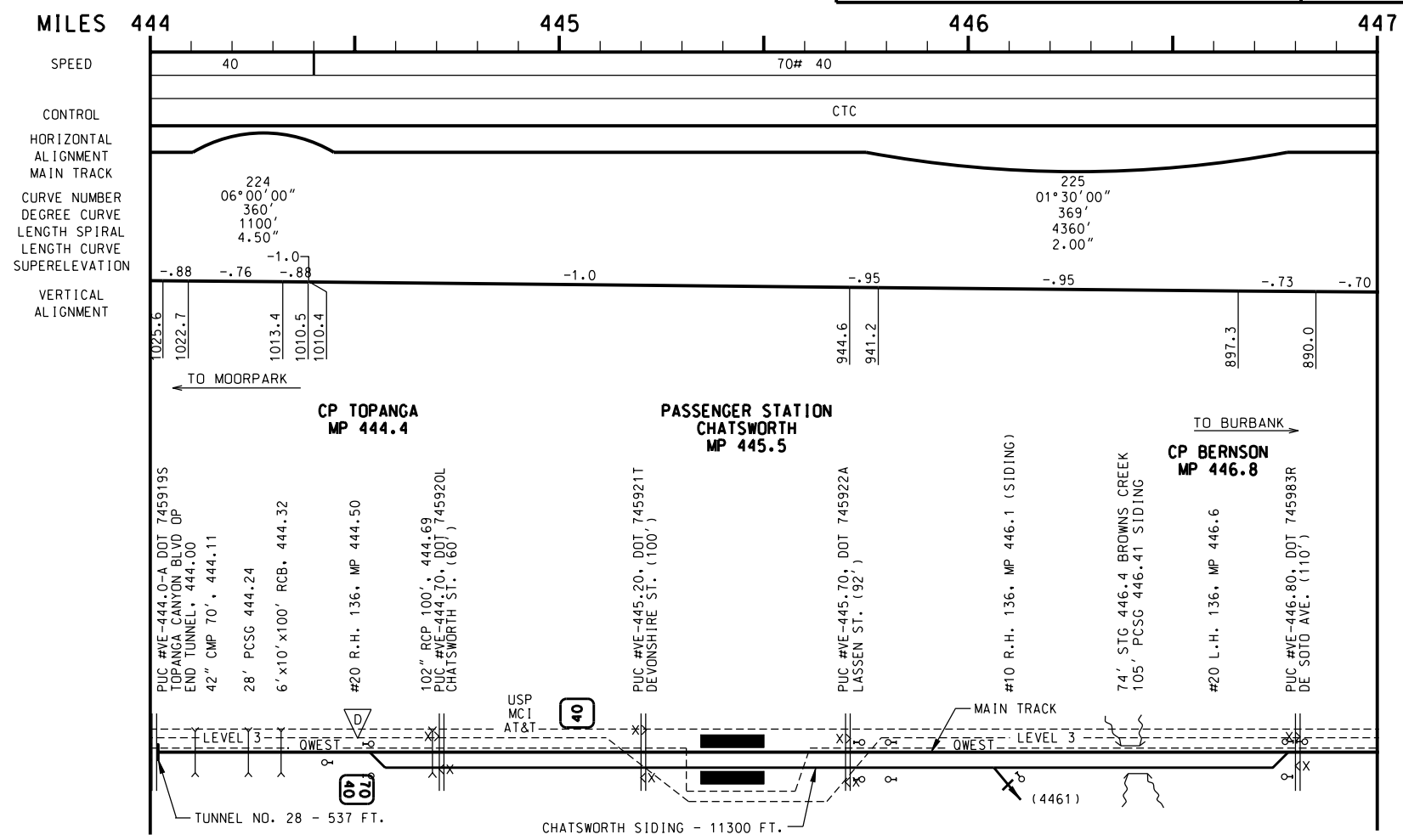

MAIN TRACK #1

MILES	444–445	445–446	446–447
RAIL WT.	136		
RAIL YR.	04 / 84	84 / 84	73 / 94 / SH 72
TIES	02 / 98 C FAST	98	05
BALLAST			

SIDING

RAIL WT.	136	132/136
RAIL YR.	02	SH 94 R 52-54
TIES	02 C FAST	94 CONC (MC KAY)
BALLAST		

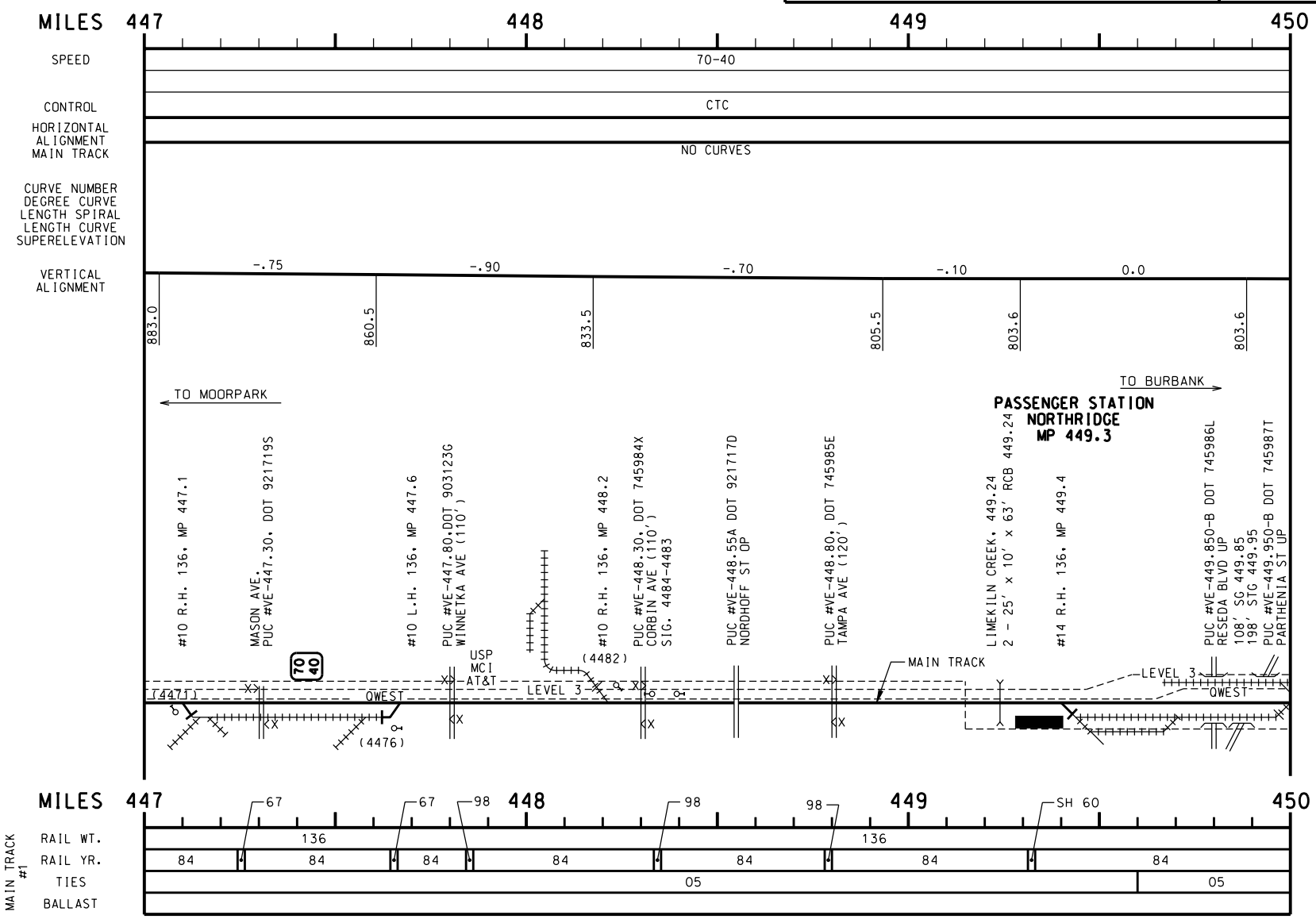
MILES 447 448 449 450
SPEED
70-40
CONTROL
CTC
HORIZONTAL ALIGNMENT MAIN TRACK
NO CURVES
CURVE NUMBER
DEGREE CURVE
LENGTH SPIRAL
LENGTH CURVE
SUPERELEVATION
VERTICAL ALIGNMENT
-.75
-.90
-.70
-.10
0.0
883.0
860.5
833.5
805.5
803.6
803.6
TO MOORPARK
TO BURBANK
PASSENGER STATION
NORTHRIDGE
MP 449.3
#10 R.H. 136, MP 447.1
MASON AVE.
PUC #VE-447.30, DOT 921719S
#10 L.H. 136, MP 447.6
PUC #VE-447.80,DOT 903123G
WINNETKA AVE (110')
#10 R.H. 136, MP 448.2
PUC #VE-448.30, DOT 745984X
CORBIN AVE (110')
SIG. 4484-4483
PUC #VE-448.55A DOT 921717D
NORDHOFF ST OP
PUC #VE-448.80, DOT 745985E
TAMPA AVE (120')
LIMEKILN CREEK, 449.24
2 - 25' x 10' x 63' RCB 449.24
#14 R.H. 136, MP 449.4
PUC #VE-449.850-B DOT 745986L
RESEDA BLVD UP
108' SG 449.85
198' STG 449.95
PUC #VE-449.950-B DOT 745987T
PARTHENIA ST UP
70
40
USP
MCI
AT&T
(4482)
MAIN TRACK
LEVEL 3
(4471)
QWEST
(4476)
LEVEL 3
QWEST
MILES 447 448 449 450
67
67
98
98
98
SH 60
MAIN TRACK #1
RAIL WT.
136
136
RAIL YR.
84
84
84
84
84
84
84
84
TIES
05
05
BALLAST

METROLINK

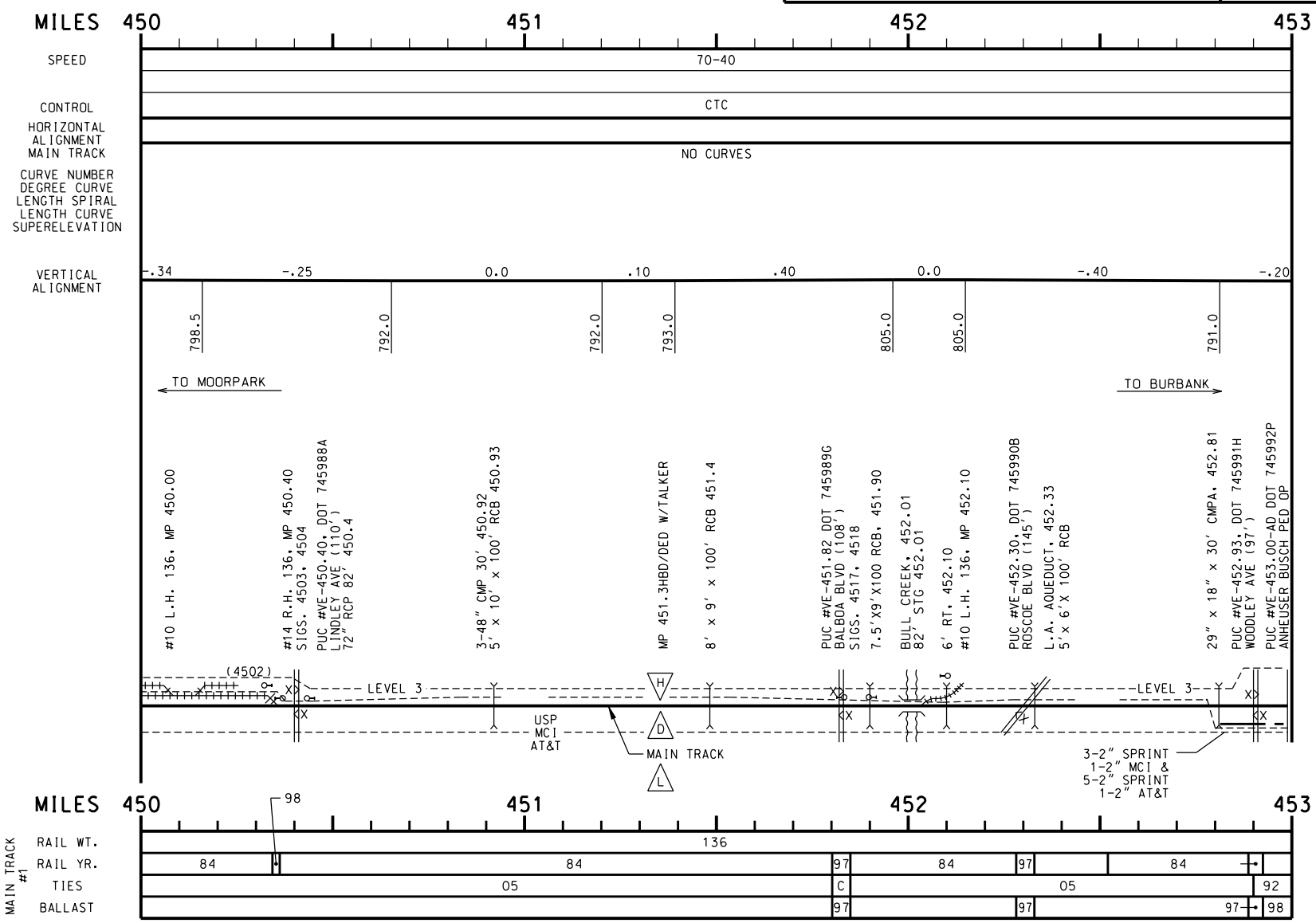
MILES 450 451 452 453
SPEED
70-40
CONTROL
CTC
HORIZONTAL ALIGNMENT MAIN TRACK
NO CURVES
CURVE NUMBER
DEGREE CURVE
LENGTH SPIRAL
LENGTH CURVE
SUPERELEVATION
VERTICAL ALIGNMENT
-.34 -.25 0.0 .10 .40 0.0 -.40 -.20
798.5 792.0 792.0 793.0 805.0 805.0 791.0
TO MOORPARK
TO BURBANK
#10 L.H. 136. MP 450.00
#14 R.H. 136. MP 450.40 SIGS. 4503, 4504
PUC #VE-450.40, DOT 745988A LINDLEY AVE (110') 72" RCP 82' 450.4
3-48" CMP 30' 450.92 5' x 10' x 100' RCB 450.93
MP 451.3HBD/DED W/TALKER
8' x 9' x 100' RCB 451.4
PUC #VE-451.82 DOT 745989G BALBOA BLVD (108') SIGS. 4517, 4518
7.5'X9'X100 RCB. 451.90
BULL CREEK. 452.01 82' STG 452.01
6' RT. 452.10 #10 L.H. 136. MP 452.10
PUC #VE-452.30, DOT 745990B ROSCOE BLVD (145')
L.A. AQUEDUCT. 452.33 5'x 6'X 100' RCB
29" x 18" x 30' CMPA. 452.81
PUC #VE-452.93, DOT 745991H WOODLEY AVE (97')
PUC #VE-453.00-AD DOT 745992P ANHEUSER BUSCH PED OP
(4502)
LEVEL 3
LEVEL 3
USP
MCI
AT&T
MAIN TRACK
3-2" SPRINT
1-2" MCI &
5-2" SPRINT
1-2" AT&T
MILES 450 451 452 453
98
MAIN TRACK #1
RAIL WT.
136
RAIL YR.
84 84 97 84 97 84
TIES
05 C 05 92
BALLAST
97 97 97 98

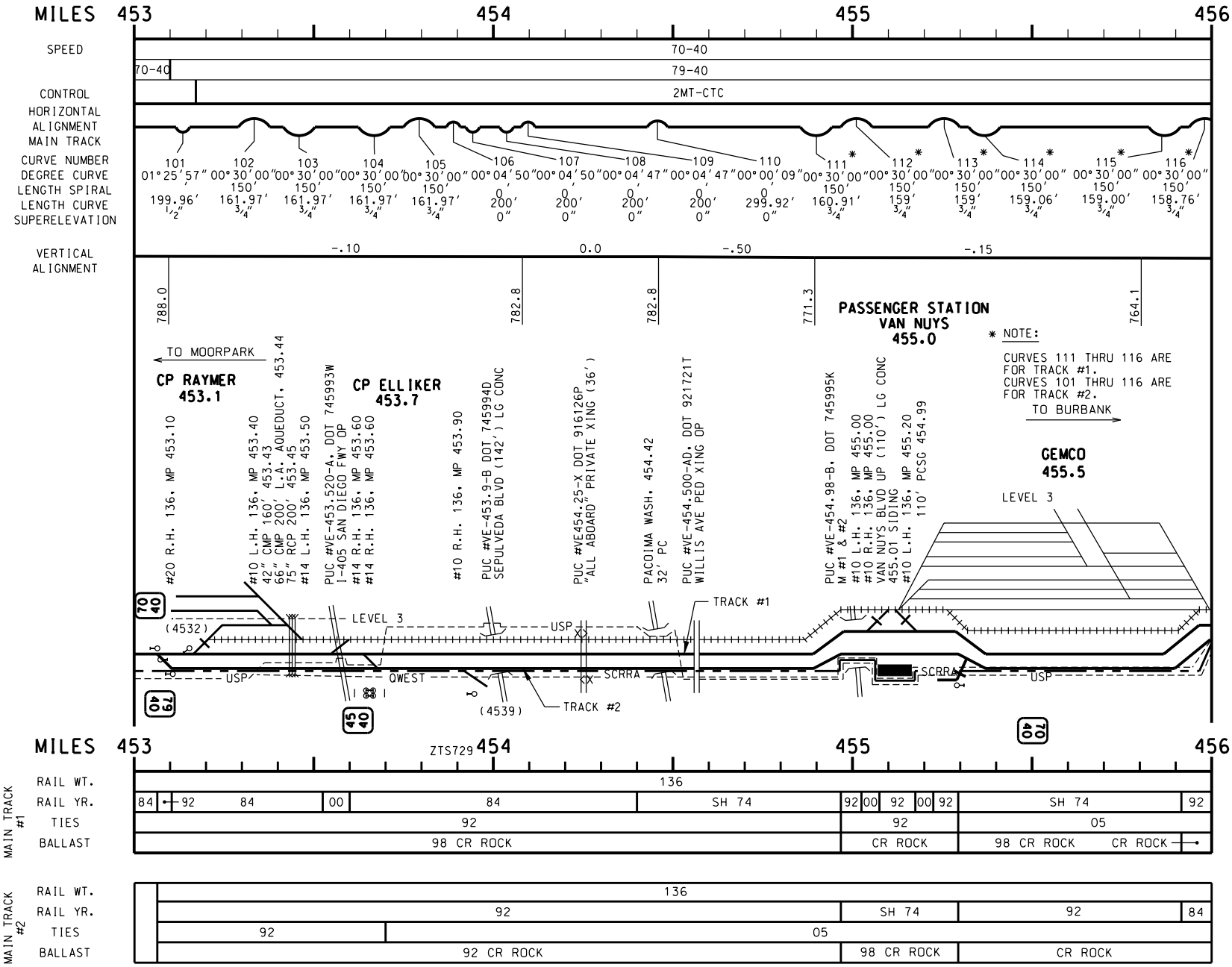
MILES 453 454 455 456
SPEED
70-40
70-40
79-40
CONTROL
2MT-CTC
HORIZONTAL ALIGNMENT MAIN TRACK
CURVE NUMBER
DEGREE CURVE
LENGTH SPIRAL
LENGTH CURVE
SUPERELEVATION
101 01°25'57" 199.96' 1/2"
102 00°30'00" 150' 161.97' 3/4"
103 00°30'00" 150' 161.97' 3/4"
104 00°30'00" 150' 161.97' 3/4"
105 00°30'00" 150' 161.97' 3/4"
106 00°04'50" 0' 200' 0"
107 00°04'50" 0' 200' 0"
108 00°04'47" 0' 200' 0"
109 00°04'47" 0' 200' 0"
110 00°00'09" 0' 299.92' 0"
111* 00°30'00" 150' 160.91' 3/4"
112* 00°30'00" 150' 159' 3/4"
113* 00°30'00" 150' 159' 3/4"
114* 00°30'00" 150' 159.06' 3/4"
115* 00°30'00" 150' 159.00' 3/4"
116* 00°30'00" 150' 158.76' 3/4"
VERTICAL ALIGNMENT
-.10
0.0
-.50
-.15
788.0
782.8
782.8
771.3
764.1
PASSENGER STATION
VAN NUYS
455.0
* NOTE:
CURVES 111 THRU 116 ARE FOR TRACK #1.
CURVES 101 THRU 116 ARE FOR TRACK #2.
TO MOORPARK
TO BURBANK
CP RAYMER
453.1
CP ELLIKER
453.7
GEMCO
455.5
#20 R.H. 136, MP 453.10
#10 L.H. 136, MP 453.40
42" CMP 160' 453.43
66" CMP 200' L.A. AQUEDUCT, 453.44
75" RCP 200' 453.45
#14 L.H. 136, MP 453.50
PUC #VE-453.520-A, DOT 745993W
I-405 SAN DIEGO FWY OP
#14 R.H. 136, MP 453.60
#14 R.H. 136, MP 453.60
#10 R.H. 136, MP 453.90
PUC #VE-453.9-B DOT 745994D
SEPULVEDA BLVD (142') LG CONC
PUC #VE454.25-X DOT 916126P
"ALL ABOARD" PRIVATE XING (36')
PACOIMA WASH, 454.42
32' PC
PUC #VE-454.500-AD, DOT 921721T
WILLIS AVE PED XING OP
PUC #VE-454.98-B, DOT 745995K
M #1 & #2
#10 L.H. 136, MP 455.00
#10 R.H. 136, MP 455.00
VAN NUYS BLVD UP (110') LG CONC
455.01 SIDING
#10 L.H. 136, MP 455.20
110' PCSG 454.99
LEVEL 3
TRACK #1
TRACK #2
(4532)
(4539)
USP
QWEST
SCRRA
70 40
79 40
45 40
70 40
MILES 453 454 455 456
ZTS729
MAIN TRACK #1
RAIL WT.
RAIL YR.
TIES
BALLAST
136
84 92 84 00 84 SH 74 92 00 92 00 92 SH 74 92
92 92 05
98 CR ROCK CR ROCK 98 CR ROCK CR ROCK
MAIN TRACK #2
RAIL WT.
RAIL YR.
TIES
BALLAST
136
92 SH 74 92 84
92 05
92 CR ROCK 98 CR ROCK CR ROCK

METROLINK

MILES 456 457 458 459

SPEED: 70-40; 79-40

CONTROL: 70-40; 2MT-CTC

HORIZONTAL ALIGNMENT MAIN TRACK

CURVE NUMBER	DEGREE CURVE	LENGTH SPIRAL	LENGTH CURVE	SUPERELEVATION
* 116	00°30′00″	150′	158.76′	3/4″
117	00°03′43″	0′	400′	0″
118	00°06′57″	100′	122.93′	0″
119	00°04′13″	0′	200′	0″
120	00°04′13″	0′	200′	0″
121	00°04′13″	0′	200′	0″
122	00°04′13″	0′	200′	0″
123	00°03′32″	0′	200′	0″
124	00°03′32″	0′	200′	0″
125	00°03′37″	0′	200′	0″
126	00°03′37″	0′	199.94′	0″

VERTICAL ALIGNMENT: 83; 83; -.40; 0.0; -.50; 0.0; -.40; -.20

CP WOODMAN 456.1

* NOTE:
CURVES 116 THRU 126 ARE FOR TRACK #1.
CURVE 116 IS FOR TRACK #2.

752.5 752.5 745.0 745.0 733.0

TO BURBANK

TO MOORPARK

PUC #VE-456.020-B, DOT 745996S
WOODMAN AVE UP (102′) LG STEEL
#10 R.H.136, MP 456.1 (TRACK 1)
2-#20 L.H.136, MP 456.1 (TRACK 1 & 2)
2-#20 R.H.136, MP 456.1 (TRACK 1 & 2)

15′X8′X41′ RCB, PANORAMA DRAIN, 456.27

TUJUNGA WASH, 102′ #1 MAIN
SGPCD, 456.28
TUJUNGA WASH SG SPD
78′ #2 MAIN 456.28

48″ RCP 60′, 456.54

#10 L.H. 136, MP 456.90
5′ x 7′ RCB 48′
L.A. AQUEDUCT 457.03

PUC #VE-457.00, DOT 745997Y
COLDWATER CANYON RD

2 - 36″ x 60′CMP 457.17

PUC #VE-457.30, DOT 745998F
BELLAIRE AVE (49′)

FIRE CROSSING (10′)

WHITSETT AVE., DOT 746001U
PUC #VE-457.60-B DOT 746001U
HOLLYWOOD FWY UP (410′) LG STEEL

PUC #VE-458.060-B, DOT 746002B
LAUREL CYN BLVD UP (108′) SG
#14 R.H. 136, MP 458.10
SIGS. 4581.4580. 4583. 4584

PUC #VE-458.210-B, DOT 746003H
SHERMAN WAY UP (172′) STG
#10 R.H. 119, MP 458.30

PUC #VE-458.570-B, DOT 746004P
LANKERSHIM BLVD UP (90′) STG

15′ BDT 458.710

79 40 70 40 79 40

ZTS724 (4569)

LEVEL 3 SCRRA USP TRACK #1 (4587) LEVEL 3 (4590) SCRRA USP USP

QWEST

TRACK #2 (4577) (4585) HEWIT SIDING

MILES 456 457 458 459

MAIN TRACK #1

RAIL WT.	136
RAIL YR.	92
TIES	05 / 92
BALLAST	CR ROCK

MAIN TRACK #2

RAIL WT.	136 / 119 / 136 / 119 / 136 / 119 / 136 / 136
RAIL YR.	62 / 92 / 62 / 92 / 62 / 92 / 62 / 63 / 62 / SH 74
TIES	84 / 05
BALLAST	98 CR ROCK / 92 CR ROCK / 98 CR ROCK / 92 CR ROCK / 98 CR ROCK / 92 CR ROCK / 98 CR ROCK

METROLINK

MILES 459 460 461 462

SPEED: 79-40 / 70-40

CONTROL: 2MT-CTC

HORIZONTAL ALIGNMENT MAIN TRACK

CURVE NUMBER: 127
DEGREE CURVE: 00°01′12″
LENGTH SPIRAL: 0′
LENGTH CURVE: 69.59′
SUPERELEVATION: 0″

VERTICAL ALIGNMENT: -.40 -.50 -.90 -.70 -1.01

726.0 718.0 703.0 694.0 682.1

TO MOORPARK

TO BURBANK

PASSENGER STATION
BURBANK-BOB HOPE AIRPORT
460.60

CP LOCKHEED
MP 460.8

CITY OF LOS ANGELES / CITY OF BURBANK

#10 R.H. 136. MP 459.05
PUC #VE-459.10. DOT 746005W
TUJUNGA AVE (68′)

PUC #VE-459.60. DOT 746006D
VINELAND AVE (98′)
48″ CMP 32′, 459.61

3-36″ CMP 60′, 460.06

PUC #VE-460.20. DOT 746007K
CLYBOURNE AVE (59′) 15′ LG

(PED. XING)
PUC #VE-460.5-DX. DOT 746008S
BURBANK AIRPORT STA PED XING

PUC #VE-460.60-DX. DOT 746008S
BURBANK AIRPORT STA PED XING

SIG. 4E-2E
2-#20 R.H. 136. MP 460.80
2-#20 L.H. 136. MP 460.80

SIG. 4W-2WA
PUC #VE-460.80-B. DOT 746009Y
HOLLYWOOD WAY UP (90′) PIP

#14 L.H. 136. MP 461.50
PUC #VE-461.50. DOT 746010T
BUENA VISTA ST. (80′)

12′ x 6′x 100′ RCB 461.650

ZTS720

LEVEL 3

SCRRA USP QWEST

TRACK #1

TRACK #2

BURBANK AIRPORT STATION

BURBANK STORAGE TRACK

(4615)

35 30

40 35

CITY OF LOS ANGELES / CITY OF BURBANK

MILES 459 460 461 462

MAIN TRACK #1	RAIL WT.	136	136	
	RAIL YR.	92	98	
	TIES	92 WOOD	98	
	BALLAST	CR ROCK		

MAIN TRACK #2	RAIL WT.	136										
	RAIL YR.	SH 74	92	SH 74	92	SH 74	92	SH 74 R63-64	98	SH 74 R63-64	92	SH 74
	TIES	05										
	BALLAST	82 CR ROCK	92	82 CR ROCK	92	98 CR ROCK	92	98 CR ROCK			92	98 CR ROCK

82 CR ROCK

METROLINK

MILES 462

SPEED	79-40	35# 30	MT-1
	70-40	40# 35	MT-2
CONTROL	2MT-CTC		

HORIZONTAL ALIGNMENT MAIN TRACK

CURVE NUMBER	128	129	130	130	131
DEGREE CURVE	NO.1	NO.1	NO.1	NO.2	NO.2
LENGTH SPIRAL	00°10'15"	00°23'00"	06°15'00"	06°00'00"	00°30'00"
LENGTH CURVE	0'	0'	150-130'	190'	0'
SUPERELEVATION	201.56'	61'	650'	342'	300'
	0"	0"	2-1/4"	3"	0"

VERTICAL ALIGNMENT

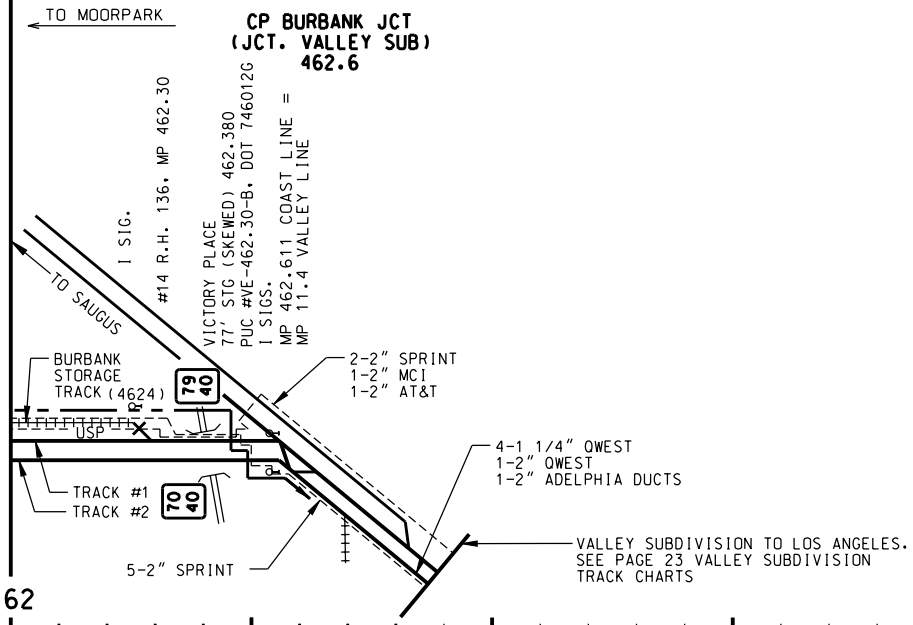

MILES 462

MAIN TRACK #1	RAIL WT.	136		
	RAIL YR.	92		
	TIES	92 WOOD	07	00 CONC FAST
	BALLAST	CR ROCK		

MAIN TRACK #2	RAIL WT.	136			
	RAIL YR.	SH 74		86 / 79	67
	TIES	05	98 WOOD	00 CONC FAST	
	BALLAST	98 CR ROCK			

METROLINK

Montalvo Subdivision

CP WYE to BRISTOL RD.
MP 403.2 MP 404.7

TO MAKE REVISIONS, PLEASE CONTACT:

DIRECTOR OF ENGINEERING AND CONSTRUCTION
METROLINK
(213) 452-0250

LAST REVISION
MAY 2008

METROLINK

MONTALVO SUBDIVISION - WEST LINE | PAGE 1

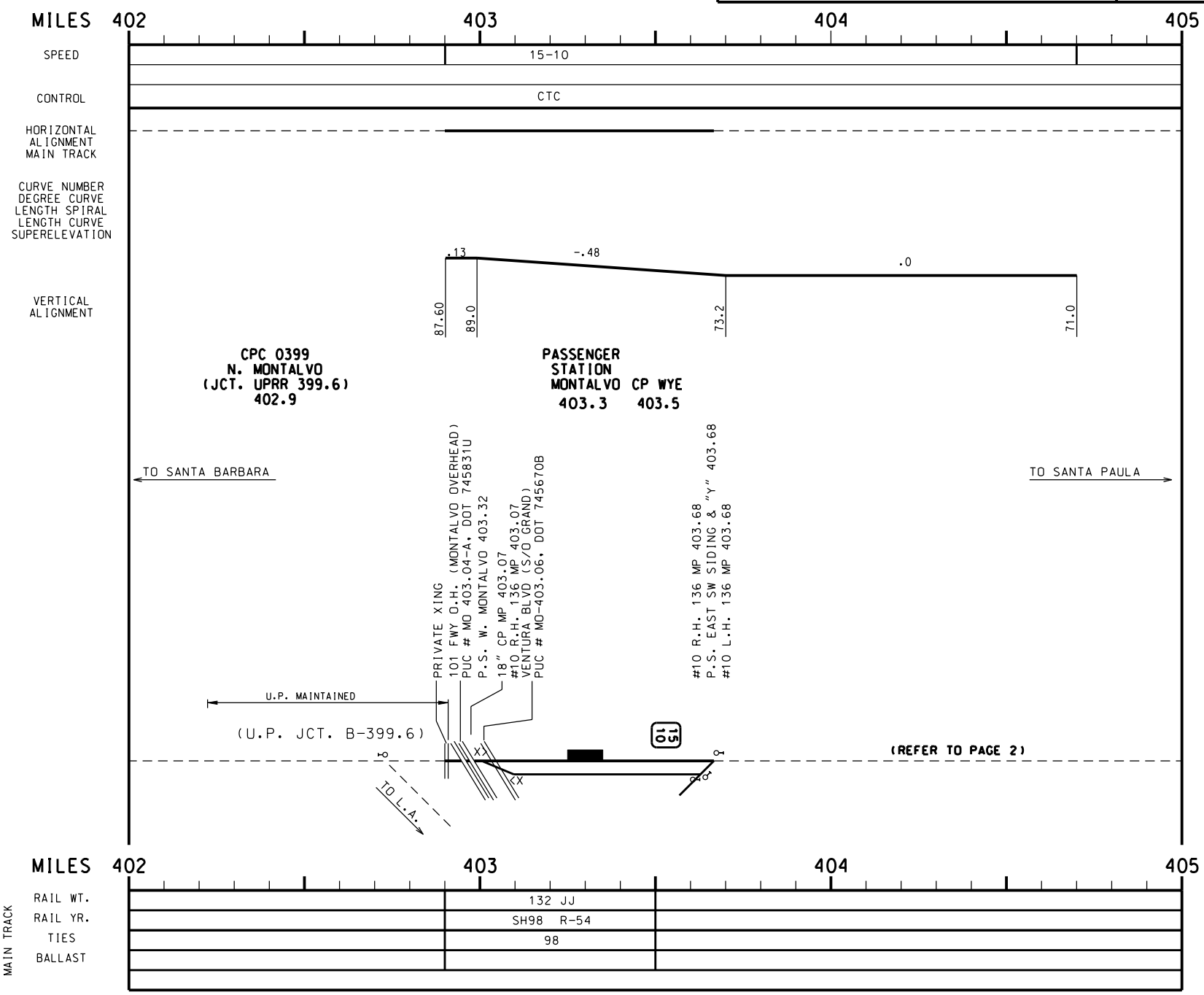

REV.5-08

METROLINK

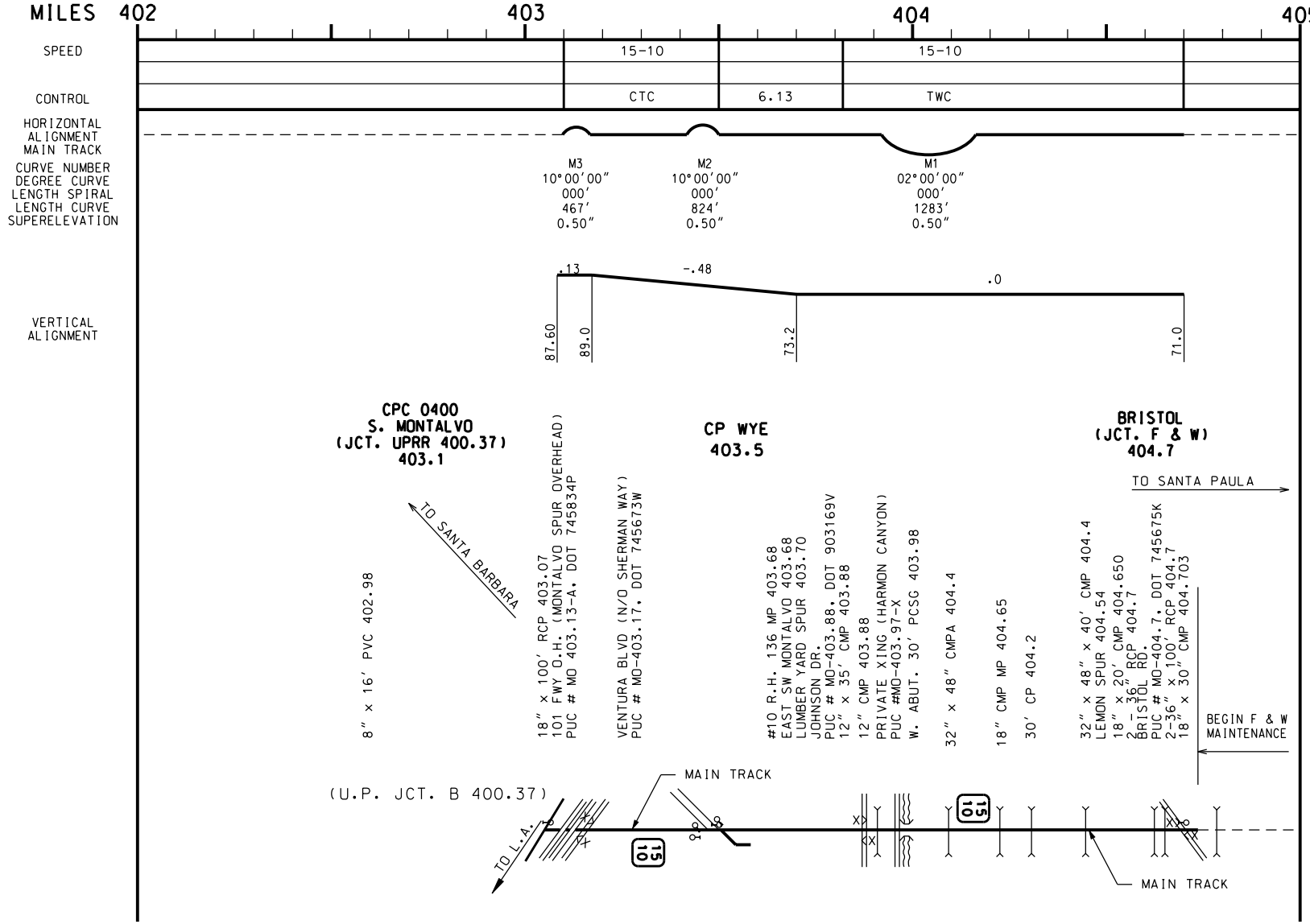

MILES	402–403	403–404	404–405	
SIDING RAIL WT.	136	80 JJ	136	
SIDING RAIL YR.	06		05	
SIDING TIES	UNKNOWN		05	
SIDING BALLAST				

METROLINK

San Gabriel Subdivision

LOS ANGELES MP 0.0 to SAN BERNARDINO MP 56.2

TO MAKE REVISIONS, PLEASE CONTACT:

DIRECTOR OF ENGINEERING AND CONSTRUCTION
METROLINK
(213) 452-0250

LAST REVISION
MAY 2008

METROLINK

SAN GABRIEL SUBDIVISION

MILES 0 1 2 3

SPEED: 15-10 | 25#-25 | 45#-30 | 50-30 | 60#-30

CONTROL: CTC

HORIZONTAL ALIGNMENT MAIN TRACK

CURVE NUMBER	B	1	2	3	4	5	6	7	8
DEGREE CURVE	10°00′	8°00′	7°30′	10°00′	3°00′	3°56′	5°00′	2°36′	1°08′
LENGTH SPIRAL		135	150	180	140	220	220	100	85
LENGTH CURVE		792′	158.4′	422.4′	633.6′	1531.2′	1372.80′	1056′	729′
SUPERELEVATION	X	1.00″	1.00″	1.50″	1.50″	3.00″	4.00″	1.50″	1.00″

VERTICAL ALIGNMENT: .39 | 1.16 | .32 | .37 | .86 | .59 | .97 | .82 | 1.57

TO SAN BERNARDINO

REFER TO RIVER SUBDIVISION, PAGE 1, FOR L.A. UNION STATION

CP PASADENA JCT. (JCT. RIVER SUB) 0.9

CP MISSION 0.8

CP MARENGO 2.4

MISSION TOWER WEST BANK LINE XING
LA RIVER BRIDGE 1-120′, 2-100′ STGBD
MISSION COMM SHELTER EAST BANK LINE XING
18″ CIP 72′ 1.098
I SIGS.
18″ CIP 72′ 1.098
24″ CMP 72′ 1.101
PUC #SG-1.30-AX DOT 903188A SP TRANSPORTATION CENTER OP / LAMAR ST.
MISSION ROAD PUC # SG-1.35-A. DOT 760627H
30″ RCP 50′ 1.410
3′ x 3′ x 100′ RCB 1.670
3′ x 3′ x 100′ RCB 1.690
PUC #SG1.79-A DOT 760634T GOLDEN STATE FWY RAMP
PUC # SG-1.84-A. DOT 760630R GOLDEN STATE FWY (2 STR). 1.84
36″ RCP 50′ 1.86
6′ x 7′ x 50′ RCB 1.950
PUC #SG-2.013-A. DOT 760631X 36″ RCP 50′ 2.033 STATE ST OP
PUC #SG-2.103-AD. DOT 760632E KINGSTON AVE/HOSPITAL PED XING
#10 R.H. 119. MP 2.39
#20 R.H. 136. MP 2.40
48″ RCP 50′ 2.413
I SIGS.
PUC #SG-2.49-A. DOT 760618J MARENGO ST OP
PUC #SG-2.58-A. DOT 760633L SOTO ST OP
PUC #SG-2.66-A. DOT 760628P SAN BERNARDINO FWY ON RAMP OP
PUC #SG-2.68-A. DOT 903187T SAN BERNARDINO FWY OFF RAMP OP

SCRRA — SCRRA

25 | 45/30 | 15/10 | 25/52 | 50/30 | 60/30 | 45/30

SIDING - 6925′ — MAIN TRACK

MILES 0 1 2 3

MAIN TRACK #1															
RAIL WT.	136	133	119	136		136	119	136	119	136	119	136	119	136	
RAIL YR.	92	98	73	00		88	73	08	73	08	73	08	73	04 SH	
TIES				PAN	McKAY	04 CONC F-CLIP						03			
BALLAST	CR ROCK														
SURFACING	04														

SIDING	
RAIL WT.	119 / 136
RAIL YR.	1973
TIES	04
BALLAST	CR ROCK
SURFACING	04

METROLINK

SAN GABRIEL SUBDIVISION

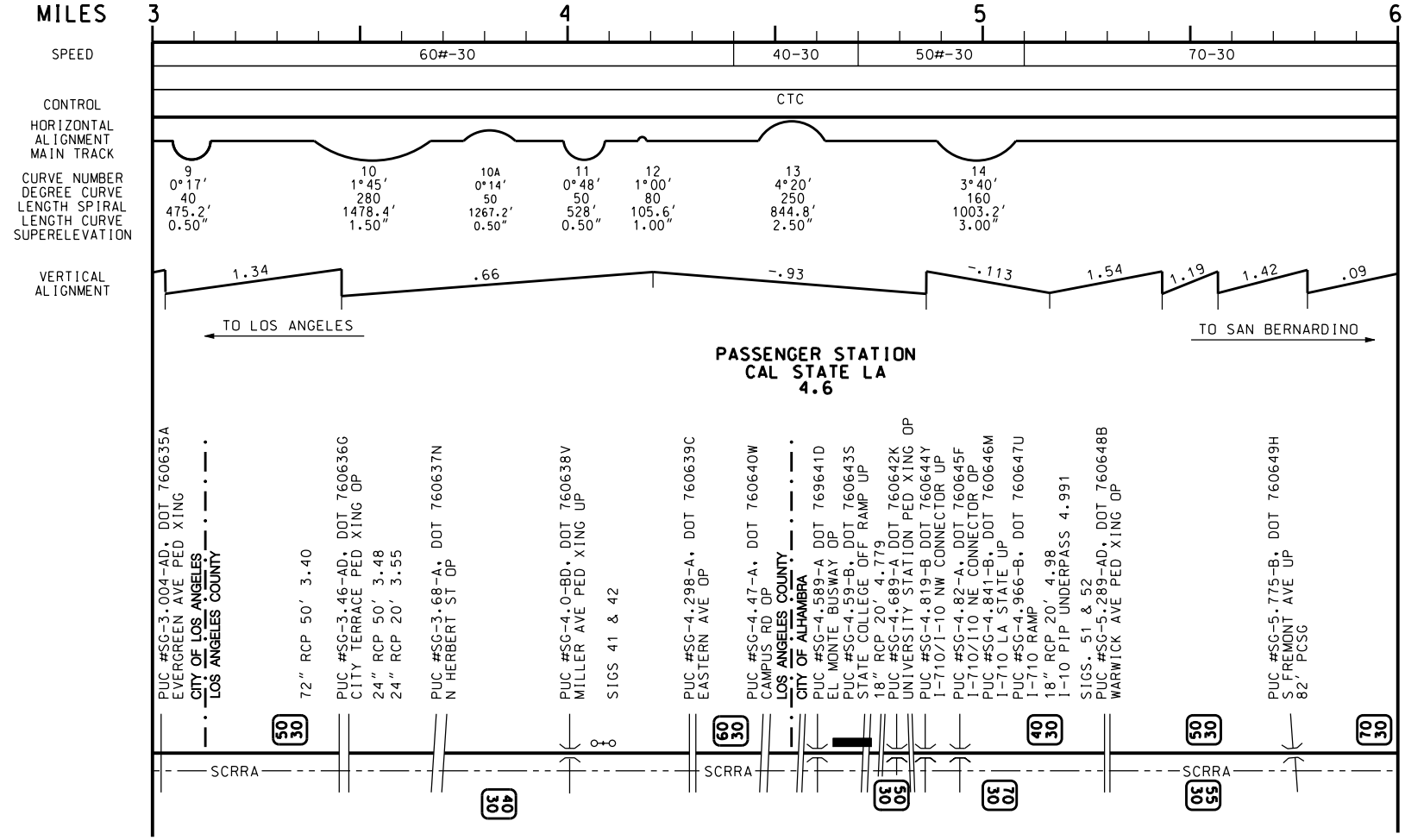

MAIN TRACK #1

MILES	3 – 4	4 – 5	5 – 6
RAIL WT.	119	136	119	136	119	136	119	136
RAIL YR.	1973	07	1973	1985	73	88	73	1985
TIES	04 CONC F-CLIP							
BALLAST	CR ROCK							
SURFACING	04							

METROLINK

SAN GABRIEL SUBDIVISION

MILES 6 7 8 9

SPEED: 55#-30 | 79#-30

CONTROL: CTC

HORIZONTAL ALIGNMENT MAIN TRACK

CURVE NUMBER / DEGREE CURVE / LENGTH SPIRAL / LENGTH CURVE / SUPERELEVATION

15	16	17	18	19	20
4°10′	2°04′	1°00′	1°00′	1°00′	1°00′
300	100	100	100	100	100
1233.7′	175.0′	264′	422′	211.2′	264′
5.25″	1.75″	1.00″	1.00″	1.00″	1.00″

VERTICAL ALIGNMENT: -.105 | -.52 | -.41 | -.55 | -.51 | -1.42 | -1.34 | -.42

← TO LOS ANGELES

TO SAN BERNARDINO →

CP FREMONT 6.0

CP JORDAN 6.3

#10 R.H. 136. MP 6.00

FREMONT SIDING 947′

#10 L.H. 136. MP 6.30
24′ x 6′ x 50′ RCB 6.33

PUC #SG-6.53-AD. DOT 760650C
MARGUERITA AVE PED XING OP

PUC #SG-6.756-B. DOT 760651J
ATLANTIC BLVD UP
82′ PCSG

55 30

PUC #SG-7.081-B. DOT 760652R
SIXTH ST UP
46′ PCSG

PUC #SG-7.415-B. DOT 760653X
GARFIELD AVE UP
81′ PCSG

PUC #SG-7.743-A. DOT 760654E
S. ALMANSOR AVE OP

PUC #SG-8.26-B. DOT 760655L
NEW AVE UP
82′ PCSG
SIGS. 81 & 82

PUC #SG-8.517-AD. DOT 760656T
JACKSON AVE PED XING OP

PUC #SG-8.63-A. DOT 760657A
EAST & WEST BOUND BUSWAY OP

PUC #SG-8.757-B. DOT 760658G
DEL MAR AVE UP
82′ PCSG

ALHAMBRA WASH
54′ PCSG 8.923

SCRRA — SCRRA — SCRRA

79 30

CITY OF ALHAMBRA | CITY OF SAN GABRIEL | CITY OF SAN GABRIEL | CITY OF ROSEMEAD

MILES 6 7 8 9

MAIN TRACK #1

RAIL WT.	136	119
RAIL YR.	03	1973
TIES	03 F-CLIP	04 CONC F-CLIP
BALLAST	CR ROCK	
SURFACING	04	

SIDING

RAIL WT.	136
RAIL YR.	85
TIES	03
BALLAST	CR ROCK
SURFACING	03

REV. 5-08

METROLINK

SAN GABRIEL SUBDIVISION

MILES 9 10 11 12

SPEED: 79#-30 | 60#-30 | 40#-30

CONTROL: CTC

HORIZONTAL ALIGNMENT MAIN TRACK

CURVE NUMBER / DEGREE CURVE / LENGTH SPIRAL / LENGTH CURVE / SUPERELEVATION

21	22	23	24
0°30′	0°30′	1°45′	6°00′
50	50	90	180
369.6′	211.2′	264′	792′
0.50″	0.50″	1.00″	4.00″

VERTICAL ALIGNMENT: -.42, -.44, -.40, -.68, -.40, -.60, -1.12, -.40, .40, 0.00, 1.7, 1.36

← TO LOS ANGELES

TO SAN BERNARDINO →

PUC #SG-9.267-B, DOT 760659N
SAN GABRIEL BLVD UP
82′ PCSG

PUC #SG-9.77-B, DOT 760660H
WALNUT GROVE AVE UP
82′ PCSG

93′ PSPC 10.145
RUBIO WASH.

PUC #SG-10.269-B, DOT 760661P
ROSEMEAD BLVD UP
174′ PCSG

CITY OF ROSEMEAD
CITY OF EL MONTE

EATON WASH. 67′ PCSG 11.261

PUC #SG-11.393-B, DOT 760662W
BALDWIN AVE UP 41′ PCSG

PUC #SG-11.409-A, DOT 760663D
SAN BERNARDINO FWY (I-10) OP
(WEST BOUND)

SIGS. 111 & 112
18″ RCP 68′, 11.499
36″ RCP 30′, 11.539

PUC #SG-11.674-B, DOT 760664K
BUSWAY UP
201.4′ STG

RIO HONDO VIADUCT, 11.774
PUC #SG-11.75-BX DOT 760665S
L A COUNTY FLOOD PVT XING UP
PUC #SG-11.85-BD DOT 760667F
RIO HONDO BIKEWAY PATH UP

PUC #SG-11.85-BD 903161R
RIO HONDO BIKEWAY PATH UP
3084′ PSPC

SCRRA — SCRRA

79 30 | 60 30 | 40 30 | 25 | 60 30

MILES 9 10 11 12

MAIN TRACK #1

RAIL WT.	119	136	119
RAIL YR.	1973	1985	1973
TIES	04 CONC F-CLIP	02 PAN	
BALLAST	CR ROCK	CR	
SURFACING	04		

REV. 5-08

METROLINK

MILES 12 13 14 15

SPEED: 40-30 | 25-25 | 60-30

CONTROL: CTC

HORIZONTAL ALIGNMENT MAIN TRACK

CURVE NUMBER / DEGREE CURVE / LENGTH SPIRAL / LENGTH CURVE / SUPERELEVATION

25	26	27	28	29	30	31	32	33	34	35	36	37	38
7°30′	9°10′	9°10′	0°36′	0°30′	0°20′	0°20′	0°32′	0°32′	0°37′	0°37′	1°30′	1°30′	0°25′
180	0	0	0	0	220′	220′	220′	220′	220′	220′	310′	310′	220′
824′	72.50′	220.46′	219.99′	642.50′	30.00′	30.00′	30.00′	30.00′	30.00′	30.00′	2.08′	2.07′	30′
2.50″	0.50	0	0	0	0	0	0	0	0	0	1.00″	1.00″	0

NOTE: Cv's 26 & 27 ARE IN SIDING

VERTICAL ALIGNMENT: 1.36 1.60 0.0 -.87 .18 0.0 -.17 -.12 -.06 .26 .65 0.0 -.25 -.02 .27 1.99 -1.94 -1.54 .45

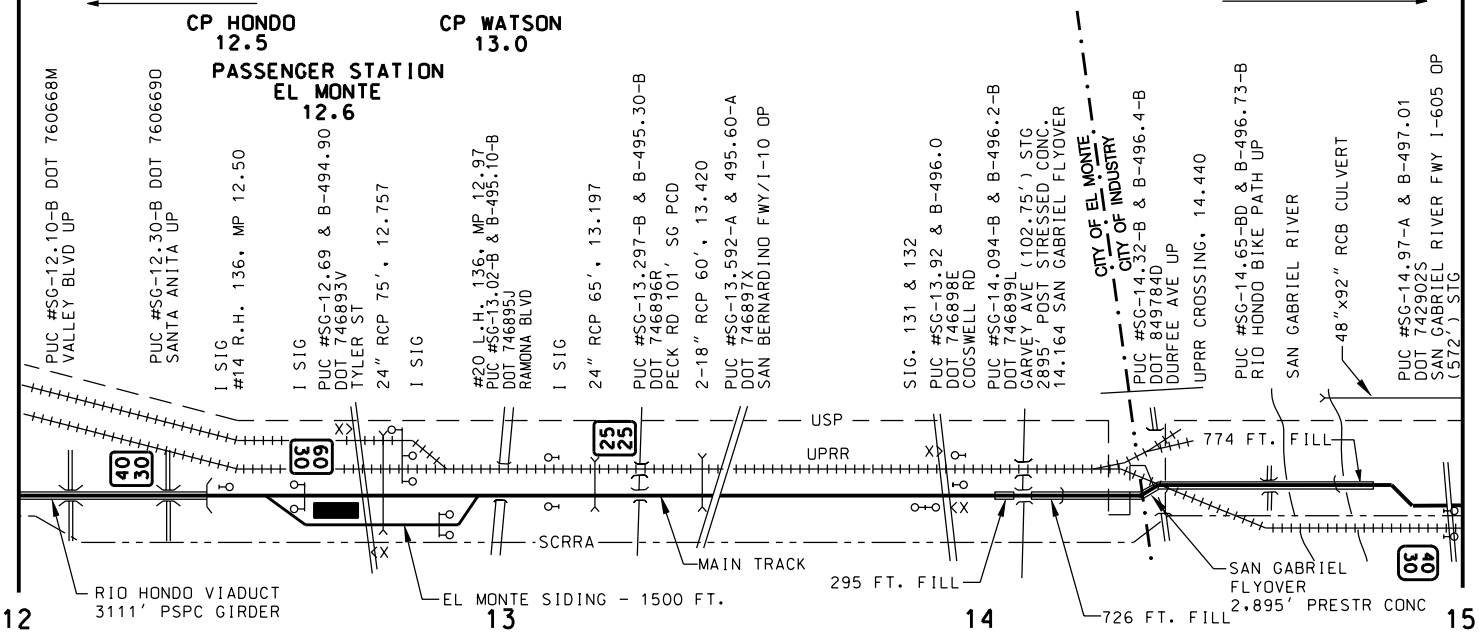

MILES 12 13 14 15

MAIN TRACK #1		
RAIL WT.	136	136
RAIL YR.	1984 / 07	1992
TIES	02 PAN	1992 C. CXT. MCKAY
BALLAST	CR ROCK	CR ROCK
SURFACING		1992

SIDING	
RAIL WT.	136
RAIL YR.	1992
TIES	1992 C. CXT.MCKAY
BALLAST	CR ROCK
SURFACING	1992

METROLINK

MILES 15 16 17 18

SPEED: 60-30 | 40#-30 | 70-30

CONTROL: CTC

HORIZONTAL ALIGNMENT MAIN TRACK

CURVE NUMBER	39	41	42	43	44	45	46
DEGREE CURVE	0°25′	7°07′,6°55′	1°00′	1°00′	0°13′	0°20′	0°01′
LENGTH SPIRAL	220′	392.85′(IN),407.35′(OUT)	0	0	0	390′	0
LENGTH CURVE	30′	1701.29′	109.72′	109.72′	116.00′	409.49′	80.00′
SUPERELEVATION	0	5.00″	0	0	0	0	0

TO LOS ANGELES

VERTICAL ALIGNMENT: .45 .26 .05 .33 .35 .33 .55 .45 .60 .47 .49 .29 .47 .44

TO SAN BERNARDINO

SD-201 2°59′58″ 0 136.38′ 0

SD-202 7°17′26″ 635.90′(IN),485.85′(OUT) 684.89′ 4¼″

CP BASSETT (CONNECTION UP ALHAMBRA SUB) 15.3

SD-203 4°12′55″ 389.91′ 67.95′ 0

CP AMAR 16.6

#14 L.H. 136, MP 15.1
I SIG.
75″ RCP
PUC #SG-15.12 & B-497.10
DOT 746903Y
TEMPLE AVE
24″ RCP 150′ 15.126
USP
I SIGS.
#20 R.H. CROSSOVER 136
SCRRA MP 15.18, UPRR MP 497.16
#14 L.H. 136, MP 15.2
8″ PVC 20′ 15.3
18″x 16″ CMPA, 15.820
#10 R.H. 136, MP 15.85
#10 R.H. 136, MP 16.05
PUC #SG-16.07, DOT 747270P
TEMPLE AVE
#10 R.H. 136, MP 16.2
8″ PVC, 16.240
#10 R.H. 136, MP 16.25
#7 R.H. 136, MP 16.31
#7 R.H. 136, MP 16.32
#7 R.H. 136, MP 16.37
PUC #SG-16.42, DOT 747272D
AMAR RD
#20 R.H. 136, MP 16.60
I SIGS.
PUC #SG-16.74-K DOT 747274S
L A COUNTY FLOOD PVT XING
CITY OF INDUSTRY
CITY OF BALDWIN PARK
WALNUT CREEK, 177′ SPD
GIRDER, 16.738
2-L.A.C.F.C.D. 4-#1-C
PUC #SG-16.74-X DOT 747275Y
L A COUNTY FLOOD PVT XING
PUC #SG-16.9, DOT 747276F
HAMBURGER LANE (VIRGINIA AVE)
#10 R.H. 136, MP 16.99
#10 L.H. 136, MP 17.00
PUC #SG-17.201-A, DOT 747277M
SAN BERNARDINO FWY/I-10 OP
(185′) CONC BOX
PUC #SG-17.33, DOT 747278U
FRANCISQUITO AVE
PUC #SG-17.6-D, DOT 849789M & 914496L
FOSTER AVE PED XING
SIG. 181 & 182

BASSET SIDING 5500′
UPRR
ZTS725
MAIN TRACK
SCRRA
USP
I SIG.
60 30
70 30
40 30

MILES 15 16 17 18

MAIN TRACK #1	
RAIL WT.	136
RAIL YR.	1992
TIES	1992 C. CXT. MCKAY
BALLAST	CR ROCK
SURFACING	

SIDING	
RAIL WT.	136
RAIL YR.	1992
TIES	1992 C. CXT. MCKAY
BALLAST	CR ROCK
SURFACING	1992

METROLINK

MILES 18 19 20 21

SPEED	70-30 / 60#-30 / 60-30
	60-30
CONTROL	CTC / 2MT-CTC

HORIZONTAL ALIGNMENT MAIN TRACK

CURVE NUMBER	47	48	49	50	51
DEGREE CURVE	3°00′	1°08′	0°04′	0°42′	0°11′
LENGTH SPIRAL	300′	150′	0	0	390′
LENGTH CURVE	1287.56′	14.15′	100′	201.83′	71.78′
SUPERELEVATION	4.50″	0	0	0	0

VERTICAL ALIGNMENT

.66 .74 .60 .55 .62 .53 .71 .80 .99 .73 .52 -.24 .51 .54 .51 .85 1.00

TO SAN BERNARDINO

TO LOS ANGELES

PASSENGER STATION
BALDWIN PARK
18.8

ORANGE AVE. JCT.
(JCT. AZUSA IND TRK)
19.9

CP IRWIN
20.4

SD-204
0°42′34″
0
201.83′
0

SD-205
0°11′37″
389.91′
71.74′
0

PUC #SG-18.02, DOT 747279B
MERCED AVE.

PUC #SG-18.36, DOT 747280V
MACDEVITT ST.

PUC #SG-18.71, DOT 747281C
PACIFIC AVE.

PUC #SG-18.97, DOT 747282J
RAMONA BLVD.

SIG. 192

CITY OF BALDWIN PARK
CITY OF IRWINDALE

STORAGE
AREA FOR OTM

SIG. 191

BIG DALTON WASH
90′ STG 19.794

PUC #SG-19.9, DOT 747283R
AZUSA CANYON RD

8″ PVC 25′, 19.921
SIG.
#10 L.H. 136, MP 19.95
8″ x 10′ PVC 20.383

I SIG.
PUC #SG-20.38, DOT 747302T
IRWINDALE AVE
#20 EQUILATERAL TURNOUT
136, MP 20.40

I SIG.

PUC #SG-20.89, DOT 747303A
VINCENT AVE

MAIN TRACK #1

USP — SCRRA

70 30

60 30

MAIN TRACK #2

CITY OF IRWINDALE
CITY OF COVINA

MILES 18 19 20 21

	MAIN TRACK #1	MAIN TRACK #2
RAIL WT.	136	136
RAIL YR.	1992	1992
TIES	1992 C, CXT, MCKAY	1992 CONC, CXT, MCKAY
BALLAST	CR ROCK	CR ROCK
SURFACING		1992

REV. 5-08

METROLINK

MILES 21 22 23 24

SPEED: 60-30 | 60-30 | 60#-30

CONTROL: 2MT-CTC | CTC

HORIZONTAL ALIGNMENT MAIN TRACK

CURVE NUMBER / DEGREE CURVE / LENGTH SPIRAL / LENGTH CURVE / SUPERELEVATION

Curve	Degree Curve	Length Spiral	Length Curve	Superelevation
52	0°01′	0	80′	0
53	0°23′	0	100′	0
54	0°00′	0	200′	0
55	0°00′	0	200′	0
56	1°00′	0	103.94′	0
57	1°00′	0	103.94′	0
58	0°00′	0	70′	0
59	2°49′	390′	380.27′	4.50″

← TO LOS ANGELES

VERTICAL ALIGNMENT: 1.00 .52 .92 1.05 1.14 1.00 1.53 1.44 1.22 1.22 1.24 1.2 .87 1.10 1.02 2.00 1.12 1.15 1.04 1.29 .72

PASSENGER STATION
COVINA
23.0

CP BARRANCA
23.4

TO SAN BERNARDINO →

Curve	Degree Curve	Length Spiral	Length Curve	Superelevation
SD-206	0°11′37″	389.91′	71.74′	0
SD-207	0°23′58″	0	99.90′	0
SD-208	0°00′15″	0	200′	0
SD-209	0°00′23″	0	200′	0
SD-210	1°30′00″	0	83′	0
SD-211	1°30′00″	0	80′	0
SD-212	1°30′00″	0	57′	0
SD-213	1°30′00″	0	55′	0

PUC #SG-21.39, DOT 747304G
LARK ELLEN AVE

18″x 24″ x 24′ RCB, 21.403
8″ PVC 40′, 21.413

8″ PVC 28′, 21.899
1′x 4′ x 100′ RCB, 21.909
PUC #SG-21.9, DOT 747305N
AZUSA AVE

SIG. 211, 213, 212, 214

PUC #SG-22.4, DOT 747306V
HOLLENBECK AVE

8″ x 110′ PVC, 22.919
PUC #SG-22.91, DOT 747307C
CITRUS AVE

I SIG.
#20 EQUILATERAL TURNOUT
136, MP 23.4
PUC #SG-23.41, DOT 747310K
BARRANCA AVE
I SIG.

12″ PVC 25′, 23.600
12″ PVC 25′, 23.630

17″x 36″ x 18′ RCB, 23.910
69″ RCP 50′, 23.920
18″x 46″ x 18′ RCB, 23.930
8″ PVC 18′, 23.930
PUC #SG-23.92, DOT 747311S
GRAND AVE

MAIN TRACK #1
ABANDONED USP
SCRRA
MAIN TRACK #2
SCRRA

MILES 21 22 23 24

MAIN TRACK #1	RAIL WT.	136
	RAIL YR.	1992
	TIES	1992 C, CXT, MCKAY
	BALLAST	CR ROCK
	SURFACING	1992
MAIN TRACK #2	RAIL WT.	136
	RAIL YR.	1992
	TIES	1992 C, CXT, MCKAY
	BALLAST	CR ROCK
	SURFACING	1992

METROLINK

MILES 24 25 26 27

SPEED: 60#-30 | 79#-30

CONTROL: CTC

HORIZONTAL ALIGNMENT MAIN TRACK

CURVE NUMBER / DEGREE CURVE / LENGTH SPIRAL / LENGTH CURVE / SUPERELEVATION

59	60	61	62	63	64	65
2°49′	0°00′	0°01′	0°01′	2°51′	0°00′	0°00′
390′	0	0	0	300′	0	0
380.27′	80′	160′	90′	460′	400′	80′
4.50″	0	0	0	4.50″	0	0

VERTICAL ALIGNMENT: 1.81 1.34 1.76 1.57 1.62 1.42 1.6 1.43 1.58 1.61 1.74 1.94 1.5 1.62 1.44 1.8 1.85 1.69 1.99 1.14 .83 1.7 1.87 1.94

TO LOS ANGELES ← | → TO SAN BERNARDINO

2-18"CIP & 1-18" CMP 25′ 24.19

PUC #SG-24.45. DOT 747312Y
GLENDORA AVE
8" PVC 25′

PUC #SG-24.72. DOT 747313F
CYPRESS ST. BANNA AVE
8" PVC 25′

48" RCP 50′. 24.828

SIGS. 241 & 242
8" PVC 25′ 24.988

PUC #SG-25.0. DOT 747314M
BONNIE COVE AVE

18" RCP 40′. 25.188

PUC #SG-25.39. DOT 747315U
COVINA BLVD

8" PVC 25′ 25.4

PUC #SG-25.53. DOT 747316B
SUNFLOWER AVE
8" PVC 25′ 25.54

36" CMP 40′. 25.773

PUC #SG-26.04. DOT 747317H
VALLEY CENTER AVE
12" PVC 20′. 26.042

SIGS. 261 & 262
PUC #SG-26.54. DOT 747318P
LONE HILL AVE
12" CMP 22′ 26.579
24" RCP 20′ 26.609
48" CMP 60′ 26.689

USP — SCRRA — USP — SCRRA — USP

60 30 | 79 30

CITY OF COVINA — CITY OF SAN DIMAS

MILES 24 25 26 27

MAIN TRACK #1

RAIL WT.	136
RAIL YR.	1992
TIES	1992 C. CXT. MCKAY
BALLAST	CR ROCK
SURFACING	1992

METROLINK

MILES 27 28 29 30

SPEED: 79#-30; 40-30

CONTROL: CTC

HORIZONTAL ALIGNMENT MAIN TRACK

CURVE NUMBER	66	67	68	69
DEGREE CURVE	0°00′	0°00′	1°00′	2°59′
LENGTH SPIRAL	0	0	390′	300′
LENGTH CURVE	300′	100′	1349.59′	506′
SUPERELEVATION	0	0	1.50″	1.50″

VERTICAL ALIGNMENT: 1.94 .25 1.83 1.78 1.76 1.86 .77 .04 .61 .48 .55 .46 .08 .56 .63 .51

← TO LOS ANGELES

TO SAN BERNARDINO →

PUC #SG-27.082-A, DOT 747319W
I-57 FWY OP

#10 R.H. 136, MP 27.55
8″ PVC 40′, 27.538
PUC #SG-27.54, DOT 747320R
CATARACT AVE
12″ PVC 35′, 27.600
8′ x 9′ x 118′ BRICK ARCH 27.619

PUC #SG-27.79, DOT 747321X
SAN DIMAS AVE
24″ CP 24′ 27.799
SIG. 271 & 272
8″ PVC 23′, 27.899
24″ CMP 24′, 27.959

PUC #SG-28.04, DOT 747322E
WALNUT AVE
18″ CIP 24′, 28.14
24″ RCP 22′, 28.23
42″ CMP 70′, 28.279

CITY OF SAN DIMAS
CITY OF LA VERNE

PUC #SG-28.55, DOT 914497T
SAN DIMAS CANYON RD
8″ PVC 22′, 28.555

2 - 11′x 14′ x 50′ RCB, 28.749

10′x 5′ RCB &
2-48″ STEEL PIPE 20′, 28.886
PUC #SG-28.8-X, DOT 747324T
GAINEY CERAMICS PVT XING

10′ x 4.5′ RCB 14′, 29.096

CONCRETE DRAINAGE CHANNEL,
10′x 18′ RCB 59′ MARSHAL CREEK, 29.166

12″ PVC 40′, 29.28
PUC #SG-29.28, DOT 914498A
WHEELER AVE
SIG. 291 & 292
#10 R.H. 136, MP 29.30

11′x21′x43′ RCB 29.626

30″x 38″ CURB INLET, 29.974
PUC #SG-29.97, DOT 747328V
FAIRPLEX DR

USP — SCRRA — USP — SCRRA — USP

79 30

40 30

MILES 27 28 29 30

MAIN TRACK #1

RAIL WT.	136
RAIL YR.	1992
TIES	1992 C. CXT. MCKAY
BALLAST	CR ROCK
SURFACING	1992

METROLINK

MILES 30 31 32 33

SPEED: 40-30 | 40#-30 | 79#-30 | 79-55

CONTROL: CTC

HORIZONTAL ALIGNMENT TRACK 1 & 2

CURVE NUMBER	70	MT1-71	MT2-72	MT1-72	MT1-73	MT1-74	MT2-75	MT1-75	MT2-76	MT1-76	MT2-77	MT1-77	MT2-78	MT1-78
DEGREE CURVE	3°17′	1°00′	3°00′	2°18′	1°00′	1°00′	1°15′	1°15′	1°15′	1°15′	1°00′	1°00′	1°00′	1°00′
LENGTH SPIRAL	290′	0′	300′	180′	80′	80′	240′	240′	240′	240′	220′	220′	220′	220′
LENGTH CURVE	444.86′	286.42′	278.34′	574.46′	37.36′	37.36′	87.49′	87.49′	87.49′	87.49′	257.8′	257.8′	257.9′	257.9′
SUPERELEVATION	1.50″	0.0″	0.0″	0.0″	1″	1″	2.5″	2.5″	2.5″	2.5″	2″	2″	2″	2″

VERTICAL ALIGNMENT: .51 .82 .57 .40 .36 .56 .43 .13 .53 .03 .02 .72 .52 1.26 1.10 .7 1.21 1.31 .65 .71 .52 1118.0 1135.3 1143.7

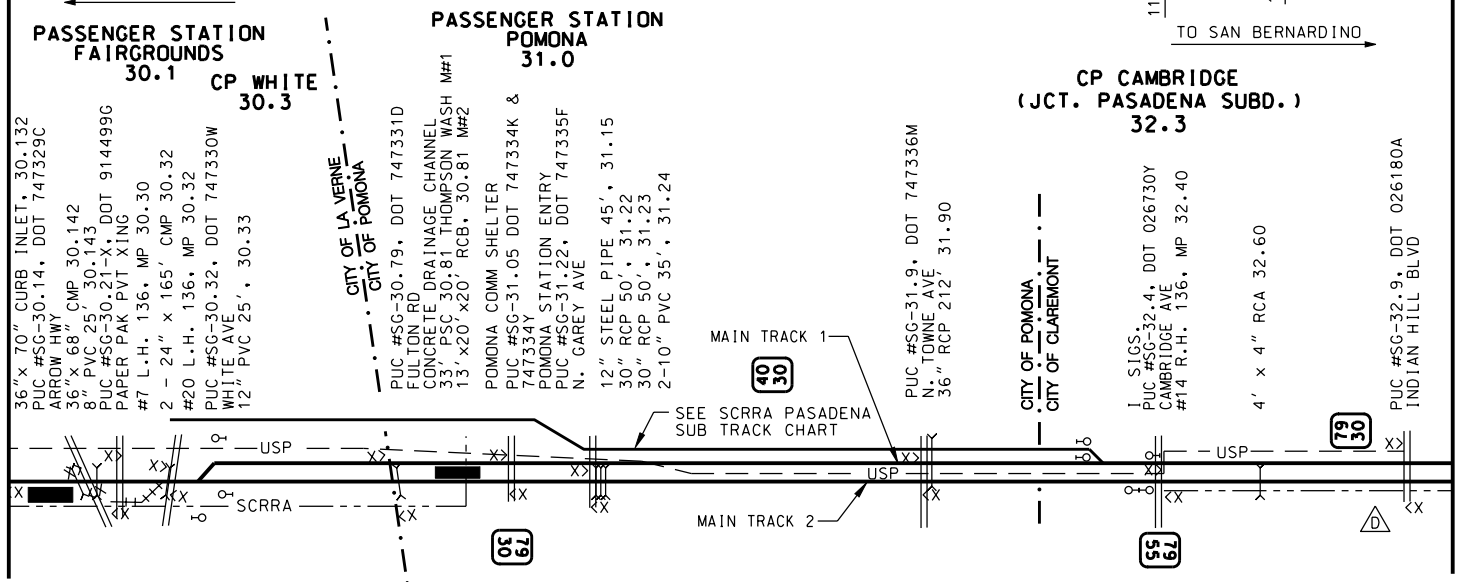

MILES 30 31 32 33

MAIN TRACK #1				
RAIL WT.	136	136	115
RAIL YR.	1992	03	94 R78
TIES	1992 C, CXT, MCKAY	03 FAST	05
BALLAST	CR ROCK		
SURFACING	1992		

MAIN TRACK #2		
RAIL WT.	136	136
RAIL YR.	1992	03
TIES	1992 C, CXT, MCKAY	03 FAST
BALLAST	CR ROCK	
SURFACING	1992	

METROLINK

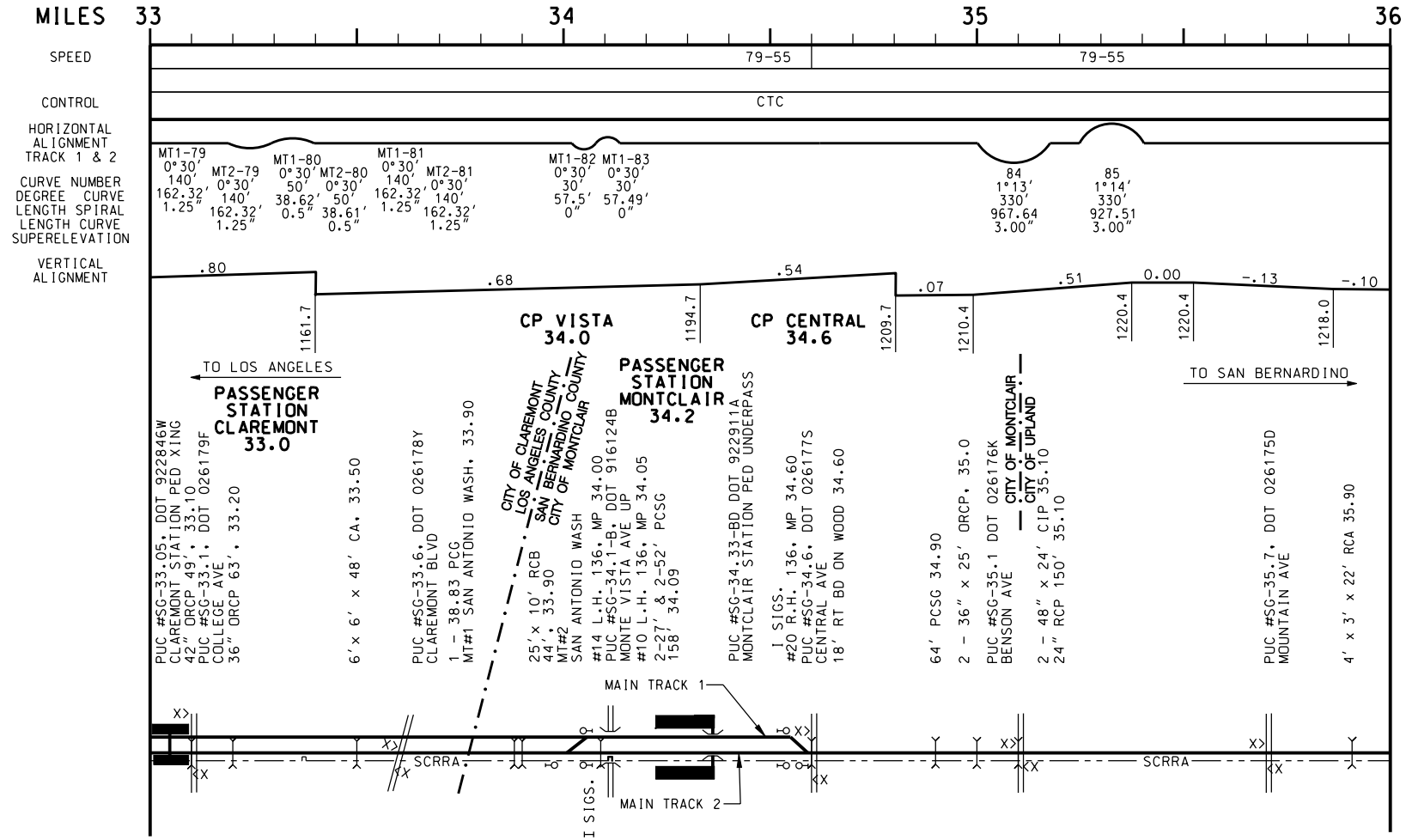

MILES 33 34 35 36

MAIN TRACK #1				
RAIL WT.	115	136	136	119
RAIL YR.	94 R78	03	1993	SH94 R78
TIES	05	F-CLIP	05	05
BALLAST			CR ROCK	CR ROCK
SURFACING			1995	1995

MAIN TRACK #2			
RAIL WT.	136	115	119
RAIL YR.	03	1994	SH94 R78
TIES	03 FAST	1995	
BALLAST		CR ROCK	
SURFACING		1995	

METROLINK

MILES 36 37 38 39

SPEED: 79-55

CONTROL: CTC

HORIZONTAL ALIGNMENT MAIN TRACK

CURVE NUMBER / DEGREE CURVE / LENGTH SPIRAL / LENGTH CURVE / SUPERELEVATION

86: 0°58′, 220′, 1728.42′, 2.00″

87: 1°00′, 220′, 1702.72′, 2.00″

VERTICAL ALIGNMENT

-.10 | 1214.3 | -.58 | 1209.3 | -.36 | 1206.8 | -.12 | 1205.4 | -.51 | 1196.2 | -1.05 | 1167.9 | -.86 | 1160.1 | -1.06 | 1121.2 | -.99

TO LOS ANGELES

PASSENGER STATION
UPLAND
36.9

TO SAN BERNARDINO

4′ x 3′ x 22′ RCA 36.10

PUC #SG-36.2, DOT 026174W
SAN ANTONIO AVE
108″ RCP 100′, 36.215

SIG. 361-362
42″ RCP 96′, 36.76

PUC #SG-36.8, DOT 026173P
EUCLID AVE

PUC #SG-36.9, DOT DOT 026172H
2ND AVE

24″ RCP 60′, 37.15

24″ & 30″ RCP 60′, 37.20

PUC #SG-37.3, DOT 026168T
CAMPUS AVE

27.92′ PCSG, 37.70
16′ x 10′ x 300′ RCB 37.90

CITY OF UPLAND
CITY OF ONTARIO

PUC #SG-38.1, DOT 026167L
GROVE AVE

CITY OF ONTARIO
CITY OF RANCHO CUCAMONGA

60′ PCSG 38.30

PUC #SG-38.6, DOT 026166E
BAKER AVE
SIG. 381-382

90′ PCSG, 38.90

SCRRA

SCRRA

MILES 36 37 38 39

MAIN TRACK #1

RAIL WT.	119
RAIL YR.	SH94 R78
TIES	05 / 06
BALLAST	CR ROCK
SURFACING	1995

METROLINK

MILES 39 40 41 42

SPEED: 79-55

CONTROL: CTC | 2MT-CTC

HORIZONTAL ALIGNMENT MAIN TRACK

CURVE NUMBER / DEGREE CURVE / LENGTH SPIRAL / LENGTH CURVE / SUPERELEVATION

- 88: 0°39′, 160′, 960.40′, 1.00″
- 89: 1°13′, 330′, 721.49′, 3.00″
- 90: 0°18′, 190′, 901.11′, 1.00″

VERTICAL ALIGNENT

-1.07 | 0.00 | .37 | .13 | .25 | 0.00 | .11 | .35 | 0.00 | -.18

1110.3 | 1094.8 | 1094.8 | 1100.3 | 1102.2 | 1111.8 | 1111.8 | 1114.3 | 1120.4 | 1120.4

TO LOS ANGELES

CP ARCHIBALD 40.2

TO SAN BERNARDINO

PASSENGER STATION RANCHO CUCAMONGA 42.0

PUC #SG-39.1, DOT 026165X
VINEYARD AVE.
141.78′ STG BD CUCAMONGA CREEK
9′ RT BD ON C. 39.40
30′ BRT BD. 39.55
14′ RT BD. 39.59
PUC #SG-39.6, DOT 026164R
HELLMAN AVE.
24″ x 20′ CMP. 39.80
#10 L.H. 136, MP 40.05
2 - 33″ RCP 114′, 40.08
PUC #SG-40.1, DOT 026161V
ARCHIBALD AVE.
8′ RT BD 40.12
#20 R.H. 136, MP 40.20
4′x 4′ RCA 148′, 40.20
1 SIG.
#10 R.H. 136, MP 40.21
4′x 3′ RCA 33′, 40.50
PUC #SG-40.6, DOT 026160N
HERMOSA AVE (TURNER AVE)
8′x 6′ RC BOX, 40.60
DEER CANYON CREEK
35′ ONE SPAN 34.1′ PSPC 40.70
9′ RT BD, 40.89
9′ RT BD, 40.90
#10 L.H. 136, MP 41.05
HAVEN AVE
PUC #SG-41.1, DOT 026157F
2 - 36″ X 65′ CMP 41.30
#10 L.H. 119, MP 41.70
#10 R.H. 136, MP 41.80
#10 R.H. 136, MP 42.00

SCRRA

1 SIG. 1 SIG.

RANCHO SIDING 11,000′

MILES 39 40 41 42

MAIN TRACK #1			
RAIL WT.	119	136	
RAIL YR.	SH94 R78	1994	
TIES	06	06 PANDROL CLIPS	94
BALLAST	CR ROCK		
SURFACING	SL1994		

SIDING			
RAIL WT.	136	119	136
RAIL YR.	1992	U	1992
TIES	1994 C (MCKAY)		
BALLAST	CR ROCK		
SURFACING	SL1993		

METROLINK

MILES 42 43 44 45

SPEED: 79-55

CONTROL: 2MT-CTC | CTC

HORIZONTAL ALIGNMENT MAIN TRACK: NO CURVES

CURVE NUMBER
DEGREE CURVE
LENGTH SPIRAL
LENGTH CURVE
SUPERELEVATION

VERTICAL ALIGNMENT: -.18 | 0.00 | .61 | 0.00 | -.18 | -.27 | 0.00 | .51 | .29 | .36

1118.0 | 1118.0 | 1127.7 | 1127.7 | 1125.7 | 1120.3 | 1120.3 | 1128.4 | 1131.7

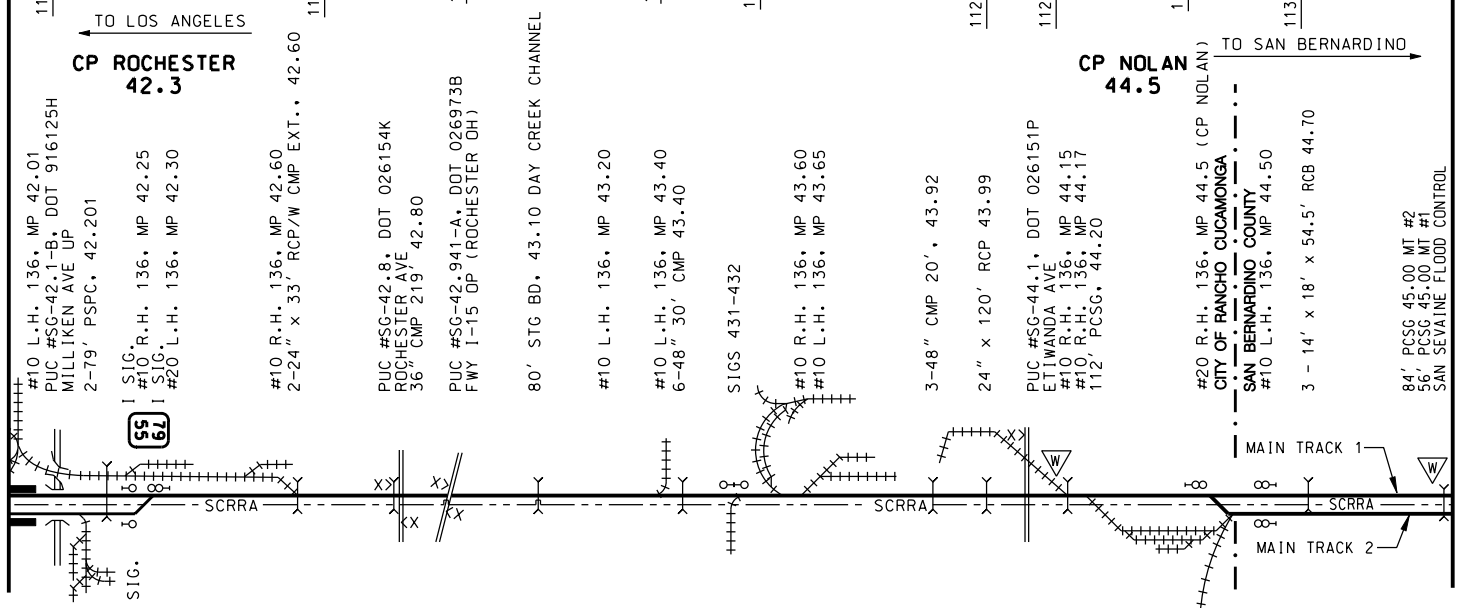

MILES 42 43 44 45

MAIN TRACK #1	RAIL WT.	136		119	136	119
	RAIL YR.	1994		1963	03	1963
	TIES	94	06 PANDROL CLIPS	95 PAN	1995	
	BALLAST	CR ROCK				
	SURFACING	SL1994				

SIDING / MAIN TRACK #2	RAIL WT.	136	136
	RAIL YR.	1994	03
	TIES	1994 C (MCKAY)	03 FAST
	BALLAST	CR ROCK	
	SURFACING	SL1993	

METROLINK

MILES 45 46 47 48

SPEED: 79-55

CONTROL: CTC

HORIZONTAL ALIGNMENT MAIN TRACK

CURVE NUMBER	91	92	93	94
DEGREE CURVE	0°45' 00"	0°45' 00"	0°45' 00"	0°45' 00"
LENGTH SPIRAL	30'	30'	30'	30'
LENGTH CURVE	210.84'	131.11	279.17'	282.46'
SUPERELEVATION	0	0	0	0

VERTICAL ALIGNMENT

.43 .48 .71 .37 .73 .46

1137.4 1145.1 1153.2 1165.4 1173.0 1210.5

TO LOS ANGELES

TO SAN BERNARDINO

PASSENGER CP KAISER STATION 45.6
CA SPEEDWAY 45.3

CP BEECH 47.5

36" CMP 67', 45.10

PUC #SG-45.3-X.
DOT 026150H
CALABASH AVE PVT XING

1 SIG.
1 SIG.
1 SIGS.

#10 R.H. 136, MP 45.42
#10 R.H. 136, MP 45.43
#10 L.H. 115, MP 45.44 (SIDING)
#10 L.H. 136, MP 45.46
#10 L.H. 136, MP 45.47
#10 L.H. 136, MP 45.48
#10 R.H. 136, MP 45.48
#10 R.H. 136, MP 45.50
#10 R.H. 136, MP 45.51 (SIDING)

PUC #SG-46.087-A. DOT 026149N
CHERRY AVE OP

KAISER YARD
(BNSF)

PUC #SG-47.1. DOT 026148G
BEECH AVE

36" CMP 80', 47.16

#10 L.H. 136, MP 47.58
1 SIGS.
#10 R.H. 136, MP 47.60
1 SIG.
#20 L.H. 136, MP 47.63

SAN BERNARDINO COUNTY
CITY OF FONTANA

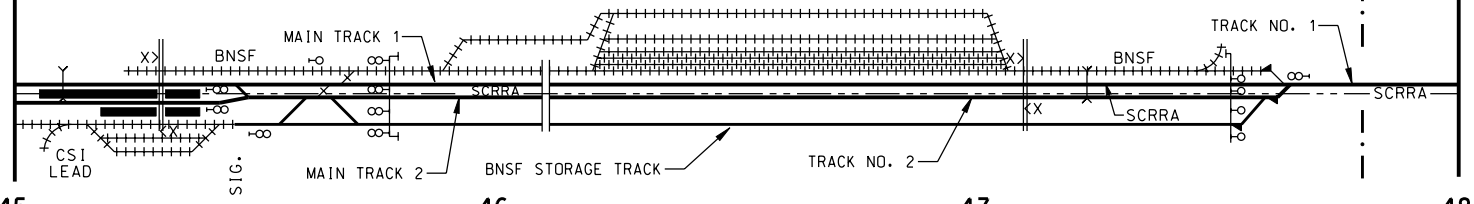

MILES 45 46 47 48

MAIN TRACK #1 RAIL WT.	119	136							119
RAIL YR.	63	03	06	03		06	03	06	63
TIES	1992								
BALLAST	CR ROCK								
SURFACING	SL1994								

MAIN TRACK #2 RAIL WT.	136
RAIL YR.	03
TIES	03 FAST
BALLAST	
SURFACING	

METROLINK

MILES 48 49 50 51

SPEED	79-55
	79-45
CONTROL	CTC
	2MT-CTC
HORIZONTAL ALIGNMENT MAIN TRACK	NO CURVES
CURVE NUMBER DEGREE CURVE LENGTH SPIRAL LENGTH CURVE SUPERELEVATION	

VERTICAL ALIGNMENT

.63 .29 -.20 0.00 -.13 -.34

1227.4 1237.5 1251.8 1248.8 1248.8 1243.4

TO LOS ANGELES

PASSENGER STATION
FONTANA
49.0

TO SAN BERNARDINO

CP LOCUST
50.7

PUC #SG-48.1, DOT 026147A
CITRUS AVE

36" ORCP 40', 48.70

MP 48.85 DED W/ TALKER
PUC #SG-48.9, DOT 026146T
JUNIPER AVE

SIG. 491-492
PUC #SG-49.1, DOT 026145L
SIERRA AVE
24" ORCP 260' 49.1

36"X22" CMP 209' 49.11
PUC #SG-49.3, DOT 026144E
MANGO AVE

PUC #SG-49.6, DOT 026143X
PALMETTO AVE

PUC #SG-50.1, DOT 026142R
ALDER AVE

CITY OF FONTANA
CITY OF RIALTO

1 SIG.
PUC #SG-50.6, DOT 026141J
LOCUST AVE
1 SIG.
#20 L.H. 136, MP 50.70

DRAINAGE CANAL

RIALTO SIDING
8100'

SCRRA SCRRA

1 SIG.

MILES 48 49 50 51

MAIN TRACK #1 RAIL WT.	119	119	119
RAIL YR.	1963	1979	1963
TIES	1992		
BALLAST	CR ROCK		
SURFACING	SL1994		

SIDING RAIL WT.	136
RAIL YR.	1992
TIES	1992 C MCKAY
BALLAST	CR ROCK
SURFACING	

METROLINK

MILES 51 52 53 54

SPEED: 79-45 | 79-55

CONTROL: 2MT-CTC | CTC

HORIZONTAL ALIGNMENT MAIN TRACK

CURVE NUMBER
DEGREE CURVE
LENGTH SPIRAL
LENGTH CURVE
SUPERELEVATION

VERTICAL ALIGNMENT: -.34 | -.61 | -.25 | -.46 | -.61

1224.4 | 1210.0 | 1204.3 | 1188.8

TO LOS ANGELES

TO SAN BERNARDINO

CP LILAC 52.4

PASSENGER STATION RIALTO 52.9

3-63" RCP 69', 51.10

PUC #SG-51.4, DOT 026140C
CEDAR AVE

2-30" ORCP 40', 51.60

#10 L.H. 136, MP 51.93
36" x 90' CMP 51.95
#10 L.H. 119 MP 52.01 (SIDING)
24" CMP 60' 52.09
43"x 27" x 386' CMP ARCH, 52.10
PUC #SG-52.1, DOT 026139H
CACTUS AVE

#10 L.H. 136, MP 52.10
2-44"x 72" x 162' CMP ARCH, 52.20
#10 R.H. 119 MP 52.30 (SIDING)

1 SIG.
24" CIP 100' 52.40 RCP EXT.
PUC #SG-52.4, DOT 026138B
LILAC AVE
1 SIG.
#20 R.H. 136, MP 52.40

PUC #SG-52.6, DOT 026137U
WILLOW AVE
42" CMP & 3 - 24" RCP 46', 52.70

PUC #SG-53.0, DOT 026136M
RIVERSIDE AVE
SIG. 842
PUC #SG-53.1, DOT 026135F
SYCAMORE AVE

PUC #SG-53.4, DOT 026134Y
ACACIA ST

PUC #SG-53.6, DOT 026133S
EUCALYPTUS AVE

PUC #SG-53.9, DOT 026132K
PEPPER AVE
SIG. 531-532

RIALTO SIDING 8100'

SCRRA

1 SIG.

SCRRA
USP

CITY OF RIALTO
CITY OF SAN BERNARDINO

MILES 51 52 53 54

MAIN TRACK #1

RAIL WT.	119	136	119	136	119
RAIL YR.	1963	99	63	93	1978
TIES	1992				
BALLAST	CR ROCK				
SURFACING					

SIDING

RAIL WT.	136	115	136
RAIL YR.	1992	U	1992
TIES	1993 C (MCKAY)		
BALLAST	CR ROCK		
SURFACING			

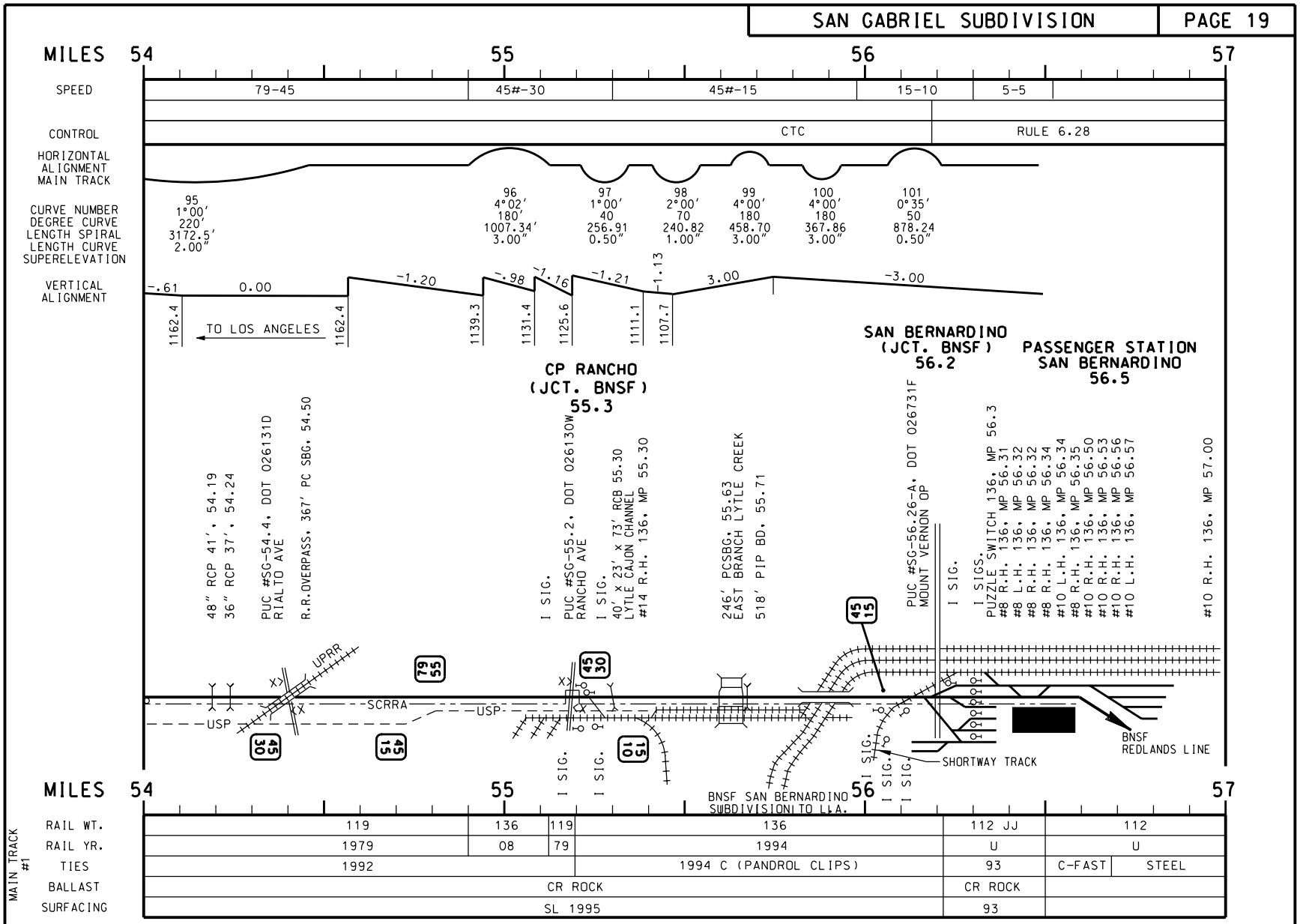
MILES 54 55 56 57
SPEED
79-45
45#-30
45#-15
15-10
5-5
CONTROL
CTC
RULE 6.28
HORIZONTAL ALIGNMENT MAIN TRACK
CURVE NUMBER
DEGREE CURVE
LENGTH SPIRAL
LENGTH CURVE
SUPERELEVATION
95 1°00′ 220′ 3172.5′ 2.00″
96 4°02′ 180′ 1007.34′ 3.00″
97 1°00′ 40 256.91 0.50″
98 2°00′ 70 240.82 1.00″
99 4°00′ 180 458.70 3.00″
100 4°00′ 180 367.86 3.00″
101 0°35′ 50 878.24 0.50″
VERTICAL ALIGNMENT
-.61
0.00
-1.20
-.98
-1.16
-1.21
-1.13
3.00
-3.00
1162.4
1162.4
1139.3
1131.4
1125.6
1111.1
1107.7
TO LOS ANGELES
CP RANCHO
(JCT. BNSF)
55.3
SAN BERNARDINO
(JCT. BNSF)
56.2
PASSENGER STATION
SAN BERNARDINO
56.5
48″ RCP 41′, 54.19
36″ RCP 37′, 54.24
PUC #SG-54.4, DOT 026131D
RIALTO AVE
R.R.OVERPASS, 367′ PC SBG, 54.50
I SIG.
PUC #SG-55.2, DOT 026130W
RANCHO AVE
I SIG.
40′ x 23′ x 73′ RCB 55.30
LYTLE CAJON CHANNEL
#14 R.H. 136, MP 55.30
246′ PCSBG, 55.63
EAST BRANCH LYTLE CREEK
518′ PIP BD. 55.71
PUC #SG-56.26-A, DOT 026731F
MOUNT VERNON OP
I SIG.
I SIGS.
PUZZLE SWITCH 136, MP 56.3
#8 R.H. 136, MP 56.31
#8 L.H. 136, MP 56.32
#8 R.H. 136, MP 56.32
#8 R.H. 136, MP 56.34
#10 L.H. 136, MP 56.34
#8 R.H. 136, MP 56.35
#10 R.H. 136, MP 56.50
#10 R.H. 136, MP 56.53
#10 R.H. 136, MP 56.56
#10 L.H. 136, MP 56.57
#10 R.H. 136, MP 57.00
UPRR
SCRRA
USP
USP
79 55
45 30
45 15
45 30
45 15
15 10
I SIG.
I SIG.
I SIG.
I SIG.
I SIG.
BNSF SAN BERNARDINO SUBDIVISION/ITO L.L.A.
SHORTWAY TRACK
BNSF REDLANDS LINE
MAIN TRACK #1
RAIL WT. 119 136 119 136 112 JJ 112
RAIL YR. 1979 08 79 1994 U U
TIES 1992 1994 C (PANDROL CLIPS) 93 C-FAST STEEL
BALLAST CR ROCK CR ROCK
SURFACING SL 1995 93

METROLINK

Orange Subdivision

FULLERTON JCT.
MP 165.4

to

COUNTY LINE
MP 207.4

TO MAKE REVISIONS, PLEASE CONTACT:

DIRECTOR OF ENGINEERING AND CONSTRUCTION
METROLINK
(213) 452-0250

LAST REVISION
MAY 2008

METROLINK

ORANGE SUBDIVISION

MILES 165 166 167 168

SPEED	55#-40	79-50
	55#-40	79-50
CONTROL	2MT-CTC	

HORIZONTAL ALIGNMENT MAIN TRACK CURVE NUMBER DEGREE CURVE LENGTH SPIRAL LENGTH CURVE SUPERELEVATION

FL (2) FL (1)

	1	2
DEGREE CURVE	03°04'00"	01°00'22"
LENGTH SPIRAL	200'	200'
LENGTH CURVE	2787'	1224'
SUPERELEVATION	3"	1-1/2"

VERTICAL ALIGNMENT

0.06 0.24 0.40 0.00 0.08 0.00 0.40

161.6 TO LOS ANGELES 163.6 166.0 170.0 170.0 168.0 168.0 164.0 TO OCEANSIDE

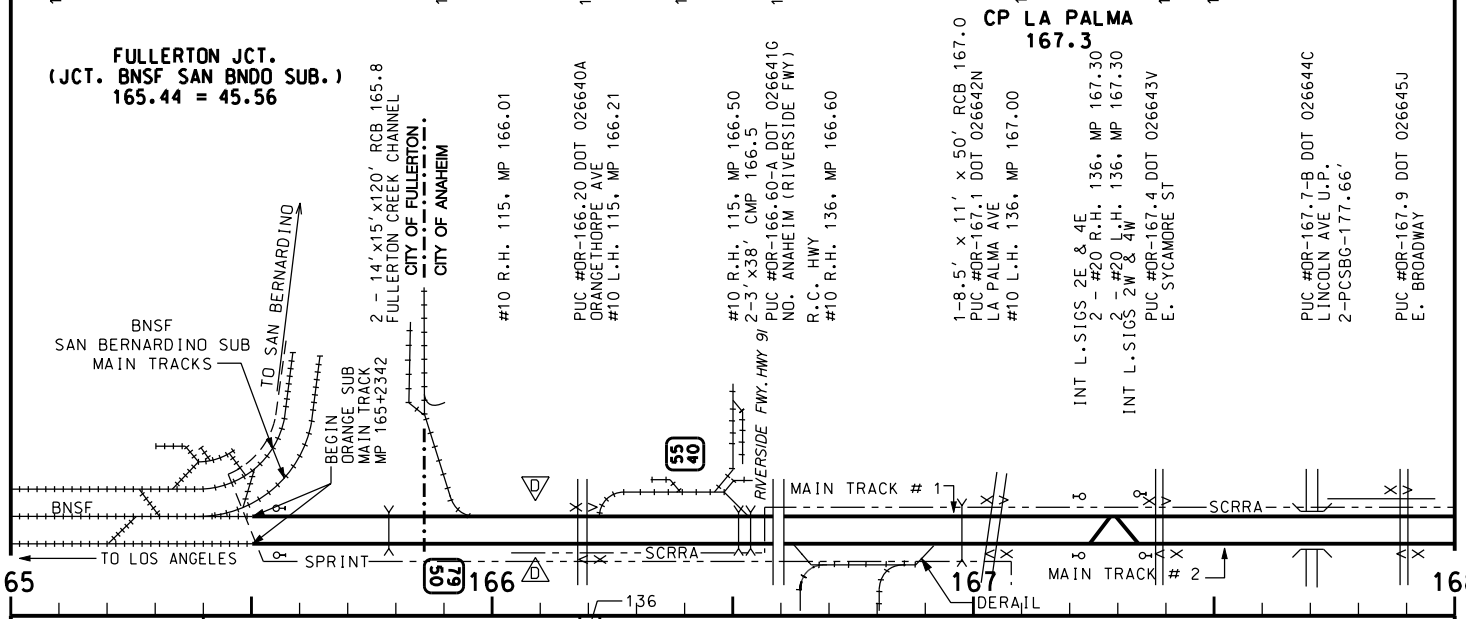

MILES 165 166 167 168

MAIN TRACK #1				
RAIL WT.			136	115
RAIL YR.			04	88
TIES	96	04		04
BALLAST			02 PAN	ROCK
SURFACING				

MAIN TRACK #2				
RAIL WT.	136 (115 XINGS)			
RAIL YR.	95			
TIES	95 CONC (MCKAY)	02 PAN	95 CONC (MCKAY)	94 CONC (MCKAY)
BALLAST	95 CR ROCK			94 CR ROCK
SURFACING				

METROLINK

ORANGE SUBDIVISION

MILES 168 169 170 171

SPEED	79-50	70-50	79-50
CONTROL	79-50	70-50	79-50
	2MT-CTC		

HORIZONTAL ALIGNMENT MAIN TRACK

CURVE NUMBER	3	4	5
DEGREE CURVE	00°30'00"	00°30'00"	01°00'00"
LENGTH SPIRAL	90'	90'	200'
LENGTH CURVE	173'	173'	5336'
SUPERELEVATION	1/2"	1/2"	1-1/2"

TO OCEANSIDE

VERTICAL ALIGNMENT

0.00 0.11 0.17 0.27 0.00

TO LOS ANGELES

164.0 155.0 160.3 170.80 162.7

PUC #OR-168.0 DOT 026646R E SANTA ANA ST

2'x18"x49' TR WB 168.2

PUC #OR-168.30 DOT 026647X E. SOUTH ST

PUC #OR-168.7 DOT 26648E E. VERMONT AVE

SIG 1681-1682-1683-1684

#10 R.H. 115, MP 169.20

PUC #OR-169.2 DOT 26649L BALL RD

PUC #OR-169.5-B, DOT 26650F LEWIS ST U.P.

2-PCSBG-301.42', 169.50 1-36"x75' RCP, 169.50

PUC #OR-169.7 DOT 26651M CERRITOS AVE

2 - 30" CMP 100', 169.8

SIG 4E-2E

2 - 30" CMP 100', 169.9

SIG4W-2W

#10 L.H. 115, MP 170.10

STATE COLLEGE BLVD

PUC #OR-170.3 DOT 26652U

CP COLLEGE (U.P. CROSSING) 169.8

9'x9' RCB 170.4

2-PCSBG-182', 170.50

PUC #OR-170.5-B, DOT 26653B KATELLA AVE U.P. PCSBG

PUC #OR-170.8-A, DOT 26976W STADIUM O.H.

PUC #OR-170.8-B, DOT 916116J DOUGLASS RD U.P.

PUC #OR-170.9-BD DOT 916117R BIKE PATH U.P.

DBL STG W/SPD 100'

CITY OF ANAHEIM

CITY OF ORANGE

1-15'x20'x35' RCB, 170.90

PASSENGER STATION ANAHEIM STADIUM 170.65

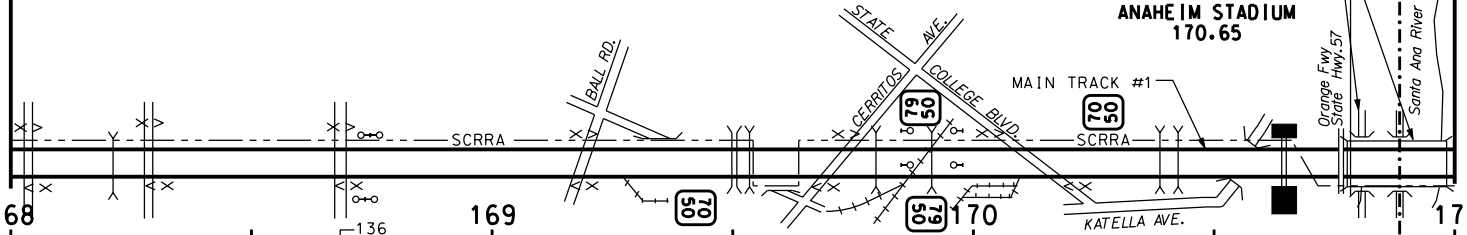

MILES 168 169 170 171

MAIN TRACK #1						
RAIL WT.	115	115 (136)	136	115	136	
RAIL YR.	88		95	05	95	
TIES	04	08	95 C (E-CLIP)	WOOD	95 C	
BALLAST	ROCK				E-CLIP	
SURFACING						

MAIN TRACK #2							
RAIL WT.	136		136	115	136	115	136
RAIL YR.	95			88	95	88	95
TIES	94 C (MCKAY)	95 C (E-CLIP)		04			95 C (E-CLIP)
BALLAST	94 CR ROCK	08	08				
SURFACING							

METROLINK

ORANGE SUBDIVISION

MILES 171 172 173 174

SPEED	79-50	35-35	60-25	40-40	79-55
CONTROL	79-50	35-35	60-25		
	2MT-CTC			CTC	

HORIZONTAL ALIGNMENT MAIN TRACK

CURVE NUMBER	6	7	8	9	10	11	12	13	14
DEGREE CURVE	00°30'00"	00°30'00"	07°11'40", 07°05'30"	01°31'16"	01°31'16"	00°30'00"	00°30'00"	02°59'00"	04°06'00"
LENGTH SPIRAL	60'	60'	260',218'	NO SPIRAL'	NO SPIRAL'	40'	40'	120'	160'
LENGTH CURVE	104'	104'	771'	188'	188'	243'	243'	700'	435'
SUPERELEVATION	1/2"	1/2"	3-1/2"	1/2"	0"	1/2"	1/2"	3"	4"

TO FULLERTON

VERTICAL ALIGNMENT: 0.56 0.12 0.46 0.80 0.67 0.50 0.21 0.10 0.25 0.00

162.7 158.5 161.0 167.0 175.0 179.0 175.0 180.5 178.5 175.0 175.0

TO OCEANSIDE

CP MAPLE (JCT. OLIVE SUBD.) 172.4

PASSENGER STATION ORANGE 172.6

2-DBL STG W/SPD 349.5', 171.00
PUC #OR-171.1 DOT 026654H ECKHOFF ST.
SIG 1711-12-13-14
#10 R.H. 136. MP 171.40
2-PCDBG 32', 171.50
PUC #OR-171.5 DOT 26655P MAIN ST
2-2'x1'x39' WB. 171.80
PUC #OR-171.8 DOT 26656W BATAVIA ST
PUC #OR-172.06-CX MR. CRANE PVT XING
BR. 172.0, 2'x1'x58' TR WB
#10 L.H. 136. MP 172.00
INT L. SIG 2EA & 2EB
PUC #OR-172.3 DOT 026657D WALNUT ST
4 - #20 L.H. 136. MP 172.40
2 - #20 R.H. 136. MP 172.40
PUC #OR-172.5 DOT 026658K PALM AVE
PUC #OR-172.7 DOT 026672F CHAPMAN AVE
PUC #OR-172.8 DOT 026673M ALMOND AVE
PUC #OR-172.9 DOT 026694F PALMYRA AVE
PUC #OR-173.3 DOT 026695M LA VETA AVE
PUC #OR-173.4-A, DOT 026696U SO. ORANGE O.H. GARDEN GROVE FWY
1-STG W/WD 270', 173.60 &
1-PCG 236.66', 173.60
PUC #OR-173.6 DOT 026697B FAIRHAVEN AVE

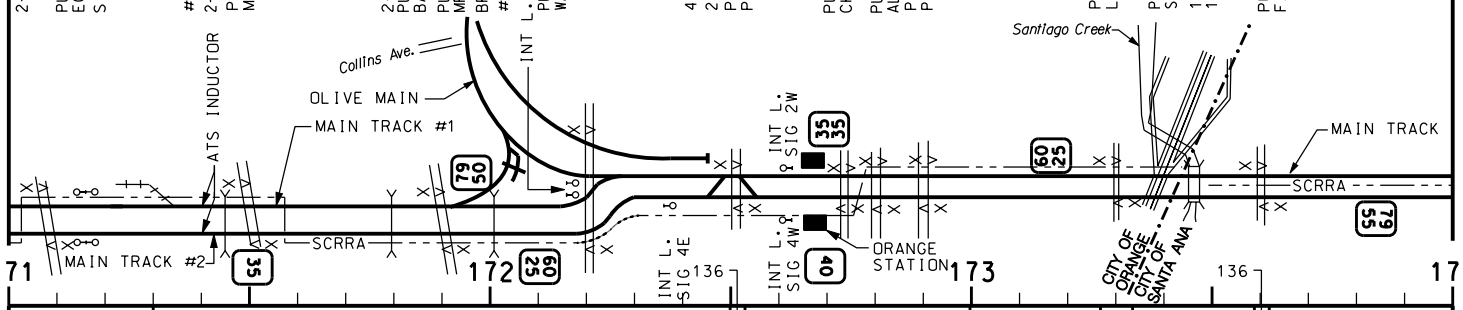

MILES 171 172 173 174

MAIN TRACK #1 RAIL WT.	115	136	136	115	136	115	115		
RAIL YR.	88	95-04	95-04	88-04	03	88-04	88-04		
TIES	04	95 C (MCKAY)	08	04		03	08		
BALLAST	ROCK						PAN		
SURFACING	88	136							
MAIN TRACK #2 RAIL WT.	136	115	136	115	136	115	115	136	115	136
RAIL YR.	95	88	03	88	95	88	88	95	88	07
TIES	95 C E-CLIP	04	FAST 03	04						FAST 07
BALLAST	ROCK		08							ROCK
SURFACING										

METROLINK

MILES 174 175 176 177

SPEED	79-55	50-40	90-55
CONTROL		50-40	90-55
	CTC	2MT-CTC	2MT-CTC-ATS

HORIZONTAL ALIGNMENT MAIN TRACK

CURVE NUMBER	15	16	17	18
DEGREE CURVE	00°20'00"	00°15'00"	03°02'00"	03°00'00"
LENGTH SPIRAL	50'	60'	120'	230'
LENGTH CURVE	200'	681'	341'	951'
SUPERELEVATION	1/2"	1-1/2"	2"	2-1/2"

To OCEANSIDE

VERTICAL ALIGNMENT

0.43 0.42 0.57 0.57 0.42 0.70 0.62 0.32

CP LINCOLN 174.70

TO FULLERTON

LEVEL155.1 EQUA155.7 150.2 142.2 134.3 123.1 117.7 116.1 114.7 113.0 111.6 110.3 105.2

PASSENGER STATION SANTA ANA 175.2

PUC #OR-174.2 DOT 026698H SANTA CLARA AVE

PUC #OR-174.7. DOT 026699P 17TH ST

PUC #OR-174.8-B. DOT 026100G SANTA ANA FWY U.P.

2-DBL STPG W/SPD 366.50, 174.80 HWY U.P.

1-22"x13"x30' RCA 175.1

PUC #OR-175.1 DOT 026702V SANTA ANA BLVD

PUC #OR-175.21-AD SANTA ANA STATION PED OVERPASS

18" x 43' RCP 175.4

PUC #OR-175.4 DOT 026703C FOURTH ST

#10 L.H. 115, MP 175.60 #10 R.H. 115, MP 175.60 PUC #OR-175.65-B. DOT 026704J FIRST ST U.P. 2-PCSBG 120.0', 175.65

PUC #OR-175.8 DOT 026740E CHESTNUT ST

SIG. 1752-54

PUC #OR-176.2 DOT 026741L GRAND AVE

PUC #OR-176.6 DOT 026742T LYON ST

SIG 1761-62-63-64

PUC #OR-176.7 DOT 026743A McFADDEN ST

PUC #OR-176.8 DOT 026744G RITCHEY ST

ATS INDUCTOR

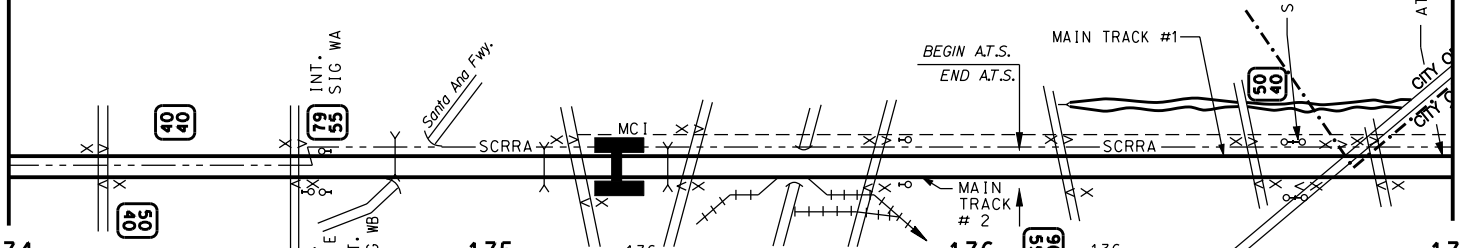

MILES 174 175 176 177

MAIN TRACK #1	RAIL WT.	115	115	136	119	136	119	115	115	136	115			
	RAIL YR.	88	88	96	85	96	85	03	88	136	88	89		
	TIES	04		96 C (MCKAY)	96		05	03	03		03	03		
	BALLAST	ROCK						08	ROCK	08				
	SURFACING													
MAIN TRACK #2	RAIL WT.	136		136	119	136	119	115	115	136	115			
	RAIL YR.	07		96	85	96	85	88	88		88			
	TIES	FAST 07		96 C E-CLIP			06	96	96		96	82		
	BALLAST	ROCK						08	CR ROCK	08				
	SURFACING								SL-03					

METROLINK

MILES 177 178 179 180

SPEED: 90-55

CONTROL: 90-55

2MT-CTC-ATS

HORIZONTAL ALIGNMENT
MAIN TRACK
CURVE NUMBER
DEGREE CURVE
LENGTH SPIRAL
LENGTH CURVE
SUPERELEVATION

← To FULLERTON

To OCEANSIDE →

VERTICAL ALIGNMENT

0.38 0.35 0.20 0.41 0.35 0.39 0.52 0.11 0.14 0.18 0.00

88.5 81.5 84.9 80.5 76.7 68.5 63.5 62.2 60.7 57.0 57.0

PUC #OR-177.40-A. DOT 02745N
SO. TUSTIN OP
(26-745-N)

1-36" CURB INLET 56' 177.5
#10 R.H. 136. MP 177.55

PUC #OR-177.9 DOT 026746V
RED HILL AVE
#10 L.H. 136. MP 177.90

CP ALISO
178.9

INT L.SIGS 2E & 4E
2 - #20 L.H. 136. MP 178.90
2 - #20 R.H. 115. MP 178.90
INT L.SIGS 2W & 4W

1 - SG W/WD 37', 179.3
1 - PCSBG 39', 179.3

1-18'x10'x40' RCB 179.5

PASSENGER
STATION
TUSTIN
179.5

PUC #OR-179.7-A DOT 026996H
JAMBOREE RD
#10 R.H. 136. MP 179.72
2-PCDBG 126' 179.70
PETERS CANYON WASH

PUC #OR-179.9 DOT 026762E
HARVARD AVE

SIG 1791-2-3-4

Dow Ave X-ing
2-179.53-G

O.C.F.C.D.
Channel

MAIN TRACK #1

MAIN TRACK #2

SCRRA SCRRA SCRRA MCI

BNSF
INDUSTRIAL
TRACK

TUSTIN
SANTA ANA
NEWPORT FWY.
STATE HWY.55

55 79

CITY OF TUSTIN
CITY OF IRVINE

MILES 177 178 179 180

MAIN TRACK #1

RAIL WT.	115	136	115
RAIL YR.	89	94	89
TIES	03		
BALLAST	ROCK		
SURFACING	SL 03		

MAIN TRACK #2

RAIL WT.	115	136	115	136	115	136	136
RAIL YR.	UNK	03	UNK	03	UNK	94	08	95
TIES	03		03				95 C (MCKAY)
BALLAST	CR ROCK						
SURFACING	SL 86						

METROLINK

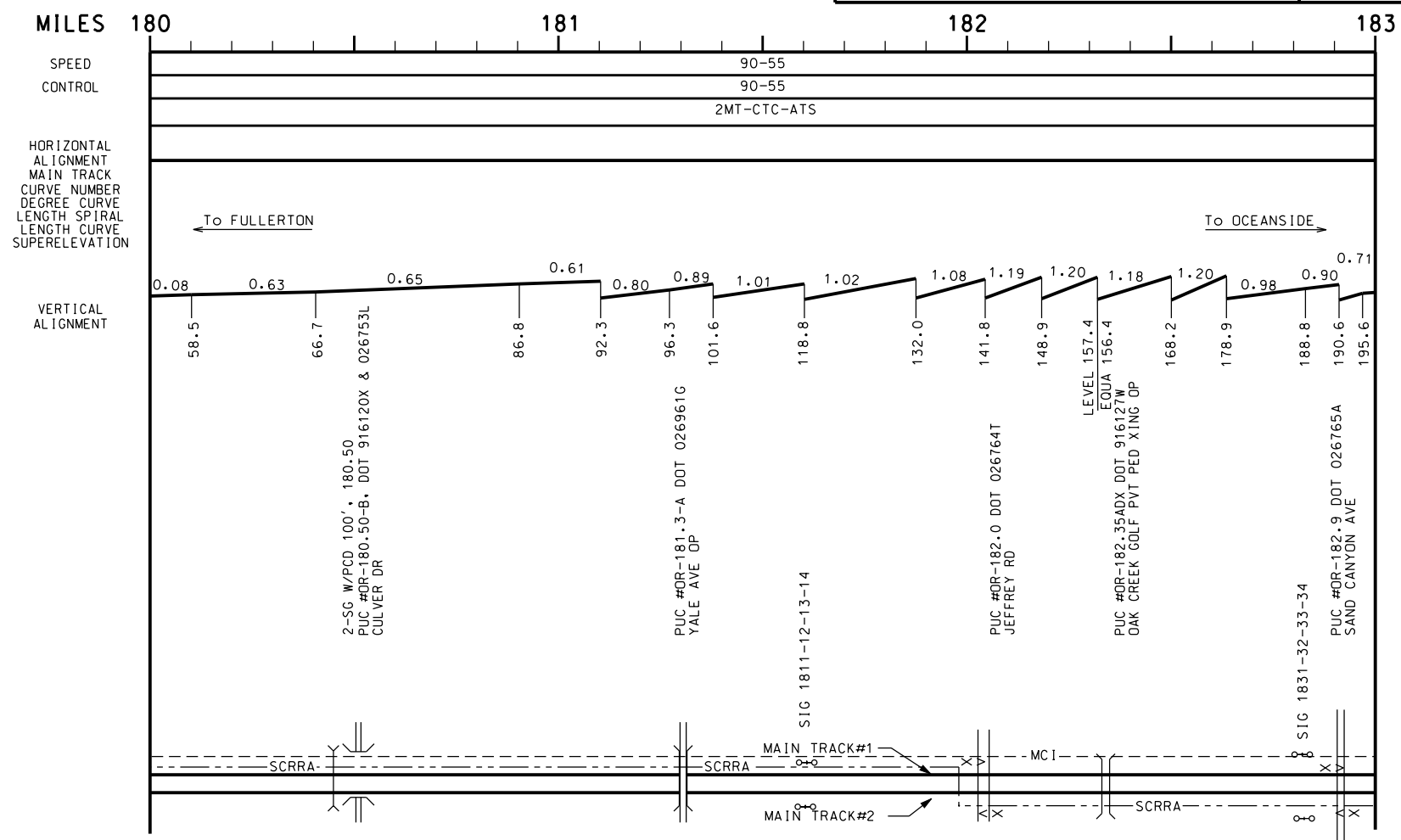

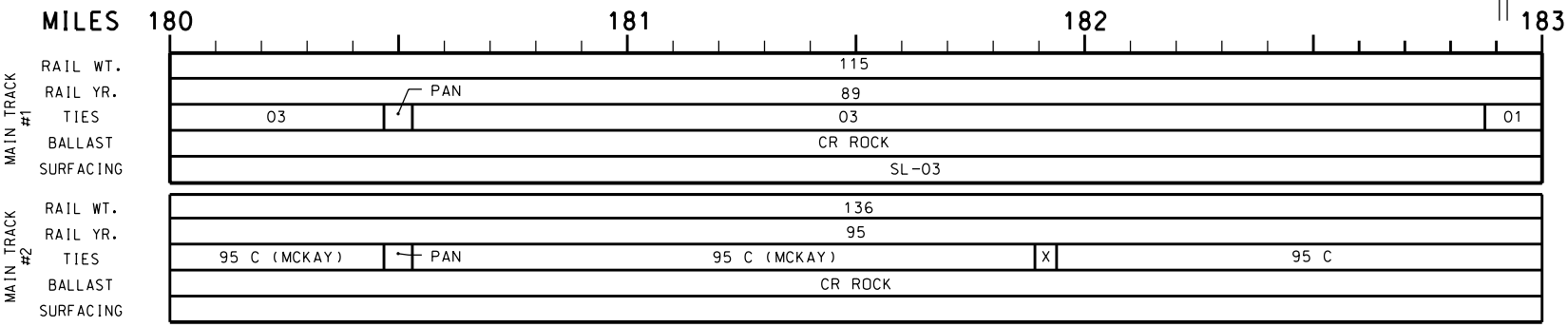

X = 1995 FASTCLIP TEST TIES LOCATION

METROLINK

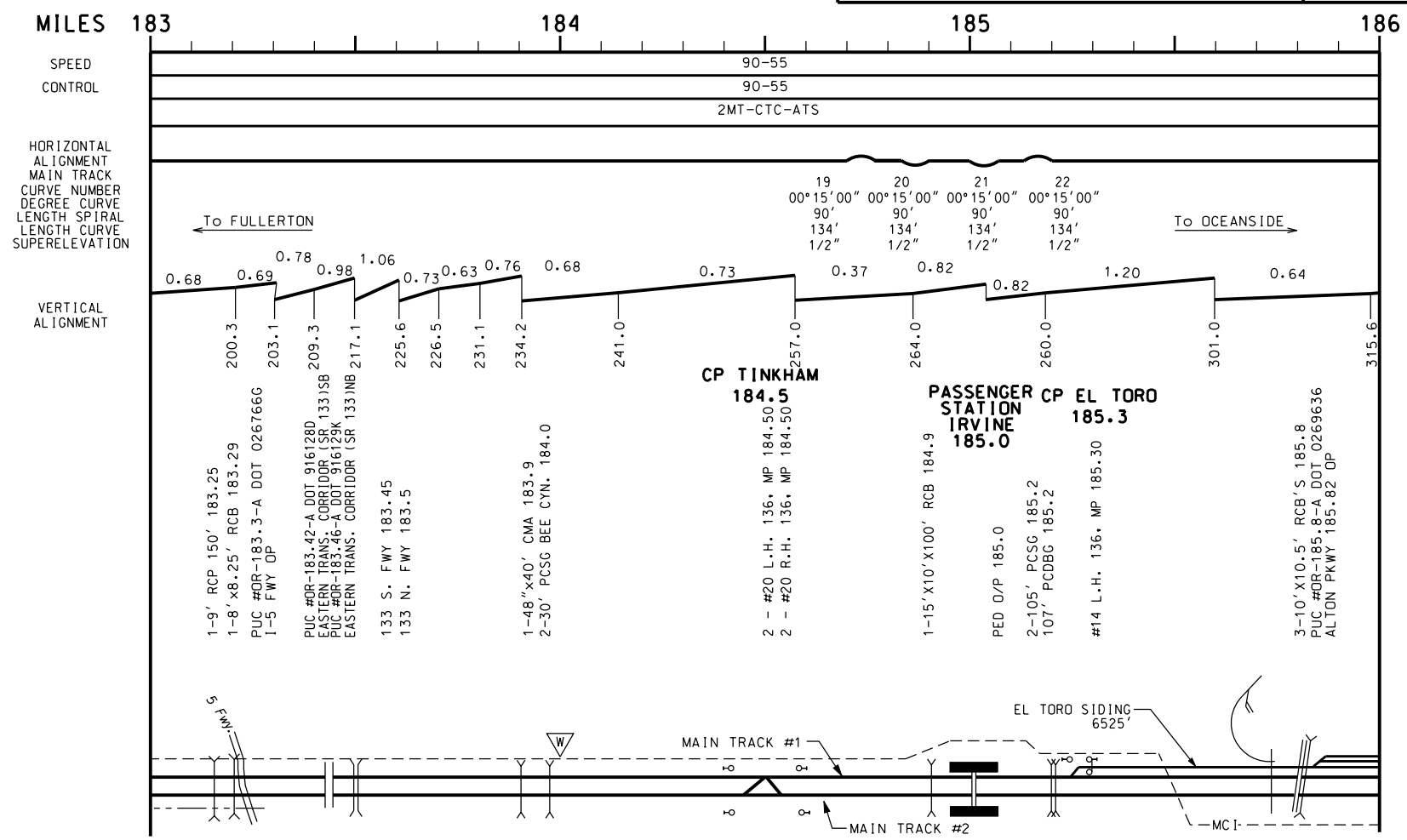
MILES 183 184 185 186
SPEED
CONTROL
90-55
90-55
2MT-CTC-ATS
HORIZONTAL ALIGNMENT
MAIN TRACK CURVE NUMBER
DEGREE CURVE
LENGTH SPIRAL
LENGTH CURVE
SUPERELEVATION
19 20 21 22
00°15'00" 00°15'00" 00°15'00" 00°15'00"
90' 90' 90' 90'
134' 134' 134' 134'
1/2" 1/2" 1/2" 1/2"
To FULLERTON
To OCEANSIDE
VERTICAL ALIGNMENT
0.68 0.69 0.78 0.98 1.06 0.73 0.63 0.76 0.68 0.73 0.37 0.82 0.82 1.20 0.64
200.3 203.1 209.3 217.1 225.6 226.5 231.1 234.2 241.0 257.0 264.0 260.0 301.0 315.6
1-9' RCP 150' 183.25
1-8'x8.25' RCB 183.29
PUC #OR-183.3-A DOT 026766G
I-5 FWY OP
PUC #OR-183.42-A DOT 916128D
EASTERN TRANS. CORRIDOR (SR 133)SB
PUC #OR-183.46-A DOT 916129K
EASTERN TRANS. CORRIDOR (SR 133)NB
133 S. FWY 183.45
133 N. FWY 183.5
1-48"x40' CMA 183.9
2-30' PCSG BEE CYN. 184.0
CP TINKHAM
184.5
2 - #20 L.H. 136. MP 184.50
2 - #20 R.H. 136. MP 184.50
PASSENGER STATION IRVINE
185.0
CP EL TORO
185.3
1-15'X10'X100' RCB 184.9
PED O/P 185.0
2-105' PCSG 185.2
107' PCDBG 185.2
#14 L.H. 136. MP 185.30
3-10'X10.5' RCB'S 185.8
PUC #OR-185.8-A DOT 0269636
ALTON PKWY 185.82 OP
5 FWY.
W
MAIN TRACK #1
MAIN TRACK #2
EL TORO SIDING
6525'
MCI

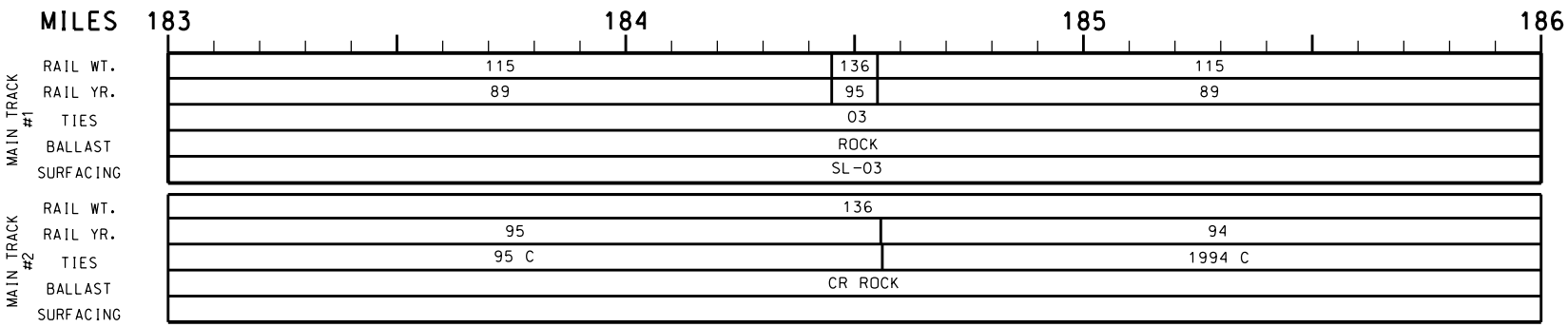
MILES 183 184 185 186
MAIN TRACK #1
RAIL WT. 115 136 115
RAIL YR. 89 95 89
TIES 03
BALLAST ROCK
SURFACING SL-03
MAIN TRACK #2
RAIL WT. 136
RAIL YR. 95 94
TIES 95 C 1994 C
BALLAST CR ROCK
SURFACING

METROLINK

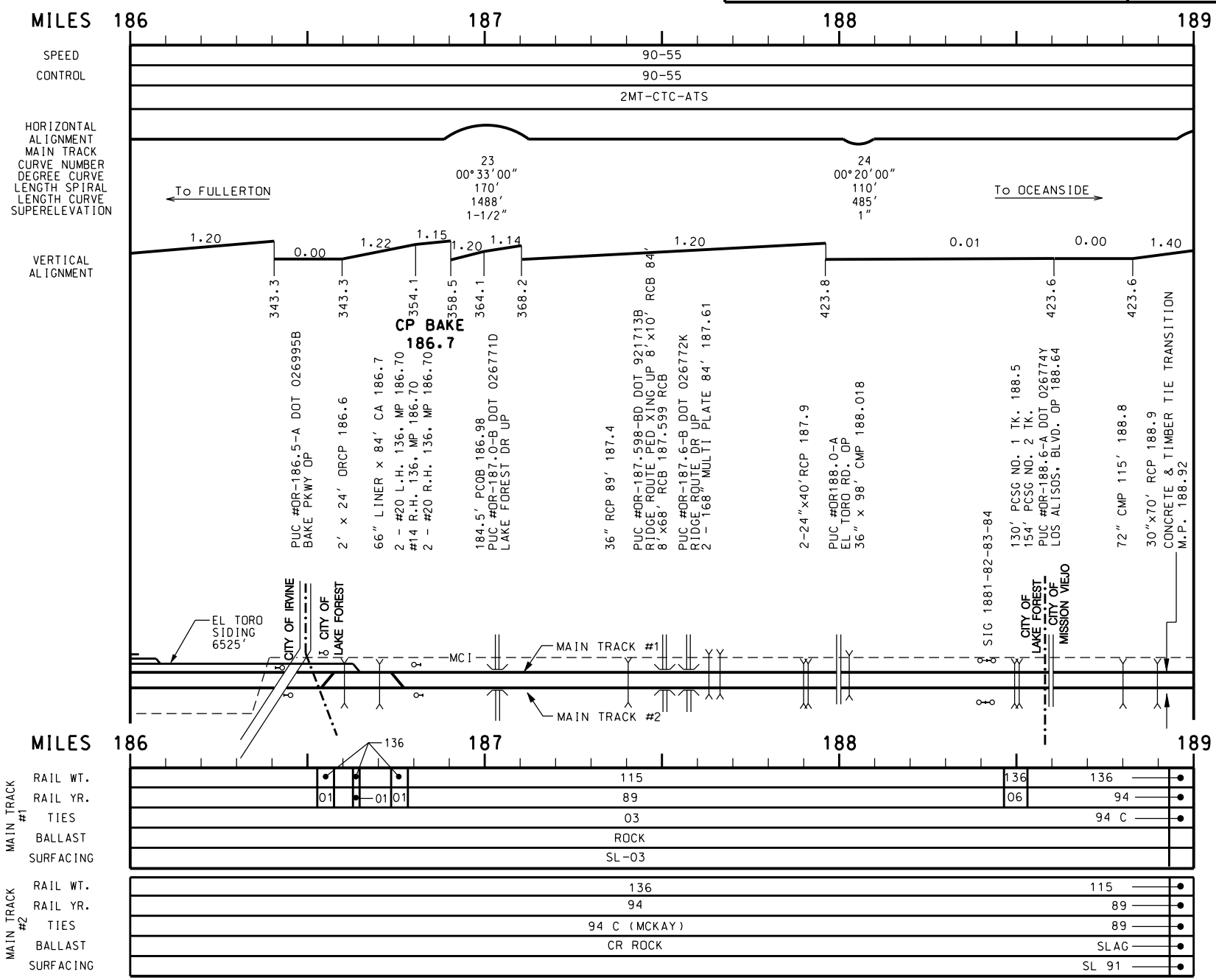
MILES 186 187 188 189
SPEED 90-55
CONTROL 90-55
2MT-CTC-ATS
HORIZONTAL ALIGNMENT
MAIN TRACK CURVE NUMBER
DEGREE CURVE
LENGTH SPIRAL
LENGTH CURVE
SUPERELEVATION
To FULLERTON
23
00°33'00"
170'
1488'
1-1/2"
24
00°20'00"
110'
485'
1"
To OCEANSIDE
VERTICAL ALIGNMENT
1.20
0.00
1.22
1.15
1.20
1.14
1.20
0.01
0.00
1.40
343.3
343.3
354.1
358.5
364.1
368.2
423.8
423.6
423.6
CP BAKE
186.7
PUC #OR-186.5-A DOT 026995B
BAKE PKWY OP
2' x 24' ORCP 186.6
66" LINER x 84' CA 186.7
2 - #20 L.H. 136. MP 186.70
#14 R.H. 136. MP 186.70
2 - #20 R.H. 136. MP 186.70
184.5' PCOB 186.98
PUC #OR-187.0-B DOT 026771D
LAKE FOREST DR UP
36" RCP 89' 187.4
PUC #OR-187.598-BD DOT 921713B
RIDGE ROUTE PED XING UP 8'x10' RCB 84'
8'x68' RCB 187.599 RCB
PUC #OR-187.6-B DOT 026772K
RIDGE ROUTE DR UP
2 - 168" MULTI PLATE 84' 187.61
2-24"x40'RCP 187.9
PUC #OR188.0-A
EL TORO RD. OP
36" x 98' CMP 188.018
SIG 1881-82-83-84
130' PCSG NO. 1 TK. 188.5
154' PCSG NO. 2 TK.
PUC #OR-188.6-A DOT 026774Y
LOS ALISOS. BLVD. OP 188.64
72" CMP 115' 188.8
30"x70' RCP 188.9
CONCRETE & TIMBER TIE TRANSITION
M.P. 188.92
EL TORO
SIDING
6525'
CITY OF IRVINE
CITY OF
LAKE FOREST
MCI
MAIN TRACK #1
MAIN TRACK #2
CITY OF
LAKE FOREST
CITY OF
MISSION VIEJO
MILES 186 187 188 189
136
MAIN TRACK #1
RAIL WT. 115 136 136
RAIL YR. 01 01 01 89 06 94
TIES 03 94 C
BALLAST ROCK
SURFACING SL-03
MAIN TRACK #2
RAIL WT. 136 115
RAIL YR. 94 89
TIES 94 C (MCKAY) 89
BALLAST CR ROCK SLAG
SURFACING SL 91

METROLINK

ORANGE SUBDIVISION

MILES 189 190 191 192

SPEED	90-55
CONTROL	90-55
	2MT-CTC-ATS

HORIZONTAL ALIGNMENT MAIN TRACK

CURVE NUMBER	25	26	27	28	29	30	31
DEGREE CURVE	01°00'00"	01°00'00"	00°20'00"	00°20'00"	00°20'00"	00°20'00"	00°51'32"
LENGTH SPIRAL	570'	570'	90'	90'	90'	90'	290'
LENGTH CURVE	897'	1935'	134'	134'	134'	134'	581'
SUPERELEVATION	4"	2-1/2"	1/2"	1/2"	1/2"	1/2"	3"

← To FULLERTON

VERTICAL ALIGNMENT

1.40 1.27 1.23 1.12 1.20 0.76 0.81 0.70 0.80

448.9 402.4 387.4 378.6 361.8 331.6 315.5 305.8

PUC #OR-189.3-A DOT 026775F
ALICIA PKWY OP

8'x6'x56' RCB 189.4

48"x80' CMP 189.5

8'x8'x36' RCB 189.9
SCRRA MAINT. ROAD (PRIVATE)

24"x60' RCP 190.0 CMP EXT.

30"x45' RCP 190.1 CMP EXT.

156' R.C. HWY O.P. 190.3
PUC #OR-190.4-A DOT 026776M
LA PAZ RD OP

30"x55' RCP 190.4 CMP EXT.

SIG 1901-02-03-04
218' I. BXM. 190.5
ON C. HWY O.P.

PUC #OR-190.5-A DOT 026778B
EL TORO OP, SAN DIEGO FWY. (I-5)

66"x150' RCP 190.8

To OCEANSIDE →

PUC #OR-191.5-A. DOT 916115C
EL PASEO OP
36"x70 RCP 191.5

PUC #OR-191.66-A DOT 026779H
OSD PKWY OH

36"x68' CMP 191.7

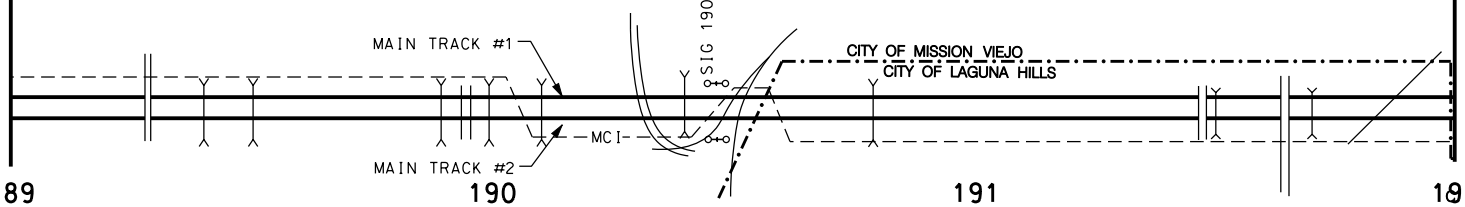

MILES 189 190 191 192

MAIN TRACK #1	RAIL WT.	136
	RAIL YR.	94
	TIES	94 C (MCKAY)
	BALLAST	
	SURFACING	SL-03
MAIN TRACK #2	RAIL WT.	115
	RAIL YR.	89
	TIES	03
	BALLAST	ROCK
	SURFACING	SL-01

METROLINK

MILES 192 193 194 195

SPEED	90-55	90-55
CONTROL	90-55	
	2MT-CTC-ATS	CTC-ATS

HORIZONTAL ALIGNMENT MAIN TRACK

CURVE NUMBER	32	33	34	35	36	37
DEGREE CURVE	00°10'00"	00°56'00"	0°22'00" (TK-1) 0°27'-00" (TK-2)	(ONLY AT TRACK 1) 00°55'00"	00°51'01"	01°00'00"
LENGTH SPIRAL	120'	290'	1259' (TK-1)	70'	330'	570'
LENGTH CURVE	400'	553'	1538' (TK-2)	300'	358'	1777'
SUPERELEVATION	1"	3½"	2"	1"	3"	3.25"

← To FULLERTON

To OCEANSIDE →

VERTICAL ALIGNMENT

0.83 0.62 0.60 0.58 0.60 0.54 0.79 0.76 0.53 0.55 0.49 0.55 0.16

297.8 291.6 285.1 278.5 272.1 267.3 263.5 258.0 243.9 230.4 224.9 220.0

PASSENGER STATION LAGUNA NIGUEL 193.7

CP AVERY 193.9

2-112" PCSG (SKEWED) 192.8

2-6'x4' 35' RCB 193.1
PUC #OR-193.2-A DOT 026780C
CROWN VALLEY PKWY OP

2-5'x45"x100' RCB 193.5
ORANGE COUNTY STORM DRAIN
PUC #OR-193.60-BD. DOT 922844H
LAGUNA NIGUEL /
MV. STATION PED XING
18' PCSG. PED U/P 193.6

PUC #OR-193.9-A DOT 026781J
PASEO DE COLINAS OP
#24 R.H. 136. MP 193.90
R.C. HYW O.P. 193.91
8'x3' RCB 283' 193.93
ORANGE COUNTY STORM DRAIN
PUC #OR-194.05-A DOT 916118X
SR73/I-5 SAN JOAQUIN HILLS TOLL RD NB
PUC #OR-194.10-A DOT 916119E
SR73/I-5 SAN JOAQUIN HILLS TOLL RD SB

2-24"x80' ORCP 194.2
PUC #OR-194.30-X DOT 026782R
RANCHO CAPISTRANO PVT XING

27' BDT 194.6
30"x33' CMP 194.7
24"x70' CMP 194.985

SIG 1921-2-3-4

Oso Creek

CITY OF MISSION VIEJO
CITY OF LAGUNA NIGUEL

MAIN TRACK #1

55

CITY OF MISSION VIEJO
CITY OF LAGUNA NIGUEL

CITY OF SAN JUAN CAPISTRANO

MCI

MAIN TRACK #2

CITY OF LAGUNA HILLS

MILES 192 193 194 195

MAIN TRACK #1 RAIL WT.	136			115
RAIL YR.	94			89
TIES	94 C	99	94 C	03
BALLAST	94	W	ROCK	
SURFACING	03			SL-03

MAIN TRACK #2 RAIL WT.	115
RAIL YR.	89
TIES	03
BALLAST	ROCK
SURFACING	SL-01

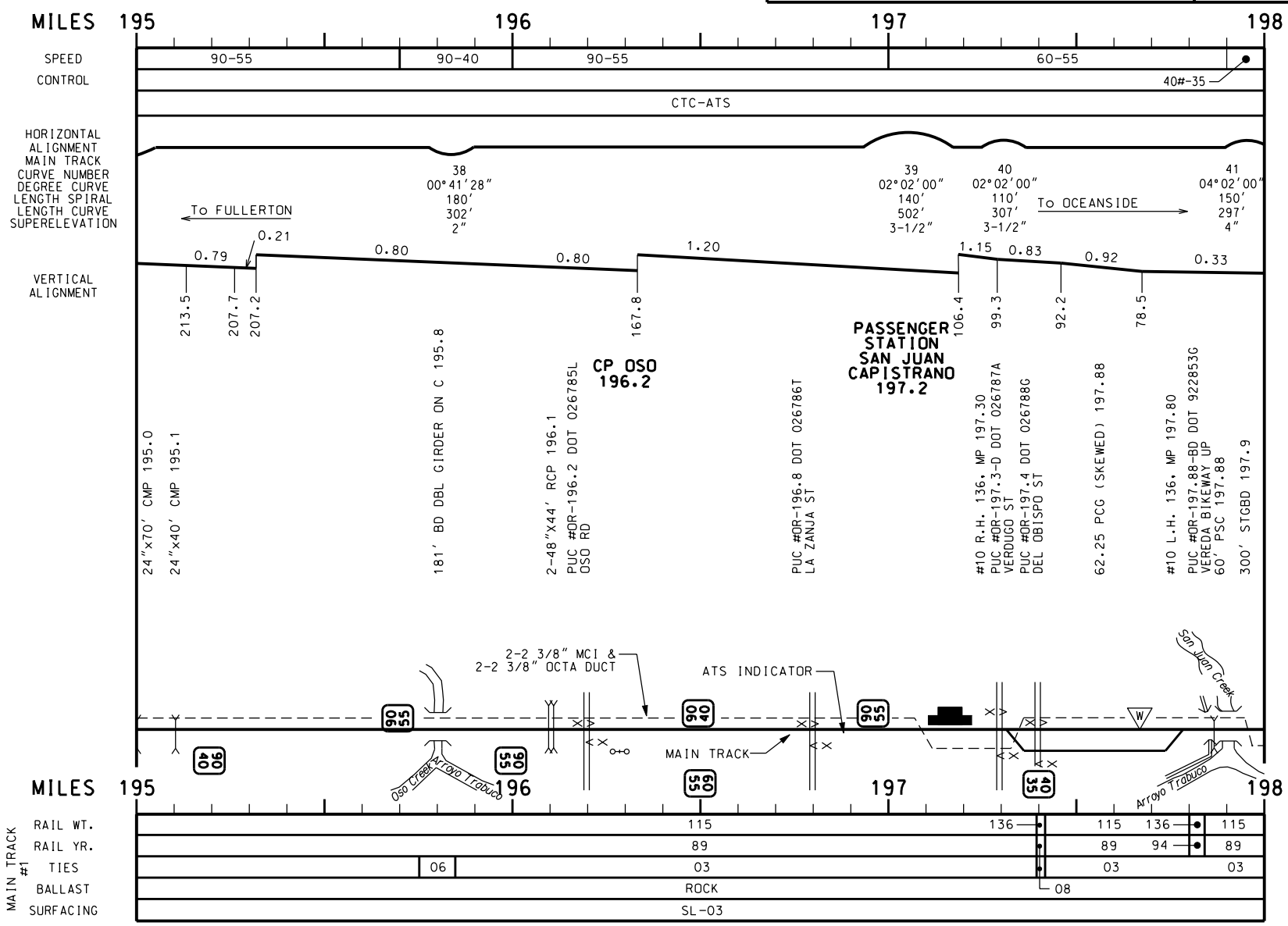
METROLINK
MILES 195 196 197 198
SPEED
90-55
90-40
90-55
60-55
CONTROL
40#-35
CTC-ATS
HORIZONTAL ALIGNMENT
MAIN TRACK
CURVE NUMBER
DEGREE CURVE
LENGTH SPIRAL
LENGTH CURVE
SUPERELEVATION
To FULLERTON
38
00°41'28"
180'
302'
2"
39
02°02'00"
140'
502'
3-1/2"
40
02°02'00"
110'
307'
3-1/2"
To OCEANSIDE
41
04°02'00"
150'
297'
4"
VERTICAL ALIGNMENT
0.79
0.21
0.80
0.80
1.20
1.15
0.83
0.92
0.33
213.5
207.7
207.2
167.8
106.4
99.3
92.2
78.5
24"x70' CMP 195.0
24"x40' CMP 195.1
181' BD DBL GIRDER ON C 195.8
2-48"X44' RCP 196.1
PUC #OR-196.2 DOT 026785L
OSO RD
CP OSO
196.2
PUC #OR-196.8 DOT 026786T
LA ZANJA ST
PASSENGER
STATION
SAN JUAN
CAPISTRANO
197.2
#10 R.H. 136. MP 197.30
PUC #OR-197.3-D DOT 026787A
VERDUGO ST
PUC #OR-197.4 DOT 026788G
DEL OBISPO ST
62.25 PCG (SKEWED) 197.88
#10 L.H. 136. MP 197.80
PUC #OR-197.88-BD DOT 922853G
VEREDA BIKEWAY UP
60' PSC 197.88
300' STGBD 197.9
2-2 3/8" MCI &
2-2 3/8" OCTA DUCT
ATS INDICATOR
MAIN TRACK
Oso Creek
Arroyo Trabuco
San Juan Creek
Arroyo Trabuco
MILES 195 196 197 198
MAIN TRACK #1
RAIL WT.
115
136
115
136
115
RAIL YR.
89
89
94
89
TIES
06
03
03
03
BALLAST
ROCK
08
SURFACING
SL-03

METROLINK

MILES 198 199 200 201

SPEED: 40#-35 | 60-55 | 45#-40 | 90-55

CONTROL: CTC-ATS

HORIZONTAL ALIGNMENT MAIN TRACK

CURVE NUMBER	42	43	44	45	46	47
DEGREE CURVE	06°20'00"	04°05'00", 02°00'00"	00°30'00"	00°30'00"	02°01'00"	04°59'57"
LENGTH SPIRAL	220'	260',80',110'	90'	90'	200'	268'
LENGTH CURVE	504'	390',566'	118'	110'	620'	1134'
SUPERELEVATION	4"	4", 2"	1"	1"	4"	4"

To OCEANSIDE

VERTICAL ALIGNMENT

0.69 | 0.52 | 0.54 | 0.00 | 0.50 | 0.20 | 0.12

69.8 To FULLERTON 40.6 17.5 25.1 25.1 15.6 16.0

CP CAPISTRANO 198.0

CP SERRA 199.9

#20 L.H. 115, MP 198.00

2-30"x50' CMP 198.2 &
1-30"x50' CIP

PUC #OR-198.8 DOT 026789N
AVENIDA AEROPUERTO

2-4'x66'x48' WB 199.07
50"x31"x50' CMPA 199.12

24" CMP 60' 199.15

PUC # OR-199.30-A DOT 027475V
199.660 STONEHILL OP
PUC #OR-199.46-X DOT 022679OH
CASSIDY BROS. PVT RD XING-GR

2-42"X40" RCP 199.7
12"x7.5"x200' RCB 199.73

9' BD TIMBER ON C. 199.8
#20 R.H. 115, MP 199.90
60" RCP 200.04
200.048 OH
PCH HWY-1 ON-RAMP

PUC #OR-200.05-A DOT 026729E
CAMINO LAS RAMBLAS (PCH) OP

6'x3'x52' RCB 200.13

PUC #OR-200.16-B DOT 026793D
PCH / SERRA (SR-1) 82' UP
81.5' STGBD 200.2
42"x40' ORCP 200.4

2'x31' RCP 200.5

30"x40' ORCP 200.6

PUC #200.68-AD DOT 909091Y
CAPISTRANO BEACH/DOHENY PED XING OP
3'x27' ORCP 200.7

36" CMP 40' 200.8

2'x24' ORCP 200.9

36" CMP 40' 200.96

2'x32' RCP 201.0

SERRA SIDING 9425'

ATS INDUCTOR

CITY OF SAN JUAN CAPISTRANO
CITY OF DANA POINT

PACIFIC COAST HWY

MAIN TRACK

40 35 55 60 40 35 OLS 45 40 60 55 OLS 55 60 45 40 MCI

MILES 198 199 200 201

MAIN TRACK #1						
RAIL WT.	115	136	115	136		115
RAIL YR.	89	97	89	07	06	89
TIES	03	97 C PAN	03	08		
BALLAST		ROCK		ROCK		
SURFACING	03					

SIDING			
RAIL WT.	136	115	
RAIL YR.	97		
TIES	97 C PAN	03	08
BALLAST			
SURFACING	ROCK		

METROLINK

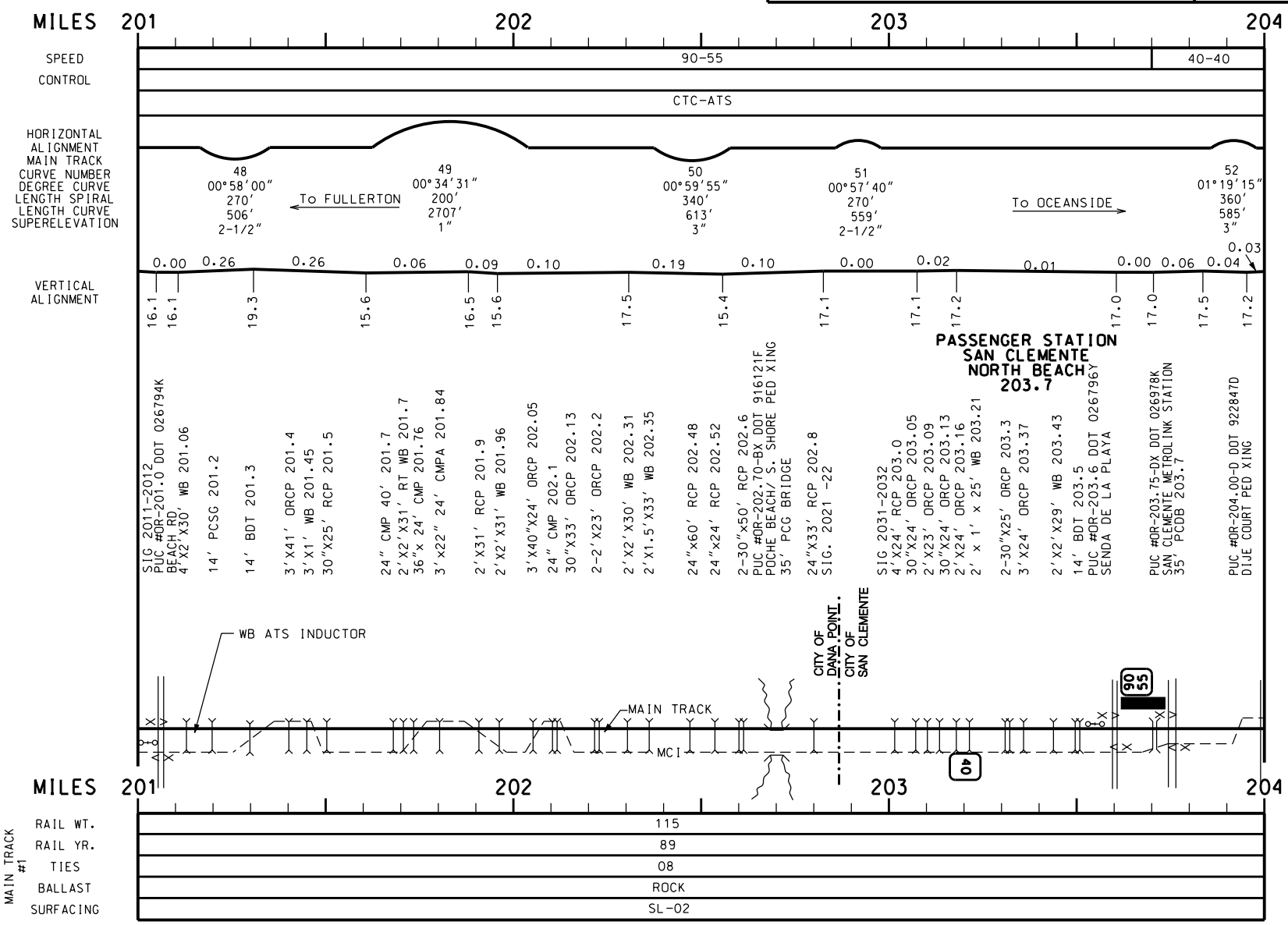
MILES 201 202 203 204
SPEED
90-55
40-40
CONTROL
CTC-ATS
HORIZONTAL ALIGNMENT
MAIN TRACK
CURVE NUMBER
DEGREE CURVE
LENGTH SPIRAL
LENGTH CURVE
SUPERELEVATION
48 00°58'00" 270' 506' 2-1/2"
To FULLERTON
49 00°34'31" 200' 2707' 1"
50 00°59'55" 340' 613' 3"
51 00°57'40" 270' 559' 2-1/2"
To OCEANSIDE
52 01°19'15" 360' 585' 3"
VERTICAL ALIGNMENT
0.00 0.26 0.26 0.06 0.09 0.10 0.19 0.10 0.00 0.02 0.01 0.00 0.06 0.04 0.03
16.1 16.1 19.3 15.6 16.5 15.6 17.5 15.4 17.1 17.1 17.2 17.0 17.0 17.5 17.2
PASSENGER STATION
SAN CLEMENTE
NORTH BEACH
203.7
SIG 2011-2012
PUC #OR-201.0 DOT 026794K
BEACH RD. WB 201.06
4'X2'X30' WB 201.06
14' PCSG 201.2
14' BDT 201.3
3'X41' ORCP 201.4
3'X1' WB 201.45
30"X25' RCP 201.5
24" CMP 40' 201.7
2'X2'X31' RT WB 201.7
36"x 24' CMP 201.76
3'x22" 24' CMPA 201.84
2'X31' RCP 201.9
2'X2'X31' WB 201.96
3'X40"X24' ORCP 202.05
24" CMP 202.1
30"X33' ORCP 202.13
2-2'X23' ORCP 202.2
2'X2'X30' WB 202.31
2'X1.5'X33' WB 202.35
24"x60' RCP 202.48
24"x24' RCP 202.52
2-30"x50' RCP 202.6
PUC #OR-202.70-BX DOT 916121F
POCHE BEACH/ S. SHORE PED XING
35' PCG BRIDGE
24"X33' RCP 202.8
SIG. 2021 -22
SIG 2031-2032
4'X24' RCP 203.0
30"X24' ORCP 203.05
2'X23' ORCP 203.09
30"X24' ORCP 203.13
2'X24' ORCP 203.16
2' x 1' x 25' WB 203.21
2-30"X25' ORCP 203.3
3'X24' ORCP 203.37
2'X2'X29' WB 203.43
14' BDT 203.5
PUC #OR-203.6 DOT 026796Y
SENDA DE LA PLAYA
PUC #OR-203.75-DX DOT 026978K
SAN CLEMENTE METROLINK STATION
35' PCDB 203.7
PUC #OR-204.00-D DOT 922847D
DIUE COURT PED XING
WB ATS INDUCTOR
CITY OF DANA POINT
CITY OF SAN CLEMENTE
MAIN TRACK
MCI
90 55
40
MILES 201 202 203 204
MAIN TRACK #1
RAIL WT. 115
RAIL YR. 89
TIES 08
BALLAST ROCK
SURFACING SL-02

METROLINK

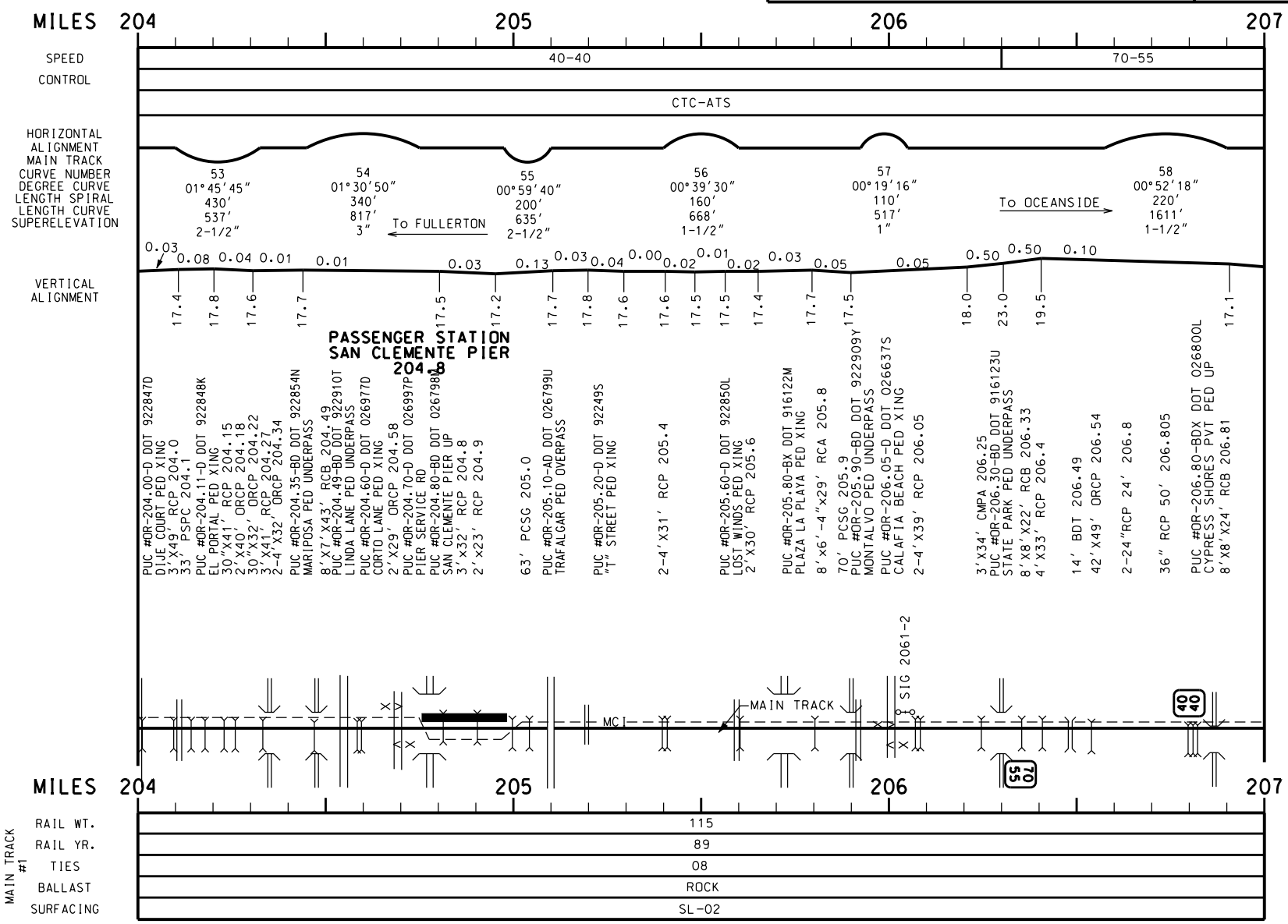
MILES 204 205 206 207
SPEED
40-40
70-55
CONTROL
CTC-ATS
HORIZONTAL ALIGNMENT MAIN TRACK
CURVE NUMBER
DEGREE CURVE
LENGTH SPIRAL
LENGTH CURVE
SUPERELEVATION
53 01°45'45" 430' 537' 2-1/2"
54 01°30'50" 340' 817' 3"
To FULLERTON
55 00°59'40" 200' 635' 2-1/2"
56 00°39'30" 160' 668' 1-1/2"
57 00°19'16" 110' 517' 1"
To OCEANSIDE
58 00°52'18" 220' 1611' 1-1/2"
VERTICAL ALIGNMENT
0.03 0.08 0.04 0.01 0.01 0.03 0.13 0.03 0.04 0.00 0.02 0.01 0.02 0.03 0.05 0.05 0.50 0.50 0.10
17.4 17.8 17.6 17.7 17.5 17.2 17.7 17.8 17.6 17.6 17.5 17.5 17.4 17.7 17.5 18.0 23.0 19.5 17.1
PASSENGER STATION
SAN CLEMENTE PIER
204.8
PUC #OR-204.00-D DOT 922847D
DUE COURT PED XING
3'X49' RCP 204.0
33' PSPC 204.1
PUC #OR-204.11-D DOT 922848K
EL PORTAL PED XING
30"X41' RCP 204.15
2'X40' ORCP 204.18
30"X32' ORCP 204.22
3'X41' RCP 204.27
2-4'X32' ORCP 204.34
PUC #OR-204.35-BD DOT 922854N
MARIPOSA PED UNDERPASS
8'X7'X43' RCB 204.49
PUC #OR-204.49-BD DOT 922910T
LINDA LANE PED UNDERPASS
PUC #OR-204.60-D DOT 026977D
CORTO LANE PED XING
2'X29' ORCP 204.58
PUC #OR-204.70-D DOT 026997P
PIER SERVICE RD
PUC #OR-204.80-BD DOT 026798S
SAN CLEMENTE PIER UP
3'x32' RCP 204.8
2'x23' RCP 204.9
63' PCSG 205.0
PUC #OR-205.10-AD DOT 026799U
TRAFALGAR PED OVERPASS
PUC #OR-205.20-D DOT 922495
"T" STREET PED XING
2-4'X31' RCP 205.4
PUC #OR-205.60-D DOT 922850L
LOST WINDS PED XING
2'X30" RCP 205.6
PUC #OR-205.80-BX DOT 916122M
PLAZA LA PLAYA PED XING
8'x6'-4"x29' RCA 205.8
70' PCSG 205.9
PUC #OR-205.90-BD DOT 922909Y
MONTALVO PED UNDERPASS
PUC #OR-206.05-D DOT 026637S
CALAFIA BEACH PED XING
2-4'X39' RCP 206.05
3'X34' CMPA 206.25
PUC #OR-206.30-BD DOT 916123U
STATE PARK PED UNDERPASS
8'X8'X22' RCB 206.33
4'X33' RCP 206.4
14' BDT 206.49
42'X49' ORCP 206.54
2-24"RCP 24' 206.8
36" RCP 50' 206.805
PUC #OR-206.80-BDX DOT 026800L
CYPRESS SHORES PVT PED UP
8'X8'X24' RCB 206.81
SIG 2061-2
MAIN TRACK
MCI
40 40
70 55
MILES 204 205 206 207
MAIN TRACK #1
RAIL WT. 115
RAIL YR. 89
TIES 08
BALLAST ROCK
SURFACING SL-02

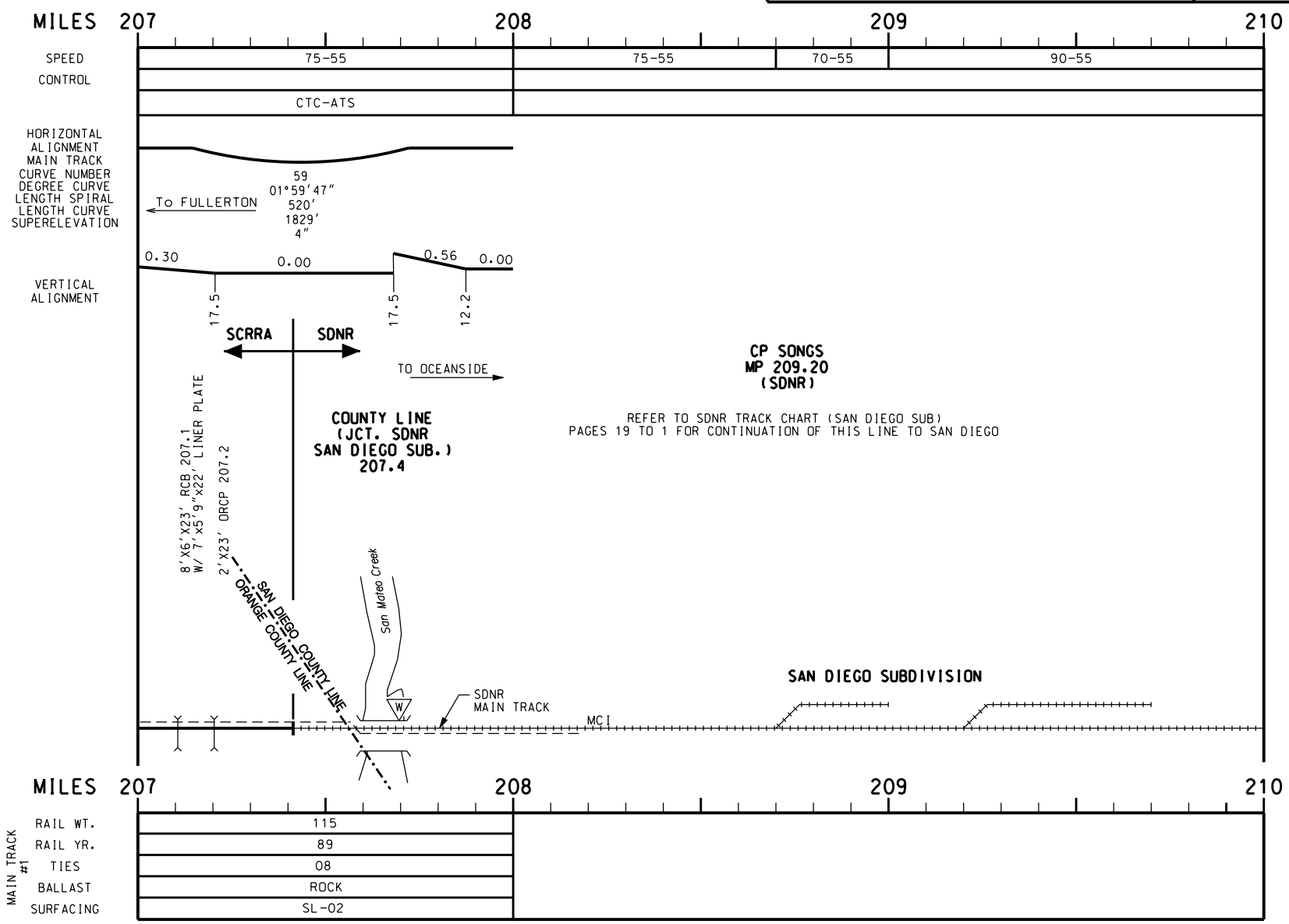
MILES 207 208 209 210
SPEED
75-55
75-55
70-55
90-55
CONTROL
CTC-ATS
HORIZONTAL ALIGNMENT MAIN TRACK CURVE NUMBER DEGREE CURVE LENGTH SPIRAL LENGTH CURVE SUPERELEVATION
To FULLERTON
59
01°59'47"
520'
1829'
4"
VERTICAL ALIGNMENT
0.30
0.00
0.56
0.00
17.5
17.5
12.2
SCRRA
SDNR
TO OCEANSIDE
CP SONGS
MP 209.20
(SDNR)
COUNTY LINE
(JCT. SDNR
SAN DIEGO SUB.)
207.4
REFER TO SDNR TRACK CHART (SAN DIEGO SUB)
PAGES 19 TO 1 FOR CONTINUATION OF THIS LINE TO SAN DIEGO
8'X6'X23' RCB 207.1
W/ 7'x5'9"x22' LINER PLATE
2'X23' ORCP 207.2
SAN DIEGO COUNTY LINE
ORANGE COUNTY LINE
San Mateo Creek
W
SDNR
MAIN TRACK
MCI
SAN DIEGO SUBDIVISION
MILES 207 208 209 210
MAIN TRACK #1
RAIL WT.
115
RAIL YR.
89
TIES
08
BALLAST
ROCK
SURFACING
SL-02

METROLINK

Olive Subdivision

(BNSF) ATWOOD MP 0.0 to ORANGE MP 5.5

TO MAKE REVISIONS, PLEASE CONTACT:

DIRECTOR OF ENGINEERING AND CONSTRUCTION
METROLINK
(213) 452-0250

LAST REVISION
MAY 2008

METROLINK

OLIVE SUBDIVISION

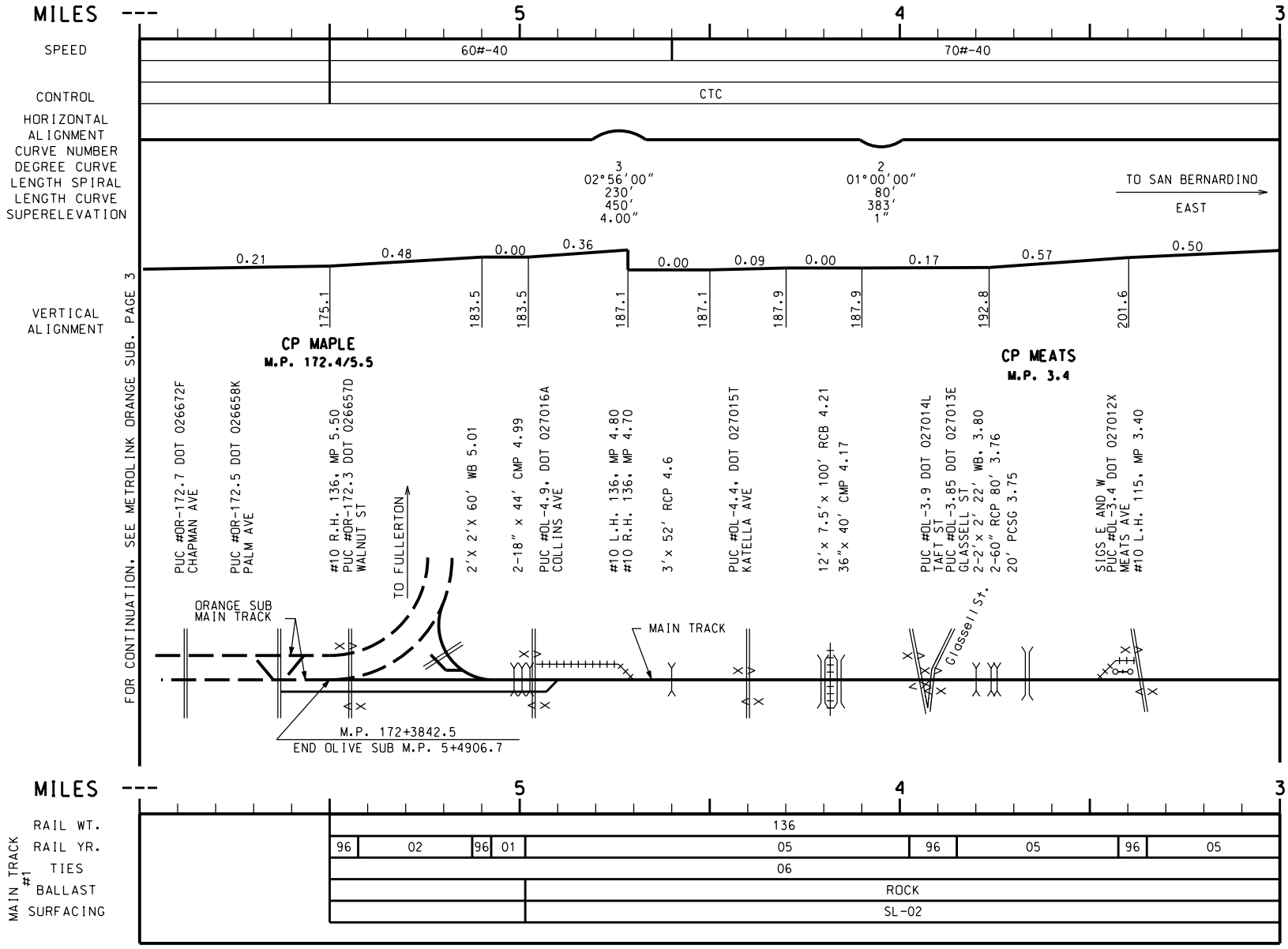

METROLINK

OLIVE SUBDIVISION

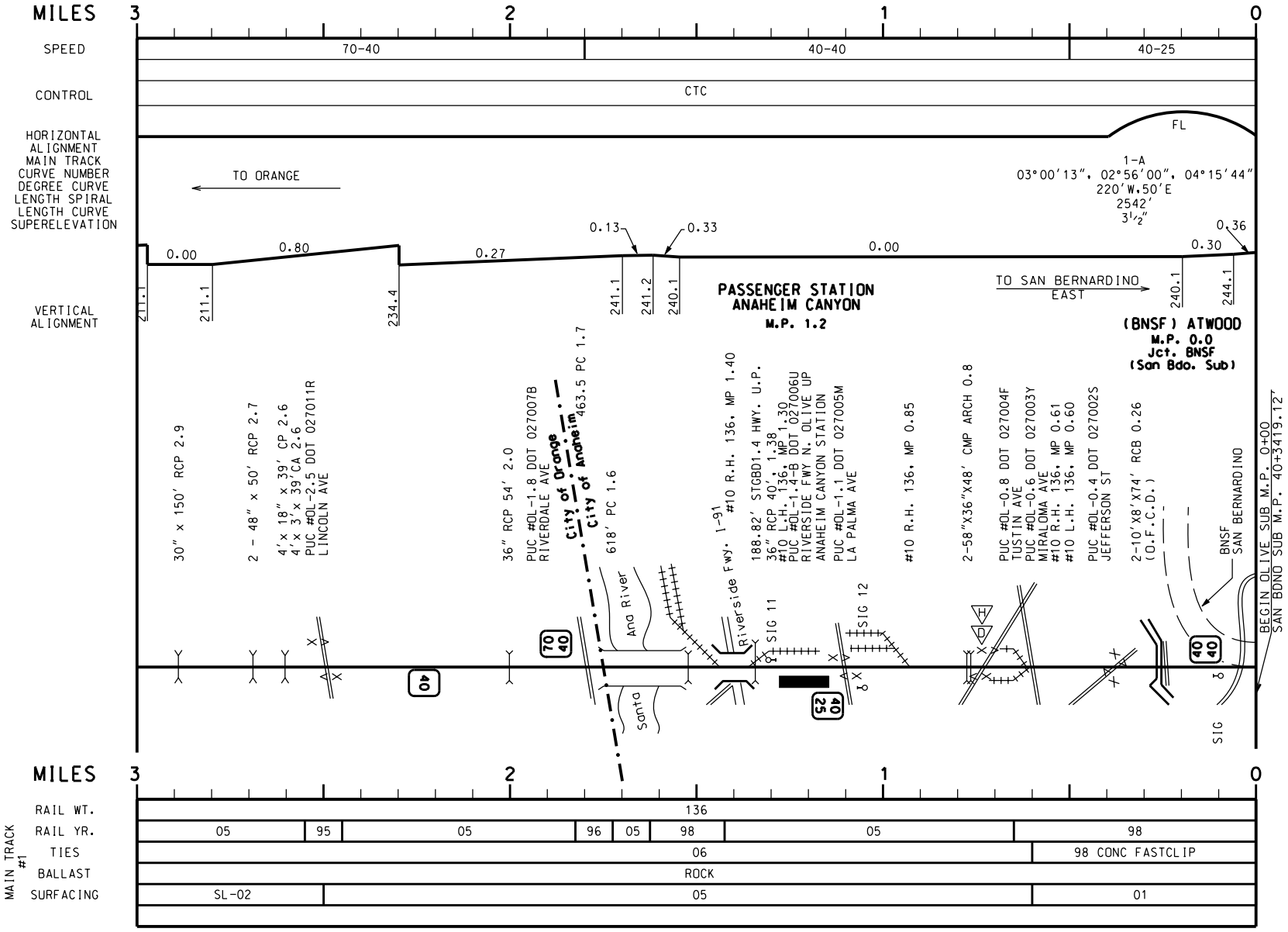

REV.5-08

METROLINK

Pasadena Subdivision

ARCADIA MP 124.2 to CP CAMBRIDGE MP 105.4

DRAWN JULY 1998
TO MAKE REVISIONS, PLEASE CONTACT:

DIRECTOR OF ENGINEERING AND CONSTRUCTION
METROLINK
(213) 452-0250

LAST REVISION
MAY 2008

METROLINK

PASADENA SUBDIVISION

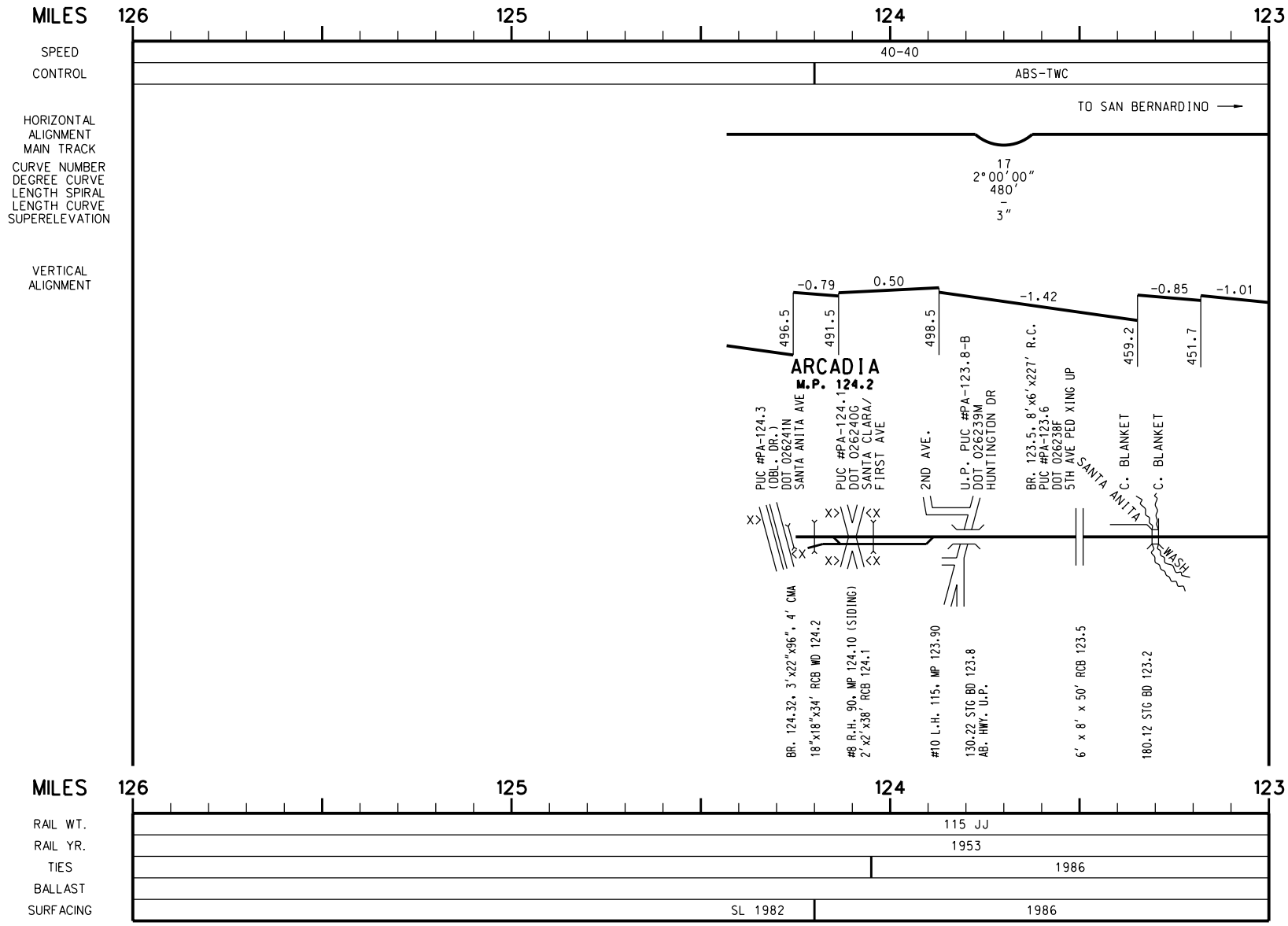

METROLINK

PASADENA SUBDIVISION

MILES 123 122 121 120

SPEED: 40-40

CONTROL: ABS-TWC

← TO PASADENA TO SAN BERNARDINO →

HORIZONTAL ALIGNMENT MAIN TRACK

CURVE NUMBER: 16
DEGREE CURVE: 1°59′25″
LENGTH SPIRAL: 200′
SUPERELEVATION: 3 1/2″

VERTICAL ALIGNMENT

-1.01 | 0.00 | 0.62 | 0.00 | -0.32 | 0.00 | 0.14 | 1.15 | 1.12

434.0 | 434.0 | 456.0 | 456.0 | 453.2 | 453.2 | 454.1 | 479.4

MONROVIA M.P. 122.4

DUARTE M.P. 121.0

BUTLER M.P. 120.2

PUC #PA-122.9 DOT 026237Y MAYFLOWER AVE

PUC #PA-122.6 DOT 026236S MAGNOLIA AVE

DEPOT

PUC #PA-122.4 DOT 026235K MYRTLE AVE

PUC #PA-122.1 DOT 026234D CALIFORNIA AVE

SIG. 1211

SAWPIT WASH

PUC #PA-121.5 DOT 026232P MOUNTAIN AVE

2-RESERV.

PUC #PA-121.0 DOT 026231H BUENA VISTA AVE

PUC #PA-120.4 DOT 026230B HIGHLAND AVE

PUC #PA-119.97-A PUC #PA-119.96-A

8.5′ x 10′ x 33′ RCB 122.9

60′ SG BD 122.8

2-30″x38.3′ RCP 122.6
SIG. 1222

2′x 26′ RCP 122.38
24″x26′ RCP 122.37

2′ x 28′ RCP 122.05
5′x1.67′x33.3′ RCB 122.04

2′ x 33′ RCP 121.95

28′ BDT 121.7

60′ STG BD 121.7
BANT. EA. AND 60′ STG BD
ON 2-C. PIERS 88.6′ LG.

3′x2′x37.5′ WB 121.2

2′x34.3′ CMP 120.98
2′x18′x36.1′ WB 120.96
24″ x 24′ CMP 120.9

15′ RTBD WD 120.8
CAP & 14″x14 1/2″
STEEL "H" BEAMS WITH
LAFCD STORM DRAIN

SIG. 1202

2′ x 3.5′ x 150′ RCB 120.4

3-58″x36″x56′ CMA 120.2
& 4-20″x15.5′ STEEL P. UND. TRK. #3

605 FWY. RAMP 120.0

MILES 123 122 121 120

RAIL WT.	115 JJ
RAIL YR.	1953
TIES	1986
BALLAST	ROCK
SURFACING	1986

METROLINK

PASADENA SUBDIVISION

MILES 120 119 118 117

SPEED: 40-40

CONTROL: ABS-TWC

← TO PASADENA TO SAN BERNARDINO →

HORIZONTAL ALIGNMENT MAIN TRACK

CURVE NUMBER	15	14	13
DEGREE CURVE	2°50'00"	2°16'30"	1°00'00"
LENGTH SPIRAL	250'	230'	130'
LENGTH CURVE	–	–	–
SUPERELEVATION	4 1/2"	3"	1 1/2"

VERTICAL ALIGNMENT

1.12 | 1.54 | 0.42 | -0.11 | 0.00 | 0.15 | 0.62 | 0.69 | 1.42 | -0.75

521.7 | 544.4 | 548.1 | 547.4 | 547.4 | 550.3 | 572.7 | 585.4 | 622.8

IRWINDALE
M.P. 118.2

DOT 026229G
PUC #PA-119.93-A
PUC #PA-119.91-A
DOT 026228A
SIG. 1191
BRADBURY CHANNEL
(L.A.F.C.D.)

PUC #PA-119.4-BD DOT 026626E
SAN GABRIEL RIVER BIKE PATH
BR. 119.4, 700.66' STG BD ON C

C. BLANKET

SIDING 6165'

CONSOLIDATED ROCK
PROD. CO., U.P.

PUC #PA-118.46-A
DOT 026227T
IRWINDALE AVE OP

TO AZUSA

AZUSA CITY LIMIT

PUC #PA-117.9-B DOT 026225E
KINCAID UP
FOOTHILL FWY (ST. RT. #210)

ROCK CRUSHER
SIG. 1171

PUC #PA-117.6
DOT 026224X
VIRGINIA AVE

PUC #PA-117.3-B
DOT 026223R
FOOTHILL BLVD/ROUTE 66 UP

PUC #PA-117.0, DOT 026221C
SAN GABRIEL AVE

SAN GABRIEL RIVER

U.P.R.R. CO.
TO BALDWIN PK.

FWY. RAMP 119.966
FWY. 605 119.964
FWY. RAMP 119.93
FWY. 605 119.90
PR. PD. XING.
1-12'x18'x70' RCB 119.79

700.66', STGBD 119.4

24"x75' RCP 119.3
#10 L.H. 119, MP 1119.21
192' PCSG 119.25
#10 R.H. 115, MP 119.20
119.1, 3-4'x70' CMP
#10 R.H. 115, MP 119.10 (SIDING)

SIG. 1182

50' x 30' 30' RCB 118.76

#10 L.H. 115, MP 118.60

118.5,
U.P.R.R. CO. UNDERPASS
PVT. XING. - GR. (26-226-L)

117.9 BUILT UP
BEAM SPAN 212.25
#10 R.H. 119, MP 117.95
#10 L.H. 115, MP 117.91

#8 R.H. 110, MP 117.80

30"x56.5' RCP 117.6
#10 R.H. 115, MP 117.50

SIG. 1172
268' STG BD 117.3
AB.& CTR. PIER. HWY. U.P.

#10 R.H. 115, MP 117.06
30"x80' RCP 117.01

MILES 120 119 118 117

RAIL WT.	115 JJ				
RAIL YR.	1953				
TIES	1986				
BALLAST	ROCK				
SURFACING	1986	SL 1987	1986	SL 1987	1986

METROLINK

PASADENA SUBDIVISION

MILES 117 116 115 114

SPEED: 40-40

CONTROL: ABS-TWC

HORIZONTAL ALIGNMENT MAIN TRACK: ← TO PASADENA — TO SAN BERNARDINO →

CURVE NUMBER / DEGREE CURVE / LENGTH SPIRAL / LENGTH CURVE / SUPERELEVATION

- 12: 1°00'00", 80', –, 1"
- 11: 1°00'00", 130', –, 1"
- 10: 2°00'00", 1°15'00", 120', –, 200'E-4", 80'W-1 1/2"
- 9: 2°31'00", 310', –, 4"

VERTICAL ALIGNMENT: 0.75, 0.19, 1.20, 1.14, 1.085, 1.18, 0.50, 1.15

613.3 — AZUSA M.P. 116.9

- (ONE WAY)
- PUC #PA-116.9, DOT 026220V, AZUSA AVE (ONE WAY)
- PUC #PA-116.8, DOT 026219B, ALAMEDA AVE
- PUC #PA-116.7, DOT 026218U, DALTON AVE
- PUC #PA-116.6, DOT 026217M, PASADENA AVE, SIG. 1161

618.2 — AZUSA CITY LIMIT

- PVT XING, PUC #PA-116.22-X, DOT 026216F
- PUC #PA-116.05, DOT 026215Y, PALM DR PVT XING
- DBL. XING. STOP SIGN
- 84" CP 115.7

682.4

- PUC #PA-115.4, DOT 026213K, BARRANCA AVE

697.3

717.3 — GLENDORA CITY LIMIT

- PUC #PA-114.8, DOT 026212D, FOOTHILL BLVD/N. GRAND AVE
- SIG. 1141

740.9

- PUC #PA-114.4, DOT 026211W, VERMONT AVE/ADA AVE

750.4 — GLENDORA M.P. 114.4

- PUC #PA-114.2, DOT 026210P, GLENDORA AVE

DEPOT

SIDING 2820'

- 2'x213.4' CIP 116.98; 2'x249.8' CMP 116.96
- 2'x165' BREA PIPE 116.90; 30"x18' RCB 164' 116.88
- 2'x277' CIP 116.82; 2'x247.5' CIP 116.80
- 2'x247.2' CIP 116.74; 2'x244.7' CIP 116.73
- 2'x102' CIP 116.665
- 81" RCP 50' 116.58
- 12" x 86' RCP 116.2
- 48"x44' CMP 116.0
- 2-43"x27"x30.6' CMPA 115.92
- 2'x23' BREA PIPE 115.5
- 2-42"x40' CMP 115.3
- 10'X7'X38' RCB 115.1; 2-2'x24.3' RCP & 2-24"x52' RCP 115.0
- 10'X15' RCB 114.8
- SIG. 1142; #10 R.H. 115, MP 114.60
- 36" x 150' WB 114.398
- CANT. SIG. 1132

MILES 117 116 115 114

RAIL WT.: 115 JJ

RAIL YR.: 1953

TIES: 1986

BALLAST: ROCK

SURFACING: SL 87 | 1986 | SL 1987 | 1986

METROLINK

PASADENA SUBDIVISION

MILES 114 113 112 111

SPEED: 40-40

CONTROL: ABS-TWC

HORIZONTAL ALIGNMENT MAIN TRACK: ← TO PASADENA — TO SAN BERNARDINO →

CURVE NUMBER / DEGREE CURVE / LENGTH SPIRAL / LENGTH CURVE / SUPERELEVATION:

- 8: 2°45'26", 250', –, 5"
- 7: 2°00'00", 180', –, 3 1/2"
- 6: 1°00'00", 140', –, 2"

VERTICAL ALIGNMENT: 1.15 | 0.93 | 1.20 | 0.87 | 1.08 | 0.76 | 0.41 | 0.41 | 1.14

772.9 | 798.0 | 822.6 | 832.1 | 866.8 | 876.7 | 883.7 | 887.5

PUC #PA-114.0, DOT 026209V, PASADENA AVE, SIG. 1131

PUC #PA-113.6, DOT 026208N, GLENWOOD AVE

PUC #PA-113.4, DOT 026207G, ELWOOD AVE

PUC #PA-113.2, DOT 026206A, LORAINE AVE

DALTON WASH

PUC #PA-112.5-B, DOT 026205T, FOOTHILL BLVD/ROUTE 66 (FORMERLY ALOSTA AVE)

PUC #PA-111.97-A, DOT 026202X, I-210/SR57 OFF RAMP

PUC #PA-111.94-A DOT 026203E, I-210 OP

PUC #PA-111.9-A, DOT 026204L, I-210/SR57 ON RAMP

I-210

SAN DIMAS WASH

SIG. 1111

#PA-111.7, DOT 026200J, LONE HILL AVE

#PA-111.4, DOT 026199S, GLADSTONE AVE

GLENDORA CITY LIMIT

PUC #PA-111.1-A, DOT 026198K, I-210 OVERPASS XING

10.5' BDT 113.9
#10 L.H. 115, MP 113.90

14'X12.5'X20.5' RCB 113.0

SIG. 1122

2-11'x11' RCB 112.6 (L.A.C.F.C.D.)

143' STG BD 112.5 ON C. HWY. U.P.

2-2'x18'x26' WB 112.4

36" RCP 29' 112.0

(26-203-E)

PVT. XING. - GR. (26-201-R)

166' SDG 111.8

30"x160.3' CIP 111.4

30"x160.2' CIP 111.3

MILES 114 113 112 111

RAIL WT.	115 JJ
RAIL YR.	1953
TIES	1986
BALLAST	ROCK
SURFACING	1986 / SL 1987 / 1986

REV. 5-08

METROLINK

PASADENA SUBDIVISION

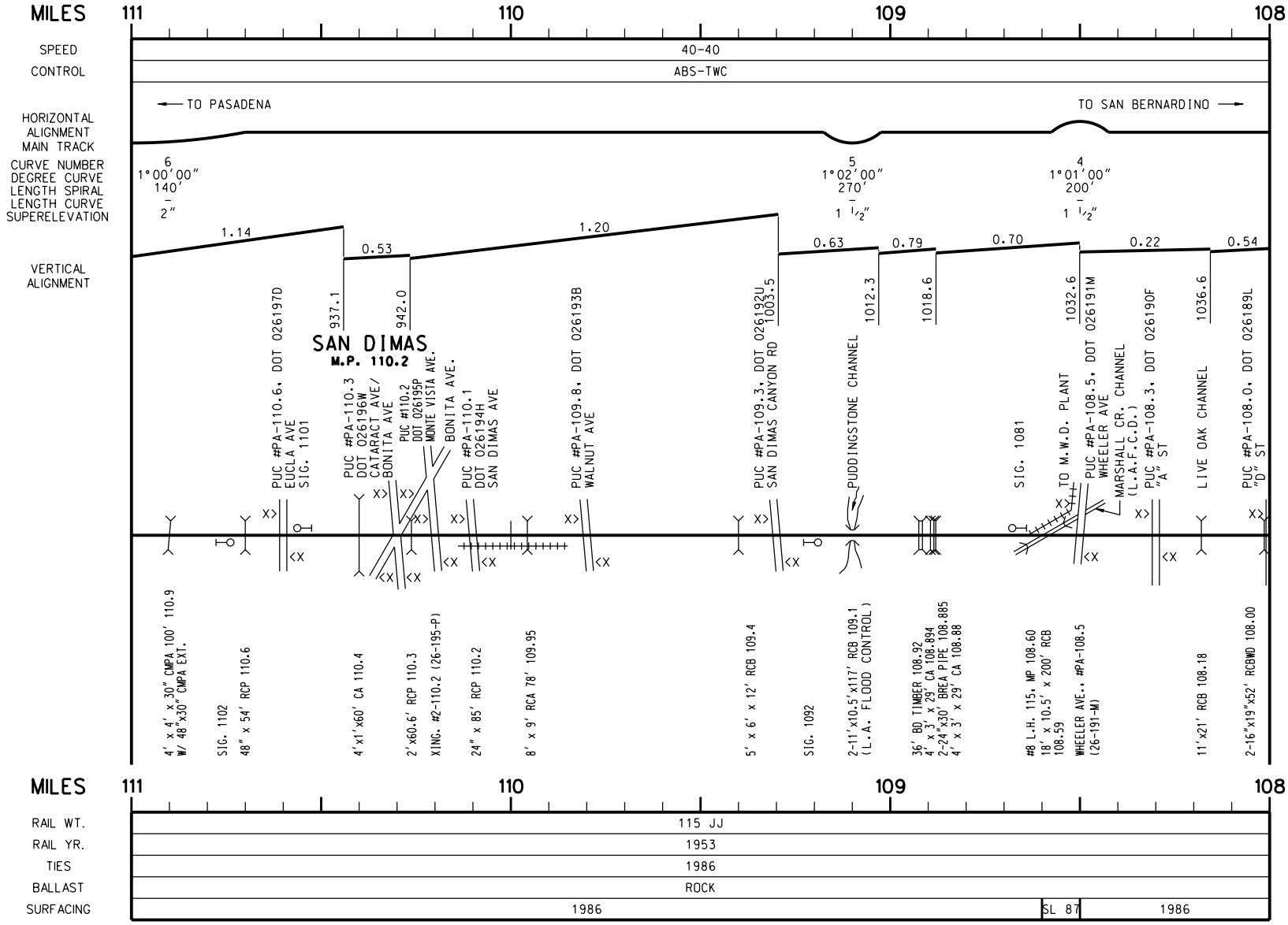

METROLINK

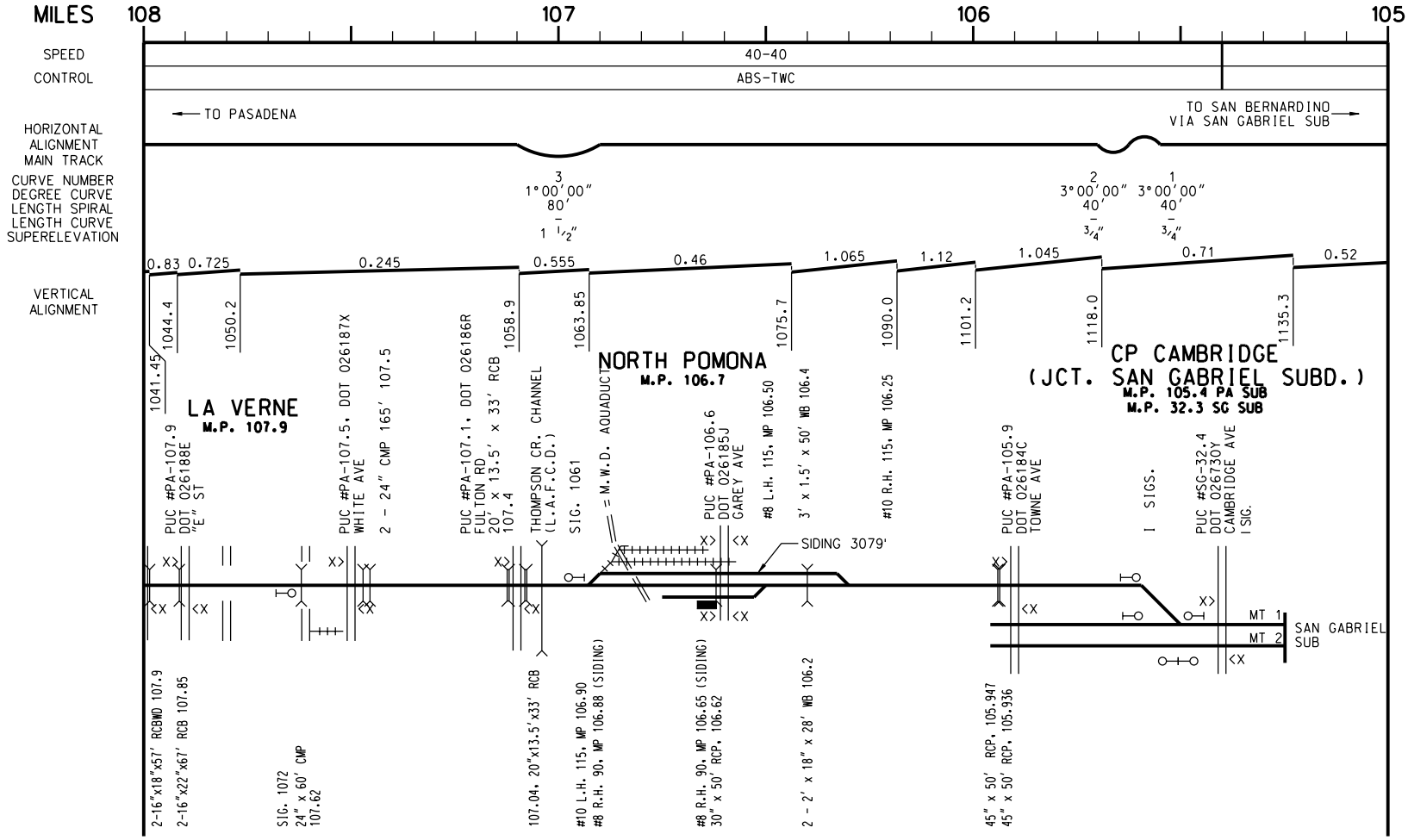
MILES 108 107 106 105
SPEED 40-40
CONTROL ABS-TWC
← TO PASADENA
TO SAN BERNARDINO VIA SAN GABRIEL SUB →
HORIZONTAL ALIGNMENT MAIN TRACK
CURVE NUMBER
DEGREE CURVE
LENGTH SPIRAL
LENGTH CURVE
SUPERELEVATION
3 1°00'00" 80' 1 1/2"
2 3°00'00" 40' 3/4"
1 3°00'00" 40' 3/4"
0.83 0.725 0.245 0.555 0.46 1.065 1.12 1.045 0.71 0.52
VERTICAL ALIGNMENT
1041.45 1044.4 1050.2 1058.9 1063.85 1075.7 1090.0 1101.2 1118.0 1135.3
LA VERNE
M.P. 107.9
NORTH POMONA
M.P. 106.7
CP CAMBRIDGE
(JCT. SAN GABRIEL SUBD.)
M.P. 105.4 PA SUB
M.P. 32.3 SG SUB
PUC #PA-107.9 DOT 026188E "E" ST
PUC #PA-107.5, DOT 026187X WHITE AVE
2 - 24" CMP 165' 107.5
PUC #PA-107.1, DOT 026186R FULTON RD 20' x 13.5' x 33' RCB 107.4
THOMPSON CR. CHANNEL (L.A.F.C.D.)
SIG. 1061
= M.W.D. AQUADUCT
PUC #PA-106.6 DOT 026185J GAREY AVE
#8 L.H. 115, MP 106.50
3' x 1.5' x 50' WB 106.4
#10 R.H. 115, MP 106.25
PUC #PA-105.9 DOT 026184C TOWNE AVE
1 SIGS.
PUC #SG-32.4 DOT 026730Y CAMBRIDGE AVE 1 SIG.
SIDING 3079'
MT 1
MT 2
SAN GABRIEL SUB
2-16"x18"x57' RCBWD 107.9
2-16"x22"x67' RCB 107.85
SIG. 1072 24" x 60' CMP 107.62
107.04, 20"x13.5'x33' RCB
#10 L.H. 115, MP 106.90
#8 R.H. 90, MP 106.88 (SIDING)
#8 R.H. 90, MP 106.65 (SIDING)
30" x 50' RCP, 106.62
2 - 2' x 18" x 28' WB 106.2
45" x 50' RCP, 105.947
45" x 50' RCP, 105.936
MILES 108 107 106 105
RAIL WT. 115 JJ
RAIL YR. 1953
TIES 1986
BALLAST ROCK
SURFACING 1986

METROLINK

Riverside Layover

RIVERSIDE STATION
MP 9.9 to MP 10.87

TO MAKE REVISIONS, PLEASE CONTACT:

DIRECTOR OF ENGINEERING AND CONSTRUCTION
METROLINK
(213) 452-0250

LAST REVISION
N/A

METROLINK

RIVERSIDE LAYOVER FACILITY

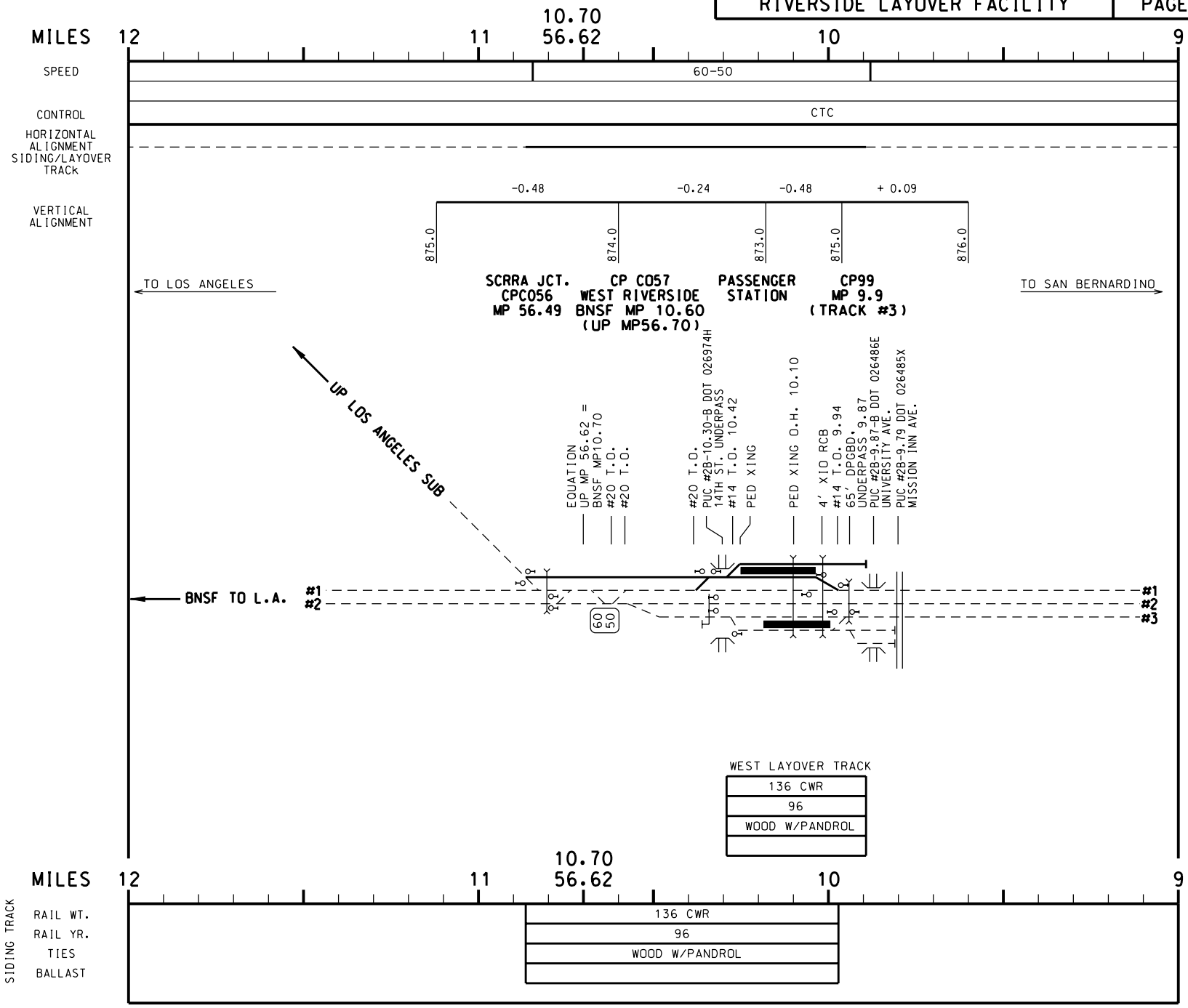

REV.4-08

METROLINK

RIVERSIDE LAYOVER FACILITY

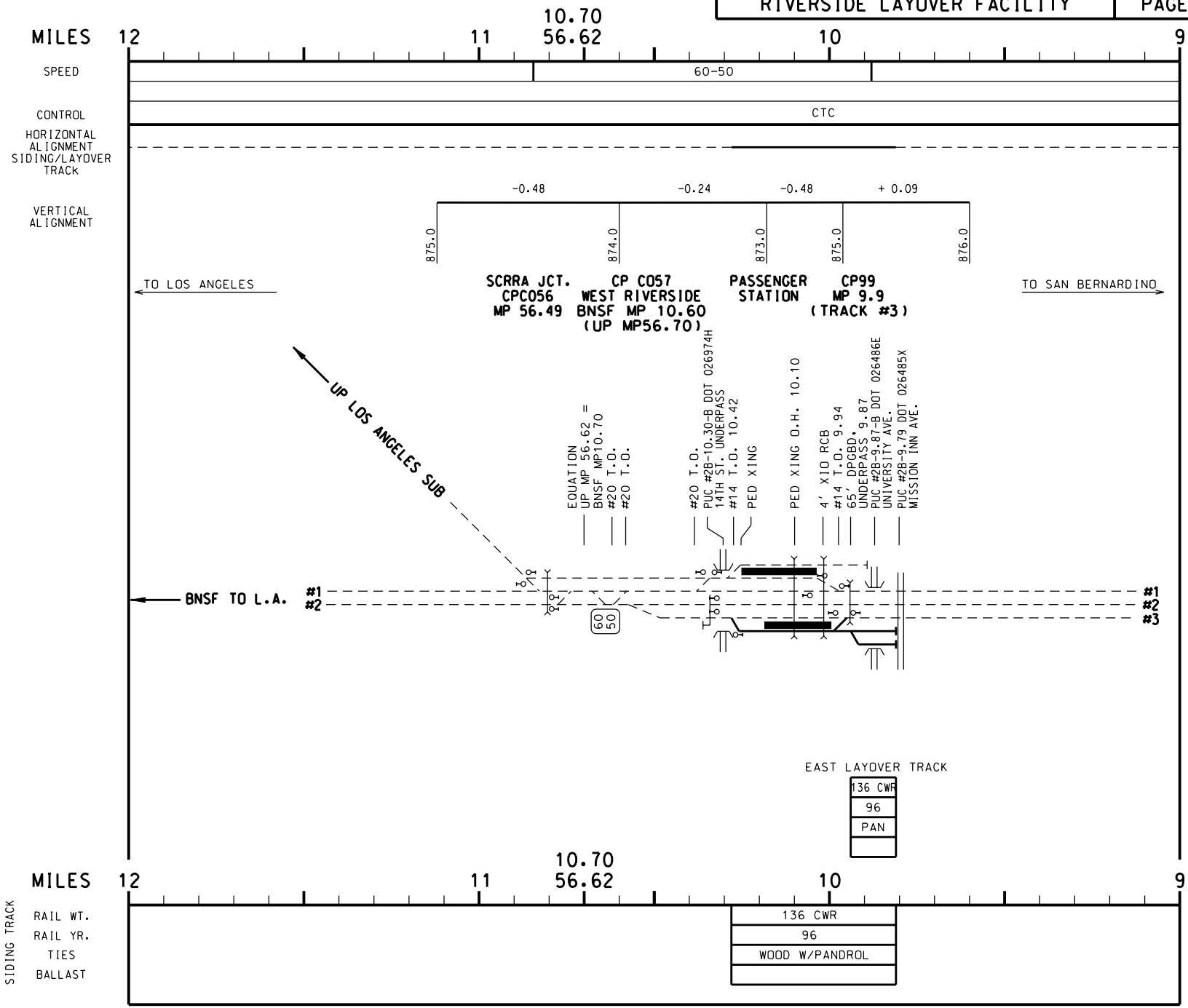

REV.4-08

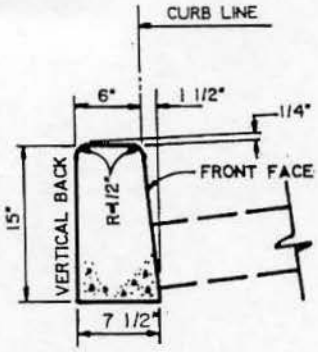

CURB DETAIL

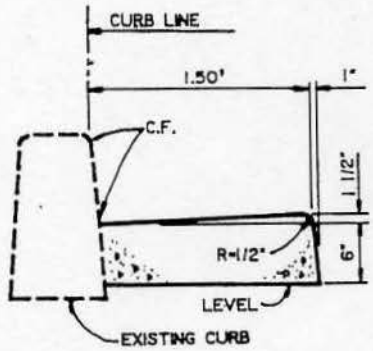

GUTTER DETAIL

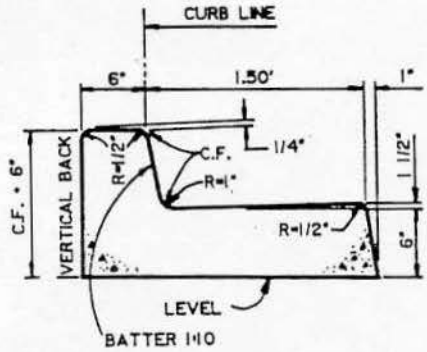

INTEGRAL CURB & GUTTER DETAIL

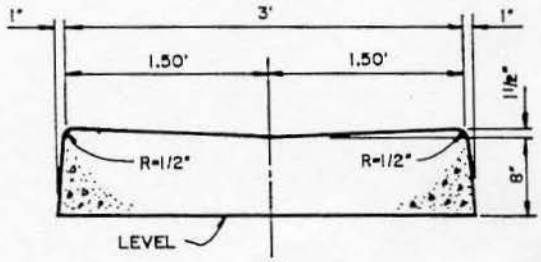

LONGITUDINAL GUTTER DETAIL

NOTES:

1. ALL WORK SHALL BE CONSTRUCTED IN ACCORDANCE WITH THE LATEST ADOPTED STANDARD SPECIFICATIONS FOR PUBLIC WORKS CONSTRUCTION.
2. THE TOP AND FRONT FACE OF CURB HAVE A STEEL TROWEL FINISH, ALL GUTTERS SHALL HAVE A STEEL TROWEL FINISH FOR 4" ADJACENT TO THE FLOW LINE, THE REMAINDER SHALL HAVE A ROUGH BROOM FINISH WITH A 4" STEEL TROWEL FINISH AT THE OUTSIDE EDGE AND AT EXPANSION JOINTS.
3. PRE-FORMED EXPANSION JOINT, 1/2" THICK, SHALL BE INSTALLED IN ALL TYPES OF CURB AND GUTTER AT INTERVALS NOT TO EXCEED 25'. IDENTICAL JOINTS SHALL BE INSTALLED AT THE BEGINNING AND END OF ALL CURVES, AT ONE FOOT BEYOND THE TOP OF 'X' OF DRIVEWAYS, AND BOTH ENDS OF CROSS GUTTERS.
4. CONCRETE SHALL BE CLASS 520-C-2500
5. CONCRETE CURB MAY BE CONSTRUCTED INTEGRALLY WITH CONCRETE PAVEMENT OR CONCRETE ALLEY APPROACHES.
6. CF IS 7" UNLESS OTHERWISE SPECIFIED.
7. WHERE EXISTING GUTTER WIDTH IS 2', A 2' WIDE GUTTER WITH 2" HIKE-UP MAY BE PERMITTED TO MATCH EXISTING.
8. WHERE NEW CURB IS ADJACENT TO EXISTING SIDEWALK; SIDEWALK SHALL BE REMOVED AND REPLACED TO NEAREST SCORELINE.

CITY OF BURBANK - PUBLIC WORKS DEPARTMENT

REV	BY	DATE	CURB AND GUTTER	STANDARD PLAN
			APPROVED BY [signature] Public Works Director 8/18/92 Date	BS-100
				SHEET 1 OF 1

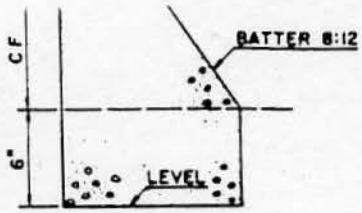

B1

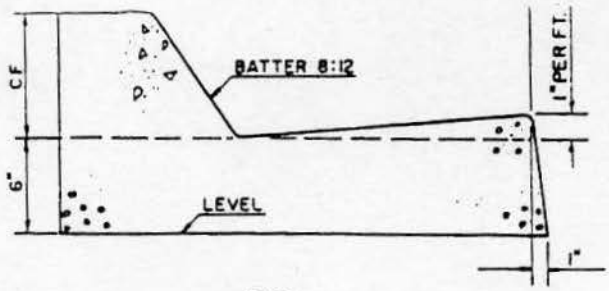

B2

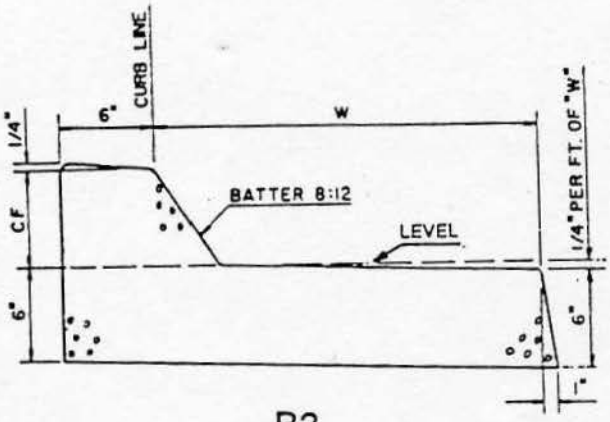

B3

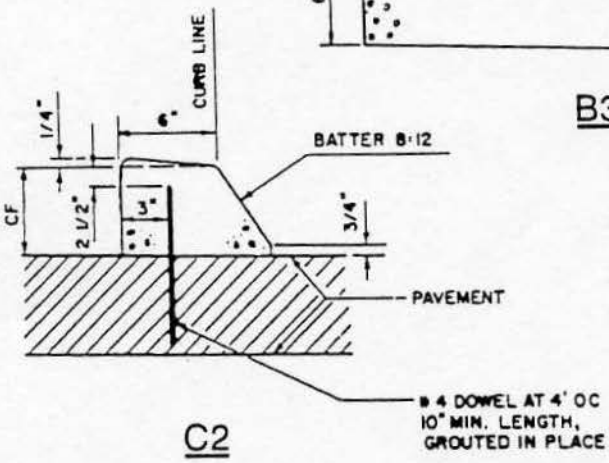

C2

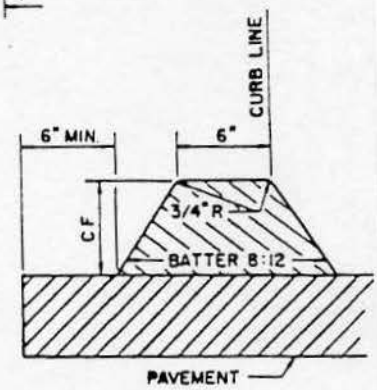

D2

NOTES:

1. ALL DIMENSIONS ARE MEASURED IN INCHES.
2. "CF" IS 6" UNLESS OTHERWISE SPECIFIED.
3. "W" IS 12" UNLESS OTHERWISE SPECIFIED.
4. TYPES B1, B2, B3 AND C2 ARE CONSTRUCTED OF PORTLAND CEMENT CONCRETE. (CLASS 520 - C - 2500)
5. TYPE D2 IS CONSTRUCTED OF ASPHALT CONCRETE.
6. TYPE C2 CURB SHALL BE ANCHORED WITH DOWELS AS SHOWN OR WITH EPOXY APPROVED BY THE ENGINEER.
7. GRADE SHALL BE MEASURED AT CURB LINE AT TOP OF CURB.
8. ALL EXPOSED CORNERS ON P.C.C. CURBS AND GUTTERS TO BE ROUNDED WITH A 1\2" RADIUS.

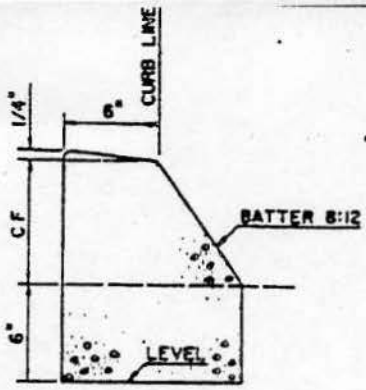

B1

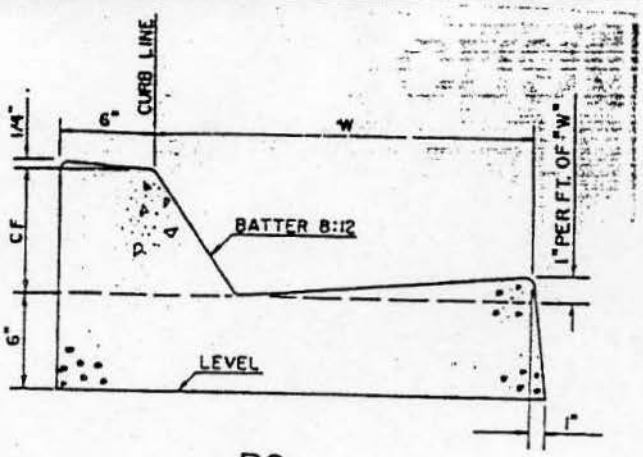

B2

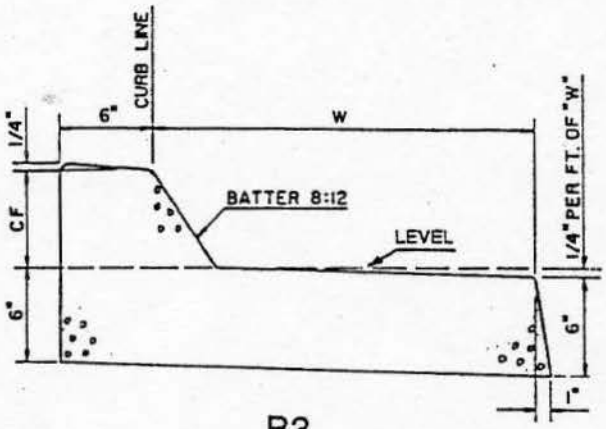

B3

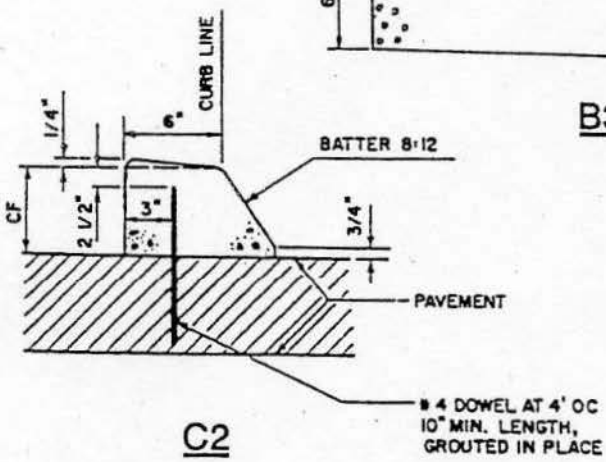

C2

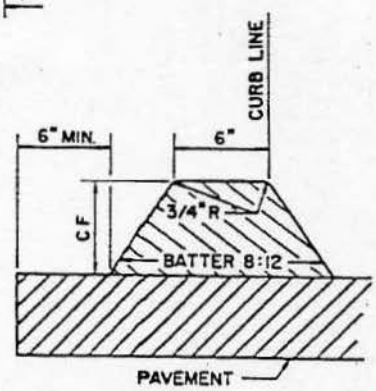

D2

NOTES:

1. ALL DIMENSIONS ARE MEASURED IN INCHES.
2. "CF" IS 6" UNLESS OTHERWISE SPECIFIED.
3. "W" IS 12" UNLESS OTHERWISE SPECIFIED.
4. TYPES B1, B2, B3 AND C2 ARE CONSTRUCTED OF PORTLAND CEMENT CONCRETE. (CLASS 520 - C - 2500)
5. TYPE D2 IS CONSTRUCTED OF ASPHALT CONCRETE.
6. TYPE C2 CURB SHALL BE ANCHORED WITH DOWELS AS SHOWN OR WITH EPOXY APPROVED BY THE ENGINEER.
7. GRADE SHALL BE MEASURED AT CURB LINE AT TOP OF CURB.
8. ALL EXPOSED CORNERS ON P.C.C. CURBS AND GUTTERS TO BE ROUNDED WITH A 1\2" RADIUS.

CITY OF BURBANK - PUBLIC WORKS DEPARTMENT

REV	BY	DATE	CURB AND GUTTER - MOUNTABLE	STANDARD PLAN
			APPROVED BY: Public Works Director — 6-1-92 Date	BS-101
				SHEET 1 OF 1

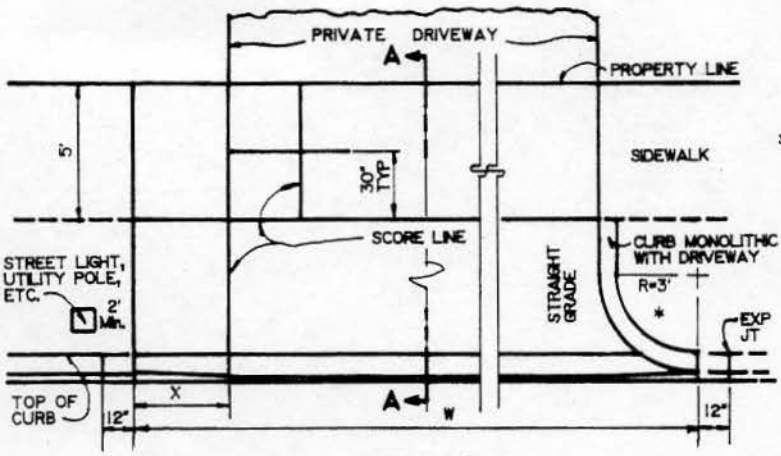

PLAN

* TO BE USED WHEN SPECIFIED BY PUBLIC WORKS DIRECTOR

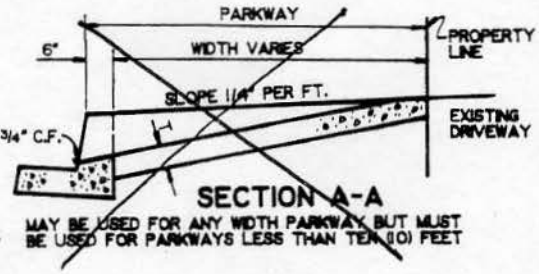

SECTION A-A

MAY BE USED FOR ANY WIDTH PARKWAY BUT MUST BE USED FOR PARKWAYS LESS THAN TEN (10) FEET

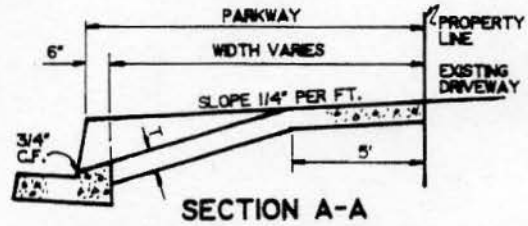

SECTION A-A

MAY BE USED FOR PARKWAYS TEN (10) FEET OR GREATER

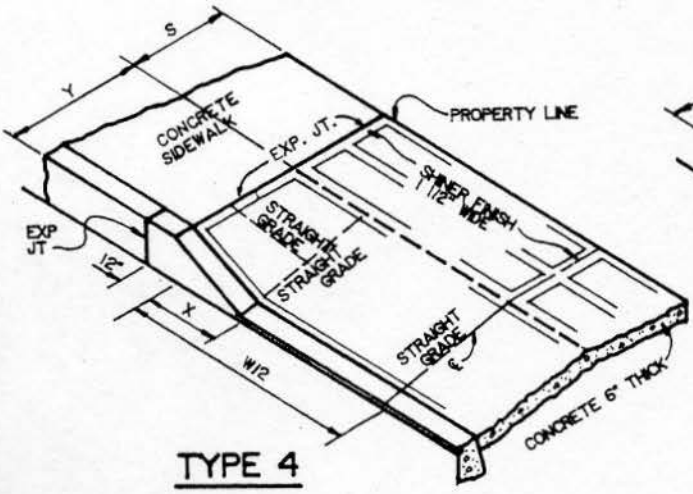

TYPE 4

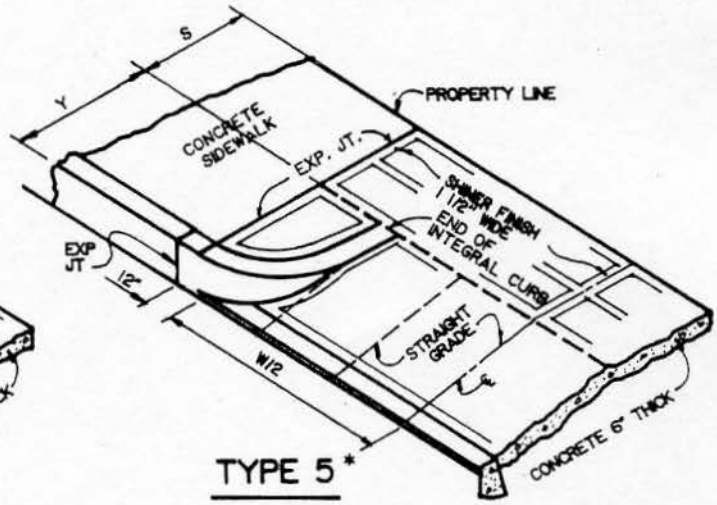

TYPE 5 *

NOTES:

1. ALL WORK SHALL BE CONSTRUCTED IN ACCORDANCE WITH THE LATEST ADOPTED STANDARD SPECIFICATIONS FOR PUBLIC WORKS CONSTRUCTION.

2. THE DRIVEWAY APPROACH SHALL BE BROOM FINISHED PARALLEL TO THE CENTERLINE OF THE DRIVEWAY. THE SIDEWALK PORTION OF THE DRIVEWAY CONSTRUCTED ON GRADES OF SIX PERCENT OR LESS SHALL BE GIVEN A ROTARY SWEAT FINISH WITH A STEEL TROWEL, ON GRADES EXCEEDING SIX PERCENT, THE FINISH SHALL BE BY HAND WITH A WOOD OR RUBBER FLOAT. SHINERS SHALL BE PLACED AROUND THE PERIMETER OF THE DRIVEWAY, AT THE CENTERLINE AND X'S. THE SIDEWALK PORTION SHALL HAVE SHINERS ON 30" SQUARE.

3. COMMERCIAL DRIVEWAY DIMENSIONS:
   T=6"; X=4'; MINIMUM W=18'
   S,AND Y - AS SPECIFIED ON THE IMPROVEMENT PLAN OR PERMIT APPLICATION.

4. EXISTING CURB SHALL BE REMOVED 12" BEYOND THE NEW TOP "X". WHERE EXISTING INTEGRAL CURB AND GUTTER EXISTS, SAWCUT AT FLOW AND REMOVE CURB PORTION.

5. CONCRETE SHALL BE CLASS 520-C-2500.

CITY OF BURBANK - PUBLIC WORKS DEPARTMENT

REV	BY	DATE	COMMERCIAL DRIVEWAY	STANDARD PLAN
			APPROVED BY [signature] Public Works Director 8/18/92 Date	BS-102 SHEET 1 OF 1

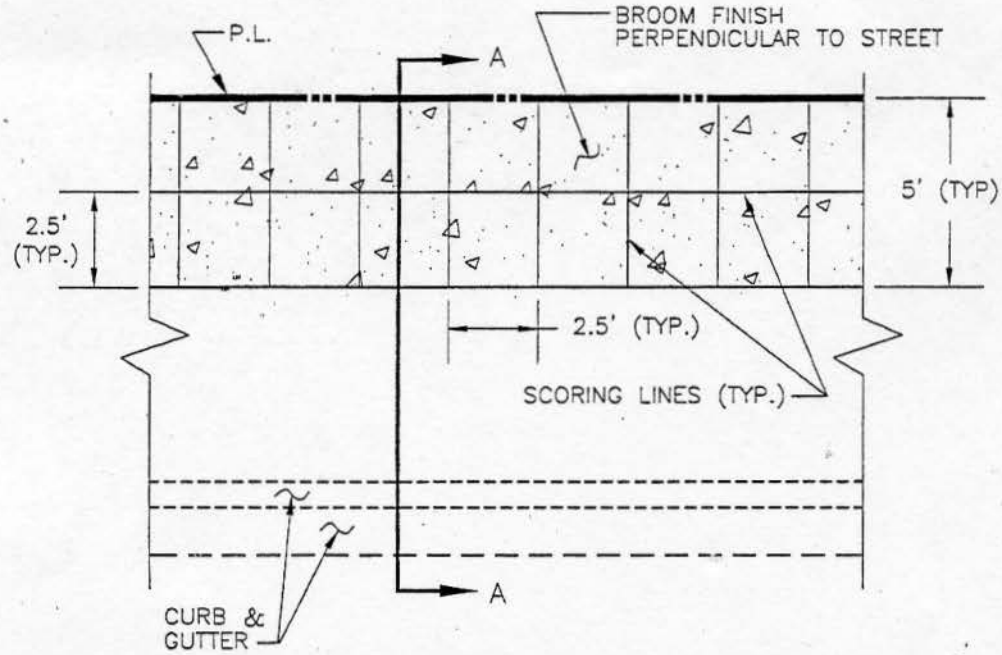

SIDEWALK CONSTRUCTION

(NOT TO SCALE)

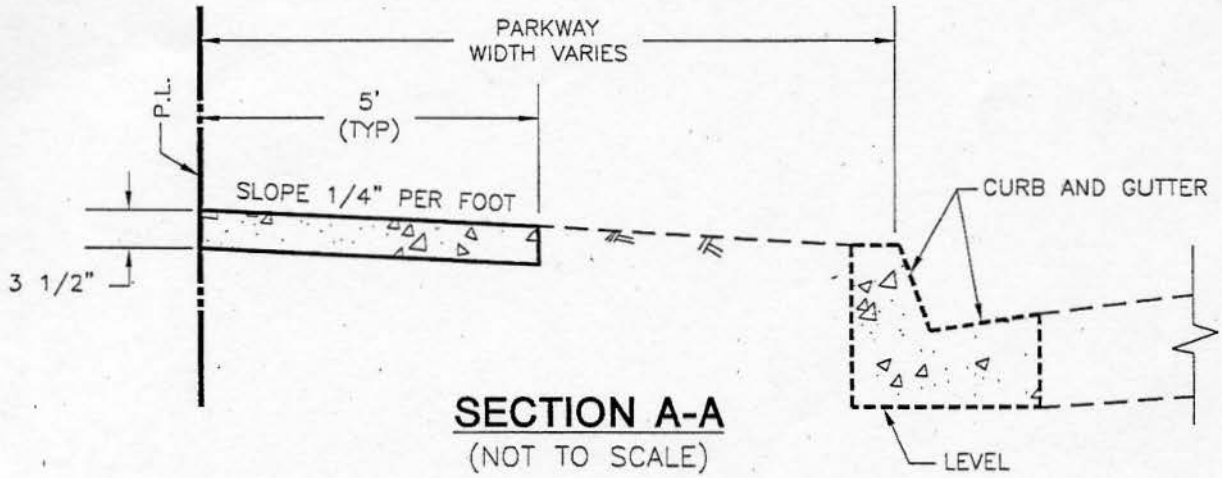

SECTION A-A

(NOT TO SCALE)

NOTES:

1. ALL WORK SHALL BE CONSTRUCTED IN ACCORDANCE WITH THE LATEST ADOPTED STANDARD SPECIFICATIONS FOR PUBLIC WORKS CONSTRUCTION.
2. CONCRETE SHALL BE CLASS 520-C-2500.
3. 1/2" THICK TRANSVERSE EXPANSION JOINTS SHALL BE PLACED AT CURB RETURNS AND AROUND DRAINAGE STRUCTURES, POLES, PIPES, ETC., IN THE SIDEWALK. FULL WIDTH PARKWAY SIDEWALK SHALL HAVE THE EXPANSION JOINTS AT THE SAME LOCATION AS THOSE IN THE CURB.
4. ALL JOINTS AND SCORING LINES PER GREENBOOK SECTION 303-5.

CITY OF BURBANK - PUBLIC WORKS DEPARTMENT

REV	BY	DATE	SIDEWALK	STANDARD PLAN
			APPROVED BY: Bruce A. Feng PUBLIC WORKS DIRECTOR 8/13/02 DATE	BS-104-1
				SHEET 1 OF 1

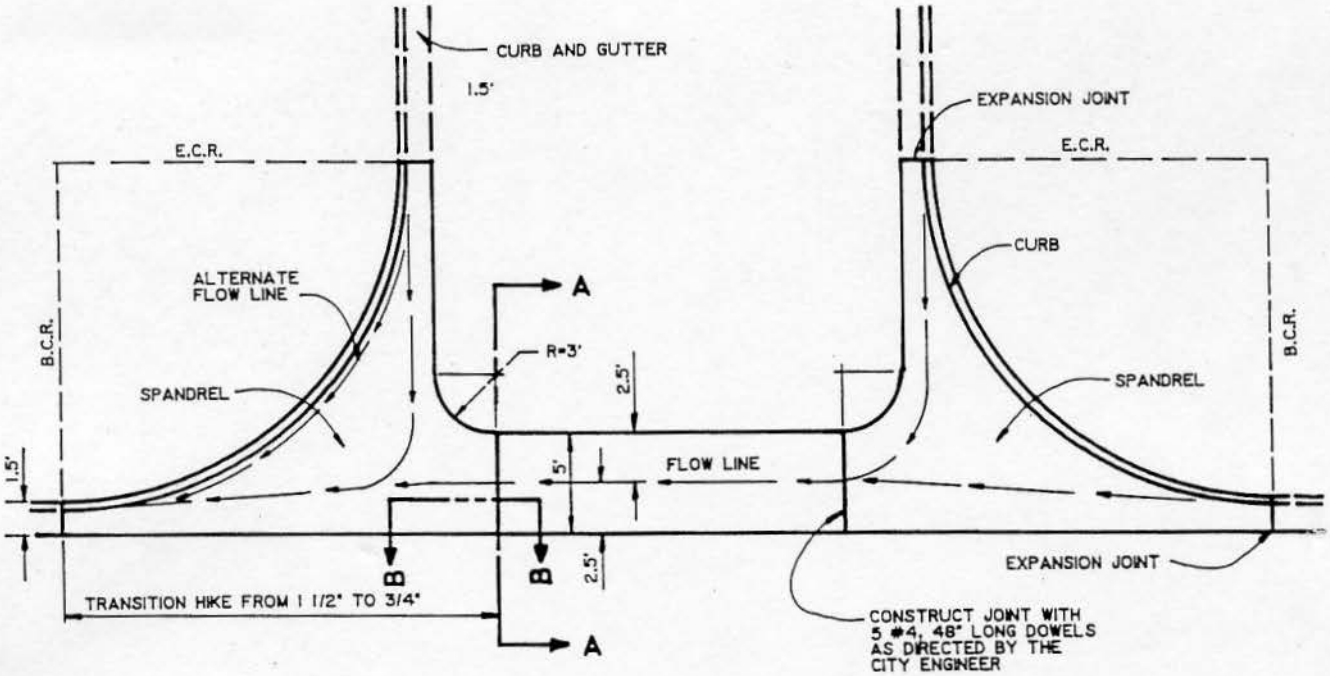

PLAN

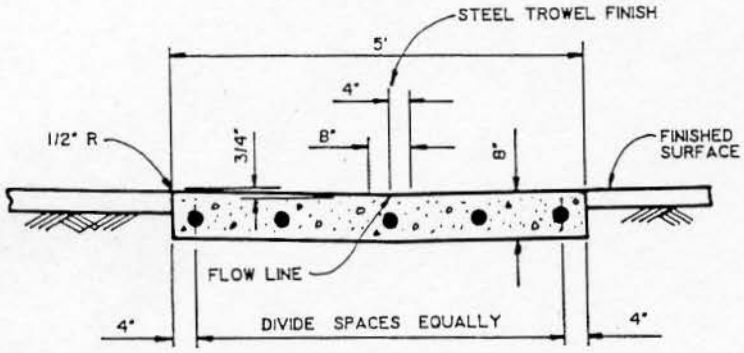

SECTION A-A

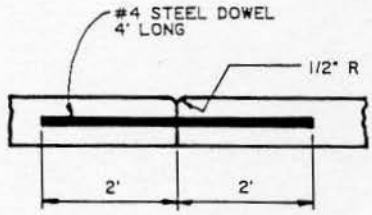

SECTION B-B

NOTES:

1. ALL WORK SHALL BE CONSTRUCTED IN ACCORDANCE WITH THE LATEST ADOPTED STANDARD SPECIFICATIONS FOR PUBLIC WORKS CONSTRUCTION.
2. VARIABLE CURB FACE ALLOWED FOR DRAINAGE PURPOSES.
3. CONCRETE SHALL BE INTEGRAL WITH CURB UNLESS OTHERWISE SPECIFIED.
4. CONCRETE SHALL BE CLASS 520-C-2500.

CITY OF BURBANK - PUBLIC WORKS DEPARTMENT

REV	BY	DATE	CROSS GUTTER	STANDARD PLAN
			APPROVED BY: [signature] 6-1-92 Public Works Director Date	BS-106 SHEET 1 OF 1

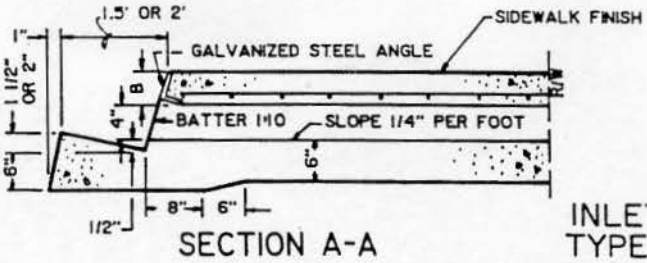

SECTION A-A

SECTION B-B

DETAIL OF ANCHOR
(SEE NOTES 5 & 7)

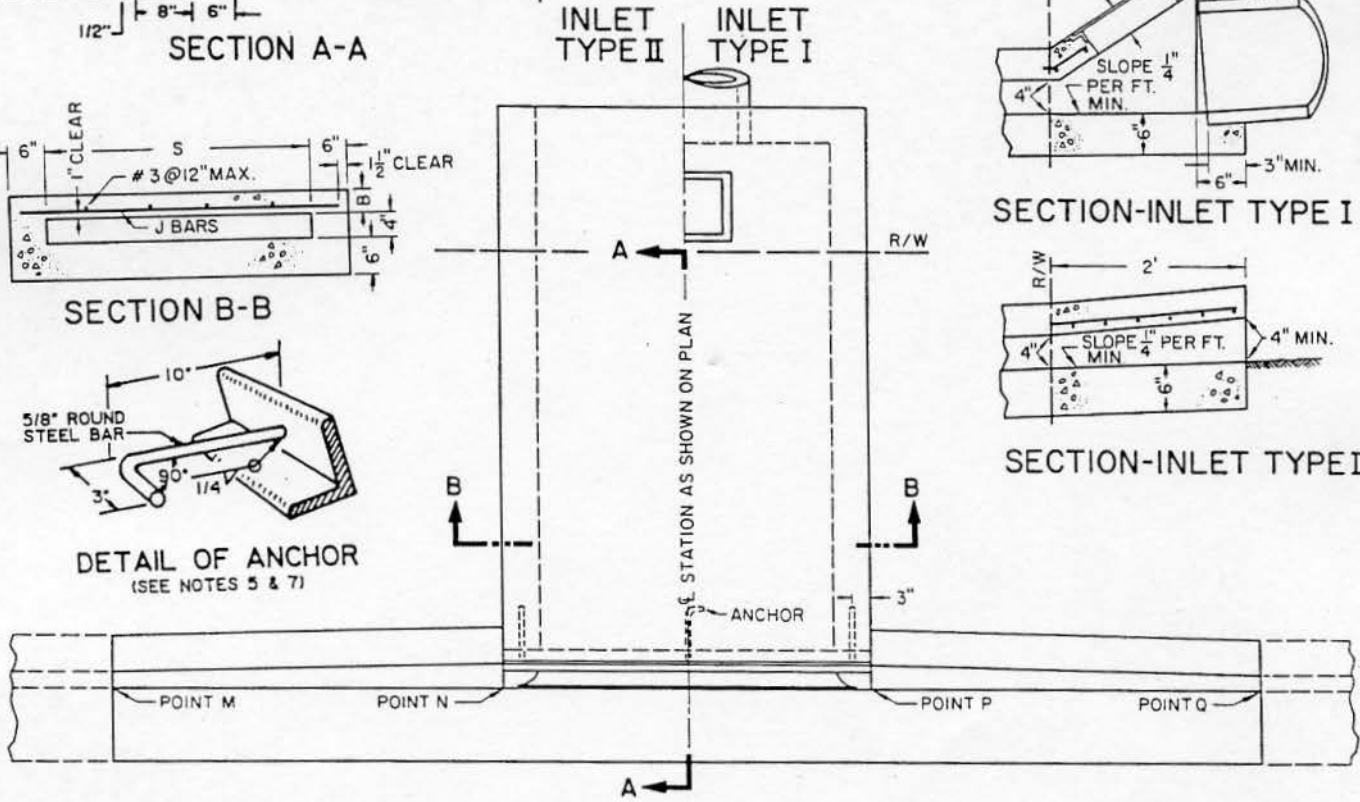

PLAN

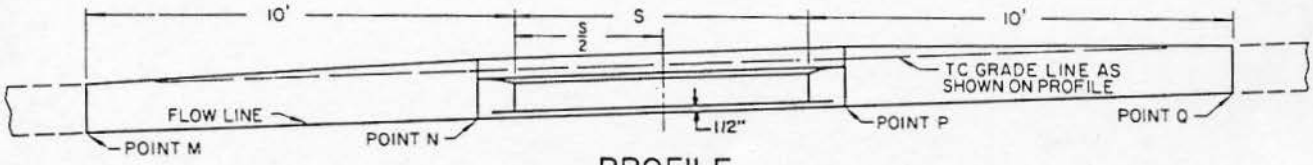

PROFILE

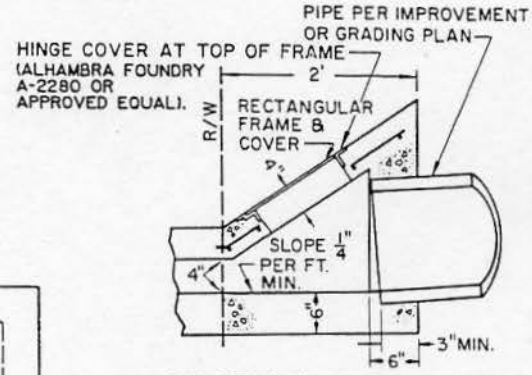

SECTION-INLET TYPE I

SECTION-INLET TYPE II

NOTES:

1. FLOOR OF BOX TO BE TROWELED SMOOTH.
2. IF THE TOE OF SLOPE IS ALLOWED WITHIN THE R\W, INLET TYPE I BEGINS AT THE TOE RATHER THAN THE R\W LINE.
3. FOR OPEN DITCH APPROACH (TYPE II) THE 2' EXTENSION BEYOND R\W LINE IS NOT REQUIRED WHEN THE BACK OF WALK IS 2' OR MORE FROM THE R\W LINE, HOWEVER, CURB DRAIN SHALLEXTEND TO R\W LINE IN ALL CASES.
4. TOP OF INLET STRUCTURE (TYPE I & II) TO BE FLUSH WITH ADJACENT SURFACE WHERE PRACTICABLE.
5. A HEADED STEEL STUD 5\8" X 6 3\8" WITH HEAD D=1" ATTACHED BY A FULL PENETRATION BUTT WELD MAY BE USED AS AN ALTERNATE ANCHOR.
6. NORMAL CURB FACE AT POINT M AND Q, B+5" AT POINT N AND P.
7. THE 3" LEG OF THE INTERIOR ANCHORS SHALL BE PARALLEL TO THE TOP OF SIDEWALK.
8. ALL WORK SHALL BE CONSTRUCTED IN ACCORDANCE WITH THE LATEST ADOPTED STANDARD SPECIFICATIONS FOR PUBLIC WORKS CONSTRUCTION.

STEEL LIST

S	B	GALVANIZED STEEL ANGLE	ANCHOR	J BAR		
				SIZE	SPACING	LENGTH
1'-0"	3"	$2\frac{1}{2}$" X 2" X $\frac{3}{8}$"	2	#3	7"	1'-9"
1'-6"	"	"	"	"	"	2'-3"
2'-0"	"	"	"	"	"	2'-9"
2'-6"	"	"	"	"	"	3'-3"
3'-0"	"	"	3	"	"	3'-9"
3'-6"	"	"	"	"	6"	4'-3"
4'-0"	"	"	"	"	5"	4'-9"
4'-6"	4"	$3\frac{1}{2}$" X 3" X $\frac{1}{2}$"	"	"	$6\frac{1}{2}$"	5'-3"
5'-0"	"	"	"	"	5"	5'-9"
5'-6"	"	"	"	"	4"	6'-3"
6'-0"	"	"	"	"	$3\frac{1}{2}$"	6'-9"

CITY OF BURBANK - PUBLIC WORKS DEPARTMENT

REV	BY	DATE

CURB DRAIN NO. 2

APPROVED BY: [signature] 6-1-92
Public Works Director Date

STANDARD PLAN

BS-108

SHEET 1 OF 1

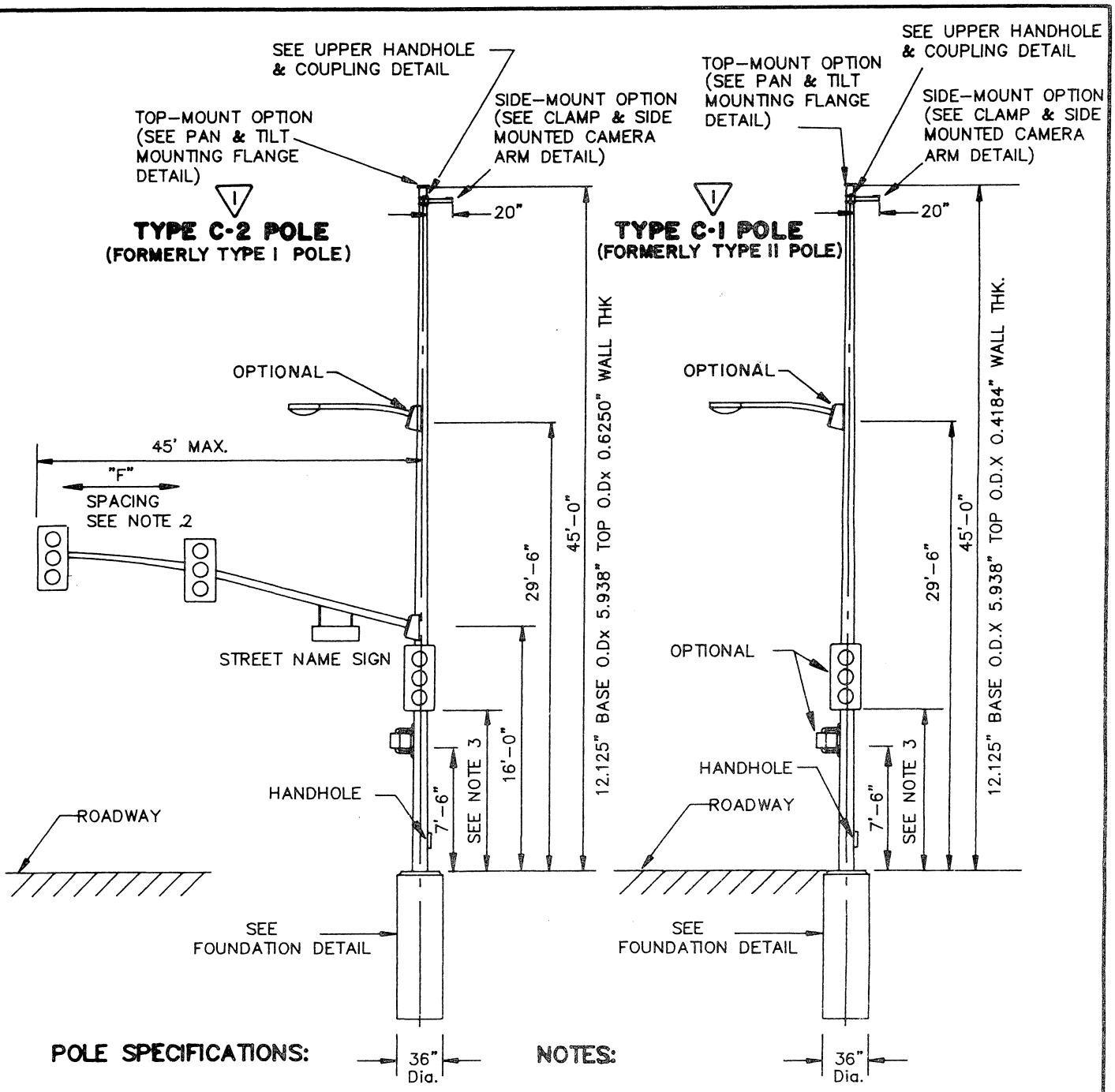

POLE SPECIFICATIONS:

BASE PLATE AND FLANGES: ASTM A-36

SHAFT: STEEL OF 48,000 PSI MINIMUM YIELD AFTER FABRICATION. DESIGN YIELD OF Fy= 48,000 PSI IN ORDER THAT Fu/Fy > 1.5

PIPE: ASTM A-53 GRADE B.

ANCHOR BOLTS: ASTM A-307

WELDS: ALL BUTT WELDS TO BE GROUND FLUSH WITH BASE METAL
LONGITUDINAL: BUTT WELD BY THE SUBMERGED ARC PROCESS
CIRCUMFERENTIAL: BUTT WELD WITH PERMANENT BACK-UP RING

FINISH POLE: HOT DIP GALVANIZE PER ASTM A-123

FINISH HARDWARE: HOT DIP GALVANIZE PER ASTM A-153

NOTES:

1. FABRICATION OF THE STANDARDS, LUMINAIRE ARMS AND MAST ARMS MUST CONFORM TO THE LATEST STANDARD SPECIFICATIONS, DEPARTMENT OF TRANSPORTATION, STATE OF CALIFORNIA.
2. REFER TO LADOT STANDARD DWG No. S-52.1.4
3. REFER TO LADOT STD DWG No. S-51.9 FOR DETAILS ON SIGNAL AND PED. HEADS MOUNTING HEIGHT.
4. REFER TO CALTRANS STD. DWG. NO. ES-6L FOR LUMINAIRE & SIGNAL ARM CONNECTION DETAIL.

Drawn By	BKC	12-03-90	Title
Checked By	BKC	12-03-90	CAMERA POLES (1/2)
Supervised By	JEM	12/5/90	
Reviewed By	RBJ	12-6-90	CITY OF LOS ANGELES
Revisions			DEPARTMENT OF TRANSPORTATION
Added Note 4		10/28/91	S. E. ROWE, General Manager
1 Changed Pole Designation		4/10/92	Approved 12-10-90 S. E. Rowe General Manager
			DRAWING NO. S-52.1.4B

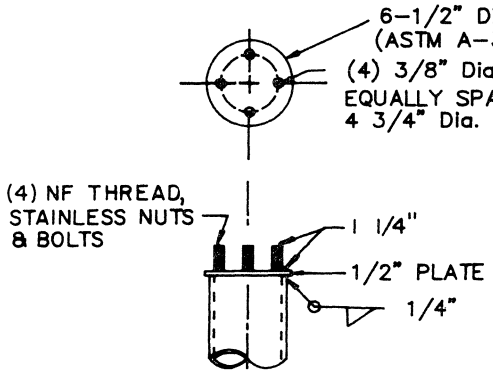

PAN & TILT MOUNTING FLANGE DETAIL

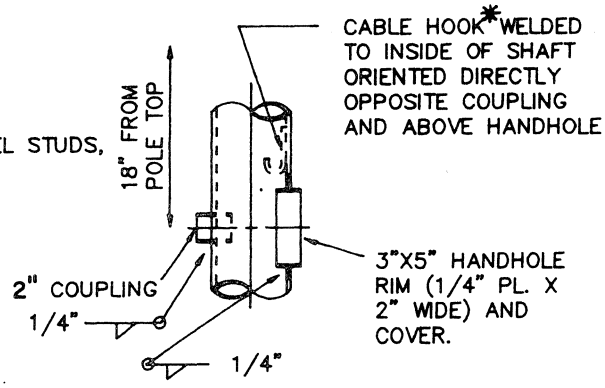

UPPER HANDHOLE & COUPLING DETAIL

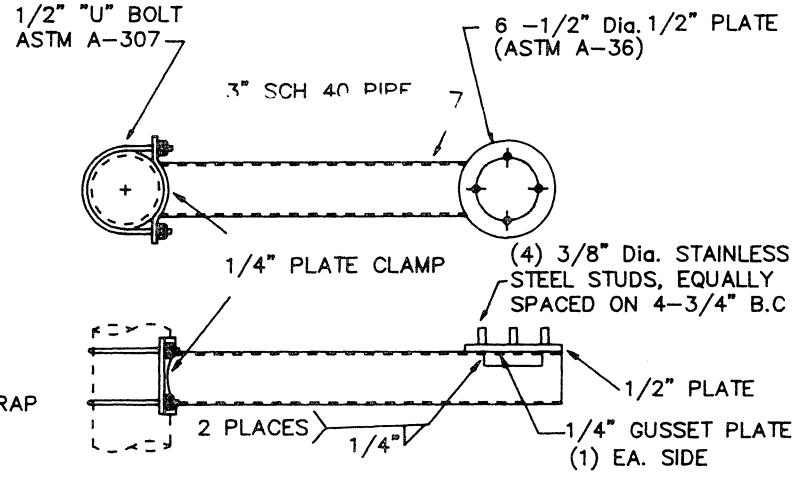

CLAMP & SIDE MOUNTED CAMERA DETAIL

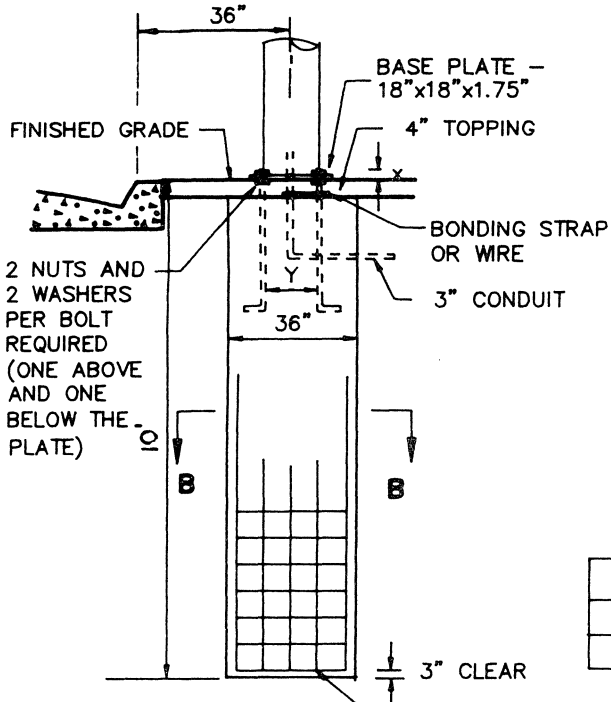

TYPE	ANCHOR BOLT	B.C	X	Y
I	2"x42"x6" ASTM A-307	17.5"	4.5"	12.4"
II	1"x36"x6" ASTM A-307	17.5"	4.5"	12.4"

1. FOUNDATION CONCRETE SHALL BE 560-C-3250
2. CONDUIT 3" NOMINAL SIZE UNLESS OTHERWISE SPECIFIED

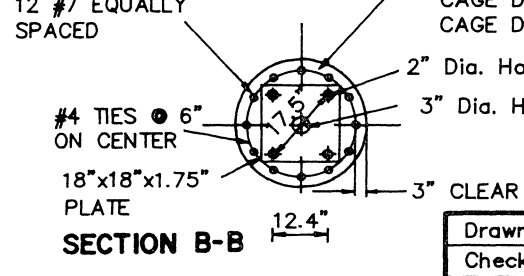

SECTION B-B

FOUNDATION - DETAIL

*CABLES SHALL BE SUPPORTED INSIDE THE POLE, AT THE TOP & AT THE MID-POINT, BY USING SUITABLE CABLE SUPPORTS (KELLIMS GRIP OR EQUIVALENT) SUSPENDED FROM THE CABLE HOOK.

Drawn By	BKC	12-01-90	Title
Checked By	BKC	12-01-90	CAMERA POLES (2/2)
Supervised By	JEM	12/5/90	
Reviewed By		12-6-90	CITY OF LOS ANGELES
Revisions			DEPARTMENT OF TRANSPORTATION
Added 10' Dim.			S. E. ROWE, General Manager
for Foundation		10/28/91	Approved 12-10-90
Updated		11-20-91	S. E. Rowe General Manager

DRAWING NO. S-52.1.4B

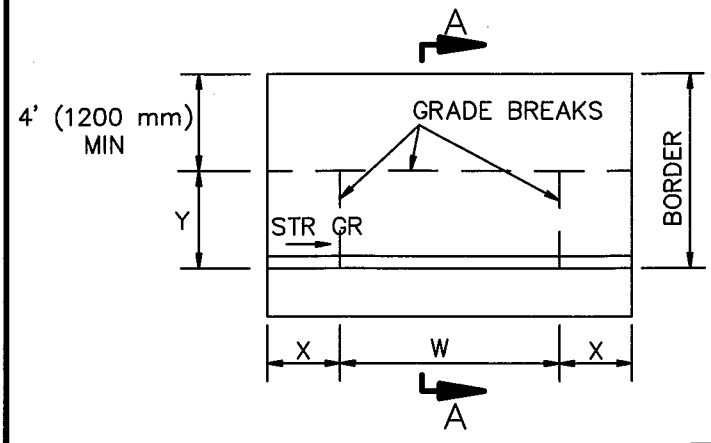

TYPE A

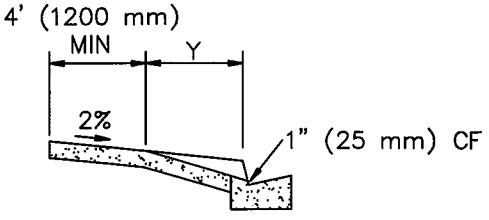

SECTION A–A

CURB FACE, inches (mm)	X, inches (mm)	Y, inches (mm)
6" (150) or less	3'–0" (900)	4'–0" (1200)
7" (175)	3'–6" (1050)	4'–9" (1425)
8" (200)	4'–0" (1200)	5'–8" (1700)
9" (225)	4'–6" (1350)	6'–6" (1950)
10" (250)	5'–0" (1500)	7'–3" (2175)
11" (275)	5'–6" (1650)	8'–0" (2400)
12" (300) or more	6'–0" (1800)	8'–9" (2625)

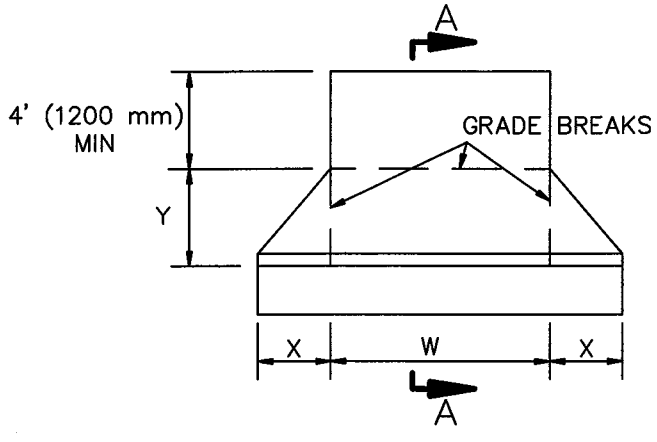

TYPE B

NOTES:

1. RESIDENTIAL DRIVEWAYS SHALL BE 4" (100 mm) THICK PCC.
2. COMMERCIAL DRIVEWAYS SHALL BE 6" (150 mm) THICK PCC.
3. WEAKENED PLANE JOINTS SHALL BE INSTALLED AT BOTH SIDES OF A DRIVEWAY AND AT 10' (3.0 m) INTERVALS.
4. CURB FOR TYPE C DRIVEWAY SHALL BE INTEGRAL AND MATCH ADJACENT CONSTRUCTION.
5. REFER TO LOCAL DEVELOPMENT REGULATIONS FOR AMERICANS WITH DISABILITIES ACCESS REQUIREMENTS AND MAXIMUM PERMITTED DRIVEWAY WIDTHS.

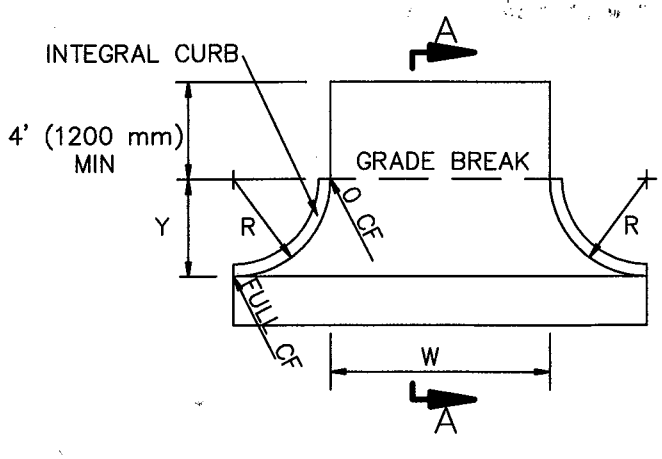

TYPE C

STANDARD PLANS FOR PUBLIC WORKS CONSTRUCTION

PROMULGATED BY THE PUBLIC WORKS STANDARDS INC. GREENBOOK COMMITTEE 1984 REV. 1996, 2009

DRIVEWAY APPROACHES

USE WITH STANDARD SPECIFICATIONS FOR PUBLIC WORKS CONSTRUCTION

STANDARD PLAN

110–2

SHEET 1 OF 1

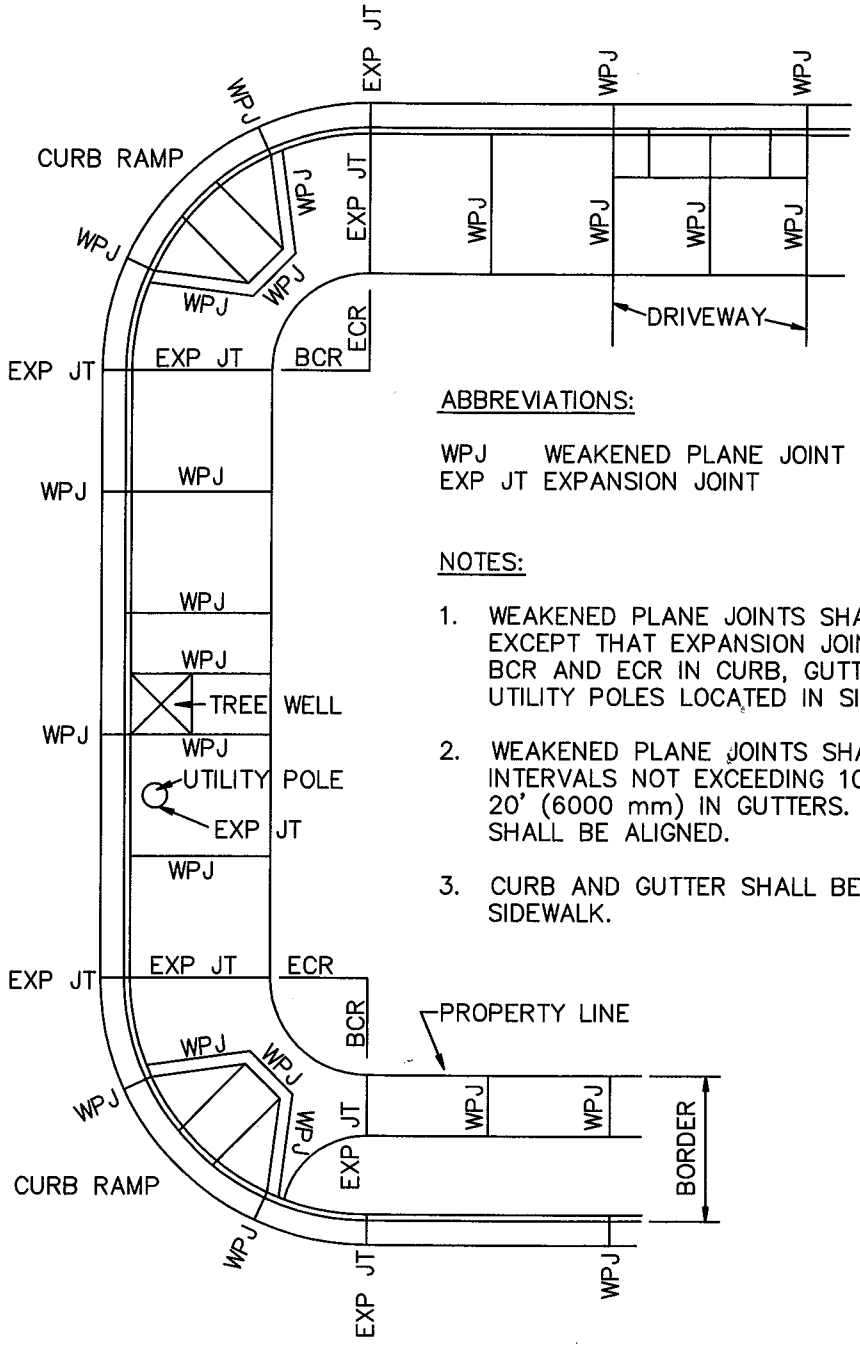

ABBREVIATIONS:

WPJ WEAKENED PLANE JOINT
EXP JT EXPANSION JOINT
BCR BEGINNING OF CURB RETURN
ECR END OF CURB RETURN

NOTES:

1. WEAKENED PLANE JOINTS SHALL BE USED FOR ALL JOINTS, EXCEPT THAT EXPANSION JOINTS SHALL BE PLACED AT THE BCR AND ECR IN CURB, GUTTER AND SIDEWALK, AND AROUND UTILITY POLES LOCATED IN SIDEWALK AREAS.
2. WEAKENED PLANE JOINTS SHALL BE CONSTRUCTED AT REGULAR INTERVALS NOT EXCEEDING 10' (3000 mm) IN WALKS AND 20' (6000 mm) IN GUTTERS. JOINTS IN CURB AND WALK SHALL BE ALIGNED.
3. CURB AND GUTTER SHALL BE CONSTRUCTED SEPARATELY FROM SIDEWALK.

STANDARD PLANS FOR PUBLIC WORKS CONSTRUCTION

PROMULGATED BY THE PUBLIC WORKS STANDARDS INC. GREENBOOK COMMITTEE 1984 REV. 1996, 2009

CURB AND SIDEWALK JOINTS

USE WITH STANDARD SPECIFICATIONS FOR PUBLIC WORKS CONSTRUCTION

STANDARD PLAN 112-2

SHEET 1 OF 1

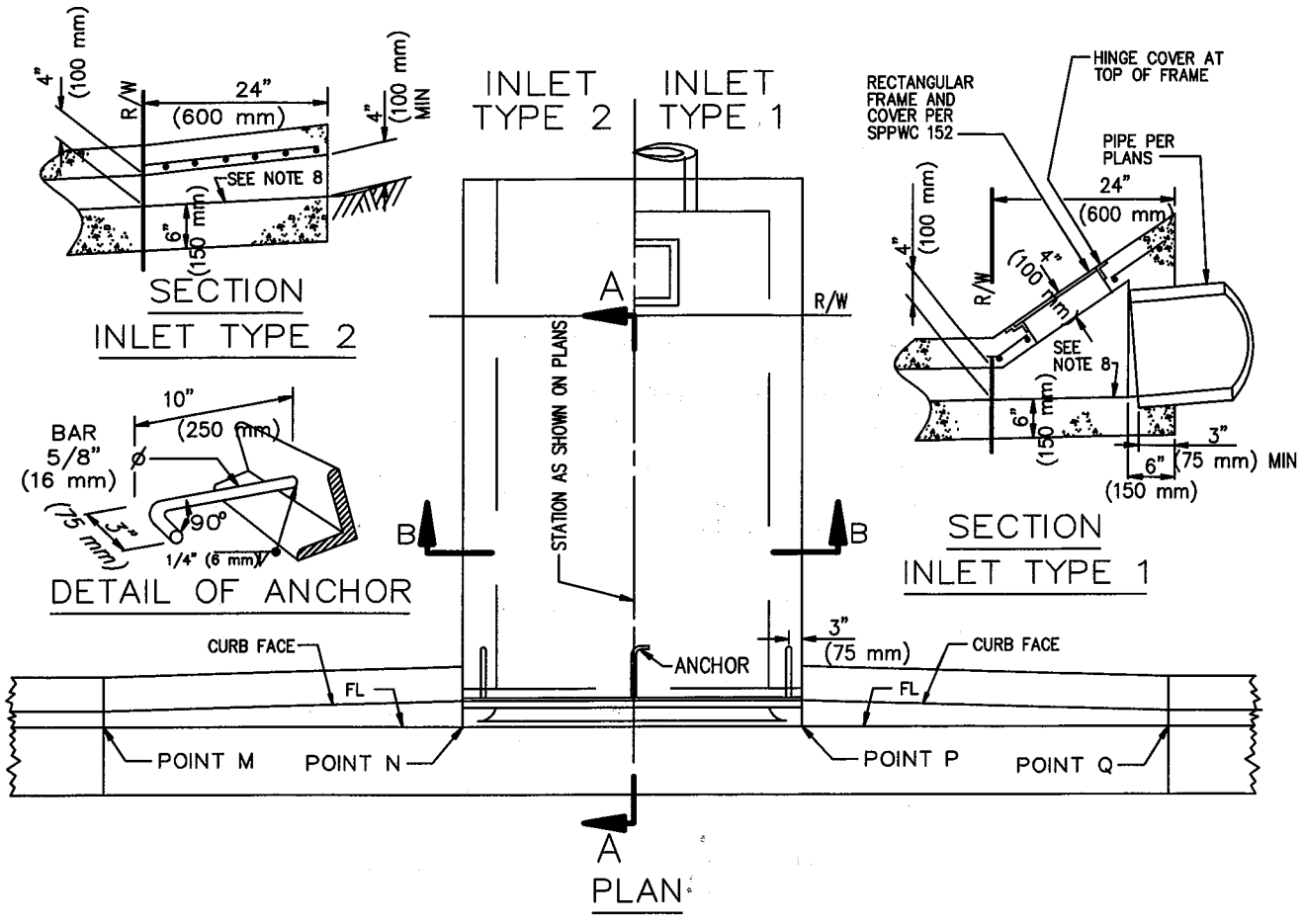

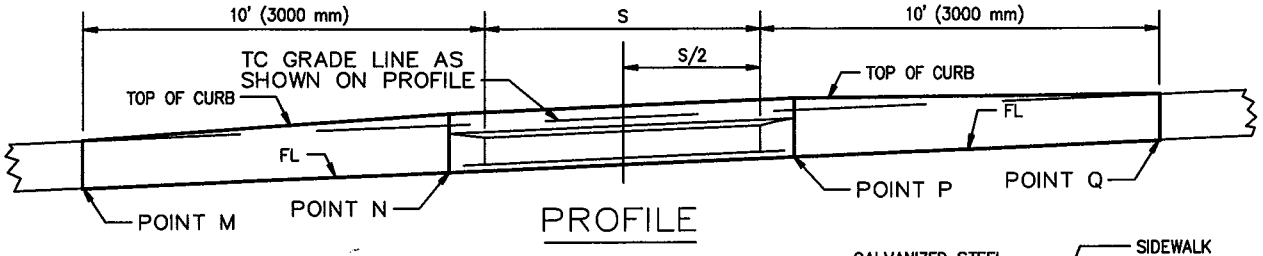

S, INCHES (mm)	J BAR SPACING
12" (300)	7" (240)
18" (450)	7" (240)
24" (600)	7" (240)
30" (750)	7" (240)
36" (900)	7" (240)
42" (1050)	6" (210)
48" (1200)	5" (180)
54" (1350)	6-1/2" (225)
60" (1500)	5" (180)
66" (1650)	4" (180)
72" (1800)	3-1/2" (120)

FOR S = 30" (750 mm) AND LESS, USE 2 ANCHORS. OTHERWISE, USE 3 ANCHORS.

FOR S = 48" (1200 mm) AND LESS, B = 3" (75 mm) USE 2-1/2"x2"x3/8" (64x51x9.5) GALVANIZED STEEL ANGLE.

OTHERWISE, B = 4" (100 mm).USE 3-1/2"x3"x1/2" (89x76x12.7) GALVANIZED STEEL ANGLE.

J BARS ARE #3 (#10M).

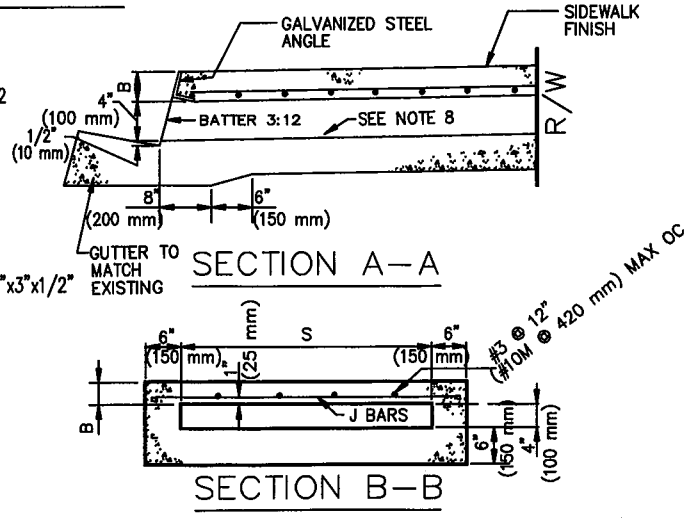

STANDARD PLANS FOR PUBLIC WORKS CONSTRUCTION

PROMULGATED BY THE PUBLIC WORKS STANDARDS INC. GREENBOOK COMMITTEE 1993 REV. 1996, 2009

PARKWAY DRAIN

USE WITH STANDARD SPECIFICATIONS FOR PUBLIC WORKS CONSTRUCTION

STANDARD PLAN

151–2

SHEET 1 OF 2

NOTES

1. FLOOR OF BOX SHALL BE TROWELED SMOOTH.

2. IF THE TOE OF SLOPE IS ALLOWED WITHIN THE R/W, INLET TYPE 1 BEGINS AT THE TOE RATHER THAN AT THE R/W LINE.

3. FOR OPEN DITCH (TYPE 2), THE 24" (600 mm) EXTENSION BEYOND THE R/W LINE IS NOT REQUIRED WHEN BACK OF WALK IS 24" (600 mm) OR MORE FROM THE R/W LINE; HOWEVER, THE PIPE SHALL EXTEND TO THE R/W LINE IN ANY EVENT.

4. TOP OF INLET STRUCTURE (TYPE 1 & 2) SHALL BE FLUSH WITH ADJACENT SURFACE WHERE PRACTICAL.

5. A HEADED STEEL STUD 5/8" x 6-3/8" WITH A 1" HEAD (16 x 160 mm, 25 mm HEAD) ATTACHED BY A FULL PENETRATION BUTT WELD MAY BE USED AS AN ALTERNATE ANCHOR.

6. NORMAL CURB FACE AT POINT M AND Q. CURB FACE IS B + 5" (125 mm) AT POINT N AND P.

7. THE 3" (75 mm) LEG OF THE 5/8" (16 mm) DIA ANCHORS SHALL BE PARALLEL TO THE TOP OF SIDEWALK.

8. SLOPE = 2.0%.

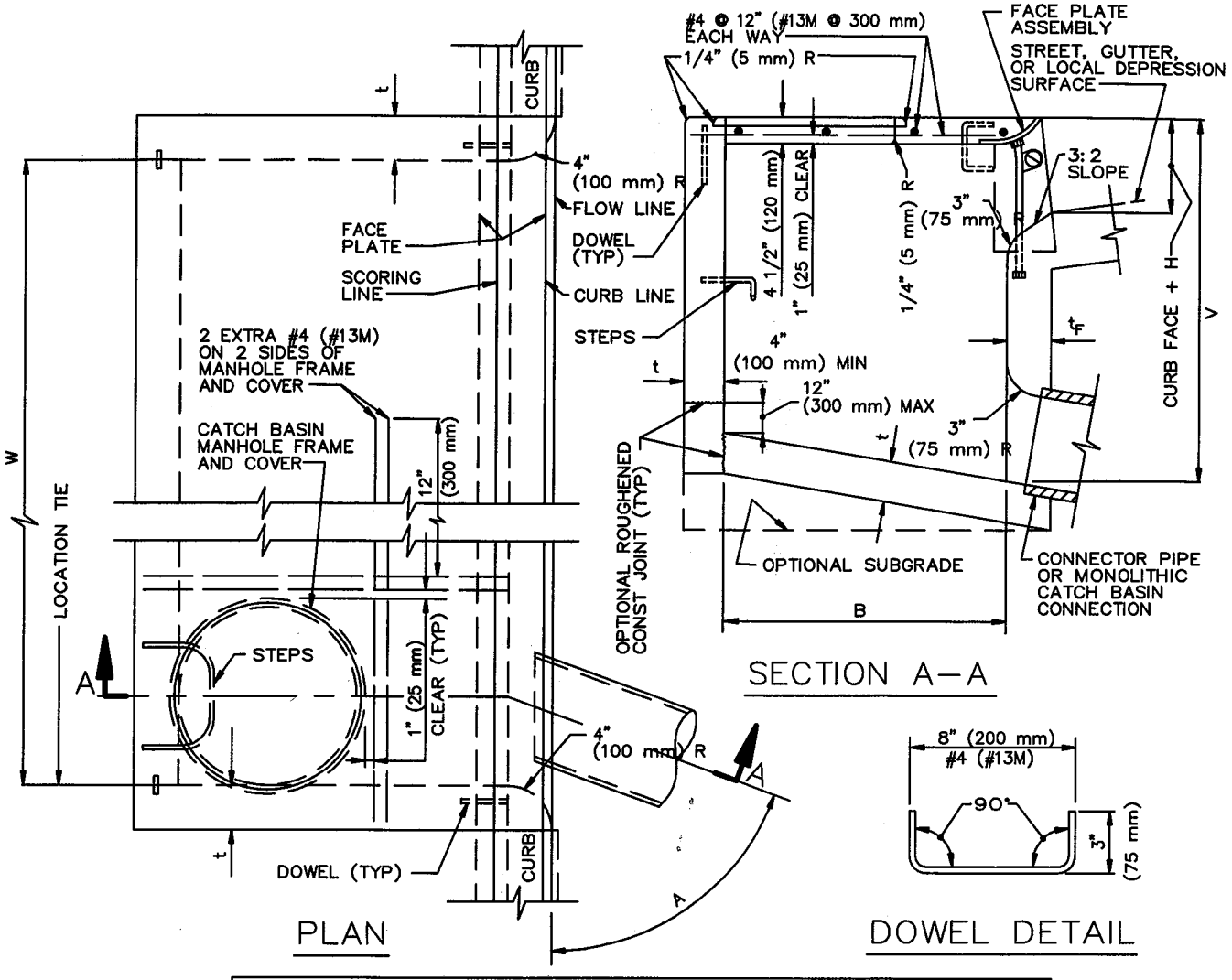

STRUCTURAL DATA

WALL AND SLAB DIMENSIONS AND REINFORCEMENT REQUIREMENTS

MAX W	MAX V	t	t_F	REINFORCEMENT REQUIRED IN: FRONT WALL	REAR WALL	BOTTOM SLAB	END WALL
3.5' (1.0 m)	8' (2.4 m)	6" (150 mm)	6" (150 mm)	NO REINFORCEMENT REQUIRED			
3.5' (1.0 m)	12' (3.5 m)	8" (200 mm)	8" (200 mm)				
7' (2.0 m)	6' (1.8 m)	6" (150 mm)	6" (150 mm)				
7' (2.0 m)	12' (3.5 m)	8" (200 mm)	8" (200 mm)				
14' (4.0 m)	4' (1.2 m)	6" (150 mm)	6" (150 mm)	REINFORCEMENT REQUIRED			
↕	8' (2.4 m)	6" (150 mm)	8" (200 mm)				
14' (4.0 m)	12' (3.5 m)	8" (200 mm)	10" (250 mm)				
6 m (21') AND 9 m (28')	4' (1.2 m)	6" (150 mm)	6" (150 mm)			REQUIRED	
	6' (1.8 m)	6" (150 mm)	8" (200 mm)				
	8' (2.4 m)	8" (200 mm)	8" (200 mm)				
	10' (3.0 m)	8" (200 mm)	10" (250 mm)				
	12' (3.5 m)	8" (200 mm)	10" (250 mm)				

FOR W > 28' (9 m), V > 12' (3.5 m) OR B > 4' (1.2 m) SEE PLANS

STANDARD PLANS FOR PUBLIC WORKS CONSTRUCTION

PROMULGATED BY THE PUBLIC WORKS STANDARDS, INC., GREENBOOK COMMITTEE 1984 REV. 1992, 1996, 2009

CURB OPENING CATCH BASIN

USE WITH STANDARD SPECIFICATIONS FOR PUBLIC WORKS CONSTRUCTION

STANDARD PLAN 300–3

SHEET 1 OF 2

NOTES:

1. WHERE THE BASIN IS TO BE CONSTRUCTED WITHIN THE LIMITS OF EXISTING OR PROPOSED SIDEWALK OR IS CONTIGUOUS TO SUCH SIDEWALK, THE TOP SLAB OF THE BASIN MAY BE POURED EITHER MONOLITHIC WITH THE SIDEWALK OR SEPARATELY, USING THE SAME CLASS OF CONCRETE AS IN THE BASIN. WHEN POURED MONOLITHICALLY, THE SIDEWALK SHALL BE PROVIDED WITH A WEAKENED PLANE OR A 1" (25 mm) DEEP SAWCUT CONTINUOUSLY AROUND THE EXTERNAL PERIMETER OF THE CATCH BASIN WALLS, INCLUDING ACROSS THE FULL WIDTH OF THE SIDEWALK. SURFACE OF ALL EXPOSED CONCRETE SHALL CONFORM IN SLOPE, GRADE, COLOR, FINISH, AND SCORING TO EXISTING OR PROPOSED CURB AND WALK ADJACENT TO THE BASIN.

2. ALL CURVED CONCRETE SURFACES SHALL BE FORMED BY CURVED FORMS, AND SHALL NOT BE SHAPED BY PLASTERING.

3. FLOOR OF BASIN SHALL BE GIVEN A STEEL TROWEL FINISH AND SHALL HAVE A LONGITUDINAL AND LATERAL SLOPE OF 1:12 MINIMUM AND 1:3 MAXIMUM, EXCEPT WHERE THE GUTTER GRADE EXCEEDS 8%, IN WHICH CASE THE LONGITUDINAL SLOPE OF THE FLOOR SHALL BE THE SAME AS THE GUTTER GRADE. SLOPE FLOOR FROM ALL DIRECTIONS TO THE OUTLET.

4. DIMENSIONS:

   B = 3'-2" (970 mm)

   V = THE DIFFERENCE IN ELEVATION BETWEEN THE TOP OF THE CURB AND THE INVERT OF THE CATCH BASIN AT THE OUTLET = 4.5' (1.35 m).

   V_U= THE DIFFERENCE IN ELEVATION BETWEEN THE TOP OF THE CURB AND THE INVERT AT THE UPSTREAM END OF THE BASIN, AND SHALL BE DETERMINED BY THE REQUIREMENTS OF NOTE 3, BUT SHALL NOT BE LESS THAN CURB FACE PLUS 12" (300 mm).

   V_I = THE DIFFERENCE IN ELEVATION BETWEEN THE TOP OF THE CURB AND THE INVERT OF THE INLET, NOTED ON THE PLANS.

   H = NOTED ON THE PLANS.

   W = NOTED ON THE PLANS.

   A = THE ANGLE, IN DEGREES, INTERCEPTED BY THE CENTERLINE OF THE CONNECTOR PIPE AND THE CATCH BASIN WALL TO WHICH THE CONNECTOR PIPE IS ATTACHED.

5. PLACE CONNECTOR PIPES AS INDICATED ON THE PLANS. UNLESS OTHERWISE SPECIFIED, THE CONNECTOR PIPE SHALL BE LOCATED AT THE DOWNSTREAM END OF THE BASIN. WHERE THE CONNECTOR PIPE IS SHOWN AT A CORNER, THE CENTERLINE OF THE PIPE SHALL INTERSECT THE INSIDE CORNER OF THE BASIN. THE PIPE MAY BE CUT AND TRIMMED AT A SKEW NECESSARY TO INSURE MINIMUM 3" (80 mm) PIPE EMBEDMENT, ALL AROUND, WITHIN THE CATCH BASIN WALL, AND 3" (75 mm) RADIUS OF ROUNDING OF STRUCTURE CONCRETE, ALL AROUND, ADJACENT TO PIPE ENDS. A MONOLITHIC CATCH BASIN CONNECTION SHALL BE USED TO JOIN THE CONNECTOR PIPE TO THE CATCH BASIN WHENEVER ANGLE "A" IS LESS THAN 70° OR GREATER THAN 110°, OR WHENEVER THE CONNECTOR PIPE IS LOCATED IN A CORNER. THE OPTIONAL USE OF A MONOLITHIC CATCH BASIN CONNECTION IN ANY CASE IS PERMITTED. MONOLITHIC CATCH BASIN CONNECTIONS MAY BE CONSTRUCTED TO AVOID CUTTING STANDARD LENGTHS OF PIPE.

6. STEPS SHALL BE LOCATED AS SHOWN. IF THE CONNECTOR PIPE INTERFERES WITH THE STEPS, THEY SHALL BE LOCATED AT THE CENTERLINE OF THE DOWNSTREAM END WALL. STEPS SHALL BE SPACED 12" (300 mm) APART. THE TOP STEP SHALL BE 7" (175 mm) BELOW THE TOP OF THE MANHOLE AND PROJECT 2-1/2" (65 mm). ALL OTHER STEPS SHALL PROJECT 5" (130 mm).

7. DOWELS ARE REQUIRED AT EACH CORNER AND AT 7' (2 m) ON CENTER (MAXIMUM) ALONG THE BACKWALL.

8. THE FOLLOWING SPPWC ARE INCORPORATED HEREIN:

   308 MONOLITHIC CATCH BASIN CONNECTION
   309 CATCH BASIN REINFORCEMENT
   310 CATCH BASIN FACE PLATE ASSEMBLY AND PROTECTION BAR
   312 CATCH BASIN MANHOLE FRAME AND COVER
   635 STEEL STEP
   636 POLYPROPYLENE PLASTIC STEP

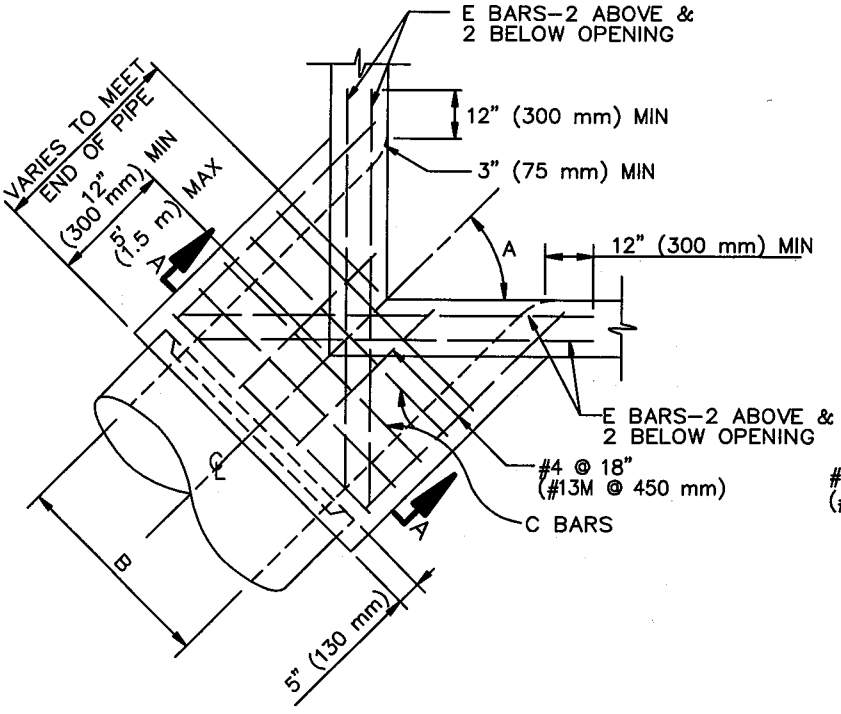

PLAN
CORNER CONNECTION

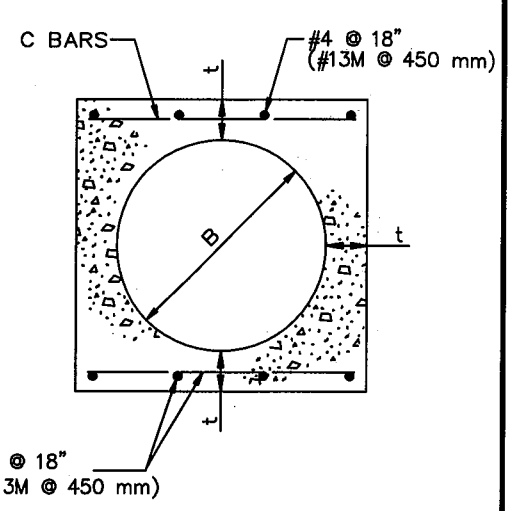

SECTION A–A

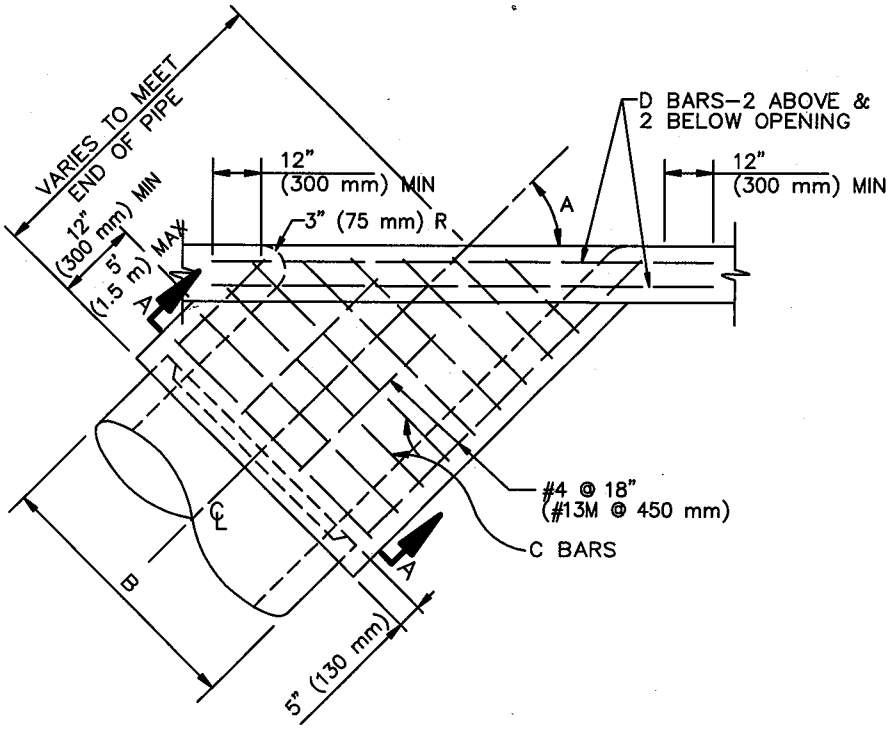

PLAN
SIDE CONNECTION

STANDARD PLANS FOR PUBLIC WORKS CONSTRUCTION

PROMULGATED BY THE
PUBLIC WORKS STANDARDS, INC.,
GREENBOOK COMMITTEE
1984
REV. 1996, 2009

MONOLITHIC CATCH BASIN CONNECTION

USE WITH STANDARD SPECIFICATIONS FOR PUBLIC WORKS CONSTRUCTION

STANDARD PLAN
308–2
SHEET 1 OF 2

STRUCTURAL DATA							
B	t	C BARS	D&E BARS	B	t	C BARS	D&E BARS
12" (300 mm)	4" (115 mm)	#4 @ 6" (#13M @ 150 mm)	#5 (#16M)	42" (1050 mm)	7 1/2" (190 mm)	#5 @ 6" (#16M @ 150 mm)	#6 (#19M)
15" (375 mm)	4–1/4" (115 mm)			45" (1125 mm)	7 3/4" (190 mm)		
18" (450 mm)	4–1/2" (115 mm)			48" (1200 mm)	8" (215 mm)		
21" (525 mm)	5" (140 mm)			51" (1275 mm)	8 1/2" (215 mm)		
24" (600 mm)	5 1/4" (140 mm)			54" (1350 mm)	9" (240 mm)		
27" (675 mm)	5 1/2" (140 mm)			57" (1425 mm)	9 1/4" (240 mm)		
30" (750 mm)	6" (165 mm)			60" (1500 mm)	9 1/2" (240 mm)		
33" (825 mm)	6 1/4" (165 mm)			63" (1575 mm)	10" (260 mm)		
36" (900 mm)	6 1/2" (165 mm)			66" (1650 mm)	10 1/4" (260 mm)		
39" (975 mm)	7" (190 mm)			69" (1725 mm)	10 3/4" (280 mm)		
				72" (1800 mm)	11" (280 mm)		
FOR B GREATER THAN 72" (1800 mm) SEE PLANS							

NOTES

1. REINFORCING STEEL SHALL BE 1–1/2" (40 mm) CLEAR FROM FACE OF CONCRETE UNLESS OTHERWISE SHOWN.

2. REINFORCING STEEL FOR INSIDE FACE OF CATCH BASIN SHALL BE CUT AT CENTER OF OPENING AND BENT INTO WALLS OF MONOLITHIC CATCH BASIN CONNECTION. REINFORCING STEEL FOR OUTSIDE FACE OF CATCH BASIN SHALL BE CUT 2" (50 mm) CLEAR OF OPENING.

3. CONNECTION SHALL BE PLACED MONOLITHIC WITH CATCH BASIN. THE ROUNDED EDGE OF OUTLET SHALL BE CONSTRUCTED BY PLACING CONCRETE WITH THE SAME CLASS OF CONCRETE AS THE CATCH BASIN AGAINST A CURVED FORM WITH A RADIUS OF 3" (75 mm).

4. CONNECTIONS SHALL BE CONSTRUCTED WHEN:

   (A) PIPES INLET OR OUTLET THROUGH CORNER OF CATCH BASIN

   (B) ANGLE A FOR PIPES THROUGH 30" (750 mm) IN DIAMETER IS LESS THAN 70° OR GREATER THAN 110°.

CASE A

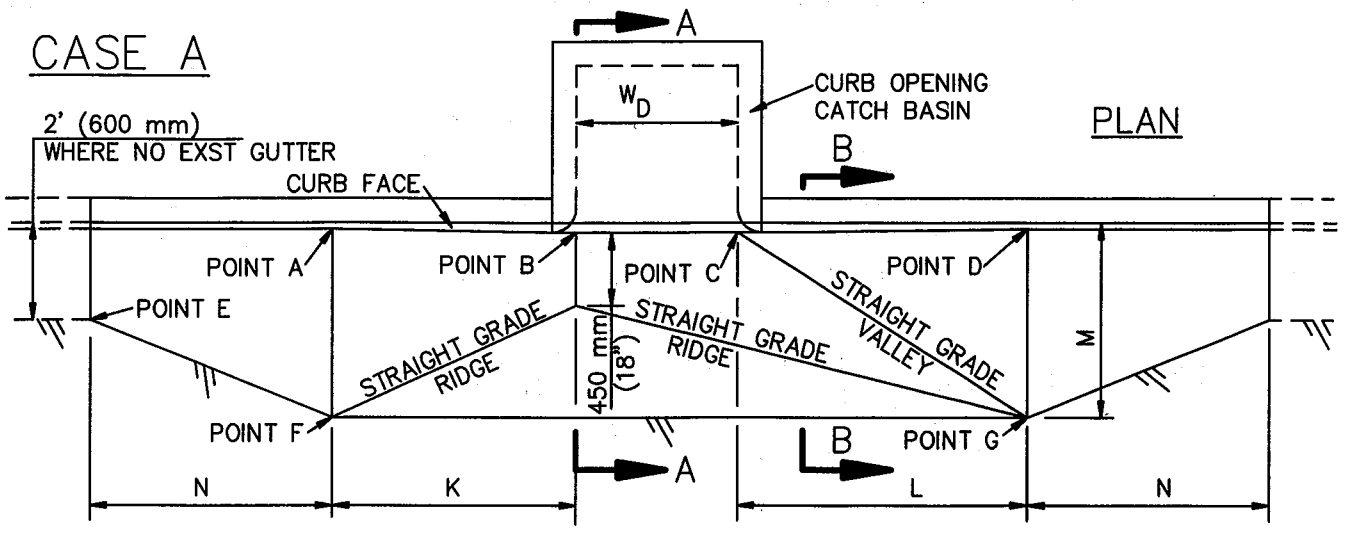

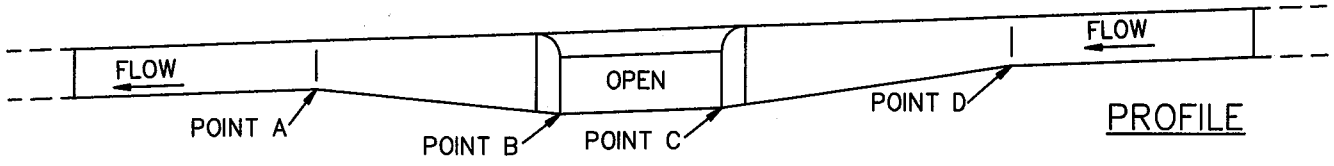

CASE B

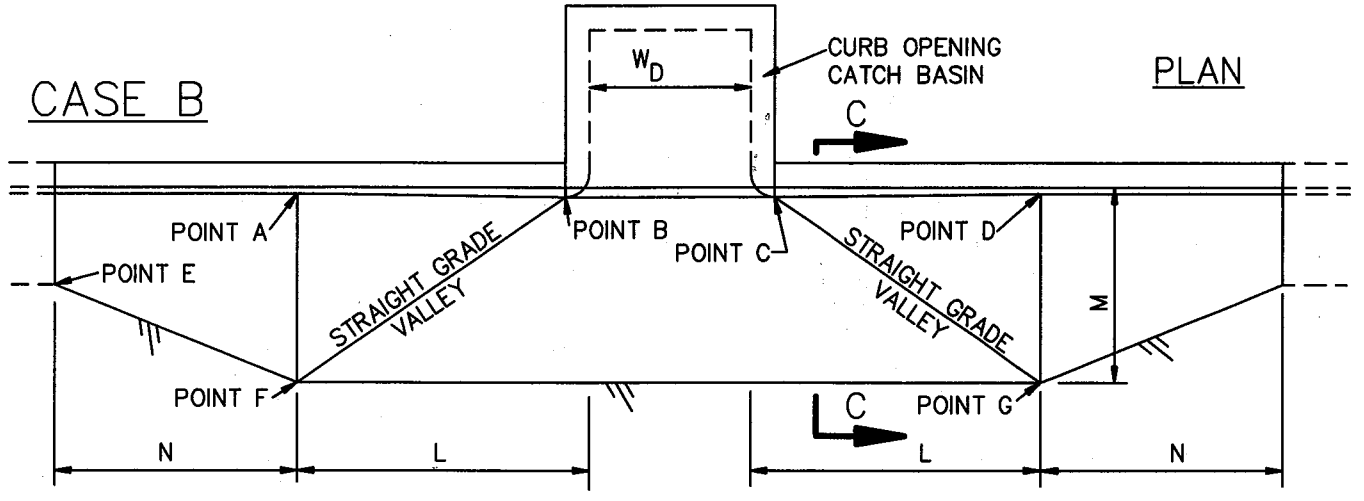

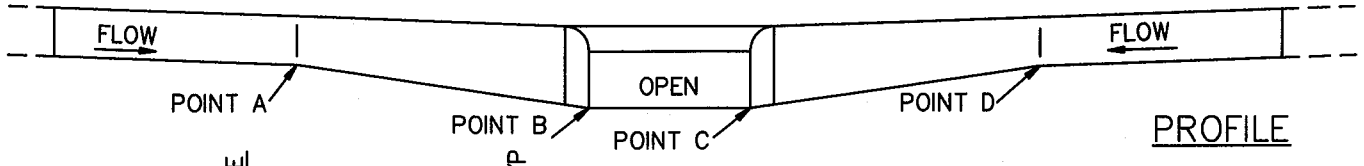

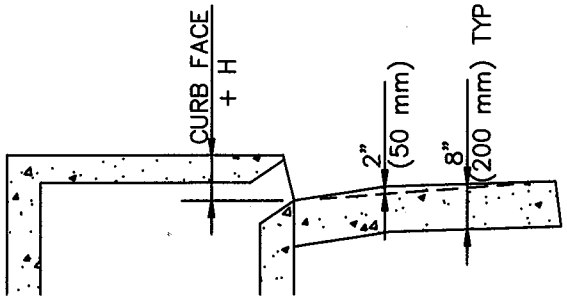

SECTION A–A

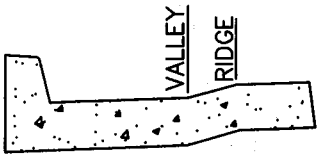

SECTION B–B

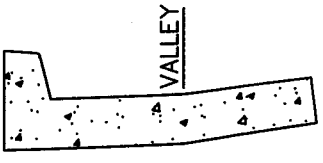

SECTION C–C

STANDARD PLANS FOR PUBLIC WORKS CONSTRUCTION

PROMULGATED BY THE
PUBLIC WORKS STANDARDS INC.
GREENBOOK COMMITTEE
1984
REV. 1996, 2005, 2009

LOCAL DEPRESSIONS AT CATCH BASINS

USE WITH STANDARD SPECIFICATIONS FOR PUBLIC WORKS CONSTRUCTION

STANDARD PLAN
313–3
SHEET 1 OF 4

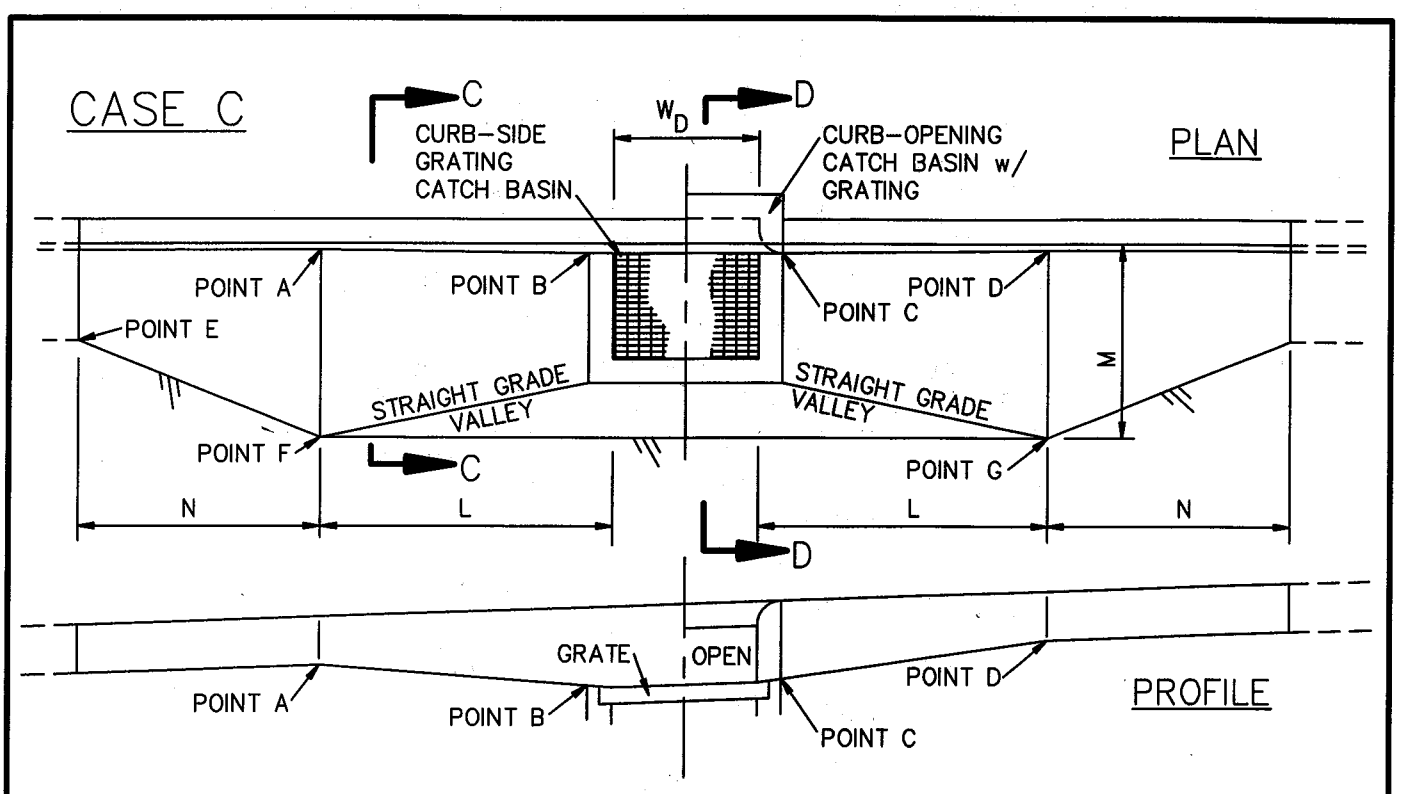

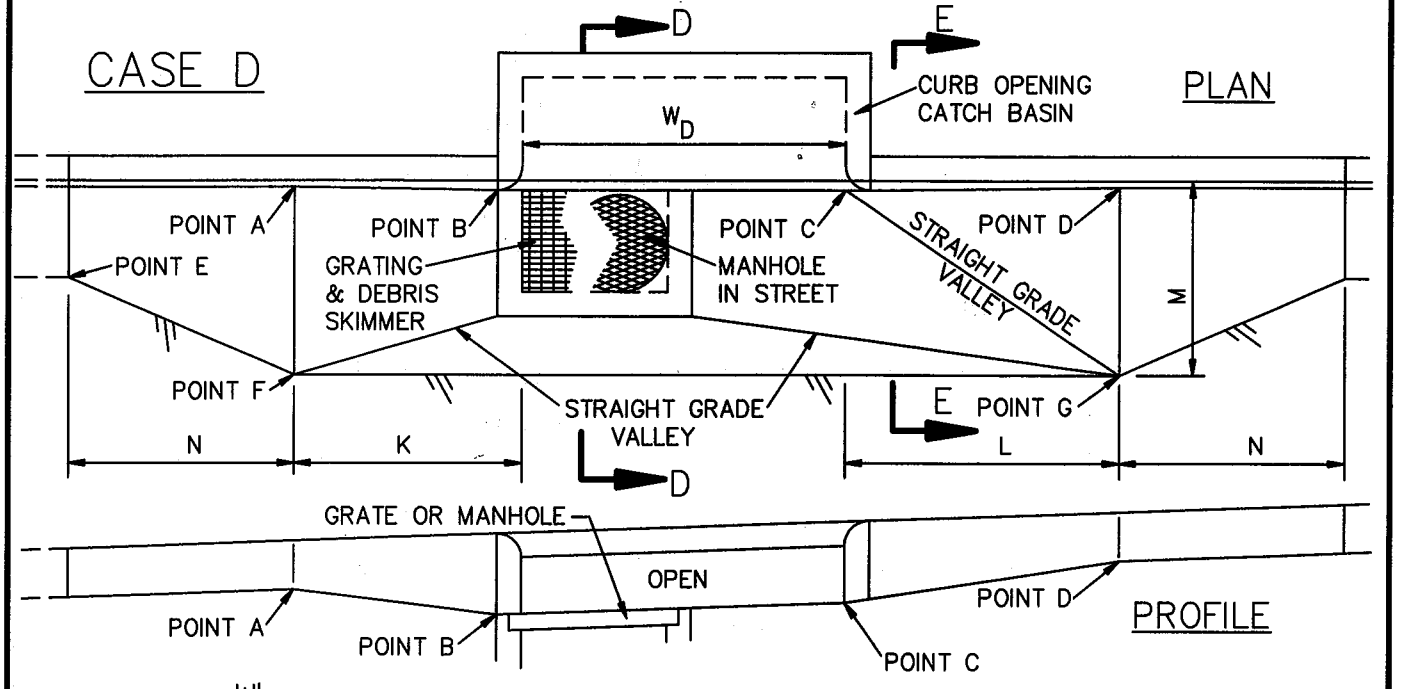

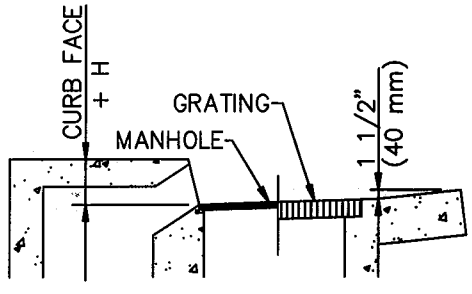

SECTION D–D

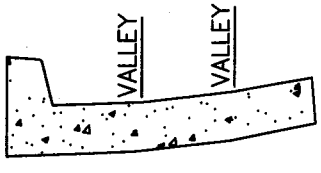

SECTION E–E

STANDARD PLANS FOR PUBLIC WORKS CONSTRUCTION

LOCAL DEPRESSIONS AT CATCH BASINS

STANDARD PLAN

313–3

SHEET 2 OF 4

CASE E

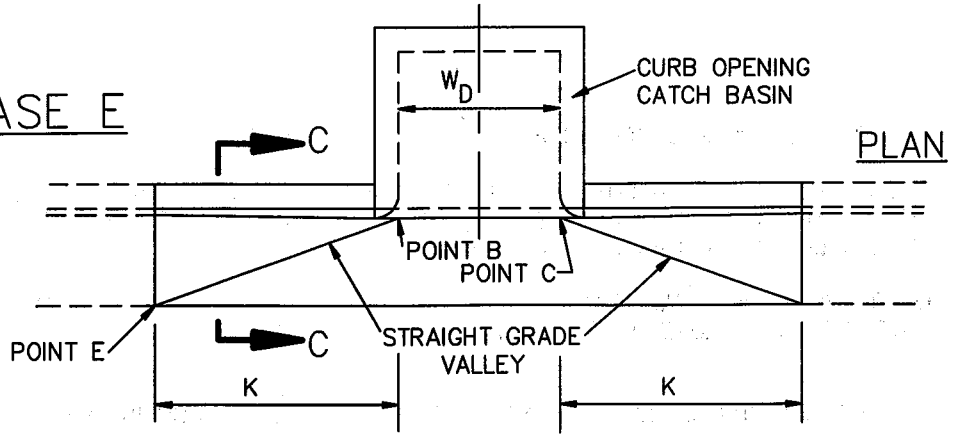

CASE F

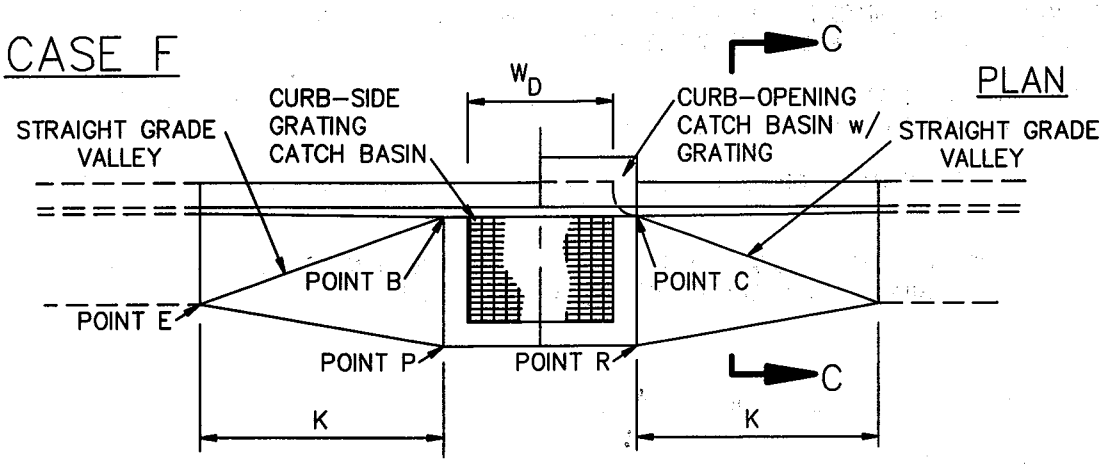

CASE G

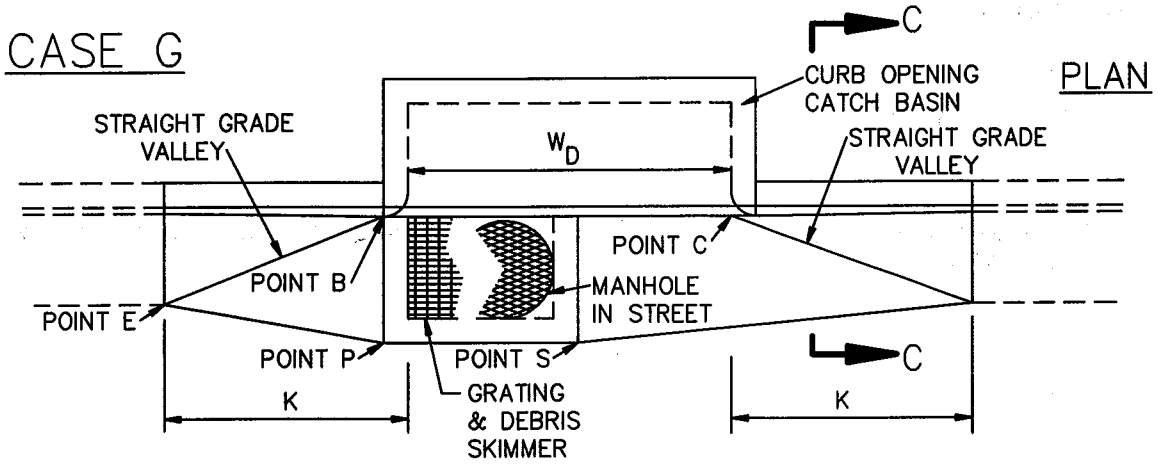

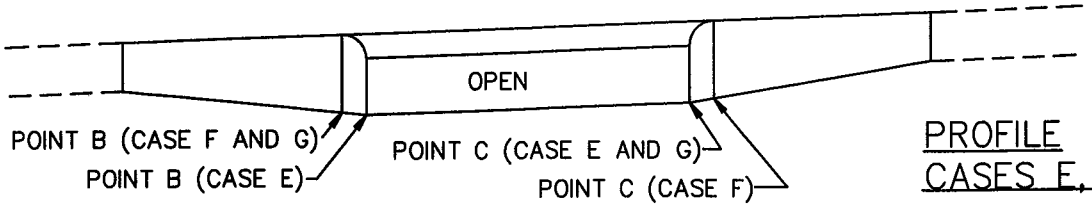

PROFILE
CASES E, F, G

STANDARD PLANS FOR PUBLIC WORKS CONSTRUCTION	STANDARD PLAN
LOCAL DEPRESSIONS AT CATCH BASINS	**313-3**
	SHEET 3 OF 4

NOTES:

1. ALL EXPOSED EDGES SHALL BE ROUNDED TO A 1/2" (15 mm) RADIUS.

2. THE CURB FACE AT POINTS A AND D SHALL BE THE NORMAL CURB FACE OF THE ADJACENT CURB. AT POINTS B AND C, THE CURB FACE SHALL BE THE NORMAL CURB FACE OF THE ADJACENT CURB PLUS H. (SEE APPLICABLE CATCH BASIN STANDARD PLAN.)

3. IN EXISTING STREETS WHERE NO PAVEMENT RECONSTRUCTION IS SPECIFIED ON THE PLANS, THE ELEVATION OF THE OUTER EDGE OF THE LOCAL DEPRESSION SHALL MEET THE FINISHED STREET SURFACE.

4. IN NEW STREETS OR IN EXISTING STREETS WHERE PAVEMENT RECONSTRUCTION IS SPECIFIED ON THE PLANS:

   THE ELEVATIONS OF POINTS F AND G SHALL BE SET H1 HIGHER THAN THE GUTTER FLOW LINE ELEVATIONS AT POINTS A AND D, RESPECTIVELY.

   THE ELEVATIONS OF POINTS P AND R SHALL BE SET H2 HIGHER THAN THE GUTTER FLOW LINE ELEVATIONS AT POINTS B AND C, RESPECTIVELY.

   THE ELEVATION OF POINT S SHALL BE SET H2 HIGHER THAN THE ELEVATION AT THE NEAREST GUTTER FLOW LINE.

   WHERE THERE IS NO GUTTER ADJACENT TO THE LOCAL DEPRESSION, THE ELEVATION OF POINT E SHALL BE SET H3 HIGHER THAN THE ELEVATION AT THE NEAREST TOE OF CURB.

5. DIMENSIONS:

   H, H1, H2 AND H3 SHALL BE AS NOTED ON THE PLANS.

   G = 24" (600 mm)

   K = 5'-0" (1500 mm)

   L = 6'-0" (1800 mm)

   M = 4'-0" (1200 mm)

   N = 5'-0" (1500 mm)

   W_D = CATCH BASIN W FOR SINGLE CATCH BASIN OR DISTANCE BETWEEN EXTREME END WALLS FOR MULTIPLE CATCH BASINS.

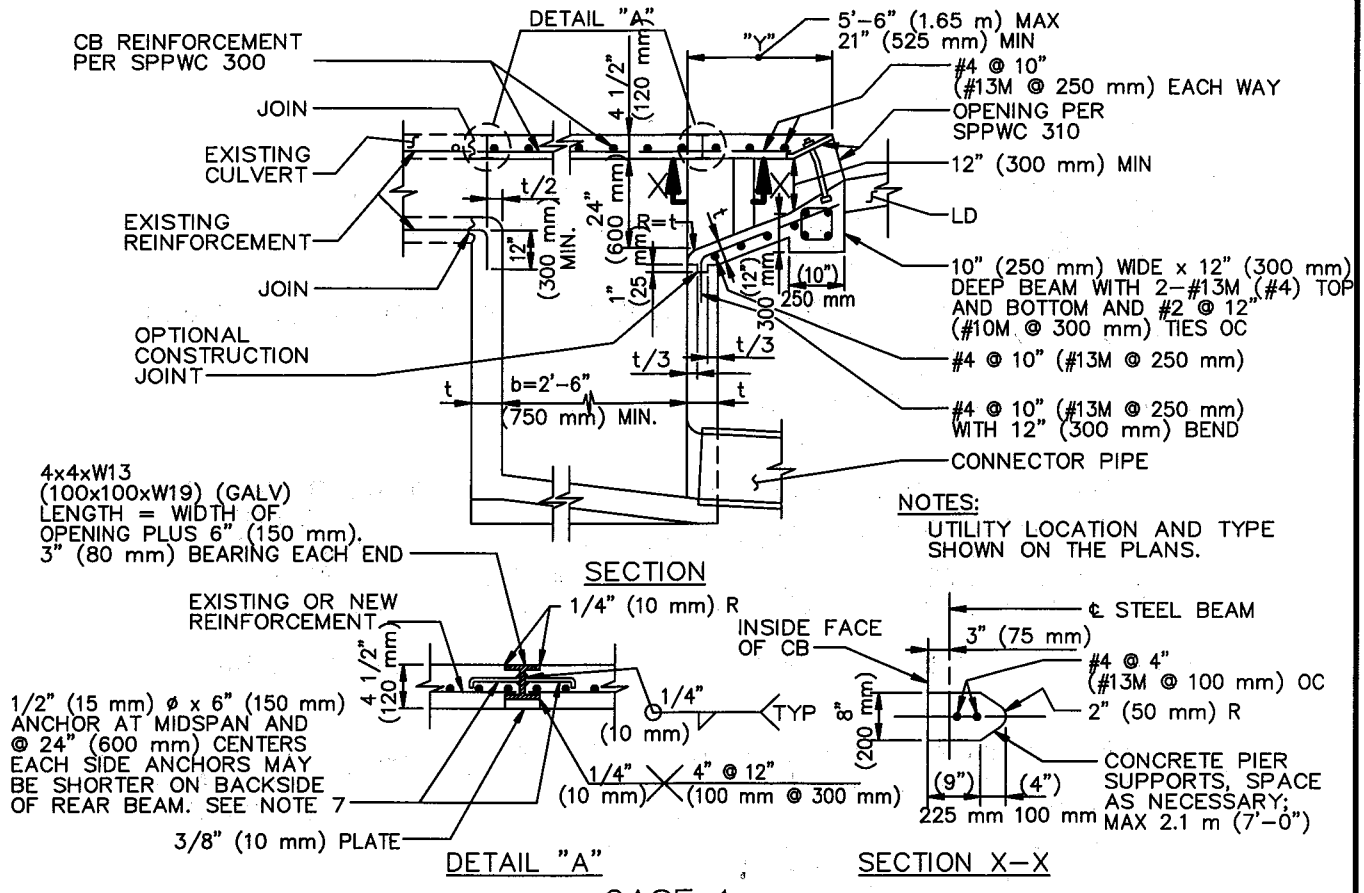

CASE 1
CATCH BASIN MODIFICATION WITH REAR CULVERT ENTRANCE AND/OR ENTRANCE PROJECTION

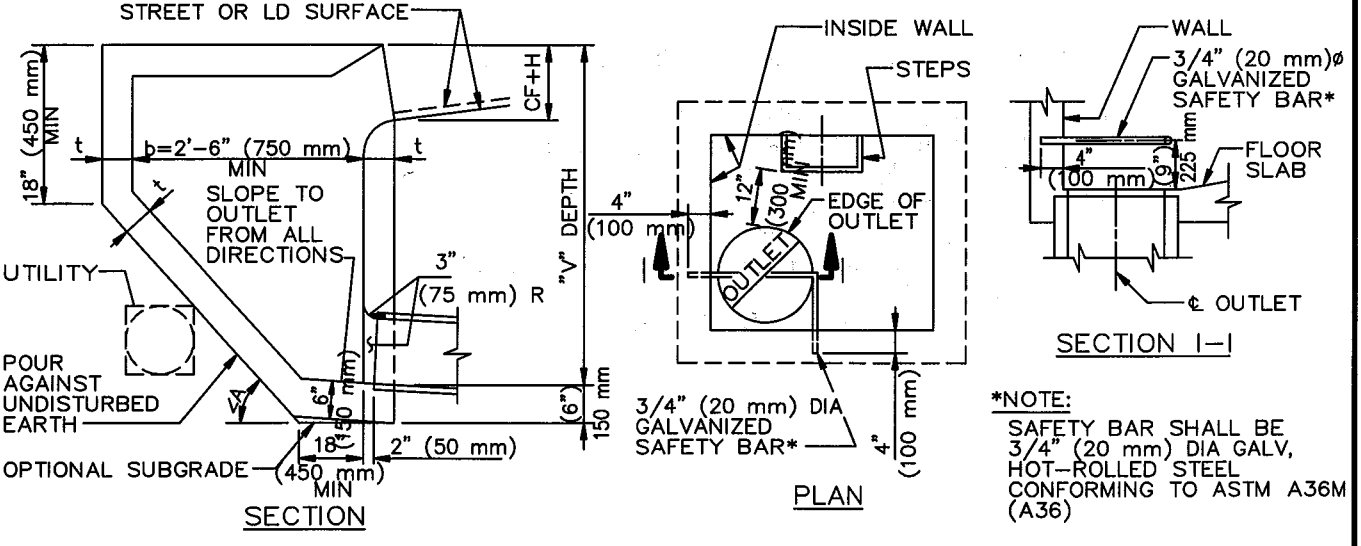

CASE 2
CATCH BASIN MODIFICATION TO AVOID EXISTING UTILITY

CASE 3
SAFETY BAR FOR DROP OUTLET CATCH BASIN

STANDARD PLANS FOR PUBLIC WORKS CONSTRUCTION

PROMULGATED BY THE PUBLIC WORKS STANDARDS INC. GREENBOOK COMMITTEE 1992 REV. 1993, 1996, 2009

MODIFICATIONS FOR SIDE OPENING CATCH-BASIN

USE WITH STANDARD SPECIFICATIONS FOR PUBLIC WORKS CONSTRUCTION

STANDARD PLAN 314-3

SHEET 1 OF 2

NOTES

1. MODIFICATIONS ARE TO BE USED AS REQUIRED BY THE PLANS. ANY ADDITIONAL CHANGES ARE SUBJECT TO THE APPROVAL OF THE ENGINEER.

2. DETAILS NOT SHOWN SHALL BE PER THE APPLICABLE CATCH BASIN STANDARD PLANS.

3. REFER TO THE PLANS FOR DETAILS OF THE UTILITY AND CULVERT.

4. INTERFERING PORTIONS OF EXISTING CULVERTS SHALL BE REMOVED ON A LINE NORMAL TO THE CULVERT CENTER LINE AND A PORTION OF THE CULVERT RECONSTRUCTED IF REQUIRED. SAWCUTTING SHALL BE USED TO PROVIDE A NEAT JOINT ON THE EXPOSED SURFACE AND TRANSVERSE STEEL SHALL BE RETAINED.

5. PLACE STEPS IN END WALL OF CATCH BASIN UNLESS OTHERWISE SHOWN.

6. WHEN REINFORCEMENT IS REQUIRED BY SPPWC 309, IT SHALL BE PLACED TO THE CONFIGURATION OF THE MODIFIED BASIN. IF ANGLE A EXCEEDS 45° THE SLOPING PORTION OF THE INVERT SHALL BE REINFORCED AS THE REAR WALL. LENGTH OF BARS SHALL BE INCREASED AS NECESSARY.

7. ELECTRICALLY WELDED STUDS 1/2" x 8" (15 mm x 200 mm), NELSON H4F OR EQUAL MAY BE USED IN LIEU OF THE DEFORMED BAR ANCHORS. IF THE TOP SLABS OF THE CATCH BASIN AND THE CULVERT ARE NOT IN THE SAME PLANE THE ANCHORS ON THE CULVERT SIDE SHALL BE OMITTED.

8. THE FOLLOWING SPPWC ARE INCORPORATED HEREIN:

   300 CURB OPENING CATCH BASIN
   308 MONOLITHIC CATCH BASIN CONNECTION
   309 CATCH BASIN REINFORCEMENT
   310 CATCH BASIN FACE PLATE ASSEMBLY AND PROTECTION BAR
   312 CATCH BASIN MANHOLE FRAME AND COVER
   635 STEEL STEP
   636 POLYPROPYLENE PLASTIC STEP

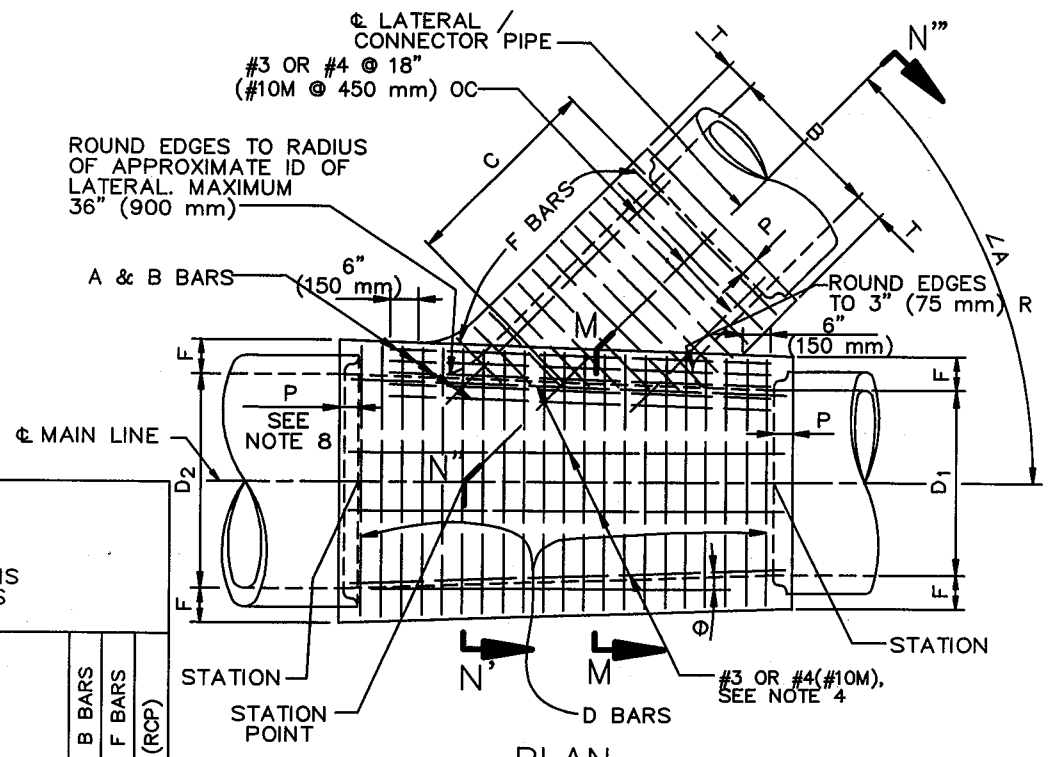

PLAN

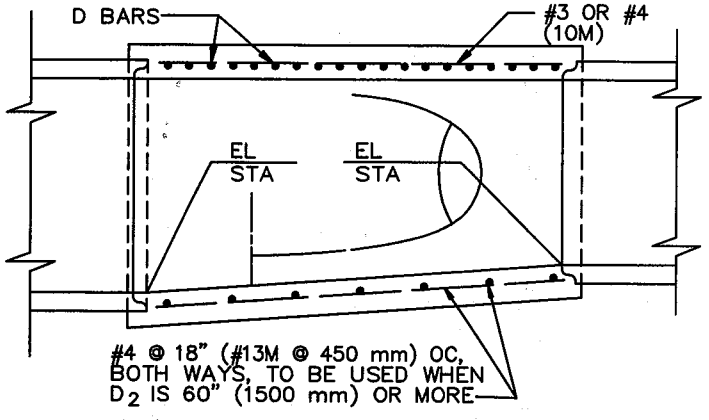

LONGITUDINAL SECTION

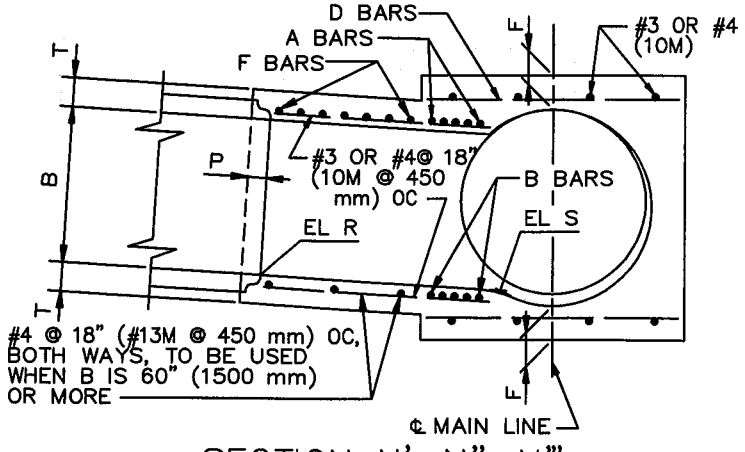

SECTION N'–N''–N'''
PROJECTED ON M–M–N'''

TABLE

FOR DIMENSIONS AND BAR SIZES

D_2 OR B (INCHES)	D_2 OR B (mm)	F OR T (INCHES)	F OR T (mm)	A OR B BARS	D OR F BARS	P (RCP)
12	300	4	110	#5@3" (#16M @ 75 mm) OC	#4@6" (#13M @ 150 mm) OC	5" (125 mm)
15	375	4 1/4	110			
18	450	4 1/2	120			
21	525	5	130			
24	600	5 1/4	140			
27	675	5 1/2	140			
30	750	6	160			
33	825	6 1/4	160			
36	900	6 1/2	170			
39	975	7	180			
42	1050	7 1/2	190	#6 @ 3" (#19M @ 75 mm) OC	#5 @ 6" (#16M @ 150 mm) OC	
45	1125	7 3/4	200			
48	1200	8	210			
51	1275	8 1/2	220			
54	1350	9	230			
57	1425	9 1/4	240			
60	1500	9 1/2	250			
63	1575	10	260			
66	1650	10 1/4	260			
69	1725	10 3/4	280			
72	1800	11	280			
78	1950	11 3/4	300			
84	2100	12 1/2	320			
90	2250	13 1/4	340	#7@3" (22M @ 75 mm) OC	#5@6" (19M @ 150 mm) OC	8" (200 mm)
96	2400	14	360			
102	2550	15 1/2	400			
108	2700	16	410			
114	2850	16 1/2	420			
120	3000	17	440			
126	3150	17	440			
132	3300	17 1/2	450			
138	3450	17 1/2	450			
144	3600	18	460			

STANDARD PLANS FOR PUBLIC WORKS CONSTRUCTION

PROMULGATED BY THE PUBLIC WORKS STANDARDS INC. GREENBOOK COMMITTEE 1992 REV. 1995, 2009

TRANSITION STRUCTURE PIPE TO PIPE

USE WITH STANDARD SPECIFICATIONS FOR PUBLIC WORKS CONSTRUCTION

STANDARD PLAN 340–2

SHEET 1 OF 2

NOTES

1. THE HORIZONTAL ANGLE OF CONVERGENCE OR DIVERGENCE, θ, SHALL NOT EXCEED 5° 45'.

2. VALUES FOR A, B, C, D_1 AND D_2 ARE SHOWN ON THE PLANS. ELEVATION R AND ELEVATION S ARE SHOWN WHEN REQUIRED BY NOTE 10.

3. FLOOR OF STRUCTURE SHALL BE STEEL TROWELED TO SPRING LINE.

4. REINFORCEMENT STEEL SHALL CONFORM TO ASTM A 615 (A 615 M), GRADE 300 (40), AND SHALL TERMINATE 1 1/2" (40 mm) CLEAR OF CONCRETE SURFACES UNLESS OTHERWISE SHOWN. LONGITUDINAL BARS SHALL BE #3 OR #4 @ 18" (#10M @ 450 mm) OC OR LESS.

5. ELEVATION S APPLIES AT INSIDE WALL OF STRUCTURE.

6. TRANSITION STRUCTURE SHALL BE POURED IN ONE CONTINUOUS OPERATION, EXCEPT THAT THE CONTRACTOR SHALL HAVE THE OPTION OF PLACING AT THE SPRING LINE A CONSTRUCTION JOINT LONGITUDINAL KEYWAY.

7. THE LENGTH OF THE STRUCTURE MAY BE INCREASED AT THE OPTION OF THE CONTRACTOR TO MEET RCP ENDS, USING D BARS, LONGITUDINAL AND BOTTOM REINFORCEMENT IN EXTENDED PORTION OF SAME DIAMETER AND SPACING AS SPECIFIED IN THE TABLE, BUT ANY CHANGE IN THE LOCATION OF SPUR MUST BE APPROVED BY THE ENGINEER.

8. EMBEDMENT P SHALL BE AS SPECIFIED IN THE TABLE, UNLESS OTHERWISE SHOWN ON THE PLANS.

9. WHEN THERE IS NO SPUR REQUIRED, A & B BARS SHALL BE OMITTED.

10. WHEN ELEVATION R AND ELEVATION S ARE NOT SHOWN ON PLANS, INLET PIPE SHALL ENTER MAIN LINE RADIALLY. WHEN INLET PIPE ENTERS MAIN LINE OTHER THAN RADIALLY, ELEVATION S SHALL BE SHOWN ON PLANS, AND INLET PIPE SHALL BE LAID ON A STRAIGHT GRADE FROM ELEVATION S TO CATCH BASIN OR GRADE BREAK IN INLET LINE. ELEVATION R SHALL BE SHOWN ON THE PLANS <u>ONLY</u> WHEN STUB IS TO BE PROVIDED IN MAIN LINE FOR FUTURE CONSTRUCTION OF INLET PIPE.

11. THE MAXIMUM COVER ABOVE THIS STRUCTURE SHALL BE 25' (7.5 m). IF THE COVER EXCEEDS 25' (7.5 m') A SPECIAL STRUCTURE SHALL BE DESIGNED FOR THE COVER AND DETAILED ON THE PLANS.

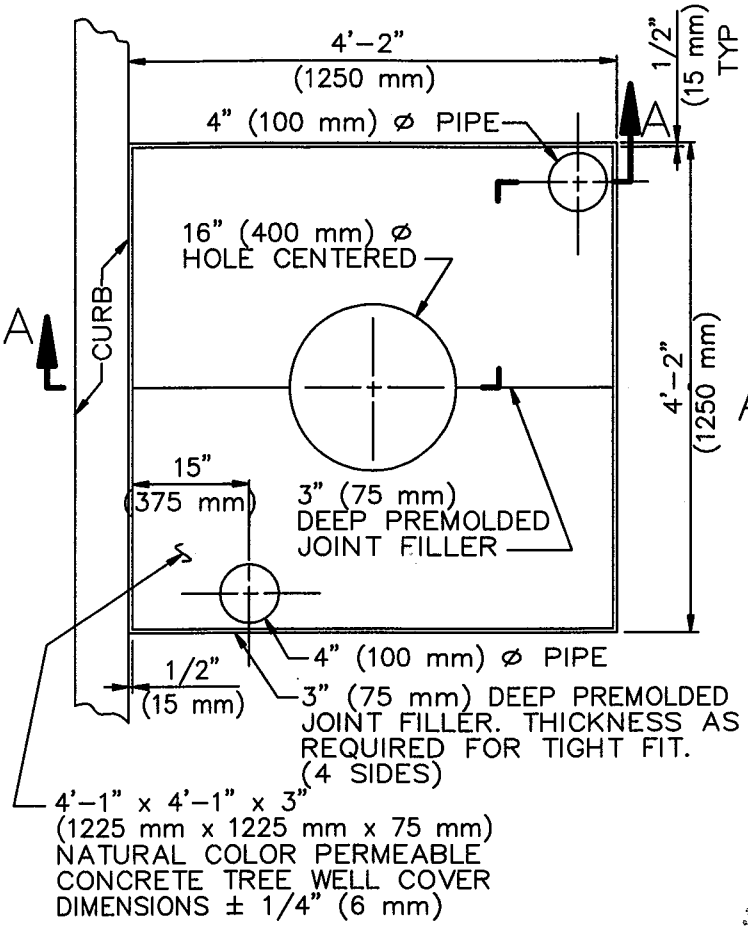

CASE 1

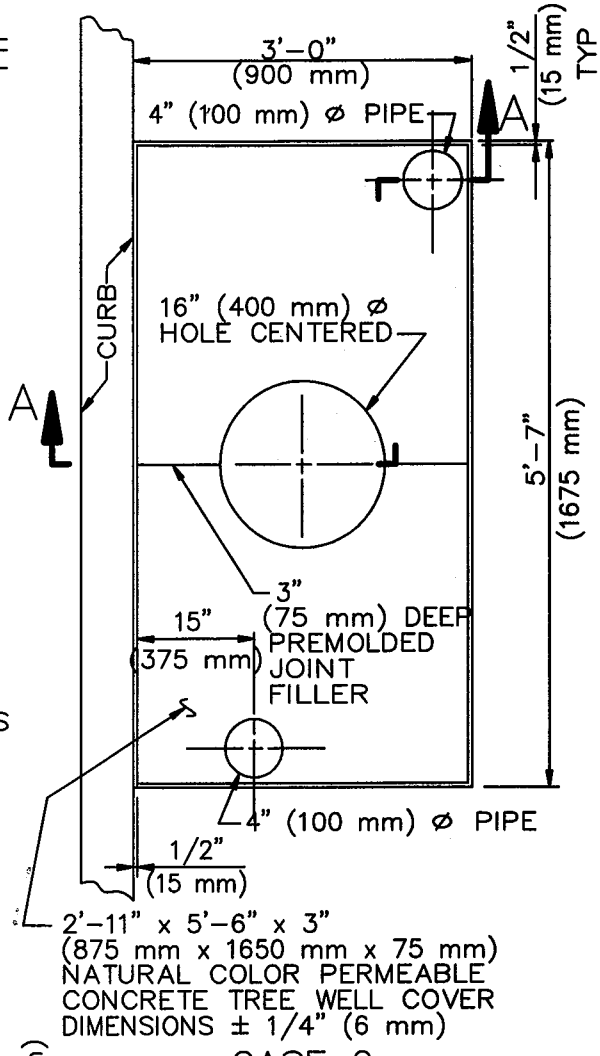

CASE 2

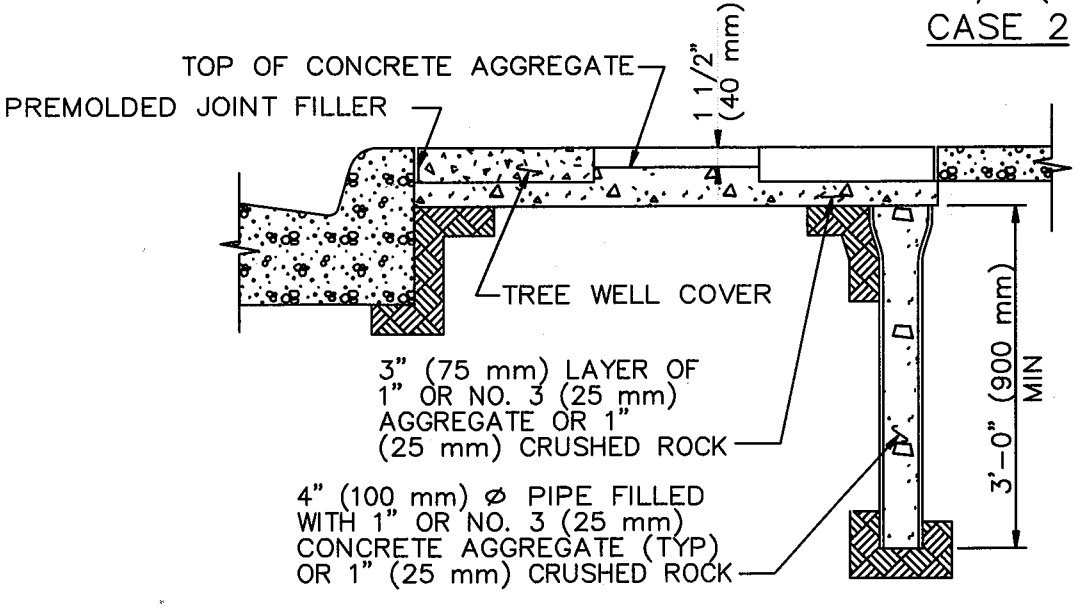

SECTION A–A

NOTE:

SEE SHEETS 3 AND 7 FOR NOTES PERTAINING TO THIS SHEET.

TYPE 1

STANDARD PLANS FOR PUBLIC WORKS CONSTRUCTION		
PROMULGATED BY THE PUBLIC WORKS STANDARDS INC. GREENBOOK COMMITTEE 1984 REV. 1996, 2005, 2009	**TREE WELL**	STANDARD PLAN **519–3**
	USE WITH STANDARD SPECIFICATIONS FOR PUBLIC WORKS CONSTRUCTION	SHEET 1 OF 7

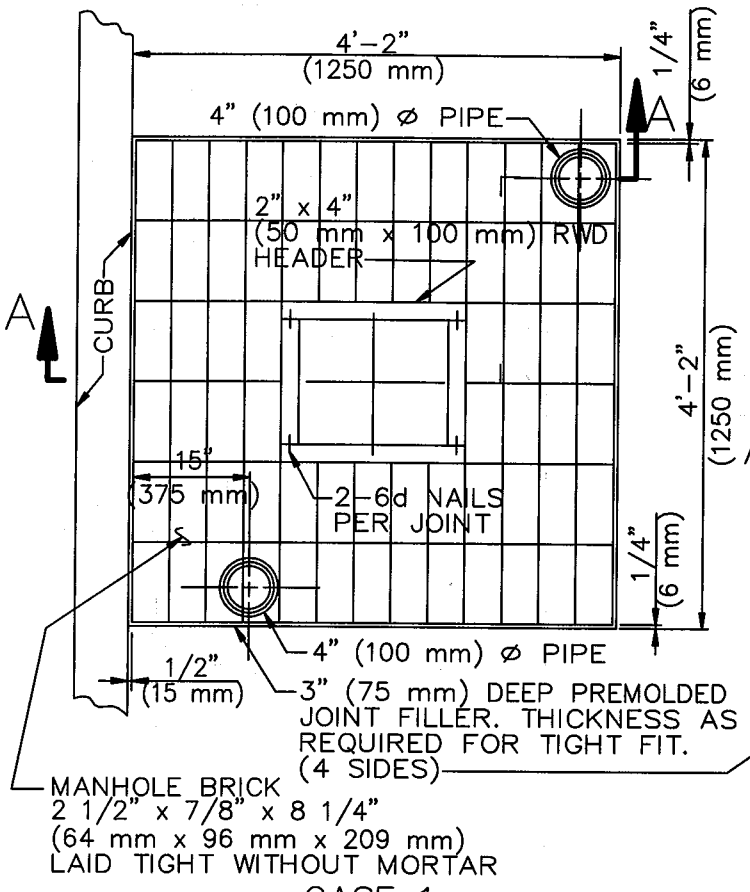

CASE 1

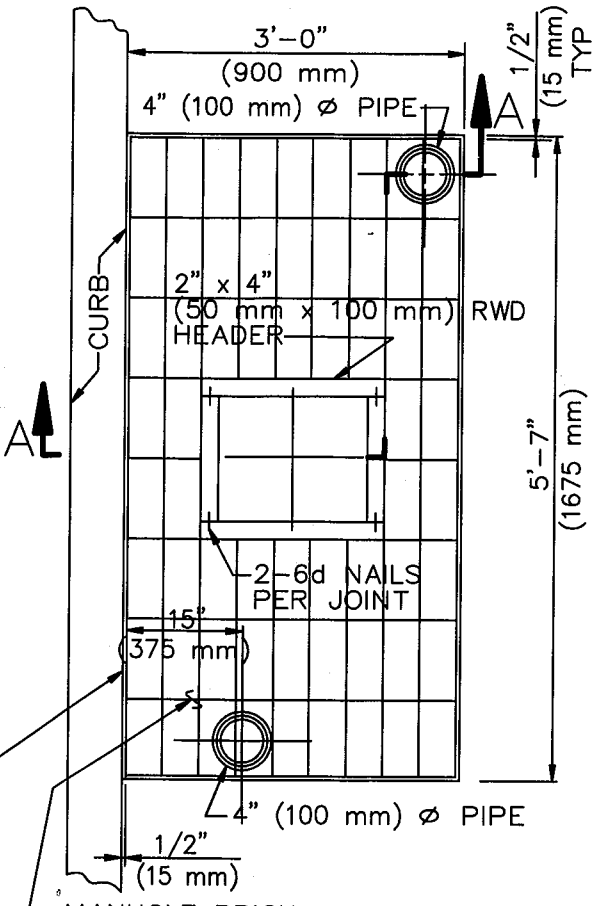

CASE 2

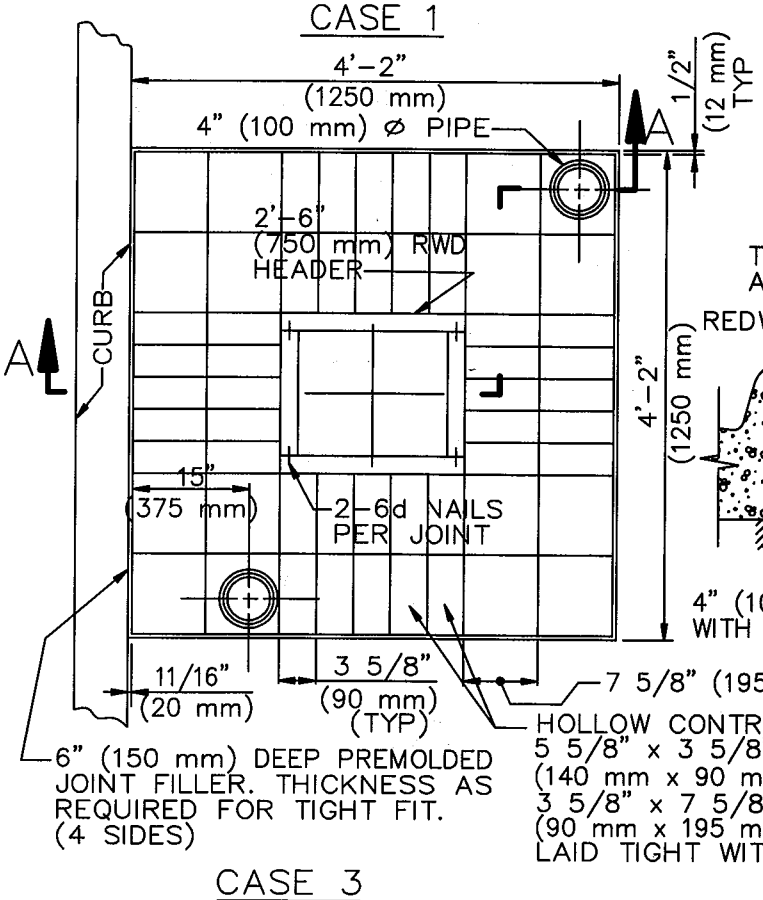

CASE 3

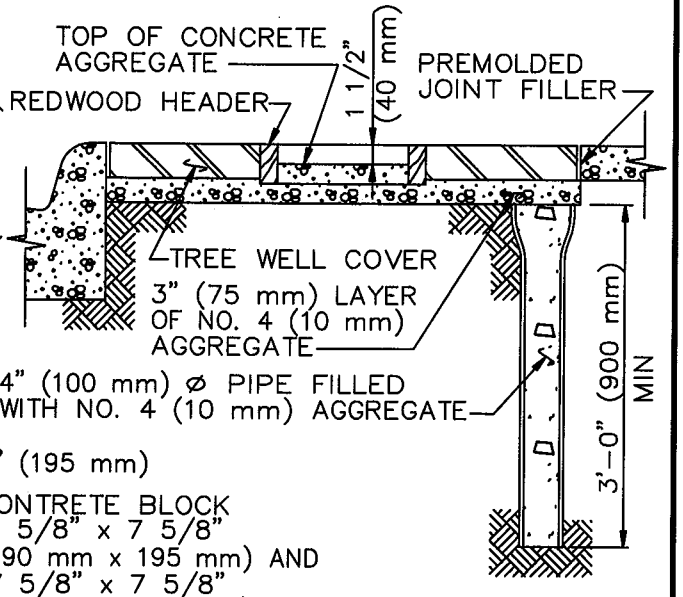

SECTION A-A

NOTE:

SEE SHEETS 3 AND 7 FOR NOTES PERTAINING TO THIS SHEET.

TYPE 2

STANDARD PLANS FOR PUBLIC WORKS CONSTRUCTION

TREE WELL

STANDARD PLAN

519-3

SHEET 2 OF 7

NOTES FOR TYPE 1 TREE WELL

1. THE COVER SHALL BE MADE OF PERMEABLE CONCRETE WITH A MINIMUM COMPRESSIVE STRENGTH OF 1200 PSI (8.5 MPa) AND SHALL BE CAST-IN PLACE OR PRECAST "AGRIPERM" OR EQUIVALENT. CAST-IN-PLACE CONCRETE SHALL CONSIST OF ONE PART CEMENT TO FOUR PARTS 3/8" (10 mm) GRAVEL AND APPROXIMATE 4 GALLONS (15 LITERS) OF WATER PER 94 LB (42.5 kg) OF CEMENT. THE GRAVEL SHALL BE CLEAN WITH FINES REMOVED. THE CONCRETE MIXTURE SHALL BE DEPOSITED AS NEAR AS POSSIBLE TO ITS FINAL LOCATION. THE EXCESS CONCRETE SHALL BE RODDED OFF IN A SAWING MOTION. A SURPLUS OF CONCRETE SHOULD BE MAINTAINED AGAINST THE FRONT SURFACE OF THE SCREED IN ORDER THAT LOW AREAS WILL BE FILLED AS THE SCREED PASSES OVER. RODDING SHALL BE HELD TO A MINIMUM. AFTER THE SURFACE IS FLAT NO OTHER FINISHING WILL BE REQUIRED. CURING COMPOUND TO WHICH WATERPROOFING MATERIALS HAVE BEEN ADDED WILL NOT BE PERMITTED.
2. EXISTING SIDEWALKS SHALL BE CAREFULLY SAWCUT PREPARATORY TO INSTALLATION OF TREE WELL COVERS. SAWCUT OVER-RUNS SHALL BE CLEANED AND FILLED WITH EPOXY APPROVED BY THE ENGINEER AND FINISHED TO SIDEWALK GRADE.
3. THE PIPE MAY BE CIP, ACP, VCP, ABS, PVC, GALV STL OR ASPHALT IMPREGNATED FIBER DUCT AND IT MAY BE BELL OR PLAIN END.
4. AFTER ALL OTHER WORK PERTINENT TO PLANTING HAS BEEN COMPLETED, EACH TREE SHALL BE WATERED IMMEDIATELY WITH A MINIMUM OF 20 GALLONS (75 LITERS) OF WATER, AND REPEATED 2 TIMES IN THE NEXT 3 DAYS, AFTER THE TREE HAS BEEN WATERED AND THE SOIL IS SUFFICIENTLY DRY, THE SOIL SHALL BE GRADED AND TAMPED. THE 3" (75 mm) LAYER OF AGGREGATE SHALL BE PLACED AND GRADED TO ACCEPT THE TREE WELL COVER FIRMLY, WITHOUT ROCKING, AND FLUSH WITH THE TOP SURFACE OF THE SIDEWALK. THE PREMOLDED JOINT FILLER SHALL BE CAREFULLY PLACED TO INSURE A TIGHT FIT WITH THE TOP OF THE JOINT FILLER FLUSH WITH THE ADJACENT SIDEWALK.
5. IF CAST-IN-PLACE, THERE SHALL BE A 3 MIL (0.075 mm) PLASTIC LINER BETWEEN WALK AND AGGREGATE

NOTES FOR TYPE 2 TREE WELL

1. EXISTING SIDEWALK SHALL BE CAREFULLY SAWCUT PREPARATORY TO LAYING OF CONCRETE BLOCKS OR BRICK. SAWCUT OVER-RUNS SHALL BE CLEANED AND FILLED WITH EPOXY APPROVED BY THE ENGINEER AND FINISHED TO SIDEWALK GRADE.
2. THE PIPE MAY BE CIP, ACP, VCP, ABS, PVC, GALV STL OR ASPHALT IMPREGNATED FIBER DUCT, AND IT MAY BE BELL OR PLAIN END.
3. NAILS SHALL BE GALVANIZED STEEL BOX.
4. AFTER ALL OTHER WORK PERTINENT TO PLANTING HAS BEEN COMPLETED, EACH TREE SHALL BE WATERED IMMEDIATELY WITH A MINIMUM OF 20 GALLONS (75 LITERS) OF WATER AND REPEATED 2 TIMES IN THE NEXT 3 DAYS. AFTER THE WATER HAS SETTLED AND THE SOIL IS SUFFICIENTLY DRY, THE SOIL SHALL BE GRADED AND TAMPED. A 3" (75 mm) LAYER OF AGGREGATE SHALL BE PLACED AND GRADED TO ACCEPT BRICKS FLUSH WITH THE TOP SURFACE OF THE SIDEWALK. THE PREMOLDED JOINT FILLER AND HEADERS SHALL BE CAREFULLY PLACED TO INSURE A TIGHT FIT WITH THE TOP OF THE JOINT FILLER FLUSH WITH THE ADJACENT SIDEWALK.

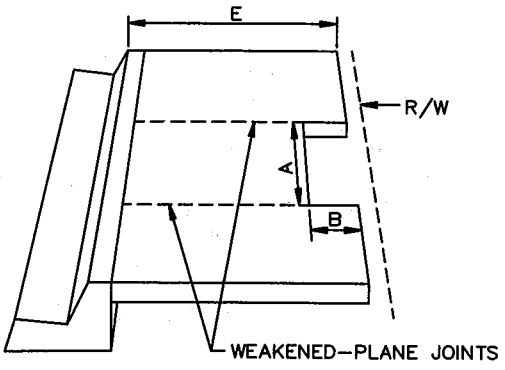

1 COVER REQUIRED

CASE 1: 3' x 18" (900 mm x 450 mm) TREE WELL
CASE 2: 4' x 24" (1200 mm x 600 mm) TREE WELL

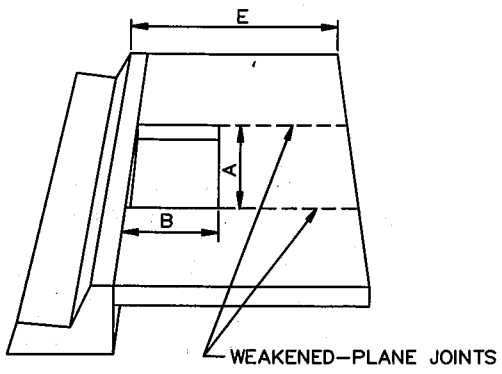

2 COVERS REQUIRED

CASE 3: 3' x 3' (900 mm x 900 mm) TREE WELL
CASE 4: 4' x 4' (1200 mm x 1200 mm) TREE WELL

TREE WELLS

CASE	A	B	C	D	E	R
1	3'–0" (900 mm)	18" (450 mm)	2'–11" (975 mm)	17 1/2" (450 mm)	5'–0" (1500 mm) MIN	9" (225 mm)
2	4'–0" (1200 mm)	(24") (600 mm)	3'–11" (1175 mm)	23 1/2" (600 mm)	5'–6" (1650 mm) MIN	15" (375 mm)
3	3'–0" (900 mm)	3'–0" (900 mm)	2'–11" (975 mm)	17 1/2" (450 mm)	6'–6" (1950 mm) MIN	9" (225 mm)
4	4'–0" (1200 mm)	4'–0" (1200 mm)	3'–11" (1175 mm)	23 1/2" (600 mm)	7'–6" (2250 mm) MIN	15" (375 mm)

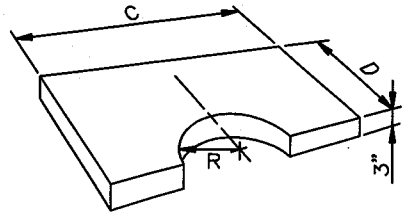

POROUS TREE WELL COVER (SEE NOTE 2)

NOTES FOR TYPE 3 TREE WELL

1. SEE SHEET 7 FOR NOTES PERTAINING TO THE SHEET.
2. PERMEABLE (POROUS) CONCRETE TREE WELL COVER:
   THE COVER SHALL BE MADE OF PERMEABLE CONCRETE WITH A MINIMUM COMPRESSIVE STRENGTH OF 1200 PSI (8.5 MPa) AND SHALL BE PRECAST & REINFORCED WITH 2 1/4" X 2 1/4" (60 mm x 60 mm) 16 GAUGE WIRE MESH. CONCRETE SHALL CONSIST OF ONE PART CEMENT TO FOUR PARTS 3/8" (10 mm) GRAVEL AND APPROXIMATELY FOUR GALLONS (15 LITERS) OF WATER PER SACK OF CEMENT. THE GRAVEL SHALL BE CLEAN WITH FINES REMOVED. CURING COMPOUND TO WHICH WATER–PROOFING MATERIALS HAVE BEEN ADDED WILL NOT BE PERMITTED.

TYPE 3

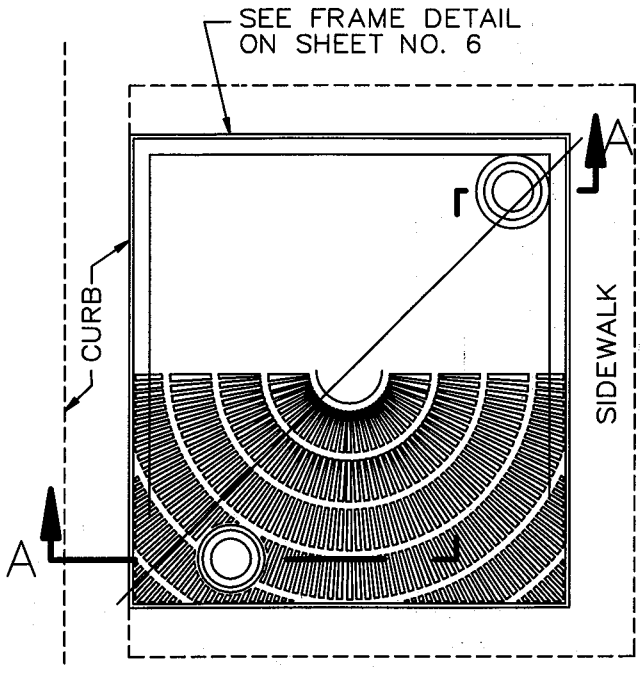

PLAN

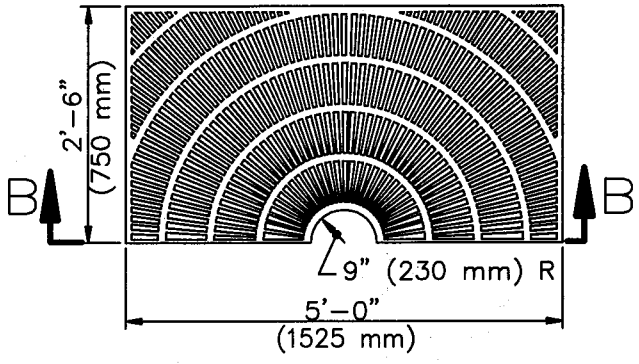

GRATE PLAN

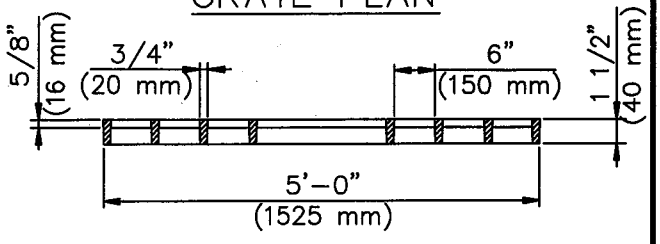

SECTION B-B

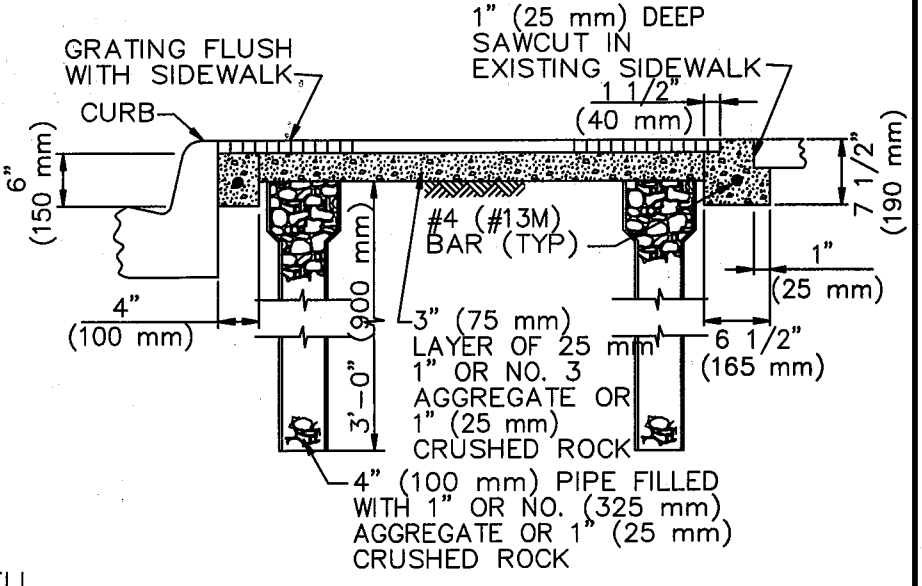

SECTION A-A

NOTES FOR TYPE 4 TREE WELL

1. GRATE MATERIAL TO BE CAST IRON.
2. GRATE PATTERN AS SPECIFIED ON PLANS OR IN SPECIFICATIONS.
3. EXISTING SIDEWALK SHALL BE CAREFULLY SAWCUT PREPARATORY TO LAYING OF FRAME. SAWCUT OVER-RUNS SHALL BE CLEANED AND FILLED WITH EPOXY APPROVED BY THE ENGINEER AND FINISHED TO SIDEWALK GRADE.
4. THE PIPE MAY BE CIP, ACP, VCP, ABS, PVC, GALV STL OR ASPHALT IMPREGNATED FIBER DUCT, AND IT MAY BE BELL OR PLAIN END.
5. AFTER ALL OTHER WORK PERTINENT TO PLANTING HAS BEEN COMPLETED. EACH TREE SHALL BE WATERED IMMEDIATELY WITH A MINIMUM OF 75 LITERS (20 GALLONS) OF WATER AND REPEATED 2 TIMES IN THE NEXT 3 DAYS. AFTER THE WATER HAS SETTLED AND THE SOIL IS SUFFICIENTLY DRY, THE SOIL SHALL BE GRADED AND TAMPED AND 3" (75 mm) CONCRETE AGGREGATE SHALL BE PLACED AND GRADED.

TYPE 4

STANDARD PLANS FOR PUBLIC WORKS CONSTRUCTION	STANDARD PLAN
TREE WELL	**519-3**
	SHEET 5 OF 7

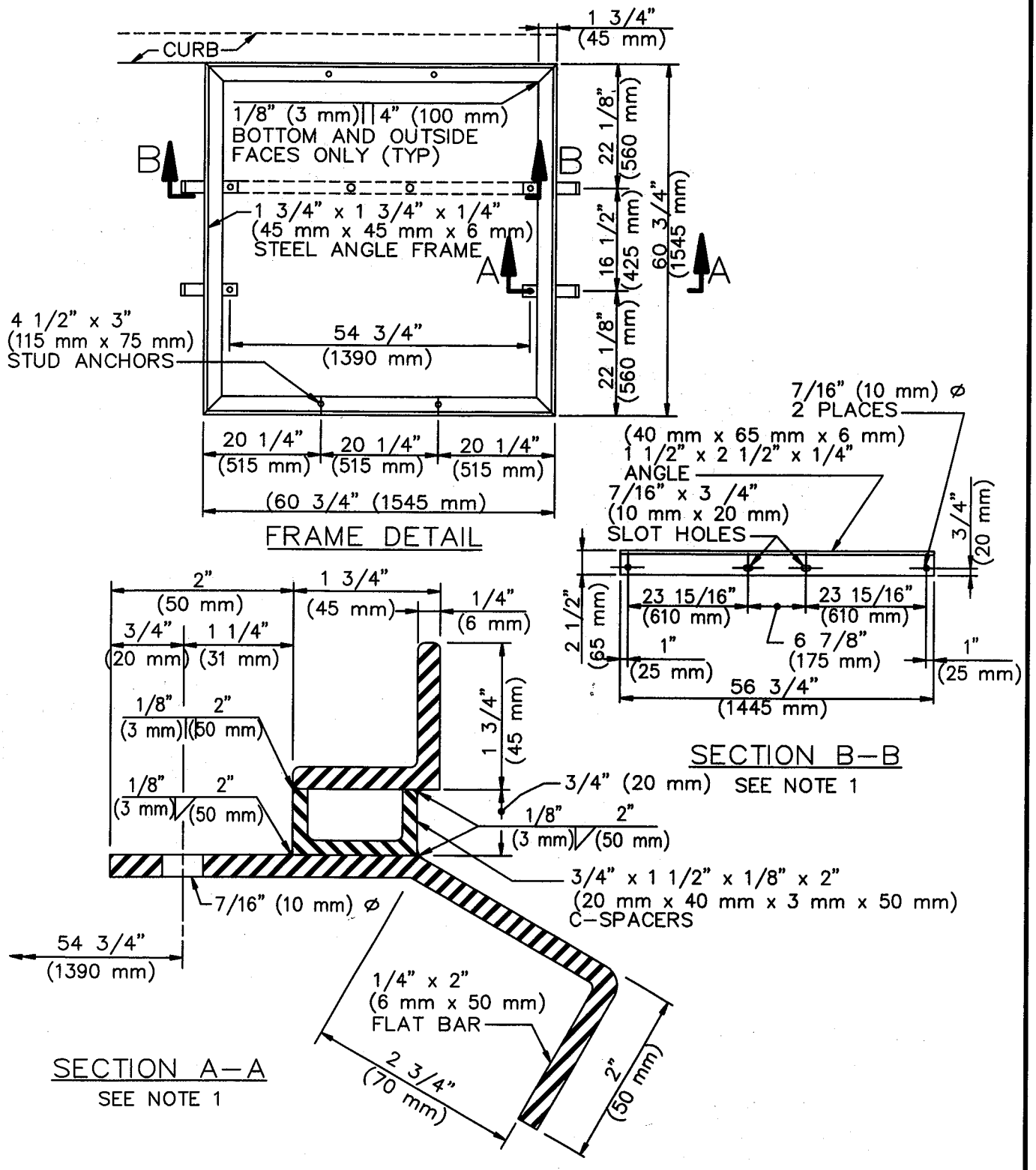

NOTES FOR TYPE 4 TREE WELL

1. SECTION A AND B REQUIRED ONLY WHEN TREE GUARD IS REQUIRED.
2. ALL METAL PARTS AND FRAME SHALL CONFORM TO THE SSPWC AND SHALL BE HOT DIP GALVANIZED AFTER FABRICATION.
3. SEE SHEET 7 FOR NOTES PERTAINING TO THIS SHEET.

TYPE 4

STANDARD PLANS FOR PUBLIC WORKS CONSTRUCTION	STANDARD PLAN
TREE WELL	**519–3**
	SHEET 6 OF 7

GENERAL NOTES FOR ALL FOUR TYPES OF TREE WELL

1. TREE WELLS SHOULD BE SPACED APPROXIMATELY 50' (15 m) APART, BUT NOT LESS THAN ONE PER RESIDENTIAL LOT.

2. LOCATION OF TREE WELLS SUBJECT TO THE FOLLOWING MINIMUM CLEARANCES:
   A. 50' (15 m) FROM BCR ON THE APPROACH TO AN INTERSECTION AND 15' (4.5 m) FROM THE ECR ON THE EXIT SIDE.
   B. 20' (6 m) FROM LIGHT STANDARDS.
   C. 10' (3 m) FROM FIRE HYDRANTS AND DRIVEWAYS.
   D. 5' (1.5 m) FROM HOUSE WALKS AND UTILITY METERS.

3. COVERS SHALL BE COLORED BUFF USING AN ACCEPTABLE COLORING AGENT.

4. TREE WELL SHALL BE BACKFILLED WITH CLEAN DIRT FLUSH WITH ADJACENT WALK UNTIL TREE IS PLANTED.

5. DO NOT USE CASE 1 OR CASE 2 TREE WELL WHERE THERE IS AN EXISTING FENCE OR WALL AT THE R/W LINE.

6. TOP OF TREE WELL COVER SHALL BE FLUSH WITH ADJACENT SIDEWALK.

7. LOCATION OF TREE SUBJECT TO CHANGE AT THE DIRECTION OF THE ENGINEER.

Table 1-2-2. Recommended Ballast Gradations

Size No. (See Note 1)	Nominal Size Square Opening	Percent Passing									
		3″	2½″	2″	1½″	1″	¾″	½″	d″	No.4	No. 8
24	2½″- ¾″	100	90-100		25-60		0-10	0-5	–	–	–
25	2½″ - d″	100	80-100	60-85	50-70	25-50	–	5-20	0-10	0-3	–
3	2″ - 1″	–	100	95-100	35-70	0-15	–	0-5	–	–	–
4A	2″ - ¾″	–	100	90-100	60-90	10-35	0-10	–	0-3	–	–
4	1½″ - ¾″	–	–	100	90-100	20-55	0-15	–	0-5	–	–
5	1″ - d″	–	–	–	100	90-100	40-75	15-35	0-15	0-5	–
57	1″ - No. 4	–	–	–	100	95-100	–	25-60	–	0-10	0-5
Note 1: Gradation Numbers 24, 25, 3, 4A and 4 are main line ballast materials. Gradation Numbers 5 and 57 are yard ballast materials.											

SECTION 2.5 PRODUCTION AND HANDLING

2.5.1 GENERAL (1988)

a. The aggregate production facility shall be of such a design to permit production and or blending without excessive working of the materials and the facility must be approved by the purchaser. The capacity of the production facility should be adequate to efficiently produce the anticipated daily loadings providing sufficient stockpiles to facilitate loadings without any delays.

b. Blending, stockpiling and other production and handling operations shall be managed by the producer to minimize segregation of the finished product. Stockpiling operations shall minimize as practical the breakage or excessive fall in stockpiling operations and the movement of wheeled or tracked machines over stockpiled materials shall be limited.

c. Processed ballast shall be washed and/or rescreened as necessary to remove fine particle contamination as defined by the specification or as directed by the individual railway company prior to stockpiling in operations using stockpiles or immediately prior to loading operations.

SECTION 2.6 LOADING (1988)

a. The manufacturer shall arrange the required supply of railcars, unless the purchase arrangement provides otherwise. The manufacturer shall assure the fitness of the cars for loading of the prepared materials, arranging to clean cars of deleterious materials, plug leaks and other like operations, as necessary.

b. Unless otherwise specified, rail cars shall be ballast cars furnished by the purchaser or hopper-type, or as designated by the Engineer.

© 2010, American Railway Engineering and Maintenance-of-Way Association

Table 8-1-2. Blended Hydraulic Cements ASTM C595

Type	Description
Portland Blast-Furnace Slag Cement	
Type IS	Portland blast-furnace slag cement for use in general concrete construction.
Type IS( )	Modified sulfate resistant (MS), air-entrainment (A), or moderate heat of hydration (MH), or any combination may be specified by adding the appropriate suffixes.
Portland-Pozzolan Cement	
Type IP	Portland-pozzolan cement for use in general concrete construction.
Type IP( )	Moderate sulfate resistance (MS), air-entrainment (A), or moderate heat of hydration (MH), or any combination may be specified by adding the appropriate suffixes.
Type P	Portland-pozzolan cement for use in concrete construction where high early strengths are not required.
Type P( )	Modified sulfate resistance (MS), air-entrainment (A), or low heat of hydration (LH), or any combination may be specified by adding the appropriate suffixes.
Pozzolan-Modified Portland Cement	
Type I(PM)	Pozzolan-modified portland cement for use in general concrete construction.
Type I(PM)( )	Modified sulfate resistance (MS), air-entrainment (A), or moderate heat of hydration (MH), or any combination may be specified by adding the appropriate suffixes.
Slag-Modified Portland Cement	
Type I(SM)	Cement for use in general concrete construction.
Type I(SM)( )	Modified sulfate resistance (MS), air-entrainment (A), or moderate heat of hydration (MH), or any combination may be specified by adding the appropriate suffixes.

1.2.3 QUALITY, SAMPLING AND TESTING (2004)

The quality of the cement and the methods of sampling and testing shall meet the requirements of the appropriate ASTM Standard Specification or Method of Test.

SECTION 1.3 OTHER CEMENTITIOUS MATERIALS

1.3.1 GENERAL (2004)

When using cementitious materials other than portland cement, reference should also be made to the provisions of Section 1.12 Proportioning; Section 1.13 Mixing; Section 1.14 Depositing Concrete; Section 1.16 Concrete in Sea Water; Section 1.17 Concrete in Alkali Soils or Alkali Water; Section 1.18 Curing; and Section 1.20 Unformed Surface Finish.

1.3.2 ACCEPTABILITY (2004)

Cementitious materials other than portland cement will be permitted only if approved in writing by the Engineer of the Railroad Company.

© 2010, American Railway Engineering and Maintenance-of-Way Association

1.3.3 SPECIFICATIONS (2004)[1]

The specifications listed in Articles 1.3.3.1 and 1.3.3.2 apply to the use of other cementitious materials, either supplied in blended form with portland cement or added separately at the time of mixing.

1.3.3.1 ASTM C595 Standard Specification for Blended Hydraulic Cements; and ASTM C618 Standard Specification for Fly Ash and Raw or Calcined Natural Pozzolan for Use as a Mineral Admixture in Portland Cement Concrete, and the following:

a. Silica Fume - ASTM C1240 Standard Specification for Silica Fume for Use in Hydraulic-Cement Concrete, Mortar, and Grout, of the following types:

   (1) As-produced silica fume -- in its original form of an extremely fine powder

   (2) Slurried silica fume -- in a water base, containing 40 to 60% silica fume by mass

   (3) Densified silica fume -- a compacted form of as-produced silica fume

b. Fly Ash - ASTM C618 Standard Specification for Coal Fly Ash and Raw or Calcined Natural Pozzolan for Use as a Mineral Admixture in Concrete, of the following Classes:

   (1) Class F -- Normally produced from high energy coals such as bituminous and anthracite coals, but sometimes produced with sub-bituminous and lignite coals

   (2) Class C -- Normally produced from sub-bituminous and lignite coals

   (3) Class N – Natural materials such as highly reactive volcanic ash, metakaolin (and other calcined clays), diatomaceous earths, calcined shales, and other reactive materials

1.3.3.2 Ground Granulated Blast-Furnace Slag - ASTM C989 Standard Specification for Ground Granulated Iron Blast-Furnace Slag for Use in Concrete and Mortars.

1.3.4 MATERIALS NOT INCLUDED IN THIS RECOMMENDED PRACTICE (2004)

The following materials are not included in this recommended practice:

a. Pelletized silica fume -- consisting of hard pellets, not presently being used as an additive for concrete.

b. Types of slag not produced in the iron making process.

c. Types ‘S’ and ‘S(A)’ blended hydraulic cements containing ground granulated blast-furnace slag, as defined in ASTM C595.

d. Blended cements containing ground granulated blast-furnace slag blended with hydrated lime.

1.3.5 DOCUMENTATION (2004)

a. Each shipment of fly ash or silica fume or ground granulated blast-furnace slag used on a project shall have a certificate of compliance which includes the following:

   (1) Name of supplier

[1] See C - Commentary

© 2010, American Railway Engineering and Maintenance-of-Way Association

(2) Consignee and destination of the shipment

(3) Vehicle identification number

(4) A unique unrepeated order number or other identification number for each shipment

(5) Source

b. Each shipment of fly ash shall also include a certificate of compliance indicating the Class (either Class C or Class F), with certified test numbers demonstrating that the material meets ASTM C618.

c. Each shipment of silica fume shall also include a certificate of compliance demonstrating that it meets the requirements of ASTM C1240.

d. Each shipment of ground granulated blast-furnace slag shall also include a certificate of compliance indicating its grade (either Grade 80, 100 or 120), with certified test numbers demonstrating that it meets the requirements of ASTM C989.

SECTION 1.4 AGGREGATES

1.4.1 GENERAL (2004)

1.4.1.1 Specifications

Except as specified otherwise herein, all aggregates shall conform to the requirements of ASTM C33, Standard Specification for Concrete Aggregates.

1.4.1.2 Sampling and Testing

a. Representative samples shall be selected and sent to the testing laboratory at frequent intervals as directed by the Engineer. Aggregates may not be used until the samples have been tested by the laboratory and approved by the Engineer.

b. Sampling and testing shall be in accordance with ASTM C33 and the Standard Specifications and Methods of Test of ASTM - International found in Table 8-1-3.

Table 8-1-3. Sampling and Testing Methods in Addition to those of ASTM C33

Type	ASTM Designation
Surface Moisture in Fine Aggregate	C70
Specific Gravity and Absorption of Coarse Aggregate	C127
Specific Gravity and Absorption of Fine Aggregate	C128
Standard Sand	C778

c. The required tests shall be made on test samples that comply with requirements of the designated test methods and are representative of the grading that will be used in the concrete. The same test sample may be used for sieve analysis and for determination of material finer than the No. 200 (75 μm) sieve. Separated sizes from the sieve analysis may be used in preparation of samples for soundness or abrasion tests. For

© 2010, American Railway Engineering and Maintenance-of-Way Association

NOTE: Pretensioned, prestressed ties that have been tested after being in service for 40+ years in extreme environmental conditions show no evidence of corrosion to tendons inside the exterior surface of the tie. No evidence suggests that end treatment is necessary to protect pretensioned tendons.

4.3.2.12 Tolerances for Placing Reinforcement

a. Placement tolerance for reinforcing steel is important to ensure that flexural strength, minimum cover, and electrical requirements are achieved.

   The tolerance for depth of placement for conventional reinforcing steel shall be +/- 1/8 inch (+/- 3.18 mm). The tolerance for placement of prestressing steel shall be +/- 1/8 inch (+/- 3.18 mm) vertical and +/- 1/4 inch (+/- 6.4 mm) horizontal. Greater tolerances are allowable, provided the Supplier can show that the tie has adequate flexural strength (with even distribution of tendons), minimum cover is not compromised, and there are no electrical shorts.

b. The tolerance for longitudinal location of bends in reinforcing bars shall be ±2 inches (50 mm).

c. The tolerance for the location of ends of reinforcing bars shall be ±1/2 inch (±13 mm).

4.3.2.13 Surface Finish

a. The top and side surfaces of the ties shall present a smooth, uniform appearance. A random scattering of surface voids will not be cause for rejection. Heavy concentrations of surface voids or evidence of improper mixing, vibrating or curing will be cause for rejection.

b. Occasional spalling of a small portion of rail seat shoulders may occur during the stripping operation. Such spalling will not be cause for rejection unless it involves that portion of a shoulder against which the heel of rail fastening clip bears.

c. Concrete ties or cast in components shall be marked with indented or raised letters or numerals to identify the manufacturer, type of tie, form and cavity, year of manufacture, and date code as approved by the engineer. If ties are intended for use with grade crossing panels, only indented letters or numerals shall be allowed for those areas to be in contact with panels.

SECTION 4.4 FLEXURAL STRENGTH OF PRESTRESSED MONOBLOCK TIES

4.4.1 FLEXURAL PERFORMANCE REQUIREMENTS FOR PRESTRESSED MONOBLOCK DESIGNS (1993)

4.4.1.1 Bending Moments

a. Figure 30-4-3 gives the unfactored positive bending moment at the centerline of the rail seat for tie lengths of 7′−9″, 8′−0″, 8′−6″ and 9′−0″ (2.360, 2.440, 2.590 and 2.740 m) for various tie spacings.

b. Bending moments may be interpolated for other tie lengths.

c. Requirements for factored design flexural values are obtained by the method described in Article 4.4.1.2.

4.4.1.2 Factored Design Flexural Values

a. In consideration of the influence of speed and annual tonnage on tie design, the factored design flexural capacity may be determined from:

© 2010, American Railway Engineering and Maintenance-of-Way Association

$$M = B.V.T.$$

where:

M = the factored design positive bending moment at the center of the rail seat

B = the bending moment in inch kips (kN-m) taken from Figure 30-4-3. For a particular tie length and spacing

V = is the speed factor obtained from Figure 30-4-4

T = the tonnage factor obtained from Figure 30-4-4

b. The use of strain attenuating tie pads in the rail fastening system has been shown to reduce positive bending moments. The factored design flexural capacity value, M, may, therefore, be reduced at the option of the engineer.

c. Factored design rail seat negative, tie center negative and tie center positive bending moments may be calculated from the factored design positive bending moment M, using the factors found in Table 30-4-1 and interpolating if necessary.

Table 30-4-1. Bending Moment Calculations

Tie Length	Rail Seat Negative	Center Negative	Center Positive
7′-9″ (2.360 m)	0.72M	1.13M	0.61M
8′-0″ (2.440 m)	0.64M	0.92M	0.56M
8′-6″ (2.590 m)	0.53M	0.67M	0.47M
9′-0″ (2.740 m)	0.46M	0.57M	0.40M

d. For tie designs having a reduced bottom width at the center of the tie, the positive moment at the rail seat will increase and the negative moment at the tie center will decrease when compared with a tie with a uniform bottom width, for a given ballast pressure.

e. In view of this condition, the rail seat and center positive flexural requirements and the negative center flexural requirements shall be modified accordingly. Required moment calculations are to be based on the geometry of the bottom surface of the tie subjected to uniform ballast pressure.

f. In lieu of moments based on calculations, the rail seat and center positive flexural requirements shall be increased by 10% and the center negative flexural requirements shall be decreased by 10%.

4.4.2 DESIGN CONSIDERATIONS (1988)

a. As well as satisfying the criteria in Article 4.4.1, prestressed concrete monoblock ties must also comply with other criteria which accord with good design practice as laid down in ACI Code 318.

b. It is recommended that the maximum precompression after all losses at any point in the cross ties should not exceed 2,500 psi (17.2 MPa).

c. Furthermore, there should be a minimum pre-compressive stress at any vertical cross section through the rail seat area of 500 psi (3.5 MPa) after all losses and without any applied load.

© 2010, American Railway Engineering and Maintenance-of-Way Association

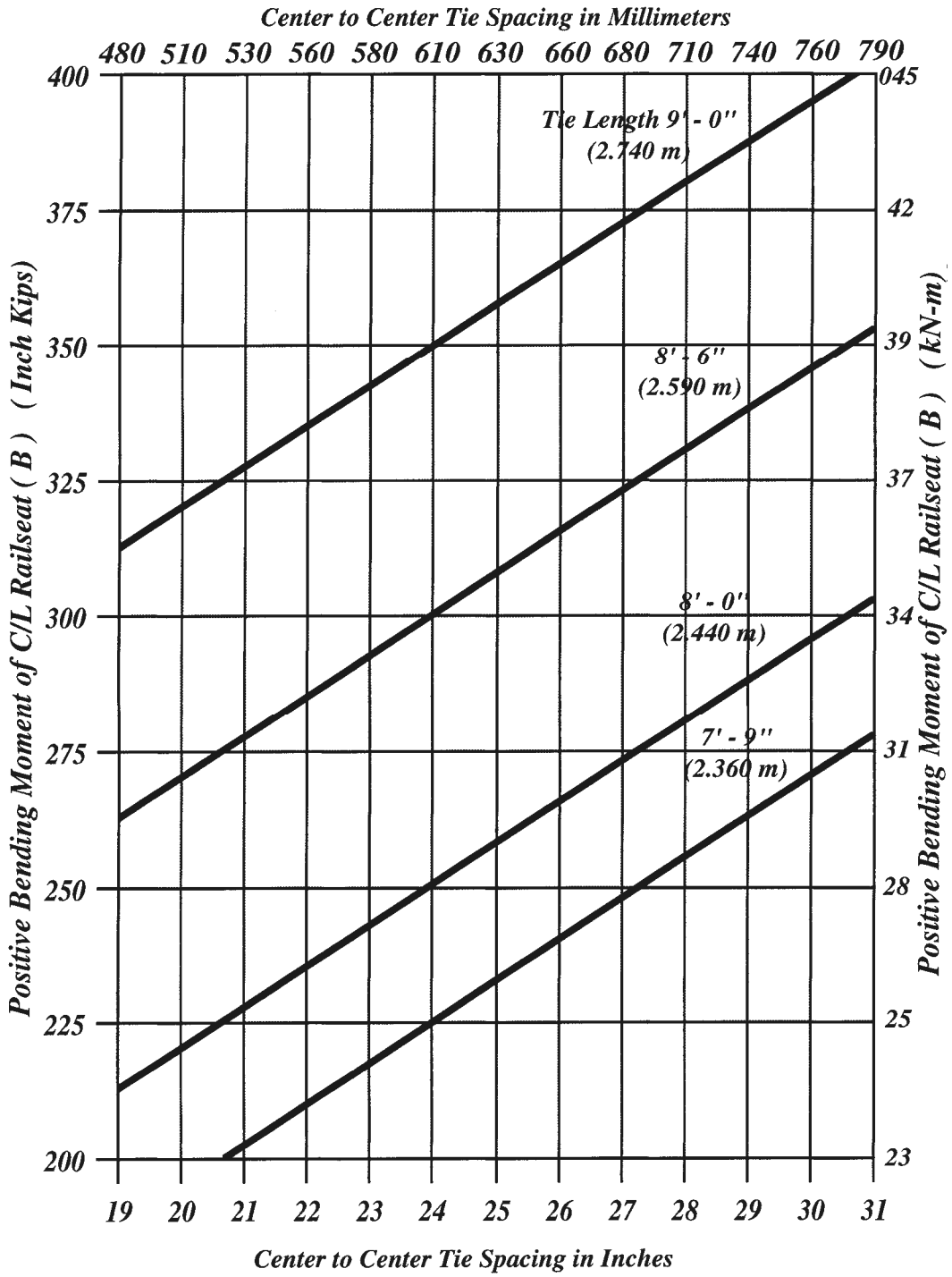

Figure 30-4-3. Unfactored Bending Moment at Centerline of Rail Seat

© 2010, American Railway Engineering and Maintenance-of-Way Association

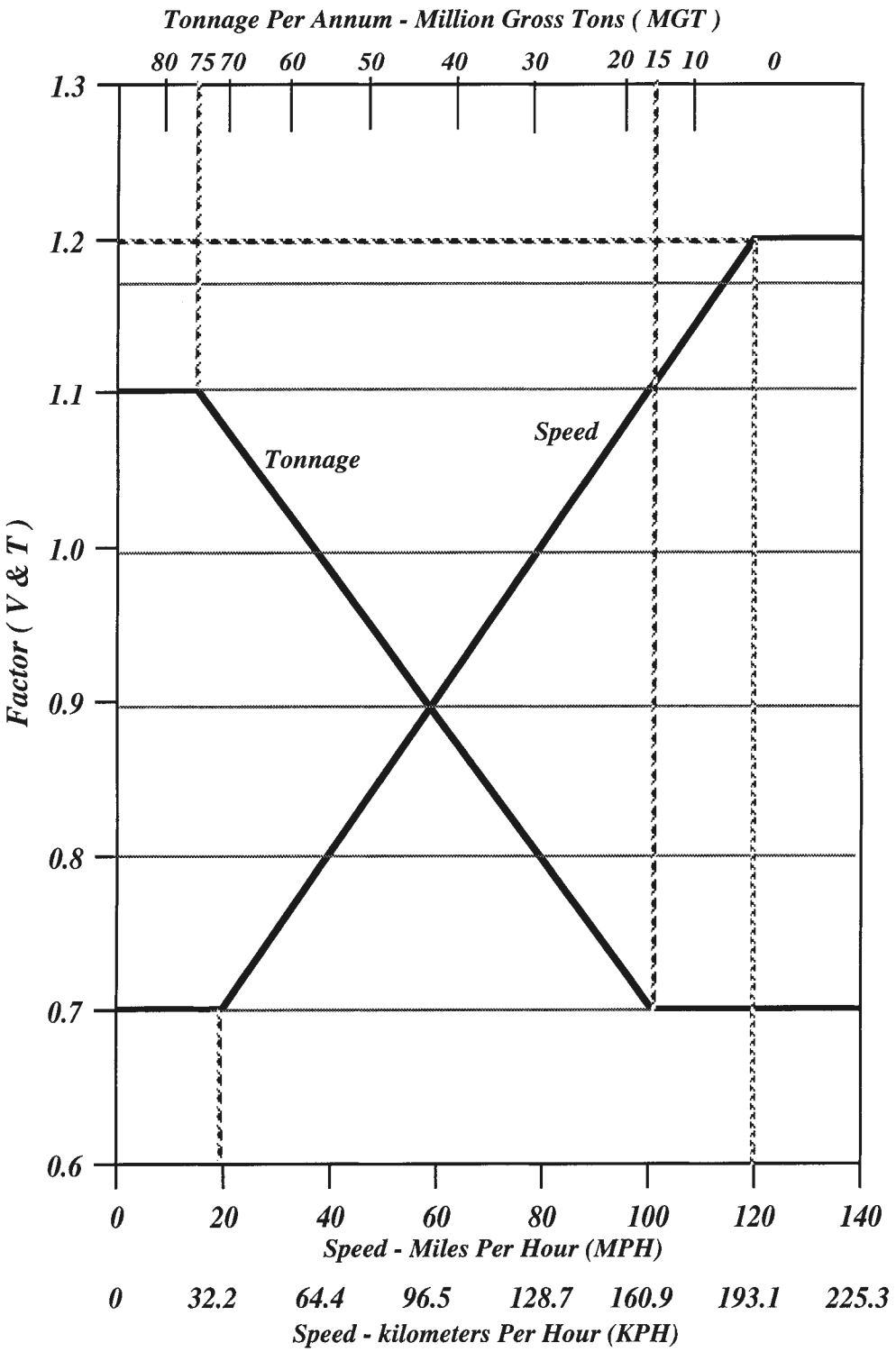

Figure 30-4-4. Tonnage and Speed Factors

© 2010, American Railway Engineering and Maintenance-of-Way Association

4.4.3 TEST REQUIREMENTS FOR APPROVING THE DESIGN OF A MONOBLOCK TIE (1988)

a. The minimum negative and positive flexural capacity at the rail seats of the tie shall be as shown in Article 4.4.1 for the tie length and spacing to be used when tested in accordance with the Rail Seat Vertical Load Test described in Article 4.9.1.4.

b. The minimum negative flexural capacity at the center of the tie shall be as shown in Article 4.4.1 for the tie length and spacing to be used when tested in accordance with the Negative Bending Moment Test described in Article 4.9.1.6.

c. The minimum positive flexural capacity at the center of the tie shall be as shown in Article 4.4.1 for the tie length and spacing to be used when tested in accordance with the Positive Bending Moment Test described in Article 4.9.1.7.

d. The tie must meet the requirements of the Rail Seat Repeated-Load Test described in Article 4.9.1.5.

e. The tie must meet the requirements of the Bond Development or Tendon Anchorage Test described in Article 4.9.1.8.

SECTION 4.5 FLEXURAL STRENGTH OF TWO-BLOCK TIES

4.5.1 FLEXURAL PERFORMANCE REQUIREMENTS FOR TWO-BLOCK DESIGNS (1988)

a. Figure 30-4-5 gives the unfactored positive bending moment at the center line of the rail seat for tie block lengths of 30 inches, 33 inches and 36 inches (762 mm, 838 mm, 914 mm) for various tie spacings for Reinforced Two-Block Ties. Bending moments may be interpolated for other tie block lengths. Requirements for factored design flexural values are obtained by the method described in Article 4.4.1.2.

b. Figure 30-4-6 gives the unfactored positive bending moment at the centerline of the rail seat for the block lengths of 30 inches, 33 inches, 36 inches (76 cm, 84 cm, 91 cm) for various tie spacings, for Prestressed Two-Block Ties. Bending moments may be interpolated for other tie block designs.

c. For two-block reinforced and two-block prestressed ties, negative bending moments may be calculated from the calculated from the calculated rail seat positive bending moment, M as shown in Table 30-4-2.

Table 30-4-2. Negative Bending Moments

Tie Block Length	Rail Seat Negative
30 in. (760 mm)	0.72M
33 in. (840 mm)	0.71M
36 in. (910 mm)	0.70M

4.5.1.1 Allowable Cracking

a. Reinforced cross ties when subjected to loads producing flexure in the blocks must crack in order for the main reinforcement to work. Corrosion of steel reinforcement is related to crack width and external environment. The maximum crack width allowed in Table 30-4-3, should not contribute to corrosion of steel reinforcement under normal railroad environments.

b. Cracks shall be measured on the surfaces of the tie block at a level directly opposite the reinforcement closest to the tension face of the tie. If it is not possible to measure a crack at this level due to chipping of the concrete or surface imperfections, measurements shall be taken equidistant above and below this level and the two values averaged to obtain the width of the crack.

c. Cracks shall be measured using a hand-held graduated microscope of sufficient power and accuracy to measure crack widths to the nearest. 0.001 inch (0.025 mm)

© 2010, American Railway Engineering and Maintenance-of-Way Association

d. Cracks shall not extend to prestressing tendons or longitudinal reinforcing steel of less than 3/8 inch (9.352 mm) diameter.

e. Maximum and average crack widths shall not exceed those values shown in Table 30-4-3.

Table 30-4-3. Allowable Crack Widths

Number of Cracks (Note 1)	Maximum Width – Inch (mm)	Average Width – Inch (mm)
1	0.006 (0.153 mm)	–
2	0.006 (0.153 mm)	0.005 (0.127 mm)
3	0.006 (0.153 mm)	0.004 (0.101 mm)
4 or more	0.006 (0.153 mm)	0.003 (0.076 mm)
Note 1: Per side per tie block		

4.5.2 TEST REQUIREMENTS FOR APPROVING THE DESIGN OF A TWO-BLOCK TIE (1993)

a. The minimum positive flexural capacity of the tie blocks shall be as shown in Article 4.5.1 for the tie block length and tie spacing to be used when tested in accordance with the Rail Seat Positive and Rail Seat Negative Moment Tests described in Article 4.10.1.4 and Article 4.10.1.5.

b. The ties must meet the requirements of the Rail Seat Ultimate Load Test described in Article 4.10.1.9.

c. The ties must meet the requirements of the Rail Seat Repeated Load Test described in Article 4.10.1.8.

d. The ties must meet the requirements of the Center Negative and Center Positive Bending Moment Tests described in Article 4.10.1.6 and Article 4.10.1.7.

SECTION 4.6 LONGITUDINAL RAIL RESTRAINT

4.6.1 REQUIREMENTS (1993)

a. Fastenings for concrete ties must have the ability to restrain 2.4 kips (10.7 kN) per tie per rail longitudinal movement of rail as determined by test procedure specified in Article 4.9.1.12.

b. Welded rail must be laid at the proper temperature range or additional anchorage provided at the ends of strings.

SECTION 4.7 LATERAL RAIL RESTRAINT

4.7.1 RAIL FASTENING REQUIREMENTS (1990)

a. Track constructed of concrete ties and appropriate fasteners shall not experience gage widening of more than 1/4 inch (6.35 mm) under test conditions. (See Article 4.9.1.13 for design tests).

b. If a concrete shoulder is used to restrain the lateral movement of the rail, a suitable bearing surface shall be provided to transmit the lateral forces to the tie.

© 2010, American Railway Engineering and Maintenance-of-Way Association

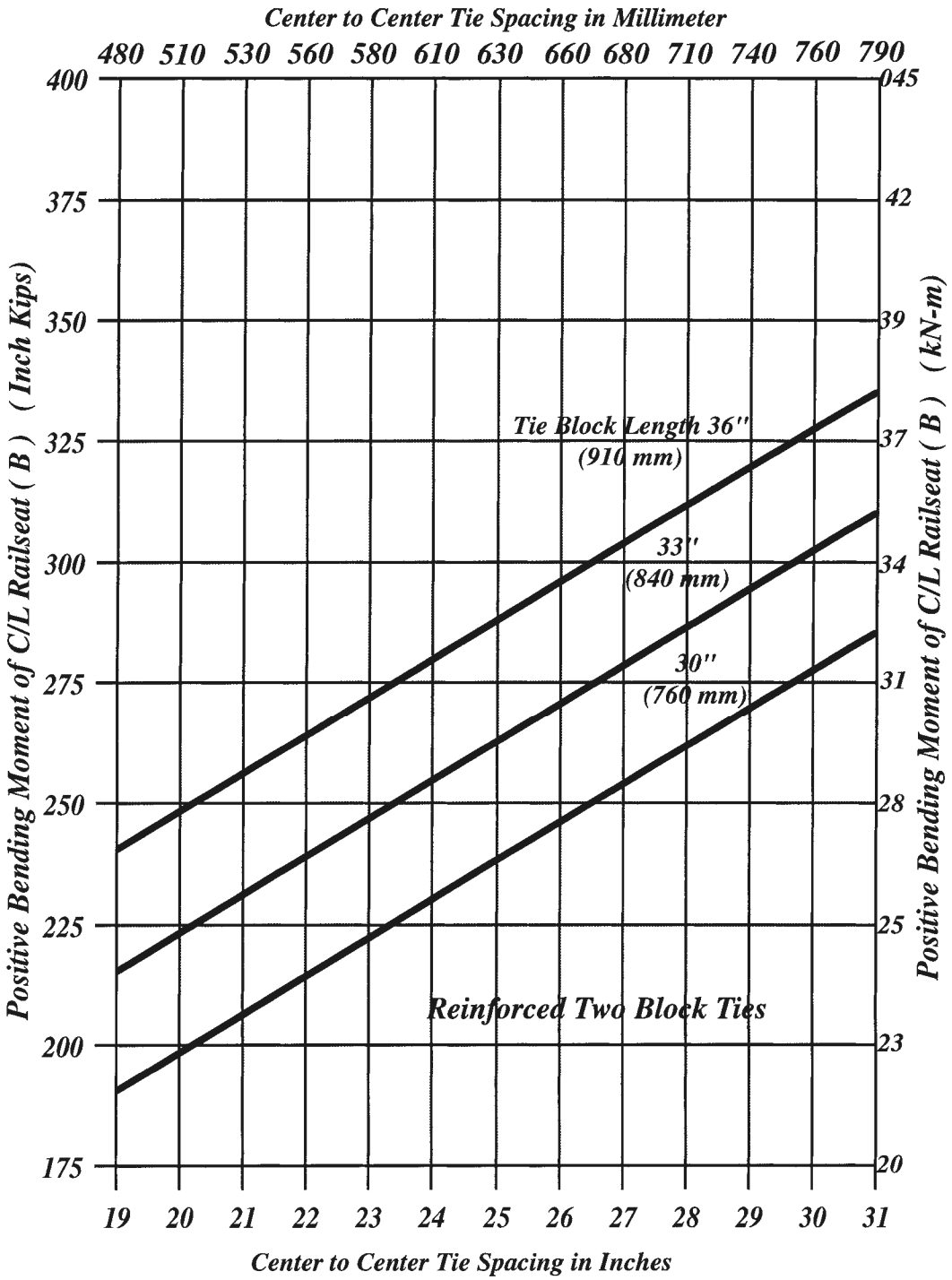

Figure 30-4-5. Bending Moment – Reinforced Two-Block Ties

© 2010, American Railway Engineering and Maintenance-of-Way Association

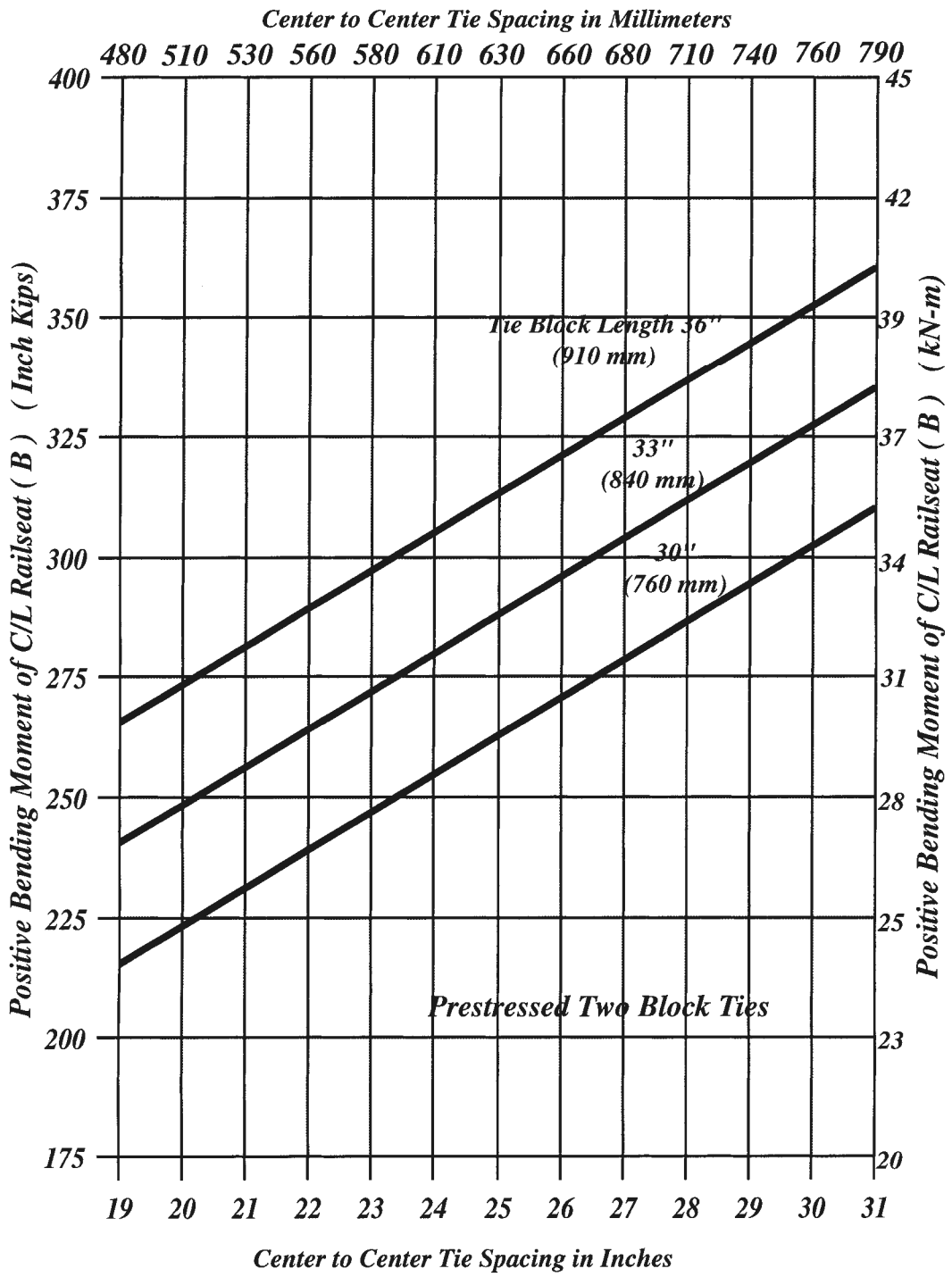

Figure 30-4-6. Bending Moment – Prestressed Two-Block Ties

© 2010, American Railway Engineering and Maintenance-of-Way Association

c. Inserts shall be arranged to distribute the load uniformly in the body of the tie and through the rail bearing area. The rail support insert shall withstand a pullout force of 12 kips (53.4 kN) (See Article 4.9.1.9, Article 4.9.1.10 and Article 4.9.1.13 for design tests).

SECTION 4.8 ELECTRICAL PROPERTIES

4.8.1 REQUIREMENTS (1990)

Individual concrete cross ties for use in signal circuit tracks together with their fastenings should be electrically isolated from the running rails so as to provide a minimum impedance of 20,000 ohms per tie when a-c energy of 10 volts, 60 Hertz is applied (see Article 4.9.1.14 for test procedure).

SECTION 4.9 TESTING OF MONOBLOCK TIES

4.9.1 DESIGN TEST OF MONOBLOCK TIES (2010)

a. Prior to approval of concrete tie designs, monoblock concrete ties of the design under study shall be subjected to testing for compliance with these specifications. The tests specified herein shall be performed at testing facilities approved by the engineer.

b. Concrete ties and rail fastening systems shall be subjected to the specified acceptance tests. Failure of the concrete ties and rail fastenings to pass the prescribed tests will be cause for rejection. Existing concrete tie and fastening designs which have already passed tests equivalent to those specified herein may be accepted without additional testing as determined by the Engineer. For such acceptance to be given, certified laboratory test reports shall be submitted in sufficient detail as required by the Engineer in order to make the determination as to equivalency.

c. From a lot of not less than ten ties produced in accordance with these specifications, four ties will be selected at random by the engineer for laboratory testing. For design testing of fastenings, the manufacturer shall also furnish a section of tie or a concrete block with rail seat and rail fastening system identical to the concrete ties furnished for testing.

d. The tie block and each of four ties submitted for testing shall be carefully measured and examined to determine their compliance with the requirements of Section 4.2, Material and Section 4.3, Tie Dimensions, Configuration and Weight. Upon satisfactory completion of this examination, the tie block and two ties, which shall be known and identified as Tie “1” and “2”, shall be subjected to performance tests specified in Article 4.9.1.4, Article 4.9.1.5, Article 4.9.1.6, Article 4.9.1.7, Article 4.9.1.8, Article 4.9.1.9, Article 4.9.1.10, Article 4.9.1.10, Article 4.9.1.12, Article 4.9.1.13, and Article 4.9.1.14. The remaining two ties, which will be known and identified as Ties “3” and “4”, will be retained by the engineer for further test use and as a control for dimensional tolerances and surface appearance of ties subsequently manufactured.

4.9.1.1 Sequence of Design Tests (Tie “1”)

The sequence of design performance tests using Tie “1” shall be as follows:

a. Rail Seat Vertical Load Test (described in Article 4.9.1.4). Shall be performed on one rail seat, hereinafter designated rail seat A.

© 2010, American Railway Engineering and Maintenance-of-Way Association

b. Center Negative Bending Moment Test (described in Article 4.9.1.6).

c. Center Positive Bending Moment Test (described in Article 4.9.1.7).

d. Rail Seat Vertical Load Test (described in Article 4.9.1.4). Shall be performed on the other rail seat, hereinafter designated rail seat B.

e. Rail Seat Repeated Load Test (described in Article 4.9.1.5). Shall be performed on rail seat B.

f. Bond Development, Tendon Anchorage, and Ultimate Load Test (described in Article 4.9.1.8). Shall be performed on rail seat A.

4.9.1.2 Sequence of Design Tests (Tie "2")

The sequence of design performance tests using Tie "2" shall be as follows:

a. Fastening Insert Test (described in Article 4.9.1.9). Shall be performed on all inserts.

b. Fastening Uplift Test (described in Article 4.9.1.10). Shall be performed on one rail seat.

c. Electrical Resistance and Impedance Test (described in Article 4.9.1.14).

4.9.1.3 Sequence of Design Tests (Tie Block)

The sequence of design performance tests using the tie block shall be as follows:

a. Tie Pad Test[1] (described in Article 4.9.1.15).

b. Fastening Uplift Test Part A (described in Article 4.9.1.10).

c. Fastening Longitudinal Restraint test (described in Article 4.9.1.12).

d. Fastening Repeated load Test (described in Article 4.9.1.10).

e. Fastening Longitudinal Restraint Test (described in Article 4.9.1.12).

f. Fastening Uplift Test Part A (described in Article 4.9.1.10).

g. Fastening Lateral Restraint Test (described in Article 4.9.1.13).

h. Tie Pad Test (described in Article 4.9.1.15).

4.9.1.4 Rail Seat Vertical Load Test

With the tie supported and loaded as shown in Figure 30-4-7 apply the load continuously and without shock until the load (P) required to produce the specified railseat negative moment from Section 4.4, Flexural Strength of Prestressed Monoblock Ties is obtained. This load shall be held for not less than 3 minutes, during which time an inspection shall be made to determine if structural cracking occurs. In like manner, the tie shall be supported and loaded as shown in Figure 30-4-8 to produce the Section 4.4 required rail seat positive moment. An illuminated 5-power magnifying glass shall be used to locate cracks. If structural cracking does not occur, the requirements of each portion of this test will have been met. Other material may be substituted for the rubber supports shown, by agreement with the Engineer.

[1] Test shall be conducted on three pads. The two pads providing highest and lowest spring rate values shall be discarded and remaining pad shall be used for tests Article 4.9.1.3b through h.

© 2010, American Railway Engineering and Maintenance-of-Way Association

4.9.1.5 Rail Seat Repeated-Load Test

a. Following the vertical load test for positive moment on rail seat B, the load shall be increased at rate of at least 5 kips (22 kN) per minute until the tie is cracked from its bottom surface up to the level of the lower layer of reinforcement.

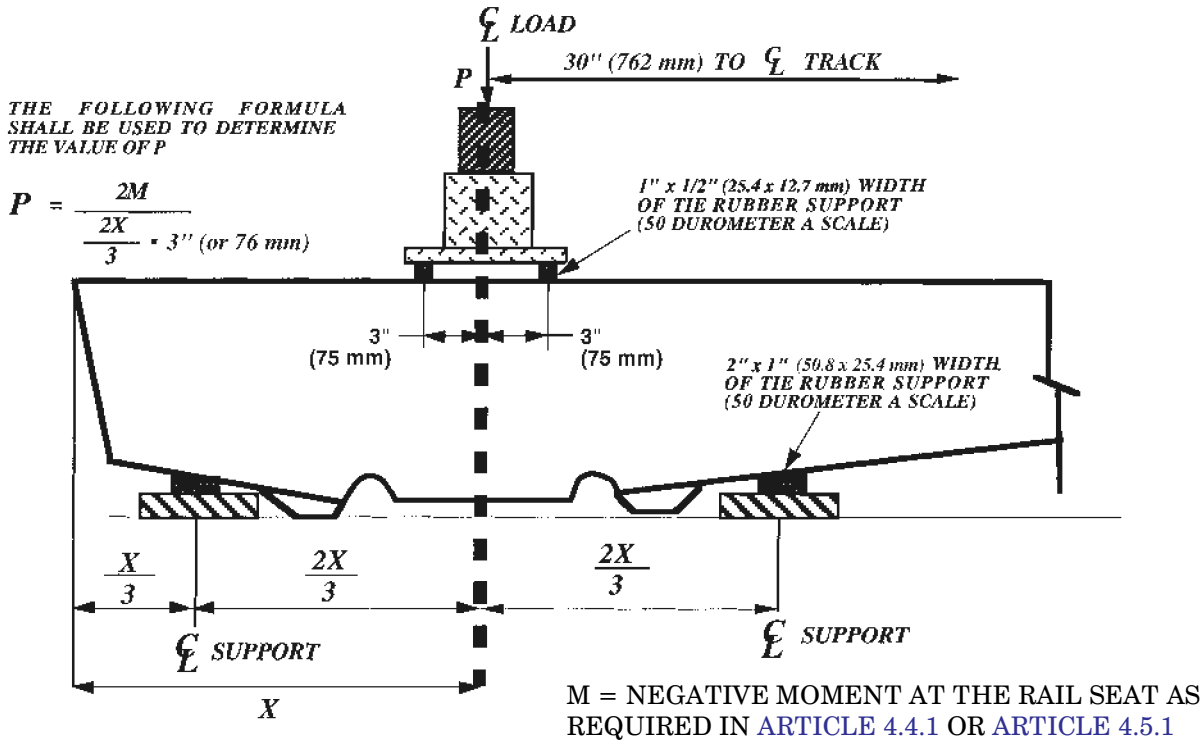

Figure 30-4-7. Rail Seat Negative Moment Test

b. After removal of the static rail seat load necessary to produce cracking, and substitution of 1/4 inch (6.35 mm) -thick plywood strips for those in Figure 30-4-8, the tie shall be subjected to 3 million cycles of repeated loading with each cycle varying uniformly from 4 kips (17.8 kN) to the value of 1.1P. The repeated loading shall not exceed 600 cycles per minute. If, after the application of 3 million cycles, the tie can support the rail seat load (1.1P), the requirements of this test will have been met.

4.9.1.6 Center Negative Bending Moment Test

With the tie supported and loaded as shown in Figure 30-4-9 a load increasing at a rate not greater than 5 kips (22kN) per minute shall be applied until the load required to produce the specified negative center design moment from Table 30-4-3 is obtained. The load shall be held for not less than 3 minutes, during which time an inspection shall be made to determine if structural cracking occurs. An illuminated, 5-power magnifying glass may be used to locate cracks. If structural cracking does not occur the requirements of this test will have been met.

4.9.1.7 Center Positive Bending Moment Test

With the tie supported and loaded as shown in Figure 30-4-10, a load increasing at a rate not greater than 5 kips (22 kN) per minute shall be applied until the load required to produce the specified positive center design moment from Table 30-4-3 is obtained. The load shall be held for not less than 3 minutes during which time an inspection shall be made to determine if structural cracking occurs. An illuminated, 5-power magnifying glass may be used to locate cracks. If structural cracking does not occur, the requirements of this test will have been met.

© 2010, American Railway Engineering and Maintenance-of-Way Association

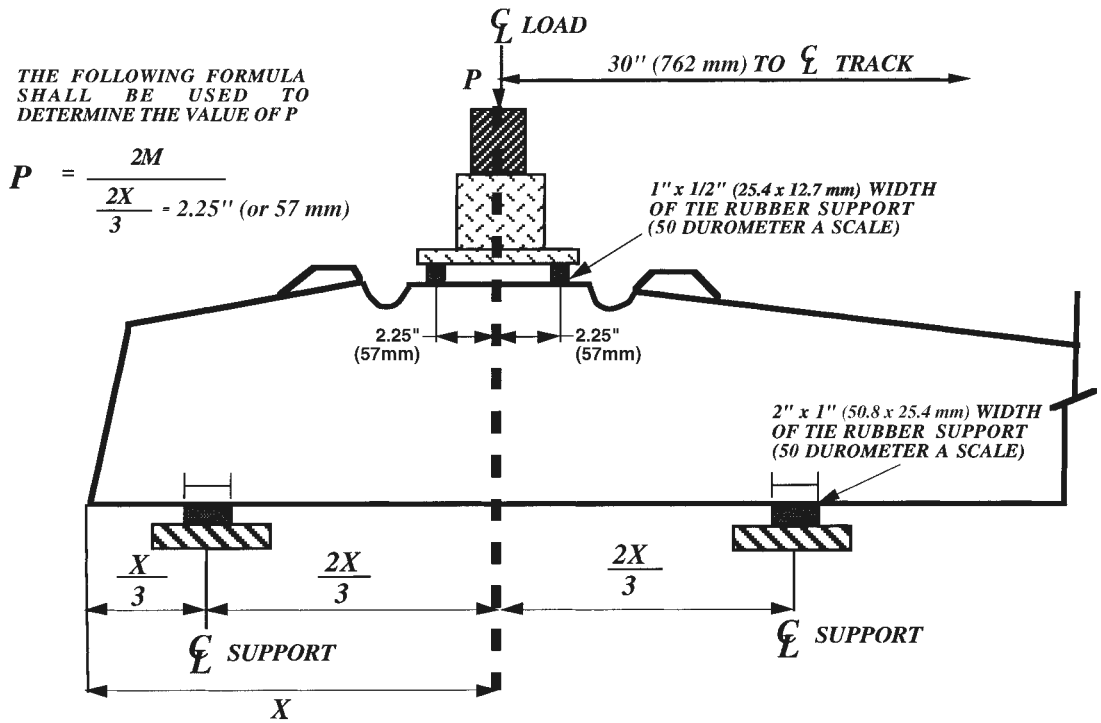

M = POSITIVE MOMENT AT THE RAIL SEAT AS REQUIRED IN ARTICLE 4.4.1 FOR PRESTRESSED MONOBLOCK TIES OR ARTICLE 4.5.1 FOR TWO BLOCK TIES

Figure 30-4-8. Rail Seat Positive Moment Test

4.9.1.8 Bond Development, Tendon Anchorage, and Ultimate Load Test

a. Pretensioned concrete ties shall be tested for bond development, and ultimate strength as specified below:

(1) With the tie supported and loaded at rail seat A as shown in Figure 30-4-8, a load increasing at a rate not greater than 5 kips (22 kN) per minute shall be applied until a total load of 1.5P is obtained (the load P shall be as determined in "Rail Seat Vertical Load Test" for positive moment).

(2) If there is no more than 0.001 inch (0.025 mm) tendon slippage determined by an extensometer reading to 1/10,000 of an inch (1/400 mm), the requirements of this test will have been met. The measurement shall be made on the outermost tendons of the lower layer. The load shall then be increased until ultimate failure occurs and the maximum load obtained shall be recorded.

b. Post-tensioned concrete ties shall be tested for tendon anchorage and ultimate strength as specified below:

With the tie supported and loaded as shown in Figure 30-4-8, a load increasing at a rate not greater than 5 kips (22 kN) per minute shall be applied until a total load equal to 1.5P is obtained. If the tie can support this load for a period of 5 minutes, the requirements of this test will have been met. The load shall then be increased until ultimate failure of the tie occurs, and the maximum load obtained shall be recorded.

4.9.1.9 Fastening Insert Test

Fastening inserts shall be subjected to a pull-out test and a torque test as follows:

© 2010, American Railway Engineering and Maintenance-of-Way Association

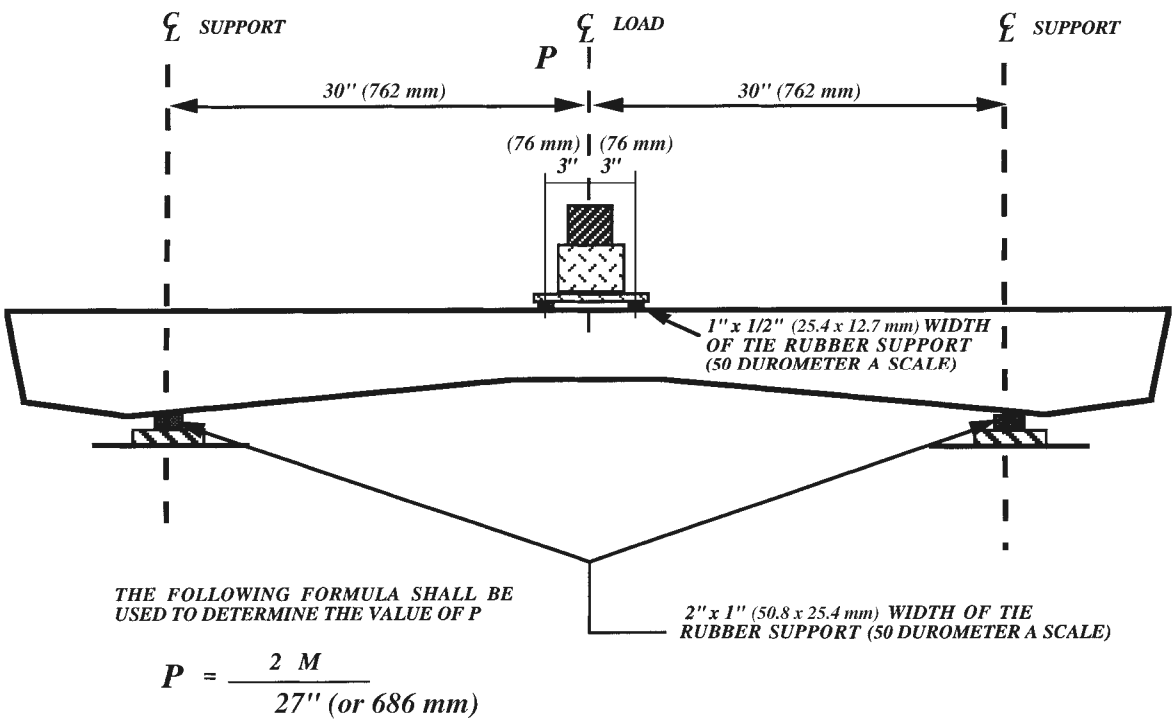

$$P = \frac{2\ M}{27''\ (\text{or } 686\ \text{mm})}$$

M = NEGATIVE MOMENT AT THE CENTER OF THE TIE AS REQUIRED IN ARTICLE 4.4.1

Figure 30-4-9. Tie Center Negative Moment Test

a. The pull-out test shall be performed on each insert as shown on Figure 30-4-11. An axial load of 12 kips (53.4 kN) shall be applied to each insert separately and held for not less than 3 minutes, during which time an inspection shall be made to determine if there is any slippage of the insert or any cracking of the concrete.

NOTE: Mortar cracking in the vicinity of the insert is not a cause for failure. If failures occur, then the requirements of this test will not have been met. Inability of the insert itself to resist the 12 kips (53.4 kN) load without permanent deformation shall also constitute failure of this test.

b. Following successful completion of the insert pull-out test, the torque test shall be performed on each insert. A torque of 250 ft-lb (339 N•m) shall be applied about the vertical axis of the insert by means of a calibrated torque wrench and a suitable attachment to the insert. The torque shall be held for not less than 3 minutes. Ability of the insert to resist this torque without rotation, cracking of the concrete, or permanent deformation shall constitute passage of this test.

4.9.1.10 Fastener Uplift Test (See Part 2, Evaluative Tests for Tie Systems, 2.6.1, Test 5A: Fastener Uplift (2006))

4.9.1.11 Fastening Repeated-Load Test

a. An 18 to 20 inches (460 mm - 510 mm) section of new rail from which loose mill scale has been removed by wiping with a cloth shall be secured to the rail seat in the block using a complete rail fastening assembly. Determine the load P that will just cause separation of the rail from the rail seat pad or the pad from the rail seat whichever occurs first. This load may be determined during the Fastening Uplift Test described in Article 4.9.1.10 in which case a new set of fastening clips shall be used for the repeated load test.

© 2010, American Railway Engineering and Maintenance-of-Way Association

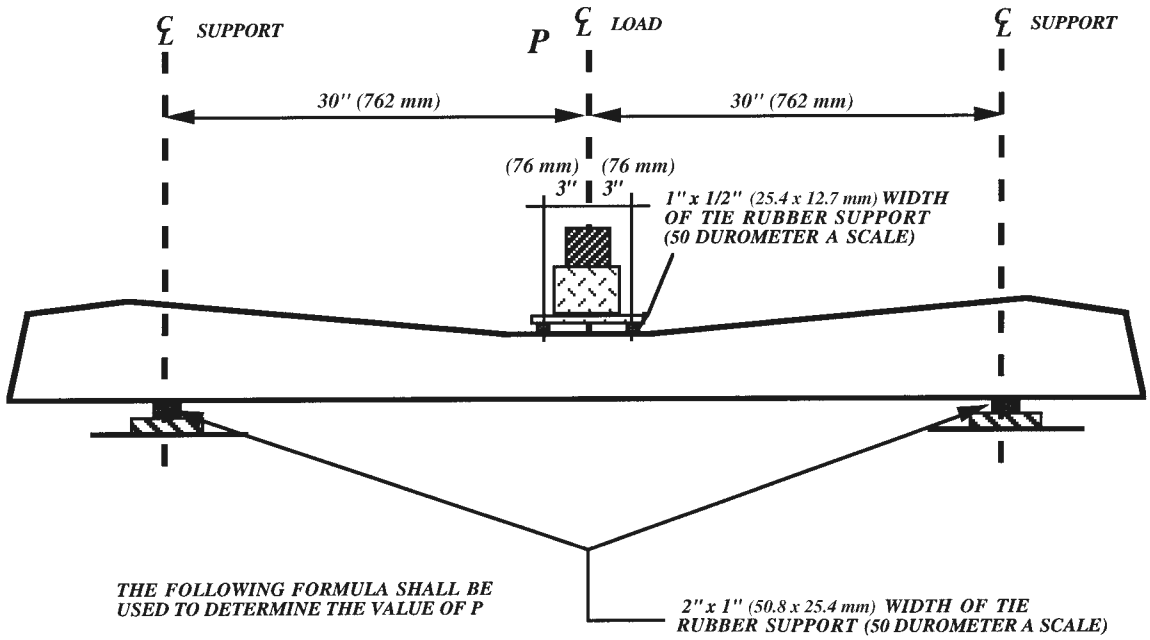

$$P = \frac{2\ M}{27''\ (\text{or } 686\ \text{mm})}$$

M = POSITIVE MOMENT AT THE CENTER OF THE TIE AS REQUIRED IN ARTICLE 4.4.1

Figure 30-4-10. Tie Center Positive Moment Test

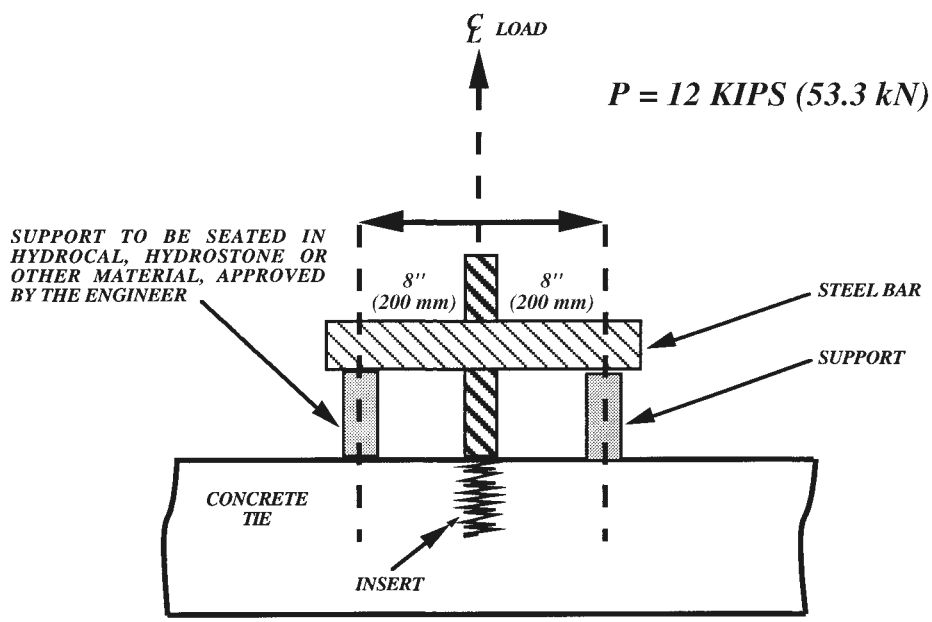

Figure 30-4-11. Insert Pullout Test

b. An 18 to 20 inches (460 mm - 510 mm) section of new rail from which loose mill scale has been removed by wiping with a cloth shall be secured to the rail seat in the tie block using a complete rail fastening assembly. In accordance with the loading diagram in Figure 30-4-12, alternating downward and upward loads shall be

© 2010, American Railway Engineering and Maintenance-of-Way Association

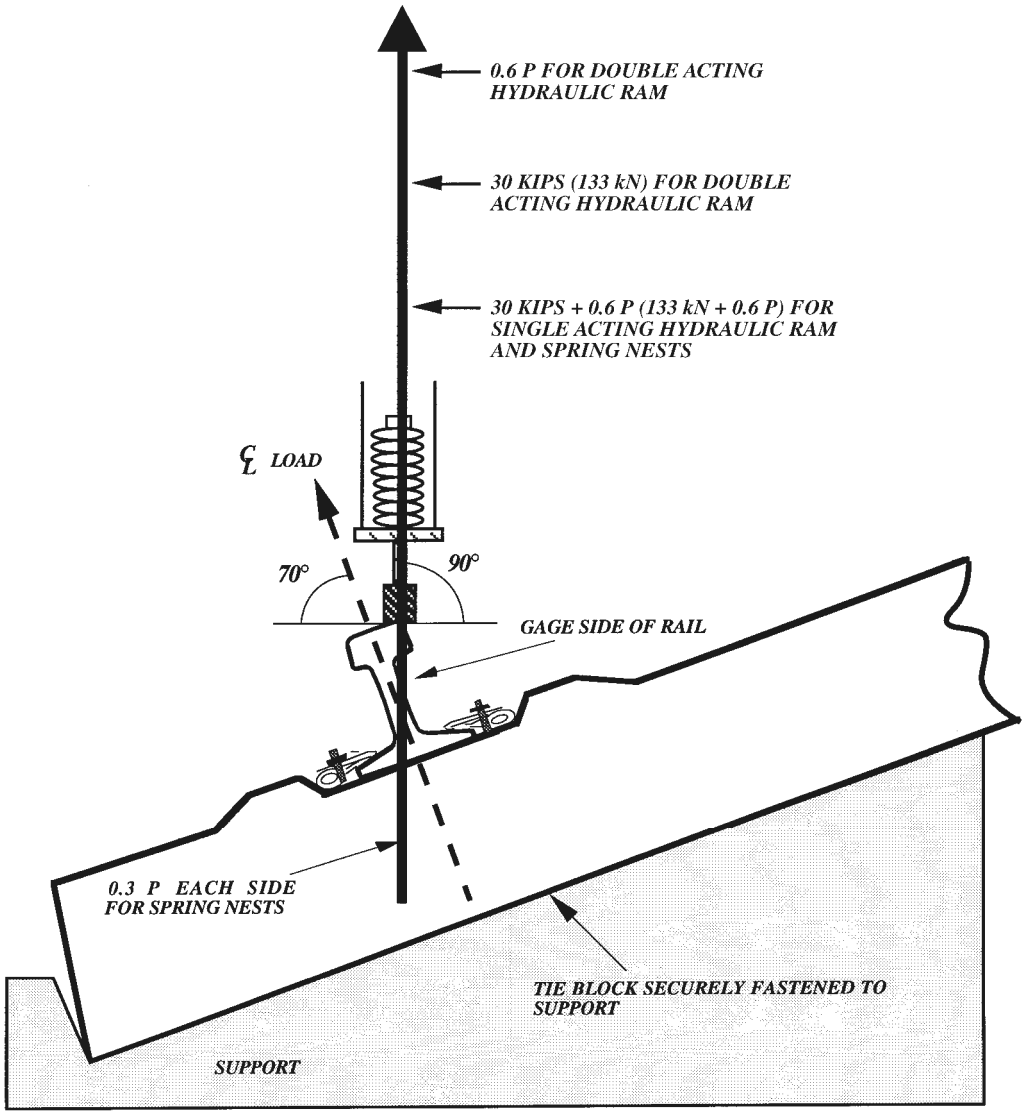

M = FOR DETERMINATION OF P SEE ARTICLE 4.9.1.10a

Figure 30-4-12. Fastening Repeated Load Test

applied at an angle of 20 degrees to the vertical axis of the rail at a rate not exceed 300 cycles per minute for 3 million cycles. The rail shall be free to rotate under the applied loads. One cycle shall consist of both a downward and an upward load. The magnitude of the upward load shall be 0.6P where P is the load determined in paragraph a. If springs are used to generate the upward load the downward load shall be 30 kips (133.5 kN) plus 0.6P. If a double-acting hydraulic ram is used to generate both the upward and the downward load, the downward load shall be 30 kips (133.5 kN).

c. This repeated load test may generate heat in elastomeric rail seat pads. Heat build-up in such pads must not be allowed to exceed 140 degrees F (71 degrees C). Heat build-up can be controlled by reducing the rate of load application or by providing periods of rest to allow cooling of the pad to take place.

d. Rupture failure of any component of the fastening system shall constitute failure of this test.

e. For this test, retorquing of threaded elements subsequent to the completion of 500,000 cycles of load shall not be permitted without the written approval of the engineer.

© 2010, American Railway Engineering and Maintenance-of-Way Association

4.9.1.12 Fastener Longitudinal Restraint Test

Refer to Chapter 30, Part 2, Evaluative Tests for Tie Systems, Test 5B for details.

4.9.1.13 Fastener Lateral Load Restraint Test

Refer to Chapter 30, Part 2, Evaluative Tests for Tie Systems, Test 5D for details.

4.9.1.14 Fastener Electrical Impedance Test

Refer to Chapter 30, Part 2, Evaluative Tests for Tie Systems, Test 7 for details.

4.9.1.15 Tie Pad Test

a. The tie pad shall be loaded vertically using a rail section in a manner similar to its use in the fastening system.

b. A cyclic load varying from 4 kips to 30 kips (17.8 kN to 134 kN) shall be applied continuously at a rate of 4 to 6 cycles per second for a total of 1,000 cycles.

c. A static load shall be applied, at a rate between 3 and 6 kips/min (13.4 and 26.7 kN/min) in increments of 1 kip (4.45 kN) up to a maximum of 50 kips (223 kN). For each load increment, vertical pad deflection shall be measured to the nearest 0.0001 inch (0.0025 mm) and recorded values for vertical load versus deflection shall be plotted on a graph. Spring rate, as determined by the slope of the line connecting the points representing pad deflections at 24 and 44 kips (107 kN and 196 kN) shall be calculated.

d. Load shall be released and pad deflection recorded 10 seconds after load removal.

e. The requirements of this test will have been met, if

(1) Pad returns to within 0.002 inch (0.051 mm) of its original position 10 seconds after load removal.

(2) Spring rate values determined from both pad tests, conducted as part of the design performance tests specified in Article 4.9.1.3, do not vary by more than 25%.

(3) Spring rate values determined from initial tests in Article 4.9.1.3a conducted on the three test pads, as part of the design performance tests specified do not vary by more than 25%.

(4) Spring rate values determined from final tests in Article 4.9.1.3h conducted on the two test pads, as part of the design performance tests specified do not vary by more than 25%.

4.9.1.16 Tie Pad Attenuation Test

Refer to Chapter 30, Part 2, Evaluative Tests for Tie Systems, Test 4B for details.

4.9.1.17 Wear/Abrasion Test

Refer to Chapter 30, Part 2, Evaluative Tests for Tie Systems, Test 6 for details.

4.9.1.18 Single Tie Lateral Push Test

Refer to Chapter 30, Part 2, Evaluative Tests for Tie Systems, Test 8 for details.

© 2010, American Railway Engineering and Maintenance-of-Way Association

4.9.2 PRODUCTION QUALITY CONTROL OF MONOBLOCK TIES (1993)

After tie and rail fastening system have passed the tests in Article 4.9.1 and have been approved by the engineer, further production of these items may proceed without further design testing. During production of such an approved design, quality-control tests must be performed to assure a uniform, high-quality product.

4.9.2.1 Daily Production Quality-Control Tests

The following production quality-control tests shall be performed prior to delivery on one tie selected at random from every 200 ties or fraction thereof produced each day.

a. The rail seat configuration and inset location shall be verified for compliance with the requirements of Article 4.3.2.

b. The Rail Seat Vertical Positive Load Test, Article 4.9.1.4, shall be performed. The load shall be applied at a rate of least 5 kips (22 kN) per minute and be held for at least 1 minute.

c. The Fastening Insert Test, Article 4.9.1.9, shall be performed on all inserts per tie when the instant demolding process is used.

4.9.2.2 Additional Quality-Control Tests

To assure the production of cross ties and rail fastenings which comply with these specifications, the manufacturer shall institute whatever additional quality-control tests, including concrete compressive strength tests (see Article 4.2.2), deemed necessary.

4.9.2.3 Failure to Pass Production Quality-Control Tests

Should any test tie fail the tests required by Article 4.9.2.1, two additional ties from that same 200-tie lot shall be tested. In the event either of these ties fails, 100% of the remainder of the 200-tie lot shall be either tested or rejected.

4.9.2.4 Disposition of Test Ties

A tie cracked (not structurally under Definition 19) and otherwise undamaged after testing, will be considered acceptable for use in track unless non-structural cracks are specifically rejected by the engineer prior to testing.

4.9.2.5 Bond Development or Tendon Anchorage Quality-Control Test

One tie selected at random from every 2,000 ties produced shall be subjected to the Bond Development or Tendon Anchorage Test described in Article 4.9.1.8. A load rate exceeding 5 kips (22.25 kN) per minute may be applied. If the tie does not meet the requirements of Article 4.9.1.8 three additional ties shall be tested, and if any of the three ties do not meet the requirements of Article 4.9.1.8, the entire lot may be rejected at the option of the engineer.

4.9.2.6 Location for Inspection and Quality-Control Testing

Quality-control testing of production ties may be performed at any test facility, including such facilities at the manufacturer's plant, provided they meet the approval of the engineer. Testing may be observed by the engineer or his designated representative if he so elects. Two copies of the results of all such tests shall be submitted to the engineer within 7 days of the performance of the tests.

© 2010, American Railway Engineering and Maintenance-of-Way Association

3.1.6 SPECIFICATIONS FOR DEVICES TO CONTROL THE SPLITTING OF WOOD TIES[1] (2005)

3.1.6.1 Anti-Splitting Devices

Anti-splitting devices may be of (a) the type made from a strip of steel and applied by driving into the end (cross section) of the tie; or (b) of the steel dowel type, applied parallel to the wide face of the tie, transverse to its length; or (c) the steel multi-nail plate type to be pressed or driven flush into the end (cross section) of the tie.

3.1.6.2 Materials

3.1.6.2.1 Dowels

If the steel dowel type is used, it shall be of the dimensions and thread design specified by the purchaser, and shall be of C-1020 steel, ASTM Specifications, designation A 575-96 (2002), with a minimum of 0.2 of 1% copper.

3.1.6.2.2 Irons

a. The finished strip shall conform to the following minimum tensile properties:

Strength, psi	75,000
Yield point, psi.	40,000
Elongation in 2 in., percent . . .	20

b. *Design.* Anti-splitting irons shall be of the shape and size stipulated by the purchaser.

c. *Manufacture.* Anti-splitting irons shall have smooth surfaces and be free of distortion, scale, jagged ends, and blunt bevelled edge.

The dimensions of the steel strip in anti-splitting irons shall be not less than:

Thickness. . . .	0.083 in.
Width	3/4 in.
Length	as required by the design

d. *Variations.* Variations (over or under) from dimensions specified shall not exceed:

Thickness	0.005 in.
Width of strip	1/32 in.
Width of bevel.	1/32 in.
Length.	1/8 in.

3.1.6.2.3 Nail Plates

If a steel nail plate is used, it shall be made of 18 gage galvanized steel or heavier conforming to ASTM A653 Grade 40, and the galvanizing coating designation G60. Dimensions shall be specified by the purchaser.

[1] References, Vol. 32, 1931, pp. 236, 736; Vol. 45, 1944, pp. 270, 598, Vol. 63, 1962, pp. 316, 741; Vol. 85, 1984, p. 9.

© 2010, American Railway Engineering and Maintenance-of-Way Association

3.1.6.3 Inspection

Inspectors representing the purchaser shall have free entry, at all times while work on the contract of the purchaser is being performed, to all parts of the manufacturer's works which concern the manufacture of the material ordered. The manufacturer shall afford the inspectors, without charge, all reasonable facilities to satisfy them that the material is being supplied in accordance with these specifications. Unless otherwise agreed all inspection and tests shall be made at the place of manufacture prior to shipment, and shall be so conducted as to not interfere unnecessarily with the operation of the works.

3.1.6.4 Delivery

Accepted devices shall be shipped by the seller in accordance with instructions in the order covering them, securely packed in containers marked with the name, type, grade, and quantity of the material therein, and with the name of the seller and the number of the buyer's contract or order.

3.1.7 APPLICATION OF ANTI-SPLITTING DEVICES[1] (2005)

3.1.7.1 General

a. All hardwood ties (those from broadleaved trees) are subject to splitting and when so designated by the purchaser shall have anti-splitting devices applied. Either nail plates, strip irons or dowels may be used for this purpose.

b. Anti-splitting devices designed to control the splitting of ties should be applied prior to or at the time the ties are delivered to the treating plant.

3.1.7.2 Nail Plates

a. One multi-nail plate should be positioned onto the end (cross section) of the tie, with the plate being placed to cover the greatest area of splitting. This should enable the plate to hold both vertical and horizontal splits together.

b. Nail plates should be applied by a mechanical device capable of squeezing the splits together, bringing the tie back to its original dimensions, prior to application.

3.1.7.3 Irons

Anti-splitting strip irons driven into the ends of ties should be so placed as to cross at right angles the greatest possible manner of radial lines of the wood. Irons should be placed far enough from the wide faces to prevent splitting.

SECTION 3.2 TIMBER SWITCH TIES[2]

3.2.1 SPECIFICATIONS FOR TIMBER SWITCH TIES (2005)

NOTE: It is recommended for West Coast species that W.C.L.B. Grading Rules apply.

---

[1] References, Vol. 32, 1931, pp. 236, 736; Vol. 45, 1944, pp. 270, 598; Vol. 63, 1962, pp. 318, 741; Vol. 85, 1984, p. 9.
[2] References, Vol. 17, 1916, pp. 245, 840; Vol. 22, 1921, pp. 332, 1005; Vol. 27, 1926, pp. 695, 1388; Vol. 35, 1934, pp. 780, 1160; Vol. 53, 1952, pp. 336, 1120; Vol. 54, 1953, pp. 626, 1394; Vol. 55, 1954, pp. 470, 1074; Vol. 63, 1962, pp. 318, 741; Vol. 75, 1974, p. 379; Vol. 88, 1987, p. 55; Vol. 94, p. 63.

© 2010, American Railway Engineering and Maintenance-of-Way Association

3.4.1.5 Insulation

Ties to be used in track circuit territory should be insulated if their native impedance or resistance is insufficient to ensure proper operation of electrical devices. The fastenings of such ties should be so designed that the insulation material will not be subjected to abrasion or to great stress other than compression.

3.4.1.6 Causes of Failure

Past experience indicates that some of the features that produce failure in substitute ties are as follows:

a. Lack of efficient protection against corrosion.

b. Failure of rail fastenings.

c. Failure of insulation.

d. Loss of beam strength due to weakening tie in vicinity of rail or tie center, resulting in flexure cracking.

e. Use of sharp interior angles, square holes, or other stress risers from which cracks develop.

f. Lack of resistance to derailed wheels.

g. Design of base of tie such as to render tamping difficult or impossible and such as to make maintenance of proper surface of track impracticable.

h. Design of tie such that track will not hold line, or such as to make lining of track impracticable.

i. Lack of beam strength causing breakage on yielding roadbed.

j. Lack of protection from abrasion by ballast.

k. Lack of provision for expansion and contraction, where materials with varying coefficients of expansion are used in combination.

l. Lack of compressive strength or ability to resist crushing action of tie plate or rail.

m. Lack of lateral strength, causing loss of retentive power of spikes, bolts, or other similar devices and insufficient resistance to their lateral thrust.

SECTION 3.5 THE HANDLING OF TIES FROM THE TREE INTO THE TRACK[1]

Long, satisfactory tie life stems from adherence to proven production practices beginning in the woods.

3.5.1 SEASONAL MANUFACTURE (1975)

Investigations of the moisture content of standing trees prove that during winter they contain as much sap as during other seasons. Consequently, felling timber during spring or summer does not result in ties having more moisture than would otherwise be the case. However, winter cutting is advantageous to the extent that then the cut surfaces of logs and ties are exposed first during cold weather, when fungi and insects are least active. By the time warm weather comes, winter-cut forest products are usually out of the woods (where destructive agents are the most prevalent) and become partly seasoned, decreasing the tendency for fungi to develop and reducing the

[1] References, Vol. 24, 1923, pp. 251, 1148; Vol. 32, 1931, pp. 260, 740: Vol. 37, 1936, pp. 417, 989; Vol. 46, 1945, pp. 470, 812; Vol. 54, 1953, pp. 626, 1394; Vol. 63, 1962, pp. 319, 741; Vol. 67, 1966, pp. 177, 718; Vol. 68, 1967, p. 182; Vol. 75, 1974, p. 379; Vol. 86, 1985, p. 9.

© 2010, American Railway Engineering and Maintenance-of-Way Association

liability to insect attack. It is also true that ties dry more slowly during the winter and early spring than they do in the summer, thereby reducing the tendency to excessively split and check. Because winter cutting is not everywhere practicable, owing to climatic or other conditions, it is necessary in most sections of the country that ties be manufactured throughout the year. Entirely satisfactory ties can be produced during any season if proper precautions are observed.

3.5.2 LOG STORAGE (1975)

Soil generally contains many species of fungi and is usually moist enough to dampen any wood in contact with it, thus providing the source of infection and conditions conducive to its propagation. Consequently, tie-logs should be moved as promptly as possible from woods to mill. Where prime seasons must be used for log hauling, pre-cut logs should be carefully stacked above the ground.

3.5.3 SPECIFICATIONS (1975)

Ties manufactured and purchased in accordance with AREMA specifications will meet requirements as to quality and size which assure the greatest economy in wood utilization and maximum service in track.

3.5.4 INSPECTION (2005)

a. If ties are to be inspected from solid stacks at mills or concentration yards prior to shipment, the inspection should take place as promptly as possible after being sawn to prevent stain and fungi build-up. If, for some reason, ties must be held for more than four winter months or one summer month, they should be air stacked in accordance with Article 3.5.6.2.

b. To reduce the high cost of mill or concentration yard inspection due to unavoidable delays, ties may be inspected at unloading stations located at destination treating plants. The area designated for inspection should be equipped with a kicker for turning, a mirror for observing the ends of ties opposite the inspection station, proper lighting and equipment for mechanical handling and separating.

c. Accepted ties should be marked to show ownership, year produced, and other information as specified.

3.5.5 TRANSPORTATION TO THE TREATING PLANTS (2005)

It may be advantageous to make provisions for the assignment of a sufficient number of cars to promptly handle the movement of green ties from concentration and/or mill yards to treating plants for seasoning prior to treatment. Delays in loading and hauling “dead” stacked ties will result in wood fiber infection.

3.5.6 SEASONING (2005)

3.5.6.1 Methods

Methods of seasoning should include air drying, Boultonizing, Steam Conditioning or other approved process.

3.5.6.2 Air Seasoning

a. Ties should be yarded in accordance with provisions set down under AREMA Plant Practice, Article 3.6.3.

b. Because the various species and sizes of ties dry at different rates, it is necessary to stack like kinds together-thus, No. 4 and No. 5 oaks would be stacked by themselves as would No. 3 beech, birch and maple. Hickory, pine and red gum are often stacked as separate species due to peculiar seasoning characteristics.

© 2010, American Railway Engineering and Maintenance-of-Way Association

c. Tie stacks should contain only those ties received during the same month or 30 day period and be so labeled. This practice will bring ties out of air seasoning prior to treatment at the approximately same moisture content, preventing over- or under-drying.

d. Ties should be stacked for air seasoning in a manner which will allow free circulation of air, minimum contact of surfaces, maximum rain run off and maximum economy of space consistent with economical handling. It is recommended that stacks be built not over 20 layers high and the ties arranged 1 × 7 to 9. (Figure 30-3-4, Figure 30-3-5, Figure 30-3-6 and Figure 30-3-7.)

e. Ground contact sills should be of sound treated wood or of inorganic materials.

f. In areas where ties are subject to excessive splitting and checking during air seasoning, semi-solid square stacks (7 to 9 × 7 to 9) with end ties turned on their edges may be employed.

g. Other methods of reducing air seasoning defects which have been successfully demonstrated are stacking ties under the roof of a pole shed, covering open stacks with portable pile covers, tie end-coating and incising.

3.5.6.2.1 Species Groups for Seasoning and Treating

Crossties shall be grouped as shown in Table 30-3-1 for air-seasoning or artificial seasoning and subsequent preservative treatment. Only the kinds of wood named in a group may be processed together.

Table 30-3-1. Species Groups for Seasoning and Treating

Group Ta	Group Tb	Group Tc	Group Td
Black Locust	Douglas Fir	Gums	Ashes
Honey Locust	Firs (True)		Beech
Red Oaks	Hemlocks		Birches
White Oaks	Larches		Cherries
Black Walnut	Pines		Elms
	Redwood		Hard Maples
	Spruces		Hickory
			Soft Maples
			White Walnut

3.5.7 CONTROL OF SPLITTING IN AIR SEASONING (1985)

a. Wooden ties, in particular the hardwood species, check and split under fast or prolonged drying due to differential shrinkage.

b. Hardwood ties may be protected prior to or during seasoning by the application of one or more of the anti-splitting devices, at or near both ends, as outlined in Article 3.1.6.1.

c. Splitting and/or excessive checking can be retarded in air seasoning by sheltering, arranging tie stacks so that tie ends do not face prevailing winds, turning the heart faces of top ties down, incising and end coating.

d. Ties can be originally incised, and then only those ties developing a definite split at the close of the air seasoning period are selected for application of split control devices.

© 2010, American Railway Engineering and Maintenance-of-Way Association

Figure 30-3-4. Ties Stacked 20 Layers High, German Style, for Seasoning

© 2010, American Railway Engineering and Maintenance-of-Way Association

Figure 30-3-5. End View of Stacks of Ties being Air-seasoned

Figure 30-3-6. Stickened Air-Dried Ties with Two Space Stickers Per Layer

© 2010, American Railway Engineering and Maintenance-of-Way Association

Figure 30-3-7. Broad View of a Clean, Well Drained Air-dry Yard Seasoning Ties

3.5.8 MACHINING (1985)

a. Ties may be bored prior to treatment to minimize splitting when driving spikes and provide preservative penetration around the spike holes.

b. Incising is recommended prior to seasoning to hasten seasoning, retard splitting and serious checking and permit deeper preservative penetration of recalcitrant woods.

c. Poorly sawn ties should be adzed prior to seasoning or treatment for the purpose of insuring even support for tie plates in the same plane.

3.5.9 PRESERVATION (1985)

a. When long service life is desired, ties should be subjected to preservative treatment to insure against early failure from both fungi and insects.

b. To determine the most economical treatment requires careful and complete study of the species of woods available, preservatives available, conditions of use and results of previous tie tests.

c. The preservative treatment of ties should be in accordance with Section 3.6, Wood Preserving.

3.5.10 CARE AFTER PRESERVATIVE TREATMENT (1975)

a. Ties treated in excess of those needed at the time on line should be stored at the treating plant until required in order to provide better care and a more flexible supply than is practicable when surplus ties are stored along the right-of-way.

b. It is recommended that treated ties be stored as steel-strapped or wired tram bundles. Stacks of bundles should be started on treated sills and should be separated with treated strips for efficient lift truck or crane rehandling.

c. It is important that treated ties be handled carefully and in such a manner that the protective sheath of preservative-treated fibers will not be broken, thereby exposing untreated heartwood to infection and insect attack. An incision made by a pick or fibers broken by the mis-blow of a maul may provide an opening through which decay may enter.

© 2010, American Railway Engineering and Maintenance-of-Way Association

3.5.11 DISTRIBUTION (2005)

a. Conditions affecting the distribution of ties in various localities differ so greatly that it is impractical to single out any procedure as universally superior. Careful study by all departments concerned is required to determine the best method of moving ties from each point of storage.

b. As a rule, it is more economical to load ties to cars directly from treatment, thereby saving one handling. Although direct loading is highly desirable, seasoning schedules may often require the storage of treated ties and rehandling will be necessary.

c. Tram bundles of treated ties are usually crane loaded, crosswise, into a gondola car. Each tie is then unloaded to a point along the right-of-way opposite the tie to be replaced.

d. Ties will be shipped from treating plants for usage under three general conditions:

(1) A large number of ties for renewal in connection with mechanized maintenance work over a several consecutive mile work location. These ties are best handled in special tie cars designed for this purpose, facilitating rapid unloading with minimum maintenance labor and greater safety. Ties should be unloaded at the point of usage to avoid labor expense in stacking or rehandling. Time between unloading and insertion should be the minimum practical to avoid damage to ties due to exposure to elements.

(2) A small number of ties to separate locations for use as on-line emergency stock or spot renewals. Handling can be in special tie cars or in such other cars as the railroad has available.

(3) A large number of ties shipped for use in construction work. The loading and handling method should mesh with the construction situation. Banded bundles can be used if ties are to be transferred from railway cars to trucks. Special tie cars are practical for adjoining track construction.

e. Ties should be carefully handled in a manner which will prevent breaking or bruising. Ties should not be discharged from cars onto rails or rocks. If a tie pick is used, it should be inserted in the end only.

f. Treated ties not needed for immediate use should be solidly stacked and may be covered with cinders or earth for protection against weather.

3.5.12 CARE DURING AND AFTER INSTALLATION (2005)

a. Ties should be carefully handled from the right-of-way to the point of insertion, guarding the vulnerable treated exterior.

b. Ties should be protected from excessive abrasion under the rail by the application of tie plates of sufficient area and thickness to distribute the traffic loads adequately. The least damage to ties as well as the smoothest track result from the use of plates having bottoms which do not necessitate the impact of traffic to seat the plate.

c. In order to economically enjoy the longest and most satisfactory service life from treated wooden ties, highest standards of surface and sub-surface maintenance must be practiced.

d. Ties should be adzed only in cases of necessity, as when rail is relaid, plate size changed or when the damage from a derailment involves the removal of splinters and crushed wood fibers. Whenever deep adzing of the treated surface takes place, steps should be taken to protect the adzed surfaces with a penetrating preservative paste or a preservative treated pad. Some states may require the applicator supervisor to have a permit for handling of pesticides.

e. Used spike holes should be filled with treated plugs or by chemical means.

f. Damage to ties from slewing as a result of rail creeping or running should be prevented by adequate anchoring of the rail.

© 2010, American Railway Engineering and Maintenance-of-Way Association

g. Ties of the species and size best suited for each location should be selected. Ties made from the denser hardwoods should be used in sharp curves, steep grades, at ends of open-deck bridges and where tonnage is excessively heavy.

h. Treated ties should be placed in track with the wide surface nearest the pith, down.

i. Ties should be laid square across the track; i.e. at right angles to the rail.

j. Care should be taken to set and drive spikes at right angles to the tie surface, straight down.

3.5.13 RENEWALS (1975)

a. Although differences in operational organizations and physical conditions on the various railroads make it impractical to formulate a procedure that is applicable everywhere, no phase of track maintenance is more important than the selection of the ties to be renewed in a given year. Improper tie renewals over a period of years are sure to be costly, and may prove to be disastrous, whether the replacements are too few or too many.

b. The total number of ties required to maintain satisfactory track in one year is rarely the same as the number renewed during the previous year or the average renewals over any period. Therefore, careful inspection of the ties in track will provide more dependable information than any assumptions based on statistics.

c. Whatever method is used in the inspection and selection of the ties to be renewed, the procedure should be so planned as to provide a record of the system requirements as distinguished from those of a section or division. Training and experience for those making inspections of ties in track are necessary to assure uniformity in their procedure and consistency in their conclusions.

d. Each tie to be removed is generally identified by a mark on the tie or on the rail above it. Absolute adherence to this marking is required in some instances. More often the foreman is allowed to leave some marked ties and to remove some unmarked ties. Ordinarily, only ties which are useless where they are should be removed; but when track is given a general out-of-face overhauling, all ties which appear to be nearing the end of their service life may be removed.

e. Records of inspections of ties in track, detailed as to location by telegraph poles or other short stretches having easily recognized landmarks, aid in the unloading of ties where needed and thus avoid expensive extra handling.

3.5.14 SALVAGE (1985)

a. Ties still serviceable enough for economical reuse become available when lines are abandoned and tracks are taken up; when the renewal of all ties in tunnels, in road crossings, or at station platforms releases them; and when ties under heavy traffic have to be removed because their service in such track is no longer satisfactory.

b. While the reclamation or salvage of ties is sound in principle and highly desirable, it can easily be overdone. To guard against any tendency toward false economy resulting from loyalty to reclamation as such, all costs must be considered. Complete records of all expenses connected with picking up, stacking, preparing, and shipping ties for reuse should be kept for comparison with the prices of other materials for a given purpose, together with the respective costs of installation. Expenditures for handling and hauling may confine their reuse to locations close to where they are removed from track.

c. The most economical use of ties is to leave them in their original locations until they are so decayed or mechanically worn that they cannot serve their purposes any longer. However, in connection with general track reconditioning, it is usually economical to replace ties near the end of their serviceability, in order that the track need not be disturbed again for several years. This procedure is desirable in heavy-traffic, high-speed lines where spot tie renewals are expensive and the disturbance of refined track surface is especially inadvisable.

d. Ties removed from track should be carefully inspected and sorted into those fit for reuse in tracks, those suitable for other uses and “culls.”

© 2010, American Railway Engineering and Maintenance-of-Way Association

e. Generally, secondhand usable ties have had their original quality lowered, and in consequence their reuse should be confined to tracks of lesser importance, such as those in light-traffic branch lines, sidings and yards. These ties should be reinserted in track quickly to avoid accelerated deterioration.

f. Ties reusable in track should be re-inserted with the same surface up as in original location. Only when light adzing of that surface will not provide satisfactory seats for the tie plates should ties be turned over.

g. All spike holes in reused ties should be filled with tight-fitting treated plugs.

h. Treated tie plugs can be inserted and a preservative paste or a preservative treated pad applied to the plate bearing areas advantageously as the removal of the rail progresses during the recovery of serviceable ties.

i. The following are visual characteristics a tie should possess to be considered salvageable:

(1) Rail seats sound, no evidence of decay.

(2) Limited mechanical wear under the tie plates.

(3) Spike holes sound.

(4) No splits from end of tie to a point beyond the outside edge of tie plate.

(5) No center-bound break.

(6) No evidence of internal decay.

(7) Tie should have evidence of treatment.

(8) Tie could have surface checks but no checks half way or more through the tie.

j. Salvaged ties must be reinstalled or re-treated as soon as possible after being removed from ballast. If a used tie is allowed to dry out it tends to be subject to excessive checking and/or splitting.

k. Ties unfit for reuse in standard gage track have possible uses as follows:

(1) *Fence posts.* Some ties removed from track will make satisfactory fence posts.

(2) *Narrow gage ties.* Cutting off the useless ends of ties will shorten them for reuse in tracks of material, repair, or seasoning yards.

(3) *Current retards*. Set on end and properly spaced, ties useless in track will divert water and thus control erosion for a period justifying their use for that purpose.

(4) *Crib walls.* Rectangular ties are more suitable than slab ties for such construction.

(5) *Mud sills.* Unusable ties serve satisfactorily to support stacks of ties or other material off the ground.

(6) *Paving*. Where more elaborate paving is not justified on motor car set-offs or in stock yards, unusable ties may provide a durable, serviceable pavement.

(7) *Scrap bins*. At section houses and elsewhere, ties no longer useful in track can be cribbed to provide receptacles for material to be reclaimed or discarded.

(8) *Sale*. Local demands for old ties to be used for landscaping, charcoal, fuel, wood chips, blocking and other uses may provide markets which will absorb ties no longer desired by the railroad company.

© 2010, American Railway Engineering and Maintenance-of-Way Association

SECTION 4.11 RECOMMENDED PRACTICES FOR SHIPPING, HANDLING, APPLICATION AND USE

4.11.1 SHIPPING (1989)

Concrete ties should be shipped in open-top cars. Ties must be securely braced for transportation to prevent any movement that will cause damage. Ties shall be shipped in a horizontal position and braced with spacer blocks in such a manner that the top surface or cast-in-place hardware does not contact ties loaded above. Ties shall not be loaded higher than the top of the cars nor more than six layers deep. The purchaser shall specify the size of shipments in accordance with unloading facilities.

4.11.1.1 Protection of Threaded Inserts

If cast-in place threaded inserts are included in ties, they shall be protected against entry of water and foreign matter by means of a plastic cap, plug or other suitable device approved by the engineer. Caps or plugs shall be placed in position at the time of manufacture, left in place during shipping and not removed until fastenings are affixed to the ties.

4.11.2 HANDLING (1989)

Unnecessary handling, redistribution and reloading of concrete ties should be avoided. To the extent practical, ties should be distributed in proper position for use without further handling. They shall be unloaded from cars in a manner that will not damage the ties. In no case shall ties be dropped from a truck or car to the roadbed.

4.11.3 PLACEMENT AND INITIAL ROADBED SUPPORT (1988)

In new construction care must be taken to insure that all concrete cross ties are uniformly supported on the roadbed and that no center-binding conditions develop prior to ballasting and tamping. If the subgrade condition indicates that there is inadequate or non-uniform support for the ties before placement of ballast, a minimum layer of 3 inches (76.2 mm) of ballast should be placed, leveled and compacted before placement of ties. Ties shall be installed at right angles to the center of track at the designed spacing prior to rail installation.

4.11.4 PLACEMENT OF RAIL AND FASTENINGS IN NEW CONSTRUCTION (2005)

4.11.4.1 Tie Pads

Rail seats should be clean and ties properly positioned prior to placement of pads. Pads should be accurately positioned and centered on the rail seat.

4.11.4.2 Rail

Rail must not be dropped into place. Where continuous welded rail is to be used, the use of rollers is recommended to facilitate its unloading and reduce the risk of dislocating ties and tie pads. Rail shall not be brought into contact with the tie ends during installation. Where rail heaters are used, care should be taken to prevent damage to pads and insulators.

4.11.4.3 Joints

If jointed rail is to be used (see Article 4.1.5.2) special fastenings may required within joint bar limits. Care must be exercised to see that such fastenings are clearly distinguishable and ordered in the proper amount. Care should also be taken to see that the actual juncture of two rails does not occur directly over a tie.

© 2010, American Railway Engineering and Maintenance-of-Way Association

4.11.4.4 Fastenings

Where more than one type of fastening, such as gage and field fastenings or special joint fastenings, are to be used they shall be clearly marked to avoid confusion and avoid difficulties during their distribution and application. Fastenings shall be applied in the manner appropriate to their design and approved by their manufacturer. If threaded fasteners are used, the shank at the screw shall be dipped in petrolatum before assembly.

4.11.4.5 Corrosion Protection

In corrosive environments, consideration should be given to protecting the external components of fastenings.

4.11.4.6 Insulators

Rail shall be centered before placing insulators. Both insulators at a rail shall be fitted before applying other fastener components. Bars or hammers shall not be used to force insulators into position.

4.11.4.7 Disposing of Concrete Ties

The characteristics of concrete ties allow several options for disposal once their normal service life is over. Options commonly chosen include using concrete ties as riprap for slope stabilization, or sending the ties to a local landfill. Concrete ties are generally designated as "Industrial Solid Waste", and such designation must be considered when compliance with Local and Federal Regulation is required. This designation prohibits simple burial within the right of way. Other local requirements, such as insuring that all concrete ties left on the ground as riprap remain above any expected high water line, or complying with environmental regulations concerning Ferro ions, must be met as well.

Crushing of concrete ties has also been successfully done. If this option for disposal is selected, reclamation of scrap metal from crushed ties may be economically advantageous.

If concrete ties are only partially damaged, consideration can be given to their reuse in track. In the case of ties on which both rail seats are intact, but only one rail seat is able to permit satisfactory rail fastening, such ties can be successfully used in yard or other light duty trackage by alternating those rail seats where rail can be fastened. By doing so, both rails are ultimately secured at every other rail seat. However, before recycling concrete ties in this manner, verify that this usage is consistent with the expected rail traffic.

4.11.5 TAMPING (1993)

Tamping of concrete ties should be in accordance with the provisions of Chapter 5, Track.

4.11.6 TRACK GEOMETRY (1993)

It is recommended that concrete ties be installed on curves only if the curves have AREMA-recommended, or equal, spiral approach and departure transitions.

4.11.7 SERVICEABILITY (2006)

While cracks and missing concrete are not aesthetically pleasing, most visible imperfections do not compromise the strength of concrete ties. Repairing these imperfections would be for cosmetic purposes only and would not improve the structural integrity of the tie.

Acceptable limits for cosmetic imperfections should be mutually agreed upon by both manufacturer and owner prior to receipt of product.

© 2010, American Railway Engineering and Maintenance-of-Way Association

4.11.7.1 Center Binding Cracks

Center binding occurs when the tie is supported primarily at the tie center, which can cause cracks to develop in the top center of the tie. Once support condition is corrected, these cracks close due to the prestressing force on the ties. These ties can remain in track, providing the center binding was not severe enough to cause loss of concrete.

4.11.7.2 Damaged Ends (Missing Concrete)

During the handling, shipping, installation, or maintenance of concrete ties, tie ends can be damaged. This damage can expose tendons, but a significant amount of concrete would need to be removed in order to reduce the strength of the tie. Testing can establish the parameters of concrete loss that affect structural integrity.

SECTION 4.12 BALLAST

4.12.1 SCOPE (1996)

Refer to Chapter 1, Roadway and Ballast, Part 2, Ballast for all ballast requirements.

SECTION 4.13 TIES FOR TURNOUTS

4.13.1 GENERAL (1993)

a. Concrete ties used in turnouts are subjected to loadings and ballast support conditions considerably different from cross ties in standard track. The trackwork mounted on the ties, and the passage of rail traffic, especially on the turnout track, generate non-uniform dynamic loads which must be considered in the tie design.

b. The dimensions, and tolerances for manufacturing turnout ties are no more critical than standard track ties, but the calculations are much more complex because they must be done precisely for each individual tie in the turnout.

c. The specific provisions below for turnout ties are to be followed in addition to the regular requirements of Part 4, Concrete Ties. Where no specific provisions are stated, the general requirements for concrete cross ties are be used.

4.13.2 LAYOUT (1993)

4.13.2.1 Tie Orientation

a. Ties may be oriented at right angles to the straight track, per Figure 30-4-15, View A in which case the ties with cast in shoulders are different for left hand and right hand turnouts. Ties in sections having the rail fastened to a steel plate, and then the steel plate fastened to the tie, shall be designed for interchangeable use in left and right hand turnouts.

b. Ties may be oriented in a fanned layout per Figure 30-4-15, View B in which case all of the turnout ties may be used for left hand, right hand, or equilateral turnouts. This minimizes the number of different ties which must be produced, and stocked, but the geometric calculations to accurately locate the fastening in the fanned layout are considerably more complex.

© 2010, American Railway Engineering and Maintenance-of-Way Association

American Railway Engineering and Maintenance-of-Way Association

Part 6

Specifications and Plans for Track Tools

— 2010 —

TABLE OF CONTENTS

Section/Article	Description	Page
6.1	**Specification for Track Tools (1997)**	**5-6-4**
6.1.1	General	5-6-4
6.1.2	Percussion Tools (2006)	5-6-5
6.1.3	Non-Percussion Tools (Materials, Inspection And Physical Tests)	5-6-9
6.2	**Specifications for Ash and Hickory Handles for Track Tools (1962)**	**5-6-13**
6.2.1	Material (1980)	5-6-13
6.2.2	Physical Requirements (1980)	5-6-14
6.2.3	Design (1980)	5-6-14
6.2.4	Manufacture (1980)	5-6-14
6.2.5	Inspection (1980)	5-6-14
6.2.6	Types of Blemishes and Defects (1980)	5-6-15
6.2.7	Delivery (1980)	5-6-15
6.2.8	Grade Classification (1984)	5-6-16
6.2.9	Use Classification (2010)	5-6-17
6.3	**Recommended Limits of Wear for Tools to be Reclaimed (1962)**	**5-6-17**
6.3.1	General (1962)	5-6-17
6.4	**Insulation for Track Tools Standard Specifications (1989)**	**5-6-18**
6.4.1	General (1989)	5-6-18
6.4.2	Technical Requirements (1989)	5-6-18
6.4.3	Inspection and Shipment (1989)	5-6-22
6.4.4	Inspection and Use (1989)	5-6-22
6.5	**Plans for Track Tools (2010)**	**5-6-23**
6.5.1	General (2010)	5-6-23
6.5.2	Hand Tool Contour Dimensions (2009)	5-6-70
6.5.3	Method for Establishing the Corner Contour of Hand Tool Striking Faces (1984)	5-6-72
6.5.4	Method for Establishing the Corner Contour of Hand Tool Struck Faces (3/4 inch Stock and Over) (1984)	5-6-73
6.5.5	Contour Blending of Corners (1984)	5-6-74

© 2010, American Railway Engineering and Maintenance-of-Way Association

TABLE OF CONTENTS (CONT)

Section/Article	Description	Page
6.6	Recommended Practices for Using, Redressing, Sharpening and Replacing Handles in Track Tools (2004)	5-6-75
6.6.1	Introduction (1994)	5-6-75
6.6.2	Tool Design and Manufacture (2004)	5-6-75
6.6.3	Redressing of Tools (1994)	5-6-76
6.6.4	Sharpening of Tools (1994)	5-6-77
6.6.5	Replacing Handles (1994)	5-6-77

LIST OF FIGURES

Figure	Description	Page
5-6-1	Plan 1-02 – AREMA Clay Pick	5-6-25
5-6-2	Plan 2-02 – AREMA Tamping Pick	5-6-26
5-6-3	Plan 3-08 – AREMA Spike Maul	5-6-27
5-6-4	Plan 4-07 – AREMA Track Wrenches for Recommended Track Bolt Nuts	5-6-28
5-6-5	Plan 5-02 – AREMA Lining Bar	5-6-29
5-6-6	Plan 6-02 – AREMA Rail Tongs	5-6-30
5-6-7	Plan 7-10 – AREMA Tie Tongs	5-6-31
5-6-8	Plan 8-10 – AREMA Timber Tongs	5-6-32
5-6-9	Plan 9-10 – AREMA Spike Puller	5-6-33
5-6-10	Plan 10-03 – AREMA Rail Fork	5-6-34
5-6-11	Plan 11-10 – AREMA Claw Bar	5-6-35
5-6-12	Plan 12-07 – AREMA Track Adz	5-6-36
5-6-13	Plan 12A-07 – AREMA Carpenter's Adz	5-6-37
5-6-14	Plan 13-08 – AREMA Double Faced Sledge	5-6-38
5-6-15	Plan 14-02 – AREMA Chisel End Tamping Bar	5-6-39
5-6-16	Plan 15-02 – AREMA Spear End Tamping Bar	5-6-40
5-6-17	Plan 16-02 – AREMA Tie Plug Driver	5-6-41
5-6-18	Plan 17-08 – AREMA Track Chisel	5-6-42
5-6-19	Plan 19-08 – AREMA Round Track Punch	5-6-43
5-6-20	Plan 20-62 – AREMA Track Gage – Pipe Center	5-6-44
5-6-21	Plan 20A-08 – AREMA Track Gage – Wood Center	5-6-45
5-6-22	Plan 21-08 – AREMA Track Shovel	5-6-46
5-6-23	Plan 22-08 – AREMA Ballast Fork	5-6-47
5-6-24	Plan 25-03 – AREMA Track Tool Handles	5-6-48
5-6-24A	Plan 25A-03 – AREMA Track Tool Handles	5-6-49
5-6-25	Plan 26-08 – AREMA Scoop	5-6-50
5-6-26	Plan 27-08 – AREMA Aluminum Combination Track Level and Gage (Insulated)	5-6-51
5-6-27	Plan 31-97 – AREMA Rail Tongs for Use with Cranes	5-6-52
5-6-28	Plan 32-08 – AREMA Track Spike Lifter	5-6-53
5-6-29	Plan 33-62 – AREMA Drive Spike Extractor Socket Wrench	5-6-54
5-6-30	Plan 34-02 – AREMA Rail Thermometer	5-6-55
5-6-31	Plan 35-08 – AREMA Nut Cutter	5-6-56
5-6-32	Plan 36-08 – AREMA 3 Pound Hot Cutter	5-6-57

© 2010, American Railway Engineering and Maintenance-of-Way Association

LIST OF FIGURES (CONT)

Figure	Description	Page
5-6-33	Plan 37-08 – AREMA 5 Pound Hot Cutter	5-6-58
5-6-34	Plan 38-06 – AREMA - Drift Pin (Short)	5-6-59
5-6-35	Plan 39-09 – AREMA - Drift Pins (Long)	5-6-60
5-6-36	Plan 41-08 – AREMA Spiking Tool	5-6-61
5-6-37	Plan 42-05 – AREMA Rail Tongs For Use With Truck Crane	5-6-62
5-6-38	Plan 43-97 – AREMA Switch Clip Wrench	5-6-63
5-6-39	Plan 44-97 – AREMA Nipping Bar	5-6-64
5-6-40	Plan 45-09 - AREMA Nipping Fork	5-6-65
5-6-41	Plan 46-08 - AREMA Drift Pin Remover	5-6-66
5-6-42	Plan 47-08 - AREMA Offset Wedge	5-6-67
5-6-43	Plan 48-09 AREMA Plug Bond Backout Punch	5-6-68
5-6-44	Plan 50-10 AREMA Aluminum Tie Tongs	5-6-69
5-6-45	Plan B-83 – AREMA Contour of Hand Tool Striking Faces	5-6-72
5-6-46	Plan C-83 – AREMA Contour of Hand Tool Struck Faces	5-6-73
5-6-47	Plan D-83 – AREMA Contour Blending of Corners	5-6-74

LIST OF TABLES

Table	Description	Page
5-6-1	Chemical Compositions	5-6-4
5-6-2	Chemical Requirements for Striking and Struck Tools	5-6-7
5-6-3	Specimen Limits	5-6-8
5-6-4	Grade Classifications	5-6-16
5-6-5	Use Classifications	5-6-17
5-6-6	Self-Amalgamating Sealant Tape Required Properties	5-6-19
5-6-7	Environmental Boots Required Properties	5-6-19
5-6-8	Heat Shrinkable Tubing and End Caps Required Properties	5-6-20
5-6-9	Self-Amalgamating Sealant Tape Size Selection	5-6-20
5-6-10	Environmental Boots Size Selection	5-6-21
5-6-11	Heat Shrinkable Tubing Size Selection	5-6-21
5-6-12	End Caps with Sealant Size Selection	5-6-21
5-6-13	Plans for Track Tools (2010)	5-6-23
5-6-14	Plan A-AREMA Hand Tool Contour Dimensions	5-6-70

© 2010, American Railway Engineering and Maintenance-of-Way Association

SECTION 6.1 Specification for Track Tools[1] (1997)

6.1.1 General

6.1.1.1 Workmanship

a. The steel used in the manufacture of all tools shall be free from pipe, porous centers, gross non-metallic inclusions or any other defects.

b. The chemical composition of percussion tools will be as stated in Article 6.1.2.3.

c. Unless specifically stated otherwise in the section on non-percussion tools, the chemical composition of non-percussion tools made from carbon steel will be as follows:

Table 5-6-1. Chemical Compositions

	Carbon		Manganese		Phosphorous		Sulfur	
Grade	Min	Max	Min	Max	Min	Max	Min	Max
Carbon	.55	.70	.60	.90		.05		.05

d. All tools shall be made in a workmanlike manner and shall be free from cracks, seams, laps and other injurious discontinuities. Tools shall be free from burrs and sharp edges not specifically shown on the plans.

e. Eyes of tools with handle holes must be on center and in true alignment.

6.1.1.2 Finish

6.1.1.2.1 Percussion Tools

The body of the tool will be unpainted. The entire tool will be coated with a transparent lacquer type rust preventative.

6.1.1.2.2 Non-Percussion tools

The body of the tool will be coated with paint, oil or varnish to prevent corrosion. Each polished cutting edge will be oiled or coated with a transparent lacquer type rust preventative.

6.1.1.3 Marking

a. Each tool shall be legibly marked by stamping the following:

(1) The manufacturer's name and/or trademark.

(2) A code indicating the production lot.

(3) For tools manufactured for use in the United States, any information required by the U.S. Department of Labor, Occupational Safety And Health Administration (OSHA). For tools

[1] References, Vol. 31, 1930, pp. 555, 1753; Vol. 33, 1932, pp. 582, 815; Vol. 34, 1933, pp. 508, 838; Vol. 35, 1934, pp. 930, 1118, 1122; Vol. 36, 1935, pp. 567, 978; Vol. 37, 1936, pp. 479, 1019; Vol. 41, 1940, pp. 560, 867; Vol. 45, 1944, pp. 337, 620; Vol. 47, 1946, pp. 482, 636; Vol. 54, 1953, pp. 974, 1398; Vol. 55, 1954, pp. 700, 1079; Vol. 58, 1957, pp. 834, 1258; Vol. 62, 1961, pp. 652, 946; Vol. 63, 1962, pp. 490, 755; Vol. 85, 1984, p. 25; Vol. 89, 1989, p. 49; Vol. 94, 1994, p. 81.

© 2010, American Railway Engineering and Maintenance-of-Way Association

manufactured for use in other countries, the requirements of that country will apply. This pertains primarily to lifting devices used by cranes but may also be required for other tools. The manufacturer will also furnish certified testing and/or other information with each item shipped as needed to comply with OSHA Standards or the requirements of other countries.

(4) If requested by the purchaser, a specific marking indicating the railroad for which the tool was made.

b. The marking shall be located in a position which will not interfere with the quality or performance of the tool, and will not be removed by subsequent redressing.

6.1.1.4 Inspection

a. The inspector representing the purchaser shall have free entry, at all times while the work on the contract of the purchases is being performed, to all parts of the manufacturer's works which concern the manufacture of the materials ordered. The manufacturer shall afford the inspector free of charge, all reasonable facilities and necessary assistance to satisfy the inspector that the material is being furnished in accordance with these specifications. Tests and inspections shall be made prior to shipment at the place of manufacture unless otherwise specified.

b. The purchaser may make tests to govern the acceptance or rejection in the purchaser's laboratory or elsewhere. Such tests shall be made at the expense of the purchaser.

c. Rejection—Material represented by samples which fail to conform to the requirements of these specifications will be rejected.

d. Material which, subsequent to test and inspection at the manufacturer's plant or elsewhere, shows injurious defects will be rejected and the manufacturer shall be notified.

6.1.1.5 Shipment or Delivery

Tools shall be properly packed for shipment to avoid damage. All bundles and boxes shall be plainly marked with the name of the purchaser, purchaser's order number, the name of the supplier, and the point of shipment.

6.1.1.6 Warranty

The manufacturer shall warrant that all tools are free from defects in material, workmanship and heat treatment, that the tools meet all requirements of this specification, and that any defective tools will be replaced free of cost to the purchaser. Certified test report may be requested by the purchaser.

6.1.2 Percussion Tools (2006)

6.1.2.1 Scope

This section of specifications covers the contouring and metallurgical requirements for the manufacturing, ordering, inspection and acceptance of the following percussion tools.

6.1.2.1.1 Metal to Metal Contact Striking Tools

Spike Maul	Plan No. 3
Double-Face Sledge Hammers	Plan No. 13

© 2010, American Railway Engineering and Maintenance-of-Way Association

6.1.2.1.2 Metal To Metal Contact Struck Tools

Track Chisels	Plan No. 17
Round Track Punch	Plan No. 19
Track Spike Lifter	Plan No. 32
Nut Cutter	Plan No. 35
3 lb. Hot Cutter	Plan No. 36
5 lb. Hot Cutter	Plan No. 37
Drift Pin-Short	Plan No. 38
Drift Pin-Long	Plan No. 39
Spiking Tool	Plan No. 41
Drift Pin Remover	Plan No. 46
Offset Wedge	Plan No. 47
Plug Bond Backout Punch	Plan No. 48

6.1.2.2 Manufacture

6.1.2.2.1 Process

The shock resisting steel shall be made from carbon deoxidized, special quality, fine grain size alloy bar produced in accordance with ASTM A576, Standard Specification For Steel Bars, Carbon, Hot-Wrought, Special Quality.

6.1.2.2.2 Heat Treatment

a. Each tool classified in Article 6.1.2.1.1 and Article 6.1.2.1.2 shall be hardened by liquid quenching and subsequent tempering in such a manner that the hardness range will be maintained to a sufficient depth to absorb the normal working stresses. This heat treatment shall be such that a fracture test of the tool will exhibit a silky, fine grained appearance according to Shephard Standard No. 6 or finer.

b. All tools made with alloy steel to be redressed without subsequent heat treatment shall be initially heat treated so that the hardness specified in Article 6.1.2.3.1 is maintained to depth from the end not less than the average cross sectional thickness.

© 2010, American Railway Engineering and Maintenance-of-Way Association

6.1.2.3 Chemical and Hardness Requirements

All striking and struck tools (Article 6.1.2.1.1 and Article 6.1.2.1.2) shall be made of shock resisting alloy steel of a chemical composition with standard AISI residuals (see Table 5-6-2).

Table 5-6-2. Chemical Requirements for Striking and Struck Tools

	Carbon		Manganese		Phos.	Sulfur	Silicon		Vanadium		Molybdenum		Nickel		Chromium	
Grade	Min	Max	Min	Max	Max	Max	Min	Max	Min	Max	Min	Max	Min	Max	Min	Max
Alloy 4140	0.38	0.43	0.75	1.00	0.035	0.04	0.15	0.30	0.00	0.00	0.15	0.25	0.00	0.00	0.80	1.10
Grade	Min	Max	Min	Max	Max	Max	Min	Max	Min	Max	Min	Max	Min	Max	Min	Max
Alloy "B"	0.51	0.60	0.75	1.00	0.025	0.025	1.80	2.20	0.00	0.45	0.35	0.50	0.00	0.00	0.00	0.00
Grade	Min	Max	Min	Max	Max	Max	Min	Max	Min	Max	Min	Max	Min	Max	Min	Max
EN30B	0.28	0.32	0.40	0.60	0.03	0.025	0.20	0.35	0.00	0.05	0.20	0.30	3.75	4.00	1.10	1.40

6.1.2.3.1 Hardness

All hardness tests shall be performed according to the latest revision of ASTM Spec. E-18. Frequency of testing should be performed to the requirements in the latest revision of "MIL-STD-105E, Military Standard Sampling Procedure Tables for Inspection Attributes."

- All struck surfaces shall be 44/48 Rockwell "C" Hardness except Drift Pins, see Plans 38 and 39.
- All striking surfaces shall be 51/55 Rockwell "C" Hardness.
- All cutting surfaces shall be 56/60 Rockwell "C" Hardness.
- All punch ends shall be 52/56 Rockwell "C" Hardness.

6.1.2.4 Hardenability

6.1.2.4.1 Alloy Steel

Composition of the steel shall be such that, in the standard Jominy test, the hardness is greater than 50 Rockwell C at 8/16 inch from the quenched end of the specimen.

6.1.2.4.2 Frequency of Testing

The steel manufacturer shall have conducted a Jominy test from the first, middle and last ingot of each heat of steel purchased.

© 2010, American Railway Engineering and Maintenance-of-Way Association

6.1.2.5 Microscopic Inclusion Evaluation

Alloy steel shall meet the following requirements for inclusions.

6.1.2.5.1 Test Specimens

Specimens shall be taken from approximately 4 inch (100 mm) forged, square section taken from the top and bottom of the first, middle and last ingot. The specimen shall be 3⁄8 by 3⁄4 inch (9.5 by 19 mm) and shall be taken from an area midway between the center and outside of the test section. Procedures outlined in the latest revision of ASTM Method E 45 shall be followed.

6.1.2.5.2 Examination and Limits

Specimens shall be examined in accordance with the latest revision of ASTM Method E 45, Method D, using the modified JK Chart Fig. 12 of Plate III. The worst field in any specimen shall not exceed the following limits:

Table 5-6-3. Specimen Limits

	A	B	C	D
Thin	3.0	3.0	2.5	2.0
Thick	2.0	2.5	1.5	1.5

6.1.2.6 Nondestructive Test Requirements

To ensure that all tools are free from defects listed in Article 6.1.1, each tool shall be inspected after finished grinding by the supplier according to one of the following procedures:

- Magnetic Particle Inspection in accordance with the latest revision of ASTM Method A-275.
- Liquid Penetrant Inspection in accordance with the latest revision of ASTM Recommended Practice E-165.

6.1.2.7 Design

All tools shall conform substantially when applicable to the dimensions set forth. Dimensions for head contours are shown in Plans A, B or C, D.

6.1.2.7.1 Head Contour

a. Heads of tools with a round cross section shall be ground to the corner contours prescribed in Plans A, B or C.

b. Heads of tools with a hexagonal or octagonal cross section should also be ground to the corner contours prescribed in Plans A, B or C. In addition, the arcs not tangent to the hexagonal or octagonal corners shall be “blended” into a smooth contour similar to that shown in Plan D.

c. Punch ends shall have corner radii according to paragraph a, but with no crown radius.

d. All ground surfaces shall be free of decarburization.

© 2010, American Railway Engineering and Maintenance-of-Way Association

6.1.3 Non-Percussion Tools (Materials, Inspection And Physical Tests)

6.1.3.1 Clay Pick—Plan No. 1

Chemical composition for carbon steel as specified in Article 6.1.1.1c, or alloy steel as specified in AISI 4140. No special tests required.

6.1.3.2 Tamping Pick—Plan No. 2

Chemical composition for carbon steel as specified in Article 6.1.1.1c, or alloy steel as specified in AISI 4140. No special tests required.

6.1.3.3 Spike Maul—Plan No. 3

See percussion tools.

6.1.3.4 Track Wrenches—Plan No. 4

Chemical composition for carbon steel as specified in Article 6.1.1.1c. One wrench to be tested from each lot of 10 dozen or less by applying for 1 minute a load of 400 lb. at a point distant from the jaw end equal to 95 percent of the total length of the wrench without any spreading of the jaw or any permanent set in the handle. If requested by the purchaser, Article 6.1.2.6, Nondestructive Test Requirements, will be adhered to.

6.1.3.5 Lining Bar—Plan No. 5

Chemical composition for carbon steel as specified in Article 6.1.1.1c. One bar to be tested from each lot of 10 dozen or less by applying a load of 350 lb. 9 inch from the end of the handle, with the point suitably secured 6 inch from the end, without leaving a permanent set in excess of 1/4 inch.

6.1.3.6 Rail Tongs—Plan No. 6

Chemical composition for carbon steel as specified in Article 6.1.1.1c. No special tests required.

6.1.3.7 Tie Tongs—Plan No. 7

Chemical composition for carbon steel as specified in Article 6.1.1.1c. No special tests required.

6.1.3.8 Timber Tongs—Plan No. 8

Chemical composition for carbon steel as specified in Article 6.1.1.1c. Three pairs of tongs to be tested from each lot of 10 dozen or less by suspending a load of 300 lb. or 400 lb. work wise in the tongs with the handles in a horizontal position and supported 2 inch from the end. Deflection with 300 lb. weight shall not exceed 1 inch with no permanent set, and with 400 lb. weight deflection shall not exceed 1-1/4 inches with a permanent set not to exceed 1/8 inch.

6.1.3.9 Spike Puller—Plan No. 9

Chemical composition for carbon steel as specified in Article 6.1.1.1c. One puller from each lot of 10 dozen or less to be tested in actual use by pulling a spike with a standard claw bar.

6.1.3.10 Rail Fork—Plan No. 10

Chemical composition for carbon steel as specified in Article 6.1.1.1c. No special tests required.

© 2010, American Railway Engineering and Maintenance-of-Way Association

6.1.3.11 Claw Bar—Plan No. 11

Chemical composition for carbon steel as specified in Article 6.1.1.1c. In the manufacture of claw bars, Article 6.1.2.6, Nondestructive Test Requirements will be adhered to. One bar from each lot of 10 dozen or less to be tested by placing the claws of the bar 1/2 inch under the head of a standard spike, rigidly placed and so located as to hold the bar in a horizontal position while a shock load equivalent to that of a 200 lb. weight falling a distance of 1 foot is applied to the handle at a point 5 inches from its end, without the toes showing any cracks or the handle taking any permanent set.

6.1.3.12 Track Adz—Plan No. 12

Chemical composition for carbon steel as specified in Article 6.1.1.1c. Test one adz in each lot of 10 dozen or less by subjecting cutting edge to 5 normal blows on metal of the same composition as a railroad spike without breakage or serious nicking.

6.1.3.13 Carpenter's Adz—Plan No. 12A

Chemical composition for carbon steel as specified in Article 6.1.1.1c. No special tests required.

6.1.3.14 Double Face Sledge—Plan No. 13

See percussion tools.

6.1.3.15 Tamping Bar—Plan Numbers 14–15

Chemical composition for carbon steel as specified in Article 6.1.1.1c. No special tests required.

6.1.3.16 Tie Plug Driver—Plan No. 16

Material as shown on plan. No special tests required.

6.1.3.17 Track Chisels—Plan No. 17

See percussion tools.

6.1.3.18 Round Track Punch—Plan No. 19

See percussion tools.

6.1.3.19 Track Gage—Plan No. 20

Material as shown on plans. No special tests required.

6.1.3.20 Track Gage with Wood Rod—Plan No. 20-A

Material as shown on plans. No special tests required.

6.1.3.21 Track Shovel—Plan No. 21

6.1.3.21.1 Scope and Design

This specification covers the welded or riveted type and the solid shank type with either wood, malleable iron, combination wood metal, or user approved composition handle tops. Dimension shall conform to plans, which are made part of this specification. A variation of 1/2 inch more or less from the dimensions shown on the plan for the length of the strap or shank and handle will be allowed. A variation of 1/4 inch more or less from the

© 2010, American Railway Engineering and Maintenance-of-Way Association

dimensions shown on the plan for the width or length of the blade will be allowed, but the total variation in the overall length of shovels shall not exceed 1/2 inch more or less of the dimensions shown on the plan.

6.1.3.21.2 Materials

a. Blades shall be of carbon or alloy steel, with a Rockwell (Rc) hardness for carbon steel of 45 to 50.

b. Carbon steel blades shall have a thickness of not less than No. 13 gage and alloy blades shall be not less than No. 14 gage U.S. Standard, the gage to be measured at the point where the hardness is taken. For welded or riveted types, the straps shall be welded or riveted to the blade.

6.1.3.21.3 Handles and Tops

This specification covers either wood, malleable iron, combination wood metal, or user approved composition handle tops. Wood handles shall be made of ash and shall conform to Grade AA and be in accordance with the general Specifications for Handles for Track Tools.

6.1.3.21.4 Tests

a. One shovel from each lot of 10 dozen or less shall be selected. Metal straps (curved to fit the contour of the handle) shall be clamped to the upper and lower parts of the handle. Then, the shovel shall be placed in a prying position, supported at the end of the blade by clamps. The shovel shall be capable of sustaining a load of 200 lb. suspended from the end for a period of 2 minutes without showing any permanent set, fracture or distortion.

b. Alloy steel shovels which have been given heat treatment to ensure uniformity in hardness shall be subject to shock test to ensure against brittleness. The test shall be made by forcibly striking the blade of the shovel with a hand hammer at several places when placed on an anvil.

6.1.3.22 Ballast Forks—Plan No. 22

6.1.3.22.1 Scope and Design

The dimensions shall conform to the plans, which are made part of this specification. The total variation in the overall length of the forks shall not exceed 1/2 inch more or less of the dimensions shown on plan.

6.1.3.22.2 Material

Forks shall be made of high grade carbon steel. Tines of forks shall show Rockwell (Rc) harness of 35-45. Straps shall be 0.04 U.S. Standard gage steel.

6.1.3.22.3 Handles

This specification covers either wood, malleable iron, combination wood metal, or user approved composition handle tops. Wood handles shall be made of ash and shall conform to Grade AA and be in accordance with the general Specifications for Handles for Track Tools.

6.1.3.23 Track Tool Handles—Plan Numbers 25-25A

See Specification For Ash And Hickory Handles For Track Tools for material requirements. No special tests required.

© 2010, American Railway Engineering and Maintenance-of-Way Association

6.1.3.24 Scoop—Plan No. 26

6.1.3.24.1 Scope and Design

This specification covers the welded or riveted type and the solid shank type with either wood, malleable iron, combination wood metal, or user approved composition handle tops. Dimension shall conform to plans, which are made part of this specification. A variation of 1/2 inch more or less from the dimensions shown on the plan for the length of the strap or shank and handle will be allowed. A variation of 1/4 inch more or less from the dimensions shown on the plan for the width or length of the blade will be allowed, but the total variation in the overall length of scoops shall not exceed 1/2 inch more or less of the dimensions shown on the plan.

6.1.3.24.2 Materials

Blades shall be of carbon or alloy steel, with a Rockwell (Rc) hardness for carbon steel of 45 to 50.

Carbon steel blades shall have a thickness of not less than No. 13 gage and alloy blades shall be not less than No. 14 gage U.S. Standard, the gage to be measured at the point where the hardness is taken. For welded or riveted types, the straps shall be welded or riveted to the blade.

6.1.3.24.3 Handles and Tops

This specification covers either wood, malleable iron, combination wood metal, or user approved composition handle tops. Wood handles shall be made of ash and shall conform to Grade AA and be in accordance with the general Specifications for Handles for Track Tools.

6.1.3.24.4 Tests

a. One scoop from each lot of 10 dozen or less shall be selected and metal straps (curved to fit the contour of the handle) shall be clamped to the upper and lower parts of the handle, after which the shovel shall be placed in a prying position, supported at the end of the blade by clamps and shall be capable of sustaining a load of 200 lb. suspended from the end for a period of 2 minutes without showing any permanent set, fracture or distortion.

b. Alloy steel scoops which have been given heat treatment to ensure uniformity in hardness shall be subject to shock test to ensure against brittleness. The test shall be made by forcibly striking the blade of the scoop with a hand hammer at several places when placed on an anvil.

6.1.3.25 Aluminum Track Level And Gage—Plan No. 27

Material as shown on plans. No special tests required.

6.1.3.26 Spot Board—Plan No. 30

Material as shown on plans. No special tests required.

6.1.3.27 Rail Tongs for use with cranes—Plan No. 31

Material as shown on plans. In the manufacture of the rail tongs, Article 6.1.2.6, Nondestructive Test Requirements, will be adhered to.

6.1.3.28 Track Spike Lifter—Plan No. 32

See percussion tools.

© 2010, American Railway Engineering and Maintenance-of-Way Association

6.1.3.29 Drive Spike Extractor Socket Wrench—Plan No. 33

No special tests required.

6.1.3.30 Rail Thermometer—Plan No. 34

Material as shown on plans. No special tests required.

6.1.3.31 Nut Cutter—Plan No. 35

See percussion tools.

6.1.3.32 Hot Cutter (3 Pound)—Plan No. 36

See percussion tools.

6.1.3.33 Hot Cutter (5 Pound)—Plan No. 37

See percussion tools.

6.1.3.34 Drift Pin (Short)—Plan No. 38

See percussion tools.

6.1.3.35 Drift Pin (Long)—Plan No. 39

See percussion tools.

6.1.3.36 Spiking Tool—Plan No. 41

See percussion tools.

6.1.3.37 Switch Clip Wrench—Plan No. 43

Chemical composition for carbon steel as specified in Article 6.1.1.1c. If requested by the purchaser, Article 6.1.2.6, will be adhered to (see Table 5-6-4).

SECTION 6.2 SPECIFICATIONS FOR ASH AND HICKORY HANDLES FOR TRACK TOOLS[1] (1962)

6.2.1 MATERIAL (1980)

a. Before manufacturing tool handles, the manufacturer shall ascertain which of the following kinds of ash or hickory will be accepted. Other woods will not be accepted unless specifically ordered.

b. Ash for fork, hoe, rake, scoop, shovel, and scythe handles.

- Black ash (Fraxinus nigra).
- Green ash (Fraxinus pennsylvanica lanceolata).

[1] References, Vol. 43, 1942, pp. 519, 767; Vol. 47, 1946, pp. 484, 636; Vol. 54, 1953, pp. 975, 1399; Vol. 58, 1957, pp. 834, 1258; Vol. 63, 1962, pp. 490, 755. Reapproved without change 1962.

© 2010, American Railway Engineering and Maintenance-of-Way Association

- Oregon ash (Fraxinus oregona).
- White ash (Fraxinus americana).

c. Hickory for adz, axe, canthook, chisel, hammer, hatchet, jack, maul, pick, punch and sledge handles.

- Bitternut hickory (Hicoria cordiformis).
- Mockernut hickory (Hicoria alba).
- Nutmeg hickory (Hicora myristicaeformis).
- Pignut hickory (Hicoria glabra).
- Shagbark hickory (Hicoria ovata).
- Shellbark hickory – Bigleaf (Hicoria laciniosa).
- Water hickory (Hicoria acquatica)

6.2.2 PHYSICAL REQUIREMENTS (1980)

a. Except as hereinafter provided, all tool handles shall be seasoned to a moisture content not exceeding 12%, and shall be free of injurious characteristics that may impair their serviceability, such as decay, cross grain, abrupt grain dip, holes, large knots, splits, heavy stain, warp, and lightweight wood.

b. Any tool handle may be either all heartwood, all sapwood, or a mixture of both.

6.2.3 DESIGN (1980)

Tool handles shall conform to the design and dimensions shown on AREMA plans which form a part of these specifications, with an allowable variation of 1/4 inch over or under in length and 1/16 inch over or under in all other dimensions.

6.2.4 MANUFACTURE (1980)

a. Tool handles shall be cut square at the ends, uniform in size and shape for each type, smoothly finished, and waxed. Lacquered, painted, or stained handles are not acceptable.

b. The manufacturer shall legibly impress into each accepted handle, at a location and in a manner that will not weaken the handle and at a location designated by the purchaser, whatever grade, maker, or ownership symbol may be required by the purchaser.

6.2.5 INSPECTION (1980)

a. Handles will be inspected at points of manufacture, shipment, or destination, in suitable and convenient places satisfactory to the purchaser.

b. Inspectors representing the purchaser shall have free entry to the works of the manufacturer at all times while work on the contract of the purchaser is being performed, and shall have all reasonable facilities (including adequate light) afforded them, free of cost, to satisfy them that the handles being supplied are in accordance with these specifications.

c. Inspectors will make a reasonably close examination of each handle and acceptance or rejection will be based on visual inspection and the judgment of the inspector. He will not determine the exact weight and density of each handle, but in case of question, one or both of these characteristics may be accurately

© 2010, American Railway Engineering and Maintenance-of-Way Association

measured for conformance with the requirements for each grade. Exactness of size and shape will be checked by accurate measurements of handles taken at random.

d. Each handle will be judged independently, without regard for the decisions on others in the same lot.

e. The inspector shall have his identifying designation legibly branded into the grasp end of each accepted tool handle.

6.2.6 TYPES OF BLEMISHES AND DEFECTS (1980)

Following is a list of blemishes and defects. Definitions for these effects are listed in the Glossary at the back of this chapter.

cross grain	abrupt grain dip	slight grain dip	hole
pin knot	small knot	medium knot	
split	light stain	medium stain	
small streak	medium streak	large streak	

6.2.7 DELIVERY (1980)

Accepted handles shall be shipped in accordance with the instructions in the order covering them, securely packed in containers marked with the name, type, grade, and quantity of the material therein and with the name of the shipper and the number of the purchaser's contract or order.

© 2010, American Railway Engineering and Maintenance-of-Way Association

6.2.8 GRADE CLASSIFICATION (1984)

Grade classifications are found in Table 5-6-4.

Table 5-6-4. Grade Classifications

Grade Symbol	Color	Maximum Number of Annual Rings per Inch of Radius	Minimum Weight per Cu Ft Lb	Maximum Slope of Grain	Admissible Blemishes and Defects
AA	White, red or brown, or brown, red, and white; but dark brown or dark red only within 10″ from tool end.	15	43	1 in 12	1 slight grain dip: tight pin knots and small streaks at least 12″ apart; light stain.
AB	White, red or brown, or brown, red, and white; but dark brown or dark red only with 10″ from each end.	18	36	1 in 12	1 small tight knot at each end; 2 slight grain dips and 2 tight pin knots at least 6″ apart; medium stain; 2 small streaks.
HA	Red or white or red and white.	17	55	1 in 50	Light stain: medium streaks
HB-1	Red or white or red and white.	22	46	1 in 50	Medium stain: large streak bird pecks or tight knots not more than 1/4″ in average diameter, in the eye end or first third of the grasp end.
HB-2	Red or white or red and white	27	46	1 in 20	Medium stain; slight grain dip; large streak; bird pecks or tight knots, the sum or whose average diameters does not exceed 1/4″ in the eye end or the first third of the grasp end.

© 2010, American Railway Engineering and Maintenance-of-Way Association

6.2.9 USE CLASSIFICATION (2010)

Use classifications are found in Table 5-6-5.

Table 5-6-5. Use Classifications

Handle	Handle Grade Symbol	Number of Tool Plan
Adz - 34″	HA	12 and 12A
Axe - 36″	HA	–
Chisel (Track) 24″, 36″	HB-2	17
Drift Pin Remover - 36″	HB-2	46
Fork (Ballast)	AA	22
Hot Cutter (3 lb) 24″, 36″	HB-2	36
Hot Cutter (5 lb) 24″, 36″	HB-2	37
Maul (Spike) 36″	HA	3
Nut Cutter - 24″, 36″	HB-2	35
Pick - 36″	HA	1 and 2
Punch (Round Track) 24″, 36″	HB-2	19
Scoop	AA	26
Shovel (Track)	AA	21
Sledge - 36″	HA	13
Spiking Tool - 24″, 36″	HB-2	41
Track Spike Lifter - 36″	HB-2	32

SECTION 6.3 RECOMMENDED LIMITS OF WEAR FOR TOOLS TO BE RECLAIMED[1] (1962)

6.3.1 GENERAL (1962)

a. Dashed lines and notes indicating the limits of wear of tools to be reclaimed are shown on the plans of the following tools: Nos. 1, 2, 3, 5, 12, 12A, 13, 14, 15, 17, 19 and 21.

b. For reclaiming alloy track tools, company forces should be limited to grinding methods; where it is advisable to reclaim them by heating methods, due to the numerous and continuous changes in alloy they should be returned to the manufacturer who is familiar with their precise metallurgical content.

[1] References, Vol. 42, 1941, pp. 587, 836; Vol. 43, 1942, pp. 522, 767; Vol. 52, 1951, pp. 519, 817; Vol. 54, 1953, pp. 975, 1399; Vol. 58, 1957, pp. 834, 1258; Vol. 63, 1962, pp. 490, 755. Reapproved without change 1962.

© 2010, American Railway Engineering and Maintenance-of-Way Association

SECTION 6.4 INSULATION FOR TRACK TOOLS STANDARD SPECIFICATIONS[1] (1989)

6.4.1 GENERAL (1989)

6.4.1.1 Scope

This specification covers the requirements for self-amalgamating sealant tape; heat shrinkable environmental sealing boots and thick wall tubing to be used for insulating track tools.

6.4.1.2 Type

a. The products specified in this section shall be compatible with each other.

b. Each product shall be furnished in sizes and quantities specified and manufactured in accordance with these specifications.

6.4.2 TECHNICAL REQUIREMENTS (1989)

6.4.2.1 Material

a. Self-amalgamating sealant tape shall be a cross-linked Butyl based tape that fuses to itself in ambient temperatures. It shall be formulated so that it can be stretch orientated to at least four times its original length, allowing conformance to irregular shapes. The tape shall be supplied with a release paper backing, which allows at least a 1.16 inch overlap to avoid roll contamination and ease of release.

b. Environmental boots shall be heat shrinkable cross-linked blends of polyolefin and elastomers which provide low moisture permeability, weather resistance and resistance to ozone attack.

c. Environmental boots shall include an adhesive system that provides an effective environmental seal that meets or exceeds the requirements of ANSI C119.1 for 600V rated systems.

d. Heat shrinkable tubing and end caps shall be a cross-linked blend of modified polyolefin and elastomers. A sealant shall be applied inside the tubing and end caps which remains flexible for the life of the system. This sealant shall provide both environmental sealing and waterproofing. The tubing shall provide a shrink ratio of at least 3:1 and the end caps at least 2:1.

e. The sealant system shall provide an effective environment seal to cable jacketing material, including standard plastic and elastomeric materials, yet will strip cleanly from most metallic substances, while resisting water ingress.

6.4.2.2 Properties

a. The properties for self-amalgamating sealant tape are found in Table 5-6-6 and are a requirement.

b. The properties for environmental boots are found in Table 5-6-7 and are a requirement.

c. The properties for heat shrinkable tubing and end caps are found in Table 5-6-8 and must be adhered to.

[1] References, Vol. 90, 1989, p. 49. Adopted 1989.

© 2010, American Railway Engineering and Maintenance-of-Way Association

Table 5-6-6. Self-Amalgamating Sealant Tape Required Properties

Properties	Test Method	Typical Values
Physical Properties		
Water Absorption	ASTM D-570-81	0.5%
Specific Gravity	ASTM D-792-66 Method A1	1.49
Adhesion:		
Lap Shear XLPE to XLPE	ASTM D-1002-72	8-10 psi
Elongation	ASTM D-142, Method A 412-80	350-400%
Electrical Properties		
Dielectric Strength (125 mil sample)	ASTM D-149-81	250 v/mil
Volume Resistivity	ASTM D-257-78	10^{14} (min)
Dielectric Constant	ASTM D-150-81	4.9
Dissipation Factor	ASTM D-150-81	0.06
Thermal Properties		
Maximum Service Temperature	C-792-75	265°F
Low Temperature Flexibility	ASTM-3111-76	–40°F on 1/2″ mandrel
Chemical Properties		
Corrosivity	ASTM D-2671-80	Non-corrosive 16 hrs @ 150°C
Chemical Resistance	ASTM D-2671-80	Resistant to: alcohol, ketones, acids, alkalis. Non-resistant to: Mineral spirits, naptha, hydrocarbons.
Fungus Resistance	ASTM G-21	Rating 0

Table 5-6-7. Environmental Boots Required Properties

Properties	Test Method	Results
Physical Properties		
Tensile Strength, psi	ASTM D-412 Method A	1500 (min)
Ultimate Elongation (%)	ASTM D-412 Method A	440 (min)
Hardness - Shore “D”	ASTM D-2240	55 ±5
Water Absorption (%)	ASTM D-570 24 hours	0.1% (max)
Specific Gravity	ASTM D-792 Method A1	1.22 ±12
Electrical Properties		
Dielectric Strength 125 mil	ASTM D-149	350 (min)
125 mils (v/mil)		
Dielectric Constant (1 kHz)	ASTM D-150	4.5
Volume Resistivity (ohm-cm)	ASTM D-257	10^{14} (min)

© 2010, American Railway Engineering and Maintenance-of-Way Association

Table 5-6-8. Heat Shrinkable Tubing and End Caps Required Properties

Properties	Test Method	Results
Physical Properties		
Tensile Strength, psi	ASTM D-412 Method A	1800(min)
Ultimate Elongation (%)	ASTM D-412 Method A	400% (min)
Hardness - Shore "D"	ASTM D-2240	48 ±5
Water Absorption (%)	ASTM D-570	0.1% (max)
Specific Gravity	ASTM D-792 Method A1	1.08 ±.08
Chemical Properties		
Corrosivity	ASTM D-2671 Method A	Non-corrosive 16 hrs @ 175°C
Fungus Resistance	ASTM G-21	Rating 0
Oil Resistance – 24 hrs @ 25°C	ASTM D-412	Rating 0
Hydraulic Fluid Mil H5606 °C	% Original Strength	90 (min)
	% Original Elongation	100 (min)
Diesel Fuel	% Original Strength	100 (min)
	% Original Elongation	120 (min)
Electrical Properties		
Dielectric Strength 125 mils (v/mil)	ASTM D-149	350 (min)
Dielectric Constant (1 khz)	ASTM D-150	3.4 (min)
Volume Resistivity (ohm-cm)	ASTM D-257	10^{14} (min)
Dissipation Factor (1 khz)	ASTM D-150	0.005 nominal

6.4.2.3 Sizes

a. The size selection chart for self-amalgamating sealant tape is found in Table 5-6-9. The size, length and quantity manufactured shall be as specified.

Table 5-6-9. Self-Amalgamating Sealant Tape Size Selection

Width (Inches)	Length (Feet)	Thickness (Inches)
1	25	1₀16 (min)
3-3/4	10	1₀8 (min)

b. The size selection for environmental boots is found in Table 5-6-10. The size, length and quantity manufactured shall be as specified.

c. The size selection for heat shrinkable tubing and end caps with sealant is found in Table 5-6-11 and Table 5-6-12. The size, length and quantity manufactured shall be as specified. Tubing shall be supplied up to and including 60 inch lengths with sealant applied. The recovered inside diameter dimensions are reduced by the flow of the sealant.

© 2010, American Railway Engineering and Maintenance-of-Way Association

Table 5-6-10. Environmental Boots Size Selection

Expanded Diameter (Inches)	Recovered Diameter (Inches)	Nominal Length (Inches)	Recovered Wall Thickness (Inches)
0.75	0.37	3.0	0.10
1.50	0.70	3.5	0.10
2.50	1.20	4.0	0.10
3.60	2.20	4.0	0.14
4.50	2.20	6.0	0.16

Table 5-6-11. Heat Shrinkable Tubing Size Selection

Expanded Diameter (Inches)	Recovered Diameter (Inches)	Recovered Wall Thickness (Inches)
0.40	0.15	0.060
0.75	0.22	0.090
1.10	0.37	0.105
1.50	0.50	0.120
1.70	0.50	0.120
2.00	0.75	0.155
2.70	0.90	0.155
3.00	1.25	0.155
4.00	1.75	0.155
4.50	1.75	0.155

Table 5-6-12. End Caps with Sealant Size Selection

Nominal Length (Inches)	Min Expanded ID (Inches)	Max Rec ID (Inches)	Nominal Recovered Wall (Inches)
3.250	1.150	0.500	0.095
3.500	1.500	0.750	0.100
3.750	2.000	1.000	0.105
4.500	2.500	1.250	0.110

© 2010, American Railway Engineering and Maintenance-of-Way Association

6.4.2.4 Tolerances

Tolerances shall be as stated in the pertinent test method under the properties part of this specification.

6.4.2.5 Manufacture

a. Tubing and end caps can be black in color for ultraviolet protection. Other colors available (without ultraviolet protection) are green, white and red.

b. All insulated tools shall be clean, without burrs or rough edges and have a uniform cross section throughout and finished in a first class, workmanlike manner.

6.4.2.6 Drawings

The manufacturer shall submit for approval to the railroad, shop drawings of each product to be manufactured. Such drawings shall consist of scale and full-size drawings showing in detail all dimensions, kind and quantity of materials, specifications and any other information required for the fabrication of each product. No work indicated by such shop drawings required for the fabrication of said item is to commence until the manufacturer has received written approval of the submitted drawings.

6.4.3 INSPECTION AND SHIPMENT (1989)

6.4.3.1 Inspection

The manufacturer shall have adequate facilities for the inspection of each product by a representative of the railroad during the course of manufacturing.

6.4.3.2 Testing and Acceptance

If the product offered by the manufacturer is not a standard catalog item in production for at least three (3) years the vendor will, prior to delivery, submit for approval seven (7) copies of notarized certified test reports from a recognized independent laboratory (approved by the railroad) that the material lot to be supplied is in accordance with the specifications contained herein.

6.4.3.3 Packing

Each product shall be carefully prepared for shipment to prevent any damage in transit. Any item found damaged in shipment will be rejected by the railroad and shall be removed.

6.4.4 INSPECTION AND USE (1989)

a. Tools must be inspected before each use to ensure that there has been no damage to the insulation. Tools with damaged insulation must not be used.

b. Tools should be stored in location free of oils and grease to ensure proper protection of the insulation.

© 2010, American Railway Engineering and Maintenance-of-Way Association

SECTION 6.5 PLANS FOR TRACK TOOLS[1] (2010)

6.5.1 GENERAL (2010)

a. For the plans for track tools refer to Table 5-6-13 and Figure 5-6-1 through Figure 5-6-45.

b. For the chemical specifications for carbon steel track tools refer to Article 6.1.1.1c.

c. For the chemical specifications for alloy steel track tools, refer to Article 6.1.2.3.

Table 5-6-13. Plans for Track Tools (2010)

Plan Number	Description	Grade of Steel	Hardness
1-02	*Clay Pick	Carbon or Alloy	425-500 BHN
2-02	*Tamping Pick	Carbon or Alloy	425-500 BHN
3-08	*Spike Maul	Alloy	51-55 Rc
4-07	Track Wrenches	Carbon	375-450 BHN
5-02	Lining Bar	Carbon	300-450 BHN
6-02	Rail Tongs	Carbon	
7-10	Tie Tongs	Carbon or Alloy	
8-10	Timber Tongs	Carbon or Alloy	
9-10	Spike Puller	Carbon	375-450 BHN
10-03	Rail Fork	Carbon	275-350 BHN
11-10	Claw Bar	Carbon	300-375 BHN
12-07	*Track Adz	Carbon	375-450 BHN
12A-07	*Carpenter's Adz	Carbon	
13-08	*Double Faced Sledge	Alloy	51-55 Rc
14-02	Chisel End Tamping Bar	Carbon	425-500 BHN
15-02	Spear End Tamping Bar	Carbon	425-500 BHN
16-02	Tie Plug Driver	Carbon	
17-08	*Track Chisel	Alloy	44-48 Rc (Head) 56-60 Rc (Point)
19-08	*Round Track Punch	Alloy	44-48 Rc (Head) 52-56 Rc (Point)
20-62	Track Gage—Pipe Center	See Plan	
20A-08	Track Gage—Wood Center	See Plan	
21-08	Track Shovel	Carbon or Alloy	45-50 Rc
22-08	Ballast Fork	Carbon	35-45 Rc
25-03 & 25A-03	Track Tool Handles		

[1] References, Vol. 31, 1930, pp. 562, 1753; Vol. 33, 1932, pp. 582, 815; Vol. 34, 1933, pp. 508, 838; Vol. 35, 1934, pp. 936, 1118, 1122; Vol. 37, 1936, pp. 458, 1019; Vol. 39, 1938, pp. 405, 793; Vol. 40, 1939, pp. 544, 760; Vol. 41, 1940, pp. 564, 867; Vol. 42, 1941, pp. 587, 836; Vol. 43, 1942, pp. 522, 767; Vol. 45, 1944, pp. 338, 620; Vol. 47, 1946, pp. 483, 636; Vol. 50, 1949, pp. 569, 789; Vol. 51, 1950, pp. 650, 855; Vol. 52, 1951, pp. 519, 817; Vol. 54, 1953, pp. 975, 1399; Vol. 55, 1954, pp. 701, 1079; Vol. 57, 1956, pp. 685, 1066; Vol. 58, 1957, pp. 832, 1258; Vol. 62, 1961, pp. 652, 946; Vol. 63, 1962, pp. 490, 755; Vol. 67, 1966, pp. 409, 732; Vol. 68, 1967, p. 359; Vol. 69, 1968, p. 358; Vol. 72, 1971, p. 161; Vol. 94, p. 83.

© 2010, American Railway Engineering and Maintenance-of-Way Association

Table 5-6-13. Plans for Track Tools (2010) (Continued)

Plan Number	Description	Grade of Steel	Hardness
26-08	Scoop	Carbon or Alloy	45-50 Rc
27-08	Aluminum Combination Track Level and Gage (Insulated)		
31-97	Rail Tongs For Use With Cranes	See Plan	See Plan
32-08	Track Spike Lifter	Alloy	44-48 Rc (Head) 44-48 Rc (Claw)
33-62	Drive Spike Extractor	Carbon	300-350 BHN
34-02	Rail Thermometer		
35-08	*Nut Cutter	Alloy	44-48 Rc (Head) 56-60 Rc (Point)
36-08	*3 Pound Hot Cutter	Alloy	44-48 Rc (Head) 56-60 Rc (Point)
37-08	*5 Pound Hot Cutter	Alloy	44-48 Rc (Head) 56-60 Rc (Point)
38-06	Drift Pin (Short)	Alloy or EN30B	32-37 Rc (Overall)
39-06	Drift Pin (Long)	Alloy or EN30B	32-37 Rc (Overall)
41-08	*Spiking Tool	Alloy	44-48 Rc (Head) 52-56 (Point)
43-97	Switch Clip Wrench	Carbon	375-450 BHN
44-97	Nipping Bar	Carbon	300-375 BHN
45-09	Nipping Fork	See Plan	330-400 BHN
46-08	*Drift Pin Remover	Alloy	44-48 Rc (Head)
47-08	Offset Wedge	Alloy	44-48 Rc
48-09	Plug Bond Backout Punch	See Plan	44-48 Rc (Head) 48-52 (Point)
50-10	Aluminum Tie Tongs	See Plan	300-350 BHN
*When specified, track tools will be furnished with properly fitted AREMA handles.			

© 2010, American Railway Engineering and Maintenance-of-Way Association

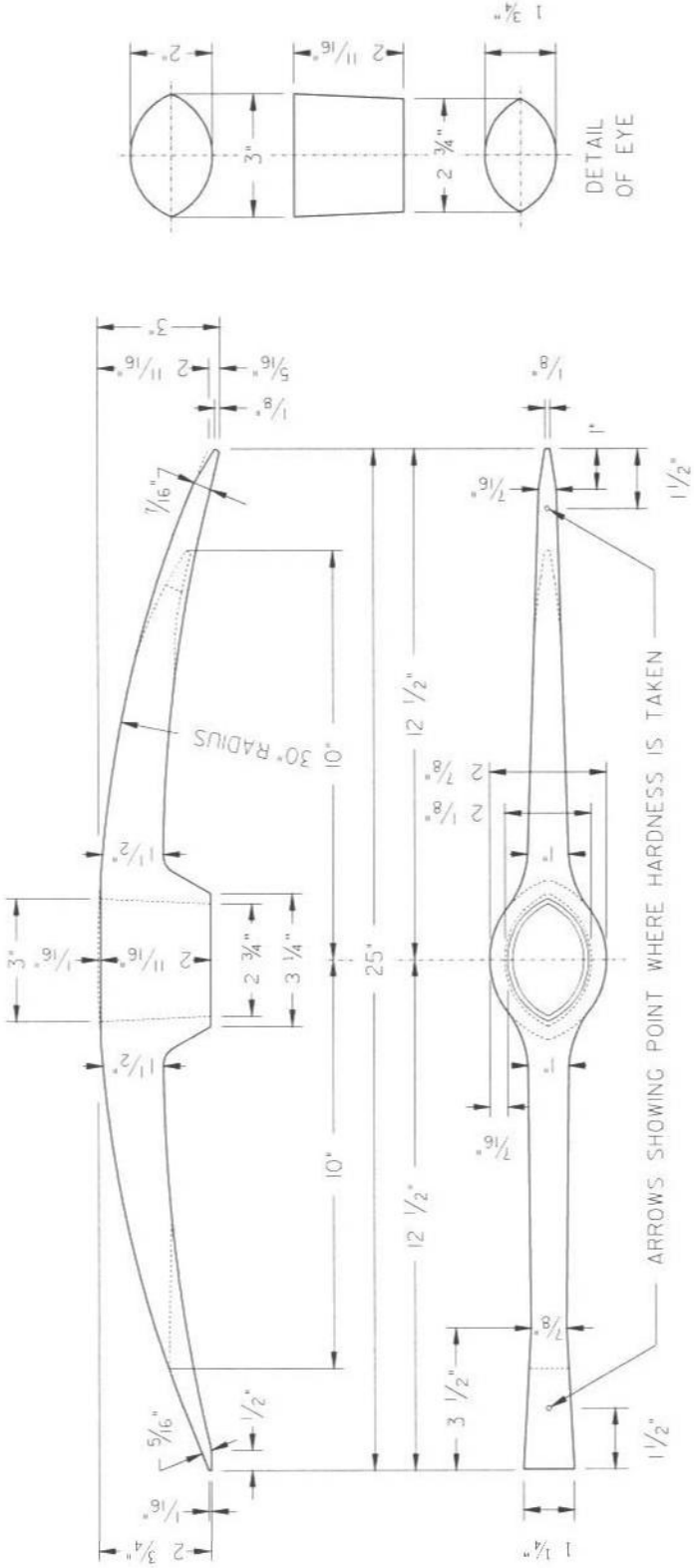

NOTE :

1. TOLERANCE - 2% ON LENGTH 5% ON CROSS SECTION
2. CURVATURE OF BACK SHALL BE CONTINUOUS AND OF 30" RADIUS EXCEPT WHERE FLATTENED OVER THE EYE.
3. RADIUS TO BE COINCIDENT WITH THE CENTER LINE OF EYE.
4. FURNISH IN CARBON STEEL OR AISI/SAE 4140 ALLOY STEEL.
5. BRINELL: 425 - 500 FOR CARBON STEEL AND AISI/SAE ALLOY STEEL.
6. RECLAIM LIMITS: DASHED LINES INDICATE OUTLINE (MINIMUM) OF TOOLS AS RECLAIMED.
7. DOUBLE POINTED PICK SHALL BE FURNISHED WHEN SPECIFIED.
8. APPROXIMATE WEIGHT 7 POUNDS.

Figure 5-6-1. Plan 1-02 – AREMA Clay Pick

© 2010, American Railway Engineering and Maintenance-of-Way Association

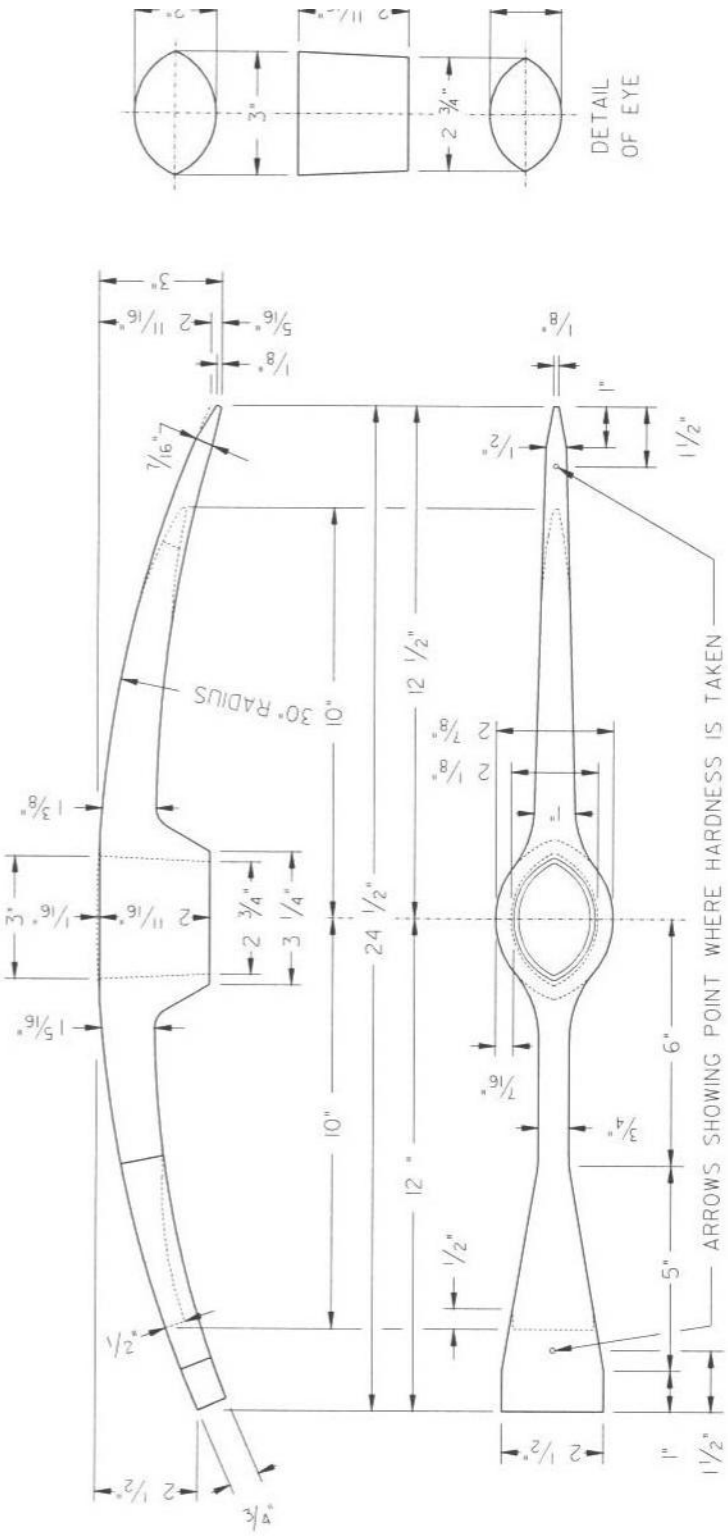

Figure 5-6-2. Plan 2-02 – AREMA Tamping Pick

© 2010, American Railway Engineering and Maintenance-of-Way Association

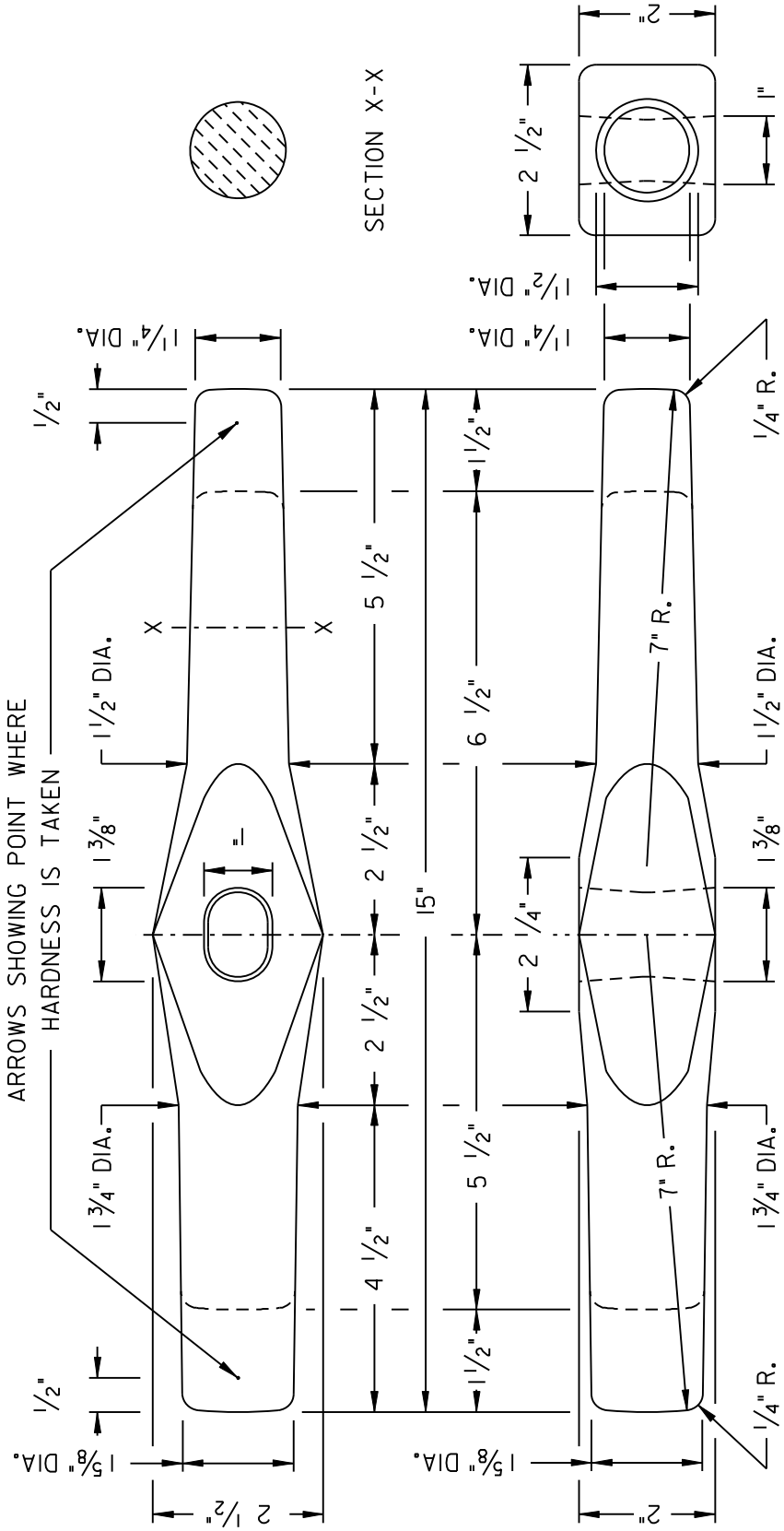

NOTE:

1. TOLERANCE -
   2 % ON LENGTH
   5 % ON CROSS SECTION
2. EYE TAPERED TO CENTER -
   4 DEGREES ON LONG DIAMETER
   3 DEGREES ON SHORT DIAMETER
3. FURNISH IN GRADE B ALLOY STEEL.
4. ROCKWELL C - 51/55
5. CONTOUR GRIND HEAD PER AREMA PLANS A, B, AND D.
6. DASHED LINES INDICATE OUTLINE (MINIMUM) OF TOOLS AS RECLAIMED.
7. APPROXIMATE WEIGHT 10 POUNDS.

Figure 5-6-3. Plan 3-08 – AREMA Spike Maul

© 2010, American Railway Engineering and Maintenance-of-Way Association

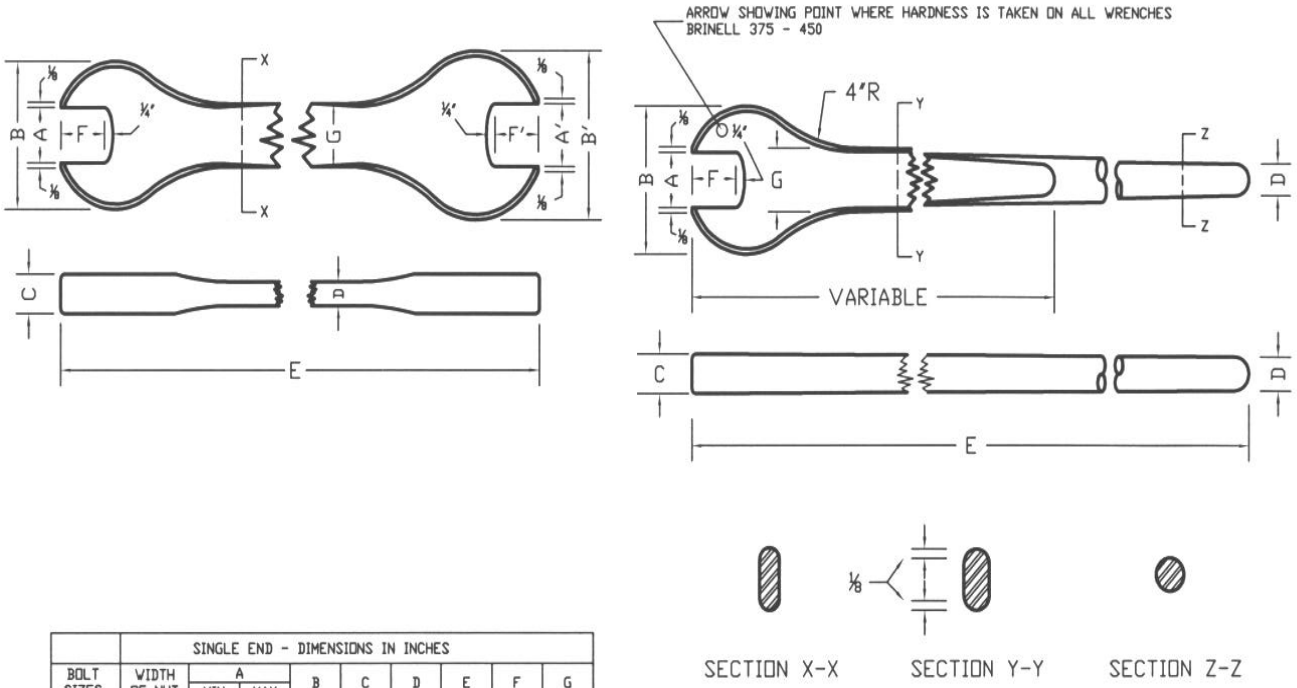

BOLT SIZES	SINGLE END - DIMENSIONS IN INCHES								
	WIDTH OF NUT	A		B	C	D	E	F	G
		MIN	MAX						
¾	1¼	1.257	1.330	3½	15/16	¾	30	1¼	1½
⅞	1 7/16	1.445	1.519	4	15/16	¾	36	1¼	1½
1	1⅝	1.634	1.709	4	15/16	⅞	42	1⅜	1½
1⅛	1 13/16	1.822	1.898	4⅛	15/16	⅞	48	1 9/16	1½
1¼	2	2.011	2.088	4½	1	⅞	48	1¾	1½
1⅜	2 3/16	2.199	2.277	5	1	⅞	54	1 15/16	1½

BOLT SIZES	DOUBLE END - DIMENSIONS IN INCHES													
	WIDTH OF NUT	A		A'		B	B'	C	D	E	F	F'	G
		MIN	MAX	MIN	MAX								
¾ & ⅞	1¼ & 1 7/16	1.257	1.330	1.445	1.519	3½	4	15/16	½	36	1¼	1¼	1½
⅞ & 1	1 7/16 & 1⅝	1.445	1.519	1.634	1.709	4	4	15/16	½	42	1¼	1⅜	1½
1 & 1⅛	1⅝ & 1 13/16	1.634	1.709	1.822	1.898	4	4⅛	15/16	9/16	48	1⅜	1 9/16	1½
1⅛ & 1¼	1 13/16 & 2	1.822	1.898	2.011	2.088	4⅛	4½	*	9/16	48	1 9/16	1¾	1½
1¼ & 1⅜	2 & 2 3/16	2.011	2.088	2.199	2.277	4½	5	1	9/16	48	1¾	1 15/16	1½
* C = 15/16 ON 1⅛ END, 1 ON 1¼ END													

NOTE

1. Width of nut shall be stamped plainly in ¾" characters on one side of head near each jaw.
2. Tolerance –
   2% on length
   5% on cross section
3. Single end wrench will be furnished with end tapered for last 6" to ½" diam. at end when specified.
4. All wrench jaws shall be milled to dimensions shown.

Figure 5-6-4. Plan 4-07 – AREMA Track Wrenches for Recommended Track Bolt Nuts

© 2010, American Railway Engineering and Maintenance-of-Way Association

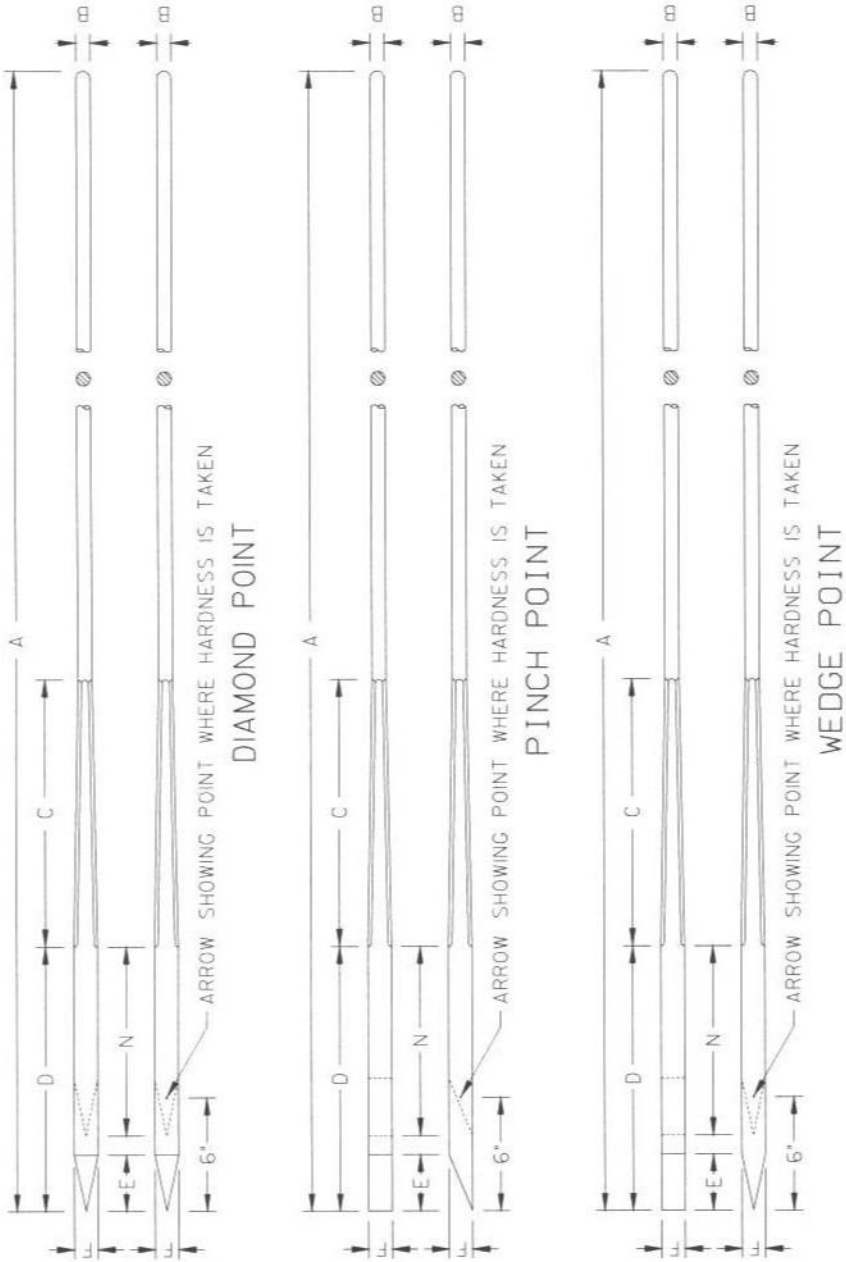

SCHEDULE OF DIMENSIONS							
APPROX. WEIGHT	A	B	C	D	E	F	N
18 LB.	5'-0"	3/4"	14"	14"	3"	1 1/4"	10"
22 LB.	5'-4"	7/8"	14"	14"	3"	1 3/8"	10"
26 LB.	5'-6"	7/8"	14"	14"	3"	1 1/2"	10"

NOTE:

1. FURNISH IN CARBON STEEL.
2. TOLERANCE: 2 % ON LENGTH.
   5 % ON CROSS SECTION.
3. HARDNESS: BRINELL 300 - 375.
4. RECLAIM LIMITS: DASHED LINES INDICATE OUTLINE (MINIMUM) OF TOOLS AS RECLAIMED.
5. SPECIFY TYPE OF POINT AND LENGTH OF BAR ON REQUISITION.

Figure 5-6-5. Plan 5-02 – AREMA Lining Bar

© 2010, American Railway Engineering and Maintenance-of-Way Association

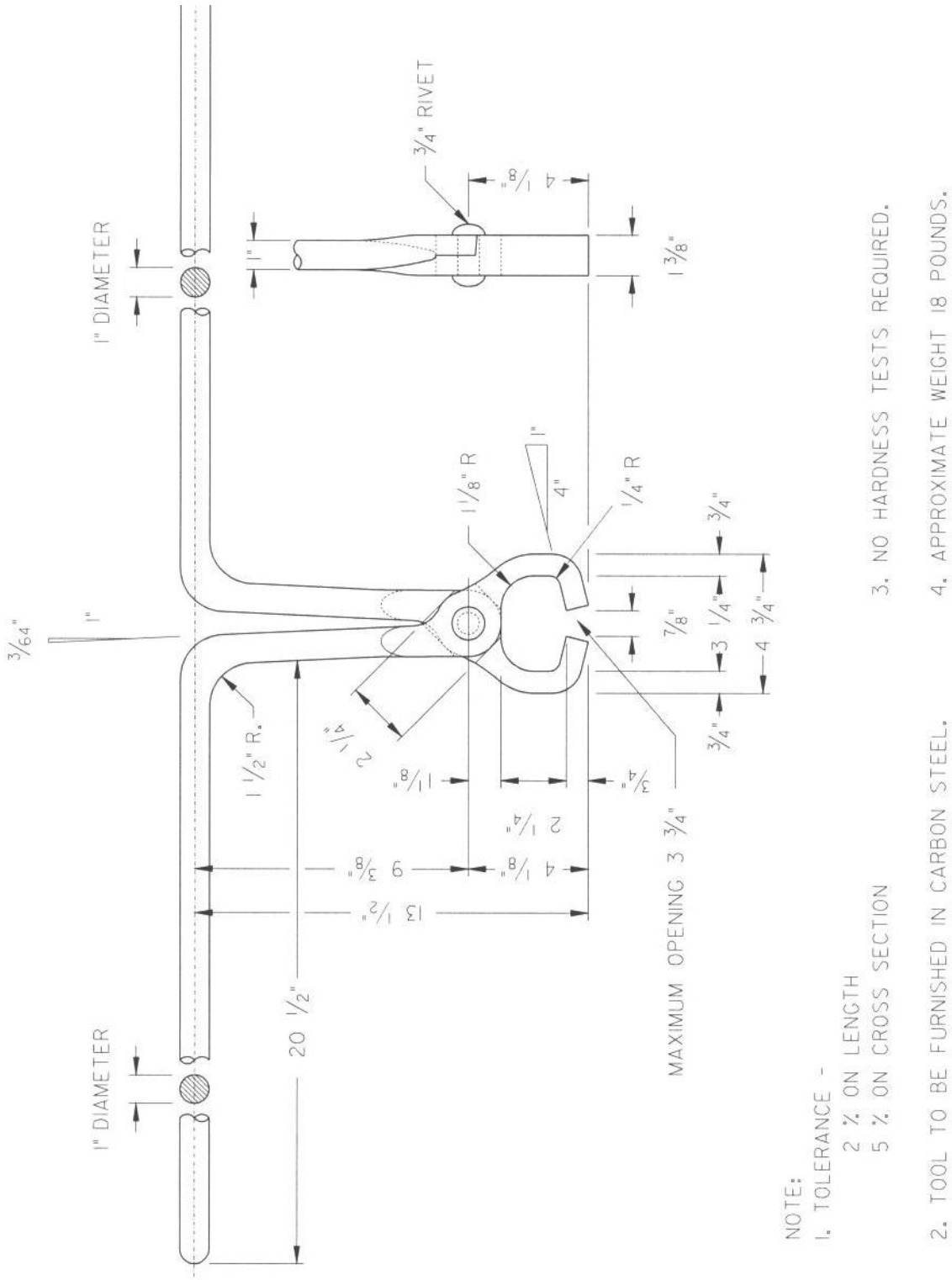

Figure 5-6-6. Plan 6-02 – AREMA Rail Tongs

© 2010, American Railway Engineering and Maintenance-of-Way Association

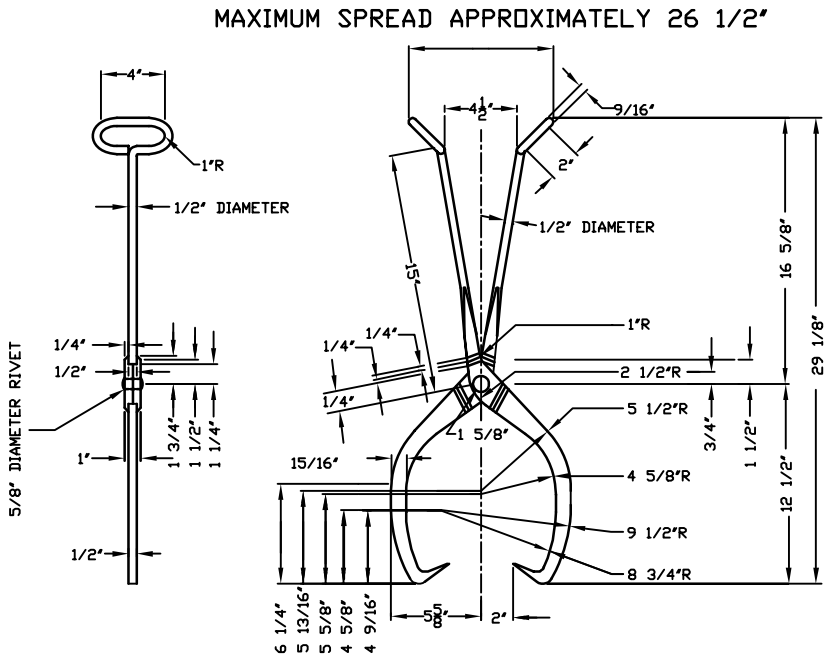

JAW OPENING - 4" MINIMUM 15-1/2" MAXIMUM

NOTE:
FURNISH IN CARBON STEEL, NO HARDNESS TEST REQUIRED
TOLERANCE-
2% ON LENGTH
5% ON CROSS SECTION
APPROXIMATE WEIGHT 10 POUNDS
STANDARD - PEAVEY POINTS TO BE FINISHED BY GRINDING

IF SPECIFIED BY PURCHASER, FURNISH WITH:
1. HANDLES FROM 1/2" X 1" BARS INSTEAD OF 9/16" ROUNDS
2. REPLACEABLE POINTS

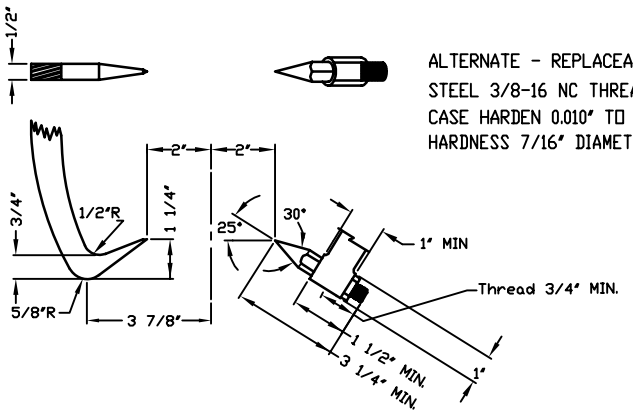

ALTERNATE - REPLACEABLE POINT 5/8" SQUARE OR HEXAGON STEEL 3/8-16 NC THREADS CLASS 2 FIT WITH LOCKNUT CASE HARDEN 0.010" TO 0.015" DEEP 300 TO 350 BRINELL HARDNESS 7/16" DIAMETER HOLE IN TONGS

Figure 5-6-7. Plan 7-10 – AREMA Tie Tongs

© 2010, American Railway Engineering and Maintenance-of-Way Association

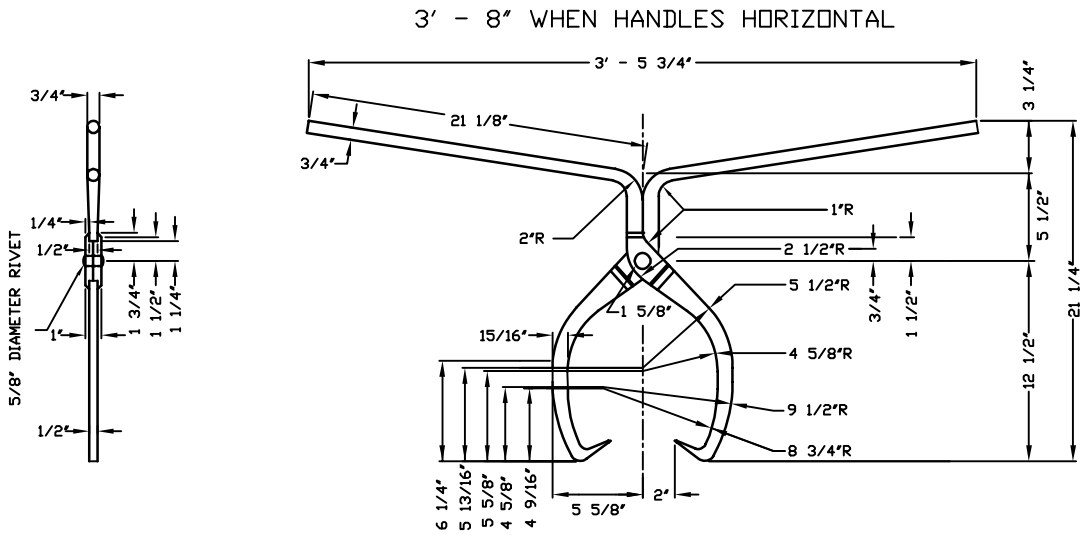

JAW OPENING – 4″ MINIMUM 15-1/2″ MAXIMUM

NOTE:
FURNISH IN CARBON STEEL
NO HARDNESS TESTS REQUIRED
TOLERANCE–
2% ON LENGTH
5% ON CROSS SECTION
APPROXIMATE WEIGHT 12.2 POUNDS
STANDARD – PEAVEY POINTS
TO BE FINISHED BY GRINDING

IF SPECIFIED BY PURCHASER, FURNISH
WITH REPLACEABLE POINTS

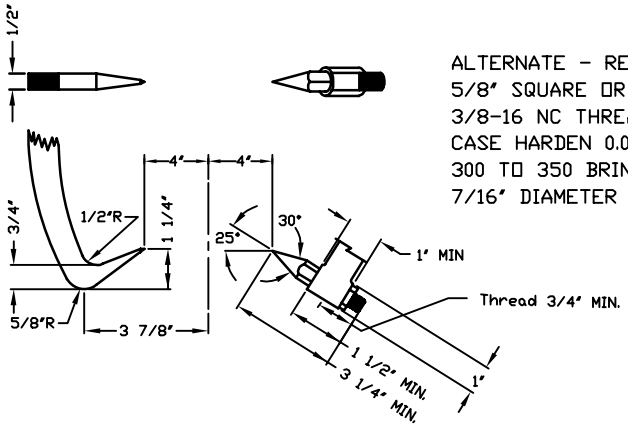

ALTERNATE – REPLACEABLE POINT
5/8″ SQUARE OR HEXAGON STEEL
3/8–16 NC THREADS CLASS 2 FIT WITH LOCKNUT
CASE HARDEN 0.010 TO 0.015 DEEP
300 TO 350 BRINELL HARDNESS
7/16″ DIAMETER HOLE IN TONGS

Figure 5-6-8. Plan 8-10 – AREMA Timber Tongs

© 2010, American Railway Engineering and Maintenance-of-Way Association

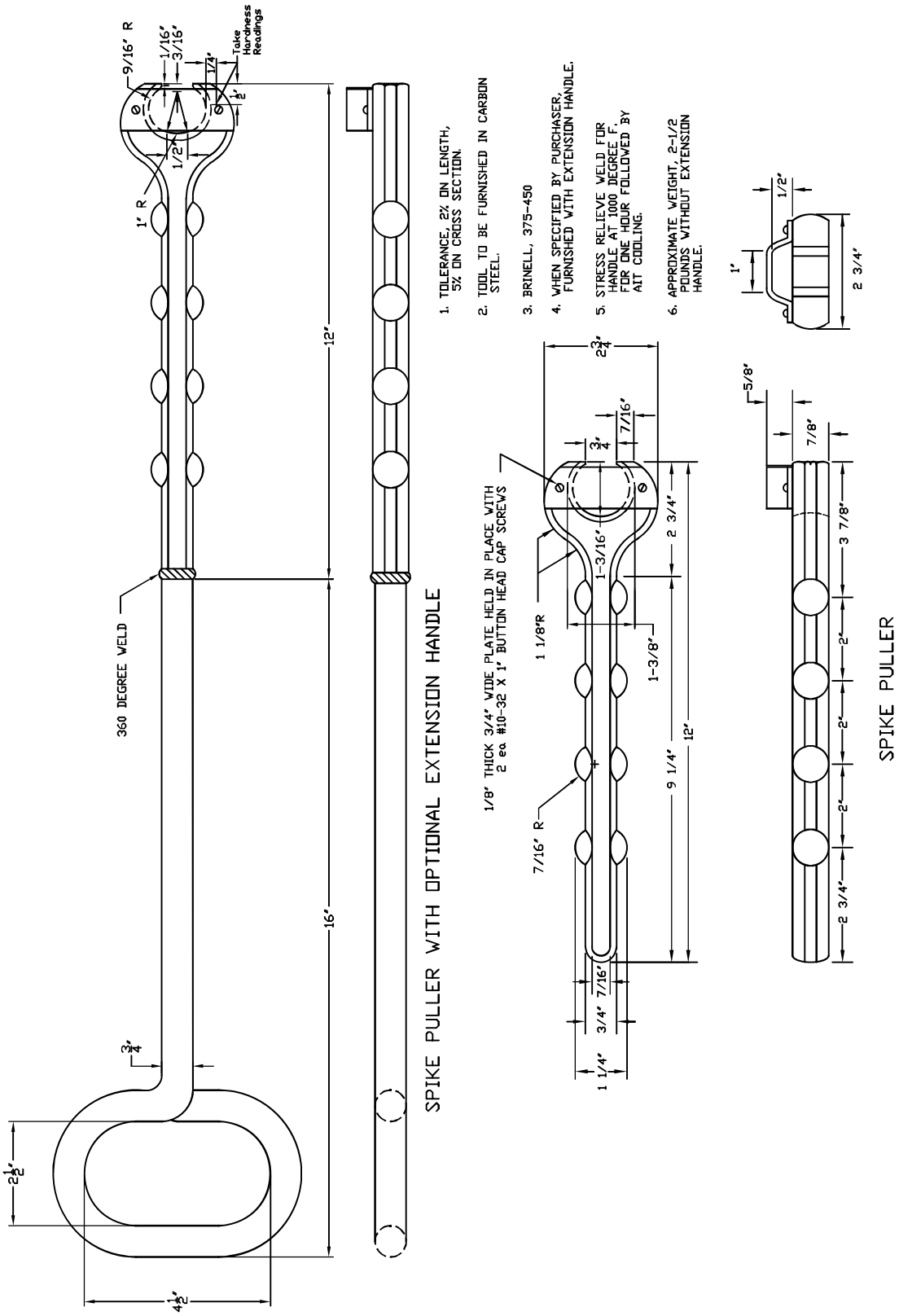

Figure 5-6-9. Plan 9-10 – AREMA Spike Puller

© 2010, American Railway Engineering and Maintenance-of-Way Association

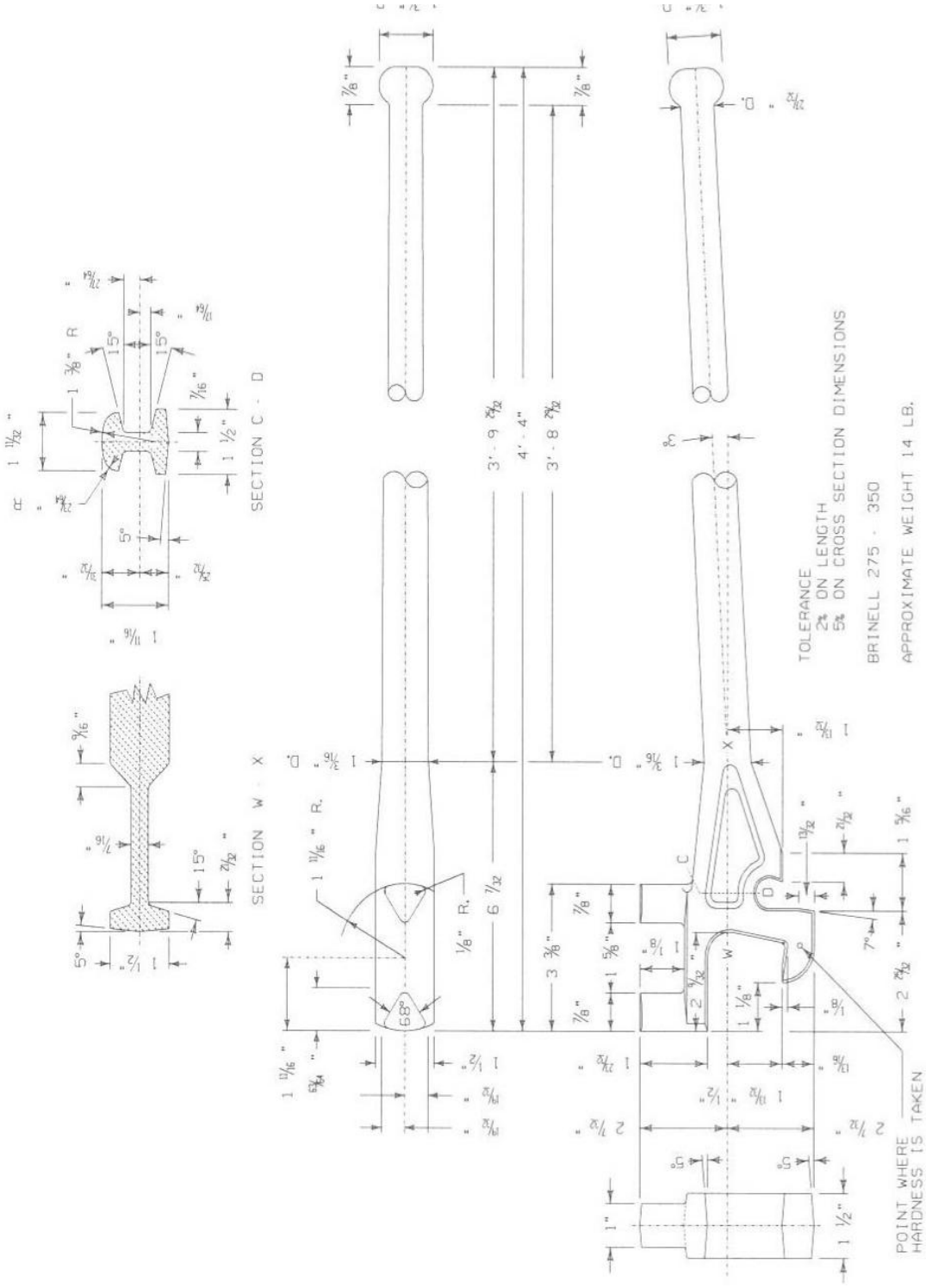

Figure 5-6-10. Plan 10-03 – AREMA Rail Fork

© 2010, American Railway Engineering and Maintenance-of-Way Association

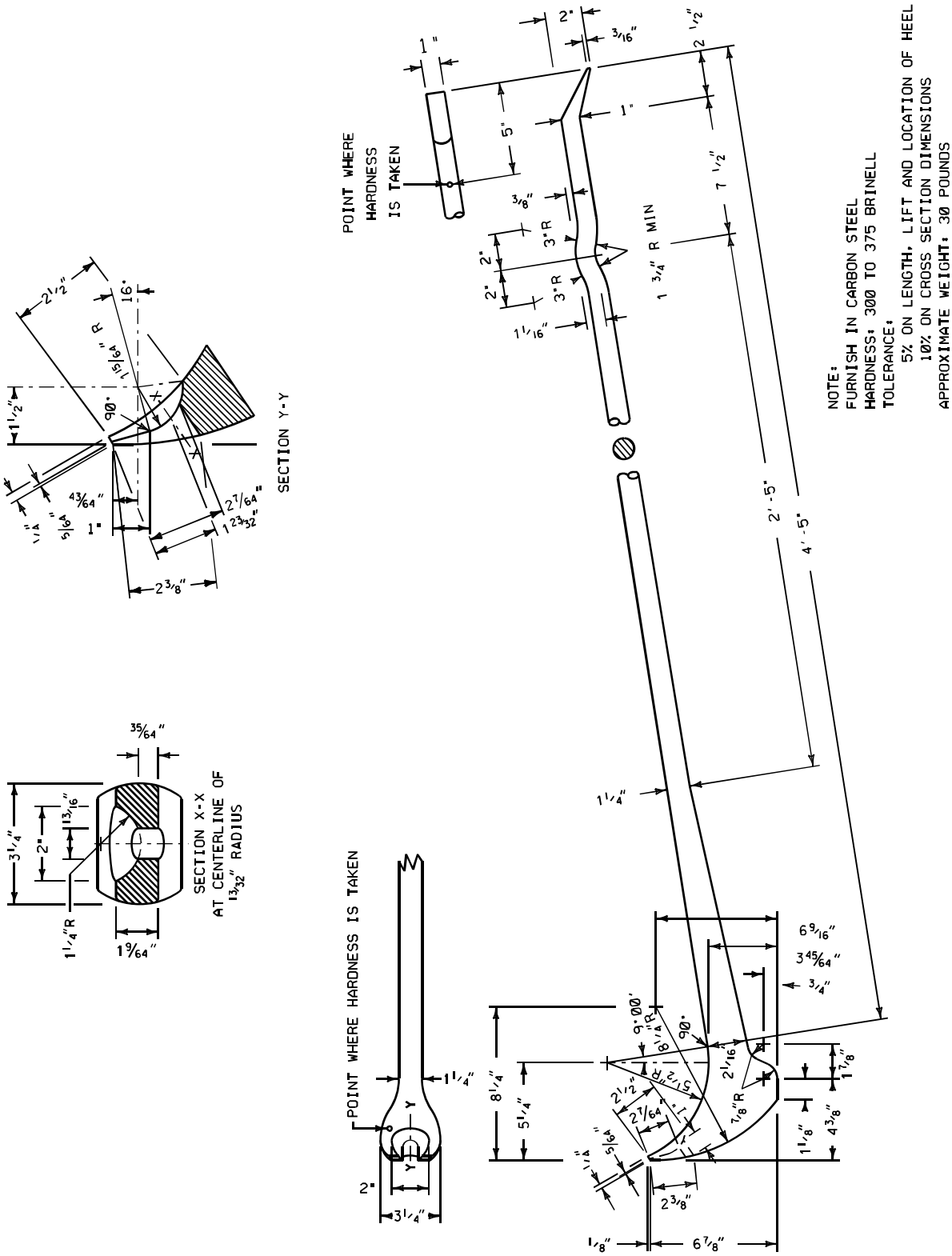

Figure 5-6-11. Plan 11-10 – AREMA Claw Bar

© 2010, American Railway Engineering and Maintenance-of-Way Association

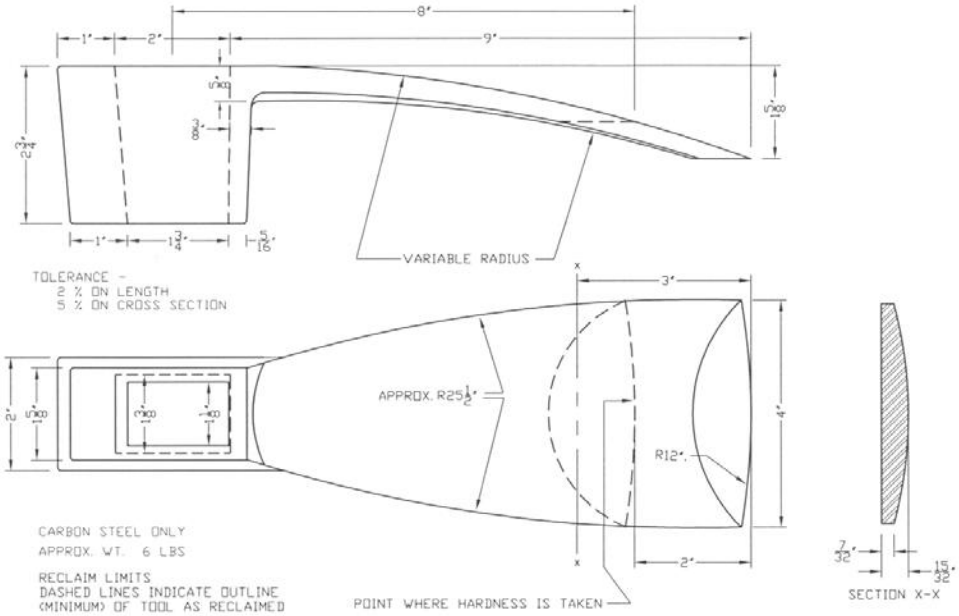

Figure 5-6-12. Plan 12-07 – AREMA Track Adz

© 2010, American Railway Engineering and Maintenance-of-Way Association

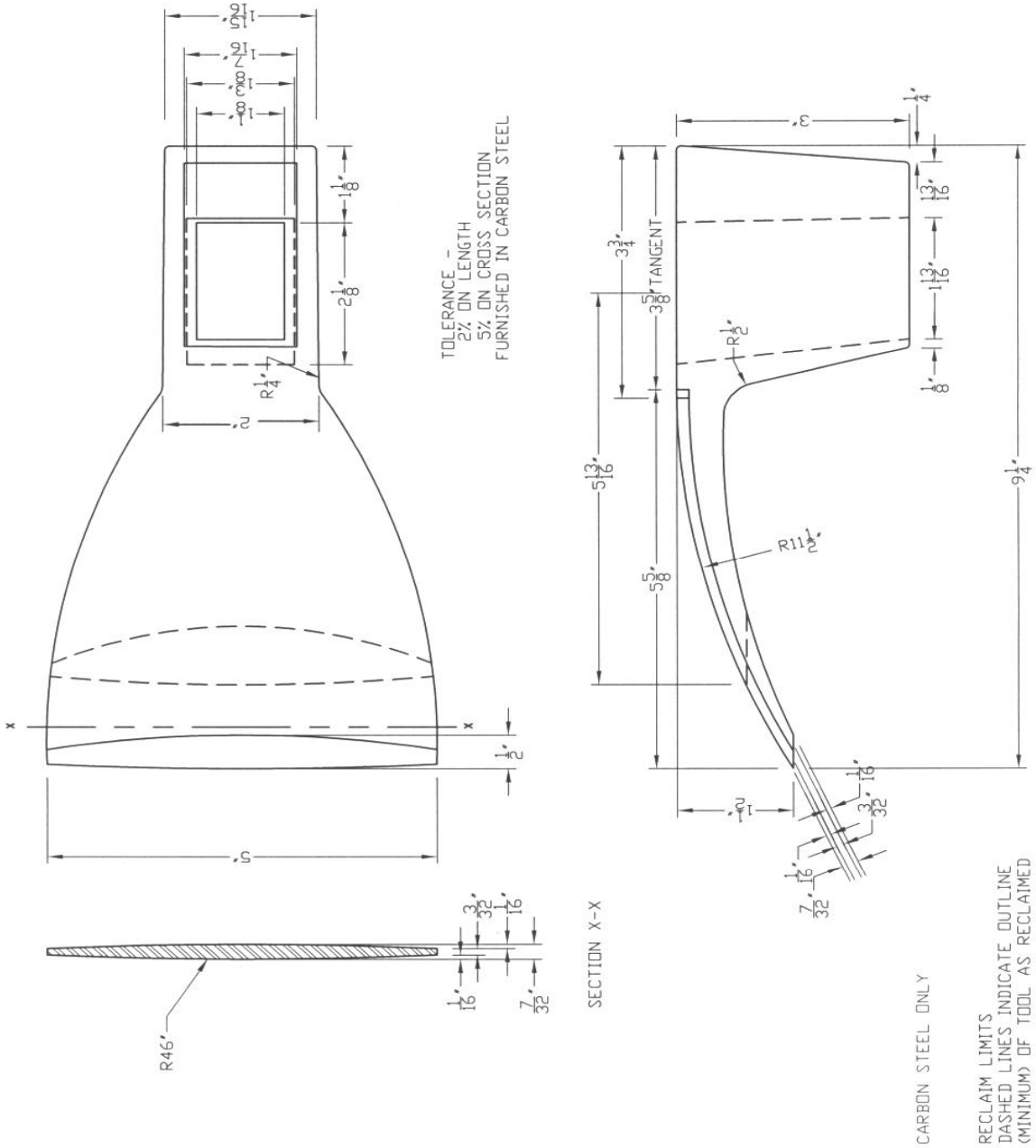

Figure 5-6-13. Plan 12A-07 – AREMA Carpenter's Adz

© 2010, American Railway Engineering and Maintenance-of-Way Association

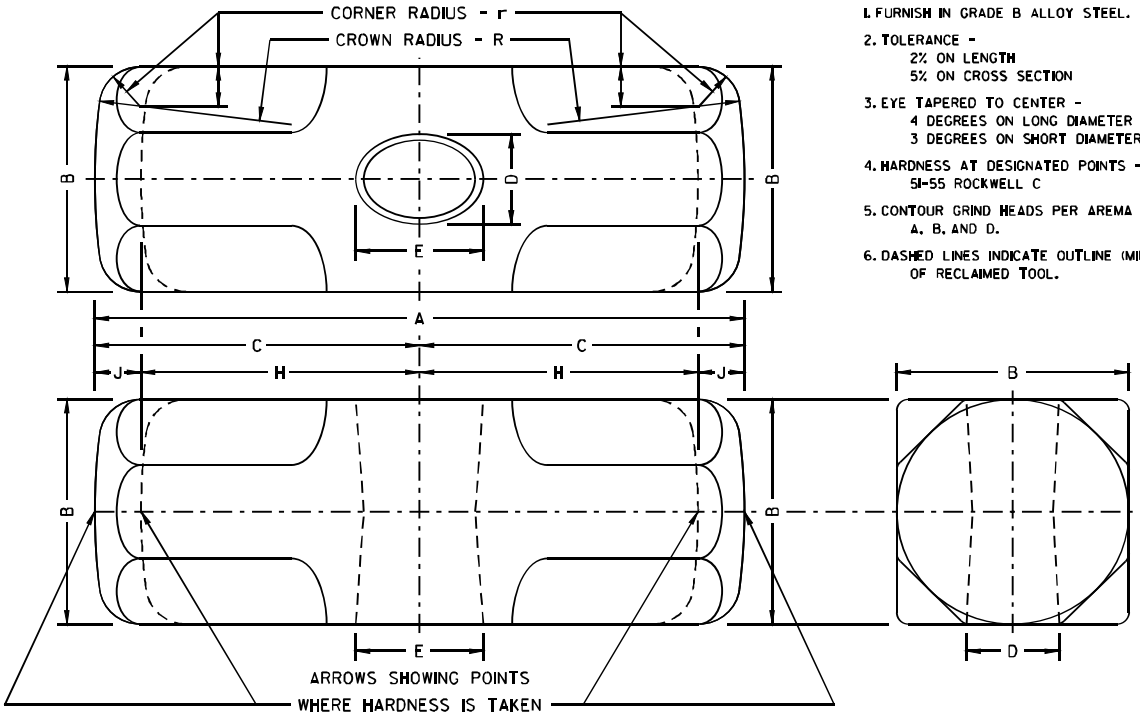

NOTES:

1. FURNISH IN GRADE B ALLOY STEEL.
2. TOLERANCE -
   2% ON LENGTH
   5% ON CROSS SECTION
3. EYE TAPERED TO CENTER -
   4 DEGREES ON LONG DIAMETER
   3 DEGREES ON SHORT DIAMETER
4. HARDNESS AT DESIGNATED POINTS -
   51-55 ROCKWELL C
5. CONTOUR GRIND HEADS PER AREMA PLANS A, B, AND D.
6. DASHED LINES INDICATE OUTLINE (MINIMUM) OF RECLAIMED TOOL.

APPROXIMATE WEIGHT IN POUNDS	LENGTH OF HEAD IN INCHES	WIDTH ACROSS FLATS AT FACE IN INCHES	CENTERLINE OF EYE TO FACE IN INCHES	WIDTH OF EYE IN INCHES	LENGTH OF EYE IN INCHES	RADIUS OF CROWN ON FACE IN INCHES	CORNER RADIUS IN INCHES	CENTERLINE OF EYE TO HARDNESS AND WEAR POINT IN INCHES	FACE TO HARDNESS AND WEAR POINT in inches
	A	B	C	D	E	R	r	H	J
1	4 1/4	1 1/4	2 1/8	5/8	3/4	7	1/4	2	1/4
2	4 3/8	1 3/8	2 3/16	3/4	1	7	1/4	2	1/4
2 1/2	4 1/2	1 1/2	2 1/4	3/4	1	7	1/4	2	1/4
3	4 3/4	1 5/8	2 3/8	3/4	1	7	1/4	2 1/8	1/4
4	5 1/4	1 3/4	2 5/8	3/4	1	7	3/8	2 3/8	1/4
6	6	2 1/8	3	1	1 3/8	7	3/8	2 3/4	1/4
8	6 1/2	2 1/4	3 1/4	1	1 3/8	7	7/16	2 3/4	1/2
10	7	2 1/2	3 1/2	1	1 3/8	7	7/16	3	1/2
12	7 1/2	2 5/8	3 3/4	1	1 3/8	7	7/16	3 1/4	1/2
16	8 1/2	2 7/8	4 1/8	1	1 3/8	7	1/2	3 1/2	1/2
20	9	3 1/8	4 1/2	1 1/4	1 1/2	7	1/2	3 7/8	1/2

Figure 5-6-14. Plan 13-08 – AREMA Double Faced Sledge

© 2010, American Railway Engineering and Maintenance-of-Way Association

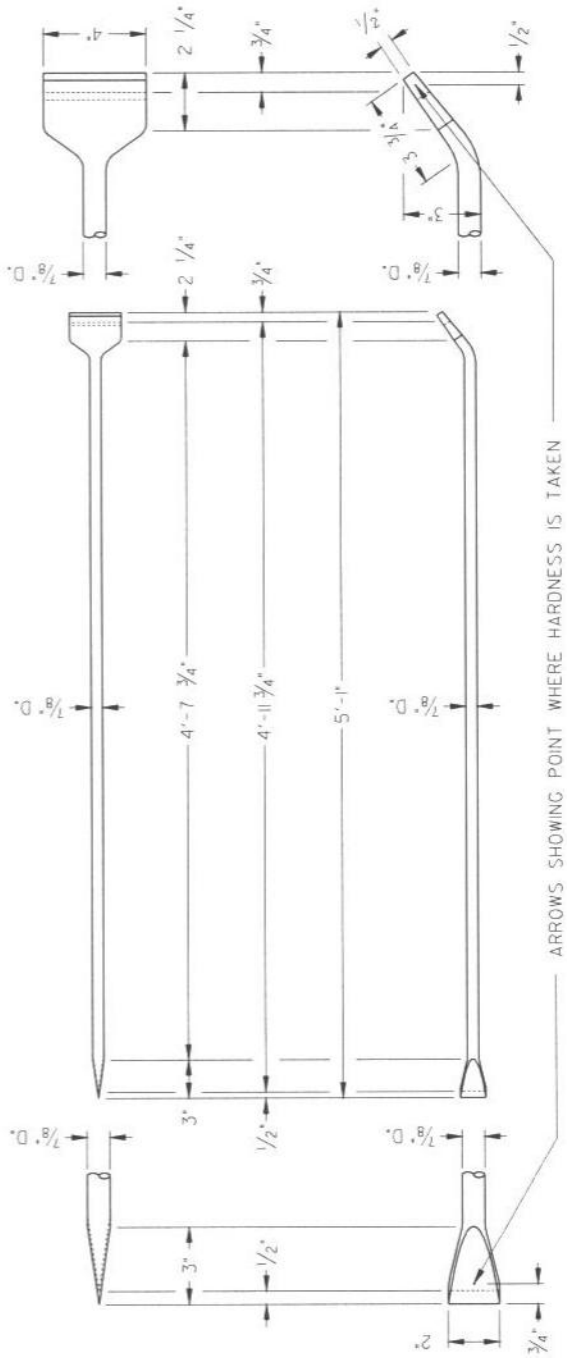

NOTE:

1. FURNISH IN AREMA CARBON STEEL.
2. TOLERANCE: 2 % ON LENGTH.
   5 % ON CROSS SECTION.
3. HARDNESS: BRINELL 425 - 500.
4. RECLAIM LIMITS: DASHED LINES INDICATE OUTLINE (MINIMUM) OF TOOLS AS RECLAIMED.
5. APPROXIMATE WEIGHT 13 POUNDS.

Figure 5-6-15. Plan 14-02 – AREMA Chisel End Tamping Bar

© 2010, American Railway Engineering and Maintenance-of-Way Association

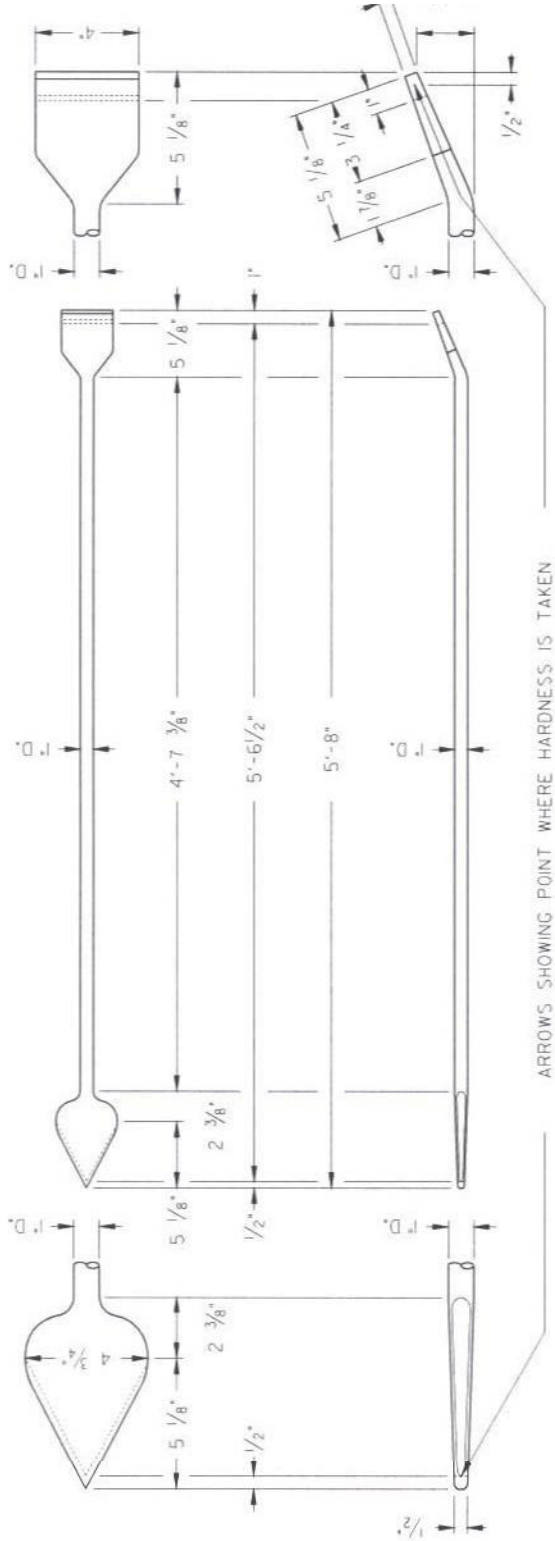

NOTE:

1. FURNISH IN AREMA CARBON STEEL.
2. TOLERANCE: 2 % ON LENGTH.
   5 % ON CROSS SECTION.
3. HARDNESS: BRINELL 425 - 500.
4. RECLAIM LIMITS: DASHED LINES INDICATE OUTLINE (MINIMUM) OF TOOLS AS RECLAIMED.
5. APPROXIMATE WEIGHT 15 POUNDS.

Figure 5-6-16. Plan 15-02 – AREMA Spear End Tamping Bar

© 2010, American Railway Engineering and Maintenance-of-Way Association

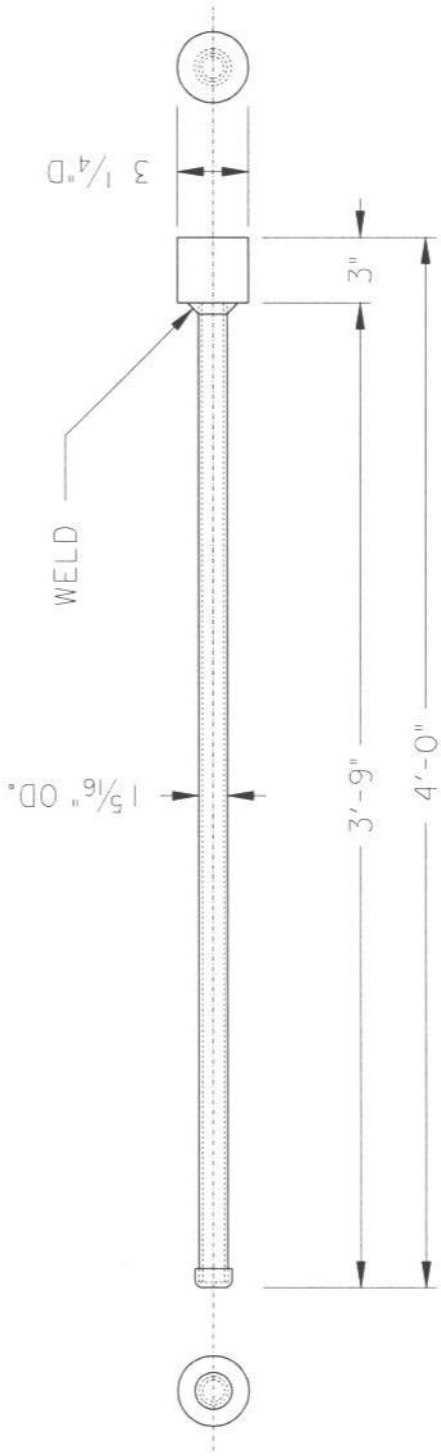

NOTE:

1. MATERIAL: HANDLE - STANDARD WEIGHT PIPE WITH CAP.
   BLOCK - ROLLED ROUND STEEL.
2. TOLERANCE: 2 % ON LENGTH.
   5 % ON CROSS SECTION.
3. REMOVE ALL SHARP EDGES BY GRINDING.
4. APPROXIMATE WEIGHT 13.5 POUNDS.

Figure 5-6-17. Plan 16-02 – AREMA Tie Plug Driver

© 2010, American Railway Engineering and Maintenance-of-Way Association

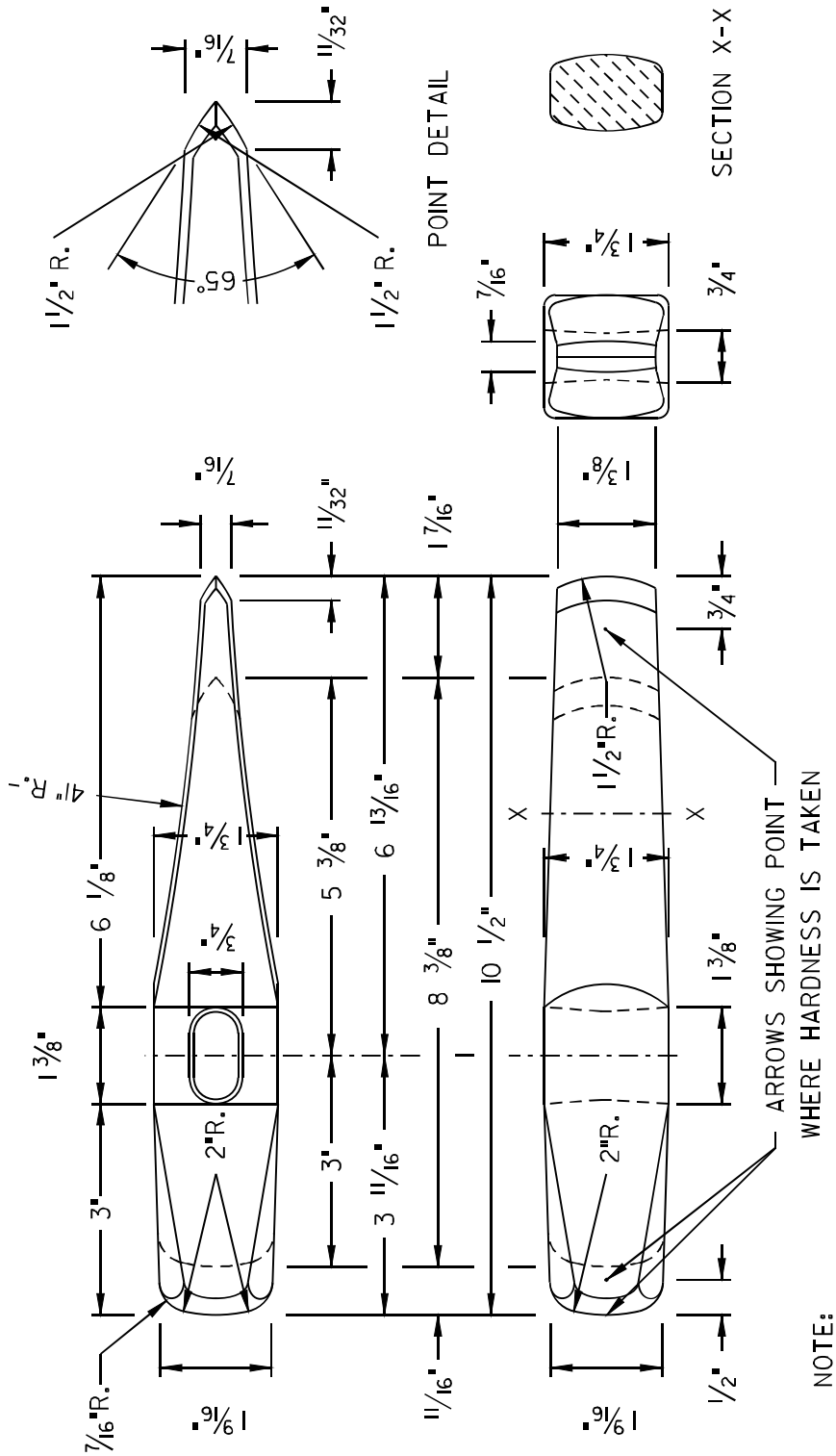

NOTE:

1. TOLERANCE -
   2 % ON LENGTH
   5 % ON CROSS SECTION
2. EYE TAPERED TO CENTER -
   4 DEGREES ON LONG DIAMETER
   3 DEGREES ON SHORT DIAMETER
3. FURNISH IN GRADE B ALLOY STEEL.
4. ROCKWELL C -
   POINT 56/60
   HEAD 44/48
5. CONTOUR GRIND HEAD PER AREMA PLANS A, C, AND D.
6. DASHED LINES INDICATE OUTLINE (MINIMUM) OF TOOLS AS RECLAIMED.
7. APPROXIMATE WEIGHT 5 1/2 POUNDS.

Figure 5-6-18. Plan 17-08 – AREMA Track Chisel

© 2010, American Railway Engineering and Maintenance-of-Way Association

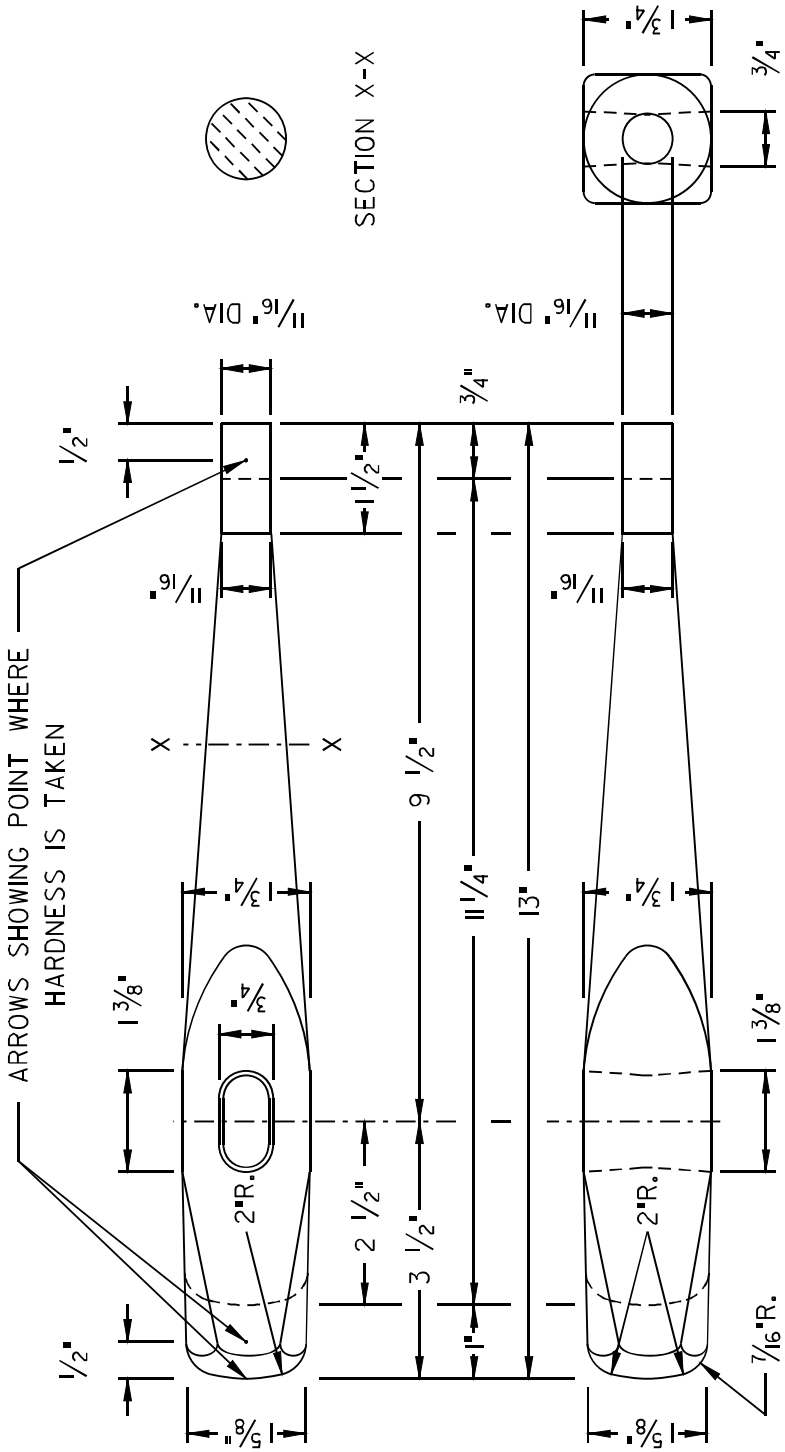

NOTE:

1. TOLERANCE -
   2 % ON LENGTH
   5 % ON CROSS SECTION
2. EYE TAPERED TO CENTER -
   4 DEGREES ON LONG DIAMETER
   3 DEGREES ON SHORT DIAMETER
3. FURNISH IN GRADE B ALLOY STEEL.
4. ROCKWELL C -
   POINT 52/56
   HEAD 44/48
5. CONTOUR GRIND HEAD PER AREMA PLANS A, C, AND D.
6. DASHED LINES INDICATE OUTLINE (MINIMUM) OF TOOLS AS RECLAIMED.
7. APPROXIMATE WEIGHT 5 1/2 POUNDS.

Figure 5-6-19. Plan 19-08 – AREMA Round Track Punch

© 2010, American Railway Engineering and Maintenance-of-Way Association

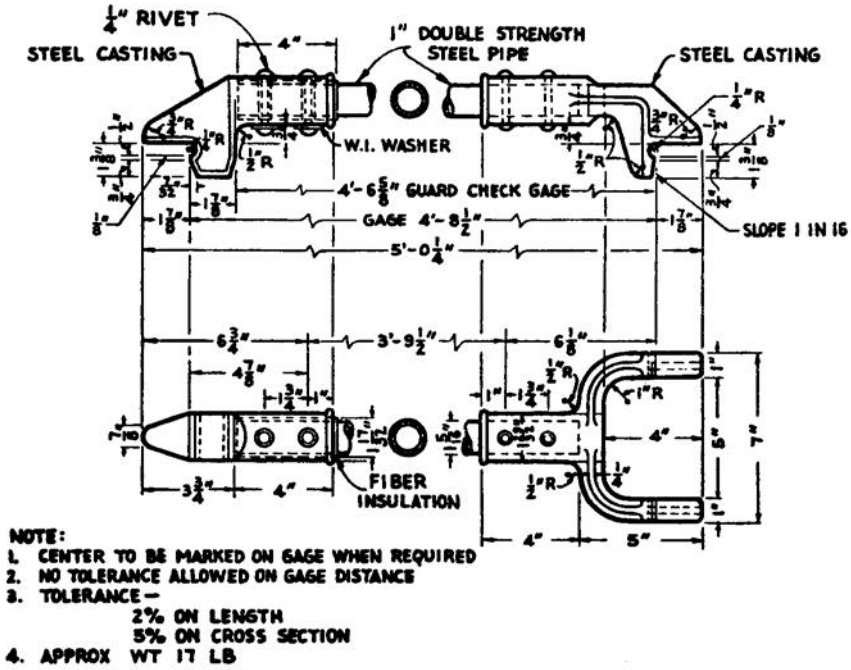

Figure 5-6-20. Plan 20-62 – AREMA Track Gage – Pipe Center

© 2010, American Railway Engineering and Maintenance-of-Way Association

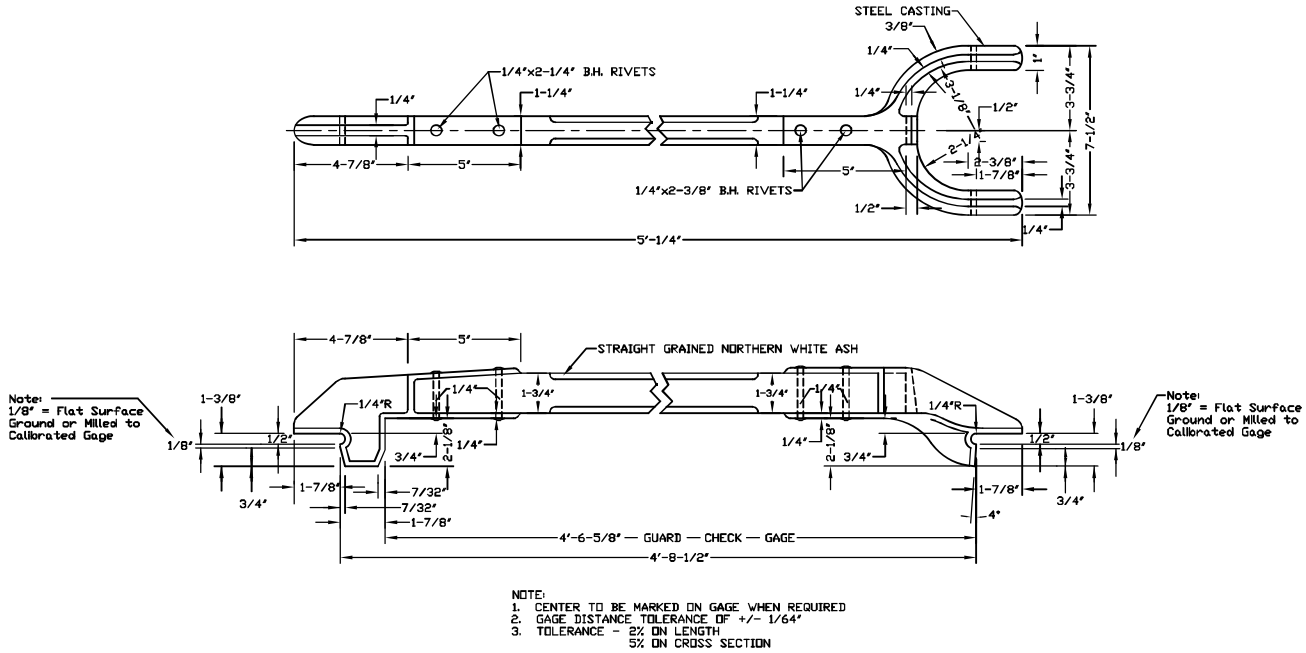

Figure 5-6-21. Plan 20A-08 – AREMA Track Gage – Wood Center

© 2010, American Railway Engineering and Maintenance-of-Way Association

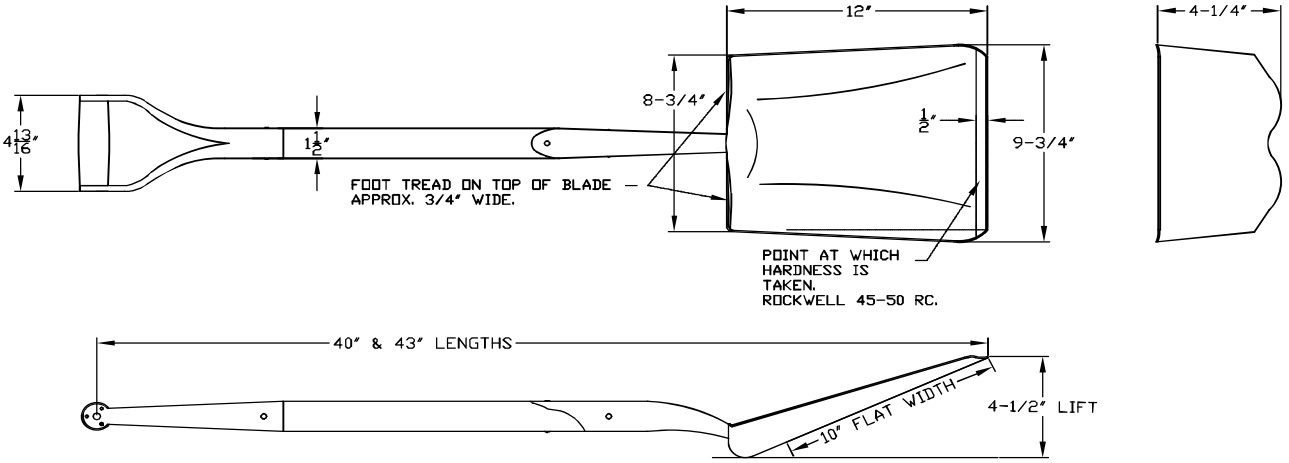

Figure 5-6-22. Plan 21-08 – AREMA Track Shovel

© 2010, American Railway Engineering and Maintenance-of-Way Association

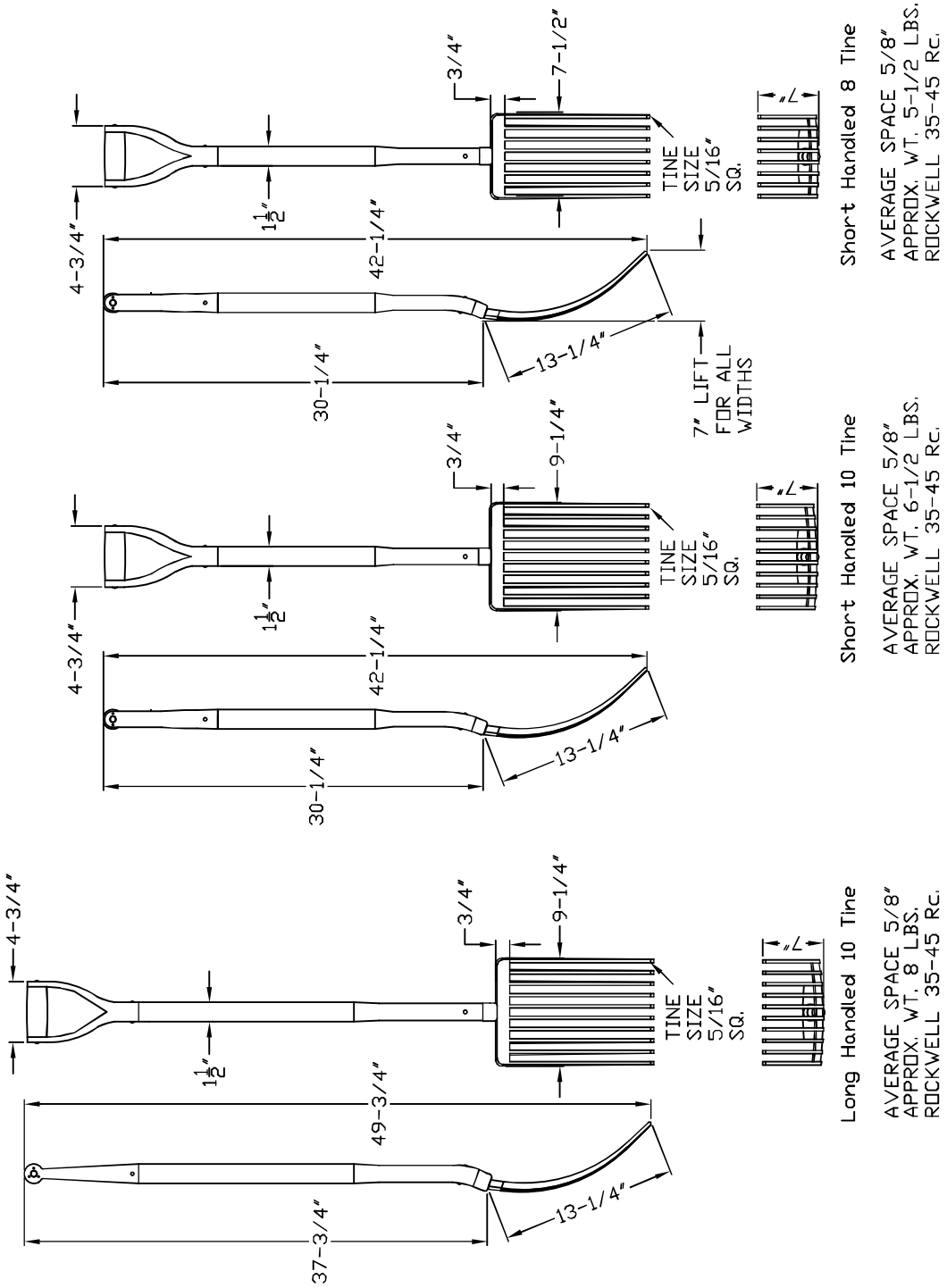

Figure 5-6-23. Plan 22-08 – AREMA Ballast Fork

© 2010, American Railway Engineering and Maintenance-of-Way Association

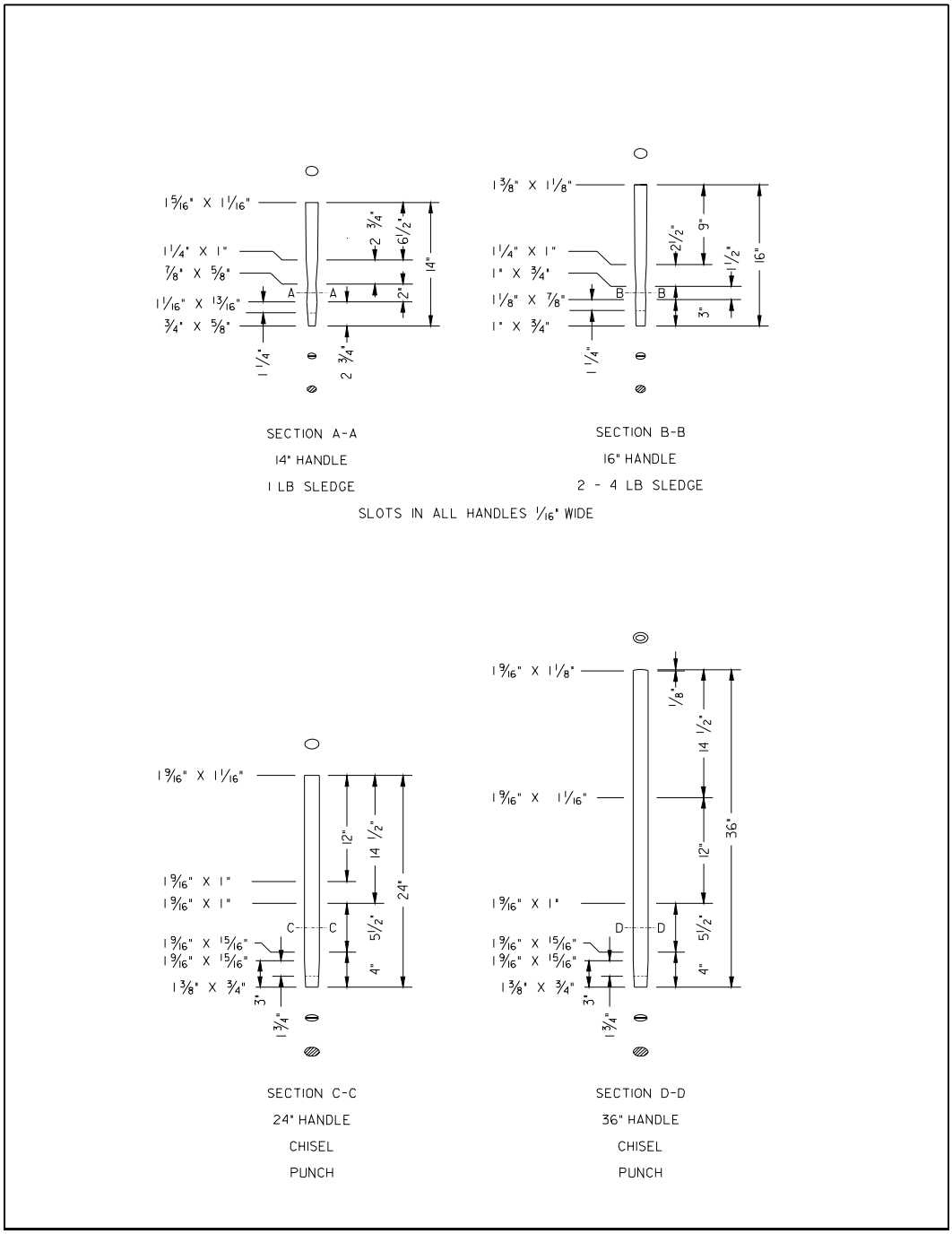

Figure 5-6-24. Plan 25-03 – AREMA Track Tool Handles

© 2010, American Railway Engineering and Maintenance-of-Way Association

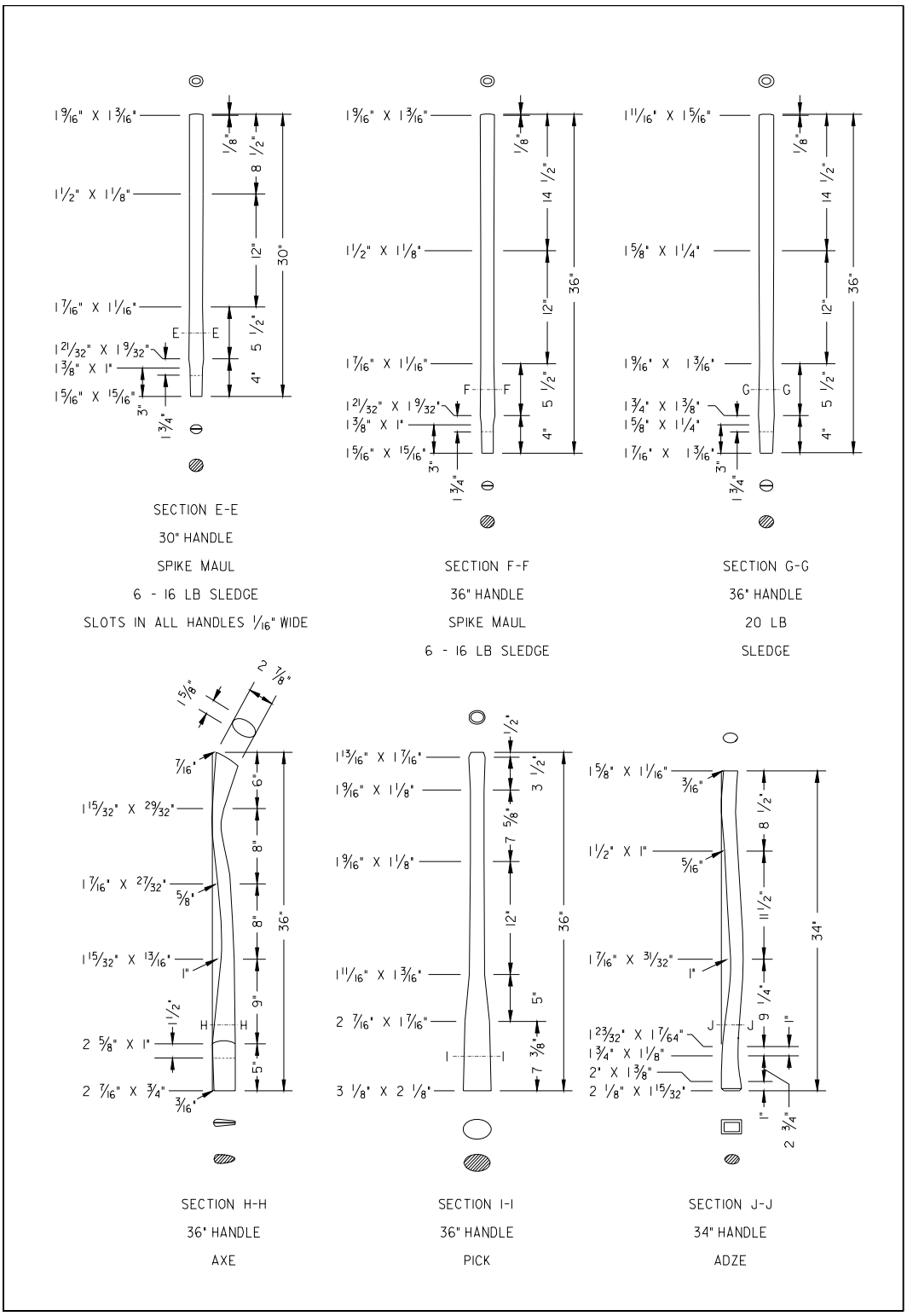

Figure 5-6-24A. Plan 25A-03 – AREMA Track Tool Handles

© 2010, American Railway Engineering and Maintenance-of-Way Association

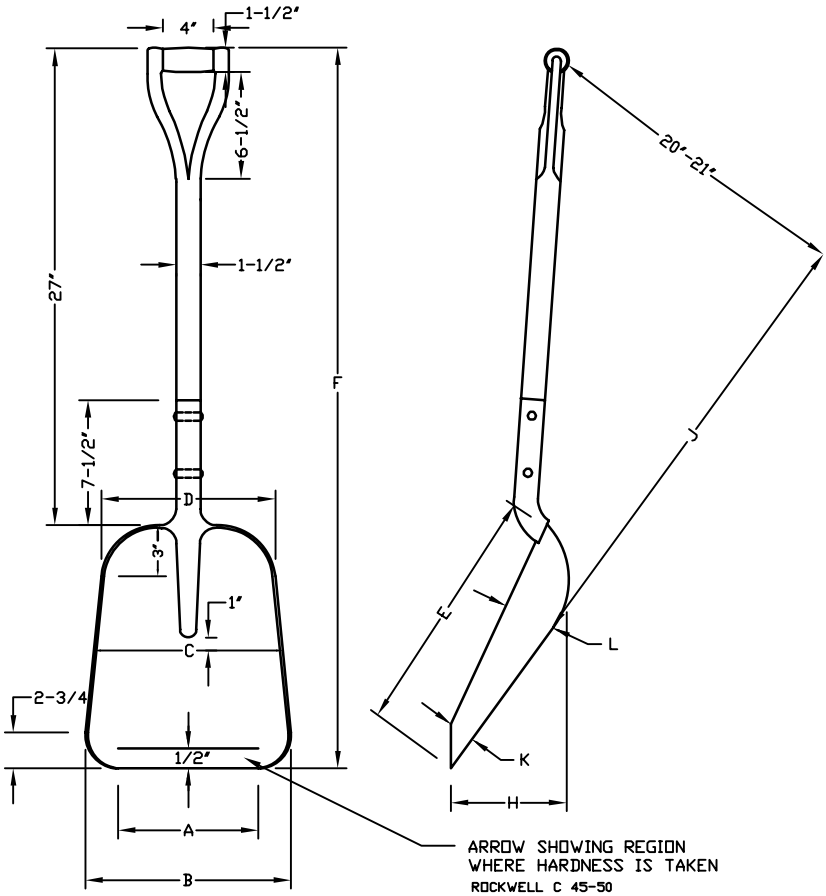

TABLE OF DIMENSIONS- SIZES No 2, 4 AND 6

SIZE	A	B	C	D	E	F	H	J	K	L
2	10-1/2	11-3/4	11	9	15	40-3/4	7	35	1-3/8	3-3/8
4	11	12	11-1/4	9-1/4	16	41-3/4	7-3/8	36	1-5/8	3-5/8
6	11-1/2	12-1/4	11-1/2	9-1/2	17	42-3/4	7-5/8	37	1-7/8	3-7/8

TOLERANCE + OR - 1/4"

Figure 5-6-25. Plan 26-08 – AREMA Scoop

© 2010, American Railway Engineering and Maintenance-of-Way Association

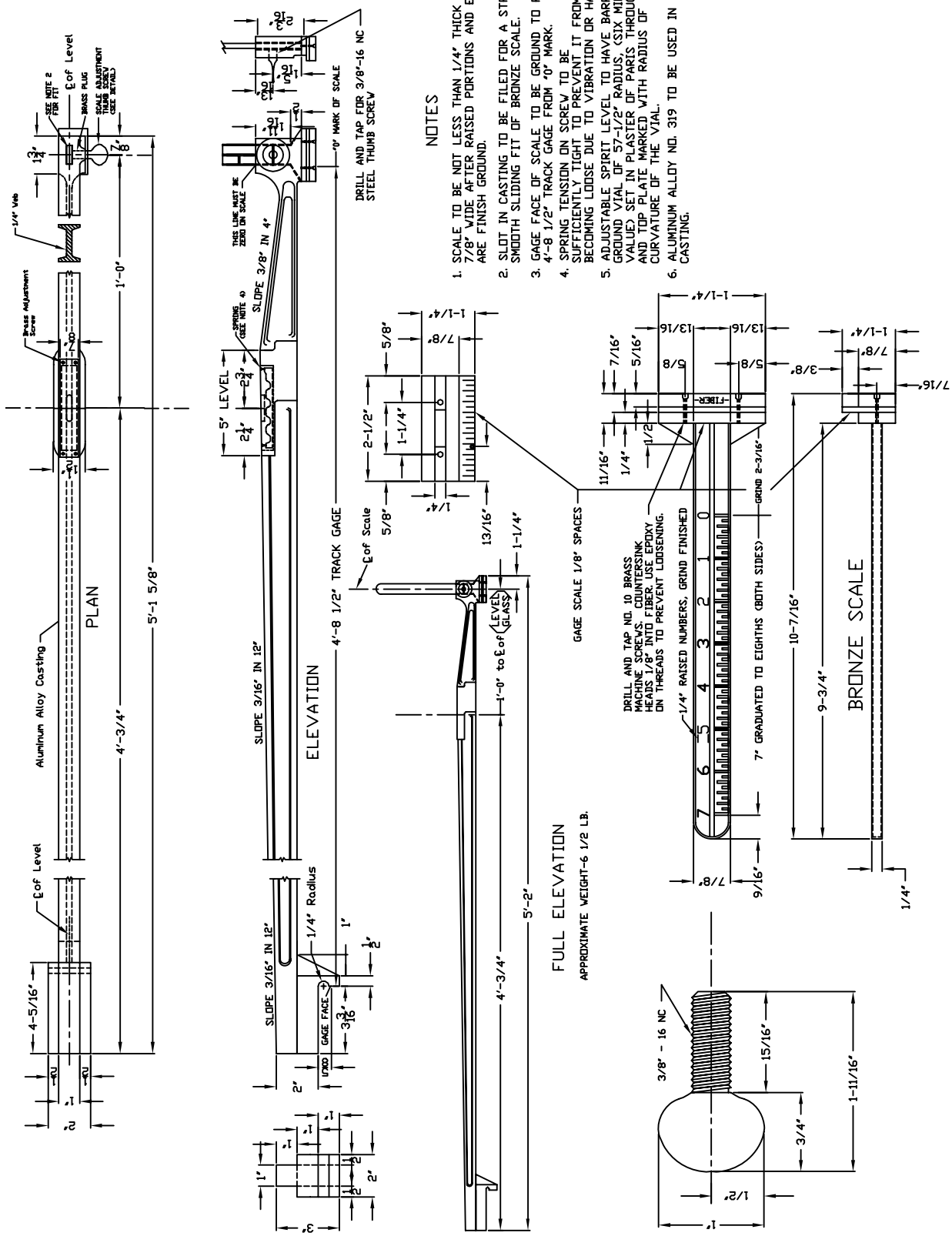

Figure 5-6-26. Plan 27-08 – AREMA Aluminum Combination Track Level and Gage (Insulated)

© 2010, American Railway Engineering and Maintenance-of-Way Association

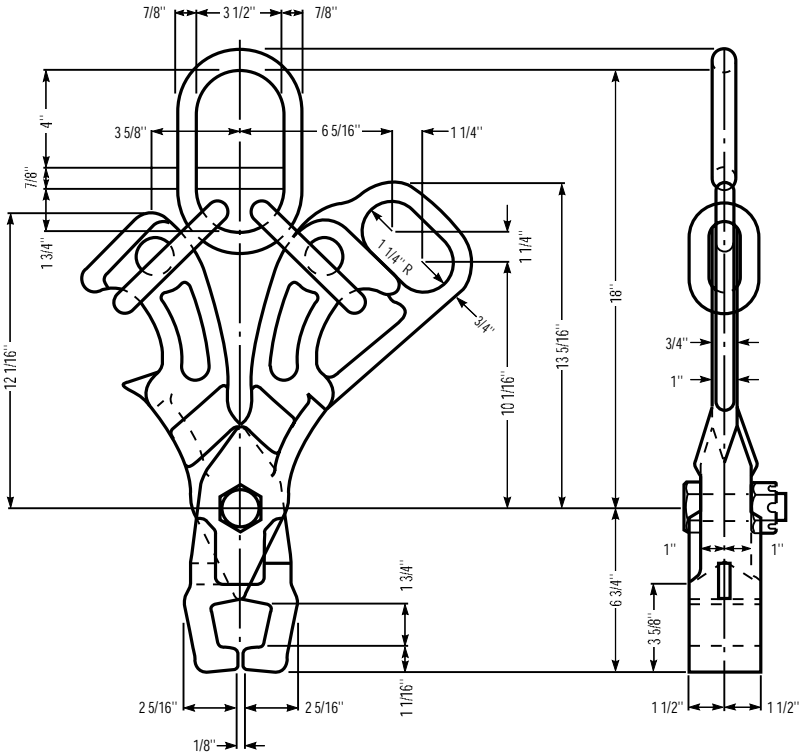

NOTES:

1. MATERIAL - HEAT TREATED ALLOY STEEL.
2. LIFTING RING - 7/8'' DIAMETER BAR, MILD STEEL.
3. OBLONG LINK - 7/8'' DIAMETER BAR, MILD STEEL.
4. JAW SPREAD - APPROXIMATELY 6 3/4''.
5. LIFTING CAPACITY - ''3 TON MAX'' TO BE STAMPED ON TONGS.
6. APPROXIMATE WEIGHT - 56 POUNDS.

TYPE 1

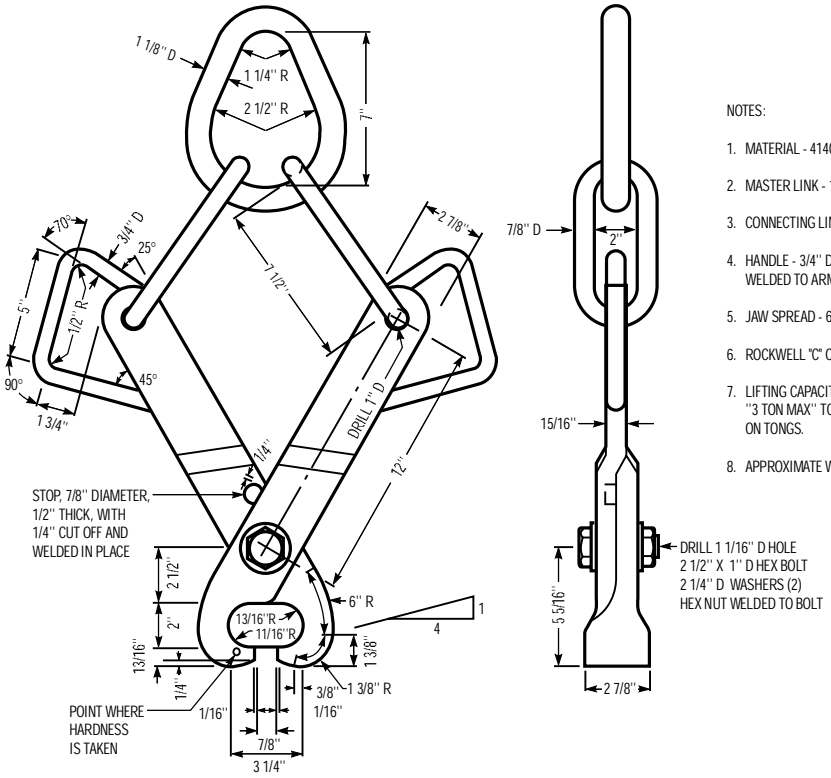

NOTES:

1. MATERIAL - 4140 STEEL FORGED.
2. MASTER LINK - 1 1/8'' DIAMETER.
3. CONNECTING LINKS - 7/8'' DIAMETER.
4. HANDLE - 3/4'' DIAMETER MILD STEEL WELDED TO ARM.
5. JAW SPREAD - 6 3/8'' MINIMUM.
6. ROCKWELL "C" OVERALL 34/40.
7. LIFTING CAPACITY - ''3 TON MAX'' TO BE STAMPED ON TONGS.
8. APPROXIMATE WEIGHT - 40 POUNDS.

DRILL 1 1/16'' D HOLE
2 1/2'' X 1'' D HEX BOLT
2 1/4'' D WASHERS (2)
HEX NUT WELDED TO BOLT

TYPE 2

Figure 5-6-27. Plan 31-97 – AREMA Rail Tongs for Use with Cranes

© 2010, American Railway Engineering and Maintenance-of-Way Association

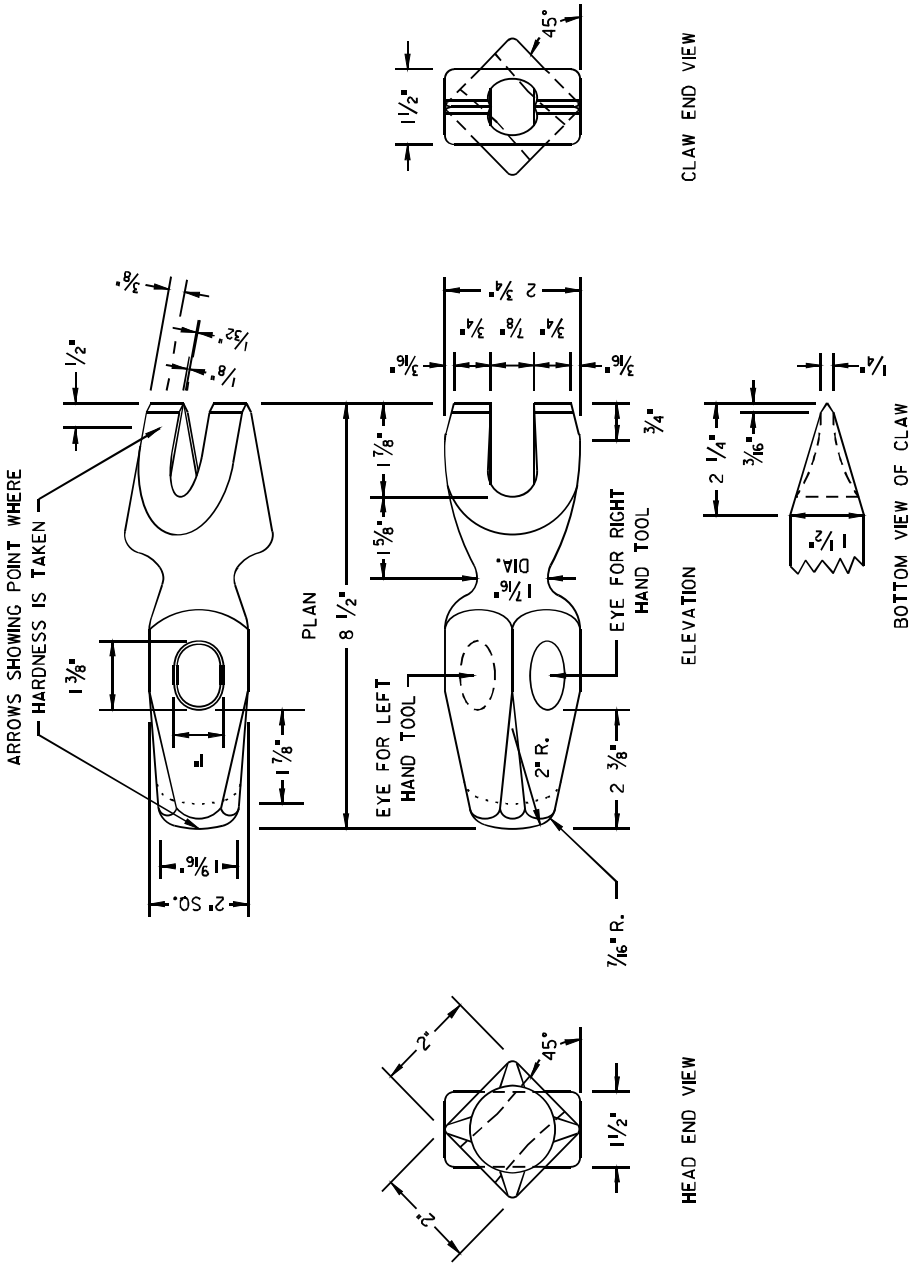

NOTE:

1. TOLERANCE -
   2 % ON LENGTH
   5 % ON CROSS SECTION
2. EYE TAPERED TO CENTER -
   4 DEGREES ON LONG DIAMETER
   3 DEGREES ON SHORT DIAMETER
3. FURNISH IN GRADE B ALLOY STEEL.
4. ROCKWELL C - CLAW AND HEAD 44/48
5. CONTOUR GRIND HEAD PER AREA PLANS A, B, AND D.
6. DASHED LINES INDICATE OUTLINE (MINIMUM) OF TOOLS AS RECLAIMED.
7. APPROXIMATE WEIGHT 6 POUNDS, 5 OUNCES.
8. HAND OF TOOL.
   DRAWING IS FOR A RIGHT HAND TOOL. THE CLAW OPENING IS TO THE RIGHT FOR A TOOL IN THE WORKING POSITION. WHEN SPECIFIED BY PURCHASER, THE EYE MAY BE PLACED IN OPPOSITE FACE FOR A LEFT HAND TOOL. THE CLAW OPENING IS TO THE LEFT FOR A TOOL IN THE WORKING POSITION.

Figure 5-6-28. Plan 32-08 – AREMA Track Spike Lifter

© 2010, American Railway Engineering and Maintenance-of-Way Association

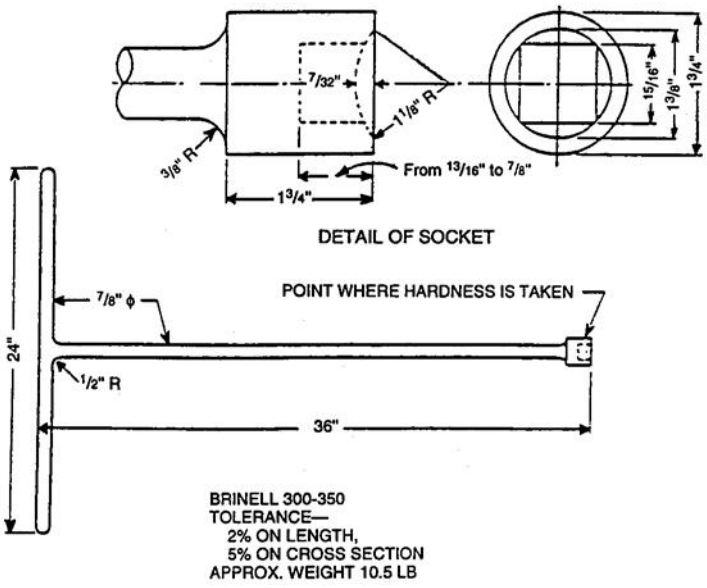

Figure 5-6-29. Plan 33-62 – AREMA Drive Spike Extractor Socket Wrench

© 2010, American Railway Engineering and Maintenance-of-Way Association

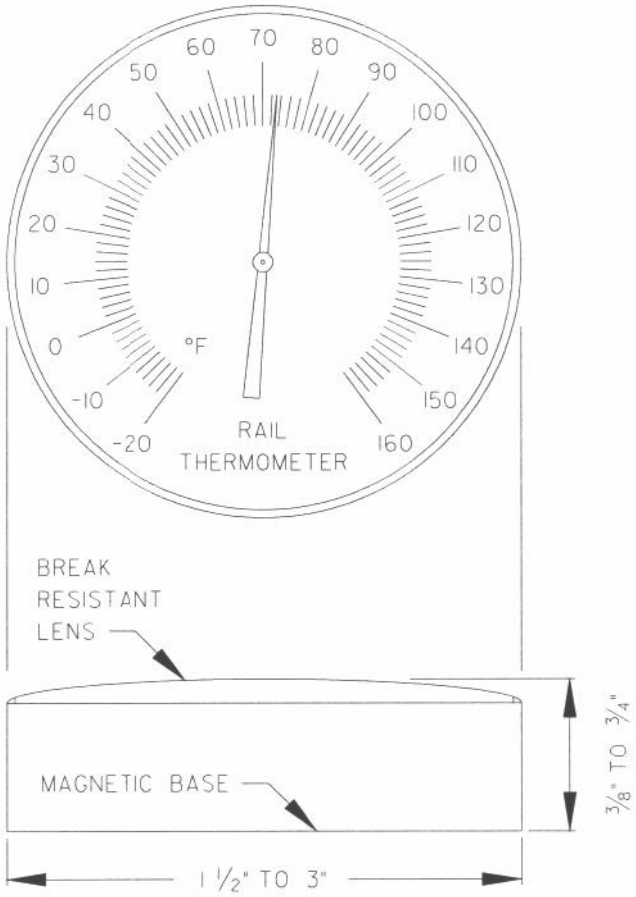

1. THERMOMETER SHALL HAVE A SUITABLE WEATHER RESISTANT CASE BETWEEN 1 1/2" AND 3" IN DIAMETER, AND BETWEEN 3/8" AND 3/4" IN THICKNESS.

2. THERMOMETER SHALL HAVE A BREAK RESISTANT LENS.

3. THERMOMETER SHALL HAVE A BLACK TEMPERATURE SCALE WITH BLACK NUMERALS, A RED INDICATOR HAND AND A CONTRASTING FACE. NUMERALS SHALL BE AS LARGE AS POSSIBLE FOR EASY READABILITY. SCALE GRADUATIONS WILL BE IN 2 DEGREE INCREMENTS AND 10 DEGREE MARKED INTERVALS.

4. THERMOMETER SHALL HAVE A BI-METALLIC SENSING ELEMENT PRE-CONDITIONED AND TESTED FOR PERMANENT CALIBRATION FOR ACCURACY TO WITHIN PLUS OR MINUS OF 2 % OF FULL SCALE RANGE.

5. THERMOMETER SENSING ELEMENT SHALL REACH SENSING EQUILIBRIUM WITHIN 3 MINUTES.

6. THERMOMETER SHALL HAVE A MAGNET OR MAGNETS ON THE BACK SIDE OF CASE STRONG ENOUGH TO SUSTAIN ITS OWN WEIGHT IN ANY POSITION.

7. CORNERS OF THE THERMOMETER CASE TO BE ROUNDED WHERE PRACTICABLE.

Figure 5-6-30. Plan 34-02 – AREMA Rail Thermometer

© 2010, American Railway Engineering and Maintenance-of-Way Association

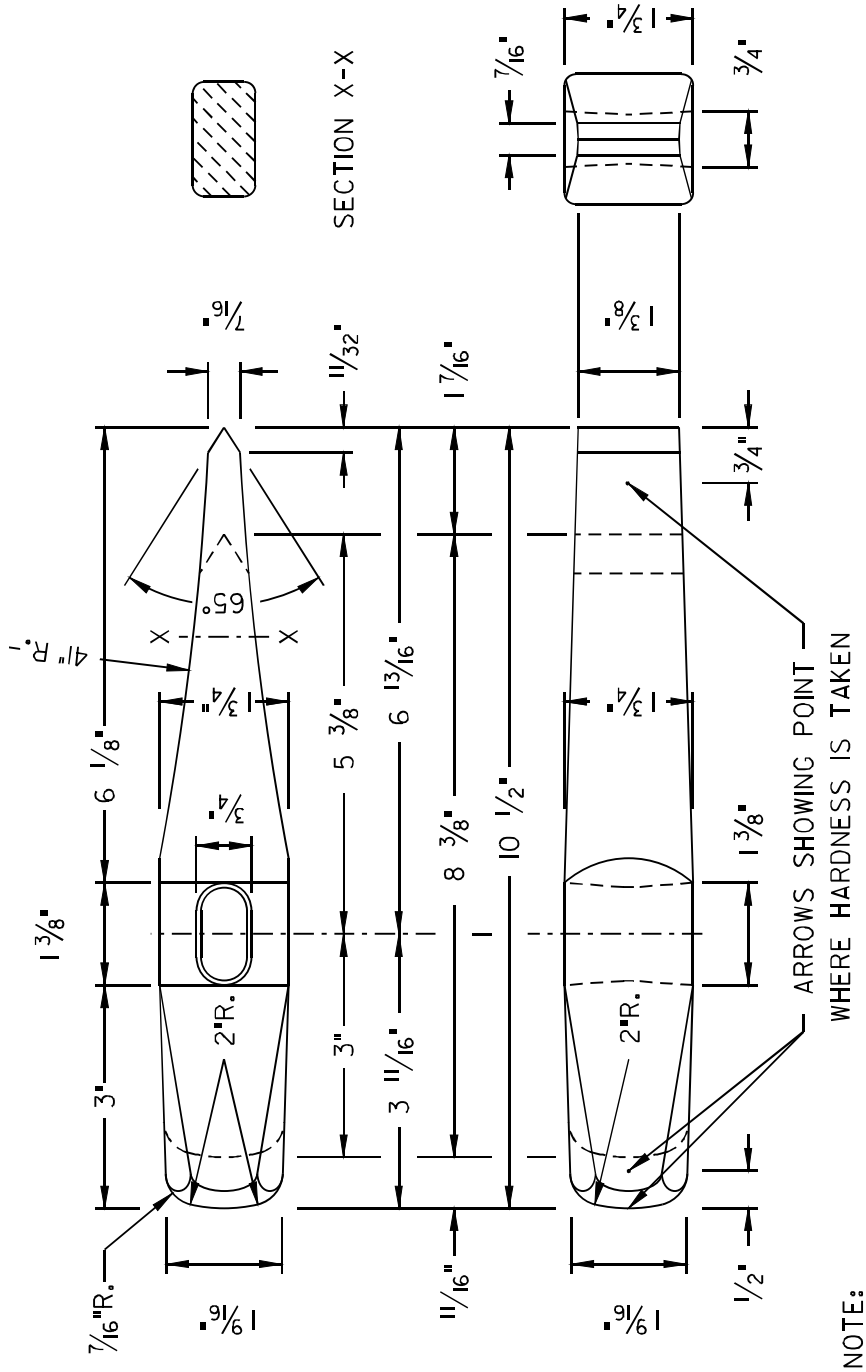

Figure 5-6-31. Plan 35-08 – AREMA Nut Cutter

© 2010, American Railway Engineering and Maintenance-of-Way Association

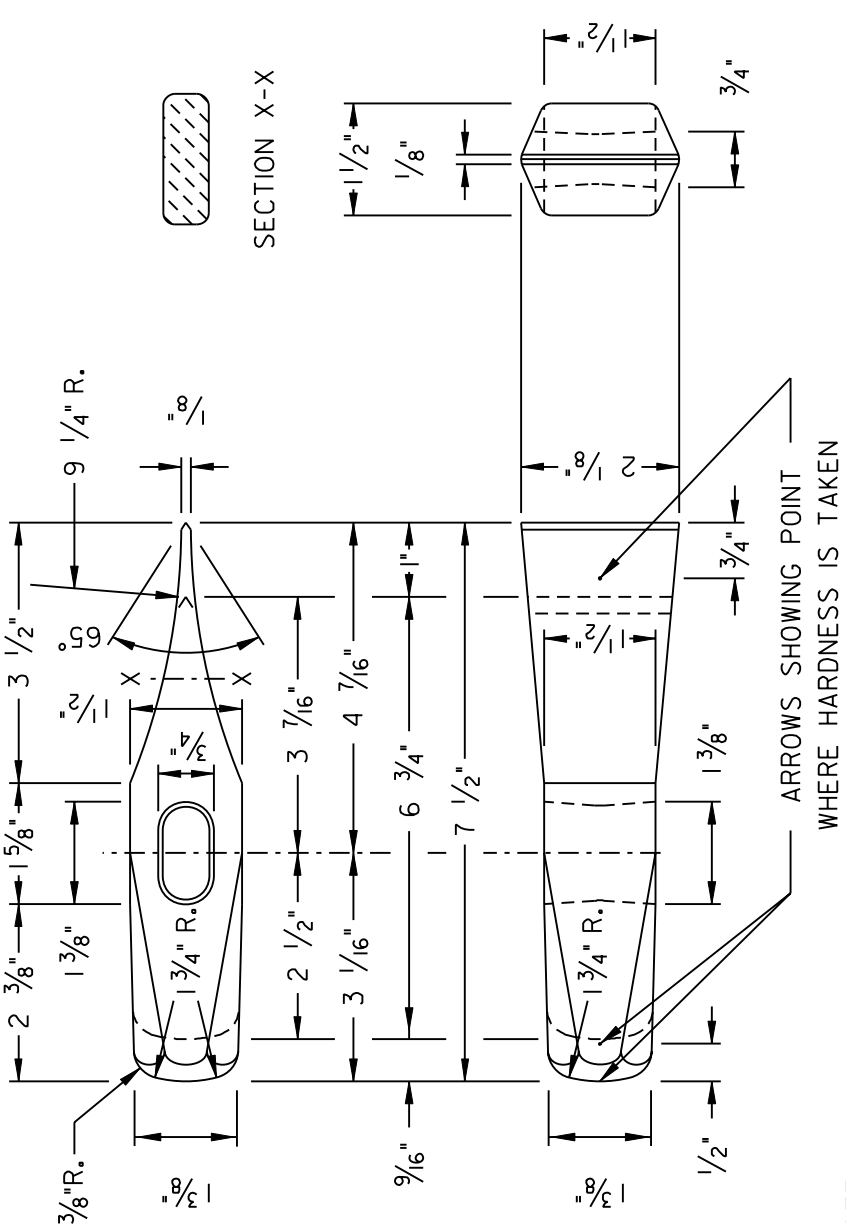

Figure 5-6-32. Plan 36-08 – AREMA 3 Pound Hot Cutter

© 2010, American Railway Engineering and Maintenance-of-Way Association

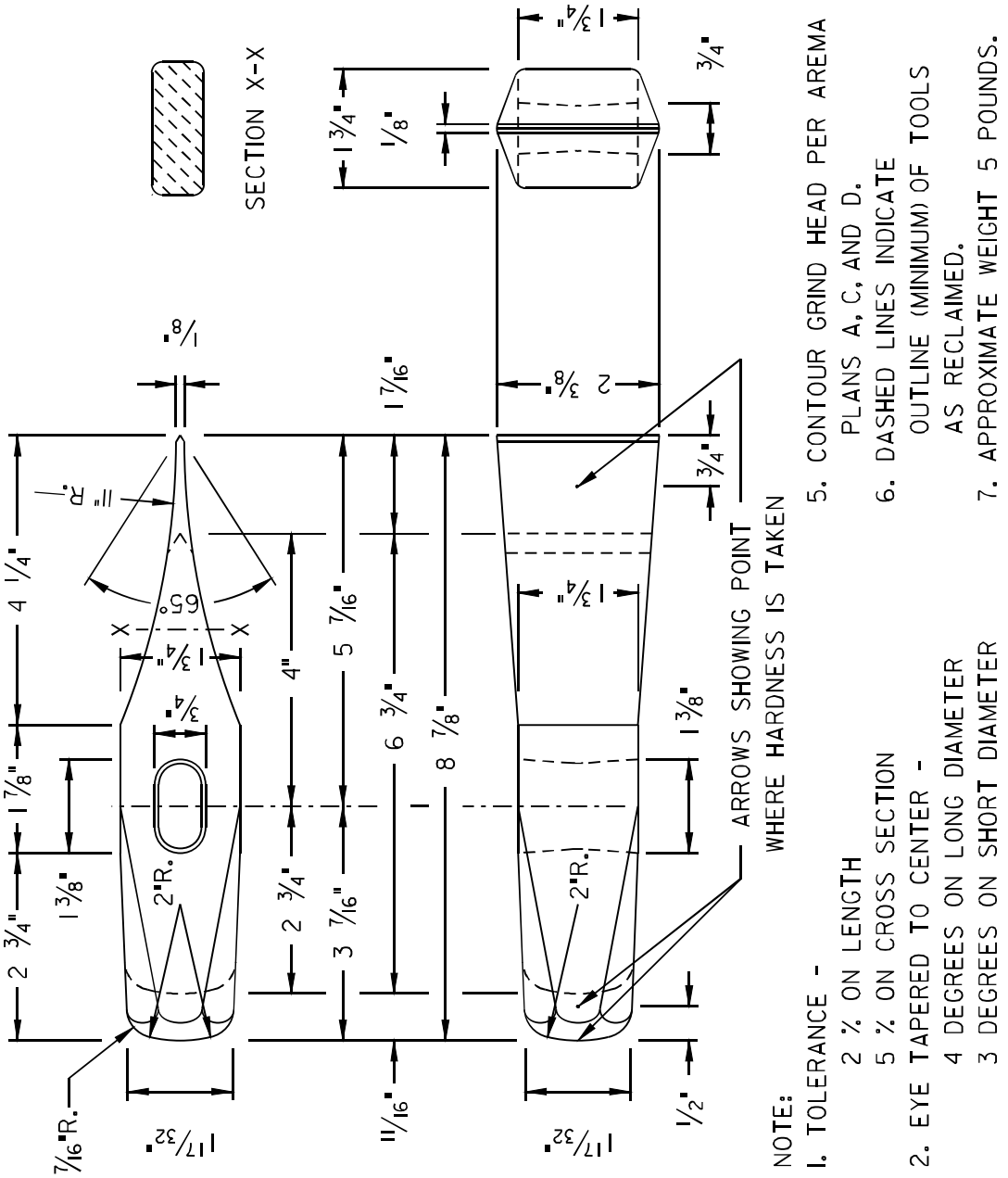

Figure 5-6-33. Plan 37-08 – AREMA 5 Pound Hot Cutter

© 2010, American Railway Engineering and Maintenance-of-Way Association

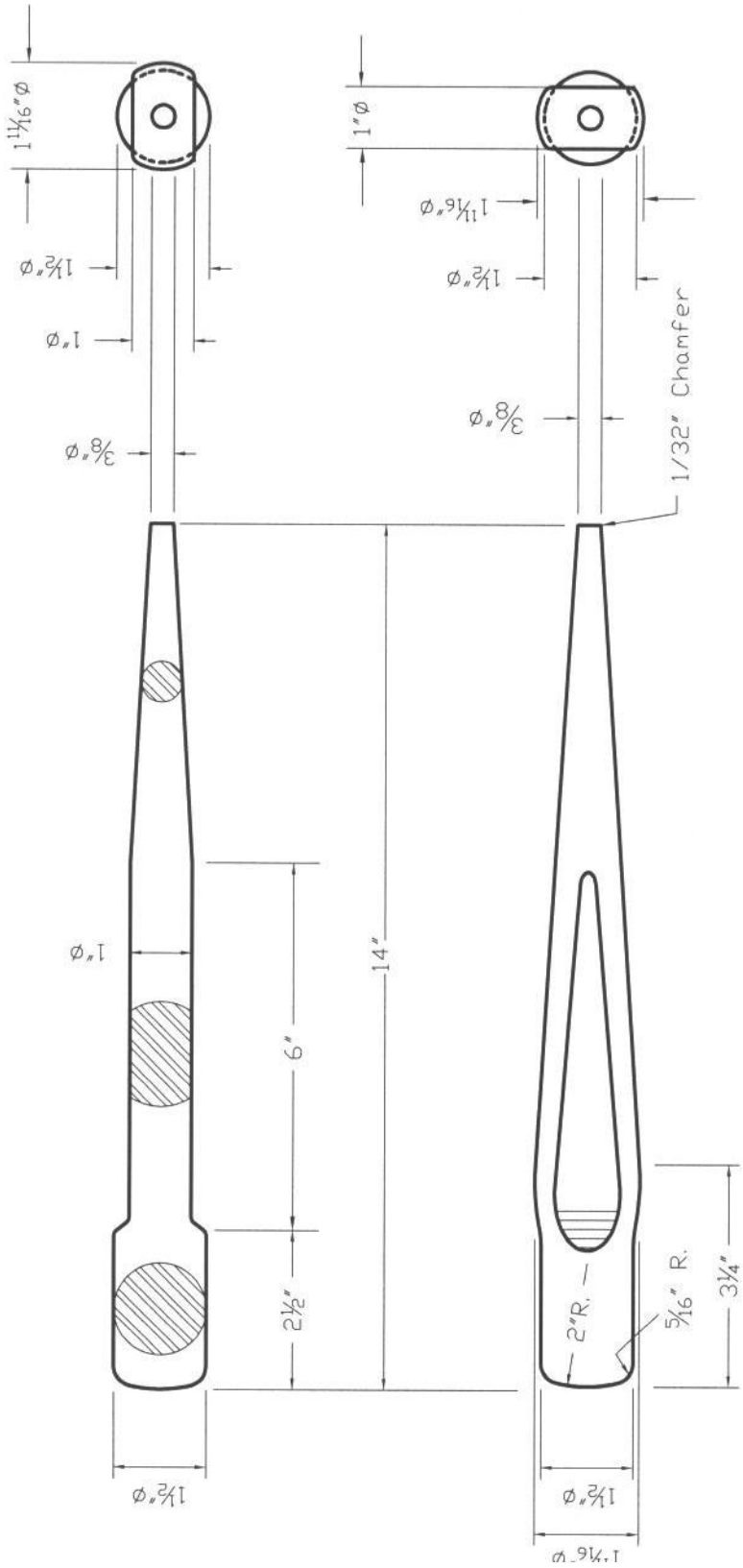

NOTES:

1. TOLERANCE -
   2% ON LENGTH
   5% ON CROSS SECTION
2. TOOL TO BE FURNISHED IN 9260 (GRADE B) OR EN30B
3. HARDNESS, ROCKWELL C - 32 / 37.
4. CONTOUR HEAD PER AREMA PLANS A-03, C-83, AND D-83.

Figure 5-6-34. Plan 38-06 – AREMA - Drift Pin (Short)

© 2010, American Railway Engineering and Maintenance-of-Way Association

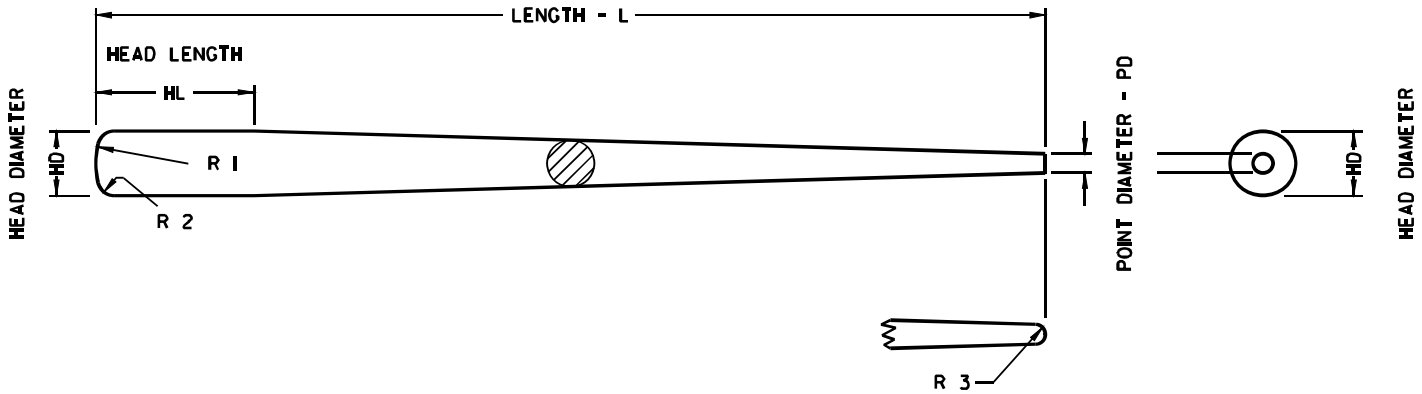

NOTES:

1. TOLERANCE -
   2 % ON LENGTH
   5 % ON CROSS SECTION

2. TOOL TO BE FURNISHED IN
   ALLOY STEEL
   9260 GRADE B OR
   EN30 B

3. ROCKWELL C - SEE TABLE

4. CONTOUR GRIND HEAD PER AREA
   PLANS A, C, AND D.

LENGTH L	HEAD LENGTH HL	HEAD DIAMETER HD	CENTER RADIUS R 1	CORNER RADIUS R 2	POINT DIAMETER PD	POINT RADIUS R 3	OVERALL ROCKWELL HARDNESS
18"	3"	1¼"	1¾"	5/16"	3/8"	NONE	32/37
19"	3"	1½"	2"	5/16"	3/8"	3/16"	32/37
26"	2"	1½"	2"	5/16"	7/8"	NONE	32/37
26"	2"	2"	2"	5/16"	7/8"	NONE	32/37

Figure 5-6-35. Plan 39-09 – AREMA - Drift Pins (Long)

© 2010, American Railway Engineering and Maintenance-of-Way Association

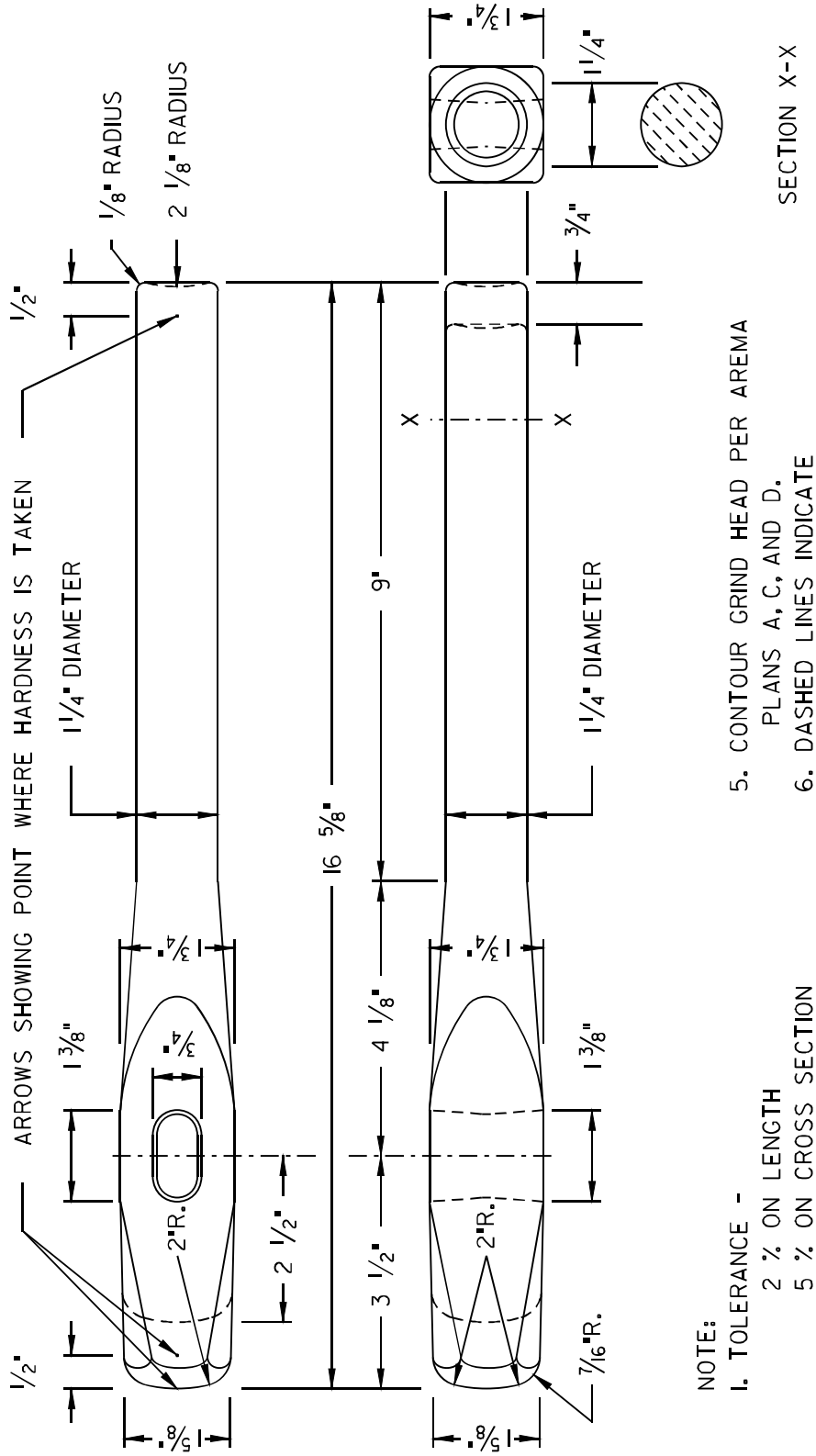

NOTE:

1. TOLERANCE -
   2 % ON LENGTH
   5 % ON CROSS SECTION
2. EYE TAPERED TO CENTER -
   4 DEGREES ON LONG DIAMETER
   3 DEGREES ON SHORT DIAMETER
3. TOOL TO BE FURNISHED IN GRADE B ALLOY STEEL.
4. ROCKWELL C -
   POINT 52/56
   HEAD 44/48
5. CONTOUR GRIND HEAD PER AREMA PLANS A, C, AND D.
6. DASHED LINES INDICATE OUTLINE (MINIMUM) OF TOOLS AS RECLAIMED.
7. APPROXIMATE WEIGHT 6 POUNDS.

Figure 5-6-36. Plan 41-08 – AREMA Spiking Tool

© 2010, American Railway Engineering and Maintenance-of-Way Association

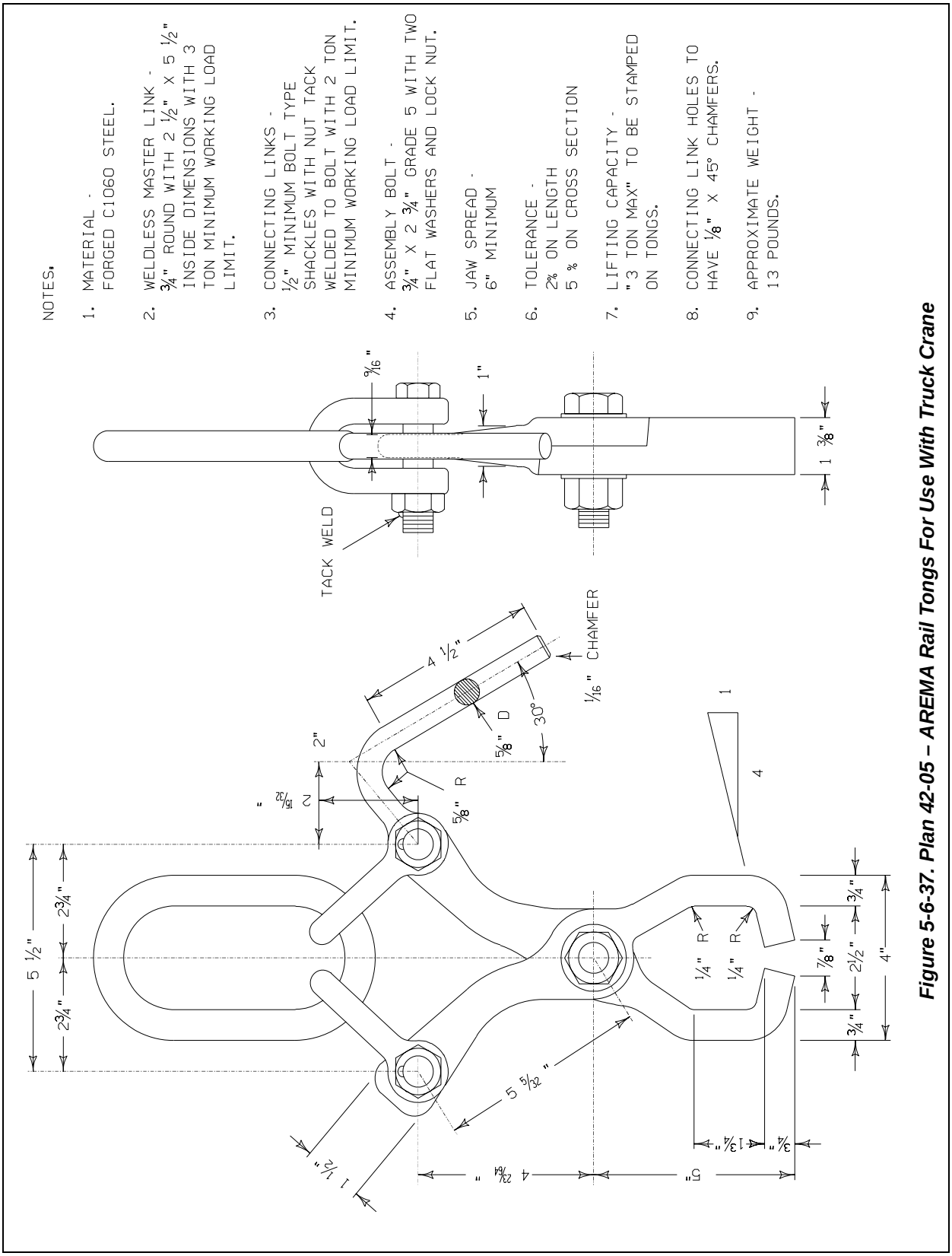

Figure 5-6-37. Plan 42-05 – AREMA Rail Tongs For Use With Truck Crane

© 2010, American Railway Engineering and Maintenance-of-Way Association

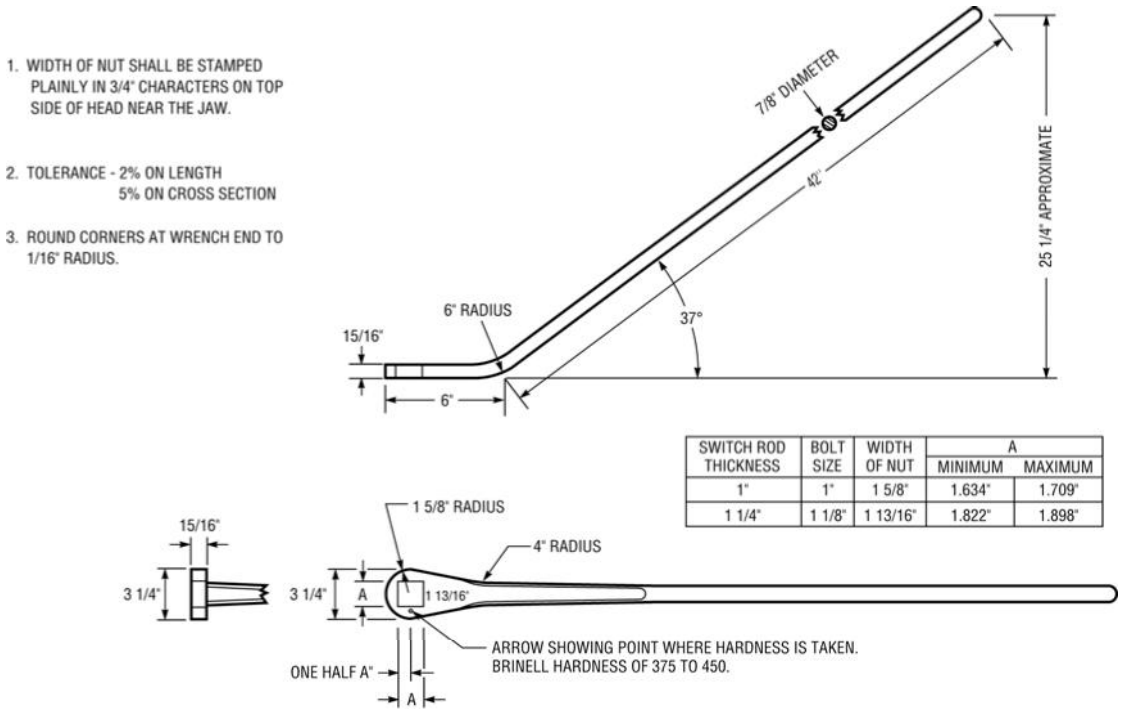

SWITCH ROD THICKNESS	BOLT SIZE	WIDTH OF NUT	A	
			MINIMUM	MAXIMUM
1"	1"	1 5/8"	1.634"	1.709"
1 1/4"	1 1/8"	1 13/16"	1.822"	1.898"

Figure 5-6-38. Plan 43-97 – AREMA Switch Clip Wrench

© 2010, American Railway Engineering and Maintenance-of-Way Association

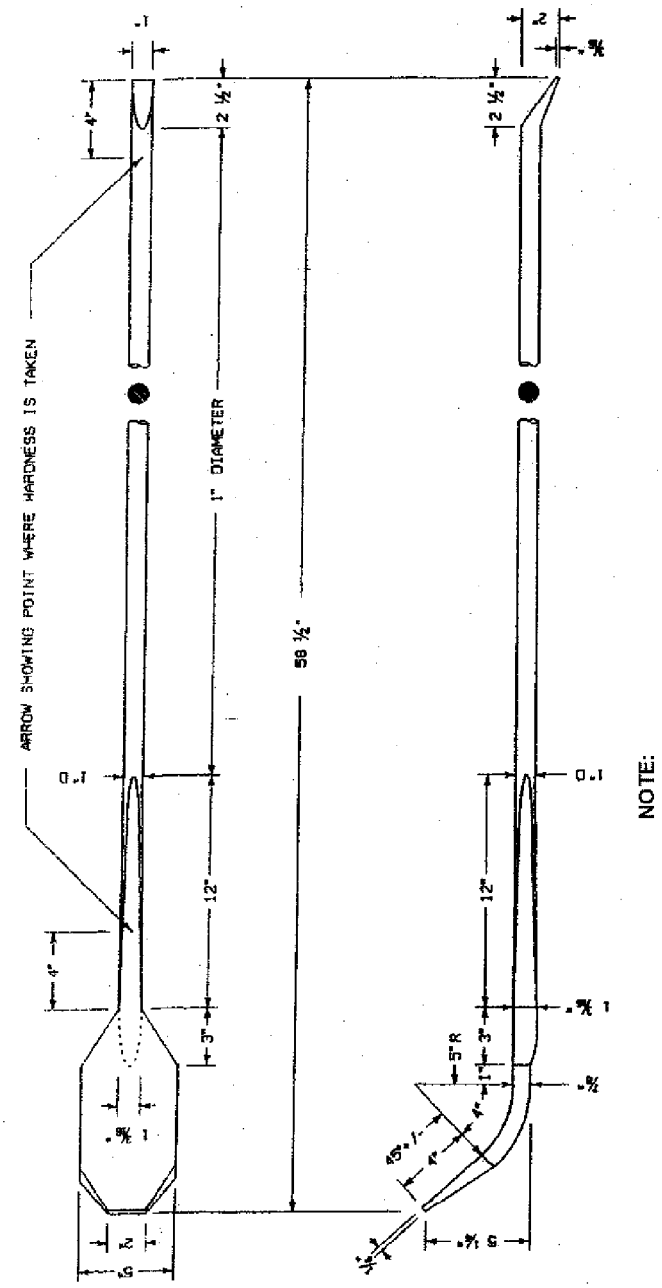

NOTE:

1. FURNISH IN AREMA CARBON STEEL
2. TOLERANCE: 2% ON LENGTH
   5% ON CROSS SECTION
3. HARDNESS: BRINELL 300 - 375
4. APPROXIMATE WEIGHT: 21 POUNDS

Figure 5-6-39. Plan 44-97 – AREMA Nipping Bar

© 2010, American Railway Engineering and Maintenance-of-Way Association

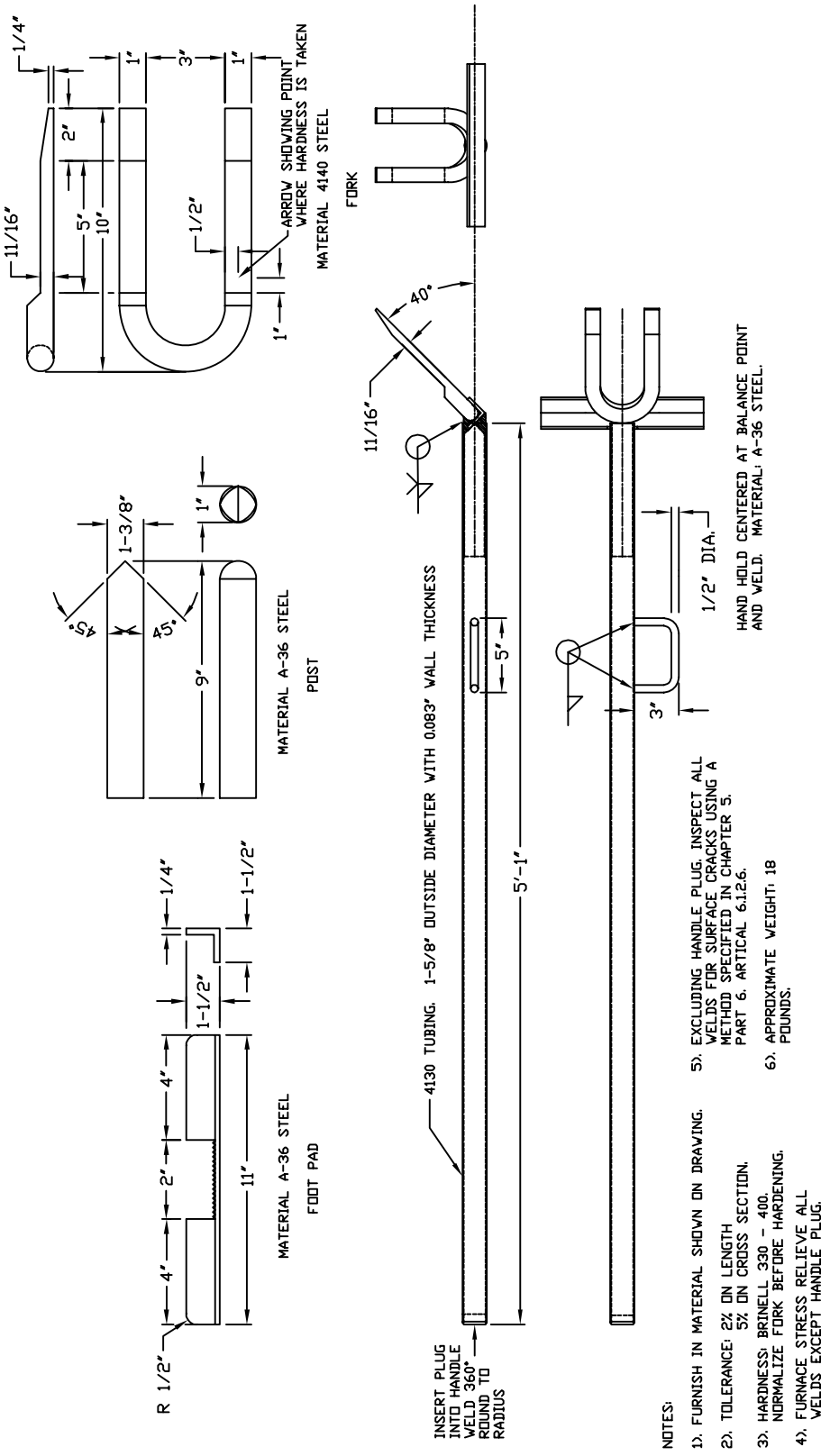

Figure 5-6-40. Plan 45-09 - AREMA Nipping Fork

© 2010, American Railway Engineering and Maintenance-of-Way Association

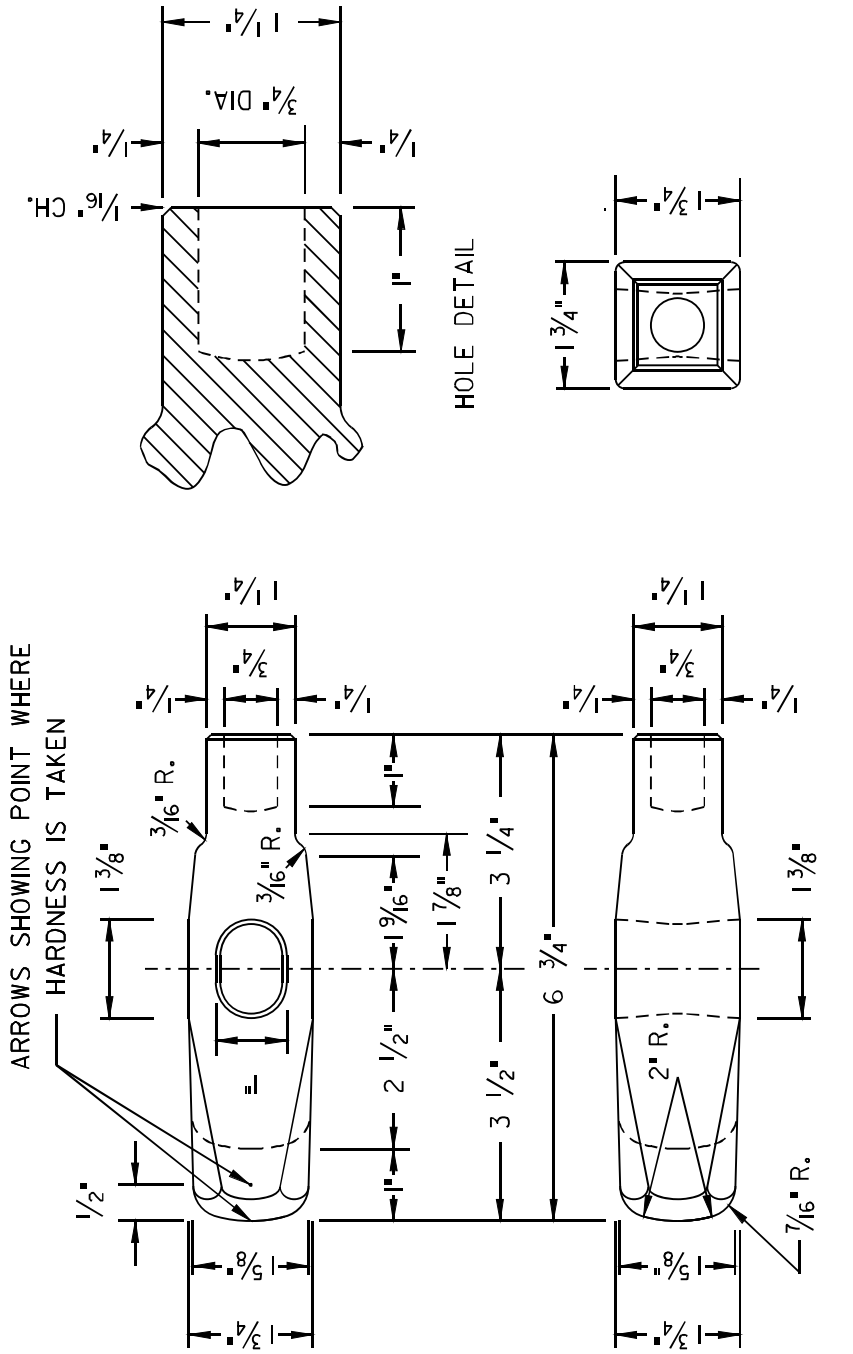

NOTE:

1. TOLERANCE -
   2 % ON LENGTH
   5 % ON CROSS SECTION
2. EYE TAPERED TO CENTER -
   4 DEGREES ON LONG DIAMETER
   3 DEGREES ON SHORT DIAMETER
3. FURNISH IN GRADE B ALLOY STEEL.
4. ROCKWELL C - HEAD 44/48
5. CONTOUR GRIND HEAD PER AREMA PLANS A, B, AND D.
6. DASHED LINE ON HEAD INDICATES OUTLINE (MINIMUM) OF TOOLS AS RECLAIMED.
7. APPROXIMATE WEIGHT 5 POUNDS.

Figure 5-6-41. Plan 46-08 - AREMA Drift Pin Remover

© 2010, American Railway Engineering and Maintenance-of-Way Association

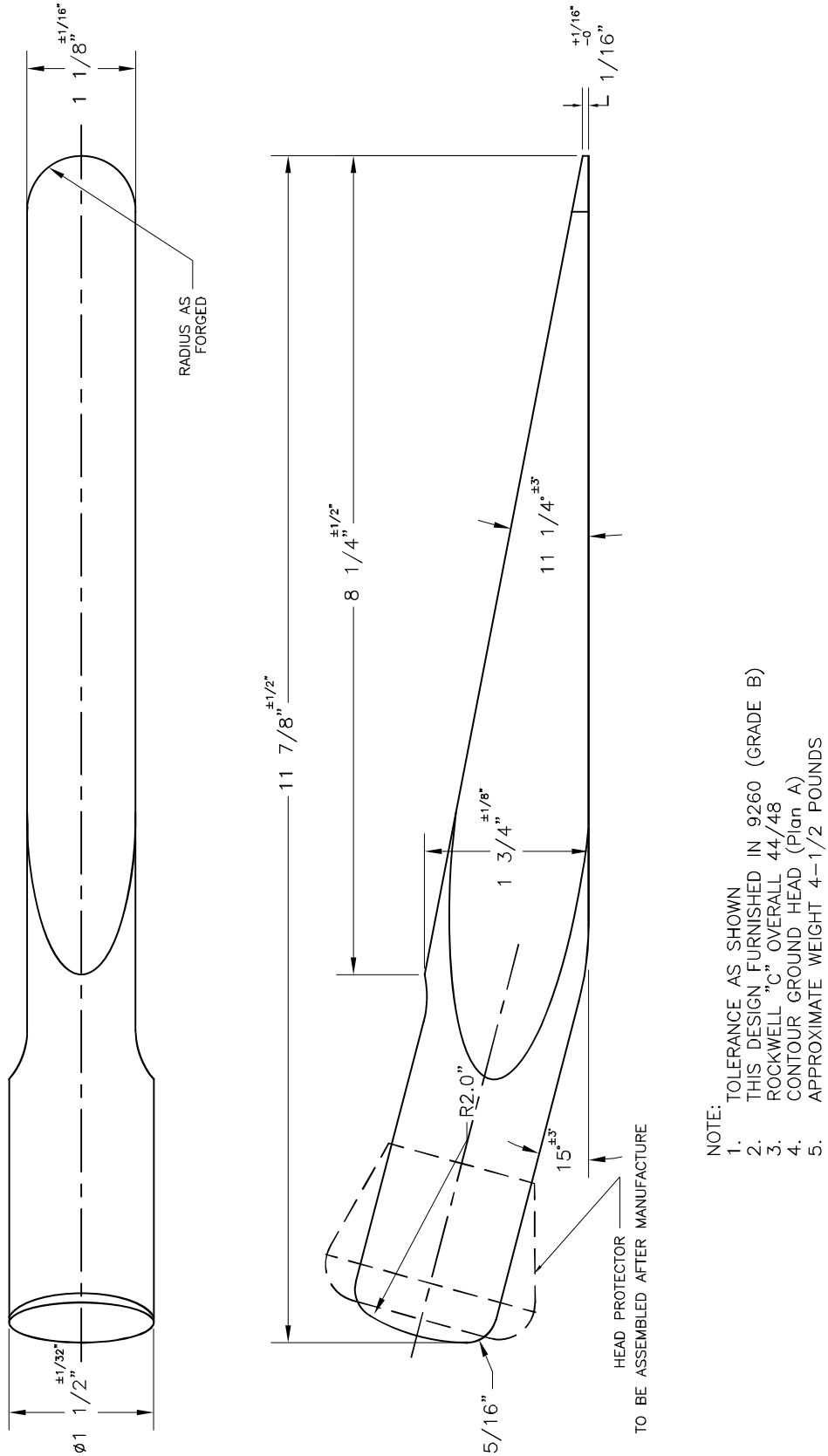

Figure 5-6-42. Plan 47-08 - AREMA Offset Wedge

© 2010, American Railway Engineering and Maintenance-of-Way Association

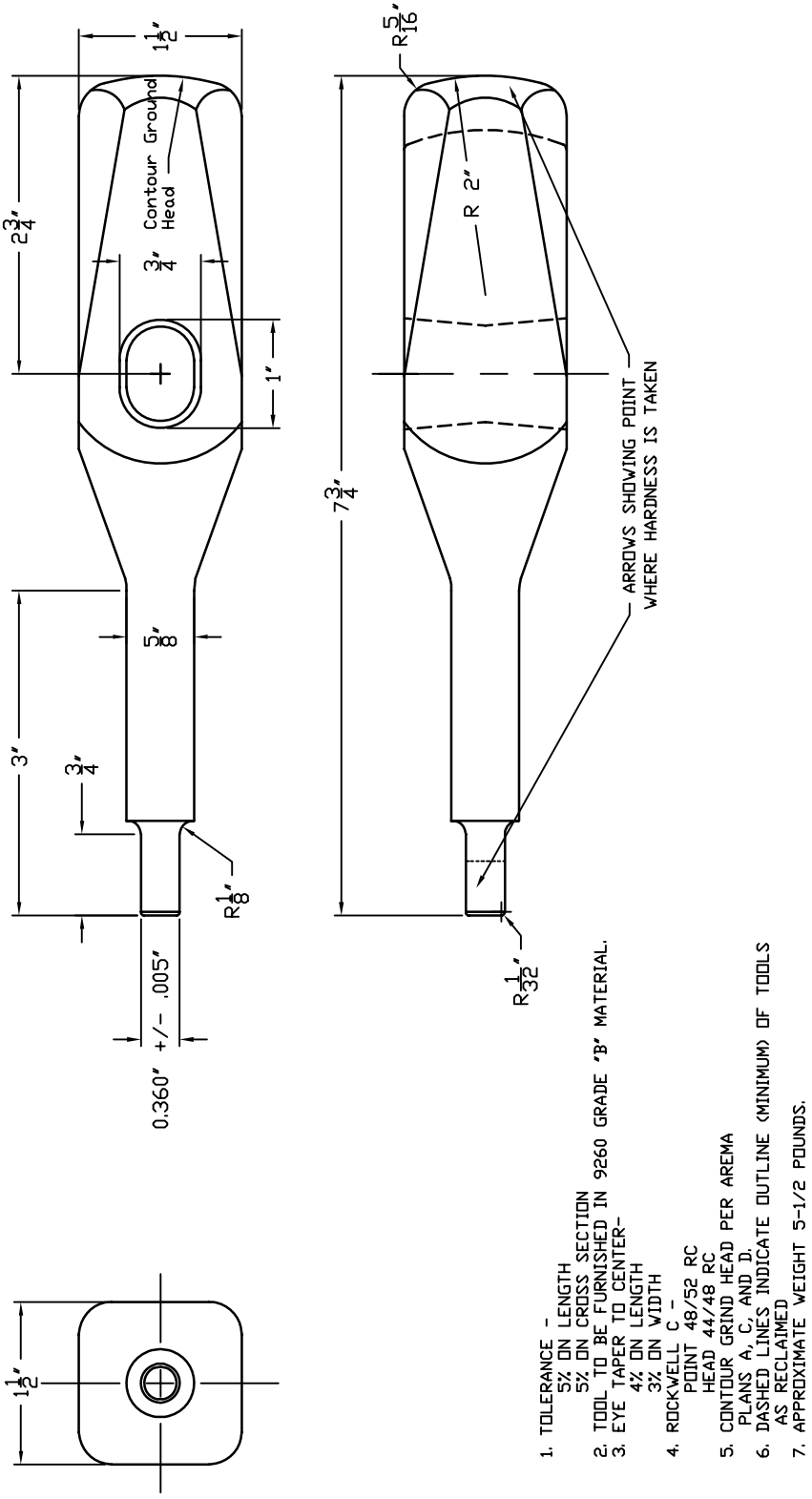

Figure 5-6-43. Plan 48-09 AREMA Plug Bond Backout Punch

© 2010, American Railway Engineering and Maintenance-of-Way Association

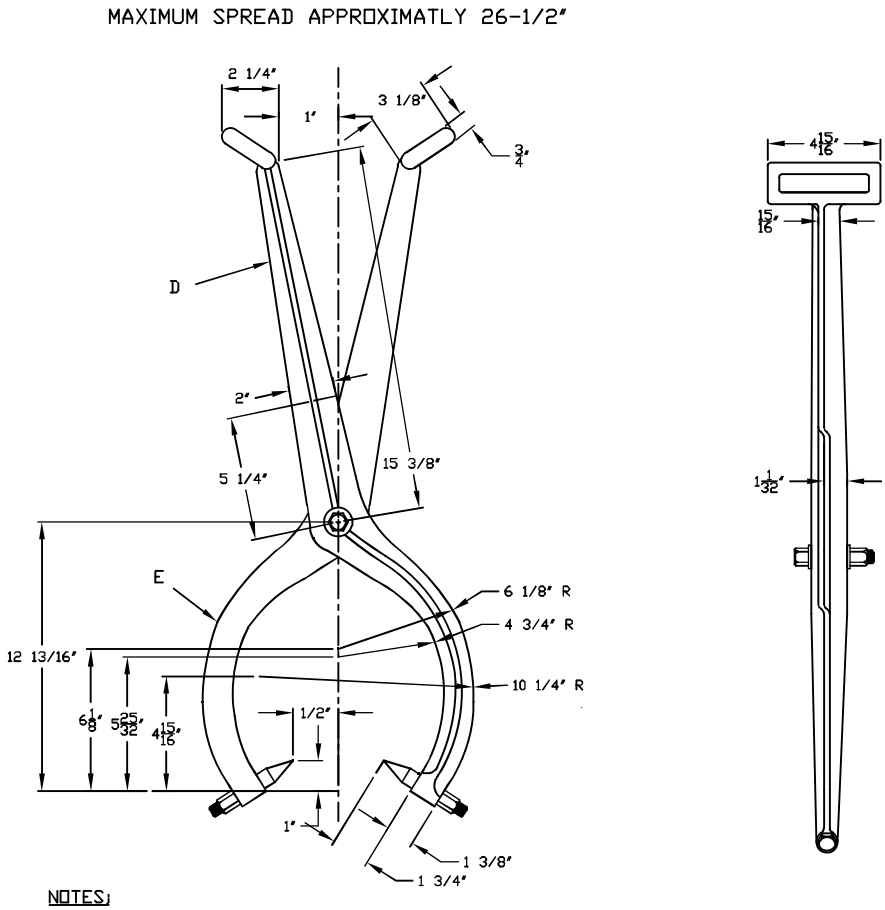

NOTES:

A). TONG HALVES MADE OF AA535 ALUMINUM.
B). POINTS MADE OF MILD STEEL CASE HARDENED & ASSEMBLED WITH 3/8" LOCK NUT.
C). ASSEMBLED WITH 3/4" X 3-1/2" HEX HEAD GRADE 5 BOLT, 2 WASHERS & LOCK NUT.
D). MARK IN THIS LOCATION: "LA104", "FOR HAND USE ONLY" AND "YEAR/MONTH" CODE
E). APPROXIMATE WEIGHT 9 POUNDS

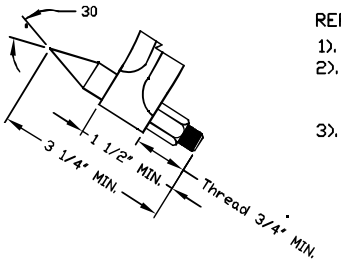

REPLACEABLE POINT

1). 5/8" SQUARE OR HEXAGON STEEL
2). 3/8"-16 NC THREADS CLASS 2 FIT WITH LOCK NUT CASE HARDEN 0.010" TO 0.015" DEEP 300 TO 350 BRINELL HARDNESS
3). 7/16" DIAMETER HOLE IN TONGS.

Figure 5-6-44. Plan 50-10 AREMA Aluminum Tie Tongs

© 2010, American Railway Engineering and Maintenance-of-Way Association

6.5.2 HAND TOOL CONTOUR DIMENSIONS (2009)

For the hand tool contour dimensions refer to Table 5-6-14.

Table 5-6-14. Plan A-AREMA Hand Tool Contour Dimensions

Type of Tool	Plan Number	Tool Size	Stock Diameter of Head (See Note 1) In inches	Radius of Crown on Face In inches	Corner Radius In inches	Dimensions Indentation In inches	Also See Plan Numbers
			D	R	-	C	
Spike Maul	3	–	1-1/4	7	1/4	–	B and D
		–	1-5/8	7	1/4	–	
Double Faced Sledge	13	1 lb	1-1/4	7	1/4	–	B-83 and D
		2 lb	1-3/8	7	1/4	–	
		2-1/2 lb	1-1/2	7	1/4	–	
		3 lb	1-5/8	7	1/4	–	
		4 lb	1-3/4	7	3/8	–	
		6 lb	2-1/8	7	3/8	–	
		8 lb	2-1/4	7	7/16	–	
		10 lb	2-1/2	7	7/16	–	
		12 lb	2-5/8	7	7/16	–	
		16 lb	2-7/8	7	1/2	–	
		20 lb	3-1/8	7	1/2	–	
Track Chisel	17	–	1-9/16	2	7/16	7/32	C and D
Round Track Punch	19	–	1-5/8	2	7/16	7/32	C and D
Track Spike Lifter	32	–	1-9/16	2	7/16	7/32	C and D
Nut Cutter	35	–	1-9/16	2	7/16	7/32	C and D
Hot Cutter	36	3 lb	1-3/8	1-3/4	3/8	3/16	C and D
Hot Cutter	37	5 lb	1-17/32	2	7/16	7/32	C and D
Drift Pin - Short	38	14"	1-1/2	2	5/16	5/16	C and D
Drift Pin - Long	39	18"	1-1/4	1-3/4	5/16	5/16	C and D
		19"	1-1/2	2	5/16	5/16	
		26"	1-1/2	2	5/16	5/16	
		26"	2	2	5/16	5/16	
Spiking Tool	41	–	1-5/8	2	7/16	7/32	C and D
Drift Pin Remover	46	5 lb	1-3/4	2	7/16	7/32	C and D
Offset Wedge	47	4-1/2 lb	1-1/2	2	5/16	7/32	C and D
Plug Bond Backout Punch	48	5-1/2 lb	1-1/2	2	5/16	–	C and D
Note 1: Distance across flats, if tools are hexagons or octagons							

© 2010, American Railway Engineering and Maintenance-of-Way Association

6.5.3 METHOD FOR ESTABLISHING THE CORNER CONTOUR OF HAND TOOL STRIKING FACES (1984)

Refer to Figure 5-6-45 when establishing the tool contact face contour according to the following steps:

a. Draw tool head centerline C/L.

b. Draw line AC, representing the side of the tool head. Except in tapered tools, this line is parallel to C/L at a distance of D/2. D is the stock diameter of the tool or with hexagons and octagons the distance across the flats.

c. Draw arc AA' with a radius of R.

d. Draw line EE' parallel to line AC at a distance (r) equal to the corner radius to be used.

e. Draw arc BB' parallel to arc AA' at a distance equal to the corner radius. The radius of this arc (R') is equal to the crown radius minus the corner radius.

f. Draw arc SP with a radius r from point O, the intersection of line EE' and arc BB'. The resultant arc is tangent to arc AA' and line AC at points S and P, respectively.

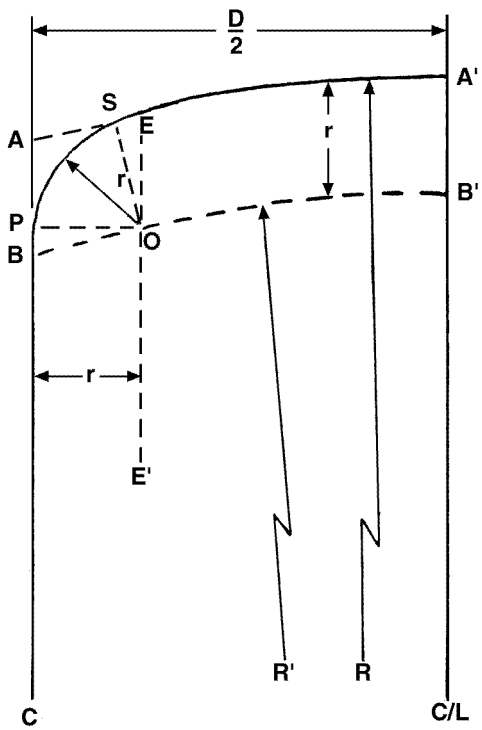

D = Stock Diameter or with hexagons and octagons the distance across the flats

R = Crown Radius

r = Corner Radius

R' = Crown Radius–Corner Radius

Figure 5-6-45. Plan B-83 – AREMA Contour of Hand Tool Striking Faces

© 2010, American Railway Engineering and Maintenance-of-Way Association

6.5.4 METHOD FOR ESTABLISHING THE CORNER CONTOUR OF HAND TOOL STRUCK FACES (3/4 INCH STOCK AND OVER) (1984)

Refer to Figure 5-6-46 when establishing the tool contact face contour according to the following steps:

a. Draw tool head centerline C/L.

b. Draw line ab, representing the side of the tool head, parallel to C/L at a distance of D/2. D is the stock diameter of the tool or with hexagons and octagons the distance across the flats.

c. Draw line aa' perpendicular to C/L.

d. Draw line ab' at a 45 degree angle from line aa.

e. On line aa', locate point A, which is the distance C (Corner indentation shown in Table 5-6-14) from point a.

f. From point A, locate point O on line ab by scribing an arc of radius r (the corner radius).

g. From point O scribe the corner arc BA with radius (r).

h. From point A locate the center of struck face arc AA' by scribing arc of radius R (crown radius) so that it intersects C/L.

i. From this point of intersection scribe arc AA' with radius R.

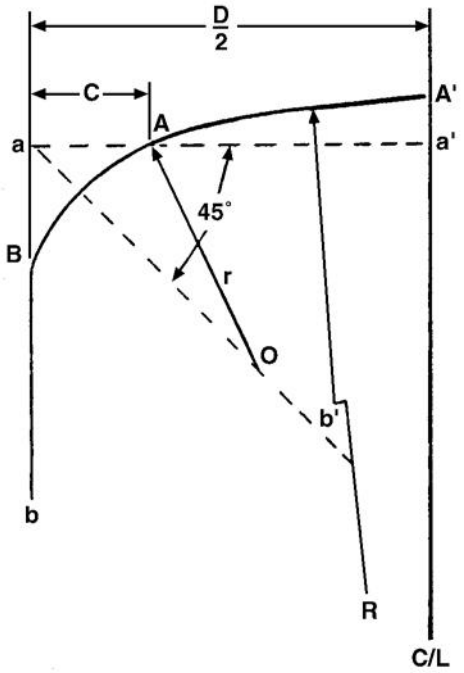

D = Stock Diameter or with hexagons and octagons the distant across the flats.

R = Crown Radius

r = Corner Radius

C = Corner Indentation

Figure 5-6-46. Plan C-83 – AREMA Contour of Hand Tool Struck Faces

© 2010, American Railway Engineering and Maintenance-of-Way Association

6.5.5 CONTOUR BLENDING OF CORNERS (1984)

Refer to Figure 5-6-47 for the contour blending of corners.

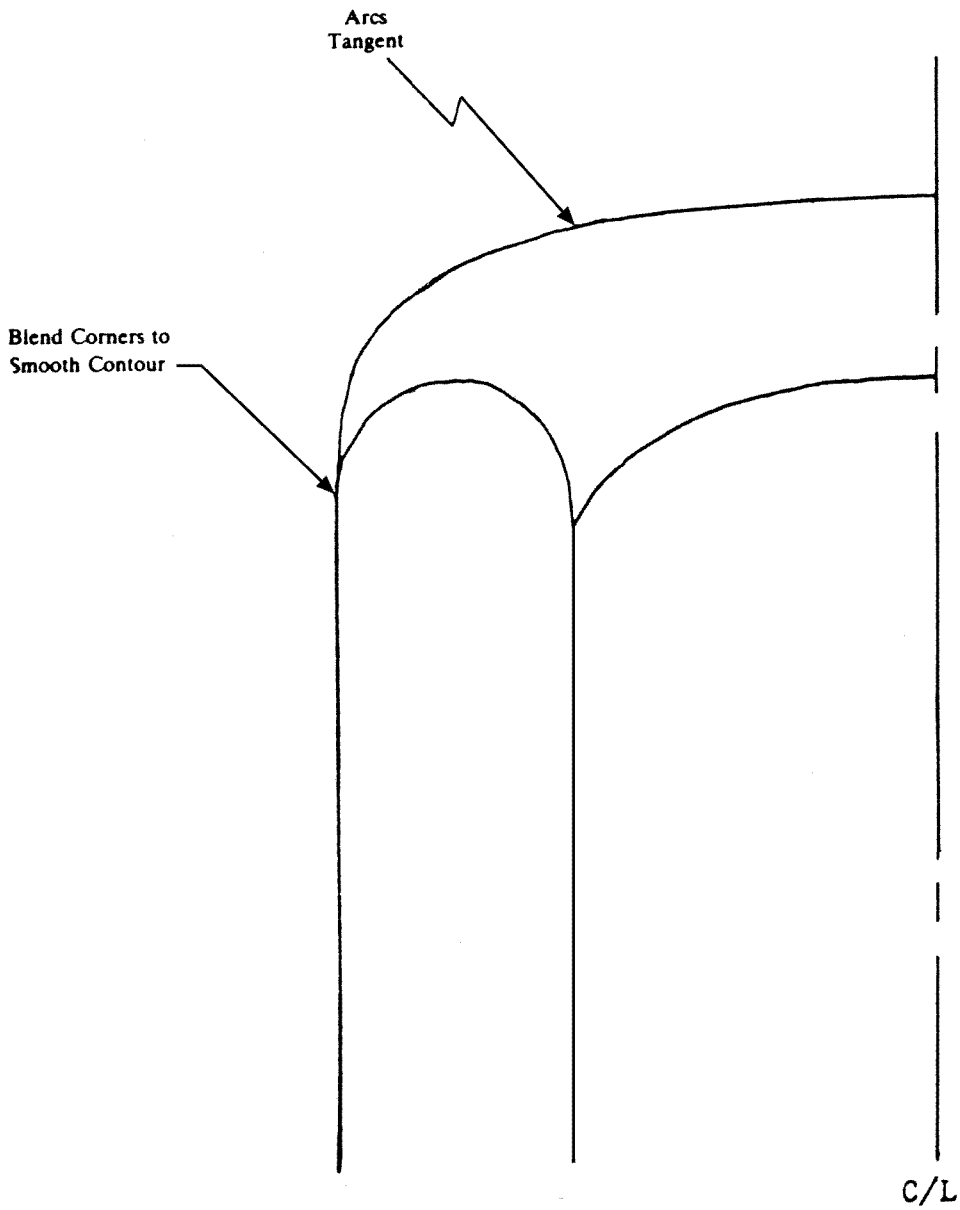

Figure 5-6-47. Plan D-83 – AREMA Contour Blending of Corners

© 2010, American Railway Engineering and Maintenance-of-Way Association

SECTION 6.6 RECOMMENDED PRACTICES FOR USING, REDRESSING, SHARPENING AND REPLACING HANDLES IN TRACK TOOLS[1] (2004)

6.6.1 INTRODUCTION (1994)

a. Striking and struck track tools such as spike mauls and sledge hammers are the most used hand tools in the maintenance of track. These and other tools are subject to severe service and require constant attention to ensure that they are in a safe condition to use.

b. Proper use of these tools requires the following of a few basic rules in conjunction with the appropriate safety rules.

(1) A hammer swing should end up with the hammer face parallel with the surface being hit. Avoid glancing blows, over strikes and under strikes.

(2) Use a spike maul only to drive spikes.

(3) Never strike one hammer with another hammer.

(4) Match the hammer to the job. Don't use a sledge to drive small nails. If another tool is being struck, the face of the hammer should be larger than the face of the tool being hit.

(5) Make sure the handle is tight and not damaged.

(6) Check the striking or struck face for cracks or mushrooming. Check the cutting end for cracks and sharpness. Redress, sharpen, or replace tool depending on severity of condition that is present.

(7) Redress frequently to reduce the amount of grinding required to keep the tool in good working condition.

6.6.2 TOOL DESIGN AND MANUFACTURE (2004)

a. AREMA track tools may be made from one of two types of steel.

- Carbon steel.
- Alloy steel, grade B.

See Table 5-6-1 and Table 5-6-2 for the chemical composition of these steels.

b. The chemical composition of AREMA alloy steel is designed to allow field dressing of tools without the need of subsequent heat treating. AREMA alloy also has the highest resistance to spalling. Carbon steel tools can be sharpened in the field but should not be redressed. Table 5-6-13 is a list of track tools and the type steel that can be used in their manufacture.

c. The ends of tools are hardened as specified in Table 5-6-13. The distance back from the original end of the tool that this hardness extends is "not less than the average cross sectional thickness." The degree of hardness depends on the use the tool end is to receive.

- Struck surfaces: Rockwell C hardness 44 to 48.

[1] References, Vol. 94, (1994), p. 83.

© 2010, American Railway Engineering and Maintenance-of-Way Association

- Striking surfaces: Rockwell C hardness 51 to 55.
- Cutting surfaces: Rockwell C hardness 56 to 60.
- Punch ends: Rockwell C hardness 52 to 56.
- Drift pins: Rockwell C hardness 32 to 37 overall.

d. Striking and struck faces are contour ground. The original shape of striking and struck faces was to have a radius ending in a 45 degree bevel which extended to the side of the tool. The corner between the radius and the bevel was apt to spall if a glancing blow was struck. The bevel was replaced with a second radius. The radii used with various track tools are given in Article 6.1.2.7.1. It is difficult to use this information to redress tools in the field but a commercial template is available.

6.6.3 REDRESSING OF TOOLS (1994)

a. The first thing to do in redressing a tool is to give it a good visual inspection.

(1) Look for the manufacturer's brand. If not found, discard the tool. Look for the letter "B" to indicate "AREMA Grade B Steel." If not found, the tool is made of other than grade B alloy steel and cannot be field redressed without subsequent heat treatment but it may be sharpened.

(2) Will the tool be usable after redressing or will so much grinding have to be done that the hardened end will be lost or the shape of the tool changed to the point where it will no longer serve its intended purpose? Refer to Section 6.3, Recommended Limits of Wear for Tools to be Reclaimed (1962) for tool details or use a template.

(3) Look at the striking and struck end for spalls and cracks. If present, will the tool be returned to its original shape after grinding? If not, discard the tool.

(4) Check the condition of the eye for the handle. Usually, wear is not a problem in this area but look for cracks. At times, tools are abused by using the flat near the eye for striking which may lead to cracking. If cracks are found discard the tool.

(5) Discard any tool which has electric welding arc strikes on it or has indications of being repaired by oxy-acetylene welding.

(6) Replace the handle if it has cracks, slivers and other defects that cannot be sanded out.

b. Redressing of tools has a few basic rules.

(1) **ALWAYS WEAR EYE PROTECTION**.

(2) The tool must be returned to its original shape. Get a new tool of the type that is being redressed to act as a reference if the shape is in question or use a template.

(3) A stationary belt sander or bench grinder may be used. Use a medium or fine grit abrasive belt or grinding wheel.

(4) The grinding temperature must be kept low. If the grinding temperature is not controlled, the hardness may be changed in one of two ways. The section may have the hardness removed or a hard, brittle area created. The first case may lead to mushrooming. The second may cause chipping and spalling. Keep water handy and dip the tool frequently to control the heat. Discard the tool if it is overheated during grinding. If the tool turns a bluish color, it indicates overheating.

© 2010, American Railway Engineering and Maintenance-of-Way Association

(5) If the handle requires replacement, remove the old handle before redressing. It is usually easier to redress a tool without a handle.

(6) Redressing should be done in the long dimension of the tool whenever practicable. (From eye toward head.) Belt or wheel direction should be away from head.

(7) Adjustable work rests should set to rigidly support the tool being worked.

(8) Vary the grinding location of the tool being redressed frequently to avoid overheating the steel. Dip tool in water to cool as necessary.

(9) All cracks and spalls must be removed. Dye penetrant testing kits are available to check for cracks.

(10) Check shape of head against new item or with template to determine if the proper contour has been restored.

(11) Repairing or altering tools by field welding is prohibited.

6.6.4 SHARPENING OF TOOLS (1994)

a. Sharpening of cutting edges requires caution.

(1) **ALWAYS WEAR EYE PROTECTION**.

(2) A stationary belt sander or bench grinder may be used. Use a medium or fine grit abrasive belt or grinding wheel.

(3) Sharpening should be done in the long dimension of the tool whenever practicable. (From eye toward edge.) Belt or wheel direction should be away from edge. Get a new tool of the type that is being sharpened to act as a reference if the shape is in question or use the cutting edge guide of the template.

(4) The steel is thinner in this section and is easier to overheat. Keep water handy and dip the tool frequently to control the heat. If the tool turns a bluish color, it indicates overheating.

(5) Another error to watch for is making the edge too thin. The end shape and dimensions of track tools are shown in Section 6.3, Recommended Limits of Wear for Tools to be Reclaimed (1962). Avoid undercutting the edge. The cutting edge should go straight back from the point or may have a light "barrel" shape. This gives more steel behind the point to resist chipping.

(6) The working end of drift pins and back out punches should be ground flat and square to the long axis of the tool.

(7) When sharpening, the tool should be held at the desired angle and moved across the face of the belt or wheel. Adjustable work rests should be set to the proper angle. Pressure of the tool against the belt or wheel must be controlled to prevent overheating. Belt or wheel direction should be away from the cutting edge. (From eye toward edge.)

6.6.5 REPLACING HANDLES (1994)

a. The following procedure should be used to replace tool handles.

(1) **ALWAYS WEAR EYE PROTECTION**.

© 2010, American Railway Engineering and Maintenance-of-Way Association

(2) Remove old handle by sawing close to the tool.

(3) Place the tool on a proper support and drive out the part of handle remaining in the eye from the side opposite the wedges.

(4) Clean the eye. Check inside the eye for pieces of the old handle and for any damage to the tool.

(5) Select the correct replacement handle. Do not use a handle if it is not the right size or shape.

(6) Partially insert the handle into the eye to check for a proper fit. Check to see if the handle and tool come into contact on the entire circumference of the eye.

(7) Lubricate the eye portion of the handle. Waterless hand cleaner or a wax crayon may be used.

(8) Place tool on a proper support so eye portion of handle can be driven through the tool to ensure a tight fit. Drive the handle on tight. Be careful not to drive the handle to point where the back side of the tool cuts deeply into the handle. This will damage the handle and could lead to the handle failing. The collar of the handle should be approximately ¾ to 1 inch from the tool.

(9) After the handle has been seated properly, cut off the excess of the handle sticking out from the eye flush with the tool.

(10) Open the slot in the tool handle in the eye of the tool with a chisel or similar tool.

(11) Drive a wood wedge into slot as deeply as is possible. Trim or file off wedge flush with tool.

(12) Drive steel wedge in center of eye. The steel wedge may be either circular or flat. If flat, it is to be driven at right angle to wood wedge. Drive wedge flush with tool. Be careful of glancing blows that might cause the steel wedge to chip or mushroom.

(13) The above instructions apply to drive on handles. For slip on handles used with tools such as picks and adzes, drive out the old handle, slip head onto new handle, and tap firmly on a solid base until a tight fit is achieved.

(14) Handles made from material other than wood are available and may be an acceptable substitute. Handles made of other materials have both advantages and disadvantages. Other materials may have better durability, a distinctive “feel” to users, a different method of installation and greater initial cost. Users should investigate and decide which material is most economical for use on their property.

© 2010, American Railway Engineering and Maintenance-of-Way Association

LIST OF TABLES (CONT)

Table	Description	Page
4-2-1-4-1c	Tensile Properties Table for Standard Chemistry Rail Steel	4-2-9
4-2-1-4-2a	Product/Chemical Analysis Table for Low Alloy Rail Steel	4-2-10
4-2-1-4-2b	Rail Hardness Table for Low Alloy Rail Steel	4-2-11
4-2-1-4-2c	Tensile Properties Table for Low Alloy Rail Steel	4-2-11
4-2-2	Section Tolerances	4-2-12
4-2-3	Macrographs	4-2-27
4-2-4	Gage Drawings	4-2-27

SECTION 2.1 SPECIFICATIONS FOR STEEL RAILS[1]

— 2005 —

2.1.1 SCOPE (2003)

a. These specifications cover steel tee rails weighing 115 lb/yd and over for use in railway track.

b. Drawings of recommended rail sections are shown in Part 1, Design of Rail, Figure 4-1-1 through Figure 4-1-7.

c. ASTM Specifications A 1, A 2, and A 759 are referenced for tee rails weighing 60 lb/yd and over, girder rails, and crane rails, respectively.

d. Supplementary requirements Paragraph 2.1.17.1 and Paragraph 2.1.17.2 shall apply only when specified by the purchaser.

2.1.2 MANUFACTURE (2005)

a. The steel shall be made by either of the following processes: basic oxygen or electric furnace.

b. The steel shall be cast by a continuous process, or by other methods agreed by purchaser and manufacturer.

c. Rails shall be furnished in the as-rolled (standard and low alloy), or head hardened (on-line or off-line processes) conditions.

---

[1] References, Vol. 3, 1902, pp. 204, 208; Vol. 5, 1904, pp. 465, 469; Vol. 6, 1905, p. 183; Vol. 7, 1906, pp. 549, 573; Vol. 10, 1909, part 1, pp. 374, 393; Vol. 11, 1910, part 1, pp. 237, 255; Vol. 12, 1911, part 1, p. 467; Vol. 12, 1911, part 2, p. 12; Vol. 13, 1912, pp. 853, 1017; Vol. 14, 1913, pp. 181, 1103; Vol. 15, 1914, pp. 158, 375; Vol. 16, 1915, p. 1117; Vol. 21, 1920, pp. 1070, 1447; Vol. 26, 1925, pp. 619, 1413; Vol. 31, 1930, pp. 1455, 1770; Vol. 32, 1931, pp. 347, 816; Vol. 34, 1933, pp. 606, 821; Vol. 37, 1936, pp. 426, 991; Vol. 38, 1937, pp. 216, 635; Vol. 40 1939, pp. 596, 738; Vol. 43, 1942, pp. 575, 704; Vol. 47, 1946, pp. 373, 625; Vol. 52, 1951, pp. 596, 824; Vol. 54, 1953, pp. 1177, 1413; Vol. 55, 1954, pp. 775, 1098; Vol. 57, 1956, pp. 786, 1088; Vol. 58, 1957, pp. 962, 1248; Vol. 63, 1952, pp. 501, 768; Vol. 64, 1963, pp. 498, 690; Vol. 65, 1964, pp. 521, 851; Vol. 68, 1967, p. 408; Vol. 69, 1968, p. 356; Vol. 71, 1970, p. 223; Vol. 75, 1974, p. 479; Vol. 80, 1979, p. 82; Vol. 85, 1984, p. 13; Vol. 87, 1986, p. 69; Vol. 89, 1988, p. 71; Vol. 92, 1991, p. 58; Vol. 93, 1992, p. 57; Vol. 94, pg. 67; Vol. 94, p. 54; Vol. 96, p. 29, Vol. 97, p. 37. Reapproved with revisions 1996.

© 2010, American Railway Engineering and Maintenance-of-Way Association

2.1.3 CHEMICAL COMPOSITION AND MECHANICAL PROPERTIES (2007)

2.1.3.1 Chemical Composition

a. The chemical composition of a rail steel grade, determined as prescribed in Paragraph d, shall be within the limits found in the Product/Chemical Analysis Table for that rail steel grade. Current Tables are Table 4-2-1-4-1a. and Table 4-2-1-4-2a.

b. Finished material representing the heat may be product tested. The product analysis shall be within the limits for product analyses specified in Paragraph a.

c. The chemical composition limits of alloy high-strength rail steel grades not shown in current Product/Chemical Analysis Tables are subject to agreement of the purchaser and manufacturer.

d. Separate analyses shall be made from test samples representing the front, middle (optional), and back of the heat preferably taken during pouring of the heat. Determination may be made chemically or spectrographically. Any portion of the heat meeting the chemical analysis requirements of Paragraph a may be applied.

e. Upon request by the purchaser, samples shall be furnished to verify the analysis as determined in Paragraph d.

f. The analysis, most representative of the heat (clear of the transition zone for continuous cast steel), shall be recorded as the official heat analysis, but the purchaser shall have access to all chemical analysis determinations.

g. Rail heats shall be tested for hydrogen content using a sampling/analytical method or a direct measurement method. The testing shall be performed during the continuous casting process. Hydrogen content[1] shall be recorded and available for review or reporting at the request of the purchaser. The producer shall define the method used to determine hydrogen content, which of the following methods are used for hydrogen removal, and present evidence of applicable procedures used to control the final rail hydrogen.

- Vacuum Degassing.
- Bloom Controlled Cooling.
- Rail Controlled Cooling.

h. Product analysis limits may be applied only in testing for chemical composition after the rail manufacturing process is completed and will not supercede chemical composition limits done for the same heats when the steel is in the molten state.

2.1.3.2 Surface Hardness

a. Rails shall be produced as specified by the purchaser within the limits found in the Rail Hardness Table for that rail steel grade. Current Tables are Table 4-2-1-4-1b. and Table 4-2-1-4-2b.

b. The Brinell hardness test, using a tungsten carbide indentor, shall be performed on a piece of rail at least 6 inches long cut from a rail of each heat of steel or heat-treatment lot, or from a ground/milled transverse sample cut from the 6 inch piece above. A test report shall be furnished to the purchaser.

[1] As a result of the use of different methods and reporting procedures, the comparison of hydrogen levels between various rail producers may not be appropriate.

© 2010, American Railway Engineering and Maintenance-of-Way Association

(1) The test shall be made on the side or top of the rail head after decarburized material has been removed to permit an accurate determination of hardness. Alternately, the test may be made on the prepared transverse ground/milled sample no less than 3/8 inch in from all rail surfaces.

(2) The test shall otherwise be conducted in accordance with ASTM E 10, "Standard Test Method for Brinell Hardness of Metallic Materials," latest version.

c. If any test result fails to meet the specifications, two additional checks shall be made on the same piece. If both checks meet the specified hardness, the heat or heat treatment lot meets the hardness requirement. If either of the additional checks fails, two additional rails in the heat or lot shall be checked. Both of these checks must be satisfactory for the heat or lot to be accepted. If any one of these two checks fails, individual rails may be tested for acceptance.

d. If the results for off-line head hardened rails fail to meet the requirements of Paragraph a, the rails may be retreated at the option of the manufacturer, and such rails shall be re-tested in accordance with Paragraph b and Paragraph c.

2.1.3.3 Internal Hardness of High-Strength Rail

a. The internal hardness of high-strength rail of any rail steel grade shall be determined on a transverse specimen cut from the head and at least 6 inches from the end of the rail. The specimen shall be ground or milled so that the transverse surfaces are parallel.

b. The hardness shall be determined at intervals of not greater than 1/8 inch along traverses 1, 2, and 3 and at positions 4 and 5 as shown in Figure 4-2-1. Hardness gradient of head hardened rail along lines 1, 2 and 3 shall be gradual towards the center of the rail, with no sharp drop or discontinuity. Traverse 2 can extend into the web of the rail (X + 1.6 inch) upon agreement between the purchaser and the manufacturer.

c. The hardness test shall be conducted by Rockwell (ASTM E18)[1]. The results can also be reported in Brinell (using AREMA HRC to HB Conversion Table 4-2-1).

d. Brinell hardness readings can be used to determine the hardness value at specific point locations, maintaining a minimum spacing in accordance with ASTM E10.

e. The hardness at a depth of 0.6 inch on lines 1, 2, and 3 and at points 4 and 5 of (depth of 3/8 inch) Figure 4-2-1 shall be 352 HB or higher for high strength rail. For the low alloy head hardened rail steel grade (LH) the hardness at a depth of 7/8 inch on lines 1, 2 and 3 shall be 341 HB or higher.

f. The testing frequency shall be one test per heat or 10,000 feet of rail, whichever is the smaller amount of rail.

g. If any test specimen fails to meet the required hardness, two additional test specimens shall be obtained from the same lot and tested. If both meet the requirements, the lot shall be accepted. If one of the specimens fails to meet the requirements, two additional rails from the lot shall be sampled and tested. Both of these tests must be satisfactory for the lot to be accepted. If one of the tests is unsatisfactory, individual rails may be sampled and tested for acceptance.

h. If the results for off-line head hardened rail fail to meet the requirement, the rails represented by the test may be re-treated and re-tested.

[1] ASTM E18 Standard Test Method for Rockwell Hardness and Rockwell Superficial Hardness of Metallic Materials.

© 2010, American Railway Engineering and Maintenance-of-Way Association

Table 4-2-1. AREMA HRC to HB Conversion for Rail Steels

HRC	HB	HRC	HB	HRC	HB
20	244	30	306	41.8	400
21	250	31	314	42	402
22	255	32	321	43	411
23	261	33	328	44	420
24	267	34	336	45	429
25	273	35	344	46	439
26	280	36	351	47	448
27	286	37	359	48	458
28	293	38	368	49	468
29	300	39	376	50	478
		40	384		
$HB = 165.77 + 2.3597HRC + 0.0777HRC^2$					

Developed by AREMA Committee Four specifically for rail steel.

2.1.3.4 Tensile Properties

a. Rails shall be produced as specified by the purchaser within the limits found in the Tensile Properties for that rail steel grade. Current Tables are Table 4-2-1-4-1c. and Table 4-2-1-4-2c.

b. One longitudinal tension test specimen shall be taken from the gage corner of the rail head, centered ½ inch from the gage side and ½ inch from the running surface.

c. The specimen shall be 0.5 inch diameter and shall be tested per ASTM A370, Standard Test Methods and Definitions for Mechanical Testing of Steel Products.

d. Except as provided in Paragraph e, the test frequency shall be one test for each heat for the first one hundred heats, one test for every fifth heat for the second hundred heats and one test for every tenth heat thereafter for heats furnished to the same manufacturing practice. In addition, a minimum of one tensile test per order may be furnished at the customer's request, from a heat supplied on the order.

e. For high-strength rail of all steel grades, the testing frequency shall be one test per heat or 10,000 feet of rail, whichever is the smaller amount of rail.

© 2010, American Railway Engineering and Maintenance-of-Way Association

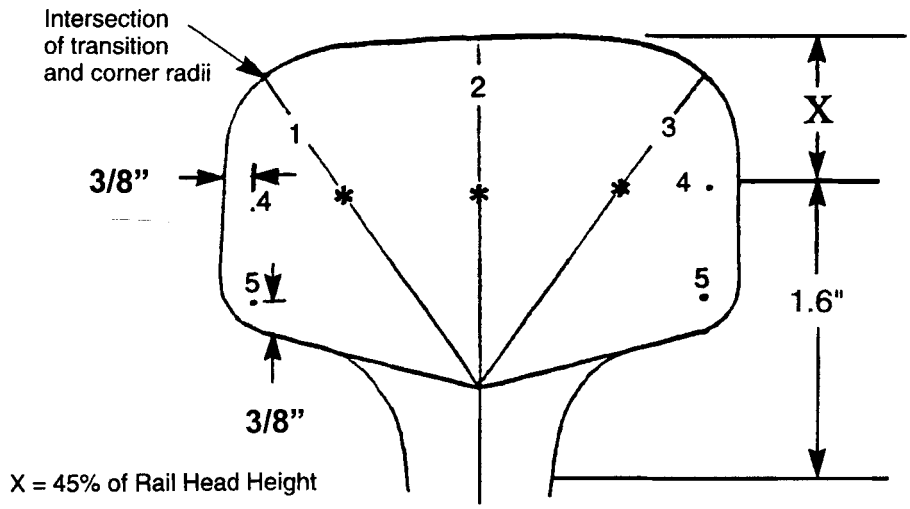

	115#	119#	132#	133#	136#	140#	141#
X	¾″ 0.750″	27/32″ 0.844″	25/32″ 0.781″	7/8″ 0.875″	7/8″ 0.875″	15/16″ 0.938″	1″ 1.000″

Figure 4-2-1. Determining Internal Hardness of High Strength Rail

f. If any test specimen fails because of a malfunction of the test equipment or a flaw in the specimen, it shall be discarded and another one taken.

g. If a test specimen fails to meet the required tensile properties, two additional test specimens shall be cut from rails from the same lot and tested. If both meet the requirements, the lot shall be accepted. If one of the tests fails to meet the requirements, two additional rails from the lot shall be sampled and tested. Both of the tests must be satisfactory for the lot to be accepted. If one of these tests is unsatisfactory, individual rails may be sampled and tested for acceptance.

h. If the results for off-line head hardened rail fail to meet the requirements, the rails represented by the test may be re-treated and re-tested.

2.1.4 PROPERTIES OF AREMA RAIL GRADES (2007)

2.1.4.1 Standard AREMA Chemistry Rail

a. Product/Analysis for Standard Chemistry Rail Steel

© 2010, American Railway Engineering and Maintenance-of-Way Association

Table 4-2-1-4-1a. Product/Chemical Analysis Table for Standard Chemistry Rail Steel

Elements	Notes	Chemical Analysis Weight Percent		Product Analysis, Weight Percent Allowance Beyond Limits of Specified Chemical Analysis	
		Miminum	Maximum	Under Miminum	Over Maximum
Carbon	1	0.74	0.86	0.04	0.04
Manganese		0.75	1.25	0.06	0.06
Phosphorus	2		0.020		0.008
Sulfur	3		0.020		0.008
Silicon		0.10	0.60	0.02	0.05
Nickel			0.25		
Chromium	1		0.30		
Molybdenum	1		0.060		
Vanadium			0.010		
Aluminum			0.010		
Other	4				
Note 1: The chemical composition of head-hardened rails will be subject to the requirements of standard strength rails, except as approved in writing by the purchaser. Any alteration of the chemical composition may require modification of welding procedures.					
Note 2: Up to 5% of the order may exceed 0.020 if purchaser and supplier agree, but in no case may the phosphorus exceed 0.025.					
Note 3: Up to 5% of the ordermay exceed 0.020 if purchaser and supplier agree, but in no case may the sulfur exceed 0.025.					
Note 4: Additional elements may be included in the chemistry and the chemical anaylsis when agreed upon by the purchaser and the supplier.					

© 2010, American Railway Engineering and Maintenance-of-Way Association

b. Hardness of Standards Chemistry Rail Steel

Table 4-2-1-4-1b. Rail Hardness Table for Standard Chemistry Rail Steel

Type of Rail	Minimum Surface Brinell Hardness, HB
Standard Rail	310
High Strength Rail	370
Note 1: Hardness specified above shall be maintained in the head area only.	
Note 2: A fully pearlitic microstructure shall be maintained in the head.	
Note 3: If 410 HB is exceeded, the microstructure through the head shall be examined at 100X or higher for confirmation of a fully pearlitic microstructure in the head.	
Note 4: No untempered martensite shall be present within the rail.	

c. Tensile Properties of Standard Chemistry Rail Steel

Table 4-2-1-4-1c. Tensile Properties Table for Standard Chemistry Rail Steel

Description	Standard	High-Strength
Yield Strength, ksi, minimum	74.0	120.0
Tensile Strength, ksi, minimum	142.5	171.0
Elongation in 2 inches, percent, minimum	10 Note 1	10 Note 1
Note 1: Up to 5% of the order may be less than 10% elongation if purchaser's authorized representative and supplier agree, but in no case may the elongation be less than 9%.		

d. Welding of Standard Chemistry Rail Steel

Standard strength rail steel does not require special welding procedures.

High strength rail steel may require air quenching of the weld area to achieve hardness and tensile properties consistent with the requirements for the as-rolled rail.

© 2010, American Railway Engineering and Maintenance-of-Way Association

2.1.4.2 Low Alloy Rail Steel

a. Product/Analysis for Low Alloy Rail Steel

Table 4-2-1-4-2a. Product/Chemical Analysis Table for Low Alloy Rail Steel

Elements	Notes	Chemical Analysis Weight Percent Note 1				Product Analysis, Weight Percent Allowance Beyond Limits of Specified Chemical Analysis	
		Standard Strength		Intermediate and High Strength			
		Minimum	Maximum	Minimum	Maximum	Under Minimum	Over Maximum
Carbon		0.72	0.82	0.72	0.82		
Manganese		0.80	1.10	0.70	1.25		
Phosphorus	2		0.020		0.020		
Sulfur	3		0.020		0.020		
Chromium		0.25	0.40	0.40	0.70		
Silicon		0.10	0.50	0.10	1.00		
Nickel	5		0.15		0.15		
Molybdenum			0.050		0.050		
Vanadium			0.010		0.010		
Aluminum			0.005		0.005		
Copper	5		0.40		0.40		
Other	4						
Note 1: The chemical composition of low alloy intermediate and head-hardened rails will be subject to the requirements of standard strength low alloy rails, except as approved in writing by the purchaser. Any alteration of the chemical composition may require modification of welding procedures.							
Note 2: Up to 5% of the order may exceed 0.020 if purchaser and supplier agree, but in no case may the phosphorus exceed 0.025.							
Note 3: Up to 5% of the order may exceed 0.020 if purchaser and supplier agree, but in no case may the sulfur exceed 0.025.							
Note 4: Additional elements may be included in the chemistry and chemical analysis when agreed upon by the purchaser and the supplier.							
Note 5: Copper content between 0.30 and 0.40 shall be acceptable if the ratio of nickel to copper > 1 : 3.							

© 2010, American Railway Engineering and Maintenance-of-Way Association

b. Hardness of Low Alloy Rail Steel

Table 4-2-1-4-2b. Rail Hardness Table for Low Alloy Rail Steel

Type of Rail	Minimum Surface Brinell Hardness, HB
Standard Strength Rail	310
Intermediate Strength Rail	325
High Strength Rail	370
Note 1: Hardness specified above shall be maintained in the head area only.	
Note 2: A fully pearlitic microstructure shall be maintained in the head.	
Note 3: If 410 HB is exceeded, the microstructure through the head shall be examined at 100X or higher for confirmation of a fully pearlitic microstructure in the head.	
Note 4: No untempered martensite shall be present within the rail.	

c. Tensile Properties of Low Alloy Rail Steel

Table 4-2-1-4-2c. Tensile Properties Table for Low Alloy Rail Steel

Description	Standard	Intermediate Strength	High-Strength
Yield Strength, ksi, minimum	74.0	80.0	120.0
Tensile Strength, ksi, minimum	142.5	147.0	171.0
Elongation in 2 inches, percent, minimum	10 Note 1	8.0	10 Note 1
Note 1: Up to 5% of the order may be less than 10% elongation if purchaser's authorized representative and supplier agree, but in no case may the elongation be less than 9%.			

d. Welding of Low Alloy Rail Steel

Welding of rails welded manufactured to this chemistry do not require post heating or quenching to achieve hardness.

© 2010, American Railway Engineering and Maintenance-of-Way Association

2.1.5 SECTION (2003)

Table 4-2-2. Section Tolerances

Description	Tolerance, Inches			
	Rail		Trackwork Rail	
	Plus	Minus	Plus	Minus
Height of rail (measured within one foot from end)	0.030	0.015	0.030	0.015
Width of rail head (measured within one foot from end)	0.025	0.025	0.015	0.015
Thickness of web	0.040	0.020	0.040	0.020
Fishing template standout	0.060	0.000	0.030	0.000
Asymmetry of head with respect to base	0.050	0.050	0.030	0.030
Width of base	0.040	0.040	0.030	0.030
Flange height	0.025	0.015	0.015	0.015

Note 1: Base concavity shall not exceed 0.010 inch. Convexity is not permitted.
Note 2: No variation will be allowed in dimensions affecting the fit of the joint bars, except that the fishing template may stand out not to exceed 0.060 inch laterally.
Note 3: All four corners of the rail base shall have the radii according to the drawing ±1/32 inch. Any disputes shall be analyzed on an Optical Comparator.
Note 4: The section of the rails to be used in AREMA trackwork shall conform to the design specified by the purchaser subject to the tolerances listed under trackwork rail above.
Note 5: Head radius to be within (±) 2 inches per Figure 4-2-40.
Note 6: On up to 5% of the order, the height of the rail plus tolerance can be between 0.030 and 0.040 inches, if the purchaser's authorized representative and the manufacturer agree. This exception does not apply to trackwork rail.

© 2010, American Railway Engineering and Maintenance-of-Way Association

2.1.6 BRANDING AND STAMPING (2003)

a. Branding shall be rolled in raised characters on the side of the web of each rail at a minimum of every 16 feet in accordance with the following requirements:

(1) The data and order of arrangement of the branding shall be as shown in the following typical brand.

136	RE	Manufacturer	2003	III or 3
(Weight)	(Section)	(Mill Brand)	(Year Rolled)	(Month Rolled)

(2) The design of letters and numerals are determined by the manufacturer.

b. The web of each rail shall be hot stamped a minimum of 3 times per rail (short rails must contain a minimum of one full stamp) on the side opposite the brand, and shall not occur within 2 feet of either end of rails, and in accordance with the following requirements:

(1) The data shall be shown in the following typical stamping. The height of the letters and numerals shall be e inch.

SS, HH, LA, IH, or LH	297165	PSTU	12	BC
(Rail Type) SS = Standard Strength HH = Head Hardened LA = Low Alloy Standard Strength IH = Low Alloy Intermediate LH = Low Alloy Head Hardened	(Heat Number)	(Rail Letter)	(Strand and Bloom Number)	(Method of Hydrogen Elimination, if indicated in stamping)

(2) Rails from continuous cast blooms shall be identified by a designation for heat number, strand number, and bloom number. The rail shall be identified by an alphabetical designation beginning with “P”, and succeeding “S”, “T”, “U”, etc., consecutively, or any other identification of the position of the rail within the cast, as agreed between the purchaser and manufacturer.

NOTE: Strand and bloom numbers may be joined or may be coded at the manufacturer’s option.

(3) The e inch stamped characters shall have a flat or radius face (0.040 inch to 0.060 inch wide) with bevels on each side so as not to produce metallurgical stress risers. The letters and numbers shall be on a 10 degree angle from vertical and shall have rounded corners. The stamping shall be between 0.020 inch and 0.060 inch in depth along the center of the web. The design shall be as shown in Figure 4-2-2.

(4) High-strength rail shall be identified in accordance with Paragraph 2.1.154-a.

© 2010, American Railway Engineering and Maintenance-of-Way Association

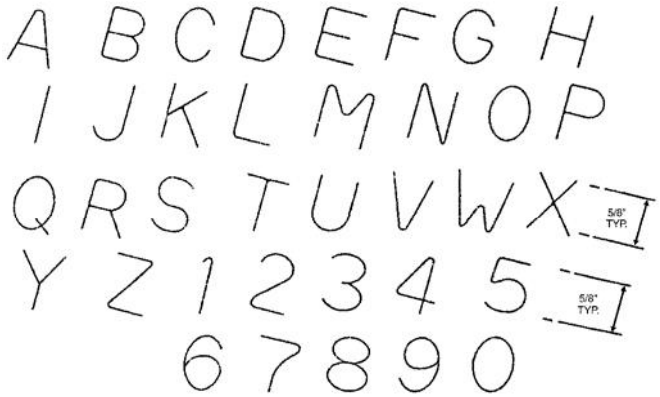

Figure 4-2-2. Design of Special Letters and Numbers on a 10 Degree Angle for Rail Stamps, No Sharp Corners

2.1.7 HYDROGEN ELIMINATION (2001)

a. The rail shall be free from shatter cracks.

b. The above shall be accomplished by at least one of the following processes:

- Control Cooling of Rails (CC) (See Article 2.1.18).
- Control Cooling of Blooms (BC).
- Vacuum Treated (VT).
- Such other processes as will meet the conditions of paragraph a (OP).

2.1.8 ULTRASONIC TESTING (2001)

a. Rails shall be ultrasonically tested for internal imperfections subject to the provisions of, Step b through, Step h.

b. Full length of the rail shall be tested using in line ultrasonic testing equipment provided by the manufacturer except, if agreed to between purchaser and manufacturer, rails may be tested in accordance with supplementary requirement Paragraph 2.1.17.2. The rail shall be free from rough surfaces, loose scale or foreign matter which would interfere with the ultrasonic detection of defects. Testing shall be done when the rail temperature is below 150 degrees F.

c. The calibration test rail shall be a full section rail of the same section as that being tested. The test rail shall be long enough to allow calibration at the same rate of speed as the production rail.

d. The size, shape, location and orientation of calibration references to be placed in the test rail shall be agreed upon by the purchaser and manufacturer. At least one reference shall be put into the test rail to represent each search unit in the system.

(1) The in-line testing system sensitivity level, using the calibration rail, shall be adjusted to detect a minimum 1/16 inch diameter defect anywhere in the sound path in the head, a minimum of 3/32 inch diameter in the web, and longitudinal imperfections exceeding 1/2 inch length and greater than 1/16 inch depth occurring in the base.

© 2010, American Railway Engineering and Maintenance-of-Way Association

(2) Any indication equal to or greater than the references specified in, paragraph (1) when scanning the rail at the production speed shall be cause for initial rejection. A record shall be made of each suspect rail. This record shall be available to the purchaser's inspector.

e. The calibration rail shall be run through the ultrasonic testing equipment at the start of each shift or at least once each 8 hour operating turn and additionally at any section change or at any indication of equipment malfunction. A record shall be maintained by the manufacturer of each time the calibration test rail is run through the test system. This record shall be available to the purchaser's inspector.

f. In the event of a calibration failure, all rails processed since the last successful calibration shall be retested.

g. The suspect rail may be retested using manual nondestructive testing techniques before final rejection. The testing criteria of the manual nondestructive retesting shall be in accordance with, Step d. The method of inspection shall be agreed to between purchaser and manufacturer.

h. Rejected rails shall be cut back to sound metal as indicated by the ultrasonic testing subject to the length restrictions in Paragraph 2.1.11. The cut shall be a minimum of 12 inches from any indication.

2.1.9 INTERIOR CONDITION/MACROETCH STANDARDS (2003)

2.1.9.1 Sample Location and Frequency

a. *Continuous Cast Steel.* A test piece shall be macroetched representing a rail from each strand from the beginning of each sequence and whenever a new ladle is begun, which is the point representative of the lowest level in the tundish (i.e. the point of lowest ferrostatic pressure.) One additional sample from the end of each strand of the last heat in the sequence shall also be tested. A new tundish is considered to be the beginning of a new sequence.

b. Upon receipt the purchaser has the right to examine any rail from any part of a heat at his option, and if the purchaser determines that the rail sample selected is rejectionable, the entire heat shall be reevaluated according to Paragraph 2.1.9.4.

2.1.9.2 Sample Preparation

a. A full transverse section of the rail can be cut by abrasive or mechanical means as long as care is maintained in preventing metallurgical damage.

b. The face to be etched shall have at least a 125 microinch finish.

c. The sample shall be degreased and totally immersed in a hot (160 degrees to 180 degrees F) one to one mixture, by volume, of concentrated hydrochloric acid (38 volume percent) and water to sufficiently etch the specimen. Etching time shall be between ten and twenty minutes. The solution surface shall be at least one inch above the etched surface.

d. Upon removal from the bath, the sample shall be rinsed and brushed under hot water and dried. The sample shall not be blotted dry. A rust inhibitor may be applied to the etched face at the request of the purchaser.

© 2010, American Railway Engineering and Maintenance-of-Way Association

2.1.9.3 Macroetch Evaluation

According to Figure 4-2-3, the areas of cross section shall be defined as head, web, and base. Schematic descriptions of some rejectionable conditions are depicted in Figure 4-2-4 through Figure 4-2-12. Photographs of rejectionable conditions are presented in Paragraph 2.1.19.

2.1.9.3.1 Rejectionable Condition – Continuous Cast

a. Hydrogen flakes (Figure 4-2-10 and Figure 4-2-11).

b. Pipe; any size (Figure 4-2-12 and Figure 4-2-13).

c. Central web streaking extending into the head or base (Figure 4-2-14 and Figure 4-2-15).

d. Streaking greater than 2-1/2 inches in length (Figure 4-2-16 and Figure 4-2-17).

e. Scattered central web streaking from the web into the head and base (Figure 4-2-18).

f. Scattered segregation extending more than one inch into the head or base (Figure 4-2-19).

g. Subsurface porosity (Figure 4-2-20).

h. Inverse or negative segregation having a width greater than 1/4 inch and extending more than 1/2 inch into the head or base (Figure 4-2-21).

i. Streaking greater than 1/8 inch in the head from radial streaks, radial cracks, halfway cracks, or hinged cracks (Figure 4-2-22).

j. Other defects that could cause premature failure (i.e. slag, refractory, etc.) (Figure 4-2-23).

2.1.9.4 Retests

a. If any specimen fails to meet the macroetch standard for interior quality, two additional samples of rail representative of the same strand shall be obtained.

b. These retests shall be taken from positions selected by the manufacturer and the material from between the two retest positions shall be rejected.

c. If any retest fails, testing shall continue until acceptable internal quality is exhibited.

d. All rails represented by failed tests shall be rejected.

e. Short Rails – If finished rail from the beginning of a strand shows defects, it shall be cut back through successive rails to sound metal and accepted as short rail, subject to the requirements of Article 2.1.11.

2.1.9.5 Magnified Inspection

a. In the event that there is a question of the seriousness of the indication, further examination may be performed at higher magnification.

b. Inspect sample with stereo microscope up to 5X.

c. A polished sample may be inspected at 100X for metallographic interpretation.

© 2010, American Railway Engineering and Maintenance-of-Way Association

2.1.9.6 Interior Condition / Microcleanliness Standards

2.1.9.6.1 Sample Frequency

The metallurgical cleanliness of the rail steel shall be determined from samples taken from the finished rail section. A minimum of every tenth heat must be tested. The purchaser reserves the right to require 100% testing of all heats should it be deemed necessary.

2.1.9.6.2 Sample Size and Location

A minimum of three one-inch long full section samples per heat tested shall be taken, one from the end of the first acceptable rail, one from the end of a rail representing the approximate middle of the heat, and one from the end of the last acceptable rail. Test specimens will be sectioned and surface analyzed as shown in Figure 4-2-3.

2.1.9.6.3 Sample Preparation and Evaluation

Each 3/4" by 3/4" section (Sample A) shall be carefully prepared and evaluated according to ASTM Standard Practice E45, Method A. Each individual metallographic sample shall have a maximum average rating of 2 and a maximum individual rating of 3 for any inclusion type, thin or heavy. Results shall be made available to the purchaser upon request.

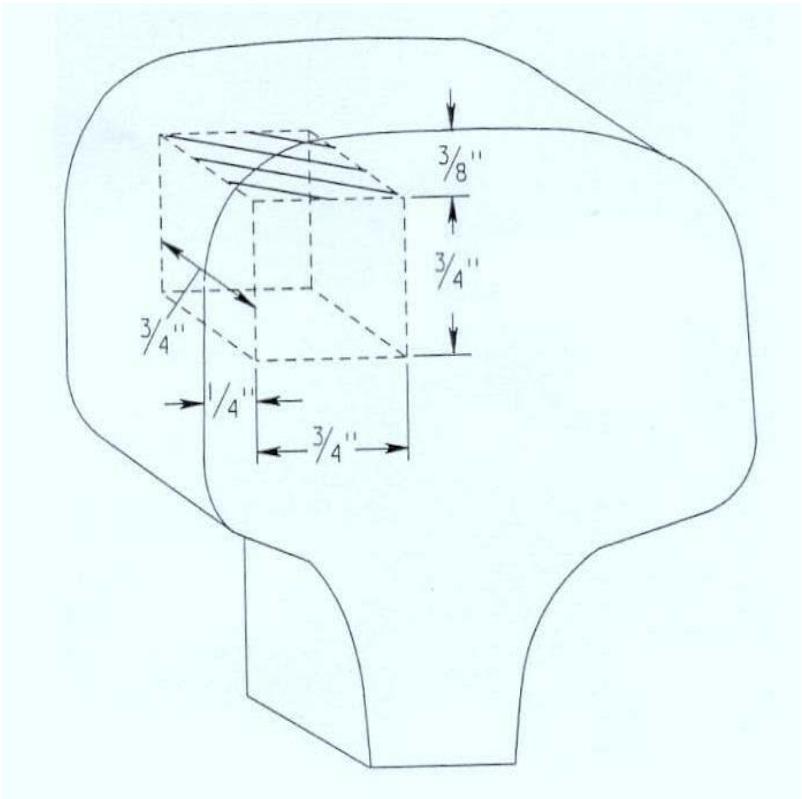

Figure 4-2-3. Sample A location in rail head - Shaded area denotes area to be analyzed

© 2010, American Railway Engineering and Maintenance-of-Way Association

2.1.10 SURFACE CLASSIFICATION (2003)

Rails which do not contain surface imperfections in such number or of such character as will, in the judgment of the purchaser, render them unfit for recognized uses, shall be accepted.

2.1.10.1 Hot Marks

a. Rails with hot marks such as from shearing, scabs, pits, or hot scratches greater than 0.020 inch in depth shall be rejected.

b. Rails with guide marks in the head greater than 0.020 inch deep or greater than 0.062 inch wide shall be rejected.

2.1.10.2 Cold Scratches

a. Rails with longitudinal cold scratches, formed below 700 degrees F, exceeding 36 inches in length *and/or* 0.010 inch in depth shall be rejected.

b. Rails with transverse cold scratches, formed below 700 degrees F, which exceed 0.010 inch in depth shall be rejected.

2.1.10.3 Protrusions

a. Rails with any protrusion of excess metal extending from the surface of the rail, such as could be caused by a hole in the roll or a roll parting in the web shall be rejected if the protrusion affects the fit of the joint bar or causes the fishing template to stand out more than 1/16 inch laterally.

b. Rails with any protrusion in the web greater than 1/16 inch high and greater than 2 square inch in area shall be rejected.

c. No protrusion of excess metal shall be allowed on the head or the base of the rail.

2.1.10.4 Surface Conditioning

a. Surface imperfections may be corrected only by grinding and only with the purchaser's approval.

b. If the purchaser agrees to surface conditioning, a plan containing a specific description of the work to be performed must be furnished by the manufacturer to the purchaser for approval. The plan must ensure that no metallurgical damage is done to the rail.

2.1.11 Length (2004)

a. The standard length of rails shall be 39 feet and/or 80 feet, when corrected to a temperature of 60 degrees F. Other standard lengths may be specified by the purchaser.

b. Up to 10 percent of standard length rail of the total tonnage accepted from each individual rolling will be accepted in shorter lengths as follows:

Standard Length of Order:	80 feet	39 feet
Permissible Short Lengths:	78	36
	74	33
	70	30
	66	
	60	
	39	

© 2010, American Railway Engineering and Maintenance-of-Way Association

c. Variations from the specified length will be permitted as follows:

	Length > 40	Length ≤ 40
Undrilled	-0, +6 inch	-0, +4 inch
Drilled one end	-0, +6 inch	-0, +4 inch
Drilled both ends	±7/8 inch	±7/16 inch

d. Standard short length variations other than those set forth in, paragraph b and paragraph c may be established by agreement between the purchaser and manufacturer.

e. Lengths of rails shall be designated with proper color paint as set forth in Article 2.1.15.

2.1.12 DRILLING (1995)

a. The purchaser's order shall specify the amount of right-hand drilled and left-hand drilled rails, drilled-both-end rails and undrilled (blank) rails desired. The right-hand or left-hand end of the rail is determined by facing the side of the rail on which the brand (raised characters) appears.

(1) When right-hand and left-hand drilling is specified, at least the minimum quantity of each indicated by the purchaser will be supplied.

(2) Disposition of short rails which accrue from left-hand drilled, right-hand drilled, and undrilled (blank) rail production, and which are acceptable in accordance with paragraph b shall be established by agreement between the purchaser and the manufacturer.

b. Circular holes for joint bolts shall be drilled to conform to the drawings and dimensions furnished by the purchaser.

(1) A variation of nothing under and 1/16 inch over in the size of the bolt holes will be permitted.

(2) A variation of 1/32 inch in the location of the holes will be permitted.

(3) The drilling process shall be controlled so as not to mechanically or metallurgically damage the rail.

c. Dressing of drilled rails shall be as follows:

(1) Chamfer the entrance and exit sides of the holes. Aim for 1/32 inch minimum chamfer at an aim 45 degree angle.

(2) Bevel grind the radius and sides of the rail head 1/16 inch back (+1/32 inch, –0 inches) by 1/8 inch down (+1/16 inch, –0 inches) when looking at the rail face.

2.1.13 WORKMANSHIP (2003)

2.1.13.1 Rail Straightness

a. Rails shall be straightened cold in a press or roller machine to remove twists, waves and kinks until they meet the surface and line requirements specified, as determined by visual inspection.

b. When placed head up on a horizontal support, rails that have ends higher than the middle will be accepted, if they have a uniform upsweep, the maximum ordinate of which does not exceed 3/4 inch in any 80 feet as illustrated in Figure 4-2-4.

© 2010, American Railway Engineering and Maintenance-of-Way Association

c. The uniform surface upsweep at the rail ends shall not exceed a maximum ordinate of 0.020 inch in 3 feet and the 0.020 inch maximum ordinate shall not occur at a point closer than 18 inches from the rail end as illustrated in Figure 4-2-5.

d. Surface downsweep and droop shall not be accepted.

e. Deviations of the lateral (horizontal) line in either direction at the rail ends shall not exceed: (1) a maximum mid-ordinate of 0.020 inch in 3 feet using a straight edge and of 0.010 inch at the end quarter point as illustrated in Figure 4-2-6a.; (2) a maximum of 0.040 inch measured by the tangent offset method at the end of the rail as illustrated in Figure 4-2-6b.

f. Uniform lateral sidesweep in any 80 feet shall not exceed 3/4 inch as illustrated in Figure 4-2-7.

g. When required, proof of compliance with, paragraph b shall be determined by string (wire) lining, and a straightedge and taper gage shall be used to determine rail end surface and line characteristics specified in paragraph c, paragraph d and paragraph e.

h. Rails shall be hot sawed, cold sawed, milled, abrasive wheel cut, or ground to length, as specified by purchaser on purchase order, with a variation in end squareness of not more than 1/32 inch allowed. The method of end finishing rails shall be such that the rail end shall not be metallurgically or mechanically damaged.

i. If the rail shows evidence of twist while being laid head up on the final inspection bed, it will be checked by inserting a taper or feeler gage between the base and the rail skid nearest the end. If the gap exceeds 0.060 inch the rail will be rejected. Alternatively, a twist gage may be used and if the rail exceeds 1.5 degrees in 80 feet the rail will be rejected. Rejected rails may be subject to straightening.

© 2010, American Railway Engineering and Maintenance-of-Way Association

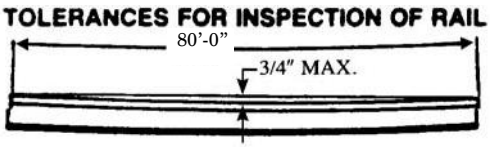

Figure 4-2-4. Side Elevation of Rail Uniform Upsweep Tolerance

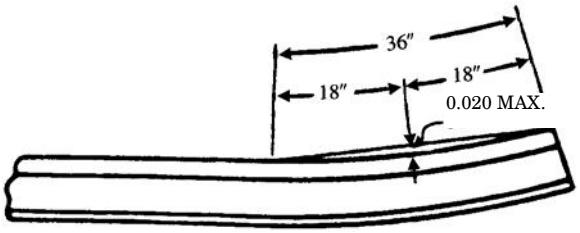

Figure 4-2-5. Side Elevation of Rail Uniform Upsweep Tolerance at Rail Ends

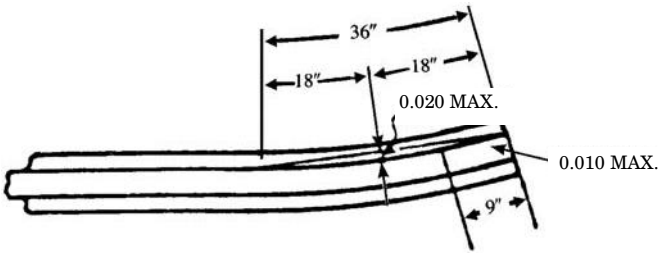

Figure 4-2-6a. Top View of Rail Lateral (Horizontal) Line Tolerance at Rail Ends

Figure 4-2-6b. Top View of Rail Lateral (Horizontal) Line Tolerance at Rail Ends

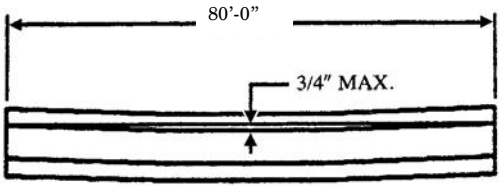

Figure 4-2-7. Top View of Uniform Lateral Sidesweep Tolerance

2.1.13.2 Evaluation of Residual Stresses in Rail

a. Purpose of the Test

(1) Manufacturing practices can induce residual stresses in rail that may result in web cracking or web distortion in service if the service stresses have sufficient magnitude and if stress risers exist. The purpose of the test shall be to evaluate the magnitude of these residual tensile or residual compressive stresses in the rail web.

(2) The web saw cut test shall be the primary method used to evaluate the magnitude of the residual stresses in rail.

© 2010, American Railway Engineering and Maintenance-of-Way Association

b. Web Saw Cut Test Procedure

(1) Rail shall meet the below requirements of a web saw cut test conducted on a fully roller-straightened rail sample of a regular production rail. The rail ends not affected by the roller straightening process shall not be used for the test. For those production rails that are not roller-straightened, the rail shall also meet the following requirements of a web saw cut test.

(2) The test sample shall be 24" (0.61 m) in length and cut from a production rail. The sample end face furthest from the rail end shall be punch marked with two central, vertically aligned sharp cone pointed marks as shown in Figure 4-2-8. The initial vertical distance between these two punch marks shall be measured with a calibrated vernier caliper and recorded. An alternate method shall be to use a calibrated caliper to measure the initial height of the dl burred end of the rail to be saw-cut. The caliper measurement shall be taken at a distance no more than 0.25" (6 mm) from the rail end at the vertical centerline of the rail. The caliper point locations shall be marked and this measurement shall be recorded.

(3) The web of the test sample shall be saw cut as shown in Figure 4-2-8 for a distance (L) of 16" (400 mm). The cut shall take place along the neutral axis in the web. If the rail closes during the saw cut, sufficient material shall be removed from the mouth of the saw cut to prevent the top portion of the rail from touching the bottom portion of the rail. The sawing process shall use procedures so as not to induce distortion or heating of the rail.

(4) Immediately after cutting, the distance between the two vertical punch marks shall again be measured with the vernier caliper and recorded. For the alternate method the rail height shall be re-measured by placing the caliper points at the same position as previously measured on the top and base of the rail. This value should be recorded. For either procedure, the value after subtracting the final measurement from the initial measurement is called the vertical displacement (d). The vertical displacement may be a positive or negative value depending upon whether the longitudinal and vertical residual tensile stresses of the rail sample are in tension (+) or compression (-).

c. Rail Acceptance Criteria

(1) Any rail demonstrating a vertical displacement (+ or -) of greater than 0.148" (3.75 mm) shall be rejected.

(2) For fully-hardened rails, that have significantly higher fracture toughness properties in the web of the rail, an alternate acceptance criteria based on stress intensity and fracture toughness measurements can be used. If the stress intensity level is less than the fracture toughness level the rail shall be acceptable.

d. Retest Criteria

(1) Any rail that does not meet the acceptance criteria in Paragraph c (1) shall be accepted if a steel wedge forced into the mouth of the saw cut generates crack propagation and completed fracture through either the base or head of the rail.

(2) Alternately, any rail that does not meet the acceptance criteria in Paragraph c (1) shall be accepted if two additional rails from the same week's production are secured, saw cut tested and pass the acceptance criteria.

e. Testing Frequency

Residual stresses within rails are generated in critical locations of each manufacturer's process. Rail manufacturers are encouraged to develop and demonstrate a statistically sound continuous monitoring test for control of their critical processing steps during production of rail. These monitoring tests shall demonstrate to the satisfaction of the rail customer the existence of a positive correlation between the

© 2010, American Railway Engineering and Maintenance-of-Way Association

continuous process monitoring and the finished rails' acceptance saw cut test measurements. During development of this monitoring process, a saw cut test shall be taken at a frequency of one rail per 24 hours for a two-week period. Also, if major changes occur in the critical rail manufacturing processes in the course of production, tests must be taken at a frequency of one rail per 24 hours for a one-week period of that change. Once these steps have been taken, a rail shall be tested at a continuous frequency of at least one rail per week.

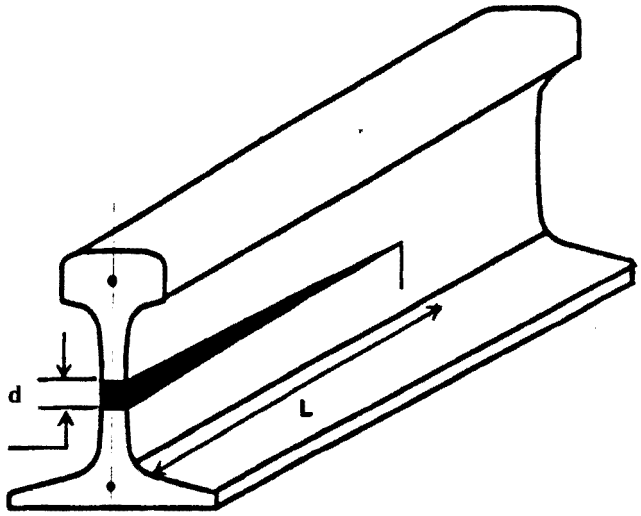

Figure 4-2-8. Rail - Web Saw Cut Test

d = displacement

L = saw cut length

2.1.14 ACCEPTANCE (2007)

a. To be accepted, the rails offered must fulfill all the requirements of these specifications.

b. Those rails which fail to fulfill all requirements of these specifications but which upon agreement between purchaser and manufacturer are suitable for specific uses shall be classified as “Industrial Quality” (IQ) rails and be identified as specified in Article 2.1.15.g.

c. The rail producer shall furnish to the purchaser the following records of inspection and shipment by the method and in the form agreed upon between the purchaser and the producer.

(1) The chemical analysis of the rails shipped, listed by heat number, and the specified chemical analysis elements. (See Paragraph 2.1.3.)

(2) The Brinell hardness of the rails shipped by heat numbers, and the hardness pattern for hardened rails as agreed upon by purchaser and manufacturer. (See Paragraph 2.1.4.)

(3) The method of hydrogen elimination.

(4) A shipping statement of the rails shipped which will include the number of pieces of each length, and the total tons shipped in each vehicle (rail car or ship).

(5) A statement that all rails supplied meet the ultrasonic requirements. (See Paragraph 2.1.8.)

© 2010, American Railway Engineering and Maintenance-of-Way Association

(6) A statement that all macroetched samples representing the rails supplied meet the Macroetch requirements. (See Paragraph 2.1.9.)

2.1.15 MARKINGS (2007)

a. High-strength rails shall be marked by either a metal plate permanently attached to the neutral axis, hot stamped, or in the brand which gives the manufacturer, type and/or method of treatment. Heat treated rail shall be paint-marked orange. Alloy rail shall be paint-marked aluminum color.

b. Non AREMA (Industrial Quality) rails shall be paint-marked yellow.

c. Short rails (less than 80 feet) shall be paint-marked green.

d. Trackwork rails shall be paint-marked white.

e. Rail length shall be painted on the end faces or in a manner acceptable to the purchaser or manufacturer.

f. Individual rails shall be paint-marked only one color, according to the order listed above.

g. Industrial Quality (IQ) rails shall be permanently identified by grinding diagonally through every "RE" or other designation within the rails' branding. Each designation brand shall be ground or milled diagonally from the top right-hand corner to the bottom left-hand corner, a minimum of 1/4" in width and to within 0.010" of the parent rail web surface.

2.1.16 LOADING (1993)

All rails shall be handled carefully to avoid damage and shall be loaded with the branding on all rails facing the same direction. Rails of different markings shall not be intermixed in loading, but shall be segregated and loaded head up. If there are not enough rails of one marking for a full car, smaller groups consisting of tiers of different markings as approved by the purchaser, may be loaded onto one car.

2.1.17 SUPPLEMENTARY REQUIREMENTS (1988)

The following supplementary requirements shall apply only when specified by the purchaser in the inquiry, order, and contract.

2.1.17.1 End Hardening

The drilled ends may be specified to be end hardened. When so specified, end hardening and chamfering shall be in accordance with paragraph a through paragraph g.

a. End-hardened rails may be hot stamped with letters "CH" in the web of the rail ahead of the heat number.

b. Water shall not be used as a quenching medium except in oil-water or polymer-water emulsion process approved by the purchaser.

c. Longitudinal and transverse sections showing the typical distribution of the hardness pattern produced by any proposed process shall, upon request of purchaser, be submitted for approval before production on the contract is started.

© 2010, American Railway Engineering and Maintenance-of-Way Association

d. The heat-affected zone defined as the region in which the hardness is above that of the parent metal shall cover the full width of the rail head and extend longitudinally a minimum of 12 inches from the end of the rail. The effective hardness zone 2 inch from the end of the rail shall be at least 3 inch deep.

e. The hardness measured at a spot on the center line of the head 3 inch to 2 inch from the end of the rail shall show a Brinell hardness number range of 341 to 401 when decarburized surface has been removed. A report of hardness determination representing the product shall be given to the purchaser or his representative.

f. The manufacturer reserves the right to retreat any rails which fail to meet the required Brinell hardness number range.

g. Chamfering rail ends shall be done in such a manner as will avoid formation of grinding cracks.

2.1.17.2 Manual Ultrasonic Testing

a. The rail may be specified by the purchaser to be ultrasonically tested for internal imperfections subject to the provisions of paragraph b.

b. Manual Ultrasonic Test of Web at the Rail Ends for Weld Plant Application.

(1) Manual End testing shall be performed using standard ultrasonic testing equipment acceptable to the purchaser and manufacturer.

(2) The search unit shall be a standard dual element crystal or similar transducer acceptable to the purchaser and manufacturer.

(3) The calibration test block shall be of the following characteristics: Material 4340 AISI Steel/Nickel plated, manufactured in accordance with ASTM E428. As an alternate, reference standards may be fabricated from a section of rail as agreed upon between the purchaser and manufacturer.

(4) Dimensions of the calibration test block and calibration references shall be agreed upon by the purchaser and manufacturer. (For calibration reference the recommended thickness of the block should approximate the thickness of the rail web and contain a 1/16 inch flat bottom hole drilled to one-half the thickness.)

(5) Calibration of the instrument shall be performed before the commencement of testing, every 100 rail ends thereafter, and after any test delay exceeding 30 minutes.

(6) When the search unit is coupled to the calibration test block, the indication height from the calibration reference shall serve as a reference level for the test. (Recommended reference levels should appear from 40% to 80% of the maximum height on the display graticule.)

(7) Couplant shall be distributed over the entire web area at least 12 inches from the end of the rail and the search unit moved over the entire area in vertical and/or horizontal sweeps.

(8) An indication equal to or exceeding the reference level shall be cause for rejection.

(9) Rejected rails may be cut back to sound metal as indicated by the ultrasonic testing, subject to the length restrictions in Paragraph 2.1.11.

2.1.18 APPENDIX 1 (1993)

Inasmuch as the controlled cooling of rails has proved a successful method for the elimination of hydrogen, the following procedure is presented as one which will meet the requirements of Paragraph 2.1.7, paragraph a.

© 2010, American Railway Engineering and Maintenance-of-Way Association

a. All rails shall be cooled on the hot beds or runways until full transformation is accomplished and then charged immediately into the containers. In no case should the rail be charged at a temperature below 725 degrees F.

b. The temperature of the rails before charging shall be determined at the head of the rail at least 12 inches from the end.

c. The cover shall be placed on the container immediately after completion of the charge and shall remain in place for at least 10 hours. After removal or raising of the lid of the container, no rail shall be removed until the temperature of the top layer of rails has fallen to 300 degrees F or lower.

d. The temperature of an outside rail or between an outside rail and the adjacent rail in the bottom tier of the container, at a location not less than 12 inches nor more than 36 inches from the rail end, shall be recorded. This temperature shall be the control for judging rate of cooling.

e. The container shall be so protected and insulated that the control temperature shall not drop below 300 degrees F in 7 hours for rails 100 lbs per yd in weight or heavier from the time the bottom tier is placed in the container and 5 hours for rails of less than 100 lbs per yd in weight. If this cooling requirement is not met, the rails shall be considered control-cooled, provided that the temperature at a location not less than 12 inches from the end of a rail at approximately the center of the middle tier does not drop below 300 degrees F in less than 15 hours.

f. The manufacturer shall maintain a complete record of the process for each container of rails.

2.1.19 APPENDIX 2 (1994)

These photomacrographs are intended to supplement the Macroetch standards presented in Paragraph 2.1.9 and depict rejectionable conditions. The macrographs are presented in the order found in Table 4-2-3.

2.1.20 APPENDIX 3 (2004)

The figures in this paragraph represent drawings of gages for determining compliance with AREMA rail section tolerances per Article 2.1.5. The gage drawings are presented in the order found in Table 4-2-4.

© 2010, American Railway Engineering and Maintenance-of-Way Association

Table 4-2-3. Macrographs

Figure	Rejectionable Condition	Rail Specification Paragraph
4-2-9	Definition of rail cross sectional areas for macroetch evaluation.	4-2.1.9.3
4-2-10 and 4-2-11	Hydrogen flakes.	4-2.1.9.3.1a
4-2-12 and 4-2-13	Pipe; any size.	4-2.1.9.3.1b
4-2-14 and 4-2-15	Central web streaking extending into the head or base.	4-2.1.9.3.1c
4-2-16 and 4-2-17	Streaking greater than 2-1/2 inches in length.	4-2.1.9.3.1d
4-2-18	Scattered central web streaking from the web into the head and base.	4-2.1.9.3.1e
4-2-19	Scattered segregation extending more than one inch into the head or base.	4-2.1.9.3.1f
4-2-20	Subsurface porosity.	4-2.1.9.3.1g
4-2-21	Inverse or negative segregation having a width greater than 3 inches and extending more than 1/2 inches into the head or base.	4-2.1.9.3.1h
4-2-22	Streaking greater than 1/8 inches in the head from radial streaks, radial cracks, halfway cracks, or hinged cracks.	4-2.1.9.3.1i
4-2-23	Other defects that could cause premature failure (i.e. slag, refractory, etc.).	4-2.1.9.3.1j
4-2-24 and 4-2-25	Segregation extending into the head or base.	
4-2-26	Segregation greater than 1/8 inches wide in the head or base.	
4-2-27	Scattered central web segregation extending into the head and base.	

Table 4-2-4. Gage Drawings

Figure	Title
4-2-28	Gage for Rail Height
4-2-29	Gage for Head Width
4-2-30	Gage for Web Thickness
4-2-31	Gage for Verticality/Asymmetry - Minus Rail Gauge
4-2-32	Gage for Verticality/Asymmetry - Plus Rail Gauge
4-2-33	Gage for Base Width
4-2-34	Fishing Surface Gage, AREMA 115RE
4-2-35	Rail Fishing Gage AREMA 119RE
4-2-36	Fishing Surface Gage, AREMA 132RE
4-2-37	Fishing Surface Gage, AREMA 133RE
4-2-38	Fishing Surface Gage, AREMA 136RE
4-2-39	Rail Fishing Gage, AREMA 141RE
4-2-40	Head Radius Gage

© 2010, American Railway Engineering and Maintenance-of-Way Association

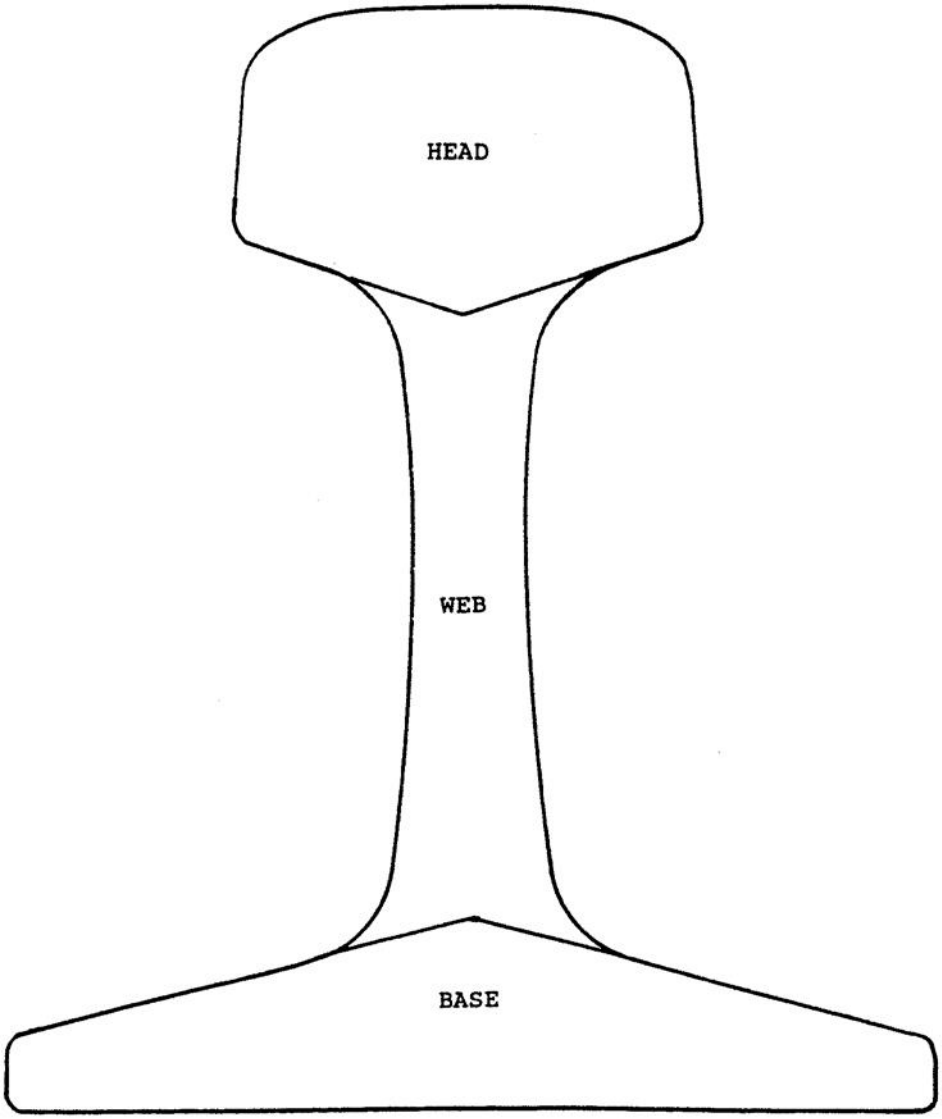

Figure 4-2-9. Definition of Rail Cross Sectional Areas for Macroetch Evaluation

© 2010, American Railway Engineering and Maintenance-of-Way Association

Figure 4-2-10. Hydrogen Flakes

© 2010, American Railway Engineering and Maintenance-of-Way Association

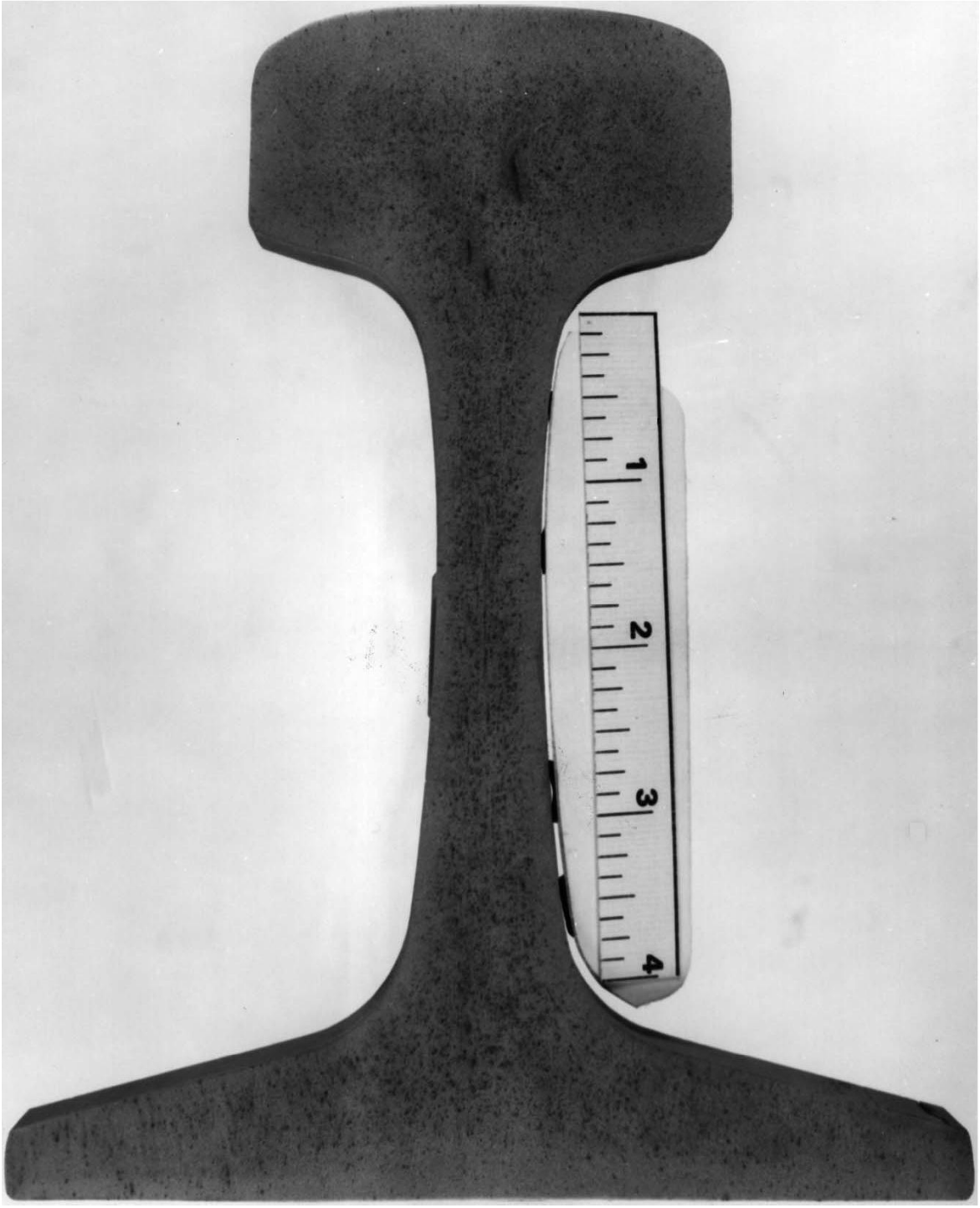

Figure 4-2-11. Hydrogen Flakes

© 2010, American Railway Engineering and Maintenance-of-Way Association

Figure 4-2-12. Pipe – Any Size

© 2010, American Railway Engineering and Maintenance-of-Way Association

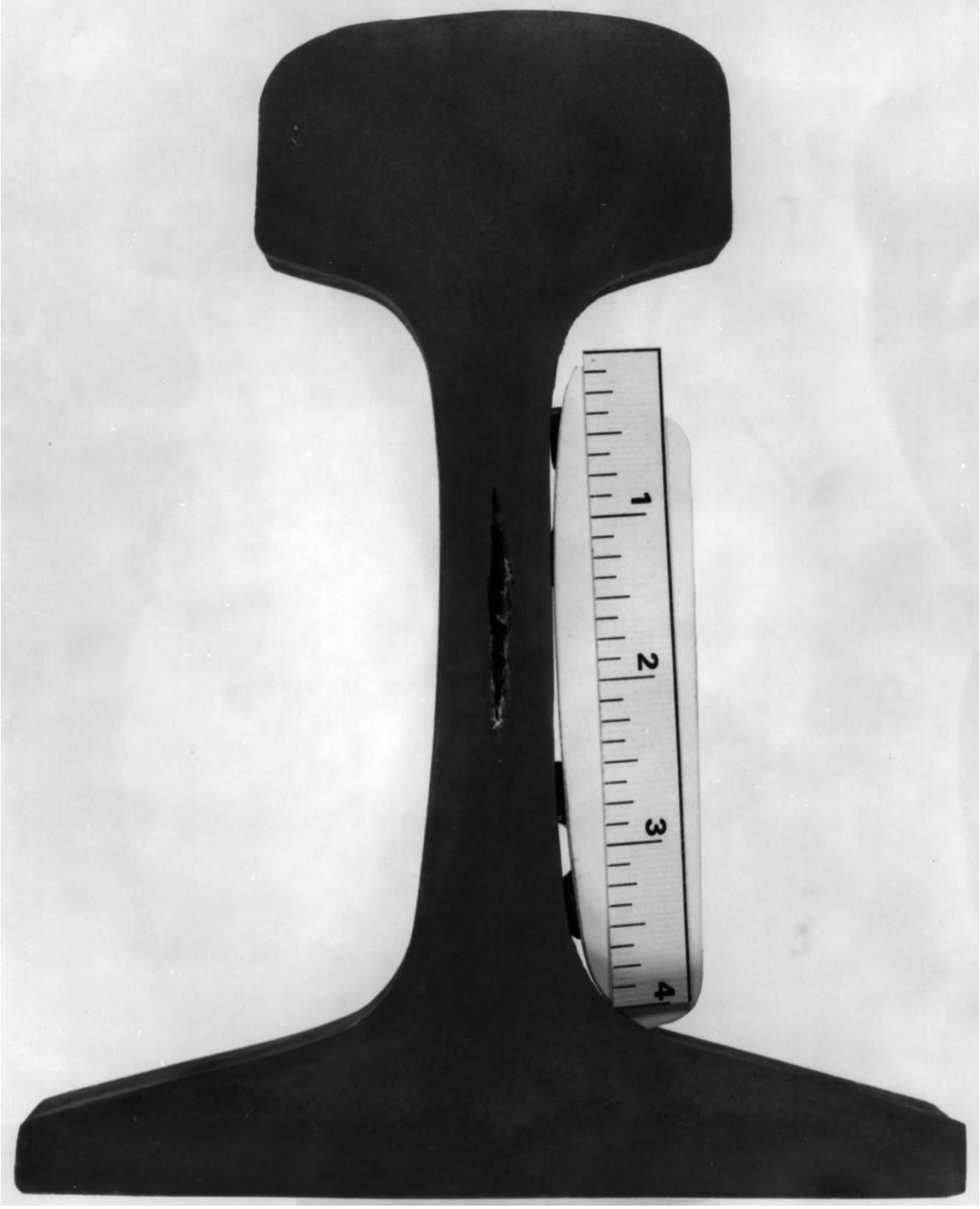

Figure 4-2-13. Pipe – Any Size

© 2010, American Railway Engineering and Maintenance-of-Way Association

Figure 4-2-14. Central Web Streaking Extending Into the Head or Base

© 2010, American Railway Engineering and Maintenance-of-Way Association

Figure 4-2-15. Central Web Streaking Extending Into the Head or Base

© 2010, American Railway Engineering and Maintenance-of-Way Association

Figure 4-2-16. Streaking Greater than 2-1/2 inches in Length

© 2010, American Railway Engineering and Maintenance-of-Way Association

Figure 4-2-17. Streaking Greater than 2-1/2 inches in Length

© 2010, American Railway Engineering and Maintenance-of-Way Association

Figure 4-2-18. Scattered Central Web Streaking From the Web Into the Head and Base

© 2010, American Railway Engineering and Maintenance-of-Way Association

Figure 4-2-19. Scattered Segregation Extending More Than One Inch Into the Head or Base

© 2010, American Railway Engineering and Maintenance-of-Way Association

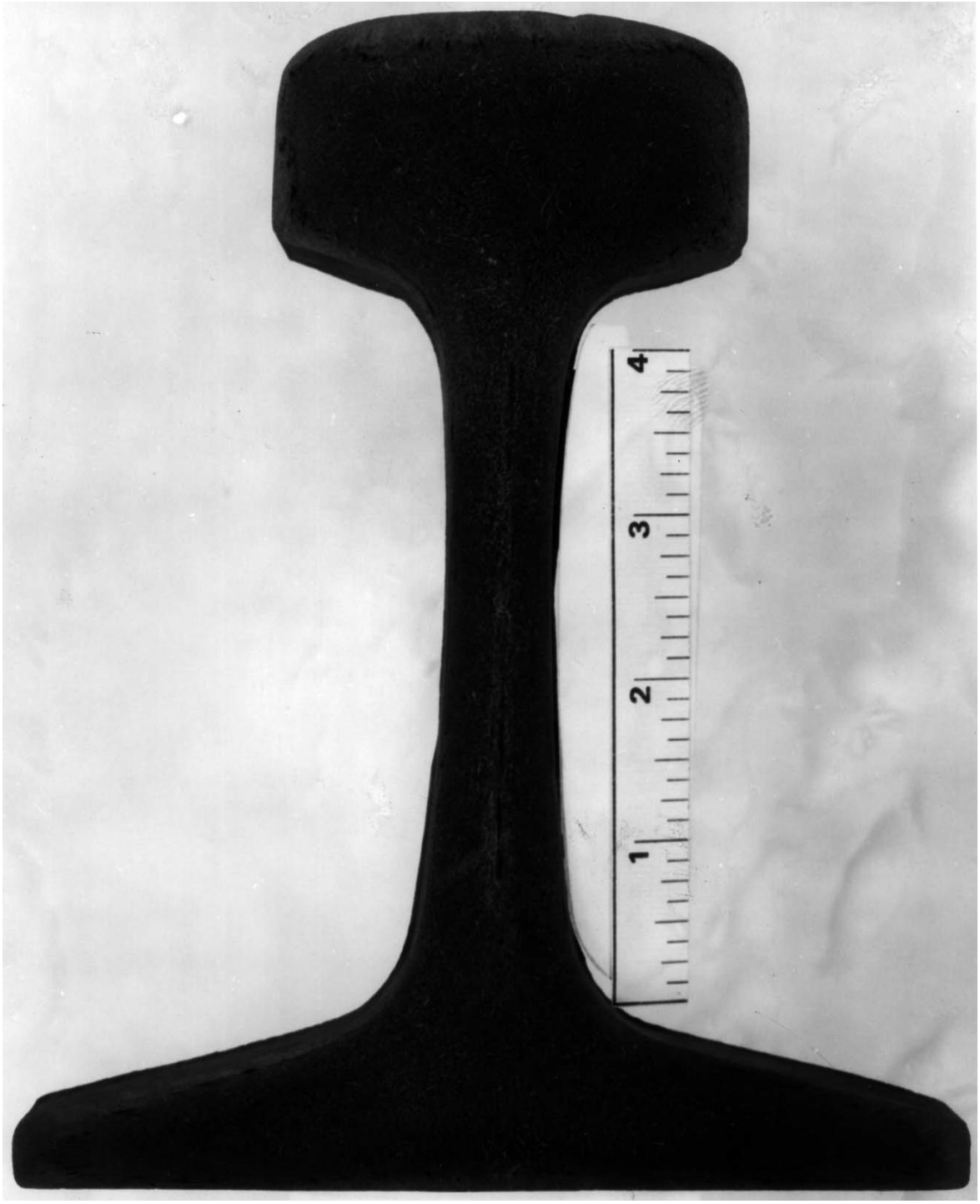

Figure 4-2-20. Subsurface Porosity

© 2010, American Railway Engineering and Maintenance-of-Way Association

Figure 4-2-21. Inverse or Negative Segregation Having a Width Greater Than 1/4 inch and Extending More Than 1/2 inch Into the Head or Base

© 2010, American Railway Engineering and Maintenance-of-Way Association

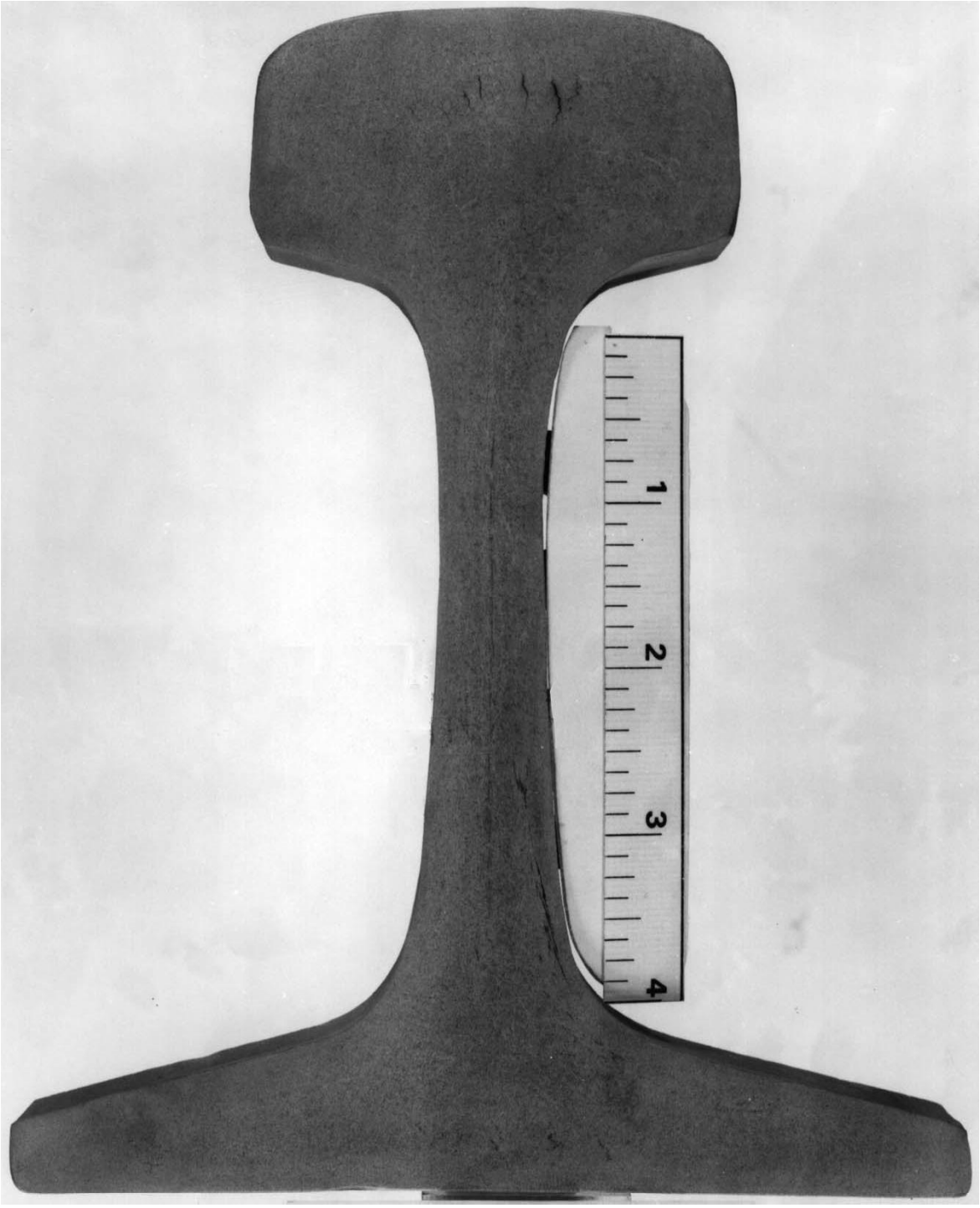

Figure 4-2-22. Streaking Greater than 1/8 inch in the Head From Radial Streaks, Radial Cracks, Halfway Cracks, or Hinged Cracks

© 2010, American Railway Engineering and Maintenance-of-Way Association

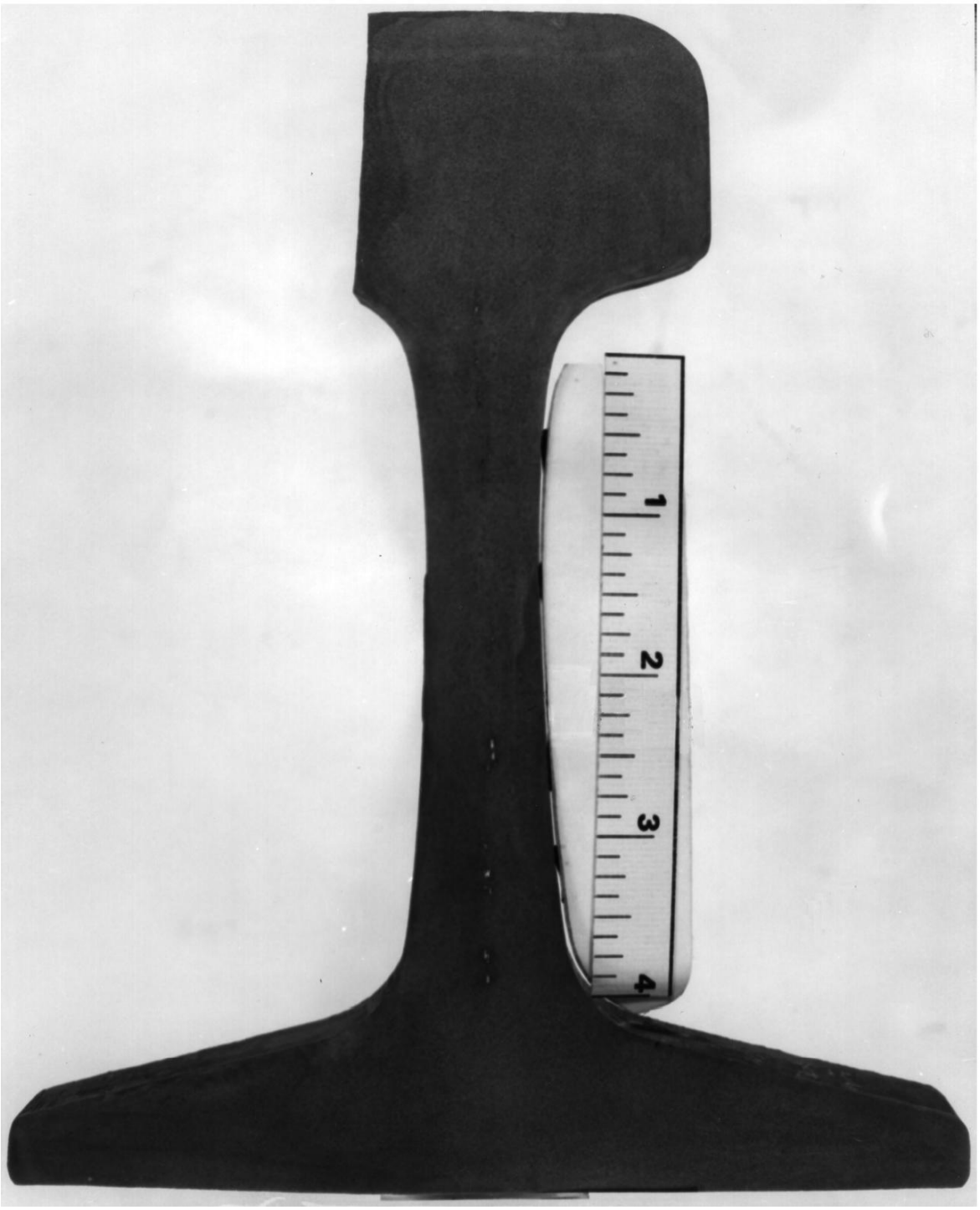

Figure 4-2-23. Other Defects That Could Cause Premature Failure (i.e., Slag, Refractory, etc.)

© 2010, American Railway Engineering and Maintenance-of-Way Association

Figure 4-2-24. Segregation Extending Into the Head or Base

© 2010, American Railway Engineering and Maintenance-of-Way Association

Figure 4-2-25. Segregation Extending Into the Head or Base

© 2010, American Railway Engineering and Maintenance-of-Way Association

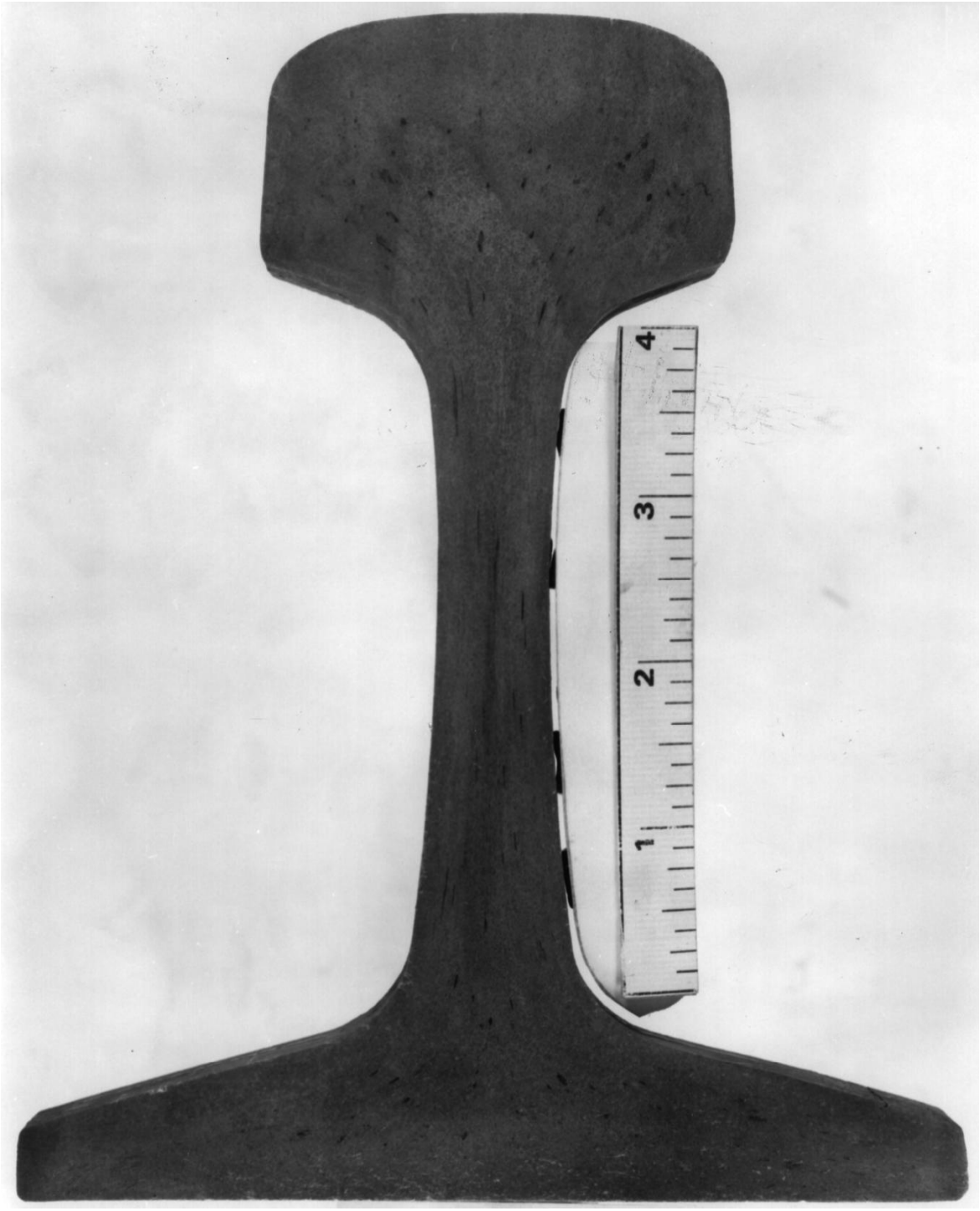

Figure 4-2-26. Segregation Greater than 1/8 inch Wide in the Head or Base

© 2010, American Railway Engineering and Maintenance-of-Way Association

Figure 4-2-27. Scattered Central Web Segregation Extending Into the Head and Base

© 2010, American Railway Engineering and Maintenance-of-Way Association

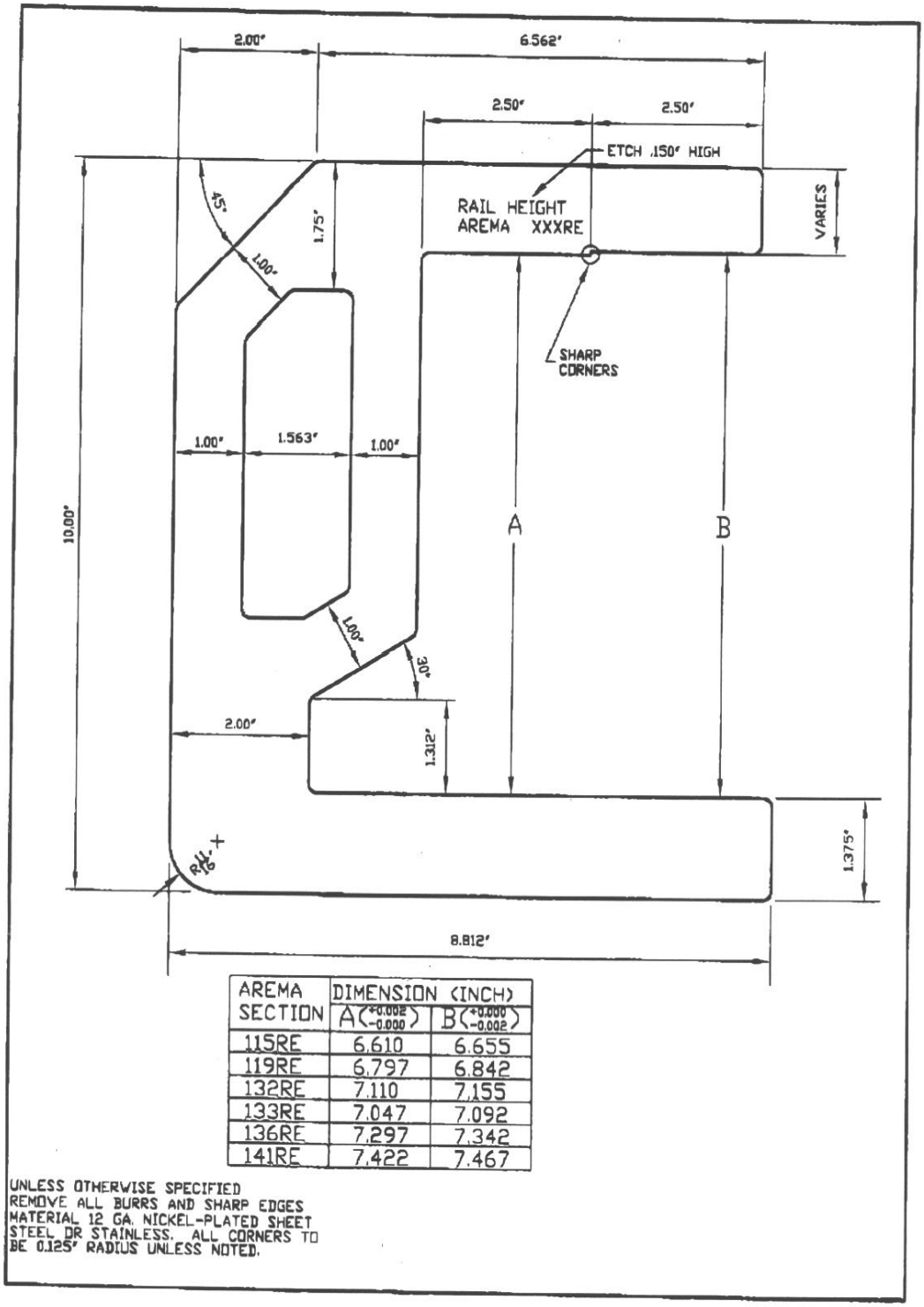

AREMA SECTION	DIMENSION (INCH) A (+0.002 −0.000)	B (+0.000 −0.002)
115RE	6.610	6.655
119RE	6.797	6.842
132RE	7.110	7.155
133RE	7.047	7.092
136RE	7.297	7.342
141RE	7.422	7.467

Figure 4-2-28. Gage for Rail Height

© 2010, American Railway Engineering and Maintenance-of-Way Association

NOTES: MATERIAL 12 GA. NICKEL-PLATED SHEET STEEL OR STAINLESS.

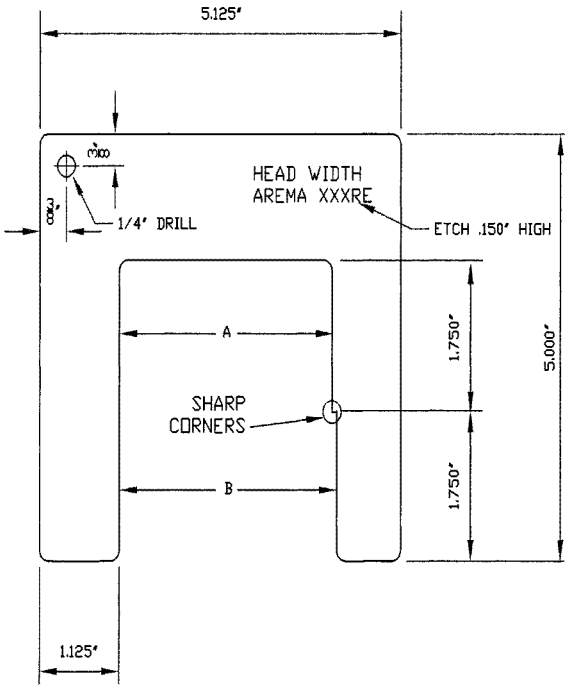

AREMA SECTION	DIMENSION (INCH) A $(^{+0.002}_{-0.000})$	B $(^{+0.000}_{-0.002})$
115RE	2.694	2.744
119RE	2.631	2.681
132RE	2.975	3.025
133RE	2.975	3.025
136RE	2.913	2.963
141RE	3.037	3.087

- UNLESS OTHERWISE SPECIFIED:
- ALL CORNERS TO BE 0.125" RADIUS UNLESS NOTED.
- REMOVE ALL BURRS AND SHARP EDGES
- DIMENSIONS ARE IN INCHES
- TOLERANCES ON:
  ANGLES +/- 1
  .XX DECIMALS +/-.005
  .XXX DECIMALS +/-.001

HEAD WIDTH GAUGE
SECTIONS AS SHOWN
12/3/03
FILE: 161K099

Figure 4-2-29. Gage for Head Width

© 2010, American Railway Engineering and Maintenance-of-Way Association

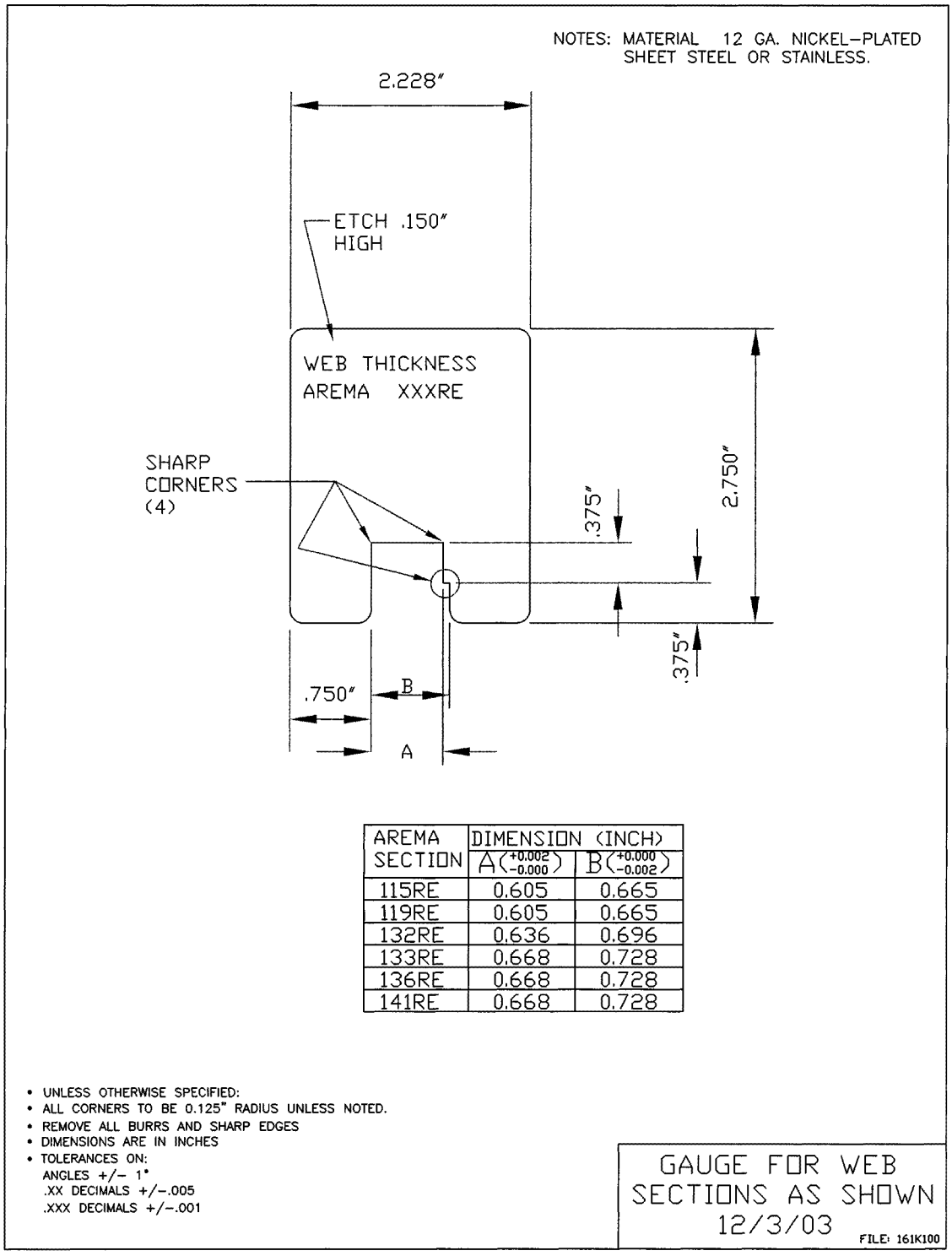

AREMA SECTION	DIMENSION (INCH)	
	A (+0.002 / −0.000)	B (+0.000 / −0.002)
115RE	0.605	0.665
119RE	0.605	0.665
132RE	0.636	0.696
133RE	0.668	0.728
136RE	0.668	0.728
141RE	0.668	0.728

Figure 4-2-30. Gage for Web Thickness

© 2010, American Railway Engineering and Maintenance-of-Way Association

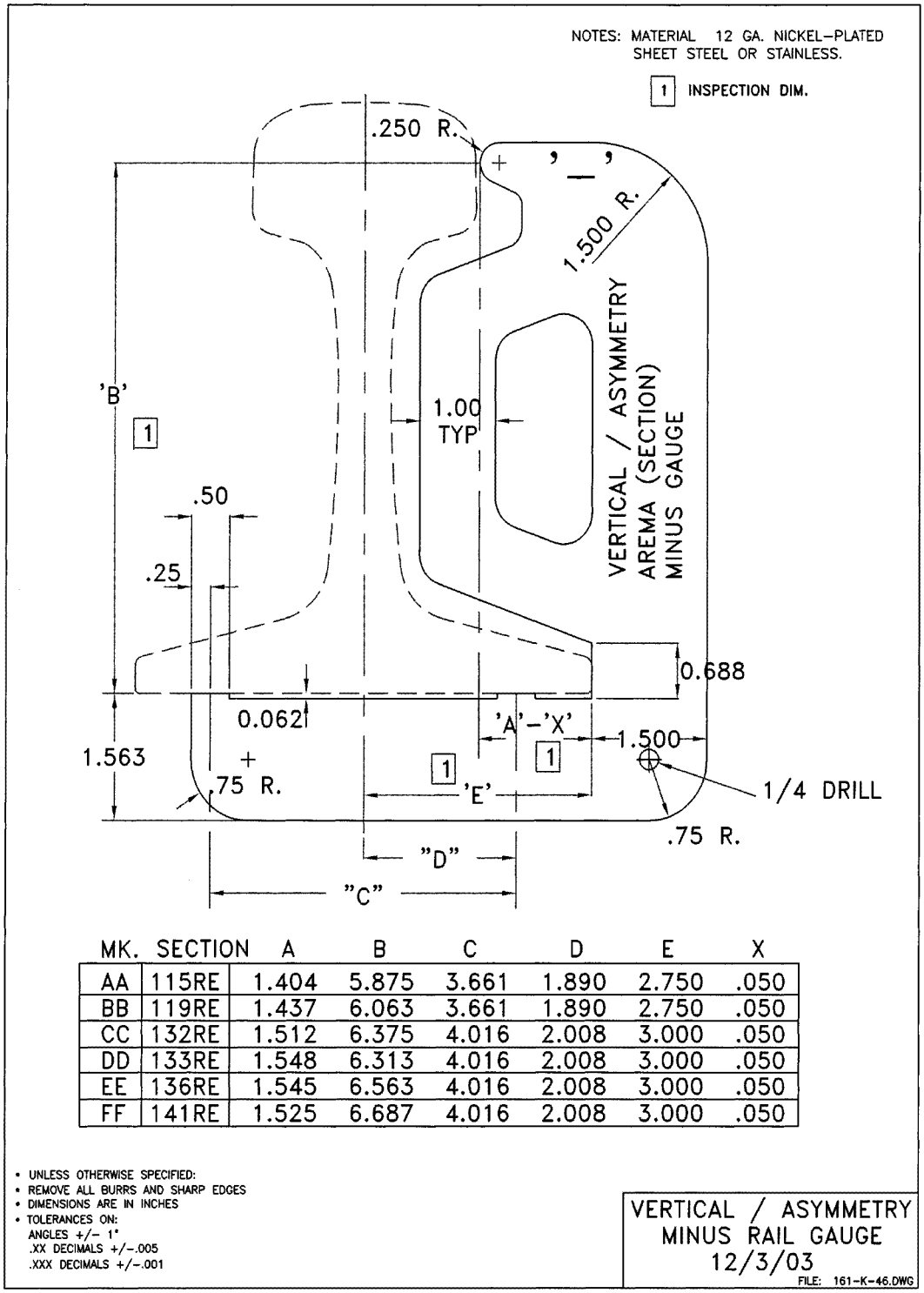

MK.	SECTION	A	B	C	D	E	X
AA	115RE	1.404	5.875	3.661	1.890	2.750	.050
BB	119RE	1.437	6.063	3.661	1.890	2.750	.050
CC	132RE	1.512	6.375	4.016	2.008	3.000	.050
DD	133RE	1.548	6.313	4.016	2.008	3.000	.050
EE	136RE	1.545	6.563	4.016	2.008	3.000	.050
FF	141RE	1.525	6.687	4.016	2.008	3.000	.050

Figure 4-2-31. Gage for Verticality/Asymmetry - Minus Rail Gauge

© 2010, American Railway Engineering and Maintenance-of-Way Association

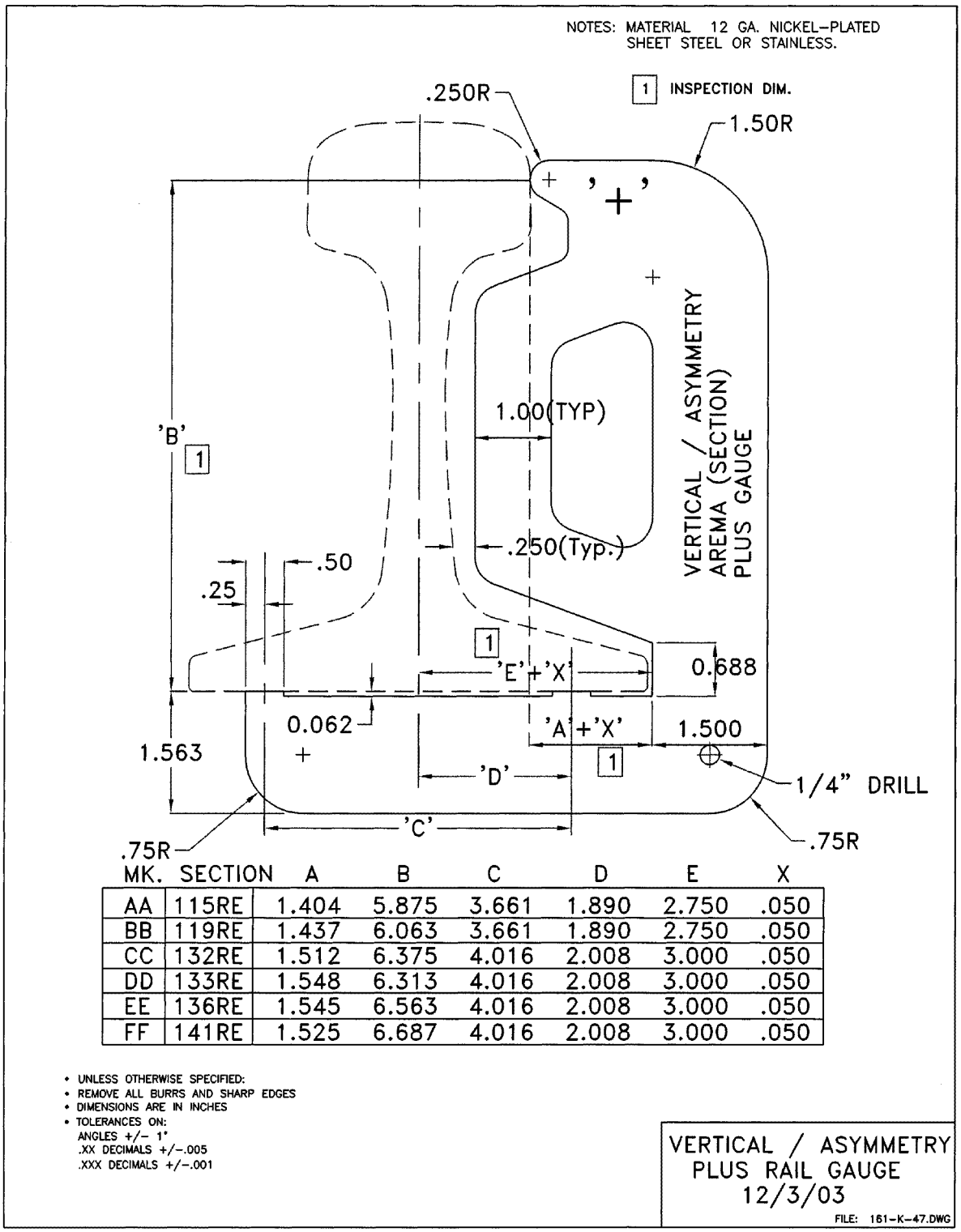

MK.	SECTION	A	B	C	D	E	X
AA	115RE	1.404	5.875	3.661	1.890	2.750	.050
BB	119RE	1.437	6.063	3.661	1.890	2.750	.050
CC	132RE	1.512	6.375	4.016	2.008	3.000	.050
DD	133RE	1.548	6.313	4.016	2.008	3.000	.050
EE	136RE	1.545	6.563	4.016	2.008	3.000	.050
FF	141RE	1.525	6.687	4.016	2.008	3.000	.050

Figure 4-2-32. Gage for Verticality/Asymmetry - Plus Rail Gauge

© 2010, American Railway Engineering and Maintenance-of-Way Association

NOTES: MATERIAL 12 GA. NICKEL-PLATED SHEET STEEL OR STAINLESS.

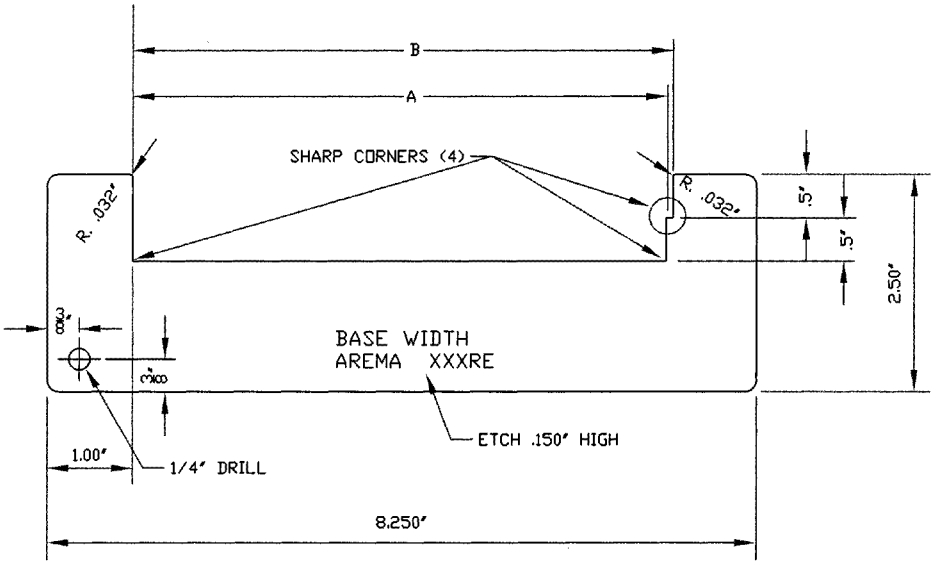

AREMA SECTION	DIMENSION (INCH)	
	A(+0.002 −0.000)	B(+0.000 −0.002)
115RE	5.460	5.540
119RE	5.460	5.540
132RE	5.960	6.040
133RE	5.960	6.040
136RE	5.960	6.040
141RE	5.960	6.040

- UNLESS OTHERWISE SPECIFIED:
- ALL CORNERS TO BE 0.125" RADIUS UNLESS NOTED.
- REMOVE ALL BURRS AND SHARP EDGES
- DIMENSIONS ARE IN INCHES
- TOLERANCES ON:
  ANGLES +/− 1°
  .XX DECIMALS +/−.005
  .XXX DECIMALS +/−.001

BASE WIDTH GAUGE
SECTIONS AS SHOWN
12/3/03
FILE: 162K001

Figure 4-2-33. Gage for Base Width

© 2010, American Railway Engineering and Maintenance-of-Way Association

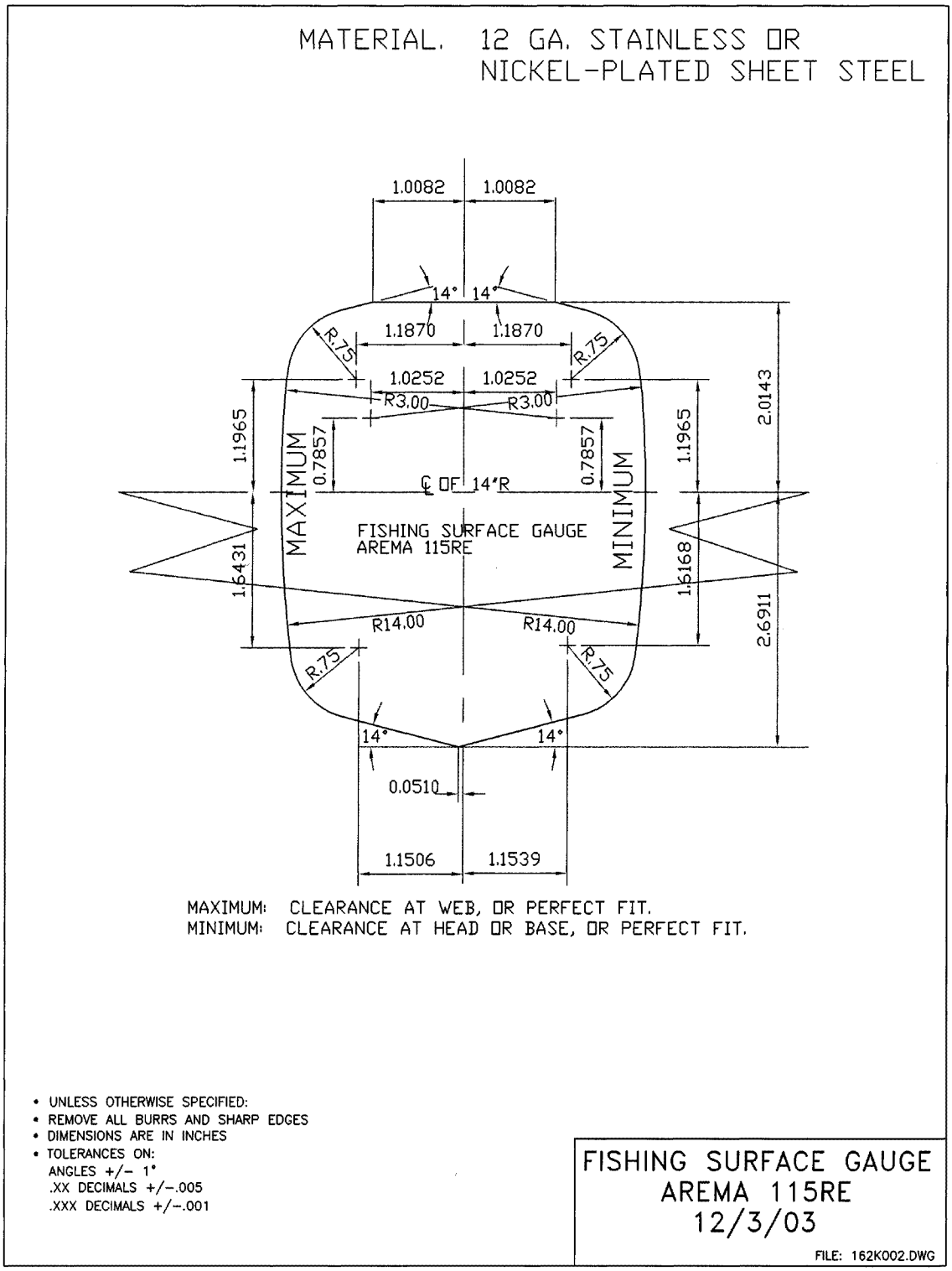

Figure 4-2-34. Fishing Surface Gage, AREMA 115RE

© 2010, American Railway Engineering and Maintenance-of-Way Association

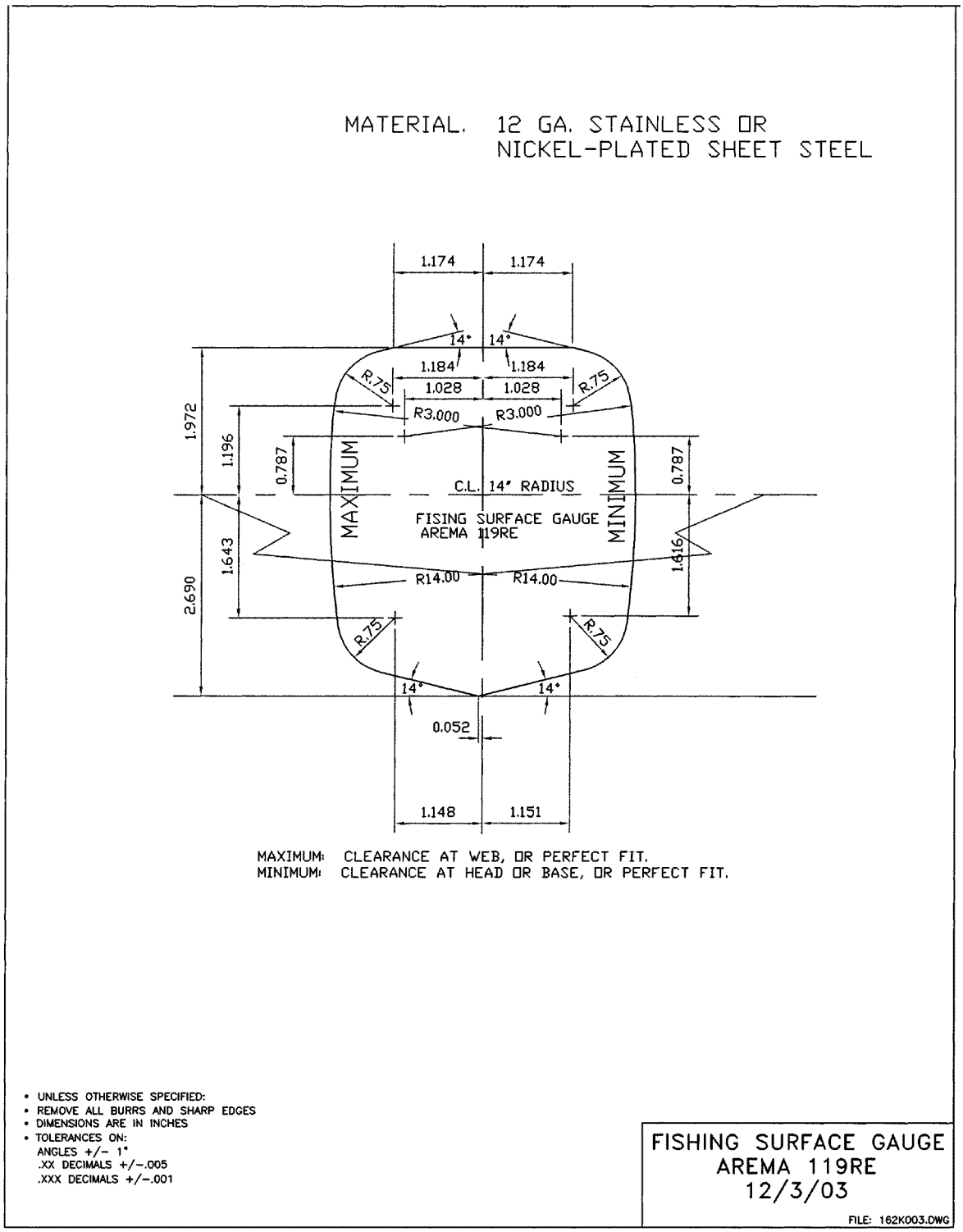

Figure 4-2-35. Fishing Surface Gage, AREMA 119RE

© 2010, American Railway Engineering and Maintenance-of-Way Association

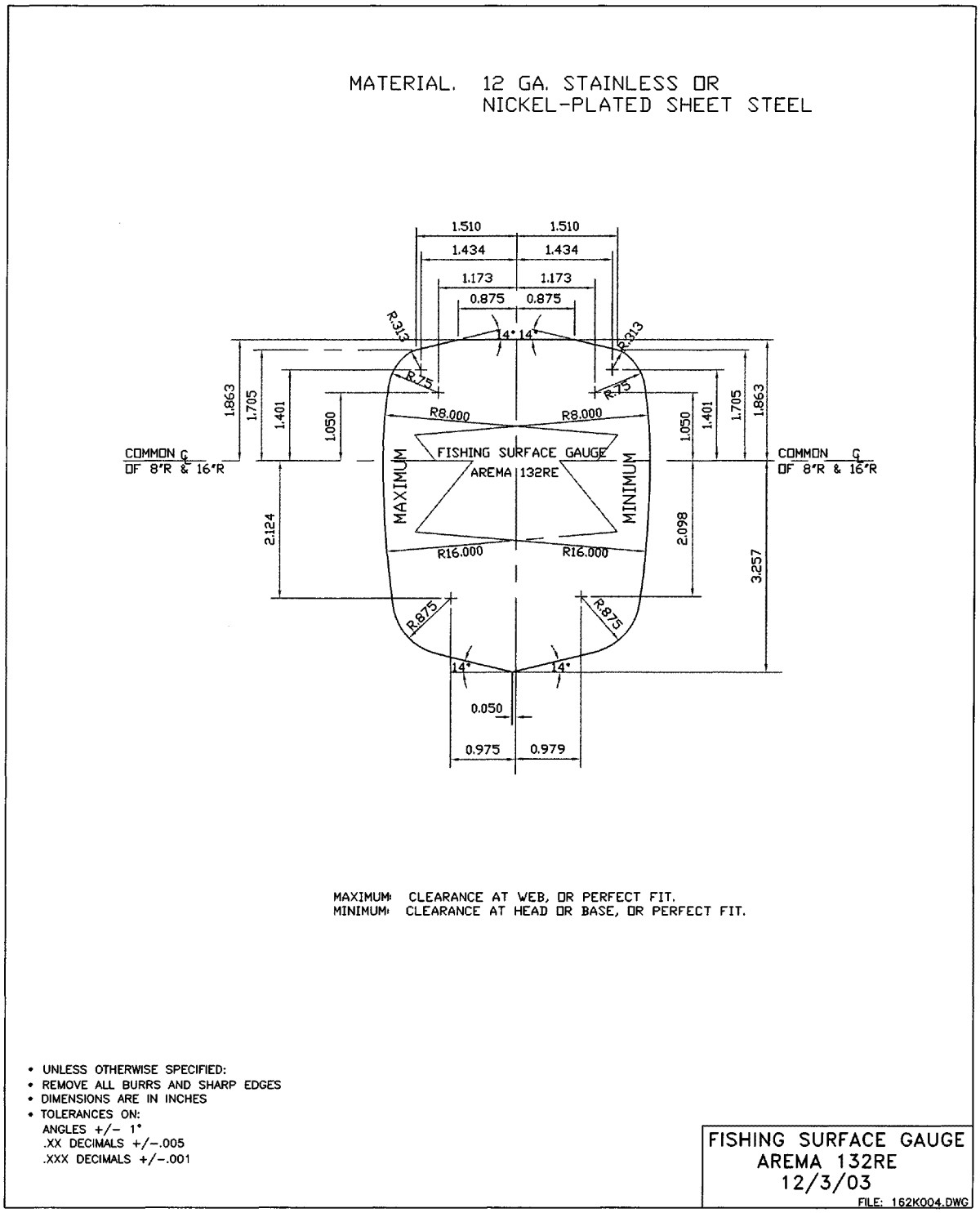

Figure 4-2-36. Fishing Surface Gage, AREMA 132RE

© 2010, American Railway Engineering and Maintenance-of-Way Association

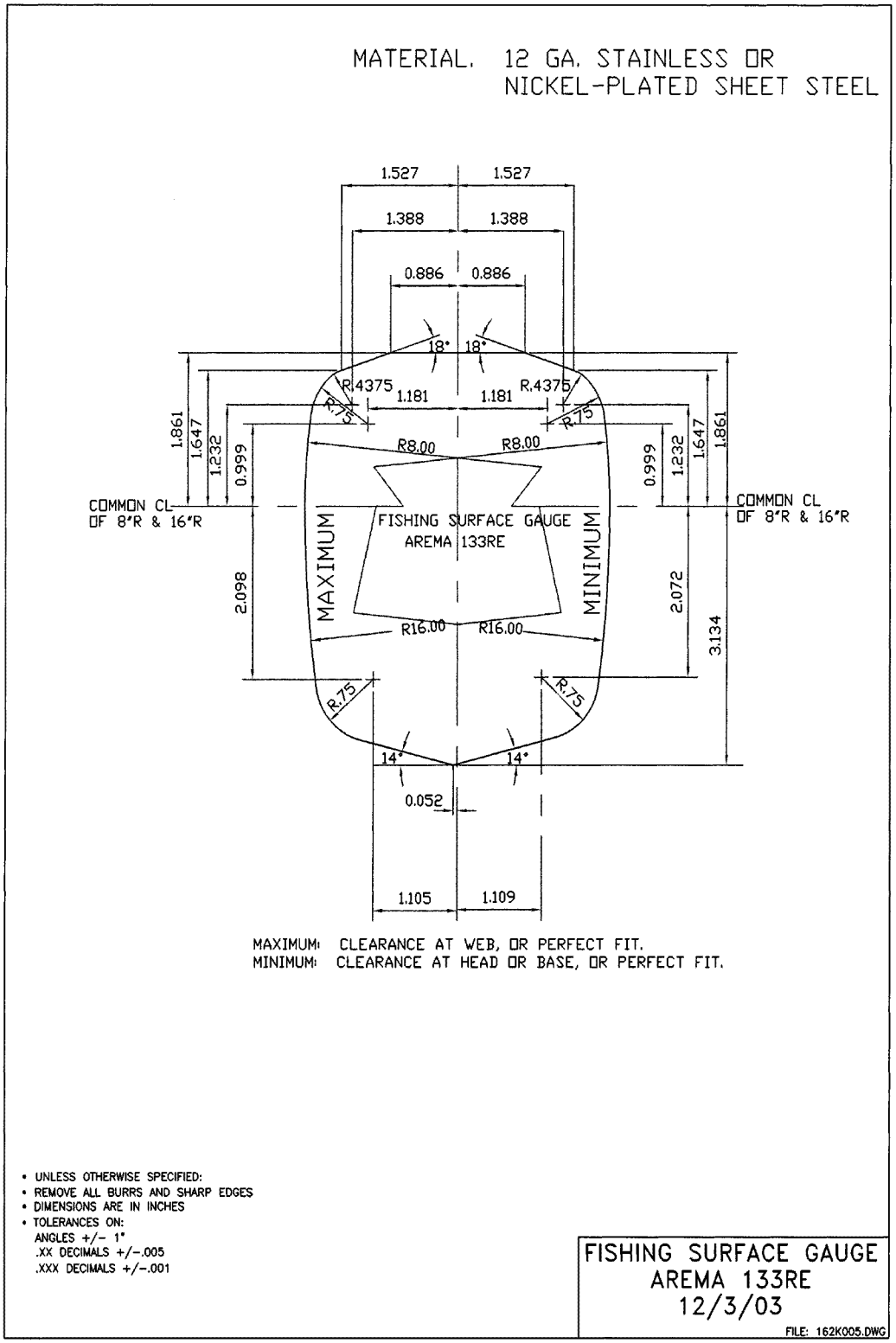

Figure 4-2-37. Fishing Surface Gage, AREMA 133RE

© 2010, American Railway Engineering and Maintenance-of-Way Association

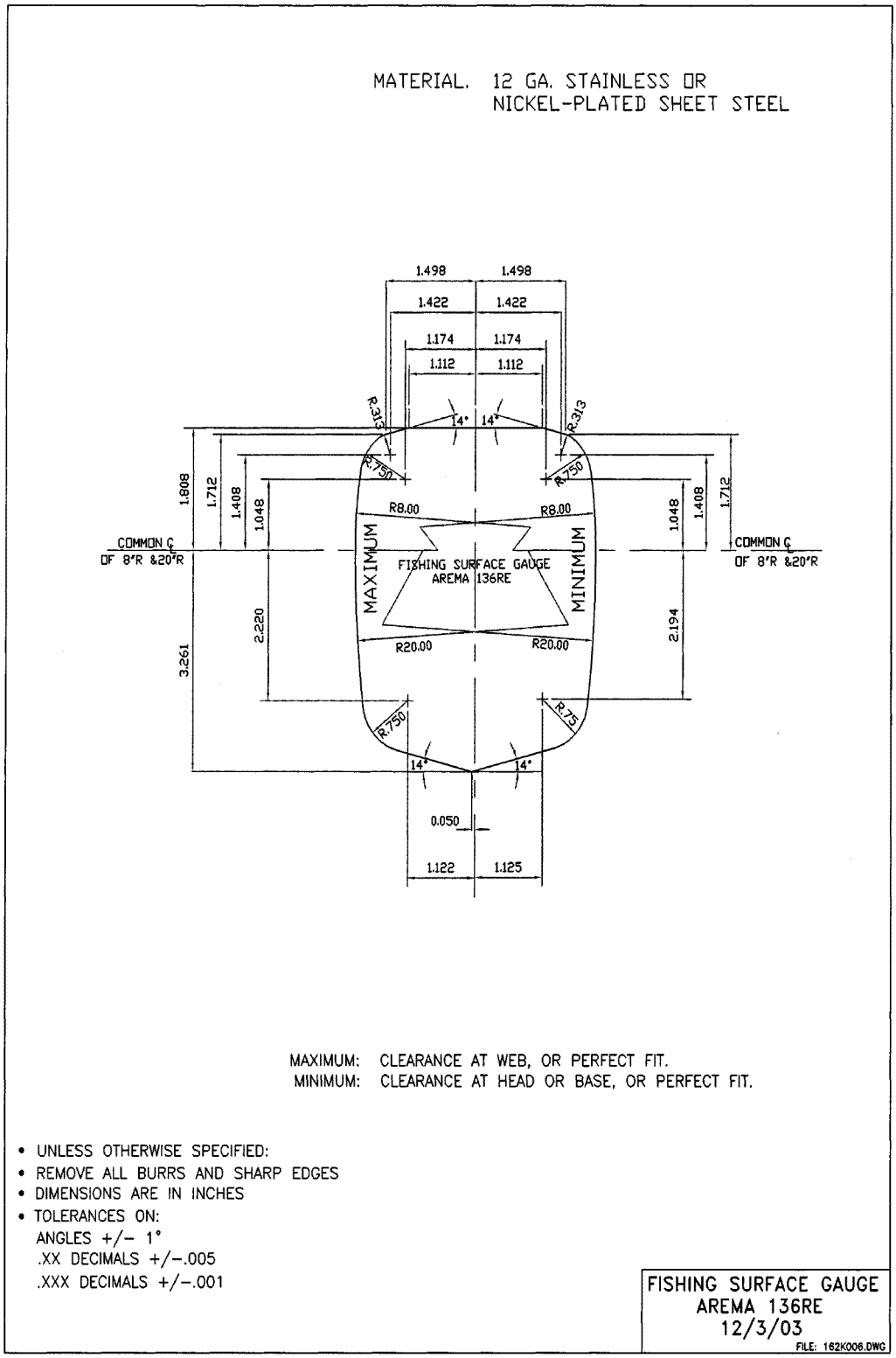

Figure 4-2-38. Fishing Surface Gage, AREMA 136RE

© 2010, American Railway Engineering and Maintenance-of-Way Association

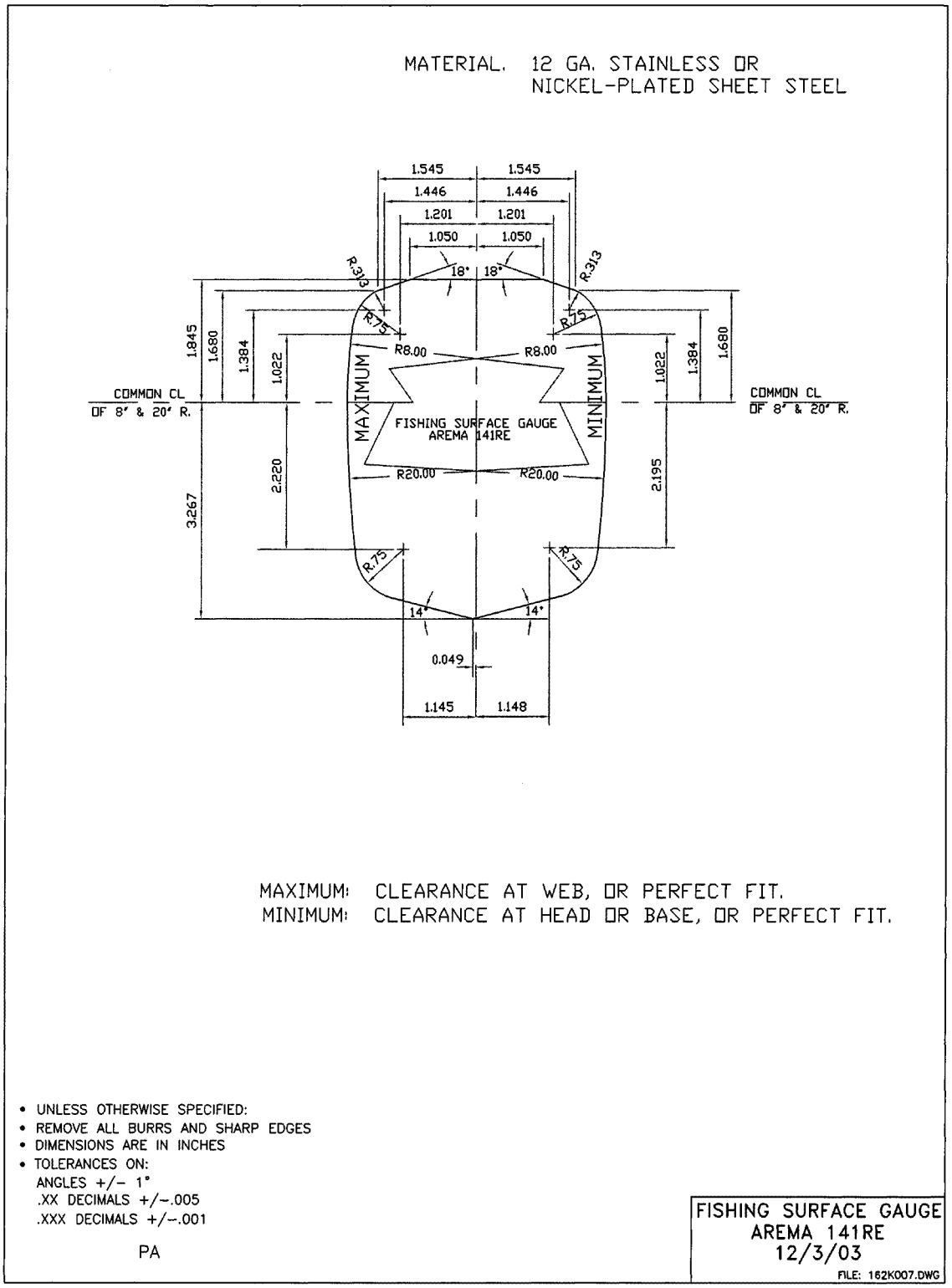

Figure 4-2-39. Fishing Surface Gage, AREMA 141RE

© 2010, American Railway Engineering and Maintenance-of-Way Association

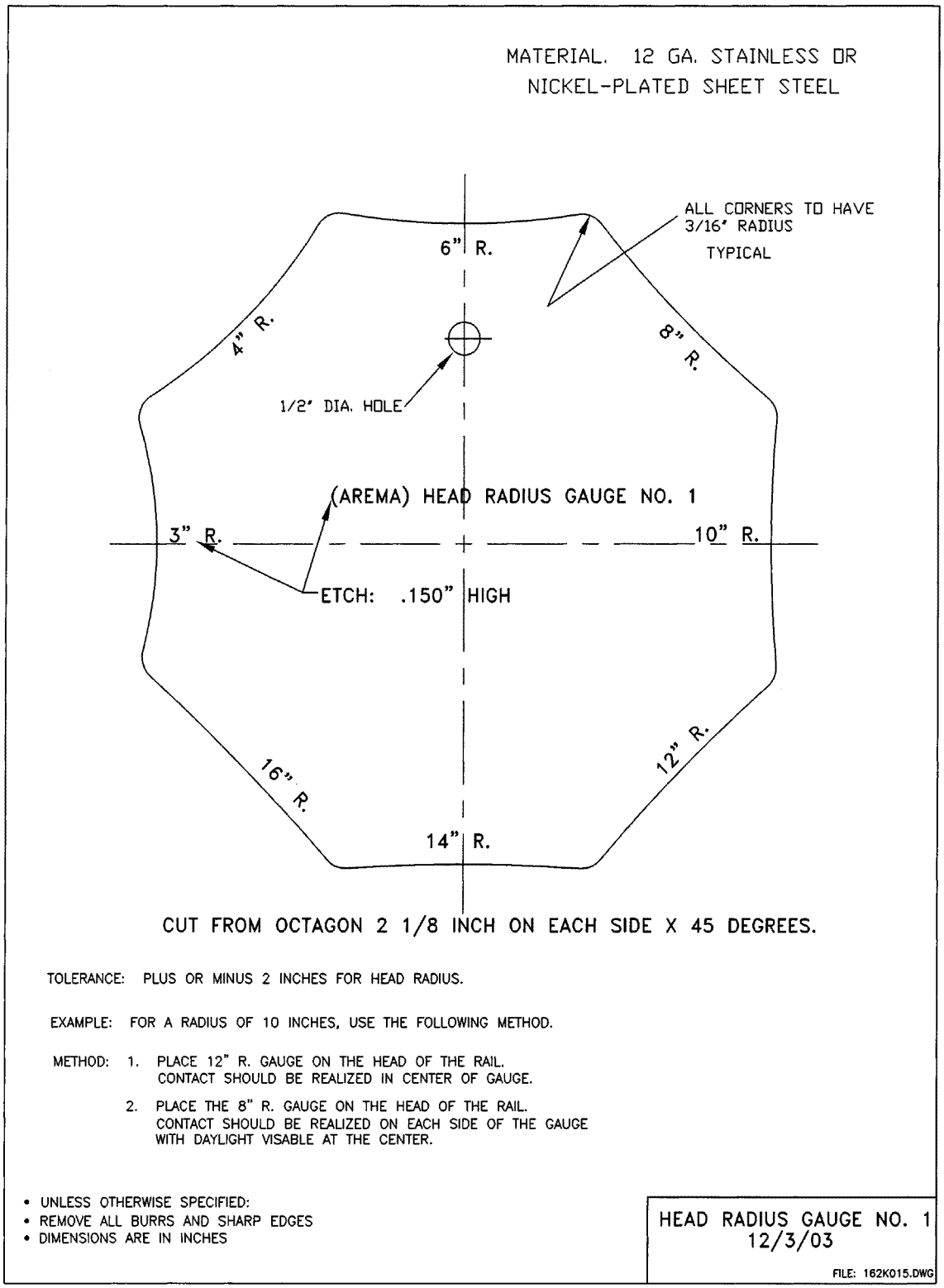

Figure 4-2-40. Head Radius Gage

© 2010, American Railway Engineering and Maintenance-of-Way Association

SECTION 3.5 SPECIFICATION FOR HEAT-TREATED CARBON STEEL TRACK BOLTS AND CARBON-STEEL NUTS[1] — 2007 —

3.5.1 SCOPE (2007)

a. This specification covers the material and mechanical requirements for heat-treated carbon-steel track bolts and carbon-steel track nuts, in diameters from 7/8 to 1-1/8 inches.

b. Heat-treated carbon-steel track bolts shall be produced to either a Grade 5 or Grade 8 designation in conformance with the chemical requirements, mechanical requirements, and in general as far as applicable to the latest issue of the Society of Automotive Engineers Specification SAE J429 for *Mechanical and Material Requirements For Externally Threaded Fasteners.*

c. Carbon-steel nuts shall be produced to either a Grade 5 or Grade 8 designation in conformance with the chemical requirements, mechanical requirements, and in general as far as applicable to the latest issue of the Society of Automotive Engineers Specification SAE J995 for *Mechanical and Material Requirements For Steel Nuts.*

3.5.2 CHEMICAL COMPOSITION (2007)

a. Bolts shall be made of steel conforming to the description and chemical composition requirements in the table below:

Table 4-3-3. Chemical Composition Requirements for Bolts

Grade of Steel	Material and Treatment	Element (%)			
		C		P	S
		Min.	Max.	Max.	Max.
5	Medium carbon steel, quench and tempered	0.28	0.55	.030	.050
8	Medium carbon alloy steel, quench and tempered	0.28	0.55	.030	.050
Note: Boron additions are not permissible under this specification.					

b. Nuts shall be made of steel conforming to the description and chemical composition requirements in the table below:

Table 4-3-4. Chemical Composition Requirements for Nuts

Grade of Steel	C	Mn	P	S
	Max.	Min.	Max.	Max.
5	0.55	0.30	0.05	0.15
8	0.55	0.30	0.04	0.05

[1] Sections of this specification have been reprinted with kind permission from SAE J429 (C) 1999 and from SAE J995 (C) 1999, SAE International.

© 2010, American Railway Engineering and Maintenance-of-Way Association

3.5.3 LADLE ANALYSIS (2007)

a. An analysis of each heat of steel shall be made to determine the percentage of carbon, manganese (if applicable), phosphorus and sulphur.

b. The analysis prescribed in Section 3.5.3.a above shall be made by the manufacturer from test samples taken during the pouring of each heat or melt. The chemical composition thus determined shall be reported to the purchaser or his representative and shall conform to the requirements specified in Section 3.5.2.

3.5.4 CHECK ANALYSIS (2007)

a. An analysis may be made by the purchaser from a finished bolt representing each heat or melt. The phosphorus content thus determined shall not exceed that specified in Section 3.5.2 by more than 25 percent.

3.5.5 MECHANICAL REQUIREMENTS (2007)

a. Bolts produced under this specification shall conform to the mechanical requirements listed in Table 4-3-5 below for that grade of bolt. Grade designations are by number where increasing number represents increasing tensile strength.

Table 4-3-5. Mechanical Requirements of Bolts

Bolt Grade No.	Nom. Dia. in.	Full Size Bolts		Machine Test Specimens				Surface Hardness	Core Hardness	
		Proof Load Psi	Tensile Strength Psi	Yield Strength Min. Psi	Tensile Strength Min. Psi	Elong. Min. %	Red. of Area Min. %	Rockwell 30N Max.	Rockwell Min.	Rockwell Max.
5	7/8 to 1	85,000	120,000	92,000	120,000	14	35	54	C25	C34
5	>1 to 1-1/8	74,000	105,000	81,000	105,000	14	35	50	C19	C30
8	7/8 to 1-1/8	120,000	150,000	130,000	150,000	12	35	58.6	C33	C39

b. Nuts produced under this specification shall conform to the hardness requirements listed in Table 4-3-6 below for that grade of bolt. Grade designations are by number where increasing number represents increasing tensile strength.

Table 4-3-6. Hardness Requirements for Nuts

Nut Grade	Nominal Nut Size (in.)	Min. Hardness	Max. Hardness
5	7/8 to 1-1/8	-	32 HRC
8	7/8 to 1	26 HRC	34 HRC
8	Over 1 to 1-1/8	26 HRC	36 HRC

© 2010, American Railway Engineering and Maintenance-of-Way Association

3.5.6 PRODUCT TESTING (2007)

3.5.6.1 Core Hardness

a. The hardness of the bolts shall be determined at mid-radius of a transverse section through the threaded portion of the bolt taken at a distance of one diameter from the end of the bolt. The reported hardness shall be the average of four hardness readings taken at 90 degrees to one another.

b. The sample preparation of test specimens and the performance of the hardness test shall be in conformance with the requirements of SAE J429 and J417, latest editions.

c. To meet the requirements of this test, the hardness shall not exceed the maximum hardness, nor be less than the minimum hardness specified in Table 4-3-5 for the applicable grade of bolt.

3.5.6.2 Surface Hardness

a. Surface hardness readings of bolts shall be conducted on the ends or unthreaded shanks that have been prepared by lightly grinding or polishing to insure accurate reproducible readings.

b. The sample preparation of test specimens and the performance of the hardness test shall be in conformance with the requirements of SAE J429, J417 and J121, latest editions.

c. To meet the requirements of this test, the surface hardness shall not exceed the maximum hardness specified in Table 4-3-5 for the applicable grade of bolt.

d. Surface hardness readings of nuts shall be conducted on the top or bottom nut face halfway between the major diameter of the thread and one corner, or on a wrench face one third of the distance from corner to the center of the wrench face.

e. Hardness tests on nuts shall be conducted in accordance with SAE J417. In preparing the testing surface, sufficient material shall be removed to assure the elimination of any decarburization or other surface irregularities.

3.5.6.3 Proof Load (Optional)

Proof load testing shall be performed when specified by the purchaser.

a. Bolts that have a minimum tensile strength as specified in Table 4-3-7 of 100,00 lb. or less, and are less than 8” in length or 8 bolt diameters (whichever is greater) must be proof load tested full size.

b. Bolts shall be proof loaded by stressing a bolt with a specified load that the bolt must withstand without permanent set.

c. The overall length of the bolt shall be measured between conical or ball centers on the centerline of the bolt, using mating centers on the measuring anvils. The bolt shall be marked so that it can be placed in the measuring fixture in the same position for all measurements. The measurement instrument shall be capable of measurement to 0.0001 in. The bolt shall be placed in the fixture of the tensile testing machine so that six complete threads are exposed between the grips. The bolt is then axially loaded to the proof load specified for the applicable bolt diameter, thread series and grade designation as indicated in Table 4-3-7 and the load retained for a period of 10 seconds. The load will then be removed and the overall length of bolt measured again.

d. The speed of testing as determined from a free running cross-head, shall not exceed 0.12 inch/minute.

e. The sample preparation of test specimens and the performance of the bolt proof load test shall be in conformance with the requirements of SAE J429.

© 2010, American Railway Engineering and Maintenance-of-Way Association

Table 4-3-7. Proof Load and Tensile Strength Requirements

Nominal Diameter and threads per in.	Stress Area in.^{2}	Grade 5		Grade 8	
		Proof Load (lb.)	Min. Tensile Strength (lb.)	Proof Load (lb.)	Min. Tensile Strength (lb.)
7/8 - 9	0.462	39,300	55,400	55,400	69,300
1 - 8	0.606	51,500	72,700	72,700	90,900
1-1/16 - 8	0.694	51,400	72,900	83,300	104,100
1-1/8 - 7	0.763	56,500	80,100	91,600	114,400

3.5.6.4 Axial Tensile Strength

Bolts that have a minimum tensile strength as specified in Table 4-3-7 of 100,00 lb or less and are less than 8" in length or 8 bolt diameters (whichever is greater) must be axially tensile tested full size.

3.5.6.4.1 Full Size Testing:

a. A bolt shall be placed in the tensile testing machine and axial loading applied until failure occurs. The speed of the testing as determined with a free running cross head, shall not exceed 1 inch per minute.

b. To meet the requirements of this test:

(1) The bolt shall not fracture before having withstood the minimum tensile load specified for the applicable bolt diameter, thread series and grade as indicated in Table 4-3-7.

(2) The ultimate failure location shall occur in the body or threaded section and not at the junction of the head and shank of the bolt.

3.5.6.5 Testing of Machined Specimens

a. Bolts to be tested for either proof load or tensile strength requirements, that require machined specimen testing, shall be conducted using test specimens machined from the bolt.

b. Bolts 7/8 in. to 1-1/8 in. in diameter shall have their shanks machined to the dimensions of a standard 0.500 inch round, 2 inch gage length test specimen concentric with the axis of the bolt as per Table 4-3-8 below.

c. The manufacturer shall leave the bolt head and threaded section intact as shown in Figure 4-3-10 below. The specimen shall be placed in the testing machine holders in such a manner to ensure that the applied load is axial.

Table 4-3-8. Dimensions of Machined Test Specimens

Nominal bolt diameter (in.)	Gage Length (in.) G	Diameter parallel section (in.) D	Length parallel section (in.) A	Recommended fillet radius (in.) R	Min. fillet radius (in.) R
7/8 to 1-1/8	2.000±0.005	0.500±0.010	2.25	0.375	0.125

© 2010, American Railway Engineering and Maintenance-of-Way Association

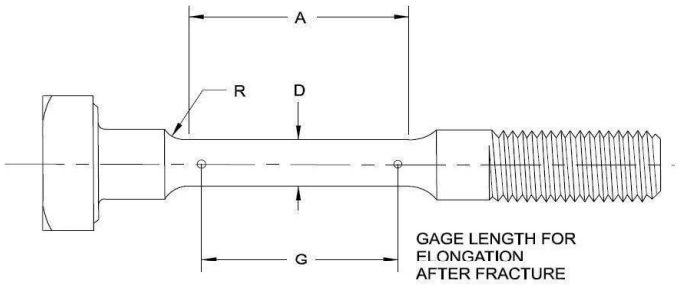

Figure 4-3-10. Standard 2 Inch Gage Length Tension Specimen

d. The test specimens shall be tensile tested, and the yield strength, tensile strength, elongation and reduction of area determined. To meet requirements, the test specimen must have a yield strength, tensile strength, elongation and reduction of area equal to or greater than the values indicated for the applicable bolt diameter and grade designation in Table 4-3-5.

3.5.6.6 Nut Proof Load Test

a. Nuts covered by this specification shall withstand the proof load specified for the applicable nut grade, nominal diameter and thread series. The proof load to be applied is indicated in Table 4-3-9.

b. The nut shall be assembled on a threaded, hardened mandrel. The specified proof load for that nut shall be applied against the nut in an axial direction. The nut shall resist this load without failure by stripping and shall be removable from the mandrel by the fingers after the load is released.

Table 4-3-9. Proof Load Requirements for Nuts

Nominal Diameter and threads per in.	Stress Area (in.^{2})	Grade 5	Grade 8
		Proof Load (lb.)	Proof Load (lb.)
7/8 - 9	0.462	55,400	69,300
1 - 8	0.606	72,700	90,900
1-/16 - 8	0.694	72,900	104,100
1-1/8 - 7	0.763	80,100	114,400

© 2010, American Railway Engineering and Maintenance-of-Way Association

3.5.6.7 Bend Test

a. In addition to the above tests, a full size carbon-steel track bolt shall withstand being bent cold through 45 degrees without cracking on the outside of the bent portion, around a pin whose diameter is not greater than the diameter of the bolt. Should the bend test specimen break in the threaded portion of the bolt, one retest shall be allowed.

3.5.6.8 Number of Tests

a. One of each of the following: core hardness, surface hardness, bolt proof load, bolt axial tension, nut proof load (strip test) and bend test, shall be made from each lot of 50 kegs of bolts or fraction thereof.

b. If any test specimen shows defective machining or develops flaws, it may be discarded and another specimen substituted.

c. If the percentage of elongation or reduction of area, of any test specimen is less than that specified in Table 4-3-5 and any part of the fracture is more than ¾ inch from the center of the gage length, as indicated by scribe marks on the specimen before testing, a retest shall be allowed.

3.5.7 RE-HEAT TREATMENT (2007)

a. If the results of any of the physical tests do not conform to the requirements of this specification, the manufacturer may re-heat treat the lot affected not more than twice.

b. Should the manufacturer elect to re-heat treat a non conforming lot, the tests specified in Article 3.5.6 shall be repeated in duplicate and all test must conform to the requirements specified.

3.5.8 TOLERANCES (2007)

a. The bolts and nuts shall conform to the dimensions specified in Table 4-3-11 and Table 4-3-12 respectively, subject to the following variations:

(1) The nominal diameter of the bolts shall be taken as the overall diameter of the threads.

(2) The diameter of the rolled threads shall not exceed the diameter of the shank by more than 1/16 inch for bolts 7/8 inch in diameter and under, nor more than 3/32 inch for bolts 1 inch in diameter and over.

b. The following tolerances (in inches) shall apply to finished nuts and bolts:

Shank diameter	+1/64 or –1/32
Neck dimensions	±0.0313”
Length under head	±1/8"
Height and diameter of head	±0.0625”
Nut-Width	–0.05 × thread diameter of bolt
Nut-Height	±(0.016 × thread diameter of bolt + 0.012)

© 2010, American Railway Engineering and Maintenance-of-Way Association

3.5.9 FINISH (2007)

a. Both the bolts and the nuts shall be neatly formed and free from fins, nicking or other injurious defects. The head of the bolt shall be concentric with the shank, with the underside at right angles to the axis of the bolt. The bolts and nuts shall have a workmanlike finish.

3.5.10 THREADS AND THREAD FIT (2007)

a. The threads on bolts must be cold rolled.

b. The threads on nuts and bolts shall conform to the latest issue of the American National Standard Institute, Unified Screw Thread Requirements, ANSI B1.1, Course Thread Series, UNC, with tolerances and allowances in accordance with Class 2A for external threads (bolts) and Class 2B for internal threads (nuts).

c. The threaded portion of the bolts shall be coated with a metal preservative, and before packaging, the nuts shall be screwed onto the bolts with enough turns to hold them in place until used.

d. The grade of nut supplied must be equal to or greater than the grade of bolt.

3.5.11 HEADING (2007)

a. Bolts may only be headed by method of upsetting and/or extrusion.

3.5.12 MARKING (2007)

a. A letter or brand indicating the manufacturer shall be located on the top of the head and may be either raised or depressed. It shall be pressed onto the head when the bolt head is formed.

b. Grade 5 and Grade 8 bolts shall have grade identification markings as shown in Table 4-3-10. Grade 5 bolts shall have 3 markings 120° apart and Grade 8 bolts shall have 6 markings 60° apart. Markings shall be located on top of the head and may be raised or depressed.

c. Grade 5 and 8 nuts shall have a letter or brand indicating the manufacturer.

d. Grade 5 and Grade 8 nuts shall have grade identification markings as shown in Table 4-3-10. Grade 5 nuts shall have two depressed circumferential lines 120° apart, and Grade 8 nuts shall have two depressed circumferential lines 60° apart. The circumferential lines shall conform to the following dimensions:

Nut to fit bolt diameter	line width	line length	line depth
7/8 in.	0.03	0.08	0.01
1 in. or greater	0.03	0.12	0.01

© 2010, American Railway Engineering and Maintenance-of-Way Association

Table 4-3-10. Bolt and Nut Marking

	Grade 5	Grade 8
Bolt Marking	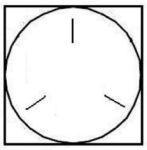	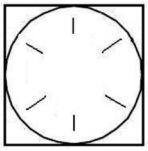
Nut Marking	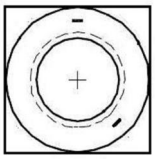	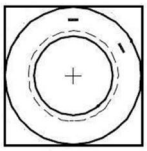

3.5.13 PACKAGING (2007)

a. All containers shall be marked by the manufacturer as follows:

(1) Name of manufacturer

(2) Size of bolt (both diameter and length)

(3) Grade designation for both bolt and nut

(4) Weight of filled container

© 2010, American Railway Engineering and Maintenance-of-Way Association

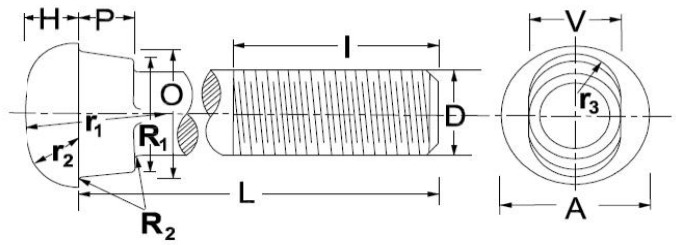

Figure 4-3-11. Oval Neck Track Bolt

Table 4-3-11. Oval Neck Track Bolt Dimensions

D	A	H	R_2	r_1	r_2	O	R_1	P	r_3	V	L	I	
Nom. Dia. Over Thread	Head					Neck					Length Under Head	Min. Thread Length	Threads Per Inch
7/8 1 1-1/8	1.4844 1.6875 1.8906	0.5469 0.6250 0.7031	0.0625 0.0625 0.0625	1.3906 1.6250 1.8594	0.5156 0.5938 0.6719	1.2188 1.3750 1.5313	1.1875 1.3438 1.50	0.50 0.5625 0.6250	1/2 body dia. of bolt	Same as body dia. bolt	Under 7”, in steps of 1/4” From 7” to 10” in steps of 1/2”	2 2-1/4” 2-1/2”	9 8 7
Additional Sizes Now in Use But Not Recommended for New Designs													
13/16 15/16 1-1/16	1.2813 1.4844 1.6875	0.4688 0.5469 0.6250	0.0625 0.0625 0.0625	1.1563 1.3906 1.6250	0.4375 0.5156 0.5938	1.0625 1.2188 1.3750	1.0313 1.1875 1.3438	0.4375 0.50 0.5625	Same as above	Same as above	Same as above	1-7/8 2-1/8 2-3/8	10 9 8

Notes: All dimension given in inches.
Tolerances: Length (L) ±1/8”, Neck (O adn R_1) ±0.0313”, Head (A and H) ±0.0625”, R_2 ±0.0175”
In ordering bolts, specify the nominal diameter, “D”, over the threads and not the body diameter.

© 2010, American Railway Engineering and Maintenance-of-Way Association

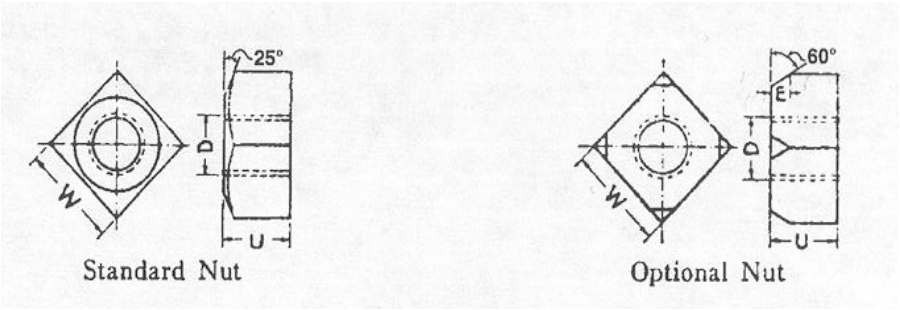

Figure 4-3-12. Track Nuts

Table 4-3-12. Track Nut Dimensions

Nominal Diameter	Width Across Flats (W)			Thickness (U)			Chamfer (Optional Nut Only)
D	Nominal	Max.	Min.	Nominal	Max.	Min.	E
7/8	1.4375	1.4375	1.3940	0.8750	0.9010	0.8330	0.2500
1	1.6250	1.6250	1.5750	1.0000	1.0280	0.9560	0.3750
1-1/8	1.8125	1.8125	1.7560	1.1250	1.1550	1.0790	0.5000
13/16	1.2500	1.2500	1.2120				0.2500
15/16	1.5000	1.5000	1.4500				0.3750
1	1.5000	1.5000	1.4500				0.3750
1-1/16	1.6250	1.6250	1.5750				0.3750
1-1/8	1.6875	1.6875	1.6310				0.5000

Notes: All dimensions given in inches.
A 25 degree chamfer is standard.

© 2009, American Railway Engineering and Maintenance-of-Way Association

American Railway Engineering and Maintenance-of-Way Association

Part 7

Rail Anchors[1]

— 1990 —

TABLE OF CONTENTS

Section/Article	Description	Page
7.1	**Specifications for Rail Anchors (1990)**	**5-7-2**
7.1.1	Scope (1990)	5-7-2
7.1.2	Function (1990)	5-7-2
7.1.3	Design (1990)	5-7-2
7.1.4	Bearing Area (1990)	5-7-2
7.1.5	Slip Test (1990)	5-7-2
7.1.6	Fracture Test (1990)	5-7-3
7.1.7	Retests and Rejection (1990)	5-7-3
7.1.8	Dimensions (1990)	5-7-3
7.1.9	Workmanship (1990)	5-7-4
7.1.10	Identification (1990)	5-7-4
7.1.11	Bagging (1990)	5-7-4
7.1.12	Tagging (1990)	5-7-4
7.1.13	Shipping Tag (1990)	5-7-4
7.1.14	Inspection (1990)	5-7-4
7.1.15	Acceptance (1990)	5-7-4
7.2	**Recommended Practices for Rail Anchor Application and Maintenance (1990)**	**5-7-5**
7.2.1	General (1990)	5-7-5

[1] References, Vol. 85, 1984, p. 26; Vol. 91, 1990, pp. 54-57.

© 2010, American Railway Engineering and Maintenance-of-Way Association

SECTION 7.1 SPECIFICATIONS FOR RAIL ANCHORS[1] (1990)

7.1.1 SCOPE (1990)

These specifications define the requirements for drive-on and spring-type rail anchors, both new and remanufactured, which either may be applied manually or with standard anchor machines that readily can be adapted to the anchor being considered. (For the purpose of this specification, remanufactured anchors are defined as used drive-on or spring-type anchors which have been reformed to restore performance to the requirements described herein, except where specifically noted.)

7.1.2 FUNCTION (1990)

Rail anchors transmit static and dynamic longitudinal forces in the rail to the cross tie. A sufficient number of anchors are required to hold the rail in a fixed position.

7.1.3 DESIGN (1990)

Rail anchors shall be designed:

a. To function during their service life without damage to the rail base due to longitudinal forces, application forces, or vibratory action.

b. To be able to resist longitudinal and torsional forces exerted by skewed ties without damage to the base of rail.

c. To be capable of being applied tightly against the tie either manually or by machine.

d. For easy application, removal and successive reapplication without appreciable loss of holding power as required by the following slip test.

7.1.4 BEARING AREA (1990)

Rail anchors shall have sufficient bearing area and depth to minimize the possibility of the anchor damaging or becoming embedded in the tie under pressure and to prevent the anchor from overriding the tie.

7.1.5 SLIP TEST (1990)

a. Rail anchor slippage shall be determined by applying a gradually increasing load directly to the end of the rail; the anchor, applied perpendicular to the rail base, shall be resisted by a fixed metal block positioned 5/8 inch below the base of the rail. In the interest of safety, the fixture should have clamps or other engagement which will prevent the rail and anchor from slipping off the fixed block while the load is being applied, but which will not restrain the rail from slipping through the anchor. The rail used in conducting the test shall meet AREMA dimensional specification without any variation in the width and thickness of the base.

   NOTE: Some purchasers require that the load be applied to the end of the rail in increments varying from 500 to 1,000 pounds and held for 5 to 10 seconds to enhance uniformity of testing.

b. The rail shall be preloaded to 500 pounds to allow the anchor to take its initial set including anchor lean. The location of the anchor at the drive-on or applied side of the rail base shall be marked or fixed by a

[1] Revised 1990.

© 2010, American Railway Engineering and Maintenance-of-Way Association

dial gage. The load shall be increased at a rate not to exceed 1.0 inch per minute or 10,000 pounds per minute until it reaches 5,000 pounds where it shall be held for three minutes before measuring slippage, which shall not exceed a total of 1/16 inch; the 5,000-pound load shall be held for an additional three minutes during which time there shall be no further slippage.

c. Upon satisfactory completion of each test, the anchor being tested shall be removed, reapplied at a different location on the rail base, and shall meet the foregoing criteria for a second and a third successive test.

d. Slip tests shall be made as frequently as necessary by the manufacturer, *or as required by the purchaser*, during production to insure that the rail anchors meet the above criteria.

7.1.6 FRACTURE TEST (1990)

a. New anchors from each production batch, or remanufactured anchors from each production batch of each anchor design submitted by the purchaser for remanufacturing shall be randomly selected and subject to fracture tests. The test shall be repeated three successive times on the same anchor with no fractures allowed.

b. For drive-on anchors the test shall require a 275 ft-lb impact on the jaw of the anchor placed upright over a 30 degree angle wedge.

c. For spring-type anchors the test shall require a force of sufficient magnitude to spread the anchor, without breaking to a permanent dimension which exceeds the width of the rail base plus 0.05 inch, on which it is to be applied, by 6%. This measurement shall be made between points, in the same plane parallel to the rail base, where the anchor normally comes in contact with the rail base.

7.1.7 RETESTS AND REJECTION (1990)

a. Should a sample fail the fracture or slip test, a retest consisting of two anchors randomly selected from the same production lot shall be made. If both of these samples meet the test requirements, the anchors from that lot shall be accepted.

b. If either new anchor retest sample fails the fracture or slip test, all of the anchors in the production lot shall be rejected. Following rejection these anchors may be scrapped or reheat-treated at the manufacturer's discretion. Any reheat-treated anchors subsequently shall be tested using the original criteria.

c. If either remanufactured anchor retest sample fails the fracture or slip test, all of the anchors from the lot from which the samples were taken shall be rejected. Following rejection these anchors may be scrapped or reheat-treated at the manufacturer's discretion. Any reheat-treated anchors subsequently shall be tested using the original criteria.

7.1.8 DIMENSIONS (1990)

The manufacturer shall carry out dimensional checks on 2 of every 500 anchors produced per line to assure compliance with all dimensional requirements. If either of these two anchors fail to conform, the manufacturer must take immediate remedial action to reject all nonconforming anchors. The foregoing dimensional checks will apply to remanufactured anchors only as related to those areas of the anchors which require reforming in order for the anchor to meet the requirements of this specification. The remanufacturer shall not be held responsible for the dimensional configuration or tolerances as related to original anchor design.

© 2010, American Railway Engineering and Maintenance-of-Way Association

7.1.9 WORKMANSHIP (1990)

The finished rail anchors shall not be marred or deformed and shall be free of detrimental defects, such as, laps, cracks, seams and decarbonized or burned steel. It is recognized that remanufactured anchors may have defects that have resulted from previous service or application. Only those anchors having defects which may impair function that resulted from previous service or from the reforming process need be culled unless otherwise specified by the purchaser. All anchors to be remanufactured shall be cleaned of oil, grease, or other residue so as to improve inspection and performance.

7.1.10 IDENTIFICATION (1990)

Each new rail anchor shall be hot-stamped to show the rail section and year of manufacture. Remanufactured anchors shall be identified as such by means of hot or cold stamping. The original manufacturer's identification as to rail section and year of manufacture will remain on the anchor.

7.1.11 BAGGING (1990)

Unless otherwise specified all new or remanufactured anchors shall be bagged fifty (50) acceptable anchors per bag for shipment or storage. All anchors within each bag shall be for the same rail size and shall be of the same type of anchor. All correctly filled anchor bags shall have the open end of the bag closed completely and securely bound in such a manner as to insure that the bound end will not reopen during handling and shipping.

7.1.12 TAGGING (1990)

Each bag shall have securely affixed to the outside an inspector's tag which shows the date of manufacture or remanufacture, type of anchor and the intended rail sizes covering the anchors contained in that bag.

7.1.13 SHIPPING TAG (1990)

Each load shall have securely affixed to not less than 10% of its bags tags which show consignee name and address, customer order number, manufacturer's order number, date of shipment and quantity of anchors in that shipment.

7.1.14 INSPECTION (1990)

When specified, the inspector representing the purchaser shall have free entry to the manufacturer's facilities and shall be provided, on a no charge basis, all reasonable facilities to satisfy him that the materials being furnished are in accordance with the purchaser's specifications. The plant manager shall be notified prior to the inspection so that the facilities, materials and product shall be available for inspection.

7.1.15 ACCEPTANCE (1990)

To be accepted, the rail anchors offered must fulfill all the requirements of these specifications.

© 2010, American Railway Engineering and Maintenance-of-Way Association

SECTION 7.2 RECOMMENDED PRACTICES FOR RAIL ANCHOR APPLICATION AND MAINTENANCE (1990)

7.2.1 GENERAL (1990)

a. Anchor shall be applied to the rail sections for which they are designed.

b. Rails having reduced base width and/or flange thickness account wear, corrosion, or rolling variations may require custom manufactured anchors for satisfactory performance. The purchaser or the anchor manufacturer's representative shall provide appropriate measurements of rail base to aid in optimizing rail anchor design.

c. Anchors applied at any one tie shall be of the same type.

d. Where the minimum recommended quantity of anchors is not sufficient to restrain the rail, additional anchors as determined by the Engineer/Maintenance shall be applied.

e. The base of the rail shall be reasonably clean and cribs open to accept the anchor and provide maximum rail restraint.

f. Whenever possible, anchors shall be applied against sound ties, preferably those with vertical sides. Anchors must be applied so as to have full bearing against the tie or tie plate. Before applying anchors which bear against the tie plate, the tie plate should be properly centered and spiked. Anchors should be applied from the gage side of the rail when possible.

g. When rail or ties are renewed or respaced, anchors shall be properly repositioned.

h. Anchors shall be uniformly spaced along the rail length. To avoid tie skewing they must be installed on the same side of each tie on both rails.

i. Care shall be taken when applying rail anchors to ensure that they are properly seated. The manufacturer's instructions or recommendations must be followed.

j. Anchors must be applied and removed with the proper tools. Machines used to apply anchors must be properly adjusted, and adjustment must be checked daily or at more frequent intervals if necessary.

k. Anchors shall not be installed:

(1) At ties which support rail joints.

(2) Where they will interfere with bond wire, boot legs, insulated joints, or other signal or track appliances.

(3) Within a minimum of 2 inches from the edge of any weld to prevent nicks or gouges within the heat-affected zone of welds.

l. Rails shall be fully anchored immediately after laying. When necessary trains must be operated at slow speed until track is anchored at proper temperatures.

© 2010, American Railway Engineering and Maintenance-of-Way Association

m. Sufficient anchors shall be applied and maintained through both tracks of turnouts, and on each side of turnouts to reduce rail movement. Additional anchors may be required to reduce rail movement at locations where gradients exist or where train braking or acceleration is common. Sufficient rail anchors shall be applied on all tracks approaching any crossings to prevent rail movement.

n. Damaged, defective, or ineffective anchors shall be replaced.

o. Anchors which become displaced shall be repositioned. Cause of rail movement shall be determined and additional anchors installed as necessary. When repositioning anchors by manual means they should be removed and applied rather than slid along the rail.

© 2010, American Railway Engineering and Maintenance-of-Way Association

SECTION 3.4 SPECIFICATIONS FOR QUENCHED CARBON-STEEL JOINT BARS, MICROALLOYED JOINT BARS, AND FORGED COMPROMISE JOINT BARS[1]

— 2009 —

3.4.1 SCOPE (1994)

These specifications cover quenched carbon steel joint bars, microalloyed joint bars, and forged compromise joint bars for general use in standard railroad tracks.

3.4.2 MANUFACTURE (2005)

a. Melting Practice – The steel shall be made by any of the following processes: open hearth, basic oxygen, or electric furnace.

b. The steel shall be cast by a continuous process, or by other methods agreed upon by the purchaser and the manufacturer.

c. Heating and Quenching – Quenched carbon steel joint bars and forged compromise joint bars shall be uniformly heated for punching, slotting, shaping and forging, and subsequently quenched. Maximum depth of decarburized layer of forged bars shall not exceed 0.040 inch.

d. Microalloyed joint bars shall be produced from hot rolled steel sections. Bars shall be sheared or sawed cold, and holes shall be drilled. No reheating and quenching is required.

3.4.3 CHEMICAL COMPOSITION (2005)

3.4.3.1 Composition

a. The chemical composition of the quenched carbon-steel joint bars and forged compromise joint bars, determined as prescribed in Paragraph 3.4.3.2.a, shall be within the limits shown in Table 4-3-2.

b. Finished material representing the heat may be product tested. The product analysis shall be within the limits for product analyses specified in Table 4-3-2.

c. The chemical composition of the microalloyed joint bars shall be agreed upon by the purchaser and the manufacturer. Microalloying shall be accomplished with columbium, vanadium, and nitrogen, or combinations thereof.

3.4.3.2 Heat or Cast Analysis

a. Separate analysis shall be made from test samples representing one of the first and one of the last three continuously cast blooms, preferably taken during the pouring of the heat. Determinations may be made chemically or spectrographically. Any portion of the heat meeting the chemical analysis requirements of Table 4-3-2 may be applied. Additionally, any material meeting the product analysis limits shown in Table 4-3-2 may be applied against the customer's order after testing such material.

---

[1] Adopted, Vol. 37, 1936, pp. 436, 994; Reference, Vol. 25, 1924, pp. 406, 1283; Vol. 52, 1951, pp. 598, 824; Vol. 54, 1953, pp. 1178, 1413; Vol. 58, 1957, pp. 963, 1248; Vol. 63, 1962, pp. 501, 768; Vol. 64, 1963, pp. 499, 690; Vol. 68, 1967, p. 408; Vol. 70, 1969, p. 197; Vol. 87, 1986, p. 80; Vol. 94, p. 70.

© 2010, American Railway Engineering and Maintenance-of-Way Association

Table 4-3-2. Chemical Composition

Element	Chemical Analysis Weight Percent	Product Analysis Weight Percent Allowance Beyond Limits of Specified Chemical Analysis	
		Under Minimum Limit	Over Minimum Limit
Carbon	0.35 to 0.60	0.040	0.040
Manganese	1.20 max	0.060	0.060
Phosphorus	0.040 max	N/A	0.008
Sulfur	0.050 max	N/A	0.008

b. The first heat analysis shall be recorded as the official analysis, but the purchaser shall have access to all chemical analysis determinations.

c. Upon request by the purchaser, samples shall be furnished to verify the analysis as determined in paragraph a.

3.4.4 TENSILE PROPERTIES (1993)

a. The material shall conform to the following requirements as to tensile properties:

Tensile strength, minimum psi 100,000
Yield point, minimum psi. 70,000
Elongation in 2″, minimum percent . . . 12
Reduction of area, minimum percent . . 25

b. The yield point shall be determined by the drop of the beam or halt in the gage of the testing machine operated at a cross-head speed not to exceed c inch per minimum. The tensile strength shall be determined at a speed of head not to exceed 12 inches per minimum.

3.4.5 BENDING PROPERTIES (2006)

3.4.5.1 Small Specimen Bend Test

The bend test specimen specified in Paragraph 3.4.6 shall stand being bent cold through 90 degrees without cracking on the outside of the bent portion around a pin the diameter of which is not greater than three times the thickness of the specimen.

3.4.5.2 Full Section Bend Test

If preferred by the manufacturer and approved by the purchaser, the following bend test may be substituted for or performed in addition to that described in Paragraph 3.4.5.1. A complete finished bar shall stand being bent cold through 45 degrees without cracking on the outside of the bent portion around a pin the diameter of which is not greater than three times the greatest thickness of the section. The test fixture used shall bend the bar laterally about its center, with the outside surface of the bar being placed on the opposite side from the bending pin.

© 2010, American Railway Engineering and Maintenance-of-Way Association

3.4.6 TEST SPECIMENS (2005)

Tension and bend test specimens shall be taken from the middle of the head at the center of the finished bars. Tension test specimens shall be machined to the form and dimensions shown in Figure 4-3-10. Bend test specimens may be 1/2 inch square in section or rectangular in section with two parallel faces as rolled and with corners rounded to a radius not over 1o16 inch.

The gage length, parallel section and fillets shall be as shown in Figure 4-3-10. Tests shall be conducted in accordance with ASTM A49

NOTE: The ends of the tension test specimens shall be of a shape to fit the testing machine and to ensure axial loading.

3.4.7 NUMBER OF TESTS (1993)

a. One tension test and one bend test shall be made from each lot of 1,000 bars or fraction thereof, but not less than one test for each heat on each day on which quenched carbon steel bars are heated and quenched, or on which microalloyed joint bars are sheared or sawed.

b. If any test specimen shows defective machining or develops flaws it may be discarded and another specimen substituted.

c. If the percentage of elongation of any tension test specimen is less than specified in Paragraph 3.4.4 and any part of the fracture is more than 3/4 inch from the center of the gage length, as indicated by scribe scratches marked on the specimen before testing, a retest of additional specimen shall be allowed as per Paragraph 3.4.8.

3.4.8 RETESTS (1993)

a. If any tensile property of any tension test specimen is less than that specified, and any part of the fracture is outside the middle third of the gage length, as indicated by scribe scratches marked on the specimen before testing, a retest shall be allowed.

b. If the results of an original tension specimen fail to meet the specified minimum requirements and are within 2000 psi of the required tensile strength, within 1000 psi of the required yield point, or within two percentage units of the required elongation, a retest shall be permitted on two random specimens for each original tension specimen failure from the lot. If all results of these retest specimens meet the specified requirements, the lot shall be accepted.

c. If a bend test fails for reasons other than mechanical reasons or flaws in the specimen as described in paragraph d and e, a retest shall be permitted on two random specimens from the same lot. If the results of both test specimens meet the specified requirements, the lot shall be accepted. The retest shall be performed on test specimens that are at air temperature but not less than 60 degrees F.

d. If any test specimen fails because of mechanical reasons such as failure of testing equipment or improper specimen preparation, it may be discarded and another specimen taken.

e. If any test specimen develops flaws, it may be discarded and another specimen of the same size bar from the same lot substituted.

f. For quenched joint bars – If the results of the mechanical tests of any test lot (retests included) do not conform to the requirements specified, the manufacturer may retreat such lot not more than twice, in which case two additional tension tests and two additional bend tests shall be made from such lot, all of which shall conform to the requirements specified.

© 2010, American Railway Engineering and Maintenance-of-Way Association

3.4.9 WORKMANSHIP (1993)

The bars shall be smoothly rolled, or forged, true to template and shall accurately fit the rails for which they are intended and shall provide a true alignment of the gage and running surfaces of the two rails being connected. (Head easement is recommended per Figure 4-3-7, View C) The bars shall be either sheared or sawed to length, and the punching or drilling, and slotting shall conform to the dimensions specified by the purchaser. A variation of ±1/32 inch from the specified size of holes, or ±1/16 inch from the specified location of holes, and of ±1/8 inch from the specified length of joint bar will be permitted. Any variation from a straight line in a vertical plane shall be such as will make the bars high in the center. The camber in either plane shall not exceed 1/32 inch in 24 inch bars and 1/16 inch in 36 inch bars.

3.4.10 FINISH (1993)

The material shall be free from injurious defects and shall have a workmanlike finish.

3.4.11 MARKING AND STAMPING (2009)

a. The name or brand of the manufacturer, the rail section designation, and the year of the manufacture shall be either hot stamped on the side of each of the bars or rolled in raised letters and figures on the side of each of the bars. All non-applicable rail section markings shall be removed in a permanent non-damaging manner.

b. For quenched bars, a serial number representing the heat shall be hot stamped on the outside of the web of each bar, near one end.

c. Each compromise joint bar shall also have the rail sections shown at each end along with the word "Gage" or "Out" to indicate on which side of the rail the bar is to be used. (If the compromise joint bars are interchangeable, the words gage and out will be omitted.)

3.4.12 INSPECTION (1993)

The inspector representing the purchaser shall have free entry, at all times while work on the contract of the purchaser is being performed, to all parts of the manufacturer's works which concern the manufacture of the material ordered. The manufacturer shall afford the inspector, without charge, all reasonable facilities to satisfy him that the material is being furnished in accordance with these specifications. All tests (except check analyses) and inspection shall be made at the place of manufacture prior to shipment, unless otherwise specified, and shall be so conducted as not to interfere unnecessarily with the operation of the works.

3.4.13 REJECTION (1993)

a. Material failing to meet the requirements of these specifications will be rejected.

b. Unless otherwise specified, any rejection based on tests made in accordance with Paragraph 3.4.3.1b shall be reported to the manufacturer within five working days from the receipt of samples by the purchaser.

c. Material that shows injurious defects subsequent to its acceptance at the manufacturer's works will be rejected, and the manufacturer shall be notified.

3.4.14 REHEARING (1993)

Samples tested in accordance with Paragraph 3.4.3.1.b that represent rejected material shall be preserved for two weeks from the date of the test report. In case of dissatisfaction with the results of the tests, the manufacturer may request a rehearing within that time.

© 2010, American Railway Engineering and Maintenance-of-Way Association

LIST OF FIGURES (CONT)

Figure	Description	Page
5-1-7	Plan No. 11 - AREMA 13 Inch Tie Plate for 6 Inch Rail Base Width	5-1-11
5-1-8	Plan No. 12 - AREMA 14 Inch Tie Plate for 6 Inch Rail Base Width	5-1-11
5-1-9	Plan No. 13 - AREMA 14-3/4 Inch Tie Plate for 6 Inch Rail Base Width	5-1-12
5-1-10	Plan No. 20 - AREMA 15 Inch Tie Plate for 5-1/2 Inch Rail Base Width for Curves Only	5-1-12
5-1-11	Plan No. 21 - AREMA 16 Inch Tie Plate for 6 Inch Rail Base Width for Curves Only	5-1-13
5-1-12	Plan No. 22 - 18 Inch Tie Plate for 6 Inch Rail Base Width	5-1-13

LIST OF TABLES

Table	Description	Page
5-1-1	Chemical Composition	5-1-3
5-1-2	Tie Plate Dimension Variations	5-1-6
5-1-3	Tie Plate Designs for use with AREMA Rail Sections	5-1-7

SECTION 1.1 SPECIFICATIONS FOR STEEL TIE PLATES (1992)

1.1.1 SCOPE (1992)

a. These specifications cover steel tie plates for use in railroad track.

b. Either low carbon or high carbon steel tie plates may be furnished unless purchaser specifies the chemical composition to be used.

c. ASTM A67 applies in so far as conflicts do not exist.

1.1.2 MANUFACTURE (1992)

a. Melting Practice – The steel shall be made by any of the following processes: open-hearth, basic-oxygen, or electric-furnace.

b. The steel shall be cast by a continuous process, in ingots, or by other methods agreed upon by the purchaser and the manufacturer.

c. Sufficient discard shall be taken from ingots and blooms rolled from ingots to ensure freedom from injurious segregations and pipe.

d. Tie plates shall be produced from hot rolled steel sections punched and sheared either hot or cold as appropriate to the chemical composition of the steel being used.

© 2010, American Railway Engineering and Maintenance-of-Way Association

1.1.3 CHEMICAL COMPOSITION (1992)

1.1.3.1 Composition

a. The chemical composition of the tie plate steel, determined as prescribed in Article 1.1.3.2, paragraph a, shall be within the limits shown in Table 5-1-1.

b. Finished material representing the heat may be product tested. The product analysis shall be within the limits for product analyses specified in Table 5-1-1.

Table 5-1-1. Chemical Composition

Element	Chemical Analysis Weight Percent		Product Analysis Weight Percent Allowance Beyond Limits of Specified Chemical Analysis	
	Low Carbon Tie Plates	High Carbon Tie Plates	Under Minimum Limit	Over Maximum Limit
Carbon	0.150 min to 0.349	0.350 to 0.850	0.040	0.000
Phosphorus	0.050 max	0.050 max	N/A	0.008
Sulfur	0.040 max	0.040 max	N/A	0.008

1.1.3.2 Heat or Cast Analysis

a. Separate analysis shall be made from test samples representing one of the first three and one of the last three ingots or continuously cast blooms preferably taken during the pouring of the heat. Determinations may be made chemically or spectrographically. Any portion of the heat meeting chemical analysis requirements of Table 5-1-1 may be applied. Additionally, any material meeting the product analysis limits shown in Table 5-1-1 may be applied after testing such material.

b. The first heat analysis shall be recorded as the official analysis, but the purchaser shall have access to all chemical analysis determinations.

c. Upon request by the purchaser, samples shall be furnished to verify the analysis as determined in Article 1.1.3.2, paragraph a.

1.1.4 BENDING PROPERTIES (1992)

1.1.4.1 Bend Test – Low Carbon Steel

The bend test specimen specified in Article 1.1.5 shall stand being bent cold through 180 degrees around a pin the diameter of which is not greater than the thickness of the specimen without cracking on the outside of the bent portion.

1.1.4.2 Optional Bend Tests – Low Carbon Steel

If preferred by the manufacturer the following bend test may be substituted for that described in Article 1.1.4.1. A piece of the rolled bar or the finished tie plate shall stand being bent cold through 90 degrees around a pin the diameter of which is not greater than the thickness of the section where bent, without

© 2010, American Railway Engineering and Maintenance-of-Way Association

cracking on the outside of the bent portion. The term “thickness” includes vertical height of ribs and shoulder where they are transverse to direction of pin.

1.1.4.3 Bend Test – High Carbon Steel

The bend test specimen specified in Article 1.1.5 shall stand being bent cold through 30 degrees around a pin the diameter of which is not greater than three times the thickness of the specimen without cracking on the outside of the bent portion.

1.1.4.4 Optional Bend Test – High Carbon Steel

If preferred by the manufacturer, the following bend test may be substituted for that described in Article 1.1.4.3. A piece of the rolled bar or the finished tie plate which may be bent in either direction shall stand being bent cold through 30 degrees around a pin the diameter of which is not greater than three times the thickness of the section where bent, without cracking on the outside of the bent portion. The term “thickness” includes vertical height of ribs and shoulder where they are transverse to direction of pin.

1.1.5 TEST SPECIMENS (1992)

Bend test specimens for Article 1.1.4.1 or Article 1.1.4.3 shall be taken longitudinally with the direction of rolling from the finished tie plates, or from the rolled bars. They shall be rectangular in section, not less than 1/2 inch in width between the planed sides, and shall have two faces as rolled. They shall be free from ribs or projections. Where the design of the tie plates is such that the specimen cannot be taken between the ribs or projections, these ribs or projections shall, in preparing the specimen, be planed off even with the main surface of the tie plate.

1.1.6 NUMBER OF TESTS (1992)

a. One bend test shall be made from each heat of open-hearth, electric-furnace or basic-oxygen steel, or from each 25 tons where heats are not identified.

b. If any test specimen shows defective machining or surface flaws, it may be discarded and another specimen substituted.

1.1.7 RETESTS (1992)

High carbon steel tie plates represented by bend tests failing to meet the requirements prescribed in Article 1.1.4.3 or Article 1.1.4.4 may be reannealed and resubmitted. If tie plates fail to meet the second test they shall be rejected.

1.1.8 FINISH AND PERMISSIBLE VARIATION IN DIMENSIONS (1992)

The tie plates shall be smoothly rolled and free from injurious warp and other imperfections in surface, and projecting fins of metal caused by shearing and punching.

The tie plate shall conform to the dimensions specified by the purchaser, subject to the permissible variations shown in Table 5-1-2.

© 2010, American Railway Engineering and Maintenance-of-Way Association

1.1.9 MARKING (1992)

The tie plate will be marked with 3/8 inch minimum height raised letters and figures when the section is rolled. The marking shall be on the top of the plate on the field side shoulder. Each finished tie plate will contain a portion of the marking. The marking will contain:

- Tie Plate Designation – AREMA Tie Plate Plan Number.
- Name or Brand of Manufacturer.
- Year of Manufacture: Last two digits of year if space limitation precludes use of four digits.
- HW: If tie plate is made of high carbon steel and hot worked. Low carbon steel plates are not marked.

1.1.10 INSPECTION (1992)

The inspector representing the purchaser shall have free entry at all times while work on the contract of the purchaser is being performed that concern the manufacture of the material ordered. The manufacturer shall afford the inspector, without charge, all reasonable facilities to satisfy him that the material is being furnished in accordance with these specifications. All tests and inspection shall be made at the place of manufacture prior to shipment, unless otherwise specified, and shall be so conducted as not to interfere unnecessarily with the operation of the works.

1.1.11 REJECTION (1992)

a. Material failing to meet the requirements of these specifications will be rejected.

b. Material that shows injurious defects subsequent to its acceptance at the manufacturer's works will be rejected, and the manufacturer shall be notified.

SECTION 1.2 DEFINITIONS (1992)

The following terms are for general use in Part 1. Refer to the Glossary located at the end of the chapter for definitions.

Tie Plate	Gage Side	Shoulder
Length	Field Side	Eccentricity
Width	Rail Seat	Line Holes
Rolled Width	Rail Seat Cant	Hold Down Holes
Sheared Length		

© 2010, American Railway Engineering and Maintenance-of-Way Association

SECTION 2.1 SPECIFICATIONS FOR SOFT-STEEL TRACK SPIKES[1] (2005)

2.1.1 SCOPE (2005)

This specification covers steel track cut spikes.

2.1.2 PROCESS (2005)

One or more of the following processes shall make the steel: electric-furnace, basic-oxygen.

2.1.3 CHEMICAL COMPOSITION (2005)

The carbon steel material shall conform to the following requirements as to chemical composition:

Carbon, %	.17 - .25
Manganese, %	.90 - 1.35
Silicon, %	.35 Max.
Phosphorus, %	.04 Max.
Sulfur, %	.05 Max.
Copper, %	.20 - .50
Vanadium, %	.02 Min.

2.1.4 LADLE ANALYSIS (2005)

a. A determination for carbon and copper shall be made of each heat of steel. This analysis shall be made from a test ingot taken during the pouring of the heat. The chemical composition thus determined shall be reported to the purchaser or his representative, and shall conform to the requirements specified in Article 2.1.3.

b. When ladle analysis cannot be furnished, the manufacturer shall submit a report of the chemical analysis made on three spikes selected at random from each 10-ton lot.

2.1.5 TENSILE PROPERTIES (2005)

The purchaser may, at his option, require tension tests according to ASTM A 370 in which case the finished spikes shall conform to the following requirements as to tensile properties:

Tensile strength, min, psi	70,000
Yield strength, min, psi	46,000
Elongation in 2 in., min, percent	25

[1] References, Vol. 27, 1926, pp. 636, 1367; Vol. 35, 1934, pp. 925, 1118; Vol. 54. 1953, pp. 972, 1398; Vol. 60, 1959, pp. 786, 1170; Vol. 62, 1961, pp. 644, 946; Vol. 64, 1963, pp. 426, 683; Vol. 69, 1968, p. 357. Reapproved with revisions 1968

© 2010, American Railway Engineering and Maintenance-of-Way Association

2.1.6 BENDING PROPERTIES (2005)

a. The body of a full-size finished spike shall stand being bent cold through 120 degrees around a pin, the diameter of which is not greater than the thickness of the spike without cracking on the outside of the bent portion.

b. The head of a full-size finished spike shall stand being bent backward to an angle of 55 degrees with the line of the face of the spike, without cracking on the outside of the bent portion.

2.1.7 IMPACT PROPERTIES (2005)

a. If requested by the purchaser, the carbon steel track spikes shall meet the following Charpy V-Notch impact strength requirement at the specified temperature.

Temperature	Absorbed Energy
0 degrees F	15 Ft-Lbs. Minimum

b. The supplemental testing shall be conducted on standard Charpy V-Notch Type "A" specimens per ASTM A 370 standard, latest revision, results to meet the above requirements.

2.1.8 NUMBER OF TESTS (2005)

a. When the option in Article 2.1.5 is exercised, one tension test shall be made from each 10-ton lot or fraction thereof.

b. One bend test of each kind specified in Article 2.1.6a and Article 2.1.6b shall be made from each lot of 5 tons or fraction thereof.

c. The impact test shall consist of determining the average absorbed energy from the three impact-test specimens obtained from three track spikes of the same heat.

2.1.9 RETESTS (2005)

Spikes represented by bend tests failing to meet the requirements prescribed in Article 2.1.6a and Article 2.1.6b may be annealed and resubmitted. If the spikes fail to meet the requirements on the retest, they shall be rejected.

© 2010, American Railway Engineering and Maintenance-of-Way Association

2.1.10 PERMISSIBLE VARIATIONS IN DIMENSIONS (2005)

The finished spikes shall conform to the dimensions specified by the purchaser, subject to the permissible variations specified in Table 5-2-1. Dimensions contained in the drawing but not contained in the table shall have a tolerance of +/- 1/32".

Table 5-2-1. Permissible Variations From Specified Dimensions

Type	Over	Under
Cross section (shank)	1/32"	1/64"
Head	3/32"	1/32"
Length (under head to point)	1/8"	1/8"
Angle (under side of head)	1°	1°
Shank Straightness (either plane convex)	1/32"	1/32"

2.1.11 FINISH (2005)

All finished spikes shall be straight, with well-formed and centered heads, be free from injurious defects and shall be finished in a workmanlike manner. In addition, spike tips shall have a sharp point.

2.1.12 MARKING (2005)

Raised lettering or branding indicating the manufacturer and also the letters "MC", indicating medium carbon, shall be pressed on the head of each spike while it is being formed.

2.1.13 INSPECTION (2005)

The inspector representing the purchaser shall have free entry at all times while work on the contract of the purchaser is being performed, to all parts of the manufacturer's works which concern the manufacture of the material ordered. The manufacturer shall afford the inspector, without charge, all reasonable facilities to satisfy himself that the material is being furnished in accordance with these specifications. All tests and inspections shall be made at the place of manufacture, prior to shipment, unless otherwise specified, and shall be so conducted as not to interfere unnecessarily with the operation of the works.

2.1.14 REJECTION (2005)

Any materials used in the manufacture of spikes failing to meet the requirements of their specification will be rejected.

Any materials used in the manufacture of spikes that show injurious defects subsequent to their acceptance at the manufacturer's works will be rejected and the manufacturer shall be notified.

Finished spikes not meeting the requirements of this specification shall be rejected.

© 2010, American Railway Engineering and Maintenance-of-Way Association

SECTION 7.1 SPECIFICATIONS FOR RAIL ANCHORS[1] (1990)

7.1.1 SCOPE (1990)

These specifications define the requirements for drive-on and spring-type rail anchors, both new and remanufactured, which either may be applied manually or with standard anchor machines that readily can be adapted to the anchor being considered. (For the purpose of this specification, remanufactured anchors are defined as used drive-on or spring-type anchors which have been reformed to restore performance to the requirements described herein, except where specifically noted.)

7.1.2 FUNCTION (1990)

Rail anchors transmit static and dynamic longitudinal forces in the rail to the cross tie. A sufficient number of anchors are required to hold the rail in a fixed position.

7.1.3 DESIGN (1990)

Rail anchors shall be designed:

a. To function during their service life without damage to the rail base due to longitudinal forces, application forces, or vibratory action.

b. To be able to resist longitudinal and torsional forces exerted by skewed ties without damage to the base of rail.

c. To be capable of being applied tightly against the tie either manually or by machine.

d. For easy application, removal and successive reapplication without appreciable loss of holding power as required by the following slip test.

7.1.4 BEARING AREA (1990)

Rail anchors shall have sufficient bearing area and depth to minimize the possibility of the anchor damaging or becoming embedded in the tie under pressure and to prevent the anchor from overriding the tie.

7.1.5 SLIP TEST (1990)

a. Rail anchor slippage shall be determined by applying a gradually increasing load directly to the end of the rail; the anchor, applied perpendicular to the rail base, shall be resisted by a fixed metal block positioned 5/8 inch below the base of the rail. In the interest of safety, the fixture should have clamps or other engagement which will prevent the rail and anchor from slipping off the fixed block while the load is being applied, but which will not restrain the rail from slipping through the anchor. The rail used in conducting the test shall meet AREMA dimensional specification without any variation in the width and thickness of the base.

   NOTE: Some purchasers require that the load be applied to the end of the rail in increments varying from 500 to 1,000 pounds and held for 5 to 10 seconds to enhance uniformity of testing.

b. The rail shall be preloaded to 500 pounds to allow the anchor to take its initial set including anchor lean. The location of the anchor at the drive-on or applied side of the rail base shall be marked or fixed by a

[1] Revised 1990.

© 2010, American Railway Engineering and Maintenance-of-Way Association

dial gage. The load shall be increased at a rate not to exceed 1.0 inch per minute or 10,000 pounds per minute until it reaches 5,000 pounds where it shall be held for three minutes before measuring slippage, which shall not exceed a total of 1/16 inch; the 5,000-pound load shall be held for an additional three minutes during which time there shall be no further slippage.

c. Upon satisfactory completion of each test, the anchor being tested shall be removed, reapplied at a different location on the rail base, and shall meet the foregoing criteria for a second and a third successive test.

d. Slip tests shall be made as frequently as necessary by the manufacturer, *or as required by the purchaser*, during production to insure that the rail anchors meet the above criteria.

7.1.6 FRACTURE TEST (1990)

a. New anchors from each production batch, or remanufactured anchors from each production batch of each anchor design submitted by the purchaser for remanufacturing shall be randomly selected and subject to fracture tests. The test shall be repeated three successive times on the same anchor with no fractures allowed.

b. For drive-on anchors the test shall require a 275 ft-lb impact on the jaw of the anchor placed upright over a 30 degree angle wedge.

c. For spring-type anchors the test shall require a force of sufficient magnitude to spread the anchor, without breaking to a permanent dimension which exceeds the width of the rail base plus 0.05 inch, on which it is to be applied, by 6%. This measurement shall be made between points, in the same plane parallel to the rail base, where the anchor normally comes in contact with the rail base.

7.1.7 RETESTS AND REJECTION (1990)

a. Should a sample fail the fracture or slip test, a retest consisting of two anchors randomly selected from the same production lot shall be made. If both of these samples meet the test requirements, the anchors from that lot shall be accepted.

b. If either new anchor retest sample fails the fracture or slip test, all of the anchors in the production lot shall be rejected. Following rejection these anchors may be scrapped or reheat-treated at the manufacturer's discretion. Any reheat-treated anchors subsequently shall be tested using the original criteria.

c. If either remanufactured anchor retest sample fails the fracture or slip test, all of the anchors from the lot from which the samples were taken shall be rejected. Following rejection these anchors may be scrapped or reheat-treated at the manufacturer's discretion. Any reheat-treated anchors subsequently shall be tested using the original criteria.

7.1.8 DIMENSIONS (1990)

The manufacturer shall carry out dimensional checks on 2 of every 500 anchors produced per line to assure compliance with all dimensional requirements. If either of these two anchors fail to conform, the manufacturer must take immediate remedial action to reject all nonconforming anchors. The foregoing dimensional checks will apply to remanufactured anchors only as related to those areas of the anchors which require reforming in order for the anchor to meet the requirements of this specification. The remanufacturer shall not be held responsible for the dimensional configuration or tolerances as related to original anchor design.

© 2010, American Railway Engineering and Maintenance-of-Way Association

7.1.9 WORKMANSHIP (1990)

The finished rail anchors shall not be marred or deformed and shall be free of detrimental defects, such as, laps, cracks, seams and decarbonized or burned steel. It is recognized that remanufactured anchors may have defects that have resulted from previous service or application. Only those anchors having defects which may impair function that resulted from previous service or from the reforming process need be culled unless otherwise specified by the purchaser. All anchors to be remanufactured shall be cleaned of oil, grease, or other residue so as to improve inspection and performance.

7.1.10 IDENTIFICATION (1990)

Each new rail anchor shall be hot-stamped to show the rail section and year of manufacture. Remanufactured anchors shall be identified as such by means of hot or cold stamping. The original manufacturer's identification as to rail section and year of manufacture will remain on the anchor.

7.1.11 BAGGING (1990)

Unless otherwise specified all new or remanufactured anchors shall be bagged fifty (50) acceptable anchors per bag for shipment or storage. All anchors within each bag shall be for the same rail size and shall be of the same type of anchor. All correctly filled anchor bags shall have the open end of the bag closed completely and securely bound in such a manner as to insure that the bound end will not reopen during handling and shipping.

7.1.12 TAGGING (1990)

Each bag shall have securely affixed to the outside an inspector's tag which shows the date of manufacture or remanufacture, type of anchor and the intended rail sizes covering the anchors contained in that bag.

7.1.13 SHIPPING TAG (1990)

Each load shall have securely affixed to not less than 10% of its bags tags which show consignee name and address, customer order number, manufacturer's order number, date of shipment and quantity of anchors in that shipment.

7.1.14 INSPECTION (1990)

When specified, the inspector representing the purchaser shall have free entry to the manufacturer's facilities and shall be provided, on a no charge basis, all reasonable facilities to satisfy him that the materials being furnished are in accordance with the purchaser's specifications. The plant manager shall be notified prior to the inspection so that the facilities, materials and product shall be available for inspection.

7.1.15 ACCEPTANCE (1990)

To be accepted, the rail anchors offered must fulfill all the requirements of these specifications.

© 2010, American Railway Engineering and Maintenance-of-Way Association

(6) A statement that all macroetched samples representing the rails supplied meet the Macroetch requirements. (See Paragraph 2.1.9.)

2.1.15 MARKINGS (2007)

a. High-strength rails shall be marked by either a metal plate permanently attached to the neutral axis, hot stamped, or in the brand which gives the manufacturer, type and/or method of treatment. Heat treated rail shall be paint-marked orange. Alloy rail shall be paint-marked aluminum color.

b. Non AREMA (Industrial Quality) rails shall be paint-marked yellow.

c. Short rails (less than 80 feet) shall be paint-marked green.

d. Trackwork rails shall be paint-marked white.

e. Rail length shall be painted on the end faces or in a manner acceptable to the purchaser or manufacturer.

f. Individual rails shall be paint-marked only one color, according to the order listed above.

g. Industrial Quality (IQ) rails shall be permanently identified by grinding diagonally through every "RE" or other designation within the rails' branding. Each designation brand shall be ground or milled diagonally from the top right-hand corner to the bottom left-hand corner, a minimum of 1/4" in width and to within 0.010" of the parent rail web surface.

2.1.16 LOADING (1993)

All rails shall be handled carefully to avoid damage and shall be loaded with the branding on all rails facing the same direction. Rails of different markings shall not be intermixed in loading, but shall be segregated and loaded head up. If there are not enough rails of one marking for a full car, smaller groups consisting of tiers of different markings as approved by the purchaser, may be loaded onto one car.

2.1.17 SUPPLEMENTARY REQUIREMENTS (1988)

The following supplementary requirements shall apply only when specified by the purchaser in the inquiry, order, and contract.

2.1.17.1 End Hardening

The drilled ends may be specified to be end hardened. When so specified, end hardening and chamfering shall be in accordance with paragraph a through paragraph g.

a. End-hardened rails may be hot stamped with letters "CH" in the web of the rail ahead of the heat number.

b. Water shall not be used as a quenching medium except in oil-water or polymer-water emulsion process approved by the purchaser.

c. Longitudinal and transverse sections showing the typical distribution of the hardness pattern produced by any proposed process shall, upon request of purchaser, be submitted for approval before production on the contract is started.

© 2010, American Railway Engineering and Maintenance-of-Way Association

d. The heat-affected zone defined as the region in which the hardness is above that of the parent metal shall cover the full width of the rail head and extend longitudinally a minimum of 12 inches from the end of the rail. The effective hardness zone 2 inch from the end of the rail shall be at least 3 inch deep.

e. The hardness measured at a spot on the center line of the head 3 inch to 2 inch from the end of the rail shall show a Brinell hardness number range of 341 to 401 when decarburized surface has been removed. A report of hardness determination representing the product shall be given to the purchaser or his representative.

f. The manufacturer reserves the right to retreat any rails which fail to meet the required Brinell hardness number range.

g. Chamfering rail ends shall be done in such a manner as will avoid formation of grinding cracks.

2.1.17.2 Manual Ultrasonic Testing

a. The rail may be specified by the purchaser to be ultrasonically tested for internal imperfections subject to the provisions of paragraph b.

b. Manual Ultrasonic Test of Web at the Rail Ends for Weld Plant Application.

(1) Manual End testing shall be performed using standard ultrasonic testing equipment acceptable to the purchaser and manufacturer.

(2) The search unit shall be a standard dual element crystal or similar transducer acceptable to the purchaser and manufacturer.

(3) The calibration test block shall be of the following characteristics: Material 4340 AISI Steel/Nickel plated, manufactured in accordance with ASTM E428. As an alternate, reference standards may be fabricated from a section of rail as agreed upon between the purchaser and manufacturer.

(4) Dimensions of the calibration test block and calibration references shall be agreed upon by the purchaser and manufacturer. (For calibration reference the recommended thickness of the block should approximate the thickness of the rail web and contain a 1/16 inch flat bottom hole drilled to one-half the thickness.)

(5) Calibration of the instrument shall be performed before the commencement of testing, every 100 rail ends thereafter, and after any test delay exceeding 30 minutes.

(6) When the search unit is coupled to the calibration test block, the indication height from the calibration reference shall serve as a reference level for the test. (Recommended reference levels should appear from 40% to 80% of the maximum height on the display graticule.)

(7) Couplant shall be distributed over the entire web area at least 12 inches from the end of the rail and the search unit moved over the entire area in vertical and/or horizontal sweeps.

(8) An indication equal to or exceeding the reference level shall be cause for rejection.

(9) Rejected rails may be cut back to sound metal as indicated by the ultrasonic testing, subject to the length restrictions in Paragraph 2.1.11.

2.1.18 APPENDIX 1 (1993)

Inasmuch as the controlled cooling of rails has proved a successful method for the elimination of hydrogen, the following procedure is presented as one which will meet the requirements of Paragraph 2.1.7, paragraph a.

© 2010, American Railway Engineering and Maintenance-of-Way Association

d. Having arrived at the cost of the structure ready for service, the first item of annual cost is obtained by multiplying this initial cost by the average interest rate paid on railroad bonds over a period of years.

e. The second item is that of maintenance, the estimate of which should be based upon actual records of costs of maintenance of similar structures.

f. The third item, replacement annuity, is dependent upon the sum necessary to be accumulated, the rate of return on sinking funds, and the useful life of the structure. With this information and a table of annuities, the third item in the annual cost formula is easily obtained.

g. The useful life for structures of various types should be estimated for each major service classification, from records of the company, or from an examination of structures in each service classification that have been in service for at least 5 to 10 years. Much can be learned from painstaking field inspection of existing structures if all factors affecting the performance of the structures are taken into consideration.

h. Since cost comparisons are so easily made, and since it is one of the chief functions of a railroad engineer to operate the road, in so far as his sphere of influence extends, at the lowest true annual cost possible, economic comparisons should be made one of the guides toward the selection of drainage structures.

SECTION 4.2 SPECIFICATIONS FOR PLACEMENT OF REINFORCED CONCRETE CULVERT PIPE

See Chapter 8, Concrete Structures and Foundations, Part 10, Reinforced Concrete Culvert Pipe.

SECTION 4.3 SPECIFICATIONS FOR PREFABRICATED CORRUGATED STEEL PIPE AND PIPE-ARCHES FOR CULVERTS, STORM DRAINS, AND UNDERDRAINS

4.3.1 GENERAL (1989)

4.3.1.1 Scope

This specification covers coated, prefabricated corrugated steel pipe and pipe arches for use as culverts, storm sewers and underdrains.

4.3.1.2 Class

Pipe and pipe arches shall be of the following classes with respect to corrugations (See Table 1-4-1):

- Class I Annular corrugations.
- Class II Helical corrugations.

4.3.1.3 Shape

Pipe and pipe arches shall be of the following cross-sectional shapes:

© 2010, American Railway Engineering and Maintenance-of-Way Association

- Shape 1 Pipe, full circular cross section.
- Shape 2 Pipe, factory elongated.
- Shape 3 Pipe arch cross section.

4.3.2 MATERIAL (1989)

4.3.2.1 Steel Sheets

Corrugated steel pipe and pipe arches shall be fabricated from either of the following materials:

- Steel sheet, zinc coated in accordance with AASHTO M-2l8.
- Steel sheet, aluminum coated in accordance with AASHTO M-274.

4.3.2.2 Rivets

All rivets shall conform to the specifications of ASTM designation A31, Grade A, and shall be electroplated in accordance with the specifications of ASTM designation A 164, Type RS.

4.3.3 FABRICATION (1989)

4.3.3.1 Corrugations

The corrugations shall form smooth, continuous curves and tangents. The crests and valleys of annularly corrugated pipe and pipe arches shall form circumferential rings about the longitudinal axis of the pipe. The crests and valleys of helically corrugated pipe and pipe arches shall form helices about the longitudinal axis of the pipe, and the direction of the corrugations shall be not less than 45 degrees from the longitudinal axis of the pipe. The dimensions of the corrugations shall be as specified in Table 1-4-1.

Table 1-4-1. Corrugations

Class	Diameter	Nominal Size	Maximum Pitch (Note 1)	Minimum Inside Radius
I	8″–96″	2-2/3″ × 1/2″	2-3/4″	11/16″
	12″–96″	3″ × 1″	3-1/4″	9/32″
II	6″–18″	1-1/2″ × 1/4″	1-7/8″	9/32″
	12″–96″	2-2/3″ × 1/2″	2-3/4″	11/16″
	48″–120″	3″ × 1″	3-1/4″	9/32″
	48″–120″	5″ × 1″	5-1/4″	1-9/32″
Note 1: Pitch is measured at right angles to the corrugation. Note 2: Depth shall not overrun by more than 5%.				

© 2010, American Railway Engineering and Maintenance-of-Way Association

4.3.3.2 Perforations for Underdrains

Perforations, unless otherwise specified, shall be arranged in two groups of longitudinal rows placed symmetrically on each side of an unperforated segment corresponding to the flow line of the pipe. The longitudinal rows within each group shall be spaced on approximately 1-1/2 inches centers in annularly corrugated pipe and on approximately 1 inch centers on helically corrugated pipe. The perforations shall have a diameter of approximately 3/8 inch and shall be located on the inside crests, or on the neutral axis, of all corrugations except that perforations are not required within 6 inches of each pipe or in the crests of corrugations where seams are located. The minimum number of longitudinal rows of perforations and the minimum width of the unperforated segment shall be as shown in Table 1-4-2.

Table 1-4-2. Perforations

Nominal Inside Diameter Inches	Minimum Number or Rows of Perforations	Minimum Width of Unperforated Segment Inches
6	4	4
8	4	7
10	4	9
12	6	9-1/2
15	6	13
18	6	16-1/2
21	6	20
24	8	22

© 2010, American Railway Engineering and Maintenance-of-Way Association

4.3.3.3 Widths of Laps (Class I Annular Pipe)

a. The lapped joints in longitudinal seams shall be as shown in Table 1-4-3.

b. The average inside diameter of circular pipe and pipe to be reformed into pipe arches shall not vary more than 1/2 inch from the nominal diameter when measured on the inside crest of the corrugations for diameters through 48 inches and 1% for diameters greater than 48 inches. In no case shall the difference in diameter of the abutting pipe ends be more than 1/2 inch.

Table 1-4-3. Pipe Requirements

Nominal Inside Diameter Inches	Corrugation Depth Nominal Inches	Minimum Width or Lap Inches
8	1/2	1-1/2
10	1/2	1-1/2
12	1/2	1-1/2
15	1/2	1-1/2
18	1/2	1-1/2
21	1/2	1-1/2
24	1/2	2
30	1/2	2
36	1/2	2
36	1	3
42	1/2 or 1	3
48	1/2 or 1	3
54	1/2 or 1	3
60	1/2 or 1	3
66	1/2 or 1	3
72	1/2 or 1	3
78	1/2 or 1	3
84	1/2 or 1	3
90	1	3
96	1	3
102	1	3
108	1	3
114	1	3
120	1	3

© 2010, American Railway Engineering and Maintenance-of-Way Association

4.3.3.4 Riveted Seams

a. Rivets shall be of the diameter shown in Table 1-4-4.

Table 1-4-4. Riveted Seams

Gage	Sheet Thickness Inches	Rivet Diameter Inches	
		2-2/3 x 1/2	3 × 1
16	0.064	5/16	3/8
14	0.079	9/32	3/8
12	0.109	3/8	7/16
10	0.138	3/8	7/16
8	0.168	3/8	7/16

b. All rivets shall be cold driven in such a manner that the metal shall be drawn tightly together throughout the entire lap. The center of each rivet shall be not closer than 2 rivet diameters from the edge of the sheets. All rivets shall have full hemispherical heads or heads of a form acceptable to the engineer. They shall be driven in a neat, workmanlike manner to completely fill the hole without bending. Longitudinal seams shall be riveted with one rivet in each corrugation for pipes less than 42 inches in diameter and two rivets in each corrugation for pipes 42 inches in diameter and larger. Circumferential seams shall be riveted with a rivet spacing of 6 inches except that six rivets will be sufficient in 12 inches diameter pipe. The longitudinal seams of all 1 inch corrugated depth shall be two rivets in each corrugation.

4.3.3.5 Welded Seams (Class II Helical Pipe)

Helically corrugated welded seam pipe shall have a continuous welded seam extending from end to end of each length of pipe section. The welded seam shall be of the high-frequency resistance butt welded type and shall be sufficiently strong to develop the full strength of the pipe.

4.3.3.6 Lock Seams (Class II Helical Pipe)

Helically corrugated lock seam pipe shall have a continuous folded lock seam extending from end to end of each length of pipe section. Folded lock seams shall be formed with sufficient pressure to prevent any seam slippage that would seriously affect the load-carrying capacity of the pipe but without damaging the metal to such an extent that a plane of weakness is created. The metal used in fabricating lock seam shall be one that will permit cold forming without damage.

4.3.4 COUPLING BANDS (1989)

a. Field joints for each class of corrugated steel pipe shall provide circumferential and longitudinal strength to preserve the pipe alignment, prevent separation of pipe and prevent infiltration of side fill material. The coupling bands shall be made of the same base metal as the pipe and shall be similarly coated. Coupling bands may be the next thickness lighter than that used for the pipe but not more than 0.109 inch (12 gage) nor less than 0.052 inch (18 gage). To facilitate field jointing, the ends of individual pipe section with helical corrugations may be rerolled to form circumferential corrugations extending at least two corrugations from the pipe end. All types of pipe ends, whether rerolled or not, shall be matched in a joint such that the maximum difference in the diameter of abutting pipe ends is 2 inch.

b. Class I pipe furnished with circumferential corrugations, including rerolled end helical pipe, shall be field jointed with locking bands. The corrugated bands shall be not less than 7 inches wide for diameters through 36 inches, and 102 inches wide for all other pipe diameters. Wider bands should be considered where transverse forces are present, particularly on side hill slopes.

© 2010, American Railway Engineering and Maintenance-of-Way Association

c. Class II pipe with helical corrugations shall be field jointed, preferably with bands with projections. The projections shall conform substantially to the shape and depth of the pipe corrugations and shall be in circumferential rows with one projection for each corrugation of helical pipe. Bands shall be so constructed as to lap on an equal portion of each of the culvert sections to be connected. The bands for pipe diameters of 12 inches to 54 inches incl., shall be at least 102 inches wide and shall have two circumferential rows of projections: and for pipe diameters 60 inches and greater shall be at least 163 inches wide and shall have four circumferential rows of projections. The band shall be connected in a manner approved by the chief engineer or his representative, with a suitable fastening device such as galvanized 2 inches by 2 inches by 3/16 inch angles, or integrally or separately formed and attached flanges bolted with 2 inch-in-diameter galvanized bolts, or a wedgelock constructed of the same gage as the band itself. The 102 inches band shall have two, and the 163 inches band shall have three 2 inch band shall have two, and the 163 inches band shall have three 2 inch diameter galvanized fastening bolts.

d. Underdrain pipe may be field jointed with bands as described above or with a smooth sleeve-type coupler. The sleeve-type coupling may be either plastic or galvanized steel, suitable for holding the pipe firmly in alignment without the use of sealing compound or gaskets. Integral formed flanges fastened with 3/8 inch diameter galvanized bolts may be used in lieu of angles on two-piece corrugated bands.

e. Other equally effective types of coupling bands and/or band-fastening devices may be used if approved by the chief engineer or his representative.

4.3.5 SHAPE (1989)

a. Class I and Class II pipe shall be furnished, as specified, as Shape 1, Shape 2 or Shape 3.

b. Shape 1 pipe shall be round pipe, available in diameters of 6 inches to 120 inches, incl.

c. Shape 2 pipe shall be factory elongated to form an approximate ellipse with the vertical diameter approximately 5% greater than the nominal diameter of the corresponding round pipe. Shape 2 pipe shall be available in nominal diameters of 48 inches to 120 inches incl.

d. Shape 3 pipe arch shall be fabricated by reforming a circular pipe to a multi-centered pipe having an arch-shaped top with a slightly convex integral bottom. The pipe-arch shall conform to the requirements of Table 1-4-5 and Table 1-4-6. The longitudinal seams of riveted pipe arches shall not be placed in the haunch area.

© 2010, American Railway Engineering and Maintenance-of-Way Association

Table 1-4-5. Pipe Arch Specification Requirements Pipe Arches – 2-2/3″ × 1/2″ Corrugations (See Note 3)

Pipe Arch Size Inches	Equivalent Diameter Inches	Span Inches (Note 1)	Rise Inches (Note 1)	Minimum Corner Radius Inches	Maximum B Inches (Note 2)
17 × 13	15	17	13	3	5-1/4
21 × 15	18	21	15	3	6
24 × 18	21	24	18	3	7-1/4
28 × 20	24	28	20	3	8
35 × 24	30	35	24	3	9-1/2
42 × 29	36	42	29	3-1/2	10-1/2
49 × 33	42	49	33	4	11-1/2
57 × 38	48	57	38	5	13-1/2
64 × 43	54	64	43	6	15
71 × 47	60	71	47	7	16-1/2
77 × 52	66	77	52	8	18
83 × 57	72	83	57	9	20

Note 1: A tolerance of ±1″ or 2% of equivalent circular diameter, whichever is greater, will be permissible in span and rise.
Note 2: B is defined as the vertical dimension from a horizontal line across the widest portion of the arch to the lowest portion of the base.
Note 3: All dimensions are measured from the inside crests of the corrugations.

Table 1-4-6. Pipe Arch Specification Requirements Pipe Arches – 3″ × 1″ and 5″ × 1″ Corrugations (See Note 2)

Pipe Arch Size Inches	Equivalent Diameter Inches	Span Inches (Note 1)	Rise Inches (Note 1)	Minimum Corner Radius Inches
40 × 31	36	40–1.8	31+1.8	5
46 × 36	42	46–2.1	36+2.1	6
53 × 41	48	53–2.4	41+2.4	7
60 × 46	54	60–2.7	46+2.7	8
66 × 51	60	66–3.0	51+3.0	9
73 × 55	66	73–3.3	55+3.3	12
81 × 59	72	81–3.6	59+3.6	14
87 × 63	78	87–4.4	63+4.4	14
95 × 67	84	95–4.8	67+4.8	16
103 × 71	90	103–5.2	71+5.2	16
112 × 75	96	112–5.6	75+5.6	18
117 × 79	102	117–5.9	79+5.9	18

© 2010, American Railway Engineering and Maintenance-of-Way Association

Table 1-4-6. Pipe Arch Specification Requirements Pipe Arches – 3″ × 1″ and 5″ × 1″ Corrugations (See Note 2) (Continued)

Pipe Arch Size Inches	Equivalent Diameter Inches	Span Inches (Note 1)	Rise Inches (Note 1)	Minimum Corner Radius Inches
128 × 83	108	128–6.4	83+6.4	18
137 × 87	114	137–6.9	87+6.9	18
142 × 91	120	142–7.1	91+7.1	18

Note 1: Negative and positive numbers listed with span and rise dimensions are negative and positive tolerances.
Note 2: All dimensions are measured from the inside crests of the corrugation.

4.3.6 WORKMANSHIP (1989)

Pipe shall show careful, finished workmanship in all particulars and shall be free from the following defects:

a. Undue deviation from true shape.

b. Uneven laps.

c. Variations from a reasonably straight center line.

d. Ragged or diagonally sheared edges.

e. Loose, unevenly lined or spaced rivets, or welds.

f. Poorly formed rivet heads.

g. Illegible brand.

h. Dents or bends, other than corrugations.

i. Poor welds.

j. Poorly formed lock seams and/or damaged lock seam metal.

k. Bruised, scaled or broken coating.

4.3.7 MILL OR SHOP INSPECTION (1989)

If the purchaser so elects, he may have the material inspected in the shop where it is fabricated. He may require from the mill that a chemical analysis be made of any heat. The purchaser, or his representative, shall have free access to the mill or shop for inspection purposes, and every facility shall be extended to him for this purpose. Any material included in any shipment which has been rejected at the mill or shop will be considered sufficient cause for the rejection of the entire shipment.

4.3.8 FIELD INSPECTION AND ACCEPTANCE (1989)

The field inspection shall be made by the purchaser, who shall be furnished by the seller with an itemized statement of the sizes and lengths of pipe for deficiencies in length of sheets used, nominal specified diameter, net

© 2010, American Railway Engineering and Maintenance-of-Way Association

length of finished pipe and any evidences of poor workmanship as outlined above. The inspection may include the taking of samples for chemical analysis and determination of weight of zinc coating. If 25% of the pipe in any shipment fails to meet all the requirements of this specifications, the entire shipment may be rejected.

SECTION 4.4 SPECIFICATIONS FOR COATED CORRUGATED STEEL PIPE AND ARCHES

4.4.1 SPECIFICATION FOR BITUMINOUS COATED GALVANIZED STEEL PIPE AND PIPE ARCHES (1989)

Corrugated steel galvanized pipe or pipe arches shall be bituminous coated or coated and paved in accordance with current AASHTO Specification M-190.

4.4.2 SPECIFICATION FOR POLYMERIC COATED CORRUGATED GALVANIZED STEEL PIPE OR PIPE ARCHES (1989)

Corrugated steel galvanized pipe or pipe arches shall be polymeric coated in accordance with current AASHTO Specification M-246.

SECTION 4.5 STANDARD SPECIFICATION FOR CORRUGATED ALUMINUM ALLOY PIPE

4.5.1 GENERAL (1989)

4.5.1.1 Scope

This specification covers corrugated aluminum pipe for use as culverts, storm drains, and underdrains.

4.5.1.2 Class

Pipe and pipe arches shall be of the following classes with respect to corrugations (See Table 1-4-10):

- Class I – Annular corrugation.
- Class II – Helical corrugation.

4.5.1.3 Shapes

Pipe and pipe arches shall be of the following cross-sectional shapes:

- Shape 1 – Pipe, full circular cross-section.
- Shape 2 – Pipe, factory elongated.
- Shape 3 – Pipe arch cross section.

© 2010, American Railway Engineering and Maintenance-of-Way Association

4.3.3.4 Riveted Seams

a. Rivets shall be of the diameter shown in Table 1-4-4.

Table 1-4-4. Riveted Seams

Gage	Sheet Thickness Inches	Rivet Diameter Inches	
		2-2/3 x 1/2	3 × 1
16	0.064	5/16	3/8
14	0.079	9/32	3/8
12	0.109	3/8	7/16
10	0.138	3/8	7/16
8	0.168	3/8	7/16

b. All rivets shall be cold driven in such a manner that the metal shall be drawn tightly together throughout the entire lap. The center of each rivet shall be not closer than 2 rivet diameters from the edge of the sheets. All rivets shall have full hemispherical heads or heads of a form acceptable to the engineer. They shall be driven in a neat, workmanlike manner to completely fill the hole without bending. Longitudinal seams shall be riveted with one rivet in each corrugation for pipes less than 42 inches in diameter and two rivets in each corrugation for pipes 42 inches in diameter and larger. Circumferential seams shall be riveted with a rivet spacing of 6 inches except that six rivets will be sufficient in 12 inches diameter pipe. The longitudinal seams of all 1 inch corrugated depth shall be two rivets in each corrugation.

4.3.3.5 Welded Seams (Class II Helical Pipe)

Helically corrugated welded seam pipe shall have a continuous welded seam extending from end to end of each length of pipe section. The welded seam shall be of the high-frequency resistance butt welded type and shall be sufficiently strong to develop the full strength of the pipe.

4.3.3.6 Lock Seams (Class II Helical Pipe)

Helically corrugated lock seam pipe shall have a continuous folded lock seam extending from end to end of each length of pipe section. Folded lock seams shall be formed with sufficient pressure to prevent any seam slippage that would seriously affect the load-carrying capacity of the pipe but without damaging the metal to such an extent that a plane of weakness is created. The metal used in fabricating lock seam shall be one that will permit cold forming without damage.

4.3.4 COUPLING BANDS (1989)

a. Field joints for each class of corrugated steel pipe shall provide circumferential and longitudinal strength to preserve the pipe alignment, prevent separation of pipe and prevent infiltration of side fill material. The coupling bands shall be made of the same base metal as the pipe and shall be similarly coated. Coupling bands may be the next thickness lighter than that used for the pipe but not more than 0.109 inch (12 gage) nor less than 0.052 inch (18 gage). To facilitate field jointing, the ends of individual pipe section with helical corrugations may be rerolled to form circumferential corrugations extending at least two corrugations from the pipe end. All types of pipe ends, whether rerolled or not, shall be matched in a joint such that the maximum difference in the diameter of abutting pipe ends is 2 inch.

b. Class I pipe furnished with circumferential corrugations, including rerolled end helical pipe, shall be field jointed with locking bands. The corrugated bands shall be not less than 7 inches wide for diameters through 36 inches, and 102 inches wide for all other pipe diameters. Wider bands should be considered where transverse forces are present, particularly on side hill slopes.

© 2010, American Railway Engineering and Maintenance-of-Way Association

4.6.2 MATERIAL (1989)

4.6.2.1 Description of Plates

a. Plates shall consist of structural units of galvanized corrugated steel. The corrugations shall run at right angles to the longitudinal axis of the structure and shall have a pitch of 6 inches, with a tolerance of 3 inch and a depth of 2 inches, with a tolerance of 1/8 inch. The radius of the inside of the corrugation shall be at least 1-1/16 inches. Plates shall be furnished in standard sizes to permit structure length increments of 2 - feet. Plates shall have approximately a 2 inches lip beyond each end crest.

b. The gage of plates and radii of curvature shall be as specified. The plates at longitudinal and circumferential seams shall be connected by bolts. Joints shall be staggered so that not more than three plates come together at any one point. Each plate shall be curved to a circular arc.

c. Plates for a pipe arch, when assembled, shall form a cross section made up of four circular arcs tangent to each other at their junctions and symmetrical about the vertical axis. Pipe arches shall be installed with the flat side down.

4.6.2.2 Base Metal

The base metal of the corrugated steel plates shall conform to the requirements of current ASTM Specification, Designation A-761.

4.6.2.3 Spelter Coating

a. A coating of prime western spelter, or equal, of not less than 12 oz. per square foot on each surface for 0.188 inch or thicker and 1 oz. per square foot on each surface less than 0.188 inch in thickness shall be applied by the hot-dip process. If the average spelter coating as determined from the required samples is less than the amount specified above, or if any one specimen shows a deficiency of 10%, the lot sampled shall be rejected. Spelter coating shall be of first-class commercial quality, free from injurious defects, such as blisters, flux and uncoated spots.

b. The sheets are to be galvanized after fabrication.

4.6.2.4 Physical Properties

a. The minimum physical properties of the flat sheet or plate before corrugation shall be as follows:

Tensile strength, psi.	42,000
Yield point, psi	28,000
Elongation in 2″, %.	30

b. The supplier shall certify that the tests performed on each heat of the material furnished meet the above requirements.

4.6.2.5 Sampling

For testing the weight of the spelter coating and for chemical analysis of the base metal, when required, a sample approximately 3 inch square, or a sample of equivalent area, shall be cut from the corner of one plate in each 100 plates of a shipment or fraction thereof, or coupons approximately 6 inch square of the same gage and base metal as the material sampled shall be attached to the center of one edge of the plates before galvanizing. If the result of a weight of coating test for any coupon does not conform to the requirements specified, retests of two additional samples cut from the product plates for the order shall be made, each of which shall conform to the requirements specified.

© 2010, American Railway Engineering and Maintenance-of-Way Association

4.6.2.6 Test for Spelter Coating

The test for weight of spelter coating shall be made in accordance with the hydrocholoric acid-antimony chloride method, as described in current ASTM Specification, Designation A 90.

4.6.2.7 Identification

a. No plates shall be accepted unless the metal is identified by a stamp on each plate showing:

   (1) Name of base metal manufacturer.

   (2) Name of brand and kind of base metal.

   (3) Gage number.

   (4) Weight of spelter coating.

   (5) Identification symbols showing heat number.

b. The identification brands shall be so placed that when the pipe or arch is erected the identification will appear on the inside of the structure.

4.6.2.8 Bolts

a. Bolts for connecting plates shall be not less than 3/4 inch in diameter, of proper length to accommodate the number of plate laps, and the bolts and nuts shall be hot-dip galvanized to conform with the requirements of the current ASTM Specification, Designation A. 153. The threads shall be American Standard Coarse Thread Series, Class 2, free fit. Bolt and nut materials shall conform to the requirements of the current ASTM Specification, Designation A 449 and A 563 Grade C respectively.

b. The bolts may be sampled and tested before erection is commenced or the bolts may be accepted on the manufacturer's certification.

c. Bolt heads and nuts, shaped to provide adequate bearing, shall be used.

4.6.2.9 Gage Determination and Tolerance

The gage shall be determined by the weight of fabricated galvanized plates. The average weight of any one lot of plates shall not underrun the theoretical weight by more than 5%, and no individual plate weighed shall underrun the theoretical weight by more than 10%.

4.6.2.10 Field Inspection and Acceptance of Plates

a. The field inspection shall be made by the engineer. The manufacturer shall furnish an itemized statement of the number and length of the plates in each shipment.

b. Each plate included in a shipment failing to meet the requirements of these specifications shall be rejected, and if 25% of the plates fail to meet the requirements the entire shipment may be rejected.

© 2010, American Railway Engineering and Maintenance-of-Way Association

4.6.3 FABRICATION (1989)

4.6.3.1 Forming and Punching Plates

a. Plates shall be formed to provide lap joints. The bolt holes shall be so punched that all plates having like dimensions, curvature, and the same number of bolts per foot of seam, shall be interchangeable. Each plate shall be curved to the proper radius so that the dimensions of the finished structure will be as specified.

b. Unless otherwise specified, bolt holes along those edges of the plates that will form longitudinal seams in the finished structure shall be staggered in rows 2 inches apart, with one row in the valley and one in the crest of the corrugations. Bolt holes along those edges of the plates that will form circumferential seams in the finished structure shall provide for a bolt spacing of not more than 12 inches. The minimum distance from center of holes to the edge of the plate shall be 1-3/4 times the diameter of the bolt. The diameter of the bolt hole in the longitudinal seams shall not exceed the diameter of the bolt by more than 1/8 inch.

c. Plates for forming skewed or sloped ends shall be cut so as to give the angle of skew or slope specified. Flame cut edges shall be free from oxide or burrs and shall present a workmanlike finish. Legible identification numerals shall be placed on each part plate to designate its proper position in the finished structure.

d. When specified, the structural plate for round pipe shall be formed so as to provide, when assembled, an elliptical cross section having a vertical elongation of approximately 5%.

SECTION 4.7 SPECIFICATIONS FOR CORRUGATED STRUCTURAL ALUMINUM ALLOY PLATE PIPE, PIPE-ARCHES, AND ARCHES

NOTE: Design of structural aluminum alloy pipes, pipe arches and arches are based on empirical rules.

4.7.1 GENERAL (1989)

These specifications cover aluminum alloy corrugated structural plate pipe, pipe arches and arch culverts 60 inches or more in diameter or in span.

4.7.2 MATERIAL (1989)

4.7.2.1 Description of Plates

a. Plates shall consist of structural units of uncoated aluminum alloy. The corrugations shall run at tight angles to the longitudinal axis of the structure and shall have a pitch of 9 inches with a tolerance of 3/8 inch and a depth of 2-1/2 inches with a tolerance of 1/8 inch. The radius of the inside of the corrugation shall be not less than 2 inches. Plates shall have approximately a 2 inches lip beyond each end crest.

b. The gage plates and radii of curvature shall be as specified. The plates at longitudinal and circumferential seams shall be connected by bolts. Joints shall be staggered so that not more than three plates come together at any one point. Each plate shall be curved to a circular arc.

c. Plates for a pipe arch, when assembled, shall form a cross section made up of four circular arcs tangent to each other at their junctions and symmetrical about the vertical axis. Pipe arches shall be installed with the flat side down.

© 2010, American Railway Engineering and Maintenance-of-Way Association

American Railway Engineering and Maintenance-of-Way Association

Part 16

Design and Construction of Reinforced Concrete Box Culverts

— 2006 —

TABLE OF CONTENTS

Section/Article	Description	Page
16.1	**General**	**8-16-2**
16.1.1	Scope (2006)	8-16-2
16.1.2	Units (2006)	8-16-3
16.1.3	Definition (2006)	8-16-3
16.2	**Materials**	**8-16-4**
16.2.1	Existing Foundation Material (2006)	8-16-4
16.2.2	Existing Embankment Material (2006)	8-16-4
16.2.3	Backfill and Bedding Materials (2006)	8-16-5
16.2.4	Concrete (2006)	8-16-5
16.2.5	Reinforcement (2006)	8-16-5
16.2.6	Miscellaneous Metal (2006)	8-16-5
16.2.7	Miscellaneous Materials (2006)	8-16-5
16.3	**Design Methods**	**8-16-6**
16.3.1	Design Considerations (2006)	8-16-6
16.3.2	Design to Accommodate Flow (2006)	8-16-6
16.3.3	Structural Design (2006)	8-16-6
16.4	**Design Loads**	**8-16-7**
16.4.1	General (2006)	8-16-7
16.4.2	Dead Load (2006)	8-16-7
16.4.3	Live Load (2006)	8-16-9
16.4.4	Impact Load (2006)	8-16-13
16.4.5	Other Forces (2006)	8-16-13
16.5	**Details of Design**	**8-16-13**
16.5.1	General (2006)	8-16-13
16.5.2	Wingwalls (2006)	8-16-13
16.5.3	Barrel and Apron (2006)	8-16-13

© 2010, American Railway Engineering and Maintenance-of-Way Association

TABLE OF CONTENTS (CONT)

Section/Article	Description	Page
16.5.4	Longitudinal Reinforcement (2006)	8-16-15
16.5.5	Drainage and Waterproofing (2006)	8-16-15
16.5.6	Backfill (2006)	8-16-15
16.6	**Manufacture of Precast Units**	**8-16-16**
16.6.1	General (2006)	8-16-16
16.6.2	Manufacturing Tolerances (2006)	8-16-16
16.6.3	Physical Requirements (2006)	8-16-16
16.6.4	Marking (2006)	8-16-17
16.7	**Construction**	**8-16-17**
16.7.1	Construction Tolerances (2006)	8-16-17
16.7.2	Joints (2006)	8-16-17
16.7.3	Waterproofing or Dampproofing (2006)	8-16-18
16.7.4	Handling Devices (2006)	8-16-18
16.7.5	Foundations (2006)	8-16-18
16.7.6	Backfilling (2006)	8-16-19
Commentary		8-16-19

LIST OF FIGURES

Figure	Description	Page
8-16-1	Uniformly Distributed Load to Top of Box	8-16-8
8-16-2	Distribution of Loads	8-16-9
8-16-3	Design Data	8-16-10
8-16-4	Design Equations U.S. Customary Units	8-16-11
8-16-5	Design Equations Metric Units	8-16-12
8-16-6	Tongue and Groove Joint	8-16-14
8-16-7	Male and Female Joint	8-16-14
8-16-8	Backfilling	8-16-18

SECTION 16.1 GENERAL

16.1.1 SCOPE (2006)[1]

a. This recommended practice governs the design and construction of precast or cast-in-place rigid frame reinforced concrete box culverts on soil foundations.

b. This recommended practice does not apply to installations where the vertical dimension (H) from the top of the structure to the base of rail is less than 18 inches (450 mm).

[1] See Commentary

© 2010, American Railway Engineering and Maintenance-of-Way Association

c. This recommended practice does not provide for installation of precast units by jacking. Provisions for jacking must be considered separately and in addition to the recommendations of this Part.

d. This recommended practice applies to installations beneath conventional ballasted track.

16.1.2 UNITS (2006)

This recommended practice uses U. S. customary units. The metric (SI) units in parentheses are approximate, and are provided for information only.

ASTM Standard Specifications are cited, where available. Corresponding Metric ASTM International Specifications are shown in parenthesis where available.

16.1.3 DEFINITION (2006)[1]

A box culvert is a structure which forms one or more rectangular openings through an embankment.

The size designation of a box culvert opening indicates first the width, followed by the height.

16.1.3.1 Notations

		U.S. Customary	Metric Units
b	The width of a box culvert opening.	ft	m
b´	The horizontal distance between center lines of box culvert walls.	ft	m
h	The height of a box culvert opening.	ft	m
h´	The vertical distance between center lines of box culvert top and bottom slabs.	ft	m
H	The vertical distance between the top of a box culvert and the base of rail.	ft	m
H´	The vertical distance between the center of a box culvert opening and the base of rail.	ft	m
I	The impact load applied to the top of a box culvert, as a percentage of W_{LL}.	%	%
I_S	Moment of inertia of the box culvert top slab gross section, per foot (meter) of culvert length.	in^4	mm^4
I_W	Moment of inertia of the box culvert wall gross section, per foot (meter) of culvert length.	in^4	mm^4
k_e	The coefficient of active earth pressure of embankment fill excluding surcharge loading.	none	none
k_s	The coefficient of active earth pressure of embankment fill including surcharge loading.	none	none
k	The ratio of S to R.	none	none
L_d	Lateral live load distribution length illustrated in Figure 8-16-2.	ft	m

[1] See Commentary

© 2010, American Railway Engineering and Maintenance-of-Way Association

		U.S. Customary	Metric Units
M_A	The maximum negative moment at the exterior corner of a box culvert per foot (meter) of culvert length.	kip.ft	kN.m
M_B	The maximum positive moment in a box culvert top slab near the center of a culvert opening per foot (meter) of culvert length.	kip.ft	kN.m
M_C	The maximum negative moment in the top slab of a box culvert at the top of a center wall per foot (meter) of culvert length.	kip.ft	kN.m
P_e	The uniformly distributed design load on the sides of a box culvert, excluding surcharge loading.	lbs/ft^2	kN/m^2
P_s	The uniformly distributed design load on the sides of a box culvert, including surcharge loading.	lbs/ft^2	kN/m^2
R	The ratio of b´ to h´.	none	none
S	The ratio of I_s to I_w	none	none
V_A	The maximum vertical shear in the top slab of a box culvert, at the face of support near an exterior corner per foot (meter) of culvert length.	lbs	kN
V_C	The maximum vertical shear in the top slab of a box culvert, at the face of support near a center wall per foot (meter) of culvert length.	lbs	kN
W	The total uniformly distributed load on the top of a box culvert; a combination of W_{LL} , W_{DL} , and I.	lbs/ft^2	kN/m^2
W_{DL}	The uniformly distributed dead load on the top of a box culvert.	lbs/ft^2	kN/m^2
W_e	Weight density of embankment fill taken as 120 lbs/ft^3 (Mass density of embankment fill taken as 1900 kg/m^3).	lbs/ft^3	kg/m^3
W_{LL}	The uniformly distributed live load on the top of a box culvert.	lbs/ft^2	kN/m^2
W_s	Weight of concrete per square foot of top slab area (Mass of concrete per square meter of top slab area).	lbs/ft^2	kg/m^2

SECTION 16.2 MATERIALS

16.2.1 EXISTING FOUNDATION MATERIAL (2006)

The Engineer shall investigate the characteristics of existing foundation materials as recommended in Part 22, Geotechnical Subsurface Investigation.

16.2.2 EXISTING EMBANKMENT MATERIAL (2006)

The Engineer shall investigate the characteristics of existing embankment materials in conjunction with existing foundation conditions where existing embankment material will be excavated and reused.

© 2010, American Railway Engineering and Maintenance-of-Way Association

16.2.3 BACKFILL AND BEDDING MATERIALS (2006)

a. Backfill and bedding materials shall be subject to the approval of the Engineer. Wet or impervious materials shall not be used except as outlined in Article 16.2.3 g, and all backfill and bedding shall be free from brush and other organic materials.

b. Crushed stone for bedding shall consist of crushed rock graded such that 100% passes a 2 inch (50 mm) sieve, and 100% is retained on a 3/4 inch (19 mm) sieve.

c. Sand for foundation leveling shall consist of selected excavated sand, free from clay and organic materials, and free from rock fragments exceeding 3/4 inch (19 mm).

d. Crushed stone placed around drainage pipes shall meet the same requirements for bedding, except that the Engineer may specify a different grading.

e. Unless otherwise shown on the contract documents, structural granular backfill shall consist of well-graded granular pit run gravel or crushed stone with 100% passing the 4-1/4 inch (106 mm) sieve and 100% retained on the Number 200 (75 μm) sieve.

f. Native or imported backfill materials not meeting the requirements of structural granular backfill may be used subject to the approval of the Engineer.

g. Clay for seepage barriers shall consist of clay or silty clay of a medium to high plasticity and of a low permeability, all subject to the approval of the Engineer.

16.2.4 CONCRETE (2006)[1]

a. The minimum compressive strength of concrete shall be 4000 psi (28 MPa) at 28 days.

b. Concrete materials shall comply with the requirements of Part 1, Materials, Tests and Construction Requirements that affect the durability of the culvert, including alkali-aggregate reactions, sulfate and other chemical reactions, and freezing and thawing. Use air entraining and other admixtures only when approved by the Engineer. Admixtures containing chlorides shall not be used.

16.2.5 REINFORCEMENT (2006)

Reinforcing steel shall meet the requirements of ASTM 615 (A615M) Grade 60 (Grade 420), or ASTM A706 (A706M), or welded steel wire fabric conforming to ASTM A497 (ASTM A497M), with an allowable tensile stress of 24,000 psi (165 MPa) for service load design.

16.2.6 MISCELLANEOUS METAL (2006)

All hardware for sleeves, anchor bolts, inserts and other hardware shall be either hot-dip galvanized in accordance with ASTM A153, or epoxy coated in accordance with ASTM A775 (ASTM A775M), or stainless steel in accordance with ASTM A955 (A955M), as approved by the Engineer.

16.2.7 MISCELLANEOUS MATERIALS (2006)

a. Water stops shall meet the requirements of Part 1, Materials, Tests and Construction Requirements for watertight construction joints.

---

[1] See Commentary

© 2010, American Railway Engineering and Maintenance-of-Way Association

b. Gasket material shall conform to ASTM C990-03 Preformed Flexible Joint Sealant, as approved by the Engineer.

SECTION 16.3 DESIGN METHODS

16.3.1 DESIGN CONSIDERATIONS (2006)[1]

a. The design shall consider the following:

(1) The purpose of the structure.

(2) Depth of culvert from base of rail to invert level.

(3) Requirements for soil cover above the top of the structure and below the base of rail, as specified by the Engineer, in addition to the requirements of these recommendations.

(4) Waterway alignment and skew angle.

(5) Subgrade width and embankment slopes.

(6) Existing foundation conditions.

b. For precast culverts, the design shall consider the following:

(1) Stresses induced by handling and transportation of units.

(2) Methods of installation.

(3) Methods of connecting sections of box culverts together to secure the units in their intended position.

16.3.2 DESIGN TO ACCOMMODATE FLOW (2006)

Calculation of flow rates and the design of the culvert and approaches to accommodate flows in accordance with Chapter 1, Roadway and Ballast, Part 3, Natural Waterways.

16.3.3 STRUCTURAL DESIGN (2006)[2]

a. The design shall comply with all provisions of Part 2, Reinforced Concrete Design, except as modified in this part.

b. The structure shall be analyzed assuming that all joints between slabs and walls are rigid, with positive and negative bending moments determined by the theory of elasticity.

---

[1] See Commentary
[2] See Commentary

© 2010, American Railway Engineering and Maintenance-of-Way Association

SECTION 16.4 DESIGN LOADS

16.4.1 GENERAL (2006)

a. The design of box culverts supporting track shall consider the following loads:

(1) dead load,

(2) live load,

(3) impact load.

b. The loads, uniformly distributed per square foot (per square meter) to the top of the box, are shown in Figure 8-16-1 for various depths of fill.

16.4.2 DEAD LOAD (2006)[1]

a. The vertical dead load consists of the estimated weight (mass) of the track, fill, and top slab of the structure. Dead load shall be determined from, and uniformly distributed to the culvert as shown on Figure 8-16-1 and Figure 8-16-2, respectively.

b. The minimum lateral pressure on the sides of the box shall be based on an assumed earth pressure coefficient of 0.33.

c. The maximum lateral pressure on the sides of the box shall be based on an assumed earth pressure coefficient of 1.0.

d. As an alternative to paragraph c, the Engineer may determine the maximum designed density of a fully saturated fill, and the corresponding earth pressure coefficient that would apply, and use these in the calculation of both vertical and lateral pressures from dead loads.

e. The lateral pressures on each side of the box may be assumed to be uniformly distributed over the entire height, equal and opposite in direction. This assumption has been made in the design equations shown in Figure 8-16-4 and Figure 8-16-5. If a more exact distribution is used, Figure 8-16-4 and Figure 8-16-5 do not apply.

[1] See Commentary

© 2010, American Railway Engineering and Maintenance-of-Way Association

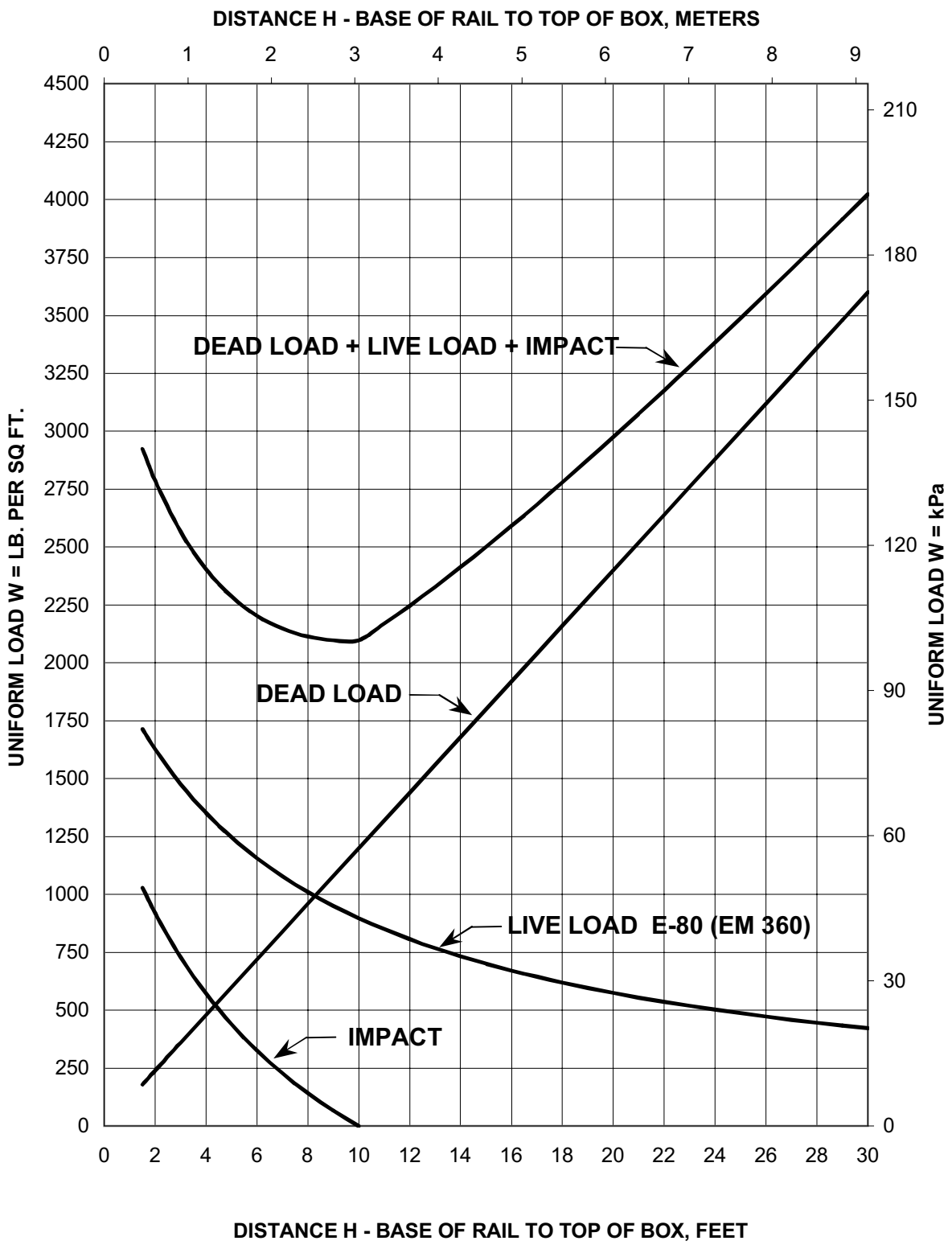

Figure 8-16-1. Uniformly Distributed Load to Top of Box

© 2010, American Railway Engineering and Maintenance-of-Way Association

16.4.3 LIVE LOAD (2006)[1]

a. Determine live load for each track in accordance with Part 2, Reinforced Concrete Design. Distribution of the live load to the culvert shall be in accordance with Figure 8-16-2.

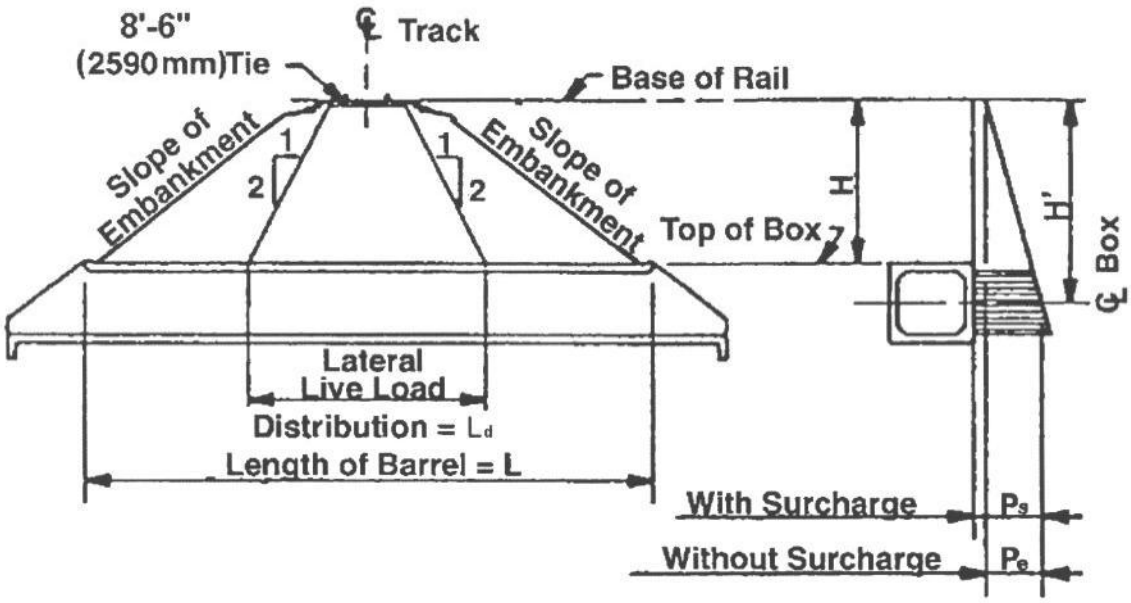

Figure 8-16-2. Distribution of Loads

b. No increase in live load shall be used for multiple track loadings.

c. Calculate the minimum lateral pressure induced from live load on the sides of the box using the earth pressure coefficient determined by Article 16.4.2.

d. The maximum lateral pressures that may be generated on the sides of the box shall be considered in the design, except that the earth pressure coefficient of Article 16.4.2 c need not be applied to live loads. If the provisions of Article 16.4.2 d are used with respect to dead loads, then they shall be used for the calculation of maximum pressures from live loads also.

[1] See Commentary

© 2010, American Railway Engineering and Maintenance-of-Way Association

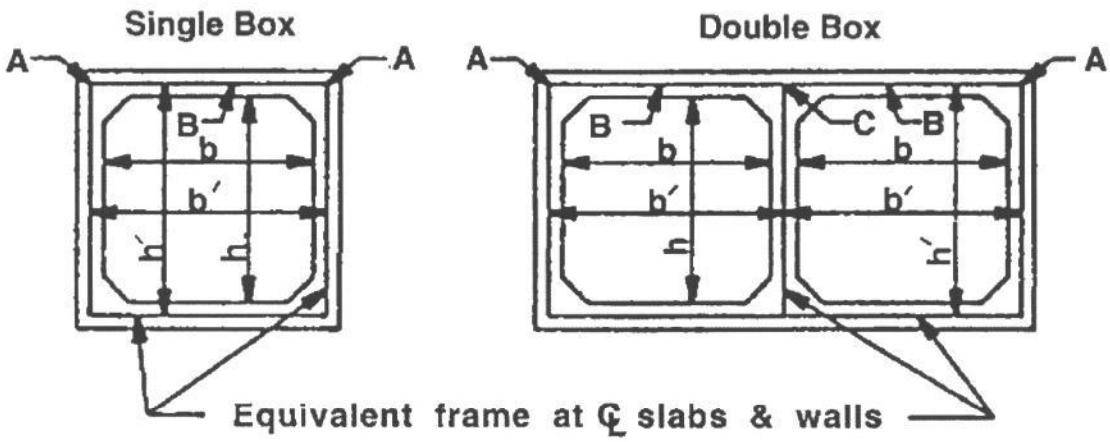

Figure 8-16-3. Design Data

© 2010, American Railway Engineering and Maintenance-of-Way Association

Design Constraints Used in Equations

Live Load: E80

Loads on Top Slab:

$$W = W_{LL}\left(1 + \frac{I}{100}\right) + W_{DL} = \text{Uniform Load} = \text{psf}$$

$$W_{LL} = \frac{80000}{5 \times L_d} = \text{Uniform Load} = \text{psf}$$

$$W_{DL} = W_e H + \frac{200}{L_d} + W_s = \text{Uniform Load} = \text{psf}$$

I (Impact) = From 60% at H = 18 inches

To 0% at H = 10 feet

Load on Walls:

$$P_e = k_e W_e H' = \text{Uniform Load} = \text{psf}$$

$$P_s = k_s W_e\left(H' + \frac{80000}{5 W_e L_d}\right) = \text{Uniform Load} = \text{psf}$$

k_e = 0.33 min., 1.0 max.

k_s = 0.33

Design Equations for Single Box (per Foot of Culvert Length)

$$\text{Max. } M_B = \frac{Wb^2}{24}\left(\frac{1+3k}{1+k}\right) - \frac{P_e h^2}{12}\left(\frac{k}{1+k}\right) = \text{lb. ft. use min. value of } P_e$$

$$\text{Max. } M_A = \frac{Wb^2}{12}\left(\frac{1}{1+k}\right) + \frac{P_s h^2}{12}\left(\frac{k}{1+k}\right) = \text{lb. ft. use max. value of } P_e \text{ or } P_s$$

$$V_A = \frac{Wb}{2} = \text{lbs}$$

Design Equations for Double Box (per Foot of Culvert Length)

$$\text{Max. } M_A = \frac{Wb^2}{12}\left(\frac{1}{1+2k}\right) + \frac{P_s h^2}{6}\left(\frac{k}{1+2k}\right) = \text{lb. ft. use max. value of } P_e \text{ or } P_s$$

$$\text{Min. } M_A = \frac{Wb^2}{12}\left(\frac{1}{1+2k}\right) + \frac{P_e h^2}{6}\left(\frac{k}{1+2k}\right) = \text{lb. ft. use min. value of } P_e$$

$$\text{Max. } M_C = \frac{Wb^2}{12}\left(\frac{1+3k}{1+2k}\right) - \frac{P_e h^2}{12}\left(\frac{k}{1+2k}\right) = \text{lb. ft. use min. value of } P_e$$

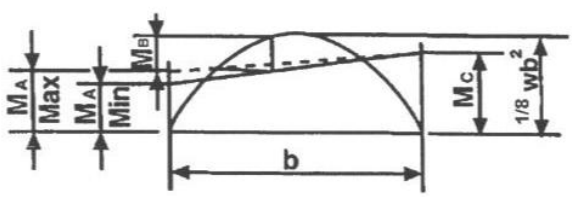

ASSUME M_C SAME FOR M_A Max and M_A Min

$$V_A = \frac{Wb}{4}\left(\frac{2+3k}{1+2k}\right) + \frac{P_s h^2}{4b}\left(\frac{k}{1+2k}\right) = \text{lbs. use max. value of } P_e \text{ or } P_s$$

$$V_c = \frac{Wb}{4}\left(\frac{2+5k}{1+2k}\right) - \frac{P_e h^2}{4b}\left(\frac{k}{1+2k}\right) = \text{lbs. use min. value of } P_e$$

Figure 8-16-4. Design Equations U.S. Customary Units

© 2010, American Railway Engineering and Maintenance-of-Way Association

Chap TOC
VOL 1
VOL 2
VOL 3
VOL 4

Design Constraints Used in Equations

Live Load: E360

Loads on Top Slab:

$$W = W_{LL}\left(1 + \frac{I}{100}\right) + W_{DL} = \text{Uniform Load} = kN/m^2$$

$$W_{LL} = \frac{356}{1.52 \times L_d} = \text{Uniform Load} = kN/m^2$$

$$W_{DL} = 0.00981 W_e H + \frac{2.92}{L_d} + 0.00981 W_s = \text{Uniform Load} = kN/m^2$$

I (Impact) = From 60% at H = 0.45 m

To 0% at H = 3.0 m

Load on Walls:

$$P_e = 0.00981 k_e W_e H' = \text{Uniform Load} = kN/m^2$$

$$P_s = 0.00981 k_s W_e \left(H' + \frac{36,300}{1.52 W_e L_d}\right) = \text{Uniform Load} = kN/m^2$$

k_e = 0.33 min., 1.0 max.

k_s = 0.33

Design Equations for Single Box (per Meter of Culvert Length)

$$\text{Max. } M_B = \frac{Wb^2}{24}\left(\frac{1+3k}{1+k}\right) - \frac{P_e h^2}{12}\left(\frac{k}{1+k}\right) = \text{kN.m use min. value } P_e$$

$$\text{Max. } M_A = \frac{Wb^2}{12}\left(\frac{1}{1+k}\right) + \frac{P_s h^2}{12}\left(\frac{k}{1+k}\right) = \text{kN.m use max. value of } P_e \text{ or } P_s$$

$$V_A = \frac{Wb}{2} = kN$$

Design Equations for Double Box (per Meter of Culvert Length)

$$\text{Max. } M_A = \frac{Wb^2}{12}\left(\frac{1}{1+2k}\right) + \frac{P_s h^2}{6}\left(\frac{k}{1+2k}\right) = \text{kN.m use max. value of } P_e \text{ or } P_s$$

$$\text{Min. } M_A = \frac{Wb^2}{12}\left(\frac{1}{1+2k}\right) + \frac{P_e h^2}{6}\left(\frac{k}{1+2k}\right) = \text{kN.m use min. value of } P_e$$

$$\text{Max. } M_C = \frac{Wb^2}{12}\left(\frac{1+3k}{1+2k}\right) - \frac{P_e h^2}{12}\left(\frac{k}{1+2k}\right) = \text{kN.m use min. value of } P_e$$

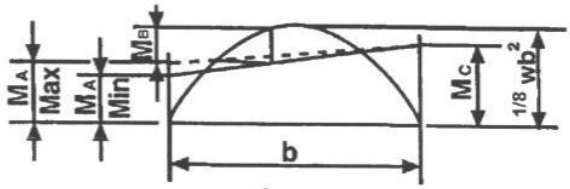

ASSUME M_C SAME FOR M_A Max and M_A Min

$$V_A = \frac{Wb}{4}\left(\frac{2+3k}{1+2k}\right) + \frac{P_s h^2}{4b}\left(\frac{k}{1+2k}\right) = \text{kN use max. value of } P_e \text{ or } P_s$$

$$V_c = \frac{Wb}{4}\left(\frac{2+5k}{1+2k}\right) - \frac{P_e h^2}{4b}\left(\frac{k}{1+2k}\right) = \text{kN use min. value of } P_e$$

Figure 8-16-5. Design Equations Metric Units

© 2010, American Railway Engineering and Maintenance-of-Way Association

16.4.4 IMPACT LOAD (2006)

a. Add impact load to the live load as determined from Figure 8-16-1 or Figure 8-16-4 or Figure 8-16-5, respectively, and uniformly distributed to the culvert top slab in the same manner as the live load.

b. No impact shall be added to the lateral forces on the sides of the box.

16.4.5 OTHER FORCES (2006)

a. Centrifugal force, wind force, and longitudinal forces resulting from starting and stopping of trains need not be considered.

SECTION 16.5 DETAILS OF DESIGN

16.5.1 GENERAL (2006)

a. The contract documents shall show construction elements in detail including dimensions, spacing and size of reinforcement, permitted locations for the placement of handling devices and holes in the case of precast, construction and expansion joints, water stops, waterproofing, and drainage. The maximum design foundation pressure shall also be shown.

b. When it is anticipated that multiple culverts will be built, standardization of the design and construction details is recommended.

c. The culvert shall be designed with a camber along its longitudinal axis where required by the Engineer, to counteract the effects of settlement.

16.5.2 WINGWALLS (2006)

a. Wingwalls may be cast-in-place or precast.

b. Wingwalls shall have such slope and length as required to retain the embankment and maintain the culvert opening.

c. Wingwalls may be straight or flared, as local conditions and hydraulic design require.

16.5.3 BARREL AND APRON (2006)

a. The minimum concrete cover for reinforcement shall be 2 inches (50 mm) unless approved otherwise by the Engineer. This requirement does not apply at the joints of precast units.

b. The same barrel section shall be used throughout, except under deep fills where a reduced barrel section may be used toward the ends of the box. Consideration shall be given to the construction of future tracks.

c. Wall and top and bottom slab thicknesses shall be a minimum of 10 inches (250 mm), or as required by the Engineer. Greater wall and slab thicknesses should be considered for cast-in-place construction to facilitate concrete placement.

© 2010, American Railway Engineering and Maintenance-of-Way Association

d. A minimum haunch of 6 inches (150 mm) shall be provided.

e. In long culverts, or culverts under deep fills, consideration should be given to the placement of joints to provide for possible vertical and longitudinal movements of the barrel of cast-in-place culverts. If joints are used, the first joint shall be not less than 10 feet (3 meters) from the end of the cast-in-place barrel. For cast-in-place construction, joints should not be placed in regions of maximum stress.

f. Precast units shall be designed with tongue and groove or male and female ends such as shown in Figure 8-16-6 and Figure 8-16-7 or as determined by the Engineer. The inside face reinforcement shall extend into the male portion of the joint, and the outside face reinforcement shall extend into the female portion of the joint.

g. Where differential deflection from live load between units exceeds b/800, (where b is the width of the box opening) joints between precast units shall be capable of transferring shear loads through the top slab between adjacent units by a method or devices which may be mutually agreed upon by the box culvert manufacturer and the Engineer. If individual shear connectors are used to fasten the adjacent top slabs together, they shall be spaced no more than 30 inches (750 mm) on center, with a minimum of two shear connectors per joint.

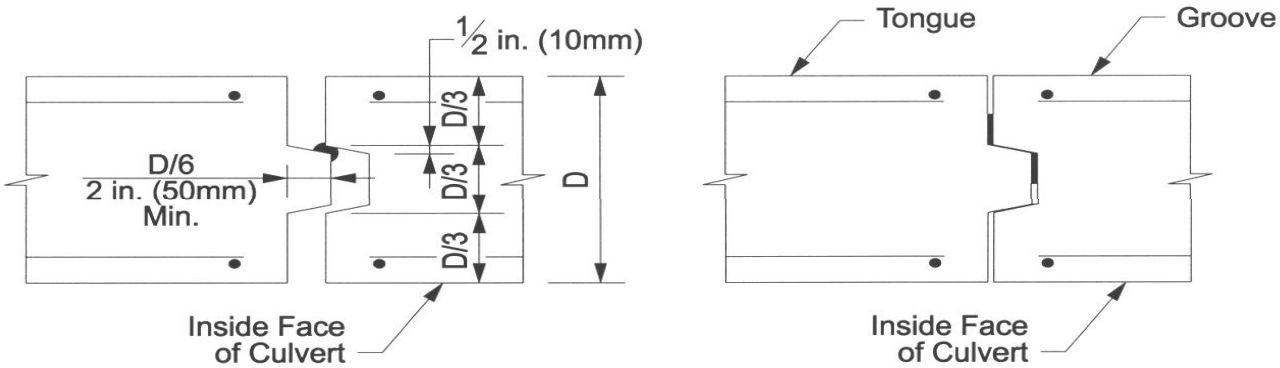

Figure 8-16-6. Tongue and Groove Joint

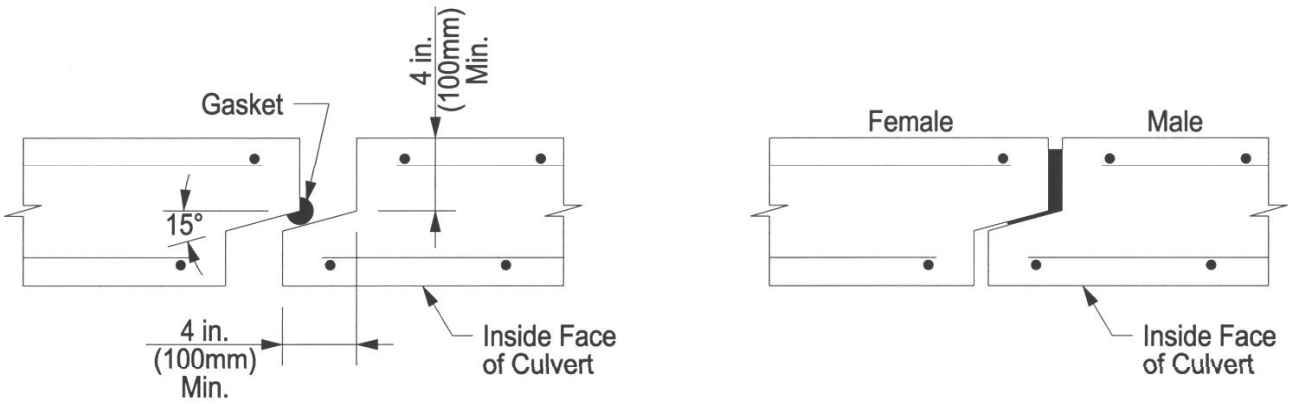

Figure 8-16-7. Male and Female Joint

© 2010, American Railway Engineering and Maintenance-of-Way Association

h. The floor of the barrel and apron may be sloped toward the center. Flow energy dissipation may be provided by texturing the floor of the culvert if this is taken into account in the flow capacity design.

i. The surface of the top slab in contact with the backfill may be sloped toward the sidewalls for drainage.

j. The length of the apron, and rip-rap requirements, shall be determined by field conditions in accordance with Chapter 1, Roadway and Ballast.

k. Cutoff walls shall be used at inlet and outlet ends to a depth consistent with the field conditions and potential scour.

16.5.4 LONGITUDINAL REINFORCEMENT (2006)

a. The minimum longitudinal reinforcement in the top slab, bottom slab and walls shall be as follows:

(1) 0.4% of concrete cross sectional area for fill depths over the top of the top slab equal to or less than 10 feet (3 meters).

(2) For fill depths greater than 10 feet (3 meters), this percentage shall be increased proportionally to 1.0% for fills of 100 feet (30 meters).

b. The minimum reinforcement determined from paragraph a shall be provided half on each face of the slab or wall.

16.5.5 DRAINAGE AND WATERPROOFING (2006)[1]

a. Pipe drains in the backfill adjacent to the side walls shall be shown on the contract drawings when necessary. Horizontal drain pipes shall be not less than 8 inches (200 mm) in diameter, perforated, and in such a position that they will function properly. Provisions shall be made for cleaning drainage pipes.

b. Special provision may be made for waterproofing by use of non-corrosive water stops in accordance with Part 1, Materials, Tests and Construction Requirements for watertight construction joints, and/or by use of a waterproofing membrane in accordance with Part 29, Waterproofing.

16.5.6 BACKFILL (2006)

a. The limits of structural granular backfill shall be shown on the contract drawings.

b. Where structural granular backfill is not required, the Engineer shall specify the materials to be used.

c. When a seepage barrier is required, the details of its location and thickness shall be shown on the contract drawings.

d. The Engineer shall specify any other backfill details required.

[1] See Commentary

© 2010, American Railway Engineering and Maintenance-of-Way Association

SECTION 16.6 MANUFACTURE OF PRECAST UNITS

16.6.1 GENERAL (2006)

a. Manufacturer's shop drawings shall be submitted to the Engineer for review and approval.

b. Precast reinforced concrete culvert units shall be manufactured using steel forms and cured in accordance with Part 1, Materials, Tests and Construction Requirements.

c. Concrete shall be placed by the wet cast method when air-entrainment is specified in the contract documents. When air-entrainment is not specified, the precast reinforced concrete culvert units may be manufactured by the dry cast method if approved by the Engineer.

d. Handling devices or holes shall be provided where shown on the contract drawings. Details of handling devices shall be shown on the shop drawings and shall be subject to the approval of the Engineer, and shall also satisfy the requirements of Article 16.7.4.

16.6.2 MANUFACTURING TOLERANCES (2006)

a. Opening Dimensions — The dimensions of the culvert opening shall vary by not more than +/– 1% from the dimensions shown on the contract documents. Such variations shall also satisfy the requirements of Article 16.6.3 a. The haunch dimensions shall vary by not more than 1/4 inch (7 mm) from the dimensions shown on the contract documents.

b. Slab and Wall Thickness — The slab and wall thickness shall not be less than 95% of that shown on the contract documents. A thickness more than that shown on the contract documents shall not be cause for rejection.

c. Length of Opposite Surfaces — Variations in laying lengths of two opposite surfaces of the box unit shall not be more than 1/8 inch per foot (10 mm per meter) of span, with a maximum of 3/4 inch (20 mm) in any box unit, except where beveled ends for laying on curves are specified on the contract documents.

d. Length of Precast Unit — The length of a precast unit shall vary by not more than 1/8 inch per foot (10 mm per meter) of length from that shown on the contract documents with a maximum variation of 1/2 inch (12 mm) in any box unit.

e. Position of reinforcement — The maximum variation in the position of reinforcement shall be 3/8 inch (10 mm) from that shown on the contract documents. In no case, however, shall the as-manufactured cover over the reinforcement be less than 1-1/2 inch (40 mm) as measured to the internal surface or the external surface of the completed box unit unless approved otherwise by the Engineer. This minimum cover limitation does not apply at the mating surfaces of joints.

f. Area of Reinforcement — The areas of steel reinforcement shall be as required by the contract documents. Steel areas greater than those required shall not be cause for rejection.

16.6.3 PHYSICAL REQUIREMENTS (2006)

a. The ends of the units shall be produced with joints as shown on the contract documents, and so formed that when the units are laid together they will make a continuous line of box units with a smooth interior free of irregularities exceeding 3/8 inch (10 mm) at the joints.

b. The manufacturer may use alternate joint details to those shown on the contract documents subject to the approval of the Engineer.

© 2010, American Railway Engineering and Maintenance-of-Way Association

c. When concrete is placed by the wet cast method concrete compressive strength shall be determined from cylindrical concrete specimens made in conformance with ASTM Standard C39/C39M, and prepared in conformance with ASTM Standard C31/C31M.

d. When units are manufactured by the dry cast method, cylinders shall be made in conformance with ASTM Standard C361, Article 10.3.2.

e. At least five test cylinders shall be prepared from each day's production of concrete.

f. Compression test requirements shall be in accordance with ASTM Standard C361, Article 10.3.3.

16.6.4 MARKING (2006)

a. The following information shall be clearly marked on each box unit by indentation, waterproof paint, or other approved means:

(1) Project name.

(2) Date of manufacture.

(3) Name or trademark of the manufacturer.

(4) Identification of the plant.

(5) Location number/match mark.

(6) Identification of top slab.

(7) Weight (mass) of unit.

SECTION 16.7 CONSTRUCTION

16.7.1 CONSTRUCTION TOLERANCES (2006)

The construction tolerances of Article 16.6.2 a, b, e, and f shall also apply for cast-in-place concrete.

16.7.2 JOINTS (2006)

a. Joints shall be located as shown on the contract drawings or as approved by the Engineer. Joints in cast-in-place box culverts shall be formed as prescribed in Part 1, Materials, Tests and Construction Requirements.

b. Premolded bituminous filler at least 1/2 inch (12 mm) thick may be used at joints in cast-in-place box culverts.

c. Precast units shall be placed against previously completed units in such a manner as to assure an adequate seal.

16.7.3 WATERPROOFING OR DAMPPROOFING (2006)

a. Waterproofing, if any, shall be provided in accordance with Part 29, Waterproofing, or as specified by the Engineer.

© 2010, American Railway Engineering and Maintenance-of-Way Association

b. Where no waterproofing is specified, the surface in contact with the backfill may be dampproofed. Dampproofing, if any, shall be in accordance with the provisions of Part 29, Waterproofing.

16.7.4 HANDLING DEVICES (2006)

Following installation of precast units, and before waterproofing or backfilling, all protruding handling devices shall be removed, and all holes and pockets shall be filled with a non-shrink grout approved by the Engineer.

16.7.5 FOUNDATIONS (2006)[1]

a. The foundation requirements apply where the reinforced concrete box culvert is to be constructed by open cut.

b. Foundation conditions shall be inspected and approved by the Engineer.

c. Existing unsuitable foundation materials shall be excavated and replaced with new material as required by the Engineer.

d. A compacted crushed stone bed shall be provided under precast reinforced concrete box culverts. The depth of the crushed stone bed shall be a minimum of 12 inches (300 mm), and shall extend 12 inches (300 mm) on each side of the precast reinforced concrete box culvert with a minimum one to one side slope as shown on Figure 8-16-8.

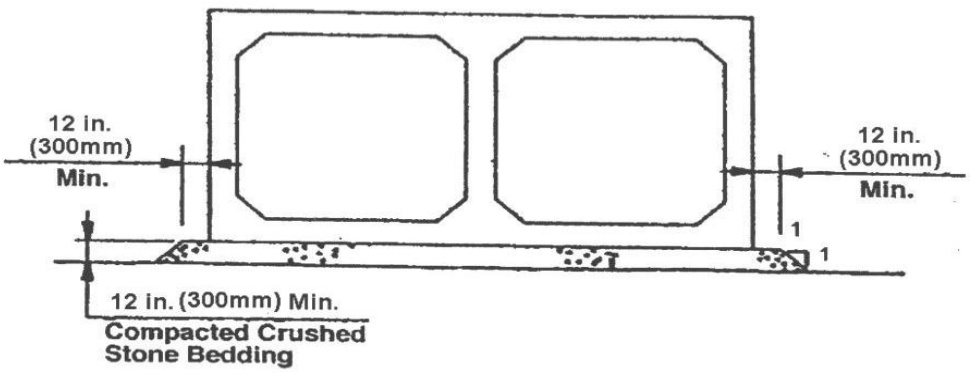

Figure 8-16-8. Backfilling

e. In cast-in-place construction, the crushed stone bed may be omitted if foundation conditions are favorable, as determined by the Engineer.

f. The foundation surface upon which the reinforced concrete box culvert is to be supported shall be carefully graded to the required line and grade. A well compacted sand layer not exceeding 4 inches (100 mm) in thickness may be provided directly under a precast culvert, and on top of the crushed stone bedding, to facilitate this.

16.7.6 BACKFILLING (2006)

a. The backfilling requirements apply where the reinforced concrete box culvert is to be constructed by open cut.

b. Structural granular backfill shall be used for the entire backfill area unless shown otherwise on the contract drawings, and except as required for:

[1] See Commentary

© 2010, American Railway Engineering and Maintenance-of-Way Association

(1) foundations, as recommended in Article 16.7.5; and

(2) drainage materials, as recommended in Article 16.2.3 d; and

(3) parallel installations as recommended by Article 16.7.6 c.

c. When reinforced concrete culverts are used in parallel for multicell installations, positive means of ensuring lateral support shall be provided by grouting with non-shrink grout between the units or by filling the space between adjacent units with compacted granular or cementitious material as approved by the Engineer.

d. Backfill shall be placed alternately on each side of the box and deposited in layers not more than 12 inches (300 mm) thick. The layers shall be horizontal or sloping away from the structure, with each layer carefully tamped.

e. Care shall be taken in selecting and placing the backfill to prevent damage when the exterior of the culvert has a waterproofing coating or membrane. Protective cover material may be used to prevent damage to the waterproofing system.

COMMENTARY

C - 16.1 GENERAL

C - 16.1.1 SCOPE (2006)

The design and construction of reinforced concrete box culverts having more than two openings may be modeled upon these recommendations, but the design equations of Figure 8-16-4 and Figure 8-16-5 will not apply.

For culverts of more than two openings the effects of unbalanced loading or pattern loading should be considered.

The design of box culverts on pile or rock foundations is governed by support conditions, and box culverts on pile foundations will require a special analysis because of these different support conditions. However, the design of box culverts on rock foundations may be based on these recommendations if the Engineer ensures that there is sufficiently elastic backfill bedding between the culvert and the rock.

The design and construction of reinforced concrete box structures having a vertical dimension from the top of the structure to the base of rail of less than 18 inches (450 mm) may be modeled upon these recommendations, but the effects of impact loading will require special determination. The design equations of Figure 8-16-4 and Figure 8-16-5 will not apply, particularly with regard to impact.

Reinforced concrete box culvert installations will normally be by open cut, and the reference to jacking in Article 16.1.1 c will not apply.

C - 16.1.3 DEFINITION (2006)

Box culverts are used principally for waterways, but may also be used as pedestrian or livestock underpasses, or for other purposes.

C - 16.2 MATERIALS

C - 16.2.4 CONCRETE (2006)

Air entrainment should always be provided where concrete will be subjected to freeze-thaw cycles. To increase the imperviousness of the concrete, air entrainment should also be considered in chemically aggressive environments

© 2010, American Railway Engineering and Maintenance-of-Way Association

including dissolved sulfates, industrial effluent, and acid rain. Since the dry cast method is not compatible with air entrainment, the Engineer should consider this when preparing the contract specifications.

The preparation of cylinders for determining concrete compressive strength differs for wet cast and dry cast concrete. The Engineer should determine the methods employed by potential manufacturers when preparing the contract specifications.

C - 16.3 DESIGN METHODS

C - 16.3.1 DESIGN CONSIDERATIONS (2006)

Shallow boxes or boxes without much fill may be subject to heaving depending on conditions of the soil below the box.

C - 16.3.3 STRUCTURAL DESIGN (2006)

A box culvert may be designed as a rigid "U" shape, with a top slab acting as a simple span without negative corner moments. A box culvert may also be designed as an inverted U-shape and placed upon a separate footing slab. Design of such culverts may be modeled upon these recommendations but the design equations of Figure 8-16-4 and Figure 8-16-5 will not apply.

C - 16.4 DESIGN LOADS

C - 16.4.2 DEAD LOAD (2006) and

C - 16.4.3 LIVE LOAD (2006)

Pressures applied to a box culvert will vary with soil moisture content, and over time with increased compaction under traffic. To accurately account for these changes, it would be necessary to determine a range of soil density, earth pressure coefficients, and hydrostatic conditions. These would then be applied in combinations to determine both maximum positive and maximum negative moments.

Article 16.4.2 and Article 16.4.3 permit such an approach, but also offer a simplified method. The intent of Article 16.4.2 c with regard to a maximum design earth pressure coefficient for the application of dead loads is to approximate the more rigorous analysis of maximum negative moments.

C - 16.5 DETAILS OF DESIGN

C - 16.5.5 DRAINAGE AND WATERPROOFING (2006)

Waterproofing will not normally be required for reinforced concrete box culverts. However, the Engineer may require waterproofing at special installations, such as where culverts are to serve as pedestrian underpasses.

C - 16.7 CONSTRUCTION

C - 16.7.5 FOUNDATIONS (2006)

The Engineer may determine that special foundation requirements should apply, for example, where precast culverts are to serve as pedestrian underpasses. In such cases, grillage supports may be considered in order to control differential displacements.

© 2010, American Railway Engineering and Maintenance-of-Way Association

10.3.5 MINIMUM PIPE STRENGTH (1989)

Pipe subjected to track loads shall have a minimum strength of D = 1350 (Class III) even if analysis indicates that a lower D-Load is satisfactory.

10.3.6 FACTOR OF SAFETY (1989)

The standard Factor of Safety of 1.0 against a 0.01 inch crack should be used for design unless the Engineer indicates that a higher Factor of Safety is required.

10.3.7 ALTERNATE DESIGN PROCEDURE (1989)

a. In lieu of carrying out the complete design analysis required by these specifications, the Designer may use Class V RCP for all sizes up to a height of cover of 14 feet; for greater heights of cover, the designer must make an analysis. For Elliptical or Arch Pipe where D = 3000 RCP is not available, a design analysis shall be made.

b. The Engineer may specify the use of Class V RCP if he feels that the conditions of the site, or construction procedures, require this strength of pipe.

10.3.8 PIPE STRENGTH (1989)

The required D-Load of the pipe shall be determined by the following equation:

$$\text{D-Load} = \frac{(W_L \times B_c + W_E + W_s \times B_c) \times FS}{B_f \times D}$$

SECTION 10.4 INSTALLATION

10.4.1 PREPARATION OF SUBGRADE (1989)

10.4.1.1 Excavation

a. Trenches shall be excavated in accordance with the bank stability requirements to a width sufficient to allow for proper jointing of the pipe and thorough compaction of the bedding and backfill material under and around the pipe. Where feasible, trench walls shall be vertical. A maximum trench width in conformance with the design assumptions, should be specified on the construction plans. Wide trenches generally require the use of stronger pipe, and require a more complete design analysis. The completed trench bottom shall be firm and cleaned for its full length and width.

b. Where specifically requested the pipe trench bottom may be cambered longitudinally to provide for expected settlement. If camber of the pipe trench is required, the indicated camber must be shown on the plans.

c. Where specified on the plans, the excavation for a pipe to be placed within embankment fill shall be made after the embankment has been completed to a specified height above the top of the pipe.

© 2010, American Railway Engineering and Maintenance-of-Way Association

10.4.1.2 Foundation

a. If the foundation is incapable of supporting the pipe loads, an adequate support shall be supplied by excavating the unstable soil and backfilling with compacted material, or by such other means as may be specified or approved by the Engineer.

b. If the foundation is muck, or similar yielding material, the pipe shall be supported by piling, or by other such means as may be specified or approved by the Engineer.

c. For Class B or Class C Beddings, the subgrade should be undercut and replaced with compacted granular material, if necessary, so that a firm foundation free of protruding rocks is provided. Special care may be necessary with Class A or other unyielding foundation to cushion the pipe from shock when blasting can be anticipated in the area.

10.4.2 PIPE INSTALLATION (1989)

10.4.2.1 Laying Pipe

a. Pipe laying shall begin at the downstream end of the culvert. The bell or groove end of the pipe shall be placed upstream. No culvert shall be put into service until a suitable outlet is provided for the water.

b. Elliptical pipe shall be placed with the vertical axis within 5 degrees of a vertical plane through the longitudinal axis of the culvert.

10.4.2.2 Bedding

a. Pipe bedding and placement shall be specified to conform to one of the Bedding Classes illustrated in Figure 8-10-2, Figure 8-10-3, Figure 8-10-4, Figure 8-10-5, and Figure 8-10-6.

b. When pipe cannot be placed on a prepared surface but must instead be placed on an unprepared surface, the bedding shall be considered to be Class D Bedding. Class D Bedding should only be used for emergency work, and is not permitted for permanent installations unless authorized by the Engineer. For typical Class D Bedding see Figure 8-10-2 and Figure 8-10-4.

10.4.2.3 Joining Pipe

a. Pipe may be either bell and spigot, or tongue and groove design unless otherwise specified. When bell pipe is used, a shallow excavation shall be made underneath the bell of sufficient depth so that the bell does not rest on the bedding material.

b. Pipe sections shall be joined so that the ends are fully entered and the inner surfaces are reasonably flush and even.

c. Joints shall be made with either mortar, grout, rubber gaskets, plastic mastic compounds, or other combination of these types as approved and specified by the Engineer. Mortar joints in pipe that is jacked into place shall not be sealed with mortar until the culvert jacking is complete.

d. In areas where a tendency exists for pipe sections to separate, suitable ties shall be fabricated and installed to prevent this separation.

e. Endwalls or headwalls should be used for culverts under tracks and designed to resist pipe separation as well as to retain the embankment.

© 2010, American Railway Engineering and Maintenance-of-Way Association

10.4.2.4 Water Tightness

If water tightness is a problem, rubber gasketed pipe is recommended. When such joints are specified the pipe should be tested for infiltration or exfiltration as stipulated by the Engineer. The maximum rate of leakage shall conform to the following accepted requirements, or to other standards set forth by the Engineer:

- Infiltration – 0.6 gallons per inch of diameter per 100 feet of pipe per hour.
- Exfiltration – 0.6 gallons per inch of diameter per 100 feet of pipe per hour when subjected to an internal head of 2 feet, and increased by 10% for each additional 2 feet of head.

10.4.2.5 Culverts Carrying High Acid Fluids

Where the PH of the conducted fluid is less than 4.5, the internal surfaces of the culvert should be protected from acid attack by a special permanent coating. The Engineer shall specify the type of coating and the means of application.

10.4.3 BACKFILL AND EMBANKMENT (1989)

10.4.3.1 General

a. The backfill around the culvert shall be placed in accordance with the bedding requirements illustrated in Figure 8-10-2, Figure 8-10-3, Figure 8-10-4, Figure 8-10-5, and Figure 8-10-6, and other requirements of these specifications.

b. All culverts that are to carry track load shall have the backfill thoroughly compacted to a minimum density of 95% as determined by ASTM D698, and as specified elsewhere in the project specifications for adjacent embankment.

c. Where the pipe is placed on a shaped subgrade, see Figure 8-10-2 and Figure 8-10-4, extreme care shall be taken not to overexcavate the shaped surface so that point loading shall not occur on the pipe bottom.

10.4.3.2 Embankment Bedding (See Figure 8-10-2 and Figure 8-10-3).

a. Where rock or noncompressible foundation material is encountered, the hard unyielding material should be excavated below the elevation of the concrete cradle (Class A) or the bottom of the pipe or pipe bell (Class B and C Beddings) for a depth of at least 6 inches or 1/2 inch for each foot of fill over the top of the pipe whichever is greater, but not more than 3/4 inch of the diameter (or horizontal span) of the pipe.

b. For the Negative Projecting Embankment Condition, the width of the excavation, B_d, should be at least $1.5 \times B_c$ and with a minimum of 2 feet greater than the outside diameter of the pipe for thorough filling and compaction of the void space under the pipe haunch.

10.4.3.3 Trench Bedding (See Figure 8-10-4 and Figure 8-10-5)

a. Materials for backfill on each side of the pipe for the full width of the trench and to an elevation of 1 foot above the top of the pipe shall be fine, readily compacted soil or granular material, and shall not contain frozen lumps, stones that would be retained on a 2 inches sieve, chunks, highly plastic clay, or other objectionable material. Granular backfill material shall have 100% passing a 3/4 inch sieve, not less than 95% passing a 1/2 inch sieve, and not less than 95% retained on a No. 16 sieve. Oversized material shall be removed at the source of the material, except as directed by the Engineer.

© 2010, American Railway Engineering and Maintenance-of-Way Association

b. When the top of the pipe is even with or below the top of the trench, backfill material shall be placed at or near the optimum moisture content and compacted in layers not exceeding 6 inches (compacted) on both sides of the pipe for the full required length.

c. Backfill material shall be placed and compacted for the full depth of the trench, unless induced trench installation is used.

d. When the top of the pipe is above the top of the trench, backfill shall be placed at or near optimum moisture content and compacted in layers not exceeding 6 inches (compacted) and shall be brought up evenly on both sides of the pipe for its full length to an elevation 1 foot above the top of the pipe. The width of backfill on each side of the pipe for the portion above the top of the trench shall be equal to twice the diameter of the pipe or 12 feet whichever is less. The backfill material used in the trench section and the portion above the top of the trench for a distance on each side of the pipe equal to the horizontal diameter and to 1 foot above the top of the pipe shall conform to the requirements for backfill in paragraph a. The remainder of the backfill shall meet the requirements for embankment construction.

e. The width of the trench, B_d, shall be $1.5 \times B_c$ but not less than 2 feet greater than the outside diameter of the pipe in order to completely fill the void.

10.4.3.4 Induced Trench Bedding (See Figure 8-10-6)

a. The Induced Trench method shall not be used when the pipe is subjected to track loading without making a complete investigation of the settlements involved.

b. When the Induced Trench method is used, the embankment shall be completed as required in Article 10.4.3.3 and as illustrated in Figure 8-10-6, to a height above the pipe equal to the vertical outside diameter of the pipe plus 1 foot. A trench equal in width to the outside horizontal diameter of the pipe, in depth equal to the vertical outside diameter of the pipe, and to the length shown on the plans shall then be excavated to within 1 foot of the top of the pipe, trench walls being as nearly vertical as possible. This trench shall be loosely filled with highly compressible material. Construction of the embankment above the pipe shall then proceed in a normal manner using regular fill material.

c. The length of the Induced Trench method shall be determined by the designer in keeping with the design assumptions and the pipe strength being used.

d. When the Alternate Induced Trench method is used, the embankment shall be constructed in a normal manner to a height above the culvert bedding elevation equal to twice the outside diameter of the pipe. A trench as required shall then be excavated with the walls as nearly vertical as possible, and the pipe bedded and backfilled to 1 foot above the pipe as called for in Article 10.4.3.3. The remaining portion of the trench shall then be loosely filled with highly compressible material. Construction of embankment shall then proceed in a normal manner.

e. In no case shall the length of compressible material extend to the ends of the culvert.

f. Rock fill shall not be dumped over the culvert without a sufficient cushion of earth to prevent breakage of the pipe.

© 2010, American Railway Engineering and Maintenance-of-Way Association

10.4.3.5 Jacking Pipe

a. Pipe used for jacking through fills shall be tongue and groove design. The tongue shall preferably be at the downstream end. Jacking frames shall be so constructed as to avoid breaking the pipe or forcing it out of alignment. The pipe shall preferably be jacked upgrade in order to provide drainage at the heading during excavation. Satisfactory means shall be provided for maintaining the lead pipe at the correct line and grade.

b. The pipe shall be installed according to specially prepared plans and specifications. The contractor shall set forth the construction procedure, extra pipe reinforcement and jack shield (if required), jacking pit location and shoring, and other special features for the safe and satisfactory completion of the work. Plans prepared by the contractor giving the construction details shall be submitted for review by the Engineer.

c. Straw filler shall be inserted into voids created by excavation during jacking operations. Locations shall be recorded and after mining is completed, grout holes are to be drilled through the pipe and the voids filled with grout.

d. A survey crew must continually monitor elevation and alignment of the railroad track above during the jacking procedures. Jacking must be stopped and any problems corrected if track movement is detected.

10.4.3.6 Constructing Pipe in Tunnels

When it is necessary to place culvert pipe by tunneling, plans and specifications for the completed structure shall be prepared by the Engineer. The contractor shall set forth the construction procedures and other necessary details and submit them for review by the Engineer.

© 2010, American Railway Engineering and Maintenance-of-Way Association