Dist	COUNTY	ROUTE	POST MILES TOTAL PROJECT	SHEET No.	TOTAL SHEETS
07	LA	5	29.4/31.6	179A	1931

REGISTERED CIVIL ENGINEER DATE 1/31/12

5-21-12
PLANS APPROVAL DATE

REGISTERED PROFESSIONAL ENGINEER R.M SASAKI No. 30849 Exp. 3-31-12 CIVIL STATE OF CALIFORNIA

THE STATE OF CALIFORNIA OR ITS OFFICERS OR AGENTS SHALL NOT BE RESPONSIBLE FOR THE ACCURACY OR COMPLETENESS OF SCANNED COPIES OF THIS PLAN SHEET.

3

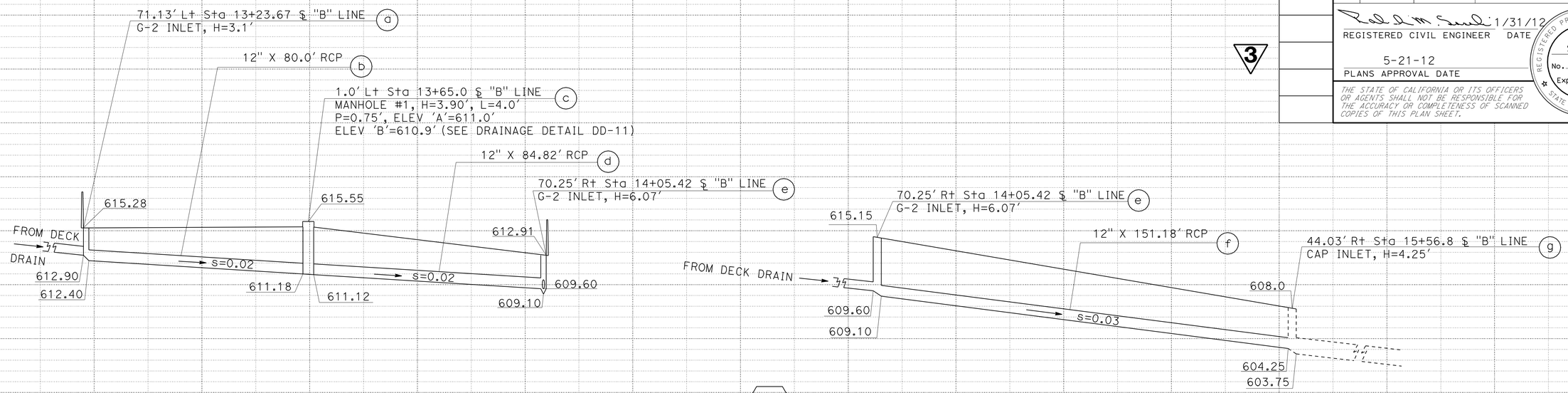

DRAINAGE SYSTEM 10-A

DRAINAGE PROFILE

SCALE: Horiz 1" = 20'
Vert 1" = 5'

DP-11A

3 **ADDED PER ADDENDUM No. 3 DATED SEPTEMBER 28, 2012**

STATE OF CALIFORNIA - DEPARTMENT OF TRANSPORTATION
Caltrans HYDRAULICS

FUNCTIONAL SUPERVISOR: R.M SASAKI
CALCULATED-DESIGNED BY: SIDDHARTH RANA
CHECKED BY: R.M SASAKI
REVISED BY
DATE REVISED

STATION

LAST REVISION 00-00-00
DATE PLOTTED => 27-SEP-2012
TIME PLOTTED => 11:11

Dist	COUNTY	ROUTE	POST MILES TOTAL PROJECT	SHEET No.	TOTAL SHEETS
07	LA	5	29.4/31.6	278M	1931

REGISTERED CIVIL ENGINEER 4-3-12 DATE

5-21-12
PLANS APPROVAL DATE

REGISTERED PROFESSIONAL ENGINEER VICTOR T. PONCE No. C 57559 Exp. 12-31-13 CIVIL STATE OF CALIFORNIA

THE STATE OF CALIFORNIA OR ITS OFFICERS OR AGENTS SHALL NOT BE RESPONSIBLE FOR THE ACCURACY OR COMPLETENESS OF SCANNED COPIES OF THIS PLAN SHEET.

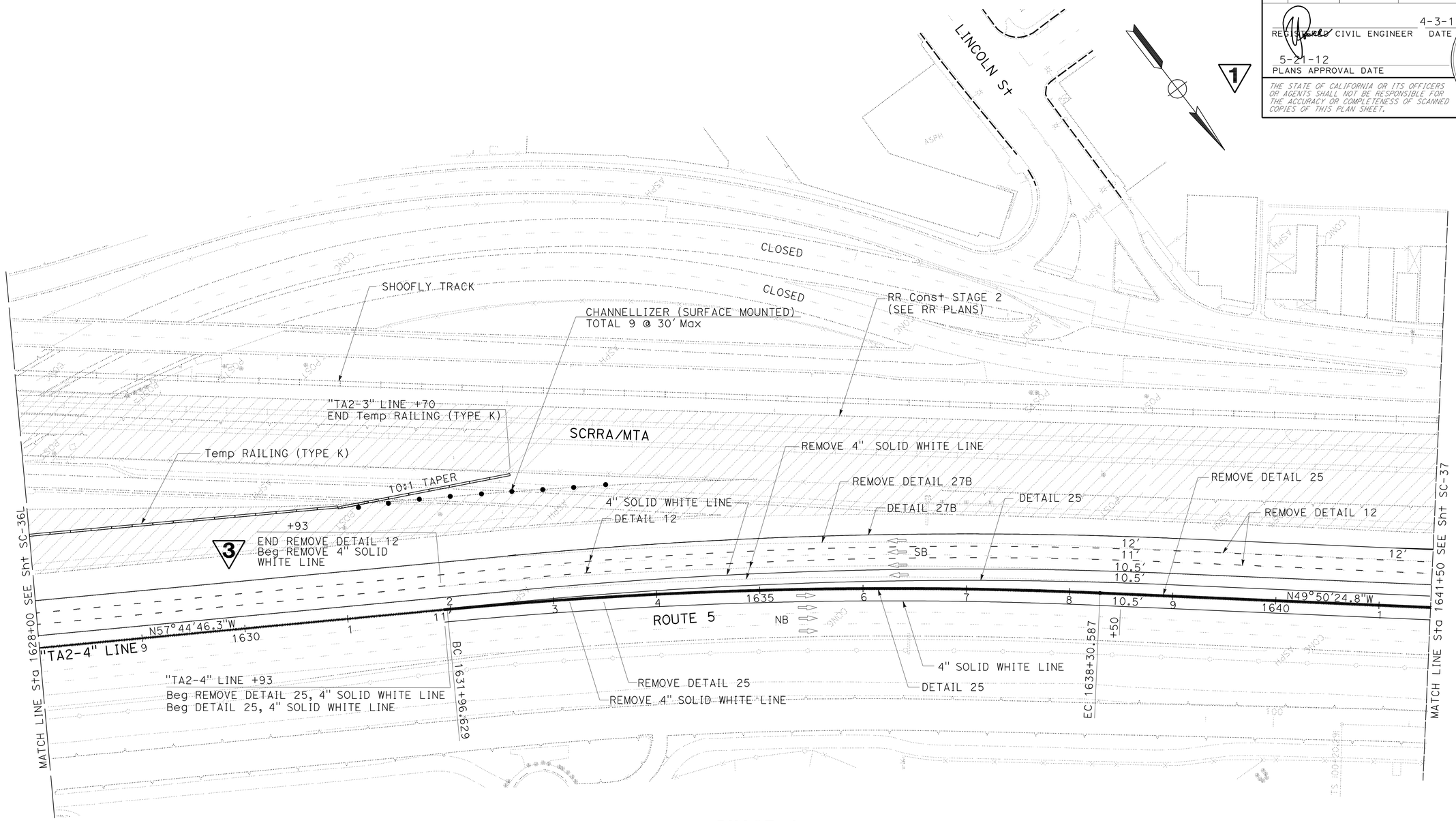

PHASE 4

3 REVISED PER ADDENDUM No. 3 DATED SEPTEMBER 28, 2012

1 ADDED PER ADDENDUM No. 1 DATED SEPTEMBER 13, 2012

APPROVED FOR STAGE CONSTRUCTION AND TRAFFIC HANDLING WORK ONLY

STAGE CONSTRUCTION AND TRAFFIC HANDLING PLAN

(STAGE 2)

SCALE: 1" = 50'

SC-36M

STATE OF CALIFORNIA - DEPARTMENT OF TRANSPORTATION
Caltrans® DESIGN

FUNCTIONAL SUPERVISOR: CHARLES P. TON

CALCULATED-DESIGNED BY: STEVEN TRIEU
CHECKED BY: SAFWAT SALAHIEH

REVISED BY
DATE REVISED

LAST REVISION 00-00-00
DATE PLOTTED => 27-SEP-2012
TIME PLOTTED => 11:00

Dist	COUNTY	ROUTE	POST MILES TOTAL PROJECT	SHEET No.	TOTAL SHEETS
07	LA	5	29.4/31.6	285	1931

REGISTERED CIVIL ENGINEER DATE 4-3-12

5-21-12
PLANS APPROVAL DATE

REGISTERED PROFESSIONAL ENGINEER VICTOR T. PONCE No. C 57559 Exp. 12-31-13 CIVIL STATE OF CALIFORNIA

THE STATE OF CALIFORNIA OR ITS OFFICERS OR AGENTS SHALL NOT BE RESPONSIBLE FOR THE ACCURACY OR COMPLETENESS OF SCANNED COPIES OF THIS PLAN SHEET.

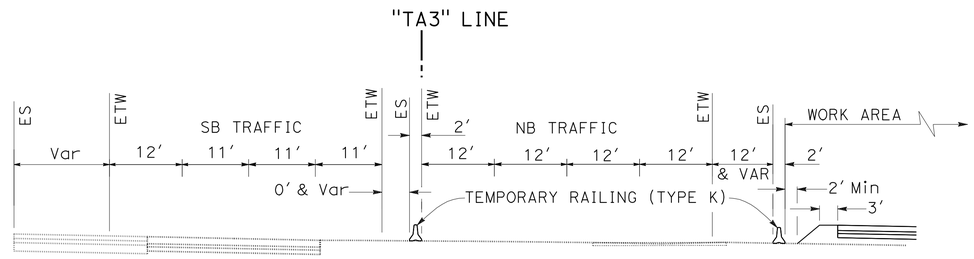

TYPICAL SECTION
Sta 1558+50 TO Sta 1601+50
NO SCALE

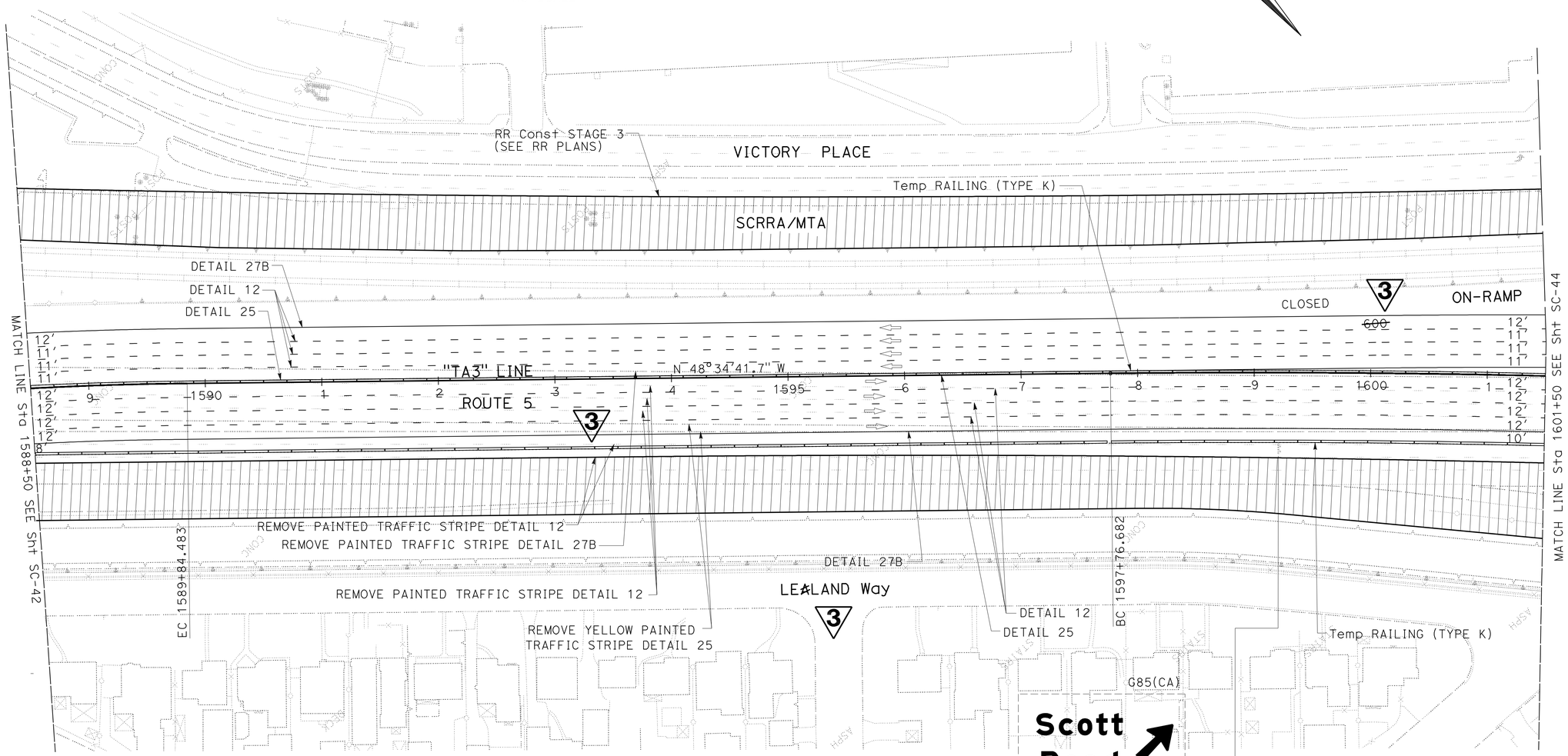

PHASE 1

STAGE CONSTRUCTION AND TRAFFIC HANDLING PLAN

(STAGE 3)

SCALE: 1" = 50'

3 **REVISED PER ADDENDUM No. 3 DATED SEPTEMBER 28, 2012**

APPROVED FOR STAGE CONSTRUCTION AND TRAFFIC HANDLING WORK ONLY

SC-43

STATE OF CALIFORNIA - DEPARTMENT OF TRANSPORTATION
Caltrans
DESIGN

FUNCTIONAL SUPERVISOR: CHARLES P. TON
CALCULATED-DESIGNED BY: STEVEN TRIEU
CHECKED BY: SAFWAT SALAHIEH
REVISED BY
DATE REVISED

LAST REVISION 01-27-12
DATE PLOTTED => 27-SEP-2012
TIME PLOTTED => 11:00

Dist	COUNTY	ROUTE	POST MILES TOTAL PROJECT	SHEET No.	TOTAL SHEETS
07	LA	5	29.4/31.6	286	1931

REGISTERED CIVIL ENGINEER 4-3-12 DATE

5-21-12
PLANS APPROVAL DATE

REGISTERED PROFESSIONAL ENGINEER VICTOR T. PONCE No. C 57559 Exp. 12-31-13 CIVIL STATE OF CALIFORNIA

THE STATE OF CALIFORNIA OR ITS OFFICERS OR AGENTS SHALL NOT BE RESPONSIBLE FOR THE ACCURACY OR COMPLETENESS OF SCANNED COPIES OF THIS PLAN SHEET.

G83(CA)

Burbank Blvd
NEXT EXIT

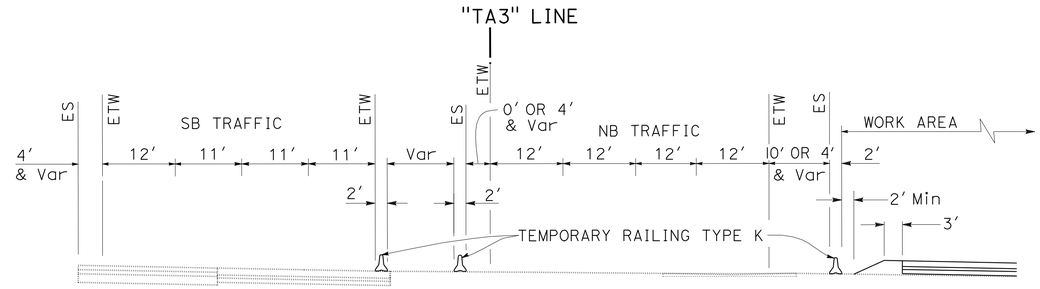

TYPICAL SECTION
Sta 1601+50 TO Sta 1607+40
Sta 1609+32 TO Sta 1619+84
NO SCALE

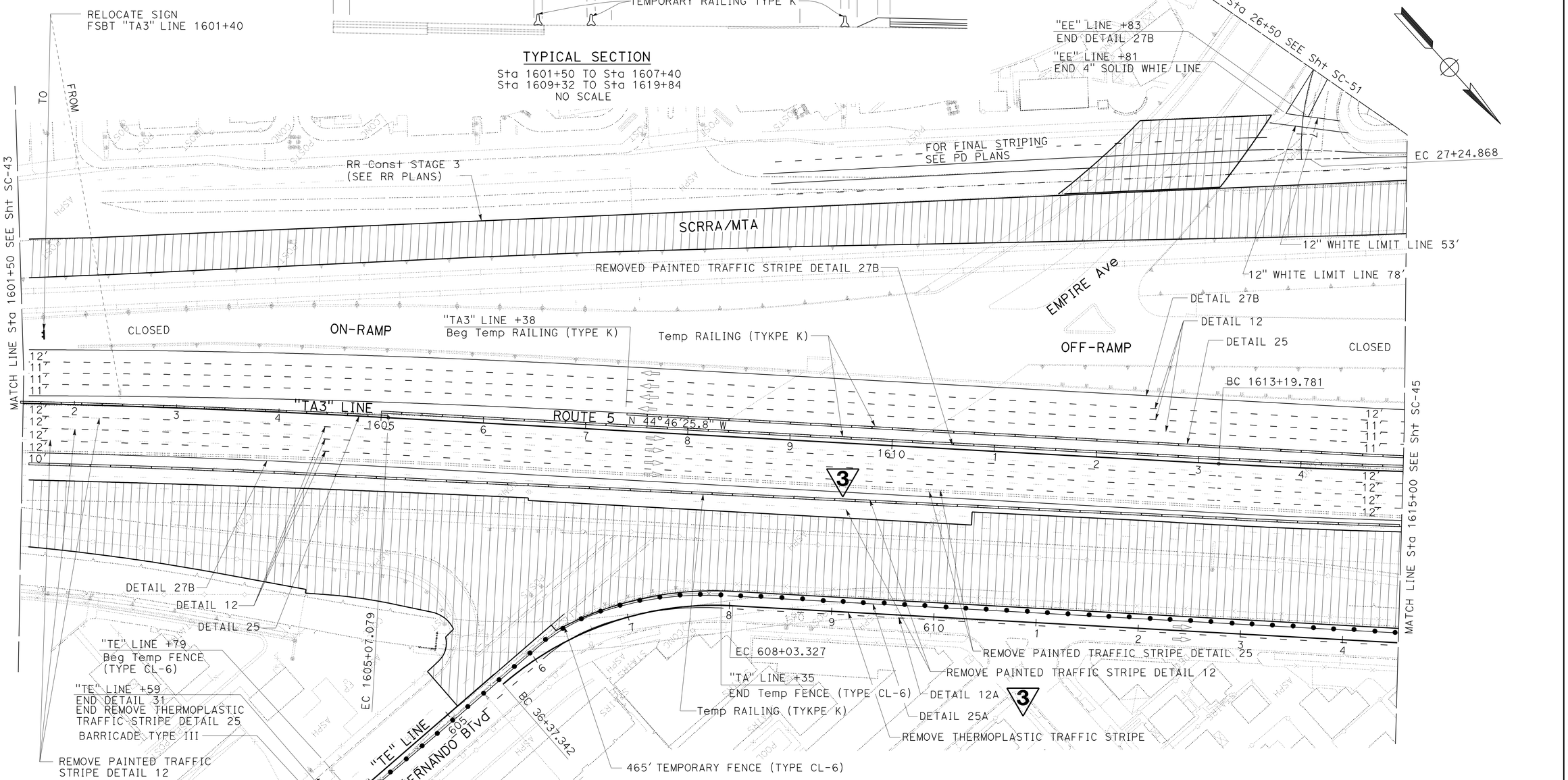

PHASE 1

STAGE CONSTRUCTION AND TRAFFIC HANDLING PLAN
(STAGE 3)
SCALE: 1" = 50'

3 REVISED PER ADDENDUM No. 3 DATED SEPTEMBER 28, 2012

1 REVISED PER ADDENDUM No. 1 DATED SEPTEMBER 13, 2012 SC-44

APPROVED FOR STAGE CONSTRUCTION AND TRAFFIC HANDLING WORK ONLY

STATE OF CALIFORNIA - DEPARTMENT OF TRANSPORTATION
Caltrans DESIGN
FUNCTIONAL SUPERVISOR CHARLES P. TON
CALCULATED-DESIGNED BY STEVEN TRIEU
CHECKED BY SAFWAT SALAHIEH
REVISED BY
DATE REVISED

LAST REVISION DATE PLOTTED => 27-SEP-2012
TIME PLOTTED => 11:00
01-26-12

Dist	COUNTY	ROUTE	POST MILES TOTAL PROJECT	SHEET No.	TOTAL SHEETS
07	LA	5	29.4/31.6	287	1931

REGISTERED CIVIL ENGINEER DATE 4-3-12

5-21-12
PLANS APPROVAL DATE

REGISTERED PROFESSIONAL ENGINEER VICTOR T. PONCE No. C 57559 Exp. 12-31-13 CIVIL STATE OF CALIFORNIA

THE STATE OF CALIFORNIA OR ITS OFFICERS OR AGENTS SHALL NOT BE RESPONSIBLE FOR THE ACCURACY OR COMPLETENESS OF SCANNED COPIES OF THIS PLAN SHEET.

3 **REVISED PER ADDENDUM No. 3 DATED SEPTEMBER 28, 2012**

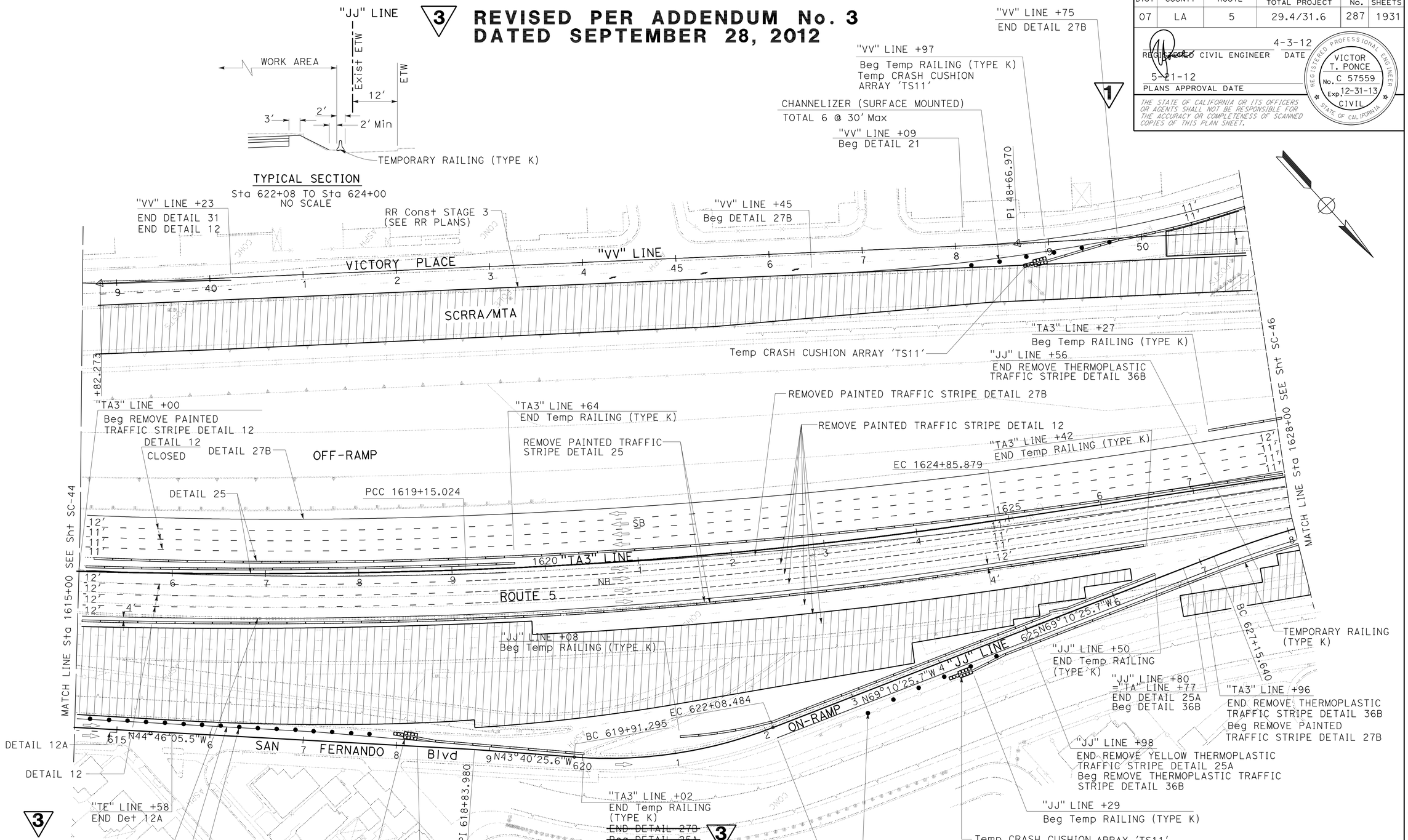

PHASE 1

1 **REVISED PER ADDENDUM No. 1 DATED SEPTEMBER 13, 2012**

APPROVED FOR STAGE CONSTRUCTION AND TRAFFIC HANDLING WORK ONLY

STAGE CONSTRUCTION AND TRAFFIC HANDLING PLAN
(STAGE 3)

SCALE: 1" = 50'

SC-45

STATE OF CALIFORNIA - DEPARTMENT OF TRANSPORTATION
Caltrans
DESIGN

FUNCTIONAL SUPERVISOR: CHARLES P. TON
CALCULATED-DESIGNED BY: STEVEN TRIEU
CHECKED BY: SAFWAT SALAHIEH
REVISED BY
DATE REVISED

LAST REVISION 01-27-12
DATE PLOTTED => 27-SEP-2012
TIME PLOTTED => 10:31

Dist	COUNTY	ROUTE	POST MILES TOTAL PROJECT	SHEET No.	TOTAL SHEETS
07	LA	5	29.4/31.6	356	1931

REGISTERED CIVIL ENGINEER 4-3-12 DATE

5-21-12
PLANS APPROVAL DATE

REGISTERED PROFESSIONAL ENGINEER VICTOR T. PONCE No. C 57559 Exp. 12-31-13 CIVIL STATE OF CALIFORNIA

THE STATE OF CALIFORNIA OR ITS OFFICERS OR AGENTS SHALL NOT BE RESPONSIBLE FOR THE ACCURACY OR COMPLETENESS OF SCANNED COPIES OF THIS PLAN SHEET.

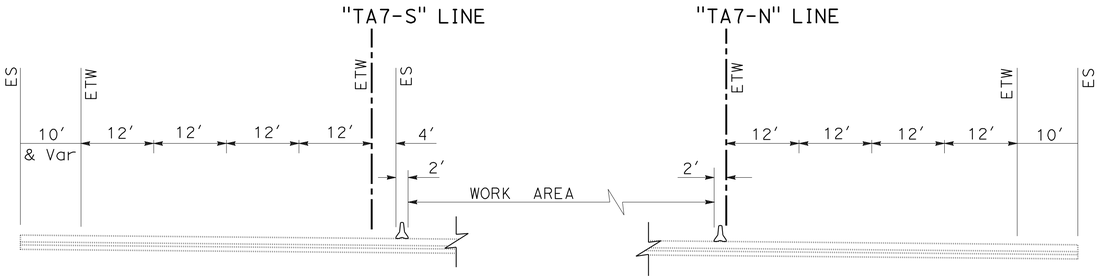

TYPICAL SECTION
Sta 1588+20 TO Sta 1593+60
NO SCALE

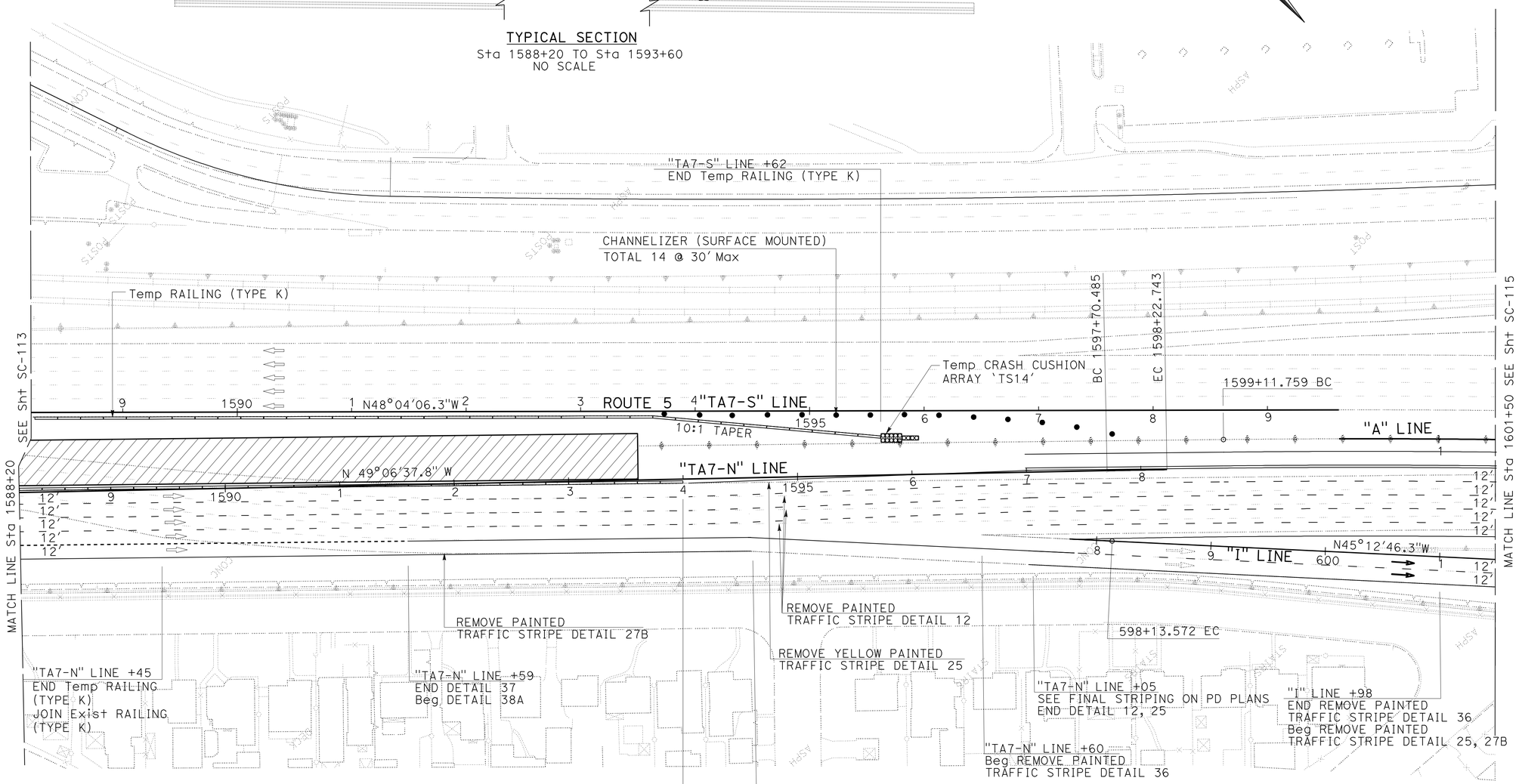

STAGE CONSTRUCTION AND TRAFFIC HANDLING PLAN
(STAGE 7)

SCALE: 1" = 50'

3 REVISED PER ADDENDUM No. 3 DATED SEPTEMBER 28, 2012

APPROVED FOR STAGE CONSTRUCTION AND TRAFFIC HANDLING WORK ONLY

SC-114

STATE OF CALIFORNIA - DEPARTMENT OF TRANSPORTATION
Caltrans
DESIGN
FUNCTIONAL SUPERVISOR: CHARLES P. TON
CALCULATED-DESIGNED BY: SAFWAT SALAHIEH
CHECKED BY: STEVEN TRIEU
REVISED BY
DATE REVISED

LAST REVISION 01-30-12
DATE PLOTTED => 27-SEP-2012
TIME PLOTTED => 10:31

BORDER LAST REVISED 7/2/2010
USERNAME => s123631
DGN FILE => 71218wma114.dgn
RELATIVE BORDER SCALE IS IN INCHES 0 1 2 3
UNIT 1812
PROJECT NUMBER & PHASE 07000211191

Dist	COUNTY	ROUTE	POST MILES TOTAL PROJECT	SHEET No.	TOTAL SHEETS
07	LA	5	29.4/31.6	370	1931

REGISTERED CIVIL ENGINEER 4-3-12 DATE

5-21-12
PLANS APPROVAL DATE

REGISTERED PROFESSIONAL ENGINEER VICTOR T. PONCE No. C 57559 Exp. 12-31-13 CIVIL STATE OF CALIFORNIA

THE STATE OF CALIFORNIA OR ITS OFFICERS OR AGENTS SHALL NOT BE RESPONSIBLE FOR THE ACCURACY OR COMPLETENESS OF SCANNED COPIES OF THIS PLAN SHEET.

3

TEMPORARY PAVEMENT DELINEATION & TRAFFIC HANDLING QUANTITIES

STAGE	SHEET No.	LOCATION & STATION	DIRECTION	DETAIL No. OR PAVEMENT MARKING	REMOVE ~~PAINTED~~ PAVEMENT MARKER	REMOVE PAINTED PAVEMENT MARKING	REMOVE PAINTED TRAFFIC STRIPE		REMOVE THERMOPLASTIC			PAVEMENT MARKER (RETROREFLECTIVE)			PAINT TRAFFIC STRIPE (2-COAT)			PAINT PAVEMENT MARKING (2-COAT)	TEMPORARY RAILING (TYPE K)	TEMPORARY CRASH CUSHION MODULE	TEMPORARY FENCE (TYPE CL-6)	CHANNELIZER (SURFACE MOUNTED)	TYPE III BARRICADE
									TRAFFIC STRIPE		PAVEMENT MARKING												
							YELLOW	WHITE	YELLOW	WHITE		TYPE C	TYPE G	TYPE H	4" YELLOW	4" WHITE	8" WHITE						
					EA	SQFT	LF		LF		SQFT	EA	EA	EA	LF			SQFT	LF	EA	LF	EA	EA
		"AA" ROUTE 5																					
1	SC-6	1575+32 TO 1576+50	NB	12, 25	30				118	59			7	4	118	236						2	
		1575+56 TO 1576+50	SB	12, 25	24				94	47			6	3	94	188							
	SC-7	1576+50 TO 1588+50	NB	12, 25	277				1200	600			52	26	1200	2400			970	14		10	
		1576+50 TO 1588+50	SB	12, 25	277				1200	600			52	26	1200	2400			863				
	SC-8	1588+50 TO 1601+50	NB	12, 25	302				1300	650			57	29	1300	2600			1300				
		1588+50 TO 1601+50	SB	12, 25	302				1300	650			57	29	1300	2600			1300				
	SC-9	1601+50 TO 1615+00	NB	12,25,27B,TYPE VI	313			153	1350	675			59	30	1350	2853		42	1433				
		1601+50 TO 1615+00	SB	12, 25, TYPE VI	313				1350	675			59	30	1350	2700		84	1350				
	SC-10	1615+00 TO 1628+00	NB	12, 25, 25A, 27B	332			909	1300	650			57	45	1635	2633			1640			33	
		1615+00 TO 1628+00	SB	12, 25	302				1300	650			57	29	1300	2600			1300				
	SC-11	1628+00 TO 1641+50	NB	12, 25	313				1350	675			59	30	1350	2700			1350				
		1628+00 TO 1641+50	SB	12, 25	313				1350	675			59	30	1350	2700			1350				
	SC-12	1641+50 TO 1652+00	NB	12, 25	243				1050	525			46	23	1050	2100			1050				
		1641+50 TO 1652+00	SB	12, 25	243				1050	525			46	23	1050	2100			1050				
	SC-13	1652+00 TO 1660+50	NB	12, 25	198				850	425			38	19	850	1700			850				
		1652+00 TO 1660+50	SB	12, 25	198				850	425			38	19	850	1700			850				
		"NN" 655+15 TO 659+10																	420	14		20	
	SC-13A	"BV" 12+10 TO 19+28		8, 12, 21, 28, 38A		75			916	450					1444	184	426	90					
		"NN" 654+97 TO 658+72		12, 25A, 4" SOLID WHITE									4	24	374	196							
	SC-14	1660+50 TO 1672+50	NB	12, 25	277				1200	600			52	26	1200	2400			1020				
		1660+50 TO 1672+50	SB	12, 25	277				1200	600			52	26	1200	2400			1150	14		5	
	SC-15	1672+50 TO 1673+11	NB	12, 25	18				62	31			5	3	62	123							
		1672+50 TO 1673+11	SB	12, 25	18				62	31			5	3	62	123						4	
	SC-16	"VV" 28+00 TO 40+00		21,27B,38A,41,TYPE VI					926	115					1055	1623	40	227	1484	33	600		
	SC-17	"EE" 16+12 TO 25+35		8,21,27B,38A,TYPE VI					682	160	144				918	1041	176	45	875	11	1020		
	SC-18	"V" 52+53 TO 58+00		8	10	297			430							547							
	SC-19	"V" 58+00 TO 68+00		8, 25A	10			20	250	~~378~~ ~~588~~				33	770	1058			160			21 ~~42~~	5
		"P" 7+36 TO 10+00		21, 24, 27B																			
SUBTOTAL					4590	372		1082	22740	10871 ~~11081~~	144		867	510	24432	43905	642	488	21765	86	1620	95 ~~116~~	5
SHEET TOTAL					4590	372	1082		22740	10871 ~~11081~~	144	1377			68979			488	21765	86	1620	95 ~~116~~	5

1 1 1

3 REVISED PER ADDENDUM No. 3 DATED SEPTEMBER 28, 2012

1 REVISED PER ADDENDUM No. 1 DATED SEPTEMBER 13, 2012

STAGE CONSTRUCTION AND TRAFFIC HANDLING QUANTITIES

SCQ-1

STATE OF CALIFORNIA - DEPARTMENT OF TRANSPORTATION

DESIGN

FUNCTIONAL SUPERVISOR: CHARLES P. TON

CALCULATED-DESIGNED BY: STEVEN TRIEU

CHECKED BY: VICTOR PONCE

REVISED BY / DATE REVISED

LAST REVISION 03-27-12

DATE PLOTTED => 27-SEP-2012
TIME PLOTTED => 10:31

Dist	COUNTY	ROUTE	POST MILES TOTAL PROJECT	SHEET No.	TOTAL SHEETS
07	LA	5	29.4/31.6	372	1931

REGISTERED CIVIL ENGINEER 4-3-12 DATE

5-21-12
PLANS APPROVAL DATE

REGISTERED PROFESSIONAL ENGINEER VICTOR T. PONCE No. C 57559 Exp. 12-31-13 CIVIL STATE OF CALIFORNIA

THE STATE OF CALIFORNIA OR ITS OFFICERS OR AGENTS SHALL NOT BE RESPONSIBLE FOR THE ACCURACY OR COMPLETENESS OF SCANNED COPIES OF THIS PLAN SHEET.

TEMPORARY PAVEMENT DELINEATION & TRAFFIC HANDLING QUANTITIES

STAGE	SHEET No.	LOCATION & STATION	DIRECTION	DETAIL No. OR PAVEMENT MARKING	REMOVE PAVEMENT MARKER	REMOVE PAINTED PAVEMENT MARKING	REMOVE PAINTED TRAFFIC STRIPE		REMOVE THERMOPLASTIC			PAVEMENT MARKER (RETROREFLECTIVE)			PAINT TRAFFIC STRIPE (2-COAT)			PAINT PAVEMENT MARKING (2-COAT)	TEMPORARY RAILING (TYPE K)	TEMPORARY CRASH CUSHION MODULE	TEMPORARY FENCE (TYPE CL-6)	CHANNELIZER (SURFACE MOUNTED)	TYPE III BARRICADE
									TRAFFIC STRIPE		PAVEMENT MARKING												
							YELLOW	WHITE	YELLOW	WHITE		TYPE C	TYPE G	TYPE H	4" YELLOW	4" WHITE	8" WHITE						
					EA	SQFT	LF		LF		SQFT	EA	EA	EA	LF			SQFT	LF	EA	LF	EA	EA
		"AA", "TA2-3" ROUTE 5																					
2	SC-36C	1601+50 TO 1615+00	SB	4" SOLID WHITE	3											100			100				
	SC-36D	1615+00 TO 1628+00	SB	12, 27B, 4" SOLID WHITE	82			1820					55			4745			845				
	SC-36E	1631+93 TO 1641+50	NB	25, 4" SOLID WHITE	122		957			240				21	957	957			957				
		1628+00 TO 1641+50	SB	12, 25, 27B, 4" SOLID WHITE	107		957	2365					37	21	957	5400			1350				
	SC-36F	1641+50 TO 1652+00	NB	12, 25, 27B, 4" SOLID WHITE	128		1050			265				22	1050	1050			1050				
		1641+50 TO 1652+00	SB	12, 25, 27B, 36A, 4" SOLID WHITE	89		1050	1880					22	22	1050	4200	60		1050				
	SC-36G	1652+00 TO 1660+50	NB	25, 4" SOLID WHITE	110		850			215				5	185	185			185				
		1652+00 TO 1660+50	SB	12, 25, 27B, 36A, 4" SOLID WHITE	83		850	2110					29	19	850	3195	514		5				
	SC-36H	1660+50 TO 1673+50	NB	25, 4" SOLID WHITE	164		1300			325				26	1190	1300			1190				
		1660+50 TO 1673+50	SB	12, 25, 27B, 36, 4" SOLID WHITE	116		1300	2020					57	28	1300	4885	410		700	14			
	SC-36I	1673+50 TO 1688+00	NB	25, 4" SOLID WHITE	14		104	600		26				3	104	104							
		1673+50 TO 1688+00	SB	12, 25, 27B, TYPE VI	128		1450	2605			228		99	31	1450	6135		84	1450				
	SC-36J	1688+00 TO 1696+79	SB	12, 25, 27B, TYPE VI	93	880	1960			114		74	19	880	4400		42	352					
	SC-36K	1601+00 TO 1615+00	SB	12, 27B, 4" Solid WHITE	211			2450					89			5960							
	SC-36L	1615+00 TO 1628+00	SB	12, 27B, 4" SOLID WHITE	56			3250					55			5200							
	SC-36M	1628+00 TO 1641+50	NB	25, 4" SOLID WHITE										21	957	957							
		1628+00 TO 1641+50	SB	12, 27B, 4" SOLID WHITE	37			3713					57			6357							
	SC-37	1641+50 TO 1652+00	NB	4" SOLID WHITE												1050							
		1641+50 TO 1652+00	SB	12, 25, 27B, 36A	48		1050	3497				2	23	23	1050	4228	28		1050				
	SC-38	1652+00 TO 1660+50	NB	25, 4" SOLID WHITE	19		850	850						19	850	850							
		1652+00 TO 1660+50	SB	1, 12, 21, 25, 27B	57	15	850	2976					31	57	2357	5004		283	1282	14		19	
	SC-39	1660+50 TO 1673+50	NB	12, 25, 4" SOLID WHITE	79		1300	1300					21	28	1300	1300							
		1660+50 TO 1673+50	SB	12, 25, 25A, 27B, 36	107		1300	3428				24	29	51	1794	3094	498		988	21			
	SC-39A	1673+50 TO 1678+63	NB	12, 25, 4" SOLID WHITE	12		513	129					12	12	513	612							
		1673+50 TO 1678+63	SB	12, 25, 27B	48		513	900					36	12	2052	513			513				
3		"TA3" ROUTE 5																					
	SC-41	1572+74 TO 1576+50	NB	12, 25, 27B	36		376	658					27	9	376	1504							
	SC-42	1576+50 TO 1588+50	NB	12, 25, 27B	53		1650	1989					20	26	1200	2100			1020	14		10	
		1580+52 TO 1588+50	SB	12, 25, 27B,36	22		348	1334					14	18	798	834	146		758				
		"TG3" 576+00 TO 584+28	SB	27B,36				278		369						576	148						
3	SUBTOTAL				~~1913~~ 2024	895	~~18204~~ 20578	~~35893~~ 40152		~~1185~~ 1554	228	100	~~671~~ 732	~~1301~~ 1354	~~24366~~ 26740	~~67381~~ 72395	~~1552~~ 1846	719	~~12715~~ 14493	~~49~~ 63		~~19~~ 29	
	SHEET TOTAL				~~1913~~ 2024	895	~~54097~~ 60730			~~1185~~ 1554	228		~~2072~~ 2186			~~93299~~ 100981		719	~~12715~~ 14493	~~49~~ 63		~~19~~ 29	

3 REVISED PER ADDENDUM No. 3 DATED SEPTEMBER 28, 2012

STAGE CONSTRUCTION AND TRAFFIC HANDLING QUANTITIES

SCQ-3

STATE OF CALIFORNIA - DEPARTMENT OF TRANSPORTATION
Caltrans DESIGN

FUNCTIONAL SUPERVISOR: CHARLES P. TON
CALCULATED-DESIGNED BY: VICTOR PONCE
CHECKED BY: STEVEN TRIEU
REVISED BY / DATE REVISED

LAST REVISION 03-27-12 | DATE PLOTTED => 27-SEP-2012 | TIME PLOTTED => 10:51

Dist	COUNTY	ROUTE	POST MILES TOTAL PROJECT	SHEET No.	TOTAL SHEETS
07	LA	5	29.4/31.6	373	1931

REGISTERED CIVIL ENGINEER 4-3-12 DATE

5-21-12
PLANS APPROVAL DATE

REGISTERED PROFESSIONAL ENGINEER VICTOR T. PONCE No. C 57559 Exp. 12-31-13 CIVIL STATE OF CALIFORNIA

THE STATE OF CALIFORNIA OR ITS OFFICERS OR AGENTS SHALL NOT BE RESPONSIBLE FOR THE ACCURACY OR COMPLETENESS OF SCANNED COPIES OF THIS PLAN SHEET.

3

TEMPORARY PAVEMENT DELINEATION & TRAFFIC HANDLING QUANTITIES

STAGE	SHEET No.	LOCATION & STATION	DIRECTION	DETAIL No. OR PAVEMENT MARKING	REMOVE PAVEMENT MARKER	REMOVE PAINTED PAVEMENT MARKING	REMOVE PAINTED TRAFFIC STRIPE		REMOVE THERMOPLASTIC			PAVEMENT MARKER (RETROREFLECTIVE)			PAINT TRAFFIC STRIPE (2-COAT)			PAINT PAVEMENT MARKING (2-COAT)	TEMPORARY RAILING (TYPE K)	TEMPORARY CRASH CUSHION MODULE	TEMPORARY FENCE (TYPE CL-6)	CHANNELIZER (SURFACE MOUNTED)	TYPE III BARRICADE
									TRAFFIC STRIPE		PAVEMENT MARKING												
							YELLOW	WHITE	YELLOW	WHITE		TYPE C	TYPE G	TYPE H	4" YELLOW	4" WHITE	8" WHITE						
					EA	SQFT	LF		LF		SQFT	EA	EA	EA	LF			SQFT	LF	EA	LF	EA	EA
		"TA3" LINE																					
3	SC-43	1588+50 TO 1601+50	NB	12, 25, 27B	140		2600	2925					84	28	1300	5200			2600				
		1588+50 TO 1601+50	SB	12, 25, 27B									84	28	1300	5200							
	SC-44	1601+50 TO 1615+00	NB	12, 25, 25A 27B, 31	247		2700	1583	1148	278			135	77	2561	6509			2700		465	56	4
		1601+50 TO 1615+00	SB	12, 25, 27B									88	29	1350	5884			762				
	SC-45	1615+00 TO 1628+00	NB	12, 25, 25A, 27B	252		2600	2059	390	1894			90	81	2527	5907			2671	22		22	
		1615+00 TO 1628+00	SB	12, 21, 25, 27B, 31									88	28	2474	5976			1590	11		6	
	SC-46	1628+00 TO 1641+50	NB	12, 25, 25A, 27B, 36	142		2304	3713		1350		10	60	30	1350	4050	202		2700				
		1628+00 TO 1641+50	SB	1, 12, 21, 25, 27B									90	30	2653	6795			1094	22		19	
	SC-47	1641+50 TO 1652+00	NB	12, 21, 25, 27B, 31	312		5250	2888		1050			78	27	1123	2891			2016	21			
		1641+50 TO 1652+00	SB	1, 12, 21, 25, 27B, 38A									79	23	2444	5213	147		189	11		10	
	SC-48	1652+00 TO 1660+50	NB	12, 25, 25A, 27B	196		170	5102					111	23	964	2891			1627	28		7	
		1652+00 TO 1660+50	SB	12, 25, 27B									54	19	850	3457							
	SC-49	1652+00 TO 1660+50	NB	12, 25, 25A, 27B, 36B	142		1200	3600				14	78	30	1264	5222	306						
		1652+00 TO 1660+50	SB	12, 25, 27B, 36, 37								41	78	26	1200	4818	1401						
	SC-50	1652+00 TO 1660+50	NB	12, 25, 27B	423			1250	1250	2189			81	27	1250	5000			1250			7	
		1652+00 TO 1660+50	SB	12, 25, 27B, 37	108		1250	2189			42	43	81	27	1250	5000	1250						
	SC-50A	1652+00 TO 1660+50	NB	12, 25, 27B									3	1	18	72			1250			7	
		1652+00 TO 1660+50	SB	12, 25, 27B	108		1414	2489			42		108	31	1414	6085							
	SC-51	("E" LINE) 20+68 TO 21+49																	81				
	SC-53	("VV LINE) 62+56 TO 65+00		8, 27B, 31											984	1142						23	
	SC-54	("VV LINE) 65+00 TO 68+22		8, 31											1288	733							
	SC-55	1592+32 TO 1601+50		25A, 27B, 36B				918					14	14	311	918	311						
	SC-56	1601+50 TO 1615+00		25A, 27B, 36B, 38A									86	85	1973	1192	1972		300				
	SC-57	1615+00 TO 1628+00		25A, 27B, 36, 38A									9	51	1194	1286	1224						
	SC-58	1628+00 TO 1629+95		27B, 36 ,TYPE IV ARROW							15		18			422	392						
	SC-59	("E" LINE) 14+90 TO 26+50		12, 21, 38A ,TYPE IV ARROW				2032			30		52		3912	1141	574	45				24	
	SC-60	("E" LINE) 8+35 TO ("J" LINE) 615+00		25A, 27B	7		278						15	49	1150	1892			535	22		66	3
	SC-61	1615+00 TO 1628+00		12, 25A, 27B, 36A	29		673							66	1034	1303	169		855	11		23	
	SC-62	1628+00 TO 1635+00		27B, 36A				600								669	68						
SUBTOTAL					2106		20439	31348	2788	6761	129	108	1664	830	39138	96868	8016	45	23258	148	465	270	7
SHEET TOTAL					2106		51787		2788	6761	129	2662			144022			45	23258	148	465	270	7

3 **REVISED PER ADDENDUM No. 3 DATED SEPTEMBER 28, 2012**

STAGE CONSTRUCTION AND TRAFFIC HANDLING QUANTITIES

SCQ-4

STATE OF CALIFORNIA - DEPARTMENT OF TRANSPORTATION
Caltrans®
DESIGN

FUNCTIONAL SUPERVISOR: CHARLES P. TON
CALCULATED-DESIGNED BY: STEVEN TRIEU
CHECKED BY: VICTOR PONCE
REVISED BY
DATE REVISED

LAST REVISION 00-00-00 DATE PLOTTED => 27-SEP-2012 TIME PLOTTED => 10:46

Dist	COUNTY	ROUTE	POST MILES TOTAL PROJECT	SHEET No.	TOTAL SHEETS
07	LA	5	29.4/31.6	379	1931

REGISTERED CIVIL ENGINEER 4-3-12 DATE

5-21-12
PLANS APPROVAL DATE

REGISTERED PROFESSIONAL ENGINEER VICTOR T. PONCE No. C 57559 Exp. 12-31-13 CIVIL STATE OF CALIFORNIA

THE STATE OF CALIFORNIA OR ITS OFFICERS OR AGENTS SHALL NOT BE RESPONSIBLE FOR THE ACCURACY OR COMPLETENESS OF SCANNED COPIES OF THIS PLAN SHEET.

TEMPORARY PAVEMENT DELINEATION & TRAFFIC HANDLING QUANTITIES

STAGE	SHEET No.	LOCATION & STATION	DIRECTION	DETAIL No. OR PAVEMENT MARKING	REMOVE PAVEMENT MARKER	REMOVE PAINTED PAVEMENT MARKING	REMOVE PAINTED TRAFFIC STRIPE		REMOVE THERMOPLASTIC TRAFFIC STRIPE		REMOVE THERMOPLASTIC PAVEMENT MARKING	PAVEMENT MARKER (RETROREFLECTIVE)			PAINT TRAFFIC STRIPE (2-COAT)			PAINT PAVEMENT MARKING (2-COAT)	TEMPORARY RAILING (TYPE K)	TEMPORARY CRASH CUSHION MODULE	TEMPORARY FENCE (TYPE CL-6)	CHANNELIZER (SURFACE MOUNTED)	TYPE III BARRICADE
							YELLOW	WHITE	YELLOW	WHITE		TYPE C	TYPE G	TYPE H	4" YELLOW	4" WHITE	8" WHITE						
					EA	SQFT	LF		LF		SQFT	EA	EA	EA	LF			SQFT	LF	EA	LF	EA	EA
		"AA" ROUTE 5																					
7	SC-109	1543+37 TO 1546+80	NB	12, 25, 27B, 36B	36		343	601					53	9	343	1589	277						
		1543+37 TO 1546+80	SB	12, 25, 27B	36		343	601					27	9	343	1372							
	SC-110	1546+80 TO 1558+50	NB	12, 27B, 36, 36B, 37, 38B	34		494	1628				25	125	26	1170	4752	1108		706	14		9	
		1546+80 TO 1558+50	SB	12, 25, 27B	90		523	2048					78	26	1170	4680			647				
	SC-111	1558+50 TO 1568+80	NB	12, 25, 27B, 36									106	23	2060	6180	270		1030			4	
		1558+50 TO 1568+80	SB	12, 25, 27B	31		853	1803					69	23	4120	1030			1030				
	SC-112	1568+80 TO 1575+80	NB	12,25,27B,38,4",TYPE III									103	45	1916	3275	407	126	1301	25			
		1568+80 TO 1575+80	SB	12, 25, 27B	80		700	1400					39	16	700	2800			1158			6	
	SC-113	1575+80 TO 1588+20	NB	12, 25, 27B, 36B, 37								18	107	34	260	5844	980		1240				
		1575+80 TO 1588+20	SB	12, 25, 27B, 36	99		995	886					86	22	995	3635	420		1280	14		8	
	SC-114	1641+50 TO 1652+50	NB	12, 25, 27B, 37, 38A	144		797	2566				13	60	20	885	3295	1280		1100				
		1641+50 TO 1652+50	SB																742	14		14	
	SC-115	1652+00 TO 1660+20	NB		107		2021	2823															
		1652+00 TO 1660+20	SB																				
	SC-116	1660+20 TO 1672+50	NB		171		1888	4700															
		1660+20 TO 1672+50	SB																				
SUBTOTAL					828		8957	19056				56	853	253	13962	38452	4742	126	10234	67		41	
REMOVE TEMP & CONFLICT STRIPING *					1162	126	13962	43194															
SHEET TOTAL					1990	126	85169					1162			57156			126	10234	67		41	
TOTAL FROM SHEET PDQ-2					3154				21504	24319	1017												
GRAND TOTAL					~~23083~~	~~1606~~	~~306390~~		~~56381~~	~~64451~~ ~~64661~~	1943		~~15506~~			~~739700~~		2230	~~120271~~	~~775~~	~~4703~~ ~~4013~~	~~679~~ ~~706~~	~~55~~ ~~50~~
					23581 (3)	1621 (3)	402831 (3)		57529 (3)	(1) 65098 (3)			16263 (3)			776871 (3)			138335 (3)	789 (3)	(1) 5198 (3)	(1) 745 (3)	(1) 59 (3)

NOTES:

* REMOVE ALL TEMPORARY & CONFLICT STRIPING PRIOR TO PUTTING THE FINAL STRIPING PER PAVEMENT DELINEATION PLANS.

(3) REVISED PER ADDENDUM No. 3 DATED SEPTEMBER 28, 2012

(1) REVISED PER ADDENDUM No. 1 DATED SEPTEMBER 13, 2012

STAGE CONSTRUCTION AND TRAFFIC HANDLING QUANTITIES

SCQ-10

REVISED BY | DATE REVISED
DARRYL MAYS | VICTOR PONCE
CALCULATED-DESIGNED BY | CHECKED BY
FUNCTIONAL SUPERVISOR
CHARLES P. TON

STATE OF CALIFORNIA - DEPARTMENT OF TRANSPORTATION
Caltrans
DESIGN

LAST REVISION 03-27-12 | DATE PLOTTED => 27-SEP-2012 | TIME PLOTTED => 11:33

DIST	COUNTY	ROUTE	POST MILES TOTAL PROJECT	SHEET No.	TOTAL SHEETS
07	LA	5	29.4/31.6	992	1931

REGISTERED CIVIL ENGINEER — DATE 01/31/12

5-21-12
PLANS APPROVAL DATE

REGISTERED PROFESSIONAL ENGINEER — Jorge I. Estrada — No. C51473 — Exp. 06-30-12 — CIVIL — STATE OF CALIFORNIA

The State of California or its officers or agents shall not be responsible for the accuracy or completeness of electronic copies of this plan sheet.

Post Tensioning Notes:

Tie Rod P_F = 162 kips

Notes:

1. Longitudinal keyways to be filled with mortar prior to post-tensioning tie rods.
2. 3"Ø formed holes in diaphragms to be filled with grout before overlay is placed.
3. Tie rod blockouts to be filled with Class"D" concrete after grout has been placed.
4. Polyester Concrete Overlay to be placed after tensioning tie rods.
5. Tie rod units shall be galvanized after fabrication.

LEGEND

- Indicates Existing Structure
- Indicates New Constuction
- Concrete Removal (Portion)

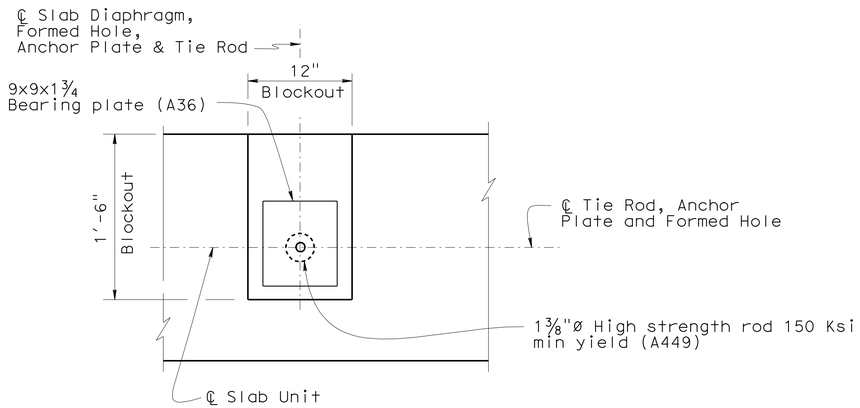

SECTION M-M

1' = 1½"

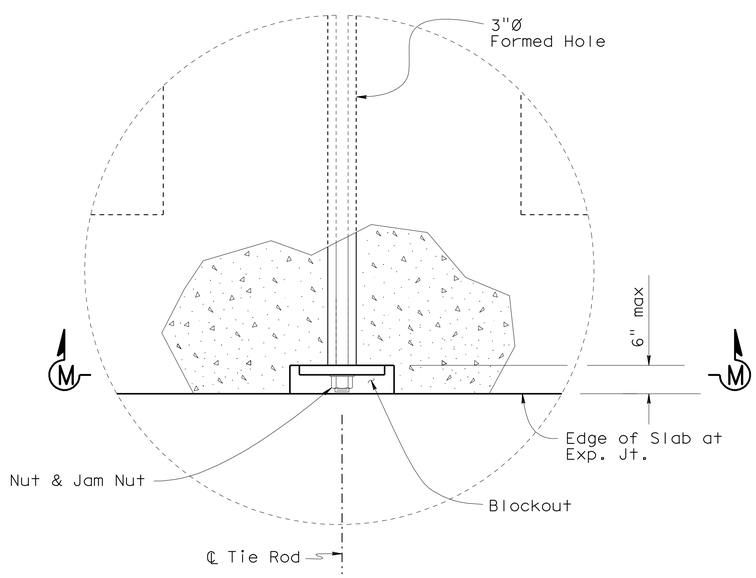

END DETAIL

1 = 1½"

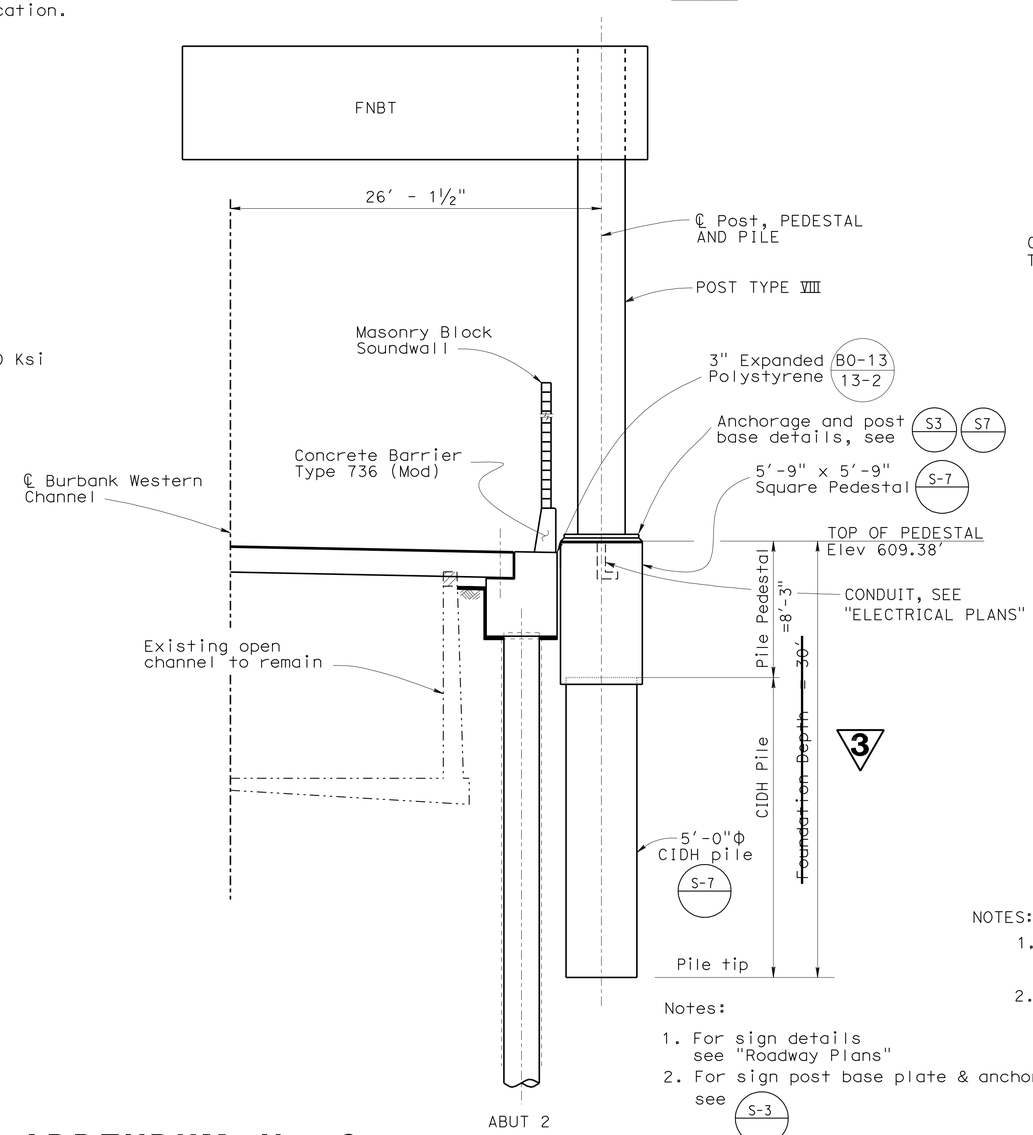

SECTION A-A

1' = 3/16"

Notes:

1. For sign details see "Roadway Plans"
2. For sign post base plate & anchor bolt details, see S-3
3. For pedestal & pile details not shown see S-7
4. For origin of Section A-A see "Abutment 1 & 2 Layout No.3" sheet

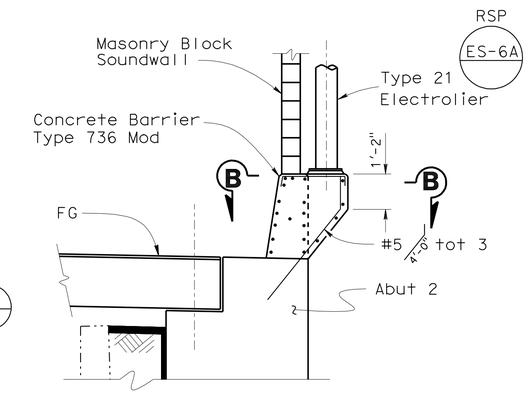

PEDESTAL ELEVATION

⅜" = 1'-0"

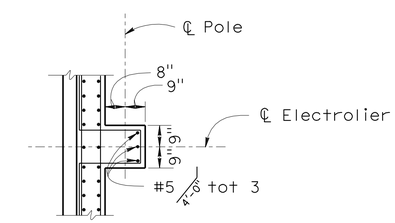

SECTION B-B

⅜" = 1'-0"

NOTES:

1. For pedestal details not shown, see B11-56
2. Electrolier Locations (Stations along ℄ Rte 5): 1588+26, 1590+27, 1592+10, 1593+90, 1595+70, 1597+50

3 REVISED PER ADDENDUM No. 3 DATED SEPTEMBER 28, 2012

1 REVISED PER ADDENDUM No. 1 DATED SEPTEMBER 13, 2012

DESIGN	BY J. ESTRADA	CHECKED D.R. MURRAY	
DETAILS	BY SURAJ DUTTA	CHECKED J.ESTRADA	
QUANTITIES	BY DAVID R MURRAY	CHECKED PREM RIMAL	

STATE OF CALIFORNIA
DEPARTMENT OF TRANSPORTATION

DIVISION OF ENGINEERING SERVICES
STRUCTURE DESIGN
DESIGN BRANCH 18

BRIDGE NO. 53-3078
POST MILE 30.07

BURBANK WESTERN CHANNEL
CHANNEL COVER
MISCELLANEOUS DETAILS

STRUCTURES DESIGN DETAIL SHEET (ENGLISH) (REV. 09-01-10)

ORIGINAL SCALE IN INCHES FOR REDUCED PLANS 0 1 2 3

UNIT: 3603
PROJECT NUMBER & PHASE: 0700021119-1
CONTRACT NO.: 07-1218w1

DISREGARD PRINTS BEARING EARLIER REVISION DATES

REVISION DATES 03/18/11 12/16/11 05/15/12 07/12/08

SHEET 16 OF 40

FILE => 53-3078-g-tie_rod.dgn

USERNAME => s117606 DATE PLOTTED => 27-SEP-2012 TIME PLOTTED => 11:25

DIST	COUNTY	ROUTE	POST MILES TOTAL PROJECT	SHEET No.	TOTAL SHEETS
07	LA	5	29.4/31.6	1036	1931

JEstrada. 1/31/12
REGISTERED CIVIL ENGINEER DATE

5-21-12
PLANS APPROVAL DATE

REGISTERED PROFESSIONAL ENGINEER JORGE I. ESTRADA No. C51473 Exp. 06-30-12 CIVIL STATE OF CALIFORNIA

The State of California or its officers or agents shall not be responsible for the accuracy or completeness of electronic copies of this plan sheet.

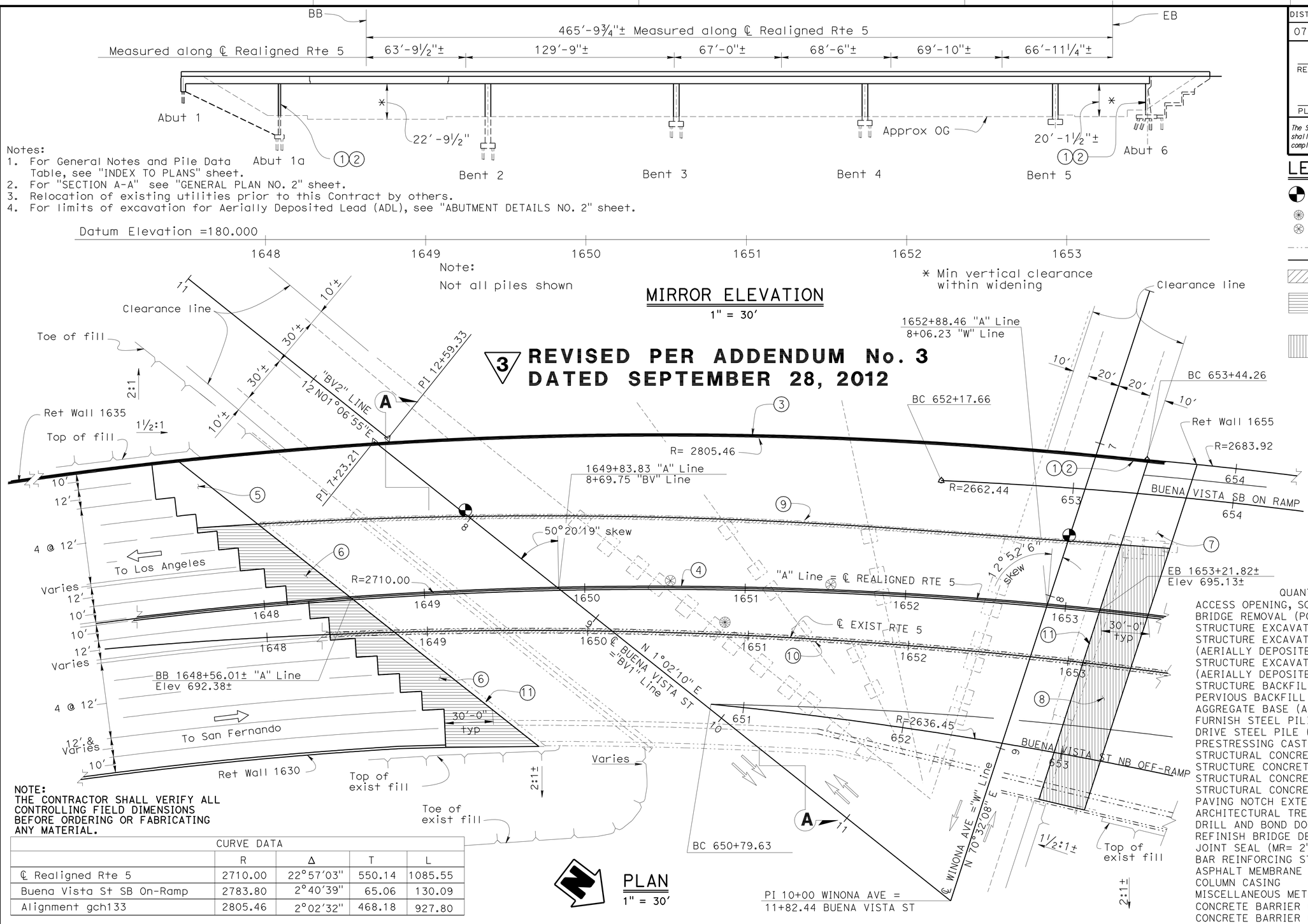

Notes:
1. For General Notes and Pile Data Table, see "INDEX TO PLANS" sheet.
2. For "SECTION A-A" see "GENERAL PLAN NO. 2" sheet.
3. Relocation of existing utilities prior to this Contract by others.
4. For limits of excavation for Aerially Deposited Lead (ADL), see "ABUTMENT DETAILS NO. 2" sheet.

REVISED PER ADDENDUM No. 3 DATED SEPTEMBER 28, 2012 (3)

NOTE:
THE CONTRACTOR SHALL VERIFY ALL CONTROLLING FIELD DIMENSIONS BEFORE ORDERING OR FABRICATING ANY MATERIAL.

CURVE DATA	R	Δ	T	L
℄ Realigned Rte 5	2710.00	22°57'03"	550.14	1085.55
Buena Vista St SB On-Ramp	2783.80	2°40'39"	65.06	130.09
Alignment gch133	2805.46	2°02'32"	468.18	927.80

LEGEND

- Denotes point of minimun vertical clearance
- Exist deck drain to be abandoned
- Deck Drain Type A
- Indicates Existing Structure
- Indicates New Construction
- Indicates Bridge Removal (Portion)
- Indicates location and limits of new structure approach Type R(30D) (Paving Notch Extensions required at this location)
- Indicates location and limits of new structure approach Type R(30S) (Paving Notch Extensions not required at this location)

NOTES:

1. Paint "BUENA VISTA-WINONA UC"
2. Paint "BRIDGE NO. 53-1110"
3. Concrete Barrier Type 736 (MOD)
4. Concrete Barrier Type 60A (MOD)
5. Structure Approach Type N(30D)
6. Structure Approach Type R(30D)
7. Structure Approach Type N(30S)
8. Structure Approach Type R(30S)
9. Remove Exist Concrete Barrier, Railing and Overhang
10. Remove Exist Type 50 Barrier
11. New Joint Seal

QUANTITIES

ACCESS OPENING, SOFFIT	2	EA
BRIDGE REMOVAL (PORTION), LOCATION E	LUMP	SUM
STRUCTURE EXCAVATION (BRIDGE)	1,036	CY
STRUCTURE EXCAVATION (TYPE Y-1) (AERIALLY DEPOSITED LEAD)	72	CY
STRUCTURE EXCAVATION (TYPE Y-2) (AERIALLY DEPOSITED LEAD)	18	CY
STRUCTURE BACKFILL (BRIDGE)	1,252	CY
PERVIOUS BACKFILL MATERIAL	65	CY
AGGREGATE BASE (APPROACH SLAB)	31	CY
FURNISH STEEL PILING (PP 16x0.500)	8,130	LF
DRIVE STEEL PILE (PP 16x0.500)	187	EA
PRESTRESSING CAST-IN-PLACE CONCRETE	LUMP	SUM
STRUCTURAL CONCRETE, BRIDGE FOOTING	254	CY
STRUCTURE CONCRETE, BRIDGE	2,833	CY
STRUCTURAL CONCRETE, APPROACH SLAB TYPE N	86	CY
STRUCTURAL CONCRETE, APPROACH SLAB TYPE R	303	CY
PAVING NOTCH EXTENSION	225	CF
ARCHITECTURAL TREATMENT	1,189	SQFT
DRILL AND BOND DOWEL	699	LF
REFINISH BRIDGE DECK	1,279	SQFT
JOINT SEAL (MR= 2")	259	LF
BAR REINFORCING STEEL (BRIDGE) (3)	788,536	LB
ASPHALT MEMBRANE WATERPROOFING	926	SQFT
COLUMN CASING	67,800	~~76,134~~ LB
MISCELLANEOUS METAL (RESTRAINER-CABLE TYPE))	1,450	LB
CONCRETE BARRIER (TYPE 60A MODIFIED)	523	LF
CONCRETE BARRIER (TYPE 736A MODIFIED)	647	LF

MICHAEL POPE
DESIGN ENGINEER

	BY	CHECKED
DESIGN	Jorge Estrada	XL/ Jenny Zhang
DETAILS	FR/ Minh Tran	XL/ Jenny Zhang
QUANTITIES	Tanya Wyckoff	Prem Rimal

	BY	CHECKED
LOAD FACTOR DESIGN	LIVE LOADING: HS20-44 AND ALTERNATIVE AND PERMIT DESIGN LOAD	
LAYOUT	FR/ Minh Tran	Jorge Estrada
SPECIFICATIONS	James Choi	PLANS AND SPECS COMPARED James Choi

STATE OF CALIFORNIA
DEPARTMENT OF TRANSPORTATION

DIVISION OF ENGINEERING SERVICES
STRUCTURE DESIGN
DESIGN BRANCH 18

BRIDGE NO. 53-1110
POST MILE 31.23

BUENA VISTA - WINONA UC (WIDEN)
GENERAL PLAN NO. 1

STRUCTURES MAINTENANCE GENERAL PLAN SHEET (ENGLISH) (REV. 09-01-10)

ORIGINAL SCALE IN INCHES FOR REDUCED PLANS 0 1 2 3

UNIT: 3603
PROJECT NUMBER & PHASE: 07000221119-1 CONTRACT NO.: 07-1218w1

DISREGARD PRINTS BEARING EARLIER REVISION DATES

REVISION DATES: 7/30/08 10/27/11 2/3/12

SHEET 1 OF 52

FILE => e53-1110-a-gp1.add

USERNAME => s117606 DATE PLOTTED => 27-SEP-2012 TIME PLOTTED => 12:28

DIST	COUNTY	ROUTE	POST MILES TOTAL PROJECT	SHEET No.	TOTAL SHEETS
07	LA	5	29.4/31.6	1061	1931

JEstrada. 1/31/12
REGISTERED CIVIL ENGINEER DATE

5-21-12
PLANS APPROVAL DATE

REGISTERED PROFESSIONAL ENGINEER JORGE I. ESTRADA No. C51473 Exp. 06-30-12 CIVIL STATE OF CALIFORNIA

The State of California or its officers or agents shall not be responsible for the accuracy or completeness of electronic copies of this plan sheet.

Notes:
1. [xx] Indicates girder stem width
2. * measured along the girder
3. ——— Indicates New Construction
4. —·—·— Indicates Existing Structure

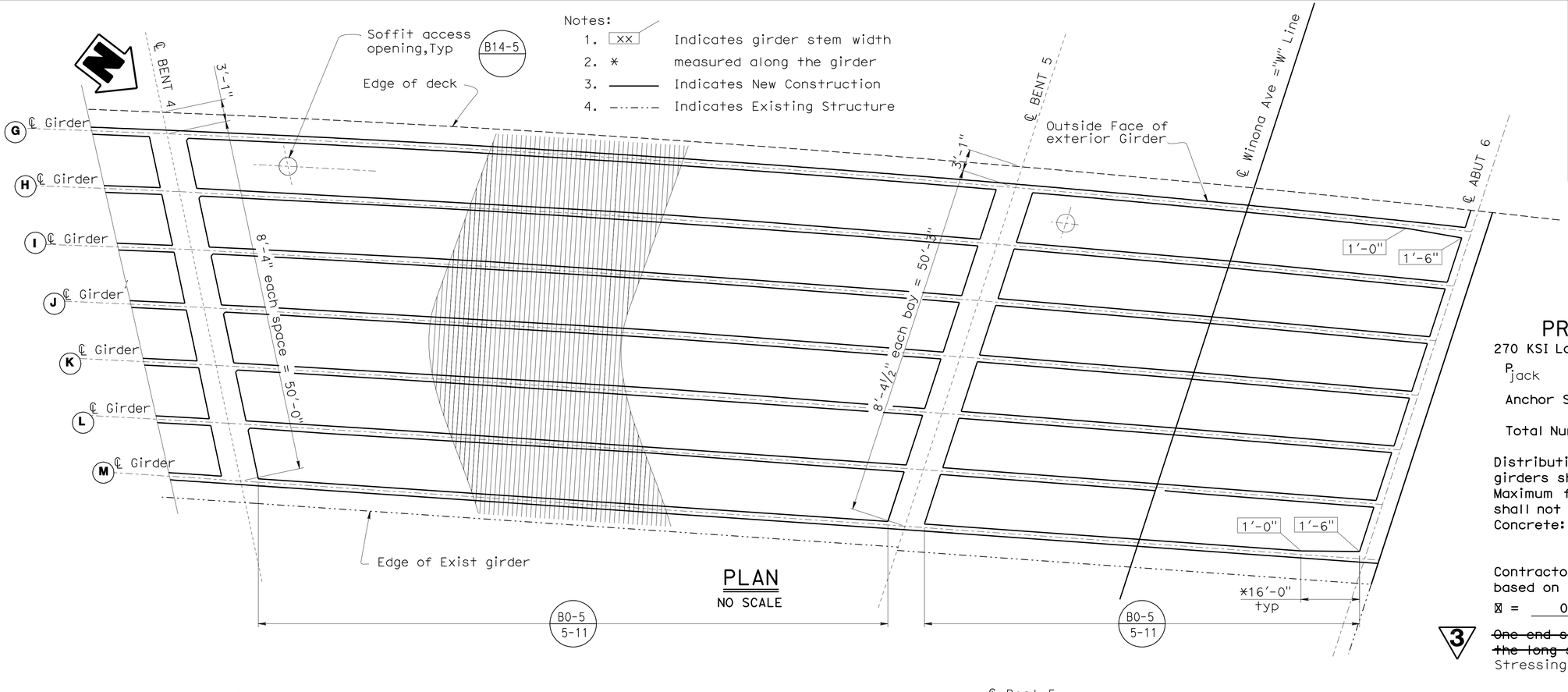

PLAN
NO SCALE

PRESTRESSING NOTES

270 KSI Low Relaxation Strand:

P_{jack} = 9900 kips

Anchor Set = 3/8 in

Total Number of Girders = 6

Distribution of prestress force (Pjack) between girders shall not exceed the ratio of 3:2. Maximum final force variation between girders shall not exceed 725 kips.

Concrete: f'_c = 4500 psi @ 28 days

f'_{ci} = 3600 psi @ time of stressing

Contractor shall submit elongation calculations based on initial stress at

⊠ = 0.959 times jacking stress.

3 ~~One end stressing shall be performed from the long span end only.~~

Stressing shall be performed from both ends.

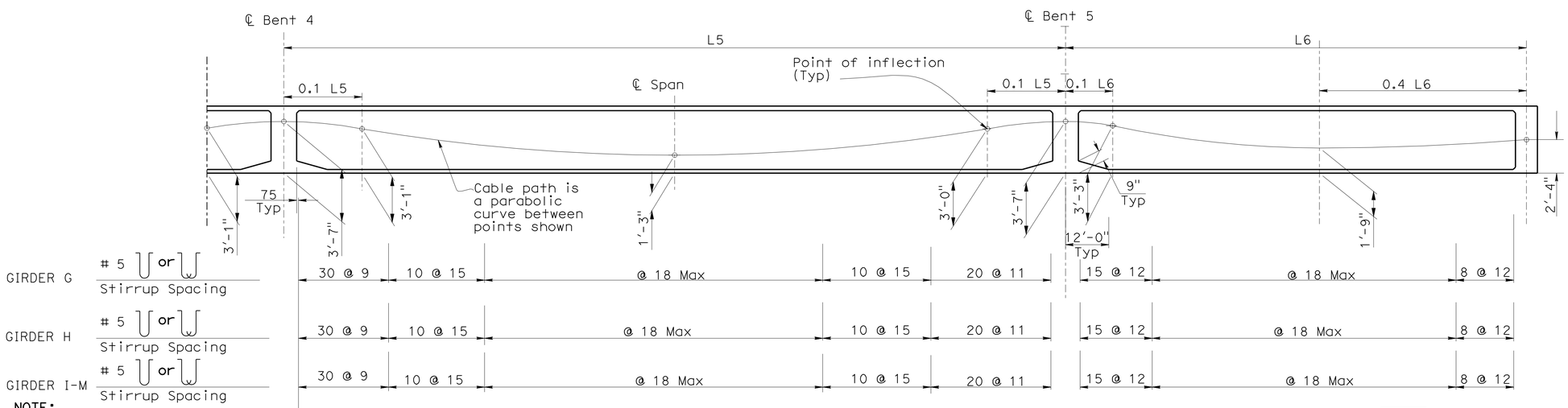

Note:
Prestressed frame is from Hinge 2 to Abutment 6

NOTE:
THE CONTRACTOR SHALL VERIFY ALL CONTROLLING FIELD DIMENSIONS BEFORE ORDERING OR FABRICATING ANY MATERIAL.

LONGITUDINAL SECTION
NO SCALE

3 **REVISED PER ADDENDUM No. 3 DATED SEPTEMBER 28, 2012**

DESIGN	BY Prem Rimal	CHECKED Xiahong Li	
DETAILS	BY Farideh Rashedi/ MT	CHECKED Xiahong Li/ JE	
QUANTITIES	BY Tanya Wyckoff	CHECKED Prem Rimal	

STATE OF CALIFORNIA
DEPARTMENT OF TRANSPORTATION

DIVISION OF ENGINEERING SERVICES
STRUCTURE DESIGN
DESIGN BRANCH 18

BRIDGE NO. 53-1110
POST MILE 31.23

BUENA VISTA - WINONA UC (WIDEN)
GIRDER LAYOUT NO. 4

STRUCTURES DESIGN DETAIL SHEET (ENGLISH) (REV. 09-01-10)

ORIGINAL SCALE IN INCHES FOR REDUCED PLANS 0 1 2 3

UNIT: 3603
PROJECT NUMBER & PHASE: 0700021119-1
CONTRACT NO.: 07-1218W1

DISREGARD PRINTS BEARING EARLIER REVISION DATES

REVISION DATES: 10/4/06 1/31/12

SHEET 26 OF 52

FILE => e53-1110-1-g_io04.dgn

USERNAME => s119571 DATE PLOTTED => 27-SEP-2012 TIME PLOTTED => 11:22

DIST	COUNTY	ROUTE	POST MILES TOTAL PROJECT	SHEET No.	TOTAL SHEETS
07	LA	5	29.4/31.6	1072	1931

JEstrada. 1/31/12
REGISTERED CIVIL ENGINEER DATE

5-21-12
PLANS APPROVAL DATE

REGISTERED PROFESSIONAL ENGINEER
JORGE I. ESTRADA
No. C51473
Exp. 06-30-12
CIVIL
STATE OF CALIFORNIA

The State of California or its officers or agents shall not be responsible for the accuracy or completeness of electronic copies of this plan sheet.

3

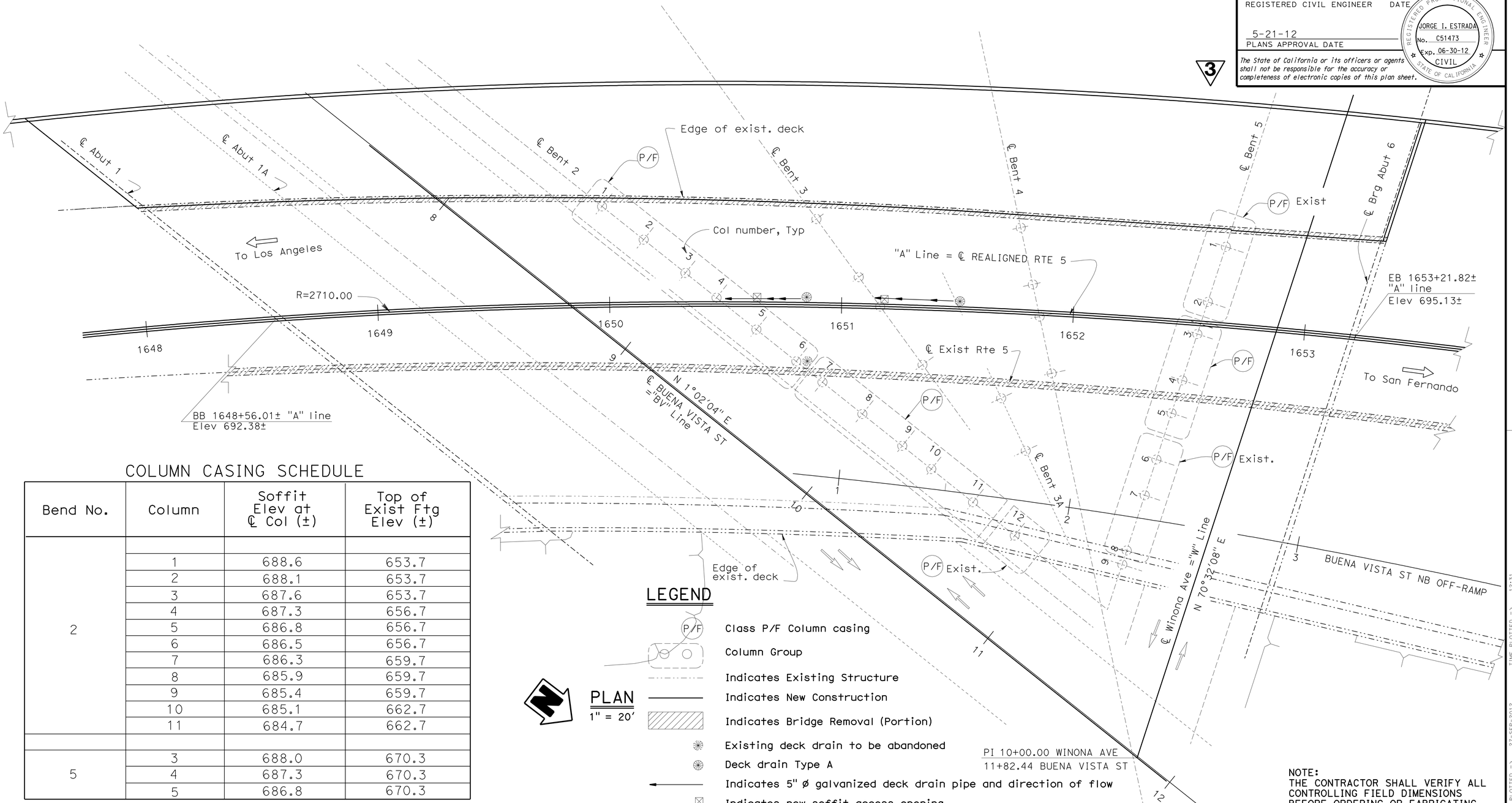

COLUMN CASING SCHEDULE

Bend No.	Column	Soffit Elev at ℄ Col (±)	Top of Exist Ftg Elev (±)
2	1	688.6	653.7
	2	688.1	653.7
	3	687.6	653.7
	4	687.3	656.7
	5	686.8	656.7
	6	686.5	656.7
	7	686.3	659.7
	8	685.9	659.7
	9	685.4	659.7
	10	685.1	662.7
	11	684.7	662.7
5	3	688.0	670.3
	4	687.3	670.3
	5	686.8	670.3

LEGEND

- P/F — Class P/F Column casing
- Column Group
- Indicates Existing Structure
- Indicates New Construction
- Indicates Bridge Removal (Portion)
- Existing deck drain to be abandoned
- Deck drain Type A
- Indicates 5" ø galvanized deck drain pipe and direction of flow
- Indicates new soffit access opening

PLAN
1" = 20'

NOTE:
THE CONTRACTOR SHALL VERIFY ALL CONTROLLING FIELD DIMENSIONS BEFORE ORDERING OR FABRICATING ANY MATERIAL.

3 **REVISED PER ADDENDUM No. 3 DATED SEPTEMBER 28, 2012**

	BY	CHECKED
DESIGN	Xiahong Li	Jorge Estrada
DETAILS	Farideh Rashedi/ MT	X. Li/ JE
QUANTITIES	Tanya Wyckoff	Prem Rimal

STATE OF CALIFORNIA
DEPARTMENT OF TRANSPORTATION

DIVISION OF ENGINEERING SERVICES
STRUCTURE DESIGN
DESIGN BRANCH 18

BRIDGE NO. 53-1110
POST MILE 31.23

BUENA VISTA - WINONA UC (WIDEN)
SEISMIC RETROFIT DETAILS NO. 1

STRUCTURES DESIGN DETAIL SHEET (ENGLISH) (REV. 09-01-10)

ORIGINAL SCALE IN INCHES FOR REDUCED PLANS 0 1 2 3

UNIT: 3603
PROJECT NUMBER & PHASE: 0700021119-1
CONTRACT NO.: 07-1218w1

DISREGARD PRINTS BEARING EARLIER REVISION DATES

REVISION DATES: ~~9/6/07~~ 1/31/12

SHEET 37 OF 52

FILE => e53-1110-o-erdt01.dgn

USERNAME => s132614 DATE PLOTTED => 27-SEP-2012 TIME PLOTTED => 12:31

DIST	COUNTY	ROUTE	POST MILES TOTAL PROJECT	SHEET No.	TOTAL SHEETS
07	LA	5	29.4/31.6	1073	1931

REGISTERED CIVIL ENGINEER — DATE 1/31/12

5-21-12
PLANS APPROVAL DATE

REGISTERED PROFESSIONAL ENGINEER — JORGE I. ESTRADA — No. C51473 — Exp. 06-30-12 — CIVIL — STATE OF CALIFORNIA

The State of California or its officers or agents shall not be responsible for the accuracy or completeness of electronic copies of this plan sheet.

3

NOTES: Southbound widening not shown for clarity

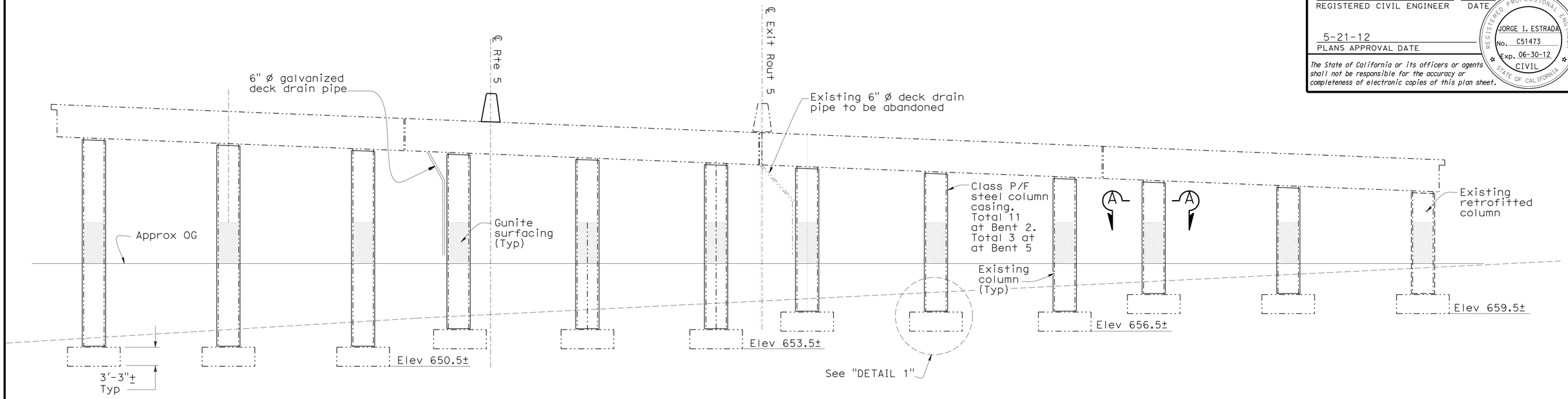

ELEVATION AT BENT 2 (BENT 5 SIMILAR)

NO SCALE

LEGEND

- Indicates existing structure
- Indicates new construction
- Indicates structure excavation
- Indicates structure backfill

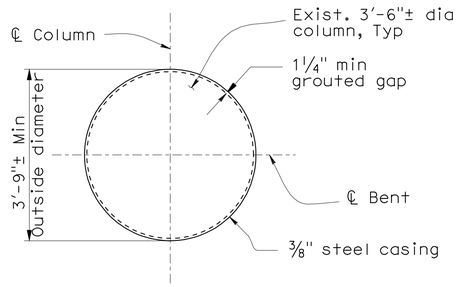

SECTION A-A

NO SCALE

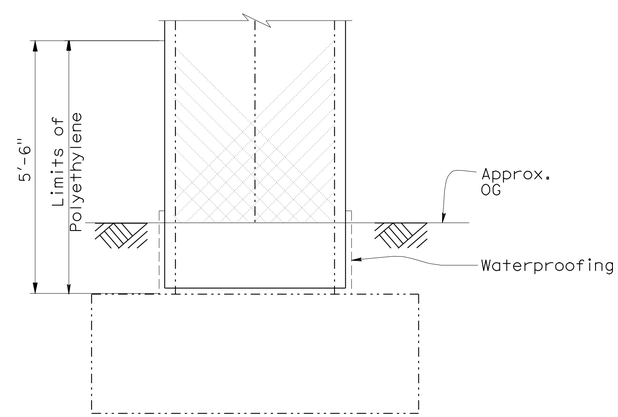

DETAIL 1

NO SCALE

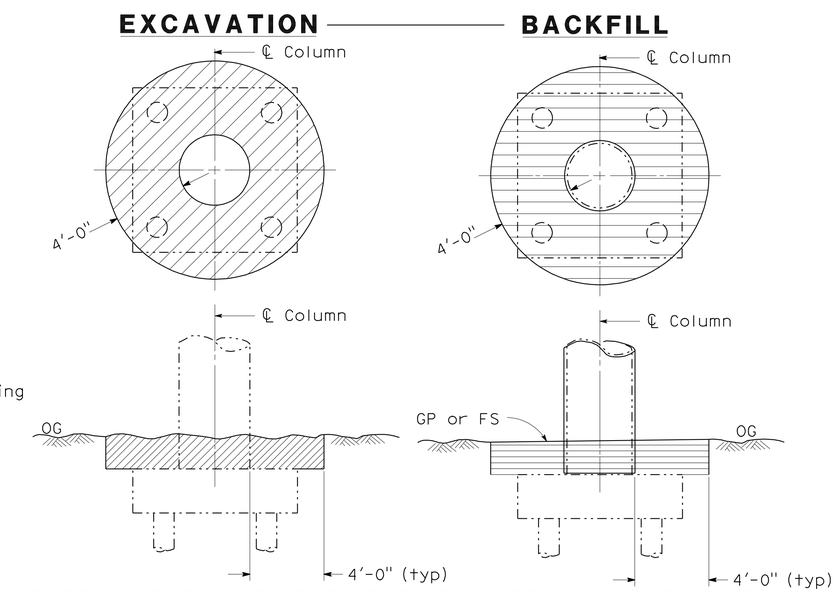

LIMITS OF PAYMENT FOR EXCAVATION AND BACKFILL

COLUMN CASING ONLY

NOTES:

1. For existing deck drain to be relocated,see "GENERAL PLAN NO. 1" sheet.
2. The contractor shall remove the existing anti- graffiti from column prior to the column casing installation.
3. For steel casing details, see "STEEL COLUMN CASING" sheet.

3 **REVISED PER ADDENDUM No. 3 DATED SEPTEMBER 28, 2012**

	BY	CHECKED
DESIGN	Xiahong Li	Jorge Estrada
DETAILS	Farideh Rashedi/ MT	X. Li/ JE
QUANTITIES	Tanya Wyckoff	Prem Rimal

STATE OF CALIFORNIA
DEPARTMENT OF TRANSPORTATION

DIVISION OF ENGINEERING SERVICES
STRUCTURE DESIGN
DESIGN BRANCH 18

BRIDGE NO. 53-1110
POST MILE 31.23

BUENA VISTA - WINONA UC (WIDEN)
SEISMIC RETROFIT DETAILS NO. 2

STRUCTURES DESIGN DETAIL SHEET (ENGLISH) (REV. 09-01-10)

ORIGINAL SCALE IN INCHES FOR REDUCED PLANS 0 1 2 3

UNIT: 3603
PROJECT NUMBER & PHASE: 0700021119-1
CONTRACT NO.: 07-1218w1

DISREGARD PRINTS BEARING EARLIER REVISION DATES

REVISION DATES: 3/6/07 1/31/12

SHEET 38 OF 52

FILE => e53-1110-o-erdt02.dgn

USERNAME => s124496 DATE PLOTTED => 27-SEP-2012 TIME PLOTTED => 10:43

DIST	COUNTY	ROUTE	POST MILES TOTAL PROJECT	SHEET No.	TOTAL SHEETS
07	LA	5	29.4/31.6	1127	1931

J Estrada 01-30-12
REGISTERED CIVIL ENGINEER DATE

5-21-12
PLANS APPROVAL DATE

REGISTERED PROFESSIONAL ENGINEER J. I. Estrada No. C 51473 Exp. 6-30-2012 CIVIL STATE OF CALIFORNIA

The State of California or its officers or agents shall not be responsible for the accuracy or completeness of electronic copies of this plan sheet.

1

INDEX TO PLANS

1. GENERAL PLAN
2. FOUNDATION PLAN NO.1
3. FOUNDATION PLAN NO.2
4. STRUCTURE PLAN NO. 1
5. STRUCTURE PLAN NO. 2
6. STRUCTURE PLAN NO. 3
7. STRUCTURE PLAN NO. 4
8. STRUCTURE PLAN NO. 5
9. MISCELLANEOUS DETAILS
10. SIGN DETAILS
11. RETAINING WALL TYPE 1RR CASE I - DETAILS NO.1
12. RETAINING WALL TYPE 1RR CASE I - DETAILS NO.2
13. ARCHITECTURAL TREATMENT
14. LOG OF TEST BORINGS
15. LOG OF TEST BORINGS
16. LOG OF TEST BORINGS
17. LOG OF TEST BORINGS

LEGEND

STANDARD PLAN SHEET NO.

DETAIL NO.

STANDARD PLANS DATED MAY 2006

SHEET NO.	TITLE
A10A - A10B	ACRONYMS AND ABBREVIATIONS
A10C - A10D	SYMBOLS
A62B	LIMITS OF PAYMENT FOR EXCAVATION AND BACKFILL BRIDGE SURCHARGE AND WALL
RSP A76A	CONCRETE BARRIER TYPE 60
BO-3	BRIDGE DETAILS
B3-8	RETAINING WALL DETAILS NO.1
B3-9	RETAINING WALL DETAILS NO.2
RSP B11-47	CABLE RAILING
RSP ES-6A	ELECTRICAL SYSTEM (LIGHTING STANDARD, TYPE 15 AND 21)
S-35	OVERHEAD SIGNS-TUBULAR SINGLE POST AND TWO POST TYPE BASE PLATE AND ANCHORAGE DETAIL
S-36	OVERHEAD SIGNS-TUBULAR SINGLE POST AND TWO POST TYPE BASE SQUARE PEDESTAL PILE FOUNDATION

Notes:

1. For spread footing data table, see "MISCELLANEOUS DETAILS" sheet
2. For electrolier locations, see "STRUCTURE PLANS" sheet. For electrolieor details see, "MISCELLANEOUS DETAILS" sheet
3. For limits of excavation for Aerially Deposited Lead (ADL), see "MISCELLANEOUS DETAILS" sheet
4. Relocation of existing utilities prior to this Contract by Others.

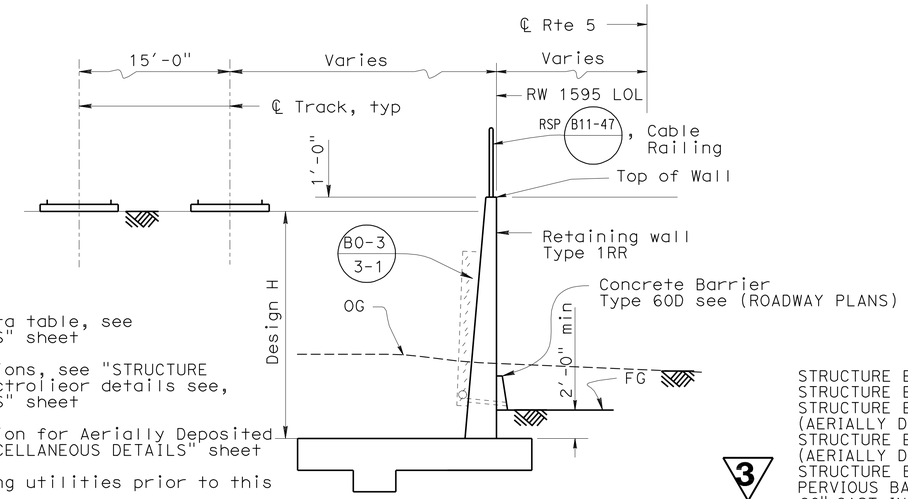

3

TYPICAL SECTION - RW 1595

3/16" = 1'-0"

QUANTITIES

STRUCTURE EXCAVATION (PETROLEUM HYDROCARBON)	260	CY
STRUCTURE EXCAVATION (RETAINING WALL)	8,241	CY
STRUCTURE EXCAVATION (TYPE Z-3) (AERIALLY DEPOSITED LEAD)	68	CY
STRUCTURE EXCAVATION (TYPE Y-1) (AERIALLY DEPOSITED LEAD)	269	CY
STRUCTURE BACKFILL (RETAINING WALL)	9,393	CY
PERVIOUS BACKFILL MATERIAL	203	CY
60" CAST-IN-DRILLED HOLE CONCRETE PILING	25	LF
STRUCTURAL CONCRETE, RETAINING WALL	1,832	CY
ARCHITECTURAL TREATMENT	3,256	SQFT
BAR REINFORCING STEEL (RETAINING WALL)	160,263	LB
CABLE RAILING	1,137	LF

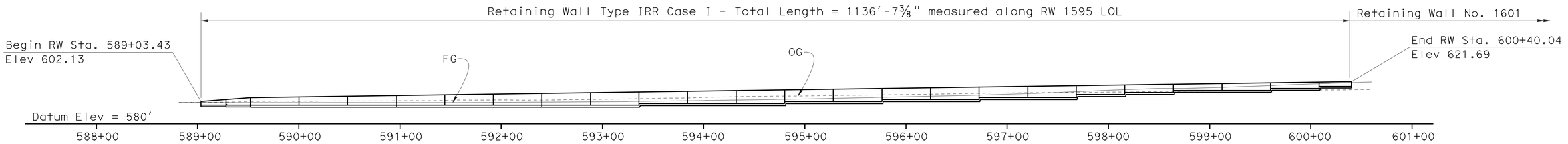

ELEVATION

1" = 50'

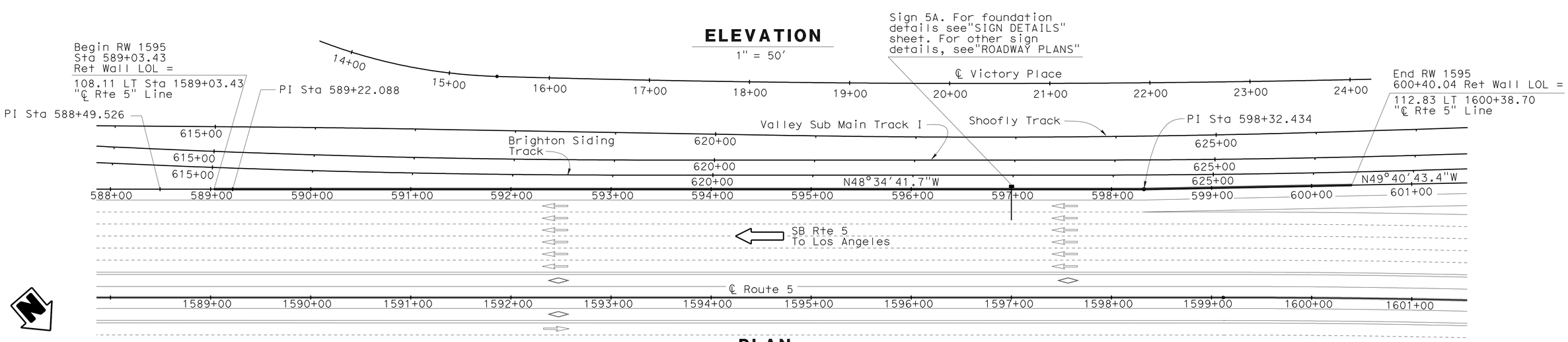

PLAN

1" = 50'

3 REVISED PER ADDENDUM No. 3 DATED SEPTEMBER 28, 2012

1 REVISED PER ADDENDUM No. 1 DATED SEPTEMBER 13, 2012

MICHAEL POPE, DESIGN ENGINEER	DESIGN	BY Michael Pope	CHECKED Jorge Estrada	LOAD FACTOR DESIGN — LIVE LOADING: HS20-44 AND ALTERNATIVE AND PERMIT DESIGN VEHICLE
	DETAILS	BY Michael Pope	CHECKED Jorge Estrada	LAYOUT: BY Suraj Dutta — CHECKED Jorge Estrada
	QUANTITIES	BY Michael Pope	CHECKED Josh Runnion	SPECIFICATIONS: BY James Choi — PLANS AND SPECS COMPARED X

ORIGINAL SCALE IN INCHES FOR REDUCED PLANS 0 1 2 3

STATE OF CALIFORNIA
DEPARTMENT OF TRANSPORTATION

DIVISION OF ENGINEERING SERVICES
STRUCTURE DESIGN
DESIGN BRANCH 18

BRIDGE NO. RW1595
POST MILE 30.12

RETAINING WALL 1595
GENERAL PLAN

UNIT: 3603
PROJECT NUMBER & PHASE: 0700021119-1 CONTRACT NO.: 07-1218W1

DISREGARD PRINTS BEARING EARLIER REVISION DATES

REVISION DATES: 01-16-11 4-19-12 4-30-12

SHEET 1 OF 17

USERNAME => s124196 DATE PLOTTED => 27-SEP-2012 TIME PLOTTED => 10:37

STRUCTURES DESIGN GENERAL PLAN SHEET (ENGLISH) (REV.09-01-10)

FILE => 53-rw1595-a-gp01.add

DIST	COUNTY	ROUTE	POST MILES TOTAL PROJECT	SHEET No	TOTAL SHEETS
07	LA	5	29.4/31.6	1354	1931

REGISTERED CIVIL ENGINEER — DATE 5/11/12

5-21-12
PLANS APPROVAL DATE

REGISTERED PROFESSIONAL ENGINEER — RICHARD STEVEN AGOR — No. 57082 — Exp. 12/31/13 — CIVIL — STATE OF CALIFORNIA

The State of California or its officers or agents shall not be responsible for the accuracy or completeness of electronic copies of this plan sheet.

TETRA TECH
17885 VON KARMAN AVE
IRVINE, CA 92614

CITY OF BURBANK
150 N 3RD ST
BURBANK, CA 91510

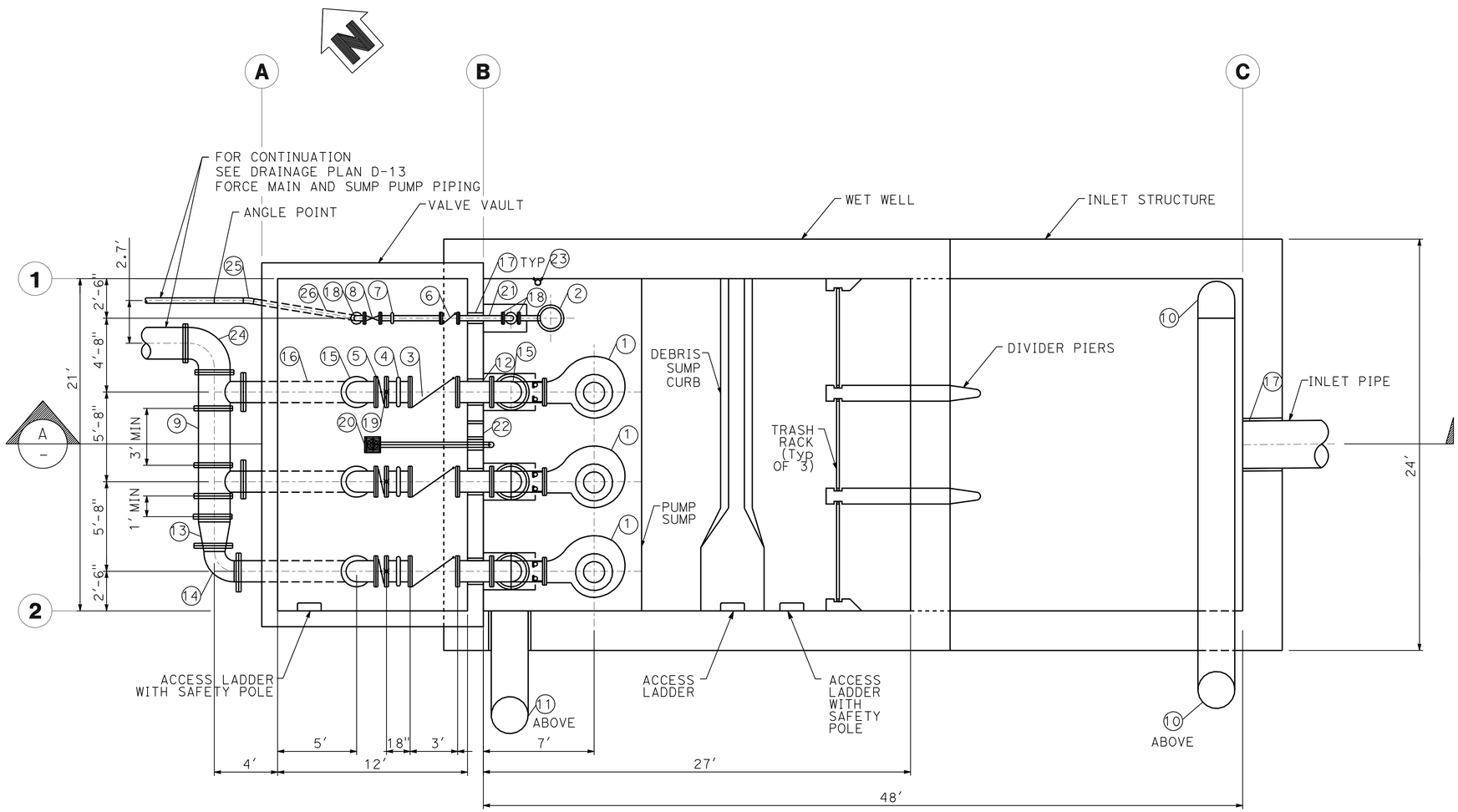

PLAN
1"= 8'-0"

CONSTRUCTION NOTES

1. 75 HP SUBMERSIBLE PUMP, 4000 GPM WITH BASE ELBOW AND GUIDE BARS.
2. 5 HP SUBMERSIBLE PUMP, 196 GPM WITH BASE ELBOW AND GUIDE BARS.
3. 16" SWING CHECK VALVE, LEVER AND SPRING, FLG.
4. 16" VICTUALIC COUPLING.
5. 16" BUTTERFLY VALVE, FLG.
6. 4" SWING CHECK VALVE, LEVEL AND SPRING, FLG.
7. 4" VICTUALIC COUPLING.
8. 4" GATE VALVE, FLG.
9. 24" DUCTILE IRON HEADER, CI 250 WITH 2-16" OUTLETS, MJ.
10. FAN WITH 20" FRP DUCT PER DETAIL 2/M-3
11. 20" STAINLESS STL VENT PIPE PER DETAIL 4/M-3
12. 16" DIP, CI 250, FLG.
13. 24" X 16" DUCTILE IRON CONCETRIC REDUCER, FLG.
14. 16" DUCTILE IRON 90° ELBOW, FLG.
15. 16" DUCTILE IRON 90° ELBOW, FLG.
16. 16" DIP, CI 250.
17. WALL PENETRATION PER DETAIL 3/M-4
18. 4" DUCTILE IRON 90° LONG RADIUS ELBOW, FLG.
19. PIPE SUPPORT PER DETAIL 3/M-3
20. 4" PVC PIPE TRAP DRAIN TO WET WELL WITH HEAVY DUTY STAINLESS STEEL GRATE.
21. 4" DUCTILE IRON CI 350, MJ, FLG.
22. 12" DIAMETER VENT HOLE.
23. LEVEL TRANSDUCER IN 25' LONG, 4" Dia, PERFORATED, SCH. 40, PVC PIPE MOUNTED ON WETWELL WALL. POSITION LEVEL TRANSDUCER AT ELEVATION 585.0.
24. 24" DUCTILE IRON 90° ELBOW, FLG.
25. 4" DUCTILE IRON 11.25° ELBOW, FLG.
26. 4" DUCTILE IRON CI 350, FLG.

NOTES

1. ACTUAL DIMENSIONS SHALL BE PER PUMP MANUFACTURER'S RECOMENDATIONS.
2. SLOPE FLOOR TO DRAIN GRATE/ SUMP PUMP.
3. DUCTILE IRON PIPE IN THE WET WELL AND VAULT SHALL BE ~~CEMENT MORTAR~~ LINED AND PAINTED. BURIED DUCTILE IRON PIPE SHALL BE ~~CEMENT LINED~~ AND COATED PER PROJECT SPECIFICATIONS.

EPOXY LINED

3 REVISED PER ADDENDUM No. 3 DATED SEPTEMBER 28, 2012

M-1

EMPIRE AVENUE UC
PUMPING PLANT
PUMP STATION MECHANICAL PLAN

STEVEN AGOR
DESIGN OVERSIGHT
5/11/12
SIGN OFF DATE

	BY	CHECKED
DESIGN	CRISNA ESTRADA	STEVEN AGOR
DETAILS	CRISNA ESTRADA	STEVEN AGOR
QUANTITIES	CRISNA ESTRADA	STEVEN AGOR

PREPARED FOR THE STATE OF CALIFORNIA DEPARTMENT OF TRANSPORTATION

CRISNA ESTRADA
PROJECT ENGINEER

BRIDGE NO. 53-2920W
POST MILES 30.63

DESIGN DETAIL SHEET (ENGLISH) (REV.7/16/10)

ORIGINAL SCALE IN INCHES FOR REDUCED PLANS 0 1 2 3

UNIT: 1812
PROJECT NUMBER & PHASE: 07000211191 CONTRACT NO.: X

DISREGARD PRINTS BEARING EARLIER REVISION DATES

REVISION DATES: X

SHEET 16 OF 32

FILE => wd001.add

USERNAME => s124496 DATE PLOTTED => 28-SEP-2012 TIME PLOTTED => 07:33

DIST	COUNTY	ROUTE	POST MILES TOTAL PROJECT	SHEET No	TOTAL SHEETS
07	LA	5	29.4/31.6	1355	1931

REGISTERED CIVIL ENGINEER — DATE 5/11/12

PLANS APPROVAL DATE 5-21-12

REGISTERED PROFESSIONAL ENGINEER — RICHARD STEVEN AGOR — No. 57082 — Exp. 12/31/13 — CIVIL — STATE OF CALIFORNIA

The State of California or its officers or agents shall not be responsible for the accuracy or completeness of electronic copies of this plan sheet.

TETRA TECH
17885 VON KARMAN AVE
IRVINE, CA 92614

CITY OF BURBANK
150 N 3RD ST
BURBANK, CA 91510

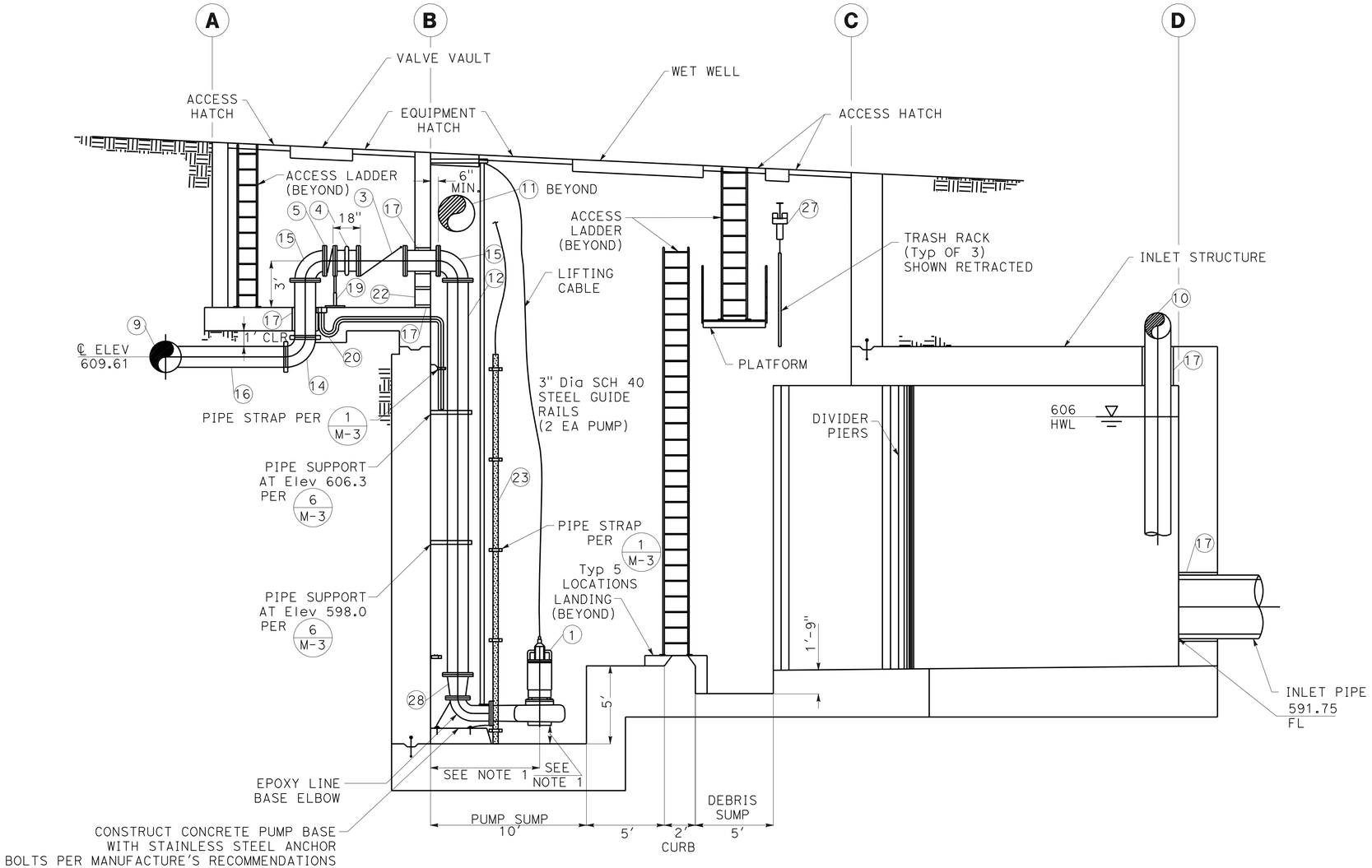

SECTION A/—

1"= 8'-0"

CONSTRUCTION NOTES

1. 75 HP SUBMERSIBLE PUMP, 4000 GPM WITH BASE ELBOW AND GUIDE BARS.
3. 16" SWING CHECK VALVE, LEVER AND SPRING, FLG.
4. 16" VICTUALIC COUPLING.
5. 16" BUTTERFLY VALVE, FLG.
9. 24" DIP HEADER, CI 250 WITH 2-16" OUTLETS, FLG.
10. FAN WITH 20" FRP DUCT PER DETAIL 2/M-3
11. 20" STAINLESS STL VENT PIPE PER DETAIL 4/M-3
12. 16" DIP, CI 250, FLG.
14. 16" DUCTILE IRON 90° ELBOW, FLG.
15. 16" DUCTILE IRON 90° ELBOW, FLG.
16. 16" DIP, CI 250, FLG.
17. WALL PENETRATION PER DETAIL 3/M-4
19. PIPE SUPPORT PER DETAIL 3/M-3
20. 4" PVC PIPE TRAP DRAIN TO WET WELL WITH HEAVY DUTY STAINLESS STL GRATE.
22. 12" DIAMETER VENT HOLE.
23. LEVEL TRANSDUCER IN 25' LONG, 4" Dia, PERFORATED, SCH. 40, PVC PIPE MOUNTED ON WETWELL WALL. POSITION LEVEL TRANSDUCER AT ELEVATION 585.0.
27. MECHANICAL HAND HOST WITH GEARED TROLLEY, ONE-PIECE SUSPENSION FRAME WITH CHAIN LENGTH TO SUIT.
28. 16" x 12" DUCTILE IRON CONCENTRIC REDUCER, FLG.

PUMP CONTROL SCHEDULE

TRANSDUCER CONTROLLED

Conditions	Control	Pump	Action
Rising Levels	595.0	Lead Pump	On
	605.0	Lag Pump	On
Falling Levels	595.0	Lag Pump	Off
	590.0	Lead Pump	Off
	590.0	Sump Pump	On
	585.0	Sump Pump	Off

NOTES

1. ACTUAL DIMENSIONS SHALL BE PER PUMP MANUFACTURER'S RECOMENDATIONS.
2. SLOPE FLOOR TO DRAIN GRATE/ SUMP PUMP.
3. DUCTILE IRON PIPE IN THE WET WELL AND VAULT SHALL BE ~~CEMENT MORTAR~~ EPOXY LINED AND PAINTED. BURIED DUCTILE IRON PIPE SHALL BE ~~CEMENT LINED~~ EPOXY LINED AND COATED PER PROJECT SPECIFICATIONS.

REDUNDANT CONTROL SCHEDULE

LEVEL SWITCH CONTROLLED

Control Elevation	Action
590.0	Off-Restore
606.0	High Wetwell Alarm
606.5	High- High Wetwell Alarm Activation of Pump Start Sequence

STORM WATER PUMPS OPERATE IN A FIRST ON/ FIRST OFF BASIS

3 REVISED PER ADDENDUM No. 3 DATED SEPTEMBER 28, 2012

M-2

EMPIRE AVENUE UC
PUMPING PLANT
PUMP STATION MECHANICAL SECTION

STEVEN AGOR
DESIGN OVERSIGHT
5/11/12
SIGN OFF DATE

	BY	CHECKED
DESIGN	CRISNA ESTRADA	STEVEN AGOR
DETAILS	CRISNA ESTRADA	STEVEN AGOR
QUANTITIES	CRISNA ESTRADA	STEVEN AGOR

PREPARED FOR THE STATE OF CALIFORNIA DEPARTMENT OF TRANSPORTATION

CRISNA ESTRADA
PROJECT ENGINEER

BRIDGE NO. 53-2920W
POST MILES 30.63

DESIGN DETAIL SHEET (ENGLISH) (REV.7/16/10)

ORIGINAL SCALE IN INCHES FOR REDUCED PLANS 0 1 2 3

UNIT: 1812
PROJECT NUMBER & PHASE: 07000211191 CONTRACT NO.: X

DISREGARD PRINTS BEARING EARLIER REVISION DATES

REVISION DATES X

SHEET 17 OF 32

FILE => wd002.add

USERNAME => s124496 DATE PLOTTED => 28-SEP-2012 TIME PLOTTED => 07:39

Dist	COUNTY	ROUTE	POST MILES TOTAL PROJECT	SHEET No.	TOTAL SHEETS
07	LA	5	29.4/31.6	1606	1931

REGISTERED CIVIL ENGINEER 05-21-12 DATE

PLANS APPROVAL DATE 05-21-12

REGISTERED PROFESSIONAL ENGINEER PATRICK NICHOLSON No. C 40993 Exp. 3-31-2013 CIVIL STATE OF CALIFORNIA

THE STATE OF CALIFORNIA OR ITS OFFICERS OR AGENTS SHALL NOT BE RESPONSIBLE FOR THE ACCURACY OR COMPLETENESS OF SCANNED COPIES OF THIS PLAN SHEET.

SCRRA
279 E. ARROW HIGHWAY
SAN DIMAS, CA 91773

AECOM
515 SOUTH FLOWER ST. 4th FLOOR
LOS ANGELES, CA 90071

REMOVAL AND SALVAGE SUMMARY		
REMOVE CHAIN LINK FENCE	LF	14,190
REMOVE PORTLAND CEMENT CONCRETE PAVEMENT	SQYD	210
REMOVE EXISTING TRACK, TIES AND BALLAST AND INSTALL BUMPING POST	TF	27,555
REMOVE GRADE CROSSING (SHOOFLY AND MAINLINE)	TF	370
REMOVE TURN-OUT AND RETURN TO METROLINK	EA	1
~~SALVAGE, HAUL OFF AND RE-USE OF BALLAST~~	~~CY~~	~~30,640~~
~~SALVAGE, TEST AND STORE EXISTING RAILS AND TIES FOR RE-USE~~	~~TF~~	~~17,155~~

1

EARTHWORK QUANTITIES SUMMARY		
CLEARING AND DEMOLITION	ACRE	1.9
ROADWAY EXCAVATION	CY	24,500
TEMPORARY SHORING FOR UNDERPASS EXCAVATION	SF	42,741
IMPORTED BORROW	CY	268,000

PAVEMENT STRUCTURE QUANTITIES SUMMARY		
COLD PLANE ASPHALT CONCRETE PAVEMENT	SQYD	2,300
HOT MIX ASPHALT (TYPE A)	TON	777
RUBBERIZED HOT MIX ASPHALT (GAP RATED)	TON	638
PLACE HOT MIX ASPHALT DIKE (TYPE A)	LF	731
CRUSHED MISCELLANEOUS BASE	CY	762
TEMPORARY CRASH CUSHION MODULE	EA	44
TEMPORARY RAILING (TYPE K)	LF	580

3 3

MINOR CONCRETE (MISCELLANEOUS CONSTRUCTION)		
MINOR CONCRETE (MISCELLANEOUS CONSTRUCTION)	CY	270

3

FENCE AND RAILING QUANTITIES SUMMARY		
CHAIN LINK FENCE (TYPE CL-4)	LF	380
CHAIN LINK FENCE (TYPE CL-6)	LF	11,588
CABLE RAILING	LF	12,435
TUBULAR HAND RAILING	LF	94

3

3 REVISED PER ADDENDUM NO. 3 DATED SEPTEMBER 28, 2012

1 REVISED PER ADDENDUM NO. 1 DATED SEPTEMBER 13, 2012

APPROVED FOR RAILROAD WORK.

RR - QUANTITIES SUMMARY SHEET

RR-WQ-001

RAILROAD SHEET NO. 237 OF 394

NO SCALE

STATE OF CALIFORNIA - DEPARTMENT OF TRANSPORTATION
Caltrans® DESIGN

CONSULTANT FUNCTIONAL SUPERVISOR: PATRICK NICHOLSON

CALCULATED-DESIGNED BY: ANGELKA GRANDOV
CHECKED BY: RICHARD SILOS

REVISED BY
DATE REVISED

PEN TABLE => ...\cadd\support\pen\PlotStamp.tbl
PLOT DRIVER => ...\Plotdrv\SCRRA_pdfBW.plt
DATE PLOTTED => 9/26/2012 TIME PLOTTED => 11:16:50 AM
LAST REVISION 00-00-00