DIST.	COUNTY	ROUTE	KILOMETER POST TOTAL PROJECT	SHEET NO.	TOTAL SHEETS
07	LA	5	50.8/58.0	801	869

Caltrans Metric

Xiaodong Chen 6-25-08
REGISTERED ENGINEER - CIVIL

5-3-10
PLANS APPROVAL DATE

REGISTERED PROFESSIONAL ENGINEER XIAODONG CHEN No. C 58858 Exp. 6-30-11 CIVIL STATE OF CALIFORNIA

The State of California or its officers or agents shall not be responsible for the accuracy or completeness of electronic copies of this plan sheet.

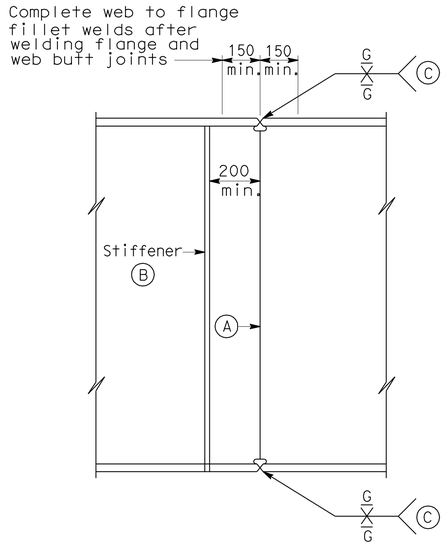

GIRDER SPLICE

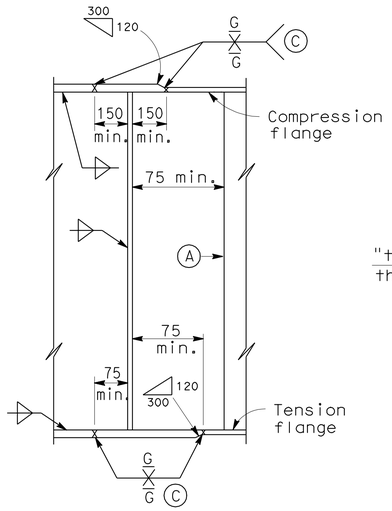

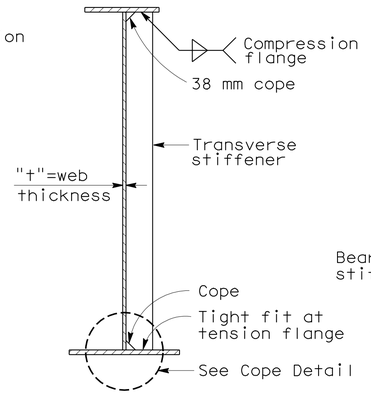

ASSEMBLY AND FABRICATION DETAILS

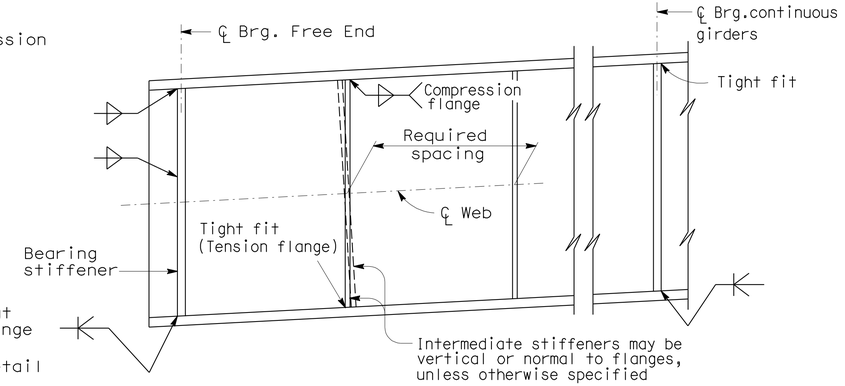

TRANSVERSE STIFFENERS

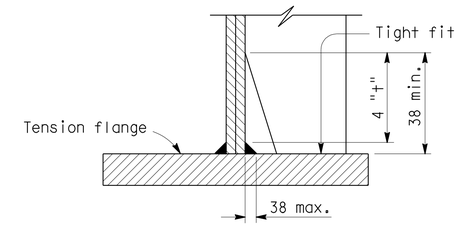

COPE DETAIL

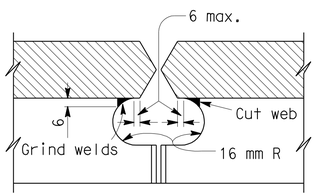

WEB COPE AT GIRDER SPLICE

NOTES:

Alternative girder splices will be permitted subject to approval by the Engineer.

(A) Web butt joints shall be full penetration groove welds. All weld areas on the exterior face of exterior girders shall be ground flush.

Under full dead load and deck shrinkage, as shown on the camber diagram, girder ends and bearing stiffeners shall be vertical except they may be normal to grade for grades less than 2 percent.

(B) Stiffeners adjacent to a girder splice may be field welded.

(C) Grind all surfaces flush on tension flanges.

Grind all surfaces on compression flanges when required for NDI.

Grind all exterior surfaces flush on all bottom compression flanges.

(D) Stop fillet welds 6 mm from end of plate.

(E) Size fillet weld to match the strength of connection required for the joint.

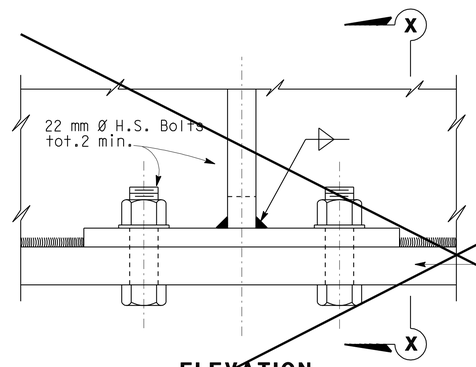

ELEVATION

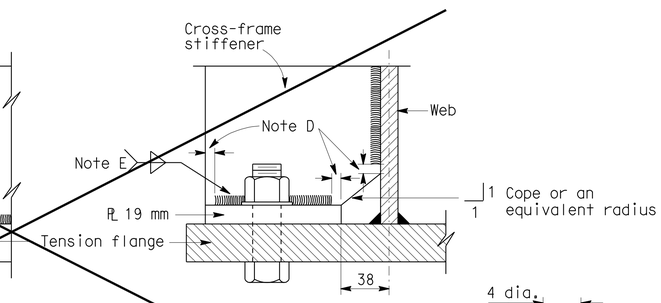

VIEW X-X

CROSS FRAME STIFFENER DETAIL

(1)

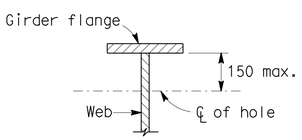

25 mm max.diameter hole at 1.2 m± min. spacing to be used for falsework support when specified by the Contractor. Contractor to determine location, size and spacing.

50 mm max.diameter hole to be drilled where lighting conduit passes through girder web. For location and size of hole see "Lighting Plan".

HOLES FOR CONDUIT AND FALSEWORK

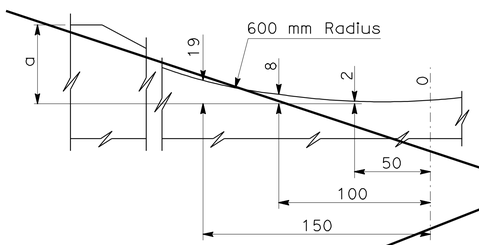

ELEVATION

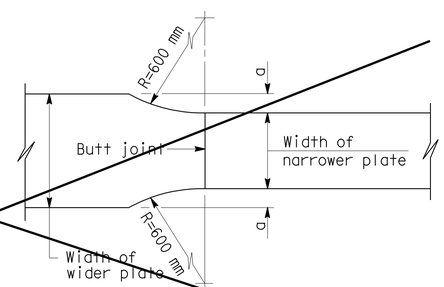

TRANSITION OF WIDTH

FLANGE TRANSITION DETAIL

(1)

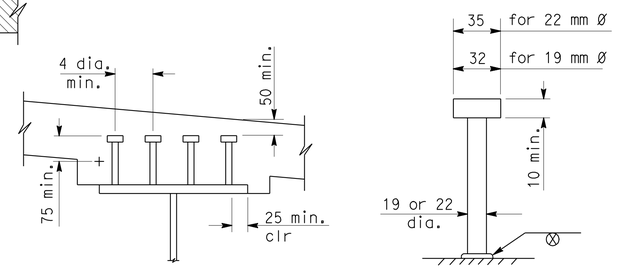

Lengths to be determined by the Contractor,unless otherwise shown.

Minimum length is 127 mm.

The top of deck is designed to be approximately parallel to the top of web for determining girder stud connector height.

Alternative types of shear connectors will be permitted subject to approval by the Engineer.

STUD CONNECTOR

NO SCALE

ALL DIMENSIONS ARE IN MILLIMETERS UNLESS OTHERWISE SHOWN

(1) Detail does not apply.

STANDARD DRAWING					
RELEASE DATE 3/26/97	DESIGN	BY G. INENEGA	CHECKED D. FUKUSHIMA	RELEASED BY	
	DETAILS	BY R. YEE	CHECKED D. FUKUSHIMA		
FILE NO. xs1-410	SUBMITTED	BY R.C. ANDERSON	DRAWING DATE 1/89	OFFICE CHIEF	

STATE OF CALIFORNIA DEPARTMENT OF TRANSPORTATION

DIVISION OF ENGINEERING SERVICES

BRIDGE NO. 53-1134
KILOMETER POST 55.6

SUN VALLEY OH (WIDEN)

GIRDER DETAILS NO. 2

DS OSD 2147A (METRIC) (REV. 2/25/97)

ORIGINAL SCALE IN MILLIMETERS FOR REDUCED PLANS 0 10 20 30 40 50 60 70 80 90 100

CU 07
EA 1218V1

DISREGARD PRINTS BEARING EARLIER REVISION DATES → 1-16-06 7-16-09

REVISION DATES (PRELIMINARY STAGE ONLY)

SHEET 20 OF 33

USERNAME => trrichf

53-1134-1-girdet2

DATE PLOTTED => 03-MAY-2010 TIME PLOTTED => 13:51

DIST	COUNTY	ROUTE	KILOMETER POST TOTAL PROJECT	SHEET No	TOTAL SHEETS
07	LA	5	50.8/58.0	802	869

REGISTERED CIVIL ENGINEER — DATE 6-25-08

5-3-10
PLANS APPROVAL DATE

REGISTERED PROFESSIONAL ENGINEER — XIAODONG CHEN — No. C 58858 — Exp. 6-30-11 — CIVIL — STATE OF CALIFORNIA

The State of California or its officers or agents shall not be responsible for the accuracy or completeness of electronic copies of this plan sheet.

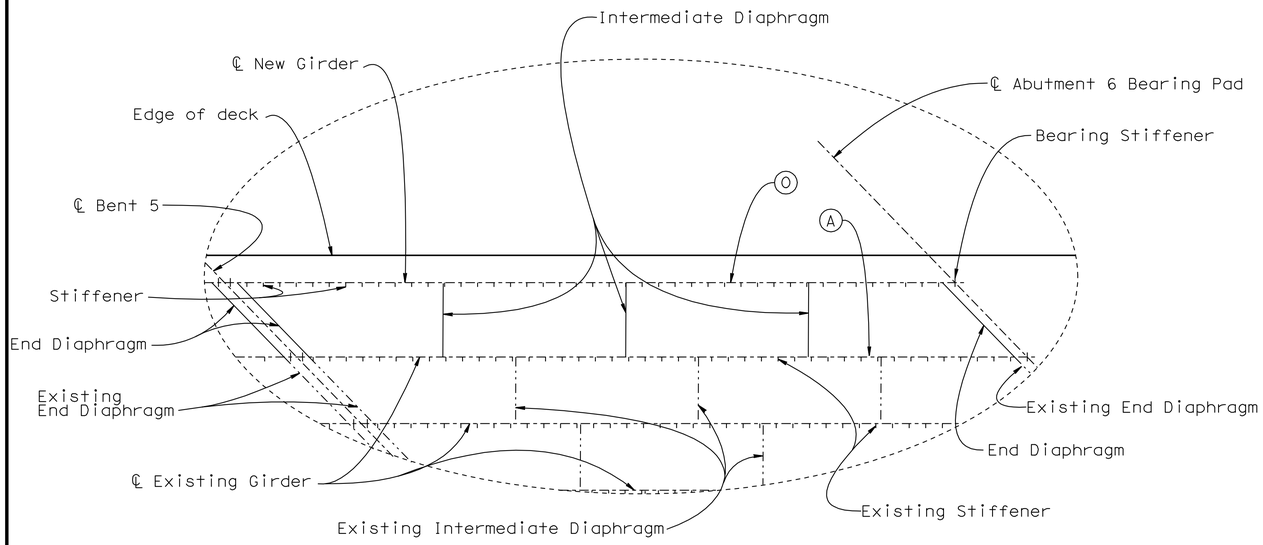

DETAIL C
1:100

NOTE:
For DETAIL C, see "GIRDER LAYOUT" sheet.

Legend:
-·-·- Indicates existing structure
——— Indicates new structure

CAMBER TABLE
No scale

		SPAN LOCATION		
GIRDER K	Camber Compenents	1/4	1/2	3/4
	Deck Slab Dead Load (mm)	23	32	23
	Steel Girder Dead Load (mm)	6	9	6
	Added Dead Load (mm)	7	9	7
	Total Camber	36	50	36

		SPAN LOCATION		
GIRDER L	Camber Compenents	1/4	1/2	3/4
	Deck Slab Dead Load (mm)	45	62	45
	Steel Girder Dead Load (mm)	14	19	14
	Added Dead Load (mm)	16	23	16
	Total Camber	76	104	76

		SPAN LOCATION		
GIRDER M	Camber Compenents	1/4	1/2	3/4
	Deck Slab Dead Load (mm)	59	80	59
	Steel Girder Dead Load (mm)	18	25	18
	Added Dead Load (mm)	24	33	24
	Total Camber	101	138	101

		SPAN LOCATION		
GIRDER N	Camber Compenents	1/4	1/2	3/4
	Deck Slab Dead Load (mm)	52	71	52
	Steel Girder Dead Load (mm)	16	22	16
	Added Dead Load (mm)	22	30	22
	Total Camber	91	124	91

		SPAN LOCATION		
GIRDER O	Camber Compenents	1/4	1/2	3/4
	Deck Slab Dead Load (mm)	23	33	23
	Steel Girder Dead Load (mm)	7	10	7
	Added Dead Load (mm)	8	11	8
	Total Camber	38	53	38

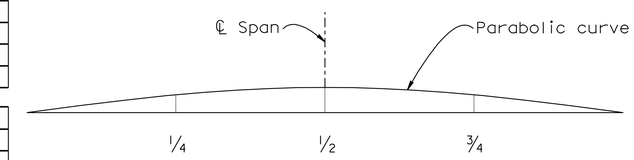

CAMBER DIAGRAM
No scale

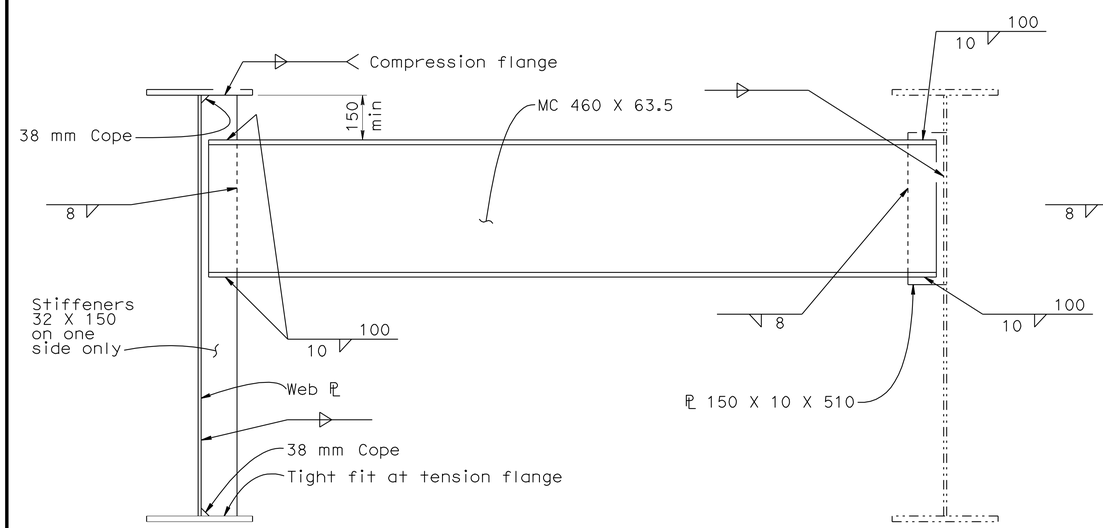

INTERMEDIATE DIAPHRAGM
1:10

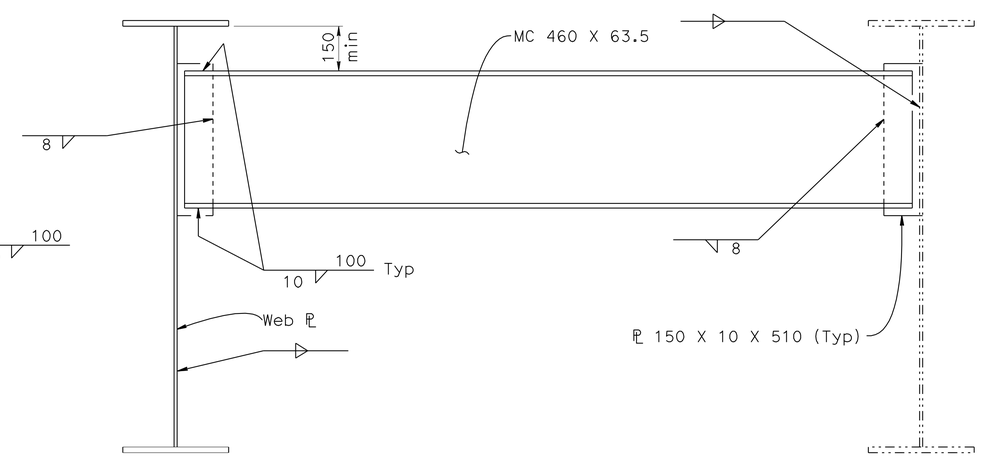

END DIAPHRAGM
1:10

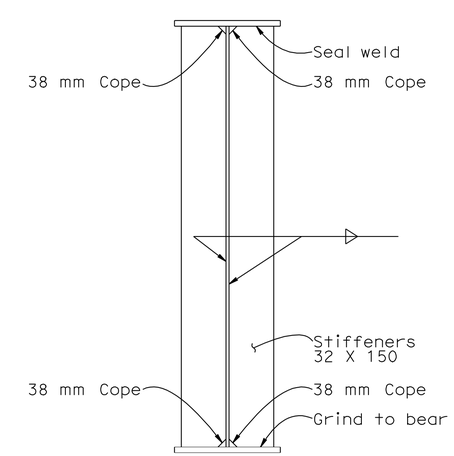

BEARING STIFFENER
1:10

NOTE:
THE CONTRACTOR SHALL VERIFY ALL CONTROLLING FIELD DIMENSIONS BEFORE ORDERING OR FABRICATING ANY MATERIAL.

TYPICAL GIRDER SECTIONS

Caltrans Metric

	BY	CHECKED
DESIGN	Vivian Dang	Marc Friedheim
DETAILS	Roelina Martinez	Marc Friedheim
QUANTITIES	Vivian Dang	Marc Friedheim

STATE OF CALIFORNIA
DEPARTMENT OF TRANSPORTATION

DIVISION OF ENGINEERING SERVICES
STRUCTURE DESIGN
DESIGN BRANCH 6

BRIDGE NO. 53-1134
KILOMETER POST 55.6

SUN VALLEY OH (WIDEN)
GIRDER DETAILS NO. 3

ALL DIMENSIONS ARE IN MILLIMETERS UNLESS OTHERWISE SHOWN

ORIGINAL SCALE IN MILLIMETERS FOR REDUCED PLANS 0 10 20 30 40 50 60 70 80 90 100

CU 07
EA 1218V1

DISREGARD PRINTS BEARING EARLIER REVISION DATES

REVISION DATES: 1-18-07 9-14-07 9-11-08 4-3-08 7-16-09

SHEET 21 OF 33

STRUCTURES DESIGN DETAIL SHEET (METRIC) (REV.03-17-04)

FILE => 53-1134-1-girdet3.dgn

USERNAME => trrichf DATE PLOTTED => 03-MAY-2010 TIME PLOTTED => 13:51

DIST	COUNTY	ROUTE	KILOMETER POST TOTAL PROJECT	SHEET No	TOTAL SHEETS
07	LA	5	50.8/58.0	803	869

Xiaodong Chen 6-25-08
REGISTERED CIVIL ENGINEER DATE

5-3-10
PLANS APPROVAL DATE

REGISTERED PROFESSIONAL ENGINEER XIAODONG CHEN No. C 58858 Exp. 6-30-11 CIVIL STATE OF CALIFORNIA

The State of California or its officers or agents shall not be responsible for the accuracy or completeness of electronic copies of this plan sheet.

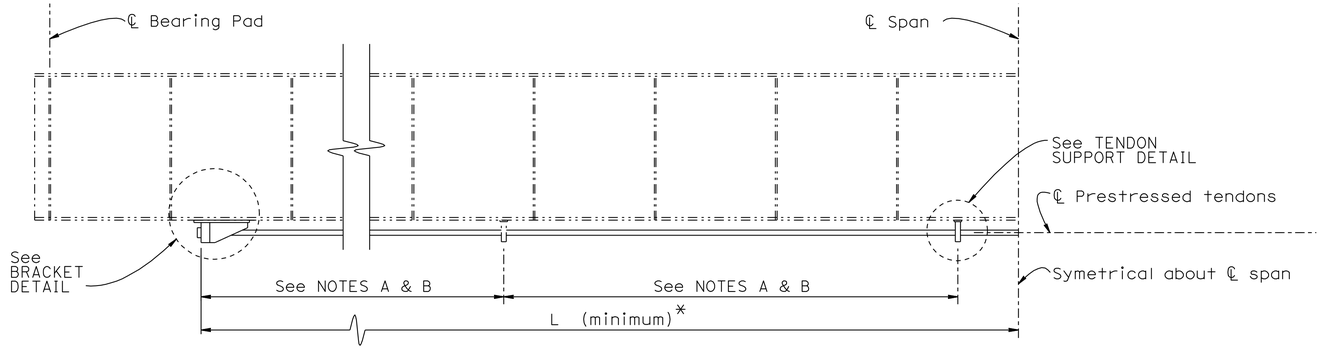

PART GIRDER ELEVATION

No scale

*See Strengthening Table on "STRENGTHENING DETAILS NO. 2" sheet

NOTES:

A. End anchorage and tendon supports to be located between stiffeners.

B. Spacing between end anchorage and tendon supports, and between each tendon support, shall be 4.5 m maximum.

Legend:

-·-·-·- Indicates existing structure

——— Indicates new structure

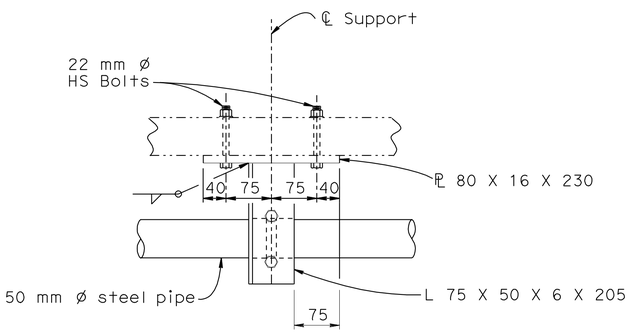

VIEW N-N

1:5

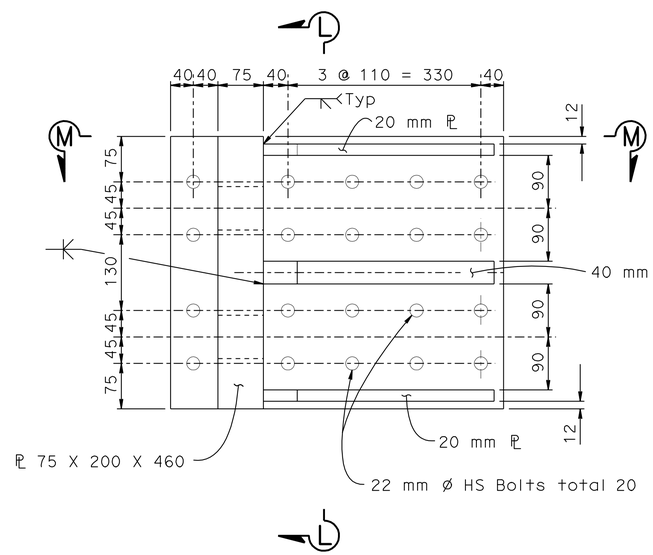

BRACKET DETAIL

1:5

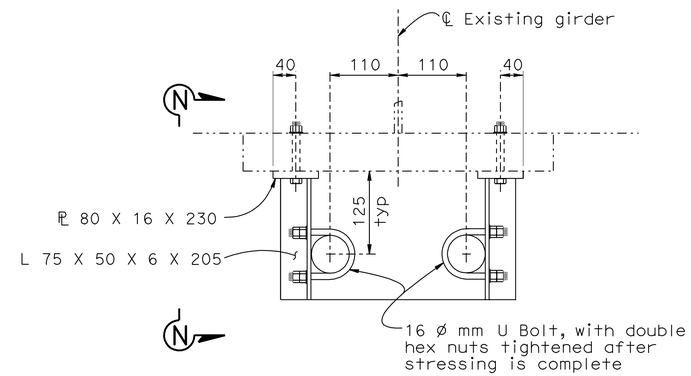

TENDON SUPPORT DETAIL

1:5

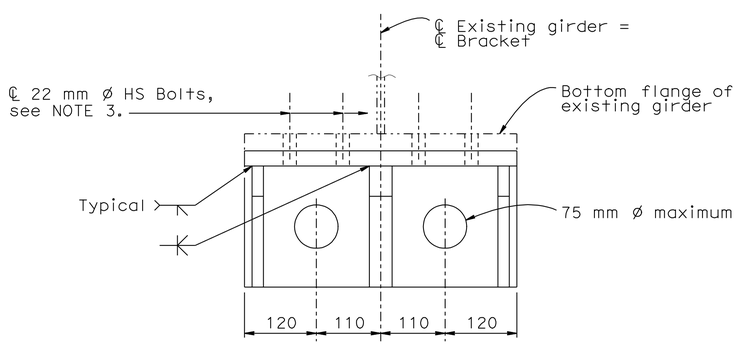

VIEW L-L

1:5

NOTES:

1. Seal weld all open joints on bracket only.
2. High Strength Bolts shall be placed to avoid threads in the shear plane.
3. Paint inside holes with organic zinc-rich paint.
4. All assemblies to be galvanized after fabrication.

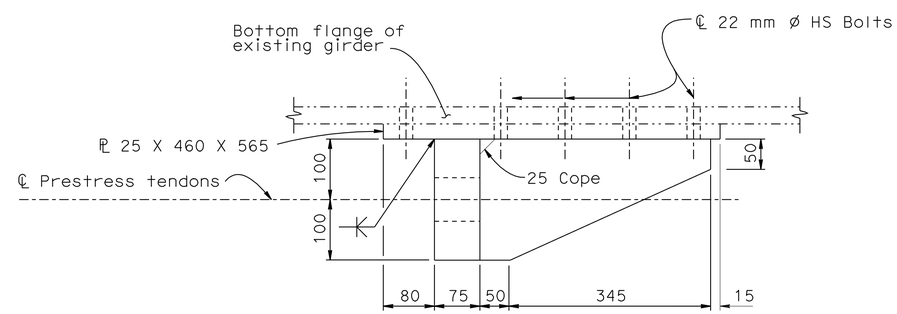

VIEW M-M

1:5

DESIGN	BY Vivian Dang	CHECKED Marc Friedheim	
DETAILS	BY Roelina Martinez	CHECKED Marc Friedheim	
QUANTITIES	BY Vivian Dang	CHECKED Marc Friedheim	

STATE OF CALIFORNIA DEPARTMENT OF TRANSPORTATION

DIVISION OF ENGINEERING SERVICES STRUCTURE DESIGN DESIGN BRANCH 6

BRIDGE NO. 53-1134
KILOMETER POST 55.6

SUN VALLEY OH (WIDEN)
STRENGTHENING DETAILS NO. 1

Caltrans Metric

ALL DIMENSIONS ARE IN MILLIMETERS UNLESS OTHERWISE SHOWN

ORIGINAL SCALE IN MILLIMETERS FOR REDUCED PLANS 0 10 20 30 40 50 60 70 80 90 100

CU 07
EA 1218V1

DISREGARD PRINTS BEARING EARLIER REVISION DATES

REVISION DATES 11-29-06 9-5-07 4-3-08 7-16-09

SHEET 22 OF 33

FILE => 53-1134-1-girdet4.dgn

STRUCTURES DESIGN DETAIL SHEET (METRIC) (REV.03-17-04)

USERNAME => trrichf DATE PLOTTED => 03-MAY-2010 TIME PLOTTED => 13:51

DIST	COUNTY	ROUTE	KILOMETER POST TOTAL PROJECT	SHEET No	TOTAL SHEETS
07	LA	5	50.8/58.0	804	869

REGISTERED CIVIL ENGINEER 6-25-08 DATE

5-3-10
PLANS APPROVAL DATE

REGISTERED PROFESSIONAL ENGINEER XIAODONG CHEN No. C 58858 Exp. 6-30-11 CIVIL STATE OF CALIFORNIA

The State of California or its officers or agents shall not be responsible for the accuracy or completeness of electronic copies of this plan sheet.

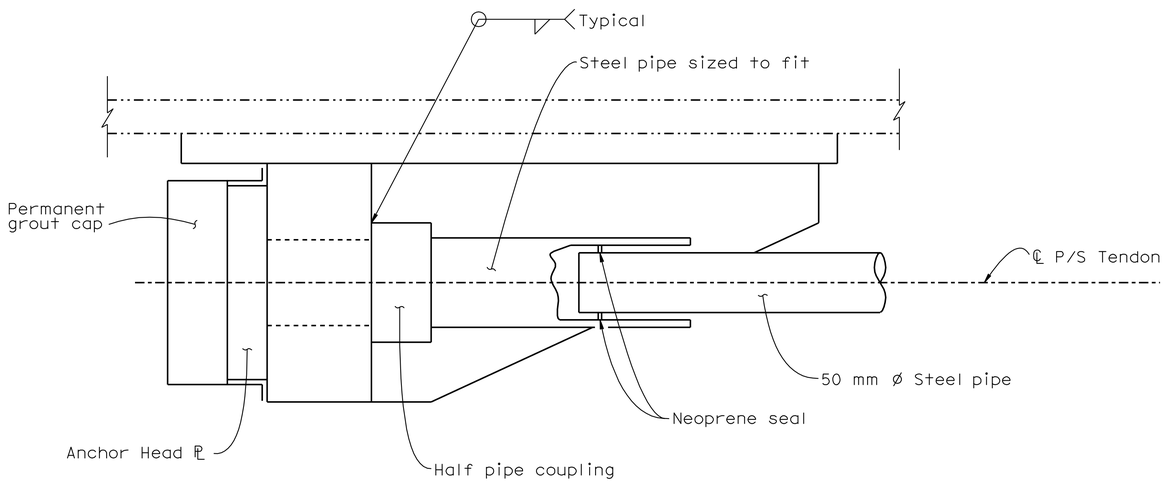

P/S DUCT DETAIL

1:2.5

PRESTRESSING

1. The total force remaining at ℄ of span after losses, including those due to creep of the steel, is listed in the Stengthening Table.
2. The loss in stress in prestressing steel due to creep shall be assumed to be 35 MPa.
3. In addition to the losses noted above, provisions shall be made for losses due to anchorage seating and any other losses peculiar to the prestressing system used.
4. The tendons on each side of ℄ of girder shall be stressed simultaneously using one end stressing. (Stressing may be performed at opposite ends to facilitate prestressing jacks.)
5. Prestressing tendons shall be placed in 50 mm galvanized steel pipe and grouted after stressing. Tendons inside anchor head caps shall be grouted and caps left in place.

Legend:

-·-·-·- Indicates existing structure

——— Indicates new structure

STRENGTHENING TABLE

SPAN	GIRDER TYPE*	Pf per GIRDER	L (min)
1	H	450 kN	10 m
2	C	1250 kN	12.5 m
3	D	2100 kN	14.5 m
4	F	1700 kN	14 m
5	A	850 kN	10 m

* For girder type, see "GIRDER LAYOUT" sheet

NOTE:
THE CONTRACTOR SHALL VERIFY ALL CONTROLLING FIELD DIMENSIONS BEFORE ORDERING OR FABRICATING ANY MATERIAL.

Caltrans Metric

ALL DIMENSIONS ARE IN MILLIMETERS UNLESS OTHERWISE SHOWN

ORIGINAL SCALE IN MILLIMETERS FOR REDUCED PLANS 0 10 20 30 40 50 60 70 80 90 100

	BY	CHECKED
DESIGN	Vivian Dang	Marc Friedheim
DETAILS	Roelina Martinez	Marc Friedheim
QUANTITIES	Vivian Dang	Marc Friedheim

STATE OF CALIFORNIA
DEPARTMENT OF TRANSPORTATION

DIVISION OF ENGINEERING SERVICES
STRUCTURE DESIGN
DESIGN BRANCH 6

CU 07
EA 1218V1

BRIDGE NO. 53-1134
KILOMETER POST 55.6

SUN VALLEY OH (WIDEN)
STRENGTHENING DETAILS NO. 2

DISREGARD PRINTS BEARING EARLIER REVISION DATES

REVISION DATES: 12-4-06 9-5-07 7-16-09

SHEET 23 OF 33

FILE => 53-1134-1-girdet5.dgn

STRUCTURES DESIGN DETAIL SHEET (METRIC) (REV.03-17-04)

USERNAME => trrichf DATE PLOTTED => 03-MAY-2010 TIME PLOTTED => 13:52

DIST	COUNTY	ROUTE	KILOMETER POST TOTAL PROJECT	SHEET No	TOTAL SHEETS
07	LA	5	50.8/58.0	805	869

REGISTERED CIVIL ENGINEER 6-25-08 DATE

5-3-10
PLANS APPROVAL DATE

REGISTERED PROFESSIONAL ENGINEER XIAODONG CHEN No. C 58858 Exp. 6-30-11 CIVIL STATE OF CALIFORNIA

The State of California or its officers or agents shall not be responsible for the accuracy or completeness of electronic copies of this plan sheet.

Legend:

-·-·-·- Indicates existing structure

——— Indicates new structure

NOTES:

1. Extend all top transverse deck reinforcement across diaphragm.
2. Abutment 1 left corner reinforcement shown, Abutment 6 right corner similar

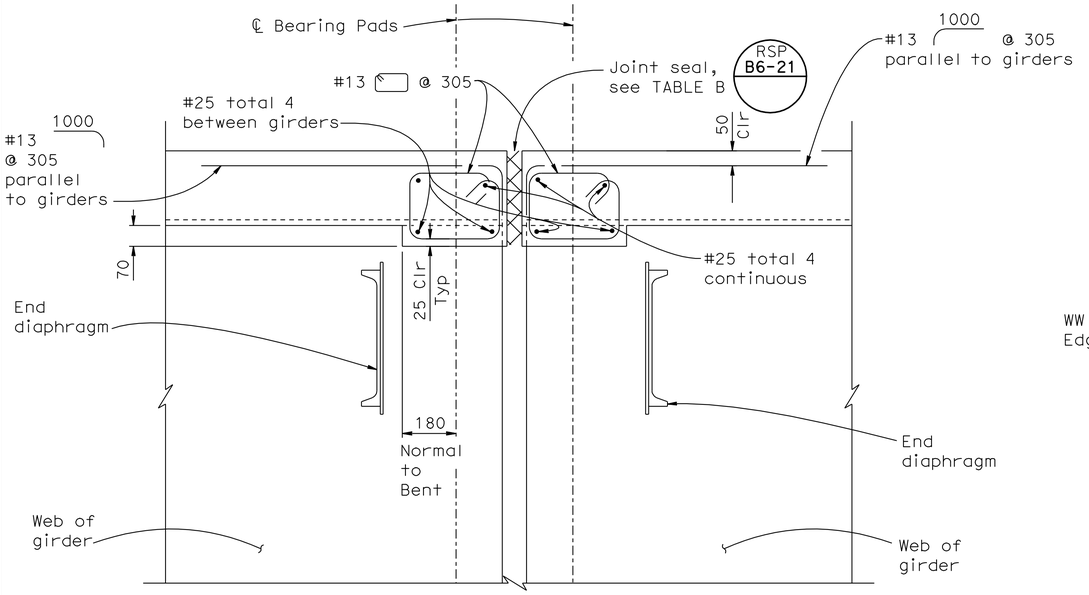

LONGITUDINAL SECTION AT BENT

1:10

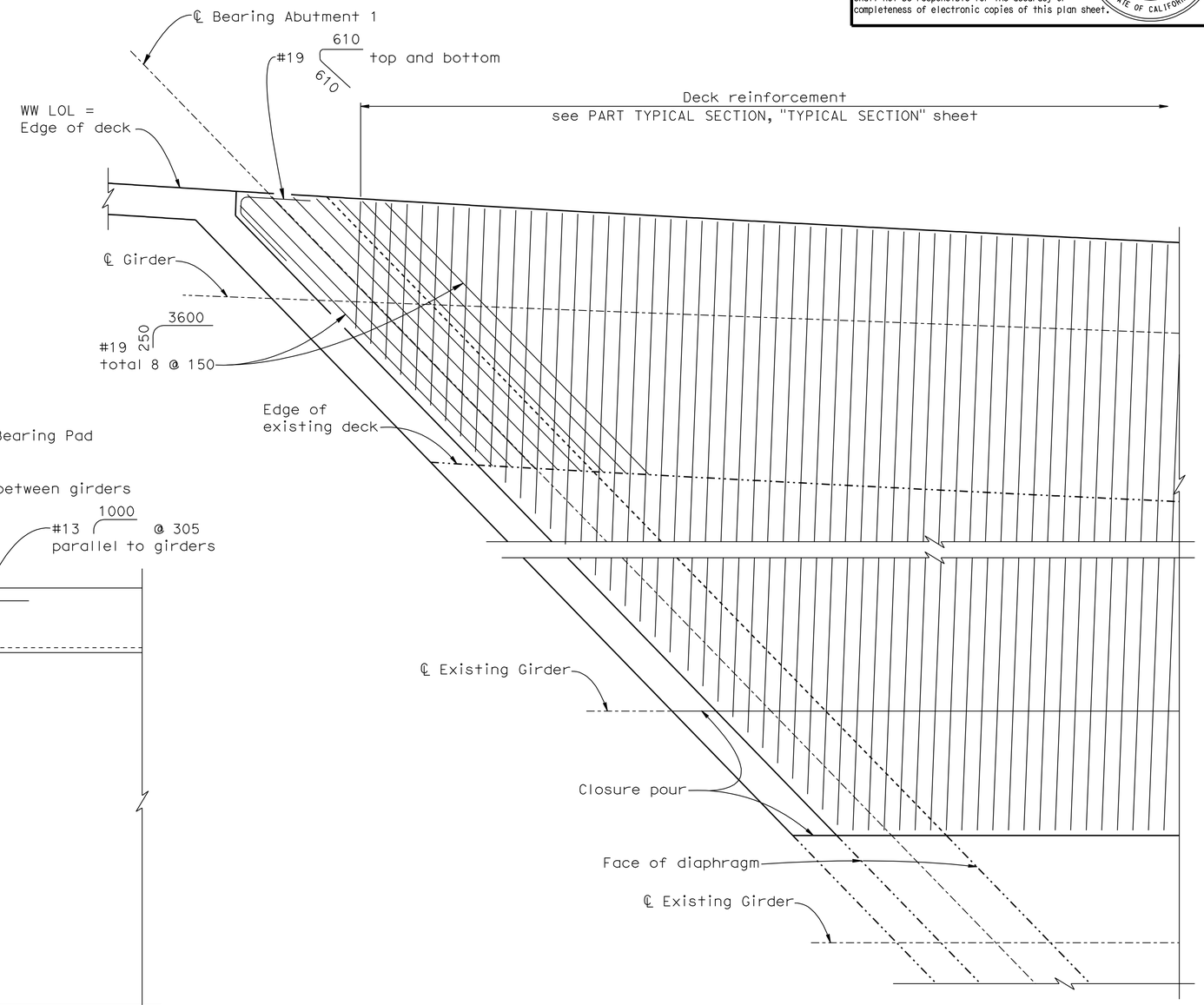

ABUTMENT 1 LEFT CORNER REINFORCEMENT

1:25

TABLE B

LOCATION	MOVEMENT RATING (MR)
Abutment 1	13 mm
Bent 2	25 mm
Bent 3	50 mm
Bent 4	25 mm
Bent 5	25 mm
Abutment 6	13 mm

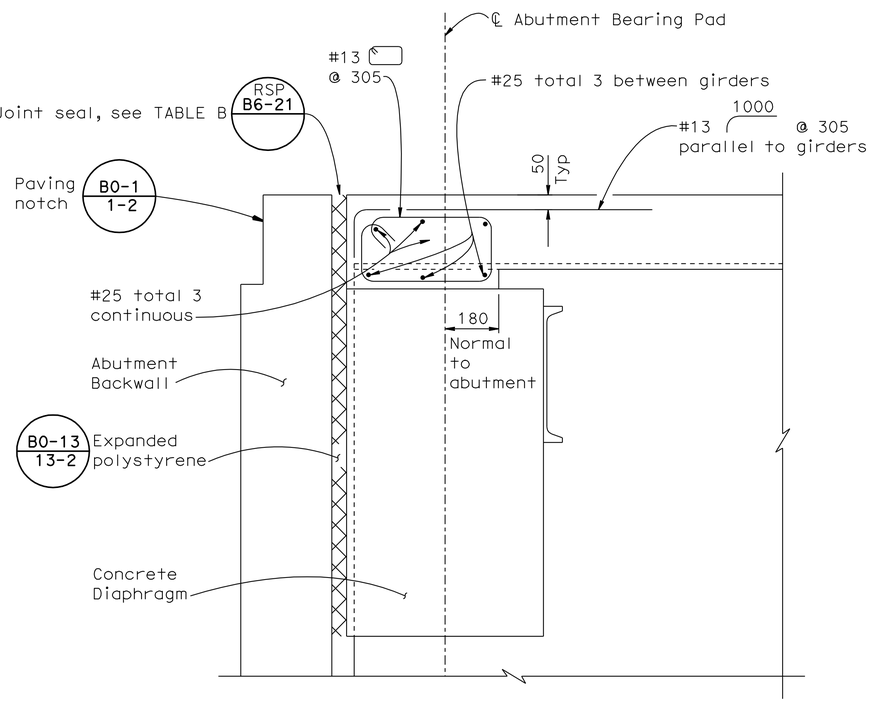

LONGITUDINAL SECTION AT ABUTMENT

1:10

NOTE:
THE CONTRACTOR SHALL VERIFY ALL CONTROLLING FIELD DIMENSIONS BEFORE ORDERING OR FABRICATING ANY MATERIAL.

Caltrans Metric

	BY	CHECKED
DESIGN	Vivian Dang	Marc Friedheim
DETAILS	Roelina Martinez	Marc Friedheim
QUANTITIES	Vivian Dang	Marc Friedheim

STATE OF CALIFORNIA
DEPARTMENT OF TRANSPORTATION

DIVISION OF ENGINEERING SERVICES
STRUCTURE DESIGN
DESIGN BRANCH 6

BRIDGE NO. 53-1134
KILOMETER POST 55.6

SUN VALLEY OH (WIDEN)
DECK DETAILS

ALL DIMENSIONS ARE IN MILLIMETERS UNLESS OTHERWISE SHOWN

ORIGINAL SCALE IN MILLIMETERS FOR REDUCED PLANS 0 10 20 30 40 50 60 70 80 90 100

CU 07
EA 1218V1

DISREGARD PRINTS BEARING EARLIER REVISION DATES

REVISION DATES: 1-9-07 9-5-07 9-19-07 11-29-07 6-16-08 7-16-09

SHEET 24 OF 33

FILE => 53-1134-m-deckdet.dgn

STRUCTURES DESIGN DETAIL SHEET (METRIC) (REV.03-17-04)

USERNAME => trrichf DATE PLOTTED => 03-MAY-2010 TIME PLOTTED => 13:52

DIST.	COUNTY	ROUTE	KILOMETER POST TOTAL PROJECT	SHEET NO.	TOTAL SHEETS
07	LA	5	50.8/58.0	806	869

Caltrans Metric

Xiaodong Chen 6-25-08
REGISTERED ENGINEER - CIVIL

5-3-10
PLANS APPROVAL DATE

REGISTERED PROFESSIONAL ENGINEER XIAODONG CHEN No. C 58858 Exp. 6-30-11 CIVIL STATE OF CALIFORNIA

The State of California or its officers or agents shall not be responsible for the accuracy or completeness of electronic copies of this plan sheet.

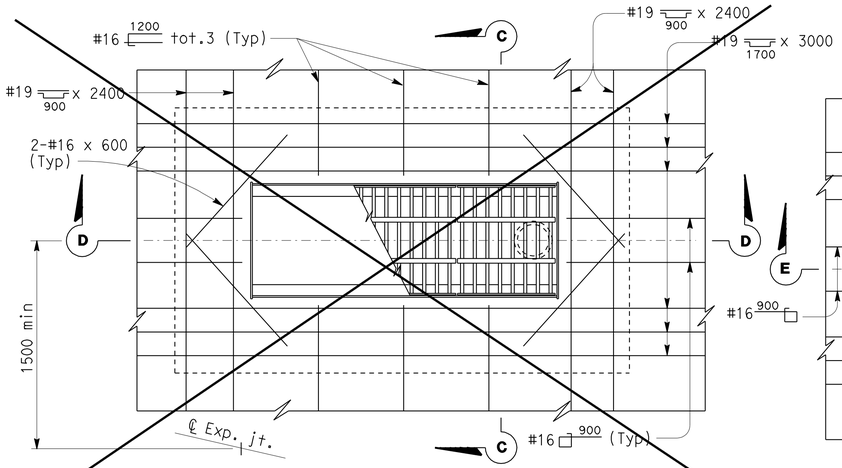

⚠1 PLAN - MEDIAN INSTALLATION

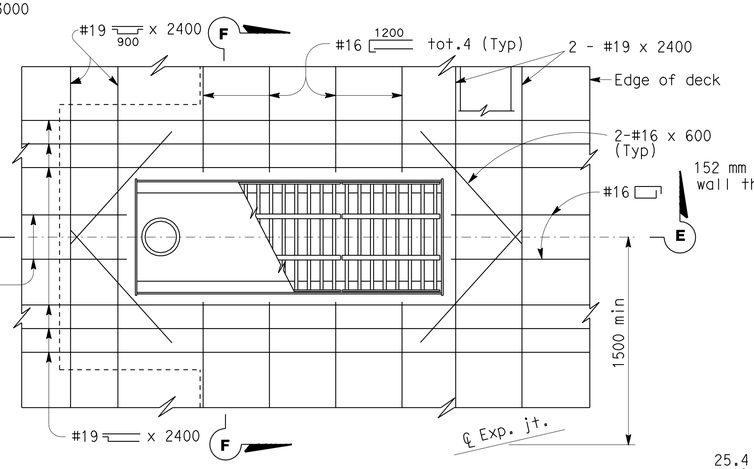

PLAN - CURB INSTALLATION

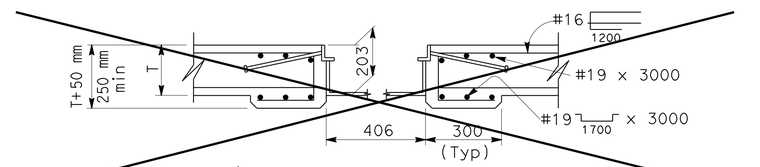

⚠1 SECTION C-C

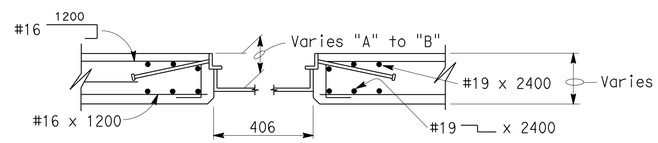

SECTION F-F

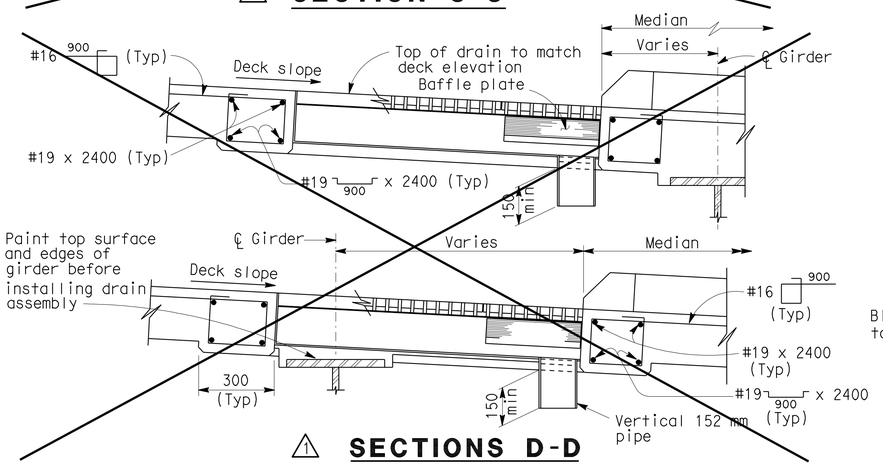

⚠1 SECTIONS D-D

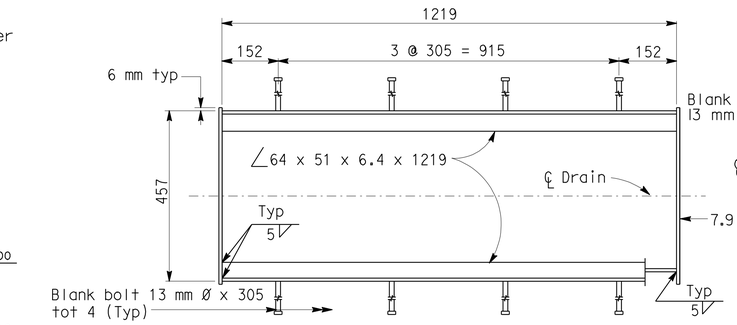

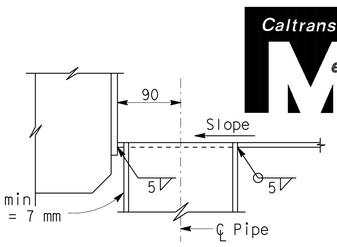

PIPE SECTION

Notes: Galvanize deck drain assembly after fabrication. Reinforcement shown at drains is to be placed in addition to typical slab reinforcement. Typical slab reinforcement not shown

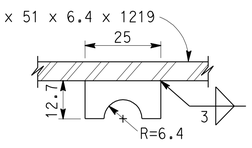

LOCK BAR

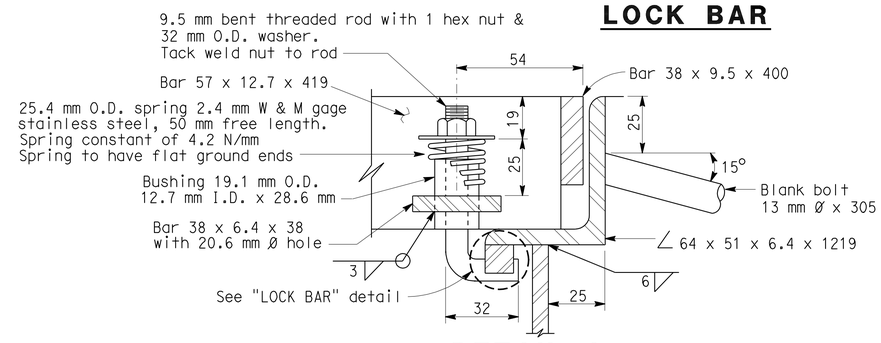

DETAIL A

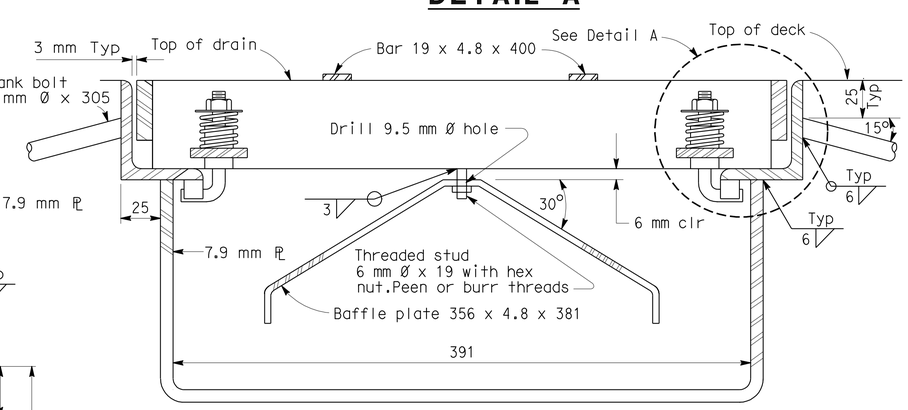

SECTION A-A (FRAME & GRATE)

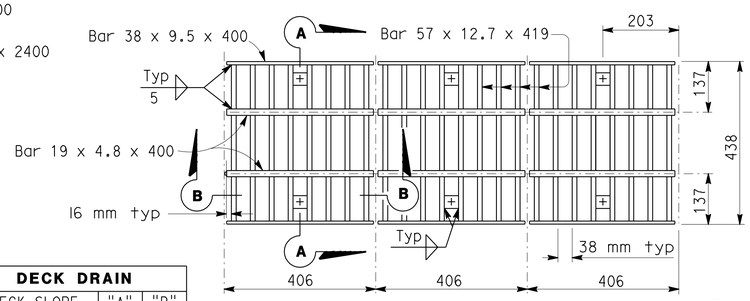

PLAN - FRAME & GRATE

Note: Grating consists of 3 identical units except for Baffle plate. Baffle plate is required only for the grate over the 152 mm Ø pipe

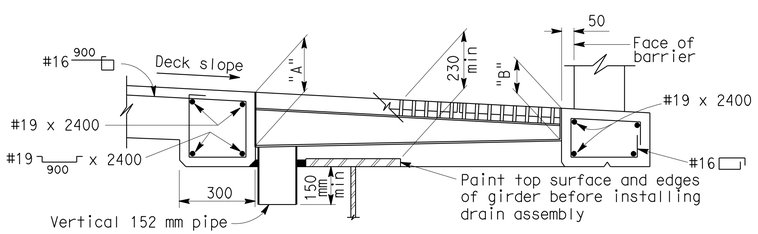

SECTION E-E

DECK DRAIN		
DECK SLOPE	"A"	"B"
0% to 6%	230	130
7% to 9%	250	130
10% to 12%	270	100

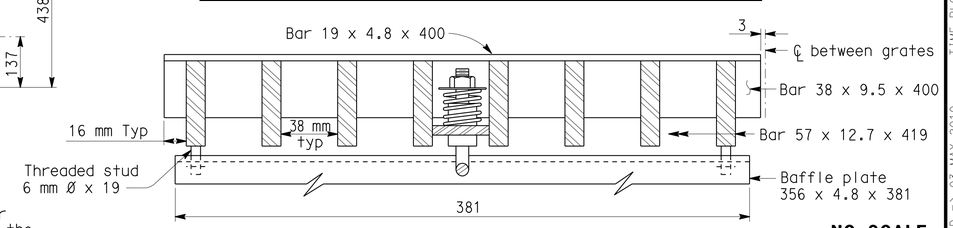

SECTION B-B

ALL DIMENSIONS ARE IN MILLIMETERS UNLESS OTHERWISE SHOWN

NO SCALE

⚠1 Detail does not apply.

STANDARD DRAWING

RELEASE DATE	4/18/97	DESIGN	BY	CHECKED	RELEASED BY
FILE NO.	xs10-010	DETAILS	BY R. YEE	CHECKED	
		SUBMITTED	BY	DRAWING DATE 12/76	OFFICE CHIEF

DS OSD 2147A (METRIC) (REV. 2/25/97)

ORIGINAL SCALE IN MILLIMETERS FOR REDUCED PLANS 0 10 20 30 40 50 60 70 80 90 100

STATE OF CALIFORNIA DEPARTMENT OF TRANSPORTATION

DIVISION OF ENGINEERING SERVICES

CU 07
EA 1218V1

BRIDGE NO. 53-1134
KILOMETER POST 55.6

SUN VALLEY OH (WIDEN)

DECK DRAIN - TYPE C

DISREGARD PRINTS BEARING EARLIER REVISION DATES

REVISION DATES (PRELIMINARY STAGE ONLY) 1-24-07 7-16-09

SHEET 25 OF 33

USERNAME => trrichf

53-1134-r-deckdr1

DATE PLOTTED => 03-MAY-2010 TIME PLOTTED => 13:52

DIST	COUNTY	ROUTE	KILOMETER POST TOTAL PROJECT	SHEET No	TOTAL SHEETS
07	LA	5	50.8/58.0	807	869

REGISTERED CIVIL ENGINEER — DATE 6-25-08

5-3-10
PLANS APPROVAL DATE

REGISTERED PROFESSIONAL ENGINEER — XIAODONG CHEN — No. C 58858 — Exp. 6-30-11 — CIVIL — STATE OF CALIFORNIA

The State of California or its officers or agents shall not be responsible for the accuracy or completeness of electronic copies of this plan sheet.

NOTES:

1. All bends to be on 460 mm minimum radius measured along ℄ pipe. All bends to be smooth. Pipes not encased in concrete to be supported by suitable galvanized hangers @ 3 m maximum spacing throughout. All joints or connections to be butt welded or connected by a steel pipe sleeve and to be smooth throughout inside of pipe except as noted.
2. Omit details when web stiffeners within 260 ± of ℄ drain.

Legend:

-·-·-·- Indicates existing structure

——— Indicates new structure

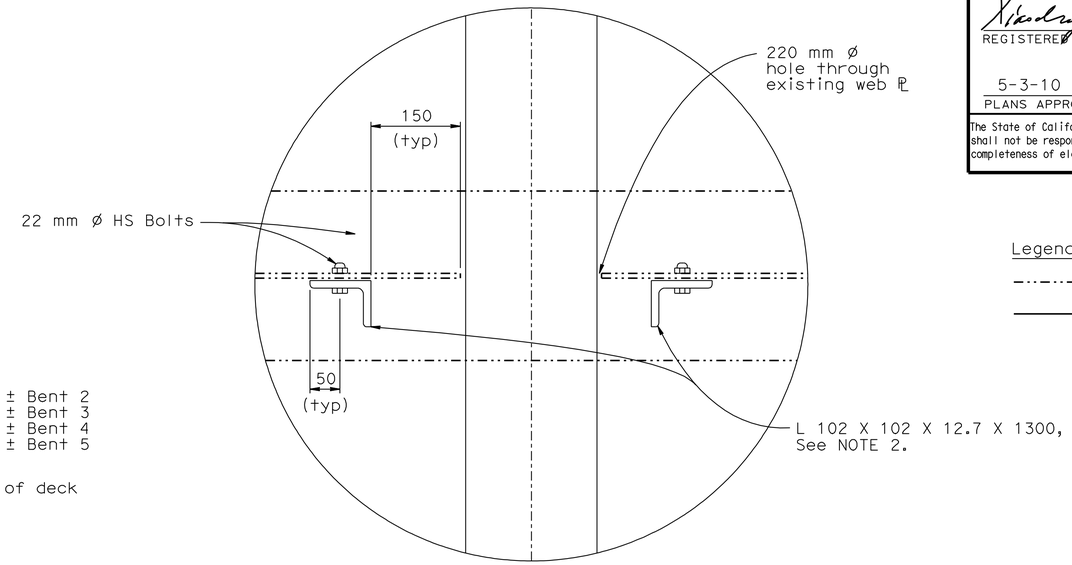

DETAIL D
1:5

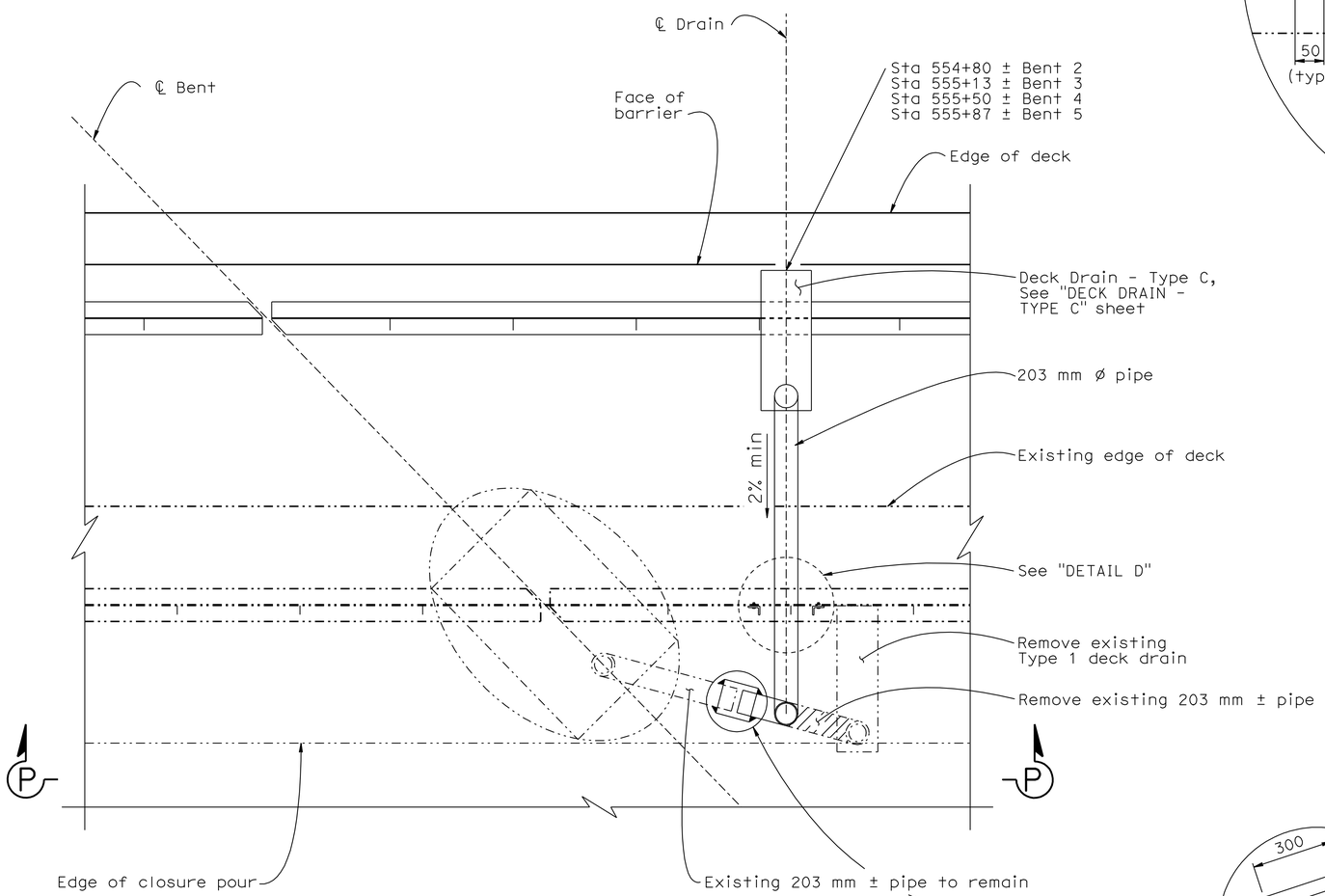

PLAN - DECK DRAIN AT SOUTH CURB
1:25

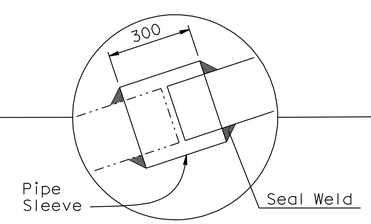

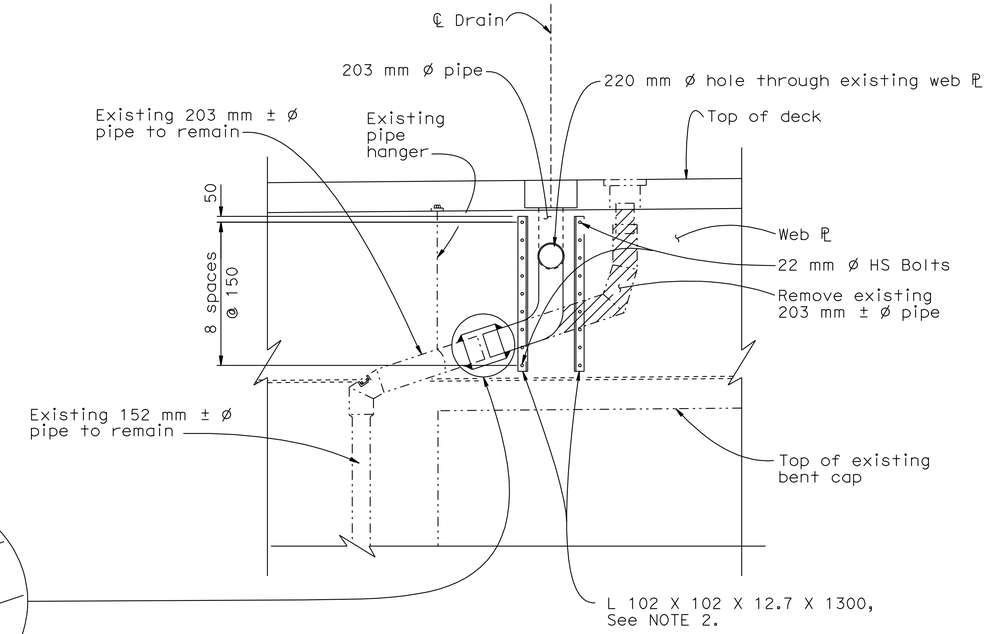

SECTION P-P
1:25

NOTE:
THE CONTRACTOR SHALL VERIFY ALL CONTROLLING FIELD DIMENSIONS BEFORE ORDERING OR FABRICATING ANY MATERIAL.

Caltrans Metric

	BY	CHECKED
DESIGN	Vivian Dang	Xiaodong Chen
DETAILS	Roelina Martinez	Vivian Dang
QUANTITIES	Vivian Dang	Marc Friedheim

STATE OF CALIFORNIA
DEPARTMENT OF TRANSPORTATION

DIVISION OF ENGINEERING SERVICES
STRUCTURE DESIGN
DESIGN BRANCH 6

BRIDGE NO. 53-1134
KILOMETER POST 55.6

SUN VALLEY OH (WIDEN)
DECK DRAIN DETAILS

ALL DIMENSIONS ARE IN MILLIMETERS UNLESS OTHERWISE SHOWN

ORIGINAL SCALE IN MILLIMETERS FOR REDUCED PLANS 0 10 20 30 40 50 60 70 80 90 100

CU 07
EA 1218V1

DISREGARD PRINTS BEARING EARLIER REVISION DATES — REVISION DATES 10-2-07 7-16-09

SHEET 26 OF 33

FILE => 53-1134-r-deckdr2.dgn

STRUCTURES DESIGN DETAIL SHEET (METRIC) (REV.03-17-04)

USERNAME => trrichf DATE PLOTTED => 03-MAY-2010 TIME PLOTTED => 13:52

DIST	COUNTY	ROUTE	KILOMETER POST TOTAL PROJECT	SHEET No	TOTAL SHEETS
07	LA	5	50.8/58.0	808	869

REGISTERED CIVIL ENGINEER 6-25-08 DATE

5-3-10
PLANS APPROVAL DATE

REGISTERED PROFESSIONAL ENGINEER XIAODONG CHEN No. C 58858 Exp. 6-30-11 CIVIL STATE OF CALIFORNIA

The State of California or its officers or agents shall not be responsible for the accuracy or completeness of electronic copies of this plan sheet.

NOTES:

1. Snug each cable to remove slack from system.
2. Back nut off 40 mm.
3. Set anchor nut, washer and jam nut each end.
4. All assemblies to be galvanized after fabrication.
5. Tighten existing cables per same procedure.

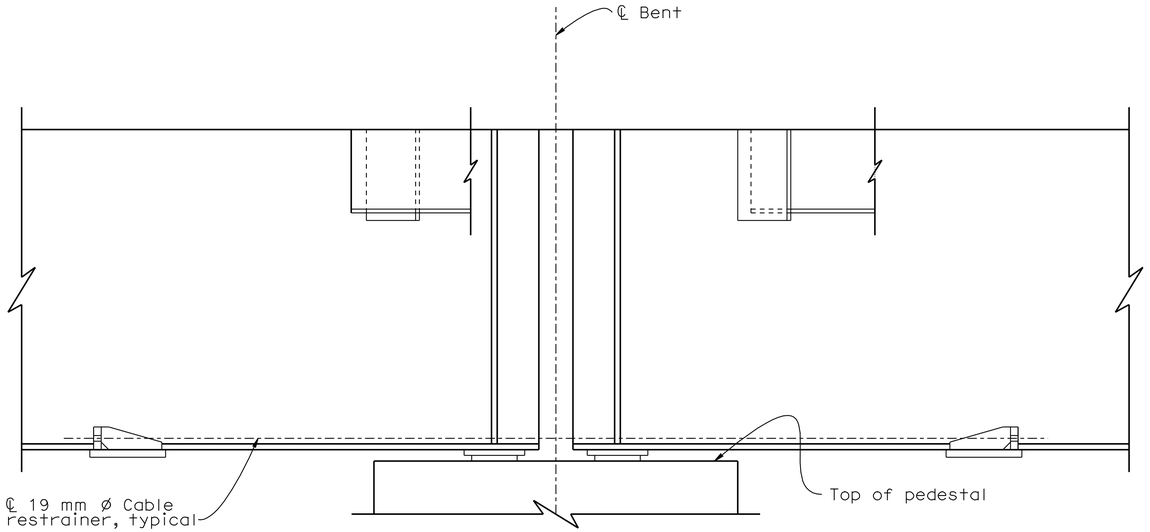

PART GIRDER ELEVATION

No scale

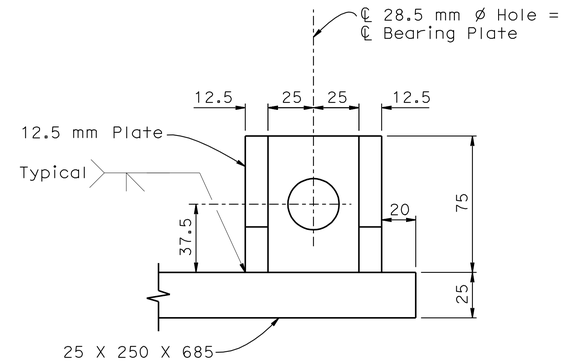

VIEW R - R

No scale

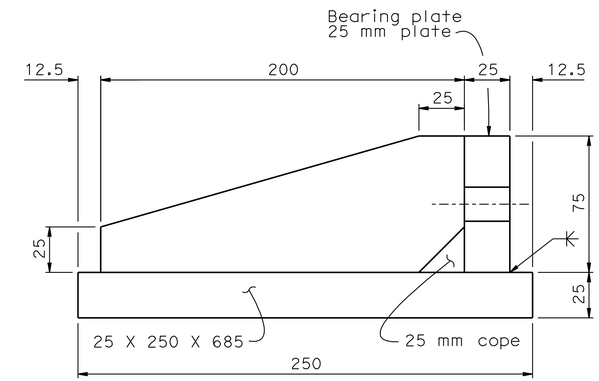

SECTION S - S

No scale

RESTRAINER BRACKET

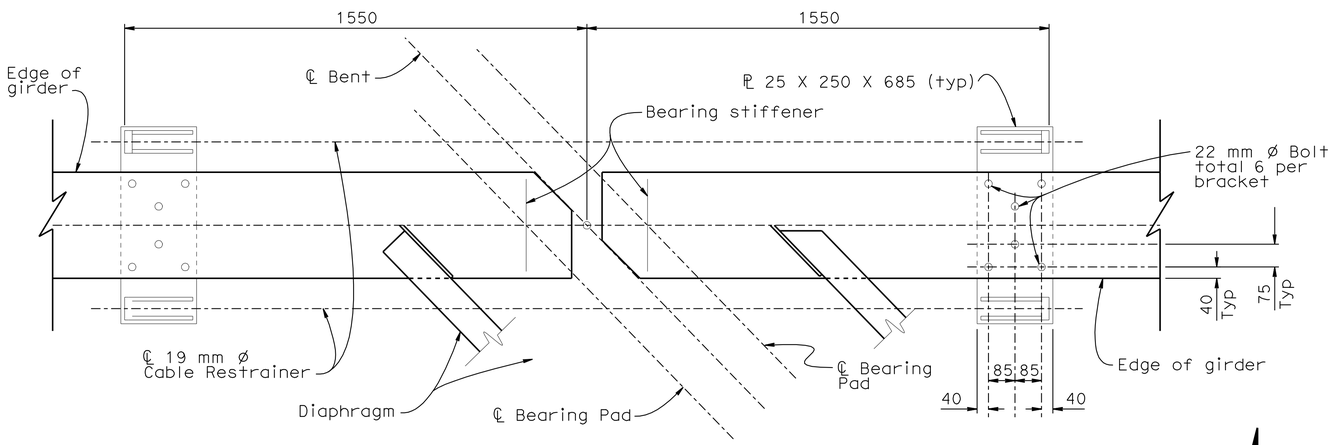

PART PLAN

No scale

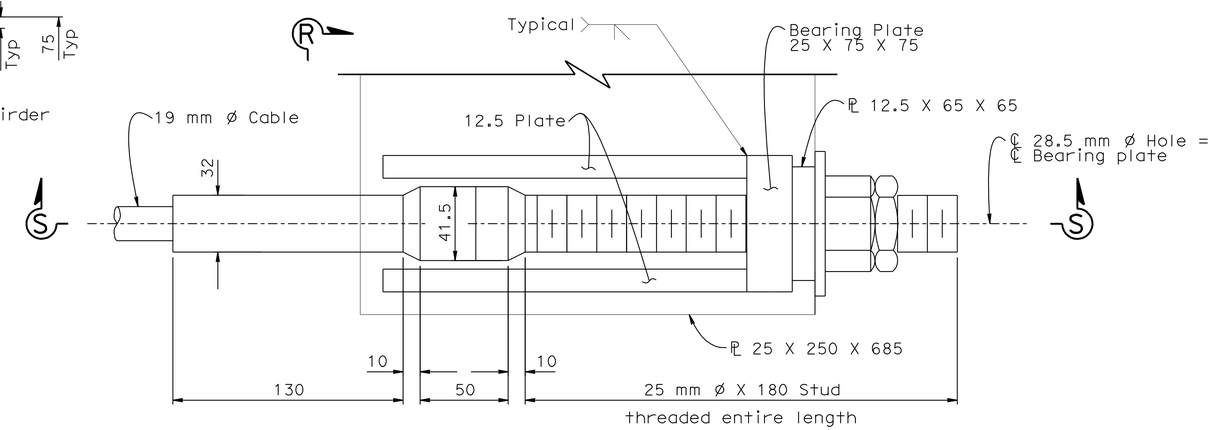

PLAN

No scale

Legend:

-·-·-·- Indicates existing structure

——— Indicates new structure

NOTE:
THE CONTRACTOR SHALL VERIFY ALL CONTROLLING FIELD DIMENSIONS BEFORE ORDERING OR FABRICATING ANY MATERIAL.

Caltrans Metric

	BY	CHECKED
DESIGN	Vivian Dang	Xiaodong Chen
DETAILS	Roelina Martinez	Xiaodong Chen
QUANTITIES	Vivian Dang	Marc Friedheim

STATE OF CALIFORNIA
DEPARTMENT OF TRANSPORTATION

DIVISION OF ENGINEERING SERVICES
STRUCTURE DESIGN
DESIGN BRANCH 6

BRIDGE NO. 53-1134
KILOMETER POST 55.6

SUN VALLEY OH (WIDEN)
RESTRAINER DETAILS

ALL DIMENSIONS ARE IN MILLIMETERS UNLESS OTHERWISE SHOWN

ORIGINAL SCALE IN MILLIMETERS FOR REDUCED PLANS 0 10 20 30 40 50 60 70 80 90 100

CU 07
EA 1218V1

DISREGARD PRINTS BEARING EARLIER REVISION DATES

REVISION DATES: 12-11-06 9-18-07 10-19-07 7-16-09

SHEET 27 OF 33

FILE => 53-1134-t-restrain.dgn

STRUCTURES DESIGN DETAIL SHEET (METRIC) (REV.03-17-04)

USERNAME => trright DATE PLOTTED => 03-MAY-2010 TIME PLOTTED => 13:53

DIST.	COUNTY	ROUTE	KILOMETER POST TOTAL PROJECT	SHEET NO.	TOTAL SHEETS
07	LA	5	50.8/58.0	809	869

Xiaodong Chen 6-25-28
REGISTERED ENGINEER - CIVIL

5-3-10
PLANS APPROVAL DATE

REGISTERED PROFESSIONAL ENGINEER Xiaodong Chen No. 58858 Exp. 6-30-11 CIVIL STATE OF CALIFORNIA

The State of California or its officers or agents shall not be responsible for the accuracy or completeness of electronic copies of this plan sheet.

Caltrans Metric

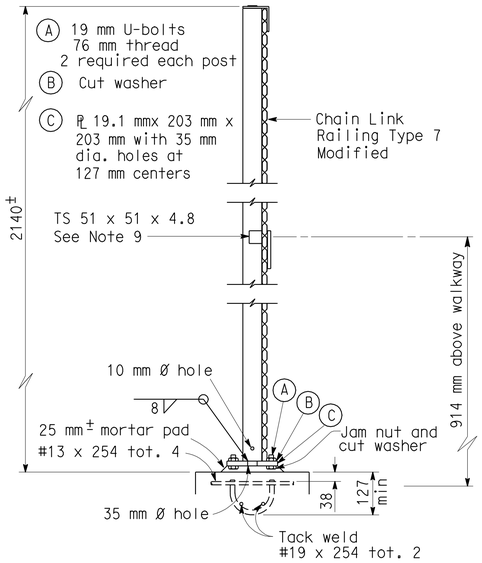

TYPICAL POST DETAIL

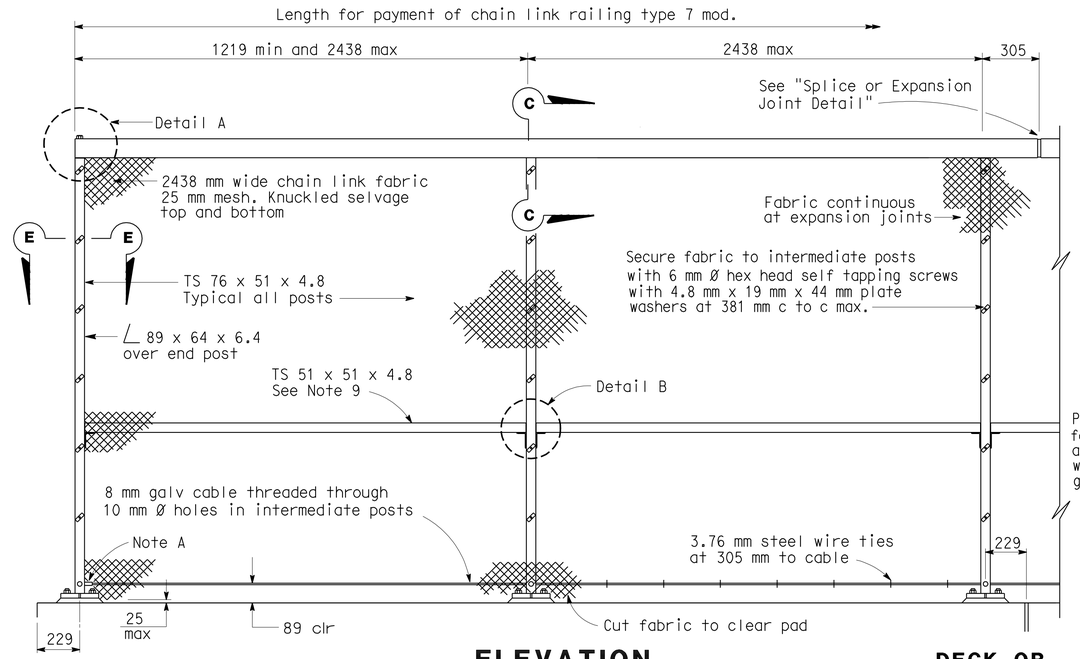

END POST

ELEVATION

DECK OR WALL JOINT

Note A: Anchor 8 mm galvanized cable at end post with 13 mm Ø stud socket assembly or 13 mm Ø welded eyebolt and crimped sleeve clamp. Provide 38 mm min. take-up at each anchorage.

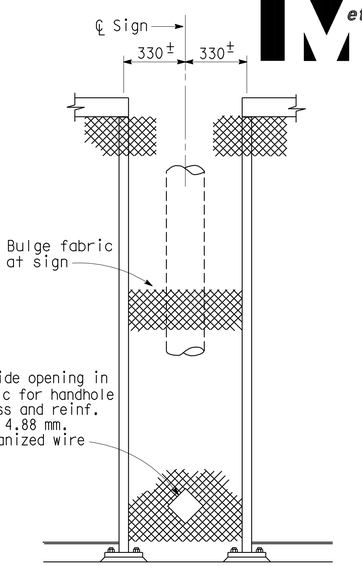

SIGN PANEL

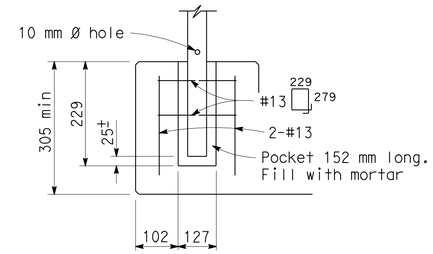

ALTERNATIVE ANCHORAGE DETAIL

May be used when thickness of concrete is 305 mm or more. Not to be used when post contains electrical conduit.

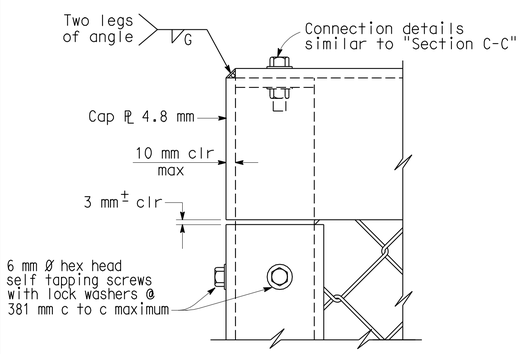

DETAIL A

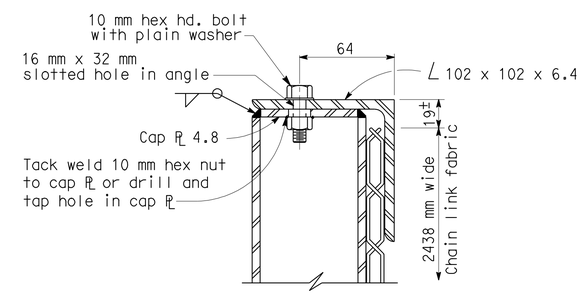

SECTION C-C

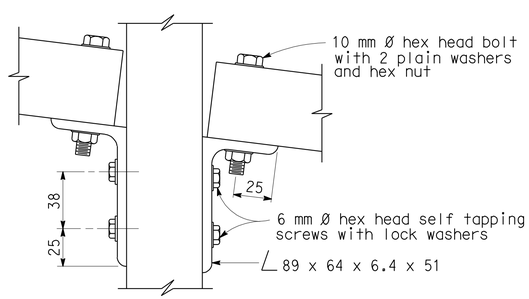

DETAIL B

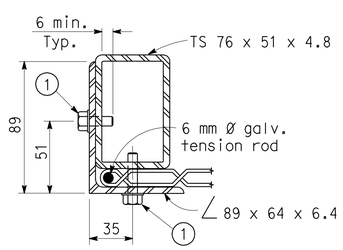

1 6 mm Ø hex head self-tapping screws with lock washers @ 381 mm c.to c. maximum

SECTION E-E

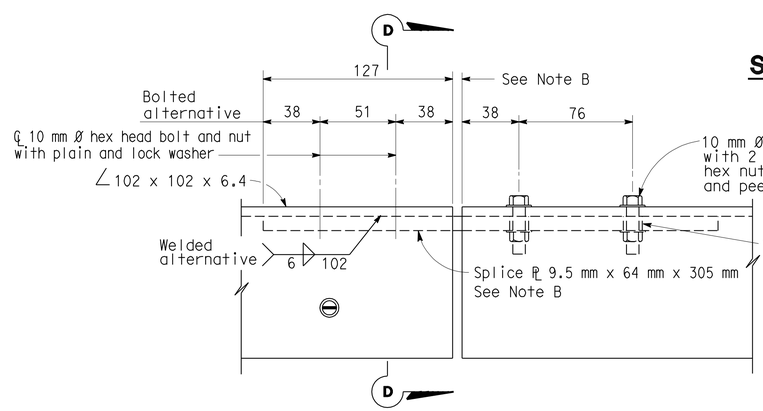

SPLICE OR EXPANSION JOINT DETAIL

Note B: Expansion joint same dimension as expansion joint in deck or wall. Increase slotted hole length and splice PL length correspondingly.

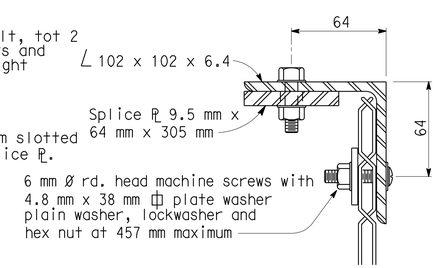

SECTION D-D

NO SCALE

NOTES:

1. Railing assembly except chain link fabric to be galvanized after fabrication.
2. Railing shall conform to horizontal and vertical alignment. Post shall be vertical. Horizontal angle shall be bent to conform to horizontal alignment if radius is 45.72 m or less.
3. Horizontal angle shall be continuous over not less than two intermediate posts,except that a shorter length is permitted at expansion joints and other rail discontinuities.
4. When railing is placed on curved horizontal alignment with radius of 45.72 m or less,drill 13 mm Ø x 76 mm deep hole in slab and set in epoxy adhesives 10 mm Ø welded eyebolt for 8 mm cable to limit the midordinate distance between the 8 mm cable and curve to be 25 mm max.
5. Place fabric parallel to slope.
6. Alternative details may be submitted by the Contractor for Engineer's approval.
7. Provide thimbles at all cable loops.
8. Peen all exposed bolts.
9. TS 51 x 51 x 4.8 required for curves with radius of 45.72 or less. Bend to conform to curve.

ALL DIMENSIONS ARE IN MILLIMETERS UNLESS OTHERWISE SHOWN

STANDARD DRAWING					
RELEASE DATE 6/9/98	DESIGN	BY R.W. BISHOP	CHECKED J. HAMAGUCHI	RELEASED BY	
FILE NO. xs16-360	DETAILS	BY R. YEE	CHECKED J. HAMAGUCHI		
	SUBMITTED	BY R.W. BISHOP	DRAWING DATE 12/76	OFFICE CHIEF	

STATE OF CALIFORNIA DEPARTMENT OF TRANSPORTATION

DIVISION OF ENGINEERING SERVICES

BRIDGE NO. 53-1134
KILOMETER POST 55.65

SUN VALLEY OH (WIDEN)

CHAIN LINK RAILING TYPE 7 MODIFIED

DS OSD 2147A (METRIC) (REV. 2/25/97)

ORIGINAL SCALE IN MILLIMETERS FOR REDUCED PLANS 0 10 20 30 40 50 60 70 80 90 100

CU 07
EA 1218V1

DISREGARD PRINTS BEARING EARLIER REVISION DATES

REVISION DATES (PRELIMINARY STAGE ONLY) 6-28-06 7-16-09

SHEET 28 OF 33

USERNAME => trrichf

53-1134-uchain1.dg

DATE PLOTTED => 03-MAY-2010 TIME PLOTTED => 13:53

DIST.	COUNTY	ROUTE	KILOMETER POST TOTAL PROJECT	SHEET NO.	TOTAL SHEETS
07	LA	5	50.8/58.0	810	869

Caltrans Metric

Xiaodong Chen 6-30-09
REGISTERED ENGINEER - CIVIL

5-3-10
PLANS APPROVAL DATE

REGISTERED PROFESSIONAL ENGINEER XIAODONG CHEN No. C 58858 Exp. 6-30-11 CIVIL STATE OF CALIFORNIA

The State of California or its officers or agents shall not be responsible for the accuracy or completeness of electronic copies of this plan sheet.

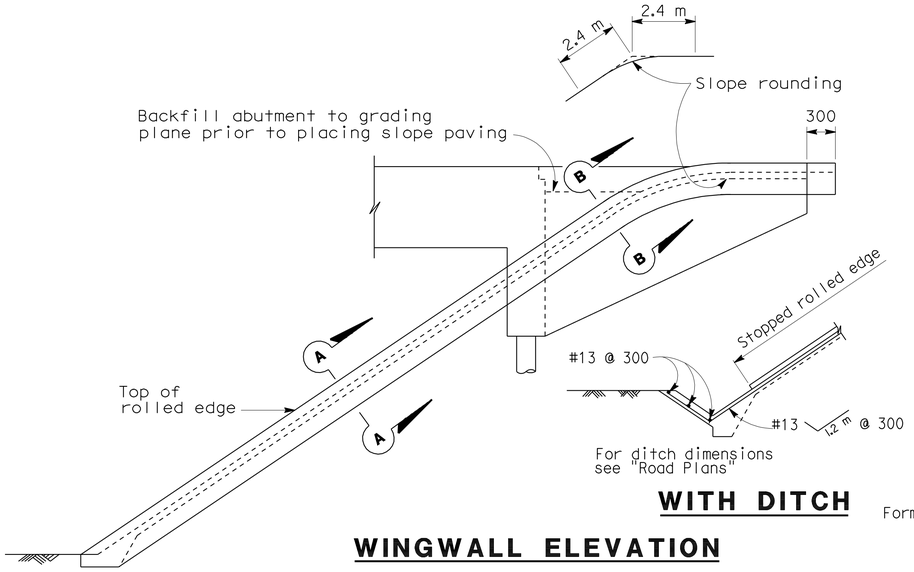

WITH DITCH

WINGWALL ELEVATION

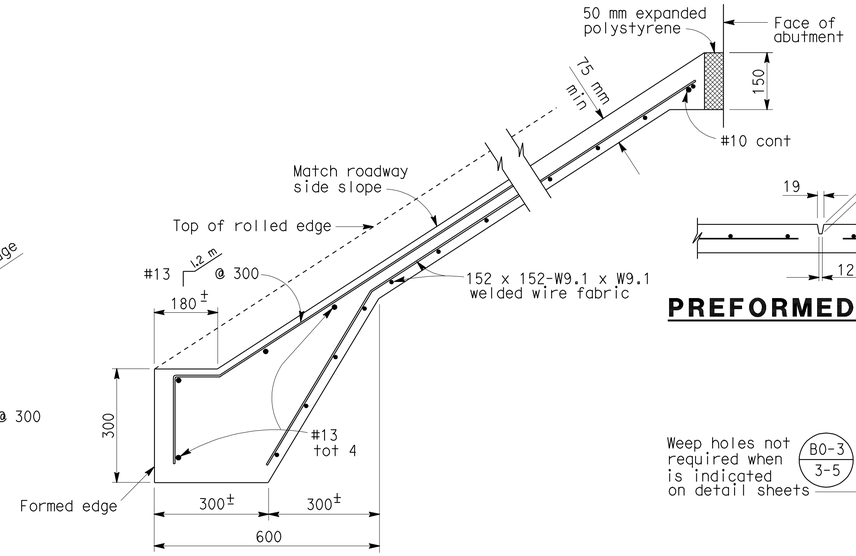

TYPICAL SECTION - CONCRETE PAVING

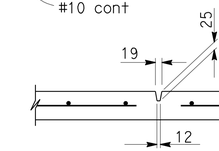

PREFORMED GROOVE

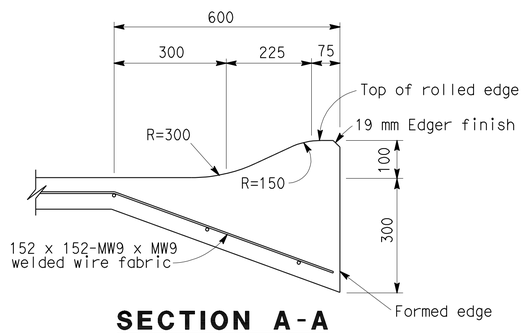

SECTION A-A

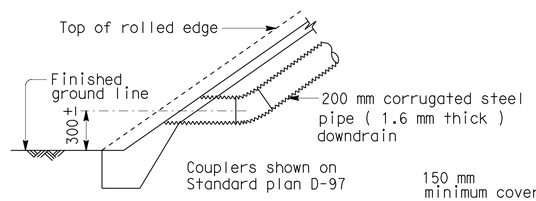

TYPICAL - NO CURB

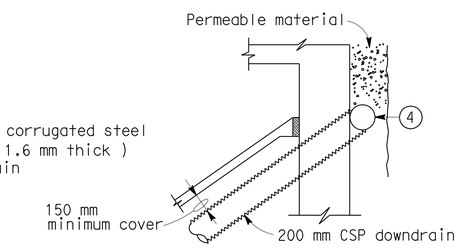

TYPICAL - DRAIN CONNECTION

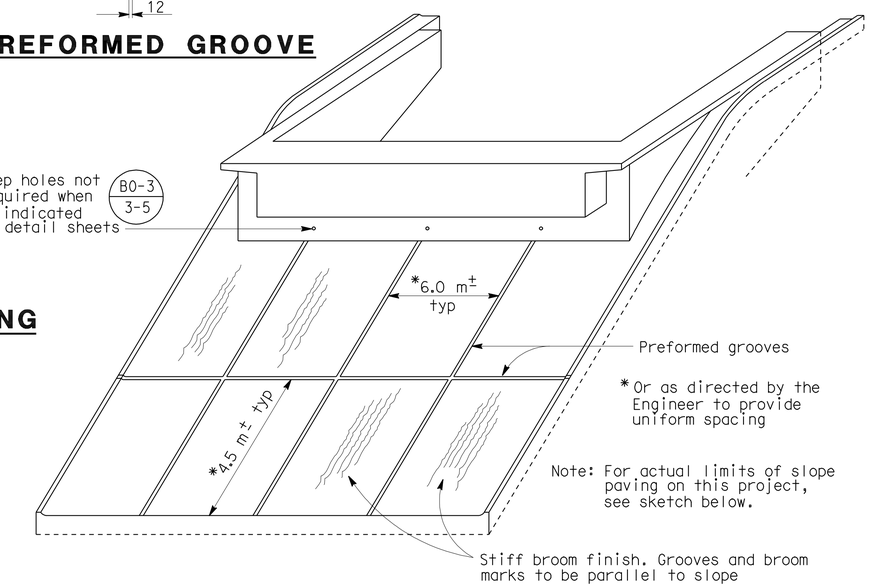

PICTORIAL VIEW OF TYPICAL INSTALLATION

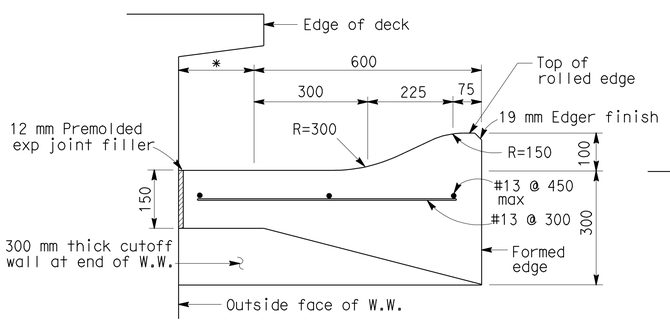

SECTION B-B

*This dimension becomes zero when edge of deck is at outside face of W.W.

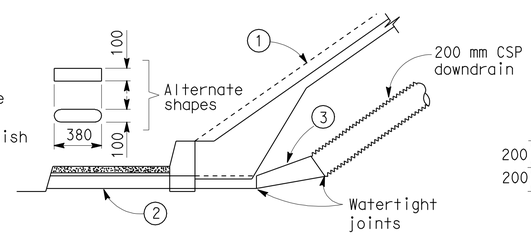

TYPICAL - WITH SIDEWALK

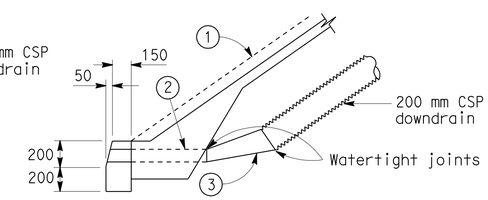

TYPICAL - WITH CURB

DRAINAGE DETAILS

Note: Drainage details are only applicable when B0-3/3-5 is indicated on detail sheets.

1. Top of rolled edge
2. Conduit: 1.6 mm galv corrugated steel or 2.8 mm smooth galv steel
3. Taper: 1.6 mm / 2.8 mm smooth galv steel
4. 200 mm perforated steel pipe (1.6 mm thick) underdrain behind abutment. Connect to downdrain as shown on limits of Slope Paving & Drainage layout.

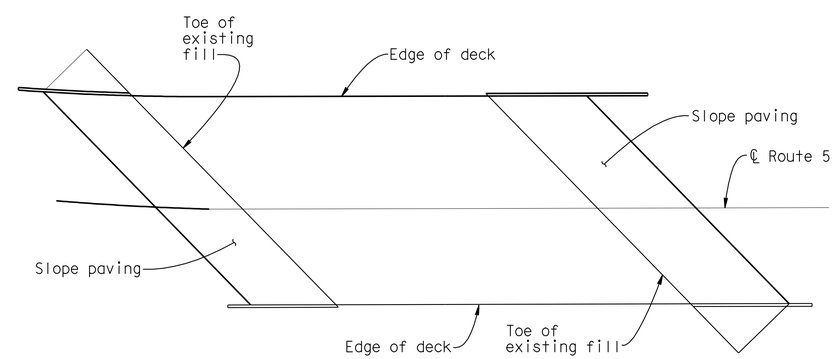

LIMITS OF SLOPE PAVING

NO SCALE

ALL DIMENSIONS ARE IN MILLIMETERS UNLESS OTHERWISE SHOWN

STANDARD DRAWING				
RELEASE DATE 4/20/00	DESIGN	BY	CHECKED	RELEASED BY
FILE NO. xs4-210	DETAILS	BY R. YEE	CHECKED	
	SUBMITTED	BY C.W. PURKISS	DRAWING DATE 3/89	OFFICE CHIEF

STATE OF CALIFORNIA DEPARTMENT OF TRANSPORTATION

DIVISION OF ENGINEERING SERVICES

BRIDGE NO. 53-1134

KILOMETER POST 55.6

SUN VALLEY OH (WIDEN)

SLOPE PAVING - FULL SLOPE

DS OSD 2147A (METRIC) (REV. 2/25/97)

ORIGINAL SCALE IN MILLIMETERS FOR REDUCED PLANS 0 10 20 30 40 50 60 70 80 90 100

CU 07
EA 1218V1

DISREGARD PRINTS BEARING EARLIER REVISION DATES

REVISION DATES (PRELIMINARY STAGE ONLY) 6-1-07 7-16-09

SHEET 29 OF 33

USERNAME => trrichf

53-1134-vslopepav.

DATE PLOTTED => 03-MAY-2010 TIME PLOTTED => 13:53

DIST	COUNTY	ROUTE	KILOMETER POST TOTAL PROJECT	SHEET No	TOTAL SHEETS
07	LA	5	50.8/58.0	811	869

Xiaodong Chen 6-25-08
REGISTERED CIVIL ENGINEER DATE

5-3-10
PLANS APPROVAL DATE

REGISTERED PROFESSIONAL ENGINEER Xiaodong Chen No. C 58858 Exp. 6-30-11 CIVIL STATE OF CALIFORNIA

The State of California or its officers or agents shall not be responsible for the accuracy or completeness of electronic copies of this plan sheet.

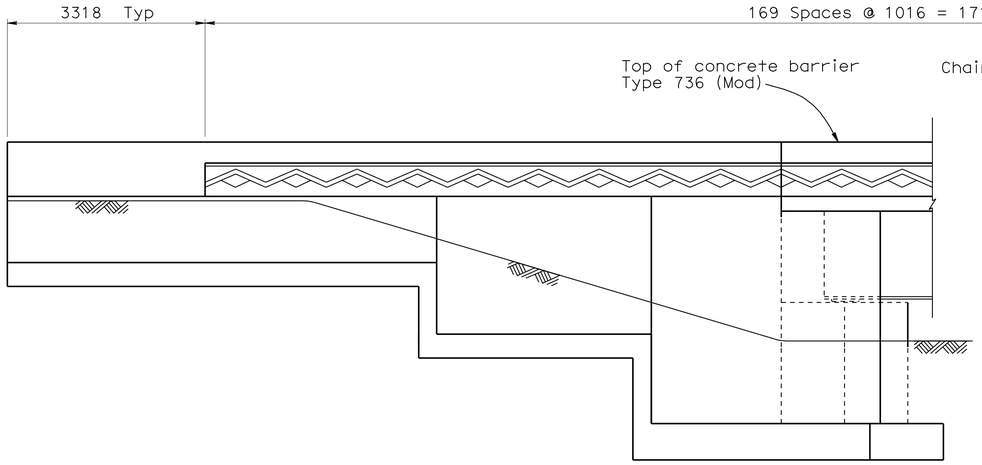

ELEVATION - ABUTMENT 6 LEFT

NO SCALE

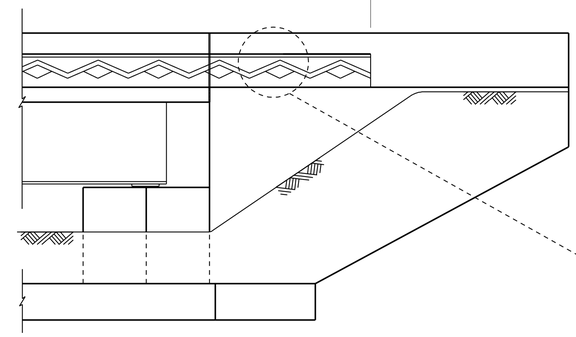

ELEVATION - ABUTMENT 1 LEFT

NO SCALE

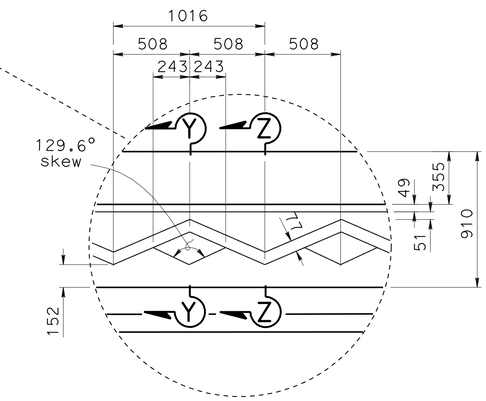

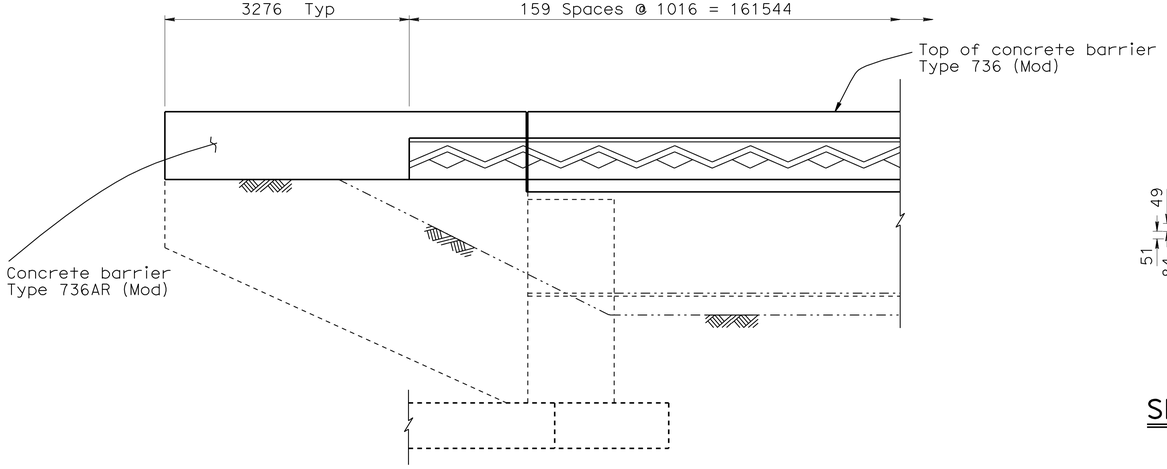

ELEVATION - EXISTING ABUTMENT 1 RIGHT

NO SCALE

NOTE:

Existing Abutment 1 right shown,
Existing Abutment 6 right similar

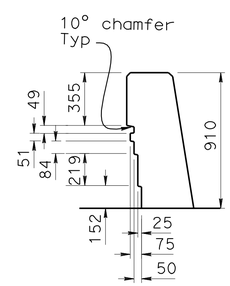

SECTION Y-Y

1:20

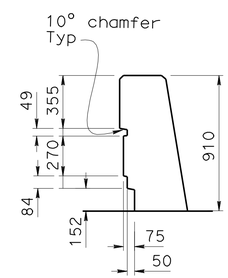

SECTION Z-Z

1:20

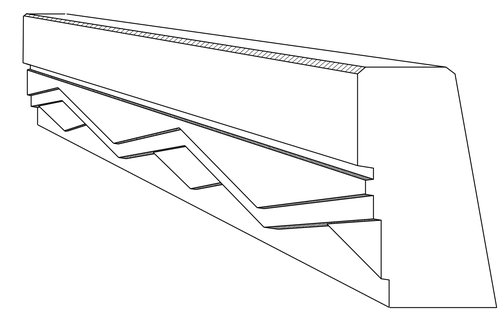

PERSPECTIVE VIEW

NO SCALE

Legend:

-·-·- Indicates existing structure

——— Indicates new structure

DESIGN	BY Vivian Dang	CHECKED Marc Friedheim	
DETAILS	BY Kamal Chonkria	CHECKED Marc Friedheim	
QUANTITIES	BY Vivian Dang	CHECKED Marc Friedheim	

STATE OF CALIFORNIA
DEPARTMENT OF TRANSPORTATION

DIVISION OF ENGINEERING SERVICES
STRUCTURE DESIGN
DESIGN BRANCH

BRIDGE NO. 53-1134
KILOMETER POST 55.6

SUN VALLEY OH (WIDEN)
ARCHITECTURAL DETAILS

Caltrans Metric

ALL DIMENSIONS ARE IN MILLIMETERS UNLESS OTHERWISE SHOWN

ORIGINAL SCALE IN MILLIMETERS FOR REDUCED PLANS 0 10 20 30 40 50 60 70 80 90 100

CU 07
EA 1218V1

DISREGARD PRINTS BEARING EARLIER REVISION DATES

REVISION DATES: 03-14-08 4-21-08 4-29-08 7-16-09

SHEET 30 OF 33

FILE => 53-1134-y-archdet.dgn

STRUCTURES DESIGN DETAIL SHEET (METRIC) (REV.03-17-04)

USERNAME => trright DATE PLOTTED => 03-MAY-2010 TIME PLOTTED => 13:53

DIST	COUNTY	ROUTE	KILOMETER POST TOTAL PROJECT	SHEET No	TOTAL SHEETS
07	LA	5	50.8/58.0	812	869

REGISTERED CIVIL ENGINEER 01-02-08

5-3-10
PLANS APPROVAL DATE

REGISTERED PROFESSIONAL ENGINEER Qiang Huang No. C055671 Exp. 12-31-08 CIVIL STATE OF CALIFORNIA

The State of California or its officers or agents shall not be responsible for the accuracy or completeness of electronic copies of this plan sheet.

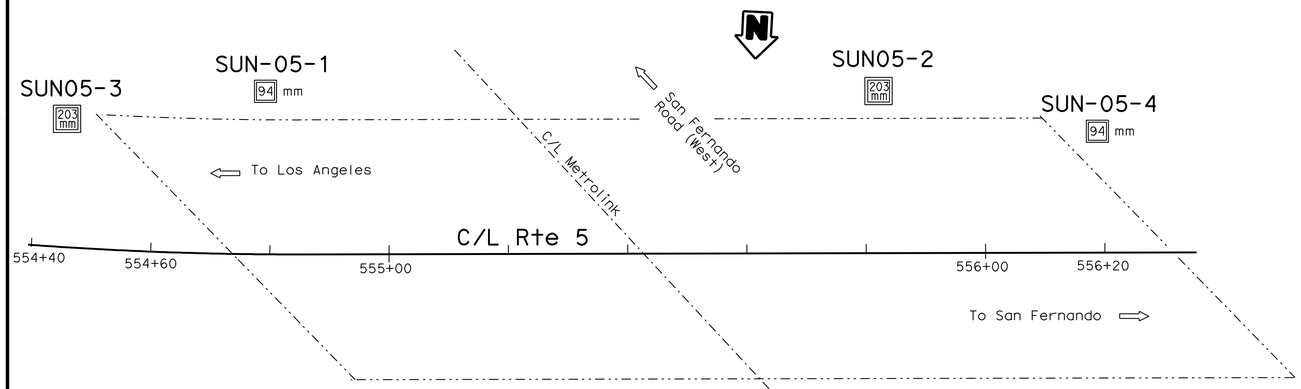

Note: No ground water encountered during field investigation.

BENCH MARK

SURVEY CONTROL

PRHV-1299 (SHOWN ON FP NO. 2)
Fnd FD MONUMENT SPIKE
24.614 M Lt. ℄ Rte 5
Sta. 555+61.545
N 580651.956
E 1965009.083
ELEV. = 259.573

PRHV-1550
Fnd 1"IP CONTROL POINT
21.931 M Rt. ℄ Rte 5
Sta. 554+68.969
N 580702.998
E 1965099.744
ELEV. = 271.553

PLAN
1:500

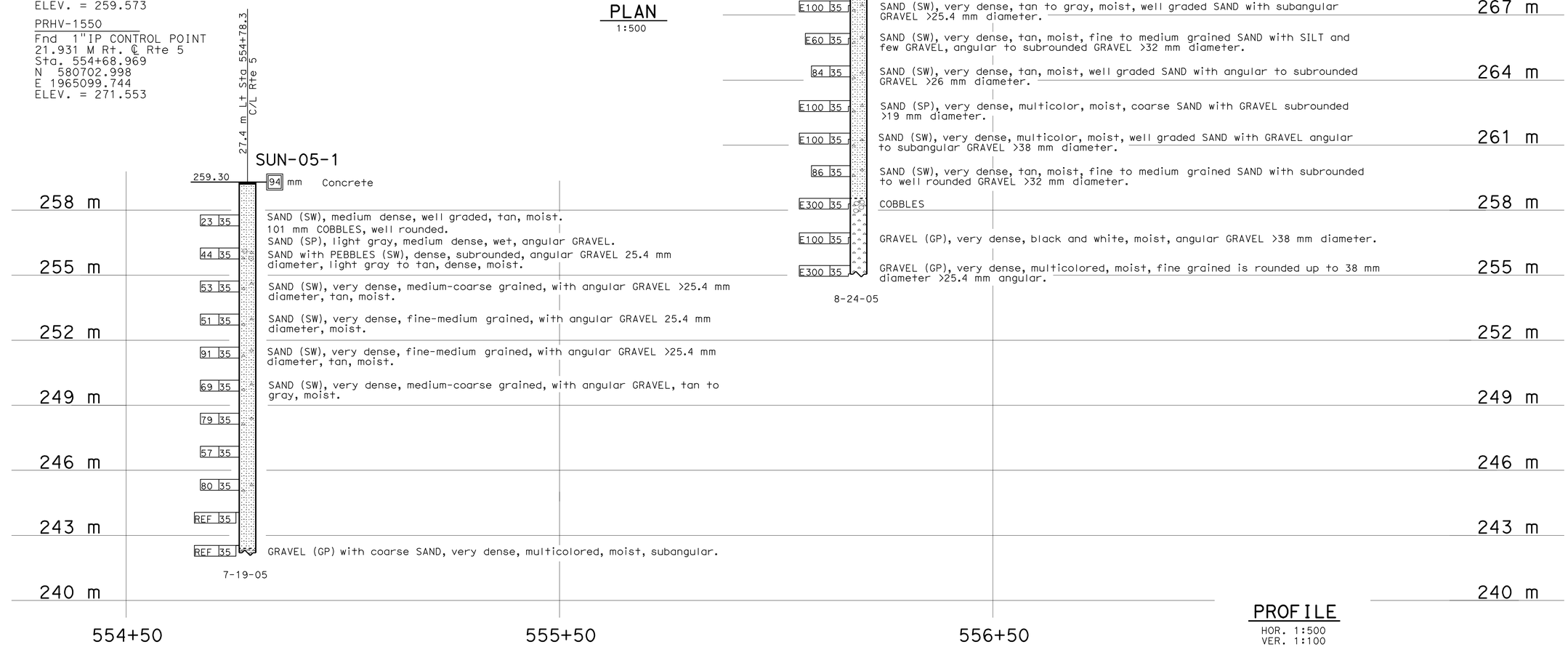

PROFILE
HOR. 1:500
VER. 1:100

LEGEND OF BORING OPERATIONS

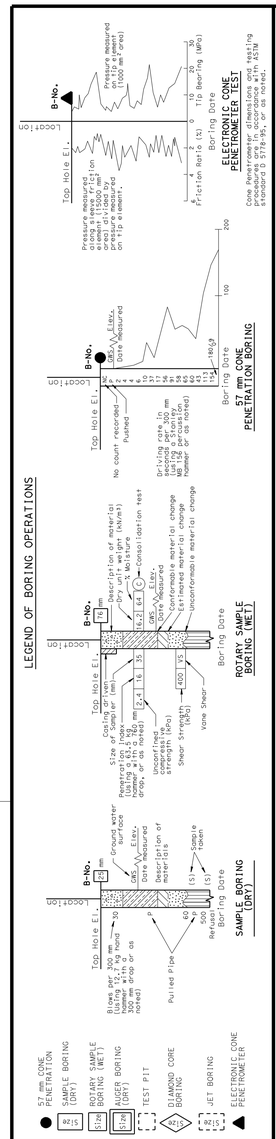

LEGEND OF EARTH MATERIALS

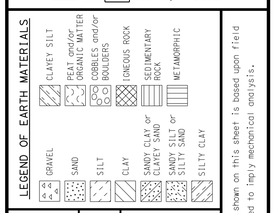

CONSISTENCY CLASSIFICATION FOR SOILS

According to the Standard Penetration Test

SPT N-Value (Blows/0.3m)	Granular	SPT N-Value (Blows/0.3m)	Cohesive
0-4	Very Loose	<2	Very Soft
5-10	Loose	2-4	Soft
11-30	Medium Dense	5-8	Firm
31-50	Dense	9-15	Stiff
>50	Very Dense	16-30	Very stiff
		>30	Hard

NOTE: Classification of earth material as shown on this sheet is based upon field inspection and is not to be construed to imply mechanical analysis.

OGS CIVIL LOG OF TEST BORINGS SHEET (METRIC) (REV. 4/04)

Caltrans Metric

GEOTECHNICAL SERVICES	
DRAWN BY	W. Tang 11/05
CHECKED BY	B. Bertucci

ALL DIMENSIONS ARE IN METERS UNLESS OTHERWISE SHOWN

FIELD INVESTIGATION BY: B. Bertucci / C. Kark

ORIGINAL SCALE IN MILLIMETERS FOR REDUCED PLANS 0 10 20 30 40 50 60 70 80 90 100

STATE OF CALIFORNIA DEPARTMENT OF TRANSPORTATION

DIVISION OF ENGINEERING SERVICES STRUCTURE DESIGN
DESIGN BRANCH

CU 07
EA 1218V1

BRIDGE NO. 53-1134
KILOMETER POST 55.65

SUN VALLEY OH (WIDEN)
LOG OF TEST BORINGS 1 OF 3

DISREGARD PRINTS BEARING EARLIER REVISION DATES → 10-31-07 12-24-07 7-16-09

REVISION DATES (PRELIMINARY STAGE ONLY) | SHEET 31 | OF 33

FILE => 53-1134-z-lotb1of3.dgn

USERNAME => trrright DATE PLOTTED => 03-MAY-2010 TIME PLOTTED => 13:53

DIST	COUNTY	ROUTE	KILOMETER POST TOTAL PROJECT	SHEET No	TOTAL SHEETS
07	LA	5	50.8/58.0	813	869

REGISTERED CIVIL ENGINEER 01-02-08

5-3-10
PLANS APPROVAL DATE

REGISTERED PROFESSIONAL ENGINEER Qiang Huang No. C055671 Exp. 12-31-08 CIVIL STATE OF CALIFORNIA

The State of California or its officers or agents shall not be responsible for the accuracy or completeness of electronic copies of this plan sheet.

NOTE:

The information presented on this drawing was not the result of any work developed, performed or completed this Department (Caltrans). The following party should account for all this information:

URS Corp.

It should be expressly understood that Caltrans assumes no responsibility whatsoever in respect to the sufficiency, accuracy, completeness, and interpretation set forth therein or any other aspect of the information shown or represented on this drawing.

FOR PLAN VIEW, SEE
"LOG OF TEST BORINGS" 1 OF 3

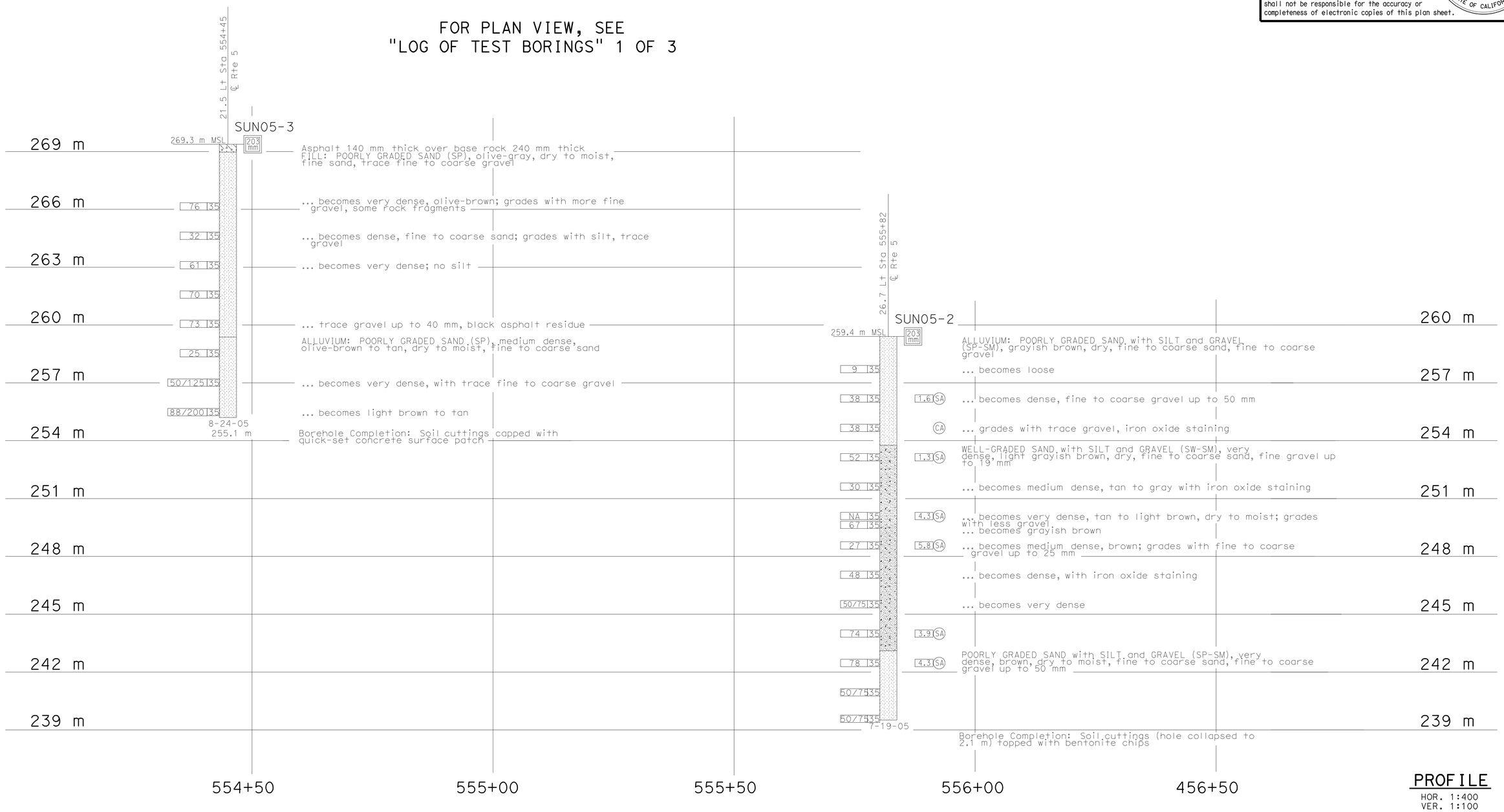

PROFILE
HOR. 1:400
VER. 1:100

Caltrans Metric	GEOTECHNICAL SERVICES	FIELD INVESTIGATION BY:	STATE OF CALIFORNIA DEPARTMENT OF TRANSPORTATION	DIVISION OF ENGINEERING SERVICES STRUCTURE DESIGN	BRIDGE NO. 53-1134
	PREPARED BY I.G-Remmen 3/06	URS Corp.		DESIGN BRANCH	KILOMETER POST 55.65
	CHECKED BY B. Bertucci				

SUN VALLEY OH (WIDEN)

LOG OF TEST BORINGS 2 OF 3

OGS CIVIL LOG OF TEST BORINGS SHEET (METRIC) (REV. 4/04)

ALL DIMENSIONS ARE IN METERS UNLESS OTHERWISE SHOWN

ORIGINAL SCALE IN MILLIMETERS FOR REDUCED PLANS 0 10 20 30 40 50 60 70 80 90 100

CU 07
EA 1218V1

DISREGARD PRINTS BEARING EARLIER REVISION DATES

REVISION DATES (PRELIMINARY STAGE ONLY) 10-31-07 12-24-07 7-16-09

SHEET 32 OF 33

FILE => 53-1134-z-lotb2of3.dgn

USERNAME => trrichf DATE PLOTTED => 03-MAY-2010 TIME PLOTTED => 13:54

I-005-3(17)150

FED. ROAD DIV. No.	STATE	PROJ. No.	FISCAL YEAR	SHEET No.	TOTAL SHEETS
7	CAL.			151	251

DIST.	COUNTY	ROUTE	SECTION	SHEET No.	TOTAL SHEETS
VII	LA	4	LA	14	15

BRIDGE ENGINEER — CIVIL ENGINEER—LICENSE 5995

DATE APPROVED April 13, 1959

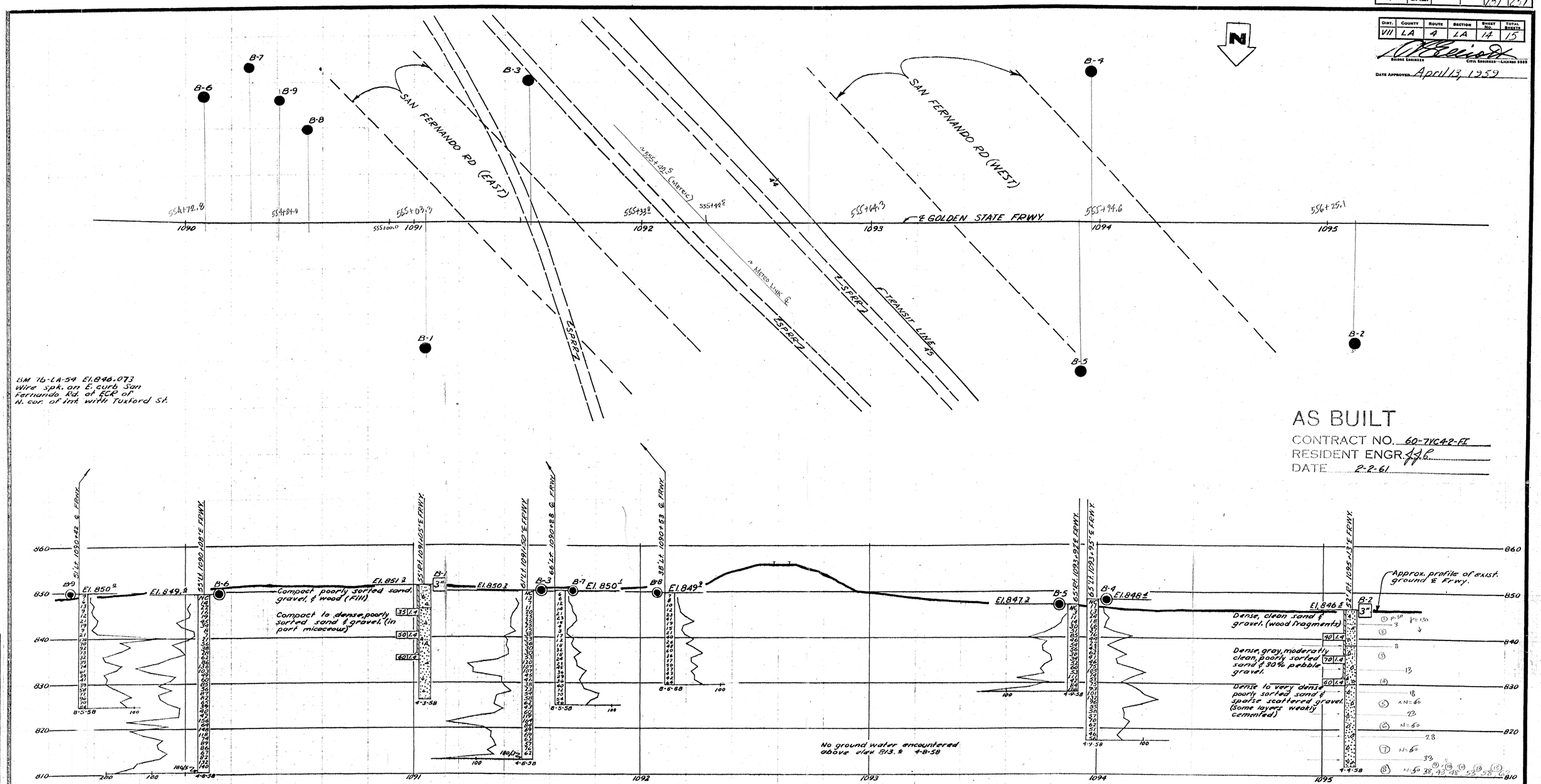

AS BUILT
CONTRACT NO. 60-7VC42-FL
RESIDENT ENGR. [illegible]
DATE 2-2-61

BRIDGE DEPARTMENT

FIELD STUDY	R. SHILLEY	4-21-58	Revision 10/1/58
DRAWN	C.B. Zeller	6-24-58	Drawn by C.B. Zeller
CHECKED	R. L. Lee	7-9-58	

Approval Recommended by [signature] Engineering Geologist
[signature] Assoc. Soils Engineer

CLASSIFICATION OF MATERIAL BASED ON STANDARD GRADE S

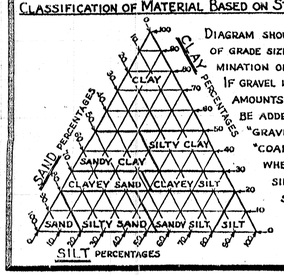

DIAGRAM SHOWING THE BASIS FOR OF GRADE SIZE DISTRIBUTION USED MINATION OF CLASS NAMES. IF GRAVEL IS PRESENT IN APPR AMOUNTS THE TERM "GRAVI BE ADDED TO THE CLASS "GRAVELLY SAND." THE "COARSE", "MEDIUM" AN WHEN USED TO DESCRIBE SAND, SILT AND GRAVEL REFER TO STANDARD GRADE SIZE LIMITS.

CLAY
SANDY CLAY OR CLAYEY SAND
SANDY SILT OR SILTY SAND
IGNEOUS ROCK
SEDIMENTARY ROCK
METAMORPHIC ROCK
JET BO
CORE B
TEST P

Notes:
1. See the General Plan and/or Foundation Plan for Metric Stationing.
2. Structure Design produced the data presented in the table above. The data are the metric locations for the As-Built Test Borings referenced to the proposed new structure location. This table is presented on the As-Built Log of Test Boring sheet for the convenience of any bidder, contractor or other interested party.

Revisions made to this Log of Test Borings from the original 1958 Log of Test Borings are the addition of the following table and notes:

Boring	Station	Offset from C/L Rte 5
B-1	555+05.0	16.8 m Rt.
B-3	556+29.0	15.8 m Rt.
B-2	555+19.3	18.6 m Lt.
B-4	555+93.9	19.8 m Rt.
B-5	555+92.0	19.8 m Rt.
B-6	554+74.6	16.8 m Lt.
B-7	554+81.6	20.1 m Lt.
B-8	554+89.4	11.5 m Lt.
B-9	554+85.2	15.5 m Lt.

DIVISION OF ENGINEERING SERVICES - GEOTECHNICAL SERVICES

As-Built Log of Test Borings sheet is considered an informational document only. As such, the State of California registration seal with signature, license number and registration certificate expiration date confirm that this is a true and accurate copy of the original document. This drawing is available and presented only for the convenience of any bidder, contractor or other interested party.

DIST.	COUNTY	ROUTE	KILOMETER POST-TOTAL PROJECT	Sheet No.	Total Sheets
07	LA	5	50.8/58.0	814	869

1/12/08
REGISTERED CIVIL ENGINEER

REGISTERED PROFESSIONAL ENGINEER — Qiang Huang — No. C055671 — Exp. 12-31-08 — CIVIL — STATE OF CALIFORNIA

SUN VALLEY OH (WIDEN)
LOG OF TEST BORINGS 3 OF 3

NOTE: A COPY OF THIS LOG OF TEST BORINGS IS AVAILABLE AT OFFICE OF STRUCTURE MAINTENANCE AND INVESTIGATIONS, SACRAMENTO, CALIFORNIA

CU: 07
EA: 121811

BRIDGE No. 53-1134
Sheet of

To accompany plans dated 5-3-10

NOTES

The contractor's attention is directed to Section 2, Article (c) of the Standard Specifications and to the Special Provisions accompanying this set of plans.

Classification of earth material as shown on this sheet is based upon field inspection and is not to be construed to imply mechanical analysis.

STATE OF CALIFORNIA
DEPARTMENT OF PUBLIC WORKS
DIVISION OF HIGHWAYS

SUN VALLEY OVERHEAD

LOG OF TEST BORINGS

SCALE Horiz 1"=20' Vert 1"=10' | BRIDGE 53-1134 | FILE E-53 | DRAWING C-3996-14

184-1 15

53-1134-z-1otb3of3.tif

PRELIM. DRAWING NO. P: 3996 44

DIST	COUNTY	ROUTE	KILOMETER POST TOTAL PROJECT	SHEET No	TOTAL SHEETS
07	LA	5	50.8/58.0	815	869

C.M. Duan 6-05-09
REGISTERED CIVIL ENGINEER DATE

5-3-10
PLANS APPROVAL DATE

REGISTERED PROFESSIONAL ENGINEER CARL DUAN No. C59976 Exp. 06-30-10 CIVIL STATE OF CALIFORNIA

The State of California or its officers or agents shall not be responsible for the accuracy or completeness of electronic copies of this plan sheet.

INDEX TO PLANS

SHEET NO.	TITLE
1	GENERAL PLAN NO. 1
2	GENERAL PLAN NO. 2
3	JOINT SEAL DETAILS
4	STRUCTURE APPROACH TYPE R(9D)

STANDARD PLANS DATED JULY 2004

SHEET NO.	TITLE
A10A	ACRONYMS AND ABBREVIATION (SHEET 1 OF 2)
A10B	ACRONYMS AND ABBREVIATION (SHEET 2 OF 2)
RSP B6-21	JOINT SEALS (MAXIMUM MOVEMENT RATING 50 mm)
P10	CONCRETE PAVEMENT - DOWEL BAR DETAILS

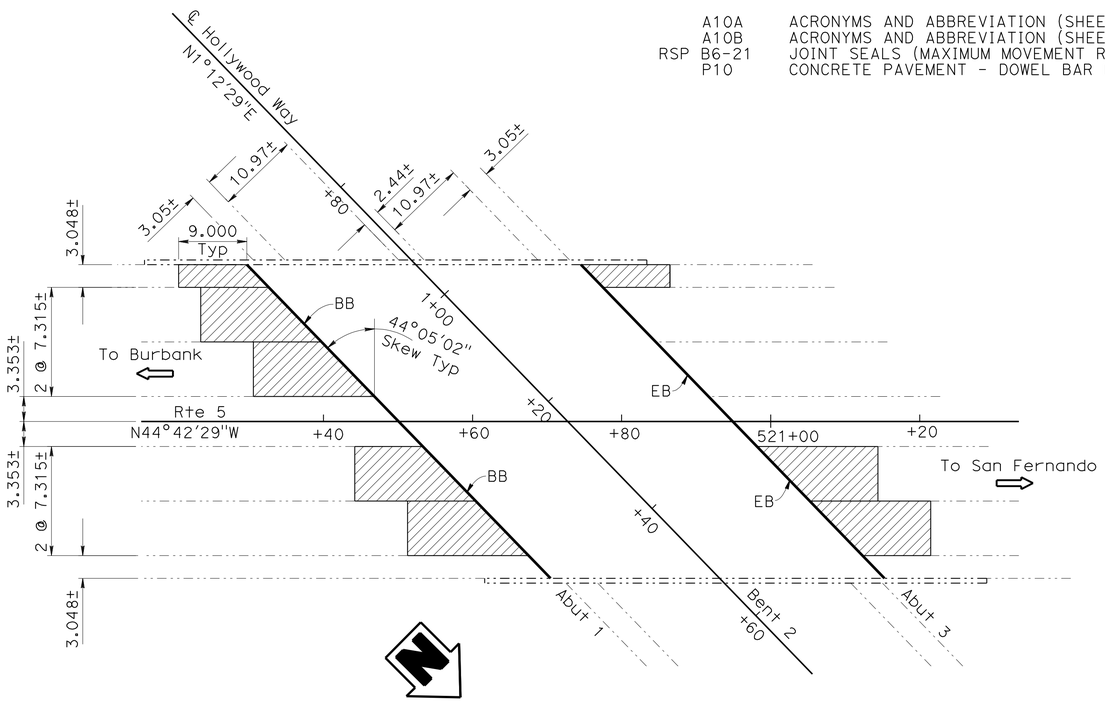

HOLLYWOOD WAY UC

Br No 53-1112, KP 52.06
1:400

QUANTITIES

AGGREGATE BASE (APPROACH SLAB)	19	m^3
STRUCTURAL CONCRETE, APPROACH SLAB (TYPE R)	189	m^3
PAVING NOTCH EXTENSION	5	m^3
CLEAN EXPANSION JOINT	49	m
JOINT SEAL (MR 25 MM)	119	m

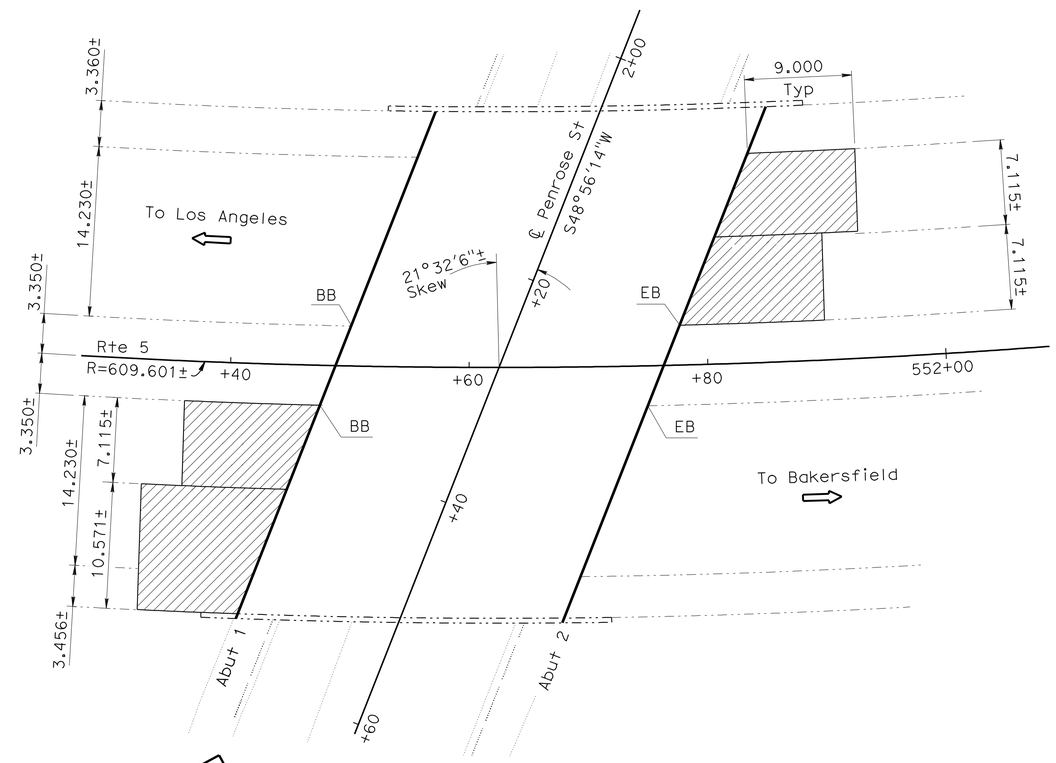

PENROSE STREET UC

Br. No. 53-1116, KP 55.17
1:250

QUANTITIES

AGGREGATE BASE (APPROACH SLAB)	11	m^3
STRUCTURAL CONCRETE, APPROACH SLAB (TYPE R)	106	m^3
PAVING NOTCH EXTENSION	3	m^3
CLEAN EXPANSION JOINT	57	m
JOINT SEAL (MR 13 MM)	92	m

LEGEND

Indicates limits of remove existing approach slab or AC pavement and replace with Structure Approach Type R(9D). For details see "STRUCTURE APPROACH TYPE R(9D)" sheet.

Indicates limits of existing joint seal removal and placement of new joint seal. Prior to placement of new joint seal, repair joint spalls.

Indicates existing

NOTE:
THE CONTRACTOR SHALL VERIFY ALL CONTROLLING FIELD DIMENSIONS BEFORE ORDERING OR FABRICATING ANY MATERIAL.

Caltrans Metric

HOWARD NG
DESIGN ENGINEER

	BY	CHECKED
DESIGN	Ed B Mu	Carl M Duan
DETAILS	Lan T Tran	Carl M Duan
QUANTITIES	Ed B Mu	Carl M Duan

LOAD FACTOR DESIGN — LIVE LOADING: HS20-44 AND ALTERNATIVE AND PERMIT DESIGN LOAD
LAYOUT — BY Ed B Mu — CHECKED Carl M Duan
SPECIFICATIONS — BY Mingxia Pan — PLANS AND SPECS COMPARED Mingxia Pan

STATE OF CALIFORNIA
DEPARTMENT OF TRANSPORTATION

DIVISION OF ENGINEERING SERVICES
STRUCTURE DESIGN
DESIGN BRANCH 20

BRIDGE NO. Varies
KILOMETER POST Varies

BRIDGE APPROACH SLAB REPLACEMENT
GENERAL PLAN NO.1

ALL DIMENSIONS ARE IN METERS UNLESS OTHERWISE SHOWN

ORIGINAL SCALE IN MILLIMETERS FOR REDUCED PLANS 0 10 20 30 40 50 60 70 80 90 100

CU 07608
EA 1218V1

DISREGARD PRINTS BEARING EARLIER REVISION DATES

REVISION DATES: 04/08/09 04/14/09 04/24/09 05/26/09 06/02/09 06/05/09 7-23-09

SHEET 1 OF 4

FILE => 53-99VAR-a-gp01a.dgn

STRUCTURES DESIGN GENERAL PLAN SHEET (METRIC) (REV.03-17-04)

USERNAME => trrfrlnf DATE PLOTTED => 03-MAY-2010 TIME PLOTTED => 14:55

DIST	COUNTY	ROUTE	KILOMETER POST TOTAL PROJECT	SHEET No	TOTAL SHEETS
07	LA	5	50.8/58.0	816	869

C.M. Duan 6-05-09
REGISTERED CIVIL ENGINEER DATE

5-3-10
PLANS APPROVAL DATE

REGISTERED PROFESSIONAL ENGINEER CARL DUAN No. C59976 Exp. 06-30-10 CIVIL STATE OF CALIFORNIA

The State of California or its officers or agents shall not be responsible for the accuracy or completeness of electronic copies of this plan sheet.

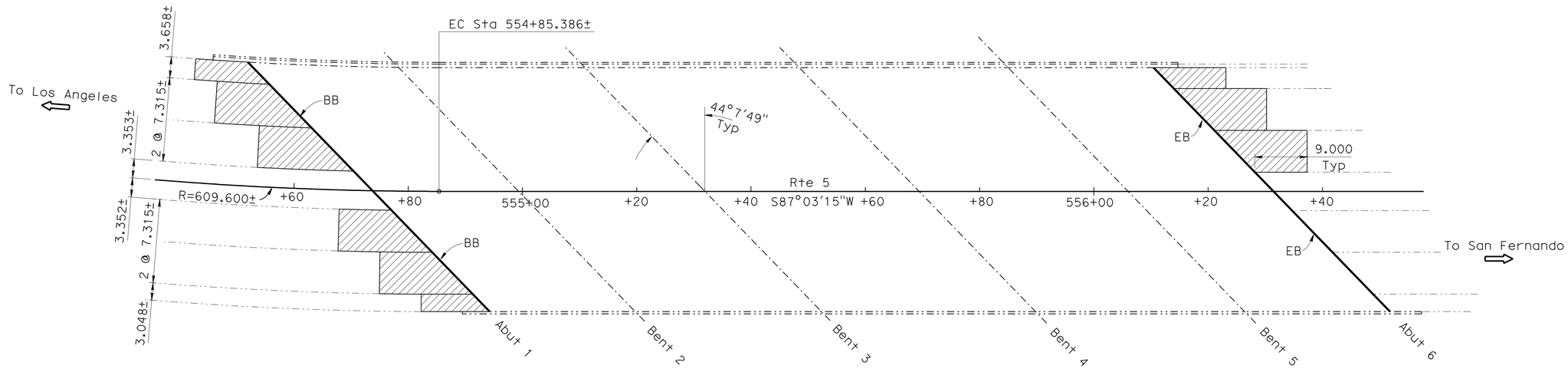

SUN VALLEY OH

Br No 53-1134, KP 55.6
1:400

N

QUANTITIES

AGGREGATE BASE (APPROACH SLAB)	21	m^3
STRUCTURAL CONCRETE, APPROACH SLAB (TYPE R)	207	m^3
PAVING NOTCH EXTENSION	5	m^3
CLEAN EXPANSION JOINT	45	m
JOINT SEAL (MR 13 MM)	121	m

LEGEND

Indicates limits of remove existing approach slab or AC pavement and replace with Structure Approach Type R(9D). For details see "STRUCTURE APPROACH TYPE R(9D)" sheet.

Indicates limits of existing joint seal removal and placement of new joint seal. Prior to placement of new joint seal, repair joint spalls.

Indicates existing

NOTE:
THE CONTRACTOR SHALL VERIFY ALL CONTROLLING FIELD DIMENSIONS BEFORE ORDERING OR FABRICATING ANY MATERIAL.

Caltrans Metric

HOWARD NG
DESIGN ENGINEER

	BY	CHECKED
DESIGN	Ed B Mu	Carl M Duan
DETAILS	Lan T Tran	Carl M Duan
QUANTITIES	Ed B Mu	Carl M Duan

LOAD FACTOR DESIGN — LIVE LOADING: HS20-44 AND ALTERNATIVE AND PERMIT DESIGN LOAD

	BY	CHECKED
LAYOUT	Ed B Mu	Carl M Duan
SPECIFICATIONS	Mingxia Pan	PLANS AND SPECS COMPARED Mingxia Pan

ALL DIMENSIONS ARE IN METERS UNLESS OTHERWISE SHOWN

ORIGINAL SCALE IN MILLIMETERS FOR REDUCED PLANS 0 10 20 30 40 50 60 70 80 90 100

STATE OF CALIFORNIA
DEPARTMENT OF TRANSPORTATION

DIVISION OF ENGINEERING SERVICES
STRUCTURE DESIGN
DESIGN BRANCH 20

CU 07608
EA 1218V1

BRIDGE NO. 53-1134
KILOMETER POST 55.6

BRIDGE APPROACH SLAB REPLACEMENT
GENERAL PLAN NO.2

DISREGARD PRINTS BEARING EARLIER REVISION DATES

REVISION DATES: 04/08/09 04/14/09 04/24/09 05/26/09 06/02/09 06/05/09 7-23-09

SHEET 2 OF 4

FILE => 53-99VAR-a-gp02a.dgn

STRUCTURES DESIGN GENERAL PLAN SHEET (METRIC) (REV.03-17-04)

USERNAME => trrright DATE PLOTTED => 03-MAY-2010 TIME PLOTTED => 14:55

DIST	COUNTY	ROUTE	KILOMETER POST TOTAL PROJECT	SHEET No	TOTAL SHEETS
07	LA	5	50.8/58.0	817	869

C.M. Duan 6-05-09
REGISTERED CIVIL ENGINEER DATE

5-3-10
PLANS APPROVAL DATE

REGISTERED PROFESSIONAL ENGINEER CARL DUAN No. C59976 Exp. 06/30/2010 CIVIL STATE OF CALIFORNIA

The State of California or its officers or agents shall not be responsible for the accuracy or completeness of electronic copies of this plan sheet.

JOINT SEAL TABLE

BRIDGE NO.	LOCATION		MINIMUM "MR" (mm)	EXISTING WATERSTOP (Y/N)	APPROX DEPTH TO CLEAN EXP JOINT (mm)
53-1112 HOLLYWOOD WAY UC	Abut 1	PN	25	N	305
	Abut 3	PN	25	N	305
53-1116 PENROSE STREET UC	Abut 1	PN	13	N	305
	Abut 2	PN	13	N	305
53-1134 SUNVALLEY OH	Abut 1	PN	13	N	305
	Abut 6	PN	13	N	305

Note

PN Indicates Paving Notch

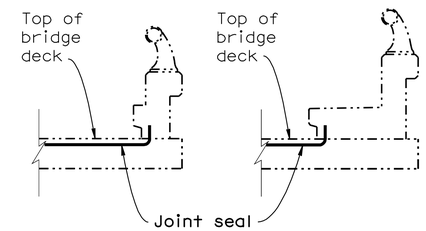

JOINT SEAL AT LOW SIDE OF DECK

NO SCALE

DETAILS SHOWN FOR ILLUSTRATION PURPOSE ONLY. FOR USE ONLY WHERE DECK JOINT MATCHES THE SIDEWALK, CURB OR BARRIER RAIL JOINT.

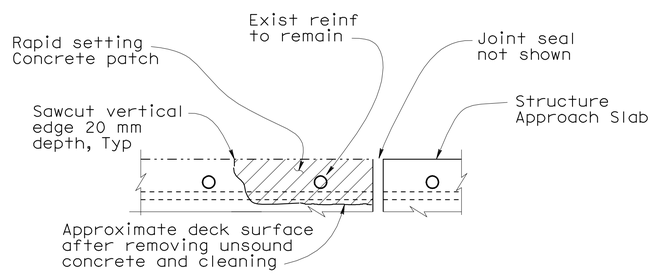

JOINT SPALL REPAIR DETAIL

NOTE: REINFORCEMENT MAY BE ENCOUNTERED DURING DECK CONCRETE REMOVAL AND IS TO REMAIN UNDAMAGED.

NO SCALE

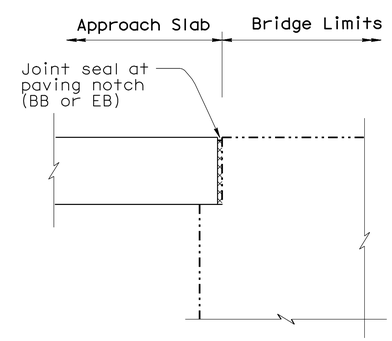

DIAPHRAGM ABUTMENT

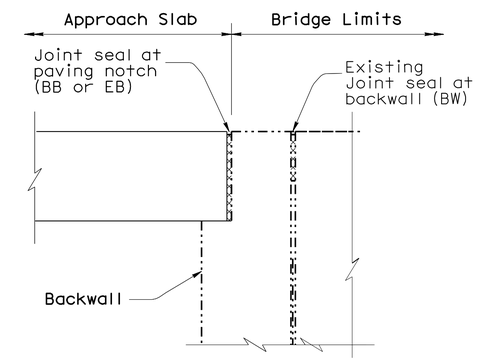

ABUTMENT WITH BACKWALL

The following notes apply to Joint Seal Type A and Type B:

1. Bend Type A Joint seal 75 mm up into curb or rail curb or rail joint
   Bend Type B Joint seal 150 mm up into curb or rail curb or rail joint
2. For details not shown see RSP B6-21

LEGEND

Indicates concrete removal and replacement by Rapid Setting Concrete patch

Indicates existing structure

NOTE:
THE CONTRACTOR SHALL VERIFY ALL CONTROLLING FIELD DIMENSIONS BEFORE ORDERING OR FABRICATING ANY MATERIAL.

Caltrans Metric

	BY	CHECKED
DESIGN	Ed B Mu	Carl. M Duan
DETAILS	Kay. Farahzadi	Carl. M Duan
QUANTITIES	Ed B Mu	Carl. M Duan

STATE OF CALIFORNIA
DEPARTMENT OF TRANSPORTATION

DIVISION OF ENGINEERING SERVICES
STRUCTURE DESIGN
DESIGN BRANCH 20

BRIDGE NO. Varies
KILOMETER POST Varies

BRIDGE APPROACH SLAB REPLACEMENT
JOINT SEAL DETAILS

ALL DIMENSIONS ARE IN MILLIMETERS UNLESS OTHERWISE SHOWN

ORIGINAL SCALE IN MILLIMETERS FOR REDUCED PLANS 0 10 20 30 40 50 60 70 80 90 100

CU 07608
EA 1218V1

DISREGARD PRINTS BEARING EARLIER REVISION DATES

REVISION DATES: 03/26/09 04/01/09 04/06/09 04/01/09 04/14/09 04/21/09 05/28/09 06/02/09 7-23-09

SHEET 3 OF 4

FILE => 53-99VAR-s-sadd-dt01.dgn

STRUCTURES DESIGN DETAIL SHEET (METRIC) (REV.03-17-04)

USERNAME => trright DATE PLOTTED => 03-MAY-2010 TIME PLOTTED => 14:55

DIST.	COUNTY	ROUTE	KILOMETER POST TOTAL PROJECT	SHEET NO.	TOTAL SHEETS
07	LA	5	50.8/58.0	818	869

Caltrans Metric

REGISTERED ENGINEER - CIVIL 6-05-09

5-3-10
PLANS APPROVAL DATE

REGISTERED PROFESSIONAL ENGINEER CARL DUAN No. C 59976 Exp. 06-30-10 CIVIL STATE OF CALIFORNIA

The State of California or its officers or agents shall not be responsible for the accuracy or completeness of electronic copies of this plan sheet.

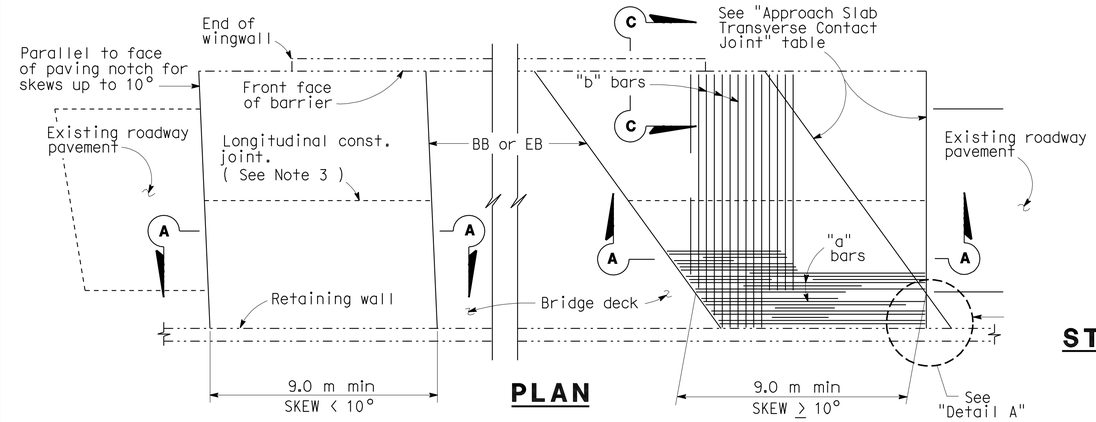

PLAN

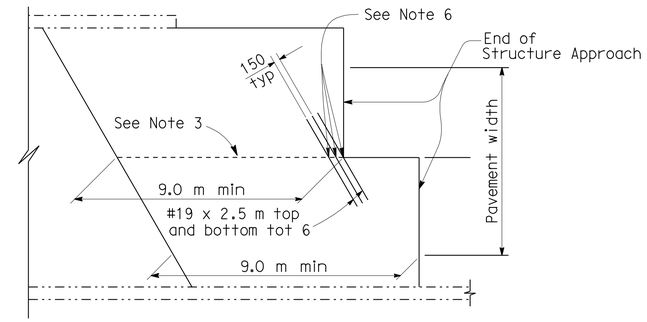

STRUCTURE APPROACH - END STAGGER DETAIL

APPROACH SLAB TRANSVERSE CONTACT JOINT		
APPROACH SKEW	WITH AC ROADWAY PAVEMENT	WITH PCC ROADWAY PAVEMENT
< 10°	Parallel to face of paving notch	Parallel to face of paving notch
10°- 45°	Parallel to face of P N use (Detail A)	Stagger lines 7.2 m to 10.8 m apart
> 45°	Parallel to face of P N use (Detail A)	Stagger at each lane line

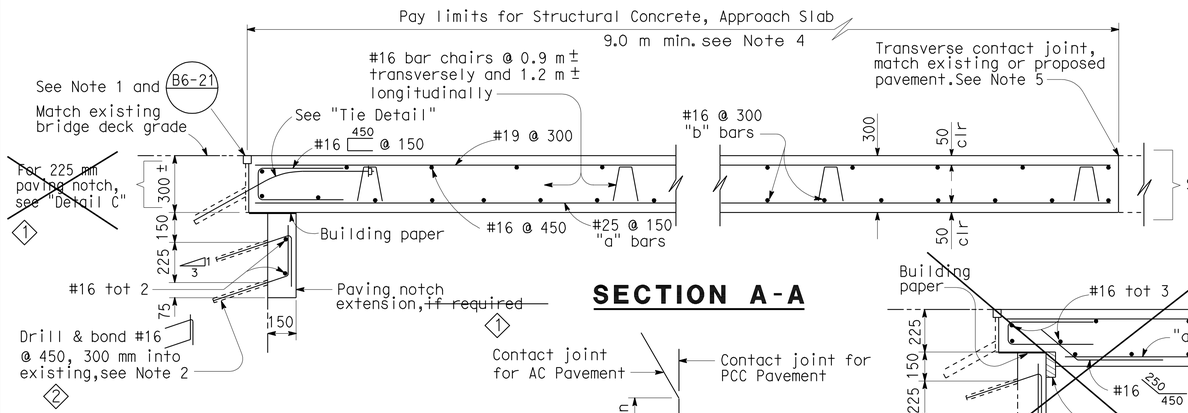

SECTION A-A

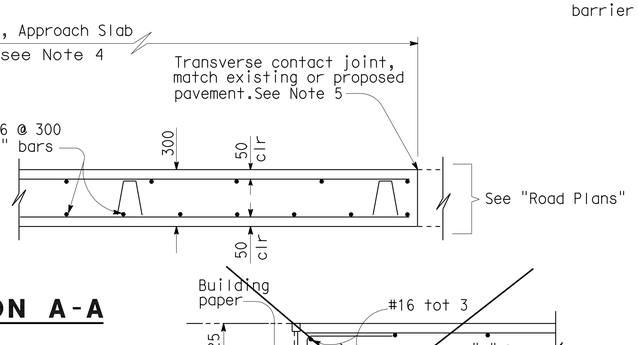

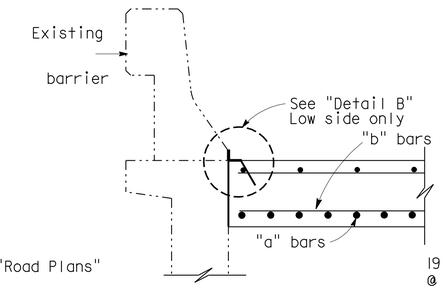

SECTION C-C

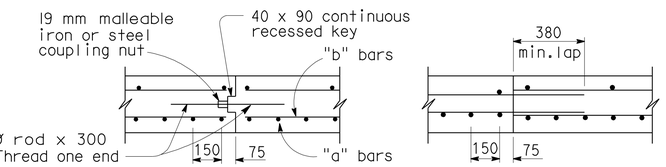

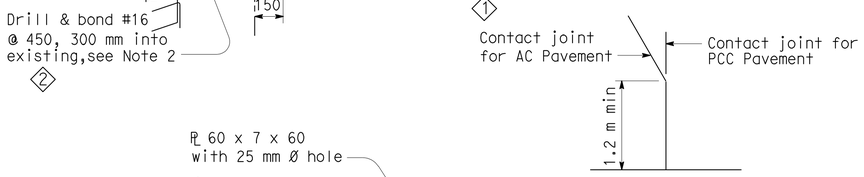

DETAIL A

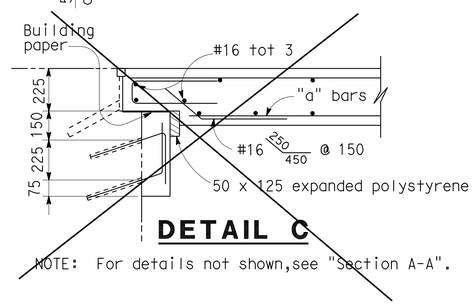

DETAIL C

NOTE: For details not shown, see "Section A-A".

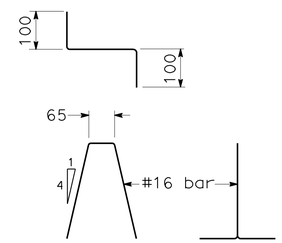

BAR CHAIR DETAIL

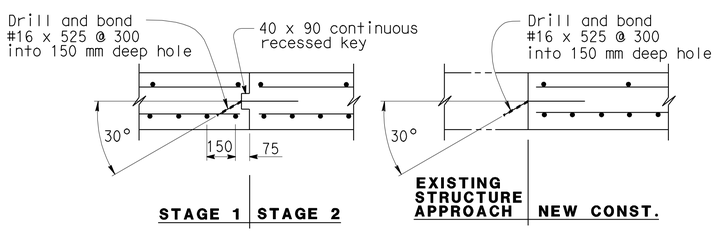

LONGITUDINAL CONSTRUCTION JOINT ALTERNATIVES

NOTES:

1. For details not shown or noted, see Structure Plans. Adjust bar reinforcement to clear a sawcut for sealed joint, when required.
2. Space to avoid existing prestress anchorages and main reinforcement.
3. Longitudinal construction joints, when permitted by the Engineer, shall be located on lane lines.
4. Transverse contact joint shall be a minimum of 1.5 m from an existing or constructed weakened plane joint.
5. For transverse contact joint with new PCC paving, refer to Standard Plan P10.
6. Couplers are required for stage construction.
7. End angle or plate at beginning of barrier transition, end of wingwall or end of structure approach as applicable.

NO SCALE

ALL DIMENSIONS ARE IN MILLIMETERS UNLESS OTHERWISE SHOWN

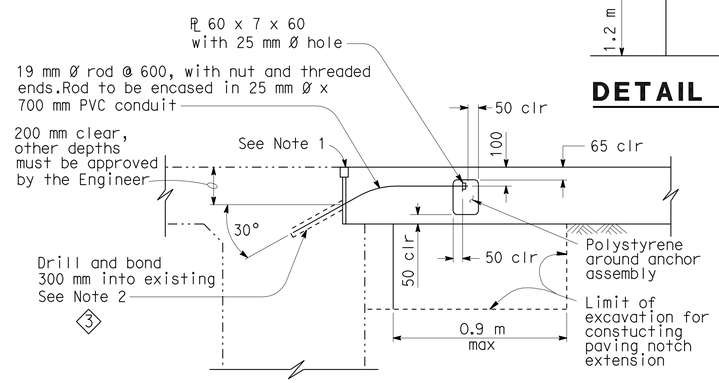

TIE DETAIL

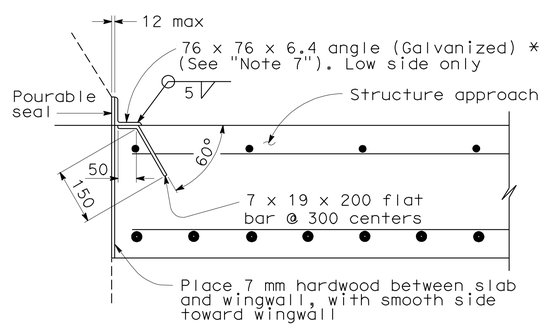

*(TO BE USED WITH TYPE 25 OR TYPE 27 CONCRETE BARRIER)

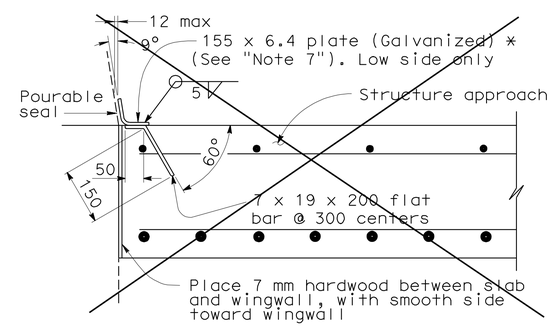

*(TO BE USED WITH TYPE 732 OR TYPE 736 CONCRETE BARRIER)

DETAIL B

NOTE:
THE CONTRACTOR SHALL VERIFY ALL CONTROLLING FIELD DIMENSIONS BEFORE ORDERING OR FABRICATING ANY MATERIAL.

1. Deleted note
2. For "Sun Valley OH", Dill and bond #16 @ 380 mm 225 mm into existing
3. For "Sun Valley OH", Dill and bond #16 @ 380 mm 150 mm into existing

STANDARD DRAWING

RELEASE DATE	3/14/05	DESIGN	BY M. TRAFFALIS	CHECKED E. THORKILDSEN	RELEASED BY
		DETAILS	BY R. YEE	CHECKED E. THORKILDSEN	
FILE NO.	xs3-140	SUBMITTED	BY M. HA	DRAWING DATE 8/92	OFFICE CHIEF

STATE OF CALIFORNIA DEPARTMENT OF TRANSPORTATION

DIVISION OF ENGINEERING SERVICES

BRIDGE NO. Varies
KILOMETER POST Varies

BRIDGE APPROACH SLAB REPLACEMENT

STRUCTURE APPROACH TYPE R(9D)

DS OSD 2147A (METRIC) (REV. 2/25/97)

ORIGINAL SCALE IN MILLIMETERS FOR REDUCED PLANS 0 10 20 30 40 50 60 70 80 90 100

CU 07608
EA 1218V1

DISREGARD PRINTS BEARING EARLIER REVISION DATES

REVISION DATES (PRELIMINARY STAGE ONLY) 04/06/09 04/14/09 04/21/09 06/08/09 7-23-09

SHEET 4 OF 4

USERNAME => trrichf

53-99VAR-s-sadd-dt

DATE PLOTTED => 03-MAY-2010 TIME PLOTTED => 14:56

DIST	COUNTY	ROUTE	KILOMETER POST TOTAL PROJECT	SHEET No	TOTAL SHEETS
07	LA	5	50.8/58.0	819	869

Xiaodong Chen 6-25-08
REGISTERED CIVIL ENGINEER DATE

5-3-10
PLANS APPROVAL DATE

REGISTERED PROFESSIONAL ENGINEER Xiaodong Chen No. C58858 Exp. 06-30-11 CIVIL STATE OF CALIFORNIA

The State of California or its officers or agents shall not be responsible for the accuracy or completeness of electronic copies of this plan sheet.

LEGEND:

- Indicates soundwall on barrier removal (portion)
- Indicates New Construction
- Indicates Existing Structure

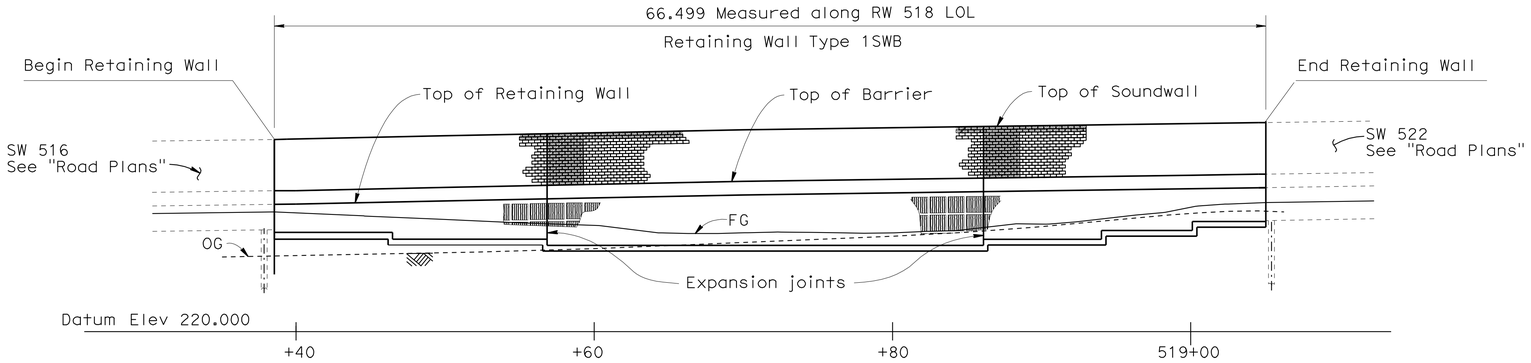

ELEVATION

1:200

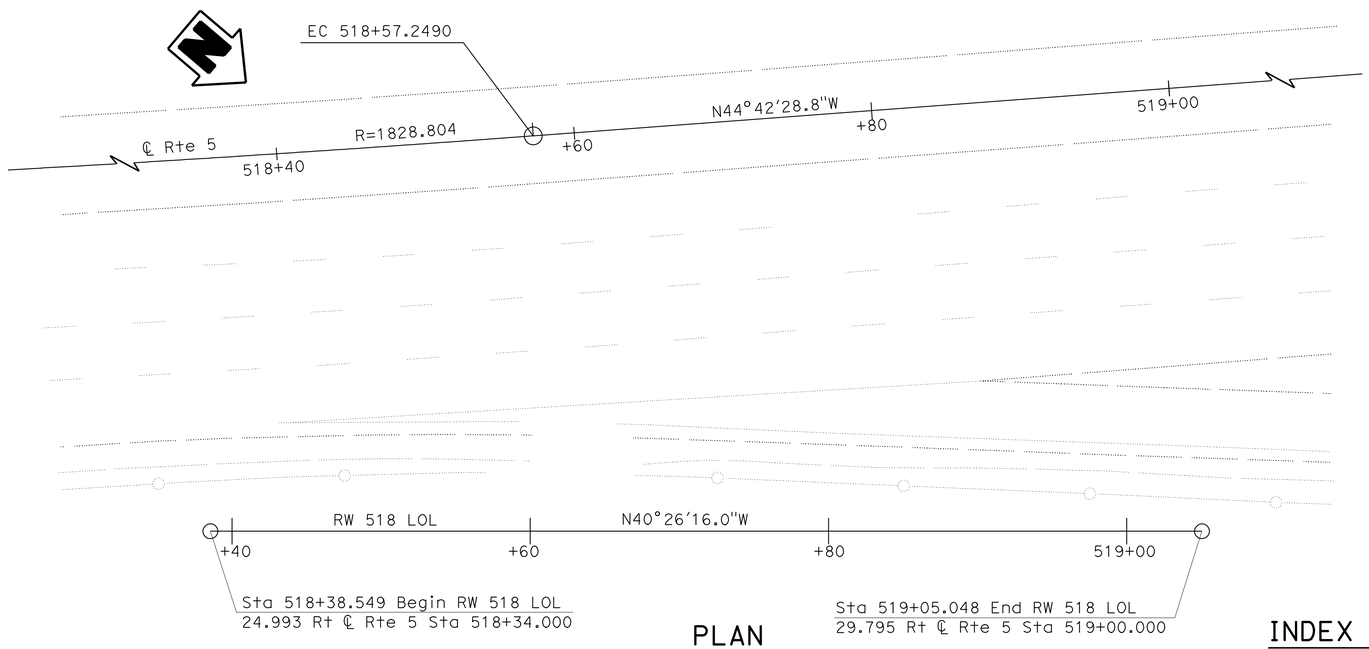

PLAN

1:200

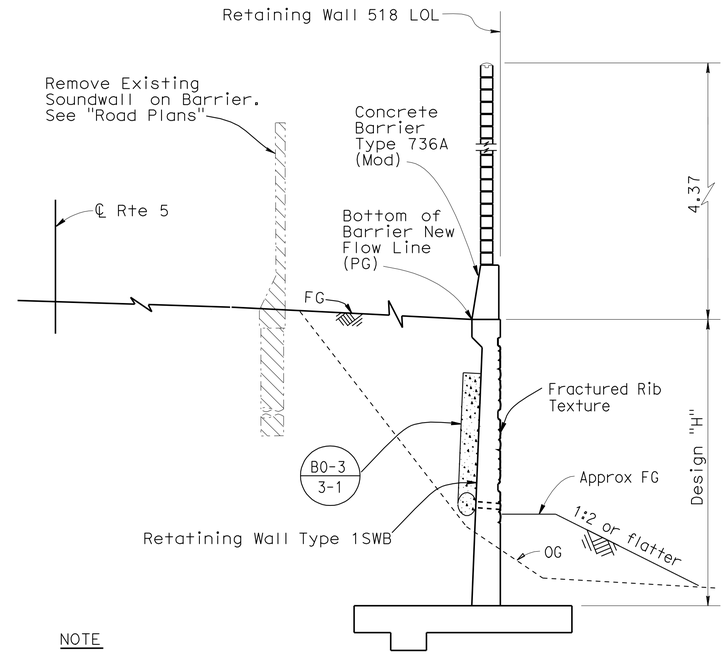

NOTE

For Details, see "RETAINING WALL TYPE 1SWB" sheet

TYPICAL SECTION

1:50

NOTE:
THE CONTRACTOR SHALL VERIFY ALL CONTROLLING FIELD DIMENSIONS BEFORE ORDERING OR FABRICATING ANY MATERIAL.

QUANTITIES

STRUCTURE EXCAVATION (RETAINING WALL)	350	m^3
STRUCTURE EXCAVATION (TYPE Y-2) (AERIALLY DEPOSITED LEAD)	125	m^3
STRUCTURE BACKFILL (RETAINING WALL)	390	m^3
PERVIOUS BACKFILL MATERIAL (RETAINING WALL)	20	m^3
STRUCTURAL CONCRETE, RETAINING WALL	160	m^3
FRACTURED RIB TEXTURE	135	m^2
SOUND WALL (MASONRY BLOCK)	230	m^2
BAR REINFORCING STEEL (RETAINING WALL)	1 000	kg
CONCRETE BARRIER (TYPE 736A MODIFIED)	67	m

INDEX TO PLANS

SHEET NO.	SHEET TITLE
1	GENERAL PLAN
2	STRUCTURAL PLANS
3	RETAINING WALL DETAILS - MISCELLANEOUS
4	RETAINING WALL TYPE 1SWB
5	SOUNDWALL - MASONRY BLOCK WITH BARRIER ON RETAINING WALL DETAILS NO.1
6	SOUNDWALL - MASONRY BLOCK WITH BARRIER ON RETAINING WALL DETAILS NO. 2
7	SOUND WALL MASONRY BLOCK MISCELLANEOUS DETAILS
8	LOG OF TEST BORINGS

STANDARD PLANS DATED JULY 2004

A10A	ACRONYMS AND ABBREVIATIONS (A-L)
A10B	ACRONYMS AND ABBREVIATIONS (M-Z)
A62B	LIMITS OF PAYMENT FOR EXCAVATION AND BACKFILL - BRIDGE SURCHARGE AND WALL
B0-3	BRIDGE DETAILS
B3-8	RETAINING WALL DETAILS NO. 1
B11-56	CONCRETE BARRIER TYPE 736

STANDARD PLAN SHEET NO.
DETAIL NO.

Caltrans Metric

Fritz Hoffman 6-25-08
DESIGN ENGINEER

	BY	CHECKED
DESIGN	D. Avarez	R. Washington
DETAILS	Y. Tang	R. Washington
QUANTITIES	R. Washington	R. Asistin

LOAD & RESISTANCE FACTOR DESIGN — LIVE LOADING: HL93 W/"LOW-BOY"; PERMIT DESIGN VEHICLE

	BY	CHECKED
LAYOUT	Y. Tang	X. Chen
SPECIFICATIONS	M. Pan	PLANS AND SPECS COMPARED

ALL DIMENSIONS ARE IN METERS UNLESS OTHERWISE SHOWN

ORIGINAL SCALE IN MILLIMETERS FOR REDUCED PLANS 0 10 20 30 40 50 60 70 80 90 100

STATE OF CALIFORNIA
DEPARTMENT OF TRANSPORTATION

DIVISION OF ENGINEERING SERVICES
STRUCTURE DESIGN
DESIGN BRANCH 6

CU 07
EA 1218V1

BRIDGE NO. RW 518
KILOMETER POST

RETAINING WALL NO. 518
GENERAL PLAN

DISREGARD PRINTS BEARING EARLIER REVISION DATES

REVISION DATES: 8-18-07 | 1-7-08 | 1-13-08 | 03-04-08 | 4-16-08 | 4-29-08 | 6-19-08 | 7-16-09

SHEET 1 OF 8

FILE => rtw518_agp.dgn

STRUCTURES DESIGN GENERAL PLAN SHEET (METRIC) (REV.07-24-06)

USERNAME => rtrright DATE PLOTTED => 03-MAY-2010 TIME PLOTTED => 14:56

DIST	COUNTY	ROUTE	KILOMETER POST TOTAL PROJECT	SHEET No	TOTAL SHEETS
07	LA	5	50.8/58.0	820	869

Xiaodong Chen 6-25-08
REGISTERED CIVIL ENGINEER DATE

5-3-10
PLANS APPROVAL DATE

REGISTERED PROFESSIONAL ENGINEER Xiaodong Chen No. C58858 Exp. 06-30-11 CIVIL STATE OF CALIFORNIA

The State of California or its officers or agents shall not be responsible for the accuracy or completeness of electronic copies of this plan sheet.

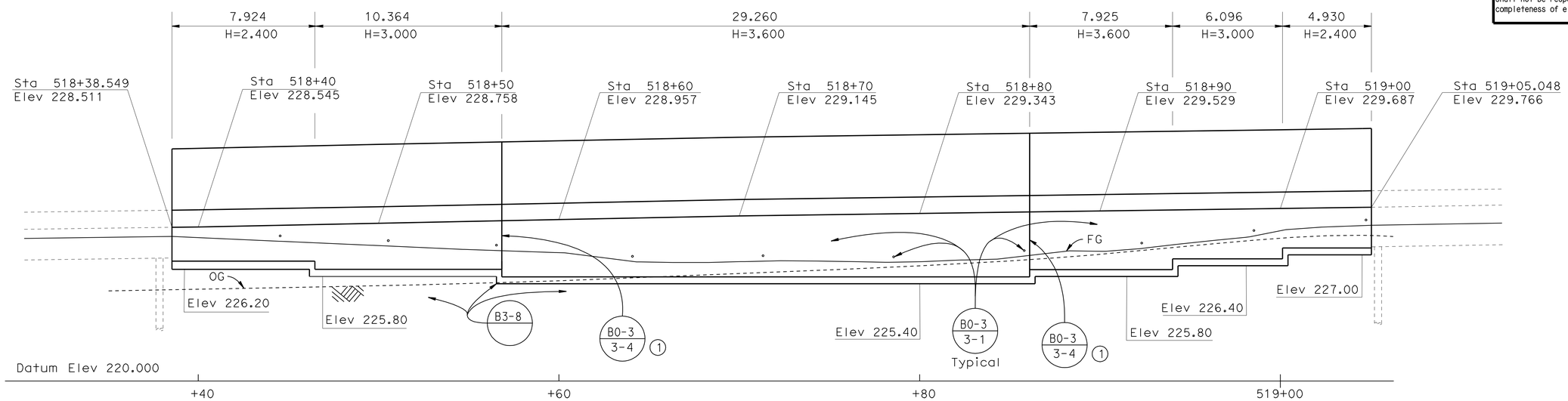

Notes:

1. Extend Waterstop 150 mm into Concrete Barrier

ELEVATION
1:125

B0-3 / 3-2

B0-3 / 3-3

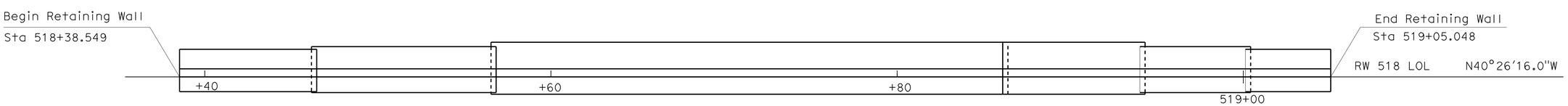

PLAN
1:125

NOTE:
THE CONTRACTOR SHALL VERIFY ALL CONTROLLING FIELD DIMENSIONS BEFORE ORDERING OR FABRICATING ANY MATERIAL.

Caltrans Metric

	BY	CHECKED
DESIGN	D. Avarez	R. Washington
DETAILS	Y. Tang	R. Washington
QUANTITIES	R. Washington	R. Asistin

STATE OF CALIFORNIA
DEPARTMENT OF TRANSPORTATION

DIVISION OF ENGINEERING SERVICES
STRUCTURE DESIGN
DESIGN BRANCH 6

BRIDGE NO. RW 518
KILOMETER POST

RETAINING WALL NO. 518
STRUCTURAL PLAN

ALL DIMENSIONS ARE IN METERS UNLESS OTHERWISE SHOWN

ORIGINAL SCALE IN MILLIMETERS FOR REDUCED PLANS 0 10 20 30 40 50 60 70 80 90 100

CU 07
EA 1218V1

DISREGARD PRINTS BEARING EARLIER REVISION DATES

REVISION DATES: 8-18-07 1-5-08 03-04-08 06-17-08 06-23-08 7-16-11

SHEET 2 OF 8

FILE => rtw518_sp.dgn

STRUCTURES DESIGN DETAIL SHEET (METRIC) (REV.03-17-04)

USERNAME => ttrflint DATE PLOTTED => 03-MAY-2010 TIME PLOTTED => 14:56

DIST	COUNTY	ROUTE	KILOMETER POST TOTAL PROJECT	SHEET No	TOTAL SHEETS
07	LA	5	50.8/58.0	821	869

Xiaodong Chen 6-25-08
REGISTERED CIVIL ENGINEER DATE

5-3-10
PLANS APPROVAL DATE

REGISTERED PROFESSIONAL ENGINEER Xiaodong Chen No. C58858 Exp. 6-30-11 CIVIL STATE OF CALIFORNIA

The State of California or its officers or agents shall not be responsible for the accuracy or completeness of electronic copies of this plan sheet.

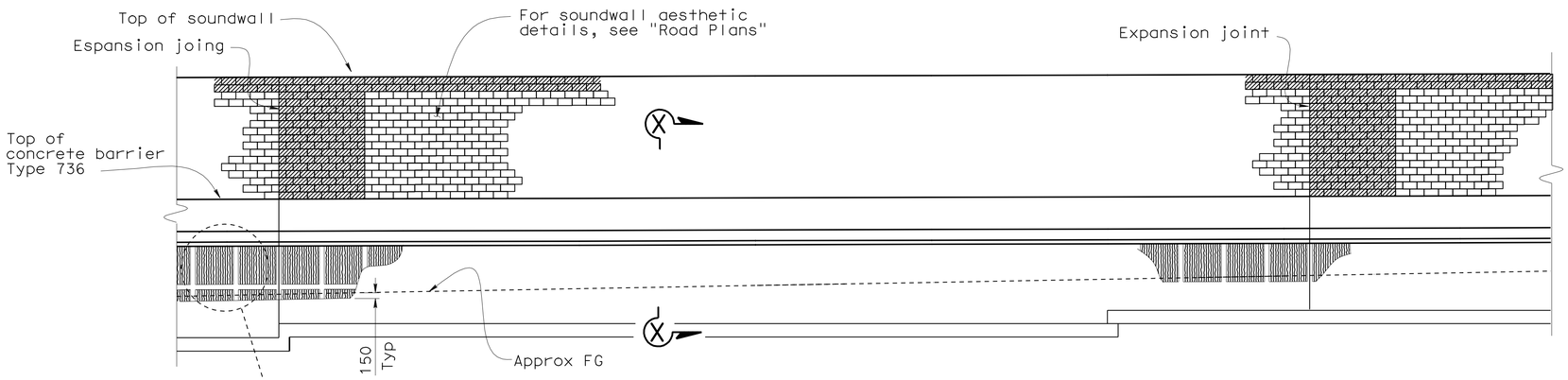

ELEVATION

No scale
(1:80)

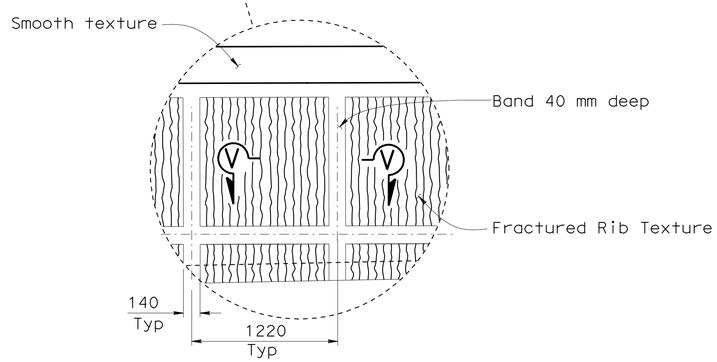

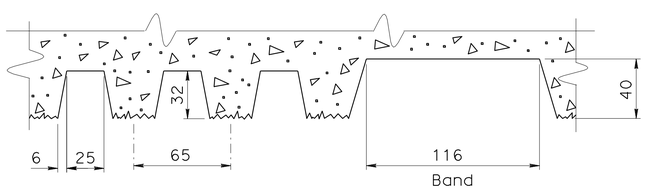

SECTION V-V
FRACTURED RIB TEXTURE & BAND

1:2

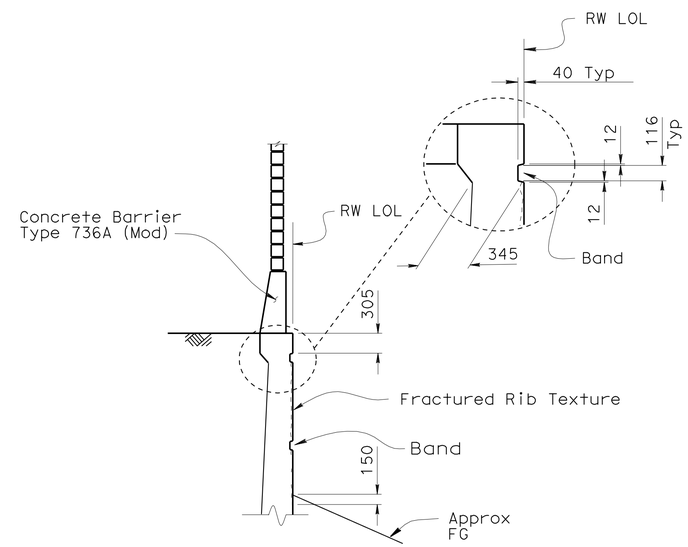

SECTION X-X

1:40

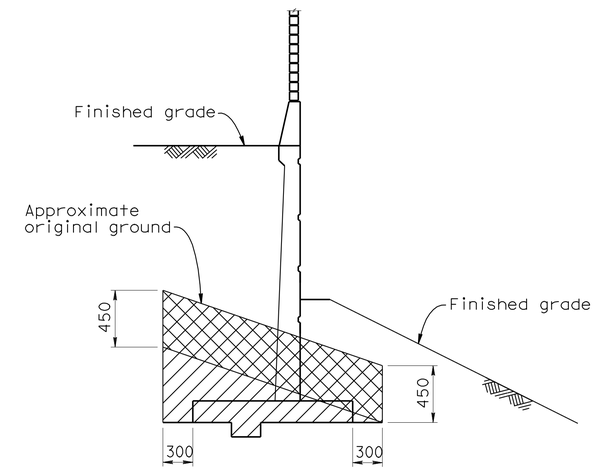

LIMITS OF PAYMENT FOR STRUCTURE EXCAVATION (AERIALLY DEPOSITED LEAD)

No scale

LEGEND:

Indicates structure excavation

Indicates structure excavation (Type Y-2) (Aerially deposited lead)

ARCHITECTURAL DETAILS

NOTE:
THE CONTRACTOR SHALL VERIFY ALL CONTROLLING FIELD DIMENSIONS BEFORE ORDERING OR FABRICATING ANY MATERIAL.

Caltrans Metric

	BY	CHECKED
DESIGN	X. Chen	R. Washington
DETAILS	Y. Tang	R. Washington
QUANTITIES	R. Washington	R. Asistin

STATE OF CALIFORNIA
DEPARTMENT OF TRANSPORTATION

DIVISION OF ENGINEERING SERVICES
STRUCTURE DESIGN
DESIGN BRANCH 6

BRIDGE NO. RW 518
KILOMETER POST

RETAINING WALL NO. 518
RETAINING WALL DETAILS-MISCELLANEOUS

ALL DIMENSIONS ARE IN MILLIMETERS UNLESS OTHERWISE SHOWN

ORIGINAL SCALE IN MILLIMETERS FOR REDUCED PLANS 0 10 20 30 40 50 60 70 80 90 100

CU 07
EA 1218V1

DISREGARD PRINTS BEARING EARLIER REVISION DATES

REVISION DATES: 1-17-08 03-03-08 4-14-08 4-22-08 7-16-09

SHEET 3 OF 8

STRUCTURES DESIGN DETAIL SHEET (METRIC) (REV.03-17-04)

FILE => rtw518_uarchdet.dgn

USERNAME => trright DATE PLOTTED => 03-MAY-2010 TIME PLOTTED => 14:56

DIST.	COUNTY	ROUTE	KILOMETER POST TOTAL PROJECT	SHEET NO.	TOTAL SHEETS
07	LA	5	50.8/58.0	822	869

Xiaodong Chen 6-25-08
REGISTERED ENGINEER - CIVIL

5-3-10
PLANS APPROVAL DATE

REGISTERED PROFESSIONAL ENGINEER XIAODONG CHEN No. C58858 Exp. 6-30-11 CIVIL STATE OF CALIFORNIA

The State of California or its officers or agents shall not be responsible for the accuracy or completeness of electronic copies of this plan sheet.

Caltrans Metric

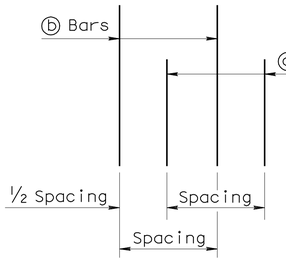

DETAIL B
No Scale

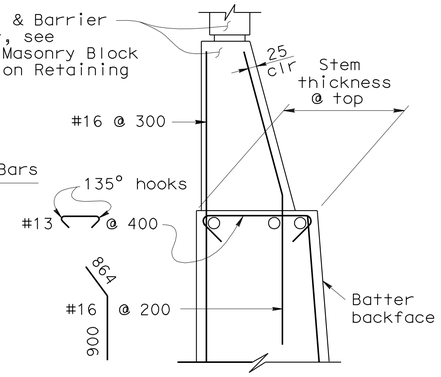

DETAIL A WITHOUT HAUNCH
No Scale

GENERAL NOTES

1. For soundwall and retaining wall architectural finish or texture, see details elsewhere in project plans.
2. For details not shown and drainage notes, see B3-8
3. Footing cover, 450 mm minimum.
4. Limit of no splicing rebars = H/3
5. Increasing stem thickness not permitted:

* ⓐ & ⓑ bars are bundled together.

** Alternate ⓐ & ⓑ bars are shown in "Detail B".

Cont = Continuous.

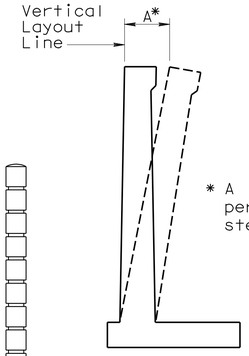

* A Offset = 12 mm per 3000 mm of wall stem height

WALL OFFSET
No Scale

Values for offsetting forms to be determined by the Engineer.

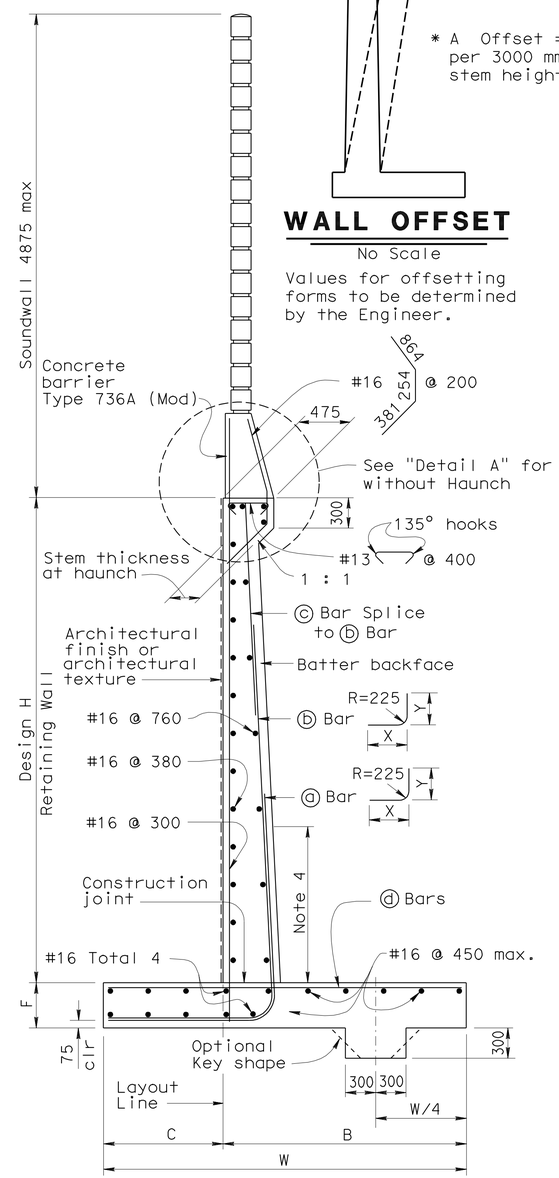

SPREAD FOOTING SECTION
No Scale

DESIGN DATA

DESIGN: Load Factor Design (LFD)

CONCRETE: Reinforced Concrete, f'c = 25 MPa
fy = 420 MPa

LOADING CASE:
Level ground with 11.5 KPa Live Load Surcharge and 4875 mm Soundwall

Seismic Load = 0.3 Dead Load
Wind Load = 1435 Pa
Dead Load of Soundwall = 20.6 kN/m
Dead Load of Barrier = 5.4 kN/m

SEISMIC LOAD: SOIL
Kh = 0.3g
Kv = 0.0
Kae : Mononobe-Okabe Method

SOIL: $\emptyset = 34°$ $\gamma = 19$ kN/m³
Equivalent fluid pressure:
= 5.6 KPa/m for determination of toe pressure
= 4.2 KPa/m for determination of heel pressure

LOAD COMBINATIONS:

EXTERNAL STABILITY: (For Overturning, Sliding)
Group 1: D + E + SC
Group 2 : D + E + SC + W
Group 3 : D + PYM

INTERNAL STABILITY (LFD): (For Member Design)
Group A : βD + 1.7E + 1.7SC
Group B : βD + 1.7E + 1.3W
Group C (stem) : 1.0D + 1.0E + 1.0EQD + 1.0EQE
Group C (footing) : D + PYM

Where : β = 1.0 or 1.3 whichever controls design
D = Dead Load
E = Lateral Earth Pressure
SC = Live Load Surcharge
W = Wind Load
EQD = Seismic Dead Load
EQE = Seismic Lateral Earth Pressure
PYM = Probable Yield Moment (1.3 x Nominal Yield Moment of Stem)

ALL DIMENSIONS ARE IN MILLIMETERS UNLESS OTHERWISE SHOWN

ALTERNATIVE A: (CONSTANT TOP OF WALL THICKNESS) TABLE OF REINFORCING STEEL DIMENSIONS AND DATA

	Stem With Haunch													
Design H	1800	2400	3000	3600	4200	4800	5500	6100	6700	7300	7900	8500	9100	9800
W	2300	2450	2650	3000	3300	3650	3950	4350	4650	5000	5650	6000	6450	6850
C	850	850	900	1000	1100	1200	1300	1450	1500	1650	1900	2050	2200	2350
B	1500	1600	1750	2000	2200	2450	2650	2900	3150	3350	3750	3950	4250	4500
F Spread Footing	380	380	380	380	380	450	450	550	600	700	850	900	1000	1150
Batter	0	100:4	100:4	100:4	100:4	100:4	100:4	100:4	100:4	100:5	100:6	100:7	100:8	100:8
Stem Thickness @ Haunch	305	305	305	305	305	305	305	305	305	305	305	305	305	305
ⓐ Bars				#19@450**	#22@450**	#25@450**	#29@450**	#32@450**	#25@225*	#25@225*	#22@150*	#32@300**	#29@225*	#36@300**
X				Cont	Cont	Cont	Cont	Cont	Cont	Cont	Cont	Cont	Cont	Cont
Y				2400	2000	2300	2600	2900	2900	3350	3500	3950	4250	4700
ⓑ Bars	#16@300	#16@300	#16@225	#19@450**	#22@450**	#25@450**	#29@450**	#32@450**	#25@225*	#25@225*	#22@150*	#32@300**	#29@225*	#36@300**
X	Cont	Cont	Cont	Cont	Cont	Cont	Cont	Cont	Cont	1700	2000	2150	2450	2600
Y	Cont	Cont	Cont	Cont	3200	3950	4550	5350	5950	6400	5650	5800	7750	7150
ⓒ Bars					#19@450	#19@450	#19@450	#19@450	#19@450	#19@450	#19@300	#22@300	#22@450	#22@300
ⓓ Bars	#16@300	#16@300	#16@300	#16@225	#19@225	#19@225	#19@150	#25@225	#25@225	#25@225	#22@150	#22@150	#29@225	#29@225
Ultimate Bearing Capacity Req'd Kpa	220	265	290	315	350	390	430	475	540	585	600	640	675	740

ALTERNATIVE B: (VARIABLE TOP OF WALL THICKNESS) TABLE OF REINFORCING STEEL DIMENSIONS AND DATA

	Stem With Haunch						Stem Without Haunch						
Design H	2400	3000	3600	4200	4800	5500	6100	6700	7300	7900	8500	9100	9800
W	2450	2600	2800	3100	3450	3950	4200	4900	5000	5650	6100	6250	6650
C	850	850	900	1050	1150	1300	1400	1600	1650	1900	2050	2050	2300
B	1600	1750	1900	2050	2300	2650	2800	3300	3350	3750	4050	4200	4350
F Spread Footing	380	380	380	380	450	450	550	600	700	850	900	1000	1050
Batter	0	0	0	0	0	0	0	0	0	100:2	100:4	100:4	100:4
Stem Thickness @ Top							475	610	610	610	610	610	610
Stem Thickness @ Haunch	305	305	305	305	380	380							
ⓐ Bars			#19@300**	#16@150*	#29@450**	#29@300**	#29@300**	#29@300**	#22@150*	#22@150*	#22@150*	#29@225*	#36@300**
X			Cont	Cont	Cont	Cont	Cont	Cont	Cont	Cont	Cont	Cont	Cont
Y			1700	1700	2600	2600	2600	2600	2900	3350	3800	4100	4400
ⓑ Bars	#16@225	#19@225	#19@300**	#16@150*	#29@450**	#29@300**	#29@300**	#29@300**	#22@150*	#22@150*	#22@150*	#29@225*	#36@300**
X	Cont	Cont	Cont	Cont	Cont	Cont	Cont	Cont	1700	1850	2300	2300	2450
Y	Cont	Cont	Cont	Cont	3500	3500	3650	3650	5350	6100	6550	7300	7300
ⓒ Bars					#22@450	#22@300	#22@300	#22@300	#19@300	#19@300	#19@300	#22@450	#22@300
ⓓ Bars	#16@300	#16@225	#16@225	#19@225	#19@225	#29@300	#29@300	#22@150	#19@150	#22@150	#22@150	#29@225	#29@225
Ultimate Bearing Capacity Req'd Kpa	265	310	350	365	430	430	510	505	585	605	640	740	770

STANDARD DRAWING

RELEASE DATE	2/25/03	DESIGN	BY Madon Sah	CHECKED Overcomer Hor	RELEASED BY
FILE NO.	xs14-220	DETAILS	BY A R Dudsak	CHECKED J C Moese	OFFICE CHIEF
		SUBMITTED	BY Overcomer Hor	DRAWING DATE 2/94	

STATE OF CALIFORNIA
DEPARTMENT OF TRANSPORTATION

DIVISION OF ENGINEERING SERVICES

BRIDGE NO. RW 518
KILOMETER POST

RETAINING WALL NO. 518
RETAINING WALL TYPE 1SWB

DS OSD 2147A (METRIC) (REV. X/XX/XX)

ORIGINAL SCALE IN MILLIMETERS FOR REDUCED PLANS 0 10 20 30 40 50 60 70 80 90 100

CU 07
EA 1218V1

DISREGARD PRINTS BEARING EARLIER REVISION DATES 8-18-07 7-16-09

REVISION DATES (PRELIMINARY STAGE ONLY)

SHEET 4 OF 8

USERNAME => trrichf

DATE PLOTTED => 03-MAY-2010 TIME PLOTTED => 14:57

rtw518_xs14-220.dg

DIST.	COUNTY	ROUTE	KILOMETER POST TOTAL PROJECT	SHEET NO.	TOTAL SHEETS
07	LA	5	50.8/58.0	823	869

Caltrans Metric

Xiaodong Chen 6-25-08
REGISTERED ENGINEER - CIVIL

5-3-10
PLANS APPROVAL DATE

REGISTERED PROFESSIONAL ENGINEER XIAODONG CHEN No. C58858 Exp. 6-30-11 CIVIL STATE OF CALIFORNIA

The State of California or its officers or agents shall not be responsible for the accuracy or completeness of electronic copies of this plan sheet.

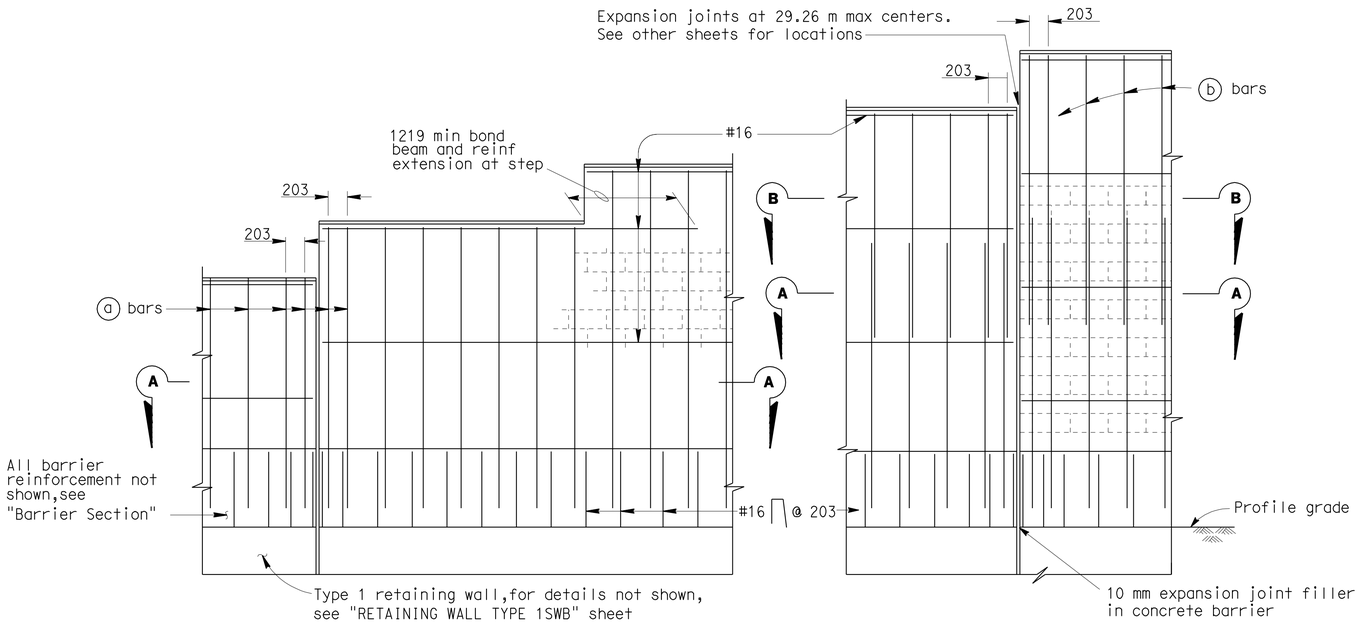

PART ELEVATIONS

SOUNDWALL REINFORCEMENT TABLE

Maximum H	(a) bars @ 406 max	(b) bars @ 406 max	"y"	f'm (MPa)	Compressive Strength of CMU (MPa)	Maximum H
1930	#13	———	———	10.34	13.1	1930
2540	#13	———	———	10.34	13.1	2540
3150	#13	———	———	10.34	13.1	3150
3759	#16	#13	1524	10.34	13.1	3759
4369	#19	#13	2134	10.34	13.1	4369
4978	#19	#13	2743	17.24	25.6	4978

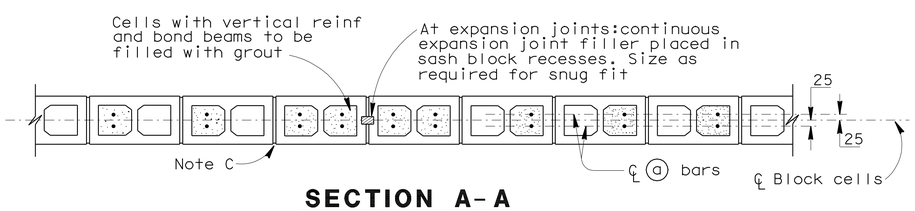

SECTION A-A

For details not shown,see other details

H=1930 THRU H=3150

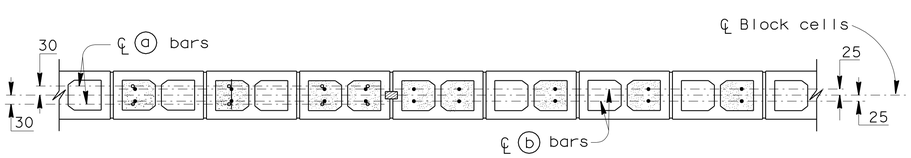

SECTION A-A

SECTION B-B

For details not shown,see other details

H=3759 THRU H=4978

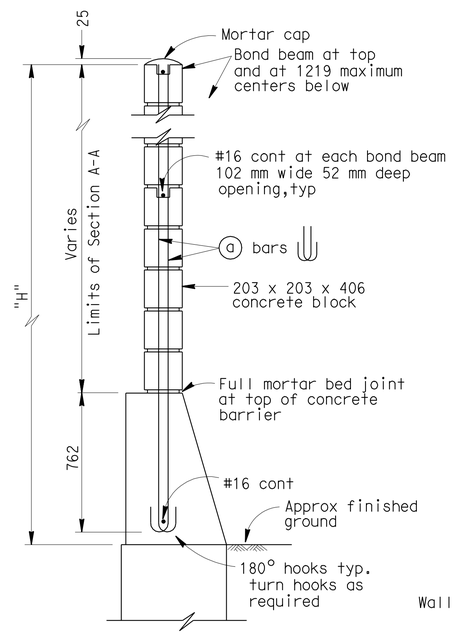

H=1930 THRU H=3150

For details not shown,see H=3759 thru H=4978

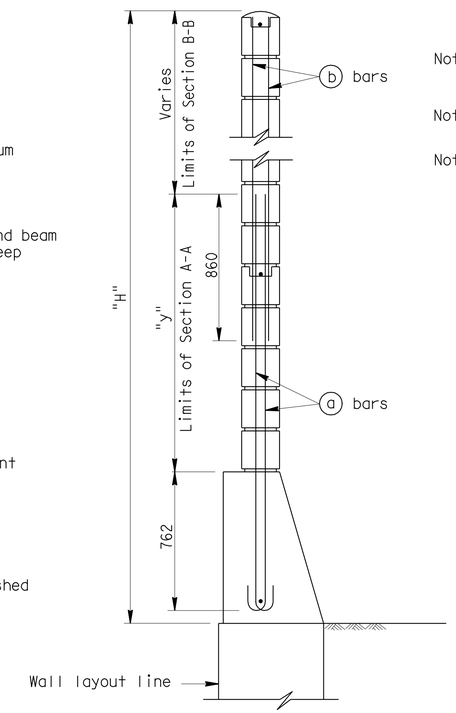

H=3759 THRU H=4978

For details not shown,see H=1930 thru H=3150

TYPICAL SECTIONS

Note I : For details not shown,see "SOUNDWALL WITH BARRIER ON RETAINING WALL - MASONRY BLOCK -- DETAILS NO.2" sheet.

Note II : Slope ground at traffic side of barrier to drain. Maximum slope ±10%.

Note III: See "SOUNDWALL MASONRY BLOCK - MISCELLANEOUS DETAILS" sheet for other details.

GENERAL NOTES

Note A: For type of block and joint finish, see other sheets.

Note B: When blocks are laid in stacked bond, ladder type, galvanized joint reinforcement shall be provided. A minimum of 2-3.76 mm wire continuous at 1219 mm maximum to be used. Locate reinforcement in joints that are at the approximate midpoint between bond beams.

Note C: Horizontal joints shall be tooled concave or may be weathered.
Vertical joints shall be tooled concave or may be raked.

Note D: For intermediate wall heights that are between the "H's" given. Use the tabular information for the next higher "H".

Note E: Masonry strengths are listed in "SOUNDWALL REINFORCEMENT TABLE".

Note F: Class 2 concrete to be used for the barrier.

NO SCALE

ALL DIMENSIONS ARE IN MILLIMETERS UNLESS OTHERWISE SHOWN

RETAINING WALL NO. 518

SOUNDWALL - MASONRY BLOCK WITH BARRIER ON RETAINING WALL

DETAILS NO. 1

STANDARD DRAWING

RELEASE DATE	7/3/03	DESIGN	BY D. DUNRUD	CHECKED W.C. WALKER	RELEASED BY
FILE NO.	xs15-130-1	DETAILS	BY R. YEE	CHECKED W.C. WALKER	OFFICE CHIEF
		SUBMITTED	BY D. DUNRUD	DRAWING DATE 11/94	

DS OSD 2147A (METRIC) (REV. 2/25/97)

STATE OF CALIFORNIA DEPARTMENT OF TRANSPORTATION

DIVISION OF ENGINEERING SERVICES

BRIDGE NO. RW 518

KILOMETER POST

ORIGINAL SCALE IN MILLIMETERS FOR REDUCED PLANS 0 10 20 30 40 50 60 70 80 90 100

CU 07
EA 1218V1

DISREGARD PRINTS BEARING EARLIER REVISION DATES 8-18-07 7-16-09

REVISION DATES (PRELIMINARY STAGE ONLY)

SHEET 5 OF 8

USERNAME => trrichf

rtw518_xs15-130-1.dgn

DATE PLOTTED => 03-MAY-2010 TIME PLOTTED => 14:57

DIST.	COUNTY	ROUTE	KILOMETER POST TOTAL PROJECT	SHEET NO.	TOTAL SHEETS
07	LA	5	50.8/58.0	824	869

Caltrans Metric

Xiaodong Chen 6-25-08
REGISTERED ENGINEER - CIVIL

5-3-10
PLANS APPROVAL DATE

REGISTERED PROFESSIONAL ENGINEER XIAODONG CHEN No. C58858 Exp. 6-30-11 CIVIL STATE OF CALIFORNIA

The State of California or its officers or agents shall not be responsible for the accuracy or completeness of electronic copies of this plan sheet.

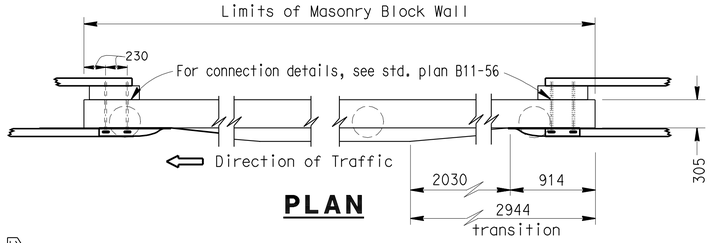

PLAN

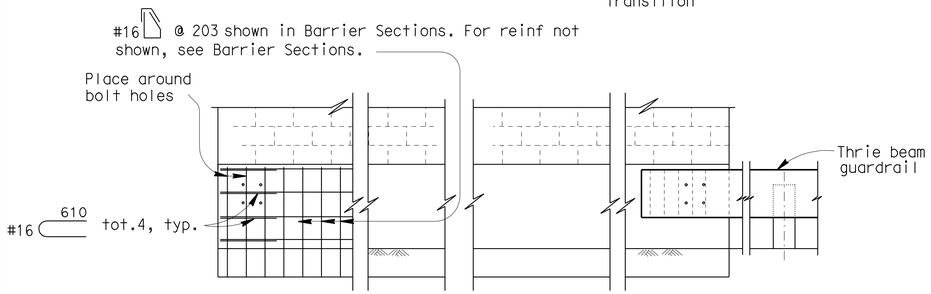

ELEVATION

METAL BEAM GUARDRAIL ANCHORAGE

For details not shown, see std. plan B11-56.

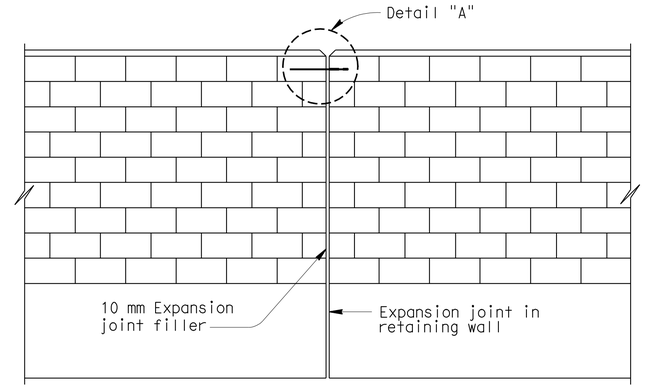

ALIGNMENT KEY DETAIL

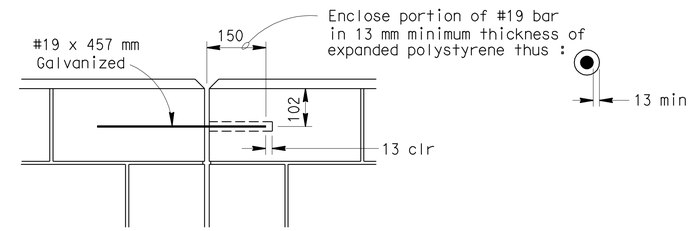

DETAIL A

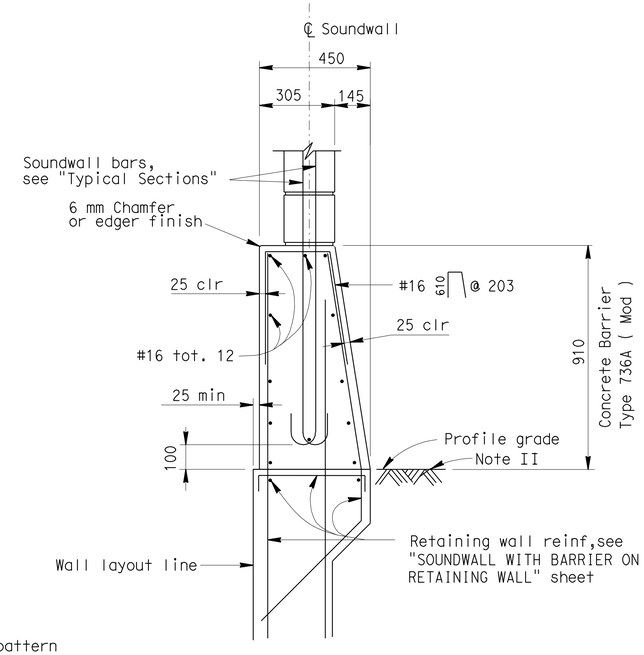

BARRIER SECTION

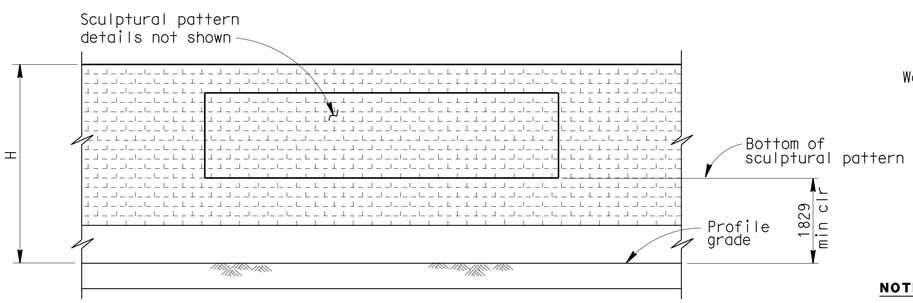

CLEARANCE DETAIL

NOTES:

I : For details not shown,see "RETAINING WALL WITH SOUNDWALL" sheets.

II : Slope ground at traffic side of barrier to drain. Maximum slope ±10%. See Standard Plan B11-56, Note D.

DESIGN NOTES

DESIGN

Uniform Building Code,1997 Edition and the Bridge Design Specifications.

DESIGN WIND LOAD

1293 Pa

DESIGN SEISMIC LOAD

0.57 Dead load

REINFORCED CONCRETE

f'c = 22.408 Mpa
fy = 413.688 MPa

CONCRETE MASONRY

REGULAR STRENGTH	HIGH STRENGTH	
f'm = 10.34 MPa	f'm = 13.79 MPa	f'm = 17.24 MPa
f_b = 3.41 MPa	f_b = 4.55 MPa	f_b = 5.72 MPa
fs = 165.5 MPa	fs = 165.5 MPa	fs = 165.5 MPa
n = 25.8	n = 19.3	n = 15.5

LOAD FACTORS AND LOAD COMBINATIONS

Working Stress Design (WSD) Percentage of unit stress

Group 1: D + E + SC 100%
Group 2: D + W + SC + E 100%
Group 3: D + 0.71 EQD + E 100%

Where:

D = Dead load
E = Lateral earth pressure
SC = Live load surcharge
W = Wind load
EQD = Seismic dead load

Load Factor Design (LFD)

Group A: βD +1.7 E + 1.7 SC
Group B: βD +1.7 E + 1.3 W
Group C: βD +1.3 E + 1.0 EQE
Group D: βD +1.3 E + 1.0 EQD
Group E: βD +1.1 E + 0.85 (EQE + EQD)

Where : β = 0.9 or 1.2, whichever controls in design
D = Dead load
E = Lateral earth pressure
SC = Live load surcharge
W = Wind load
EQD = Seismic dead load
EQE = Seismic earth load

STRENGTH REDUCTION FACTORS, Ø

Reinforced concrete:
For flexure ---------- Ø=0.90
For shear ---------- Ø=0.85

Concrete masonry:
For flexure ---------- Ø=0.80
For shear ---------- Ø=0.60

Foundations :
See "RETAINING WALL WITH SOUNDWALL" sheets.

NO SCALE

ALL DIMENSIONS ARE IN MILLIMETERS UNLESS OTHERWISE SHOWN

RETAINING WALL NO. 518

SOUNDWALL - MASONRY BLOCK WITH BARRIER ON RETAINING WALL

DETAILS NO. 2

STANDARD DRAWING

RELEASE DATE 9/8/03	DESIGN BY D. DUNRUD	CHECKED W.C. WALKER	RELEASED BY Roberto Lovalle OFFICE CHIEF
FILE NO. xs15-130-2	DETAILS BY R. YEE	CHECKED W.C. WALKER	
	SUBMITTED BY D. DUNRUD	DRAWING DATE 11/94	

DS OSD 2147A (METRIC) (REV. 2/25/97)

ORIGINAL SCALE IN MILLIMETERS FOR REDUCED PLANS 0 10 20 30 40 50 60 70 80 90 100

STATE OF CALIFORNIA DEPARTMENT OF TRANSPORTATION

DIVISION OF ENGINEERING SERVICES

CU 07
EA 1218V1

BRIDGE NO. RW 518
KILOMETER POST

DISREGARD PRINTS BEARING EARLIER REVISION DATES

REVISION DATES (PRELIMINARY STAGE ONLY) 8-18-07 7-16-09

SHEET 6 OF 8

USERNAME => trrichf

rtw518_xs15-130-2.dg

DATE PLOTTED => 03-MAY-2010 TIME PLOTTED => 14:57

DIST.	COUNTY	ROUTE	KILOMETER POST TOTAL PROJECT	SHEET NO.	TOTAL SHEETS
07	LA	5	50.8/58.0	825	869

Caltrans Metric

Xiaodong Chen 6-25-08
REGISTERED ENGINEER - CIVIL

5-3-10
PLANS APPROVAL DATE

REGISTERED PROFESSIONAL ENGINEER XIAODONG CHEN No. C58858 Exp. 6-30-11 CIVIL STATE OF CALIFORNIA

The State of California or its officers or agents shall not be responsible for the accuracy or completeness of electronic copies of this plan sheet.

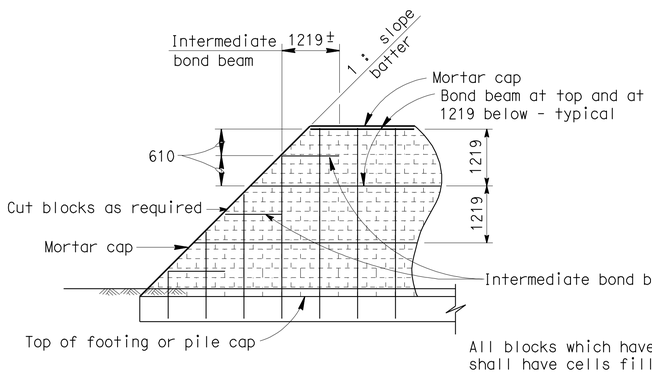

TYPE I

Note : Slope batter shall not be flatter than 1:1

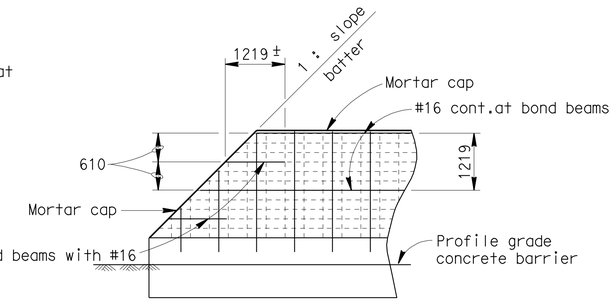

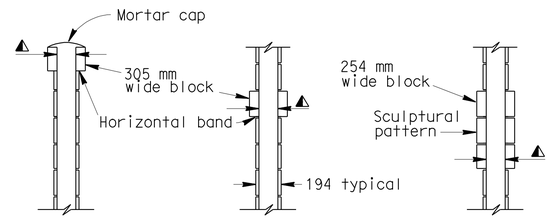

ARCHITECTURAL ALTERNATIVES

◭ Cell width to match 203 mm block

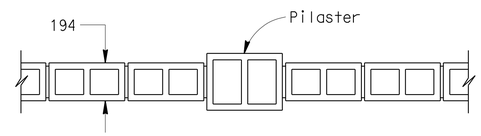

305 mm WIDE PROJECTING BLOCK

NOTES:

305 mm wide block not allowed within 1829 mm of profile grade.

Alternatives using 305 mm wide projecting block will not be permitted on standard sheet: "SOUNDWALL - MASONRY BLOCK ON PILES".

For structural details,see other sheets.

Type III not permitted for soundwalls with "H" less than 3048 mm.

The end of the wall details may be used with any of the standard supporting foundations for masonry block. The foundations shown for the different types are for the purpose of illustration only.

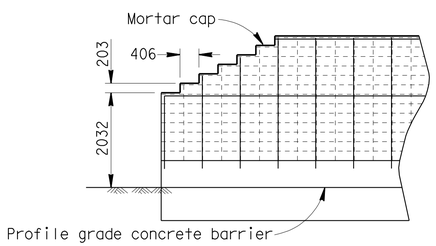

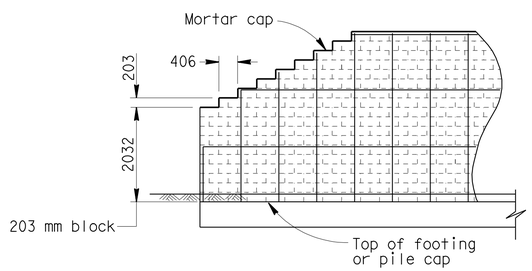

TYPE II

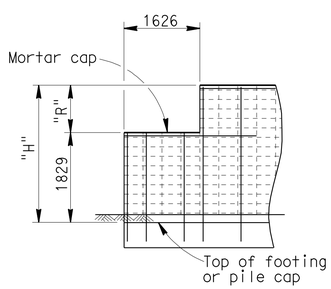

H=3048

SINGLE STEP

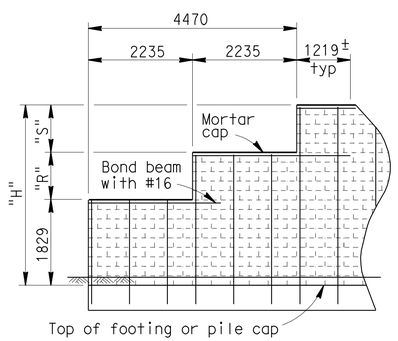

H=3251 TO H=4267

2 STEPS

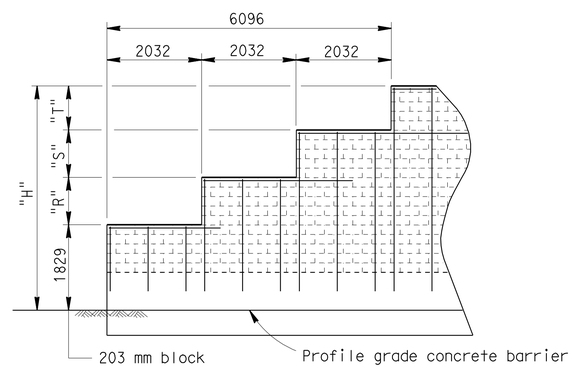

H=4470 TO H=4877

3 STEPS

TYPE III

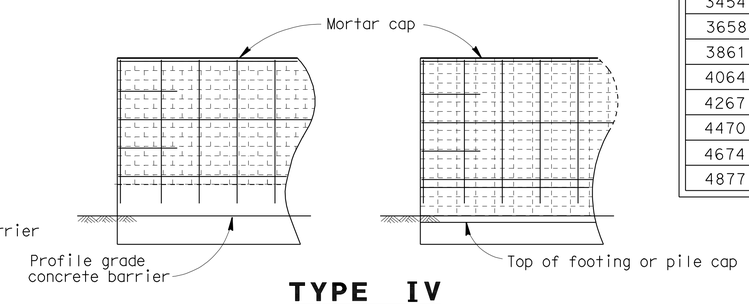

TYPE IV

END OF WALL DETAILS

203 mm x 203 mm x 406 mm BLOCK

H	R	S	T
3048	1219	—	—
3251	813	610	—
3454	813	813	—
3658	1016	813	—
3861	1016	1016	—
4064	1219	1016	—
4267	1219	1219	—
4470	1016	813	813
4674	1016	1016	813
4877	1016	1016	1016

NO SCALE

ALL DIMENSIONS ARE IN MILLIMETERS UNLESS OTHERWISE SHOWN

RETAINING WALL NO. 518

SOUNDWALL MASONRY BLOCK

MISCELLANEOUS DETAILS

STANDARD DRAWING

RELEASE DATE 7/3/03	DESIGN BY D. DUNRUD	CHECKED W.C. WALKER	RELEASED BY Roberto Lovelle OFFICE CHIEF
FILE NO. xs15-210	DETAILS BY R. YEE	CHECKED W.C. WALKER	
	SUBMITTED BY D. DUNRUD	DRAWING DATE 11/94	

STATE OF CALIFORNIA DEPARTMENT OF TRANSPORTATION

DIVISION OF ENGINEERING SERVICES

BRIDGE NO. RW 518

KILOMETER POST

CU 07
EA 1218V1

DS OSD 2147A (METRIC) (REV. 2/25/97)

ORIGINAL SCALE IN MILLIMETERS FOR REDUCED PLANS 0 10 20 30 40 50 60 70 80 90 100

DISREGARD PRINTS BEARING EARLIER REVISION DATES 8-18-07 7-16-09

REVISION DATES (PRELIMINARY STAGE ONLY)

SHEET 7 OF 8

USERNAME => trrichf

DATE PLOTTED => 03-MAY-2010 TIME PLOTTED => 14:57

rtw518_xs15-210.dgn

DIST	COUNTY	ROUTE	KILOMETER POST TOTAL PROJECT	SHEET No	TOTAL SHEETS
07	LA	5	50.8/58.0	826	869

REGISTERED CIVIL ENGINEER 6-4-07

5-3-10
PLANS APPROVAL DATE

REGISTERED PROFESSIONAL ENGINEER
Bhaskar Joshi
No. C66350
Exp. 6-30-10
CIVIL
STATE OF CALIFORNIA

The State of California or its officers or agents shall not be responsible for the accuracy or completeness of electronic copies of this plan sheet.

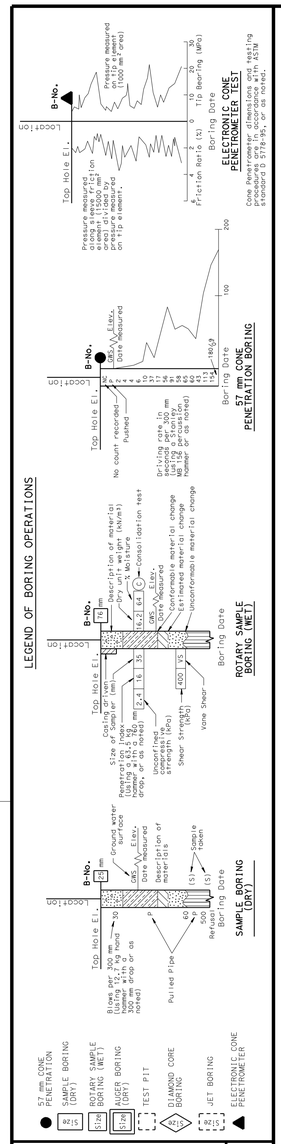

OGS CIVIL LOG OF TEST BORINGS SHEET (METRIC) (REV. 4/04)

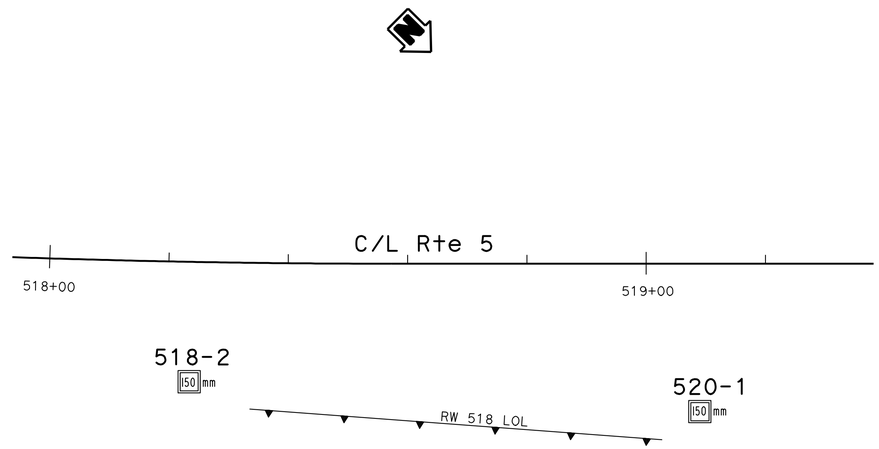

BENCH MARK

N 578996.73
E 1967898.053
Elev. 226.694 m

PLAN

1:500

Notes:

1. Borehole locations and elevation were not surveyed and are estimated from Project Plans.

2. Test borings utilized a CME Automatic Hammer Driver (theoretical free fall energy of 0.35 kip-ft) to advance the SPT sampler. A multiplication factor of 1.36 may be used to obtain N values adjusted to a hammer efficiency of 60% (N_{60}). Refer to Office of Drilling Services Memo dated December 7, 2005 for a list of hammer efficiency adjustment factors.

3. Penetration index values shown on the Log of Test Boring (LOTB) sheets are the actual values recorded in the field. Soil consistency shown on the LOTB sheets is based on the actual penetration index values recorded in the field.

4. No ground water encountered during field investigation.

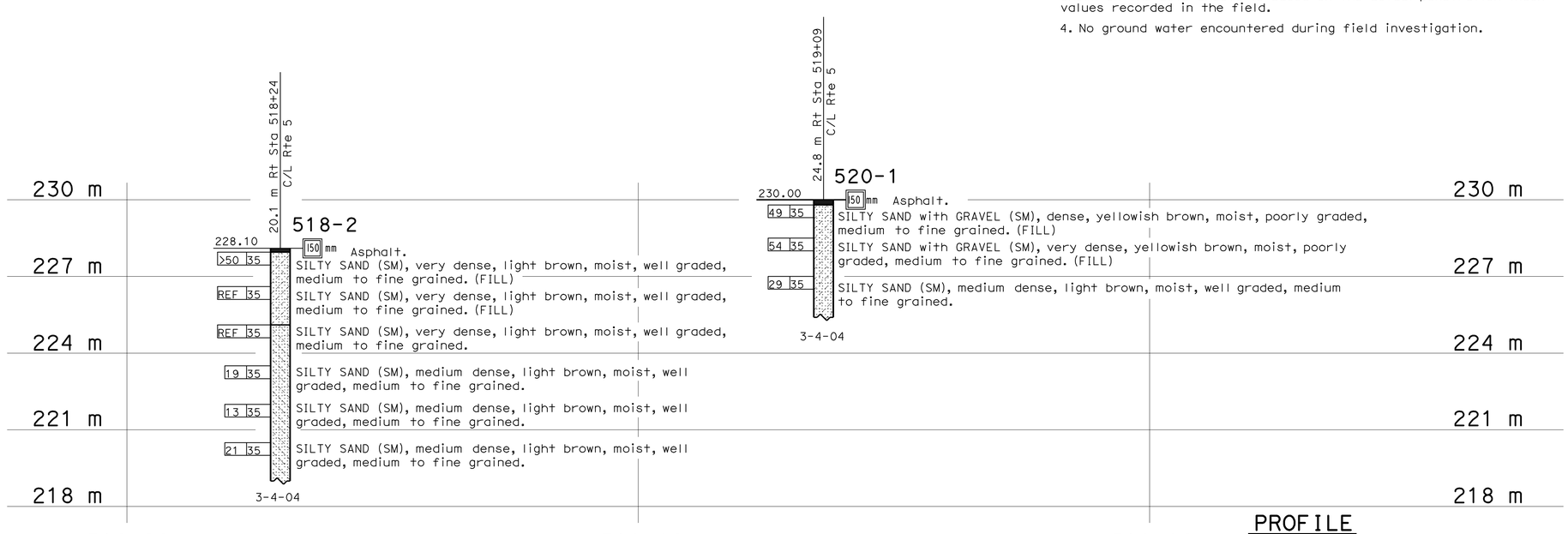

PROFILE

HOR. 1:400
VER. 1:100

Caltrans Metric

GEOTECHNICAL SERVICES	
DRAWN BY	F. Nguyen 7/05
CHECKED BY	B. Joshi

FIELD INVESTIGATION BY: B. Joshi

STATE OF CALIFORNIA DEPARTMENT OF TRANSPORTATION

DIVISION OF ENGINEERING SERVICES STRUCTURE DESIGN
DESIGN BRANCH 6

BRIDGE NO. RW 518
KILOMETER POST

RETAINING WALL NO. 518
LOG OF TEST BORINGS

ALL DIMENSIONS ARE IN METERS UNLESS OTHERWISE SHOWN

ORIGINAL SCALE IN MILLIMETERS FOR REDUCED PLANS 0 10 20 30 40 50 60 70 80 90 100

CU 07
EA 1218V1

DISREGARD PRINTS BEARING EARLIER REVISION DATES

REVISION DATES (PRELIMINARY STAGE ONLY): 7-10-06 7-5-06 5-1-07 12-20-07 7-16-09

SHEET 8 OF 8

FILE => rtw518zltb.dgn

USERNAME => trrichf DATE PLOTTED => 03-MAY-2010 TIME PLOTTED => 14:58

DIST	COUNTY	ROUTE	KILOMETER POST TOTAL PROJECT	SHEET No	TOTAL SHEETS
07	LA	5	50.8/58.0	827	869

REGISTERED CIVIL ENGINEER 6-25-08 DATE

5-3-10
PLANS APPROVAL DATE

REGISTERED PROFESSIONAL ENGINEER XIAODONG CHEN No. C58858 Exp. 06-30-11 CIVIL STATE OF CALIFORNIA

The State of California or its officers or agents shall not be responsible for the accuracy or completeness of electronic copies of this plan sheet.

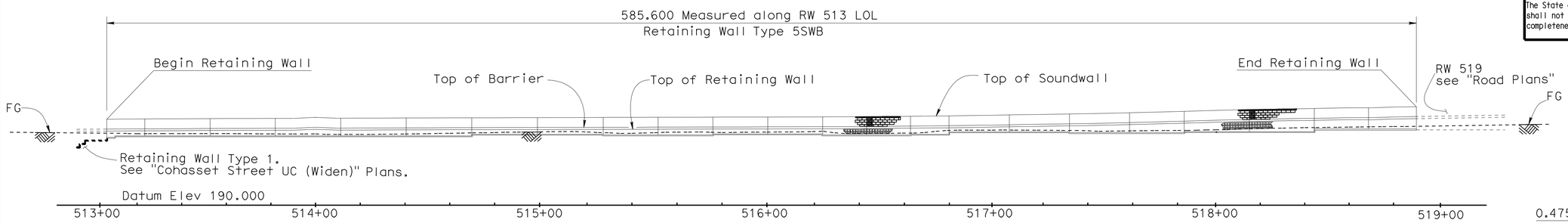

MIRRORED ELEVATION

1:1000

QUANTITIES

STRUCTURE EXCAVATION (RETAINING WALL)	2 020	m^3
STRUCTURE EXCAVATION (TYPE Y-1) (AERIALLY DEPOSITED LEAD)	1 910	m^3
STRUCTURE BACKFILL (RETAINING WALL)	4 620	m^3
PERVIOUS BACKFILL MATERIAL (RETAINING WALL)	175	m^3
STRUCTURAL CONCRETE, RETAINING WALL	1 630	m^3
FRACTURED RIB TEXTURE	1 010	m^2
SOUND WALL (MASONRY BLOCK)	2 026	m^2
BAR REINFORCING STEEL (RETAINING WALL)	100 800	kg
CONCRETE BARRIER (TYPE 736A MODIFIED)	586	m

CURVE DATA

NO.	R	Δ	T	L
A	1754.101	4°27'31.6"	68.287	136.505
B	1693.769	7°24'44.7"	109.715	219.125
C	1695.879	2°39'55.2"	39.452	78.890

STANDARD PLANS DATED JULY 2004

A10A	ACRONYMS AND ABBREVIATIONS (A-L)
A10B	ACRONYMS AND ABBREVIATIONS (M-Z)
A62B	LIMITS OF PAYMENT FOR EXCAVATION AND BACKFILL - BRIDGE SURCHARGE AND WALL
B0-3	BRIDGE DETAILS
B3-8	RETAINING WALL DETAILS NO.1
B11-56	CONCRETE BARRIER TYPE 736

STANDARD PLAN SHEET NO.

DETAIL NO.

INDEX TO PLANS

SHEET NO.	SHEET TITLE
1	GENERAL PLAN
2	STRUCTURAL PLANS NO. 1
3	STRUCTURAL PLANS NO. 2
4	STRUCTURAL PLANS NO. 3
5	STRUCTURAL PLANS NO. 4
6	RETAINING WALL DETAILS
7	RETAINING WALL DETAILS-MISCELLANEOUS
8	RETAINING WALL TYPE 5SWB
9	SOUND WALL- MASONRY BLOCK WITH BARRIER ON RETAINING WALL DETAILS NO.1
10	SOUND WALL- MASONRY BLOCK WITH BARRIER ON RETAINING WALL DETAILS NO.2
11	SOUNDWALL MASONRY BLOCK MISCELLANEOUS DETAILS
12	LOG OF TEST BORINGS NO. 1 OF 2
13	LOG OF TEST BORINGS NO. 2 OF 2

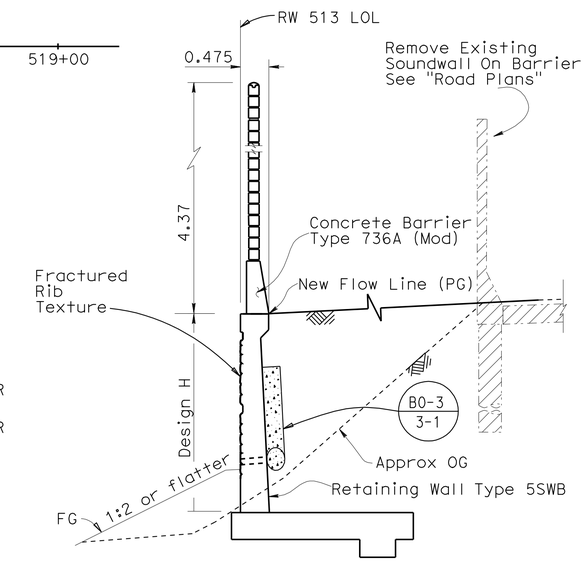

TYPICAL SECTION

1:50

NOTE

For Details, see "Retaining Wall Type 5SWB" sheet

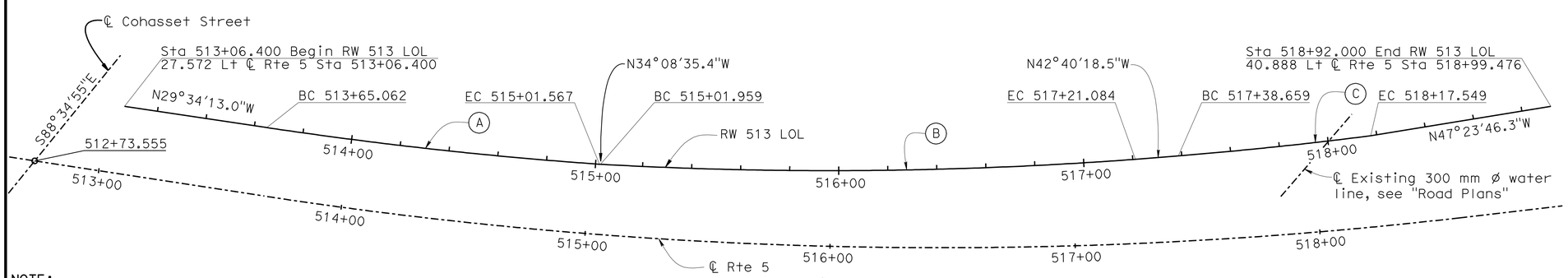

PLAN

1:1000

LEGEND

Indicates soundwall on barrier removal

Indicates New Construction

Indicates Existing Structure

NOTE:
THE CONTRACTOR SHALL VERIFY ALL CONTROLLING FIELD DIMENSIONS BEFORE ORDERING OR FABRICATING ANY MATERIAL.

Caltrans Metric

Fritz Hoffman 6-25-08
DESIGN ENGINEER

	BY	CHECKED
DESIGN	Hilario Tuazon	Vivian Dang
DETAILS	George Zweier/Y. Tang	Vivian Dang
QUANTITIES	Rachel Washington	Ryan Odell

LOAD & RESISTANCE FACTOR DESIGN — LIVE LOADING: HL93 W/"LOW-BOY"; PERMIT DESIGN VEHICLE

LAYOUT: George Zweier — CHECKED: Xiaodong Chen

SPECIFICATIONS: M. Pan — PLANS AND SPECS COMPARED

STATE OF CALIFORNIA
DEPARTMENT OF TRANSPORTATION

DIVISION OF ENGINEERING SERVICES
STRUCTURE DESIGN
DESIGN BRANCH 6

BRIDGE NO. RW 513
KILOMETER POST

RETAINING WALL NO.513
GENERAL PLAN

ALL DIMENSIONS ARE IN METERS UNLESS OTHERWISE SHOWN

ORIGINAL SCALE IN MILLIMETERS FOR REDUCED PLANS 0 10 20 30 40 50 60 70 80 90 100

CU 07
EA 1218V1

DISREGARD PRINTS BEARING EARLIER REVISION DATES

REVISION DATES: 02-28-07 | 05-04-07 | 1-14-08 | 03-04-08 | 4-16-08 | 4-22-08 | 5-20-08 | 5-28-08 | 6-12-08 | 7-16-09

SHEET 1 OF 13

FILE => rw513-a-gp.dgn

STRUCTURES DESIGN GENERAL PLAN SHEET (METRIC) (REV.07-24-06)

USERNAME => trrichf DATE PLOTTED => 03-MAY-2010 TIME PLOTTED => 14:58

DIST	COUNTY	ROUTE	KILOMETER POST TOTAL PROJECT	SHEET No	TOTAL SHEETS
07	LA	5	50.8/58.0	828	869

REGISTERED CIVIL ENGINEER — DATE 6-25-08

5-3-10
PLANS APPROVAL DATE

REGISTERED PROFESSIONAL ENGINEER — XIAODONG CHEN — No. C58858 — Exp. 06-30-11 — CIVIL — STATE OF CALIFORNIA

The State of California or its officers or agents shall not be responsible for the accuracy or completeness of electronic copies of this plan sheet.

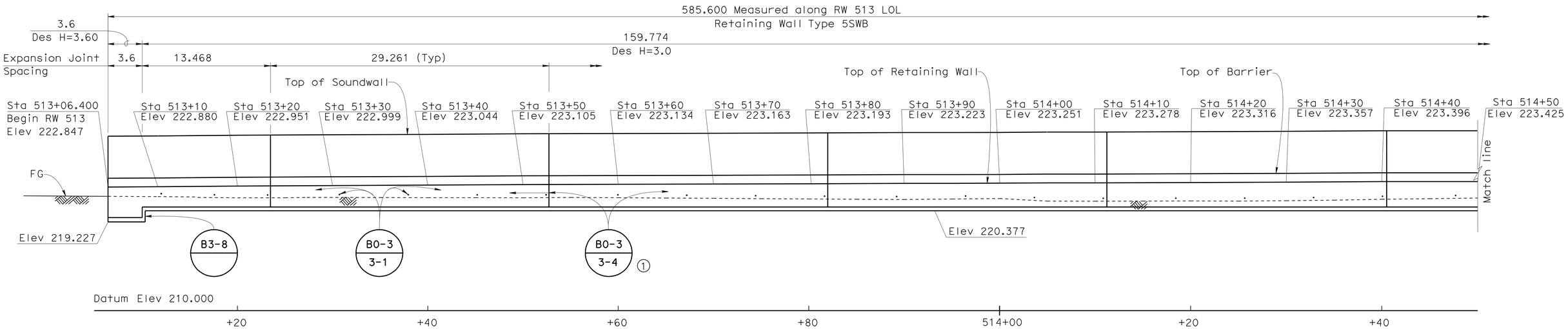

MIRRORED ELEVATION

1:200

B0-3 / 3-2 — B0-3 / 3-3

NOTE

1. Extend Waterstop 150 mm into Concrete Barrier

NOTE

For Match Line Sta 514+50, see "STRUCTURAL PLAN NO. 2" sheet

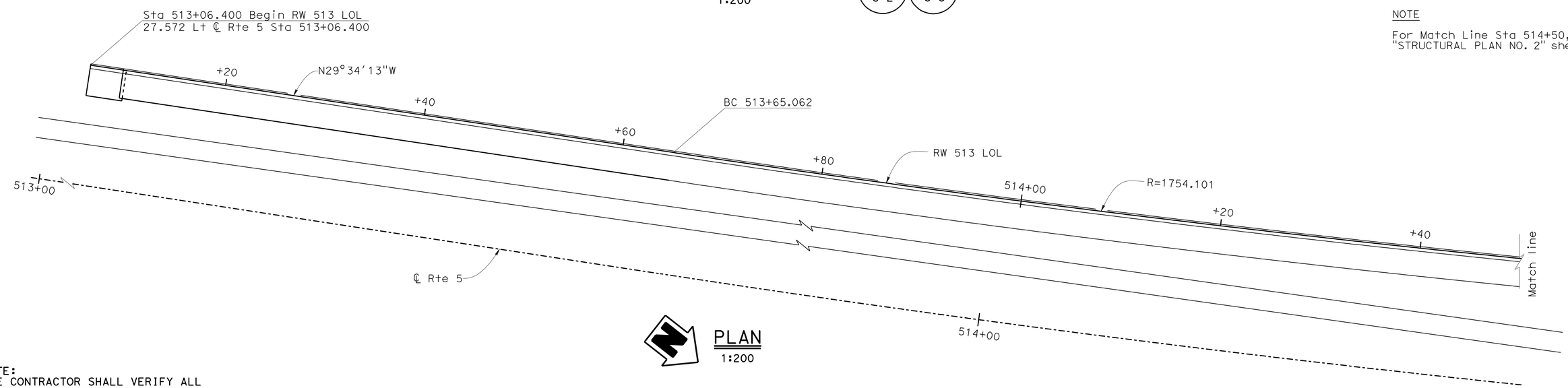

PLAN

1:200

NOTE:
THE CONTRACTOR SHALL VERIFY ALL CONTROLLING FIELD DIMENSIONS BEFORE ORDERING OR FABRICATING ANY MATERIAL.

	BY	CHECKED
DESIGN	Hilario Tuazon	Vivian Dang
DETAILS	George Zweier/Y.Tang	Vivian Dang
QUANTITIES	Rachel Washington	Ryan Odell

STATE OF CALIFORNIA
DEPARTMENT OF TRANSPORTATION

DIVISION OF ENGINEERING SERVICES
STRUCTURE DESIGN
DESIGN BRANCH 6

BRIDGE NO. RW 513
KILOMETER POST

RETAINING WALL NO.513
STRUCTURE PLAN NO.1

ALL DIMENSIONS ARE IN METERS UNLESS OTHERWISE SHOWN

ORIGINAL SCALE IN MILLIMETERS FOR REDUCED PLANS 0 10 20 30 40 50 60 70 80 90 100

CU 07
EA 1218V1

DISREGARD PRINTS BEARING EARLIER REVISION DATES

REVISION DATES: 02-22-07 | 05-03-07 | 1-14-08 | 5-20-08 | 5-28-08 | 7-16-09

SHEET 2 OF 13

FILE => rw513-c-sp1.dgn

STRUCTURES DESIGN DETAIL SHEET (METRIC) (REV.03-17-04)

USERNAME => trright DATE PLOTTED => 03-MAY-2010 TIME PLOTTED => 14:58

DIST	COUNTY	ROUTE	KILOMETER POST TOTAL PROJECT	SHEET No	TOTAL SHEETS
07	LA	5	50.8/58.0	829	869

REGISTERED CIVIL ENGINEER — DATE 6-25-08

5-3-10
PLANS APPROVAL DATE

REGISTERED PROFESSIONAL ENGINEER — XIAODONG CHEN — No. C58858 — Exp. 06-30-11 — CIVIL — STATE OF CALIFORNIA

The State of California or its officers or agents shall not be responsible for the accuracy or completeness of electronic copies of this plan sheet.

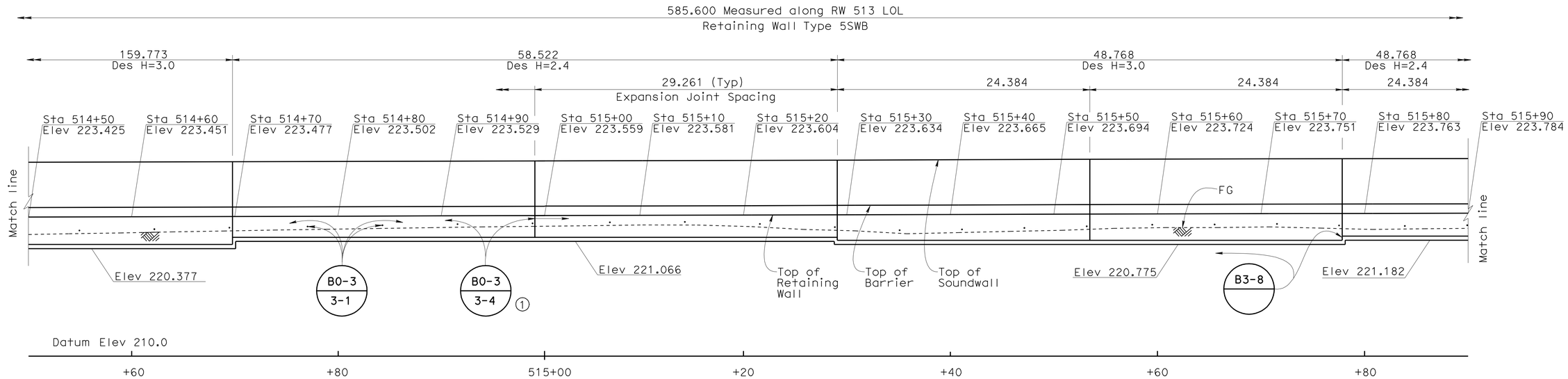

NOTE

For Match Line Sta 514+50, see "STRUCTURAL PLAN NO. 1" sheet

NOTE

1 Extend Waterstop 150 mm into Concrete Barrier

MIRRORED ELEVATION

1:200

B0-3 / 3-2 B0-3 / 3-3

NOTE

For Match Line Sta 515+90, see "STRUCTURAL PLAN NO. 3" sheet

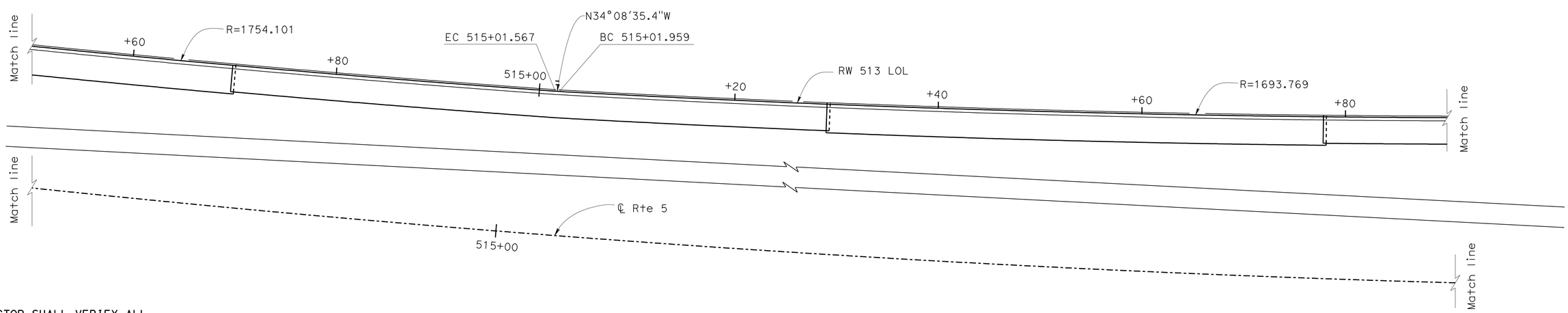

NOTE:
THE CONTRACTOR SHALL VERIFY ALL CONTROLLING FIELD DIMENSIONS BEFORE ORDERING OR FABRICATING ANY MATERIAL.

PLAN

1:200

Caltrans Metric

ALL DIMENSIONS ARE IN METERS UNLESS OTHERWISE SHOWN

ORIGINAL SCALE IN MILLIMETERS FOR REDUCED PLANS 0 10 20 30 40 50 60 70 80 90 100

	BY	CHECKED
DESIGN	Hilario Tuazon	Vivian Dang
DETAILS	George Zweier/Y.Tang	Vivian Dang
QUANTITIES	Rachel Washington	Ryan Odell

STATE OF CALIFORNIA
DEPARTMENT OF TRANSPORTATION

DIVISION OF ENGINEERING SERVICES
STRUCTURE DESIGN
DESIGN BRANCH 6

CU 07
EA 1218V1

BRIDGE NO. RW 513
KILOMETER POST

RETAINING WALL NO.513
STRUCTURE PLAN NO.2

DISREGARD PRINTS BEARING EARLIER REVISION DATES

REVISION DATES: 03-01-07 03-12-07 05-03-07 1-14-08 5-28-08 5-28-08 7-16-09

SHEET 3 OF 13

FILE => rw513-c-sp2.dgn

STRUCTURES DESIGN DETAIL SHEET (METRIC) (REV.03-17-04)

USERNAME => ttrrlchf DATE PLOTTED => 03-MAY-2010 TIME PLOTTED => 14:58

DIST	COUNTY	ROUTE	KILOMETER POST TOTAL PROJECT	SHEET No	TOTAL SHEETS
07	LA	5	50.8/58.0	830	869

REGISTERED CIVIL ENGINEER 6-25-08 DATE

5-3-10
PLANS APPROVAL DATE

REGISTERED PROFESSIONAL ENGINEER XIAODONG CHEN No. C58858 Exp. 6-30-11 CIVIL STATE OF CALIFORNIA

The State of California or its officers or agents shall not be responsible for the accuracy or completeness of electronic copies of this plan sheet.

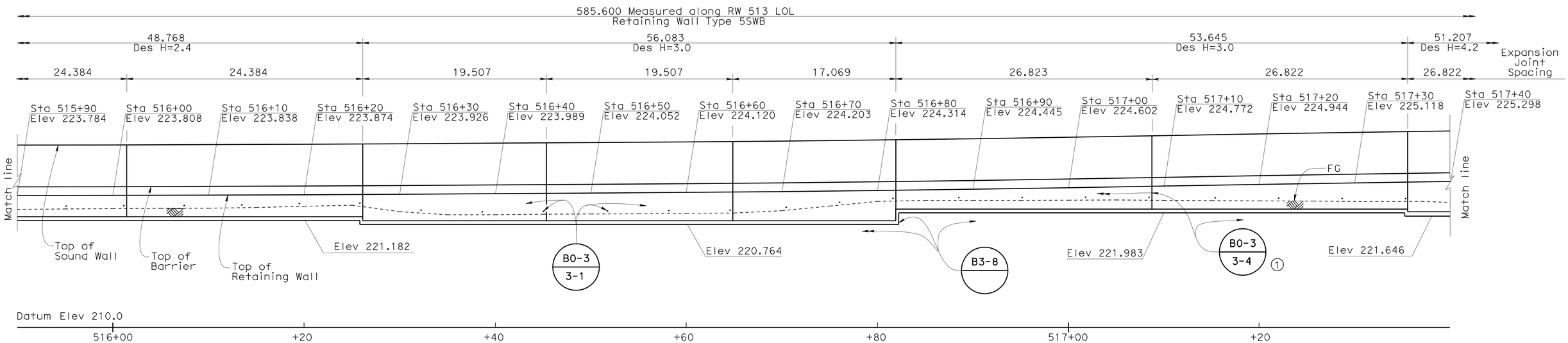

NOTE

For Match Line Sta 515+90, see "STRUCTURAL PLAN NO. 2" sheet

MIRRORED ELEVATION

1:200

B0-3 3-2 B0-3 3-3

NOTE

1 Extend waterstop 150 mm into Concrete Barrier

NOTE

For Match Line Sta 517+40, see "STRUCTURAL PLAN NO. 4" sheet

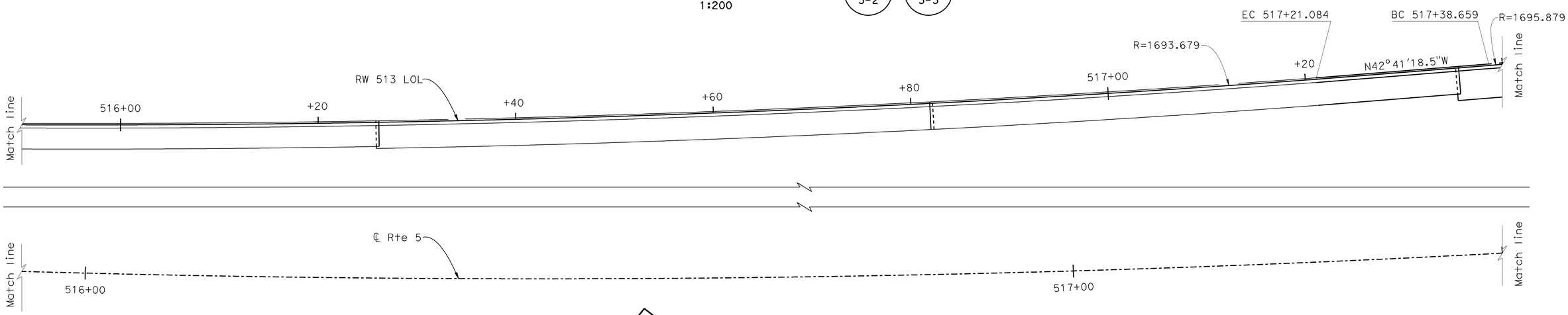

NOTE:
THE CONTRACTOR SHALL VERIFY ALL CONTROLLING FIELD DIMENSIONS BEFORE ORDERING OR FABRICATING ANY MATERIAL.

PLAN

1:200

Caltrans Metric

ALL DIMENSIONS ARE IN METERS UNLESS OTHERWISE SHOWN

ORIGINAL SCALE IN MILLIMETERS FOR REDUCED PLANS 0 10 20 30 40 50 60 70 80 90 100

	BY	CHECKED
DESIGN	Hilario Tuazon	Vivian Dang
DETAILS	George Zweier/Y. Tang	Vivian Dang
QUANTITIES	Rachel Washington	Ryan Odell

STATE OF CALIFORNIA
DEPARTMENT OF TRANSPORTATION

DIVISION OF ENGINEERING SERVICES
STRUCTURE DESIGN
DESIGN BRANCH 6

CU 07
EA 1218V1

BRIDGE NO. RW 513
KILOMETER POST

RETAINING WALL NO. 513
STRUCTURE PLAN NO.3

DISREGARD PRINTS BEARING EARLIER REVISION DATES

REVISION DATES: 03-08-07 03-12-07 05-03-07 1-14-08 5-28-08 5-29-08 7-16-09

SHEET 4 OF 13

FILE => rw513-c-sp3.dgn

STRUCTURES DESIGN DETAIL SHEET (METRIC) (REV.03-17-04)

USERNAME => trrichf DATE PLOTTED => 03-MAY-2010 TIME PLOTTED => 14:58

DIST	COUNTY	ROUTE	KILOMETER POST TOTAL PROJECT	SHEET No	TOTAL SHEETS
07	LA	5	50.8/58.0	831	869

REGISTERED CIVIL ENGINEER — DATE 6-25-08

5-3-10
PLANS APPROVAL DATE

REGISTERED PROFESSIONAL ENGINEER — XIAODONG CHEN — No. C58858 — Exp. 6-30-11 — CIVIL — STATE OF CALIFORNIA

The State of California or its officers or agents shall not be responsible for the accuracy or completeness of electronic copies of this plan sheet.

LEGEND

——— Indicates new construction

—·—·— Indicates existing pipe line

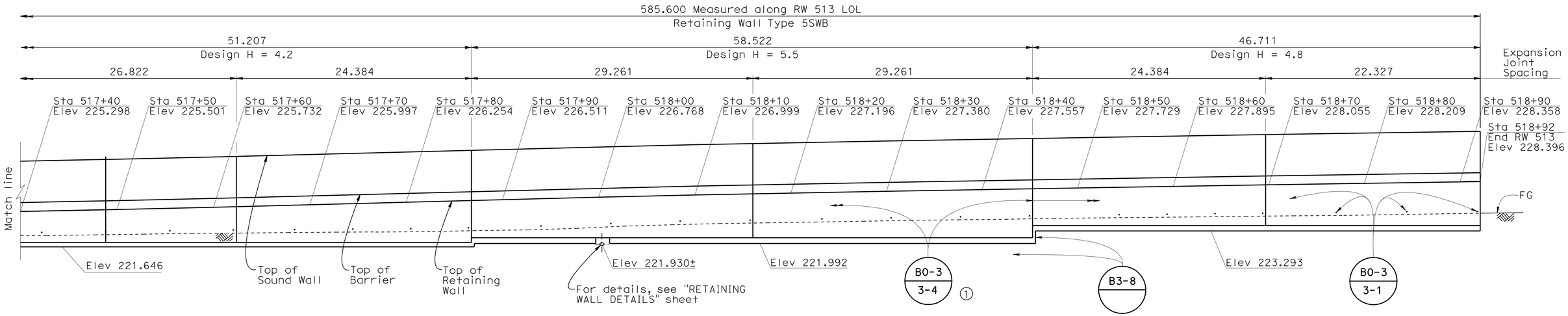

NOTE

For Match Line Sta 517+40, see "STRUCTURAL PLAN NO. 3" sheet

MIRRORED ELEVATION

1:200

B0-3 / 3-2 — B0-3 / 3-3

NOTE:

1 Extend waterstop 150 mm into Concrete Barrier

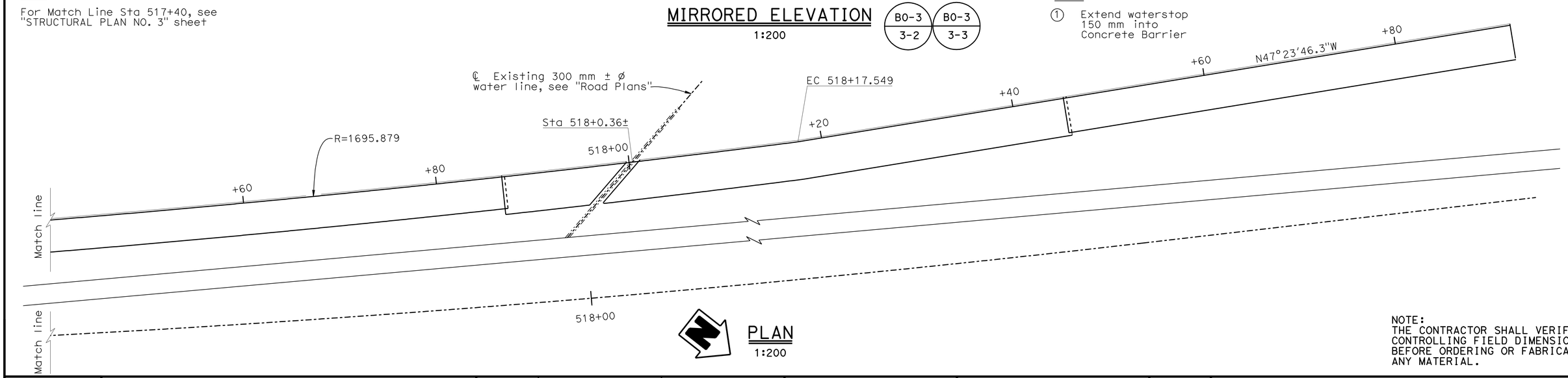

PLAN

1:200

NOTE:
THE CONTRACTOR SHALL VERIFY ALL CONTROLLING FIELD DIMENSIONS BEFORE ORDERING OR FABRICATING ANY MATERIAL.

Caltrans Metric

	BY	CHECKED
DESIGN	Hilario Tuazon	Vivian Dang
DETAILS	George Zweier/Y. Tang	Vivian Dang
QUANTITIES	Rachel Washington	Ryan Odell

STATE OF CALIFORNIA
DEPARTMENT OF TRANSPORTATION

DIVISION OF ENGINEERING SERVICES
STRUCTURE DESIGN
DESIGN BRANCH 6

BRIDGE NO. RW 513
KILOMETER POST

RETAINING WALL NO.513
STRUCTURE PLAN NO.4

ALL DIMENSIONS ARE IN METERS UNLESS OTHERWISE SHOWN

ORIGINAL SCALE IN MILLIMETERS FOR REDUCED PLANS 0 10 20 30 40 50 60 70 80 90 100

CU 07
EA 1218V1

DISREGARD PRINTS BEARING EARLIER REVISION DATES

REVISION DATES: 03-08-07 03-12-07 05-03-07 1-14-08 5-20-08 6-3-08 7-16-09

SHEET 5 OF 13

FILE => rw513-c-sp4.dgn

STRUCTURES DESIGN DETAIL SHEET (METRIC) (REV.03-17-04)

USERNAME => trrichf DATE PLOTTED => 03-MAY-2010 TIME PLOTTED => 14:58

DIST	COUNTY	ROUTE	KILOMETER POST TOTAL PROJECT	SHEET No	TOTAL SHEETS
07	LA	5	50.8/58.0	832	869

Xiaodong Chen 6-25-08
REGISTERED CIVIL ENGINEER DATE

5-3-10
PLANS APPROVAL DATE

REGISTERED PROFESSIONAL ENGINEER Xiaodong Chen No. C58858 Exp. 06-30-11 CIVIL STATE OF CALIFORNIA

The State of California or its officers or agents shall not be responsible for the accuracy or completeness of electronic copies of this plan sheet.

LEGEND:

——— Indicates new construction

-·-·-·- Indicates existing pipe line

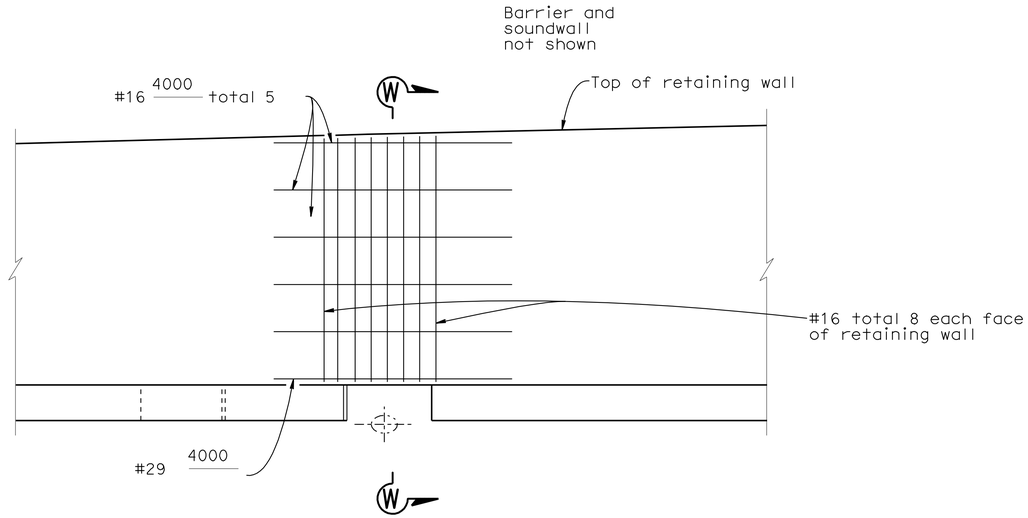

PART MIRRORED ELEVATION

1:50

NOTE:

For reinforcement not shown, see "RETAINING WALL TYPE SWB5" sheet

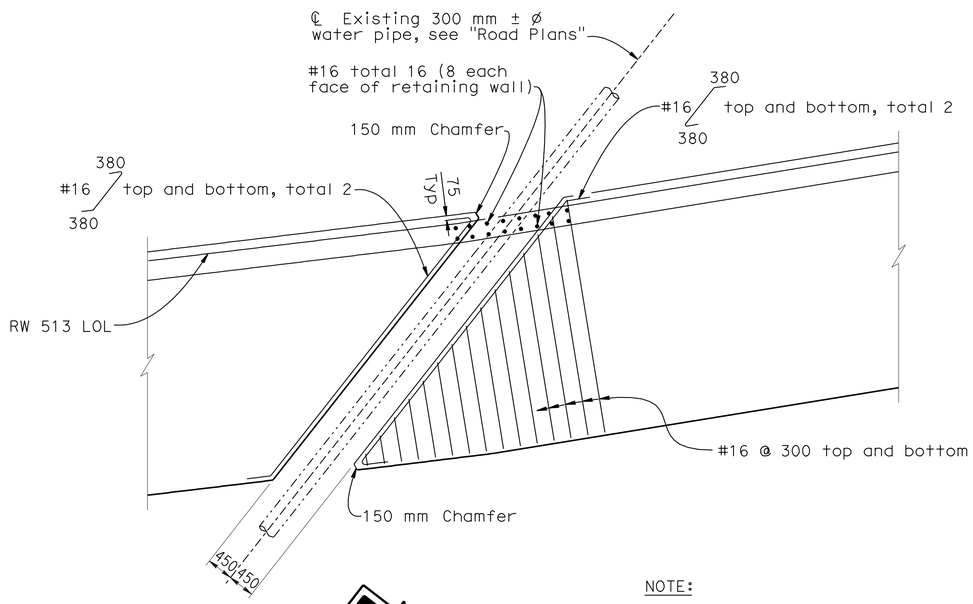

PART PLAN

1:50

NOTE:

For reinforcement not shown, see "RETAINING WALL TYPE SWB5" sheet

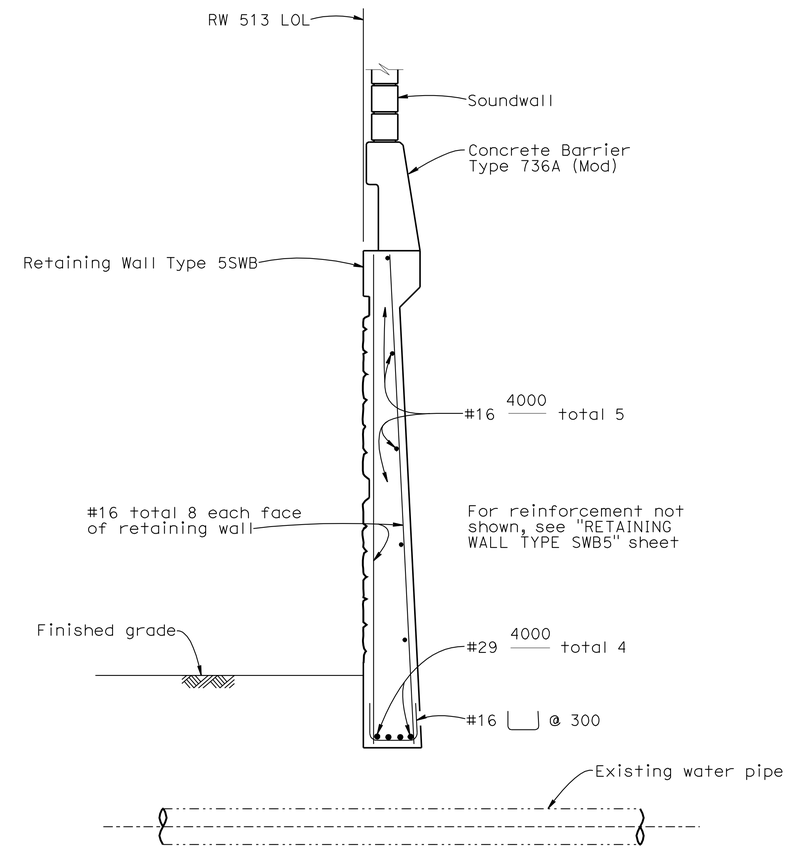

TYPICAL SECTION

1:25

Caltrans Metric

DESIGN	BY Xioadong Chen	CHECKED Vivian Dang	
DETAILS	BY Roelina Martinez	CHECKED Xiaodong Chen	
QUANTITIES	BY R. Washington	CHECKED Ryan Odell	

STATE OF CALIFORNIA
DEPARTMENT OF TRANSPORTATION

DIVISION OF ENGINEERING SERVICES
STRUCTURE DESIGN
DESIGN BRANCH 6

BRIDGE NO. RW 513
KILOMETER POST

RETAINING WALL NO. 513

RETAINING WALL DETAILS

ALL DIMENSIONS ARE IN MILLIMETERS UNLESS OTHERWISE SHOWN

ORIGINAL SCALE IN MILLIMETERS FOR REDUCED PLANS 0 10 20 30 40 50 60 70 80 90 100

CU 07
EA 1218V1

DISREGARD PRINTS BEARING EARLIER REVISION DATES

REVISION DATES: 3-26-08 5-21-08 7-16-09

SHEET 6 OF 13

FILE => rw513-u-1waterpipe.dgn

STRUCTURES DESIGN DETAIL SHEET (METRIC) (REV.03-17-04)

USERNAME => trrichf DATE PLOTTED => 03-MAY-2010 TIME PLOTTED => 15:15

DIST	COUNTY	ROUTE	KILOMETER POST TOTAL PROJECT	SHEET No	TOTAL SHEETS
07	LA	5	50.8/58.0	833	869

Xiaodong Chen 6-25-08
REGISTERED CIVIL ENGINEER DATE

5-3-10
PLANS APPROVAL DATE

REGISTERED PROFESSIONAL ENGINEER Xiaodong Chen No. C58858 Exp. 6-30-11 CIVIL STATE OF CALIFORNIA

The State of California or its officers or agents shall not be responsible for the accuracy or completeness of electronic copies of this plan sheet.

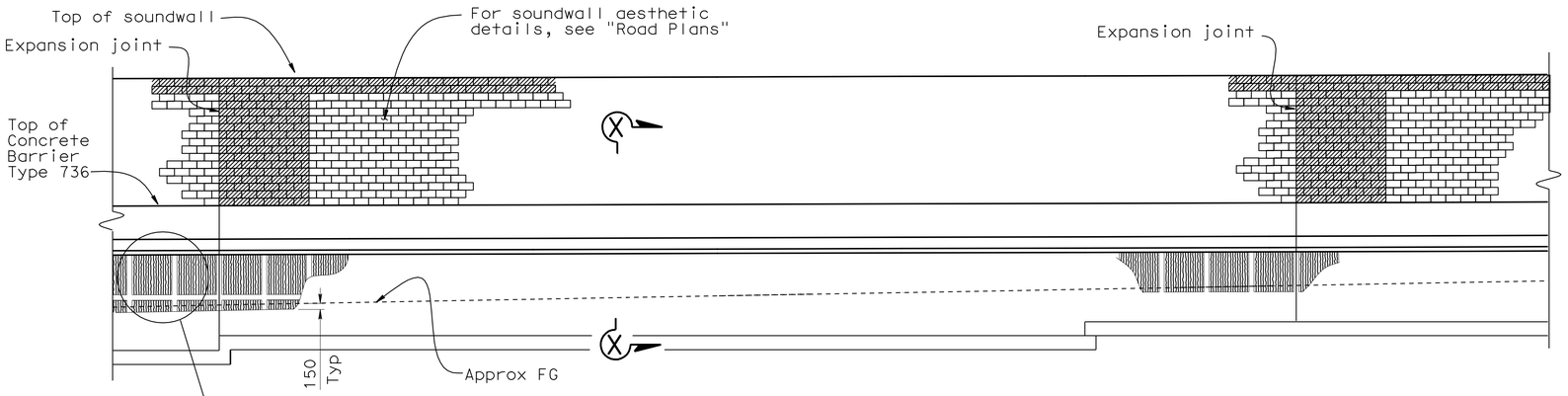

ELEVATION
No scale

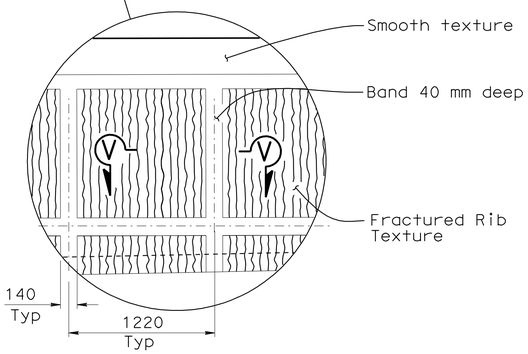

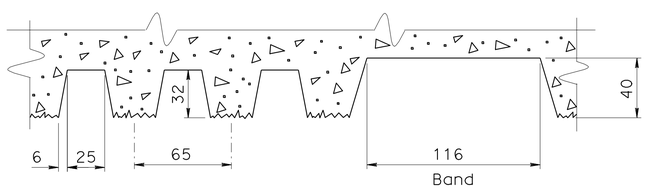

SECTION V-V
FRACTURED RIB TEXTURE & BAND
1:2

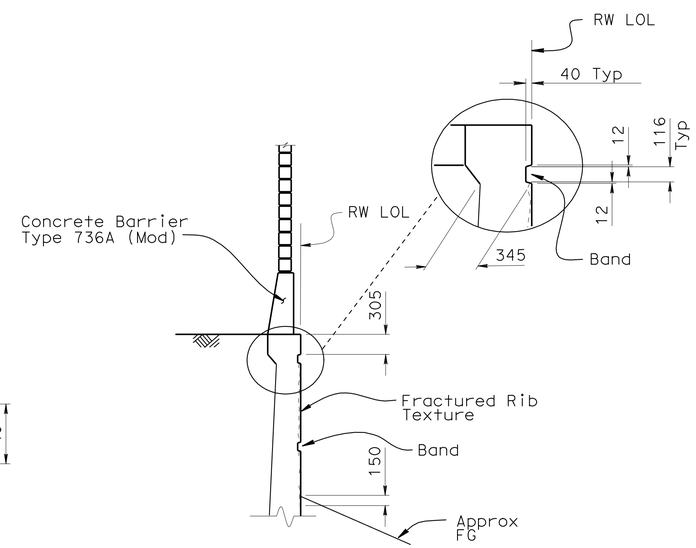

SECTION X-X
1:40

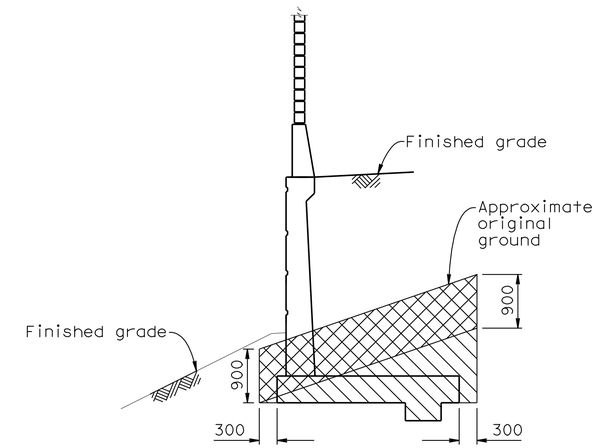

LIMITS OF PAYMENT FOR STRUCTURE EXCAVATION AERIALLY DEPOSITED LEAD)
No scale

LEGEND:

Indicates structure excavation

Indicates structure excavation (Type Y-2) (Aerially deposited lead)

ARCHITECTURAL DETAILS

NOTE:
THE CONTRACTOR SHALL VERIFY ALL CONTROLLING FIELD DIMENSIONS BEFORE ORDERING OR FABRICATING ANY MATERIAL.

DESIGN	BY X. Chen	CHECKED Vivian Dang	
DETAILS	BY Bruno Jenko	CHECKED Xiaodong Chen	
QUANTITIES	BY R. Washington	CHECKED Ryan Odell	

STATE OF CALIFORNIA
DEPARTMENT OF TRANSPORTATION

DIVISION OF ENGINEERING SERVICES
STRUCTURE DESIGN
DESIGN BRANCH 6

BRIDGE NO. RW 513
KILOMETER POST

RETAINING WALL NO. 513
RETAINING WALL DETAILS-MISCELLANEOUS

Caltrans Metric

ALL DIMENSIONS ARE IN MILLIMETERS UNLESS OTHERWISE SHOWN

ORIGINAL SCALE IN MILLIMETERS FOR REDUCED PLANS 0 10 20 30 40 50 60 70 80 90 100

CU 07
EA 1218V1

DISREGARD PRINTS BEARING EARLIER REVISION DATES

REVISION DATES: 1-2-08 1-14-08 03-04-08 4-16-08 5-28-08 7-16-09

SHEET 7 OF 13

FILE => rw513-u-2archdet.dgn

STRUCTURES DESIGN (STRUCTURES DETAIL) SHEET (MISTRAIL) SHEET.DGN (BTP-DGN) (REV.03-17-04)

USERNAME => trrichf DATE PLOTTED => 03-MAY-2010 TIME PLOTTED => 14:59

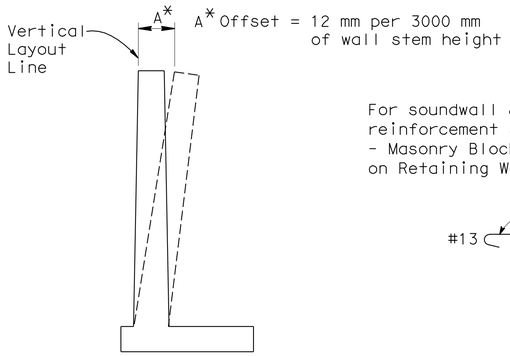

WALL OFFSET

NO SCALE

Values for offsetting forms to be determined by the engineer

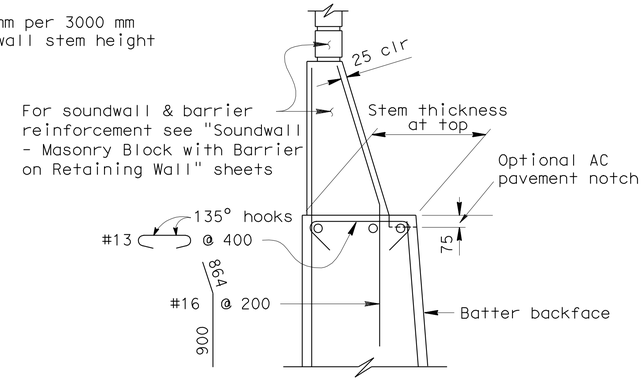

DETAIL A WITHOUT HAUNCH

NO SCALE

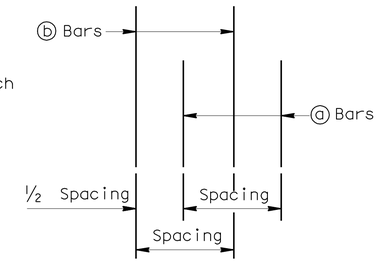

DETAIL B

NO SCALE

ALTERNATIVE A: (CONSTANT TOP OF WALL THICKNESS) TABLE OF REINFORCING STEEL DIMENSIONS AND DATA

STEM WITH HAUNCH

Design H	1800	2400	3000	3600	4200	4800	5500	6100	6700	7300	7900	8500	9100	9800
W	2600	2600	2800	3050	3450	3750	4050	4400	4800	5200	5650	6100	6500	6950
F Spread Ftg.	400	400	400	450	450	550	600	600	700	750	900	1000	1150	1200
Batter	100:0	100:4	100:4	100:4	100:4	100:4	100:4	100:4	100:4	100:5	100:6	100:7	100:8	100:8
Stem Thickness @ Haunch	305	305	305	305	305	305	305	305	305	305	305	305	305	305
ⓐ Bars				#19 @ 450**	#22 @ 450**	#25 @ 450**	#29 @ 450**	#32 @ 450**	#25 @ 225*	#25 @ 225*	#22 @ 150*	#32 @ 300**	#29 @ 225*	#36 @ 300**
Y				2450	2000	2300	2450	2750	2900	3350	3500	4000	4300	4750
ⓑ Bars	#16 @ 300	#16 @ 300	#16 @ 225	#19 @ 450**	#22 @ 450**	#25 @ 450**	#29 @ 450**	#32 @ 450**	#25 @ 225*	#25 @ 225*	#22 @ 150*	#32 @ 300**	#29 @ 225*	#36 @ 300**
Y	Cont	Cont	Cont	Cont	3200	4000	4600	5350	5950	6400	5650	5800	7800	7200
ⓒ Bars					#19 @ 450	#19 @ 450	#19 @ 450	#19 @ 450	#19 @ 450	#19 @ 450	#19 @ 300	#22 @ 300	#22 @ 450	#22 @ 300
SHORT ⓓ BARS	#16 @ 300	#16 @ 225	#19 @ 225	#22 @ 450**	#25 @ 450**	#25 @ 450**	#29 @ 450**	#32 @ 450**	#25 @ 225*	#25 @ 225*	#22 @ 150*	#32 @ 300*	#29 @ 225*	#36 @ 300**
X	Cont	Cont	Cont	1700	2000	2300	2450	2600	2900	3200	3500	3800	4100	4600
ⓓ Bars				#22 @ 450**	#25 @ 450**	#25 @ 450**	#29 @ 450**	#32 @ 450**	#25 @ 225*	#25 @ 225*	#22 @ 150*	#32 @ 300*	#29 @ 225*	#36 @ 300**
X				Cont	Cont	Cont	Cont	Cont	Cont	Cont	Cont	Cont	Cont	Cont
Ultimate Bearing Capacity req'd Kpa	300	375	420	495	545	630	720	775	850	930	1010	1075	1170	1235

ALTERNATIVE B: (VARIABLE TOP OF WALL THICKNESS) TABLE OF REINFORCING STEEL DIMENSIONS AND DATA

	STEM WITH HAUNCH						STEM WITHOUT HAUNCH						
Design H	2400	3000	3600	4200	4800	5500	6100	6700	7300	7900	8500	9100	9800
W	2600	2750	2950	3200	3800	4050	4350	4950	5200	5700	6150	6500	6850
F Spread Ftg.	400	400	400	400	450	450	550	700	700	850	1000	1150	1150
Batter	0	0	0	0	0	0	0	0	0	100:2	100:4	100:4	100:4
Stem thickness @ Top							475	610	610	610	610	610	610
Stem thickness @ Haunch	305	305	305	305	380	380							
ⓐ Bars			#19 @ 300**	#16 @ 150*	#25 @ 300**	#25 @ 225*	#29 @ 300**	#29 @ 300**	#22 @ 150*	#22 @ 150*	#22 @ 150*	#29 @ 225*	#36 @ 300**
Y			1700	1700	1850	2000	2450	2600	2900	3350	3800	4100	4400
ⓑ Bars	#16 @ 225	#19 @ 225	#19 @ 300**	#16 @ 150*	#25 @ 300**	#25 @ 225*	#29 @ 300**	#29 @ 300**	#22 @ 150*	#22 @ 150*	#22 @ 150*	#29 @ 225*	#36 @ 300**
Y	Cont	Cont	Cont	Cont	2600	3350	3350	3500	5200	5950	6550	7300	7300
ⓒ Bars					#19 @ 300	#22 @ 450	#22 @ 300	#22 @ 300	#19 @ 300	#19 @ 300	#19 @ 300	#22 @ 450	#22 @ 300
SHORT ⓓ BARS	#16 @ 225	#19 @ 225	#22 @ 450**	#16 @ 150*	#25 @ 300**	#25 @ 225*	#29 @ 300**	#29 @ 300**	#22 @ 150*	#29 @ 150*	#29 @ 150*	#29 @ 225*	#25 @ 150*
X	Cont	Cont	1850	1700	2150	2600	2750	3050	3350	3650	3950	4250	4600
ⓓ Bars			#22 @ 450**	#16 @ 150*	#25 @ 300**	#25 @ 225*	#29 @ 300**	#29 @ 300**	#22 @ 150*	#29 @ 150*	#29 @ 150*	#29 @ 225*	#25 @ 150*
X			Cont	Cont	Cont	Cont	Cont	Cont	Cont	Cont	Cont	Cont	Cont
Ultimate Bearing Capacity req'd Kpa	375	430	495	565	605	685	775	830	915	985	1070	1175	1235

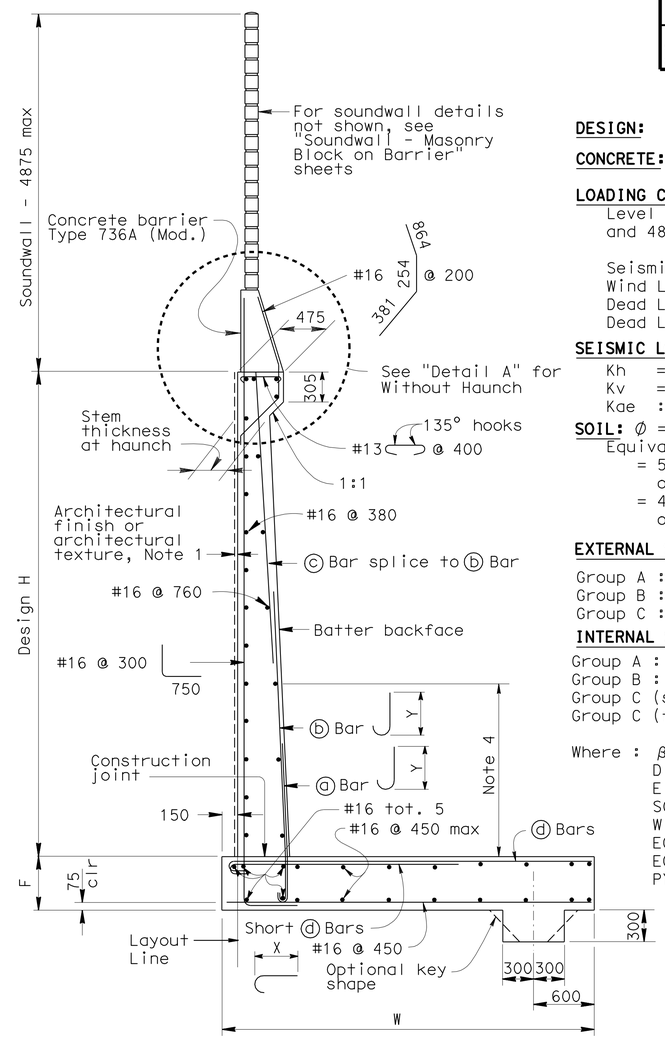

SPREAD FOOTING SECTION

NO SCALE

Cont = Continuous

* = ⓐ&ⓑ, Short ⓓ&ⓓ bars are bundled together.

** = Alternate ⓐ&ⓑ bars as shown in "Detail B". Alternate Short ⓑ&ⓑ bars

DESIGN DATA

DESIGN: Load Factor Design (LFD)

CONCRETE: Reinforced Concrete, f'c = 25 MPa
fy = 420 MPa

LOADING CASE:
Level ground with 11.5 KPa Live Load Surcharge and 4875 mm Soundwall

Seismic Load = 0.3 Dead Load
Wind Load = 1435 Pa
Dead Load of Soundwall = 20.6 kN/m
Dead Load of Barrier = 5.4 kN/m

SEISMIC LOAD: SOIL
Kh = 0.3g
Kv = 0.0
Kae : Mononobe-Okabe Method

SOIL: $\emptyset = 34°$ $\gamma = 19$ kN/m³
Equivalent fluid pressure:
= 5.6 KPa/m for determination of toe pressure
= 4.2 KPa/m for determination of heel pressure

EXTERNAL STABILITY:
Group A : D + E + SC
Group B : D + E + SC + W
Group C : D + PYM

INTERNAL STABILITY (LFD):
Group A : βD + 1.7 E + 1.7 SC
Group B : βD + 1.7 E + 1.3 W
Group C (stem) : 1.0 D + 1.0 E + 1.0 EQD + 1.0 EQE
Group C (footing) : D + PYM

Where : β = 1.0 or 1.3 whichever controls design
D = Dead Load
E = Lateral Earth Pressure
SC = Live Load Surcharge
W = Wind Load
EQD = Seismic Dead Load
EQE = Seismic Lateral Earth Pressure
PYM = Probable Yield Moment (1.3 x Nominal Yield Moment of Stem)

GENERAL NOTES

1. For soundwall and retaining wall architectural finish or texture, see details elsewhere in project plans.
2. For details not shown and drainage notes, see B3-8
3. Footing cover, 450 mm minimum.
4. Limit of no splicing rebars = H/3
5. Increasing stem thickness not permitted.

ALL DIMENSIONS ARE IN MILLIMETERS UNLESS OTHERWISE SHOWN

Caltrans Metric

DIST.	COUNTY	ROUTE	KILOMETER POST TOTAL PROJECT	SHEET NO.	TOTAL SHEETS
07	LA	5	50.8/58.0	834	869

REGISTERED ENGINEER - CIVIL 6-25-08
5-3-10
PLANS APPROVAL DATE
REGISTERED PROFESSIONAL ENGINEER XIAODONG CHEN No. C58858 Exp. 6-30-11 CIVIL STATE OF CALIFORNIA

The State of California or its officers or agents shall not be responsible for the accuracy or completeness of electronic copies of this plan sheet.

STANDARD DRAWING

RELEASE DATE 7/29/03	DESIGN BY Madon Sah	CHECKED Overcomer Hor	RELEASED BY
	DETAILS BY R Yee	CHECKED J.C. Moose	
FILE NO. xs14-350	SUBMITTED BY Overcomer Hor	DRAWING DATE 12/00	OFFICE CHIEF

STATE OF CALIFORNIA DEPARTMENT OF TRANSPORTATION

DIVISION OF ENGINEERING SERVICES STRUCTURE DESIGN
DESIGN BRANCH 6

BRIDGE NO. RW 513
KILOMETER POST

RETAINING WALL NO. 513
RETAINING WALL TYPE 5SWB

DS OSD 2147A (METRIC) (REV. 2/25/97)

ORIGINAL SCALE IN MILLIMETERS FOR REDUCED PLANS 0 10 20 30 40 50 60 70 80 90 100

CU 07
EA 1218V1

DISREGARD PRINTS BEARING EARLIER REVISION DATES

REVISION DATES (PRELIMINARY STAGE ONLY) 03-01-07 05-03-07 11-14-08 7-16-09

SHEET 8 OF 13

USERNAME => trrichf

rw513-xs14-350.dgn

DATE PLOTTED => 03-MAY-2010 TIME PLOTTED => 14:59

DIST.	COUNTY	ROUTE	KILOMETER POST TOTAL PROJECT	SHEET NO.	TOTAL SHEETS
07	LA	5	50.8/58.0	835	869

Caltrans Metric

Xiaodong Chen 06-25-08
REGISTERED ENGINEER - CIVIL

5-3-10
PLANS APPROVAL DATE

REGISTERED PROFESSIONAL ENGINEER XIAODONG CHEN No. C58858 Exp. 06-30-11 CIVIL STATE OF CALIFORNIA

The State of California or its officers or agents shall not be responsible for the accuracy or completeness of electronic copies of this plan sheet.

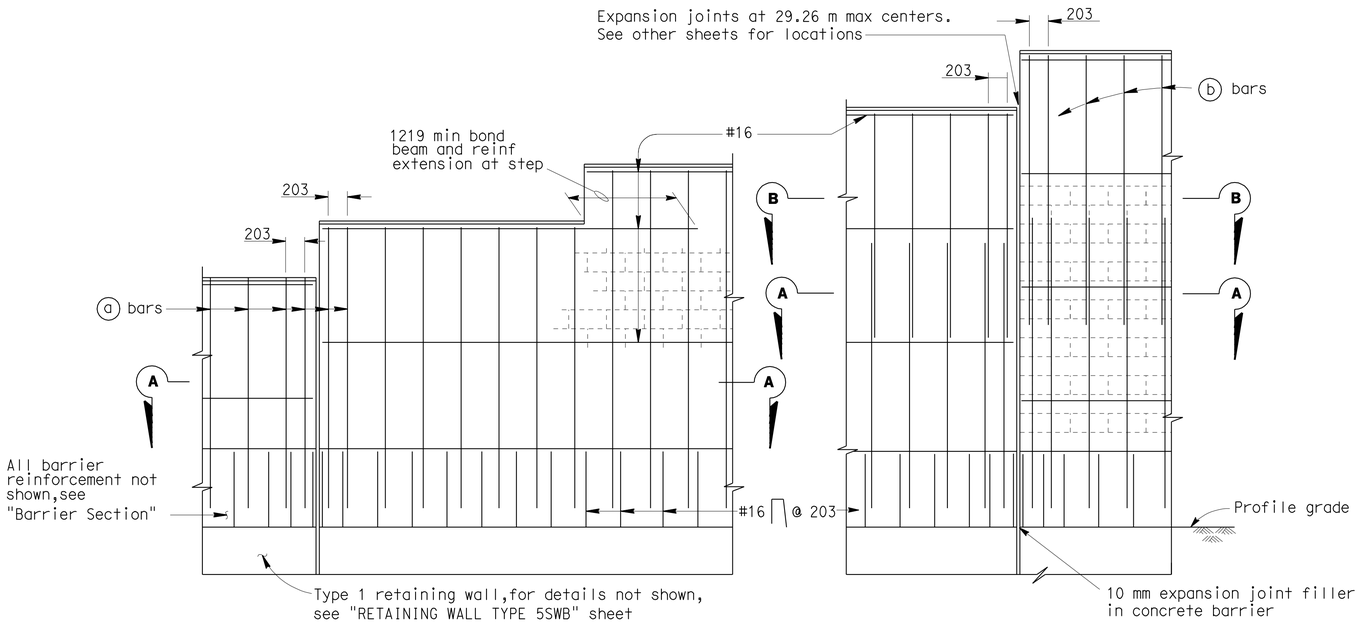

PART ELEVATIONS

SOUNDWALL REINFORCEMENT TABLE

Maximum H	(a) bars @ 406 max	(b) bars @ 406 max	"y"	f'm (MPa)	Compressive Strength of CMU (MPa)	Maximum H
1930	#13	———	———	10.34	13.1	1930
2540	#13	———	———	10.34	13.1	2540
3150	#13	———	———	10.34	13.1	3150
3759	#16	#13	1524	10.34	13.1	3759
4369	#19	#13	2134	10.34	13.1	4369
4978	#19	#13	2743	17.24	25.6	4978

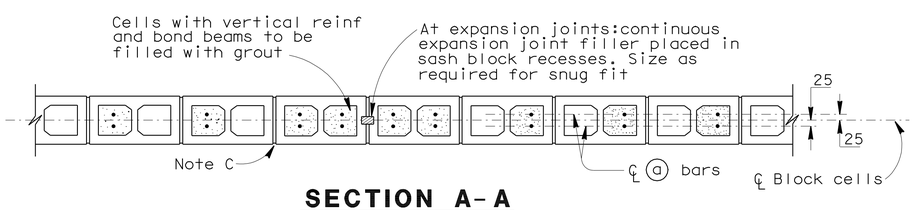

SECTION A-A

For details not shown,see other details

H=1930 THRU H=3150

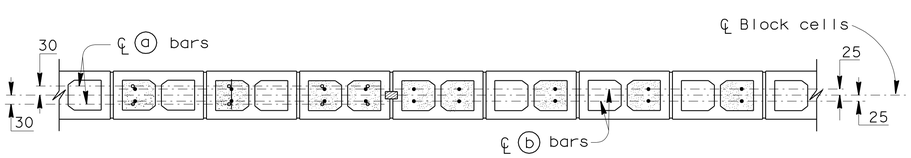

SECTION A-A

SECTION B-B

For details not shown,see other details

H=3759 THRU H=4978

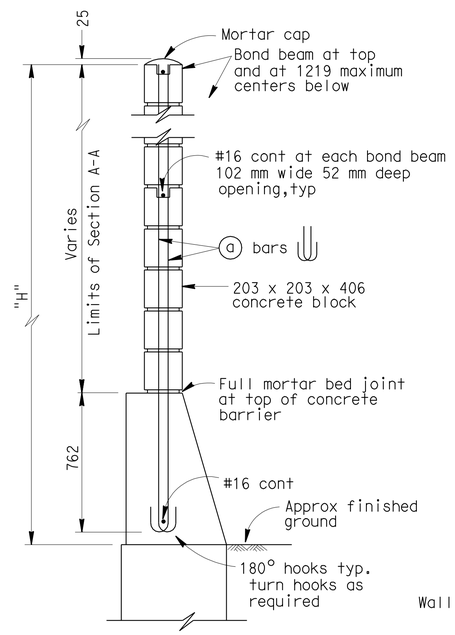

H=1930 THRU H=3150

For details not shown,see H=3759 thru H=4978

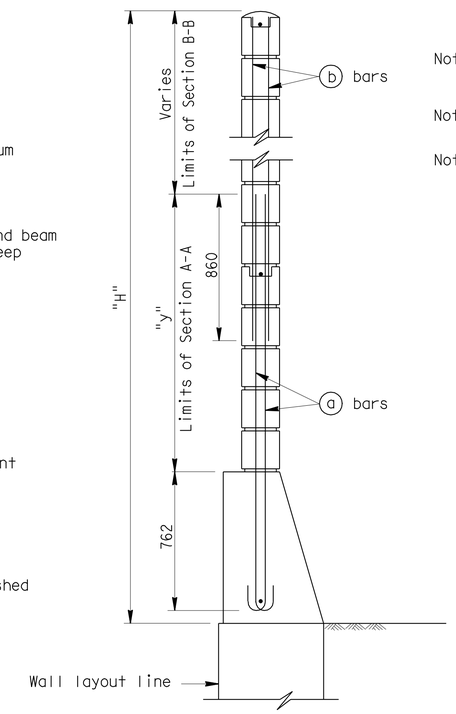

H=3759 THRU H=4978

For details not shown,see H=1930 thru H=3150

TYPICAL SECTIONS

Note I : For details not shown,see "SOUNDWALL WITH BARRIER ON RETAINING WALL - MASONRY BLOCK -- DETAILS NO.2" sheet.

Note II : Slope ground at traffic side of barrier to drain. Maximum slope ±10%.

Note III: See "SOUNDWALL MASONRY BLOCK - MISCELLANEOUS DETAILS" sheet for other details.

GENERAL NOTES

Note A: For type of block and joint finish, see other sheets.

Note B: When blocks are laid in stacked bond, ladder type, galvanized joint reinforcement shall be provided. A minimum of 2-3.76 mm wire continuous at 1219 mm maximum to be used. Locate reinforcement in joints that are at the approximate midpoint between bond beams.

Note C: Horizontal joints shall be tooled concave or may be weathered.
Vertical joints shall be tooled concave or may be raked.

Note D: For intermediate wall heights that are between the "H's" given. Use the tabular information for the next higher "H".

Note E: Masonry strengths are listed in "SOUNDWALL REINFORCEMENT TABLE".

Note F: Class 2 concrete to be used for the barrier.

NO SCALE

ALL DIMENSIONS ARE IN MILLIMETERS UNLESS OTHERWISE SHOWN

RETAINING WALL NO.513

SOUNDWALL - MASONRY BLOCK WITH BARRIER ON RETAINING WALL

DETAILS NO. 1

STANDARD DRAWING

RELEASE DATE	7/3/03	DESIGN	BY D. DUNRUD	CHECKED W.C. WALKER	RELEASED BY
FILE NO.	xs15-130-1	DETAILS	BY R. YEE	CHECKED W.C. WALKER	
		SUBMITTED	BY D. DUNRUD	DRAWING DATE 11/94	OFFICE CHIEF

DS OSD 2147A (METRIC) (REV. 2/25/97)

STATE OF CALIFORNIA DEPARTMENT OF TRANSPORTATION

DIVISION OF ENGINEERING SERVICES

BRIDGE NO. RW 513

KILOMETER POST

ORIGINAL SCALE IN MILLIMETERS FOR REDUCED PLANS 0 10 20 30 40 50 60 70 80 90 100

CU 07
EA 1218V1

DISREGARD PRINTS BEARING EARLIER REVISION DATES

REVISION DATES (PRELIMINARY STAGE ONLY) 05-03-07 1-14-08 7-16-09

SHEET 9 OF 13

USERNAME => trrichf

rw513-xs15-130-1.dg

DATE PLOTTED => 03-MAY-2010 TIME PLOTTED => 15:00

DIST.	COUNTY	ROUTE	KILOMETER POST TOTAL PROJECT	SHEET NO.	TOTAL SHEETS
07	LA	5	50.8/58.0	836	869

Caltrans Metric

Xiaodong Chen 06-25-08
REGISTERED ENGINEER - CIVIL

5-3-10
PLANS APPROVAL DATE

REGISTERED PROFESSIONAL ENGINEER XIAODONG CHEN No. C58858 Exp. 06-30-11 CIVIL STATE OF CALIFORNIA

The State of California or its officers or agents shall not be responsible for the accuracy or completeness of electronic copies of this plan sheet.

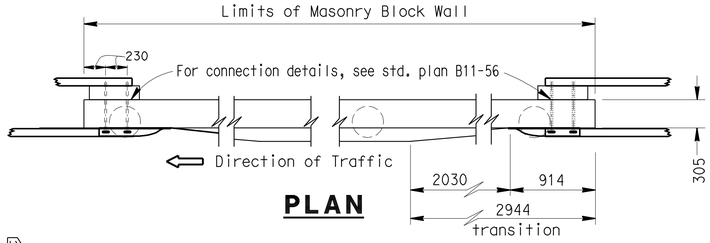

PLAN

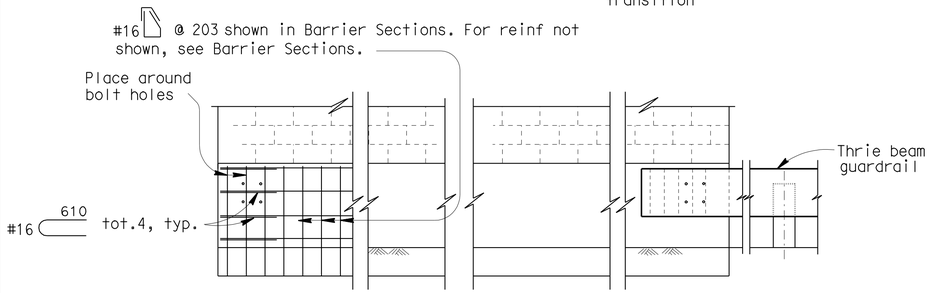

ELEVATION

METAL BEAM GUARDRAIL ANCHORAGE

For details not shown, see std. plan B11-56.

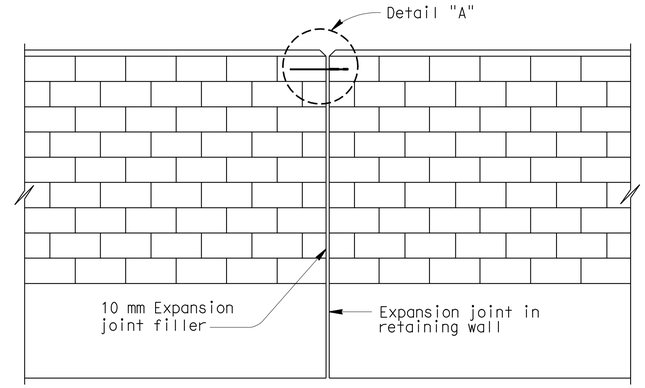

ALIGNMENT KEY DETAIL

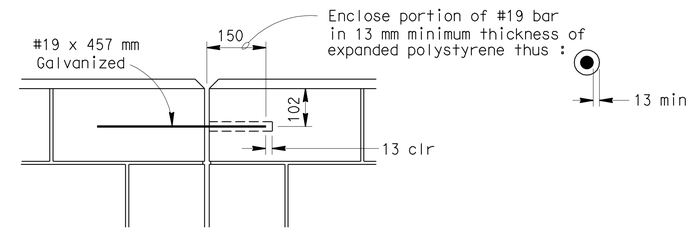

DETAIL A

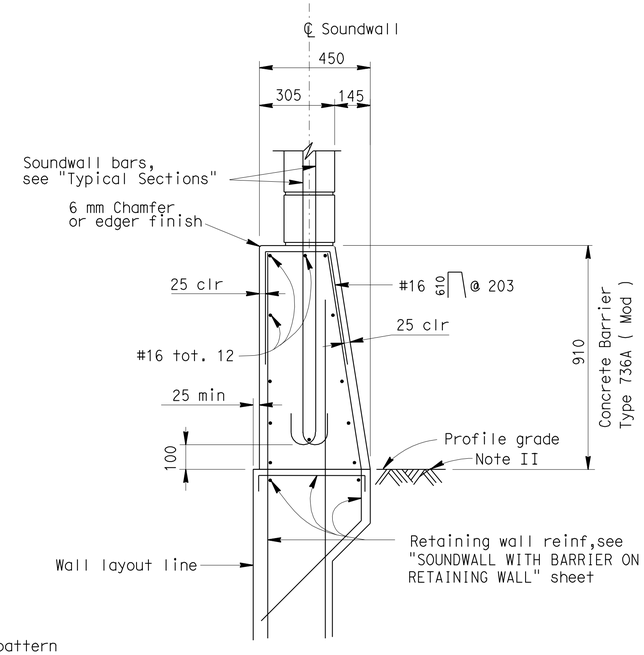

BARRIER SECTION

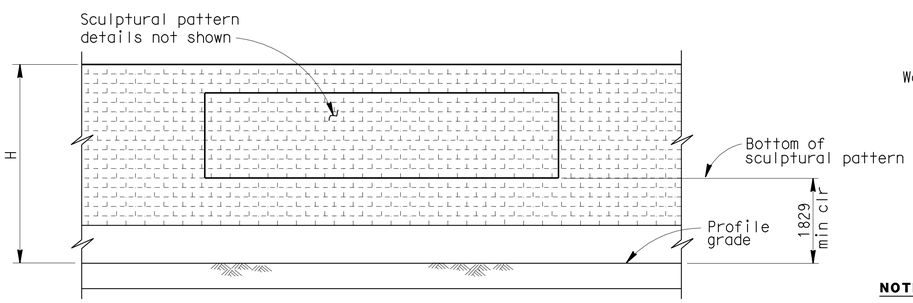

CLEARANCE DETAIL

DESIGN NOTES

DESIGN

Uniform Building Code,1997 Edition and the Bridge Design Specifications.

DESIGN WIND LOAD

1293 Pa

DESIGN SEISMIC LOAD

0.57 Dead load

REINFORCED CONCRETE

f'c = 22.408 Mpa
fy = 413.688 MPa

CONCRETE MASONRY

REGULAR STRENGTH	HIGH STRENGTH	
f'm = 10.34 MPa	f'm = 13.79 MPa	f'm = 17.24 MPa
f_b = 3.41 MPa	f_b = 4.55 MPa	f_b = 5.72 MPa
fs = 165.5 MPa	fs = 165.5 MPa	fs = 165.5 MPa
n = 25.8	n = 19.3	n = 15.5

LOAD FACTORS AND LOAD COMBINATIONS

Working Stress Design (WSD) Percentage of unit stress

Group 1: D + E + SC 100%
Group 2: D + W + SC + E 100%
Group 3: D + 0.71 EQD + E 100%

Where:

D = Dead load
E = Lateral earth pressure
SC = Live load surcharge
W = Wind load
EQD = Seismic dead load

Load Factor Design (LFD)

Group A: βD +1.7 E + 1.7 SC
Group B: βD +1.7 E + 1.3 W
Group C: βD +1.3 E + 1.0 EQE
Group D: βD +1.3 E + 1.0 EQD
Group E: βD +1.1 E + 0.85 (EQE + EQD)

Where : β = 0.9 or 1.2, whichever controls in design
D = Dead load
E = Lateral earth pressure
SC = Live load surcharge
W = Wind load
EQD = Seismic dead load
EQE = Seismic earth load

STRENGTH REDUCTION FACTORS, Ø

Reinforced concrete:
For flexure _____ Ø=0.90
For shear _____ Ø=0.85

Concrete masonry:
For flexure _____ Ø=0.80
For shear _____ Ø=0.60

Foundations :
See "RETAINING WALL WITH SOUNDWALL" sheets.

NOTES:

I : For details not shown,see "RETAINING WALL WITH SOUNDWALL" sheets.

II : Slope ground at traffic side of barrier to drain. Maximum slope ±10%. See Standard Plan B11-56, Note D.

NO SCALE

ALL DIMENSIONS ARE IN MILLIMETERS UNLESS OTHERWISE SHOWN

RETAINING WALL NO.513

SOUNDWALL - MASONRY BLOCK WITH BARRIER ON RETAINING WALL

DETAILS NO. 2

STANDARD DRAWING				
RELEASE DATE 9/8/03	DESIGN BY D. DUNRUD	CHECKED W.C. WALKER	RELEASED BY Roberto Lovalle OFFICE CHIEF
FILE NO. xs15-130-2	DETAILS BY R. YEE	CHECKED W.C. WALKER	
	SUBMITTED BY D. DUNRUD	DRAWING DATE 11/94	

DS OSD 2147A (METRIC) (REV. 2/25/97)

ORIGINAL SCALE IN MILLIMETERS FOR REDUCED PLANS 0 10 20 30 40 50 60 70 80 90 100

STATE OF CALIFORNIA DEPARTMENT OF TRANSPORTATION

DIVISION OF ENGINEERING SERVICES

CU 07
EA 1218V1

BRIDGE NO. RW 513
KILOMETER POST

DISREGARD PRINTS BEARING EARLIER REVISION DATES

REVISION DATES (PRELIMINARY STAGE ONLY) 05-03-07 11-14-08 7-16-09

SHEET 10 OF 13

USERNAME => trrichf

rw513-xs15-130-2.dgn

DATE PLOTTED => 03-MAY-2010 TIME PLOTTED => 15:00

DIST.	COUNTY	ROUTE	KILOMETER POST TOTAL PROJECT	SHEET NO.	TOTAL SHEETS
07	LA	5	50.8/58.0	837	869

Caltrans Metric

REGISTERED ENGINEER - CIVIL 6-25-08

5-3-10
PLANS APPROVAL DATE

REGISTERED PROFESSIONAL ENGINEER XIAODONG CHEN No. C58858 Exp. 6-30-11 CIVIL STATE OF CALIFORNIA

The State of California or its officers or agents shall not be responsible for the accuracy or completeness of electronic copies of this plan sheet.

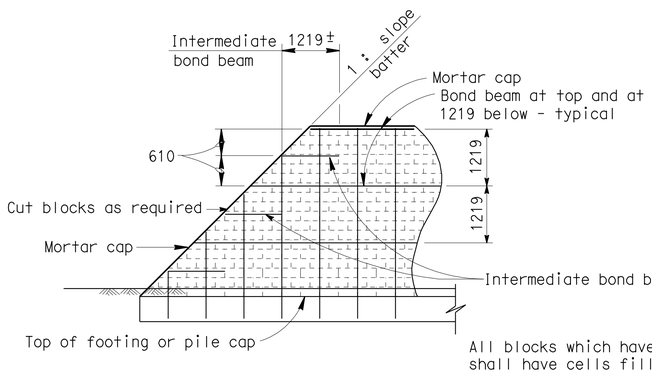

TYPE I

Note : Slope batter shall not be flatter than 1:1

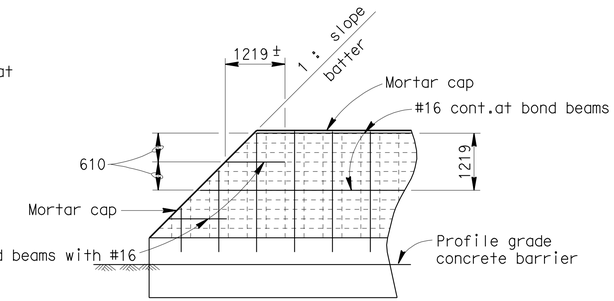

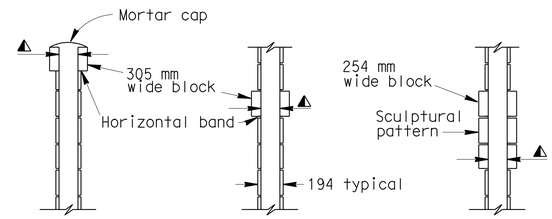

ARCHITECTURAL ALTERNATIVES

◭ Cell width to match 203 mm block

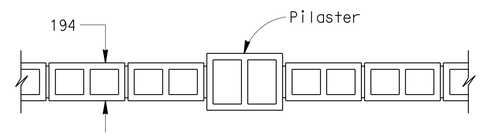

305 mm WIDE PROJECTING BLOCK

NOTES:

305 mm wide block not allowed within 1829 mm of profile grade.

Alternatives using 305 mm wide projecting block will not be permitted on standard sheet: "SOUNDWALL - MASONRY BLOCK ON PILES".

For structural details,see other sheets.

Type III not permitted for soundwalls with "H" less than 3048 mm.

The end of the wall details may be used with any of the standard supporting foundations for masonry block. The foundations shown for the different types are for the purpose of illustration only.

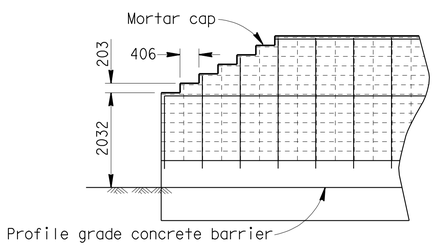

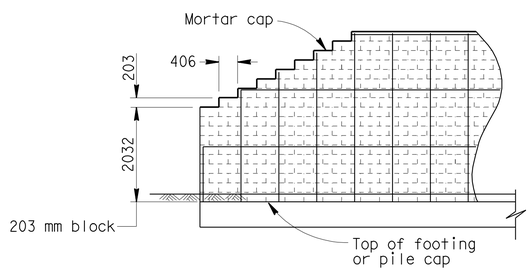

TYPE II

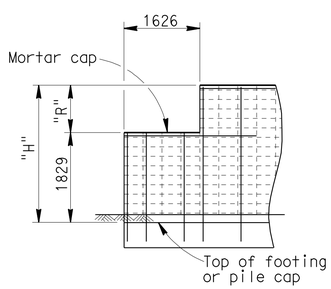

H=3048

SINGLE STEP

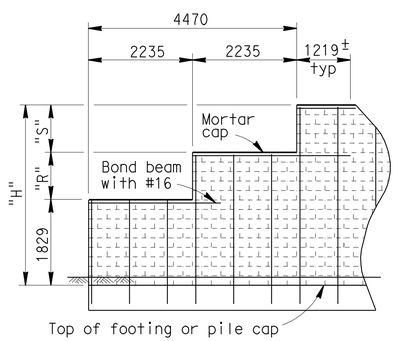

H=3251 TO H=4267

2 STEPS

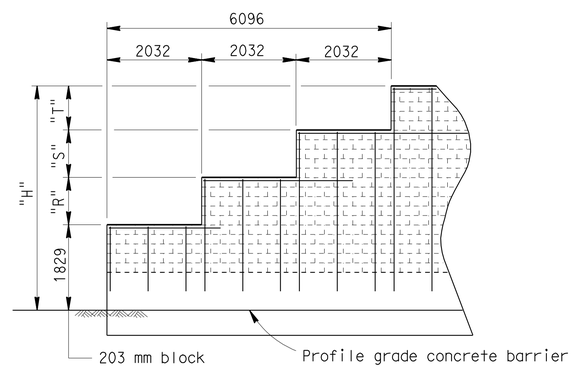

H=4470 TO H=4877

3 STEPS

TYPE III

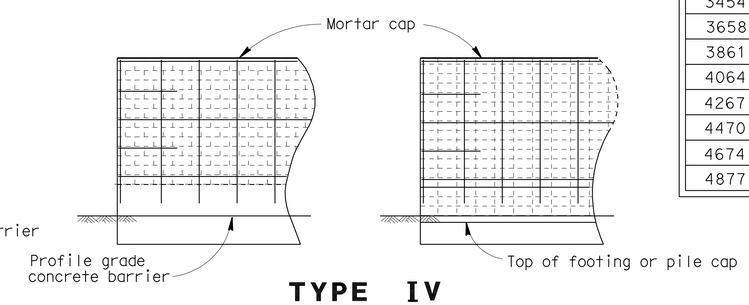

TYPE IV

END OF WALL DETAILS

203 mm x 203 mm x 406 mm BLOCK

H	R	S	T
3048	1219	—	—
3251	813	610	—
3454	813	813	—
3658	1016	813	—
3861	1016	1016	—
4064	1219	1016	—
4267	1219	1219	—
4470	1016	813	813
4674	1016	1016	813
4877	1016	1016	1016

NO SCALE

ALL DIMENSIONS ARE IN MILLIMETERS UNLESS OTHERWISE SHOWN

RETAINING WALL NO. 513

SOUNDWALL MASONRY BLOCK

MISCELLANEOUS DETAILS

STANDARD DRAWING

RELEASE DATE 7/3/03	DESIGN	BY D. DUNRUD	CHECKED W.C. WALKER	RELEASED BY
FILE NO. xs15-210	DETAILS	BY R. YEE	CHECKED W.C. WALKER	OFFICE CHIEF
	SUBMITTED	BY D. DUNRUD	DRAWING DATE 11/94	

DS OSD 2147A (METRIC) (REV. 2/25/97)

STATE OF CALIFORNIA DEPARTMENT OF TRANSPORTATION

DIVISION OF ENGINEERING SERVICES

BRIDGE NO. RW 513

KILOMETER POST

ORIGINAL SCALE IN MILLIMETERS FOR REDUCED PLANS 0 10 20 30 40 50 60 70 80 90 100

CU 07
EA 1218V1

DISREGARD PRINTS BEARING EARLIER REVISION DATES

REVISION DATES (PRELIMINARY STAGE ONLY) 5-11-08 7-16-09

SHEET 11 OF 13

USERNAME => trrichf

rw513-y-misc.dgn

DATE PLOTTED => 03-MAY-2010 TIME PLOTTED => 15:00

DIST	COUNTY	ROUTE	KILOMETER POST TOTAL PROJECT	SHEET No	TOTAL SHEETS
07	LA	5	50.8/58.0	838	869

REGISTERED CIVIL ENGINEER 6-4-07

5-3-10
PLANS APPROVAL DATE

REGISTERED PROFESSIONAL ENGINEER
Bhaskar Joshi
No. C66350
Exp. 6-30-10
CIVIL
STATE OF CALIFORNIA

The State of California or its officers or agents shall not be responsible for the accuracy or completeness of electronic copies of this plan sheet.

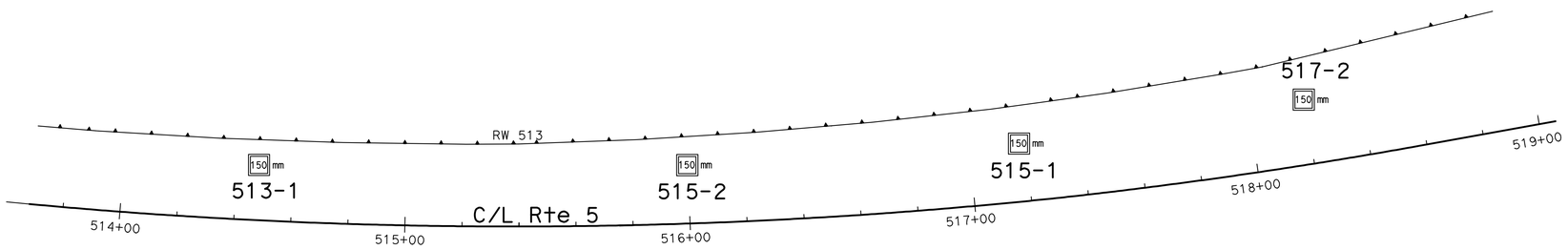

PLAN
1:1000

BENCH MARK
N 578996.73
E 1967898.053
Elev 226.694 m

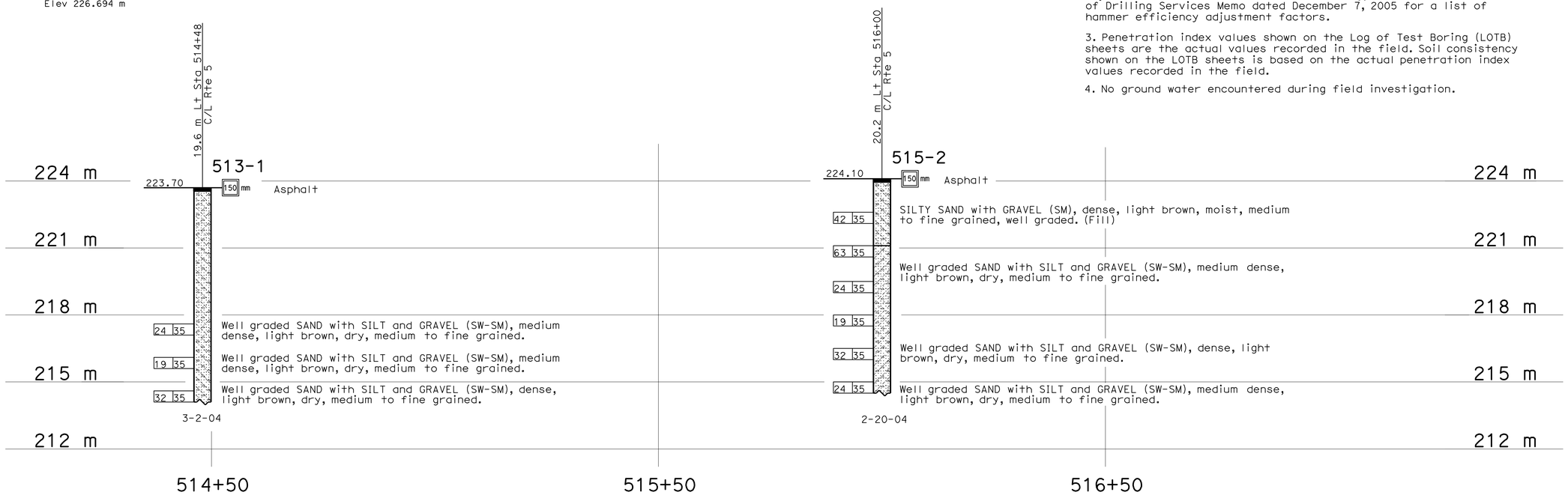

PROFILE
HOR. 1:500
VER. 1:100

Notes:

1. Borehole locations and elevation were not surveyed and are estimated from Project Plans.

2. Test borings utilized a CME Automatic Hammer Driver (theoretical free fall energy of 0.35 kip-ft) to advance the SPT sampler. A multiplication factor of 1.36 may be used to obtain N values adjusted to a hammer efficiency of 60% (N_{60}). Refer to Office of Drilling Services Memo dated December 7, 2005 for a list of hammer efficiency adjustment factors.

3. Penetration index values shown on the Log of Test Boring (LOTB) sheets are the actual values recorded in the field. Soil consistency shown on the LOTB sheets is based on the actual penetration index values recorded in the field.

4. No ground water encountered during field investigation.

LEGEND OF BORING OPERATIONS

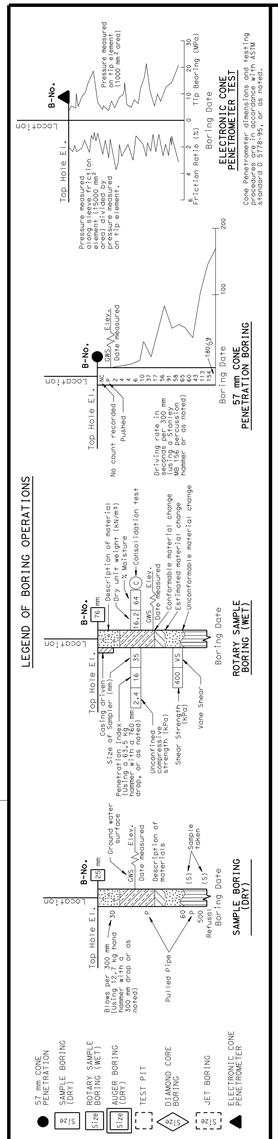

LEGEND OF EARTH MATERIALS

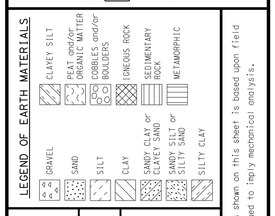

CONSISTENCY CLASSIFICATION FOR SOILS

According to the Standard Penetration Test

SPT N-Value (Blows/0.3m)	Granular	SPT N-Value (Blows/0.3m)	Cohesive
0-4	Very Loose	<2	Very Soft
5-10	Loose	2-4	Soft
11-30	Medium Dense	5-8	Firm
31-50	Dense	9-15	Stiff
>50	Very Dense	16-30	Very stiff
		>30	Hard

NOTE: Classification of earth material as shown on this sheet is based upon field inspection and is not to be construed to imply mechanical analysis.

OGS CIVIL LOG OF TEST BORINGS SHEET (METRIC) (REV. 4/04)

Caltrans Metric

GEOTECHNICAL SERVICES	
DRAWN BY	W. Tang 10/05
CHECKED BY	B. Joshi

FIELD INVESTIGATION BY: B. Joshi

STATE OF CALIFORNIA DEPARTMENT OF TRANSPORTATION

DIVISION OF ENGINEERING SERVICES STRUCTURE DESIGN
DESIGN BRANCH 6

BRIDGE NO. RW 513
KILOMETER POST

RETAINING WALL NO. 513
LOG OF TEST BORINGS 1 OF 2

ALL DIMENSIONS ARE IN METERS UNLESS OTHERWISE SHOWN

ORIGINAL SCALE IN MILLIMETERS FOR REDUCED PLANS 0 10 20 30 40 50 60 70 80 90 100

CU 07
EA 1218V1

DISREGARD PRINTS BEARING EARLIER REVISION DATES

REVISION DATES (PRELIMINARY STAGE ONLY) 7-26-06 7-3-08 7-16-09

SHEET 12 OF 13

FILE => rw513-z-1of2.dgn

USERNAME => trrright DATE PLOTTED => 03-MAY-2010 TIME PLOTTED => 15:00

DIST	COUNTY	ROUTE	KILOMETER POST TOTAL PROJECT	SHEET No	TOTAL SHEETS
07	LA	5	50.8/58.0	839	869

REGISTERED CIVIL ENGINEER 6-4-07

5-3-10
PLANS APPROVAL DATE

REGISTERED PROFESSIONAL ENGINEER
Bhaskar Joshi
No. C66350
Exp. 6-30-10
CIVIL
STATE OF CALIFORNIA

The State of California or its officers or agents shall not be responsible for the accuracy or completeness of electronic copies of this plan sheet.

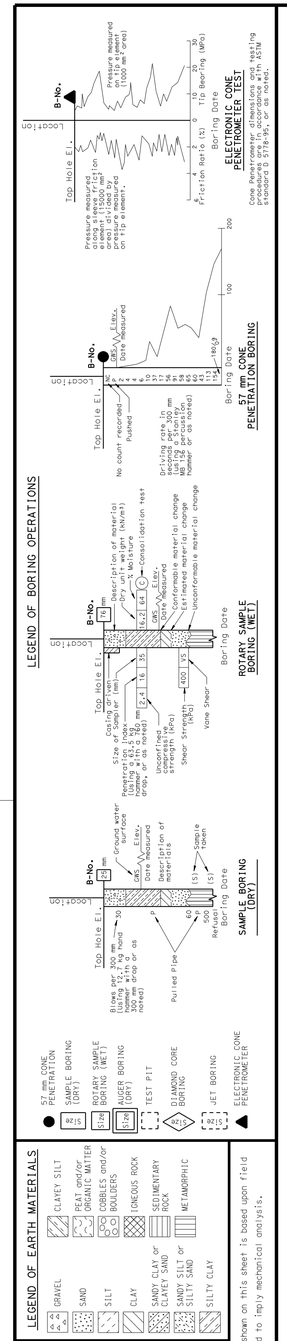

OGS CIVIL LOG OF TEST BORINGS SHEET (METRIC) (REV. 4/04)

FOR PLAN VIEW, SEE
"LOG OF TEST BORINGS" 1 OF 2

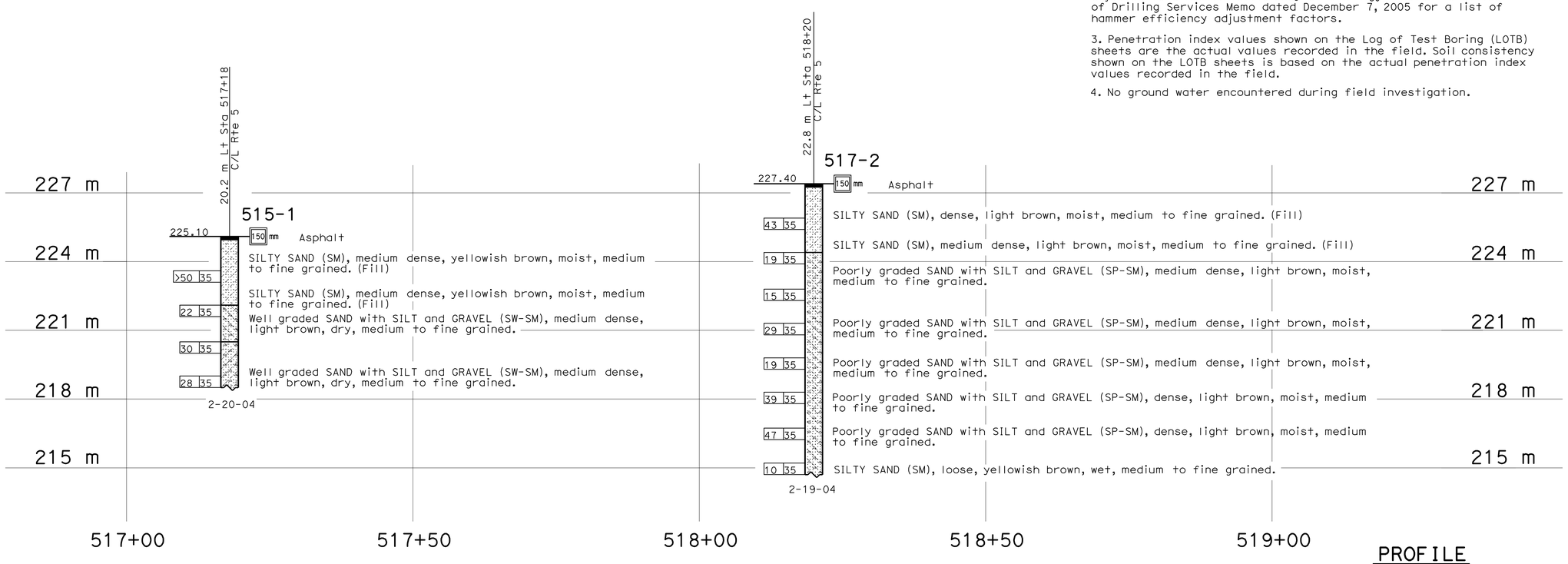

Notes:

1. Borehole locations and elevation were not surveyed and are estimated from Project Plans.

2. Test borings utilized a CME Automatic Hammer Driver (theoretical free fall energy of 0.35 kip-ft) to advance the SPT sampler. A multiplication factor of 1.36 may be used to obtain N values adjusted to a hammer efficiency of 60% (N_{60}). Refer to Office of Drilling Services Memo dated December 7, 2005 for a list of hammer efficiency adjustment factors.

3. Penetration index values shown on the Log of Test Boring (LOTB) sheets are the actual values recorded in the field. Soil consistency shown on the LOTB sheets is based on the actual penetration index values recorded in the field.

4. No ground water encountered during field investigation.

PROFILE
HOR. 1:400
VER. 1:100

Caltrans Metric

GEOTECHNICAL SERVICES
DRAWN BY W. Tang 10/05
CHECKED BY B. Joshi

FIELD INVESTIGATION BY: B. Joshi

STATE OF CALIFORNIA
DEPARTMENT OF TRANSPORTATION

DIVISION OF ENGINEERING SERVICES
STRUCTURE DESIGN
DESIGN BRANCH 6

BRIDGE NO. RW 513
KILOMETER POST

RETAINING WALL NO. 513
LOG OF TEST BORINGS 2 OF 2

ALL DIMENSIONS ARE IN METERS UNLESS OTHERWISE SHOWN

ORIGINAL SCALE IN MILLIMETERS FOR REDUCED PLANS 0 10 20 30 40 50 60 70 80 90 100

CU 07
EA 1218V1

DISREGARD PRINTS BEARING EARLIER REVISION DATES
REVISION DATES (PRELIMINARY STAGE ONLY) 7-25-06 7-5-08 7-16-09

SHEET 13 OF 13

FILE => rw513-z-2of2.dgn

USERNAME => trrichf DATE PLOTTED => 03-MAY-2010 TIME PLOTTED => 15:01

DIST	COUNTY	ROUTE	KILOMETER POST TOTAL PROJECT	SHEET No	TOTAL SHEETS
07	LA	5	50.8/58.0	840	869

REGISTERED CIVIL ENGINEER 6-25-08 DATE

5-3-10
PLANS APPROVAL DATE

REGISTERED PROFESSIONAL ENGINEER XIAODONG CHEN No. C 58858 Exp. 6-30-11 CIVIL STATE OF CALIFORNIA

The State of California or its officers or agents shall not be responsible for the accuracy or completeness of electronic copies of this plan sheet.

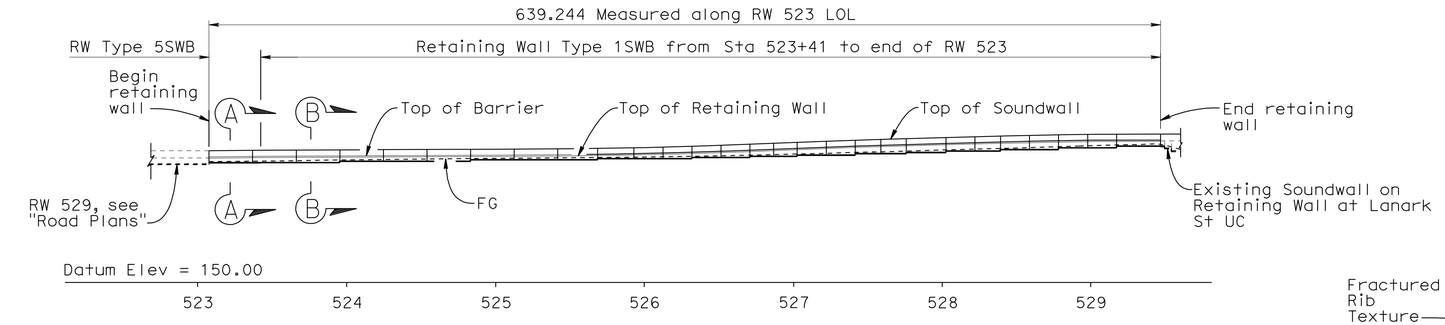

MIRRORED ELEVATION
1:2000

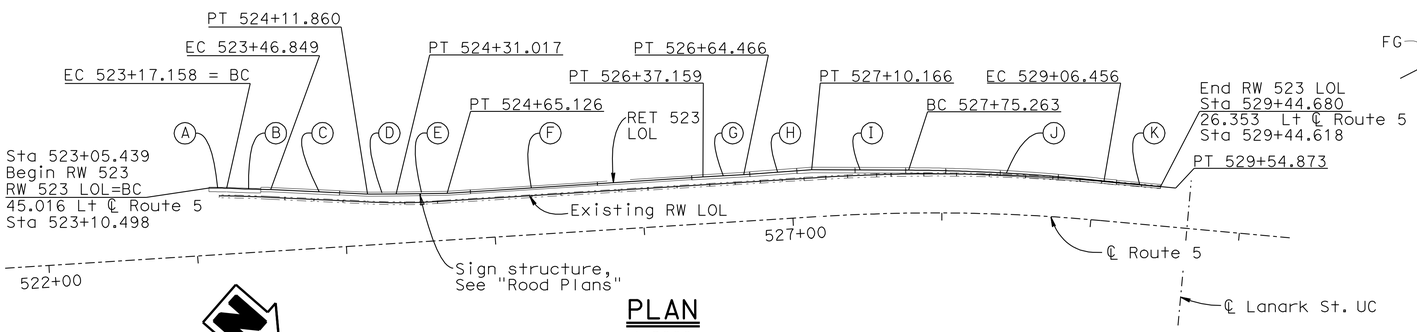

PLAN
1:2000

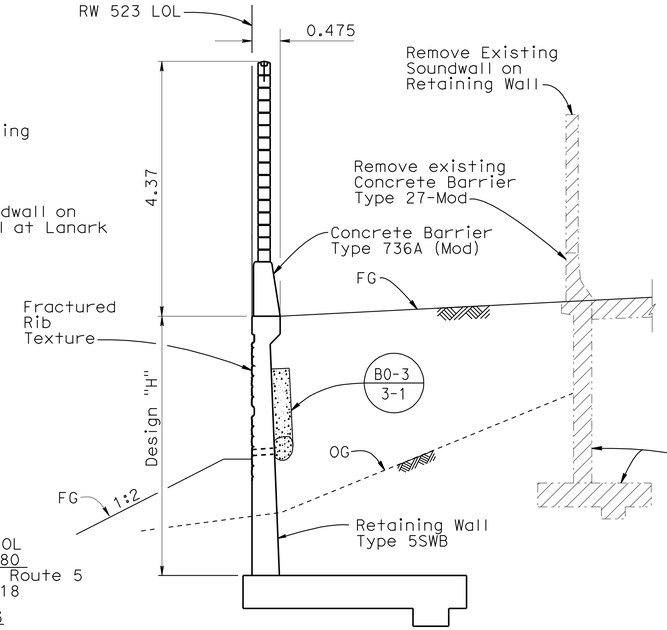

SECTION A - A
1:50

STATION 523+05.439 TO 523+41

LEGEND

- Indicates soundwall and retaining wall removal (portion)
- Indicates New Construction
- Indicates Existing Structure

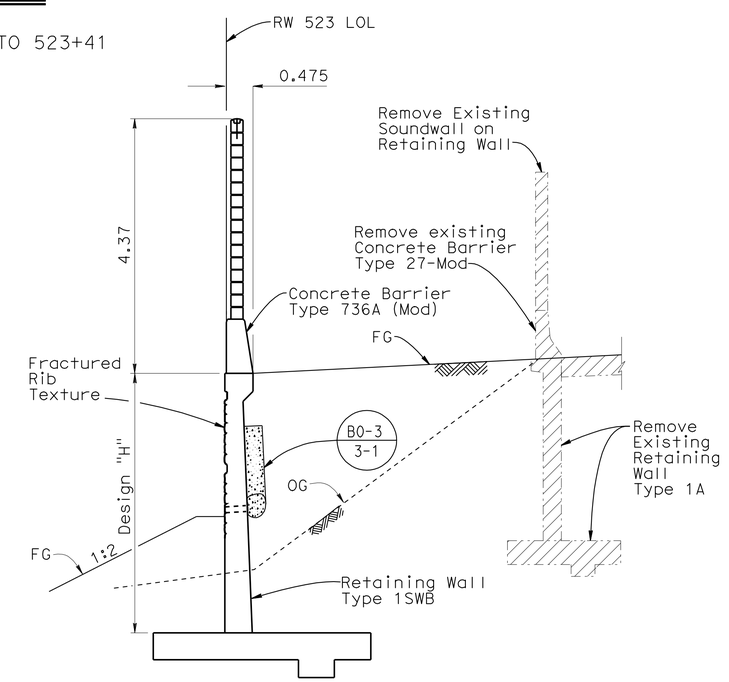

SECTION B - B
1:50

STATION 523+41 TO 529+44.640

RW 523 LOL DATA

	CURVE DATA				BEARING
	R	Δ	T	L	
Ⓐ	920.707 m	0°43′45.4″	5.860 m	11.719 m	
Ⓑ	929.813 m	1°49′46.5″	14.847 m	29.691 m	
Ⓒ					N38°20′30.2″W
Ⓓ					N41°31′30.0″W
Ⓔ					N41°47′07.6″W
Ⓕ					N44°45′11.9″W
Ⓖ					N44°23′59.3″W
Ⓗ					N45°13′38.1″W
Ⓘ					N40°48′19.9″W
Ⓙ	1288.148 m	5°50′07.3″	65.653 m	131.193 m	
Ⓚ					N35°31′19.6″W

NOTE:
THE CONTRACTOR SHALL VERIFY ALL CONTROLLING FIELD DIMENSIONS BEFORE ORDERING OR FABRICATING ANY MATERIAL.

INDEX TO PLANS

SHEET NO.	SHEET TITLE
1	GENERAL PLAN NO. 1
2	STRUCTURAL PLAN NO. 1
3	STRUCTURAL PLAN NO. 2
4	STRUCTURAL PLAN NO. 3
5	STRUCTURAL PLAN NO. 4
6	STRUCTURAL PLAN NO. 5
7	STRUCTURAL PLAN NO. 6
8	STRUCTURAL PLAN NO. 7
9	STRUCTURAL PLAN NO. 8
10	STRUCTURAL PLAN NO. 9
11	SIGN PEDESTAL DETAILS NO. 1
12	SIGN PEDESTAL DETAILS NO. 2
13	SIGN PEDESTAL DETAILS NO. 3
14	ARCHITECTURAL DETAILS
15	RETAINING WALL DETAILS-MISCELLANEOUS
16	RETAINING WALL TYPE 1SWB
17	RETAINING WALL TYPE 5SWB
18	SOUNDWALL-MASONRY BLOCK WITH BARRIER ON RETAINING WALL DETAILS NO. 1
19	SOUNDWALL-MASONRY BLOCK WITH BARRIER ON RETAINING WALL DETAILS NO. 2
20	SOUNDWALL MASONRY BLOCK MISCELLANEOUS DETAILS
21	LOG OF TEST BORINGS

QUANTITIES

	LUMP SUM	
REMOVE RETAINING WALL (PORTION)		
STRUCTURE EXCAVATION (RETAINING WALL)	2 350	m^3
STRUCTURE EXCAVATION (TYPE Y-1) (AERIALLY DEPOSITED LEAD)	1 050	m^3
STRUCTURE BACKFILL (RETAINING WALL)	4 510	m^3
PERVIOUS BACKFILL MATERIAL (RETAINING WALL)	260	m^3
STRUCTURAL CONCRETE, RETAINING WALL	1 720	m^3
FRACTURED RIB TEXTURE	1 630	m^2
SOUND WALL (MASONRY BLOCK)	2 210	m^2
BAR REINFORCING STEEL (RETAINING WALL)	106 800	kg
1524 MM CAST-IN-DRILLED-HOLE	6	m
CONCRETE PILE (SIGN FOUNDATION)		
CONCRETE BARRIER (TYPE 736A MODIFIED)	640	m
CONCRETE BARRIER (TYPE 736B MODIFIED)	21	m

STANDARD PLANS DATED JULY 2004

A10A	ACRONYMS AND ABBREVIATIONS (A-L)
A10B	ACRONYMS AND ABBREVIATIONS (M-Z)
A62B	LIMITS OF PAYMENT FOR EXCAVATION AND BACKFILL - BRIDGE SURCHARGE AND WALL
B0-1	BRIDGE DETAILS
B0-3	BRIDGE DETAILS
B3-8	RETAINING WALL DETAILS NO.1
B11-56	CONCRETE BARRIER TYPE 736
S2	OVERHEAD SIGNS-TRUSS, SINGLE POST TYPE-POST TYPES II THRU IX
S3	OVERHEAD SIGNS-TRUSS, SINGLE POST TYPE-BASE PLATE AND ANCHORAGE DETAILS
S7	OVERHEAD SIGNS-TRUSS, SINGLE POST TYPE-SQUARE PEDESTAL FOUNDATION

STANDARD PLAN SHEET NO.
DETAIL NO.

Caltrans Metric

Fritz Hoffman 6-25-08
DESIGN ENGINEER

	BY	CHECKED
DESIGN	Hilario Tuazon	Rachel Washington
DETAILS	Roelina Martinez	Hilario Tuazon
QUANTITIES	Hilario Tuazon	Rachel Washington

LOAD & RESISTANCE FACTOR DESIGN — LIVE LOADING: HL93 W/"LOW-BOY"; PERMIT DESIGN VEHICLE
LAYOUT — BY Roelina Martinez — CHECKED
SPECIFICATIONS — BY M. Pan — PLANS AND SPECS COMPARED

ALL DIMENSIONS ARE IN METERS UNLESS OTHERWISE SHOWN

ORIGINAL SCALE IN MILLIMETERS FOR REDUCED PLANS 0 10 20 30 40 50 60 70 80 90 100

STATE OF CALIFORNIA
DEPARTMENT OF TRANSPORTATION

DIVISION OF ENGINEERING SERVICES
STRUCTURE DESIGN
DESIGN BRANCH 6

CU 07
EA 1218V1

BRIDGE NO. RW 523
KILOMETER POST

RETAINING WALL NO. 523
GENERAL PLAN NO. 1

DISREGARD PRINTS BEARING EARLIER REVISION DATES

REVISION DATES: 6-12-07 1-13-08 3-3-08 3-14-08 4-08-08 4-16-08 7-16-09

SHEET 1 OF 21

FILE => rw523-a-gp.dgn

STRUCTURES DESIGN GENERAL PLAN SHEET (METRIC) (REV.07-24-06)

USERNAME => trfright DATE PLOTTED => 03-MAY-2010 TIME PLOTTED => 15:15

DIST	COUNTY	ROUTE	KILOMETER POST TOTAL PROJECT	SHEET No	TOTAL SHEETS
07	LA	5	50.8/58.0	841	869

REGISTERED CIVIL ENGINEER — DATE 6-25-08

5-3-10
PLANS APPROVAL DATE

REGISTERED PROFESSIONAL ENGINEER — XIAODONG CHEN — No. C 58858 — Exp. 6-30-11 — CIVIL — STATE OF CALIFORNIA

The State of California or its officers or agents shall not be responsible for the accuracy or completeness of electronic copies of this plan sheet.

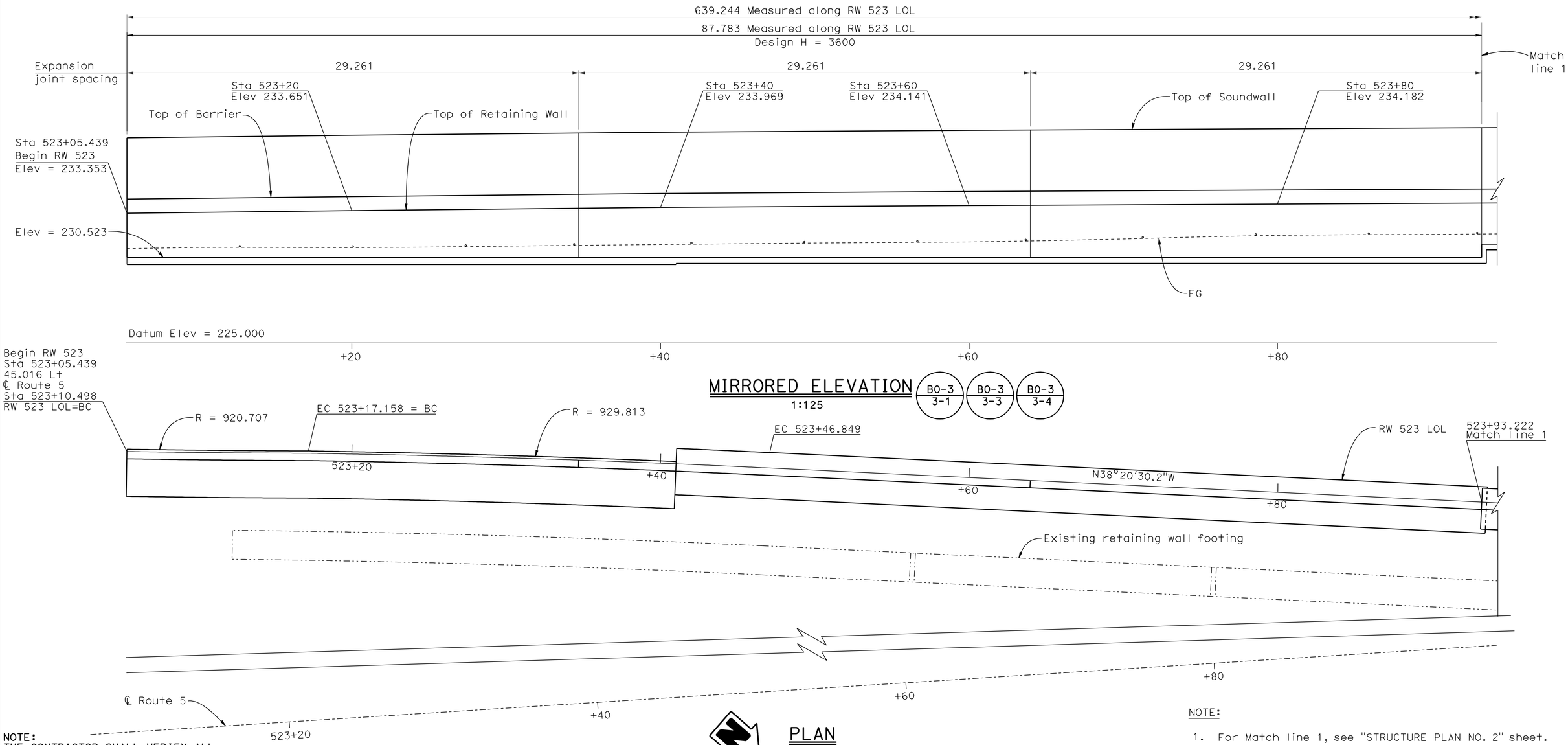

MIRRORED ELEVATION
1:125

B0-3 / 3-1 B0-3 / 3-3 B0-3 / 3-4

PLAN
1:125

NOTE:
THE CONTRACTOR SHALL VERIFY ALL CONTROLLING FIELD DIMENSIONS BEFORE ORDERING OR FABRICATING ANY MATERIAL.

NOTE:

1. For Match line 1, see "STRUCTURE PLAN NO. 2" sheet.

-·-·-·- Indicates existing retaining wall.

DESIGN	BY Hilario Tuazon	CHECKED Rachel Washington	
DETAILS	BY Roelina Martinez	CHECKED Hilario Tuazon	
QUANTITIES	BY Hilario Tuazon	CHECKED Rachel Washington	

STATE OF CALIFORNIA
DEPARTMENT OF TRANSPORTATION

DIVISION OF ENGINEERING SERVICES
STRUCTURE DESIGN
DESIGN BRANCH 6

CU 07
EA 1218V1

BRIDGE NO. RW 523
KILOMETER POST

RETAINING WALL NO. 523
STRUCTURE PLAN NO. 1

ALL DIMENSIONS ARE IN METERS UNLESS OTHERWISE SHOWN

ORIGINAL SCALE IN MILLIMETERS FOR REDUCED PLANS 0 10 20 30 40 50 60 70 80 90 100

DISREGARD PRINTS BEARING EARLIER REVISION DATES

REVISION DATES: 6-12-07 1-11-08 1-16-08 3-14-08 4-16-08 5-12-08 7-16-09

SHEET 2 OF 21

FILE => rw523-c-sp1.dgn

STRUCTURES DESIGN DETAIL SHEET (METRIC) (REV.03-17-04)

USERNAME => trrichf DATE PLOTTED => 03-MAY-2010 TIME PLOTTED => 15:01

DIST	COUNTY	ROUTE	KILOMETER POST TOTAL PROJECT	SHEET No	TOTAL SHEETS
07	LA	5	50.8/58.0	842	869

Xiaodong Chen 6-25-08
REGISTERED CIVIL ENGINEER DATE

5-3-10
PLANS APPROVAL DATE

REGISTERED PROFESSIONAL ENGINEER
XIAODONG CHEN
No. C 58858
Exp. 6-30-11
CIVIL
STATE OF CALIFORNIA

The State of California or its officers or agents shall not be responsible for the accuracy or completeness of electronic copies of this plan sheet.

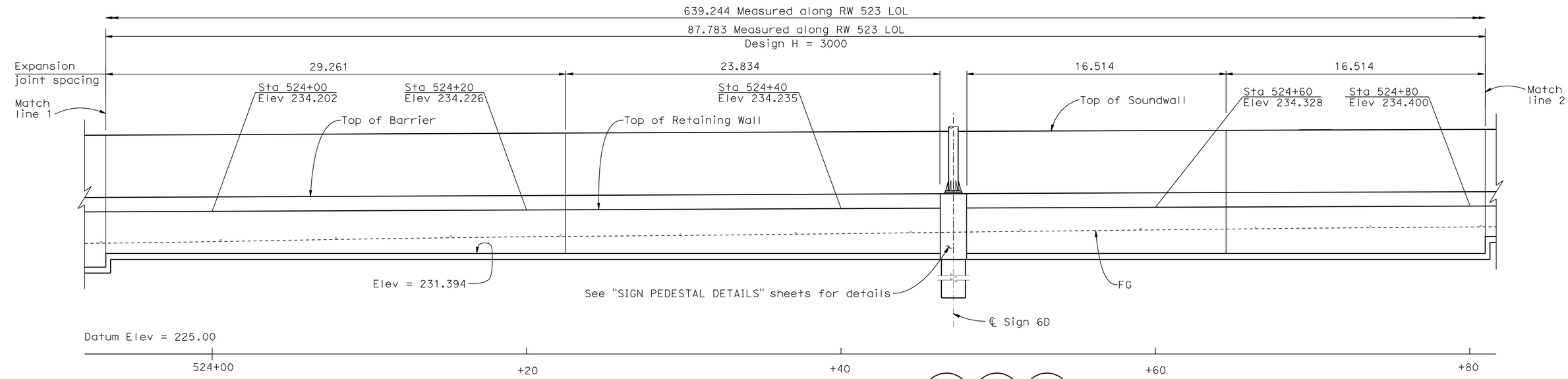

MIRRORED ELEVATION
1:125

B0-3 3-1 | B0-3 3-3 | B0-3 3-4

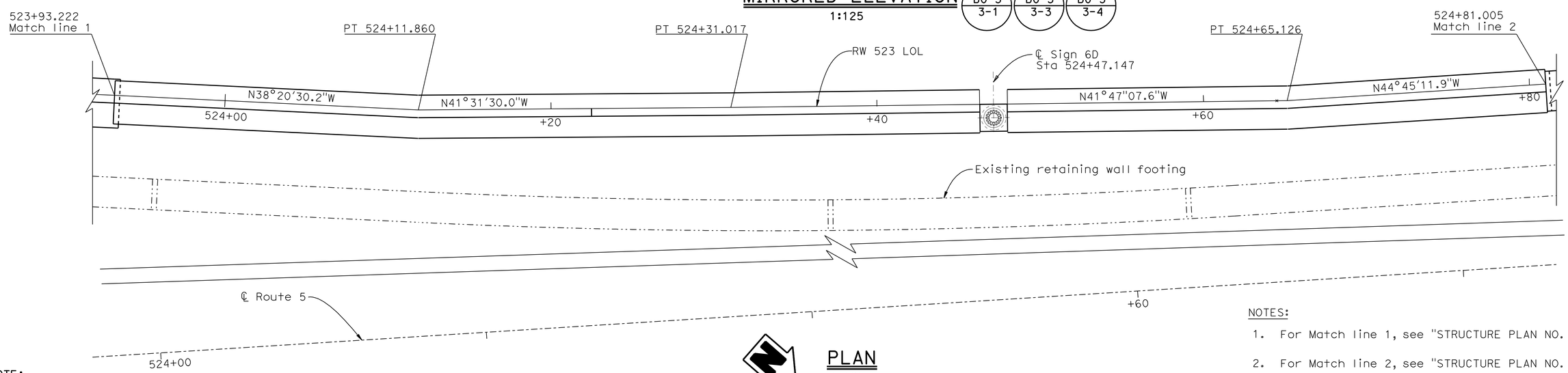

PLAN
1:125

NOTES:

1. For Match line 1, see "STRUCTURE PLAN NO. 1" sheet.
2. For Match line 2, see "STRUCTURE PLAN NO. 3" sheet.

---·---·--- Indicates existing retaining wall.

NOTE:
THE CONTRACTOR SHALL VERIFY ALL CONTROLLING FIELD DIMENSIONS BEFORE ORDERING OR FABRICATING ANY MATERIAL.

Caltrans Metric

ALL DIMENSIONS ARE IN METERS UNLESS OTHERWISE SHOWN

ORIGINAL SCALE IN MILLIMETERS FOR REDUCED PLANS 0 10 20 30 40 50 60 70 80 90 100

	BY	CHECKED
DESIGN	Hilario Tuazon	Rachel Washington
DETAILS	Roelina Martinez	Hilario Tuazon
QUANTITIES	Hilario Tuazom	Rachel Washington

STATE OF CALIFORNIA
DEPARTMENT OF TRANSPORTATION

DIVISION OF ENGINEERING SERVICES
STRUCTURE DESIGN
DESIGN BRANCH 6

CU 07
EA 1218V1

BRIDGE NO. RW 523
KILOMETER POST

RETAINING WALL NO. 523
STRUCTURE PLAN NO. 2

DISREGARD PRINTS BEARING EARLIER REVISION DATES

REVISION DATES: 6-13-07 | 1-13-08 | 1-16-08 | 3-14-08 | 4-16-08 | 5-12-08 | 7-16-09

SHEET 3 OF 21

FILE => rw523-c-sp2.dgn

STRUCTURES DESIGN DETAIL SHEET (METRIC) (REV.03-17-04)

USERNAME => trrichf DATE PLOTTED => 03-MAY-2010 TIME PLOTTED => 15:01

DIST	COUNTY	ROUTE	KILOMETER POST TOTAL PROJECT	SHEET No	TOTAL SHEETS
07	LA	5	50.8/58.0	843	869

REGISTERED CIVIL ENGINEER — DATE 6-25-08

5-3-10
PLANS APPROVAL DATE

REGISTERED PROFESSIONAL ENGINEER — XIAODONG CHEN — No. C 58858 — Exp. 6-30-11 — CIVIL — STATE OF CALIFORNIA

The State of California or its officers or agents shall not be responsible for the accuracy or completeness of electronic copies of this plan sheet.

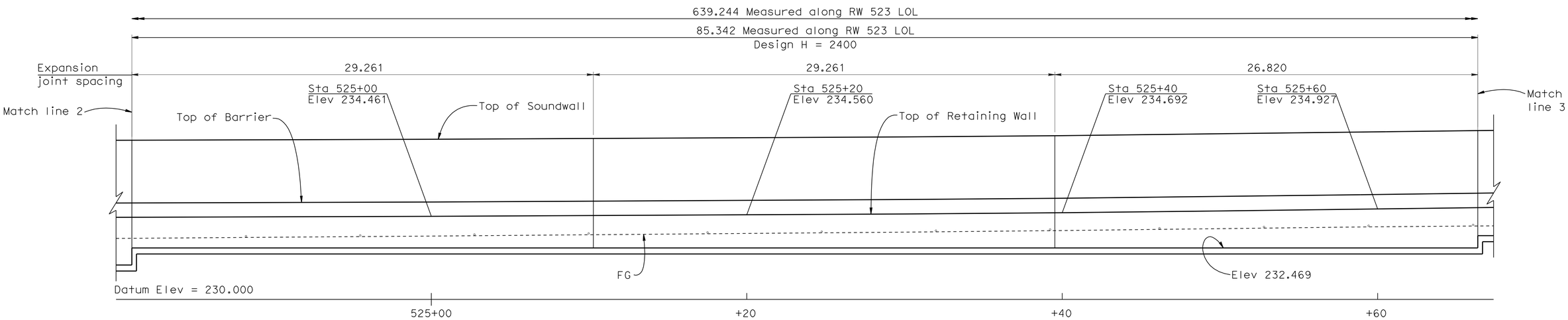

MIRRORED ELEVATION

1:125

B0-3 3-1 | B0-3 3-3 | B0-3 3-4

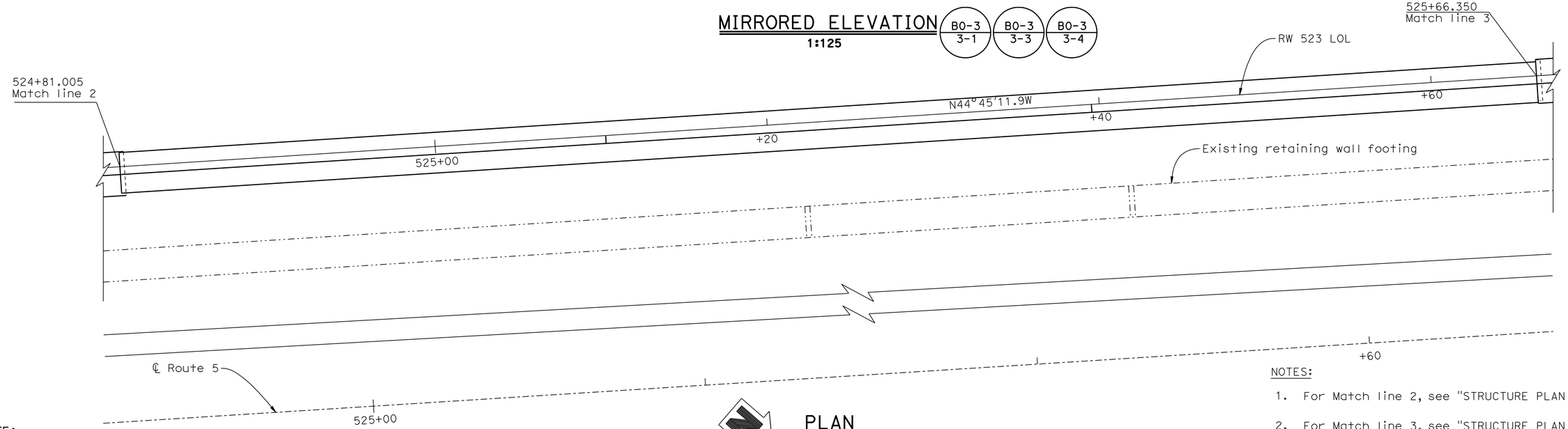

PLAN

1:125

NOTES:

1. For Match line 2, see "STRUCTURE PLAN NO. 2" sheet.
2. For Match line 3, see "STRUCTURE PLAN NO. 4" sheet.

Indicates existing retaining wall.

NOTE:
THE CONTRACTOR SHALL VERIFY ALL CONTROLLING FIELD DIMENSIONS BEFORE ORDERING OR FABRICATING ANY MATERIAL.

Caltrans Metric

	BY	CHECKED
DESIGN	Hilario Tuazon	Rachel Washington
DETAILS	Roelina Martinez	Hilario Tuazon
QUANTITIES	Hilario Tuazon	Rachel Washington

STATE OF CALIFORNIA
DEPARTMENT OF TRANSPORTATION

DIVISION OF ENGINEERING SERVICES
STRUCTURE DESIGN
DESIGN BRANCH 6

BRIDGE NO. RW 523
KILOMETER POST

RETAINING WALL NO. 523
STRUCTURE PLAN NO. 3

ALL DIMENSIONS ARE IN METERS UNLESS OTHERWISE SHOWN

ORIGINAL SCALE IN MILLIMETERS FOR REDUCED PLANS 0 10 20 30 40 50 60 70 80 90 100

CU 07
EA 1218V1

DISREGARD PRINTS BEARING EARLIER REVISION DATES

REVISION DATES: 6-18-07 | 1-13-08 | 1-16-08 | 3-14-08 | 4-16-08 | 5-12-08 | 7-16-09

SHEET 4 OF 21

FILE => rw523-c-sp3.dgn

STRUCTURES DESIGN DETAIL SHEET (METRIC) (REV.03-17-04)

USERNAME => trrichf DATE PLOTTED => 03-MAY-2010 TIME PLOTTED => 15:01

DIST	COUNTY	ROUTE	KILOMETER POST TOTAL PROJECT	SHEET No	TOTAL SHEETS
07	LA	5	50.8/58.0	844	869

REGISTERED CIVIL ENGINEER 6-25-08 DATE

5-3-10
PLANS APPROVAL DATE

REGISTERED PROFESSIONAL ENGINEER XIAODONG CHEN No. C 58858 Exp. 6-30-11 CIVIL STATE OF CALIFORNIA

The State of California or its officers or agents shall not be responsible for the accuracy or completeness of electronic copies of this plan sheet.

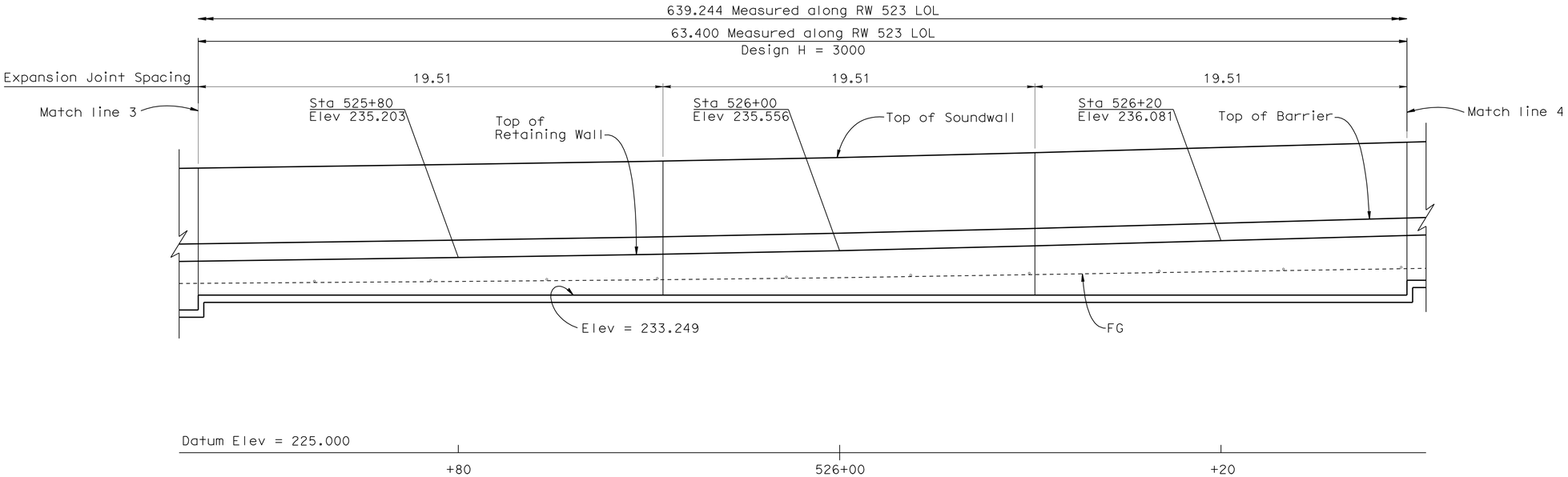

MIRRORED ELEVATION

1:125

B0-3 / 3-1 B0-3 / 3-3 B0-3 / 3-4

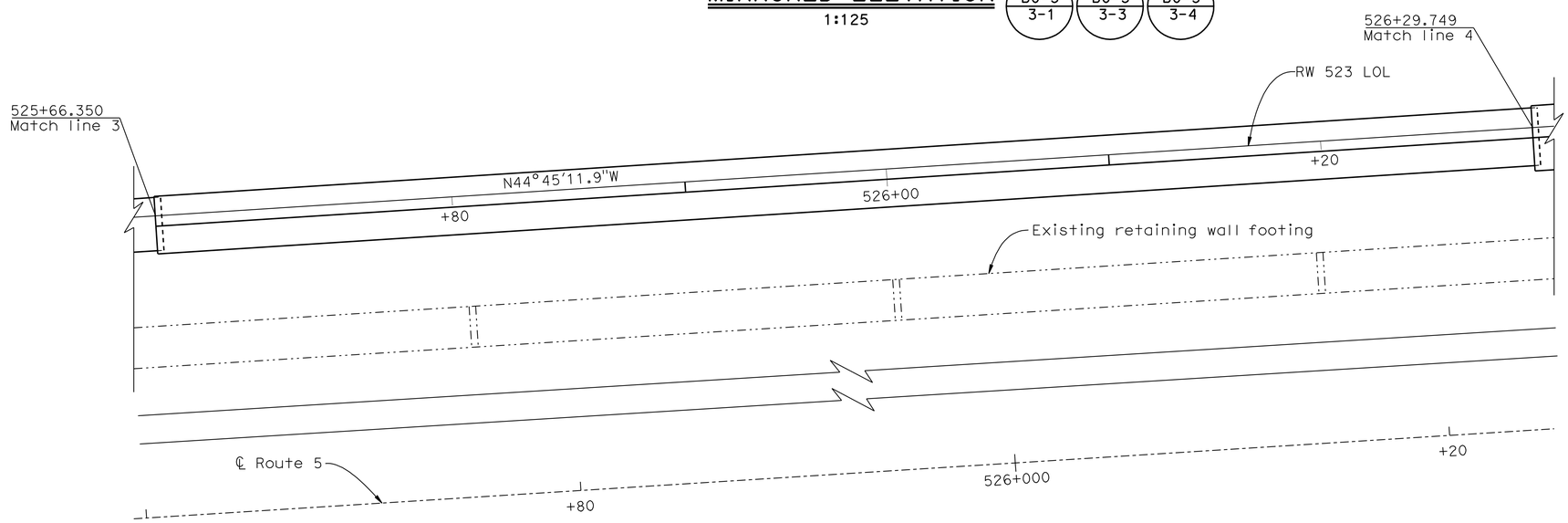

PLAN

1:125

NOTES:

1. For Match line 3, see "STRUCTURE PLAN NO. 3" sheet.
2. For Match line 4, see "STRUCTURE PLAN NO. 5" sheet.

-·-·-·-·- Indicates existing retaining wall.

NOTE:
THE CONTRACTOR SHALL VERIFY ALL CONTROLLING FIELD DIMENSIONS BEFORE ORDERING OR FABRICATING ANY MATERIAL.

Caltrans Metric

ALL DIMENSIONS ARE IN METERS UNLESS OTHERWISE SHOWN

ORIGINAL SCALE IN MILLIMETERS FOR REDUCED PLANS 0 10 20 30 40 50 60 70 80 90 100

	BY	CHECKED
DESIGN	Hilario Tuazon	Rachel Washington
DETAILS	Roelina Martinez	Hilario Tuazon
QUANTITIES	Hilario Tuazon	Rachel Washington

STATE OF CALIFORNIA
DEPARTMENT OF TRANSPORTATION

DIVISION OF ENGINEERING SERVICES
STRUCTURE DESIGN
DESIGN BRANCH 6

CU 07
EA 1218V1

BRIDGE NO. RW 523
KILOMETER POST

RETAINING WALL NO. 523
STRUCTURE PLAN NO. 4

DISREGARD PRINTS BEARING EARLIER REVISION DATES

REVISION DATES: 6-19-07 1-14-08 1-16-08 3-14-08 4-16-08 5-12-08 7-16-09

SHEET 5 OF 21

FILE => rw523-c-sp4.dgn

STRUCTURES DESIGN DETAIL SHEET (METRIC) (REV.03-17-04)

USERNAME => trrichf DATE PLOTTED => 03-MAY-2010 TIME PLOTTED => 15:01

DIST	COUNTY	ROUTE	KILOMETER POST TOTAL PROJECT	SHEET No	TOTAL SHEETS
07	LA	5	50.8/58.0	845	869

Xiaodong Chen 6-25-08
REGISTERED CIVIL ENGINEER DATE

5-3-10
PLANS APPROVAL DATE

REGISTERED PROFESSIONAL ENGINEER
XIAODONG CHEN
No. C 58858
Exp. 6-30-11
CIVIL
STATE OF CALIFORNIA

The State of California or its officers or agents shall not be responsible for the accuracy or completeness of electronic copies of this plan sheet.

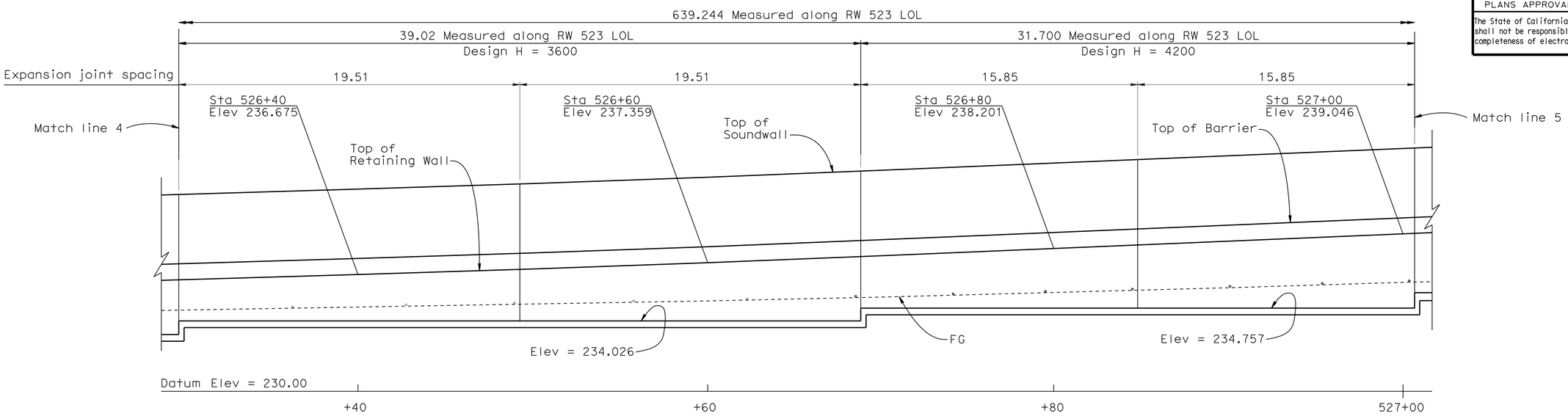

MIRRORED ELEVATION

1:125

B0-3 3-1 | B0-3 3-3 | B0-3 3-4

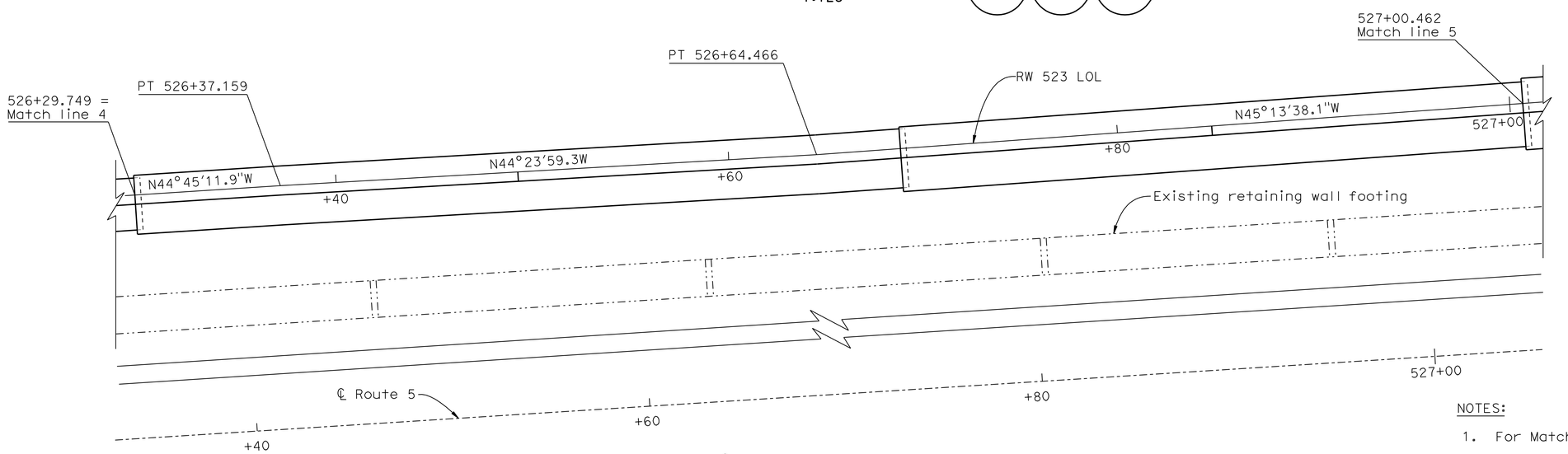

PLAN

1:125

NOTES:

1. For Match line 4, see "STRUCTURE PLAN NO. 4" sheet.
2. For Match line 5, see "STRUCTURE PLAN NO. 6" sheet.

-·-·-·-·- Indicates existing retaining wall.

NOTE:
THE CONTRACTOR SHALL VERIFY ALL CONTROLLING FIELD DIMENSIONS BEFORE ORDERING OR FABRICATING ANY MATERIAL.

Caltrans Metric

ALL DIMENSIONS ARE IN METERS UNLESS OTHERWISE SHOWN

ORIGINAL SCALE IN MILLIMETERS FOR REDUCED PLANS 0 10 20 30 40 50 60 70 80 90 100

	BY	CHECKED
DESIGN	Hilario Tuazon	Rachel Washington
DETAILS	Roelina Martinez	Hilarior Tuazon
QUANTITIES	Hilario Tuazon	Rachel Washington

STATE OF CALIFORNIA
DEPARTMENT OF TRANSPORTATION

DIVISION OF ENGINEERING SERVICES
STRUCTURE DESIGN
DESIGN BRANCH 6

CU 07
EA 1218V1

BRIDGE NO. RW 523
KILOMETER POST

RETAINING WALL NO. 523
STRUCTURE PLAN NO. 5

DISREGARD PRINTS BEARING EARLIER REVISION DATES

REVISION DATES: 6-19-07 | 1-13-08 | 1-16-08 | 3-14-08 | 4-16-08 | 5-13-08 | 7-16-09

SHEET 6 OF 21

FILE => rw523-c-sp5.dgn

STRUCTURES DESIGN DETAIL SHEET (METRIC) (REV.03-17-04)

USERNAME => trrichf DATE PLOTTED => 03-MAY-2010 TIME PLOTTED => 15:02

DIST	COUNTY	ROUTE	KILOMETER POST TOTAL PROJECT	SHEET No	TOTAL SHEETS
07	LA	5	50.8/58.0	846	869

REGISTERED CIVIL ENGINEER — DATE 6-25-08

5-3-10
PLANS APPROVAL DATE

REGISTERED PROFESSIONAL ENGINEER — XIAODONG CHEN — No. C 58858 — Exp. 6-30-11 — CIVIL — STATE OF CALIFORNIA

The State of California or its officers or agents shall not be responsible for the accuracy or completeness of electronic copies of this plan sheet.

NOTES:

1. For Match line 5, see "STRUCTURE PLAN NO. 5" sheet.
2. For Match line 6, see "STRUCTURE PLAN NO. 7" sheet.

—·—·—·— Indicates existing retaining wall.

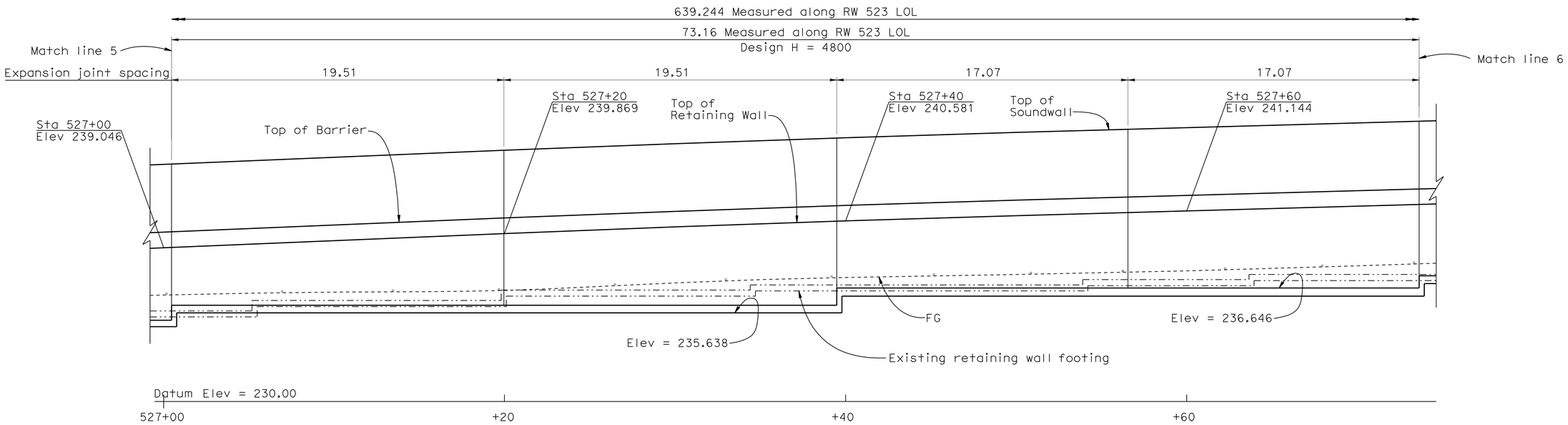

MIRRORED ELEVATION
1:125

B0-3 3-1 | B0-3 3-3 | B0-3 3-4

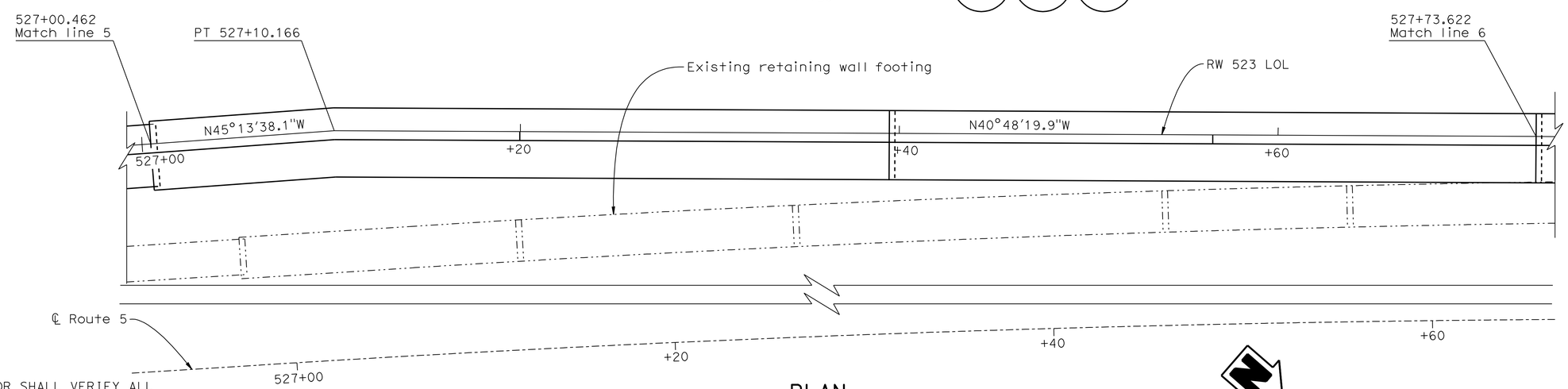

PLAN
1:125

NOTE:
THE CONTRACTOR SHALL VERIFY ALL CONTROLLING FIELD DIMENSIONS BEFORE ORDERING OR FABRICATING ANY MATERIAL.

Caltrans Metric

	BY	CHECKED
DESIGN	Hilario Tuazon	Rachel Washington
DETAILS	Roelina Martinez	Hilario Tuazon
QUANTITIES	Hilario Tuazon	Rachel Washington

STATE OF CALIFORNIA
DEPARTMENT OF TRANSPORTATION

DIVISION OF ENGINEERING SERVICES
STRUCTURE DESIGN
DESIGN BRANCH 6

BRIDGE NO. RW 523
KILOMETER POST

RETAINING WALL NO. 523
STRUCTURE PLAN NO. 6

ALL DIMENSIONS ARE IN METERS UNLESS OTHERWISE SHOWN

ORIGINAL SCALE IN MILLIMETERS FOR REDUCED PLANS 0 10 20 30 40 50 60 70 80 90 100

CU 07
EA 1218V1

DISREGARD PRINTS BEARING EARLIER REVISION DATES

REVISION DATES: 6-29-07 | 1-13-08 | 1-16-08 | 3-14-08 | 4-16-08 | 5-13-08 | 7-16-09

SHEET 7 OF 21

FILE => rw523-c-sp6.dgn

STRUCTURES DESIGN DETAIL SHEET (METRIC) (REV.03-17-04)

USERNAME => trrichf DATE PLOTTED => 03-MAY-2010 TIME PLOTTED => 15:02

DIST	COUNTY	ROUTE	KILOMETER POST TOTAL PROJECT	SHEET No	TOTAL SHEETS
07	LA	5	50.8/58.0	847	869

REGISTERED CIVIL ENGINEER — DATE 6-25-08

5-3-10
PLANS APPROVAL DATE

REGISTERED PROFESSIONAL ENGINEER — XIAODONG CHEN — No. C 58858 — Exp. 6-30-11 — CIVIL — STATE OF CALIFORNIA

The State of California or its officers or agents shall not be responsible for the accuracy or completeness of electronic copies of this plan sheet.

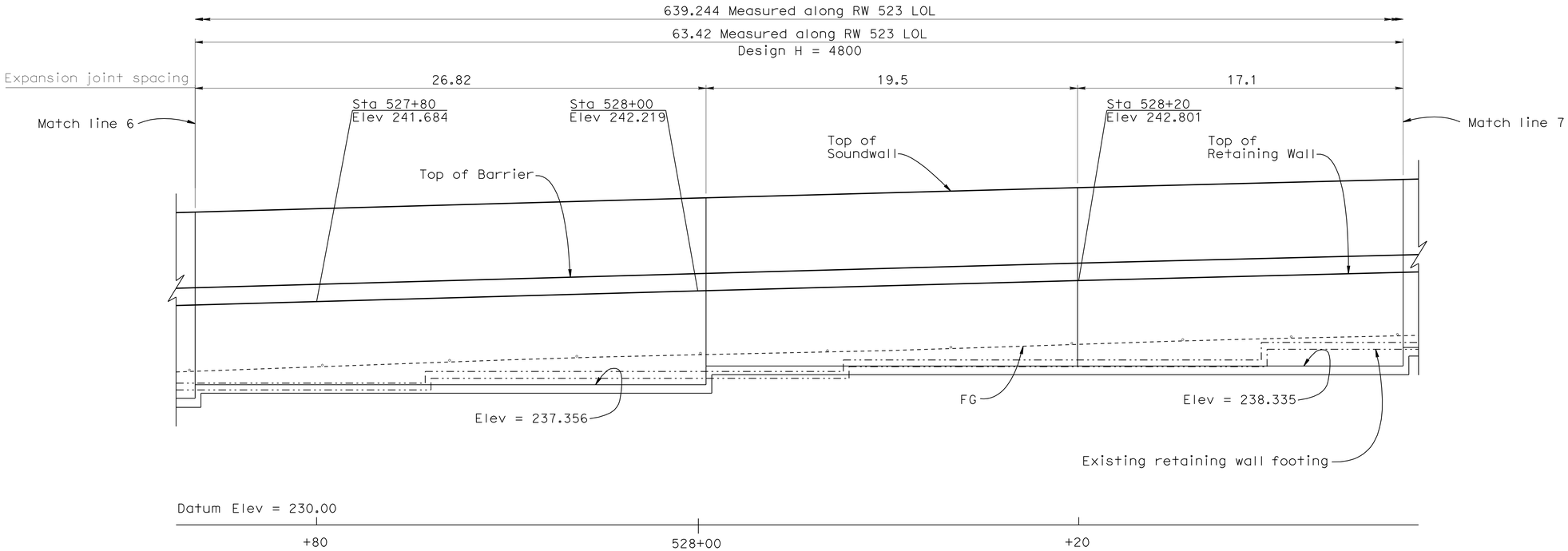

MIRRORED ELEVATION
1:125

B0-3 / 3-1 B0-3 / 3-3 B0-3 / 3-4

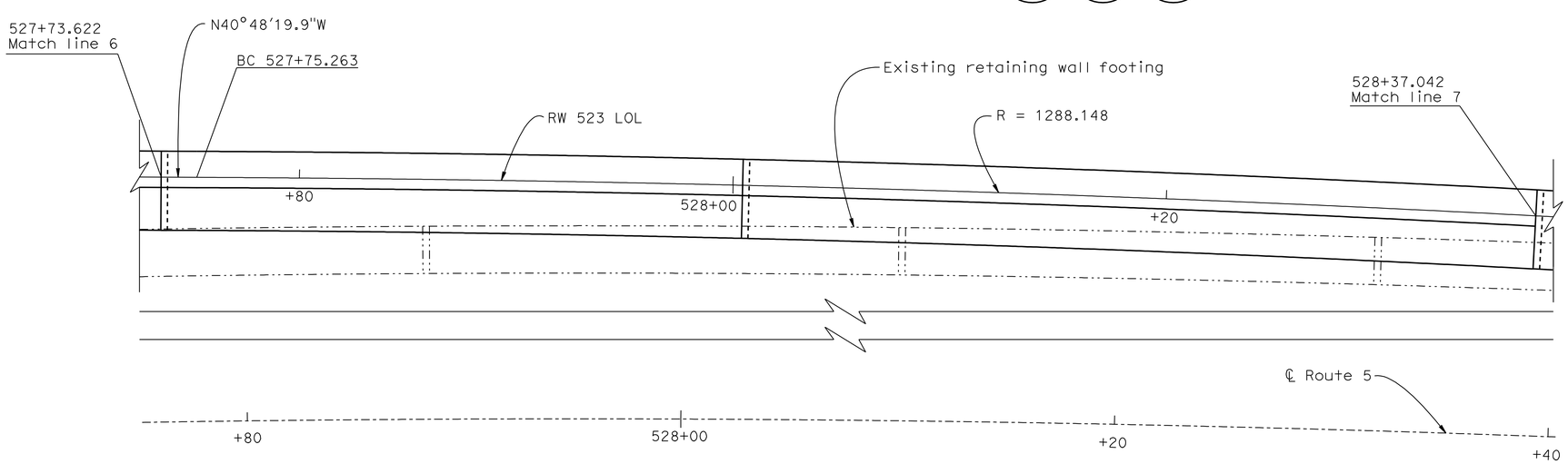

PLAN
1:125

NOTES:

1. For Match line 6, see "STRUCTURE PLAN NO. 6" sheet.
2. For Match line 7, see "STRUCTURE PLAN NO. 8" sheet.

-·-·-·- Indicates retaining wall to be removed.

NOTE:
THE CONTRACTOR SHALL VERIFY ALL CONTROLLING FIELD DIMENSIONS BEFORE ORDERING OR FABRICATING ANY MATERIAL.

Caltrans Metric

ALL DIMENSIONS ARE IN METERS UNLESS OTHERWISE SHOWN

ORIGINAL SCALE IN MILLIMETERS FOR REDUCED PLANS 0 10 20 30 40 50 60 70 80 90 100

	BY	CHECKED
DESIGN	Hilario Tuazon	Rachel Washington
DETAILS	Roelina Martinez	Hilario Tuazon
QUANTITIES	Hilario Tuazon	Rachel Washington

STATE OF CALIFORNIA
DEPARTMENT OF TRANSPORTATION

DIVISION OF ENGINEERING SERVICES
STRUCTURE DESIGN
DESIGN BRANCH 6

CU 07
EA 1218V1

BRIDGE NO. RW 523
KILOMETER POST

RETAINING WALL NO. 523
STRUCTURE PLAN NO. 7

DISREGARD PRINTS BEARING EARLIER REVISION DATES

REVISION DATES: 6-4-07 1-11-08 1-11-08 3-11-08 4-11-08 5-11-08 7-16-09

SHEET 8 OF 21

FILE => rw523-c-sp7.dgn

STRUCTURES DESIGN DETAIL SHEET (METRIC) (REV.03-17-04)

USERNAME => trrichf DATE PLOTTED => 03-MAY-2010 TIME PLOTTED => 15:02

DIST	COUNTY	ROUTE	KILOMETER POST TOTAL PROJECT	SHEET No	TOTAL SHEETS
07	LA	5	50.8/58.0	848	869

REGISTERED CIVIL ENGINEER 6-25-08 DATE

5-3-10
PLANS APPROVAL DATE

REGISTERED PROFESSIONAL ENGINEER XIAODONG CHEN No. C 58858 Exp. 6-30-11 CIVIL STATE OF CALIFORNIA

The State of California or its officers or agents shall not be responsible for the accuracy or completeness of electronic copies of this plan sheet.

NOTES:

1. For Match line 7, see "STRUCTURE PLAN NO. 7" sheet.
2. For Match line 8, see "STRUCTURE PLAN NO. 9" sheet.

-·-·-·-·- Indicates existing retaining wall to be removed.

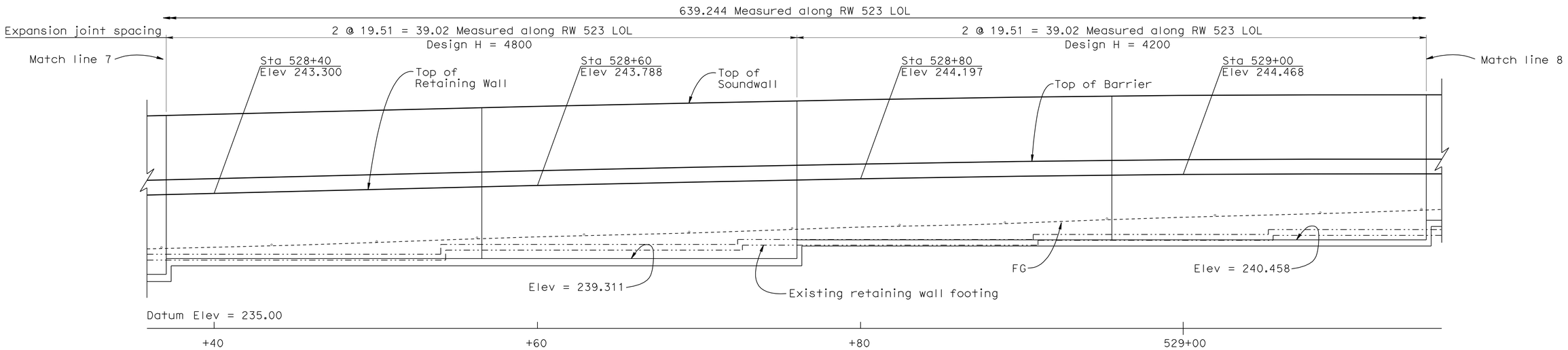

MIRRORED ELEVATION (B0-3 3-1) (B0-3 3-3) (B0-3 3-4)
1:125

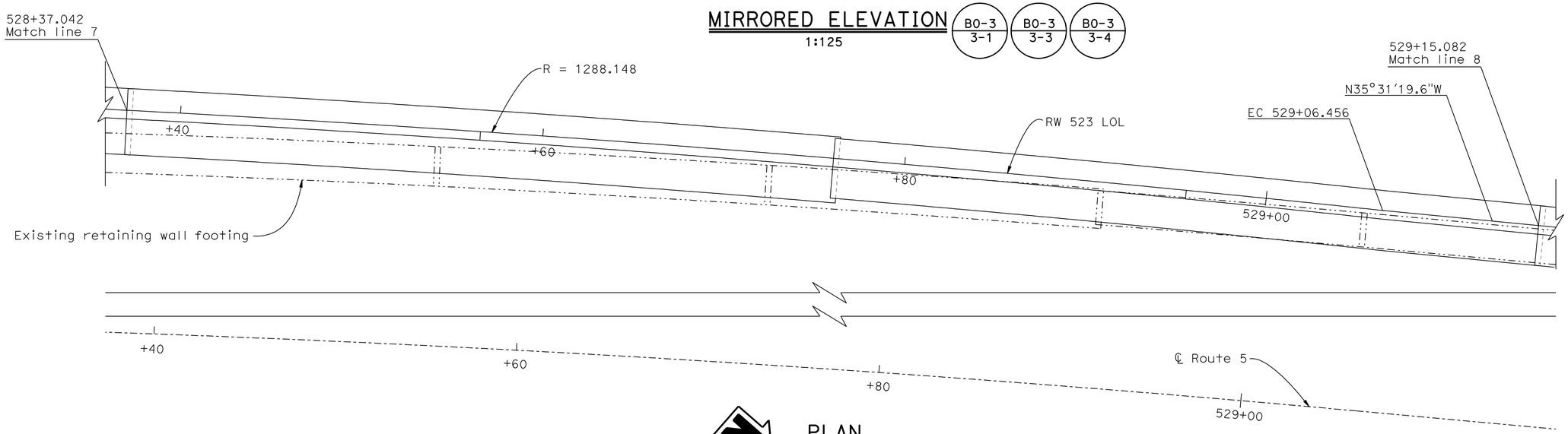

PLAN
1:125

NOTE:
THE CONTRACTOR SHALL VERIFY ALL CONTROLLING FIELD DIMENSIONS BEFORE ORDERING OR FABRICATING ANY MATERIAL.

Caltrans Metric

ALL DIMENSIONS ARE IN METERS UNLESS OTHERWISE SHOWN

ORIGINAL SCALE IN MILLIMETERS FOR REDUCED PLANS 0 10 20 30 40 50 60 70 80 90 100

	BY	CHECKED
DESIGN	Hilario Tuazon	Rachel Washington
DETAILS	Roelina Martinez	Hilario Tuazon
QUANTITIES	Hilario Tuazon	Rachel Washington

STATE OF CALIFORNIA
DEPARTMENT OF TRANSPORTATION

DIVISION OF ENGINEERING SERVICES
STRUCTURE DESIGN
DESIGN BRANCH 6

CU 07
EA 1218V1

BRIDGE NO. RW 523
KILOMETER POST

RETAINING WALL NO. 523
STRUCTURE PLAN NO. 8

DISREGARD PRINTS BEARING EARLIER REVISION DATES

REVISION DATES: 6-25-07 1-15-08 3-14-08 4-16-08 5-15-08 7-16-09

SHEET 9 OF 21

STRUCTURES DESIGN DETAIL SHEET (METRIC) (REV.03-17-04)

FILE => rw523-c-sp8.dgn

USERNAME => trrichf DATE PLOTTED => 03-MAY-2010 TIME PLOTTED => 15:02

DIST	COUNTY	ROUTE	KILOMETER POST TOTAL PROJECT	SHEET No	TOTAL SHEETS
07	LA	5	50.8/58.0	849	869

REGISTERED CIVIL ENGINEER — DATE 6-25-08

5-3-10
PLANS APPROVAL DATE

REGISTERED PROFESSIONAL ENGINEER — XIAODONG CHEN — No. C 58858 — Exp. 6-30-11 — CIVIL — STATE OF CALIFORNIA

The State of California or its officers or agents shall not be responsible for the accuracy or completeness of electronic copies of this plan sheet.

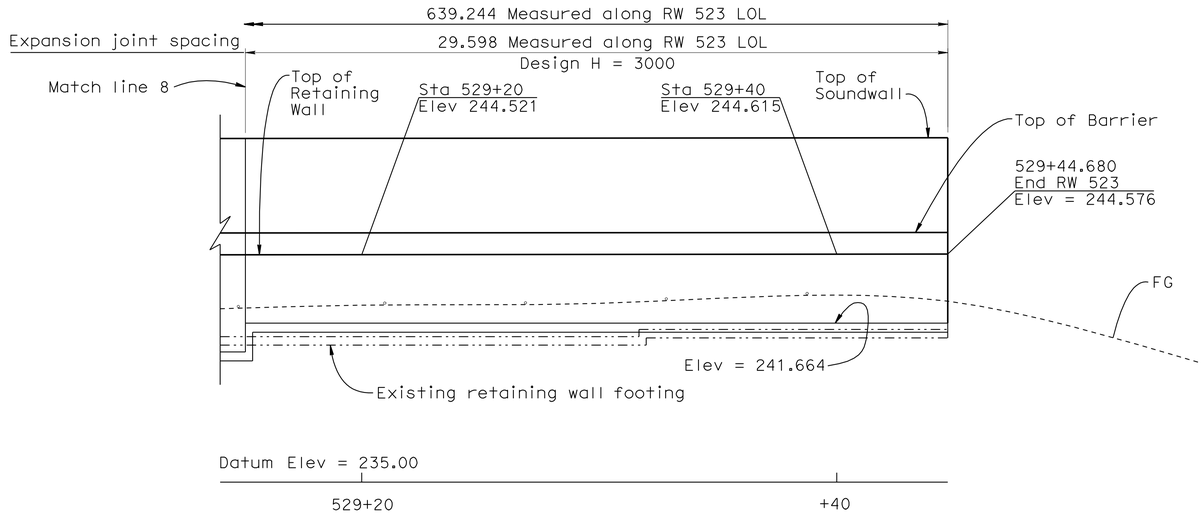

MIRRORED ELEVATION
1:125

B0-3 / 3-1 B0-3 / 3-3 B0-3 / 3-4

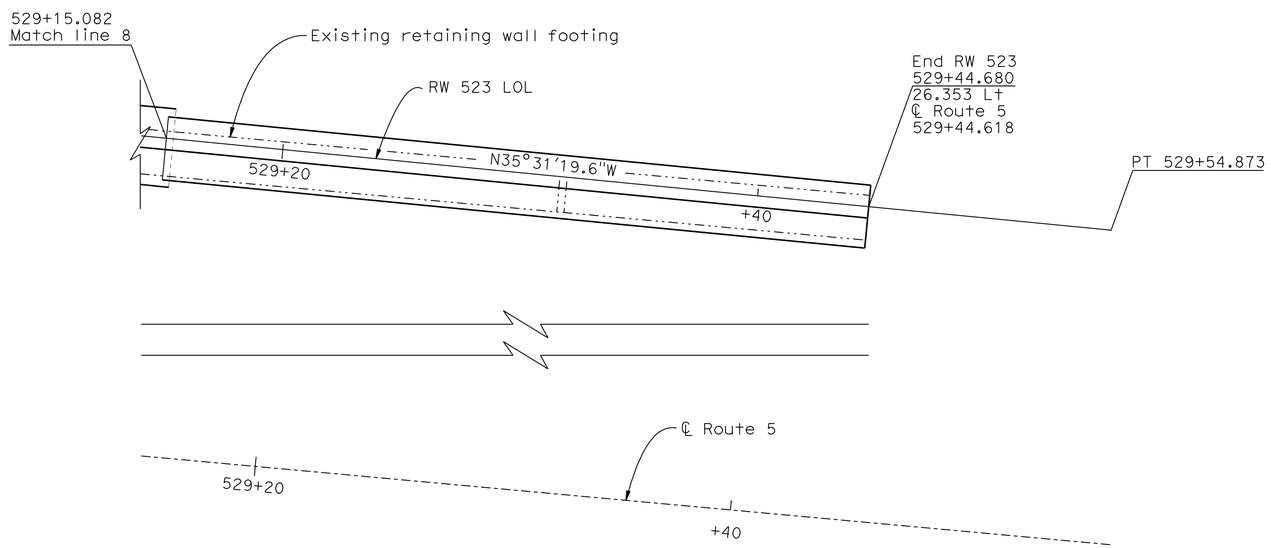

PLAN
1:125

NOTES:

1. For Match line 8, see "STRUCTURE PLAN NO. 8" sheet.

—·—·—·— Indicates existing retaining wall to be removed.

NOTE:
THE CONTRACTOR SHALL VERIFY ALL CONTROLLING FIELD DIMENSIONS BEFORE ORDERING OR FABRICATING ANY MATERIAL.

Caltrans Metric

ALL DIMENSIONS ARE IN METERS UNLESS OTHERWISE SHOWN

ORIGINAL SCALE IN MILLIMETERS FOR REDUCED PLANS 0 10 20 30 40 50 60 70 80 90 100

	BY	CHECKED
DESIGN	Hilario Tuazon	Rachel Washington
DETAILS	Roelina Martinez	Hilario Tuazon
QUANTITIES	Hilario Tuazon	Rachel Washington

STATE OF CALIFORNIA
DEPARTMENT OF TRANSPORTATION

DIVISION OF ENGINEERING SERVICES
STRUCTURE DESIGN
DESIGN BRANCH 6

CU 07
EA 1218V1

BRIDGE NO. RW 523
KILOMETER POST

RETAINING WALL NO. 523
STRUCTURE PLAN NO. 9

DISREGARD PRINTS BEARING EARLIER REVISION DATES

REVISION DATES: 6-28-07 1-13-08 3-14-08 4-16-08 5-13-08 7-16-09

SHEET 10 OF 21

FILE => rw523-c-sp9.dgn

STRUCTURES DESIGN DETAIL SHEET (METRIC) (REV.03-17-04)

USERNAME => trrichf DATE PLOTTED => 03-MAY-2010 TIME PLOTTED => 15:02

DIST	COUNTY	ROUTE	KILOMETER POST TOTAL PROJECT	SHEET No	TOTAL SHEETS
07	LA	5	50.8/58.0	850	869

REGISTERED CIVIL ENGINEER 6-25-08 DATE

5-3-10
PLANS APPROVAL DATE

REGISTERED PROFESSIONAL ENGINEER XIAODONG CHEN No. C 58858 Exp. 6-30-11 CIVIL STATE OF CALIFORNIA

The State of California or its officers or agents shall not be responsible for the accuracy or completeness of electronic copies of this plan sheet.

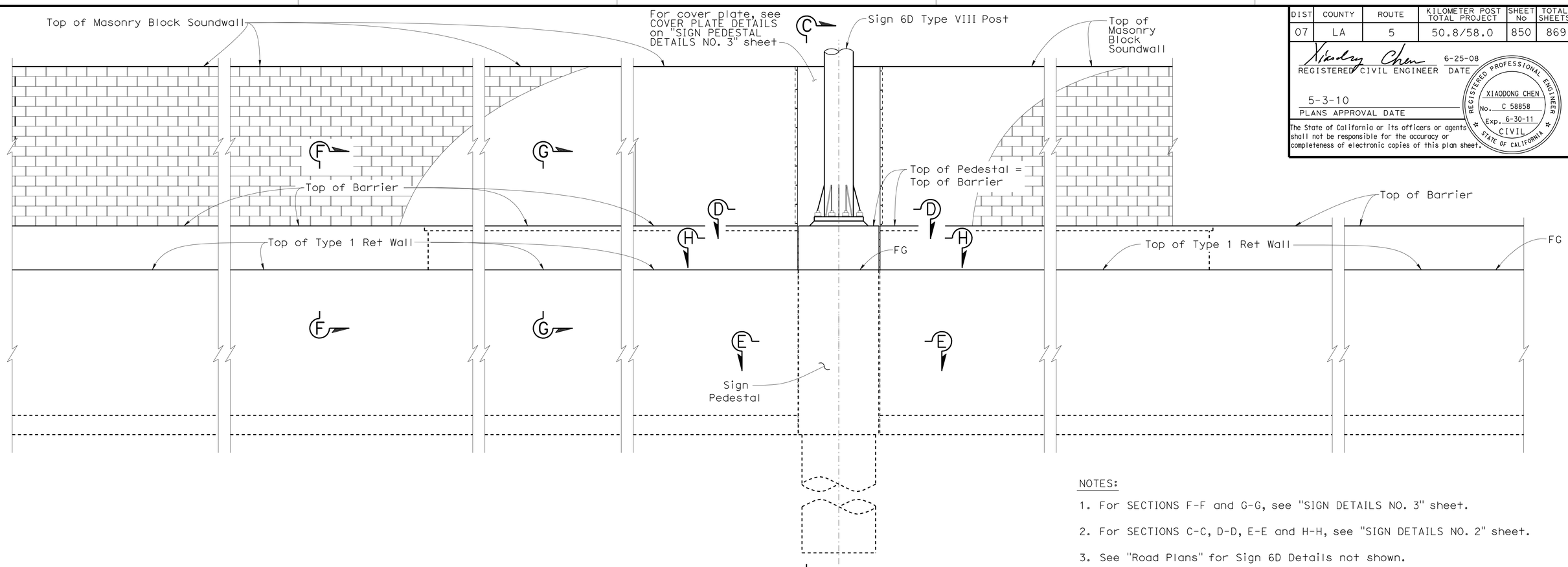

ELEVATION
1:40

NOTES:

1. For SECTIONS F-F and G-G, see "SIGN DETAILS NO. 3" sheet.
2. For SECTIONS C-C, D-D, E-E and H-H, see "SIGN DETAILS NO. 2" sheet.
3. See "Road Plans" for Sign 6D Details not shown.

LEGEND:

Indicates joint filler material

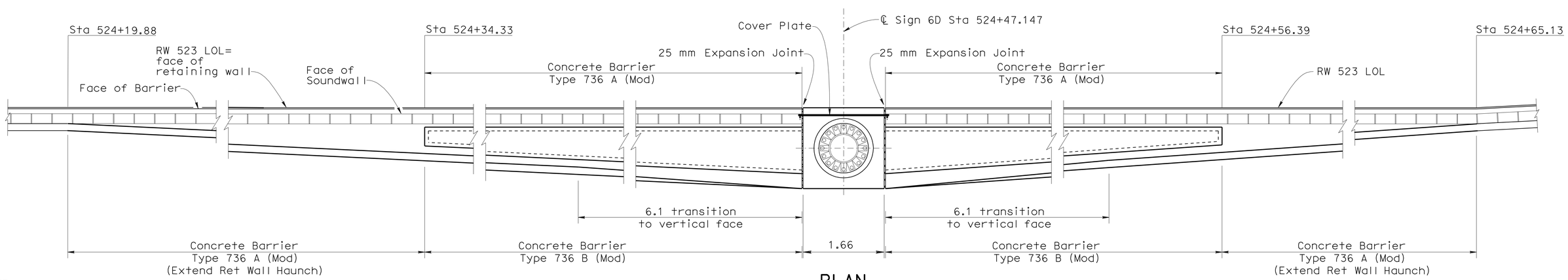

PLAN
1:40

NOTE:
THE CONTRACTOR SHALL VERIFY ALL CONTROLLING FIELD DIMENSIONS BEFORE ORDERING OR FABRICATING ANY MATERIAL.

Caltrans Metric

	BY	CHECKED
DESIGN	Rodney Simmons	Xiaodong Chen
DETAILS	Phil Silva	Rodney Simmons
QUANTITIES	Marshall Moore	Ae F Tern

STATE OF CALIFORNIA
DEPARTMENT OF TRANSPORTATION

DIVISION OF ENGINEERING SERVICES
STRUCTURE DESIGN
DESIGN BRANCH 6

BRIDGE NO. RW 523
KILOMETER POST

RETAINING WALL NO. 523
SIGN PEDESTAL DETAILS NO.1

ALL DIMENSIONS ARE IN METERS UNLESS OTHERWISE SHOWN

ORIGINAL SCALE IN MILLIMETERS FOR REDUCED PLANS 0 10 20 30 40 50 60 70 80 90 100

CU 07
EA 1218V1

DISREGARD PRINTS BEARING EARLIER REVISION DATES

REVISION DATES: 12-14-07 | 3-4-08 | 3-14-08 | 5-15-08 | 7-16-09

SHEET 11 OF 21

FILE => rw523-g-rw_1o01.dgn

STRUCTURES DESIGN DETAIL SHEET (METRIC) (REV.03-17-04)

USERNAME => frrichf DATE PLOTTED => 03-MAY-2010 TIME PLOTTED => 15:02

DIST	COUNTY	ROUTE	KILOMETER POST TOTAL PROJECT	SHEET No	TOTAL SHEETS
07	LA	5	50.8/58.0	851	869

REGISTERED CIVIL ENGINEER 6-25-08 DATE

5-3-10
PLANS APPROVAL DATE

REGISTERED PROFESSIONAL ENGINEER XIAODONG CHEN No. C 58858 Exp. 6-30-11 CIVIL STATE OF CALIFORNIA

The State of California or its officers or agents shall not be responsible for the accuracy or completeness of electronic copies of this plan sheet.

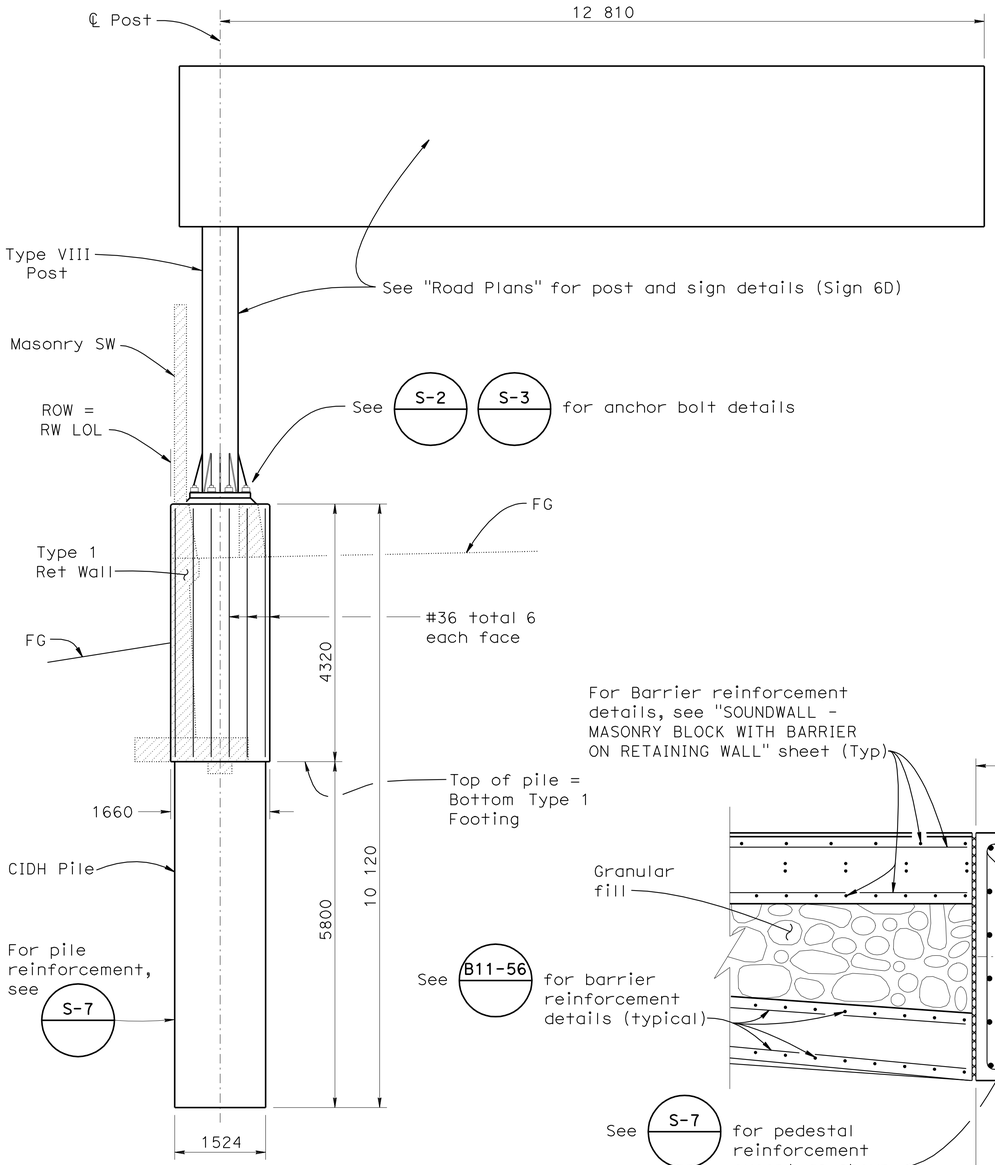

SECTION C-C
1:50
S-2 S-3 S-7

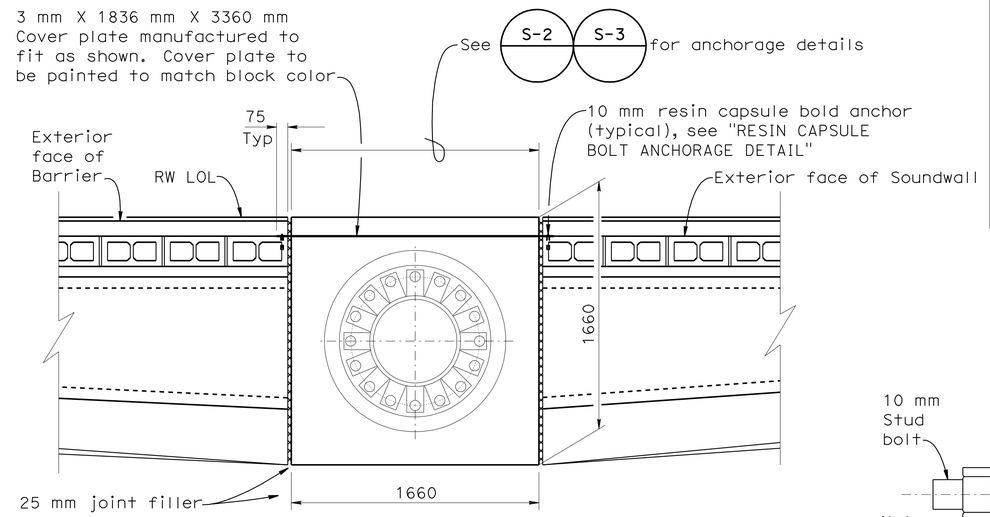

SECTION D-D
1:20

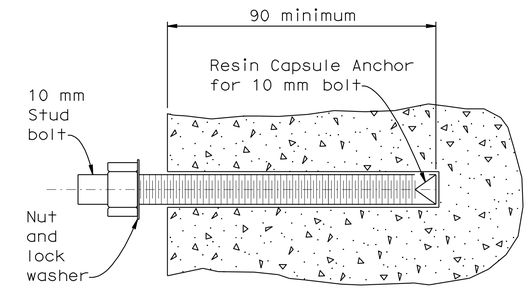

RESIN CAPSULE BOLT ANCHORAGE
1:1

NOTE:
Resin capsule anchorage is subject to approval of Engineer. Installation procedures shall comply with manufacturer's instructions.

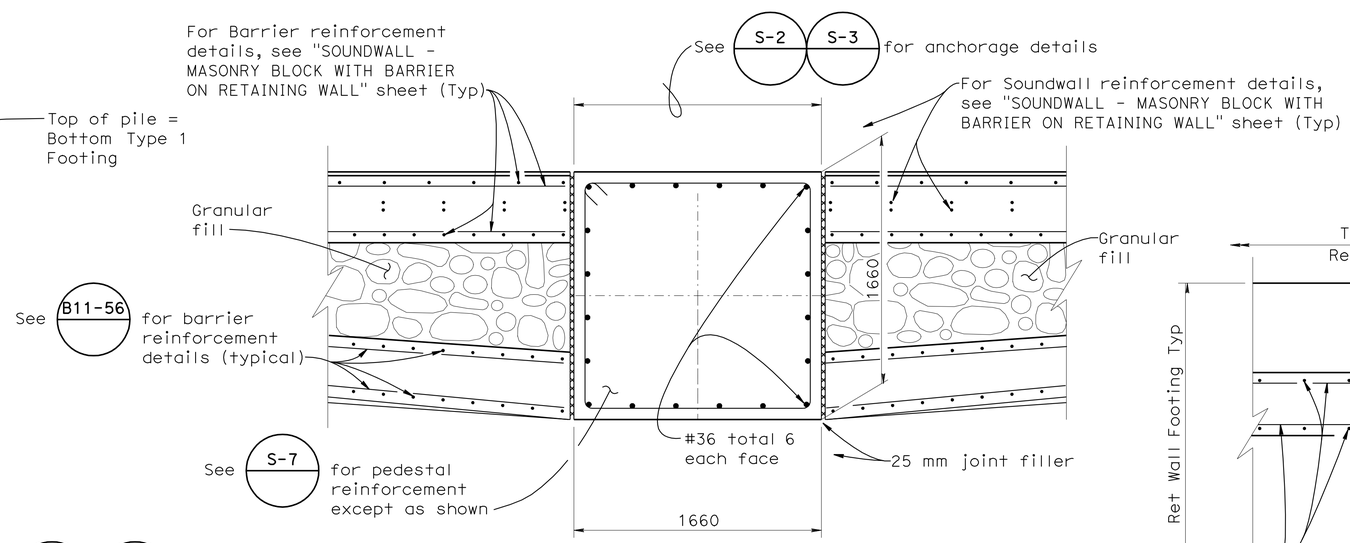

SECTION H-H
1:20

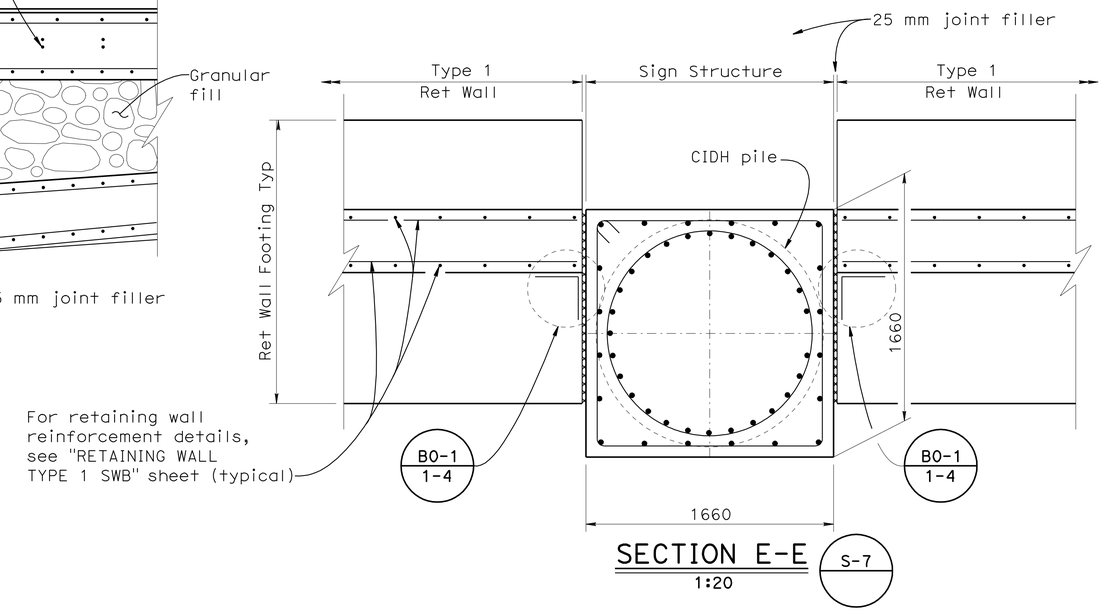

SECTION E-E
1:20
S-7

DESIGN	BY Rodney Simmons	CHECKED Xiaodong Chen	STATE OF CALIFORNIA DEPARTMENT OF TRANSPORTATION	DIVISION OF ENGINEERING SERVICES STRUCTURE DESIGN DESIGN BRANCH 6
DETAILS	BY Phil Silva	CHECKED Rodney Simmons		
QUANTITIES	BY Marshall Moore	CHECKED Ae F Tern		

BRIDGE NO. RW 523
KILOMETER POST

RETAINING WALL NO. 523
SIGN PEDESTAL DETAILS NO.2

Caltrans Metric

ALL DIMENSIONS ARE IN MILLIMETERS UNLESS OTHERWISE SHOWN

ORIGINAL SCALE IN MILLIMETERS FOR REDUCED PLANS 0 10 20 30 40 50 60 70 80 90 100

CU 07
EA 1218V1

DISREGARD PRINTS BEARING EARLIER REVISION DATES

REVISION DATES: 12-14-07 3-4-08 3-14-08 5-1-08 7-16-09

SHEET 12 OF 21

FILE => rw523-g-rwdt01.dgn

STRUCTURES DESIGN DETAIL SHEET (METRIC) (REV.03-17-04)

USERNAME => trright DATE PLOTTED => 03-MAY-2010 TIME PLOTTED => 15:02

DIST	COUNTY	ROUTE	KILOMETER POST TOTAL PROJECT	SHEET No	TOTAL SHEETS
07	LA	5	50.8/58.0	852	869

REGISTERED CIVIL ENGINEER — DATE 6-25-08

5-3-10
PLANS APPROVAL DATE

REGISTERED PROFESSIONAL ENGINEER — XIAODONG CHEN — No. C 58858 — Exp. 6-30-11 — CIVIL — STATE OF CALIFORNIA

The State of California or its officers or agents shall not be responsible for the accuracy or completeness of electronic copies of this plan sheet.

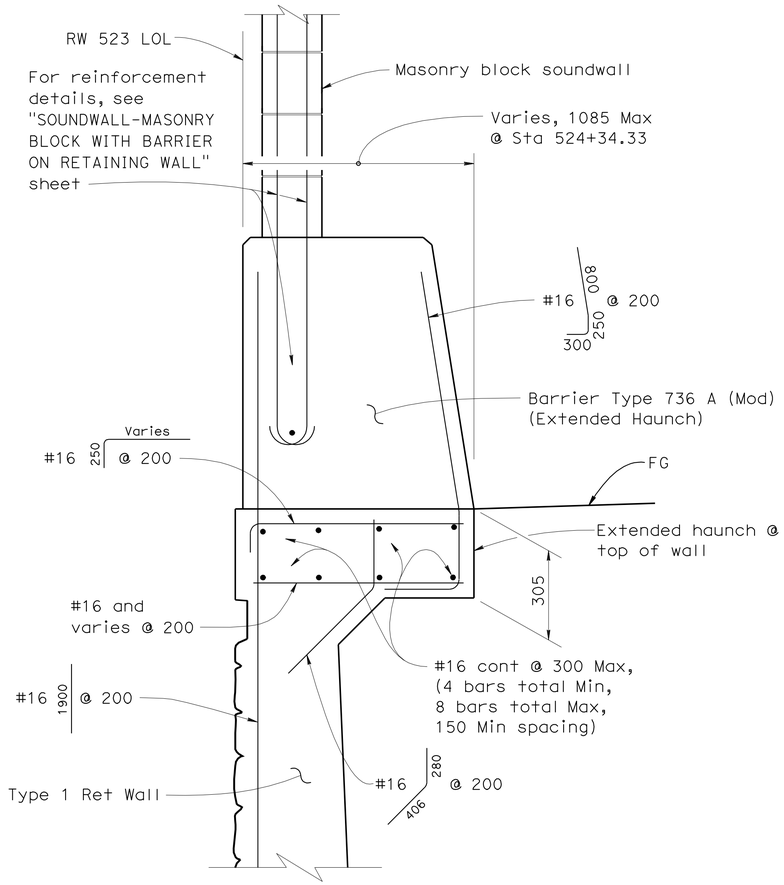

SECTION F-F
1:10

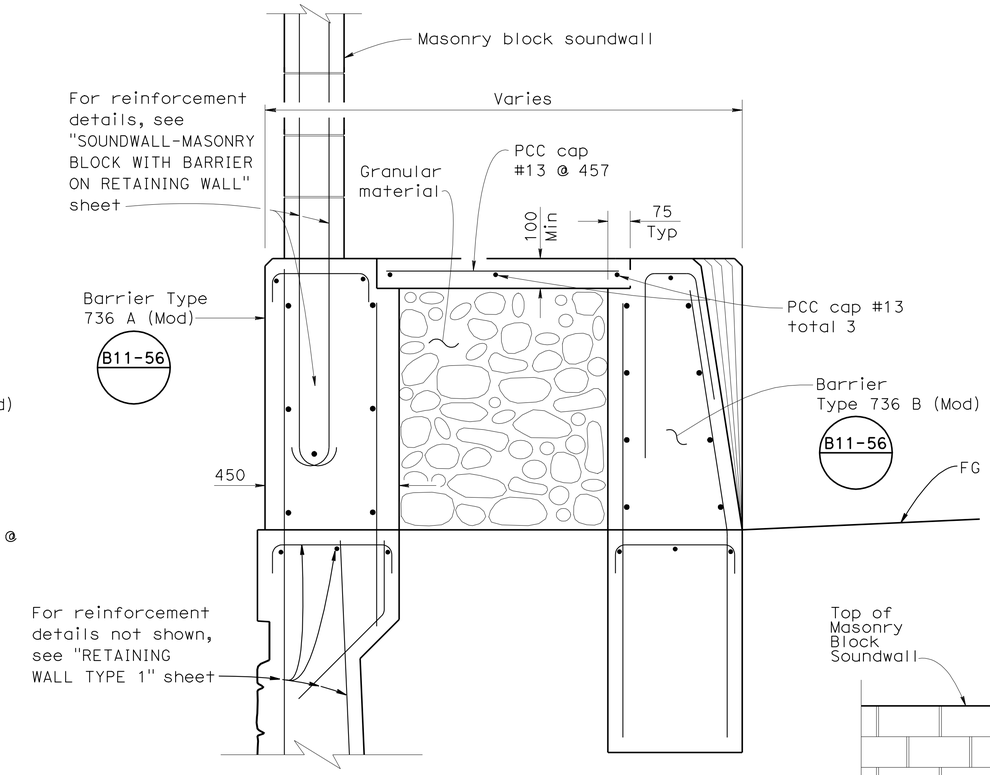

SECTION G-G
1:10

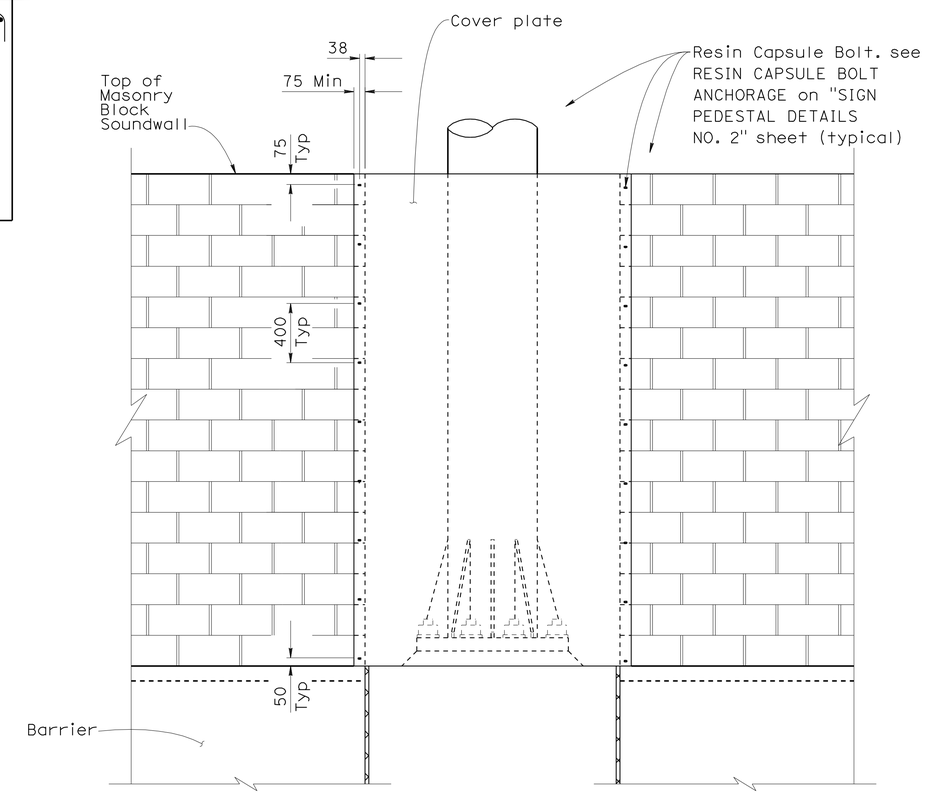

COVER PLATE DETAILS
1:20

NOTE:
THE CONTRACTOR SHALL VERIFY ALL CONTROLLING FIELD DIMENSIONS BEFORE ORDERING OR FABRICATING ANY MATERIAL.

Caltrans Metric

ALL DIMENSIONS ARE IN METERS UNLESS OTHERWISE SHOWN

ORIGINAL SCALE IN MILLIMETERS FOR REDUCED PLANS 0 10 20 30 40 50 60 70 80 90 100

	BY	CHECKED
DESIGN	Rod Simmons	Xiaodong Chen
DETAILS	Phil Silva	Rod Simmons
QUANTITIES	Marshall Moore	Ae F Tern

STATE OF CALIFORNIA
DEPARTMENT OF TRANSPORTATION

DIVISION OF ENGINEERING SERVICES
STRUCTURE DESIGN
DESIGN BRANCH 6

CU 07
EA 1218V1

BRIDGE NO. RW 523
KILOMETER POST

RETAINING WALL NO. 523
SIGN PEDESTAL DETAILS NO.3

DISREGARD PRINTS BEARING EARLIER REVISION DATES

REVISION DATES: 6-15-07 | 3-14-08 | 3-14-08 | 5-1-08 | 7-16-09

SHEET 13 OF 21

FILE => rw523-g-rwdt02.dgn

STRUCTURES DESIGN DETAIL SHEET (METRIC) (REV.03-17-04)

USERNAME => trrichf DATE PLOTTED => 03-MAY-2010 TIME PLOTTED => 15:03

DIST	COUNTY	ROUTE	KILOMETER POST TOTAL PROJECT	SHEET No	TOTAL SHEETS
07	LA	5	50.8/58.0	853	869

Xiaodong Chen 6-25-08
REGISTERED CIVIL ENGINEER DATE

5-3-10
PLANS APPROVAL DATE

REGISTERED PROFESSIONAL ENGINEER Xiaodong Chen No. C58858 Exp. 6-30-11 CIVIL STATE OF CALIFORNIA

The State of California or its officers or agents shall not be responsible for the accuracy or completeness of electronic copies of this plan sheet.

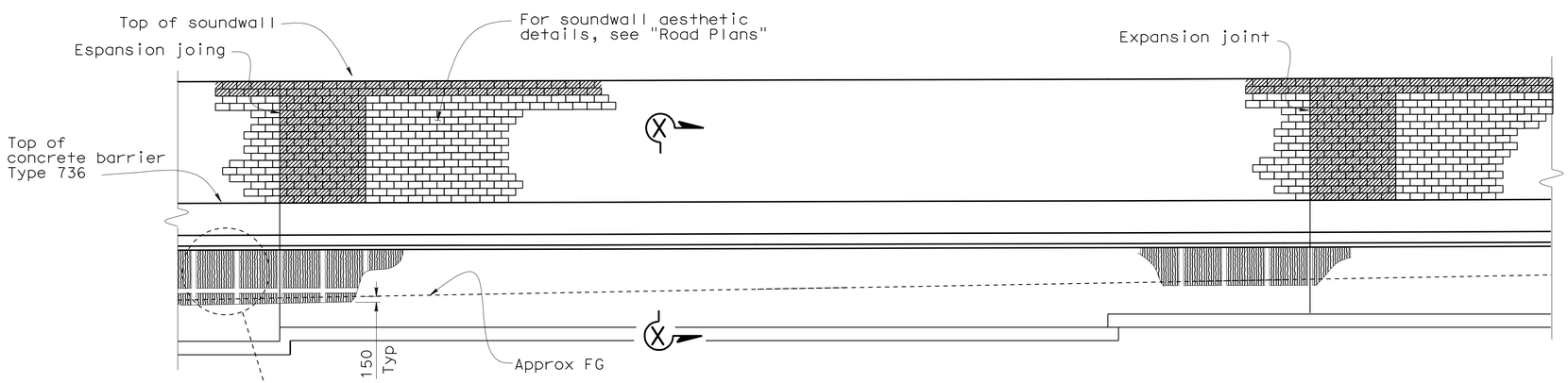

ELEVATION
No scale

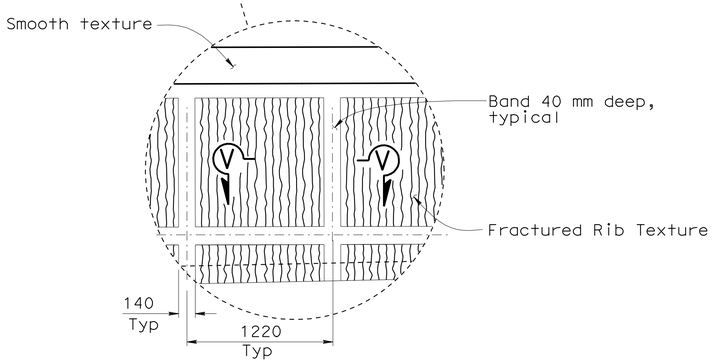

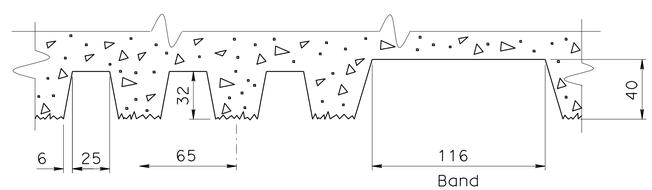

SECTION V-V
FRACTURED RIB TEXTURE & BAND
1:2

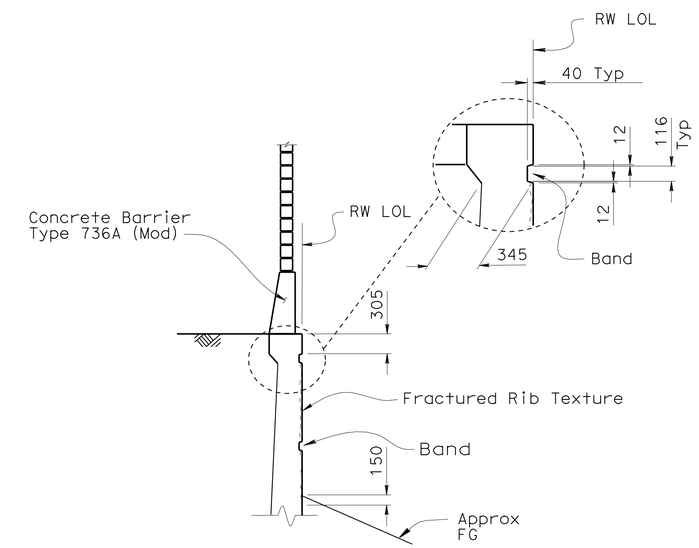

SECTION X-X
1:40

NOTE:
THE CONTRACTOR SHALL VERIFY ALL CONTROLLING FIELD DIMENSIONS BEFORE ORDERING OR FABRICATING ANY MATERIAL.

Caltrans Metric

	BY	CHECKED
DESIGN	X. Chen	R. Washington
DETAILS	Y. Tang	R. Washington
QUANTITIES	R. Washington	R. Asistin

STATE OF CALIFORNIA
DEPARTMENT OF TRANSPORTATION

DIVISION OF ENGINEERING SERVICES
STRUCTURE DESIGN
DESIGN BRANCH 6

BRIDGE NO. RW 523
KILOMETER POST

RETAINING WALL NO. 523
ARCHITECTURAL DETAILS

ALL DIMENSIONS ARE IN MILLIMETERS UNLESS OTHERWISE SHOWN

ORIGINAL SCALE IN MILLIMETERS FOR REDUCED PLANS 0 10 20 30 40 50 60 70 80 90 100

CU 07
EA 1218V1

DISREGARD PRINTS BEARING EARLIER REVISION DATES

REVISION DATES: 1-16-08 3-4-08 3-14-08 7-16-09

SHEET 14 OF 21

FILE => rw523-u-narchdet.dgn

STRUCTURES DESIGN DETAIL SHEET (METRIC) (REV.03-17-04)

USERNAME => trright DATE PLOTTED => 03-MAY-2010 TIME PLOTTED => 15:03

DIST	COUNTY	ROUTE	KILOMETER POST TOTAL PROJECT	SHEET No	TOTAL SHEETS
07	LA	5	50.8/58.0	854	869

Xiaodong Chen 6-25-08
REGISTERED CIVIL ENGINEER DATE

5-3-10
PLANS APPROVAL DATE

REGISTERED PROFESSIONAL ENGINEER
XIAODONG CHEN
No. C 58858
Exp. 6-30-11
CIVIL
STATE OF CALIFORNIA

The State of California or its officers or agents shall not be responsible for the accuracy or completeness of electronic copies of this plan sheet.

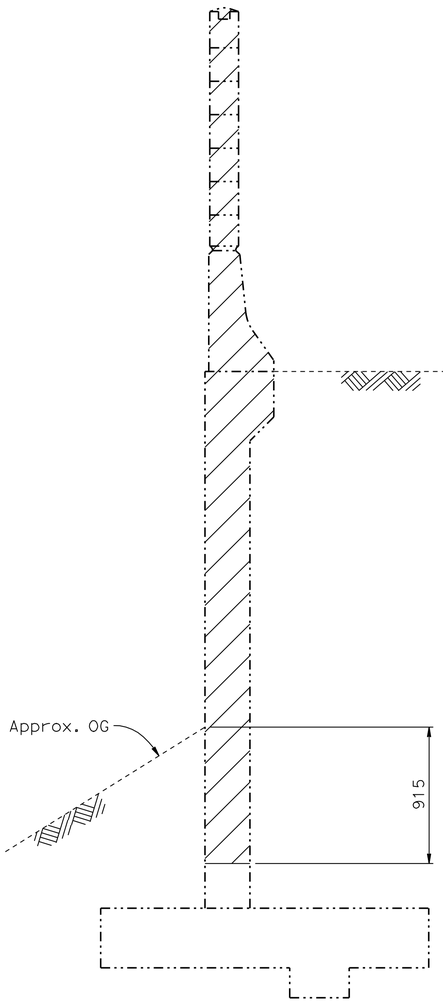

Beginning of RW to Station 527+37.744

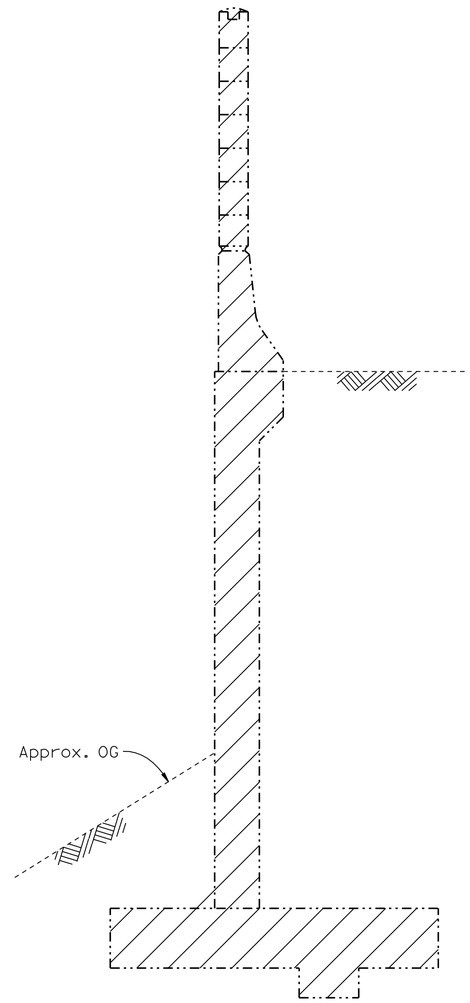

Station 527+37.744 to Station 529+44.62

LIMITS OF EXISTING WALL REMOVAL

1:20

LEGEND:

Indicates new construction

Indicates existing concrete

Indicates concrete removal

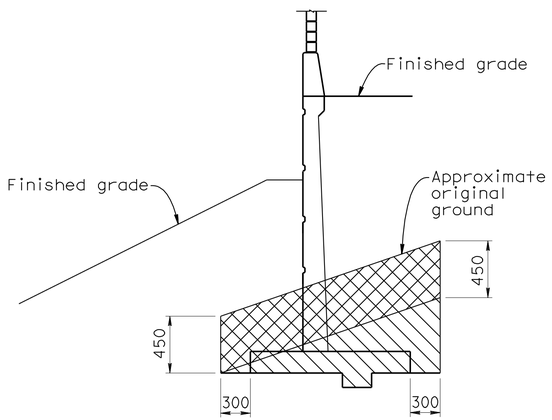

LIMITS OF PAYMENT FOR STRUCTURE EXCAVATION (AERIALLY DEPOSITED LEAD)

No scale

LEGEND:

Indicates structure excavation

Indicates structure excavation (Type Y-1) (Aerially deposited lead)

NOTE:
THE CONTRACTOR SHALL VERIFY ALL CONTROLLING FIELD DIMENSIONS BEFORE ORDERING OR FABRICATING ANY MATERIAL.

Caltrans Metric

ALL DIMENSIONS ARE IN METERS UNLESS OTHERWISE SHOWN

ORIGINAL SCALE IN MILLIMETERS FOR REDUCED PLANS 0 10 20 30 40 50 60 70 80 90 100

	BY	CHECKED
DESIGN	Hilario Tuazon	Rachel Washington
DETAILS	Roelina Martinez	Hilario Tuazon
QUANTITIES	Hilario Tuazon	Rachel Washington

STATE OF CALIFORNIA
DEPARTMENT OF TRANSPORTATION

DIVISION OF ENGINEERING SERVICES
STRUCTURE DESIGN
DESIGN BRANCH 6

CU 07
EA 1218V1

BRIDGE NO. RW 523
KILOMETER POST

RETAINING WALL NO. 523

RETAINING WALL DETAILS-MISCELLANEOUS

DISREGARD PRINTS BEARING EARLIER REVISION DATES

REVISION DATES: 7-2-07, 8-14-07, 3-13-08, 3-14-08, 4-16-08, 7-16-09

SHEET 15 OF 21

FILE => rw523-u-remov.dgn

STRUCTURES DESIGN DETAIL SHEET (METRIC) (REV.03-17-04)

USERNAME => trright DATE PLOTTED => 03-MAY-2010 TIME PLOTTED => 15:03

DIST.	COUNTY	ROUTE	KILOMETER POST TOTAL PROJECT	SHEET NO.	TOTAL SHEETS
07	LA	5	50.8/58.0	855	869

Xiaodong Chen 6-25-08
REGISTERED ENGINEER - CIVIL

5-3-10
PLANS APPROVAL DATE

REGISTERED PROFESSIONAL ENGINEER XIAODONG CHEN No. C 58858 Exp. 6-30-11 CIVIL STATE OF CALIFORNIA

The State of California or its officers or agents shall not be responsible for the accuracy or completeness of electronic copies of this plan sheet.

Caltrans Metric

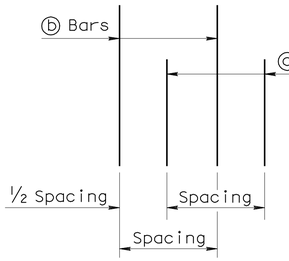

DETAIL B
No Scale

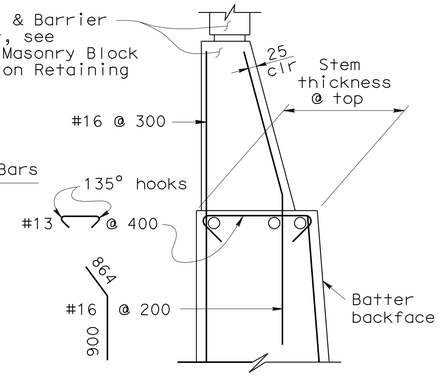

DETAIL A WITHOUT HAUNCH
No Scale

GENERAL NOTES

1. For soundwall and retaining wall architectural finish or texture, see details elsewhere in project plans.
2. For details not shown and drainage notes, see B3-8
3. Footing cover, 450 mm minimum.
4. Limit of no splicing rebars = H/3
5. Increasing stem thickness not permitted:

* ⓐ & ⓑ bars are bundled together.

** Alternate ⓐ & ⓑ bars are shown in "Detail B".

Cont = Continuous.

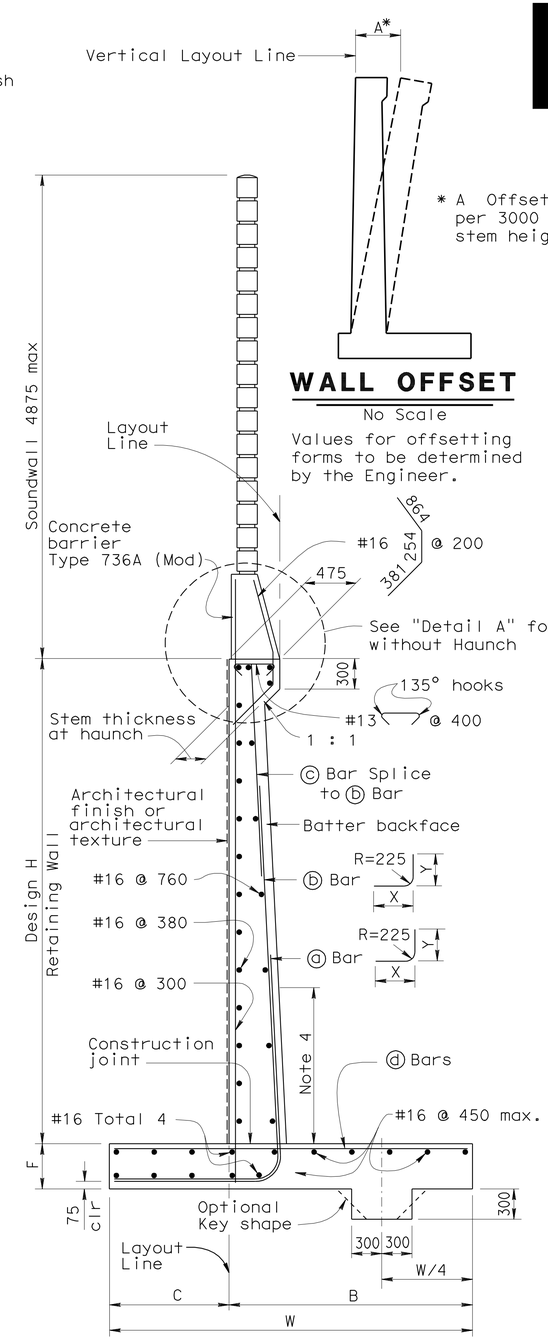

WALL OFFSET
No Scale

Values for offsetting forms to be determined by the Engineer.

SPREAD FOOTING SECTION
No Scale

DESIGN DATA

DESIGN: Load Factor Design (LFD)

CONCRETE: Reinforced Concrete, f'c = 25 MPa
fy = 420 MPa

LOADING CASE:
Level ground with 11.5 KPa Live Load Surcharge and 4875 mm Soundwall

Seismic Load	= 0.3 Dead Load
Wind Load	= 1435 Pa
Dead Load of Soundwall	= 20.6 kN/m
Dead Load of Barrier	= 5.4 kN/m

SEISMIC LOAD: SOIL
Kh = 0.3g
Kv = 0.0
Kae : Mononobe-Okabe Method

SOIL: $\emptyset = 34°$ $\gamma = 19$ kN/m³
Equivalent fluid pressure:
= 5.6 KPa/m for determination of toe pressure
= 4.2 KPa/m for determination of heel pressure

LOAD COMBINATIONS:

EXTERNAL STABILITY: (For Overturning, Sliding)

Group 1:	D + E + SC
Group 2 :	D + E + SC + W
Group 3 :	D + PYM

INTERNAL STABILITY (LFD): (For Member Design)

Group A :	β D + 1.7E + 1.7SC
Group B :	β D + 1.7E + 1.3W
Group C (stem) :	1.0D + 1.0E + 1.0EQD + 1.0EQE
Group C (footing) :	D + PYM

Where : β = 1.0 or 1.3 whichever controls design
D = Dead Load
E = Lateral Earth Pressure
SC = Live Load Surcharge
W = Wind Load
EQD = Seismic Dead Load
EQE = Seismic Lateral Earth Pressure
PYM = Probable Yield Moment (1.3 x Nominal Yield Moment of Stem)

ALTERNATIVE A: (CONSTANT TOP OF WALL THICKNESS) TABLE OF REINFORCING STEEL DIMENSIONS AND DATA

	Stem With Haunch													
Design H	1800	2400	3000	3600	4200	4800	5500	6100	6700	7300	7900	8500	9100	9800
W	2300	2450	2650	3000	3300	3650	3950	4350	4650	5000	5650	6000	6450	6850
C	850	850	900	1000	1100	1200	1300	1450	1500	1650	1900	2050	2200	2350
B	1500	1600	1750	2000	2200	2450	2650	2900	3150	3350	3750	3950	4250	4500
F Spread Footing	380	380	380	380	380	450	450	550	600	700	850	900	1000	1150
Batter	0	100:4	100:4	100:4	100:4	100:4	100:4	100:4	100:4	100:5	100:6	100:7	100:8	100:8
Stem Thickness @ Haunch	305	305	305	305	305	305	305	305	305	305	305	305	305	305
ⓐ Bars				#19@450**	#22@450**	#25@450**	#29@450**	#32@450**	#25@225*	#25@225*	#22@150*	#32@300**	#29@225*	#36@300**
X				Cont	Cont	Cont	Cont	Cont	Cont	Cont	Cont	Cont	Cont	Cont
Y				2400	2000	2300	2600	2900	2900	3350	3500	3950	4250	4700
ⓑ Bars	#16@300	#16@300	#16@225	#19@450**	#22@450**	#25@450**	#29@450**	#32@450**	#25@225*	#25@225*	#22@150*	#32@300**	#29@225*	#36@300**
X	Cont	Cont	Cont	Cont	Cont	Cont	Cont	Cont	Cont	1700	2000	2150	2450	2600
Y	Cont	Cont	Cont	Cont	3200	3950	4550	5350	5950	6400	5650	5800	7750	7150
ⓒ Bars					#19@450	#19@450	#19@450	#19@450	#19@450	#19@450	#19@300	#22@300	#22@450	#22@300
ⓓ Bars	#16@300	#16@300	#16@300	#16@225	#19@225	#19@225	#19@150	#25@225	#25@225	#25@225	#22@150	#22@150	#29@225	#29@225
Ultimate Bearing Capacity Req'd Kpa	220	265	290	315	350	390	430	475	540	585	600	640	675	740

ALTERNATIVE B: (VARIABLE TOP OF WALL THICKNESS) TABLE OF REINFORCING STEEL DIMENSIONS AND DATA

	Stem With Haunch						Stem Without Haunch						
Design H	2400	3000	3600	4200	4800	5500	6100	6700	7300	7900	8500	9100	9800
W	2450	2600	2800	3100	3450	3950	4200	4900	5000	5650	6100	6250	6650
C	850	850	900	1050	1150	1300	1400	1600	1650	1900	2050	2050	2300
B	1600	1750	1900	2050	2300	2650	2800	3300	3350	3750	4050	4200	4350
F Spread Footing	380	380	380	380	450	450	550	600	700	850	900	1000	1050
Batter	0	0	0	0	0	0	0	0	0	100:2	100:4	100:4	100:4
Stem Thickness @ Top							475	610	610	610	610	610	610
Stem Thickness @ Haunch	305	305	305	305	380	380							
ⓐ Bars			#19@300**	#16@150*	#29@450**	#29@300**	#29@300**	#29@300**	#22@150*	#22@150*	#22@150*	#29@225*	#36@300**
X			Cont	Cont	Cont	Cont	Cont	Cont	Cont	Cont	Cont	Cont	Cont
Y			1700	1700	2600	2600	2600	2600	2900	3350	3800	4100	4400
ⓑ Bars	#16@225	#19@225	#19@300**	#16@150*	#29@450**	#29@300**	#29@300**	#29@300**	#22@150*	#22@150*	#22@150*	#29@225*	#36@300**
X	Cont	Cont	Cont	Cont	Cont	Cont	Cont	Cont	1700	1850	2300	2300	2450
Y	Cont	Cont	Cont	Cont	3500	3500	3650	3650	5350	6100	6550	7300	7300
ⓒ Bars					#22@450	#22@300	#22@300	#22@300	#19@300	#19@300	#19@300	#22@450	#22@300
ⓓ Bars	#16@300	#16@225	#16@225	#19@225	#19@225	#29@300	#29@300	#22@150	#19@150	#22@150	#22@150	#29@225	#29@225
Ultimate Bearing Capacity Req'd Kpa	265	310	350	365	430	430	510	505	585	605	640	740	770

ALL DIMENSIONS ARE IN MILLIMETERS UNLESS OTHERWISE SHOWN

STANDARD DRAWING

RELEASE DATE 2/25/03	DESIGN BY Madon Sah	CHECKED Overcomer Hor	RELEASED BY Roberto Lovalle OFFICE CHIEF
FILE NO. xs14-220	DETAILS BY A R Dudsak	CHECKED J C Moese	
	SUBMITTED BY Overcomer Hor	DRAWING DATE 2/94	

STATE OF CALIFORNIA DEPARTMENT OF TRANSPORTATION

DIVISION OF ENGINEERING SERVICES

BRIDGE NO. RW 523

KILOMETER POST

RETAINING WALL NO. 523

RETAINING WALL TYPE 1SWB

DS OSD 2147A (METRIC) (REV. X/XX/XX)

ORIGINAL SCALE IN MILLIMETERS FOR REDUCED PLANS 0 10 20 30 40 50 60 70 80 90 100

CU 07
EA 1218V1

DISREGARD PRINTS BEARING EARLIER REVISION DATES

REVISION DATES (PRELIMINARY STAGE ONLY) 6-25-07 3-14-08 7-16-09

SHEET 16 OF 21

USERNAME => trrichf

rw523-u-xs1.dgn

DATE PLOTTED => 03-MAY-2010 TIME PLOTTED => 15:03

DIST.	COUNTY	ROUTE	KILOMETER POST TOTAL PROJECT	SHEET NO.	TOTAL SHEETS
07	LA	5	50.8/58.0	856	869

Caltrans Metric

Xiaodong Chen 6-25-08
REGISTERED ENGINEER - CIVIL

5-3-10
PLANS APPROVAL DATE

REGISTERED PROFESSIONAL ENGINEER XIAODONG CHEN No. C 58858 Exp. 6-30-11 CIVIL STATE OF CALIFORNIA

The State of California or its officers or agents shall not be responsible for the accuracy or completeness of electronic copies of this plan sheet.

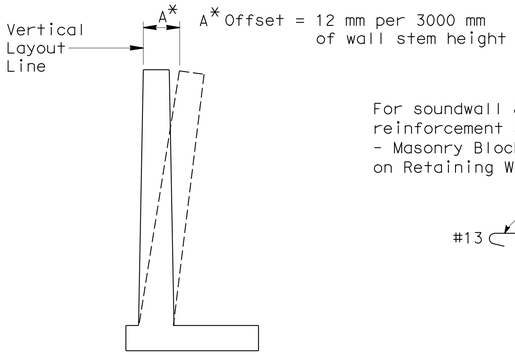

WALL OFFSET

NO SCALE
Values for offsetting forms to be determined by the engineer

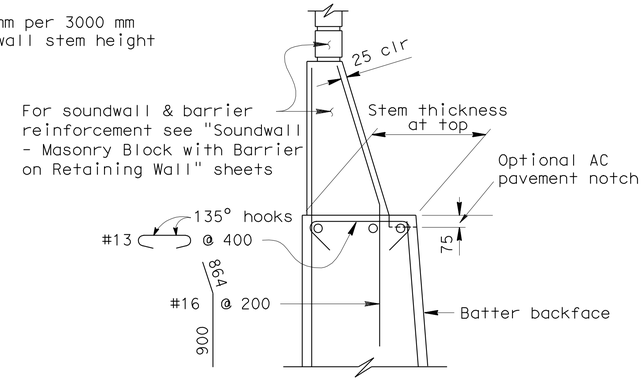

DETAIL A WITHOUT HAUNCH

NO SCALE

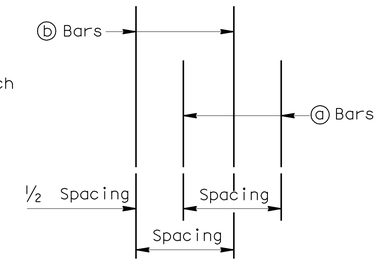

DETAIL B

NO SCALE

ALTERNATIVE A: (CONSTANT TOP OF WALL THICKNESS) TABLE OF REINFORCING STEEL DIMENSIONS AND DATA

STEM WITH HAUNCH														
Design H	1800	2400	3000	3600	4200	4800	5500	6100	6700	7300	7900	8500	9100	9800
W	2600	2600	2800	3050	3450	3750	4050	4400	4800	5200	5650	6100	6500	6950
F Spread Ftg.	400	400	400	450	450	550	600	600	700	750	900	1000	1150	1200
Batter	100:0	100:4	100:4	100:4	100:4	100:4	100:4	100:4	100:4	100:5	100:6	100:7	100:8	100:8
Stem Thickness @ Haunch	305	305	305	305	305	305	305	305	305	305	305	305	305	305
ⓐ Bars				#19 @ 450**	#22 @ 450**	#25 @ 450**	#29 @ 450**	#32 @ 450**	#25 @ 225*	#25 @ 225*	#22 @ 150*	#32 @ 300**	#29 @ 225*	#36 @ 300**
Y				2450	2000	2300	2450	2750	2900	3350	3500	4000	4300	4750
ⓑ Bars	#16 @ 300	#16 @ 300	#16 @ 225	#19 @ 450**	#22 @ 450**	#25 @ 450**	#29 @ 450**	#32 @ 450**	#25 @ 225*	#25 @ 225*	#22 @ 150*	#32 @ 300**	#29 @ 225*	#36 @ 300**
Y	Cont	Cont	Cont	Cont	3200	4000	4600	5350	5950	6400	5650	5800	7800	7200
ⓒ Bars					#19 @ 450	#19 @ 450	#19 @ 450	#19 @ 450	#19 @ 450	#19 @ 450	#19 @ 300	#22 @ 300	#22 @ 450	#22 @ 300
SHORT ⓓ BARS	#16 @ 300	#16 @ 225	#19 @ 225	#22 @ 450**	#25 @ 450**	#25 @ 450**	#29 @ 450**	#32 @ 450**	#25 @ 225*	#25 @ 225*	#22 @ 150*	#32 @ 300*	#29 @ 225*	#36 @ 300**
X	Cont	Cont	Cont	1700	2000	2300	2450	2600	2900	3200	3500	3800	4100	4600
ⓓ Bars				#22 @ 450**	#25 @ 450**	#25 @ 450**	#29 @ 450**	#32 @ 450**	#25 @ 225*	#25 @ 225*	#22 @ 150*	#32 @ 300*	#29 @ 225*	#36 @ 300**
X				Cont	Cont	Cont	Cont	Cont	Cont	Cont	Cont	Cont	Cont	Cont
Ultimate Bearing Capacity req'd Kpa	300	375	420	495	545	630	720	775	850	930	1010	1075	1170	1235

ALTERNATIVE B: (VARIABLE TOP OF WALL THICKNESS) TABLE OF REINFORCING STEEL DIMENSIONS AND DATA

	STEM WITH HAUNCH						STEM WITHOUT HAUNCH						
Design H	2400	3000	3600	4200	4800	5500	6100	6700	7300	7900	8500	9100	9800
W	2600	2750	2950	3200	3800	4050	4350	4950	5200	5700	6150	6500	6850
F Spread Ftg.	400	400	400	400	450	450	550	700	700	850	1000	1150	1150
Batter	0	0	0	0	0	0	0	0	0	100:2	100:4	100:4	100:4
Stem thickness @ Top							475	610	610	610	610	610	610
Stem thickness @ Haunch	305	305	305	305	380	380							
ⓐ Bars			#19 @ 300**	#16 @ 150*	#25 @ 300**	#25 @ 225*	#29 @ 300**	#29 @ 300**	#22 @ 150*	#22 @ 150*	#22 @ 150*	#29 @ 225*	#36 @ 300**
Y			1700	1700	1850	2000	2450	2600	2900	3350	3800	4100	4400
ⓑ Bars	#16 @ 225	#19 @ 225	#19 @ 300**	#16 @ 150*	#25 @ 300**	#25 @ 225*	#29 @ 300**	#29 @ 300**	#22 @ 150*	#22 @ 150*	#22 @ 150*	#29 @ 225*	#36 @ 300**
Y	Cont	Cont	Cont	Cont	2600	3350	3350	3500	5200	5950	6550	7300	7300
ⓒ Bars					#19 @ 300	#22 @ 450	#22 @ 300	#22 @ 300	#19 @ 300	#19 @ 300	#19 @ 300	#22 @ 450	#22 @ 300
SHORT ⓓ BARS	#16 @ 225	#19 @ 225	#22 @ 450**	#16 @ 150*	#25 @ 300**	#25 @ 225*	#29 @ 300**	#29 @ 300**	#22 @ 150*	#29 @ 150*	#29 @ 150*	#29 @ 225*	#25 @ 150*
X	Cont	Cont	1850	1700	2150	2600	2750	3050	3350	3650	3950	4250	4600
ⓓ Bars			#22 @ 450**	#16 @ 150*	#25 @ 300**	#25 @ 225*	#29 @ 300**	#29 @ 300**	#22 @ 150*	#29 @ 150*	#29 @ 150*	#29 @ 225*	#25 @ 150*
X			Cont	Cont	Cont	Cont	Cont	Cont	Cont	Cont	Cont	Cont	Cont
Ultimate Bearing Capacity req'd Kpa	375	430	495	565	605	685	775	830	915	985	1070	1175	1235

Cont = Continuous

* = ⓐ&ⓑ, Short ⓓ&ⓓ bars are bundled together.

** = Alternate ⓐ&ⓑ bars as shown in "Detail B". Alternate Short ⓑ&ⓑ bars

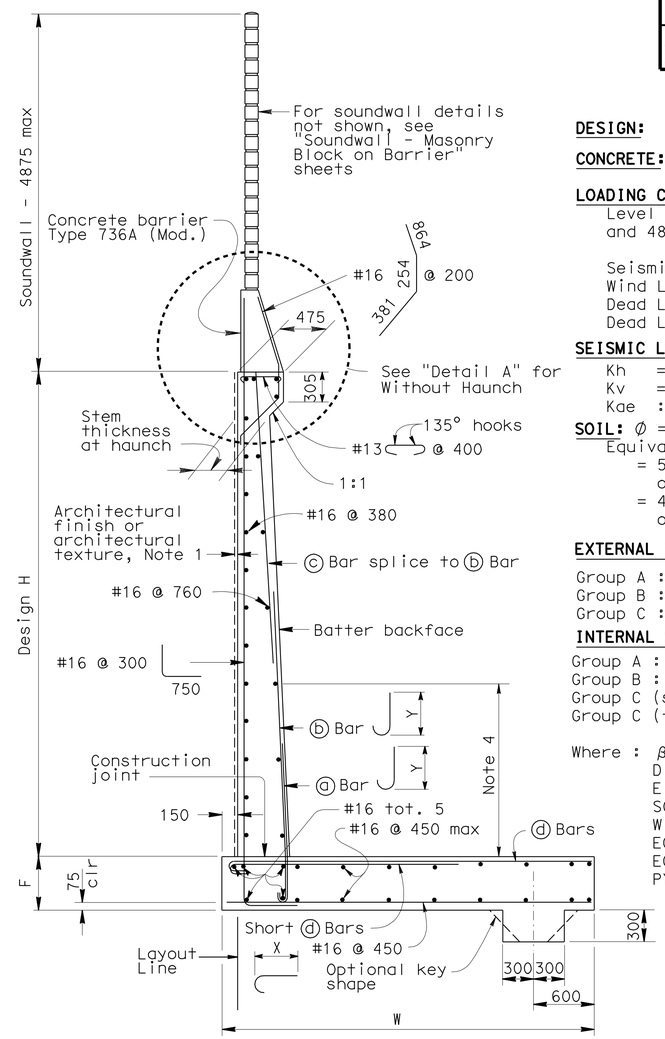

SPREAD FOOTING SECTION

NO SCALE

DESIGN DATA

DESIGN: Load Factor Design (LFD)

CONCRETE: Reinforced Concrete, f'c = 25 MPa
fy = 420 MPa

LOADING CASE:
Level ground with 11.5 KPa Live Load Surcharge and 4875 mm Soundwall

Seismic Load = 0.3 Dead Load
Wind Load = 1435 Pa
Dead Load of Soundwall = 20.6 kN/m
Dead Load of Barrier = 5.4 kN/m

SEISMIC LOAD: SOIL
Kh = 0.3g
Kv = 0.0
Kae : Mononobe-Okabe Method

SOIL: $\emptyset = 34°$ $\gamma = 19$ kN/m³
Equivalent fluid pressure:
= 5.6 KPa/m for determination of toe pressure
= 4.2 KPa/m for determination of heel pressure

EXTERNAL STABILITY:
Group A : D + E + SC
Group B : D + E + SC + W
Group C : D + PYM

INTERNAL STABILITY (LFD):
Group A : βD + 1.7 E + 1.7 SC
Group B : βD + 1.7 E + 1.3 W
Group C (stem) : 1.0 D + 1.0 E + 1.0 EQD + 1.0 EQE
Group C (footing) : D + PYM

Where : β = 1.0 or 1.3 whichever controls design
D = Dead Load
E = Lateral Earth Pressure
SC = Live Load Surcharge
W = Wind Load
EQD = Seismic Dead Load
EQE = Seismic Lateral Earth Pressure
PYM = Probable Yield Moment (1.3 x Nominal Yield Moment of Stem)

GENERAL NOTES

1. For soundwall and retaining wall architectural finish or texture, see details elsewhere in project plans.
2. For details not shown and drainage notes, see B3-8
3. Footing cover, 450 mm minimum.
4. Limit of no splicing rebars = H/3
5. Increasing stem thickness not permitted.

ALL DIMENSIONS ARE IN MILLIMETERS UNLESS OTHERWISE SHOWN

STANDARD DRAWING

RELEASE DATE 7/29/03	DESIGN BY Madon Sah	CHECKED Overcomer Hor	RELEASED BY
FILE NO. xs14-350	DETAILS BY R Yee	CHECKED J.C. Moose	
	SUBMITTED BY Overcomer Hor	DRAWING DATE 12/00	OFFICE CHIEF

STATE OF CALIFORNIA
DEPARTMENT OF TRANSPORTATION

DIVISION OF ENGINEERING SERVICES

BRIDGE NO. RW 523
KILOMETER POST

RETAINING WALL NO. 523

RETAINING WALL TYPE 5SWB

DS OSD 2147A (METRIC) (REV. 2/25/97)

ORIGINAL SCALE IN MILLIMETERS FOR REDUCED PLANS 0 10 20 30 40 50 60 70 80 90 100

CU 07
EA 1218V1

DISREGARD PRINTS BEARING EARLIER REVISION DATES

REVISION DATES (PRELIMINARY STAGE ONLY) 6-28-07 3-14-08 7-16-09

SHEET 17 OF 21

USERNAME => trrichf

rw523-u-xs2.dgn

DATE PLOTTED => 03-MAY-2010 TIME PLOTTED => 15:03

DIST.	COUNTY	ROUTE	KILOMETER POST TOTAL PROJECT	SHEET NO.	TOTAL SHEETS
07	LA	5	50.8/58.0	857	869

Caltrans Metric

Xiaodong Chen 6-25-08
REGISTERED ENGINEER - CIVIL

5-3-10
PLANS APPROVAL DATE

REGISTERED PROFESSIONAL ENGINEER XIAODONG CHEN No. C 58858 Exp. 6-30-11 CIVIL STATE OF CALIFORNIA

The State of California or its officers or agents shall not be responsible for the accuracy or completeness of electronic copies of this plan sheet.

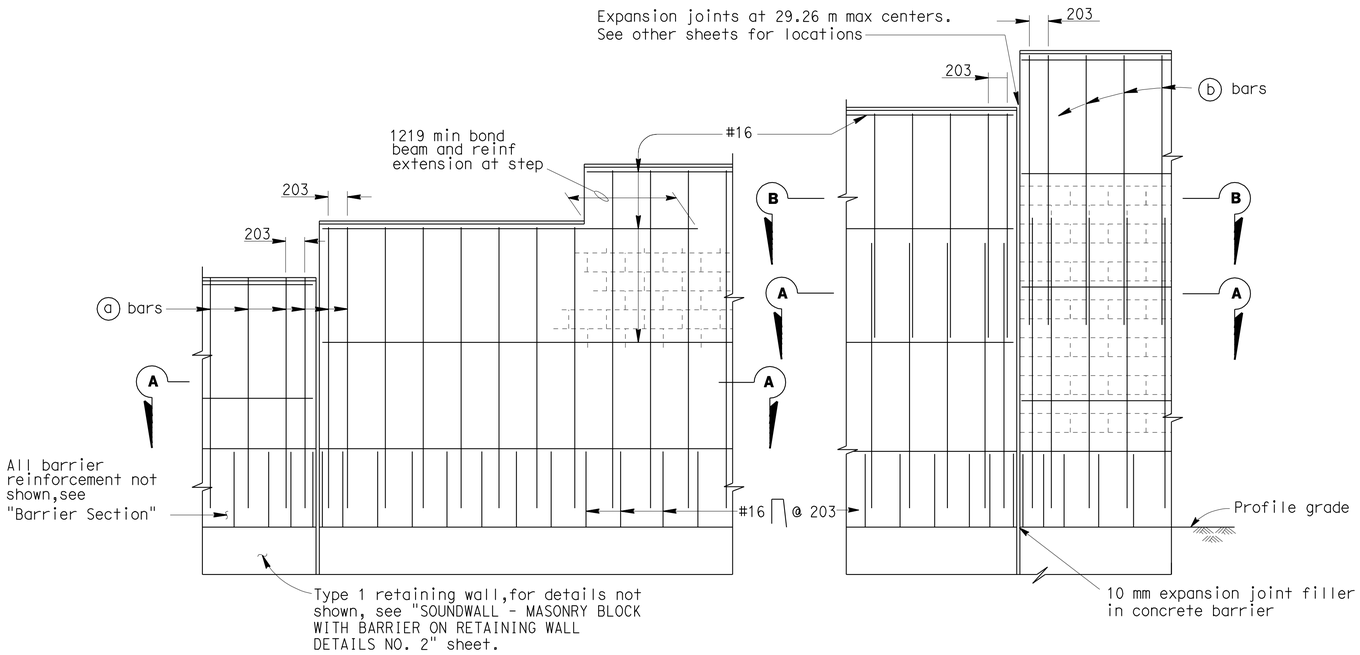

PART ELEVATIONS

SOUNDWALL REINFORCEMENT TABLE						
Maximum H	(a) bars @ 406 max	(b) bars @ 406 max	"y"	f'm (MPa)	Compressive Strength of CMU (MPa)	Maximum H
1930	#13	———	———	10.34	13.1	1930
2540	#13	———	———	10.34	13.1	2540
3150	#13	———	———	10.34	13.1	3150
3759	#16	#13	1524	10.34	13.1	3759
4369	#19	#13	2134	10.34	13.1	4369
4978	#19	#13	2743	17.24	25.6	4978

Note I : For details not shown,see "SOUNDWALL WITH BARRIER ON RETAINING WALL - MASONRY BLOCK -- DETAILS NO.2" sheet.

Note II : Slope ground at traffic side of barrier to drain. Maximum slope ±10%.

Note III: See "SOUNDWALL MASONRY BLOCK - MISCELLANEOUS DETAILS" sheet for other details.

GENERAL NOTES

Note A: For type of block and joint finish, see other sheets.

Note B: When blocks are laid in stacked bond, ladder type, galvanized joint reinforcement shall be provided. A minimum of 2-3.76 mm wire continuous at 1219 mm maximum to be used. Locate reinforcement in joints that are at the approximate midpoint between bond beams.

Note C: Horizontal joints shall be tooled concave or may be weathered.
Vertical joints shall be tooled concave or may be raked.

Note D: For intermediate wall heights that are between the "H's" given. Use the tabular information for the next higher "H".

Note E: Masonry strengths are listed in "SOUNDWALL REINFORCEMENT TABLE".

Note F: Class 2 concrete to be used for the barrier.

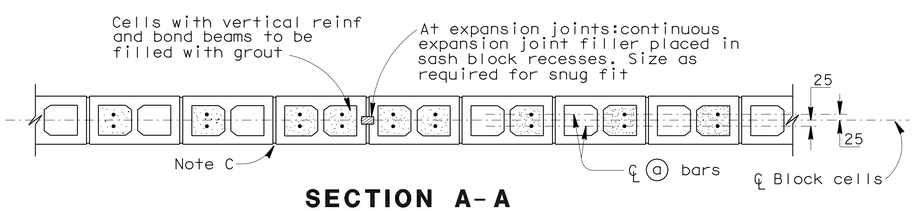

SECTION A-A

For details not shown,see other details

H=1930 THRU H=3150

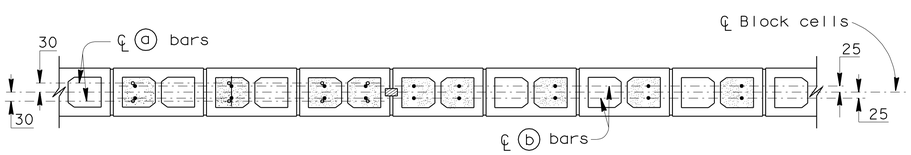

SECTION A-A

SECTION B-B

For details not shown,see other details

H=3759 THRU H=4978

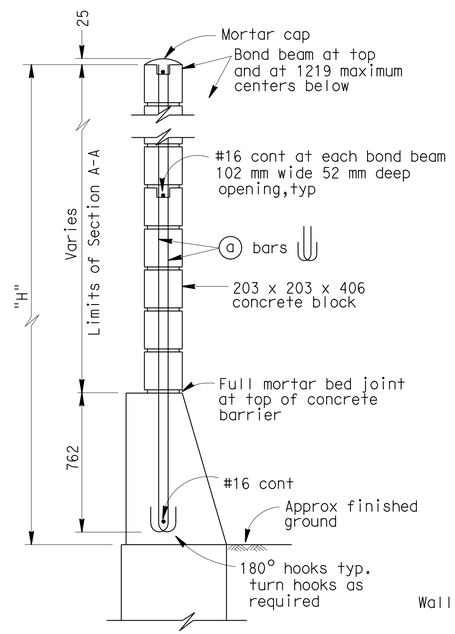

H=1930 THRU H=3150

For details not shown,see H=3759 thru H=4978

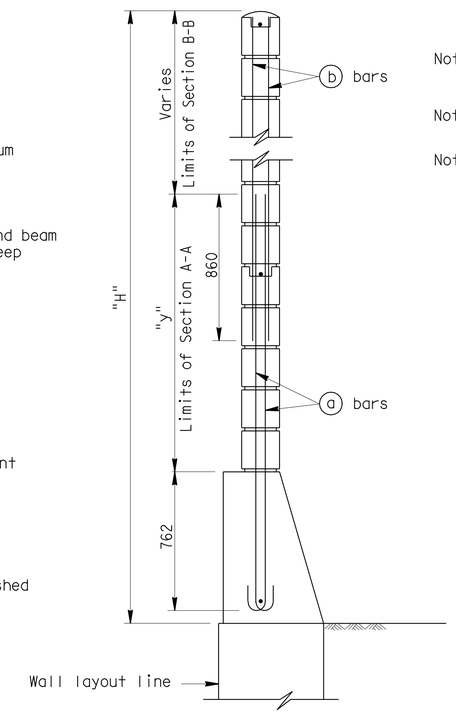

H=3759 THRU H=4978

For details not shown,see H=1930 thru H=3150

TYPICAL SECTIONS

NO SCALE

ALL DIMENSIONS ARE IN MILLIMETERS UNLESS OTHERWISE SHOWN

RETAINING WALL NO. 523

SOUNDWALL - MASONRY BLOCK WITH BARRIER ON RETAINING WALL

DETAILS NO. 1

STANDARD DRAWING					
RELEASE DATE 7/3/03	DESIGN	BY D. DUNRUD	CHECKED W.C. WALKER	RELEASED BY Roberto Lacalle OFFICE CHIEF
FILE NO. xs15-130-1	DETAILS	BY R. YEE	CHECKED W.C. WALKER	
	SUBMITTED	BY D. DUNRUD	DRAWING DATE 11/94	

DS OSD 2147A (METRIC) (REV. 2/25/97)

STATE OF CALIFORNIA DEPARTMENT OF TRANSPORTATION

DIVISION OF ENGINEERING SERVICES

BRIDGE NO. RW 523

KILOMETER POST

ORIGINAL SCALE IN MILLIMETERS FOR REDUCED PLANS 0 10 20 30 40 50 60 70 80 90 100

CU 07
EA 1218V1

DISREGARD PRINTS BEARING EARLIER REVISION DATES

REVISION DATES (PRELIMINARY STAGE ONLY) 7-2-07 3-14-08 7-16-09

SHEET 18 OF 21

USERNAME => trrichf

rw523-u-xs3.dgn

DATE PLOTTED => 03-MAY-2010 TIME PLOTTED => 15:04

DIST.	COUNTY	ROUTE	KILOMETER POST TOTAL PROJECT	SHEET NO.	TOTAL SHEETS
07	LA	5	50.8/58.0	858	869

Caltrans Metric

Xiaodong Chen 6-25-08
REGISTERED ENGINEER - CIVIL

5-3-10
PLANS APPROVAL DATE

REGISTERED PROFESSIONAL ENGINEER XIAODONG CHEN No. C 58858 Exp. 6-30-11 CIVIL STATE OF CALIFORNIA

The State of California or its officers or agents shall not be responsible for the accuracy or completeness of electronic copies of this plan sheet.

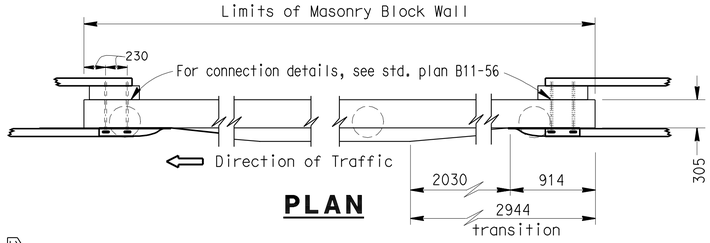

PLAN

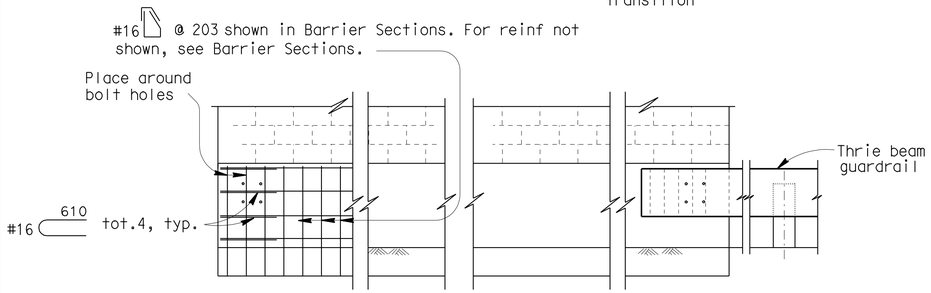

ELEVATION

METAL BEAM GUARDRAIL ANCHORAGE

For details not shown, see std. plan B11-56.

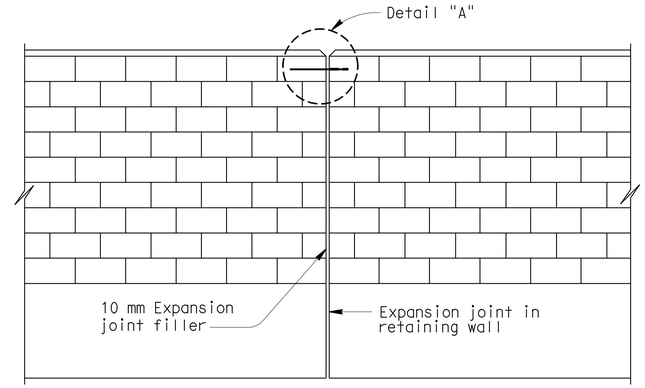

ALIGNMENT KEY DETAIL

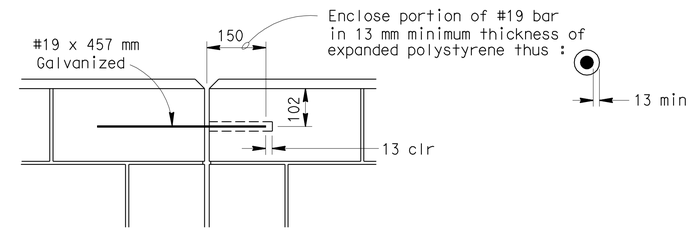

DETAIL A

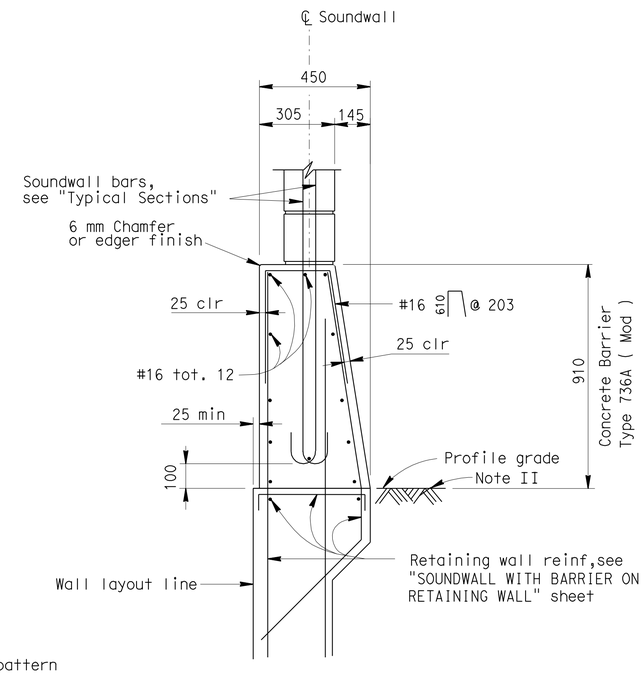

BARRIER SECTION

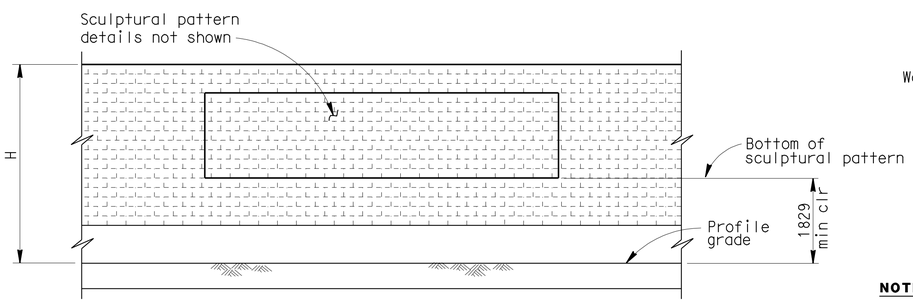

CLEARANCE DETAIL

DESIGN NOTES

DESIGN

Uniform Building Code,1997 Edition and the Bridge Design Specifications.

DESIGN WIND LOAD

1293 Pa

DESIGN SEISMIC LOAD

0.57 Dead load

REINFORCED CONCRETE

f'c = 22.408 Mpa
fy = 413.688 MPa

CONCRETE MASONRY

REGULAR STRENGTH	HIGH STRENGTH	
f'm = 10.34 MPa	f'm = 13.79 MPa	f'm = 17.24 MPa
f_b = 3.41 MPa	f_b = 4.55 MPa	f_b = 5.72 MPa
fs = 165.5 MPa	fs = 165.5 MPa	fs = 165.5 MPa
n = 25.8	n = 19.3	n = 15.5

LOAD FACTORS AND LOAD COMBINATIONS

Working Stress Design (WSD) Percentage of unit stress

Group 1: D + E + SC 100%
Group 2: D + W + SC + E 100%
Group 3: D + 0.71 EQD + E 100%

Where:

D = Dead load
E = Lateral earth pressure
SC = Live load surcharge
W = Wind load
EQD = Seismic dead load

Load Factor Design (LFD)

Group A: βD +1.7 E + 1.7 SC
Group B: βD +1.7 E + 1.3 W
Group C: βD +1.3 E + 1.0 EQE
Group D: βD +1.3 E + 1.0 EQD
Group E: βD +1.1 E + 0.85 (EQE + EQD)

Where : β = 0.9 or 1.2, whichever controls in design
D = Dead load
E = Lateral earth pressure
SC = Live load surcharge
W = Wind load
EQD = Seismic dead load
EQE = Seismic earth load

STRENGTH REDUCTION FACTORS, Ø

Reinforced concrete:
For flexure ---------- Ø=0.90
For shear ---------- Ø=0.85

Concrete masonry:
For flexure ---------- Ø=0.80
For shear ---------- Ø=0.60

Foundations :
See "RETAINING WALL WITH SOUNDWALL" sheets.

NOTES:

I : For details not shown,see "RETAINING WALL WITH SOUNDWALL" sheets.

II : Slope ground at traffic side of barrier to drain. Maximum slope ±10%. See Standard Plan B11-56, Note D.

NO SCALE

ALL DIMENSIONS ARE IN MILLIMETERS UNLESS OTHERWISE SHOWN

STANDARD DRAWING

RELEASE DATE 9/8/03	DESIGN BY D. DUNRUD	CHECKED W.C. WALKER	RELEASED BY Roberto Lavalle OFFICE CHIEF
FILE NO. xs15-130-2	DETAILS BY R. YEE	CHECKED W.C. WALKER	
	SUBMITTED BY D. DUNRUD	DRAWING DATE 11/94	

DS OSD 2147A (METRIC) (REV. 2/25/97)

ORIGINAL SCALE IN MILLIMETERS FOR REDUCED PLANS 0 10 20 30 40 50 60 70 80 90 100

STATE OF CALIFORNIA DEPARTMENT OF TRANSPORTATION

DIVISION OF ENGINEERING SERVICES

CU 07
EA 1218V1

BRIDGE NO. RW 523
KILOMETER POST

RETAINING WALL NO. 523

SOUNDWALL - MASONRY BLOCK WITH BARRIER ON RETAINING WALL

DETAILS NO. 2

DISREGARD PRINTS BEARING EARLIER REVISION DATES

REVISION DATES (PRELIMINARY STAGE ONLY) 7-2-07 3-14-08 7-16-09

SHEET 19 OF 21

USERNAME => trrichf

rw523-u-xs4.dgn

DATE PLOTTED => 03-MAY-2010 TIME PLOTTED => 15:04

DIST.	COUNTY	ROUTE	KILOMETER POST TOTAL PROJECT	SHEET NO.	TOTAL SHEETS
07	LA	5	50.8/58.0	859	869

Caltrans Metric

Xiaodong Chen 6-25-08
REGISTERED ENGINEER - CIVIL

5-3-10
PLANS APPROVAL DATE

REGISTERED PROFESSIONAL ENGINEER XIAODONG CHEN No. C58858 Exp. 6-30-11 CIVIL STATE OF CALIFORNIA

The State of California or its officers or agents shall not be responsible for the accuracy or completeness of electronic copies of this plan sheet.

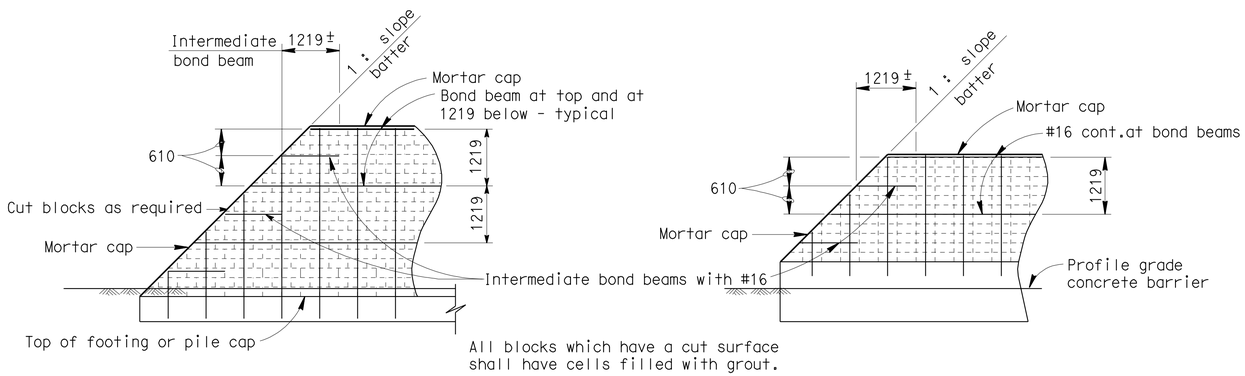

All blocks which have a cut surface shall have cells filled with grout.

TYPE I

Note : Slope batter shall not be flatter than 1:1

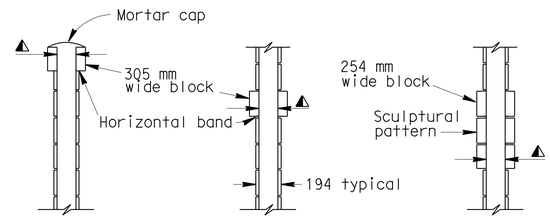

ARCHITECTURAL ALTERNATIVES

◭ Cell width to match 203 mm block

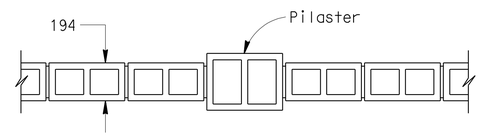

305 mm WIDE PROJECTING BLOCK

NOTES:

305 mm wide block not allowed within 1829 mm of profile grade.

Alternatives using 305 mm wide projecting block will not be permitted on standard sheet: "SOUNDWALL - MASONRY BLOCK ON PILES".

For structural details,see other sheets.

Type III not permitted for soundwalls with "H" less than 3048 mm.

The end of the wall details may be used with any of the standard supporting foundations for masonry block. The foundations shown for the different types are for the purpose of illustration only.

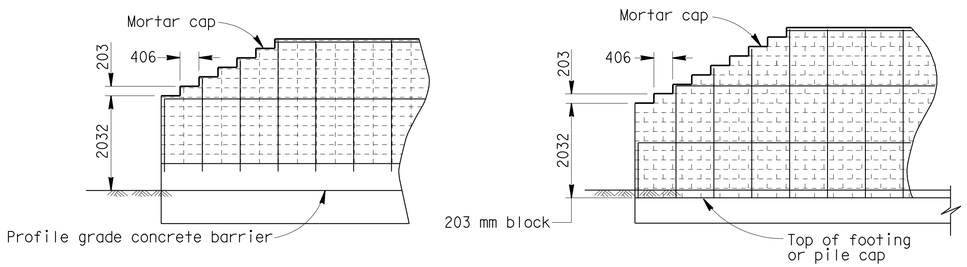

TYPE II

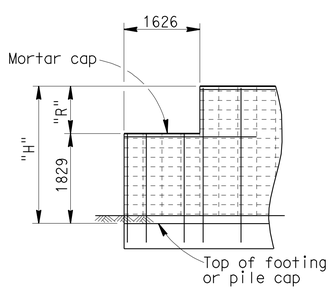

H=3048

SINGLE STEP

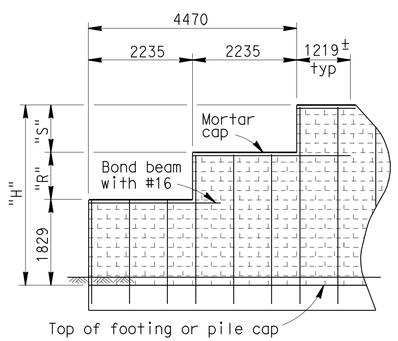

H=3251 TO H=4267

2 STEPS

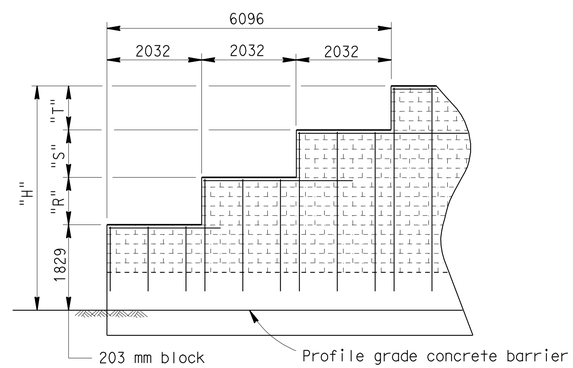

H=4470 TO H=4877

3 STEPS

TYPE III

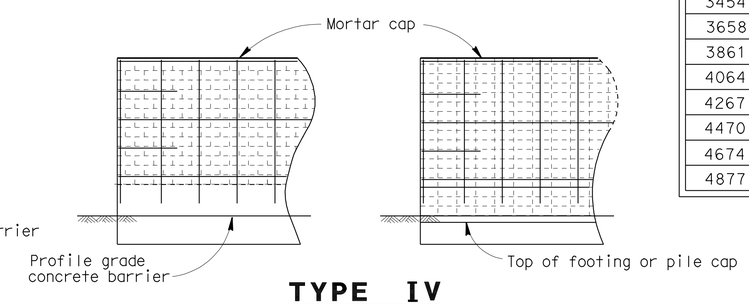

TYPE IV

END OF WALL DETAILS

203 mm x 203 mm x 406 mm BLOCK

H	R	S	T
3048	1219	—	—
3251	813	610	—
3454	813	813	—
3658	1016	813	—
3861	1016	1016	—
4064	1219	1016	—
4267	1219	1219	—
4470	1016	813	813
4674	1016	1016	813
4877	1016	1016	1016

NO SCALE

ALL DIMENSIONS ARE IN MILLIMETERS UNLESS OTHERWISE SHOWN

RETAINING WALL NO. 523

SOUNDWALL MASONRY BLOCK

MISCELLANEOUS DETAILS

STANDARD DRAWING

RELEASE DATE 7/3/03	DESIGN	BY D. DUNRUD	CHECKED W.C. WALKER	RELEASED BY
FILE NO. xs15-210	DETAILS	BY R. YEE	CHECKED W.C. WALKER	OFFICE CHIEF
	SUBMITTED	BY D. DUNRUD	DRAWING DATE 11/94	

DS OSD 2147A (METRIC) (REV. 2/25/97)

ORIGINAL SCALE IN MILLIMETERS FOR REDUCED PLANS 0 10 20 30 40 50 60 70 80 90 100

STATE OF CALIFORNIA DEPARTMENT OF TRANSPORTATION

DIVISION OF ENGINEERING SERVICES

CU 07
EA 1218V1

BRIDGE NO. RW 523
KILOMETER POST

DISREGARD PRINTS BEARING EARLIER REVISION DATES

REVISION DATES (PRELIMINARY STAGE ONLY) 5-11-08 5-14-08 7-16-11

SHEET 20 OF 21

USERNAME => trrichf

DATE PLOTTED => 03-MAY-2010 TIME PLOTTED => 15:04

rw523-y-xs15-210.d

DIST	COUNTY	ROUTE	KILOMETER POST TOTAL PROJECT	SHEET No	TOTAL SHEETS
07	LA	5	50.8/58.0	860	869

REGISTERED CIVIL ENGINEER 6-4-07

5-3-10
PLANS APPROVAL DATE

REGISTERED PROFESSIONAL ENGINEER
Bhaskar Joshi
No. C66350
Exp. 6-30-10
CIVIL
STATE OF CALIFORNIA

The State of California or its officers or agents shall not be responsible for the accuracy or completeness of electronic copies of this plan sheet.

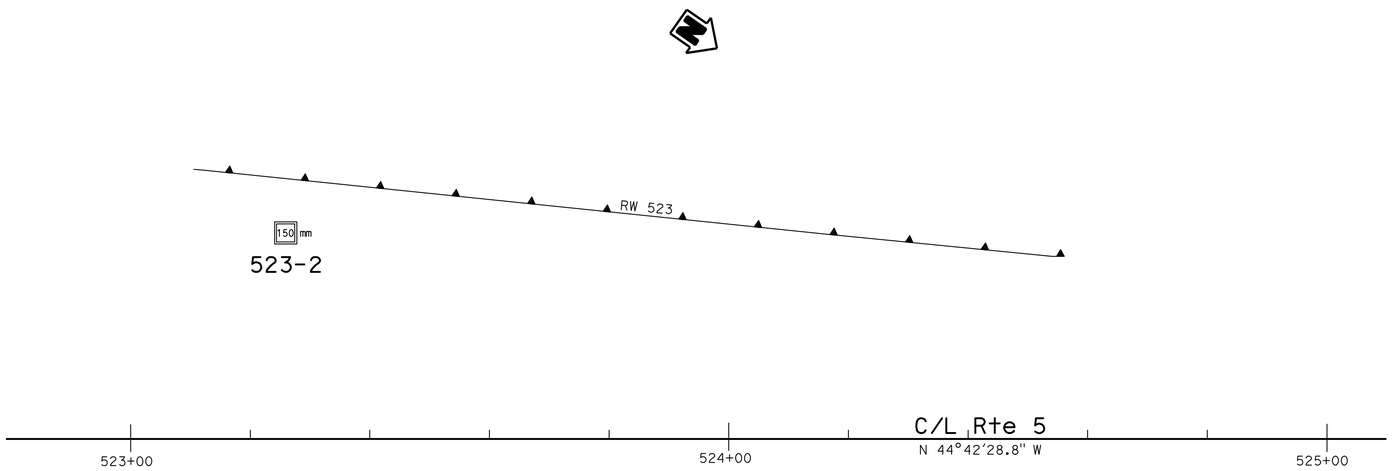

PLAN
1:500

BENCH MARK

N 578996.73
E 1967898.053
Elev 226.694 m

Notes:

1. Borehole locations and elevation were not surveyed and are estimated from Project Plans.

2. Test borings utilized a CME Automatic Hammer Driver (theoretical free fall energy of 0.35 kip-ft) to advance the SPT sampler. A multiplication factor of 1.36 may be used to obtain N values adjusted to a hammer efficiency of 60% (N_{60}). Refer to Office of Drilling Services Memo dated December 7, 2005 for a list of hammer efficiency adjustment factors.

3. Penetration index values shown on the Log of Test Boring (LOTB) sheets are the actual values recorded in the field. Soil consistency shown on the LOTB sheets is based on the actual penetration index values recorded in the field.

4. No ground water encountered during field investigation.

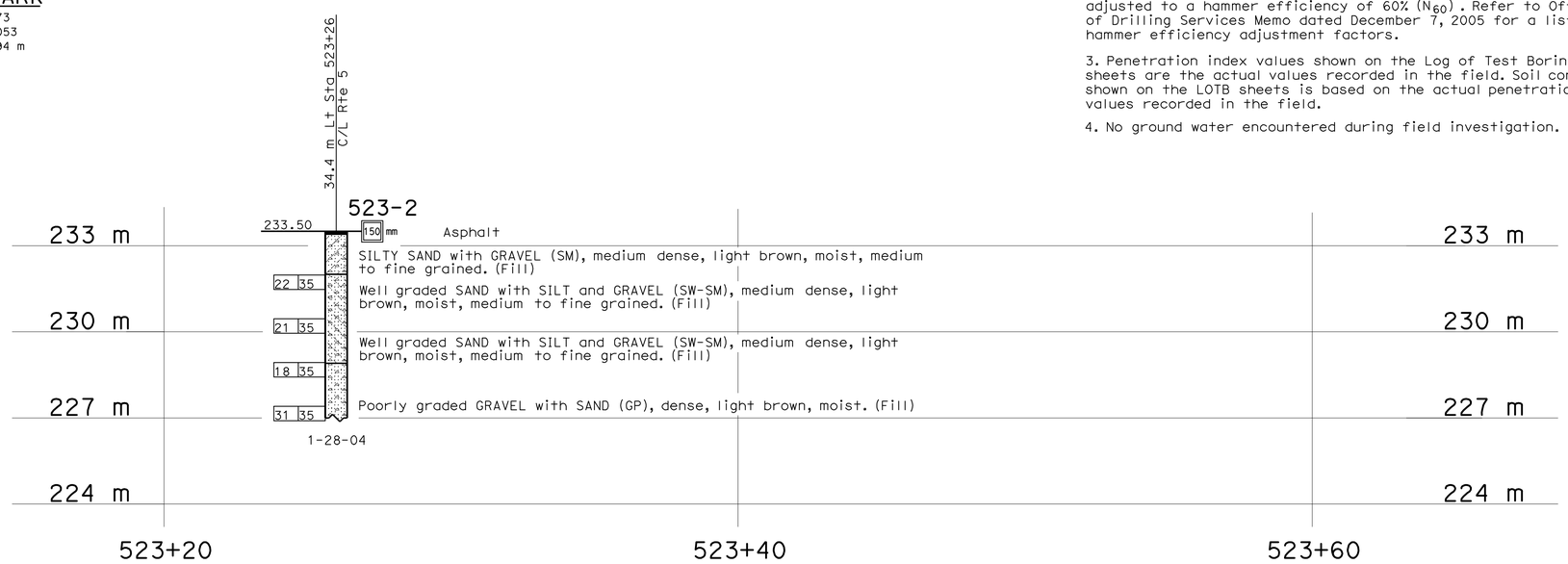

PROFILE
HOR. 1:100
VER. 1:100

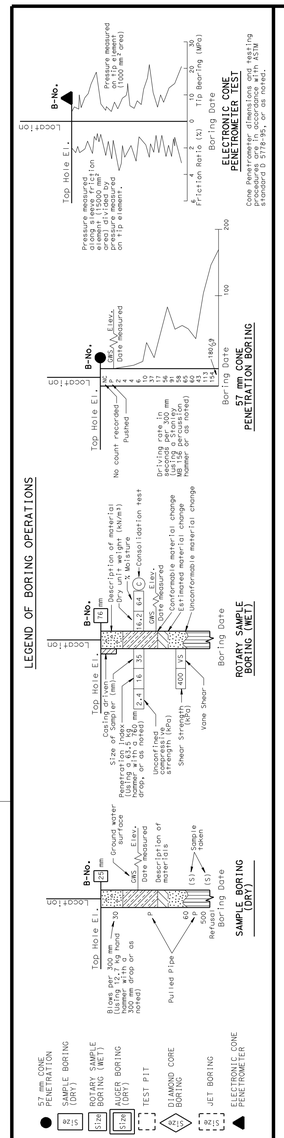

LEGEND OF EARTH MATERIALS

GRAVEL, SAND, SILT, CLAY, SANDY CLAY or CLAYEY SAND, SANDY SILT or SILTY SAND, SILTY CLAY, CLAYEY SILT, PEAT and/or ORGANIC MATTER, COBBLES and/or BOULDERS, IGNEOUS ROCK, SEDIMENTARY ROCK, METAMORPHIC

CONSISTENCY CLASSIFICATION FOR SOILS

According to the Standard Penetration Test

SPT N-Value (Blows/0.3m)	Granular	SPT N-Value (Blows/0.3m)	Cohesive
0-4	Very Loose	<2	Very Soft
5-10	Loose	2-4	Soft
11-30	Medium Dense	5-8	Firm
31-50	Dense	9-15	Stiff
>50	Very Dense	16-30	Very stiff
		>30	Hard

NOTE: Classification of earth material as shown on this sheet is based upon field inspection and is not to be construed to imply mechanical analysis.

OGS CIVIL LOG OF TEST BORINGS SHEET (METRIC) (REV. 4/04)

Caltrans Metric

GEOTECHNICAL SERVICES	
DRAWN BY	W. Tang 10/05
CHECKED BY	B. Joshi

FIELD INVESTIGATION BY: B. Joshi

STATE OF CALIFORNIA DEPARTMENT OF TRANSPORTATION

DIVISION OF ENGINEERING SERVICES STRUCTURE DESIGN
DESIGN BRANCH 6

BRIDGE NO. RW 523
KILOMETER POST

RETAINING WALL NO. 523
LOG OF TEST BORINGS

ALL DIMENSIONS ARE IN METERS UNLESS OTHERWISE SHOWN

ORIGINAL SCALE IN MILLIMETERS FOR REDUCED PLANS 0 10 20 30 40 50 60 70 80 90 100

CU 07
EA 1218V1

DISREGARD PRINTS BEARING EARLIER REVISION DATES

REVISION DATES (PRELIMINARY STAGE ONLY): 1-25-06, 1-6-06, 3-14-08, 7-16-09

SHEET 21 OF 21

FILE => rw523-z-lotb.dgn

USERNAME => trrright DATE PLOTTED => 03-MAY-2010 TIME PLOTTED => 15:04

DIST	COUNTY	ROUTE	KILOMETER POST TOTAL PROJECT	SHEET No	TOTAL SHEETS
07	LA	5	50.8/58.0	861	869

REGISTERED CIVIL ENGINEER 6-25-08 DATE

5-3-10
PLANS APPROVAL DATE

REGISTERED PROFESSIONAL ENGINEER XIAODONG CHEN No. C58858 Exp. 6-30-11 CIVIL STATE OF CALIFORNIA

The State of California or its officers or agents shall not be responsible for the accuracy or completeness of electronic copies of this plan sheet.

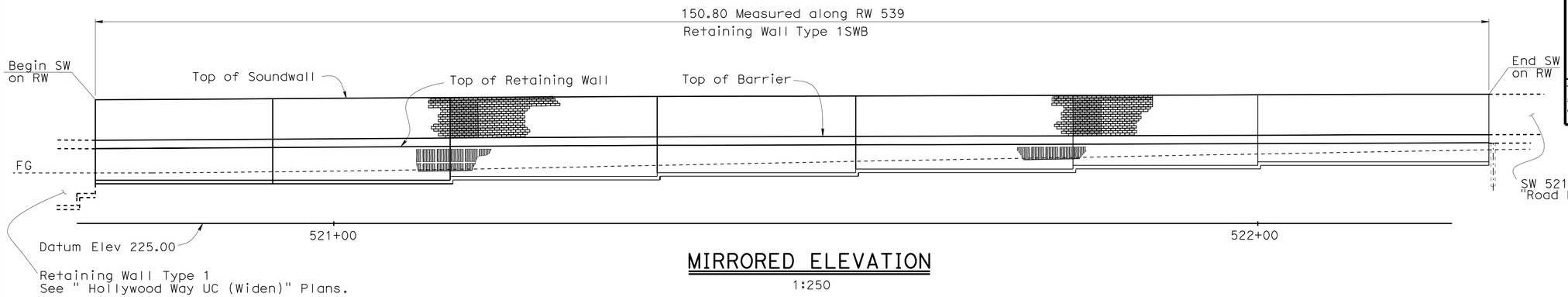

MIRRORED ELEVATION

1:250

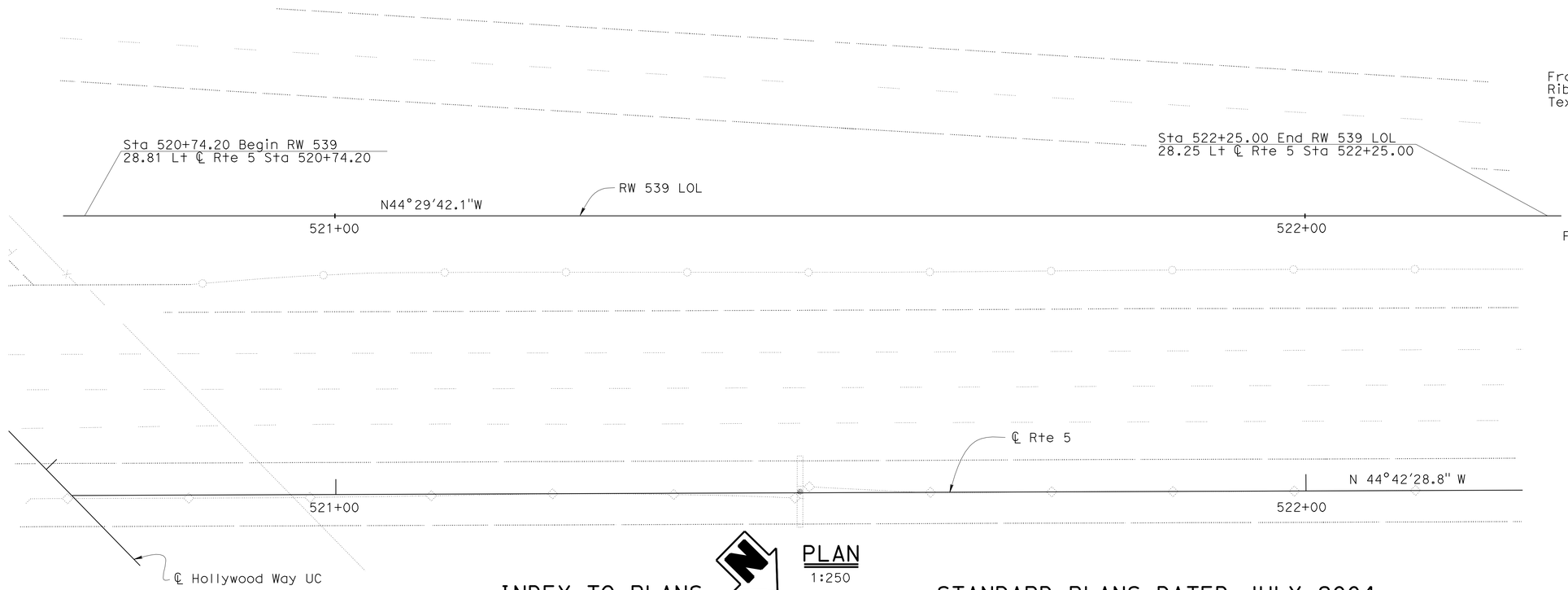

PLAN

1:250

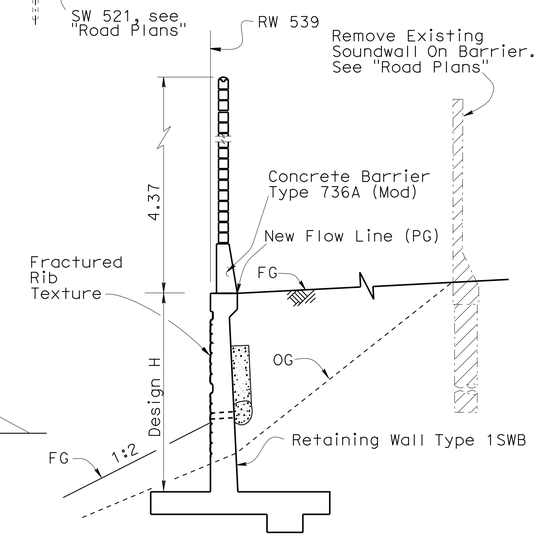

TYPICAL SECTION

1:50

BO-3 / 3-1

NOTE

For Details, see "RETAINING WALL TYPE 1SWB" sheet

LEGEND:

- Indicates soundwall on barrier removal (portion)
- Indicates New Construction
- Indicates Existing Structure

NOTE:
THE CONTRACTOR SHALL VERIFY ALL CONTROLLING FIELD DIMENSIONS BEFORE ORDERING OR FABRICATING ANY MATERIAL.

INDEX TO PLANS

SHEET NO.	SHEET TITLE
1	GENERAL PLAN
2	STRUCTURAL PLANS NO.1
3	STRUCTURAL PLANS NO.2
4	RETAINING WALL DETAILS-MISCELLANEOUS
5	RETAINING WALL TYPE 1SWB
6	SOUNDWALL - MASONRY BLOCK WITH BARRIER ON RETAINING WALL DETAILS NO.1
7	SOUNDWALL - MASONRY BLOCK WITH BARRIER ON RETAINING WALL DETAILS NO.2
8	SOUNDWALL MASONRY BLOCK MISCELLANEOUS DETAILS
9	LOG OF TEST BORINGS

STANDARD PLANS DATED JULY 2004

A10A	ACRONYMS AND ABBREVIATIONS (A-L)
A10B	ACRONYMS AND ABBREVIATIONS (M-Z)
A62B	LIMITS OF PAYMENT FOR EXCAVATION AND BACKFILL - BRIDGE SURCHARGE AND WALL
BO-3	BRIDGE DETAILS
B3-8	RETAINING WALL DETAILS NO.1
B11-56	CONCRETE BARRIER TYPE 736

STANDARD PLAN SHEET NO.

DETAIL NO.

QUANTITIES

STRUCTURE EXCAVATION (RETAINING WALL)	380	m^3
STRUCTURE EXCAVATION (TYPE Y-1) (AERIALLY DEPOSITED LEAD)	390	m^3
STRUCTURE BACKFILL (RETAINING WALL)	950	m^3
PERVIOUS BACKFILL MATERIAL (RETAINING WALL)	45	m^3
STRUCTURAL CONCRETE, RETAINING WALL	350	m^3
FRACTURED RIB TEXTURE	275	m^2
SOUND WALL (MASONRY BLOCK)	522	m^2
BAR REINFORCING STEEL (RETAINING WALL)	18 400	kg
CONCRETE BARRIER (TYPE 736A MODIFIED)	151	m

Caltrans Metric

Fritz Hoffman 6-25-08
DESIGN ENGINEER

	BY	CHECKED				
DESIGN	D. Alvarez	Vivian Dang	LOAD FACTOR DESIGN	LIVE LOADING: HS20-44 AND ALTERNATIVE AND PERMIT DESIGN LOAD		
DETAILS	Bruno Jenko	Vivian Dang	LAYOUT	D. Alvarez	XIAODONG CHEN	
QUANTITIES	D. Alvarez	Vivian Dang	SPECIFICATIONS	M. Pan	PLANS AND SPECS COMPARED	

ALL DIMENSIONS ARE IN METERS UNLESS OTHERWISE SHOWN

ORIGINAL SCALE IN MILLIMETERS FOR REDUCED PLANS 0 10 20 30 40 50 60 70 80 90 100

STATE OF CALIFORNIA
DEPARTMENT OF TRANSPORTATION

DIVISION OF ENGINEERING SERVICES
STRUCTURE DESIGN
DESIGN BRANCH 6

CU 07
EA 1218V1

BRIDGE NO. RW 539
KILOMETER POST

RETAINING WALL NO. 539
GENERAL PLAN

DISREGARD PRINTS BEARING EARLIER REVISION DATES

REVISION DATES: 2-19-07 2-19-07 03-04-08 4-18-08 4-22-08 7-16-09

SHEET 1 OF 9

FILE => rw539-a-gp.dgn

STRUCTURES DESIGN GENERAL PLAN SHEET (METRIC) (REV.03-17-04)

USERNAME => trrichf DATE PLOTTED => 03-MAY-2010 TIME PLOTTED => 15:05

DIST	COUNTY	ROUTE	KILOMETER POST TOTAL PROJECT	SHEET No	TOTAL SHEETS
07	LA	5	50.8/58.0	862	869

Xiaodong Chen 6-25-08
REGISTERED CIVIL ENGINEER DATE

5-3-10
PLANS APPROVAL DATE

REGISTERED PROFESSIONAL ENGINEER XIAODONG CHEN No. C58858 Exp. 6-30-11 CIVIL STATE OF CALIFORNIA

The State of California or its officers or agents shall not be responsible for the accuracy or completeness of electronic copies of this plan sheet.

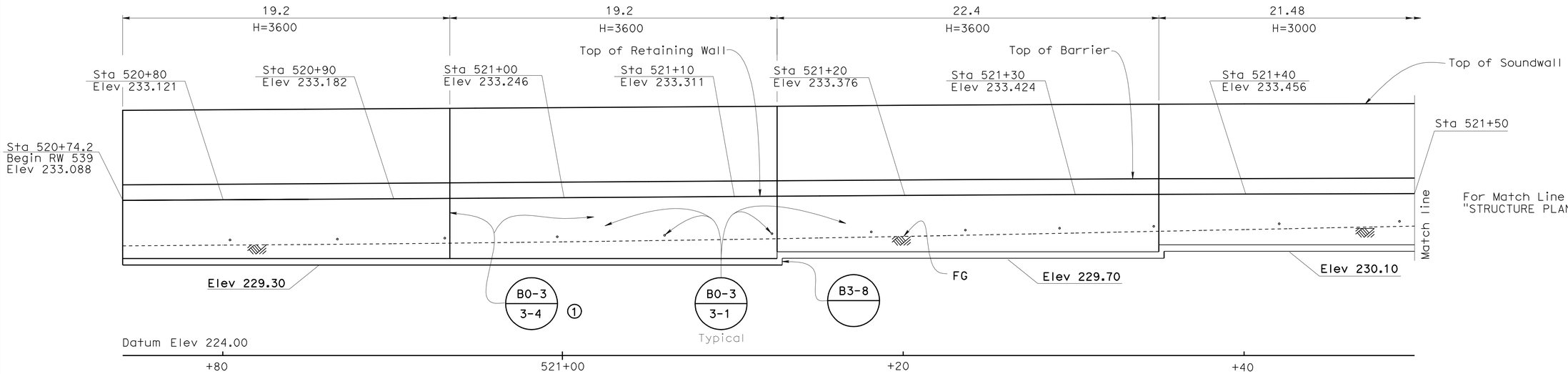

For Match Line Sta 521+50, see "STRUCTURE PLANS NO. 2" sheet.

Notes:

1. Extend Waterstop 150 mm into Concrete Barrier

MIRRORED ELEVATION

1:125

B0-3 / 3-2 B0-3 / 3-3

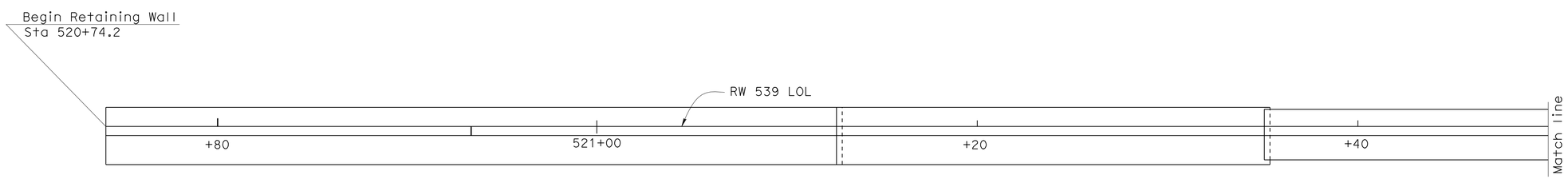

PLAN

1:125

NOTE:
THE CONTRACTOR SHALL VERIFY ALL CONTROLLING FIELD DIMENSIONS BEFORE ORDERING OR FABRICATING ANY MATERIAL.

Caltrans Metric

	BY	CHECKED
DESIGN	David Alvarez	Vivian Dang
DETAILS	Bruno Jenko	Vivian Dang
QUANTITIES	David Alvarez	Vivian Dang

STATE OF CALIFORNIA
DEPARTMENT OF TRANSPORTATION

DIVISION OF ENGINEERING SERVICES
STRUCTURE DESIGN
DESIGN BRANCH 6

BRIDGE NO. RW 539
KILOMETER POST

RETAINING WALL NO. 539
STRUCTURAL PLANS NO. 1

ALL DIMENSIONS ARE IN METERS UNLESS OTHERWISE SHOWN

ORIGINAL SCALE IN MILLIMETERS FOR REDUCED PLANS 0 10 20 30 40 50 60 70 80 90 100

CU 07
EA 1218V1

DISREGARD PRINTS BEARING EARLIER REVISION DATES

REVISION DATES: 2-23-07 12-10-07 7-16-09

SHEET 2 OF 9

FILE => rw539-d-sp1.dgn

STRUCTURES DESIGN DETAIL SHEET (METRIC) (REV.03-17-04)

USERNAME => trrichf DATE PLOTTED => 03-MAY-2010 TIME PLOTTED => 15:05

DIST	COUNTY	ROUTE	KILOMETER POST TOTAL PROJECT	SHEET No	TOTAL SHEETS
07	LA	5	50.8/58.0	863	869

REGISTERED CIVIL ENGINEER — DATE 6-25-08

5-3-10
PLANS APPROVAL DATE

REGISTERED PROFESSIONAL ENGINEER — XIAODONG CHEN — No. C58858 — Exp. 6-30-11 — CIVIL — STATE OF CALIFORNIA

The State of California or its officers or agents shall not be responsible for the accuracy or completeness of electronic copies of this plan sheet.

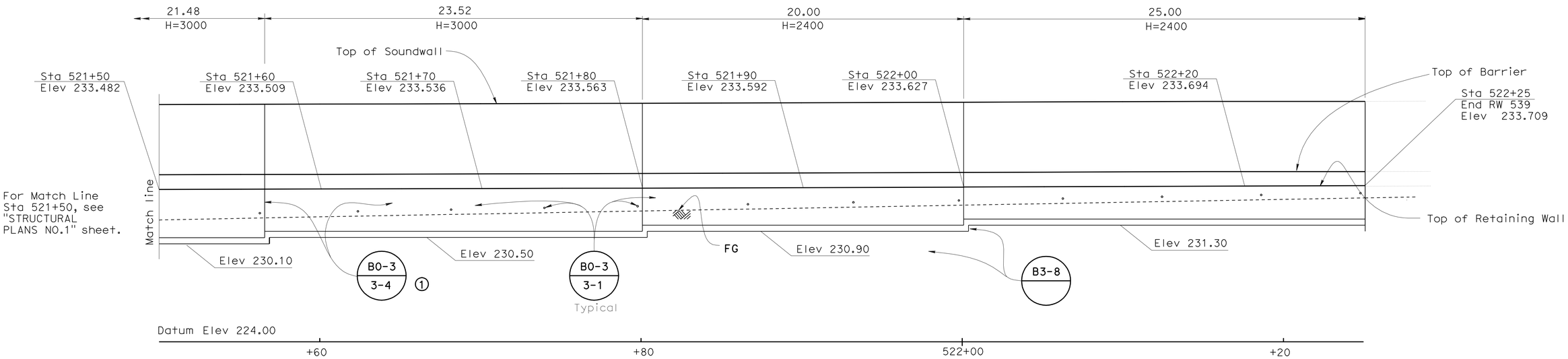

Notes:

1. Extend Waterstop 150 mm into Concrete Barrier

MIRRORED ELEVATION (B0-3 / 3-2) (B0-3 / 3-3)
1:125

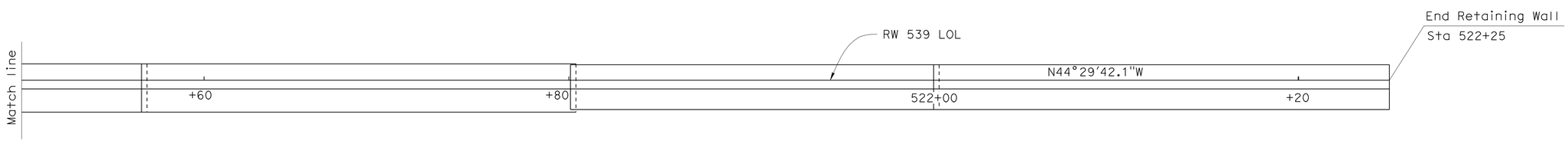

PLAN
1:125

NOTE:
THE CONTRACTOR SHALL VERIFY ALL CONTROLLING FIELD DIMENSIONS BEFORE ORDERING OR FABRICATING ANY MATERIAL.

	BY	CHECKED
DESIGN	David Alvarez	Vivian Dang
DETAILS	Bruno Jenko	Vivian Dang
QUANTITIES	David Alvarez	Vivian Dang

STATE OF CALIFORNIA
DEPARTMENT OF TRANSPORTATION

DIVISION OF ENGINEERING SERVICES
STRUCTURE DESIGN
DESIGN BRANCH 6

BRIDGE NO. RW 539
KILOMETER POST

RETAINING WALL NO. 539
STRUCTURAL PLANS NO. 2

ALL DIMENSIONS ARE IN METERS UNLESS OTHERWISE SHOWN

ORIGINAL SCALE IN MILLIMETERS FOR REDUCED PLANS 0 10 20 30 40 50 60 70 80 90 100

CU 07
EA 1218V1

DISREGARD PRINTS BEARING EARLIER REVISION DATES — 2-23-07 12-10-07 7-16-09

REVISION DATES

SHEET 3 OF 9

FILE => rw539-d-sp2.dgn

STRUCTURES DESIGN DETAIL SHEET (METRIC) (REV.03-17-04)

USERNAME => trrichf DATE PLOTTED => 03-MAY-2010 TIME PLOTTED => 15:05

DIST	COUNTY	ROUTE	KILOMETER POST TOTAL PROJECT	SHEET No	TOTAL SHEETS
07	LA	5	50.8/58.0	864	869

REGISTERED CIVIL ENGINEER — DATE 6-25-08

5-3-10
PLANS APPROVAL DATE

REGISTERED PROFESSIONAL ENGINEER — XIAODONG CHEN — No. C58858 — Exp. 6-30-11 — CIVIL — STATE OF CALIFORNIA

The State of California or its officers or agents shall not be responsible for the accuracy or completeness of electronic copies of this plan sheet.

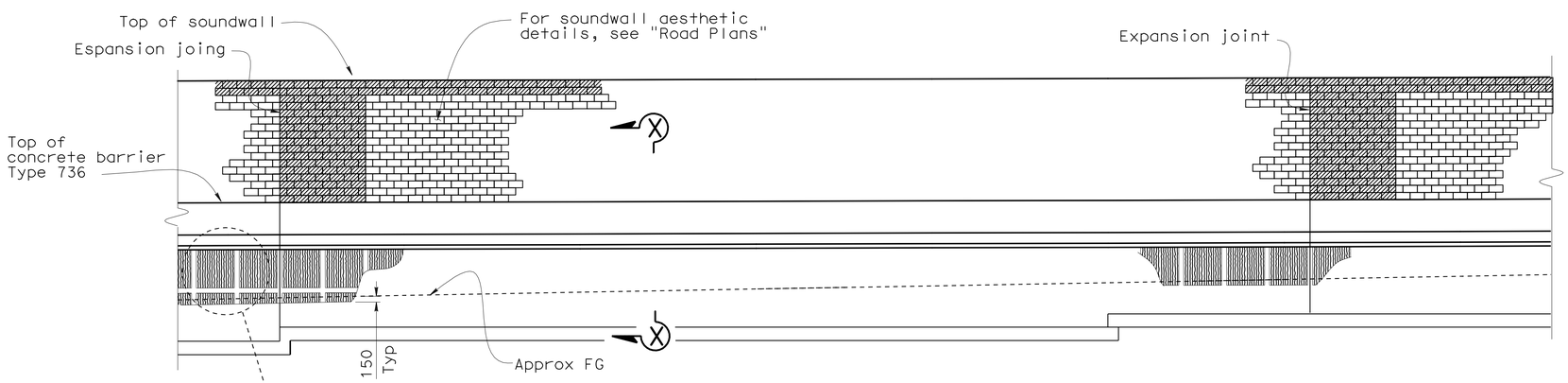

ELEVATION
No scale

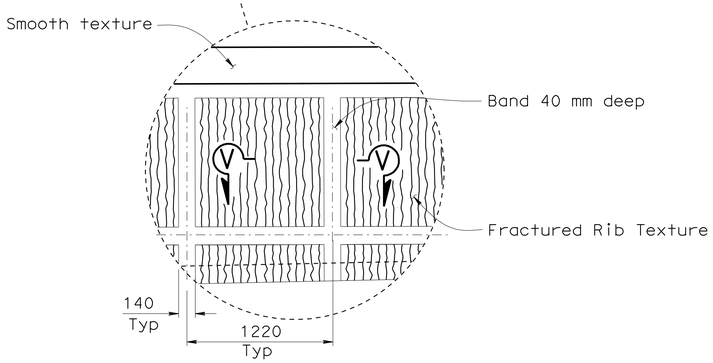

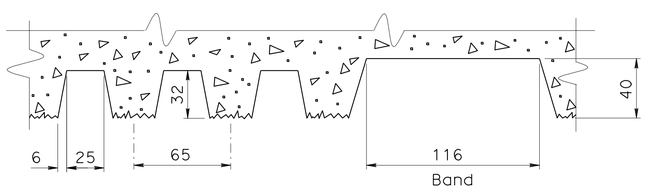

SECTION V-V
FRACTURED RIB TEXTURE & BAND
1:2

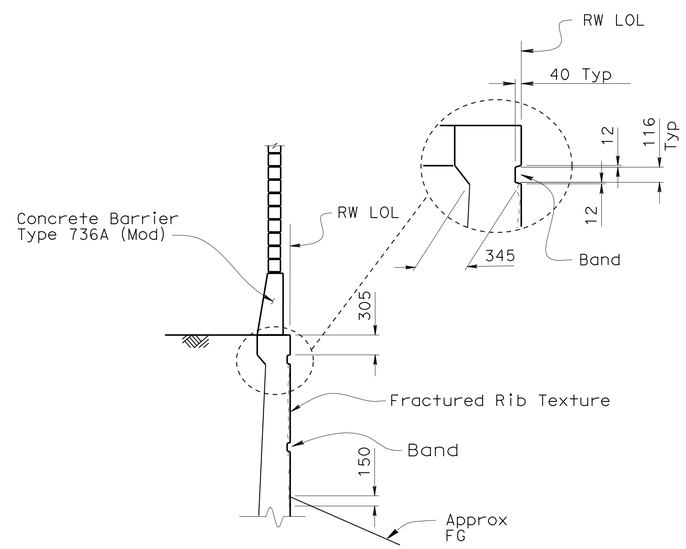

SECTION X-X
1:40

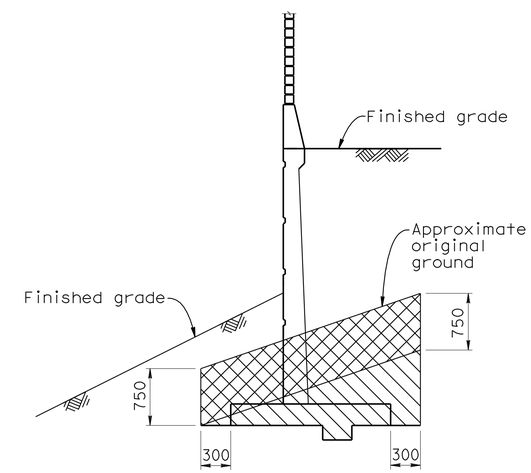

LIMITS OF PAYMENT FOR STRUCTURE EXCAVATION (AERIALLY DEPOSITED LEAD)
No scale

LEGEND:

Indicates structure excavation

Indicates structure excavation (Type Y-1) (Aerially deposited lead)

ARCHITECTURAL DETAILS

NOTE:
THE CONTRACTOR SHALL VERIFY ALL CONTROLLING FIELD DIMENSIONS BEFORE ORDERING OR FABRICATING ANY MATERIAL.

DESIGN	BY Xiaodong Chen	CHECKED Vivian Dang	
DETAILS	BY Bruno Jenko	CHECKED Vivian Dang	
QUANTITIES	BY David Alvarez	CHECKED Vivian Dang	

STATE OF CALIFORNIA
DEPARTMENT OF TRANSPORTATION

DIVISION OF ENGINEERING SERVICES
STRUCTURE DESIGN
DESIGN BRANCH 6

BRIDGE NO. RW 539
KILOMETER POST

RETAINING WALL NO. 539
RETAINING WALL DETAILS-MISCELLANEOUS

ALL DIMENSIONS ARE IN MILLIMETERS UNLESS OTHERWISE SHOWN

ORIGINAL SCALE IN MILLIMETERS FOR REDUCED PLANS 0 10 20 30 40 50 60 70 80 90 100

CU 07
EA 1218V1

DISREGARD PRINTS BEARING EARLIER REVISION DATES

REVISION DATES: 12-1-07 03-17-08 4-14-08 7-16-09

SHEET 4 OF 9

FILE => rw539-u-arch-det.dgn

STRUCTURES DESIGN DETAIL SHEET (METRIC) (REV.03-17-04)

USERNAME => trright DATE PLOTTED => 03-MAY-2010 TIME PLOTTED => 15:05

DIST.	COUNTY	ROUTE	KILOMETER POST TOTAL PROJECT	SHEET NO.	TOTAL SHEETS
07	LA	5	50.8/58.0	865	869

REGISTERED ENGINEER - CIVIL 6-25-08

5-3-10
PLANS APPROVAL DATE

REGISTERED PROFESSIONAL ENGINEER XIAODONG CHEN No. C58858 Exp. 6-30-11 CIVIL STATE OF CALIFORNIA

The State of California or its officers or agents shall not be responsible for the accuracy or completeness of electronic copies of this plan sheet.

Caltrans Metric

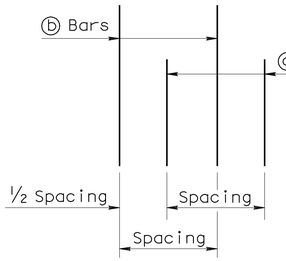

DETAIL B
No Scale

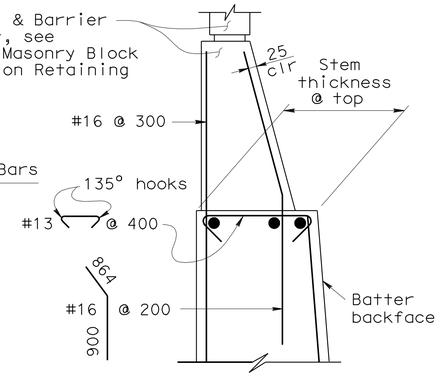

DETAIL A WITHOUT HAUNCH
No Scale

GENERAL NOTES

1. For soundwall and retaining wall architectural finish or texture, see details elsewhere in project plans.
2. For details not shown and drainage notes, see B3-8
3. Footing cover, 450 mm minimum.
4. Limit of no splicing rebars = H/3
5. Increasing stem thickness not permitted:

X ○ ○
XX ○ ○

a & b bars are bundled together.
Alternate a & b bars are shown in "Detail B".
Cont = Continuous.

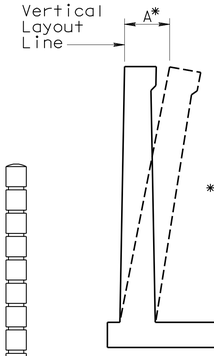

* A Offset = 12 mm per 3000 mm of wall stem height

WALL OFFSET
No Scale

Values for offsetting forms to be determined by the Engineer.

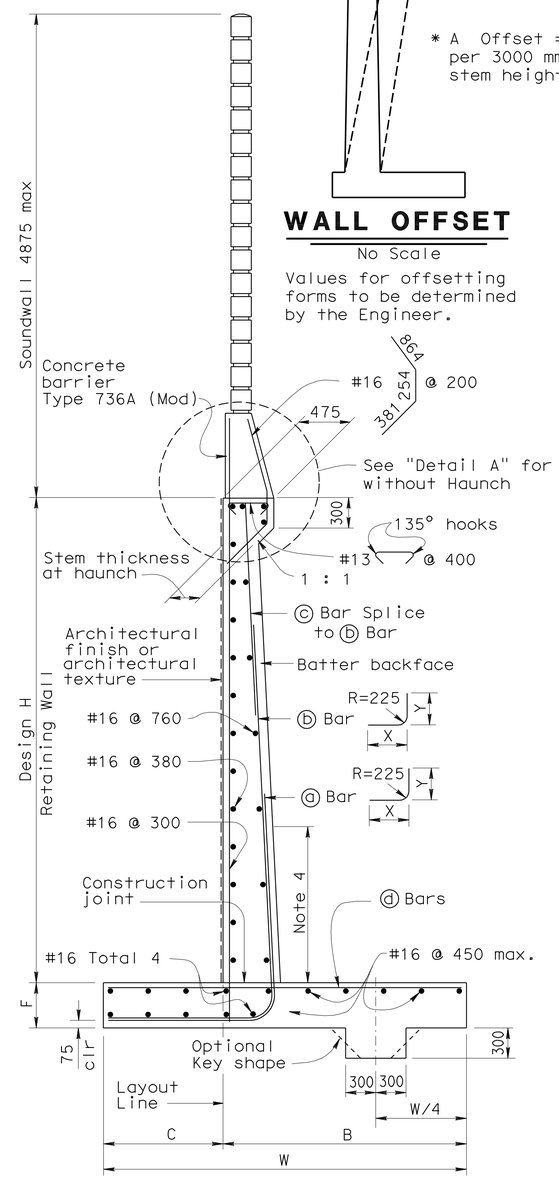

SPREAD FOOTING SECTION
No Scale

DESIGN DATA

DESIGN: Load Factor Design (LFD)

CONCRETE: Reinforced Concrete, f'c = 25 MPa
fy = 420 MPa

LOADING CASE:
Level ground with 11.5 KPa Live Load Surcharge and 4875 mm Soundwall

Seismic Load	= 0.3 Dead Load
Wind Load	= 1435 Pa
Dead Load of Soundwall	= 20.6 kN/m
Dead Load of Barrier	= 5.4 kN/m

SEISMIC LOAD: SOIL
Kh = 0.3g
Kv = 0.0
Kae : Mononobe-Okabe Method

SOIL: $\emptyset = 34°$ $\gamma = 19$ kN/m³
Equivalent fluid pressure:
= 5.6 KPa/m for determination of toe pressure
= 4.2 KPa/m for determination of heel pressure

LOAD COMBINATIONS:

EXTERNAL STABILITY: (For Overturning, Sliding)

Group 1:	D + E + SC
Group 2 :	D + E + SC + W
Group 3 :	D + PYM

INTERNAL STABILITY (LFD): (For Member Design)

Group A :	βD + 1.7E + 1.7SC
Group B :	βD + 1.7E + 1.3W
Group C (stem) :	1.0D + 1.0E + 1.0EQD + 1.0EQE
Group C (footing) :	D + PYM

Where : β = 1.0 or 1.3 whichever controls design
D = Dead Load
E = Lateral Earth Pressure
SC = Live Load Surcharge
W = Wind Load
EQD = Seismic Dead Load
EQE = Seismic Lateral Earth Pressure
PYM = Probable Yield Moment (1.3 x Nominal Yield Moment of Stem)

ALTERNATIVE A: (CONSTANT TOP OF WALL THICKNESS) TABLE OF REINFORCING STEEL DIMENSIONS AND DATA

	Stem With Haunch													
Design H	1800	2400	3000	3600	4200	4800	5500	6100	6700	7300	7900	8500	9100	9800
W	2300	2450	2650	3000	3300	3650	3950	4350	4650	5000	5650	6000	6450	6850
C	850	850	900	1000	1100	1200	1300	1450	1500	1650	1900	2050	2200	2350
B	1500	1600	1750	2000	2200	2450	2650	2900	3150	3350	3750	3950	4250	4500
F Spread Footing	380	380	380	380	380	450	450	550	600	700	850	900	1000	1150
Batter	0	100:4	100:4	100:4	100:4	100:4	100:4	100:4	100:4	100:5	100:6	100:7	100:8	100:8
Stem Thickness @ Haunch	305	305	305	305	305	305	305	305	305	305	305	305	305	305
ⓐ Bars				#19@450XX	#22@450XX	#25@450XX	#29@450XX	#32@450XX	#25@225X	#25@225X	#22@150X	#32@300XX	#29@225X	#36@300XX
X				Cont	Cont	Cont	Cont	Cont	Cont	Cont	Cont	Cont	Cont	Cont
Y				2400	2000	2300	2600	2900	2900	3350	3500	3950	4250	4700
ⓑ Bars	#16@300	#16@300	#16@225	#19@450XX	#22@450XX	#25@450XX	#29@450XX	#32@450XX	#25@225X	#25@225X	#22@150X	#32@300XX	#29@225X	#36@300XX
X	Cont	Cont	Cont	Cont	Cont	Cont	Cont	Cont	Cont	1700	2000	2150	2450	2600
Y	Cont	Cont	Cont	Cont	3200	3950	4550	5350	5950	6400	5650	5800	7750	7150
ⓒ Bars					#19@450	#19@450	#19@450	#19@450	#19@450	#19@450	#19@300	#22@300	#22@450	#22@300
ⓓ Bars	#16@300	#16@300	#16@300	#16@225	#19@225	#19@225	#19@150	#25@225	#25@225	#25@225	#22@150	#22@150	#29@225	#29@225
Ultimate Bearing Capacity Req'd Kpa	220	265	290	315	350	390	430	475	540	585	600	640	675	740

ALTERNATIVE B: (VARIABLE TOP OF WALL THICKNESS) TABLE OF REINFORCING STEEL DIMENSIONS AND DATA

	Stem With Haunch						Stem Without Haunch						
Design H	2400	3000	3600	4200	4800	5500	6100	6700	7300	7900	8500	9100	9800
W	2450	2600	2800	3100	3450	3950	4200	4900	5000	5650	6100	6250	6650
C	850	850	900	1050	1150	1300	1400	1600	1650	1900	2050	2050	2300
B	1600	1750	1900	2050	2300	2650	2800	3300	3350	3750	4050	4200	4350
F Spread Footing	380	380	380	380	450	450	550	600	700	850	900	1000	1050
Batter	0	0	0	0	0	0	0	0	0	100:2	100:4	100:4	100:4
Stem Thickness @ Top							475	610	610	610	610	610	610
Stem Thickness @ Haunch	305	305	305	305	380	380							
ⓐ Bars			#19@300XX	#16@150X	#29@450XX	#29@300XX	#29@300XX	#29@300XX	#22@150X	#22@150X	#22@150X	#29@225X	#36@300XX
X			Cont	Cont	Cont	Cont	Cont	Cont	Cont	Cont	Cont	Cont	Cont
Y			1700	1700	2600	2600	2600	2600	2900	3350	3800	4100	4400
ⓑ Bars	#16@225	#19@225	#19@300XX	#16@150X	#29@450XX	#29@300XX	#29@300XX	#29@300XX	#22@150X	#22@150X	#22@150X	#29@225X	#36@300XX
X	Cont	Cont	Cont	Cont	Cont	Cont	Cont	Cont	1700	1850	2300	2300	2450
Y	Cont	Cont	Cont	Cont	3500	3500	3650	3650	5350	6100	6550	7300	7300
ⓒ Bars					#22@450	#22@300	#22@300	#22@300	#19@300	#19@300	#19@300	#22@450	#22@300
ⓓ Bars	#16@300	#16@225	#16@225	#19@225	#19@225	#29@300	#29@300	#22@150	#19@150	#22@150	#22@150	#29@225	#29@225
Ultimate Bearing Capacity Req'd Kpa	265	310	350	365	430	430	510	505	585	605	640	740	770

ALL DIMENSIONS ARE IN MILLIMETERS UNLESS OTHERWISE SHOWN

STANDARD DRAWING

RELEASE DATE 2/25/03	DESIGN	BY Madon Sah	CHECKED Overcomer Hor	RELEASED BY Roberto Lucelle OFFICE CHIEF
FILE NO. xs14-220	DETAILS	BY A R Dudsak	CHECKED J C Moese	
	SUBMITTED	BY Overcomer Hor	DRAWING DATE 2/94	

STATE OF CALIFORNIA DEPARTMENT OF TRANSPORTATION

DIVISION OF ENGINEERING SERVICES

BRIDGE NO. RW 539
KILOMETER POST

RETAINING WALL NO. 539
RETAINING WALL TYPE 1SWB

DS OSD 2147A (METRIC) (REV. X/XX/XX)

ORIGINAL SCALE IN MILLIMETERS FOR REDUCED PLANS 0 10 20 30 40 50 60 70 80 90 100

CU 07
EA 1218V1

DISREGARD PRINTS BEARING EARLIER REVISION DATES

REVISION DATES (PRELIMINARY STAGE ONLY)

SHEET 5 OF 9

USERNAME => trrichf

DATE PLOTTED => 03-MAY-2010 TIME PLOTTED => 15:05

rw539-xs14-220.dgn

DIST.	COUNTY	ROUTE	KILOMETER POST TOTAL PROJECT	SHEET NO.	TOTAL SHEETS
07	LA	5	50.8/58.0	866	869

Caltrans Metric

REGISTERED ENGINEER - CIVIL 6-25-08

5-3-10
PLANS APPROVAL DATE

REGISTERED PROFESSIONAL ENGINEER XIAODONG CHEN No. C58858 Exp. 6-30-11 CIVIL STATE OF CALIFORNIA

The State of California or its officers or agents shall not be responsible for the accuracy or completeness of electronic copies of this plan sheet.

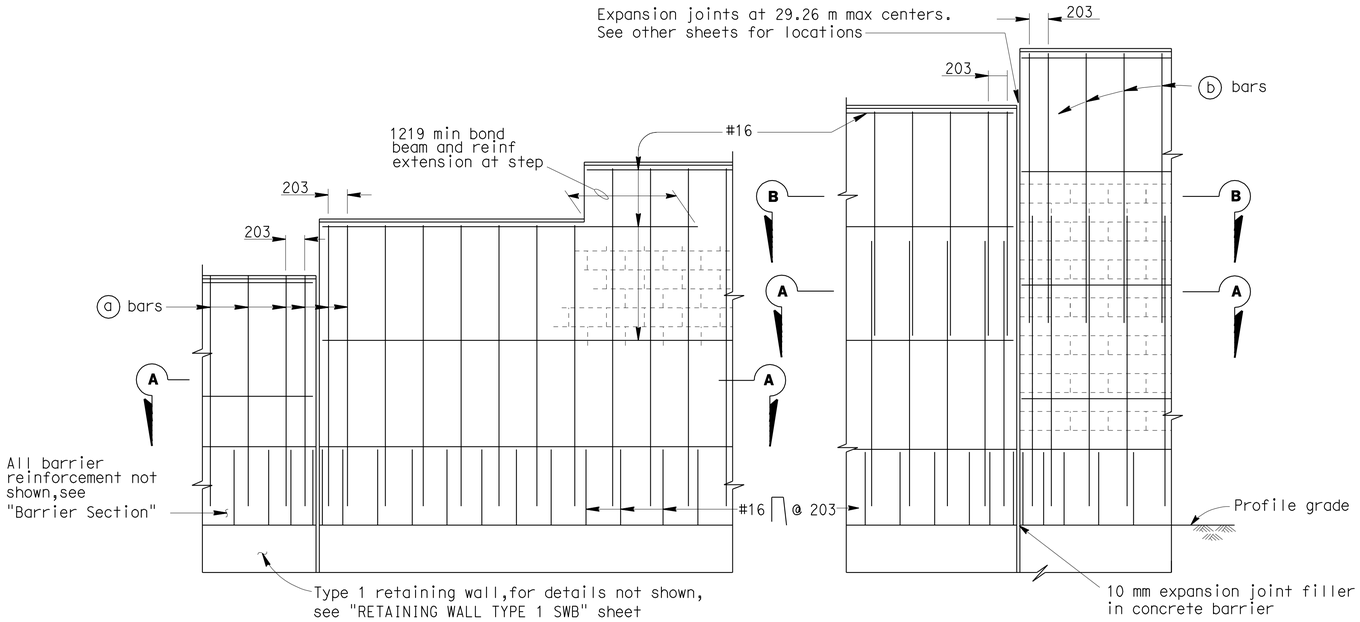

PART ELEVATIONS

SOUNDWALL REINFORCEMENT TABLE

Maximum H	ⓐ bars @ 406 max	ⓑ bars @ 406 max	"y"	f'm (MPa)	Compressive Strength of CMU (MPa)	Maximum H
1930	#13	———	———	10.34	13.1	1930
2540	#13	———	———	10.34	13.1	2540
3150	#13	———	———	10.34	13.1	3150
3759	#16	#13	1524	10.34	13.1	3759
4369	#19	#13	2134	10.34	13.1	4369
4978	#19	#13	2743	17.24	25.6	4978

Note I : For details not shown,see "SOUNDWALL MASONRY BLOCK WITH BARRIER ON RETAINING WALL - DETAILS NO.2" sheet.

Note II : Slope ground at traffic side of barrier to drain. Maximum slope 10%. ±

Note III: See "SOUNDWALL MASONRY BLOCK - MISCELLANEOUS DETAILS" sheet for other details.

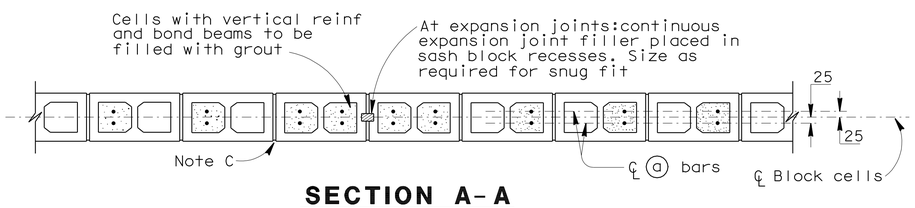

SECTION A-A

For details not shown,see other details

H=1930 THRU H=3150

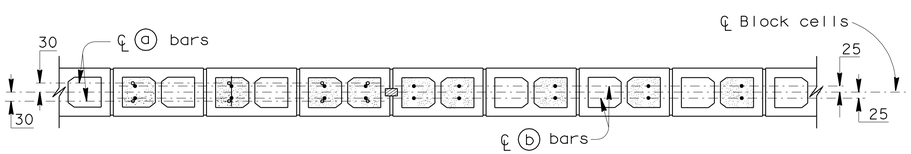

SECTION A-A

SECTION B-B

For details not shown,see other details

H=3759 THRU H=4978

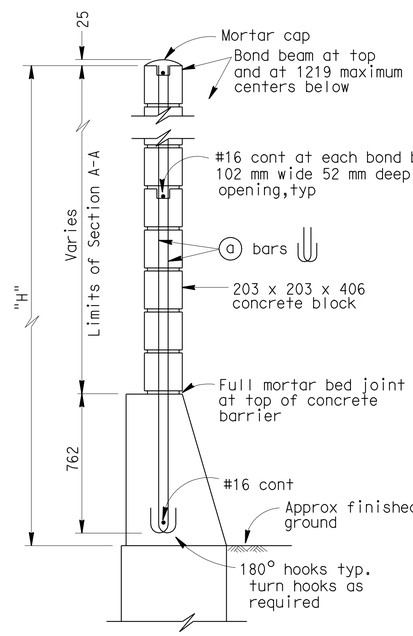

H=1930 THRU H=3150

For details not shown,see H=3759 thru H=4978

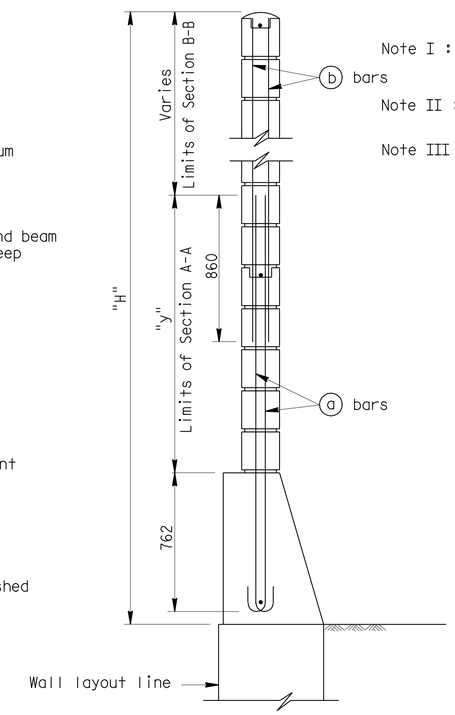

H=3759 THRU H=4978

For details not shown,see H=1930 thru H=3150

TYPICAL SECTIONS

GENERAL NOTES

Note A: For type of block and joint finish, see other sheets.

Note B: When blocks are laid in stacked bond, ladder type, galvanized joint reinforcement shall be provided. A minimum of 2-3.76 mm wire continuous at 1219 mm maximum to be used. Locate reinforcement in joints that are at the approximate midpoint between bond beams.

Note C: Horizontal joints shall be tooled concave or may be weathered.
Vertical joints shall be tooled concave or may be raked.

Note D: For intermediate wall heights that are between the "H's" given. Use the tabular information for the next higher "H".

Note E: Masonry strengths are listed in "SOUNDWALL REINFORCEMENT TABLE".

Note F: Class 2 concrete to be used for the barrier.

NO SCALE

ALL DIMENSIONS ARE IN MILLIMETERS UNLESS OTHERWISE SHOWN

RETAINING WALL NO. 539

SOUNDWALL - MASONRY BLOCK WITH BARRIER ON RETAINING WALL

DETAILS NO. 1

STANDARD DRAWING

RELEASE DATE 7/3/03	DESIGN BY D. DUNRUD	CHECKED W.C. WALKER	RELEASED BY Roberto Trevelle OFFICE CHIEF
FILE NO. xs15-130-1	DETAILS BY R. YEE	CHECKED W.C. WALKER	
	SUBMITTED BY D. DUNRUD	DRAWING DATE 11/94	

DS OSD 2147A (METRIC) (REV. 2/25/97)

STATE OF CALIFORNIA DEPARTMENT OF TRANSPORTATION

DIVISION OF ENGINEERING SERVICES

BRIDGE NO. RW 539

KILOMETER POST

ORIGINAL SCALE IN MILLIMETERS FOR REDUCED PLANS 0 10 20 30 40 50 60 70 80 90 100

CU 07
EA 1218V1

DISREGARD PRINTS BEARING EARLIER REVISION DATES

REVISION DATES (PRELIMINARY STAGE ONLY)

SHEET 6 OF 9

USERNAME => trrichf

rw539-xs15-130-1.dg

DATE PLOTTED => 03-MAY-2010 TIME PLOTTED => 15:05

DIST.	COUNTY	ROUTE	KILOMETER POST TOTAL PROJECT	SHEET NO.	TOTAL SHEETS
07	LA	5	50.8/58.0	867	869

Caltrans Metric

Xiaodong Chen 6-25-08
REGISTERED ENGINEER - CIVIL

5-3-10
PLANS APPROVAL DATE

REGISTERED PROFESSIONAL ENGINEER XIAODONG CHEN No. C58858 Exp. 6-30-11 CIVIL STATE OF CALIFORNIA

The State of California or its officers or agents shall not be responsible for the accuracy or completeness of electronic copies of this plan sheet.

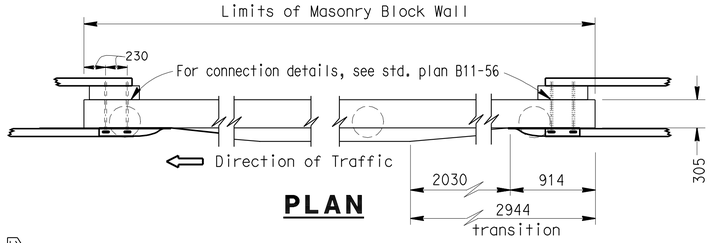

PLAN

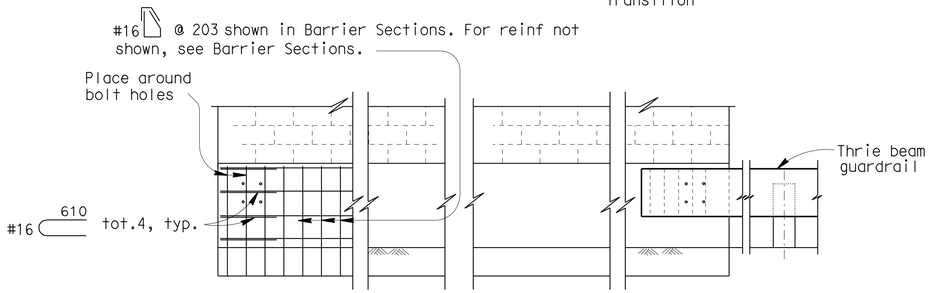

ELEVATION

METAL BEAM GUARDRAIL ANCHORAGE

For details not shown, see std. plan B11-56.

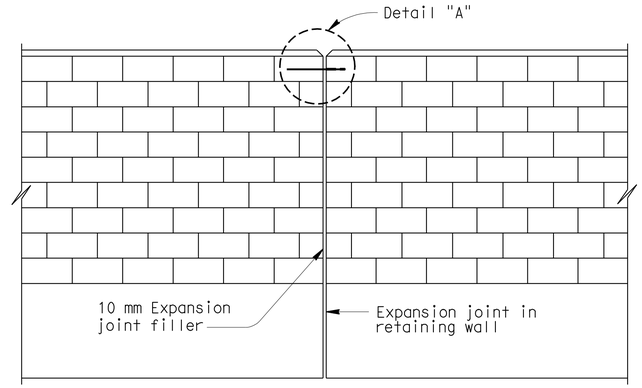

ALIGNMENT KEY DETAIL

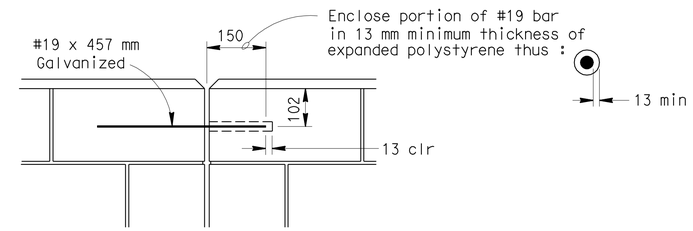

DETAIL A

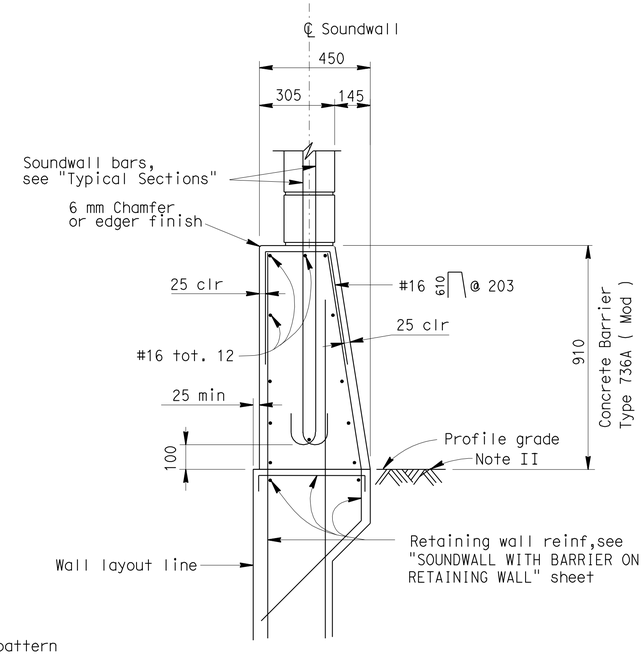

BARRIER SECTION

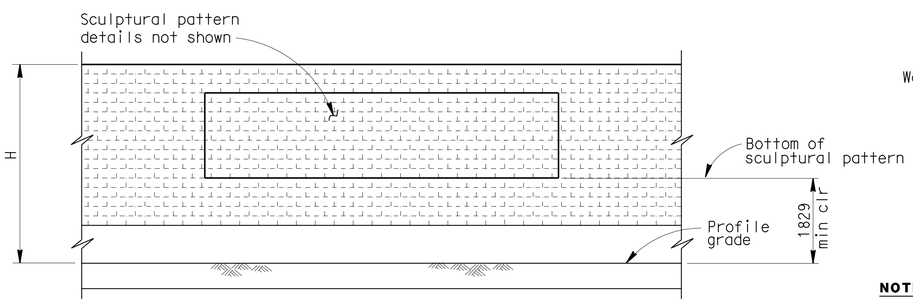

CLEARANCE DETAIL

NOTES:

I : For details not shown,see "RETAINING WALL WITH SOUNDWALL" sheets.

II : Slope ground at traffic side of barrier to drain. Maximum slope ±10%. See Standard Plan B11-56, Note D.

DESIGN NOTES

DESIGN

Uniform Building Code,1997 Edition and the Bridge Design Specifications.

DESIGN WIND LOAD

1293 Pa

DESIGN SEISMIC LOAD

0.57 Dead load

REINFORCED CONCRETE

f'c = 22.408 Mpa
fy = 413.688 MPa

CONCRETE MASONRY

REGULAR STRENGTH	HIGH STRENGTH	
f'm = 10.34 MPa	f'm = 13.79 MPa	f'm = 17.24 MPa
f_b = 3.41 MPa	f_b = 4.55 MPa	f_b = 5.72 MPa
fs = 165.5 MPa	fs = 165.5 MPa	fs = 165.5 MPa
n = 25.8	n = 19.3	n = 15.5

LOAD FACTORS AND LOAD COMBINATIONS

Working Stress Design (WSD) Percentage of unit stress

Group 1: D + E + SC 100%
Group 2: D + W + SC + E 100%
Group 3: D + 0.71 EQD + E 100%

Where:

D = Dead load
E = Lateral earth pressure
SC = Live load surcharge
W = Wind load
EQD = Seismic dead load

Load Factor Design (LFD)

Group A: βD +1.7 E + 1.7 SC
Group B: βD +1.7 E + 1.3 W
Group C: βD +1.3 E + 1.0 EQE
Group D: βD +1.3 E + 1.0 EQD
Group E: βD +1.1 E + 0.85 (EQE + EQD)

Where : β = 0.9 or 1.2, whichever controls in design
D = Dead load
E = Lateral earth pressure
SC = Live load surcharge
W = Wind load
EQD = Seismic dead load
EQE = Seismic earth load

STRENGTH REDUCTION FACTORS, Ø

Reinforced concrete:
For flexure ---------- Ø=0.90
For shear ---------- Ø=0.85

Concrete masonry:
For flexure ---------- Ø=0.80
For shear ---------- Ø=0.60

Foundations :
See "RETAINING WALL WITH SOUNDWALL" sheets.

NO SCALE

ALL DIMENSIONS ARE IN MILLIMETERS UNLESS OTHERWISE SHOWN

RETAINING WALL NO. 539

SOUNDWALL - MASONRY BLOCK WITH BARRIER ON RETAINING WALL

DETAILS NO. 2

STANDARD DRAWING

RELEASE DATE 9/8/03	DESIGN BY D. DUNRUD	CHECKED W.C. WALKER	RELEASED BY Roberto Lavalle OFFICE CHIEF
FILE NO. xs15-130-2	DETAILS BY R. YEE	CHECKED W.C. WALKER	
	SUBMITTED BY D. DUNRUD	DRAWING DATE 11/94	

STATE OF CALIFORNIA DEPARTMENT OF TRANSPORTATION

DIVISION OF ENGINEERING SERVICES

BRIDGE NO. RW 539
KILOMETER POST

CU 07
EA 1218V1

DISREGARD PRINTS BEARING EARLIER REVISION DATES

REVISION DATES (PRELIMINARY STAGE ONLY)

SHEET 7 OF 9

DS OSD 2147A (METRIC) (REV. 2/25/97)

ORIGINAL SCALE IN MILLIMETERS FOR REDUCED PLANS 0 10 20 30 40 50 60 70 80 90 100

USERNAME => trrichf

rw539-xs15-130-2.dgn

DATE PLOTTED => 03-MAY-2010 TIME PLOTTED => 15:06

DIST.	COUNTY	ROUTE	KILOMETER POST TOTAL PROJECT	SHEET NO.	TOTAL SHEETS
07	LA	5	50.8/58.0	868	869

Caltrans Metric

Xiaodong Chen 6-25-08
REGISTERED ENGINEER - CIVIL

5-3-10
PLANS APPROVAL DATE

REGISTERED PROFESSIONAL ENGINEER XIAODONG CHEN No. C58858 Exp. 6-30-11 CIVIL STATE OF CALIFORNIA

The State of California or its officers or agents shall not be responsible for the accuracy or completeness of electronic copies of this plan sheet.

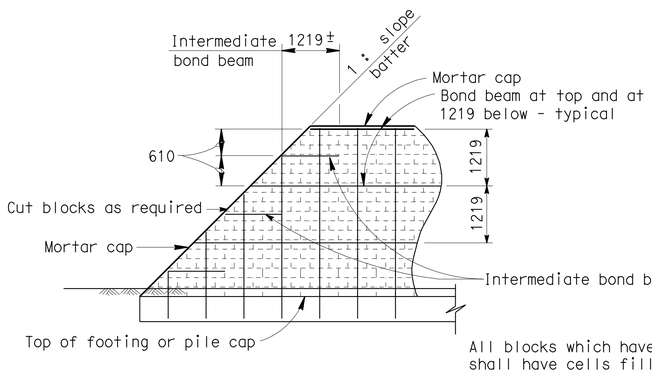

TYPE I

Note : Slope batter shall not be flatter than 1:1

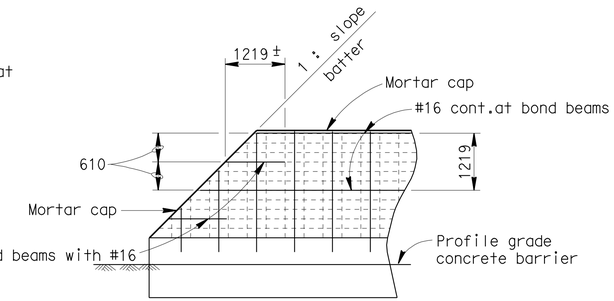

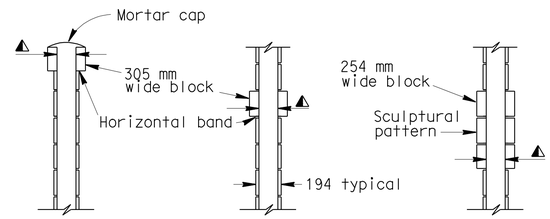

ARCHITECTURAL ALTERNATIVES

◭ Cell width to match 203 mm block

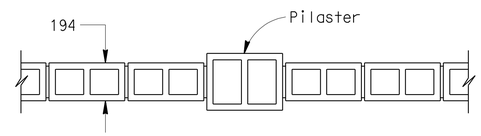

305 mm WIDE PROJECTING BLOCK

NOTES:

305 mm wide block not allowed within 1829 mm of profile grade.

Alternatives using 305 mm wide projecting block will not be permitted on standard sheet: "SOUNDWALL - MASONRY BLOCK ON PILES".

For structural details,see other sheets.

Type III not permitted for soundwalls with "H" less than 3048 mm.

The end of the wall details may be used with any of the standard supporting foundations for masonry block. The foundations shown for the different types are for the purpose of illustration only.

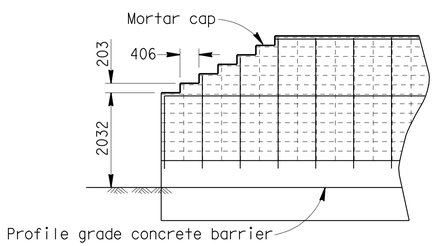

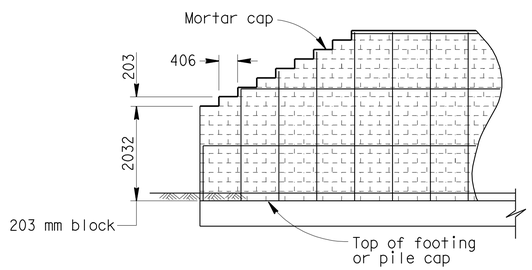

TYPE II

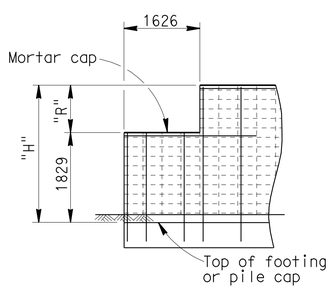

H=3048

SINGLE STEP

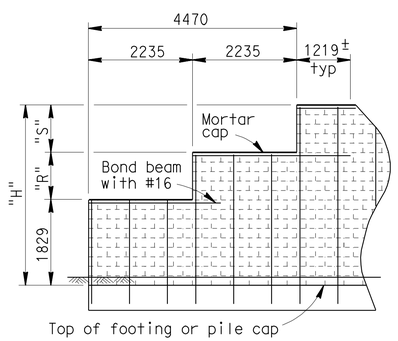

H=3251 TO H=4267

2 STEPS

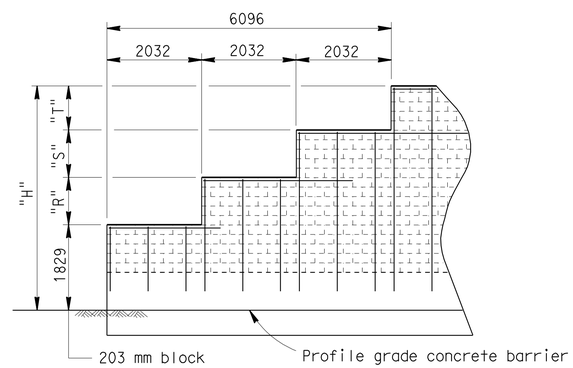

H=4470 TO H=4877

3 STEPS

TYPE III

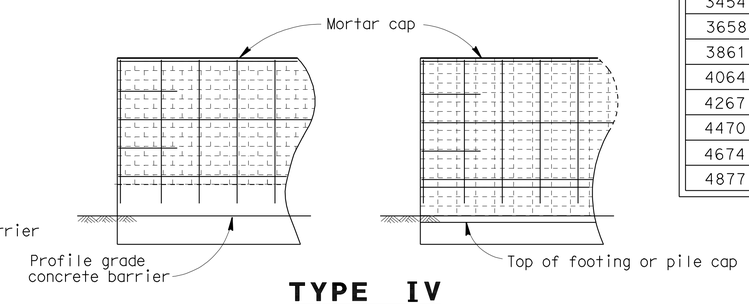

TYPE IV

END OF WALL DETAILS

203 mm x 203 mm x 406 mm BLOCK

H	R	S	T
3048	1219	—	—
3251	813	610	—
3454	813	813	—
3658	1016	813	—
3861	1016	1016	—
4064	1219	1016	—
4267	1219	1219	—
4470	1016	813	813
4674	1016	1016	813
4877	1016	1016	1016

NO SCALE

ALL DIMENSIONS ARE IN MILLIMETERS UNLESS OTHERWISE SHOWN

RETAINING WALL NO. 539

SOUNDWALL MASONRY BLOCK

MISCELLANEOUS DETAILS

STANDARD DRAWING

RELEASE DATE 7/3/03	DESIGN	BY D. DUNRUD	CHECKED W.C. WALKER	RELEASED BY
FILE NO. xs15-210	DETAILS	BY R. YEE	CHECKED W.C. WALKER	OFFICE CHIEF
	SUBMITTED	BY D. DUNRUD	DRAWING DATE 11/94	

DS OSD 2147A (METRIC) (REV. 2/25/97)

STATE OF CALIFORNIA DEPARTMENT OF TRANSPORTATION

DIVISION OF ENGINEERING SERVICES

BRIDGE NO. RW 539

KILOMETER POST

CU 07
EA 1218V1

ORIGINAL SCALE IN MILLIMETERS FOR REDUCED PLANS 0 10 20 30 40 50 60 70 80 90 100

DISREGARD PRINTS BEARING EARLIER REVISION DATES

REVISION DATES (PRELIMINARY STAGE ONLY)

SHEET 8 OF 9

USERNAME => trrichf

DATE PLOTTED => 03-MAY-2010 TIME PLOTTED => 15:06

rw539-xs15-210.dgn

DIST	COUNTY	ROUTE	KILOMETER POST TOTAL PROJECT	SHEET No	TOTAL SHEETS
07	LA	5	50.8/58.0	869	869

REGISTERED CIVIL ENGINEER 6-4-07

5-3-10
PLANS APPROVAL DATE

REGISTERED PROFESSIONAL ENGINEER
Bhaskar Joshi
No. C66350
Exp. 6-30-10
CIVIL
STATE OF CALIFORNIA

The State of California or its officers or agents shall not be responsible for the accuracy or completeness of electronic copies of this plan sheet.

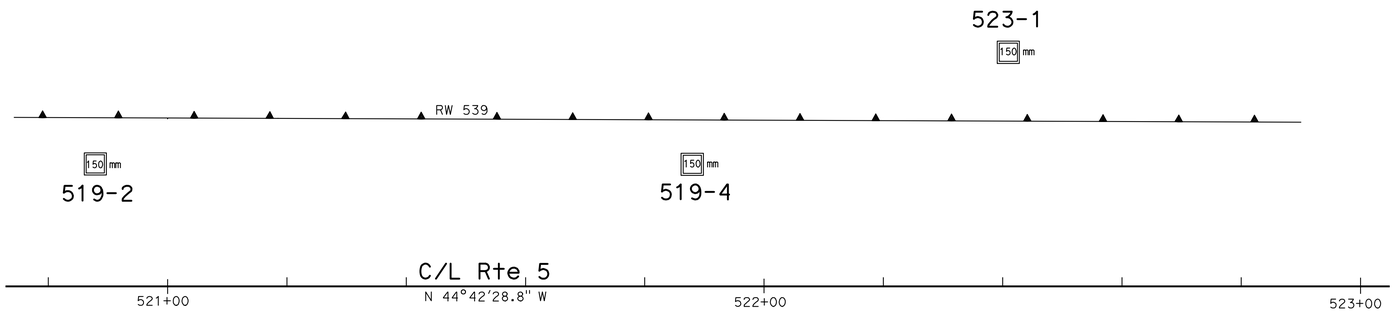

PLAN
1:500

BENCH MARK

N 578996.73
E 1967898.053
Elev 226.694 m

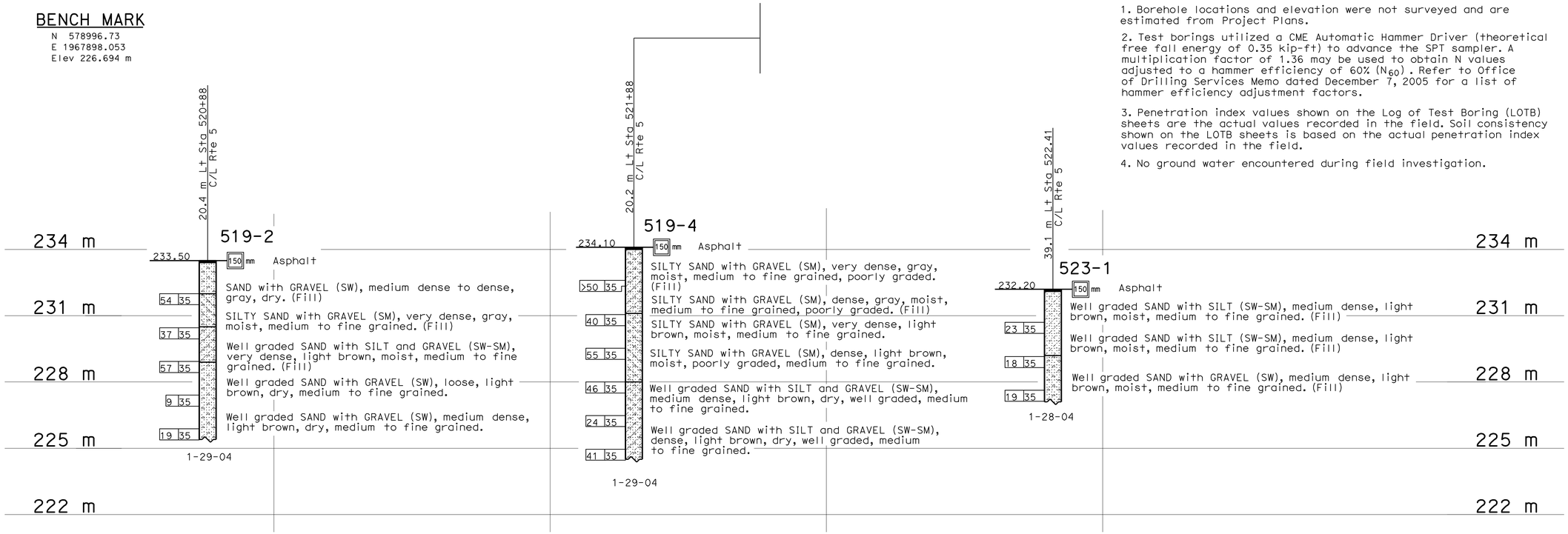

PROFILE
HOR. 1:400
VER. 1:100

Notes:

1. Borehole locations and elevation were not surveyed and are estimated from Project Plans.

2. Test borings utilized a CME Automatic Hammer Driver (theoretical free fall energy of 0.35 kip-ft) to advance the SPT sampler. A multiplication factor of 1.36 may be used to obtain N values adjusted to a hammer efficiency of 60% (N_{60}). Refer to Office of Drilling Services Memo dated December 7, 2005 for a list of hammer efficiency adjustment factors.

3. Penetration index values shown on the Log of Test Boring (LOTB) sheets are the actual values recorded in the field. Soil consistency shown on the LOTB sheets is based on the actual penetration index values recorded in the field.

4. No ground water encountered during field investigation.

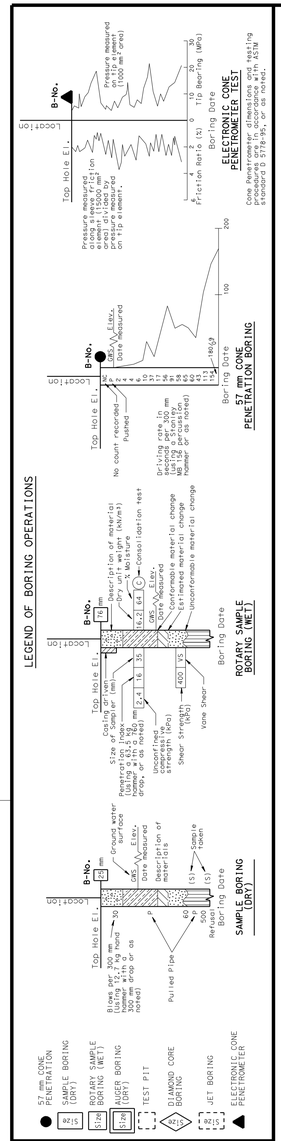

LEGEND OF EARTH MATERIALS

GRAVEL, SAND, SILT, CLAY, SANDY CLAY or CLAYEY SAND, SANDY SILT or SILTY SAND, SILTY CLAY, CLAYEY SILT, PEAT and/or ORGANIC MATTER, COBBLES and/or BOULDERS, IGNEOUS ROCK, SEDIMENTARY ROCK, METAMORPHIC

CONSISTENCY CLASSIFICATION FOR SOILS

According to the Standard Penetration Test

SPT N-Value (Blows/0.3m)	Granular	SPT N-Value (Blows/0.3m)	Cohesive
0-4	Very Loose	<2	Very Soft
5-10	Loose	2-4	Soft
11-30	Medium Dense	5-8	Firm
31-50	Dense	9-15	Stiff
>50	Very Dense	16-30	Very stiff
		>30	Hard

NOTE: Classification of earth material as shown on this sheet is based upon field inspection and is not to be construed to imply mechanical analysis.

OGS CIVIL LOG OF TEST BORINGS SHEET (METRIC) (REV. 4/04)

Caltrans Metric

GEOTECHNICAL SERVICES	
DRAWN BY	W. Tang 10/05
CHECKED BY	B. Joshi

FIELD INVESTIGATION BY: B. Joshi

STATE OF CALIFORNIA DEPARTMENT OF TRANSPORTATION

DIVISION OF ENGINEERING SERVICES STRUCTURE DESIGN
DESIGN BRANCH 6

BRIDGE NO. RW 539
KILOMETER POST

RETAINING WALL NO. 539
LOG OF TEST BORINGS

ALL DIMENSIONS ARE IN METERS UNLESS OTHERWISE SHOWN

ORIGINAL SCALE IN MILLIMETERS FOR REDUCED PLANS 0 10 20 30 40 50 60 70 80 90 100

CU 07
EA 1218V1

DISREGARD PRINTS BEARING EARLIER REVISION DATES

REVISION DATES (PRELIMINARY STAGE ONLY): 7-26-06 7-26-06 7-16-09

SHEET 9 OF 9

FILE => rw539-z-lotb.dgn

USERNAME => trrright DATE PLOTTED => 03-MAY-2010 TIME PLOTTED => 15:06