DIST	COUNTY	ROUTE	KILOMETER POST TOTAL PROJECT	SHEET No	TOTAL SHEETS
07	LA	5	42.8/47.3	1001	1073

Andrew Rittenhouse 12-05-08
REGISTERED CIVIL ENGINEER DATE

6-8-09
PLANS APPROVAL DATE

REGISTERED PROFESSIONAL ENGINEER Andrew P. Rittenhouse No. 61006 Exp. 12-31-10 CIVIL STATE OF CALIFORNIA

The State of California or its officers or agents shall not be responsible for the accuracy or completeness of electronic copies of this plan sheet.

CURVE DATA TABLE

Curve Ⓐ	Curve Ⓑ	Curve Ⓒ
R= 373.084 m Δ= 4°9'41" T= 13.554 m L= 27.097 m	R= 1.480 m Δ= 180°0'0" T= N/A L= 4.650 m	R= 376.044 m Δ= 4°9'33" T= 13.655 m L= 27.297 m

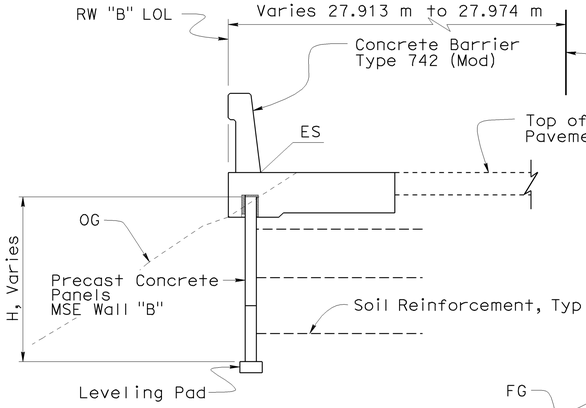

SECTION A-A
1:40

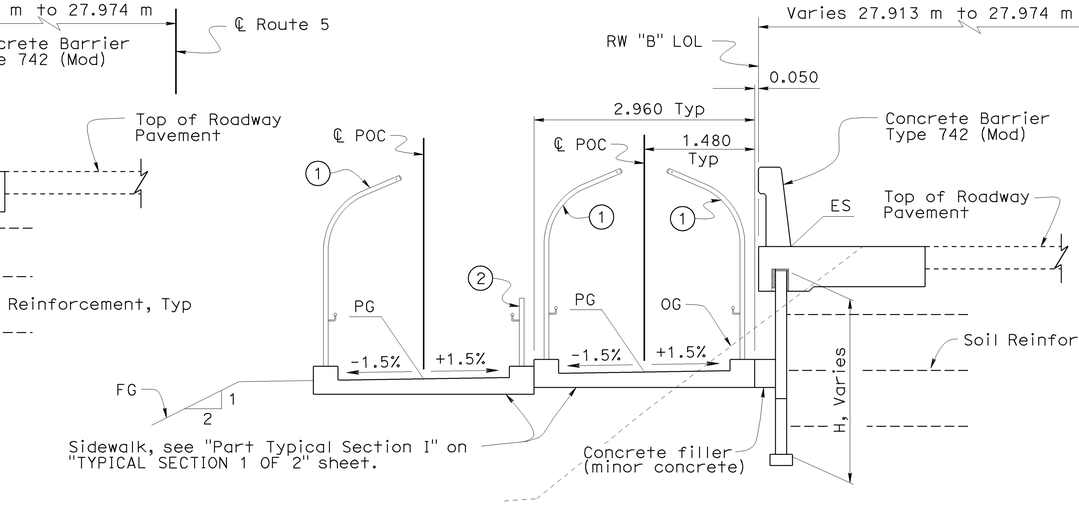

SECTION B-B
1:40

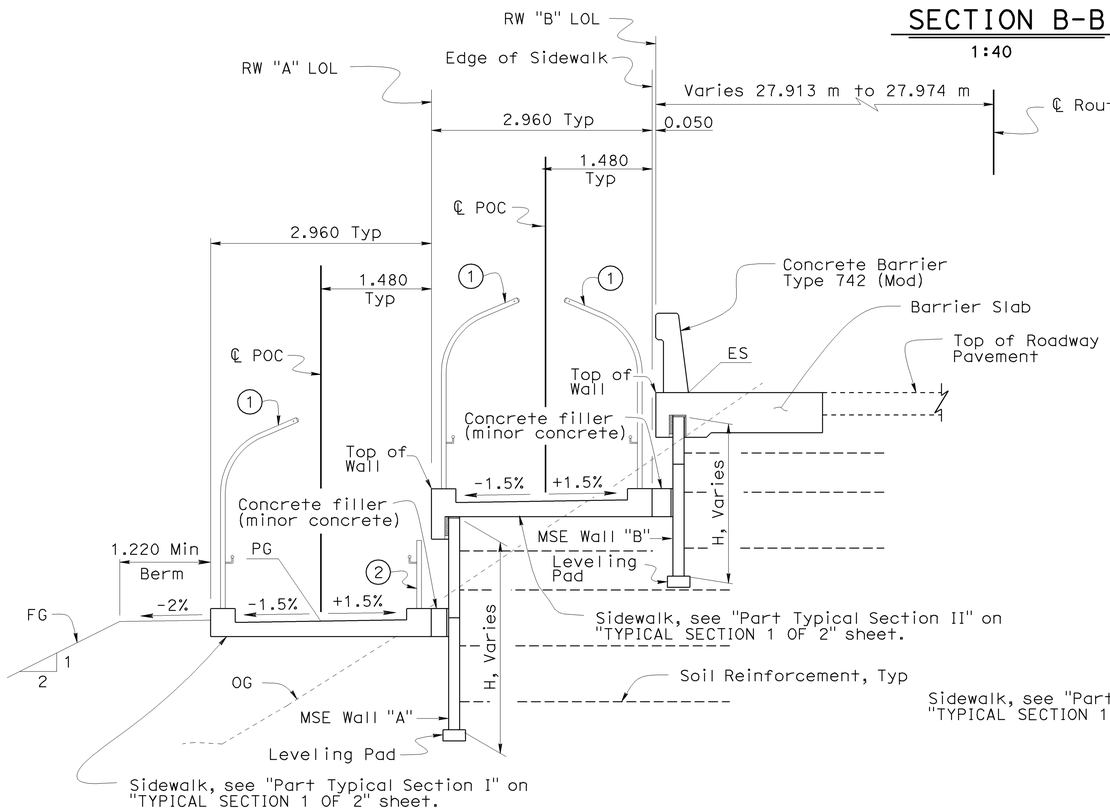

SECTION C-C
1:40

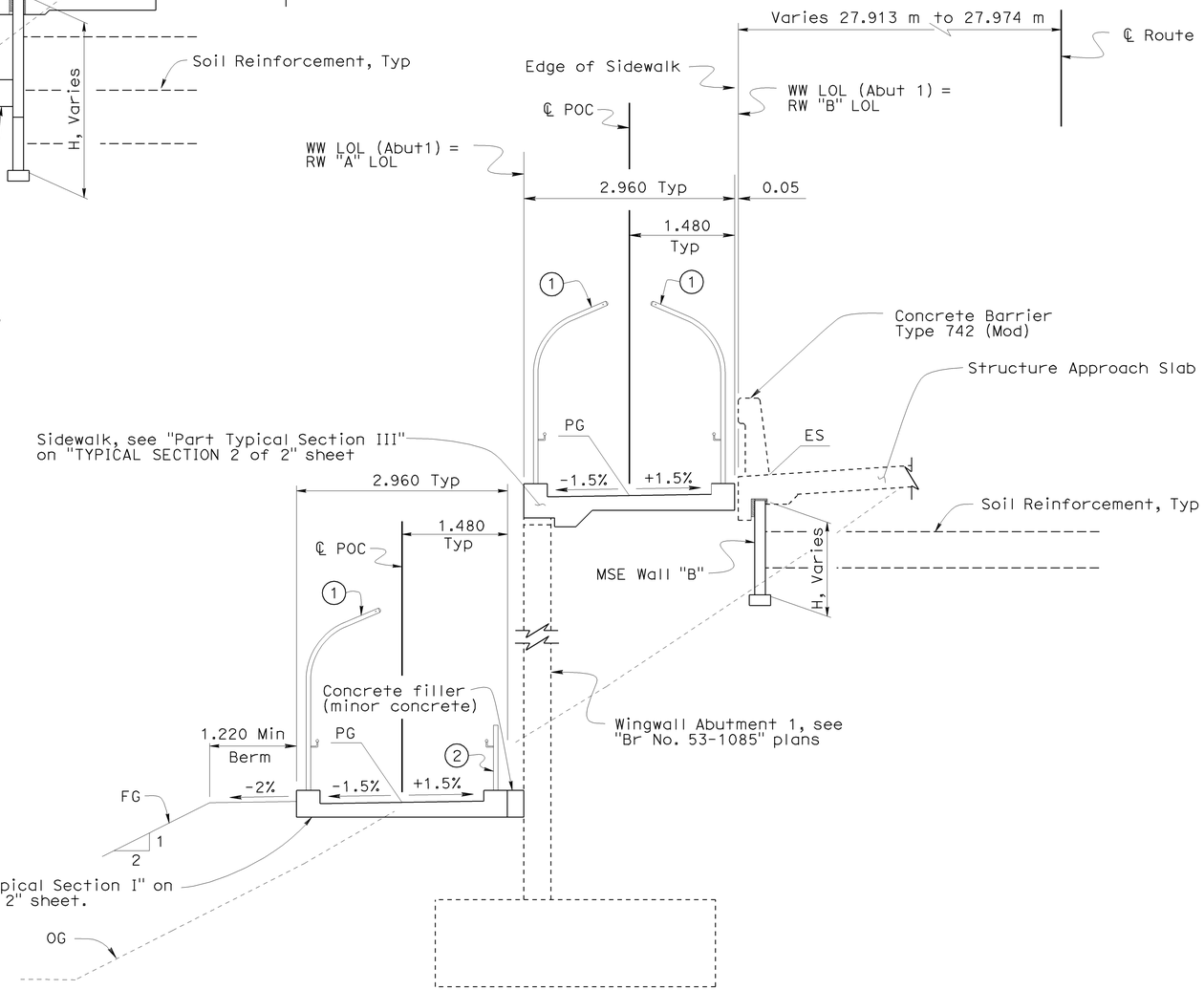

SECTION D-D
1:40

NOTE:
THE CONTRACTOR SHALL VERIFY ALL CONTROLLING FIELD DIMENSIONS BEFORE ORDERING OR FABRICATING ANY MATERIAL.

Notes:

1. Chain Link Railing Type 3L. For limits, see "FENCE & HANDRAIL LAYOUT 1 OF 2" sheet.
2. Pipe Handrailing, Post Type. For limits, see "FENCE & HANDRAIL LAYOUT 1 OF 2" sheet.

KP (PM) Indicates Kilometer Post (Post Mile)

Caltrans Metric

Traci Menard
DESIGN ENGINEER

	BY	CHECKED
DESIGN	G. Galo	R. Novik
DETAILS	S. Cholda	R. Novik
QUANTITIES	A. Logus	D. Kubochi

LOAD & RESISTANCE FACTOR DESIGN — LIVE LOADING: HL93 W/"LOW-BOY"; PERMIT DESIGN VEHICLE

	BY	CHECKED
LAYOUT	G. Galo	R. Novik
SPECIFICATIONS	L. Yang	PLANS AND SPECS COMPARED A. Rittenhouse

STATE OF CALIFORNIA
DEPARTMENT OF TRANSPORTATION

DIVISION OF ENGINEERING SERVICES
STRUCTURE DESIGN
DESIGN BRANCH 15

BRIDGE NO. 53E0127
KP (PM) 46.1(28.7)

SOUTH APPROACH RAMP & RETAINING WALLS
GENERAL PLAN 2 OF 3

ALL DIMENSIONS ARE IN METERS UNLESS OTHERWISE SHOWN

ORIGINAL SCALE IN MILLIMETERS FOR REDUCED PLANS 0 10 20 30 40 50 60 70 80 90 100

CU 07
EA 121841

DISREGARD PRINTS BEARING EARLIER REVISION DATES

REVISION DATES: 12-14-07 11-18-08 11-28-08 12-12-08 12-29-08 01-08-09 01-08-09 01-16-09 11-06-08 11-13-08

SHEET 2 OF 31

FILE => 53e0127-a-gp02.dgn

STRUCTURES DESIGN GENERAL PLAN SHEET (METRIC) (REV.07-24-06)

USERNAME => s135318 DATE PLOTTED => 15-JUN-2009 TIME PLOTTED => 08:34

DIST	COUNTY	ROUTE	KILOMETER POST TOTAL PROJECT	SHEET No	TOTAL SHEETS
07	LA	5	42.8/47.3	1002	1073

Andrew Rittenhouse 12-05-08
REGISTERED CIVIL ENGINEER DATE

6-8-09
PLANS APPROVAL DATE

REGISTERED PROFESSIONAL ENGINEER
Andrew P. Rittenhouse
No. 61006
Exp. 12-31-10
CIVIL
STATE OF CALIFORNIA

The State of California or its officers or agents shall not be responsible for the accuracy or completeness of electronic copies of this plan sheet.

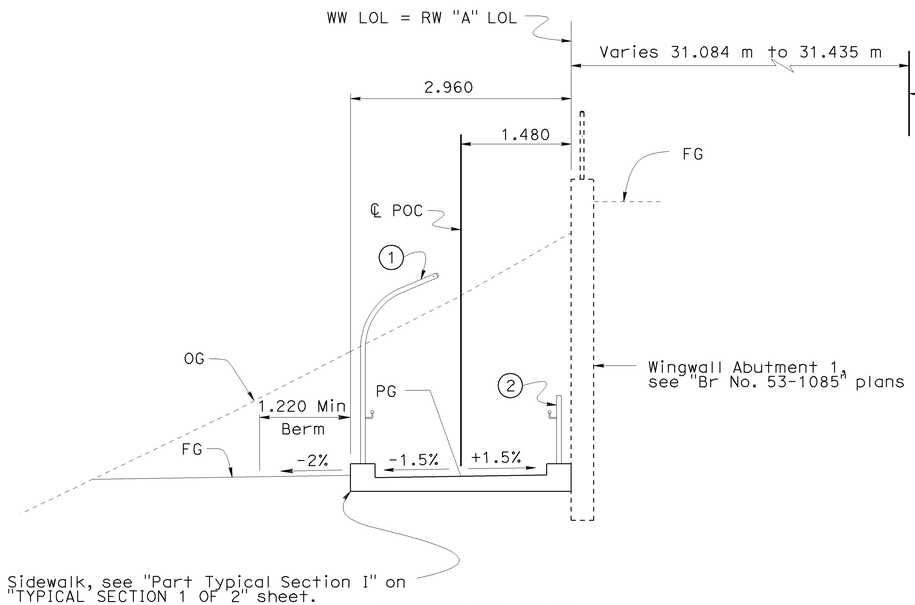

SECTION E-E
1:40

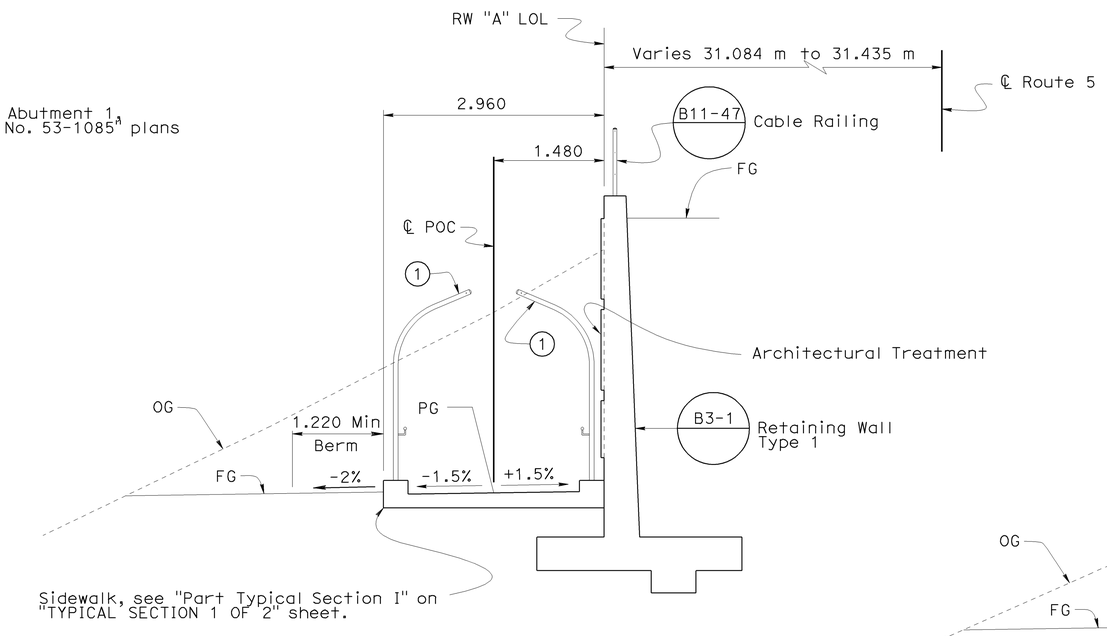

SECTION F-F
1:40

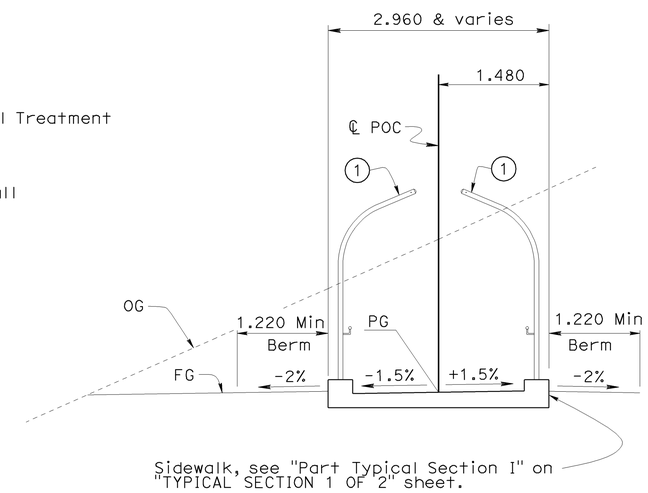

SECTION G-G
1:40

Notes:

1. Chain Link Railing Type 3L. For limits, see "FENCE & HANDRAIL LAYOUT 1 OF 2" sheet.
2. Pipe Handrailing, Post Type. For limits, see "FENCE & HANDRAIL LAYOUT 1 OF 2" sheet.

NOTE:
THE CONTRACTOR SHALL VERIFY ALL CONTROLLING FIELD DIMENSIONS BEFORE ORDERING OR FABRICATING ANY MATERIAL.

KP (PM) Indicates Kilometer Post (Post Mile)

Caltrans Metric

Traci Menard
DESIGN ENGINEER

	BY	CHECKED
DESIGN	G. Galo	R. Novik
DETAILS	S. Cholda	R. Novik
QUANTITIES	A. Logus	D. Kubochi

LOAD & RESISTANCE FACTOR DESIGN — LIVE LOADING: HL93 W/"LOW-BOY"; PERMIT DESIGN VEHICLE

	BY	CHECKED
LAYOUT	G. Galo	R. Novik
SPECIFICATIONS	L. Yang	PLANS AND SPECS COMPARED A. Rittenhouse

ALL DIMENSIONS ARE IN METERS UNLESS OTHERWISE SHOWN

ORIGINAL SCALE IN MILLIMETERS FOR REDUCED PLANS 0 10 20 30 40 50 60 70 80 90 100

STATE OF CALIFORNIA
DEPARTMENT OF TRANSPORTATION

DIVISION OF ENGINEERING SERVICES
STRUCTURE DESIGN
DESIGN BRANCH 15

CU 07
EA 121841

BRIDGE NO. 53E0127
KP (PM) 46.1(28.7)

SOUTH APPROACH RAMP & RETAINING WALLS
GENERAL PLAN 3 OF 3

DISREGARD PRINTS BEARING EARLIER REVISION DATES

REVISION DATES: 12-14-07 12-28-08 01-08-09 01-16-09 08-20-08 11-13-08 11-18-08 11-20-08 12-12-08

SHEET 3 OF 31

FILE => 53e0127-g-gp03.dgn

STRUCTURES DESIGN GENERAL PLAN SHEET (METRIC) (REV.07-24-06)

USERNAME => s135318 DATE PLOTTED => 15-JUN-2009 TIME PLOTTED => 08:34

DIST	COUNTY	ROUTE	KILOMETER POST TOTAL PROJECT	SHEET No	TOTAL SHEETS
07	LA	5	42.8/47.3	1003	1073

Andrew Rittenhouse 12-05-08
REGISTERED CIVIL ENGINEER DATE

6-8-09
PLANS APPROVAL DATE

REGISTERED PROFESSIONAL ENGINEER
Andrew P. Rittenhouse
No. 61006
Exp. 12-31-08
CIVIL
STATE OF CALIFORNIA

The State of California or its officers or agents shall not be responsible for the accuracy or completeness of electronic copies of this plan sheet.

INDEX TO PLANS

SHEET NO.	TITLE
1.	GENERAL PLAN 1 OF 3
2.	GENERAL PLAN 2 OF 3
2.	GENERAL PLAN 3 OF 3
4.	INDEX TO PLANS
5.	SIDEWALK LAYOUT 1 OF 2
6.	SIDEWALK LAYOUT 2 OF 2
7.	SIDEWALK DETAILS
8.	RETAINING WALL "A" LAYOUT 1 OF 2
9.	RETAINING WALL "A" LAYOUT 2 OF 2
10.	RETAINING WALL "B" LAYOUT 1 OF 2
11.	RETAINING WALL "B" LAYOUT 2 OF 2
12.	TYPICAL SECTION 1 OF 2
13.	TYPICAL SECTION 2 OF 2
14.	DRAINAGE DETAILS 1 OF 2
15.	DRAINAGE DETAILS 2 OF 2
16.	PANEL DETAILS 1 OF 7
17.	PANEL DETAILS 2 OF 7
18.	PANEL DETAILS 3 OF 7
19.	PANEL DETAILS 4 OF 7
20.	PANEL DETAILS 5 OF 7
21.	PANEL DETAILS 6 OF 7
22.	PANEL DETAILS 7 OF 7
23.	MISCELLANEOUS DETAILS 1 OF 2
24.	MISCELLANEOUS DETAILS 2 OF 2
25.	FENCE & HANDRAIL LAYOUT 1 OF 2
26.	FENCE & HANDRAIL LAYOUT 2 OF 2
27.	HANDRAIL DETAILS
28.	CHAIN LINK RAILING TYPE 3L
29.	ARCHITECTURAL TREATMENT DETAILS 1 OF 2
30.	ARCHITECTURAL TREATMENT DETAILS 2 OF 2
31.	LOG OF TEST BORINGS

STANDARD PLANS DATED JULY 2004

A10A	ACRONYMS AND ABBREVIATIONS (A-L)
A10B	ACRONYMS AND ABBREVIATIONS (M-Z)
A62B	EXCAVATION AND BACKFILL
RSP P1	JOINTED PLAIN CONCRETE PAVEMENT
RSP P10	CONCRETE PAVEMENT-DOWEL BAR DETAILS
B3-1	RETAINING WALL, TYPE 1
B3-8	RETAINING WALL DETAILS NO.1
B11-7	CHAIN LINK RAILING
B11-47	CABLE RAILING
B11-57	CONCRETE BARRIER, TYPE 742
D102	UNDERDRAINS
RSP ES-7P	ELECTRICAL SYSTEMS (PEDESTRIAN BARRICADES)

STANDARD PLAN SHEET NO.

DETAIL NO.

Note:
1. For General Notes see "PANEL DETAILS 4 OF 7" sheet.

Caltrans Metric

ALL DIMENSIONS ARE IN MILLIMETERS UNLESS OTHERWISE SHOWN

ORIGINAL SCALE IN MILLIMETERS FOR REDUCED PLANS 0 10 20 30 40 50 60 70 80 90 100

	BY	CHECKED
DESIGN	G. Galo	R. Novik
DETAILS	S. Cholda	R. Novik
QUANTITIES	A. Logus	D. Kubochi

STATE OF CALIFORNIA
DEPARTMENT OF TRANSPORTATION

DIVISION OF ENGINEERING SERVICES
STRUCTURE DESIGN
DESIGN BRANCH 15

CU 07
EA 121841

BRIDGE NO. 53E0127
KILOMETER POST 46.1

SOUTH APPROACH RAMP & RETAINING WALLS
INDEX TO PLANS

DISREGARD PRINTS BEARING EARLIER REVISION DATES

REVISION DATES: 09-02-08 09-29-08 11-18-08 11-20-08 12-15-08 01-06-09 02-19-09 3-19-09 3-23-09

SHEET 4 OF 31

FILE => 53e0127-a-itp.dgn

STRUCTURES DESIGN DETAIL SHEET (METRIC) (REV.03-17-04)

USERNAME => s135318 DATE PLOTTED => 15-JUN-2009 TIME PLOTTED => 08:34

DIST	COUNTY	ROUTE	KILOMETER POST TOTAL PROJECT	SHEET No	TOTAL SHEETS
07	LA	5	42.8/47.3	1004	1073

Andrew Rittenhouse 12-05-08
REGISTERED CIVIL ENGINEER DATE

6-8-09
PLANS APPROVAL DATE

The State of California or its officers or agents shall not be responsible for the accuracy or completeness of electronic copies of this plan sheet.

REGISTERED PROFESSIONAL ENGINEER
Andrew P. Rittenhouse
No. 61006
Exp. 12-31-10
CIVIL
STATE OF CALIFORNIA

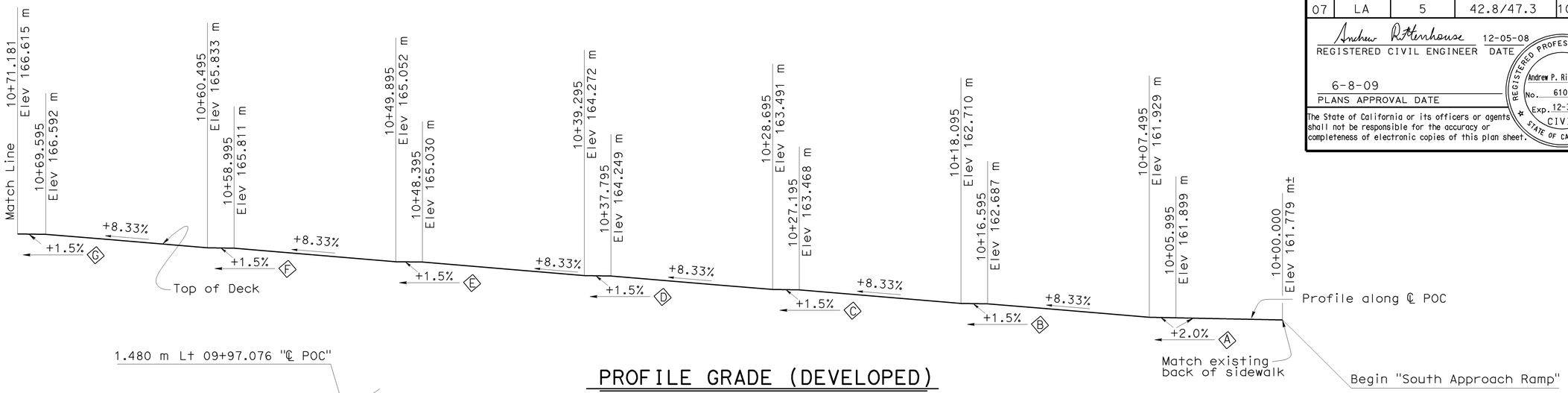

PROFILE GRADE (DEVELOPED)

NO SCALE

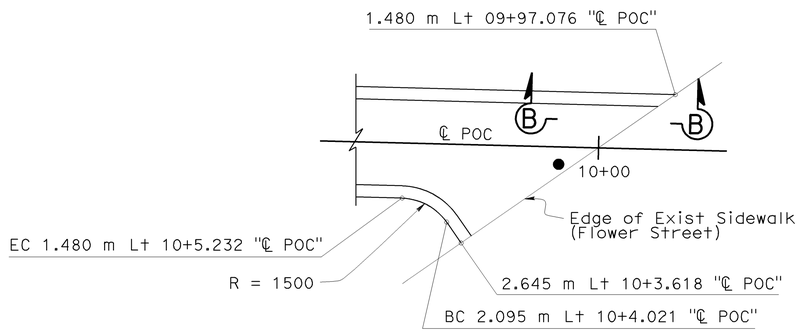

DETAIL "A"

1:80

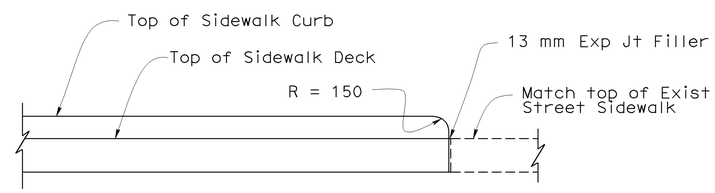

SECTION B-B

1:20

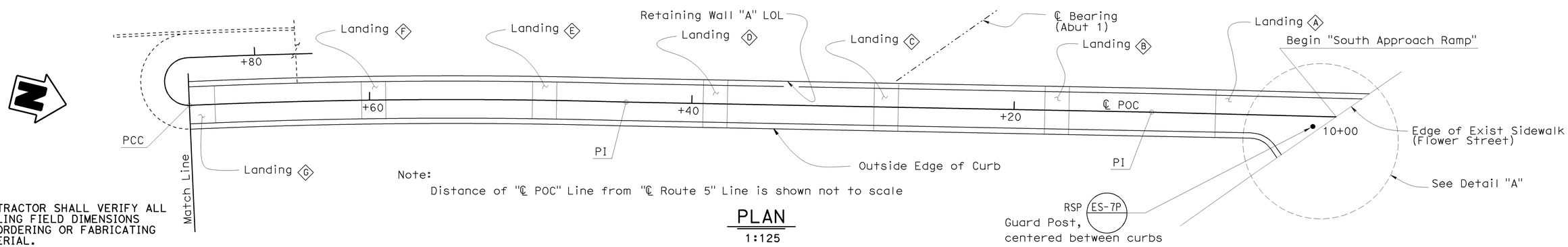

Note:
Distance of "℄ POC" Line from "℄ Route 5" Line is shown not to scale

PLAN

1:125

NOTE:
THE CONTRACTOR SHALL VERIFY ALL CONTROLLING FIELD DIMENSIONS BEFORE ORDERING OR FABRICATING ANY MATERIAL.

Caltrans Metric

	BY	CHECKED
DESIGN	G. Galo	R. Novik
DETAILS	S. Cholda	R. Novik
QUANTITIES	A. Logus	D. Kubochi

STATE OF CALIFORNIA
DEPARTMENT OF TRANSPORTATION

DIVISION OF ENGINEERING SERVICES
STRUCTURE DESIGN
DESIGN BRANCH 15

BRIDGE NO. 53E0127
KILOMETER POST 46.1

SOUTH APPROACH RAMP & RETAINING WALLS
SIDEWALK LAYOUT 1 OF 2

ALL DIMENSIONS ARE IN MILLIMETERS UNLESS OTHERWISE SHOWN

ORIGINAL SCALE IN MILLIMETERS FOR REDUCED PLANS 0 10 20 30 40 50 60 70 80 90 100

CU 07
EA 12141

DISREGARD PRINTS BEARING EARLIER REVISION DATES

REVISION DATES: 02-19-09 01-05-08 03-27-08 04-12-08 11-08-08 11-15-08 11-20-08 12-15-08 12-29-08 01-08-09

SHEET 5 OF 31

FILE => 53e0127-f-s1o01.dgn

STRUCTURES DESIGN DETAIL SHEET (METRIC) (REV.03-17-04)

USERNAME => s135318 DATE PLOTTED => 15-JUN-2009 TIME PLOTTED => 08:34

DIST	COUNTY	ROUTE	KILOMETER POST TOTAL PROJECT	SHEET No	TOTAL SHEETS
07	LA	5	42.8/47.3	1005	1073

Andrew Rittenhouse 12-05-08
REGISTERED CIVIL ENGINEER DATE

6-8-09
PLANS APPROVAL DATE

REGISTERED PROFESSIONAL ENGINEER
Andrew P. Rittenhouse
No. 61006
Exp. 12-31-10
CIVIL
STATE OF CALIFORNIA

The State of California or its officers or agents shall not be responsible for the accuracy or completeness of electronic copies of this plan sheet.

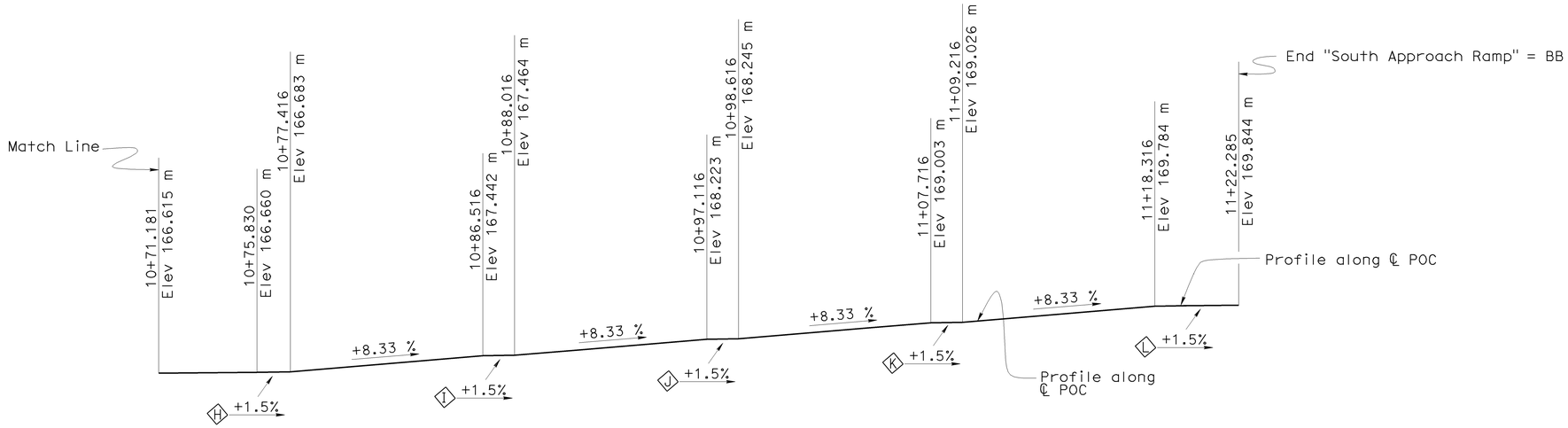

PROFILE GRADE (DEVELOPED)

NO SCALE

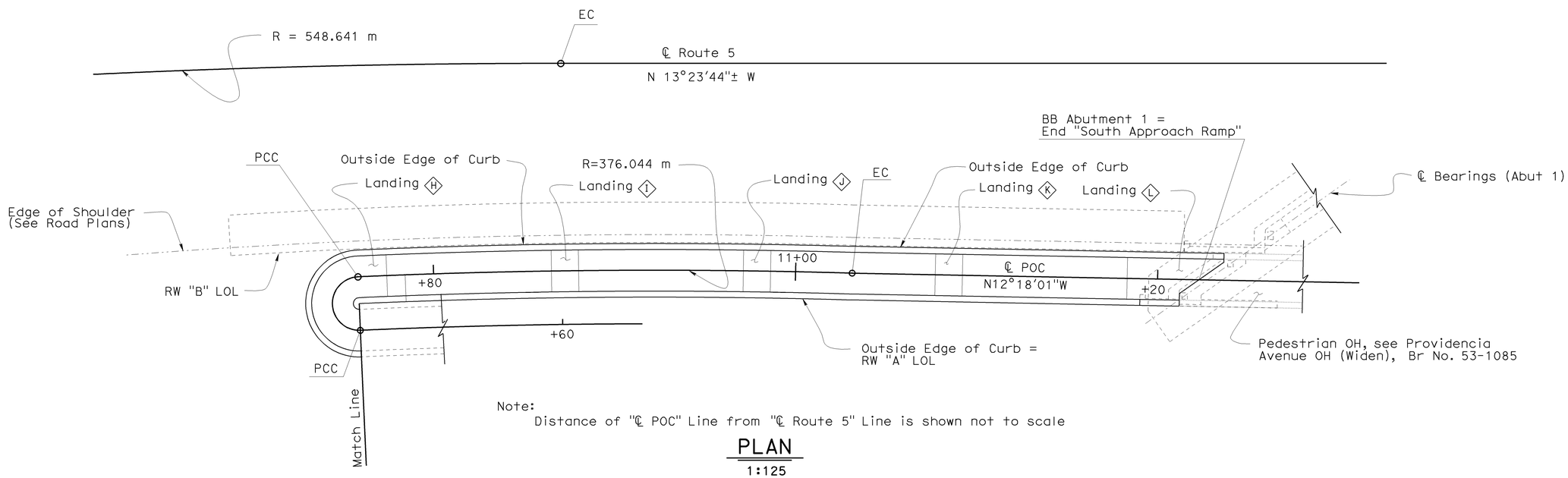

Note:
Distance of "℄ POC" Line from "℄ Route 5" Line is shown not to scale

PLAN

1:125

NOTE:
THE CONTRACTOR SHALL VERIFY ALL CONTROLLING FIELD DIMENSIONS BEFORE ORDERING OR FABRICATING ANY MATERIAL.

	BY	CHECKED
DESIGN	G. Galo	R. Novik
DETAILS	S. Cholda	R. Novik
QUANTITIES	A. Logus	D. Kubochi

STATE OF CALIFORNIA
DEPARTMENT OF TRANSPORTATION

DIVISION OF ENGINEERING SERVICES
STRUCTURE DESIGN
DESIGN BRANCH 15

BRIDGE NO. 53E0127
KILOMETER POST 46.1

SOUTH APPROACH RAMP & RETAINING WALLS
SIDEWALK LAYOUT 2 OF 2

ALL DIMENSIONS ARE IN MILLIMETERS UNLESS OTHERWISE SHOWN

ORIGINAL SCALE IN MILLIMETERS FOR REDUCED PLANS 0 10 20 30 40 50 60 70 80 90 100

CU 07
EA 12141

DISREGARD PRINTS BEARING EARLIER REVISION DATES

REVISION DATES: 12-14-07 | 01-02-08 | 11-15-08 | 11-20-08 | 12-15-08 | 01-08-09 | 01-09-09

SHEET 6 OF 31

FILE => 53e0127-f-s1o02.dgn

STRUCTURES DESIGN DETAIL SHEET (METRIC) (REV.03-17-04)

USERNAME => s133518 DATE PLOTTED => 15-JUN-2009 TIME PLOTTED => 08:34

DIST	COUNTY	ROUTE	KILOMETER POST TOTAL PROJECT	SHEET No	TOTAL SHEETS
07	LA	5	42.8/47.3	1006	1073

Andrew Rittenhouse 12-05-08
REGISTERED CIVIL ENGINEER DATE

6-8-09
PLANS APPROVAL DATE

REGISTERED PROFESSIONAL ENGINEER
Andrew P. Rittenhouse
No. 61006
Exp. 12-31-10
CIVIL
STATE OF CALIFORNIA

The State of California or its officers or agents shall not be responsible for the accuracy or completeness of electronic copies of this plan sheet.

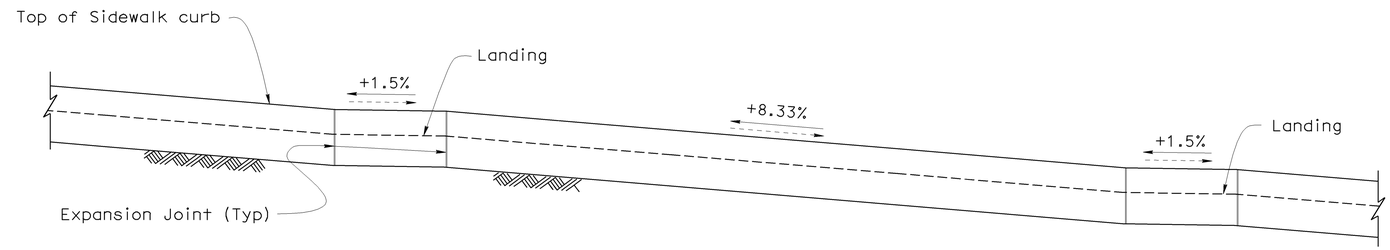

ELEVATION
1:40

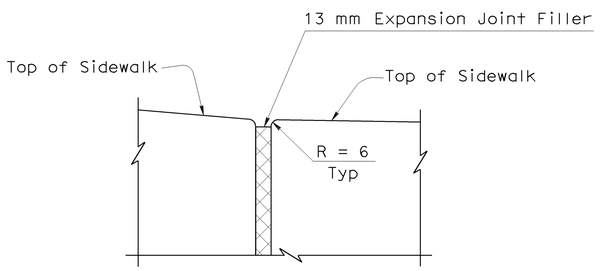

SECTION A-A
1:2.5

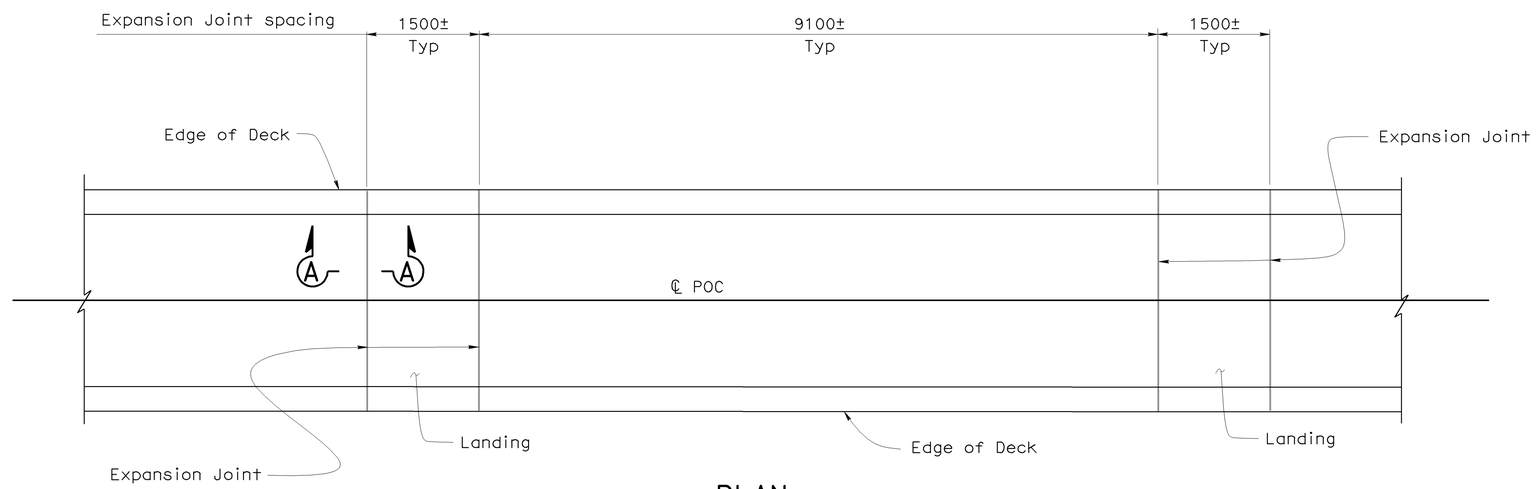

PLAN
1:40

SIDEWALK EXPANSION JOINT

NOTE:
THE CONTRACTOR SHALL VERIFY ALL CONTROLLING FIELD DIMENSIONS BEFORE ORDERING OR FABRICATING ANY MATERIAL.

Caltrans Metric

	BY	CHECKED
DESIGN	G. Galo	R. Novik
DETAILS	S. Cholda	R. Novik
QUANTITIES	A. Logus	D. Kubochi

STATE OF CALIFORNIA
DEPARTMENT OF TRANSPORTATION

DIVISION OF ENGINEERING SERVICES
STRUCTURE DESIGN
DESIGN BRANCH

BRIDGE NO. 53E0127
KILOMETER POST 46.1

SOUTH APPROACH RAMP & RETAINING WALLS
SIDEWALK DETAILS

ALL DIMENSIONS ARE IN MILLIMETERS UNLESS OTHERWISE SHOWN

ORIGINAL SCALE IN MILLIMETERS FOR REDUCED PLANS 0 10 20 30 40 50 60 70 80 90 100

CU 07
EA 121841

DISREGARD PRINTS BEARING EARLIER REVISION DATES

REVISION DATES: 01-07-08 08-12-08 11-18-08 11-20-08 12-15-08 01-08-09

SHEET 7 OF 31

FILE => 53e0127-f-ssdt01.dgn

STRUCTURES DESIGN DETAIL SHEET (METRIC) (REV.03-17-04)

USERNAME => s135318 DATE PLOTTED => 15-JUN-2009 TIME PLOTTED => 08:48

DIST	COUNTY	ROUTE	KILOMETER POST TOTAL PROJECT	SHEET No	TOTAL SHEETS
07	LA	5	42.8/47.3	1007	1073

Andrew Rittenhouse 12-05-08
REGISTERED CIVIL ENGINEER DATE

6-8-09
PLANS APPROVAL DATE

REGISTERED PROFESSIONAL ENGINEER Andrew P. Rittenhouse No. 61006 Exp. 12-31-10 CIVIL STATE OF CALIFORNIA

The State of California or its officers or agents shall not be responsible for the accuracy or completeness of electronic copies of this plan sheet.

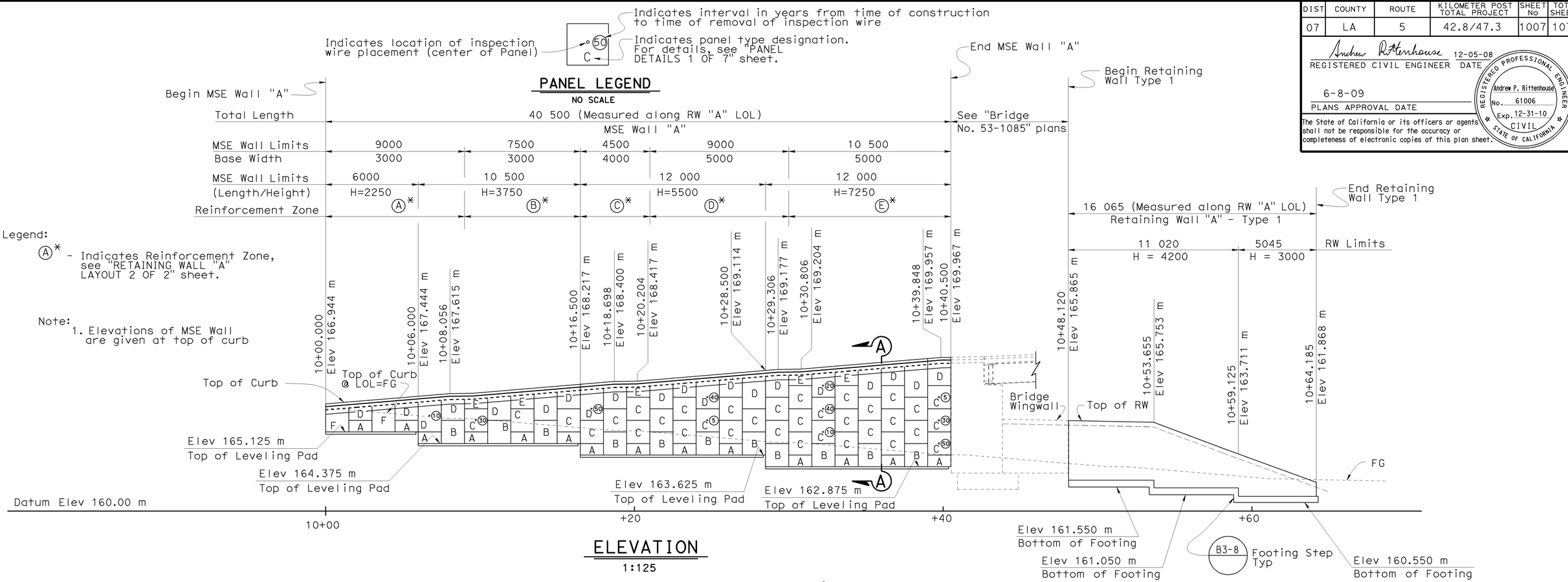

ELEVATION
1:125

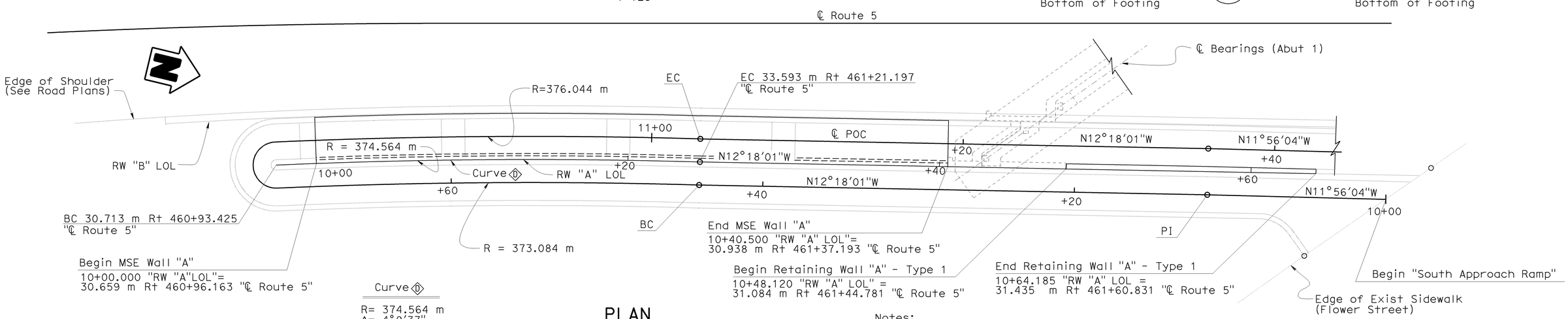

Curve ◊
R= 374.564 m
Δ= 4°9'37"
T= 13.605 m
L= 27.197 m

PLAN
1:125

RETAINING WALL "A"- LAYOUT

NOTE:
THE CONTRACTOR SHALL VERIFY ALL CONTROLLING FIELD DIMENSIONS BEFORE ORDERING OR FABRICATING ANY MATERIAL.

Notes:
1. MSE Wall "A" and "Retaining Wall "A"- Type 1, are divided by Abutment 1 Overcrossing Structure
2. Distance of South Approach Ramp from ℄ Route 5 is not to scale
3. Fence Railing and Architectural Feature not shown for clarity.
4. For "Section A-A" , see "RETAINING WALL "A" LAYOUT 2 OF 2" sheet.

Caltrans Metric

	BY	CHECKED
DESIGN	G. Galo	F. Feng
DETAILS	S. Cholda	F. Feng
QUANTITIES	A. Logus	D. Kubochi

STATE OF CALIFORNIA
DEPARTMENT OF TRANSPORTATION

DIVISION OF ENGINEERING SERVICES
STRUCTURE DESIGN
DESIGN BRANCH 15

BRIDGE NO. 53E0127
KILOMETER POST 46.1

SOUTH APPROACH RAMP & RETAINING WALLS
RETAINING WALL "A" LAYOUT 1 OF 2

ALL DIMENSIONS ARE IN MILLIMETERS UNLESS OTHERWISE SHOWN

ORIGINAL SCALE IN MILLIMETERS FOR REDUCED PLANS 0 10 20 30 40 50 60 70 80 90 100

CU 07
EA 121841

DISREGARD PRINTS BEARING EARLIER REVISION DATES

REVISION DATES: 12-14-07 01-04-08 07-08-08 09-09-08 10-06-08 10-14-08 11-06-08 11-20-08 12-15-08 01-09-09

SHEET 8 OF 31

FILE => 53e0127-g-rw_lo01.dgn

STRUCTURES DESIGN DETAIL SHEET (METRIC) (REV.03-17-04)

USERNAME => s135318 DATE PLOTTED => 15-JUN-2009 TIME PLOTTED => 08:34

DIST	COUNTY	ROUTE	KILOMETER POST TOTAL PROJECT	SHEET No	TOTAL SHEETS
07	LA	5	42.8/47.3	1008	1073

Andrew Rittenhouse 12-05-08
REGISTERED CIVIL ENGINEER DATE

6-8-09
PLANS APPROVAL DATE

REGISTERED PROFESSIONAL ENGINEER
Andrew P. Rittenhouse
No. 61006
Exp. 12-31-10
CIVIL
STATE OF CALIFORNIA

The State of California or its officers or agents shall not be responsible for the accuracy or completeness of electronic copies of this plan sheet.

TABLE

	Reinforcement Zone					
	Ⓐ	Ⓑ	Ⓒ	Ⓓ	Ⓔ	
Soil Reinforcement (size and spacing)	1-MW71+MW71x230	1-MW71+MW71x230	1-MW71+MW71x230	1-MW71+MW71x230	1-MW71+MW71x230	(Top of wall)
	2-MW97+MW71x230	3-MW97+MW71x230	4-MW97+MW71x230	4-MW97+MW71x230	4-MW97+MW71x230	
			1-MW97+MW71x460	2-MW97+MW71x460	4-MW97+MW71x460	(Bottom of wall)

Nomenclature:

Number of rows

Transverse wire size

1-MW71+MW71x230

Longitudinal MW wire size, spaced @ 150

Transverse wire size

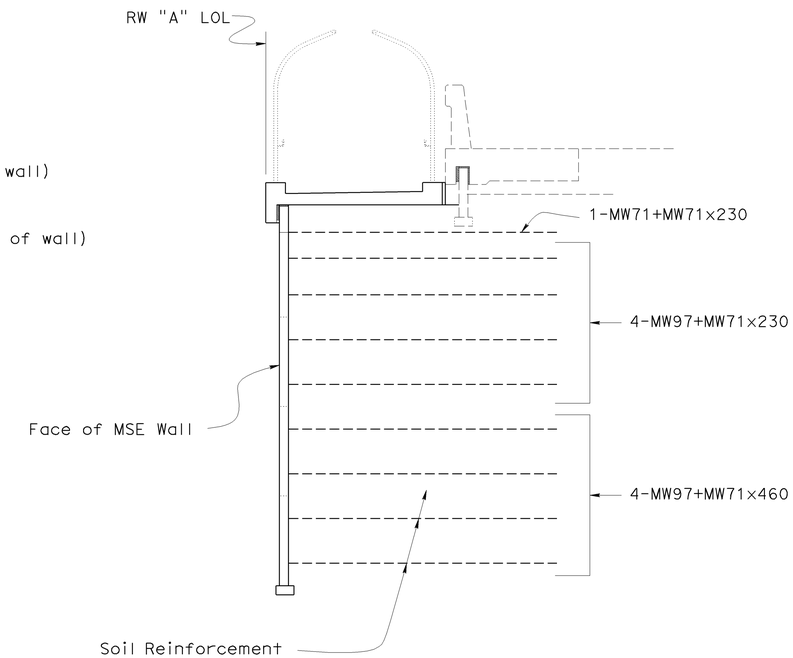

SECTION A-A
(REINFORCEMENT ZONE Ⓔ)
1:50

NOTE:
THE CONTRACTOR SHALL VERIFY ALL CONTROLLING FIELD DIMENSIONS BEFORE ORDERING OR FABRICATING ANY MATERIAL.

Caltrans Metric

	BY	CHECKED
DESIGN	G. Galo	F. Feng
DETAILS	S. Cholda	F. Feng
QUANTITIES	A. Logus	D. Kubochi

STATE OF CALIFORNIA
DEPARTMENT OF TRANSPORTATION

DIVISION OF ENGINEERING SERVICES
STRUCTURE DESIGN
DESIGN BRANCH 15

BRIDGE NO. 53E0127
KILOMETER POST 46.1

SOUTH APPROACH RAMP & RETAINING WALLS
RETAINING WALL "A" LAYOUT 2 OF 2

ALL DIMENSIONS ARE IN MILLIMETERS UNLESS OTHERWISE SHOWN

ORIGINAL SCALE IN MILLIMETERS FOR REDUCED PLANS 0 10 20 30 40 50 60 70 80 90 100

CU 07
EA 121841

DISREGARD PRINTS BEARING EARLIER REVISION DATES

REVISION DATES: 12-14-07 01-20-09 07-08-08 09-09-08 10-06-08 10-10-08 11-13-08 11-20-08 12-15-08 01-06-09

SHEET 9 OF 31

FILE => 53e0127-g-rw_1o02.dgn

STRUCTURES DESIGN DETAIL SHEET (METRIC) (REV.03-17-04)

USERNAME => s133518 DATE PLOTTED => 15-JUN-2009 TIME PLOTTED => 08:34

DIST	COUNTY	ROUTE	KILOMETER POST TOTAL PROJECT	SHEET No	TOTAL SHEETS
07	LA	5	42.8/47.3	1009	1073

REGISTERED CIVIL ENGINEER 12-05-08 DATE

6-8-09
PLANS APPROVAL DATE

REGISTERED PROFESSIONAL ENGINEER Andrew P. Rittenhouse No. 61006 Exp. 12-31-10 CIVIL STATE OF CALIFORNIA

The State of California or its officers or agents shall not be responsible for the accuracy or completeness of electronic copies of this plan sheet.

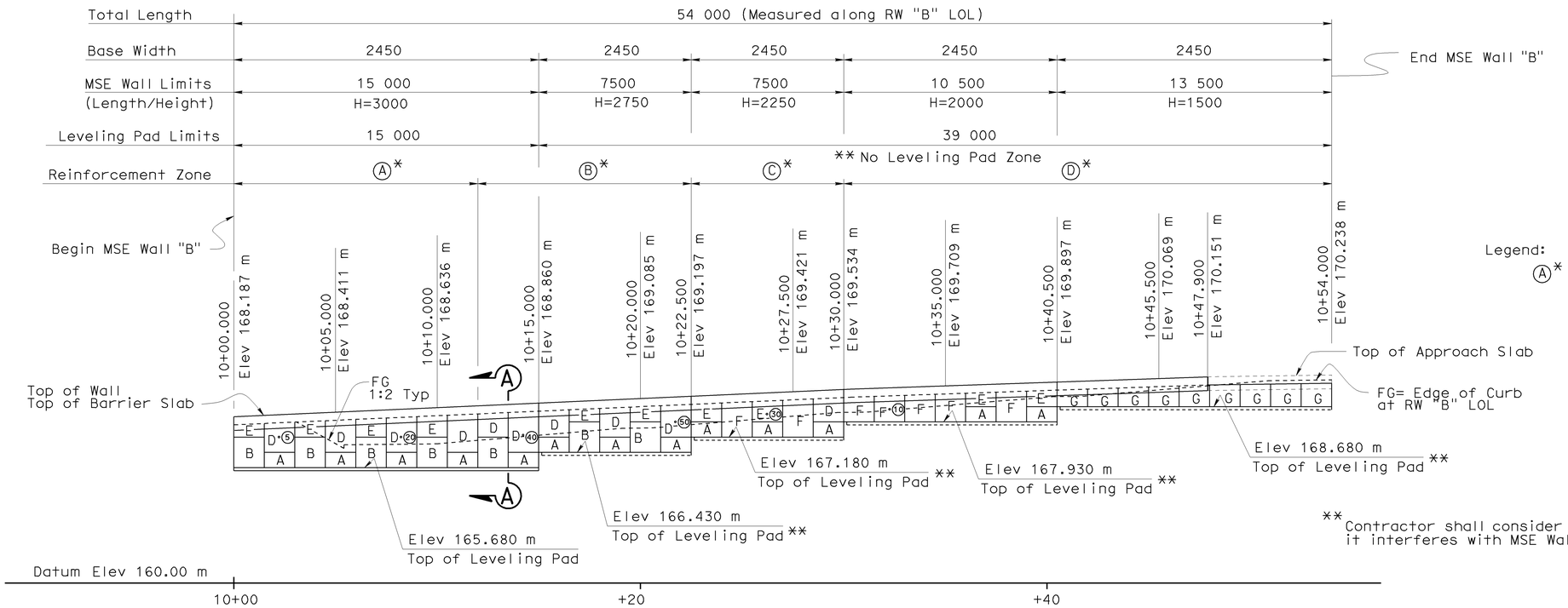

Legend:

A* - Indicates Reinforcement Zone, see "RETAINING WALL "B" LAYOUT 2 OF 2" sheet.

** Contractor shall consider omitting leveling pad if it interferes with MSE Wall "A" reinforcement.

ELEVATION (DEVELOPED)

1:125

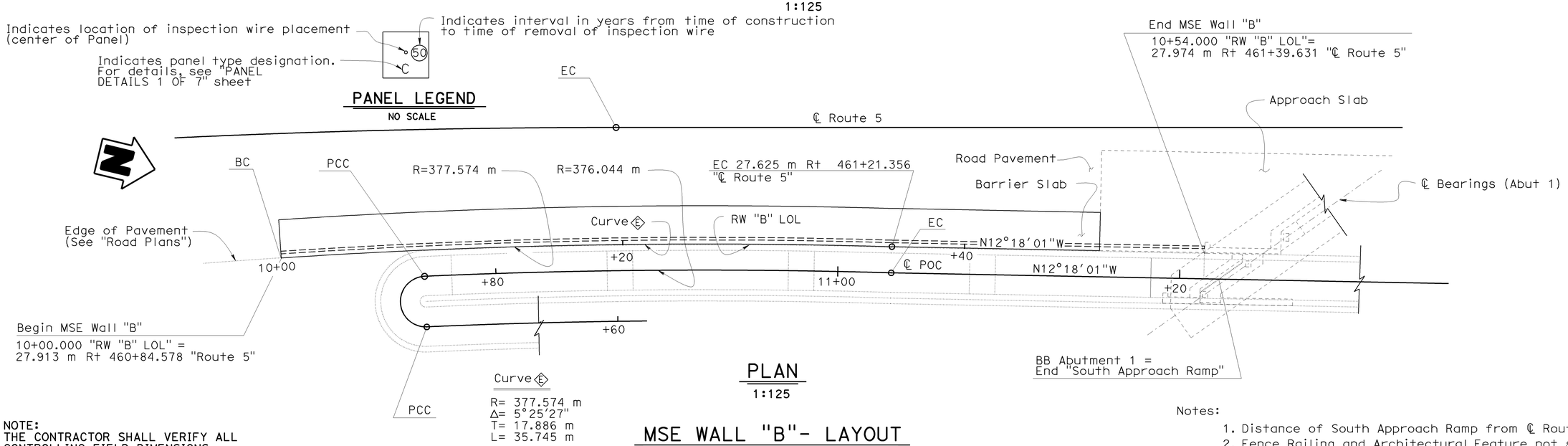

PLAN

1:125

MSE WALL "B"- LAYOUT

NOTE:
THE CONTRACTOR SHALL VERIFY ALL CONTROLLING FIELD DIMENSIONS BEFORE ORDERING OR FABRICATING ANY MATERIAL.

Notes:

1. Distance of South Approach Ramp from ℄ Route 5 is not to scale
2. Fence Railing and Architectural Feature not shown for clarity.
3. For "Section A-A" , see "RETAINING WALL "B" LAYOUT 1 OF 2" sheet.

Caltrans Metric

	BY	CHECKED
DESIGN	G. Galo	F. Feng
DETAILS	S. Cholda	F. Feng
QUANTITIES	A. Logus	D. Kubochi

STATE OF CALIFORNIA
DEPARTMENT OF TRANSPORTATION

DIVISION OF ENGINEERING SERVICES
STRUCTURE DESIGN
DESIGN BRANCH 15

BRIDGE NO. 53E0127
KILOMETER POST 46.1

SOUTH APPROACH RAMP & RETAINING WALLS
RETAINING WALL "B" LAYOUT 1 OF 2

ALL DIMENSIONS ARE IN MILLIMETERS UNLESS OTHERWISE SHOWN

ORIGINAL SCALE IN MILLIMETERS FOR REDUCED PLANS 0 10 20 30 40 50 60 70 80 90 100

CU 07
EA 121841

DISREGARD PRINTS BEARING EARLIER REVISION DATES

REVISION DATES: 01-26-06 05-13-06 09-29-06 10-26-06 11-06-06 11-20-06 12-29-06 01-08-09 4-09-09

SHEET 10 OF 31

FILE => 53e0127-g-rw_1o03.dgn

STRUCTURES DESIGN DETAIL SHEET (METRIC) (REV.03-17-04)

USERNAME => s133518 DATE PLOTTED => 15-JUN-2009 TIME PLOTTED => 08:34

DIST	COUNTY	ROUTE	KILOMETER POST TOTAL PROJECT	SHEET No	TOTAL SHEETS
07	LA	5	42.8/47.3	1010	1073

Andrew Rittenhouse 12-05-08
REGISTERED CIVIL ENGINEER DATE

6-8-09
PLANS APPROVAL DATE

REGISTERED PROFESSIONAL ENGINEER
Andrew P. Rittenhouse
No. 61006
Exp. 12-31-10
CIVIL
STATE OF CALIFORNIA

The State of California or its officers or agents shall not be responsible for the accuracy or completeness of electronic copies of this plan sheet.

TABLE

	Reinforcement Zone				
	Ⓐ	Ⓑ	Ⓒ	Ⓓ	
Soil Reinforcement (size and spacing)	3-MW71+MW71x230	2-MW71+MW71x230 2-MW97+MW71x300	3-MW71+MW71x230	2-MW71+MW71x230	(Top of wall) (Bottom of wall)

Nomenclature:

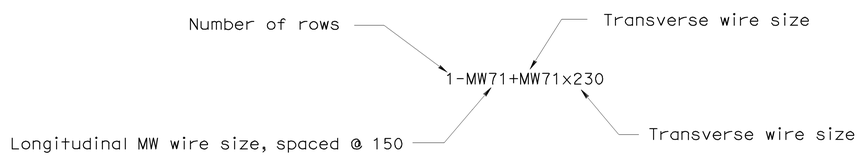

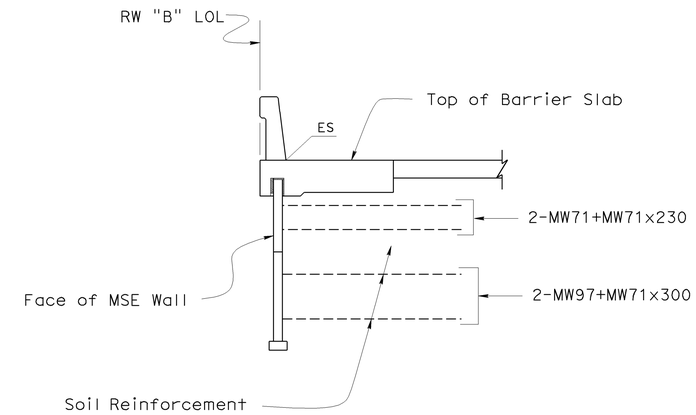

SECTION A-A
(REINFORCEMENT ZONE Ⓑ)
1:50

NOTE:
THE CONTRACTOR SHALL VERIFY ALL CONTROLLING FIELD DIMENSIONS BEFORE ORDERING OR FABRICATING ANY MATERIAL.

Caltrans Metric

ALL DIMENSIONS ARE IN MILLIMETERS UNLESS OTHERWISE SHOWN

ORIGINAL SCALE IN MILLIMETERS FOR REDUCED PLANS 0 10 20 30 40 50 60 70 80 90 100

	BY	CHECKED
DESIGN	G. Galo	F. Feng
DETAILS	S. Cholda	F. Feng
QUANTITIES	A. Logus	D. Kubochi

STATE OF CALIFORNIA
DEPARTMENT OF TRANSPORTATION

DIVISION OF ENGINEERING SERVICES
STRUCTURE DESIGN
DESIGN BRANCH 15

CU 07
EA 121841

BRIDGE NO. 53E0127
KILOMETER POST 46.1

SOUTH APPROACH RAMP & RETAINING WALLS
RETAINING WALL "B" LAYOUT 2 OF 2

DISREGARD PRINTS BEARING EARLIER REVISION DATES

REVISION DATES: 12-11-07 01-08-09 01-09-09 01-20-09 10-06-08 10-16-08 11-13-08 11-26-08 12-15-08 12-29-08

SHEET 11 OF 31

FILE => 53e0127-g-rw_lo04.dgn

STRUCTURES DESIGN DETAIL SHEET (METRIC) (REV.03-17-04)

USERNAME => s135318 DATE PLOTTED => 15-JUN-2009 TIME PLOTTED => 08:35

DIST	COUNTY	ROUTE	KILOMETER POST TOTAL PROJECT	SHEET No	TOTAL SHEETS
07	LA	5	42.8/47.3	1011	1073

Andrew Rittenhouse 12-05-08
REGISTERED CIVIL ENGINEER DATE

6-8-09
PLANS APPROVAL DATE

REGISTERED PROFESSIONAL ENGINEER Andrew P. Rittenhouse No. 61006 Exp. 12-31-10 CIVIL STATE OF CALIFORNIA

The State of California or its officers or agents shall not be responsible for the accuracy or completeness of electronic copies of this plan sheet.

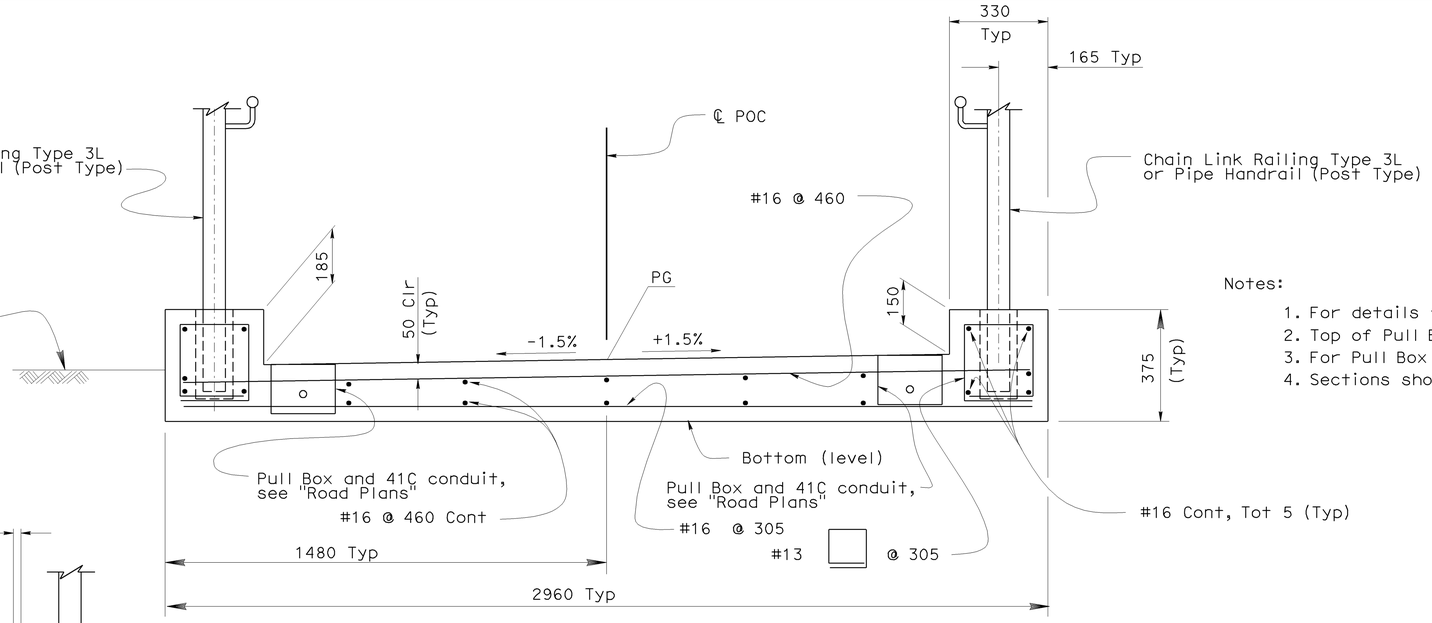

PART TYPICAL SECTION I

1:10

Notes:

1. For details for Pull Boxes Type 9, see Standard Plan ES-9C.
2. Top of Pull Box Type 9 to be flush with sidewalk surface.
3. For Pull Box and lightning location, see "Road Plans".
4. Sections shown looking down station with respect to ℄ Route 5.

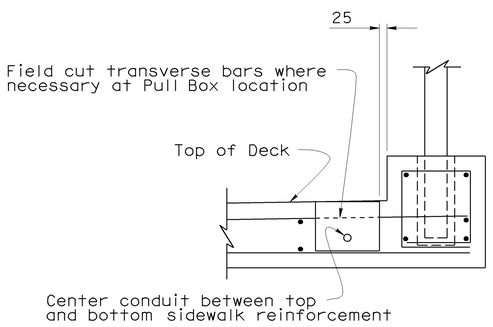

PULL BOX AND CONDUIT DETAIL

1:10

(RIGHT SIDE SHOWN, LEFT SIDE SIMILAR)

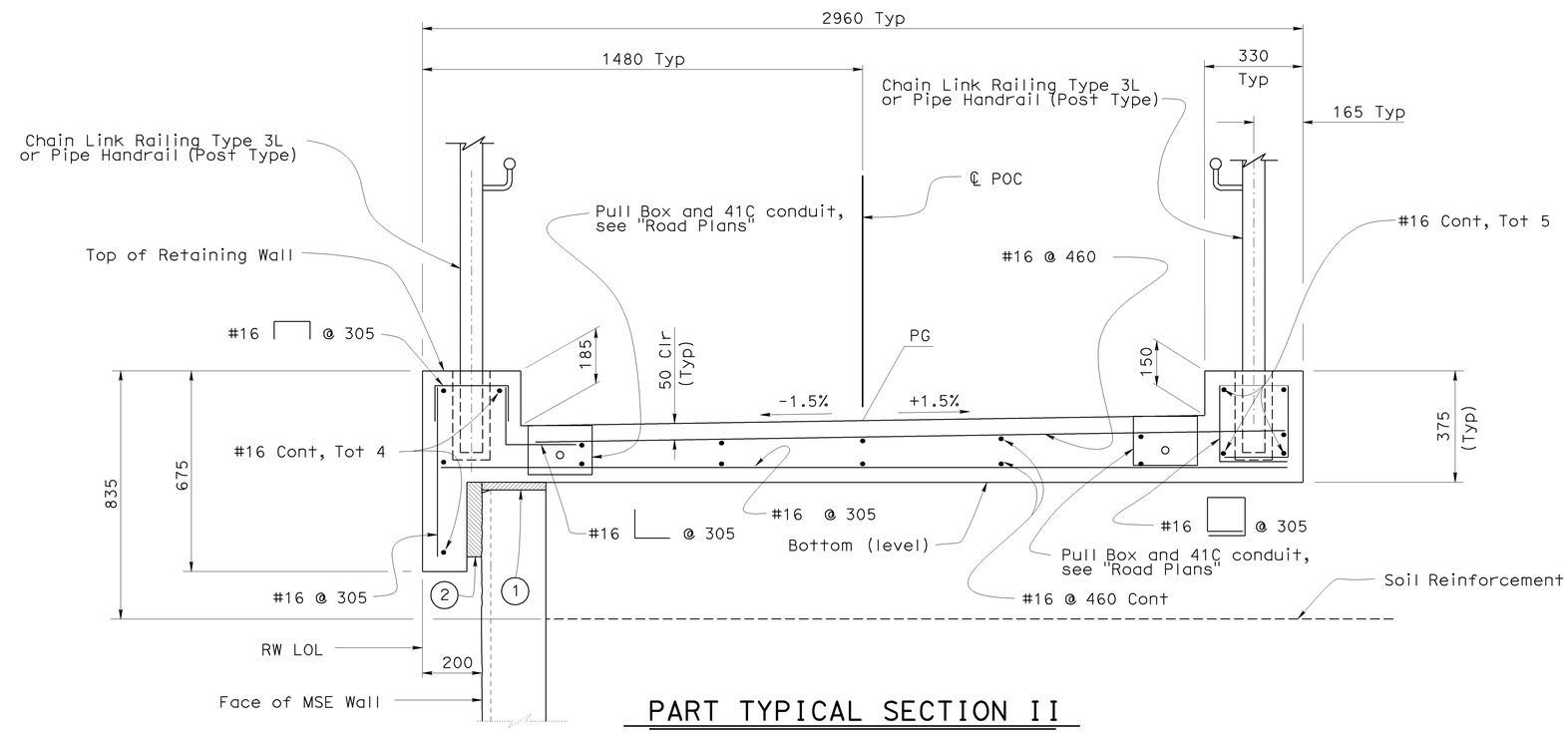

PART TYPICAL SECTION II

1:10

Legend:

1. 25 mm Expanded Polystyrene
2. 50 mm Expanded Polystyrene. Recessed 50 mm

NOTE:
THE CONTRACTOR SHALL VERIFY ALL CONTROLLING FIELD DIMENSIONS BEFORE ORDERING OR FABRICATING ANY MATERIAL.

Caltrans Metric

	BY	CHECKED
DESIGN	G. Galo	F. Feng
DETAILS	S. Cholda	F. Feng
QUANTITIES	A. Logus	D. Kubochi

STATE OF CALIFORNIA
DEPARTMENT OF TRANSPORTATION

DIVISION OF ENGINEERING SERVICES
STRUCTURE DESIGN
DESIGN BRANCH 15

BRIDGE NO. 53E0127
KILOMETER POST 46.1

SOUTH APPROACH RAMP & RETAINING WALLS
TYPICAL SECTION 1 OF 2

ALL DIMENSIONS ARE IN MILLIMETERS UNLESS OTHERWISE SHOWN

ORIGINAL SCALE IN MILLIMETERS FOR REDUCED PLANS 0 10 20 30 40 50 60 70 80 90 100

CU 07
EA 121841

DISREGARD PRINTS BEARING EARLIER REVISION DATES

REVISION DATES: 01-07-08 08-12-08 11-18-08 11-20-08 12-15-08 01-08-09

SHEET 12 OF 31

FILE => 53e0127-k-ts01.dgn

STRUCTURES DESIGN DETAIL SHEET (METRIC) (REV.03-17-04)

USERNAME => s135318 DATE PLOTTED => 15-JUN-2009 TIME PLOTTED => 08:35

DIST	COUNTY	ROUTE	KILOMETER POST TOTAL PROJECT	SHEET No	TOTAL SHEETS
07	LA	5	42.8/47.3	1012	1073

Andrew Rittenhouse 12-05-08
REGISTERED CIVIL ENGINEER DATE

6-8-09
PLANS APPROVAL DATE

REGISTERED PROFESSIONAL ENGINEER
Andrew P. Rittenhouse
No. 61006
Exp. 12-31-10
CIVIL
STATE OF CALIFORNIA

The State of California or its officers or agents shall not be responsible for the accuracy or completeness of electronic copies of this plan sheet.

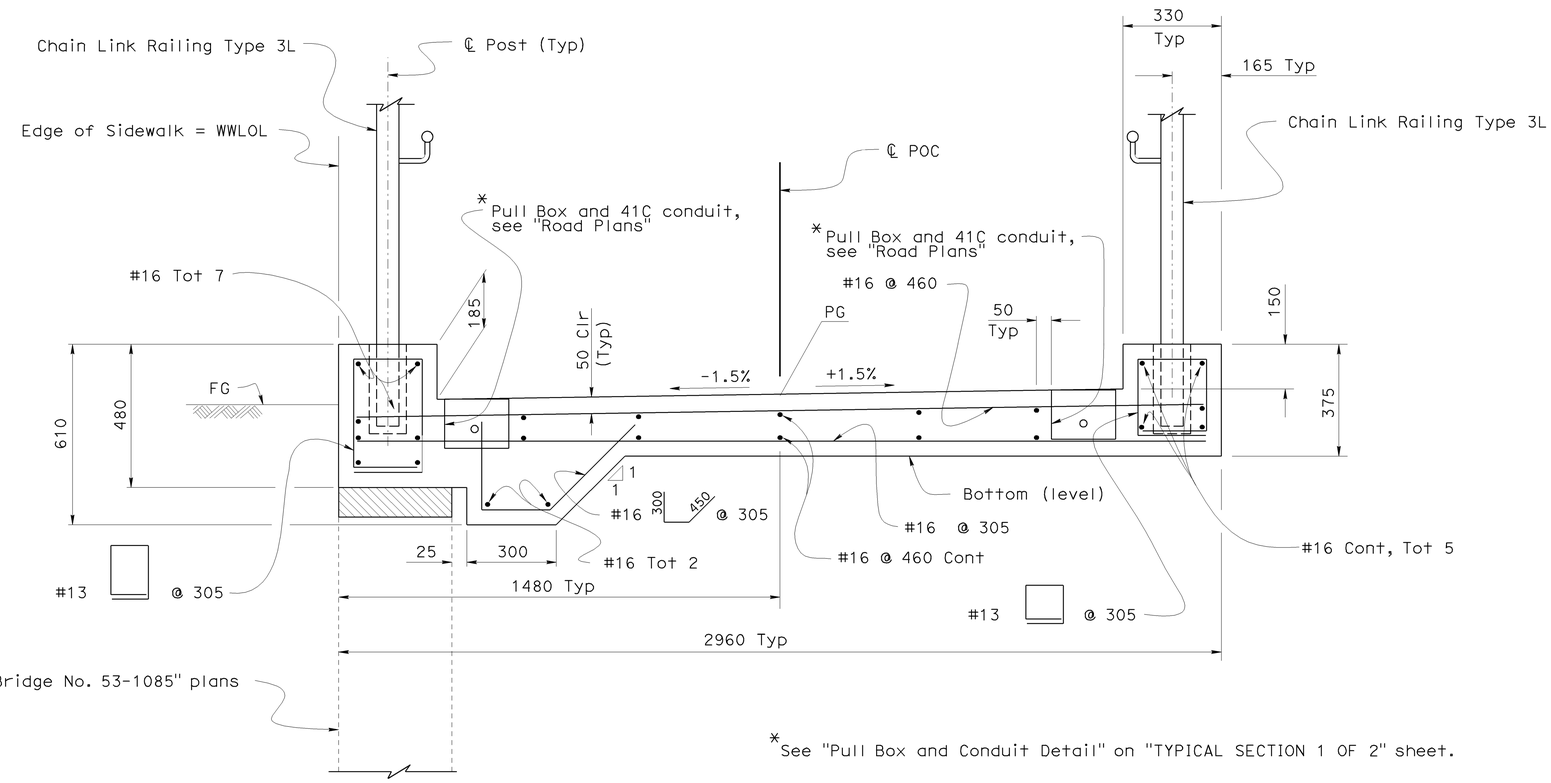

*See "Pull Box and Conduit Detail" on "TYPICAL SECTION 1 OF 2" sheet.

PART TYPICAL SECTION III

1:10

Legend:

100 mm polysterene (remove completely after construction)

NOTE:
THE CONTRACTOR SHALL VERIFY ALL CONTROLLING FIELD DIMENSIONS BEFORE ORDERING OR FABRICATING ANY MATERIAL.

Caltrans Metric

	BY	CHECKED
DESIGN	G. Galo	F. Feng
DETAILS	S. Cholda	F. Feng
QUANTITIES	A. Logus	D. Kubochi

STATE OF CALIFORNIA
DEPARTMENT OF TRANSPORTATION

DIVISION OF ENGINEERING SERVICES
STRUCTURE DESIGN
DESIGN BRANCH

BRIDGE NO. 53E0127
KILOMETER POST 46.1

SOUTH APPROACH RAMP & RETAINING WALLS
TYPICAL SECTION 2 OF 2

ALL DIMENSIONS ARE IN MILLIMETERS UNLESS OTHERWISE SHOWN

ORIGINAL SCALE IN MILLIMETERS FOR REDUCED PLANS 0 10 20 30 40 50 60 70 80 90 100

CU 07
EA 121841

DISREGARD PRINTS BEARING EARLIER REVISION DATES

REVISION DATES: 01-07-08 08-12-08 11-28-06 12-15-08

SHEET 13 OF 31

FILE => 53e0127-k-ts02.dgn

STRUCTURES DESIGN DETAIL SHEET (METRIC) (REV.03-17-04)

USERNAME => s135318 DATE PLOTTED => 15-JUN-2009 TIME PLOTTED => 08:35

DIST	COUNTY	ROUTE	KILOMETER POST TOTAL PROJECT	SHEET No	TOTAL SHEETS
07	LA	5	42.8/47.3	1013	1073

Andrew Rittenhouse 12-05-08
REGISTERED CIVIL ENGINEER DATE

6-8-09
PLANS APPROVAL DATE

REGISTERED PROFESSIONAL ENGINEER
Andrew P. Rittenhouse
No. 61006
Exp. 12-31-10
CIVIL
STATE OF CALIFORNIA

The State of California or its officers or agents shall not be responsible for the accuracy or completeness of electronic copies of this plan sheet.

TABLE 1

Drainage Pipe Location	
MSE Wall "A"	Station
1	2.670 m Lt 10+02.045 "RW "A" LOL"
2	2.670 m Lt 10+07.610 "RW "A" LOL"
3	3.670 m Lt 10+08.600 "RW "A" LOL"
4	3.670 m Lt 10+19.330 "RW "A" LOL"
5	4.665 m Lt 10+120.315 "RW "A" LOL"
6	4.665 m Lt 10+40.010 "RW "A" LOL"
MSE Wall "B"	Station
1	2.510 m Lt 10+02.110 "RW "B" LOL"
2	2.510 m Lt 10+13.005 "RW "B" LOL"

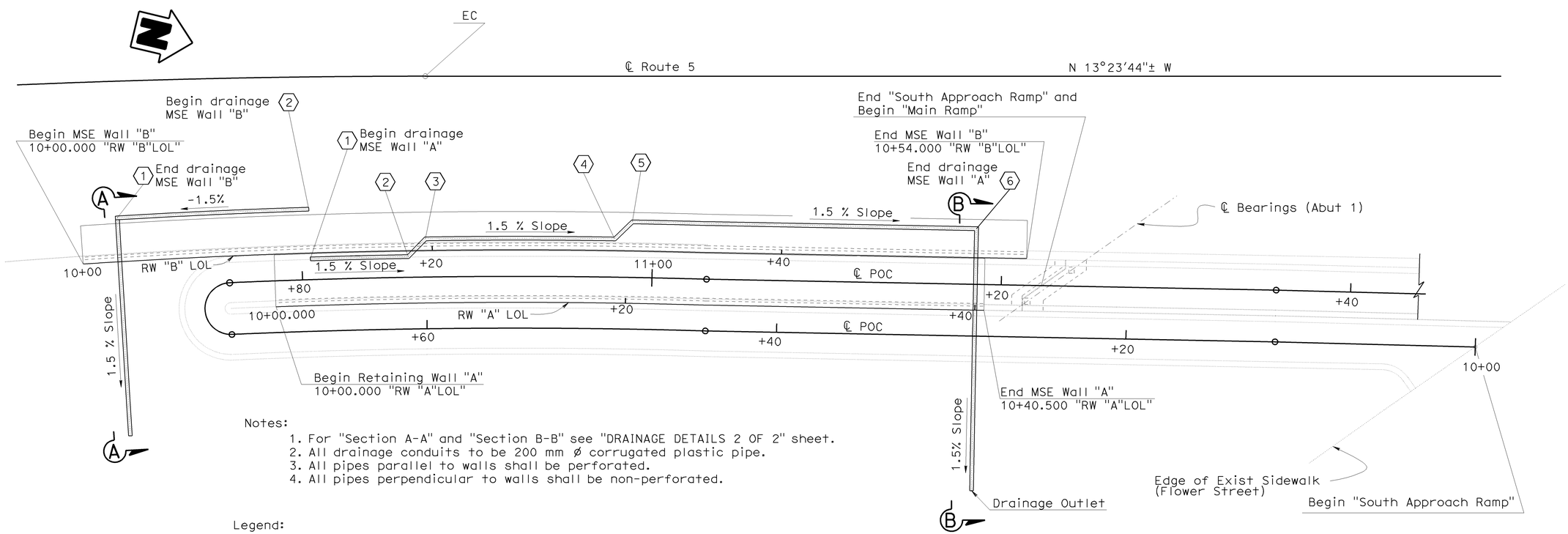

Notes:

1. For "Section A-A" and "Section B-B" see "DRAINAGE DETAILS 2 OF 2" sheet.
2. All drainage conduits to be 200 mm ø corrugated plastic pipe.
3. All pipes parallel to walls shall be perforated.
4. All pipes perpendicular to walls shall be non-perforated.

Legend:

XX Indicates Pipe location along drainage line (see "TABLE 1" above)

PLAN
1:125

NOTE:
THE CONTRACTOR SHALL VERIFY ALL CONTROLLING FIELD DIMENSIONS BEFORE ORDERING OR FABRICATING ANY MATERIAL.

Caltrans Metric

	BY	CHECKED
DESIGN	G. Galo	F. Feng
DETAILS	S. Cholda	F. Feng
QUANTITIES	A. Logus	D. Kubochi

STATE OF CALIFORNIA
DEPARTMENT OF TRANSPORTATION

DIVISION OF ENGINEERING SERVICES
STRUCTURE DESIGN
DESIGN BRANCH 15

BRIDGE NO. 53E0127
KILOMETER POST 46.1

SOUTH APPROACH RAMP & RETAINING WALLS
DRAINAGE DETAILS 1 OF 2

ALL DIMENSIONS ARE IN MILLIMETERS UNLESS OTHERWISE SHOWN

ORIGINAL SCALE IN MILLIMETERS FOR REDUCED PLANS 0 10 20 30 40 50 60 70 80 90 100

CU 07
EA 121841

DISREGARD PRINTS BEARING EARLIER REVISION DATES
REVISION DATES: 9-18-08, 11-18-08, 11-20-08, 12-29-08, 01-08-09, 02-11-09

SHEET 14 OF 31

FILE => 53e0127-r-ddet01.dgn

STRUCTURES DESIGN DETAIL SHEET (METRIC) (REV.03-17-04)

USERNAME => s135318 DATE PLOTTED => 15-JUN-2009 TIME PLOTTED => 08:35

DIST	COUNTY	ROUTE	KILOMETER POST TOTAL PROJECT	SHEET No	TOTAL SHEETS
07	LA	5	42.8/47.3	1014	1073

Andrew Rittenhouse 12-05-08
REGISTERED CIVIL ENGINEER DATE

6-8-09
PLANS APPROVAL DATE

REGISTERED PROFESSIONAL ENGINEER
Andrew P. Rittenhouse
No. 61006
Exp. 12-31-10
CIVIL
STATE OF CALIFORNIA

The State of California or its officers or agents shall not be responsible for the accuracy or completeness of electronic copies of this plan sheet.

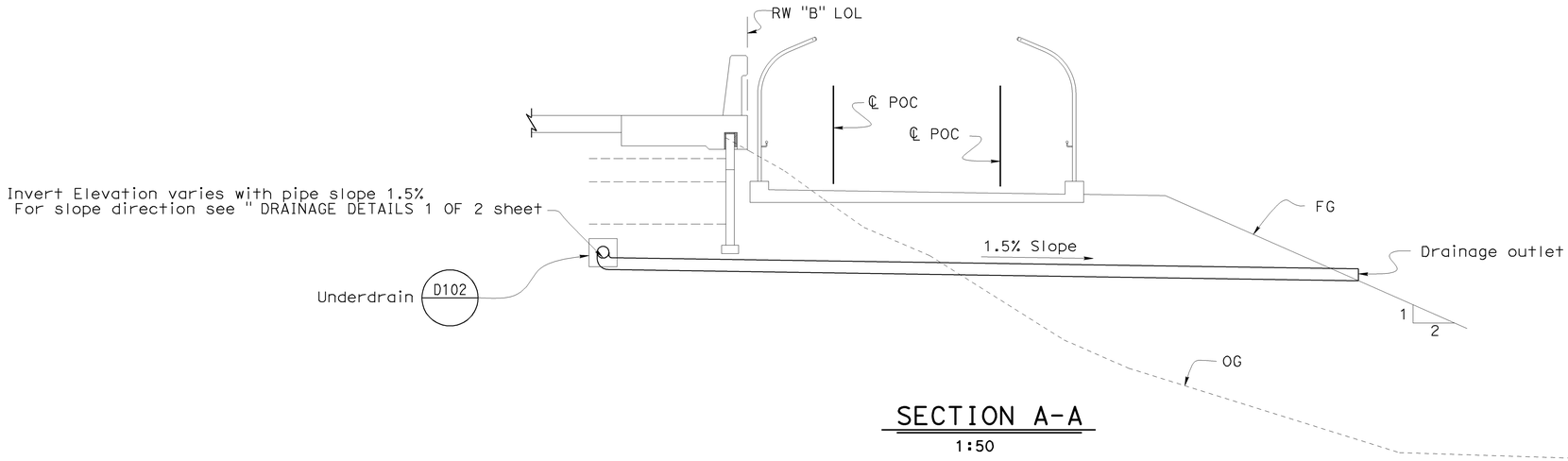

SECTION A-A

1:50

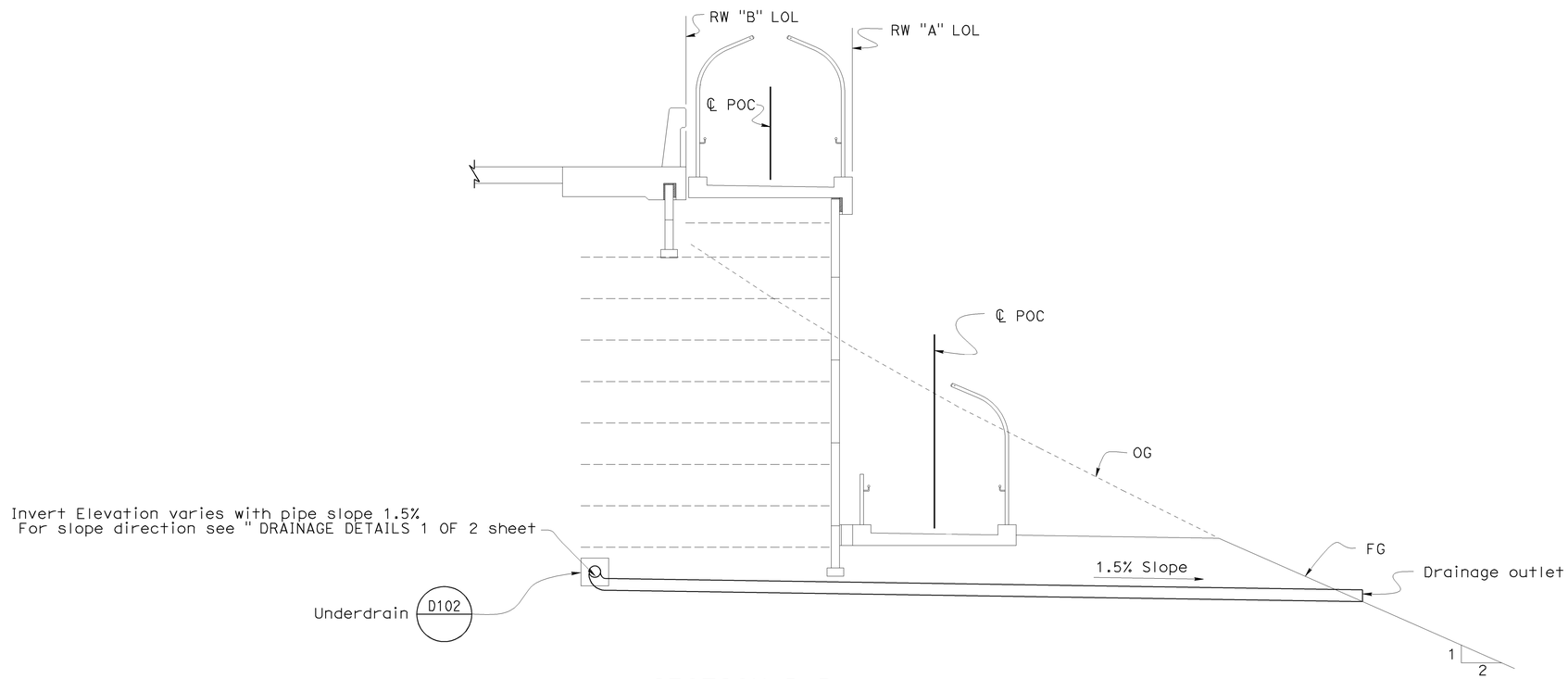

SECTION B-B

1:50

NOTE:
THE CONTRACTOR SHALL VERIFY ALL CONTROLLING FIELD DIMENSIONS BEFORE ORDERING OR FABRICATING ANY MATERIAL.

Caltrans Metric

	BY	CHECKED
DESIGN	G. Galo	F. Feng
DETAILS	S. Cholda	F. Feng
QUANTITIES	A. Logus	D. Kubochi

STATE OF CALIFORNIA
DEPARTMENT OF TRANSPORTATION

DIVISION OF ENGINEERING SERVICES
STRUCTURE DESIGN
DESIGN BRANCH 15

BRIDGE NO. 53E0127
KILOMETER POST 46.1

SOUTH APPROACH RAMP & RETAINING WALLS
DRAINAGE DETAILS 2 OF 2

ALL DIMENSIONS ARE IN MILLIMETERS UNLESS OTHERWISE SHOWN

ORIGINAL SCALE IN MILLIMETERS FOR REDUCED PLANS 0 10 20 30 40 50 60 70 80 90 100

CU 07
EA 121841

DISREGARD PRINTS BEARING EARLIER REVISION DATES

REVISION DATES: 9-19-08 11-13-08 11-28-08 12-15-08 12-29-08 01-07-09

SHEET 15 OF 31

FILE => 53e0127-r-ddet02.dgn

STRUCTURES DESIGN DETAIL SHEET (METRIC) (REV.03-17-04)

USERNAME => s135318 DATE PLOTTED => 15-JUN-2009 TIME PLOTTED => 08:35

DIST	COUNTY	ROUTE	KILOMETER POST TOTAL PROJECT	SHEET No	TOTAL SHEETS
07	LA	5	42.8/47.3	1015	1073

Andrew Rittenhouse 12-05-08
REGISTERED CIVIL ENGINEER DATE

6-8-09
PLANS APPROVAL DATE

REGISTERED PROFESSIONAL ENGINEER Andrew P. Rittenhouse No. 61006 Exp. 12-31-10 CIVIL STATE OF CALIFORNIA

The State of California or its officers or agents shall not be responsible for the accuracy or completeness of electronic copies of this plan sheet.

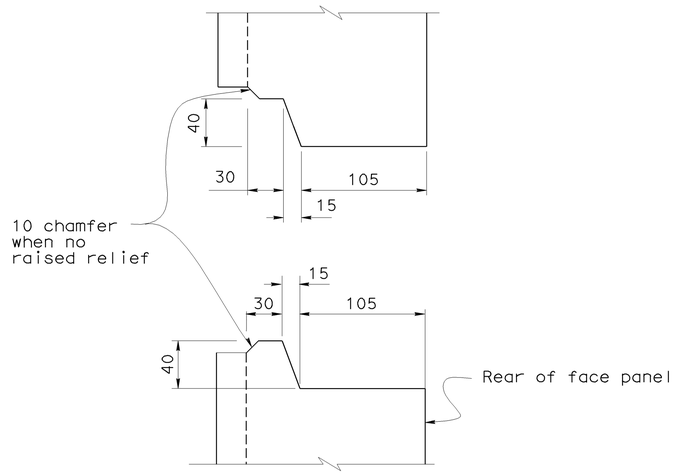

HORIZONTAL JOINT DETAIL
1:2.5

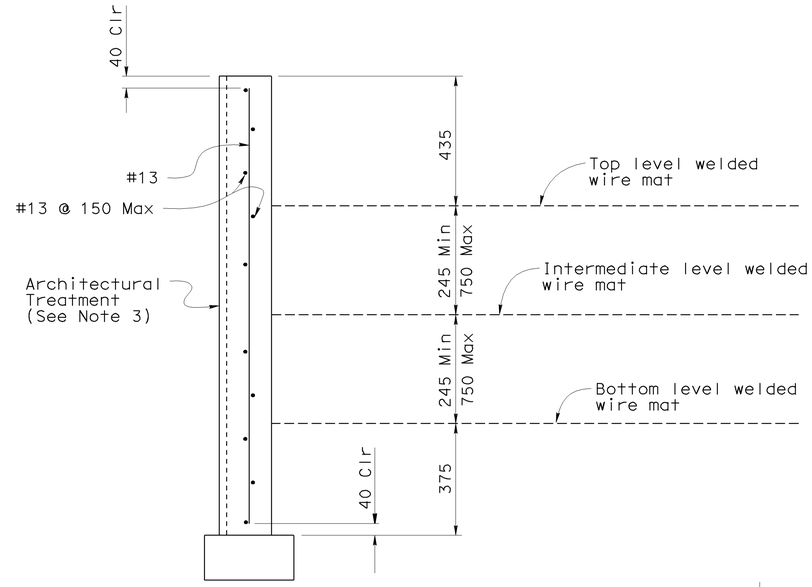

TYPE "F" PANELS
1:10

NOTES:

1. Place elastomeric bearing pads in all of the panel joints between the panels. Place one in each vertical joint where the horizontal joint intersects it. Place two per panel in each horizontal joint.
   20 x 60 x 150 for vertical joints
   20 x 100 x 300 for horizontal joints.
2. Bond a strip of filter fabric, 300 mm wide, over the full length of all panel joints.
3. Panel G similar to panel F, with architectural treatment as optional.

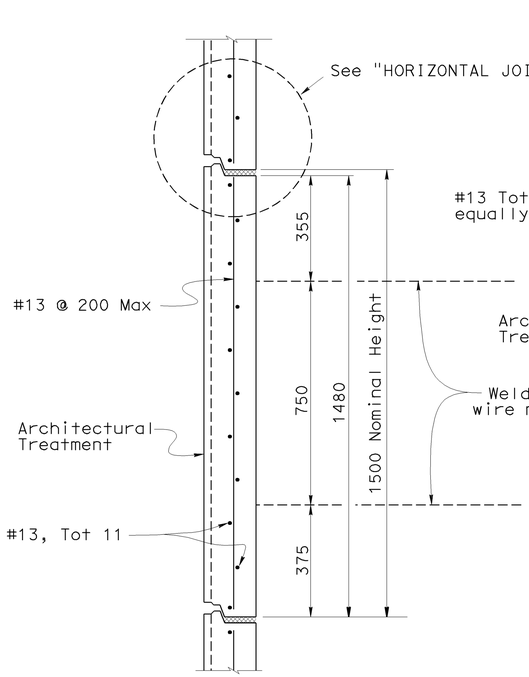

INTERMEDIATE PANEL "C"
1:10

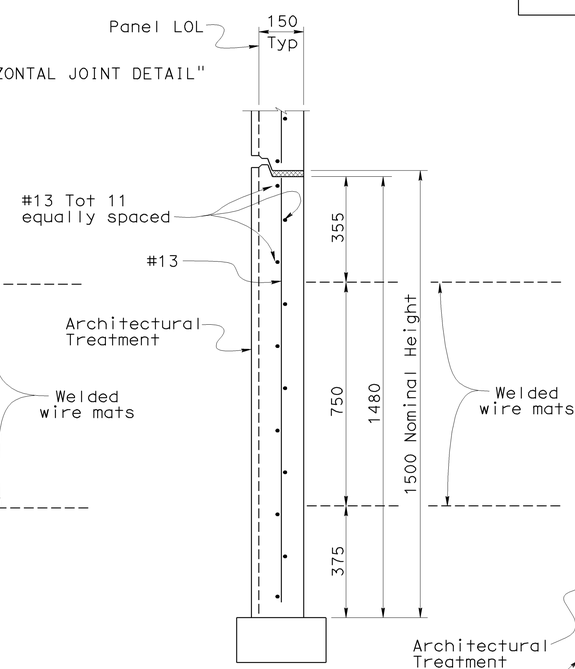

BOTTOM PANEL "B"
1:10

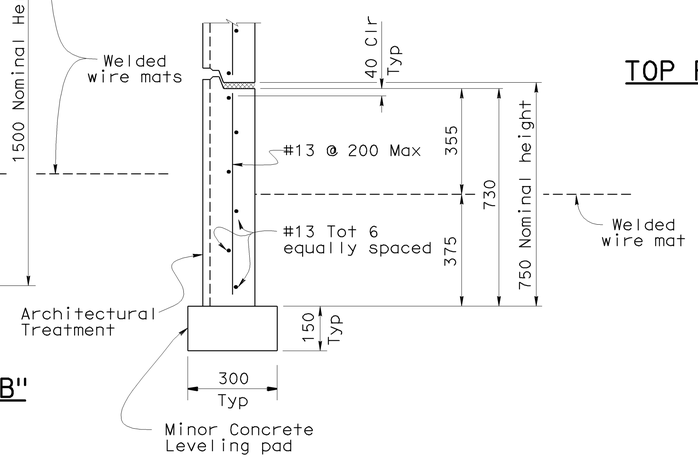

BOTTOM HALF PANEL "A"
1:10

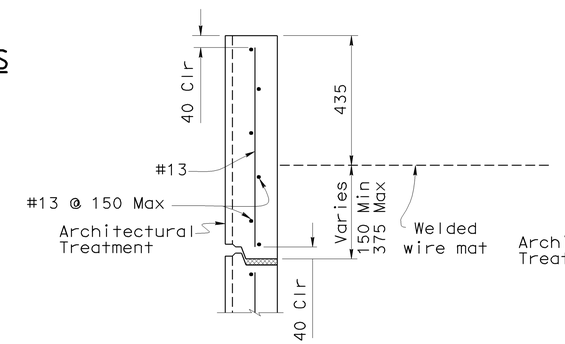

TOP PANEL "E"
1:10

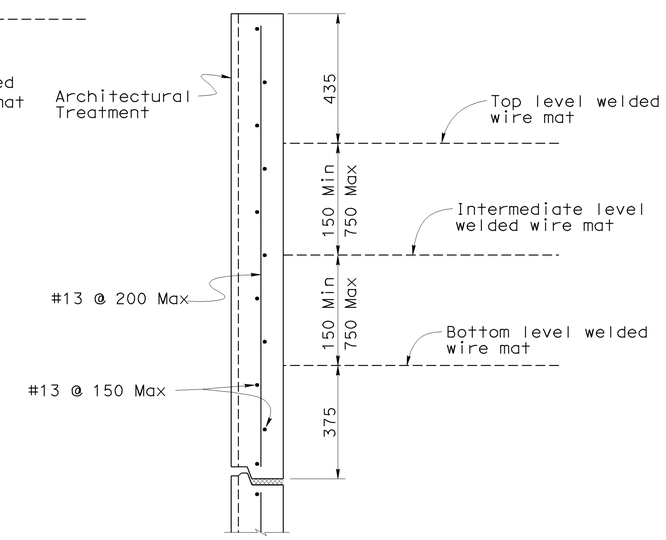

TOP PANEL "D"
1:10

NOTE:
THE CONTRACTOR SHALL VERIFY ALL CONTROLLING FIELD DIMENSIONS BEFORE ORDERING OR FABRICATING ANY MATERIAL.

Caltrans Metric

	BY	CHECKED
DESIGN	G. Galo	F. Feng
DETAILS	S. Cholda	F. Feng
QUANTITIES	A. Logus	D. Kubochi

STATE OF CALIFORNIA
DEPARTMENT OF TRANSPORTATION

DIVISION OF ENGINEERING SERVICES
STRUCTURE DESIGN
DESIGN BRANCH 15

BRIDGE NO. 53E0127
KILOMETER POST 46.1

SOUTH APPROACH RAMP & RETAINING WALLS
PANEL DETAILS 1 OF 7

ALL DIMENSIONS ARE IN MILLIMETERS UNLESS OTHERWISE SHOWN

ORIGINAL SCALE IN MILLIMETERS FOR REDUCED PLANS 0 10 20 30 40 50 60 70 80 90 100

CU 07
EA 121841

DISREGARD PRINTS BEARING EARLIER REVISION DATES

REVISION DATES: 9-01-08 11-12-08 11-28-08 12-18-08 12-29-08 01-07-09 01-09-09 02-11-09

SHEET 16 OF 31

STRUCTURES DESIGN DETAIL SHEET (METRIC) (REV.03-17-04)

FILE => 53e0127-u-miscdt01.dgn

USERNAME => s135318 DATE PLOTTED => 15-JUN-2009 TIME PLOTTED => 08:35

DIST	COUNTY	ROUTE	KILOMETER POST TOTAL PROJECT	SHEET No	TOTAL SHEETS
07	LA	5	42.8/47.3	1016	1073

Andrew Rittenhouse 12-05-08
REGISTERED CIVIL ENGINEER DATE

6-8-09
PLANS APPROVAL DATE

REGISTERED PROFESSIONAL ENGINEER
Andrew P. Rittenhouse
No. 61006
Exp. 12-31-10
CIVIL
STATE OF CALIFORNIA

The State of California or its officers or agents shall not be responsible for the accuracy or completeness of electronic copies of this plan sheet.

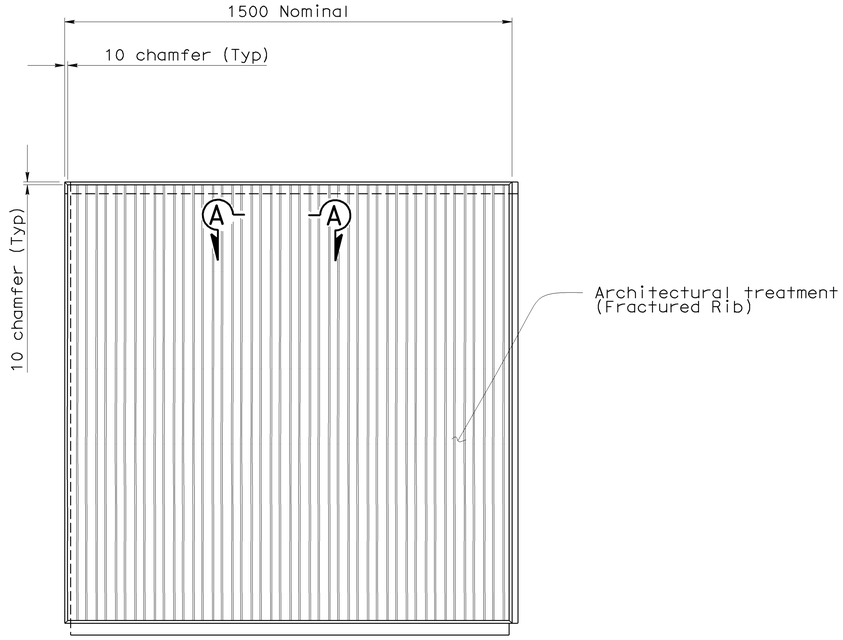

ELEVATION
1:10

INTERMEDIATE PANEL W/ARCHITECTURAL TREATMENT

Notes:

1. Intermediate panel with Architectural treatment shown. Bottom and top panels similar.
2. No chamfer is placed at bottom of a bottom panel.

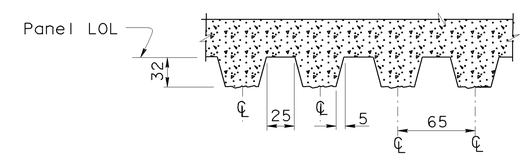

SECTION A-A
No Scale

ARCHITECTURAL TREATMENT

NOTE:
THE CONTRACTOR SHALL VERIFY ALL CONTROLLING FIELD DIMENSIONS BEFORE ORDERING OR FABRICATING ANY MATERIAL.

Caltrans Metric

	BY	CHECKED
DESIGN	G. Galo	F. Feng
DETAILS	S. Cholda	F. Feng
QUANTITIES	A. Logus	D. Kubochi

STATE OF CALIFORNIA
DEPARTMENT OF TRANSPORTATION

DIVISION OF ENGINEERING SERVICES
STRUCTURE DESIGN
DESIGN BRANCH 15

BRIDGE NO. 53E0127
KILOMETER POST 46.1

SOUTH APPROACH RAMP & RETAINING WALLS
PANEL DETAILS 2 OF 7

ALL DIMENSIONS ARE IN MILLIMETERS UNLESS OTHERWISE SHOWN

ORIGINAL SCALE IN MILLIMETERS FOR REDUCED PLANS 0 10 20 30 40 50 60 70 80 90 100

CU 07
EA 121841

DISREGARD PRINTS BEARING EARLIER REVISION DATES
REVISION DATES: 9-01-08 11-13-08 11-28-08 12-15-08 12-29-08 01-09-09 01-20-09

SHEET 17 OF 31

FILE => 53e0127-u-miscdt02.dgn

STRUCTURES DESIGN DETAIL SHEET (METRIC) (REV.03-17-04)

USERNAME => s135318 DATE PLOTTED => 15-JUN-2009 TIME PLOTTED => 08:35

DIST	COUNTY	ROUTE	KILOMETER POST TOTAL PROJECT	SHEET No	TOTAL SHEETS
07	LA	5	42.8/47.3	1017	1073

Andrew Rittenhouse 12-05-08
REGISTERED CIVIL ENGINEER DATE

6-8-09
PLANS APPROVAL DATE

REGISTERED PROFESSIONAL ENGINEER Andrew P. Rittenhouse No. 61006 Exp. 12-31-10 CIVIL STATE OF CALIFORNIA

The State of California or its officers or agents shall not be responsible for the accuracy or completeness of electronic copies of this plan sheet.

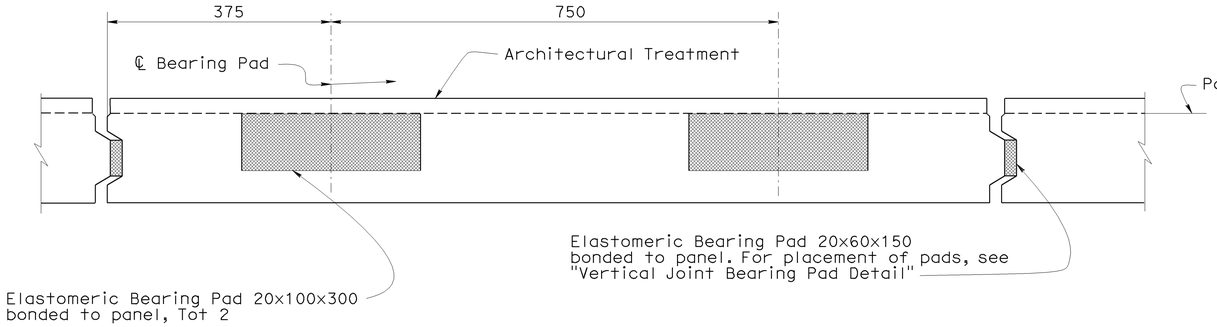

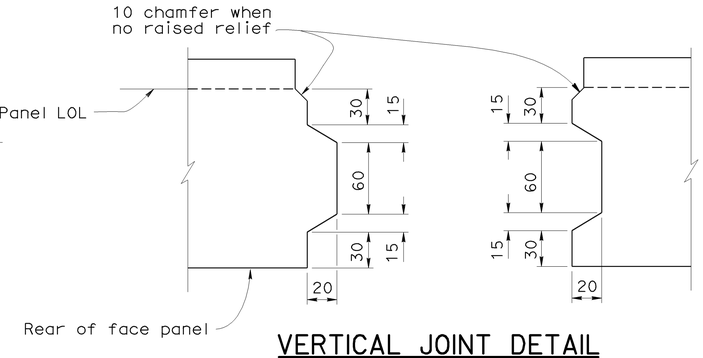

VERTICAL JOINT DETAIL

1:2.5

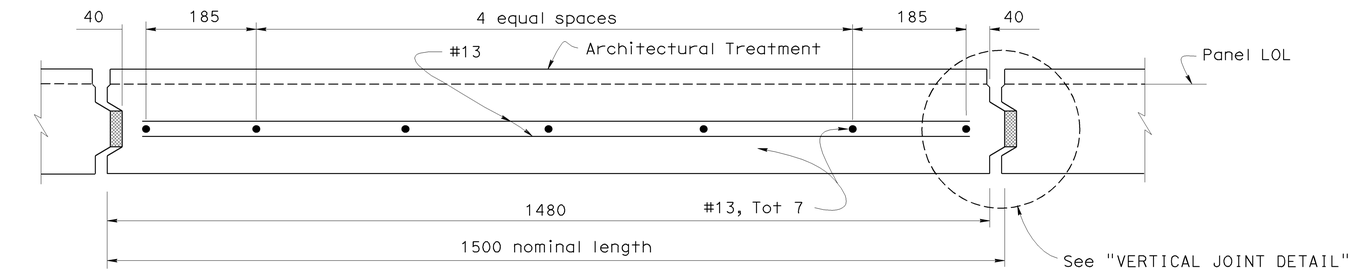

PLAN - FACE PANEL

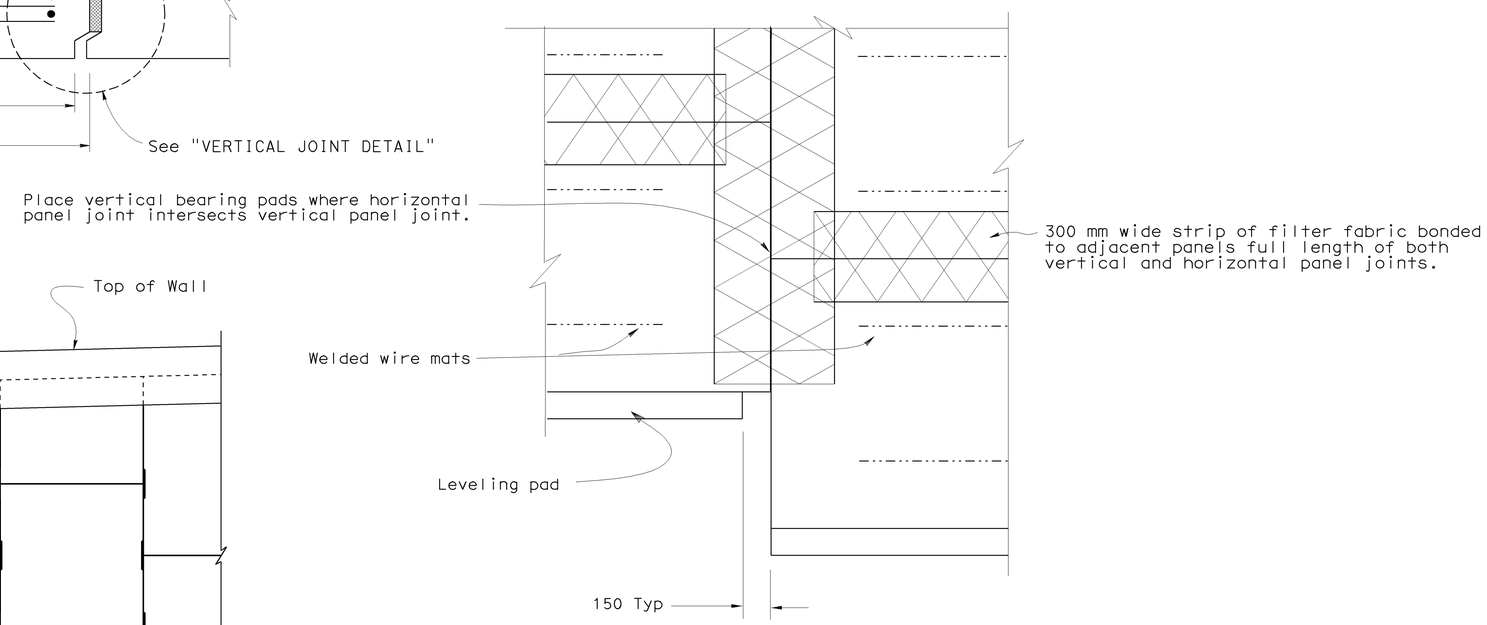

REAR ELEVATION

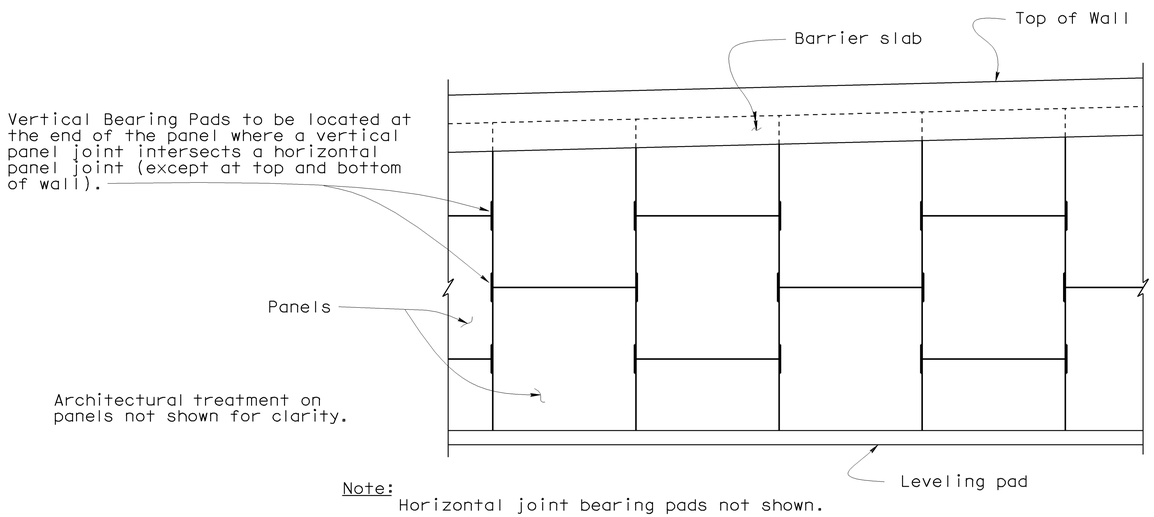

Note:
Horizontal joint bearing pads not shown.

VERTICAL JOINT BEARING PAD DETAIL

NO SCALE

NOTES:

1. Place elastomeric bearing pads in all of the panel joints between the panels. Place one in each vertical joint where the horizontal joint intersects it. Place two per panel in each horizontal joint.
   20 x 60 x 150 for vertical joints
   20 x 100 x 300 for horizontal joints.
2. Bond a strip of filter fabric, 300 mm wide, over the full length of all panel joints.

NOTE:
THE CONTRACTOR SHALL VERIFY ALL CONTROLLING FIELD DIMENSIONS BEFORE ORDERING OR FABRICATING ANY MATERIAL.

Caltrans Metric

	BY	CHECKED
DESIGN	G. Galo	F. Feng
DETAILS	S. Cholda	F. Feng
QUANTITIES	A. Logus	D. Kubochi

STATE OF CALIFORNIA
DEPARTMENT OF TRANSPORTATION

DIVISION OF ENGINEERING SERVICES
STRUCTURE DESIGN
DESIGN BRANCH 15

BRIDGE NO. 53E0127
KILOMETER POST 46.1

SOUTH APPROACH RAMP & RETAINING WALLS
PANEL DETAILS 3 OF 7

ALL DIMENSIONS ARE IN MILLIMETERS UNLESS OTHERWISE SHOWN

ORIGINAL SCALE IN MILLIMETERS FOR REDUCED PLANS 0 10 20 30 40 50 60 70 80 90 100

CU 07
EA 121841

DISREGARD PRINTS BEARING EARLIER REVISION DATES

REVISION DATES: 9-22-08, 11-13-08, 11-26-08, 01-26-09, 02-11-09

SHEET 18 OF 31

FILE => 53e0127-u-miscdt03.dgn

STRUCTURES DESIGN DETAIL SHEET (METRIC) (REV.03-17-04)

USERNAME => s135318 DATE PLOTTED => 15-JUN-2009 TIME PLOTTED => 08:35

DIST	COUNTY	ROUTE	KILOMETER POST TOTAL PROJECT	SHEET No	TOTAL SHEETS
07	LA	5	42.8/47.3	1018	1073

Andrew Rittenhouse 12-05-08
REGISTERED CIVIL ENGINEER DATE

6-8-09
PLANS APPROVAL DATE

REGISTERED PROFESSIONAL ENGINEER Andrew P. Rittenhouse No. 61006 Exp. 12-31-10 CIVIL STATE OF CALIFORNIA

The State of California or its officers or agents shall not be responsible for the accuracy or completeness of electronic copies of this plan sheet.

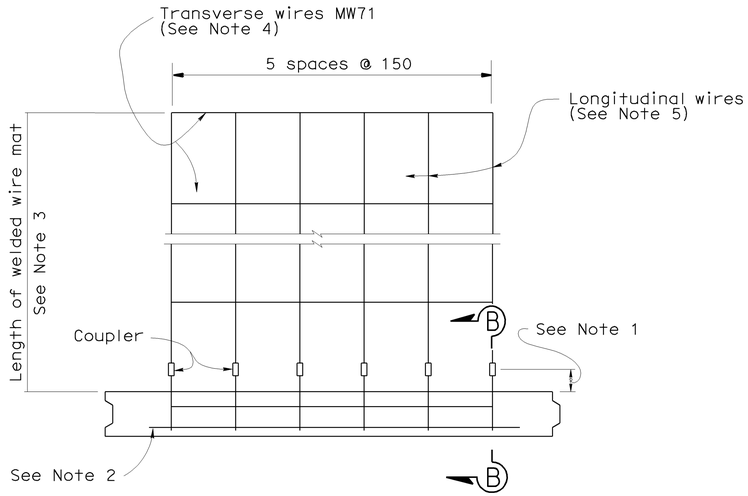

PLAN OF PANEL WITH WELDED WIRE MAT

No scale

GENERAL NOTES (MSE WALLS)

DESIGN:

CALTRANS BRIDGE DESIGN SPECIFICATIONS
LFD Version 2004 (2000 AASHTO with Interims
and Revision by Caltrans)

Live load: Surcharge = 11.5 kPa (See Note 6)
Live load sidewalk = 4.1 kPa

Soil parameters:

Internal design $\phi = 34^o$, $\gamma = 19\ kN/m^3$
External design ϕ (Backfill) = 34°, $\gamma = 19\ kN/m^3$
ϕ (Foundation) = 30°

Precast concrete panels:

f'c = 28 MPa (Concrete compressive strength at 28 days)

f'c = 42 MPa (for panels where MW130 wire mat soil reinforcement is required))

fy = 420 MPa (Yield strength of reinforcement)

Soil reinforcement:

Welded wire mats: fy = 450 MPa (Yield strength)
Coupler: fy = 250 MPa (Yield strength)
Corrosion rate = 28 µm / year

Reinforced concrete:

f'c = 25 MPa, except as noted (Concrete compressive strength at 28 days)
fy = 420 MPa (Yield strength of reinforcement)

MSE = Mechanically stabilized embankment

Notes:

1. Distance as required to permit coupler to be swaged.
2. Place #13 bar, 960 mm long, centered on connector mat, but not welded to it.
3. Length equals "Base width" of wall, except it shall not be less than 4880 mm for the top 2 levels of mats at the top of the wall under traffic barriers.
4. All Transverse Wires size MW71 at various spacings as shown elsewhere in plans.
5. All Longitudinal Wires at 150 mm spacing, of various sizes, as shown elsewhere in plans.
6. Load for upper MSE Wall "C", exposed to vehicular traffic

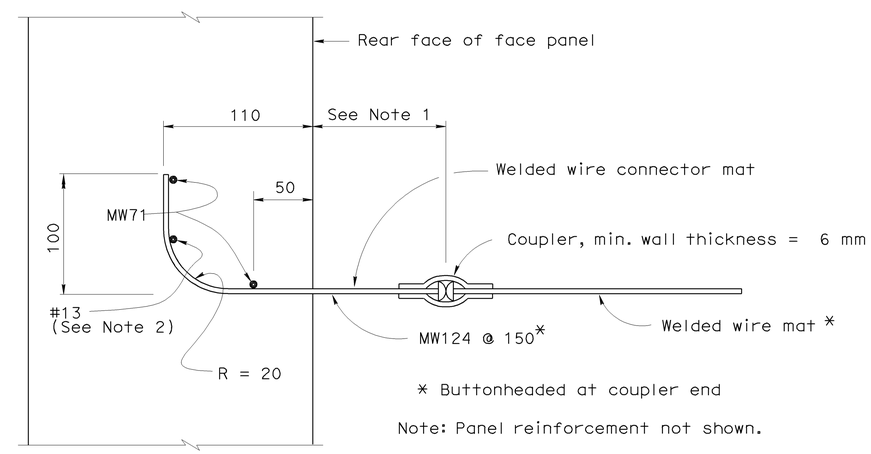

SECTION B-B

No scale

Caltrans Metric	DESIGN	BY G. Galo	CHECKED F. Feng	STATE OF CALIFORNIA DEPARTMENT OF TRANSPORTATION	DIVISION OF ENGINEERING SERVICES STRUCTURE DESIGN DESIGN BRANCH
	DETAILS	BY S. Cholda	CHECKED F. Feng		
	QUANTITIES	BY A. Logus	CHECKED D. Kubochi		

BRIDGE NO. 53E0127 | KILOMETER POST 46.1

SOUTH APPROACH RAMP & RETAINING WALLS

PANEL DETAILS 4 OF 7

ALL DIMENSIONS ARE IN MILLIMETERS UNLESS OTHERWISE SHOWN

ORIGINAL SCALE IN MILLIMETERS FOR REDUCED PLANS 0 10 20 30 40 50 60 70 80 90 100

CU 07
EA 121841

DISREGARD PRINTS BEARING EARLIER REVISION DATES

REVISION DATES: 9-27-08 11-13-08 11-28-08 12-15-08 12-29-08 01-09-09

SHEET 19 OF 31

STRUCTURES DESIGN DETAIL SHEET (METRIC) (REV.03-17-04)

FILE => 53e0127-u-miscdt04.dgn

USERNAME => s135318 DATE PLOTTED => 15-JUN-2009 TIME PLOTTED => 08:35

DIST	COUNTY	ROUTE	KILOMETER POST TOTAL PROJECT	SHEET No	TOTAL SHEETS
07	LA	5	42.8/47.3	1019	1073

Andrew Rittenhouse 12-05-08
REGISTERED CIVIL ENGINEER DATE

6-8-09
PLANS APPROVAL DATE

REGISTERED PROFESSIONAL ENGINEER
Andrew P. Rittenhouse
No. 61006
Exp. 12-31-10
CIVIL
STATE OF CALIFORNIA

The State of California or its officers or agents shall not be responsible for the accuracy or completeness of electronic copies of this plan sheet.

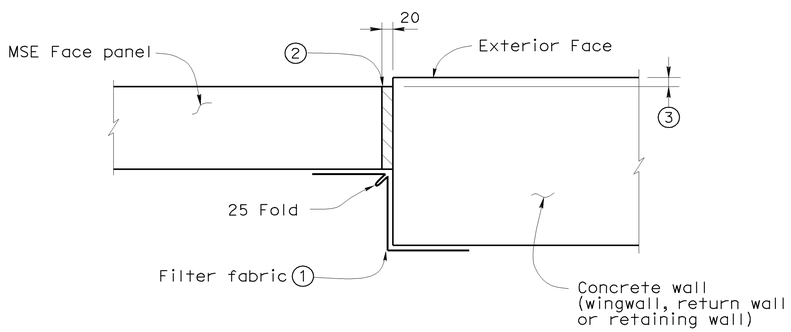

MSE FACE PANEL-TO-CONCRETE WALL JOINT DETAIL

LEGEND:

1. Bond a strip of filter fabric, 450 mm wide, to back of MSE panels and the adjacent concrete wall for entire length of vertical joint.
2. Bond expansion joint material to the concrete wall.
3. Offset between face of MSE face panel and face of the concrete wall as dictated by location of layout lines shown elsewhere in Project Plans.

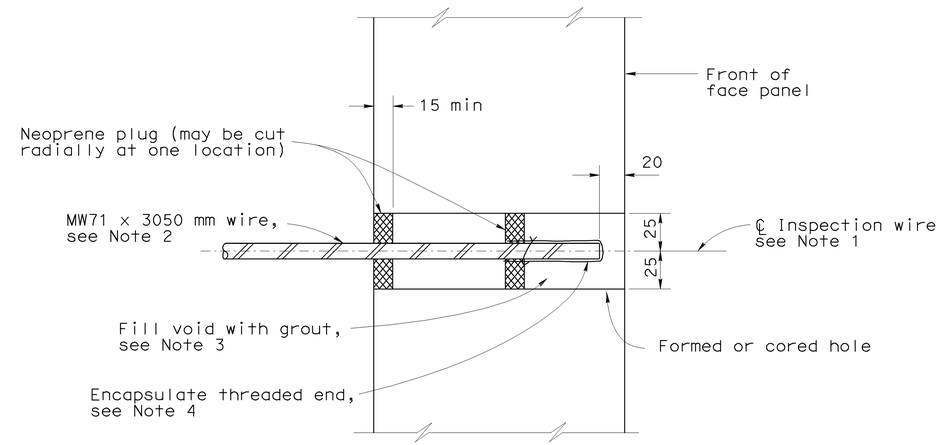

SECTION THRU INSPECTION WIRE

NOTES:

1. Center inspection wire in face panel.
2. Fabricate inspection wires from MW71 wire representative of the welded wire mats, with 10 mm dia - 16 UNC threads for at least 40 mm of one end.
3. Place inspection wire horizontal and perpendicular to the wall panel prior to backfilling. After backfill placement to a level at least 600 above the inspection wire, dry pack opening with 6.895 Mpa to 10.342 Mpa mortar. Trowel mortar smooth and flush with face of panel.
4. Encapsulate threaded end with corrosion inhibiting mastic, and secure round vinyl cover with nylon tie.

   UNC = Unified coarse threads

NOTE:
THE CONTRACTOR SHALL VERIFY ALL CONTROLLING FIELD DIMENSIONS BEFORE ORDERING OR FABRICATING ANY MATERIAL.

Caltrans Metric

	BY	CHECKED
DESIGN	G. Galo	F. Feng
DETAILS	S. Cholda	F. Feng
QUANTITIES	A. Logus	D. Kubochi

STATE OF CALIFORNIA
DEPARTMENT OF TRANSPORTATION

DIVISION OF ENGINEERING SERVICES
STRUCTURE DESIGN
DESIGN BRANCH 15

BRIDGE NO. 53E0127
KILOMETER POST 46.1

SOUTH APPROACH RAMP & RETAINING WALLS
PANEL DETAILS 5 OF 7

ALL DIMENSIONS ARE IN MILLIMETERS UNLESS OTHERWISE SHOWN

ORIGINAL SCALE IN MILLIMETERS FOR REDUCED PLANS 0 10 20 30 40 50 60 70 80 90 100

CU 07
EA 121841

DISREGARD PRINTS BEARING EARLIER REVISION DATES → 9-01-08 9-22-08 11-13-06 11-20-08

REVISION DATES

SHEET 20 OF 31

FILE => 53e0127-u-miscdt05.dgn

STRUCTURES DESIGN DETAIL SHEET (METRIC) (REV.03-17-04)

USERNAME => s135318 DATE PLOTTED => 15-JUN-2009 TIME PLOTTED => 08:36

DIST	COUNTY	ROUTE	KILOMETER POST TOTAL PROJECT	SHEET No	TOTAL SHEETS
07	LA	5	42.8/47.3	1020	1073

Andrew Rittenhouse 12-05-08
REGISTERED CIVIL ENGINEER DATE

6-8-09
PLANS APPROVAL DATE

REGISTERED PROFESSIONAL ENGINEER
Andrew P. Rittenhouse
No. 61006
Exp. 12-31-10
CIVIL
STATE OF CALIFORNIA

The State of California or its officers or agents shall not be responsible for the accuracy or completeness of electronic copies of this plan sheet.

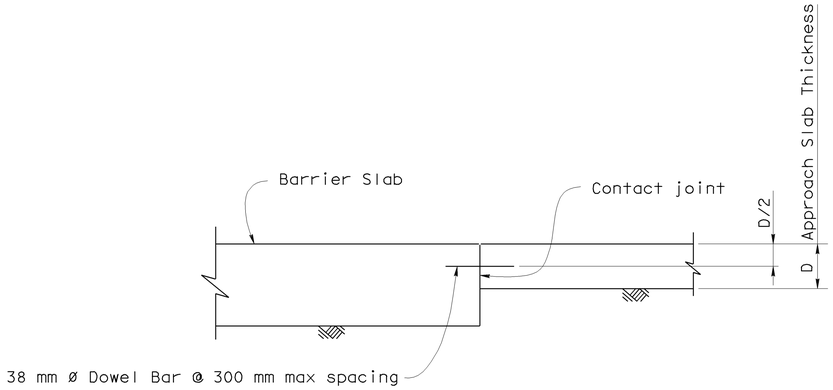

SECTION A-A
1:20

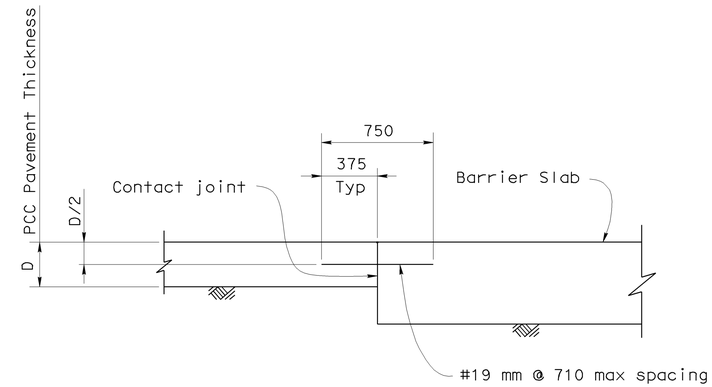

SECTION B-B
1:20

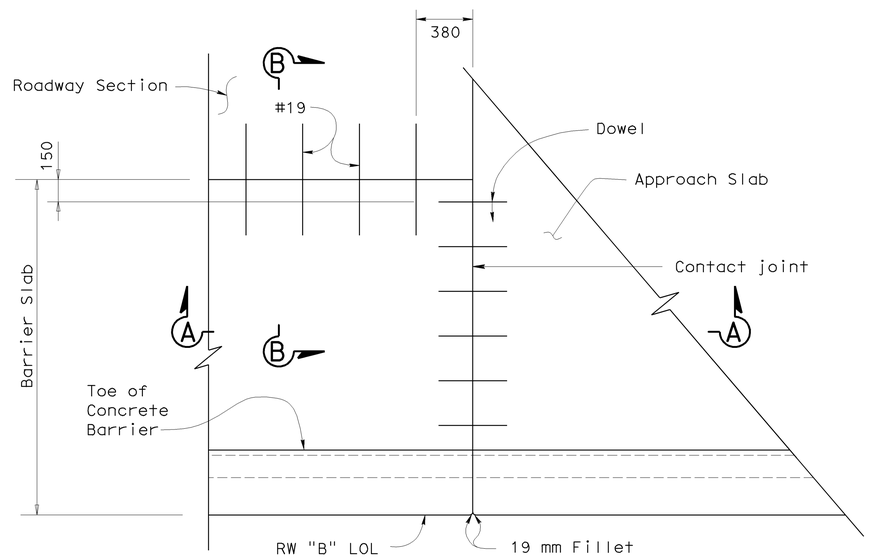

PLAN
1:20

BARRIER SLAB DOWEL AND TIE BAR DETAIL

NOTES:

1. Concrete barrier, Barrier slab and Approach slab reinforcement not shown.
2. For additional details see RSP P-1 and RSP P-10 .

DESIGN	BY G. Galo	CHECKED F. Feng
DETAILS	BY S. Cholda	CHECKED F. Feng
QUANTITIES	BY A. Logus	CHECKED D. Kubochi

STATE OF CALIFORNIA
DEPARTMENT OF TRANSPORTATION

DIVISION OF ENGINEERING SERVICES
STRUCTURE DESIGN
DESIGN BRANCH

BRIDGE NO. 53E0127
KILOMETER POST 46.1

SOUTH APPROACH RAMP & RETAINING WALLS
PANEL DETAILS 6 OF 7

ALL DIMENSIONS ARE IN MILLIMETERS UNLESS OTHERWISE SHOWN

ORIGINAL SCALE IN MILLIMETERS FOR REDUCED PLANS 0 10 20 30 40 50 60 70 80 90 100

CU 07
EA 121841

DISREGARD PRINTS BEARING EARLIER REVISION DATES

REVISION DATES: 9-01-08 9-21-09 11-13-08 11-20-08 12-29-08 3-19-09

SHEET 21 OF 31

FILE => 53e0127-u-miscdt06.dgn

STRUCTURES DESIGN DETAIL SHEET (METRIC) (REV.03-17-04)

USERNAME => trpierce DATE PLOTTED => 15-JUN-2009 TIME PLOTTED => 08:23

DIST	COUNTY	ROUTE	KILOMETER POST TOTAL PROJECT	SHEET No	TOTAL SHEETS
07	LA	5	42.8/47.3	1021	1073

Andrew Rittenhouse 12-05-08
REGISTERED CIVIL ENGINEER DATE

6-8-09
PLANS APPROVAL DATE

REGISTERED PROFESSIONAL ENGINEER
Andrew P. Rittenhouse
No. 61006
Exp. 12-31-10
CIVIL
STATE OF CALIFORNIA

The State of California or its officers or agents shall not be responsible for the accuracy or completeness of electronic copies of this plan sheet.

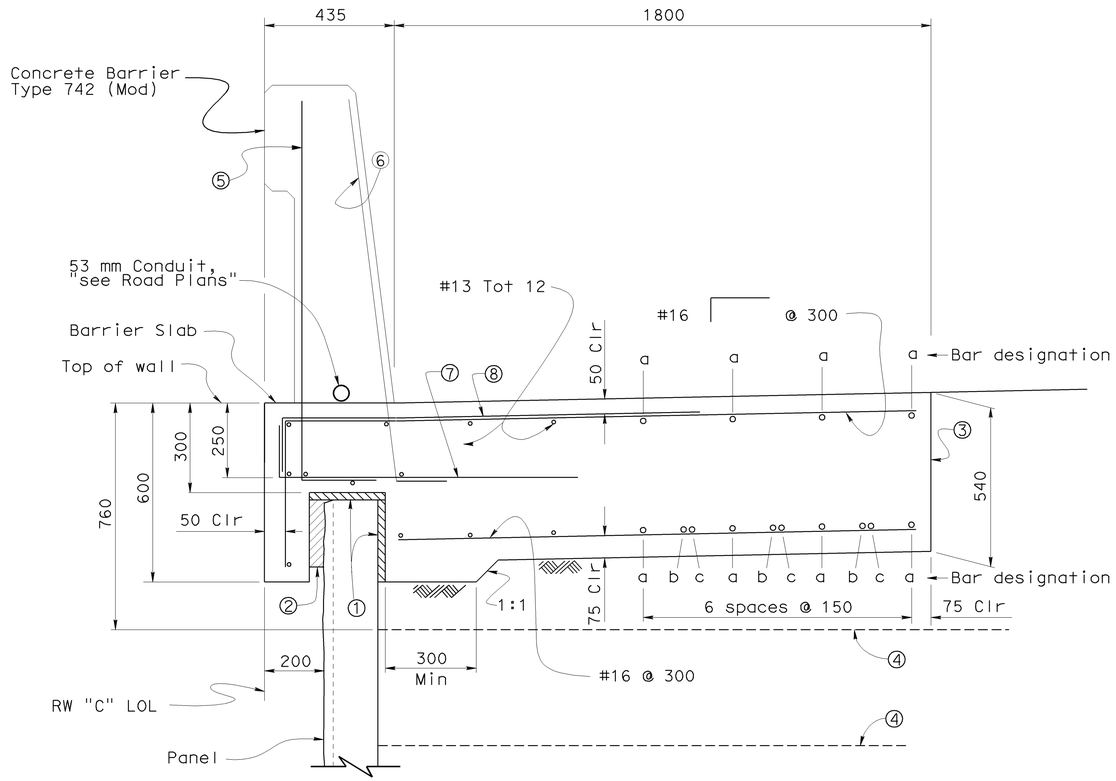

SECTION AT TOP OF WALL WITH CONCRETE BARRIER TYPE 742 (Mod)

1:10

Legend:

1. 25 mm Expanded Polystyrene
2. 50 mm Expanded Polystyrene recessed into Barrier Slab 50 mm
3. Contact joint
4. Soil reinforcement
5. #16 (160) @ 400
6. #16 (160) @ 200
7. #16 (1000) @ 200
8. #16 (1400) @ 300, bundled with #16 @ 300

Bar Designation:

"a" bar = #19 continuous
"b" bar = #19 x 18 m
"c" bar = #19 x 15 m

Place "b" and "c" bars at beginning and ending of barrier slab.

Notes:

1. For Concrete Barrier Type 742 (Mod) details not shown or noted, see "ARCHITECTURAL TREATMENT DETAILS 2 OF 2" sheet.
2. No expansion joints in concrete barrier or barrier slab within limits of MSE Wall
3. For Soil Reinforcement, see Note 3 on "PANEL DETAILS 4 OF 7" sheet.

Caltrans Metric

	BY	CHECKED
DESIGN	G. Galo	F. Feng
DETAILS	S. Cholda	F. Feng
QUANTITIES	A. Logus	D. Kubochi

STATE OF CALIFORNIA
DEPARTMENT OF TRANSPORTATION

DIVISION OF ENGINEERING SERVICES
STRUCTURE DESIGN
DESIGN BRANCH

BRIDGE NO. 53E0127
KILOMETER POST 46.1

SOUTH APPROACH RAMP & RETAINING WALLS
PANEL DETAILS 7 OF 7

ALL DIMENSIONS ARE IN MILLIMETERS UNLESS OTHERWISE SHOWN

ORIGINAL SCALE IN MILLIMETERS FOR REDUCED PLANS 0 10 20 30 40 50 60 70 80 90 100

CU 07
EA 121841

DISREGARD PRINTS BEARING EARLIER REVISION DATES

REVISION DATES: 3-31-06 5-31-08 11-14-08 11-26-08 12-12-08 01-23-09 5-01-09

SHEET 22 OF 31

FILE => 53e0127-u-miscdt07.dgn

STRUCTURES DESIGN DETAIL SHEET (METRIC) (REV.03-17-04)

USERNAME => trpierce DATE PLOTTED => 15-JUN-2009 TIME PLOTTED => 08:23

DIST	COUNTY	ROUTE	KILOMETER POST TOTAL PROJECT	SHEET No	TOTAL SHEETS
07	LA	5	42.8/47.3	1022	1073

Andrew Rittenhouse 12-05-08
REGISTERED CIVIL ENGINEER DATE

6-8-09
PLANS APPROVAL DATE

The State of California or its officers or agents shall not be responsible for the accuracy or completeness of electronic copies of this plan sheet.

REGISTERED PROFESSIONAL ENGINEER
Andrew P. Rittenhouse
No. 61006
Exp. 12-31-10
CIVIL
STATE OF CALIFORNIA

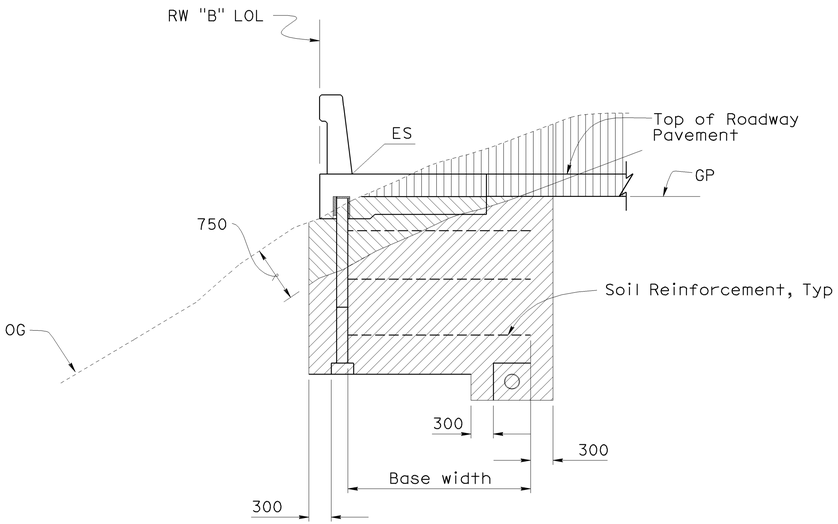

SECTION A-A
1:40

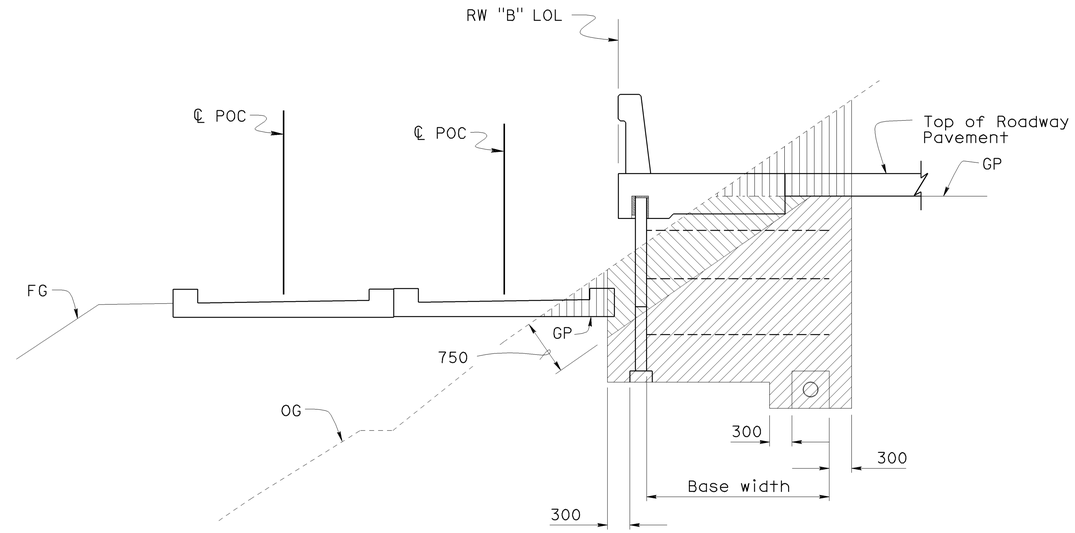

SECTION B-B
1:40

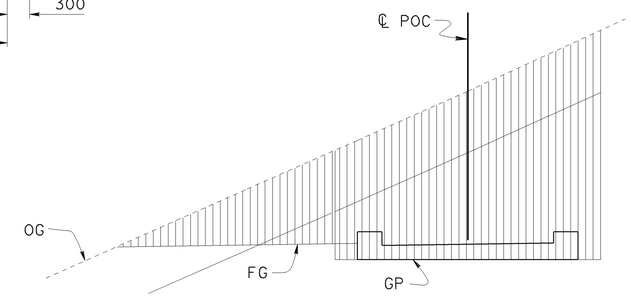

SECTION G-G
1:40

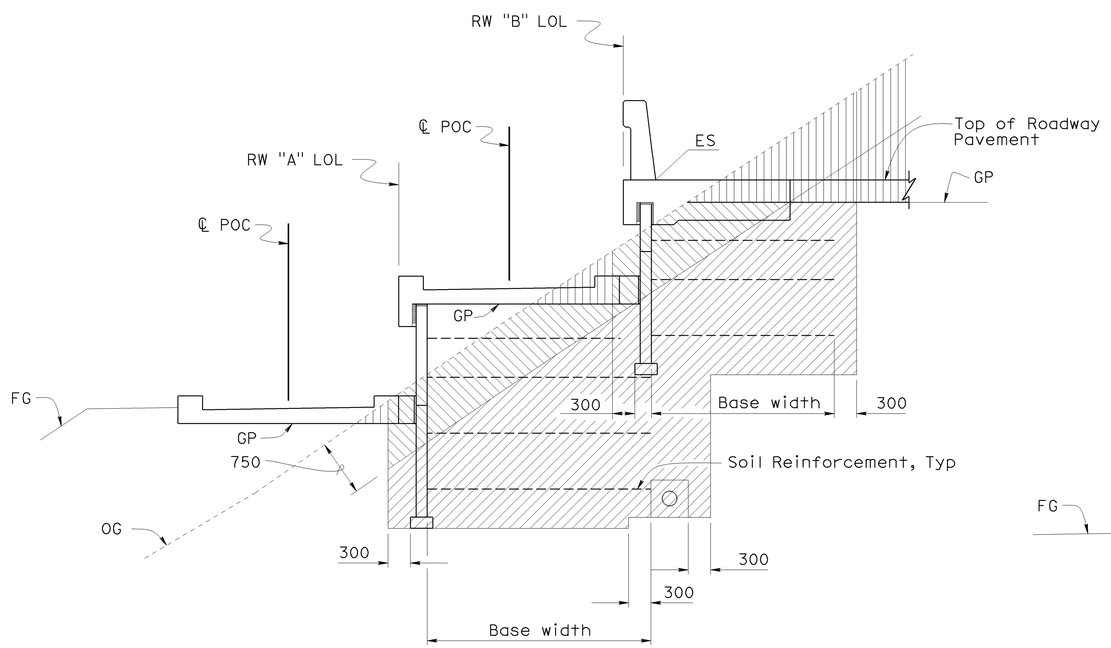

SECTION C-C
1:40

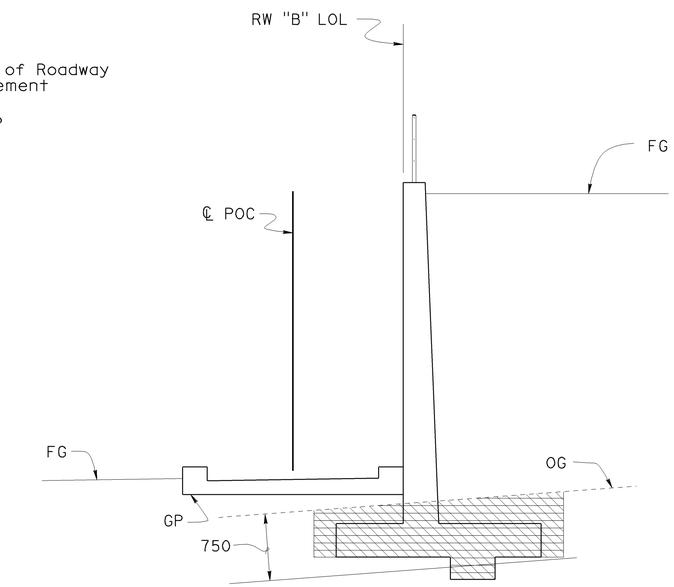

SECTION F-F
1:40

Legend:

- Indicates Structure Excavation paid as Earth Retaining Structure (Mechanically Stabilized Earth Wall)
- Indicates Structure Excavation (Type Y-2) (Aerially Deposited Lead) paid as Earth Retaining Structure (Mechanically Stabilized Earth Wall)
- Indicates Structure Excavation, Retaining Wall (Type Y-2) (Aerially Deposited Lead)
- Indicates Roadway Excavation or Roadway Excavation (Aerially Deposited Lead), see "Road Plans"

Note:

1. For section locations see "GENERAL PLAN 1 OF 3" sheet.
2. Chain Link Railing and Handrail not shown, for clarity.

NOTE:
THE CONTRACTOR SHALL VERIFY ALL CONTROLLING FIELD DIMENSIONS BEFORE ORDERING OR FABRICATING ANY MATERIAL.

LIMITS OF EXCAVATION

Caltrans Metric

	BY	CHECKED
DESIGN	G. Galo	F. Feng
DETAILS	S. Cholda	F. Feng
QUANTITIES	A. Logus	D. Kubochi

STATE OF CALIFORNIA
DEPARTMENT OF TRANSPORTATION

DIVISION OF ENGINEERING SERVICES
STRUCTURE DESIGN
DESIGN BRANCH 15

BRIDGE NO. 53E0127
KILOMETER POST 46.1

SOUTH APPROACH RAMP & RETAINING WALLS
MISCELLANEOUS DETAILS 1 OF 2

ALL DIMENSIONS ARE IN MILLIMETERS UNLESS OTHERWISE SHOWN

ORIGINAL SCALE IN MILLIMETERS FOR REDUCED PLANS 0 10 20 30 40 50 60 70 80 90 100

CU 07
EA 121841

DISREGARD PRINTS BEARING EARLIER REVISION DATES

REVISION DATES: 9-01-08, 11-06-08, 11-17-08, 11-20-08, 12-15-08, 12-30-08, 01-07-09, 3-23-09

SHEET 23 OF 31

FILE => 53e0127-u-miscdt08.dgn

STRUCTURES DESIGN DETAIL SHEET (METRIC) (REV.03-17-04)

USERNAME => trpierce DATE PLOTTED => 15-JUN-2009 TIME PLOTTED => 08:24

DIST	COUNTY	ROUTE	KILOMETER POST TOTAL PROJECT	SHEET No	TOTAL SHEETS
07	LA	5	42.8/47.3	1023	1073

Andrew Rittenhouse 12-05-08
REGISTERED CIVIL ENGINEER DATE

6-8-09
PLANS APPROVAL DATE

The State of California or its officers or agents shall not be responsible for the accuracy or completeness of electronic copies of this plan sheet.

REGISTERED PROFESSIONAL ENGINEER
Andrew P. Rittenhouse
No. 61006
Exp. 12-31-10
CIVIL
STATE OF CALIFORNIA

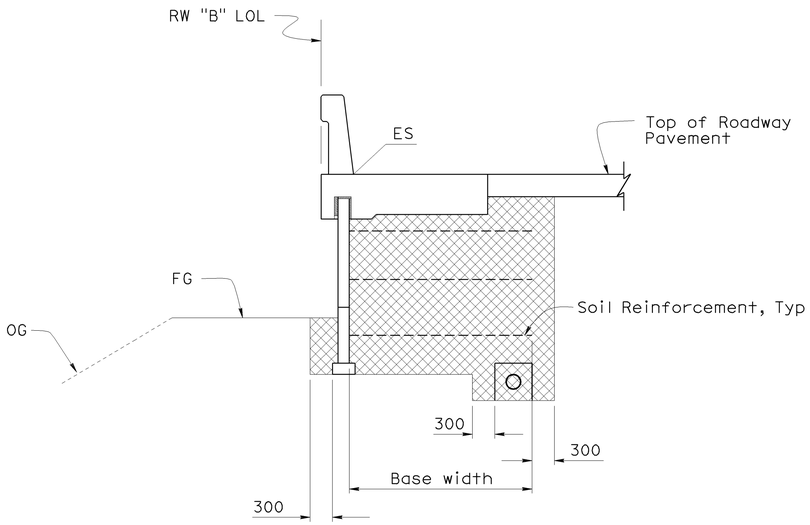

SECTION A-A
1:40

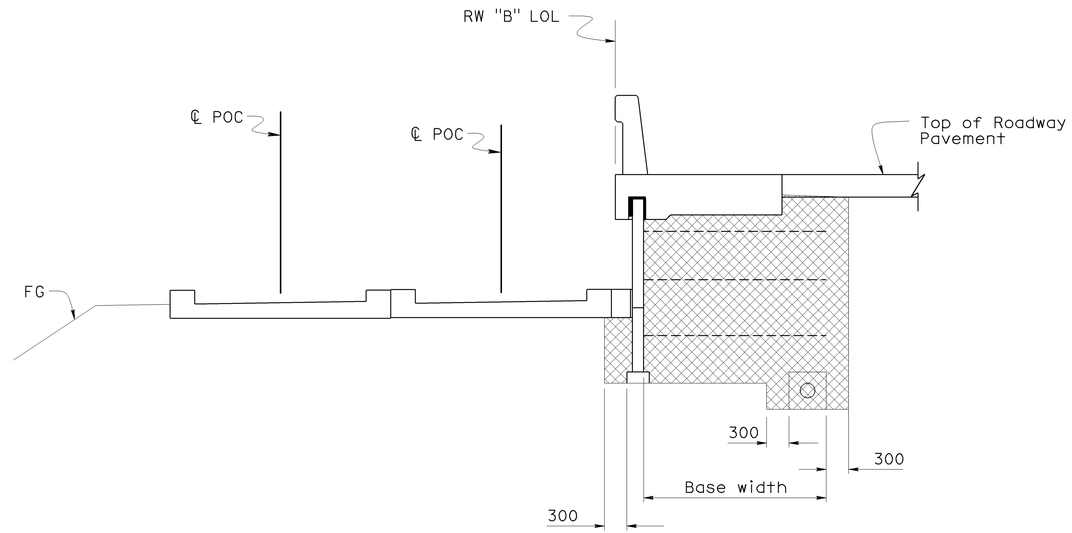

SECTION B-B
1:40

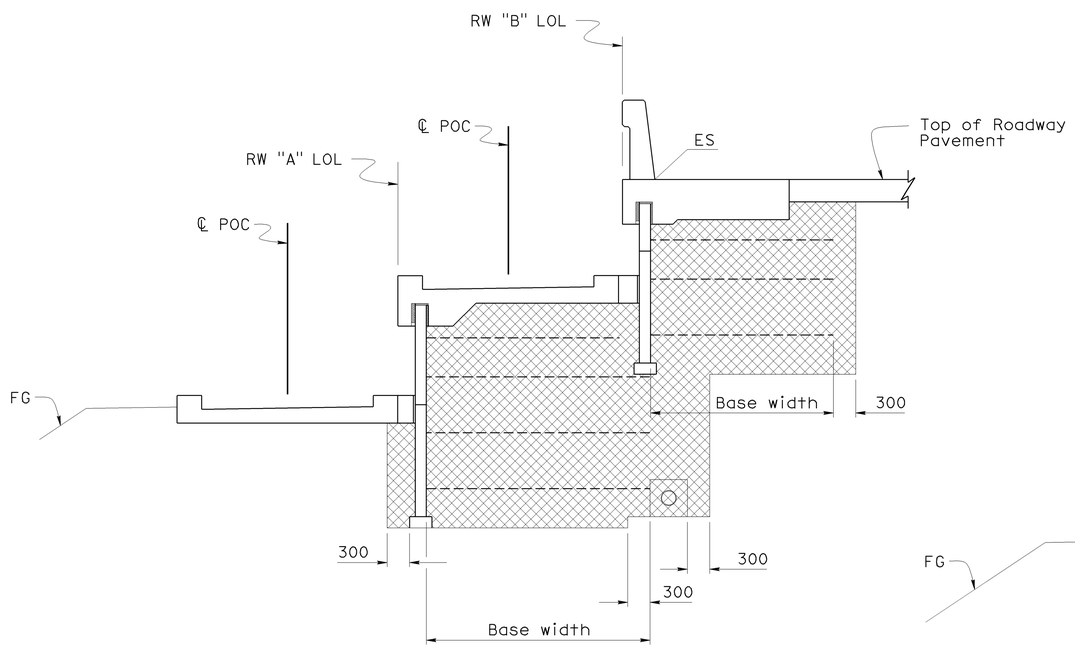

SECTION C-C
1:40

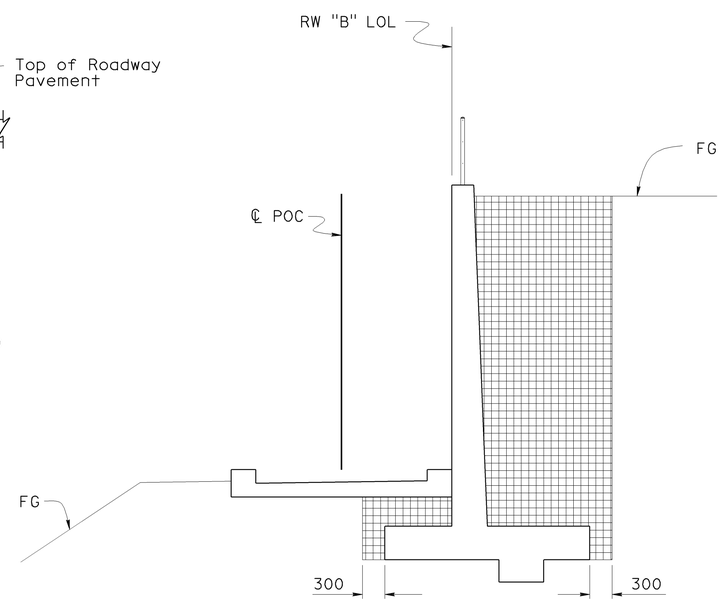

SECTION F-F
1:40

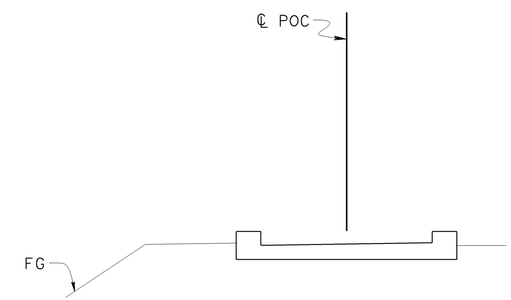

SECTION G-G
1:40

Legend:

- Indicates Structure Backfill paid as Earth Retaining Structure (Mechanically Stabilized Earth Wall)
- Indicates Structure Backfill, Retaining Wall
- Indicates Roadway Earthwork, see "Road Plans"

Note:

1. For section locations see "GENERAL PLAN 1 OF 3" sheet.
2. Chain Link Railing and Handrail not shown for clarity.

NOTE:
THE CONTRACTOR SHALL VERIFY ALL CONTROLLING FIELD DIMENSIONS BEFORE ORDERING OR FABRICATING ANY MATERIAL.

LIMITS OF BACKFILL

Caltrans Metric

ALL DIMENSIONS ARE IN MILLIMETERS UNLESS OTHERWISE SHOWN

ORIGINAL SCALE IN MILLIMETERS FOR REDUCED PLANS 0 10 20 30 40 50 60 70 80 90 100

	BY	CHECKED
DESIGN	G. Galo	F. Feng
DETAILS	S. Cholda	F. Feng
QUANTITIES	A. Logus	D. Kubochi

STATE OF CALIFORNIA
DEPARTMENT OF TRANSPORTATION

DIVISION OF ENGINEERING SERVICES
STRUCTURE DESIGN
DESIGN BRANCH 15

CU 07
EA 121841

BRIDGE NO. 53E0127
KILOMETER POST 46.1

SOUTH APPROACH RAMP & RETAINING WALLS
MISCELLANEOUS DETAILS 2 OF 2

DISREGARD PRINTS BEARING EARLIER REVISION DATES

REVISION DATES: 9-01-08, 11-20-08, 12-18-08, 12-30-08, 01-07-09, 3-23-09

SHEET 24 OF 31

FILE => 53e0127-u-miscdt09.dgn

STRUCTURES DESIGN DETAIL SHEET (METRIC) (REV.03-17-04)

USERNAME => trpierce DATE PLOTTED => 15-JUN-2009 TIME PLOTTED => 08:24

DIST	COUNTY	ROUTE	KILOMETER POST TOTAL PROJECT	SHEET No	TOTAL SHEETS
07	LA	5	42.8/47.3	1024	1073

Andrew Rittenhouse 12-05-08
REGISTERED CIVIL ENGINEER DATE

6-8-09
PLANS APPROVAL DATE

The State of California or its officers or agents shall not be responsible for the accuracy or completeness of electronic copies of this plan sheet.

REGISTERED PROFESSIONAL ENGINEER
Andrew P. Rittenhouse
No. 61006
Exp. 12-31-10
CIVIL
STATE OF CALIFORNIA

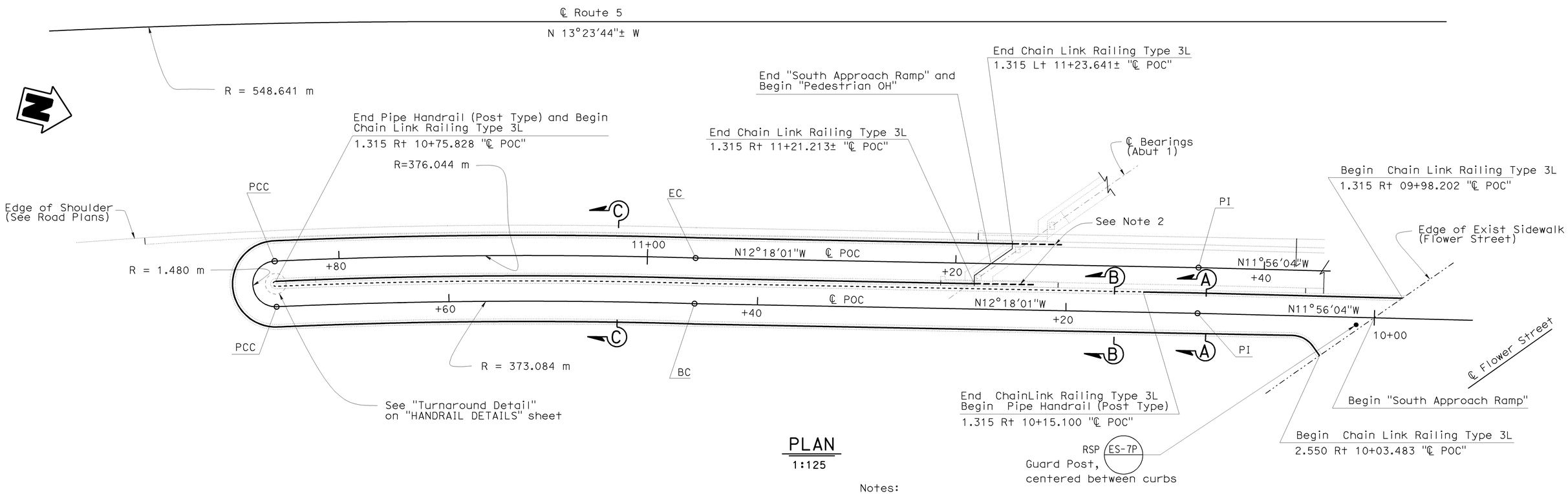

PLAN
1:125

Notes:

1. Distance of South Approach Ramp from ℄ Route 5 is shown not to scale.
2. For fencing continuation, see "Br No. 53-1085" plans .
3. For "Section A-A", "Section B-B", and "Section C-C", see "FENCE AND HANDRAIL LAYOUT 2 OF 2" sheet.
4. For Cable Railing on Retaining Wall "A", not shown on "Plan", see "GENERAL PLAN 1 OF 3" and "GENERAL PLAN 3 OF 3" sheets.

NOTE:
THE CONTRACTOR SHALL VERIFY ALL CONTROLLING FIELD DIMENSIONS BEFORE ORDERING OR FABRICATING ANY MATERIAL.

Legend:

——— Indicates Chain Link Railing Type 3L

- - - - - - Indicates Pipe Handrail (Post Type)

Caltrans Metric

	BY	CHECKED
DESIGN	G. Galo	F. Feng
DETAILS	S. Cholda	F. Feng
QUANTITIES	A. Logus	D. Kubochi

STATE OF CALIFORNIA
DEPARTMENT OF TRANSPORTATION

DIVISION OF ENGINEERING SERVICES
STRUCTURE DESIGN
DESIGN BRANCH 15

BRIDGE NO. 53E0127
KILOMETER POST 46.1

SOUTH APPROACH RAMP & RETAINING WALLS
FENCE & HANDRAIL LAYOUT 1 OF 2

ALL DIMENSIONS ARE IN MILLIMETERS UNLESS OTHERWISE SHOWN

ORIGINAL SCALE IN MILLIMETERS FOR REDUCED PLANS 0 10 20 30 40 50 60 70 80 90 100

CU 07
EA 121841

DISREGARD PRINTS BEARING EARLIER REVISION DATES

REVISION DATES: 9-01-08 11-20-08 12-15-08 01-07-09 02-19-09

SHEET 25 OF 31

FILE => 53e0127-u-miscdt10.dgn

STRUCTURES DESIGN DETAIL SHEET (METRIC) (REV.03-17-04)

USERNAME => trpierce DATE PLOTTED => 15-JUN-2009 TIME PLOTTED => 08:24

DIST	COUNTY	ROUTE	KILOMETER POST TOTAL PROJECT	SHEET No	TOTAL SHEETS
07	LA	5	42.8/47.3	1025	1073

Andrew Rittenhouse 12-05-08
REGISTERED CIVIL ENGINEER DATE

6-8-09
PLANS APPROVAL DATE

The State of California or its officers or agents shall not be responsible for the accuracy or completeness of electronic copies of this plan sheet.

REGISTERED PROFESSIONAL ENGINEER
Andrew P. Rittenhouse
No. 61006
Exp. 12-31-10
CIVIL
STATE OF CALIFORNIA

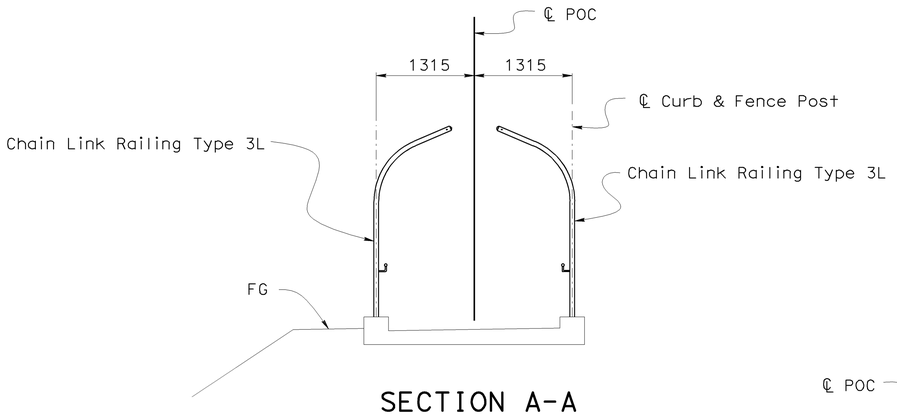

SECTION A-A
1:40

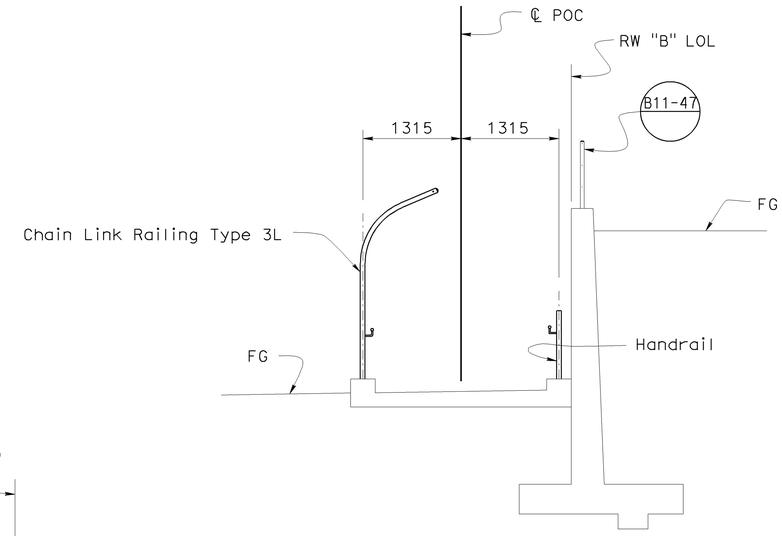

SECTION B-B
1:40

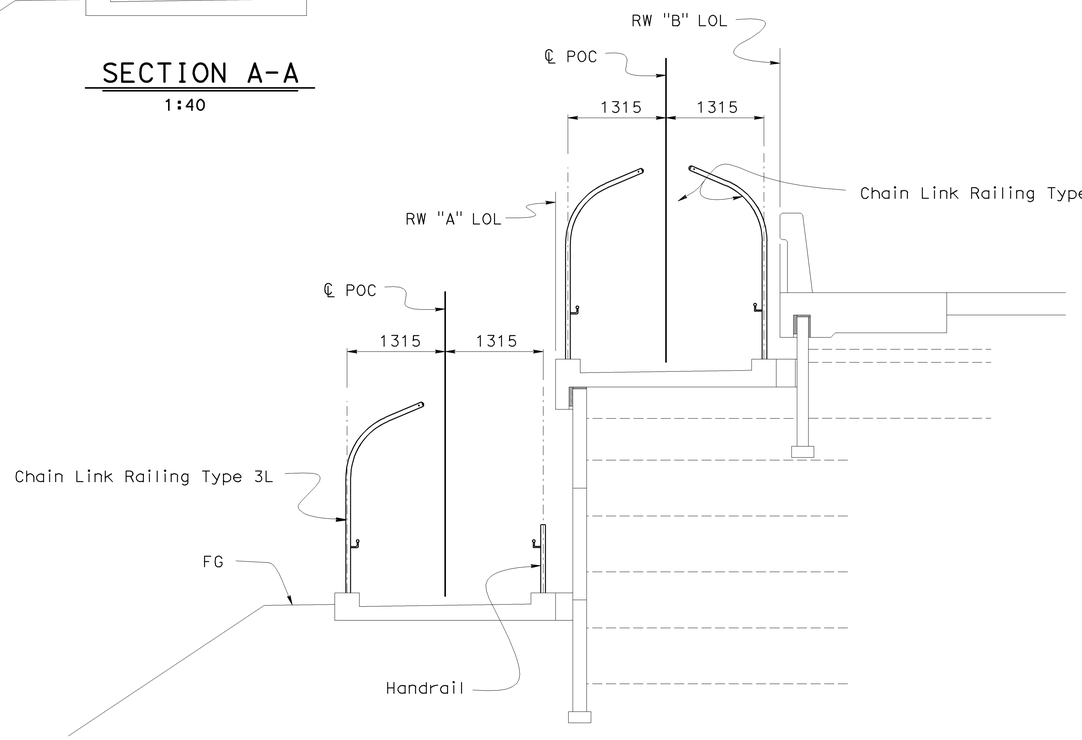

SECTION C-C
1:40

NOTE:
THE CONTRACTOR SHALL VERIFY ALL CONTROLLING FIELD DIMENSIONS BEFORE ORDERING OR FABRICATING ANY MATERIAL.

Caltrans Metric

	BY	CHECKED
DESIGN	G. Galo	F. Feng
DETAILS	S. Cholda	F. Feng
QUANTITIES	A. Logus	D. Kubochi

STATE OF CALIFORNIA
DEPARTMENT OF TRANSPORTATION

DIVISION OF ENGINEERING SERVICES
STRUCTURE DESIGN
DESIGN BRANCH 15

BRIDGE NO. 53E0127
KILOMETER POST 46.1

SOUTH APPROACH RAMP & RETAINING WALLS
FENCE & HANDRAIL LAYOUT 2 OF 2

ALL DIMENSIONS ARE IN MILLIMETERS UNLESS OTHERWISE SHOWN

ORIGINAL SCALE IN MILLIMETERS FOR REDUCED PLANS 0 10 20 30 40 50 60 70 80 90 100

CU 07
EA 121841

DISREGARD PRINTS BEARING EARLIER REVISION DATES

REVISION DATES: 12-14-07 01-04-09 01-16-09 3-19-09 11-17-08 11-20-08 12-15-08 12-24-08 01-07-09

SHEET 26 OF 31

FILE => 53e0127-u-miscdt11.dgn

STRUCTURES DESIGN DETAIL SHEET (METRIC) (REV.03-17-04)

USERNAME => trpierce DATE PLOTTED => 15-JUN-2009 TIME PLOTTED => 08:24

DIST	COUNTY	ROUTE	KILOMETER POST TOTAL PROJECT	SHEET No	TOTAL SHEETS
07	LA	5	42.8/47.3	1026	1073

Andrew Rittenhouse 12-05-08
REGISTERED CIVIL ENGINEER DATE

6-8-09
PLANS APPROVAL DATE

The State of California or its officers or agents shall not be responsible for the accuracy or completeness of electronic copies of this plan sheet.

REGISTERED PROFESSIONAL ENGINEER
Andrew P. Rittenhouse
No. 61006
Exp. 12-31-10
CIVIL
STATE OF CALIFORNIA

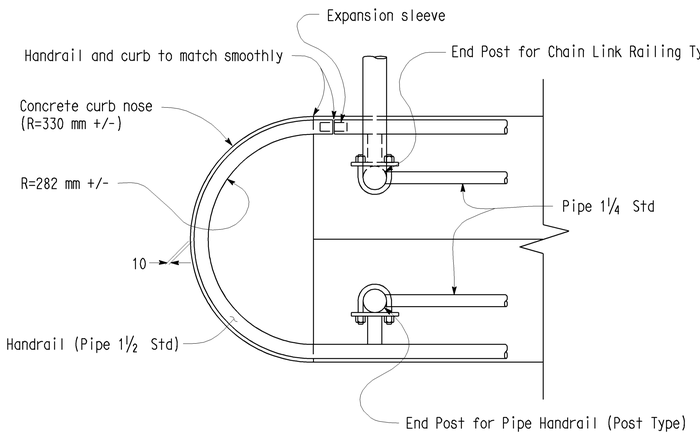

TURNAROUND DETAIL

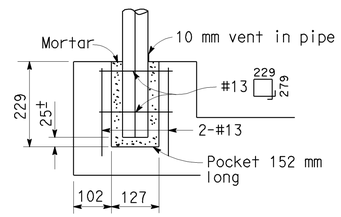

ALTERNATIVE ANCHORAGE DETAIL

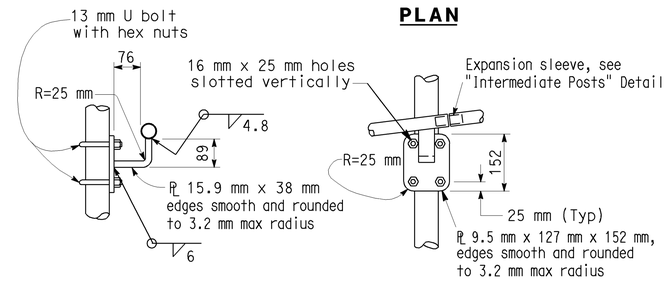

SIDE VIEW ELEVATION

PIPE HANDRAILING BRACKET

PLAN PLAN

ELEVATION

PIPE HANDRAILING AT END

NOTES:

1. Railing assembly to be galvanized after fabrication.
2. Railing shall conform to horizontal and vertical alignment. Posts shall be vertical. Horizontal pipes shall be bent if radius is 45.72 m or less-may be on 2.438 m chords if radius is over 45.72 m.
3. Peen all bolts and remove sharp edges.
4. Alternative details may be submitted by Contractor for Engineer's approval.

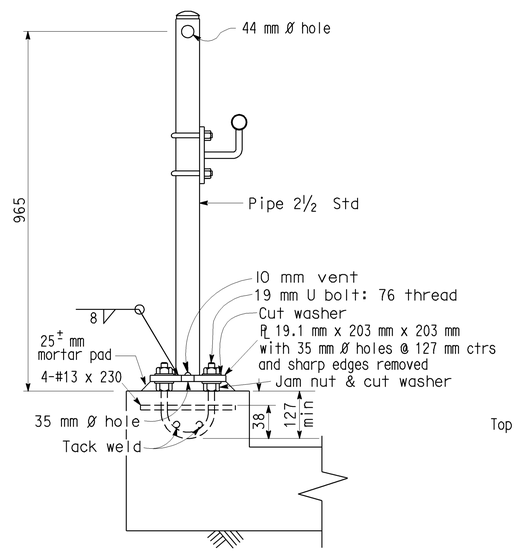

TYPICAL POST DETAIL

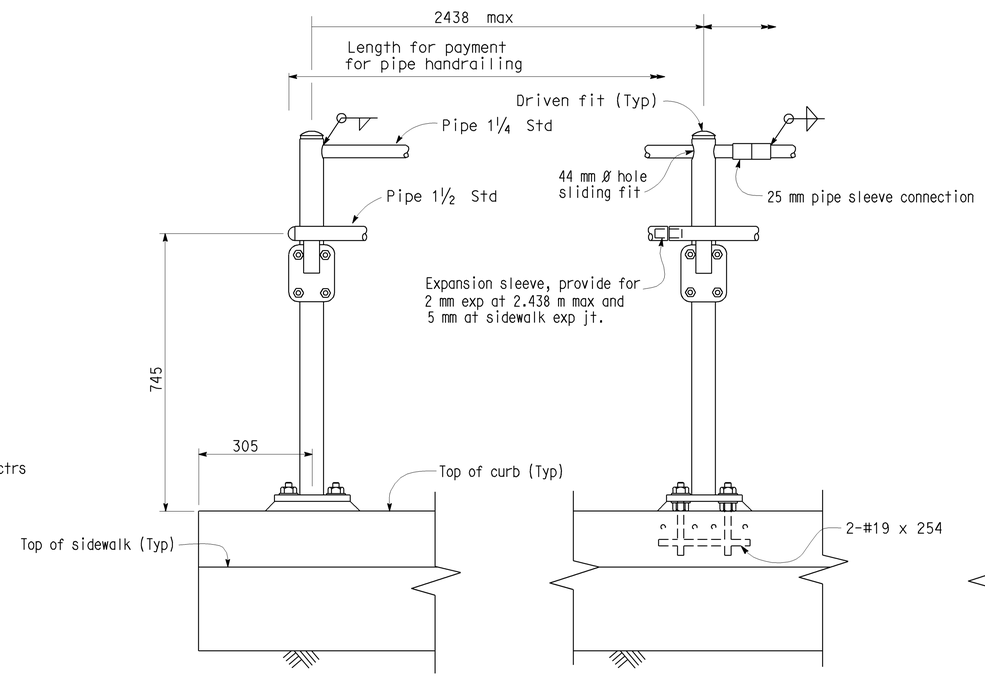

END POST INTERMEDIATE POSTS

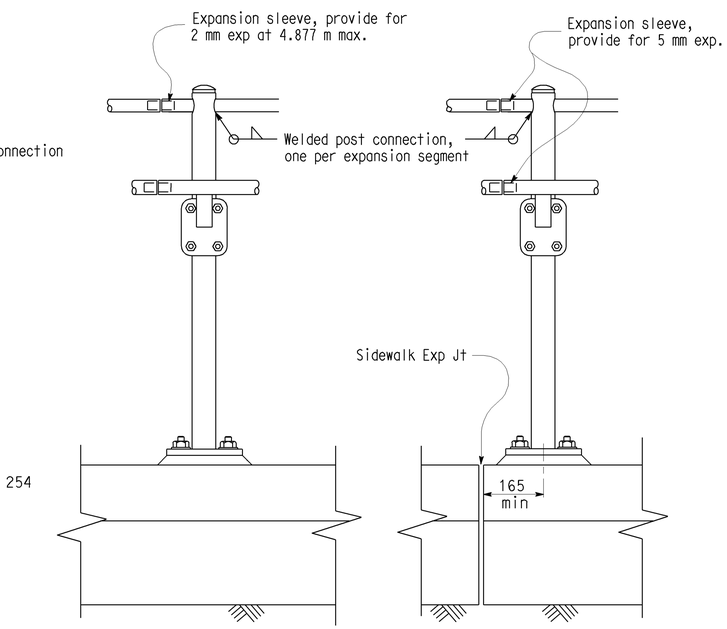

SIDEWALK EXPANSION JOINT

ELEVATION

DESIGN	BY G. Galo	CHECKED F. Feng	
DETAILS	BY S. Cholda	CHECKED F. Feng	
QUANTITIES	BY A. Logus	CHECKED D. Kubochi	

STATE OF CALIFORNIA
DEPARTMENT OF TRANSPORTATION

DIVISION OF ENGINEERING SERVICES
STRUCTURE DESIGN
DESIGN BRANCH

BRIDGE NO. 53E0127
KILOMETER POST 46.1

SOUTH APPROACH RAMP & RETAINING WALLS
HANDRAIL DETAILS

ALL DIMENSIONS ARE IN MILLIMETERS UNLESS OTHERWISE SHOWN

ORIGINAL SCALE IN MILLIMETERS FOR REDUCED PLANS 0 10 20 30 40 50 60 70 80 90 100

CU 07
EA 121841

DISREGARD PRINTS BEARING EARLIER REVISION DATES 11-13-08 11-20-08 12-15-08 01-07-09

REVISION DATES

SHEET 27 OF 31

FILE => 53e0127-u-miscdt12.dgn

STRUCTURES DESIGN DETAIL SHEET (METRIC) (REV.03-17-04)

USERNAME => trpierce DATE PLOTTED => 15-JUN-2009 TIME PLOTTED => 08:24

DIST.	COUNTY	ROUTE	KILOMETER POST TOTAL PROJECT	SHEET NO.	TOTAL SHEETS
07	LA	5	42.8/47.3	1027	1073

Caltrans Metric

Andrew Rittenhouse 12-05-08
REGISTERED ENGINEER - CIVIL

6-8-09
PLANS APPROVAL DATE

The State of California or its officers or agents shall not be responsible for the accuracy or completeness of electronic copies of this plan sheet.

REGISTERED PROFESSIONAL ENGINEER — Andrew P. Rittenhouse — No. 61006 — Exp. 12-31-10 — CIVIL — STATE OF CALIFORNIA

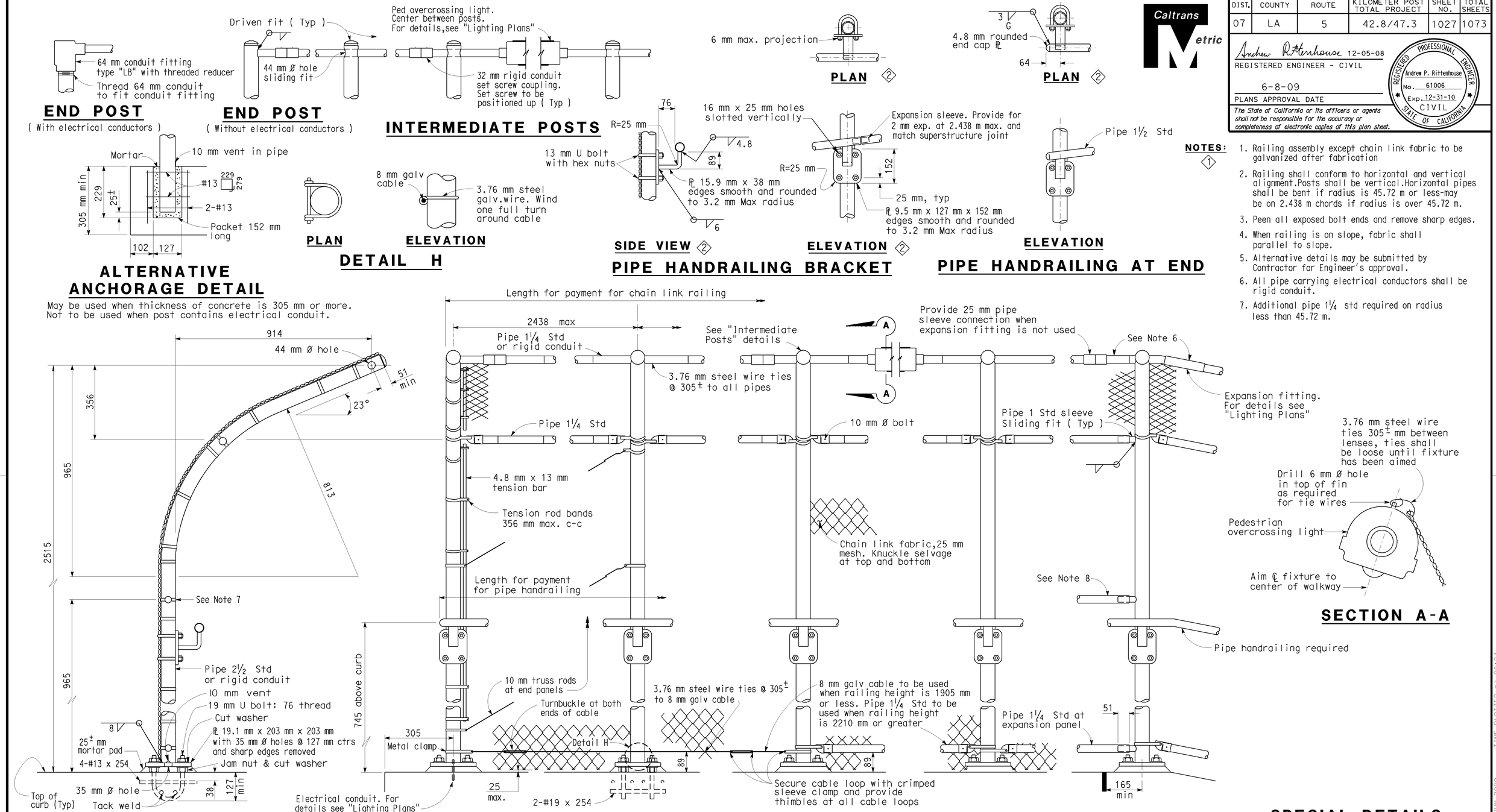

NOTES: 1

1. Railing assembly except chain link fabric to be galvanized after fabrication
2. Railing shall conform to horizontal and vertical alignment.Posts shall be vertical.Horizontal pipes shall be bent if radius is 45.72 m or less-may be on 2.438 m chords if radius is over 45.72 m.
3. Peen all exposed bolt ends and remove sharp edges.
4. When railing is on slope, fabric shall parallel to slope.
5. Alternative details may be submitted by Contractor for Engineer's approval.
6. All pipe carrying electrical conductors shall be rigid conduit.
7. Additional pipe 1¼ std required on radius less than 45.72 m.

SPECIAL DETAILS

NO SCALE

ALL DIMENSIONS ARE IN MILLIMETERS UNLESS OTHERWISE SHOWN

STANDARD DRAWING					
RELEASE DATE **Revised**	DESIGN	BY R.W. BISHOP	CHECKED J. HAMAGUCHI	RELEASED BY	
FILE NO. **xs16-330**	DETAILS	BY R. YEE	CHECKED J. HAMAGUCHI		
	SUBMITTED	BY R.W. BISHOP	DRAWING DATE 4/91	OFFICE CHIEF	

1 Modified notes
2 Modified details

STATE OF **CALIFORNIA** DEPARTMENT OF TRANSPORTATION

DIVISION OF ENGINEERING SERVICES

BRIDGE NO. 53E0127
KILOMETER POST 46.1

SOUTH APPROACH RAMP & RETAINING WALLS

CHAIN LINK RAILING TYPE 3L

DS OSD 2147A (METRIC) (REV. 2/25/97)

ORIGINAL SCALE IN MILLIMETERS FOR REDUCED PLANS 0 10 20 30 40 50 60 70 80 90 100

CU 07
EA 121841

DISREGARD PRINTS BEARING EARLIER REVISION DATES

REVISION DATES (PRELIMINARY STAGE ONLY) 9-02-08 9-22-08 11-20-08 01-07-09 01-09-09

SHEET 28 OF 31

USERNAME => trpierce

53e0127-u-xs16-330

DATE PLOTTED => 15-JUN-2009 TIME PLOTTED => 08:24

DIST	COUNTY	ROUTE	KILOMETER POST TOTAL PROJECT	SHEET No	TOTAL SHEETS
07	LA	5	42.8/47.3	1028	1073

Andrew Rittenhouse 12-05-08
REGISTERED CIVIL ENGINEER DATE

6-8-09
PLANS APPROVAL DATE

REGISTERED PROFESSIONAL ENGINEER
Andrew P. Rittenhouse
No. 61006
Exp. 12-31-10
CIVIL
STATE OF CALIFORNIA

The State of California or its officers or agents shall not be responsible for the accuracy or completeness of electronic copies of this plan sheet.

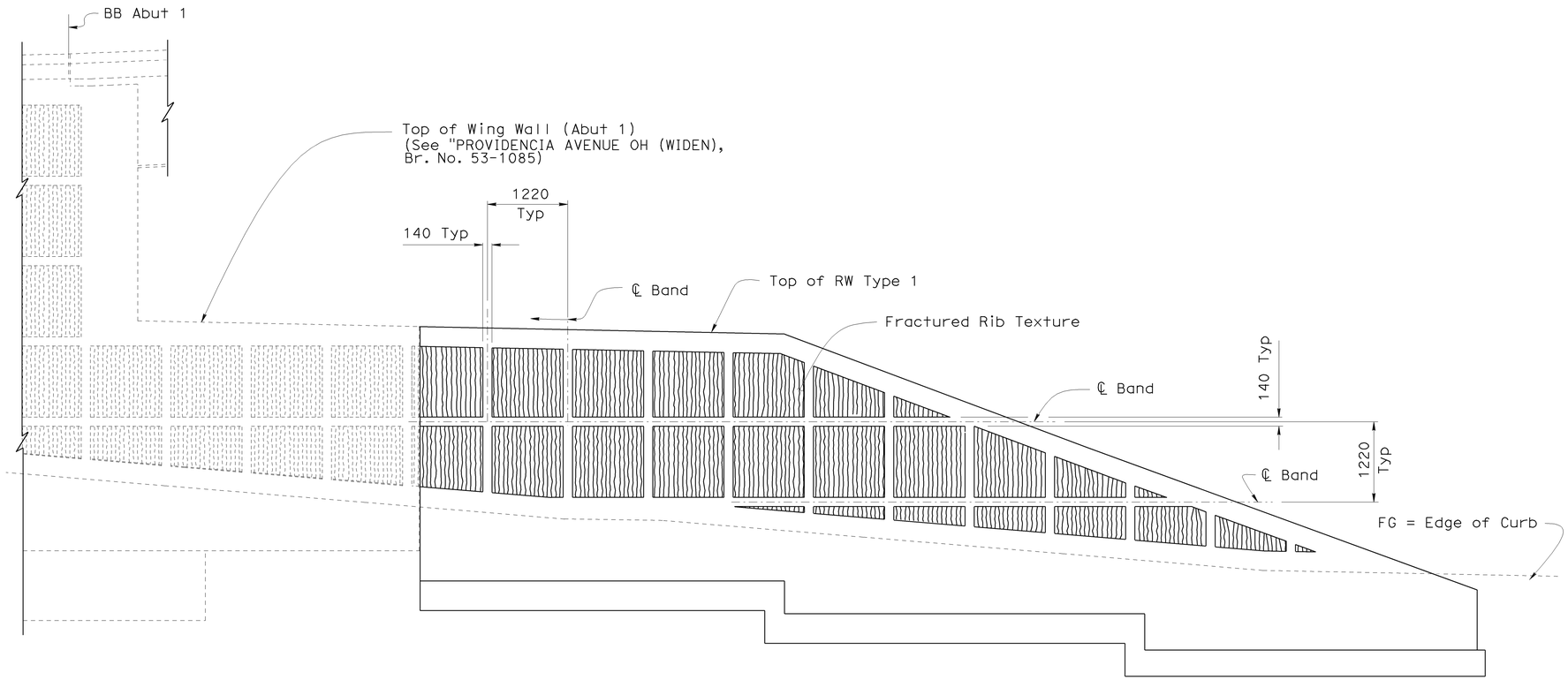

Note:
Cable Railing not shown for clarity.

ELEVATION
1:40

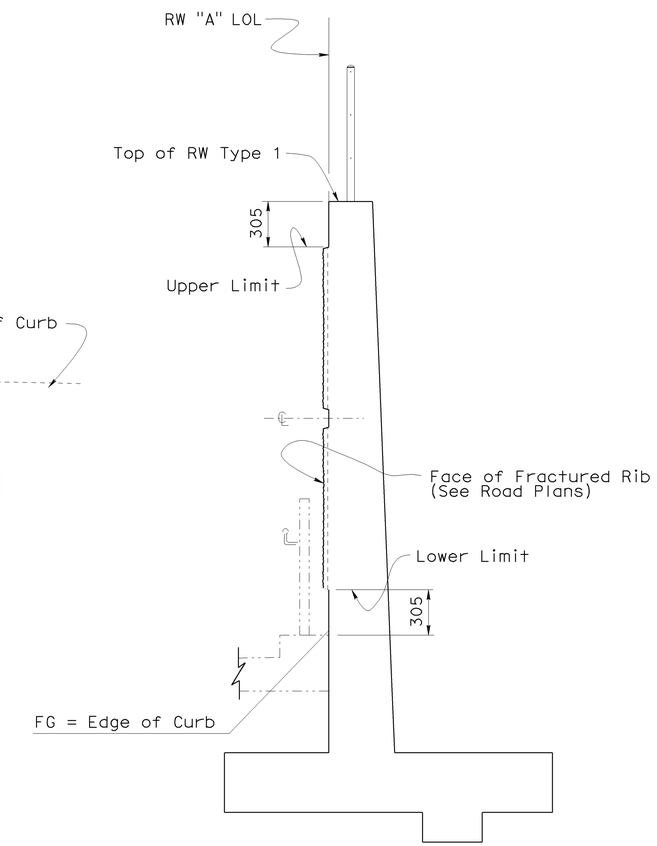

TYPICAL SECTION
1:20

NOTE:
THE CONTRACTOR SHALL VERIFY ALL CONTROLLING FIELD DIMENSIONS BEFORE ORDERING OR FABRICATING ANY MATERIAL.

Caltrans Metric

ALL DIMENSIONS ARE IN MILLIMETERS UNLESS OTHERWISE SHOWN

ORIGINAL SCALE IN MILLIMETERS FOR REDUCED PLANS 0 10 20 30 40 50 60 70 80 90 100

	BY	CHECKED
DESIGN	G. Galo	F. Feng
DETAILS	S. Cholda	F. Feng
QUANTITIES	A. Logus	D. Kubochi

STATE OF CALIFORNIA
DEPARTMENT OF TRANSPORTATION

DIVISION OF ENGINEERING SERVICES
STRUCTURE DESIGN
DESIGN BRANCH 15

CU 07
EA 121841

BRIDGE NO. 53E0127
KP (PM) 46.1

SOUTH APPROACH RAMP & RETAINING WALLS
ARCHITECTURAL TREATMENT DETAILS 1 OF 2

DISREGARD PRINTS BEARING EARLIER REVISION DATES → 10-30-08 11-20-08 12-18-08 12-29-08

REVISION DATES

SHEET 29 OF 31

FILE => 53e0127-v-arch01.dgn

STRUCTURES DESIGN DETAIL SHEET (METRIC) (REV.03-17-04)

USERNAME => trpierce DATE PLOTTED => 15-JUN-2009 TIME PLOTTED => 08:24

DIST	COUNTY	ROUTE	KILOMETER POST TOTAL PROJECT	SHEET No	TOTAL SHEETS
07	LA	5	42.8/47.3	1029	1073

Andrew Rittenhouse 12-05-08
REGISTERED CIVIL ENGINEER DATE

6-8-09
PLANS APPROVAL DATE

The State of California or its officers or agents shall not be responsible for the accuracy or completeness of electronic copies of this plan sheet.

REGISTERED PROFESSIONAL ENGINEER
Andrew P. Rittenhouse
No. 61006
Exp. 12-31-10
CIVIL
STATE OF CALIFORNIA

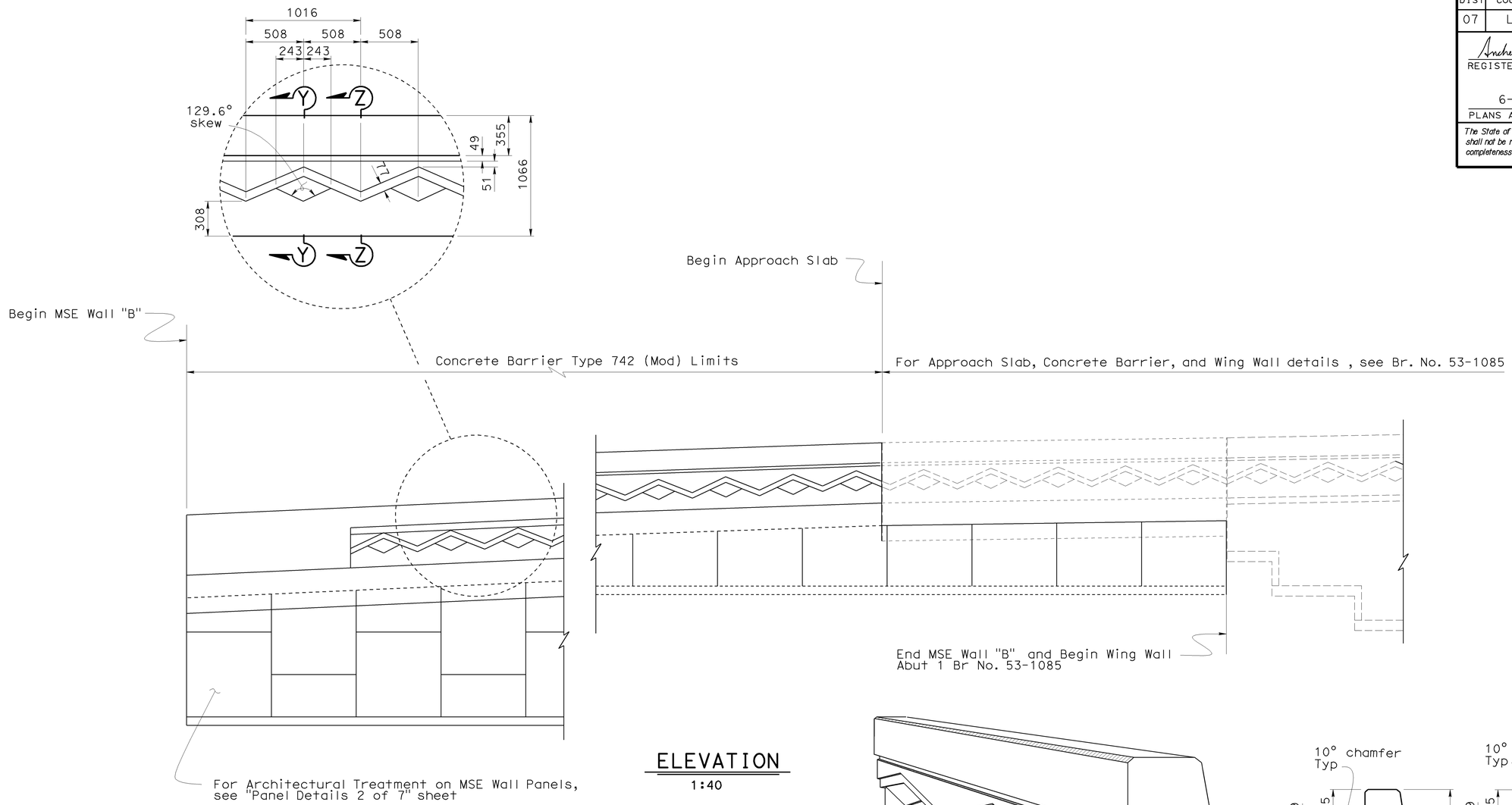

ELEVATION
1:40

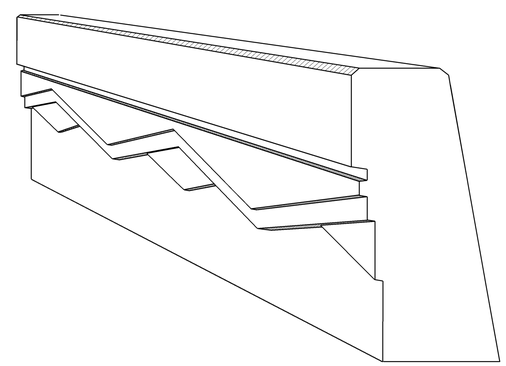

PERSPECTIVE VIEW
No Scale

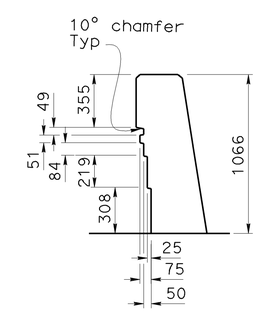

SECTION Y-Y
1:20

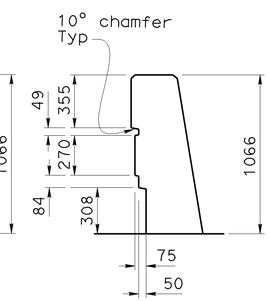

SECTION Z-Z
1:20

NOTE:
THE CONTRACTOR SHALL VERIFY ALL CONTROLLING FIELD DIMENSIONS BEFORE ORDERING OR FABRICATING ANY MATERIAL.

CONCRETE BARRIER TYPE 742 (MOD)

Caltrans Metric

ALL DIMENSIONS ARE IN MILLIMETERS UNLESS OTHERWISE SHOWN

ORIGINAL SCALE IN MILLIMETERS FOR REDUCED PLANS 0 10 20 30 40 50 60 70 80 90 100

	BY	CHECKED
DESIGN	G. Galo	F. Feng
DETAILS	S. Cholda	F. Feng
QUANTITIES	A. Logus	D. Kubochi

STATE OF CALIFORNIA
DEPARTMENT OF TRANSPORTATION

DIVISION OF ENGINEERING SERVICES
STRUCTURE DESIGN
DESIGN BRANCH 15

CU 07
EA 121841

BRIDGE NO. 53E0127
KILOMETER POST 46.1

SOUTH APPROACH RAMP & RETAINING WALLS
ARCHITECTURAL TREATMENT DETAILS 2 OF 2

DISREGARD PRINTS BEARING EARLIER REVISION DATES
REVISION DATES: 10-06-08 10-17-08 11-20-08 12-16-08 01-07-09 01-20-09

SHEET 30 OF 31

FILE => 53e0127-v-arch02.dgn

STRUCTURES DESIGN DETAIL SHEET (METRIC) (REV.03-17-04)

USERNAME => trpierce DATE PLOTTED => 15-JUN-2009 TIME PLOTTED => 08:24

DIST	COUNTY	ROUTE	KILOMETER POST TOTAL PROJECT	SHEET No	TOTAL SHEETS
07	LA	5	42.8/47.3	1030	1073

REGISTERED CIVIL ENGINEER 9-4-08

6-8-09
PLANS APPROVAL DATE

REGISTERED PROFESSIONAL ENGINEER
Qiang Huang
No. C055671
Exp. 12-31-08
CIVIL
STATE OF CALIFORNIA

The State of California or its officers or agents shall not be responsible for the accuracy or completeness of electronic copies of this plan sheet.

BENCH MARK

SURVEY CONTROL

TRVPT113
Fnd SET PK NAIL
9.012 M Rt. ℄ Rte 5
Sta. 462+45.471
N 574824.813
E 1971740.657
Elev. = 163.175

TRVPR138
Fnd SET SPIKE
29.988 M Lt. ℄ Rte 5
Sta. 464+17.373
N 574975.094
E 1971655.794
Elev. = 166.824

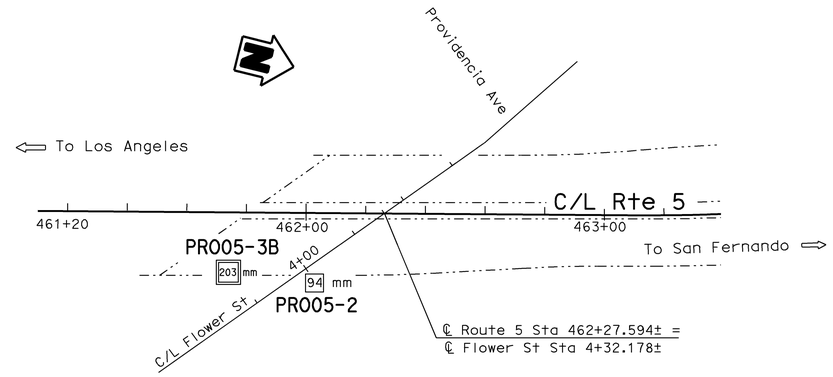

Note: Ground water not measured during field investigation.

PLAN
1:1000

20.1 m Rt Sta 461+74
℄ Rte. 5

171.8 m

PR005-3B

203 mm Asphalt 125 mm thick over concrete 175 mm thick over 225 mm of base.

SILTY SAND (SM), yellowish brown, dry, fine sand, trace fine to coarse gravel. (FILL)

64 35 — SILTY SAND with GRAVEL (SM), very dense, olive-brown to grayish brown, dry, fine sand, fine to coarse gravel.

26 35 — 60 SA CLAYEY SAND with GRAVEL (SC), medium dense, dark brown,dry, fine to coarse sand, fine to coarse gravel up to 25 mm.

70 35 — Poorly graded SAND with SILT and GRAVEL (SP-SM), very dense, olive-brown, dry, fine to medium sand, fine to coarse gravel.

44 35 — ... becomes dense, with trace clay

60 35 — ... becomes very dense, moist

25 35 — ALLUVIUM: poorly graded SAND with SILT (SP-SM), medium dense, light brown to tan, dry, fine sand, trace organics.

38 35 — Poorly graded SAND (SP), dense, light brown to tan, dry, fine to medium sand.

8-22-05

23.5 m Rt Sta 462+03.0
C/L Rte 5

161.99

PR005-2

94 mm Asphalt.

SAND (SM), loose, brown, moist, CLAYEY SAND with SANDY CLAY.

10 35 — CLAYEY SAND (SM), loose, brown, moist, CLAYEY SAND with SANDY CLAY.

39 35 — SAND (SP), dense, brown, moist, fine to medium grained SAND

39 35 — SAND (SW), dense, brown, moist, well graded SAND with few subrounded GRAVELS >12.7 mm dia.

38 35 — SILTY SAND with CLAY (SW-SC), dense, brown, moist, low to medium plasticity.

17 35 — CLAYEY SAND (SP-SC), medium dense, brown, very stiff, moist, low to medium plasticity.

22 35 — CLAYEY SAND (SP-SC), medium dense, brown, moist, very stiff.

30 35 — CLAYEY SAND (SP-SC), dense, brown, moist.

31 35 — SILTY SAND (SP-SM), very dense, brown, moist, fine to medium grained SAND with SILT.

E120 35 — SAND (SW-SM), very dense, brown, moist, well graded SAND with SILT.

E109 35 — SAND (SW-SC), very dense, brown, moist, well graded SAND with SILT.

E100 35 — SAND (SP), very dense, tan to gray, fine to medium grained SAND.

25 35 — Fat CLAY (CH), very stiff, blue, moist, high plasticity. qu=168 kPa

E60 35 — SAND (SP-SC), very dense, brown, moist, SILTY SAND with CLAYEY subangular GRAVEL >38 mm diameter.

9-1-05

171 m | 168 m | 165 m | 162 m | 159 m | 156 m | 153 m | 150 m | 147 m | 144 m | 141 m

461+70 | 461+90 | 462+10 | 462+30

PROFILE
HOR. 1:100
VER. 1:100

LEGEND OF BORING OPERATIONS

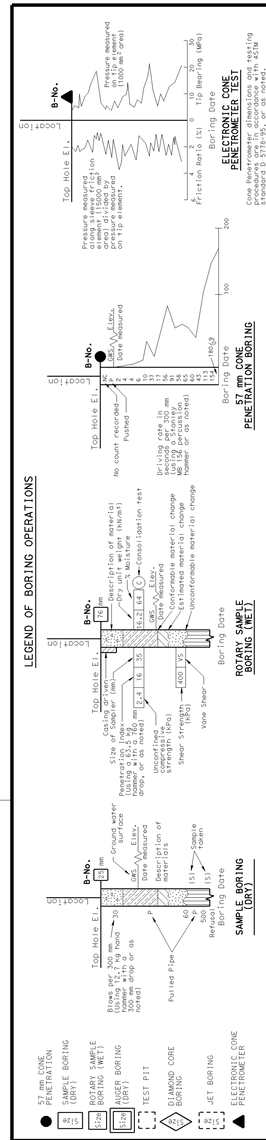

LEGEND OF EARTH MATERIALS

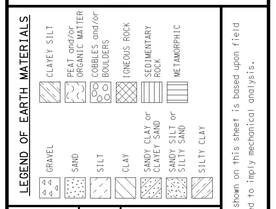

NOTE: Classification of earth material as shown on this sheet is based upon field inspection and is not to be construed to imply mechanical analysis.

CONSISTENCY CLASSIFICATION FOR SOILS

According to the Standard Penetration Test

SPT N-Value (Blows/0.3m)	Granular	SPT N-Value (Blows/0.3m)	Cohesive
0-4	Very Loose	<2	Very Soft
5-10	Loose	2-4	Soft
11-30	Medium Dense	5-8	Firm
31-50	Dense	9-15	Stiff
>50	Very Dense	16-30	Very stiff
		>30	Hard

OGS CIVIL LOG OF TEST BORINGS SHEET (METRIC) (REV. 4/04)

Caltrans Metric

GEOTECHNICAL SERVICES	
DRAWN BY	F. Nguyen 9/08
CHECKED BY	B. Bertucci

FIELD INVESTIGATION BY: B. Bertucci, C. Kark

STATE OF CALIFORNIA DEPARTMENT OF TRANSPORTATION

DIVISION OF ENGINEERING SERVICES STRUCTURE DESIGN — DESIGN BRANCH

BRIDGE NO. 53E0127
KILOMETER POST 46.1

SOUTH APPROACH SIDEWALK & RETAINING WALL

LOG OF TEST BORINGS

ALL DIMENSIONS ARE IN METERS UNLESS OTHERWISE SHOWN

ORIGINAL SCALE IN MILLIMETERS FOR REDUCED PLANS 0 10 20 30 40 50 60 70 80 90 100

CU 07
EA 121841

DISREGARD PRINTS BEARING EARLIER REVISION DATES

REVISION DATES (PRELIMINARY STAGE ONLY) 09-04-08 09-19-08

SHEET 31 OF 31

FILE => 53e0127-z-1tb01.dgn

USERNAME => tripierce DATE PLOTTED => 15-JUN-2009 TIME PLOTTED => 08:24

DIST	COUNTY	ROUTE	KILOMETER POST TOTAL PROJECT	SHEET No	TOTAL SHEETS
07	LA	5	42.8/47.3	1031	1073

Andrew P. Rittenhouse 12-05-08
REGISTERED CIVIL ENGINEER DATE

6-8-09
PLANS APPROVAL DATE

REGISTERED PROFESSIONAL ENGINEER Andrew P. Rittenhouse No. 61006 Exp. 12-31-10 CIVIL STATE OF CALIFORNIA

The State of California or its officers or agents shall not be responsible for the accuracy or completeness of electronic copies of this plan sheet.

Note:

1. Distance of North Approach Ramp from ℄ Route 5 is shown not to scale.
2. For curve data, see "Curve Data Table" on "GENERAL PLAN NO.2" sheet.
3. For "Section A-A", "Section B-B", "Section C-C", "Section D-D", "SECTION E-E" and "SECTION F-F", see "GENERAL PLAN 2 OF 4", "GENERAL PLAN 3 OF 4" and "GENERAL PLAN 4 OF 4" sheets.
4. For MSE Wall alignment information, see "RETAINING WALL "C" LAYOUT 1 OF 3", "RETAINING WALL "C" LAYOUT 2 OF 3", "RETAINING WALL "D" LAYOUT 1 OF 2, and "RETAINING WALL "E" LAYOUT 1 OF 2" sheets.
5. For Chain Link Railing and Handrail layout, see "FENCE AND HANDRAIL LAYOUT 1 OF 3" sheet.

QUANTITIES

EARTH RETAINING STRUCTURE (MECHANICALLY STABILIZED EARTH WALL)	1 575	m^2
STRUCTURAL CONCRETE, BARRIER SLAB	215	m^3
MINOR CONCRETE (GUTTER)	1	m^3
MINOR CONCRETE (SIDEWALK)	175	m^3
CHAIN LINK RAILING (TYPE 3L)	271	m
PIPE HANDRAILING (POST TYPE)	77	m
CONCRETE BARRIER (TYPE 742 MODIFIED)	180	m

Legend:

Indicates Electrolier and Pullbox location. (Not all locations shown, see "Road Plans".

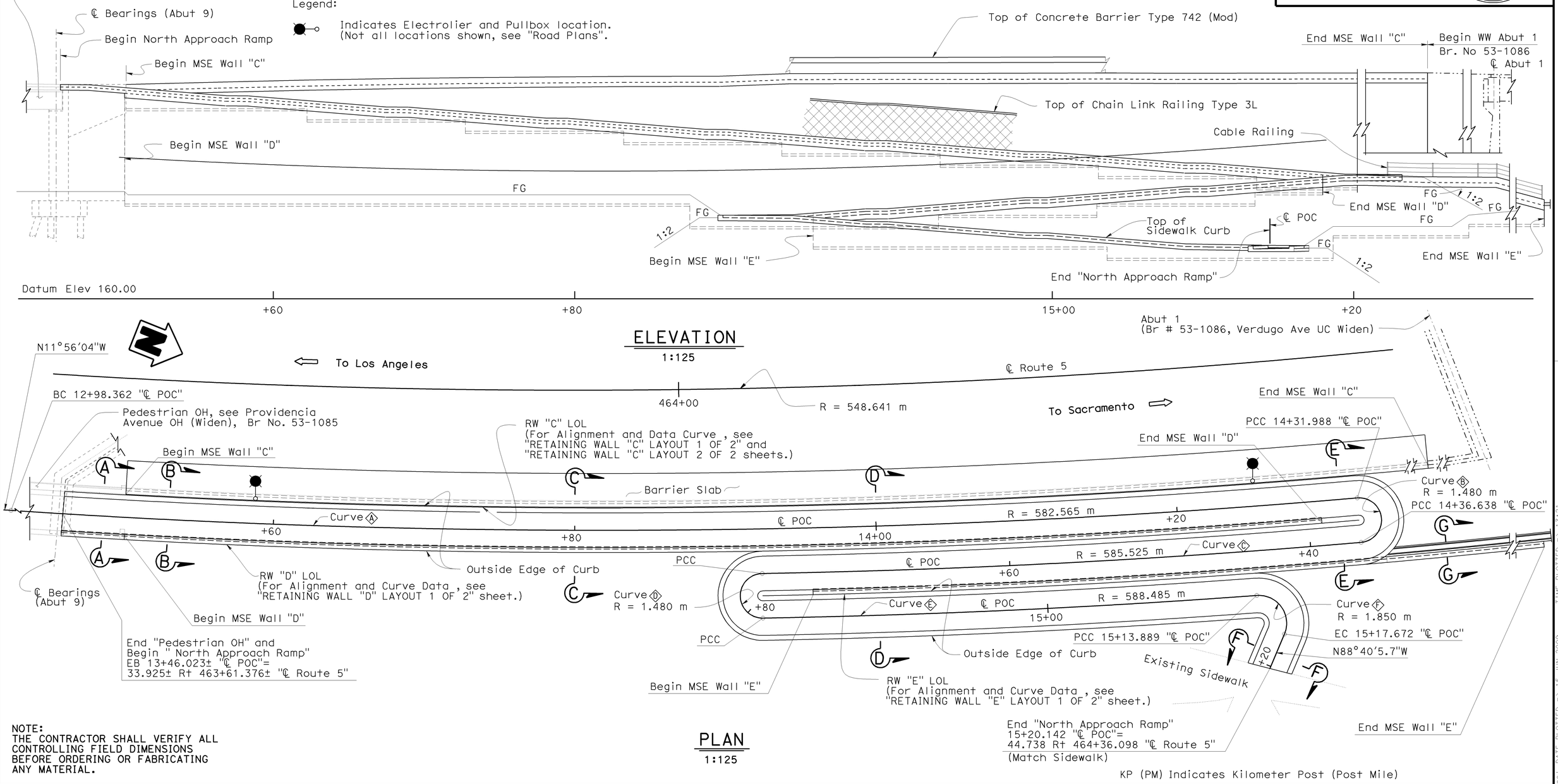

NOTE:
THE CONTRACTOR SHALL VERIFY ALL CONTROLLING FIELD DIMENSIONS BEFORE ORDERING OR FABRICATING ANY MATERIAL.

KP (PM) Indicates Kilometer Post (Post Mile)

Caltrans Metric

Traci Menard
DESIGN ENGINEER

	BY	CHECKED
DESIGN	G. Galo	R. Novik
DETAILS	S. Cholda	R. Novik
QUANTITIES	A. Logus	D. Kubochi

LOAD & RESISTANCE FACTOR DESIGN — LIVE LOADING: HL93 W/"LOW-BOY"; PERMIT DESIGN VEHICLE

	BY	CHECKED
LAYOUT	G. Galo	R. Novik
SPECIFICATIONS	L. Yang	PLANS AND SPECS COMPARED A. Rittenhouse

ALL DIMENSIONS ARE IN METERS UNLESS OTHERWISE SHOWN

ORIGINAL SCALE IN MILLIMETERS FOR REDUCED PLANS 0 10 20 30 40 50 60 70 80 90 100

STATE OF CALIFORNIA
DEPARTMENT OF TRANSPORTATION

DIVISION OF ENGINEERING SERVICES
STRUCTURE DESIGN
DESIGN BRANCH 15

CU 07
EA 121841

BRIDGE NO. 53E0128
KP (PM) 46.3(28.8)

NORTH APPROACH RAMP & RETAINING WALLS
GENERAL PLAN 1 OF 4

DISREGARD PRINTS BEARING EARLIER REVISION DATES

REVISION DATES: 12-14-07 12-14-08 01-16-09 01-26-09 2-20-09 4-28-09 5-01-09 5-14-09 12-14-09

SHEET 1 OF 41

FILE => 53e0128-a-gp01.dgn

STRUCTURES DESIGN GENERAL PLAN SHEET (METRIC) (REV.07-24-06)

USERNAME => trmikes1 DATE PLOTTED => 15-JUN-2009 TIME PLOTTED => 13:21

DIST	COUNTY	ROUTE	KILOMETER POST TOTAL PROJECT	SHEET No	TOTAL SHEETS
07	LA	5	42.8/47.3	1032	1073

Andrew Rittenhouse 12-05-08
REGISTERED CIVIL ENGINEER DATE

6-8-09
PLANS APPROVAL DATE

REGISTERED PROFESSIONAL ENGINEER
Andrew P. Rittenhouse
No. 61006
Exp. 12-31-10
CIVIL
STATE OF CALIFORNIA

The State of California or its officers or agents shall not be responsible for the accuracy or completeness of electronic copies of this plan sheet.

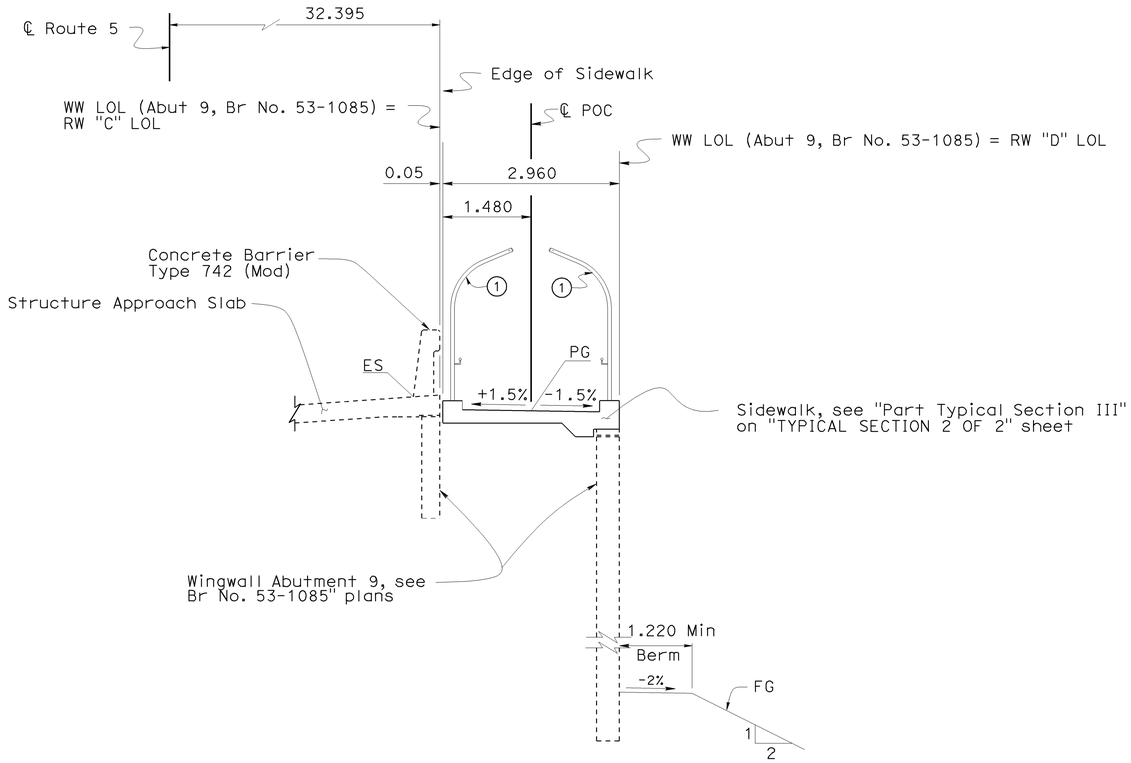

SECTION A-A

1:50

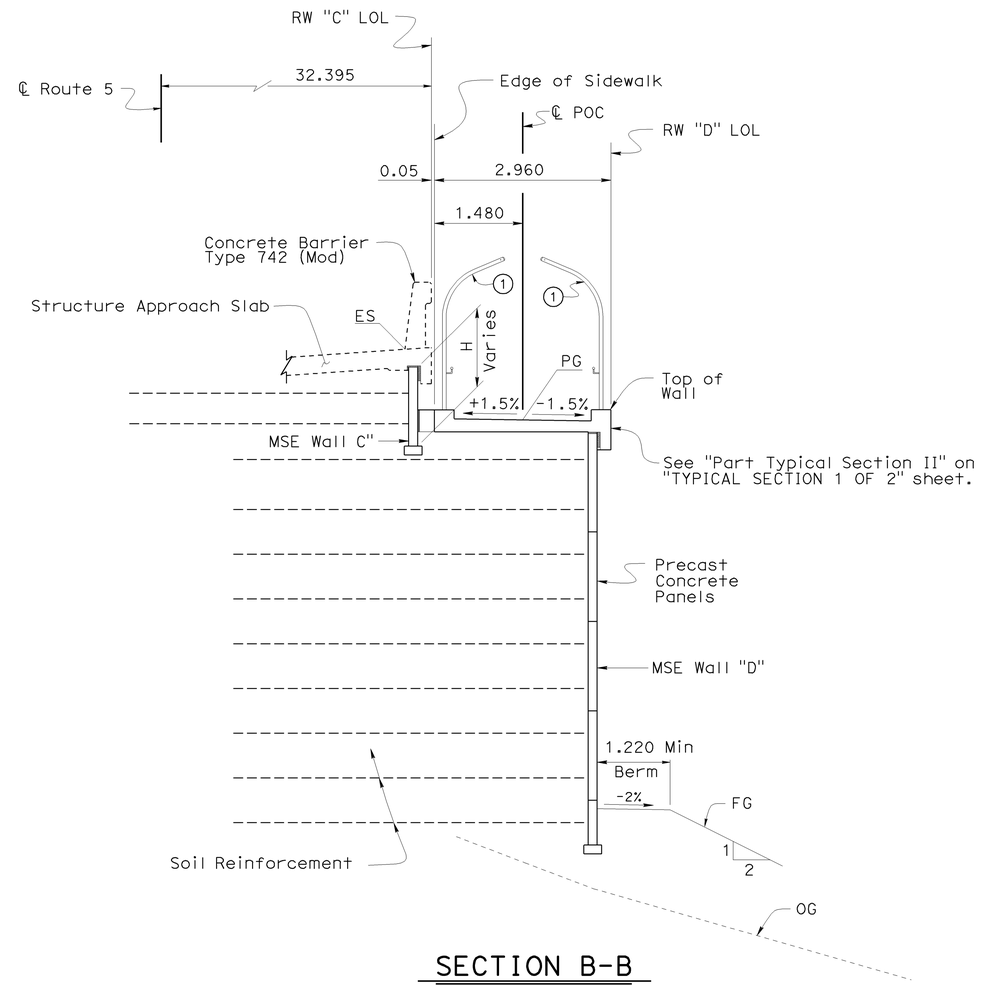

SECTION B-B

1:50

CURVE DATA TABLE

Curve A	Curve B	Curve C	Curve D	Curve E	Curve F
R= 582.565 m Δ= 13°8'32" T= 67.107 m L= 133.625 m	R= 1.480 m Δ= 180°0'0" T= N/A L= 4.650 m	R= 585.525 m Δ= 3°53'41" T= 19.909 m L= 39.802 m	R= 1.480 m Δ= 180°0'0" T= N/A L= 4.650 m	R= 588.485 m Δ= 3°11'36" T= 16.404 m L= 32.799 m	R= 1.850 m Δ= 117°9'55" T= 3.029 m L= 3.783 m

Note:

(1) Chain Link Railing Type 3L. For limits, see "FENCE & HANDRAIL LAYOUT 1 OF 3" sheet.

NOTE:
THE CONTRACTOR SHALL VERIFY ALL CONTROLLING FIELD DIMENSIONS BEFORE ORDERING OR FABRICATING ANY MATERIAL.

KP (PM) Indicates Kilometer Post (Post Mile)

Caltrans Metric

Traci Menard
DESIGN ENGINEER

	BY	CHECKED
DESIGN	G. Galo	R. Novik
DETAILS	S. Cholda	R. Novik
QUANTITIES	A. Logus	D. Kubochi

LOAD & RESISTANCE FACTOR DESIGN — LIVE LOADING: HL93 W/"LOW-BOY"; PERMIT DESIGN VEHICLE

	BY	CHECKED
LAYOUT	G. Galo	R. Novik
SPECIFICATIONS	L. Yang	PLANS AND SPECS COMPARED A. Rittenhouse

STATE OF CALIFORNIA
DEPARTMENT OF TRANSPORTATION

DIVISION OF ENGINEERING SERVICES
STRUCTURE DESIGN
DESIGN BRANCH 15

BRIDGE NO. 53E0128
KP (PM) 46.3(28.8)

NORTH APPROACH RAMP & RETAINING WALLS
GENERAL PLAN 2 OF 4

ALL DIMENSIONS ARE IN METERS UNLESS OTHERWISE SHOWN

ORIGINAL SCALE IN MILLIMETERS FOR REDUCED PLANS 0 10 20 30 40 50 60 70 80 90 100

CU 07
EA 121841

DISREGARD PRINTS BEARING EARLIER REVISION DATES

REVISION DATES: 12-14-07 01-12-09 01-16-09 05-13-08 08-28-08 10-09-08 10-10-08 11-20-08 12-10-08 12-24-08

SHEET 2 OF 41

FILE => 53e0128-a-gp02.dgn

STRUCTURES DESIGN GENERAL PLAN SHEET (METRIC) (REV.07-24-06)

USERNAME => ttpierce DATE PLOTTED => 15-JUN-2009 TIME PLOTTED => 08:25

DIST	COUNTY	ROUTE	KILOMETER POST TOTAL PROJECT	SHEET No	TOTAL SHEETS
07	LA	5	42.8/47.3	1033	1073

Andrew Rittenhouse 12-05-08
REGISTERED CIVIL ENGINEER DATE

6-8-09
PLANS APPROVAL DATE

The State of California or its officers or agents shall not be responsible for the accuracy or completeness of electronic copies of this plan sheet.

REGISTERED PROFESSIONAL ENGINEER
Andrew P. Rittenhouse
No. 61006
Exp. 12-31-10
CIVIL
STATE OF CALIFORNIA

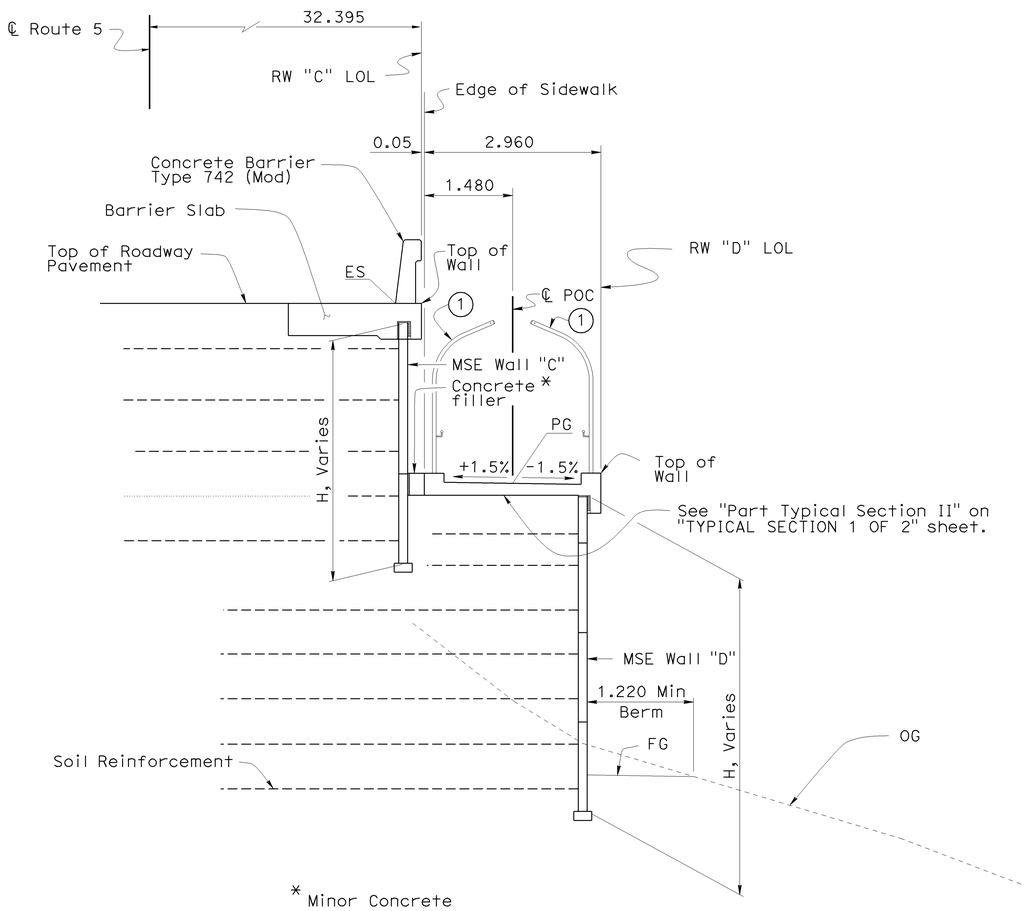

SECTION C-C

1:50

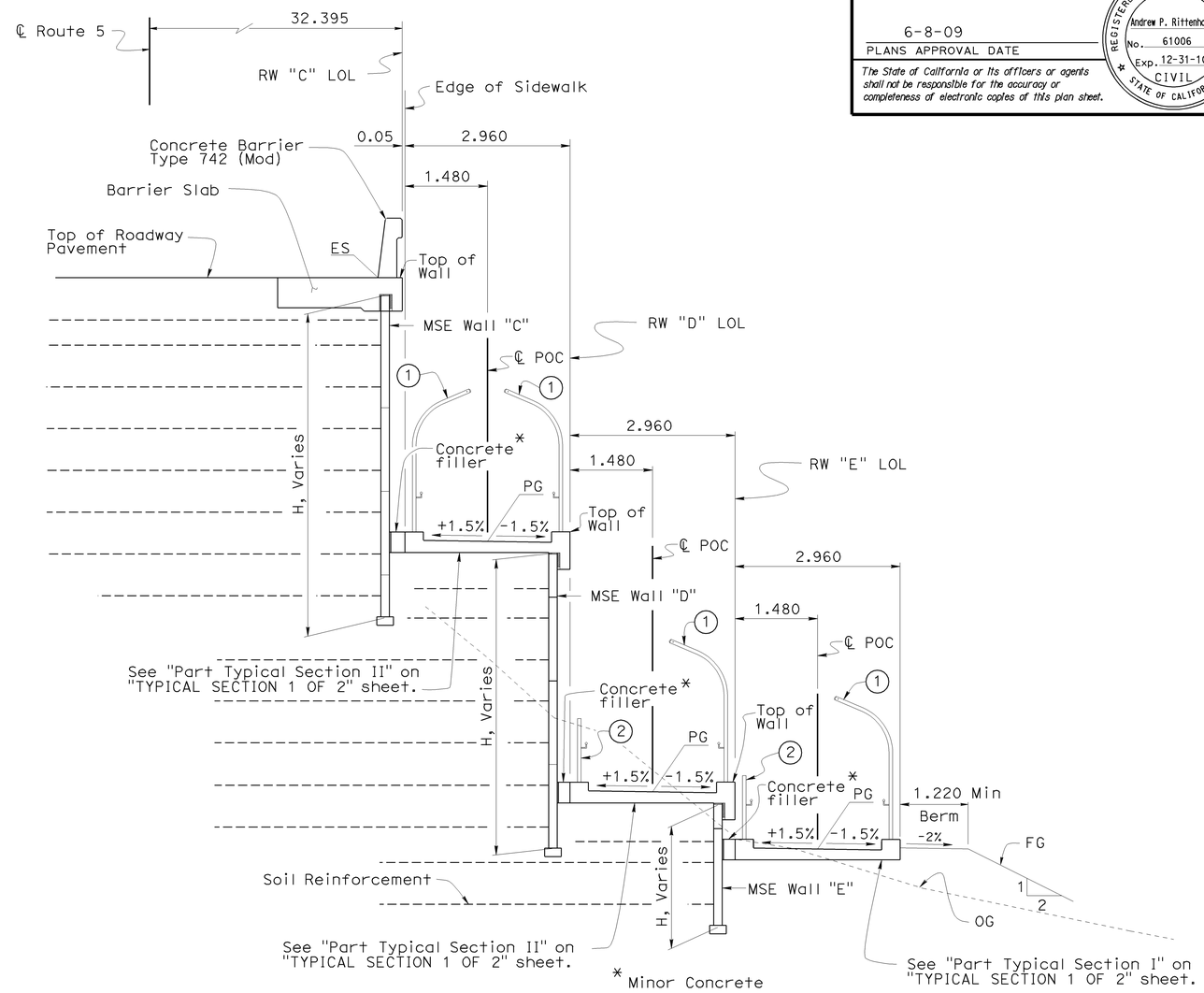

SECTION D-D

1:50

Notes:

1. Chain Link Railing Type 3L. For limits, see "FENCE & HANDRAIL LAYOUT 1 OF 3" sheet.
2. Pipe Handrailing, Post Type. For limits, see "FENCE & HANDRAIL LAYOUT 1 OF 3" sheet.

NOTE:
THE CONTRACTOR SHALL VERIFY ALL CONTROLLING FIELD DIMENSIONS BEFORE ORDERING OR FABRICATING ANY MATERIAL.

KP (PM) Indicates Kilometer Post (Post Mile)

Caltrans Metric

Traci Menard
DESIGN ENGINEER

	BY	CHECKED
DESIGN	G. Galo	R. Novik
DETAILS	S. Cholda	R. Novik
QUANTITIES	A. Logus	D. Kubochi

LOAD & RESISTANCE FACTOR DESIGN — LIVE LOADING: HL93 W/"LOW-BOY"; PERMIT DESIGN VEHICLE

	BY	CHECKED
LAYOUT	G. Galo	R. Novik
SPECIFICATIONS	L. Yang	PLANS AND SPECS COMPARED A. Rittenhouse

ALL DIMENSIONS ARE IN METERS UNLESS OTHERWISE SHOWN

ORIGINAL SCALE IN MILLIMETERS FOR REDUCED PLANS 0 10 20 30 40 50 60 70 80 90 100

STATE OF CALIFORNIA
DEPARTMENT OF TRANSPORTATION

DIVISION OF ENGINEERING SERVICES
STRUCTURE DESIGN
DESIGN BRANCH 15

CU 07
EA 121841

BRIDGE NO. 53E0128
KP (PM) 46.3(28.8)

NORTH APPROACH RAMP & RETAINING WALLS
GENERAL PLAN 3 OF 4

DISREGARD PRINTS BEARING EARLIER REVISION DATES

REVISION DATES: 12-11-07 01-16-09 3-30-09 08-25-08 10-10-08 11-18-08 11-20-08 12-10-08 12-24-08

SHEET 3 OF 41

FILE => 53e0128-a-gp03.dgn

STRUCTURES DESIGN GENERAL PLAN SHEET (METRIC) (REV.07-24-06)

USERNAME => rtpierce DATE PLOTTED => 15-JUN-2009 TIME PLOTTED => 08:25

DIST	COUNTY	ROUTE	KILOMETER POST TOTAL PROJECT	SHEET No	TOTAL SHEETS
07	LA	5	42.8/47.3	1034	1073

Andrew Rittenhouse 12-05-08
REGISTERED CIVIL ENGINEER DATE

6-8-09
PLANS APPROVAL DATE

REGISTERED PROFESSIONAL ENGINEER Andrew P. Rittenhouse No. 61006 Exp. 12-31-10 CIVIL STATE OF CALIFORNIA

The State of California or its officers or agents shall not be responsible for the accuracy or completeness of electronic copies of this plan sheet.

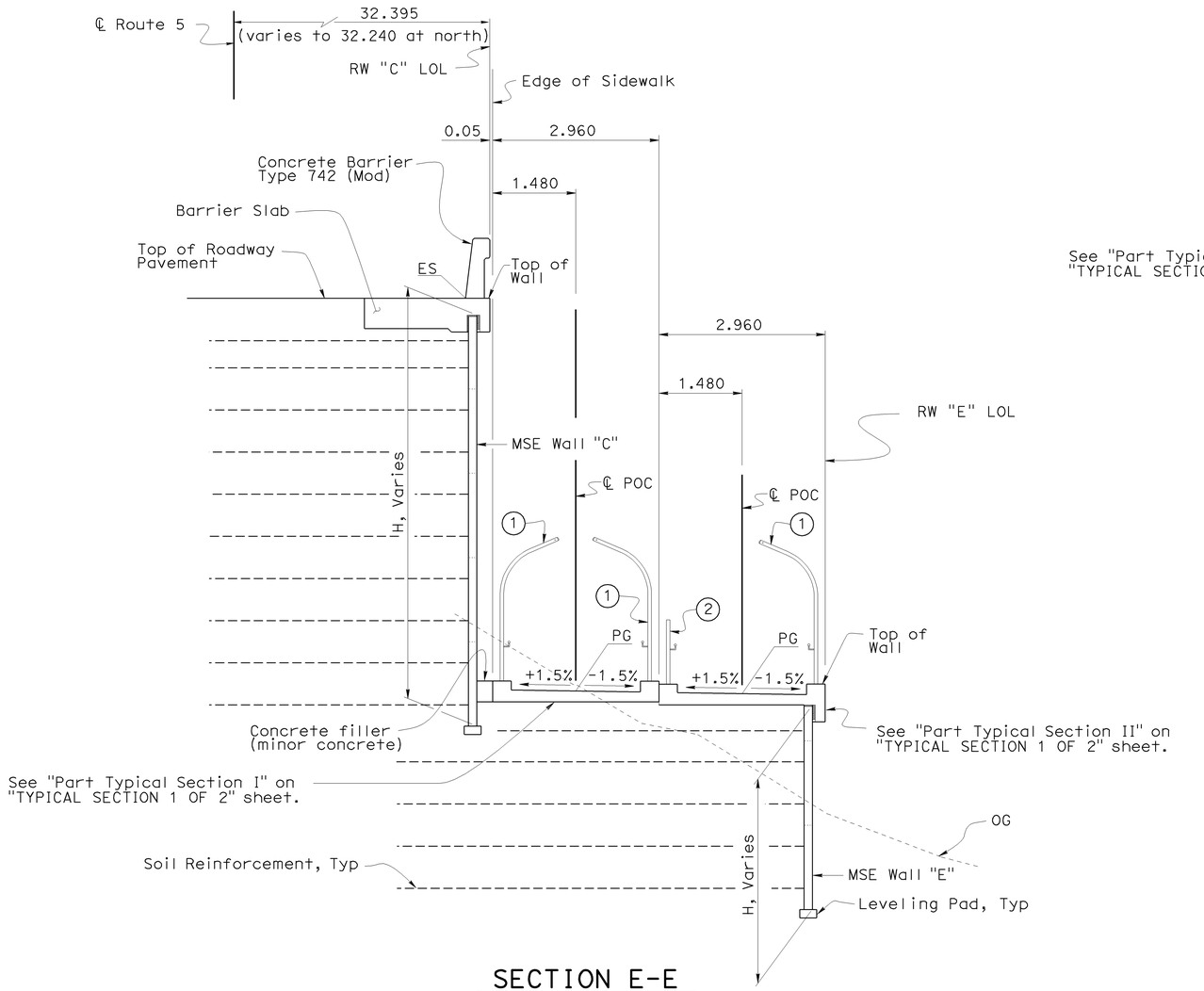

SECTION E-E
1:50

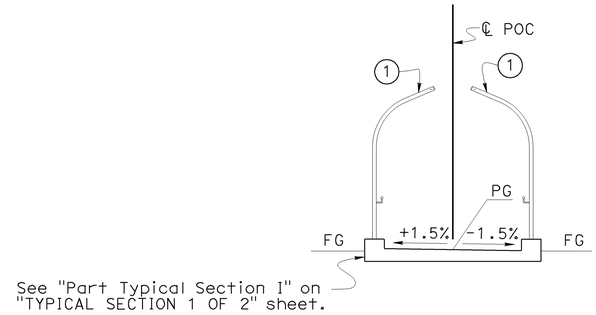

SECTION F-F
1:50

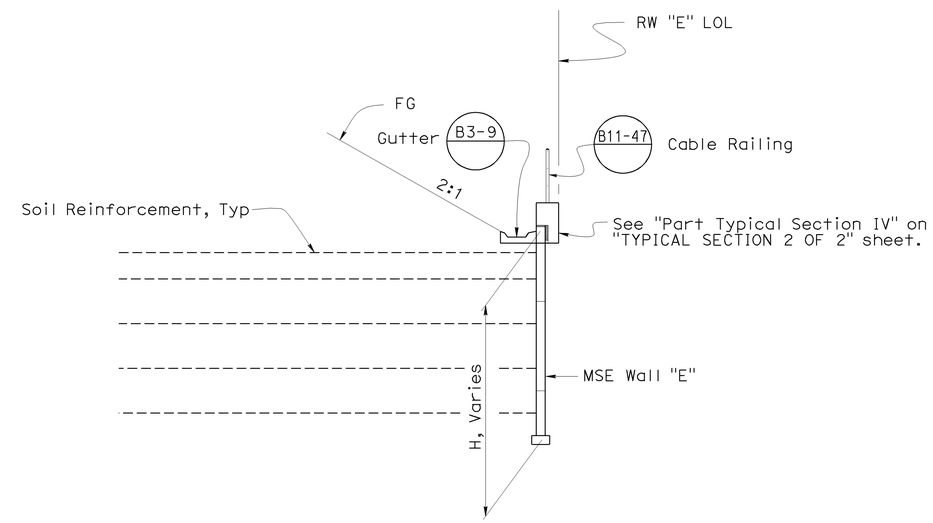

SECTION G-G
1:50

NOTE:
THE CONTRACTOR SHALL VERIFY ALL CONTROLLING FIELD DIMENSIONS BEFORE ORDERING OR FABRICATING ANY MATERIAL.

Notes:

1. Chain Link Railing Type 3L. For limits, see "FENCE & HANDRAIL LAYOUT 1 OF 3" sheet.
2. Pipe Handrailing, Post Type. For limits, see "FENCE & HANDRAIL LAYOUT 1 OF 3" sheet.

KP (PM) Indicates Kilometer Post (Post Mile)

Caltrans Metric

Traci Menard
DESIGN ENGINEER

	BY	CHECKED
DESIGN	G. Galo	R. Novik
DETAILS	S. Cholda	R. Novik
QUANTITIES	A. Logus	D. Kubochi

LOAD & RESISTANCE FACTOR DESIGN — LIVE LOADING: HL93 W/"LOW-BOY"; PERMIT DESIGN VEHICLE
LAYOUT — BY G. Galo — CHECKED R. Novik
SPECIFICATIONS — BY L. Yang — PLANS AND SPECS COMPARED A. Rittehouse

STATE OF CALIFORNIA
DEPARTMENT OF TRANSPORTATION

DIVISION OF ENGINEERING SERVICES
STRUCTURE DESIGN
DESIGN BRANCH 15

BRIDGE NO. 53E0128
KP (PM) 46.3(28.8)

NORTH APPROACH RAMP & RETAINING WALLS
GENERAL PLAN 4 OF 4

ALL DIMENSIONS ARE IN METERS UNLESS OTHERWISE SHOWN

ORIGINAL SCALE IN MILLIMETERS FOR REDUCED PLANS 0 10 20 30 40 50 60 70 80 90 100

CU 07
EA 121841

DISREGARD PRINTS BEARING EARLIER REVISION DATES → 12-14-07 01-15-09 3-30-09 08-28-09 10-16-09 11-16-08 11-20-08 12-16-08 01-12-09

SHEET 4 OF 41

FILE => 53e0128-g-gp04.dgn

STRUCTURES DESIGN GENERAL PLAN SHEET (METRIC) (REV.07-24-06)

USERNAME => trpierce DATE PLOTTED => 15-JUN-2009 TIME PLOTTED => 08:25

DIST	COUNTY	ROUTE	KILOMETER POST TOTAL PROJECT	SHEET No	TOTAL SHEETS
07	LA	5	42.8/47.3	1035	1073

Andrew Rittenhouse 12-05-08
REGISTERED CIVIL ENGINEER DATE

6-8-09
PLANS APPROVAL DATE

REGISTERED PROFESSIONAL ENGINEER
Andrew P. Rittenhouse
No. 61006
Exp. 12-31-10
CIVIL
STATE OF CALIFORNIA

The State of California or its officers or agents shall not be responsible for the accuracy or completeness of electronic copies of this plan sheet.

INDEX TO PLANS

SHEET NO.	TITLE
1.	GENERAL PLAN 1 OF 4
2.	GENERAL PLAN 2 OF 4
3.	GENERAL PLAN 3 OF 4
4.	GENERAL PLAN 4 OF 4
5.	INDEX TO PLANS
6.	SIDEWALK LAYOUT 1 OF 3
7.	SIDEWALK LAYOUT 2 OF 3
8.	SIDEWALK LAYOUT 3 OF 3
9.	SIDEWALK DETAILS
10.	RETAINING WALL "C" LAYOUT 1 OF 3
11.	RETAINING WALL "C" LAYOUT 2 OF 3
12.	RETAINING WALL "C" LAYOUT 3 OF 3
13.	RETAINING WALL "D" LAYOUT 1 OF 2
14.	RETAINING WALL" D" LAYOUT 2 OF 2
15.	RETAINING WALL "E" LAYOUT 1 OF 2
16.	RETAINING WALL "E" LAYOUT 2 OF 2
17.	TYPICAL SECTION 1 OF 2
18.	TYPICAL SECTION 2 OF 2
19.	DRAINAGE DETAILS 1 OF 4
20.	DRAINAGE DETAILS 2 OF 4
21.	DRAINAGE DETAILS 3 OF 4
22.	DRAINAGE DETAILS 4 OF 4
23.	PANEL DETAILS 1 OF 7
24.	PANEL DETAILS 2 OF 7
25.	PANEL DETAILS 3 OF 7
26.	PANEL DETAILS 4 OF 7
27.	PANEL DETAILS 5 OF 7
28.	PANEL DETAILS 6 OF 7
29.	PANEL DETAILS 7 OF 7
30.	MISCELLANEOUS DETAILS 1 OF 4
31.	MISCELLANEOUS DETAILS 2 OF 4
32.	MISCELLANEOUS DETAILS 3 OF 4
33.	MISCELLANEOUS DETAILS 4 OF 4
34.	FENCE & HANDRAIL LAYOUT NO.1
35.	FENCE & HANDRAIL LAYOUT NO.2
36.	FENCE & HANDRAIL LAYOUT NO.3
37.	HANDRAIL DETAILS
38.	CHAIN LINK RAILING TYPE 3L
39.	ARCHITECTURAL TREATMENT DETAILS
40.	LOG OF TEST BORINGS 1 OF 2
41.	LOG OF TEST BORINGS 1 OF 2

STANDARD PLANS DATED JULY 2004

A10A	ACRONYMS AND ABBREVIATIONS (A-L)
A10B	ACRONYMS AND ABBREVIATIONS (M-Z)
RSP P1	JOINTED PLAIN CONCRETE PAVEMENT
RSP P10	CONCRETE PAVEMENT-DOWEL BAR DETAILS
B3-9	RETAINING WALL DETAILS NO.2
B11-7	CHAIN LINK RAILING
B11-47	CABLE RAILING
B11-57	CONCRETE BARRIER, TYPE 742
D102	UNDERDRAINS
RSP ES-7P	ELECTRICAL SYSTEMS (PEDESTRIAN BARRICADES)

STANDARD PLAN SHEET NO.

DETAIL NO.

Note:
1. For General Notes see "PANEL DETAILS 4 OF 7" sheet.

Caltrans Metric

ALL DIMENSIONS ARE IN MILLIMETERS UNLESS OTHERWISE SHOWN

ORIGINAL SCALE IN MILLIMETERS FOR REDUCED PLANS 0 10 20 30 40 50 60 70 80 90 100

	BY	CHECKED
DESIGN	G. Galo	R. Novik
DETAILS	S. Cholda	R. Novik
QUANTITIES	A. Logus	D. Kubochi

STATE OF CALIFORNIA
DEPARTMENT OF TRANSPORTATION

DIVISION OF ENGINEERING SERVICES
STRUCTURE DESIGN
DESIGN BRANCH 15

CU 07
EA 121841

BRIDGE NO. 53E0128
KILOMETER POST 46.3

NORTH APPROACH RAMP & RETAINING WALLS
INDEX TO PLANS

DISREGARD PRINTS BEARING EARLIER REVISION DATES

REVISION DATES: 8-30-08, 9-23-08, 9-29-08, 11-26-08, 12-12-08, 01-15-09, 01-16-09, 02-19-09, 3-19-09

SHEET 5 OF 41

FILE => 53e0128-a-itp.dgn

STRUCTURES DESIGN DETAIL SHEET (METRIC) (REV.03-17-04)

USERNAME => trpierce DATE PLOTTED => 15-JUN-2009 TIME PLOTTED => 08:25

DIST	COUNTY	ROUTE	KILOMETER POST TOTAL PROJECT	SHEET No	TOTAL SHEETS
07	LA	5	42.8/47.3	1036	1073

Andrew Rittenhouse 12-05-08
REGISTERED CIVIL ENGINEER DATE

6-8-09
PLANS APPROVAL DATE

The State of California or its officers or agents shall not be responsible for the accuracy or completeness of electronic copies of this plan sheet.

REGISTERED PROFESSIONAL ENGINEER
Andrew P. Rittenhouse
No. 61006
Exp. 12-31-10
CIVIL
STATE OF CALIFORNIA

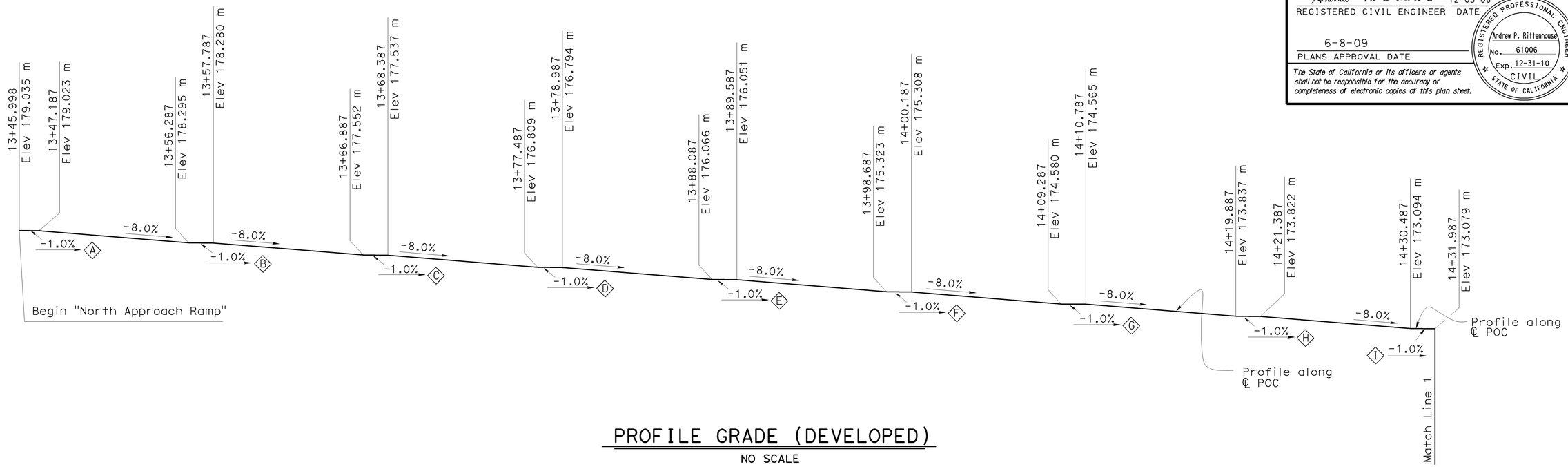

PROFILE GRADE (DEVELOPED)

NO SCALE

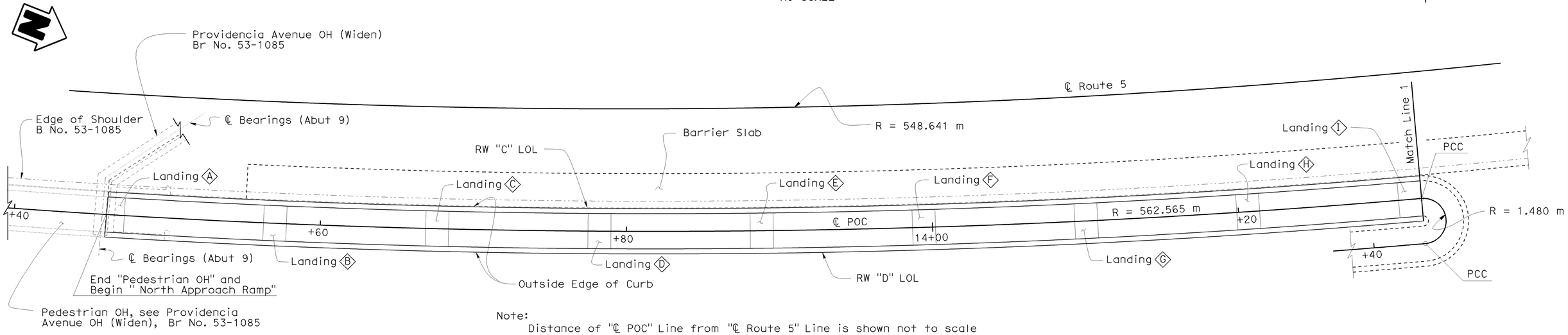

Note:
Distance of "℄ POC" Line from "℄ Route 5" Line is shown not to scale

PLAN

1:125

NOTE:
THE CONTRACTOR SHALL VERIFY ALL CONTROLLING FIELD DIMENSIONS BEFORE ORDERING OR FABRICATING ANY MATERIAL.

Caltrans Metric

	BY	CHECKED
DESIGN	G. Galo	R. Novik
DETAILS	S. Cholda	R. Novik
QUANTITIES	A. Logus	D. Kubochi

STATE OF CALIFORNIA
DEPARTMENT OF TRANSPORTATION

DIVISION OF ENGINEERING SERVICES
STRUCTURE DESIGN
DESIGN BRANCH 15

BRIDGE NO. 53E0128
KILOMETER POST 46.3

NORTH APPROACH RAMP & RETAINING WALLS
SIDEWALK LAYOUT 1 OF 3

ALL DIMENSIONS ARE IN MILLIMETERS UNLESS OTHERWISE SHOWN

ORIGINAL SCALE IN MILLIMETERS FOR REDUCED PLANS 0 10 20 30 40 50 60 70 80 90 100

CU 07
EA 121841

DISREGARD PRINTS BEARING EARLIER REVISION DATES

REVISION DATES: 12-14-07 01-25-08 04-09-08 04-18-08 8-30-08 11-19-08 11-20-08 12-12-08 01-12-09

SHEET 6 OF 41

FILE => 53e0128-f-sl001.dgn

STRUCTURES DESIGN DETAIL SHEET (METRIC) (REV.03-17-04)

USERNAME => trpierce DATE PLOTTED => 15-JUN-2009 TIME PLOTTED => 08:25

DIST	COUNTY	ROUTE	KILOMETER POST TOTAL PROJECT	SHEET No	TOTAL SHEETS
07	LA	5	42.8/47.3	1037	1073

Andrew Rittenhouse 12-05-08
REGISTERED CIVIL ENGINEER DATE

6-8-09
PLANS APPROVAL DATE

The State of California or its officers or agents shall not be responsible for the accuracy or completeness of electronic copies of this plan sheet.

REGISTERED PROFESSIONAL ENGINEER
Andrew P. Rittenhouse
No. 61006
Exp. 12-31-10
CIVIL
STATE OF CALIFORNIA

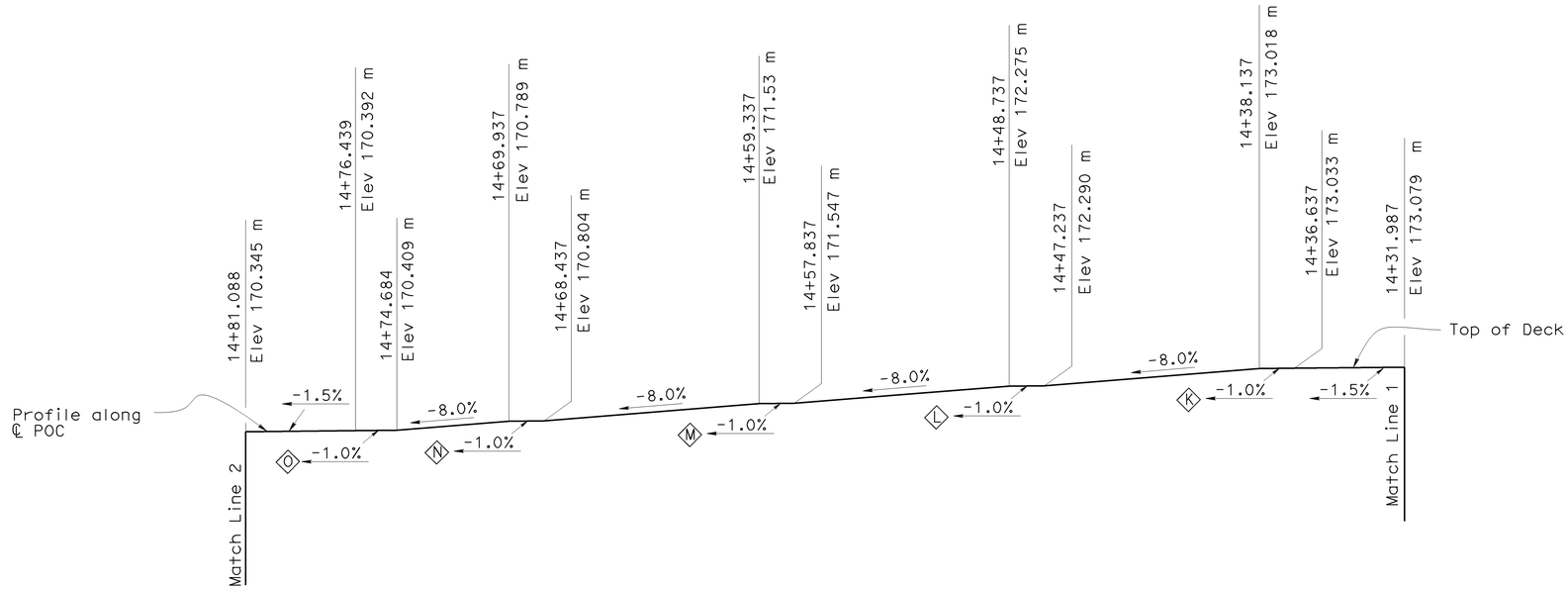

PROFILE GRADE (DEVELOPED)

NO SCALE

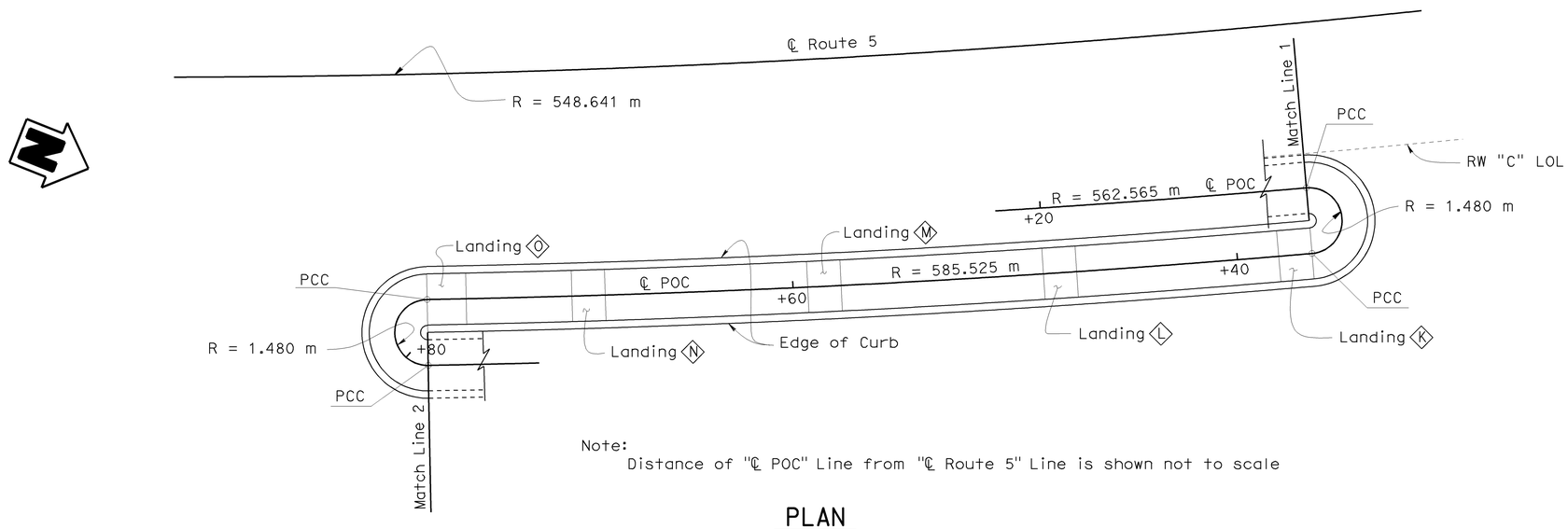

Note:
Distance of "℄ POC" Line from "℄ Route 5" Line is shown not to scale

PLAN

1:125

NOTE:
THE CONTRACTOR SHALL VERIFY ALL CONTROLLING FIELD DIMENSIONS BEFORE ORDERING OR FABRICATING ANY MATERIAL.

	BY	CHECKED
DESIGN	G. Galo	R. Novik
DETAILS	S. Cholda	R. Novik
QUANTITIES	A. Logus	D. Kubochi

STATE OF CALIFORNIA
DEPARTMENT OF TRANSPORTATION

DIVISION OF ENGINEERING SERVICES
STRUCTURE DESIGN
DESIGN BRANCH 15

BRIDGE NO. 53E0128
KILOMETER POST 46.3

NORTH APPROACH RAMP & RETAINING WALLS
SIDEWALK LAYOUT 2 OF 3

ALL DIMENSIONS ARE IN MILLIMETERS UNLESS OTHERWISE SHOWN

ORIGINAL SCALE IN MILLIMETERS FOR REDUCED PLANS 0 10 20 30 40 50 60 70 80 90 100

CU 07
EA 121841

DISREGARD PRINTS BEARING EARLIER REVISION DATES

REVISION DATES: 12-11-07 04-25-08 8-30-08 11-19-08 11-28-08 12-12-08 12-24-08

SHEET 7 OF 41

FILE => 53e0128-f-slo02.dgn

STRUCTURES DESIGN DETAIL SHEET (METRIC) (REV.03-17-04)

USERNAME => trpierce DATE PLOTTED => 15-JUN-2009 TIME PLOTTED => 08:25

DIST	COUNTY	ROUTE	KILOMETER POST TOTAL PROJECT	SHEET No	TOTAL SHEETS
07	LA	5	42.8/47.3	1038	1073

Andrew Rittenhouse 12-05-08
REGISTERED CIVIL ENGINEER DATE

6-8-09
PLANS APPROVAL DATE

REGISTERED PROFESSIONAL ENGINEER
Andrew P. Rittenhouse
No. 61006
Exp. 12-31-10
CIVIL
STATE OF CALIFORNIA

The State of California or its officers or agents shall not be responsible for the accuracy or completeness of electronic copies of this plan sheet.

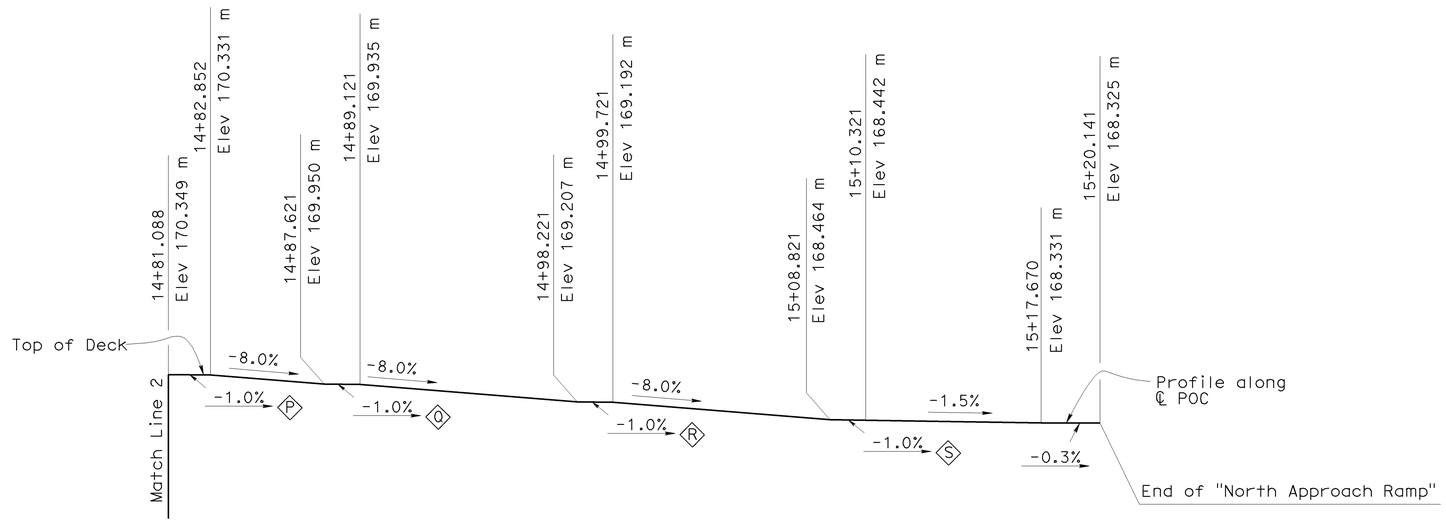

PROFILE GRADE (DEVELOPED)

NO SCALE

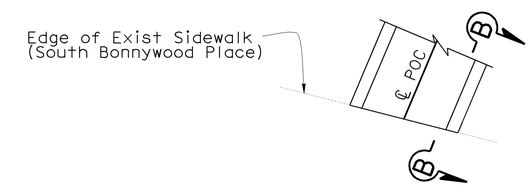

DETAIL "A"

1:80

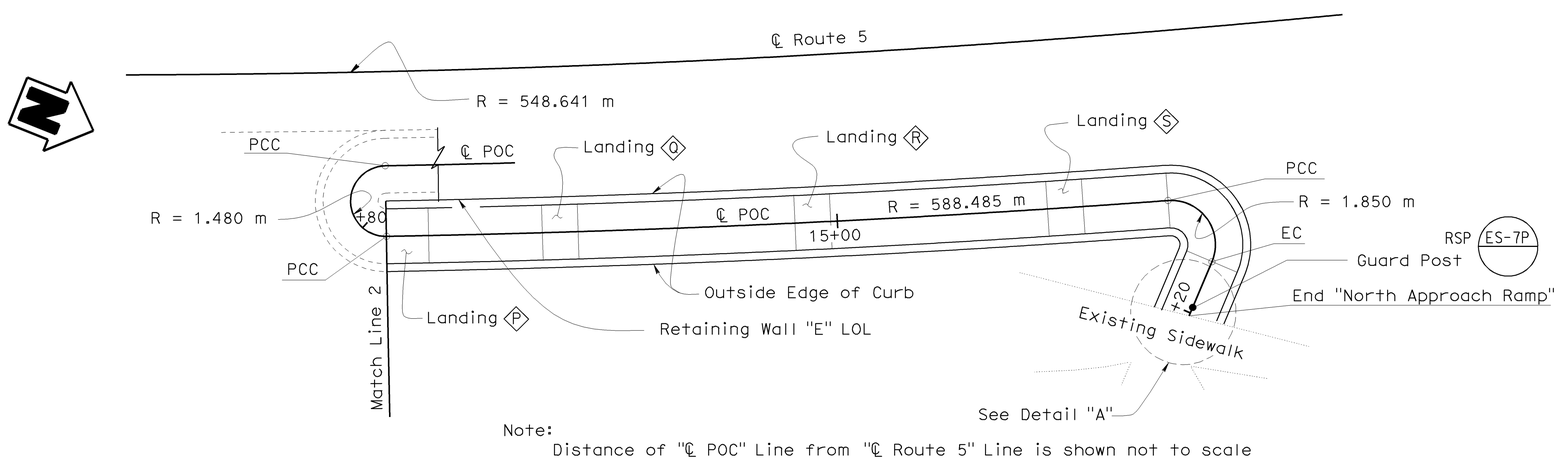

Note:
Distance of "℄ POC" Line from "℄ Route 5" Line is shown not to scale

PLAN

1:125

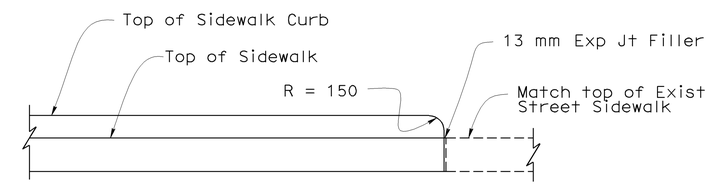

SECTION B-B

1:20

NOTE:
THE CONTRACTOR SHALL VERIFY ALL CONTROLLING FIELD DIMENSIONS BEFORE ORDERING OR FABRICATING ANY MATERIAL.

Caltrans Metric

	BY	CHECKED
DESIGN	G. Galo	R. Novik
DETAILS	S. Cholda	R. Novik
QUANTITIES	A. Logus	D. Kubochi

STATE OF CALIFORNIA
DEPARTMENT OF TRANSPORTATION

DIVISION OF ENGINEERING SERVICES
STRUCTURE DESIGN
DESIGN BRANCH 15

BRIDGE NO. 53E0128
KILOMETER POST 46.3

NORTH APPROACH RAMP & RETAINING WALLS
SIDEWALK LAYOUT 3 OF 3

ALL DIMENSIONS ARE IN MILLIMETERS UNLESS OTHERWISE SHOWN

ORIGINAL SCALE IN MILLIMETERS FOR REDUCED PLANS 0 10 20 30 40 50 60 70 80 90 100

CU 07
EA 121841

DISREGARD PRINTS BEARING EARLIER REVISION DATES

REVISION DATES: 12-11-07 04-25-08 8-30-08 11-18-08 11-20-08 12-12-08 12-24-08 01-12-09 01-16-09 02-19-09

SHEET 8 OF 41

FILE => 53e0128-f-slo03.dgn

STRUCTURES DESIGN DETAIL SHEET (METRIC) (REV.03-17-04)

USERNAME => trpierce DATE PLOTTED => 15-JUN-2009 TIME PLOTTED => 08:25

DIST	COUNTY	ROUTE	KILOMETER POST TOTAL PROJECT	SHEET No	TOTAL SHEETS
07	LA	5	42.8/47.3	1039	1073

Andrew Rittenhouse 12-05-08
REGISTERED CIVIL ENGINEER DATE

6-8-09
PLANS APPROVAL DATE

REGISTERED PROFESSIONAL ENGINEER
Andrew P. Rittenhouse
No. 61006
Exp. 12-31-10
CIVIL
STATE OF CALIFORNIA

The State of California or its officers or agents shall not be responsible for the accuracy or completeness of electronic copies of this plan sheet.

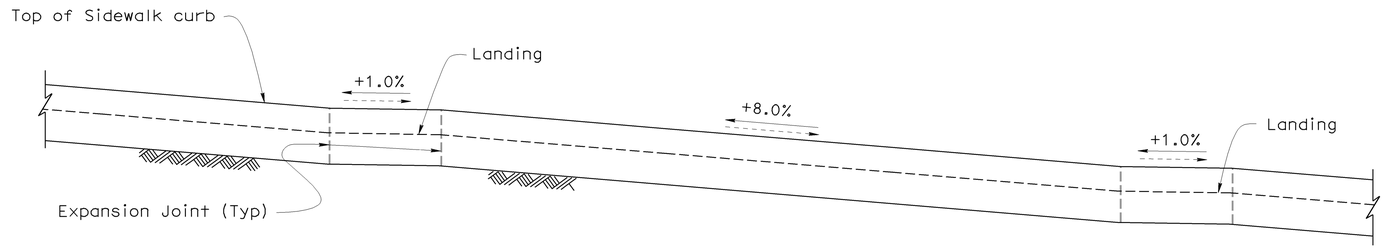

ELEVATION
1:40

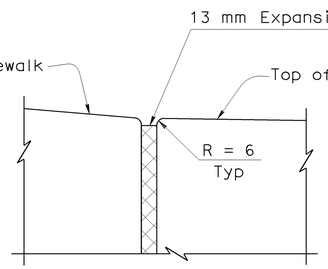

SECTION A-A
1:2.5

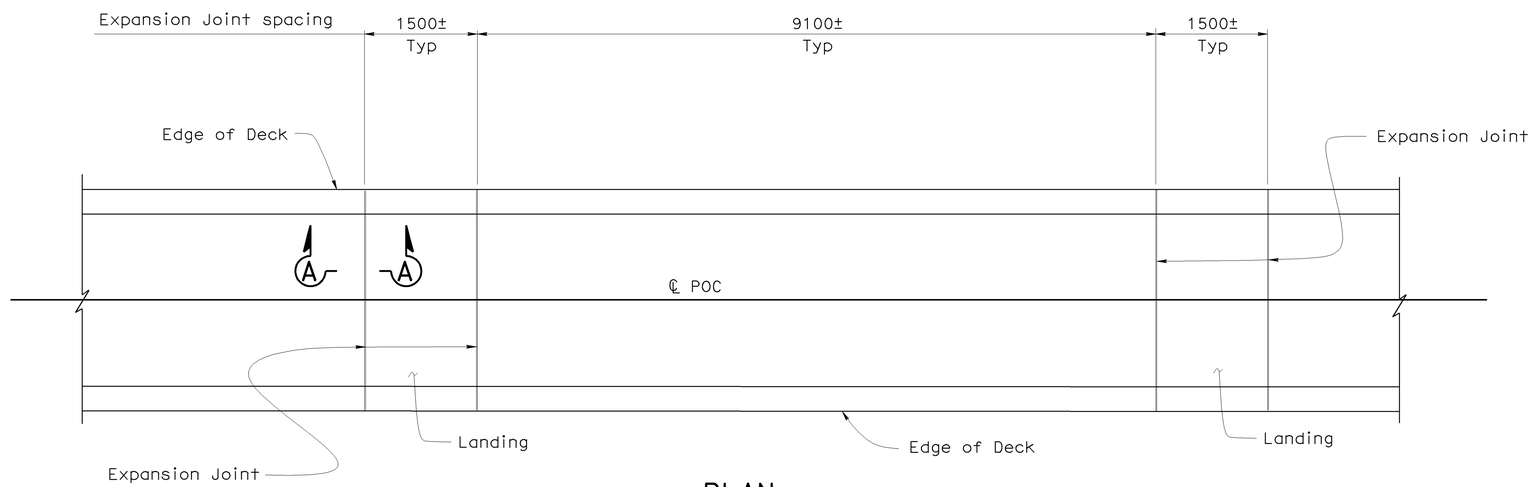

PLAN
1:40

SIDEWALK EXPANSION JOINT

NOTE:
THE CONTRACTOR SHALL VERIFY ALL CONTROLLING FIELD DIMENSIONS BEFORE ORDERING OR FABRICATING ANY MATERIAL.

Caltrans Metric

	BY	CHECKED
DESIGN	G. Galo	R. Novik
DETAILS	S. Cholda	R. Novik
QUANTITIES	A. Logus	D. Kubochi

STATE OF CALIFORNIA
DEPARTMENT OF TRANSPORTATION

DIVISION OF ENGINEERING SERVICES
STRUCTURE DESIGN
DESIGN BRANCH 15

BRIDGE NO. 53E0128
KILOMETER POST 46.3

NORTH APPROACH RAMP & RETAINING WALLS
SIDEWALK DETAILS

ALL DIMENSIONS ARE IN MILLIMETERS UNLESS OTHERWISE SHOWN

ORIGINAL SCALE IN MILLIMETERS FOR REDUCED PLANS 0 10 20 30 40 50 60 70 80 90 100

CU 07
EA 121841

DISREGARD PRINTS BEARING EARLIER REVISION DATES
REVISION DATES: 01-07-08 03-12-08 11-28-08 12-12-08 01-12-09

SHEET 9 OF 41

FILE => 53e0128-f-ssdt.dgn

STRUCTURES DESIGN DETAIL SHEET (METRIC) (REV.03-17-04)

USERNAME => trmartin DATE PLOTTED => 15-JUN-2009 TIME PLOTTED => 08:38

DIST	COUNTY	ROUTE	KILOMETER POST TOTAL PROJECT	SHEET No	TOTAL SHEETS
07	LA	5	42.8/47.3	1040	1073

REGISTERED CIVIL ENGINEER — DATE 12-05-08

6-8-09
PLANS APPROVAL DATE

The State of California or its officers or agents shall not be responsible for the accuracy or completeness of electronic copies of this plan sheet.

REGISTERED PROFESSIONAL ENGINEER — Andrew P. Rittenhouse — No. 61006 — Exp. 12-31-10 — CIVIL — STATE OF CALIFORNIA

LEGEND:

Ⓐ* through Ⓚ* - Indicates Reinforcement Zone, see "RETAINING WALL "C" LAYOUT 3 OF 3" sheet.

** FG = Top of curb @ MSE Wall "C" LOL

Indicates location of inspection wire placement (center of Panel)

Indicates panel type designation. For details, see "PANEL DETAILS 1 OF 7" sheet.

Indicates interval in years from time of construction to time of removal of inspection wire

PANEL LEGEND
NO SCALE

NOTES:
1. Distance of North Approach Ramp from ℄ Route 5 is not to scale.
2. Fence, Railing, Barrier, and Architectural Treatment not shown for clarity.
3. For "Section A-A", see "RETAINING WALL "C" LAYOUT 3 OF 3" sheet.
4. For curve data, see "RETAINING WALL "C" LAYOUT 2 OF 3" sheet.

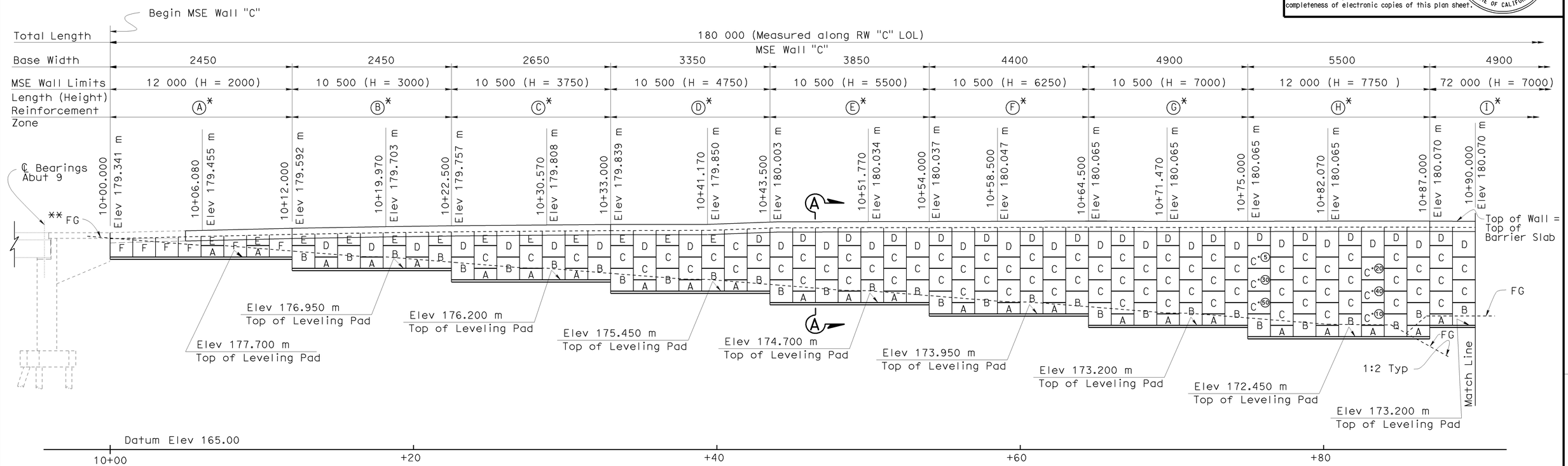

ELEVATION (DEVELOPED)
1:125

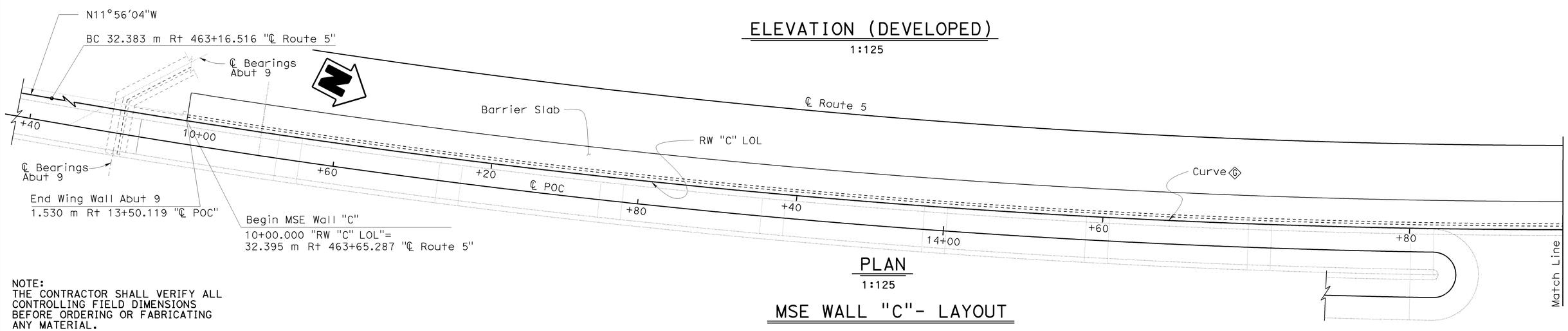

PLAN
1:125

NOTE:
THE CONTRACTOR SHALL VERIFY ALL CONTROLLING FIELD DIMENSIONS BEFORE ORDERING OR FABRICATING ANY MATERIAL.

MSE WALL "C"- LAYOUT

Caltrans Metric

	BY	CHECKED
DESIGN	G. Galo	F. Feng
DETAILS	S. Cholda	F. Feng
QUANTITIES	A. Logus	D. Kubochi

STATE OF CALIFORNIA
DEPARTMENT OF TRANSPORTATION

DIVISION OF ENGINEERING SERVICES
STRUCTURE DESIGN
DESIGN BRANCH 15

BRIDGE NO. 53E0128
KILOMETER POST 46.3

NORTH APPROACH RAMP & RETAINING WALLS
RETAINING WALL "C" LAYOUT 1 OF 3

ALL DIMENSIONS ARE IN MILLIMETERS UNLESS OTHERWISE SHOWN

ORIGINAL SCALE IN MILLIMETERS FOR REDUCED PLANS 0 10 20 30 40 50 60 70 80 90 100

CU 07
EA 121841

DISREGARD PRINTS BEARING EARLIER REVISION DATES

REVISION DATES: 12-14-07 12-24-08 01-12-09 01-16-09 02-19-09 08-30-09 09-09-09 10-09-08 11-20-08 12-14-08

SHEET 10 OF 41

FILE => 53e0128-g-rw_lo01.dgn

STRUCTURES DESIGN DETAIL SHEET (METRIC) (REV.03-17-04)

USERNAME => rrmartin DATE PLOTTED => 15-JUN-2009 TIME PLOTTED => 08:35

DIST	COUNTY	ROUTE	KILOMETER POST TOTAL PROJECT	SHEET No	TOTAL SHEETS
07	LA	5	42.8/47.3	1041	1073

Andrew Rittenhouse 12-05-08
REGISTERED CIVIL ENGINEER DATE

6-8-09
PLANS APPROVAL DATE

REGISTERED PROFESSIONAL ENGINEER
Andrew P. Rittenhouse
No. 61006
Exp. 12-31-10
CIVIL
STATE OF CALIFORNIA

The State of California or its officers or agents shall not be responsible for the accuracy or completeness of electronic copies of this plan sheet.

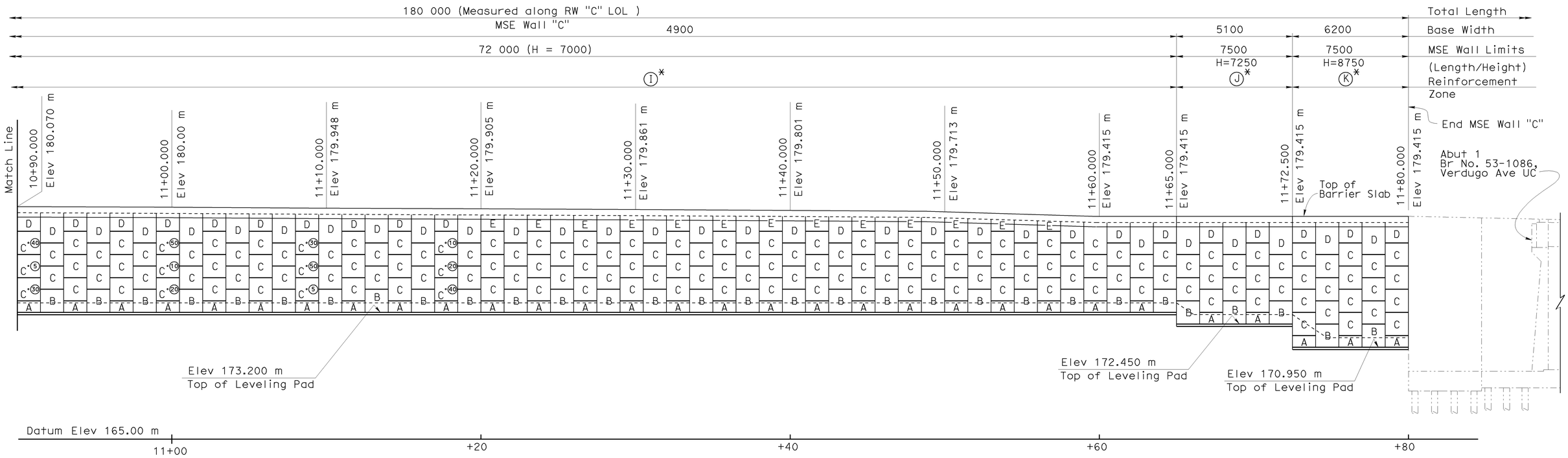

ELEVATION (DEVELOPED)

1:125

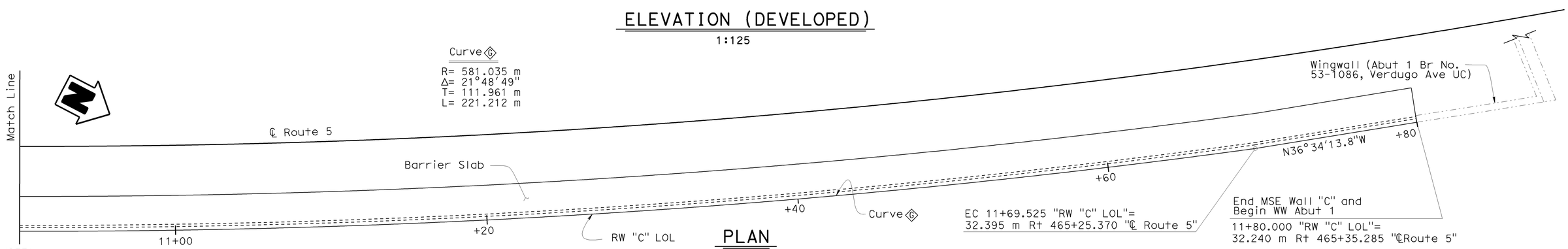

PLAN

1:125

NOTE:
THE CONTRACTOR SHALL VERIFY ALL CONTROLLING FIELD DIMENSIONS BEFORE ORDERING OR FABRICATING ANY MATERIAL.

NOTE:
1. Distance of "℄ POC" Line from "℄ Route 5" Line is shown not to scale

MSE WALL "C"- LAYOUT (CONT)

Caltrans Metric

	BY	CHECKED
DESIGN	G. Galo	F. Feng
DETAILS	S. Cholda	F. Feng
QUANTITIES	A. Logus	D. Kubochi

STATE OF CALIFORNIA
DEPARTMENT OF TRANSPORTATION

DIVISION OF ENGINEERING SERVICES
STRUCTURE DESIGN
DESIGN BRANCH 15

BRIDGE NO. 53E0128
KILOMETER POST 46.3

NORTH APPROACH RAMP & RETAINING WALLS
RETAINING WALL "C" LAYOUT 2 OF 3

ALL DIMENSIONS ARE IN MILLIMETERS UNLESS OTHERWISE SHOWN

ORIGINAL SCALE IN MILLIMETERS FOR REDUCED PLANS 0 10 20 30 40 50 60 70 80 90 100

CU 07
EA 121841

DISREGARD PRINTS BEARING EARLIER REVISION DATES

REVISION DATES: 12-11-07 01-12-09 01-16-09 06-30-08 08-28-08 09-09-08 10-09-08 10-10-08 11-28-08 12-11-08

SHEET 11 OF 41

FILE => 53e0128-g-rw_lo02.dgn

STRUCTURES DESIGN DETAIL SHEET (METRIC) (REV.03-17-04)

USERNAME => trmartin DATE PLOTTED => 15-JUN-2009 TIME PLOTTED => 08:35

DIST	COUNTY	ROUTE	KILOMETER POST TOTAL PROJECT	SHEET No	TOTAL SHEETS
07	LA	5	42.8/47.3	1042	1073

Andrew Rittenhouse 12-05-08
REGISTERED CIVIL ENGINEER DATE

6-8-09
PLANS APPROVAL DATE

REGISTERED PROFESSIONAL ENGINEER Andrew P. Rittenhouse No. 61006 Exp. 12-31-10 CIVIL STATE OF CALIFORNIA

The State of California or its officers or agents shall not be responsible for the accuracy or completeness of electronic copies of this plan sheet.

TABLE

	REINFORCEMENT ZONE					
	Ⓐ	Ⓑ	Ⓒ	Ⓓ	Ⓔ	
Soil Reinforcement (size and spacing)				2-MW71+MW71x230	2-MW71+MW71x230	(Top of wall)
			2-MW71+MW71x230	2-MW71+MW71x300	2-MW71+MW71x300	
			2-MW71+MW71x300	1-MW71+MW71x460	1-MW71+MW71x460	
	2-MW71+MW71x230	3-MW71+MW71x230	1-MW71+MW71x460	1-MW71+MW71x600	2-MW71+MW71x600	(Bottom of wall)

TABLE (CONT)

	REINFORCEMENT ZONE						
	Ⓕ	Ⓖ	Ⓗ	Ⓘ	Ⓙ	Ⓚ	
Soil Reinforcement (size and spacing)	2-MW71+MW71x230						(Top of wall)
	3-MW71+MW71x460	5-MW71+MW71x460	5-MW71+MW71x460	5-MW71+MW71x460	5-MW71+MW71x460	10-MW71+MW71x460	
	3-MW71+MW71x600	4-MW71+MW71x600	5-MW71+MW71x600	4-MW71+MW71x600	5-MW71+MW71x600	2-MW71+MW71x600	(Bottom of wall)

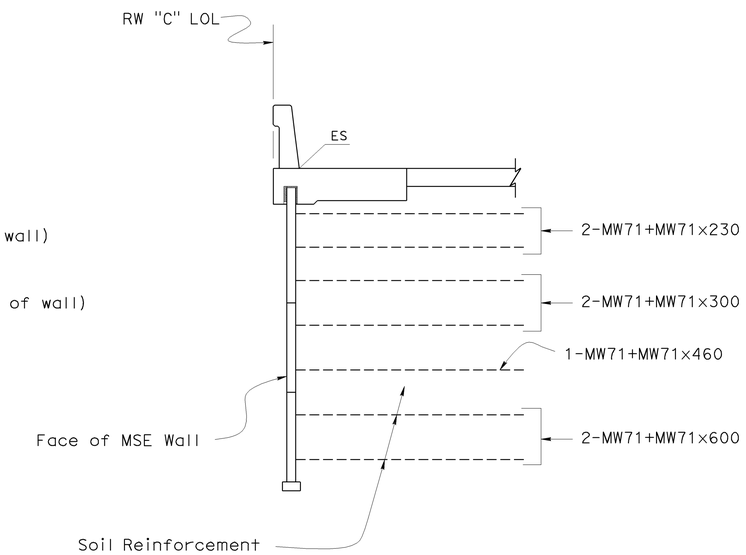

SECTION A-A
(REINFORCEMENT ZONE Ⓔ)
1:50

NOMENCLATURE:

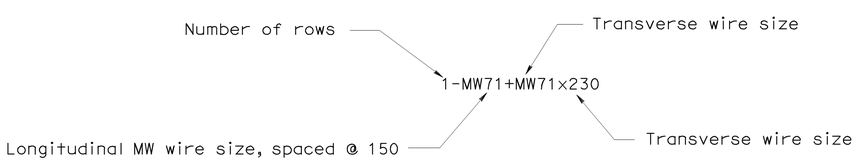

NOTE:

1. Numbers of rows in particular Reinforcement Zone varies. Use mat wire rows accordingly to size and number of panels in column.

NOTE:
THE CONTRACTOR SHALL VERIFY ALL CONTROLLING FIELD DIMENSIONS BEFORE ORDERING OR FABRICATING ANY MATERIAL.

Caltrans Metric

	BY	CHECKED
DESIGN	G. Galo	F. Feng
DETAILS	S. Cholda	F. Feng
QUANTITIES	A. Logus	D. Kubochi

STATE OF CALIFORNIA
DEPARTMENT OF TRANSPORTATION

DIVISION OF ENGINEERING SERVICES
STRUCTURE DESIGN
DESIGN BRANCH 15

BRIDGE NO. 53E0128
KP (PM) 46.3

NORTH APPROACH RAMP & RETAINING WALLS
RETAINING WALL "C" LAYOUT 3 OF 3

ALL DIMENSIONS ARE IN MILLIMETERS UNLESS OTHERWISE SHOWN

ORIGINAL SCALE IN MILLIMETERS FOR REDUCED PLANS 0 10 20 30 40 50 60 70 80 90 100

CU 07
EA 121841

DISREGARD PRINTS BEARING EARLIER REVISION DATES

REVISION DATES: 12-14-07 | 01-20-09 | 07-06-09 | 09-09-09 | 10-06-09 | 10-16-09 | 11-20-09 | 12-14-09 | 12-24-09 | 01-12-09

SHEET 12 OF 41

STRUCTURES DESIGN DETAIL SHEET (METRIC) (REV.03-17-04)

FILE => 53e0128-g-rw_1o03.dgn

USERNAME => trmartin DATE PLOTTED => 15-JUN-2009 TIME PLOTTED => 08:35

DIST	COUNTY	ROUTE	KILOMETER POST TOTAL PROJECT	SHEET No	TOTAL SHEETS
07	LA	5	42.8/47.3	1043	1073

Andrew Rittenhouse 12-05-08
REGISTERED CIVIL ENGINEER DATE

6-8-09
PLANS APPROVAL DATE

REGISTERED PROFESSIONAL ENGINEER Andrew P. Rittenhouse No. 61006 Exp. 12-31-10 CIVIL STATE OF CALIFORNIA

The State of California or its officers or agents shall not be responsible for the accuracy or completeness of electronic copies of this plan sheet.

Indicates location of inspection wire placement (center of Panel)

Indicates panel type designation. For details, see "PANEL DETAILS 1 OF 7" sheet.

Indicates interval in years from time of construction to time of removal of inspection wire

PANEL LEGEND

NO SCALE

NOTES:

1. Distance of North Approach Ramp from ℄ Route 5 is not to scale
2. Fence Railing and Architectural Texture not shown for clarity.
3. For "Section A-A" , see "RETAINING WALL "D" LAYOUT 2 of 2" sheet.
4. Contractor shall consider omitting leveling pad if it interferes with MSE Wall "E" reinforcement.

LEGEND:

Ⓐ* through Ⓓ* - Indicates Reinforcement Zone, see "RETAINING WALL "D" LAYOUT 2 OF 2" sheet.

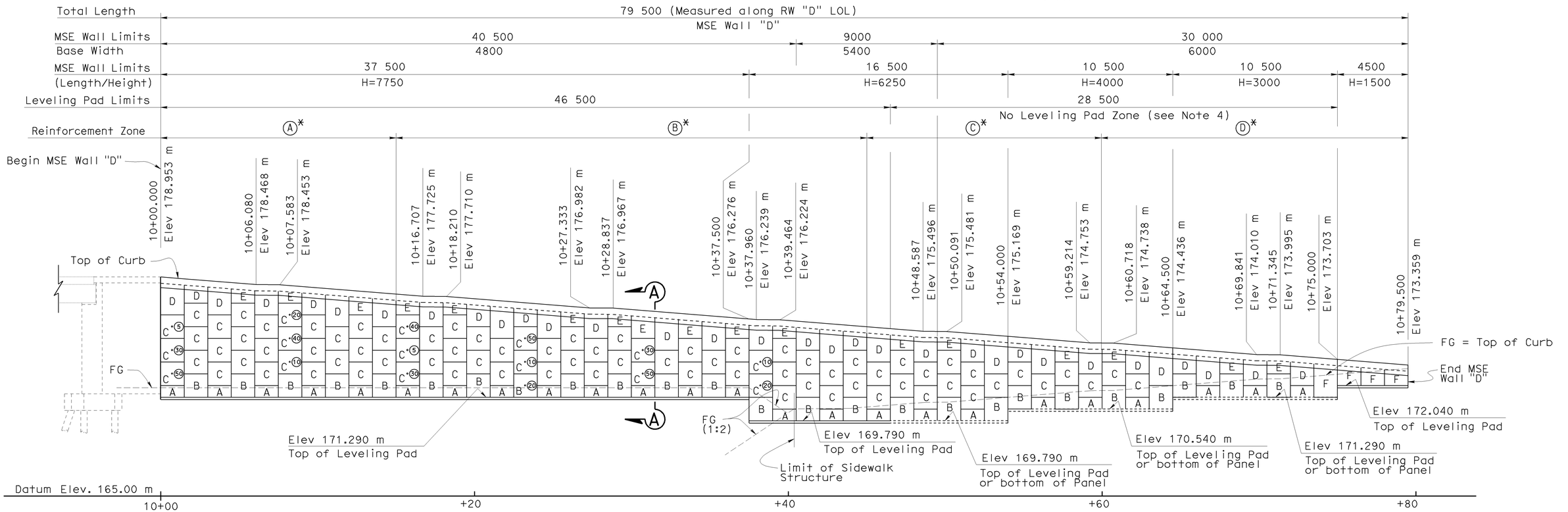

ELEVATION

1:125

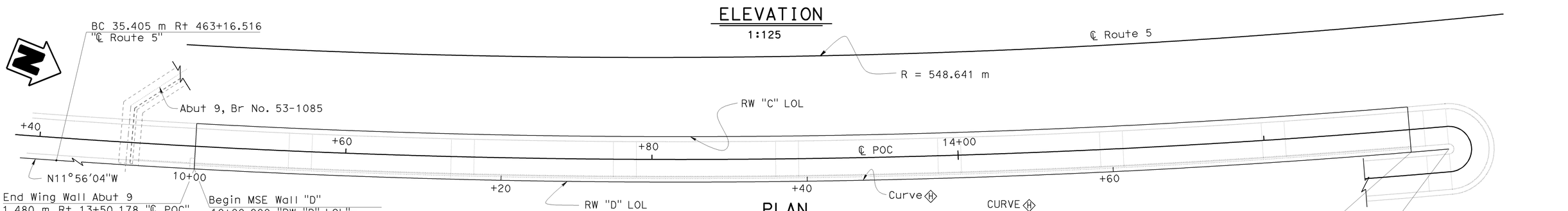

PLAN

1:125

CURVE Ⓗ

R= 584.045 m
Δ= 13°8'45"
T= 67.297 m
L= 134.002 m

NOTE:
THE CONTRACTOR SHALL VERIFY ALL CONTROLLING FIELD DIMENSIONS BEFORE ORDERING OR FABRICATING ANY MATERIAL.

MSE WALL "D"- LAYOUT

	BY	CHECKED
DESIGN	G. Galo	F. Feng
DETAILS	S. Cholda	F. Feng
QUANTITIES	A. Logus	D. Kubochi

STATE OF CALIFORNIA
DEPARTMENT OF TRANSPORTATION

DIVISION OF ENGINEERING SERVICES
STRUCTURE DESIGN
DESIGN BRANCH 15

BRIDGE NO. 53E0128
KILOMETER POST 46.3

NORTH APPROACH RAMP & RETAINING WALLS
RETAINING WALL "D" LAYOUT 1 OF 2

ALL DIMENSIONS ARE IN MILLIMETERS UNLESS OTHERWISE SHOWN

ORIGINAL SCALE IN MILLIMETERS FOR REDUCED PLANS 0 10 20 30 40 50 60 70 80 90 100

CU 07
EA 121841

DISREGARD PRINTS BEARING EARLIER REVISION DATES

REVISION DATES: 12-11-07 01-12-09 01-16-09 06-19-08 08-30-08 09-09-08 10-08-08 11-20-08 12-11-08 12-24-08

SHEET 13 OF 41

FILE => 53e0128-g-rw_lo04.dgn

STRUCTURES DESIGN DETAIL SHEET (METRIC) (REV.03-17-04)

USERNAME => trmorth DATE PLOTTED => 15-JUN-2009 TIME PLOTTED => 08:35

DIST	COUNTY	ROUTE	KILOMETER POST TOTAL PROJECT	SHEET No	TOTAL SHEETS
07	LA	5	42.8/47.3	1044	1073

Andrew Rittenhouse 12-05-08
REGISTERED CIVIL ENGINEER DATE

6-8-09
PLANS APPROVAL DATE

REGISTERED PROFESSIONAL ENGINEER
Andrew P. Rittenhouse
No. 61006
Exp. 12-31-10
CIVIL
STATE OF CALIFORNIA

The State of California or its officers or agents shall not be responsible for the accuracy or completeness of electronic copies of this plan sheet.

TABLE

	REINFORCEMENT ZONE			
	Ⓐ	Ⓑ	Ⓒ	Ⓓ
Soil Reinforcement (size and spacing)	2-MW71+MW71x230 4-MW97+MW71x230 4-MW97+MW71x460	1-MW71+MW71x230 4-MW97+MW71x230 3-MW97+MW71x460	1-MW71+MW71x230 4-MW97+MW71x230 2-MW97+MW71x460	2-MW71+MW71x230 2-MW97+MW71x230

(Top of wall)

(Bottom of wall)

NOMENCLATURE:

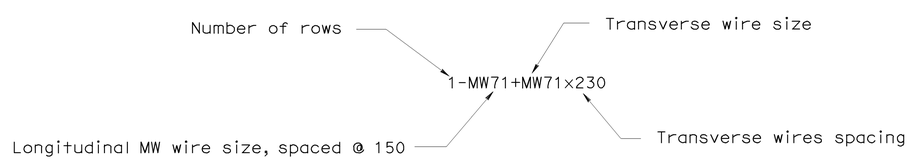

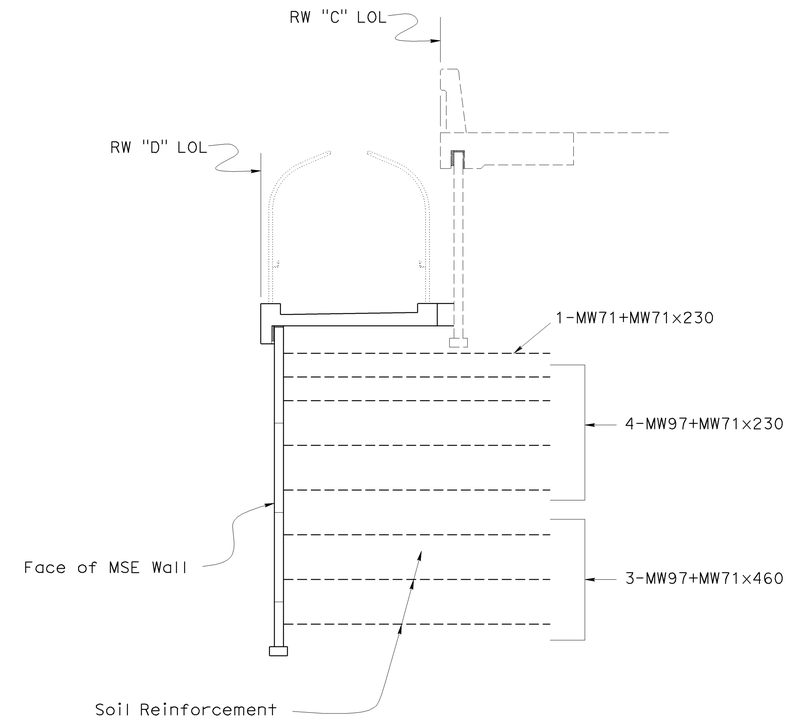

SECTION A-A
(REINFORCEMENT ZONE Ⓑ)
1:50

NOTE:

1. Numbers of rows in particular Reinforcement Zone varies. Use mat wires accordingly to size and number of panels in column.

NOTE:
THE CONTRACTOR SHALL VERIFY ALL CONTROLLING FIELD DIMENSIONS BEFORE ORDERING OR FABRICATING ANY MATERIAL.

Caltrans Metric

	BY	CHECKED
DESIGN	G. Galo	F. Feng
DETAILS	S. Cholda	F. Feng
QUANTITIES	A. Logus	D. Kubochi

STATE OF CALIFORNIA
DEPARTMENT OF TRANSPORTATION

DIVISION OF ENGINEERING SERVICES
STRUCTURE DESIGN
DESIGN BRANCH 15

BRIDGE NO. 53E0128
KP (PM) 46.3

NORTH APPROACH RAMP & RETAINING WALLS
RETAINING WALL "D" LAYOUT 2 OF 2

ALL DIMENSIONS ARE IN MILLIMETERS UNLESS OTHERWISE SHOWN

ORIGINAL SCALE IN MILLIMETERS FOR REDUCED PLANS 0 10 20 30 40 50 60 70 80 90 100

CU 07
EA 121841

DISREGARD PRINTS BEARING EARLIER REVISION DATES

REVISION DATES: 12-11-07 01-04-08 07-08-08 09-09-08 10-06-08 10-10-08 11-20-08 12-11-08 01-12-09 01-20-09

SHEET 14 OF 41

FILE => 53e0128-g-rw_1o05.dgn

STRUCTURES DESIGN DETAIL SHEET (METRIC) (REV.03-17-04)

USERNAME => ttmorth DATE PLOTTED => 15-JUN-2009 TIME PLOTTED => 08:35

DIST	COUNTY	ROUTE	KILOMETER POST TOTAL PROJECT	SHEET No	TOTAL SHEETS
07	LA	5	42.8/47.3	1045	1073

Andrew Rittenhouse 12-05-08
REGISTERED CIVIL ENGINEER DATE

6-8-09
PLANS APPROVAL DATE

REGISTERED PROFESSIONAL ENGINEER Andrew P. Rittenhouse No. 61006 Exp. 12-31-10 CIVIL STATE OF CALIFORNIA

The State of California or its officers or agents shall not be responsible for the accuracy or completeness of electronic copies of this plan sheet.

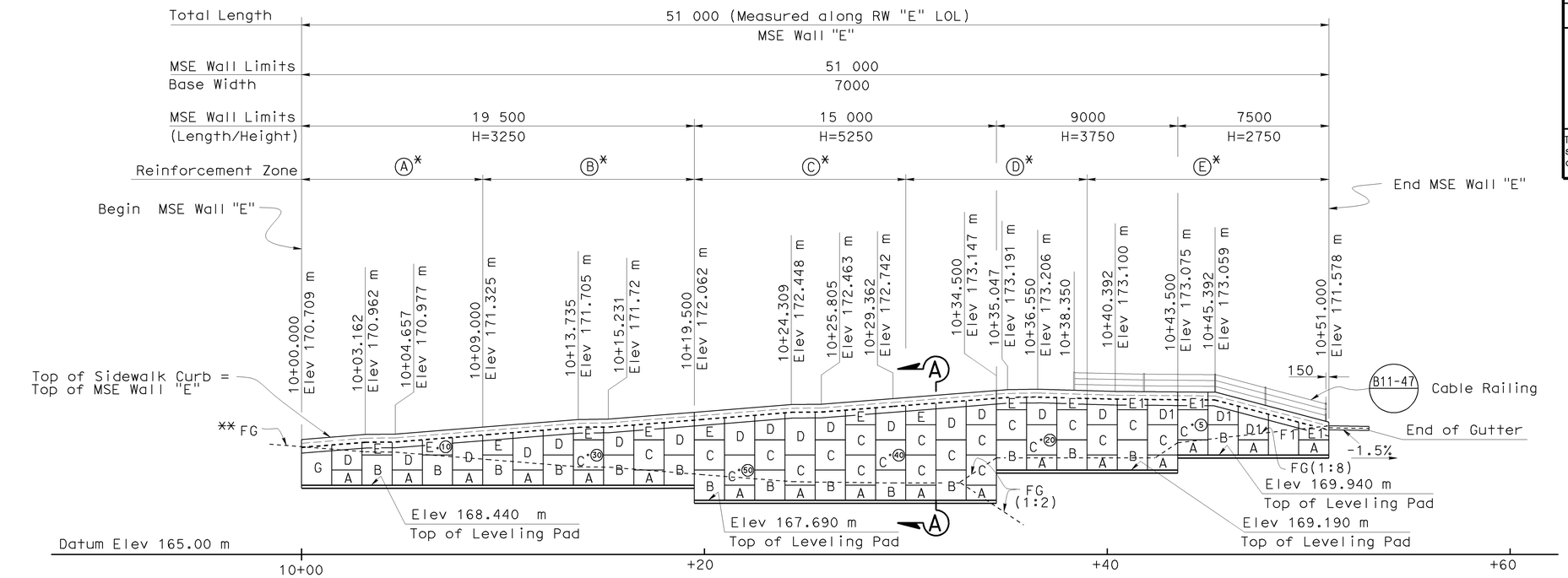

LEGEND:

Ⓐ* through Ⓔ* - Indicates Reinforcement Zone, see "RETAINING WALL "E" LAYOUT 2 OF 2" sheet.

** FG = Top of Sidewalk curb @ MSE Wall "E" LOL

ELEVATION (DEVELOPED)

1:125

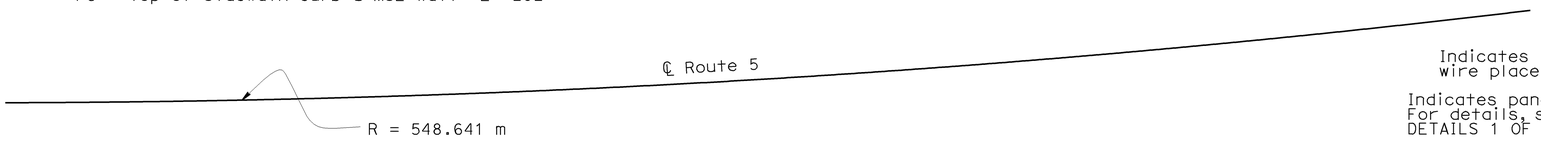

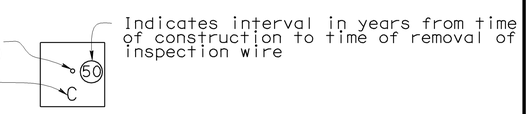

PANEL LEGEND

NO SCALE

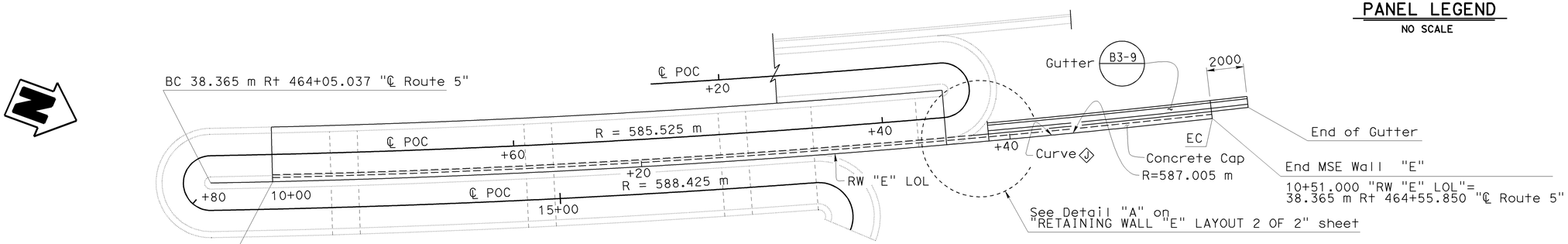

CURVE Ⓙ

R= 587.005 m
Δ= 5°18'19"
T= 27.196 m
L= 54.354 m

PLAN

1:125

MSE WALL "E"- LAYOUT

NOTE:
THE CONTRACTOR SHALL VERIFY ALL CONTROLLING FIELD DIMENSIONS BEFORE ORDERING OR FABRICATING ANY MATERIAL.

NOTES:

1. Distance of North Approach Ramp from ℄ Route 5 is not to scale
2. Fence Railing and Architectural Feature not shown for clarity.
3. For "Section A-A", see "RETAINING WALL "E" LAYOUT 2 OF 2" sheet.

Caltrans Metric

	BY	CHECKED
DESIGN	G. Galo	F. Feng
DETAILS	S. Cholda	F. Feng
QUANTITIES	A. Logus	D. Kubochi

STATE OF CALIFORNIA
DEPARTMENT OF TRANSPORTATION

DIVISION OF ENGINEERING SERVICES
STRUCTURE DESIGN
DESIGN BRANCH 15

BRIDGE NO. 53E0128
KILOMETER POST 46.3

NORTH APPROACH RAMP & RETAINING WALLS
RETAINING WALL "E" LAYOUT 1 OF 2

ALL DIMENSIONS ARE IN MILLIMETERS UNLESS OTHERWISE SHOWN

ORIGINAL SCALE IN MILLIMETERS FOR REDUCED PLANS 0 10 20 30 40 50 60 70 80 90 100

CU 07
EA 121841

DISREGARD PRINTS BEARING EARLIER REVISION DATES

REVISION DATES: 12-11-07 12-14-08 12-23-08 12-24-08 01-12-09 10-09-08 10-10-08 11-05-08 11-20-08 12-11-08

SHEET 15 OF 41

FILE => 53e0128-g-rw_1o06.dgn

STRUCTURES DESIGN DETAIL SHEET (METRIC) (REV.03-17-04)

USERNAME => trmorrin DATE PLOTTED => 15-JUN-2009 TIME PLOTTED => 08:35

DIST	COUNTY	ROUTE	KILOMETER POST TOTAL PROJECT	SHEET No	TOTAL SHEETS
07	LA	5	42.8/47.3	1046	1073

Andrew Rittenhouse 12-05-08
REGISTERED CIVIL ENGINEER DATE

6-8-09
PLANS APPROVAL DATE

REGISTERED PROFESSIONAL ENGINEER Andrew P. Rittenhouse No. 61006 Exp. 12-31-10 CIVIL STATE OF CALIFORNIA

The State of California or its officers or agents shall not be responsible for the accuracy or completeness of electronic copies of this plan sheet.

TABLE

	REINFORCEMENT ZONE					
	Ⓐ	Ⓑ	Ⓒ	Ⓓ	Ⓔ	
Soil Reinforcement (size and spacing)			1-MW71+MW71x230	1-MW71+MW71x230		(Top of wall)
	1-MW71+MW71x230	1-MW71+MW71x230	4-MW97+MW71x230	4-MW97+MW71x230	4-MW97+MW71x230	
	1-MW97+MW71x230	4-MW97+MW71x230	1-MW97+MW71x460	2-MW97+MW71x460	1-MW97+MW71x460	(Bottom of wall)

NOMENCLATURE:

Number of rows — Transverse wire size

1-MW71+MW71x230

Longitudinal MW wire size, spaced @ 150 — Transverse wires spacing

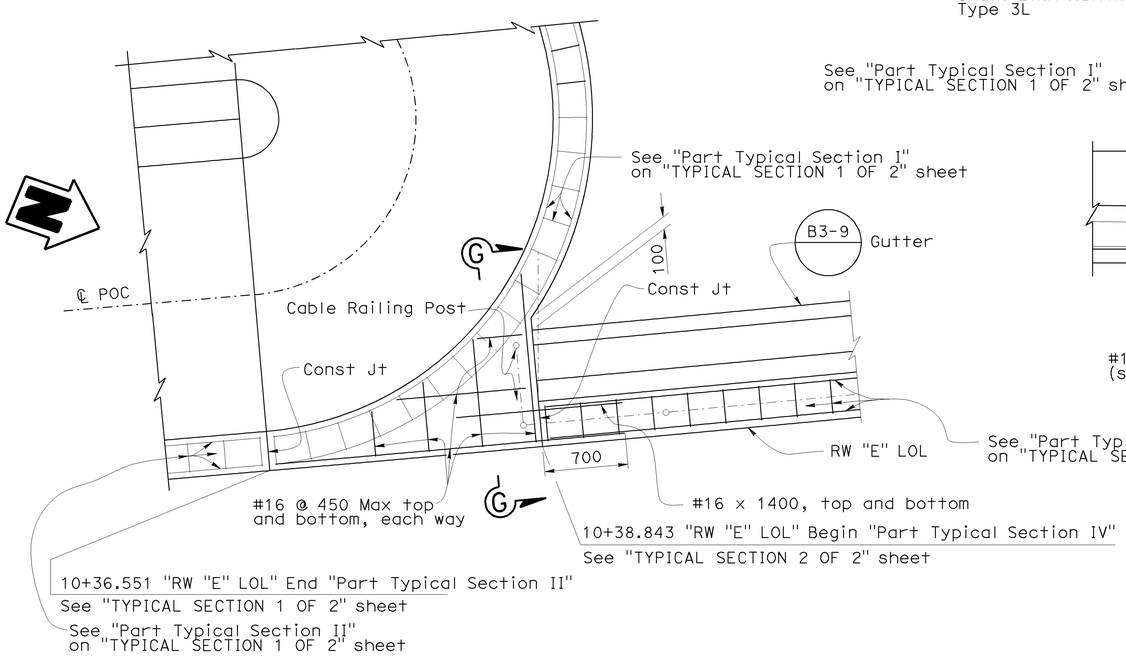

DETAIL "A"
1:25

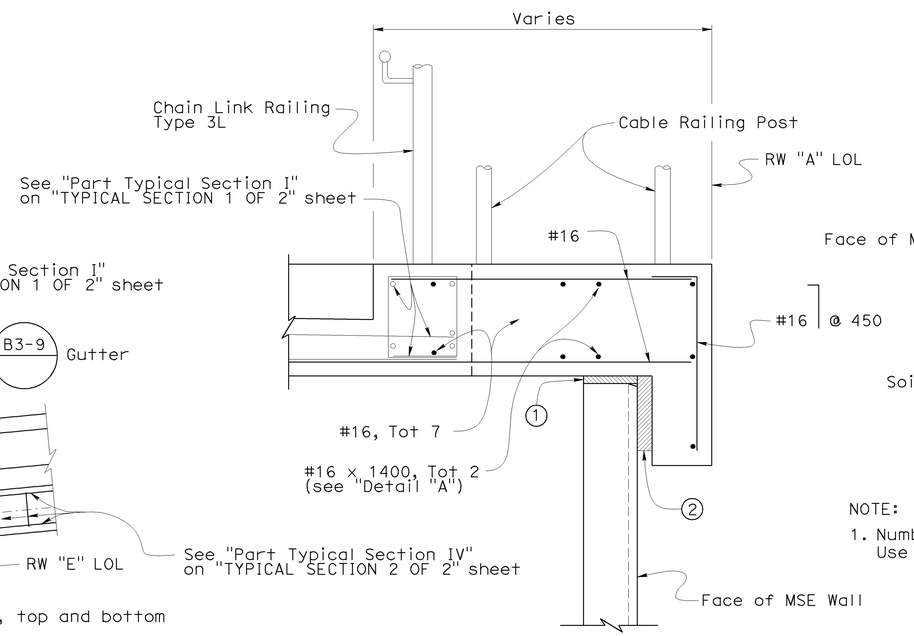

LEGEND:

1. 25 mm Expanded Polystyrene
2. 50 mm Expanded Polystyrene. Recess Expanded Polystyrene 50 mm into Sidewalk Curb

SECTION G-G
1:10

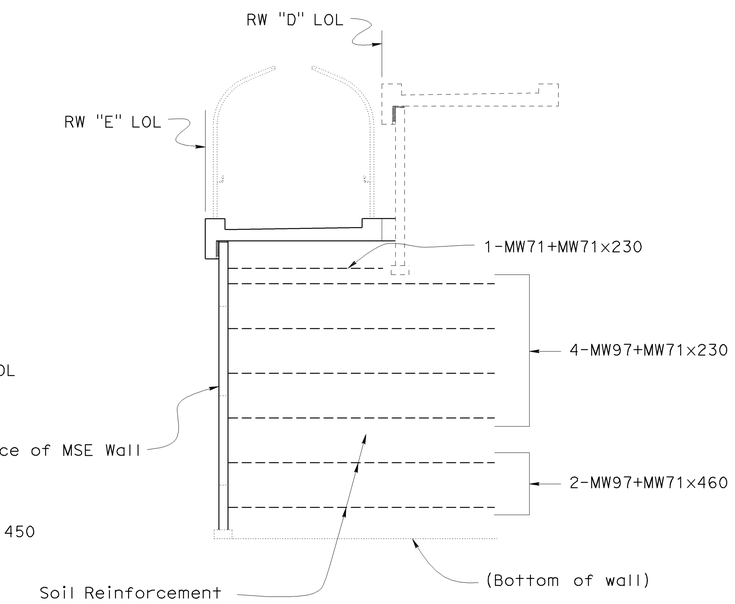

SECTION A-A
(REINFORCEMENT ZONE "D")
1:50

NOTE:
1. Numbers of rows in particular Reinforcement Zone varies. Use mat wire rows accordingly to size and number of panels in column.

NOTE:
THE CONTRACTOR SHALL VERIFY ALL CONTROLLING FIELD DIMENSIONS BEFORE ORDERING OR FABRICATING ANY MATERIAL.

DESIGN	BY G. Galo	CHECKED F. Feng	
DETAILS	BY S. Cholda	CHECKED F. Feng	
QUANTITIES	BY A. Logus	CHECKED D. Kubochi	

STATE OF CALIFORNIA
DEPARTMENT OF TRANSPORTATION

DIVISION OF ENGINEERING SERVICES
STRUCTURE DESIGN
DESIGN BRANCH 15

CU 07
EA 121841

BRIDGE NO. 53E0128
KILOMETER POST 46.3

NORTH APPROACH RAMP & RETAINING WALLS
RETAINING WALL "E" LAYOUT 2 OF 2

Caltrans Metric

ALL DIMENSIONS ARE IN MILLIMETERS UNLESS OTHERWISE SHOWN

ORIGINAL SCALE IN MILLIMETERS FOR REDUCED PLANS 0 10 20 30 40 50 60 70 80 90 100

DISREGARD PRINTS BEARING EARLIER REVISION DATES

REVISION DATES: 12-11-07 01-16-09 01-20-09 09-09-08 10-06-08 10-10-08 11-20-08 12-11-08 12-23-08 01-13-09

SHEET 16 OF 41

FILE => 53e0128-g-rw_1o07.dgn

STRUCTURES DESIGN DETAIL SHEET (METRIC) (REV.03-17-04)

USERNAME => trmartin DATE PLOTTED => 15-JUN-2009 TIME PLOTTED => 08:36

DIST	COUNTY	ROUTE	KILOMETER POST TOTAL PROJECT	SHEET No	TOTAL SHEETS
07	LA	5	42.8/47.3	1047	1073

Andrew Rittenhouse 12-05-08
REGISTERED CIVIL ENGINEER DATE

6-8-09
PLANS APPROVAL DATE

REGISTERED PROFESSIONAL ENGINEER Andrew P. Rittenhouse No. 61006 Exp. 12-31-10 CIVIL STATE OF CALIFORNIA

The State of California or its officers or agents shall not be responsible for the accuracy or completeness of electronic copies of this plan sheet.

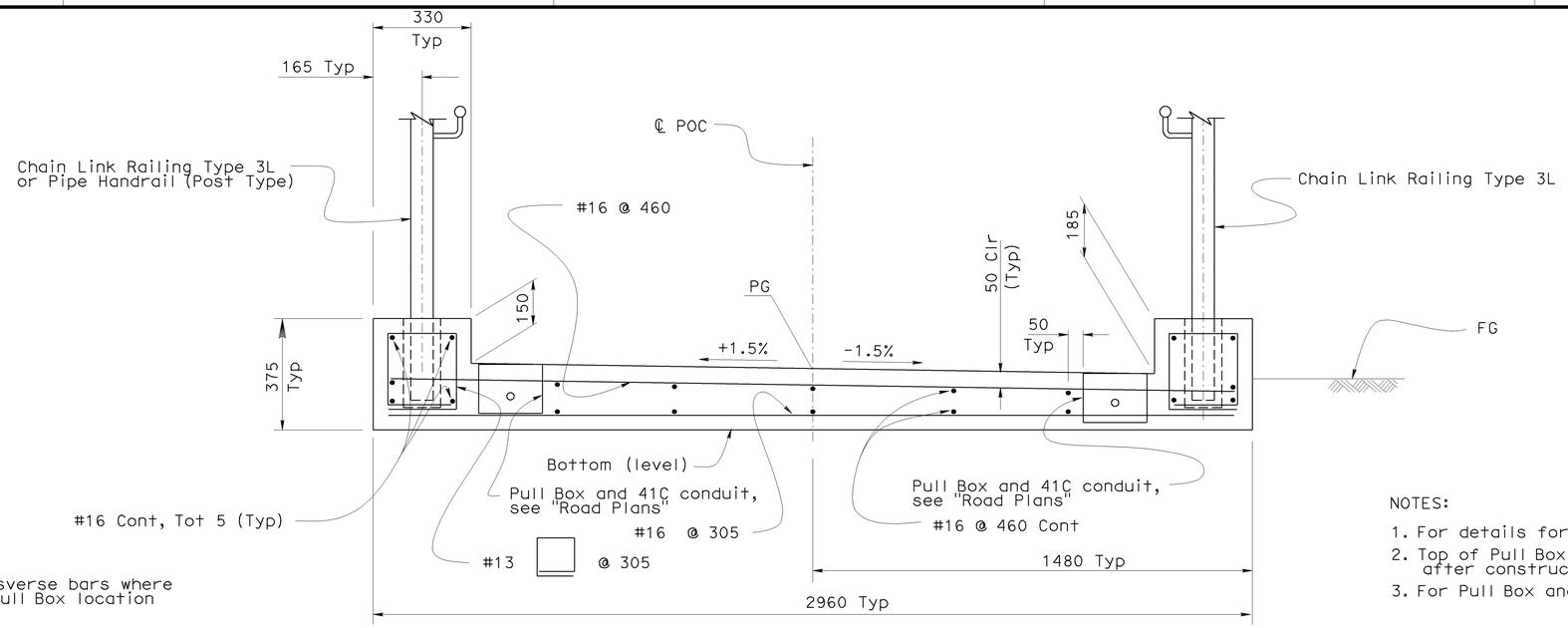

PART TYPICAL SECTION I

1:10

NOTES:

1. For details for Pull Boxes Type 9, see Standard Plan ES-9C
2. Top of Pull Box Type 9 to be flush with sidewalk surface after construction.
3. For Pull Box and lightning location, see "Road Plans".

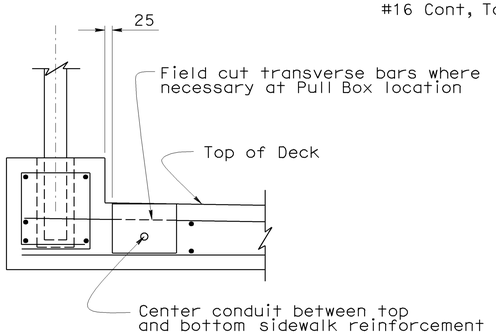

PULL BOX AND CONDUIT DETAIL

1:10

(LEFT SIDE SHOWN, RIGHT SIDE SIMILAR)

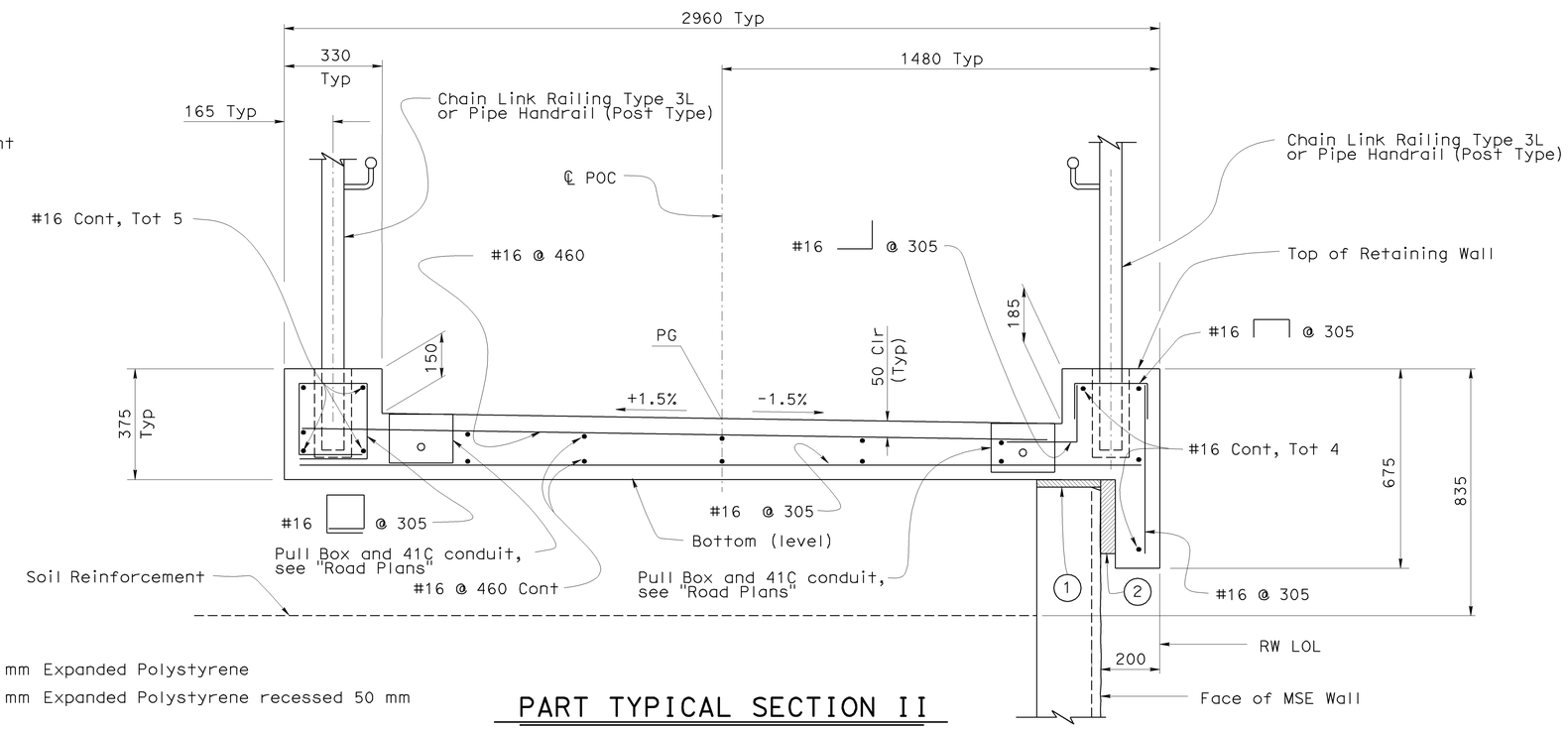

NOTES:

1. 25 mm Expanded Polystyrene
2. 50 mm Expanded Polystyrene recessed 50 mm

PART TYPICAL SECTION II

1:10

NOTE:
THE CONTRACTOR SHALL VERIFY ALL CONTROLLING FIELD DIMENSIONS BEFORE ORDERING OR FABRICATING ANY MATERIAL.

Caltrans Metric

	BY	CHECKED
DESIGN	G. Galo	F. Feng
DETAILS	S. Cholda	F. Feng
QUANTITIES	A. Logus	D. Kubochi

STATE OF CALIFORNIA
DEPARTMENT OF TRANSPORTATION

DIVISION OF ENGINEERING SERVICES
STRUCTURE DESIGN
DESIGN BRANCH 15

BRIDGE NO. 53E0128
KILOMETER POST 46.3

NORTH APPROACH RAMP & RETAINING WALLS

TYPICAL SECTION 1 OF 2

ALL DIMENSIONS ARE IN MILLIMETERS UNLESS OTHERWISE SHOWN

ORIGINAL SCALE IN MILLIMETERS FOR REDUCED PLANS 0 10 20 30 40 50 60 70 80 90 100

CU 07
EA 121841

DISREGARD PRINTS BEARING EARLIER REVISION DATES

REVISION DATES: 01-04-08 08-12-08 11-28-08 12-11-08 01-14-09 01-16-09

SHEET 17 OF 41

FILE => 53e0128-k-ts01.dgn

STRUCTURES DESIGN DETAIL SHEET (METRIC) (REV.03-17-04)

USERNAME => trmorrin DATE PLOTTED => 15-JUN-2009 TIME PLOTTED => 08:36

DIST	COUNTY	ROUTE	KILOMETER POST TOTAL PROJECT	SHEET No	TOTAL SHEETS
07	LA	5	42.8/47.3	1048	1073

Andrew Rittenhouse 12-05-08
REGISTERED CIVIL ENGINEER DATE

6-8-09
PLANS APPROVAL DATE

REGISTERED PROFESSIONAL ENGINEER Andrew P. Rittenhouse No. 61006 Exp. 12-31-10 CIVIL STATE OF CALIFORNIA

The State of California or its officers or agents shall not be responsible for the accuracy or completeness of electronic copies of this plan sheet.

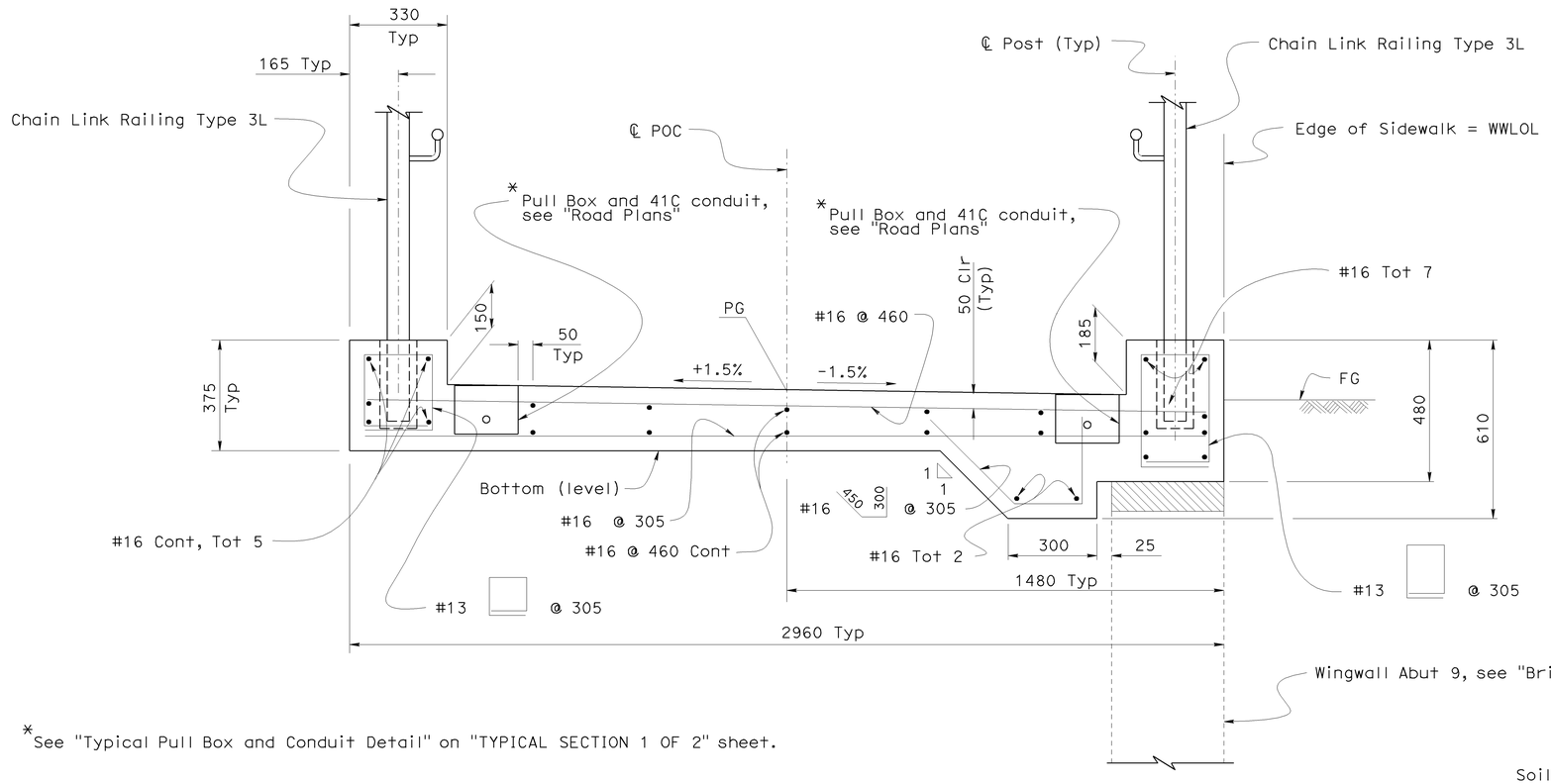

*See "Typical Pull Box and Conduit Detail" on "TYPICAL SECTION 1 OF 2" sheet.

PART TYPICAL SECTION III

1:10

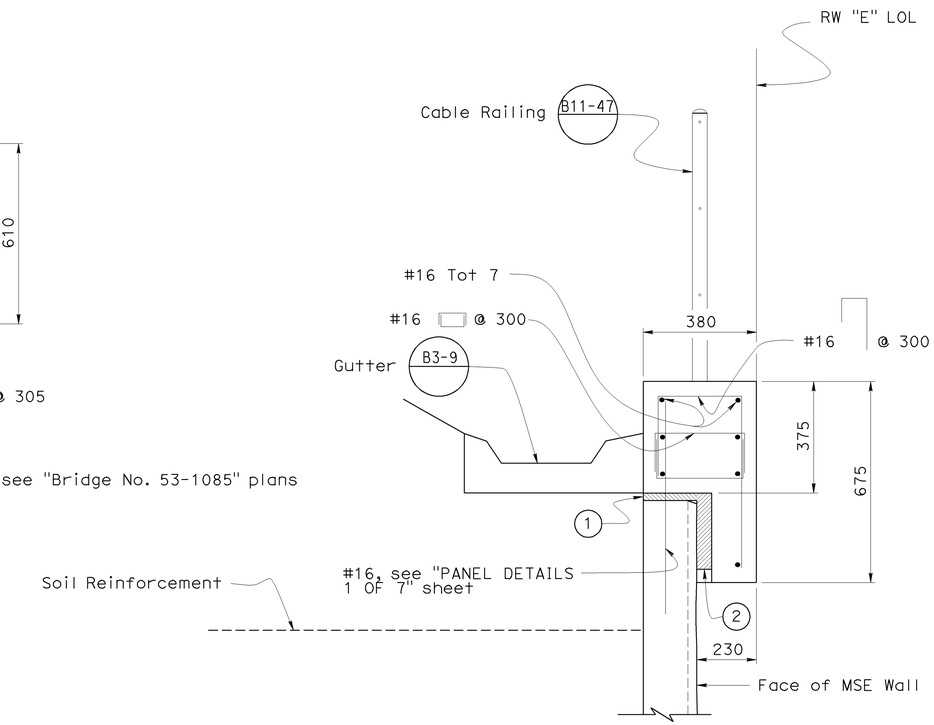

PART TYPICAL SECTION IV

1:10

NOTES:

1. 25 mm Expanded Polystyrene
2. 50 mm Expanded Polystyrene. Recessed Expanded Polystyrene 50 mm into Sidewalk Curb

LEGEND:

100 mm polysterene (remove completely after construction)

NOTE:
THE CONTRACTOR SHALL VERIFY ALL CONTROLLING FIELD DIMENSIONS BEFORE ORDERING OR FABRICATING ANY MATERIAL.

Caltrans Metric

	BY	CHECKED
DESIGN	G. Galo	F. Feng
DETAILS	S. Cholda	F. Feng
QUANTITIES	A. Logus	D. Kubochi

STATE OF CALIFORNIA
DEPARTMENT OF TRANSPORTATION

DIVISION OF ENGINEERING SERVICES
STRUCTURE DESIGN
DESIGN BRANCH

BRIDGE NO. 53E0128
KILOMETER POST 46.3

NORTH APPROACH RAMP & RETAINING WALLS
TYPICAL SECTION 2 OF 2

ALL DIMENSIONS ARE IN MILLIMETERS UNLESS OTHERWISE SHOWN

ORIGINAL SCALE IN MILLIMETERS FOR REDUCED PLANS 0 10 20 30 40 50 60 70 80 90 100

CU 07
EA 121841

DISREGARD PRINTS BEARING EARLIER REVISION DATES

REVISION DATES: 01-07-08 08-12-08 11-28-08 12-11-08 12-23-08 01-16-09

SHEET 18 OF 41

FILE => 53e0128-k-ts02.dgn

STRUCTURES DESIGN DETAIL SHEET (METRIC) (REV.03-17-04)

USERNAME => trmartin DATE PLOTTED => 15-JUN-2009 TIME PLOTTED => 08:36

DIST	COUNTY	ROUTE	KILOMETER POST TOTAL PROJECT	SHEET No	TOTAL SHEETS
07	LA	5	42.8/47.3	1049	1073

Andrew Rittenhouse 12-05-08
REGISTERED CIVIL ENGINEER DATE

6-8-09
PLANS APPROVAL DATE

REGISTERED PROFESSIONAL ENGINEER
Andrew P. Rittenhouse
No. 61006
Exp. 12-31-10
CIVIL
STATE OF CALIFORNIA

The State of California or its officers or agents shall not be responsible for the accuracy or completeness of electronic copies of this plan sheet.

TABLE 1

Drainage Pipe Location					
Retaining Wall "C"	Station	Retaining Wall "D"	Station	Retaining Wall "E"	Station
1	4.950 m Lt 10+73.360 "RW "C" LOL"	1	4.965 m Lt 10+01.558 "RW "D" LOL"	1	3.315 m Lt 10+00.000 "RW "E" LOL"
2	5.450 m Lt 10+80.138 "RW "C" LOL"	2	4.965 m Lt 10+33.462 "RW "D" LOL"	2	3.670 m Lt 10+04.663 "RW "E" LOL"
3	5.555 m Lt 10+85.413 "RW "C" LOL"	3	5.565 m Lt 10+33.462 "RW "D" LOL"	3	3.670 m Lt 10+08.975 "RW "E" LOL"
4	5.035 m Lt 10+89.613 "RW "C" LOL"	4	5.565 m Lt 10+37.462 "RW "D" LOL"	4	3.670 m Lt 10+14.452 "RW "E" LOL"
5	4.950 m Lt 10+90.428 "RW "C" LOL"	5	5.565 m Lt 10+60.760 "RW "D" LOL"	5	4.170 m Lt 10+27.234 "RW "E" LOL"
6	4.750 m Lt 11+09.665 "RW "C" LOL"	6	4.165 m Lt 10+61.768 "RW "D" LOL"	6	3.910 m Lt 10+27.413 "RW "E" LOL"
7	4.750 m Lt 11+29.665 "RW "C" LOL"	7	4.165 m Lt 10+73.601 "RW "D" LOL	7	3.910 m Lt 10+35.033 "RW "E" LOL"
8	4.750 m Lt 11+49.665 "RW "C" LOL"	8	2.600 m Lt 10+75.517 "RW "D" LOL	8	3.482 m Lt 10+35.033 "RW "E" LOL"
9	5.725 m Lt 11+65.088 "RW "C" LOL"	9	2.600 m Lt 10+85.815 "RW "D" LOL	9	3.160 m Lt 10+41.249 "RW "E" LOL"
10	5.948 m Lt 11+69.663 "RW "C" LOL"			10	3.160 m Lt 10+44.566 "RW "E" LOL"
11	5.797 m Lt 11+80.000 "RW "C" LOL"			11	3.160 m Lt 10+52.055 "RW "E" LOL"

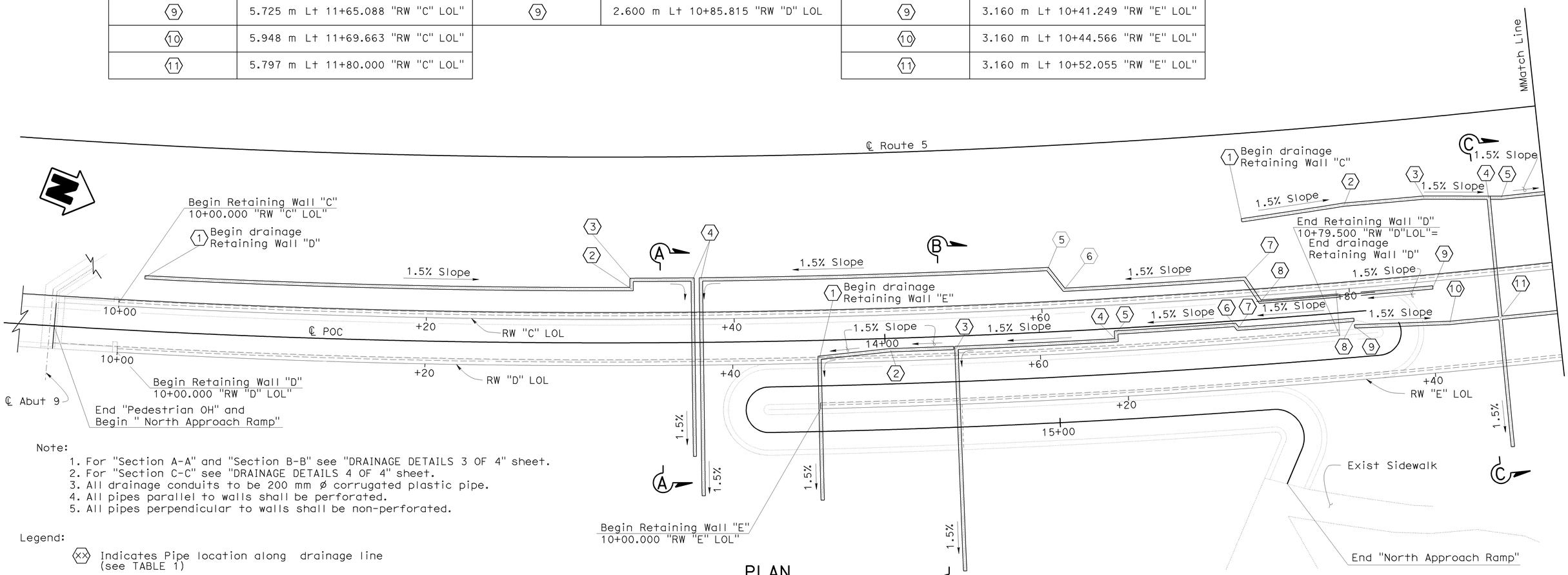

Note:

1. For "Section A-A" and "Section B-B" see "DRAINAGE DETAILS 3 OF 4" sheet.
2. For "Section C-C" see "DRAINAGE DETAILS 4 OF 4" sheet.
3. All drainage conduits to be 200 mm ø corrugated plastic pipe.
4. All pipes parallel to walls shall be perforated.
5. All pipes perpendicular to walls shall be non-perforated.

Legend:

(XX) Indicates Pipe location along drainage line (see TABLE 1)

NOTE:
THE CONTRACTOR SHALL VERIFY ALL CONTROLLING FIELD DIMENSIONS BEFORE ORDERING OR FABRICATING ANY MATERIAL.

PLAN
1:125

Legend:

(XX) Indicates Pipe location along drainage line (see TABLE 1)

Caltrans Metric

	BY	CHECKED
DESIGN	G. Galo	F. Feng
DETAILS	S. Cholda	F. Feng
QUANTITIES	A. Logus	D. Kubochi

STATE OF CALIFORNIA
DEPARTMENT OF TRANSPORTATION

DIVISION OF ENGINEERING SERVICES
STRUCTURE DESIGN
DESIGN BRANCH 15

BRIDGE NO. 53E0128
KILOMETER POST 46.3

NORTH APPROACH RAMP & RETAINING WALLS
DRAINAGE DETAILS 1 OF 4

ALL DIMENSIONS ARE IN MILLIMETERS UNLESS OTHERWISE SHOWN

ORIGINAL SCALE IN MILLIMETERS FOR REDUCED PLANS 0 10 20 30 40 50 60 70 80 90 100

CU 07
EA 121841

DISREGARD PRINTS BEARING EARLIER REVISION DATES

REVISION DATES: 9-18-08 11-20-08 12-11-08 01-15-09 01-16-09 02-11-09

SHEET 19 OF 41

FILE => 53e0128-r-ddet01.dgn

STRUCTURES DESIGN DETAIL SHEET (METRIC) (REV.03-17-04)

USERNAME => frrright DATE PLOTTED => 15-JUN-2009 TIME PLOTTED => 08:23

DIST	COUNTY	ROUTE	KILOMETER POST TOTAL PROJECT	SHEET No	TOTAL SHEETS
07	LA	5	42.8/47.3	1050	1073

Andrew Rittenhouse 12-05-08
REGISTERED CIVIL ENGINEER DATE

6-8-09
PLANS APPROVAL DATE

REGISTERED PROFESSIONAL ENGINEER
Andrew P. Rittenhouse
No. 61006
Exp. 12-31-10
CIVIL
STATE OF CALIFORNIA

The State of California or its officers or agents shall not be responsible for the accuracy or completeness of electronic copies of this plan sheet.

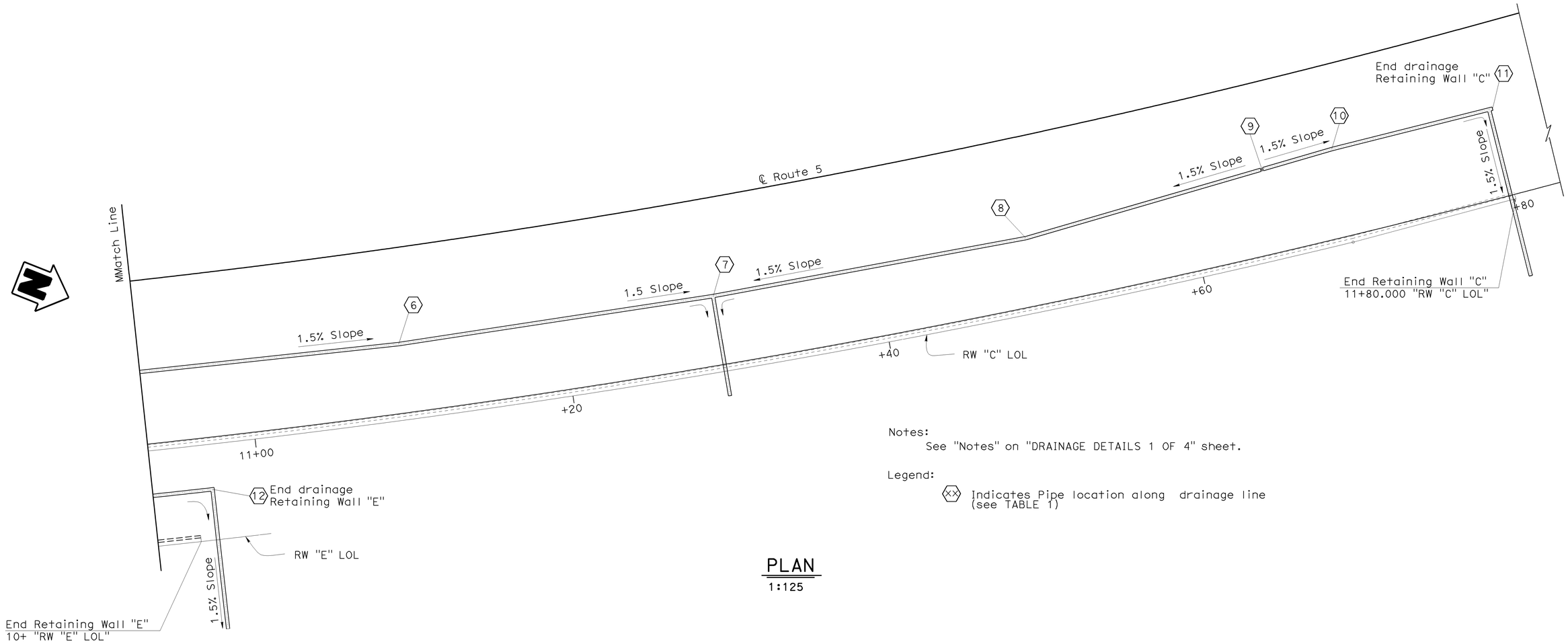

Notes:
See "Notes" on "DRAINAGE DETAILS 1 OF 4" sheet.

Legend:
(xx) Indicates Pipe location along drainage line (see TABLE 1)

PLAN
1:125

NOTE:
THE CONTRACTOR SHALL VERIFY ALL CONTROLLING FIELD DIMENSIONS BEFORE ORDERING OR FABRICATING ANY MATERIAL.

Caltrans Metric

	BY	CHECKED
DESIGN	G. Galo	F. Feng
DETAILS	S. Cholda	F. Feng
QUANTITIES	A. Logus	D. Kubochi

STATE OF CALIFORNIA
DEPARTMENT OF TRANSPORTATION

DIVISION OF ENGINEERING SERVICES
STRUCTURE DESIGN
DESIGN BRANCH 15

BRIDGE NO. 53E0128
KILOMETER POST 46.3

NORTH APPROACH RAMP & RETAINING WALLS
DRAINAGE DETAILS 2 OF 4

ALL DIMENSIONS ARE IN MILLIMETERS UNLESS OTHERWISE SHOWN

ORIGINAL SCALE IN MILLIMETERS FOR REDUCED PLANS 0 10 20 30 40 50 60 70 80 90 100

CU 07
EA 121841

DISREGARD PRINTS BEARING EARLIER REVISION DATES

REVISION DATES: 9-18-08 11-20-08 12-11-08 02-11-09

SHEET 20 OF 41

FILE => 53e0128-r-ddet02.dgn

STRUCTURES DESIGN DETAIL SHEET (METRIC) (REV.03-17-04)

USERNAME => trrlcht DATE PLOTTED => 15-JUN-2009 TIME PLOTTED => 08:23

DIST	COUNTY	ROUTE	KILOMETER POST TOTAL PROJECT	SHEET No	TOTAL SHEETS
07	LA	5	42.8/47.3	1051	1073

Andrew Rittenhouse 12-05-08
REGISTERED CIVIL ENGINEER DATE

6-8-09
PLANS APPROVAL DATE

REGISTERED PROFESSIONAL ENGINEER
Andrew P. Rittenhouse
No. 61006
Exp. 12-31-10
CIVIL
STATE OF CALIFORNIA

The State of California or its officers or agents shall not be responsible for the accuracy or completeness of electronic copies of this plan sheet.

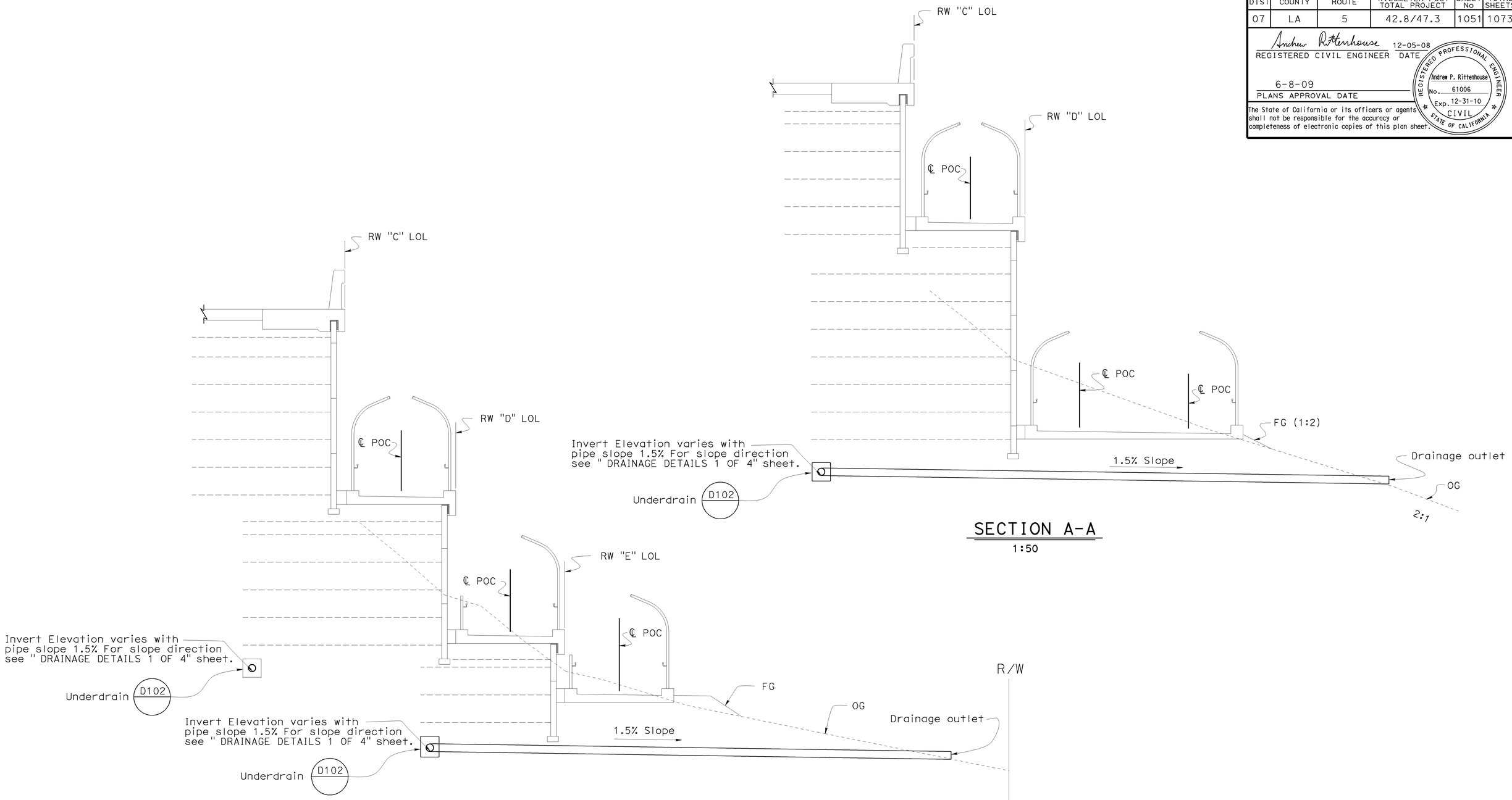

NOTE:
THE CONTRACTOR SHALL VERIFY ALL CONTROLLING FIELD DIMENSIONS BEFORE ORDERING OR FABRICATING ANY MATERIAL.

Caltrans Metric

	BY	CHECKED
DESIGN	G. Galo	F. Feng
DETAILS	S. Cholda	F. Feng
QUANTITIES	A. Logus	D. Kubochi

STATE OF CALIFORNIA
DEPARTMENT OF TRANSPORTATION

DIVISION OF ENGINEERING SERVICES
STRUCTURE DESIGN
DESIGN BRANCH 15

BRIDGE NO. 53E0128
KILOMETER POST 46.3

NORTH APPROACH RAMP & RETAINING WALLS
DRAINAGE DETAILS 3 OF 4

ALL DIMENSIONS ARE IN MILLIMETERS UNLESS OTHERWISE SHOWN

ORIGINAL SCALE IN MILLIMETERS FOR REDUCED PLANS 0 10 20 30 40 50 60 70 80 90 100

CU 07
EA 121841

DISREGARD PRINTS BEARING EARLIER REVISION DATES

REVISION DATES: 9-24-08 11-20-08 12-11-08 12-29-08

SHEET 21 OF 41

FILE => 53e0128-r-ddet03.dgn

STRUCTURES DESIGN DETAIL SHEET (METRIC) (REV.03-17-04)

USERNAME => trrichf DATE PLOTTED => 15-JUN-2009 TIME PLOTTED => 08:23

DIST	COUNTY	ROUTE	KILOMETER POST TOTAL PROJECT	SHEET No	TOTAL SHEETS
07	LA	5	42.8/47.3	1052	1073

Andrew Rittenhouse 12-05-08
REGISTERED CIVIL ENGINEER DATE

6-8-09
PLANS APPROVAL DATE

REGISTERED PROFESSIONAL ENGINEER
Andrew P. Rittenhouse
No. 61006
Exp. 12-31-10
CIVIL
STATE OF CALIFORNIA

The State of California or its officers or agents shall not be responsible for the accuracy or completeness of electronic copies of this plan sheet.

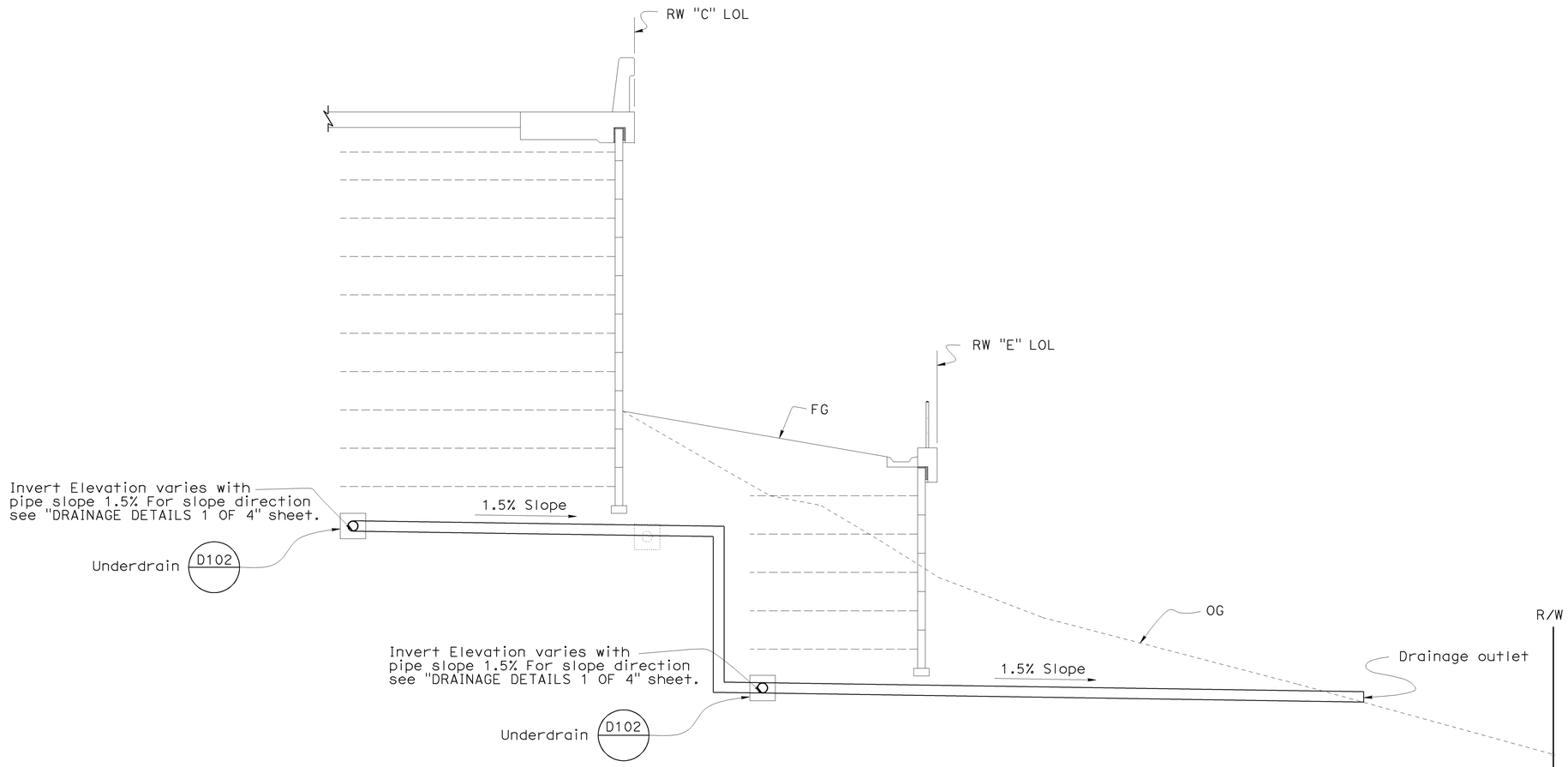

SECTION C-C

1:50

NOTE:
THE CONTRACTOR SHALL VERIFY ALL CONTROLLING FIELD DIMENSIONS BEFORE ORDERING OR FABRICATING ANY MATERIAL.

Caltrans Metric

	BY	CHECKED
DESIGN	G. Galo	F. Feng
DETAILS	S. Cholda	F. Feng
QUANTITIES	A. Logus	D. Kubochi

STATE OF CALIFORNIA
DEPARTMENT OF TRANSPORTATION

DIVISION OF ENGINEERING SERVICES
STRUCTURE DESIGN
DESIGN BRANCH 15

BRIDGE NO. 53E0128
KILOMETER POST 46.3

NORTH APPROACH RAMP & RETAINING WALLS
DRAINAGE DETAILS 4 OF 4

ALL DIMENSIONS ARE IN MILLIMETERS UNLESS OTHERWISE SHOWN

ORIGINAL SCALE IN MILLIMETERS FOR REDUCED PLANS 0 10 20 30 40 50 60 70 80 90 100

CU 07
EA 121841

DISREGARD PRINTS BEARING EARLIER REVISION DATES

REVISION DATES: 9-21-08, 11-20-08, 12-14-08, 12-29-08, 01-14-09, 01-16-09

SHEET 22 OF 41

FILE => 53e0128-r-ddet04.dgn

STRUCTURES DESIGN DETAIL SHEET (METRIC) (REV.03-17-04)

USERNAME => trrichf DATE PLOTTED => 15-JUN-2009 TIME PLOTTED => 08:23

DIST	COUNTY	ROUTE	KILOMETER POST TOTAL PROJECT	SHEET No	TOTAL SHEETS
07	LA	5	42.8/47.3	1053	1073

Andrew Rittenhouse 12-05-08
REGISTERED CIVIL ENGINEER DATE

6-8-09
PLANS APPROVAL DATE

REGISTERED PROFESSIONAL ENGINEER Andrew P. Rittenhouse No. 61006 Exp. 12-31-10 CIVIL STATE OF CALIFORNIA

The State of California or its officers or agents shall not be responsible for the accuracy or completeness of electronic copies of this plan sheet.

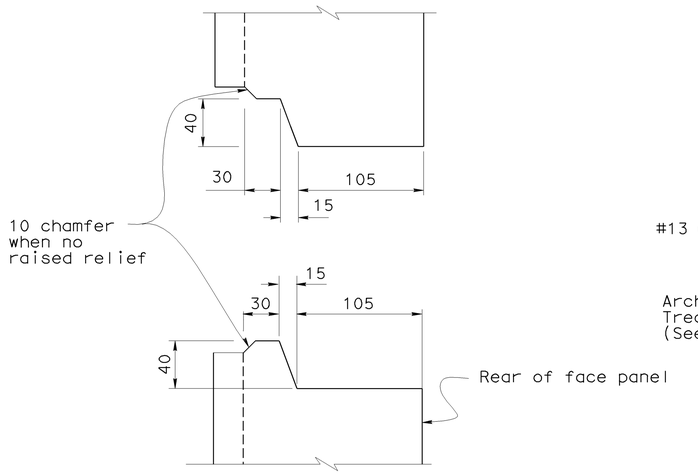

HORIZONTAL JOINT DETAIL
1:2.5

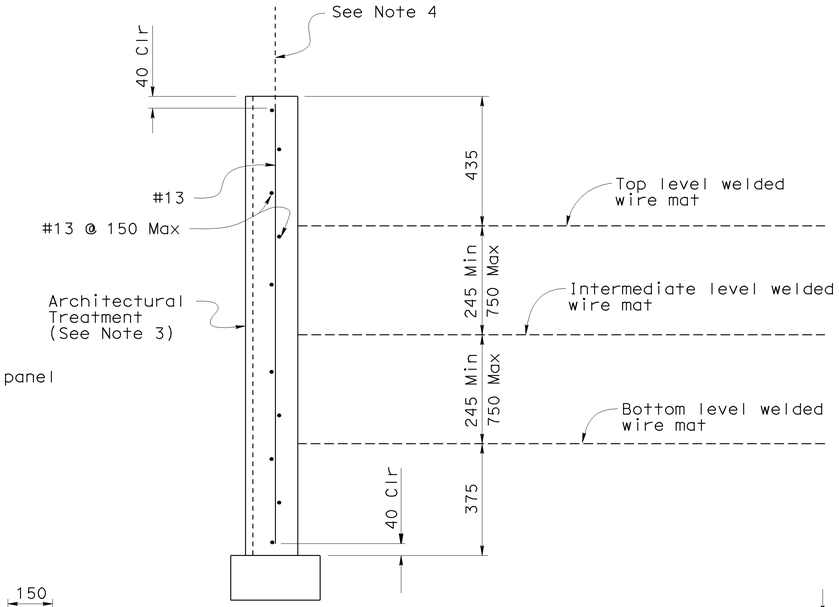

TYPE "F" OR "FI" PANEL
1:10

NOTES:

1. Place elastomeric bearing pads in all of the panel joints between the panels. Place one in each vertical joint where the horizontal joint intersects it. Place two per panel in each horizontal joint.
   20 x 60 x 150 for vertical joints
   20 x 100 x 300 for horizontal joints.
2. Bond a strip of filter fabric, 300 mm wide, over the full length of all panel joints.
3. Panel G similar to panel F, but with architectural treatment optional.
4. For Panels "D1", "E1", and "F1", extend vertical reinforcement 300 mm beyond top edge of panel. For Panel "D", "E", and "F" vertical reinforcement to maintain 40 mm clearance.

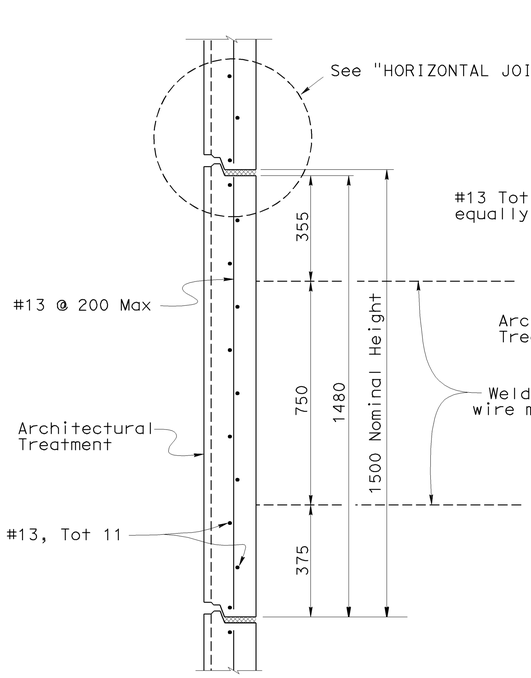

INTERMEDIATE PANEL "C"
1:10

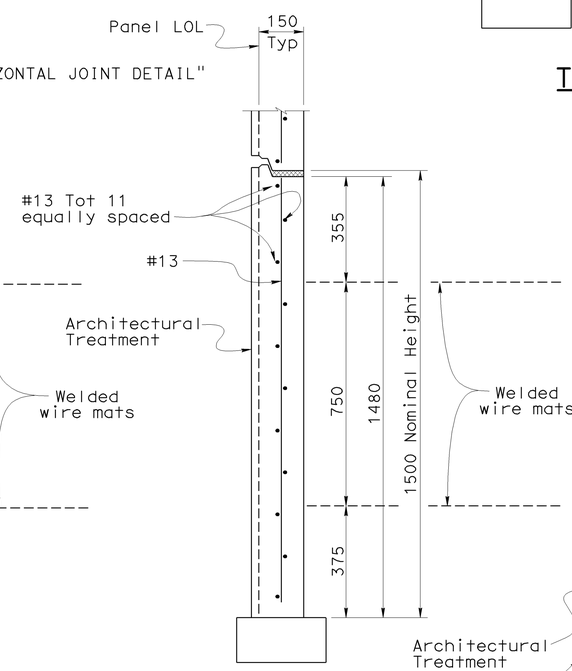

BOTTOM PANEL "B"
1:10

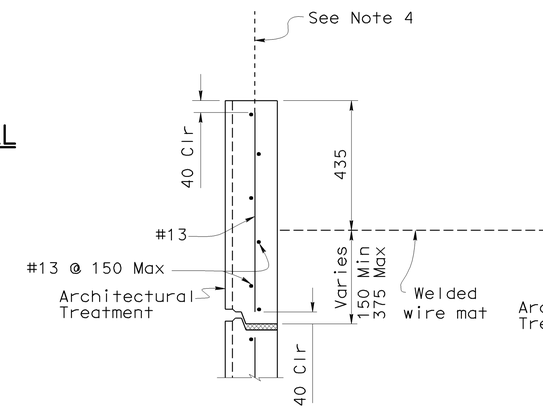

TOP PANEL "E" OR "EI"
1:10

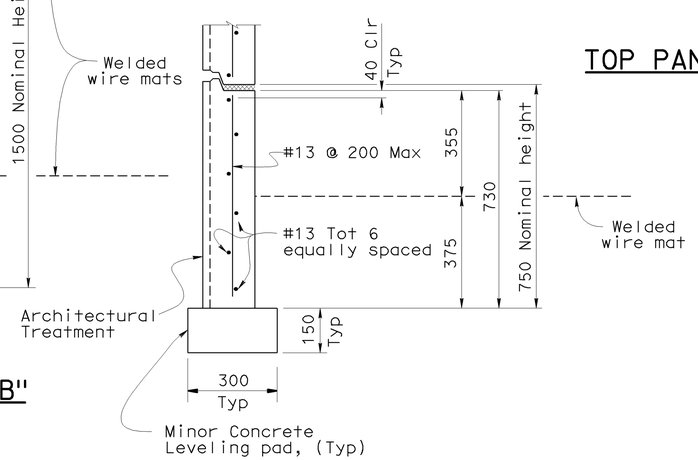

BOTTOM HALF PANEL "A"
1:10

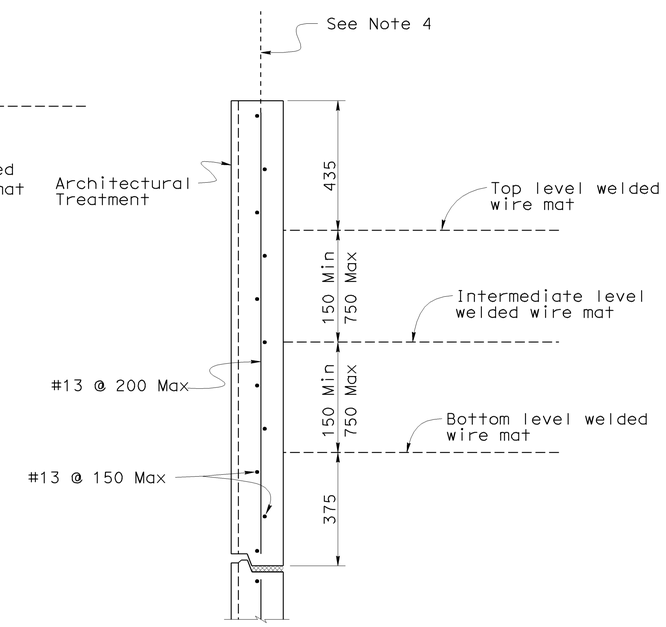

TOP PANEL "D" OR "DI"
1:10

NOTE:
THE CONTRACTOR SHALL VERIFY ALL CONTROLLING FIELD DIMENSIONS BEFORE ORDERING OR FABRICATING ANY MATERIAL.

	BY	CHECKED
DESIGN	G. Galo	F. Feng
DETAILS	S. Cholda	F. Feng
QUANTITIES	A. Logus	D. Kubochi

STATE OF CALIFORNIA
DEPARTMENT OF TRANSPORTATION

DIVISION OF ENGINEERING SERVICES
STRUCTURE DESIGN
DESIGN BRANCH 15

BRIDGE NO. 53E0128
KILOMETER POST 46.3

NORTH APPROACH RAMP & RETAINING WALLS
PANEL DETAILS 1 OF 7

ALL DIMENSIONS ARE IN MILLIMETERS UNLESS OTHERWISE SHOWN

ORIGINAL SCALE IN MILLIMETERS FOR REDUCED PLANS 0 10 20 30 40 50 60 70 80 90 100

CU 07
EA 121841

DISREGARD PRINTS BEARING EARLIER REVISION DATES

REVISION DATES: 9-01-08 11-12-08 11-28-08 12-11-08 01-14-09 01-16-09 01-28-09 02-11-09

SHEET 23 OF 41

FILE => 53e0128-u-miscdt01.dgn

STRUCTURES DESIGN DETAIL SHEET (METRIC) (REV.03-17-04)

USERNAME => ttright DATE PLOTTED => 15-JUN-2009 TIME PLOTTED => 08:23

DIST	COUNTY	ROUTE	KILOMETER POST TOTAL PROJECT	SHEET No	TOTAL SHEETS
07	LA	5	42.8/47.3	1054	1073

Andrew Rittenhouse 12-05-08
REGISTERED CIVIL ENGINEER DATE

6-8-09
PLANS APPROVAL DATE

REGISTERED PROFESSIONAL ENGINEER
Andrew P. Rittenhouse
No. 61006
Exp. 12-31-10
CIVIL
STATE OF CALIFORNIA

The State of California or its officers or agents shall not be responsible for the accuracy or completeness of electronic copies of this plan sheet.

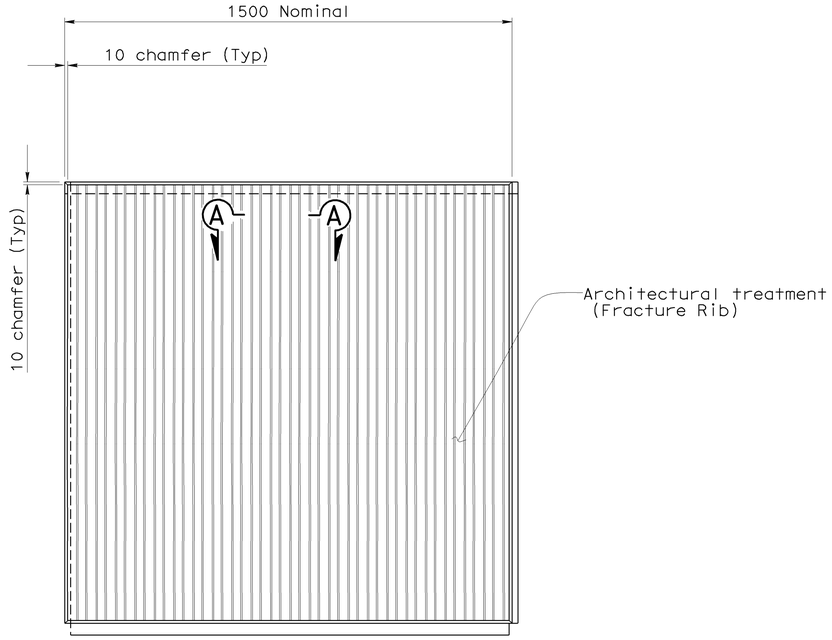

ELEVATION
1:10

INTERMEDIATE PANEL W/ARCHITECTURAL TREATMENT

Notes:

1. Intermediate panel with Architectural treatment shown. Bottom and top panels similar.
2. No chamfer is placed at bottom of a bottom panel.

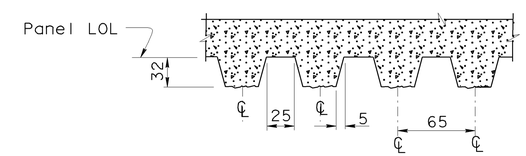

SECTION A-A
No Scale

ARCHITECTURAL TREATMENT

NOTE:
THE CONTRACTOR SHALL VERIFY ALL CONTROLLING FIELD DIMENSIONS BEFORE ORDERING OR FABRICATING ANY MATERIAL.

Caltrans Metric

	BY	CHECKED
DESIGN	G. Galo	F. Feng
DETAILS	S. Cholda	F. Feng
QUANTITIES	A. Logus	D. Kubochi

STATE OF CALIFORNIA
DEPARTMENT OF TRANSPORTATION

DIVISION OF ENGINEERING SERVICES
STRUCTURE DESIGN
DESIGN BRANCH 15

BRIDGE NO. 53E0128
KILOMETER POST 46.3

NORTH APPROACH RAMP & RETAINING WALLS
PANEL DETAILS 2 OF 7

ALL DIMENSIONS ARE IN MILLIMETERS UNLESS OTHERWISE SHOWN

ORIGINAL SCALE IN MILLIMETERS FOR REDUCED PLANS 0 10 20 30 40 50 60 70 80 90 100

CU 07
EA 121841

DISREGARD PRINTS BEARING EARLIER REVISION DATES
REVISION DATES: 9-01-08 11-13-08 11-28-08 12-11-08 01-14-09 01-20-09

SHEET 24 OF 41

FILE => 53e0128-u-miscdt02.dgn

STRUCTURES DESIGN DETAIL SHEET (METRIC) (REV.03-17-04)

USERNAME => rtrright DATE PLOTTED => 15-JUN-2009 TIME PLOTTED => 08:23

DIST	COUNTY	ROUTE	KILOMETER POST TOTAL PROJECT	SHEET No	TOTAL SHEETS
07	LA	5	42.8/47.3	1055	1073

Andrew Rittenhouse 12-05-08
REGISTERED CIVIL ENGINEER DATE

6-8-09
PLANS APPROVAL DATE

REGISTERED PROFESSIONAL ENGINEER Andrew P. Rittenhouse No. 61006 Exp. 12-31-10 CIVIL STATE OF CALIFORNIA

The State of California or its officers or agents shall not be responsible for the accuracy or completeness of electronic copies of this plan sheet.

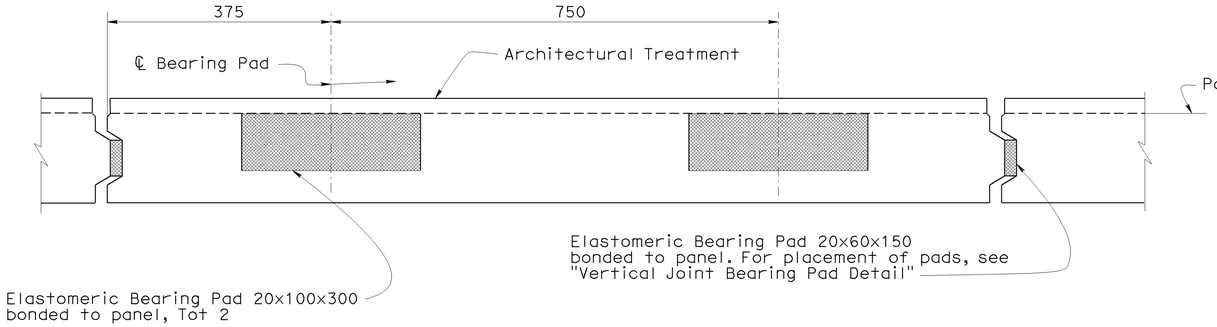

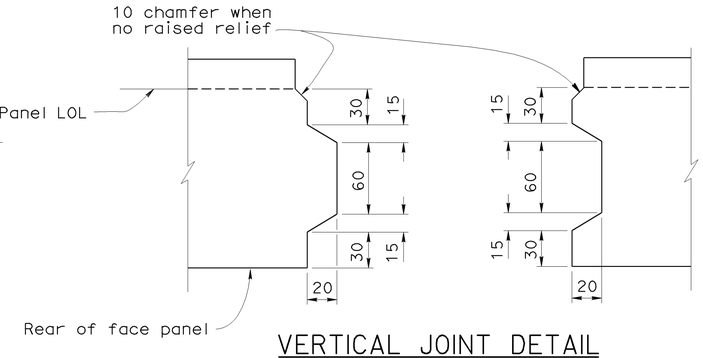

VERTICAL JOINT DETAIL

1:2.5

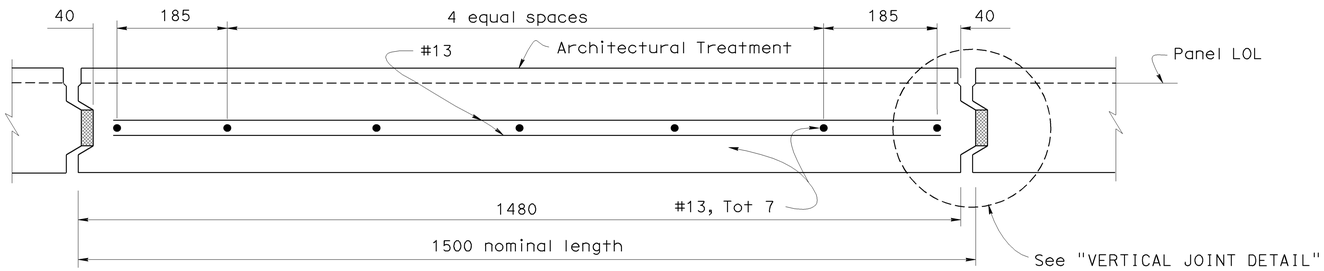

PLAN - FACE PANEL

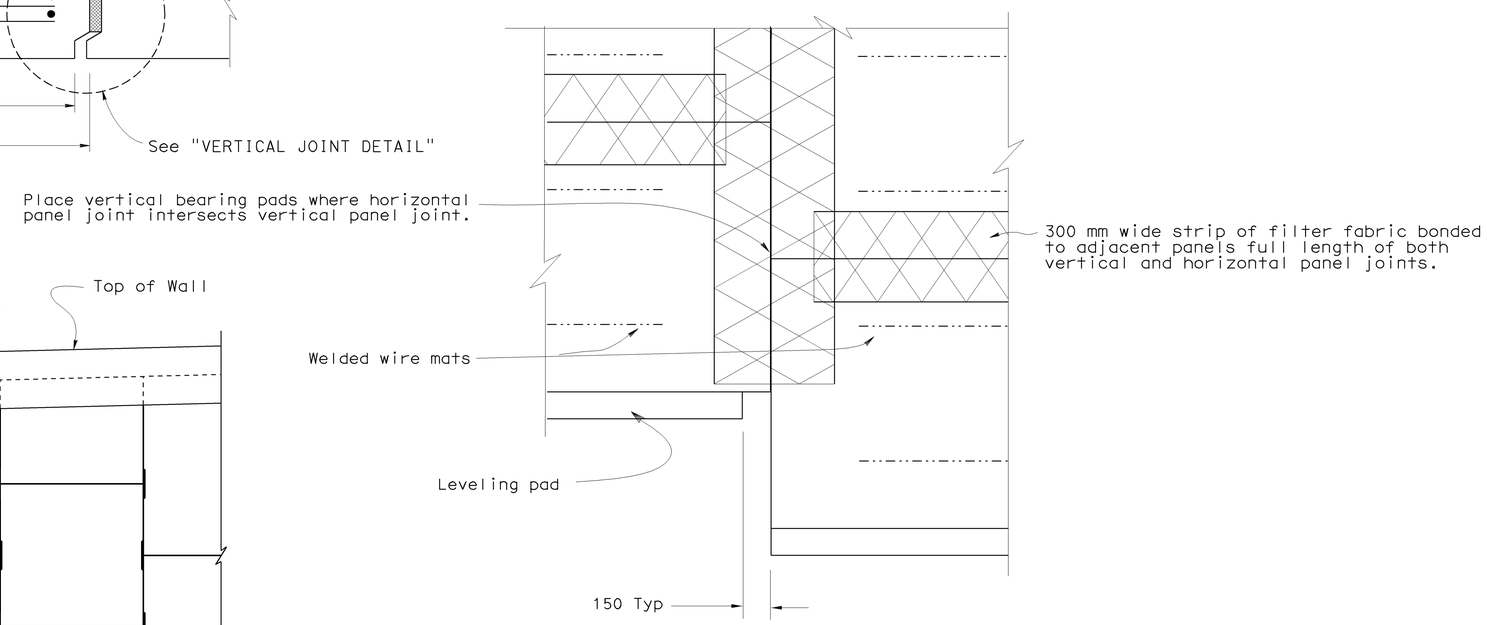

REAR ELEVATION

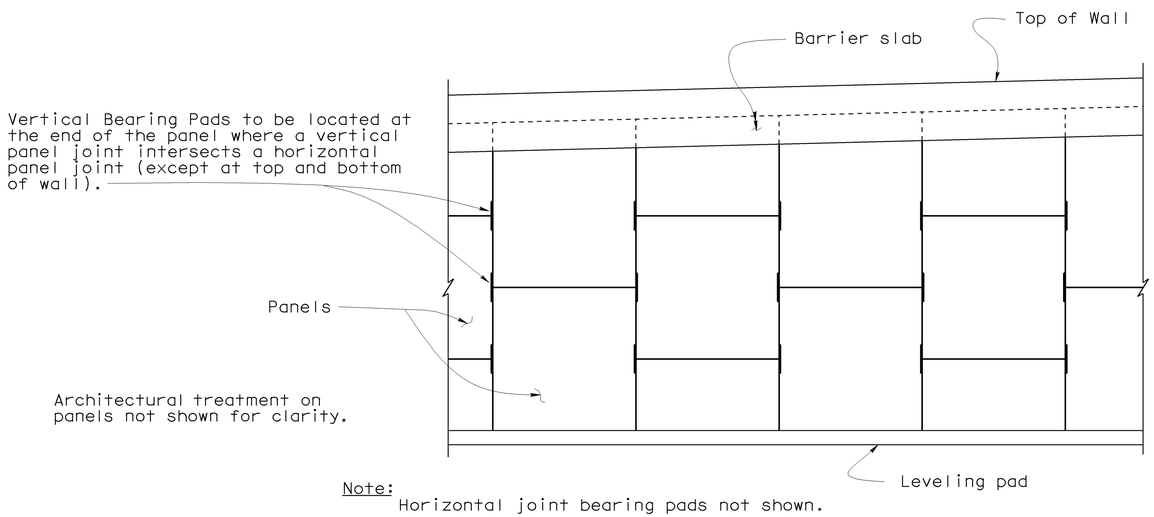

Note:
Horizontal joint bearing pads not shown.

VERTICAL JOINT BEARING PAD DETAIL

NO SCALE

NOTES:

1. Place elastomeric bearing pads in all of the panel joints between the panels. Place one in each vertical joint where the horizontal joint intersects it. Place two per panel in each horizontal joint.
   20 x 60 x 150 for vertical joints
   20 x 100 x 300 for horizontal joints.
2. Bond a strip of filter fabric, 300 mm wide, over the full length of all panel joints.

NOTE:
THE CONTRACTOR SHALL VERIFY ALL CONTROLLING FIELD DIMENSIONS BEFORE ORDERING OR FABRICATING ANY MATERIAL.

Caltrans Metric

	BY	CHECKED
DESIGN	G. Galo	F. Feng
DETAILS	S. Cholda	F. Feng
QUANTITIES	A. Logus	D. Kubochi

STATE OF CALIFORNIA
DEPARTMENT OF TRANSPORTATION

DIVISION OF ENGINEERING SERVICES
STRUCTURE DESIGN
DESIGN BRANCH 15

BRIDGE NO. 53E0128
KILOMETER POST 46.3

NORTH APPROACH RAMP & RETAINING WALLS
PANEL DETAILS 3 OF 7

ALL DIMENSIONS ARE IN MILLIMETERS UNLESS OTHERWISE SHOWN

ORIGINAL SCALE IN MILLIMETERS FOR REDUCED PLANS 0 10 20 30 40 50 60 70 80 90 100

CU 07
EA 121841

DISREGARD PRINTS BEARING EARLIER REVISION DATES

REVISION DATES: 9-01-08 11-20-08 01-20-09 02-11-09

SHEET 25 OF 41

FILE => 53e0128-u-miscdt03.dgn

STRUCTURES DESIGN DETAIL SHEET (METRIC) (REV.03-17-04)

USERNAME => trright DATE PLOTTED => 15-JUN-2009 TIME PLOTTED => 08:23

DIST	COUNTY	ROUTE	KILOMETER POST TOTAL PROJECT	SHEET No	TOTAL SHEETS
07	LA	5	42.8/47.3	1056	1073

Andrew Rittenhouse 12-05-08
REGISTERED CIVIL ENGINEER DATE

6-8-09
PLANS APPROVAL DATE

REGISTERED PROFESSIONAL ENGINEER Andrew P. Rittenhouse No. 61006 Exp. 12-31-10 CIVIL STATE OF CALIFORNIA

The State of California or its officers or agents shall not be responsible for the accuracy or completeness of electronic copies of this plan sheet.

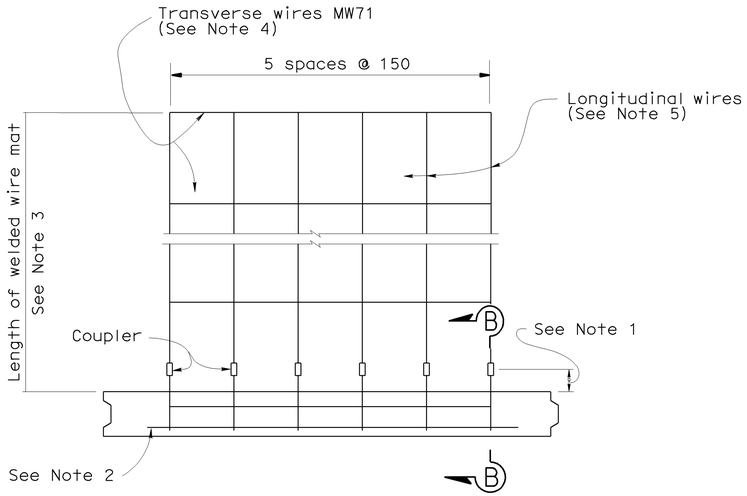

PLAN OF PANEL WITH WELDED WIRE MAT
No scale

GENERAL NOTES (MSE WALLS)

DESIGN:

CALTRANS BRIDGE DESIGN SPECIFICATIONS
LFD Version 2004 (2000 AASHTO with Interims
and Revision by Caltrans)

Live load: Surcharge = 11.5 kPa (See Note 6)
Live load sidewalk = 4.1 kPa

Soil parameters:

Internal design $\phi = 34^\circ$, $\gamma = 19$ kN/m^3
External design ϕ (Backfill) = 34°, $\gamma = 19$ kN/m^3
ϕ (Foundation) = 30°

Precast concrete panels:

f'c = 28 MPa (Concrete compressive strength at 28 days)

f'c = 42 MPa (for panels where MW130 wire mat soil reinforcement is required))

fy = 420 MPa (Yield strength of reinforcement)

Soil reinforcement:

Welded wire mats: fy = 450 MPa (Yield strength)
Coupler: fy = 250 MPa (Yield strength)
Corrosion rate = 28 µm / year

Reinforced concrete:

f'c = 25 MPa, except as noted (Concrete compressive strength at 28 days)
fy = 420 MPa (Yield strength of reinforcement)

MSE = Mechanically stabilized embankment

Notes:

1. Distance as required to permit coupler to be swaged.
2. Place #13 bar, 960 mm long, centered on connector mat, but not welded to it.
3. Length equals "Base width" of wall, except it shall not be less than 4880 mm for the top 2 levels of mats at the top of the wall under traffic barriers.
4. All Transverse Wires size MW71 at various spacings as shown elsewhere in plans.
5. All Longitudinal Wires at 150 mm spacing, of various sizes, as shown elsewhere in plans.
6. Load for upper MSE Wall "C", exposed to vehicular traffic

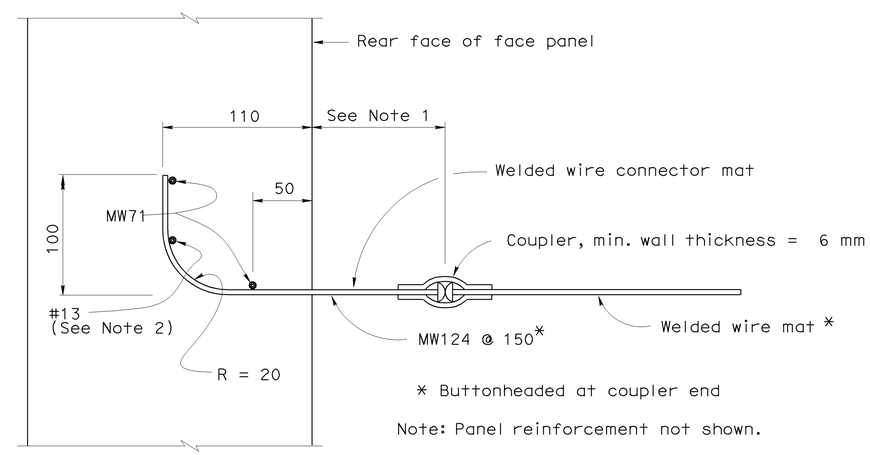

SECTION B-B
No scale

NOTE:
THE CONTRACTOR SHALL VERIFY ALL CONTROLLING FIELD DIMENSIONS BEFORE ORDERING OR FABRICATING ANY MATERIAL.

Caltrans Metric

	BY	CHECKED
DESIGN	G. Galo	F. Feng
DETAILS	S. Cholda	F. Feng
QUANTITIES	A. Logus	D. Kubochi

STATE OF CALIFORNIA
DEPARTMENT OF TRANSPORTATION

DIVISION OF ENGINEERING SERVICES
STRUCTURE DESIGN
DESIGN BRANCH 15

BRIDGE NO. 53E0128
KILOMETER POST 46.3

NORTH APPROACH RAMP & RETAINING WALLS
PANEL DETAILS 4 OF 7

ALL DIMENSIONS ARE IN MILLIMETERS UNLESS OTHERWISE SHOWN

ORIGINAL SCALE IN MILLIMETERS FOR REDUCED PLANS 0 10 20 30 40 50 60 70 80 90 100

CU 07
EA 121841

DISREGARD PRINTS BEARING EARLIER REVISION DATES
REVISION DATES: 9-01-08 11-20-08 12-12-08 12-29-08 01-09-09 01-14-09

SHEET 26 OF 41

FILE => 53e0128-u-miscdt04.dgn

STRUCTURES DESIGN DETAIL SHEET (METRIC) (REV.03-17-04)

USERNAME => trrtcht DATE PLOTTED => 15-JUN-2009 TIME PLOTTED => 08:24

DIST	COUNTY	ROUTE	KILOMETER POST TOTAL PROJECT	SHEET No	TOTAL SHEETS
07	LA	5	42.8/47.3	1057	1073

Andrew Rittenhouse 12-05-08
REGISTERED CIVIL ENGINEER DATE

6-8-09
PLANS APPROVAL DATE

REGISTERED PROFESSIONAL ENGINEER
Andrew P. Rittenhouse
No. 61006
Exp. 12-31-10
CIVIL
STATE OF CALIFORNIA

The State of California or its officers or agents shall not be responsible for the accuracy or completeness of electronic copies of this plan sheet.

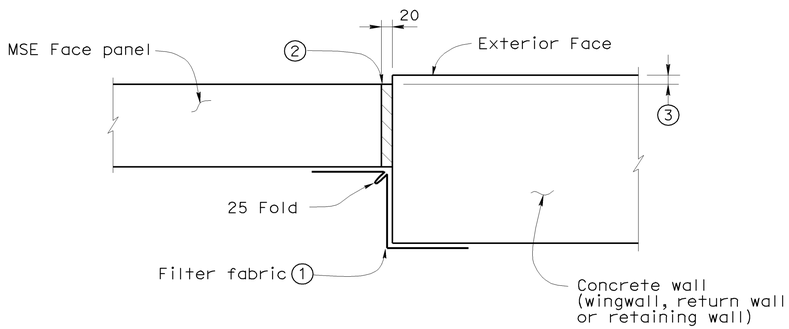

MSE FACE PANEL-TO-CONCRETE WALL JOINT DETAIL

LEGEND:

1. Bond a strip of filter fabric, 450 mm wide, to back of MSE panels and the adjacent concrete wall for entire length of vertical joint.
2. Bond expansion joint material to the concrete wall.
3. Offset between face of MSE face panel and face of the concrete wall as dictated by location of layout lines shown elsewhere in Project Plans.

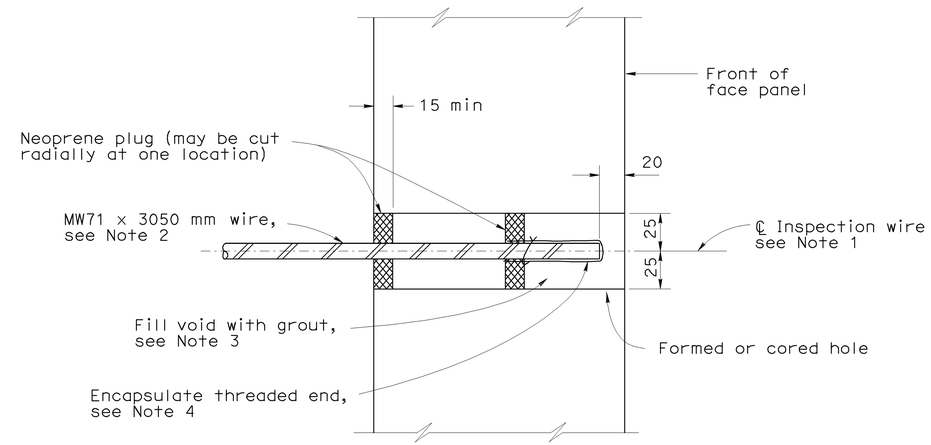

SECTION THRU INSPECTION WIRE

NOTES:

1. Center inspection wire in face panel.
2. Fabricate inspection wires from MW71 wire representative of the welded wire mats, with 10 mm dia - 16 UNC threads for at least 40 mm of one end.
3. Place inspection wire horizontal and perpendicular to the wall panel prior to backfilling. After backfill placement to a level at least 600 above the inspection wire, dry pack opening with 6.895 Mpa to 10.342 Mpa mortar. Trowel mortar smooth and flush with face of panel.
4. Encapsulate threaded end with corrosion inhibiting mastic, and secure round vinyl cover with nylon tie.

   UNC = Unified coarse threads

NOTE:
THE CONTRACTOR SHALL VERIFY ALL CONTROLLING FIELD DIMENSIONS BEFORE ORDERING OR FABRICATING ANY MATERIAL.

Caltrans Metric

	BY	CHECKED
DESIGN	G. Galo	F. Feng
DETAILS	S. Cholda	F. Feng
QUANTITIES	A. Logus	D. Kubochi

STATE OF CALIFORNIA
DEPARTMENT OF TRANSPORTATION

DIVISION OF ENGINEERING SERVICES
STRUCTURE DESIGN
DESIGN BRANCH 15

BRIDGE NO. 53E0128
KILOMETER POST 46.3

NORTH APPROACH RAMP & RETAINING WALLS
PANEL DETAILS 5 OF 7

ALL DIMENSIONS ARE IN MILLIMETERS UNLESS OTHERWISE SHOWN

ORIGINAL SCALE IN MILLIMETERS FOR REDUCED PLANS 0 10 20 30 40 50 60 70 80 90 100

CU 07
EA 121841

DISREGARD PRINTS BEARING EARLIER REVISION DATES 9-01-08 11-04-08 11-20-08

REVISION DATES

SHEET 27 OF 41

FILE => 53e0128-u-miscdt05.dgn

STRUCTURES DESIGN DETAIL SHEET (METRIC) (REV.03-17-04)

USERNAME => trrichf DATE PLOTTED => 15-JUN-2009 TIME PLOTTED => 08:24

DIST	COUNTY	ROUTE	KILOMETER POST TOTAL PROJECT	SHEET No	TOTAL SHEETS
07	LA	5	42.8/47.3	1058	1073

Andrew Rittenhouse 12-05-08
REGISTERED CIVIL ENGINEER DATE

6-8-09
PLANS APPROVAL DATE

REGISTERED PROFESSIONAL ENGINEER
Andrew P. Rittenhouse
No. 61006
Exp. 12-31-10
CIVIL
STATE OF CALIFORNIA

The State of California or its officers or agents shall not be responsible for the accuracy or completeness of electronic copies of this plan sheet.

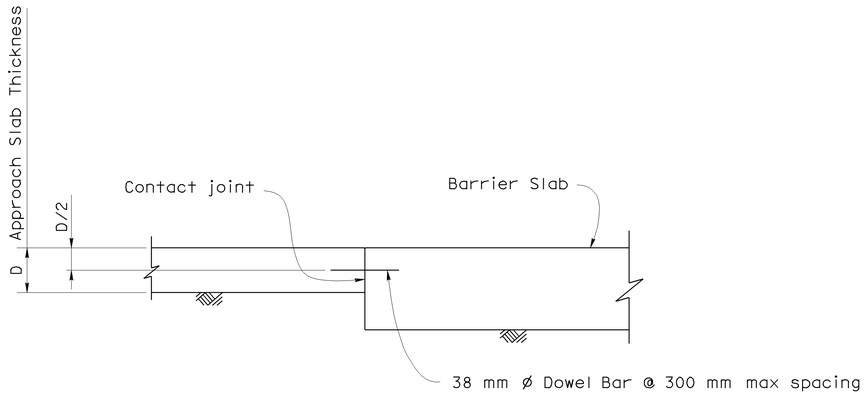

SECTION A-A
1:20

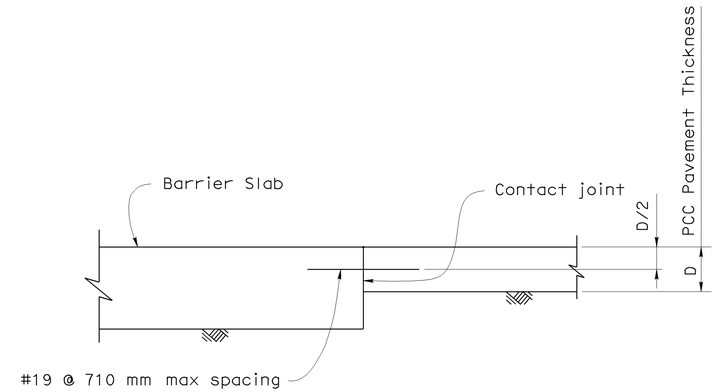

SECTION B-B
1:20

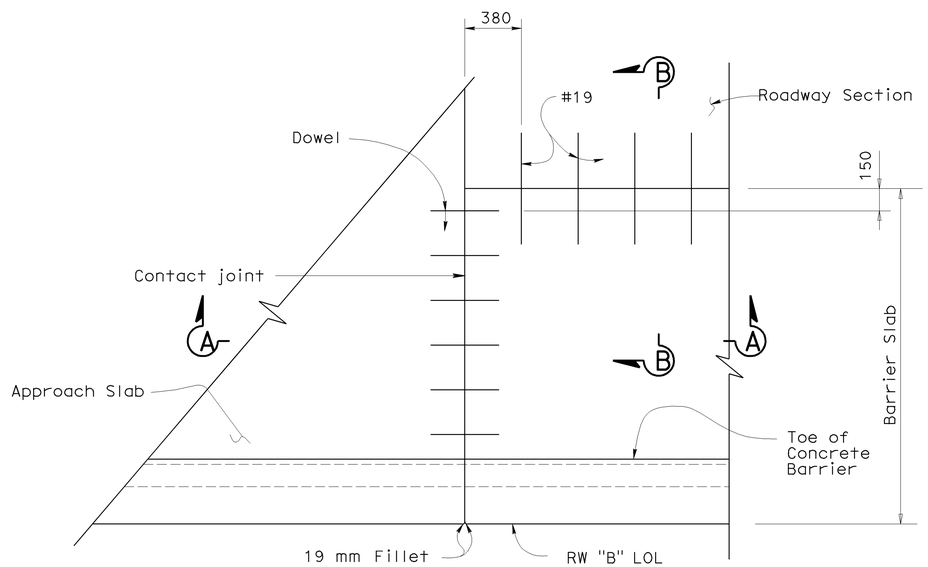

PART PLAN
1:20

NOTE:
THE CONTRACTOR SHALL VERIFY ALL CONTROLLING FIELD DIMENSIONS BEFORE ORDERING OR FABRICATING ANY MATERIAL.

BARRIER SLAB DOWEL AND TIE BAR DETAIL

NOTES:

1. Concrete barrier, Barrier slab and Approach slab reinforcement not shown.
2. For additional details see RSP P-1 and RSP P-10.

DESIGN	BY G. Galo	CHECKED F. Feng	
DETAILS	BY S. Cholda	CHECKED F. Feng	
QUANTITIES	BY A. Logus	CHECKED D. Kubochi	

STATE OF CALIFORNIA
DEPARTMENT OF TRANSPORTATION

DIVISION OF ENGINEERING SERVICES
STRUCTURE DESIGN
DESIGN BRANCH 15

BRIDGE NO. 53E0128
KILOMETER POST 46.3

NORTH APPROACH RAMP & RETAINING WALLS
PANEL DETAILS 6 OF 7

ALL DIMENSIONS ARE IN MILLIMETERS UNLESS OTHERWISE SHOWN

ORIGINAL SCALE IN MILLIMETERS FOR REDUCED PLANS 0 10 20 30 40 50 60 70 80 90 100

CU 07
EA 121841

DISREGARD PRINTS BEARING EARLIER REVISION DATES

REVISION DATES: 9-01-08, 11-20-08, 12-12-08, 3-18-09, 5-21-09, 4-22-09

SHEET 28 OF 41

FILE => 53e0128-u-miscdt06.dgn

STRUCTURES DESIGN DETAIL SHEET (METRIC) (REV.03-17-04)

USERNAME => trrright DATE PLOTTED => 15-JUN-2009 TIME PLOTTED => 08:24

DIST	COUNTY	ROUTE	KILOMETER POST TOTAL PROJECT	SHEET No	TOTAL SHEETS
07	LA	5	42.8/47.3	1059	1073

Andrew Rittenhouse 12-05-08
REGISTERED CIVIL ENGINEER DATE

6-8-09
PLANS APPROVAL DATE

REGISTERED PROFESSIONAL ENGINEER Andrew P. Rittenhouse No. 61006 Exp. 12-31-10 CIVIL STATE OF CALIFORNIA

The State of California or its officers or agents shall not be responsible for the accuracy or completeness of electronic copies of this plan sheet.

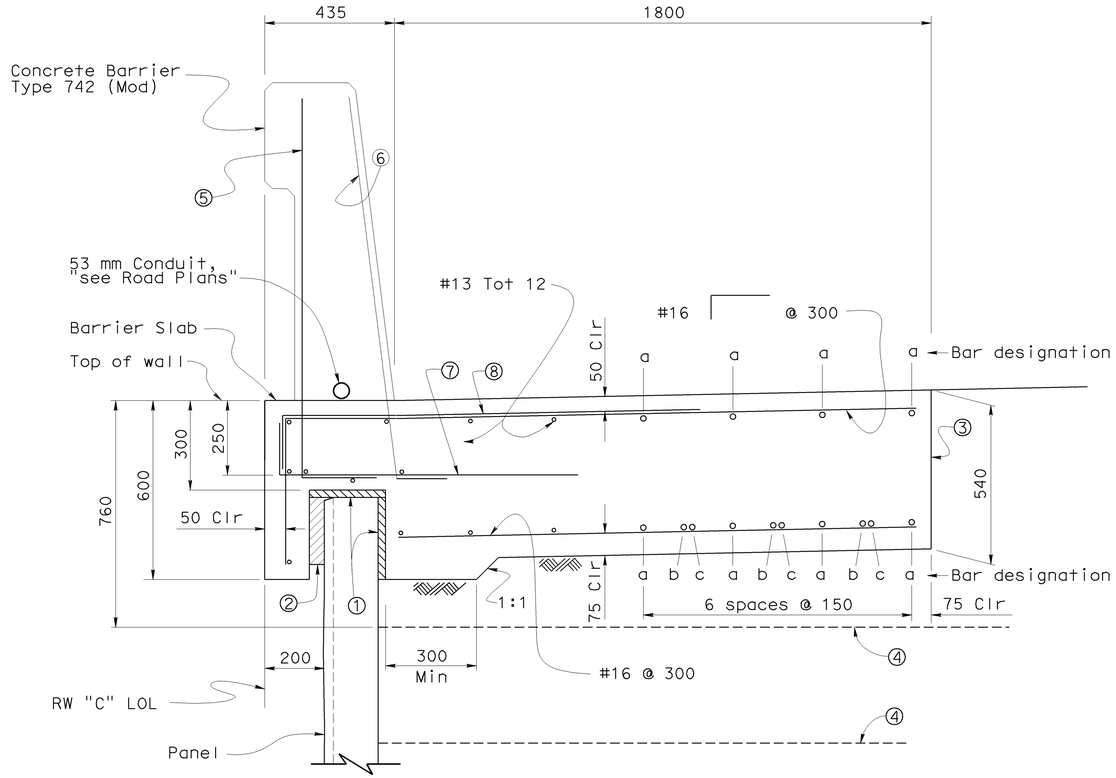

SECTION AT TOP OF WALL WITH CONCRETE BARRIER TYPE 742 (Mod)

1:10

Legend:

1. 25 mm Expanded Polystyrene
2. 50 mm Expanded Polystyrene recessed into Barrier Slab 50 mm
3. Contact joint
4. Soil reinforcement
5. #16 L 160 @ 400
6. #16 L 160 @ 200
7. #16 L 1000 @ 200
8. #16 L 1400 @ 300, bundled with #16 L @ 300

Bar Designation:

"a" bar = #19 continuous
"b" bar = #19 x 18 m
"c" bar = #19 x 15 m

Place "b" and "c" bars at beginning and ending of barrier slab.

Notes:

1. For Concrete Barrier Type 742 (Mod) details not shown or noted, see "ARCHITECTURAL TREATMENT DETAILS" sheet.
2. No expansion joints in concrete barrier or barrier slab within limits of MSE Wall
3. For Soil Reinforcement, see Note 3 on "PANEL DETAILS 4 OF 7" sheet.

NOTE:
THE CONTRACTOR SHALL VERIFY ALL CONTROLLING FIELD DIMENSIONS BEFORE ORDERING OR FABRICATING ANY MATERIAL.

Caltrans Metric

	BY	CHECKED
DESIGN	G. Galo	F. Feng
DETAILS	S. Cholda	F. Feng
QUANTITIES	A. Logus	D. Kubochi

STATE OF CALIFORNIA
DEPARTMENT OF TRANSPORTATION

DIVISION OF ENGINEERING SERVICES
STRUCTURE DESIGN
DESIGN BRANCH 15

BRIDGE NO. 53E0128
KILOMETER POST 46.3

NORTH APPROACH RAMP & RETAINING WALLS
PANEL DETAILS 7 OF 7

ALL DIMENSIONS ARE IN MILLIMETERS UNLESS OTHERWISE SHOWN

ORIGINAL SCALE IN MILLIMETERS FOR REDUCED PLANS 0 10 20 30 40 50 60 70 80 90 100

CU 07
EA 121841

DISREGARD PRINTS BEARING EARLIER REVISION DATES

REVISION DATES: 3-01-08 11-20-08 5-01-09

SHEET 29 OF 41

FILE => 53e0128-u-miscdt07.dgn

STRUCTURES DESIGN DETAIL SHEET (METRIC) (REV.03-17-04)

USERNAME => trrichf DATE PLOTTED => 15-JUN-2009 TIME PLOTTED => 08:36

DIST	COUNTY	ROUTE	KILOMETER POST TOTAL PROJECT	SHEET No	TOTAL SHEETS
07	LA	5	42.8/47.3	1060	1073

Andrew Rittenhouse 12-05-08
REGISTERED CIVIL ENGINEER DATE

6-8-09
PLANS APPROVAL DATE

REGISTERED PROFESSIONAL ENGINEER
Andrew P. Rittenhouse
No. 61006
Exp. 12-31-10
CIVIL
STATE OF CALIFORNIA

The State of California or its officers or agents shall not be responsible for the accuracy or completeness of electronic copies of this plan sheet.

Legend:

Indicates Structure Excavation paid as Earth Retaining Structure (Mechanically Stabilized Earth Wall)

Indicates Structure Excavation (Type Y-2) (Aerially Deposited Lead) paid as Earth Retaining Structure (Mechanically Stabilized Earth Wall)

Indicates Roadway Excavation or Roadway Excavation (Aerially Deposited Lead), see "Road Plans"

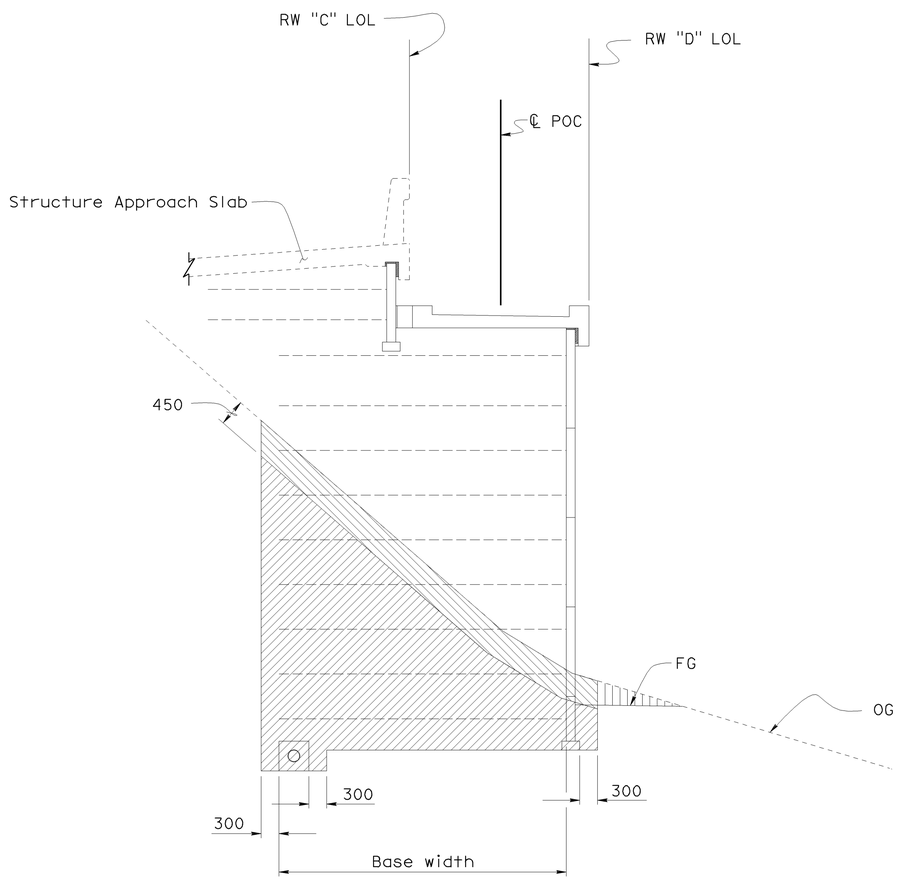

SECTION A-A
1:50

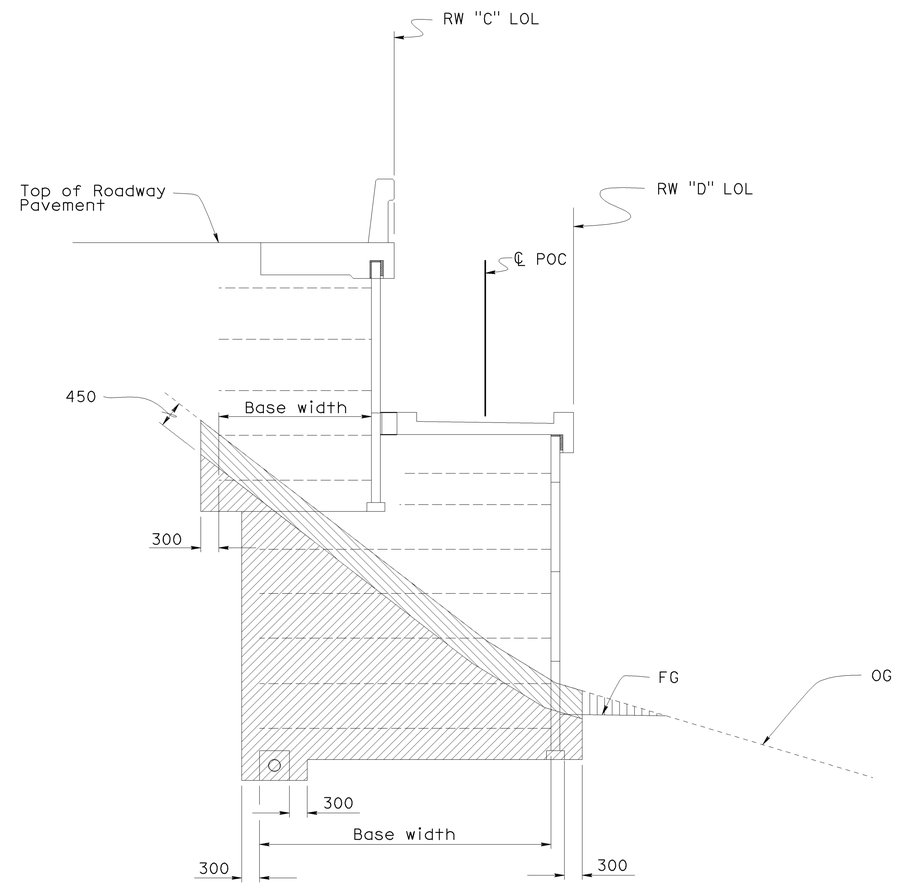

SECTION B-B
1:50

NOTE:
THE CONTRACTOR SHALL VERIFY ALL CONTROLLING FIELD DIMENSIONS BEFORE ORDERING OR FABRICATING ANY MATERIAL.

Note:
For section locations see "GENERAL PLAN 1 OF 4" sheet

LIMITS OF EXCAVATION

	BY	CHECKED
DESIGN	G. Galo	F. Feng
DETAILS	S. Cholda	F. Feng
QUANTITIES	A. Logus	D. Kubochi

STATE OF CALIFORNIA
DEPARTMENT OF TRANSPORTATION

DIVISION OF ENGINEERING SERVICES
STRUCTURE DESIGN
DESIGN BRANCH 15

BRIDGE NO. 53E0128
KILOMETER POST 46.3

NORTH APPROACH RAMP & RETAINING WALLS
MISCELLANEOUS DETAILS 1 OF 4

ALL DIMENSIONS ARE IN MILLIMETERS UNLESS OTHERWISE SHOWN

ORIGINAL SCALE IN MILLIMETERS FOR REDUCED PLANS 0 10 20 30 40 50 60 70 80 90 100

CU 07
EA 121841

DISREGARD PRINTS BEARING EARLIER REVISION DATES

REVISION DATES: 9-01-08 11-20-08 12-12-08 01-14-09 3-23-09

SHEET 30 OF 41

FILE => 53e0128-u-miscdt08.dgn

STRUCTURES DESIGN DETAIL SHEET (METRIC) (REV.03-17-04)

USERNAME => trrright DATE PLOTTED => 15-JUN-2009 TIME PLOTTED => 08:36

DIST	COUNTY	ROUTE	KILOMETER POST TOTAL PROJECT	SHEET No	TOTAL SHEETS
07	LA	5	42.8/47.3	1061	1073

Andrew Rittenhouse 12-05-08
REGISTERED CIVIL ENGINEER DATE

6-8-09
PLANS APPROVAL DATE

REGISTERED PROFESSIONAL ENGINEER
Andrew P. Rittenhouse
No. 61006
Exp. 12-31-10
CIVIL
STATE OF CALIFORNIA

The State of California or its officers or agents shall not be responsible for the accuracy or completeness of electronic copies of this plan sheet.

Legend:

- Indicates Structure Excavation paid as Earth Retaining Structure (Mechanically Stabilized Earth Wall)
- Indicates Structure Excavation (Type Y-2) (Aerially Deposited Lead) paid as Earth Retaining Structure (Mechanically Stabilized Earth Wall)
- Indicates Roadway Excavation or Roadway Excavation (Aerially Deposited Lead), see "Road Plans"

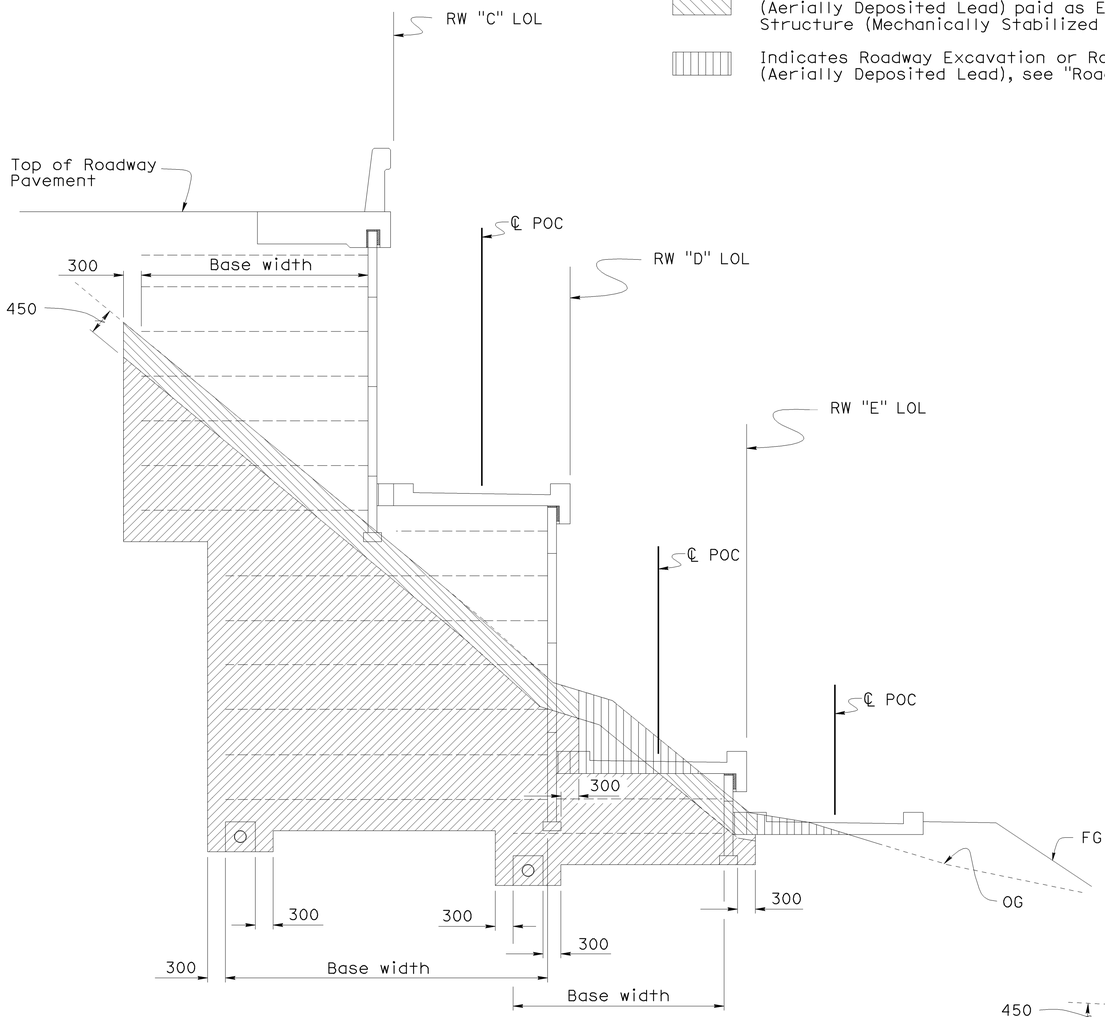

SECTION D-D
1:50

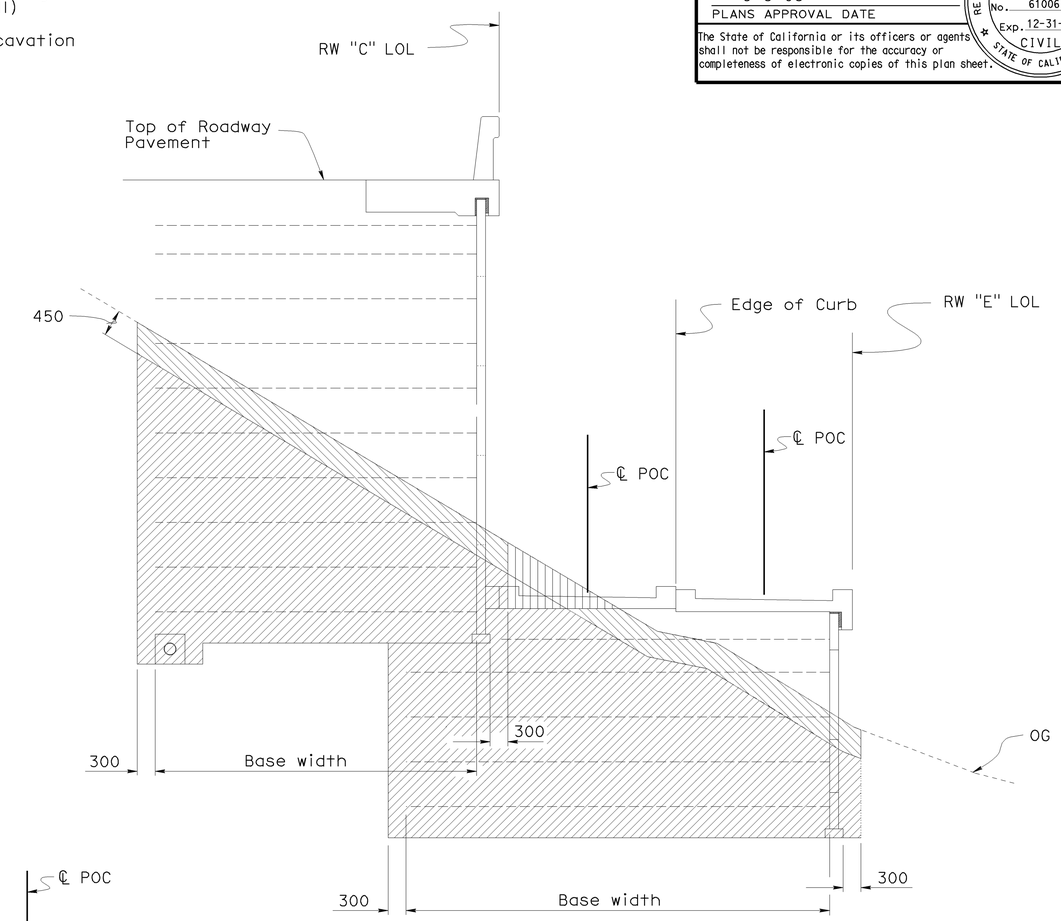

SECTION E-E
1:50

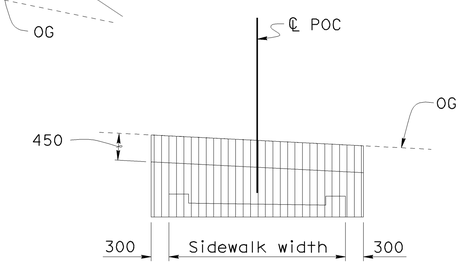

SECTION F-F
1:50

Note:
For section locations see "GENERAL PLAN NO.1" sheet.

NOTE:
THE CONTRACTOR SHALL VERIFY ALL CONTROLLING FIELD DIMENSIONS BEFORE ORDERING OR FABRICATING ANY MATERIAL.

LIMITS OF EXCAVATION

Caltrans Metric

	BY	CHECKED
DESIGN	G. Galo	F. Feng
DETAILS	S. Cholda	F. Feng
QUANTITIES	A. Logus	D. Kubochi

STATE OF CALIFORNIA
DEPARTMENT OF TRANSPORTATION

DIVISION OF ENGINEERING SERVICES
STRUCTURE DESIGN
DESIGN BRANCH 15

BRIDGE NO. 53E0128
KILOMETER POST 46.3

NORTH APPROACH RAMP & RETAINING WALLS
MISCELLANEOUS DETAILS 2 OF 4

ALL DIMENSIONS ARE IN MILLIMETERS UNLESS OTHERWISE SHOWN

ORIGINAL SCALE IN MILLIMETERS FOR REDUCED PLANS 0 10 20 30 40 50 60 70 80 90 100

CU 07
EA 121841

DISREGARD PRINTS BEARING EARLIER REVISION DATES

REVISION DATES: 9-01-08 11-20-08 12-12-08 12-29-08 01-14-09 01-16-09 3-23-09

SHEET 31 OF 41

FILE => 53e0128-u-miscdt09.dgn

STRUCTURES DESIGN DETAIL SHEET (METRIC) (REV.03-17-04)

USERNAME => trrright DATE PLOTTED => 15-JUN-2009 TIME PLOTTED => 08:36

DIST	COUNTY	ROUTE	KILOMETER POST TOTAL PROJECT	SHEET No	TOTAL SHEETS
07	LA	5	42.8/47.3	1062	1073

Andrew Rittenhouse 12-05-08
REGISTERED CIVIL ENGINEER DATE

6-8-09
PLANS APPROVAL DATE

REGISTERED PROFESSIONAL ENGINEER
Andrew P. Rittenhouse
No. 61006
Exp. 12-31-10
CIVIL
STATE OF CALIFORNIA

The State of California or its officers or agents shall not be responsible for the accuracy or completeness of electronic copies of this plan sheet.

Legend:

Indicates Structure Backfill paid as Earth Retaining Structure (Mechanically Stabilized Earth Wall)

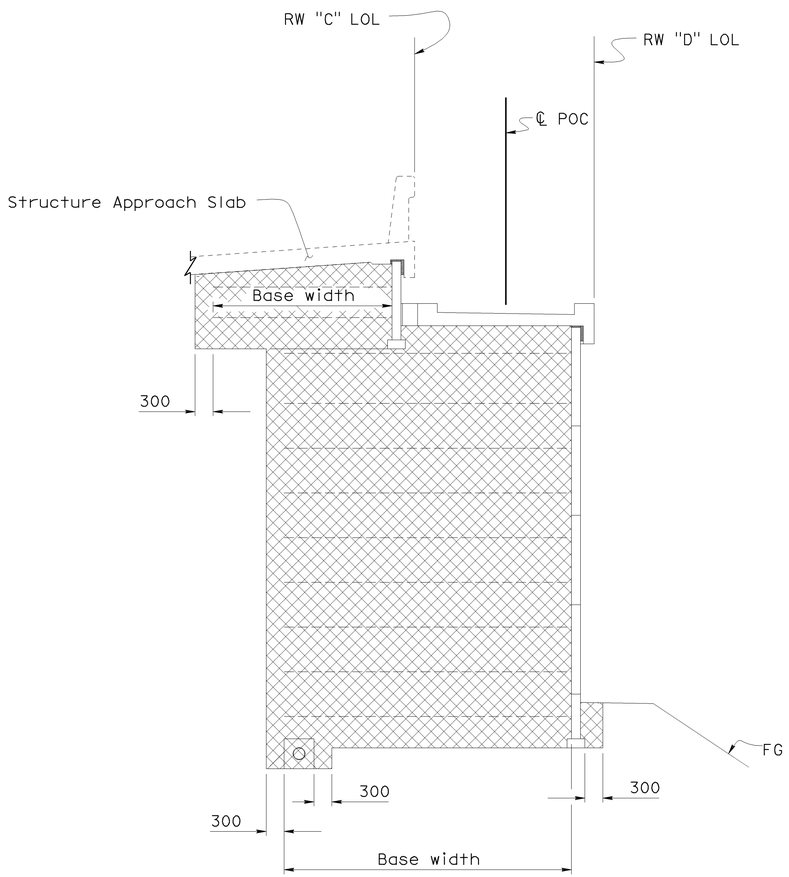

SECTION A-A
1:50

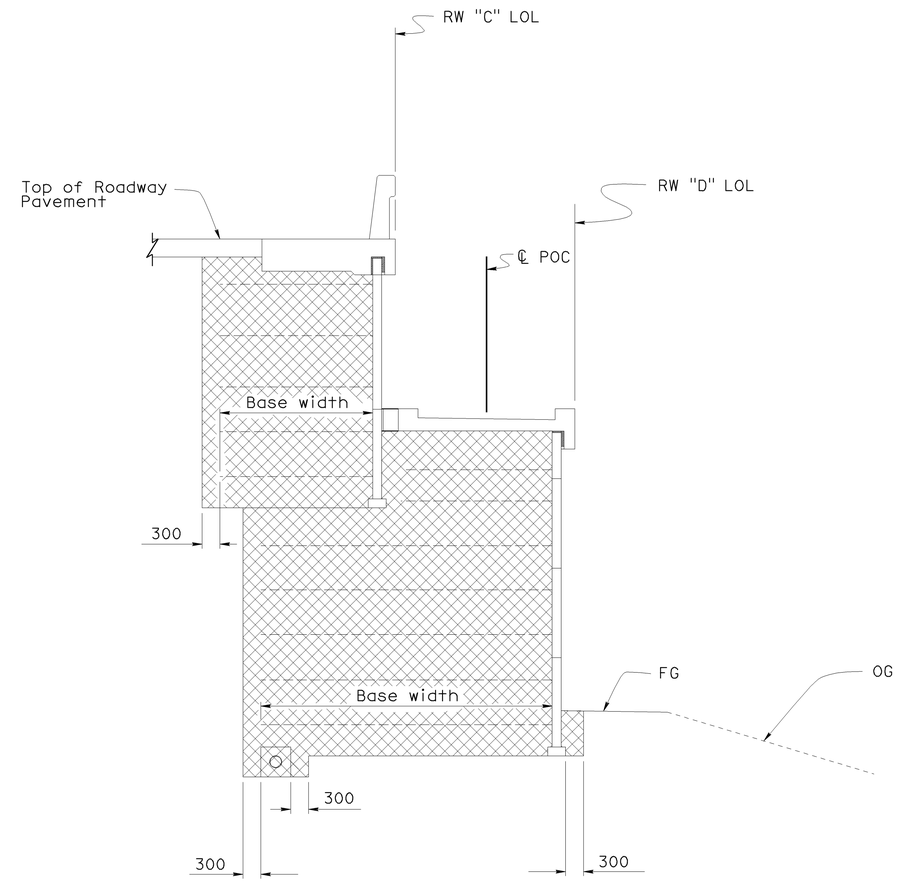

SECTION B-B
1:50

Note:
For section locations see "GENERAL PLAN 1 OF 4" sheet.

NOTE:
THE CONTRACTOR SHALL VERIFY ALL CONTROLLING FIELD DIMENSIONS BEFORE ORDERING OR FABRICATING ANY MATERIAL.

LIMITS OF BACKFILL

	BY	CHECKED
DESIGN	G. Galo	F. Feng
DETAILS	S. Cholda	F. Feng
QUANTITIES	A. Logus	D. Kubochi

STATE OF CALIFORNIA
DEPARTMENT OF TRANSPORTATION

DIVISION OF ENGINEERING SERVICES
STRUCTURE DESIGN
DESIGN BRANCH 15

BRIDGE NO. 53E0128
KILOMETER POST 46.3

NORTH APPROACH RAMP & RETAINING WALLS
MISCELLANEOUS DETAILS 3 OF 4

ALL DIMENSIONS ARE IN MILLIMETERS UNLESS OTHERWISE SHOWN

ORIGINAL SCALE IN MILLIMETERS FOR REDUCED PLANS 0 10 20 30 40 50 60 70 80 90 100

CU 07
EA 121841

DISREGARD PRINTS BEARING EARLIER REVISION DATES

REVISION DATES: 9-01-08 11-20-08 01-14-09 3-23-09

SHEET 32 OF 41

FILE => 53e0128-u-miscdt10.dgn

STRUCTURES DESIGN DETAIL SHEET (METRIC) (REV.03-17-04)

USERNAME => trrright DATE PLOTTED => 15-JUN-2009 TIME PLOTTED => 08:37

DIST	COUNTY	ROUTE	KILOMETER POST TOTAL PROJECT	SHEET No	TOTAL SHEETS
07	LA	5	42.8/47.3	1063	1073

Andrew Rittenhouse 12-05-08
REGISTERED CIVIL ENGINEER DATE

6-8-09
PLANS APPROVAL DATE

REGISTERED PROFESSIONAL ENGINEER
Andrew P. Rittenhouse
No. 61006
Exp. 12-31-10
CIVIL
STATE OF CALIFORNIA

The State of California or its officers or agents shall not be responsible for the accuracy or completeness of electronic copies of this plan sheet.

Legend:

Indicates Structure Backfill paid as Earth Retaining Structure (Mechanically Stabilized Earth Wall)

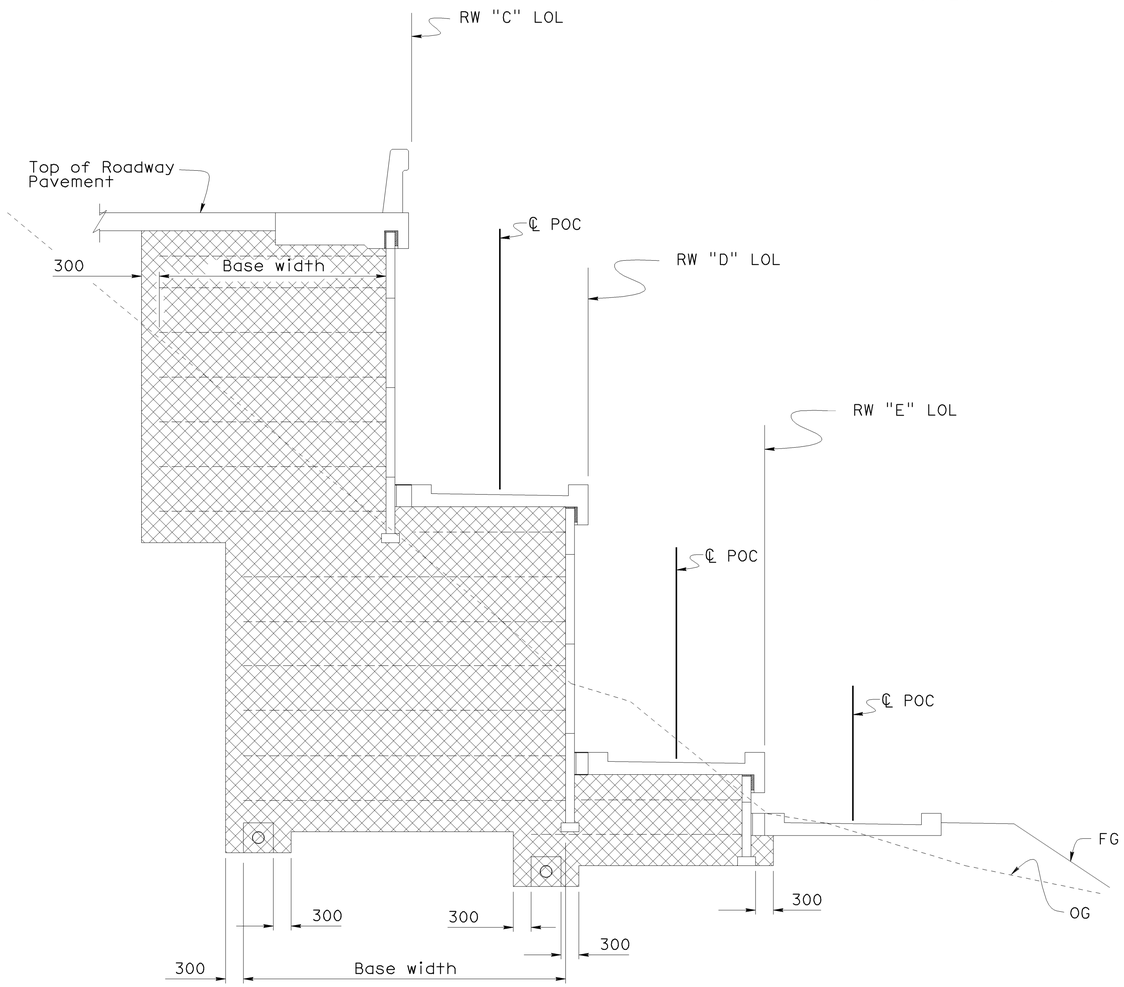

SECTION D-D
1:50

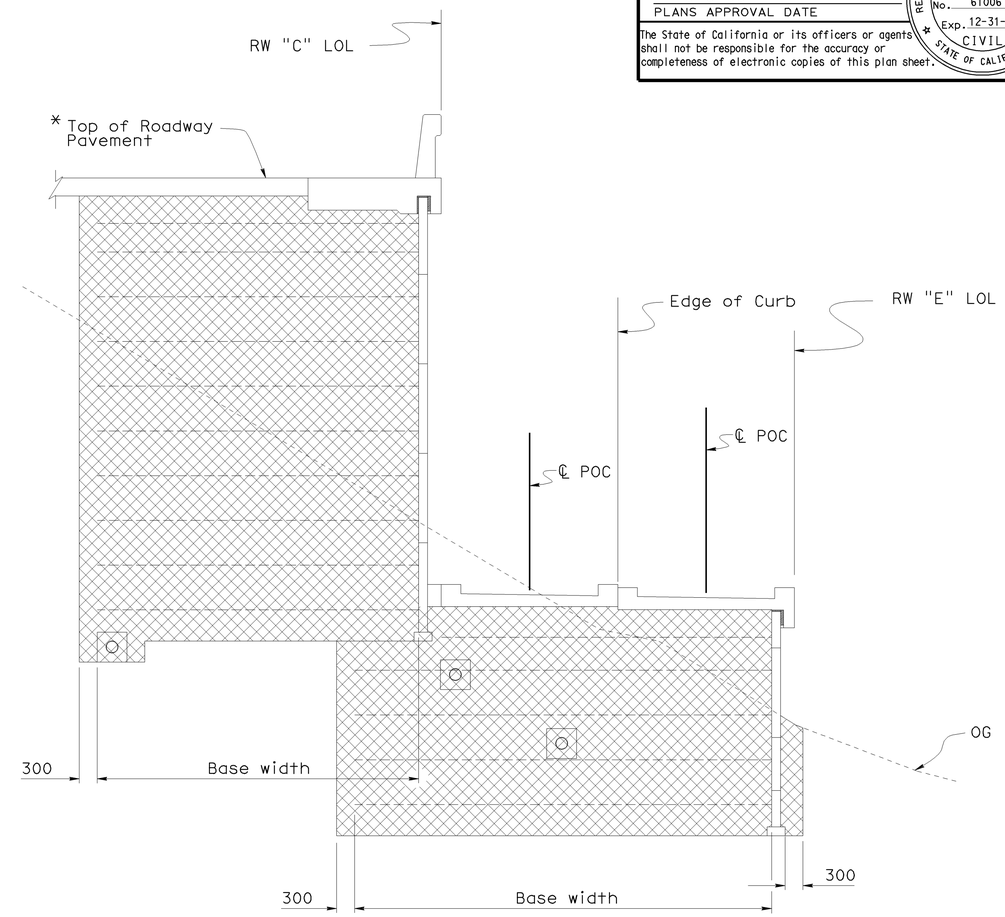

SECTION E-E
1:50

LIMITS OF BACKFILL

Note:
For section locations see "GENERAL PLAN 1 OF 4" sheet.

NOTE:
THE CONTRACTOR SHALL VERIFY ALL CONTROLLING FIELD DIMENSIONS BEFORE ORDERING OR FABRICATING ANY MATERIAL.

Caltrans Metric

ALL DIMENSIONS ARE IN MILLIMETERS UNLESS OTHERWISE SHOWN

ORIGINAL SCALE IN MILLIMETERS FOR REDUCED PLANS 0 10 20 30 40 50 60 70 80 90 100

	BY	CHECKED
DESIGN	G. Galo	F. Feng
DETAILS	S. Cholda	F. Feng
QUANTITIES	A. Logus	D. Kubochi

STATE OF CALIFORNIA
DEPARTMENT OF TRANSPORTATION

DIVISION OF ENGINEERING SERVICES
STRUCTURE DESIGN
DESIGN BRANCH 15

CU 07
EA 121841

BRIDGE NO. 53E0128
KILOMETER POST 46.3

NORTH APPROACH RAMP & RETAINING WALLS
MISCELLANEOUS DETAILS 4 OF 4

DISREGARD PRINTS BEARING EARLIER REVISION DATES

REVISION DATES: 9-01-08, 11-20-08, 12-12-08, 3-23-09

SHEET 33 OF 41

FILE => 53e0128-u-miscdt11.dgn

STRUCTURES DESIGN DETAIL SHEET (METRIC) (REV.03-17-04)

USERNAME => trrichf DATE PLOTTED => 15-JUN-2009 TIME PLOTTED => 08:37

DIST	COUNTY	ROUTE	KILOMETER POST TOTAL PROJECT	SHEET No	TOTAL SHEETS
07	LA	5	42.8/47.3	1064	1073

Andrew Rittenhouse 12-05-08
REGISTERED CIVIL ENGINEER DATE

6-8-09
PLANS APPROVAL DATE

REGISTERED PROFESSIONAL ENGINEER
Andrew P. Rittenhouse
No. 61006
Exp. 12-31-10
CIVIL
STATE OF CALIFORNIA

The State of California or its officers or agents shall not be responsible for the accuracy or completeness of electronic copies of this plan sheet.

Note:

1. Distance of North Approach Ramp from ℄ Route 5 is shown not to scale.
2. For curve data, see "Curve Data Table" on "GENERAL PLAN 2 OF 4" sheet.
3. For "Section A-A", "Section B-B", "Section C-C", see "FENCE AND HANDRAIL LAYOUT 2 OF 3" sheets.
4. For "Section D-D", "Section E-E", "Section F-F", see "FENCE AND HANDRAIL LAYOUT 3 OF 3" sheets.

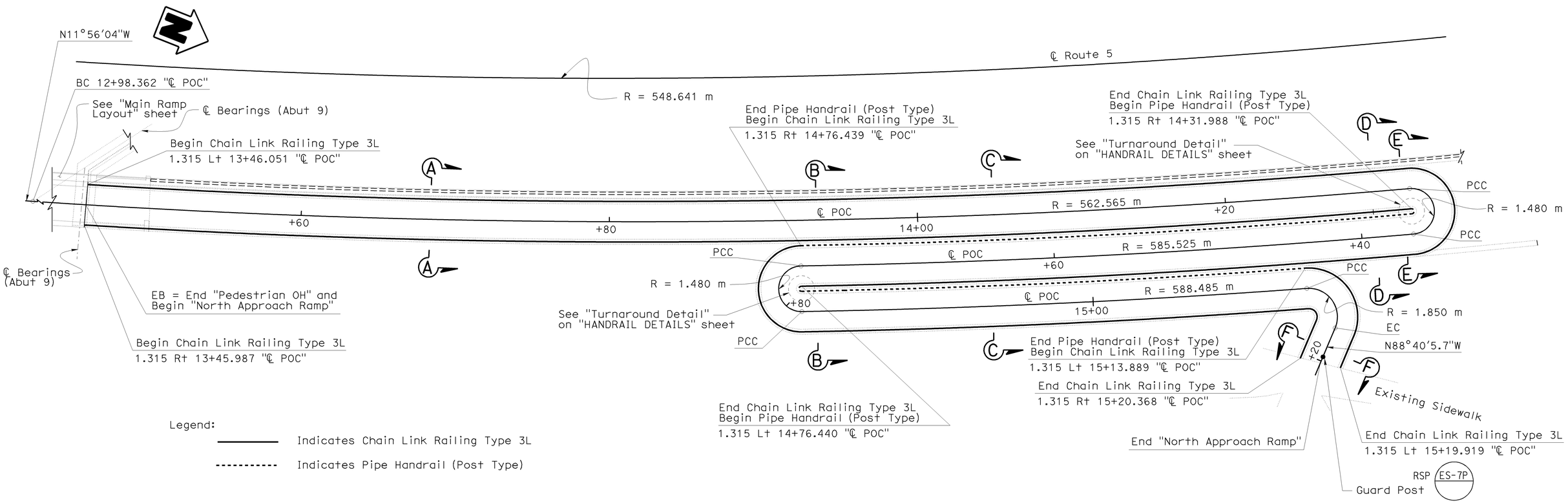

PLAN
1:125

NOTE:
THE CONTRACTOR SHALL VERIFY ALL CONTROLLING FIELD DIMENSIONS BEFORE ORDERING OR FABRICATING ANY MATERIAL.

	BY	CHECKED
DESIGN	G. Galo	F. Feng
DETAILS	S. Cholda	F. Feng
QUANTITIES	A. Logus	D. Kubochi

STATE OF CALIFORNIA
DEPARTMENT OF TRANSPORTATION

DIVISION OF ENGINEERING SERVICES
STRUCTURE DESIGN
DESIGN BRANCH 15

BRIDGE NO. 53E0128
KILOMETER POST 46.3

NORTH APPROACH RAMP & RETAINING WALLS
FENCE & HANDRAIL LAYOUT 1 OF 3

Caltrans Metric

ALL DIMENSIONS ARE IN MILLIMETERS UNLESS OTHERWISE SHOWN

ORIGINAL SCALE IN MILLIMETERS FOR REDUCED PLANS 0 10 20 30 40 50 60 70 80 90 100

CU 07
EA 121841

DISREGARD PRINTS BEARING EARLIER REVISION DATES

REVISION DATES: 02-19-09 01-04-06 04-12-06 05-13-08 08-25-06 09-08-06 11-20-08 12-12-08 01-15-09 01-16-09

SHEET 34 OF 41

FILE => 53e0128-u-miscdt12.dgn

STRUCTURES DESIGN DETAIL SHEET (METRIC) (REV.03-17-04)

USERNAME => tfrichf DATE PLOTTED => 15-JUN-2009 TIME PLOTTED => 08:37

DIST	COUNTY	ROUTE	KILOMETER POST TOTAL PROJECT	SHEET No	TOTAL SHEETS
07	LA	5	42.8/47.3	1065	1073

Andrew Rittenhouse 12-05-08
REGISTERED CIVIL ENGINEER DATE

6-8-09
PLANS APPROVAL DATE

REGISTERED PROFESSIONAL ENGINEER
Andrew P. Rittenhouse
No. 61006
Exp. 12-31-10
CIVIL
STATE OF CALIFORNIA

The State of California or its officers or agents shall not be responsible for the accuracy or completeness of electronic copies of this plan sheet.

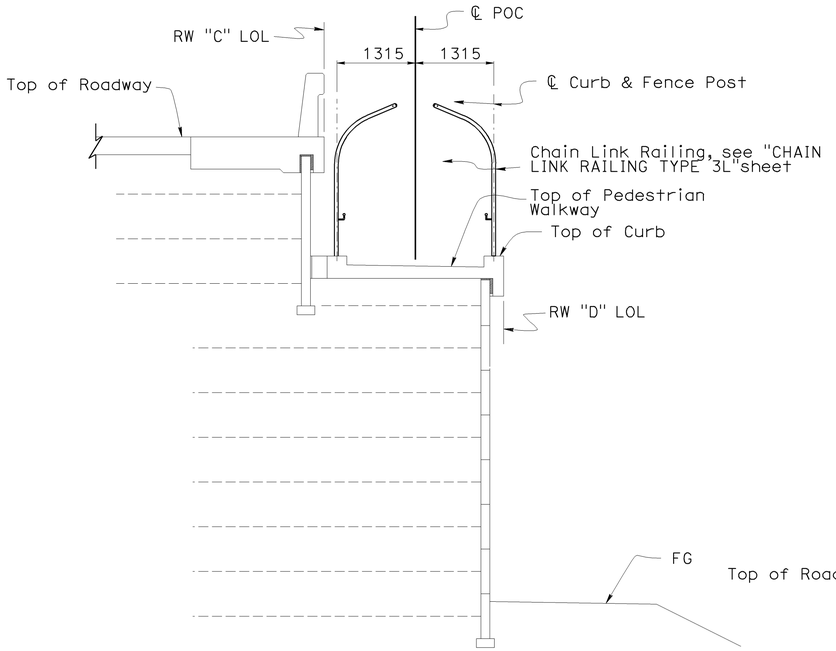

SECTION A-A
1:50

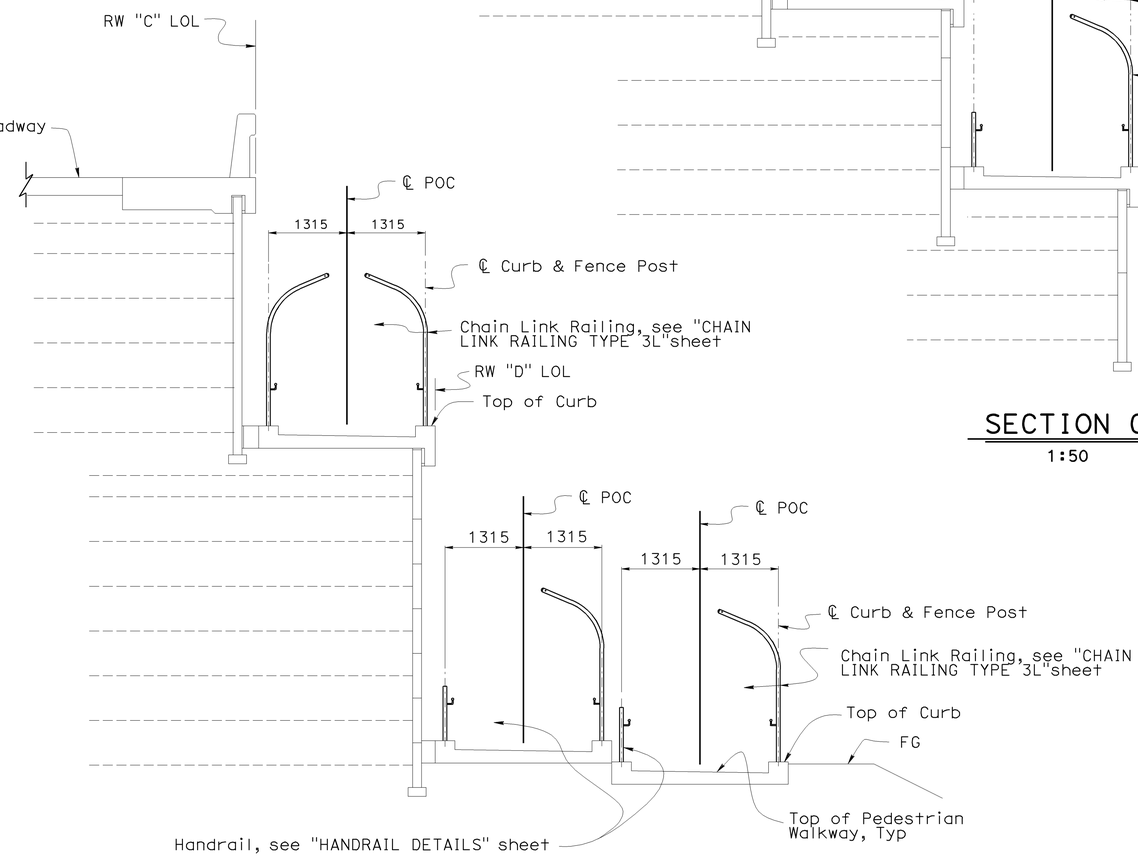

SECTION B-B
1:50

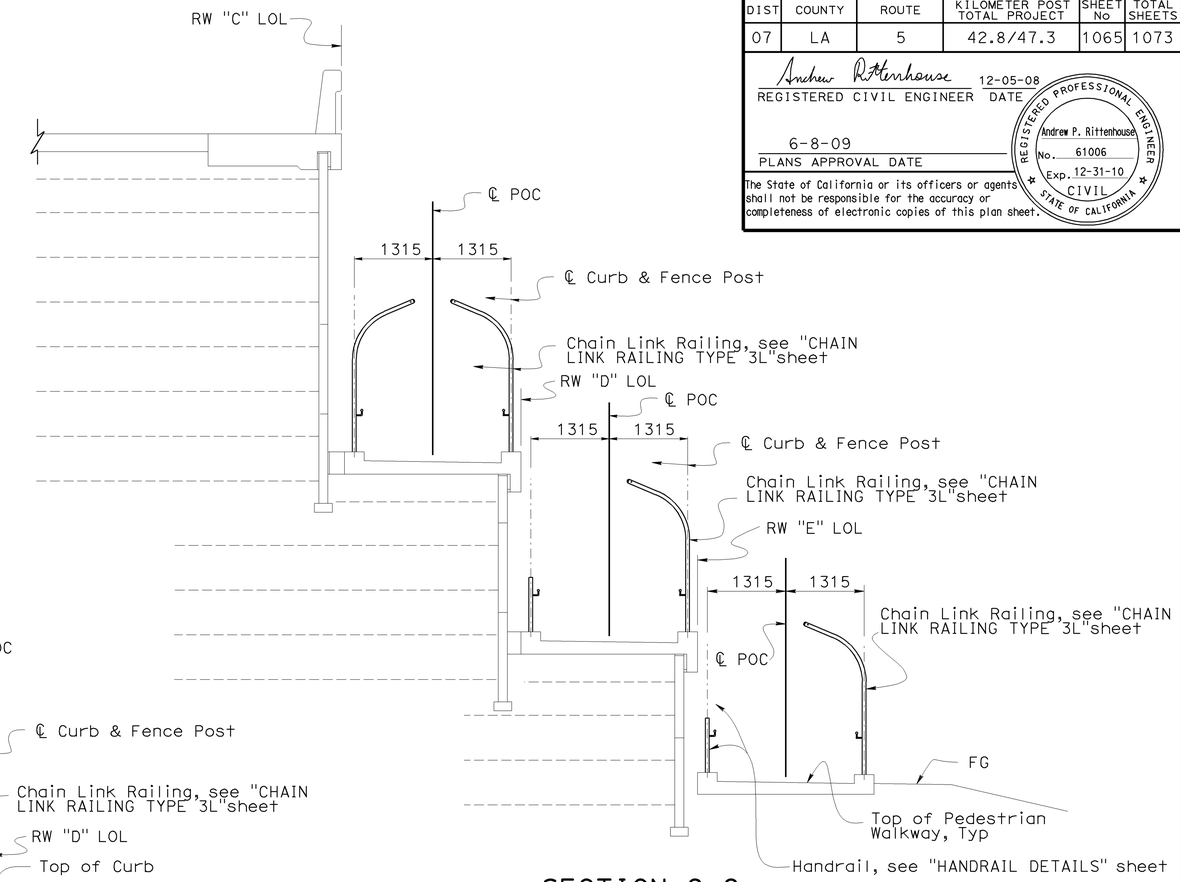

SECTION C-C
1:50

NOTE:
THE CONTRACTOR SHALL VERIFY ALL CONTROLLING FIELD DIMENSIONS BEFORE ORDERING OR FABRICATING ANY MATERIAL.

Caltrans Metric

	BY	CHECKED
DESIGN	G. Galo	F. Feng
DETAILS	S. Cholda	F. Feng
QUANTITIES	A. Logus	D. Kubochi

STATE OF CALIFORNIA
DEPARTMENT OF TRANSPORTATION

DIVISION OF ENGINEERING SERVICES
STRUCTURE DESIGN
DESIGN BRANCH 15

BRIDGE NO. 53E0128
KILOMETER POST 46.3

NORTH APPROACH RAMP & RETAINING WALLS
FENCE & HANDRAIL LAYOUT 2 OF 3

ALL DIMENSIONS ARE IN MILLIMETERS UNLESS OTHERWISE SHOWN

ORIGINAL SCALE IN MILLIMETERS FOR REDUCED PLANS 0 10 20 30 40 50 60 70 80 90 100

CU 07
EA 121841

DISREGARD PRINTS BEARING EARLIER REVISION DATES

REVISION DATES: 10-03-08 11-20-08 12-12-08 01-15-09

SHEET 35 OF 41

FILE => 53e0128-u-miscdt13.dgn

STRUCTURES DESIGN DETAIL SHEET (METRIC) (REV.03-17-04)

USERNAME => trrright DATE PLOTTED => 15-JUN-2009 TIME PLOTTED => 08:37

DIST	COUNTY	ROUTE	KILOMETER POST TOTAL PROJECT	SHEET No	TOTAL SHEETS
07	LA	5	42.8/47.3	1066	1073

Andrew Rittenhouse 12-05-08
REGISTERED CIVIL ENGINEER DATE

6-8-09
PLANS APPROVAL DATE

REGISTERED PROFESSIONAL ENGINEER
Andrew P. Rittenhouse
No. 61006
Exp. 12-31-10
CIVIL
STATE OF CALIFORNIA

The State of California or its officers or agents shall not be responsible for the accuracy or completeness of electronic copies of this plan sheet.

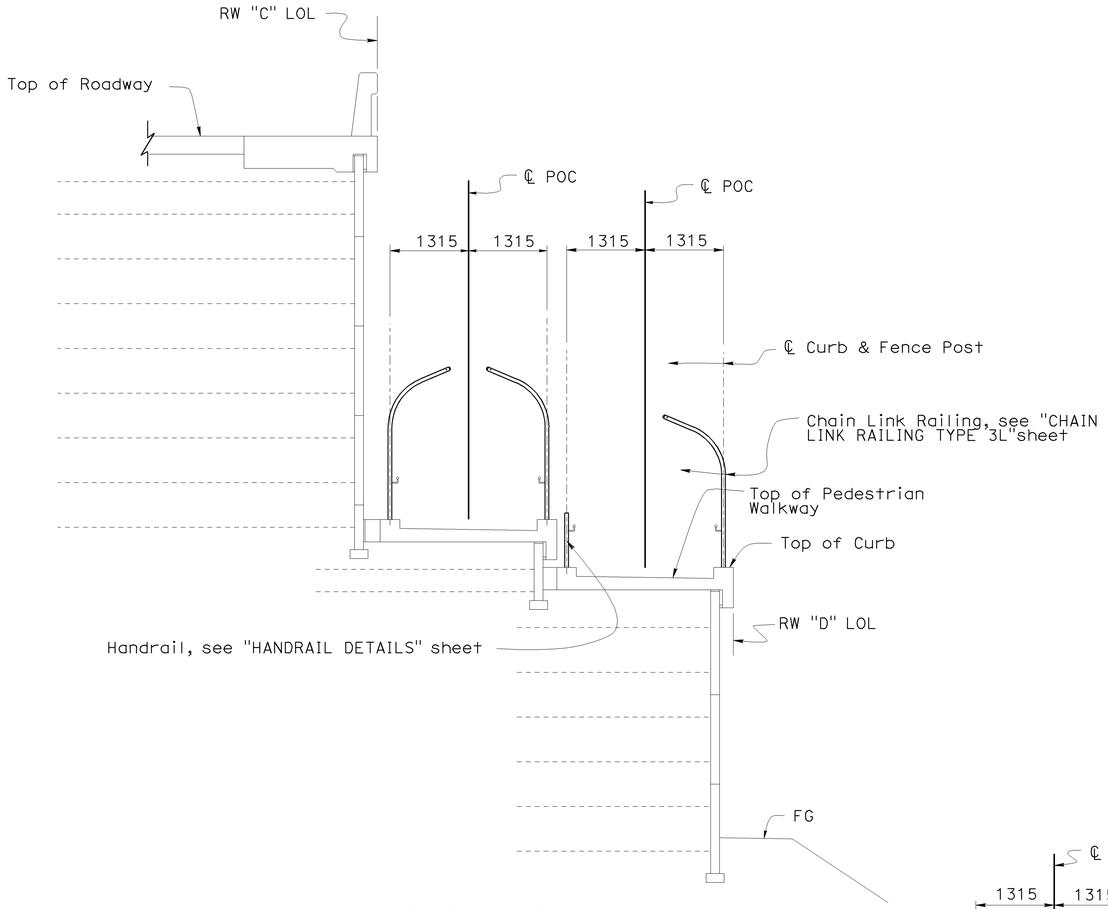

SECTION D-D
1:50

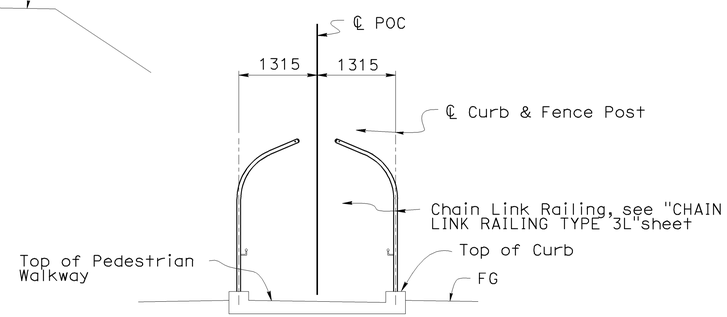

SECTION F-F
1:50

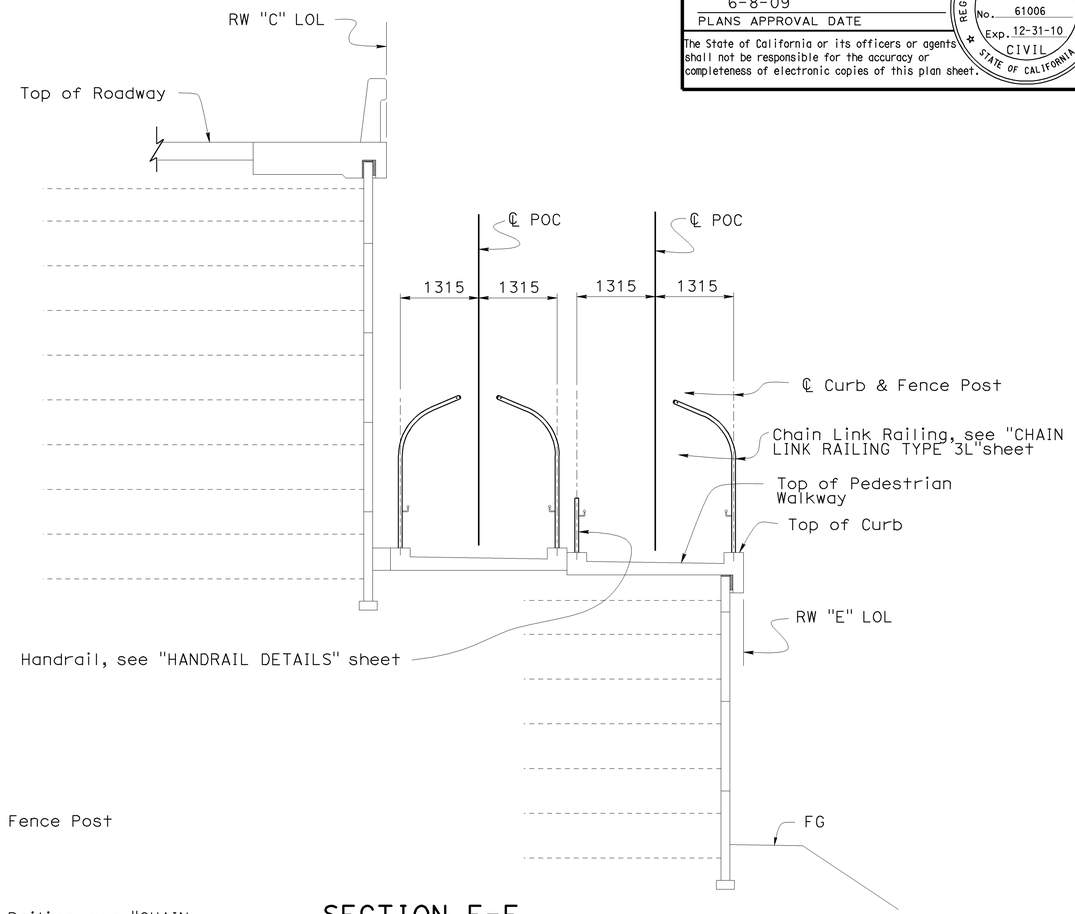

SECTION E-E
1:50

NOTE:
THE CONTRACTOR SHALL VERIFY ALL CONTROLLING FIELD DIMENSIONS BEFORE ORDERING OR FABRICATING ANY MATERIAL.

Caltrans Metric

	BY	CHECKED
DESIGN	G. Galo	F. Feng
DETAILS	S. Cholda	F. Feng
QUANTITIES	A. Logus	D. Kubochi

STATE OF CALIFORNIA
DEPARTMENT OF TRANSPORTATION

DIVISION OF ENGINEERING SERVICES
STRUCTURE DESIGN
DESIGN BRANCH 15

BRIDGE NO. 53E0128
KILOMETER POST 46.3

NORTH APPROACH RAMP & RETAINING WALLS
FENCE & HANDRAIL LAYOUT 3 OF 3

ALL DIMENSIONS ARE IN MILLIMETERS UNLESS OTHERWISE SHOWN

ORIGINAL SCALE IN MILLIMETERS FOR REDUCED PLANS 0 10 20 30 40 50 60 70 80 90 100

CU 07
EA 121841

DISREGARD PRINTS BEARING EARLIER REVISION DATES

REVISION DATES: 12-14-07 01-04-08 04-12-08 05-13-08 08-25-08 09-09-08 11-20-08 01-15-09

SHEET 36 OF 41

FILE => 53e0128-u-miscdt14.dgn

STRUCTURES DESIGN DETAIL SHEET (METRIC) (REV.03-17-04)

USERNAME => trrright DATE PLOTTED => 15-JUN-2009 TIME PLOTTED => 08:37

DIST	COUNTY	ROUTE	KILOMETER POST TOTAL PROJECT	SHEET No	TOTAL SHEETS
07	LA	5	42.8/47.3	1067	1073

Andrew P. Rittenhouse 12-05-08
REGISTERED CIVIL ENGINEER DATE

6-8-09
PLANS APPROVAL DATE

REGISTERED PROFESSIONAL ENGINEER Andrew P. Rittenhouse No. 61006 Exp. 12-3-10 CIVIL STATE OF CALIFORNIA

The State of California or its officers or agents shall not be responsible for the accuracy or completeness of electronic copies of this plan sheet.

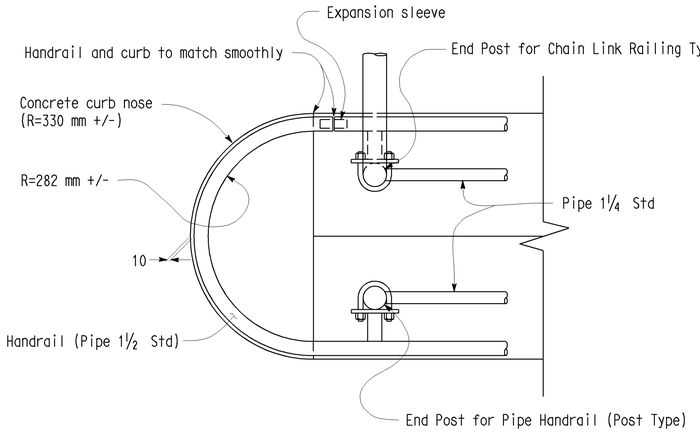

* TURNAROUND DETAIL

*Reverse detail as needed for each location

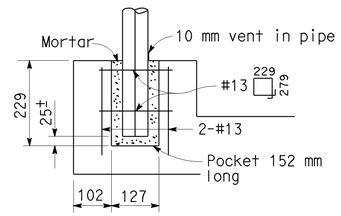

ALTERNATIVE ANCHORAGE DETAIL

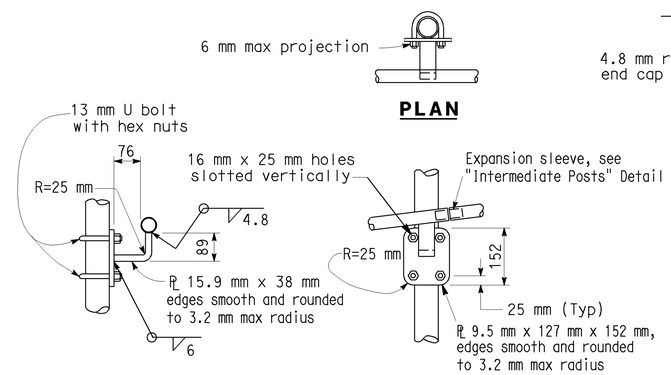

SIDE VIEW — ELEVATION

PIPE HANDRAILING BRACKET

ELEVATION

PIPE HANDRAILING AT END

NOTES:

1. Railing assembly to be galvanized after fabrication.
2. Railing shall conform to horizontal and vertical alignment. Posts shall be vertical. Horizontal pipes shall be bent if radius is 45.72 m or less-may be on 2.438 m chords if radius is over 45.72 m.
3. Peen all bolts and remove sharp edges.
4. Alternative details may be submitted by Contractor for Engineer's approval.

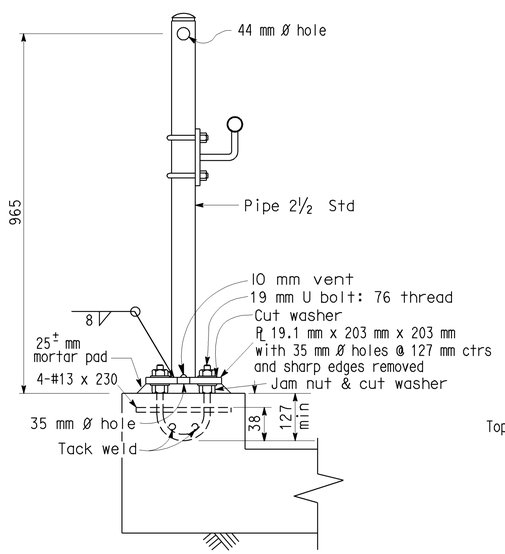

TYPICAL POST DETAIL

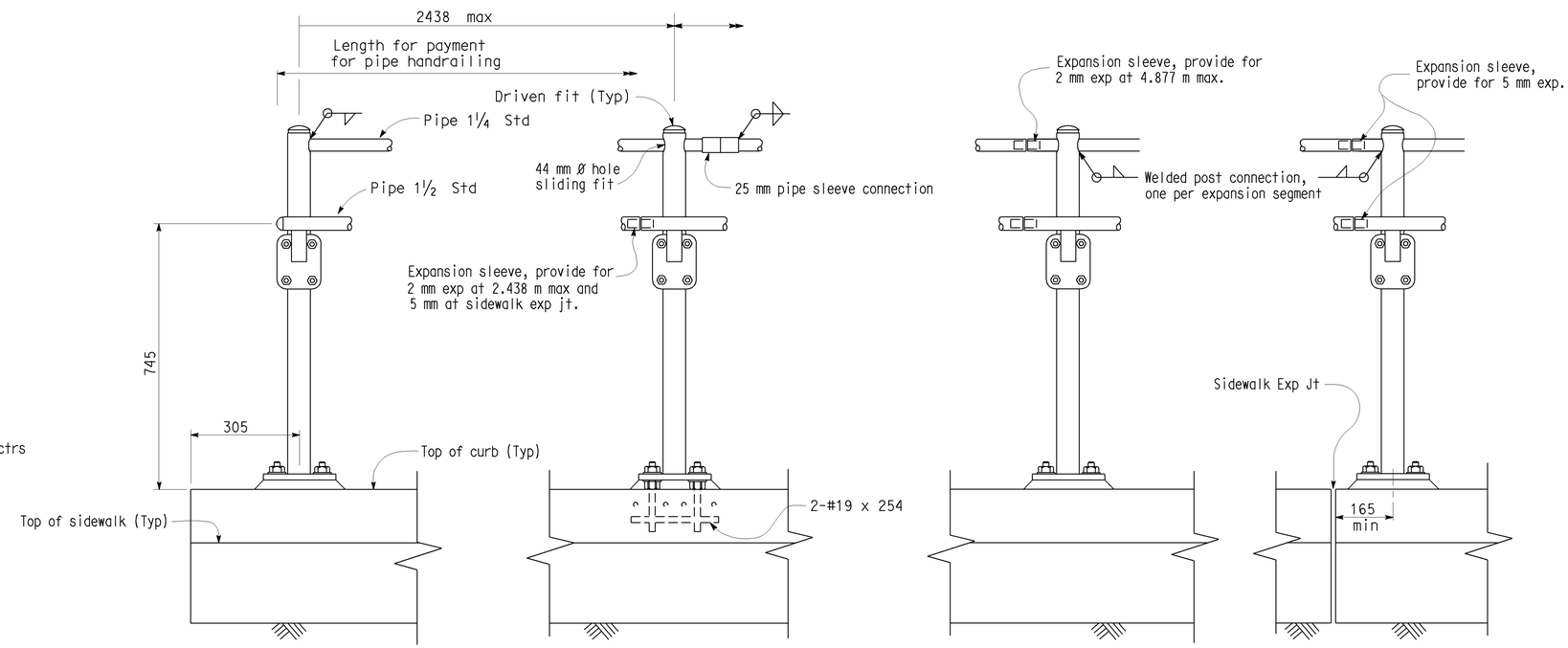

END POST — INTERMEDIATE POSTS — SIDEWALK EXPANSION JOINT

ELEVATION

NOTE:
THE CONTRACTOR SHALL VERIFY ALL CONTROLLING FIELD DIMENSIONS BEFORE ORDERING OR FABRICATING ANY MATERIAL.

Caltrans Metric

	BY	CHECKED
DESIGN	G. Galo	F. Feng
DETAILS	S. Cholda	F. Feng
QUANTITIES	A. Logus	D. Kubochi

STATE OF CALIFORNIA DEPARTMENT OF TRANSPORTATION

DIVISION OF ENGINEERING SERVICES STRUCTURE DESIGN
DESIGN BRANCH 15

BRIDGE NO. 53E0128
KILOMETER POST 46.3

NORTH APPROACH RAMP & RETAINING WALLS
HANDRAIL DETAILS

ALL DIMENSIONS ARE IN MILLIMETERS UNLESS OTHERWISE SHOWN

ORIGINAL SCALE IN MILLIMETERS FOR REDUCED PLANS 0 10 20 30 40 50 60 70 80 90 100

CU 07
EA 121841

DISREGARD PRINTS BEARING EARLIER REVISION DATES

REVISION DATES: 11-06-08 11-20-08 12-15-08 01-14-09

SHEET 37 OF 41

FILE => 53e0128-u-miscdt15.dgn

STRUCTURES DESIGN DETAIL SHEET (METRIC) (REV.03-17-04)

USERNAME => trrright DATE PLOTTED => 15-JUN-2009 TIME PLOTTED => 08:37

DIST.	COUNTY	ROUTE	KILOMETER POST TOTAL PROJECT	SHEET NO.	TOTAL SHEETS
07	LA	5	42.8/47.3	1068	1073

Caltrans Metric

Andrew P. Rittenhouse 12-05-08
REGISTERED ENGINEER - CIVIL

6-8-09
PLANS APPROVAL DATE

REGISTERED PROFESSIONAL ENGINEER Andrew P. Rittenhouse No. 61006 Exp. 12-31-10 CIVIL STATE OF CALIFORNIA

The State of California or its officers or agents shall not be responsible for the accuracy or completeness of electronic copies of this plan sheet.

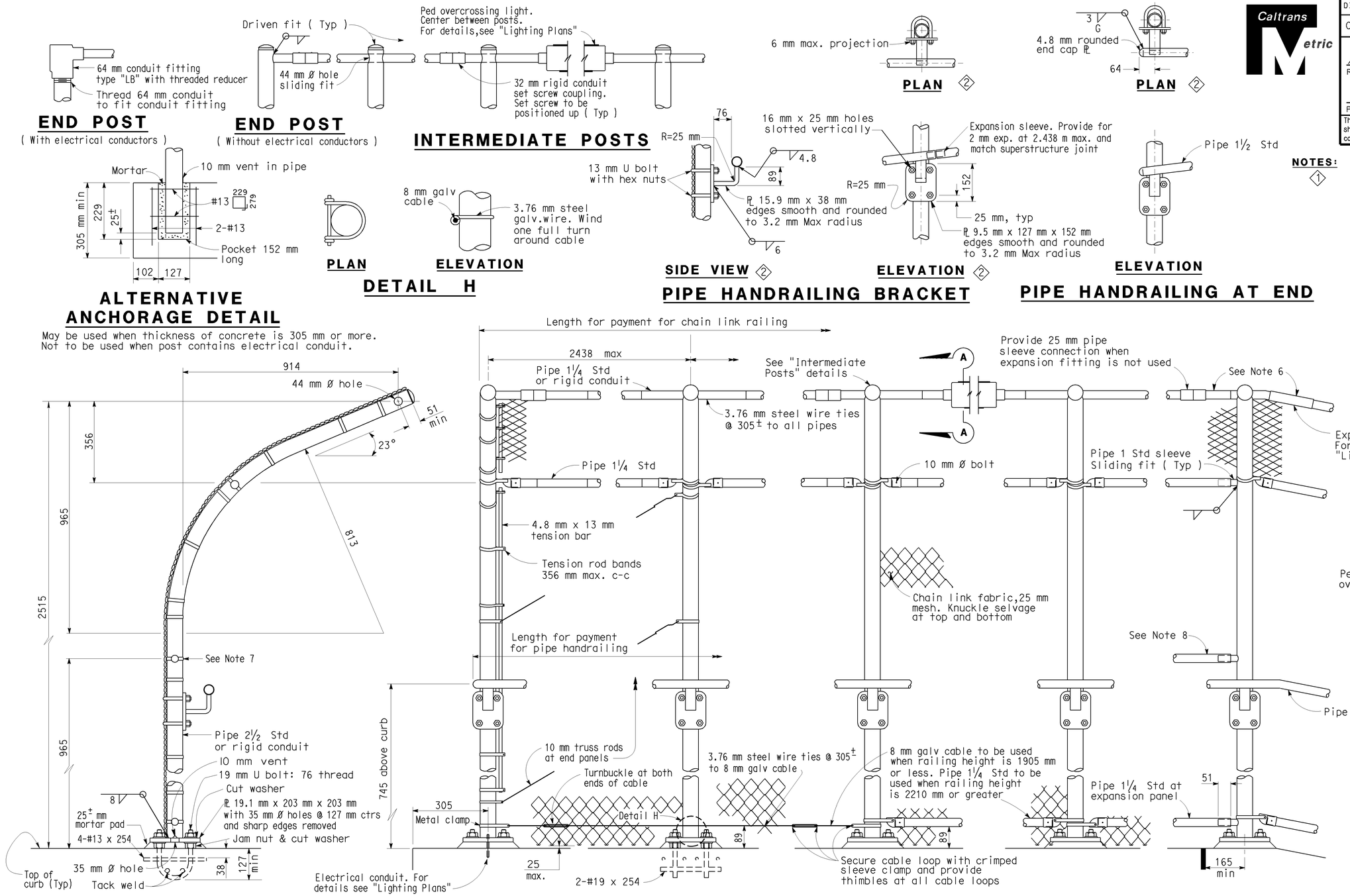

NOTES: 1

1. Railing assembly except chain link fabric to be galvanized after fabrication
2. Railing shall conform to horizontal and vertical alignment.Posts shall be vertical.Horizontal pipes shall be bent if radius is 45.72 m or less-may be on 2.438 m chords if radius is over 45.72 m.
3. Peen all exposed bolt ends and remove sharp edges.
4. When railing is on slope, fabric shall parallel to slope.
5. Alternative details may be submitted by Contractor for Engineer's approval.
6. All pipe carrying electrical conductors shall be rigid conduit.
7. Additional pipe 1¼ std required on radius less than 45.72 m.

SPECIAL DETAILS

NO SCALE

ALL DIMENSIONS ARE IN MILLIMETERS UNLESS OTHERWISE SHOWN

STANDARD DRAWING					
RELEASE DATE Revised	DESIGN	BY R.W. BISHOP	CHECKED J. HAMAGUCHI	RELEASED BY	
FILE NO. xs16-330	DETAILS	BY R. YEE	CHECKED J. HAMAGUCHI		
	SUBMITTED	BY R.W. BISHOP	DRAWING DATE 4/91	OFFICE CHIEF	

1 Modified notes
2 Modified details

STATE OF CALIFORNIA
DEPARTMENT OF TRANSPORTATION

DIVISION OF ENGINEERING SERVICES

BRIDGE NO. 53E0128
KILOMETER POST 46.3

NORTH APPROACH RAMP & RETAINING WALLS

CHAIN LINK RAILING TYPE 3L

DS OSD 2147A (METRIC) (REV. 2/25/97)

ORIGINAL SCALE IN MILLIMETERS FOR REDUCED PLANS 0 10 20 30 40 50 60 70 80 90 100

CU 07
EA 121841

DISREGARD PRINTS BEARING EARLIER REVISION DATES

REVISION DATES (PRELIMINARY STAGE ONLY) 9-02-08 9-22-08 11-20-08 01-07-09 01-15-09

SHEET 38 OF 41

USERNAME => trrichf

DATE PLOTTED => 15-JUN-2009 TIME PLOTTED => 08:37

53e0128-u-xs16-330

DIST	COUNTY	ROUTE	KILOMETER POST TOTAL PROJECT	SHEET No	TOTAL SHEETS
07	LA	5	42.8/47.3	1069	1073

Andrew P. Rittenhouse 12-05-08
REGISTERED CIVIL ENGINEER DATE

6-8-09
PLANS APPROVAL DATE

REGISTERED PROFESSIONAL ENGINEER
Andrew P. Rittenhouse
No. 61006
Exp. 12-31-10
CIVIL
STATE OF CALIFORNIA

The State of California or its officers or agents shall not be responsible for the accuracy or completeness of electronic copies of this plan sheet.

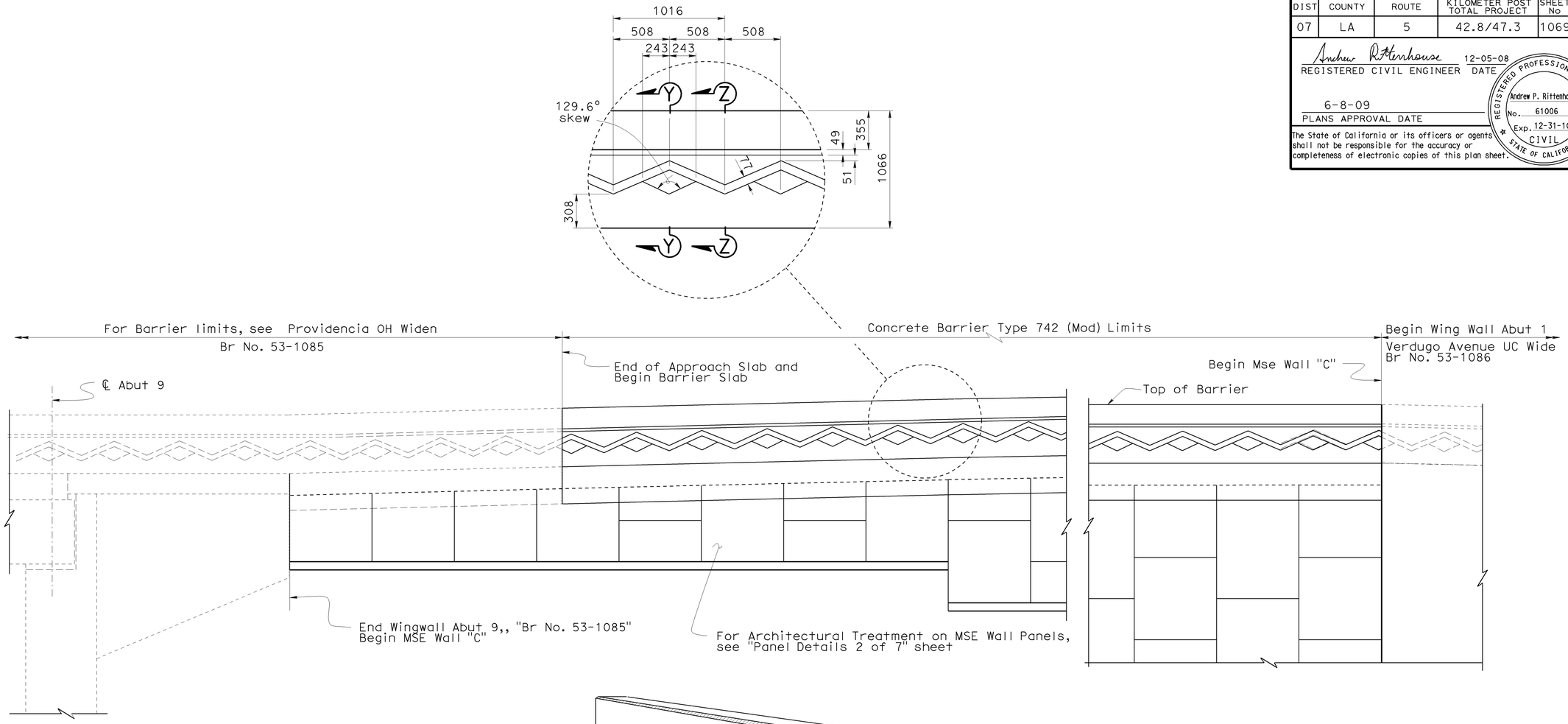

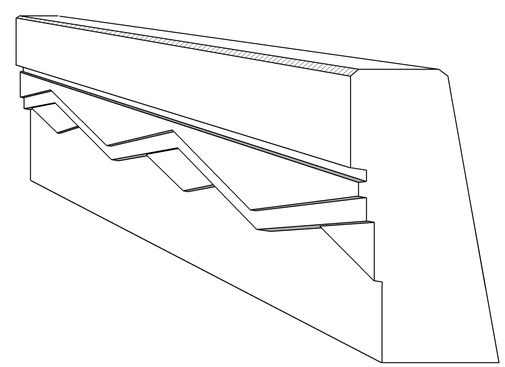

PERSPECTIVE VIEW

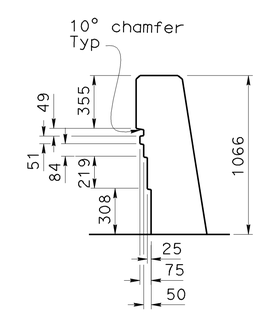

SECTION Y-Y

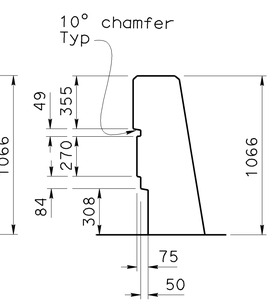

SECTION Z-Z

NOTE:
THE CONTRACTOR SHALL VERIFY ALL CONTROLLING FIELD DIMENSIONS BEFORE ORDERING OR FABRICATING ANY MATERIAL.

CONCRETE BARRIER TYPE 742 (MOD) & TYPE 742A (MOD)

No Scale

Caltrans Metric

	BY	CHECKED
DESIGN	G. Galo	F. Feng
DETAILS	S. Cholda	F. Feng
QUANTITIES	A. Logus	D. Kubochi

STATE OF CALIFORNIA
DEPARTMENT OF TRANSPORTATION

DIVISION OF ENGINEERING SERVICES
STRUCTURE DESIGN
DESIGN BRANCH 15

BRIDGE NO. 53E0128
KP (PM) 46.3

NORTH APPROACH RAMP & RETAINING WALLS
ARCHITECTURAL TREATMENT DETAILS

ALL DIMENSIONS ARE IN MILLIMETERS UNLESS OTHERWISE SHOWN

ORIGINAL SCALE IN MILLIMETERS FOR REDUCED PLANS 0 10 20 30 40 50 60 70 80 90 100

CU 07
EA 121841

DISREGARD PRINTS BEARING EARLIER REVISION DATES
REVISION DATES: 10-06-08 11-20-08 12-12-08 01-15-09 01-16-09

SHEET 39 OF 41

FILE => 53e0128-v-arch01.dgn

STRUCTURES DESIGN DETAIL SHEET (METRIC) (REV.03-17-04)

USERNAME => trright DATE PLOTTED => 15-JUN-2009 TIME PLOTTED => 08:46

DIST	COUNTY	ROUTE	KILOMETER POST TOTAL PROJECT	SHEET No	TOTAL SHEETS
07	LA	5	42.8/47.3	1070	1073

REGISTERED CIVIL ENGINEER 9-4-08

6-8-09
PLANS APPROVAL DATE

REGISTERED PROFESSIONAL ENGINEER Qiang Huang No. C055671 Exp. 12-31-08 CIVIL STATE OF CALIFORNIA

The State of California or its officers or agents shall not be responsible for the accuracy or completeness of electronic copies of this plan sheet.

BENCH MARK

SURVEY CONTROL

TRVPT113
Fnd SET PK NAIL
9.012 M Rt. ℄ Rte 5
Sta. 462+45.471
N 574824.813
E 1971740.657
Elev. = 163.175

TRVPR138
Fnd SET SPIKE
29.988 M Lt. ℄ Rte 5
Sta. 464+17.373
N 574975.094
E 1971655.794
Elev. = 166.824

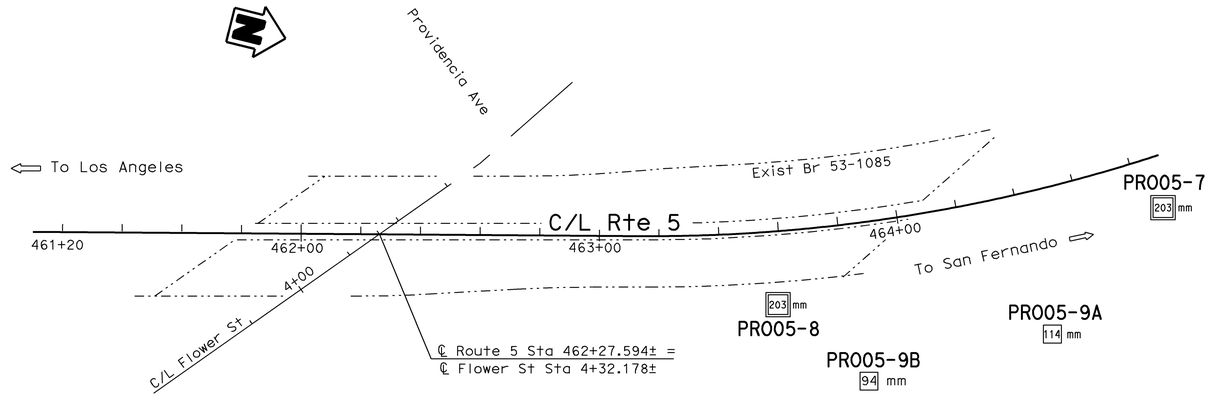

PLAN
1:1000

Note: Ground water not measured during field investigation.

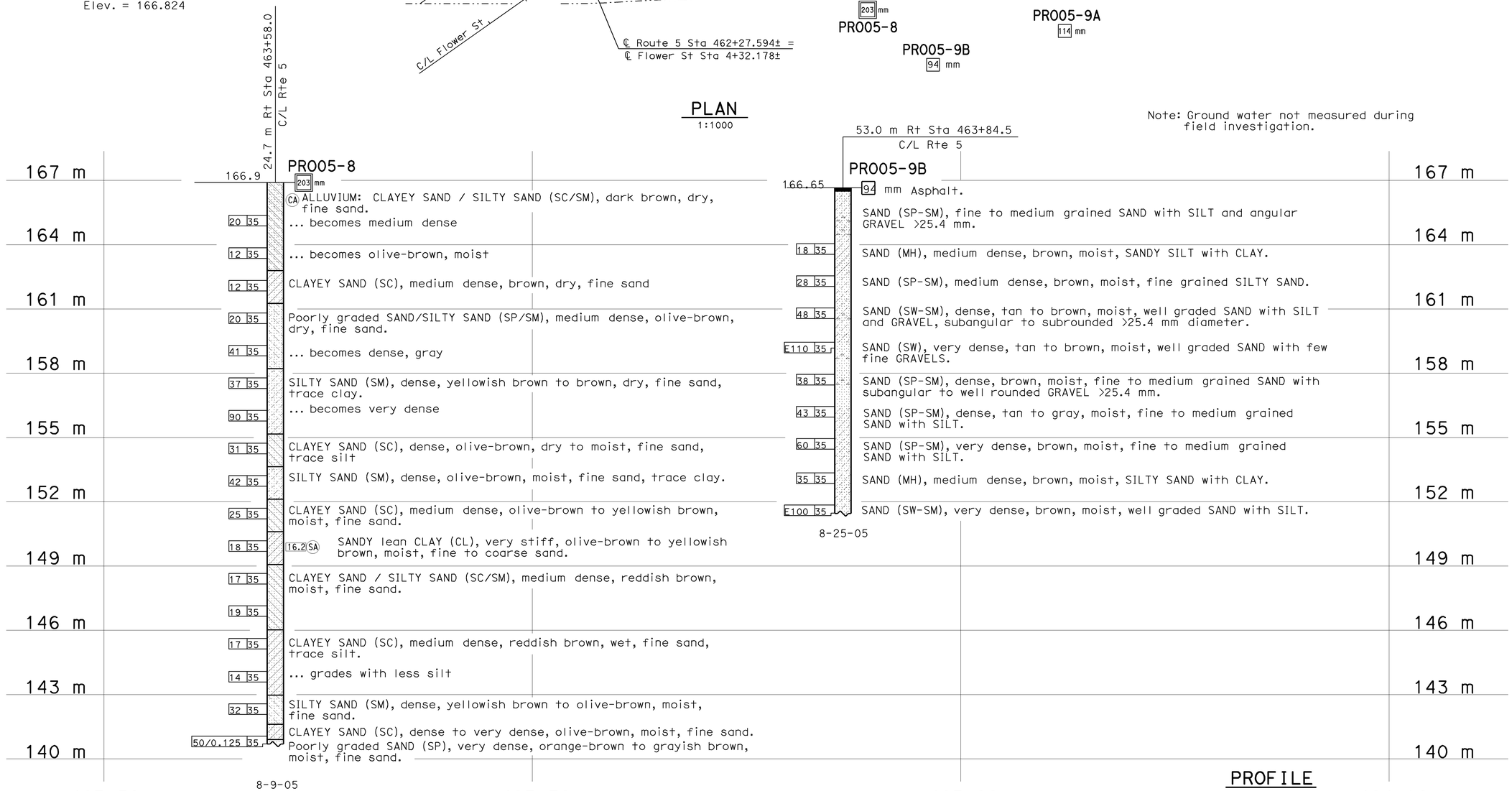

PROFILE
HOR. 1:100
VER. 1:100

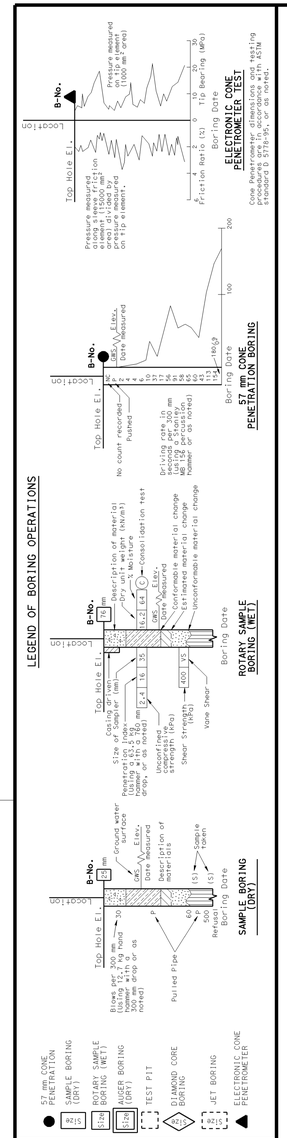

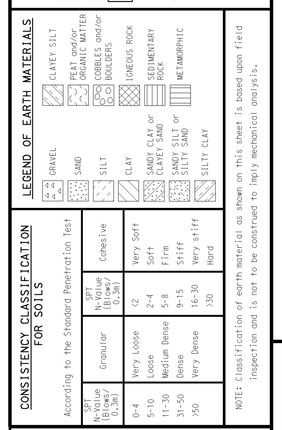

NOTE: Classification of earth material as shown on this sheet is based upon field inspection and is not to be construed to imply mechanical analysis.

OGS CIVIL LOG OF TEST BORINGS SHEET (METRIC) (REV. 4/04)

Caltrans Metric

GEOTECHNICAL SERVICES	
DRAWN BY	F. Nguyen 9/08
CHECKED BY	B. Bertucci

FIELD INVESTIGATION BY: B. Bertucci, C. Kark

STATE OF CALIFORNIA DEPARTMENT OF TRANSPORTATION

DIVISION OF ENGINEERING SERVICES STRUCTURE DESIGN
DESIGN BRANCH

BRIDGE NO. 53E0128
KILOMETER POST 46.3

NORTH APPROACH SIDEWALK & RETAINING WALLS
LOG OF TEST BORINGS 1 OF 2

ALL DIMENSIONS ARE IN METERS UNLESS OTHERWISE SHOWN

ORIGINAL SCALE IN MILLIMETERS FOR REDUCED PLANS 0 10 20 30 40 50 60 70 80 90 100

CU 07
EA 121841

DISREGARD PRINTS BEARING EARLIER REVISION DATES 09-04-08 09-19-08

REVISION DATES (PRELIMINARY STAGE ONLY)

SHEET 40 OF 41

FILE => 53e0128-z-ltb01.dgn

USERNAME => trrrichf DATE PLOTTED => 15-JUN-2009 TIME PLOTTED => 08:46

DIST	COUNTY	ROUTE	KILOMETER POST TOTAL PROJECT	SHEET No	TOTAL SHEETS
07	LA	5	42.8/47.3	1071	1073

REGISTERED CIVIL ENGINEER 9-4-08

6-8-09
PLANS APPROVAL DATE

REGISTERED PROFESSIONAL ENGINEER
Qiang Huang
No. C055671
Exp. 12-31-08
CIVIL
STATE OF CALIFORNIA

The State of California or its officers or agents shall not be responsible for the accuracy or completeness of electronic copies of this plan sheet.

FOR PLAN VIEW, SEE
"LOG OF TEST BORINGS" 1 OF 2

Note: Ground water not measured during field investigation.

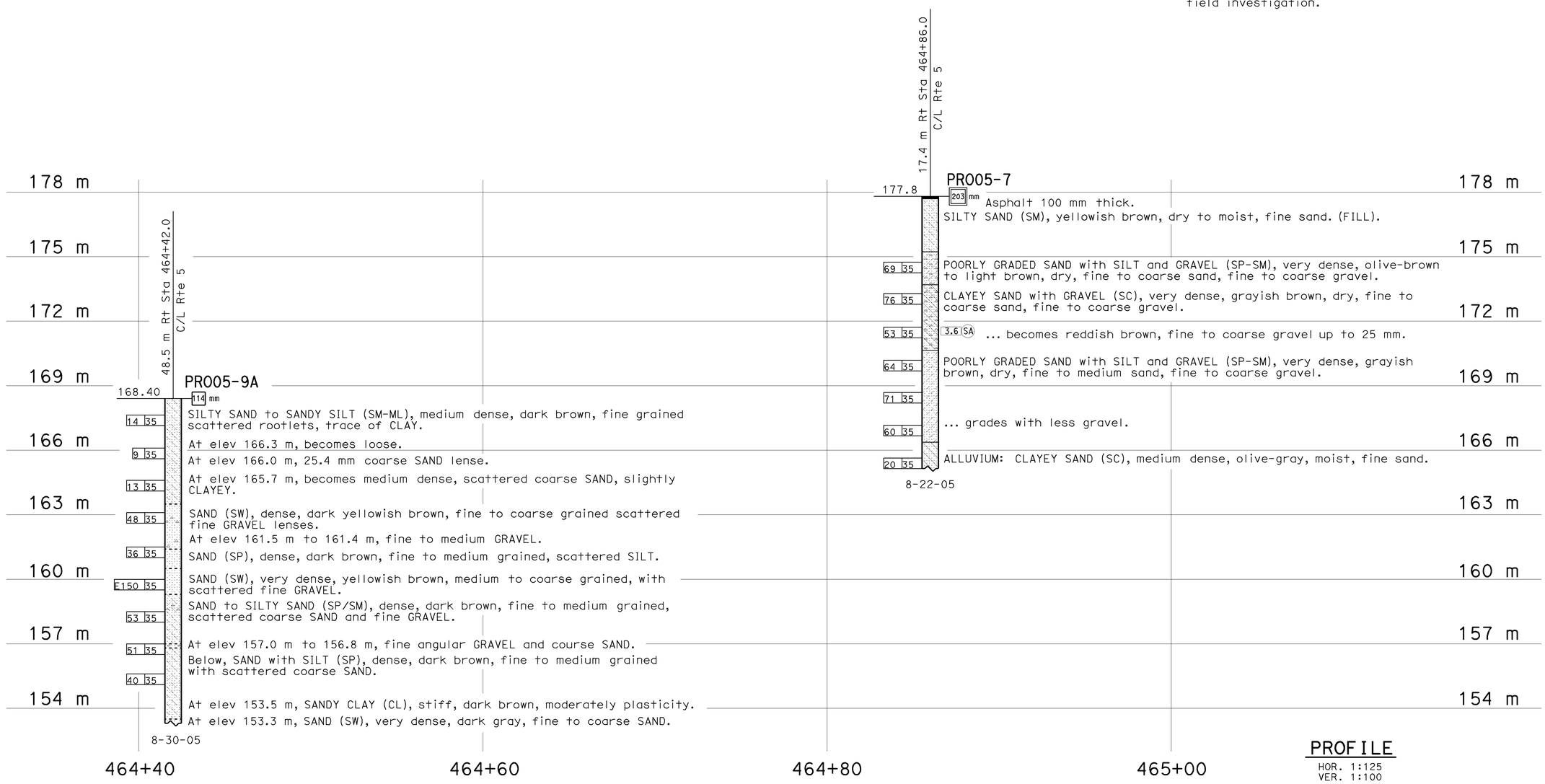

PROFILE
HOR. 1:125
VER. 1:100

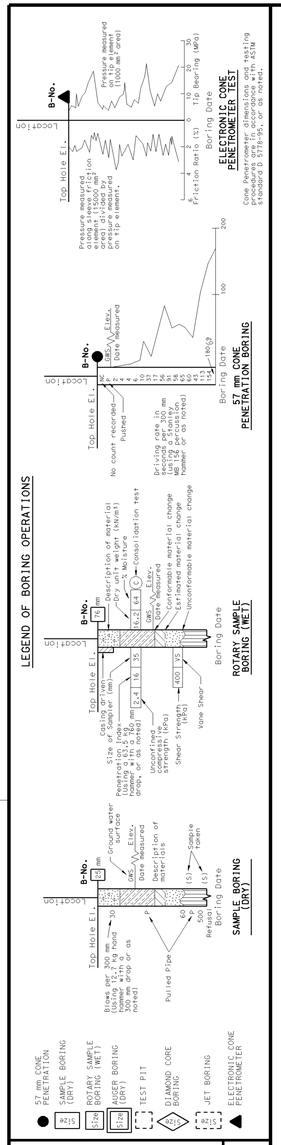

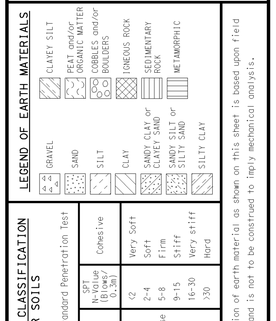

CONSISTENCY CLASSIFICATION FOR SOILS

According to the Standard Penetration Test

SPT N-Value (Blows/ 0.3m)	Granular	SPT N-Value (Blows/ 0.3m)	Cohesive
0-4	Very Loose	<2	Very Soft
5-10	Loose	2-4	Soft
11-30	Medium Dense	5-8	Firm
31-50	Dense	9-15	Stiff
>50	Very Dense	16-30	Very stiff
		>30	Hard

NOTE: Classification of earth material as shown on this sheet is based upon field inspection and is not to be construed to imply mechanical analysis.

OGS CIVIL LOG OF TEST BORINGS SHEET (METRIC) (REV. 4/04)

Caltrans Metric

GEOTECHNICAL SERVICES

DRAWN BY F. Nguyen 9/08
CHECKED BY B. Bertucci

FIELD INVESTIGATION BY:
B. Bertucci, C. Kark

STATE OF CALIFORNIA
DEPARTMENT OF TRANSPORTATION

DIVISION OF ENGINEERING SERVICES
STRUCTURE DESIGN
DESIGN BRANCH

BRIDGE NO. 53E0128
KILOMETER POST 46.3

NORTH APPROACH SIDEWALK & RETAINING WALLS
LOG OF TEST BORINGS 2 OF 2

ALL DIMENSIONS ARE IN METERS UNLESS OTHERWISE SHOWN

ORIGINAL SCALE IN MILLIMETERS FOR REDUCED PLANS 0 10 20 30 40 50 60 70 80 90 100

CU 07
EA 121841

DISREGARD PRINTS BEARING EARLIER REVISION DATES
REVISION DATES (PRELIMINARY STAGE ONLY) 09-04-08 09-19-08

SHEET 41 OF 41

FILE => 53e0128-z-1tb02.dgn

USERNAME => trrichf DATE PLOTTED => 15-JUN-2009 TIME PLOTTED => 08:46

DIST	COUNTY	ROUTE	KILOMETER POST TOTAL PROJECT	SHEET No	TOTAL SHEETS
07	LA	5	42.8/47.3	1072	1073

Andrew Rittenhouse 12-05-08
REGISTERED CIVIL ENGINEER DATE

6-8-09
PLANS APPROVAL DATE

REGISTERED PROFESSIONAL ENGINEER Andrew P. Rittenhouse No. 61006 Exp. 12-31-10 CIVIL STATE OF CALIFORNIA

The State of California or its officers or agents shall not be responsible for the accuracy or completeness of electronic copies of this plan sheet.

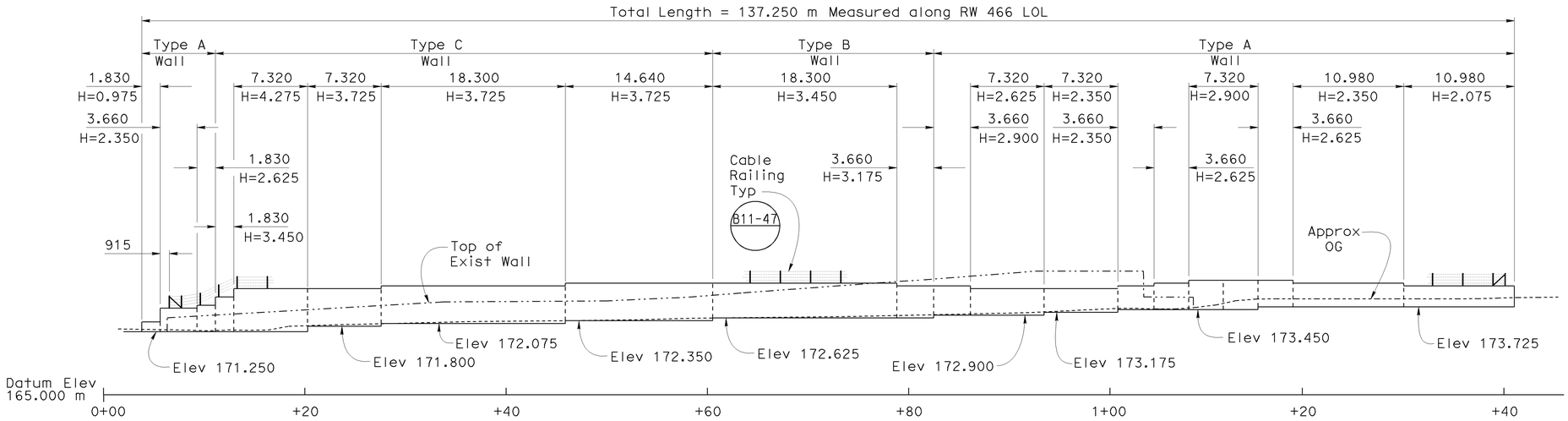

ELEVATION

1:250

Note:

1. For "TYPICAL SECTION" and "INDEX TO PLANS" see "GENERAL PLAN NO. 2" sheet.

QUANTITIES

STRUCTURE EXCAVATION (CRIB WALL)	4	m^3
STRUCTURE EXCAVATION (TYPE Y-2) (AERIALLY DEPOSITED LEAD)	102	m^3
STRUCTURE BACKFILL (CRIB WALL)	1 250	m^3
REINFORCED CONCRETE CRIB WALL (TYPE A)	170	m^2
REINFORCED CONCRETE CRIB WALL (TYPE B)	75	m^2
REINFORCED CONCRETE CRIB WALL (TYPE C)	180	m^2
CABLE RAILING	139	m

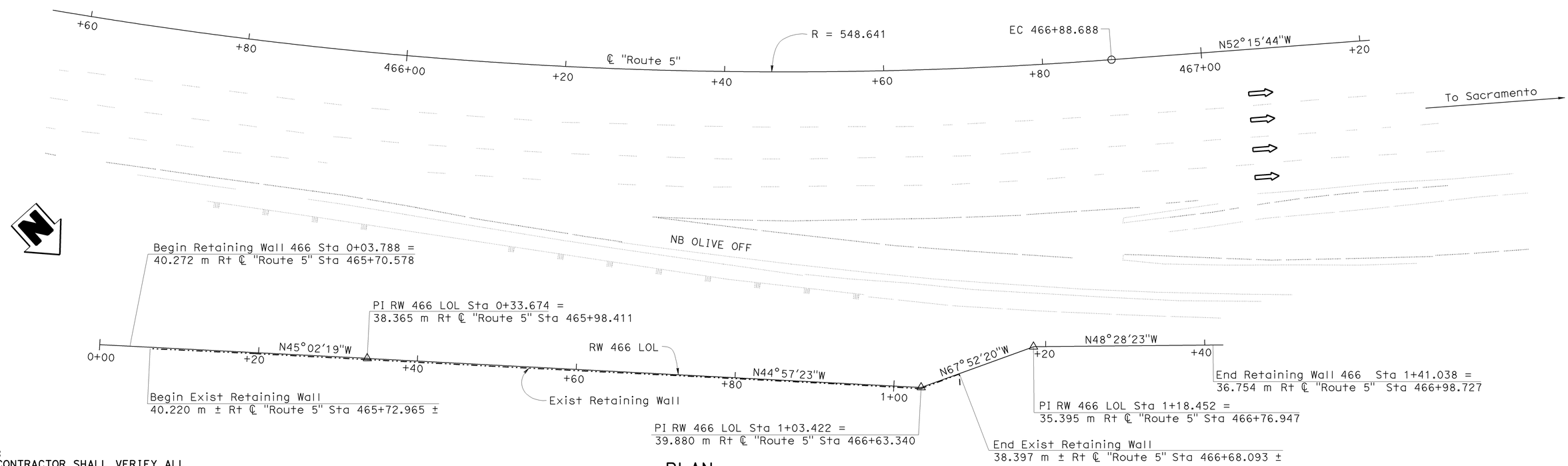

NOTE:
THE CONTRACTOR SHALL VERIFY ALL CONTROLLING FIELD DIMENSIONS BEFORE ORDERING OR FABRICATING ANY MATERIAL.

PLAN

1:250

KP (PM) Indicates Kilometer Post (Post Mile)

Caltrans Metric

DESIGN ENGINEER

	BY	CHECKED
DESIGN	J. Ralston	C. Chan
DETAILS	H. Mauroschadt	C. Chan
QUANTITIES	J. Ralston/S. Moradi	T. Menard

LOAD & RESISTANCE FACTOR DESIGN — LIVE LOADING: HL93 W/"LOW-BOY"; PERMIT DESIGN VEHICLE

LAYOUT BY J. Ralston — CHECKED C. Chan

SPECIFICATIONS BY T. Chen — PLANS AND SPECS COMPARED T. Chen

STATE OF CALIFORNIA
DEPARTMENT OF TRANSPORTATION

DIVISION OF ENGINEERING SERVICES
STRUCTURE DESIGN
DESIGN BRANCH 15

BRIDGE NO. 53E0138
KP (PM) 46.6 (28.9)

RETAINING WALL 466
GENERAL PLAN NO. 1

ALL DIMENSIONS ARE IN METERS UNLESS OTHERWISE SHOWN

ORIGINAL SCALE IN MILLIMETERS FOR REDUCED PLANS 0 10 20 30 40 50 60 70 80 90 100

CU 07
EA 121841

DISREGARD PRINTS BEARING EARLIER REVISION DATES

REVISION DATES: 3-13-08 4-22-08 5-16-08 11-17-08 01-15-09 01-23-09 01-26-09

SHEET 1 OF 2

FILE => 53e0138-a-gp01.dgn

STRUCTURES DESIGN GENERAL PLAN SHEET (METRIC) (REV.07-24-06)

USERNAME => trrichf DATE PLOTTED => 15-JUN-2009 TIME PLOTTED => 08:46

DIST	COUNTY	ROUTE	KILOMETER POST TOTAL PROJECT	SHEET No	TOTAL SHEETS
07	LA	5	42.8/47.3	1073	1073

Andrew P. Rittenhouse 12-05-08
REGISTERED CIVIL ENGINEER DATE

6-8-09
PLANS APPROVAL DATE

REGISTERED PROFESSIONAL ENGINEER Andrew P. Rittenhouse No. 61006 Exp. 12-31-10 CIVIL STATE OF CALIFORNIA

The State of California or its officers or agents shall not be responsible for the accuracy or completeness of electronic copies of this plan sheet.

INDEX TO PLANS

Sheet No.	Title
1	GENERAL PLAN NO. 1
2	GENERAL PLAN NO. 2

STANDARD PLANS DATED JULY 2004

A10A	ABBREVIATIONS
A10B	ABBREVIATIONS
A62B	LIMITS OF PAYMENT FOR EXCAVATION AND BACKFILL BRIDGE SURCHARGE AND WALL
B11-47	CABLE RAILING
C7C	REINFORCED CONCRETE CRIB WALL VERTICAL WALL TYPES A, B AND C
C7E	REINFORCED CONCRETE CRIB WALL TYPES A, B, C, D, E AND F HEADER AND STRETCHER DETAILS
C7G	REINFORCED CONCRETE CRIB WALL FOUNDATION PRESSURE VERTICAL WALL

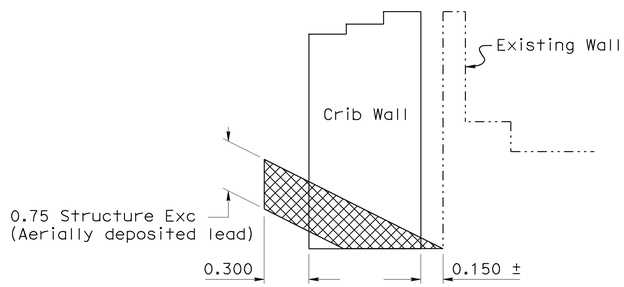

LEGEND:

Structure Exc (Type Y-2)
(Aerially deposited lead)

NOTE:
For details not shown see A62B

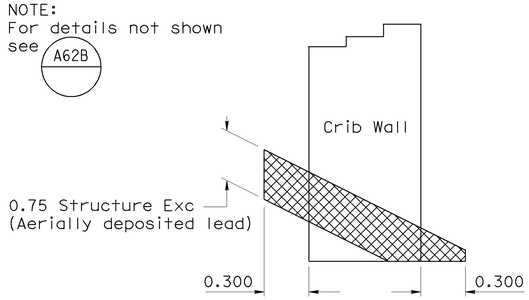

TYPICAL EXCAVATION

LIMITS OF STRUCTURE EXCAVATION (TYPE Y-2) (AERIALLY DEPOSITED LEAD)

NO SCALE

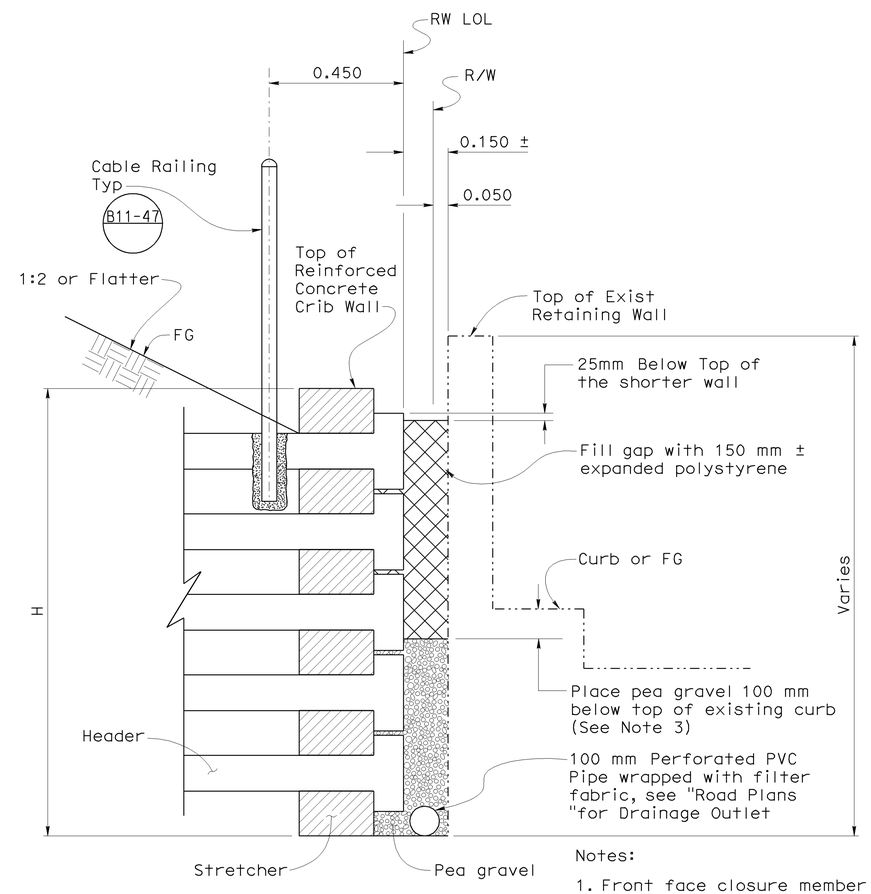

Notes:

1. Front face closure member required
2. Cable railing posts to be spaced between headers
3. Place pea gravel 100 mm below top of crib wall when top of crib wall is lower than the existing curb

TYPICAL SECTION

C7C C7E C7G

1:10

KP (PM) Indicates Kilometer Post (Post Mile)

NOTE:
THE CONTRACTOR SHALL VERIFY ALL CONTROLLING FIELD DIMENSIONS BEFORE ORDERING OR FABRICATING ANY MATERIAL.

Caltrans Metric

Traci Menard
DESIGN ENGINEER

	BY	CHECKED
DESIGN	J. Ralston	C. Chan
DETAILS	H. Mauroschadt	C. Chan
QUANTITIES	J. Ralston/S. Moradi	T. Menard

LOAD & RESISTANCE FACTOR DESIGN — LIVE LOADING: HL93 W/"LOW-BOY"; PERMIT DESIGN VEHICLE

	BY	CHECKED
LAYOUT	J. Ralston	C. Chan
SPECIFICATIONS	T. Chen	PLANS AND SPECS COMPARED T. Chen

STATE OF CALIFORNIA
DEPARTMENT OF TRANSPORTATION

DIVISION OF ENGINEERING SERVICES
STRUCTURE DESIGN
DESIGN BRANCH 15

BRIDGE NO. 53E0138
KP (PM) 46.6 (28.9)

RETAINING WALL 466
GENERAL PLAN NO. 2

ALL DIMENSIONS ARE IN METERS UNLESS OTHERWISE SHOWN

ORIGINAL SCALE IN MILLIMETERS FOR REDUCED PLANS 0 10 20 30 40 50 60 70 80 90 100

CU 07
EA 121841

DISREGARD PRINTS BEARING EARLIER REVISION DATES

REVISION DATES: 3-25-08 4-15-08 5-13-08 11-12-08 01-15-09

SHEET 2 OF 2

FILE => 53e0138-a-gp02.dgn

STRUCTURES DESIGN GENERAL PLAN SHEET (METRIC) (REV.07-24-06)

USERNAME => trrichf DATE PLOTTED => 15-JUN-2009 TIME PLOTTED => 08:47