DIST	COUNTY	ROUTE	KILOMETER POST TOTAL PROJECT	SHEET No	TOTAL SHEETS
07	LA	5	42.8/47.3	901	1073

Andrew Rittenhouse 12-05-08
REGISTERED CIVIL ENGINEER DATE

6-8-09
PLANS APPROVAL DATE

REGISTERED PROFESSIONAL ENGINEER
Andrew P. Rittenhouse
No. 61006
Exp. 12-31-10
CIVIL
STATE OF CALIFORNIA

The State of California or its officers or agents shall not be responsible for the accuracy or completeness of electronic copies of this plan sheet.

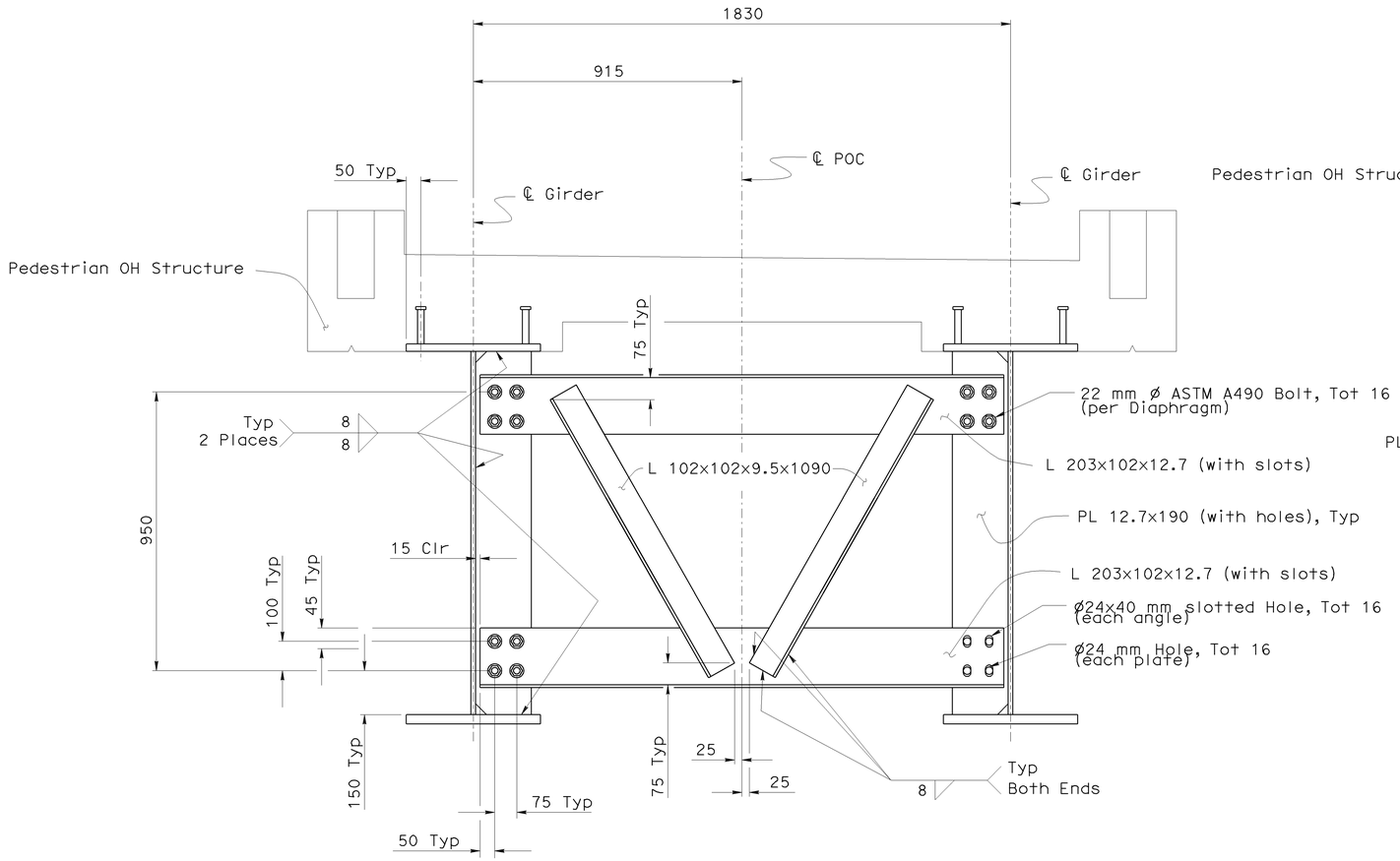

INTERMEDIATE DIAPHRAGM
1:10

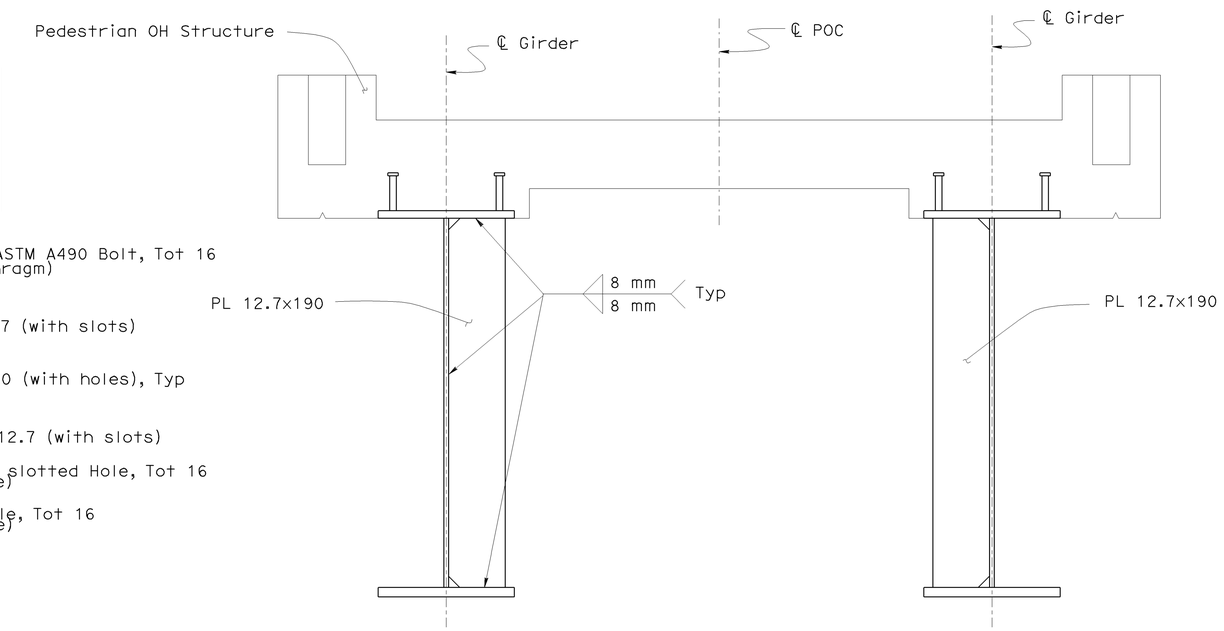

INTERMEDIATE STIFFENERS
1:10

Note:
1. For Intermediate Diaphragm and Intermediate Stiffener layout see "PEDESTRIAN OH DETAILS NO.2" sheet

NOTE:
THE CONTRACTOR SHALL VERIFY ALL CONTROLLING FIELD DIMENSIONS BEFORE ORDERING OR FABRICATING ANY MATERIAL.

Caltrans Metric

ALL DIMENSIONS ARE IN MILLIMETERS UNLESS OTHERWISE SHOWN

ORIGINAL SCALE IN MILLIMETERS FOR REDUCED PLANS 0 10 20 30 40 50 60 70 80 90 100

	BY	CHECKED
DESIGN	A. Logus	C. Moulton
DETAILS	S. Cholda	C. Chan
QUANTITIES	A. Logus	D. Kubochi

STATE OF CALIFORNIA
DEPARTMENT OF TRANSPORTATION

DIVISION OF ENGINEERING SERVICES
STRUCTURE DESIGN
DESIGN BRANCH 15

CU 07
EA 121841

BRIDGE NO. 53-1085
KILOMETER POST 46.1

PROVIDENCIA AVENUE OH (WIDEN)
PEDESTRIAN OH DETAILS NO.4

DISREGARD PRINTS BEARING EARLIER REVISION DATES

REVISION DATES: 01-05-08 10-24-08 11-28-08 01-27-09 1-26-09 1-27-09 1-28-09

SHEET 112 OF 152

STRUCTURES DESIGN DETAIL SHEET (METRIC) (REV.03-17-04)

FILE => 53-1085-s-mr_det04.dgn

USERNAME => trpierce DATE PLOTTED => 15-JUN-2009 TIME PLOTTED => 06:48

DIST	COUNTY	ROUTE	KILOMETER POST TOTAL PROJECT	SHEET No	TOTAL SHEETS
07	LA	5	42.8/47.3	902	1073

Andrew Rittenhouse 12-05-08
REGISTERED CIVIL ENGINEER DATE

6-8-09
PLANS APPROVAL DATE

The State of California or its officers or agents shall not be responsible for the accuracy or completeness of electronic copies of this plan sheet.

REGISTERED PROFESSIONAL ENGINEER
Andrew P. Rittenhouse
No. 61006
Exp. 12-31-10
CIVIL
STATE OF CALIFORNIA

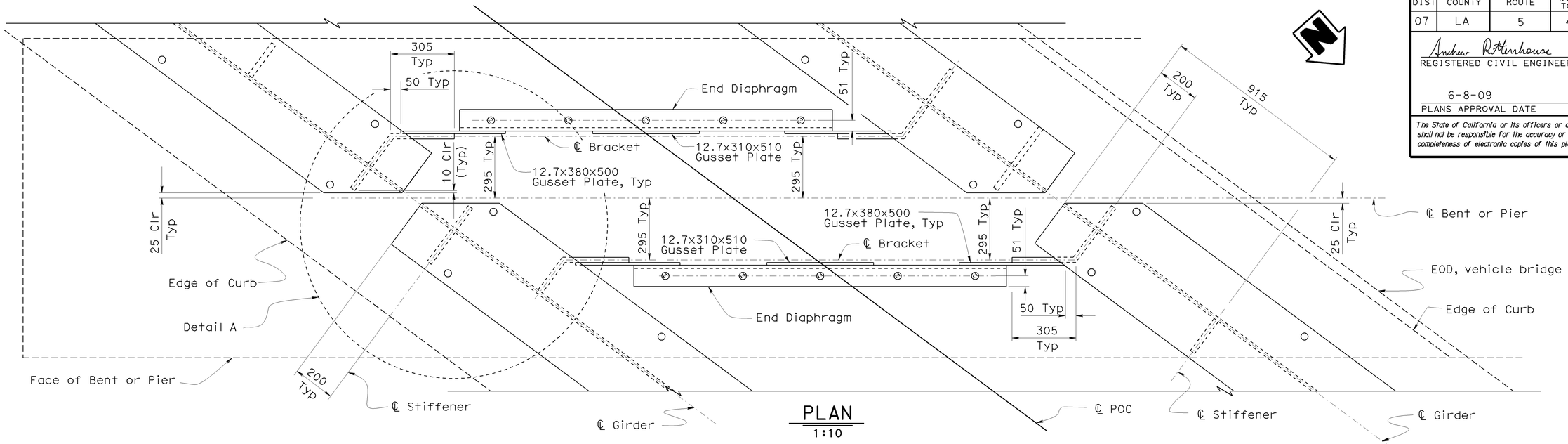

PLAN
1:10

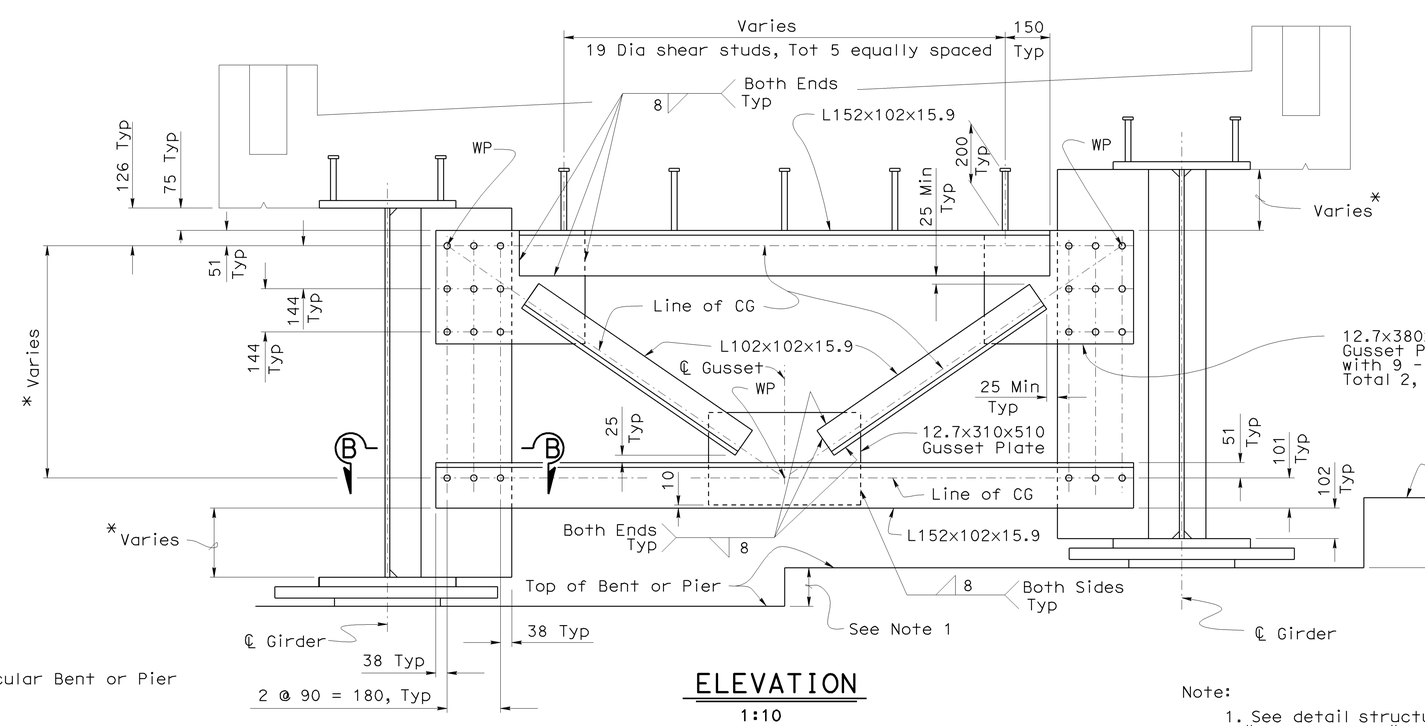

ELEVATION
1:10

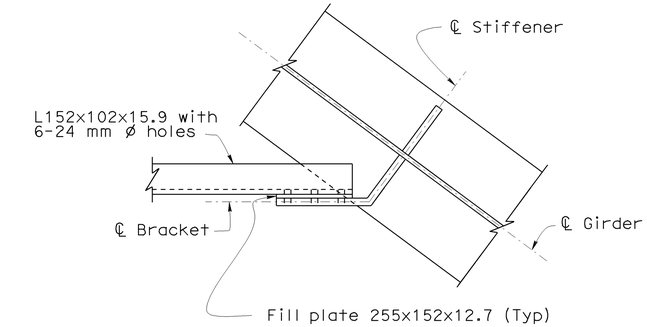

SECTION B-B
1:10

** This step occurs at Bent 2 only

* Verify dimmension for particular Bent or Pier

Note:

1. See detail structure drawings on "BENT 2 LAYOUT" through "BENT 5 LAYOUT" sheets, and "PIER 6 LAYOUT" through "PIER 8 LAYOUT" sheets.
2. For "Detail A" , see "PEDESTRIAN OH DETAILS NO. 8 sheet.

NOTE:
THE CONTRACTOR SHALL VERIFY ALL CONTROLLING FIELD DIMENSIONS BEFORE ORDERING OR FABRICATING ANY MATERIAL.

END DIAPHRAGM LAYOUT AT BENTS AND PIERS
(BENTS 2 THROUGH 5, & PIERS 6, 7, 8)

	BY	CHECKED
DESIGN	A. Logus	C. Moulton
DETAILS	S. Cholda	C. Chan
QUANTITIES	A. Logus	D. Kubochi

STATE OF CALIFORNIA
DEPARTMENT OF TRANSPORTATION

DIVISION OF ENGINEERING SERVICES
STRUCTURE DESIGN
DESIGN BRANCH 15

BRIDGE NO. 53-1085
KILOMETER POST 46.1

PROVIDENCIA AVENUE OH (WIDEN)
PEDESTRIAN OH DETAILS NO.5

Caltrans Metric

ALL DIMENSIONS ARE IN MILLIMETERS UNLESS OTHERWISE SHOWN

ORIGINAL SCALE IN MILLIMETERS FOR REDUCED PLANS 0 10 20 30 40 50 60 70 80 90 100

CU 07
EA 121841

DISREGARD PRINTS BEARING EARLIER REVISION DATES

REVISION DATES: 01-04-08 01-14-08 10-15-08 10-24-08 11-20-08 1-26-09 1-22-09 1-28-09 1-29-09 2-24-09

SHEET 113 OF 152

FILE => 53-1085-s-mr_det05.dgn

STRUCTURES DESIGN DETAIL SHEET (METRIC) (REV.03-17-04)

USERNAME => trpierce DATE PLOTTED => 15-JUN-2009 TIME PLOTTED => 06:48

DIST	COUNTY	ROUTE	KILOMETER POST TOTAL PROJECT	SHEET No	TOTAL SHEETS
07	LA	5	42.8/47.3	903	1073

Andrew P. Rittenhouse 12-05-08
REGISTERED CIVIL ENGINEER DATE

6-8-09
PLANS APPROVAL DATE

REGISTERED PROFESSIONAL ENGINEER Andrew P. Rittenhouse No. 61006 Exp. 12-31-10 CIVIL STATE OF CALIFORNIA

The State of California or its officers or agents shall not be responsible for the accuracy or completeness of electronic copies of this plan sheet.

Notes:

1. Install lower nut in contact with plate and then back off ½ turn. Install upper nut snug tight to prevent lower nut from loosening.
2. If girder has a grade of 1% or more, bevel the sole plate to provide a level bearing surface. Minimum thichness of sole plate is 38 mm, after beveling.

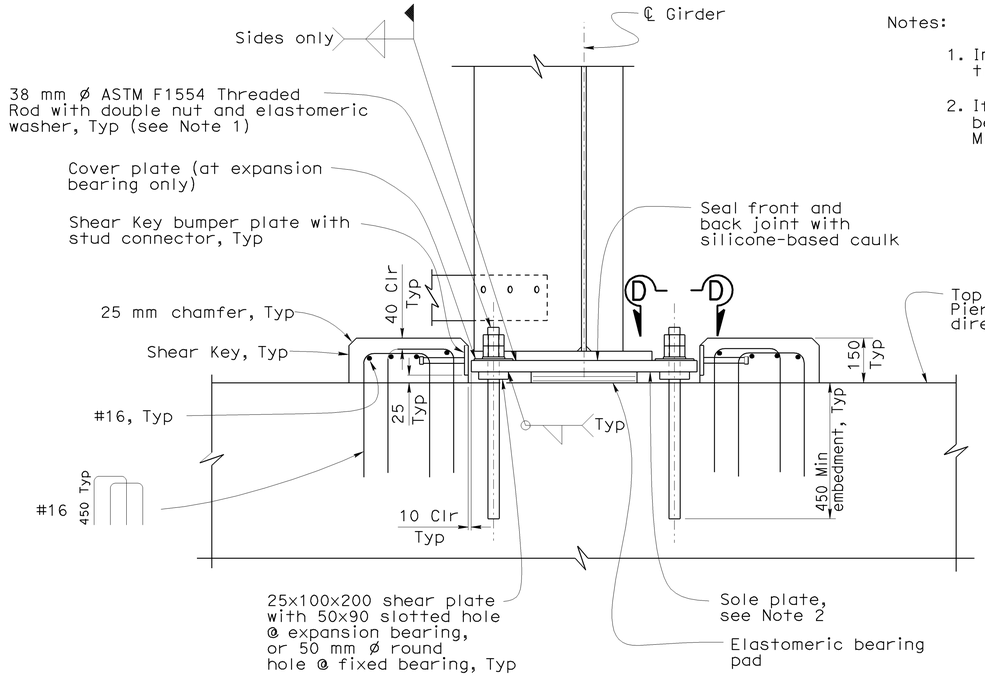

SECTION C-C
1:10

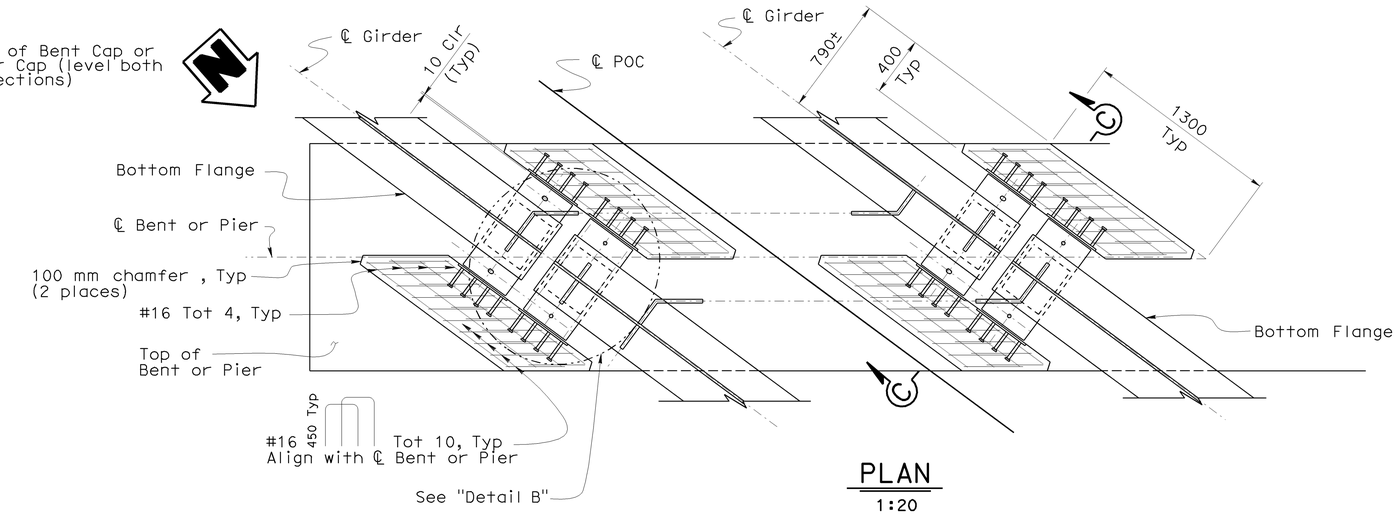

PLAN
1:20

AT ALIGNED GIRDERS

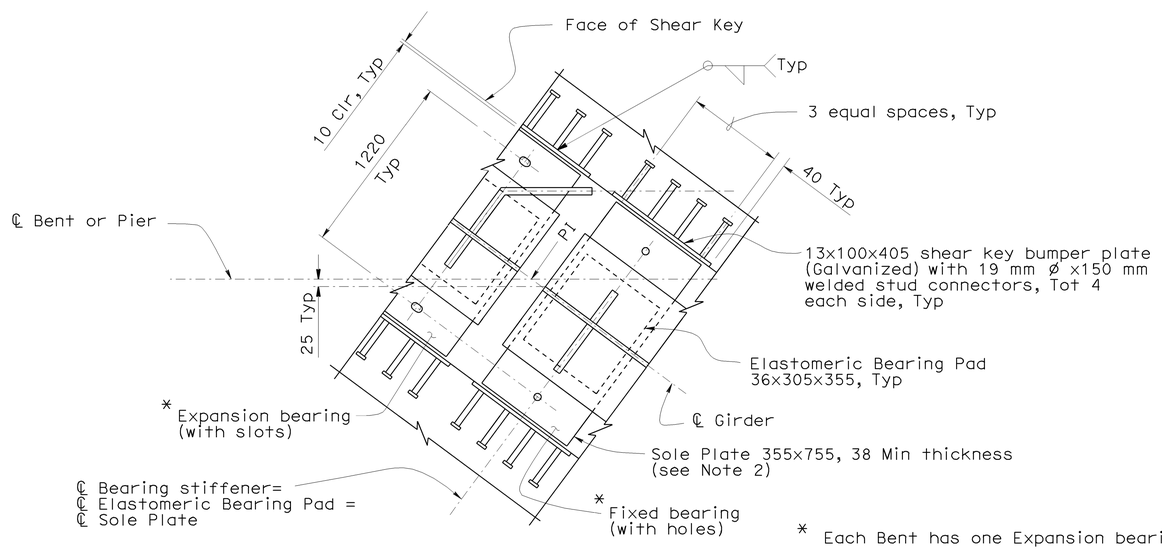

DETAIL B
1:10

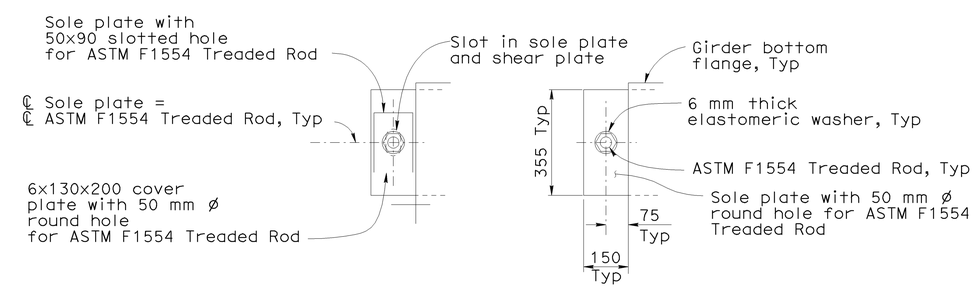

AT EXPANSION BEARING

AT FIXED BEARING

Note:
Each Girder has one fixed, one expansion bearing

VIEW D-D
1:10

* Each Bent has one Expansion bearing and one Fixed bearing

NOTE:
THE CONTRACTOR SHALL VERIFY ALL CONTROLLING FIELD DIMENSIONS BEFORE ORDERING OR FABRICATING ANY MATERIAL.

GIRDER BEARINGS AND SHEAR KEYS PLAN
(BENTS 2 THROUGH 5 & PIER 6)

Caltrans Metric

	BY	CHECKED
DESIGN	A. Logus	C. Moulton
DETAILS	S. Cholda	C. Chan
QUANTITIES	A. Logus	D. Kubochi

STATE OF CALIFORNIA
DEPARTMENT OF TRANSPORTATION

DIVISION OF ENGINEERING SERVICES
STRUCTURE DESIGN
DESIGN BRANCH 15

BRIDGE NO. 53-1085
KILOMETER POST 46.1

PROVIDENCIA AVENUE OH (WIDEN)
PEDESTRIAN OH DETAILS NO.6

ALL DIMENSIONS ARE IN MILLIMETERS UNLESS OTHERWISE SHOWN

ORIGINAL SCALE IN MILLIMETERS FOR REDUCED PLANS 0 10 20 30 40 50 60 70 80 90 100

CU 07
EA 121841

DISREGARD PRINTS BEARING EARLIER REVISION DATES

REVISION DATES: 01-04-08 01-14-08 04-17-08 10-24-08 11-28-08 12-09-08 01-16-09 01-22-09 1-26-09 1-27-09

SHEET 114 OF 152

FILE => 53-1085-s-mr_det06.dgn

STRUCTURES DESIGN DETAIL SHEET (METRIC) (REV.03-17-04)

USERNAME => trpierce DATE PLOTTED => 15-JUN-2009 TIME PLOTTED => 06:48

DIST	COUNTY	ROUTE	KILOMETER POST TOTAL PROJECT	SHEET No	TOTAL SHEETS
07	LA	5	42.8/47.3	904	1073

Andrew Rittenhouse 12-05-08
REGISTERED CIVIL ENGINEER DATE

6-8-09
PLANS APPROVAL DATE

REGISTERED PROFESSIONAL ENGINEER
Andrew P. Rittenhouse
No. 61006
Exp. 12-31-10
CIVIL
STATE OF CALIFORNIA

The State of California or its officers or agents shall not be responsible for the accuracy or completeness of electronic copies of this plan sheet.

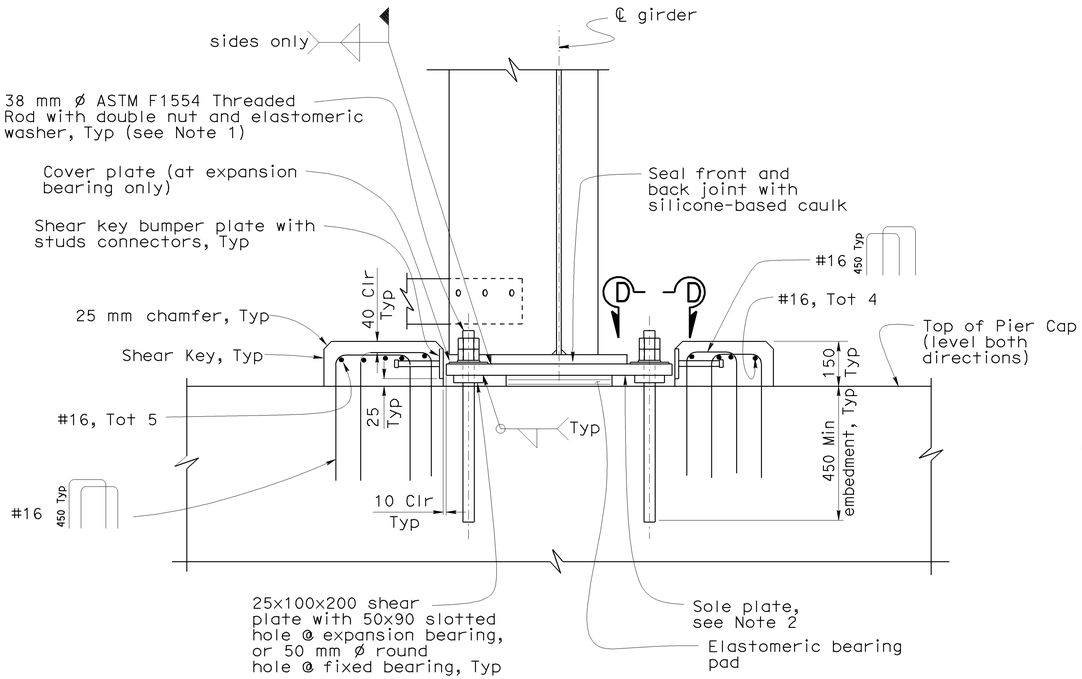

SECTION E-E
1:10

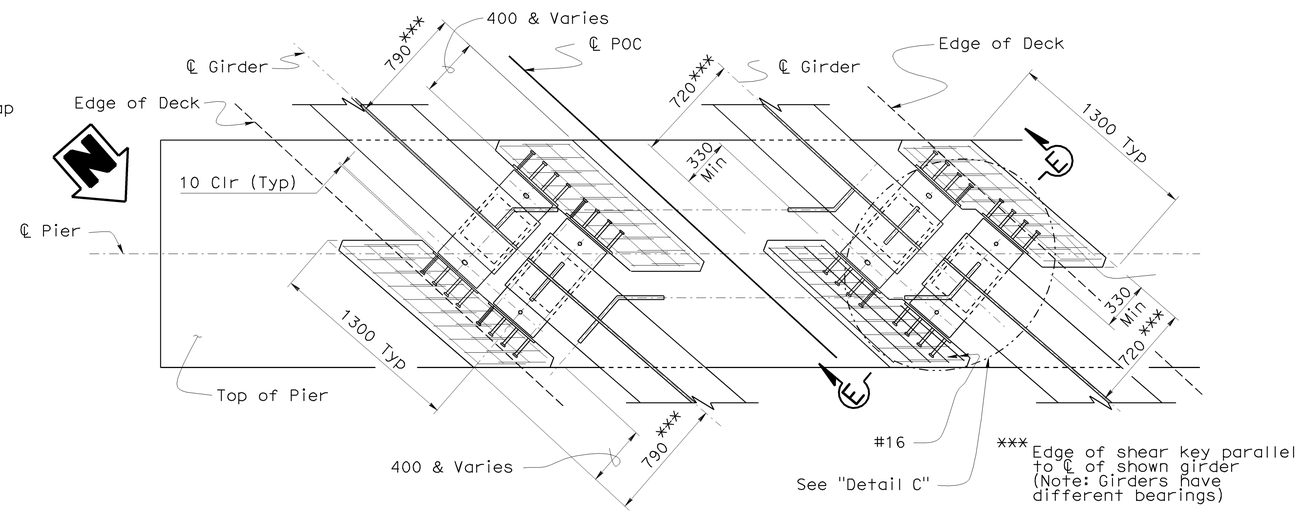

PLAN
1:20

AT OFFSET GIRDERS

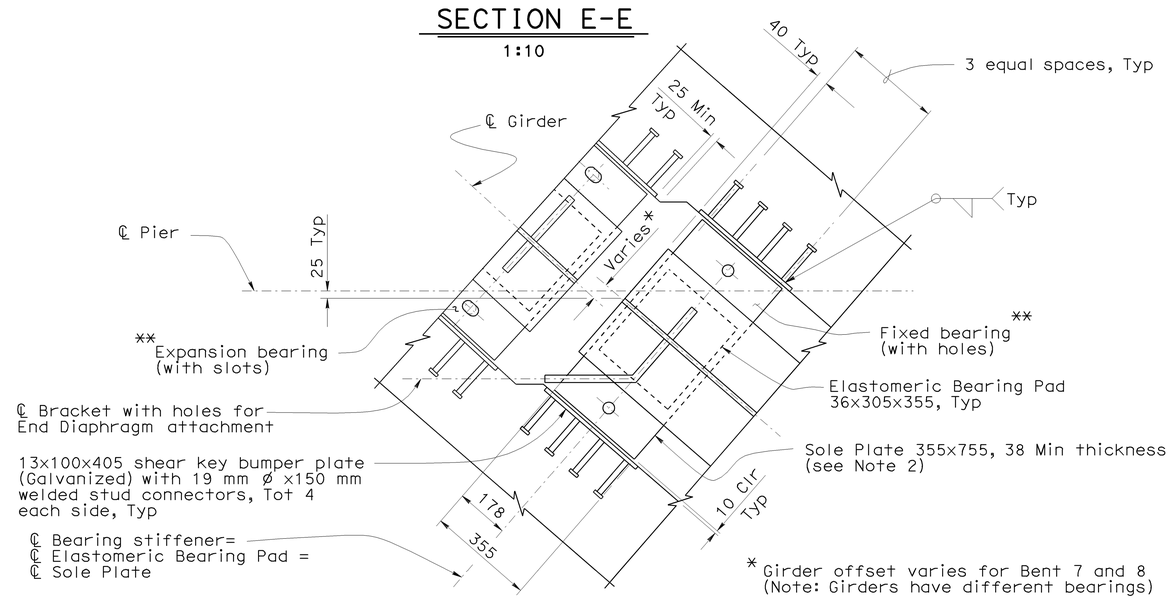

* Girder offset varies for Bent 7 and 8 (Note: Girders have different bearings)

** Each Pier has one Expansion bearing and one Fixed bearing

DETAIL C
1:10

Notes:

1. Install lower nut in contact with plate and then back off ½ turn. Install upper nut snug tight to prevent lower nut from loosening.
2. If girder has a grade of 1% or more, bevel the sole plate to provide a level bearing surface. Minimum thickness of sole plate should be 38 mm after beveling.
3. For "View D-D", see "PEDESTRIAN OH DETAILS NO.6" sheet.

NOTE:
THE CONTRACTOR SHALL VERIFY ALL CONTROLLING FIELD DIMENSIONS BEFORE ORDERING OR FABRICATING ANY MATERIAL.

GIRDER BEARINGS AND SHEAR KEYS PLAN
(PIERS 7 & 8)

Caltrans Metric

	BY	CHECKED
DESIGN	A. Logus	C. Moulton
DETAILS	S. Cholda	C. Chan
QUANTITIES	A. Logus	D. Kubochi

STATE OF CALIFORNIA
DEPARTMENT OF TRANSPORTATION

DIVISION OF ENGINEERING SERVICES
STRUCTURE DESIGN
DESIGN BRANCH 15

BRIDGE NO. 53-1085
KILOMETER POST 46.1

PROVIDENCIA AVENUE OH (WIDEN)
PEDESTRIAN OH DETAILS NO.7

ALL DIMENSIONS ARE IN MILLIMETERS UNLESS OTHERWISE SHOWN

ORIGINAL SCALE IN MILLIMETERS FOR REDUCED PLANS 0 10 20 30 40 50 60 70 80 90 100

CU 07
EA 121841

DISREGARD PRINTS BEARING EARLIER REVISION DATES

REVISION DATES: 01-04-08 01-14-08 04-18-08 11-20-08 12-04-08 01-22-09 1-26-09 1-27-09

SHEET 115 OF 152

FILE => 53-1085-s-mr_det07.dgn

STRUCTURES DESIGN DETAIL SHEET (METRIC) (REV.03-17-04)

USERNAME => trpierce DATE PLOTTED => 15-JUN-2009 TIME PLOTTED => 06:49

DIST	COUNTY	ROUTE	KILOMETER POST TOTAL PROJECT	SHEET No	TOTAL SHEETS
07	LA	5	42.8/47.3	905	1073

Andrew Rittenhouse 12-05-08
REGISTERED CIVIL ENGINEER DATE

6-8-09
PLANS APPROVAL DATE

The State of California or its officers or agents shall not be responsible for the accuracy or completeness of electronic copies of this plan sheet.

REGISTERED PROFESSIONAL ENGINEER
Andrew P. Rittenhouse
No. 61006
Exp. 12-31-10
CIVIL
STATE OF CALIFORNIA

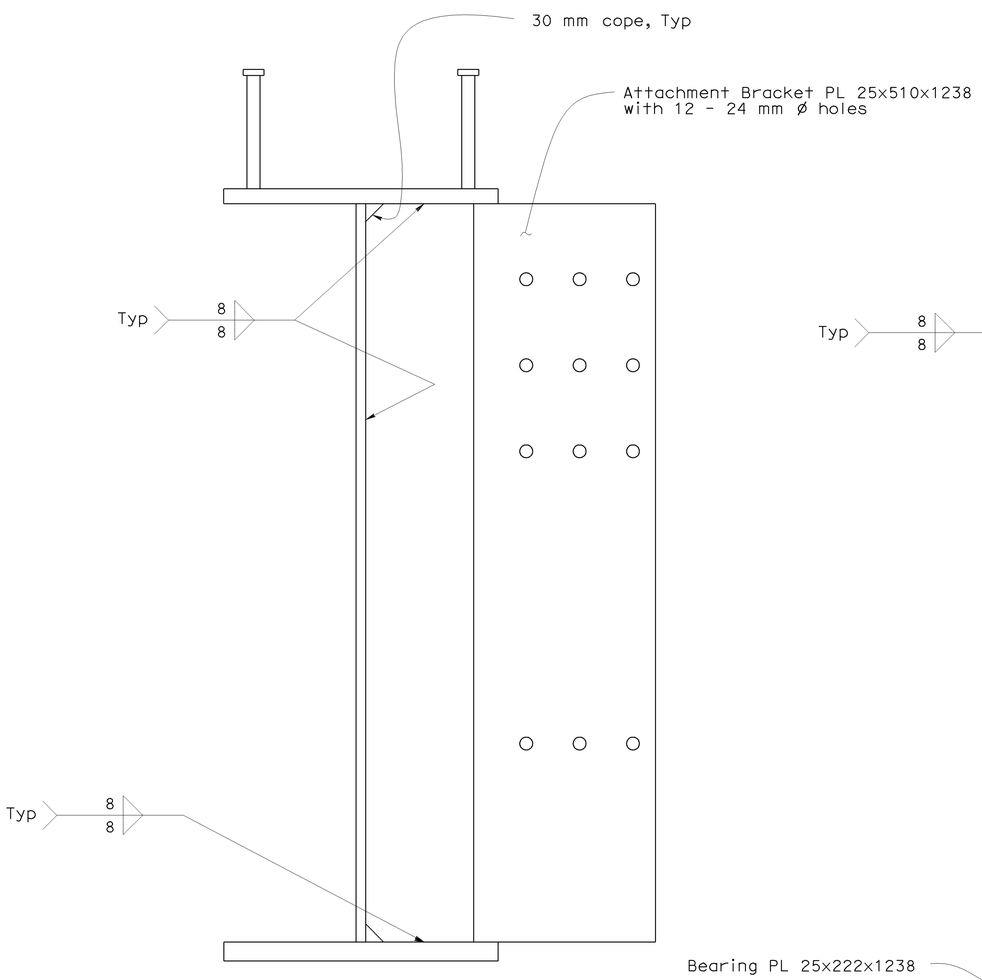

SECTION F-F(DEVELOPED)
1:5

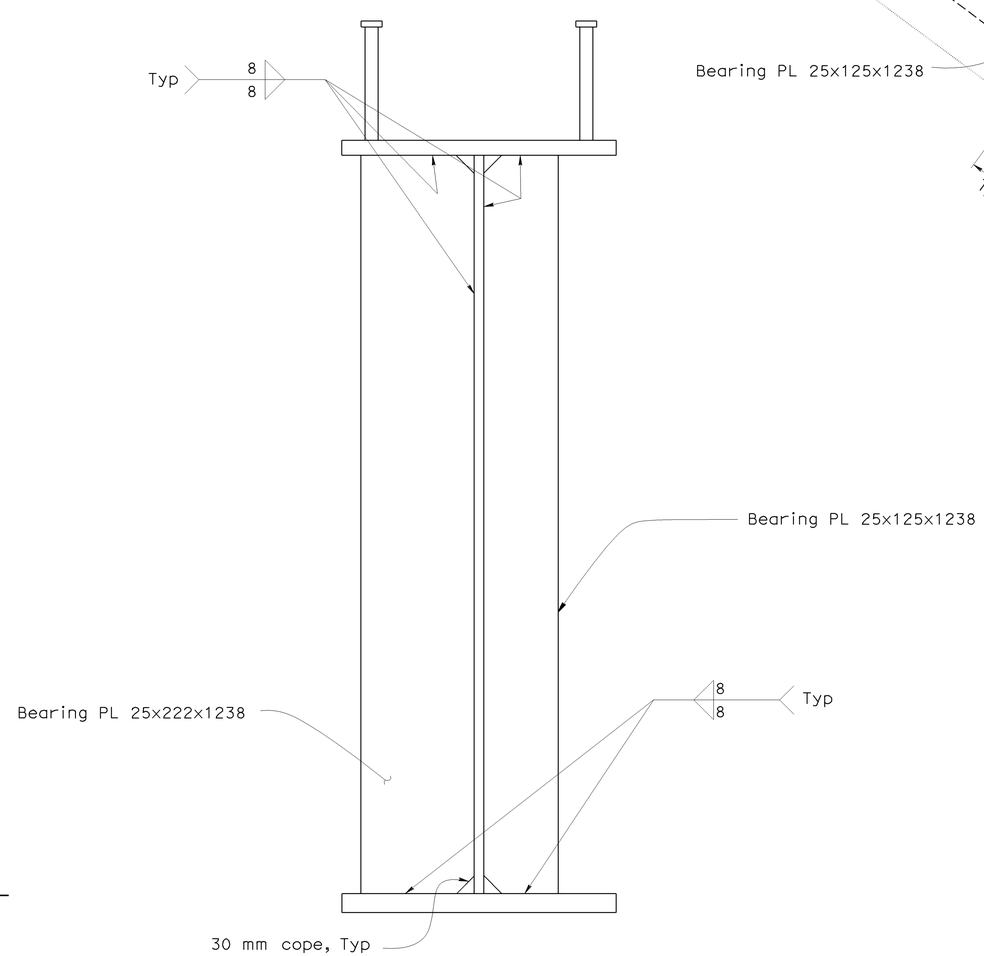

SECTION G-G
1:5

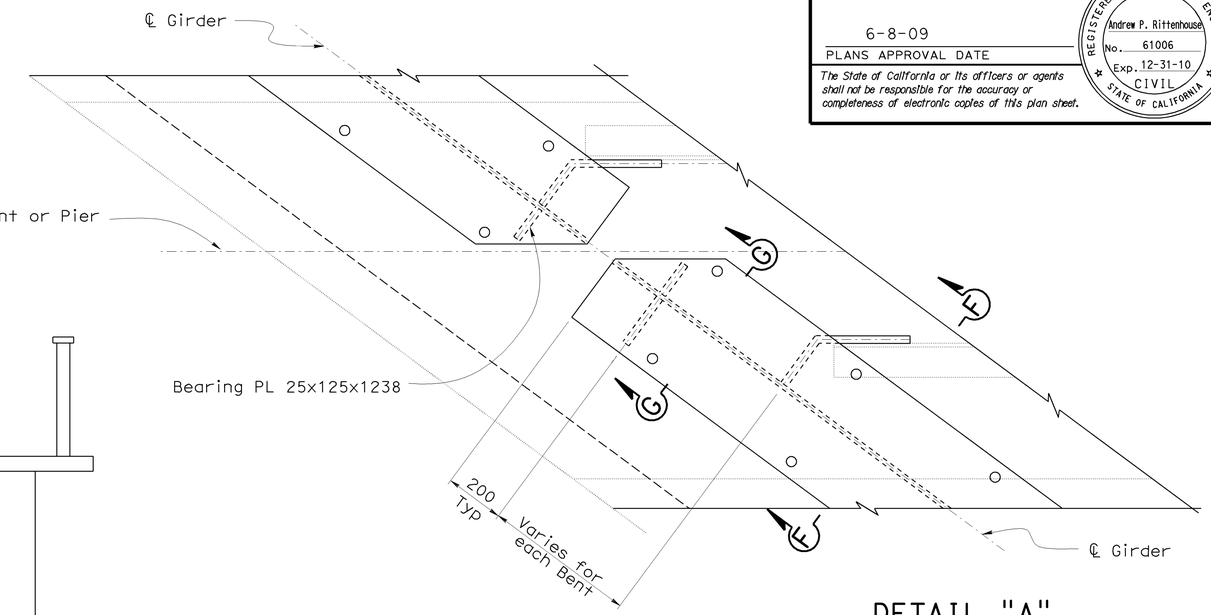

DETAIL "A"
1:10

NOTE:
THE CONTRACTOR SHALL VERIFY ALL CONTROLLING FIELD DIMENSIONS BEFORE ORDERING OR FABRICATING ANY MATERIAL.

Caltrans Metric

	BY	CHECKED
DESIGN	A. Logus	C. Moulton
DETAILS	S. Cholda	C. Chan
QUANTITIES	A. Logus	D. Kubochi

STATE OF CALIFORNIA
DEPARTMENT OF TRANSPORTATION

DIVISION OF ENGINEERING SERVICES
STRUCTURE DESIGN
DESIGN BRANCH 15

BRIDGE NO. 53-1085
KILOMETER POST 46.1

PROVIDENCIA AVENUE OH (WIDEN)
PEDESTRIAN OH DETAILS NO.8

ALL DIMENSIONS ARE IN MILLIMETERS UNLESS OTHERWISE SHOWN

ORIGINAL SCALE IN MILLIMETERS FOR REDUCED PLANS 0 10 20 30 40 50 60 70 80 90 100

CU 07
EA 121841

DISREGARD PRINTS BEARING EARLIER REVISION DATES

REVISION DATES: 01-04-08 01-14-08 10-31-08 11-20-08 12-08-08 01-20-09 1-26-09 1-29-09 2-24-09

SHEET 116 OF 152

FILE => 53-1085-s-mr_det08.dgn

STRUCTURES DESIGN DETAIL SHEET (METRIC) (REV.03-17-04)

USERNAME => trpierce DATE PLOTTED => 15-JUN-2009 TIME PLOTTED => 06:49

DIST	COUNTY	ROUTE	KILOMETER POST TOTAL PROJECT	SHEET No	TOTAL SHEETS
07	LA	5	42.8/47.3	906	1073

Andrew Rittenhouse 12-05-08
REGISTERED CIVIL ENGINEER DATE

6-8-09
PLANS APPROVAL DATE

REGISTERED PROFESSIONAL ENGINEER Andrew P. Rittenhouse No. 61006 Exp. 12-31-10 CIVIL STATE OF CALIFORNIA

The State of California or its officers or agents shall not be responsible for the accuracy or completeness of electronic copies of this plan sheet.

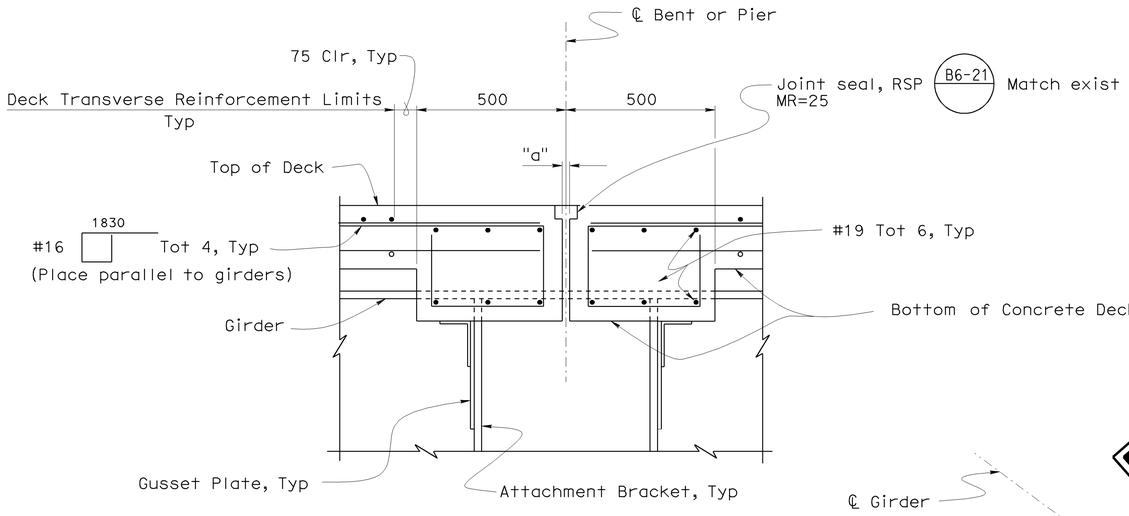

SECTION H-H
1:10

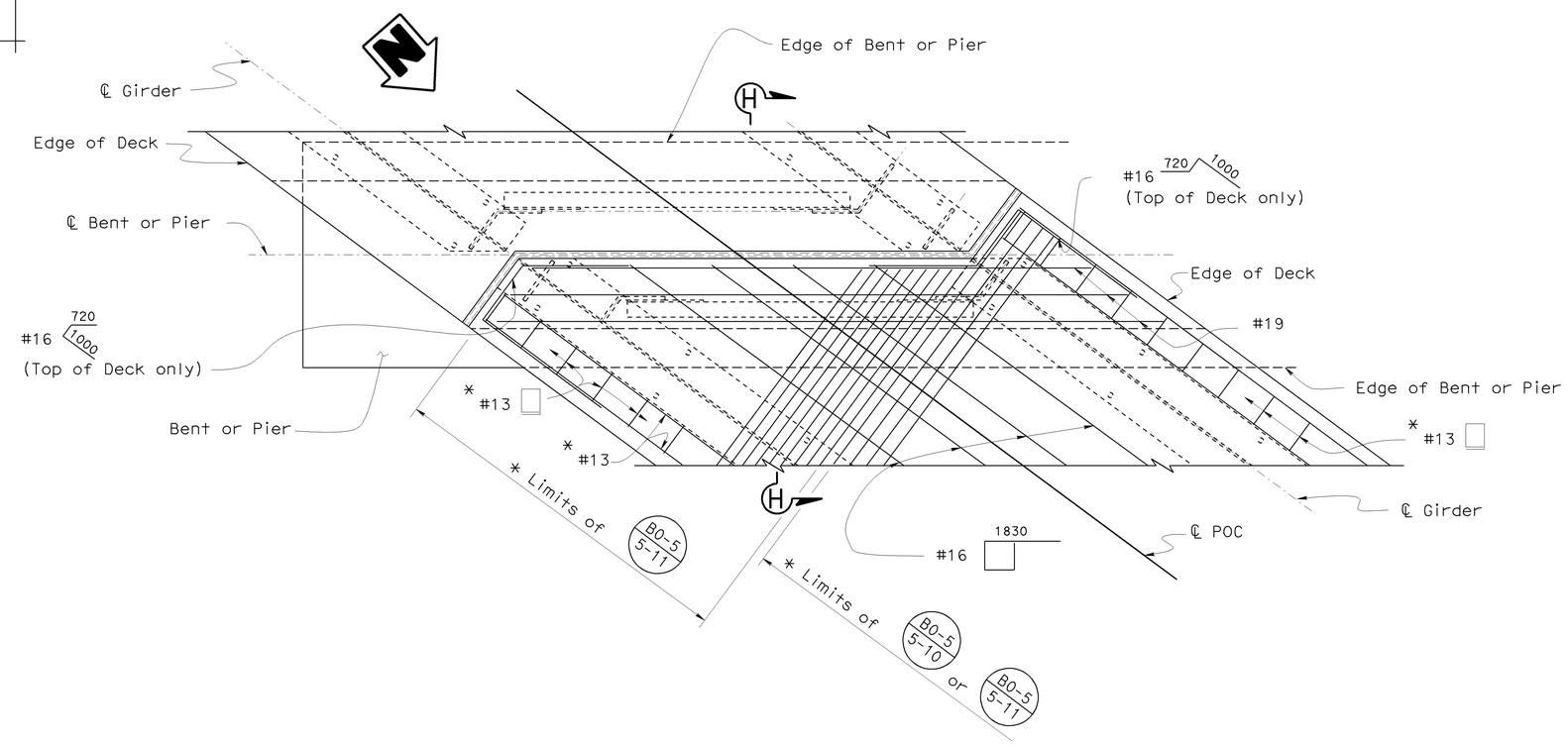

PLAN
1:20

DECK REINFORCEMENT AT BENTS AND PIERS

*For details see "Part Typical Section" on "PEDESTRIAN OH DETAILS NO.1" sheet.

NOTE:
THE CONTRACTOR SHALL VERIFY ALL CONTROLLING FIELD DIMENSIONS BEFORE ORDERING OR FABRICATING ANY MATERIAL.

	BY	CHECKED
DESIGN	A. Logus	C. Moulton
DETAILS	S. Cholda	C. Chan
QUANTITIES	A. Logus	D. Kubochi

STATE OF CALIFORNIA
DEPARTMENT OF TRANSPORTATION

DIVISION OF ENGINEERING SERVICES
STRUCTURE DESIGN
DESIGN BRANCH 15

BRIDGE NO. 53-1085
KILOMETER POST 46.1

PROVIDENCIA AVENUE OH (WIDEN)
PEDESTRIAN OH DETAILS NO.9

ALL DIMENSIONS ARE IN MILLIMETERS UNLESS OTHERWISE SHOWN

ORIGINAL SCALE IN MILLIMETERS FOR REDUCED PLANS 0 10 20 30 40 50 60 70 80 90 100

CU 07
EA 121841

DISREGARD PRINTS BEARING EARLIER REVISION DATES

REVISION DATES: 01-04-08 | 01-14-08 | 11-28-08 | 01-28-09 | 1-26-09 | 1-23-09 | 2-24-09

SHEET 117 OF 152

FILE => 53-1085-s-mr_det09.dgn

STRUCTURES DESIGN DETAIL SHEET (METRIC) (REV.03-17-04)

USERNAME => trpierce DATE PLOTTED => 15-JUN-2009 TIME PLOTTED => 06:49

DIST	COUNTY	ROUTE	KILOMETER POST TOTAL PROJECT	SHEET No	TOTAL SHEETS
07	LA	5	42.8/47.3	907	1073

Andrew P. Rittenhouse 12-05-08
REGISTERED CIVIL ENGINEER DATE

6-8-09
PLANS APPROVAL DATE

REGISTERED PROFESSIONAL ENGINEER Andrew P. Rittenhouse No. 61006 Exp. 12-31-10 CIVIL STATE OF CALIFORNIA

The State of California or its officers or agents shall not be responsible for the accuracy or completeness of electronic copies of this plan sheet.

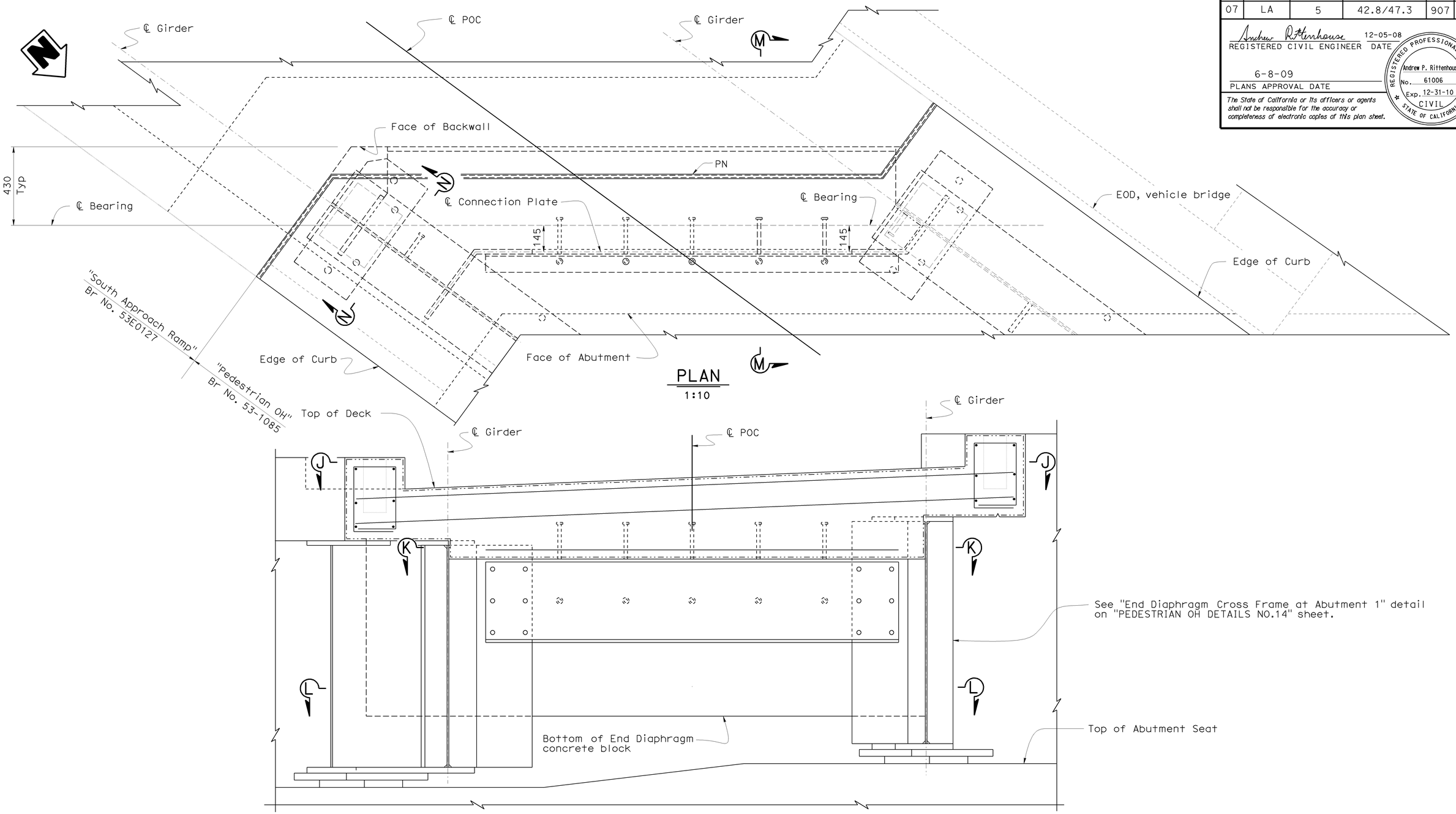

ELEVATION
1:10

END DIAPHRAGM LAYOUT AT ABUTMENT 1

NOTE:
THE CONTRACTOR SHALL VERIFY ALL CONTROLLING FIELD DIMENSIONS BEFORE ORDERING OR FABRICATING ANY MATERIAL.

Note:
1. For "Section J-J" and "Section K-K" see "PEDESTRIAN OH DETAILS NO.11" sheet.
2. For "Section L-L", see "PEDESTRIAN OH DETAILS NO.12" sheet
3. For "Section M-M" and "Section N-N", see 'PEDESTRIAN OH DETAILS NO.13" sheet.

Caltrans Metric

	BY	CHECKED
DESIGN	A. Logus	R. Novik
DETAILS	S. Cholda	R. Novik
QUANTITIES	A. Logus	D. Kubochi

STATE OF CALIFORNIA
DEPARTMENT OF TRANSPORTATION

DIVISION OF ENGINEERING SERVICES
STRUCTURE DESIGN
DESIGN BRANCH 15

BRIDGE NO. 53-1085
KILOMETER POST 46.1

PROVIDENCIA AVENUE OH (WIDEN)
PEDESTRIAN OH DETAILS NO.10

ALL DIMENSIONS ARE IN MILLIMETERS UNLESS OTHERWISE SHOWN

ORIGINAL SCALE IN MILLIMETERS FOR REDUCED PLANS 0 10 20 30 40 50 60 70 80 90 100

CU 07
EA 121841

DISREGARD PRINTS BEARING EARLIER REVISION DATES

REVISION DATES: 01-04-08 01-14-08 10-28-08 11-28-08 12-08-08 01-28-09 1-26-09 1-27-09 2-24-09

SHEET 118 OF 152

FILE => 53-1085-s-mr_det10.dgn

STRUCTURES DESIGN DETAIL SHEET (METRIC) (REV.03-17-04)

USERNAME => trpierce DATE PLOTTED => 15-JUN-2009 TIME PLOTTED => 06:49

DIST	COUNTY	ROUTE	KILOMETER POST TOTAL PROJECT	SHEET No	TOTAL SHEETS
07	LA	5	42.8/47.3	908	1073

Andrew Rittenhouse 12-05-08
REGISTERED CIVIL ENGINEER DATE

6-8-09
PLANS APPROVAL DATE

The State of California or its officers or agents shall not be responsible for the accuracy or completeness of electronic copies of this plan sheet.

REGISTERED PROFESSIONAL ENGINEER
Andrew P. Rittenhouse
No. 61006
Exp. 12-31-10
CIVIL
STATE OF CALIFORNIA

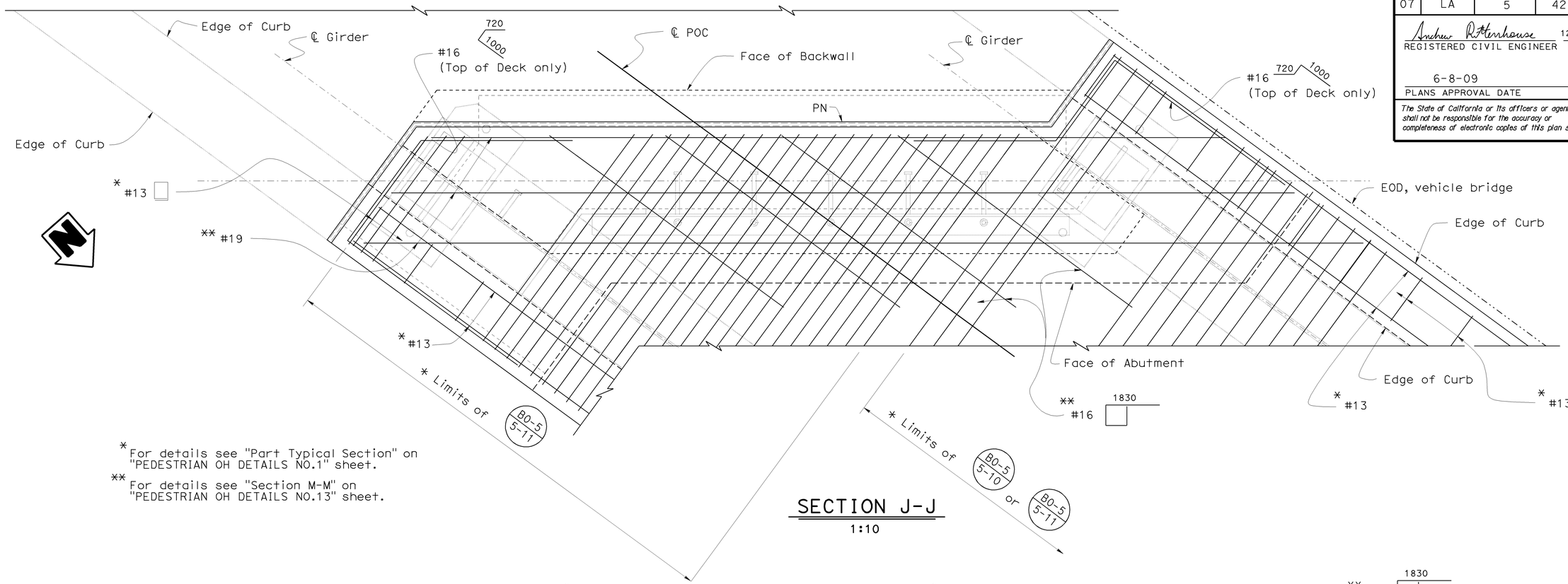

* For details see "Part Typical Section" on "PEDESTRIAN OH DETAILS NO.1" sheet.

** For details see "Section M-M" on "PEDESTRIAN OH DETAILS NO.13" sheet.

SECTION J-J
1:10

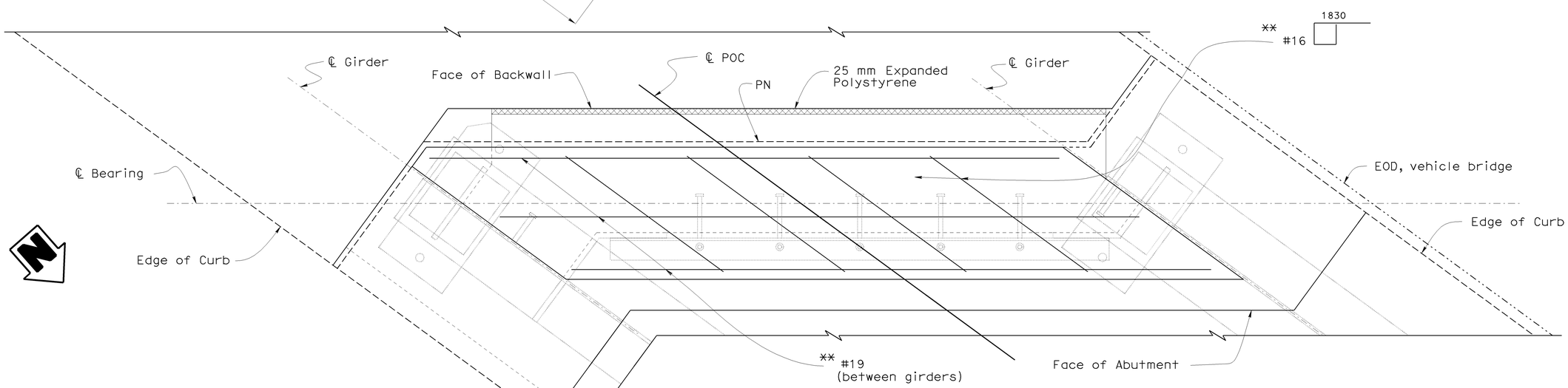

SECTION K-K
1:10

DECK REINFORCEMENT AT ABUTMENT 1

NOTE:
THE CONTRACTOR SHALL VERIFY ALL CONTROLLING FIELD DIMENSIONS BEFORE ORDERING OR FABRICATING ANY MATERIAL.

Caltrans Metric

ALL DIMENSIONS ARE IN MILLIMETERS UNLESS OTHERWISE SHOWN

ORIGINAL SCALE IN MILLIMETERS FOR REDUCED PLANS 0 10 20 30 40 50 60 70 80 90 100

	BY	CHECKED
DESIGN	A. Logus	C. Moulton
DETAILS	S. Cholda	C. Chan
QUANTITIES	A. Logus	D. Kubochi

STATE OF CALIFORNIA
DEPARTMENT OF TRANSPORTATION

DIVISION OF ENGINEERING SERVICES
STRUCTURE DESIGN
DESIGN BRANCH 15

CU 07
EA 121841

BRIDGE NO. 53-1085
KILOMETER POST 46.1

PROVIDENCIA AVENUE OH (WIDEN)
PEDESTRIAN OH DETAILS NO.11

DISREGARD PRINTS BEARING EARLIER REVISION DATES

REVISION DATES: 01-04-08 01-14-08 05-01-08 10-28-08 11-28-08 1-26-09 1-27-09 2-24-09

SHEET 119 OF 152

FILE => 53-1085-s-mr_det11.dgn

STRUCTURES DESIGN DETAIL SHEET (METRIC) (REV.03-17-04)

USERNAME => trpierce DATE PLOTTED => 15-JUN-2009 TIME PLOTTED => 06:49

DIST	COUNTY	ROUTE	KILOMETER POST TOTAL PROJECT	SHEET No	TOTAL SHEETS
07	LA	5	42.8/47.3	909	1073

Andrew P. Rittenhouse 12-05-08
REGISTERED CIVIL ENGINEER DATE

6-8-09
PLANS APPROVAL DATE

The State of California or its officers or agents shall not be responsible for the accuracy or completeness of electronic copies of this plan sheet.

REGISTERED PROFESSIONAL ENGINEER
Andrew P. Rittenhouse
No. 61006
Exp. 12-31-10
CIVIL
STATE OF CALIFORNIA

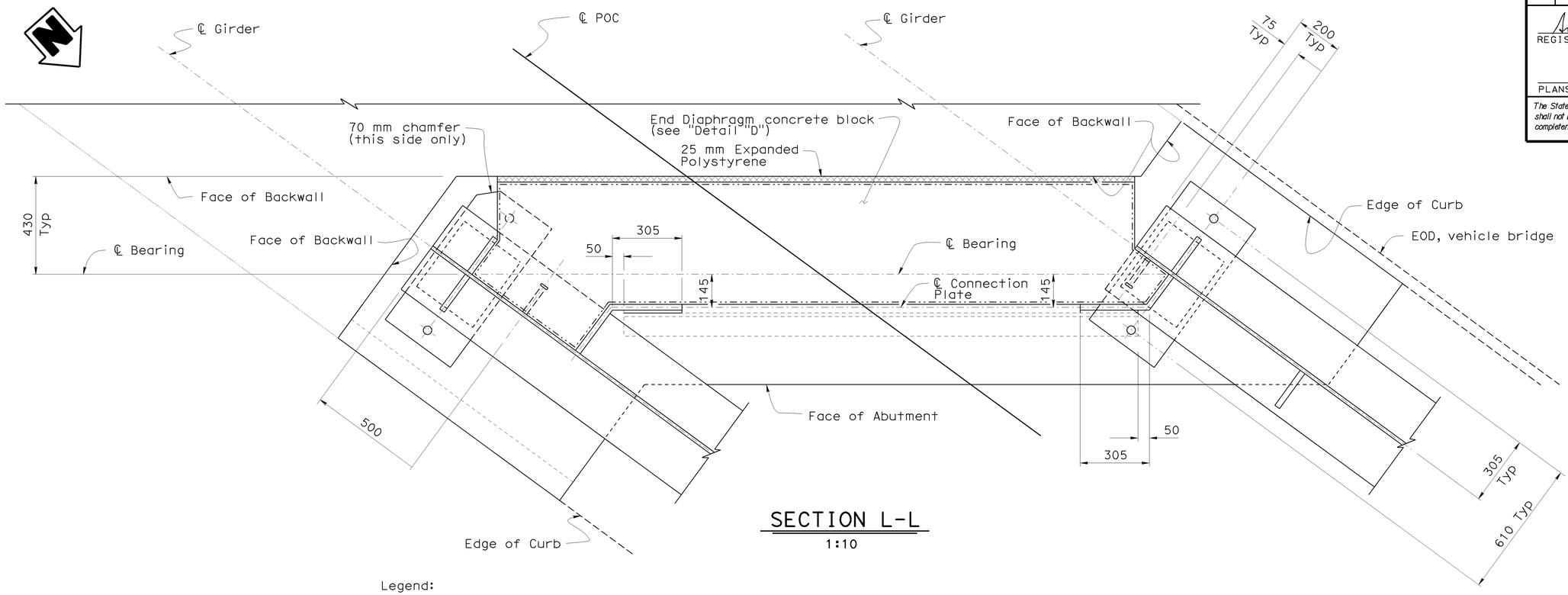

SECTION L-L

1:10

Legend:

—·—·— Indicates outline of End Diaphragm concrete block

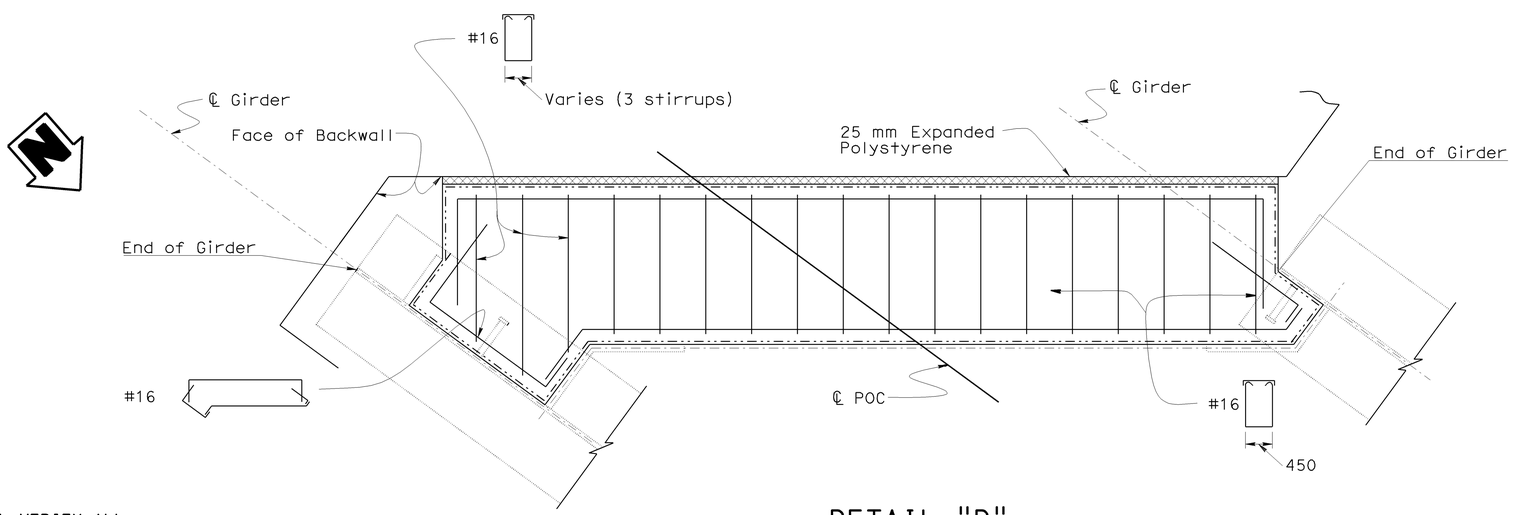

DETAIL "D"

1:10

NOTE:
THE CONTRACTOR SHALL VERIFY ALL CONTROLLING FIELD DIMENSIONS BEFORE ORDERING OR FABRICATING ANY MATERIAL.

	BY	CHECKED
DESIGN	A. Logus	C. Moulton
DETAILS	S. Cholda	C. Chan
QUANTITIES	A. Logus	D. Kubochi

STATE OF CALIFORNIA
DEPARTMENT OF TRANSPORTATION

DIVISION OF ENGINEERING SERVICES
STRUCTURE DESIGN
DESIGN BRANCH 15

BRIDGE NO. 53-1085
KILOMETER POST 46.1

PROVIDENCIA AVENUE OH (WIDEN)
PEDESTRIAN OH DETAILS NO.12

Caltrans Metric

ALL DIMENSIONS ARE IN MILLIMETERS UNLESS OTHERWISE SHOWN

ORIGINAL SCALE IN MILLIMETERS FOR REDUCED PLANS 0 10 20 30 40 50 60 70 80 90 100

CU 07
EA 121841

DISREGARD PRINTS BEARING EARLIER REVISION DATES

REVISION DATES: 01-04-08 01-14-08 11-28-08 12-10-08 1-26-09 1-22-09 2-24-05

SHEET 120 OF 152

FILE => 53-1085-s-mr_det12.dgn

STRUCTURES DESIGN DETAIL SHEET (METRIC) (REV.03-17-04)

USERNAME => trpierce DATE PLOTTED => 15-JUN-2009 TIME PLOTTED => 06:49

DIST	COUNTY	ROUTE	KILOMETER POST TOTAL PROJECT	SHEET No	TOTAL SHEETS
07	LA	5	42.8/47.3	910	1073

Andrew Rittenhouse 12-05-08
REGISTERED CIVIL ENGINEER DATE

6-8-09
PLANS APPROVAL DATE

REGISTERED PROFESSIONAL ENGINEER
Andrew P. Rittenhouse
No. 61006
Exp. 12-31-10
CIVIL
STATE OF CALIFORNIA

The State of California or its officers or agents shall not be responsible for the accuracy or completeness of electronic copies of this plan sheet.

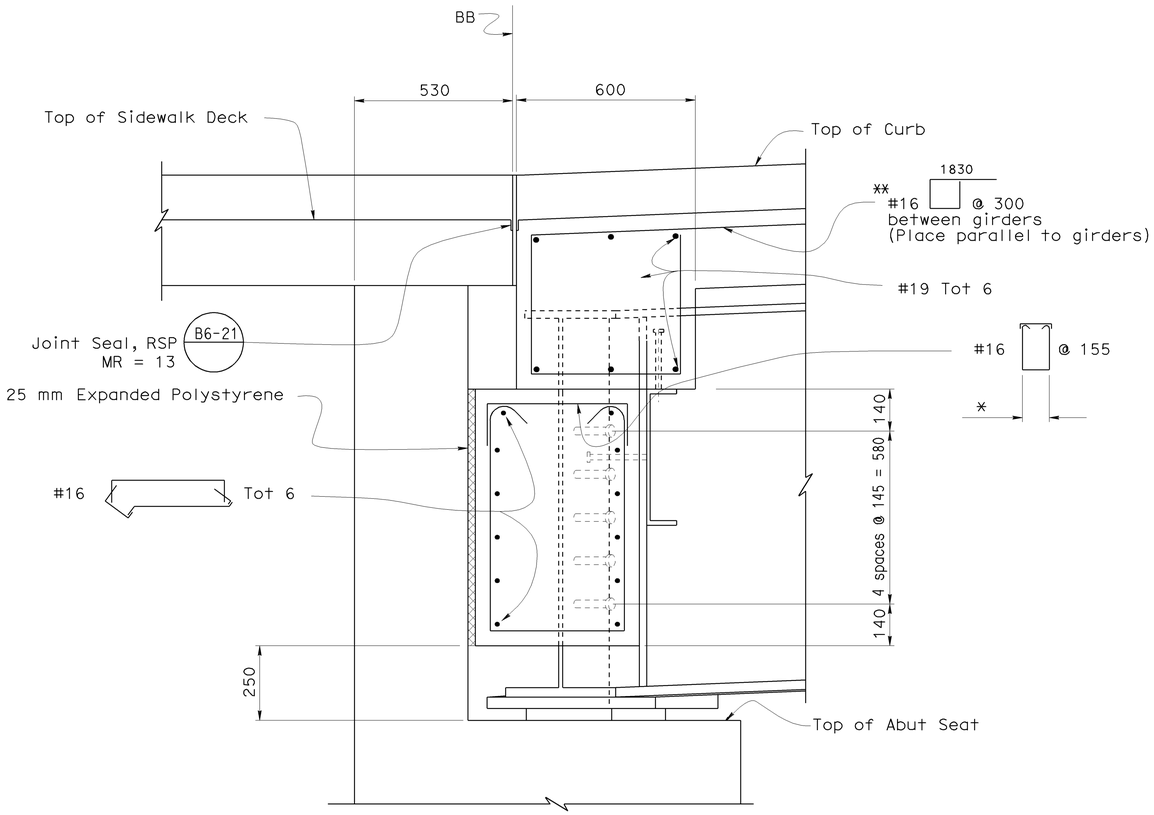

* For details, see "Detail "D"" on "PEDESTRIAN OH DETAILS NO.12"
** Typical deck reinforcement not shown for clarity

SECTION M-M
1:10

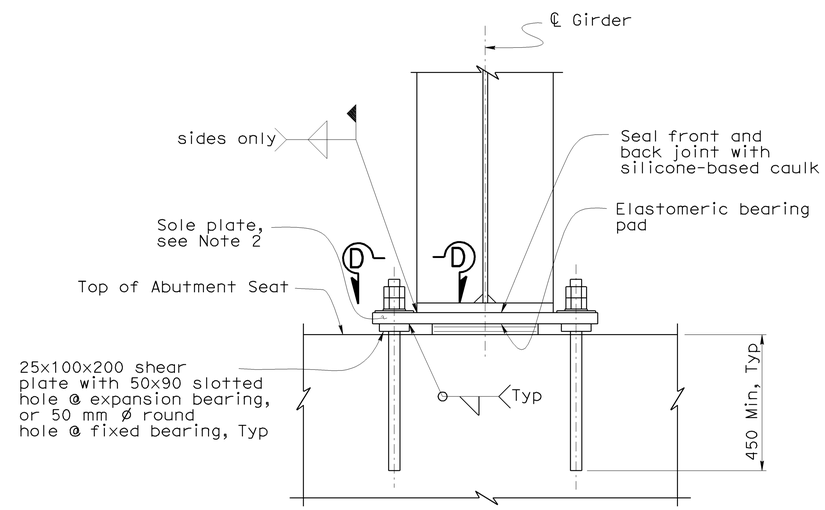

SECTION N-N
1:10

Notes:

1. Install lower nut in contact with plate and then back off ½ turn. Install upper nut snug tight to prevent lower nut from loosening.
2. If girder has a grade of 1% or more, bevel the sole plate to provide a level bearing surface. Minimum thickeness of sole plate is 38 mm, after beveling.
3. For "View D-D" see "GIRDER DETAILS NO. 6" sheet.

NOTE:
THE CONTRACTOR SHALL VERIFY ALL CONTROLLING FIELD DIMENSIONS BEFORE ORDERING OR FABRICATING ANY MATERIAL.

Caltrans Metric

	BY	CHECKED
DESIGN	A. Logus	C. Moulton
DETAILS	S. Cholda	C. Chan
QUANTITIES	A. Logus	D. Kubochi

STATE OF CALIFORNIA
DEPARTMENT OF TRANSPORTATION

DIVISION OF ENGINEERING SERVICES
STRUCTURE DESIGN
DESIGN BRANCH 15

BRIDGE NO. 53-1085
KILOMETER POST 46.1

PROVIDENCIA AVENUE OH (WIDEN)
PEDESTRIAN OH DETAILS NO.13

ALL DIMENSIONS ARE IN MILLIMETERS UNLESS OTHERWISE SHOWN

ORIGINAL SCALE IN MILLIMETERS FOR REDUCED PLANS 0 10 20 30 40 50 60 70 80 90 100

CU 07
EA 121841

DISREGARD PRINTS BEARING EARLIER REVISION DATES

REVISION DATES: 01-04-08 01-14-08 11-28-08 12-05-08 1-26-09 1-23-09 2-18-09

SHEET 121 OF 152

FILE => 53-1085-s-mr_det13.dgn

STRUCTURES DESIGN DETAIL SHEET (METRIC) (REV.03-17-04)

USERNAME => trpierce DATE PLOTTED => 15-JUN-2009 TIME PLOTTED => 06:49

DIST	COUNTY	ROUTE	KILOMETER POST TOTAL PROJECT	SHEET No	TOTAL SHEETS
07	LA	5	42.8/47.3	911	1073

Andrew Rittenhouse 12-05-08
REGISTERED CIVIL ENGINEER DATE

6-8-09
PLANS APPROVAL DATE

The State of California or its officers or agents shall not be responsible for the accuracy or completeness of electronic copies of this plan sheet.

REGISTERED PROFESSIONAL ENGINEER
Andrew P. Rittenhouse
No. 61006
Exp. 12-31-10
CIVIL
STATE OF CALIFORNIA

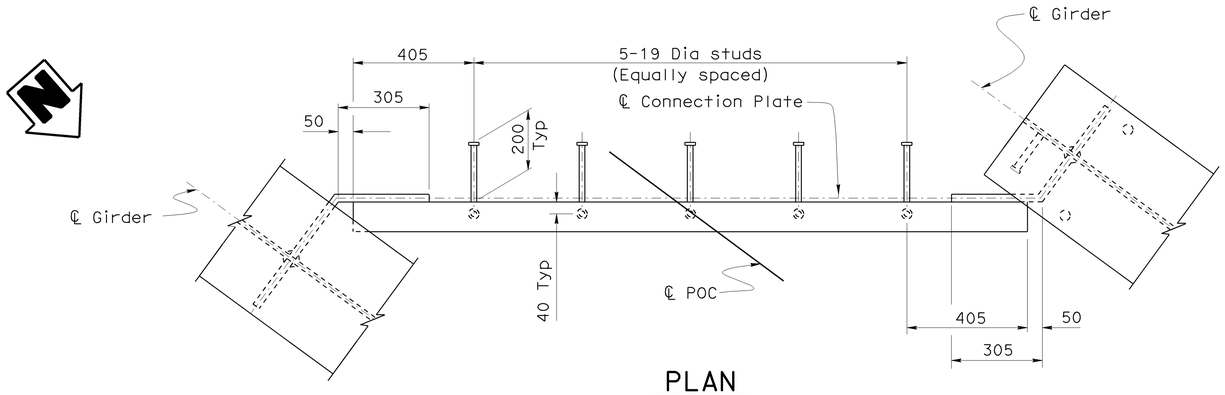

PLAN
1:10

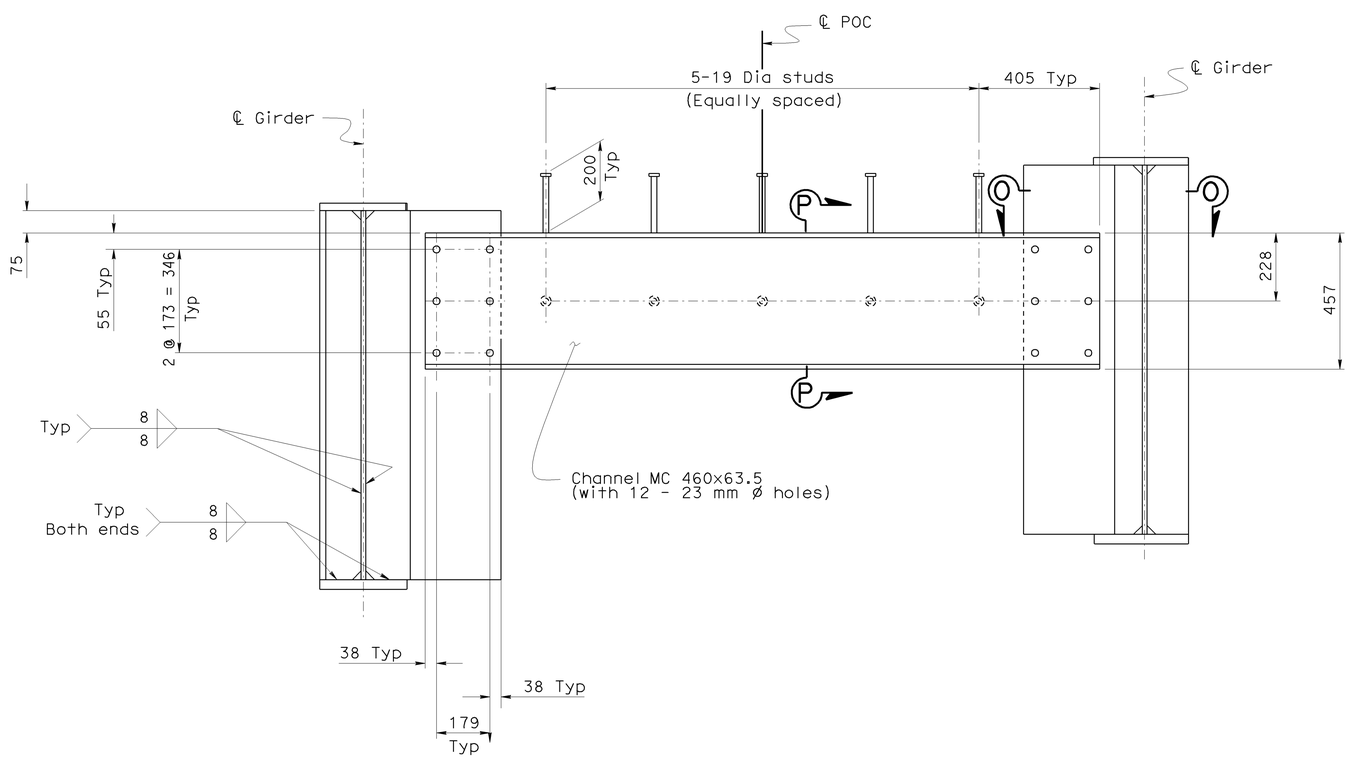

ELEVATION
1:10

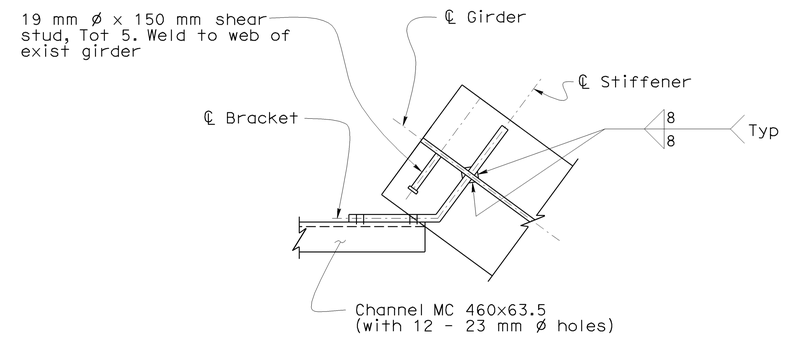

SECTION Q-Q
1:10

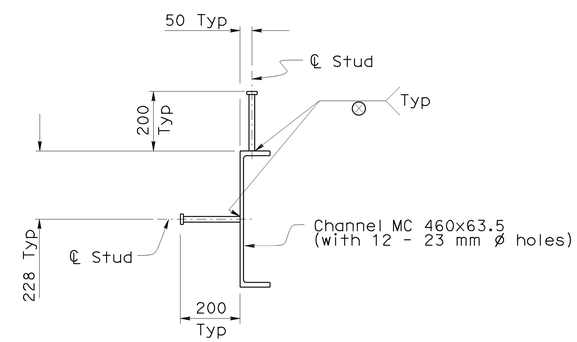

SECTION P-P
1:10

END DIAPHRAGM CROSS FRAME AT ABUTMENT 1

NOTE:
THE CONTRACTOR SHALL VERIFY ALL CONTROLLING FIELD DIMENSIONS BEFORE ORDERING OR FABRICATING ANY MATERIAL.

Caltrans Metric

	BY	CHECKED
DESIGN	A. Logus	C. Moulton
DETAILS	S. Cholda	C. Chan
QUANTITIES	A. Logus	D. Kubochi

STATE OF CALIFORNIA
DEPARTMENT OF TRANSPORTATION

DIVISION OF ENGINEERING SERVICES
STRUCTURE DESIGN
DESIGN BRANCH 15

BRIDGE NO. 53-1085
KILOMETER POST 46.1

PROVIDENCIA AVENUE OH (WIDEN)
PEDESTRIAN OH DETAILS NO.14

ALL DIMENSIONS ARE IN MILLIMETERS UNLESS OTHERWISE SHOWN

ORIGINAL SCALE IN MILLIMETERS FOR REDUCED PLANS 0 10 20 30 40 50 60 70 80 90 100

CU 07
EA 121841

DISREGARD PRINTS BEARING EARLIER REVISION DATES

REVISION DATES: 01-04-06 01-14-06 10-17-06 10-28-08 11-20-08 12-08-08 1-26-09 1-27-09

SHEET 122 OF 152

FILE => 53-1085-s-mr_det14.dgn

STRUCTURES DESIGN DETAIL SHEET (METRIC) (REV.03-17-04)

USERNAME => trpierce DATE PLOTTED => 15-JUN-2009 TIME PLOTTED => 06:49

DIST	COUNTY	ROUTE	KILOMETER POST TOTAL PROJECT	SHEET No	TOTAL SHEETS
07	LA	5	42.8/47.3	912	1073

Andrew Rittenhouse 12-05-08
REGISTERED CIVIL ENGINEER DATE

6-8-09
PLANS APPROVAL DATE

The State of California or its officers or agents shall not be responsible for the accuracy or completeness of electronic copies of this plan sheet.

REGISTERED PROFESSIONAL ENGINEER
Andrew P. Rittenhouse
No. 61006
Exp. 12-31-10
CIVIL
STATE OF CALIFORNIA

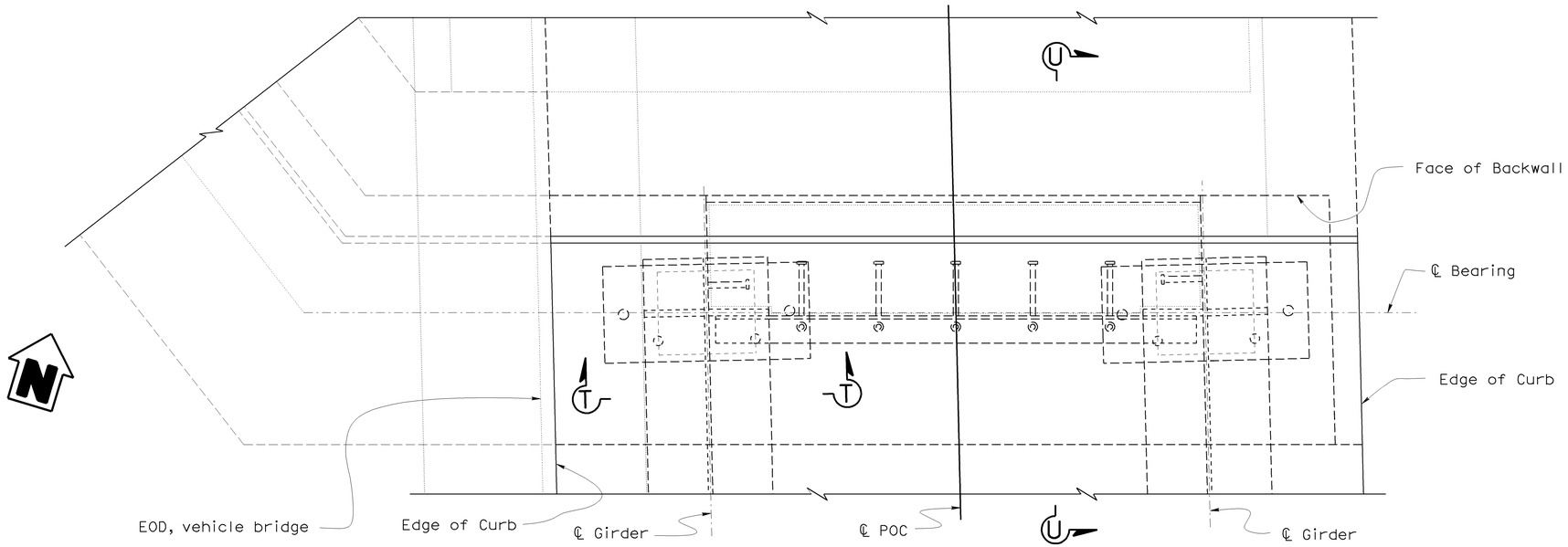

PLAN
1:10

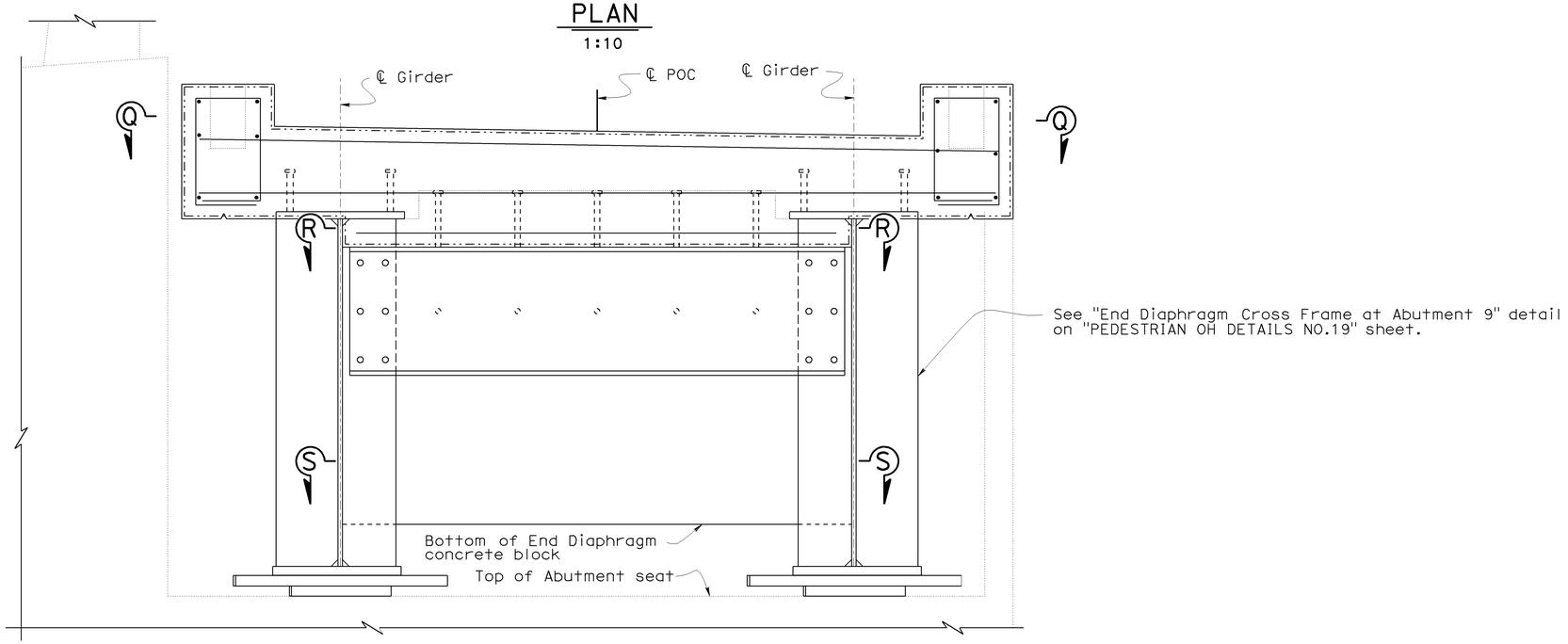

ELEVATION
1:10

END DIAPHRAGM LAYOUT AT ABUTMENT 9

NOTE:
THE CONTRACTOR SHALL VERIFY ALL CONTROLLING FIELD DIMENSIONS BEFORE ORDERING OR FABRICATING ANY MATERIAL.

Note:
1. For "Section Q-Q" and "Section R-R", see "PEDESTRIAN OH DETAILS NO.16" sheet.
2. For "Section S-S" , see "PEDESTRIAN OH DETAILS NO.17" sheet
3. For "Section T-T" and "Section U-U", see 'PEDESTRIAN OH DETAILS NO.18" sheet.

Caltrans Metric

	BY	CHECKED
DESIGN	A. Logus	C. Moulton
DETAILS	S. Cholda	C. Chan
QUANTITIES	A. Logus	D. Kubochi

STATE OF CALIFORNIA
DEPARTMENT OF TRANSPORTATION

DIVISION OF ENGINEERING SERVICES
STRUCTURE DESIGN
DESIGN BRANCH 15

BRIDGE NO. 53-1085
KILOMETER POST 46.1

PROVIDENCIA AVENUE OH (WIDEN)
PEDESTRIAN OH DETAILS NO.15

ALL DIMENSIONS ARE IN MILLIMETERS UNLESS OTHERWISE SHOWN

ORIGINAL SCALE IN MILLIMETERS FOR REDUCED PLANS 0 10 20 30 40 50 60 70 80 90 100

CU 07
EA 121841

DISREGARD PRINTS BEARING EARLIER REVISION DATES

REVISION DATES: 8-29-08 | 11-20-08 | 12-08-08 | 1-26-09 | 1-22-09 | 1-29-09 | 2-18-09

SHEET 123 OF 152

FILE => 53-1085-s-mr_det15.dgn

STRUCTURES DESIGN DETAIL SHEET (METRIC) (REV.03-17-04)

USERNAME => trpierce DATE PLOTTED => 15-JUN-2009 TIME PLOTTED => 06:49

DIST	COUNTY	ROUTE	KILOMETER POST TOTAL PROJECT	SHEET No	TOTAL SHEETS
07	LA	5	42.8/47.3	913	1073

Andrew Rittenhouse 12-05-08
REGISTERED CIVIL ENGINEER DATE

6-8-09
PLANS APPROVAL DATE

The State of California or its officers or agents shall not be responsible for the accuracy or completeness of electronic copies of this plan sheet.

REGISTERED PROFESSIONAL ENGINEER
Andrew P. Rittenhouse
No. 61006
Exp. 12-31-10
CIVIL
STATE OF CALIFORNIA

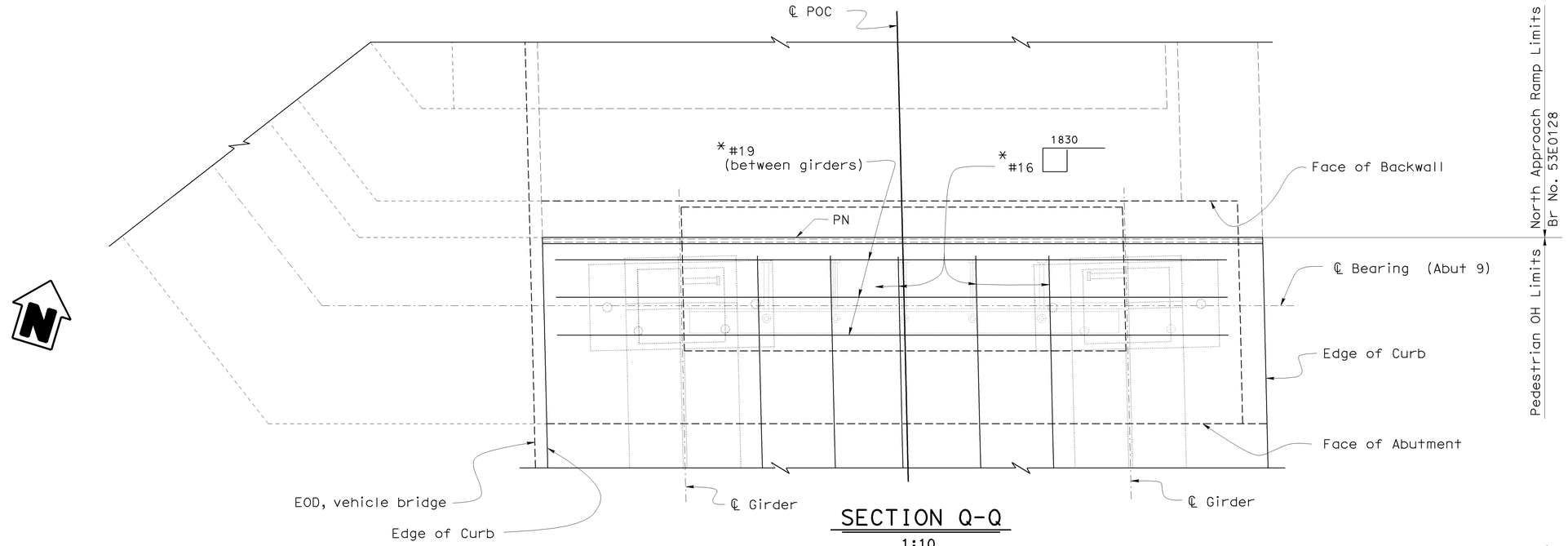

SECTION Q-Q
1:10

* For details see "Section U-U" on "PEDESTRIAN OH DETAILS NO.18" sheet.

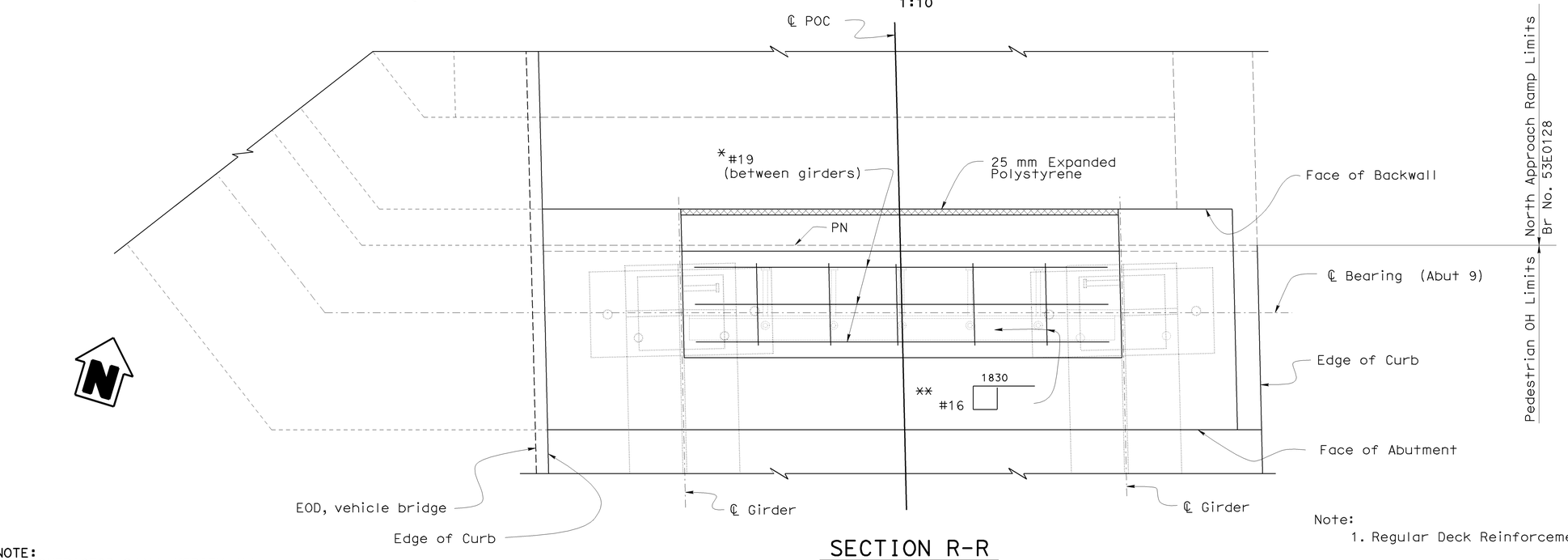

SECTION R-R
1:10

Note:
1. Regular Deck Reinforcement not shown for clarity.

NOTE:
THE CONTRACTOR SHALL VERIFY ALL CONTROLLING FIELD DIMENSIONS BEFORE ORDERING OR FABRICATING ANY MATERIAL.

DECK REINFORCEMENT AT ABUTMENT 9

DESIGN	BY A. Logus	CHECKED C. Moulton	
DETAILS	BY S. Cholda	CHECKED C. Chan	
QUANTITIES	BY A. Logus	CHECKED D. Kubochi	

STATE OF CALIFORNIA
DEPARTMENT OF TRANSPORTATION

DIVISION OF ENGINEERING SERVICES
STRUCTURE DESIGN
DESIGN BRANCH 15

BRIDGE NO. 53-1085
KILOMETER POST 46.1

PROVIDENCIA AVENUE OH (WIDEN)
PEDESTRIAN OH DETAILS NO.16

Caltrans Metric

ALL DIMENSIONS ARE IN MILLIMETERS UNLESS OTHERWISE SHOWN

ORIGINAL SCALE IN MILLIMETERS FOR REDUCED PLANS 0 10 20 30 40 50 60 70 80 90 100

CU 07
EA 121841

DISREGARD PRINTS BEARING EARLIER REVISION DATES

REVISION DATES: 9-29-08 | 10-28-08 | 11-28-08 | 01-28-09 | 1-28-09 | 1-22-09 | 2-24-09

SHEET 124 OF 152

FILE => 53-1085-s-mr_det16.dgn

STRUCTURES DESIGN DETAIL SHEET (METRIC) (REV.03-17-04)

USERNAME => trpierce DATE PLOTTED => 15-JUN-2009 TIME PLOTTED => 06:49

DIST	COUNTY	ROUTE	KILOMETER POST TOTAL PROJECT	SHEET No	TOTAL SHEETS
07	LA	5	42.8/47.3	914	1073

Andrew Rittenhouse 12-05-08
REGISTERED CIVIL ENGINEER DATE

6-8-09
PLANS APPROVAL DATE

REGISTERED PROFESSIONAL ENGINEER
Andrew P. Rittenhouse
No. 61006
Exp. 12-31-10
CIVIL
STATE OF CALIFORNIA

The State of California or its officers or agents shall not be responsible for the accuracy or completeness of electronic copies of this plan sheet.

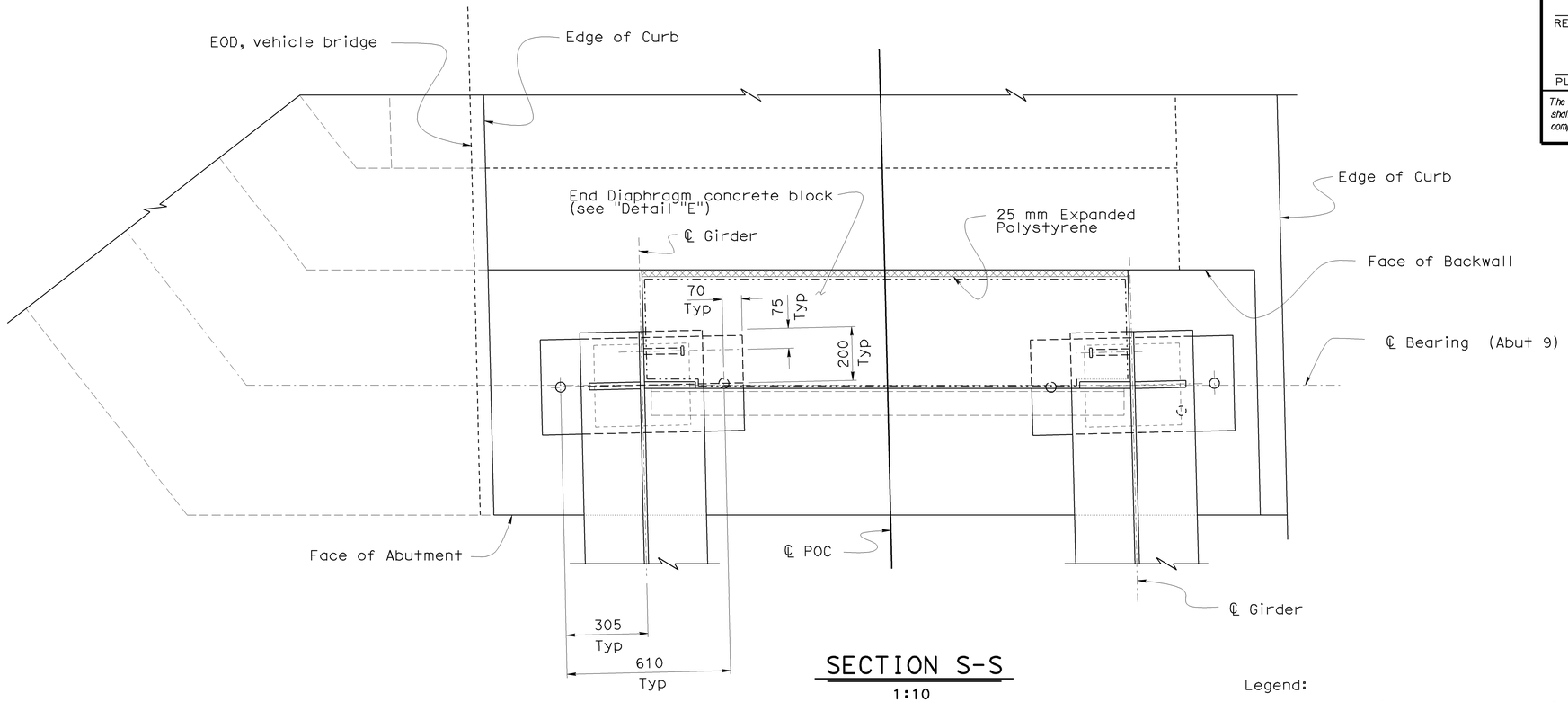

SECTION S-S

1:10

Legend:

-·-·-·- Indicates outline of End Diaphragm concrete block

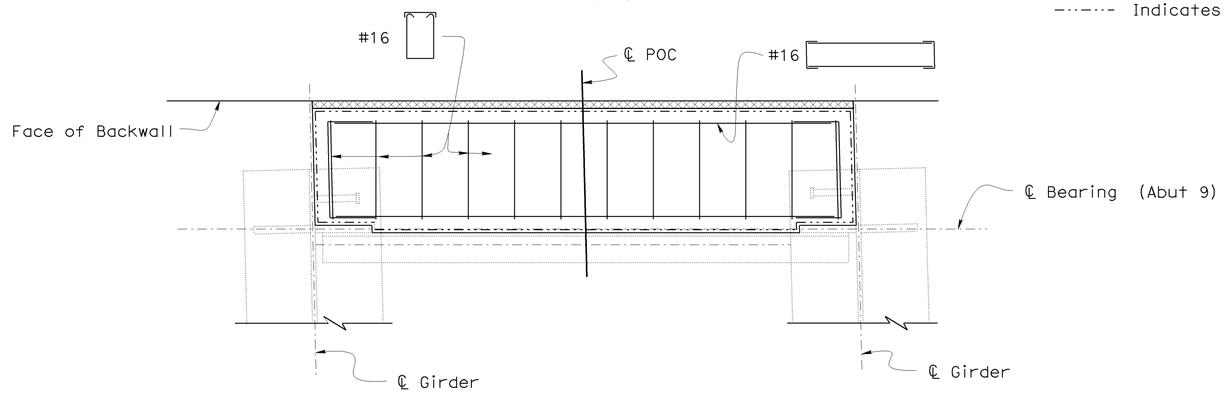

DETAIL "E"

1:10

NOTE:
THE CONTRACTOR SHALL VERIFY ALL CONTROLLING FIELD DIMENSIONS BEFORE ORDERING OR FABRICATING ANY MATERIAL.

END DIAPHRAGM LAYOUT AT ABUTMENT 9

Caltrans Metric

	BY	CHECKED
DESIGN	A. Logus	C. Moulton
DETAILS	S. Cholda	C. Chan
QUANTITIES	A. Logus	D. Kubochi

STATE OF CALIFORNIA
DEPARTMENT OF TRANSPORTATION

DIVISION OF ENGINEERING SERVICES
STRUCTURE DESIGN
DESIGN BRANCH 15

BRIDGE NO. 53-1085
KILOMETER POST 46.1

PROVIDENCIA AVENUE OH (WIDEN)
PEDESTRIAN OH DETAILS NO.17

ALL DIMENSIONS ARE IN MILLIMETERS UNLESS OTHERWISE SHOWN

ORIGINAL SCALE IN MILLIMETERS FOR REDUCED PLANS 0 10 20 30 40 50 60 70 80 90 100

CU 07
EA 121841

DISREGARD PRINTS BEARING EARLIER REVISION DATES

REVISION DATES: 8-29-08 11-28-08 1-26-09 1-27-09

SHEET 125 OF 152

FILE => 53-1085-s-mr_det17.dgn

STRUCTURES DESIGN DETAIL SHEET (METRIC) (REV.03-17-04)

USERNAME => trpierce DATE PLOTTED => 15-JUN-2009 TIME PLOTTED => 06:49

DIST	COUNTY	ROUTE	KILOMETER POST TOTAL PROJECT	SHEET No	TOTAL SHEETS
07	LA	5	42.8/47.3	915	1073

Andrew Rittenhouse 12-05-08
REGISTERED CIVIL ENGINEER DATE

6-8-09
PLANS APPROVAL DATE

REGISTERED PROFESSIONAL ENGINEER
Andrew P. Rittenhouse
No. 61006
Exp. 12-31-10
CIVIL
STATE OF CALIFORNIA

The State of California or its officers or agents shall not be responsible for the accuracy or completeness of electronic copies of this plan sheet.

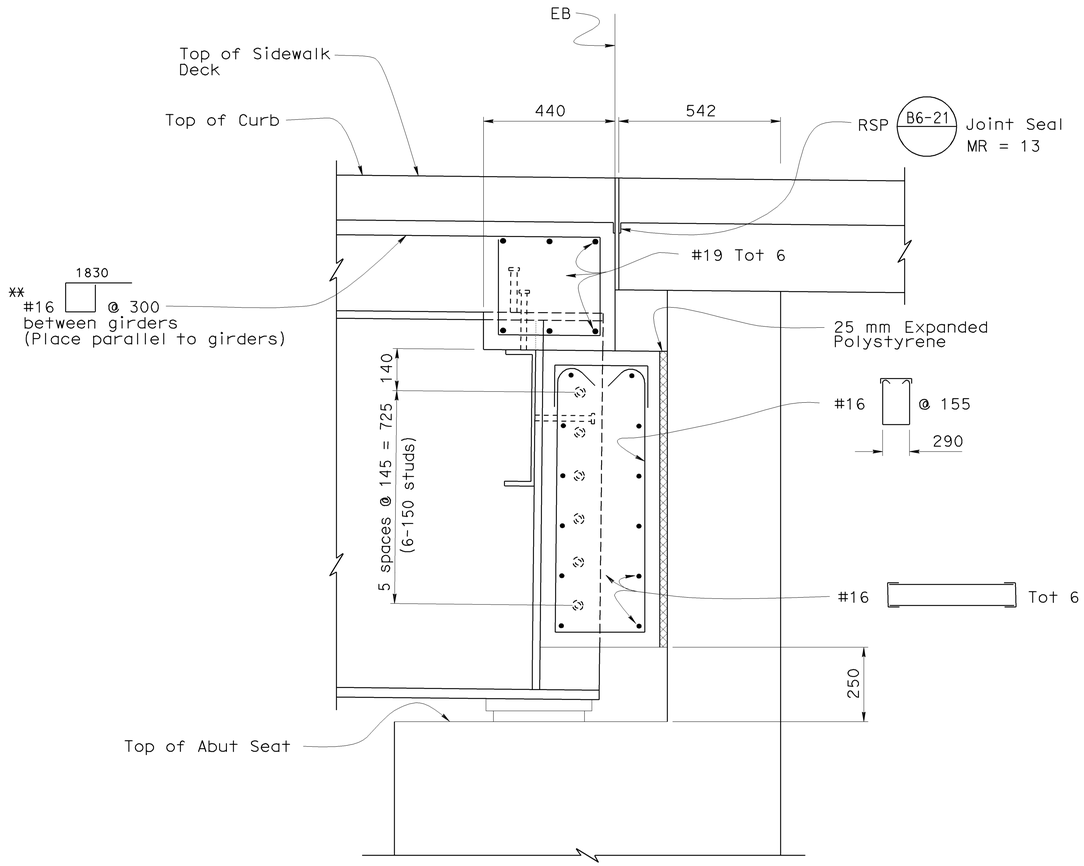

SECTION U-U
1:10

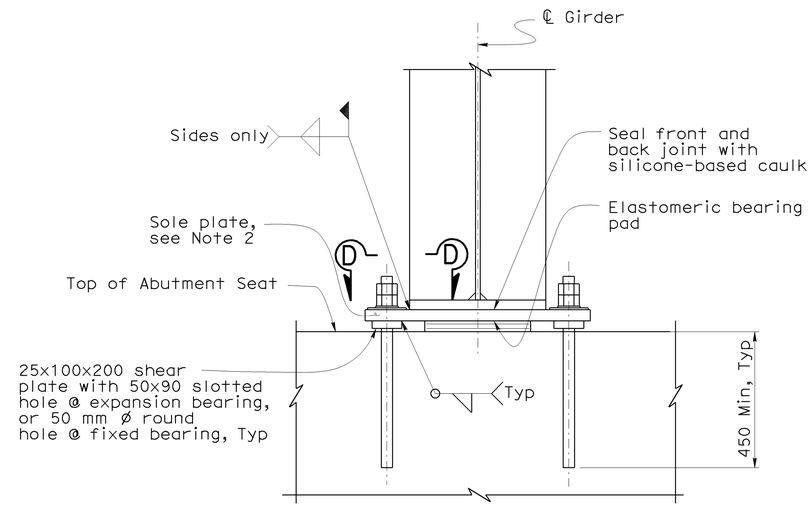

SECTION T-T
1:10

Notes:

1. Install lower nut in contact with plate and then back off ½ turn. Install upper nut snug tight to prevent lower nut from loosening.
2. If girder has a grade of 1% or more, bevel the sole plate to provide a level bearing surface. Minimum thickness of sole plate is 38 mm, after beveling.
3. For "View D-D" see "GIRDER DETAILS NO. 6" sheet.

NOTE:
THE CONTRACTOR SHALL VERIFY ALL CONTROLLING FIELD DIMENSIONS BEFORE ORDERING OR FABRICATING ANY MATERIAL.

Caltrans Metric

	BY	CHECKED
DESIGN	A. Logus	C. Moulton
DETAILS	S. Cholda	C. Chan
QUANTITIES	A. Logus	D. Kubochi

STATE OF CALIFORNIA
DEPARTMENT OF TRANSPORTATION

DIVISION OF ENGINEERING SERVICES
STRUCTURE DESIGN
DESIGN BRANCH 15

BRIDGE NO. 53-1085
KILOMETER POST 46.1

PROVIDENCIA AVENUE OH (WIDEN)
PEDESTRIAN OH DETAILS NO.18

ALL DIMENSIONS ARE IN MILLIMETERS UNLESS OTHERWISE SHOWN

ORIGINAL SCALE IN MILLIMETERS FOR REDUCED PLANS 0 10 20 30 40 50 60 70 80 90 100

CU 07
EA 121841

DISREGARD PRINTS BEARING EARLIER REVISION DATES

REVISION DATES: 8-29-08 11-28-08 01-28-09 1-26-09 1-22-09 2-19-09 2-25-09 2-26-09 4-22-09

SHEET 126 OF 152

FILE => 53-1085-s-mr_det18.dgn

STRUCTURES DESIGN DETAIL SHEET (METRIC) (REV.03-17-04)

USERNAME => trmnguye DATE PLOTTED => 15-JUN-2009 TIME PLOTTED => 07:04

DIST	COUNTY	ROUTE	KILOMETER POST TOTAL PROJECT	SHEET No	TOTAL SHEETS
07	LA	5	42.8/47.3	916	1073

Andrew Rittenhouse 12-05-08
REGISTERED CIVIL ENGINEER DATE

6-8-09
PLANS APPROVAL DATE

REGISTERED PROFESSIONAL ENGINEER
Andrew P. Rittenhouse
No. 61006
Exp. 12-31-10
CIVIL
STATE OF CALIFORNIA

The State of California or its officers or agents shall not be responsible for the accuracy or completeness of electronic copies of this plan sheet.

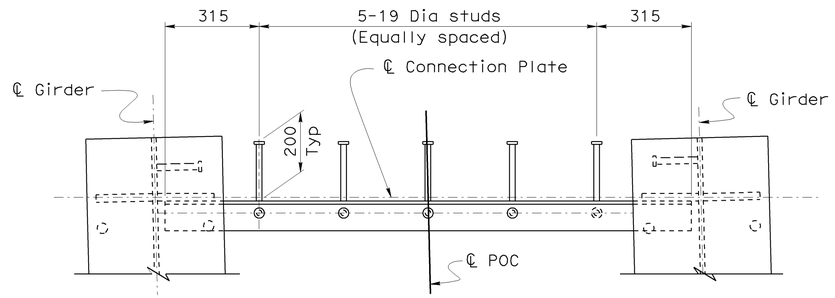

PLAN
1:10

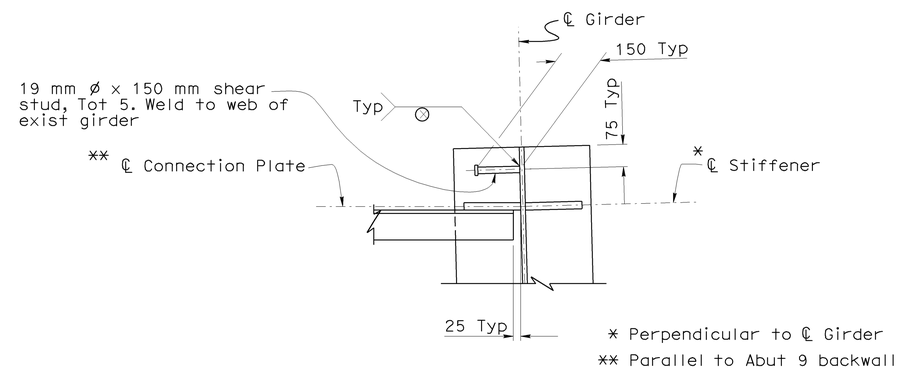

SECTION V-V
1:10

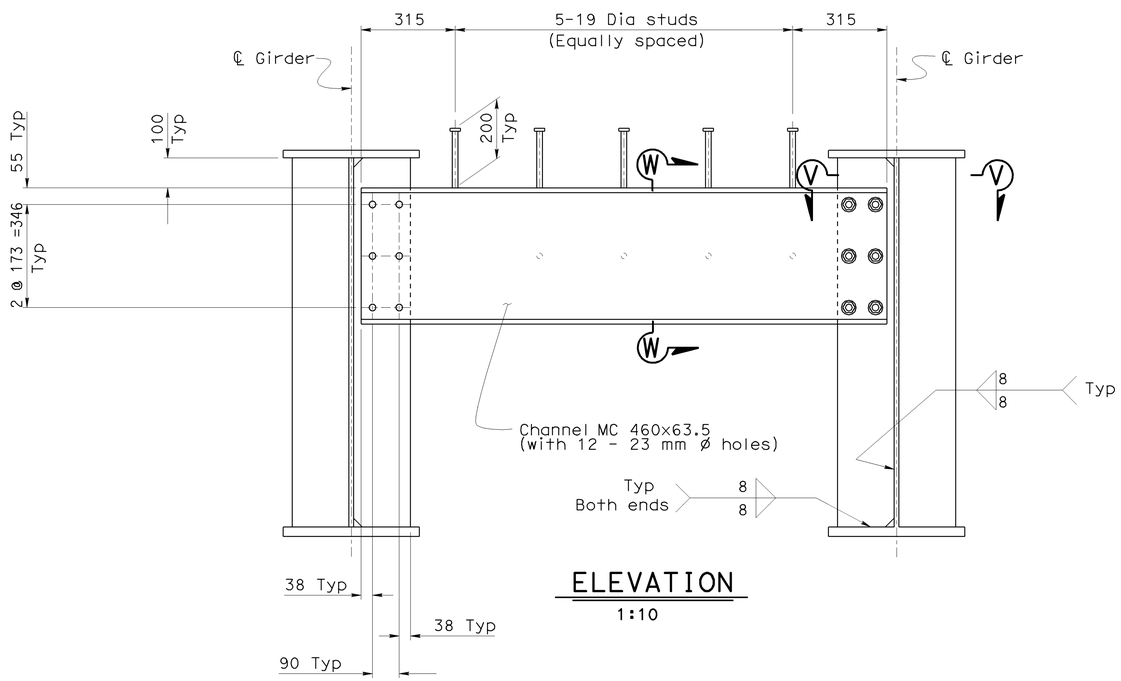

ELEVATION
1:10

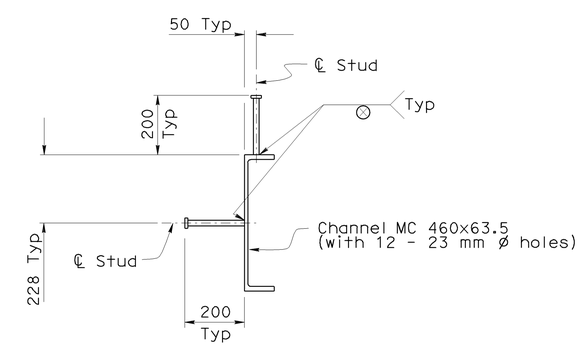

SECTION W-W
1:10

END DIAPHRAGM CROSS FRAME AT ABUTMENT 9

NOTE:
THE CONTRACTOR SHALL VERIFY ALL CONTROLLING FIELD DIMENSIONS BEFORE ORDERING OR FABRICATING ANY MATERIAL.

Caltrans Metric

	BY	CHECKED
DESIGN	A. Logus	C. Moulton
DETAILS	S. Cholda	C. Chan
QUANTITIES	A. Logus	D. Kubochi

STATE OF CALIFORNIA
DEPARTMENT OF TRANSPORTATION

DIVISION OF ENGINEERING SERVICES
STRUCTURE DESIGN
DESIGN BRANCH 15

BRIDGE NO. 53-1085
KILOMETER POST 46.1

PROVIDENCIA AVENUE OH (WIDEN)
PEDESTRIAN OH DETAILS NO.19

ALL DIMENSIONS ARE IN MILLIMETERS UNLESS OTHERWISE SHOWN

ORIGINAL SCALE IN MILLIMETERS FOR REDUCED PLANS 0 10 20 30 40 50 60 70 80 90 100

CU 07
EA 121841

DISREGARD PRINTS BEARING EARLIER REVISION DATES
REVISION DATES: 6-24-08 11-20-08 12-17-08 01-21-09 1-22-09 1-26-09

SHEET 127 OF 152

FILE => 53-1085-s-mr_det19.dgn

STRUCTURES DESIGN DETAIL SHEET (METRIC) (REV.03-17-04)

USERNAME => trmnguye DATE PLOTTED => 15-JUN-2009 TIME PLOTTED => 07:04

DIST	COUNTY	ROUTE	KILOMETER POST TOTAL PROJECT	SHEET No	TOTAL SHEETS
07	LA	5	42.8/47.3	917	1073

Andrew Rittenhouse 12-05-08
REGISTERED CIVIL ENGINEER DATE

6-8-09
PLANS APPROVAL DATE

REGISTERED PROFESSIONAL ENGINEER
Andrew P. Rittenhouse
No. 61006
Exp. 12-31-10
CIVIL
STATE OF CALIFORNIA

The State of California or its officers or agents shall not be responsible for the accuracy or completeness of electronic copies of this plan sheet.

CAMBER DIAGRAM TABLE

GIRDER	CAMBER COMPONENT	1/4Span	1/2Span	3/4Span
Span 1	Deck Slab Dead Load	25	35	25
	Steel Girder Dead Load	8	11	8
	Added Dead Load	1	1	1
	Total Camber	34	47	34
Span 2	Deck Slab Dead Load	47	65	47
	Steel Girder Dead Load	15	20	15
	Added Dead Load	1	2	1
	Total Camber	63	87	63
Span 3	Deck Slab Dead Load	23	33	23
	Steel Girder Dead Load	8	10	8
	Added Dead Load	1	1	1
	Total Camber	32	44	32
Span 4	Deck Slab Dead Load	54	76	54
	Steel Girder Dead Load	17	24	17
	Added Dead Load	2	2	2
	Total Camber	73	102	73
Span 5	Deck Slab Dead Load	24	33	24
	Steel Girder Dead Load	8	11	8
	Added Dead Load	1	2	1
	Total Camber	33	46	59
Span 6	Deck Slab Dead Load	13	17	13
	Steel Girder Dead Load	5	6	5
	Added Dead Load	1	1	1
	Total Camber	19	24	19
Span 7	Deck Slab Dead Load	15	21	15
	Steel Girder Dead Load	5	7	5
	Added Dead Load	1	1	1
	Total Camber	21	29	21
Span 8	Deck Slab Dead Load	20	27	20
	Steel Girder Dead Load	6	9	6
	Added Dead Load	1	1	1
	Total Camber	27	37	27

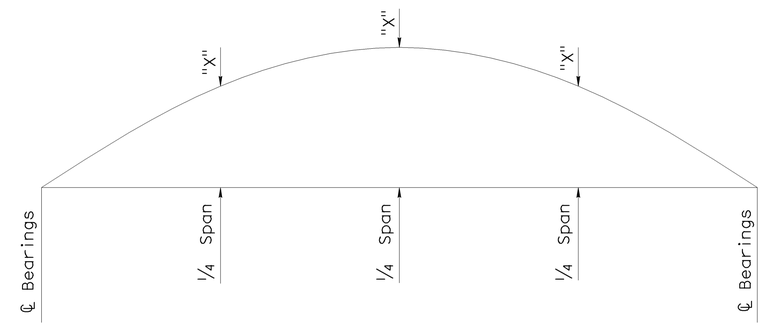

CAMBER DIAGRAM

NO SCALE

Note:

"X" - For value see "Camber Diagram Table"

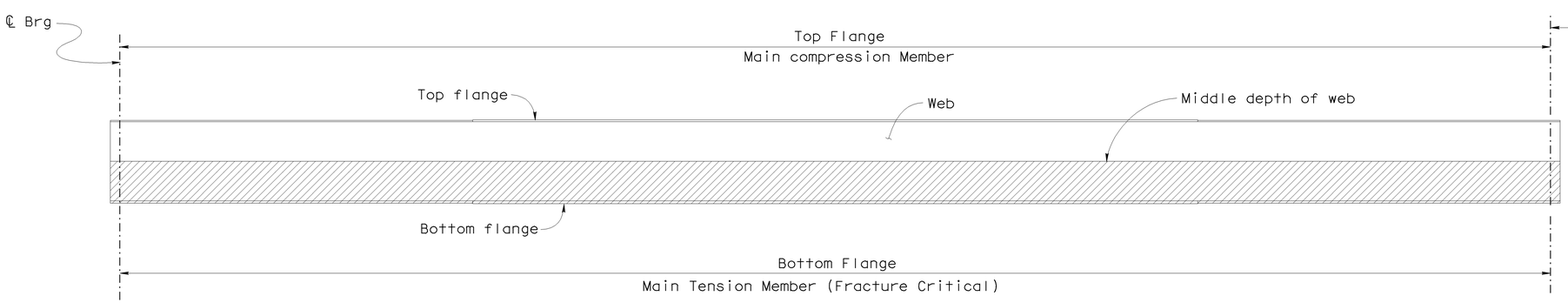

℄ Brg

LEGEND

- Denotes Main Tension Member (Fracture Critical)
- Denotes Main Compression Member

Notes:

1. "Primary Components of Main Members are flanges, webs, splice plates and cover plates, transverse and longitudinal stiffeners and bearing stiffeners".
2. "Secondary Members" are all members not designated as either Fracture Critical Member or Main Members.

ALL GIRDERS (TYP)

MAIN MEMBER DESIGNATIONS

1:50

NOTE:
THE CONTRACTOR SHALL VERIFY ALL CONTROLLING FIELD DIMENSIONS BEFORE ORDERING OR FABRICATING ANY MATERIAL.

NOTE:
In addition to camber values shown, girder fabrication shall account for structure geometry including profile grade, superelevation, and changes in thickness of bottom flange.

Caltrans Metric

ALL DIMENSIONS ARE IN MILLIMETERS UNLESS OTHERWISE SHOWN

ORIGINAL SCALE IN MILLIMETERS FOR REDUCED PLANS 0 10 20 30 40 50 60 70 80 90 100

	BY	CHECKED
DESIGN	A. Logus	C. Moulton
DETAILS	S. Cholda	C. Chan
QUANTITIES	A. Logus	D. Kubochi

STATE OF CALIFORNIA
DEPARTMENT OF TRANSPORTATION

DIVISION OF ENGINEERING SERVICES
STRUCTURE DESIGN
DESIGN BRANCH 15

CU 07
EA 121841

BRIDGE NO. 53-1085
KILOMETER POST 46.1

PROVIDENCIA AVENUE OH (WIDEN)
PEDESTRIAN OH DETAILS NO. 20

DISREGARD PRINTS BEARING EARLIER REVISION DATES

REVISION DATES: 01-04-08 01-14-08 11-28-08 1-22-09 1-26-09

SHEET 128 OF 152

FILE => 53-1085-s-mr_det20.dgn

STRUCTURES DESIGN DETAIL SHEET (METRIC) (REV.03-17-04)

USERNAME => trmnguye DATE PLOTTED => 15-JUN-2009 TIME PLOTTED => 07:04

DIST	COUNTY	ROUTE	KILOMETER POST TOTAL PROJECT	SHEET No	TOTAL SHEETS
07	LA	5	42.8/47.3	918	1073

Andrew Rittenhouse 12-05-08
REGISTERED CIVIL ENGINEER DATE

6-8-09
PLANS APPROVAL DATE

REGISTERED PROFESSIONAL ENGINEER
Andrew P. Rittenhouse
No. 61006
Exp. 12-31-10
CIVIL
STATE OF CALIFORNIA

The State of California or its officers or agents shall not be responsible for the accuracy or completeness of electronic copies of this plan sheet.

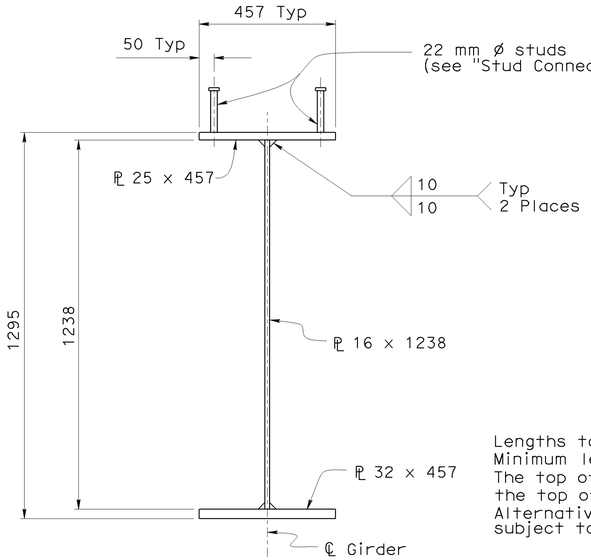

SECTION X-X
1:10

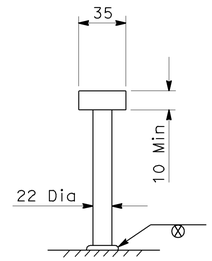

Lengths to be determined by the Contractor,unless otherwise shown.
Minimum length is 157 mm.
The top of deck is designed to be approximately parallel to the top of web for determining girder stud connector height.
Alternative types of shear connectors will be permitted subject to approval by the Engineer.

STUD CONNECTOR

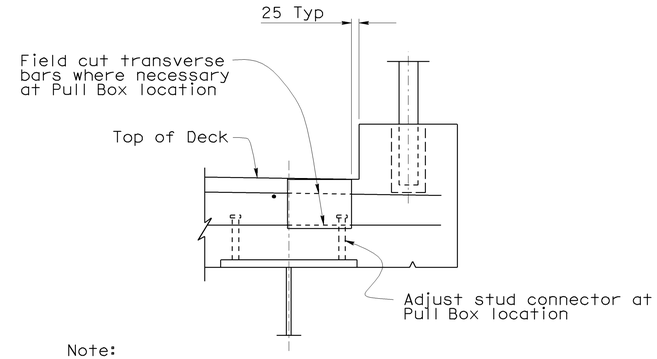

Note:
Right side shown, left side similiar.

TYPICAL PULL BOX DETAIL
1:10

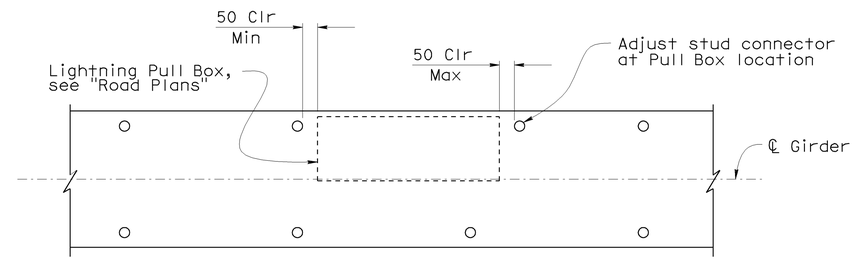

PART PLAN @ PULL BOX
1:40

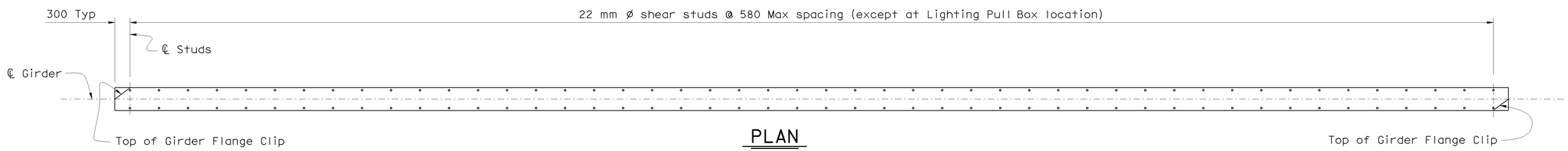

PLAN
1:40

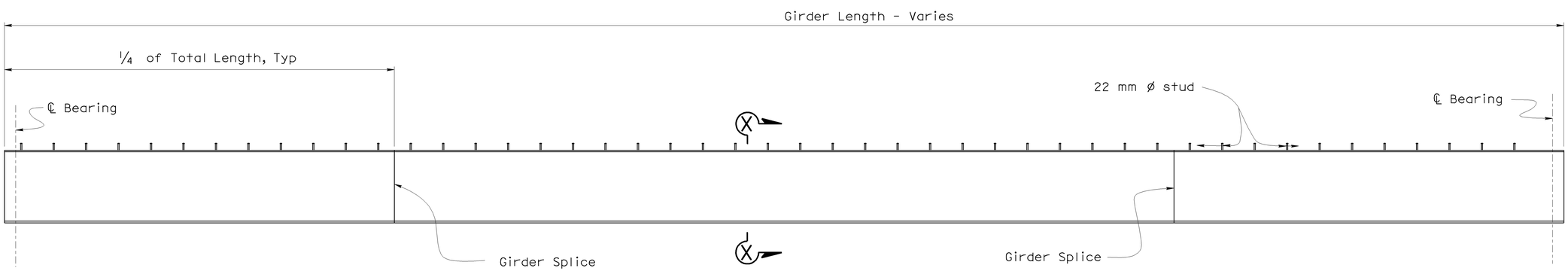

ELEVATION
1:40

NOTE:
THE CONTRACTOR SHALL VERIFY ALL CONTROLLING FIELD DIMENSIONS BEFORE ORDERING OR FABRICATING ANY MATERIAL.

Notes:

1. For girder intermediate stiffeners and intermediate Diaphragm connector location, see "PEDESTRIAN OH DETAILS NO.2" sheet.

DESIGN	BY A. Logus	CHECKED C. Moulton	
DETAILS	BY S. Cholda	CHECKED C. Chan	
QUANTITIES	BY A. Logus	CHECKED D. Kubochi	

Caltrans Metric

ALL DIMENSIONS ARE IN MILLIMETERS UNLESS OTHERWISE SHOWN

ORIGINAL SCALE IN MILLIMETERS FOR REDUCED PLANS 0 10 20 30 40 50 60 70 80 90 100

STATE OF CALIFORNIA
DEPARTMENT OF TRANSPORTATION

DIVISION OF ENGINEERING SERVICES
STRUCTURE DESIGN
DESIGN BRANCH 15

CU 07
EA 121841

BRIDGE NO. 53-1085
KILOMETER POST 46.1

PROVIDENCIA AVENUE OH (WIDEN)
PEDESTRIAN OH DETAILS NO.21

DISREGARD PRINTS BEARING EARLIER REVISION DATES

REVISION DATES: 01-04-08 01-14-08 10-28-08 11-04-08 11-20-08 12-10-08 01-20-09 1-22-09 1-26-09 2-25-09

SHEET 129 OF 152

FILE => 53-1085-s-mr_det21.dgn

STRUCTURES DESIGN DETAIL SHEET (METRIC) (REV.03-17-04)

USERNAME => trimmguye DATE PLOTTED => 15-JUN-2009 TIME PLOTTED => 07:04

DIST	COUNTY	ROUTE	KILOMETER POST TOTAL PROJECT	SHEET No	TOTAL SHEETS
07	LA	5	42.8/47.3	919	1073

Andrew Rittenhouse 12-05-08
REGISTERED CIVIL ENGINEER DATE

6-8-09
PLANS APPROVAL DATE

REGISTERED PROFESSIONAL ENGINEER Andrew P. Rittenhouse No. 61006 Exp. 12-31-10 CIVIL STATE OF CALIFORNIA

The State of California or its officers or agents shall not be responsible for the accuracy or completeness of electronic copies of this plan sheet.

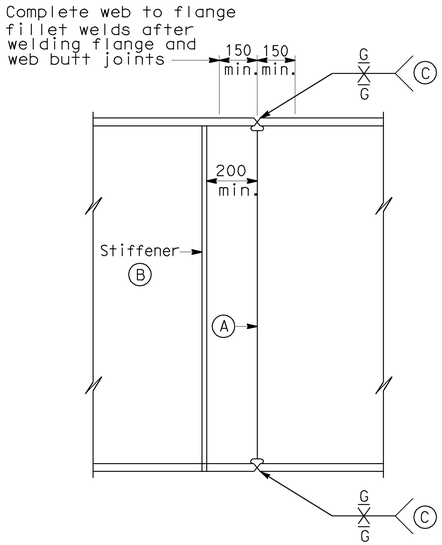

GIRDER SPLICE

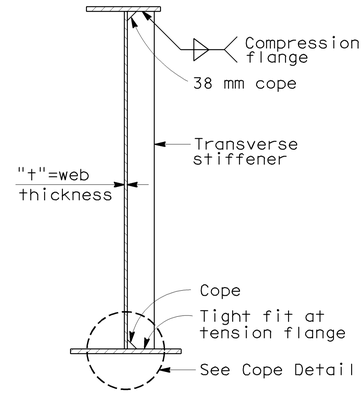

ASSEMBLY AND FABRICATION DETAILS

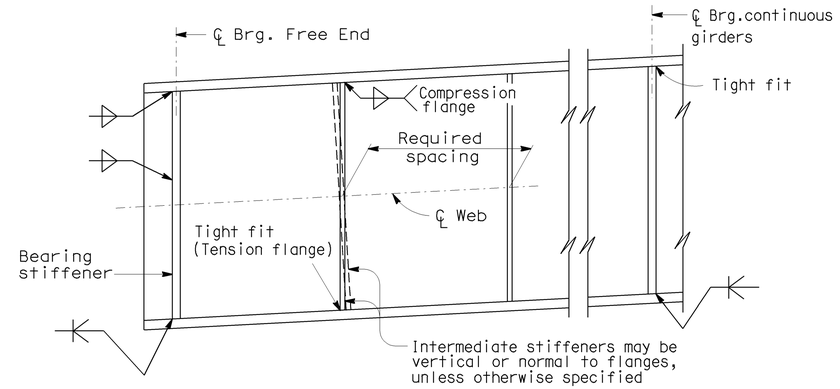

TRANSVERSE STIFFENERS

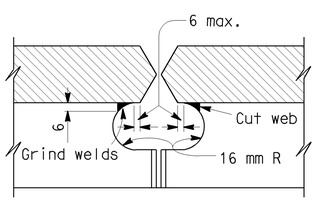

WEB COPE AT GIRDER SPLICE

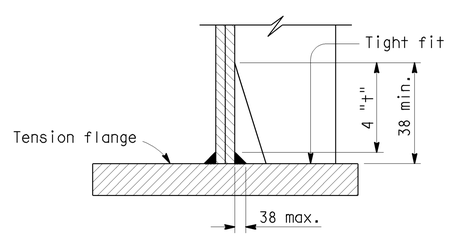

COPE DETAIL

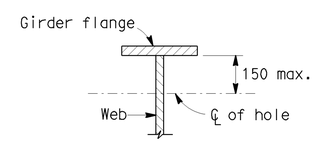

25 mm max.diameter hole at 1.2 m± min. spacing to be used for falsework support when specified by the Contractor. Contractor to determine location, size and spacing.

50 mm max.diameter hole to be drilled where lighting conduit passes through girder web. For location and size of hole see "Lighting Plan".

HOLES FOR CONDUIT AND FALSEWORK

NOTES:

Alternative girder splices will be permitted subject to approval by the Engineer.

(A) Web butt joints shall be full penetration groove welds. All weld areas on the exterior face of exterior girders shall be ground flush.

Under full dead load and deck shrinkage, as shown on the camber diagram, girder ends and bearing stiffeners shall be vertical except they may be normal to grade for grades less than 2 percent.

(B) Stiffeners adjacent to a girder splice may be field welded.

(C) Grind all surfaces flush on tension flanges.

Grind all surfaces on compression flanges when required for NDI.

Grind all exterior surfaces flush on all bottom compression flanges.

(D) Stop fillet welds 6 mm from end of plate.

(E) Size fillet weld to match the strength of connection required for the joint.

NOTE:
THE CONTRACTOR SHALL VERIFY ALL CONTROLLING FIELD DIMENSIONS BEFORE ORDERING OR FABRICATING ANY MATERIAL.

Caltrans Metric

	BY	CHECKED
DESIGN	A. Logus	C. Moulton
DETAILS	S. Cholda	C. Chan
QUANTITIES	A. Logus	D. Kubochi

STATE OF CALIFORNIA
DEPARTMENT OF TRANSPORTATION

DIVISION OF ENGINEERING SERVICES
STRUCTURE DESIGN
DESIGN BRANCH 15

BRIDGE NO. 53-1085
KILOMETER POST 46.1

PROVIDENCIA AVENUE OH (WIDEN)
PEDESTRIAN OH DETAILS NO.22

ALL DIMENSIONS ARE IN MILLIMETERS UNLESS OTHERWISE SHOWN

ORIGINAL SCALE IN MILLIMETERS FOR REDUCED PLANS 0 10 20 30 40 50 60 70 80 90 100

CU 07
EA 121841

DISREGARD PRINTS BEARING EARLIER REVISION DATES

REVISION DATES: 01-04-08 01-14-08 11-28-08 12-08-08 1-22-09 1-26-09

SHEET 130 OF 152

FILE => 53-1085-s-mr_det22.dgn

STRUCTURES DESIGN DETAIL SHEET (METRIC) (REV.03-17-04)

USERNAME => trmnguye DATE PLOTTED => 15-JUN-2009 TIME PLOTTED => 07:04

DIST	COUNTY	ROUTE	KILOMETER POST TOTAL PROJECT	SHEET No	TOTAL SHEETS
07	LA	5	42.8/47.3	920	1073

Andrew P. Rittenhouse 12-05-08
REGISTERED CIVIL ENGINEER DATE

6-8-09
PLANS APPROVAL DATE

REGISTERED PROFESSIONAL ENGINEER Andrew P. Rittenhouse No. 61006 Exp. 12-31-10 CIVIL STATE OF CALIFORNIA

The State of California or its officers or agents shall not be responsible for the accuracy or completeness of electronic copies of this plan sheet.

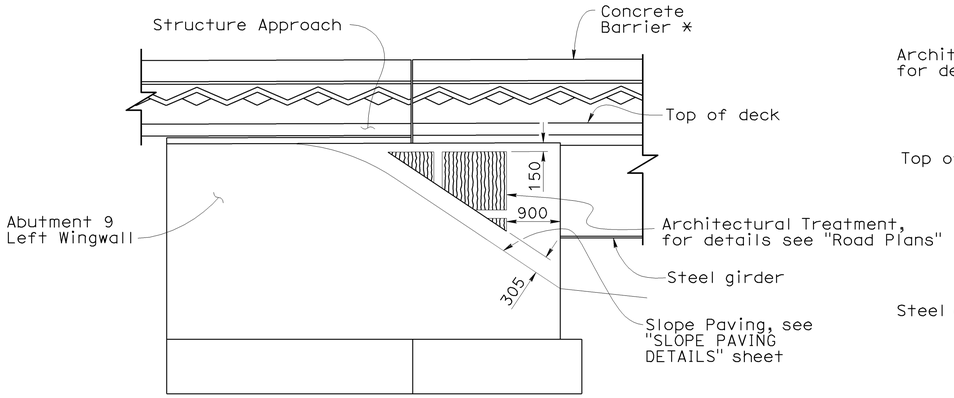

* - Chain Link Railing not shown

ABUTMENT 9 LEFT

1:50

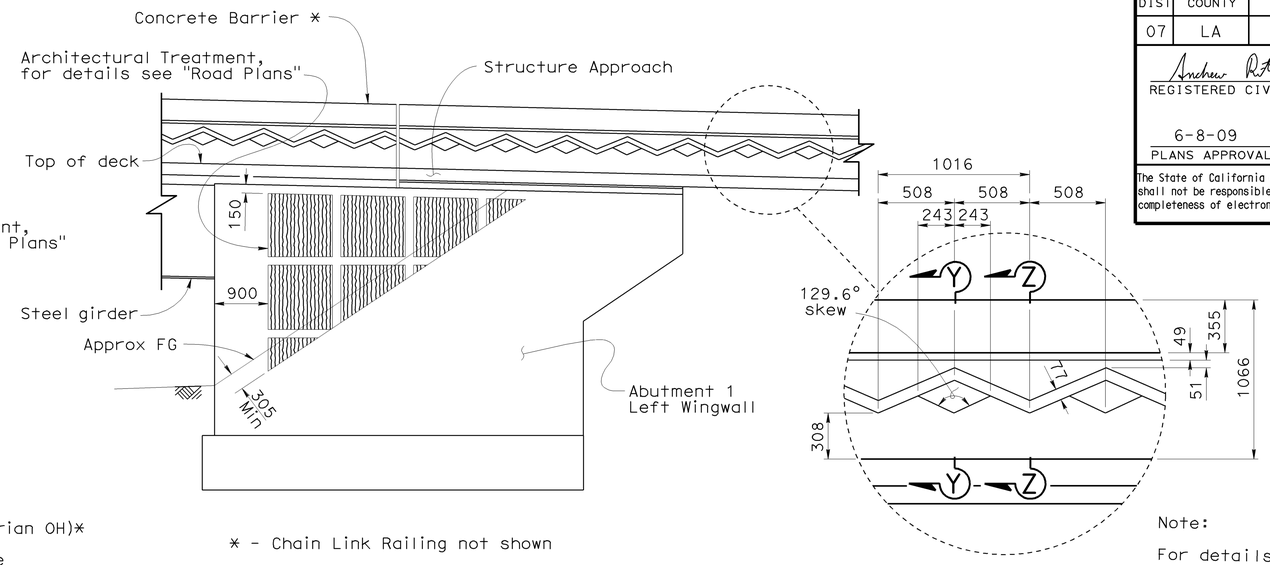

* - Chain Link Railing not shown

Note:
For details not shown see B11-57

ABUTMENT 1 LEFT

1:50

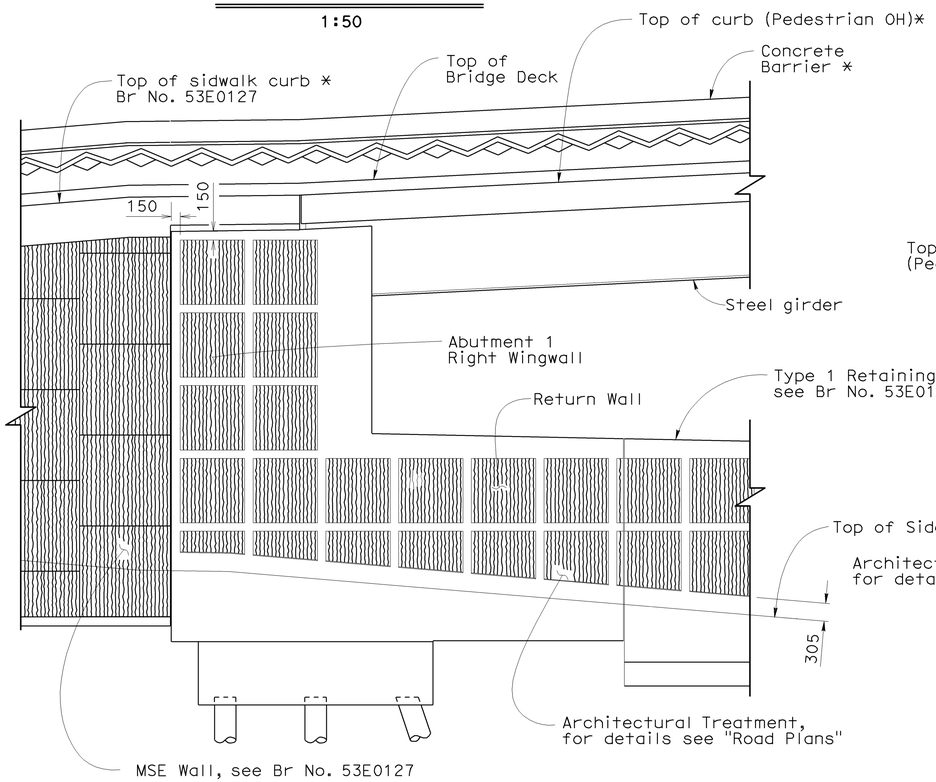

* - Chain Link Railing not shown
** - Cable Railing not shown

ABUTMENT 1 RIGHT

1:50

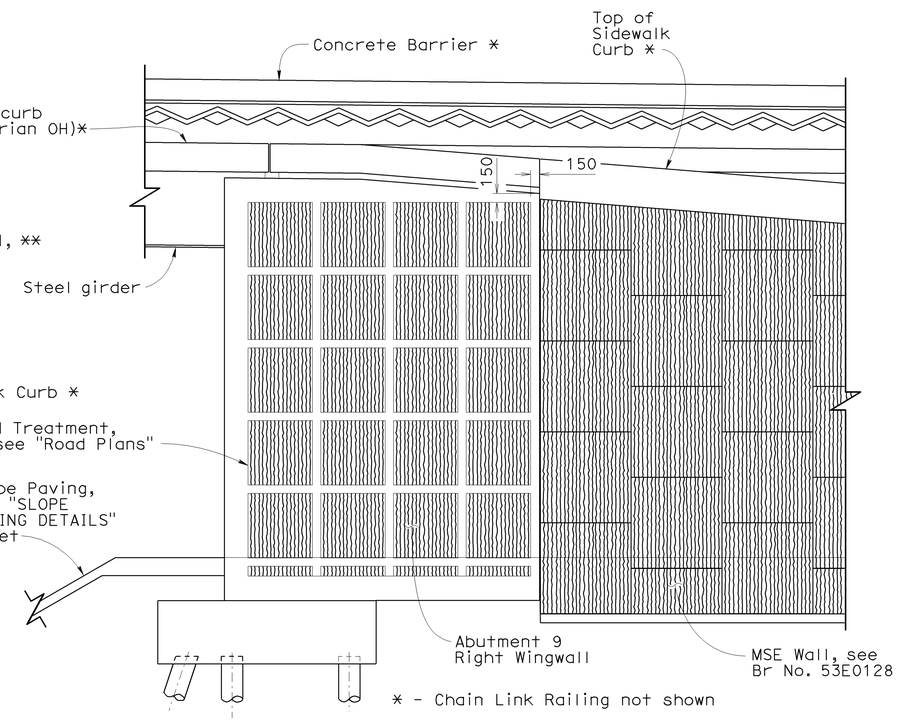

* - Chain Link Railing not shown

ABUTMENT 9 RIGHT

1:50

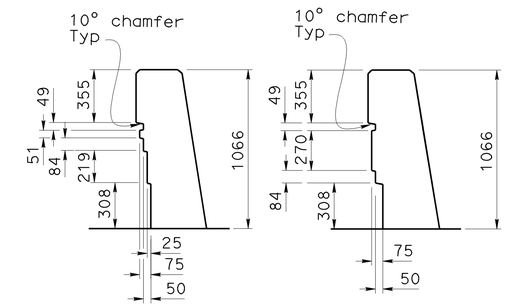

SECTION Y-Y

SECTION Z-Z

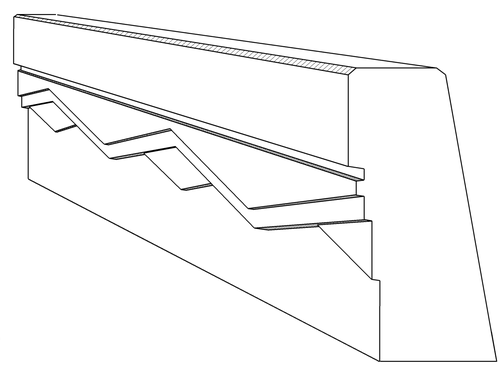

CONCRETE BARRIER TYPE 742 (MOD) PERSPECTIVE VIEW

NOTE:
THE CONTRACTOR SHALL VERIFY ALL CONTROLLING FIELD DIMENSIONS BEFORE ORDERING OR FABRICATING ANY MATERIAL.

Caltrans Metric

	BY	CHECKED
DESIGN	Ulysses Smpardos	F. Feng/C. Chan
DETAILS	B. Jenko / H. Mauroschadt	F. Feng/C. Chan
QUANTITIES	E. Hall/A. Logus	R. Odell/D. Kubochi

STATE OF CALIFORNIA
DEPARTMENT OF TRANSPORTATION

DIVISION OF ENGINEERING SERVICES
STRUCTURE DESIGN
DESIGN BRANCH 15

BRIDGE NO. 53-1085
KILOMETER POST 46.1

PROVIDENCIA AVENUE OH (WIDEN)
ARCHITECTURAL DETAILS

ALL DIMENSIONS ARE IN MILLIMETERS UNLESS OTHERWISE SHOWN

ORIGINAL SCALE IN MILLIMETERS FOR REDUCED PLANS 0 10 20 30 40 50 60 70 80 90 100

CU 07
EA 121841

DISREGARD PRINTS BEARING EARLIER REVISION DATES

REVISION DATES: 10-12-07 11-16-07 3-14-08 4-17-08 8-07-08 11-14-08 12-12-08 1-05-09 3-10-09

SHEET 131 OF 152

FILE => 53-1085-t-b-c-arch-det1.dgn

STRUCTURES DESIGN DETAIL SHEET (METRIC) (REV.03-17-04)

USERNAME => rtrmnguye DATE PLOTTED => 15-JUN-2009

DIST	COUNTY	ROUTE	KILOMETER POST TOTAL PROJECT	SHEET No	TOTAL SHEETS
07	LA	5	42.8/47.3	921	1073

Andrew Rittenhouse 12-05-08
REGISTERED CIVIL ENGINEER DATE

6-8-09
PLANS APPROVAL DATE

REGISTERED PROFESSIONAL ENGINEER Andrew P. Rittenhouse No. 61006 Exp. 12-31-10 CIVIL STATE OF CALIFORNIA

The State of California or its officers or agents shall not be responsible for the accuracy or completeness of electronic copies of this plan sheet.

LOCATION (CENTER OF DECK DRAIN)	
DESIGNATION	RIGHT OF STATION (℄ Route 5)
1	462+09.303
2	462+42.346
3	462+70.108
4	462+95.882
5	463+23.688
6	463+48.253
7	463+74.581

LOCATION (CENTER OF DECK DRAIN)	
DESIGNATION	LEFT OF STATION (℄ Route 5)
8	462+48.396
9	462+82.122
10	463+10.458
11	463+29.332
12	463+60.556
13	463+89.004
14	464+20.175

Notes:

1. For "Section C-C", "Section D-D", "Section E-E", "Section F-F", "Section G-G", "Section H-H", "Section J-J" and "Section K-K" see "DECK DRAIN DETAILS NO. 1" sheet.
2. For "Detail A" see "DECK DRAIN DETAILS NO. 2" sheet.
3. For "Detail B", "Detail C" and "Detail D" see "DECK DRAIN DETAILS NO. 3" sheet.
4. For Pipe Hanger details see "DECK DRAIN DETAILS NO. 2" sheet.
5. Remove existing drain system. Plug existing drain inlets with concrete to match surrounding deck grade, see "Existing Drain Inlet Detail" on "DECK DRAIN DETAILS NO. 3" sheet.

Legend:

- Indicates deck drainage pipe and direction of flow
- Indicates deck drain, Type D-2 (Mod)
- Indicates existing deck drain inlet
- Indicates deck drainage expansion coupling

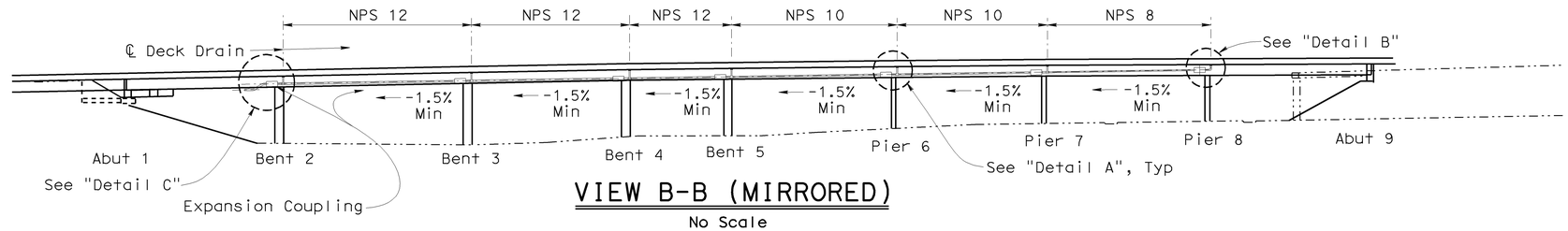

VIEW B-B (MIRRORED)

No Scale

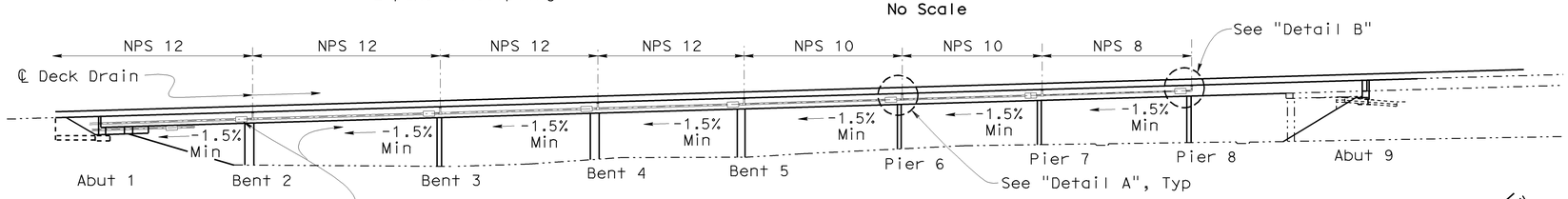

VIEW A-A (MIRRORED)

No Scale

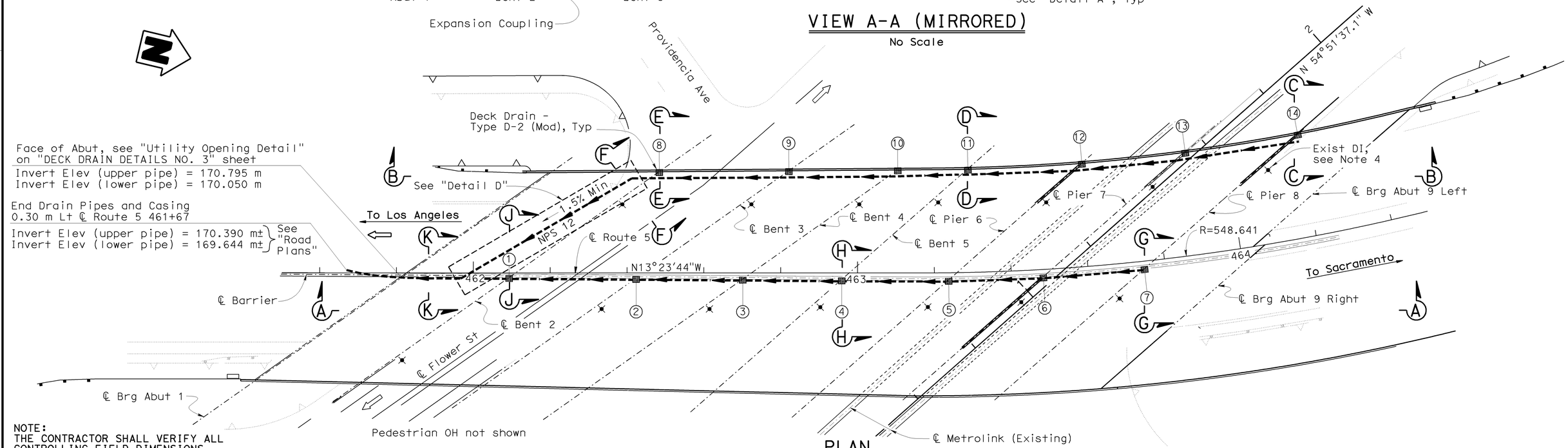

PLAN

1:500

NOTE:
THE CONTRACTOR SHALL VERIFY ALL CONTROLLING FIELD DIMENSIONS BEFORE ORDERING OR FABRICATING ANY MATERIAL.

Caltrans Metric

	BY	CHECKED
DESIGN	Anthony Logus	Christine Chan
DETAILS	Herman Mauroschadt	Ulysses Smpardos
QUANTITIES	Anthony Logus	Rusian Novik

STATE OF CALIFORNIA
DEPARTMENT OF TRANSPORTATION

DIVISION OF ENGINEERING SERVICES
STRUCTURE DESIGN
DESIGN BRANCH 15

BRIDGE NO. 53-1085
KILOMETER POST 46.1

PROVIDENCIA AVENUE OH (WIDEN)
DECK DRAINAGE LAYOUT

ALL DIMENSIONS ARE IN MILLIMETERS UNLESS OTHERWISE SHOWN

ORIGINAL SCALE IN MILLIMETERS FOR REDUCED PLANS 0 10 20 30 40 50 60 70 80 90 100

CU 07
EA 121841

DISREGARD PRINTS BEARING EARLIER REVISION DATES

REVISION DATES: 9-22-08 | 10-2-08 | 11-24-08 | 12-2-08 | 1-22-09 | 2-18-09 | 5-11-09 | 6-3-09 | 6-10-09

SHEET 132 OF 152

FILE => 53-1085-t-b-c-ddlo.dgn

STRUCTURES DESIGN DETAIL SHEET (METRIC) (REV.03-17-04)

USERNAME => trmikest DATE PLOTTED => 15-JUN-2009 TIME PLOTTED => 13:21

DIST	COUNTY	ROUTE	KILOMETER POST TOTAL PROJECT	SHEET No	TOTAL SHEETS
07	LA	5	42.8/47.3	922	1073

Andrew P. Rittenhouse 12-05-08
REGISTERED CIVIL ENGINEER DATE

6-8-09
PLANS APPROVAL DATE

REGISTERED PROFESSIONAL ENGINEER Andrew P. Rittenhouse No. 61006 Exp. 12-31-10 CIVIL STATE OF CALIFORNIA

The State of California or its officers or agents shall not be responsible for the accuracy or completeness of electronic copies of this plan sheet.

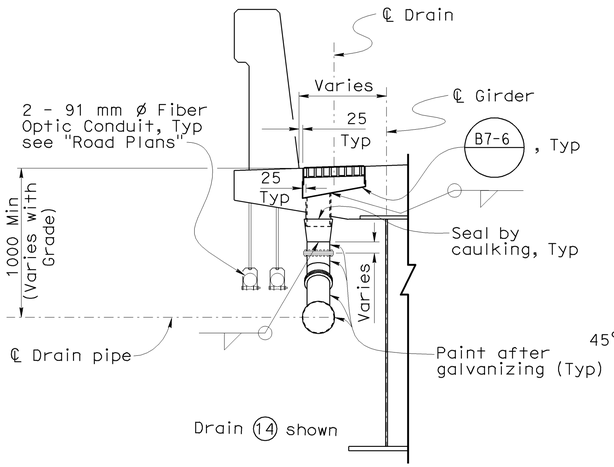

SECTION C-C

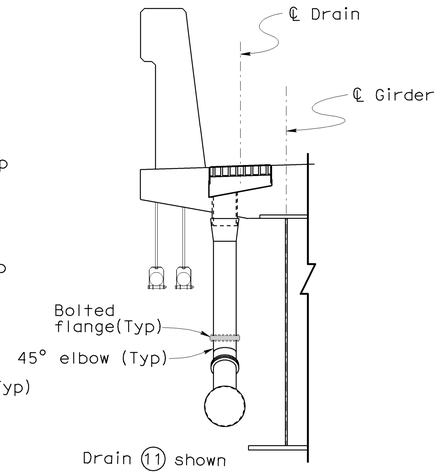

SECTION D-D

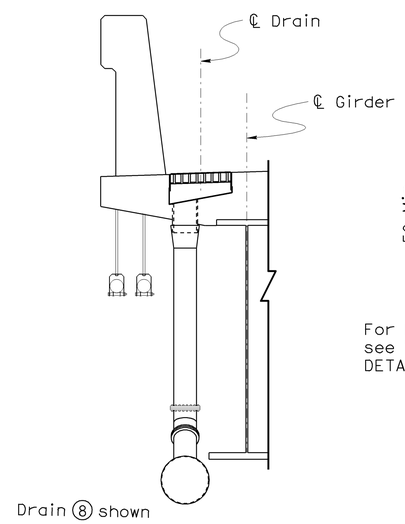

SECTION E-E

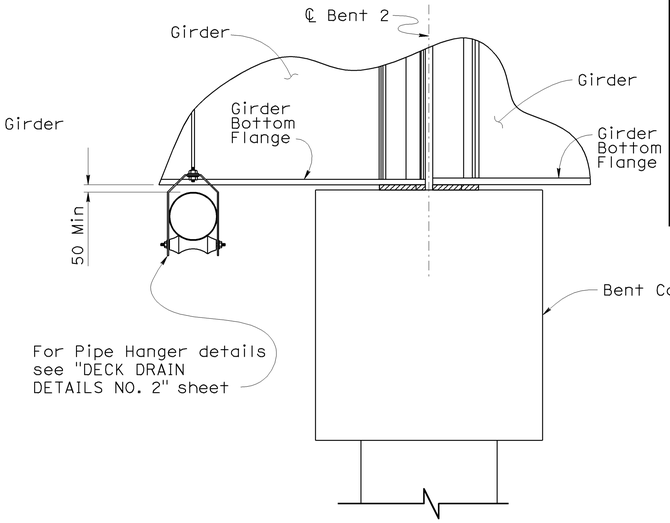

SECTION F-F

Note:
For details and dimensions not noted see "Section C-C"

LEFT WIDEN

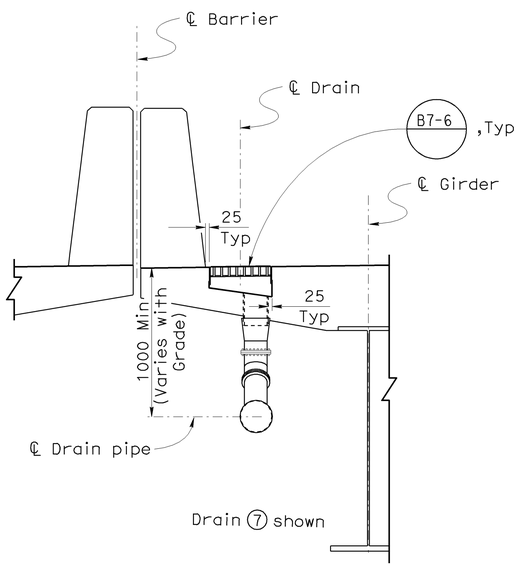

SECTION G-G

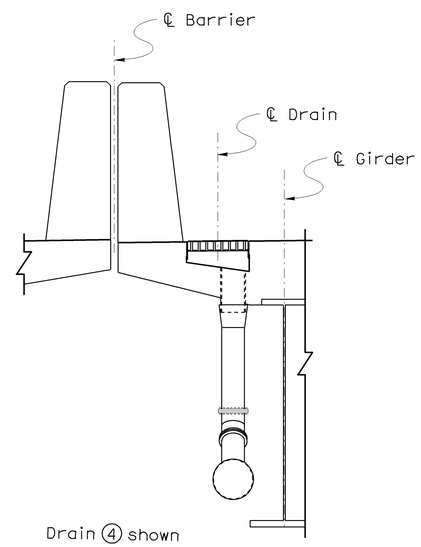

SECTION H-H

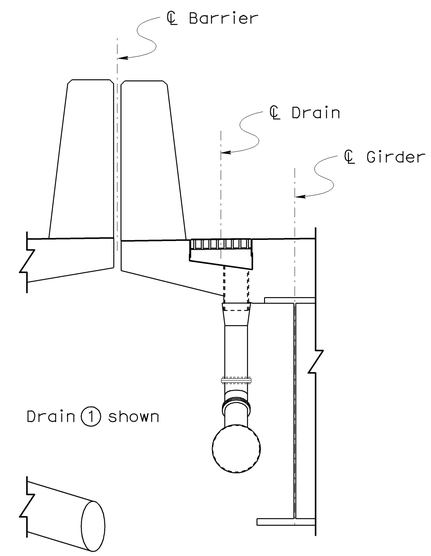

SECTION J-J

Note:
For details and dimensions not noted see "Section C-C"

MEDIAN WIDEN

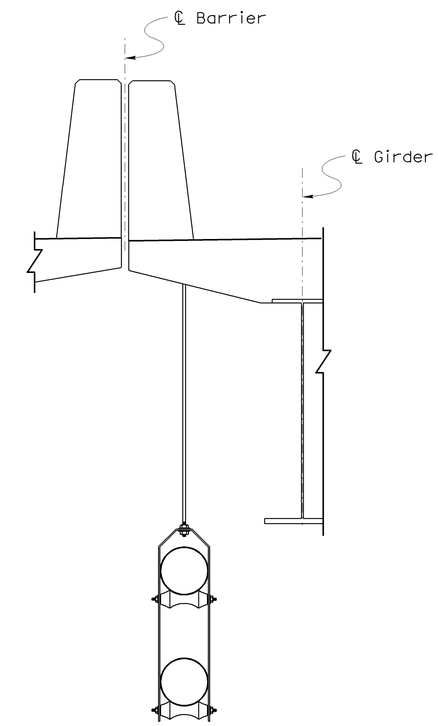

SECTION K-K

NOTE:
THE CONTRACTOR SHALL VERIFY ALL CONTROLLING FIELD DIMENSIONS BEFORE ORDERING OR FABRICATING ANY MATERIAL.

DECK DRAIN TYPE D-2 (MOD)

1:20

	BY	CHECKED
DESIGN	Anthony Logus	Christine Chan
DETAILS	Herman Mauroschadt	Ulysses Smpardos
QUANTITIES	Anthony Logus	Rusian Novik

STATE OF CALIFORNIA
DEPARTMENT OF TRANSPORTATION

DIVISION OF ENGINEERING SERVICES
STRUCTURE DESIGN
DESIGN BRANCH 15

BRIDGE NO. 53-1085
KILOMETER POST 46.1

PROVIDENCIA AVENUE OH (WIDEN)
DECK DRAIN DETAILS NO. 1

Caltrans Metric

ALL DIMENSIONS ARE IN MILLIMETERS UNLESS OTHERWISE SHOWN

ORIGINAL SCALE IN MILLIMETERS FOR REDUCED PLANS 0 10 20 30 40 50 60 70 80 90 100

CU 07
EA 121841

DISREGARD PRINTS BEARING EARLIER REVISION DATES

REVISION DATES: 7-27-08 10-17-08 11-14-08 12-2-08 1-23-09 5-13-09 6-5-09 6-10-09

SHEET 133 OF 152

FILE => 53-1085-t-b-dddet1.dgn

STRUCTURES DESIGN DETAIL SHEET (METRIC) (REV.03-17-04)

USERNAME => trmikest DATE PLOTTED => 15-JUN-2009 TIME PLOTTED => 13:21

DIST	COUNTY	ROUTE	KILOMETER POST TOTAL PROJECT	SHEET No	TOTAL SHEETS
07	LA	5	42.8/47.3	923	1073

REGISTERED CIVIL ENGINEER — DATE 12-05-08

6-8-09
PLANS APPROVAL DATE

REGISTERED PROFESSIONAL ENGINEER — Andrew P. Rittenhouse — No. 61006 — Exp. 12-31-10 — CIVIL — STATE OF CALIFORNIA

The State of California or its officers or agents shall not be responsible for the accuracy or completeness of electronic copies of this plan sheet.

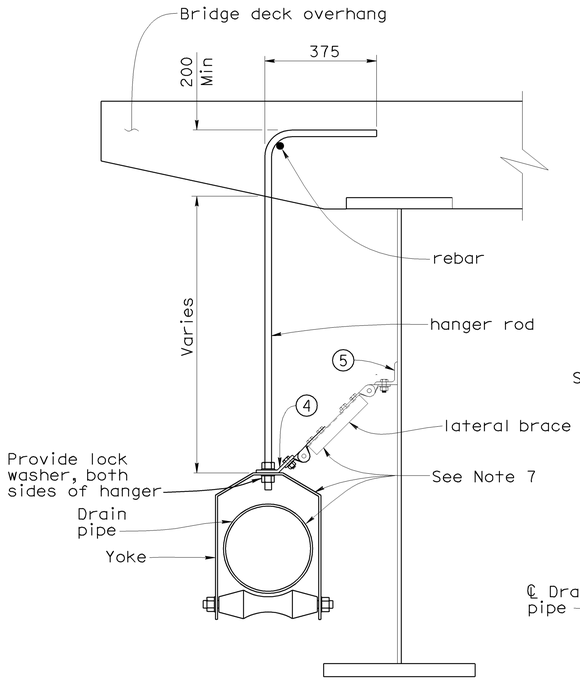

SINGLE ROLLER HANGER

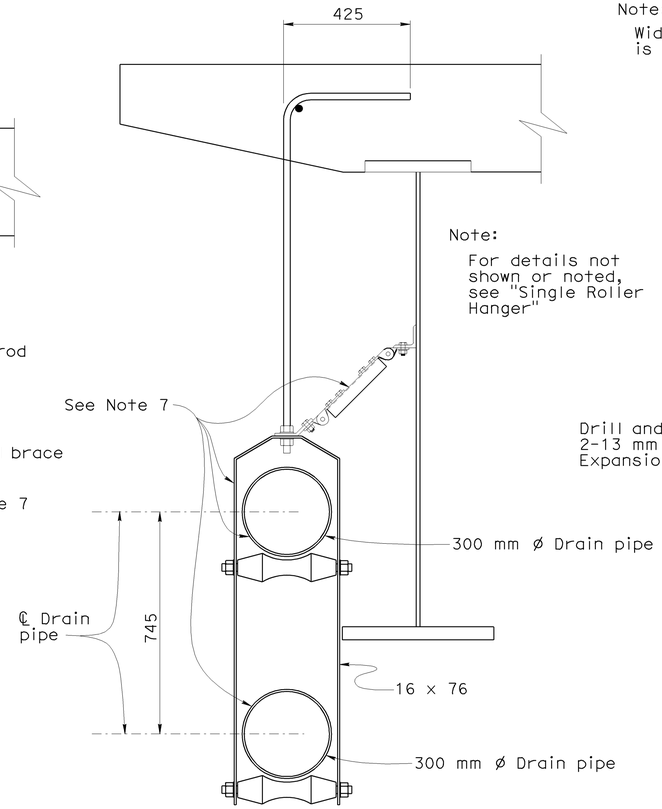

Note:
For details not shown or noted, see "Single Roller Hanger"

DOUBLE ROLLER HANGER

Note:
Width of bracket is 65 mm

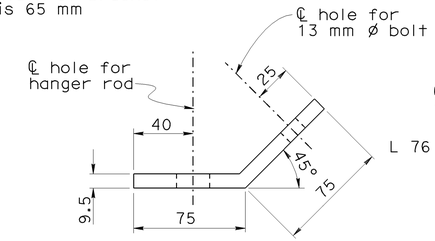

CONNECTION BRACKET

1:2

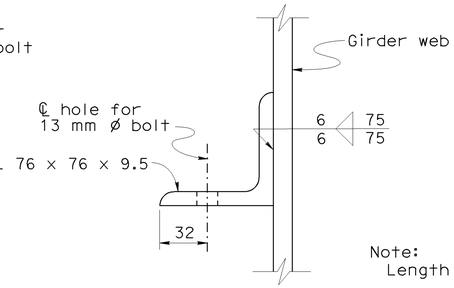

Note:
Length of angle is 65 mm

CONNECTION ANGLE

1:2

PIPE ROLLER HANGERS AT OVERHANG

1:10

Legend:

1. Single roller hanger with lateral brace
2. Single roller hanger without lateral brace
3. Riser type pipe clamp with longitudinal brace
4. Connection Bracket (at lateral brace only)
5. Connection Angle (at lateral brace only)

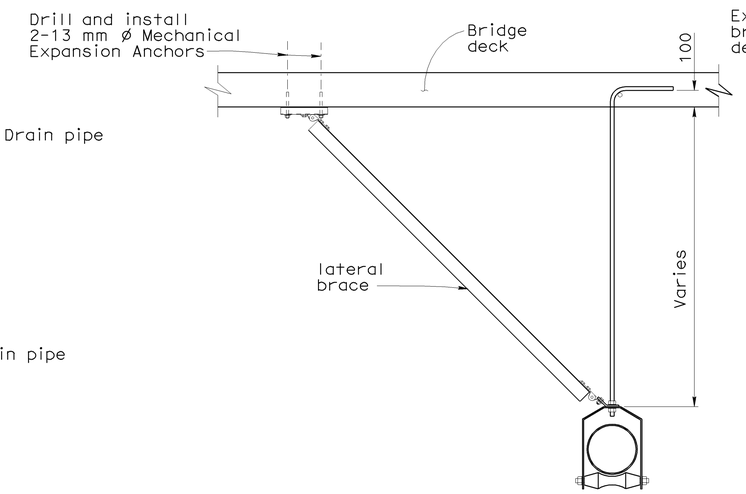

AT LEFT WIDEN

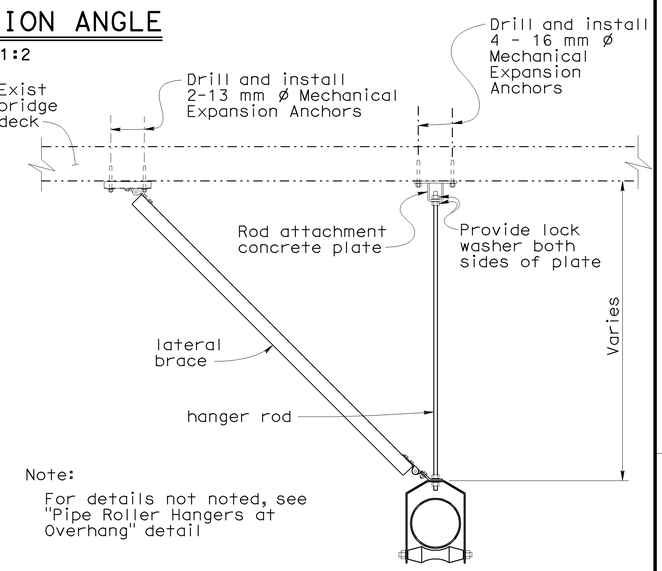

Note:
For details not noted, see "Pipe Roller Hangers at Overhang" detail

AT EXISTING BRIDGE

PIPE ROLLER HANGERS AT SPAN 1 INTERIOR

1:10

Notes:

1. All pipes to be welded steel pipe and galvanized.
2. All joints or connections to be flanged and bolted and to be smooth throughout inside of pipe.
3. Pipe Hanger and bracing to be galvanized.
4. All bends to be 450 mm minimum radius unless noted otherwise. All bends to be smooth unless noted otherwise.
5. Lateral bracing to deck drain pipes to be located at every other hanger or 5 m max.
6. Hangers shall be selected to withstand all conditions of loading to which the piping maybe subjected and within the manufacturers load rating.
7. All pipes, flanges, braces, hanger yokes, and fittings (except sliding parts of expansion couplings) to be painted after galvanizing.

NOTE:
THE CONTRACTOR SHALL VERIFY ALL CONTROLLING FIELD DIMENSIONS BEFORE ORDERING OR FABRICATING ANY MATERIAL.

PIPE DRAIN TABLE

PIPE SIZE	WALL THICKNESS (mm)	PIPE HANGER MAXIMUM SPACING (m)	MINIMUM ROD SIZE (mm)
NPS 6	3.404	N/A	N/A
NPS 8	3.759	3.0	22
NPS 10	4.191	3.0	22
NPS 12	4.572	3.0/2.0*	22/25*

*At Double Roller Hanger

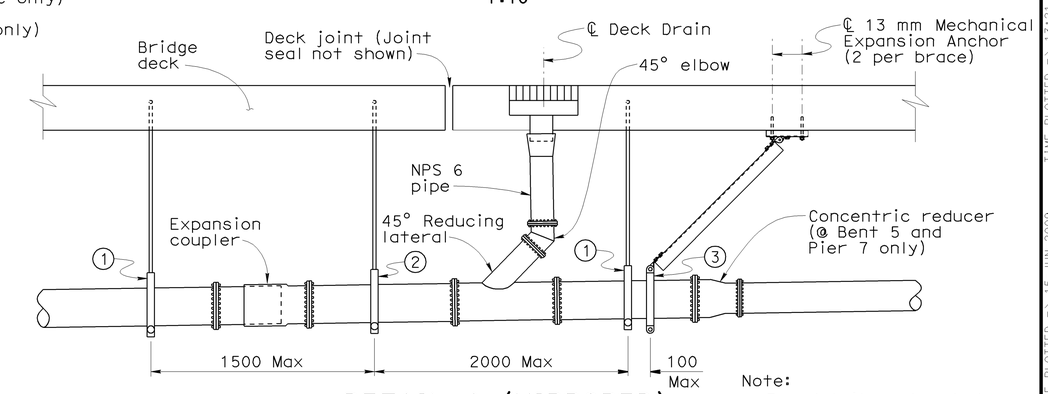

DETAIL A (MIRRORED)

1:20

Note:
For details not noted, see "Pipe Roller Hangers at Overhang" detail

DESIGN	BY Anthony Logus	CHECKED Christine Chan	
DETAILS	BY Steven Schenck	CHECKED Ulysses Smpardos	
QUANTITIES	BY Anthony Logus	CHECKED Ruslan Novik	

STATE OF CALIFORNIA
DEPARTMENT OF TRANSPORTATION

DIVISION OF ENGINEERING SERVICES
STRUCTURE DESIGN
DESIGN BRANCH 15

BRIDGE NO. 53-1085
KILOMETER POST 46.1

PROVIDENCIA AVENUE OH (WIDEN)
DECK DRAIN DETAILS NO. 2

Caltrans Metric

ALL DIMENSIONS ARE IN MILLIMETERS UNLESS OTHERWISE SHOWN

ORIGINAL SCALE IN MILLIMETERS FOR REDUCED PLANS 0 10 20 30 40 50 60 70 80 90 100

CU 07
EA 121841

DISREGARD PRINTS BEARING EARLIER REVISION DATES

REVISION DATES: 7-24-08, 10-1-08, 11-24-08, 12-2-08, 1-26-09, 2-18-09, 5-14-09, 6-4-09, 6-10-09

SHEET 134 OF 152

STRUCTURES DESIGN DETAIL SHEET (METRIC) (REV.03-17-04)

FILE => 53-1085-t-b-dddet2.dgn

USERNAME => ttmirkes| DATE PLOTTED => 15-JUN-2009 TIME PLOTTED => 13:21

DIST	COUNTY	ROUTE	KILOMETER POST TOTAL PROJECT	SHEET No	TOTAL SHEETS
07	LA	5	42.8/47.3	924	1073

REGISTERED CIVIL ENGINEER — DATE 12-05-08

6-8-09
PLANS APPROVAL DATE

REGISTERED PROFESSIONAL ENGINEER — Andrew P. Rittenhouse — No. 61006 — Exp. 12-31-10 — CIVIL — STATE OF CALIFORNIA

The State of California or its officers or agents shall not be responsible for the accuracy or completeness of electronic copies of this plan sheet.

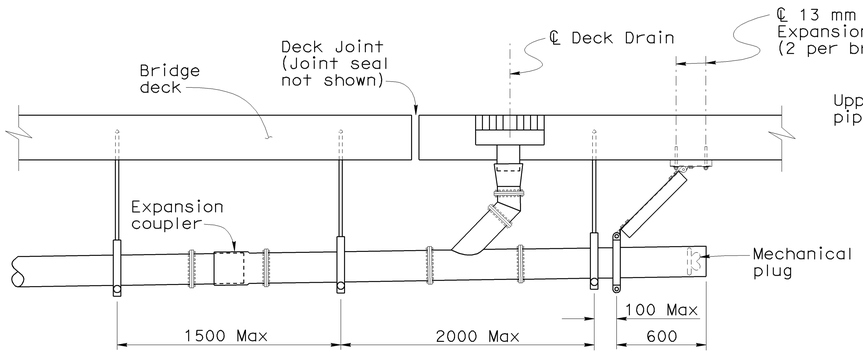

Note:
For details not shown or noted, see "Detail A" on "DECK DRAIN DETAILS NO. 2" sheet.

DETAIL B (MIRRORED)
1:20

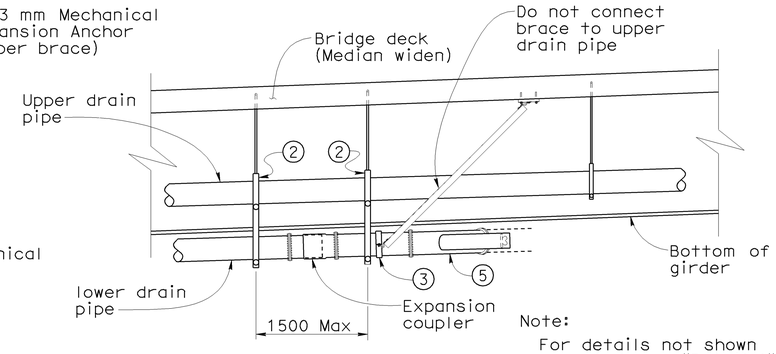

Note:
For details not shown or noted, see "Detail A" on "DECK DRAIN DETAILS NO. 2" sheet.

VIEW L-L
1:40

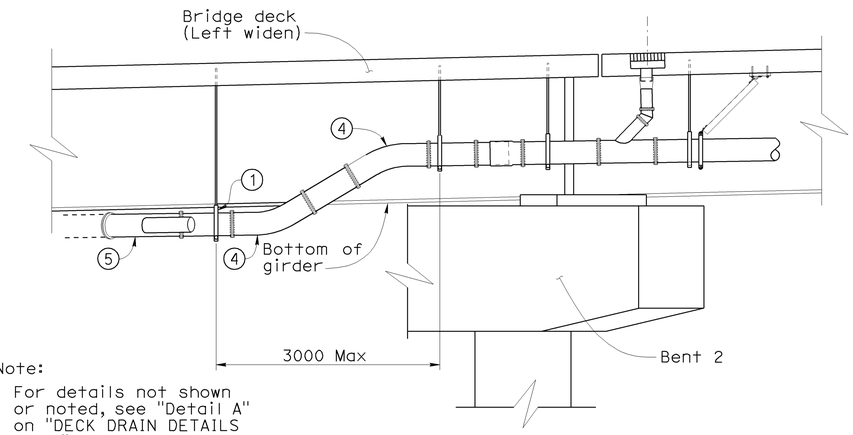

Note:
For details not shown or noted, see "Detail A" on "DECK DRAIN DETAILS NO. 2" sheet.

DETAIL C (MIRRORED)
1:40

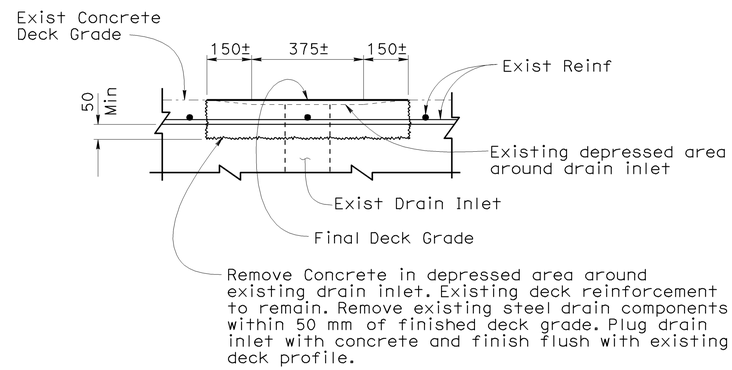

EXISTING DRAIN INLET DETAIL
1:10

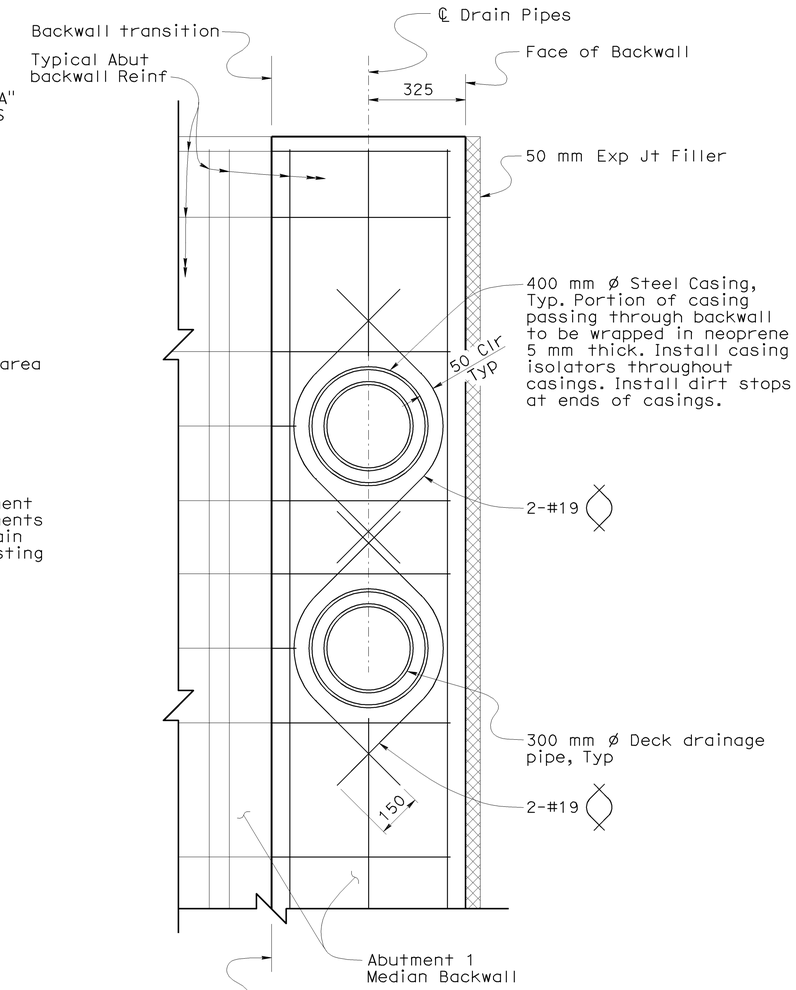

Note: View looking down station. Adjacent wingwall not shown.

UTILITY OPENING DETAIL
No Scale

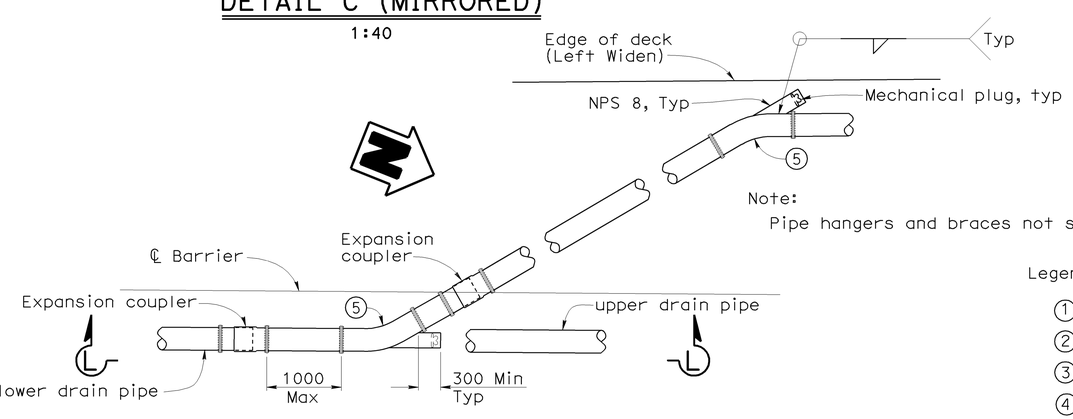

Note:
Pipe hangers and braces not shown.

Note:
For details not shown or noted, see "Detail A" on "DECK DRAIN DETAILS NO. 2" sheet.

DETAIL D
1:40

Legend:

1. Single roller hanger with lateral brace
2. Double roller hanger with lateral brace
3. Riser type pipe clamp with longitudinal brace
4. 30° long radius elbow (radius = 3 x pipe diameter)
5. 30° long radius elbow with cleanout attachment

Caltrans Metric

	BY	CHECKED
DESIGN	Anthony Logus	Christine Chan
DETAILS	Herman Mauroschadt	Ulysses Smpardos
QUANTITIES	Anthony Logus	Ruslan Novik

STATE OF CALIFORNIA
DEPARTMENT OF TRANSPORTATION

DIVISION OF ENGINEERING SERVICES
STRUCTURE DESIGN
DESIGN BRANCH 15

BRIDGE NO. 53-1085
KILOMETER POST 46.1

PROVIDENCIA AVENUE OH (WIDEN)
DECK DRAIN DETAILS NO. 3

ALL DIMENSIONS ARE IN MILLIMETERS UNLESS OTHERWISE SHOWN

ORIGINAL SCALE IN MILLIMETERS FOR REDUCED PLANS 0 10 20 30 40 50 60 70 80 90 100

CU 07
EA 121841

DISREGARD PRINTS BEARING EARLIER REVISION DATES

REVISION DATES: 1-15-09 2-18-09 4-03-09 5-20-09 6-5-09 6-10-09

SHEET 135 OF 152

FILE => 53-1085-t-b-dddet3.dgn

STRUCTURES DESIGN DETAIL SHEET (METRIC) (REV.03-17-04)

USERNAME => trmikesl DATE PLOTTED => 15-JUN-2009 TIME PLOTTED => 13:21

DIST	COUNTY	ROUTE	KILOMETER POST TOTAL PROJECT	SHEET No	TOTAL SHEETS
07	LA	5	42.8/47.3	925	1073

Andrew Rittenhouse 12-05-08
REGISTERED CIVIL ENGINEER DATE

6-8-09
PLANS APPROVAL DATE

REGISTERED PROFESSIONAL ENGINEER Andrew P. Rittenhouse No. 61006 Exp. 12-31-10 CIVIL STATE OF CALIFORNIA

The State of California or its officers or agents shall not be responsible for the accuracy or completeness of electronic copies of this plan sheet.

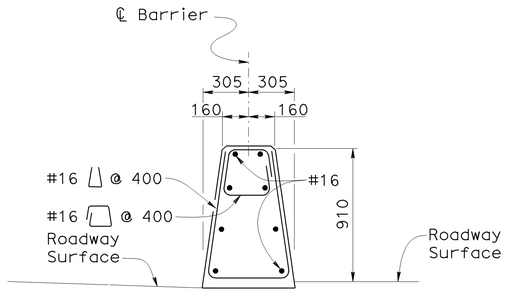

SECTION A-A
1:20

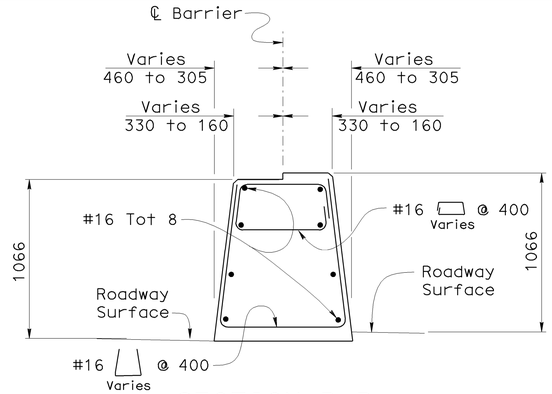

SECTION B-B
1:20

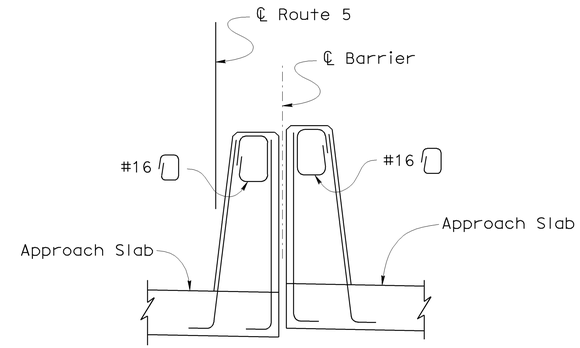

SECTION C-C
1:20

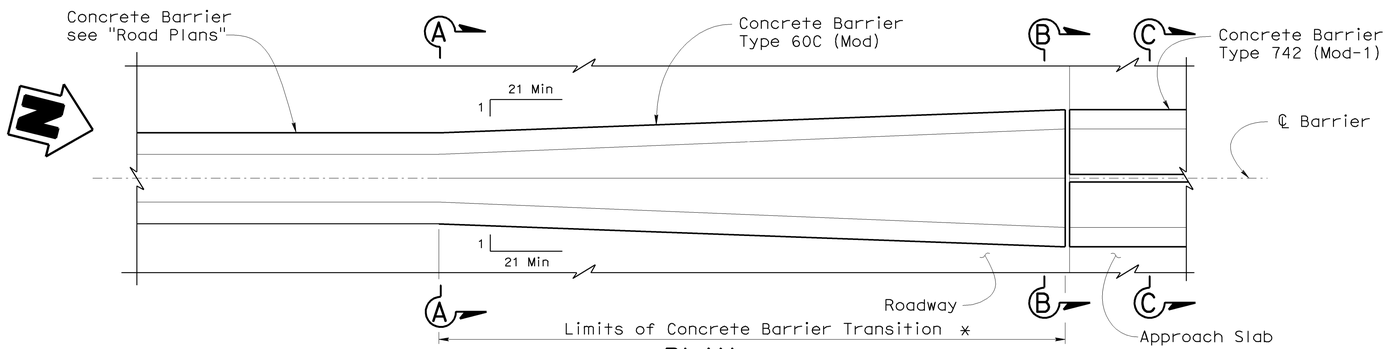

PLAN

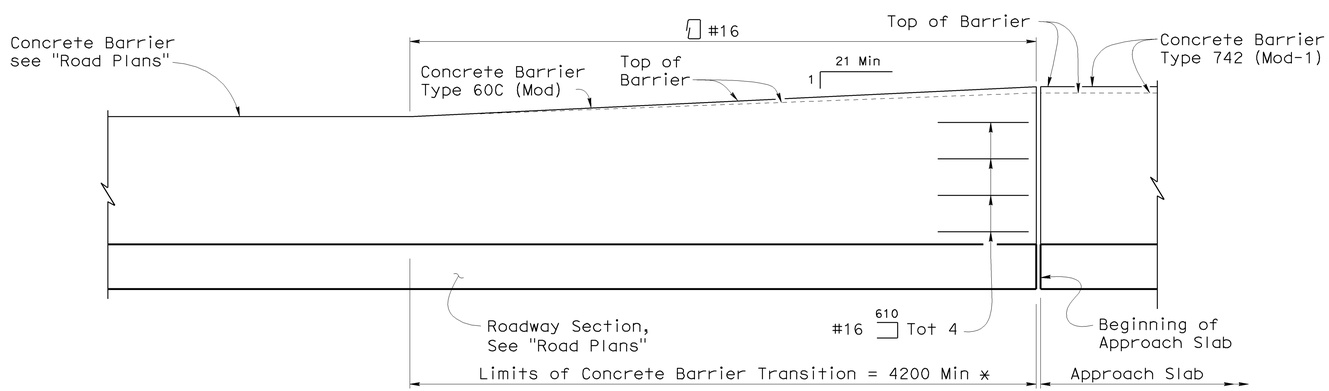

ELEVATION

BARRIER TRANSITION BEFORE BRIDGE
1:20

NOTE:
THE CONTRACTOR SHALL VERIFY ALL CONTROLLING FIELD DIMENSIONS BEFORE ORDERING OR FABRICATING ANY MATERIAL.

Notes:

For details not shown see A76A and "TYPICAL SECTION NO. 4" sheet.

Clearance to reinforcing steel in barrier to be 25 mm, except as noted.

* Vertical and Horizontal Concrete Barrier Transition to end at same location.

Caltrans Metric

ALL DIMENSIONS ARE IN MILLIMETERS UNLESS OTHERWISE SHOWN

ORIGINAL SCALE IN MILLIMETERS FOR REDUCED PLANS 0 10 20 30 40 50 60 70 80 90 100

	BY	CHECKED
DESIGN	Ulysses Smpardos	Mark Okimura
DETAILS	Herman Mauroschadt	Mark Okimura
QUANTITIES	E. Hall	R. Odell

STATE OF CALIFORNIA
DEPARTMENT OF TRANSPORTATION

DIVISION OF ENGINEERING SERVICES
STRUCTURE DESIGN
DESIGN BRANCH 15

CU 07
EA 121841

BRIDGE NO. 53-1085
KILOMETER POST 46.1

PROVIDENCIA AVENUE OH (WIDEN)
BARRIER TRANSITION DETAILS NO. 1

DISREGARD PRINTS BEARING EARLIER REVISION DATES

REVISION DATES: 2-11-08 4-18-08 9-2-08 11-14-08 11-25-08 1-15-09 1-23-09 3-11-09 3-16-09

SHEET 136 OF 152

FILE => 53-1085-t-btdet1.dgn

STRUCTURES DESIGN DETAIL SHEET (METRIC) (REV.03-17-04)

USERNAME => trmnguye DATE PLOTTED => 16-JUN-2009 TIME PLOTTED => 07:03

DIST	COUNTY	ROUTE	KILOMETER POST TOTAL PROJECT	SHEET No	TOTAL SHEETS
07	LA	5	42.8/47.3	926	1073

Andrew P. Rittenhouse 12-05-08
REGISTERED CIVIL ENGINEER DATE

6-8-09
PLANS APPROVAL DATE

REGISTERED PROFESSIONAL ENGINEER Andrew P. Rittenhouse No. 61006 Exp. 12-31-10 CIVIL STATE OF CALIFORNIA

The State of California or its officers or agents shall not be responsible for the accuracy or completeness of electronic copies of this plan sheet.

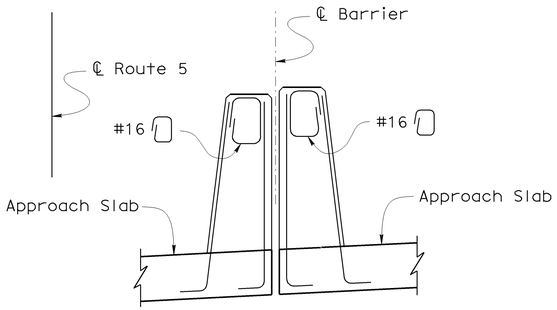

SECTION D-D
1:20

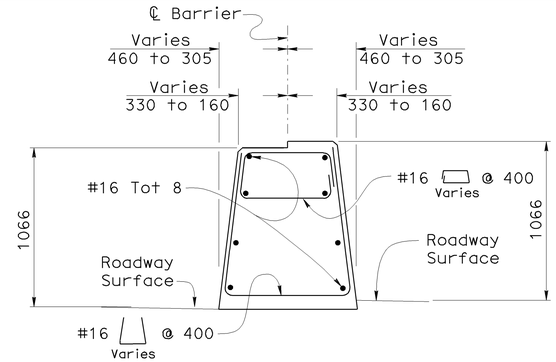

SECTION E-E
1:20

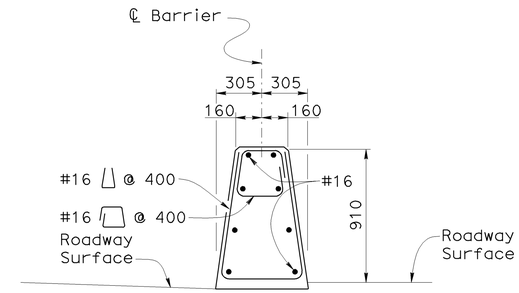

SECTION F-F
1:20

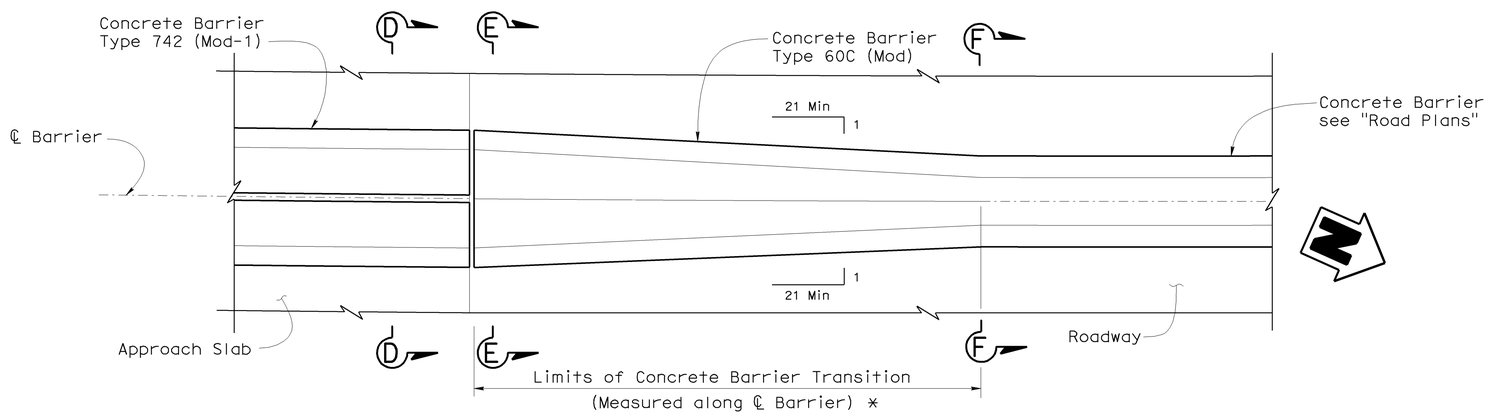

PLAN

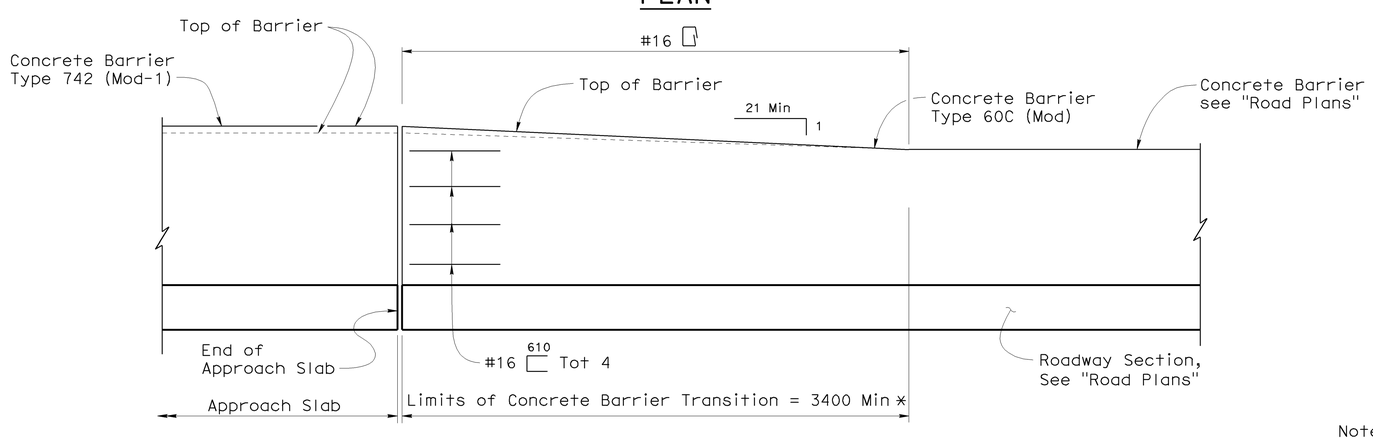

ELEVATION

BARRIER TRANSITION AFTER BRIDGE
1:20

NOTE:
THE CONTRACTOR SHALL VERIFY ALL CONTROLLING FIELD DIMENSIONS BEFORE ORDERING OR FABRICATING ANY MATERIAL.

Notes:

For details not shown see A76A and "TYPICAL SECTION NO. 4" sheet.

Clearance to reinforcing steel in barrier to be 25 mm, except as noted.

* Vertical and Horizontal Concrete Barrier Transition to end at same location.

Caltrans Metric

ALL DIMENSIONS ARE IN MILLIMETERS UNLESS OTHERWISE SHOWN

ORIGINAL SCALE IN MILLIMETERS FOR REDUCED PLANS 0 10 20 30 40 50 60 70 80 90 100

	BY	CHECKED
DESIGN	Ulysses Smpardos	Mark Okimura
DETAILS	Herman Mauroschadt	Mark Okimura
QUANTITIES	E. Hall	R. Odell

STATE OF CALIFORNIA
DEPARTMENT OF TRANSPORTATION

DIVISION OF ENGINEERING SERVICES
STRUCTURE DESIGN
DESIGN BRANCH 15

CU 07
EA 121841

BRIDGE NO. 53-1085
KILOMETER POST 46.1

PROVIDENCIA AVENUE OH (WIDEN)
BARRIER TRANSITION DETAILS NO. 2

DISREGARD PRINTS BEARING EARLIER REVISION DATES

REVISION DATES: 2-14-08 4-14-08 9-25-08 11-14-08 11-26-08 1-23-09 2-13-09 3-16-09

SHEET 137 OF 152

FILE => 53-1085-t-btdet2.dgn

STRUCTURES DESIGN DETAIL SHEET (METRIC) (REV.03-17-04)

USERNAME => trmnguye DATE PLOTTED => 15-JUN-2009 TIME PLOTTED => 07:03

DIST	COUNTY	ROUTE	KILOMETER POST TOTAL PROJECT	SHEET No	TOTAL SHEETS
07	LA	5	42.8/47.3	927	1073

Andrew P. Rittenhouse 12-05-08
REGISTERED CIVIL ENGINEER DATE

6-8-09
PLANS APPROVAL DATE

REGISTERED PROFESSIONAL ENGINEER Andrew P. Rittenhouse No. 61006 Exp. 12-31-10 CIVIL STATE OF CALIFORNIA

The State of California or its officers or agents shall not be responsible for the accuracy or completeness of electronic copies of this plan sheet.

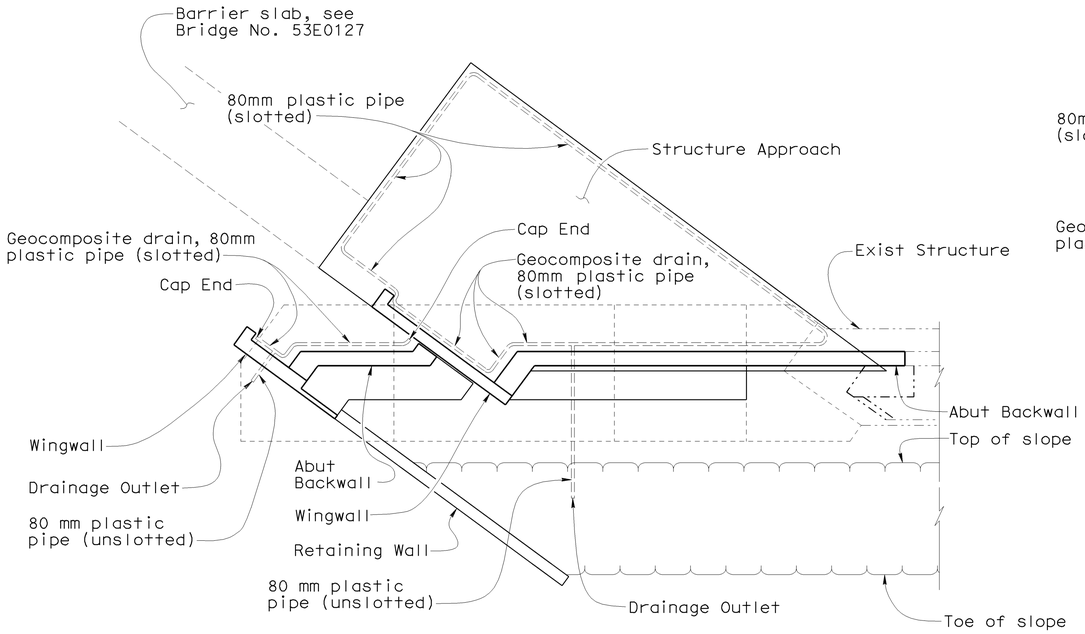

ABUTMENT 1 RIGHT WIDEN

PLAN

No Scale

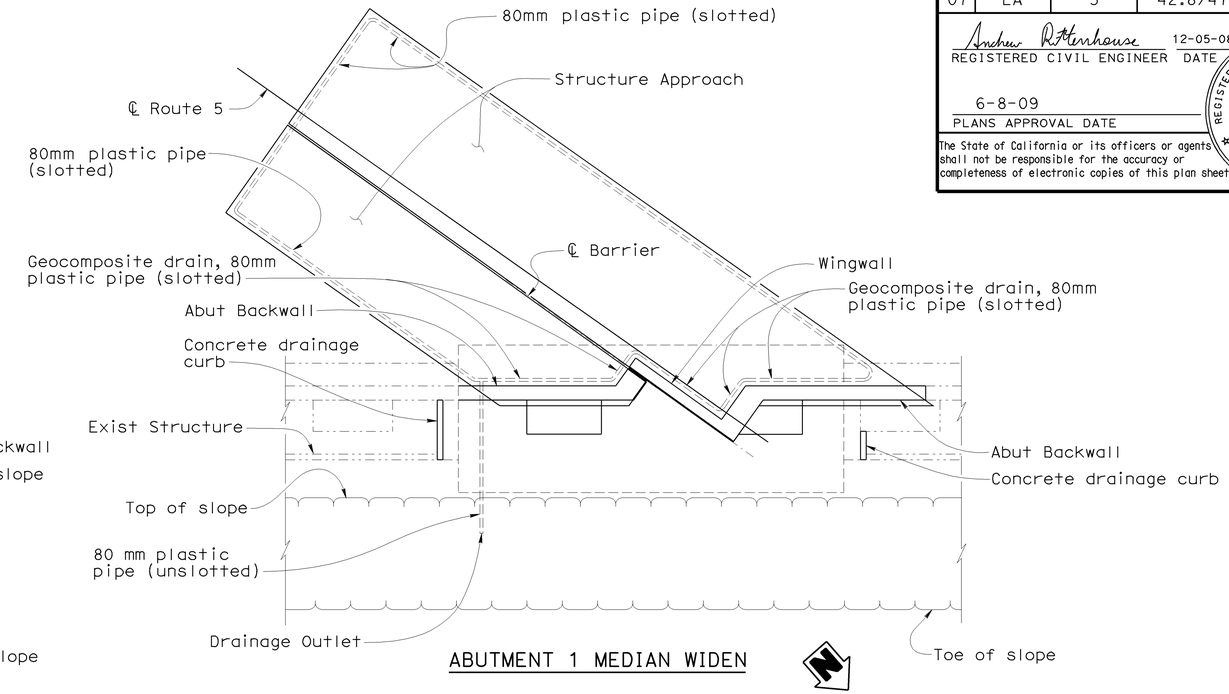

ABUTMENT 1 MEDIAN WIDEN

PLAN

No Scale

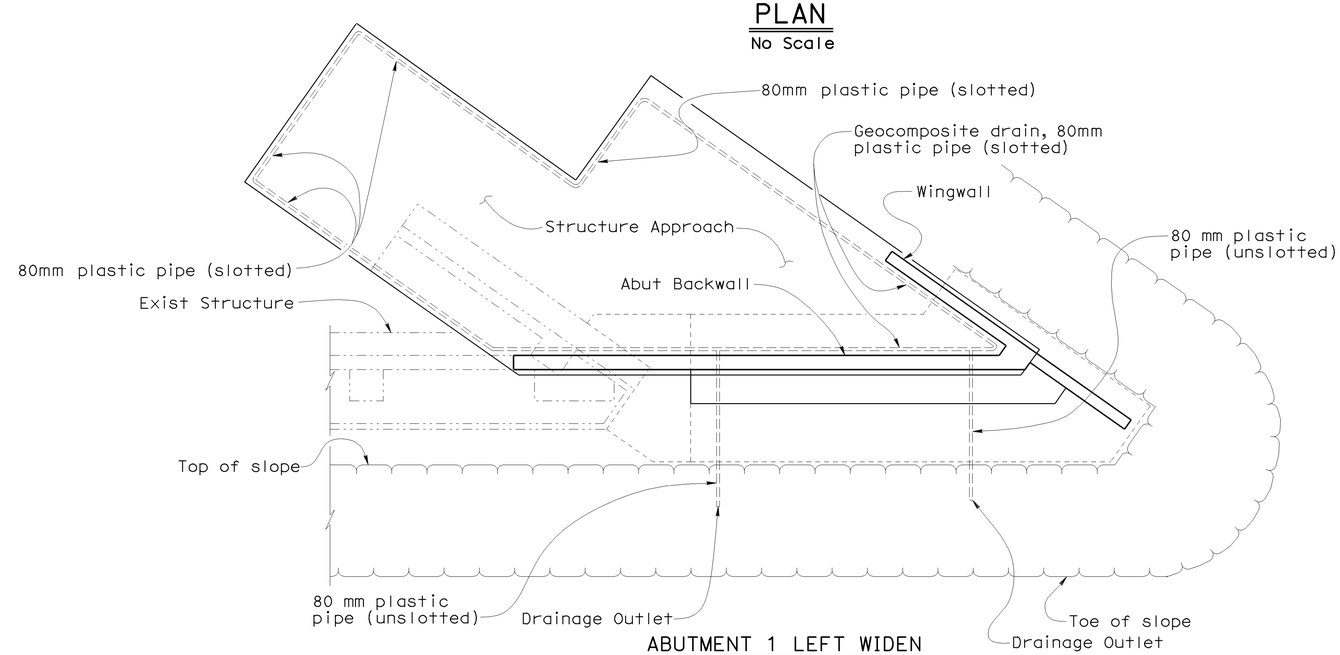

ABUTMENT 1 LEFT WIDEN

PLAN

No Scale

NOTE:
THE CONTRACTOR SHALL VERIFY ALL CONTROLLING FIELD DIMENSIONS BEFORE ORDERING OR FABRICATING ANY MATERIAL.

Caltrans Metric

	BY	CHECKED
DESIGN	R. Novik	T. Menard
DETAILS	T.Trefz	T. Menard
QUANTITIES	U. Smpardos	T. Menard

STATE OF CALIFORNIA
DEPARTMENT OF TRANSPORTATION

DIVISION OF ENGINEERING SERVICES
STRUCTURE DESIGN
DESIGN BRANCH 15

BRIDGE NO. 53-1085
KILOMETER POST 46.1

PROVIDENCIA AVENUE OH (WIDEN)
STRUCTURE APPROACH DRAINAGE LAYOUT NO. 1

ALL DIMENSIONS ARE IN MILLIMETERS UNLESS OTHERWISE SHOWN

ORIGINAL SCALE IN MILLIMETERS FOR REDUCED PLANS 0 10 20 30 40 50 60 70 80 90 100

CU 07
EA 121841

DISREGARD PRINTS BEARING EARLIER REVISION DATES

REVISION DATES: 9-11-08 11-14-08 11-26-08 12-12-08 1-26-09 3-11-09

SHEET 138 OF 152

FILE => 53-1085-u-ddet01.dgn

STRUCTURES DESIGN DETAIL SHEET (METRIC) (REV.03-17-04)

USERNAME => trmnguye DATE PLOTTED => 15-JUN-2009 TIME PLOTTED => 07:03

DIST	COUNTY	ROUTE	KILOMETER POST TOTAL PROJECT	SHEET No	TOTAL SHEETS
07	LA	5	42.8/47.3	928	1073

Andrew Rittenhouse 12-05-08
REGISTERED CIVIL ENGINEER DATE

6-8-09
PLANS APPROVAL DATE

REGISTERED PROFESSIONAL ENGINEER
Andrew P. Rittenhouse
No. 61006
Exp. 12-31-10
CIVIL
STATE OF CALIFORNIA

The State of California or its officers or agents shall not be responsible for the accuracy or completeness of electronic copies of this plan sheet.

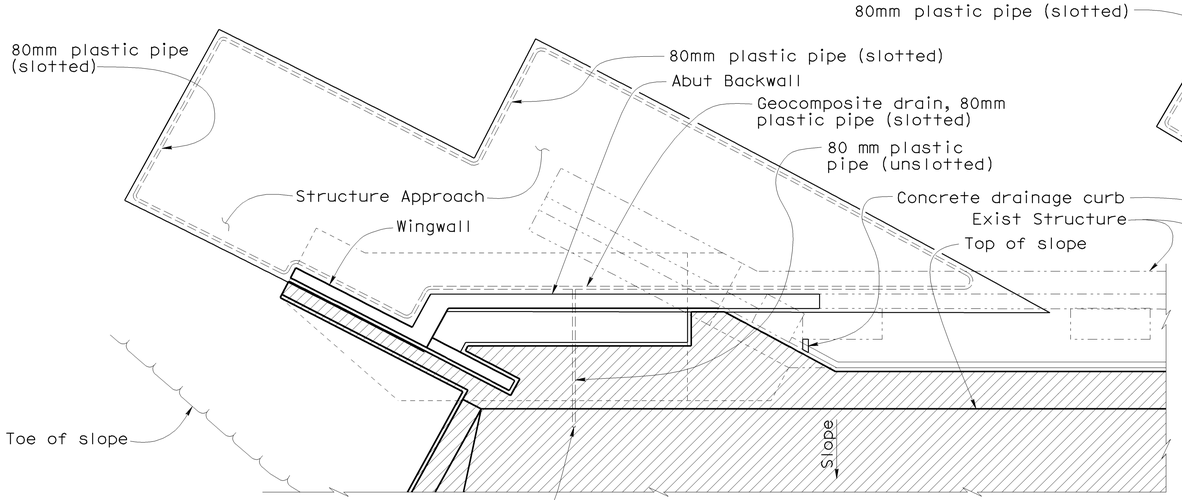

ABUTMENT 9 LEFT WIDEN

PLAN

No Scale

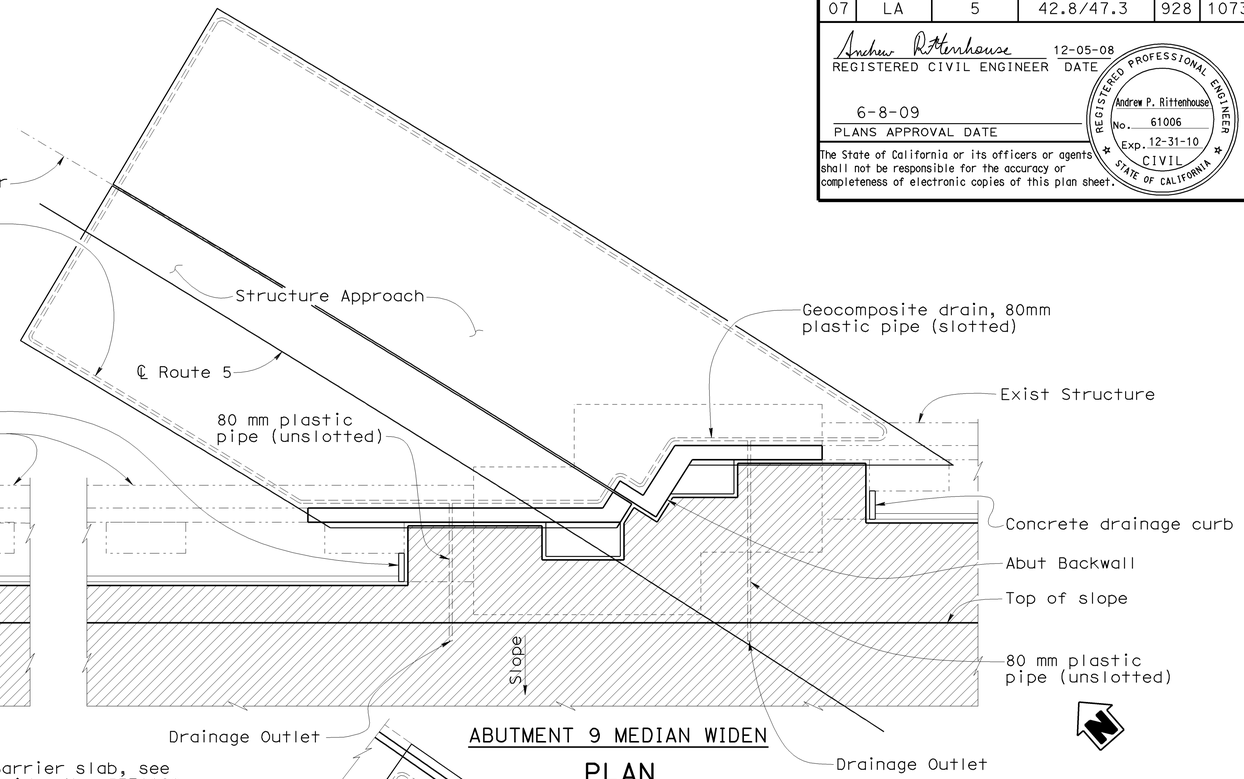

ABUTMENT 9 MEDIAN WIDEN

PLAN

No Scale

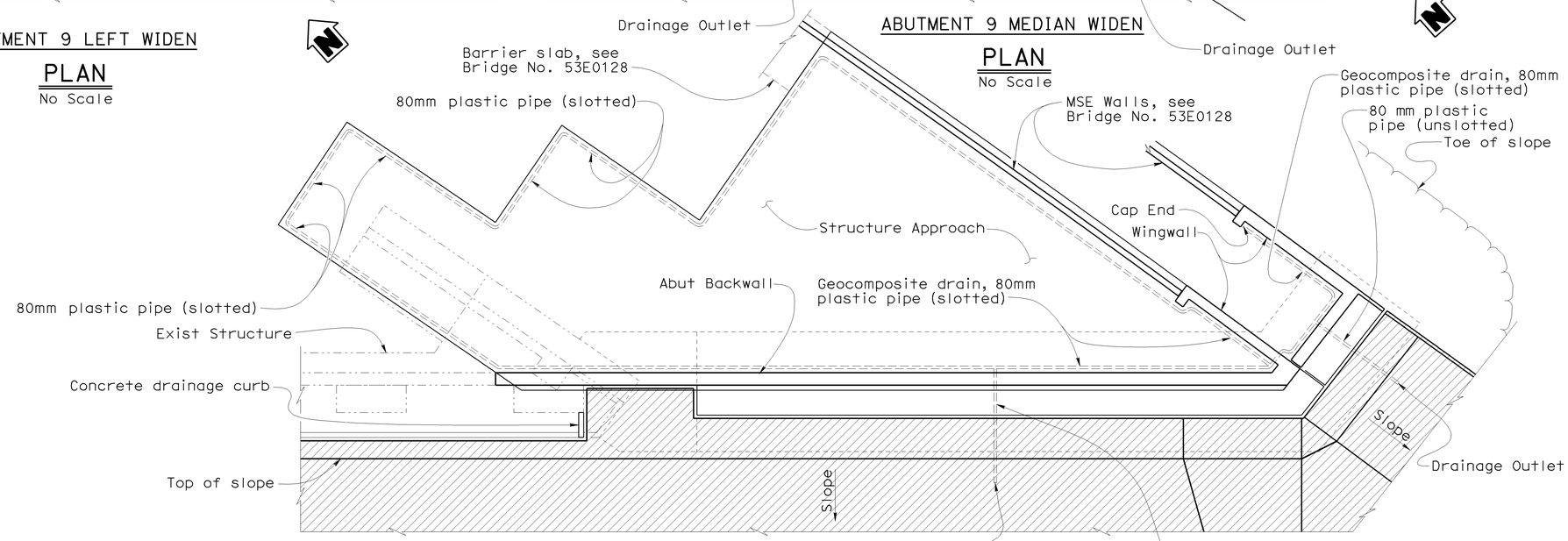

ABUTMENT 9 RIGHT WIDEN

PLAN

No Scale

NOTE:
THE CONTRACTOR SHALL VERIFY ALL CONTROLLING FIELD DIMENSIONS BEFORE ORDERING OR FABRICATING ANY MATERIAL.

Legend:

Slope Paving

	BY	CHECKED
DESIGN	R. Novik	T. Menard
DETAILS	T.Trefz	T. Menard
QUANTITIES	U. Smpardos	T. Menard

STATE OF CALIFORNIA
DEPARTMENT OF TRANSPORTATION

DIVISION OF ENGINEERING SERVICES
STRUCTURE DESIGN
DESIGN BRANCH 15

BRIDGE NO. 53-1085
KILOMETER POST 46.1

PROVIDENCIA AVENUE OH (WIDEN)

STRUCTURE APPROACH DRAINAGE LAYOUT NO. 2

ALL DIMENSIONS ARE IN MILLIMETERS UNLESS OTHERWISE SHOWN

ORIGINAL SCALE IN MILLIMETERS FOR REDUCED PLANS 0 10 20 30 40 50 60 70 80 90 100

CU 07
EA 121841

DISREGARD PRINTS BEARING EARLIER REVISION DATES

REVISION DATES: 9-2-08 11-21-08 11-26-08 1-26-09 3-11-09

SHEET 139 OF 152

FILE => 53-1085-u-ddet02.dgn

STRUCTURES DESIGN DETAIL SHEET (METRIC) (REV.03-17-04)

USERNAME => trmnguye DATE PLOTTED => 15-JUN-2009 TIME PLOTTED => 07:03

DIST	COUNTY	ROUTE	KILOMETER POST TOTAL PROJECT	SHEET No	TOTAL SHEETS
07	LA	5	42.8/47.3	929	1073

Andrew Rittenhouse 12-05-08
REGISTERED CIVIL ENGINEER DATE

6-8-09
PLANS APPROVAL DATE

REGISTERED PROFESSIONAL ENGINEER
Andrew P. Rittenhouse
No. 61006
Exp. 12-31-10
CIVIL
STATE OF CALIFORNIA

The State of California or its officers or agents shall not be responsible for the accuracy or completeness of electronic copies of this plan sheet.

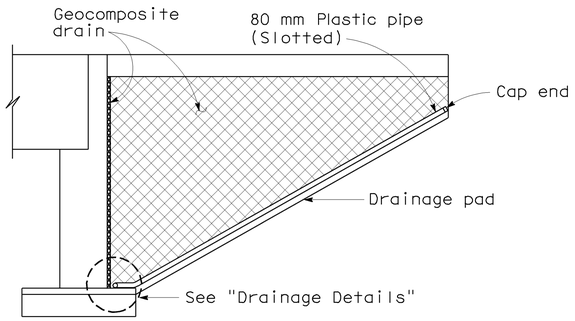

CANTILEVER WINGWALL
ELEVATION

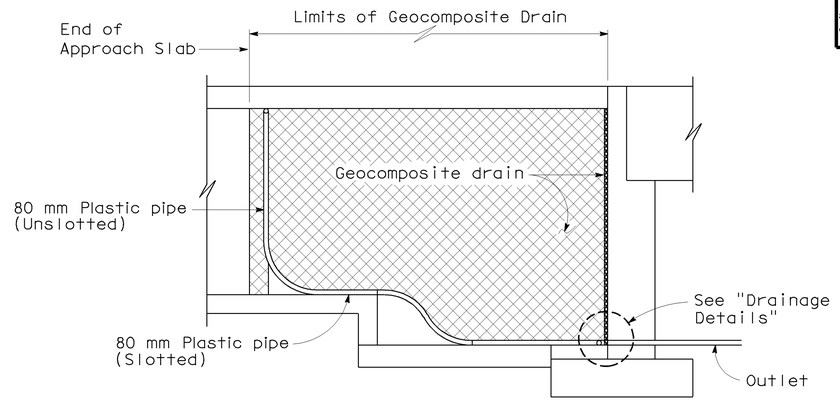

RETAINING & WINGWALL
ELEVATION

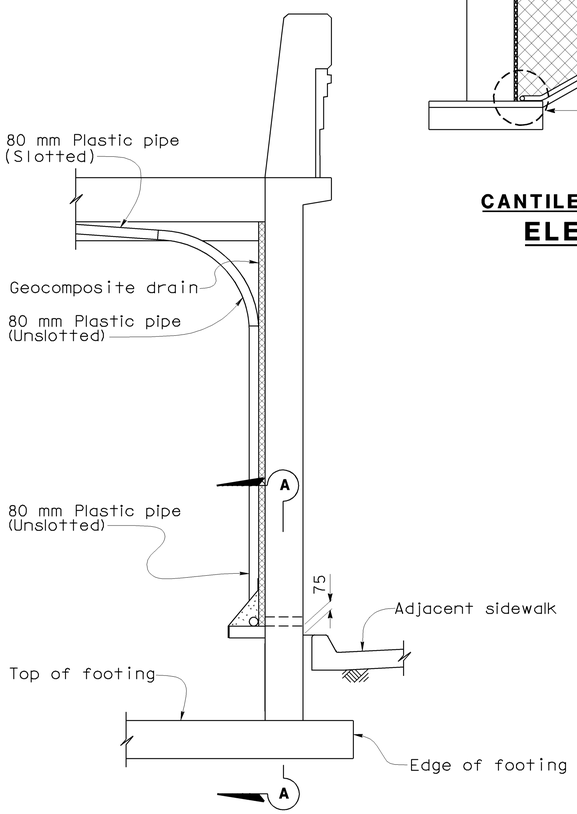

SECTION THROUGH RETAINING & WING WALLS

NOTE: Bends and junctions in 80 mm plastic pipe are 750 mm radius min.

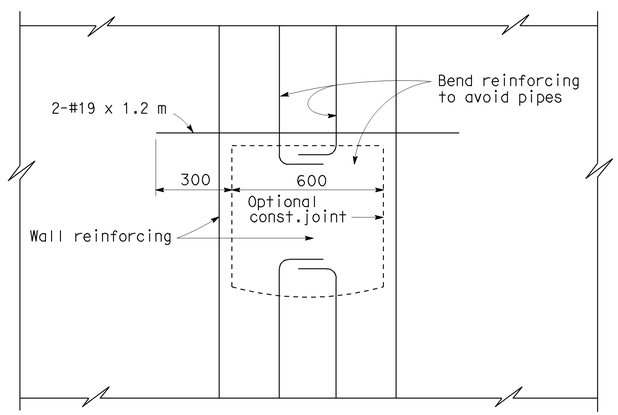

SECTION A-A

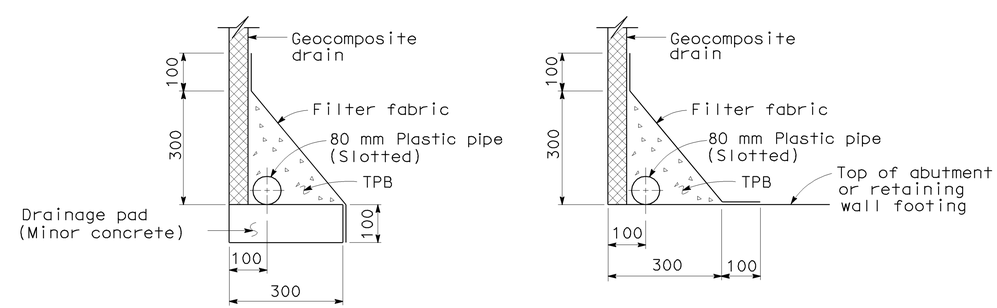

WITHOUT FOOTING **WITH FOOTING**

DRAINAGE DETAILS

NOTE:
THE CONTRACTOR SHALL VERIFY ALL CONTROLLING FIELD DIMENSIONS BEFORE ORDERING OR FABRICATING ANY MATERIAL.

SPECIAL DETAILS
NO SCALE

Caltrans Metric

	BY	CHECKED
DESIGN	R. Novik	T. Menard
DETAILS	K. Christopher	T. Menard
QUANTITIES	U. Smpardos	T. Menard

STATE OF CALIFORNIA
DEPARTMENT OF TRANSPORTATION

DIVISION OF ENGINEERING SERVICES
STRUCTURE DESIGN
DESIGN BRANCH 15

BRIDGE NO. 53-1085
KILOMETER POST 46.1

PROVIDENCIA AVENUE OH (WIDEN)
STRUCTURE APPROACH DRAINAGE DETAILS

ALL DIMENSIONS ARE IN MILLIMETERS UNLESS OTHERWISE SHOWN

ORIGINAL SCALE IN MILLIMETERS FOR REDUCED PLANS 0 10 20 30 40 50 60 70 80 90 100

CU 07
EA 121841

DISREGARD PRINTS BEARING EARLIER REVISION DATES

REVISION DATES 11-14-08 11-20-08 12-08 1-26-09 3-11-09

SHEET 140 OF 152

FILE => 53-1085-u-sadd01.dgn

STRUCTURES DESIGN DETAIL SHEET (METRIC) (REV.03-17-04)

USERNAME => trmnguye DATE PLOTTED => 15-JUN-2009 TIME PLOTTED => 07:03

DIST	COUNTY	ROUTE	KILOMETER POST TOTAL PROJECT	SHEET No	TOTAL SHEETS
07	LA	5	42.8/47.3	930	1073

Andrew P. Rittenhouse 12-05-08
REGISTERED CIVIL ENGINEER DATE

6-8-09
PLANS APPROVAL DATE

REGISTERED PROFESSIONAL ENGINEER Andrew P. Rittenhouse No. 61006 Exp. 12-31-10 CIVIL STATE OF CALIFORNIA

The State of California or its officers or agents shall not be responsible for the accuracy or completeness of electronic copies of this plan sheet.

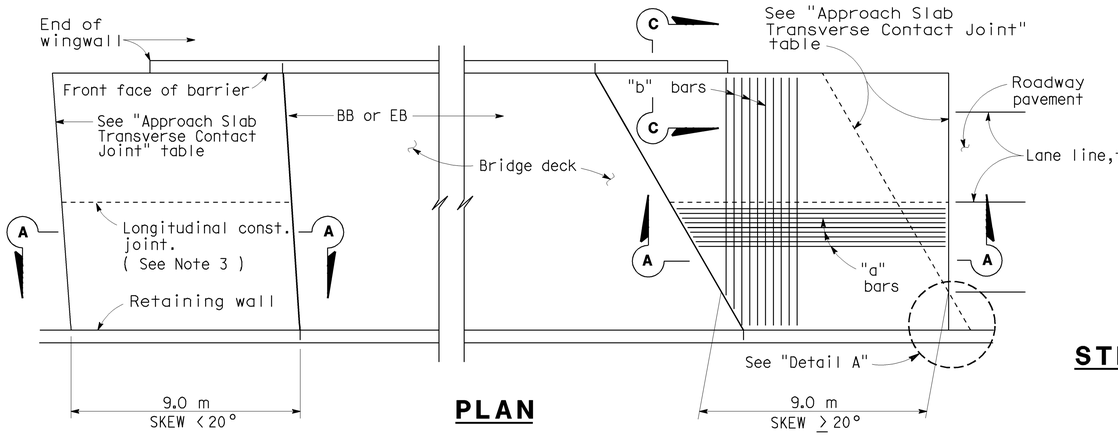

PLAN

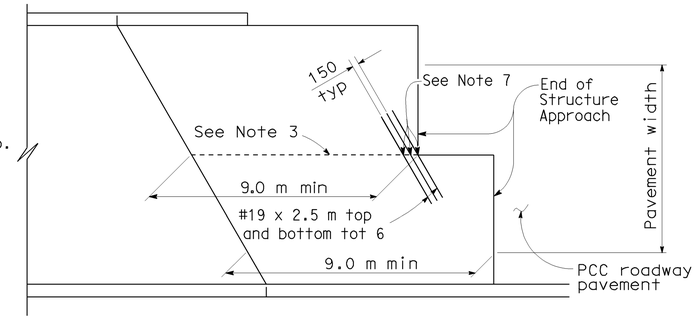

STRUCTURE APPROACH - END STAGGER DETAIL

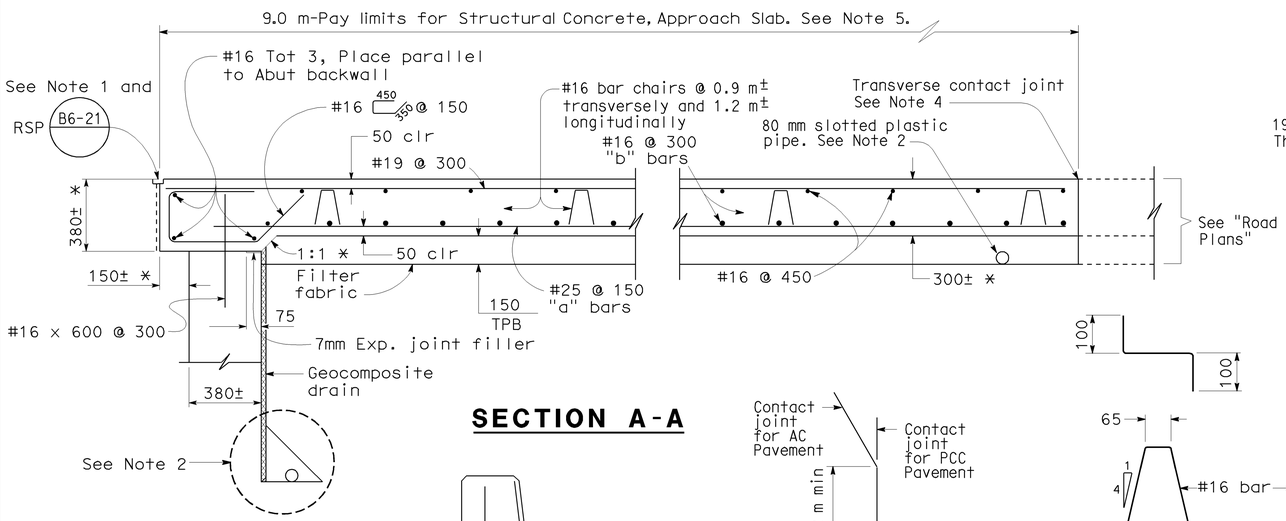

SECTION A-A

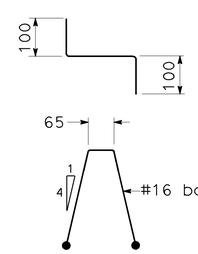

BAR CHAIR DETAIL

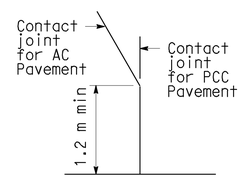

DETAIL A

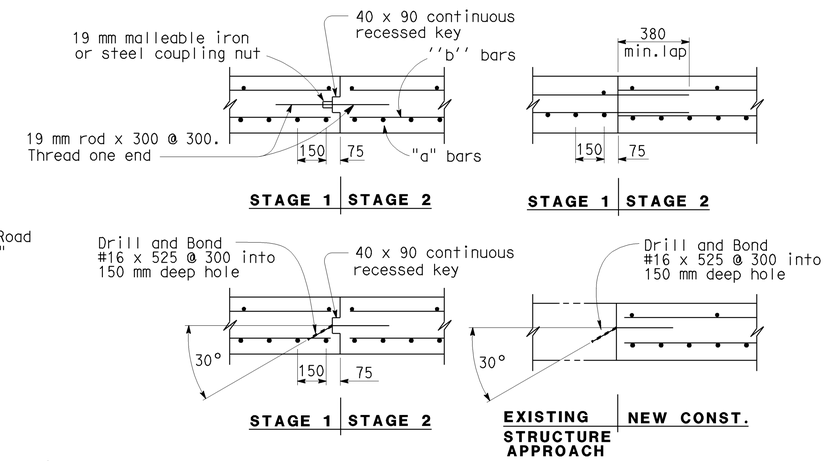

LONGITUDINAL CONSTRUCTION JOINT ALTERNATIVES

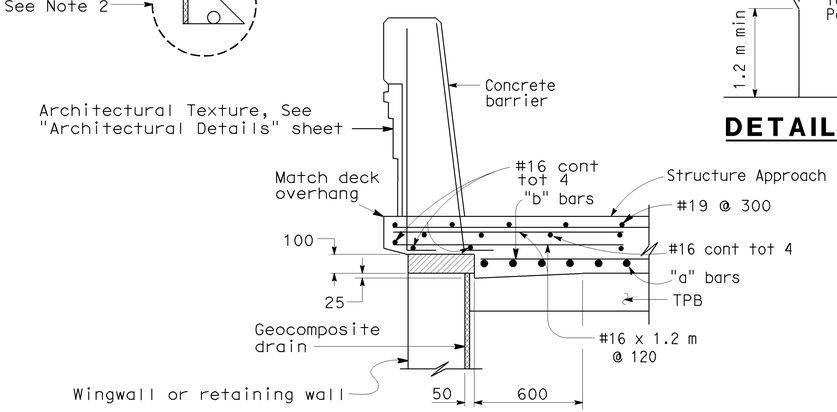

SECTION C-C

NOTE:
THE CONTRACTOR SHALL VERIFY ALL CONTROLLING FIELD DIMENSIONS BEFORE ORDERING OR FABRICATING ANY MATERIAL.

APPROACH SLAB TRANSVERSE CONTACT JOINT		
APPROACH SKEW	WITH AC ROADWAY PAVEMENT	WITH PCC ROADWAY PAVEMENT
< 20°	Parallel to face of paving notch	Parallel to face of paving notch
20°- 45°	Parallel to face of P N use (Detail A)	Stagger lines 7.2 m to 10.8 m apart.
> 45°	Parallel to face of P N use (Detail A)	Stagger at each lane line.

NOTES:

1. Sealed joint, for movement rating see Structure Plans. Adjust bar reinforcement to clear a sawcut for sealed joint, when required.
2. For drainage details, see "STRUCTURE APPROACH DRAINAGE DETAILS" sheet.
3. Longitudinal construction joints, when permitted by the Engineer, shall be located on lane lines.
4. For transverse contact joint with new PCC paving, refer to Standard Plan P10.
5. Transverse contact joint shall be a minimum of 1.5 m from an existing or constructed weakened plane joint.
6. At the contractor's option, approach slab transverse reinforcement may be placed parallel to paving notch. Spacing of transverse reinforcement is measured along ℄ roadway.
7. Couplers are required for stage construction.

Remove all polystyrene.

* Match Existing

NO SCALE

Caltrans Metric

	BY	CHECKED
DESIGN	Ulysses Smpardos	Mark Okimura
DETAILS	Herman Mauroschadt	Mark Okimura
QUANTITIES	E. Hall	R. Odell

STATE OF CALIFORNIA
DEPARTMENT OF TRANSPORTATION

DIVISION OF ENGINEERING SERVICES
STRUCTURE DESIGN
DESIGN BRANCH 15

BRIDGE NO. 53-1085
KILOMETER POST 46.1

PROVIDENCIA AVENUE OH (WIDEN)
STRUCTURE APPROACH TYPE N(9S)-MOD

ALL DIMENSIONS ARE IN MILLIMETERS UNLESS OTHERWISE SHOWN

ORIGINAL SCALE IN MILLIMETERS FOR REDUCED PLANS 0 10 20 30 40 50 60 70 80 90 100

CU 07
EA 121841

DISREGARD PRINTS BEARING EARLIER REVISION DATES

REVISION DATES: 4-17-08 11-24-08 11-20-08 1-26-09 2-3-09

SHEET 141 OF 152

FILE => 53-1085-v-sa01.dgn

STRUCTURES DESIGN DETAIL SHEET (METRIC) (REV.03-17-04)

USERNAME => trmnguye DATE PLOTTED => 15-JUN-2009 TIME PLOTTED => 07:02

DIST	COUNTY	ROUTE	KILOMETER POST TOTAL PROJECT	SHEET No	TOTAL SHEETS
07	LA	5	42.8/47.3	931	1073

Andrew P. Rittenhouse 12-05-08
REGISTERED CIVIL ENGINEER DATE

6-8-09
PLANS APPROVAL DATE

REGISTERED PROFESSIONAL ENGINEER Andrew P. Rittenhouse No. 61006 Exp. 12-31-10 CIVIL STATE OF CALIFORNIA

The State of California or its officers or agents shall not be responsible for the accuracy or completeness of electronic copies of this plan sheet.

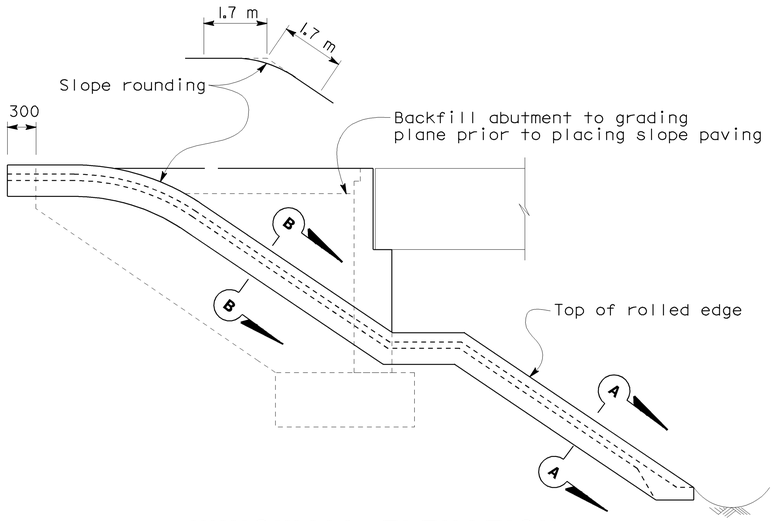

WINGWALL ELEVATION

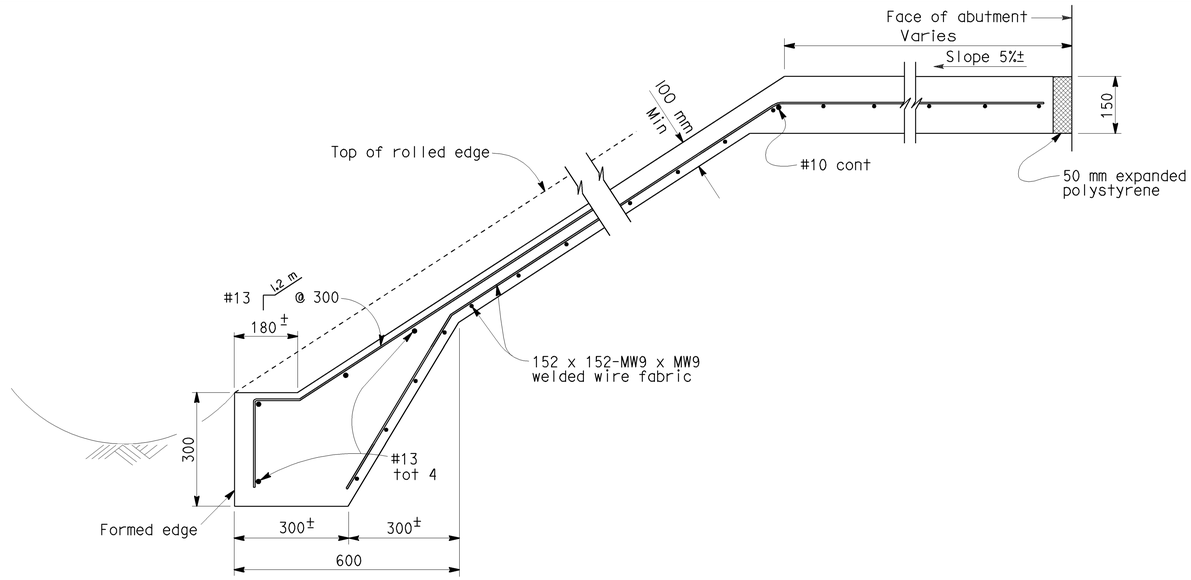

TYPICAL SECTION - CONCRETE PAVING

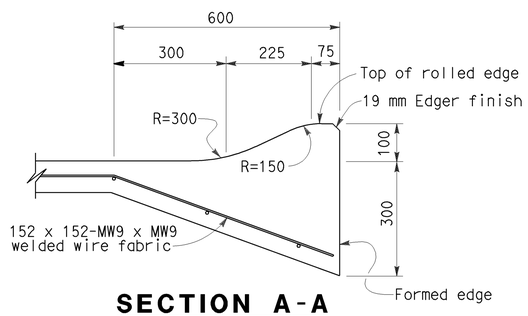

SECTION A-A

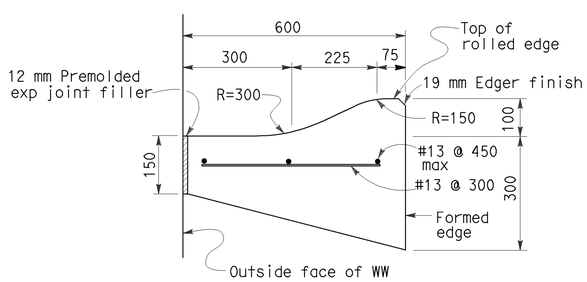

SECTION B-B

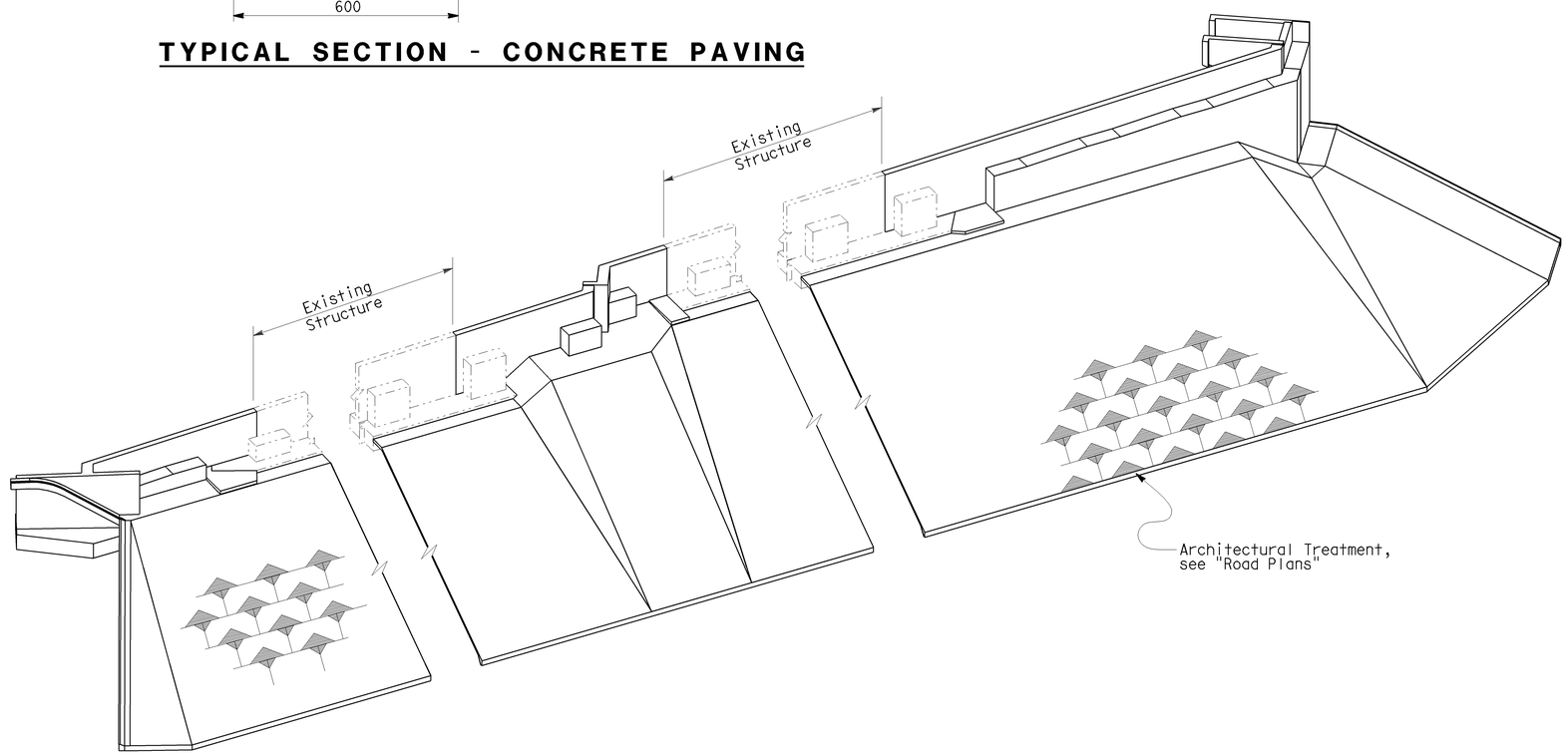

PICTORIAL VIEW OF ABUTMENT 9 SLOPE PAVING

For extent of slope paving see "STRUCTURE APPROACH DRAINAGE LAYOUT NO. 2" sheet

NOTE:
THE CONTRACTOR SHALL VERIFY ALL CONTROLLING FIELD DIMENSIONS BEFORE ORDERING OR FABRICATING ANY MATERIAL.

Caltrans Metric

	BY	CHECKED
DESIGN	R. Novik	T. Menard
DETAILS	T. Trefz	T. Menard
QUANTITIES	U. Smpardos	T. Menard

STATE OF CALIFORNIA
DEPARTMENT OF TRANSPORTATION

DIVISION OF ENGINEERING SERVICES
STRUCTURE DESIGN
DESIGN BRANCH 15

BRIDGE NO. 53-1085
KILOMETER POST 46.1

PROVIDENCIA AVENUE OH (WIDEN)
SLOPE PAVING DETAILS

ALL DIMENSIONS ARE IN MILLIMETERS UNLESS OTHERWISE SHOWN

ORIGINAL SCALE IN MILLIMETERS FOR REDUCED PLANS 0 10 20 30 40 50 60 70 80 90 100

CU 07
EA 121841

DISREGARD PRINTS BEARING EARLIER REVISION DATES

REVISION DATES: 4-15-08 11-24-08 11-26-08 1-21-09 1-26-09 3-11-09

SHEET 142 OF 152

FILE => 53-1085-v-sadd02.dgn

STRUCTURES DESIGN DETAIL SHEET (METRIC) (REV.03-17-04)

USERNAME => rtrmnguye DATE PLOTTED => 15-JUN-2009 TIME PLOTTED => 07:02

DIST.	COUNTY	ROUTE	KILOMETER POST TOTAL PROJECT	SHEET NO.	TOTAL SHEETS
07	LA	5	42.8/47.3	932	1073

Caltrans Metric

Andrew P. Rittenhouse 12-05-08
REGISTERED ENGINEER - CIVIL

6-8-09
PLANS APPROVAL DATE

REGISTERED PROFESSIONAL ENGINEER Andrew P. Rittenhouse No. 61006 Exp. 12-31-10 CIVIL STATE OF CALIFORNIA

The State of California or its officers or agents shall not be responsible for the accuracy or completeness of electronic copies of this plan sheet.

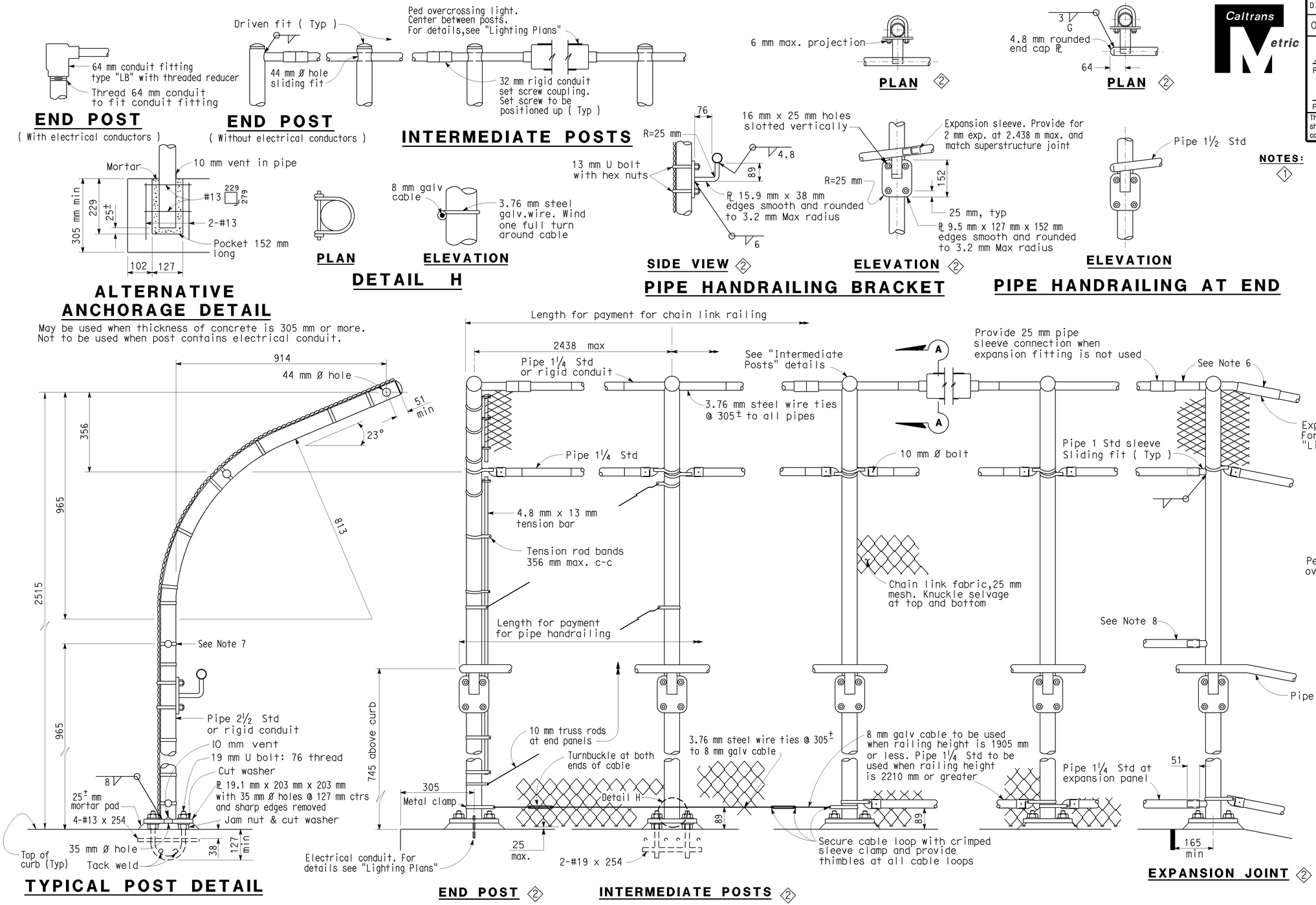

NOTES: 1

1. Railing assembly except chain link fabric to be galvanized after fabrication
2. Railing shall conform to horizontal and vertical alignment.Posts shall be vertical.Horizontal pipes shall be bent if radius is 45.72 m or less-may be on 2.438 m chords if radius is over 45.72 m.
3. Peen all exposed bolt ends and remove sharp edges.
4. When railing is on slope, fabric shall parallel to slope.
5. Alternative details may be submitted by Contractor for Engineer's approval.
6. All pipe carrying electrical conductors shall be rigid conduit.
7. Additional pipe 1¼ std required on radius less than 45.72 m.

SPECIAL DETAILS

NO SCALE

ALL DIMENSIONS ARE IN MILLIMETERS UNLESS OTHERWISE SHOWN

STANDARD DRAWING					
RELEASE DATE Revised	DESIGN	BY R.W. BISHOP	CHECKED J. HAMAGUCHI	RELEASED BY	
FILE NO. xs16-330	DETAILS	BY R. YEE	CHECKED J. HAMAGUCHI		
	SUBMITTED	BY R.W. BISHOP	DRAWING DATE 4/91	OFFICE CHIEF	

1 Modified notes
2 Modified details

STATE OF CALIFORNIA DEPARTMENT OF TRANSPORTATION

DIVISION OF ENGINEERING SERVICES

BRIDGE NO. 53-1085
KILOMETER POST 46.1

PROVIDENCIA AVENUE OH (WIDEN)

CHAIN LINK RAILING TYPE 3L

DS OSD 2147A (METRIC) (REV. 2/25/97)

ORIGINAL SCALE IN MILLIMETERS FOR REDUCED PLANS 0 10 20 30 40 50 60 70 80 90 100

CU 07
EA 121841

DISREGARD PRINTS BEARING EARLIER REVISION DATES

REVISION DATES (PRELIMINARY STAGE ONLY) 10-27-08 11-26-08 11-22-09 1-26-09

SHEET 143 OF 152

USERNAME => trmnguye

53-1085-x-clr3.dgn

DATE PLOTTED => 15-JUN-2009 TIME PLOTTED => 07:02

DIST	COUNTY	ROUTE	KILOMETER POST TOTAL PROJECT	SHEET No	TOTAL SHEETS
07	LA	5	42.8/47.3	933	1073

REGISTERED CIVIL ENGINEER 5-7-08

6-8-09
PLANS APPROVAL DATE

REGISTERED PROFESSIONAL ENGINEER Qiang Huang No. C055671 Exp. 12-31-08 CIVIL STATE OF CALIFORNIA

The State of California or its officers or agents shall not be responsible for the accuracy or completeness of electronic copies of this plan sheet.

BENCH MARK

SURVEY CONTROL

TRVPT113
Fnd SET PK NAIL
9.012 M Rt. ℄ Rte 5
Sta. 462+45.471
N 574824.813
E 1971740.657
Elev. = 163.175

TRVPR138
Fnd SET SPIKE
29.988 M Lt. ℄ Rte 5
Sta. 464+17.373
N 574975.094
E 1971655.794
Elev. = 166.824

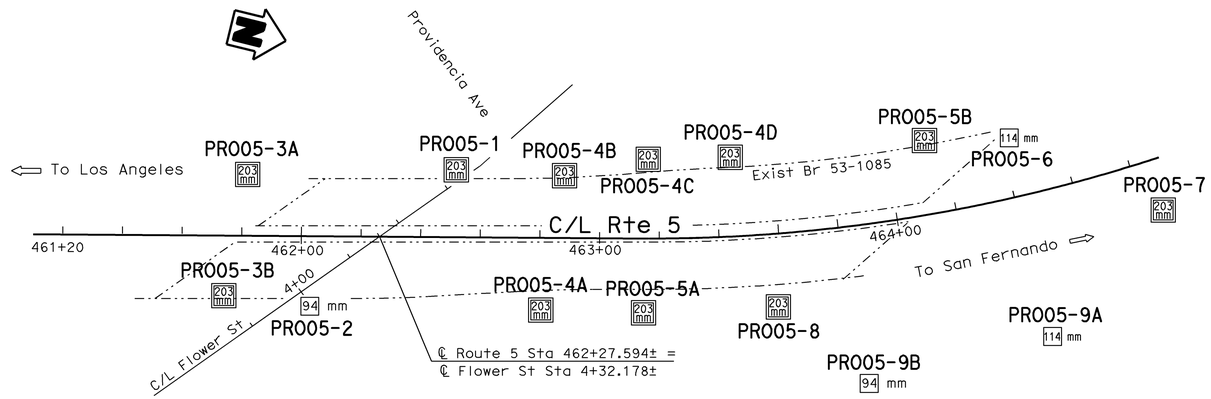

PLAN
1:1000

Note: Ground water not measured during field investigation.

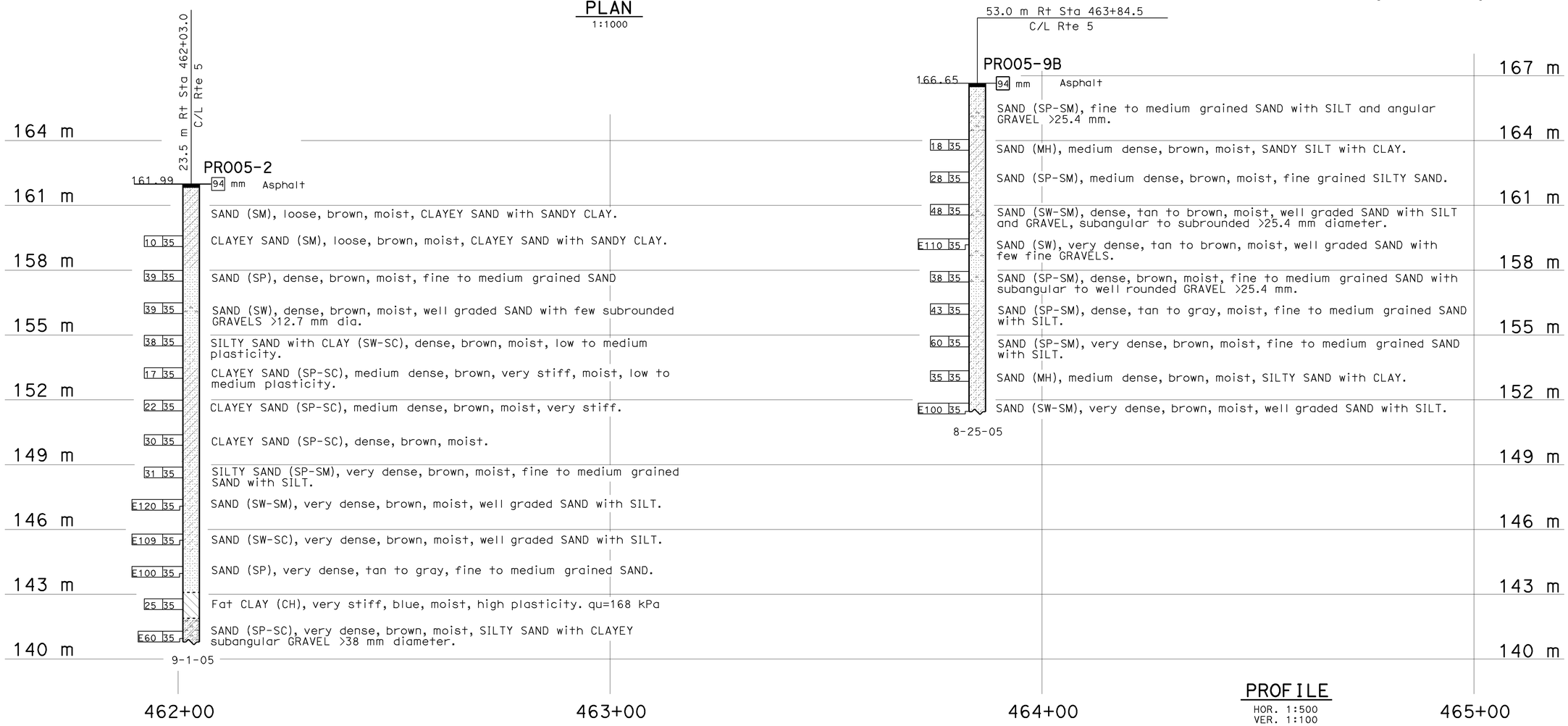

PROFILE
HOR. 1:500
VER. 1:100

LEGEND OF BORING OPERATIONS

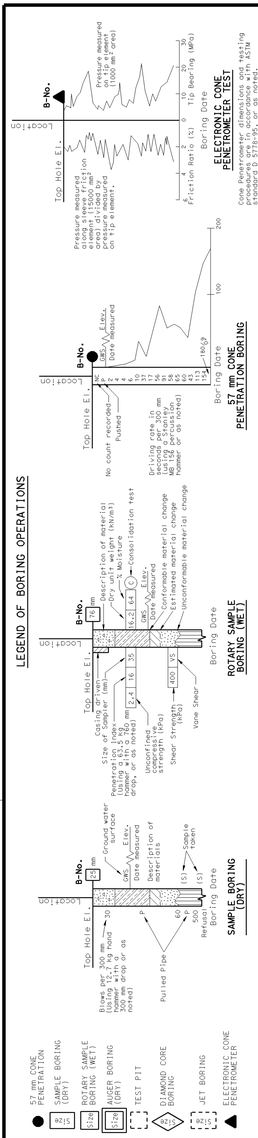

LEGEND OF EARTH MATERIALS

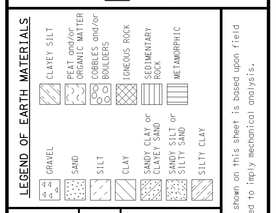

CONSISTENCY CLASSIFICATION FOR SOILS

According to the Standard Penetration Test

SPT N-Value (Blows/0.3m)	Granular	SPT N-Value (Blows/0.3m)	Cohesive
0-4	Very Loose	<2	Very Soft
5-10	Loose	2-4	Soft
11-30	Medium Dense	5-8	Firm
31-50	Dense	9-15	Stiff
>50	Very Dense	16-30	Very stiff
		>30	Hard

NOTE: Classification of earth material as shown on this sheet is based upon field inspection and is not to be construed to imply mechanical analysis.

OGS CIVIL LOG OF TEST BORINGS SHEET (METRIC) (REV. 4/04)

Caltrans Metric

GEOTECHNICAL SERVICES	
DRAWN BY	W. Tang 12/05
CHECKED BY	B. Bertucci

FIELD INVESTIGATION BY: B. Bertucci, C. Kark

STATE OF CALIFORNIA DEPARTMENT OF TRANSPORTATION

DIVISION OF ENGINEERING SERVICES STRUCTURE DESIGN DESIGN BRANCH 15

BRIDGE NO. 53-1085
KILOMETER POST 46.1

PROVIDENCIA AVENUE OH (WIDEN)
LOG OF TEST BORINGS 1 OF 9

ALL DIMENSIONS ARE IN METERS UNLESS OTHERWISE SHOWN

ORIGINAL SCALE IN MILLIMETERS FOR REDUCED PLANS 0 10 20 30 40 50 60 70 80 90 100

CU 07
EA 121841

DISREGARD PRINTS BEARING EARLIER REVISION DATES

REVISION DATES (PRELIMINARY STAGE ONLY) 04-29-08 05-06-08 1-22-09 1-26-09

SHEET 144 OF 152

FILE => 53-1085-z-lotb1.dgn

USERNAME => trmartin DATE PLOTTED => 15-JUN-2009 TIME PLOTTED => 07:37

DIST	COUNTY	ROUTE	KILOMETER POST TOTAL PROJECT	SHEET No	TOTAL SHEETS
07	LA	5	42.8/47.3	934	1073

REGISTERED CIVIL ENGINEER 5-7-08

6-8-09
PLANS APPROVAL DATE

REGISTERED PROFESSIONAL ENGINEER
Qiang Huang
No. C055671
Exp. 12-31-08
CIVIL
STATE OF CALIFORNIA

The State of California or its officers or agents shall not be responsible for the accuracy or completeness of electronic copies of this plan sheet.

FOR PLAN VIEW, SEE
"LOG OF TEST BORINGS" 1 OF 9

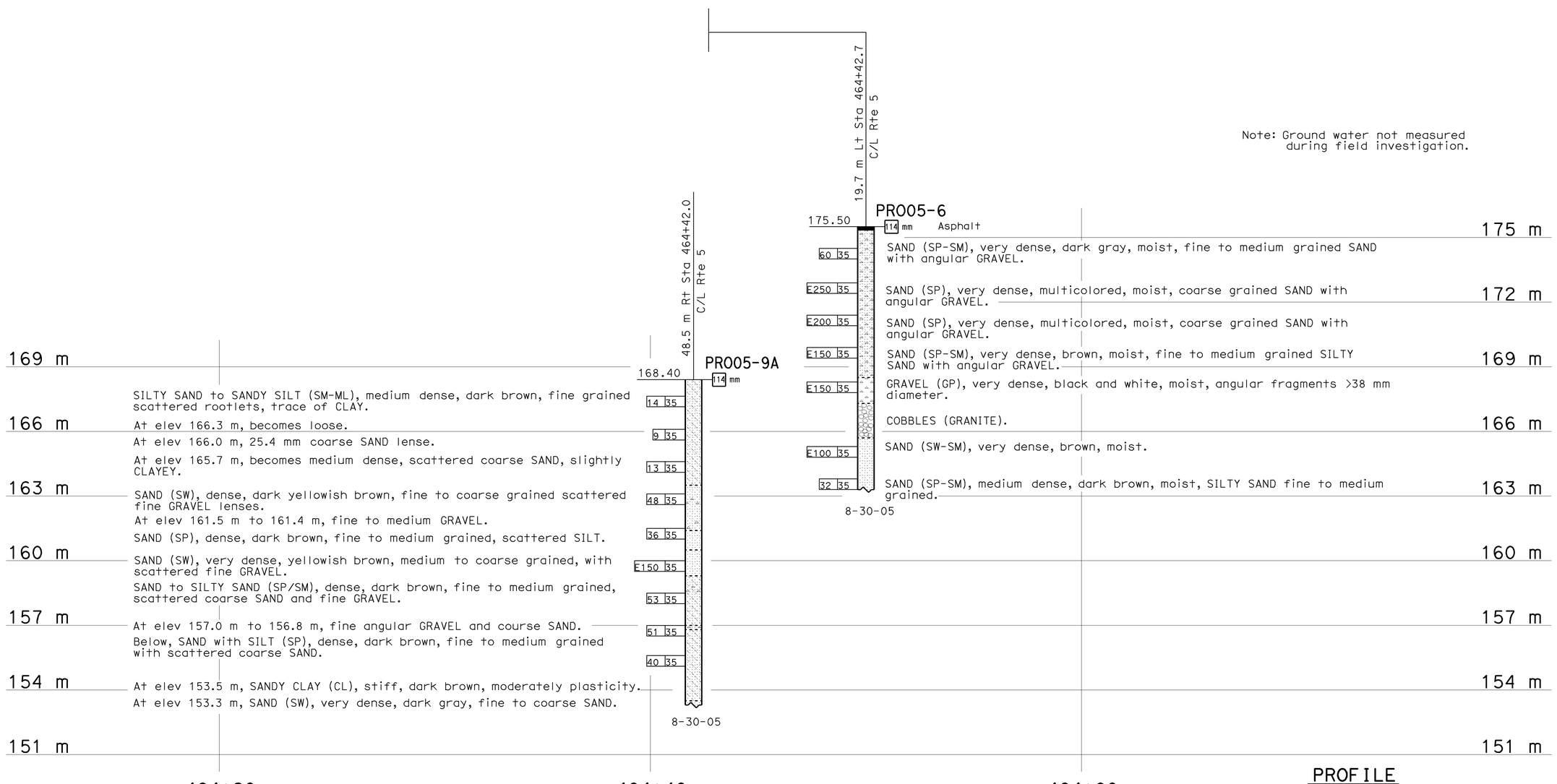

Note: Ground water not measured during field investigation.

PROFILE
HOR. 1:500
VER. 1:100

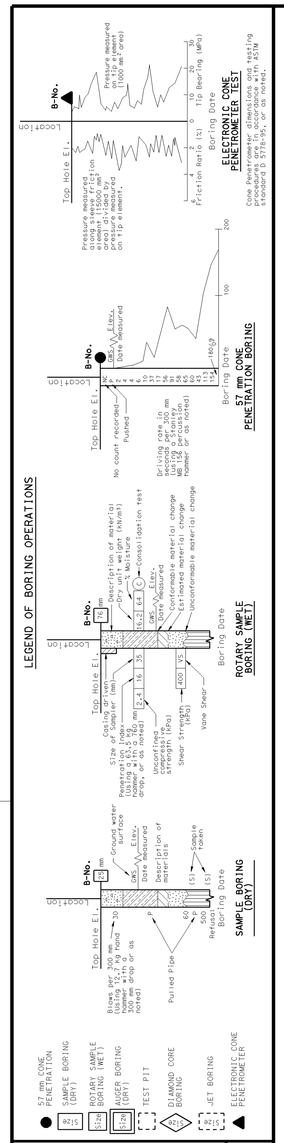

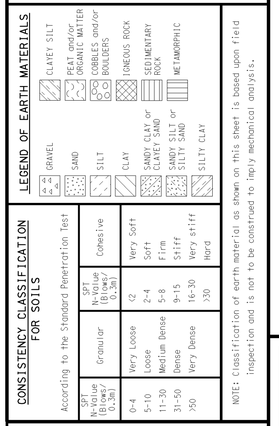

NOTE: Classification of earth material as shown on this sheet is based upon field inspection and is not to be construed to imply mechanical analysis.

OGS CIVIL LOG OF TEST BORINGS SHEET (METRIC) (REV. 4/04)

Caltrans Metric

GEOTECHNICAL SERVICES	
DRAWN BY	W. Tang 12/05
CHECKED BY	B. Bertucci

FIELD INVESTIGATION BY: B. Bertucci, C. Kark

STATE OF CALIFORNIA DEPARTMENT OF TRANSPORTATION

DIVISION OF ENGINEERING SERVICES STRUCTURE DESIGN
DESIGN BRANCH 15

BRIDGE NO. 53-1085
KILOMETER POST 46.1

PROVIDENCIA AVENUE OH (WIDEN)
LOG OF TEST BORINGS 2 OF 9

ALL DIMENSIONS ARE IN METERS UNLESS OTHERWISE SHOWN

ORIGINAL SCALE IN MILLIMETERS FOR REDUCED PLANS 0 10 20 30 40 50 60 70 80 90 100

CU 07
EA 121841

DISREGARD PRINTS BEARING EARLIER REVISION DATES

REVISION DATES (PRELIMINARY STAGE ONLY) 04-28-08 05-06-08 1-22-09 1-26-09

SHEET 145 OF 152

FILE => 53-1085-z-lotb2.dgn

USERNAME => trmartin DATE PLOTTED => 15-JUN-2009 TIME PLOTTED => 07:37

DIST	COUNTY	ROUTE	KILOMETER POST TOTAL PROJECT	SHEET No	TOTAL SHEETS
07	LA	5	42.8/47.3	935	1073

REGISTERED CIVIL ENGINEER 5-7-08

6-8-09
PLANS APPROVAL DATE

REGISTERED PROFESSIONAL ENGINEER Qiang Huang No. C055671 Exp. 12-31-08 CIVIL STATE OF CALIFORNIA

The State of California or its officers or agents shall not be responsible for the accuracy or completeness of electronic copies of this plan sheet.

NOTE:

The information presented on this drawing was not the result of any work developed, performed or completed this Department (Caltrans). The following party should account for all this information:

URS Corp.

It should be expressly understood that Caltrans assumes no responsibility whatsoever in respect to the sufficiency, accuracy, completeness, and interpretation set forth therein or any other aspect of the information shown or represented on this drawing.

FOR PLAN VIEW, SEE
"LOG OF TEST BORINGS" 1 OF 9

PROFILE
HOR. 1:200
VER. 1:100

Caltrans Metric	GEOTECHNICAL SERVICES	FIELD INVESTIGATION BY:	STATE OF CALIFORNIA DEPARTMENT OF TRANSPORTATION	DIVISION OF ENGINEERING SERVICES STRUCTURE DESIGN DESIGN BRANCH 15	BRIDGE NO. 53-1085 / KILOMETER POST 46.1	PROVIDENCIA AVENUE OH (WIDEN) LOG OF TEST BORINGS 3 OF 9
	PREPARED BY I.G-Remmen 1/06	URS CORP.				
	CHECKED BY B. Bertucci					
OGS CIVIL LOG OF TEST BORINGS SHEET (METRIC) (REV. 4/04)	ALL DIMENSIONS ARE IN METERS UNLESS OTHERWISE SHOWN	ORIGINAL SCALE IN MILLIMETERS FOR REDUCED PLANS 0 10 20 30 40 50 60 70 80 90 100		CU 07 EA 121841	DISREGARD PRINTS BEARING EARLIER REVISION DATES	REVISION DATES (PRELIMINARY STAGE ONLY) 04-29-08 05-06-08 1-22-09 1-26-09 SHEET 146 OF 152

FILE => 53-1085-z-lotb3.dgn

USERNAME => trmartin DATE PLOTTED => 15-JUN-2009 TIME PLOTTED => 07:37

DIST	COUNTY	ROUTE	KILOMETER POST TOTAL PROJECT	SHEET No	TOTAL SHEETS
07	LA	5	42.8/47.3	936	1073

REGISTERED CIVIL ENGINEER 5-7-08

6-8-09
PLANS APPROVAL DATE

REGISTERED PROFESSIONAL ENGINEER Qiang Huang No. C055671 Exp. 12-31-08 CIVIL STATE OF CALIFORNIA

The State of California or its officers or agents shall not be responsible for the accuracy or completeness of electronic copies of this plan sheet.

NOTE:

The information presented on this drawing was not the result of any work developed, performed or completed this Department (Caltrans). The following party should account for all this information:
URS Corp.

It should be expressly understood that Caltrans assumes no responsibility whatsoever in respect to the sufficiency, accuracy, completeness, and interpretation set forth therein or any other aspect of the information shown or represented on this drawing.

FOR PLAN VIEW, SEE
"LOG OF TEST BORINGS" 1 OF 9

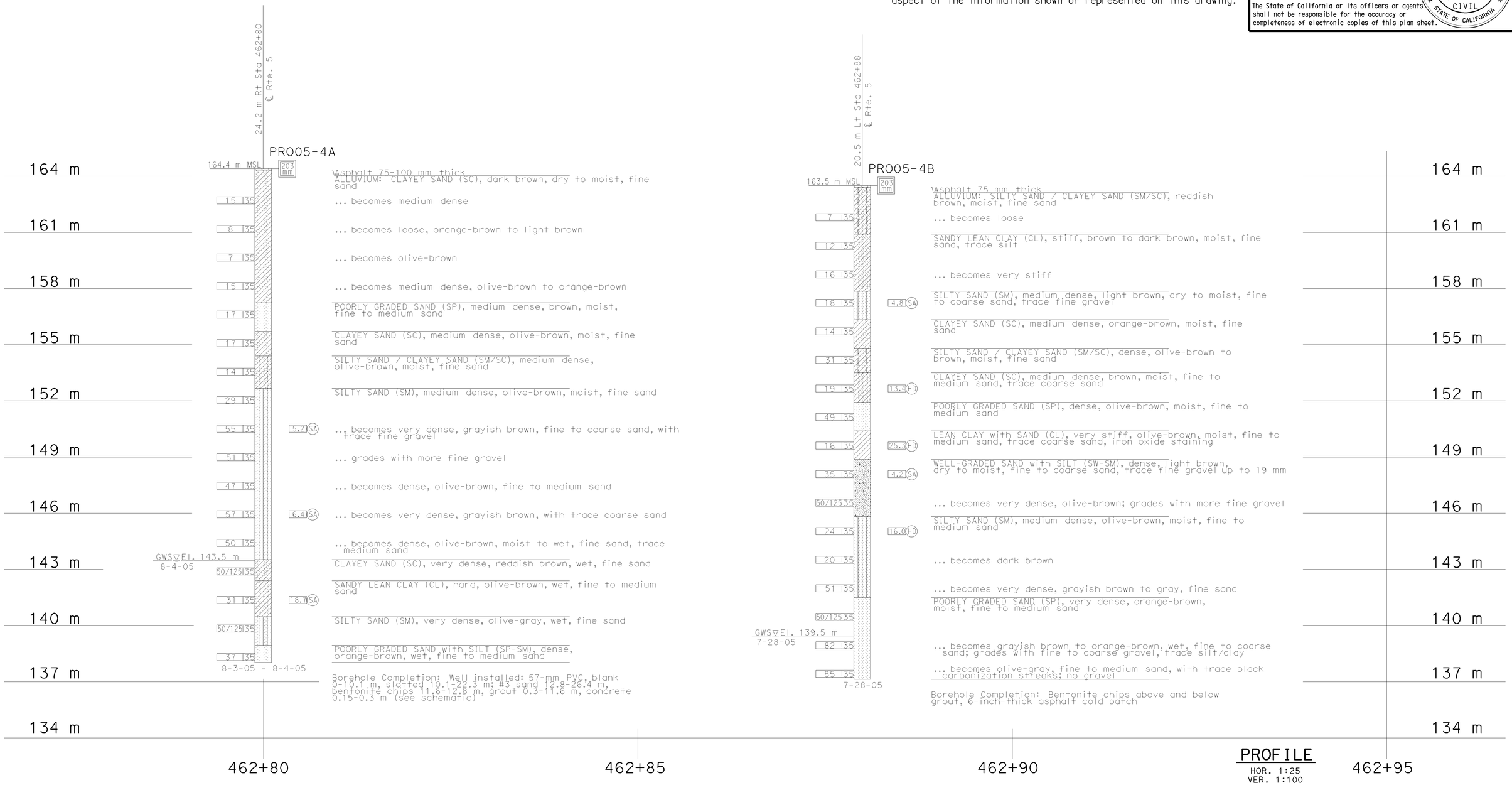

PROFILE
HOR. 1:25
VER. 1:100

Caltrans Metric	GEOTECHNICAL SERVICES PREPARED BY I.G-Remmen 1/06 CHECKED BY B. Bertucci	FIELD INVESTIGATION BY: URS CORP.	STATE OF CALIFORNIA DEPARTMENT OF TRANSPORTATION	DIVISION OF ENGINEERING SERVICES STRUCTURE DESIGN DESIGN BRANCH 15	BRIDGE NO. 53-1085 KILOMETER POST 46.1	PROVIDENCIA AVENUE OH (WIDEN) LOG OF TEST BORINGS 4 OF 9
OGS CIVIL LOG OF TEST BORINGS SHEET (METRIC) (REV. 4/04)	ALL DIMENSIONS ARE IN METERS UNLESS OTHERWISE SHOWN	ORIGINAL SCALE IN MILLIMETERS FOR REDUCED PLANS 0 10 20 30 40 50 60 70 80 90 100	CU 07 EA 121841	DISREGARD PRINTS BEARING EARLIER REVISION DATES	REVISION DATES (PRELIMINARY STAGE ONLY) 04-28-08 05-06-08 1-22-09 1-26-09	SHEET 147 OF 152

FILE => 53-1085-z-lotb4.dgn

USERNAME => trmartin DATE PLOTTED => 15-JUN-2009 TIME PLOTTED => 07:37

DIST	COUNTY	ROUTE	KILOMETER POST TOTAL PROJECT	SHEET No	TOTAL SHEETS
07	LA	5	42.8/47.3	937	1073

REGISTERED CIVIL ENGINEER 5-7-08

6-8-09
PLANS APPROVAL DATE

REGISTERED PROFESSIONAL ENGINEER Qiang Huang No. C055671 Exp. 12-31-08 CIVIL STATE OF CALIFORNIA

The State of California or its officers or agents shall not be responsible for the accuracy or completeness of electronic copies of this plan sheet.

NOTE:

The information presented on this drawing was not the result of any work developed, performed or completed this Department (Caltrans). The following party should account for all this information:
URS Corp.

It should be expressly understood that Caltrans assumes no responsibility whatsoever in respect to the sufficiency, accuracy, completeness, and interpretation set forth therein or any other aspect of the information shown or represented on this drawing.

FOR PLAN VIEW, SEE
"LOG OF TEST BORINGS" 1 OF 9

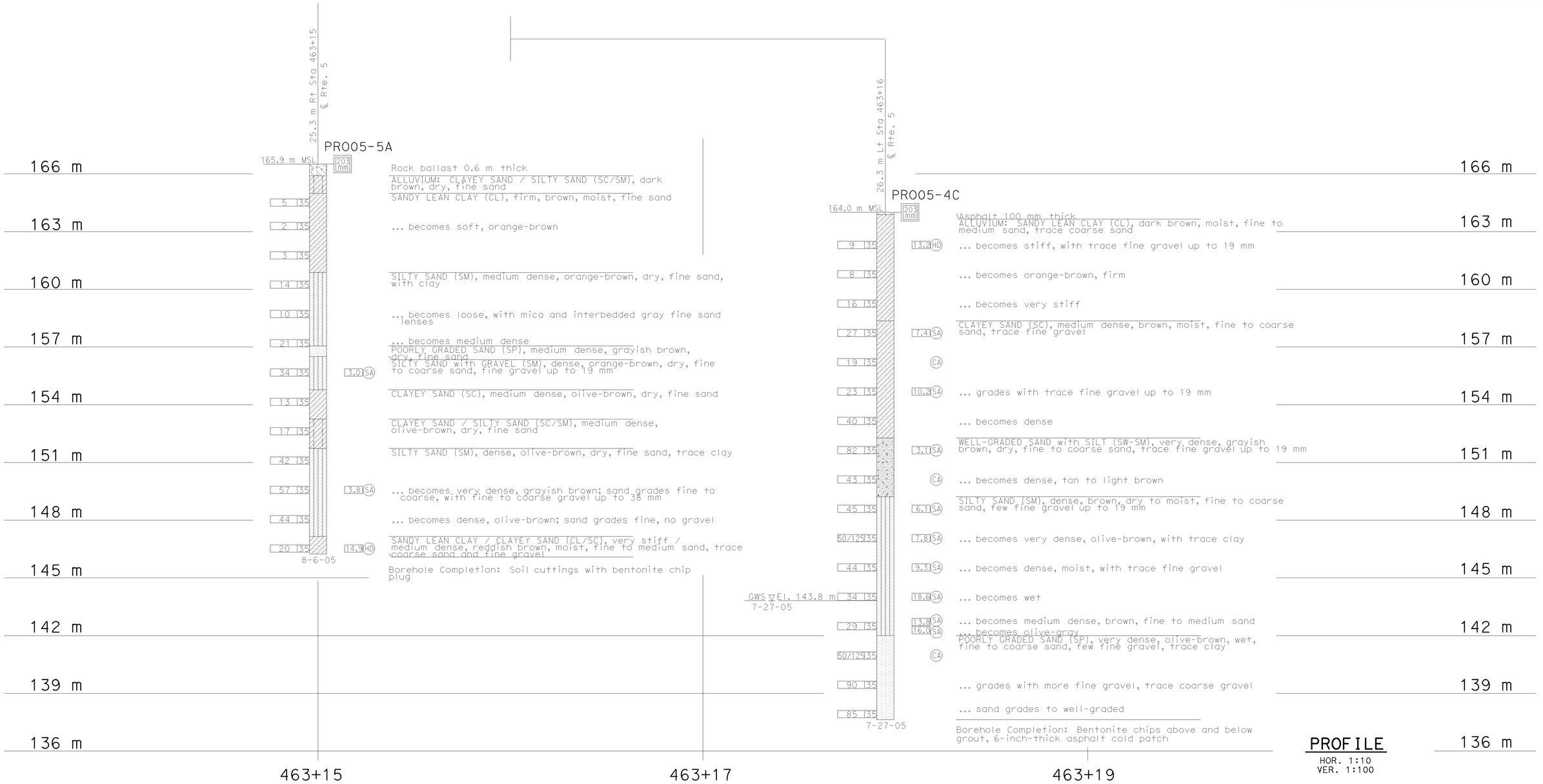

Caltrans Metric

GEOTECHNICAL SERVICES	
PREPARED BY	I.G-Remmen 1/06
CHECKED BY	B. Bertucci

FIELD INVESTIGATION BY: URS CORP.

STATE OF CALIFORNIA
DEPARTMENT OF TRANSPORTATION

DIVISION OF ENGINEERING SERVICES
STRUCTURE DESIGN
DESIGN BRANCH 15

BRIDGE NO. 53-1085
KILOMETER POST 46.1

PROVIDENCIA AVENUE OH (WIDEN)
LOG OF TEST BORINGS 5 OF 9

OGS CIVIL LOG OF TEST BORINGS SHEET (METRIC) (REV. 4/04)

ALL DIMENSIONS ARE IN METERS UNLESS OTHERWISE SHOWN

ORIGINAL SCALE IN MILLIMETERS FOR REDUCED PLANS 0 10 20 30 40 50 60 70 80 90 100

CU 07
EA 121841

DISREGARD PRINTS BEARING EARLIER REVISION DATES

REVISION DATES (PRELIMINARY STAGE ONLY): 04-29-08 05-06-08 1-22-09 1-26-09

SHEET 148 OF 152

FILE => 53-1085-z-lotb5.dgn

USERNAME => trmartin DATE PLOTTED => 15-JUN-2009 TIME PLOTTED => 07:37

DIST	COUNTY	ROUTE	KILOMETER POST TOTAL PROJECT	SHEET No	TOTAL SHEETS
07	LA	5	42.8/47.3	938	1073

REGISTERED CIVIL ENGINEER 5-7-08

6-8-09
PLANS APPROVAL DATE

REGISTERED PROFESSIONAL ENGINEER Qiang Huang No. C055671 Exp. 12-31-08 CIVIL STATE OF CALIFORNIA

The State of California or its officers or agents shall not be responsible for the accuracy or completeness of electronic copies of this plan sheet.

NOTE:

The information presented on this drawing was not the result of any work developed, performed or completed this Department (Caltrans). The following party should account for all this information:

URS Corp.

It should be expressly understood that Caltrans assumes no responsibility whatsoever in respect to the sufficiency, accuracy, completeness, and interpretation set forth therein or any other aspect of the information shown or represented on this drawing.

FOR PLAN VIEW, SEE
"LOG OF TEST BORINGS" 1 OF 9

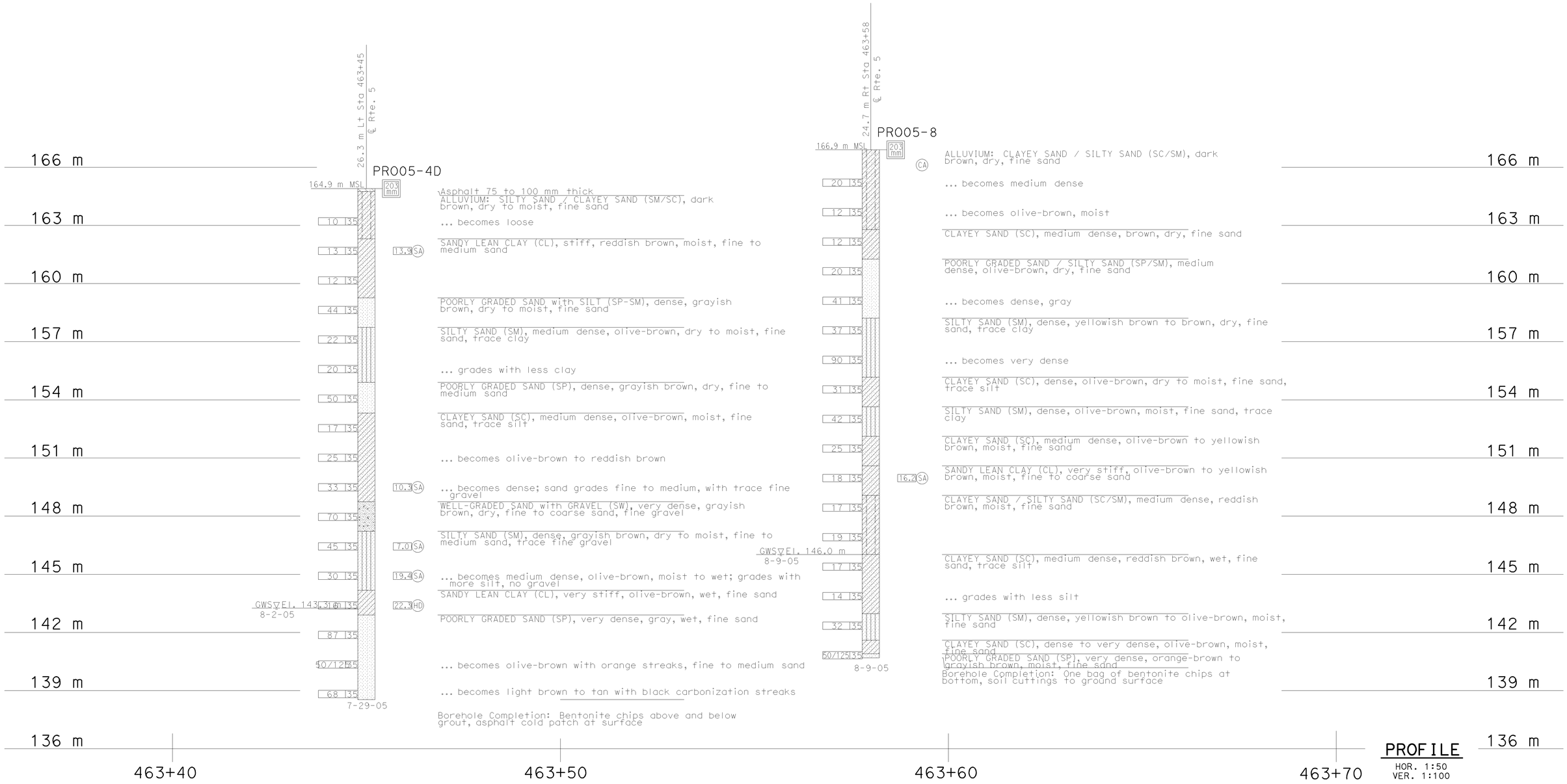

GEOTECHNICAL SERVICES	
PREPARED BY	I.G-Remmen 1/06
CHECKED BY	B. Bertucci

FIELD INVESTIGATION BY: URS CORP.

STATE OF CALIFORNIA DEPARTMENT OF TRANSPORTATION

DIVISION OF ENGINEERING SERVICES STRUCTURE DESIGN DESIGN BRANCH 15

BRIDGE NO. 53-1085
KILOMETER POST 46.1

PROVIDENCIA AVENUE OH (WIDEN)
LOG OF TEST BORINGS 6 OF 9

Caltrans Metric

OGS CIVIL LOG OF TEST BORINGS SHEET (METRIC) (REV. 4/04)

ALL DIMENSIONS ARE IN METERS UNLESS OTHERWISE SHOWN

ORIGINAL SCALE IN MILLIMETERS FOR REDUCED PLANS 0 10 20 30 40 50 60 70 80 90 100

CU 07
EA 121841

DISREGARD PRINTS BEARING EARLIER REVISION DATES

REVISION DATES (PRELIMINARY STAGE ONLY) 04-29-08 05-06-08 1-22-09 1-26-09

SHEET 149 OF 152

FILE => 53-1085-z-lotb6.dgn

USERNAME => trmartin DATE PLOTTED => 15-JUN-2009 TIME PLOTTED => 07:38

DIST	COUNTY	ROUTE	KILOMETER POST TOTAL PROJECT	SHEET No	TOTAL SHEETS
07	LA	5	42.8/47.3	939	1073

REGISTERED CIVIL ENGINEER 5-7-08

6-8-09
PLANS APPROVAL DATE

REGISTERED PROFESSIONAL ENGINEER Qiang Huang No. C055671 Exp. 12-31-08 CIVIL STATE OF CALIFORNIA

The State of California or its officers or agents shall not be responsible for the accuracy or completeness of electronic copies of this plan sheet.

NOTE:

The information presented on this drawing was not the result of any work developed, performed or completed this Department (Caltrans). The following party should account for all this information:

URS Corp.

It should be expressly understood that Caltrans assumes no responsibility whatsoever in respect to the sufficiency, accuracy, completeness, and interpretation set forth therein or any other aspect of the information shown or represented on this drawing.

FOR PLAN VIEW, SEE
"LOG OF TEST BORINGS" 1 OF 9

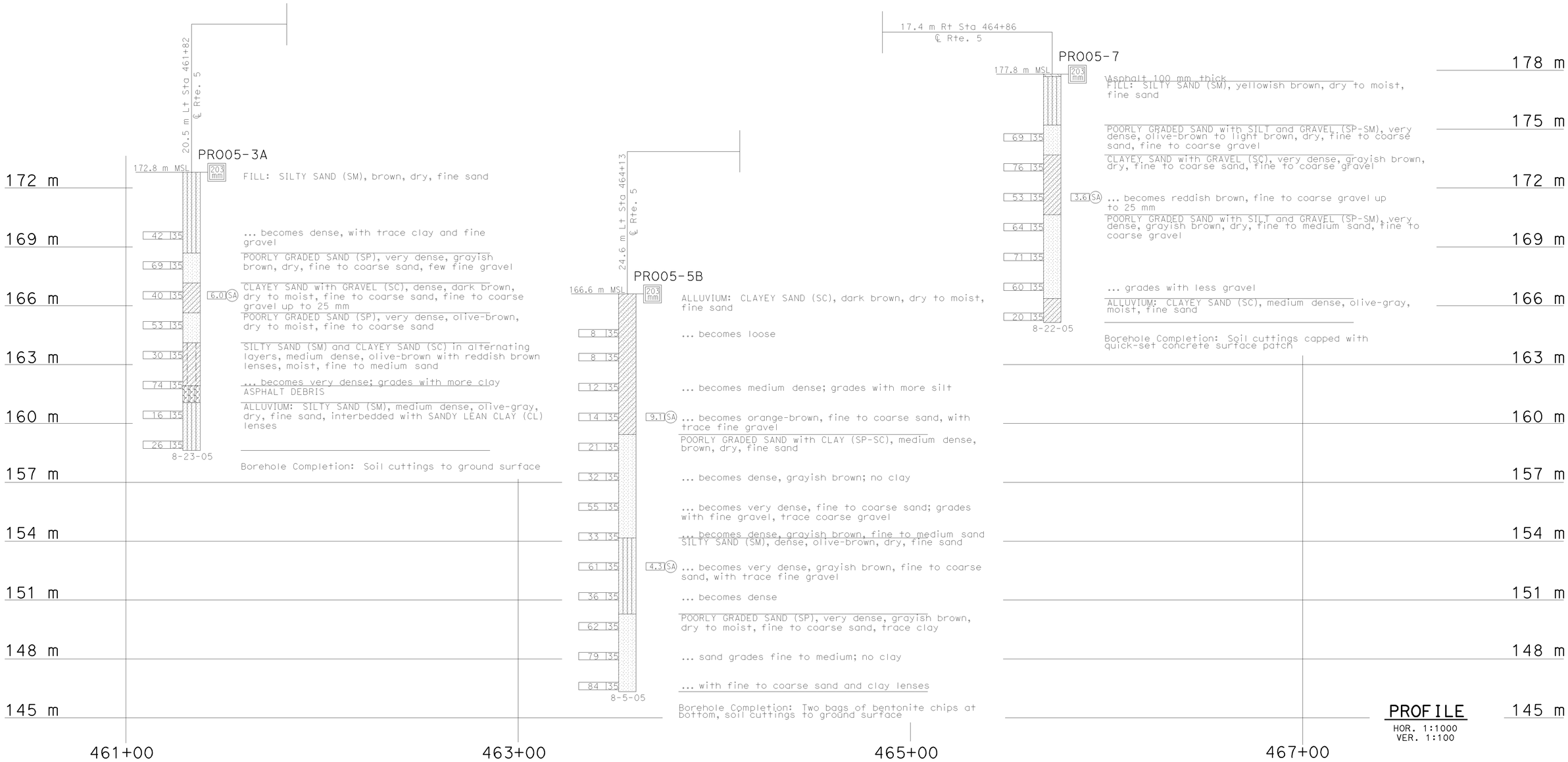

GEOTECHNICAL SERVICES	
PREPARED BY	I.G-Remmen 1/06
CHECKED BY	B. Bertucci

FIELD INVESTIGATION BY: URS CORP.

STATE OF CALIFORNIA DEPARTMENT OF TRANSPORTATION

DIVISION OF ENGINEERING SERVICES STRUCTURE DESIGN DESIGN BRANCH 15

BRIDGE NO. 53-1085
KILOMETER POST 46.1

PROVIDENCIA AVENUE OH (WIDEN)
LOG OF TEST BORINGS 7 OF 9

Caltrans Metric

OGS CIVIL LOG OF TEST BORINGS SHEET (METRIC) (REV. 4/04)

ALL DIMENSIONS ARE IN METERS UNLESS OTHERWISE SHOWN

ORIGINAL SCALE IN MILLIMETERS FOR REDUCED PLANS 0 10 20 30 40 50 60 70 80 90 100

CU 07
EA 121841

DISREGARD PRINTS BEARING EARLIER REVISION DATES

REVISION DATES (PRELIMINARY STAGE ONLY) 04-29-08 05-06-08 1-22-09 1-26-09

SHEET 150 OF 152

FILE => 53-1085-z-lotb7.dgn

USERNAME => ttmartin DATE PLOTTED => 15-JUN-2009 TIME PLOTTED => 07:38

I-081-3(2)

FED. ROAD DIV. NO.	STATE	PROJ. NO.	FISCAL YEAR	SHEET NO.	TOTAL SHEETS
7	CAL.			159	260

DIST.	COUNTY	ROUTE	SECTION	SHEET NO.	TOTAL SHEETS
VII	LA	4	Arb.	35-37	

DATE LAYOUT WAS COMPLETED August 19, 1957

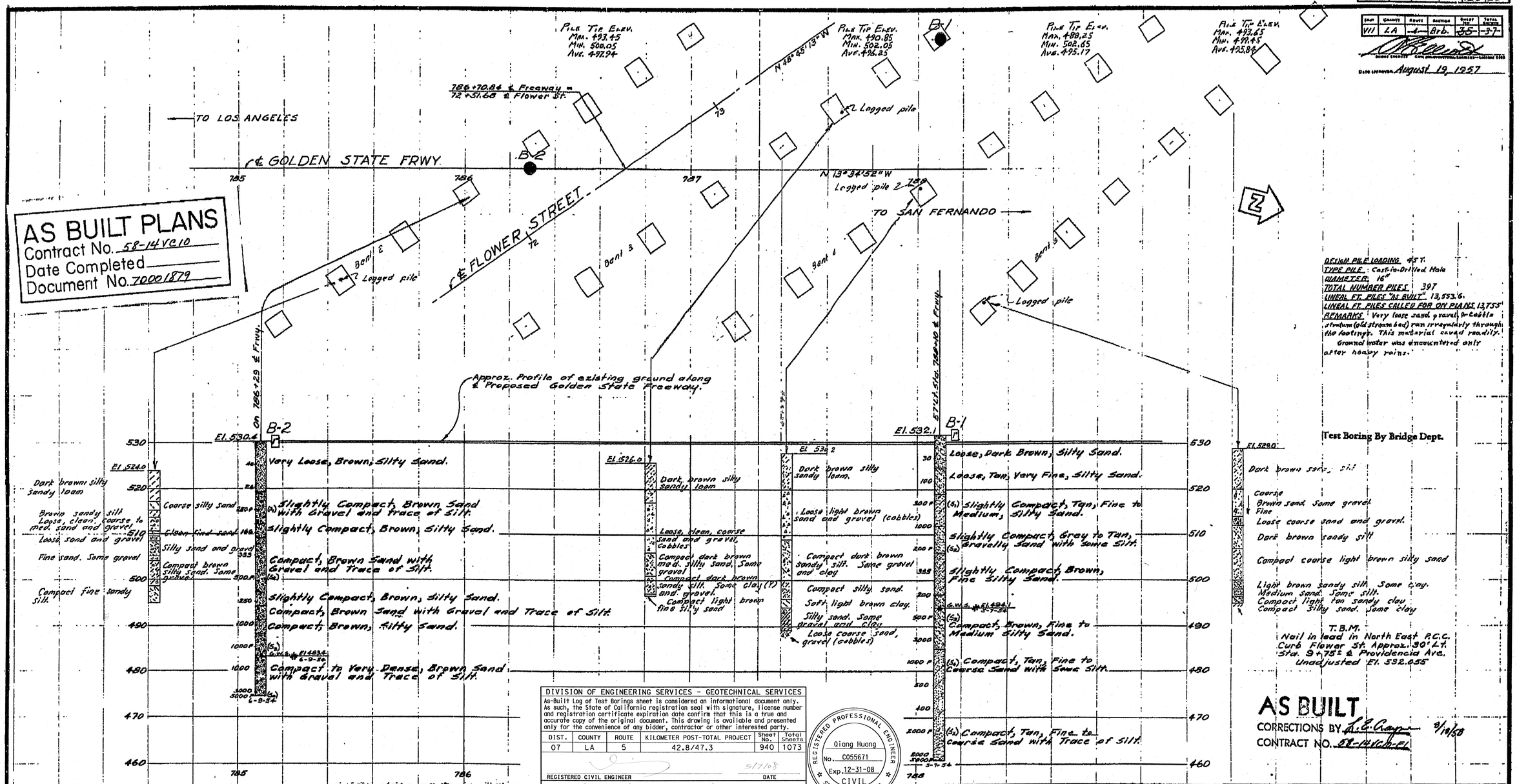

AS BUILT PLANS
Contract No. 58-14VC10
Date Completed
Document No. 70001879

DESIGN PILE LOADING 45 T.
TYPE PILE Cast-in-Drilled Hole
DIAMETER 16"
TOTAL NUMBER PILES 397
LINEAL FT. PILES "AS BUILT" 13,553.6
LINEAL FT. PILES CALLED FOR ON PLANS 13,755
REMARKS Very loose sand, gravel, or cobble stratum (old stream bed) ran irregularly through the footings. This material caved readily. Ground water was encountered only after heavy rains.

BRIDGE DEPARTMENT

FIELD STUDY by M.H.B. 7-26-54
DRAWN by V.H. 7-26-54
CHECKED
Approved Recommended by

CLASSIFICATION OF MATERIAL BASED ON STANDARD GRADE SIZE LIMITS

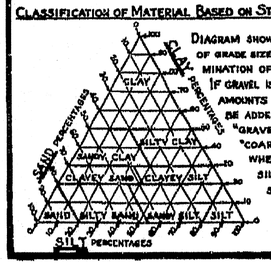

DIAGRAM SHOWING THE BASIS FOR ESTIMATES OF GRADE SIZE DISTRIBUTION USED IN DETERMINATION OF CLASS NAMES.

IF GRAVEL IS PRESENT IN APPRECIABLE AMOUNTS THE TERM "GRAVELLY" MAY BE ADDED TO THE CLASS NAME, VIZ. "GRAVELLY SAND". THE TERMS "COARSE", "MEDIUM" AND "FINE" WHEN USED TO DESCRIBE SAND, SILT AND GRAVEL REFER TO STANDARD GRADE SIZE LIMITS.

LEGEND OF EARTH MATERIALS

- Gravel
- Sand
- Silt
- Clay
- Sandy Clay or Clayey Sand
- Sandy Silt or Silty Sand
- Silty Clay or Clayey Silt
- Peat and/or Organic Matter
- Fill Material
- Igneous Rock
- Sedimentary Rock
- Metamorphic Rock

DIVISION OF ENGINEERING SERVICES - GEOTECHNICAL SERVICES

As-Built Log of Test Borings sheet is considered an informational document only. As such, the State of California registration seal with signature, license number and registration certificate expiration date confirm that this is a true and accurate copy of the original document. This drawing is available and presented only for the convenience of any bidder, contractor or other interested party.

DIST.	COUNTY	ROUTE	KILOMETER POST-TOTAL PROJECT	Sheet No.	Total Sheets
07	LA	5	42.8/47.3	940	1073

REGISTERED CIVIL ENGINEER — DATE 5/7/08

REGISTERED PROFESSIONAL ENGINEER — Qiang Huang — No. C055671 — Exp. 12-31-08 — CIVIL — STATE OF CALIFORNIA

PROVIDENCIA AVENUE OH (WIDEN)

LOG OF TEST BORINGS 8 OF 9

NOTE: A COPY OF THIS LOG OF TEST BORINGS IS AVAILABLE AT OFFICE OF STRUCTURE MAINTENANCE AND INVESTIGATIONS, SACRAMENTO, CALIFORNIA

CU: 07 EA: 121841

BRIDGE No.	
53-1085	
Sheet	of
151	152

Revisions made to this Log of Test Borings from the original 1954 Log of Test Borings are the addition of the following table and notes:

Boring	Station	Offset from ℄ Rte. 5
B-1 (Bent 3)	462+70.2	17.4 m Right
B-2 (Bent 2)	462+14.8	On ℄

Notes:

1. See the General Plan and/or Foundation Plan for Metric Stationing.
2. The data are the metric locations for the As-Built Test Borings referenced to the proposed new structure location. This table is presented on the As-Built Log of Test Boring sheet for the convenience of any bidder, contractor or other interested party.
3. Pier/bent closest to boring.

To accompany plans dated 6-8-09

OPERATIONS

tion of material
ight (#/cu ft)
Moisture
r—Consolidation Test
k—Flow
measured
mable material change
hed material change
ormable material change

Top Hole El.
Pushed
No count
Seconds per Foot (using a No. 2 McKiernan-Terry Air hammer 8 lb psi or as noted)
Average skin friction above this point (lb/ft²)
Location
B-No.
G.W.S.
Elev.
Date measured
Graphic representation of driving rate
Blows per foot
Seconds per foot

PENETRATION BORING

NOTES

The contractor's attention is directed to Section 2, Article (c) of the Standard Specifications and to the Special Provisions accompanying this set of plans.

Classification of earth material as shown on this sheet is based upon field inspection and is not to be construed to imply mechanical analysis.

STATE OF CALIFORNIA
DEPARTMENT OF PUBLIC WORKS
DIVISION OF HIGHWAYS

PROVIDENCIA AVE O.H.

LOG OF TEST BORINGS NO 1

SCALE Horiz. 1"=20' Vert. 1"=10' | BRIDGE 53-1085 | FILE | DRAWING C-3777-35

PREL. DRAWING NO. 3777-91

159

53-1085-z-lotb8.tif

I-081-3 (2)

FED. ROAD DIV. NO.	STATE	PROJ. NO.	FISCAL YEAR	SHEET NO.	TOTAL SHEETS
7	CAL.			160	260

DIST.	COUNTY	ROUTE	SECTION	SHEET NO.	TOTAL SHEETS
VII	LA	4	Brb.	36	37

Date approved August 19, 1957

BRIDGE DEPARTMENT

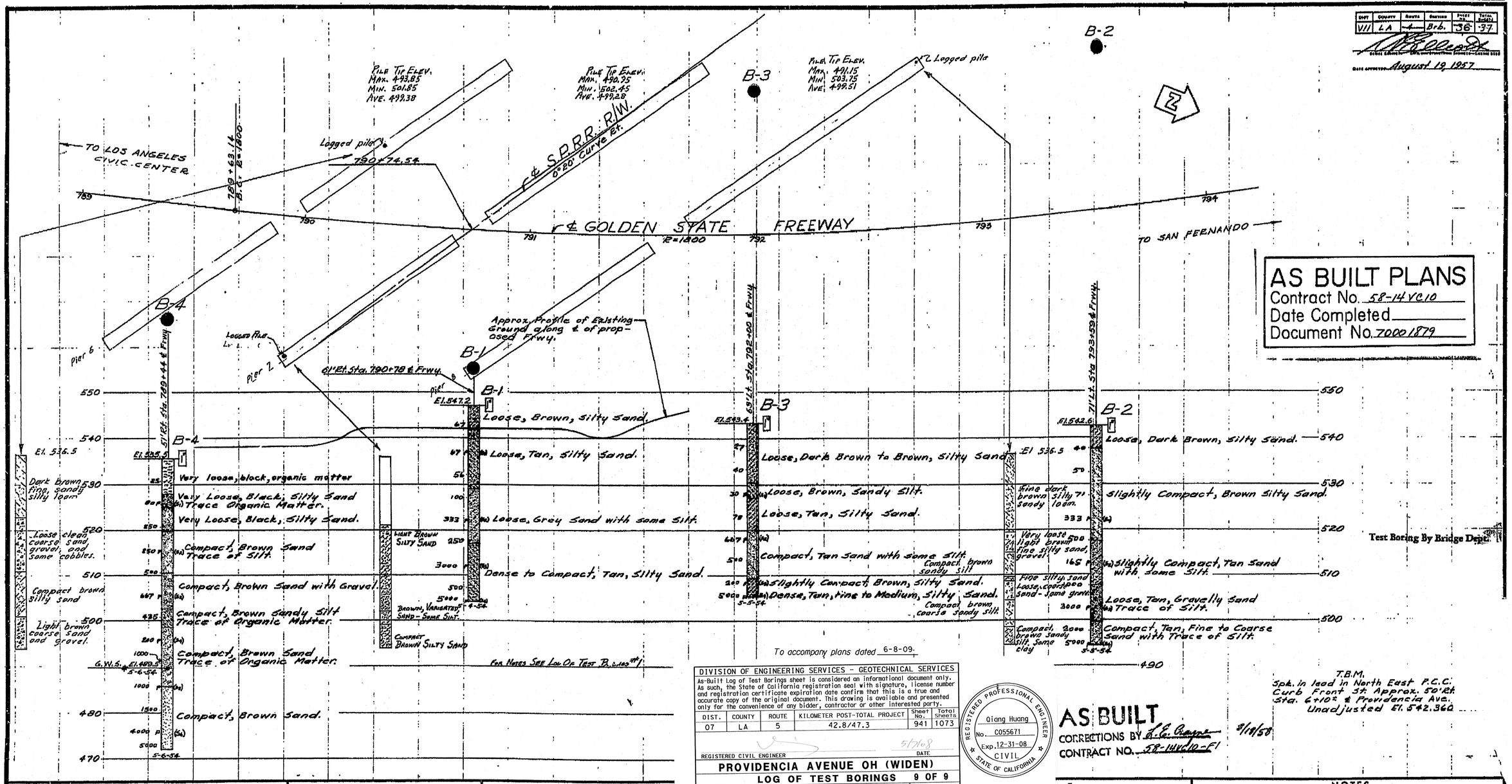

AS BUILT PLANS
Contract No. 58-14VC10
Date Completed
Document No. 70001879

FIELD STUDY By M.H.H. 8-2-56
DRAWING By M.H. 8-2-56
CHECKED
Approval Recommended by J. L. Lowery Chief Bridge Engineer

To accompany plans dated 6-8-09.

DIVISION OF ENGINEERING SERVICES - GEOTECHNICAL SERVICES					
As-Built Log of Test Borings sheet is considered an informational document only. As such, the State of California registration seal with signature, license number and registration certificate expiration date confirm that this is a true and accurate copy of the original document. This drawing is available and presented only for the convenience of any bidder, contractor or other interested party.					
DIST.	COUNTY	ROUTE	KILOMETER POST-TOTAL PROJECT	Sheet No.	Total Sheets
07	LA	5	42.8/47.3	941	1073
REGISTERED CIVIL ENGINEER			DATE 5/7/08		
PROVIDENCIA AVENUE OH (WIDEN)					
LOG OF TEST BORINGS 9 OF 9					
NOTE: A COPY OF THIS LOG OF TEST BORINGS IS AVAILABLE AT OFFICE OF STRUCTURE MAINTENANCE AND INVESTIGATIONS, SACRAMENTO, CALIFORNIA			CU: 07 EA: 121841	BRIDGE No. 53-1085	
				Sheet 152	of 152

REGISTERED PROFESSIONAL ENGINEER Qiang Huang No. C055671 Exp. 12-31-08 CIVIL STATE OF CALIFORNIA

Revisions made to this Log of Test Borings from the original 1954 Log of Test Borings are the addition of the following table and notes:

Boring	Station	Offset from ℄ Rte. 5	
B-1 (Pier 28)	463+47.2	18.2 m	Right
B-2 (Pier 28)	464+34.4	21.3 m	Left
B-3 (Pier 7)	463+84.7	18.9 m	Left
B-4 (Pier 6)	463+06.4	15.2 m	Right

Notes:

1. See the General Plan and/or Foundation Plan for Metric Stationing.
2. The data are the metric locations for the As-Built Test Borings referenced to the proposed new structure location. This table is presented on the As-Built Log of Test Boring sheet for the convenience of any bidder, contractor or other interested party.
3. Pier/bent closest to boring.

T.B.M.
Spk. in lead in North East P.C.C. Curb Front St. Approx. 50' Rt. Sta. 6+10± ℄ Providencia Ave. Unadjusted El. 542.360

AS BUILT
CORRECTIONS BY R.E. Pepper 8/18/58
CONTRACT NO. 58-14VC10-F1

Classification of Material Based on Standard Grade Size Limits

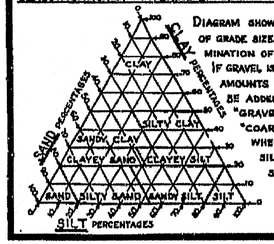

Diagram showing the basis for estimates of grade size distribution used in determination of class names.

If gravel is present in appreciable amounts the term "gravelly" may be added to the class name, viz. "gravelly sand". The terms "coarse", "medium" and "fine" when used to describe sand, silt and gravel refer to standard grade size limits.

Legend of Earth Materials

- Gravel
- Sand
- Silt
- Clay
- Sandy Clay or Clayey Sand
- Sandy Silt or Silty Sand
- Silty Clay or Clayey Silt
- Peat and/or Organic Matter
- Fill Material
- Igneous Rock
- Sedimentary Rock
- Metamorphic Rock

Legend

- Plan of any boring
- Penetrometer
- 2¼" Cone Penetrometer
- Sampler boring (dry)
- Rotary boring (wet)
- Auger boring (dry)
- Jet boring
- Core boring
- Test pit

Top Hole El.

Blows per foot (using 32 lb hand hammer with a 12" free fall)

Pulled pipe

1" S

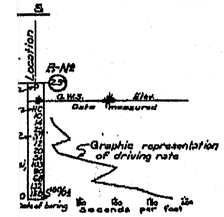

Penetration Boring

Notes

The contractor's attention is directed to Section 2, Article (c) of the Standard Specifications and to the Special Provisions accompanying this set of plans.

Classification of earth material as shown on this sheet is based upon field inspection and is not to be construed to imply mechanical analysis.

STATE OF CALIFORNIA
DEPARTMENT OF PUBLIC WORKS
DIVISION OF HIGHWAYS

PROVIDENCIA AVE. O.H.

LOG OF TEST BORINGS NO. 2

Scale	Bridge	File	Drawing
Horiz. 1"=20' Vert. 1"=10'	53-1085	E-53	C-3777-36

PREL. DRAWING NO. P. 3777-39

160

53-1085-z-lotb9.tif

DIST	COUNTY	ROUTE	KILOMETER POST TOTAL PROJECT	SHEET No	TOTAL SHEETS
07	LA	5	42.8/47.3	942	1073

Andrew P. Rittenhouse 12-05-08
REGISTERED CIVIL ENGINEER DATE

6-8-09
PLANS APPROVAL DATE

REGISTERED PROFESSIONAL ENGINEER Andrew P. Rittenhouse No. 61006 Exp. 12-31-10 CIVIL STATE OF CALIFORNIA

The State of California or its officers or agents shall not be responsible for the accuracy or completeness of electronic copies of this plan sheet.

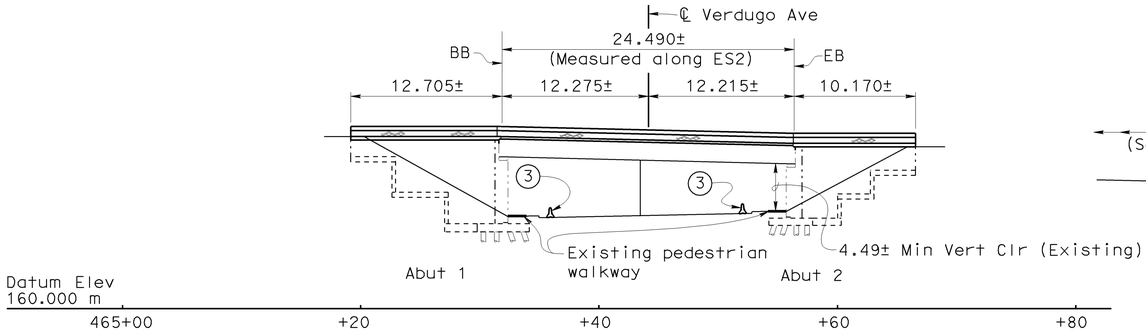

MIRRORED ELEVATION B-B

1:250

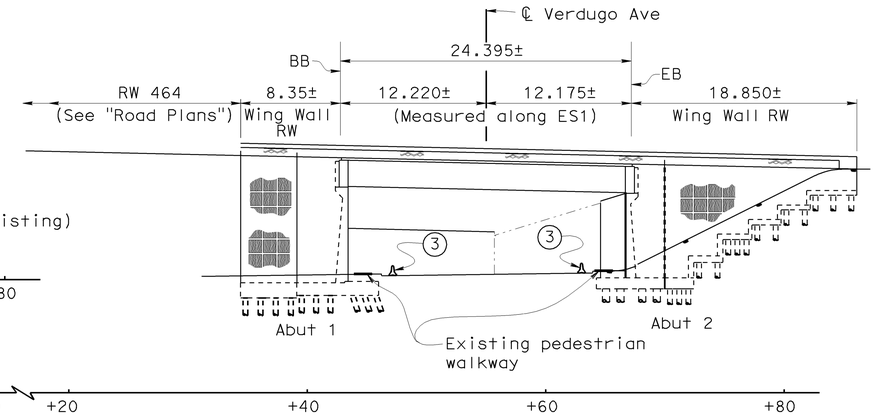

ELEVATION A-A

1:250

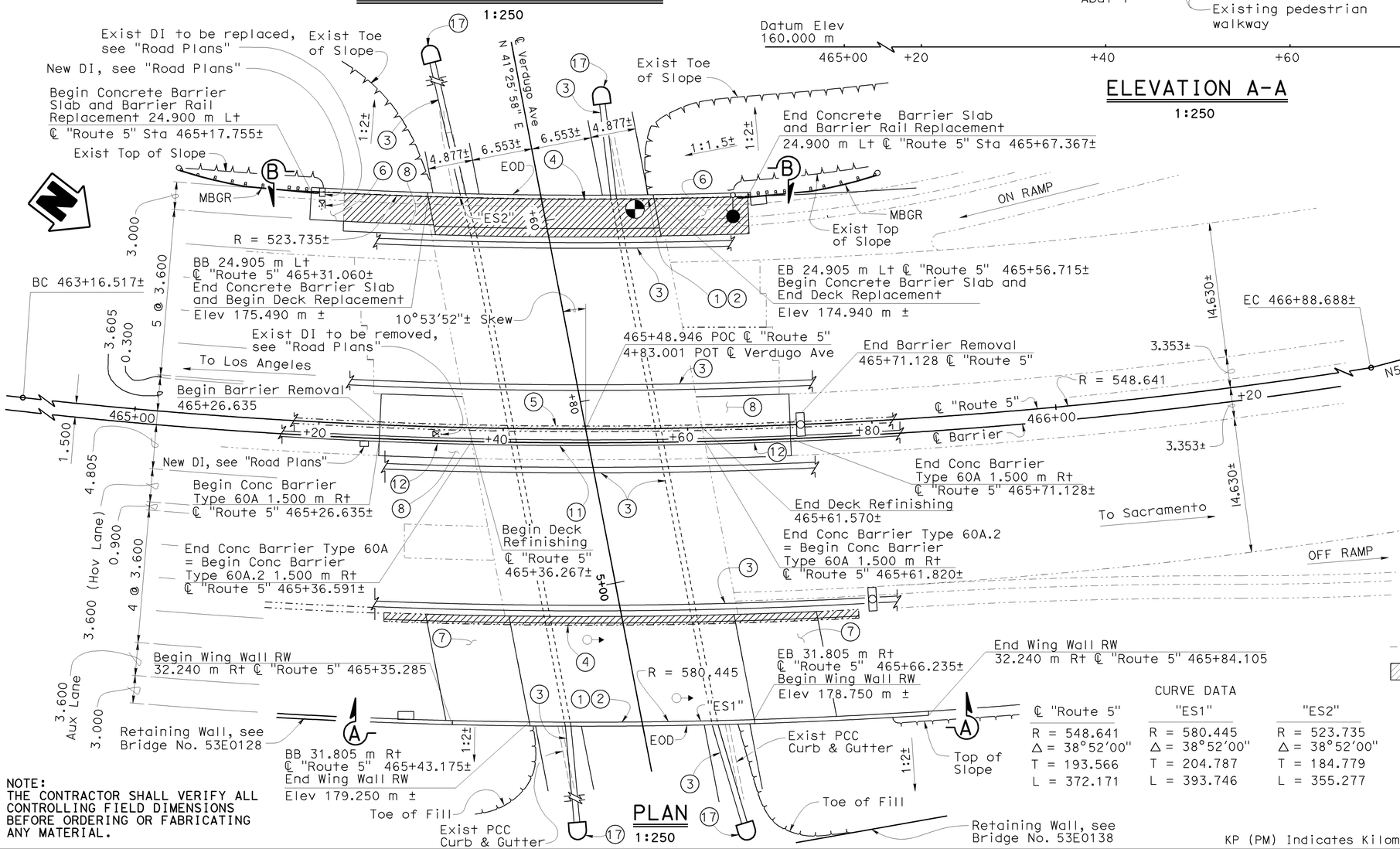

PLAN

1:250

NOTE:
THE CONTRACTOR SHALL VERIFY ALL CONTROLLING FIELD DIMENSIONS BEFORE ORDERING OR FABRICATING ANY MATERIAL.

NOTES:

For "Quantities" see "GENERAL PLAN No. 2" sheet.

For information not shown see "GENERAL PLAN No. 2" sheet.

For "General Notes" and "Index to Plans" see "INDEX TO PLANS" sheet.

LEGEND:

- Indicates Existing Structure
- Indicates Bridge Removal (Portion)
- Indicates Point of Minimum Vertical Clearance
- Indicates Soffit Luminaire (Suspended), see "Road Plans"
- Indicates Electrolier Foundation, see "Road Plans"
- Indicates Pullbox, see "Road Plans"
- Indicates Overhead Sign to be removed, see "Road Plans"

CURVE DATA

℄ "Route 5"	"ES1"	"ES2"
R = 548.641	R = 580.445	R = 523.735
Δ = 38°52'00"	Δ = 38°52'00"	Δ = 38°52'00"
T = 193.566	T = 204.787	T = 184.779
L = 372.171	L = 393.746	L = 355.277

KP (PM) Indicates Kilometer Post (Post Mile)

Caltrans Metric

Traci Menard
DESIGN ENGINEER

	BY	CHECKED
DESIGN	V.Lopez/H.Setberg	Richard Yates
DETAILS	S.Cholda/H.Mauroschadt	Richard Yates
QUANTITIES	Jenny Zhang	James Ralston

LOAD FACTOR DESIGN	LIVE LOADING: HS20-44 AND ALTERNATIVE AND PERMIT DESIGN LOAD		
LAYOUT	BY Hogni Setberg	CHECKED Richard Yates	
SPECIFICATIONS	BY T. Chen	PLANS AND SPECS COMPARED T. Chen	

STATE OF CALIFORNIA
DEPARTMENT OF TRANSPORTATION

DIVISION OF ENGINEERING SERVICES
STRUCTURE DESIGN
DESIGN BRANCH 15

BRIDGE NO. 53-1086
KP (PM) 46.5(28.9)

VERDUGO AVENUE UC WIDEN & RETROFIT

GENERAL PLAN NO. 1

ALL DIMENSIONS ARE IN METERS UNLESS OTHERWISE SHOWN

ORIGINAL SCALE IN MILLIMETERS FOR REDUCED PLANS 0 10 20 30 40 50 60 70 80 90 100

CU 07
EA 121841

DISREGARD PRINTS BEARING EARLIER REVISION DATES

REVISION DATES: 5-1-09 | 9-2-08 | 10-20-08 | 11-14-08 | 11-14-08 | 1-5-09 | 2-2-09 | 2-18-09 | 4-14-09

SHEET 1 OF 39

FILE => 53-1086-a-gp01.dgn

STRUCTURES DESIGN GENERAL PLAN SHEET (METRIC) (REV.03-17-04)

USERNAME => rtrrott1n DATE PLOTTED => 15-JUN-2009 TIME PLOTTED => 07:38

DIST	COUNTY	ROUTE	KILOMETER POST TOTAL PROJECT	SHEET No	TOTAL SHEETS
07	LA	5	42.8/47.3	943	1073

Andrew Rittenhouse 12-05-08
REGISTERED CIVIL ENGINEER DATE

6-8-09
PLANS APPROVAL DATE

REGISTERED PROFESSIONAL ENGINEER Andrew P. Rittenhouse No. 61006 Exp. 12-31-10 CIVIL STATE OF CALIFORNIA

The State of California or its officers or agents shall not be responsible for the accuracy or completeness of electronic copies of this plan sheet.

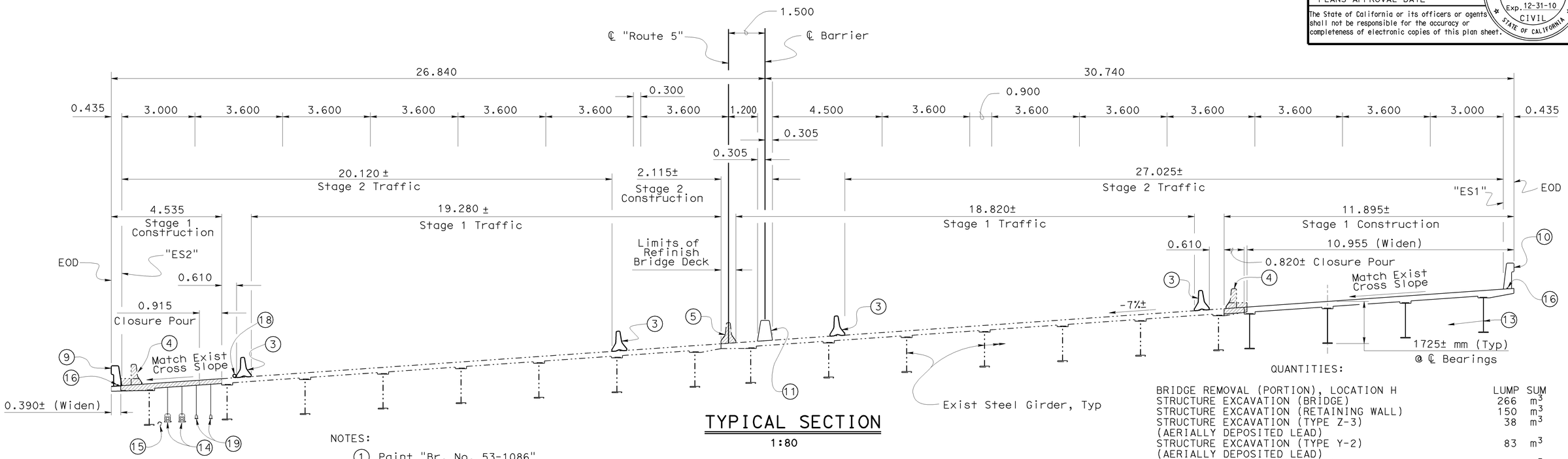

TYPICAL SECTION

1:80

NOTES:

1. Paint "Br. No. 53-1086"
2. Paint "Verdugo Ave UC"
3. Temporary Railing (Type K) (see "Road Plans")
4. Remove existing overhang and Concrete Barrier Type 27RM
5. Remove existing Concrete Barrier Type 50 (Stage 2 Construction)
6. Concrete Barrier Slab
7. Structure Approach Type N(9S)
8. Structure Approach Type R(9S)
9. Concrete Barrier Type 732 (Mod)
10. Concrete Barrier Type 742 (Mod)
11. Concrete Barrier Type 60A.2 (Stage 2 Construction)
12. Concrete Barrier Type 60A (Stage 2 Construction) A76G
13. Built up Steel Girders, Composite with deck
14. New Utility Lines (see "MISCELLANEOUS DETAILS No. 2" Sheet)
15. Exist Utility Line to be removed
16. 53C Conduit in barrier (see "Road Plans")
17. Temporary Crash Cushion (see "Road Plans")
18. Temporary Irrigation (see "Road Plans")
19. 2-91 mm ø Fiber Optic Conduit, (see "MISCELLANEOUS DETAIL No. 2" Sheet)

LEGEND:

Indicates Bridge Removal (Portion)

NOTE:
THE CONTRACTOR SHALL VERIFY ALL CONTROLLING FIELD DIMENSIONS BEFORE ORDERING OR FABRICATING ANY MATERIAL.

QUANTITIES:

	LUMP SUM	
BRIDGE REMOVAL (PORTION), LOCATION H		
STRUCTURE EXCAVATION (BRIDGE)	266	m^3
STRUCTURE EXCAVATION (RETAINING WALL)	150	m^3
STRUCTURE EXCAVATION (TYPE Z-3) (AERIALLY DEPOSITED LEAD)	38	m^3
STRUCTURE EXCAVATION (TYPE Y-2) (AERIALLY DEPOSITED LEAD)	83	m^3
STRUCTURE BACKFILL (BRIDGE)	660	m^3
STRUCTURE BACKFILL (RETAINING WALL)	455	m^3
NPS 3.5 SUPPLY LINE (BRIDGE)	101	m
AGGREGATE BASE (APPROACH SLAB)	4	m^3
600 mm CAST-IN-DRILLED-HOLE CONCRETE PILING	306	m
FURNISH PILING (CLASS 400) (ALTERNATIVE W)	1 126	m
DRIVE PILE (CLASS 400) (ALTERNATIVE W)	97	EA
STRUCTURAL CONCRETE, BRIDGE FOOTING	144	m^3
STRUCTURAL CONCRETE, BRIDGE	354	m^3
STRUCTURAL CONCRETE, RETAINING WALL	203	m^3
STRUCTURAL CONCRETE, BARRIER SLAB	56	m^3
STRUCTURAL CONCRETE, APPROACH SLAB (TYPE N)	63	m^3
STRUCTURAL CONCRETE, APPROACH SLAB (TYPE R)	44	m^3
FRACTURED RIB TEXTURE	180	m^2
DRILL AND BOND DOWEL	200	m
REFINISH BRIDGE DECK	19	m^2
CORE CONCRETE (251 mm - 300 mm)	1	m
JOINT SEAL (MR 25 mm)	33	m
BAR REINFORCING STEEL (BRIDGE)	64 300	kg
BAR REINFORCING STEEL (RETAINING WALL)	12 720	kg
FURNISH STRUCTURAL STEEL (BRIDGE)	42 000	kg
ERECT STRUCTURAL STEEL (BRIDGE)	42 000	kg
ABUTMENT LUMBER BLOCKING	2	m^3
CLEAN AND PAINT STRUCTURAL STEEL	LUMP	SUM
SPOT BLAST CLEAN AND PAINT UNDERCOAT	8	m^2
WORK AREA MONITORING	LUMP	SUM
MISCELLANEOUS METAL (BRIDGE)	3 595	kg
CONCRETE BARRIER (TYPE 60A)	19	m
CONCRETE BARRIER (TYPE 60A.2)	25	m
CONCRETE BARRIER (TYPE 732 MODIFIED)	47	m
CONCRETE BARRIER (TYPE 742 MODIFIED)	50	m

KP (PM) Indicates Kilometer Post (Post Mile)

Caltrans Metric

Traci Menard
DESIGN ENGINEER

	BY	CHECKED			
DESIGN	Victor Lopez/Hogni Setberg	Richard Yates	LOAD FACTOR DESIGN	LIVE LOADING: HS20-44 AND ALTERNATIVE AND PERMIT DESIGN LOAD	
DETAILS	S. Cholda/H. Mauroschadt	Richard Yates	LAYOUT	Hogni Setberg	Richard Yates
QUANTITIES	Jenny Zhang	James Ralston	SPECIFICATIONS	T. Chen	PLANS AND SPECS COMPARED T. Chen

ALL DIMENSIONS ARE IN METERS UNLESS OTHERWISE SHOWN

ORIGINAL SCALE IN MILLIMETERS FOR REDUCED PLANS 0 10 20 30 40 50 60 70 80 90 100

STATE OF CALIFORNIA
DEPARTMENT OF TRANSPORTATION

DIVISION OF ENGINEERING SERVICES
STRUCTURE DESIGN
DESIGN BRANCH 15

CU 07
EA 121841

BRIDGE NO. 53-1086
KP (PM) 46.5(28.9)

VERDUGO AVENUE UC WIDEN & RETROFIT

GENERAL PLAN NO. 2

DISREGARD PRINTS BEARING EARLIER REVISION DATES

REVISION DATES: 3-30-09 | 1-2-08 | 11-13-08 | 1-8-09 | 1-23-09 | 2-2-09 | 2-10-09 | 2-13-09 | 3-2-09

SHEET 2 OF 39

STRUCTURES DESIGN GENERAL PLAN SHEET (METRIC) (REV.03-17-04)

FILE => 53-1086-a-gp02r.dgn

USERNAME => ttmcrtin DATE PLOTTED => 15-JUN-2009 TIME PLOTTED => 07:38

DIST	COUNTY	ROUTE	KILOMETER POST TOTAL PROJECT	SHEET No	TOTAL SHEETS
07	LA	5	42.8/47.3	944	1073

Andrew Rittenhouse 12-05-08
REGISTERED CIVIL ENGINEER DATE

6-8-09
PLANS APPROVAL DATE

REGISTERED PROFESSIONAL ENGINEER Andrew P. Rittenhouse No. 61006 Exp. 12-31-10 CIVIL STATE OF CALIFORNIA

The State of California or its officers or agents shall not be responsible for the accuracy or completeness of electronic copies of this plan sheet.

INDEX TO PLANS

SHEET No.	TITLE
1	GENERAL PLAN No. 1
2	GENERAL PLAN No. 2
3	INDEX TO PLANS
4	EXCAVATION
5	FOUNDATION PLAN
6	ABUTMENT 1 LAYOUT
7	ABUTMENT 2 LAYOUT
8	ABUTMENT FOOTING DETAILS No. 1
9	ABUTMENT FOOTING DETAILS No. 2
10	ABUTMENT DETAILS No. 1
11	ABUTMENT DETAILS No. 2
12	ABUTMENT DETAILS No. 3
13	ABUTMENT DETAILS No. 4
14	ABUTMENT DETAILS No. 5
15	ABUTMENT DETAILS No. 6
16	RETAINING WALL DETAILS No. 1
17	RETAINING WALL DETAILS No. 2
18	BARRIER SLAB DETAILS No. 1
19	BARRIER SLAB DETAILS No. 2
20	BARRIER SLAB DETAILS No. 3
21	BARRIER SLAB DETAILS No. 4
22	ABUTMENT RETROFIT DETAILS No. 1
23	ABUTMENT RETROFIT DETAILS No. 2
24	ABUTMENT RETROFIT DETAILS No. 3
25	ABUTMENT RETROFIT DETAILS No. 4
26	TYPICAL SECTION No. 1
27	TYPICAL SECTION No. 2
28	GIRDER LAYOUT
29	GIRDER DETAILS No. 1
30	GIRDER DETAILS No. 2
31	MISCELLANEOUS DETAILS No. 1
32	MISCELLANEOUS DETAILS No. 2
33	ARCHITECTURAL DETAILS
34	BARRIER-CONCRETE TYPE 60A AND 60SA MODIFIED
35	STRUCTURE APPROACH TYPE N(9S)
36	STRUCTURE APPROACH TYPE R(9S)
37	STRUCTURE APPROACH DRAINAGE DETAILS
38	LOG OF TEST BORINGS 1 OF 2
39	LOG OF TEST BORINGS 2 OF 2

STANDARD PLANS DATED JULY 2004

	A10A	ACRONYMS AND ABBREVIATIONS (A-L)
	A10B	ACRONYMS AND ABBREVIATIONS (M-Z)
	A62C	LIMITS OF PAYMENT FOR EXCAVATION AND BACKFILL BRIDGE
	A76G	CONCRETE BARRIER TYPE 60S
	T3	TEMPORARY RAILING (TYPE K)
	B0-1	BRIDGE DETAILS
	B0-3	BRIDGE DETAILS
	B0-5	BRIDGE DETAILS
	B2-3	400 mm AND 600 mm CAST-IN-DRILLED-HOLE CONCRETE PILE
	B2-5	PILE DETAILS CLASS 400 AND CLASS 625
	B3-1	RETAINING WALL TYPE 1 H=1200 THROUGH 9100 mm
	B3-2	RETAINING WALL TYPE 1 H=9700 THROUGH 10 900 mm
	B6-10	UTILITY OPENINGS T-BEAM
RSP	B6-21	JOINT SEALS (MAXIMUM MOVEMENT RATING = 50 mm)
	B11-55	CONCRETE BARRIER TYPE 732
	B11-57	CONCRETE BARRIER TYPE 742
	B14-4	WATER SUPPLY LINE (BRIDGE) (PIPE SIZES LESS THAN NPS 4)
	B14-5	WATER SUPPLY LINE (DETAILS) (PIPE SIZES LESS THAN NPS 4)

STANDARD PLAN SHEET No.

DETAIL No.

PILE DATA TABLE

LOCATION	PILE TYPE	ALT	DESIGN LOADING	NOMINAL RESISTANCE COMPRESSION	NOMINAL RESISTANCE TENSION	DESIGN TIP ELEVATION	SPECIFIED TIP ELEVATION
Abutment 1	Class 400	W	400 kN	800 kN	400 kN	157.1 m (1) 162.0 m (2)	157.1 m
Abutment 2	600 mm CIDH	N/A	N/A	1500 kN	500 kN	153.4 m (1) 159.2 m (2)	153.4 m
Retaining Wall @ Abutment 1	Class 400	W	400 kN	800 kN	400 kN	157.1 m (1) 162.0 m (2)	157.1 m
Retaining Wall @ Abutment 2	Class 400	W	400 kN	800 kN	400 kN	157.1 m (1) 162.0 m (2)	157.1 m

Design tip elevations are controlled by the following demands:
(1) Compression (2) Tension

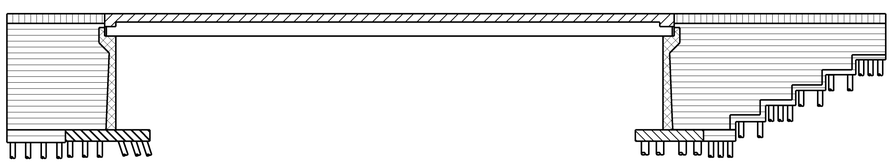

Structural Concrete, Retaining Wall

Structural Concrete, Bridge

Structural Concrete, Bridge Footing

Structural Concrete, Bridge 28 MPa @ 28 days

Structural Concrete, Barrier Slab 28 MPa @ 28 days

Structural Steel

CONCRETE STRENGTH AND TYPE LIMITS

No Scale

NOTE:
THE CONTRACTOR SHALL VERIFY ALL CONTROLLING FIELD DIMENSIONS BEFORE ORDERING OR FABRICATING ANY MATERIAL.

GENERAL NOTES
LOAD FACTOR DESIGN

DESIGN: BRIDGE DESIGN SPECIFICATIONS (1996 AASHTO with Interims and Revisions by CALTRANS)

SEISMIC DESIGN: Caltrans Seismic Design Criteria (SDC), Version 1.4 June 2006

DEAD LOAD: Includes 1.675 KPa for future wearing surface. The deck dead load between the girders has been increased by a factor of 10% to allow for the use of steel deck forms.

LIVE LOADING: HS20-44, Alternative Military and Permit design load.

SEISMIC LOADING: Site Specific Acceleration Response Spectra Curve

STRUCTURAL STEEL: f_y = 345 MPa (ASTM A709M Grade 345)

ANCHOR RODS: All Anchor Rods shall be ASTM F1554 f_y = 725 MPa

HS BOLTS: All ASTM A490 Bolts shall be f_y = 896 MPa
All threads excluded from shear plane

REINFORCED CONCRETE: f_y = 420 MPa, f'_c = 25 MPa & 28 MPa, n = 8

Transverse Deck Slabs (Working Stress Design): f_s = 138 MPa, f_c = 8.3 MPa, n = 10

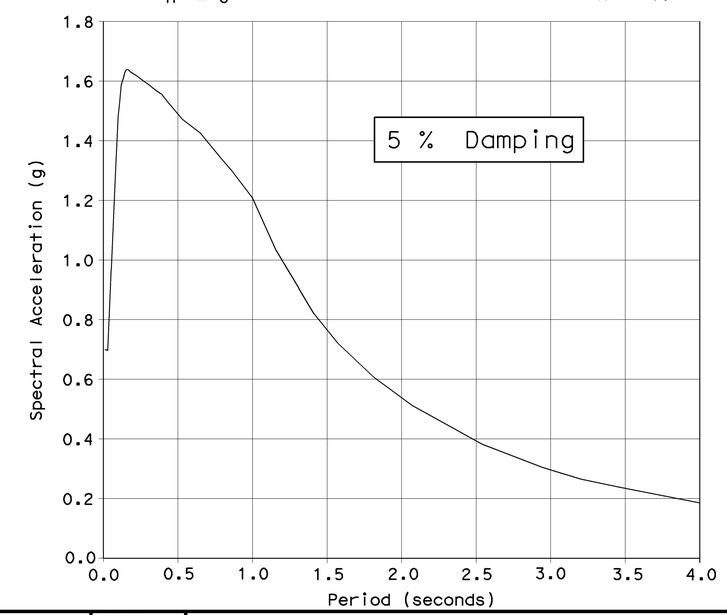

Caltrans Metric

	BY	CHECKED
DESIGN	Hogni Setberg	Richard Yates
DETAILS	Herman Mauroschadt	Richard Yates
QUANTITIES	Jenny Zhang	James Ralston

STATE OF CALIFORNIA
DEPARTMENT OF TRANSPORTATION

DIVISION OF ENGINEERING SERVICES
STRUCTURE DESIGN
DESIGN BRANCH 15

BRIDGE NO. 53-1086
KILOMETER POST 46.5

VERDUGO AVENUE UC WIDEN & RETROFIT
INDEX TO PLANS

ALL DIMENSIONS ARE IN MILLIMETERS UNLESS OTHERWISE SHOWN

ORIGINAL SCALE IN MILLIMETERS FOR REDUCED PLANS 0 10 20 30 40 50 60 70 80 90 100

CU 07
EA 121841

DISREGARD PRINTS BEARING EARLIER REVISION DATES

REVISION DATES: 1-25-09 1-29-09 2-13-09 2-27-09 3-25-09 7-2-08 11-13-08 1-2-09 1-16-09

SHEET 3 OF 39

STRUCTURES DESIGN DETAIL SHEET (METRIC) (REV.03-17-04)

FILE => 53-1086-a-itp.dgn

USERNAME => rtrrott1n DATE PLOTTED => 15-JUN-2009 TIME PLOTTED => 07:38

DIST	COUNTY	ROUTE	KILOMETER POST TOTAL PROJECT	SHEET No	TOTAL SHEETS
07	LA	5	42.8/47.3	945	1073

Andrew Rittenhouse 12-05-08
REGISTERED CIVIL ENGINEER DATE

6-8-09
PLANS APPROVAL DATE

REGISTERED PROFESSIONAL ENGINEER
Andrew P. Rittenhouse
No. 61006
Exp. 12-31-10
CIVIL
STATE OF CALIFORNIA

The State of California or its officers or agents shall not be responsible for the accuracy or completeness of electronic copies of this plan sheet.

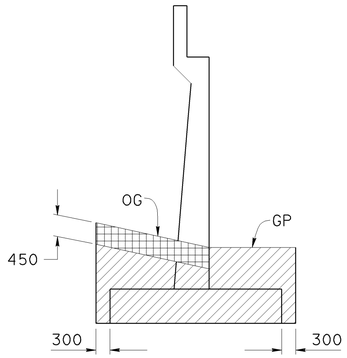

ABUTMENT 1
No Scale

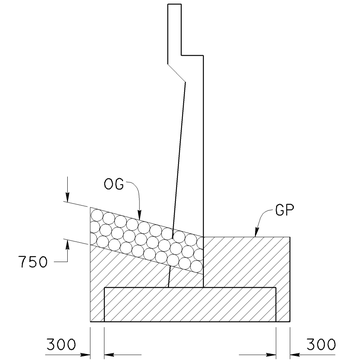

ABUTMENT 2
No Scale

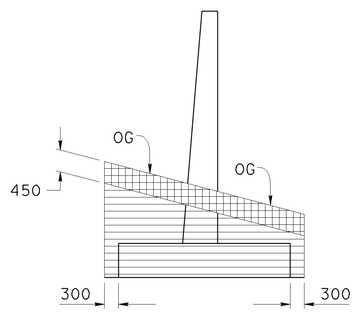

RETAINING WALL AT ABUTMENT 1
No Scale

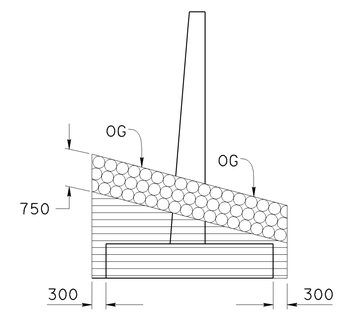

RETAINING WALL AT ABUTMENT 2
No Scale

Structure Excavation (Bridge)

Structure Excavation (Retaining Wall)

Structure Excavation (Type Y-2)
(Aerially Deposited lead)

Structure Excavation (Type Z-3)
(Aerially Deposited lead)

NOTE:
THE CONTRACTOR SHALL VERIFY ALL CONTROLLING FIELD DIMENSIONS BEFORE ORDERING OR FABRICATING ANY MATERIAL.

For backfill, see A62C

Caltrans Metric

	BY	CHECKED
DESIGN	Hogni Setberg	Richard Yates
DETAILS	Herman Mauroschadt	Richard Yates
QUANTITIES	Jenny Zhang	James Ralston

STATE OF CALIFORNIA
DEPARTMENT OF TRANSPORTATION

DIVISION OF ENGINEERING SERVICES
STRUCTURE DESIGN
DESIGN BRANCH 15

BRIDGE NO. 53-1086
KILOMETER POST 46.5

VERDUGO AVENUE UC WIDEN & RETROFIT
EXCAVATION

ALL DIMENSIONS ARE IN MILLIMETERS UNLESS OTHERWISE SHOWN

ORIGINAL SCALE IN MILLIMETERS FOR REDUCED PLANS 0 10 20 30 40 50 60 70 80 90 100

CU 07
EA 121841

DISREGARD PRINTS BEARING EARLIER REVISION DATES → 4-5-07 11-24-08 3-25-09

REVISION DATES

SHEET 4 OF 39

FILE => 53-1086-a-x-excavbkfl.dgn

STRUCTURES DESIGN DETAIL SHEET (METRIC) (REV.03-17-04)

USERNAME => trmikesl DATE PLOTTED => 15-JUN-2009 TIME PLOTTED => 07:32

DIST	COUNTY	ROUTE	KILOMETER POST TOTAL PROJECT	SHEET No	TOTAL SHEETS
07	LA	5	42.8/47.3	946	1073

Caltrans Metric

Andrew Rittenhouse 12-05-08
REGISTERED CIVIL ENGINEER DATE

6-8-09
PLANS APPROVAL DATE

REGISTERED PROFESSIONAL ENGINEER Andrew P. Rittenhouse No. 61006 Exp. 12-31-10 CIVIL STATE OF CALIFORNIA

The State of California or its officers or agents shall not be responsible for the accuracy or completeness of electronic copies of this plan sheet.

CURVE DATA				
No.	R	Δ	T	L
1	548.641	38°51'60"	193.566	372.171

(A) 465+48.946 ℄ "ROUTE 5" = 4+83.001 ℄ VERDUGO AVE.

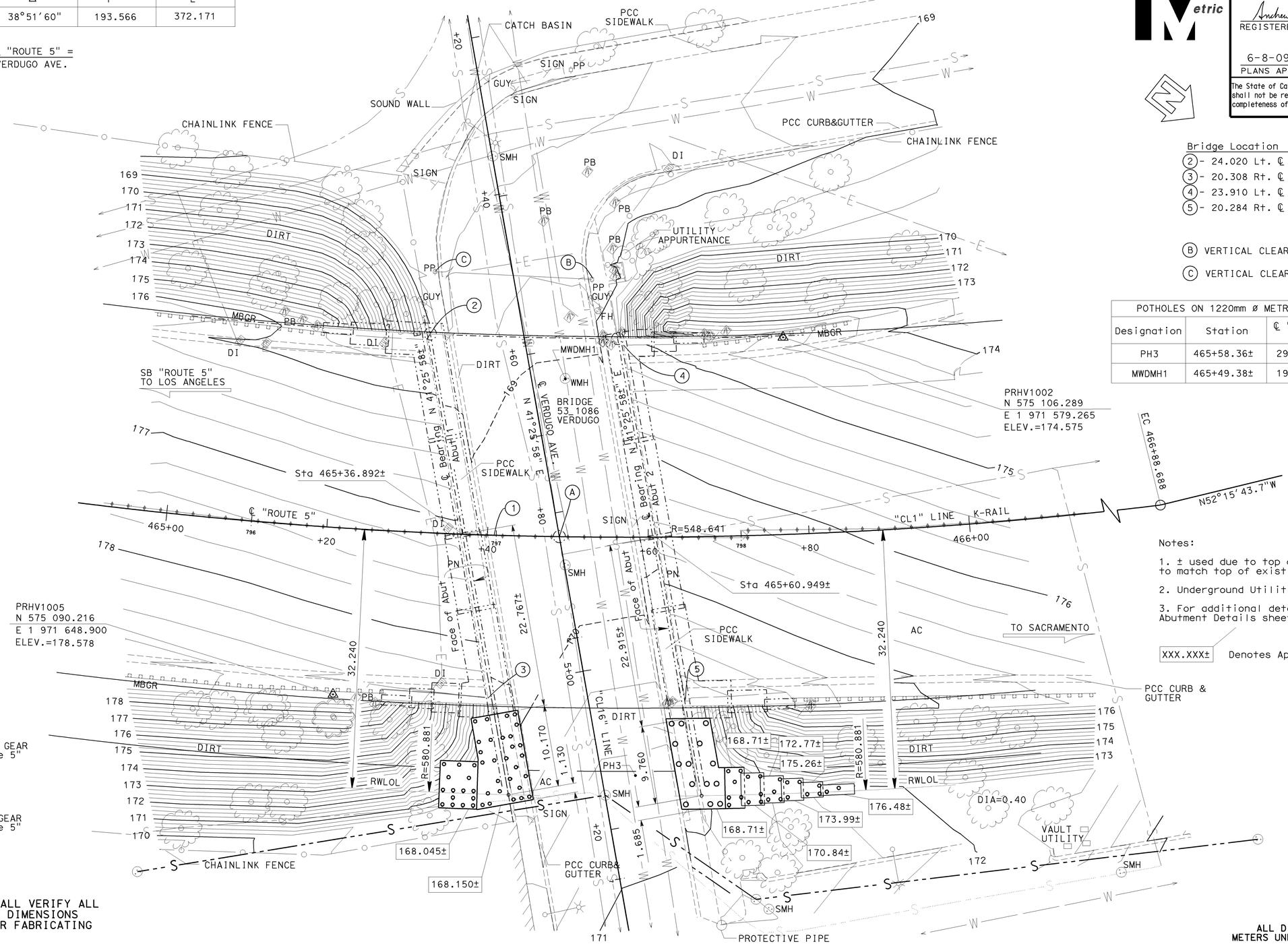

Bridge Location

(2) - 24.020 Lt. ℄ RTE5, Sta.465+31.287, Elev.=175.549 ±
(3) - 20.308 Rt. ℄ RTE5, Sta.465+40.679, Elev.=178.482 ±
(4) - 23.910 Lt. ℄ RTE5, Sta.465+56.887, Elev.=175.009 ±
(5) - 20.284 Rt. ℄ RTE5, Sta.465+64.372, Elev.=177.971 ±

(B) VERTICAL CLEARANCE = 10.185

(C) VERTICAL CLEARANCE = 10.185

POTHOLES ON 1220mm ø METROPOLITAN WATER DISTRICT UTILITY				
Designation	Station	℄ "Route 5" Offset	OG Elevation	Top of Pipe Elevation
PH3	465+58.36±	29.65± Rt	170.61±	168.17±
MWDMH1	465+49.38±	19.64± Lt	169.08±	166.82±

Notes:

1. ± used due to top of new abutment footing to match top of exist abutment footing.
2. Underground Utilities as shown are approximate
3. For additional details, see Abutment Layout and Abutment Details sheets.

XXX.XXX± Denotes Approximate Bottom Footing Elevation

SURVEY CONTROL

PRHV1005
Fnd CONTROL POINT GEAR
20.743 Rt. ℄ "Route 5"
Sta. 465+22.096
N 575 090.216
E 1 971 648.900
Elev. = 178.578

PRHV1002
Fnd CONTROLPOINT GEAR
24.519 Lt. ℄ "Route 5"
Sta. 465+77.664
N 575 106.289
E 1 971 579.265
Elev. = 174.575

NOTE:
THE CONTRACTOR SHALL VERIFY ALL CONTROLLING FIELD DIMENSIONS BEFORE ORDERING OR FABRICATING ANY MATERIAL.

ALL DIMENSIONS ARE IN METERS UNLESS OTHERWISE SHOWN

PRELIMINARY INVESTIGATION SECTION

SCALE	VERT. DATUM NAVD 88	PHOTOGRAMMETRY AS OF:			
1:250	HORZ. DATUM NAD 83	SURVEYED	BY H. REDERER 2-04	DRAFTED	BY M. SADAGHIANI 9-04
ALIGNMENT TIES DIST. TRAV. SHEETS		FIELD CHECKED	BY	CHECKED	BY

	BY	CHECKED
DESIGN	Hogni Setberg	Richard Yates
DETAILS	Herman Mauroschadt	Richard Yates
QUANTITIES	Jenny Zhang	James Ralston

STATE OF CALIFORNIA
DEPARTMENT OF TRANSPORTATION

DIVISION OF STRUCTURES
STRUCTURE DESIGN 15

BRIDGE NO. 53-1086
KILOMETER POST 46.5

VERDUGO AVENUE UC WIDEN & RETROFIT
FOUNDATION PLAN

STRUCTURES FOUNDATION PLAN SHEET (METRIC) (REV.12-1-01)

ORIGINAL SCALE IN MILLIMETERS FOR REDUCED PLANS 0 10 20 30 40 50 60 70 80 90 100

CU 07
EA 121841

DISREGARD PRINTS BEARING EARLIER REVISION DATES

REVISION DATES (PRELIMINARY STAGE ONLY) 5-29-07 9-27-07 1-14-08 6-11-08 10-16-08 11-14-08 12-19-08 6-11-09

SHEET 5 OF 39

FILE => 53-1086-b-fp1.dgn

USERNAME => trmikesl DATE PLOTTED => 15-JUN-2009 TIME PLOTTED => 13:21

DIST	COUNTY	ROUTE	KILOMETER POST TOTAL PROJECT	SHEET No	TOTAL SHEETS
07	LA	5	42.8/47.3	947	1073

Andrew Rittenhouse 12-05-08
REGISTERED CIVIL ENGINEER DATE

6-8-09
PLANS APPROVAL DATE

REGISTERED PROFESSIONAL ENGINEER Andrew P. Rittenhouse No. 61006 Exp. 12-31-10 CIVIL STATE OF CALIFORNIA

The State of California or its officers or agents shall not be responsible for the accuracy or completeness of electronic copies of this plan sheet.

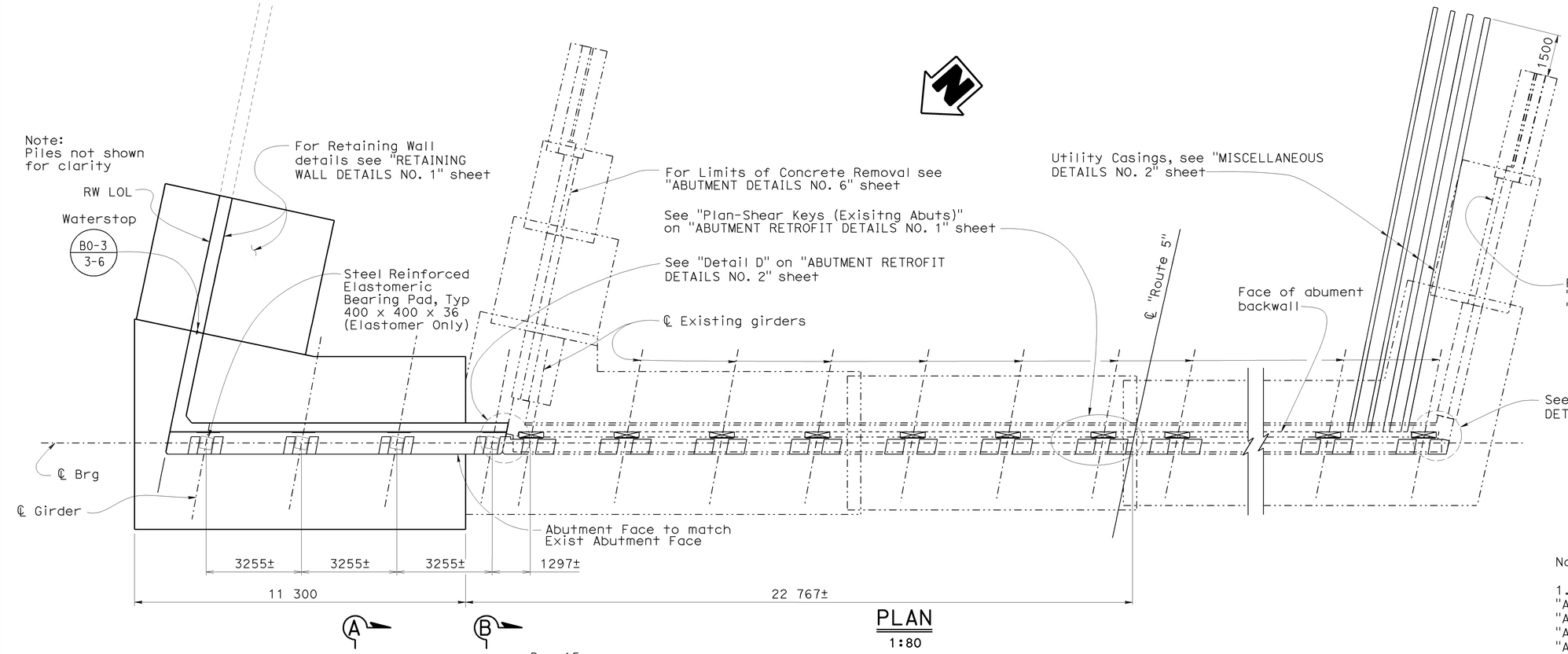

PLAN
1:80

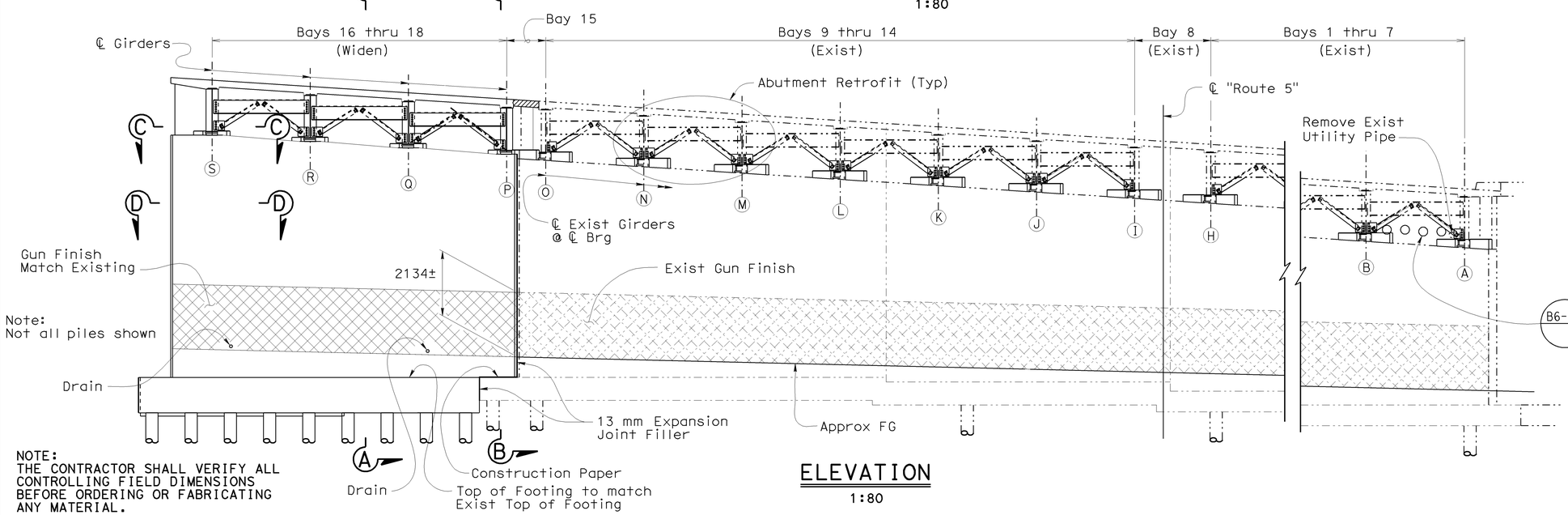

ELEVATION
1:80

Notes:

1. For Abutment Retrofit Details see "ABUTMENT RETROFIT DETAILS NO. 1", "ABUTMENT RETROFIT DETAILS NO. 2", "ABUTMENT RETROFIT DETAILS NO. 3" and "ABUTMENT RETROFIT DETAILS NO. 4" sheets.

2. For End Diaphragm Details see "MISCELLANEOUS DETAILS NO. 1" sheet.

3. For "Section A-A" and "Section B-B" see ABUTMENT DETAILS NO. 1" sheet.
For "Section C-C" and "Section D-D" see ABUTMENT DETAILS NO. 3" sheet.

B6-10 Core 300 ø hole through exist Backwall (Tot 4)

Note: For details not shown see "TYPICAL SECTION NO. 2" and "MISCELLANEOUS DETAILS NO. 2" sheets

NOTE:
THE CONTRACTOR SHALL VERIFY ALL CONTROLLING FIELD DIMENSIONS BEFORE ORDERING OR FABRICATING ANY MATERIAL.

○ Indicates Girder Designation

Caltrans Metric

	BY	CHECKED
DESIGN	Hogni Setberg	Richard Yates
DETAILS	Herman Mauroschadt	Richard Yates
QUANTITIES	Jenny Zhang	James Ralston

STATE OF CALIFORNIA
DEPARTMENT OF TRANSPORTATION

DIVISION OF ENGINEERING SERVICES
STRUCTURE DESIGN
DESIGN BRANCH 15

BRIDGE NO. 53-1086
KILOMETER POST 46.5

VERDUGO AVENUE UC WIDEN & RETROFIT
ABUTMENT 1 LAYOUT

ALL DIMENSIONS ARE IN MILLIMETERS UNLESS OTHERWISE SHOWN

ORIGINAL SCALE IN MILLIMETERS FOR REDUCED PLANS 0 10 20 30 40 50 60 70 80 90 100

CU 07
EA 121841

DISREGARD PRINTS BEARING EARLIER REVISION DATES

REVISION DATES: 5-10-06 5-12-06 3-16-07 6-3-07 11-8-07 1-14-08 11-24-08 1-8-09 5-2-09

SHEET 6 OF 39

FILE => 53-1086-f-ab-1o1.dgn

STRUCTURES DESIGN DETAIL SHEET (METRIC) (REV.03-17-04)

USERNAME => trmikest DATE PLOTTED => 15-JUN-2009 TIME PLOTTED => 07:32

DIST	COUNTY	ROUTE	KILOMETER POST TOTAL PROJECT	SHEET No	TOTAL SHEETS
07	LA	5	42.8/47.3	948	1073

Andrew Rittenhouse 12-05-08
REGISTERED CIVIL ENGINEER DATE

6-8-09
PLANS APPROVAL DATE

REGISTERED PROFESSIONAL ENGINEER Andrew P. Rittenhouse No. 61006 Exp. 12-31-10 CIVIL STATE OF CALIFORNIA

The State of California or its officers or agents shall not be responsible for the accuracy or completeness of electronic copies of this plan sheet.

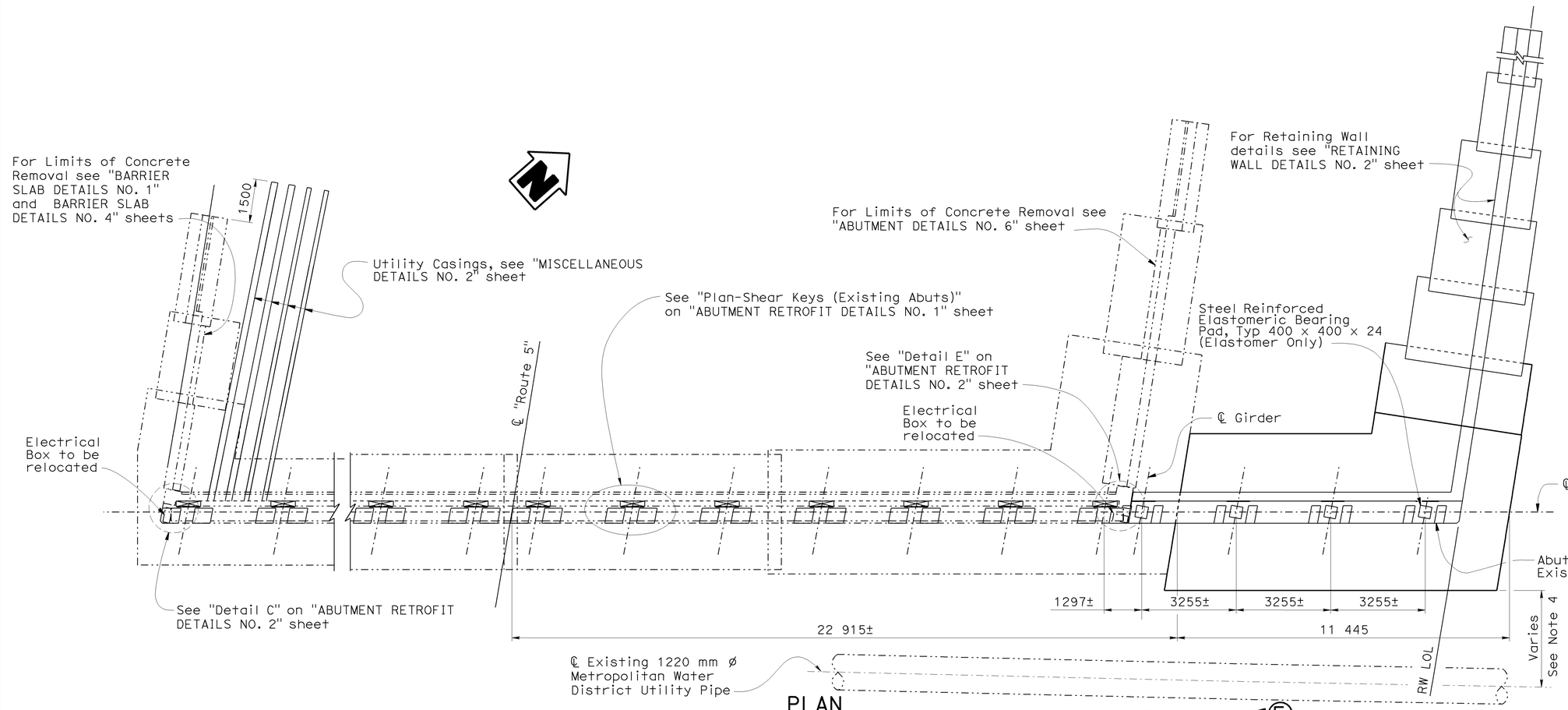

PLAN
1:80

Note:
Piles not shown for clarity

Note:
For details not shown see "TYPICAL SECTION NO. 2" and "MISCELLANEOUS DETAILS NO. 2" sheets

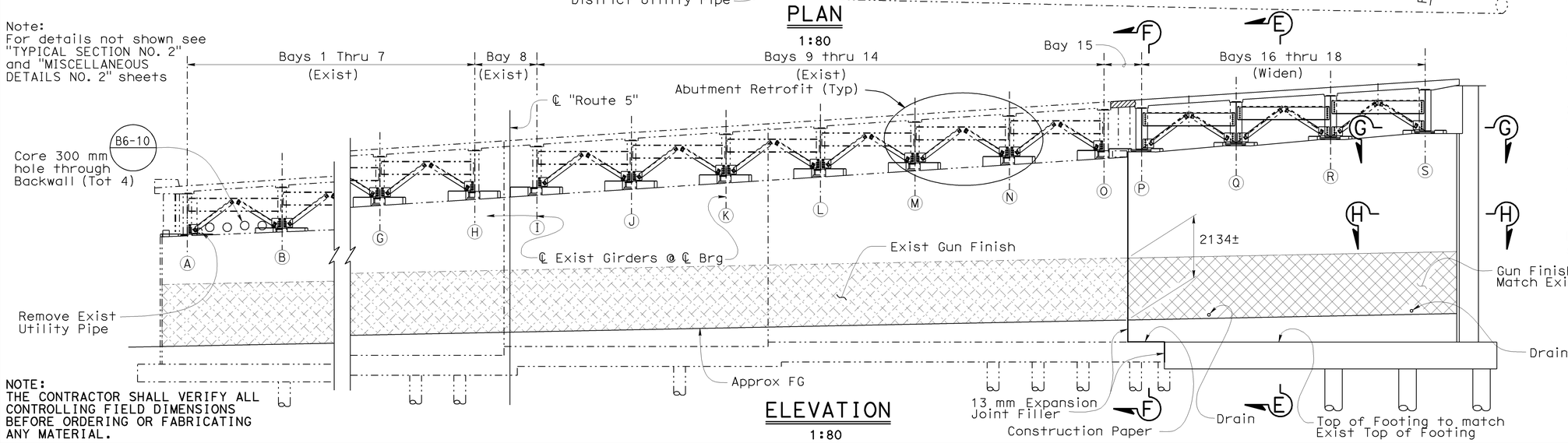

ELEVATION
1:80

Notes:

1. For Abutment Retrofit Details see "ABUTMENT RETROFIT DETAILS NO. 1", "ABUTMENT RETROFIT DETAILS NO. 2", "ABUTMENT RETROFIT DETAILS NO. 3" and "ABUTMENT RETROFIT DETAILS NO. 4" sheets.

2. For End Diaphragm Details see "MISCELLANEOUS DETAILS NO. 1" sheet.

3. For "Section E-E" and "Section F-F" see ABUTMENT DETAILS NO. 2" sheet. For "Section G-G" and "Section H-H" see "ABUTMENT DETAILS NO. 3" sheet.

4. For location of Existing 1220mm ø Metropolitan Water District Utility Pipe see "ABUTMENT FOOTING DETAILS NO. 1" sheet.

Note:
Not all piles shown

◯ Indicates Girder Designation

NOTE:
THE CONTRACTOR SHALL VERIFY ALL CONTROLLING FIELD DIMENSIONS BEFORE ORDERING OR FABRICATING ANY MATERIAL.

Caltrans Metric

	BY	CHECKED
DESIGN	Hogni Setberg	Richard Yates/James Ralston
DETAILS	H Mauroschadt	Richard Yates/James Ralston
QUANTITIES	Jenny Zhang	James Ralston

STATE OF CALIFORNIA
DEPARTMENT OF TRANSPORTATION

DIVISION OF ENGINEERING SERVICES
STRUCTURE DESIGN
DESIGN BRANCH 15

BRIDGE NO. 53-1086
KILOMETER POST 46.5

VERDUGO AVENUE UC WIDEN & RETROFIT
ABUTMENT 2 LAYOUT

ALL DIMENSIONS ARE IN MILLIMETERS UNLESS OTHERWISE SHOWN

ORIGINAL SCALE IN MILLIMETERS FOR REDUCED PLANS 0 10 20 30 40 50 60 70 80 90 100

CU 07
EA 121841

DISREGARD PRINTS BEARING EARLIER REVISION DATES

REVISION DATES: 3-2-09 | 3-16-07 | 4-3-07 | 11-8-07 | 1-14-08 | 6-12-08 | 10-31-08 | 11-24-08 | 3-8-09

SHEET 7 OF 39

FILE => 53-1086-f-ab-1o2.dgn

STRUCTURES DESIGN DETAIL SHEET (METRIC) (REV.03-17-04)

USERNAME => rtmirkes1 DATE PLOTTED => 15-JUN-2009 TIME PLOTTED => 07:33

DIST	COUNTY	ROUTE	KILOMETER POST TOTAL PROJECT	SHEET No	TOTAL SHEETS
07	LA	5	42.8/47.3	949	1073

Andrew Rittenhouse 12-05-08
REGISTERED CIVIL ENGINEER DATE

6-8-09
PLANS APPROVAL DATE

REGISTERED PROFESSIONAL ENGINEER
Andrew P. Rittenhouse
No. 61006
Exp. 12-31-10
CIVIL
STATE OF CALIFORNIA

The State of California or its officers or agents shall not be responsible for the accuracy or completeness of electronic copies of this plan sheet.

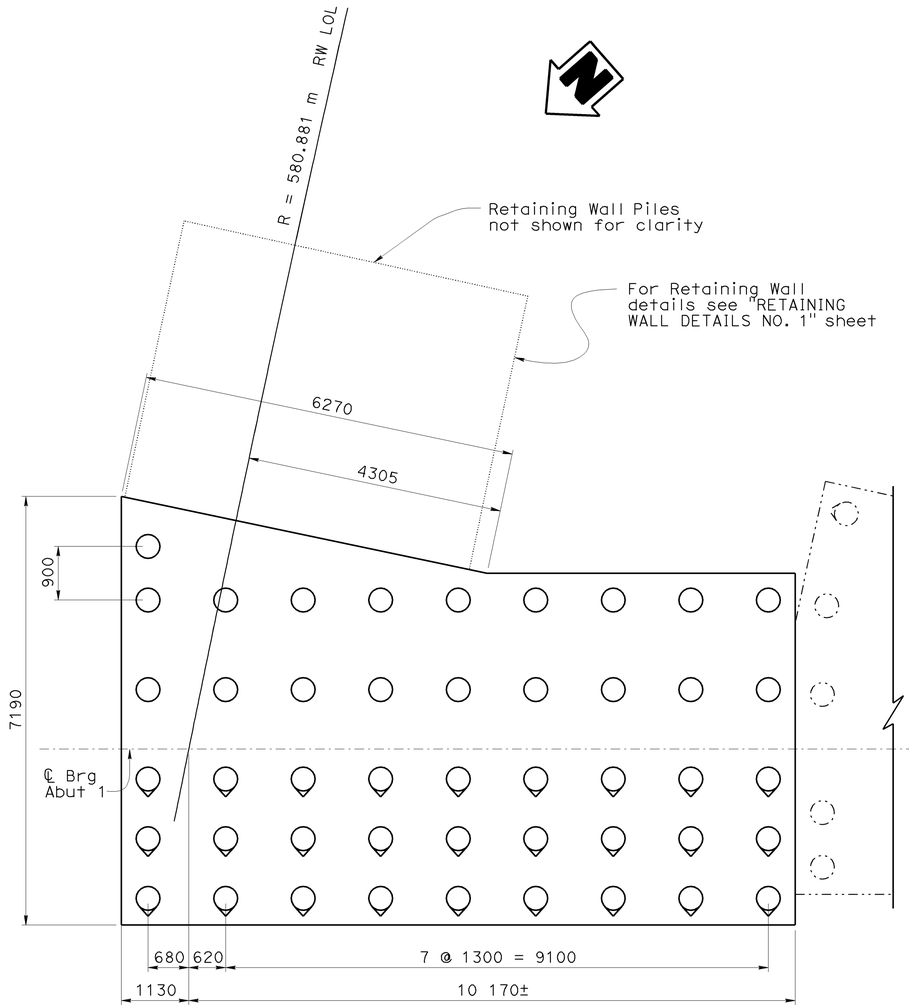

ABUTMENT 1 PLAN

1:50

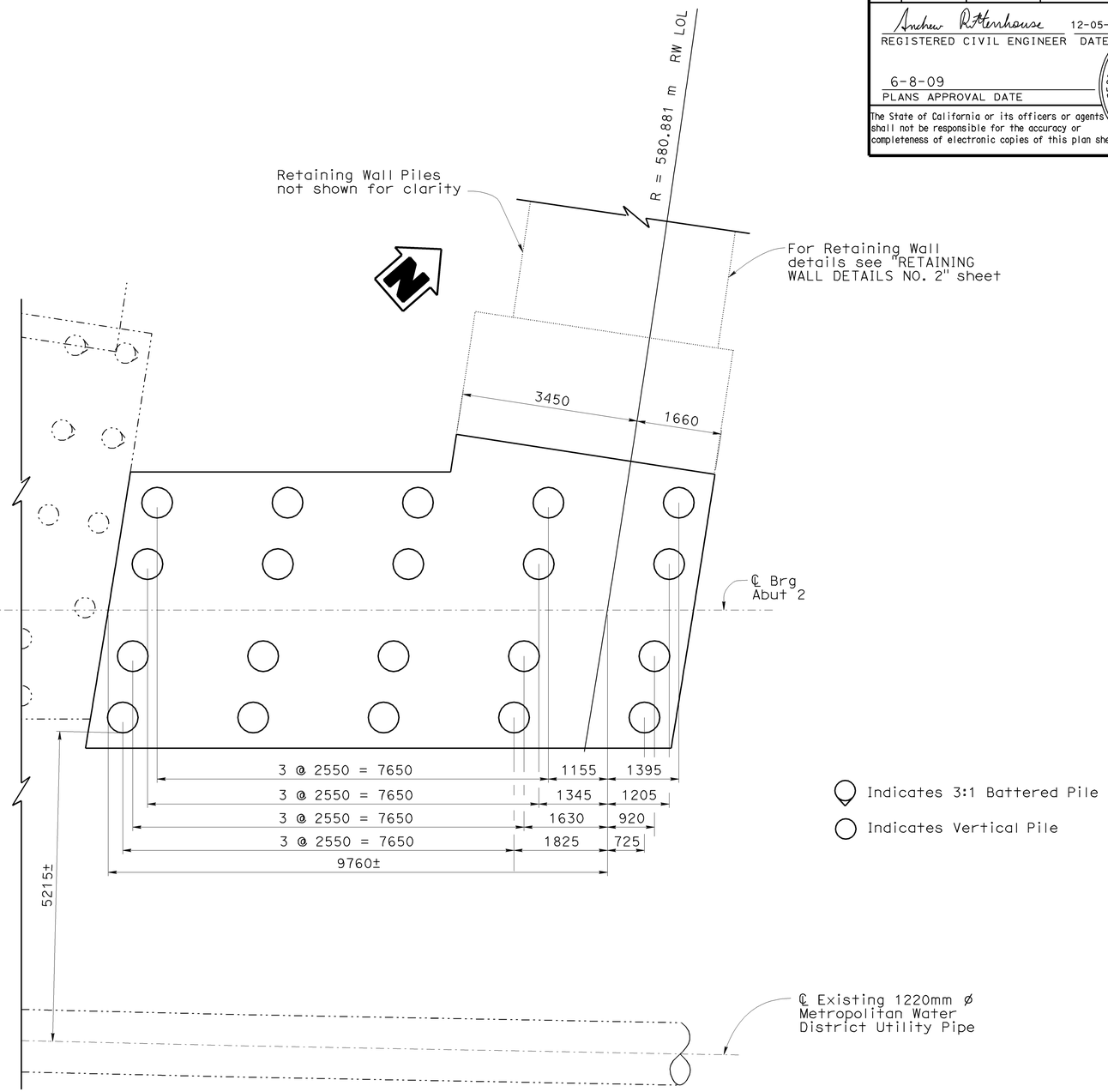

ABUTMENT 2 PLAN

1:50

NOTE:
THE CONTRACTOR SHALL VERIFY ALL CONTROLLING FIELD DIMENSIONS BEFORE ORDERING OR FABRICATING ANY MATERIAL.

Caltrans Metric

	BY	CHECKED
DESIGN	Hogni Setberg	Richard Yates/James Ralston
DETAILS	H Mauroschadt	Richard Yates/James Ralston
QUANTITIES	Jenny Zhang	James Ralston

STATE OF CALIFORNIA
DEPARTMENT OF TRANSPORTATION

DIVISION OF ENGINEERING SERVICES
STRUCTURE DESIGN
DESIGN BRANCH 15

BRIDGE NO. 53-1086
KILOMETER POST 46.5

VERDUGO AVENUE UC WIDEN & RETROFIT
ABUTMENT FOOTING DETAILS NO. 1

ALL DIMENSIONS ARE IN MILLIMETERS UNLESS OTHERWISE SHOWN

ORIGINAL SCALE IN MILLIMETERS FOR REDUCED PLANS 0 10 20 30 40 50 60 70 80 90 100

CU 07
EA 121841

DISREGARD PRINTS BEARING EARLIER REVISION DATES

REVISION DATES: 7-15-06 2/13/07 3-15-07 1-14-08 2-3-08 6-12-08 7-8-08 10-31-08 11-24-08

SHEET 8 OF 39

FILE => 53-1086-g-fd01.dgn

STRUCTURES DESIGN DETAIL SHEET (METRIC) (REV.03-17-04)

USERNAME => rtmrkes1 DATE PLOTTED => 15-JUN-2009 TIME PLOTTED => 07:33

DIST	COUNTY	ROUTE	KILOMETER POST TOTAL PROJECT	SHEET No	TOTAL SHEETS
07	LA	5	42.8/47.3	950	1073

Andrew Rittenhouse 12-05-08
REGISTERED CIVIL ENGINEER DATE

6-8-09
PLANS APPROVAL DATE

REGISTERED PROFESSIONAL ENGINEER
Andrew P. Rittenhouse
No. 61006
Exp. 12-31-10
CIVIL
STATE OF CALIFORNIA

The State of California or its officers or agents shall not be responsible for the accuracy or completeness of electronic copies of this plan sheet.

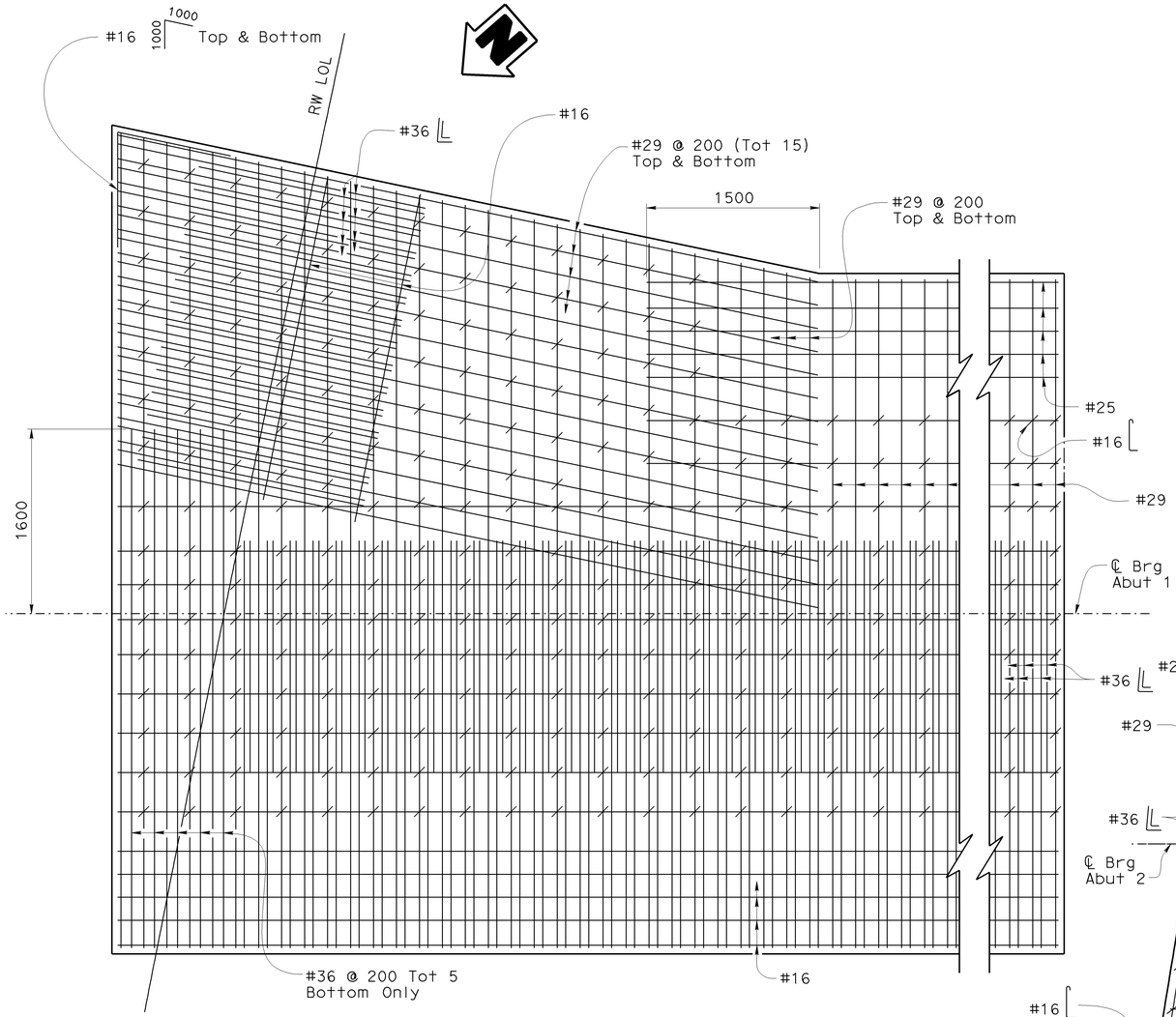

Notes:

Piles not shown for clarity

For details not shown see "ABUTMENT DETAILS NO. 1", "ABUTMENT DETAILS NO. 3" and "RETAINING WALL DETAILS NO. 1" sheets.

ABUTMENT 1 FOOTING CORNER DETAIL

1:25

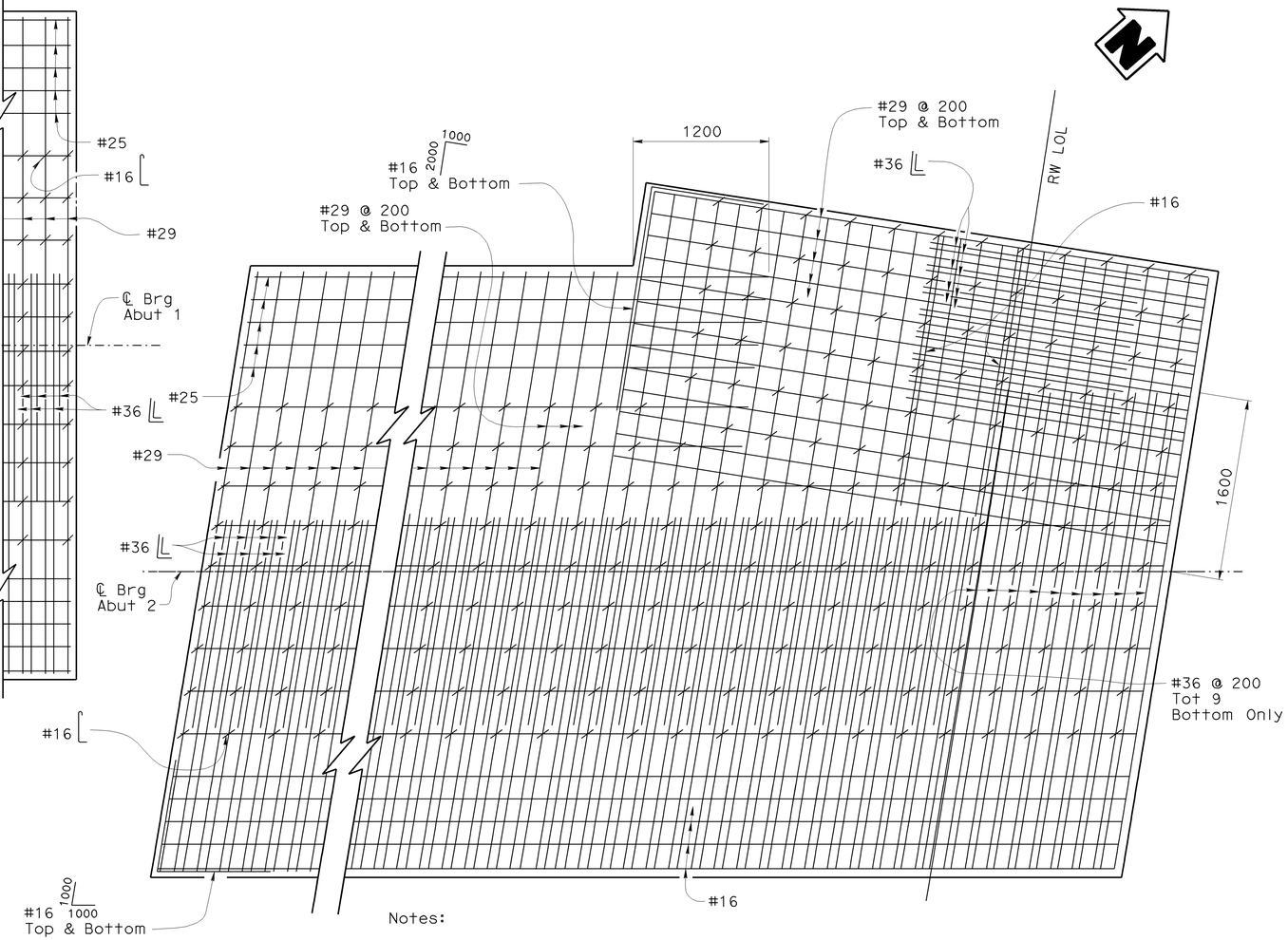

Notes:

Piles not shown for clarity

For details not shown see "ABUTMENT DETAILS NO. 2", "ABUTMENT DETAILS NO. 3" and "RETAINING WALL DETAILS NO. 2" sheets.

ABUTMENT 2 FOOTING CORNER DETAIL

1:25

NOTE:
THE CONTRACTOR SHALL VERIFY ALL CONTROLLING FIELD DIMENSIONS BEFORE ORDERING OR FABRICATING ANY MATERIAL.

Caltrans Metric

	BY	CHECKED
DESIGN	Hogni Setberg	Richard Yates
DETAILS	Herman Mauroschadt	Richard Yates
QUANTITIES	Jenny Zhang	James Ralston

STATE OF CALIFORNIA
DEPARTMENT OF TRANSPORTATION

DIVISION OF ENGINEERING SERVICES
STRUCTURE DESIGN
DESIGN BRANCH 15

BRIDGE NO. 53-1086
KILOMETER POST 46.5

VERDUGO AVENUE UC WIDEN & RETROFIT
ABUTMENT FOOTING DETAILS NO. 2

ALL DIMENSIONS ARE IN MILLIMETERS UNLESS OTHERWISE SHOWN

ORIGINAL SCALE IN MILLIMETERS FOR REDUCED PLANS 0 10 20 30 40 50 60 70 80 90 100

CU 07
EA 121841

DISREGARD PRINTS BEARING EARLIER REVISION DATES

REVISION DATES: 8-1-06, 2-23-07, 3-16-07, 12-3-07, 1-14-08, 2-22-08, 11-24-08

SHEET 9 OF 39

FILE => 53-1086-g-fd02.dgn

STRUCTURES DESIGN DETAIL SHEET (METRIC) (REV.03-17-04)

USERNAME => trmikest DATE PLOTTED => 15-JUN-2009 TIME PLOTTED => 07:33

DIST	COUNTY	ROUTE	KILOMETER POST TOTAL PROJECT	SHEET No	TOTAL SHEETS
07	LA	5	42.8/47.3	951	1073

Andrew Rittenhouse 12-05-08
REGISTERED CIVIL ENGINEER DATE

6-8-09
PLANS APPROVAL DATE

REGISTERED PROFESSIONAL ENGINEER Andrew P. Rittenhouse No. 61006 Exp. 12-31-10 CIVIL STATE OF CALIFORNIA

The State of California or its officers or agents shall not be responsible for the accuracy or completeness of electronic copies of this plan sheet.

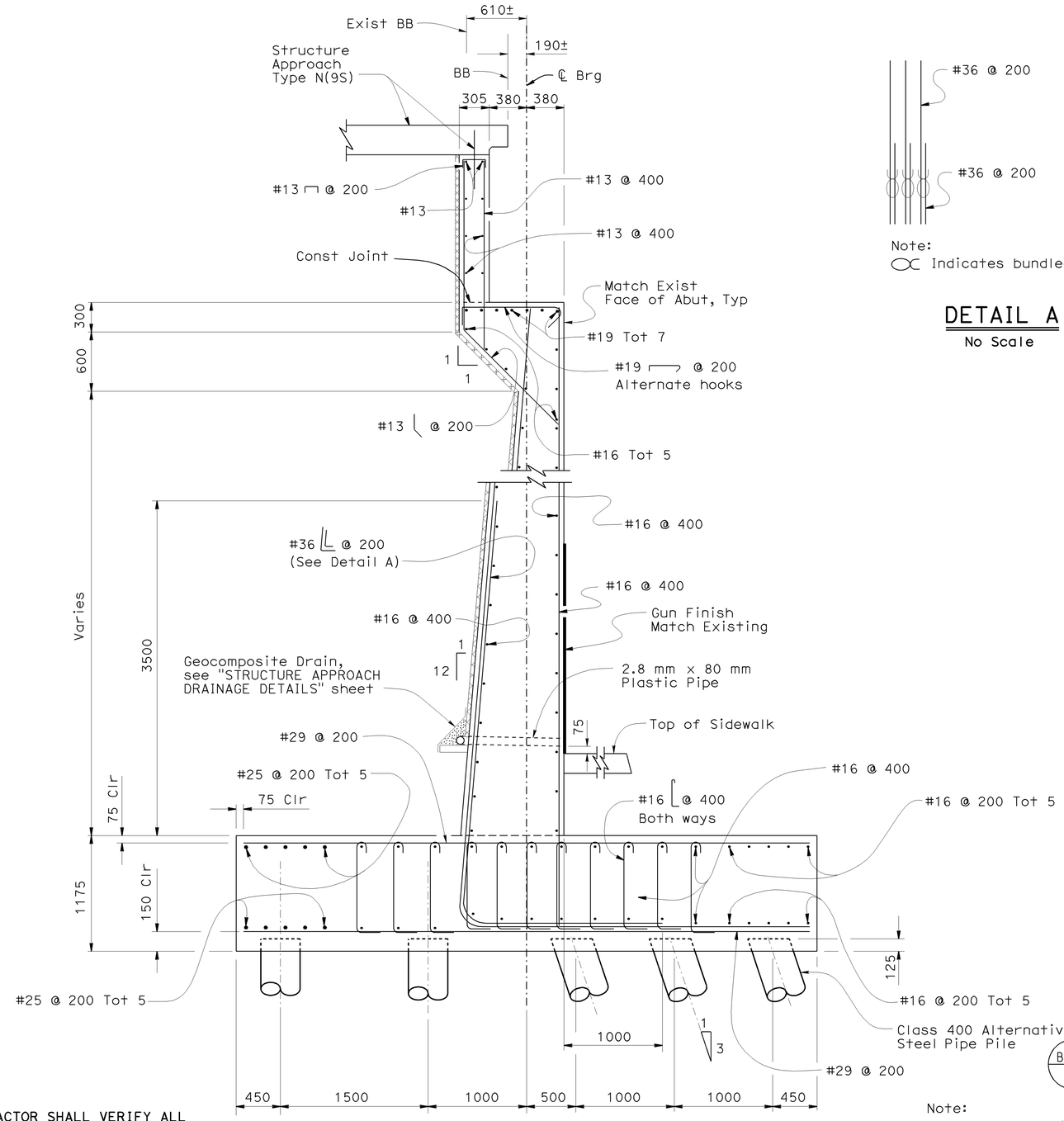

SECTION A-A

1:25

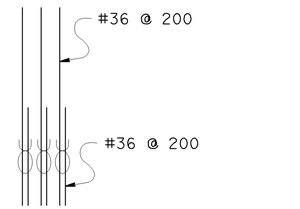

Note:
Indicates bundled bars

DETAIL A

No Scale

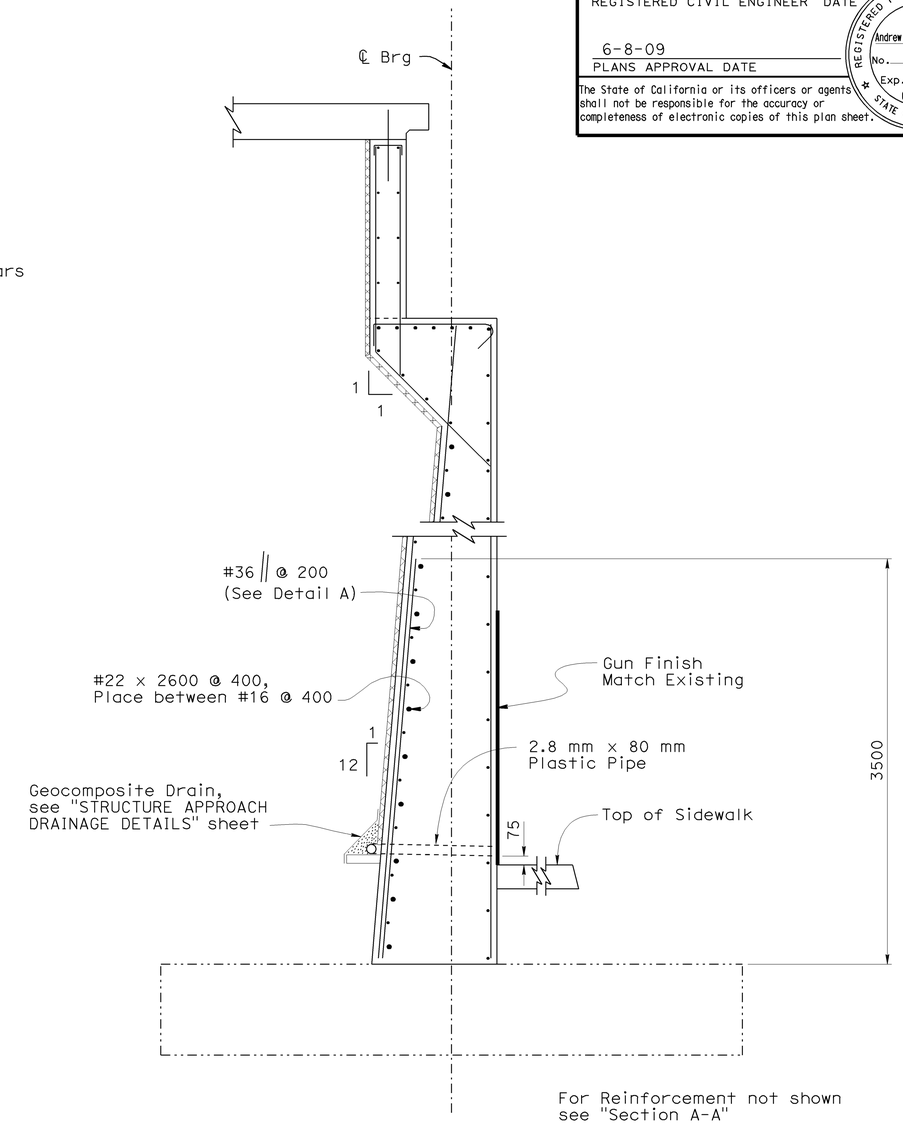

SECTION B-B

1:25

NOTE:
THE CONTRACTOR SHALL VERIFY ALL CONTROLLING FIELD DIMENSIONS BEFORE ORDERING OR FABRICATING ANY MATERIAL.

Note:
For location of "Section A-A" and "Section B-B" see "ABUTMENT 1 LAYOUT" sheet

Caltrans Metric

ALL DIMENSIONS ARE IN MILLIMETERS UNLESS OTHERWISE SHOWN

ORIGINAL SCALE IN MILLIMETERS FOR REDUCED PLANS 0 10 20 30 40 50 60 70 80 90 100

	BY	CHECKED
DESIGN	Hogni Setberg	Richard Yates
DETAILS	Herman Mauroschadt	Richard Yates
QUANTITIES	Jenny Zhang	James Ralston

STATE OF CALIFORNIA
DEPARTMENT OF TRANSPORTATION

DIVISION OF ENGINEERING SERVICES
STRUCTURE DESIGN
DESIGN BRANCH 15

CU 07
EA 121841

BRIDGE NO. 53-1086
KILOMETER POST 46.5

VERDUGO AVENUE UC WIDEN & RETROFIT

ABUTMENT DETAILS NO. 1

DISREGARD PRINTS BEARING EARLIER REVISION DATES

REVISION DATES: 9-15-06 12-14-07 12-2-07 1-16-08 4-7-08 11-14-08 1-8-09 1-28-09 3-2-09

SHEET 10 OF 39

STRUCTURES DESIGN DETAIL SHEET (METRIC) (REV.03-17-04)

FILE => 53-1086-h-a01.dgn

USERNAME => trmikesl DATE PLOTTED => 15-JUN-2009 TIME PLOTTED => 07:33

DIST	COUNTY	ROUTE	KILOMETER POST TOTAL PROJECT	SHEET No	TOTAL SHEETS
07	LA	5	42.8/47.3	952	1073

Andrew Rittenhouse 12-05-08
REGISTERED CIVIL ENGINEER DATE

6-8-09
PLANS APPROVAL DATE

REGISTERED PROFESSIONAL ENGINEER Andrew P. Rittenhouse No. 61006 Exp. 12-31-10 CIVIL STATE OF CALIFORNIA

The State of California or its officers or agents shall not be responsible for the accuracy or completeness of electronic copies of this plan sheet.

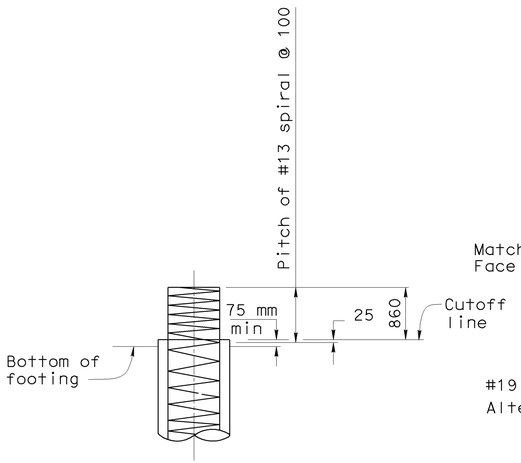

PILE CONNECTION DETAIL

1:25

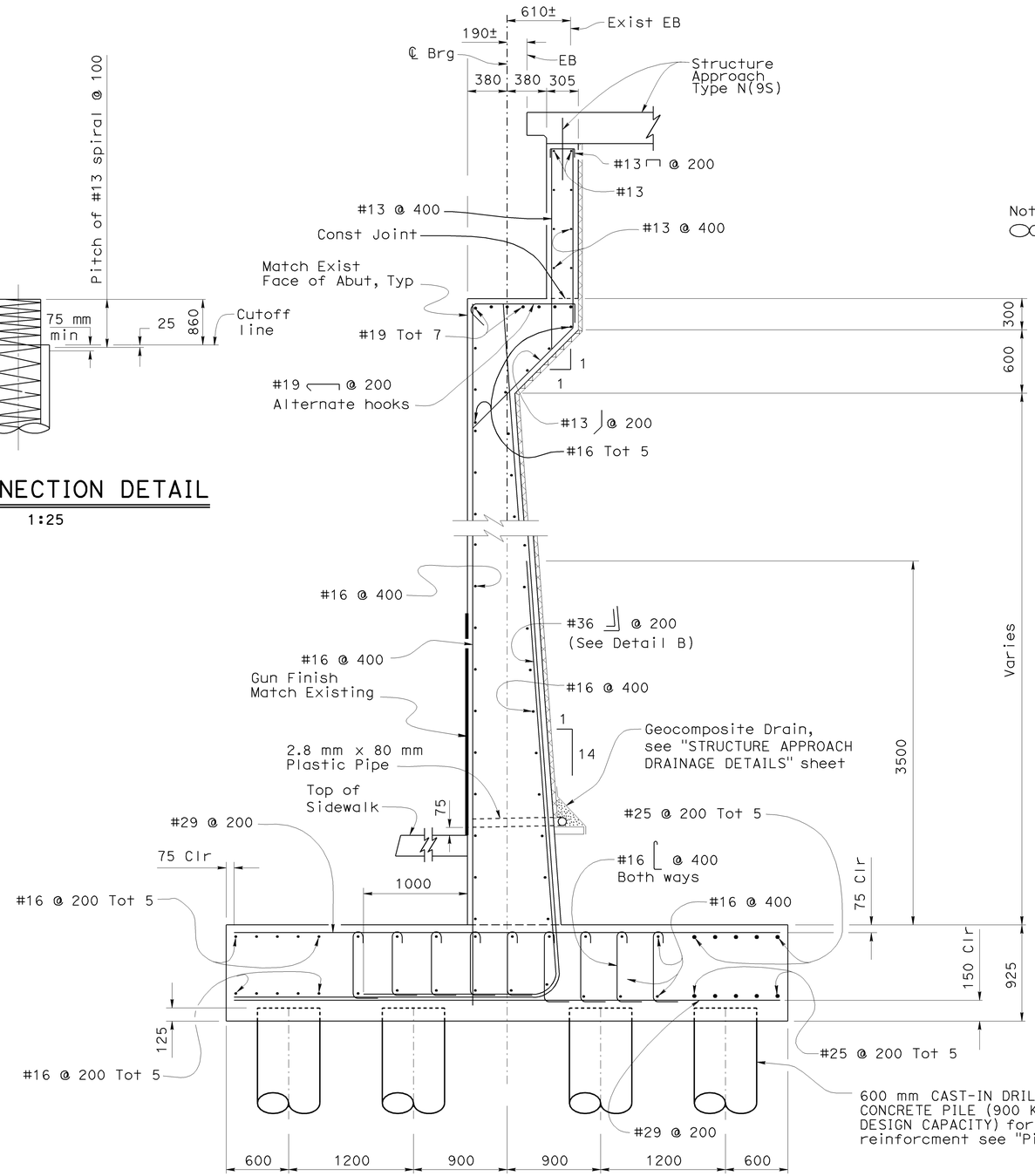

600 mm CAST-IN DRILLED-HOLE CONCRETE PILE (900 KILONEWTON DESIGN CAPACITY) for additional reinforcment see "Pile Connection Detail" B2-3

SECTION E-E

1:25

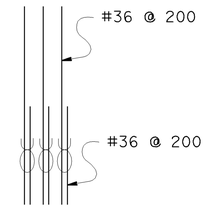

Note:
Indicates bundled bars

DETAIL B

No Scale

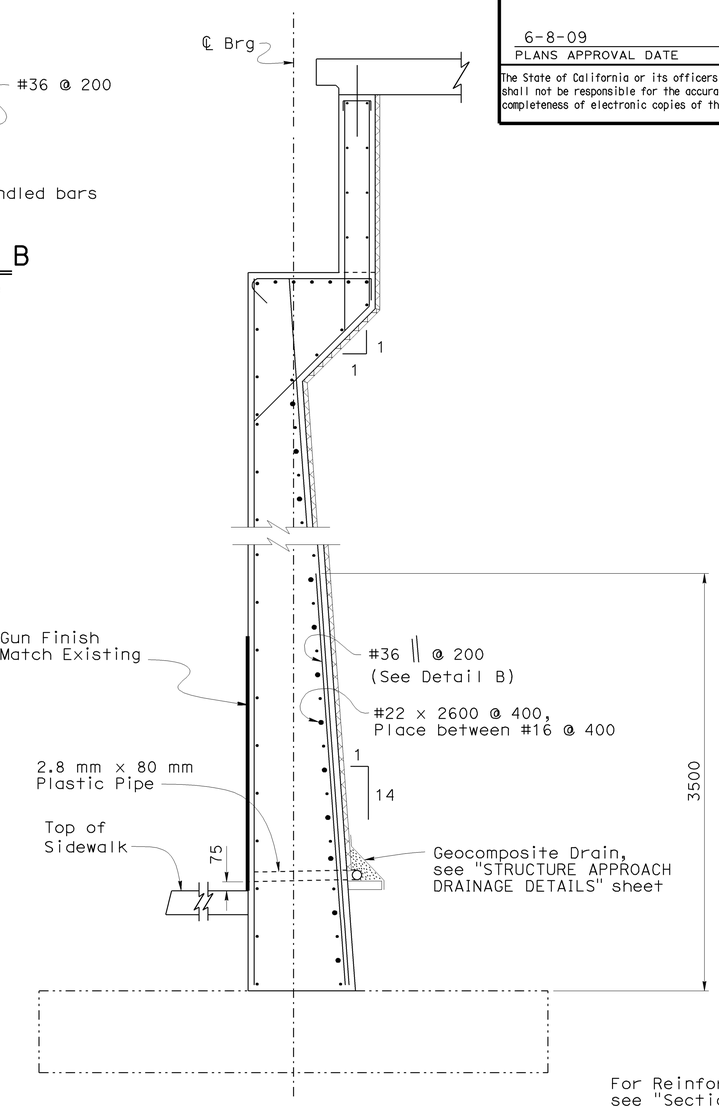

For Reinforcement not shown see "Section E-E"

SECTION F-F

1:25

Note:

For location of "Section E-E" and "Section F-F" see "ABUTMENT 2 LAYOUT" sheet

NOTE:
THE CONTRACTOR SHALL VERIFY ALL CONTROLLING FIELD DIMENSIONS BEFORE ORDERING OR FABRICATING ANY MATERIAL.

Caltrans Metric

	BY	CHECKED
DESIGN	Hogni Setberg	Richard Yates/James Ralston
DETAILS	Herman Mauroschadt	Richard Yates/James Ralston
QUANTITIES	Jenny Zhang	James Ralston

STATE OF CALIFORNIA
DEPARTMENT OF TRANSPORTATION

DIVISION OF ENGINEERING SERVICES
STRUCTURE DESIGN
DESIGN BRANCH 15

BRIDGE NO. 53-1086
KILOMETER POST 46.5

VERDUGO AVENUE UC WIDEN & RETROFIT
ABUTMENT DETAILS NO. 2

ALL DIMENSIONS ARE IN MILLIMETERS UNLESS OTHERWISE SHOWN

ORIGINAL SCALE IN MILLIMETERS FOR REDUCED PLANS 0 10 20 30 40 50 60 70 80 90 100

CU 07
EA 121841

DISREGARD PRINTS BEARING EARLIER REVISION DATES

REVISION DATES: 8-25-06 2-22-07 1-16-08 2-22-08 4-3-08 11-24-08 1-8-09 1-29-09 3-2-09

SHEET 11 OF 39

FILE => 53-1086-h-a02.dgn

STRUCTURES DESIGN DETAIL SHEET (METRIC) (REV.03-17-04)

USERNAME => trmikesl DATE PLOTTED => 15-JUN-2009 TIME PLOTTED => 07:33

DIST	COUNTY	ROUTE	KILOMETER POST TOTAL PROJECT	SHEET No	TOTAL SHEETS
07	LA	5	42.8/47.3	953	1073

Andrew Rittenhouse 12-05-08
REGISTERED CIVIL ENGINEER DATE

6-8-09
PLANS APPROVAL DATE

REGISTERED PROFESSIONAL ENGINEER
Andrew P. Rittenhouse
No. 61006
Exp. 12-31-10
CIVIL
STATE OF CALIFORNIA

The State of California or its officers or agents shall not be responsible for the accuracy or completeness of electronic copies of this plan sheet.

Notes:

1. Limits of "Section C-C" and "Section G-G" is above the Abutment Seat.
2. Limits of "Section D-D" and "Section H-H" is below the Abutment Seat.
3. For location of "Section C-C" and "Section D-D" see "ABUTMENT 1 LAYOUT" sheet.
4. For location of "Section G-G" and "Section H-H" see "ABUTMENT 2 LAYOUT" sheet.

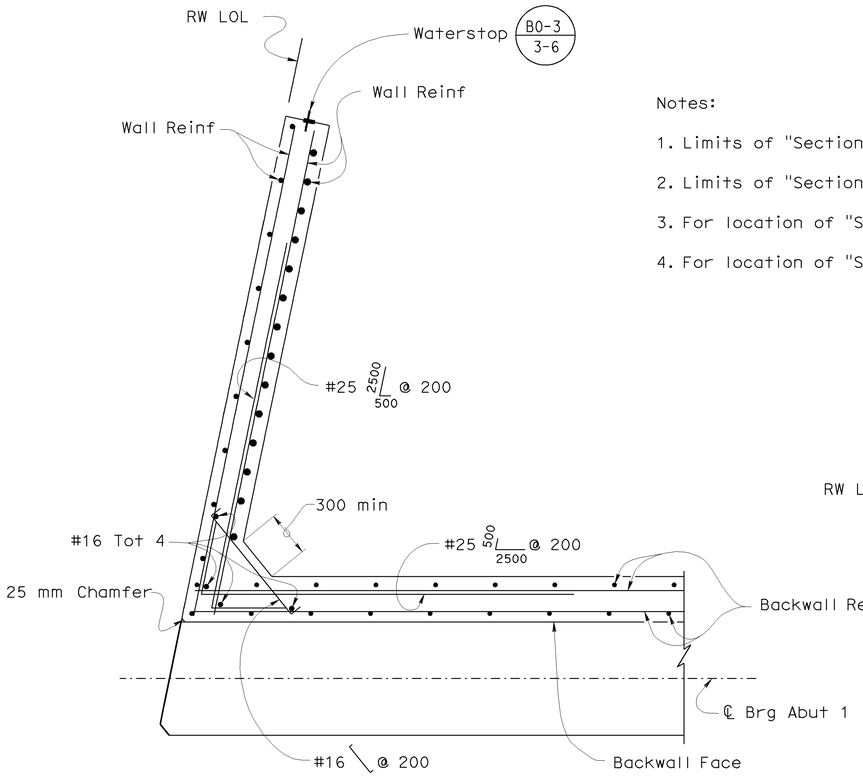

SECTION C-C
1:20

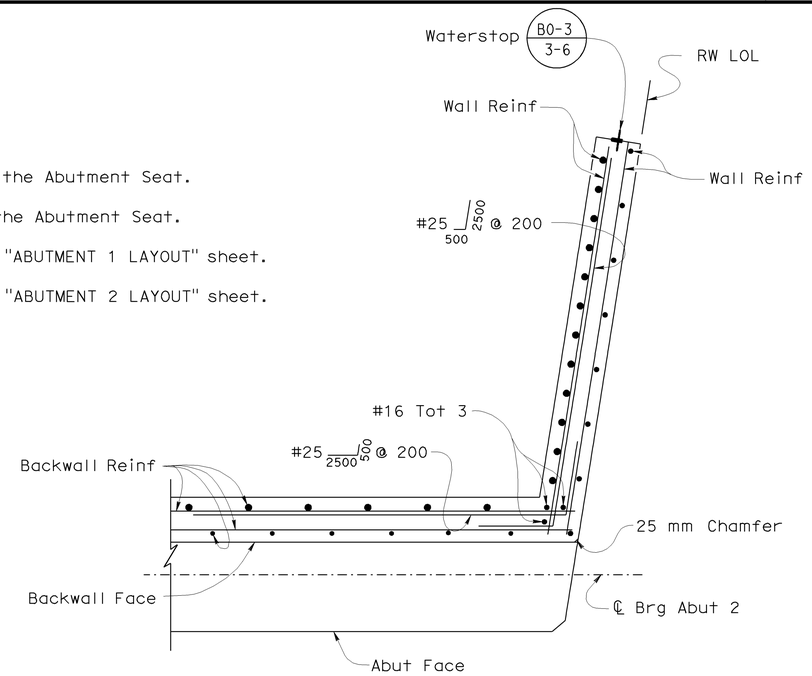

SECTION G-G
1:20

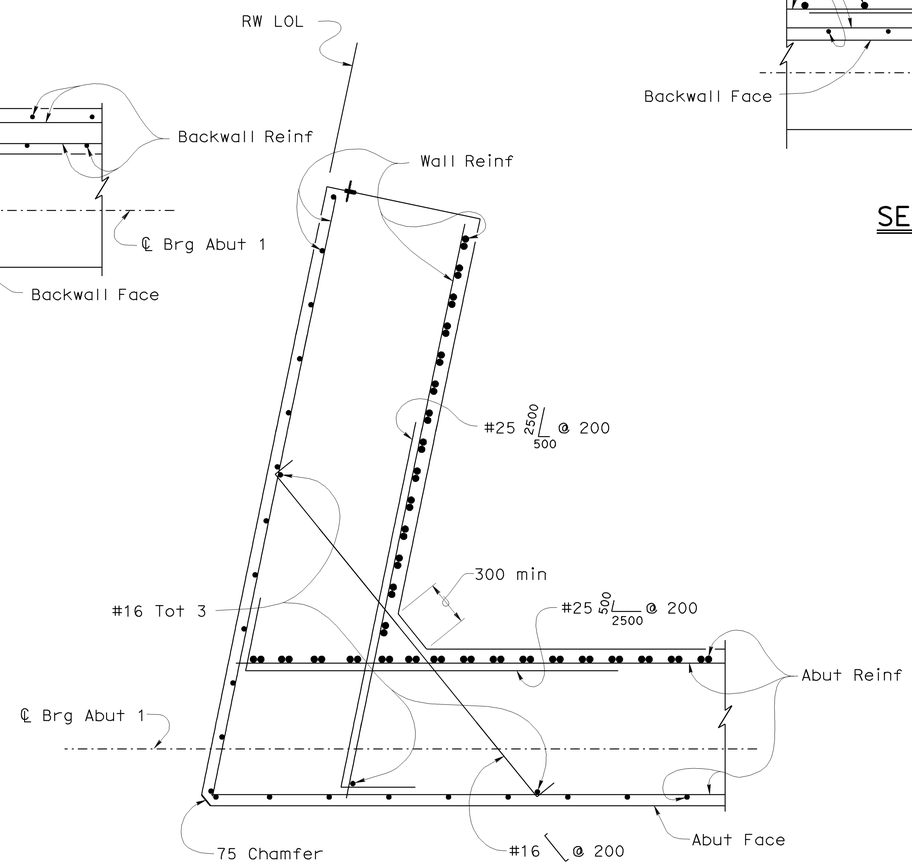

SECTION D-D
1:20

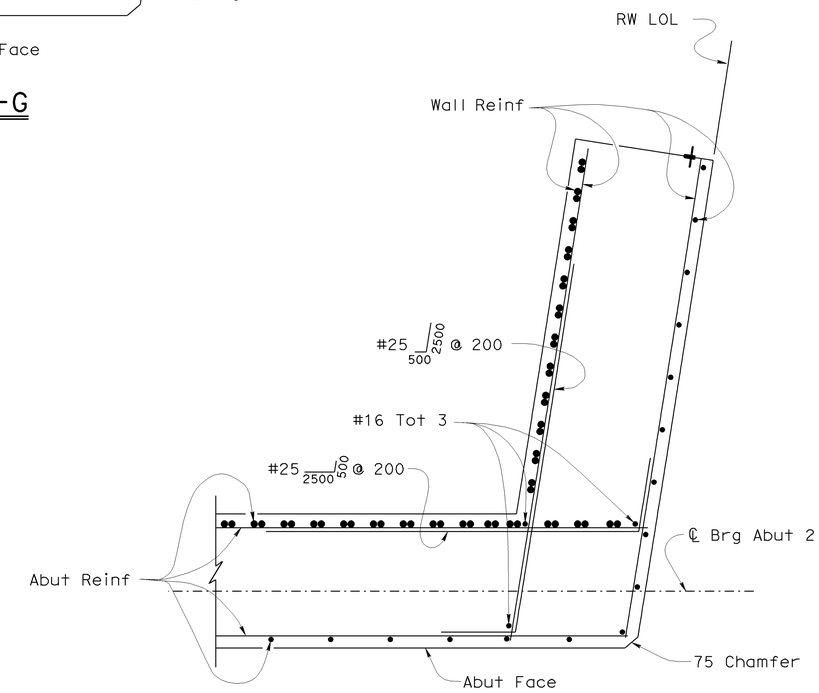

SECTION H-H
1:20

NOTE:
THE CONTRACTOR SHALL VERIFY ALL CONTROLLING FIELD DIMENSIONS BEFORE ORDERING OR FABRICATING ANY MATERIAL.

Caltrans Metric

	BY	CHECKED
DESIGN	Hogni Setberg	Richard Yates
DETAILS	Herman Mauroschadt	Richard Yates
QUANTITIES	Jenny Zhang	James Ralston

STATE OF CALIFORNIA
DEPARTMENT OF TRANSPORTATION

DIVISION OF ENGINEERING SERVICES
STRUCTURE DESIGN
DESIGN BRANCH 15

BRIDGE NO. 53-1086
KILOMETER POST 46.5

VERDUGO AVENUE UC WIDEN & RETROFIT
ABUTMENT DETAILS NO. 3

ALL DIMENSIONS ARE IN MILLIMETERS UNLESS OTHERWISE SHOWN

ORIGINAL SCALE IN MILLIMETERS FOR REDUCED PLANS 0 10 20 30 40 50 60 70 80 90 100

CU 07
EA 121841

DISREGARD PRINTS BEARING EARLIER REVISION DATES

REVISION DATES: 8-23-06 2-22-07 1-16-08 11-24-08 3-2-09

SHEET 12 OF 39

FILE => 53-1086-h-a03.dgn

STRUCTURES DESIGN DETAIL SHEET (METRIC) (REV.03-17-04)

USERNAME => frmikesl DATE PLOTTED => 15-JUN-2009 TIME PLOTTED => 07:33

DIST	COUNTY	ROUTE	KILOMETER POST TOTAL PROJECT	SHEET No	TOTAL SHEETS
07	LA	5	42.8/47.3	954	1073

Andrew Rittenhouse 12-05-08
REGISTERED CIVIL ENGINEER DATE

6-8-09
PLANS APPROVAL DATE

REGISTERED PROFESSIONAL ENGINEER Andrew P. Rittenhouse No. 61006 Exp. 12-31-10 CIVIL STATE OF CALIFORNIA

The State of California or its officers or agents shall not be responsible for the accuracy or completeness of electronic copies of this plan sheet.

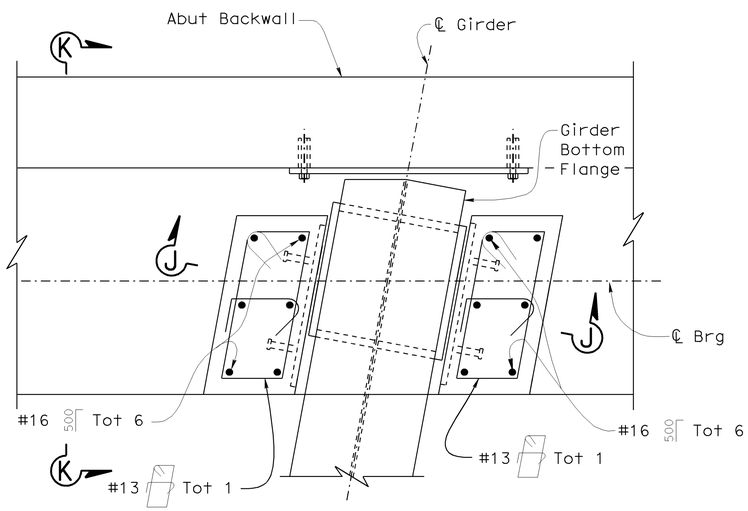

Cross bracing connection not shown for clarity

PLAN - SHEAR KEYS (ABUT 1)

1:10

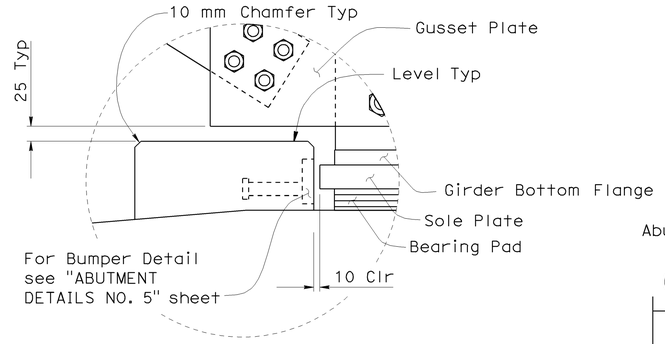

Notes:

Abut 1 shown, Abut 2 similar except as shown.

Reinforcement not shown for clarity

DETAIL C

1:5

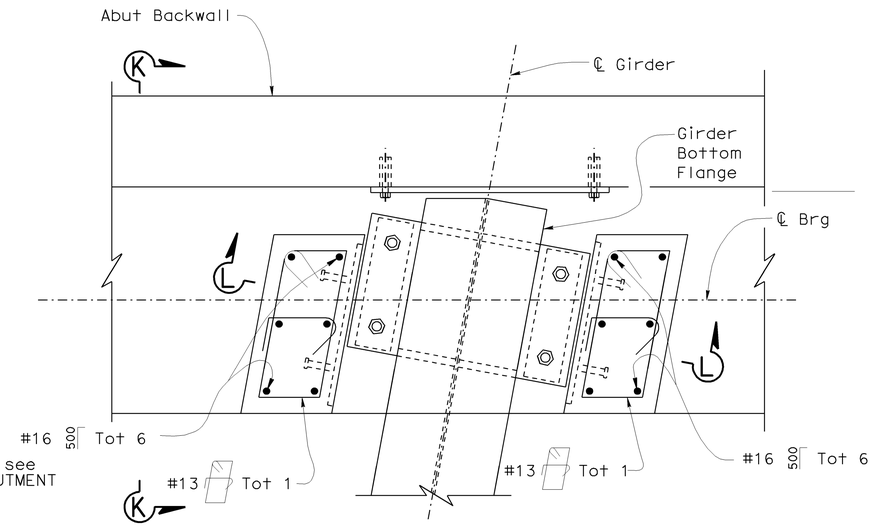

Cross bracing connection not shown for clarity

PLAN - SHEAR KEYS (ABUT 2)

1:10

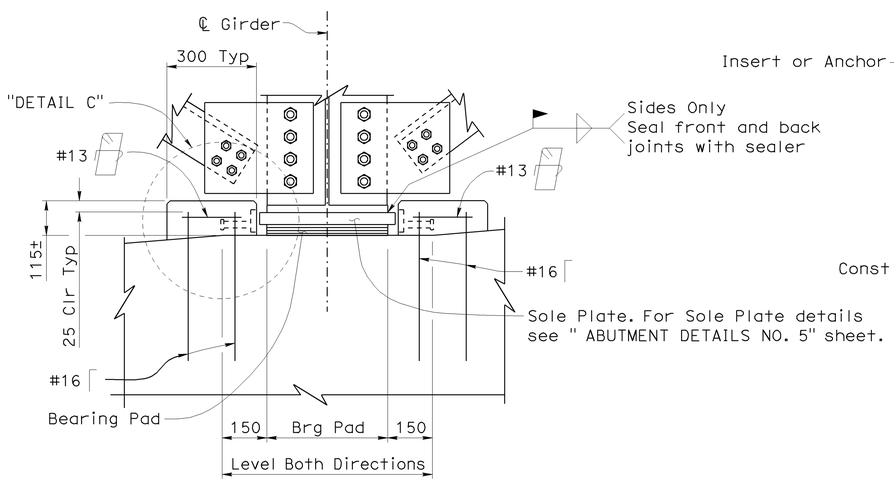

SECTION J-J

1:10

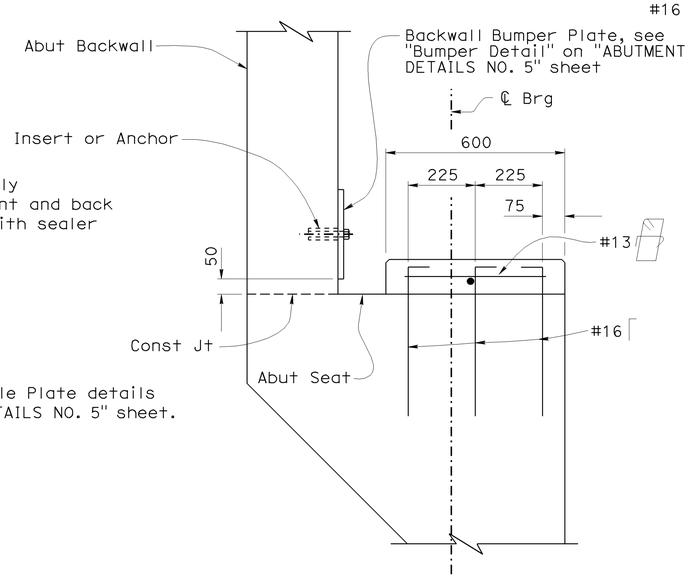

VIEW K-K

1:10

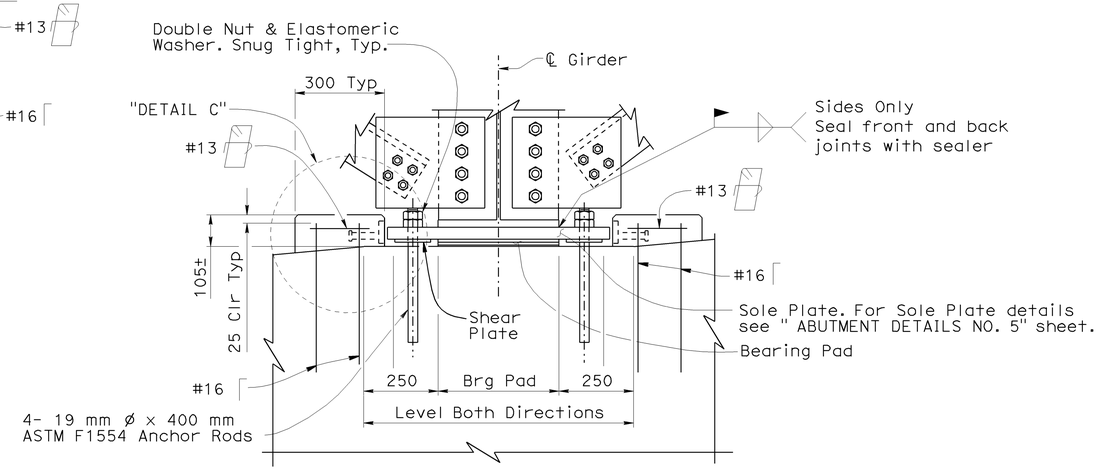

SECTION L-L

1:10

NOTE:
THE CONTRACTOR SHALL VERIFY ALL CONTROLLING FIELD DIMENSIONS BEFORE ORDERING OR FABRICATING ANY MATERIAL.

Caltrans Metric

	BY	CHECKED
DESIGN	Hogni Setberg	Richard Yates
DETAILS	Herman Mauroschadt	Richard Yates
QUANTITIES	Jenny Zhang	James Ralston

STATE OF CALIFORNIA
DEPARTMENT OF TRANSPORTATION

DIVISION OF ENGINEERING SERVICES
STRUCTURE DESIGN
DESIGN BRANCH 15

BRIDGE NO. 53-1086
KILOMETER POST 46.5

VERDUGO AVENUE UC WIDEN & RETROFIT
ABUTMENT DETAILS NO. 4

ALL DIMENSIONS ARE IN MILLIMETERS UNLESS OTHERWISE SHOWN

ORIGINAL SCALE IN MILLIMETERS FOR REDUCED PLANS 0 10 20 30 40 50 60 70 80 90 100

CU 07
EA 121841

DISREGARD PRINTS BEARING EARLIER REVISION DATES

REVISION DATES: 3-2-09 | 3-2-07 | 1-15-08 | 1-15-08 | 11-14-08 | 1-15-09 | 1-15-09 | 1-15-09 | 2-13-09

SHEET 13 OF 39

FILE => 53-1086-h-a04.dgn

STRUCTURES DESIGN DETAIL SHEET (METRIC) (REV.03-17-04)

USERNAME => trmikes1 DATE PLOTTED => 07-OCT-2009 TIME PLOTTED => 07:13

DIST	COUNTY	ROUTE	KILOMETER POST TOTAL PROJECT	SHEET No	TOTAL SHEETS
07	LA	5	42.8/47.3	955	1073

Andrew Rittenhouse 12-05-08
REGISTERED CIVIL ENGINEER DATE

6-8-09
PLANS APPROVAL DATE

REGISTERED PROFESSIONAL ENGINEER Andrew P. Rittenhouse No. 61006 Exp. 12-31-10 CIVIL STATE OF CALIFORNIA

The State of California or its officers or agents shall not be responsible for the accuracy or completeness of electronic copies of this plan sheet.

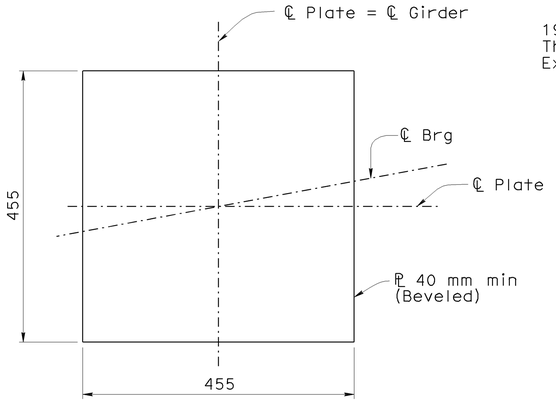

SOLE PLATE (ABUT 1)

1:5

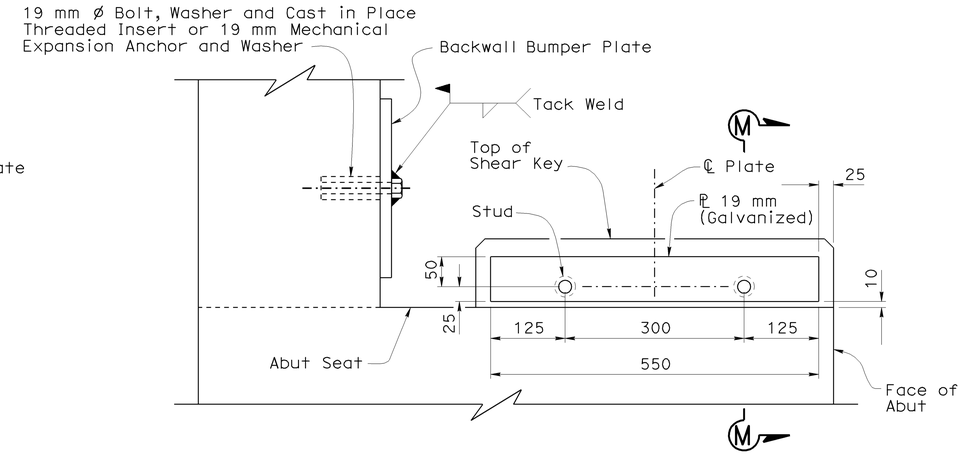

ELEVATION

BUMPER DETAIL

1:5

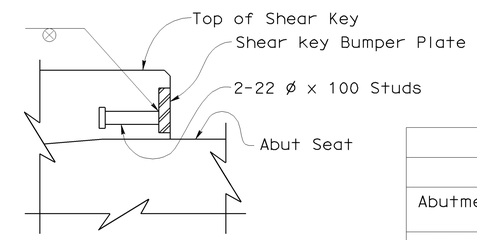

SECTION M-M

Table A			
Dimension "a"			
Abutment	Winter	Fall-Spring	Summer
Abut 1	25	20	13
Abut 2	25	20	13

Note:
For Attachment of Sole Plate to Girder see "ABUTMENT DETAILS NO. 5" sheet.

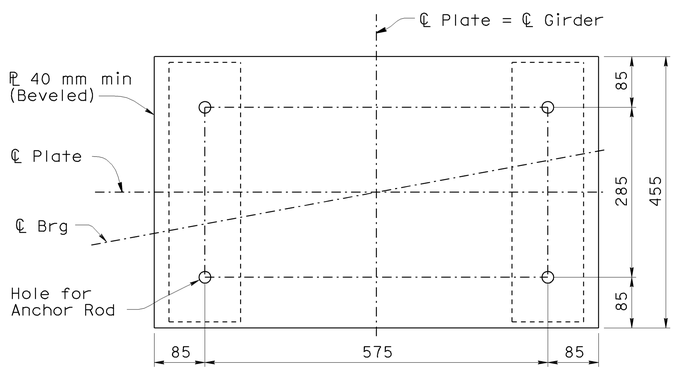

SOLE PLATE (ABUT 2)

1:5

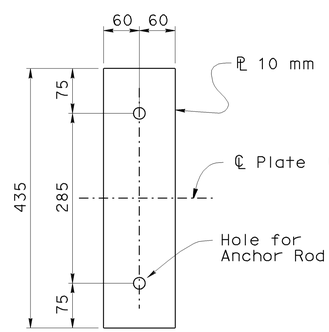

SHEAR PLATE

1:5

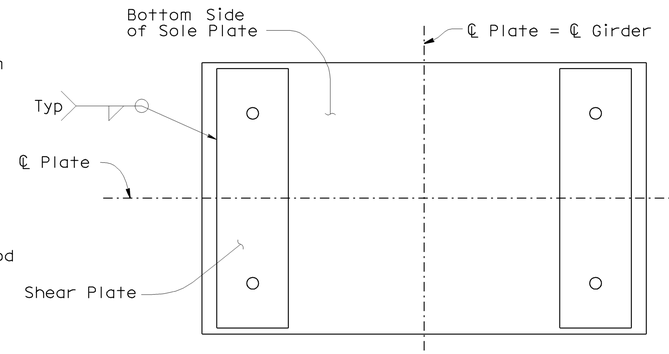

SHEAR PLATE CONNECTION TO SOLE PLATE

1:5

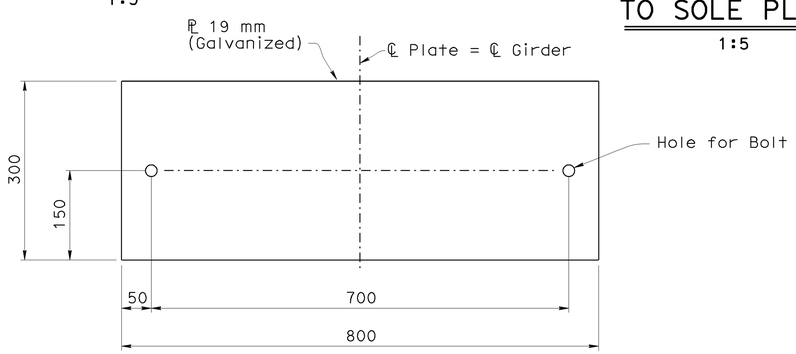

BACKWALL BUMPER PLATE

1:5

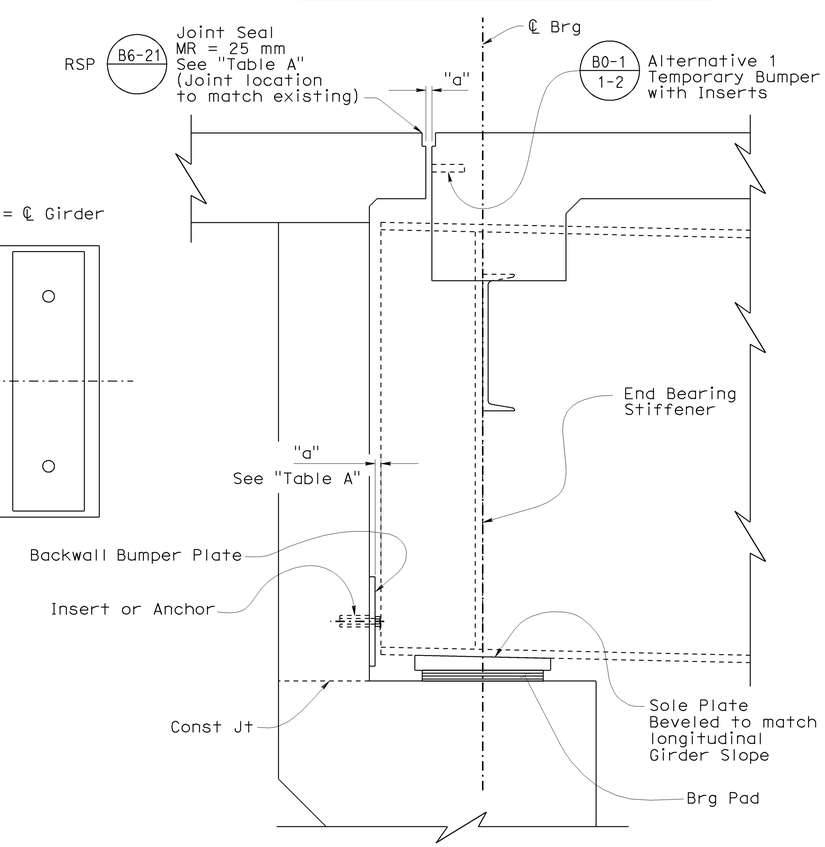

Note:
Abutment 1 shown, Abutment 2 similar.

PART ABUTMENT SECTION

1:10

NOTE:
THE CONTRACTOR SHALL VERIFY ALL CONTROLLING FIELD DIMENSIONS BEFORE ORDERING OR FABRICATING ANY MATERIAL.

Caltrans Metric

	BY	CHECKED
DESIGN	Hogni Setberg	Richard Yates
DETAILS	Herman Mauroschadt	Richard Yates
QUANTITIES	Jenny Zhang	James Ralston

STATE OF CALIFORNIA
DEPARTMENT OF TRANSPORTATION

DIVISION OF ENGINEERING SERVICES
STRUCTURE DESIGN
DESIGN BRANCH 15

BRIDGE NO. 53-1086
KILOMETER POST 46.5

VERDUGO AVENUE UC WIDEN & RETROFIT
ABUTMENT DETAILS NO. 5

ALL DIMENSIONS ARE IN MILLIMETERS UNLESS OTHERWISE SHOWN

ORIGINAL SCALE IN MILLIMETERS FOR REDUCED PLANS 0 10 20 30 40 50 60 70 80 90 100

CU 07
EA 121841

DISREGARD PRINTS BEARING EARLIER REVISION DATES

REVISION DATES: 1-12-09 1-13-09 3-2-09 1-14-08 4-1-08 1-2-08 11-13-08 1-2-09 1-14-09

SHEET 14 OF 39

FILE => 53-1086-h-a05.dgn

STRUCTURES DESIGN DETAIL SHEET (METRIC) (REV.03-17-04)

USERNAME => trmikesl DATE PLOTTED => 07-OCT-2009 TIME PLOTTED => 07:13

DIST	COUNTY	ROUTE	KILOMETER POST TOTAL PROJECT	SHEET No	TOTAL SHEETS
07	LA	5	42.8/47.3	956	1073

Andrew Rittenhouse 12-05-08
REGISTERED CIVIL ENGINEER DATE

6-8-09
PLANS APPROVAL DATE

REGISTERED PROFESSIONAL ENGINEER
Andrew P. Rittenhouse
No. 61006
Exp. 12-31-10
CIVIL
STATE OF CALIFORNIA

The State of California or its officers or agents shall not be responsible for the accuracy or completeness of electronic copies of this plan sheet.

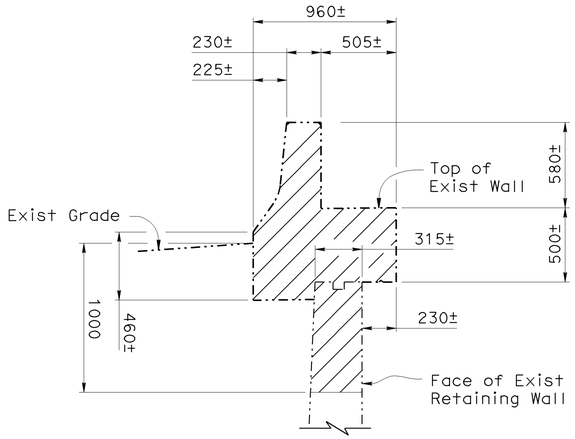

SECTION N-N
1:20

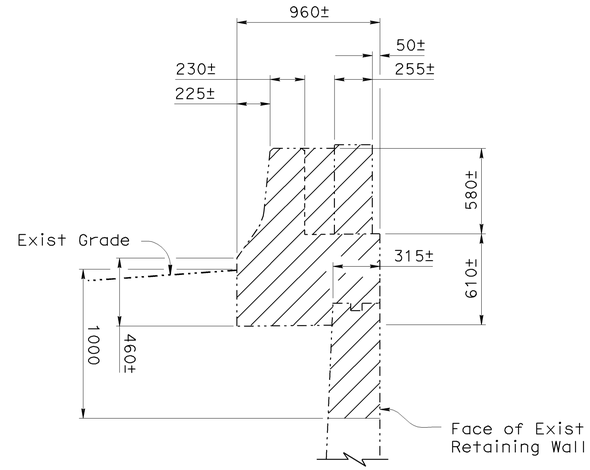

SECTION P-P
1:20

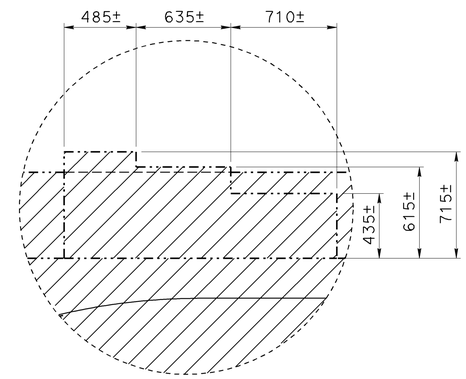

DETAIL D
1:20

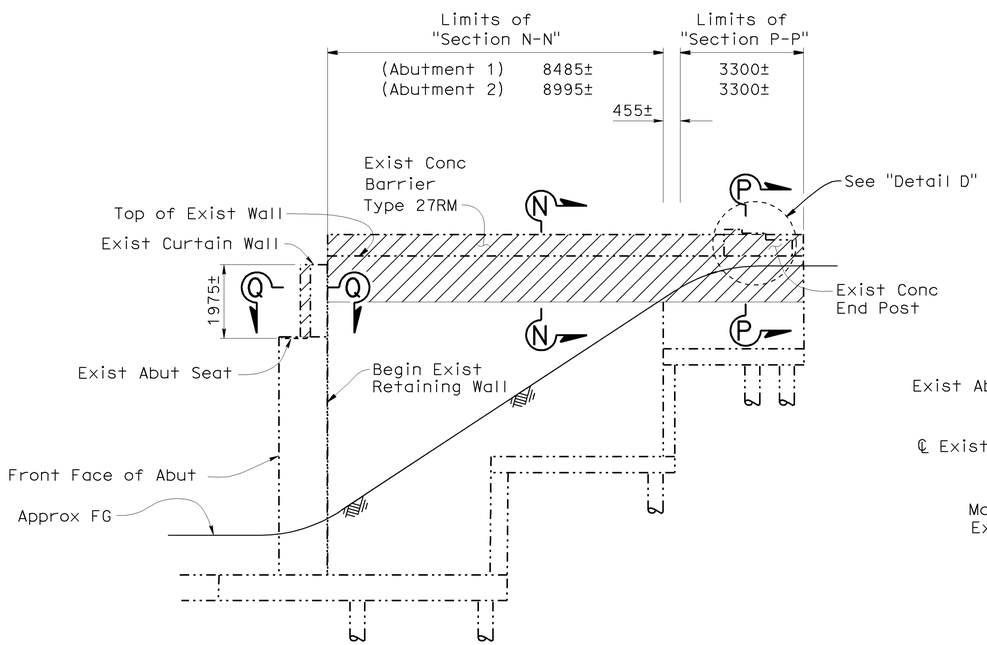

RETAINING WALL ELEVATION
No Scale

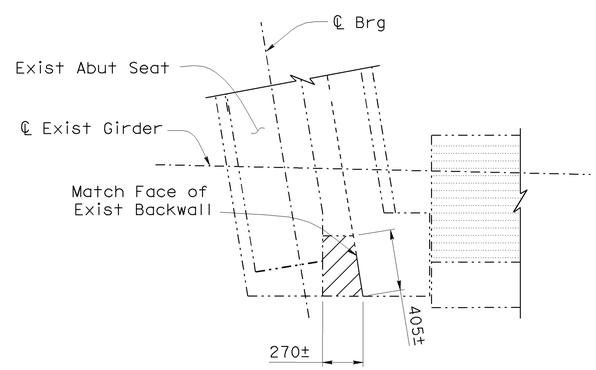

Removal for Abutment 2 only.

SECTION Q-Q
1:20

Indicates Bridge Removal (Portion)

Notes:

1. Abutment 2 (Northeast) Retaining Wall shown, Abutment 1 (Southeast) Retaining Wall similar.

2. For Concrete Removal of Abument 2 (Northwest) Retaining Wall and Abutment 1 (Southwest) Retaining Wall see "BARRIER SLAB DETAILS NO. 1" sheet.

NOTE:
THE CONTRACTOR SHALL VERIFY ALL CONTROLLING FIELD DIMENSIONS BEFORE ORDERING OR FABRICATING ANY MATERIAL.

CONCRETE REMOVAL

Caltrans Metric

	BY	CHECKED
DESIGN	Hogni Setberg	Richard Yates
DETAILS	Herman Mauroschadt	Richard Yates
QUANTITIES	Jenny Zhang	James Ralston

STATE OF CALIFORNIA
DEPARTMENT OF TRANSPORTATION

DIVISION OF ENGINEERING SERVICES
STRUCTURE DESIGN
DESIGN BRANCH 15

BRIDGE NO. 53-1086
KILOMETER POST 46.5

VERDUGO AVENUE UC WIDEN & RETROFIT
ABUTMENT DETAILS NO. 6

ALL DIMENSIONS ARE IN MILLIMETERS UNLESS OTHERWISE SHOWN

ORIGINAL SCALE IN MILLIMETERS FOR REDUCED PLANS 0 10 20 30 40 50 60 70 80 90 100

CU 07
EA 121841

DISREGARD PRINTS BEARING EARLIER REVISION DATES
REVISION DATES 12-15-06 2-22-07 5-14-07 11-24-08

SHEET 15 OF 39

FILE => 53-1086-h-a06.dgn

STRUCTURES DESIGN DETAIL SHEET (METRIC) (REV.03-17-04)

USERNAME => trmnguye DATE PLOTTED => 15-JUN-2009 TIME PLOTTED => 08:21

DIST	COUNTY	ROUTE	KILOMETER POST TOTAL PROJECT	SHEET No	TOTAL SHEETS
07	LA	5	42.8/47.3	957	1073

REGISTERED CIVIL ENGINEER — DATE 12-05-08

6-8-09
PLANS APPROVAL DATE

The State of California or its officers or agents shall not be responsible for the accuracy or completeness of electronic copies of this plan sheet.

REGISTERED PROFESSIONAL ENGINEER — Andrew P. Rittenhouse — No. 61006 — Exp. 12-31-10 — CIVIL — STATE OF CALIFORNIA

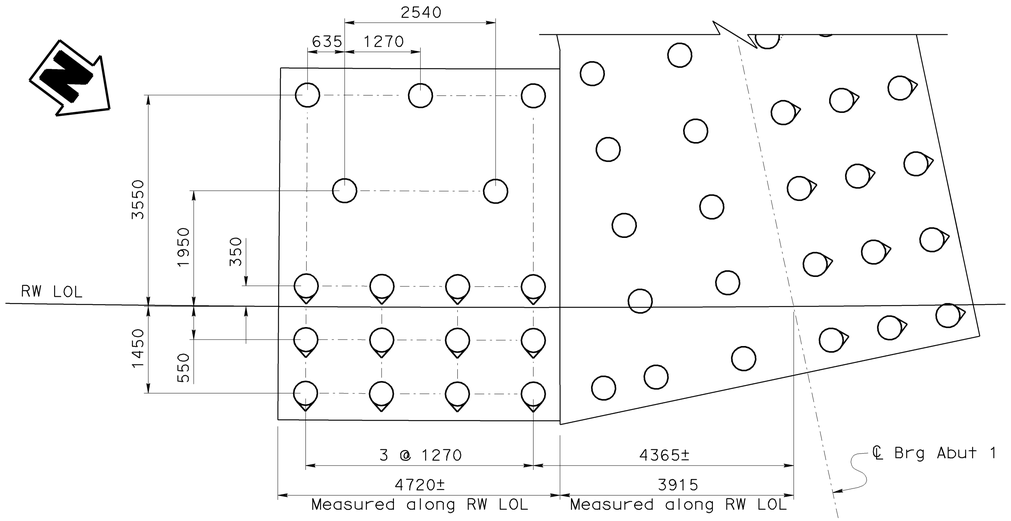

PLAN

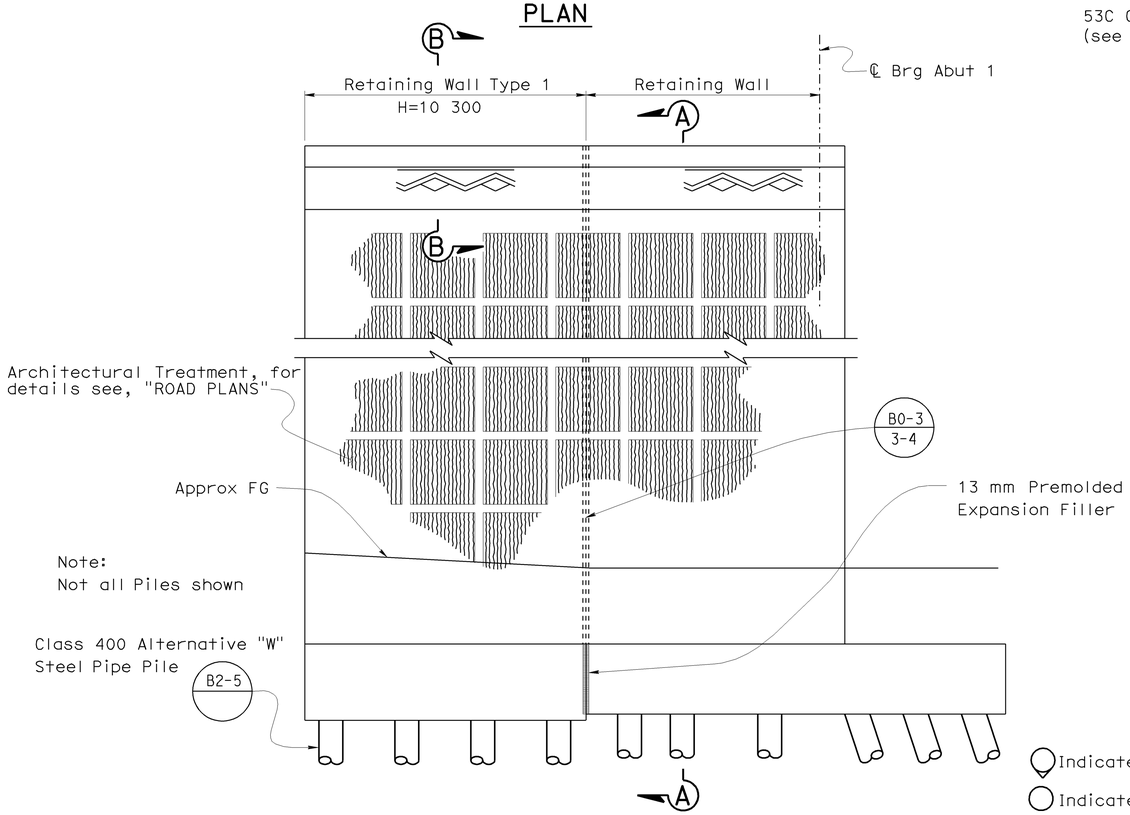

ELEVATION

ABUTMENT 1 RETAINING WALL B3-2

1:50

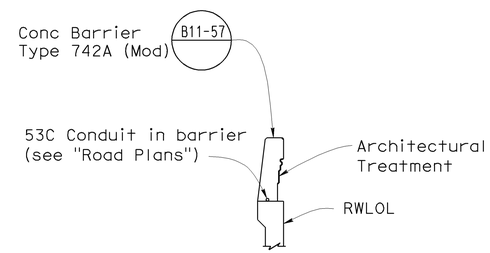

SECTION B-B

1:50

Indicates 3:1 Battered Pile

Indicates Vertical Pile

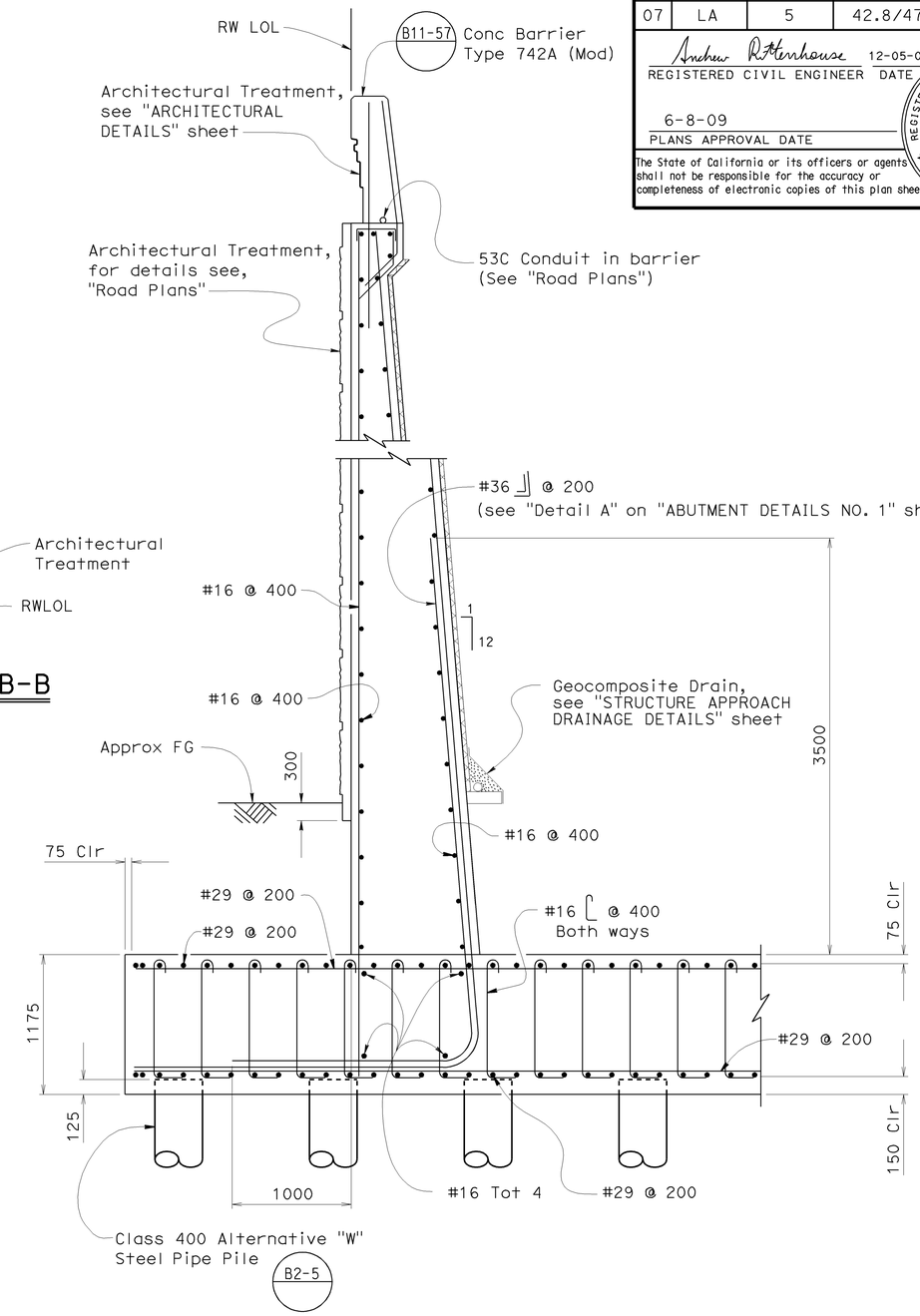

SECTION A-A

1:25

NOTE:
THE CONTRACTOR SHALL VERIFY ALL CONTROLLING FIELD DIMENSIONS BEFORE ORDERING OR FABRICATING ANY MATERIAL.

Note:

1. For pile spacing see "ABUTMENT FOOTING DETAILS NO. 1" sheet.

	BY	CHECKED
DESIGN	Hogni Setberg	Richard Yates
DETAILS	H Mauroschadt	Richard Yates
QUANTITIES	Jenny Zhang	James Ralston

STATE OF CALIFORNIA
DEPARTMENT OF TRANSPORTATION

DIVISION OF ENGINEERING SERVICES
STRUCTURE DESIGN
DESIGN BRANCH 15

BRIDGE NO. 53-1086
KILOMETER POST 46.5

VERDUGO AVENUE UNDERCROSSING (WIDEN)
RETAINING WALL DETAILS NO. 1

ALL DIMENSIONS ARE IN MILLIMETERS UNLESS OTHERWISE SHOWN

ORIGINAL SCALE IN MILLIMETERS FOR REDUCED PLANS 0 10 20 30 40 50 60 70 80 90 100

CU 07
EA 121841

DISREGARD PRINTS BEARING EARLIER REVISION DATES

REVISION DATES: 1-15-09 1-21-09 3-2-09 1-14-08 2-21-08 8-15-08 9-2-08 11-21-08 1-9-09

SHEET 16 OF 39

FILE => 53-1086-i-rw1.dgn

STRUCTURES DESIGN DETAIL SHEET (METRIC) (REV.03-17-04)

USERNAME => trmoguye DATE PLOTTED => 15-JUN-2009 TIME PLOTTED => 08:21

DIST	COUNTY	ROUTE	KILOMETER POST TOTAL PROJECT	SHEET No	TOTAL SHEETS
07	LA	5	42.8/47.3	958	1073

Andrew Rittenhouse 12-05-08
REGISTERED CIVIL ENGINEER DATE

6-8-09
PLANS APPROVAL DATE

REGISTERED PROFESSIONAL ENGINEER Andrew P. Rittenhouse No. 61006 Exp. 12-31-10 CIVIL STATE OF CALIFORNIA

The State of California or its officers or agents shall not be responsible for the accuracy or completeness of electronic copies of this plan sheet.

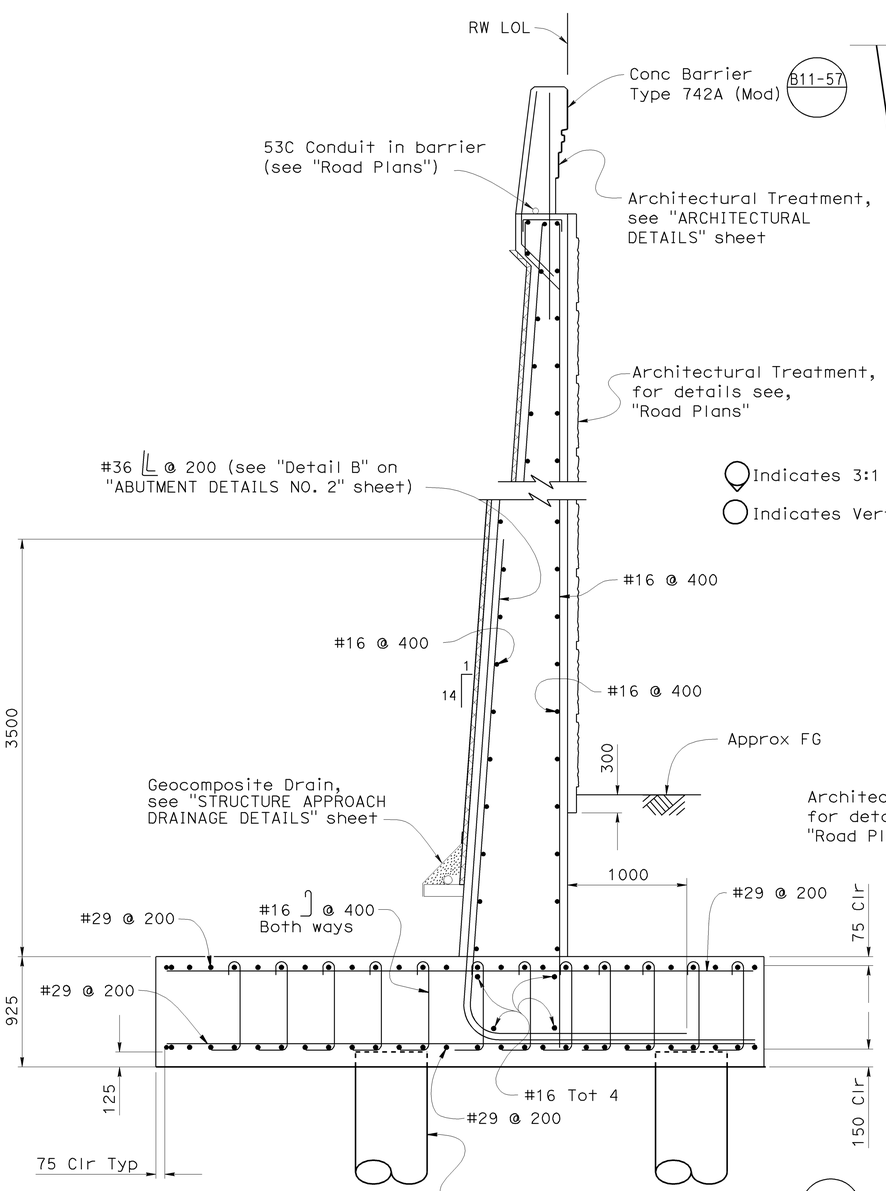

SECTION C-C

1:25

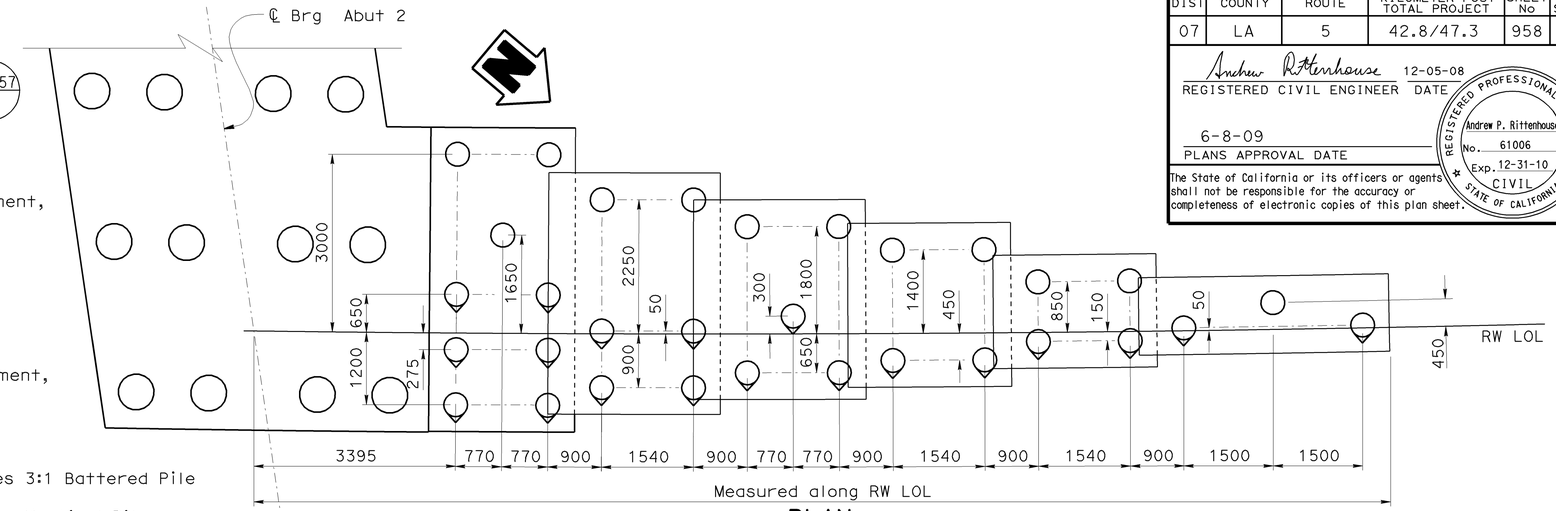

PLAN

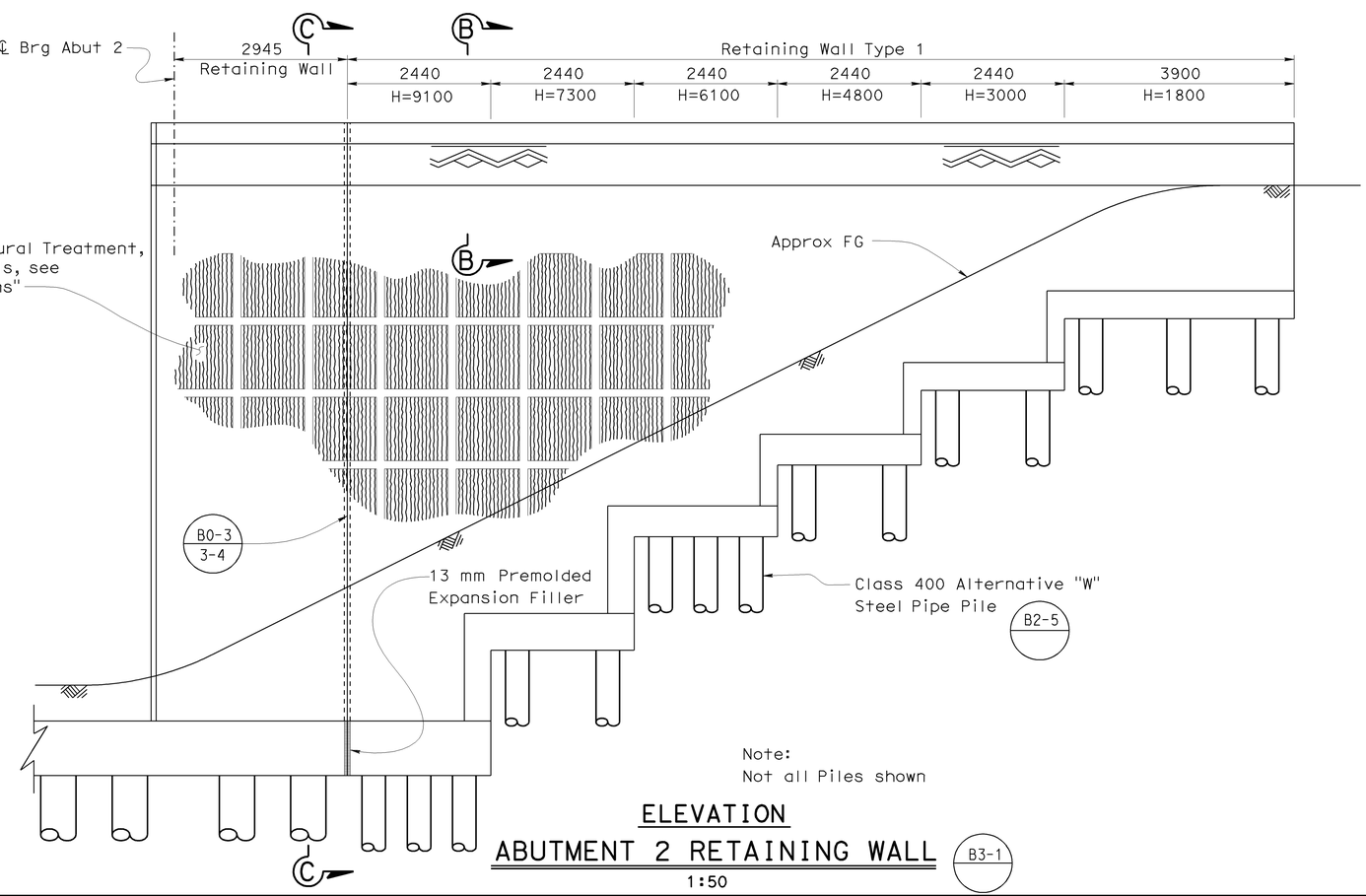

Note:
Not all Piles shown

ELEVATION

ABUTMENT 2 RETAINING WALL

1:50

B3-1

Notes:
1. For pile spacing see "ABUTMENT FOOTING DETAILS NO. 1" sheet.

2. For "Section B-B" see "RETAINING WALL DETAILS NO. 1" sheet.

NOTE:
THE CONTRACTOR SHALL VERIFY ALL CONTROLLING FIELD DIMENSIONS BEFORE ORDERING OR FABRICATING ANY MATERIAL.

Caltrans Metric

ALL DIMENSIONS ARE IN MILLIMETERS UNLESS OTHERWISE SHOWN

ORIGINAL SCALE IN MILLIMETERS FOR REDUCED PLANS 0 10 20 30 40 50 60 70 80 90 100

	BY	CHECKED
DESIGN	Hogni Setberg	Ruslan Novik
DETAILS	H Mauroschadt	Richard Yates
QUANTITIES	Jenny Zhang	James Ralston

STATE OF CALIFORNIA
DEPARTMENT OF TRANSPORTATION

DIVISION OF ENGINEERING SERVICES
STRUCTURE DESIGN
DESIGN BRANCH 15

CU 07
EA 121841

BRIDGE NO. 53-1086
KILOMETER POST 46.5

VERDUGO AVENUE UNDERCROSSING (WIDEN)

RETAINING WALL DETAILS NO. 2

DISREGARD PRINTS BEARING EARLIER REVISION DATES

REVISION DATES: 1-15-09 1-21-09 3-3-09 1-14-08 2-22-08 4-2-08 10-22-08 11-14-08 1-2-09

SHEET 17 OF 39

FILE => 53-1086-i-rw2.dgn

STRUCTURES DESIGN DETAIL SHEET (METRIC) (REV.03-17-04)

USERNAME => trmnguye DATE PLOTTED => 15-JUN-2009 TIME PLOTTED => 08:21

DIST	COUNTY	ROUTE	KILOMETER POST TOTAL PROJECT	SHEET No	TOTAL SHEETS
07	LA	5	42.8/47.3	959	1073

Andrew Rittenhouse 12-05-08
REGISTERED CIVIL ENGINEER DATE

6-8-09
PLANS APPROVAL DATE

REGISTERED PROFESSIONAL ENGINEER
Andrew P. Rittenhouse
No. 61006
Exp. 12-31-10
CIVIL
STATE OF CALIFORNIA

The State of California or its officers or agents shall not be responsible for the accuracy or completeness of electronic copies of this plan sheet.

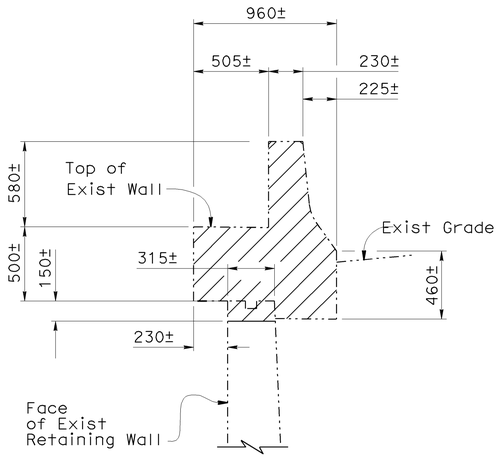

SECTION A-A
1:20

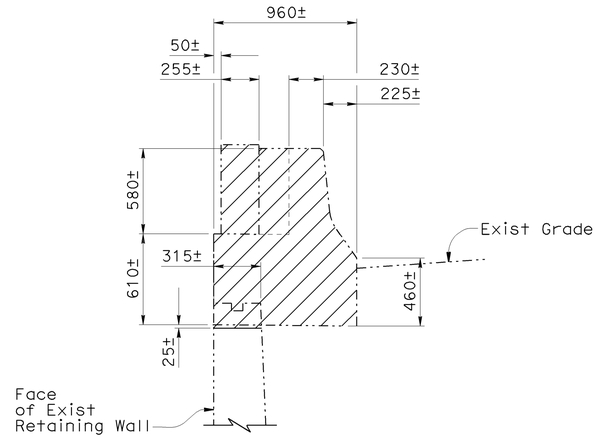

SECTION B-B
1:20

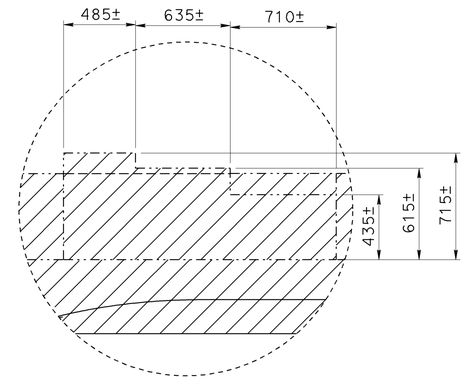

DETAIL A
1:20

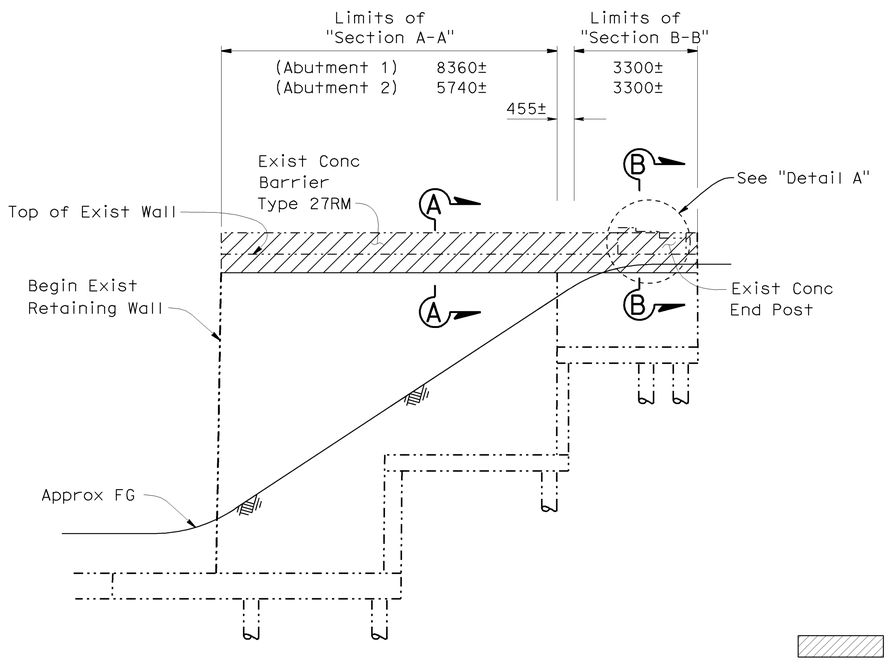

MIRRORED RETAINING WALL ELEVATION
No Scale

Indicates Bridge Removal (Portion)

Notes:

Abutment 2 (Northwest) Retaining Wall shown,
Abutment 1 (Southwest) Retaining Wall similar

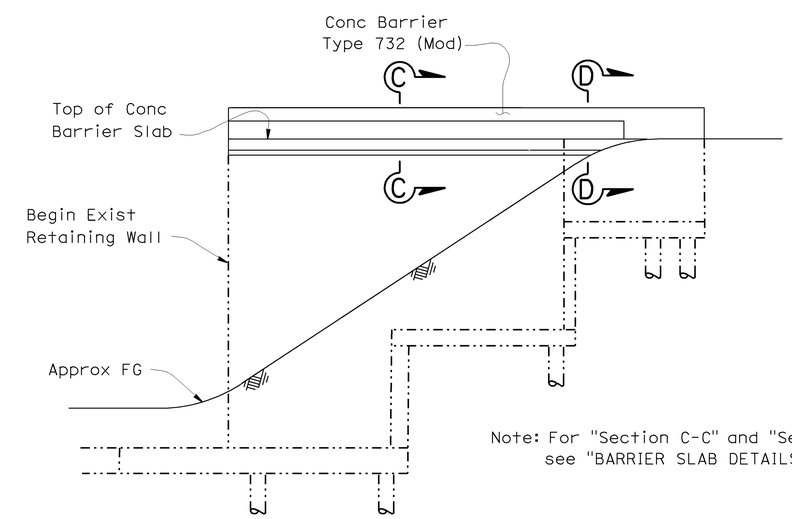

Note: For "Section C-C" and "Section D-D"
see "BARRIER SLAB DETAILS NO. 2" sheet

MIRRORED RETAINING WALL ELEVATION
No Scale

NOTE:
THE CONTRACTOR SHALL VERIFY ALL CONTROLLING FIELD DIMENSIONS BEFORE ORDERING OR FABRICATING ANY MATERIAL.

CONCRETE REMOVAL

Caltrans Metric

ALL DIMENSIONS ARE IN MILLIMETERS UNLESS OTHERWISE SHOWN

ORIGINAL SCALE IN MILLIMETERS FOR REDUCED PLANS 0 10 20 30 40 50 60 70 80 90 100

	BY	CHECKED
DESIGN	Hogni Setberg	Richard Yates
DETAILS	H. Mauroschadt	Richard Yates
QUANTITIES	Jenny Zhang	James Ralston

STATE OF CALIFORNIA
DEPARTMENT OF TRANSPORTATION

DIVISION OF ENGINEERING SERVICES
STRUCTURE DESIGN
DESIGN BRANCH 15

CU 07
EA 121841

BRIDGE NO. 53-1086
KILOMETER POST 46.5

VERDUGO AVENUE UC WIDEN & RETROFIT
BARRIER SLAB DETAILS NO. 1

DISREGARD PRINTS BEARING EARLIER REVISION DATES
REVISION DATES: 9-14-06 5-16-07 8-30-08 11-24-08
SHEET 18 OF 39

FILE => 53-1086-j-brdet1.dgn

STRUCTURES DESIGN DETAIL SHEET (METRIC) (REV.03-17-04)

USERNAME => trmnguye DATE PLOTTED => 15-JUN-2009 TIME PLOTTED => 08:22

DIST	COUNTY	ROUTE	KILOMETER POST TOTAL PROJECT	SHEET No	TOTAL SHEETS
07	LA	5	42.8/47.3	960	1073

Andrew Rittenhouse 12-05-08
REGISTERED CIVIL ENGINEER DATE

6-8-09
PLANS APPROVAL DATE

REGISTERED PROFESSIONAL ENGINEER Andrew P. Rittenhouse No. 61006 Exp. 12-31-10 CIVIL STATE OF CALIFORNIA

The State of California or its officers or agents shall not be responsible for the accuracy or completeness of electronic copies of this plan sheet.

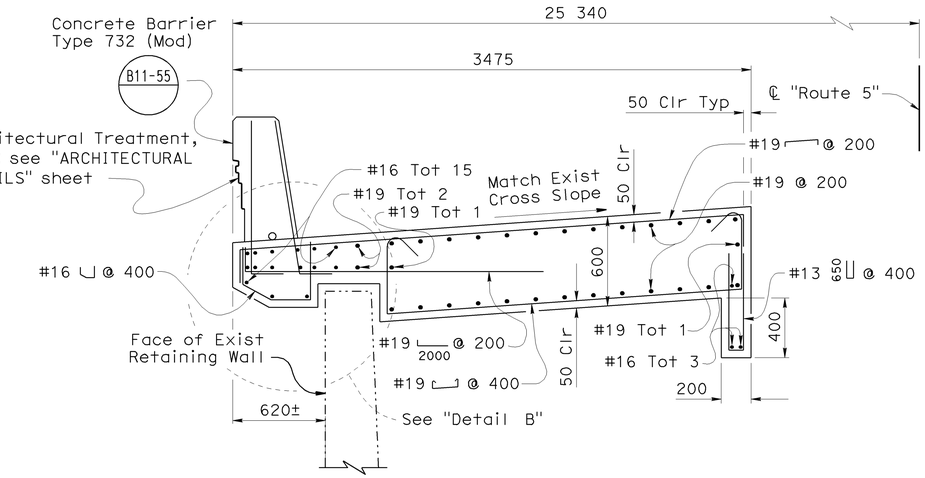

SECTION C-C (ABUTMENT 1)

1:20

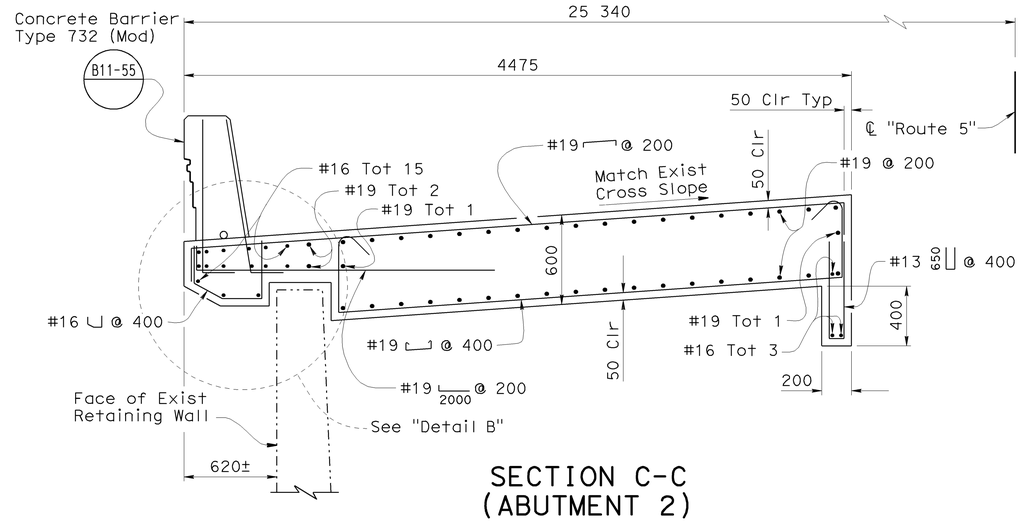

SECTION C-C (ABUTMENT 2)

1:20

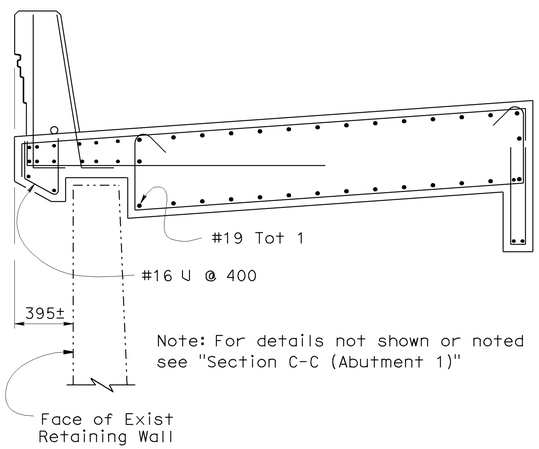

Note: For details not shown or noted see "Section C-C (Abutment 1)"

SECTION D-D (ABUTMENT 1)

1:20

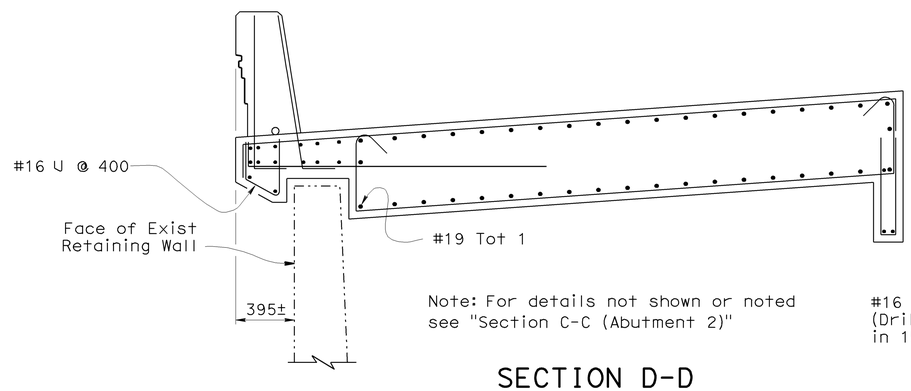

Note: For details not shown or noted see "Section C-C (Abutment 2)"

SECTION D-D (ABUTMENT 2)

1:20

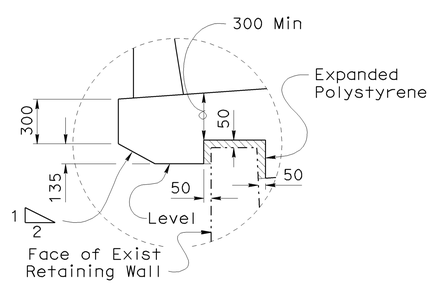

DETAIL B

1:20

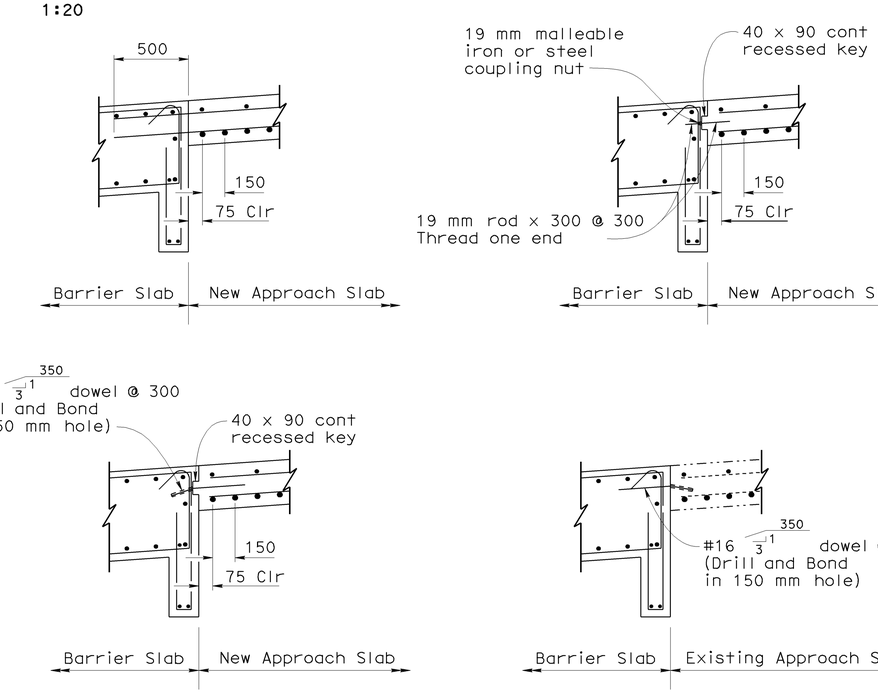

Note:
For Approach Slab reinf see "STRUCTURE APPROACH TYPE N(9S)" and "STRUCTURE APPROACH TYPE R(9S)" sheets.

LONGITUDINAL CONSTRUCTION JOINT ALTERNATIVES

No Scale

NOTE:
THE CONTRACTOR SHALL VERIFY ALL CONTROLLING FIELD DIMENSIONS BEFORE ORDERING OR FABRICATING ANY MATERIAL.

	BY	CHECKED
DESIGN	Hogni Setberg	Richard Yates
DETAILS	H. Mauroschadt	Richard Yates
QUANTITIES	Jenny Zhang	James Ralston

STATE OF CALIFORNIA
DEPARTMENT OF TRANSPORTATION

DIVISION OF ENGINEERING SERVICES
STRUCTURE DESIGN
DESIGN BRANCH 15

BRIDGE NO. 53-1086
KILOMETER POST 46.5

VERDUGO AVENUE UC WIDEN & RETROFIT
BARRIER SLAB DETAILS NO. 2

ALL DIMENSIONS ARE IN MILLIMETERS UNLESS OTHERWISE SHOWN

ORIGINAL SCALE IN MILLIMETERS FOR REDUCED PLANS 0 10 20 30 40 50 60 70 80 90 100

CU 07
EA 121841

DISREGARD PRINTS BEARING EARLIER REVISION DATES

REVISION DATES: 9-20-06, 5-15-07, 1-13-08, 8-30-08, 11-24-08, 3-3-09

SHEET 19 OF 39

FILE => 53-1086-j-brdet2.dgn

STRUCTURES DESIGN DETAIL SHEET (METRIC) (REV.03-17-04)

USERNAME => trmnguye DATE PLOTTED => 15-JUN-2009 TIME PLOTTED => 08:22

DIST	COUNTY	ROUTE	KILOMETER POST TOTAL PROJECT	SHEET No	TOTAL SHEETS
07	LA	5	42.8/47.3	961	1073

Andrew Rittenhouse 12-05-08
REGISTERED CIVIL ENGINEER DATE

6-8-09
PLANS APPROVAL DATE

REGISTERED PROFESSIONAL ENGINEER
Andrew P. Rittenhouse
No. 61006
Exp. 12-31-10
CIVIL
STATE OF CALIFORNIA

The State of California or its officers or agents shall not be responsible for the accuracy or completeness of electronic copies of this plan sheet.

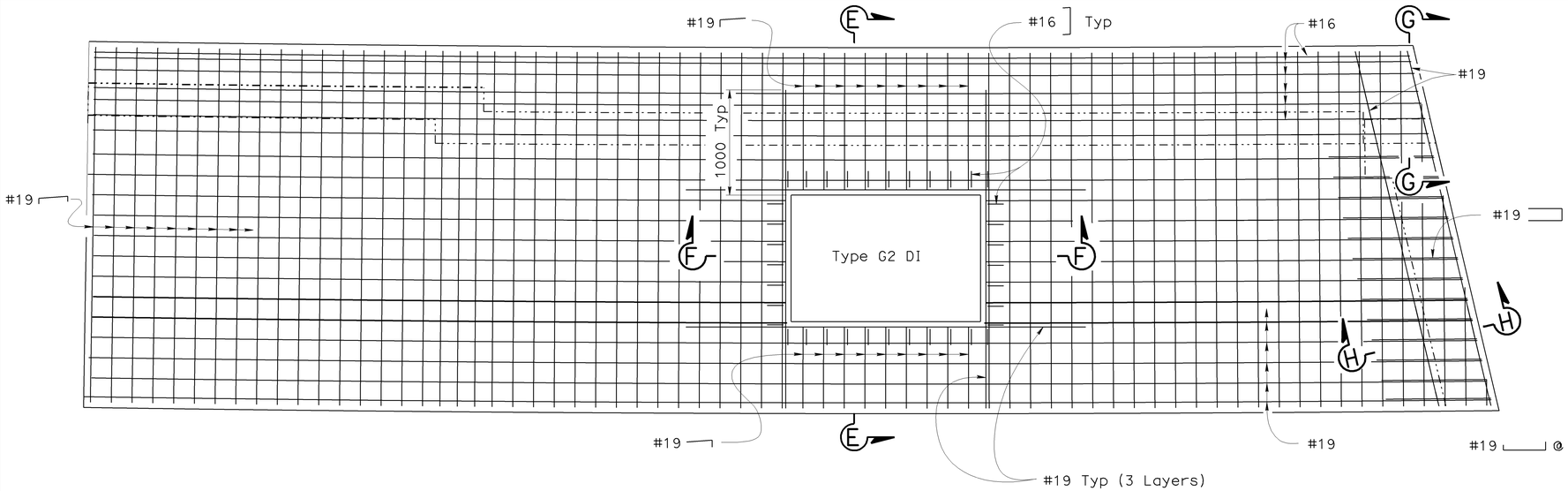

TOP REINFORCEMENT BARRIER SLAB (ABUTMENT 1)

1:25

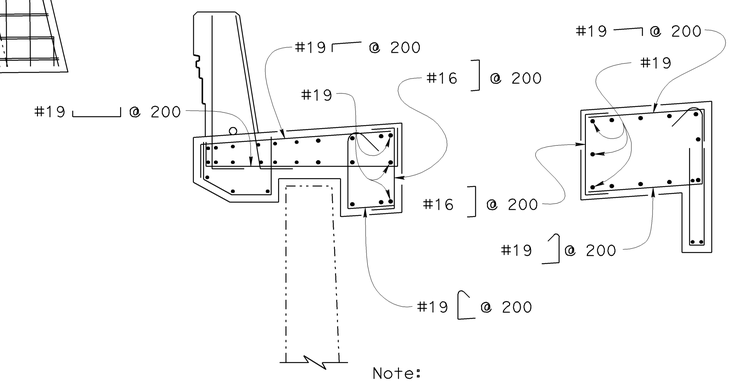

Note:

For details not shown or noted see "Section C-C (Abutment 1)" on "BARRIER SLAB DETAILS NO. 2" sheet

SECTION E-E

1:20

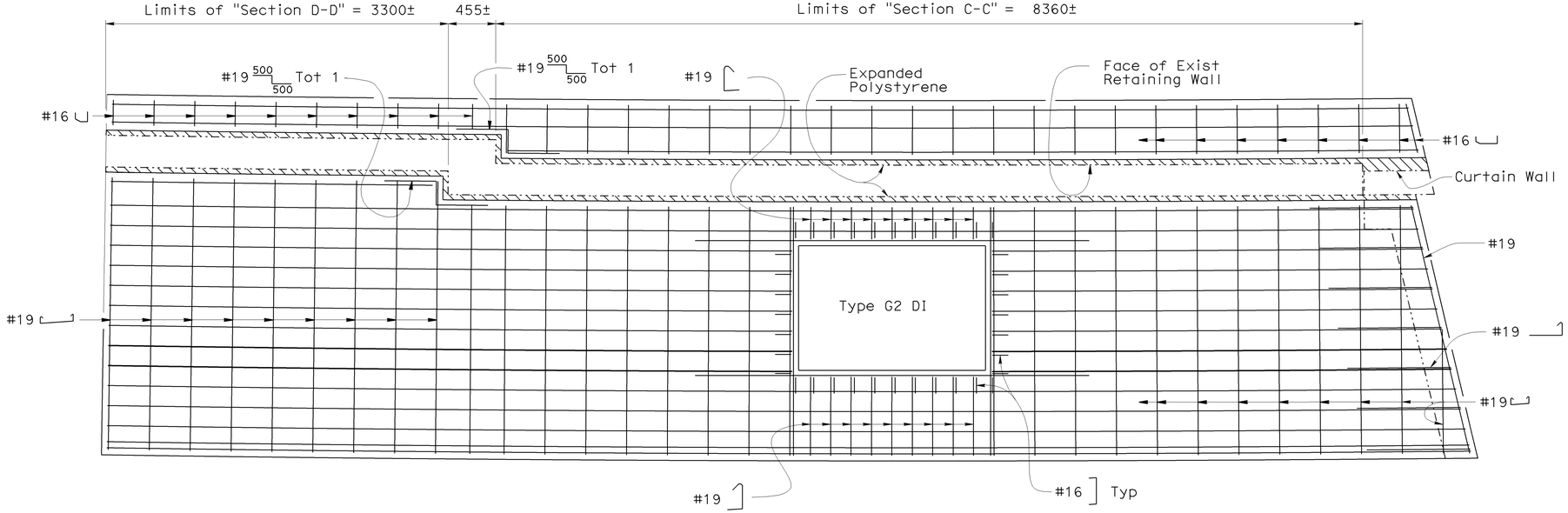

BOTTOM REINFORCEMENT BARRIER SLAB (ABUTMENT 1)

1:25

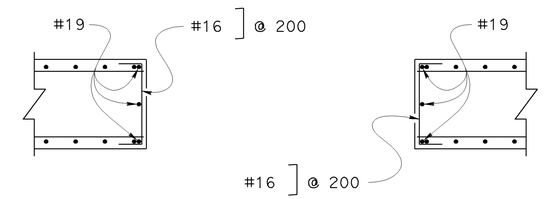

SECTION F-F

1:20

Note:

For "Section G-G" and "Section H-H" see "BARRIER SLAB DETAILS NO. 4" sheet

NOTE:
THE CONTRACTOR SHALL VERIFY ALL CONTROLLING FIELD DIMENSIONS BEFORE ORDERING OR FABRICATING ANY MATERIAL.

Caltrans Metric

ALL DIMENSIONS ARE IN MILLIMETERS UNLESS OTHERWISE SHOWN

ORIGINAL SCALE IN MILLIMETERS FOR REDUCED PLANS 0 10 20 30 40 50 60 70 80 90 100

	BY	CHECKED
DESIGN	Hogni Setberg	Richard Yates
DETAILS	H. Mauroschadt	Richard Yates
QUANTITIES	Jenny Zhang	James Ralston

STATE OF CALIFORNIA
DEPARTMENT OF TRANSPORTATION

DIVISION OF ENGINEERING SERVICES
STRUCTURE DESIGN
DESIGN BRANCH 15

CU 07
EA 121841

BRIDGE NO. 53-1086
KILOMETER POST 46.5

VERDUGO AVENUE UC WIDEN & RETROFIT
BARRIER SLAB DETAILS NO. 3

DISREGARD PRINTS BEARING EARLIER REVISION DATES

REVISION DATES: 9-15-06 5-15-07 4-7-08 7-7-08 11-13-08 3-1-09 4-15-09

SHEET 20 OF 39

FILE => 53-1086-j-brdet3.dgn

STRUCTURES DESIGN DETAIL SHEET (METRIC) (REV.03-17-04)

USERNAME => trimmguye DATE PLOTTED => 15-JUN-2009 TIME PLOTTED => 08:22

DIST	COUNTY	ROUTE	KILOMETER POST TOTAL PROJECT	SHEET No	TOTAL SHEETS
07	LA	5	42.8/47.3	962	1073

Andrew Rittenhouse 12-05-08
REGISTERED CIVIL ENGINEER DATE

6-8-09
PLANS APPROVAL DATE

REGISTERED PROFESSIONAL ENGINEER Andrew P. Rittenhouse No. 61006 Exp. 12-31-10 CIVIL STATE OF CALIFORNIA

The State of California or its officers or agents shall not be responsible for the accuracy or completeness of electronic copies of this plan sheet.

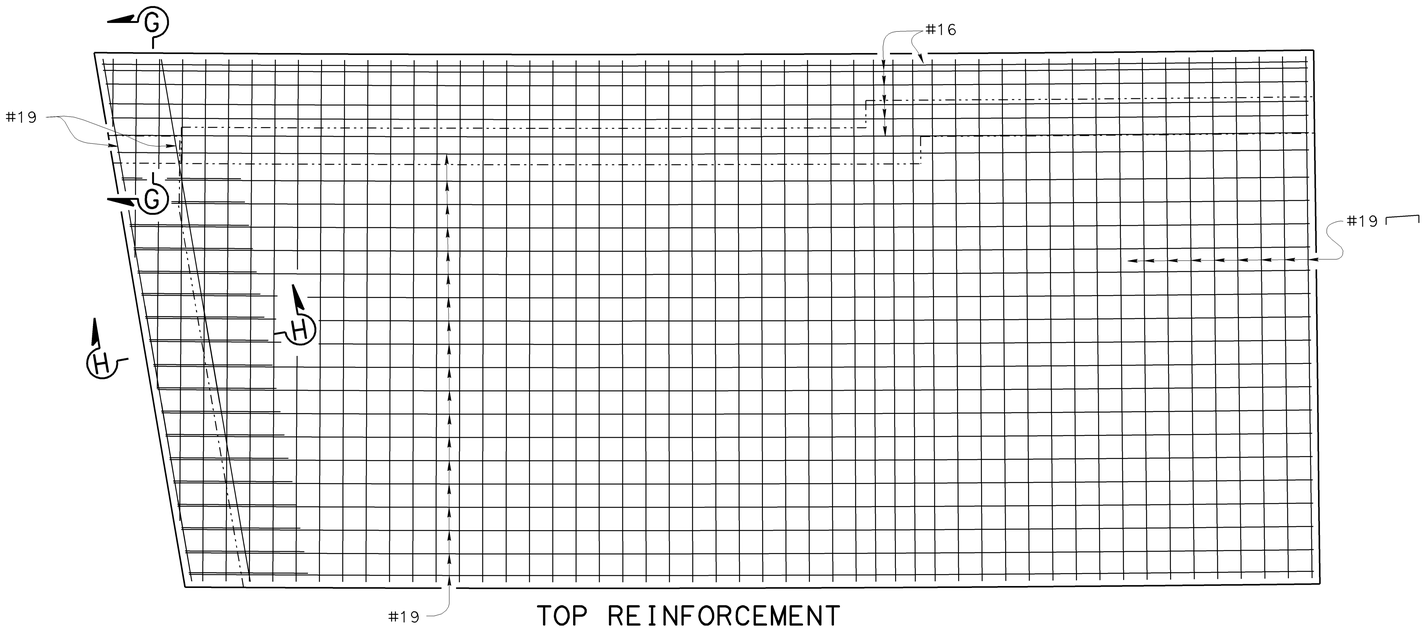

TOP REINFORCEMENT
BARRIER SLAB
(ABUTMENT 2)

1:25

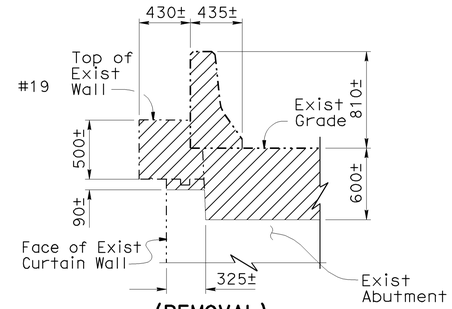

(REMOVAL)
SECTION G-G

1:25

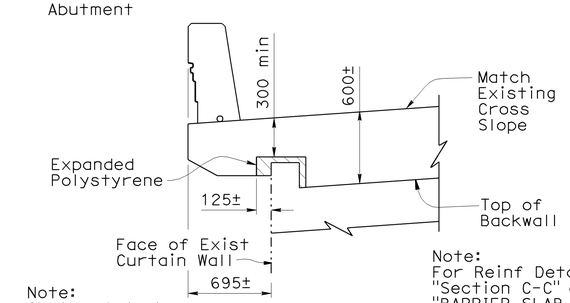

Note:
Abutment 1 shown,
Abutment 2 similar.

Note:
For Reinf Details see "Section C-C" on "BARRIER SLAB DETAILS No. 2" sheet.

(REPLACEMENT)
SECTION G-G

1:25

Table B			
Dimension "a"			
Abutment	Winter	Fall-Spring	Summer
Abut 1	25	20	13
Abut 2	25	20	13

Indicates Bridge Removal (Portion)

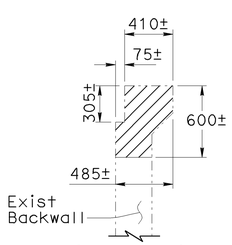

(REMOVAL)
SECTION H-H

1:25

NOTE:
THE CONTRACTOR SHALL VERIFY ALL CONTROLLING FIELD DIMENSIONS BEFORE ORDERING OR FABRICATING ANY MATERIAL.

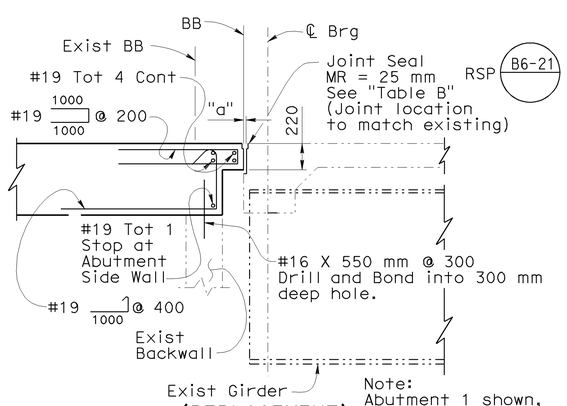

Note:
Abutment 1 shown,
Abutment 2 similar.

(REPLACEMENT)
SECTION H-H

1:25

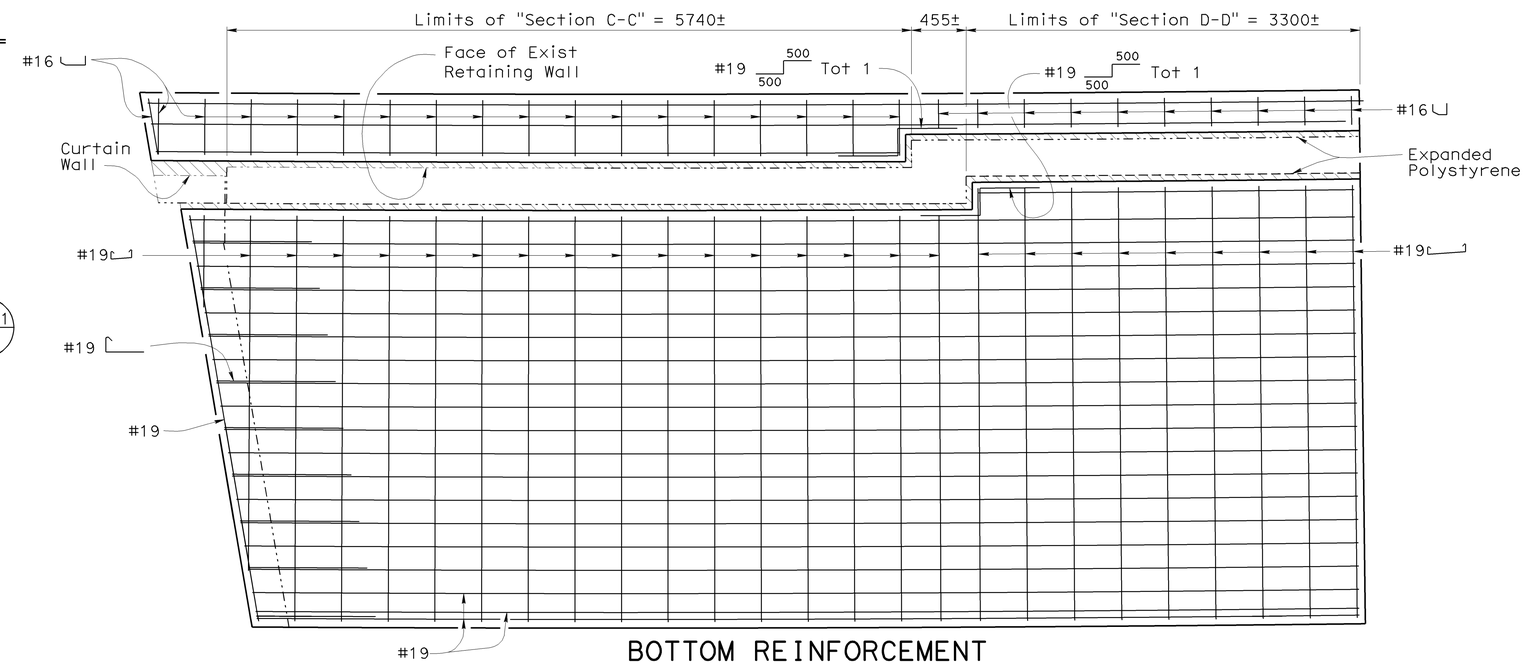

BOTTOM REINFORCEMENT
BARRIER SLAB
(ABUTMENT 2)

1:25

DESIGN	BY Hogni Setberg	CHECKED Richard Yates	
DETAILS	BY H. Mauroschadt	CHECKED Richard Yates	
QUANTITIES	BY Jenny Zhang	CHECKED James Ralston	

STATE OF CALIFORNIA
DEPARTMENT OF TRANSPORTATION

DIVISION OF ENGINEERING SERVICES
STRUCTURE DESIGN
DESIGN BRANCH 15

BRIDGE NO. 53-1086
KILOMETER POST 46.5

VERDUGO AVENUE UC WIDEN & RETROFIT
BARRIER SLAB DETAILS NO. 4

Caltrans Metric

ALL DIMENSIONS ARE IN MILLIMETERS UNLESS OTHERWISE SHOWN

ORIGINAL SCALE IN MILLIMETERS FOR REDUCED PLANS 0 10 20 30 40 50 60 70 80 90 100

CU 07
EA 121841

DISREGARD PRINTS BEARING EARLIER REVISION DATES

REVISION DATES 8-1-06 9-15-06 5-11-07 4-1-08 11-14-08 4-14-09

SHEET 21 OF 39

FILE => 53-1086-j-brdet4.dgn

STRUCTURES DESIGN DETAIL SHEET (METRIC) (REV.03-17-04)

USERNAME => ttrmnguye DATE PLOTTED => 15-JUN-2009 TIME PLOTTED => 08:22

DIST	COUNTY	ROUTE	KILOMETER POST TOTAL PROJECT	SHEET No	TOTAL SHEETS
07	LA	5	42.8/47.3	963	1073

Andrew Rittenhouse 12-05-08
REGISTERED CIVIL ENGINEER DATE

6-8-09
PLANS APPROVAL DATE

REGISTERED PROFESSIONAL ENGINEER Andrew P. Rittenhouse No. 61006 Exp. 12-31-10 CIVIL STATE OF CALIFORNIA

The State of California or its officers or agents shall not be responsible for the accuracy or completeness of electronic copies of this plan sheet.

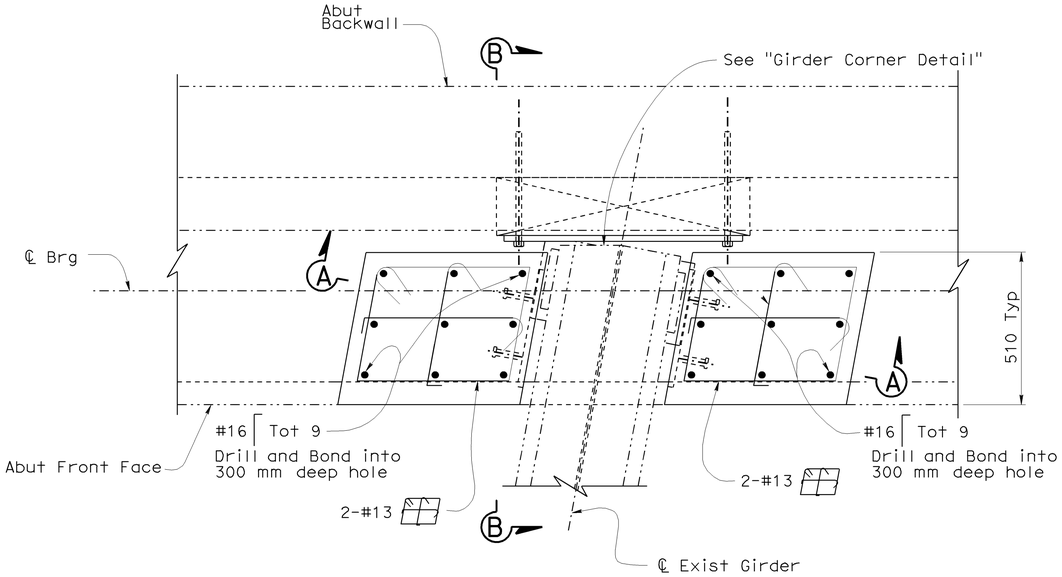

Notes:

For Abut 2 Exist Girders A & B use 1-#13

Cross bracing connection not shown for clarity

PLAN-SHEAR KEYS (EXISTING ABUTS)

1:10

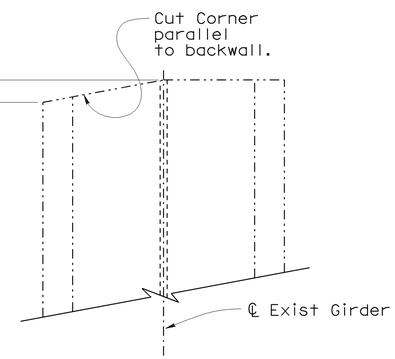

GIRDER CORNER DETAIL

1:5

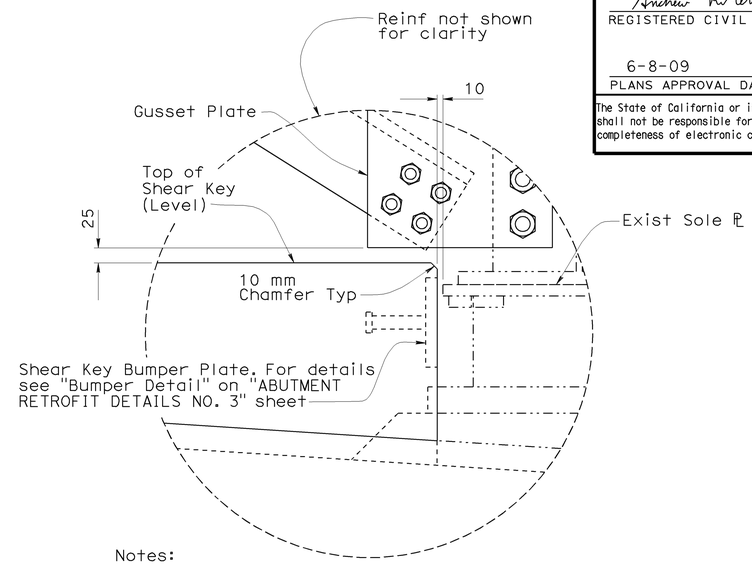

Notes:

Typical bearing, shear key, and shear key bumper plate shown.

Reinforcement not shown for clarity

DETAIL A

1:5

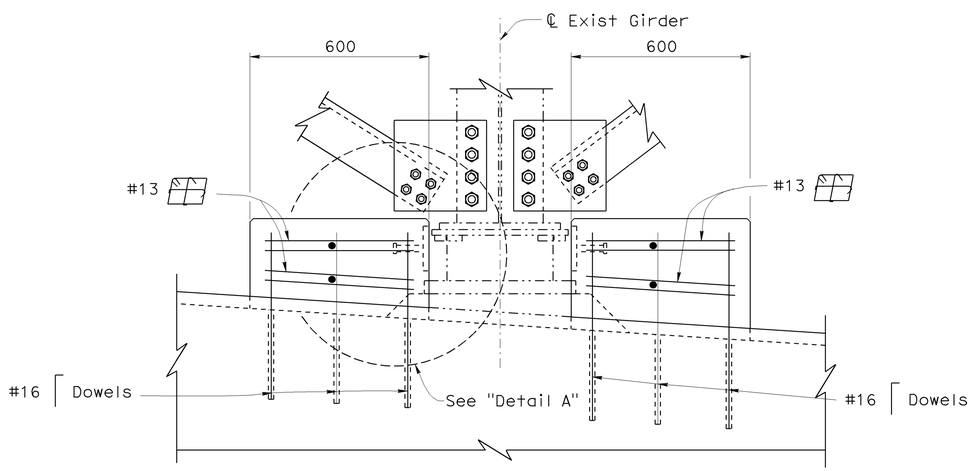

Note: Typical bearing and shear keys shown.

SECTION A-A

1:10

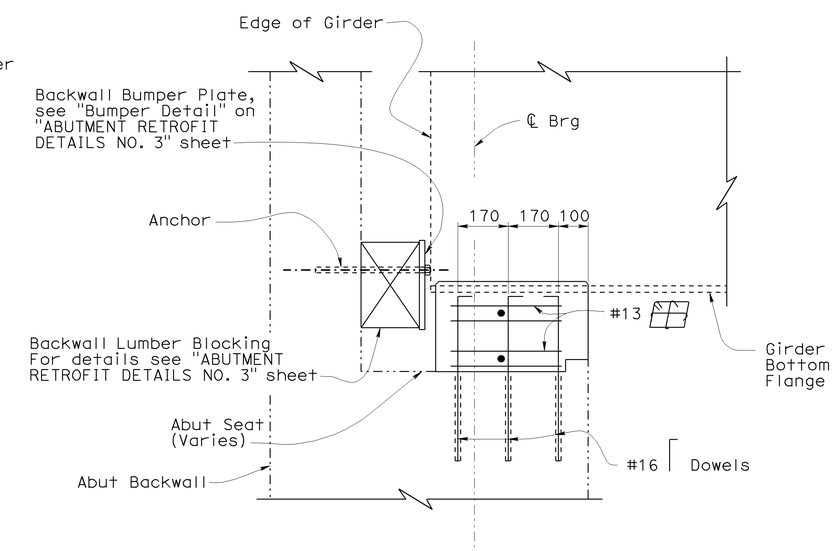

Note: Typical shear key shown.

SECTION B-B

1:10

NOTE:
THE CONTRACTOR SHALL VERIFY ALL CONTROLLING FIELD DIMENSIONS BEFORE ORDERING OR FABRICATING ANY MATERIAL.

	BY	CHECKED
DESIGN	Hogni Setberg	Richard Yates
DETAILS	Herman Mauroschadt	Richard Yates
QUANTITIES	Jenny Zhang	James Ralston

STATE OF CALIFORNIA
DEPARTMENT OF TRANSPORTATION

DIVISION OF ENGINEERING SERVICES
STRUCTURE DESIGN
DESIGN BRANCH 15

BRIDGE NO. 53-1086
KILOMETER POST 46.5

VERDUGO AVENUE UC WIDEN & RETROFIT
ABUTMENT RETROFIT DETAILS NO. 1

Caltrans Metric

ALL DIMENSIONS ARE IN MILLIMETERS UNLESS OTHERWISE SHOWN

ORIGINAL SCALE IN MILLIMETERS FOR REDUCED PLANS 0 10 20 30 40 50 60 70 80 90 100

CU 07
EA 121841

DISREGARD PRINTS BEARING EARLIER REVISION DATES

REVISION DATES: 2-23-07 5-15-07 10-15-08 11-17-08 1-9-09 1-15-09 1-23-09 3-3-09

SHEET 22 OF 39

FILE => 53-1086-k-a1.dgn

STRUCTURES DESIGN DETAIL SHEET (METRIC) (REV.03-17-04)

USERNAME => trmnguye DATE PLOTTED => 15-JUN-2009 TIME PLOTTED => 08:22

DIST	COUNTY	ROUTE	KILOMETER POST TOTAL PROJECT	SHEET No	TOTAL SHEETS
07	LA	5	42.8/47.3	964	1073

Andrew Rittenhouse 12-05-08
REGISTERED CIVIL ENGINEER DATE

6-8-09
PLANS APPROVAL DATE

REGISTERED PROFESSIONAL ENGINEER Andrew P. Rittenhouse No. 61006 Exp. 12-31-10 CIVIL STATE OF CALIFORNIA

The State of California or its officers or agents shall not be responsible for the accuracy or completeness of electronic copies of this plan sheet.

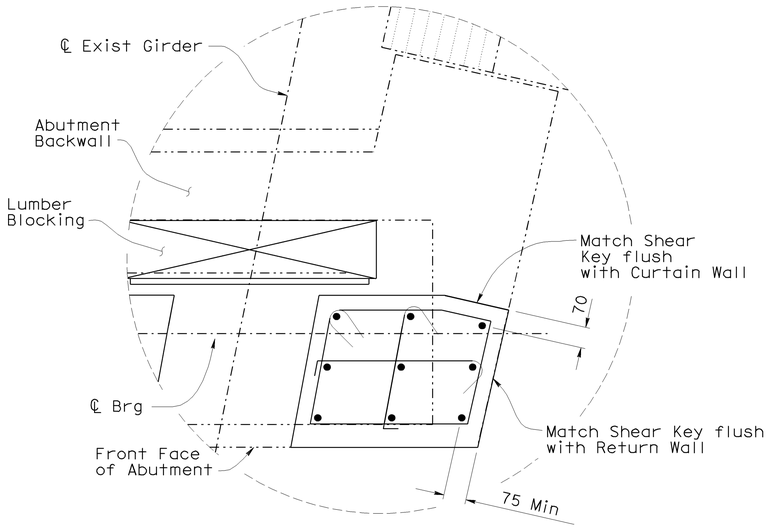

Note:
For dimensions not shown see "Section B-B" on "ABUTMENT RETROFIT DETAILS NO. 1" sheet.

DETAIL B (ABUTMENT 1)
1:10

Note:
For location of "Detail B" and "Detail D" see "ABUTMENT 1 LAYOUT" sheet.

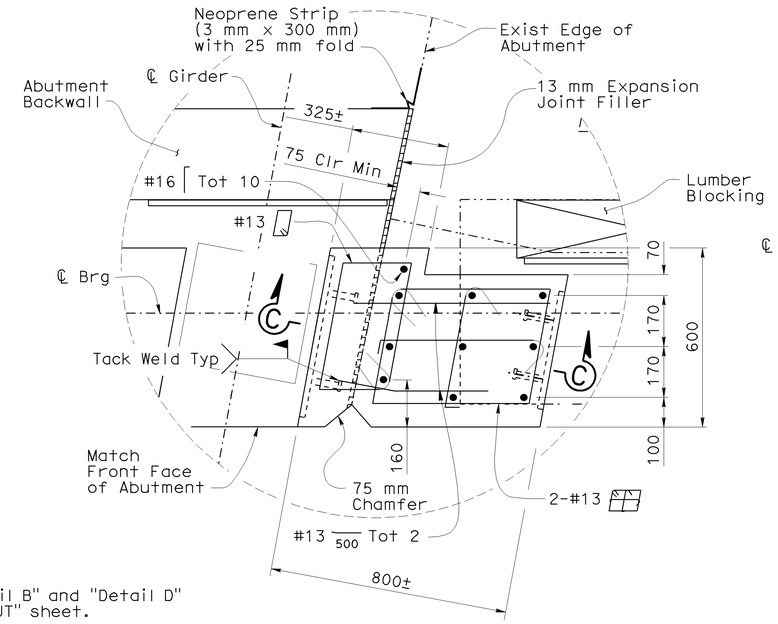

DETAIL D (ABUTMENT 1)
1:10

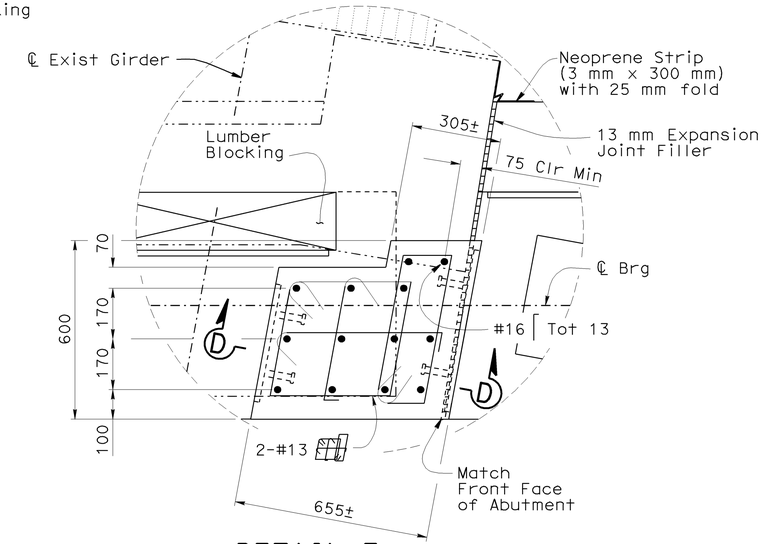

DETAIL E (ABUTMENT 2)
1:10

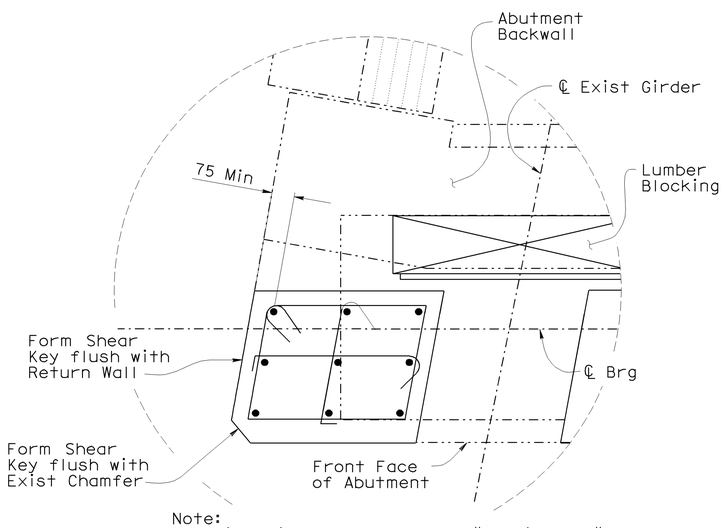

Note:
For dimensions not shown see "Section B-B" on "ABUTMENT RETROFIT DETAILS NO. 1" sheet.

DETAIL C (ABUTMENT 2)
1:10

Note:
For location of "Detail C" and "Detail E" see "ABUTMENT 2 LAYOUT" sheet.

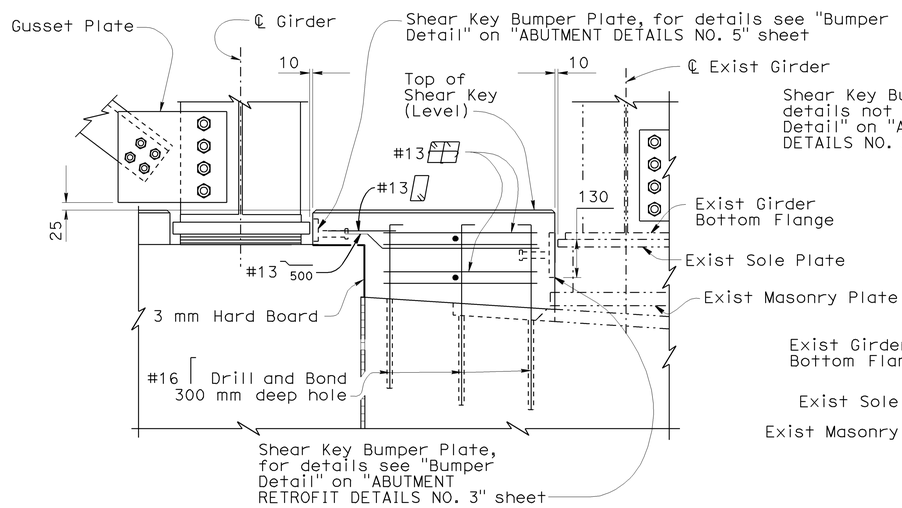

SECTION C-C
1:10

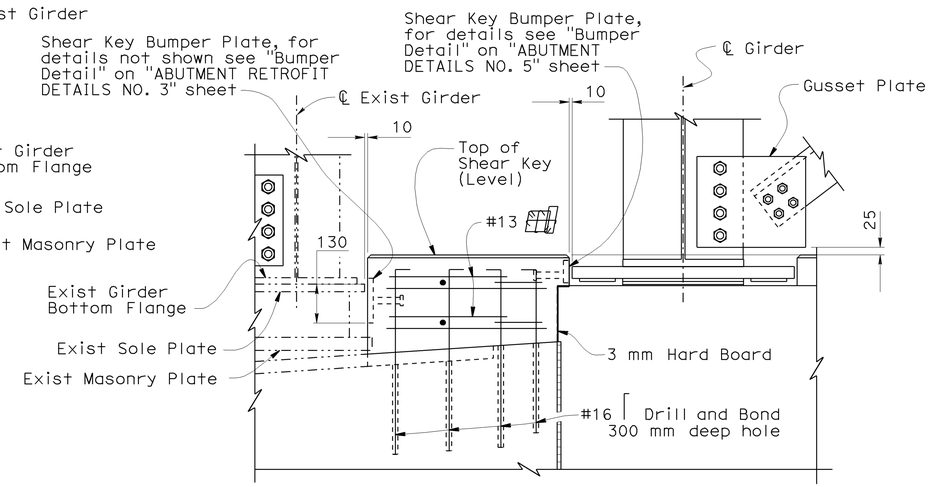

SECTION D-D
1:10

NOTE:
THE CONTRACTOR SHALL VERIFY ALL CONTROLLING FIELD DIMENSIONS BEFORE ORDERING OR FABRICATING ANY MATERIAL.

DESIGN	BY Hogni Setberg	CHECKED Richard Yates	
DETAILS	BY Herman Mauroschadt	CHECKED Richard Yates	
QUANTITIES	BY Jenny Zhang	CHECKED James Ralston	

STATE OF CALIFORNIA
DEPARTMENT OF TRANSPORTATION

DIVISION OF ENGINEERING SERVICES
STRUCTURE DESIGN
DESIGN BRANCH 15

BRIDGE NO. 53-1086
KILOMETER POST 46.5

VERDUGO AVENUE WIDEN & RETROFIT
ABUTMENT RETROFIT DETAILS NO. 2

ALL DIMENSIONS ARE IN MILLIMETERS UNLESS OTHERWISE SHOWN

ORIGINAL SCALE IN MILLIMETERS FOR REDUCED PLANS 0 10 20 30 40 50 60 70 80 90 100

CU 07
EA 121841

DISREGARD PRINTS BEARING EARLIER REVISION DATES
REVISION DATES: 2-23-07 3-26-07 11-24-08 1-15-09 3-3-09

SHEET 23 OF 39

FILE => 53-1086-K-a2.dgn

STRUCTURES DESIGN DETAIL SHEET (METRIC) (REV.03-17-04)

USERNAME => rtrmnguye DATE PLOTTED => 15-JUN-2009 TIME PLOTTED => 08:22

DIST	COUNTY	ROUTE	KILOMETER POST TOTAL PROJECT	SHEET No	TOTAL SHEETS
07	LA	5	42.8/47.3	965	1073

Andrew Rittenhouse 12-05-08
REGISTERED CIVIL ENGINEER DATE

6-8-09
PLANS APPROVAL DATE

REGISTERED PROFESSIONAL ENGINEER Andrew P. Rittenhouse No. 61006 Exp. 12-31-10 CIVIL STATE OF CALIFORNIA

The State of California or its officers or agents shall not be responsible for the accuracy or completeness of electronic copies of this plan sheet.

Table C			
Dimension "a"			
Abutment	Winter	Fall-Spring	Summer
Abut 1	25	20	13
Abut 2	25	20	13

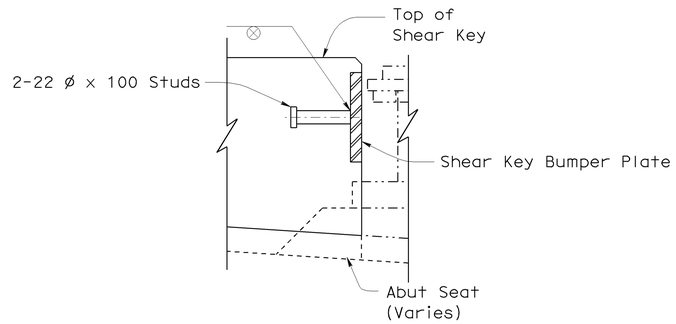

SECTION E-E

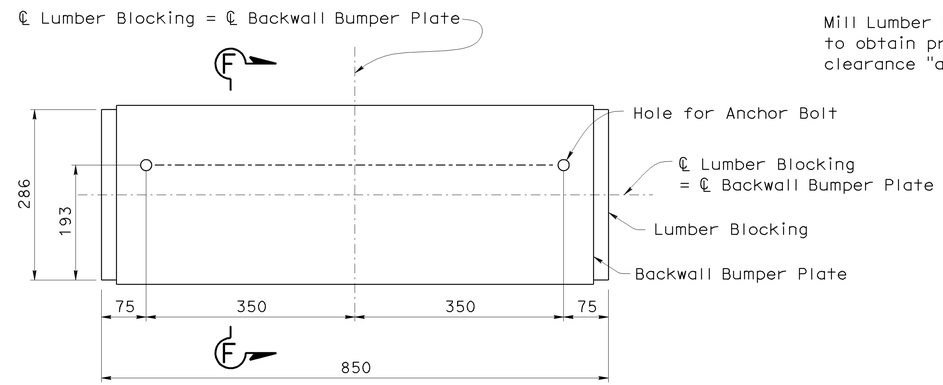

BACKWALL LUMBER BLOCKING

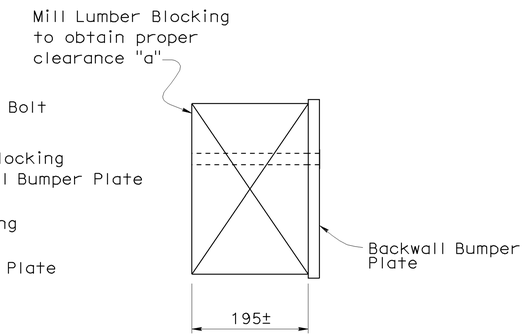

SECTION F-F

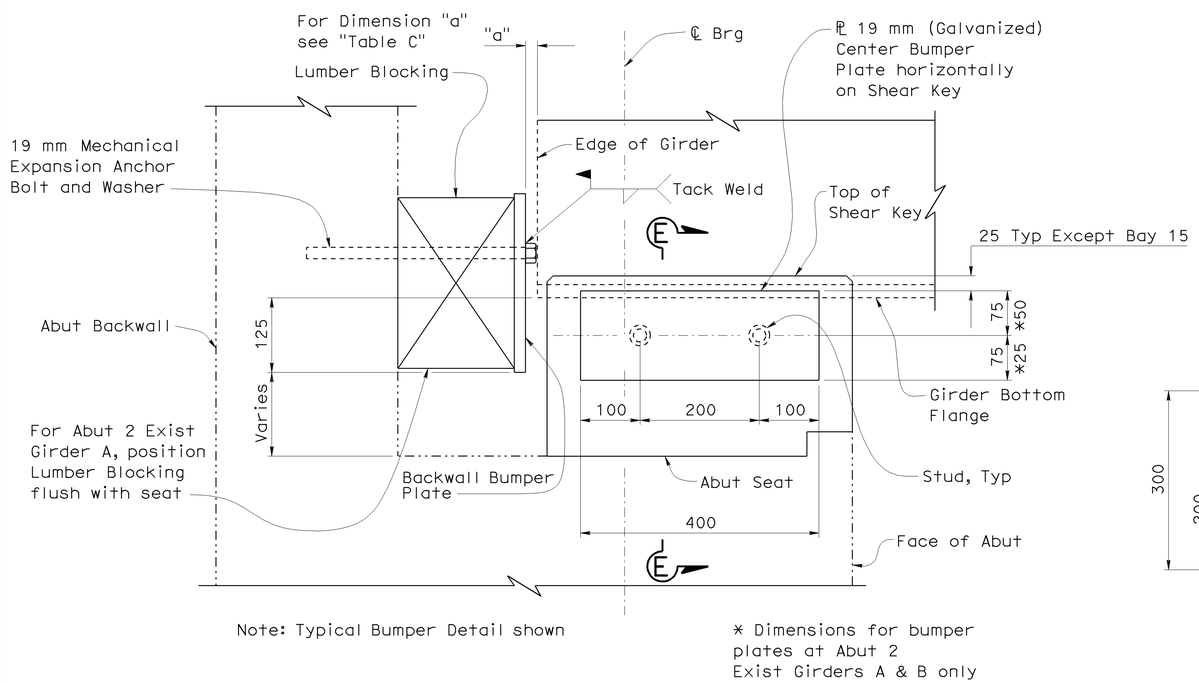

Note: Typical Bumper Detail shown

* Dimensions for bumper plates at Abut 2 Exist Girders A & B only

ELEVATION

BUMPER DETAIL

1:5

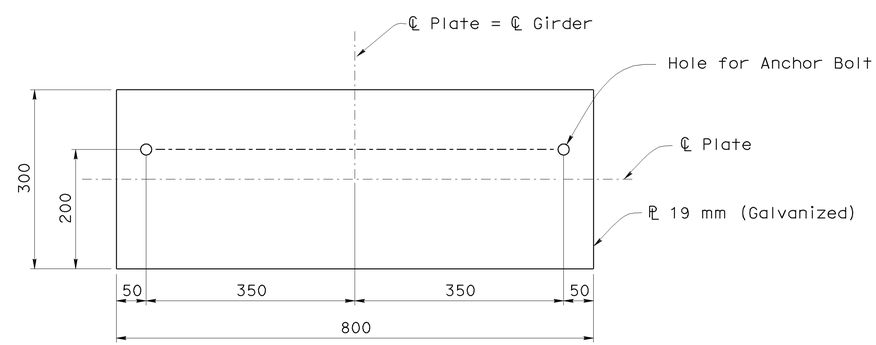

BACKWALL BUMPER PLATE

BACKWALL DETAIL

1:5

NOTE:
THE CONTRACTOR SHALL VERIFY ALL CONTROLLING FIELD DIMENSIONS BEFORE ORDERING OR FABRICATING ANY MATERIAL.

Caltrans Metric

	BY	CHECKED
DESIGN	Hogni Setberg	Richard Yates
DETAILS	Herman Mauroschadt	Richard Yates
QUANTITIES	Jenny Zhang	James Ralston

STATE OF CALIFORNIA DEPARTMENT OF TRANSPORTATION

DIVISION OF ENGINEERING SERVICES STRUCTURE DESIGN
DESIGN BRANCH 15

BRIDGE NO. 53-1086
KILOMETER POST 46.5

VERDUGO AVENUE UC WIDEN & RETROFIT
ABUTMENT RETROFIT DETAILS NO. 3

ALL DIMENSIONS ARE IN MILLIMETERS UNLESS OTHERWISE SHOWN

ORIGINAL SCALE IN MILLIMETERS FOR REDUCED PLANS 0 10 20 30 40 50 60 70 80 90 100

CU 07
EA 121841

DISREGARD PRINTS BEARING EARLIER REVISION DATES

REVISION DATES: 12-13-06 5-11-07 1-11-08 7-1-08 10-31-08 11-21-08 1-8-09 1-15-09 3-3-09

SHEET 24 OF 39

FILE => 53-1086-k-a3.dgn

STRUCTURES DESIGN DETAIL SHEET (METRIC) (REV.03-17-04)

USERNAME => trmnguye DATE PLOTTED => 15-JUN-2009 TIME PLOTTED => 08:22

DIST	COUNTY	ROUTE	KILOMETER POST TOTAL PROJECT	SHEET No	TOTAL SHEETS
07	LA	5	42.8/47.3	966	1073

Andrew Rittenhouse 12-05-08
REGISTERED CIVIL ENGINEER DATE

6-8-09
PLANS APPROVAL DATE

REGISTERED PROFESSIONAL ENGINEER Andrew P. Rittenhouse No. 61006 Exp. 12-31-10 CIVIL STATE OF CALIFORNIA

The State of California or its officers or agents shall not be responsible for the accuracy or completeness of electronic copies of this plan sheet.

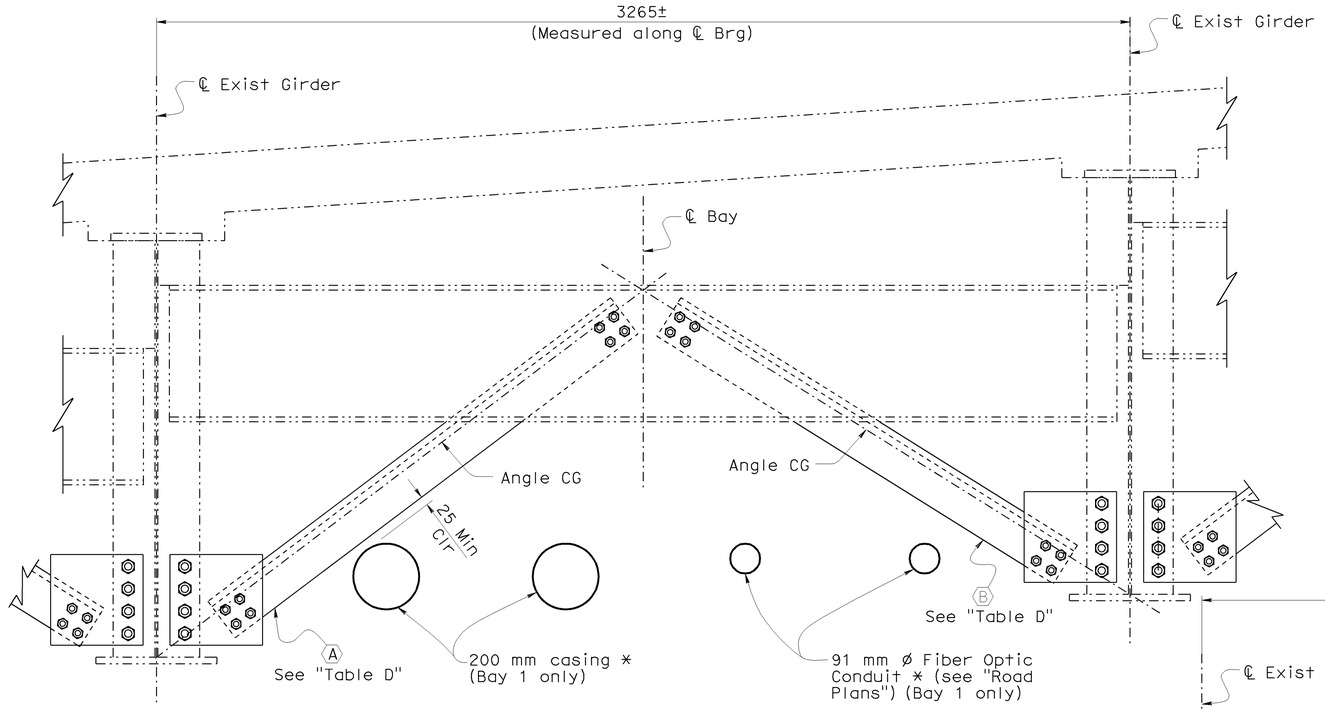

* For additional details, see "MISCELLANEOUS DETAILS NO. 2" sheet

For Details not shown, see "End Diaphragm Elevation, (Bays 9 thru 14)"

Note:
Abutment 2 shown, Abutment 1 similar.

END DIAPHRAGM ELEVATION (BAYS 1 THRU 7)

1:10

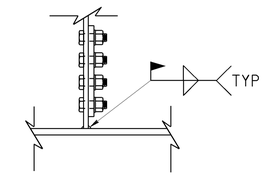

SECTION X-X

1:10

Table D			
Length of Angle Bays 1 Thru 7		Length of Angle Bays 9 Thru 14	
A	B	C	D
1695±	1570±	1690±	1565±

Note:
For location of Bays see "ABUTMENT 1 LAYOUT" and "ABUTMENT 2 LAYOUT" sheets.

⬡ Indicates Angle

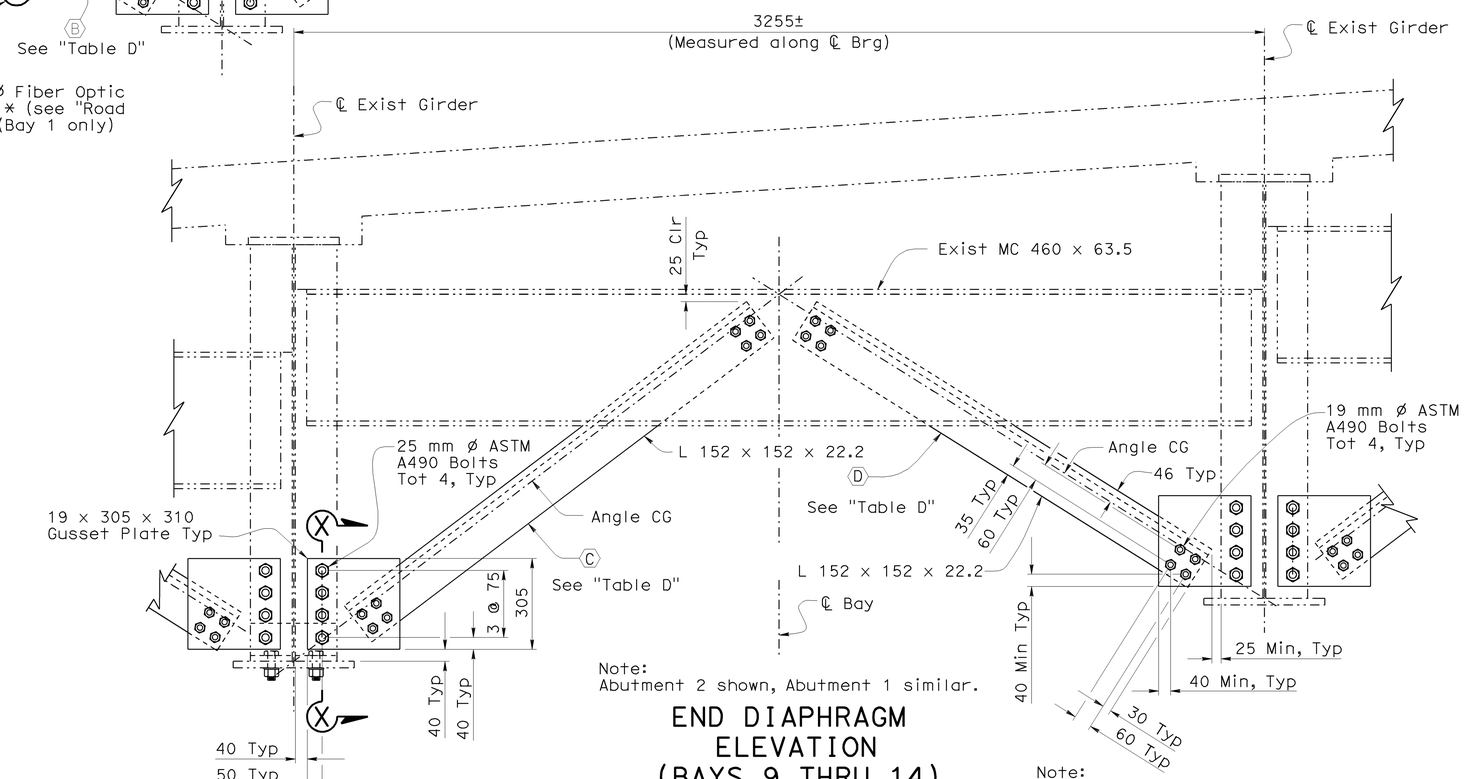

Note:
Abutment 2 shown, Abutment 1 similar.

END DIAPHRAGM ELEVATION (BAYS 9 THRU 14)

1:10

Note:
For all bolted connections, threads to be excluded from Shear Plane.

NOTE:
THE CONTRACTOR SHALL VERIFY ALL CONTROLLING FIELD DIMENSIONS BEFORE ORDERING OR FABRICATING ANY MATERIAL.

	BY	CHECKED
DESIGN	Hogni Setberg	Richard Yates
DETAILS	Herman Mauroschadt	Richard Yates
QUANTITIES	Jenny Zhang	James Ralston

STATE OF CALIFORNIA
DEPARTMENT OF TRANSPORTATION

DIVISION OF ENGINEERING SERVICES
STRUCTURE DESIGN
DESIGN BRANCH 15

BRIDGE NO. 53-1086
KILOMETER POST 46.5

VERDUGO AVENUE UC WIDEN & RETROFIT
ABUTMENT RETROFIT DETAILS NO. 4

ALL DIMENSIONS ARE IN MILLIMETERS UNLESS OTHERWISE SHOWN

ORIGINAL SCALE IN MILLIMETERS FOR REDUCED PLANS 0 10 20 30 40 50 60 70 80 90 100

CU 07
EA 121841

DISREGARD PRINTS BEARING EARLIER REVISION DATES

REVISION DATES: 10-13-06 11-17-08 10-10-08 11-17-08 1-16-09 1-15-09 3-3-09

SHEET 25 OF 39

FILE => 53-1086-k-a4.dgn

STRUCTURES DESIGN DETAIL SHEET (METRIC) (REV.03-17-04)

USERNAME => trmnguye DATE PLOTTED => 15-JUN-2009 TIME PLOTTED => 08:22

DIST	COUNTY	ROUTE	KILOMETER POST TOTAL PROJECT	SHEET No	TOTAL SHEETS
07	LA	5	42.8/47.3	967	1073

Andrew Rittenhouse 12-05-08
REGISTERED CIVIL ENGINEER DATE

6-8-09
PLANS APPROVAL DATE

REGISTERED PROFESSIONAL ENGINEER
Andrew P. Rittenhouse
No. 61006
Exp. 12-31-10
CIVIL
STATE OF CALIFORNIA

The State of California or its officers or agents shall not be responsible for the accuracy or completeness of electronic copies of this plan sheet.

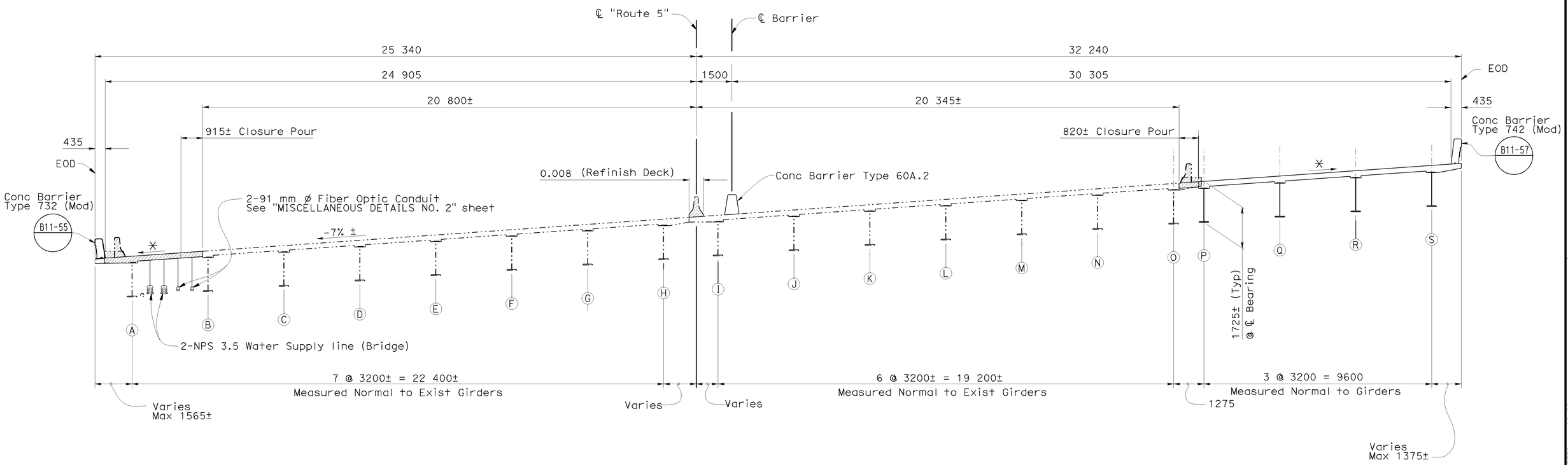

TYPICAL SECTION

1:80

NOTES:
1. ✳ Match existing cross slope

2. Closure pour concrete shall not be placed until 7 days after adjacent pours are completed

NOTE:
THE CONTRACTOR SHALL VERIFY ALL CONTROLLING FIELD DIMENSIONS BEFORE ORDERING OR FABRICATING ANY MATERIAL.

	BY	CHECKED
DESIGN	Hogni Setberg	Richard Yates
DETAILS	Herman Mauroschadt	Richard Yates
QUANTITIES	Jenny Zhang	James Ralston

STATE OF CALIFORNIA
DEPARTMENT OF TRANSPORTATION

DIVISION OF ENGINEERING SERVICES
STRUCTURE DESIGN
DESIGN BRANCH 15

BRIDGE NO. 53-1086
KILOMETER POST 46.5

VERDUGO AVENUE UC WIDEN & RETROFIT

TYPICAL SECTION NO. 1

ALL DIMENSIONS ARE IN MILLIMETERS UNLESS OTHERWISE SHOWN

ORIGINAL SCALE IN MILLIMETERS FOR REDUCED PLANS 0 10 20 30 40 50 60 70 80 90 100

CU 07
EA 121841

DISREGARD PRINTS BEARING EARLIER REVISION DATES

REVISION DATES: 1-1-07 3-31-07 12-14-07 1-17-08 8-30-08 11-14-08 1-8-09 1-15-09

SHEET 26 OF 39

FILE => 53-1086-m-ts1.dgn

STRUCTURES DESIGN DETAIL SHEET (METRIC) (REV.03-17-04)

USERNAME => trmnguye DATE PLOTTED => 15-JUN-2009 TIME PLOTTED => 08:22

DIST	COUNTY	ROUTE	KILOMETER POST TOTAL PROJECT	SHEET No	TOTAL SHEETS
07	LA	5	42.8/47.3	968	1073

Andrew Rittenhouse 12-05-08
REGISTERED CIVIL ENGINEER DATE

6-8-09
PLANS APPROVAL DATE

REGISTERED PROFESSIONAL ENGINEER
Andrew P. Rittenhouse
No. 61006
Exp. 12-31-10
CIVIL
STATE OF CALIFORNIA

The State of California or its officers or agents shall not be responsible for the accuracy or completeness of electronic copies of this plan sheet.

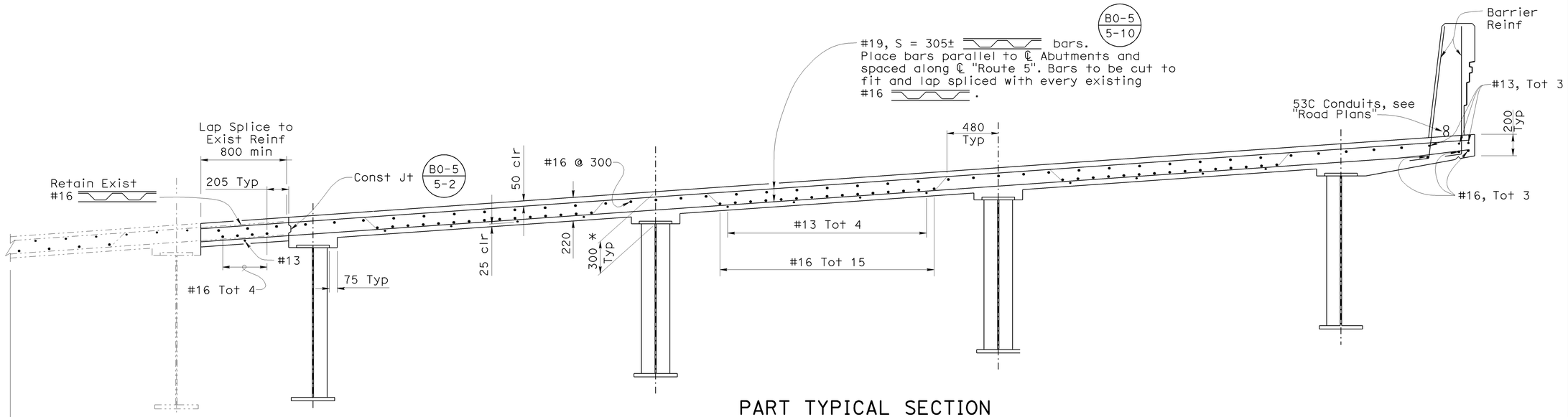

PART TYPICAL SECTION

1:20

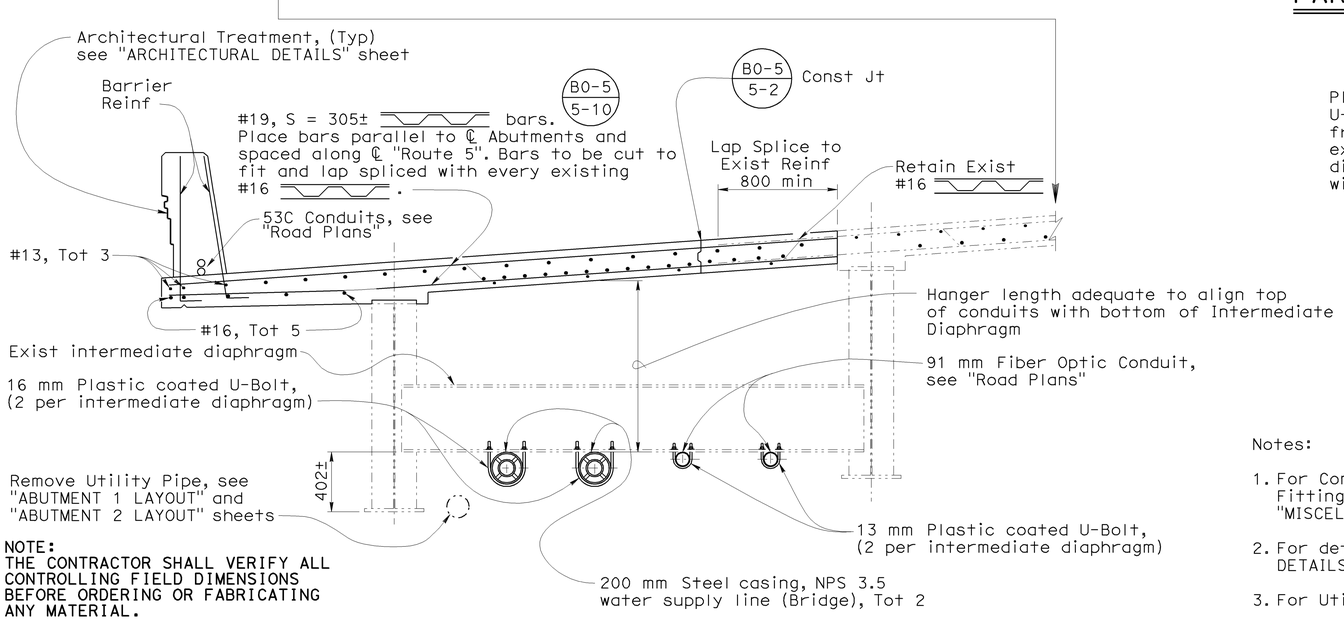

NOTE:
THE CONTRACTOR SHALL VERIFY ALL CONTROLLING FIELD DIMENSIONS BEFORE ORDERING OR FABRICATING ANY MATERIAL.

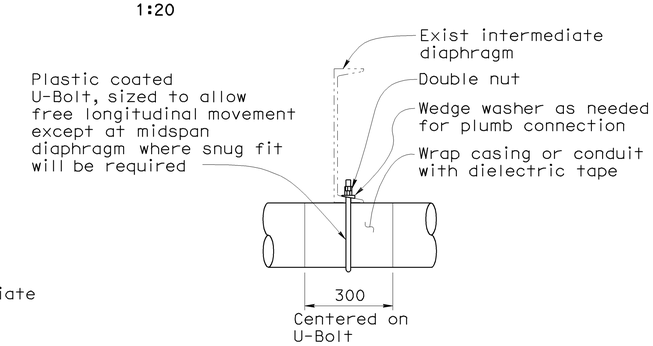

TYPICAL U-BOLT INSTALLATION

No Scale

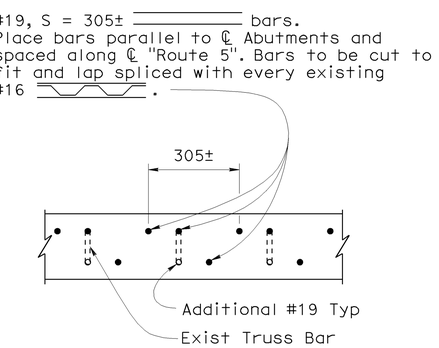

ALTERNATE BAR LAYOUT

1:10

Notes:

1. For Conduit Hanger Support Spacing and Expansion Fitting location see "Fiber Optic Detail" on "MISCELLANEOUS DETAILS NO. 2" sheet.
2. For details not shown, see "MISCELLANEOUS DETAILS NO. 2" sheet.
3. For Utility Hangers not shown, see "GIRDER LAYOUT" sheet

Legend:

* Dimension may be varied to match the existing deck profile and cross slope. Shear stud embedment must remain within the allowable range (see "Shear Connector Studs" detail on "GIRDER DETAILS NO. 2" sheet).

Caltrans Metric

	BY	CHECKED
DESIGN	Hogni Setberg	Richard Yates
DETAILS	Herman Mauroschadt	Richard Yates
QUANTITIES	Jenny Zhang	James Ralston

STATE OF CALIFORNIA
DEPARTMENT OF TRANSPORTATION

DIVISION OF ENGINEERING SERVICES
STRUCTURE DESIGN
DESIGN BRANCH 15

BRIDGE NO. 53-1086
KILOMETER POST 46.5

VERDUGO AVENUE UC WIDEN & RETROFIT
TYPICAL SECTION NO. 2

ALL DIMENSIONS ARE IN MILLIMETERS UNLESS OTHERWISE SHOWN

ORIGINAL SCALE IN MILLIMETERS FOR REDUCED PLANS 0 10 20 30 40 50 60 70 80 90 100

CU 07
EA 121841

DISREGARD PRINTS BEARING EARLIER REVISION DATES

REVISION DATES: 4-1-07 | 11-1-08 | 10-1-08 | 11-14-08 | 1-1-09 | 1-15-09 | 2-1-09 | 3-1-09 | 3-30-09

SHEET 27 OF 39

FILE => 53-1086-m-ts2.dgn

STRUCTURES DESIGN DETAIL SHEET (METRIC) (REV.03-17-04)

USERNAME => trmnguye DATE PLOTTED => 15-JUN-2009 TIME PLOTTED => 08:22

DIST	COUNTY	ROUTE	KILOMETER POST TOTAL PROJECT	SHEET No	TOTAL SHEETS
07	LA	5	42.8/47.3	969	1073

Andrew Rittenhouse 12-05-08
REGISTERED CIVIL ENGINEER DATE

6-8-09
PLANS APPROVAL DATE

REGISTERED PROFESSIONAL ENGINEER
Andrew P. Rittenhouse
No. 61006
Exp. 12-31-10
CIVIL
STATE OF CALIFORNIA

The State of California or its officers or agents shall not be responsible for the accuracy or completeness of electronic copies of this plan sheet.

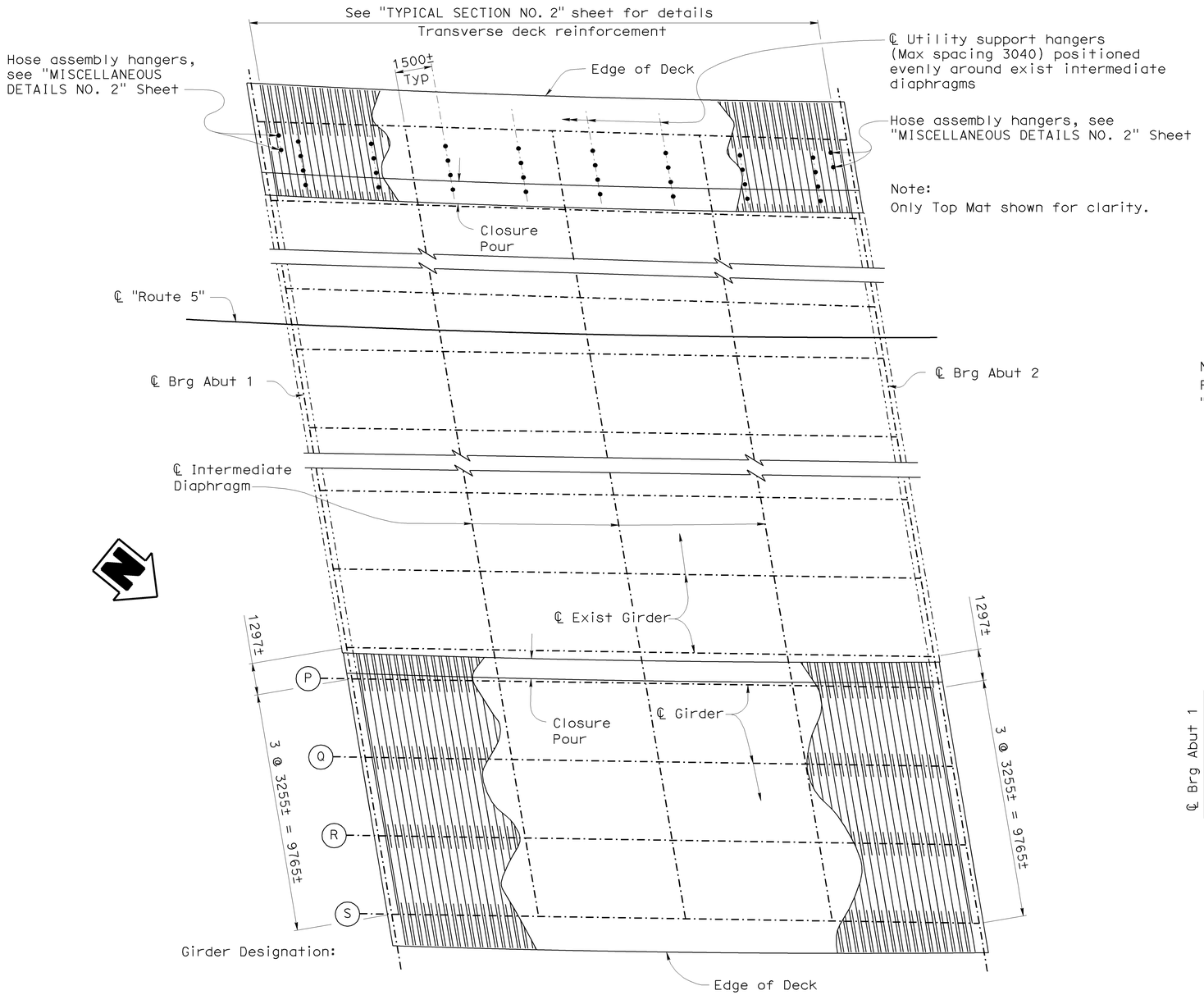

NOTE:
THE CONTRACTOR SHALL VERIFY ALL CONTROLLING FIELD DIMENSIONS BEFORE ORDERING OR FABRICATING ANY MATERIAL.

PLAN
1:100

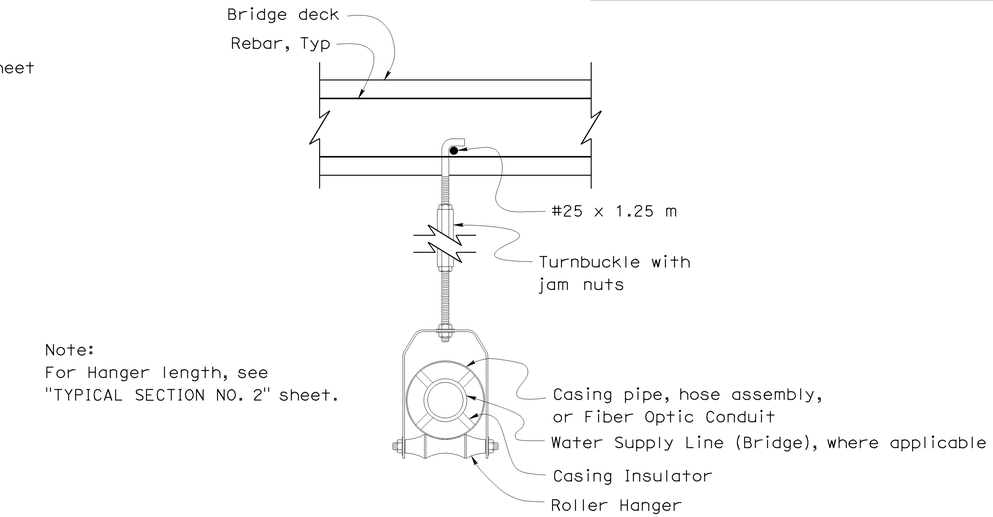

Note:
For Hanger length, see "TYPICAL SECTION NO. 2" sheet.

UTILITY SUPPORT HANGER
No Scale

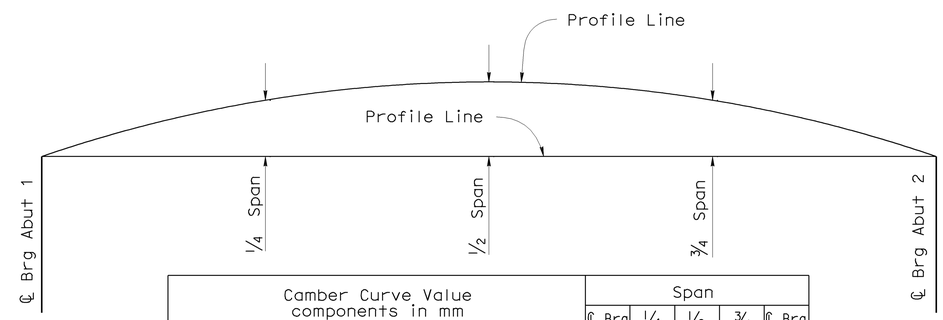

Camber Curve Value components in mm	Span				
	℄ Brg	1/4	1/2	3/4	℄ Brg
Steel Girder Dead Load (mm)	0	3	5	3	0
Deck Slab Dead Load (mm)	0	27	38	27	0
Added Dead Load (mm)	0	1	2	1	0
Total Camber (mm)	0	31	45	31	0

CAMBER DIAGRAM
No Scale

Note:
In addition to camber values shown, girder fabrication shall account for structure geometry including profile grade, superelevation, and changes in thickness of bottom flange.

Caltrans Metric

ALL DIMENSIONS ARE IN MILLIMETERS UNLESS OTHERWISE SHOWN

ORIGINAL SCALE IN MILLIMETERS FOR REDUCED PLANS 0 10 20 30 40 50 60 70 80 90 100

	BY	CHECKED
DESIGN	Hogni Setberg	Richard Yates
DETAILS	Herman Mauroschadt	Richard Yates
QUANTITIES	Jenny Zhang	James Ralston

STATE OF CALIFORNIA
DEPARTMENT OF TRANSPORTATION

DIVISION OF ENGINEERING SERVICES
STRUCTURE DESIGN
DESIGN BRANCH 15

CU 07
EA 121841

BRIDGE NO. 53-1086
KILOMETER POST 46.5

VERDUGO AVENUE UC WIDEN & RETROFIT
GIRDER LAYOUT

DISREGARD PRINTS BEARING EARLIER REVISION DATES

REVISION DATES: 12-4-06 3-21-07 1-17-08 11-24-08 1-8-09 3-3-09 3-30-09

SHEET 28 OF 39

FILE => 53-1086-n-g-lo01.dgn

STRUCTURES DESIGN DETAIL SHEET (METRIC) (REV.03-17-04)

USERNAME => trmnguye DATE PLOTTED => 15-JUN-2009 TIME PLOTTED => 08:23

DIST	COUNTY	ROUTE	KILOMETER POST TOTAL PROJECT	SHEET No	TOTAL SHEETS
07	LA	5	42.8/47.3	970	1073

Andrew Rittenhouse 12-05-08
REGISTERED CIVIL ENGINEER DATE

6-8-09
PLANS APPROVAL DATE

REGISTERED PROFESSIONAL ENGINEER
Andrew P. Rittenhouse
No. 61006
Exp. 12-31-10
CIVIL
STATE OF CALIFORNIA

The State of California or its officers or agents shall not be responsible for the accuracy or completeness of electronic copies of this plan sheet.

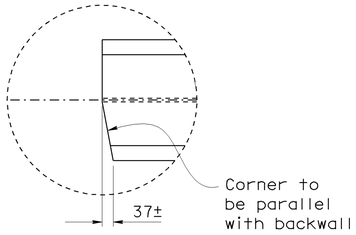

Abut 1 shown,
Abut 2 similar

DETAIL A
1:10

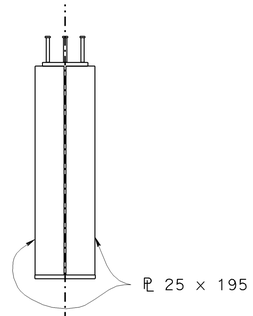

END BEARING STIFFENER
1:20

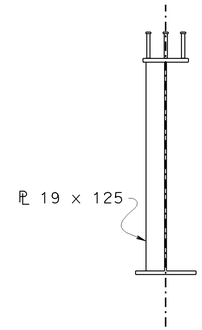

Note:
Place Intermediate Stiffener
on inside of all girders

INTERMEDIATE STIFFENER
1:20

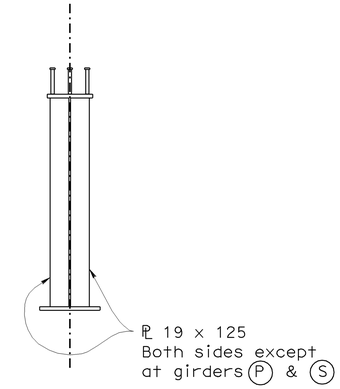

INTERMEDIATE DIAPHRAGM CONNECTOR
1:20

Notes:

1. Primary Components of Main Members are Flanges, Webs, Splice Plates and Cover Plates, Transverse and Longitudinal Stiffeners and Bearing Stiffeners
2. All members not designated as either Fracture Critical Members or Main Members are Secondary Members
3. "T" Denotes Main Tension Member (Non-Fracture Critical Member)
4. "C" Denotes Main Compression Member
5. "T" zone shown extends from Bottom Flange to middle depth of web
6. "C" zone shown extends from Top Flange to middle depth of web

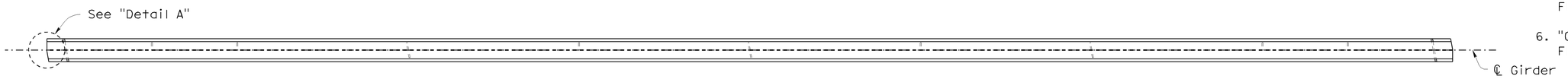

Note:
Girders (Q) & (R) shown, Girders (P) & (S) similar.

GIRDER PLAN
1:40

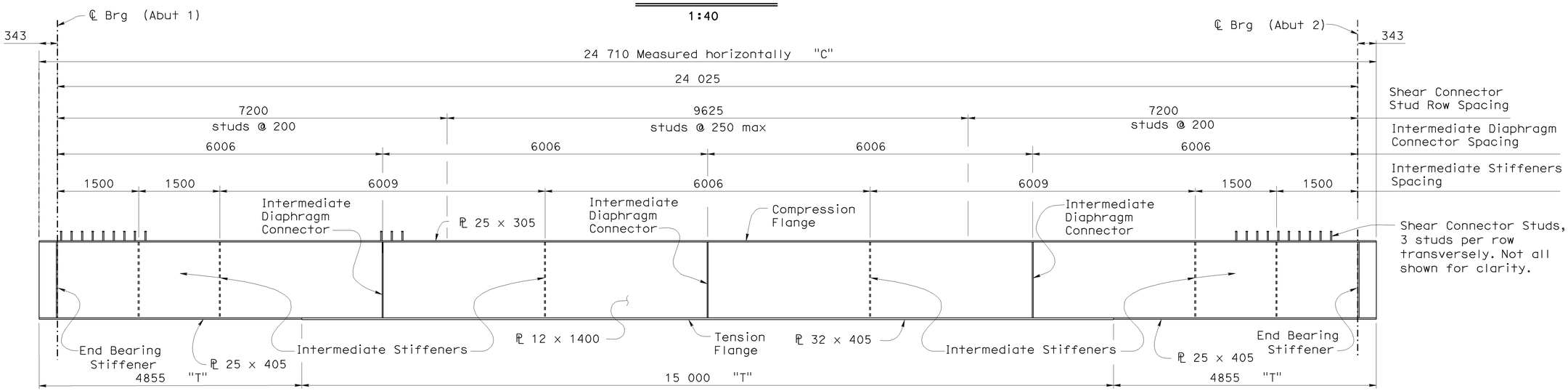

GIRDER ELEVATION
1:40

For other girder details, see "GIRDER DETAILS NO. 2" sheet.

NOTE:
THE CONTRACTOR SHALL VERIFY ALL CONTROLLING FIELD DIMENSIONS BEFORE ORDERING OR FABRICATING ANY MATERIAL.

Caltrans Metric

	BY	CHECKED
DESIGN	Hogni Setberg	Richard Yates
DETAILS	Herman Mauroschadt	Richard Yates
QUANTITIES	Jenny Zhang	James Ralston

STATE OF CALIFORNIA
DEPARTMENT OF TRANSPORTATION

DIVISION OF ENGINEERING SERVICES
STRUCTURE DESIGN
DESIGN BRANCH 15

BRIDGE NO. 53-1086
KILOMETER POST 46.5

VERDUGO AVENUE UC WIDEN & RETROFIT
GIRDER DETAILS NO. 1

ALL DIMENSIONS ARE IN MILLIMETERS UNLESS OTHERWISE SHOWN

ORIGINAL SCALE IN MILLIMETERS FOR REDUCED PLANS 0 10 20 30 40 50 60 70 80 90 100

CU 07
EA 121841

DISREGARD PRINTS BEARING EARLIER REVISION DATES

REVISION DATES: 12-7-06 4-7-08 11-24-08 3-3-09

SHEET 29 OF 39

FILE => 53-1086-o-gd01.dgn

STRUCTURES DESIGN DETAIL SHEET (METRIC) (REV.03-17-04)

USERNAME => trimnguye DATE PLOTTED => 15-JUN-2009 TIME PLOTTED => 08:23

DIST	COUNTY	ROUTE	KILOMETER POST TOTAL PROJECT	SHEET No	TOTAL SHEETS
07	LA	5	42.8/47.3	971	1073

Andrew Rittenhouse 12-05-08
REGISTERED CIVIL ENGINEER DATE

6-8-09
PLANS APPROVAL DATE

REGISTERED PROFESSIONAL ENGINEER Andrew P. Rittenhouse No. 61006 Exp. 12-31-10 CIVIL STATE OF CALIFORNIA

The State of California or its officers or agents shall not be responsible for the accuracy or completeness of electronic copies of this plan sheet.

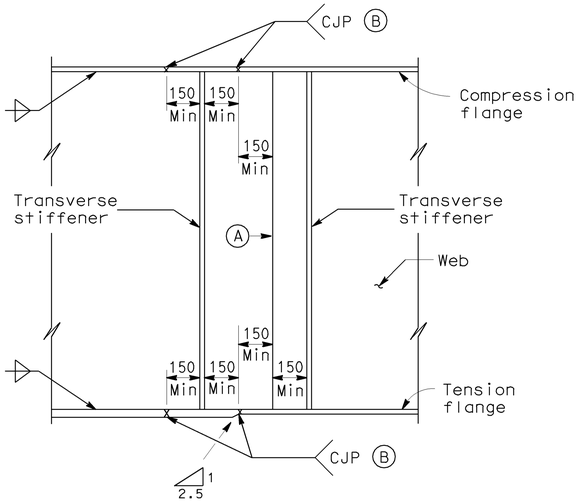

GIRDER SHOP SPLICE

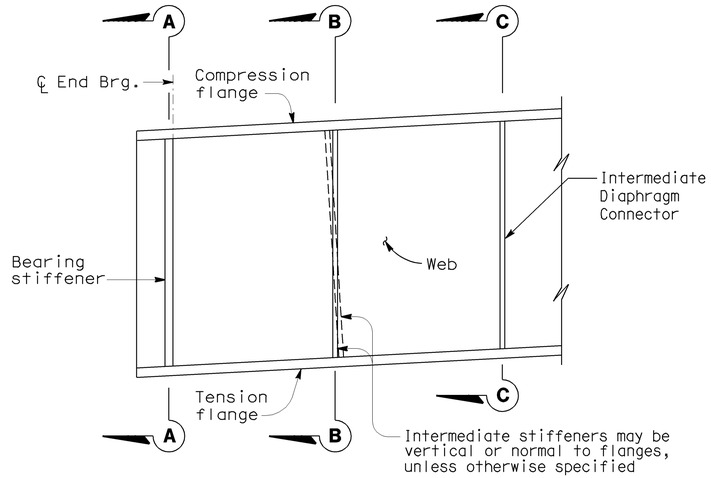

TRANSVERSE STIFFENERS

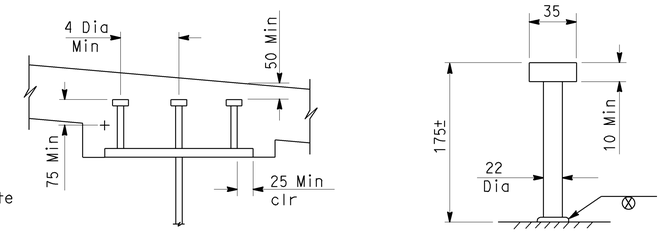

Lengths to be determined by the Contractor unless otherwise shown. Minimum length is 125 mm.
The top of deck is designed to be approximately parallel to the top of web for determining girder stud connector height. Alternative types of shear connectors will be permitted subject to approval by the Engineer.

SHEAR CONNECTOR STUDS

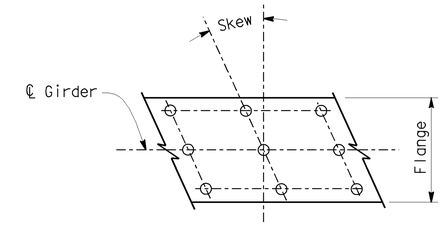

Place studs parallel to transverse deck reinf to minimize interference

PLAN

No Scale

NOTES:

Alternative girder splices will be permitted subject to approval by the Engineer.

Under full dead load as shown on the camber diagram, girder ends and bearing stiffeners shall be vertical except they may be normal to grade for grades less than 2 percent.

(A) Web splice joints shall be complete joint penetration welds (CJP). All weld areas on the exterior face of exterior girders shall be ground flush.

(B) Grind all surfaces flush on tension flanges. Grind all surfaces flush on compression flanges when required for non-destructive testing (NDT).

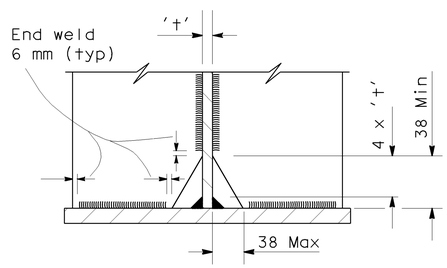

DETAIL A

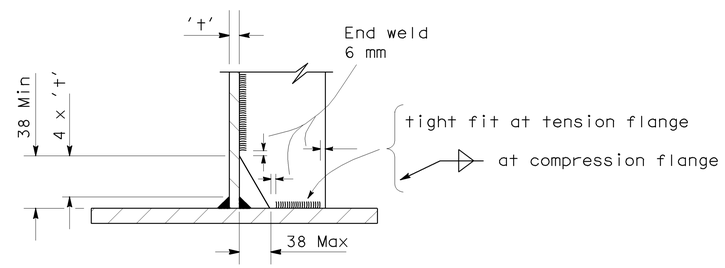

DETAIL B

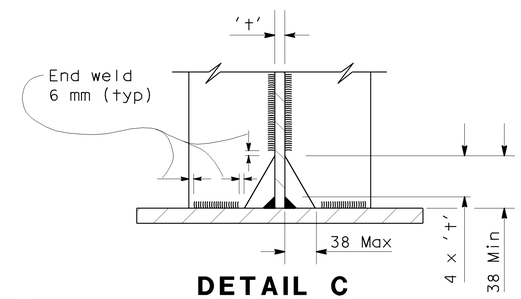

DETAIL C

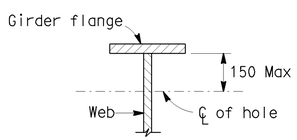

25 mm max diameter drilled hole at 1.2 m ± min spacing to be used for falsework support when specified by the Contractor. Contractor to determine location, size and spacing.

50 mm max diameter hole to be drilled where lighting conduit passes through girder web. For location and size of hole see ''Road Plans''.

HOLES FOR CONDUIT AND FALSEWORK

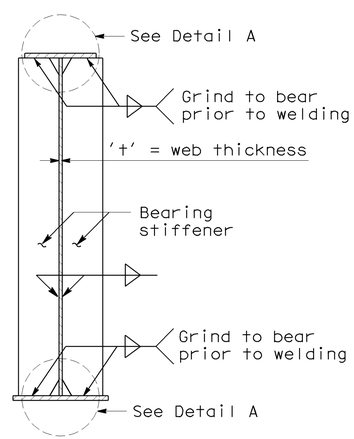

SECTION A-A

(Bearing Stiffeners)

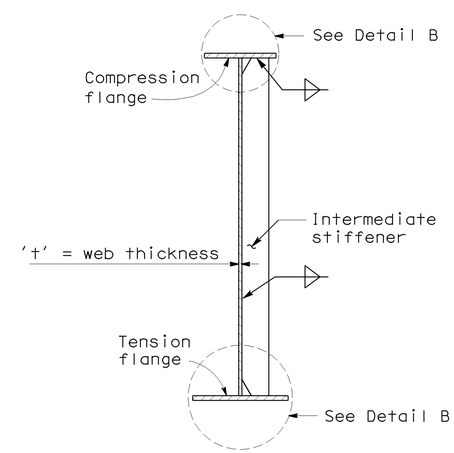

SECTION B-B

(Intermediate Stiffeners)

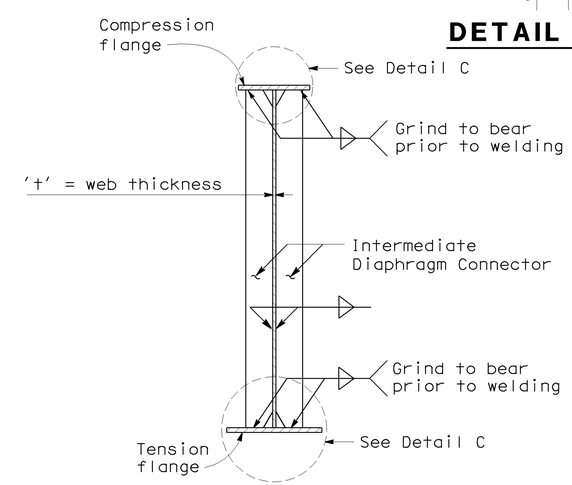

SECTION C-C

(Intermediate Diaphragm Connectors)

NOTE:
THE CONTRACTOR SHALL VERIFY ALL CONTROLLING FIELD DIMENSIONS BEFORE ORDERING OR FABRICATING ANY MATERIAL.

Caltrans Metric

	BY	CHECKED
DESIGN	Hogni Setberg	Richard Yates
DETAILS	Herman Mauroschadt	Richard Yates
QUANTITIES	Jenny Zhang	James Ralston

STATE OF CALIFORNIA
DEPARTMENT OF TRANSPORTATION

DIVISION OF ENGINEERING SERVICES
STRUCTURE DESIGN
DESIGN BRANCH 15

BRIDGE NO. 53-1086
KILOMETER POST 46.5

VERDUGO AVENUE UC WIDEN & RETROFIT
GIRDER DETAILS NO. 2

ALL DIMENSIONS ARE IN MILLIMETERS UNLESS OTHERWISE SHOWN

ORIGINAL SCALE IN MILLIMETERS FOR REDUCED PLANS 0 10 20 30 40 50 60 70 80 90 100

CU 07
EA 121841

DISREGARD PRINTS BEARING EARLIER REVISION DATES 2-21-07 11-24-08

REVISION DATES

SHEET 30 OF 39

FILE => 53-1086-o-gd2.dgn

STRUCTURES DESIGN DETAIL SHEET (METRIC) (REV.03-17-04)

USERNAME => trmoguye DATE PLOTTED => 15-JUN-2009 TIME PLOTTED => 08:23

DIST	COUNTY	ROUTE	KILOMETER POST TOTAL PROJECT	SHEET No	TOTAL SHEETS
07	LA	5	42.8/47.3	972	1073

Andrew Rittenhouse 12-05-08
REGISTERED CIVIL ENGINEER DATE

6-8-09
PLANS APPROVAL DATE

REGISTERED PROFESSIONAL ENGINEER Andrew P. Rittenhouse No. 61006 Exp. 12-31-10 CIVIL STATE OF CALIFORNIA

The State of California or its officers or agents shall not be responsible for the accuracy or completeness of electronic copies of this plan sheet.

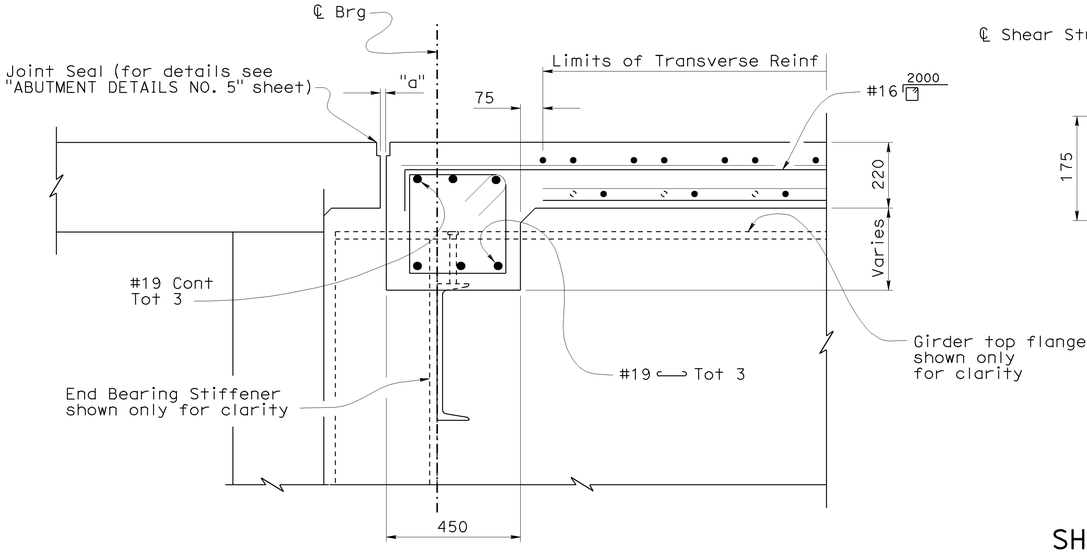

SECTION A-A
1:10

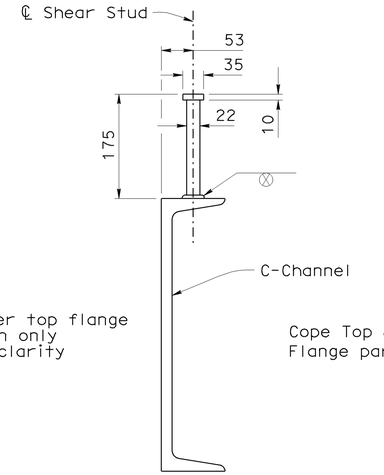

SHEAR STUD CONNECTION
1:5

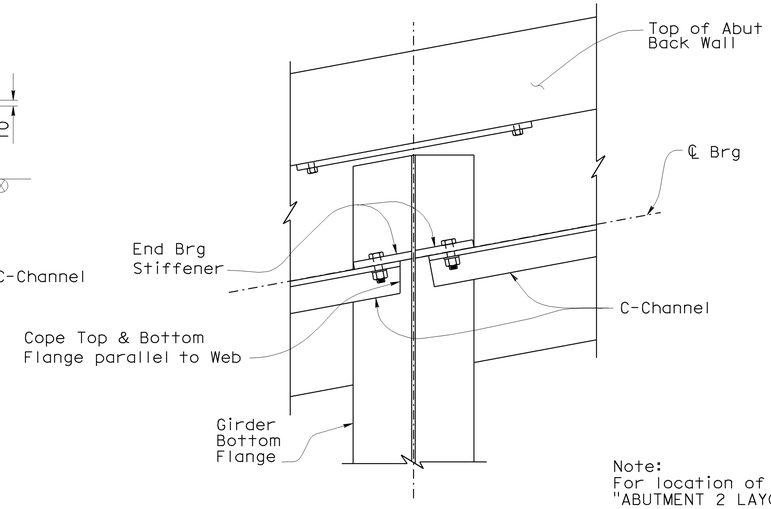

Note:
For location of Bays see "ABUTMENT 1 LAYOUT" and "ABUTMENT 2 LAYOUT" sheets.

SECTION B-B
1:10

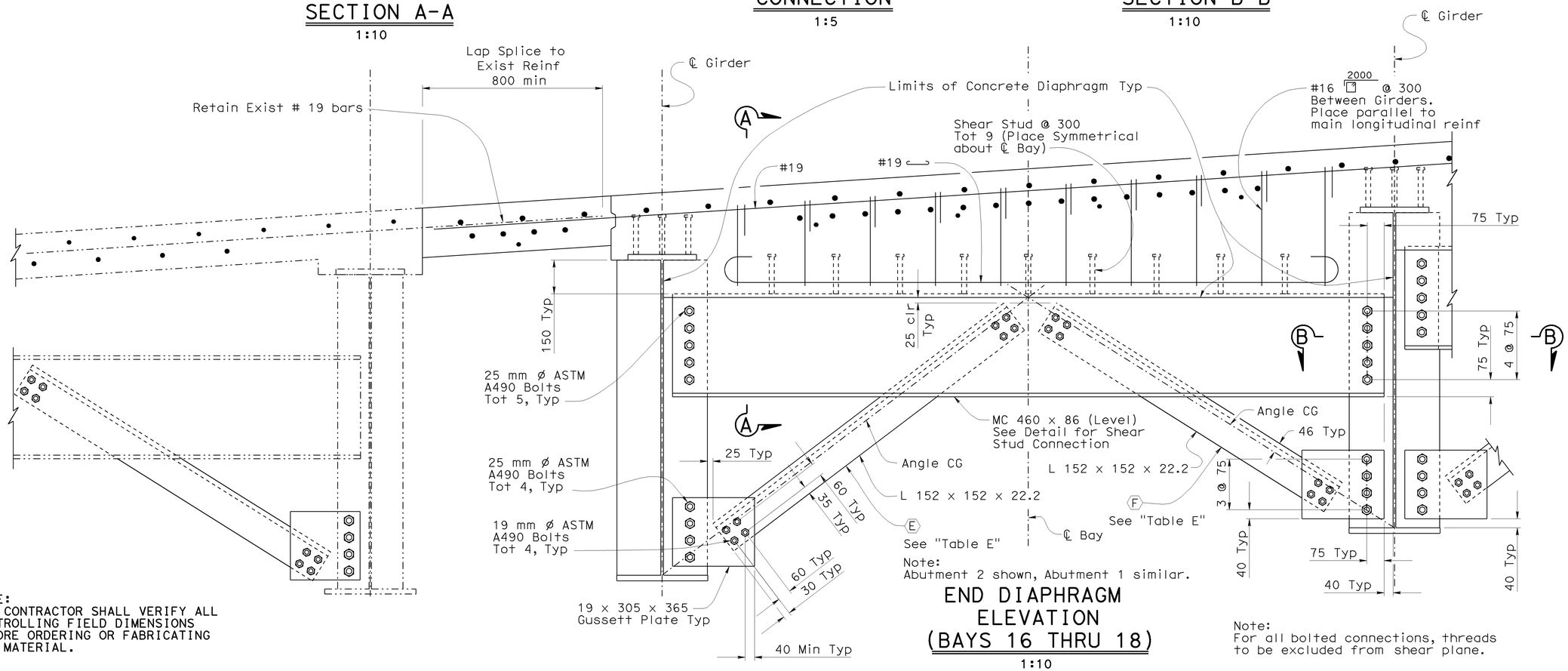

Note:
Abutment 2 shown, Abutment 1 similar.

END DIAPHRAGM ELEVATION (BAYS 16 THRU 18)
1:10

Note:
For all bolted connections, threads to be excluded from shear plane.

Table E	
Length of Angle Bays 16 Thru 18	
(E)	(F)
1620±	1500±

⬡ Indicates Angle

NOTE:
THE CONTRACTOR SHALL VERIFY ALL CONTROLLING FIELD DIMENSIONS BEFORE ORDERING OR FABRICATING ANY MATERIAL.

DESIGN	BY Hogni Setberg	CHECKED Richard Yates	
DETAILS	BY Herman Mauroschadt	CHECKED Richard Yates	
QUANTITIES	BY Jenny Zhang	CHECKED James Ralston	

STATE OF CALIFORNIA
DEPARTMENT OF TRANSPORTATION

DIVISION OF ENGINEERING SERVICES
STRUCTURE DESIGN
DESIGN BRANCH 15

BRIDGE NO. 53-1086
KILOMETER POST 46.5

VERDUGO AVENUE UC WIDEN & RETROFIT
MISCELLANEOUS DETAILS NO. 1

ALL DIMENSIONS ARE IN MILLIMETERS UNLESS OTHERWISE SHOWN

ORIGINAL SCALE IN MILLIMETERS FOR REDUCED PLANS 0 10 20 30 40 50 60 70 80 90 100

CU 07
EA 121841

DISREGARD PRINTS BEARING EARLIER REVISION DATES

REVISION DATES: 11-22-06 1-12-06 10-31-08 11-24-08 1-16-09 3-3-09

SHEET 31 OF 39

FILE => 53-1086-p-miscd1.dgn

STRUCTURES DESIGN DETAIL SHEET (METRIC) (REV.03-17-04)

USERNAME => trmnguye DATE PLOTTED => 15-JUN-2009 TIME PLOTTED => 08:23

DIST	COUNTY	ROUTE	KILOMETER POST TOTAL PROJECT	SHEET No	TOTAL SHEETS
07	LA	5	42.8/47.3	973	1073

Andrew Rittenhouse 12-05-08
REGISTERED CIVIL ENGINEER DATE

6-8-09
PLANS APPROVAL DATE

REGISTERED PROFESSIONAL ENGINEER Andrew P. Rittenhouse No. 61006 Exp. 12-31-10 CIVIL STATE OF CALIFORNIA

The State of California or its officers or agents shall not be responsible for the accuracy or completeness of electronic copies of this plan sheet.

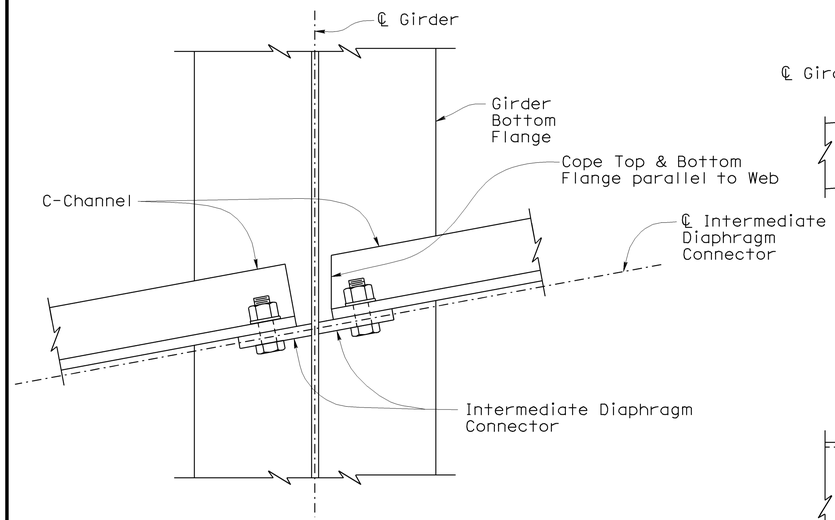

SECTION C-C
1:5

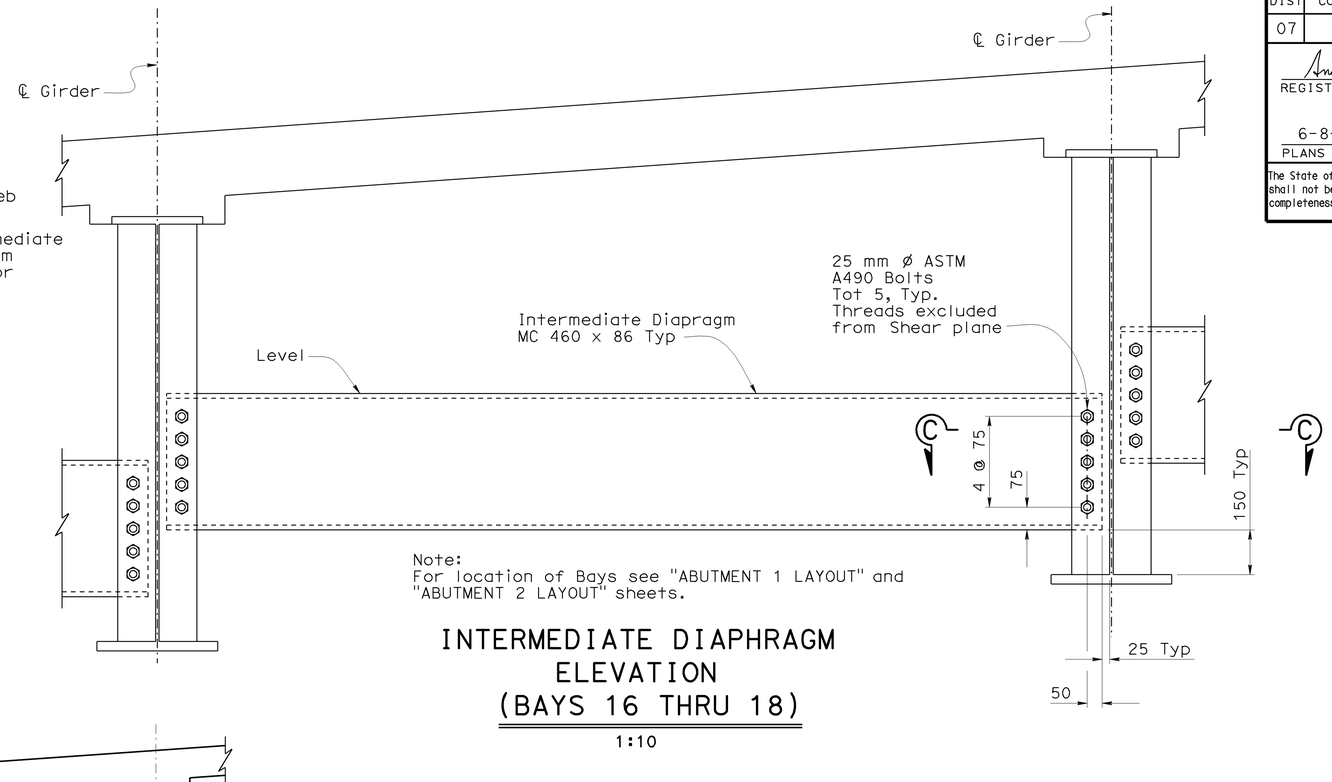

Note:
For location of Bays see "ABUTMENT 1 LAYOUT" and "ABUTMENT 2 LAYOUT" sheets.

INTERMEDIATE DIAPHRAGM ELEVATION (BAYS 16 THRU 18)
1:10

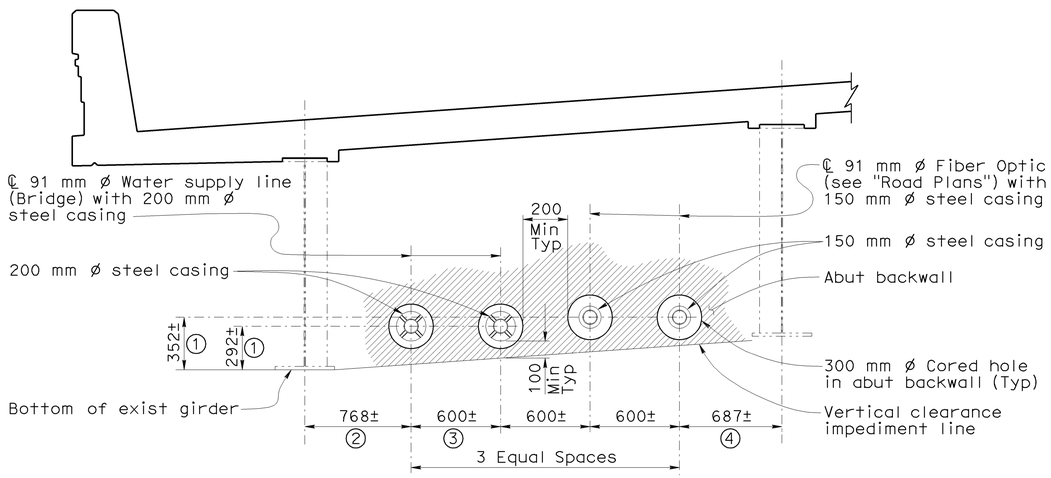

① Dimension controlled by exist intermediate diaphragm, see "TYPICAL SECTION NO. 2" Sheet

② Dimension controlled by clearance to end diaphragm, see "ABUTMENT RETROFIT DETAILS NO. 4" Sheet

③ Dimension controlled by adjacent utility spacing and by vertical clearance requirement

④ Dimension controlled by clearance of abutment backwall coring equipment, abutment shear key retrofit and clearance to end diaphragm. See "ABUTMENT LAYOUT" Sheets, "ABUTMENT RETROFIT DETAILS NO. 1" sheet and "ABUTMENT RETROFIT DETAILS NO. 4" sheet

NOTE:
THE CONTRACTOR SHALL VERIFY ALL CONTROLLING FIELD DIMENSIONS BEFORE ORDERING OR FABRICATING ANY MATERIAL.

UTILITY LOCATIONS (PROJECTED)
No Scale

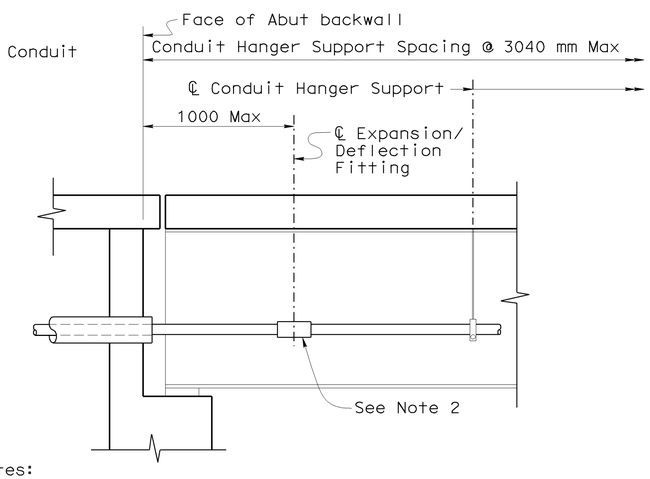

Notes:

1. Expansion/Deflection Fitting location for Abutment 1 shown, Abutment 2 similar.
2. Expansion/Deflection Fitting, see "Road Plans".
3. For utility hanger locations and details see "GIRDER LAYOUT" sheet

FIBER OPTIC DETAIL
No Scale

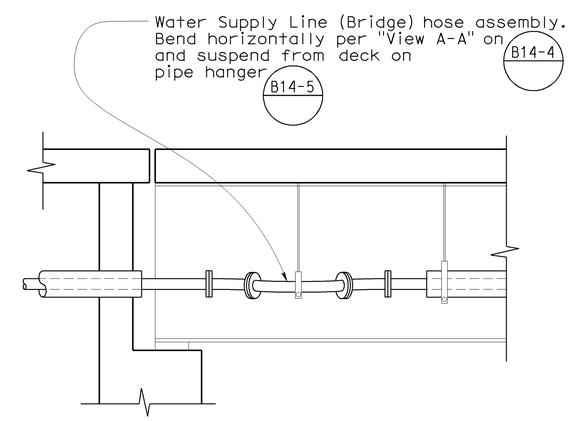

For details not shown, see B14-4 and "GIRDER LAYOUT" sheet

EXPANSION ASSEMBLY DETAIL
No Scale

Caltrans Metric

	BY	CHECKED
DESIGN	Hogni Setberg	Richard Yates
DETAILS	Herman Mauroschadt	Richard Yates
QUANTITIES	Jenny Zhang	James Ralston

STATE OF CALIFORNIA
DEPARTMENT OF TRANSPORTATION

DIVISION OF ENGINEERING SERVICES
STRUCTURE DESIGN
DESIGN BRANCH 15

BRIDGE NO. 53-1086
KILOMETER POST 46.5

VERDUGO AVENUE UC WIDEN & RETROFIT
MISCELLANEOUS DETAILS NO. 2

ALL DIMENSIONS ARE IN MILLIMETERS UNLESS OTHERWISE SHOWN

ORIGINAL SCALE IN MILLIMETERS FOR REDUCED PLANS 0 10 20 30 40 50 60 70 80 90 100

CU 07
EA 121841

DISREGARD PRINTS BEARING EARLIER REVISION DATES

REVISION DATES: 11-21-06 1-12-06 4-19-06 11-24-08 1-8-09 1-15-09 3-3-09 3-30-09

SHEET 32 OF 39

FILE => 53-1086-p-miscd2.dgn

STRUCTURES DESIGN DETAIL SHEET (METRIC) (REV.03-17-04)

USERNAME => trmnguye DATE PLOTTED => 15-JUN-2009 TIME PLOTTED => 08:23

DIST	COUNTY	ROUTE	KILOMETER POST TOTAL PROJECT	SHEET No	TOTAL SHEETS
07	LA	5	42.8/47.3	974	1073

Andrew Rittenhouse 12-05-08
REGISTERED CIVIL ENGINEER DATE

6-8-09
PLANS APPROVAL DATE

REGISTERED PROFESSIONAL ENGINEER Andrew P. Rittenhouse No. 61006 Exp. 12-31-10 CIVIL STATE OF CALIFORNIA

The State of California or its officers or agents shall not be responsible for the accuracy or completeness of electronic copies of this plan sheet.

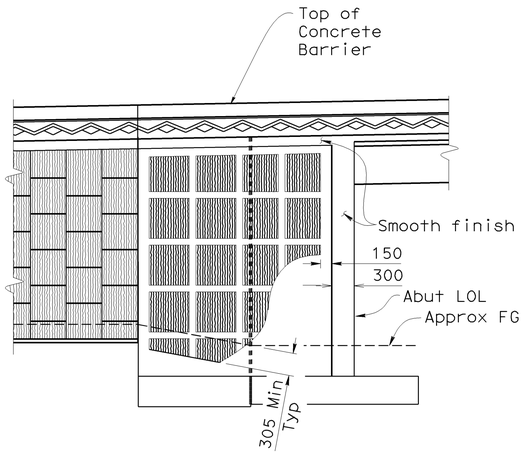

Abut 1 Retaining Wall shown

ELEVATION
No scale

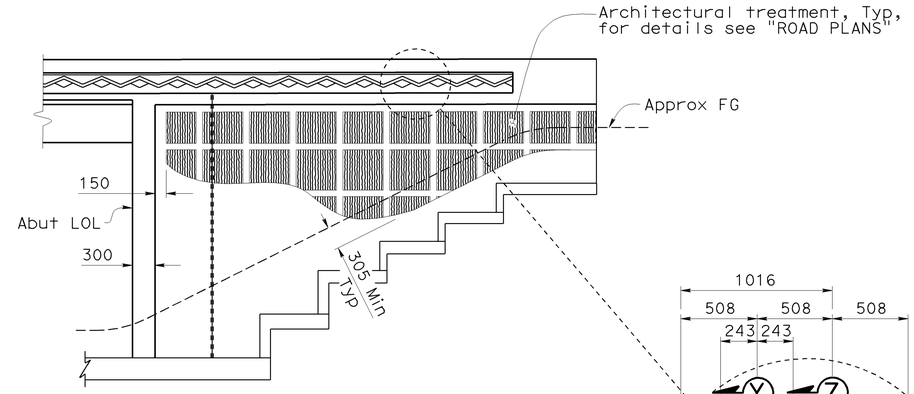

Abut 2 Retaining Wall shown

ELEVATION
No scale

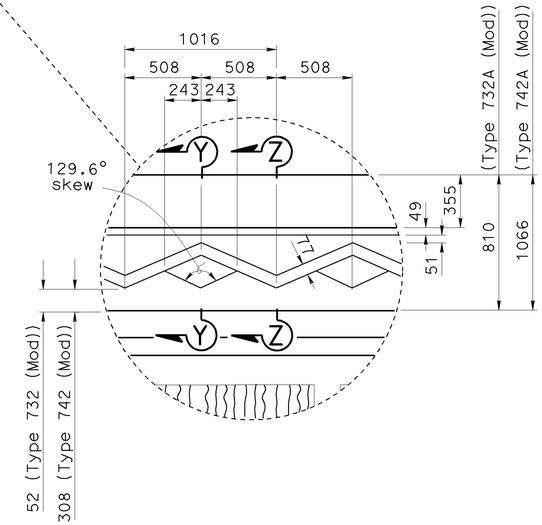

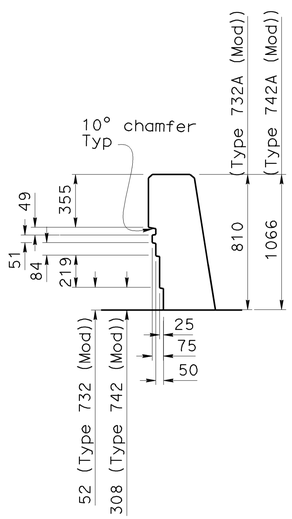

SECTION Y-Y
1:20

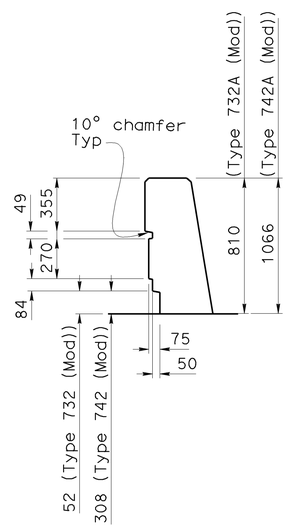

SECTION Z-Z
1:20

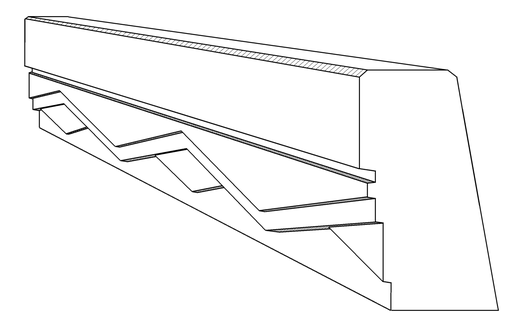

PERSPECTIVE VIEW
No scale

CONCRETE BARRIER TYPE 732 (MOD), TYPE 732A (MOD), TYPE 742 (MOD) & TYPE 742A (MOD)

NOTE:
THE CONTRACTOR SHALL VERIFY ALL CONTROLLING FIELD DIMENSIONS BEFORE ORDERING OR FABRICATING ANY MATERIAL.

Notes:

1. Concrete color shall be "Sandstone" (Federal Standard Color 30318).
2. Fractured Granite Treatment shall run perpendicular to plumb.

Caltrans Metric

	BY	CHECKED
DESIGN	Hogni Setberg	Richard Yates
DETAILS	Herman Mauroschadt	Richard Yates
QUANTITIES	Jenny Zhang	James Ralston

STATE OF CALIFORNIA
DEPARTMENT OF TRANSPORTATION

DIVISION OF ENGINEERING SERVICES
STRUCTURE DESIGN
DESIGN BRANCH 15

BRIDGE NO. 53-1086
KILOMETER POST 46.5

VERDUGO AVENUE UC WIDEN & RETROFIT
ARCHITECTURAL DETAILS

ALL DIMENSIONS ARE IN MILLIMETERS UNLESS OTHERWISE SHOWN

ORIGINAL SCALE IN MILLIMETERS FOR REDUCED PLANS 0 10 20 30 40 50 60 70 80 90 100

CU 07
EA 121841

DISREGARD PRINTS BEARING EARLIER REVISION DATES

REVISION DATES: 10-31-07 11-16-07 3-14-08 8-30-08 11-24-08 1-9-09 11-15-09

SHEET 33 OF 39

FILE => 53-1086-q-arch-det.dgn

STRUCTURES DESIGN DETAIL SHEET (METRIC) (REV.03-17-04)

USERNAME => trmnguye DATE PLOTTED => 15-JUN-2009 TIME PLOTTED => 08:23

DIST.	COUNTY	ROUTE	KILOMETER POST TOTAL PROJECT	SHEET NO.	TOTAL SHEETS
07	LA	5	42.8/47.3	975	1073

Caltrans Metric

Andrew P. Rittenhouse 12-05-08
REGISTERED ENGINEER - CIVIL

6-8-09
PLANS APPROVAL DATE

REGISTERED PROFESSIONAL ENGINEER Andrew P. Rittenhouse No. 61006 Exp. 12-31-10 CIVIL STATE OF CALIFORNIA

The State of California or its officers or agents shall not be responsible for the accuracy or completeness of electronic copies of this plan sheet.

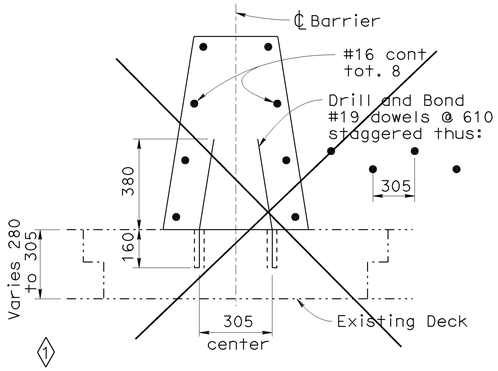

MODIFIED TYPE 60SA.1 OR 60A.1

SEE NOTE 10 FOR RESPECTIVE BARRIER DIMENSIONS

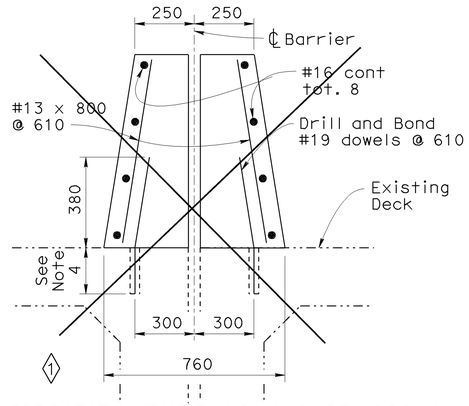

MODIFIED TYPE 60SA.4 OR 60A.4

ONLY VERTICAL DIMENSION VARIES ACCORDING TO RESPECTIVE BARRIER HEIGHT. SEE NOTE 10.

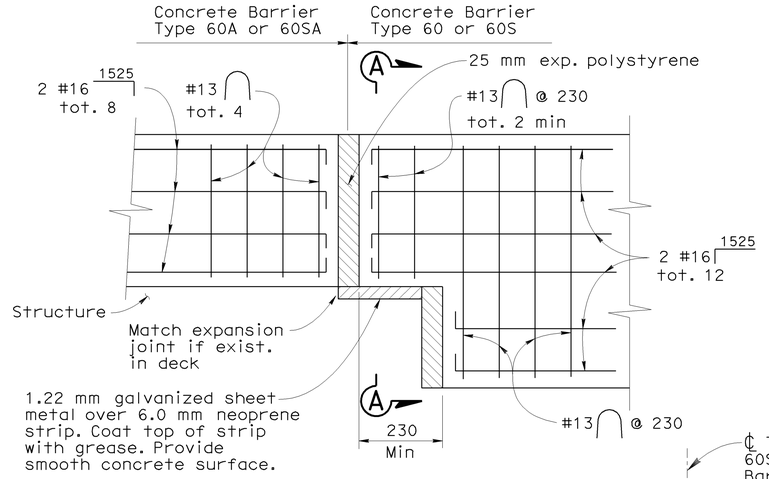

ELEVATION

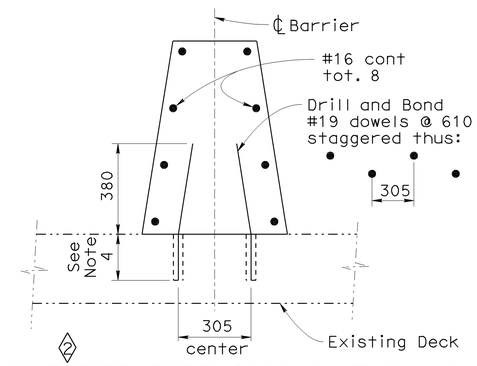

~~MODIFIED~~ TYPE 60SA.2 OR 60A.2

SEE NOTE 10 FOR RESPECTIVE BARRIER DIMENSIONS

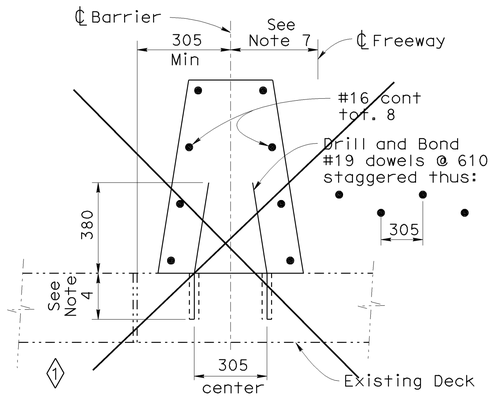

MODIFIED TYPE 60SA.5 OR 60A.5

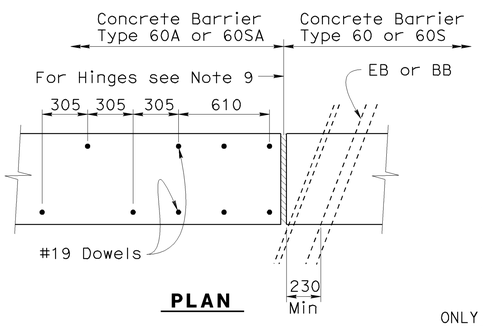

PLAN

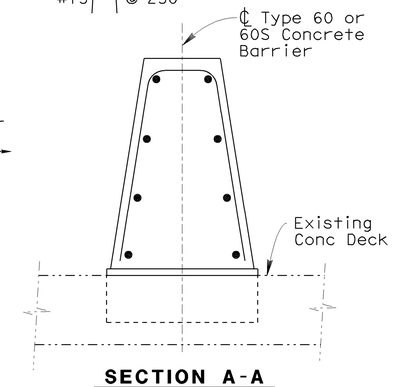

SECTION A-A

MODIFIED TYPE 60A.1

ONLY VERTICAL DIMENSION VARIES ACCORDING TO RESPECTIVE BARRIER HEIGHT. SEE NOTE 10.

CONNECTION TO STRUCTURE AT EXPANSION JOINTS

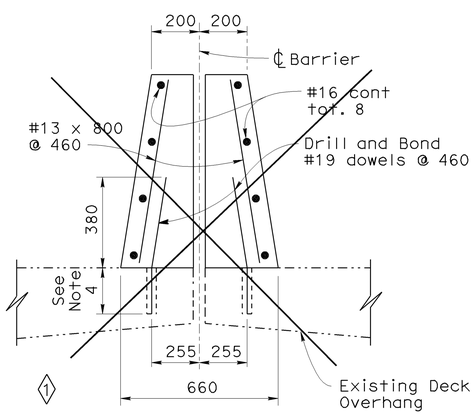

MODIFIED TYPE 60SA.3 OR 60A.3

ONLY VERTICAL DIMENSION VARIES ACCORDING TO RESPECTIVE BARRIER HEIGHT. SEE NOTE 10.

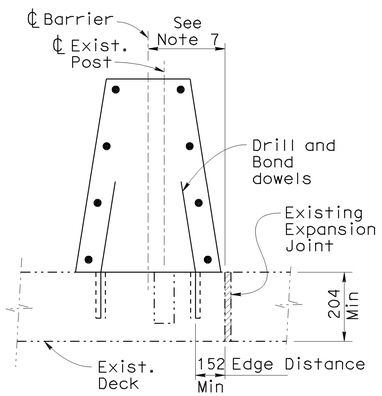

EXISTING POST HOLE

TYPE 1

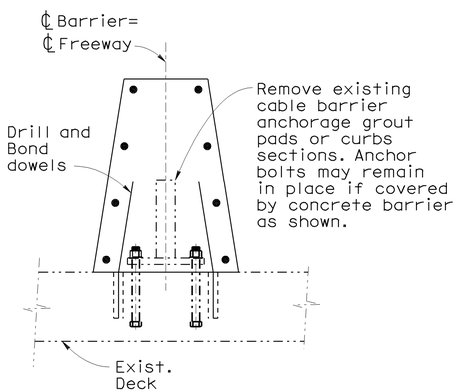

AT BOLTED ANCHORAGE PLATE

TYPE 2

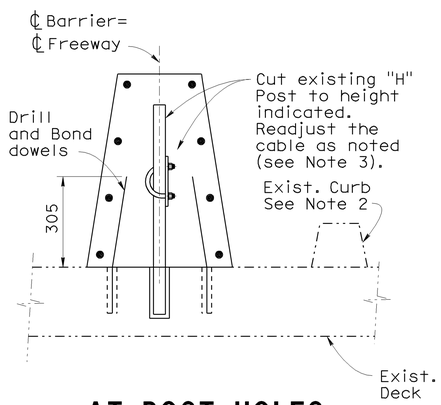

AT POST HOLES

TYPE 3

ASSUMED EXISTING ANCHORAGE CONDITIONS AND DETAILS

NOTES:

1. Transverse expansion joints in concrete barrier shall match all deck joints.
2. Remove all existing curbs and dikes.
3. Existing components of Cable Barrier may be altered and incorporated in Concrete Barriers as indicated. The existing Cable Barrier shall be removed when it is not on the centerline of the new Concrete Barrier.
4. Depth of drilled hole equals depth of slab minus 40 mm, up to 150 mm maximum.
5. Minor adjustments may be made in dowel spacing to clear main reinforcement.
6. Transitions to match adjacent "Type 60A" Barrier shall have minimum flare of 20:1 off the structure.
7. ℄ Barrier is either left, right, or on ℄ of freeway.
8. The Contractor shall verify all dependent dimensions in the field.
9. Barrier to be doweled on either side of deck joints. On skewed hinges, place sheet metal detail across joint and adjust dowels.
10. Barrier Dimensions-Type 60A & Type 60SA, See sketch below.

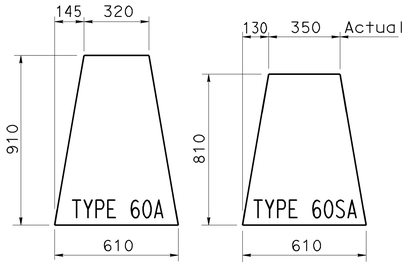

NO SCALE

ALL DIMENSIONS ARE IN MILLIMETERS UNLESS OTHERWISE SHOWN

SPECIAL DETAILS

STANDARD DRAWING					
RELEASE DATE REVISED	DESIGN	BY Ralph Bishop	CHECKED Bob Anderson	RELEASED BY Roberto Anella OFFICE CHIEF	
FILE NO. xs16-100	DETAILS	BY L. Charlot	CHECKED Ralph Bishop		
	SUBMITTED	BY Ralph Bishop	DRAWING DATE 6/99		

DS OSD 2147A (METRIC) (REV. 2/25/97)

◊1 DETAIL DOES NOT APPLY
◊2 CHANGED DETAIL NAME

STATE OF CALIFORNIA
DEPARTMENT OF TRANSPORTATION

DIVISION OF ENGINEERING SERVICES

CU 07
EA 121841

BRIDGE NO. 53-1086
KILOMETER POST 46.5

VERDUGO AVENUE UC WIDEN & RETROFIT

BARRIER - CONCRETE TYPE 60A AND 60SA MODIFIED

ORIGINAL SCALE IN MILLIMETERS FOR REDUCED PLANS 0 10 20 30 40 50 60 70 80 90 100

DISREGARD PRINTS BEARING EARLIER REVISION DATES

REVISION DATES (PRELIMINARY STAGE ONLY) 1-17-08 8-30-08 11-24-08

SHEET 34 OF 39

USERNAME => trmnguye

53-1086-q-bd.dgn

DATE PLOTTED => 15-JUN-2009 TIME PLOTTED => 08:23

DIST.	COUNTY	ROUTE	KILOMETER POST TOTAL PROJECT	SHEET NO.	TOTAL SHEETS
07	LA	5	42.8/47.3	976	1073

Caltrans Metric

Andrew P. Rittenhouse 12-05-08
REGISTERED ENGINEER - CIVIL

6-8-09
PLANS APPROVAL DATE

REGISTERED PROFESSIONAL ENGINEER Andrew P. Rittenhouse No. 61006 Exp. 12-31-10 CIVIL STATE OF CALIFORNIA

The State of California or its officers or agents shall not be responsible for the accuracy or completeness of electronic copies of this plan sheet.

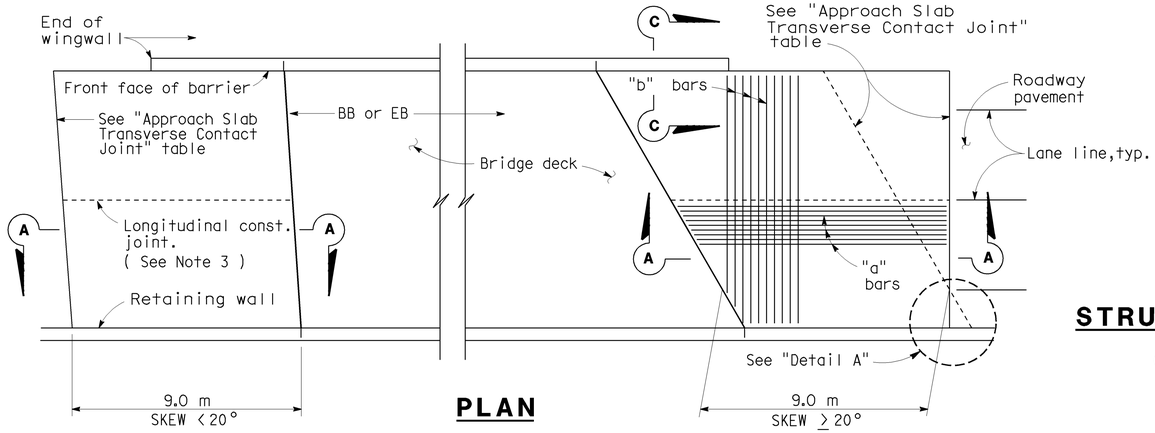

PLAN

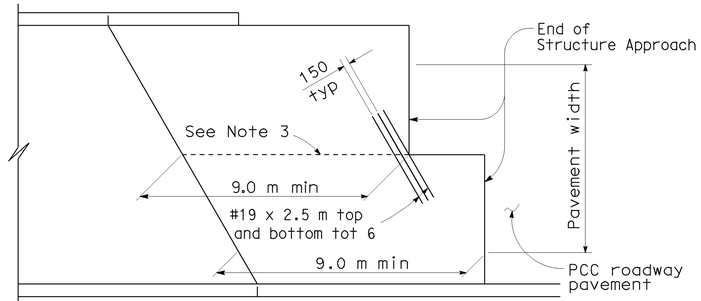

STRUCTURE APPROACH - END STAGGER DETAIL

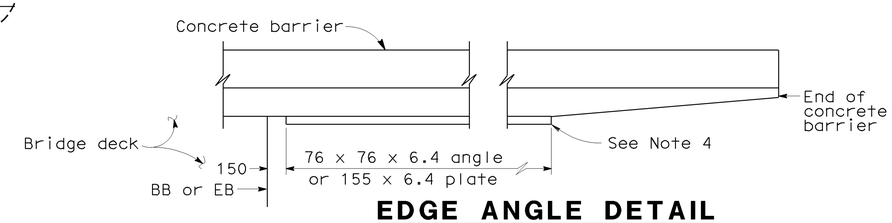

EDGE ANGLE DETAIL

APPROACH SLAB TRANSVERSE CONTACT JOINT		
APPROACH SKEW	WITH AC ROADWAY PAVEMENT	WITH PCC ROADWAY PAVEMENT
< 20°	Parallel to face of paving notch	Parallel to face of paving notch
20°- 45°	Parallel to face of P N use (Detail A)	Stagger lines 7.2 m to 10.8 m apart.
> 45°	Parallel to face of P N use (Detail A)	Stagger at each lane line.

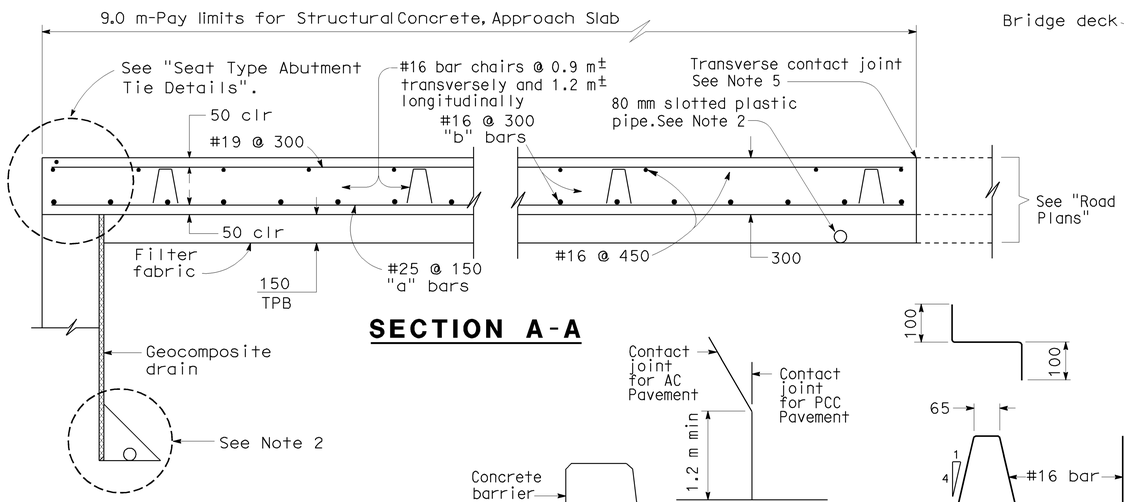

SECTION A-A

DETAIL A

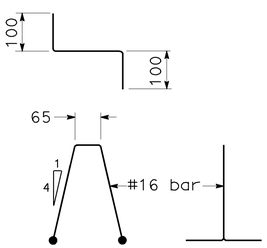

BAR CHAIR DETAIL

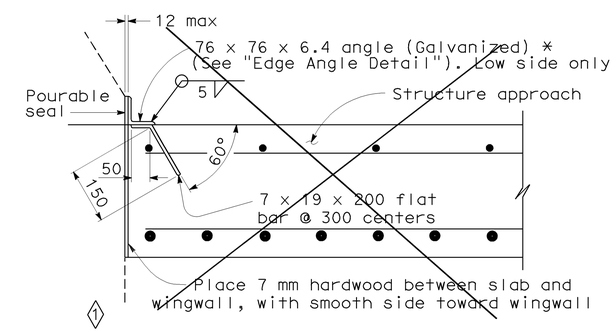

1

*(TO BE USED WITH TYPE 25 OR TYPE 27 CONCRETE BARRIER)

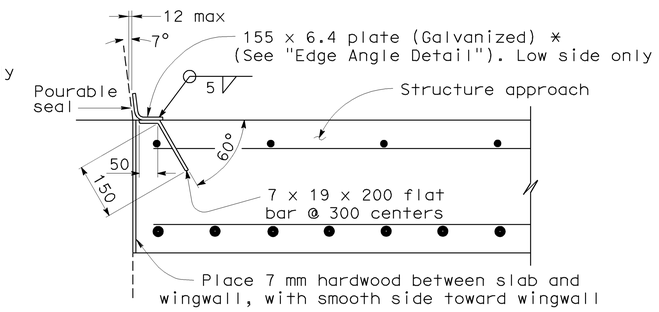

2

*(TO BE USED WITH TYPE 742 CONCRETE BARRIER)

DETAIL B

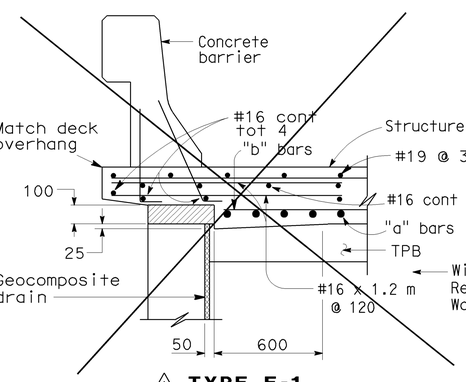

1 **TYPE E-1**

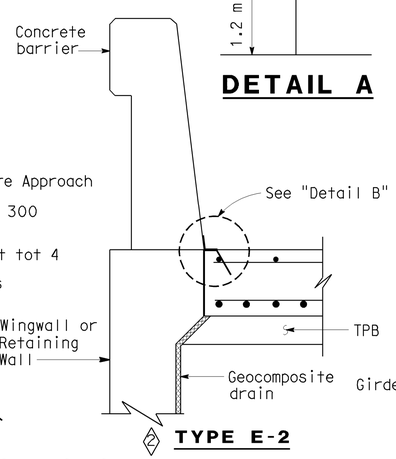

2 **TYPE E-2**

SECTION C-C

(Type E-1 to be used, unless otherwise shown on plans)

NOTE:
THE CONTRACTOR SHALL VERIFY ALL CONTROLLING FIELD DIMENSIONS BEFORE ORDERING OR FABRICATING ANY MATERIAL.

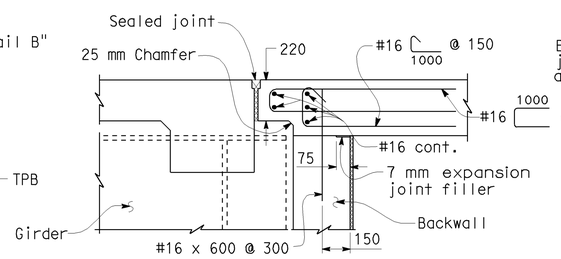

2 **MR ≤ 50 mm**

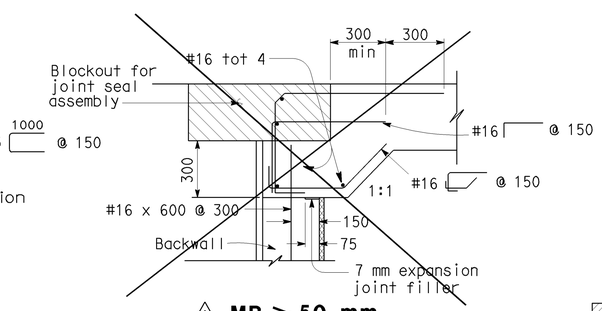

1 **MR > 50 mm**

SEAT TYPE ABUTMENT TIE DETAILS (SEE NOTE 1)

NOTES:

1. For details not shown, see Structure Plans. For MR ≤ 50 mm, adjust bar reinforcement to clear a sawcut for sealed joint, when required.
2. For drainage details, see "Structure Approach Drainage Details" sheet.
3. Longitudinal construction joints, when permitted by the Engineer, shall be located on lane lines.
4. End angle or plate at beginning of barrier transition, end of wingwall or end of structure approach as applicable.
5. For transverse contact joint with new PCC paving, refer to Standard Plan P10.
6. At the contractor's option, approach slab transverse reinforcement may be placed parallel to paving notch. Spacing of transverse reinforcement is measured along ℄ roadway.
7. For longitudinal construction joints see "Longitudinal Construction Joints Alternatives" on the "STRUCTURE APPROACH TYPE R(9S)" sheet. (3)
8. For details to attach approach slab to existing abutment, see "STRUCTURE APPROACH TYPE R(9S)" sheet.

Remove all polystyrene.

NO SCALE
ALL DIMENSIONS ARE IN MILLIMETERS UNLESS OTHERWISE SHOWN

SPECIAL DETAILS

STANDARD DRAWING					
RELEASE DATE REVISED	DESIGN	BY M. TRAFFALIS	CHECKED E. THORKILDSEN	RELEASED BY	
FILE NO. xs3-120	DETAILS	BY R. YEE	CHECKED E. THORKILDSEN		
	SUBMITTED	BY M. HA	DRAWING DATE 4/98	OFFICE CHIEF	

1 DETAIL DOES NOT APPLY
2 MODIFIED DETAIL
3 NOTES ADDED

STATE OF CALIFORNIA
DEPARTMENT OF TRANSPORTATION

DIVISION OF ENGINEERING SERVICES

BRIDGE NO. 53-1086
KILOMETER POST 46.5

VERDUGO AVENUE UC WIDEN & RETROFIT
STRUCTURE APPROACH TYPE N(9S)

DS OSD 2147A (METRIC) (REV. 2/25/97)

ORIGINAL SCALE IN MILLIMETERS FOR REDUCED PLANS 0 10 20 30 40 50 60 70 80 90 100

CU 07
EA 121841

DISREGARD PRINTS BEARING EARLIER REVISION DATES

REVISION DATES (PRELIMINARY STAGE ONLY) 1-31-07 1-17-08 10-29-08 11-24-08 2-2-09 3-3-09

SHEET 35 OF 39

USERNAME => trmnguye

53-1086-r-sa1.dgn

DATE PLOTTED => 15-JUN-2009 TIME PLOTTED => 08:24

DIST.	COUNTY	ROUTE	KILOMETER POST TOTAL PROJECT	SHEET NO.	TOTAL SHEETS
07	LA	5	42.8/47.3	977	1073

Caltrans Metric

Andrew P. Rittenhouse 12-05-08
REGISTERED ENGINEER - CIVIL

6-8-09
PLANS APPROVAL DATE

The State of California or its officers or agents shall not be responsible for the accuracy or completeness of electronic copies of this plan sheet.

REGISTERED PROFESSIONAL ENGINEER Andrew P. Rittenhouse No. 61006 Exp. 12-31-10 CIVIL STATE OF CALIFORNIA

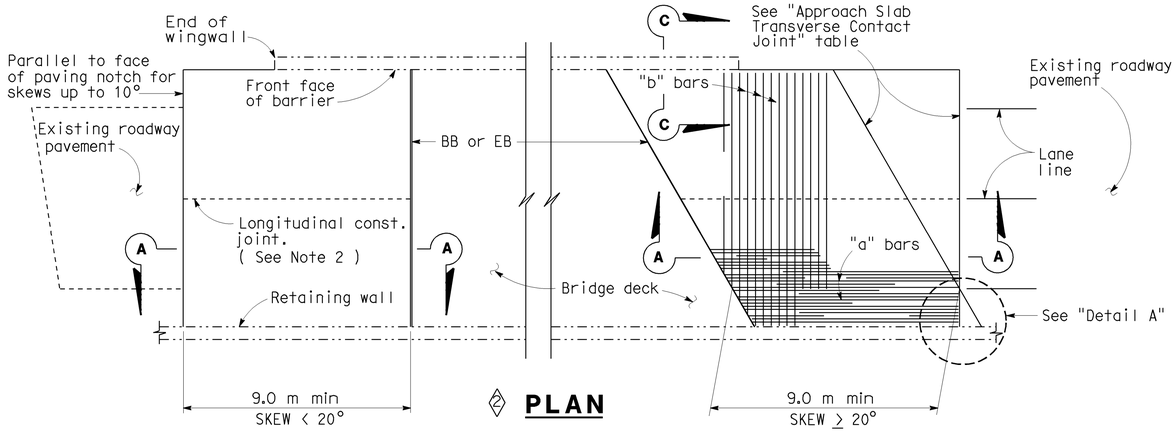

PLAN

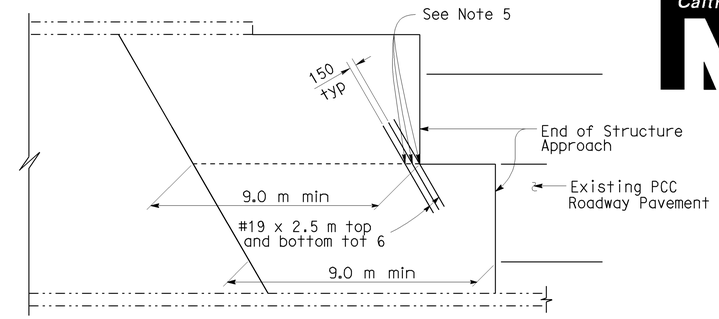

STRUCTURE APPROACH - END STAGGER DETAIL

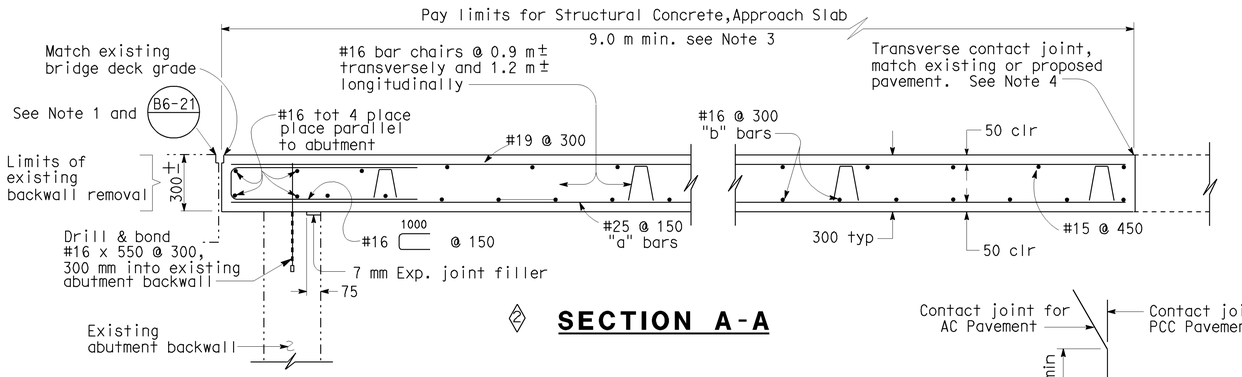

SECTION A-A

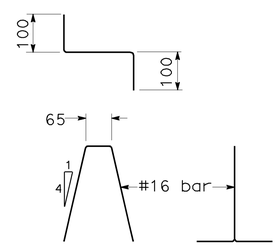

BAR CHAIR DETAIL

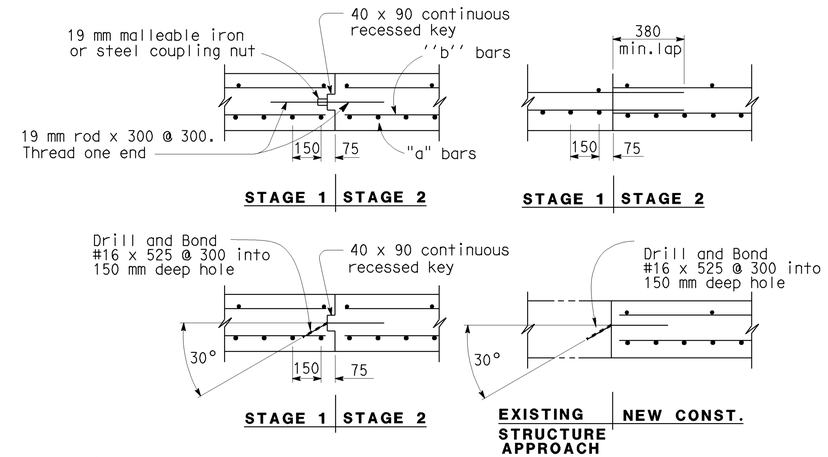

LONGITUDINAL CONSTRUCTION JOINT ALTERNATIVES

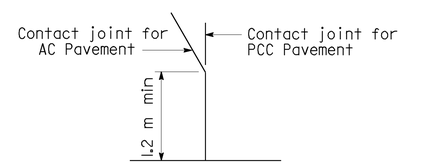

DETAIL A

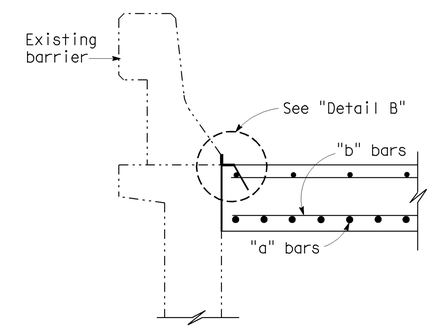

SECTION C-C

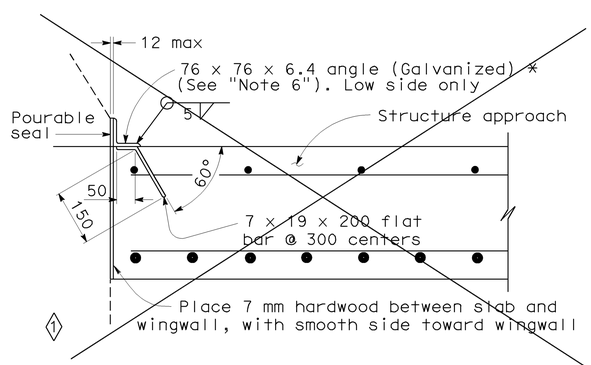

*(TO BE USED WITH TYPE 25 OR TYPE 27 CONCRETE BARRIER)

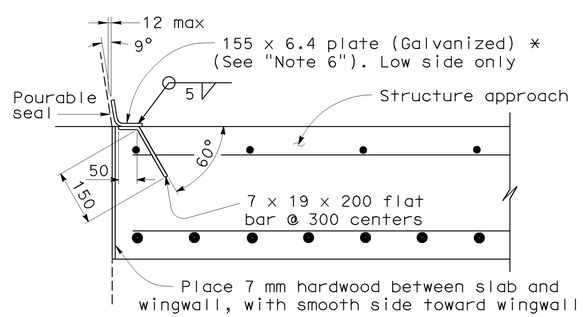

*(TO BE USED WITH TYPE 732 OR TYPE 736 CONCRETE BARRIER)

DETAIL B

NOTE:

THE CONTRACTOR SHALL VERIFY ALL CONTROLLING FIELD DIMENSIONS BEFORE ORDERING OR FABRICATING ANY MATERIAL.

3 APPROACH SLAB TRANSVERSE CONTACT JOINT		
APPROACH SKEW	WITH AC ROADWAY PAVEMENT	WITH PCC ROADWAY PAVEMENT
< 20°	Parallel to face of paving notch	Parallel to face of paving notch
20°- 45°	Parallel to face of P N use (Detail A)	Stagger lines 7.2 m to 10.8 m apart
> 45°	Parallel to face of P N use (Detail A)	Stagger at each lane line

NOTES:

1. Sealed joint, for M.R. see Structure Plans. Adjust bar reinforcement to clear a sawcut for sealed joint, when required.
2. Longitudinal construction joints, when permitted by Engineer, shall be located on lane lines.
3. Transverse contact joint shall be a minimum of 1.5 m from an existing or constructed weakened plane joint.
4. For transverse contact joint with new PCC paving, refer to Standard Plan P10.
5. Couplers are required for stage construction.
6. End angle or plate at beginning of barrier transition, end of wingwall or end of structure approach as applicable.

SPECIAL DETAILS

NO SCALE

ALL DIMENSIONS ARE IN MILLIMETERS UNLESS OTHERWISE SHOWN

STANDARD DRAWING

RELEASE DATE	REVISED	DESIGN	BY M. TRAFFALIS	CHECKED E. THORKILDSEN	RELEASED BY
FILE NO.	xs3-130	DETAILS	BY R. YEE	CHECKED E. THORKILDSEN	
		SUBMITTED	BY M. HA	DRAWING DATE 8/92	OFFICE CHIEF

1 DETAIL DOES NOT APPLY
2 MODIFIED DETAIL
3 MODIFIED TABLE

STATE OF CALIFORNIA
DEPARTMENT OF TRANSPORTATION

DIVISION OF ENGINEERING SERVICES

BRIDGE NO. 53-1086
KILOMETER POST 46.5

VERDUGO AVENUE UC WIDEN & RETROFIT

STRUCTURE APPROACH TYPE R(9S)

DS OSD 2147A (METRIC) (REV. 2/25/97)

ORIGINAL SCALE IN MILLIMETERS FOR REDUCED PLANS 0 10 20 30 40 50 60 70 80 90 100

CU 07
EA 121841

DISREGARD PRINTS BEARING EARLIER REVISION DATES

REVISION DATES (PRELIMINARY STAGE ONLY) 11-29-07 11-24-08

SHEET 36 OF 39

USERNAME => trmnguye

53-1086-r-sq2.dgn

DATE PLOTTED => 15-JUN-2009 TIME PLOTTED => 08:24

DIST.	COUNTY	ROUTE	KILOMETER POST TOTAL PROJECT	SHEET NO.	TOTAL SHEETS
07	LA	5	42.8/47.3	978	1073

Caltrans Metric

Andrew Rittenhouse 12-05-08
REGISTERED ENGINEER - CIVIL

6-8-09
PLANS APPROVAL DATE

REGISTERED PROFESSIONAL ENGINEER Andrew P. Rittenhouse No. 61006 Exp. 12-31-10 CIVIL STATE OF CALIFORNIA

The State of California or its officers or agents shall not be responsible for the accuracy or completeness of electronic copies of this plan sheet.

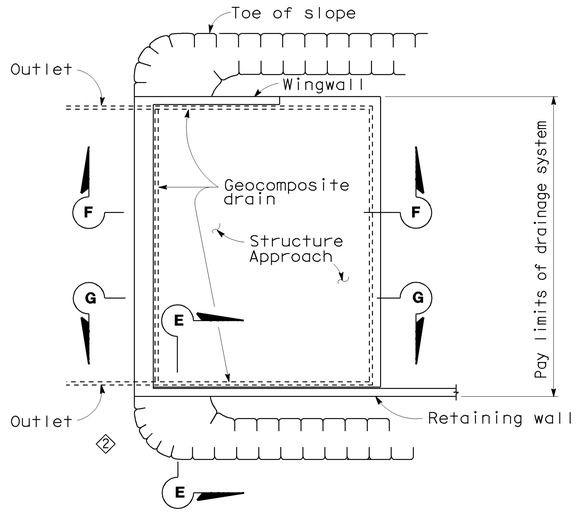

TYPICAL PLAN

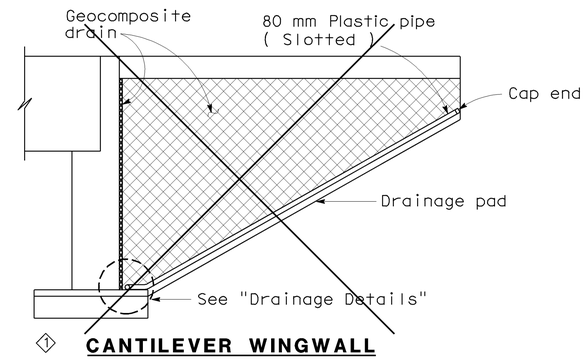

CANTILEVER WINGWALL
SECTION F-F

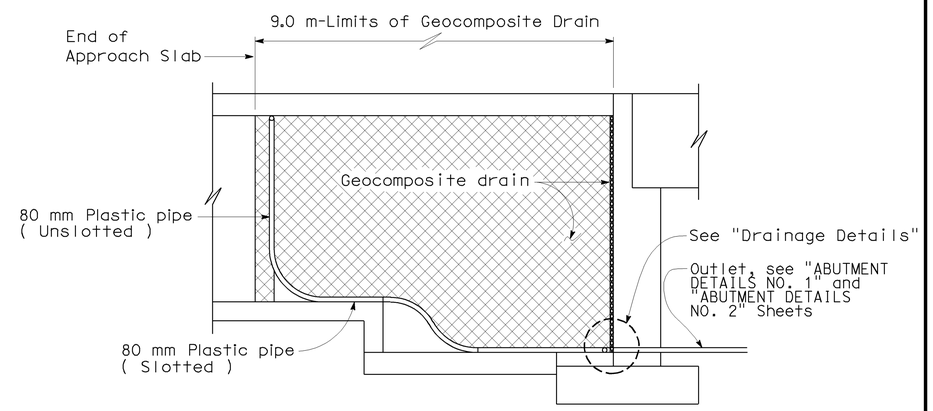

RETAINING WALL WINGWALL
SECTION G-G

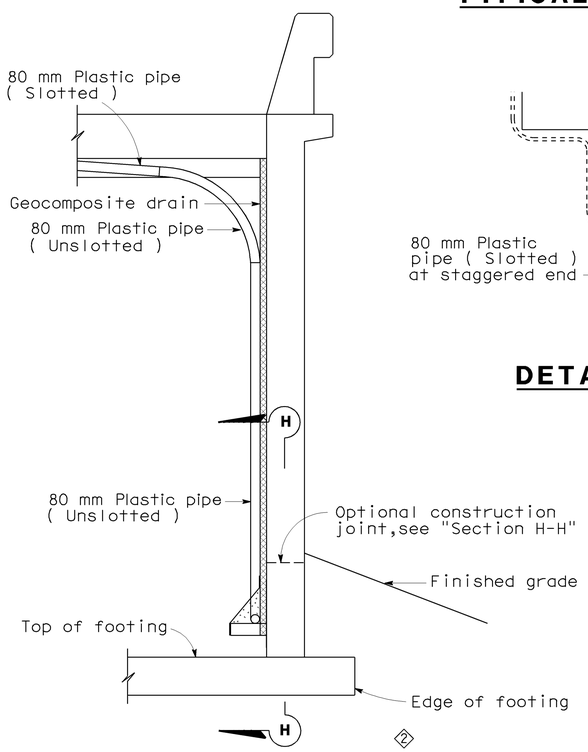

DETAIL B

SECTION E-E

NOTE: Bends and junctions in 80 mm plastic pipe are 750 mm radius min.

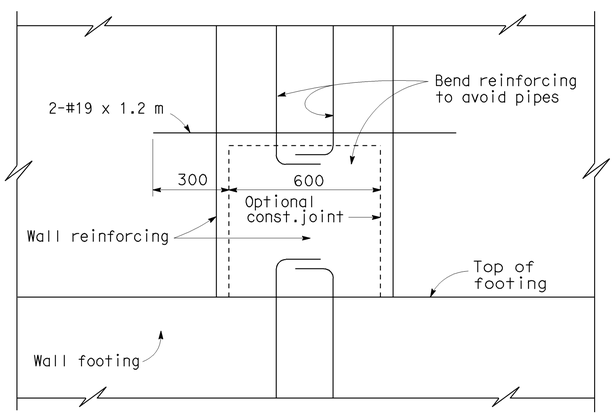

SECTION H-H

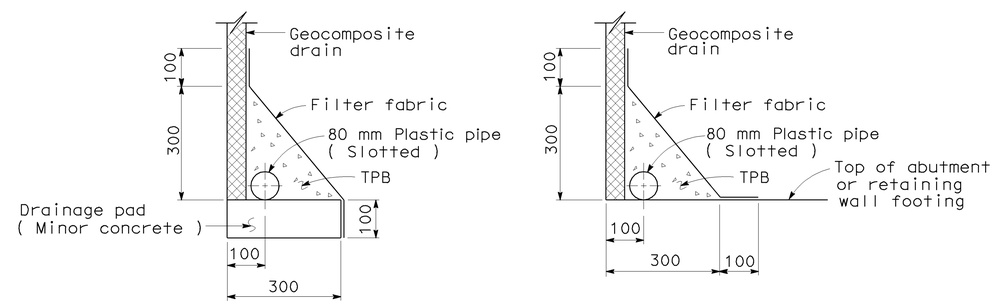

RESTING ABOVE FOOTING **RESTING ON FOOTING**

2 DRAINAGE DETAILS

SPECIAL DETAILS

NO SCALE

ALL DIMENSIONS ARE IN MILLIMETERS UNLESS OTHERWISE SHOWN

STANDARD DRAWING				
RELEASE DATE REVISED	DESIGN	BY M. TRAFFALIS	CHECKED E. THORKILDSEN	RELEASED BY
FILE NO. xs3-110	DETAILS	BY R. YEE	CHECKED E. THORKILDSEN	OFFICE CHIEF
	SUBMITTED	BY M. HA	DRAWING DATE 4/98	

DS OSD 2147A (METRIC) (REV. 2/25/97)

1 Detail does not apply
2 Modified Detail

STATE OF CALIFORNIA DEPARTMENT OF TRANSPORTATION

DIVISION OF ENGINEERING SERVICES

CU 07
EA 121841

BRIDGE NO. 53-1086
KILOMETER POST 46.5

VERDUGO AVENUE UC WIDEN & RETROFIT
STRUCTURE APPROACH DRAINAGE DETAILS

ORIGINAL SCALE IN MILLIMETERS FOR REDUCED PLANS 0 10 20 30 40 50 60 70 80 90 100

DISREGARD PRINTS BEARING EARLIER REVISION DATES

REVISION DATES (PRELIMINARY STAGE ONLY) 12-1-03 4-22-04 9-30-04 1-31-04 3-3-08 11-24-08 1-28-09 3-3-09

SHEET 37 OF 39

USERNAME => trmnguye

53-1086-s-sadd.dgn

DATE PLOTTED => 15-JUN-2009 TIME PLOTTED => 08:24

DIST	COUNTY	ROUTE	KILOMETER POST TOTAL PROJECT	SHEET No	TOTAL SHEETS
07	LA	5	42.8/47.3	979	1073

REGISTERED CIVIL ENGINEER 5-7-08

6-8-09
PLANS APPROVAL DATE

REGISTERED PROFESSIONAL ENGINEER Qiang Huang No. C055671 Exp. 12-31-08 CIVIL STATE OF CALIFORNIA

The State of California or its officers or agents shall not be responsible for the accuracy or completeness of electronic copies of this plan sheet.

NOTE:

The information presented on this drawing was not the result of any work developed, performed or completed this Department (Caltrans). The following party should account for all this information:

URS Corp.

It should be expressly understood that Caltrans assumes no responsibility whatsoever in respect to the sufficiency, accuracy, completeness, and interpretation set forth therein or any other aspect of the information shown or represented on this drawing.

BENCH MARK

SURVEY CONTROL

PRHV1005
Fnd CONTROL POINT GEAR
20.743 Rt. ℄ "Route 5"
Sta. 465+22.096
N 575 090.216
E 1 971 648.900
Elev. = 178.578

PRHV1002
Fnd CONTROLPOINT GEAR
24.519 Lt. ℄ "Route 5"
Sta. 465+77.664
N 575 106.289
E 1 971 579.265
Elev. = 174.575

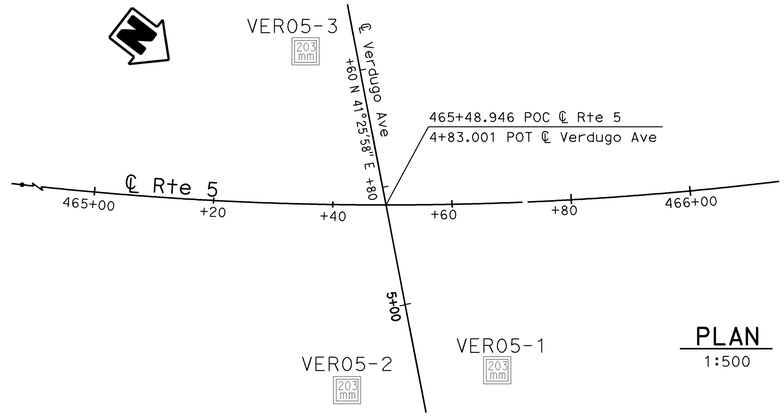

PLAN
1:500

PROFILE
HOR. 1:50
VER. 1:100

Caltrans Metric	GEOTECHNICAL SERVICES	FIELD INVESTIGATION BY:	STATE OF CALIFORNIA DEPARTMENT OF TRANSPORTATION	DIVISION OF ENGINEERING SERVICES STRUCTURE DESIGN	BRIDGE NO. 53-1086
	PREPARED BY I.G-Remmen 1/06	URS CORP.		DESIGN BRANCH 15	KILOMETER POST 46.5
	CHECKED BY B. Bertucci				

VERDUGO AVENUE UC WIDEN & RETROFIT

LOG OF TEST BORINGS 1 OF 2

OGS CIVIL LOG OF TEST BORINGS SHEET (METRIC) (REV. 4/04)

ALL DIMENSIONS ARE IN METERS UNLESS OTHERWISE SHOWN

ORIGINAL SCALE IN MILLIMETERS FOR REDUCED PLANS 0 10 20 30 40 50 60 70 80 90 100

CU 07
EA 121841

DISREGARD PRINTS BEARING EARLIER REVISION DATES 04-29-08 11-24-08

REVISION DATES (PRELIMINARY STAGE ONLY)

SHEET 38 OF 39

FILE => 53-1086-t-lotb1.dgn

USERNAME => frmnguye DATE PLOTTED => 15-JUN-2009 TIME PLOTTED => 08:24

I-181-3 (2)

FED. ROAD DIV. No.	STATE	PROJ. No.	FISCAL YEAR	SHEET No.	TOTAL SHEETS
7	CAL.			180	260

DIST.	COUNTY	ROUTE	SECTION	SHEET No.	TOTAL SHEETS
VII	LA	5	Brk.	19	173

DATE APPROVED August 19, 1957

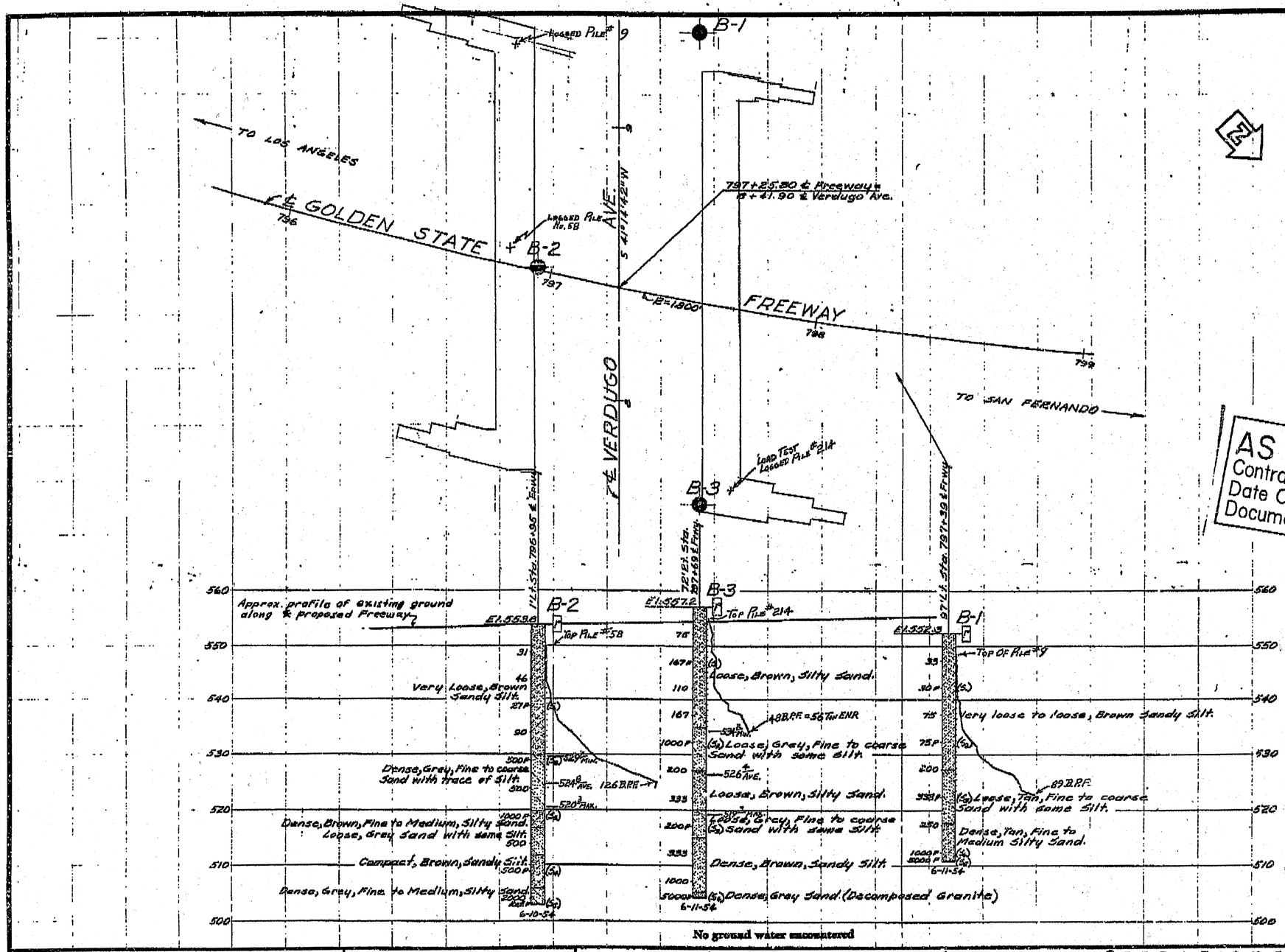

Design Pile Loading: 45 Tons
Type Pile: Raymond Shell
Diameter: Butt. - 15" Tip 11½"
Total Number Piles: 245
Lineal Ft. Piles "As Built": 6693.7
Lineal Ft. Piles Called for on Plans: 5130
Hammer: Raymond Conc. Pile Modified 65C - 6500 Lbs.
Remarks: Displacement @ 90 Tons - Under Load 0.437 - Permanent 0.267. As A Result Of The Pile Load Test, Piles Were Driven To An E.N.R. Bearing Of Between 60-70 Tons.

AS BUILT PLANS
Contract No. 58-14 VC10
Date Completed
Document No. 70001879

Test Boring By Bridge Dept.

To accompany plans dated 6-8-09

DIVISION OF ENGINEERING SERVICES - GEOTECHNICAL SERVICES

As-Built Log of Test Borings sheet is considered an informational document only. As such, the State of California registration seal with signature, license number and registration certificate expiration date confirm that this is a true and accurate copy of the original document. This drawing is available and presented only for the convenience of any bidder, contractor or other interested party.

DIST.	COUNTY	ROUTE	KILOMETER POST-TOTAL PROJECT	Sheet No.	Total Sheets
07	LA	5	42.8/47.3	980	1073

REGISTERED CIVIL ENGINEER — DATE 5/7/08

REGISTERED PROFESSIONAL ENGINEER — Qiang Huang — No. C055671 — Exp. 12-31-08 — CIVIL — STATE OF CALIFORNIA

VERDUGO AVENUE UC WIDEN & RETROFIT

LOG OF TEST BORINGS 2 OF 2

NOTE: A COPY OF THIS LOG OF TEST BORINGS IS AVAILABLE AT OFFICE OF STRUCTURE MAINTENANCE AND INVESTIGATIONS, SACRAMENTO, CALIFORNIA

CU: 07
EA: 121841

BRIDGE No. 53-1086

Sheet 39 of 39

Revisions made to this Log of Test Borings from the original 1954 Log of Test Borings are the addition of the following table and notes:

Boring	Station	Offset from ℄ Rte. 5
B-1	465+62.0	29.5 m Left
B-2	465+42.6	0.5 m Left
B-3	465+71.6	20.4 m Right

Notes:

1. See the General Plan and/or Foundation Plan for Metric Stationing.
2. The data are the metric locations for the As-Built Test Borings referenced to the proposed new structure location. This table is presented on the As-Built Log of Test Boring sheet for the convenience of any bidder, contractor or other interested party.

CLASSIFICATION OF MATERIAL BASED ON STANDARD GRADE SIZE LIMITS

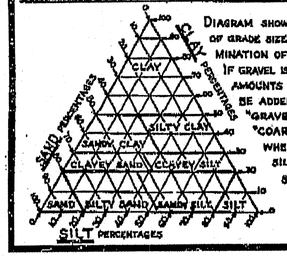

DIAGRAM SHOWING THE BASIS FOR ESTIMATES OF GRADE SIZE DISTRIBUTION USED IN DETERMINATION OF CLASS NAMES.

IF GRAVEL IS PRESENT IN APPRECIABLE AMOUNTS THE TERM "GRAVELLY" MAY BE ADDED TO THE CLASS NAME, VIZ. "GRAVELLY SAND." THE TERMS "COARSE", "MEDIUM" AND "FINE" WHEN USED TO DESCRIBE SAND, SILT AND GRAVEL REFER TO STANDARD GRADE SIZE LIMITS.

LEGEND OF EARTH MATERIALS

- GRAVEL
- SAND
- SILT
- CLAY
- SANDY CLAY OR CLAYEY SAND
- SANDY SILT OR SILTY SAND
- SILTY CLAY OR CLAYEY SILT
- PEAT AND/OR ORGANIC MATTER
- FILL MATERIAL
- IGNEOUS ROCK
- SEDIMENTARY ROCK
- METAMORPHIC ROCK

LEGEND OF BORING OPERATIONS

- PLAN OF ANY BORING
- PENETROMETER
- 2¼" CONE PENETROMETER
- SAMPLER BORING (DRY)
- ROTARY BORING (WET)
- AUGER BORING (DRY)
- JET BORING
- CORE BORING
- TEST PIT

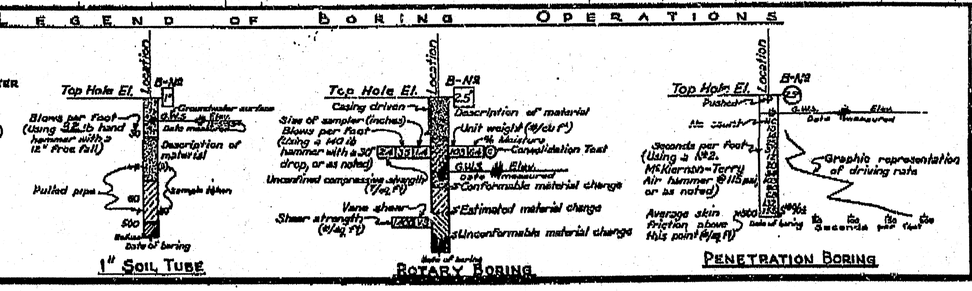

NOTES

The contractor's attention is directed to Section 2, Article (c) of the Standard Specifications and to the Special Provisions accompanying this set of plans.

Classification of earth material as shown on this sheet is based upon field inspection and is not to be construed to imply mechanical analysis.

STATE OF CALIFORNIA
DEPARTMENT OF PUBLIC WORKS
DIVISION OF HIGHWAYS

VERDUGO AVE. U.C.

LOG OF TEST BORINGS

SCALE Horiz. 1"=20' Vert. 1"=10' | BRIDGE 53-1086 | FILE E-53 | DRAWING 0-3778-19

PREL. DRAWING NO. P-3778 | 33

BRIDGE DEPARTMENT

DESIGNED	CHECKED
Approval Recommended	

80

53-1086-t-lotb2.tif

DIST	COUNTY	ROUTE	KILOMETER POST TOTAL PROJECT	SHEET No	TOTAL SHEETS
07	LA	5	42.8/47.3	981	1073

Andrew Rittenhouse 12-05-08
REGISTERED CIVIL ENGINEER DATE

6-8-09
PLANS APPROVAL DATE

REGISTERED PROFESSIONAL ENGINEER
Andrew P. Rittenhouse
No. 61006
Exp. 12-31-10
CIVIL
STATE OF CALIFORNIA

The State of California or its officers or agents shall not be responsible for the accuracy or completeness of electronic copies of this plan sheet.

Notes:

1. For Log of Test Boring information, see "Road Plans".
2. For details not shown, see "LAYOUT NO. 2" sheet.

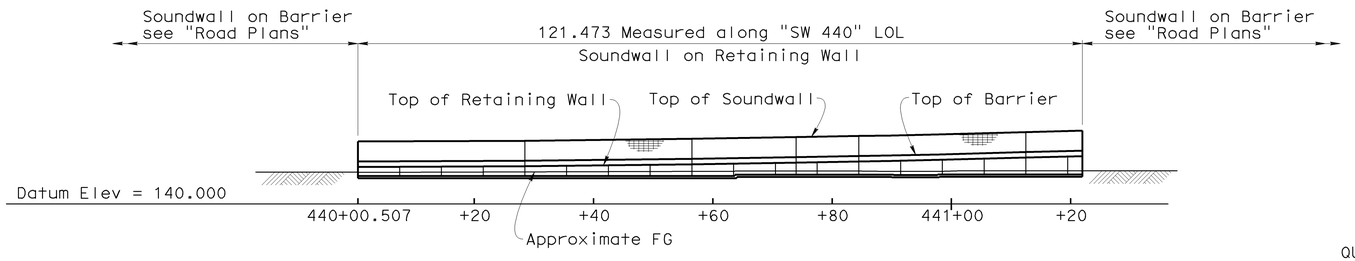

ELEVATION
1:500

QUANTITIES

STRUCTURE EXCAVATION (TYPE Y-2) (AERIALLY DEPOSITED LEAD)	355	m^3
STRUCTURE BACKFILL (RETAINING WALL)	562	m^3
STRUCTURAL CONCRETE, RETAINING WALL	230	m^3
FRACTURED RIB TEXTURE	158	m^2
SOUND WALL (MASONRY BLOCK)	414	m^2
BAR REINFORCING STEEL (RETAINING WALL)	10 270	kg
CONCRETE BARRIER (TYPE 736A MODIFIED)	123	m

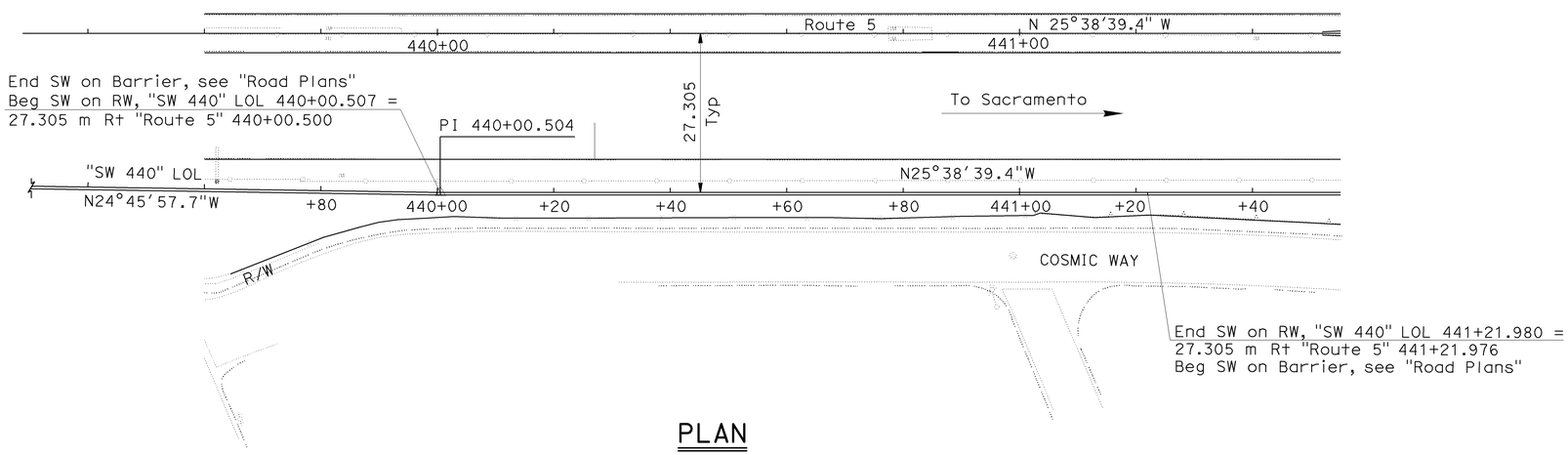

PLAN
1:500

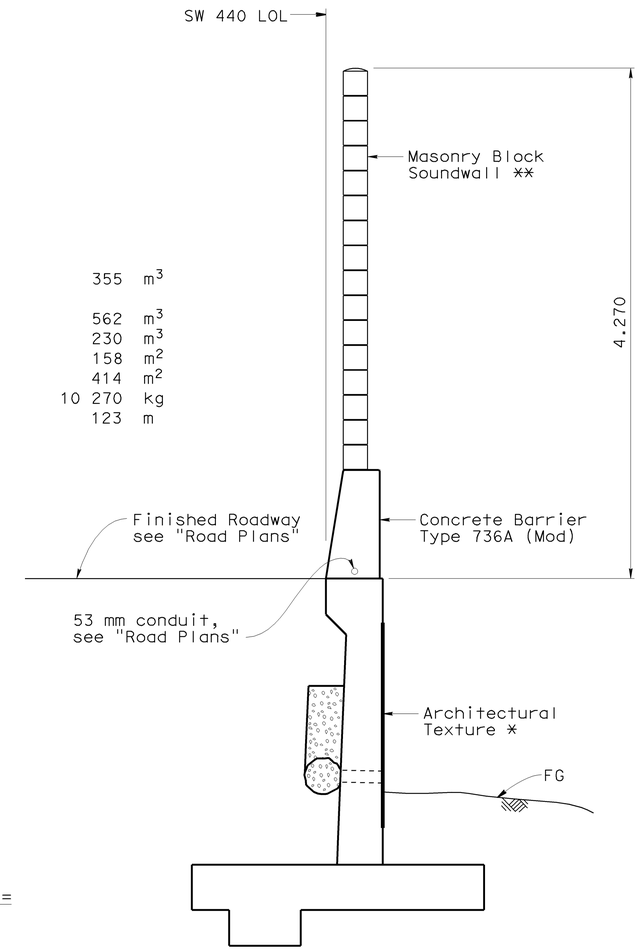

TYPICAL SECTION
1:25

Legend:

* For Architectural details, see "ROAD PLANS"

** For block type, bond type, and Architectural details, see "ROAD PLANS"

KP (PM) Indicates Kilometer Post (Post Mile)

NOTE:
THE CONTRACTOR SHALL VERIFY ALL CONTROLLING FIELD DIMENSIONS BEFORE ORDERING OR FABRICATING ANY MATERIAL.

Caltrans Metric

Traci Menard
DESIGN ENGINEER

	BY	CHECKED
DESIGN	C. Moulton	T. Menard
DETAILS	H. Mauroschadt	T. Menard/R. Novik
QUANTITIES	S. Moradi	T. Menard

LOAD & RESISTANCE FACTOR DESIGN — LIVE LOADING: HL93 W/"LOW-BOY"; PERMIT DESIGN VEHICLE

	BY	CHECKED
LAYOUT	C. Moulton	T. Menard
SPECIFICATIONS	T. Chen	PLANS AND SPECS COMPARED A. Rittenhouse

ALL DIMENSIONS ARE IN METERS UNLESS OTHERWISE SHOWN

ORIGINAL SCALE IN MILLIMETERS FOR REDUCED PLANS 0 10 20 30 40 50 60 70 80 90 100

STATE OF CALIFORNIA
DEPARTMENT OF TRANSPORTATION

DIVISION OF ENGINEERING SERVICES
STRUCTURE DESIGN
DESIGN BRANCH 15

CU 07
EA 121841

BRIDGE NO. 53E0125
KP (PM) 44.0 (27.3)

RETAINING WALL NO. 440
GENERAL PLAN

DISREGARD PRINTS BEARING EARLIER REVISION DATES

REVISION DATES: 2-28-08 6-1-08 5-9-08 8-27-08 9-1-08 10-30-08 11-24-08 1-5-09 1-23-09 4-28-09

SHEET 1 OF 7

STRUCTURES DESIGN GENERAL PLAN SHEET (METRIC) (REV.07-24-06)

FILE => 53e0125-a-gp.dgn

USERNAME => ttmirkes1 DATE PLOTTED => 15-JUN-2009 TIME PLOTTED => 08:16

DIST	COUNTY	ROUTE	KILOMETER POST TOTAL PROJECT	SHEET No	TOTAL SHEETS
07	LA	5	42.8/47.3	982	1073

Andrew P. Rittenhouse 12-05-08
REGISTERED CIVIL ENGINEER DATE

6-8-09
PLANS APPROVAL DATE

REGISTERED PROFESSIONAL ENGINEER Andrew P Rittenhouse No. 61006 Exp. 12-31-10 CIVIL STATE OF CALIFORNIA

The State of California or its officers or agents shall not be responsible for the accuracy or completeness of electronic copies of this plan sheet.

INDEX TO PLANS

SHEET NO.	TITLE
1	GENERAL PLAN
2	INDEX TO PLANS
3	LAYOUT NO. 1
4	LAYOUT NO. 2
5	RETAINING WALL TYPE 1SWB
6	SOUNDWALL WITH BARRIER ON RETAINING WALL - MASONRY BLOCK DETAILS NO. 1
7	SOUNDWALL WITH BARRIER ON RETAINING WALL - MASONRY BLOCK DETAILS NO. 2

STANDARD PLANS DATED JULY 2004

A10A	ACRONYMS AND ABBREVIATIONS (A - L)
A10B	ACRONYMS AND ABBREVIATIONS (M - Z)
A62B	LIMITS OF PAYMENT FOR EXCAVATION AND BACKFILL - BRIDGE SURCHARGE AND WALL
B0-3	BRIDGE DETAILS
B3-8	RETAINING WALL DETAILS NO. 1
B3-9	RETAINING WALL DETAILS NO. 2
B11-56	CONCRETE BARRIER TYPE 736
B15-9	SOUNDWALL MASONRY BLOCK MISCELLANEOUS DETAILS

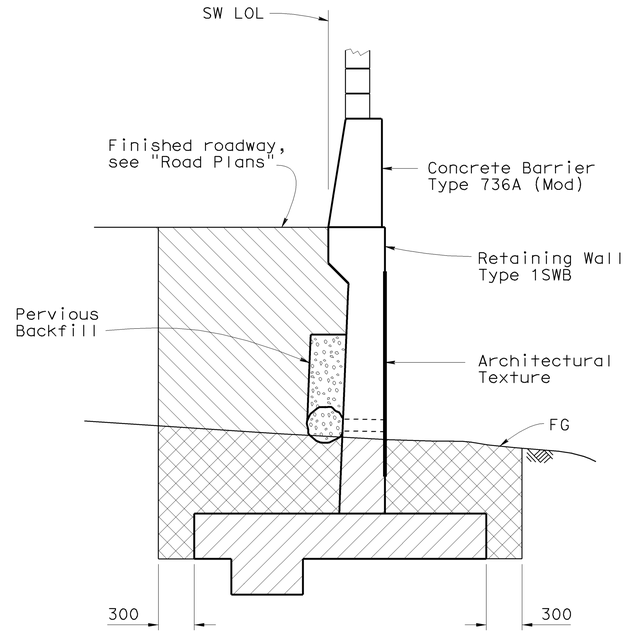

LIMITS OF EXCAVATION AND BACKFILL

No Scale

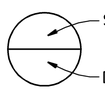

Legend:

Structure Excavation (Type Y-2)

Structure Backfill (Retaining Wall)

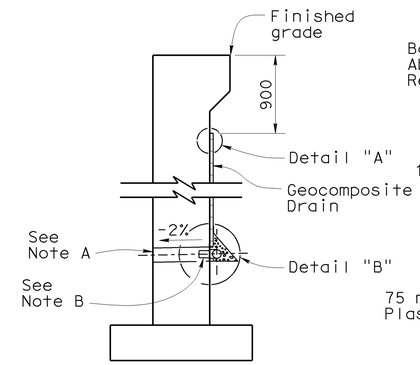

WALL SECTION

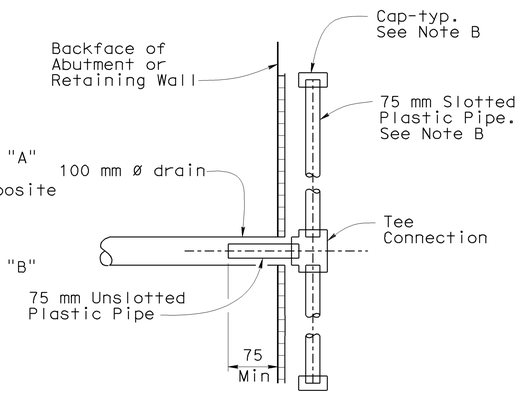

SECTION A-A

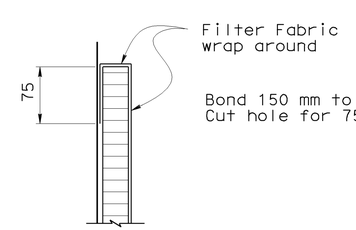

DETAIL "A"

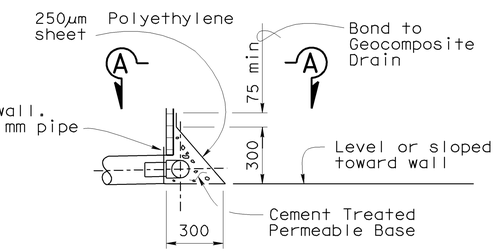

DETAIL "B"

WEEP HOLE AND GEOCOMPOSITE DRAIN ALTERNATIVE

Not to scale

Notes:

A. 100 mm Ø drains at intermediate sag points and at 7.60 meters center to center (2.75 meters c-c for Type 3 and 2.80 meters c-c for Type 4 retaining walls). For walls adjacent to sidewalks or curbs, provide 100 mm cast iron or asbestos cement pipe under the sidewalk to discharge through curb face. Exposed wall drains shall be located 75 mm ± above finished grade.

B. Geocomposite drain, cement treated permeable base, and 75 mm Ø slotted plastic pipe continuous behind retaining wall or abutment. Cap ends of pipe. Provide "Tee" connection at each 100 mm Ø drain.

C. Connect the low end of plastic pipe to the main outlet pipe as applicable.

NOTE:
THE CONTRACTOR SHALL VERIFY ALL CONTROLLING FIELD DIMENSIONS BEFORE ORDERING OR FABRICATING ANY MATERIAL.

Caltrans Metric

	BY	CHECKED
DESIGN	C. Moulton	T. Menard
DETAILS	H. Mauroschadt	T. Menard/R. Novik
QUANTITIES	S. Moradi	T. Menard

STATE OF CALIFORNIA
DEPARTMENT OF TRANSPORTATION

DIVISION OF ENGINEERING SERVICES
STRUCTURE DESIGN
DESIGN BRANCH 15

BRIDGE NO. 53E0125
KILOMETER POST 44.0

RETAINING WALL NO. 440
INDEX TO PLANS

ALL DIMENSIONS ARE IN METERS UNLESS OTHERWISE SHOWN

ORIGINAL SCALE IN MILLIMETERS FOR REDUCED PLANS 0 10 20 30 40 50 60 70 80 90 100

CU 07
EA 121841

DISREGARD PRINTS BEARING EARLIER REVISION DATES

REVISION DATES: 3-22-06 9-1-06 10-30-06 11-24-08 1-5-09

SHEET 2 OF 7

FILE => 53e0125-b-itp.dgn

STRUCTURES DESIGN DETAIL SHEET (METRIC) (REV.03-17-04)

USERNAME => trmikes1 DATE PLOTTED => 15-JUN-2009 TIME PLOTTED => 08:17

DIST	COUNTY	ROUTE	KILOMETER POST TOTAL PROJECT	SHEET No	TOTAL SHEETS
07	LA	5	42.8/47.3	983	1073

Andrew Rittenhouse 12-05-08
REGISTERED CIVIL ENGINEER DATE

6-8-09
PLANS APPROVAL DATE

REGISTERED PROFESSIONAL ENGINEER
Andrew P. Rittenhouse
No. 61006
Exp. 12-31-10
CIVIL
STATE OF CALIFORNIA

The State of California or its officers or agents shall not be responsible for the accuracy or completeness of electronic copies of this plan sheet.

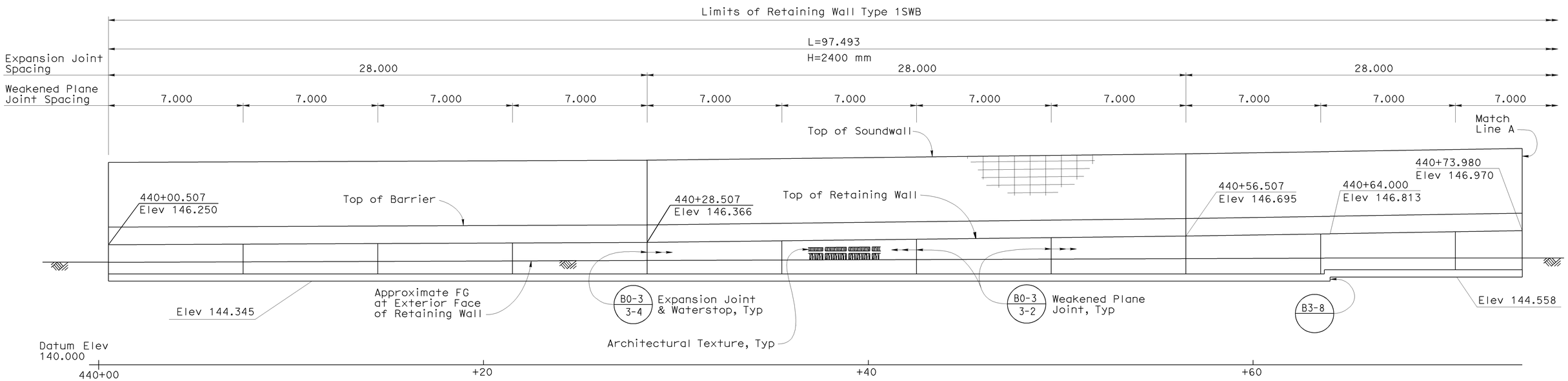

ELEVATION
1:100

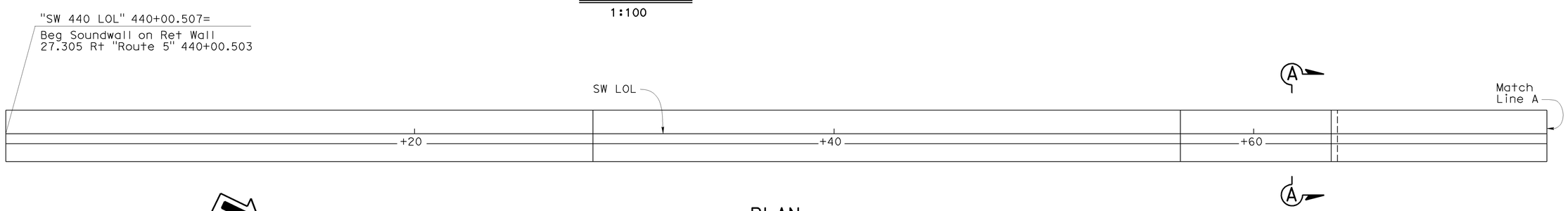

PLAN
1:100

Note:

For "Section A-A" see "LAYOUT NO. 2" sheet.

NOTE:
THE CONTRACTOR SHALL VERIFY ALL CONTROLLING FIELD DIMENSIONS BEFORE ORDERING OR FABRICATING ANY MATERIAL.

Caltrans Metric

ALL DIMENSIONS ARE IN METERS UNLESS OTHERWISE SHOWN

ORIGINAL SCALE IN MILLIMETERS FOR REDUCED PLANS 0 10 20 30 40 50 60 70 80 90 100

	BY	CHECKED
DESIGN	C. Moulton	T. Menard
DETAILS	S. Schenck / H. Mauroschadt	T. Menard / R. Novik
QUANTITIES	S. Moradi	T. Menard

STATE OF CALIFORNIA
DEPARTMENT OF TRANSPORTATION

DIVISION OF ENGINEERING SERVICES
STRUCTURE DESIGN
DESIGN BRANCH 15

CU 07
EA 121841

BRIDGE NO. 53E0125
KILOMETER POST 44.0 (27.3)

RETAINING WALL NO. 440
LAYOUT NO. 1

DISREGARD PRINTS BEARING EARLIER REVISION DATES

REVISION DATES: 11-24-08 1-24-08 3-5-08 4-3-08 5-13-08 6-9-08 8-22-08 9-1-08 10-30-08

SHEET 3 OF 7

FILE => 53e0125-g-rw01.dgn

STRUCTURES DESIGN DETAIL SHEET (METRIC) (REV.03-17-04)

USERNAME => trmikest DATE PLOTTED => 15-JUN-2009 TIME PLOTTED => 08:17

DIST	COUNTY	ROUTE	KILOMETER POST TOTAL PROJECT	SHEET No	TOTAL SHEETS
07	LA	5	42.8/47.3	984	1073

Andrew Rittenhouse 12-05-08
REGISTERED CIVIL ENGINEER DATE

6-8-09
PLANS APPROVAL DATE

REGISTERED PROFESSIONAL ENGINEER
Andrew P. Rittenhouse
No. 61006
Exp. 12-31-10
CIVIL
STATE OF CALIFORNIA

The State of California or its officers or agents shall not be responsible for the accuracy or completeness of electronic copies of this plan sheet.

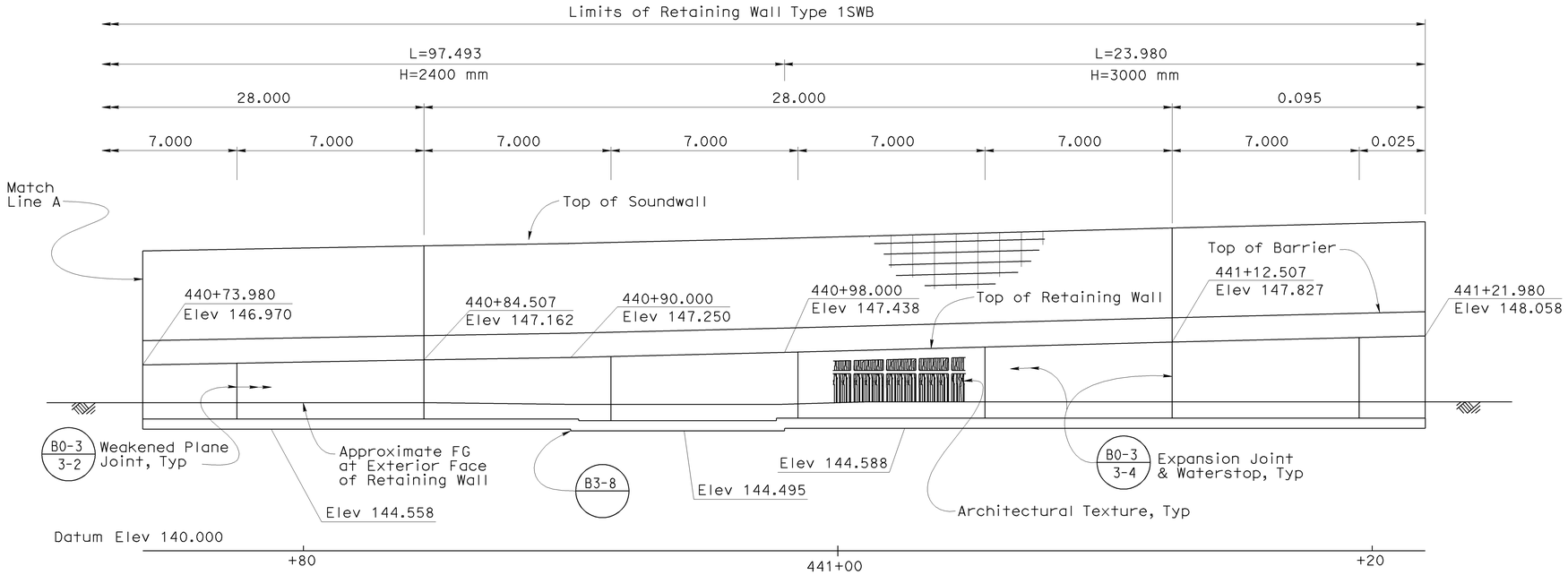

ELEVATION
1:100

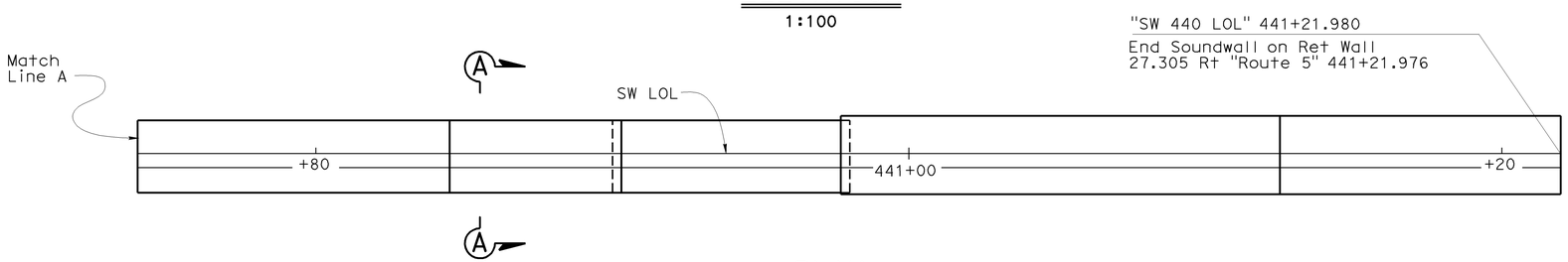

PLAN
1:100

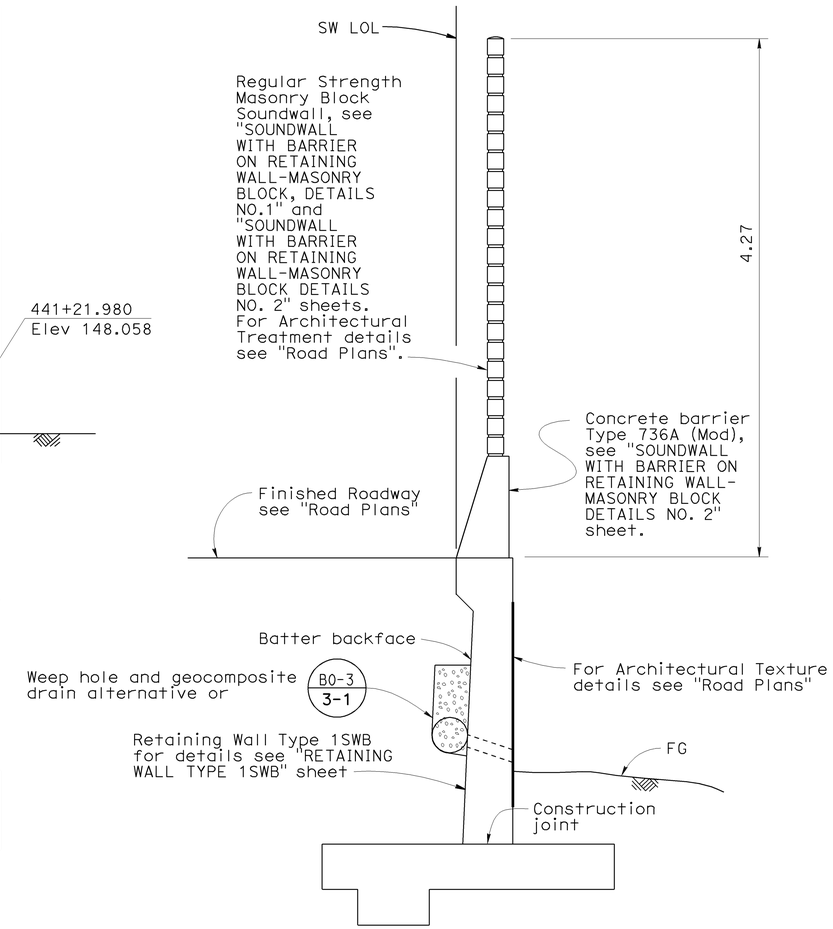

SECTION A-A
1:25

NOTE:
THE CONTRACTOR SHALL VERIFY ALL CONTROLLING FIELD DIMENSIONS BEFORE ORDERING OR FABRICATING ANY MATERIAL.

Caltrans Metric

	BY	CHECKED
DESIGN	C. Moulton	T. Menard
DETAILS	S.Schenck / H. Mauroschadt	T. Menard / R. Novik
QUANTITIES	S. Moradi	T. Menard

STATE OF CALIFORNIA
DEPARTMENT OF TRANSPORTATION

DIVISION OF ENGINEERING SERVICES
STRUCTURE DESIGN
DESIGN BRANCH 15

BRIDGE NO. 53E0125
KILOMETER POST 44.0

RETAINING WALL NO. 440
LAYOUT NO. 2

ALL DIMENSIONS ARE IN METERS UNLESS OTHERWISE SHOWN

ORIGINAL SCALE IN MILLIMETERS FOR REDUCED PLANS 0 10 20 30 40 50 60 70 80 90 100

CU 07
EA 121841

DISREGARD PRINTS BEARING EARLIER REVISION DATES

REVISION DATES: 11-24-08 1-5-09 3-5-08 4-3-08 5-13-08 6-3-08 8-26-08 9-1-08 10-30-08

SHEET 4 OF 7

FILE => 53e0125-g-rw02.dgn

STRUCTURES DESIGN DETAIL SHEET (METRIC) (REV.03-17-04)

USERNAME => rtmrikes DATE PLOTTED => 15-JUN-2009 TIME PLOTTED => 08:17

DIST.	COUNTY	ROUTE	KILOMETER POST TOTAL PROJECT	SHEET NO.	TOTAL SHEETS
07	LA	5	42.8/47.3	985	1073

Andrew Rittenhouse 12-05-08
REGISTERED ENGINEER - CIVIL

6-8-09
PLANS APPROVAL DATE

REGISTERED PROFESSIONAL ENGINEER Andrew P. Rittenhouse No. 61006 Exp. 12-31-10 CIVIL STATE OF CALIFORNIA

The State of California or its officers or agents shall not be responsible for the accuracy or completeness of electronic copies of this plan sheet.

Caltrans Metric

For Soundwall and Barrier reinforcement, see "SOUNDWALL WITH BARRIER ON RETAINING WALL - MASONRY BLOCK DETAILS NO. 1" and "SOUNDWALL WITH BARRIER ON RETAINING WALL - MASONRY BLOCK DETAILS NO. 2" sheets.

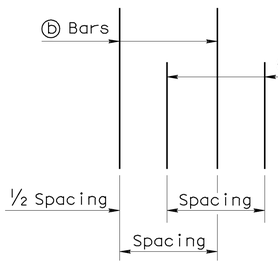

DETAIL B
No Scale

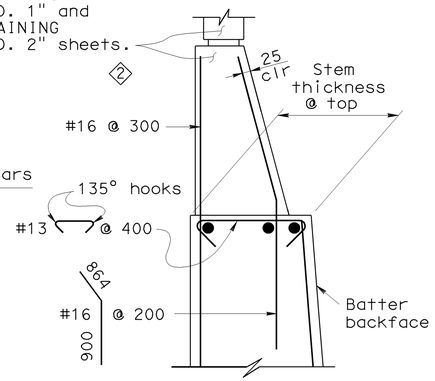

DETAIL A WITHOUT HAUNCH
No Scale

GENERAL NOTES

1. For soundwall and retaining wall architectural finish or texture, see details elsewhere in project plans.
2. For details not shown and drainage notes, see B3-8
3. Footing cover, 450 mm minimum.
4. Limit of no splicing rebars = H/3
5. Increasing stem thickness not permitted:

* ⓐ & ⓑ bars are bundled together.

** Alternate ⓐ & ⓑ bars are shown in "Detail B".

Cont = Continuous.

ALTERNATIVE A: (CONSTANT TOP OF WALL THICKNESS) TABLE OF REINFORCING STEEL DIMENSIONS AND DATA

	Stem With Haunch													
Design H	1800	2400	3000	3600	4200	4800	5500	6100	6700	7300	7900	8500	9100	9800
W	2300	2450	2650	3000	3300	3650	3950	4350	4650	5000	5650	6000	6450	6850
C	850	850	900	1000	1100	1200	1300	1450	1500	1650	1900	2050	2200	2350
B	1500	1600	1750	2000	2200	2450	2650	2900	3150	3350	3750	3950	4250	4500
F Spread Footing	380	380	380	380	380	450	450	550	600	700	850	900	1000	1150
Batter	0	100:4	100:4	100:4	100:4	100:4	100:4	100:4	100:4	100:5	100:6	100:7	100:8	100:8
Stem Thickness @ Haunch	305	305	305	305	305	305	305	305	305	305	305	305	305	305
ⓐ Bars				#19@450**	#22@450**	#25@450**	#29@450**	#32@450**	#25@225*	#25@225*	#22@150*	#32@300**	#29@225*	#36@300**
X				Cont	Cont	Cont	Cont	Cont	Cont	Cont	Cont	Cont	Cont	Cont
Y				2400	2000	2300	2600	2900	2900	3350	3500	3950	4250	4700
ⓑ Bars	#16@300	#16@300	#16@225	#19@450**	#22@450**	#25@450**	#29@450**	#32@450**	#25@225*	#25@225*	#22@150*	#32@300**	#29@225*	#36@300**
X	Cont	Cont	Cont	Cont	Cont	Cont	Cont	Cont	Cont	1700	2000	2150	2450	2600
Y	Cont	Cont	Cont	Cont	3200	3950	4550	5350	5950	6400	5650	5800	7750	7150
ⓒ Bars					#19@450	#19@450	#19@450	#19@450	#19@450	#19@450	#19@300	#22@300	#22@450	#22@300
ⓓ Bars	#16@300	#16@300	#16@300	#16@225	#19@225	#19@225	#19@150	#25@225	#25@225	#25@225	#22@150	#22@150	#29@225	#29@225
Ultimate Bearing Capacity Req'd Kpa	220	265	290	315	350	390	430	475	540	585	600	640	675	740

ALTERNATIVE B: (VARIABLE TOP OF WALL THICKNESS) TABLE OF REINFORCING STEEL DIMENSIONS AND DATA

	Stem With Haunch						Stem Without Haunch						
Design H	2400	3000	3600	4200	4800	5500	6100	6700	7300	7900	8500	9100	9800
W	2450	2600	2800	3100	3450	3950	4200	4900	5000	5650	6100	6250	6650
C	850	850	900	1050	1150	1300	1400	1600	1650	1900	2050	2050	2300
B	1600	1750	1900	2050	2300	2650	2800	3300	3350	3750	4050	4200	4350
F Spread Footing	380	380	380	380	450	450	550	600	700	850	900	1000	1050
Batter	0	0	0	0	0	0	0	0	0	100:2	100:4	100:4	100:4
Stem Thickness @ Top							475	610	610	610	610	610	610
Stem Thickness @ Haunch	305	305	305	305	380	380							
ⓐ Bars			#19@300**	#16@150*	#29@450**	#29@300**	#29@300**	#29@300**	#22@150*	#22@150*	#22@150*	#29@225*	#36@300**
X			Cont	Cont	Cont	Cont	Cont	Cont	Cont	Cont	Cont	Cont	Cont
Y			1700	1700	2600	2600	2600	2600	2900	3350	3800	4100	4400
ⓑ Bars	#16@225	#19@225	#19@300**	#16@150*	#29@450**	#29@300**	#29@300**	#29@300**	#22@150*	#22@150*	#22@150*	#29@225*	#36@300**
X	Cont	Cont	Cont	Cont	Cont	Cont	Cont	Cont	1700	1850	2300	2300	2450
Y	Cont	Cont	Cont	Cont	3500	3500	3650	3650	5350	6100	6550	7300	7300
ⓒ Bars					#22@450	#22@300	#22@300	#22@300	#19@300	#19@300	#19@300	#22@450	#22@300
ⓓ Bars	#16@300	#16@225	#16@225	#19@225	#19@225	#29@300	#29@300	#22@150	#19@150	#22@150	#22@150	#29@225	#29@225
Ultimate Bearing Capacity Req'd Kpa	265	310	350	365	430	430	510	505	585	605	640	740	770

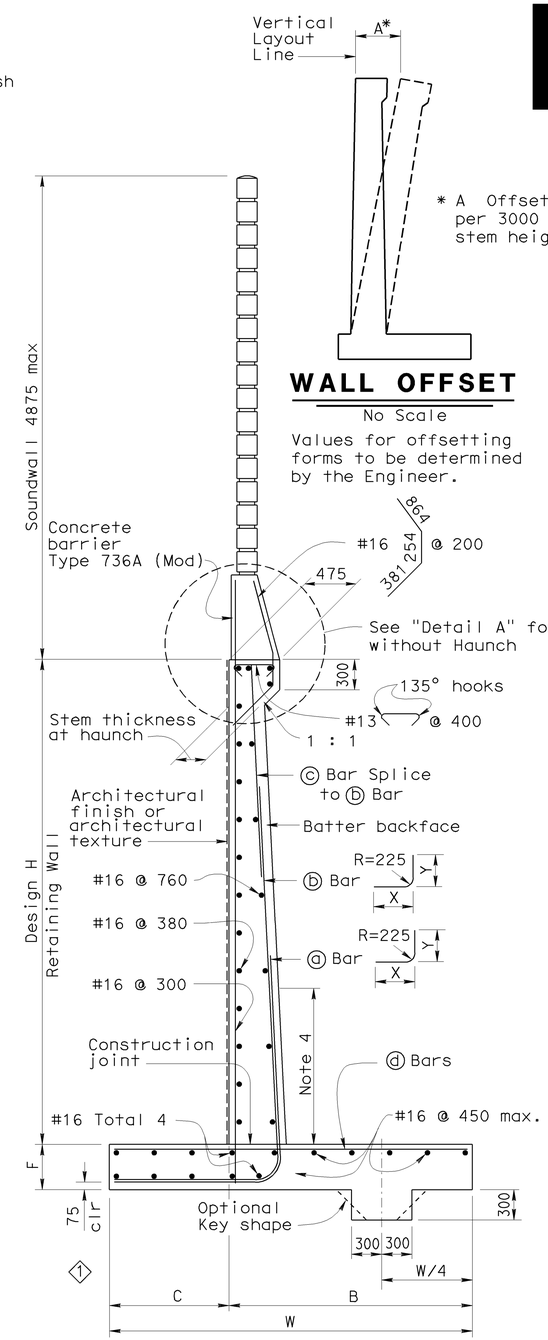

* A Offset = 12 mm per 3000 mm of wall stem height

WALL OFFSET
No Scale

Values for offsetting forms to be determined by the Engineer.

SPREAD FOOTING SECTION
No Scale

DESIGN DATA

DESIGN: Load Factor Design (LFD)

CONCRETE: Reinforced Concrete, f'c = 25 MPa
fy = 420 MPa

LOADING CASE:
Level ground with 11.5 KPa Live Load Surcharge and 4875 mm Soundwall

Seismic Load = 0.3 Dead Load
Wind Load = 1435 Pa
Dead Load of Soundwall = 20.6 kN/m
Dead Load of Barrier = 5.4 kN/m

SEISMIC LOAD: SOIL
Kh = 0.3g
Kv = 0.0
Kae : Mononobe-Okabe Method

SOIL: ϕ = 34° γ = 19 kN/m³
Equivalent fluid pressure:
= 5.6 KPa/m for determination of toe pressure
= 4.2 KPa/m for determination of heel pressure

LOAD COMBINATIONS:

EXTERNAL STABILITY: (For Overturning, Sliding)
Group 1: D + E + SC
Group 2 : D + E + SC + W
Group 3 : D + PYM

INTERNAL STABILITY (LFD): (For Member Design)
Group A : βD + 1.7E + 1.7SC
Group B : βD + 1.7E + 1.3W
Group C (stem) : 1.0D + 1.0E + 1.0EQD + 1.0EQE
Group C (footing) : D + PYM

Where : β = 1.0 or 1.3 whichever controls design
D = Dead Load
E = Lateral Earth Pressure
SC = Live Load Surcharge
W = Wind Load
EQD = Seismic Dead Load
EQE = Seismic Lateral Earth Pressure
PYM = Probable Yield Moment (1.3 x Nominal Yield Moment of Stem)

SPECIAL DETAILS

ALL DIMENSIONS ARE IN MILLIMETERS UNLESS OTHERWISE SHOWN

STANDARD DRAWING

RELEASE DATE REVISED | FILE NO. xs14-220
DESIGN BY Madon Sah CHECKED Overcomer Hor
DETAILS BY A R Dudsak CHECKED J C Moese
SUBMITTED BY Overcomer Hor DRAWING DATE 2/94
RELEASED BY Roberto Lovalle OFFICE CHIEF

1 Modified Detail
2 Modified Note

STATE OF CALIFORNIA DEPARTMENT OF TRANSPORTATION

DIVISION OF ENGINEERING SERVICES

BRIDGE NO. 53E0125
KILOMETER POST 44.0

RETAINING WALL NO. 440
RETAINING WALL TYPE 1SWB

DS OSD 2147A (METRIC) (REV. X/XX/XX)

ORIGINAL SCALE IN MILLIMETERS FOR REDUCED PLANS 0 10 20 30 40 50 60 70 80 90 100

CU 07
EA 121841

DISREGARD PRINTS BEARING EARLIER REVISION DATES

REVISION DATES (PRELIMINARY STAGE ONLY) 5-10-06 12-17-07 3-6-08 4-4-08 5-13-08 8-26-08 9-1-08 10-30-08 11-24-08

SHEET 5 OF 7

USERNAME => trmikesl

53e0125-g-rw03.dgn

DATE PLOTTED => 15-JUN-2009 TIME PLOTTED => 08:17

DIST.	COUNTY	ROUTE	KILOMETER POST TOTAL PROJECT	SHEET NO.	TOTAL SHEETS
07	LA	5	42.8/47.3	986	1073

Caltrans Metric

Andrew P. Rittenhouse 12-05-08
REGISTERED ENGINEER - CIVIL

6-8-09
PLANS APPROVAL DATE

REGISTERED PROFESSIONAL ENGINEER Andrew P. Rittenhouse No. 61006 Exp. 12-31-10 CIVIL STATE OF CALIFORNIA

The State of California or its officers or agents shall not be responsible for the accuracy or completeness of electronic copies of this plan sheet.

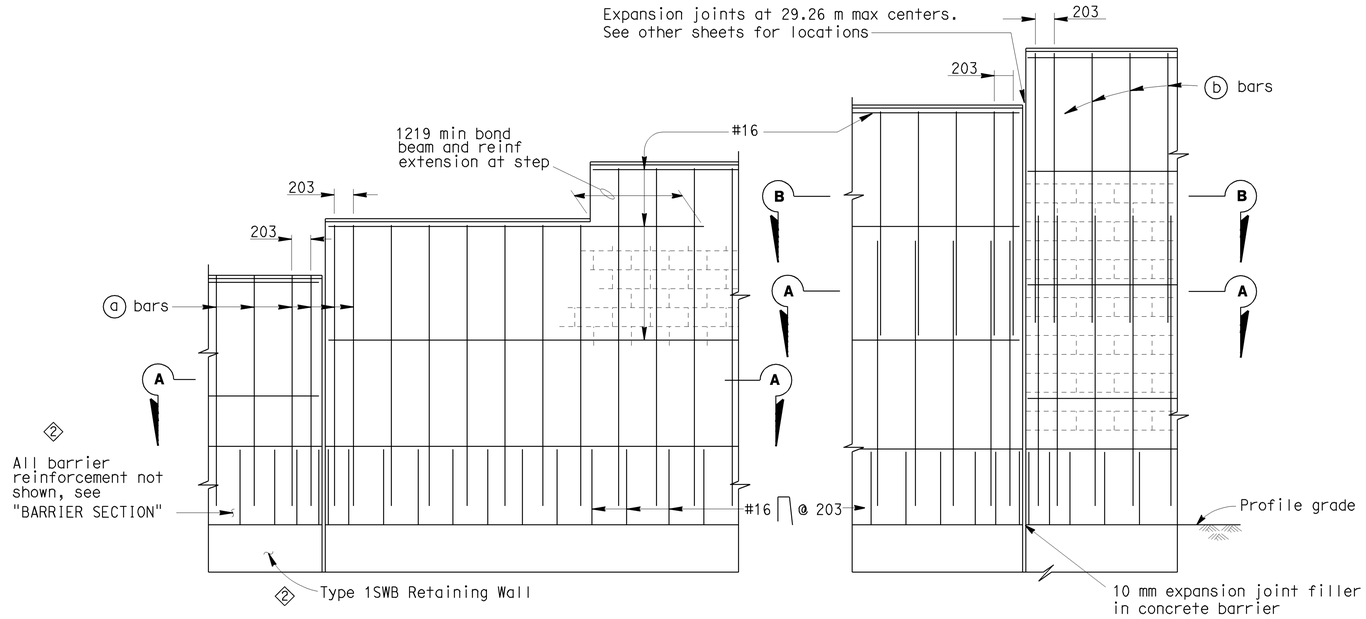

PART ELEVATIONS

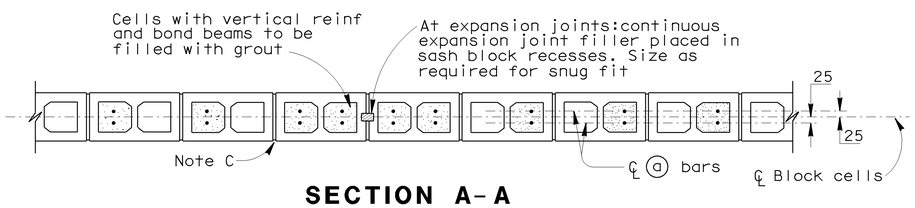

SECTION A-A

For details not shown,see other details

H=1930 THRU H=3150

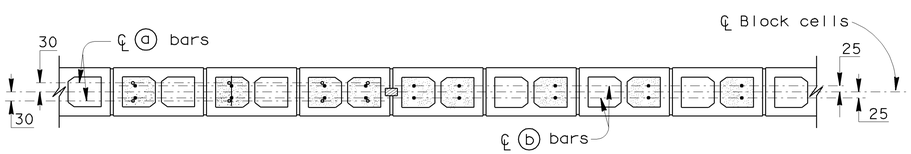

SECTION A-A

SECTION B-B

For details not shown,see other details

H=3759 THRU H=4978

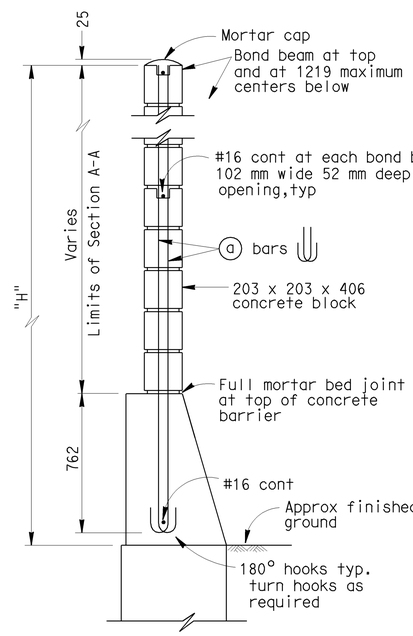

H=1930 THRU H=3150

For details not shown,see H=3759 thru H=4978

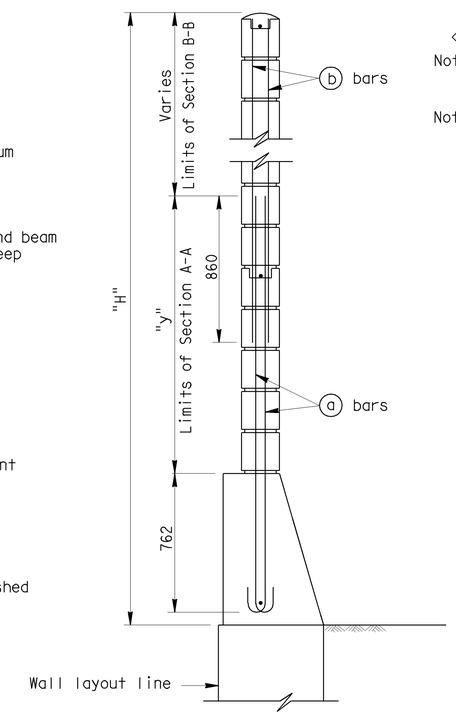

H=3759 THRU H=4978

For details not shown,see H=1930 thru H=3150

TYPICAL SECTIONS

SOUNDWALL REINFORCEMENT TABLE

Maximum H	(a) bars @ 406 max	(b) bars @ 406 max	"y"	f'm (MPa)	Compressive Strength of CMU (MPa)	Maximum H
1930	#13	———	———	10.34	13.1	1930
2540	#13	———	———	10.34	13.1	2540
3150	#13	———	———	10.34	13.1	3150
3759	#16	#13	1524	10.34	13.1	3759
4369	#19	#13	2134	10.34	13.1	4369
4978	#19	#13	2743	17.24	25.6	4978

2
Note I : For details not shown,see "SOUNDWALL WITH BARRIER ON RETAINING WALL - MASONRY BLOCK DETAILS NO. 2" sheet.

Note II : Slope ground at traffic side of barrier to drain. Maximum slope ±10%.

GENERAL NOTES

Note A: For type of block and joint finish, see other sheets.

Note B: When blocks are laid in stacked bond, ladder type, galvanized joint reinforcement shall be provided. A minimum of 2-3.76 mm wire continuous at 1219 mm maximum to be used. Locate reinforcement in joints that are at the approximate midpoint between bond beams.

Note C: Horizontal joints shall be tooled concave or may be weathered.
Vertical joints shall be tooled concave or may be raked.

Note D: For intermediate wall heights that are between the "H's" given. Use the tabular information for the next higher "H".

Note E: Masonry strengths are listed in "SOUNDWALL REINFORCEMENT TABLE".

Note F: Class 2 concrete to be used for the barrier.

SPECIAL DETAILS

NO SCALE

ALL DIMENSIONS ARE IN MILLIMETERS UNLESS OTHERWISE SHOWN

STANDARD DRAWING					
RELEASE DATE REVISED	DESIGN	BY D. DUNRUD	CHECKED W.C. WALKER	RELEASED BY	
FILE NO. xs15-130-1	DETAILS	BY R. YEE	CHECKED W.C. WALKER		
	SUBMITTED	BY D. DUNRUD	DRAWING DATE 11/94	OFFICE CHIEF	

1 Modified Title
2 Modified note

STATE OF CALIFORNIA
DEPARTMENT OF TRANSPORTATION

DIVISION OF ENGINEERING SERVICES

BRIDGE NO. 53E0125
KILOMETER POST 44.0

RETAINING WALL NO. 440

1 SOUNDWALL WITH BARRIER ON RETAINING WALL - MASONRY BLOCK DETAILS NO. 1

DS OSD 2147A (METRIC) (REV. 2/25/97)

ORIGINAL SCALE IN MILLIMETERS FOR REDUCED PLANS 0 10 20 30 40 50 60 70 80 90 100

CU 07
EA 121841

DISREGARD PRINTS BEARING EARLIER REVISION DATES

REVISION DATES (PRELIMINARY STAGE ONLY) 10-25-07 2-14-08 5-12-08 8-28-08 9-1-08 10-30-08 11-24-08

SHEET 6 OF 7

USERNAME => trmikesl

53e0125-g-sw01.dgn

DATE PLOTTED => 15-JUN-2009 TIME PLOTTED => 08:17

DIST.	COUNTY	ROUTE	KILOMETER POST TOTAL PROJECT	SHEET NO.	TOTAL SHEETS
07	LA	5	42.8/47.3	987	1073

Caltrans Metric

Andrew P. Rittenhouse 12-05-08
REGISTERED ENGINEER - CIVIL

6-8-09
PLANS APPROVAL DATE

REGISTERED PROFESSIONAL ENGINEER Andrew P. Rittenhouse No. 61006 Exp. 12-31-10 CIVIL STATE OF CALIFORNIA

The State of California or its officers or agents shall not be responsible for the accuracy or completeness of electronic copies of this plan sheet.

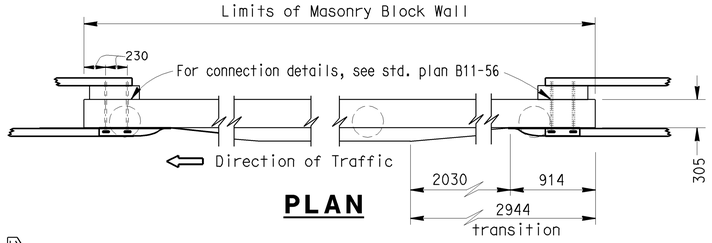

PLAN

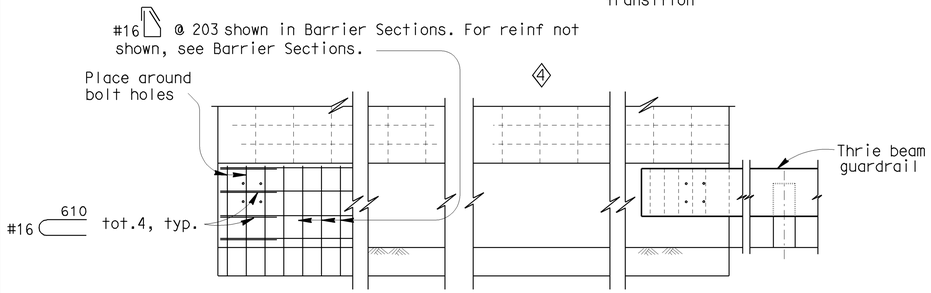

ELEVATION

METAL BEAM GUARDRAIL ANCHORAGE

For details not shown, see std. plan B11-56.

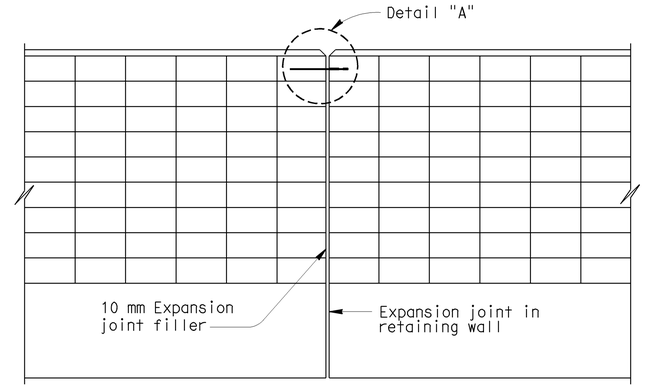

ALIGNMENT KEY DETAIL 4

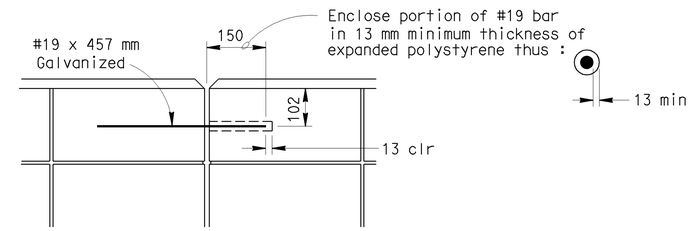

DETAIL A 4

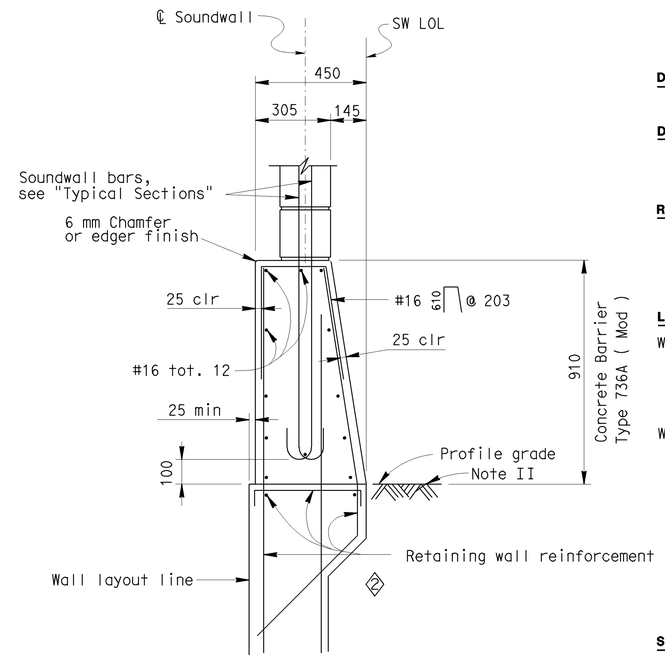

BARRIER SECTION

3

DESIGN NOTES

DESIGN

Uniform Building Code,1997 Edition and the Bridge Design Specifications.

DESIGN WIND LOAD

1293 Pa

DESIGN SEISMIC LOAD

0.57 Dead load

REINFORCED CONCRETE

f'c = 22.408 Mpa
fy = 413.688 MPa

CONCRETE MASONRY

REGULAR STRENGTH	HIGH STRENGTH	
f'm = 10.34 MPa	f'm = 13.79 MPa	f'm = 17.24 MPa
f_b = 3.41 MPa	f_b = 4.55 MPa	f_b = 5.72 MPa
fs = 165.5 MPa	fs = 165.5 MPa	fs = 165.5 MPa
n = 25.8	n = 19.3	n = 15.5

LOAD FACTORS AND LOAD COMBINATIONS

Working Stress Design (WSD) Percentage of unit stress

Group 1: D + E + SC 100%
Group 2: D + W + SC + E 100%
Group 3: D + 0.71 EQD + E 100%

Where:

D = Dead load
E = Lateral earth pressure
SC = Live load surcharge
W = Wind load
EQD = Seismic dead load

Load Factor Design (LFD)

Group A: βD +1.7 E + 1.7 SC
Group B: βD +1.7 E + 1.3 W
Group C: βD +1.3 E + 1.0 EQE
Group D: βD +1.3 E + 1.0 EQD
Group E: βD +1.1 E + 0.85 (EQE + EQD)

Where : β = 0.9 or 1.2, whichever controls in design
D = Dead load
E = Lateral earth pressure
SC = Live load surcharge
W = Wind load
EQD = Seismic dead load
EQE = Seismic earth load

STRENGTH REDUCTION FACTORS, Ø

Reinforced concrete:
For flexure _____ Ø=0.90
For shear _____ Ø=0.85

Concrete masonry:
For flexure _____ Ø=0.80
For shear _____ Ø=0.60

Retaining Walls:
See "RETAINING WALL TYPE 1SWB" sheet.
2

NOTES:

2 I : For details not shown, see "RETAINING WALL TYPE 1SWBP" sheet.

II : Slope ground at traffic side of barrier to drain. Maximum slope ±10%. See Standard Plan B11-56, Note D.

SPECIAL DETAILS

NO SCALE

ALL DIMENSIONS ARE IN MILLIMETERS UNLESS OTHERWISE SHOWN

STANDARD DRAWING

RELEASE DATE	REVISED	DESIGN	BY D. DUNRUD	CHECKED W.C. WALKER	RELEASED BY
FILE NO.	xs15-130-2	DETAILS	BY R. YEE	CHECKED W.C. WALKER	OFFICE CHIEF
		SUBMITTED	BY D. DUNRUD	DRAWING DATE 11/94	

1 Modified title
2 Modified note
3 Detail deleted
4 Modified detail

STATE OF CALIFORNIA
DEPARTMENT OF TRANSPORTATION

DIVISION OF ENGINEERING SERVICES

BRIDGE NO. 53E0125
KILOMETER POST 44.0

RETAINING WALL NO. 440

1 SOUNDWALL WITH BARRIER ON RETAINING WALL - MASONRY BLOCK DETAILS NO. 2

DS OSD 2147A (METRIC) (REV. 2/25/97)

ORIGINAL SCALE IN MILLIMETERS FOR REDUCED PLANS 0 10 20 30 40 50 60 70 80 90 100

CU 07
EA 121841

DISREGARD PRINTS BEARING EARLIER REVISION DATES

REVISION DATES (PRELIMINARY STAGE ONLY) 10-25-07 2-15-08 5-12-08 8-26-08 9-1-08 10-30-08 11-24-08

SHEET 7 OF 7

USERNAME => trmikesl

53e0125-g-sw02.dgn

DATE PLOTTED => 15-JUN-2009 TIME PLOTTED => 08:17

DIST	COUNTY	ROUTE	KILOMETER POST TOTAL PROJECT	SHEET No	TOTAL SHEETS
07	LA	5	42.8/47.3	988	1073

Andrew Rittenhouse 12-05-08
REGISTERED CIVIL ENGINEER DATE

6-8-09
PLANS APPROVAL DATE

REGISTERED PROFESSIONAL ENGINEER Andrew P. Rittenhouse No. C 61006 Exp. 12-31-10 CIVIL STATE OF CALIFORNIA

The State of California or its officers or agents shall not be responsible for the accuracy or completeness of electronic copies of this plan sheet.

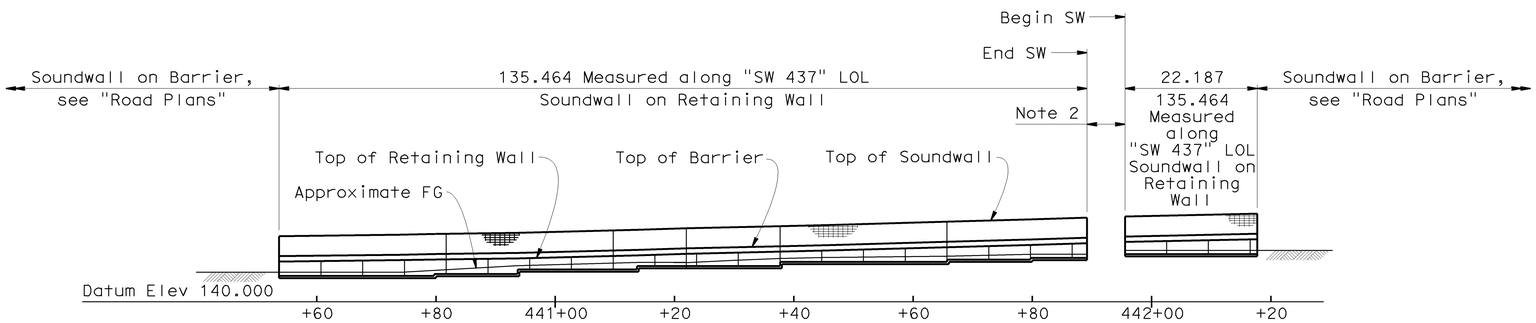

MIRRORED ELEVATION

1:100

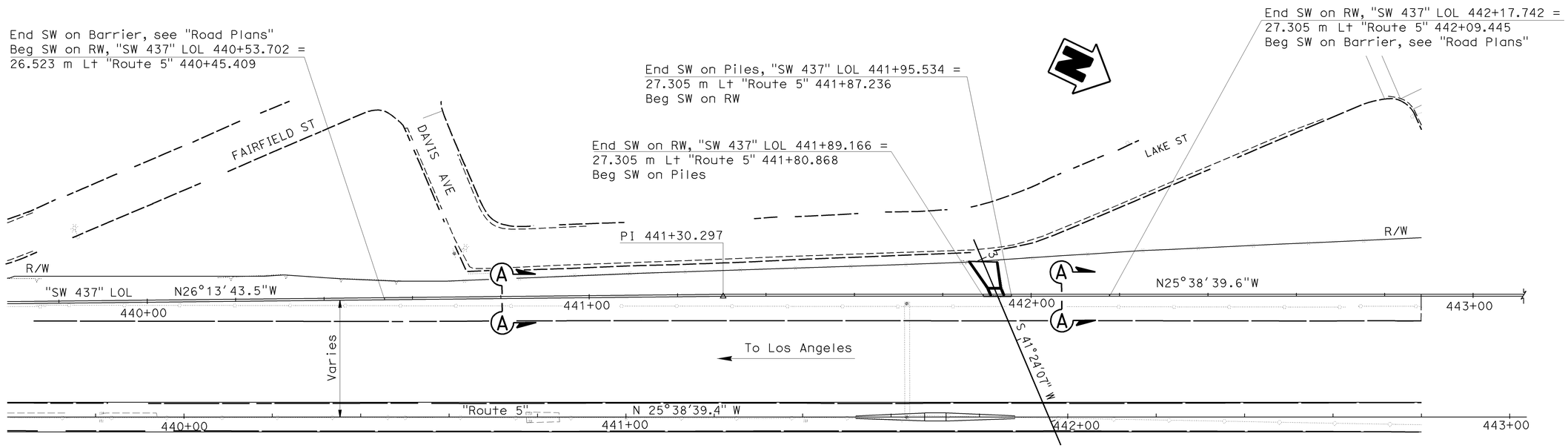

PLAN

1:500

QUANTITIES

STRUCTURE EXCAVATION (TYPE Y-2) (AERIALLY DEPOSITED LEAD)	737	m^3
STRUCTURE BACKFILL (RETAINING WALL)	1 060	m^3
STRUCTURAL CONCRETE, RETAINING WALL	435	m^3
FRACTURED RIB TEXTURE	315	m^2
SOUND WALL (MASONRY BLOCK)	884	m^2
BAR REINFORCING STEEL (RETAINING WALL)	19 650	kg
CONCRETE BARRIER (TYPE 736A MODIFIED)	258	m

Notes:

1. For "SECTION A-A" see "GENERAL PLAN NO. 2" sheet.
2. See Bridge No. 53-1076.

NOTE:
THE CONTRACTOR SHALL VERIFY ALL CONTROLLING FIELD DIMENSIONS BEFORE ORDERING OR FABRICATING ANY MATERIAL.

KP (PM) Indicates Kilometer Post (Post Mile)

Caltrans Metric

Traci Menard
DESIGN ENGINEER

	BY	CHECKED
DESIGN	C. Moulton	T. Menard
DETAILS	H. Mauroschadt	T. Menard/R. Novik
QUANTITIES	S. Moradi	T. Menard

LOAD & RESISTANCE FACTOR DESIGN — LIVE LOADING: HL93 W/"LOW-BOY"; PERMIT DESIGN VEHICLE

	BY	CHECKED
LAYOUT	C. Moulton	T. Menard
SPECIFICATIONS	T. Chen	A. Rittenhouse

STATE OF CALIFORNIA
DEPARTMENT OF TRANSPORTATION

DIVISION OF ENGINEERING SERVICES
STRUCTURE DESIGN
DESIGN BRANCH 15

BRIDGE NO. 53E0126
KP (PM) 44.0 (27.3)

RETAINING WALL NO. 437
GENERAL PLAN NO. 1

ALL DIMENSIONS ARE IN METERS UNLESS OTHERWISE SHOWN

ORIGINAL SCALE IN MILLIMETERS FOR REDUCED PLANS 0 10 20 30 40 50 60 70 80 90 100

CU 07
EA 121841

DISREGARD PRINTS BEARING EARLIER REVISION DATES

REVISION DATES: 2-28-08 4-1-08 5-8-08 8-29-08 9-2-08 10-29-08 11-24-08 1-5-09 1-23-09 4-27-09

SHEET 1 OF 12

FILE => 53e0126-a-gp01.dgn

STRUCTURES DESIGN GENERAL PLAN SHEET (METRIC) (REV.07-24-06)

USERNAME => rtmrkest DATE PLOTTED => 15-JUN-2009 TIME PLOTTED => 08:17

DIST	COUNTY	ROUTE	KILOMETER POST TOTAL PROJECT	SHEET No	TOTAL SHEETS
07	LA	5	42.8/47.3	989	1073

Andrew P. Rittenhouse 12-05-08
REGISTERED CIVIL ENGINEER DATE

6-8-09
PLANS APPROVAL DATE

REGISTERED PROFESSIONAL ENGINEER
Andrew P. Rittenhouse
No. C 61006
Exp. 12-31-10
CIVIL
STATE OF CALIFORNIA

The State of California or its officers or agents shall not be responsible for the accuracy or completeness of electronic copies of this plan sheet.

Notes:

1. For Log of Test Boring information, see "Road Plans".
2. For details not shown, see "LAYOUT NO. 3" and "LAYOUT NO. 4" sheets.

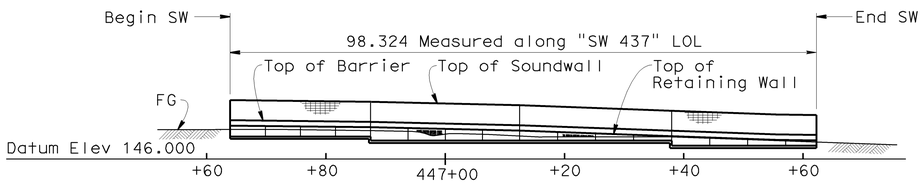

MIRRORED DEVELOPED ELEVATION

1:500

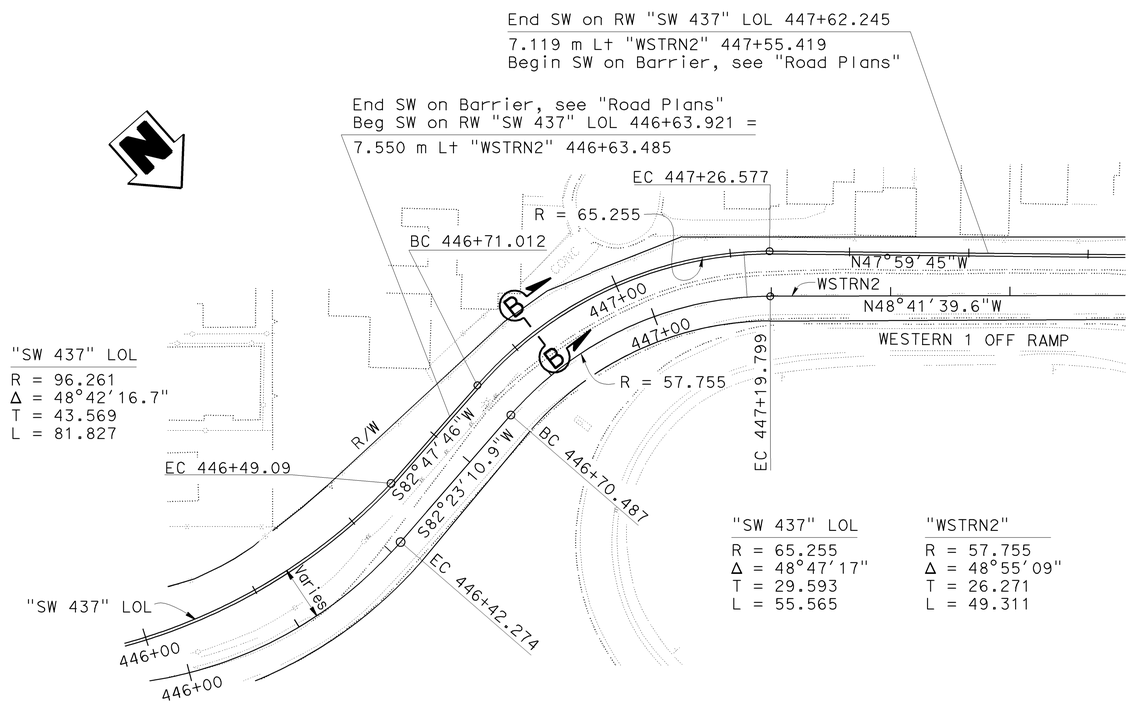

PLAN

1:500

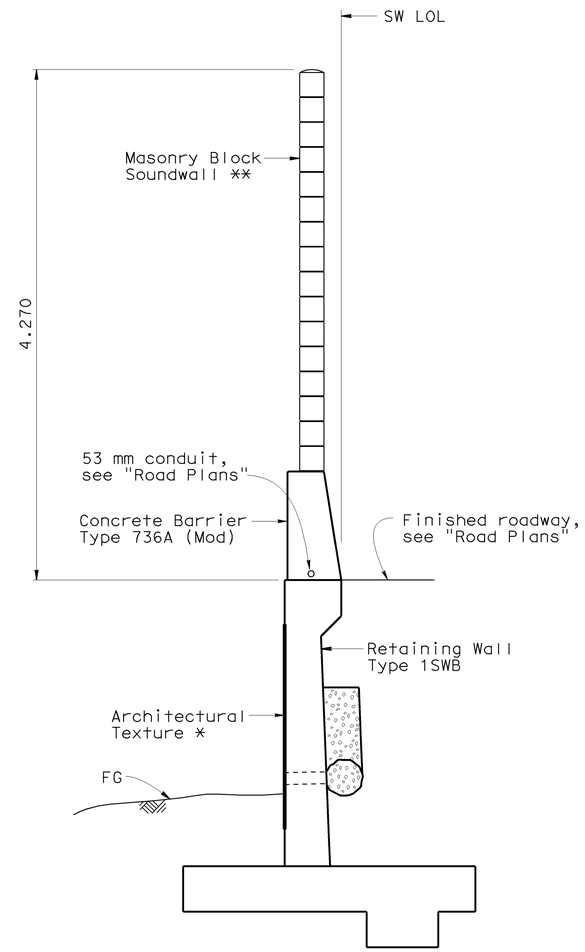

SECTION A-A

1:25

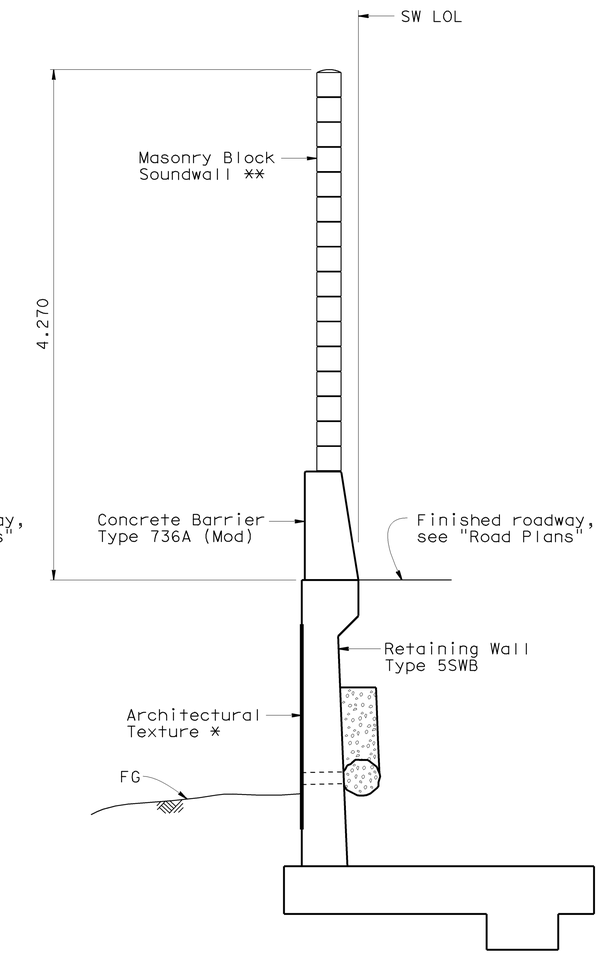

SECTION B-B

1:25

NOTE:
THE CONTRACTOR SHALL VERIFY ALL CONTROLLING FIELD DIMENSIONS BEFORE ORDERING OR FABRICATING ANY MATERIAL.

Legend:

* For details see "Road Plans"

** For block type, bond type, and Architectural details see "Road Plans".

KP (PM) Indicates Kilometer Post (Post Mile)

Caltrans Metric

Traci Menard
DESIGN ENGINEER

	BY	CHECKED
DESIGN	C. Moulton	T. Menard
DETAILS	H. Mauroschadt	T. Menard/R. Novik
QUANTITIES	S. Moradi	T. Menard

LOAD & RESISTANCE FACTOR DESIGN — LIVE LOADING: HL93 W/"LOW-BOY"; PERMIT DESIGN VEHICLE

LAYOUT — BY C. Moulton — CHECKED T. Menard
SPECIFICATIONS — BY T. Chen — PLANS AND SPECS COMPARED A. Rittenhouse

ALL DIMENSIONS ARE IN METERS UNLESS OTHERWISE SHOWN

ORIGINAL SCALE IN MILLIMETERS FOR REDUCED PLANS 0 10 20 30 40 50 60 70 80 90 100

STATE OF CALIFORNIA
DEPARTMENT OF TRANSPORTATION

DIVISION OF ENGINEERING SERVICES
STRUCTURE DESIGN
DESIGN BRANCH 15

CU 07
EA 121841

BRIDGE NO. 53E0126
KP (PM) 44.0 (27.3)

RETAINING WALL NO. 437
GENERAL PLAN NO. 2

DISREGARD PRINTS BEARING EARLIER REVISION DATES

REVISION DATES: 8-29-08 9-2-08 10-17-08 11-17-08 1-5-09 02-18-09 4-28-09

SHEET 2 OF 12

FILE => 53e0126-a-gp02.dgn

STRUCTURES DESIGN GENERAL PLAN SHEET (METRIC) (REV.07-24-06)

USERNAME => trmikest DATE PLOTTED => 15-JUN-2009 TIME PLOTTED => 08:17

DIST	COUNTY	ROUTE	KILOMETER POST TOTAL PROJECT	SHEET No	TOTAL SHEETS
07	LA	5	42.8/47.3	990	1073

Andrew P Rittenhouse 12-05-08
REGISTERED CIVIL ENGINEER DATE

6-8-09
PLANS APPROVAL DATE

REGISTERED PROFESSIONAL ENGINEER Andrew P Rittenhouse No. C 61006 Exp. 12-31-10 CIVIL STATE OF CALIFORNIA

The State of California or its officers or agents shall not be responsible for the accuracy or completeness of electronic copies of this plan sheet.

INDEX TO PLANS

SHEET NO.	TITLE
1	GENERAL PLAN NO. 1
2	GENERAL PLAN NO. 2
3	INDEX TO PLANS
4	LAYOUT NO. 1
5	LAYOUT NO. 2
6	LAYOUT NO. 3
7	LAYOUT NO. 4
8	LAYOUT NO. 5
9	RETAINING WALL TYPE 1SWB
10	RETAINING WALL TYPE 5SWB
11	SOUNDWALL WITH BARRIER ON RETAINING WALL - MASONRY BLOCK DETAILS NO. 1
12	SOUNDWALL WITH BARRIER ON RETAINING WALL - MASONRY BLOCK DETAILS NO. 2

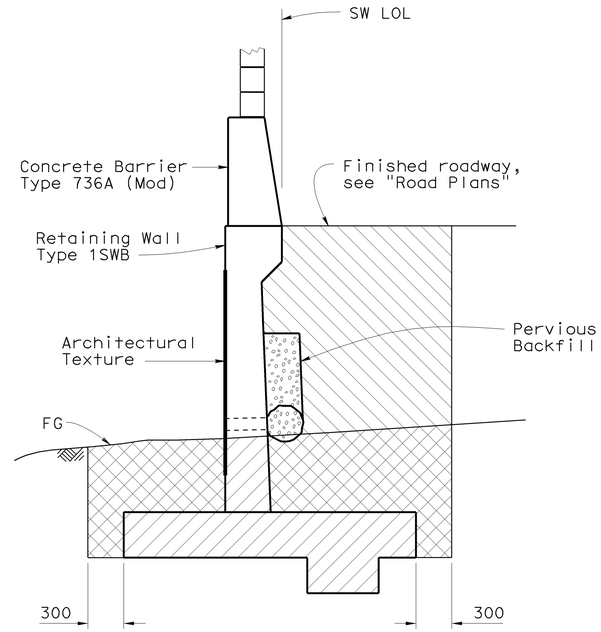

LIMITS OF EXCAVATION AND BACKFILL

No Scale

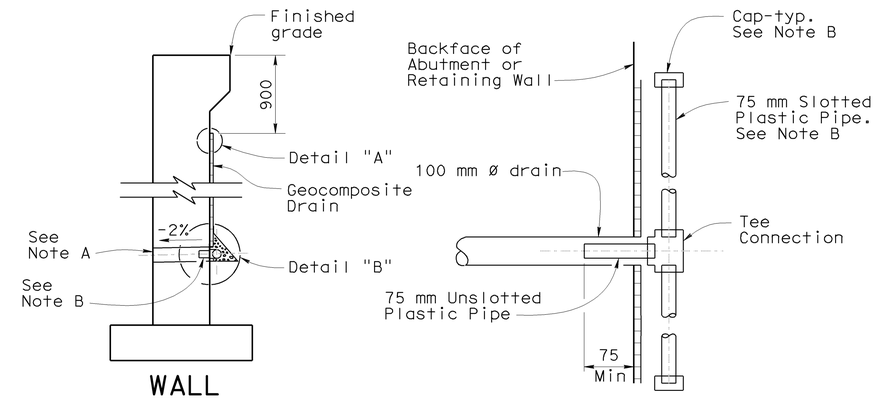

WALL SECTION

SECTION A-A

STANDARD PLANS DATED JULY 2004

A10A	ACRONYMS AND ABBREVIATIONS (A - L)
A10B	ACRONYMS AND ABBREVIATIONS (M - Z)
A62B	LIMITS OF PAYMENT FOR EXCAVATION AND BACKFILL BRIDGE SURCHARGE AND WALL
B0-3	BRIDGE DETAILS
B3-8	RETAINING WALL DETAILS NO. 1
B3-9	RETAINING WALL DETAILS NO. 2
B11-56	CONCRETE BARRIER TYPE 736
B15-9	SOUNDWALL MASONRY BLOCK MISCELLANEOUS DETAILS

Legend:

Structure Excavation (Type Y-2)

Structure Backfill (Retaining Wall)

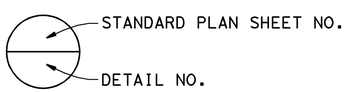

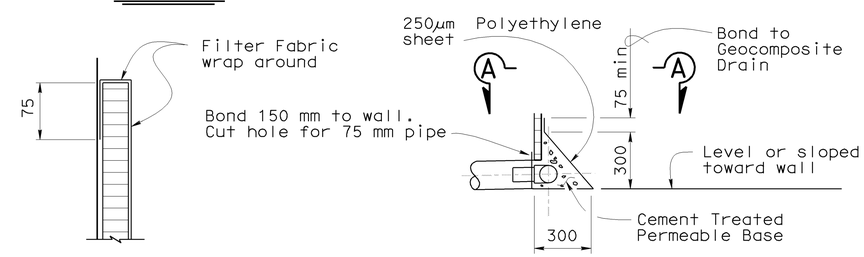

DETAIL "A"

DETAIL "B"

WEEP HOLE AND GEOCOMPOSITE DRAIN ALTERNATIVE

Not to scale

Notes:

A. 100 mm ø drains at intermediate sag points and at 7.60 meters center to center (2.75 meters c-c for Type 3 and 2.80 meters c-c for Type 4 retaining walls). For walls adjacent to sidewalks or curbs, provide 100 mm cast iron or asbestos cement pipe under the sidewalk to discharge through curb face. Exposed wall drains shall be located 75 mm ± above finished grade.

B. Geocomposite drain, cement treated permeable base, and 75 mm ø slotted plastic pipe continuous behind retaining wall or abutment. Cap ends of pipe. Provide "Tee" connection at each 100 mm ø drain.

C. Connect the low end of plastic pipe to the main outlet pipe as applicable.

NOTE:
THE CONTRACTOR SHALL VERIFY ALL CONTROLLING FIELD DIMENSIONS BEFORE ORDERING OR FABRICATING ANY MATERIAL.

Caltrans Metric

	BY	CHECKED
DESIGN	C. Moulton	T. Menard
DETAILS	H. Mauroschadt	T. Menard/R. Novik
QUANTITIES	S. Moradi	T. Menard

STATE OF CALIFORNIA
DEPARTMENT OF TRANSPORTATION

DIVISION OF ENGINEERING SERVICES
STRUCTURE DESIGN
DESIGN BRANCH 15

BRIDGE NO. 53E0126
KILOMETER POST 44.0

RETAINING WALL NO. 437
INDEX TO PLANS

ALL DIMENSIONS ARE IN METERS UNLESS OTHERWISE SHOWN

ORIGINAL SCALE IN MILLIMETERS FOR REDUCED PLANS 0 10 20 30 40 50 60 70 80 90 100

CU 07
EA 121841

DISREGARD PRINTS BEARING EARLIER REVISION DATES

REVISION DATES: 3-27-08 3-2-08 10-29-08 11-24-08 1-5-09

SHEET 3 OF 12

FILE => 53e0126-b-itp.dgn

STRUCTURES DESIGN DETAIL SHEET (METRIC) (REV.03-17-04)

USERNAME => trmikest DATE PLOTTED => 15-JUN-2009 TIME PLOTTED => 08:18

DIST	COUNTY	ROUTE	KILOMETER POST TOTAL PROJECT	SHEET No	TOTAL SHEETS
07	LA	5	42.8/47.3	991	1073

Andrew R Rittenhouse 12-05-08
REGISTERED CIVIL ENGINEER DATE

6-8-09
PLANS APPROVAL DATE

REGISTERED PROFESSIONAL ENGINEER
Andrew P Rittenhouse
No. C 61006
Exp. 12-31-10
CIVIL
STATE OF CALIFORNIA

The State of California or its officers or agents shall not be responsible for the accuracy or completeness of electronic copies of this plan sheet.

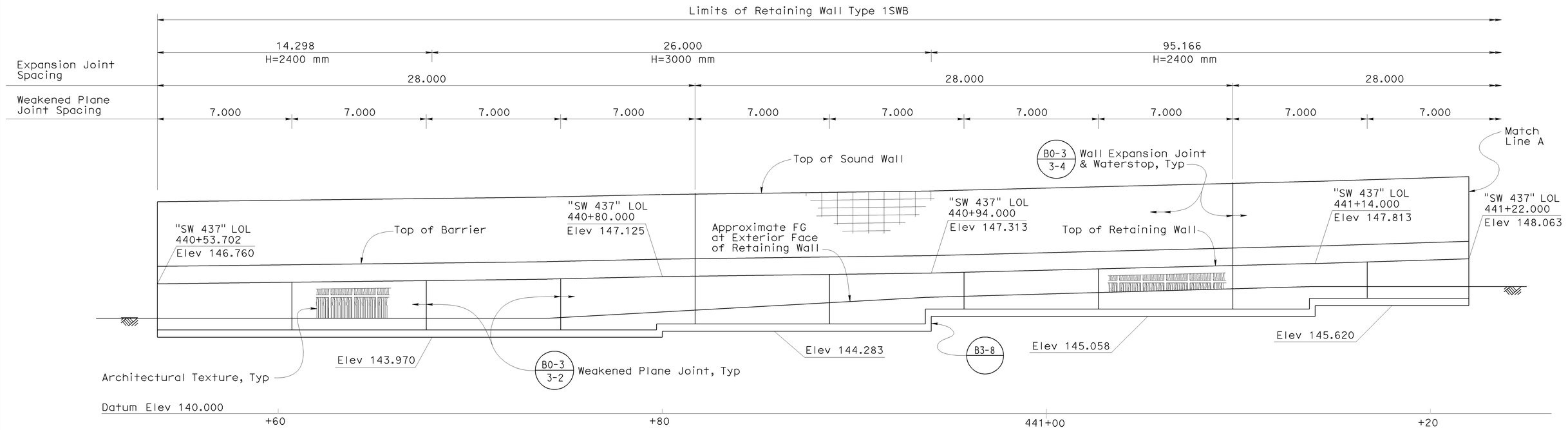

MIRRORED ELEVATION

1:100

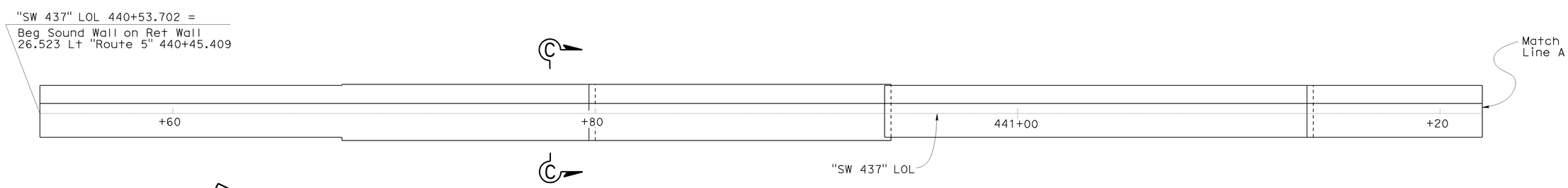

PLAN

1:100

Notes:

1. For "SECTION C-C" see "LAYOUT NO. 3" sheet.

NOTE:
THE CONTRACTOR SHALL VERIFY ALL CONTROLLING FIELD DIMENSIONS BEFORE ORDERING OR FABRICATING ANY MATERIAL.

Caltrans Metric

	BY	CHECKED
DESIGN	C. Moulton	T. Menard
DETAILS	S. Schenck / H. Mauroschadt	T. Menard/R. Novik
QUANTITIES	S. Moradi	T. Menard

STATE OF CALIFORNIA
DEPARTMENT OF TRANSPORTATION

DIVISION OF ENGINEERING SERVICES
STRUCTURE DESIGN
DESIGN BRANCH 15

BRIDGE NO. 53E0126
KILOMETER POST 44.0

RETAINING WALL NO. 437
LAYOUT NO. 1

ALL DIMENSIONS ARE IN METERS UNLESS OTHERWISE SHOWN

ORIGINAL SCALE IN MILLIMETERS FOR REDUCED PLANS 0 10 20 30 40 50 60 70 80 90 100

CU 07
EA 121841

DISREGARD PRINTS BEARING EARLIER REVISION DATES

REVISION DATES: 11-24-08 | 1-24-08 | 3-5-08 | 4-2-08 | 5-13-08 | 5-30-08 | 8-27-08 | 9-2-08 | 10-29-08

SHEET 4 OF 12

FILE => 53e0126-g-rw01.dgn

STRUCTURES DESIGN DETAIL SHEET (METRIC) (REV.03-17-04)

USERNAME => ttmirkes1 DATE PLOTTED => 15-JUN-2009 TIME PLOTTED => 08:18

DIST	COUNTY	ROUTE	KILOMETER POST TOTAL PROJECT	SHEET No	TOTAL SHEETS
07	LA	5	42.8/47.3	992	1073

Andrew Rittenhouse 12-05-08
REGISTERED CIVIL ENGINEER DATE

6-8-09
PLANS APPROVAL DATE

REGISTERED PROFESSIONAL ENGINEER
Andrew P. Rittenhouse
No. C 61006
Exp. 12-31-10
CIVIL
STATE OF CALIFORNIA

The State of California or its officers or agents shall not be responsible for the accuracy or completeness of electronic copies of this plan sheet.

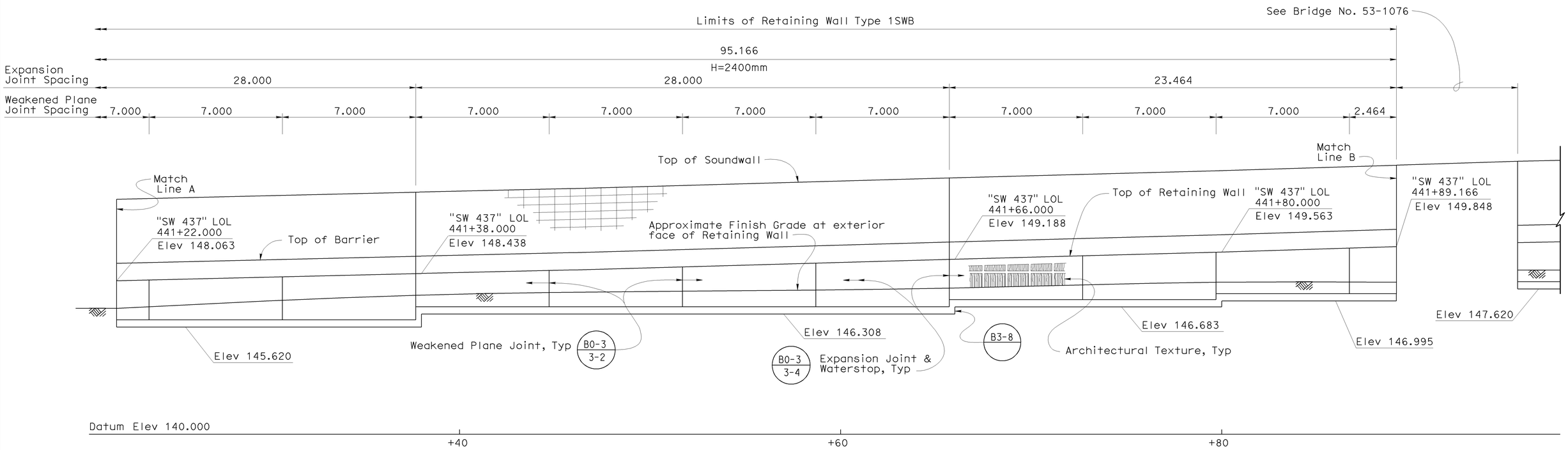

MIRRORED ELEVATION

1:100

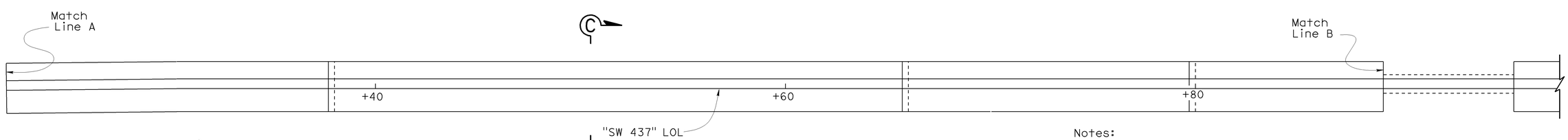

PLAN

1:100

Notes:

1. For "SECTION C-C" see "LAYOUT NO. 3" sheet

NOTE:
THE CONTRACTOR SHALL VERIFY ALL CONTROLLING FIELD DIMENSIONS BEFORE ORDERING OR FABRICATING ANY MATERIAL.

Caltrans Metric

ALL DIMENSIONS ARE IN METERS UNLESS OTHERWISE SHOWN

ORIGINAL SCALE IN MILLIMETERS FOR REDUCED PLANS 0 10 20 30 40 50 60 70 80 90 100

	BY	CHECKED
DESIGN	C. Moulton	T. Menard
DETAILS	S. Schenck / H. Mauroschadt	T. Menard / R. Novik
QUANTITIES	S. Moradi	T. Menard

STATE OF CALIFORNIA
DEPARTMENT OF TRANSPORTATION

DIVISION OF ENGINEERING SERVICES
STRUCTURE DESIGN
DESIGN BRANCH 15

CU 07
EA 121841

BRIDGE NO. 53E0126
KILOMETER POST 44.0

RETAINING WALL NO. 437
LAYOUT NO. 2

DISREGARD PRINTS BEARING EARLIER REVISION DATES

REVISION DATES: 12-17-07 1-24-08 3-5-08 4-2-08 5-13-08 6-3-08 9-2-08 10-29-08 11-24-08

SHEET 5 OF 12

FILE => 53e0126-g-rw02.dgn

STRUCTURES DESIGN DETAIL SHEET (METRIC) (REV.03-17-04)

USERNAME => trmikesl DATE PLOTTED => 15-JUN-2009 TIME PLOTTED => 08:18

DIST	COUNTY	ROUTE	KILOMETER POST TOTAL PROJECT	SHEET No	TOTAL SHEETS
07	LA	5	42.8/47.3	993	1073

Andrew Rittenhouse 12-05-08
REGISTERED CIVIL ENGINEER DATE

6-8-09
PLANS APPROVAL DATE

REGISTERED PROFESSIONAL ENGINEER
Andrew P. Rittenhouse
No. C 61006
Exp. 12-31-10
CIVIL
STATE OF CALIFORNIA

The State of California or its officers or agents shall not be responsible for the accuracy or completeness of electronic copies of this plan sheet.

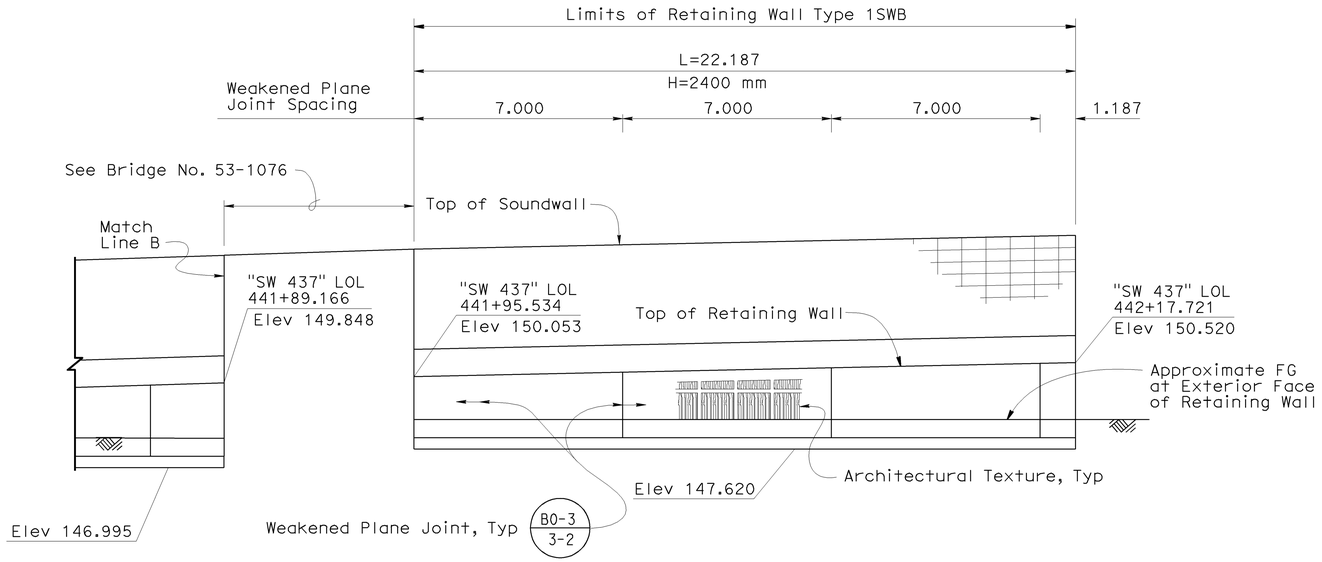

MIRRORED ELEVATION
1:100

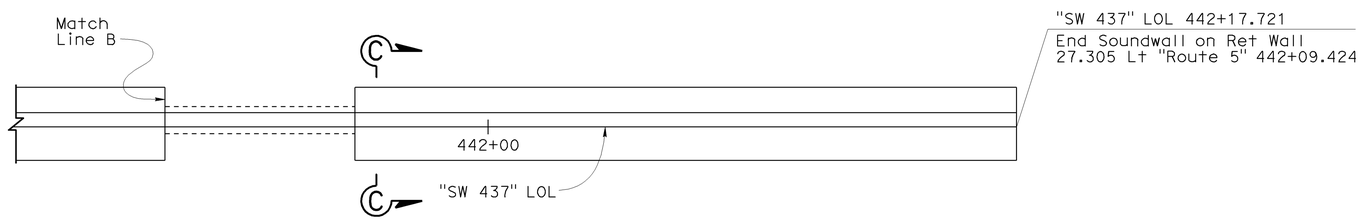

PLAN
1:100

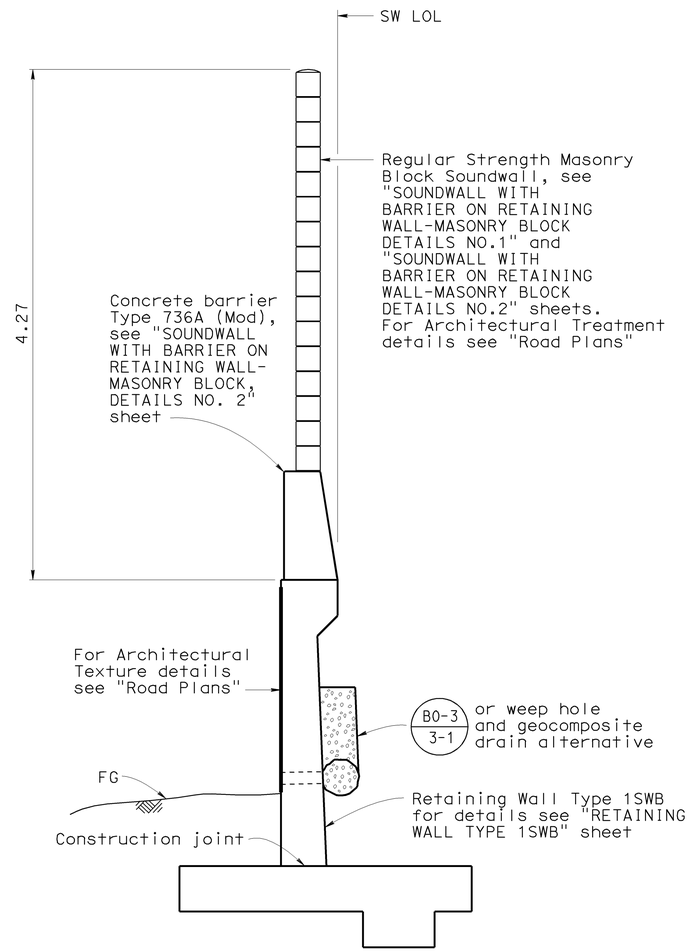

SECTION C-C
1:25

NOTE:
THE CONTRACTOR SHALL VERIFY ALL CONTROLLING FIELD DIMENSIONS BEFORE ORDERING OR FABRICATING ANY MATERIAL.

Caltrans Metric

	BY	CHECKED
DESIGN	C. Moulton	S. Moradi
DETAILS	S. Schenck / H. Mauroschadt	T. Menard / R. Novik
QUANTITIES	S. Moradi	T. Menard

STATE OF CALIFORNIA
DEPARTMENT OF TRANSPORTATION

DIVISION OF ENGINEERING SERVICES
STRUCTURE DESIGN
DESIGN BRANCH 15

BRIDGE NO. 53E0126
KILOMETER POST 44.0

RETAINING WALL NO. 437
LAYOUT NO. 3

ALL DIMENSIONS ARE IN METERS UNLESS OTHERWISE SHOWN

ORIGINAL SCALE IN MILLIMETERS FOR REDUCED PLANS 0 10 20 30 40 50 60 70 80 90 100

CU 07
EA 121841

DISREGARD PRINTS BEARING EARLIER REVISION DATES

REVISION DATES: 1-6-09 | 3-5-08 | 4-3-08 | 5-13-08 | 6-5-08 | 8-28-08 | 9-2-08 | 10-29-08 | 11-24-08

SHEET 6 OF 12

FILE => 53e0126-g-rw03.dgn

STRUCTURES DESIGN DETAIL SHEET (METRIC) (REV.03-17-04)

USERNAME => rtmrikes DATE PLOTTED => 15-JUN-2009 TIME PLOTTED => 08:18

DIST	COUNTY	ROUTE	KILOMETER POST TOTAL PROJECT	SHEET No	TOTAL SHEETS
07	LA	5	42.8/47.3	994	1073

REGISTERED CIVIL ENGINEER 12-05-08 DATE

6-8-09
PLANS APPROVAL DATE

REGISTERED PROFESSIONAL ENGINEER Andrew P. Rittenhouse No. C 61006 Exp. 12-31-10 CIVIL STATE OF CALIFORNIA

The State of California or its officers or agents shall not be responsible for the accuracy or completeness of electronic copies of this plan sheet.

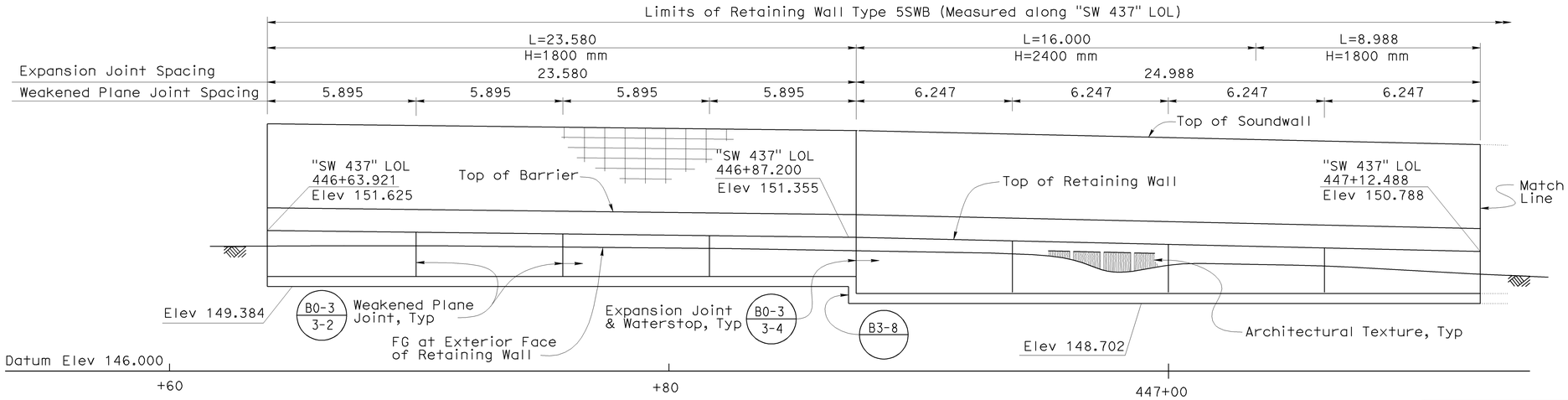

MIRRORED DEVELOPED ELEVATION

1:100

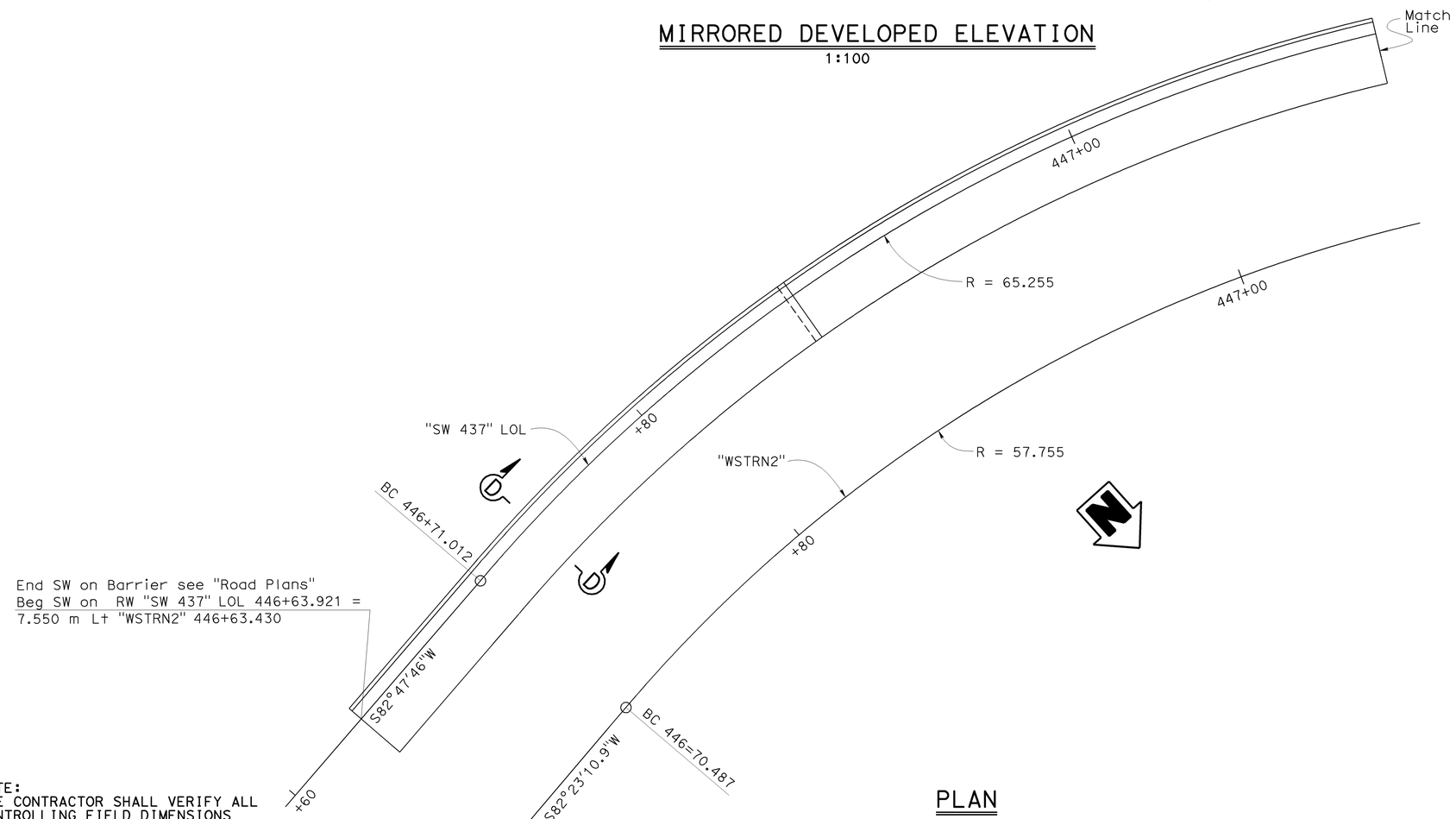

PLAN

1:100

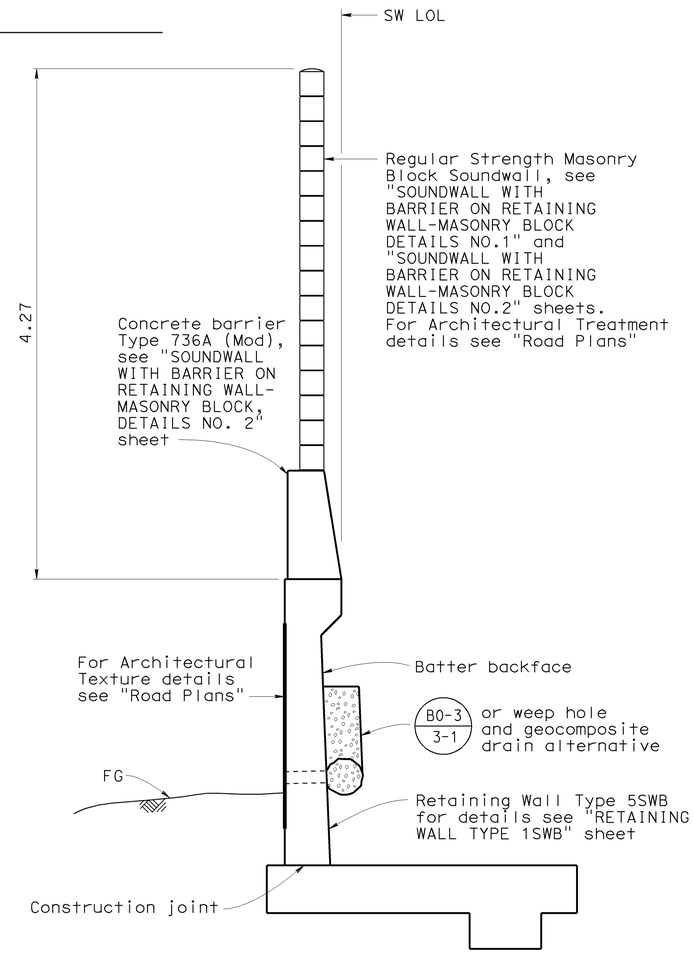

SECTION D-D

1:25

NOTE:
THE CONTRACTOR SHALL VERIFY ALL CONTROLLING FIELD DIMENSIONS BEFORE ORDERING OR FABRICATING ANY MATERIAL.

Caltrans Metric

	BY	CHECKED
DESIGN	C. Moulton	T. Menard
DETAILS	S. Schenck / H. Mauroschadt	T. Menard / R. Novik
QUANTITIES	S. Moradi	T. Menard

STATE OF CALIFORNIA
DEPARTMENT OF TRANSPORTATION

DIVISION OF ENGINEERING SERVICES
STRUCTURE DESIGN
DESIGN BRANCH 15

BRIDGE NO. 53E0126
KILOMETER POST 44.0

RETAINING WALL NO. 437
LAYOUT NO. 4

ALL DIMENSIONS ARE IN METERS UNLESS OTHERWISE SHOWN

ORIGINAL SCALE IN MILLIMETERS FOR REDUCED PLANS 0 10 20 30 40 50 60 70 80 90 100

CU 07
EA 121841

DISREGARD PRINTS BEARING EARLIER REVISION DATES

REVISION DATES: 8-8-06 12-17-07 4-30-08 6-3-08 8-28-08 9-2-08 10-29-08 11-24-08 1-6-09

SHEET 7 OF 12

FILE => 53e0126-g-rw04.dgn

STRUCTURES DESIGN DETAIL SHEET (METRIC) (REV.03-17-04)

USERNAME => ttmirkes1 DATE PLOTTED => 15-JUN-2009 TIME PLOTTED => 08:18

DIST	COUNTY	ROUTE	KILOMETER POST TOTAL PROJECT	SHEET No	TOTAL SHEETS
07	LA	5	42.8/47.3	995	1073

Andrew Rittenhouse 12-05-08
REGISTERED CIVIL ENGINEER DATE

6-8-09
PLANS APPROVAL DATE

REGISTERED PROFESSIONAL ENGINEER
Andrew P. Rittenhouse
No. C 61006
Exp. 12-31-10
CIVIL
STATE OF CALIFORNIA

The State of California or its officers or agents shall not be responsible for the accuracy or completeness of electronic copies of this plan sheet.

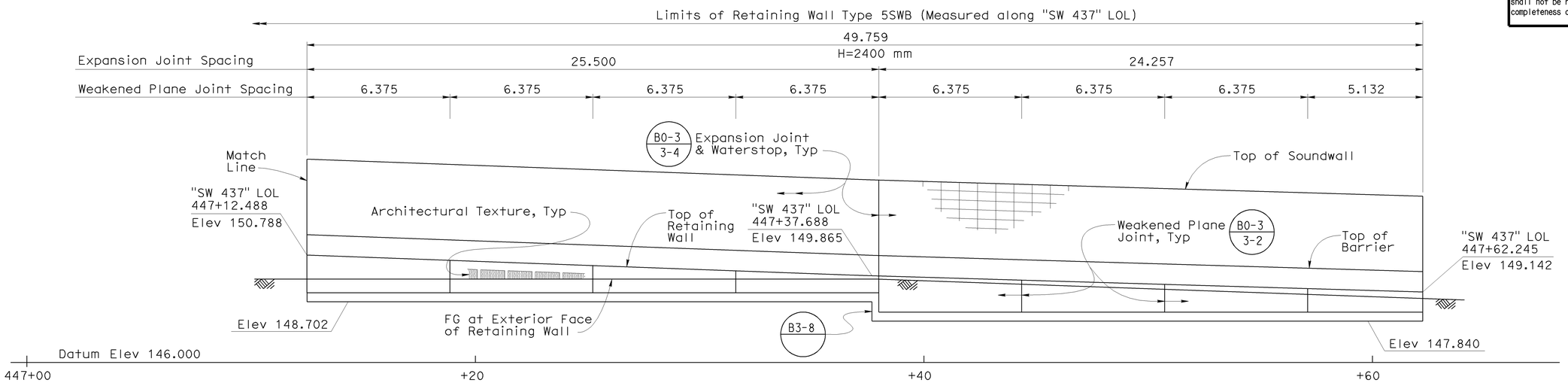

MIRRORED DEVELOPED ELEVATION

1:100

Note:

For "Section D-D" see "LAYOUT NO. 4" sheet

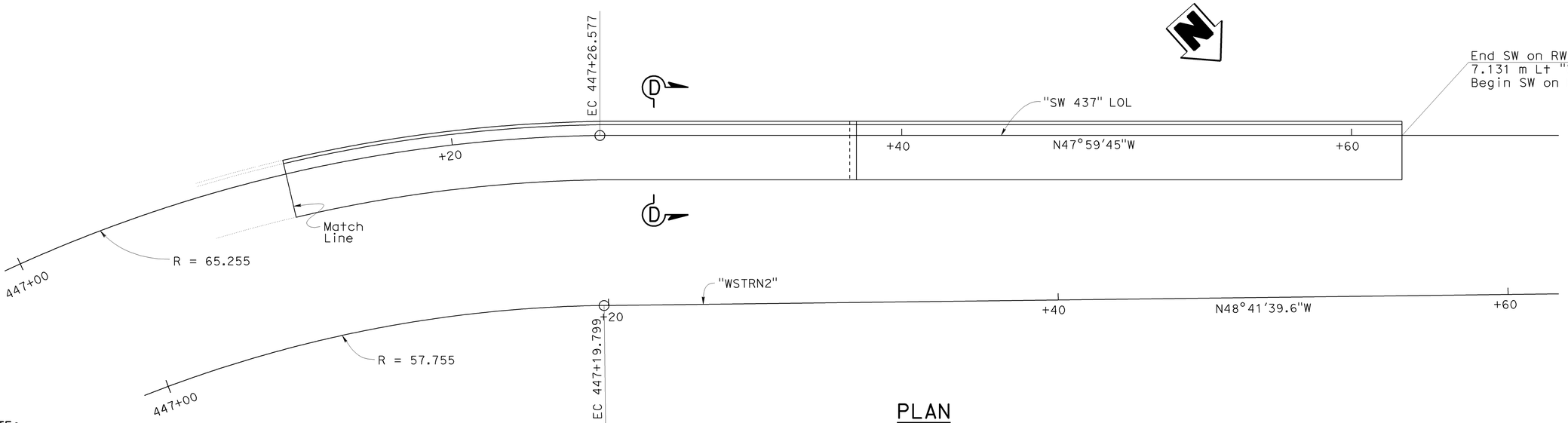

PLAN

1:100

NOTE:
THE CONTRACTOR SHALL VERIFY ALL CONTROLLING FIELD DIMENSIONS BEFORE ORDERING OR FABRICATING ANY MATERIAL.

	BY	CHECKED
DESIGN	C. Moulton	T. Menard
DETAILS	S. Schenck / H. Mauroschadt	T. Menard / R. Novik
QUANTITIES	S. Moradi	T. Menard

STATE OF CALIFORNIA
DEPARTMENT OF TRANSPORTATION

DIVISION OF ENGINEERING SERVICES
STRUCTURE DESIGN
DESIGN BRANCH 15

BRIDGE NO. 53E0126
KILOMETER POST 44.0

RETAINING WALL NO. 437
LAYOUT NO. 5

ALL DIMENSIONS ARE IN METERS UNLESS OTHERWISE SHOWN

ORIGINAL SCALE IN MILLIMETERS FOR REDUCED PLANS 0 10 20 30 40 50 60 70 80 90 100

CU 07
EA 121841

DISREGARD PRINTS BEARING EARLIER REVISION DATES

REVISION DATES: 1-6-09 | 1-24-08 | 4-30-08 | 6-4-08 | 8-22-08 | 9-2-08 | 10-29-08 | 11-24-08 | 11-24-08

SHEET 8 OF 12

FILE => 53e0126-g-rw05.dgn

STRUCTURES DESIGN DETAIL SHEET (METRIC) (REV.03-17-04)

USERNAME => trmikest DATE PLOTTED => 15-JUN-2009 TIME PLOTTED => 08:18

DIST.	COUNTY	ROUTE	KILOMETER POST TOTAL PROJECT	SHEET NO.	TOTAL SHEETS
07	LA	5	42.8/47.3	996	1073

Andrew P. Rittenhouse 12-05-08
REGISTERED ENGINEER - CIVIL

6-8-09
PLANS APPROVAL DATE

REGISTERED PROFESSIONAL ENGINEER Andrew P. Rittenhouse No. C 61006 Exp. 12-31-10 CIVIL STATE OF CALIFORNIA

The State of California or its officers or agents shall not be responsible for the accuracy or completeness of electronic copies of this plan sheet.

Caltrans Metric

For Soundwall & Barrier reinforcement, see "SOUNDWALL WITH BARRIER ON RETAINING WALL - MASONRY BLOCK DETAILS NO. 1" and "SOUNDWALL WITH BARRIER ON RETAINING WALL - MASONRY BLOCK DETAILS NO. 2"sheets.

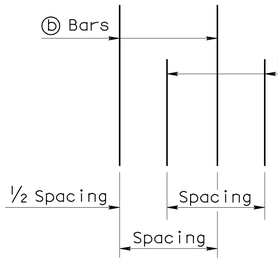

DETAIL B
No Scale

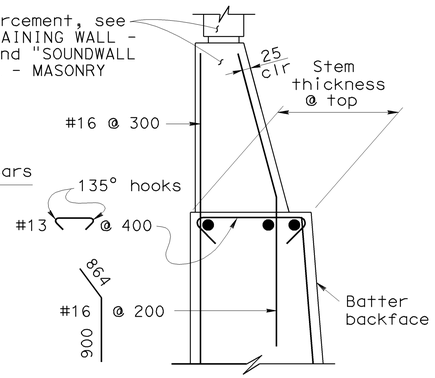

DETAIL A WITHOUT HAUNCH
No Scale

GENERAL NOTES

1. For soundwall and retaining wall architectural finish or texture, see details elsewhere in project plans.
2. For details not shown and drainage notes, see B3-8
3. Footing cover, 450 mm minimum.
4. Limit of no splicing rebars = H/3
5. Increasing stem thickness not permitted:

* ⓐ & ⓑ bars are bundled together.

** Alternate ⓐ & ⓑ bars are shown in "Detail B".

Cont = Continuous.

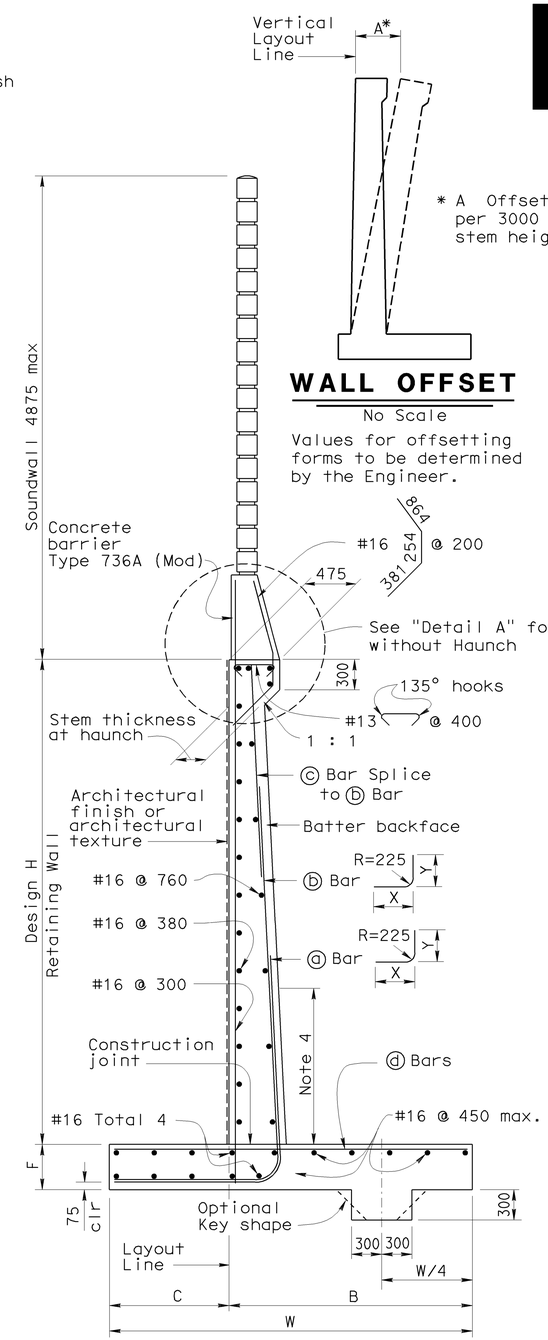

WALL OFFSET
No Scale

Values for offsetting forms to be determined by the Engineer.

SPREAD FOOTING SECTION
No Scale

DESIGN DATA

DESIGN: Load Factor Design (LFD)

CONCRETE: Reinforced Concrete, f'c = 25 MPa
fy = 420 MPa

LOADING CASE:
Level ground with 11.5 KPa Live Load Surcharge and 4875 mm Soundwall

Seismic Load = 0.3 Dead Load
Wind Load = 1435 Pa
Dead Load of Soundwall = 20.6 kN/m
Dead Load of Barrier = 5.4 kN/m

SEISMIC LOAD: SOIL
Kh = 0.3g
Kv = 0.0
Kae : Mononobe-Okabe Method

SOIL: $\emptyset$ = 34° γ = 19 kN/m³
Equivalent fluid pressure:
= 5.6 KPa/m for determination of toe pressure
= 4.2 KPa/m for determination of heel pressure

LOAD COMBINATIONS:

EXTERNAL STABILITY: (For Overturning, Sliding)
Group 1: D + E + SC
Group 2 : D + E + SC + W
Group 3 : D + PYM

INTERNAL STABILITY (LFD): (For Member Design)
Group A : βD + 1.7E + 1.7SC
Group B : βD + 1.7E + 1.3W
Group C (stem) : 1.0D + 1.0E + 1.0EQD + 1.0EQE
Group C (footing) : D + PYM

Where : β = 1.0 or 1.3 whichever controls design
D = Dead Load
E = Lateral Earth Pressure
SC = Live Load Surcharge
W = Wind Load
EQD = Seismic Dead Load
EQE = Seismic Lateral Earth Pressure
PYM = Probable Yield Moment (1.3 x Nominal Yield Moment of Stem)

ALTERNATIVE A: (CONSTANT TOP OF WALL THICKNESS) TABLE OF REINFORCING STEEL DIMENSIONS AND DATA

	Stem With Haunch													
Design H	1800	2400	3000	3600	4200	4800	5500	6100	6700	7300	7900	8500	9100	9800
W	2300	2450	2650	3000	3300	3650	3950	4350	4650	5000	5650	6000	6450	6850
C	850	850	900	1000	1100	1200	1300	1450	1500	1650	1900	2050	2200	2350
B	1500	1600	1750	2000	2200	2450	2650	2900	3150	3350	3750	3950	4250	4500
F Spread Footing	380	380	380	380	380	450	450	550	600	700	850	900	1000	1150
Batter	0	100:4	100:4	100:4	100:4	100:4	100:4	100:4	100:4	100:5	100:6	100:7	100:8	100:8
Stem Thickness @ Haunch	305	305	305	305	305	305	305	305	305	305	305	305	305	305
ⓐ Bars				#19@450**	#22@450**	#25@450**	#29@450**	#32@450**	#25@225*	#25@225*	#22@150*	#32@300**	#29@225*	#36@300**
X				Cont	Cont	Cont	Cont	Cont	Cont	Cont	Cont	Cont	Cont	Cont
Y				2400	2000	2300	2600	2900	2900	3350	3500	3950	4250	4700
ⓑ Bars	#16@300	#16@300	#16@225	#19@450**	#22@450**	#25@450**	#29@450**	#32@450**	#25@225*	#25@225*	#22@150*	#32@300**	#29@225*	#36@300**
X	Cont	Cont	Cont	Cont	Cont	Cont	Cont	Cont	Cont	1700	2000	2150	2450	2600
Y	Cont	Cont	Cont	Cont	3200	3950	4550	5350	5950	6400	5650	5800	7750	7150
ⓒ Bars					#19@450	#19@450	#19@450	#19@450	#19@450	#19@450	#19@300	#22@300	#22@450	#22@300
ⓓ Bars	#16@300	#16@300	#16@300	#16@225	#19@225	#19@225	#19@150	#25@225	#25@225	#25@225	#22@150	#22@150	#29@225	#29@225
Ultimate Bearing Capacity Req'd Kpa	220	265	290	315	350	390	430	475	540	585	600	640	675	740

ALTERNATIVE B: (VARIABLE TOP OF WALL THICKNESS) TABLE OF REINFORCING STEEL DIMENSIONS AND DATA

	Stem With Haunch						Stem Without Haunch						
Design H	2400	3000	3600	4200	4800	5500	6100	6700	7300	7900	8500	9100	9800
W	2450	2600	2800	3100	3450	3950	4200	4900	5000	5650	6100	6250	6650
C	850	850	900	1050	1150	1300	1400	1600	1650	1900	2050	2050	2300
B	1600	1750	1900	2050	2300	2650	2800	3300	3350	3750	4050	4200	4350
F Spread Footing	380	380	380	380	450	450	550	600	700	850	900	1000	1050
Batter	0	0	0	0	0	0	0	0	0	100:2	100:4	100:4	100:4
Stem Thickness @ Top							475	610	610	610	610	610	610
Stem Thickness @ Haunch	305	305	305	305	380	380							
ⓐ Bars			#19@300**	#16@150*	#29@450**	#29@300**	#29@300**	#29@300**	#22@150*	#22@150*	#22@150*	#29@225*	#36@300**
X			Cont	Cont	Cont	Cont	Cont	Cont	Cont	Cont	Cont	Cont	Cont
Y			1700	1700	2600	2600	2600	2600	2900	3350	3800	4100	4400
ⓑ Bars	#16@225	#19@225	#19@300**	#16@150*	#29@450**	#29@300**	#29@300**	#29@300**	#22@150*	#22@150*	#22@150*	#29@225*	#36@300**
X	Cont	Cont	Cont	Cont	Cont	Cont	Cont	Cont	1700	1850	2300	2300	2450
Y	Cont	Cont	Cont	Cont	3500	3500	3650	3650	5350	6100	6550	7300	7300
ⓒ Bars					#22@450	#22@300	#22@300	#22@300	#19@300	#19@300	#19@300	#22@450	#22@300
ⓓ Bars	#16@300	#16@225	#16@225	#19@225	#19@225	#29@300	#29@300	#22@150	#19@150	#22@150	#22@150	#29@225	#29@225
Ultimate Bearing Capacity Req'd Kpa	265	310	350	365	430	430	510	505	585	605	640	740	770

ALL DIMENSIONS ARE IN MILLIMETERS UNLESS OTHERWISE SHOWN

STANDARD DRAWING

RELEASE DATE 2/25/03	DESIGN BY Madon Sah	CHECKED Overcomer Hor	RELEASED BY
	DETAILS BY A R Dudsak	CHECKED J C Moese	
FILE NO. xs14-220	SUBMITTED BY Overcomer Hor	DRAWING DATE 2/94	OFFICE CHIEF

STATE OF CALIFORNIA DEPARTMENT OF TRANSPORTATION

DIVISION OF ENGINEERING SERVICES

BRIDGE NO. 53E0126
KILOMETER POST 44.0

RETAINING WALL NO. 437
RETAINING WALL TYPE 1SWB

DS OSD 2147A (METRIC) (REV. X/XX/XX)

ORIGINAL SCALE IN MILLIMETERS FOR REDUCED PLANS 0 10 20 30 40 50 60 70 80 90 100

CU 07
EA 121841

DISREGARD PRINTS BEARING EARLIER REVISION DATES

REVISION DATES (PRELIMINARY STAGE ONLY) 5-10-06 12-17-07 3-6-08 4-4-08 5-13-08 8-22-08 9-2-08 10-29-08 11-24-08

SHEET 9 OF 12

FILE => 53e0126-g-rw06.dgn

DATE PLOTTED => 15-JUN-2009 TIME PLOTTED => 08:18

DIST.	COUNTY	ROUTE	KILOMETER POST TOTAL PROJECT	SHEET NO.	TOTAL SHEETS
07	LA	5	42.8/47.3	997	1073

Caltrans Metric

Andrew P. Rittenhouse 12-05-08
REGISTERED ENGINEER - CIVIL

6-8-09
PLANS APPROVAL DATE

REGISTERED PROFESSIONAL ENGINEER Andrew P. Rittenhouse No. C 61006 Exp. 12-31-10 CIVIL STATE OF CALIFORNIA

The State of California or its officers or agents shall not be responsible for the accuracy or completeness of electronic copies of this plan sheet.

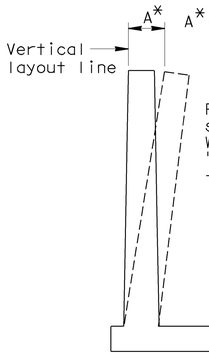

WALL OFFSET

NO SCALE
Values for offsetting forms to be determined by the engineer

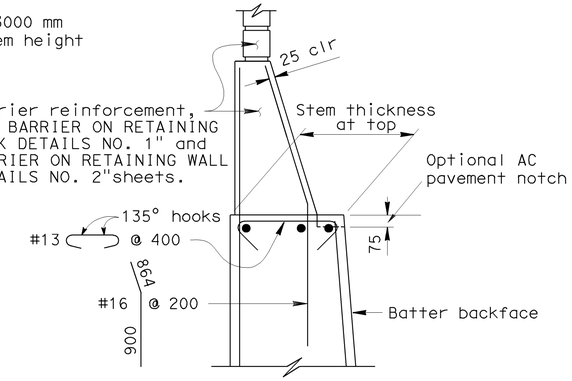

DETAIL A WITHOUT HAUNCH

NO SCALE

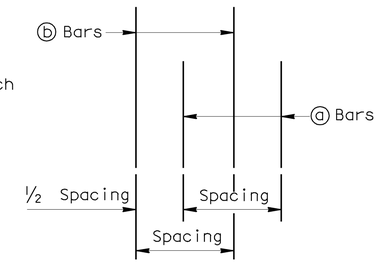

DETAIL B

NO SCALE

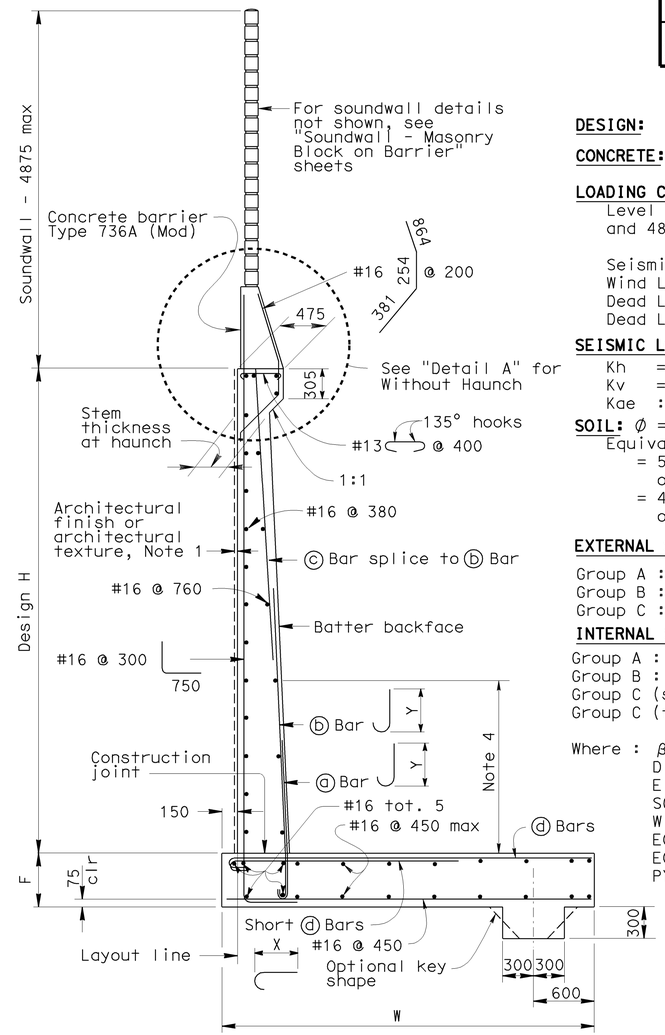

SPREAD FOOTING SECTION

NO SCALE

Cont = Continuous

* = ⓐ&ⓑ, Short ⓓ&ⓓ bars are bundled together.

** = Alternate ⓐ&ⓑ bars as shown in "Detail B". Alternate Short ⓑ&ⓑ bars

DESIGN DATA

DESIGN: Load Factor Design (LFD)

CONCRETE: Reinforced Concrete, f'c = 25 MPa
fy = 420 MPa

LOADING CASE:
Level ground with 11.5 KPa Live Load Surcharge and 4875 mm Soundwall

Seismic Load = 0.3 Dead Load
Wind Load = 1435 Pa
Dead Load of Soundwall = 20.6 kN/m
Dead Load of Barrier = 5.4 kN/m

SEISMIC LOAD: SOIL
Kh = 0.3g
Kv = 0.0
Kae : Mononobe-Okabe Method

SOIL: $\emptyset$ = 34° γ = 19 kN/m^3
Equivalent fluid pressure:
= 5.6 KPa/m for determination of toe pressure
= 4.2 KPa/m for determination of heel pressure

EXTERNAL STABILITY:
Group A : D + E + SC
Group B : D + E + SC + W
Group C : D + PYM

INTERNAL STABILITY (LFD):
Group A : βD + 1.7 E + 1.7 SC
Group B : βD + 1.7 E + 1.3 W
Group C (stem) : 1.0 D + 1.0 E + 1.0 EQD + 1.0 EQE
Group C (footing) : D + PYM

Where : β = 1.0 or 1.3 whichever controls design
D = Dead Load
E = Lateral Earth Pressure
SC = Live Load Surcharge
W = Wind Load
EQD = Seismic Dead Load
EQE = Seismic Lateral Earth Pressure
PYM = Probable Yield Moment (1.3 x Nominal Yield Moment of Stem)

GENERAL NOTES

1. For soundwall and retaining wall architectural finish or texture, see details elsewhere in project plans.
2. For details not shown and drainage notes, see B3-8
3. Footing cover, 450 mm minimum.
4. Limit of no splicing rebars = H/3
5. Increasing stem thickness not permitted.

ALL DIMENSIONS ARE IN MILLIMETERS UNLESS OTHERWISE SHOWN

ALTERNATIVE A: (CONSTANT TOP OF WALL THICKNESS) TABLE OF REINFORCING STEEL DIMENSIONS AND DATA

STEM WITH HAUNCH														
Design H	1800	2400	3000	3600	4200	4800	5500	6100	6700	7300	7900	8500	9100	9800
W	2600	2600	2800	3050	3450	3750	4050	4400	4800	5200	5650	6100	6500	6950
F Spread Ftg.	400	400	400	450	450	550	600	600	700	750	900	1000	1150	1200
Batter	100:0	100:4	100:4	100:4	100:4	100:4	100:4	100:4	100:4	100:5	100:6	100:7	100:8	100:8
Stem Thickness @ Haunch	305	305	305	305	305	305	305	305	305	305	305	305	305	305
ⓐ Bars				#19 @ 450**	#22 @ 450**	#25 @ 450**	#29 @ 450**	#32 @ 450**	#25 @ 225*	#25 @ 225*	#22 @ 150*	#32 @ 300**	#29 @ 225*	#36 @ 300**
Y				2450	2000	2300	2450	2750	2900	3350	3500	4000	4300	4750
ⓑ Bars	#16 @ 300	#16 @ 300	#16 @ 225	#19 @ 450**	#22 @ 450**	#25 @ 450**	#29 @ 450**	#32 @ 450**	#25 @ 225*	#25 @ 225*	#22 @ 150*	#32 @ 300**	#29 @ 225*	#36 @ 300**
Y	Cont	Cont	Cont	Cont	3200	4000	4600	5350	5950	6400	5650	5800	7800	7200
ⓒ Bars					#19 @ 450	#19 @ 450	#19 @ 450	#19 @ 450	#19 @ 450	#19 @ 450	#19 @ 300	#22 @ 300	#22 @ 450	#22 @ 300
SHORT ⓓ BARS	#16 @ 300	#16 @ 225	#19 @ 225	#22 @ 450**	#25 @ 450**	#25 @ 450**	#29 @ 450**	#32 @ 450**	#25 @ 225*	#25 @ 225*	#22 @ 150*	#32 @ 300*	#29 @ 225*	#36 @ 300**
X	Cont	Cont	Cont	1700	2000	2300	2450	2600	2900	3200	3500	3800	4100	4600
ⓓ Bars				#22 @ 450**	#25 @ 450**	#25 @ 450**	#29 @ 450**	#32 @ 450**	#25 @ 225*	#25 @ 225*	#22 @ 150*	#32 @ 300*	#29 @ 225*	#36 @ 300**
X				Cont	Cont	Cont	Cont	Cont	Cont	Cont	Cont	Cont	Cont	Cont
Ultimate Bearing Capacity req'd Kpa	300	375	420	495	545	630	720	775	850	930	1010	1075	1170	1235

ALTERNATIVE B: (VARIABLE TOP OF WALL THICKNESS) TABLE OF REINFORCING STEEL DIMENSIONS AND DATA

	STEM WITH HAUNCH						STEM WITHOUT HAUNCH						
Design H	2400	3000	3600	4200	4800	5500	6100	6700	7300	7900	8500	9100	9800
W	2600	2750	2950	3200	3800	4050	4350	4950	5200	5700	6150	6500	6850
F Spread Ftg.	400	400	400	400	450	450	550	700	700	850	1000	1150	1150
Batter	0	0	0	0	0	0	0	0	0	100:2	100:4	100:4	100:4
Stem thickness @ Top							475	610	610	610	610	610	610
Stem thickness @ Haunch	305	305	305	305	380	380							
ⓐ Bars			#19 @ 300**	#16 @ 150*	#25 @ 300**	#25 @ 225*	#29 @ 300**	#29 @ 300**	#22 @ 150*	#22 @ 150*	#22 @ 150*	#29 @ 225*	#36 @ 300**
Y			1700	1700	1850	2000	2450	2600	2900	3350	3800	4100	4400
ⓑ Bars	#16 @ 225	#19 @ 225	#19 @ 300**	#16 @ 150 *	#25 @ 300**	#25 @ 225 *	#29 @ 300**	#29 @ 300**	#22 @ 150*	#22 @ 150*	#22 @ 150*	#29 @ 225 *	#36 @ 300**
Y	Cont	Cont	Cont	Cont	2600	3350	3350	3500	5200	5950	6550	7300	7300
ⓒ Bars					#19 @ 300	#22 @ 450	#22 @ 300	#22 @ 300	#19 @ 300	#19 @ 300	#19 @ 300	#22 @ 450	#22 @ 300
SHORT ⓓ BARS	#16 @ 225	#19 @ 225	#22 @ 450**	#16 @ 150 *	#25 @ 300**	#25 @ 225 *	#29 @ 300**	#29 @ 300**	#22 @ 150*	#29 @ 150*	#29 @ 150 *	#29 @ 225*	#25 @ 150*
X	Cont	Cont	1850	1700	2150	2600	2750	3050	3350	3650	3950	4250	4600
ⓓ Bars			#22 @ 450**	#16 @ 150 *	#25 @ 300**	#25 @ 225 *	#29 @ 300**	#29 @ 300**	#22 @ 150*	#29 @ 150*	#29 @ 150 *	#29 @ 225*	#25 @ 150*
X			Cont	Cont	Cont	Cont	Cont	Cont	Cont	Cont	Cont	Cont	Cont
Ultimate Bearing Capacity req'd Kpa	375	430	495	565	605	685	775	830	915	985	1070	1175	1235

STANDARD DRAWING

RELEASE DATE	7/29/03	DESIGN	BY Madon Sah	CHECKED Overcomer Hor	RELEASED BY
FILE NO.	xs14-350	DETAILS	BY R. Yee	CHECKED J.C. Moose	OFFICE CHIEF
		SUBMITTED	BY Overcomer Hor	DRAWING DATE 12/00	

STATE OF CALIFORNIA
DEPARTMENT OF TRANSPORTATION

DIVISION OF ENGINEERING SERVICES

CU 07
EA 121841

BRIDGE NO. 53E0126
KILOMETER POST 44.0

RETAINING WALL NO. 437

RETAINING WALL TYPE 5SWB

DS OSD 2147A (METRIC) (REV. 2/25/97)

ORIGINAL SCALE IN MILLIMETERS FOR REDUCED PLANS 0 10 20 30 40 50 60 70 80 90 100

DISREGARD PRINTS BEARING EARLIER REVISION DATES

REVISION DATES (PRELIMINARY STAGE ONLY) ~~8-18-06~~ ~~8-27-08~~ ~~9-2-08~~ ~~10-29-08~~ 11-24-08

SHEET 10 OF 12

FILE => 53e0126-g-rw07.dgn

DATE PLOTTED => 15-JUN-2009 TIME PLOTTED => 08:18

DIST.	COUNTY	ROUTE	KILOMETER POST TOTAL PROJECT	SHEET NO.	TOTAL SHEETS
07	LA	5	42.8/47.3	998	1073

Caltrans Metric

Andrew P. Rittenhouse 12-05-08
REGISTERED ENGINEER - CIVIL

6-8-09
PLANS APPROVAL DATE

REGISTERED PROFESSIONAL ENGINEER Andrew P. Rittenhouse No. C 61006 Exp. 12-31-10 CIVIL STATE OF CALIFORNIA

The State of California or its officers or agents shall not be responsible for the accuracy or completeness of electronic copies of this plan sheet.

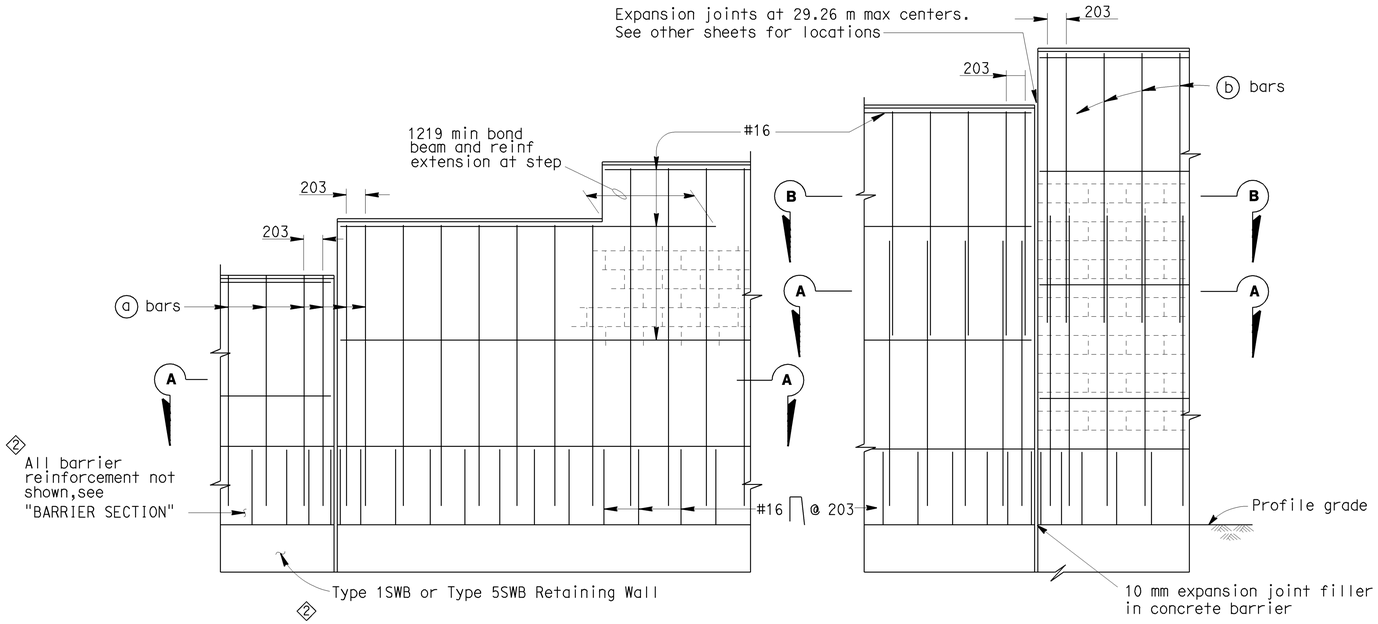

PART ELEVATIONS

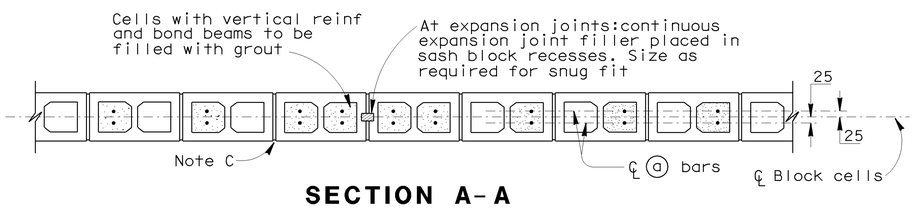

SECTION A-A

For details not shown,see other details

H=1930 THRU H=3150

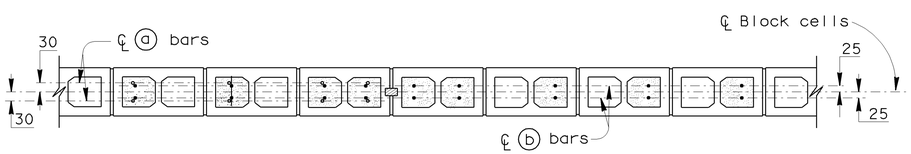

SECTION A-A

SECTION B-B

For details not shown,see other details

H=3759 THRU H=4978

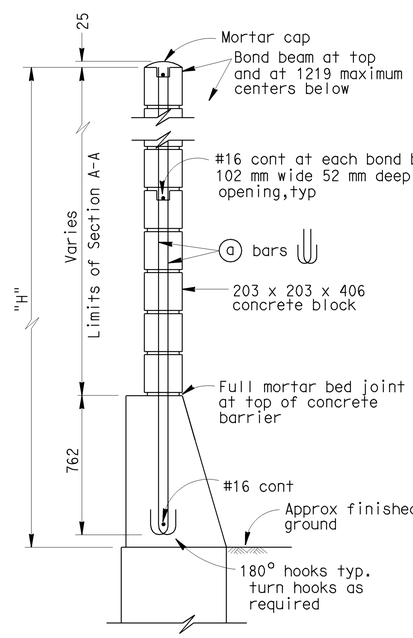

H=1930 THRU H=3150

For details not shown,see H=3759 thru H=4978

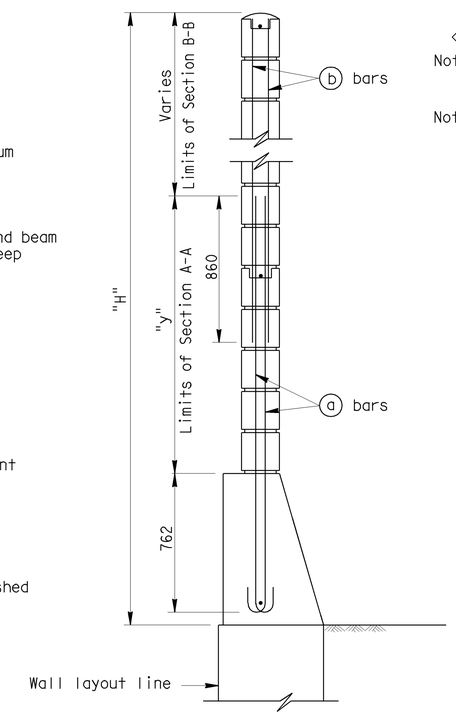

H=3759 THRU H=4978

For details not shown,see H=1930 thru H=3150

TYPICAL SECTIONS

SOUNDWALL REINFORCEMENT TABLE

Maximum H	(a) bars @ 406 max	(b) bars @ 406 max	"y"	f'm (MPa)	Compressive Strength of CMU (MPa)	Maximum H
1930	#13	———	———	10.34	13.1	1930
2540	#13	———	———	10.34	13.1	2540
3150	#13	———	———	10.34	13.1	3150
3759	#16	#13	1524	10.34	13.1	3759
4369	#19	#13	2134	10.34	13.1	4369
4978	#19	#13	2743	17.24	25.6	4978

2

Note I : For details not shown,see "SOUNDWALL WITH BARRIER ON RETAINING WALL - MASONRY BLOCK DETAILS NO. 2" sheet.

Note II : Slope ground at traffic side of barrier to drain. Maximum slope ±10%.

GENERAL NOTES

Note A: For type of block and joint finish, see other sheets.

Note B: When blocks are laid in stacked bond, ladder type, galvanized joint reinforcement shall be provided. A minimum of 2-3.76 mm wire continuous at 1219 mm maximum to be used. Locate reinforcement in joints that are at the approximate midpoint between bond beams.

Note C: Horizontal joints shall be tooled concave or may be weathered.
Vertical joints shall be tooled concave or may be raked.

Note D: For intermediate wall heights that are between the "H's" given. Use the tabular information for the next higher "H".

Note E: Masonry strengths are listed in "SOUNDWALL REINFORCEMENT TABLE".

Note F: Class 2 concrete to be used for the barrier.

SPECIAL DETAILS

NO SCALE

ALL DIMENSIONS ARE IN MILLIMETERS UNLESS OTHERWISE SHOWN

STANDARD DRAWING					
RELEASE DATE REVISED	DESIGN	BY D. DUNRUD	CHECKED W.C. WALKER	RELEASED BY	
FILE NO. xs15-130-1	DETAILS	BY R. YEE	CHECKED W.C. WALKER		
	SUBMITTED	BY D. DUNRUD	DRAWING DATE 11/94	OFFICE CHIEF	

1 Modified Title
2 Modified note

STATE OF CALIFORNIA
DEPARTMENT OF TRANSPORTATION

DIVISION OF ENGINEERING SERVICES

BRIDGE NO. 53E0126
KILOMETER POST 44.0

RETAINING WALL NO. 437

1 SOUNDWALL WITH BARRIER ON RETAINING WALL - MASONRY BLOCK DETAILS NO. 1

DS OSD 2147A (METRIC) (REV. 2/25/97)

ORIGINAL SCALE IN MILLIMETERS FOR REDUCED PLANS 0 10 20 30 40 50 60 70 80 90 100

CU 07
EA 121841

DISREGARD PRINTS BEARING EARLIER REVISION DATES

REVISION DATES (PRELIMINARY STAGE ONLY) 10-25-07 2-14-08 5-13-08 8-28-08 9-2-08 10-29-08 11-24-08

SHEET 11 OF 12

FILE => 53e0126-g-sw01.dgn

DATE PLOTTED => 15-JUN-2009 TIME PLOTTED => 08:18

DIST.	COUNTY	ROUTE	KILOMETER POST TOTAL PROJECT	SHEET NO.	TOTAL SHEETS
07	LA	5	42.8/47.3	999	1073

Caltrans Metric

Andrew Rittenhouse 12-05-08
REGISTERED ENGINEER - CIVIL

6-8-09
PLANS APPROVAL DATE

The State of California or its officers or agents shall not be responsible for the accuracy or completeness of electronic copies of this plan sheet.

REGISTERED PROFESSIONAL ENGINEER Andrew P. Rittenhouse No. C 61006 Exp. 12-31-10 CIVIL STATE OF CALIFORNIA

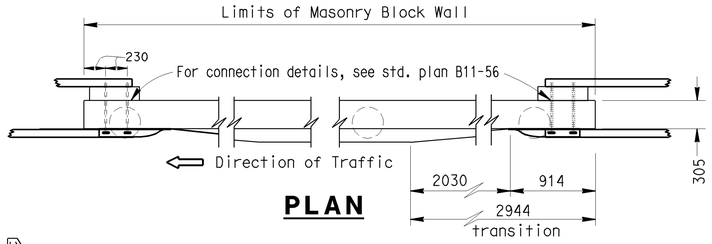

PLAN

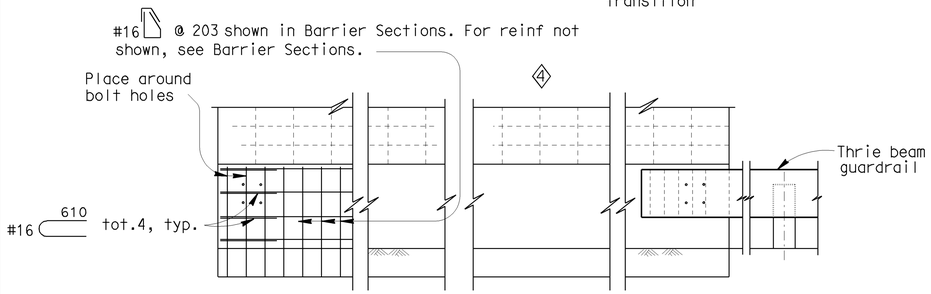

ELEVATION

METAL BEAM GUARDRAIL ANCHORAGE

For details not shown, see std. plan B11-56.

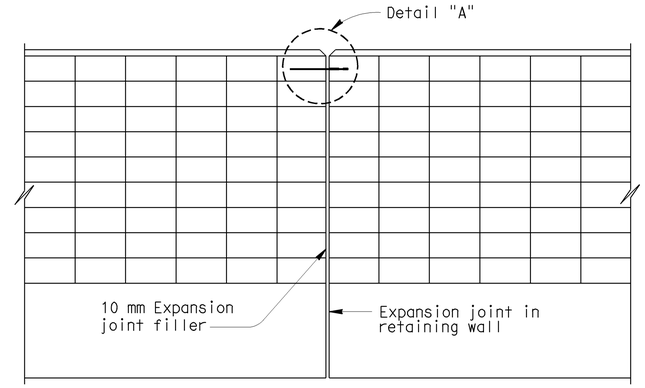

ALIGNMENT KEY DETAIL 4

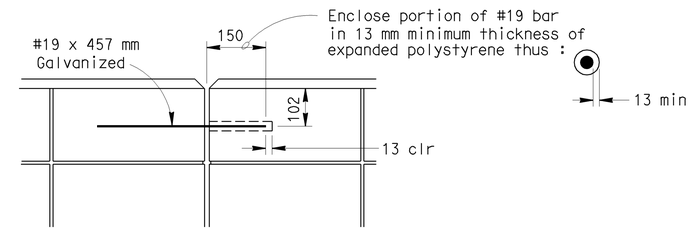

DETAIL A 4

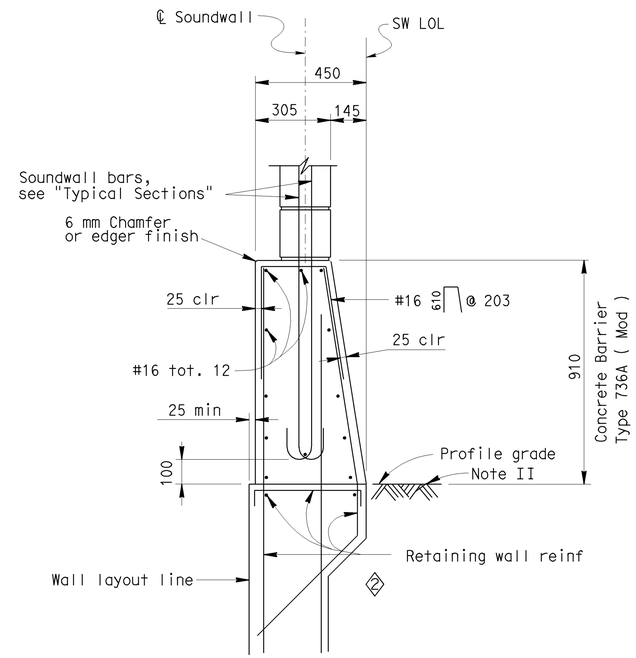

BARRIER SECTION

3

NOTES:

2 I : For details not shown, see "RETAINING WALL TYPE 1SWB" and "RETAINING WALL TYPE 5SWB" sheets.

II : Slope ground at traffic side of barrier to drain. Maximum slope ±10%. See Standard Plan B11-56, Note D.

DESIGN NOTES

DESIGN

Uniform Building Code,1997 Edition and the Bridge Design Specifications.

DESIGN WIND LOAD

1293 Pa

DESIGN SEISMIC LOAD

0.57 Dead load

REINFORCED CONCRETE

f'c = 22.408 Mpa
fy = 413.688 MPa

CONCRETE MASONRY

REGULAR STRENGTH	HIGH STRENGTH	
f'm = 10.34 MPa	f'm = 13.79 MPa	f'm = 17.24 MPa
fb = 3.41 MPa	fb = 4.55 MPa	fb = 5.72 MPa
fs = 165.5 MPa	fs = 165.5 MPa	fs = 165.5 MPa
n = 25.8	n = 19.3	n = 15.5

LOAD FACTORS AND LOAD COMBINATIONS

Working Stress Design (WSD) Percentage of unit stress

Group 1: D + E + SC	100%
Group 2: D + W + SC + E	100%
Group 3: D + 0.71 EQD + E	100%

Where:

D = Dead load
E = Lateral earth pressure
SC = Live load surcharge
W = Wind load
EQD = Seismic dead load

Load Factor Design (LFD)

Group A: βD +1.7 E + 1.7 SC
Group B: βD +1.7 E + 1.3 W
Group C: βD +1.3 E + 1.0 EQE
Group D: βD +1.3 E + 1.0 EQD
Group E: βD +1.1 E + 0.85 (EQE + EQD)

Where : β = 0.9 or 1.2, whichever controls in design
D = Dead load
E = Lateral earth pressure
SC = Live load surcharge
W = Wind load
EQD = Seismic dead load
EQE = Seismic earth load

STRENGTH REDUCTION FACTORS, Ø

Reinforced concrete:
For flexure _____ Ø=0.90
For shear _____ Ø=0.85

Concrete masonry:
For flexure _____ Ø=0.80
For shear _____ Ø=0.60

Retaining Walls:
See "RETAINING WALL TYPE 1 SWBP - DETAILS NO. 1" sheet.
2

SPECIAL DETAILS

NO SCALE

ALL DIMENSIONS ARE IN MILLIMETERS UNLESS OTHERWISE SHOWN

STANDARD DRAWING					
RELEASE DATE 9/8/03	DESIGN	BY D. DUNRUD	CHECKED W.C. WALKER	RELEASED BY	
FILE NO. xs15-130-2	DETAILS	BY R. YEE	CHECKED W.C. WALKER		
	SUBMITTED	BY D. DUNRUD	DRAWING DATE 11/94	OFFICE CHIEF	

DS OSD 2147A (METRIC) (REV. 2/25/97)

1 Modified title
2 Modified note
3 Detail deleted
4 Modified detail

STATE OF CALIFORNIA
DEPARTMENT OF TRANSPORTATION

DIVISION OF ENGINEERING SERVICES

CU 07
EA 121841

BRIDGE NO. 53E0126
KILOMETER POST 44.0

RETAINING WALL NO. 437

1 SOUNDWALL WITH BARRIER ON RETAINING WALL - MASONRY BLOCK DETAILS NO. 2

ORIGINAL SCALE IN MILLIMETERS FOR REDUCED PLANS 0 10 20 30 40 50 60 70 80 90 100

DISREGARD PRINTS BEARING EARLIER REVISION DATES

REVISION DATES (PRELIMINARY STAGE ONLY) 10-25-07 2-15-08 5-13-08 8-26-08 9-2-08 10-29-08 11-24-08

SHEET 12 OF 12

FILE => 53e0126-g-sw02.dgn

DATE PLOTTED => 15-JUN-2009 TIME PLOTTED => 08:13

DIST	COUNTY	ROUTE	KILOMETER POST TOTAL PROJECT	SHEET No	TOTAL SHEETS
07	LA	5	42.8/47.3	1000	1073

Andrew Rittenhouse 12-05-08
REGISTERED CIVIL ENGINEER DATE

6-8-09
PLANS APPROVAL DATE

REGISTERED PROFESSIONAL ENGINEER Andrew P. Rittenhouse No. 61006 Exp. 12-31-10 CIVIL STATE OF CALIFORNIA

The State of California or its officers or agents shall not be responsible for the accuracy or completeness of electronic copies of this plan sheet.

Notes:

1. Distance of South Approach Ramp from ℄ Route 5 is shown not to scale.
2. For curve data, see "Curve Data Table" on "GENERAL PLAN 2 OF 3" sheet.
3. For "Section A-A", "Section B-B", "Section C-C", and "Section D-D", see "GENERAL PLAN 2 OF 3" sheet. For "Section E-E", "Section F-F" and "Section G-G", see "GENERAL PLAN 3 OF 3" sheet.
4. For MSE Wall alignment information, see "RETAINING WALL "A" LAYOUT 1 OF 2", and "RETAINING WALL "B" LAYOUT 1 OF 2 sheets.
5. For Chain Link Railing and Handrail layout, see "FENCE AND HANDRAIL LAYOUT 1 OF 2" sheet.
6. For Retaining Wall Type 1, see "RETAINING WALL "A" LAYOUT 1 OF 2" sheet.

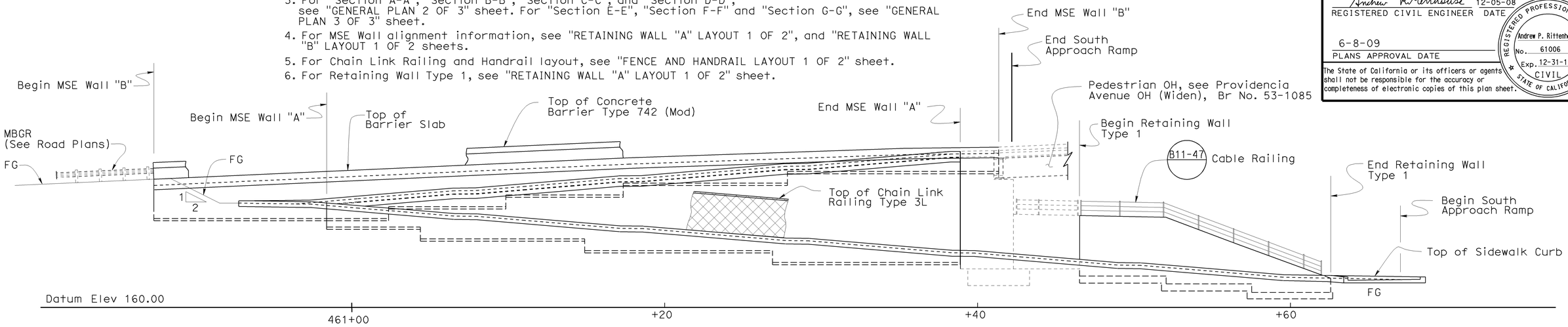

ELEVATION

1:125

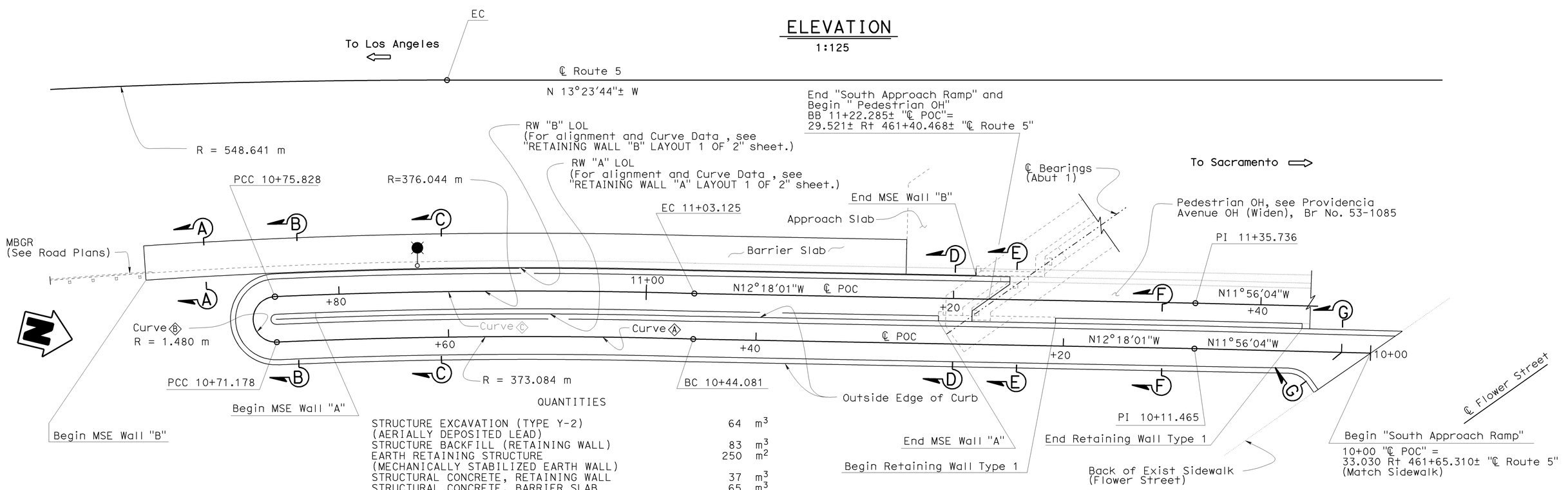

PLAN

1:125

QUANTITIES

STRUCTURE EXCAVATION (TYPE Y-2) (AERIALLY DEPOSITED LEAD)	64	m^3
STRUCTURE BACKFILL (RETAINING WALL)	83	m^3
EARTH RETAINING STRUCTURE (MECHANICALLY STABILIZED EARTH WALL)	250	m^2
STRUCTURAL CONCRETE, RETAINING WALL	37	m^3
STRUCTURAL CONCRETE, BARRIER SLAB	65	m^3
FRACTURED RIB TEXTURE	48	m^2
BAR REINFORCING STEEL (RETAINING WALL)	1 850	kg
MINOR CONCRETE (SIDEWALK)	100	m^3
CHAIN LINK RAILING (TYPE 3L)	187	m
PIPE HANDRAILING (POST TYPE)	57	m
CABLE RAILING	15	m
CONCRETE BARRIER (TYPE 742 MODIFIED)	55	m

NOTE:
THE CONTRACTOR SHALL VERIFY ALL CONTROLLING FIELD DIMENSIONS BEFORE ORDERING OR FABRICATING ANY MATERIAL.

Legend:

Indicates Electrolier and Pullbox location, see "Road Plans"

KP (PM) Indicates Kilometer Post (Post Mile)

Caltrans Metric

Traci Menard
DESIGN ENGINEER

	BY	CHECKED
DESIGN	G. Galo	R. Novik
DETAILS	S. Cholda	R. Novik
QUANTITIES	A. Logus	D. Kubochi

LOAD & RESISTANCE FACTOR DESIGN — LIVE LOADING: HL93 W/"LOW-BOY"; PERMIT DESIGN VEHICLE

	BY	CHECKED
LAYOUT	G. Galo	R. Novik
SPECIFICATIONS	L. Yang	PLANS AND SPECS COMPARED A. Rittenhouse

ALL DIMENSIONS ARE IN METERS UNLESS OTHERWISE SHOWN

ORIGINAL SCALE IN MILLIMETERS FOR REDUCED PLANS 0 10 20 30 40 50 60 70 80 90 100

STATE OF CALIFORNIA
DEPARTMENT OF TRANSPORTATION

DIVISION OF ENGINEERING SERVICES
STRUCTURE DESIGN
DESIGN BRANCH 15

CU 07
EA 121841

BRIDGE NO. 53E0127
KP (PM) 46.1(28.7)

SOUTH APPROACH RAMP & RETAINING WALLS
GENERAL PLAN 1 OF 3

DISREGARD PRINTS BEARING EARLIER REVISION DATES

REVISION DATES: 12-11-07 12-12-08 01-06-09 01-09-09 01-16-09 3-26-09 4-09-09 4-14-09 5-01-09 5-14-09

SHEET 1 OF 31

FILE => 53e0127-a-gp01.dgn

STRUCTURES DESIGN GENERAL PLAN SHEET (METRIC) (REV.07-24-06)

USERNAME => trmikest DATE PLOTTED => 15-JUN-2009 TIME PLOTTED => 13:21