To accompany plans dated 6-8-09

Caltrans Metric

DIST	COUNTY	ROUTE	KILOMETER POST TOTAL PROJECT	SHEET NO.	TOTAL SHEETS
07	LA	5	42.8/47.3	501	1073

William K. Farnbach
REGISTERED CIVIL ENGINEER

November 17, 2006
PLANS APPROVAL DATE

REGISTERED PROFESSIONAL ENGINEER William K. Farnbach No. 49042 Exp. 09-30-08 CIVIL STATE OF CALIFORNIA

The State of California or its officers or agents shall not be responsible for the accuracy or completeness of electronic copies of this plan sheet.

To get to the Caltrans web site, go to: http://www.dot.ca.gov

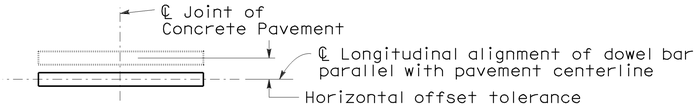

PLAN

HORIZONTAL OFFSET TOLERANCE

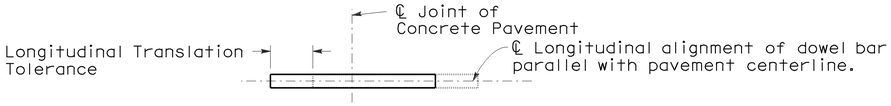

PLAN

LONGITUDINAL TRANSLATION TOLERANCE

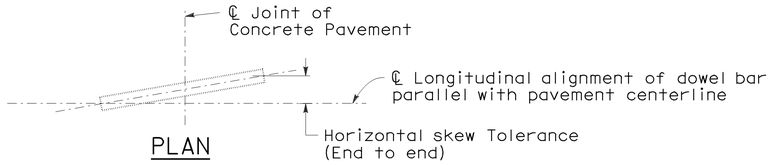

PLAN

HORIZONTAL SKEW TOLERANCE

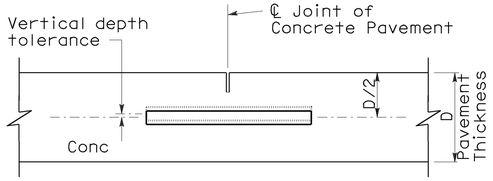

ELEVATION

VERTICAL DEPTH TOLERANCE

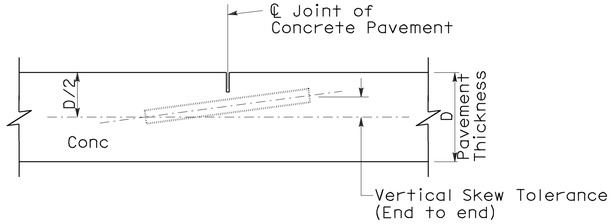

ELEVATION

VERTICAL SKEW TOLERANCE

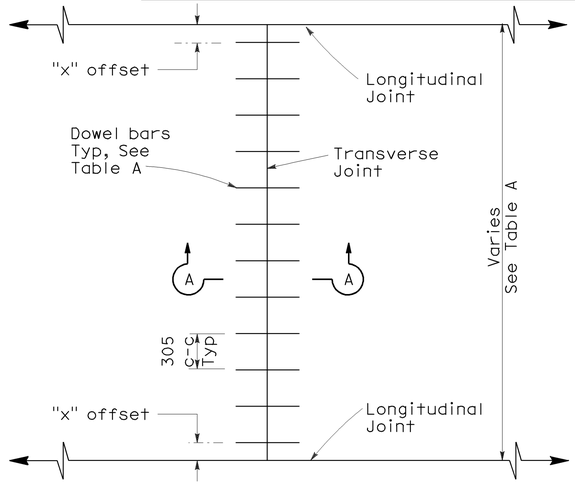

TRANSVERSE JOINT DOWEL BAR LAYOUT

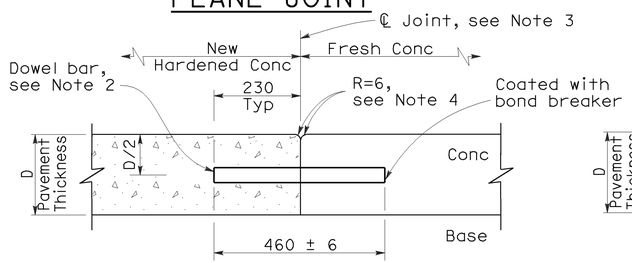

TRANSVERSE CONTACT JOINT DETAIL

SECTION A-A

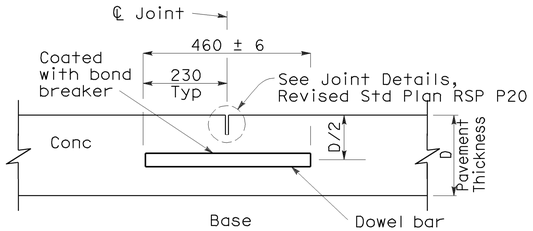

TRANSVERSE WEAKENED PLANE JOINT

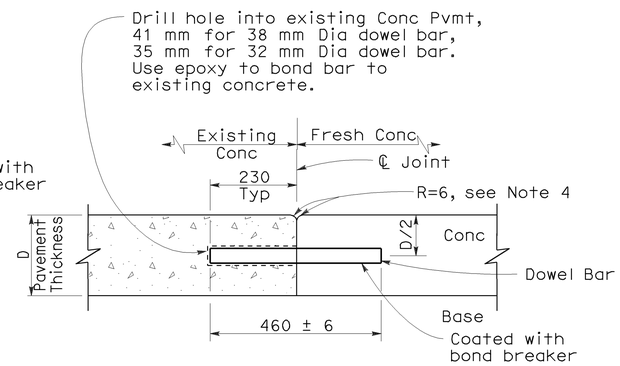

TRANSVERSE CONTACT JOINT FOR EXISTING CONCRETE PAVEMENT

(Drill and bond locations)

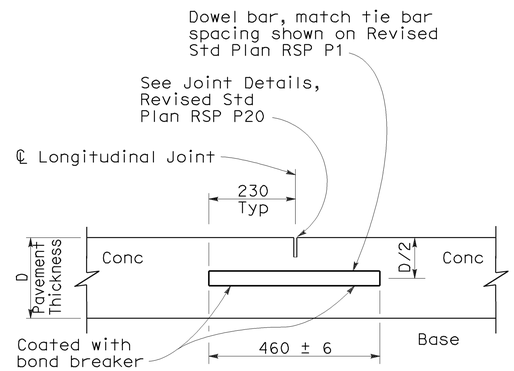

LONGITUDINAL WEAKENED PLANE JOINT WITH DOWEL BARS

(See Revised Std Plan RSP P18)

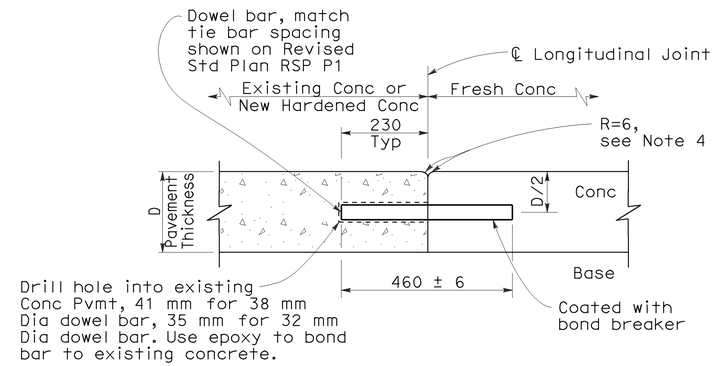

LONGITUDINAL CONTACT JOINT WITH DOWEL BARS

(See Revised Std Plan RSP P18)

TABLE A

Dowel Bar Transverse Spacing Table		
Width between Longitudinal Joints (m)	Offset Dimension "X" (mm)	Number of Dowels between Longitudinal Joints
4.27	152	14
3.66	152	12
3.60	125	12
3.05	152	10
3.00	125	10
2.44	152	8
2.4	130	8
1.52	150	5
1.50	140	5

See Note 3

NOTES

1. See Revised Standard Plan RSP P1 for typical dowel placement and locations.
2. 38 mm Dia smooth dowels are to be used with a pavement thickness, D, equal to or greater than 215 mm. For pavement thickness, D, less than 215 mm, use 32 mm Dia smooth dowels.
3. For widths not shown, see Project Plans.
4. If fresh concrete pavement is placed adjacent to existing concrete pavement, the top corner of the existing concrete pavement does not need to be rounded to the 6 mm radius, as shown.

STATE OF CALIFORNIA
DEPARTMENT OF TRANSPORTATION

CONCRETE PAVEMENT-DOWEL BAR DETAILS

NO SCALE

ALL DIMENSIONS ARE IN MILLIMETERS UNLESS OTHERWISE SHOWN

RSP P10 DATED NOVEMBER 17, 2006 SUPERSEDES STANDARD PLAN P10 DATED JULY 1, 2004-PAGE 125 OF THE STANDARD PLANS BOOK DATED JULY 2004.

REVISED STANDARD PLAN RSP P10

2004 REVISED Std PLAN RSP P10

10-25-06

DIST	COUNTY	ROUTE	KILOMETER POST TOTAL PROJECT	SHEET NO.	TOTAL SHEETS
07	LA	5	42.8/47.3	502	1073

Caltrans Metric

William K. Farnbach
REGISTERED CIVIL ENGINEER

November 17, 2006
PLANS APPROVAL DATE

REGISTERED PROFESSIONAL ENGINEER — William K. Farnbach No. 49042 Exp. 09-30-08 CIVIL — STATE OF CALIFORNIA

The State of California or its officers or agents shall not be responsible for the accuracy or completeness of electronic copies of this plan sheet.

To get to the Caltrans web site, go to: http://www.dot.ca.gov

To accompany plans dated 6-8-09

2004 REVISED Std PLAN RSP P12

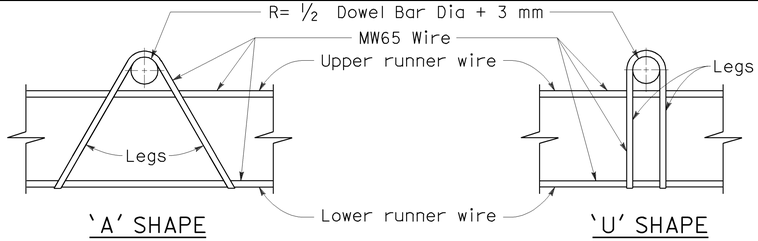

ASSEMBLY FRAME DETAILS

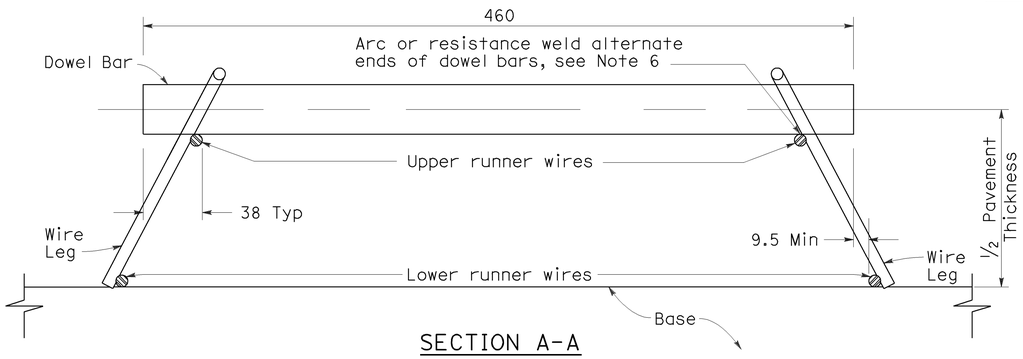

SECTION A-A

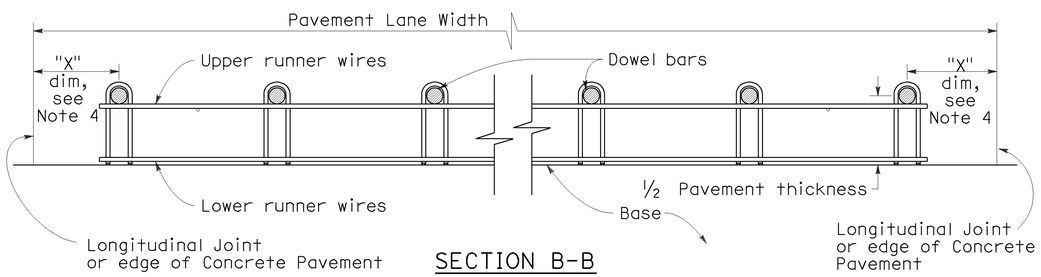

SECTION B-B

See Note 1

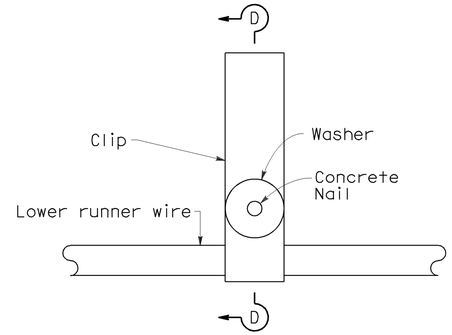

PLAN

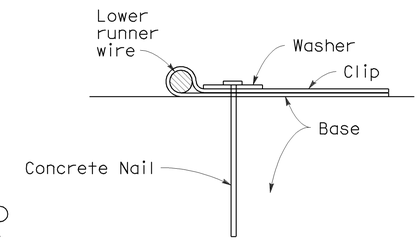

SECTION D-D

FASTENER DETAIL

NOTES

1. 'U' frame shape assembly shown. 'U' frame shape or 'A' frame shape are acceptable.
2. Wire sizes shown are minimum required.
3. All wire intersections are to be resistance welded.
4. For "X" dimension, number of dowel bars between longitudinal joints and other details for dowel bars not shown, See Revised Standard Plan RSP P10.
5. Use tie bar spacing for longitudinal dowel bar locations. See Revised Standard Plans RSP P1 and RSP P2, and New Standard Plan NSP P3 for tie bar requirements.
6. Weld may be at top or bottom of dowel bar.

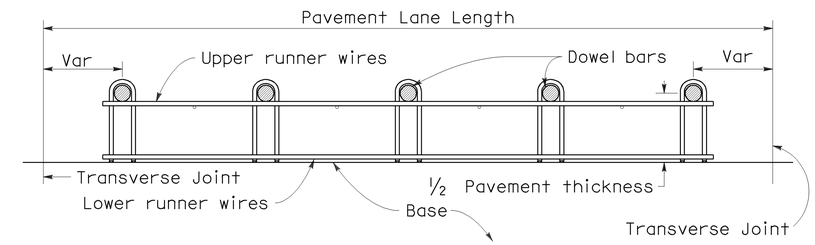

SECTION C-C

See Note 1 and 5

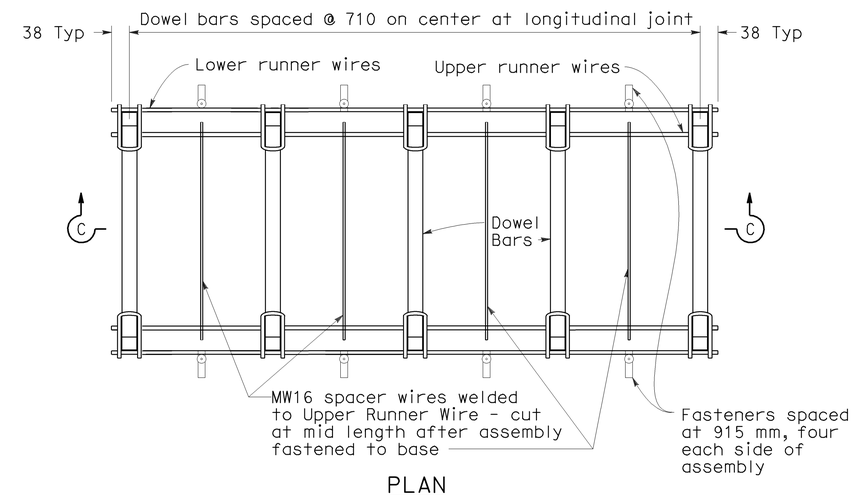

PLAN

DOWEL BAR BASKET (LONGITUDINAL JOINT)

See Note 1

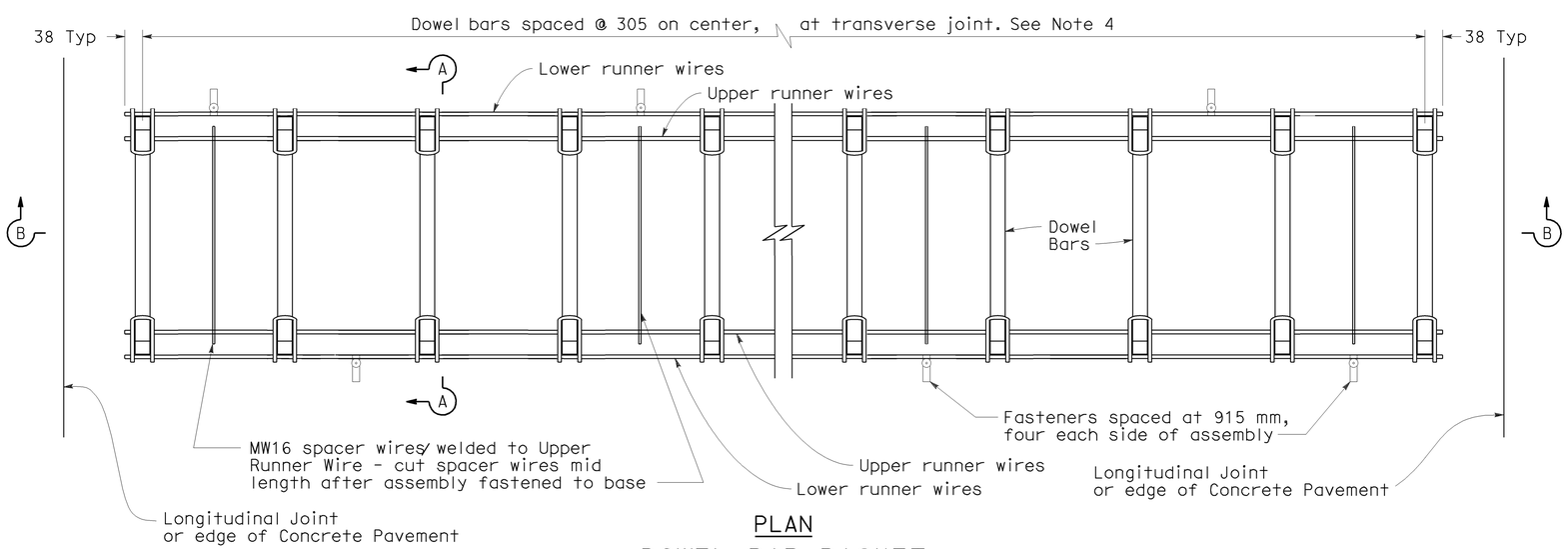

PLAN

DOWEL BAR BASKET (TRANSVERSE JOINT)

See Note 1

STATE OF CALIFORNIA
DEPARTMENT OF TRANSPORTATION

CONCRETE PAVEMENT-DOWEL BAR BASKET DETAILS

NO SCALE

ALL DIMENSIONS ARE IN MILLIMETERS UNLESS OTHERWISE SHOWN

RSP P12 DATED NOVEMBER 17, 2006 SUPERSEDES STANDARD PLAN P12 DATED JULY 1, 2004-PAGE 126 OF THE STANDARD PLANS BOOK DATED JULY 2004.

REVISED STANDARD PLAN RSP P12

10-25-06

DIST	COUNTY	ROUTE	KILOMETER POST TOTAL PROJECT	SHEET NO.	TOTAL SHEETS
07	LA	5	42.8/47.3	503	1073

Caltrans Metric

REGISTERED CIVIL ENGINEER

November 17, 2006
PLANS APPROVAL DATE

REGISTERED PROFESSIONAL ENGINEER — William K. Farnbach — No. 49042 — Exp. 09-30-08 — CIVIL — STATE OF CALIFORNIA

The State of California or its officers or agents shall not be responsible for the accuracy or completeness of electronic copies of this plan sheet.

To get to the Caltrans web site, go to: http://www.dot.ca.gov

To accompany plans dated 6-8-09

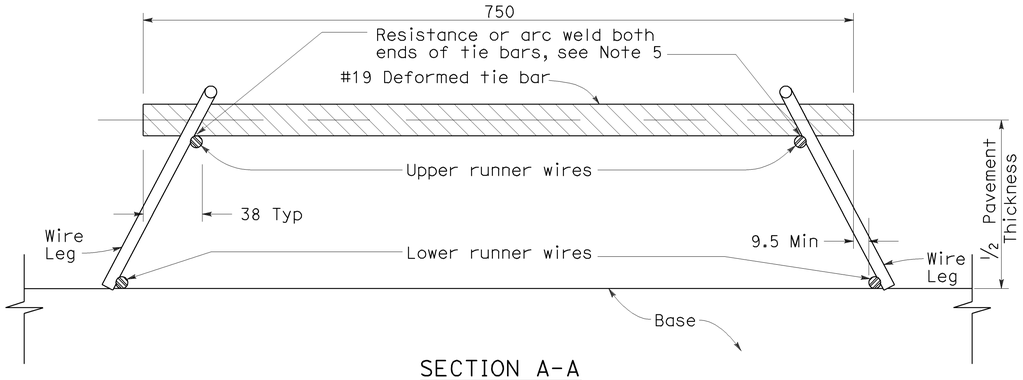

SECTION A-A

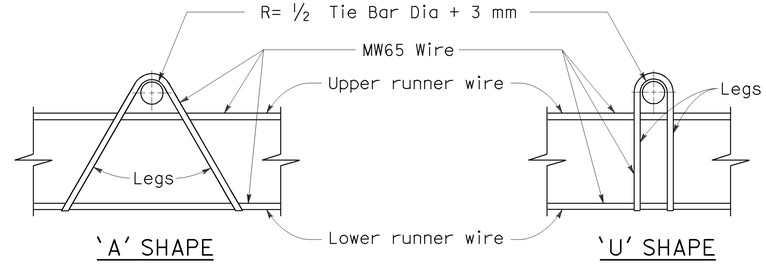

ASSEMBLY FRAME DETAILS

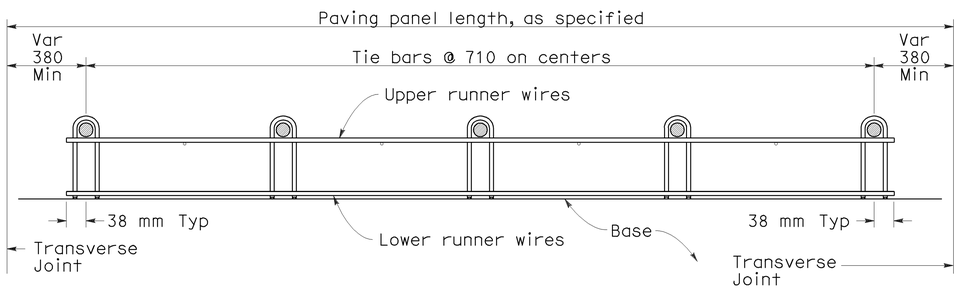

SECTION B-B

See Note 1

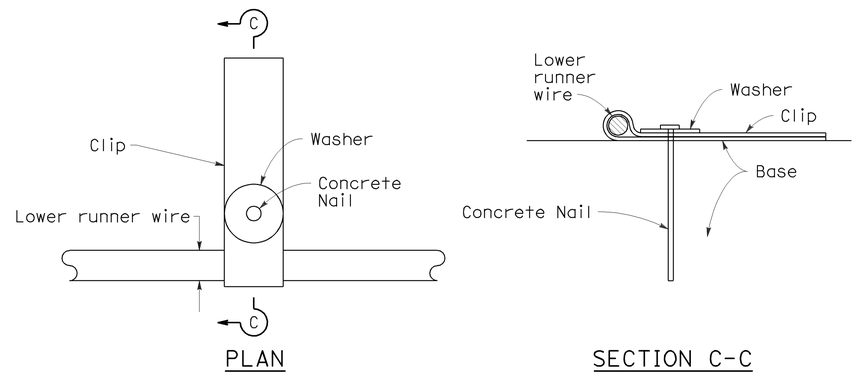

PLAN

SECTION C-C

FASTENER DETAIL

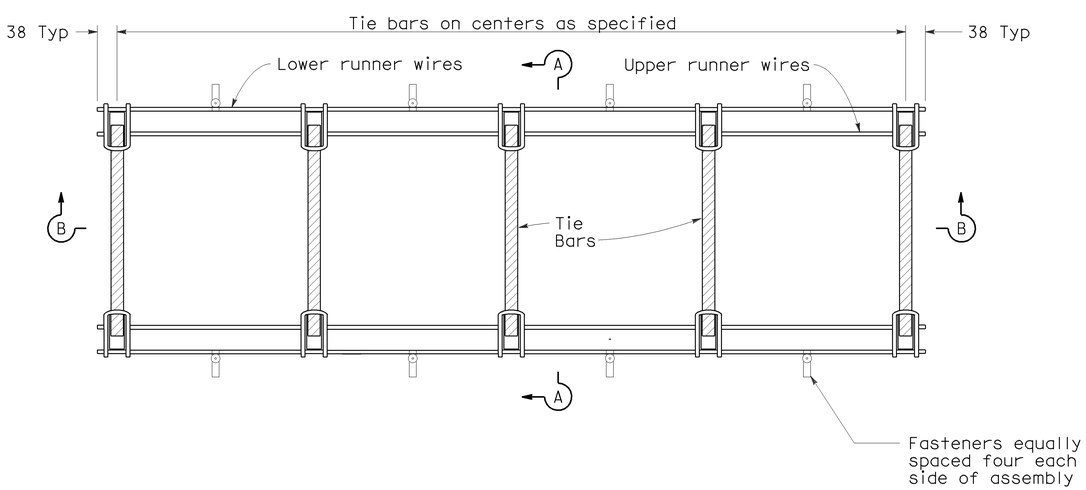

PLAN

TIE BAR BASKET

(TIE BARS AT LONGITUDINAL JOINT)
See Note 1

NOTES

1. 'U' frame shape assembly shown. 'U' frame shape or 'A' frame shape are acceptable.
2. Wire sizes shown are minimum required.
3. All wire intersections are to be resistance welded.
4. Not for use on undoweled skewed concrete pavement.
5. Weld may be at top or bottom of tie bar.

STATE OF CALIFORNIA
DEPARTMENT OF TRANSPORTATION

CONCRETE PAVEMENT-TIE BAR BASKET DETAILS

NO SCALE

ALL DIMENSIONS ARE IN MILLIMETERS UNLESS OTHERWISE SHOWN

RSP P17 DATED NOVEMBER 17, 2006 SUPERSEDES STANDARD PLAN P17 DATED JULY 1, 2004-PAGE 127 OF THE STANDARD PLANS BOOK DATED JULY 2004.

REVISED STANDARD PLAN RSP P17

2004 REVISED Std PLAN RSP P17

8-1-06

DIST	COUNTY	ROUTE	KILOMETER POST TOTAL PROJECT	SHEET NO.	TOTAL SHEETS
07	LA	5	42.8/47.3	504	1073

Caltrans Metric

REGISTERED CIVIL ENGINEER

November 17, 2006
PLANS APPROVAL DATE

REGISTERED PROFESSIONAL ENGINEER William K. Farnbach No. 49042 Exp. 09-30-08 CIVIL STATE OF CALIFORNIA

The State of California or its officers or agents shall not be responsible for the accuracy or completeness of electronic copies of this plan sheet.

To get to the Caltrans web site, go to: http://www.dot.ca.gov

To accompany plans dated 6-8-09

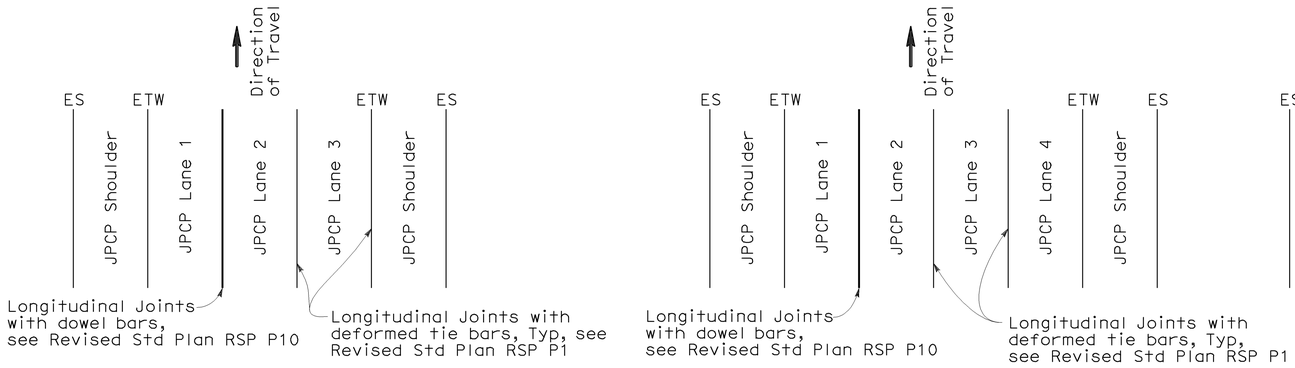

3 LANES WITH CONCRETE SHOULDERS
PLAN

4 LANES WITH CONCRETE SHOULDERS
PLAN

5 LANES WITH CONCRETE SHOULDERS
PLAN

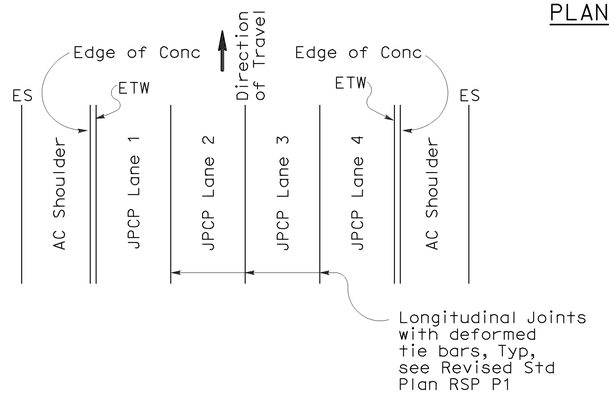

4 LANES OR LESS WITH AC SHOULDERS
PLAN

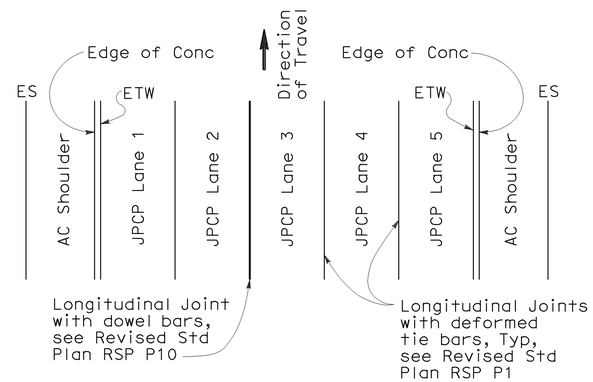

5 LANES WITH AC SHOULDERS
PLAN

NOTES

1. Where Lean Concrete Base is not used as base material, the joint filler material used for the longitudinal isolation joint shall only extend to the bottom of the new concrete slab. See Detail A.
2. Use 16±1 mm dimension for silicone sealant.
3. See Revised Stadard Plan RSP P10 for longitudinal joint with dowel bars.

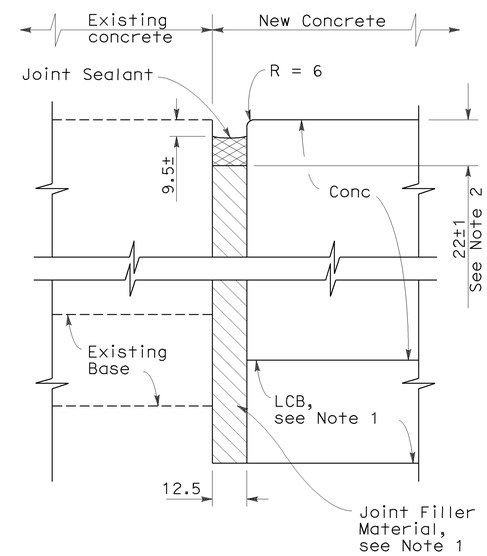

DETAIL A

ISOLATION JOINT

NEW CONSTRUCTION

Location of Longitudinal Joints (JPCP only)

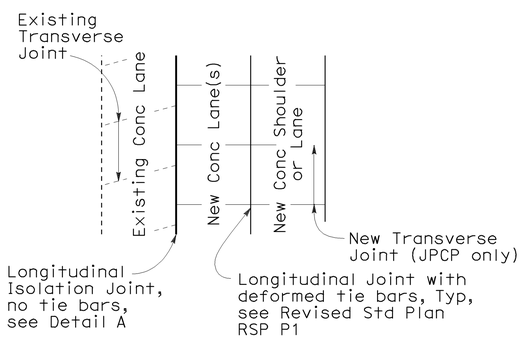

CASE 1
PLAN

Transverse Joints do not align between new and existing

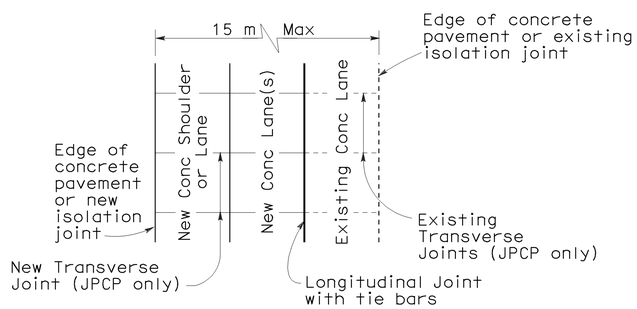

CASE 2
PLAN

Transverse Joints align between new and existing

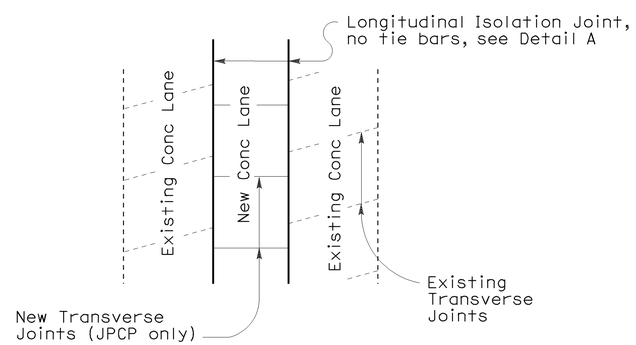

CASE 3 (INTERIOR LANE REPLACEMENT)
PLAN

Transverse Joints do not align between new and existing

LANE/SHOULDER ADDITION OR RECONSTRUCTION

For JPCP and Continuous Reinforced Concrete Pavement

STATE OF CALIFORNIA
DEPARTMENT OF TRANSPORTATION

CONCRETE PAVEMENT-LANE SCHEMATICS AND ISOLATION JOINT DETAIL

NO SCALE

ALL DIMENSIONS ARE IN MILLIMETERS UNLESS OTHERWISE SHOWN

RSP P18 DATED NOVEMBER 17, 2006 SUPERSEDES STANDARD PLAN P18 DATED JULY 1, 2004-PAGE 128 OF THE STANDARD PLANS BOOK DATED JULY 2004.

REVISED STANDARD PLAN RSP P18

2004 REVISED Std PLAN RSP P18

8-9-06

NOTE

1. Tie bars, dowel bars, and reinforcement are not shown in joint seal details, see Revised Std Plan RSP P1, New Std Plan NSP P3, Revised Std Plan RSP P10, Std Plan P35, Std Plan P45, or Std Plan P46 as applicable.

To accompany plans dated 6-8-09

Caltrans Metric

DIST	COUNTY	ROUTE	KILOMETER POST TOTAL PROJECT	SHEET NO.	TOTAL SHEETS
07	LA	5	42.8/47.3	505	1073

William K. Farnbach
REGISTERED CIVIL ENGINEER

November 17, 2006
PLANS APPROVAL DATE

REGISTERED PROFESSIONAL ENGINEER William K. Farnbach No. 49042 Exp. 09-30-08 CIVIL STATE OF CALIFORNIA

The State of California or its officers or agents shall not be responsible for the accuracy or completeness of electronic copies of this plan sheet.

To get to the Caltrans web site, go to: http://www.dot.ca.gov

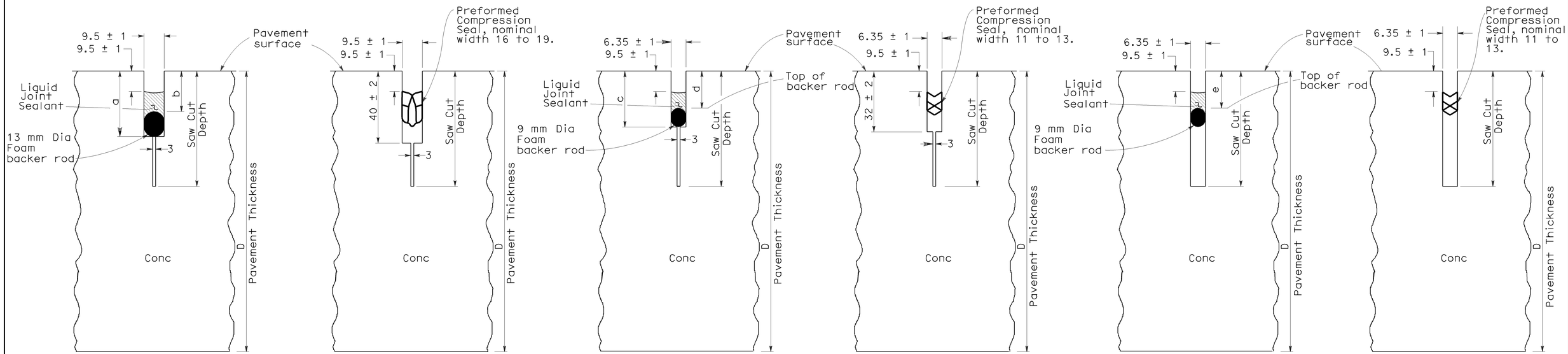

LIQUID SEALANT | COMPRESSION SEAL

TYPE A1

Transverse Weakened Plane Joints

LIQUID SEALANT | COMPRESSION SEAL

TYPE A2

Longitudinal Weakened Plane Joints

LIQUID SEALANT | COMPRESSION SEAL

TYPE B

Longitudinal or Transverse Weakened Plane Joints

LIQUID SEALANT RESERVOIR DEPTH

LIQUID SEALANT MATERIAL	9.5 mm Joint Width Type A1		6.35 mm Joint Width Type A2		6.35 mm Joint Width Type B
	DIMENSION		DIMENSION		DIMENSION
	a	b	c	d	e
SILICONE	26 ± 1	15 ± 1	23 ± 1	14 ± 1	14 ± 1
ASPHALT RUBBER	30 ± 1	19 ± 1	26 ± 1	17 ± 1	17 ± 1

TABLE A

Sawn Joint Width	Backer Rod Diameter	Dimension "c"	Dimension "d"
mm	mm ± 1	mm	mm
25	33	22	55
22	30	20	50
19	25	19	44
16	22	18	40
13	17	16	33

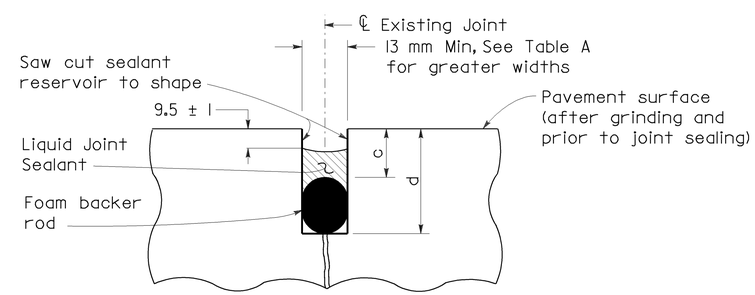

LIQUID SEALANT TYPE R

Retrofit Transverse and Longitudinal Joints

STATE OF CALIFORNIA
DEPARTMENT OF TRANSPORTATION

CONCRETE PAVEMENT-JOINT DETAILS

NO SCALE

ALL DIMENSIONS ARE IN MILLIMETERS UNLESS OTHERWISE SHOWN

RSP P20 DATED NOVEMBER 17, 2006 SUPERSEDES STANDARD PLAN P20 DATED JULY 1, 2004-PAGE 129 OF THE STANDARD PLANS BOOK DATED JULY 2004.

REVISED STANDARD PLAN RSP P20

2004 REVISED Std PLAN RSP P20

10-24-06

DIST	COUNTY	ROUTE	KILOMETER POST TOTAL PROJECT	SHEET NO.	TOTAL SHEETS
07	LA	5	42.8/47.3	506	1073

Caltrans Metric

William K. Farnbach
REGISTERED CIVIL ENGINEER

November 17, 2006
PLANS APPROVAL DATE

REGISTERED PROFESSIONAL ENGINEER — William K. Farnbach No. 49042 Exp. 09-30-08 CIVIL — STATE OF CALIFORNIA

The State of California or its officers or agents shall not be responsible for the accuracy or completeness of electronic copies of this plan sheet.

To get to the Caltrans web site, go to: http://www.dot.ca.gov

To accompany plans dated 6-8-09

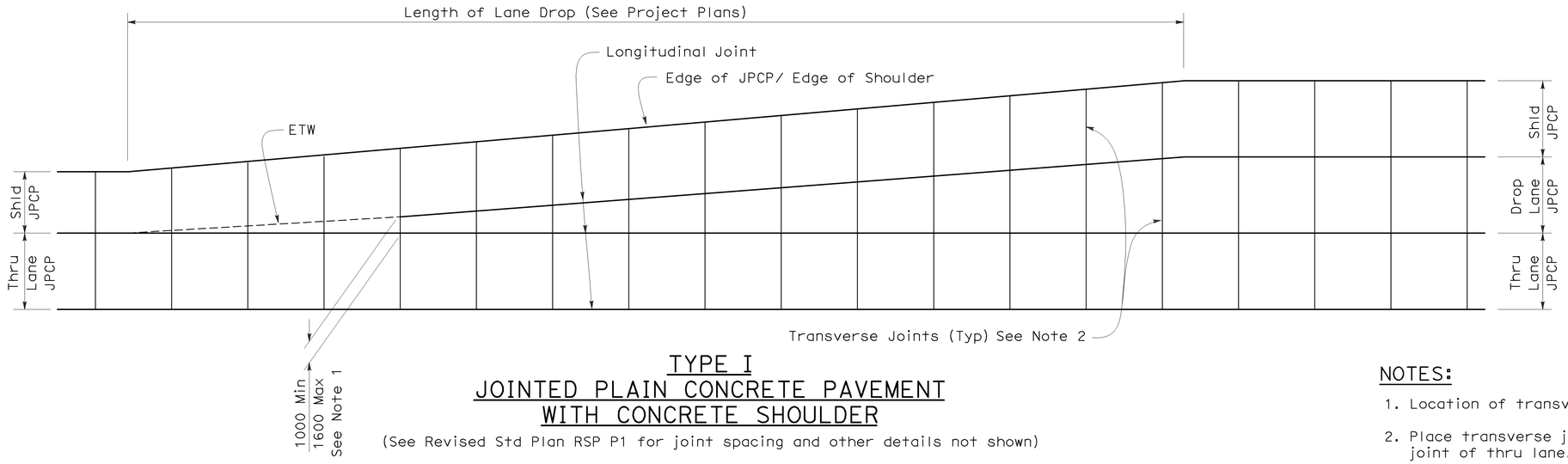

TYPE I
JOINTED PLAIN CONCRETE PAVEMENT WITH CONCRETE SHOULDER

(See Revised Std Plan RSP P1 for joint spacing and other details not shown)

NOTES:

1. Location of transverse joint to match transverse joint of adjacent lane.
2. Place transverse joint of lane and shoulder perpendicular to longitudinal joint of thru lane.

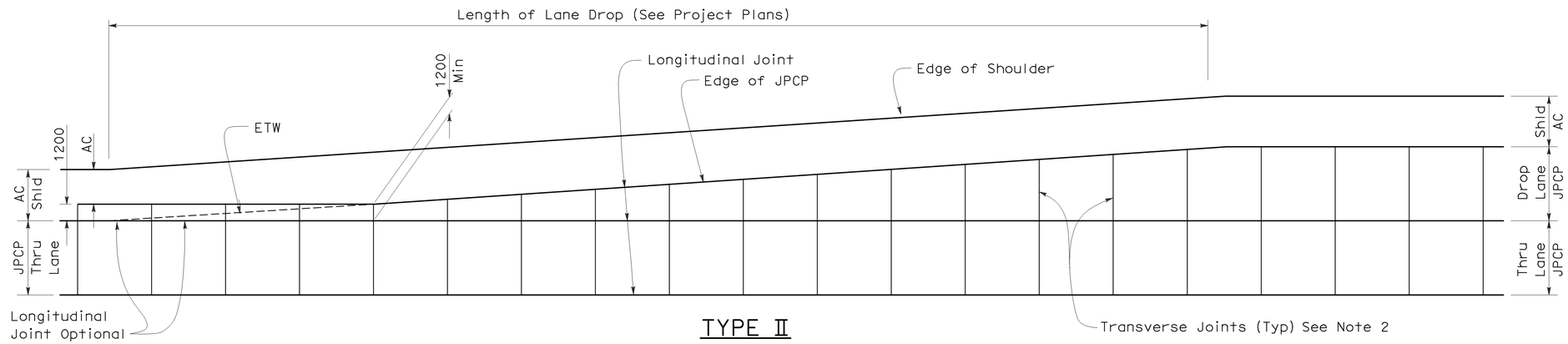

TYPE II
JOINTED PLAIN CONCRETE PAVEMENT WITH ASPHALT SHOULDER

(See Revised Std Plan RSP P1 for joint spacing and other details not shown)

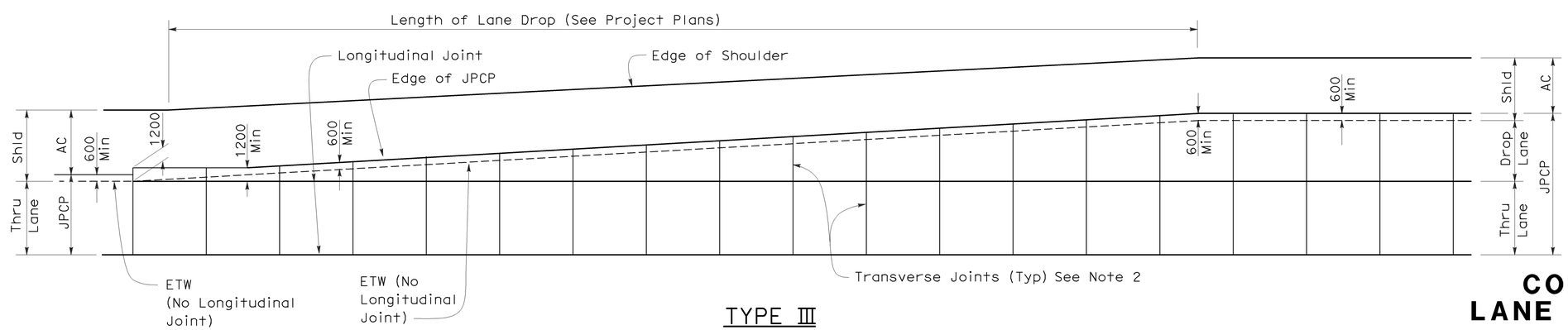

TYPE III
JOINTED PLAIN CONCRETE PAVEMENT WITH WIDENED SLAB AND ASPHALT SHOULDER

(See Revised Std Plans RSP P1 and RSP P2 for joint spacing and other details not shown)

STATE OF CALIFORNIA
DEPARTMENT OF TRANSPORTATION

CONCRETE PAVEMENT-
LANE DROP PAVING DETAILS

NO SCALE
ALL DIMENSIONS ARE IN MILLIMETERS UNLESS OTHERWISE SHOWN

NSP P33 DATED NOVEMBER 17, 2006 SUPPLEMENTS THE STANDARD PLANS BOOK DATED JULY 2004.

NEW STANDARD PLAN NSP P33

2004 NEW Std PLAN NSP P33

8-1-06

DIST	COUNTY	ROUTE	KILOMETER POST TOTAL PROJECT	SHEET NO.	TOTAL SHEETS
07	LA	5	42.8/47.3	507	1073

Caltrans Metric

Raymond Don Tsztoo
REGISTERED CIVIL ENGINEER

January 18, 2008
PLANS APPROVAL DATE

REGISTERED PROFESSIONAL ENGINEER Raymond Don Tsztoo No. C37332 Exp. 6-30-08 CIVIL STATE OF CALIFORNIA

The State of California or its officers or agents shall not be responsible for the accuracy or completeness of electronic copies of this plan sheet.

To get to the Caltrans web site, go to: http://www.dot.ca.gov

To accompany plans dated 6-8-09

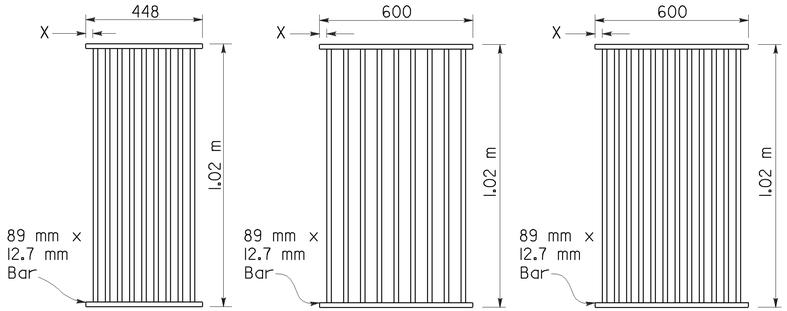

TYPE 450-9

35 mm Clear spacing. Use within the roadbed on highways where bicycles and pedestrians are excluded.

TYPE 600-9

51 mm Clear spacing. Use in locations off the roadbed on all types of highways.

TYPE 600-12

35 mm Clear spacing. Use within the roadbed on highways where bicycles and pedestrians are excluded.

RECTANGULAR GRATE DETAILS

(See table below)

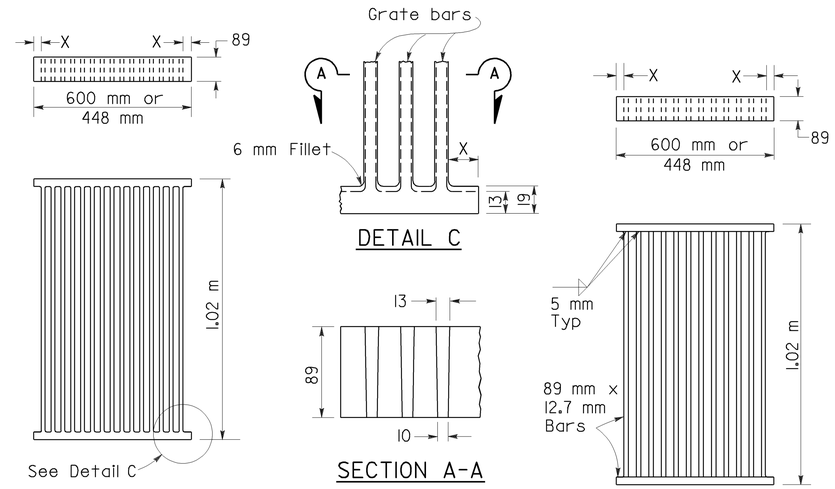

ALTERNATIVE CAST NODULAR IRON GRATE OR CAST STEEL GRATE

ALTERNATIVE WELDED GRATE

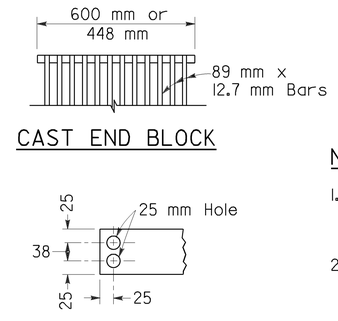

CAST END BLOCK

END OF BAR

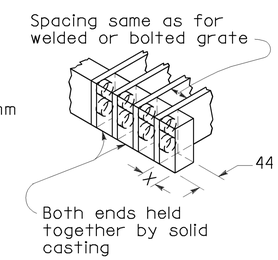

ALTERNATIVE CAST NODULAR IRON OR CAST STEEL END BLOCK GRATE

NOTES

1. Grate type numbers refer to approximate width of grate in millimeters and number of bars, respectively.
2. Contractor has the option of using cast nodular iron, cast steel, welded, bolted, or cast end block grate.
3. See Special Provisions for requirements pertaining to galvanizing or asphalt dipping of grates and frames.
4. Rounded top of bars optional on all grates.
5. Pipe inlets with a grate shall be placed so that bars parallel direction of principle surface flow.
6. Full penetration butt welds may be substituted for the fillet welds on all anchors.
7. Standard square, hexagon, round or equivalent headed anchors may be substituted for the right angle hooks on the anchors shown on this plan.
8. Grate and frame weights are based on welded grates (weights of face angles, steps, protection bars, etc. are not included).

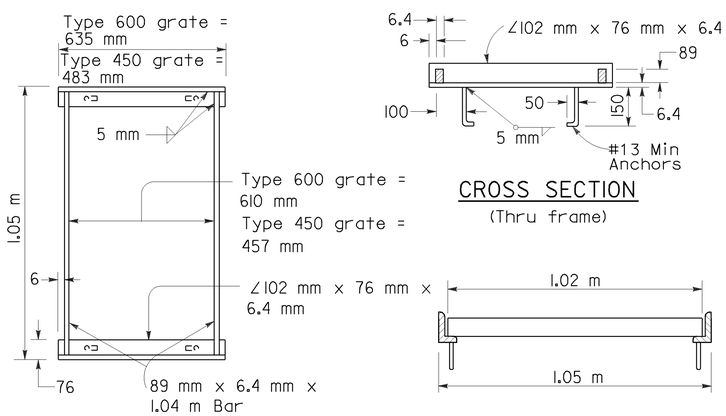

RECTANGULAR FRAME DETAILS

(For all rectangular grates)

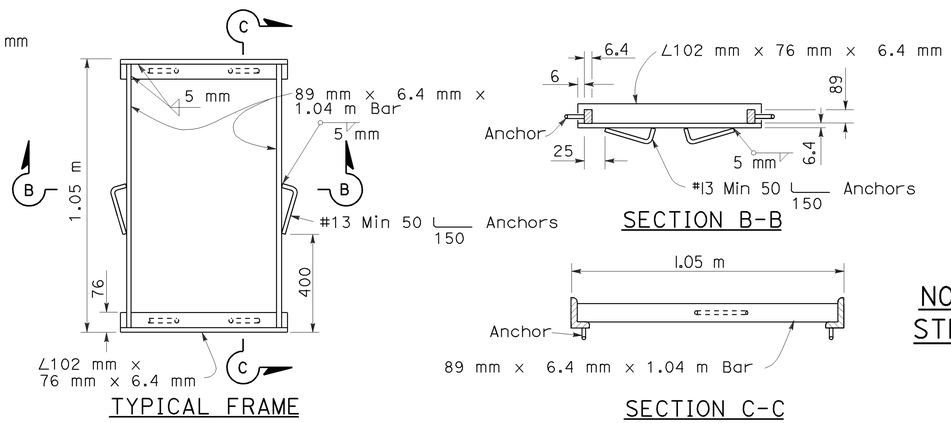

ALTERNATIVE ANCHOR FOR RECTANGULAR FRAME

(For details not shown, See Rectangular Frame Details)

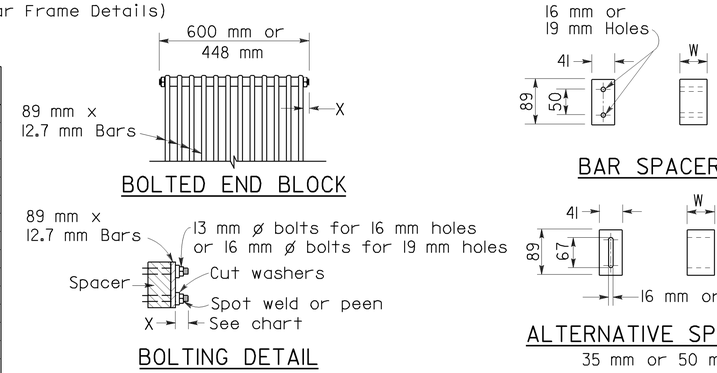

ALTERNATIVE BOLTED GRATE

GRATE BAR SPACING TABLE

TYPE	No. OF BARS	CLEAR BAR SPACING (mm)	X (mm)
450-9	9	35	27
600-9	9	51	40
600-12	12	35	32

INLET TYPE	COVER TYPE	MASS (kg)
OS	PLATE	79
OL-2.1	PLATE	77
OL-3.0	PLATE	77
OL-4.3	PLATE	77
OL-6.4	PLATE	77
OCP	PLATE	51
OCP1	PLATE	51
OCP1	REDWOOD	19
OMP	PLATE	80
OMP1	PLATE	80

INLET TYPE	GRATE TYPE	No. OF GRATES	MASS (kg)
GDO	600-12	2	288
GOL-2.1	600-12	1	148
GOL-3.0	600-12	1	148
GO,G1,G2,G3,G4(TYPE 600)	600-9	1	119
	600-12	1	148
G4(TYPE 450),G5,G6	450-9	1	113
GT-1	450-9	2	226
GT-2	450-9	2	226
GT-3	600-12	2	296
GT-4	600-12	2	296
TRASH RACK			10

BASIS FOR MISC IRON & STEEL FINAL PAY MASSES FOR DRAINAGE INLETS

(See General Notes, No. 8)

STATE OF CALIFORNIA
DEPARTMENT OF TRANSPORTATION

GRATE DETAILS

NO SCALE

ALL DIMENSIONS ARE IN MILLIMETERS UNLESS OTHERWISE SHOWN

RSP D77A DATED JANUARY 18, 2008 SUPERSEDES STANDARD PLAN D77A DATED JULY 1, 2004 - PAGE 155 OF THE STANDARD PLANS BOOK DATED JULY 2004.

REVISED STANDARD PLAN RSP D77A

2004 REVISED Std PLAN RSP D77A

DIST	COUNTY	ROUTE	KILOMETER POST TOTAL PROJECT	SHEET NO.	TOTAL SHEETS
07	LA	5	42.8/47.3	508	1073

Caltrans Metric

LICENSED LANDSCAPE ARCHITECT

March 7, 2008
PLANS APPROVAL DATE

LICENSED LANDSCAPE ARCHITECT Gregory A. Balzer 2576 Signature 02-28-2009 Renewal Date 02-21-08 Date STATE OF CALIFORNIA

The State of California or its officers or agents shall not be responsible for the accuracy or completeness of electronic copies of this plan sheet.

To get to the Caltrans web site, go to: http://www.dot.ca.gov

To accompany plans dated 6-8-09

2004 REVISED Std PLAN RSP H2

EXISTING	PROPOSED	ITEM DESCRIPTION
		WATER METER (WM)
		BACKFLOW PREVENTER ASSEMBLY (BPA)
		BACKFLOW PREVENTER ASSEMBLY IN ENCLOSURE (BPAE)
		BACKFLOW PREVENTER ENCLOSURE (BPE)
		BOOSTER PUMP (BP)
		TRUCK LOADING STANDPIPE (TLS)
fs	FS	FLOW SENSOR (FS)
X		MASTER IRRIGATION CONTROLLER (MIC)
		AUXILIARY IRRIGATION CONTROLLER (AIC)
		IRRIGATION CONTROLLER (IC)/ IRRIGATION CONTROLLER (IC) (BATTERY)
		IRRIGATION CONTROLLER(S) IN CONTROLLER ENCLOSURE CABINET (ICC)
		CONTROL AND NEUTRAL CONDUCTORS (CNC)
scc	SCC	SPRINKLER CONTROL CONDUIT (SCC)
		CONDUIT (COND)
		IRRIGATION SLEEVE
dip	DIP	DUCTILE IRON PIPE (SUPPLY LINE) (MAIN) (DIP)
		GALVANIZED STEEL PIPE (SUPPLY LINE) (MAIN) (GSP)
		GALVANIZED STEEL PIPE (SUPPLY LINE) (LATERAL) (GSP)
		PLASTIC PIPE (PR 200) (SUPPLY LINE) (MAIN)
		PLASTIC PIPE (PR 200) (SUPPLY LINE) (LATERAL)
		PLASTIC PIPE (IRRIGATION LINE)
		REMOTE CONTROL VALVE (RCV) REMOTE CONTROL VALVE (MASTER) (RCVM)
		MANUAL CONTROL VALVE (MCV)
		VALVE ASSEMBLY UNIT (VAU)
		WYE STRAINER (WS)
		FILTER ASSEMBLY UNIT (FAU)
		GATE VALVE (GV)
		BALL VALVE (BV)

EXISTING	PROPOSED	ITEM DESCRIPTION
		QUICK COUPLING VALVE (QCV)
		CAM COUPLING ASSEMBLY (CCA)
		PRESSURE REDUCING VALVE (PRV)
		PRESSURE RELIEF VALVE (PRLV)
		FLOW CONTROL VALVE (FCV)
		COMBINATION AIR RELEASE VALVE (CARV)
		CHECK VALVE (CV)
		FLUSH VALVE (FV)
		NOZZLE LINE W/TURNING UNION
		IRRIGATION SYSTEM
		IRRIGATION SYSTEM TO BE REMOVED
		CHAIN LINK GATE
		QUICK COUPLING VALVE W/SPRINKLER PROTECTOR
3	3	SPRINKLER W/SPRINKLER PROTECTOR
		CONNECT TO EXISTING SYSTEM
		CAP
		CAP EXISTING

VALVE CODE

RCV SIZE (mm)
IRRIGATION CONTROLLER
CONTROLLER STATION
VALVE IN PARALLEL (IF APPLICABLE)
L/min
QUANTITY OF SPRINKLERS (WHEN SHOWN)

* 63.5-A-2b-151.4-60

MCV SIZE (mm)
VALVE NUMBER
L/min
QUANTITY OF TYPE SPRINKLERS (WHEN SHOWN)

* 50.8-3-113.5-50

* VALVE CODES FOR EXISTING VALVES ARE SHOWN IN A DASHED ENCLOSURE.

STATE OF CALIFORNIA
DEPARTMENT OF TRANSPORTATION

PLANTING AND IRRIGATION SYMBOLS

NO SCALE

ALL DIMENSIONS ARE IN MILLIMETERS UNLESS OTHERWISE SHOWN

RSP H2 DATED MARCH 7, 2008 SUPERSEDES STANDARD PLAN H2 DATED JULY 1, 2004 - PAGE 202 OF THE STANDARD PLANS BOOK DATED JULY 2004.

REVISED STANDARD PLAN RSP H2

2-20-08

DIST	COUNTY	ROUTE	KILOMETER POST TOTAL PROJECT	SHEET NO.	TOTAL SHEETS
07	LA	5	42.8/47.3	509	1073

Caltrans Metric

Randell D. Hiatt
REGISTERED CIVIL ENGINEER

June 6, 2008
PLANS APPROVAL DATE

REGISTERED PROFESSIONAL ENGINEER
Randell D. Hiatt
No. C50200
Exp. 6-30-09
CIVIL
STATE OF CALIFORNIA

The State of California or its officers or agents shall not be responsible for the accuracy or completeness of electronic copies of this plan sheet.

To get to the Caltrans web site, go to: http://www.dot.ca.gov

To accompany plans dated 6-8-09

2004 REVISED Std PLAN RSP T1A

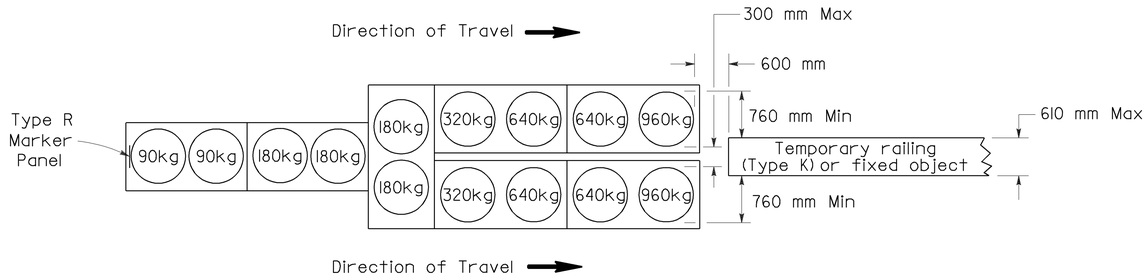

ARRAY 'TU14'

Approach speed 70 km/h or more

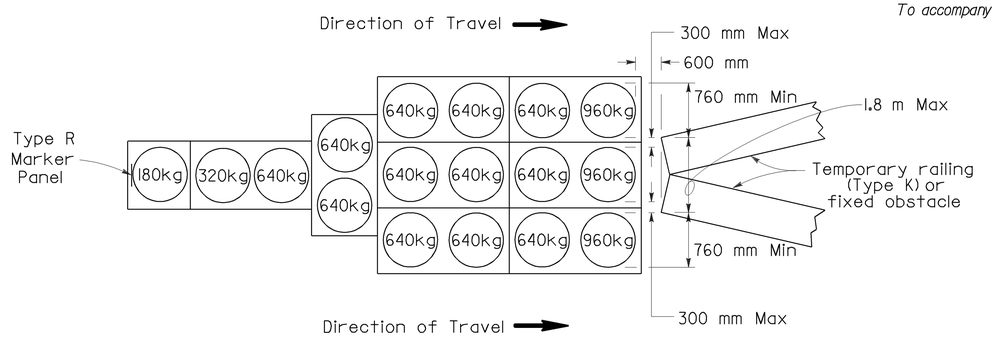

ARRAY 'TU17'

Approach speed less than 70 km/h

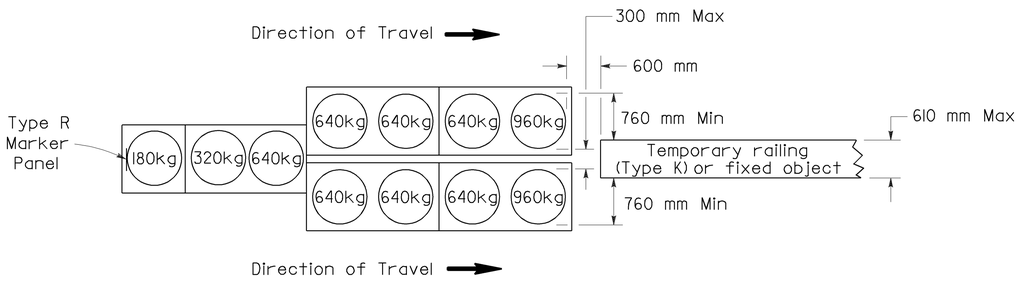

ARRAY 'TU11'

Approach speed less than 70 km/h

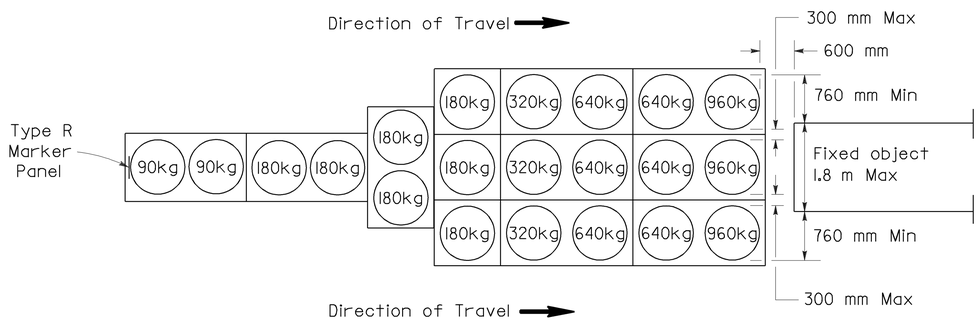

ARRAY 'TU21'

Approach speed 70 km/h or more

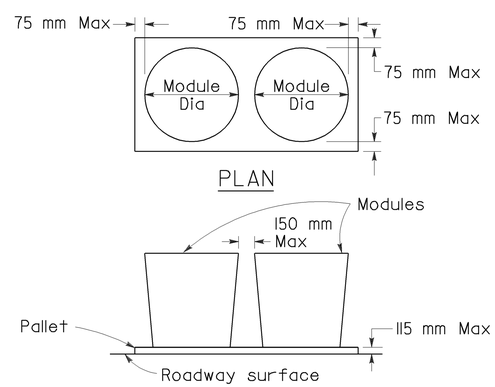

CRASH CUSHION PALLET DETAIL

See Note 7

NOTES

1. (XXX) Indicates sand filled module location and mass of sand in kilograms for each module. Module spacing is based on the greater diameter of the module.
2. All sand masses are nominal.
3. Temporary crash cushion arrays shall not encroach on the traveled way.
4. Place the top of Type R marker panel 25 mm below the module lid.
5. Refer to Standard Plan A73B for marker details.
6. Approach speeds indicated conform to NCHRP 350 Report criteria.
7. Use of Pallets is optional.

STATE OF CALIFORNIA
DEPARTMENT OF TRANSPORTATION

TEMPORARY CRASH CUSHION, SAND FILLED (UNIDIRECTIONAL)

NO SCALE

ALL DIMENSIONS ARE IN MILLIMETERS UNLESS OTHERWISE SHOWN

RSP T1A DATED JUNE 6, 2008 SUPERSEDES STANDARD PLAN T1A
DATED July 1, 2004 - PAGE 211 OF THE STANDARD PLANS BOOK DATED July 2004.

REVISED STANDARD PLAN RSP T1A

5-16-08

DIST	COUNTY	ROUTE	KILOMETER POST TOTAL PROJECT	SHEET NO.	TOTAL SHEETS
07	LA	5	42.8/47.3	510	1073

Caltrans Metric

Randell D. Hiatt
REGISTERED CIVIL ENGINEER

June 6, 2008
PLANS APPROVAL DATE

REGISTERED PROFESSIONAL ENGINEER
Randell D. Hiatt
No. C50200
Exp. 6-30-09
CIVIL
STATE OF CALIFORNIA

The State of California or its officers or agents shall not be responsible for the accuracy or completeness of electronic copies of this plan sheet.

To get to the Caltrans web site, go to: http://www.dot.ca.gov

To accompany plans dated 6-8-09

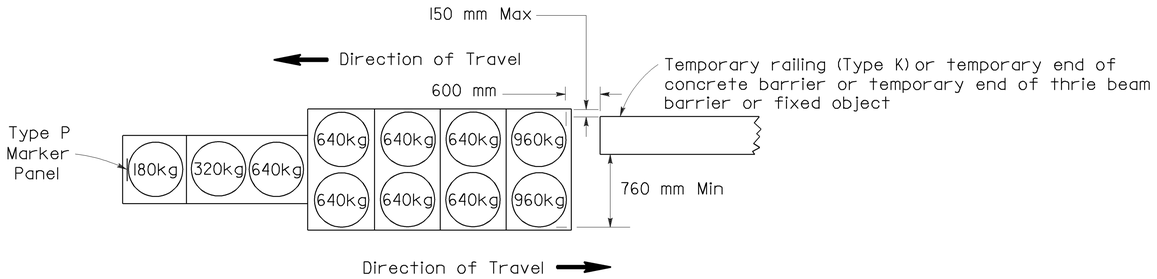

ARRAY 'TBI1'

Approach speed less than 70 km/h

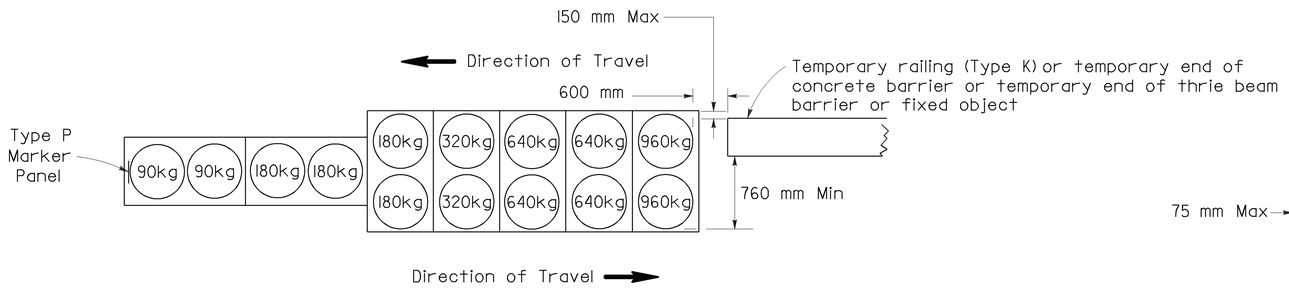

ARRAY 'TBI4'

Approach speed 70 km/h or more

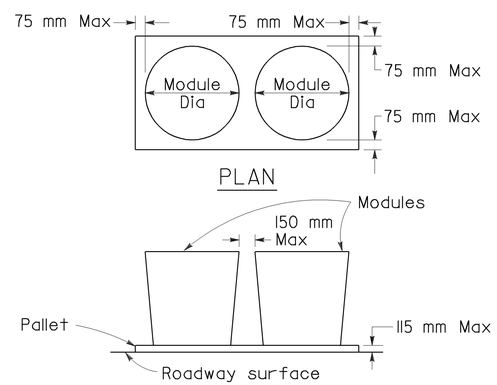

CRASH CUSHION PALLET DETAIL

See Note 7

NOTES

1. (XXX) Indicates sand filled module location and mass of sand in kilograms for each module. Module spacing is based on the greater diameter of the module.
2. All sand masses are nominal.
3. Temporary crash cushion arrays shall not encroach on the traveled way.
4. Place the Type P marker panel so that the bottom of the panel rests upon the pallet.
5. Refer to Standard Plan A73B for marker details.
6. Approach speeds indicated conform to NCHRP 350 Report criteria.
7. Use of Pallets is optional.

STATE OF CALIFORNIA
DEPARTMENT OF TRANSPORTATION

TEMPORARY CRASH CUSHION, SAND FILLED (BIDIRECTIONAL)

NO SCALE

ALL DIMENSIONS ARE IN MILLIMETERS UNLESS OTHERWISE SHOWN

RSP T1B DATED JUNE 6, 2008 SUPERSEDES STANDARD PLAN T1B DATED July 1, 2004 - PAGE 212 OF THE STANDARD PLANS BOOK DATED July 2004.

REVISED STANDARD PLAN RSP T1B

2004 REVISED Std PLAN RSP T1B

5-16-08

DIST	COUNTY	ROUTE	KILOMETER POST TOTAL PROJECT	SHEET NO.	TOTAL SHEETS
07	LA	5	42.8/47.3	511	1073

Caltrans Metric

Randell D. Hiatt
REGISTERED CIVIL ENGINEER

June 6, 2008
PLANS APPROVAL DATE

REGISTERED PROFESSIONAL ENGINEER
Randell D. Hiatt
No. C50200
Exp. 6-30-09
CIVIL
STATE OF CALIFORNIA

The State of California or its officers or agents shall not be responsible for the accuracy or completeness of electronic copies of this plan sheet.

To get to the Caltrans web site, go to: http://www.dot.ca.gov

To accompany plans dated 6-8-09

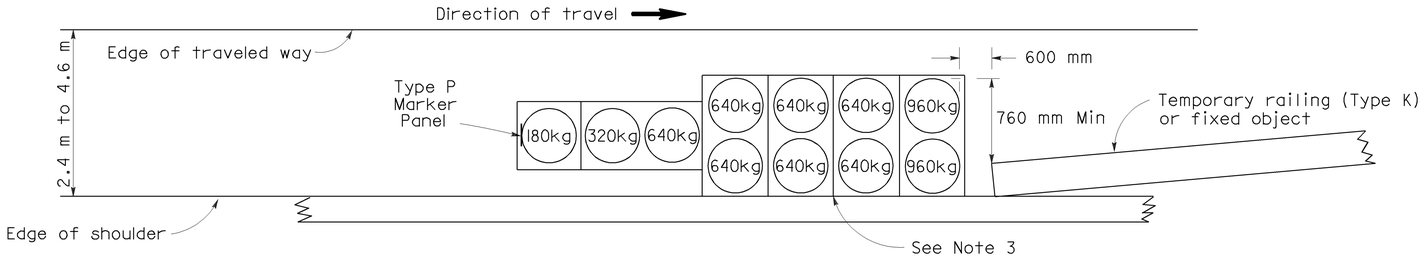

ARRAY 'TSI1'

Approach speed less than 70 km/h
See Note 9

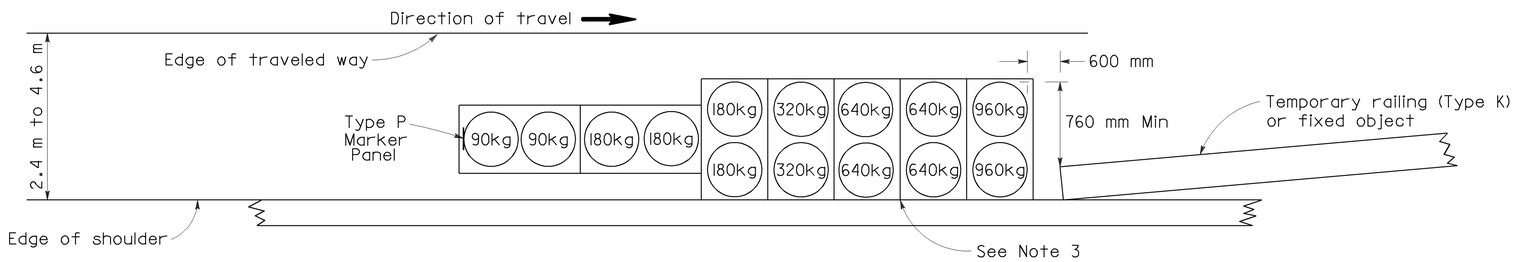

ARRAY 'TSI4'

Approach speed 70 km/h or more
See Note 9

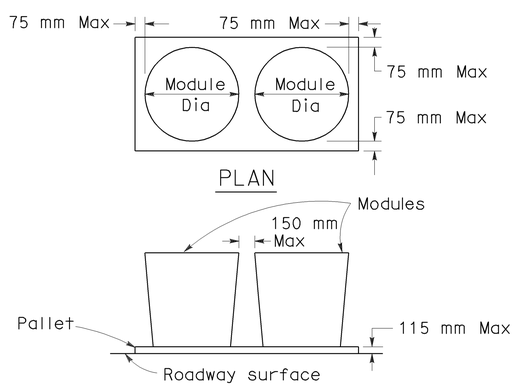

CRASH CUSHION PALLET DETAIL

See Note 11

NOTES

1. (XXX) Indicates sand filled module location and mass of sand in kilograms for each module. Module spacing is based on the greater diameter of the module.
2. All sand masses are nominal.
3. The temporary crash cushion arrays shown on this plan shall be used only in locations where there will be traffic on one side of the temporary crash cushion array.
4. If the fixed object or approach end of the temporary railing is less than 4.60 meters from the edge of traveled way, a temporary crash cushion is required.
5. Temporary crash cushion arrays shall not encroach on the traveled way.
6. Arrays for median shoulders shall conform to details shown on this plan for outside shoulders.
7. Place the Type P marker panel so that the bottom of the panel rest upon the pallet and faces traffic.
8. Refer to Standard Plan A73B for marker details.
9. For shoulder widths less than 2.4 m, appropriate approved crash cushion protection, other than sand filled modules, shall be provided at fixed objects and at approach ends of temporary railing. The specific type of crash cushion shall be as shown on the project plans or as specified in the Special Provisions, or if not shown on the project plans or specified in the Special Provisions, shall be as approved by the Engineer.
10. Approach speeds indicated conform to NCHRP 350 Report criteria.
11. Use of Pallets is optional.

STATE OF CALIFORNIA
DEPARTMENT OF TRANSPORTATION

TEMPORARY CRASH CUSHION, SAND FILLED (SHOULDER INSTALLATIONS)

NO SCALE

ALL DIMENSIONS ARE IN MILLIMETERS UNLESS OTHERWISE SHOWN

RSP T2 DATED JUNE 6, 2008 SUPERSEDES STANDARD PLAN T2
DATED July 1, 2004 - PAGE 213 OF THE STANDARD PLANS BOOK DATED July 2004.

REVISED STANDARD PLAN RSP T2

2004 REVISED Std PLAN RSP T2

5-16-08

DIST	COUNTY	ROUTE	KILOMETER POST TOTAL PROJECT	SHEET NO.	TOTAL SHEETS
07	LA	5	42.8/47.3	512	1073

REGISTERED CIVIL ENGINEER

April 28, 2005
PLANS APPROVAL DATE

REGISTERED PROFESSIONAL ENGINEER Greg W. Edwards No. C36386 Exp. 6-30-06 CIVIL STATE OF CALIFORNIA

The State of California or its officers or agents shall not be responsible for the accuracy or completeness of electronic copies of this plan sheet.

To get to the Caltrans web site, go to: http://www.dot.ca.gov

To accompany plans dated 6-8-09

Caltrans Metric

NOTES

Unless otherwise specified in the special provisions, all temporary warning signs shall have black legend on orange background.

California code are designated by (CA). Otherwise, Federal codes are shown.

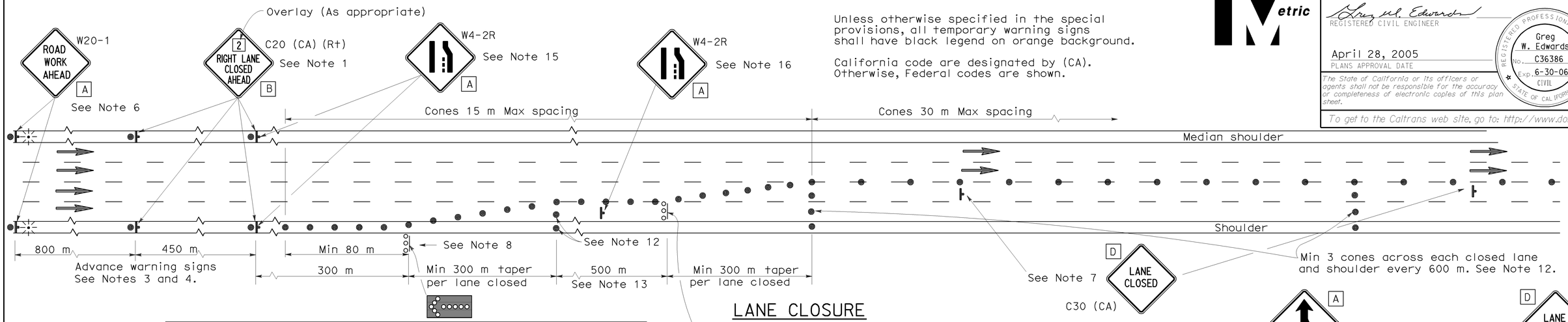

LANE CLOSURE

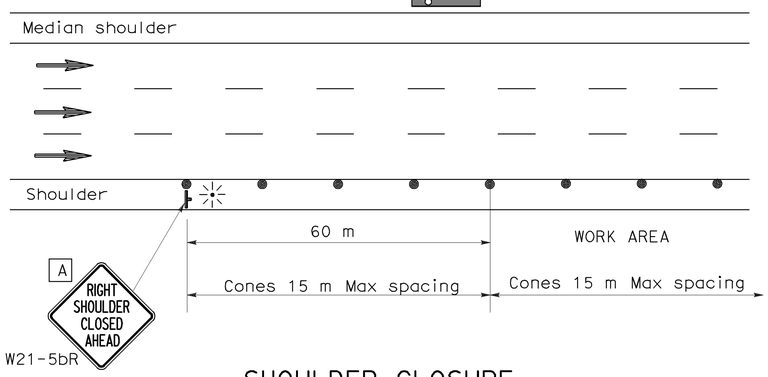

SHOULDER CLOSURE

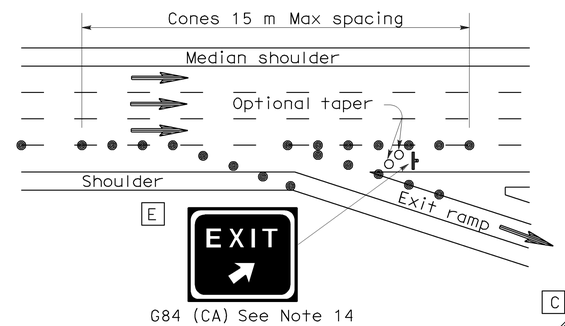

LANE CLOSURE AT EXIT RAMP

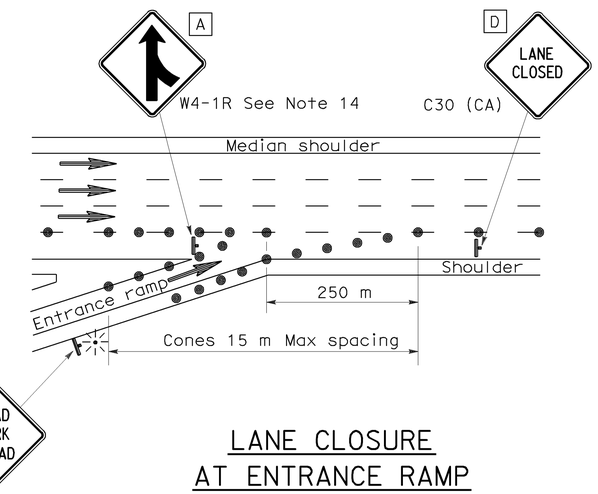

LANE CLOSURE AT ENTRANCE RAMP

NOTES

1. Median lane closures shall conform to the details for outside lane closures except that C20 (CA) (Lt) signs shall be used.
2. At least one person shall be assigned to provide full time maintenance of traffic control devices for lane closures.
3. Duplicate sign installations are not required:
   a) On opposite shoulder if at least one-half of the available lanes remain open to traffic.
   b) In the median if the width of the median shoulder is less than 2.4 m and the outside lanes are to be closed.
4. Each advance warning sign on each side of the roadway shall be equipped with at least two flags for daytime closure. Each flag shall be at least 400 mm x 400 mm in size and shall be orange or fluorescent red-orange in color. Flashing beacons shall be placed at the locations indicated for lane closure during hours of darkness.
5. A C14 (CA) "END ROAD WORK" sign, as appropriate, shall be placed at the end of the lane closure unless the end of work area is obvious or ends within a larger project's limits.
6. If the W20-1 sign would follow within 600 m of a stationary W20-1 or C11 (CA) "ROAD WORK NEXT _____ MILES", use a C20 (CA) sign for the first advance warning sign.
7. Place a C30 (CA) sign every 600 m throughout length of lane closure.
8. One flashing arrow sign for each lane closed. The first flashing arrow sign shall be Type I. All others may be either Type I or Type II.
9. A minimum 450 m of sight distance shall be provided where possible for vehicles approaching the first flashing arrow sign. Lane closures shall not begin at top of crest vertical curve or on a horizontal curve.
10. All cones used for lane closures during the hours of darkness shall be fitted with retroreflective bands (or sleeves) as specified in the specifications.
11. Portable delineators, placed at one-half the spacing indicated for traffic cones may be used instead of cones for daytime closures only.
12. Unless otherwise specified in the special provisions, a minimum of 3 cones shall be placed transversely across each closed lane and shoulder at each location where a taper across a traffic lane ends and every 600 m as shown on the "Lane Closure" detail. Two Type II barricades may be used instead of the 3 cones. The transverse alignment of the cones or barricades on the closed shoulder may be shifted from the transverse alignment to provide access to the work.
13. Unless otherwise specified in the special provisions, the 500 m tangent shown along lane lines shall be used between the 300 m tapers required for each closed traffic lane.
14. Unless otherwise specified in the special provisions, the G84 (CA) and W4-1 signs shall be used as shown.
15. When specified in the special provisions, a W4-2 "LANE ENDS" symbol sign is to be used in place of the C20 (CA) "RIGHT LANE CLOSED AHEAD" sign.
16. The W4-2 "LANE ENDS" symbol sign shown at this location is to be used where the W4-2 sign is used as advance warning as described in Note 15.

SIGN PANEL SIZE (Min)

A	1200 mm x 1200 mm
B	1219 mm x 1219 mm
C	750 mm x 750 mm
D	762 mm x 762 mm
E	1372 mm x 1219 mm

LEGEND

- Traffic Cone
- Traffic Cone (optional taper)
- Temporary Sign
- Flashing Arrow Sign (FAS)
- FAS Support or Trailer
- Direction of Travel
- Portable Flashing Beacon

STATE OF CALIFORNIA
DEPARTMENT OF TRANSPORTATION

TRAFFIC CONTROL SYSTEM FOR LANE CLOSURE ON FREEWAYS AND EXPRESSWAYS

NO SCALE

ALL DIMENSIONS ARE IN MILLIMETERS UNLESS OTHERWISE SHOWN

RSP T10 DATED APRIL 28, 2005 SUPERSEDES STANDARD PLAN T10 DATED JULY 1, 2004-PAGE 218 OF THE STANDARD PLANS BOOK DATED JULY 2004.

REVISED STANDARD PLAN RSP T10

2004 REVISED Std PLAN RSP T10

DIST	COUNTY	ROUTE	KILOMETER POST TOTAL PROJECT	SHEET NO.	TOTAL SHEETS
07	LA	5	42.8/47.3	513	1073

REGISTERED CIVIL ENGINEER

April 28, 2005
PLANS APPROVAL DATE

REGISTERED PROFESSIONAL ENGINEER G.W. Edwards No. C36386 Exp. 6-30-06 CIVIL STATE OF CALIFORNIA

The State of California or its officers or agents shall not be responsible for the accuracy or completeness of electronic copies of this plan sheet.

To get to the Caltrans web site, go to: http://www.dot.ca.gov

Caltrans Metric

To accompany plans dated 6-8-09

NOTES

Unless otherwise specified in the special provisions, all temporary warning signs shall have black legend on orange background.

California code are designated by (CA). Otherwise, Federal codes are shown.

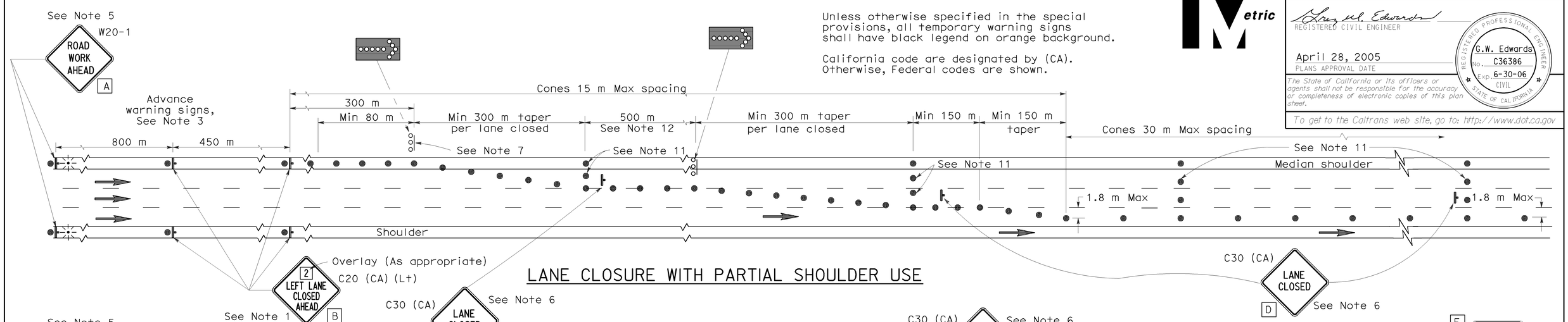

LANE CLOSURE WITH PARTIAL SHOULDER USE

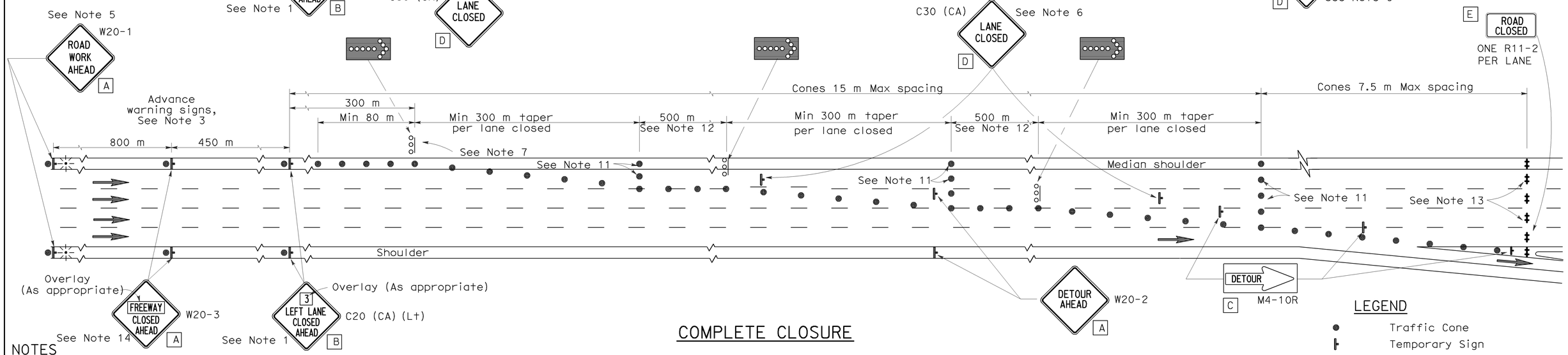

COMPLETE CLOSURE

NOTES

1. Lane closures on the right side using partial median shoulder as a traffic lane shall conform to the details for inside lane closure except that C20 (CA) (Rt) signs shall be used.
2. At least one person shall be assigned to provide full time maintenance of traffic control devices for lane closures.
3. Each advance warning sign on each side of the roadway shall be equipped with at least two flags for daytime closure. Each flag shall be at least 400 mm x 400 mm in size and shall be orange or fluorescent red-orange in color. Flashing beacons shall be placed at the locations indicated for lane closure during hours of darkness.
4. A C14 (CA) "END ROAD WORK" sign, as appropriate, shall be placed at the end of the lane closure unless the end of work area is obvious or ends within a larger project's limits.
5. If the W20-1 sign would follow within 600 m of a stationary W20-1 or C11 (CA) "ROAD WORK NEXT ___ MILES", use a C20 (CA) sign for the first advance warning sign.
6. Place a C30 (CA) sign every 600 m throughout length of lane closure.
7. One flashing arrow sign for each lane closed. The first flashing arrow sign shall be Type I. All others may be either Type I or Type II.
8. A minimum 450 m of sight distance shall be provided where possible for vehicles approaching the first flashing arrow sign. Lane closures shall not begin at the top of crest vertical curve or on a horizontal curve.
9. All cones used for lane closures during the hours of darkness shall be fitted with retroreflective bands (or sleeves) as specified in the specifications.
10. Portable delineators, placed at one-half the spacing indicated for traffic cones, may be used instead of cones for daytime closures only.
11. Unless otherwise specified in the special provisions, a minimum of 3 cones shall be placed transversely across each closed lane and shoulder at each location where a taper across a traffic lane ends and every 600 m as shown on the "Lane Closure With Partial Shoulder Use" detail. Two Type II barricades may be used instead of the 3 cones. The transverse alignment of the cones or barricades on the closed shoulder may be shifted from the transverse alignment to provide access to the work.
12. Unless otherwise specified in the special provisions, the 500 m tangent shown along lane lines shall be used between the 300 m tapers required for each closed traffic lane.
13. A minimum of Two Type II barricades shall be placed across each closed lane and shoulder at the location shown and every 600 m within the complete closure area. Within the complete closure area, the transverse alignment of the barricades on the closed shoulder may be shifted from the transverse alignment to provide access to the work.
14. When specified in the special provisions, a W20-2 "DETOUR AHEAD" sign is to be used in place of the W20-3 "FREEWAY CLOSED AHEAD" sign.

SIGN PANEL SIZE (Min)

A	1200 mm x 1200 mm
B	1219 mm x 1219 mm
C	1200 mm x 450 mm
D	762 mm x 762 mm
E	1200 mm x 750 mm

LEGEND

- Traffic Cone
- Temporary Sign
- Barricade
- Flashing Arrow Sign (FAS)
- FAS Support or Trailer
- Direction of Travel
- Portable Flashing Beacon

STATE OF CALIFORNIA
DEPARTMENT OF TRANSPORTATION

TRAFFIC CONTROL SYSTEM FOR LANE AND COMPLETE CLOSURES ON FREEWAYS AND EXPRESSWAYS

NO SCALE

ALL DIMENSIONS ARE IN MILLIMETERS UNLESS OTHERWISE SHOWN

RSP T10A DATED APRIL 28, 2005 SUPERSEDES STANDARD PLAN T10A DATED JULY 1, 2004-PAGE 219 OF THE STANDARD PLANS BOOK DATED JULY 2004.

REVISED STANDARD PLAN RSP T10A

2004 REVISED Std PLAN RSP T10A

DIST	COUNTY	ROUTE	KILOMETER POST TOTAL PROJECT	SHEET NO.	TOTAL SHEETS
07	LA	5	42.8/47.3	514	1073

Caltrans Metric

REGISTERED CIVIL ENGINEER

April 28, 2005
PLANS APPROVAL DATE

REGISTERED PROFESSIONAL ENGINEER Greg W. Edwards No. C36386 Exp. 6-30-06 CIVIL STATE OF CALIFORNIA

The State of California or its officers or agents shall not be responsible for the accuracy or completeness of electronic copies of this plan sheet.

To get to the Caltrans web site, go to: http://www.dot.ca.gov

To accompany plans dated 6-8-09

TYPICAL LANE CLOSURE

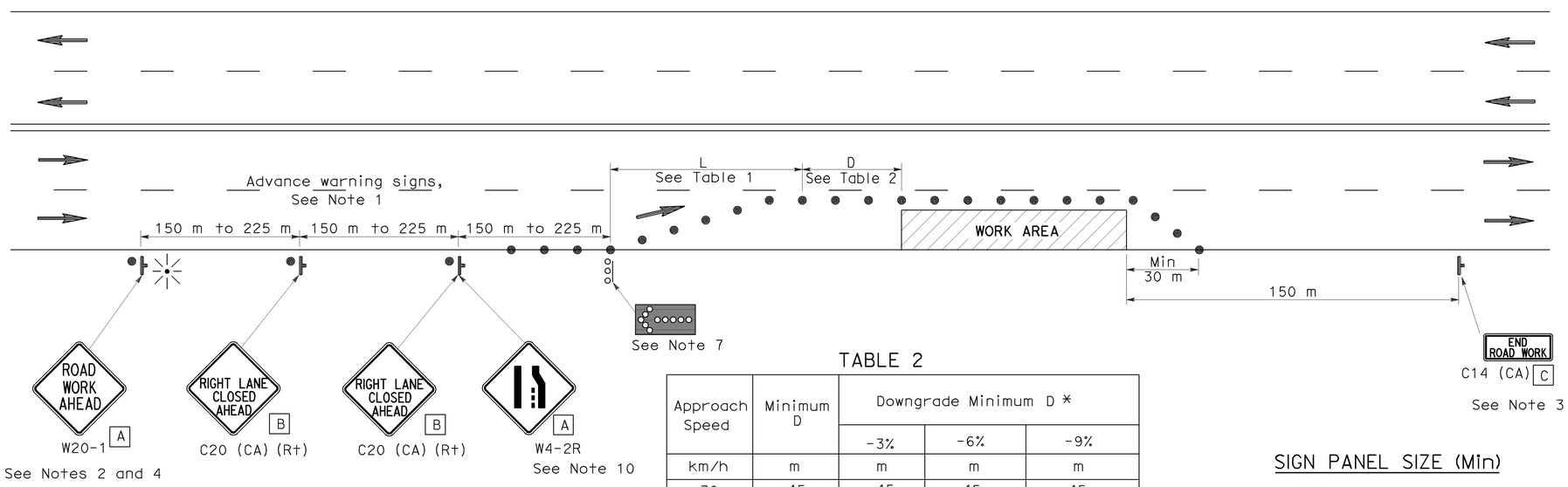

TABLE 2

Approach Speed	Minimum D	Downgrade Minimum D *		
		-3%	-6%	-9%
km/h	m	m	m	m
30	45	45	45	45
40	45	50	50	53
50	45	66	70	74
60	45	87	92	97
70	65	1 10	1 16	124
80	85	136	144	154

* Use on sustained downgrade steeper than or equal to grades shown and longer than 1.6 km.

SIGN PANEL SIZE (Min)

- A 900 mm x 900 mm
- B 914 mm x 914 mm
- C 914 mm x 457 mm

LEGEND

- Traffic Cone
- Temporary Sign
- Direction of Travel
- Flashing Arrow Sign (FAS)
- FAS Support or Trailer
- Portable Flashing Beacon

NOTES

Unless otherwise specified in the special provisions, all temporary warning signs shall have black legend on orange background.

California code are designated by (CA). Otherwise, Federal codes are shown.

NOTES

1. Where approach speeds are low, advance warning signs may be placed at 90 m spacing and placed closer in urban areas.
2. Each advance warning sign shall be equipped with at least two flags for daytime closure. Each flag shall be at least 400 mm x 400 mm in size and shall be orange or fluorescent red-orange in color. Flashing beacons shall be placed at the locations indicated for lane closure during hours of darkness.
3. A C14 (CA) "END ROAD WORK" sign, as appropriate, shall be placed at the end of the lane closure unless the end of work area is obvious, or ends within a larger project's limits.
4. If the W20-1 sign would follow within 600 m of a stationary W20-1 or C11 (CA) "ROAD WORK NEXT _____ MILES", use a C20 (CA) sign for the first advance warning sign.
5. All cones used for lane closures during the hours of darkness shall be fitted with retroreflective bands (or sleeves) as specified in the specifications.
6. Portable delineators, placed at one-half the spacing indicated for traffic cones, may be used instead of cones for daytime closures only.
7. Flashing arrow sign shall be either Type I or Type II.
8. The maximum spacing between cones along a tangent shall be 15 m and along a taper shall be approximately as shown in Table 1.
9. For approach speeds over 80 km/h, use the "Traffic Control System for Lane Closure On Freeways And Expressways" plan for lane closure details and requirements.
10. When specified in the special provisions, a W4-2 "LANE ENDS" symbol sign is to be used in place of the C20 (CA) "RIGHT LANE CLOSED AHEAD" sign.

TABLE 1

Approach Speed	* Minimum L	** Max spacing of cones along taper
km/h	m	m
30	38	6
40	38	8
50	98	10
60	98	12
70	183	14
80	183	15
Over 80	See Note 9	

* Use L for lane widths less than or equal to 3.6 m.

** See Note 8

STATE OF CALIFORNIA
DEPARTMENT OF TRANSPORTATION

TRAFFIC CONTROL SYSTEM FOR LANE CLOSURE ON MULTILANE CONVENTIONAL HIGHWAYS

NO SCALE

ALL DIMENSIONS ARE IN MILLIMETERS UNLESS OTHERWISE SHOWN

RSP T11 DATED APRIL 28, 2005 SUPERSEDES STANDARD PLAN T11 DATED JULY 1, 2004-PAGE 220 OF THE STANDARD PLANS BOOK DATED JULY 2004.

REVISED STANDARD PLAN RSP T11

2004 REVISED Std PLAN RSP T11

DIST	COUNTY	ROUTE	KILOMETER POST TOTAL PROJECT	SHEET NO.	TOTAL SHEETS
07	LA	5	42.8/47.3	515	1073

REGISTERED CIVIL ENGINEER

April 28, 2005
PLANS APPROVAL DATE

Greg W. Edwards No. C36386 Exp. 6-30-06 CIVIL — REGISTERED PROFESSIONAL ENGINEER — STATE OF CALIFORNIA

The State of California or its officers or agents shall not be responsible for the accuracy or completeness of electronic copies of this plan sheet.

To get to the Caltrans web site, go to: http://www.dot.ca.gov

Caltrans Metric

To accompany plans dated 6-8-09

LEGEND

- Traffic Cone
- Temporary Sign
- Direction of Travel
- Flashing Arrow Sign (FAS)
- FAS Support or Trailer
- Portable Flashing Beacon

TABLE 1

Approach Speed	*Minimum L	** Max spacing of cones along taper
km/h	m	m
30	38	6
40	38	8
50	98	10
60	98	12
70	183	14
80	183	15
Over 80	See Note 11	

* Use L for lane widths less than or equal to 3.6 m.

** See Note 10

TABLE 2

Approach Speed	Minimum D	Downgrade Minimum D *		
		-3%	-6%	-9%
km/h	m	m	m	m
30	45	45	45	45
40	45	50	50	53
50	45	66	70	74
60	45	87	92	97
70	65	110	116	124
80	85	136	144	154

* Use on sustained downgrade steeper than or equal to grades shown and longer than 1.6 km.

TYPICAL CLOSING OF HALF ROADWAY

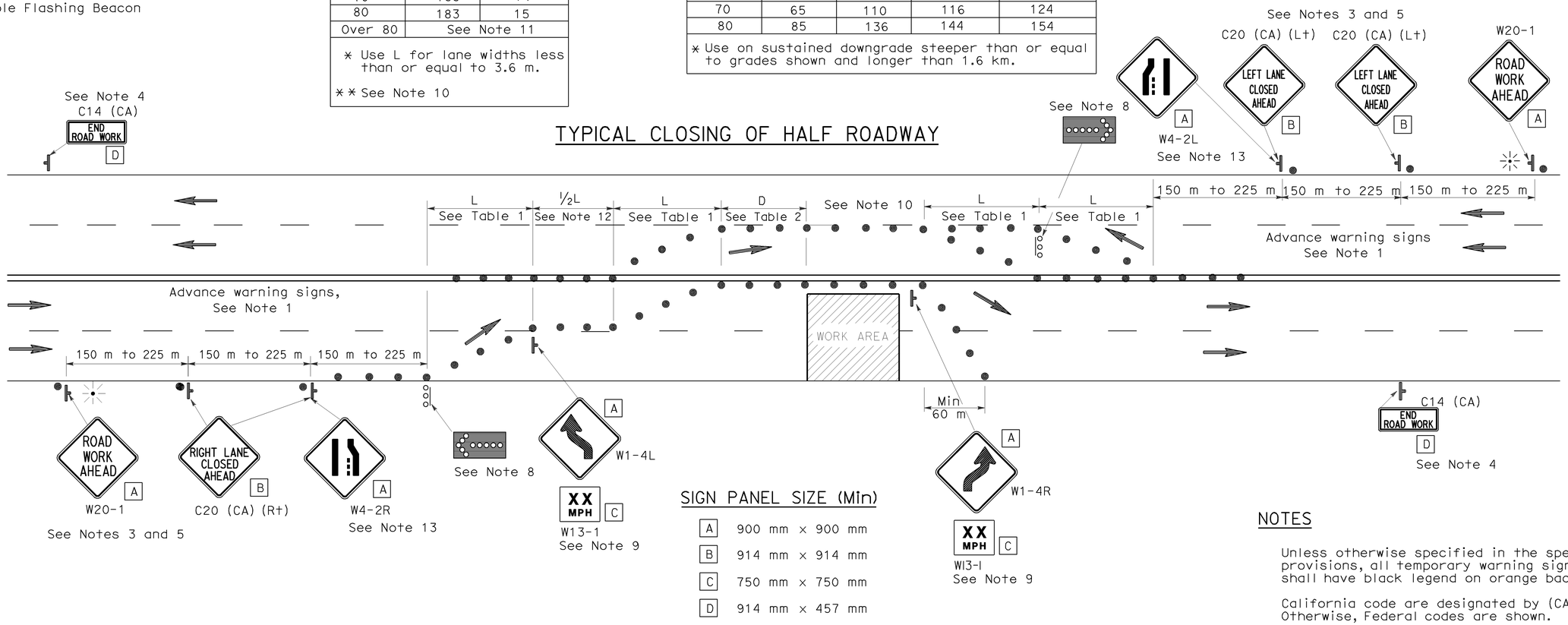

SIGN PANEL SIZE (Min)

A	900 mm × 900 mm
B	914 mm × 914 mm
C	750 mm × 750 mm
D	914 mm × 457 mm

NOTES

Unless otherwise specified in the special provisions, all temporary warning signs shall have black legend on orange background.

California code are designated by (CA). Otherwise, Federal codes are shown.

NOTES

1. Where Approach speeds are low, advance warning signs may be placed at 90 m spacing and placed closer in urban areas.
2. At least one person shall be assigned to provide full time maintenance of traffic control devices for lane closure unless, otherwise directed by the Engineer.
3. Each advance warning sign in each direction of travel shall be equipped with at least two flags for daytime closure. Each flag shall be at least 400 mm × 400 mm in size and shall be orange or fluorescent red-orange in color. Flashing beacons shall be placed at the locations indicated for lane closure during hours of darkness.
4. A C14 (CA) "END ROAD WORK" sign, as appropriate, shall be placed at the end of the lane closure unless the end of work area is obvious, or ends within a larger project's limits.
5. If the W20-1 sign would follow within 600 m of a stationary W20-1 or C11 (CA) "ROAD WORK NEXT _____ MILES", use a C20 (CA) sign for the first advance warning sign.
6. All cones used for lane closures during the hours of darkness shall be fitted with retroreflective bands (or sleeves) as specified in the specifications.
7. Portable delineators, placed at one-half the spacing indicated for traffic cones, may be used instead of cones for daytime closures only.
8. Flashing arrow signs shall be either Type I or Type II.
9. Advisory speed will be determined by the Engineer. The W13-1 Sign will not be required when advisory speed is more than the posted or maximum speed limit.
10. The maximum spacing between cones along a tangent shall be 15 m and along a taper shall be approximately as shown in Table 1.
11. For approach speeds over 80 km/h, use the "Traffic Control System For Lane Closure On Freeways And Expressways" plan for lane closure details and requirements.
12. Unless otherwise specified in the special provisions, the (½ L) shown between the two (L) lane closure tapers shall be used.
13. When specified in the special provisions, a W4-2 "Lane Ends" symbol sign is to be used in place of the C20 (CA) "RIGHT (LEFT) LANE CLOSED AHEAD" sign.

STATE OF CALIFORNIA
DEPARTMENT OF TRANSPORTATION

TRAFFIC CONTROL SYSTEM FOR LANE CLOSURE ON MULTILANE CONVENTIONAL HIGHWAYS

NO SCALE

ALL DIMENSIONS ARE IN MILLIMETERS UNLESS OTHERWISE SHOWN

RSP T12 DATED APRIL 28, 2005 SUPERSEDES STANDARD PLAN T12 DATED JULY 1, 2004-PAGE 221 OF THE STANDARD PLANS BOOK DATED JULY 2004.

REVISED STANDARD PLAN RSP T12

2004 REVISED Std PLAN RSP T12

NOTES

Unless otherwise specified in the special provisions, all temporary warning signs shall have black legend on orange background.

California code are designated by (CA). Otherwise, Federal codes are shown.

To accompany plans dated 6-8-09

Caltrans Metric

DIST	COUNTY	ROUTE	KILOMETER POST TOTAL PROJECT	SHEET No.	TOTAL SHEETS
07	LA	5	42.8/47.3	516	1073

REGISTERED CIVIL ENGINEER

April 28, 2005
PLANS APPROVAL DATE

REGISTERED PROFESSIONAL ENGINEER G.W. Edwards No. C36386 Exp. 6-30-06 CIVIL STATE OF CALIFORNIA

The State of California or its officers or agents shall not be responsible for the accuracy or completeness of electronic copies of this plan sheet.

To get to the Caltrans web site, go to: http://www.dot.ca.gov

TYPICAL LANE CLOSURE WITH REVERSIBLE CONTROL

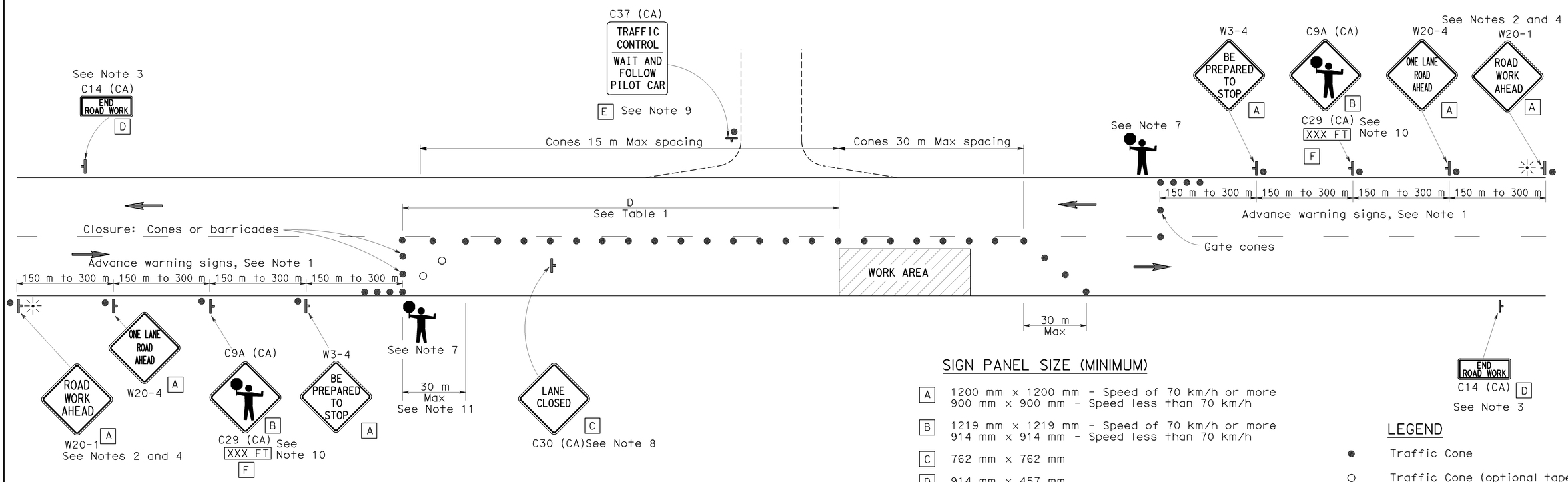

SIGN PANEL SIZE (MINIMUM)

- A — 1200 mm x 1200 mm - Speed of 70 km/h or more; 900 mm x 900 mm - Speed less than 70 km/h
- B — 1219 mm x 1219 mm - Speed of 70 km/h or more; 914 mm x 914 mm - Speed less than 70 km/h
- C — 762 mm x 762 mm
- D — 914 mm x 457 mm
- E — 914 mm x 1067 mm
- F — 914 mm x 229 mm

LEGEND

- Traffic Cone
- Traffic Cone (optional taper)
- Temporary Sign
- Direction of Travel
- Portable Flashing Beacon
- Flagger

NOTES

1. Where approach speeds are low, advance warning signs may be placed at 90 m spacing, and closer in urban areas.
2. Each advance warning sign in each direction of travel shall be equipped with at least two flags for daytime closure. Each flag shall be at least 400 mm x 400 mm in size and shall be orange or fluorescent red-orange in color. Flashing beacons shall be placed at the locations indicated for lane closure during hours of darkness.
3. A C14 (CA) "END ROAD WORK" sign, as appropriate, shall be placed at the end of the lane control unless the end of work area is obvious, or ends within a larger project's limits.
4. If the W20-1 sign would follow within 600 m of a stationary W20-1 or C11 (CA) "ROAD WORK NEXT _____ MILES", use a C16 (CA) sign for the first advance warning sign.
5. All cones used for lane closures during the hours of darkness shall be fitted with retroreflective bands (or sleeves) as specified in the specifications.
6. Portable delineators, placed at one-half the spacing indicated for traffic cones, may be used instead of cones for daytime closures only.
7. Additional advance flaggers may be required. Flagger should stand in a conspicuous place, be visible to approaching traffic as well as approaching vehicles after the first vehicle has stopped. During the hours of darkness, the flagging-station and flagger shall be illuminated and clearly visible to approaching traffic. The illumination footprint of the lighting on the ground shall be at least 6 m in diameter. Place a minimum of four cones at 15 m intervals in advance of flagger station as shown.
8. Place C30 (CA) "LANE CLOSED" sign at 150 to 300 m intervals throughout extended work areas. They are optional if the work area is visible from the flagger station.
9. When a pilot car is used, place a C37 (CA) "TRAFFIC CONTROL-WAIT AND FOLLOW PILOT CAR" sign at all intersections within traffic control area. Signs shall be clean and visible at all times.
10. An optional C29 (CA) sign may be placed below the C9A (CA) sign.
11. Traffic cones or barricades may be placed on the optional taper as shown, barricades shall be Type I, II, or III.

TABLE I

Approach Speed	Minimum D	Downgrade Minimum D *
km/h	m	m
30	60	72
40	60	72
50	60	72
60	90	108
70	90	108
80	150	180
90	150	180
100	150	180
110	170	204

* Use on substained downgrade steeper than -3 percent and longer than 1.6 km.

STATE OF CALIFORNIA
DEPARTMENT OF TRANSPORTATION

TRAFFIC CONTROL SYSTEM FOR LANE CLOSURE ON TWO LANE CONVENTIONAL HIGHWAYS

NO SCALE

ALL DIMENSIONS ARE IN MILLIMETERS UNLESS OTHERWISE SHOWN

RSP T13 DATED APRIL 28, 2005 SUPERSEDES STANDARD PLAN T13 DATED JULY 1, 2004-PAGE 222 OF THE STANDARD PLANS BOOK DATED JULY 2004.

REVISED STANDARD PLAN RSP T13

2004 REVISED Std PLAN RSP T13

TYPICAL RAMP CLOSURES

LEGEND

- Traffic Cone
- Temporary Sign
- Barricades
- Direction of Travel
- Turn Arrow

SIGN PANEL SIZE (Min)

A	1200 mm x 1200 mm
B	1200 mm x 750 mm
C	750 mm x 750 mm
D	762 mm x 762 mm
E	900 mm x 900 mm
F	1219 mm x 914 mm

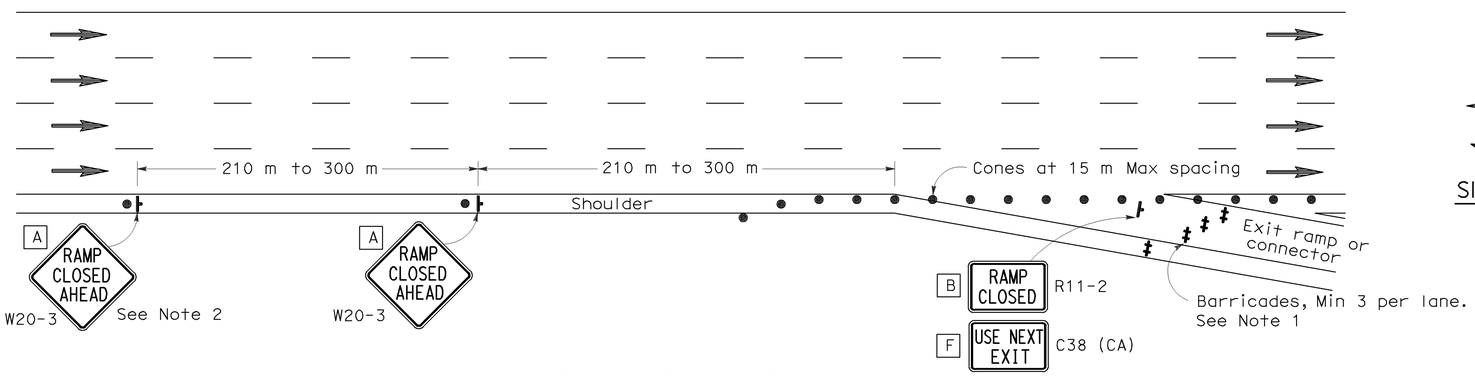

EXIT RAMP OR CONNECTOR

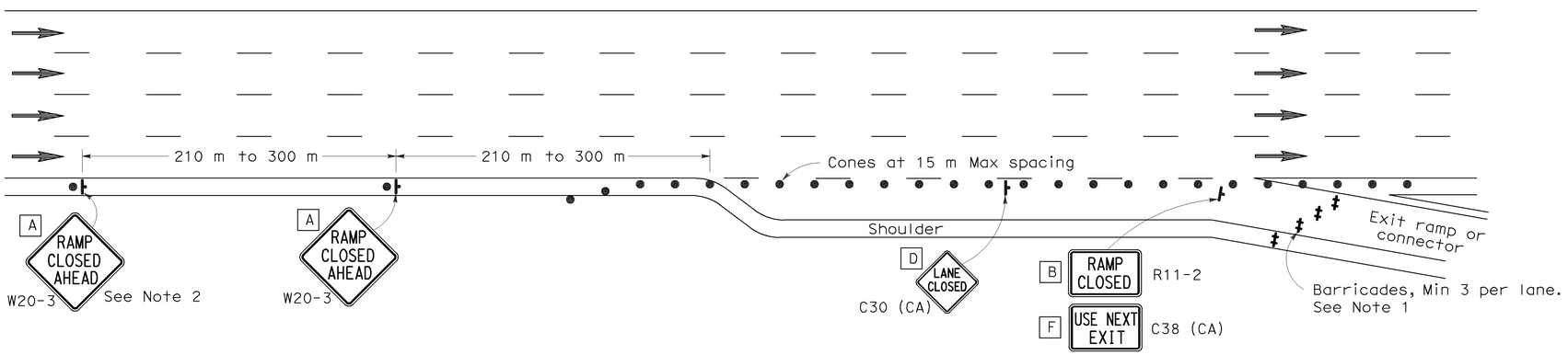

EXIT RAMP OR CONNECTOR WITH ADDITIONAL LANE

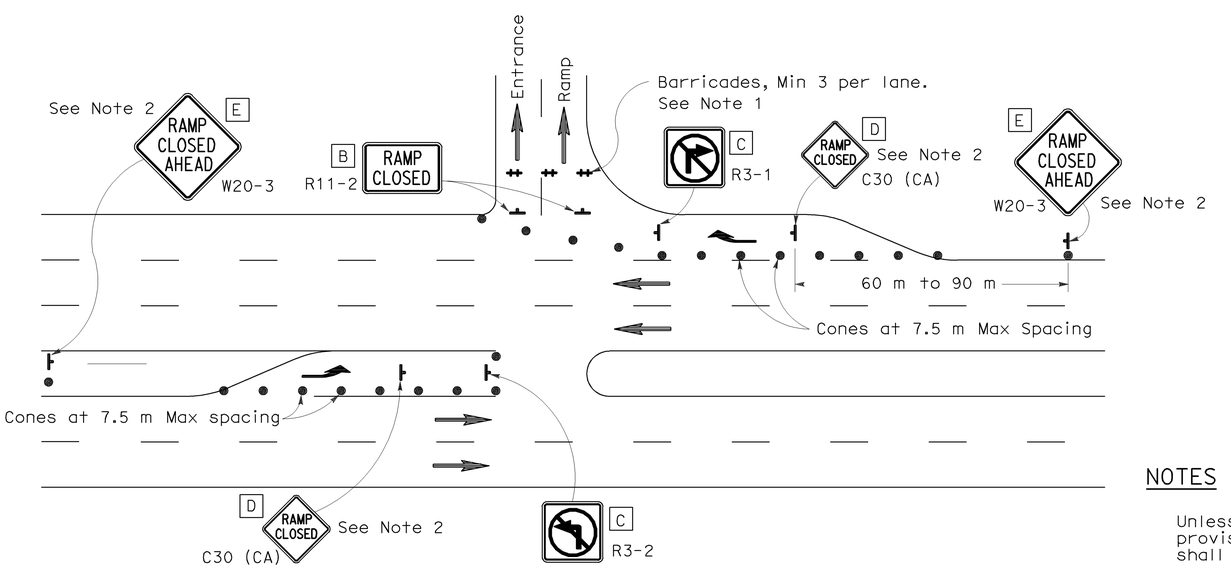

ENTRANCE RAMP WITH TURNING POCKETS

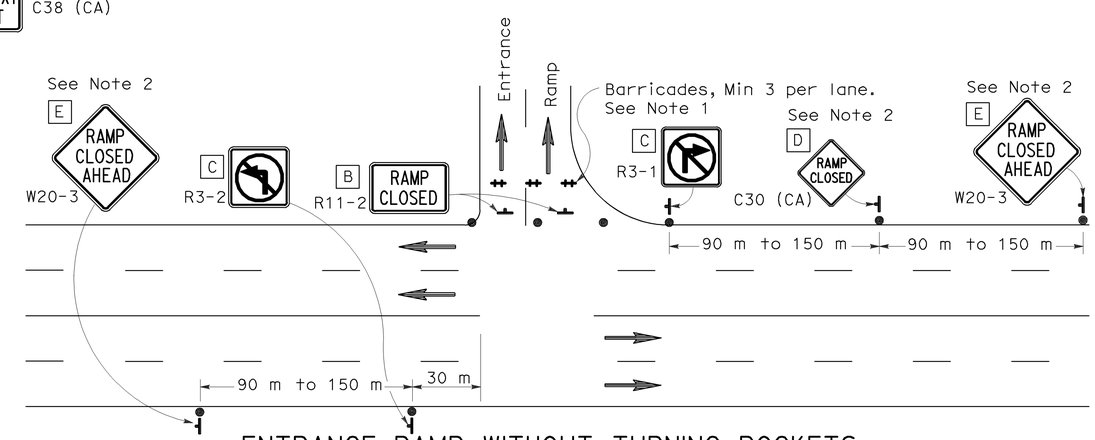

ENTRANCE RAMP WITHOUT TURNING POCKETS

NOTES

1. Barricades shall be Type I, II, or III for closures lasting one week or less and Type III for closures lasting longer than one week.
2. Instead of placing the W20-3 "RAMP CLOSED AHEAD" and C30 (CA) "RAMP CLOSED" signs, black on orange overlay plates with the word "CLOSED" may be mounted, as directed by the Engineer, on all guide signs that refer to the closed ramp. The letter size on the overlay shall be the same as the guide sign.
3. Each advance W20-3 "RAMP CLOSED AHEAD" sign shall be equipped with at least two flags for daytime closure. Each flag shall be at least 400 mm x 400 mm in size and shall be orange or fluorescent red-orange in color.
4. All cones used for ramp closures during the hours of darkness shall be fitted with retroreflective bands (or sleeves) as specified in the specifications.
5. Portable delineators, placed at one-half the spacing indicated for traffic cones, may be used instead of cones for daytime ramp closures only.
6. At least one person shall be assigned to provide full time maintenance of traffic control devices, unless otherwise directed by the Engineer.
7. The existing "EXIT" sign in the gore area shall be covered during ramp closures.

NOTES

Unless otherwise specified in the special provisions, all temporary warning signs shall have black legend on orange background.

California code are designated by (CA). Otherwise, Federal codes are shown.

DIST	COUNTY	ROUTE	KILOMETER POST TOTAL PROJECT	SHEET NO.	TOTAL SHEETS
07	LA	5	42.8/47.3	517	1073

Caltrans Metric

REGISTERED CIVIL ENGINEER

April 28, 2005
PLANS APPROVAL DATE

REGISTERED PROFESSIONAL ENGINEER Greg W. Edwards No. C36386 Exp. 6-30-06 CIVIL STATE OF CALIFORNIA

The State of California or its officers or agents shall not be responsible for the accuracy or completeness of electronic copies of this plan sheet.

To get to the Caltrans web site, go to: http://www.dot.ca.gov

To accompany plans dated 6-8-09

STATE OF CALIFORNIA
DEPARTMENT OF TRANSPORTATION

TRAFFIC CONTROL SYSTEM FOR RAMP CLOSURE

NO SCALE

ALL DIMENSIONS ARE IN MILLIMETERS UNLESS OTHERWISE SHOWN

RSP T14 DATED APRIL 28, 2005 SUPERSEDES STANDARD PLAN T14 DATED JULY 1, 2004-PAGE 223 OF THE STANDARD PLANS BOOK DATED JULY 2004.

REVISED STANDARD PLAN RSP T14

2004 REVISED Std PLAN RSP T14

DIST	COUNTY	ROUTE	KILOMETER POST TOTAL PROJECT	SHEET NO.	TOTAL SHEETS
07	LA	5	42.8/47.3	518	1073

Caltrans Metric

REGISTERED CIVIL ENGINEER

April 28, 2005
PLANS APPROVAL DATE

REGISTERED PROFESSIONAL ENGINEER Greg W. Edwards No. C36386 Exp. 6-30-06 CIVIL STATE OF CALIFORNIA

The State of California or its officers or agents shall not be responsible for the accuracy or completeness of electronic copies of this plan sheet.

To get to the Caltrans web site, go to: http://www.dot.ca.gov

To accompany plans dated 6-8-09

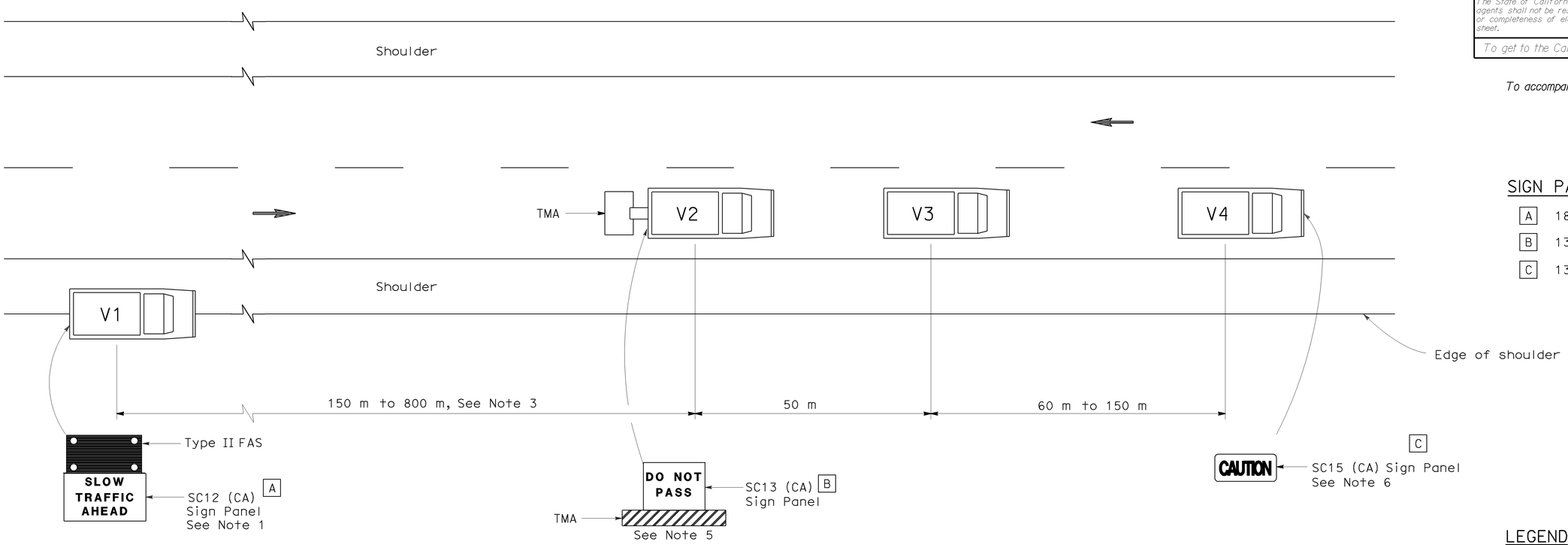

SIGN PANEL SIZE (Min)

A	1829 mm x 1067 mm
B	1372 mm x 1067 mm
C	1372 mm x 610 mm

LEGEND

V1	Sign Vehicle
V2	Shadow Vehicle
V3	Work/Application Vehicle
V4	Sign Vehicle
TMA	Truck-Mounted Attenuator
→	Direction of Travel
▭	Flashing Arrow Sign (FAS) in flashing caution mode

NOTES

1. Either a changeable message sign or a SC12 (CA) "SLOW TRAFFIC AHEAD" sign shall be mounted on the rear of sign vehicle V1. A Type II flashing arrow sign may be used with the SC12 (CA) sign panel.
2. Sign vehicle V1 should be positioned where highly
3. If traffic queues develop, sign vehicle V1 should be
4. Vehicle-mounted sign panels shall be Type III, IV VII, VIII, or IX retroreflective sheeting, black on white, black on orange, or black on fluorescent orange, with 150 mm minimum series D letters per Caltrans sign specifications.
5. Gross Vehicle Weight of shadow vehicle shall be a minimum of 9000 kilograms and shall be equipped with a truck-mounted attenuator. The sign panel shown shall be mounted on the rear of shadow vehicle V2. The message "LANE CLOSED" may be used in place of the "DO NOT PASS" message.
6. The sign panel shown shall be mounted on the front of sign vehicle V4, facing opposing traffic.
7. All vehicles shall be equipped with flashing or rotating amber lights.
8. Sign vehicle V4 will not be required when the work and vehicles V2 and V3 are 0.6 m or more from the centerline of the highway during the work or application operations.
9. All vehicles used for lane closures shall be equipped with two-way radios and the vehicle operators shall maintain communication during the work or application operation.
10. This plan shall not be used where workers would be on foot in the work area. Use a stationary type lane closure (Revised Standard Plan RSP T13) for this condition.
11. When multiple work vehicles are used in close proximity to each other, only one shadow vehicle is required and spacing between work vehicles shall be minimized in order to deter traffic from entering the closed lane.

STATE OF CALIFORNIA
DEPARTMENT OF TRANSPORTATION

TRAFFIC CONTROL SYSTEM FOR MOVING LANE CLOSURE ON TWO LANE HIGHWAYS

NO SCALE

ALL DIMENSIONS ARE IN MILLIMETERS UNLESS OTHERWISE SHOWN

RSP T17 DATED APRIL 28, 2005 SUPERSEDES STANDARD PLAN T17 DATED JULY 1, 2004-PAGE 226 OF THE STANDARD PLANS BOOK DATED JULY 2004.

REVISED STANDARD PLAN RSP T17

2004 REVISED Std PLAN RSP T17

DIST	COUNTY	ROUTE	KILOMETER POST TOTAL PROJECT	SHEET NO.	TOTAL SHEETS
07	LA	5	42.8/47.3	519	1073

REGISTERED CIVIL ENGINEER

October 5, 2007
PLANS APPROVAL DATE

REGISTERED PROFESSIONAL ENGINEER Efthymios Delis No. C51434 Exp. 6-30-08 CIVIL STATE OF CALIFORNIA

The State of California or its officers or agents shall not be responsible for the accuracy or completeness of electronic copies of this plan sheet.

To get to the Caltrans web site, go to: http://www.dot.ca.gov

Caltrans Metric

To accompany plans dated 6-8-09

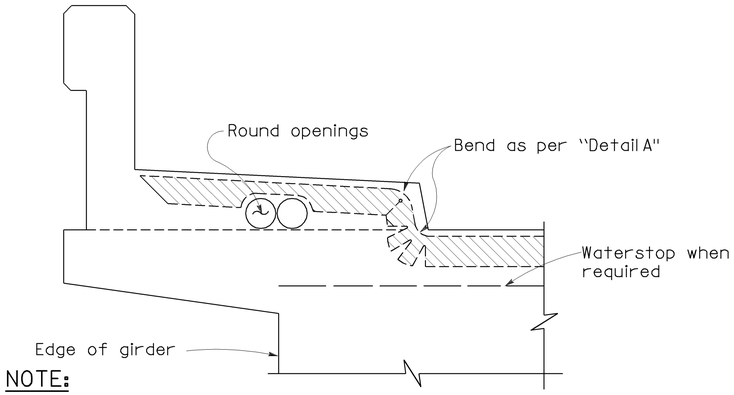

NOTE:

Type "B" seal shown. Type "A" seals to comform to the general path of seal shown, cuts for bending not required. Bend Type "A" seals 75 mm up into curb or barrier rail on only the low end of the seal.

CONCRETE BARRIER AND SIDEWALK

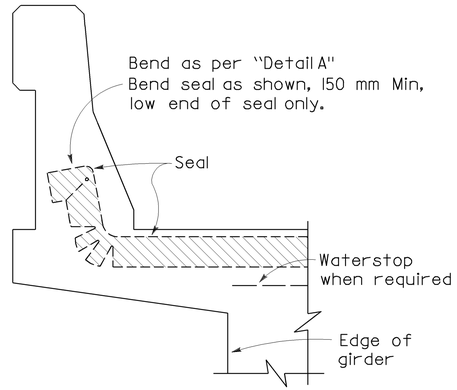

CONCRETE BARRIER

JOINT SEALS DETAILS

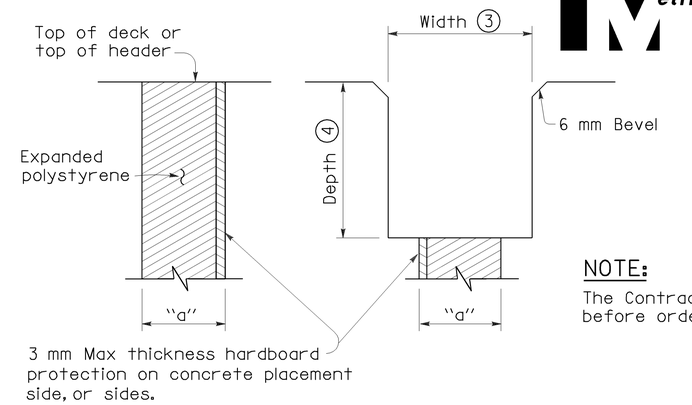

FORMING DETAIL SAWCUT DETAIL

NOTE:

The Contractor shall verify all controlling field dimensions before ordering or fabricating any material.

NOTES:

① Make smooth cuts from the bottom of seal to 40 mm clear of top leaving at least one complete cell between the top of the cut and top of the seal. When necessary cut back of seal to clear conduit and round openings.

② Opening in barrier to match width of sawn deck joint.

③ Sawcut groove widths shall be as ordered by the Engineer.

④ Depth of sawcut: Type A - Depth to be 50 mm minimum.
Type B - Depth to be equal to or greater than the depth of seal measured along the contact surface, when compressed to minimum width position (W_2) plus dimensions shown above.

⑤ MR (movement rating) as shown on other plan sheets.

⑥ Other depths must be approved by the Engineer.

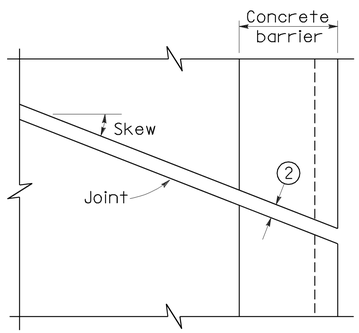

PLAN OF JOINT (SKEW ≤ 20°)

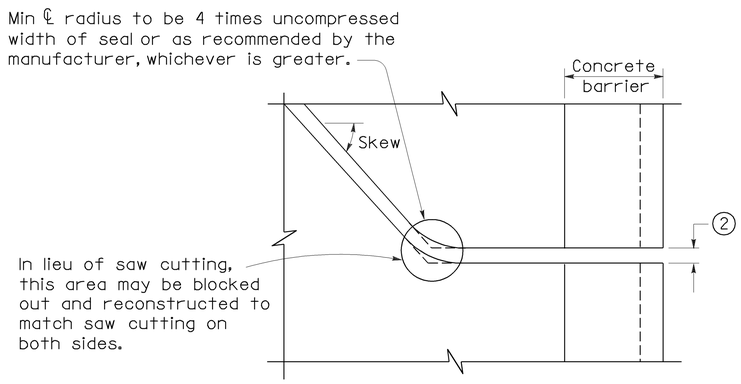

PLAN OF JOINT (SKEW > 20°)

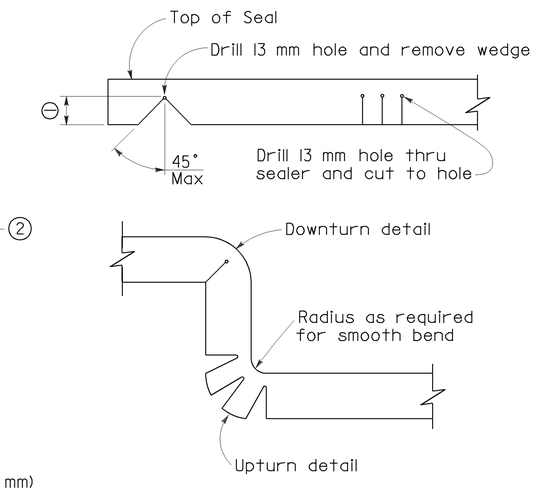

DETAIL A

DIMENSIONS "a" OF JOINT REQUIRED

Movement Rating (MR) ⑤	Bridge Type	"a" Dimension Deck Concrete Placed		
		Winter	Fall-Spring	Summer
50 mm	All except CIP/PS	40 mm	30 mm	20 mm
	CIP/PS	30 mm	25 mm	13 mm
40 mm	All except CIP/PS	30 mm	25 mm	13 mm
	CIP/PS	25 mm	20 mm	13 mm
25 mm	All except CIP/PS	25 mm	20 mm	13 mm
	CIP/PS	20 mm	13 mm	13 mm
13 mm	All except CIP/PS	20 mm	20 mm	13 mm
	CIP/PS	13 mm	13 mm	13 mm

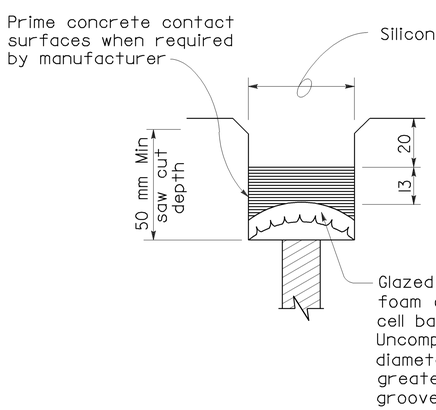

TYPE A SEAL

Movement rating : Silicone = 25 mm Max

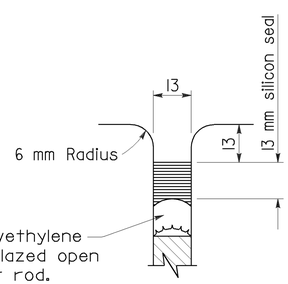

TYPE AL SEAL

Longitudinal joints only

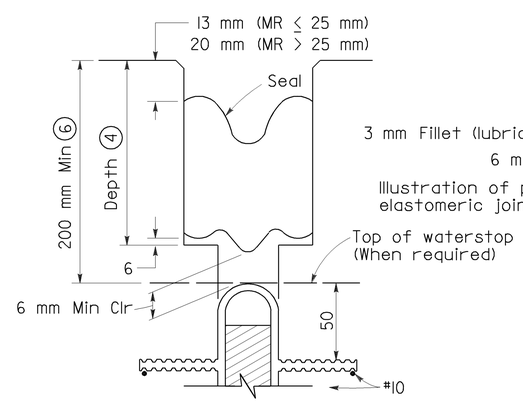

TYPE B JOINT SEAL
IN MINIMUM WIDTH POSITION (W_2)

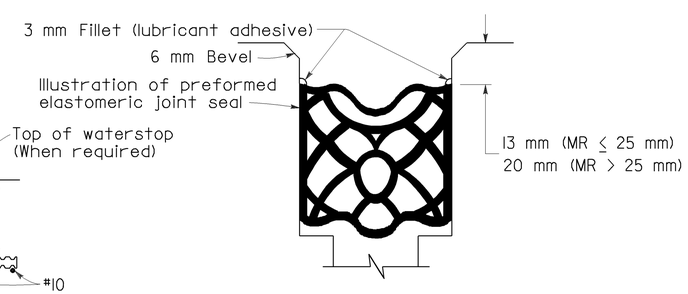

TYPE B SEAL

Movement Rating ≤ 50 mm

STATE OF CALIFORNIA
DEPARTMENT OF TRANSPORTATION

JOINT SEALS (MAXIMUM MOVEMENT RATING = 50 mm)

NO SCALE

ALL DIMENSIONS ARE IN MILLIMETERS UNLESS OTHERWISE SHOWN

RSP B6-21 DATED OCTOBER 5, 2007 SUPERSEDES RSP B6-21 DATED JANUARY 26, 2005 AND STANDARD PLAN B6-21 DATED JULY 1, 2004-PAGE 258 OF THE STANDARD PLANS BOOK DATED JULY 2004.

REVISED STANDARD PLAN RSP B6-21

2004 REVISED Std PLAN RSP B6-21

5-17-07

DIST	COUNTY	ROUTE	KILOMETER POST TOTAL PROJECT	SHEET NO.	TOTAL SHEETS
07	LA	5	42.8/47.3	520	1073

REGISTERED CIVIL ENGINEER

January 18, 2008
PLANS APPROVAL DATE

REGISTERED PROFESSIONAL ENGINEER Douglas J. Dunrud No. C47240 Exp. 12-31-09 CIVIL STATE OF CALIFORNIA

The State of California or its officers or agents shall not be responsible for the accuracy or completeness of electronic copies of this plan sheet.

To get to the Caltrans web site, go to: http://www.dot.ca.gov

Caltrans Metric

To accompany plans dated 6-8-09

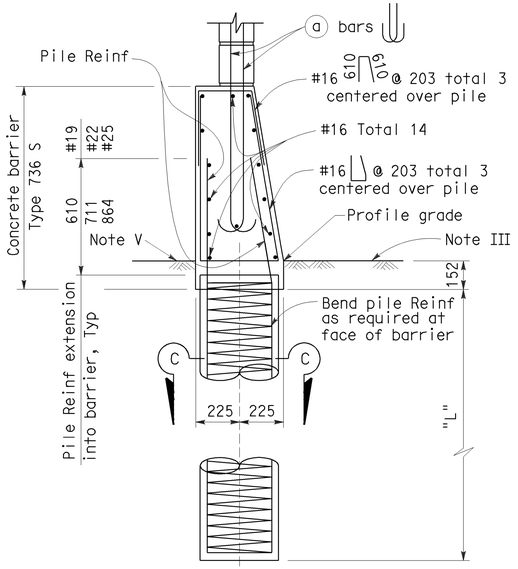

CASE 1
For details not shown, See Case 2.
Level ground ±10% on both sides of barrier.

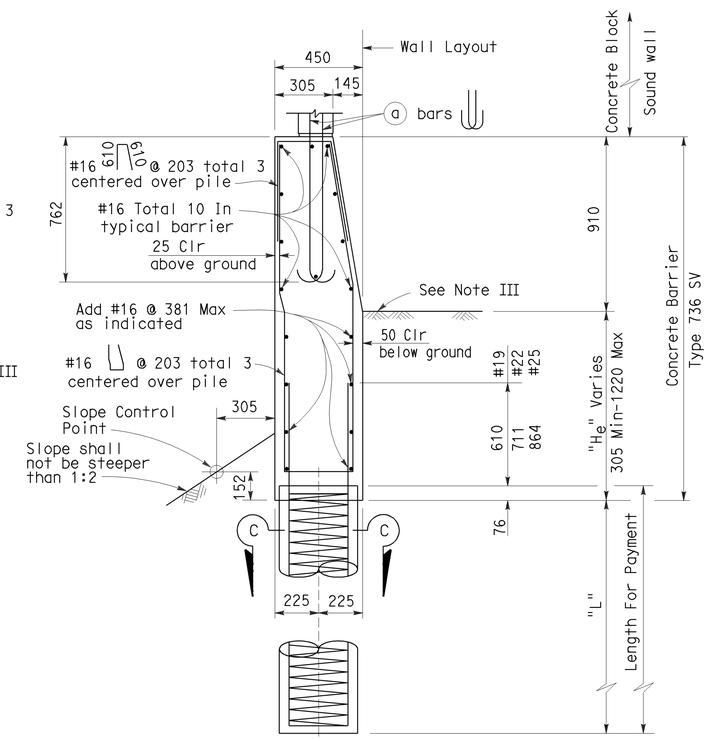

CASE 2
For details not shown, See Case 1.
Level ground ±10% at the traffic side of barrier and sloping ground on the opposite side.

BARRIER SECTIONS

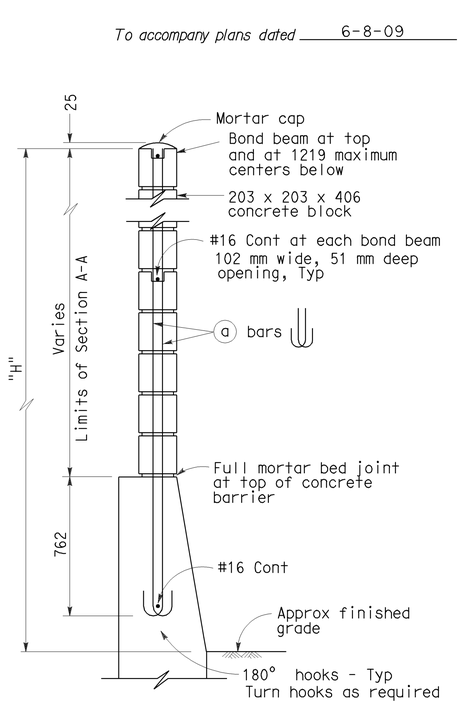

H=1930 THRU H=3150

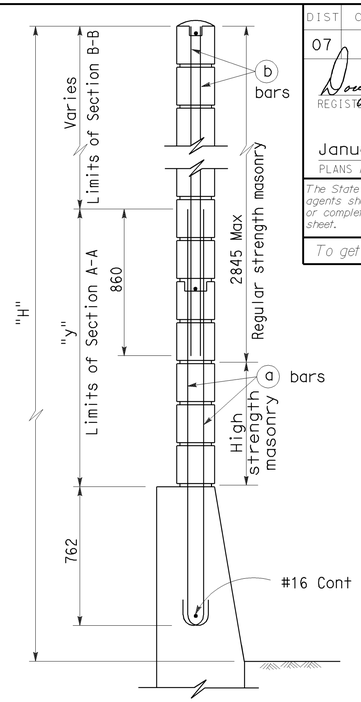

H=3759 THRU H=4978

For details not shown, see H=1930 thru H=3150.

TYPICAL SECTIONS

See Standard Plan B15-8 for pile details.

SOUND WALL REINFORCEMENT TABLE

Maximum H	ⓐ bars @ 406 Max	ⓑ bars @ 406 Max	"y"	f'm (MPa)	Compressive Strength of CMU (MPa)	Maximum H
1930	#13	---	---	10.34	13.1	1930
2540	#13	---	---	10.34	13.1	2540
3150	#13	---	---	10.34	13.1	3150
3759	#16	#13	1524	10.34	13.1	3759
4369	#19	#13	2134	10.34	13.1	4369
4978	#19	#13	2743	17.24	25.6	4978

NOTES A THROUGH G

A. For type of block, type of block bond, and joint finish, see other sheets.

B. When blocks are laid in stacked bond, ladder type, galvanized joint reinforcement shall be provided. A minimum of 2 - 3.76 mm wires continuous at 1219 mm maximum to be used. Locate reinforcement in joints that are at the approximate midpoint between bond beams.

C. Horizontal joints shall be tooled concave or may be weathered. Vertical joints shall be tooled concave or may be raked.

D. For intermediate wall heights (H), or barrier depths (He), that are between the values given, use the tabular information for the next higher (H) or (He).

E. Class 2 concrete to be used for the barrier.

F. Masonry strengths are listed in the "SOUND WALL REINFORCEMENT TABLE".

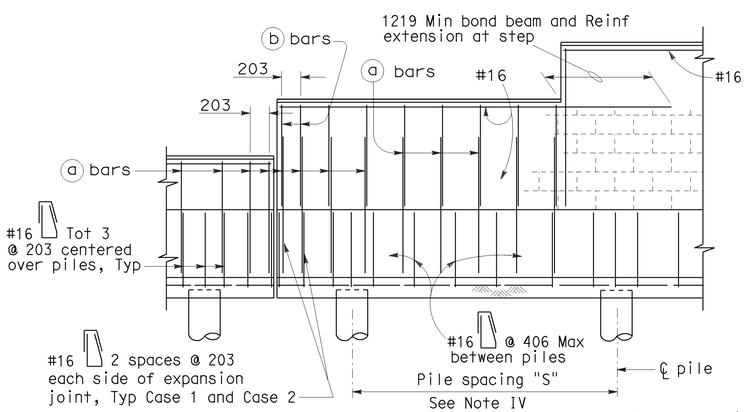

CASE 1
For details not shown, See Case 2.

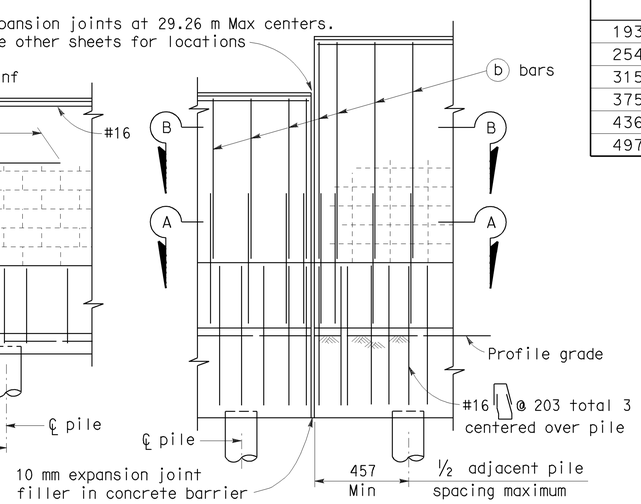

CASE 2
For details not shown, See Case 1.

PARTIAL ELEVATIONS

NOTES I THROUGH VI

I. Details shown are primarily to conform design of sound walls to Type 736S and Type 736 SV Concrete Barriers. For sound wall details conforming with barriers see Standard Plans B15-7 and B15-8.

II. For details and sections not shown, see Standard Plans B15-7 and B15-8.

III. Slope ground at traffic side of barrier to drain. Maximum slope ±10%. See Standard Plan B11-56, Note D.

IV. Pile spacing may be varied, but shall not exceed the tabular values. See Standard Plan B15-8.

V. For Case 1 - ground line to be at the same elevation on both sides of the barrier. Barrier shall not be used to retain earth.

VI. See Standard Plan B15-9 for other details.

STATE OF CALIFORNIA
DEPARTMENT OF TRANSPORTATION

SOUND WALL MASONRY BLOCK ON TYPE 736S/SV BARRIER DETAILS (1)

NO SCALE

ALL DIMENSIONS ARE IN MILLIMETERS UNLESS OTHERWISE SHOWN

RSP B15-6 DATED JANUARY 18, 2008 SUPERSEDES RSP B15-6 DATE APRIL 28, 2005 AND STANDARD PLAN B15-6 DATED JULY 1, 2004-PAGE 296 OF THE STANDARD PLANS BOOK DATED JULY 2004.

REVISED STANDARD PLAN RSP B15-6

2004 REVISED Std PLAN RSP B15-6

11-19-07

DIST	COUNTY	ROUTE	KILOMETER POST TOTAL PROJECT	SHEET NO.	TOTAL SHEETS
07	LA	5	42.8/47.3	521	1073

Caltrans Metric

REGISTERED CIVIL ENGINEER

June 6, 2008
PLANS APPROVAL DATE

REGISTERED PROFESSIONAL ENGINEER — Tillat Satter — No. C42892 — Exp. 03-31-10 — CIVIL — STATE OF CALIFORNIA

The State of California or its officers or agents shall not be responsible for the accuracy or completeness of electronic copies of this plan sheet.

To get to the Caltrans web site, go to: http://www.dot.ca.gov

To accompany plans dated 6-8-09

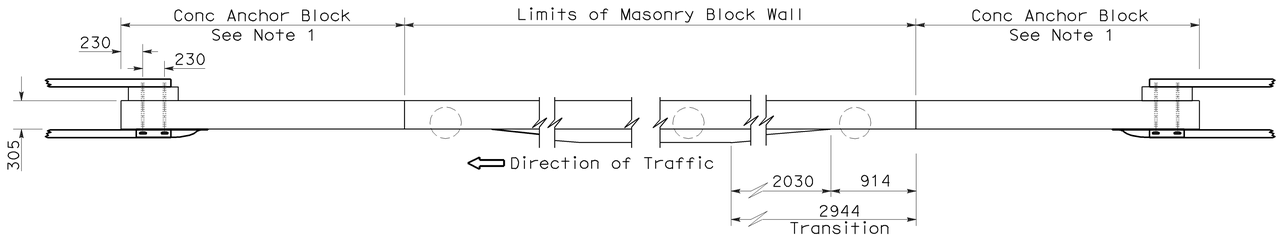

PLAN

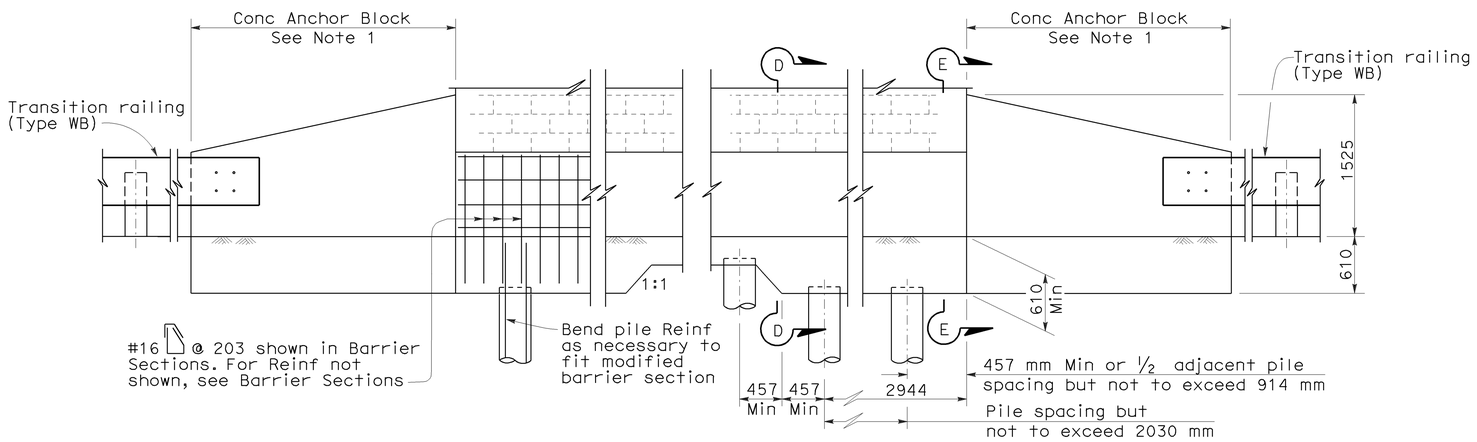

ELEVATION

METAL BEAM GUARDRAIL ANCHORAGE

For details not shown, see Standard Plan B11-56.

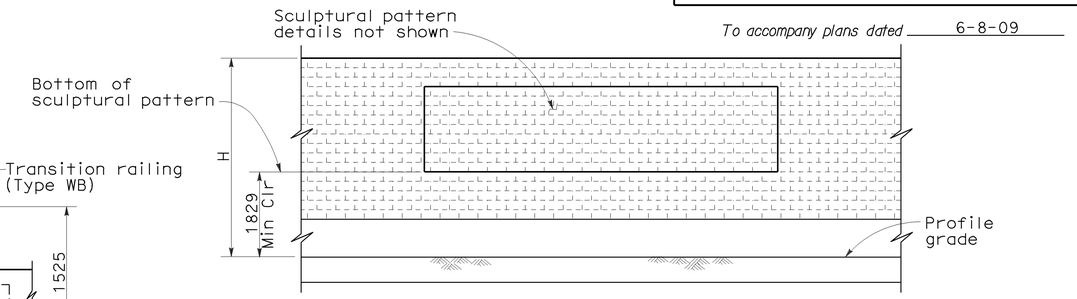

CLEARANCE DETAIL

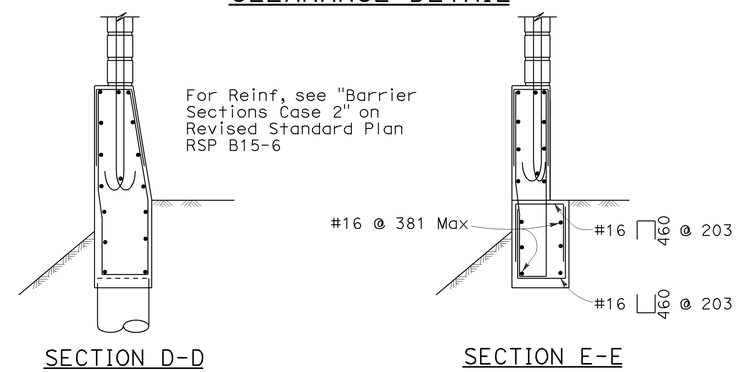

SECTION D-D

SECTION E-E

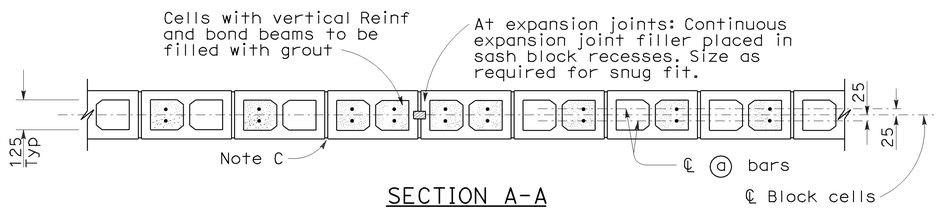

SECTION A-A

For details not shown, see other details.

H=1930 THRU H=3150

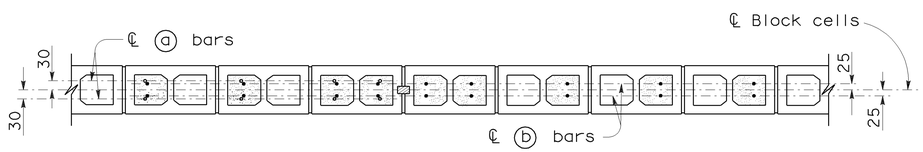

SECTION A-A SECTION B-B

For details not shown, see other details.

H=3759 THRU H=4978

DESIGN NOTES:

DESIGN

Uniform Building Code, 1997 Edition
and the Bridge Design Specifications.

DESIGN WIND LOAD

1293 Pa

DESIGN SEISMIC LOAD

0.57 Dead load

REINFORCED CONCRETE

f'c = 22.408 MPa
fy = 413.688 MPa

CONCRETE MASONRY

REGULAR STRENGTH	HIGH STRENGTH	
f'm = 10.34 MPa	f'm = 13.79 MPa	f'm = 17.24 MPa
fb = 3.41 MPa	fb = 4.55 MPa	fb = 5.72 MPa
fs = 165.5 MPa	fs = 165.5 MPa	fs = 165.5 MPa
n = 25.8	n = 19.3	n = 15.5

NOTE:

1. For Concrete Anchor Block and connection details, see "Connection Detail DD" on Standard Plan A77J3.

STATE OF CALIFORNIA
DEPARTMENT OF TRANSPORTATION

SOUND WALL MASONRY BLOCK ON TYPE 736S/SV BARRIER DETAILS (2)

NO SCALE

ALL DIMENSIONS ARE IN
MILLIMETERS UNLESS OTHERWISE SHOWN

RSP B15-7 DATED JUNE 6, 2008 SUPERSEDES STANDARD PLAN B15-7
DATED July 1, 2004 - PAGE 297 OF THE STANDARD PLANS BOOK DATED July 2004.

REVISED STANDARD PLAN RSP B15-7

2004 REVISED Std PLAN RSP B15-7

5-15-08

DIST	COUNTY	ROUTE	KILOMETER POST TOTAL PROJECT	SHEET NO.	TOTAL SHEETS
07	LA	5	42.8/47.3	522	1073

REGISTERED CIVIL ENGINEER

January 24, 2005
PLANS APPROVAL DATE

REGISTERED PROFESSIONAL ENGINEER
Tillat Sattar
No. C42892
Exp. 03-31-2006
CIVIL
STATE OF CALIFORNIA

The State of California or its officers or agents shall not be responsible for the accuracy or completeness of electronic copies of this plan sheet.

To get to the Caltrans web site, go to: http://www.dot.ca.gov

To accompany plans dated 6-8-09

INSTRUCTIONS TO FABRICATOR

PROJECT PLANS SHOW:

1. Sign structure location.
2. Length of structure frame.
3. Panel size and locations on structure.
4. Walkway length for two post signs.
5. Post type and height to bottom of frame.
6. Base plate elevation.
7. Footing elevation or location of pile foundation.
8. Photoelectric unit location if required.

REFER TO THE FOLLOWING STANDARD PLANS FOR DETAILS NOT SHOWN ON PROJECT PLANS:

Sheet #	SHEET NAME
RSP S1	Overhead Signs-Truss, Instructions and Examples
RSP S2	Overhead Signs-Truss, Single Post Type, Post Types II to IX
RSP S3	Overhead Signs-Truss, Single Post Type, Base Plate and Anchorage Details
RSP S4	Overhead Signs-Truss, Single Post Type, Structural Frame Members Details No. 1
RSP S5	Overhead Signs-Truss, Single Post Type, Structural Frame Members Details No. 2
RSP S6	Overhead Signs-Truss, Gusset Plate Details
RSP S7	Overhead Signs-Truss, Single Post Type, Square Pedestal Pile Foundation
RSP S8	Overhead Signs-Truss, Single Post Type, Round Pedestal Pile Foundation
RSP S9	Overhead Signs-Truss, Two Post Type, Post Types I-S through VII-S
RSP S10	Overhead Signs-Truss, Two Post Type, Base Plate and Anchorage Details
RSP S11	Overhead Signs-Truss, Two Post Type, Structural Frame Members
RSP S12	Overhead Signs-Truss, Structural Frame Details
RSP S13	Overhead Signs-Truss, Frame Juncture Details
RSP S14	Overhead Signs-Truss, Two Post Type, Square Pedestal Pile Foundation
RSP S15	Overhead Signs-Truss, Two Post Type, Round Pedestal Pile Foundation
RSP S16	Overhead Signs, Walkway Details No. 1
RSP S17	Overhead Signs, Walkway Details No. 2
NSP S17A	Overhead Signs, Walkway Details No. 3
RSP S18	Overhead Signs, Walkway Safety Railing Details
RSP S19	Overhead Signs-Truss, Sign Mounting Details, Laminated Panel-Type A
RSP S20	Overhead Signs, Steel Frames, Removable Sign Panel Frames
RSP S21	Overhead Signs, Removable Sign Panel Frames, Mounting Details
RSP S22	Overhead Signs-Truss, Removable Sign Panel Frames, 2794 mm and 3048 mm Sign Panels

WALKWAY BRACKETS:

Space all walkway brackets maintaining uniform spacing where possible. Maximum spacing shall not exceed 1676 mm.

LIGHTING FIXTURE SUPPORTS:

Where distance from walkway bracket to end of sign panel exceeds 406 mm, extend lighting fixture supports to next walkway bracket. See Example No. 2.

WALKWAY AND SAFETY RAILING:

Walkway to be continuous for entire length of frame for single post signs. For two post signs, see Project Plans. Safety railing to protect entire walkway, but continuous for no more than 3353 mm in one unit.

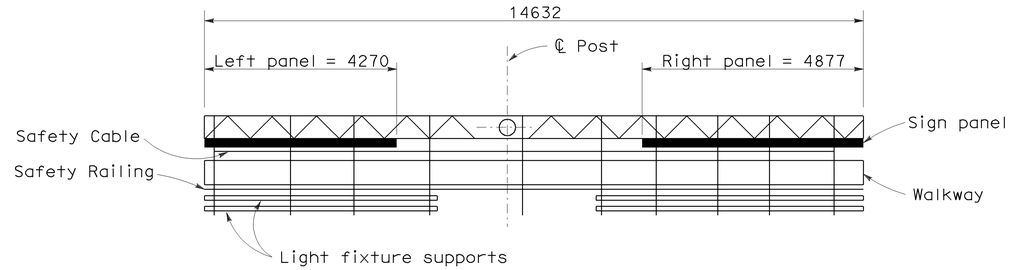

PLAN

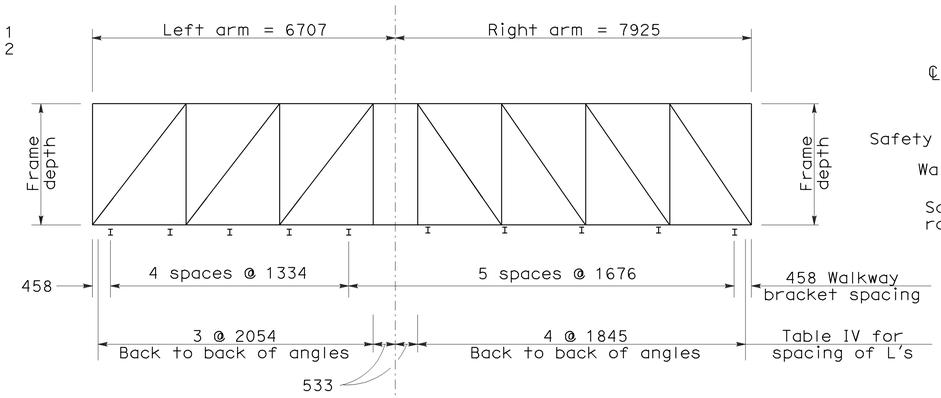

UNBALANCED SINGLE POST TYPE

Example No. 1

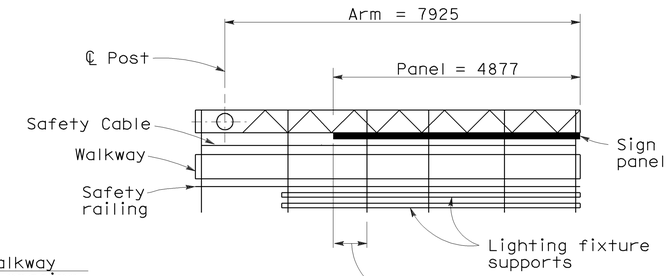

PLAN

CANTILEVER SINGLE POST TYPE

Example No. 2

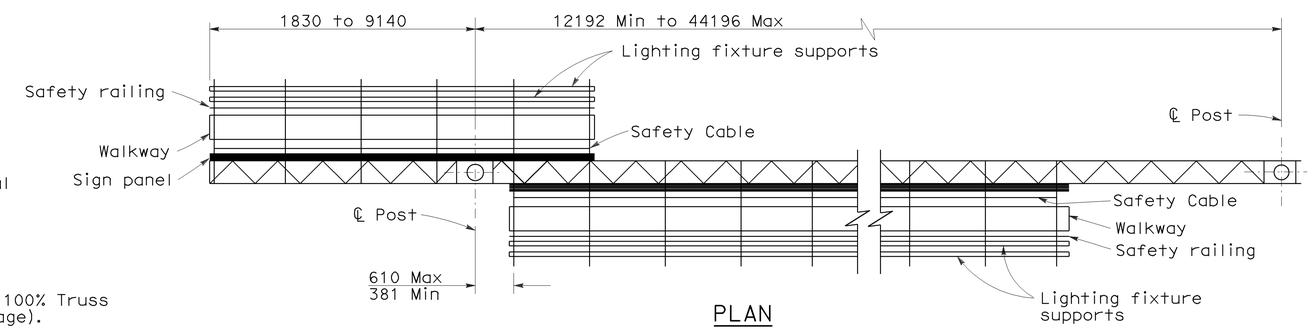

PLAN

TWO POST TYPE WITH CANTILEVER (PART DOUBLE-FACED)

Example No. 3

GENERAL NOTES

DESIGN:

AASHTO Specifications for Structural Supports for Highway Signs, Luminaires and Traffic Signals, dated 2001.

CONSTRUCTION:

Standard Specifications and the Special Provisions.

LOADING:

WIND LOADING:

Normal to face of sign: 1930 Pa on 100% Truss surface area (i.e. 100% panel coverage).

Transverse to face of sign: 20% of normal force.

WALKWAY LOADING:

Dead load +229 kg concentrated live load.

UNIT STRESSES:

STRUCTURAL STEEL: fy = 250 MPa
REINFORCED CONCRETE: fy = 415 MPa
f'c = 25 MPa

FOOTING SOIL PRESSURE: 120 kPa (spread footing)

MINIMUM CLEARANCE

Vertical roadway clearance 5500 mm.

WELDING:

All welding continuous unless otherwise noted on the plans. All welding to be done in accordance with the Standard Specifications.

Standard Plan Sheet No.

Detail No.

NOTE

Signs are shown and dimensioned looking in the direction of traffic. Double faced signs are shown and dimensioned looking ahead along stationing.

STATE OF CALIFORNIA
DEPARTMENT OF TRANSPORTATION

OVERHEAD SIGNS-TRUSS INSTRUCTIONS AND EXAMPLES

NO SCALE

ALL DIMENSIONS ARE IN MILLIMETERS UNLESS OTHERWISE SHOWN

RSP S1 DATED JANUARY 24, 2005 SUPERSEDES STANDARD PLAN S1 DATED JULY 1, 2004-PAGE 310 OF THE STANDARD PLANS BOOK DATED JULY 2004.

REVISED STANDARD PLAN RSP S1

2004 REVISED Std PLAN RSP S1

DIST	COUNTY	ROUTE	KILOMETER POST TOTAL PROJECT	SHEET NO.	TOTAL SHEETS
07	LA	5	42.8/47.3	523	1073

REGISTERED CIVIL ENGINEER

April 28, 2005
PLANS APPROVAL DATE

REGISTERED PROFESSIONAL ENGINEER Tillat Sattar No. C42892 Exp. 03-31-2006 CIVIL STATE OF CALIFORNIA

The State of California or its officers or agents shall not be responsible for the accuracy or completeness of electronic copies of this plan sheet.

To get to the Caltrans web site, go to: http://www.dot.ca.gov

To accompany plans dated 6-8-09

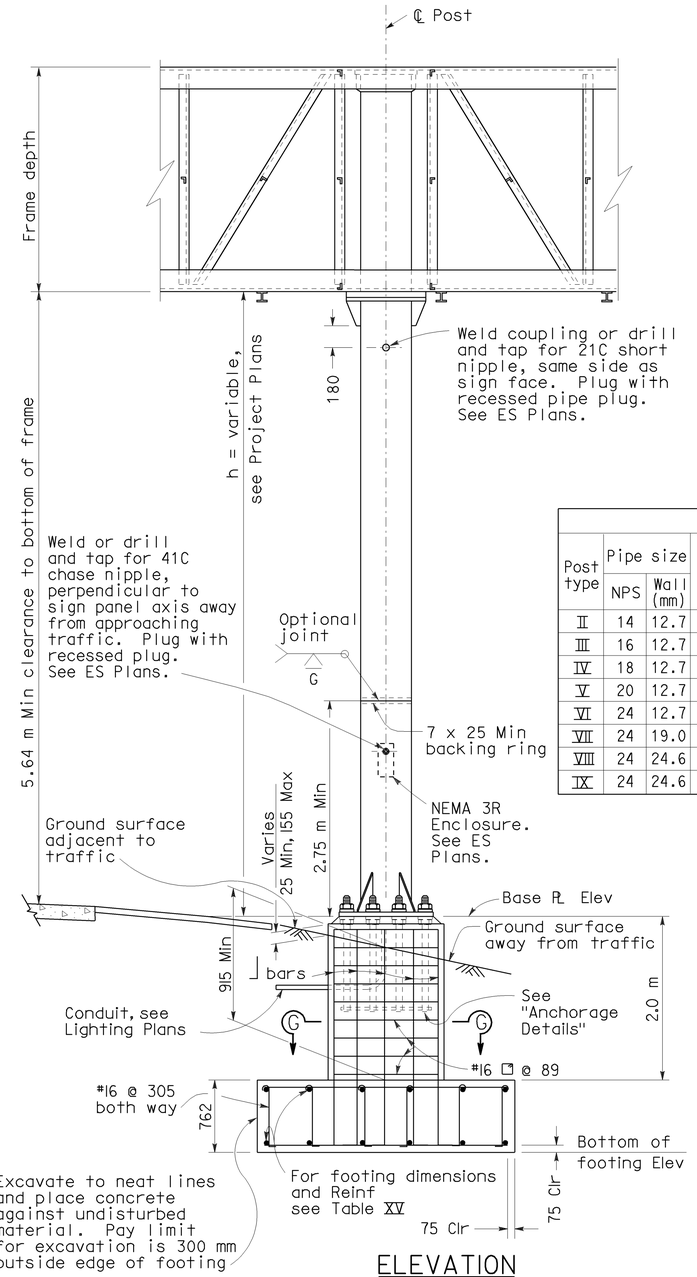

ELEVATION

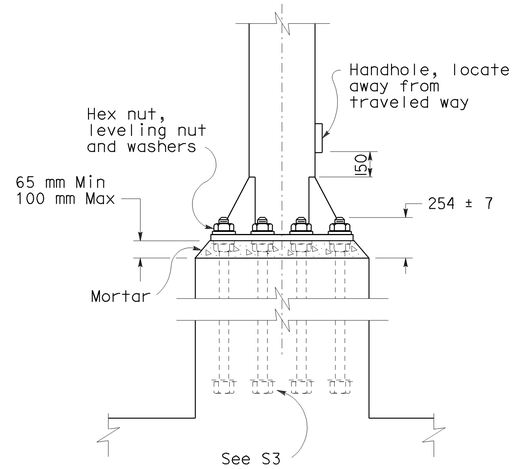

ANCHORAGE DETAILS

TABLE XV

Post type	Pipe size NPS	Pipe size Wall (mm)	Cap Plate for L 127x127 (mm)	Cap Plate for L 152x152 (mm)	Round Pedestal: Pedestal Size Dia (mm)	Round Pedestal: Vertical ⌋-Bars Equally spaced total	Round Pedestal: Vertical ⌋-Bars Bar Size	Round Pedestal: Vertical ⌋-Bars Bar B.C. (mm)	Round Pedestal: Spiral Bar Size	Round Pedestal: Spiral Pitch (mm)	Square Pedestal: Pedestal Size Square (mm)	Square Pedestal: Vertical ⌋-Bars Equally spaced total	Square Pedestal: Vertical ⌋-Bars Bar Size	Square Pedestal: Vertical ⌋-Bars Spacing ea face (mm)	Square Pedestal: Hoop Bar Size	Square Pedestal: Hoop Spacing (mm)	Pile footing Dia (mm)	Pile footing Depth (m)	Alternate: Spread Footing See note 2 (mm)	Alternate: Spread Footing Reinforcement: Width Top	Alternate: Spread Footing Reinforcement: Width Bottom	Alternate: Spread Footing Reinforcement: Longitudinal Top	Alternate: Spread Footing Reinforcement: Longitudinal Bottom	Alternate: Spread Footing Reinforcement: Footing Stirrups
II	14	12.7	610 x 610 x 25	660 x 660 x 25	1600	16	32	1372	16	89	1600	16	32	346	16	89	1372	4.5	3658 x 4267 x 762	14-#19	14-#22	13-#29	13-#29	#16 @ 305
III	16	12.7	660 x 660 x 25	711 x 711 x 25	1600	16	32	1372	16	89	1600	16	32	346	16	89	1372	4.9	3658 x 4267 x 762	15-#19	15-#22	13-#29	13-#29	#16 @ 305
IV	18	12.7	711 x 711 x 25	762 x 762 x 25	1600	16	32	1372	16	89	1600	16	32	346	16	89	1372	5.5	3658 x 4267 x 762	15-#19	15-#22	13-#29	13-#29	#16 @ 305
V	20	12.7	762 x 762 x 25	813 x 813 x 25	1600	16	32	1372	16	89	1600	16	32	346	16	89	1372	5.8	3962 x 4267 x 762	15-#19	15-#22	14-#29	14-#29	#16 @ 305
VI	24	12.7	864 x 864 x 25	914 x 914 x 25	1753	16	36	1534	16	89	1753	16	36	381	16	89	1524	6.7	3962 x 4877 x 762	17-#22	17-#22	14-#29	14-#36	#16 @ 305
VII	24	19.0	864 x 864 x 25	914 x 914 x 25	1753	16	36	1534	16	89	1753	16	36	381	16	89	1524	7.0	3962 x 5182 x 762	18-#22	18-#22	14-#29	14-#36	#16 @ 305
VIII	24	24.6	864 x 864 x 25	914 x 914 x 25	1753	16	36	1534	16	89	1753	16	36	381	16	89	1524	7.6	3962 x 5486 x 762	19-#22	19-#22	14-#29	14-#36	#16 @ 305
IX	24	24.6	864 x 864 x 25	914 x 914 x 25	1753	16	36	1534	16	89	1753	16	36	381	16	89	1524	7.6	3962 x 5486 x 762	19-#22	19-#22	14-#29	14-#36	#16 @ 305

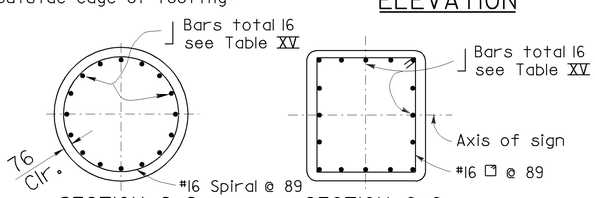

SECTION G-G
ROUND PEDESTAL

SECTION G-G
RECTANGLE PEDESTAL

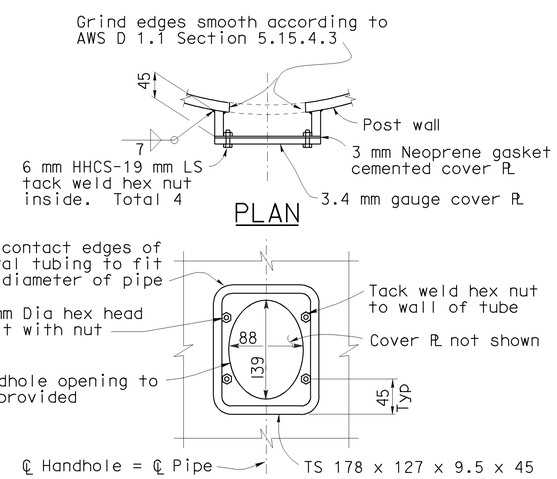

PLAN

ELEVATION

TYPICAL DETAILS OF HANDHOLE AND COVER

Notes:

1. For "General Notes" see Revised Standard Plan RSP S1.
2. Longer side of footing shall be normal to axis of sign.
3. Backfill shall be in place prior to erection of post.
4. Thread upper 254 mm of anchor bolts and galvanize upper 305 mm.
5. Spread footing shown, use Pile Foundation when shown on the Project Plans.
6. Anchor plates may be retained with hexagon nut or formed head as alternatives to details shown.
7. On single post sign structures, the post shall be raked out of plumb, with the use of the leveling nuts to make the bottom of the sign frame level.
8. At final position of post all top and bottom nuts shall be tightened against base plate.
9. When foundation is located on a steep slope with exposed face of concrete adjacent to traffic, see "Detail C" on Revised Standard Plan RSP S7 or RSP S8, as applicable.
10. Slope protection required when indicated on the Project Plans.

STATE OF CALIFORNIA
DEPARTMENT OF TRANSPORTATION

OVERHEAD SIGNS-TRUSS SINGLE POST TYPE POST TYPES II THROUGH IX

NO SCALE

ALL DIMENSIONS ARE IN MILLIMETERS UNLESS OTHERWISE SHOWN

RSP S2 DATED APRIL 28, 2005 SUPERSEDES RSP S2 DATED JANUARY 24,2005 AND STANDARD PLAN S2 DATED JULY 1, 2004-PAGE 311 OF THE STANDARD PLANS BOOK DATED JULY 2004.

REVISED STANDARD PLAN RSP S2

2004 REVISED Std PLAN RSP S2

DIST	COUNTY	ROUTE	KILOMETER POST TOTAL PROJECT	SHEET NO.	TOTAL SHEETS
07	LA	5	42.8/47.3	524	1073

REGISTERED CIVIL ENGINEER

January 24, 2005
PLANS APPROVAL DATE

REGISTERED PROFESSIONAL ENGINEER — Tillat Sattar — No. C42892 — Exp. 03-31-2006 — CIVIL — STATE OF CALIFORNIA

The State of California or its officers or agents shall not be responsible for the accuracy or completeness of electronic copies of this plan sheet.

To get to the Caltrans web site, go to: http://www.dot.ca.gov

To accompany plans dated 6-8-09

Caltrans Metric

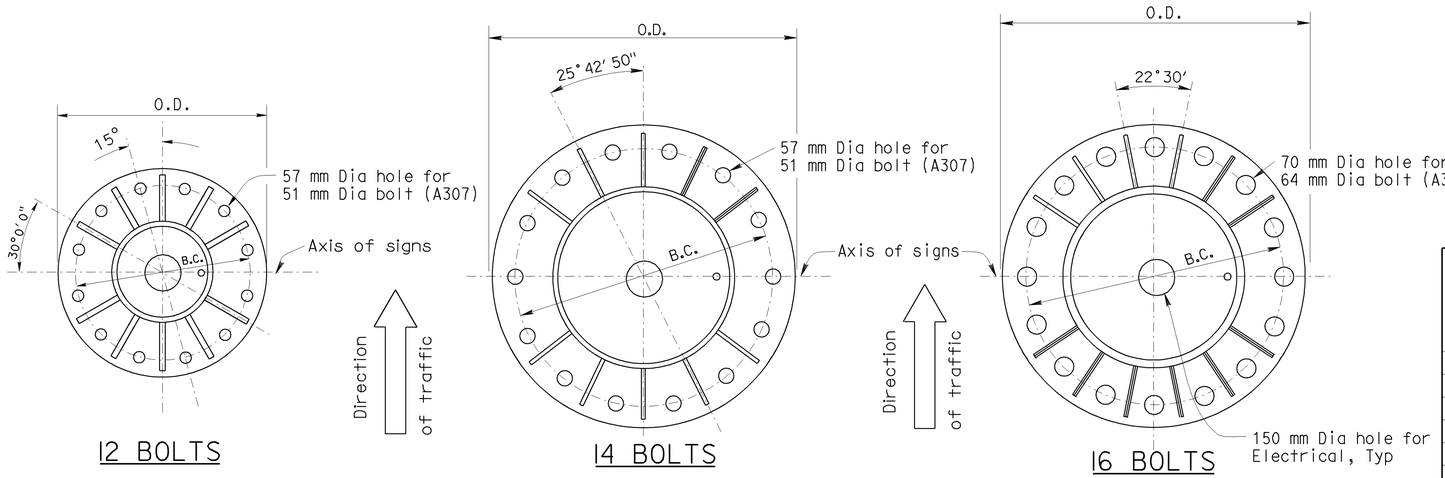

SINGLE POST TYPE BASE PLATE DETAILS

Post Type No.	Nominal Pipe Size (NPS)	Pipe Thickness (mm)	Base PL OD & Thickness (mm)	Anchor: Bolt Circle (mm)	Anchor: Bolts Total & Dia (mm)	CIDH: Pile Dia (mm)	CIDH: Pile Depth (m)	CIDH: Vertical Reinforcing: Total	CIDH: Vertical Reinforcing: Bar Size	CIDH: Vertical Reinforcing: Bar Circle (mm)	CIDH: Spiral: Bar Size	CIDH: Spiral: Pitch (mm)
II	14	12.7	864 x 51	610	12-51	1372	4.5	26	32	1143	16	89
III	16	12.7	864 x 51	610	12-51	1372	4.9	26	32	1143	16	89
IV	18	12.7	864 x 51	610	12-51	1372	5.5	26	32	1143	16	89
V	20	12.7	1016 x 64	864	14-51	1372	5.8	26	32	1143	16	89
VI	24	12.7	1016 x 64	864	16-64	1524	6.7	28	36	1295	16	89
VII	24	19.0	1016 x 64	864	16-64	1524	7.0	28	36	1295	16	89
VIII	24	24.6	1016 x 89	864	16-64	1524	7.6	28	36	1295	16	89
IX	24	24.6	1016 x 89	864	16-64	1524	7.6	28	36	1295	16	89

SINGLE POST TABLE

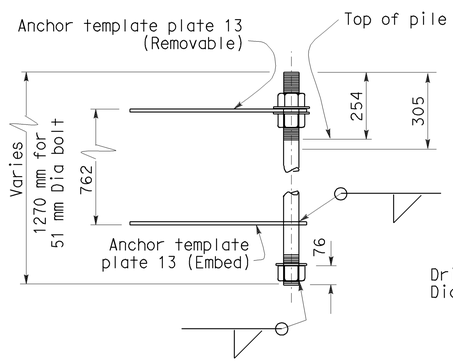

FOR POST II THRU IV
12 BOLTS PATTERN

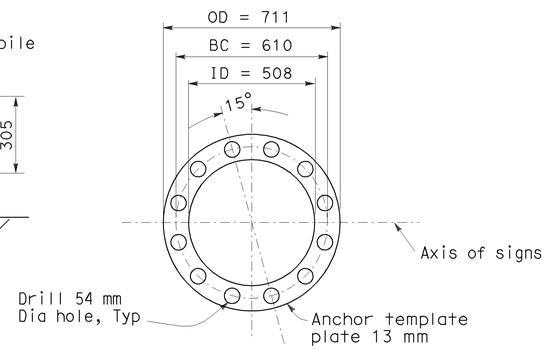

12 BOLTS

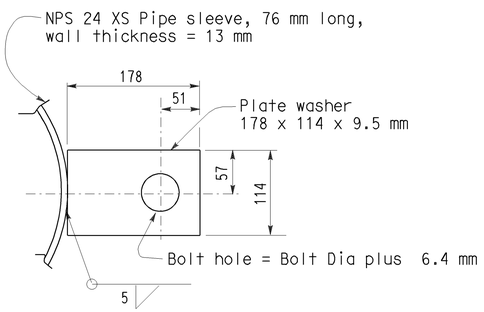

PLATE WASHER FOR
14 &16 BOLT PATTERN

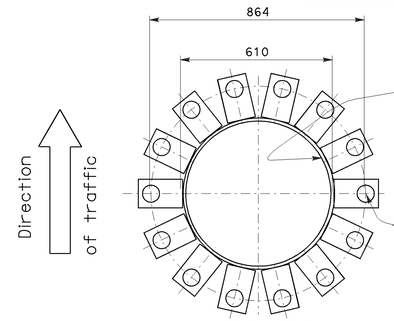

14 BOLTS

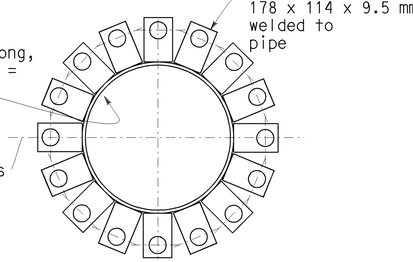

16 BOLTS

ANCHOR BOLT TEMPLATE

Template to match base plate anchor bolt layouts

(Option: Permanent template similar to ring plate type can be used in lieu of plate washer type).

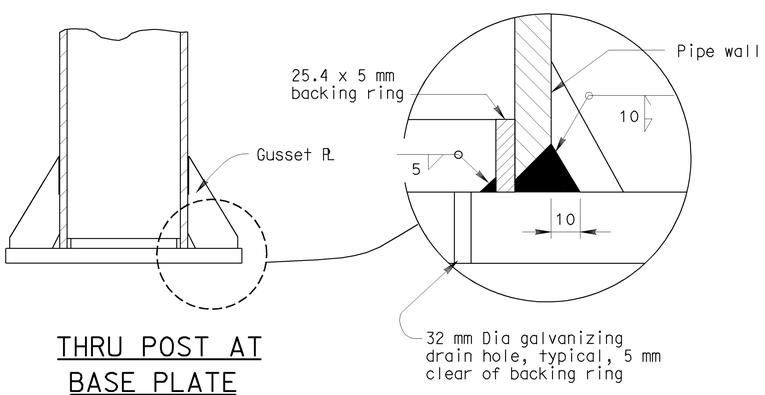

THRU POST AT
BASE PLATE

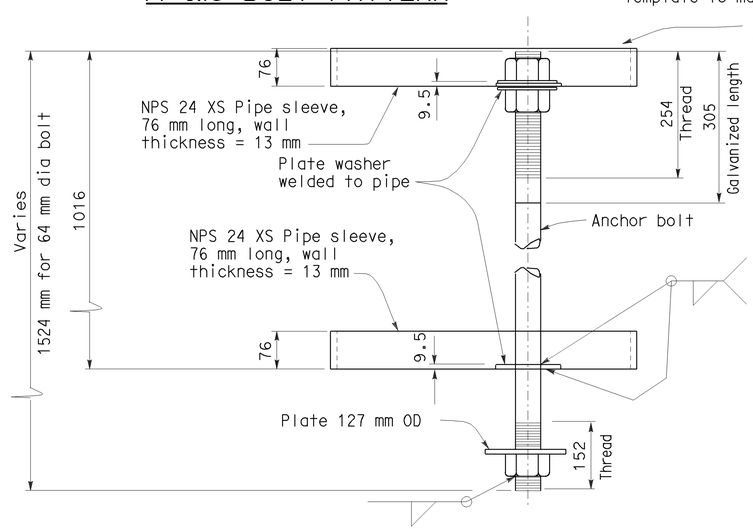

ANCHOR BOLT TEMPLATE ASSEMBLY DETAIL

Note: One bolt shown only. Other bolts not shown.

STATE OF CALIFORNIA
DEPARTMENT OF TRANSPORTATION

OVERHEAD SIGNS-TRUSS SINGLE POST TYPE BASE PLATE AND ANCHORAGE DETAILS

NO SCALE

ALL DIMENSIONS ARE IN MILLIMETERS UNLESS OTHERWISE SHOWN

RSP S3 DATED JANUARY 24, 2005 SUPERSEDES STANDARD PLAN S3
DATED JULY 1, 2004-PAGE 312 OF THE STANDARD PLANS BOOK DATED JULY 2004.

REVISED STANDARD PLAN RSP S3

2004 REVISED Std PLAN RSP S3

To accompany plans dated 6-8-09

Caltrans Metric

DIST	COUNTY	ROUTE	KILOMETER POST TOTAL PROJECT	SHEET NO.	TOTAL SHEETS
07	LA	5	42.8/47.3	525	1073

REGISTERED CIVIL ENGINEER

January 24, 2005
PLANS APPROVAL DATE

REGISTERED PROFESSIONAL ENGINEER Tillat Sattar No. C42892 Exp. 03-31-2006 CIVIL STATE OF CALIFORNIA

The State of California or its officers or agents shall not be responsible for the accuracy or completeness of electronic copies of this plan sheet.

To get to the Caltrans web site, go to: http://www.dot.ca.gov

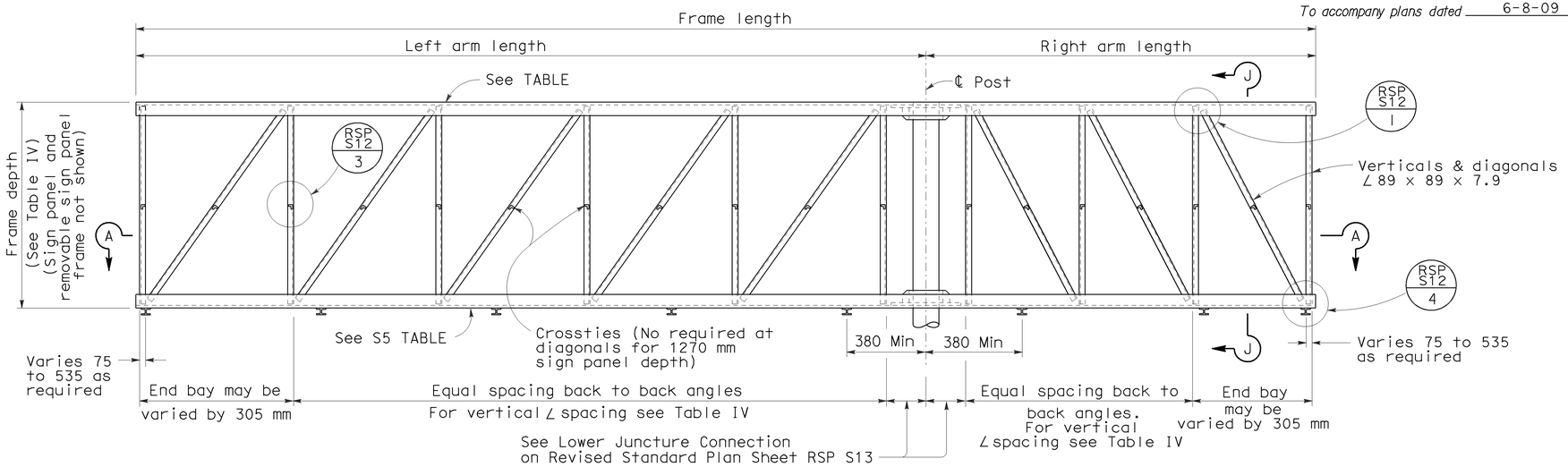

Note:

Left arm may be shorter, longer or equal to right arm length

ELEVATION

TABLE IV

Sign Panel Depth (mm)	Frame Depth (mm)	Maximum Vertical ∠ Spacing (mm)	See Note 6 (mm)
1270	1423	1372	1220
1524	1675	1524	1220
1778	1931	1676	1220
2032	2185	1829	1525
2286	2439	2134	1525
2540	2693	2134	1830
2794	2693	2134	1830
3048	2693	2134	1830

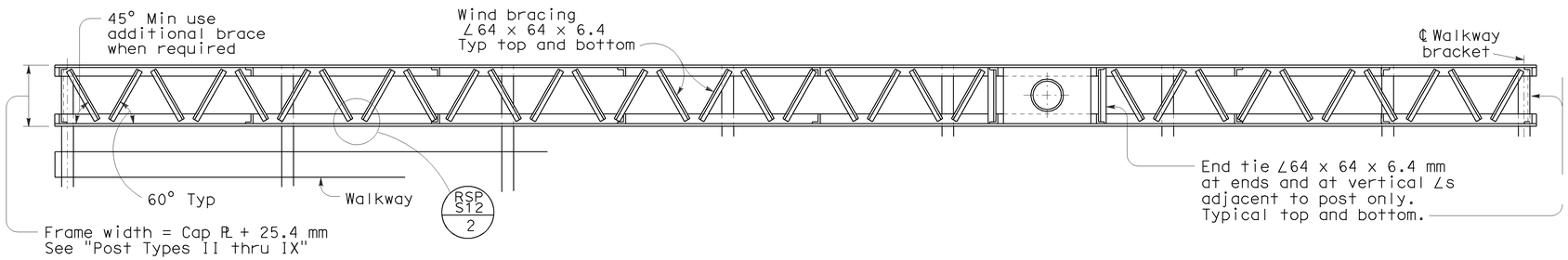

SECTION A-A

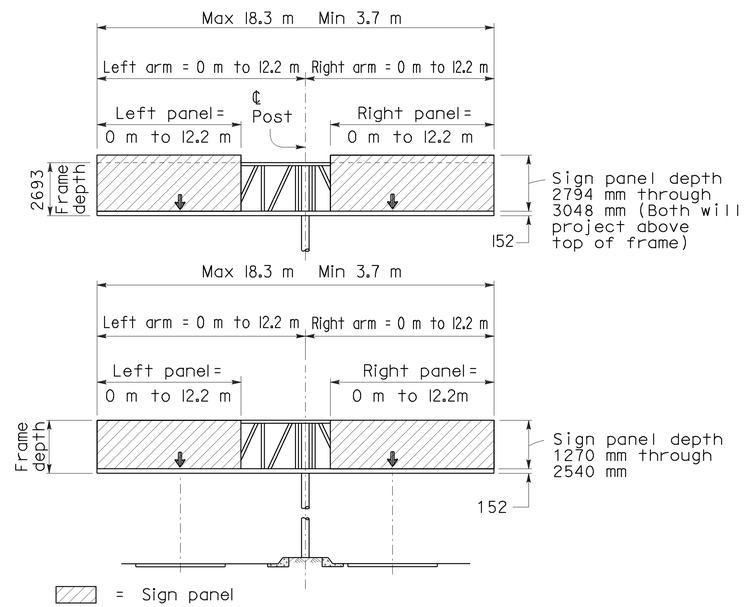

RANGE OF STRUCTURE SIZES

Notes:

1. For connection of frame to post see RSP S13.
2. For walkway see RSP S16 and RSP S17.
3. For walkway length see RSP S1.
4. Minimum length of frame = 3660 mm.
5. Maximum length of frame = 18 290 mm.
6. Diagonal not required if arm length is equal to or less than shown in this column see table IV.

Standard Plan sheet number
Detail number

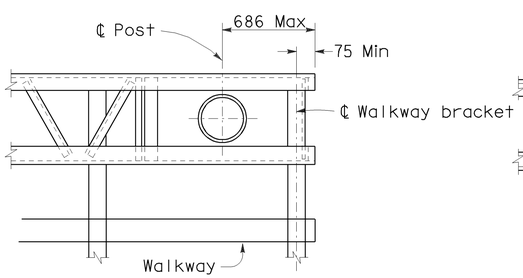

PART PLAN OF CANTILEVER TYPE AT POST

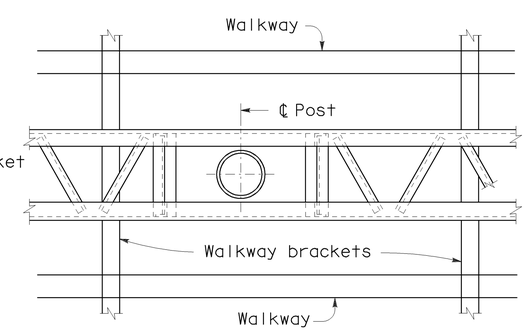

PART PLAN OF DOUBLE FACED TYPE AT POST

STATE OF CALIFORNIA
DEPARTMENT OF TRANSPORTATION

OVERHEAD SIGNS-TRUSS SINGLE POST TYPE STRUCTURAL FRAME MEMBERS DETAILS No.1

NO SCALE

ALL DIMENSIONS ARE IN MILLIMETERS UNLESS OTHERWISE SHOWN

RSP S4 DATED JANUARY 24, 2005 SUPERSEDES STANDARD PLAN S4 DATED JULY 1, 2004-PAGE 313 OF THE STANDARD PLANS BOOK DATED JULY 2004.

REVISED STANDARD PLAN RSP S4

2004 REVISED Std PLAN RSP S4

DIST	COUNTY	ROUTE	KILOMETER POST TOTAL PROJECT	SHEET NO.	TOTAL SHEETS
07	LA	5	42.8/47.3	526	1073

REGISTERED CIVIL ENGINEER

January 24, 2005
PLANS APPROVAL DATE

REGISTERED PROFESSIONAL ENGINEER
Tillat Sattar
No. C42892
Exp. 03-31-2006
CIVIL
STATE OF CALIFORNIA

The State of California or its officers or agents shall not be responsible for the accuracy or completeness of electronic copies of this plan sheet.

To get to the Caltrans web site, go to: http://www.dot.ca.gov

To accompany plans dated 6-8-09

2004 REVISED Std PLAN RSP S6

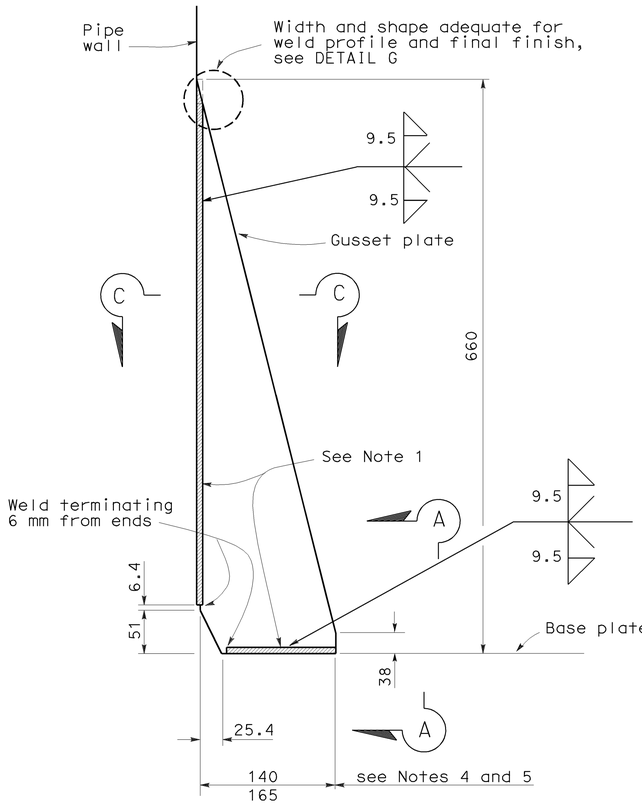

WELD DETAILS

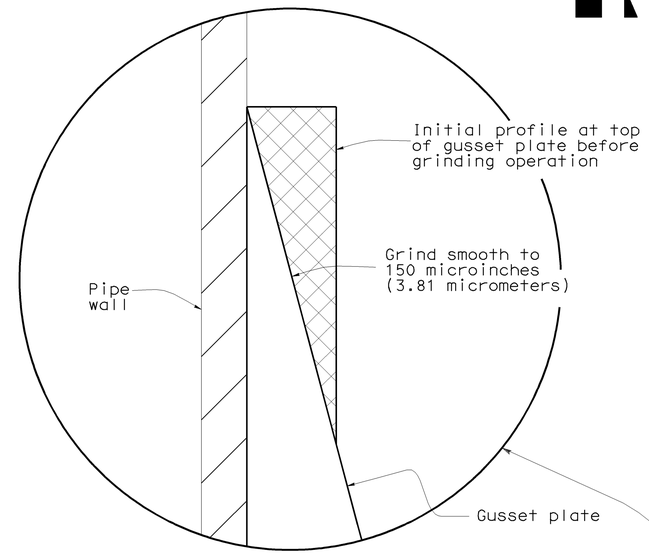

DETAIL G

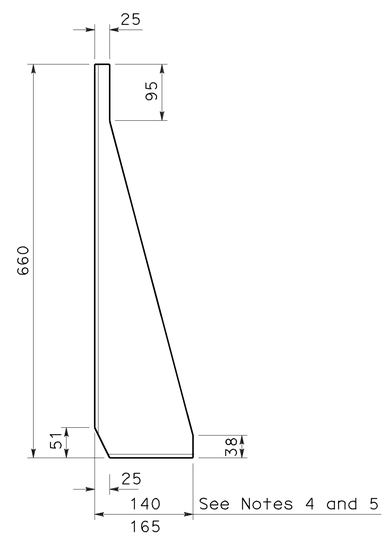

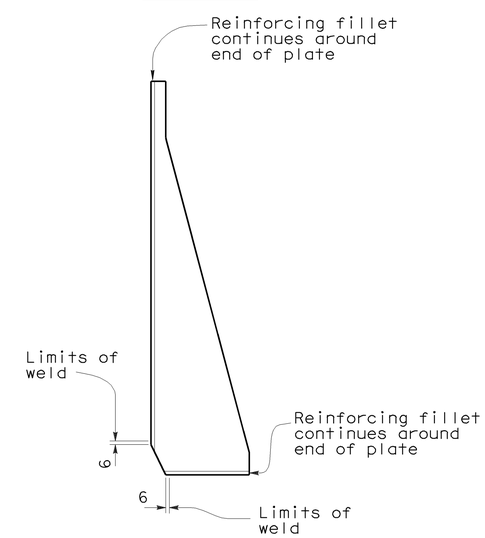

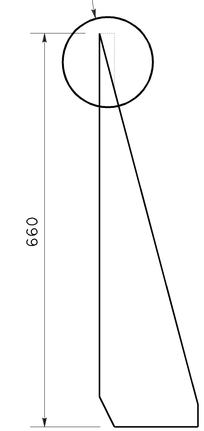

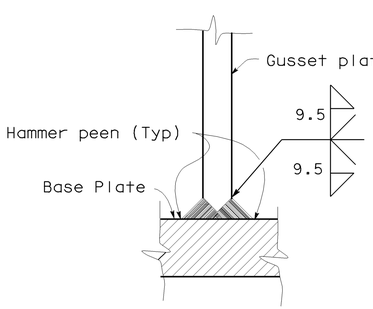

SECTION A-A

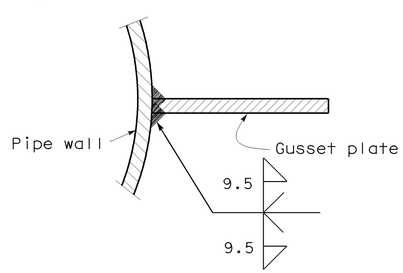

SECTION C-C

NOTES

1. All welding details shall conform to the requirements of AWS D1.1 and special provisions.
2. All gussets to be same height.
3. Provide a smooth transition from gusset plate to tube.
4. 140 mm for post Types I-S through V-S and single post with 12 and 14 bolts pattern.
5. 165 mm for post Type VI-S and VII-S and single post with 16 bolts pattern.

STATE OF CALIFORNIA
DEPARTMENT OF TRANSPORTATION

OVERHEAD SIGNS-TRUSS GUSSET PLATE DETAILS

NO SCALE

ALL DIMENSIONS ARE IN MILLIMETERS UNLESS OTHERWISE SHOWN

RSP S6 DATED JANUARY 24, 2005 SUPERSEDES STANDARD PLAN S6 DATED JULY 1, 2004-PAGE 315 OF THE STANDARD PLANS BOOK DATED JULY 2004.

REVISED STANDARD PLAN RSP S6

DIST	COUNTY	ROUTE	KILOMETER POST TOTAL PROJECT	SHEET NO.	TOTAL SHEETS
07	LA	5	42.8/47.3	527	1073

Caltrans Metric

REGISTERED CIVIL ENGINEER

January 24, 2005
PLANS APPROVAL DATE

REGISTERED PROFESSIONAL ENGINEER
Tillat Sattar
No. C42892
Exp. 03-31-2006
CIVIL
STATE OF CALIFORNIA

The State of California or its officers or agents shall not be responsible for the accuracy or completeness of electronic copies of this plan sheet.

To get to the Caltrans web site, go to: http://www.dot.ca.gov

To accompany plans dated 6-8-09

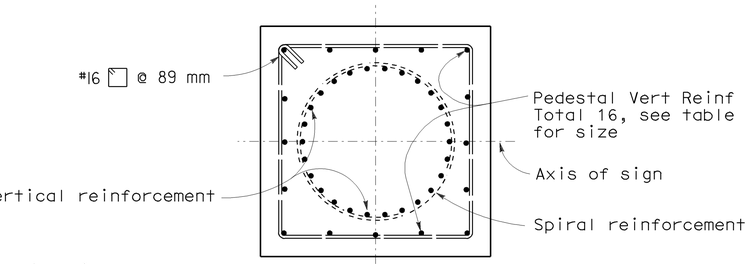

SECTION B-B

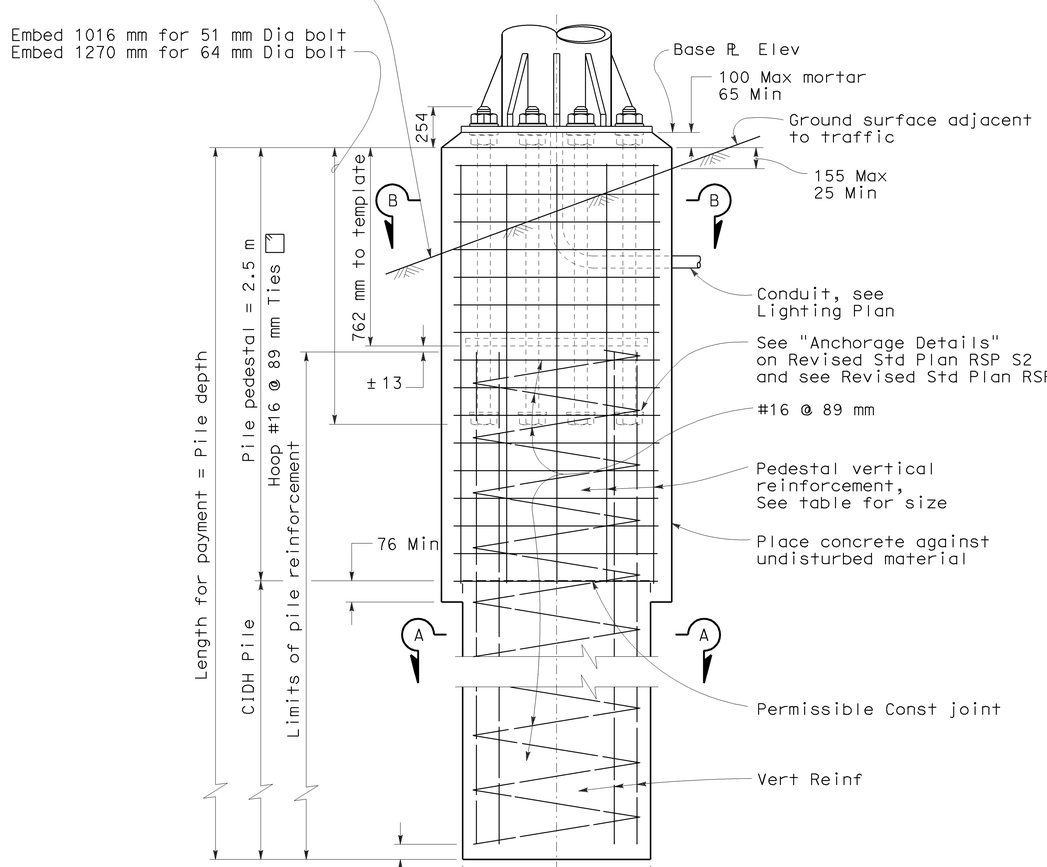

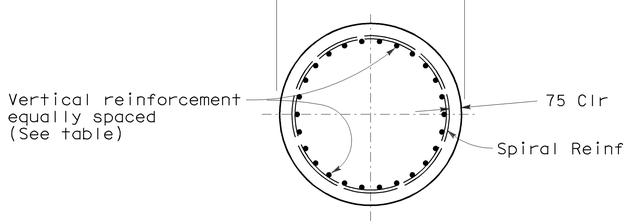

SECTION A-A

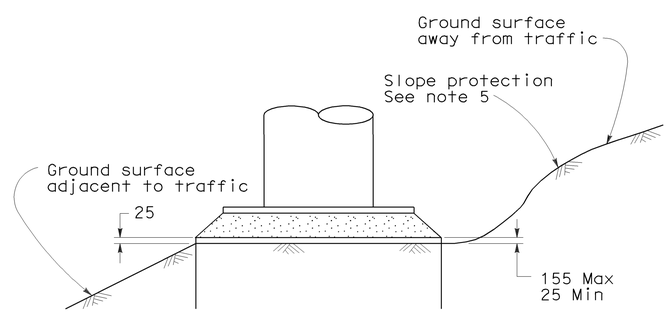

DETAIL C

Post Type No.	Anchor Bolts			Square Pedestal						CIDH						
	Bolt Circle (mm)	Bolts Total & Dia (mm)	Total Length (mm)	Pedestal Square one side (mm)	Reinforcing			Hoop		Pile Dia (mm)	✱✱ Pile Depth (m)	Vertical Reinforcing			Spiral	
					Total	Bar Size	# of bars each face	Bar Size	Pitch (mm)			Total	Bar Size	Bar Circle (mm)	Bar Size	Pitch (mm)
II	610	12-51	1270	1600	16	#32	5	#16	89	1372	4.5	26	#32	1143	#16	89
III	610	12-51	1270	1600	16	#32	5	#16	89	1372	4.9	26	#32	1143	#16	89
IV	610	12-51	1270	1600	16	#32	5	#16	89	1372	5.5	26	#32	1143	#16	89
V	864	14-51	1270	1600	16	#32	5	#16	89	1372	5.8	26	#32	1143	#16	89
VI	864	16-64	1524	1753	16	#36	5	#16	89	1524	6.7	28	#36	1295	#16	89
VII	864	16-64	1524	1753	16	#36	5	#16	89	1524	7.0	28	#36	1295	#16	89
VIII	864	16-64	1524	1753	16	#36	5	#16	89	1524	7.6	28	#36	1295	#16	89
IX	864	16-64	1524	1753	16	#36	5	#16	89	1524	7.6	28	#36	1295	#16	89

✱✱ Use Foundation Depth shown in table unless otherwise shown on the Project Plans.

NOTES

1. For anchor bolt layout see post sheet.
2. For "Base ℞ elevation" see Project Plans.
3. Prior to erection of the post, backfill which is equivalent to the surrounding material shall be in place.
4. Pedestal shall be formed 150 mm minimum below ground surface Remainder to be placed against undisturbed material.
5. Slope protection required when indicated on the Project Plans.
6. Foundation design is based on 2001 AASHTO article 13.6 Broms' approximate procedure assuming a cohesionless material. The angle of internal friction used is 30 degree and unit weight of soil used is 1922 kg/m³.

STATE OF CALIFORNIA
DEPARTMENT OF TRANSPORTATION

OVERHEAD SIGNS-TRUSS SINGLE POST TYPE SQUARE PEDESTAL PILE FOUNDATION

NO SCALE

ALL DIMENSIONS ARE IN MILLIMETERS UNLESS OTHERWISE SHOWN

RSP S7 DATED JANUARY 24, 2005 SUPERSEDES STANDARD PLAN S7 DATED JULY 1, 2004-PAGE 316 OF THE STANDARD PLANS BOOK DATED JULY 2004.

REVISED STANDARD PLAN RSP S7

2004 REVISED Std PLAN RSP S7

DIST	COUNTY	ROUTE	KILOMETER POST TOTAL PROJECT	SHEET NO.	TOTAL SHEETS
07	LA	5	42.8/47.3	528	1073

REGISTERED CIVIL ENGINEER

January 24, 2005
PLANS APPROVAL DATE

REGISTERED PROFESSIONAL ENGINEER Tillat Sattar No. C42892 Exp. 03-31-2006 CIVIL STATE OF CALIFORNIA

The State of California or its officers or agents shall not be responsible for the accuracy or completeness of electronic copies of this plan sheet.

To get to the Caltrans web site, go to: http://www.dot.ca.gov

To accompany plans dated 6-8-09

2004 REVISED Std PLAN RSP S9

TABLE XV

Post Type	Pipe size NPS	Pipe size "t" (mm)	Pipe size Split (mm)	Square pedestal size shown One side (mm)	Pedestal Vertical J-Bars Equally spaced total	Pedestal Vertical J-Bars Bar Size	Pedestal Vertical J-Bars Bar B.C. (mm)	Spiral Bar Size	Spiral Pitch (mm)	Spread Footing See note 2 (mm)	Spread Footing Reinforcement Width Top	Spread Footing Reinforcement Width Bottom	Spread Footing Reinforcement Longitudinal Top	Spread Footing Reinforcement Longitudinal Bottom	Spread Footing Reinforcement Footing Stirrups
I-S	14	12.7	127	1600	26	32	1206	16	89	2134 x 3962 x 762	14-#19	14-#22	10-#29	10-#29	#16 @ 305
II-S	16	12.7	152	1600	26	32	1206	16	89	2134 x 3962 x 762	14-#19	14-#22	10-#29	10-#29	#16 @ 305
III-S	18	12.7	178	1600	26	32	1206	16	89	2134 x 3962 x 762	14-#19	14-#22	11-#29	11-#29	#16 @ 305
IV-S	20	12.7	203	1600	26	32	1206	16	89	2438 x 4267 x 762	15-#22	15-#22	12-#29	12-#36	#16 @ 305
V-S	24	12.7	203	1753	28	36	1355	16	89	2438 x 4877 x 914	17-#22	17-#22	12-#29	12-#36	#16 @ 305
VI-S	24	24.6	254	1753	28	36	1355	16	89	2743 x 5182 x 914	18-#22	18-#22	12-#29	12-#36	#16 @ 305
VII-S	24	24.6	254	1753	28	36	1355	16	89	3048 x 5486 x 914	19-#22	19-#22	13-#29	13-#36	#16 @ 305

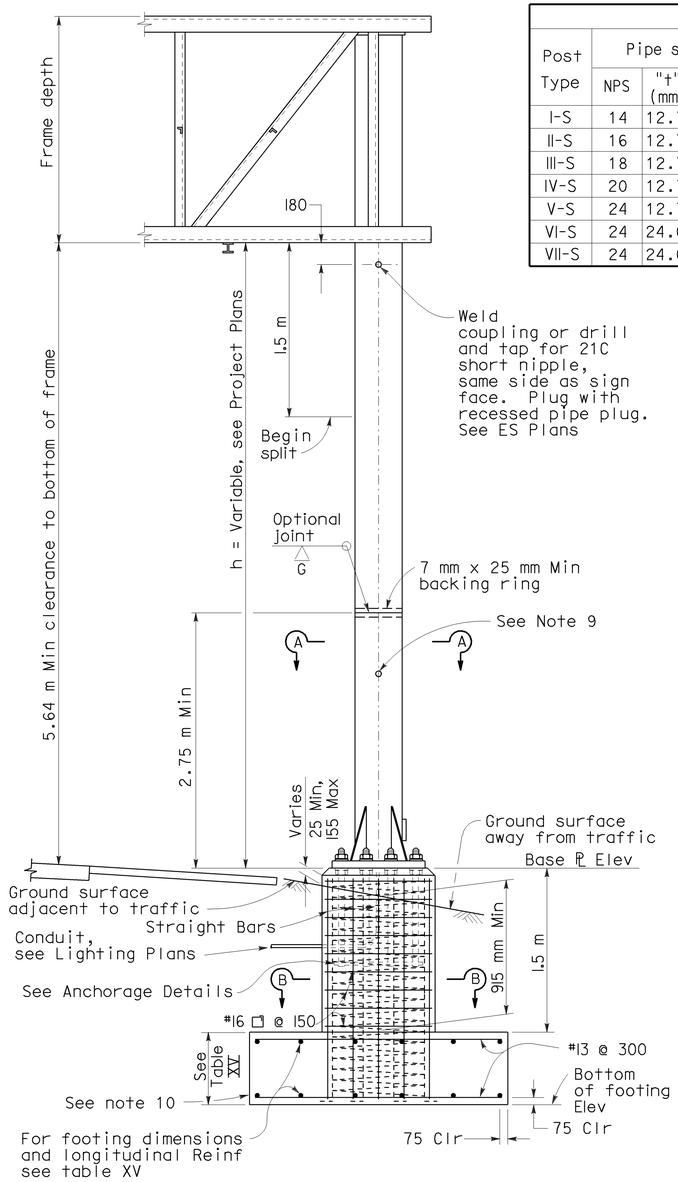

ELEVATION

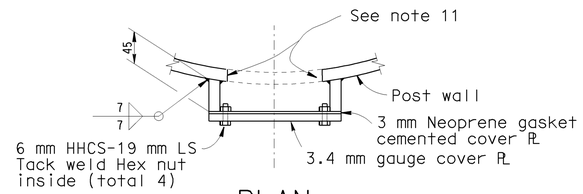

PLAN

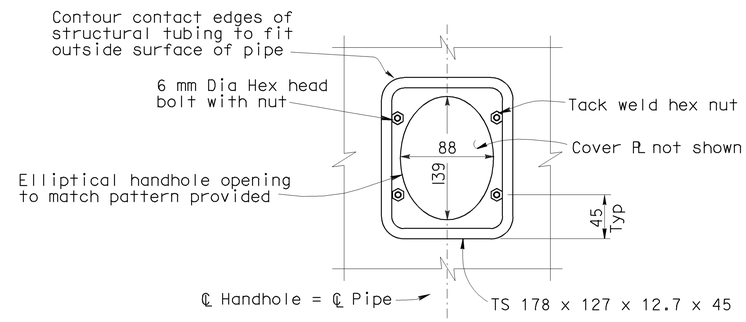

ELEVATION
TYPICAL DETAILS OF
HANDHOLE AND COVER

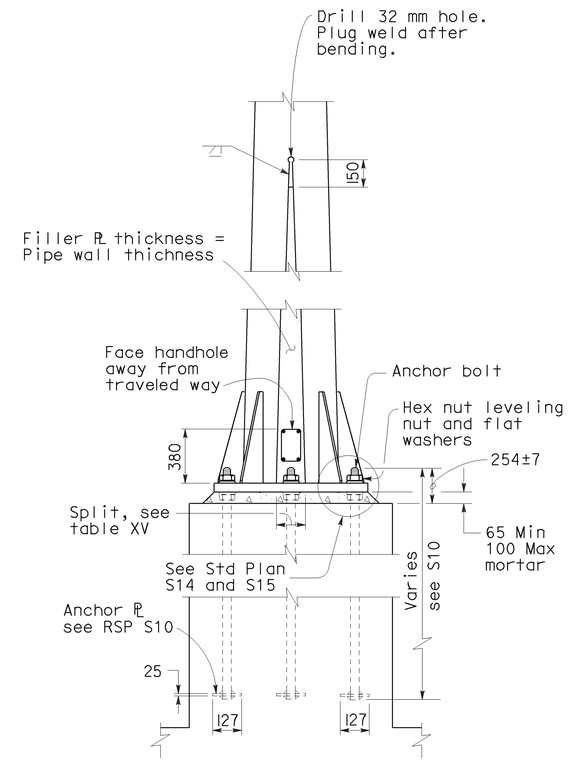

ANCHORAGE DETAILS

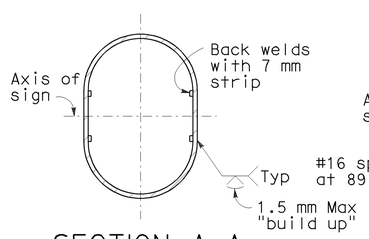

SECTION A-A

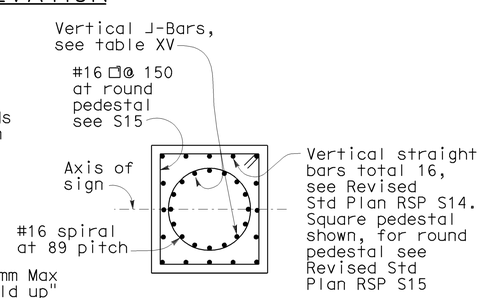

SECTION B-B

NOTES

1. For "General Notes" see Revised Standard Plan RSP S1.
2. Longer side of post and footing shall be normal to axis of sign.
3. Backfill shall be in place prior to erection of post.
4. Thread upper 254 mm of anchor bolts and galvanize upper 305 mm.
5. Spread footing shown, use pile foundation when shown on the Project Plans. See details on Revised Standard Plans RSP S14 and RSP S15.
6. Anchor plates may be retained with hex nut or formed head as an alternative to details shown.
7. When foundation is located on a steep slope with exposed face of concrete adjacent to traffic, see "Detail C" on Revised Standard Plan RSP S14 and RSP S15.
8. Slope protection required when indicated on Project Plans.
9. Weld coupling or drill and tap for 41C chase nipple, perpendicular to sign panel axis away from approaching traffic. Plug with recessed pipe plug. See Standard Plan ES-15C.
10. Excavate to neat lines and place concrete against undisturbed material.
11. Grind edges smooth according to AWS D1.1 Section 5.15.4.3.

STATE OF CALIFORNIA
DEPARTMENT OF TRANSPORTATION

OVERHEAD SIGNS-TRUSS TWO POST TYPE POST TYPES I-S THROUGH VII-S

NO SCALE

ALL DIMENSIONS ARE IN MILLIMETERS UNLESS OTHERWISE SHOWN

RSP S9 DATED JANUARY 24, 2005 SUPERSEDES STANDARD PLAN S9 DATED JULY 1, 2004-PAGE 318 OF THE STANDARD PLANS BOOK DATED JULY 2004.

REVISED STANDARD PLAN RSP S9

Post Type	Nominal Pipe Size (NPS)	Pipe Wall Thickness (mm)	Pipe split (mm)	Base PL OD & Thickness (mm)	Anchor		
					Bolt Circle (mm)	Bolts total & Dia (mm)	Length (mm)
I-S	14	12.7	127	864 x 51	711	12-51	1270
II-S	16	12.7	152	864 x 51	711	12-51	1270
III-S	18	12.7	178	940 x 51	787	12-51	1270
IV-S	20	12.7	203	1016 x 51	864	14-51	1270
V-S	24	12.7	203	1118 X 51	965	16-64	1524
VI-S	24	24.6	254	1219 x 64	1041	16-64	1524
VII-S	24	24.6	254	1219 x 64	1041	16-64	1524

TWO POST TABLE

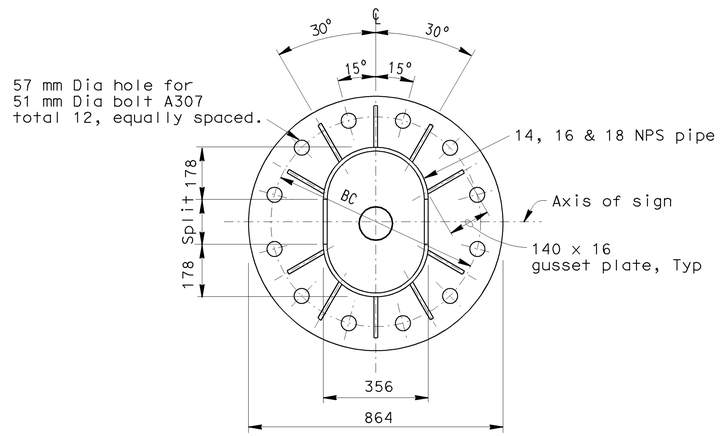

12 BOLTS

Type I-S shown

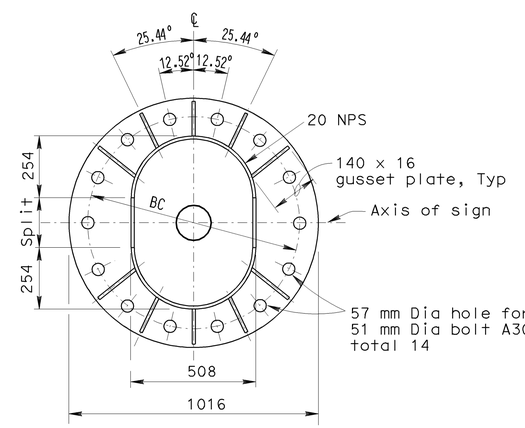

14 BOLTS

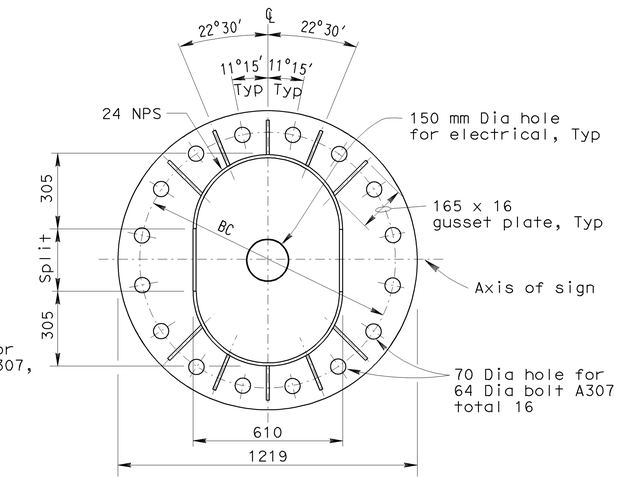

16 BOLTS

Type VI-S shown

TWO POST TYPE BASE PLATE DETAILS

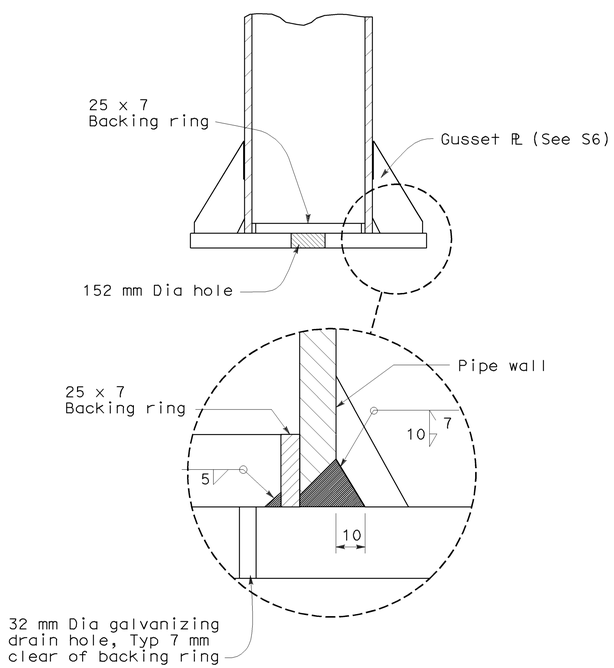

THRU POST AT BASE PLATE

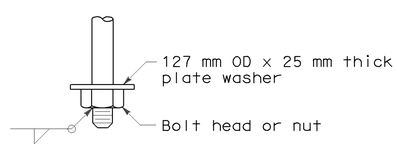

ANCHORAGE DETAIL

Caltrans Metric

DIST	COUNTY	ROUTE	KILOMETER POST TOTAL PROJECT	SHEET NO.	TOTAL SHEETS
07	LA	5	42.8/47.3	529	1073

REGISTERED CIVIL ENGINEER

January 24, 2005
PLANS APPROVAL DATE

REGISTERED PROFESSIONAL ENGINEER
Tillat Sattar
No. C42892
Exp. 03-31-2006
CIVIL
STATE OF CALIFORNIA

The State of California or its officers or agents shall not be responsible for the accuracy or completeness of electronic copies of this plan sheet.

To get to the Caltrans web site, go to: http://www.dot.ca.gov

To accompany plans dated 6-8-09

2004 REVISED Std PLAN RSP S10

STATE OF CALIFORNIA
DEPARTMENT OF TRANSPORTATION

OVERHEAD SIGNS-TRUSS TWO POST TYPE BASE PLATE AND ANCHORAGE DETAILS

NO SCALE

ALL DIMENSIONS ARE IN
MILLIMETERS UNLESS OTHERWISE SHOWN

RSP S10 DATED JANUARY 24, 2005 SUPERSEDES STANDARD PLAN S10
DATED JULY 1, 2004-PAGE 319 OF THE STANDARD PLANS BOOK DATED JULY 2004.

REVISED STANDARD PLAN RSP S10

DIST	COUNTY	ROUTE	KILOMETER POST TOTAL PROJECT	SHEET NO.	TOTAL SHEETS
07	LA	5	42.8/47.3	530	1073

Caltrans Metric

REGISTERED CIVIL ENGINEER

January 24, 2005
PLANS APPROVAL DATE

REGISTERED PROFESSIONAL ENGINEER Tillat Sattar No. C42892 Exp. 03-31-2006 CIVIL STATE OF CALIFORNIA

The State of California or its officers or agents shall not be responsible for the accuracy or completeness of electronic copies of this plan sheet.

To get to the Caltrans web site, go to: http://www.dot.ca.gov

To accompany plans dated 6-8-09

2004 REVISED Std PLAN RSP S11

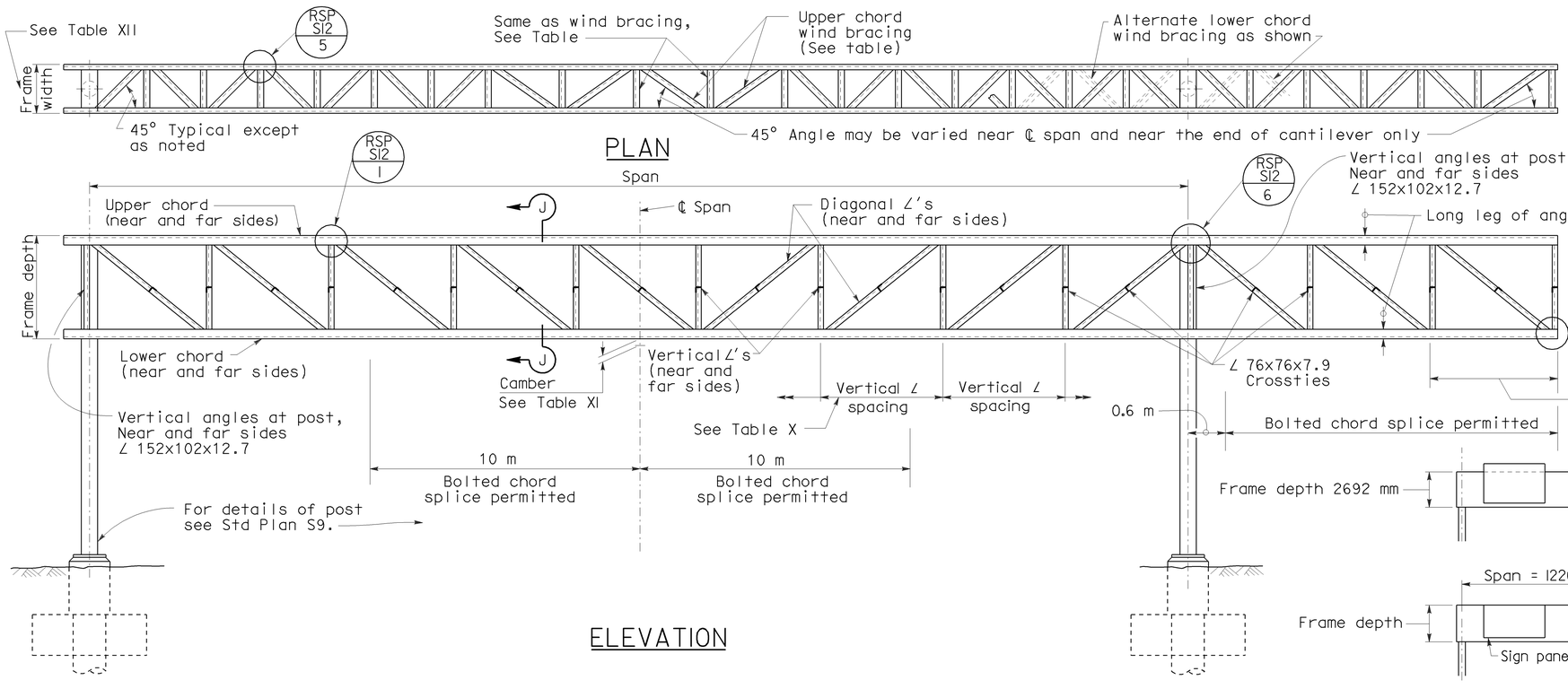

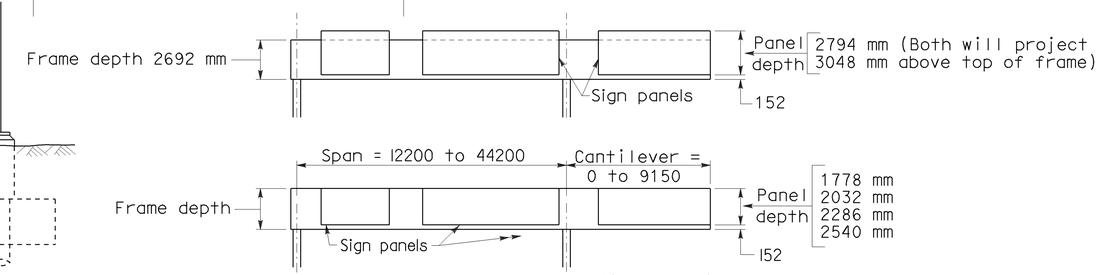

RANGE OF STRUCTURE SIZES

Panel Depth (mm)	Frame Depth (mm)	Max Vertical ∠ Spacing (mm)
1778	1931	1829
2032	2185	1829
2286	2439	2286
2540	2693	2286
2794	2693	2286
3048	2693	2286

TABLE X

Camber For Fabrication At ℄ Span	
Span (m)	Camber (mm)
12.19 - 15.24	27
15.25 - 30.48	54
30.49 - 44.20	83

Camber to approximate parabola.
Camber of cantilever arm = +13 mm for arms greater than 3050 mm

TABLE XI

Span (m)	1778 mm Panel Depth					2032 mm Panel Depth					2286 mm Panel Depth				
	Frame Width (mm)	Chord ∠'s	Vertical ∠'s	Diagonal ∠'s	Wind Bracing ∠'s	Frame Width (mm)	Chord ∠'s	Vertical ∠'s	Diagonal ∠'s	Wind Bracing ∠'s	Frame Width (mm)	Chord ∠'s	Vertical ∠'s	Diagonal ∠'s	Wind Bracing ∠'s
12.2-15.4	915	127x89x9.5	89x89x7.9	89x89x7.9	64x64x6.4	915	127x89x9.5	89x89x7.9	89x89x7.9	64x64x6.4	915	127x89x9.5	89x89x7.9	89x89x7.9	64x64x6.4
15.5-18.5	915	127x89x9.5	↓	↓	64x64x6.4	915	127x89x9.5	↓	↓	64x64x6.4	915	127x89x9.5	↓	↓	64x64x6.4
18.6-21.5	915	127x89x9.5	↓	↓	64x64x6.4	915	127x89x9.5	↓	↓	64x64x6.4	915	127x89x9.5	↓	↓	64x64x6.4
21.6-24.6	915	152x102x12.7	↓	↓	64x64x6.4	915	152x102x12.7	↓	↓	64x64x6.4	915	152x102x12.7	↓	↓	64x64x6.4
24.7-27.6	915	152x102x12.7	↓	↓	64x64x6.4	915	152x102x12.7	↓	↓	64x64x6.4	915	152x102x12.7	↓	↓	64x64x6.4
27.7-30.7	915	152x102x12.7	↓	↓	64x64x6.4	915	152x102x12.7	↓	↓	64x64x6.4	915	152x102x12.7	↓	↓	64x64x6.4
30.8-33.7	915	203x102x19.0	↓	↓	64x64x6.4	915	203x102x19.0	↓	↓	64x64x6.4	915	203x102x19.0	↓	↓	76x76x9.5
33.8-36.8	915	203x102x19.0	↓	↓	64x64x6.4	915	203x102x19.0	↓	↓	64x64x6.4	915	203x102x19.0	↓	↓	76x76x9.5
36.9-39.8	915	203x102x19.0	↓	↓	64x64x6.4	915	203x102x19.0	↓	↓	64x64x6.4	1067	203x102x19.0	↓	↓	76x76x9.5
39.9-44.2	915	203x102x19.0	↓	↓	64x64x6.4	915	203x102x19.0	↓	↓	64x64x6.4	1067	203x102x19.0	↓	↓	76x76x9.5

Span (m)	2540 mm Panel Depth				
	Frame Width (mm)	Chord ∠'s	Vertical ∠'s	Diagonal ∠'s	Wind Bracing ∠'s
12.2-15.4	915	127x89x9.5	89x89x7.9	89x89x7.9	64x64x6.4
15.5-18.5	915	127x89x9.5	↓	↓	64x64x6.4
18.6-21.5	915	127x89x9.5	↓	↓	64x64x6.4
21.6-24.6	915	152x102x12.7	↓	↓	64x64x6.4
24.7-27.6	915	152x102x12.7	↓	↓	64x64x6.4
27.7-30.7	915	152x102x12.7	↓	↓	64x64x6.4
30.8-33.7	1067	203x102x19.0	↓	↓	76x76x9.5
33.8-36.8	1067	203x102x19.0	↓	↓	76x76x9.5
36.9-39.8	1067	203x102x19.0	↓	↓	76x76x9.5
39.9-44.2	1067	203x102x19.0	↓	↓	76x76x9.5

Span (m)	2794 mm and 3048 mm Panel Depth				
	Frame Width (mm)	Chord ∠'s	Vertical ∠'s	Diagonal ∠'s	Wind Bracing ∠'s
12.2-15.4	915	127x89x9.5	89x89x7.9	89x89x7.9	64x64x6.4
15.5-18.5	915	127x89x9.5	↓	↓	64x64x6.4
18.6-21.5	915	127x89x9.5	↓	↓	64x64x6.4
21.6-24.6	915	152x102x12.7	↓	↓	76x76x9.5
24.7-27.6	915	152x102x12.7	↓	↓	76x76x9.5
27.7-30.7	1067	152x102x12.7	↓	↓	76x76x9.5
30.8-33.7	1067	203x102x19.0	↓	↓	76x76x9.5
33.8-36.8	1067	203x102x19.0	↓	↓	76x76x9.5
36.9-39.8	1067	203x102x19.0	↓	↓	76x76x9.5
39.9-44.2	1067	203x152x19.0	89x89x9.5	89x89x9.5	76x76x9.5

TABLE XII

Standard Plan Sheet No.
Detail No.

NOTES

1. Frame widths shown are nominal. These widths may be varied by 6.4 mm to standardize fabrication methods.
2. Walkway brackets not shown. Locate first interior bracket 813 mm Max from ℄ of post.

STATE OF CALIFORNIA
DEPARTMENT OF TRANSPORTATION

OVERHEAD SIGNS-TRUSS TWO POST TYPE STRUCTURAL FRAME MEMBERS

NO SCALE

ALL DIMENSIONS ARE IN MILLIMETERS UNLESS OTHERWISE SHOWN

RSP S11 DATED JANUARY 24, 2005 SUPERSEDES STANDARD PLAN S11 DATED JULY 1, 2004-PAGE 320 OF THE STANDARD PLANS BOOK DATED JULY 2004.

REVISED STANDARD PLAN RSP S11

DIST	COUNTY	ROUTE	KILOMETER POST TOTAL PROJECT	SHEET NO.	TOTAL SHEETS
07	LA	5	42.8/47.3	531	1073

REGISTERED CIVIL ENGINEER

January 24, 2005
PLANS APPROVAL DATE

REGISTERED PROFESSIONAL ENGINEER Tillat Sattar No. C42892 Exp. 03-31-2006 CIVIL STATE OF CALIFORNIA

The State of California or its officers or agents shall not be responsible for the accuracy or completeness of electronic copies of this plan sheet.

To get to the Caltrans web site, go to: http://www.dot.ca.gov

To accompany plans dated 6-8-09

Caltrans Metric

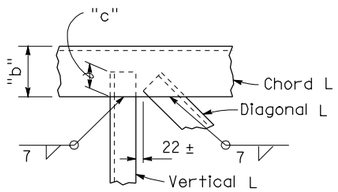

DETAIL 1

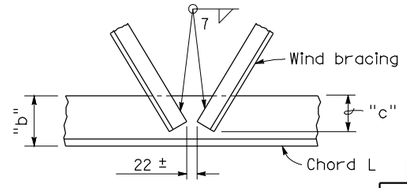

DETAIL 2

OVERLAP DISTANCES

"b"	"c"
89	57
102	70
127	83
152	102
203	127

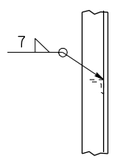

DETAIL 3

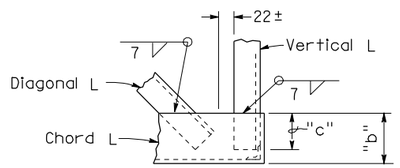

DETAIL 4

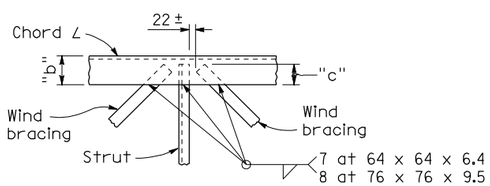

DETAIL 5

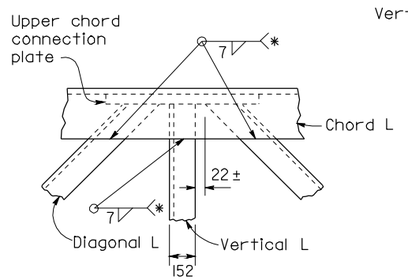

DETAIL 6

* Welds are to upper chord connection plate and chord angle

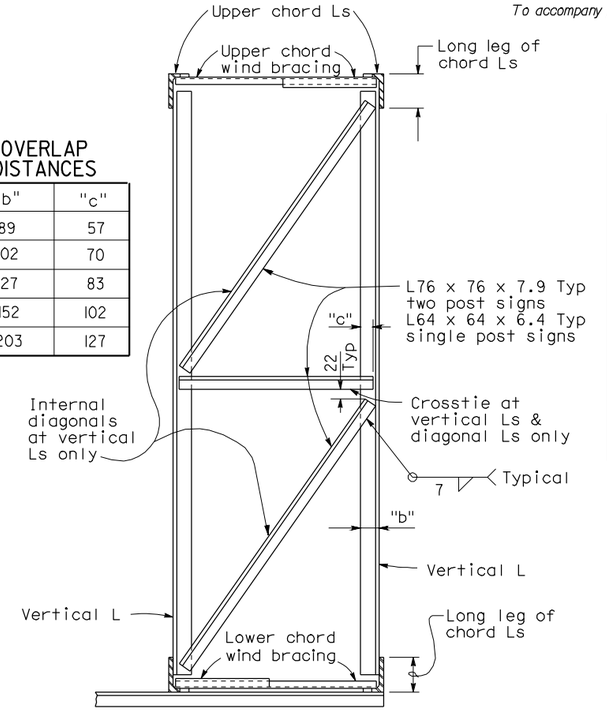

TYPICAL SECTION J-J

Note:

Diagonal Ls in plane of truss not shown. Bracing shown is at all vertical Ls of truss.

BOLTED CHORD SPLICE

TWO POST SIGNS		
Chord ∠	Nominal Bolt Diameter	"a" mm Min
127 x 89 x 9.5	M20 x 2.5	64
152 x 102 x 12.7	M22 x 2.5	76
203 x 102 x 19.0	M30 x 3.5	96
203 x 152 x 19.0	M30 x 3.5	96
SINGLE POST SIGNS		
Chord ∠	Nominal Bolt Diameter	"a" mm Min
127 x 127 x 12.7	M22 x 2.5	76
152 x 152 x 12.7	M22 x 2.5	76

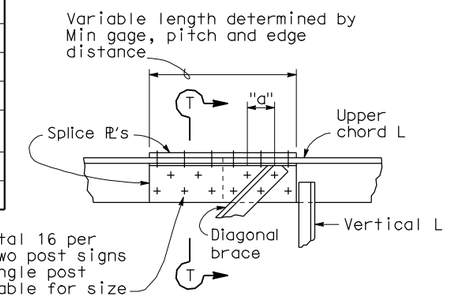

SPLICE WITH DIAGONAL ANGLE

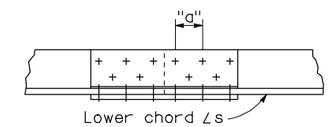

SPLICE WITHOUT DIAGONAL ANGLE

BOLTED CHORD SPLICE

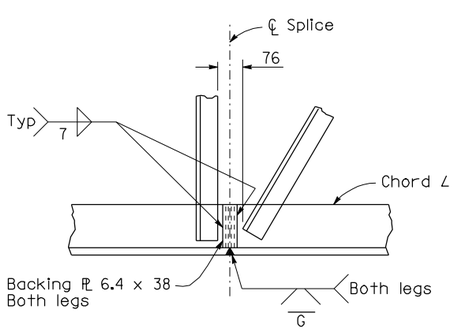

WELDED CHORD SPLICE

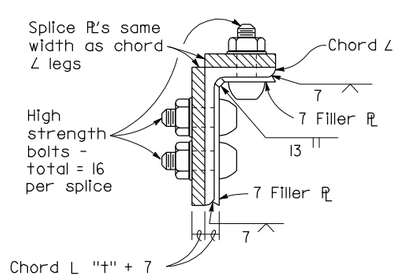

SECTION T-T
TWO POST SIGNS

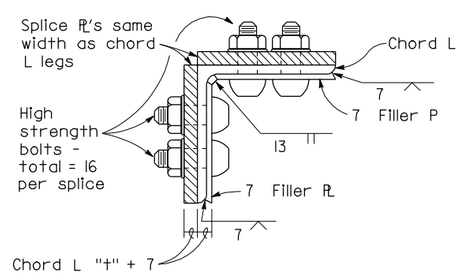

SECTION T-T
SINGLE POST SIGNS

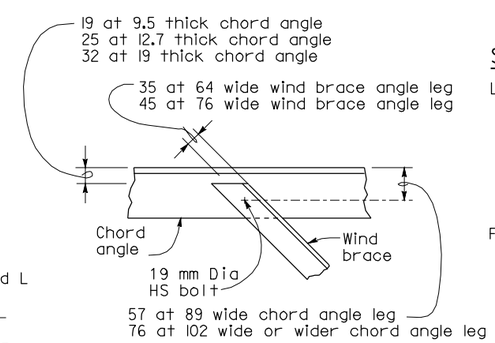

BOLTED WIND BRACE DETAIL

Each end of wind brace at bolted chord splice

SPLICE NOTES

Location of Splices:

The splice shall be located so as not to interfere with mounting the walkway brackets or the clip angles for the removable sign panel frame. For two post type see also S11.

Filler PL :

The plates welded to the angle legs on the inside shall be welded before drilling the bolt holes. The plates shall be the same length as the cover plates. The plates are not necessary on the single post signs if the splice is located over 1/3 of the cantilever length from the post. Alternative splice details may be used if approved by the Engineer.

STATE OF CALIFORNIA
DEPARTMENT OF TRANSPORTATION

OVERHEAD SIGNS-TRUSS STRUCTURAL FRAME DETAILS

NO SCALE

ALL DIMENSIONS ARE IN MILLIMETERS UNLESS OTHERWISE SHOWN

RSP S12 DATED JANUARY 24, 2005 SUPERSEDES STANDARD PLAN S12 DATED JULY 1, 2004-PAGE 321 OF THE STANDARD PLANS BOOK DATED JULY 2004.

REVISED STANDARD PLAN RSP S12

2004 REVISED Std PLAN RSP S12

DIST	COUNTY	ROUTE	KILOMETER POST TOTAL PROJECT	SHEET NO.	TOTAL SHEETS
07	LA	5	42.8/47.3	532	1073

REGISTERED CIVIL ENGINEER

January 24, 2005
PLANS APPROVAL DATE

REGISTERED PROFESSIONAL ENGINEER — Tillat Sattar — No. C42892 — Exp. 03-31-2006 — CIVIL — STATE OF CALIFORNIA

The State of California or its officers or agents shall not be responsible for the accuracy or completeness of electronic copies of this plan sheet.

To get to the Caltrans web site, go to: http://www.dot.ca.gov

To accompany plans dated 6-8-09

Notes:

1. Post not shown.
2. Photoelectric unit and 3-prong, EEI-NEMA standard, twist lock plug reception.

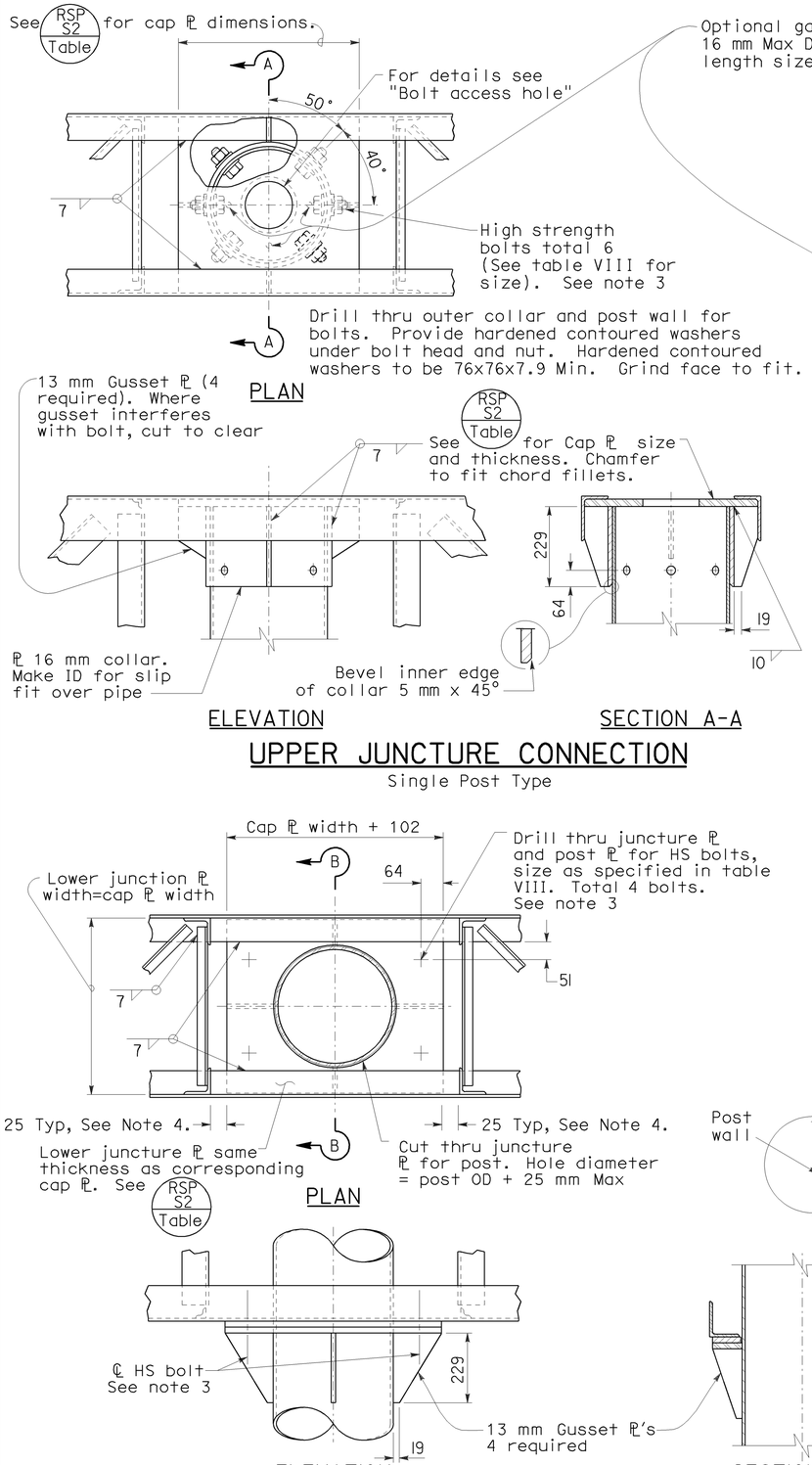

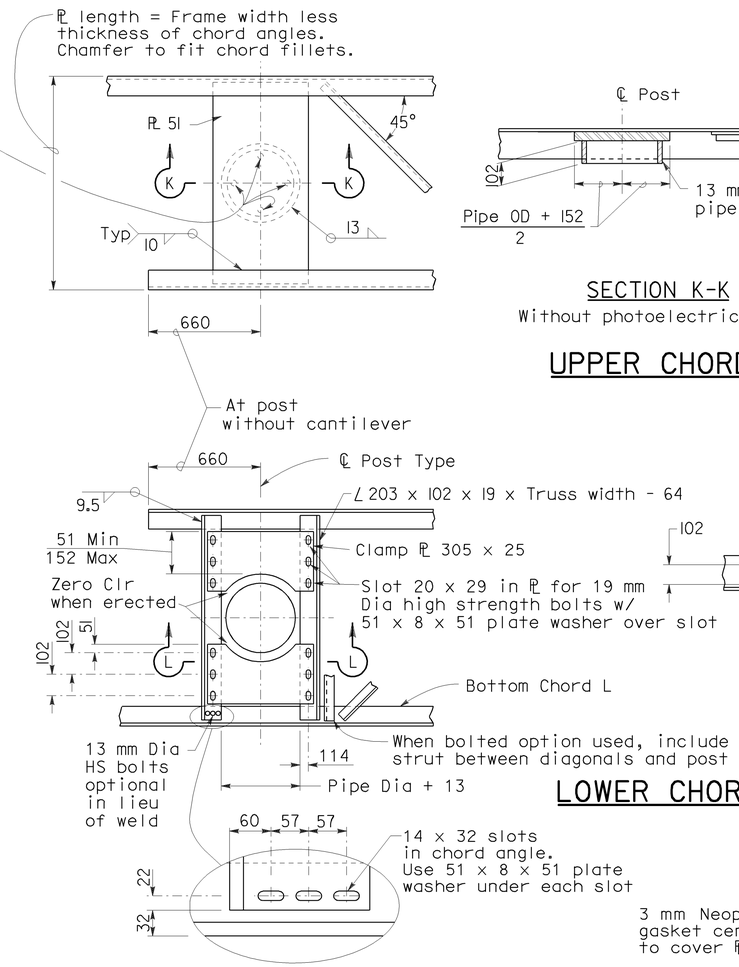

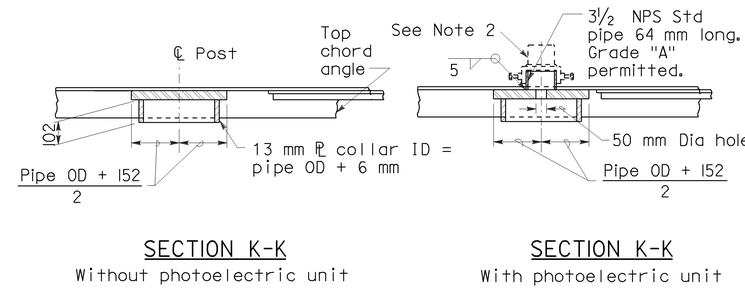

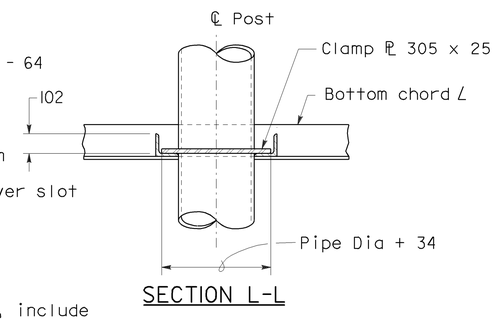

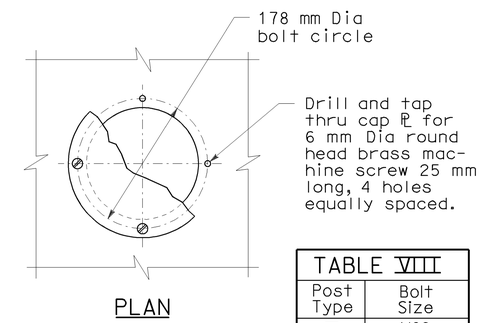

TABLE VIII	
Post Type	Bolt Size
II	M22
III	M24
IV	M27
V	M27
VI	M30
VII	M30
VIII	M36
IX	M36

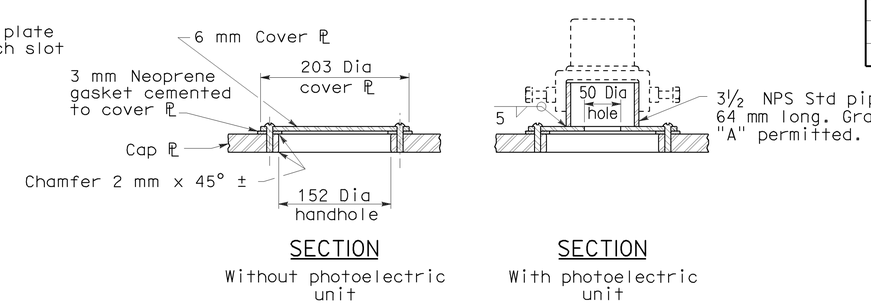

Notes: (Single Post Type)

1. In all cases, truss shall be supported at lower juncture connection. Bearing surface shall be finished true.
2. Post to truss connections shall be fitted in shop.
3. High strength bolts shall be snug tighten. Torque requirements are waived.
4. See Part Plan of Cantilever Type at post on Revised Standard Plan RSP S4.

STATE OF CALIFORNIA
DEPARTMENT OF TRANSPORTATION

OVERHEAD SIGNS-TRUSS FRAME JUNCTURE DETAILS

NO SCALE

ALL DIMENSIONS ARE IN MILLIMETERS UNLESS OTHERWISE SHOWN

RSP S13 DATED JANUARY 24, 2005 SUPERSEDES STANDARD PLAN S13 DATED JULY 1, 2004-PAGE 322 OF THE STANDARD PLANS BOOK DATED JULY 2004.

REVISED STANDARD PLAN RSP S13

2004 REVISED Std PLAN RSP S13

DIST	COUNTY	ROUTE	KILOMETER POST TOTAL PROJECT	SHEET NO.	TOTAL SHEETS
07	LA	5	42.8/47.3	533	1073

Caltrans Metric

REGISTERED CIVIL ENGINEER

January 24, 2005
PLANS APPROVAL DATE

REGISTERED PROFESSIONAL ENGINEER
Tillat Sattar
No. C42892
Exp. 03-31-2006
CIVIL
STATE OF CALIFORNIA

The State of California or its officers or agents shall not be responsible for the accuracy or completeness of electronic copies of this plan sheet.

To get to the Caltrans web site, go to: http://www.dot.ca.gov

To accompany plans dated 6-8-09

2004 REVISED Std PLAN RSP S14

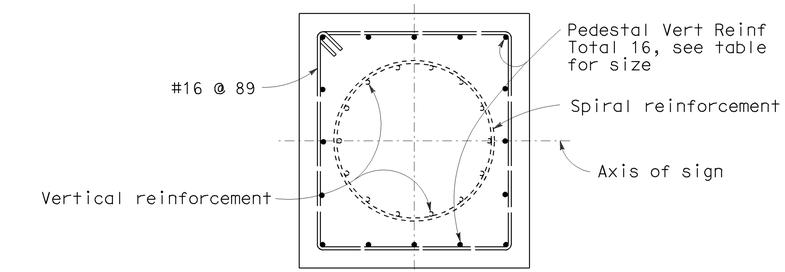

SECTION B-B

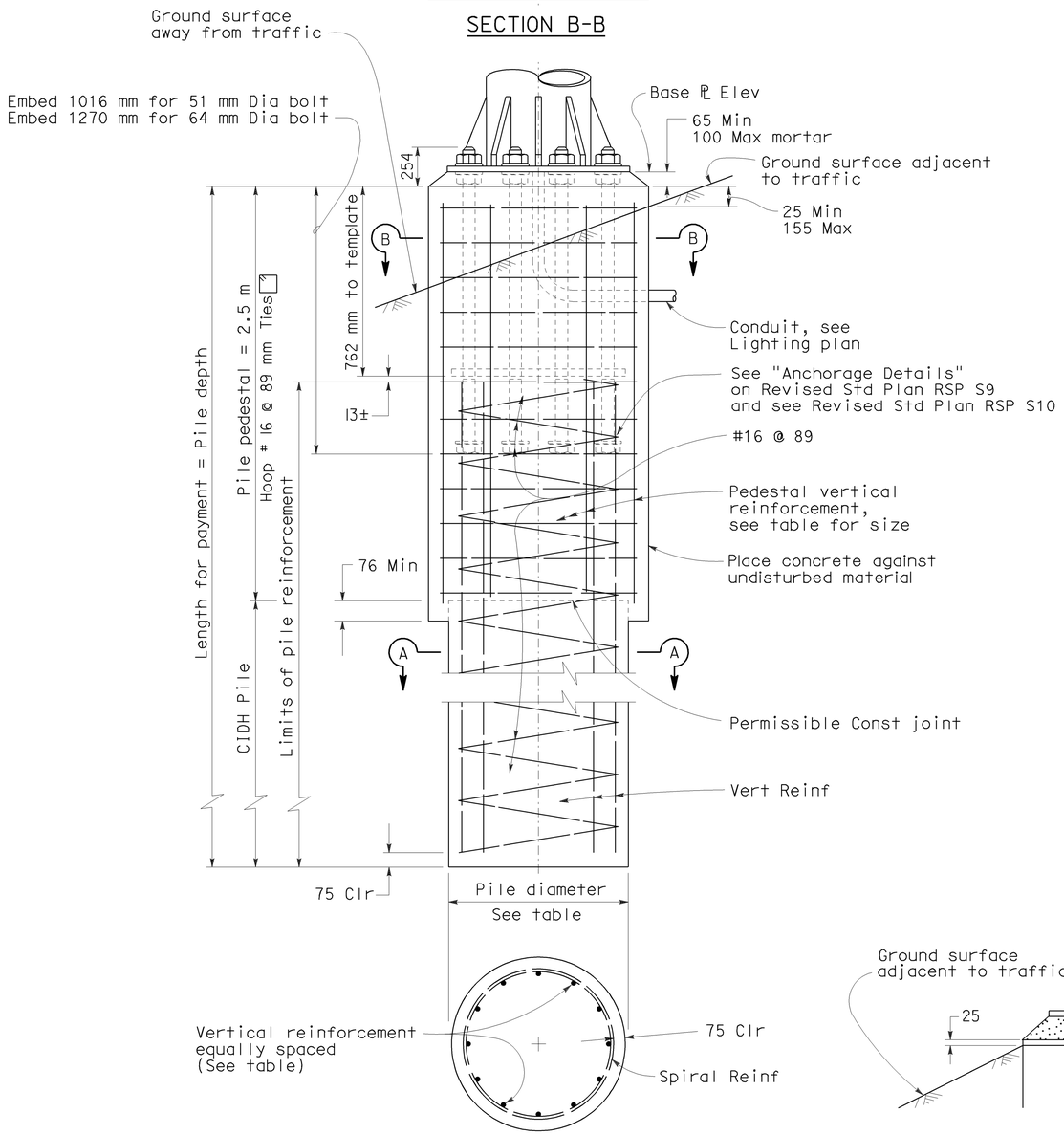

SECTION A-A

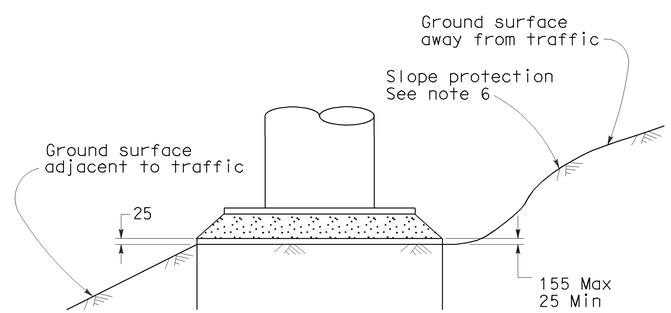

DETAIL C

Post Type	Anchor Bolts				Square Pedestal						CIDH Pile						
	Total	Dia (mm)	BC (mm)	Total Length (mm)	Pedestal Square one side (mm)	Reinforcing			Hoop		Pile Dia (mm)	Pile Depth (m) **	Reinforcing			Spiral	
						Total	Bar Size	Spacing each face	Bar Size	Pitch			Total	Bar Size	BC (mm)	Bar Size	Pitch
I-S	12	51	711	1270	1600	16	32	346	16	89	1372	5.5	26	32	1143	16	89
II-S	12	51	711	1270	1600	16	32	346	16	89	1372	6.0	26	32	1143	16	89
III-S	12	51	787	1270	1600	16	32	346	16	89	1372	7.0	26	32	1143	16	89
IV-S	14	51	864	1270	1600	16	32	346	16	89	1372	7.0	26	32	1143	16	89
V-S	16	64	965	1524	1763	16	36	381	16	89	1524	8.0	28	36	1295	16	89
VI-S	16	64	1041	1524	1763	16	36	381	16	89	1524	8.5	28	36	1295	16	89
VII-S	16	64	1041	1524	1763	16	36	381	16	89	1524	8.5	28	36	1295	16	89

** Use Foundation Depth shown in table unless otherwise shown on the Project Plans.

NOTES

1. For anchor bolt layout see post sheet.
2. For "Base ℄ elevation" see Project Plans.
3. Longer side of post shall be normal to axis of sign.
4. Prior to erection of the post, backfill which is equivalent to the surrounding material, shall be in place.
5. Pedestal shall be formed 150 mm Min below ground surface. Remainder to be placed against undisturbed material.
6. Slope protection required when indicated on the Project Plans.
7. Foundation design is based on 2001 AASHTO article 13.6 Broms' approximate procedure assuming a cohesionless material. The angle of internal friction used is 30° and unit weight of soil used is 1922 kg/m³.

STATE OF CALIFORNIA
DEPARTMENT OF TRANSPORTATION

OVERHEAD SIGNS-TRUSS TWO POST TYPE SQUARE PEDESTAL PILE FOUNDATION

NO SCALE

ALL DIMENSIONS ARE IN MILLIMETERS UNLESS OTHERWISE SHOWN

RSP S14 DATED JANUARY 24, 2005 SUPERSEDES STANDARD PLAN S14
DATED JULY 1, 2004-PAGE 323 OF THE STANDARD PLANS BOOK DATED JULY 2004.

REVISED STANDARD PLAN RSP S14

DIST	COUNTY	ROUTE	KILOMETER POST TOTAL PROJECT	SHEET NO.	TOTAL SHEETS
07	LA	5	42.8/47.3	534	1073

REGISTERED CIVIL ENGINEER

April 28, 2005
PLANS APPROVAL DATE

REGISTERED PROFESSIONAL ENGINEER
Tillat Sattar
No. C42892
Exp. 03-31-2006
CIVIL
STATE OF CALIFORNIA

The State of California or its officers or agents shall not be responsible for the accuracy or completeness of electronic copies of this plan sheet.

To get to the Caltrans web site, go to: http://www.dot.ca.gov

Caltrans Metric

To accompany plans dated 6-8-09

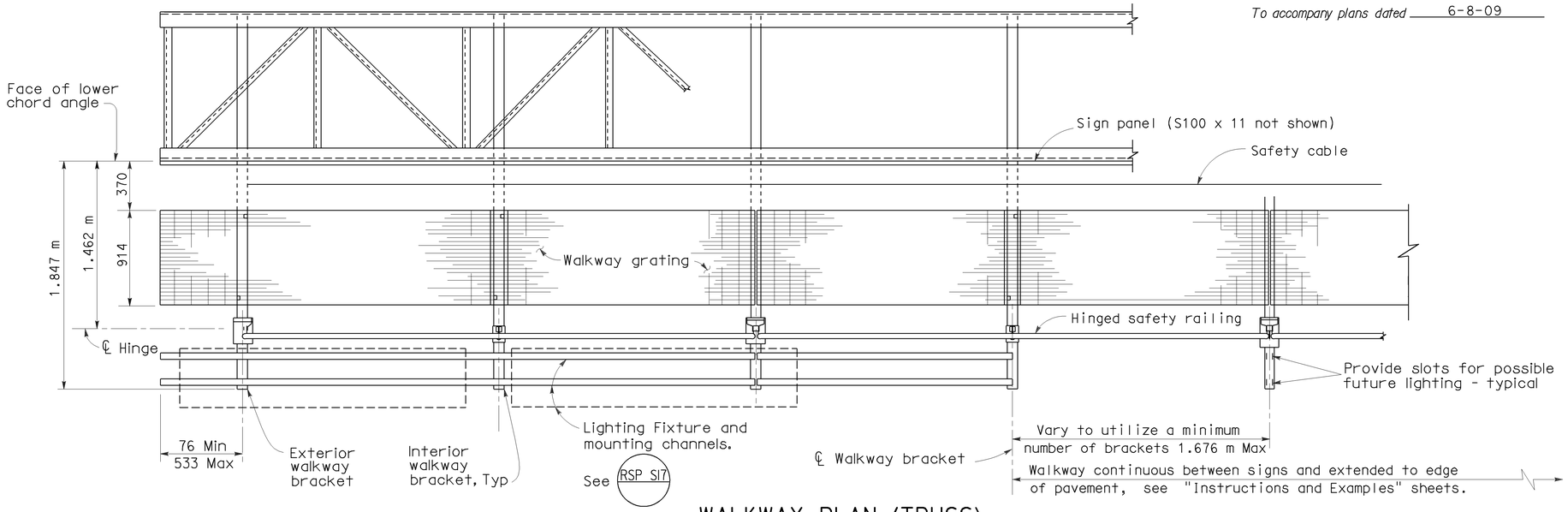

WALKWAY PLAN (TRUSS)

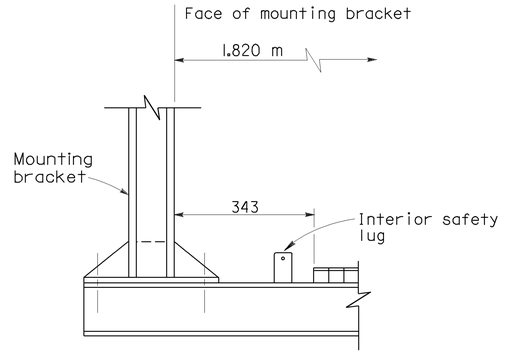

TUBULAR MOUNTED

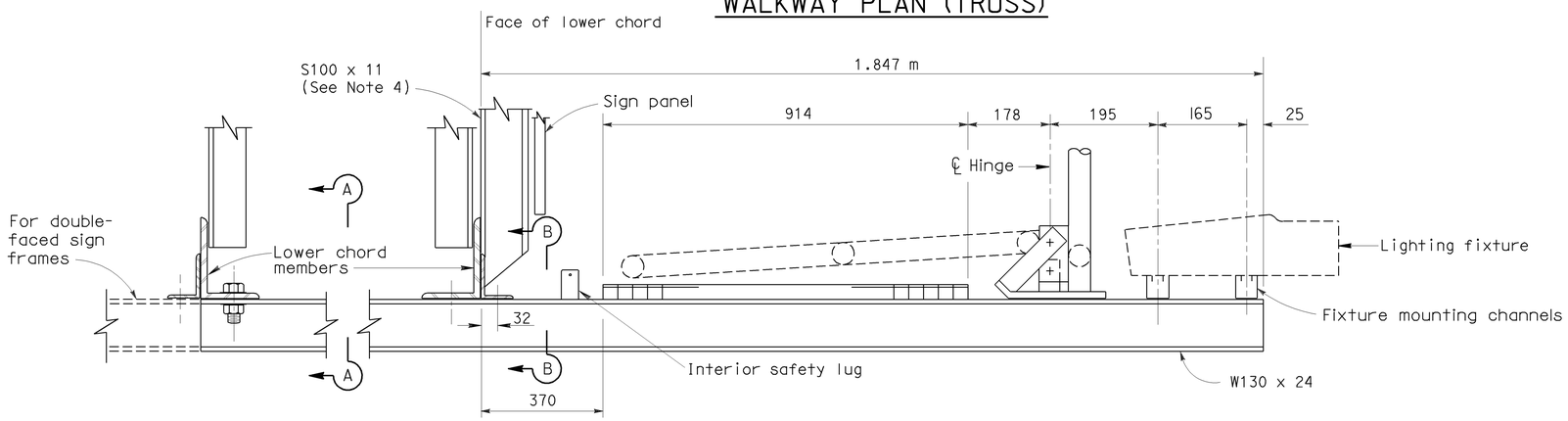

TRUSS

TYPICAL WALKWAY SECTION

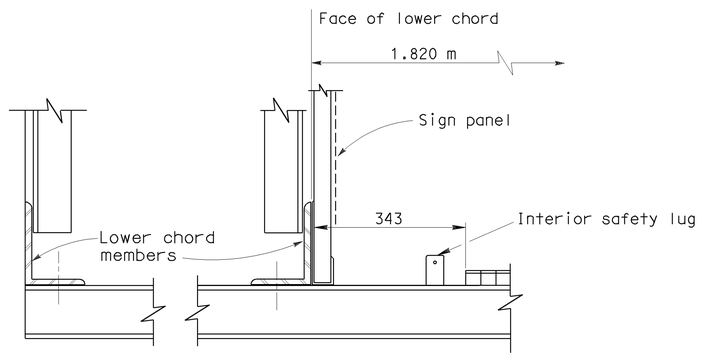

BOX BEAM
CLOSED TRUSS

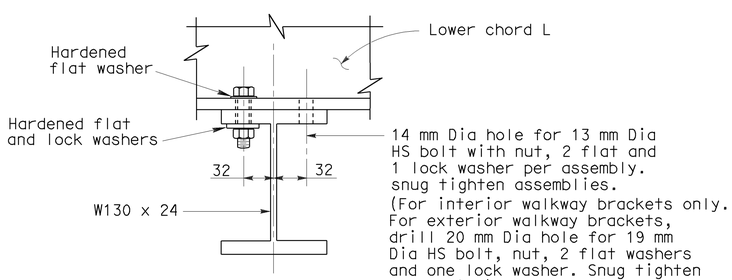

SECTION A-A

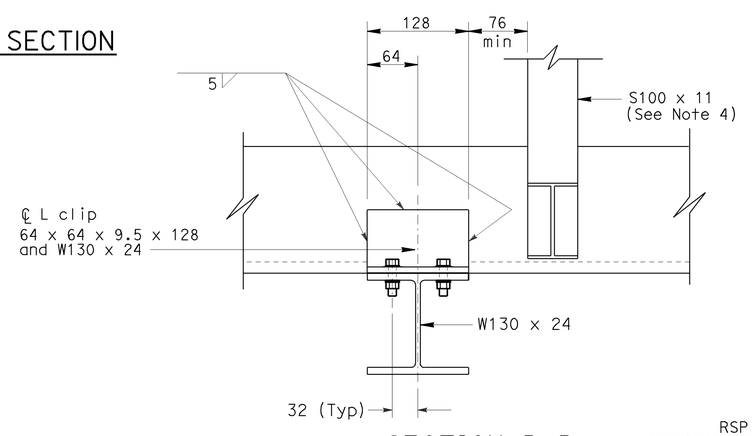

SECTION B-B

NOTES:

1. For spacing of lighting fixtures, see Standard Plan ES-15A.
2. For safety lug details, see Revised Standard Plan RSP S17.
3. For double faced sign frames with double walkways, use a total 8 bolt assemblies per bracket.
4. S100 x 11 to be used with laminated Type A panels. See Revised Standard Plan RSP S19.

STATE OF CALIFORNIA
DEPARTMENT OF TRANSPORTATION

OVERHEAD SIGNS
WALKWAY DETAILS No.1

NO SCALE

ALL DIMENSIONS ARE IN MILLIMETERS UNLESS OTHERWISE SHOWN

RSP S16 DATED APRIL 28, 2005 SUPERSEDES RSP S16 DATED JANUARY 24,2005 AND STANDARD PLAN S16 DATED JULY 1, 2004-PAGE 325 OF THE STANDARD PLANS BOOK DATED JULY 2004.

REVISED STANDARD PLAN RSP S16

2004 REVISED Std PLAN RSP S16

DIST	COUNTY	ROUTE	KILOMETER POST TOTAL PROJECT	SHEET NO.	TOTAL SHEETS
07	LA	5	42.8/47.3	535	1073

REGISTERED CIVIL ENGINEER

January 24, 2005
PLANS APPROVAL DATE

REGISTERED PROFESSIONAL ENGINEER Tillat Sattar No. C42892 Exp. 03-31-2006 CIVIL STATE OF CALIFORNIA

The State of California or its officers or agents shall not be responsible for the accuracy or completeness of electronic copies of this plan sheet.

To get to the Caltrans web site, go to: http://www.dot.ca.gov

To accompany plans dated 6-8-09

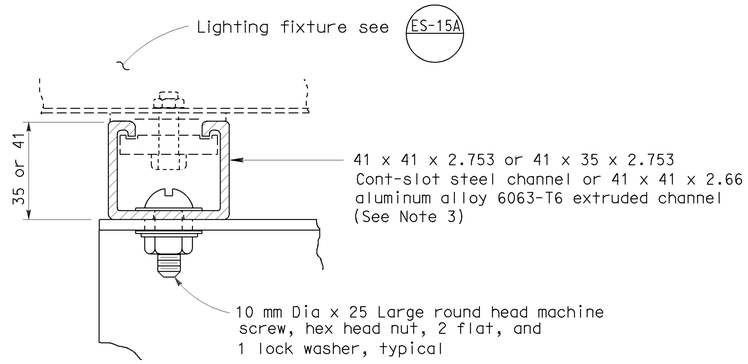

LIGHTING FIXTURE MOUNTING CHANNEL DETAILS 1

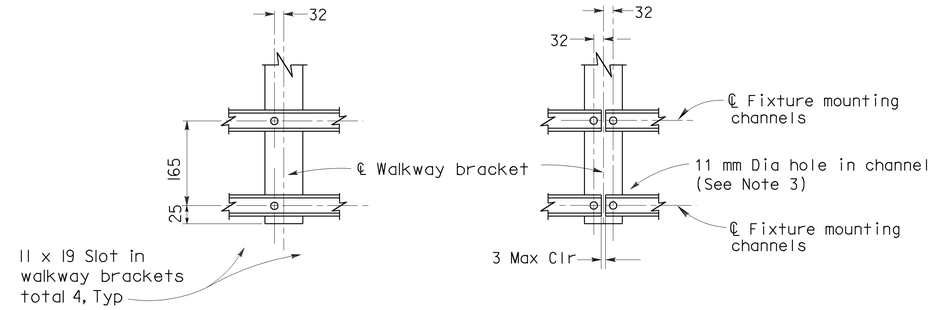

TYPICAL CONNECTION CONNECTION AT SPLICE

LIGHTING FIXTURE MOUNTING CHANNEL DETAILS 2

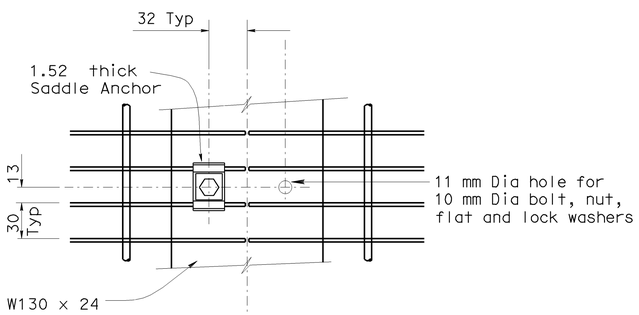

PLAN

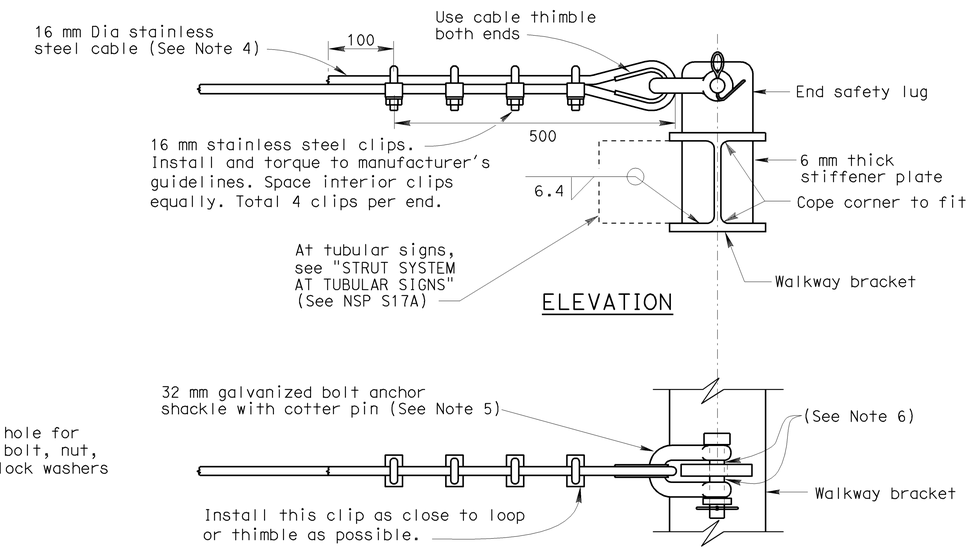

ELEVATION

PLAN

END SAFETY CABLE

NOTES

1. Welded type grating shall have 32 x 3 bearing bars at 30 mm centers with 6 mm diameter (or equal) cross bars at 102 mm centers. If mechanical lock grating is used, it shall be equal in strength to the welded type. Alternate hold-down clips may be submitted for approval.
2. Walkway grating and light fixture mounting channels to be continuous (no splices) over as many walkway brackets as practical and consistent with fabrication, ease of handling and assembly.
3. Contractor may substitute 41 x 41 x 2.753 cont-slot steel channel with pre-punched slots not larger than 10 mm x 77 mm. Slots shall be at bottom of channel and shall be parallel to channel. Slots shall be spaced not closer than 100 mm center to center.
4. Stainless steel cable shall be plain with 6 x 19 IWRC construction using Type 302 or 304 stainless steel strands. Minimun cable breaking strength shall exceed 155 kN. Cable shall be free of kinks, knots, or deformation and shall be continuous between end lugs. Splices not allowed.
5. Shackle shall be galvanized steel with working load limit of 107 kN.
6. Place an equal amount of washers on each side to align cable with end lug without restricting shakle bolt rotation or contacting cable.
7. Cable shall be installed with a deflection not to exceed 25 mm, measure from taut position, when pulled with an upward force of 0.13 kN at midpoint between any two walkway brackets.

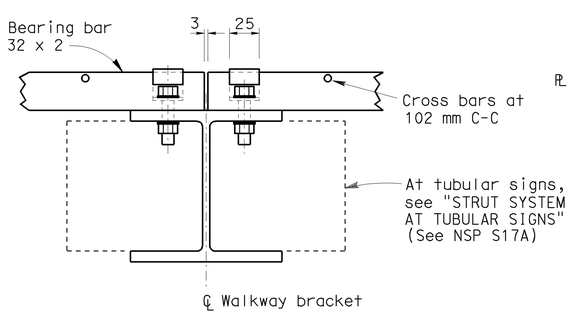

SECTION A-A

WALKWAY GRATING DETAILS

Shown at splice

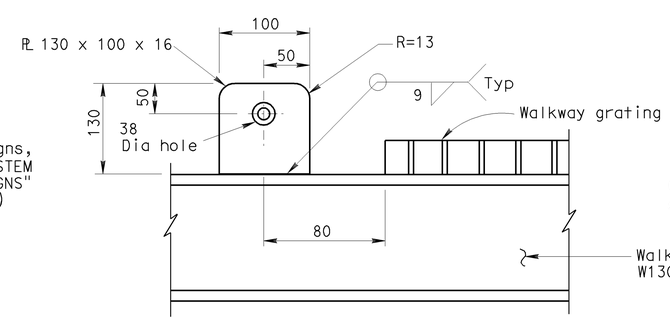

INTERIOR SAFETY LUG DETAIL

(At every walkway bracket between exterior walkway brackets)

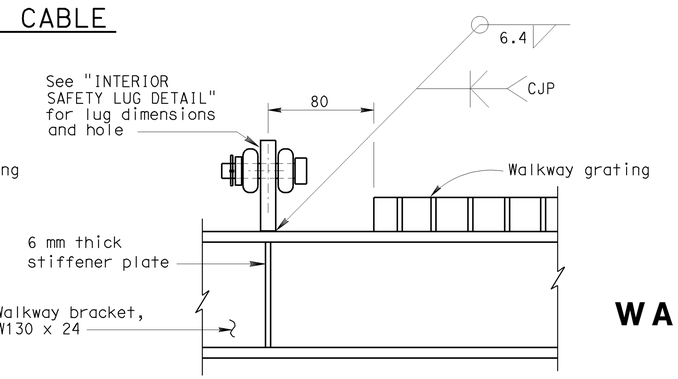

END SAFETY LUG DETAIL

(At exterior walkway brackets)

STATE OF CALIFORNIA
DEPARTMENT OF TRANSPORTATION

OVERHEAD SIGNS
WALKWAY DETAILS No.2

NO SCALE

ALL DIMENSIONS ARE IN
MILLIMETERS UNLESS OTHERWISE SHOWN

RSP S17 DATED JANUARY 24, 2005 SUPERSEDES STANDARD PLAN S17
DATED JULY 1, 2004-PAGE 326 OF THE STANDARD PLANS BOOK DATED JULY 2004.

REVISED STANDARD PLAN RSP S17

2004 REVISED Std PLAN RSP S17

DIST	COUNTY	ROUTE	KILOMETER POST TOTAL PROJECT	SHEET NO.	TOTAL SHEETS
07	LA	5	42.8/47.3	536	1073

REGISTERED CIVIL ENGINEER

January 24, 2005
PLANS APPROVAL DATE

REGISTERED PROFESSIONAL ENGINEER
Tillat Sattar
No. C42892
Exp. 03-31-2006
CIVIL
STATE OF CALIFORNIA

The State of California or its officers or agents shall not be responsible for the accuracy or completeness of electronic copies of this plan sheet.

To get to the Caltrans web site, go to: http://www.dot.ca.gov

To accompany plans dated 6-8-09

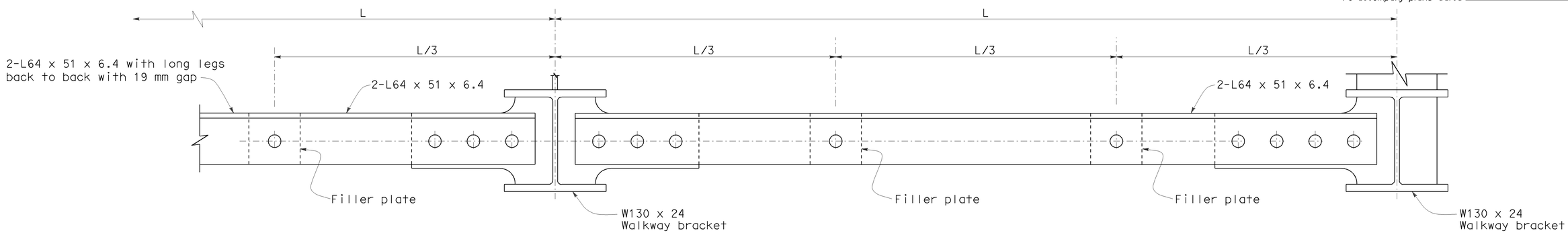

STRUT SYSTEM AT TUBULAR SIGNS

(Continuous between end safety lug locations)

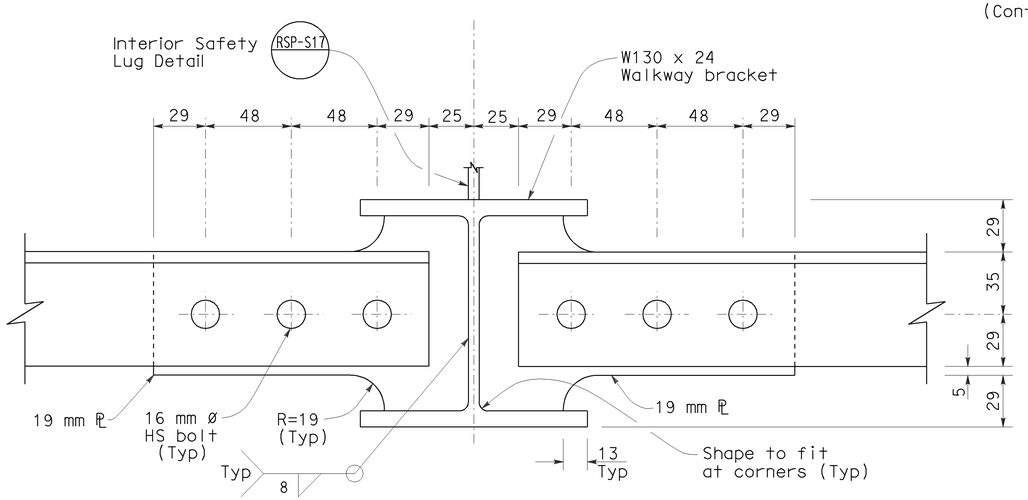

INTERIOR SAFETY LUG LOCATION

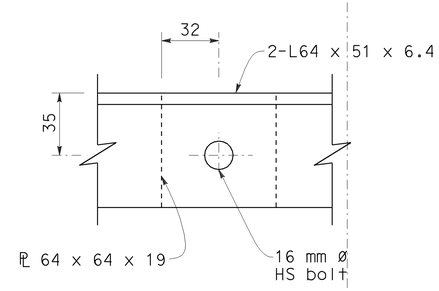

FILLER PLATE

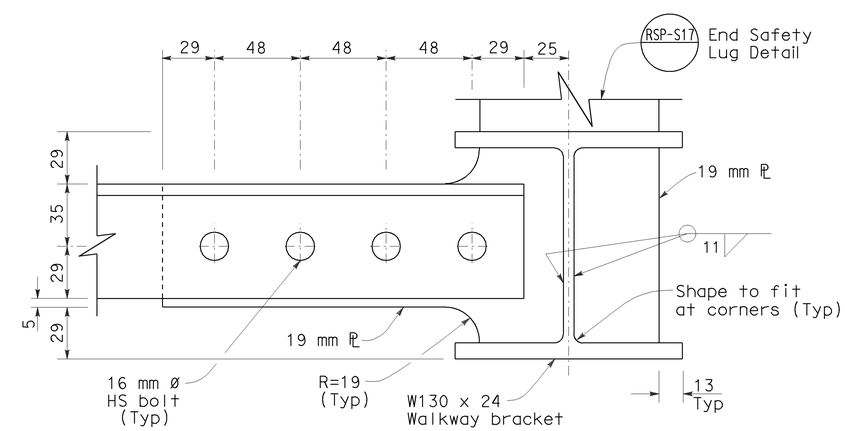

END SAFETY LUG LOCATION

STATE OF CALIFORNIA
DEPARTMENT OF TRANSPORTATION

OVERHEAD SIGNS WALKWAY DETAILS No.3

NO SCALE

ALL DIMENSIONS ARE IN MILLIMETERS UNLESS OTHERWISE SHOWN

NSP S17A DATED JANUARY 24, 2005
SUPPLEMENTS THE STANDARD PLANS BOOK DATED JULY 2004.

NEW STANDARD PLAN NSP S17A

2004 NEW Std PLAN NSP S17A

DIST	COUNTY	ROUTE	KILOMETER POST TOTAL PROJECT	SHEET NO.	TOTAL SHEETS
07	LA	5	42.8/47.3	537	1073

REGISTERED CIVIL ENGINEER

January 24, 2005
PLANS APPROVAL DATE

REGISTERED PROFESSIONAL ENGINEER Tillat Sattar No. C42892 Exp. 03-31-2006 CIVIL STATE OF CALIFORNIA

The State of California or its officers or agents shall not be responsible for the accuracy or completeness of electronic copies of this plan sheet.

To get to the Caltrans web site, go to: http://www.dot.ca.gov

To accompany plans dated 6-8-09

2004 REVISED Std PLAN RSP S18

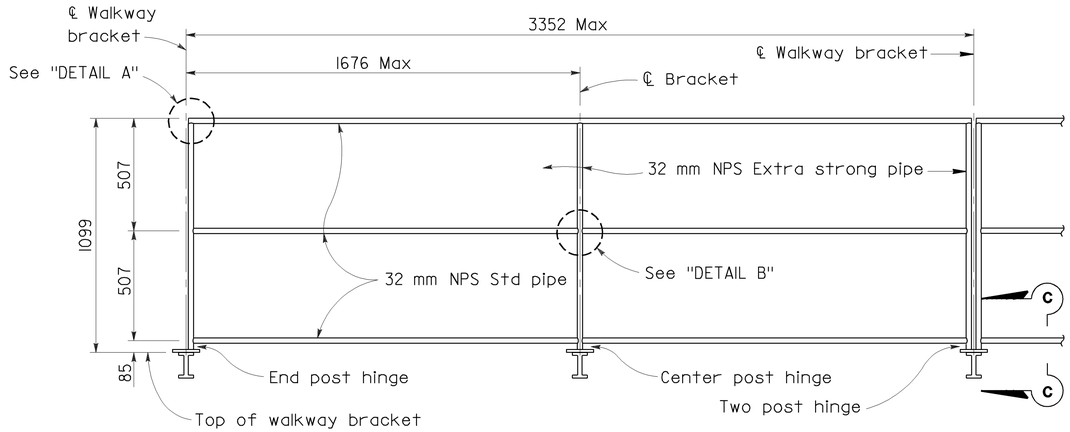

SAFETY RAILING ELEVATION

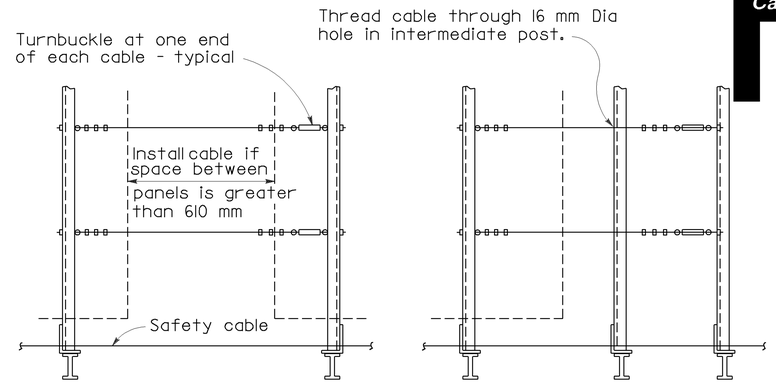

BETWEEN PANELS BEYOND PANELS

UPPER SAFETY CABLE ELEVATION

For tubular structures

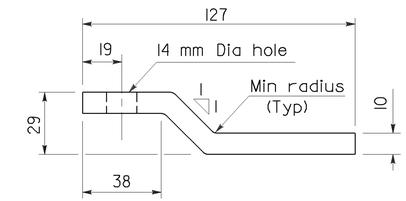

PLAN - KICKER BAR

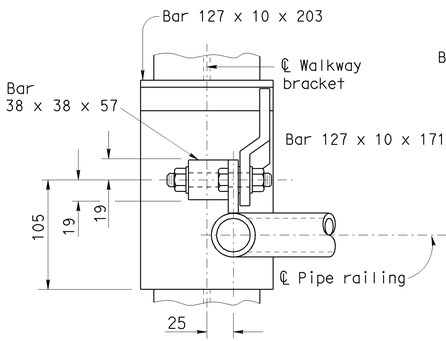

END POST

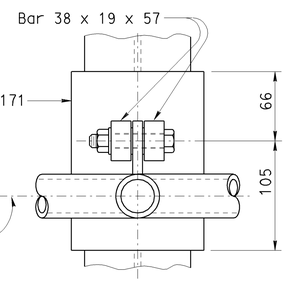

CENTER POST
WELDED HINGE - PLAN

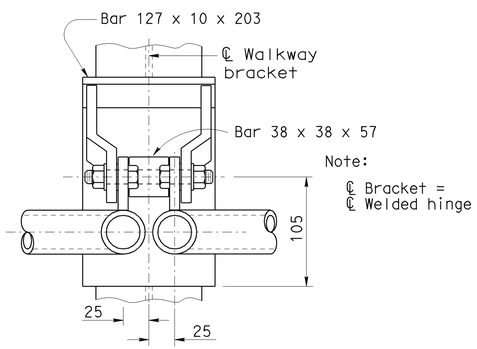

TWO POST

Note:
℄ Bracket = ℄ Welded hinge

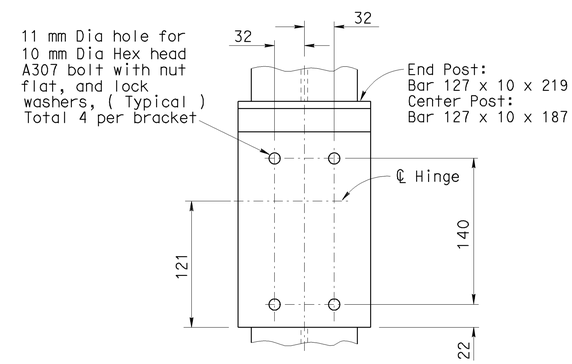

TYPICAL BOLTED (ALTERNATIVE)
HINGED CONNECTION

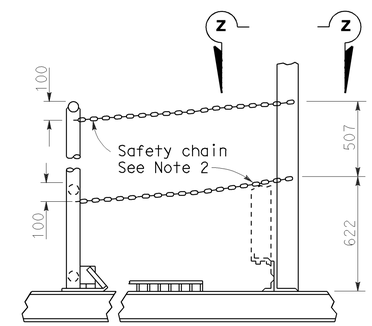

CHAIN ASSEMBLY

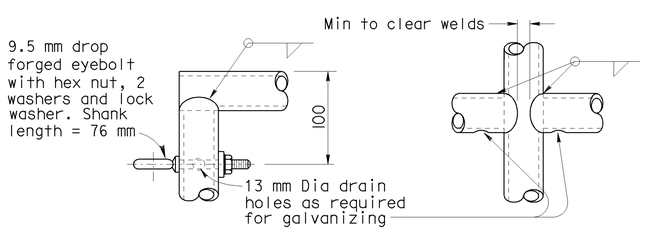

DETAIL A DETAIL B

Note: Alternative venting methods may be used if approved by the Engineer.

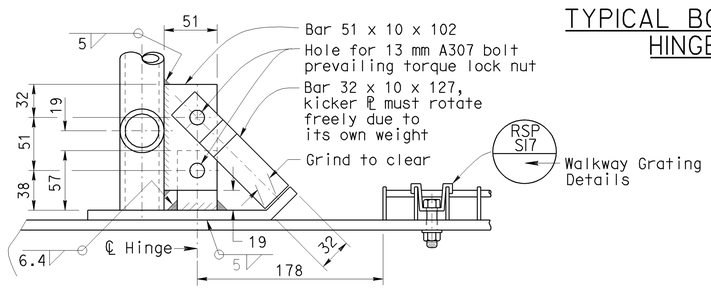

DETAIL C

NOTES

1. Special care shall be taken to insure that the complete hinge and latch assembly will hold the safety railing in a steady manner, free of wobble while in the raised position. Maximum allowable displacement from vertical at top of railing when latched shall be 12 mm.
2. Safety chain shall be 9.5 mm galvanized steel coil chain, approximately 39.4 links per meter. Length shall be minimum which allows lock-up of safety railing. Minimum of two safety chains per safety railing. Material shall be Grade 43 high test chain ASTM A413.
3. Cable clips shall be installed according to manufacturer's recommendation.

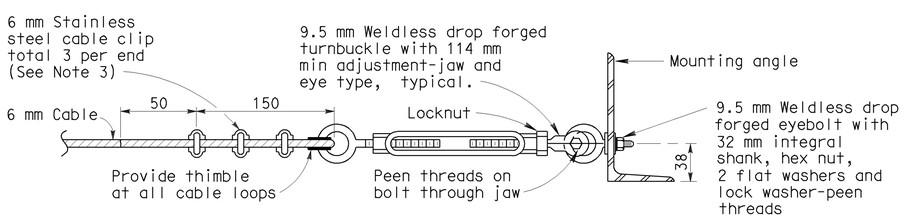

TURNBUCKLE DETAILS

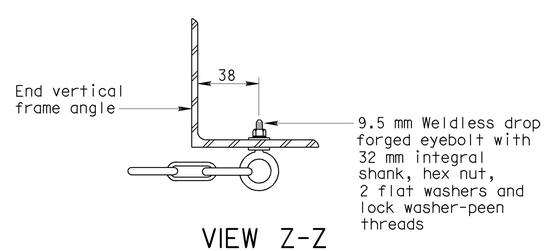

VIEW Z-Z

STATE OF CALIFORNIA
DEPARTMENT OF TRANSPORTATION

OVERHEAD SIGNS WALKWAY SAFETY RAILING DETAILS

NO SCALE

ALL DIMENSIONS ARE IN MILLIMETERS UNLESS OTHERWISE SHOWN

RSP S18 DATED JANUARY 24, 2005 SUPERSEDES STANDARD PLAN S18 DATED JULY 1, 2004-PAGE 327 OF THE STANDARD PLANS BOOK DATED JULY 2004.

REVISED STANDARD PLAN RSP S18

To accompany plans dated 6-8-09

Caltrans Metric

DIST	COUNTY	ROUTE	KILOMETER POST TOTAL PROJECT	SHEET NO.	TOTAL SHEETS
07	LA	5	42.8/47.3	538	1073

REGISTERED CIVIL ENGINEER

January 24, 2005
PLANS APPROVAL DATE

REGISTERED PROFESSIONAL ENGINEER Tillat Sattar No. C42892 Exp. 03-31-2006 CIVIL STATE OF CALIFORNIA

The State of California or its officers or agents shall not be responsible for the accuracy or completeness of electronic copies of this plan sheet.

To get to the Caltrans web site, go to: http://www.dot.ca.gov

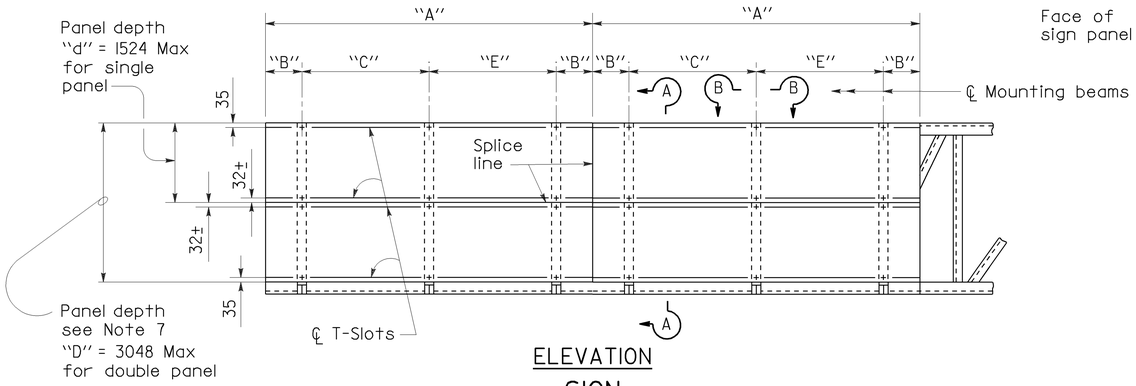

ELEVATION
SIGN

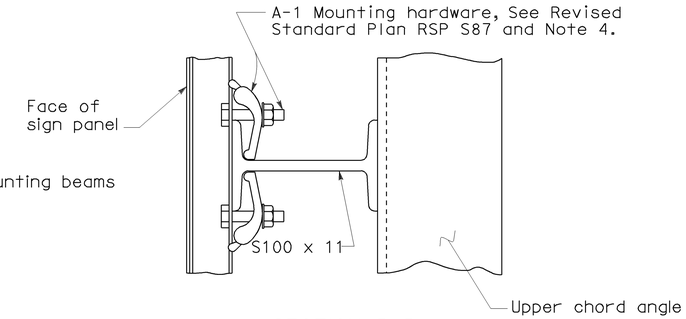

SECTION B-B

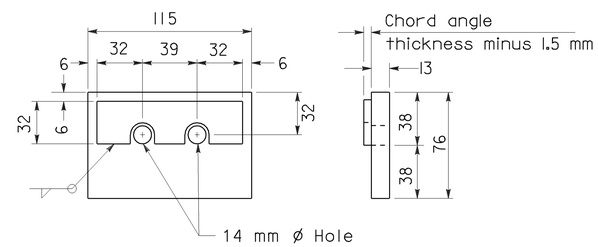

CHORD ANGLE CLAMP

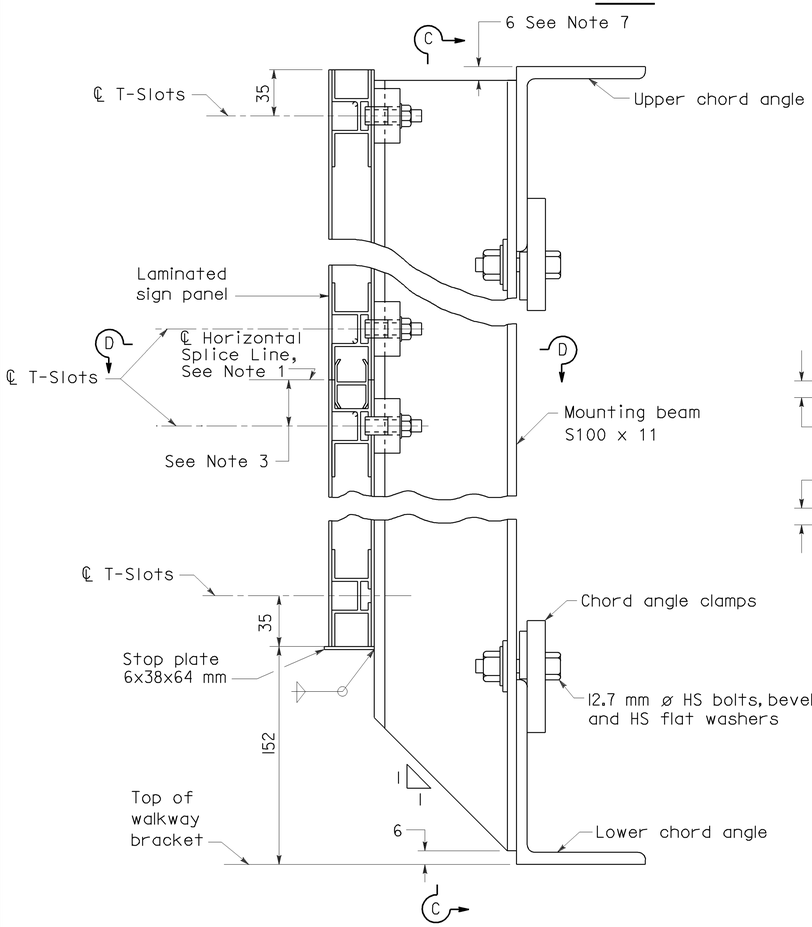

SECTION A-A

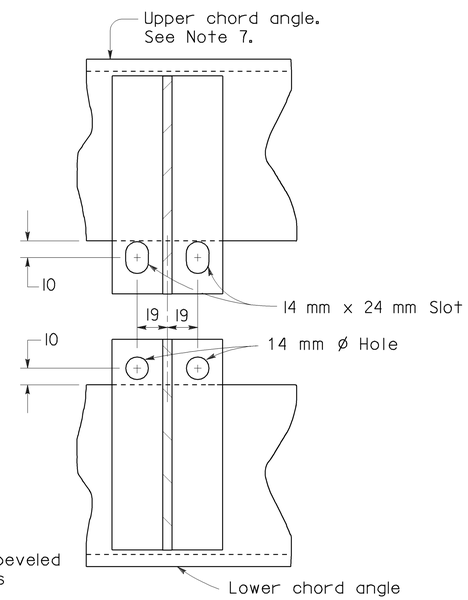

SECTION C-C

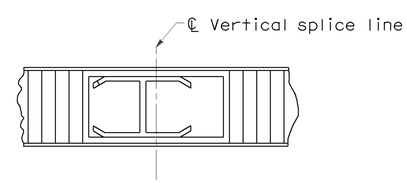

SECTION D-D

MOUNTING BEAM SPACING TABLE

SIGN PANEL LENGTH * (m)	NUMBER MOUNTING BEAMS	SIGN PANEL OVERHANG (mm)	MOUNTING BEAM SPACING (m)	(m)
"A"		"B"	"C"	"E"
1.52	2	229	1.02	
1.83	2	305	1.22	
2.13	2	381	1.37	
2.44	2	458	1.52	
2.74	2	559	1.63	
3.05	2	610	1.83	
3.35	2	610	2.13	
3.66	2	762	2.13	
3.96	2	762	2.44	
4.27	2	762	2.74	
4.57	2	915	2.74	
4.88	3	153	2.29	2.29
5.18	3	305	2.29	2.29
5.49	3	305	2.44	2.44
5.79	3	305	2.59	2.59
6.10	3	458	2.59	2.59
6.40	3	458	2.74	2.74
6.71	3	610	2.74	2.74
7.01	3	762	2.74	2.74
7.32	3	915	2.74	2.74

* Signs longer than 7.32 meters are fabricated and mounted as adjoining single panels. The location of the vertical splice line will be determined by the Engineer.

NOTES

1. The location of the horizontal splice line is dependent on the Contractor for signs greater than 1524 mm in depth.
2. Mounting bolts and clamps are required on each side of the horizontal splice lines at each support beam.
3. Dimension varies from panel to panel. Average value approximate 32 mm.
4. Torque stainless steel sign panel mounting bolts to 12 Nm.
5. Chord angle clamp to be galvanized after fabrication.
6. The Contractor shall verify all dependent dimensions in the field before ordering or fabricating any material.
7. 2794 mm and 3048 mm sign panel along with the mounting beams will project above the top chord truss member 254 mm and 508 mm respectively. Attachment details shall be the same.

STATE OF CALIFORNIA
DEPARTMENT OF TRANSPORTATION

OVERHEAD SIGNS-TRUSS SIGN MOUNTING DETAILS LAMINATED PANEL-TYPE A

NO SCALE

ALL DIMENSIONS ARE IN MILLIMETERS UNLESS OTHERWISE SHOWN

RSP S19 DATED JANUARY 24, 2005 SUPERSEDES STANDARD PLAN S19 DATED JULY 1, 2004-PAGE 328 OF THE STANDARD PLANS BOOK DATED JULY 2004.

REVISED STANDARD PLAN RSP S19

2004 REVISED Std PLAN RSP S19

To accompany plans dated 6-8-09

Caltrans Metric

DIST	COUNTY	ROUTE	KILOMETER POST TOTAL PROJECT	SHEET NO.	TOTAL SHEETS
07	LA	5	42.8/47.3	539	1073

REGISTERED CIVIL ENGINEER

January 24, 2005
PLANS APPROVAL DATE

REGISTERED PROFESSIONAL ENGINEER Tillat Sattar No. C42892 Exp. 03-31-2006 CIVIL STATE OF CALIFORNIA

The State of California or its officers or agents shall not be responsible for the accuracy or completeness of electronic copies of this plan sheet.

To get to the Caltrans web site, go to: http://www.dot.ca.gov

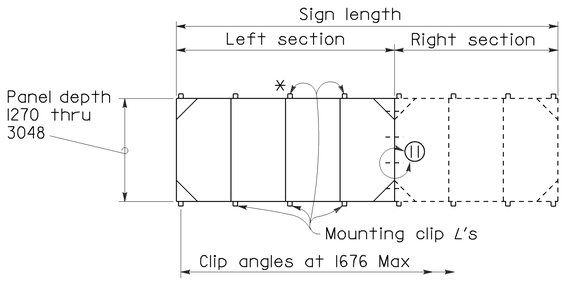

REMOVABLE FRAME GREATER THAN 6.10 m

* 2794 & 3048 sign panel frames will project above the top chord of the truss. In these cases the top clips shall be bolted to vertical frame members. See Standard Plan S22 for details.

Sign Length (m)	Left Section (m)	Right Section (m)
6.71	3.66	3.05
7.32	3.66	3.66
7.93	3.66	4.27
8.54	4.88	3.66
9.15	4.88	4.27
9.76	4.88	4.88
10.37	4.88	5.49
10.98	6.10	4.88
11.59	6.10	5.49
12.20	6.10	6.10

NOTES

Frames for signs greater than 6.10 m in length shall be fabricated in two sections with left section a multiple of 1220 in length. See table above.

Sections shall be hoisted into place individually and bolted together as per detail 11 prior to tightening of mounting clip bolts.

Bolting two sections together and hoisting simultaneously will not be permitted.

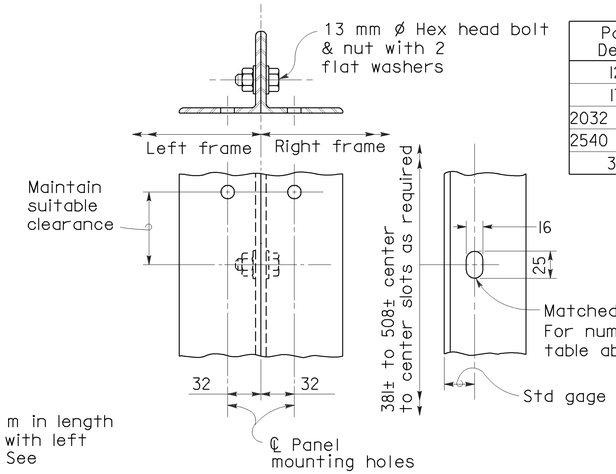

Panel Depth	No of slots
1270	2
1778	3
2032 & 2286	4
2540 & 2794	5
3048	6

NOTE

Panel mounting holes not shown. Panel lengths available in 610 increments.

DETAIL 11

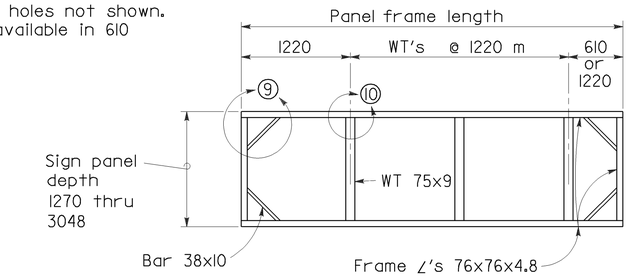

TYPICAL REMOVABLE FRAME

(1220 thru 6096)

NOTES

1. Frames shall be all-welded construction.
2. Panel mounting holes shall be drilled by template. Sign panel may be considered a template.
3. Drilled and tapped holes 6.34 mm may be used where interference due to welds or structural members is encountered.
4. WT 75 x 9 shall be flush with faces of frame angles.
5. Mounting clip angles shall be located such as to allow the top and bottom frame angles of the removable sign panel to lie on a straight horizontal line.
6. Holes for mounting removable sign panel frame may be slotted 25 mm maximum parallel to the axis of the sign.
7. WT 75 x 9 may be crimped at ends to join frame angles. Fillet weld all around.

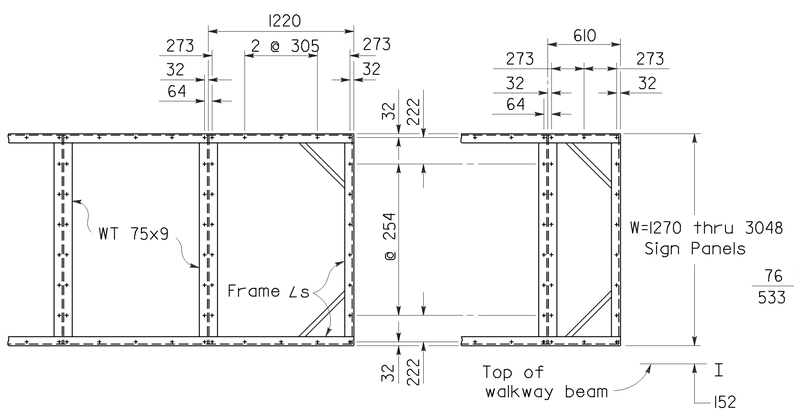

TYPICAL 1220 PANEL TYPICAL 610 PANEL

All holes 13 diameter maximum.

MOUNTING HOLE SPACING SIGN PANEL & FRAME

Hole spacing is for single sheet sign panels. For Overhead Formed Panels refer to "Removable Sign Panel Frames, Mounting Details" Sheet.

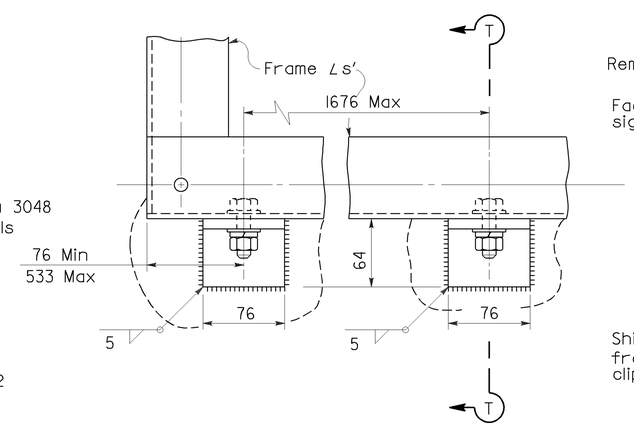

FRAME MOUNTING DETAILS

Details shown apply for sign panel frames ≤ 2540 mm deep. Mounting details for deeper panels shown on Standard Plan S22.

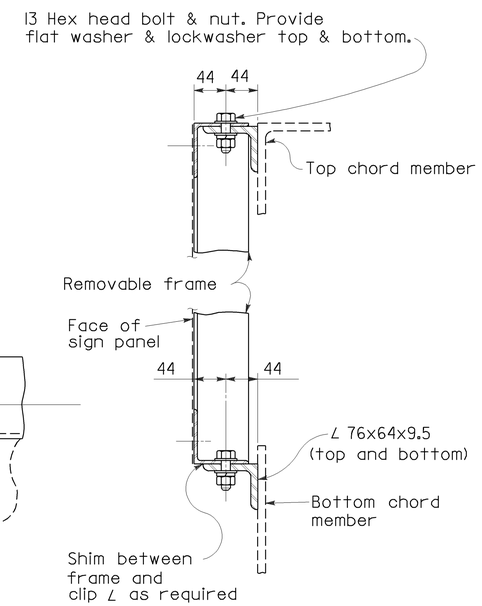

SECTION T-T

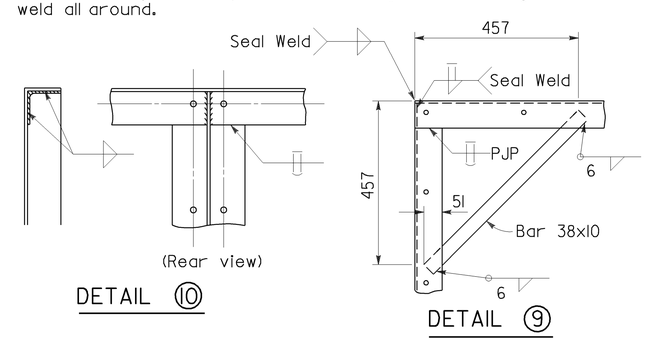

TYPICAL JOINT DETAILS

STATE OF CALIFORNIA
DEPARTMENT OF TRANSPORTATION

OVERHEAD SIGNS
STEEL FRAMES
REMOVABLE SIGN PANEL FRAMES

NO SCALE

ALL DIMENSIONS ARE IN MILLIMETERS UNLESS OTHERWISE SHOWN

RSP S20 DATED JANUARY 24, 2005 SUPERSEDES STANDARD PLAN S20 DATED JULY 1, 2004-PAGE 329 OF THE STANDARD PLANS BOOK DATED JULY 2004.

REVISED STANDARD PLAN RSP S20

2004 REVISED Std PLAN RSP S20

DIST	COUNTY	ROUTE	KILOMETER POST TOTAL PROJECT	SHEET NO.	TOTAL SHEETS
07	LA	5	42.8/47.3	540	1073

REGISTERED CIVIL ENGINEER

January 24, 2005
PLANS APPROVAL DATE

REGISTERED PROFESSIONAL ENGINEER
Tillat Sattar
No. C42892
Exp. 03-31-2006
CIVIL
STATE OF CALIFORNIA

The State of California or its officers or agents shall not be responsible for the accuracy or completeness of electronic copies of this plan sheet.

To get to the Caltrans web site, go to: http://www.dot.ca.gov

To accompany plans dated 6-8-09

Caltrans Metric

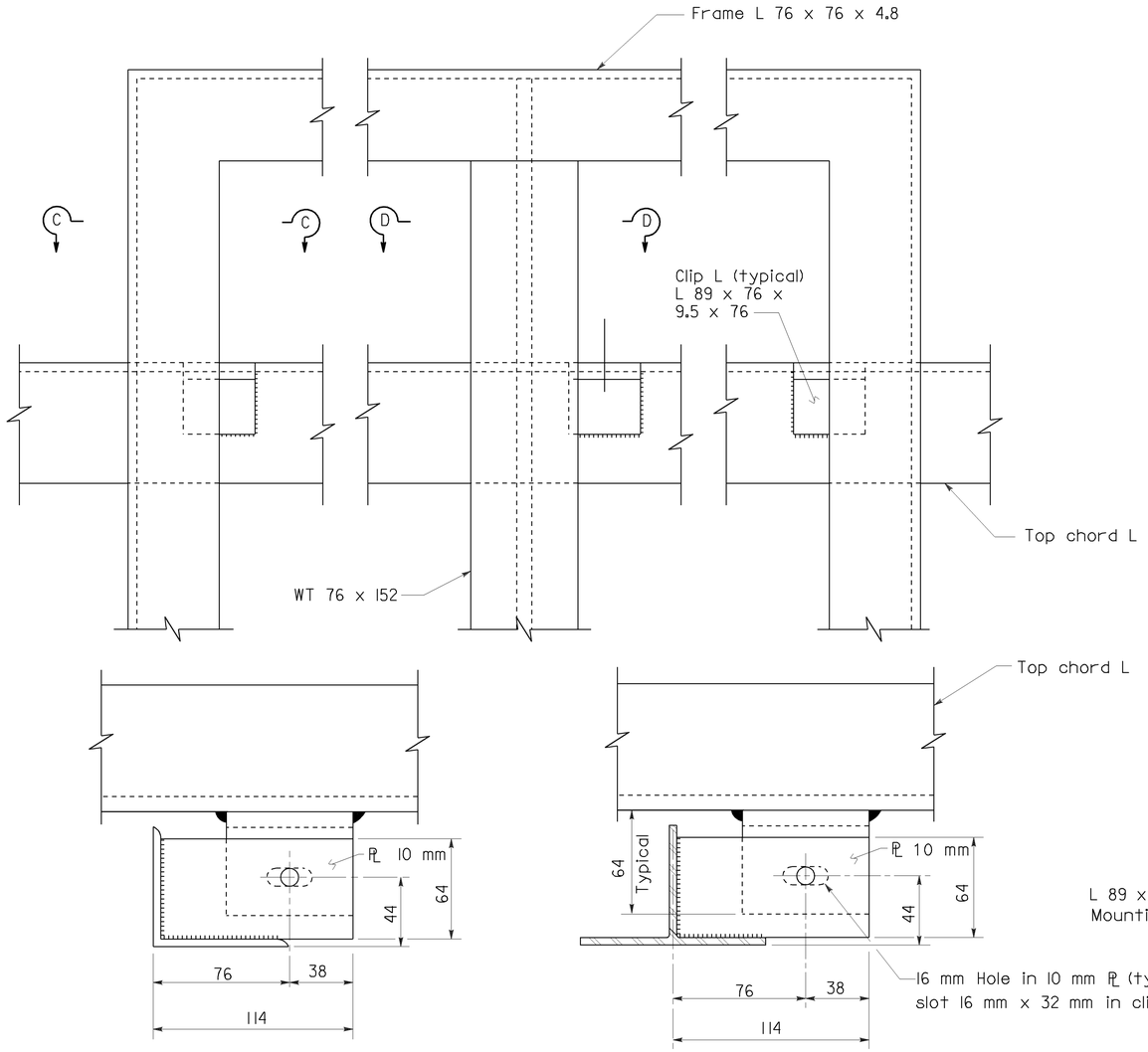

SECTION C-C SECTION D-D

ALTERNATIVE CONNECTION AT TOP CHORD

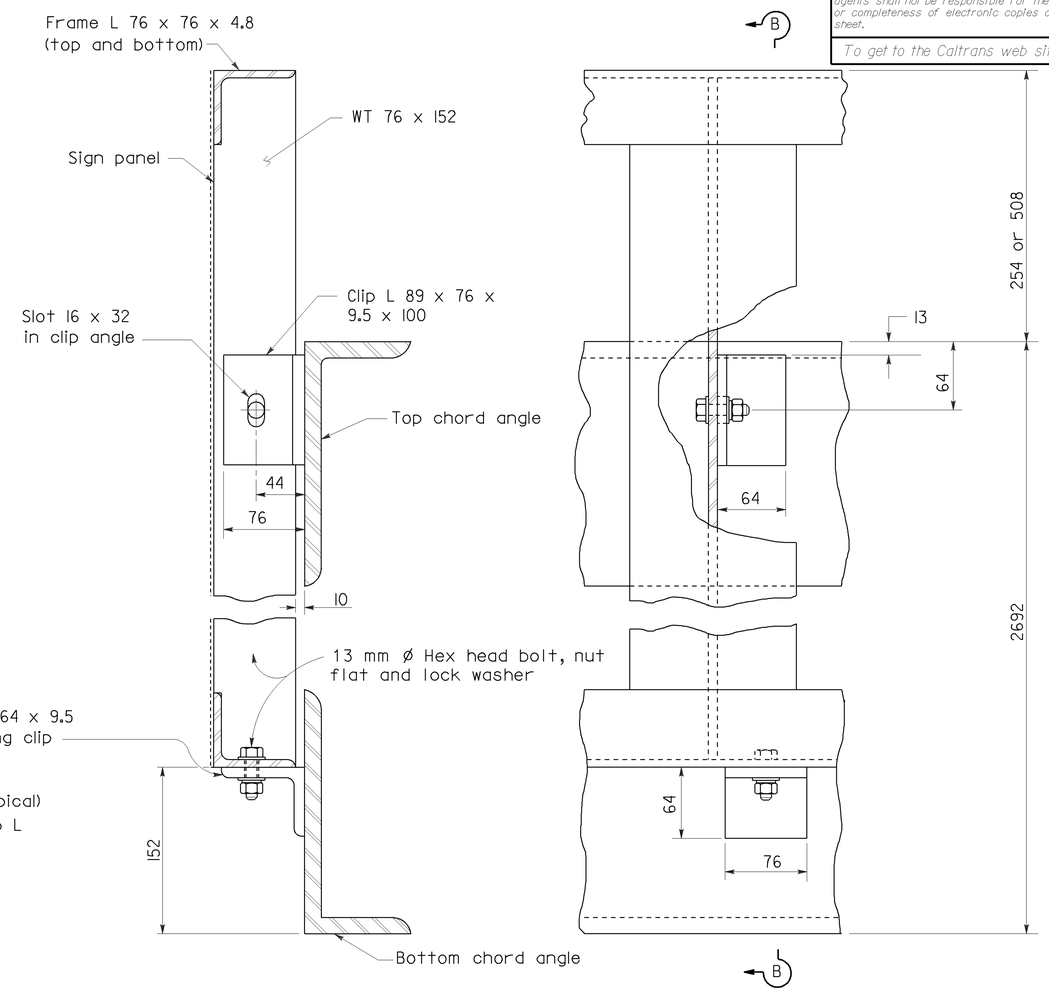

SECTION B-B ELEVATION VIEW

STEEL REMOVABLE SIGN PANEL FRAMES

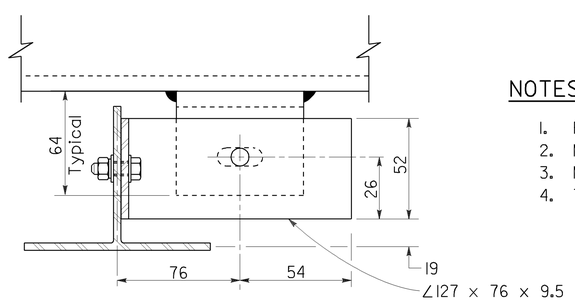

BOLTED ALTERNATIVE CONNECTION AT TOP CHORD

For details not shown, see Sections C-C and D-D.

NOTES

1. For Steel Removable Sign Panel Frame details see Revised Standard Plan RSP S20.
2. Minimum fillet weld is 7 for clip angles welded to chord member of truss.
3. Maximum spacing of bottom clip angle is 1676.
4. Top clips required for each vertical member of Removable Sign Panel Frame.

STATE OF CALIFORNIA
DEPARTMENT OF TRANSPORTATION

OVERHEAD SIGNS-TRUSS REMOVABLE SIGN PANEL FRAMES 2794 mm AND 3048 mm SIGN PANELS

NO SCALE

ALL DIMENSIONS ARE IN MILLIMETERS UNLESS OTHERWISE SHOWN

RSP S22 DATED JANUARY 24, 2005 SUPERSEDES STANDARD PLAN S22 DATED JULY 1, 2004-PAGE 331 OF THE STANDARD PLANS BOOK DATED JULY 2004.

REVISED STANDARD PLAN RSP S22

2004 REVISED Std PLAN RSP S22

DIST	COUNTY	ROUTE	KILOMETER POST TOTAL PROJECT	SHEET NO.	TOTAL SHEETS
07	LA	5	42.8/47.3	541	1073

REGISTERED ELECTRICAL ENGINEER

October 5, 2007
PLANS APPROVAL DATE

REGISTERED PROFESSIONAL ENGINEER Jeffery G. McRae No. E14512 Exp. 6-30-08 ELECTRICAL STATE OF CALIFORNIA

The State of California or its officers or agents shall not be responsible for the accuracy or completeness of electronic copies of this plan sheet.

To get to the Caltrans web site, go to: http://www.dot.ca.gov

To accompany plans dated 6-8-09

ELECTROLIERS

STANDARD TYPES
15, 15D
15 STRUCTURE
21, 21D STRUCTURE
30
31
32
35
36-20A

High mast lighting standard

Double arm lighting standard

Existing electrolier

Electrolier foundation (Future installation)

NOTES

1. Luminaires shall be 310 W HPS when installed on Type 21, 21D, 30, 31, 32, 35 and 36-20A Standards, unless otherwise specified. Luminaires shall be 200 W HPS when installed on other type standards or poles, unless otherwise specified.
2. Luminaires shall be the cutoff type, ANSI Type III medium cutoff lighting distribution, unless otherwise specified.
3. Variations noted adjacent to symbol on project plans.

Electrolier (see project notes or project plans)

Luminaire on wood pole

STANDARD NOTES

- AB — Abandon. If applied to conduit, remove conductors.
- BC — Install pull box in existing conduit run.
- BP — Pedestrian barricade, type as indicated on plan.
- CB — Install conduit into existing pull box.
- CC — Connect new and existing conduit. Remove existing conductors and install conductors as indicated.
- CF — Conduit to remain for future use. Remove conductors. Install pull wire or rope.
- DH — Detector handhole.
- FA — Foundation to be abandoned.
- IS — Install sign on signal mast arm.
- NS — No slip base on standard.
- PEC — Photoelectric control.
- PEU — Photoelectric unit.
- RC — Equipment or material to be removed and become the property of the Contractor.
- RE — Remove electrolier, fuses and ballast. Tape ends of conductors.
- RL — Relocate equipment.
- RR — Remove and reuse equipment.
- RS — Remove and salvage equipment.
- SC — Splice new to existing conductors.
- SD — Service disconnect.
- SF — Standard to remain for future use. Remove luminaire, pole conductors, fuses and ballast. Tape disconnects.
- TSP — Telephone service point.

ABBREVIATIONS AND EQUIPMENT DESIGNATIONS

PROPOSED	EXISTING	
BBS	bbs	Battery backup system
BC	bc	Bolt circle
C	C	Conduit
CCTV	cctv	Closed circuit television
CKT	ckt	Circuit
CMS	cms	Changeable message sign
DLC	dlc	Loop detector lead-in cable
EMS	ems	Extinguishable message sign
EVC	evc	Emergency vehicle cable
EVD	evd	Emergency vehicle detector
FB	fb	Flashing beacon
FBCA	fbca	Flashing beacon control assembly
FBS	fbs	Flashing beacon with slip base
FO	fo	Fiber optic
G	G	Ground (Equipment Grounding Conductor)
GFCI	GFCI	Ground fault circuit interrupt
HAR	har	Highway advisory radio
HEX	hex	Hexagonal
HPS	hps	High pressure sodium
IISNS	iisns	Internally illuminated street name sign
ISL	isl	Induction sign lighting
LED	led	Light emitting diode
LMA	lma	Luminaire mast arm
LPS	lps	Low pressure sodium
LTG	ltg	Lighting
LUM	lum	Luminaire
MAT	mat	Mast arm mounted vehicle signal faces, top attachment
MAS	mas	Mast arm mounted vehicle signal faces, side attachment
MAS-4A	mas-4A	Mast arm mounted vehicle signal faces, side attachment - 4 signal section
MAS-4B	mas-4B	
MAS-4C	mas-4C	
MAS-5A	mas-5A	Mast arm mounted vehicle signal faces, side attachment - 5 signal section
MAS-5B	mas-5B	
MC	mc	Mercury contactor
M/M	m/m	Multiple to multiple transformer
MT	mt	Conduit with pull wire or rope only
MTG	mtg	Mounting
	mv	Mercury vapor lighting fixture
N	N	Neutral (Grounded Conductor)
NC	NC	Normally closed
NO	NO	Normally open
PB	pb	Pull box
PEC	pec	Photoelectric control (Type I, II, III, IV or V as shown)
PED	ped	Pedestrian
PEU	peu	Photoelectric unit
PPB	ppb	Pedestrian push button
RL	RL	Relocated equipment
RM	rm	Ramp metering
SB	sb	Slip base
SIC	sic	Signal interconnect cable
SIG	sig	Signal
SMA	sma	Signal mast arm
SNS	sns	Street name sign
SP	sp	Service point
TDC	tdc	Telephone demarcation cabinet
TMS	tms	Traffic monitoring station
TOS	tos	Traffic Operations System
VEH	veh	Vehicle
XFMR	xfmr	Transformer
COMM	comm	Communication
RWIS	rwis	Roadway weather information system

SOFFIT AND WALL MOUNTED LUMINAIRES

Pendant, 70 W HPS unless otherwise specified.

Flush, 70 W HPS unless otherwise specified.

Wall surface, 70 W HPS unless otherwise specified.

Existing soffit or wall luminaire to remain unmodified.

Existing soffit or wall luminaire to be modified as specified.

NOTE

Arrow indicates "street side" of luminaire.

STATE OF CALIFORNIA
DEPARTMENT OF TRANSPORTATION

ELECTRICAL SYSTEMS (SYMBOLS AND ABBREVIATIONS)

NO SCALE

ALL DIMENSIONS ARE IN MILLIMETERS UNLESS OTHERWISE SHOWN

RSP ES-1A DATED OCTOBER 5, 2007 SUPERSEDES STANDARD PLAN ES-1A DATED JULY 1, 2004-PAGE 413 OF THE STANDARD PLANS BOOK DATED JULY 2004.

REVISED STANDARD PLAN RSP ES-1A

2004 REVISED Std PLAN RSP ES-1A

6-27-07

DIST	COUNTY	ROUTE	KILOMETER POST TOTAL PROJECT	SHEET NO.	TOTAL SHEETS
07	LA	5	42.8/47.3	542	1073

REGISTERED ELECTRICAL ENGINEER

October 5, 2007
PLANS APPROVAL DATE

REGISTERED PROFESSIONAL ENGINEER Jeffery G. McRae No. E14512 Exp. 6-30-08 ELECTRICAL STATE OF CALIFORNIA

The State of California or its officers or agents shall not be responsible for the accuracy or completeness of electronic copies of this plan sheet.

To get to the Caltrans web site, go to: http://www.dot.ca.gov

To accompany plans dated 6-8-09

CONDUIT

PROPOSED	EXISTING	
		Lighting conduit, unless otherwise indicated or noted
		Traffic signal conduit
C	c	Communication conduit
T	t	Telephone conduit
F	f	Fire alarm conduit
FO	fo	Fiber optic conduit
		Conduit termination (RSP ES-9A C)
R	r	Conduit riser in/on structure or Service pole

SERVICE EQUIPMENT

PROPOSED	EXISTING	
OH	oh	Overhead lines
U	u	Wood pole "U" indicates utility owned
		Pole guy-with anchor
		Utility transformer-ground mounted
III		Service equipment enclosure type
		Service equipment enclosure door indicates front of enclosure
T	t	Telephone demarcation cabinet

POLE-MOUNTED SERVICE DESIGNATION

Type of installation

TYPE H SERVICE - 8.8 m ← Pole height above grade

ILLUMINATED OVERHEAD SIGN

PROPOSED	EXISTING	
		Overhead sign - Single post
		Overhead sign - Two post
		Overhead sign - Mounted on structure
		Overhead sign with electrolier

SIGNAL EQUIPMENT

PROPOSED	EXISTING	
		Pedestrian signal face
		Pedestrian push button post
		Pedestrian barricade
		Vehicle signal face (with backplate, 3-Section: red, yellow and green)
		Vehicle signal face with angle visors
PV	PV	Modifications of basic symbols: "L" Indicates all non-arrow sections louvered "LG" Indicates louvered green section only "PV" indicates 300 mm programmed visibility sections "200" indicates all 200 mm sections (only when specified)
		Type 15TS and Vehicle signal face
		Vehicle signal face with red, yellow and green left arrow sections
		Vehicle signal face with red and yellow sections and up green arrow
		Vehicle signal face (5 Section) with red, yellow and green sections and yellow and green right arrows
		Type 1 Standard and attached vehicle signal faces
		Standard with signal mast arm only and attached vehicle signal faces and internally illuminated street name sign
		Type 33 Standard, Left-turn vehicle signal face and sign
		Standard with luminaire and signal mast arms and attached vehicle signal faces
		Cantilever flashing beacon Type 9 Frame, with a sign unless otherwise specified or indicated
Y Y	Y Y	Type 15-FBS Standard with two vehicle signal face sections with lens, backplate and visor with a sign
R	Y	Flashing beacon. One vehicle signal face section with lens, backplate and visor. "R" indicates red indication, "Y" indicates yellow indication
		Controller assembly. Door indicates front of cabinet
		Guard post
		Type 1 Standard with "Meter On" sign
		Emergency vehicle detector

NOTES

1. All signal sections shall be 300 mm unless shown otherwise.
2. Signal heads shall be provided with backplates unless shown otherwise.
3. Signal indication shall be LED.

STATE OF CALIFORNIA
DEPARTMENT OF TRANSPORTATION

ELECTRICAL SYSTEMS (SYMBOLS AND ABBREVIATIONS)

NO SCALE

ALL DIMENSIONS ARE IN MILLIMETERS UNLESS OTHERWISE SHOWN

RSP ES-1B DATED OCTOBER 5, 2007 SUPERSEDES STANDARD PLAN ES-1B DATED JULY 1, 2004-PAGE 414 OF THE STANDARD PLANS BOOK DATED JULY 2004.

REVISED STANDARD PLAN RSP ES-1B

2004 REVISED Std PLAN RSP ES-1B

8-9-07

DIST	COUNTY	ROUTE	KILOMETER POST TOTAL PROJECT	SHEET NO.	TOTAL SHEETS
07	LA	5	42.8/47.3	543	1073

Caltrans Metric

REGISTERED ELECTRICAL ENGINEER

October 5, 2007
PLANS APPROVAL DATE

REGISTERED PROFESSIONAL ENGINEER Jeffery G. McRae No. E14512 Exp. 6-30-08 ELECTRICAL STATE OF CALIFORNIA

The State of California or its officers or agents shall not be responsible for the accuracy or completeness of electronic copies of this plan sheet.

To get to the Caltrans web site, go to: http://www.dot.ca.gov

To accompany plans dated 6-8-09

EQUIPMENT IDENTIFICATION

ILLUMINATED SIGN IDENTIFICATION NUMBER:

Sign No. 12345 — Sign number - Place on post or structure

10 ISL SCI 1.0
- 1.0 — Transformer rating (kVA)
- SCI — Lighting control type
- ISL — Number and type of fixtures

Do NOT place on standard or structure

ELECTROLIER OR EQUIPMENT IDENTIFICATION NUMBER:

12345 - 4.6
- 4.6 — Mast arm length in meters, if shown. Do not place on standard or structure.
- 12345 — Equipment number - Place on standard or structure. Existing equipment numbers are shown in parenthesis

CONDUIT AND CONDUCTOR IDENTIFICATION:

41C, 2#10, 15#14, 2 DLC
- 2#10, 15#14, 2 DLC — Number and size of conductors and cables
- 41C — Size of conduit in millimeters

Ø1, Ø2, Ø2P, etc.	Traffic phase identification for signal faces, detectors and phase diagrams
1 2 3	Project note numbers
A B C	Equipment description, installation or item numbers
1 2 3	Conduit run numbers

SIGNAL AND LIGHTING STANDARD (TYPICAL DESIGNATION):

19A - 3 - 161
- 161 — Wind velocity=161 km/h
- 3 — Case 3 arm loading
- 19A — Standard type

Standard Plan sheet number
Detail number or letter

WIRING DIAGRAM LEGEND

P	Pole
CB	Circuit breaker
A	Ampere
V	Volt
M	Metered
UM	Unmetered
NB	Neutral bus
GB	Ground bus
G	Equipment grounding conductor
N	Grounded conductor (Neutral)

- External conductor
- Conductor or bus
- Tie point
- Contactor coil
- Contactor, Contact NO
- Terminal blocks
- Contactor, Contact NC
- Enclosure bond
- Grounding electrode
- Circuit breaker
- Receptacle

PULL BOXES

PROPOSED	EXISTING	
		Pull box-No. 5 unless otherwise indicated or noted.
3	9A(21)	Pull box-Additional designations or descriptions

3 = No. 3½ pull box
5 = No. 5 pull box
6 = No. 6 pull box
7 = No. 7 (Ceiling pull box)
8 = No. 8 (Pendant soffit pull box)
9 = No. 9 pull box
9A = No. 9A pull box

(C) = Communications pull box
(E) = Pull box with extension
(S) = Sprinkler control pull box
(21) = Anchor bolts and conduit for future installation of Type 21 Standard
(T) = Traffic pull box

MISCELLANEOUS EQUIPMENT

PROPOSED	EXISTING	
CMS	cms	Changeable message sign
		Closed circuit television camera
		Highway advisory radio pole and antenna
EMS	ems	Extinguishable message sign
M V	m v	Detection device M = Microwave sensor V = Video image sensor

VEHICLE DETECTORS

5 J 9 U
- U — Vehicle detector designation
- U = Upper, L = Lower
- 9 — Slot number in input file
- J — Input file (I or J)
- 5 — Phase

PROPOSED	EXISTING	
		Type A detector loop. Outline of sawcut shown.
		Type B detector loop. Outline of sawcut shown.
		Type C detector loop. Outline of sawcut shown.
		Type D detector loop. Outline of sawcut shown.
		Type E detector loop. Outline of sawcut shown.
		Type Q detector loop. Outline of sawcut shown.
		Magnetic detector
DH	dh	Detector handhole
		Microwave or video detection zone

STATE OF CALIFORNIA
DEPARTMENT OF TRANSPORTATION

ELECTRICAL SYSTEMS (SYMBOLS AND ABBREVIATIONS)

NO SCALE

ALL DIMENSIONS ARE IN MILLIMETERS UNLESS OTHERWISE SHOWN

RSP ES-1C DATED OCTOBER 5, 2007 SUPERSEDES STANDARD PLAN ES-1C DATED JULY 1, 2004-PAGE 415 OF THE STANDARD PLANS BOOK DATED JULY 2004.

REVISED STANDARD PLAN RSP ES-1C

2004 REVISED Std PLAN RSP ES-1C

10-1-07

DIST	COUNTY	ROUTE	KILOMETER POST TOTAL PROJECT	SHEET NO.	TOTAL SHEETS
07	LA	5	42.8/47.3	544	1073

Caltrans Metric

REGISTERED ELECTRICAL ENGINEER

October 5, 2007
PLANS APPROVAL DATE

REGISTERED PROFESSIONAL ENGINEER Jeffery G. McRae No. E14512 Exp. 6-30-08 ELECTRICAL STATE OF CALIFORNIA

The State of California or its officers or agents shall not be responsible for the accuracy or completeness of electronic copies of this plan sheet.

To get to the Caltrans web site, go to: http://www.dot.ca.gov

To accompany plans dated 6-8-09

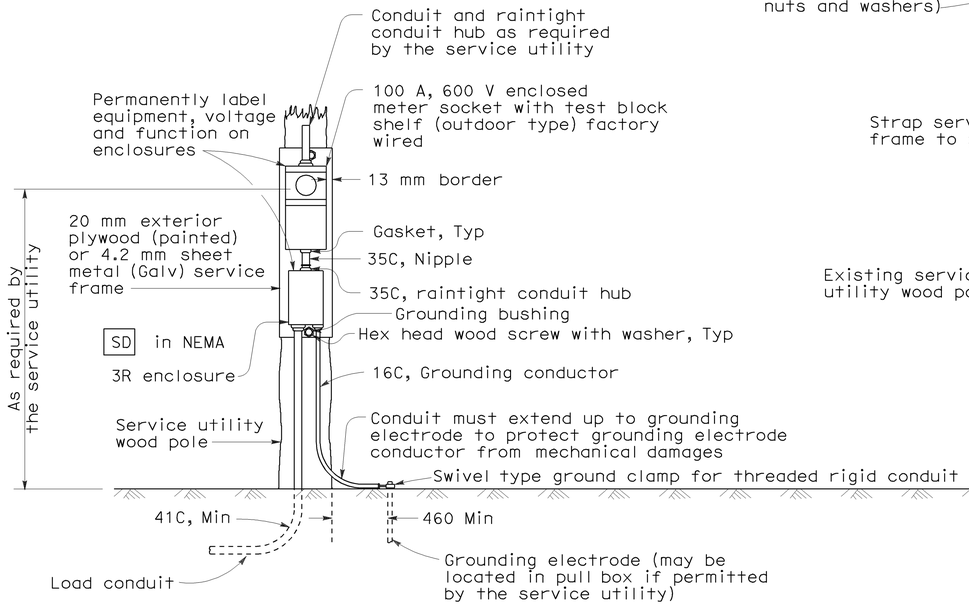

TYPE SCE-1 SERVICE

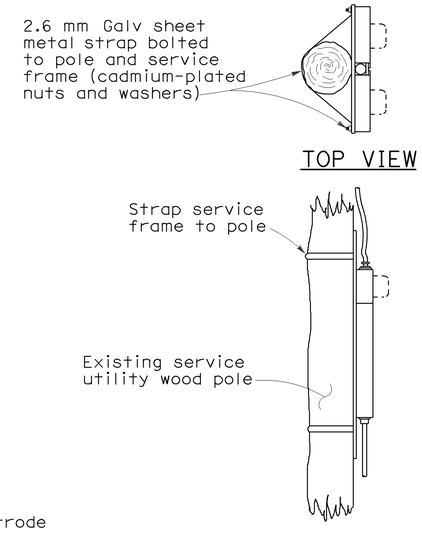

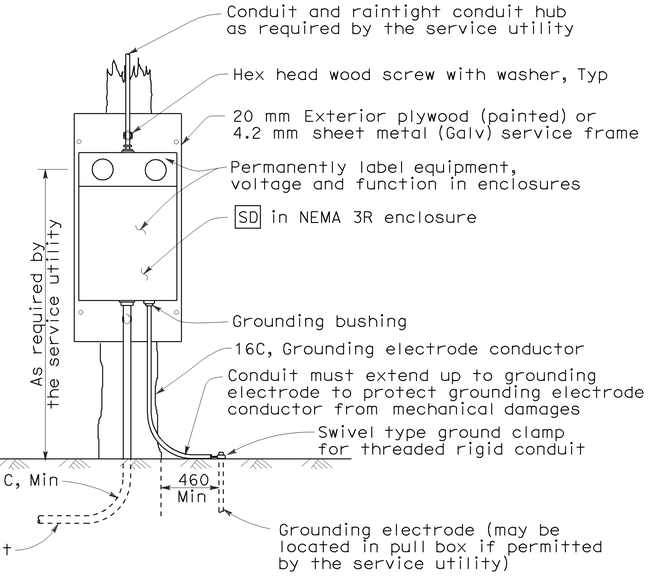

TYPE SCE-2 SERVICE

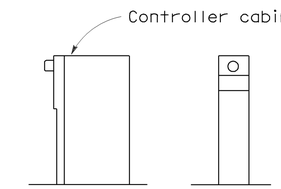

TYPE OF SERVICE (TYPICAL)

Type II service equipment enclosure mounted on a side of a controller cabinet.
Type III complete free-standing service equipment enclosure.

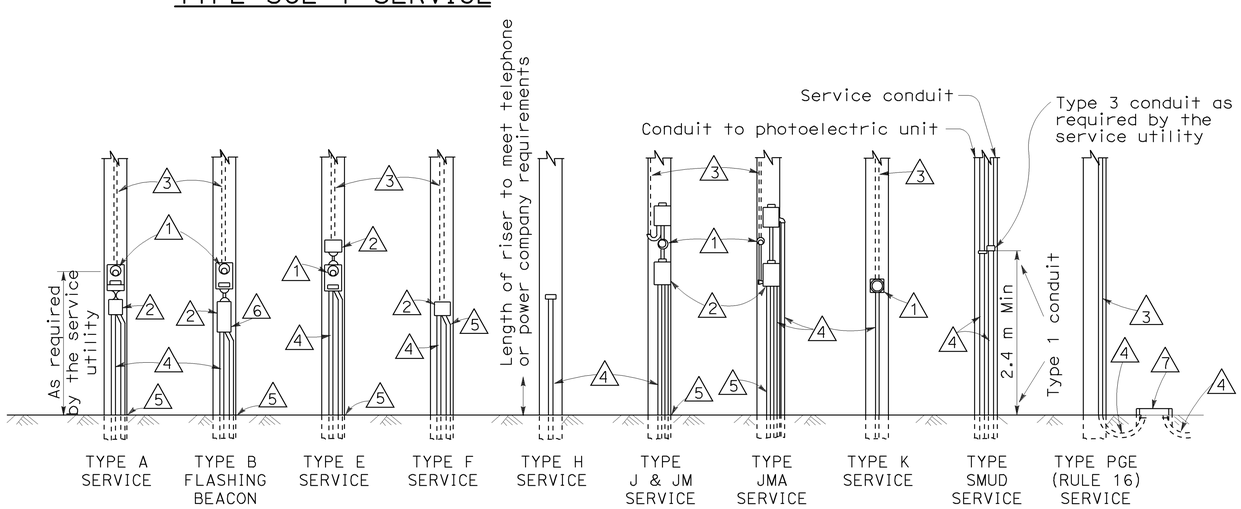

NOTES

1. Meter socket.
2. Service enclosure with a minimum 60 A rated main circuit breaker, unless otherwise shown.
3. (a) Utility owned pole. The service utility will furnish and install required service riser, PEU with conductors and other equipment as needed.
   (b) State owned pole. The Contractor shall furnish and install required service riser and equipment.
4. Conduit, length and size as required.
5. 16C, 1#6. See "Service Grounding" detail.
6. Flashing beacon control assembly.
7. Service pull box, No. 5 unless otherwise noted, furnished and installed by the Contractor. Service utility shall determine the exact location.

POLE MOUNTED SERVICE INSTALLATIONS

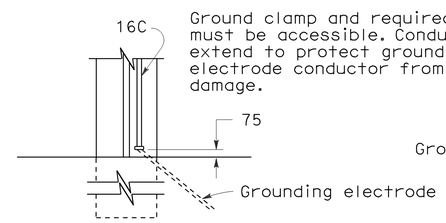

TYPE A

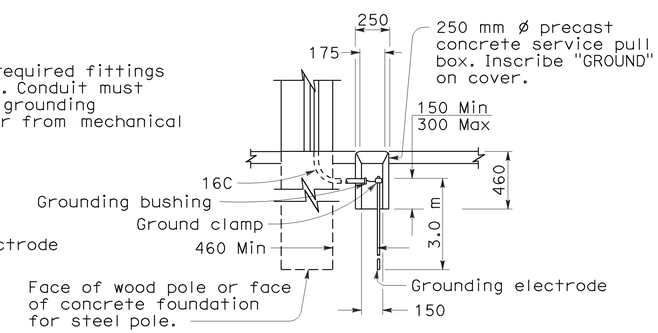

TYPE B

Use where service utility requires 460 mm clearance between grounding electrode and the pole or service equipment enclosure. Installation shown is for sidewalk or paved areas. In unpaved areas, omit special service pull box and locate ground clamp above ground or locate ground clamp in nearest pull box.

SERVICE GROUNDING

STATE OF CALIFORNIA
DEPARTMENT OF TRANSPORTATION

ELECTRICAL SYSTEMS (SERVICE EQUIPMENT)

NO SCALE

ALL DIMENSIONS ARE IN MILLIMETERS UNLESS OTHERWISE SHOWN

RSP ES-2A DATED OCTOBER 5, 2007 SUPERSEDES STANDARD PLAN ES-2A DATED JULY 1, 2004-PAGE 416 OF THE STANDARD PLANS BOOK DATED JULY 2004.

REVISED STANDARD PLAN RSP ES-2A

2004 REVISED Std PLAN RSP ES-2A

DIST	COUNTY	ROUTE	KILOMETER POST TOTAL PROJECT	SHEET NO.	TOTAL SHEETS
07	LA	5	42.8/47.3	545	1073

Caltrans Metric

REGISTERED ELECTRICAL ENGINEER

October 5, 2007
PLANS APPROVAL DATE

REGISTERED PROFESSIONAL ENGINEER
Jeffery G. McRae
No. E14512
Exp. 6-30-08
ELECTRICAL
STATE OF CALIFORNIA

The State of California or its officers or agents shall not be responsible for the accuracy or completeness of electronic copies of this plan sheet.

To get to the Caltrans web site, go to: http://www.dot.ca.gov

To accompany plans dated 6-8-09

2004 REVISED Std PLAN RSP ES-2C

NOTES-TYPE III SERVICE EQUIPMENT ENCLOSURES:

1. Service equipment enclosure and metering equipment shall meet the requirements of the service utility. The meter area shall have a sealable, lockable, weathertight cover that can be removed without the use of tools.

2. Service equipment enclosures shall be factory wired and conform to NEMA standards.

3. Dimensions of service equipment enclosures shall meet the requirements of the service utility.

4. The dead front panels on Type III-A service equipment enclosures shall have a continuous stainless steel or aluminum piano hinge. The panel in front of the breakers shall be secured with a latch or captive screws. No live parts shall be mounted on the dead front panel.

5. The exterior door shall have provisions for padlocking. The padlock hole shall be a minimum diameter of 11 mm.

6. Enclosures housing transformers of more than one kVA shall have effective screened ventilation louvers of not less than 32 000 mm^2. Screen shall be stainless steel No. 304, with a No. 10 size mesh. Framed screen shall be secured with at least four bolts.

7. Fasteners on the exterior of the enclosure shall be vandal-resistant and shall not be removable from the exterior. Screws, nuts, bolts and washers shall be stainless steel.

8. Landing lugs for incoming service conductors shall be compatible with either copper or aluminum conductors sized to suit the conductors shown on the plan. Landing lugs shall be copper or tin-plated aluminum. Neutral bus shall be rated for 125 A and be suitable for copper or aluminum conductors unless otherwise specified. The terminal shall include but not be limited to:

   a) Incoming terminals (landing lugs)
   b) Neutral lugs
   c) Solid neutral terminal strip

9. At least 6 standard single pole circuit breaker spaces, 20 mm nominal, shall be provided for branch circuits. Circuit breaker interiors shall be copper. Interiors of enclosure shall accept plug-in or cable-in/cable-out circuit breakers.

10. Control wiring shall be 600 V, 14 stranded machine tool wire. Where subject to flexing, 19 strand wire shall be used.

11. Main bus shall be rated for 125 A and shall be tin-plated copper.

12. A plastic laminated wiring diagram shall be provided with brass mounting eyelets and attached to the inside of the enclosure and the wiring diagram shall affixed to the interior with a UL or ETL approved method.

13. An engraved phenolic nameplate on the dead front panel indicating the function of each circuit or device shall be installed with stainless steel rivets or stainless steel screws:

    a) Adjacent to the breaker or device with character size a minimum of 3 mm.

    b) At the top of the exterior door panel indicating system number, voltage level and number of phases with character size a minimum of 5 mm.

14. The plan shows the approximate location of devices within the enclosure. Components may be rearranged, however, the "working" clearances within the service equipment enclosure shall be maintained.

15. In unpaved areas a raised portland cement concrete pad 600 mm x 100 mm x width of foundation shall be constructed in front of new service equipment enclosure installation. Pad shall be set to elevation of foundation.

16. Foundation shall extend 50 mm minimum beyond edge of service equipment enclosure.

17. Internal bus, where shown, is typical only. Alternative design of proposed service equipment enclosure shall be submitted to the Engineer for approval.

18. Plug-in circuit breakers may be mounted in the vertical or horizontal position. Cable-in/cable-out circuit breakers shall be mounted in the vertical position.

19. Type III-AF and Type III-BF service equipment enclosures shall have the meter viewing windows located on the front side of the service equipment enclosures.

20. Type III-AR and Type III-BR service equipment enclosures shall be similarly constructed as Type III-AF and Type III-BF respectively, except the meter viewing windows shall be located on the back side of the service equipment enclosures.

21. Minimum clearance shall be required for front and back of service equipment enclosure per National Electrical Code, Article 110.26, "Spaces About Electric Equipment (600 Volts, Nominal, or Less)".

STATE OF CALIFORNIA
DEPARTMENT OF TRANSPORTATION

ELECTRICAL SYSTEMS (SERVICE EQUIPMENT NOTES TYPE III SERIES)

NO SCALE

ALL DIMENSIONS ARE IN MILLIMETERS UNLESS OTHERWISE SHOWN

RSP ES-2C DATED OCTOBER 5, 2007 SUPERSEDES STANDARD PLAN ES-2C DATED JULY 1, 2004-PAGE 418 OF THE STANDARD PLANS BOOK DATED JULY 2004.

REVISED STANDARD PLAN RSP ES-2C

DIST	COUNTY	ROUTE	KILOMETER POST TOTAL PROJECT	SHEET NO.	TOTAL SHEETS
07	LA	5	42.8/47.3	546	1073

Caltrans Metric

REGISTERED ELECTRICAL ENGINEER

October 5, 2007
PLANS APPROVAL DATE

REGISTERED PROFESSIONAL ENGINEER Jeffery G. McRae No. E14512 Exp. 6-30-08 ELECTRICAL STATE OF CALIFORNIA

The State of California or its officers or agents shall not be responsible for the accuracy or completeness of electronic copies of this plan sheet.

To get to the Caltrans web site, go to: http://www.dot.ca.gov

To accompany plans dated 6-8-09

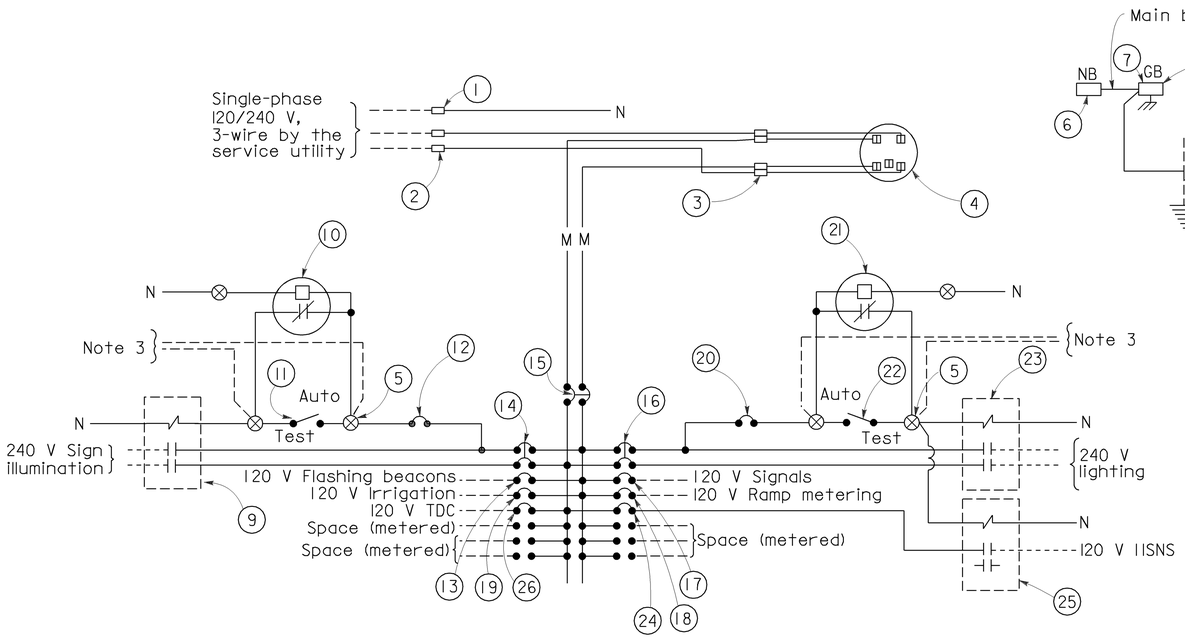

120/240 V SERVICE WIRING DIAGRAM (TYPICAL)

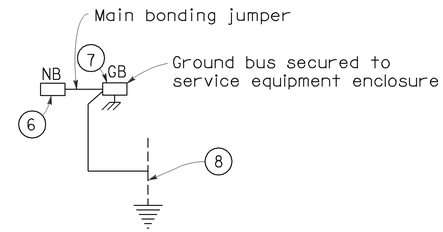

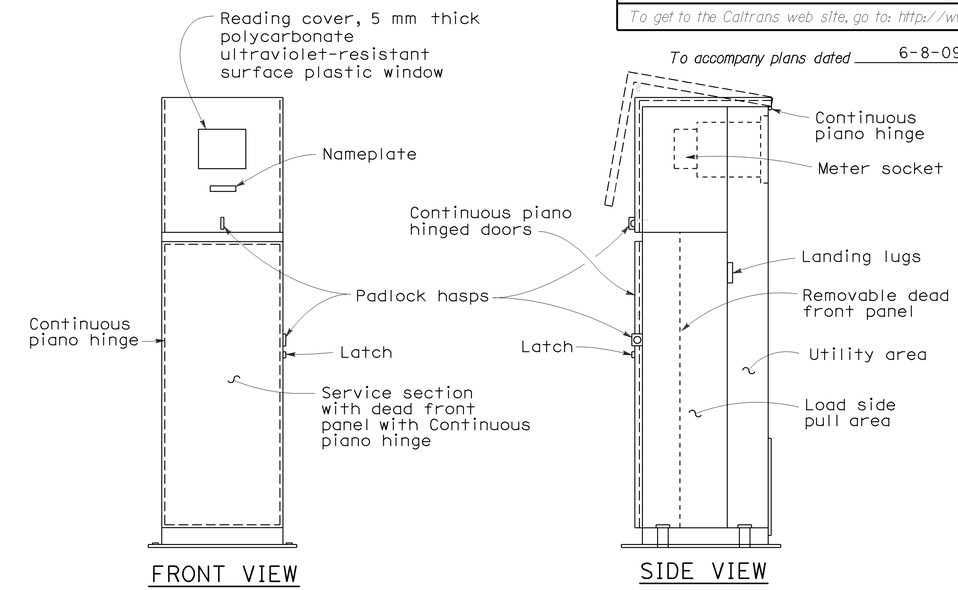

FRONT VIEW

SIDE VIEW

TYPE III-BF SERVICE EQUIPMENT ENCLOSURE WITH PROVISIONS FOR ONE 100 A METER (TYPICAL)

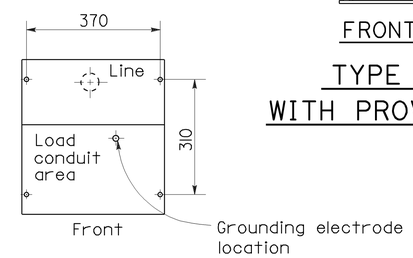

BASE FOR TYPE III-B SERVICE EQUIPMENT ENCLOSURE

TYPE III-B SERVICE (120/240 V) EQUIPMENT LEGEND		
ITEM No.	COMPONENT	NAME PLATE DESCRIPTION
1	Neutral lug	
2	Landing lug (Note 6)	
3	Test bypass facility	
4	Meter socket and support	
5	Terminal blocks	
6	Neutral bus	
7	Ground bus	
8	Grounding electrode	
9	30 A, 2PNO Contactor	Sign Illumination
10	Photoelectric unit (Note 7)	
11	15 A, IP, Test switch	Sign Illumination Test Switch
12	15 A, 120 V, IP, CB	Sign Illumination Control
13	15 A, 120 V, IP, CB	Flashing Beacon
14	30 A, 240 V, 2P, CB	Sign Illumination
15	100 A, 240 V, 2P, CB	Main Breaker
16	30 A, 240 V, 2P, CB	Lighting
17	50 A, 120 V, IP, CB	Signals
18	30 A, 120 V, IP, CB	Ramp Metering
19	20 A, 120 V, IP, CB	Irrigation
20	15 A, 120 V, IP, CB	Lighting Control
21	Photoelectric unit (Note 7)	
22	15 A, IP, Test switch	Lighting Test Switch
23	60 A, 2PNO Contactor	Lighting
24	15 A, 120 V, IP, CB	IISNS
25	30 A, 2PNO Contactor	IISNS
26	20 A, 120 V, IP, CB	Telephone Demarcation Cabinet

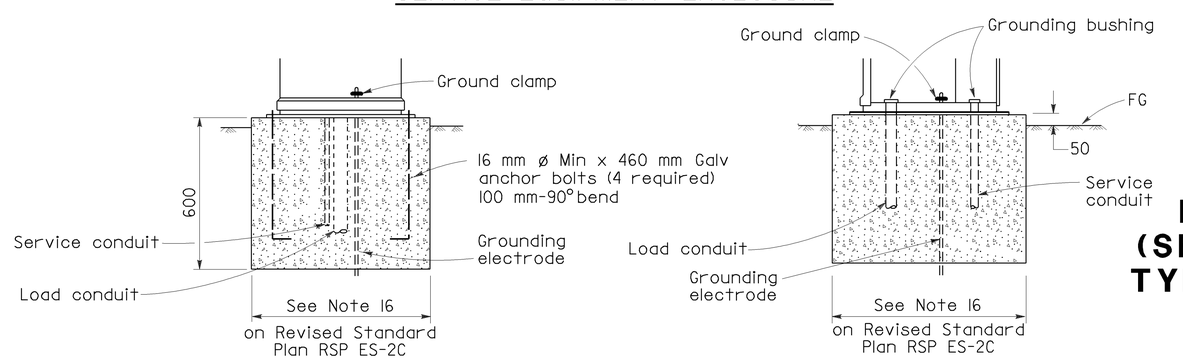

FRONT VIEW

SIDE VIEW

TYPE III-B SERVICE EQUIPMENT ENCLOSURE FOUNDATION DETAILS

NOTES (FOR SERVICE EQUIPMENT ENCLOSURE)

1. Voltage ratings of service equipment shall conform to the service voltages indicated on the plans.
2. Unless otherwise indicated on the plans, service equipment items shall be provided for each service equipment enclosure as shown.
3. Connect to remote test switch mounted on lighting standards, sign post or structure when required.
4. Items No. 1 and 6 shall be isolated from the service equipment enclosure.
5. Meter sockets shall be 5 clip type.
6. The landing lug shall be suitable for multiple conductors.
7. Type V photoelectric control shall be used unless otherwise indicated on the plans.

STATE OF CALIFORNIA
DEPARTMENT OF TRANSPORTATION

ELECTRICAL SYSTEMS (SERVICE EQUIPMENT AND TYPICAL WIRING DIAGRAM, TYPE III -B SERIES)

NO SCALE

ALL DIMENSIONS ARE IN MILLIMETERS UNLESS OTHERWISE SHOWN

RSP ES-2E DATED OCTOBER 5, 2007 SUPERSEDES STANDARD PLAN ES-2E DATED JULY 1, 2004-PAGE 420 OF THE STANDARD PLANS BOOK DATED JULY 2004.

REVISED STANDARD PLAN RSP ES-2E

2004 REVISED Std PLAN RSP ES-2E

8-9-07

DIST	COUNTY	ROUTE	KILOMETER POST TOTAL PROJECT	SHEET NO.	TOTAL SHEETS
07	LA	5	42.8/47.3	547	1073

Jeffery G. McRae
REGISTERED ELECTRICAL ENGINEER

October 5, 2007
PLANS APPROVAL DATE

REGISTERED PROFESSIONAL ENGINEER Jeffery G. McRae No. E14512 Exp. 6-30-08 ELECTRICAL STATE OF CALIFORNIA

The State of California or its officers or agents shall not be responsible for the accuracy or completeness of electronic copies of this plan sheet.

To get to the Caltrans web site, go to: http://www.dot.ca.gov

To accompany plans dated 6-8-09

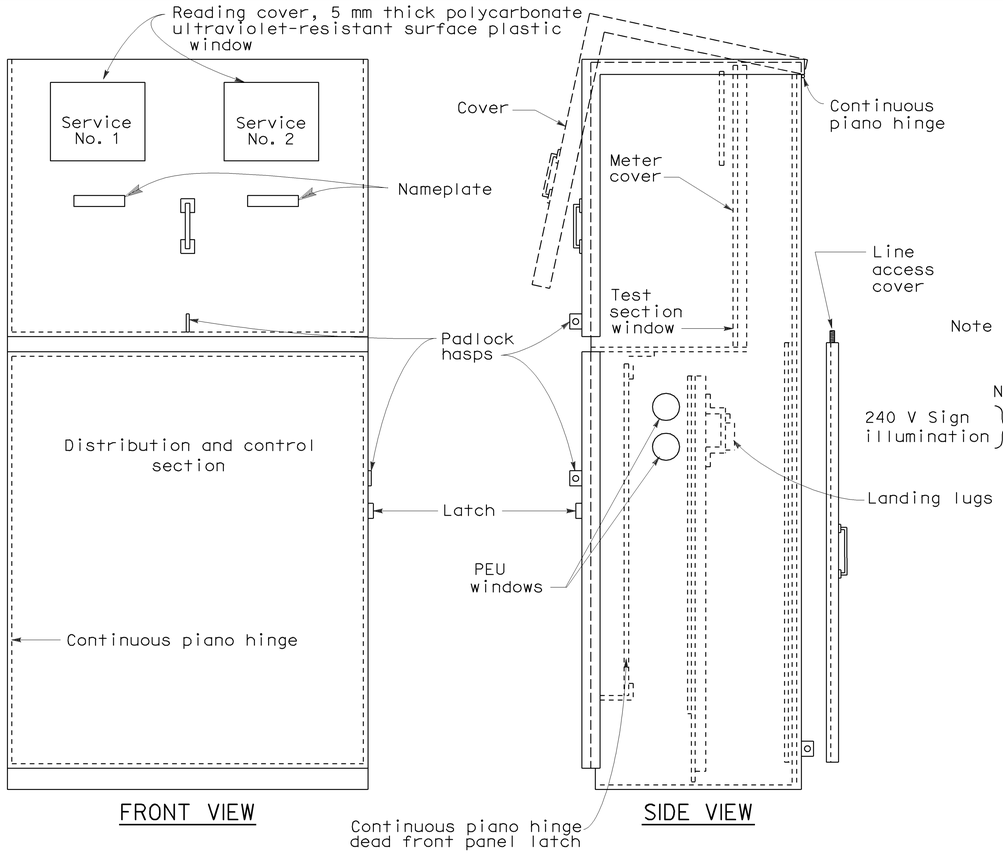

TYPE III-CF SERVICE EQUIPMENT ENCLOSURE WITH PROVISIONS FOR TWO 100 A METERS (TYPICAL)

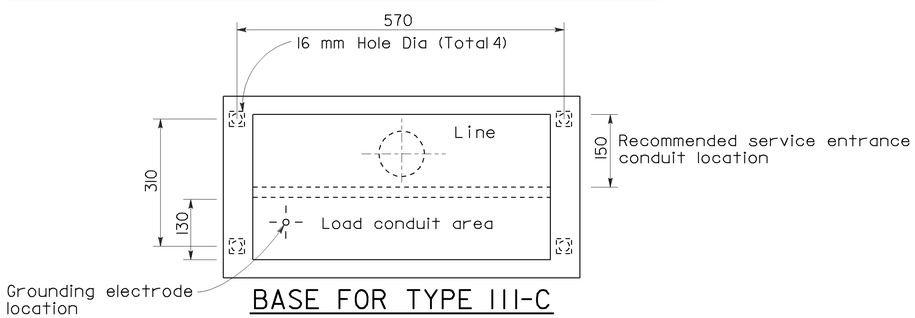

BASE FOR TYPE III-C SERVICE EQUIPMENT ENCLOSURE

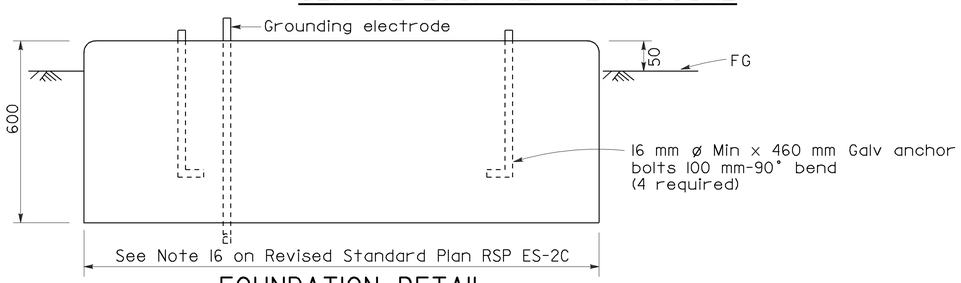

FOUNDATION DETAIL

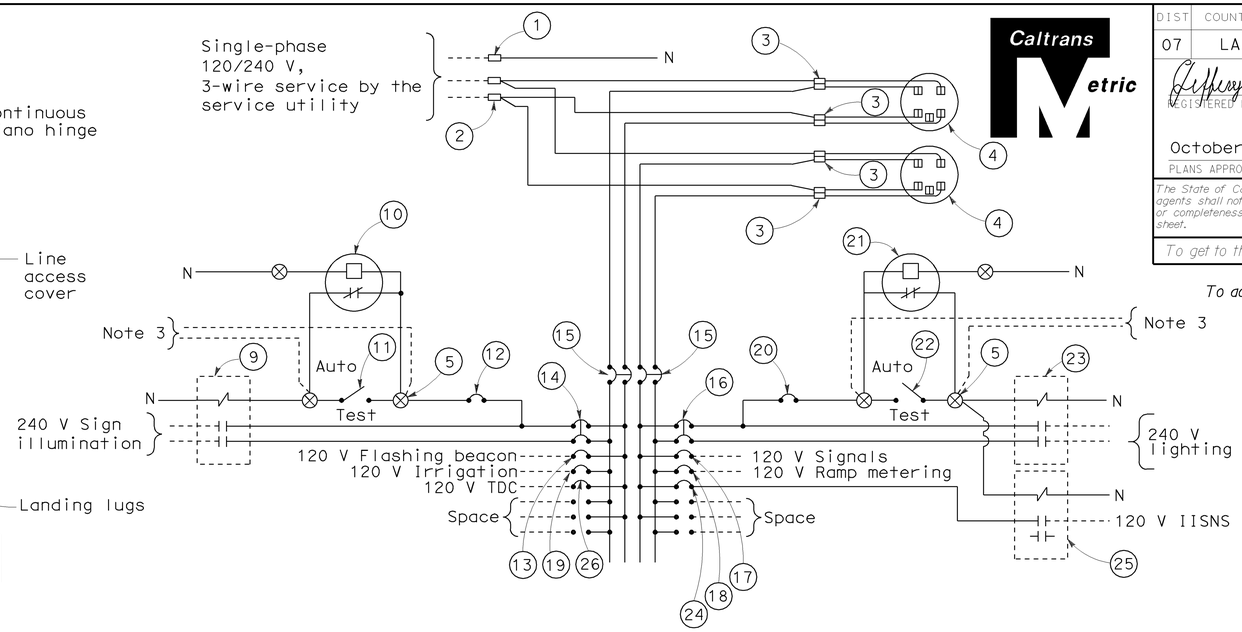

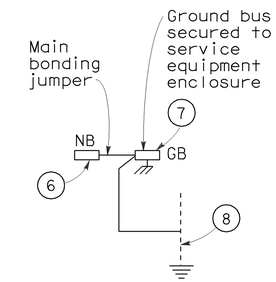

120/240 V SERVICE WIRING DIAGRAM (TYPICAL)

TYPE III-C SERVICE (120/240 V) EQUIPMENT LEGEND

ITEM No.	COMPONENT	NAME PLATE DESCRIPTION	ITEM No.	COMPONENT	NAME PLATE DESCRIPTION
1	Neutral lug		14	30 A,240 V,2P,CB	Sign Illumination
2	Landing lug (Note 6)		15	100 A,240 V,2P,CB	Main Breaker
3	Test bypass facility		16	30 A,240 V,2P,CB	Lighting
4	Meter socket and support		17	50 A,120 V,1P,CB	Signals
5	Terminal blocks		18	30 A,120 V,1P,CB	Ramp Metering
6	Neutral bus		19	20 A,120 V,1P,CB	Irrigation
7	Ground bus		20	15 A,120 V,1P,CB	Lighting Control
8	Grounding electrode		21	Photoelectric unit(Note 7)	
9	30 A,2PNO, Contactor	Sign Illumination	22	15 A,1P,Test switch	Lighting Control
10	Photoelectric unit (Note 7)		23	60 A,2PNO Contactor	Lighting
11	15 A,1P, Test switch	Sign Illumination Test Switch	24	15 A,120 V,1P,CB	IISNS
12	15 A,120 V,1P,CB	Sign Illumination Control	25	30 A,2PNO Contactor	IISNS
13	15 A,120 V,1P,CB	Flashing Beacon	26	20 A,120 V,1P,CB	Telephone Demarcation Cabinet

NOTES (FOR SERVICE EQUIPMENT ENCLOSURE)

1. Voltage ratings of service equipment shall conform to the service voltages indicated on the plans.
2. Unless otherwise indicated on the plans, service equipment items shall be provided for each service equipment enclosure as shown.
3. Connect to remote test switch mounted on lighting standards, sign post or structure when required.
4. Items No. 1 and 6 shall be isolated from the service equipment enclosure.
5. Meter sockets shall be 5 clip type.
6. The landing lug shall be suitable for multiple conductors.
7. Type V photoelectric control shall be used unless otherwise indicated on the plans.

STATE OF CALIFORNIA
DEPARTMENT OF TRANSPORTATION

ELECTRICAL SYSTEMS (SERVICE EQUIPMENT AND TYPICAL WIRING DIAGRAM TYPE III -C SERIES)

NO SCALE

ALL DIMENSIONS ARE IN MILLIMETERS UNLESS OTHERWISE SHOWN

RSP ES-2F DATED OCTOBER 5, 2007 SUPERSEDES STANDARD PLAN ES-2F DATED JULY 1, 2004-PAGE 421 OF THE STANDARD PLANS BOOK DATED JULY 2004.

REVISED STANDARD PLAN RSP ES-2F

2004 REVISED Std PLAN RSP ES-2F

8-9-07

DIST	COUNTY	ROUTE	KILOMETER POST TOTAL PROJECT	SHEET NO.	TOTAL SHEETS
07	LA	5	42.8/47.3	548	1073

Caltrans Metric

REGISTERED ELECTRICAL ENGINEER

October 5, 2007
PLANS APPROVAL DATE

REGISTERED PROFESSIONAL ENGINEER Jeffery G. McRae No. E14512 Exp. 6-30-08 ELECTRICAL STATE OF CALIFORNIA

The State of California or its officers or agents shall not be responsible for the accuracy or completeness of electronic copies of this plan sheet.

To get to the Caltrans web site, go to: http://www.dot.ca.gov

To accompany plans dated 6-8-09

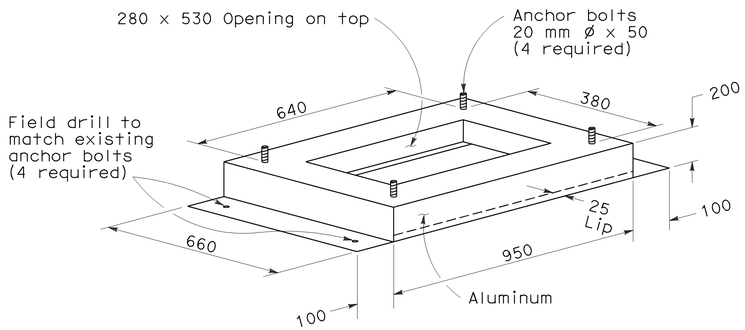

TYPE PR CABINET ADAPTER

1. Material: 4.78 thickness aluminum plate.
2. Mount adapter on Type P or Type R cabinet foundation.

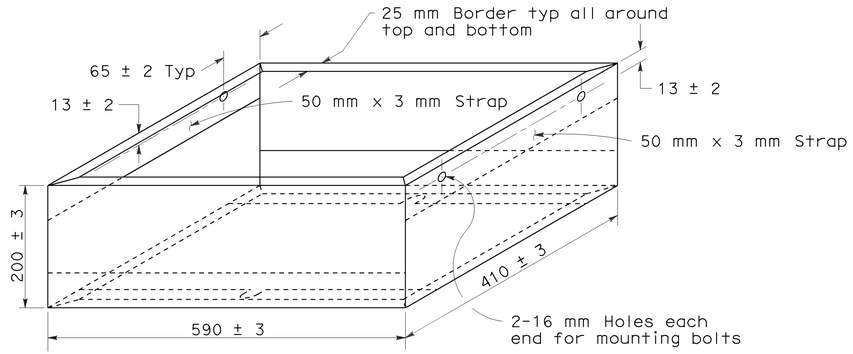

TYPE M CABINET ADAPTER

1. Mount adapter on Type M cabinet foundation.
2. Mounting bolts shall be 10 mm ø minimum size.
3. Aluminum (4.78 mm thickness).

The flasher transfer relay shall intermate with a CINCH-JONES Socket S-408-SB or equal connected as follows:

Pin No.	Circuit	Pin No.	Circuit
1	Coil	5	Common, Circuit #1
2	Coil	6	Common, Circuit #2
3	NC Circuit #1	7	NO Circuit #1
4	NC Circuit #2	8	NO Circuit #2

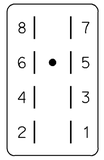

CONNECTOR SOCKET
FLASH TRANSFER RELAY

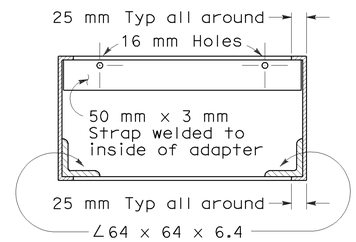

SECTION A-A

The flasher shall intermate with a CINCH-JONES Socket S-406-SB or equal connected as follows:

Pin No.	Circuit	Pin No.	Circuit
7	Load, Circuit #1	10	ac+
8	Load, Circuit #2	11	ac-
9	Chassis Ground	12	Not used

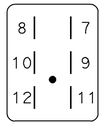

CONNECTOR SOCKET
SOLID STATE FLASHER UNIT

The Solid-state switching device shall intermate with a CINCH-JONES Socket S-2412-SB or equal connected as follows:

Pin No.	Circuit	Pin No.	Circuit
1	ac + Lights	7	Green or Walk Output
2	Chassis Ground	8	Yellow Input
3	Red or Don't Walk Output	9	dc+ (15 to 24 V)
4	Not used	10	Green or Walk Input
5	Yellow Output	11	ac-
6	Red or Don't Walk Input	12	Not used

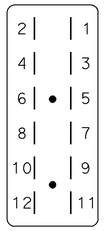

CONNECTOR SOCKET
SOLID STATE SWITCHING DEVICE

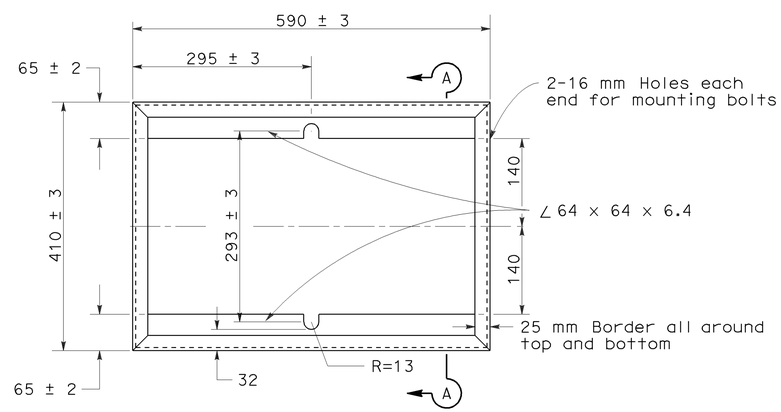

TOP VIEW

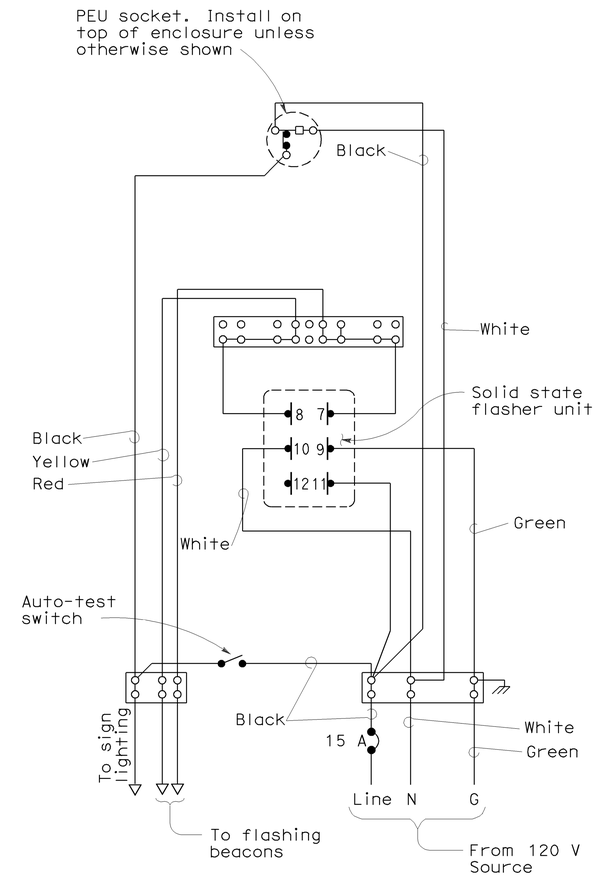

WIRING DIAGRAM
LED FLASHING BEACON CONTROL ASSEMBLY

STATE OF CALIFORNIA
DEPARTMENT OF TRANSPORTATION

ELECTRICAL SYSTEMS (CONTROLLER CABINET DETAILS)

NO SCALE

ALL DIMENSIONS ARE IN
MILLIMETERS UNLESS OTHERWISE SHOWN

RSP ES-3B DATED OCTOBER 5, 2007 SUPERSEDES STANDARD PLAN ES-3B
DATED JULY 1, 2004-PAGE 424 OF THE STANDARD PLANS BOOK DATED JULY 2004.

REVISED STANDARD PLAN RSP ES-3B

2004 REVISED Std PLAN RSP ES-3B

6-27-07

DIST	COUNTY	ROUTE	KILOMETER POST TOTAL PROJECT	SHEET NO.	TOTAL SHEETS
07	LA	5	42.8/47.3	549	1073

Caltrans Metric

Jeffery G. McRae
REGISTERED ELECTRICAL ENGINEER

October 5, 2007
PLANS APPROVAL DATE

REGISTERED PROFESSIONAL ENGINEER
Jeffery G. McRae
No. E14512
Exp. 6-30-08
ELECTRICAL
STATE OF CALIFORNIA

The State of California or its officers or agents shall not be responsible for the accuracy or completeness of electronic copies of this plan sheet.

To get to the Caltrans web site, go to: http://www.dot.ca.gov

To accompany plans dated 6-8-09

NOTES - CONTROLLER CABINETS

1. Cabinet dimensions are nominal.
2. Foundations shall be located to provide 600 mm minimum clearance between face of curb and any portion of cabinet.
3. Type G, M, P, R, S and Model 336 cabinets shall be installed with the back toward the nearest lane of traffic.
4. The controller cabinet ground bus shall be bonded to the controller equipment enclosure.
5. In unpaved areas, a raised portland cement concrete pad shall be constructed in front of each controller cabinet. Pad shall be 900 mm x 900 mm x 100 mm for Type G cabinets and shall be 900 mm x 100 mm thick x width of foundation for Types M, P, R, S and Model 336 cabinets.
6. In unpaved areas, the top of foundation for Type G, P, R and S cabinets shall be 150 mm above surrounding grade. Top of foundation for Type M or Model 336 cabinet shall be 460 mm above surrounding grade.
7. In sidewalks and other paved areas, top of foundation for Type G cabinet shall be level with surrounding grade. Top of foundation for Type P, R and S cabinets shall be 90 mm above surrounding grade.
8. The steel pedestal, base plate, bolt circle and foundation for Type G cabinet shall be the same as that shown for a Type 1-C Standard. Pedestal shall be 640 mm - 760 mm in length. Anchor bolts shall be 19 mm ø x 460 mm with a 50 mm - 90° bend. Four bolts required per cabinet.
9. Type G cabinet shall be provided with a slipfitter to permit mounting an 114 mm outside diameter pedestal. Slipfitter shall be bolted to bottom of the cabinet.
10. Type G cabinet shall be provided with 8 screened, raintight holes, 13 mm diameter or larger, in the bottom of the cabinet.
11. A 25 mm drain shall be provided through the foundation of a Type M or Model 336 cabinet. Drain pipe shall be screened.
12. See Table for cabinet and foundation dimensions; "D" = Depth, "H" = Height and "W" = Width.
13. Cabinet shelves shall be adjustable for vertical spacing and shall be removable. Type M, P, R and S cabinets shall be provided with a minimum of two shelves.
14. Anchor bolts for Type M, P, R, S and Model 336 cabinets shall be 19 mm ø x 460 mm with a 50 mm - 90° bend.
15. An approved mastic or caulking compound shall be placed on the foundation prior to placing the cabinet to seal openings between bottom of cabinet and foundation.
16. Controller units, plug-mounted equipment, shelf-mounted equipment and wall-mounted equipment shall be located to permit safe and easy removal or replacement without removing any other piece of equipment.
17. Cabinet fan may be installed at an alternate location near the top of the cabinet when approved by the Engineer.
18. Where telephone interconnect is required, a minimum of 130 mm clear vertical space shall be provided inside the cabinet for the equipment.
19. Telephone interconnect conductors shall be enclosed in a 21C or larger conduit through the foundation. Type 4 metal conduit shall be used to separate telephone and power conductors in cabinets and pedestals.
20. For Model 332, 334 and 336 cabinet details, see "Traffic signal controller equipment specifications".

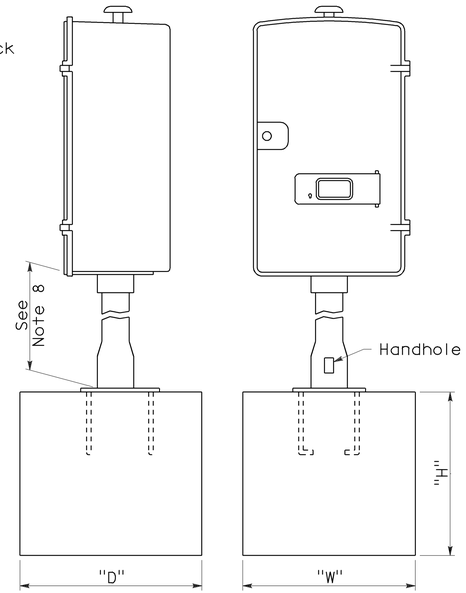

FOUNDATION FOR TYPE G CABINET

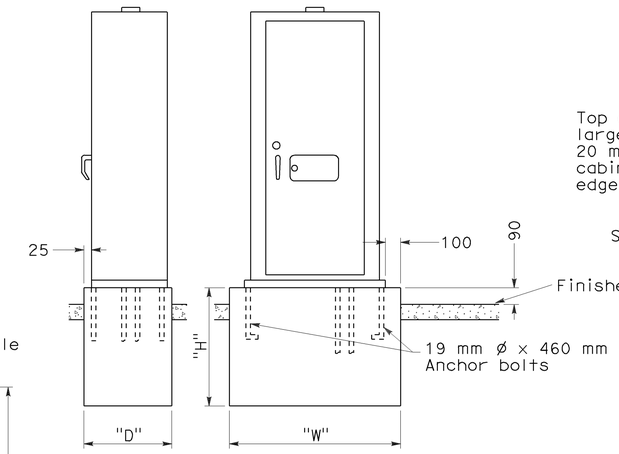

FOUNDATION FOR TYPE P, R AND S CABINETS

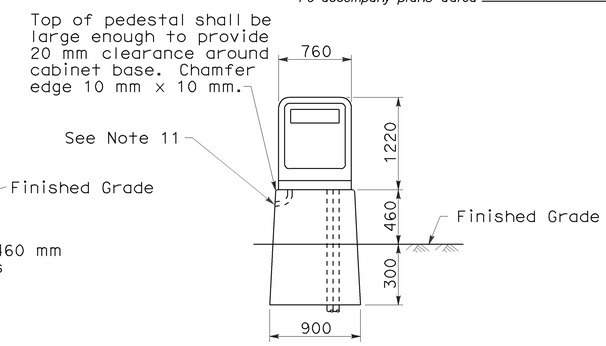

PEDESTAL FOUNDATION FOR TYPE M OR MODEL 336 CABINET

CABINET	FOUNDATION		
TYPE/ MODEL	H (mm)	W (mm)	D (mm)
G	900	600	600
M 336	760	900	560
P	460	1330	710
R	460	1330	710
S	460	1820	710

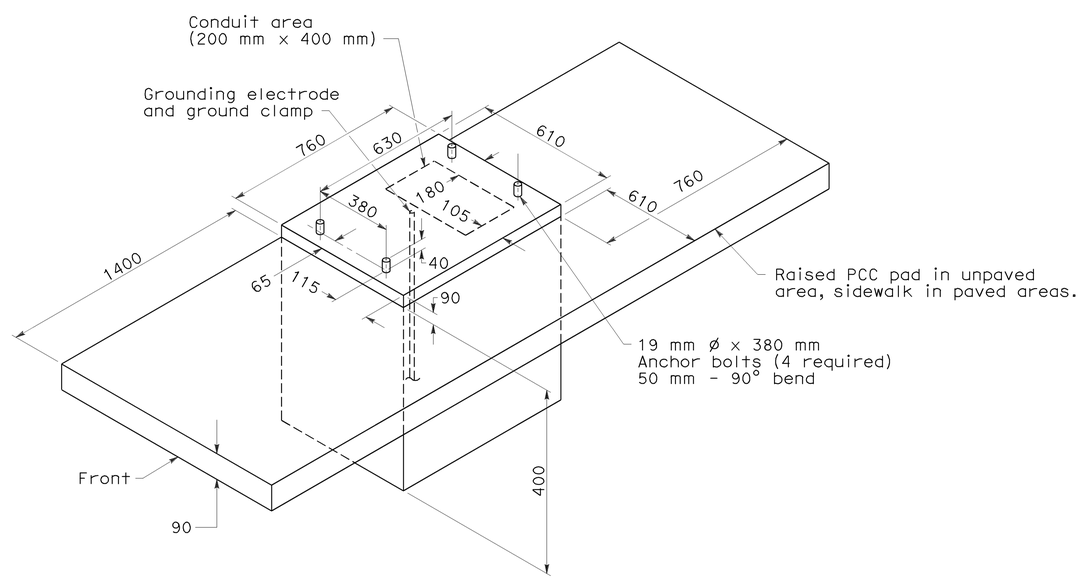

FOUNDATION DETAILS
For Model 332 and 334 cabinets

STATE OF CALIFORNIA
DEPARTMENT OF TRANSPORTATION

ELECTRICAL SYSTEMS (CONTROLLER CABINET DETAILS)

NO SCALE

ALL DIMENSIONS ARE IN MILLIMETERS UNLESS OTHERWISE SHOWN

RSP ES-3C DATED OCTOBER 5, 2007 SUPERSEDES STANDARD PLAN ES-3C DATED JULY 1, 2004-PAGE 425 OF THE STANDARD PLANS BOOK DATED JULY 2004.

REVISED STANDARD PLAN RSP ES-3C

2004 REVISED Std PLAN RSP ES-3C

6-27-07

DIST	COUNTY	ROUTE	KILOMETER POST TOTAL PROJECT	SHEET NO.	TOTAL SHEETS
07	LA	5	42.8/47.3	550	1073

Caltrans Metric

REGISTERED ELECTRICAL ENGINEER

October 5, 2007
PLANS APPROVAL DATE

REGISTERED PROFESSIONAL ENGINEER
Jeffery G. McRae
No. E14512
Exp. 6-30-08
ELECTRICAL
STATE OF CALIFORNIA

The State of California or its officers or agents shall not be responsible for the accuracy or completeness of electronic copies of this plan sheet.

To get to the Caltrans web site, go to: http://www.dot.ca.gov

To accompany plans dated 6-8-09

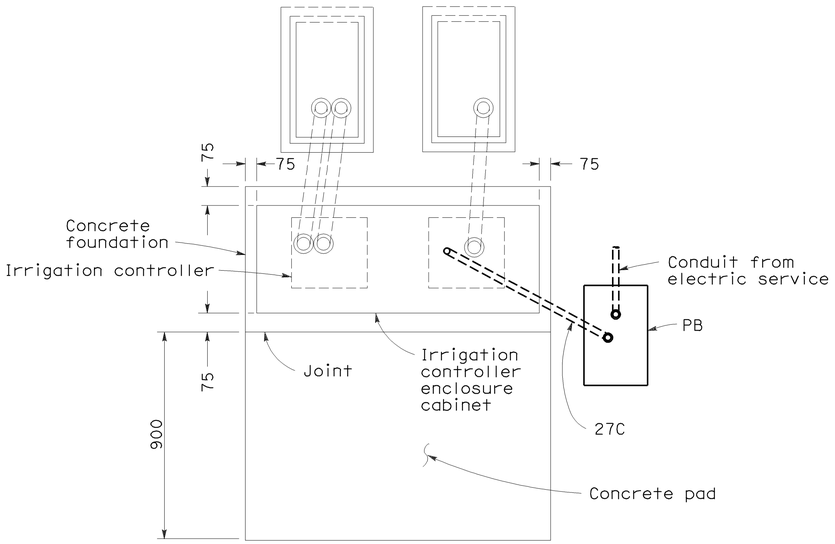

PLAN

NOTE:

See Standard Plan H10 for other details.

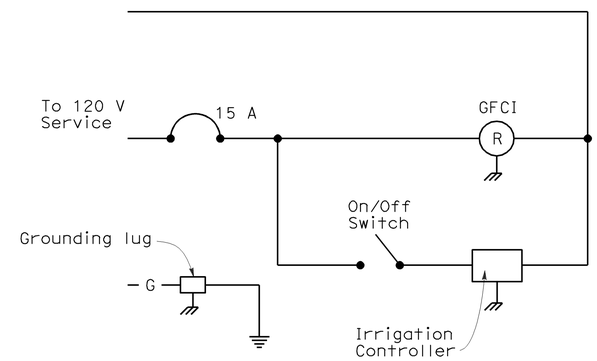

IRRIGATION CONTROLLER ENCLOSURE CABINET WIRING DIAGRAM (TYPICAL)

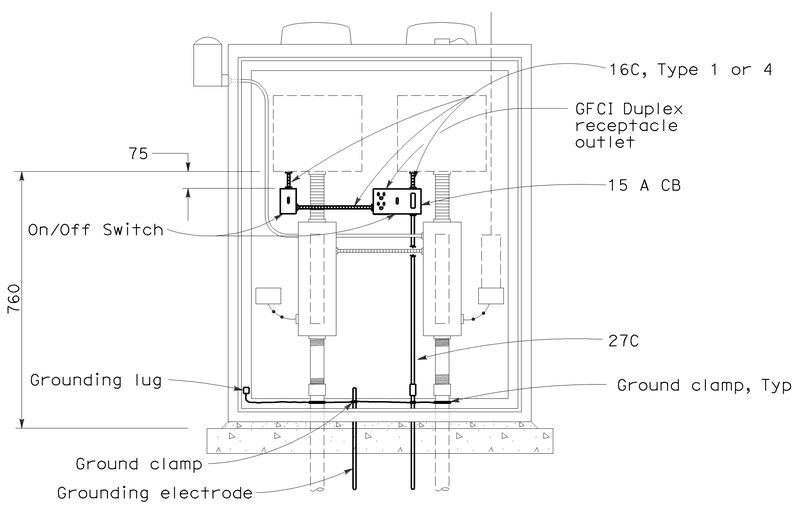

ELEVATION

STATE OF CALIFORNIA
DEPARTMENT OF TRANSPORTATION

ELECTRICAL SYSTEMS (IRRIGATION CONTROLLER ENCLOSURE CABINET)

NO SCALE

ALL DIMENSIONS ARE IN MILLIMETERS UNLESS OTHERWISE SHOWN

RSP ES-3H DATED OCTOBER 5, 2007 SUPERSEDES STANDARD PLAN ES-3H DATED JULY 1, 2004-PAGE 430 OF THE STANDARD PLANS BOOK DATED JULY 2004.

REVISED STANDARD PLAN RSP ES-3H

2004 REVISED Std PLAN RSP ES-3H

DIST	COUNTY	ROUTE	KILOMETER POST TOTAL PROJECT	SHEET NO.	TOTAL SHEETS
07	LA	5	42.8/47.3	551	1073

Caltrans Metric

Jeffery G. McRae
REGISTERED ELECTICAL ENGINEER

June 6, 2008
PLANS APPROVAL DATE

REGISTERED PROFESSIONAL ENGINEER Jeffery G. McRae No. E14512 Exp. 6-30-10 ELECTRICAL STATE OF CALIFORNIA

The State of California or its officers or agents shall not be responsible for the accuracy or completeness of electronic copies of this plan sheet.

To get to the Caltrans web site, go to: http://www.dot.ca.gov

To accompany plans dated 6-8-09

VISORS

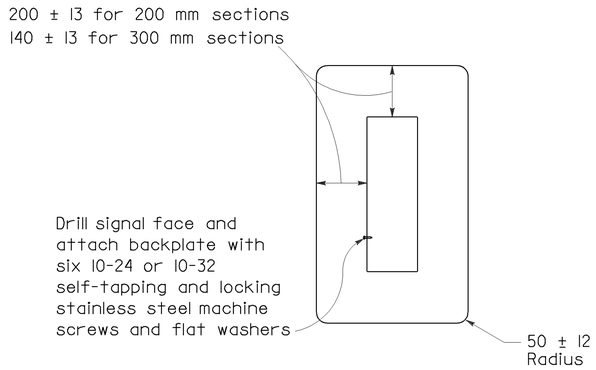

200 mm AND 300 mm SECTIONS

BACKPLATE

1.5 mm minimum thickness 3001-14 aluminum, or plastic when specified

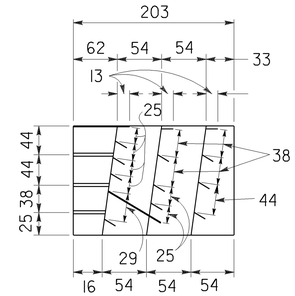

SECTION A-A

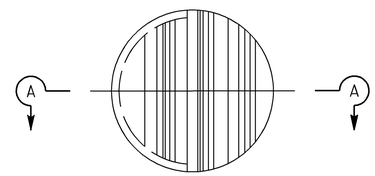

FRONT VIEW

DIRECTIONAL LOUVER

Directional louvers shall be oriented as directed by the Engineer and secured in place with one plated brass machine screw and nut.

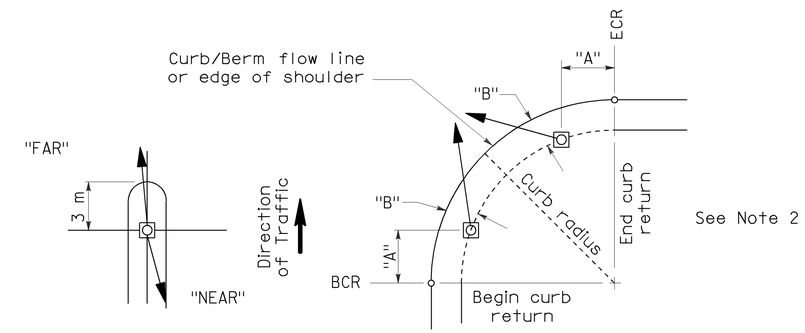

NOTES:

1. Typical signal pole placement unless dimensioned on plans.
2. For "A" and "B" dimensions, see Pole Schedule, or as directed by the Engineer.

SIGNAL STANDARD PLACEMENT DIMENSIONS AND EQUIPMENT LOCATIONS

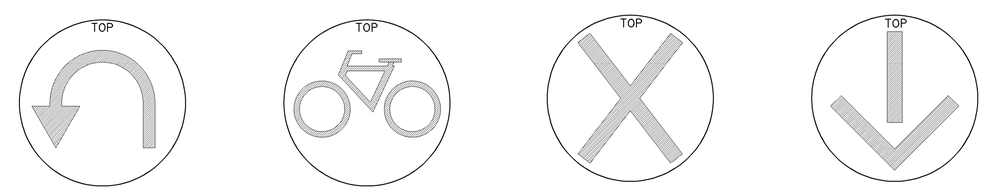

U-TURN SIGNAL FACE

BICYCLE SIGNAL FACE

LANE CONTROL SIGNAL FACE

LANE CONTROL SIGNAL FACE

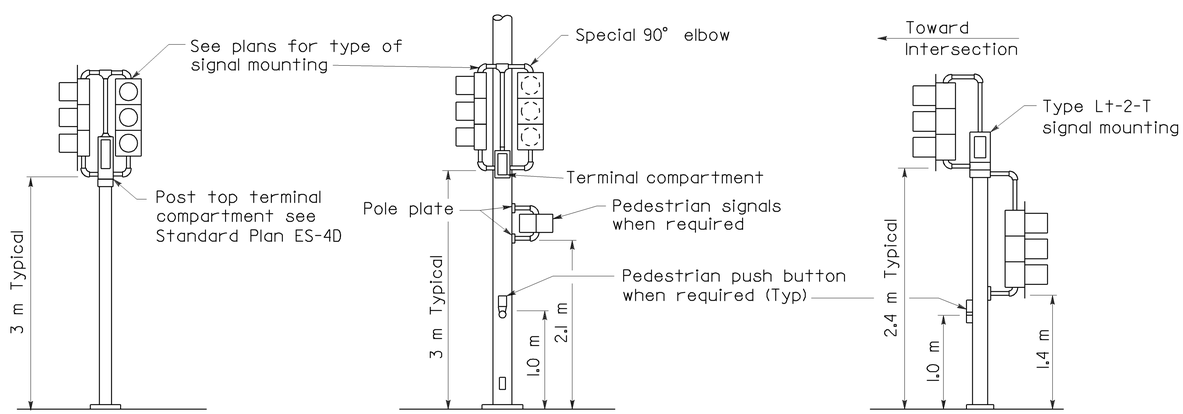

TOP MOUNTED SIGNALS (TV)

Type 1-A, 1-B, 1-C and 1-D standard as indicated on the plans

SIDE MOUNTED SIGNALS (SV AND SP)

Normally used on standards with luminaire or signal mast arm

LEFT TURN LANE SIGNAL

Type 1-A, 1-B, 1-C and 1-D standard as indicated on plans

TYPICAL SIGNAL INSTALLATIONS

STATE OF CALIFORNIA
DEPARTMENT OF TRANSPORTATION

ELECTRICAL SYSTEMS (SIGNAL HEADS AND MOUNTINGS)

NO SCALE

ALL DIMENSIONS ARE IN MILLIMETERS UNLESS OTHERWISE SHOWN

RSP ES-4C DATED JUNE 6, 2008 SUPERSEDES STANDARD PLAN ES-4C DATED July 1, 2004 - PAGE 433 OF THE STANDARD PLANS BOOK DATED July 2004.

REVISED STANDARD PLAN RSP ES-4C

2004 REVISED Std PLAN RSP ES-4C

5-19-08

DIST	COUNTY	ROUTE	KILOMETER POST TOTAL PROJECT	SHEET NO.	TOTAL SHEETS
07	LA	5	42.8/47.3	552	1073

Caltrans Metric

Jeffery G. McRae
REGISTERED ELECTRICAL ENGINEER

June 6, 2008
PLANS APPROVAL DATE

REGISTERED PROFESSIONAL ENGINEER Jeffery G. McRae No. E14512 Exp. 6-30-10 ELECTRICAL STATE OF CALIFORNIA

The State of California or its officers or agents shall not be responsible for the accuracy or completeness of electronic copies of this plan sheet.

To get to the Caltrans web site, go to: http://www.dot.ca.gov

To accompany plans dated 6-8-09

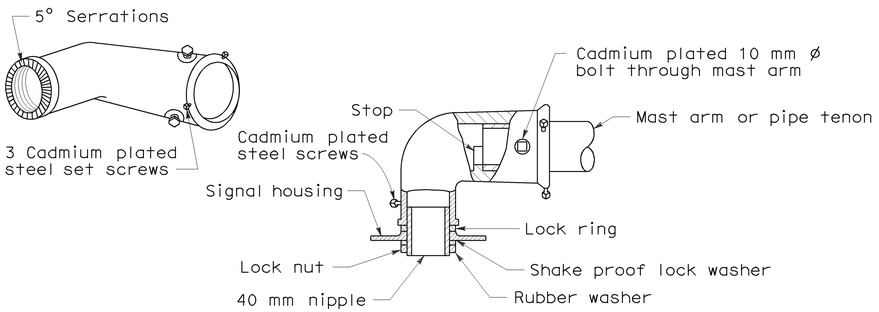

MAST ARM MOUNTING - TYPE "MAT"

For 2 NPS pipe, see Note 1.

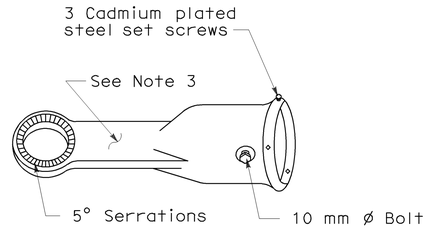

MAST ARM MOUNTING - TYPE "MAS"

For 2 NPS pipe. See Note 1.

SIGNAL SLIP FITTERS

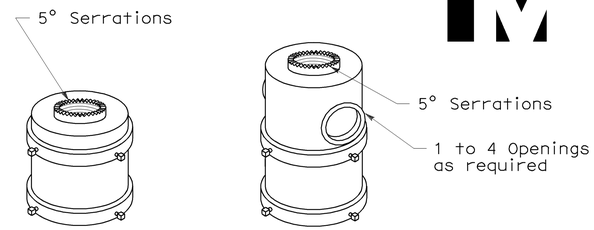

For one mounting For mulitiple mountings

TOP MOUNTINGS

For 4 NPS pipe, see Note 2.

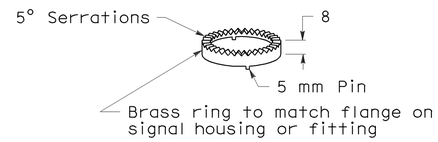

LOCK RING

Use where locking ring is not integral with signal housing or fitting.

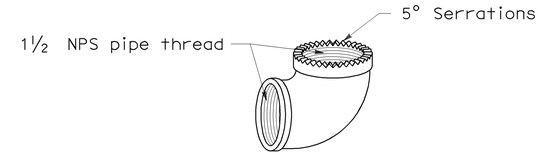

SPECIAL 90° ELBOW

One for each signal head, except those with special slip fitter mounting

MISCELLANEOUS MOUNTING HARDWARE

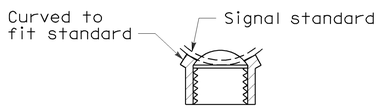

SECTION A-A

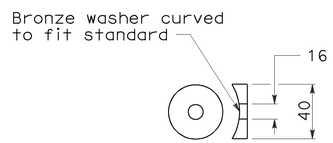

WASHER DETAIL "C"

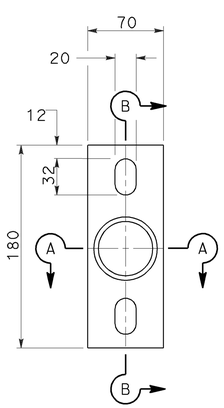

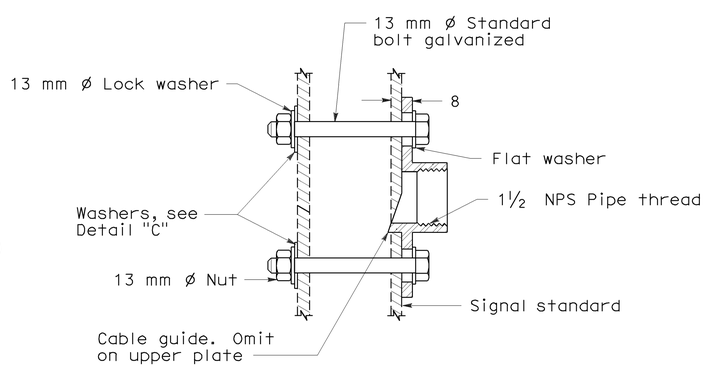

SECTION B-B

POLE PLATE

For side mountings

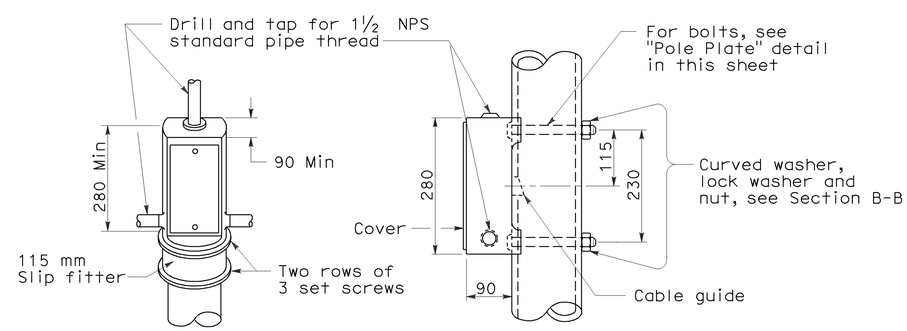

TOP MOUNTING SIDE MOUNTING

TERMINAL COMPARTMENTS

NOTES

1. After mast arm signal has been plumbed and secured, drill 11 mm hole through mast arm tenon in line with slip fitter hole. Place a cadmium plated 10 mm ø galvanized bolt with washer under bolt head through hole and secure with washer, nut, and locknut. Seal openings between mast arm mountings and mast arm with mastic.
2. (a) Threaded top mounted slip fitter openings shall be 1½ NPS.
   (b) Serrations in fittings shall match those on bottom of signal heads or in lock ring.
   (c) Top opening shall be offset when backplate is used.
3. Wireway shall have a cross section area of 600 mm^2 minimum. Minimum width of 13 mm.

STATE OF CALIFORNIA
DEPARTMENT OF TRANSPORTATION

ELECTRICAL SYSTEMS (SIGNAL HEADS AND MOUNTINGS)

NO SCALE

ALL DIMENSIONS ARE IN MILLIMETERS UNLESS OTHERWISE SHOWN

RSP ES-4D DATED JUNE 6, 2008 SUPERSEDES STANDARD PLAN ES-4D DATED July 1, 2004 - PAGE 434 OF THE STANDARD PLANS BOOK DATED July 2004.

REVISED STANDARD PLAN RSP ES-4D

2004 REVISED Std PLAN RSP ES-4D

5-20-08

DIST	COUNTY	ROUTE	KILOMETER POST TOTAL PROJECT	SHEET NO.	TOTAL SHEETS
07	LA	5	42.8/47.3	553	1073

REGISTERED ELECTRICAL ENGINEER

October 5, 2007
PLANS APPROVAL DATE

REGISTERED PROFESSIONAL ENGINEER Jeffery G. McRae No. E14512 Exp. 6-30-08 ELECTRICAL STATE OF CALIFORNIA

The State of California or its officers or agents shall not be responsible for the accuracy or completeness of electronic copies of this plan sheet.

To get to the Caltrans web site, go to: http://www.dot.ca.gov

To accompany plans dated 6-8-09

Caltrans Metric

LOOP INSTALLATION PROCEDURE

1. Loops shall be centered in lanes.
2. Saw slots in pavement for loop conductors as shown in details.
3. Distance between side of loop and a lead-in saw cut from adjacent detectors shall be 600 mm minimum. Distance between lead-in saw cuts shall be 150 mm minimum.
4. Bottom of saw slot shall be smooth with no sharp edges.
5. Slots shall be washed until clean, blown out and thoroughly dried before installing loop conductors.
6. Adjacent loops on the same sensor unit channel shall be wound in opposite directions.
7. Identify and tag loop circuit pairs in the pull box with loop number, start (S) and finish (F) of conductor. Identify and tag lead-in-cable with sensor number and phase.
8. Install loop conductor in slot using a 5 mm to 6 mm thick wood paddle. Hold loop conductors with wood paddles (at the bottom of the sawed slot) during sealant placement.
9. No more than 2 twisted pairs shall be installed in one sawed slot.
10. Allow additional 1.5 m of slack length of conductor for the lead-in run to pull box.
11. The additional length of each conductor for each loop shall be twisted together into a pair (6 turns per meter minimum) before being placed in the slot and conduit leading to pull box.
12. Test each loop circuit for continuity, circuit resistance and insulation resistance at the pull box before filling slots.
13. Fill slots as shown in details.
14. Splice loop conductors to lead-in cable. Splices shall be soldered.
15. End of lead-in-cable and Type 2 loop conductor shall be waterproofed prior to installing in conduit to prevent moisture from entering the cable.
16. Lead-in-cable shall not be spliced between the pull box and the controller cabinet terminals.
17. Test each loop circuit for continuity, circuit resistance and insulation resistance at the controller cabinet location.
18. Where loop conductors are not to be spliced to a lead-in-cable, the ends of the conductors shall be taped and waterproofed with electrical insulating coating.

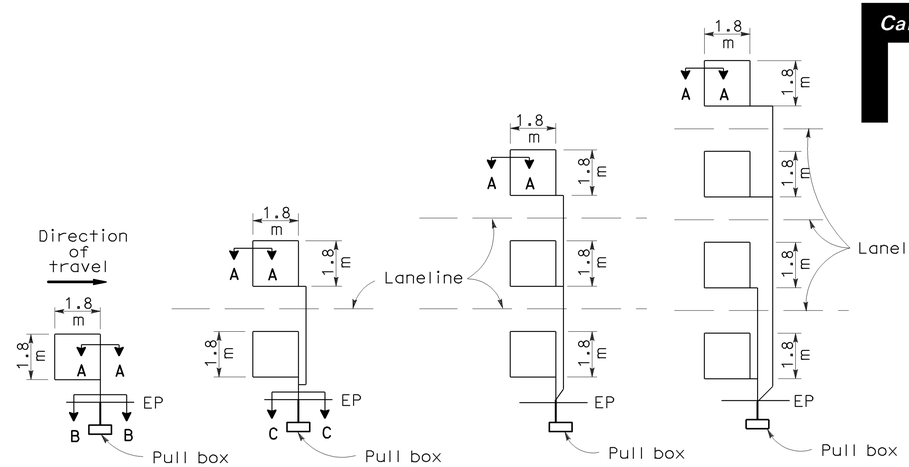

TYPE 1A INSTALLATION | TYPE 2A INSTALLATION | TYPE 3A INSTALLATION | TYPE 4A INSTALLATION

SAWCUT DETAILS

(Type A loop detector configurations illustrated)

1. 1A thru 4A = 1 Type A loop configuration in each lane.
2. 1B thru 4B = 1 Type B loop configuration in each lane.
3. 1C = 1 Type C loop configuration entering lanes as required.
4. 1D thru 4D = 1 Type D loop configuration in each lane.
5. 1E thru 4E = 1 Type E loop configuration in each lane.
6. 1Q thru 4Q = 1 Type Q loop configuration in each lane.
   (Use Type A, B, C, D, E or Q loop detector configurations only when specified or shown on plans)

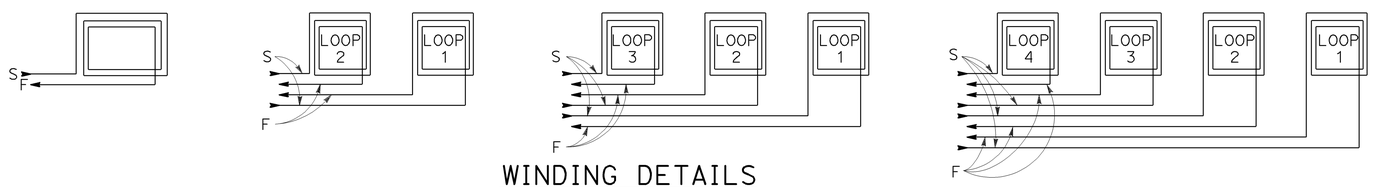

WINDING DETAILS

See Notes 6 and 7

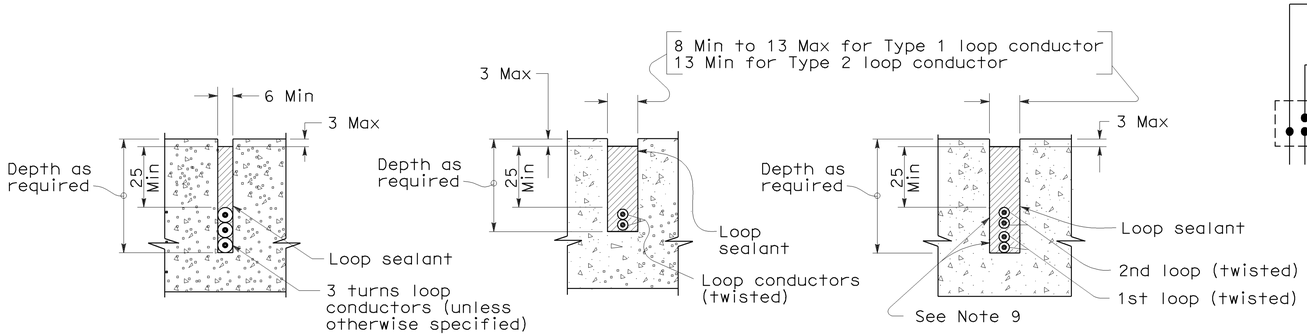

SECTION A-A | SECTION B-B | SECTION C-C

SLOT DETAILS - TYPE 1 AND TYPE 2 LOOP CONDUCTOR

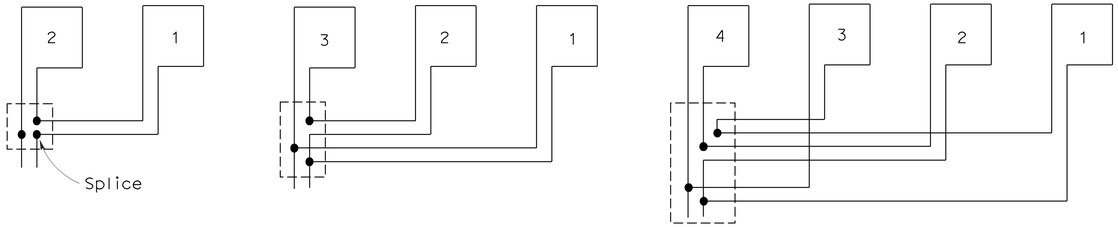

TYPICAL LOOP CONNECTIONS

(Dashed lines represent the pull box)

STATE OF CALIFORNIA
DEPARTMENT OF TRANSPORTATION

ELECTRICAL SYSTEMS (DETECTORS)

NO SCALE

ALL DIMENSIONS ARE IN MILLIMETERS UNLESS OTHERWISE SHOWN

RSP ES-5A DATED OCTOBER 5, 2007 SUPERSEDES STANDARD PLAN ES-5A DATED JULY 1, 2004-PAGE 436 OF THE STANDARD PLANS BOOK DATED JULY 2004.

REVISED STANDARD PLAN RSP ES-5A

2004 REVISED Std PLAN RSP ES-5A

8-9-07

DIST	COUNTY	ROUTE	KILOMETER POST TOTAL PROJECT	SHEET NO.	TOTAL SHEETS
07	LA	5	42.8/47.3	554	1073

Caltrans Metric

REGISTERED ELECTRICAL ENGINEER

October 5, 2007
PLANS APPROVAL DATE

REGISTERED PROFESSIONAL ENGINEER Jeffery G. McRae No. E14512 Exp. 6-30-08 ELECTRICAL STATE OF CALIFORNIA

The State of California or its officers or agents shall not be responsible for the accuracy or completeness of electronic copies of this plan sheet.

To get to the Caltrans web site, go to: http://www.dot.ca.gov

To accompany plans dated 6-8-09

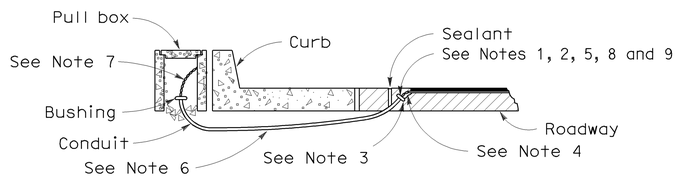

TYPE A
CURB TERMINATION DETAIL

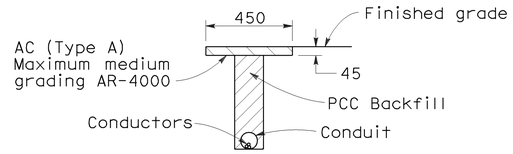

"T" TRENCH DETAIL

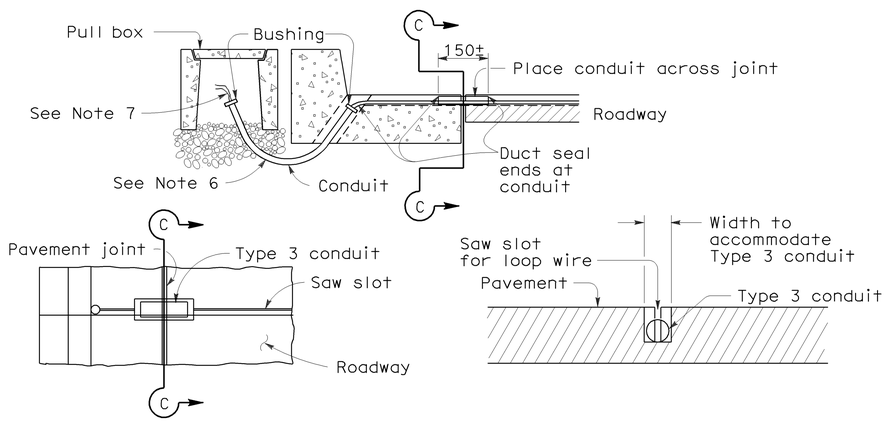

PLAN VIEW

SECTION C-C

TYPE B
CURB TERMINATION DETAILS

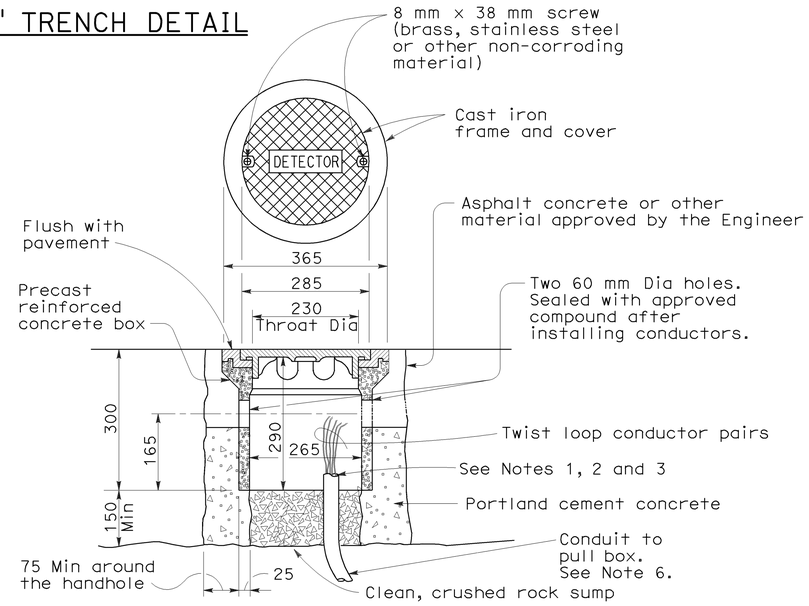

DETECTOR HANDHOLE DETAILS

NOTES (This sheet only):

1. Bushing shall be used at end of conduit.
2. Tape detector conductors or cables 75 mm each side of bushings.
3. Install duct seal compound to each end of termination conduit before installing sealant.
4. Round all sharp edges where detector conductors or cables have to pass.
5. End of conduit shall be 80 mm below roadway surface.
6. Conduit size / Loop Conductors
   - 27C Minimum — 1 to 2 pairs
   - 41C Minimum — 3 to 4 pairs
   - 53C Minimum — 5 or more pairs
7. Splice detector conductors or cables to lead-in-cable run to controller cabinet.
8. Location of detector handhole when shown on plans.
9. When the shoulder and traveled way are paved with the same material and there is no joint between them, the conduit shall extend only 600 mm into the shoulder pavement.

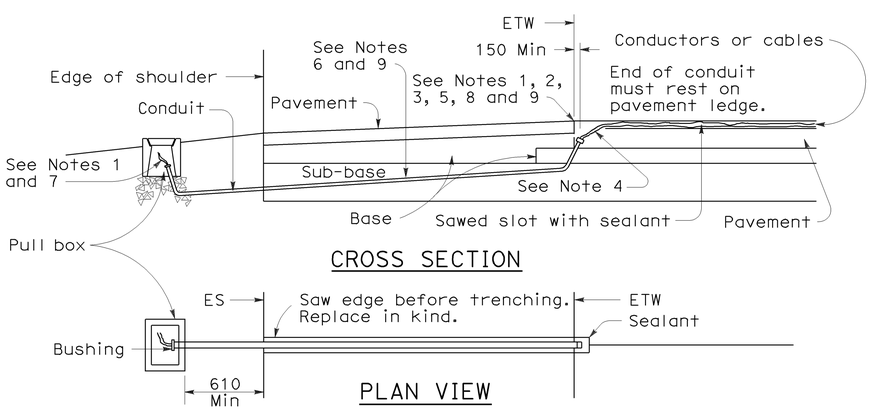

CROSS SECTION

PLAN VIEW

SHOULDER TERMINATION DETAILS

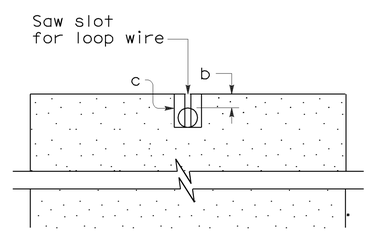

SECTION A-A

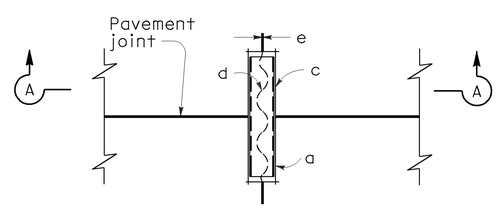

PLAN VIEW

TYPICAL LOOP LEAD-IN DETAILS AT PAVEMENT JOINT

NOTES:

a. 21C, Type 3 conduit 150 mm long minimum, plug both ends with caulking compound to keep out sealant.

b. 13 mm minimum between top of conduit and pavement surface.

c. Saw cut shall not exceed 25 mm in width and 3 mm longer than conduit to be installed.

d. Conductors with 13 mm minimum slack inside conduit.

e. Inductive loop detector saw slot.

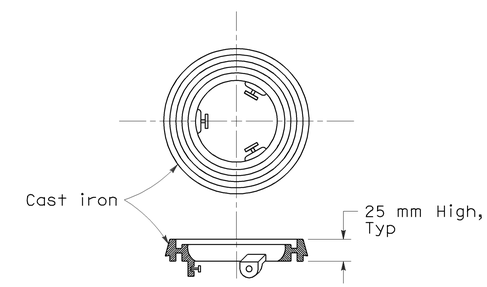

NOTE:

Use for Type A detector handhole on pavement resurfacing only.

LOCKING GRADE RING

STATE OF CALIFORNIA
DEPARTMENT OF TRANSPORTATION

ELECTRICAL SYSTEMS (DETECTORS)

NO SCALE

ALL DIMENSIONS ARE IN
MILLIMETERS UNLESS OTHERWISE SHOWN

RSP ES-5D DATED OCTOBER 5, 2007 SUPERSEDES STANDARD PLAN ES-5D
DATED JULY 1, 2004-PAGE 439 OF THE STANDARD PLANS BOOK DATED JULY 2004.

REVISED STANDARD PLAN RSP ES-5D

2004 REVISED Std PLAN RSP ES-5D

10-1-07

DIST	COUNTY	ROUTE	KILOMETER POST TOTAL PROJECT	SHEET NO.	TOTAL SHEETS
07	LA	5	42.8/47.3	555	1073

REGISTERED CIVIL ENGINEER

October 5, 2007
PLANS APPROVAL DATE

REGISTERED PROFESSIONAL ENGINEER
Stanley P. Johnson
No. C57793
Exp. 03-31-08
CIVIL
STATE OF CALIFORNIA

The State of California or its officers or agents shall not be responsible for the accuracy or completeness of electronic copies of this plan sheet.

To get to the Caltrans web site, go to: http://www.dot.ca.gov

To accompany plans dated 6-8-09

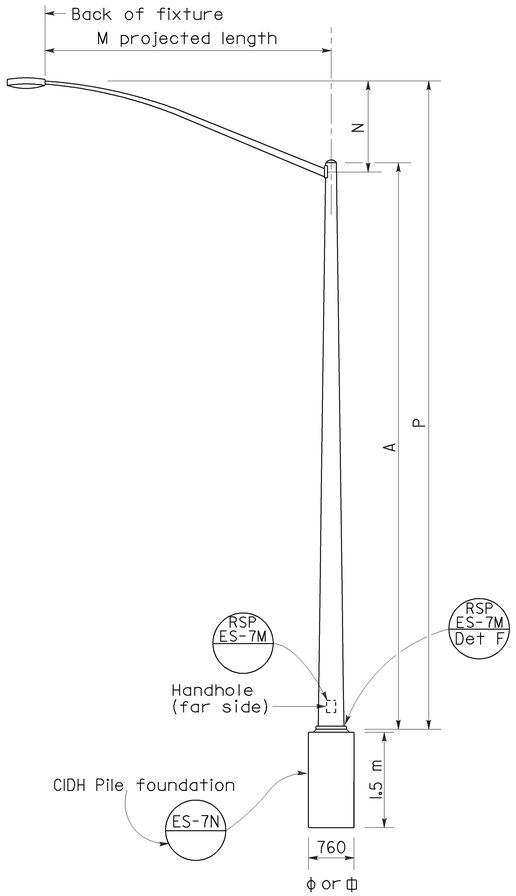

ELEVATION
TYPE 15 AND TYPE 21

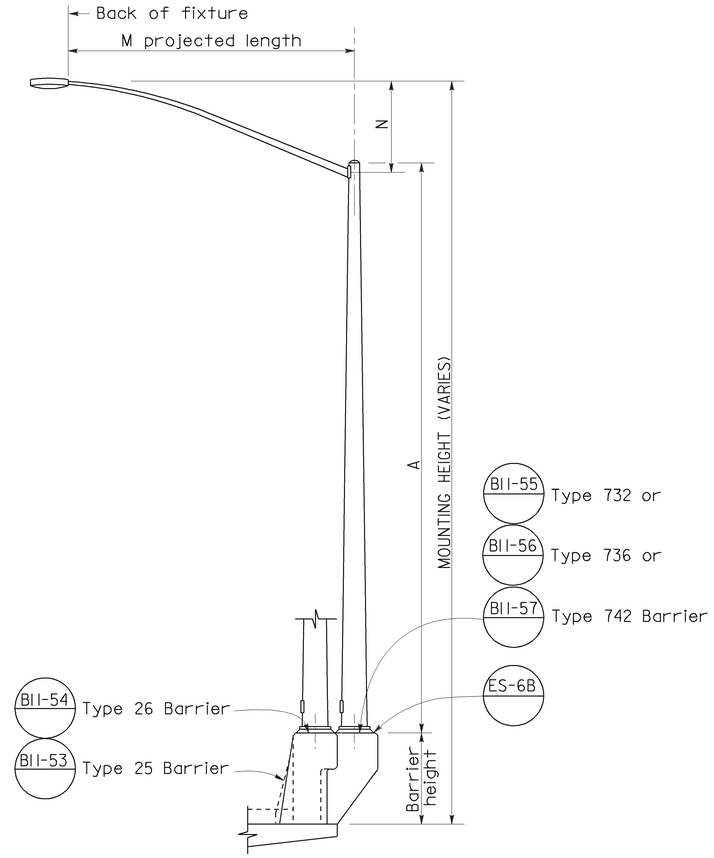

ELEVATION
TYPE 15 AND TYPE 21 BARRIER RAIL MOUNTED

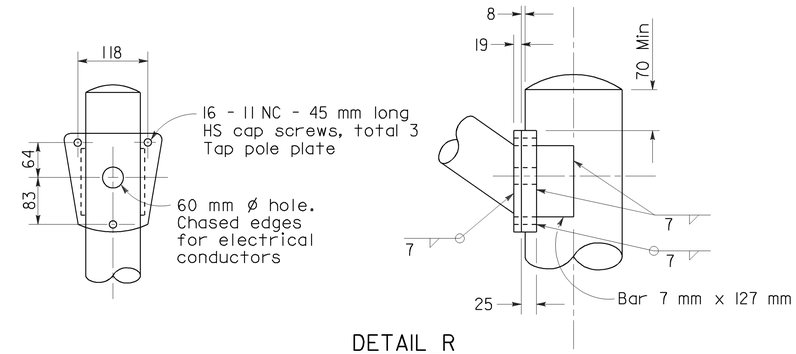

DETAIL R
LUMINAIRE ARM CONNECTION

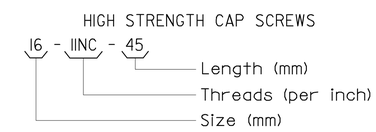

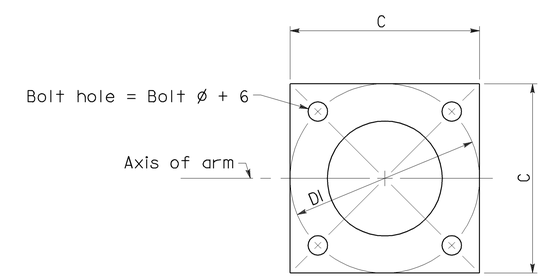

BASE PLATE

POLE TYPE	POLE DATA				BASE PLATE DATA				LUMINAIRE ARM
	A Height	Min OD Base	Min OD Top	Wall Thickness	C	DI Bolt Circle	Thick-ness	Anchor Bolts Size	
	m	mm	mm	mm	mm				m
15	9.1	203	98	3.04	305	305	25	25 ø × 915 × 102*	1.8-4.6 [3.7]
21	10.7	219	98	3.04	305	305	25	See ES-6B	1.8-4.6 [3.7]

*For barrier rail bolts, see Standard Plan ES-6B.

LUMINAIRE ARM DATA					
M Projected Length	N Rise	Min OD At Pole	Nominal Thickness	P Type 15	P Type 21
m	mm	mm	mm	m	m
1.8	610±	83	3.04	9.5±	11.2±
2.4	760±	89	3.04	9.7±	11.3±
3.1	990±	98	3.04	9.9±	11.5±
3.7	1290±	98	3.04	10.2±	11.8±
4.6	1450±	108	3.04	10.3±	11.9±

NOTES:

1. ☐ Indicates arm length to be used unless otherwise noted on the plans.
2. For Type 15-SB, use Type 15 standard with Type 30 base plate details, see Standard Plan ES-6F.
3. For additional notes, see Revised Standard Plan RSP ES-7M and ES-7N.

STATE OF CALIFORNIA
DEPARTMENT OF TRANSPORTATION

ELECTRICAL SYSTEMS (LIGHTING STANDARD TYPES 15 AND 21)

NO SCALE

ALL DIMENSIONS ARE IN MILLIMETERS UNLESS OTHERWISE SHOWN

RSP ES-6A DATED OCTOBER 5, 2007 SUPERSEDES STANDARD PLAN ES-6A DATED JULY 1, 2004-PAGE 440 OF THE STANDARD PLANS BOOK DATED JULY 2004.

REVISED STANDARD PLAN RSP ES-6A

2004 REVISED Std PLAN RSP ES-6A

To accompany plans dated 6-8-09

Caltrans Metric

DIST	COUNTY	ROUTE	KILOMETER POST TOTAL PROJECT	SHEET NO.	TOTAL SHEETS
07	LA	5	42.8/47.3	556	1073

REGISTERED CIVIL ENGINEER

October 5, 2007
PLANS APPROVAL DATE

REGISTERED PROFESSIONAL ENGINEER Stanley P. Johnson No. C57793 Exp. 03-31-08 CIVIL STATE OF CALIFORNIA

The State of California or its officers or agents shall not be responsible for the accuracy or completeness of electronic copies of this plan sheet.

To get to the Caltrans web site, go to: http://www.dot.ca.gov

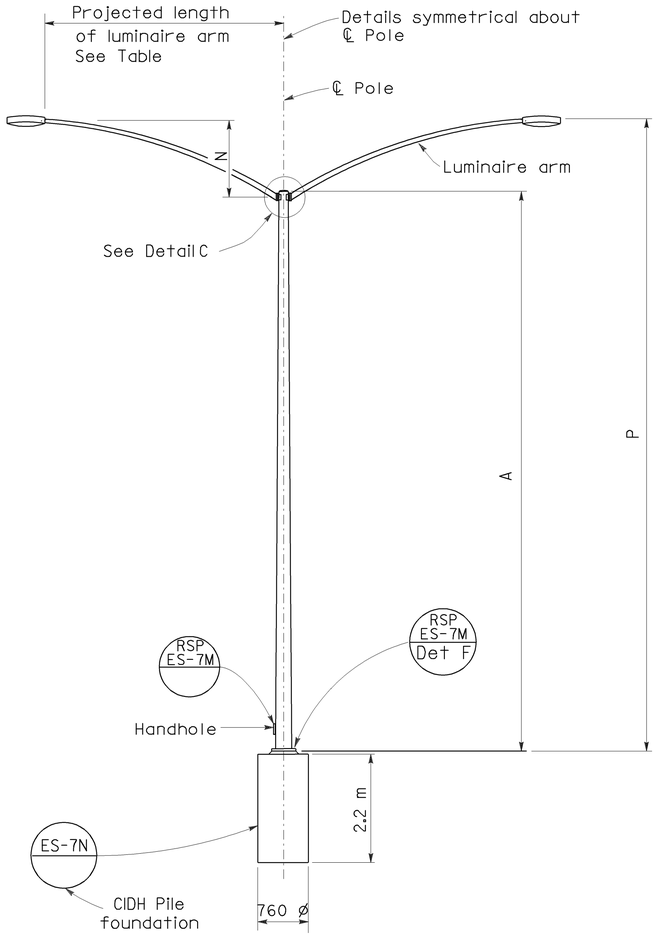

ELEVATION
TYPE 15D AND TYPE 21D

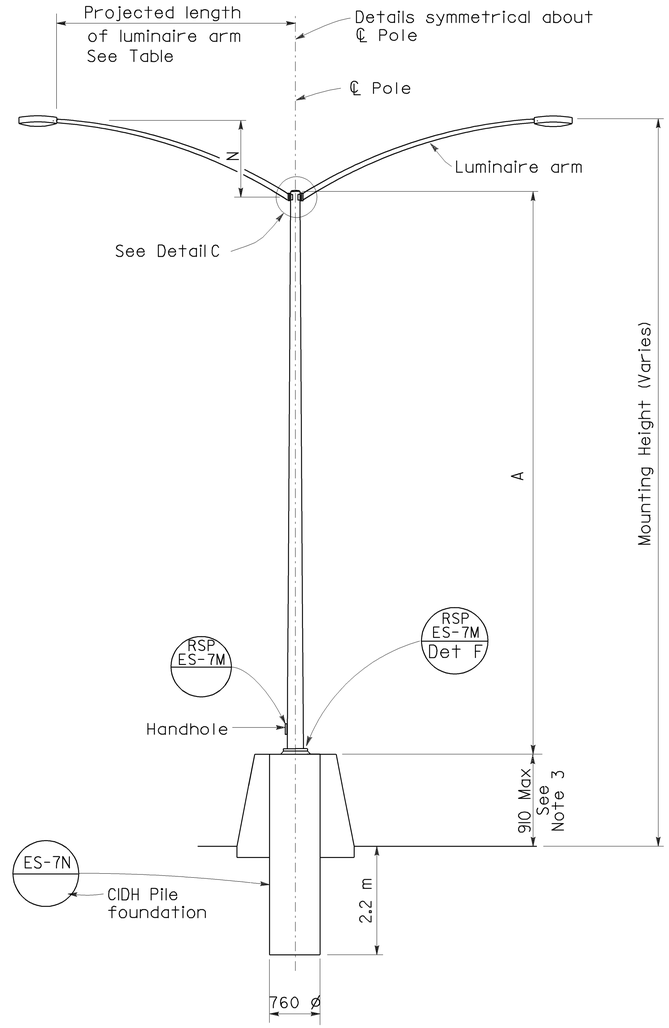

ELEVATION
TYPE 15D AND TYPE 21D MEDIAN BARRIER MOUNTED

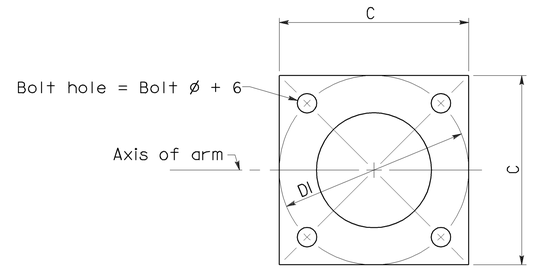

BASE PLATE

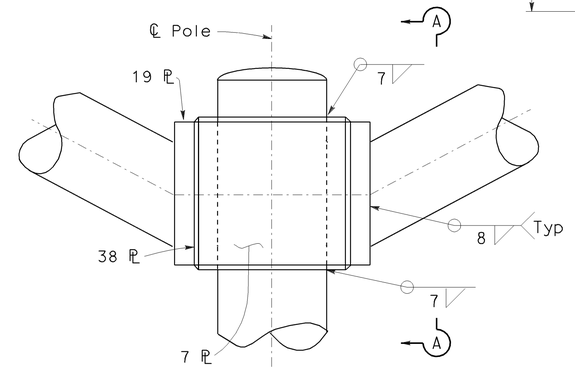

DETAIL C

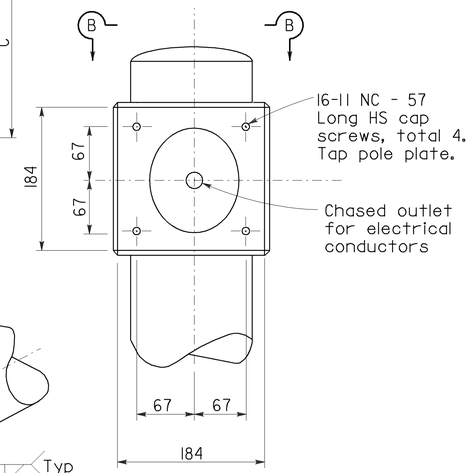

SECTION A-A

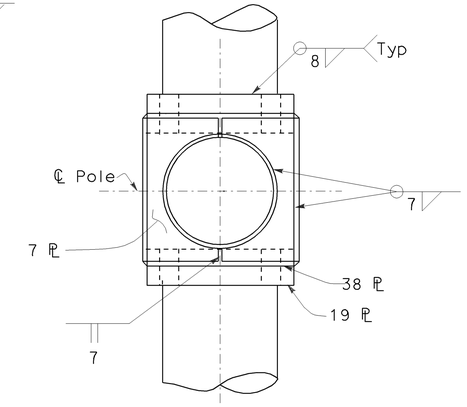

SECTION B-B

POLE TYPE	POLE DATA				BASE PLATE DATA				
	A Height	Min OD Base	Min OD Top	Min Thickness	C	DI Bolt Circle	Thick-ness	Anchor Bolts Size	Anchor Bolts Bolt Circle
	m	mm	mm	mm	mm	mm	mm	mm	mm
15D	9.1	203	98	4.55	305	305	25	32 ø x 915 x 152	305
21D	10.7	219	98	4.55					

HIGH STRENGTH CAP SCREWS
16 - 11NC - 45
Length (mm)
Threads (per inch)
Size (mm)

LUMINAIRE ARM DATA					
Projected Length	N Rise	Min OD At Pole	Nominal Thickness	P Type 15D	P Type 21D
m	mm	mm	mm	m	m
1.8	610±	83	3.04	9.5±	11.2±
2.4	760±	89	3.04	9.7±	11.3±
3.1	990±	98	3.04	9.9±	11.5±
3.7	1290±	98	3.04	10.2±	11.8±

NOTES:

1. ☐ Indicates arm length to be used unless otherwise noted on the plans.
2. For additional notes see Revised Standard Plan RSP ES-7M.
3. See Concrete Barrier Details Type 60E and 60SE.

STATE OF CALIFORNIA
DEPARTMENT OF TRANSPORTATION

ELECTRICAL SYSTEMS (LIGHTING STANDARD TYPES 15D AND 21D DOUBLE ARM)

NO SCALE

ALL DIMENSIONS ARE IN MILLIMETERS UNLESS OTHERWISE SHOWN

RSP ES-6D DATED OCTOBER 5, 2007 SUPERSEDES STANDARD PLAN ES-6D DATED JULY 1, 2004-PAGE 443 OF THE STANDARD PLANS BOOK DATED JULY 2004.

REVISED STANDARD PLAN RSP ES-6D

2004 REVISED Std PLAN RSP ES-6D

6-20-07

DIST	COUNTY	ROUTE	KILOMETER POST TOTAL PROJECT	SHEET NO.	TOTAL SHEETS
07	LA	5	42.8/47.3	557	1073

REGISTERED CIVIL ENGINEER

January 18, 2008
PLANS APPROVAL DATE

REGISTERED PROFESSIONAL ENGINEER Stanley P. Johnson No. C57793 Exp. 03-31-08 CIVIL STATE OF CALIFORNIA

The State of California or its officers or agents shall not be responsible for the accuracy or completeness of electronic copies of this plan sheet.

To get to the Caltrans web site, go to: http://www.dot.ca.gov

To accompany plans dated 6-8-09

LUMINAIRE ARM DATA

	PROJECTED LENGTH	THICKNESS	MINIMUM OD @ POLE	MOUNTING HEIGHT
	m	mm	mm	m
*	1.8	3.04	83	11.2±
	2.4		89	11.4±
	3.1		95	11.6±
	3.7		95	11.9±
	4.6		108	12.0±
**	6.1	4.55	127	11.3±

* Type 30 - arm length 1.8 m - 4.6 m maximum

** Type 31 - arm lengths 6.1 m

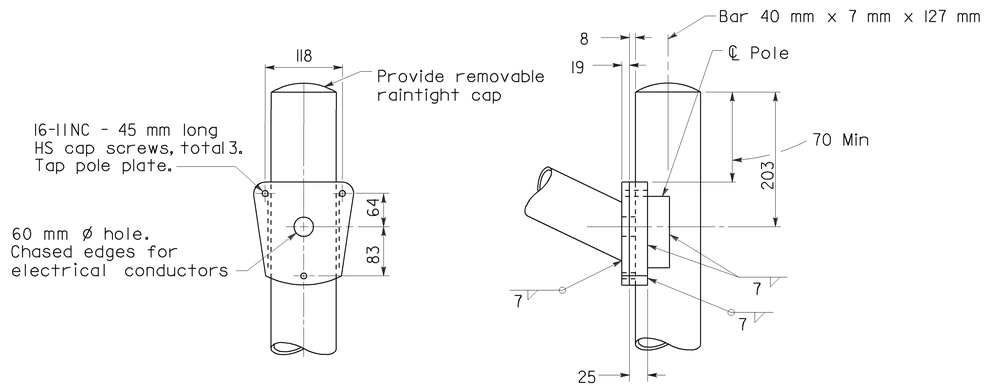

DETAIL A - TYPE 30

HIGH STRENGTH CAP SCREWS

16 - 11NC - 45
- Length (mm)
- Threads (per inch)
- Size (mm)

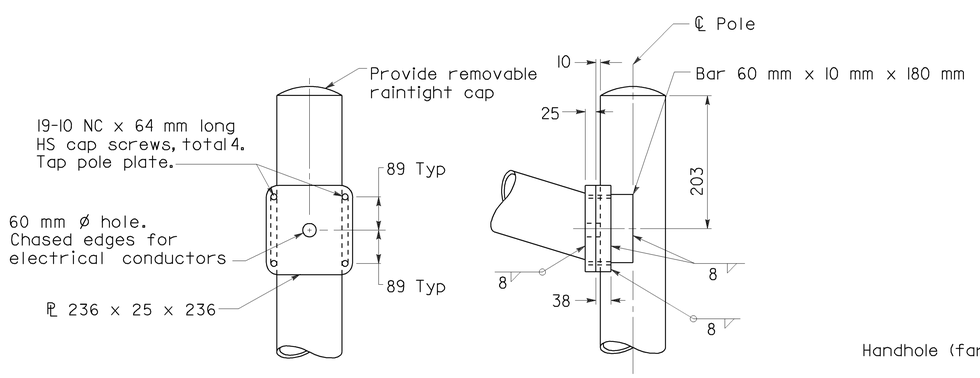

DETAIL A - TYPE 31

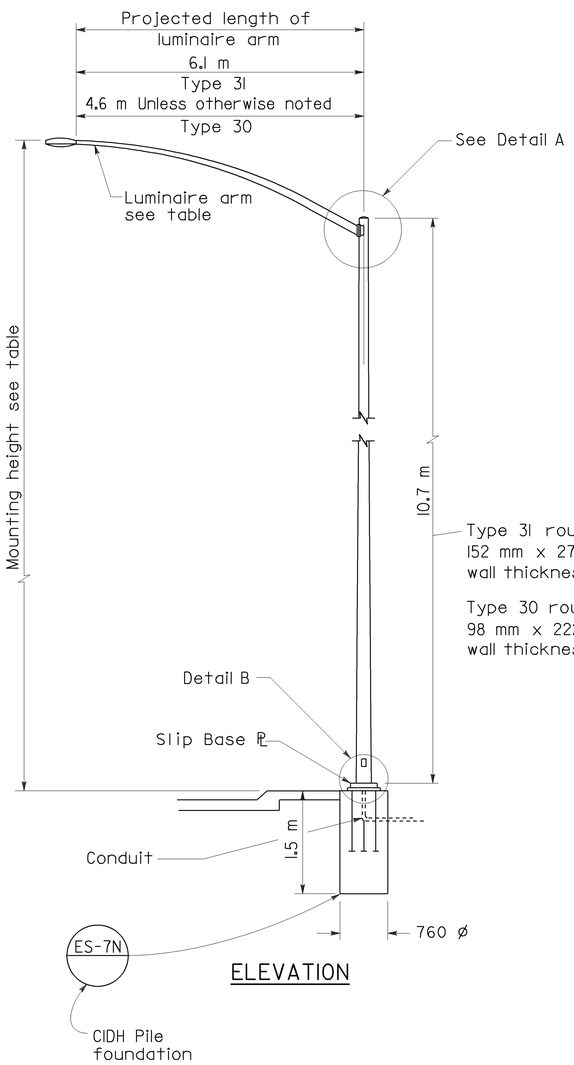

ELEVATION

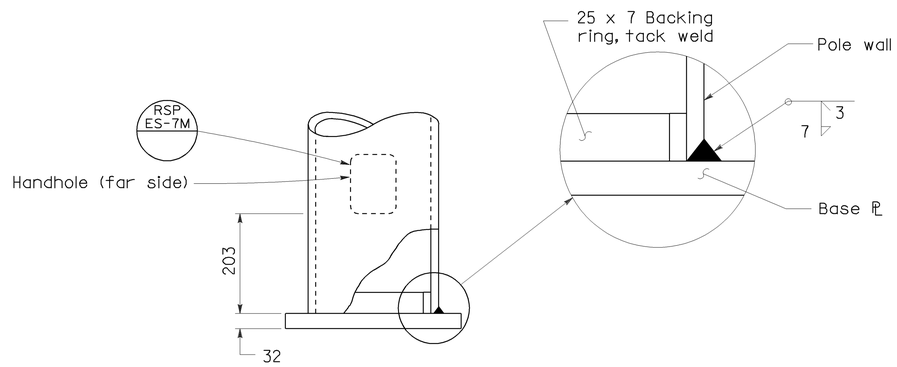

DETAIL B

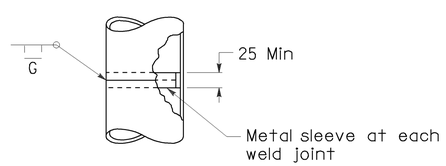

POLE SPLICE

NOTES

1. Sheet steel shall have a minimum yield of 330 MPa.
2. For slip base details see Standard Plan ES-6F.
3. For Type 30 fixed base use Type 15 base plate, and foundation shown on Revised Standard Plan RSP ES-6A. Use 32 Dia x 915 x 104 anchor bolts
4. For Type 31 fixed base use Type 32 base plate, anchor bolts and foundation on Standard Plan ES-6G.
5. Handhole shall be located on downstream side of traffic unless noted otherwise on plans.
6. For additional general notes refer to Revised Standard Plan RSP ES-7M.

STATE OF CALIFORNIA
DEPARTMENT OF TRANSPORTATION

ELECTRICAL SYSTEMS (LIGHTING STANDARDS TYPES 30 AND 31

NO SCALE

ALL DIMENSIONS ARE IN MILLIMETERS UNLESS OTHERWISE SHOWN

RSP ES-6E DATED JANUARY 18, 2008 SUPERSEDES RSP ES-6E DATED JANUARY 218, 2005 AND STANDARD PLAN ES-6E DATED JULY 1, 2004-PAGE 444 OF THE STANDARD PLANS BOOK DATED JULY 2004.

REVISED STANDARD PLAN RSP ES-6E

2004 REVISED Std PLAN RSP ES-6E

11-19-07

DIST	COUNTY	ROUTE	KILOMETER POST TOTAL PROJECT	SHEET NO.	TOTAL SHEETS
07	LA	5	42.8/47.3	558	1073

REGISTERED CIVIL ENGINEER

October 5, 2007
PLANS APPROVAL DATE

REGISTERED PROFESSIONAL ENGINEER Stanley P. Johnson No. C57793 Exp. 03-31-08 CIVIL STATE OF CALIFORNIA

The State of California or its officers or agents shall not be responsible for the accuracy or completeness of electronic copies of this plan sheet.

To get to the Caltrans web site, go to: http://www.dot.ca.gov

To accompany plans dated 6-8-09

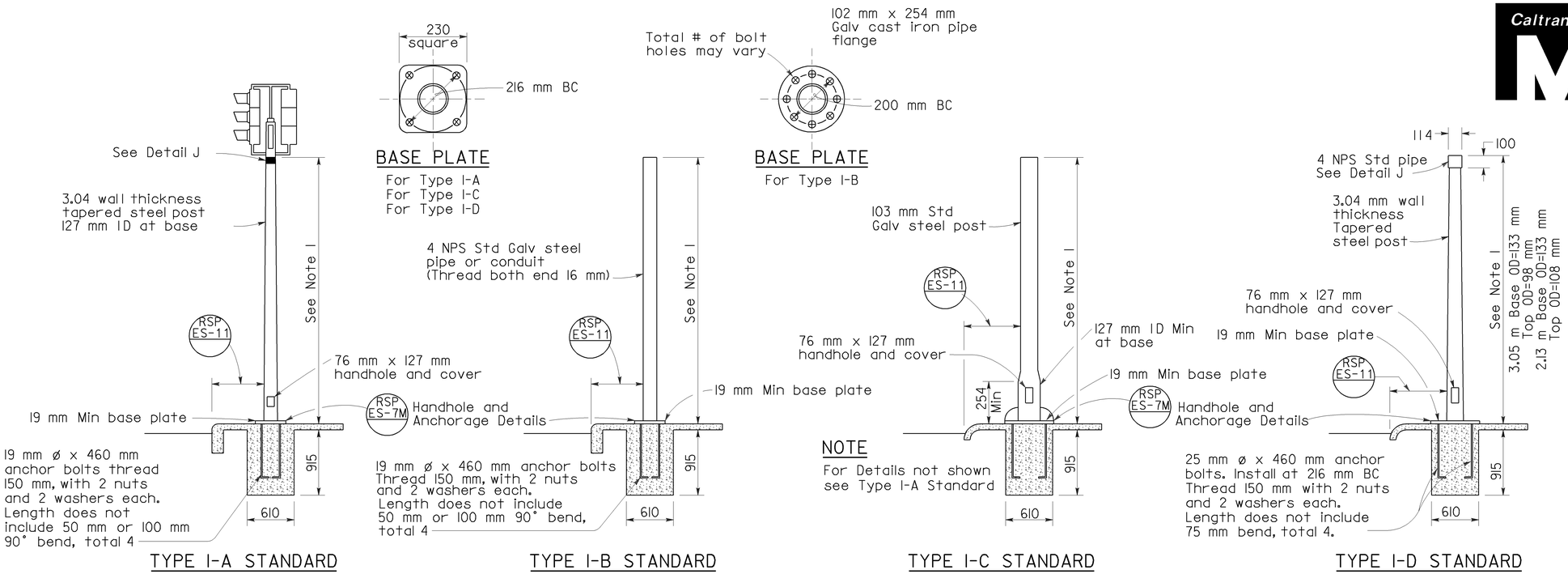

NOTES:

1. Standards shall be 3.05 m± 50 mm for vehicle signals and 2.13 m± 50 mm for pedestrian signals unless otherwise noted on plans.
2. Top of standards shall be 114 mm OD.
3. Conduits shall extend 50 mm maximum above finished surface of foundation and for Types I-A, I-C and I-D shall be sloped toward handhole.
4. Anchor bolts shall be bonded to conduit or grounding conductor.
5. Conduit between standard and adjacent pull box shall be Size 53 minimum.
6. Paint numbers on roadway side facing traffic when electrolier or post is left of direction of traffic.

TYPE I SIGNAL STANDARDS

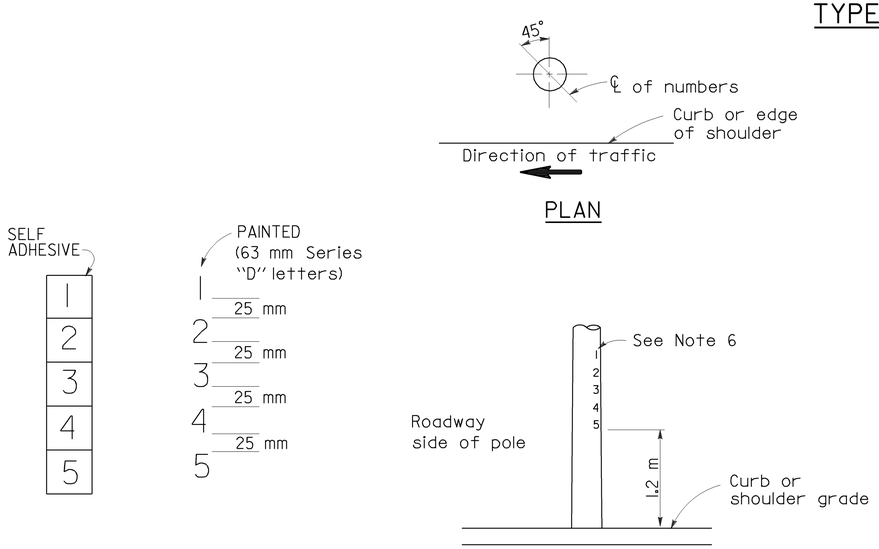

LOCATION OF EQUIPMENT NUMBERS ON STANDARDS AND POSTS

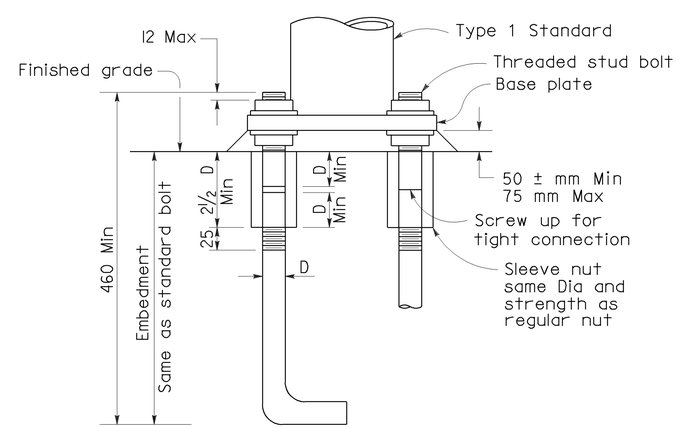

ANCHOR BOLTS WITH SLEEVE NUTS

Sleeve nuts to be used only when shown or specified on Project Plans
D = Diameter of anchor bolt

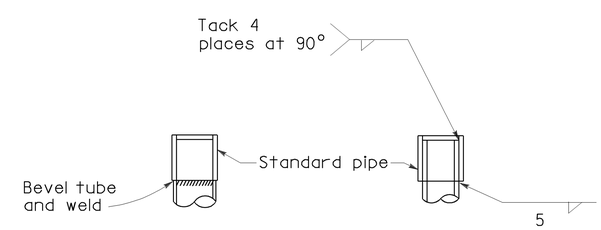

DETAIL J

Tube may be inserted into pipe or butted as required

STATE OF CALIFORNIA
DEPARTMENT OF TRANSPORTATION

ELECTRICAL SYSTEM (SIGNAL AND LIGHTING STANDARD TYPE 1 STANDARDS AND EQUIPMENT NUMBERING)

NO SCALE

ALL DIMENSIONS ARE IN MILLIMETERS UNLESS OTHERWISE SHOWN

RSP ES-7B DATED OCTOBER 5, 2007 SUPERSEDES STANDARD PLAN ES-7B DATED JULY 1, 2004-PAGE 452 OF THE STANDARD PLANS BOOK DATED JULY 2004.

REVISED STANDARD PLAN RSP ES-7B

2004 REVISED Std PLAN RSP ES-7B

10-1-07

To accompany plans dated 6-8-09

Caltrans Metric

DIST	COUNTY	ROUTE	KILOMETER POST TOTAL PROJECT	SHEET NO.	TOTAL SHEETS
07	LA	5	42.8/47.3	559	1073

REGISTERED CIVIL ENGINEER

October 5, 2007
PLANS APPROVAL DATE

REGISTERED PROFESSIONAL ENGINEER Stanley P. Johnson No. C57793 Exp. 03-31-08 CIVIL STATE OF CALIFORNIA

The State of California or its officers or agents shall not be responsible for the accuracy or completeness of electronic copies of this plan sheet.

To get to the Caltrans web site, go to: http://www.dot.ca.gov

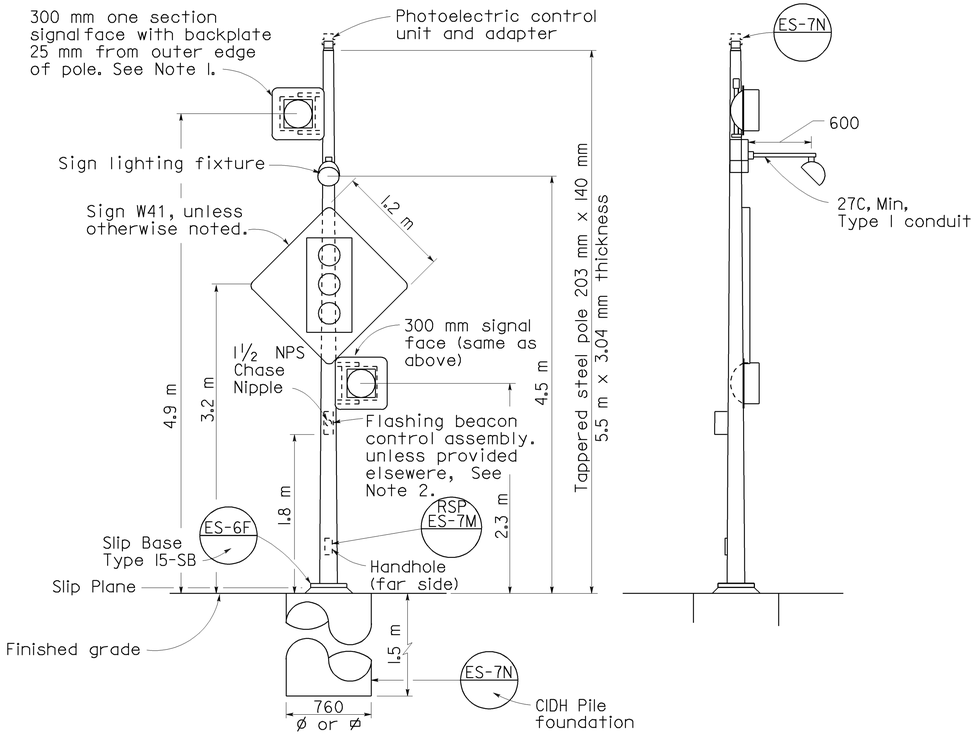

FRONT VIEW

SIDE VIEW

TYPE 15-FBS

ADVANCE FLASHING BEACON WITH SLIP BASE INSTALLATION

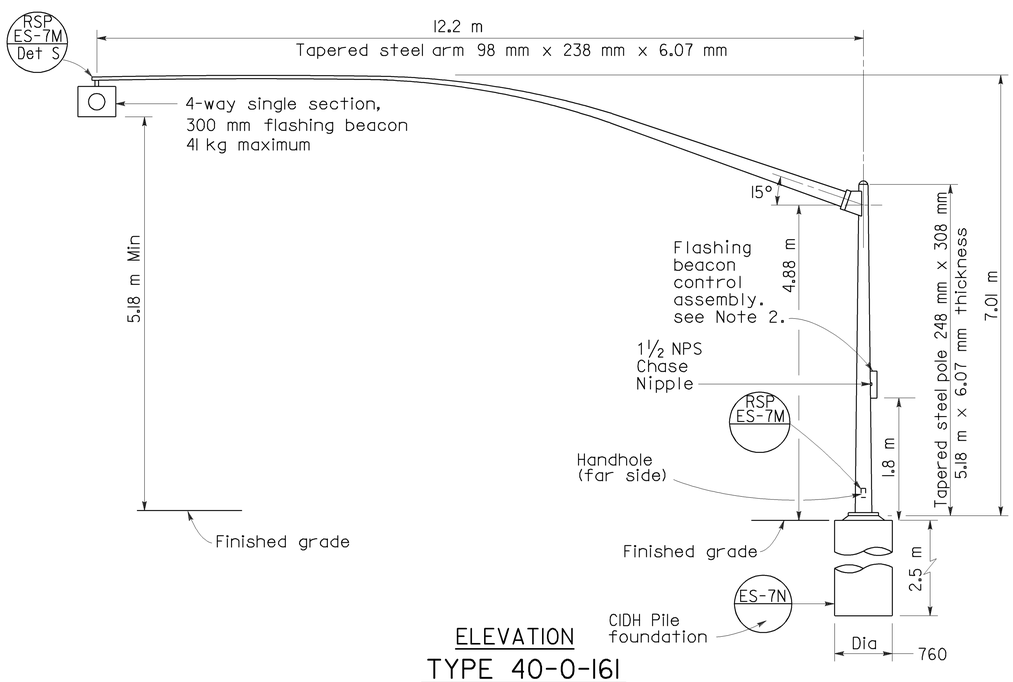

ELEVATION

TYPE 40-0-161

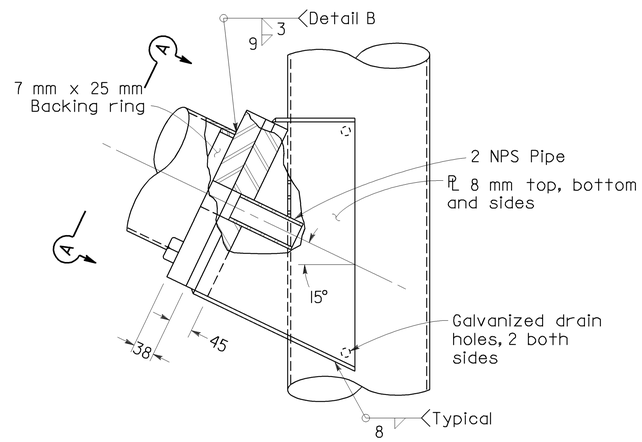

ELEVATION

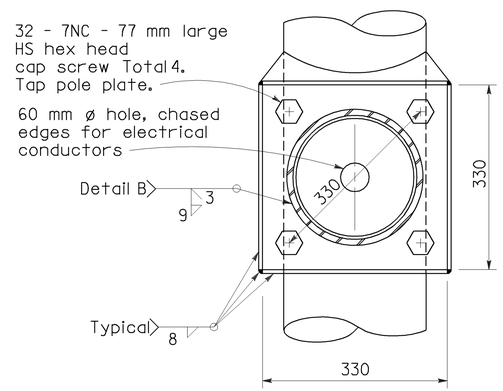

SECTION A-A

SIGNAL ARM CONNECTION DETAILS

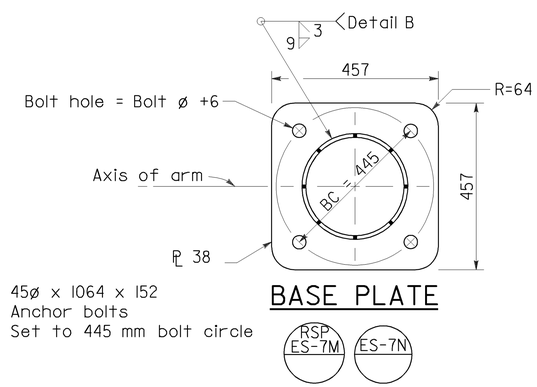

BASE PLATE

HIGH STRENGTH CAP SCREWS

16 - 11NC - 45
- Length (mm)
- Threads (per inch)
- Size (mm)

NOTES:

1. See Standard Plans ES-4D and ES-4E for attachment fitting details.
2. For wiring diagram, see Standard Plan ES-3B.

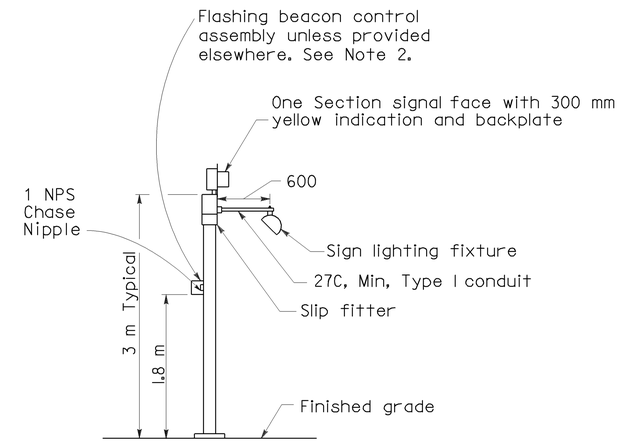

TYPE 1-A, 1-B, 1-C AND 1-D

ADVANCE FLASHING BEACON INSTALLATION

(See Project Plans for type of standard to be installed)

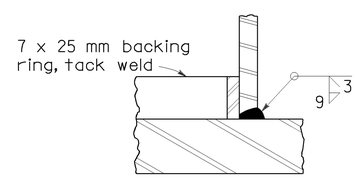

DETAIL B

STATE OF CALIFORNIA
DEPARTMENT OF TRANSPORTATION

ELECTRICAL SYSTEMS (SIGNAL AND LIGHTING STANDARD ADVANCE FLASHING BEACONS)

NO SCALE

ALL DIMENSIONS ARE IN MILLIMETERS UNLESS OTHERWISE SHOWN

RSP ES-7J DATED OCTOBER 5, 2007 SUPERSEDES STANDARD PLAN ES-7J DATED JULY 1, 2004-PAGE 460 OF THE STANDARD PLANS BOOK DATED JULY 2004.

REVISED STANDARD PLAN RSP ES-7J

2004 REVISED Std PLAN RSP ES-7J

10-1-07

DIST	COUNTY	ROUTE	KILOMETER POST TOTAL PROJECT	SHEET NO.	TOTAL SHEETS
07	LA	5	42.8/47.3	560	1073

REGISTERED CIVIL ENGINEER

April 28, 2005
PLANS APPROVAL DATE

REGISTERED PROFESSIONAL ENGINEER Tillat Sattar No. C42892 Exp. 03-31-2006 CIVIL STATE OF CALIFORNIA

The State of California or its officers or agents shall not be responsible for the accuracy or completeness of electronic copies of this plan sheet.

To get to the Caltrans web site, go to: http://www.dot.ca.gov

To accompany plans dated 6-8-09

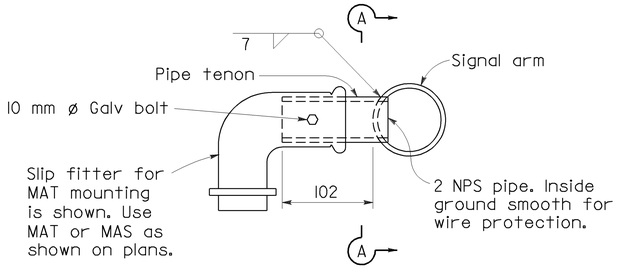

ES-4D

DETAIL S-SIDE TENON

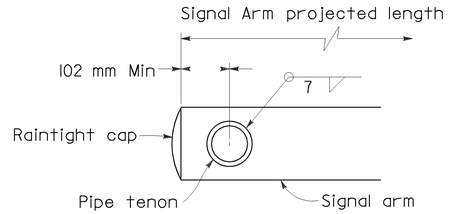

SECTION A-A

PIPE TENONS

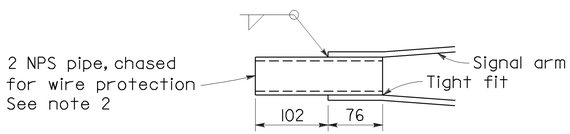

DETAIL TS-TIP TENON

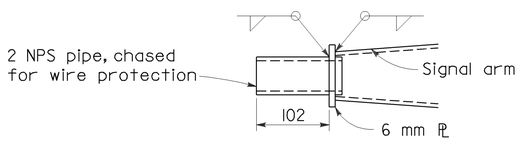

DETAIL TL-TIP TENON

This detail supersedes Detail S when so designated

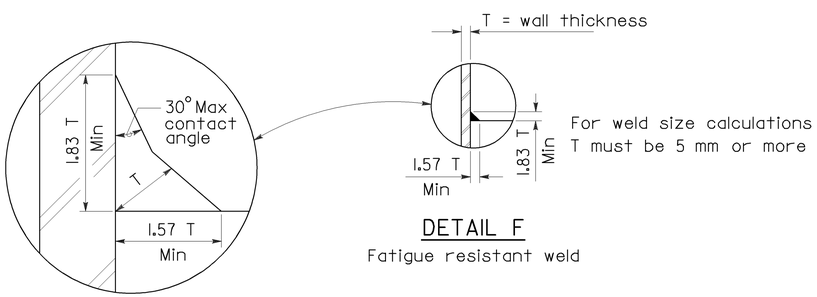

DETAIL F

Fatigue resistant weld

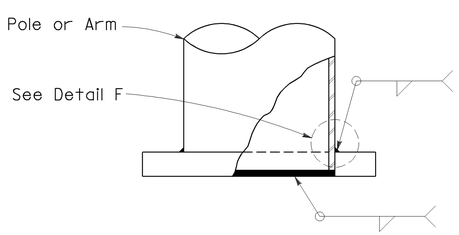

Weld Size	Wall Thickness
7	3.04
8	4.55
10	6.07
11	7.94
4	3.04
5	4.55
7	6.07
8	7.94

ELEVATION A

IDENTIFICATION NUMBER

Attach a stamped metal tag with each pole's indentification number to shaft above handhole. 7 mm high number minimum.

A similar tag shall be attached to the top of the signal mast arm near the pole plate.

Sample Identification Number

Type, Load case, Design wind velocity (km/h), Signal arm length maximum (m), Standard plan year, Only for poles with fatigue resistant welds

19A - 3 - 161 - 9.1 - 04 - F

Use SL for special load case

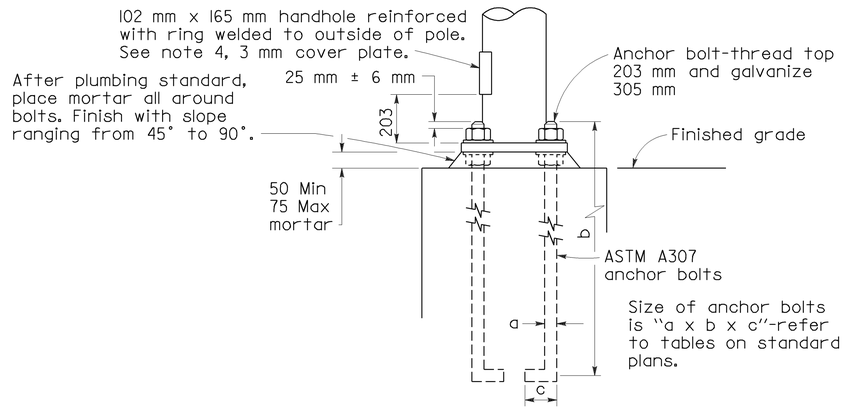

HANDHOLE AND ANCHORAGE DETAILS

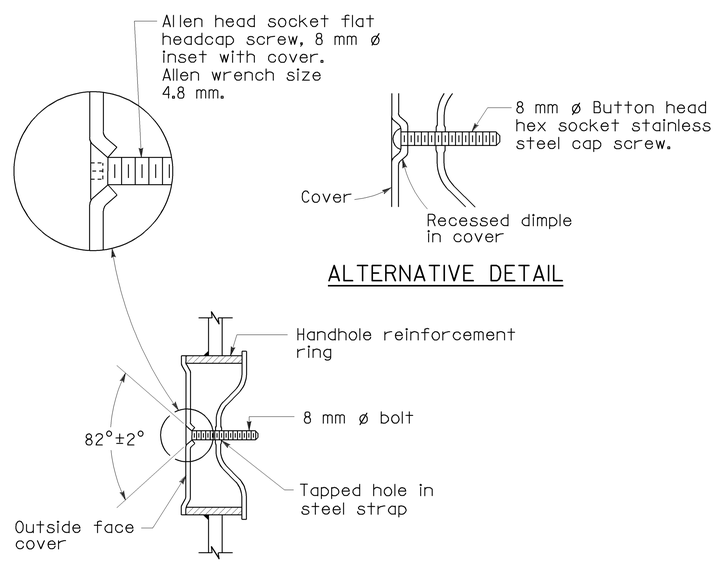

ALTERNATIVE DETAIL

TAMPER RESISTANT HANDHOLE COVER

GENERAL NOTES

SPECIFICATIONS

DESIGN : AASHTO Standard specifications for structural supports for highway signs, luminaires and traffic signals dated 2001.

Loading

WIND LOADINGS : 161 km/h

Unit Stresses

STRUCTURAL STEEL : fy = 330 MPa tapered steel tube
fy = 250 MPa unless otherwise noted

CONSTRUCTION : Standard Specifications and the Special Provisions

NOTES

1. ASTM A307 anchor bolts are required for each pole. Provide a hex nut, leveling nut and 2 washers for each bolt.
2. Luminaire arms shall be round, tapered steel tubes, taper of 11.45 mm/m to 11.66 mm/m with an end section 60 mm OD for mounting hardware. Extensions of 2 NPS Standard pipe and 178 mm long may be used at the option of the manufacturer. When low pressure sodium luminaires are required, the extension shall be 381 mm.
3. Signal arms shall be round, tapered steel tubes, maximum taper 11.66 mm/m.
4. Handhole reinforcement ring shall be 6 mm x 51 mm for 3.04 mm to 6.07 mm poles, 10 mm x 51mm for 7.94 mm.
5. Handholes for lighting standards shall be located on the downstream side of the pole unless otherwise noted on the plans.
6. Detail F, fatigue resistant weld, is required at signal arm plate and pole base plate.
7. Cap screws shall be tightened by the turn-of-nut method 1/3 turn to form a snug tight condition. No washer will be required.
8. During pole erection, the post shall be raked as necessary with the use of leveling nuts to provide a plumb pole axis.
9. When Project Plans show a lesser number of signs and signals, the Project Plans shall prevail.
10. Outside diameter, wall thickness, and corresponding section properties at the base of traffic signal poles and arms as shown in the Standard Plans are minimums. Unless otherwise specified, alternative sections require approval by the Engineer.

STATE OF CALIFORNIA
DEPARTMENT OF TRANSPORTATION

ELECTRICAL SYSTEMS (SIGNAL AND LIGHTING STANDARDS DETAILS No. 1)

NO SCALE

ALL DIMENSIONS ARE IN MILLIMETERS UNLESS OTHERWISE SHOWN

RSP ES-7M DATED APRIL 28, 2005 SUPERSEDES RSP ES-7M DATED JANUARY 24,2005 AND STANDARD PLAN ES-7M DATED JULY 1, 2004-PAGE 463 OF THE STANDARD PLANS BOOK DATED JULY 2004.

REVISED STANDARD PLAN RSP ES-7M

2004 REVISED Std PLAN RSP ES-7M

DIST	COUNTY	ROUTE	KILOMETER POST TOTAL PROJECT	SHEET NO.	TOTAL SHEETS
07	LA	5	42.8/47.3	561	1073

Caltrans Metric

REGISTERED CIVIL ENGINEER

October 5, 2007
PLANS APPROVAL DATE

REGISTERED PROFESSIONAL ENGINEER Stanley P. Johnson No. C57793 Exp. 03-31-08 CIVIL STATE OF CALIFORNIA

The State of California or its officers or agents shall not be responsible for the accuracy or completeness of electronic copies of this plan sheet.

To get to the Caltrans web site, go to: http://www.dot.ca.gov

To accompany plans dated 6-8-09

2004 REVISED Std PLAN RSP ES-7P

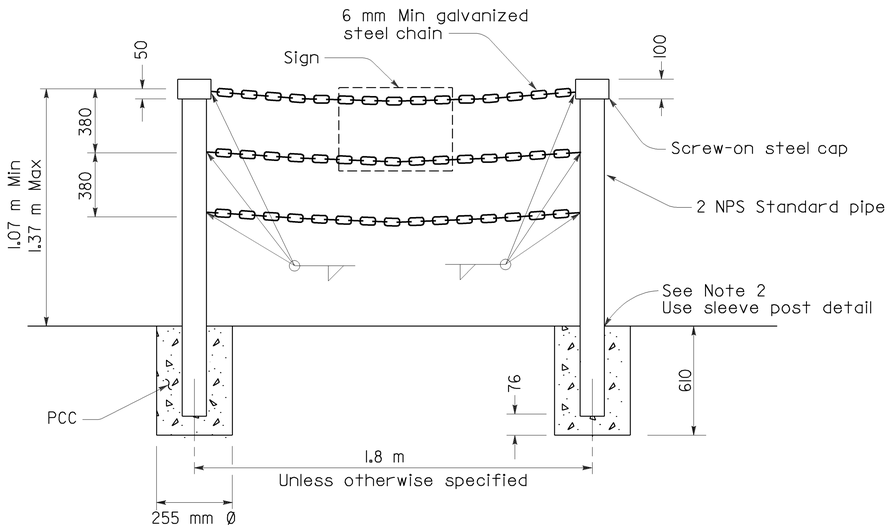

TYPE II

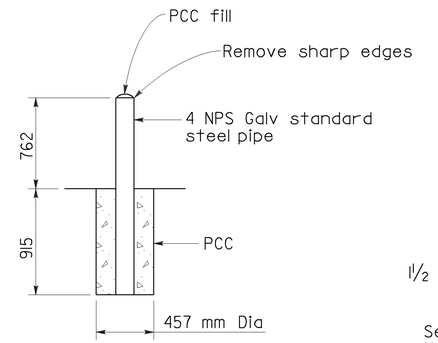

GUARD POST

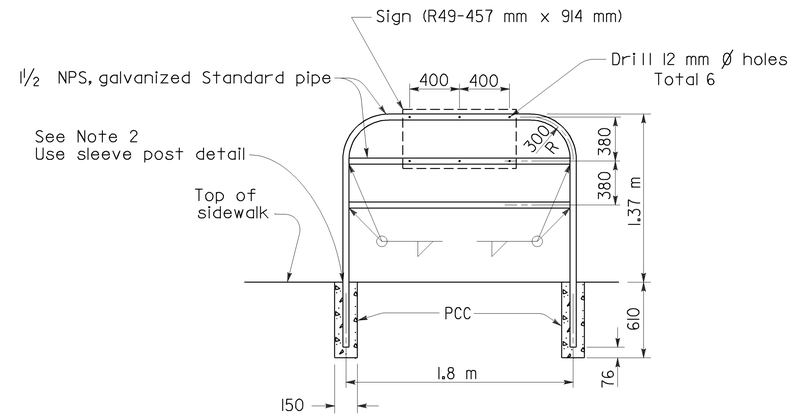

TYPE I

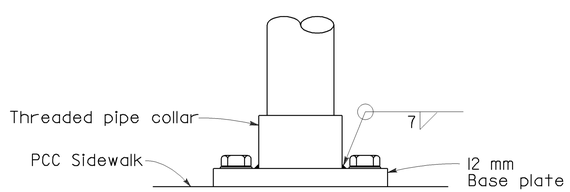

ELEVATION

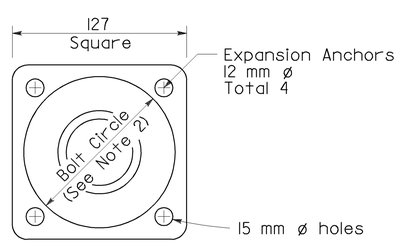

PLAN

POST ANCHORAGE DETAIL

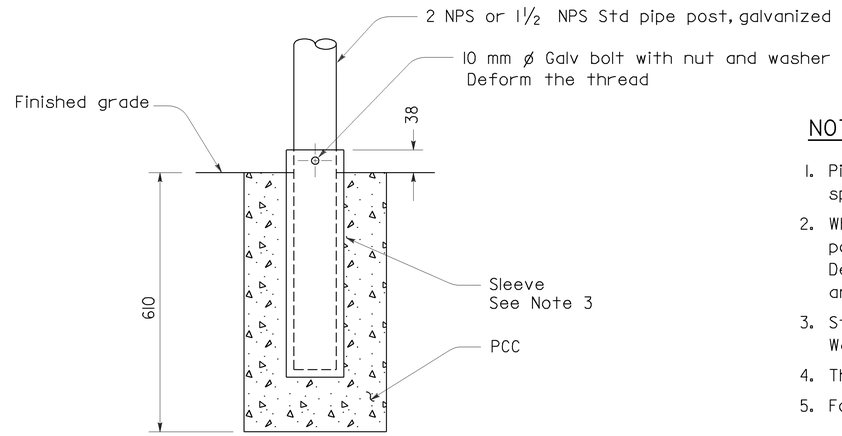

SLEEVE POST DETAIL

Use unless otherwise specified or shown on plans

NOTES:

1. Pipe post to be set 460 mm back from face of curb unless otherwise specified.
2. Where barricade posts are installed in existing concrete sidewalk, the post may be anchored to the sidewalk as shown in the "Post Anchorage Detail". Bolt circle diameter shall be 102 mm minimum for Type I barricade and 127 mm minimum for Type II barricade.
3. Steel sleeve to be constructed with a diameter 2.5 mm larger than post. Wall thickness of sleeve to be same as post or larger.
4. The Contractor may submit alternative details for approval by the Engineer.
5. For minimum pipe diameters and wall thickness refer to ASTM A6M.

STATE OF CALIFORNIA
DEPARTMENT OF TRANSPORTATION

ELECTRICAL SYSTEMS (PEDESTRIAN BARRICADES)

NO SCALE

ALL DIMENSIONS ARE IN MILLIMETERS UNLESS OTHERWISE SHOWN

RSP ES-7P DATED OCTOBER 5, 2007 SUPERSEDES STANDARD PLAN ES-7P DATED JULY 1, 2004-PAGE 466 OF THE STANDARD PLANS BOOK DATED JULY 2004.

REVISED STANDARD PLAN RSP ES-7P

6-12-07

DIST	COUNTY	ROUTE	KILOMETER POST TOTAL PROJECT	SHEET NO.	TOTAL SHEETS
07	LA	5	42.8/47.3	562	1073

Caltrans Metric

REGISTERED ELECTRICAL ENGINEER

October 5, 2007
PLANS APPROVAL DATE

REGISTERED PROFESSIONAL ENGINEER Jeffery G. McRae No. E14512 Exp. 6-30-08 ELECTRICAL STATE OF CALIFORNIA

The State of California or its officers or agents shall not be responsible for the accuracy or completeness of electronic copies of this plan sheet.

To get to the Caltrans web site, go to: http://www.dot.ca.gov

To accompany plans dated 6-8-09

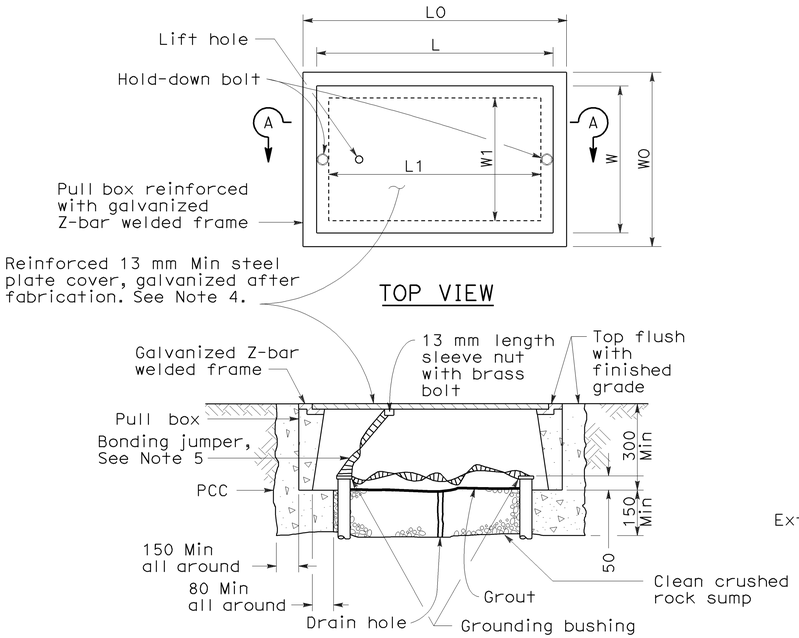

SECTION A-A

No. 3½(T), No. 5(T) AND No. 6(T) TRAFFIC PULL BOX

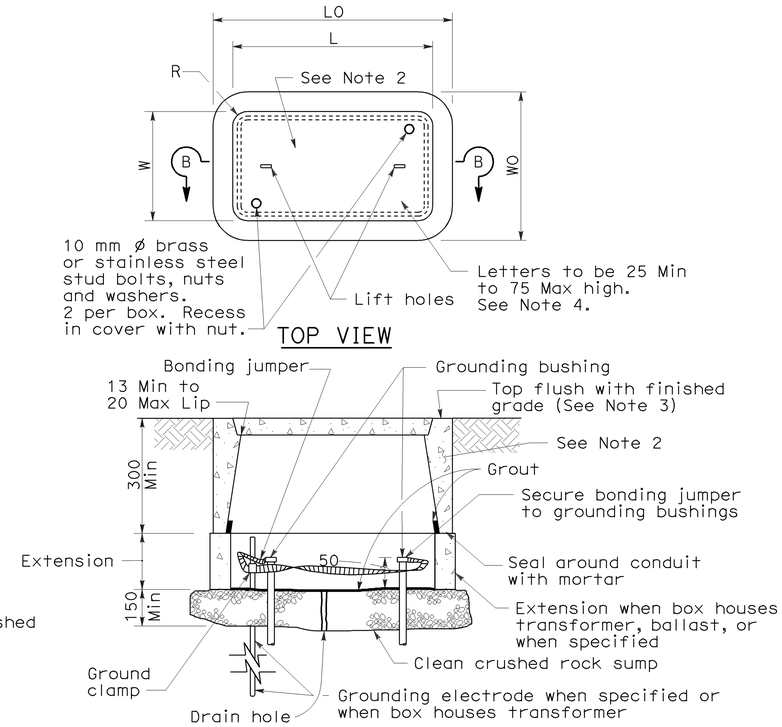

SECTION B-B

INSTALLATION DETAILS

DIMENSION TABLE

PULL BOX	CONCRETE BOX				NON-PCC BOX		CONCRETE OR NON-PCC COVERS				
	Minimum * Thickness	Minimum Depth Box and Extension	LO (mm)	WO (mm)	Minimum ** Thickness	Minimum Depth Box and Extension	L ** (mm)	W ** (mm)	R (mm)	Edge Thickness	Edge Taper
No. 3½	25 mm	No Extension	457	330	8 mm	No Extension	390	260	27	45 mm	3 mm
No. 5	25 mm	560 mm	666	425	8 mm	510 mm	590	350	32	50 mm	3 mm
No. 6	40 mm	610 mm	854	524	10 mm	510 mm	775	444	32	50 mm	3 mm

* Excluding conduit web ** Top dimension

DIMENSION TABLE

PULL BOX	CONCRETE BOX						NON-PCC BOX		CONCRETE OR NON-PCC COVERS				
	Minimum * Thickness	Minimum Depth Box and Extension	LO (mm)	WO (mm)	L1 (mm)	W1 (mm)	Minimum ** Thickness	Minimum Depth Box and Extension	L ** (mm)	W ** (mm)	R (mm)	Edge Thickness	Edge Taper
No. 3½(T)	40 mm	305 mm	530 ±	430 ± 25	370 ±	270 ± 25	Does Not Apply		510 ±	350 ±	0	13 mm	None
No. 5(T)	45 mm	305 mm	750 ±	600 ± 25	480 ±	330 ± 25	Does Not Apply		690 ±	410 ±	0	13 mm	None
No. 6(T)	50 mm	305 mm	900 ±	760 ± 25	600 ±	430 ± 25	Does Not Apply		840 ±	510 ±	0	13 mm	None

* Excluding conduit web ** Top dimension

NOTES ON PULL BOXES:

1. Traffic pull box shall be provided with steel cover and special concrete footing. Steel cover shall have embossed non-skid pattern.
2. Steel reinforcing shall be as regularly used in the standard products of the respective manufacturer.
3. Top of pull boxes shall be flush with surrounding grade or top of adjacent curb, except that in unpaved areas where pull box is not immediately adjacent to and protected by a concrete foundation, pole or other protective construction, the box shall be placed with its top 30 mm above surrounding grade. Where practicable, pull boxes shown in the vicinity of curbs shall be placed adjacent to the back of curb, and pull boxes shown adjacent to standards shall be placed on side of foundation facing away from traffic, unless otherwise noted. When pull box is installed in sidewalk area, the depth of the pull box shall be adjusted so that the top of the pull box is flush with the sidewalk.
4. Pull box covers shall be marked as follows: "SERVICE" Service circuits between service point and service disconnect; "SPRINKLER-CONTROL" Sprinkler control circuits, 50 V or less; "CALTRANS" On all pull boxes, except pull boxes marked "SPRINKLER-CONTROL"; and "TELEPHONE" Telephone service.

   a) No. 3½ pull box.

      1) "SIGNAL" Traffic signal circuits with or without street or sign lighting circuits.

      2) "ST LIGHTING" Street or sign lighting circuits where voltage is under 600 V.

   b) No. 5, 6, 9 or 9A pull box.

      1) "TRAFFIC SIGNAL" Traffic signal circuits with or without street or sign lighting circuits.

      2) "STREET LIGHTING" Street or sign lighting circuits where voltage is under 600 V.

      3) "STREET LIGHTING-HIGH VOLTAGE" Street or sign lighting circuits where voltage is above 600 V.

      4) "IRRIGATION" Circuits to irrigation controller 120 V or more.

      5) "RAMP METER" Ramp meter circuits.

      6) "COUNT STATION" Count or speed monitor circuits.

      7) "COMMUNICATION" Communication circuits.

      8) "TOS COMMUNICATIONS" TOS communications line.

      9) "TOS POWER" TOS power.

      10) "TDC POWER" Telephone demarcation cabinet power.

      11) "CCTV" Closed circuit television circuits.

      12) "TMS" Traffic monitoring station circuits.

      13) "CMS" Changeable message sign circuits.

      14) "HAR" Highway advisory radio circuits.
5. Bonding jumper for metal covers shall be 1 m long, minimum.
6. The nominal dimensions of the opening in which the cover sets shall be the same as the cover dimensions except the length and width dimensions shall be 3 mm greater.
7. Covers and boxes shall be interchangeable with California standard male and female gages. When interchanged with a standard male or female gage, the top surfaces shall be flush within 3 mm. Top outside edge of concrete covers and pull boxes shall have a 6 mm minimum radius.
8. Pull box shall not be installed within the boundaries of new or existing curb ramps.
9. Pull boxes for electroliers, post and signal standards shall be located ± 1.5 m from the station of the adjacent electrolier, post or signal standard. Pull boxes shall be placed adjacent to back of curb or edge of shoulder except where this is impractical, a box may be placed in another suitable protected and accessible location.

STATE OF CALIFORNIA
DEPARTMENT OF TRANSPORTATION

ELECTRICAL SYSTEMS (PULL BOX DETAILS)

NO SCALE

ALL DIMENSIONS ARE IN MILLIMETERS UNLESS OTHERWISE SHOWN

RSP ES-8 DATED OCTOBER 5, 2007 SUPERSEDES STANDARD PLAN ES-8 DATED JULY 1, 2004-PAGE 467 OF THE STANDARD PLANS BOOK DATED JULY 2004.

REVISED STANDARD PLAN RSP ES-8

2004 REVISED Std PLAN RSP ES-8

7-3-07

DIST	COUNTY	ROUTE	KILOMETER POST TOTAL PROJECT	SHEET NO.	TOTAL SHEETS
07	LA	5	42.8/47.3	563	1073

Caltrans Metric

REGISTERED ELECTRICAL ENGINEER

October 5, 2007
PLANS APPROVAL DATE

REGISTERED PROFESSIONAL ENGINEER Jeffery G. McRae No. E14512 Exp. 6-30-08 ELECTRICAL STATE OF CALIFORNIA

The State of California or its officers or agents shall not be responsible for the accuracy or completeness of electronic copies of this plan sheet.

To get to the Caltrans web site, go to: http://www.dot.ca.gov

To accompany plans dated 6-8-09

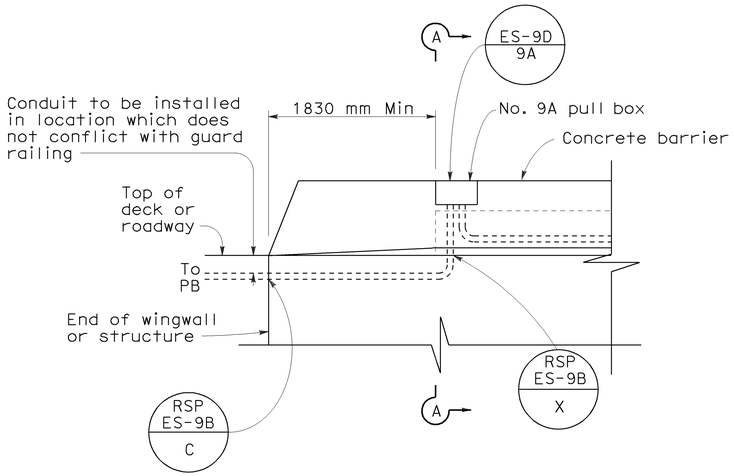

SIDEVIEW

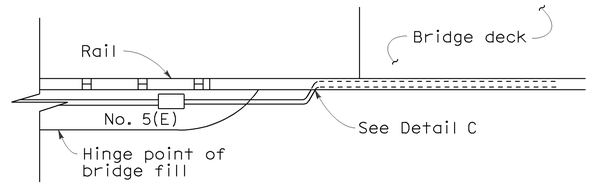

TOP VIEW

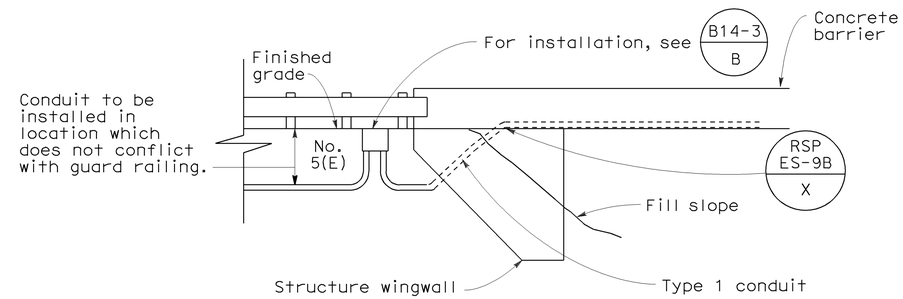

SIDE VIEW
DETAIL I
CONDUIT TERMINATION

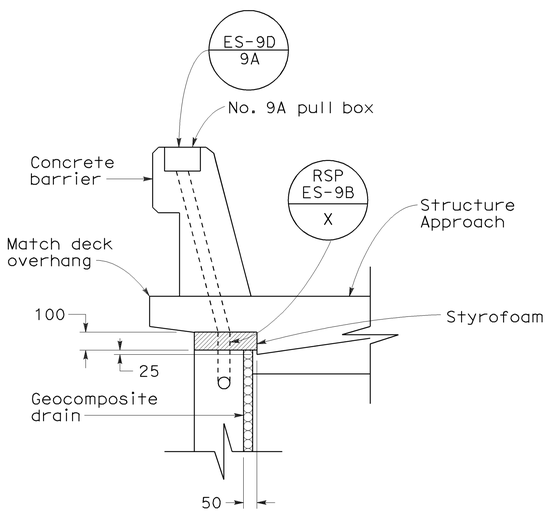

SECTION A-A

DETAIL A
CONDUIT TERMINATION

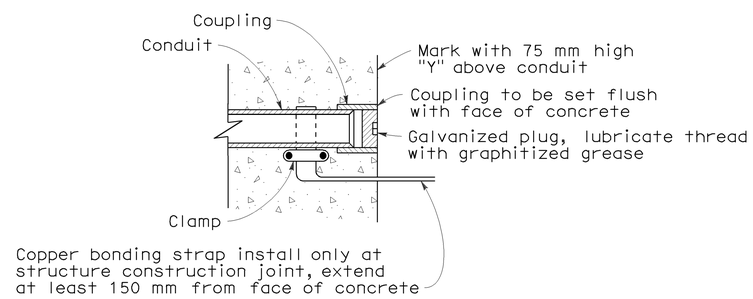

DETAIL C
CONDUIT TERMINATION

STATE OF CALIFORNIA
DEPARTMENT OF TRANSPORTATION

ELECTRICAL SYSTEMS (ELECTRICAL DETAILS STRUCTURE INSTALLATIONS)

NO SCALE

ALL DIMENSIONS ARE IN MILLIMETERS UNLESS OTHERWISE SHOWN

RSP ES-9A DATED OCTOBER 5, 2007 SUPERSEDES STANDARD PLAN ES-9A DATED JULY 1, 2004-PAGE 468 OF THE STANDARD PLANS BOOK DATED JULY 2004.

REVISED STANDARD PLAN RSP ES-9A

2004 REVISED Std PLAN RSP ES-9A

10-1-07

DIST	COUNTY	ROUTE	KILOMETER POST TOTAL PROJECT	SHEET NO.	TOTAL SHEETS
07	LA	5	42.8/47.3	564	1073

Caltrans Metric

REGISTERED ELECTRICAL ENGINEER

October 5, 2007
PLANS APPROVAL DATE

REGISTERED PROFESSIONAL ENGINEER J. S. Sandhu No. E11803 Exp. 9-30-08 ELECTRICAL STATE OF CALIFORNIA

The State of California or its officers or agents shall not be responsible for the accuracy or completeness of electronic copies of this plan sheet.

To get to the Caltrans web site, go to: http://www.dot.ca.gov

To accompany plans dated 6-8-09

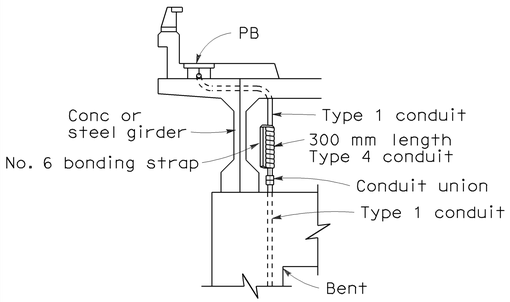

DETAIL R
CONDUIT RISER CONNECTION

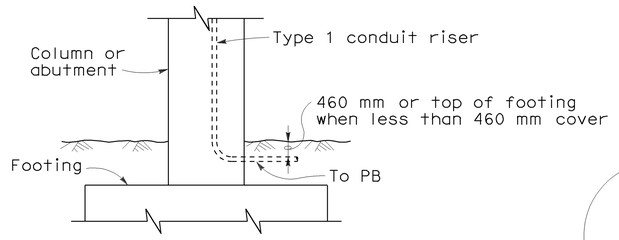

DETAIL T
LOWER END OF CONDUIT RISER AT COLUMN OR ABUTMENT

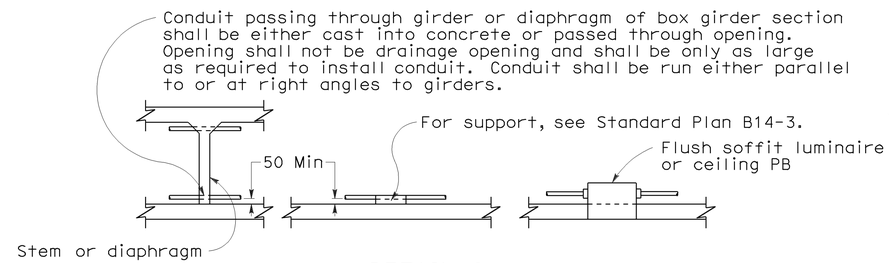

DETAIL S
CONDUIT INSTALLATION WITHIN BOX GIRDER SECTIONS

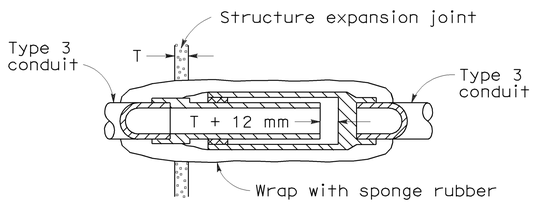

NON-METALLIC CONDUIT EXPANSION FITTING INSTALLATION DETAIL
(To be used only when shown or specified on Project Plans)

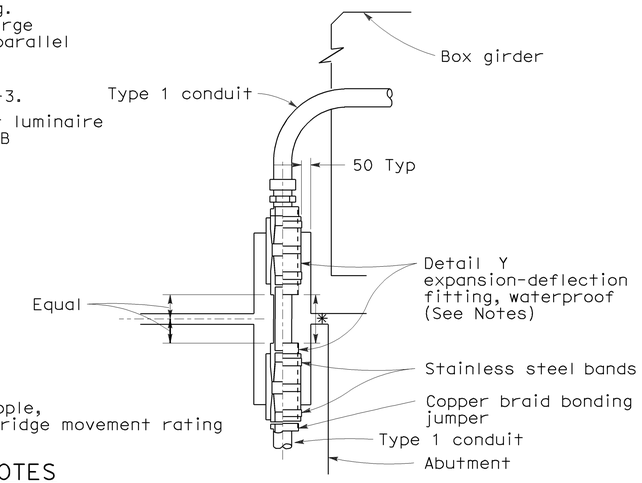

NOTES

1. Fitting and pocket required only where movement can occur between girder and abutment.
2. Fill pocket around fitting with resilient waterproof compound.

DETAIL U
CONDUIT RISER CONNECTION AT COLUMN, ABUTMENT OR STRUCTURE WING WALL

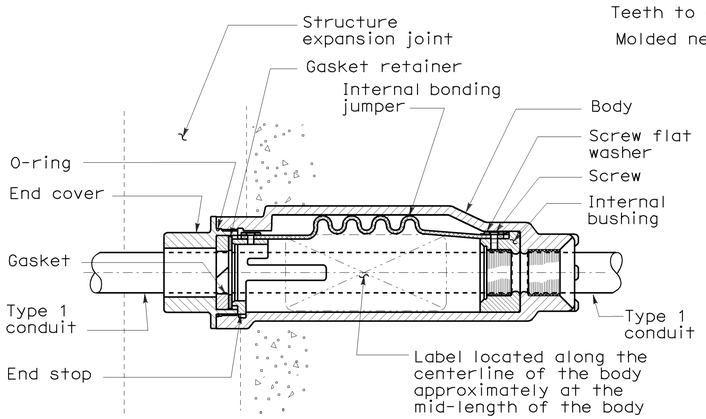

DETAIL X
CONDUIT EXPANSION FITTINGS

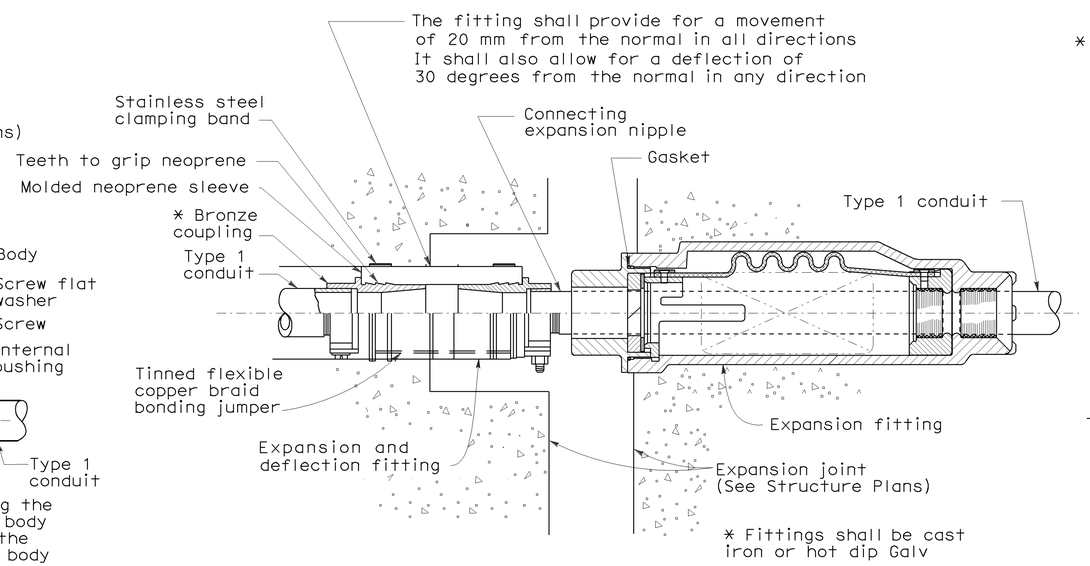

DETAIL XY
COMBINATION EXPANSION-DEFLECTION FITTINGS
METALLIC CONDUIT INSTALLATION

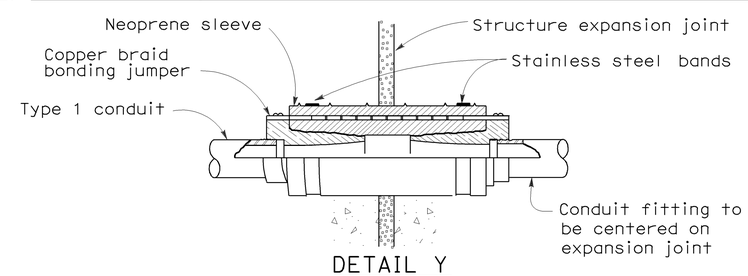

DETAIL Y
CONDUIT EXPANSION-DEFLECTION FITTING

NOTES

1. Except for sidewalk joints, a conduit expansion fitting or expansion-deflection fitting shall be installed at each 13 mm or greater structure joint, hinge or abutment.
2. Fittings or combination of fittings shall be installed to accommodate the movement rating as shown on the structure plans.
3. Fittings shall be installed parallel to superstructure girders.
4. Where lateral movement greater than 6 mm may occur, a neoprene sleeve expansion-deflection fitting shall be installed straddling the joint.

STATE OF CALIFORNIA
DEPARTMENT OF TRANSPORTATION

ELECTRICAL SYSTEMS (ELECTRICAL DETAILS STRUCTURE INSTALLATIONS)

NO SCALE
ALL DIMENSIONS ARE IN MILLIMETERS UNLESS OTHERWISE SHOWN

RSP ES-9B DATED OCTOBER 5, 2007 SUPERSEDES STANDARD PLAN ES-9B DATED JULY 1, 2004-PAGE 469 OF THE STANDARD PLANS BOOK DATED JULY 2004.

REVISED STANDARD PLAN RSP ES-9B

2004 REVISED Std PLAN RSP ES-9B

7-2-07

DIST	COUNTY	ROUTE	KILOMETER POST TOTAL PROJECT	SHEET NO.	TOTAL SHEETS
07	LA	5	42.8/47.3	565	1073

Caltrans Metric

REGISTERED ELECTRICAL ENGINEER

October 5, 2007
PLANS APPROVAL DATE

REGISTERED PROFESSIONAL ENGINEER Jeffery G. McRae No. E14512 Exp. 6-30-08 ELECTRICAL STATE OF CALIFORNIA

The State of California or its officers or agents shall not be responsible for the accuracy or completeness of electronic copies of this plan sheet.

To get to the Caltrans web site, go to: http://www.dot.ca.gov

To accompany plans dated 6-8-09

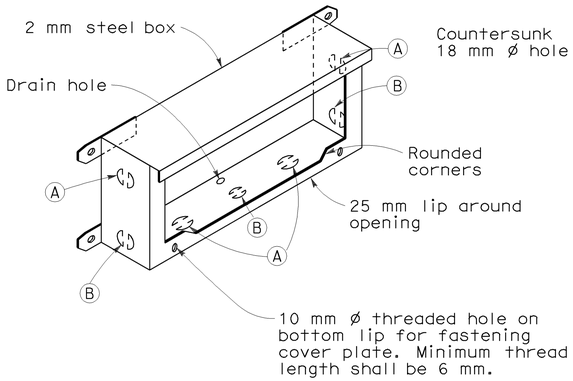

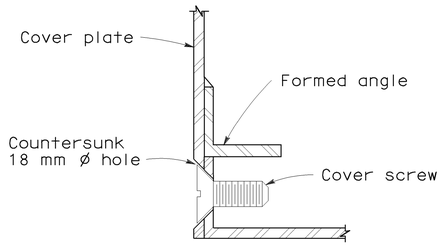

DETAIL J

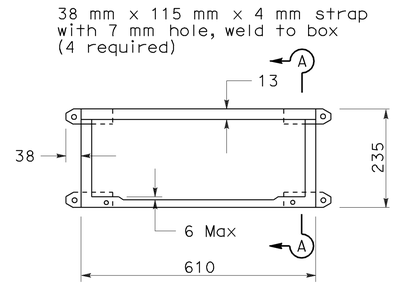

PLAN

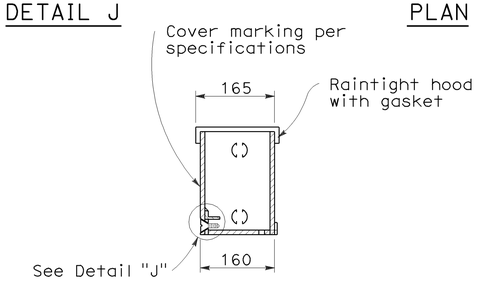

SECTION A-A

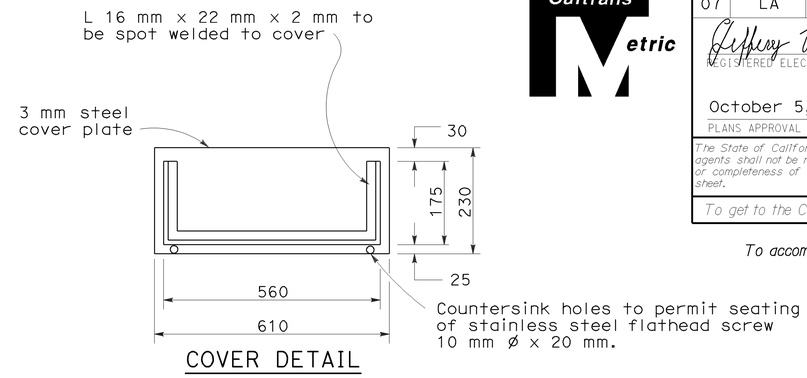

COVER DETAIL

INSTALLATION NOTE

Box shall be parallel to top of railing. Close cover box during pouring with 6 mm plywood of sufficient size to provide 1:1 chamfer on 3 sides of cover. Upper edge of plywood shall fit against lower edge of raintight hood.

No. 9 STRUCTURE PULL BOX

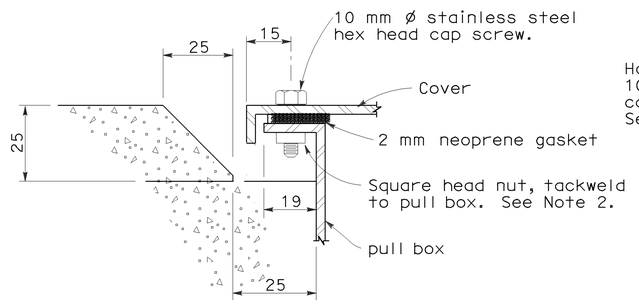

SECTION C-C

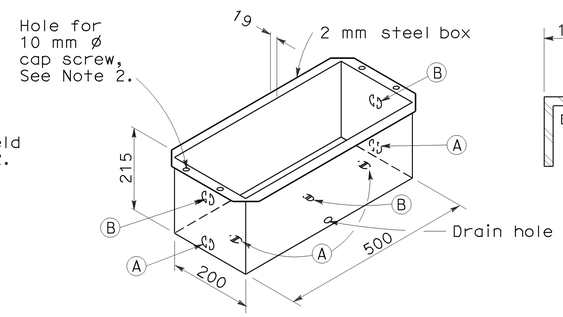

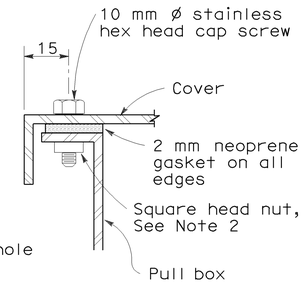

DETAIL A

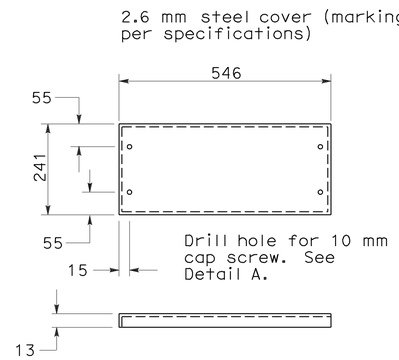

COVER DETAIL

No. 9A STRUCTURE PULL BOX

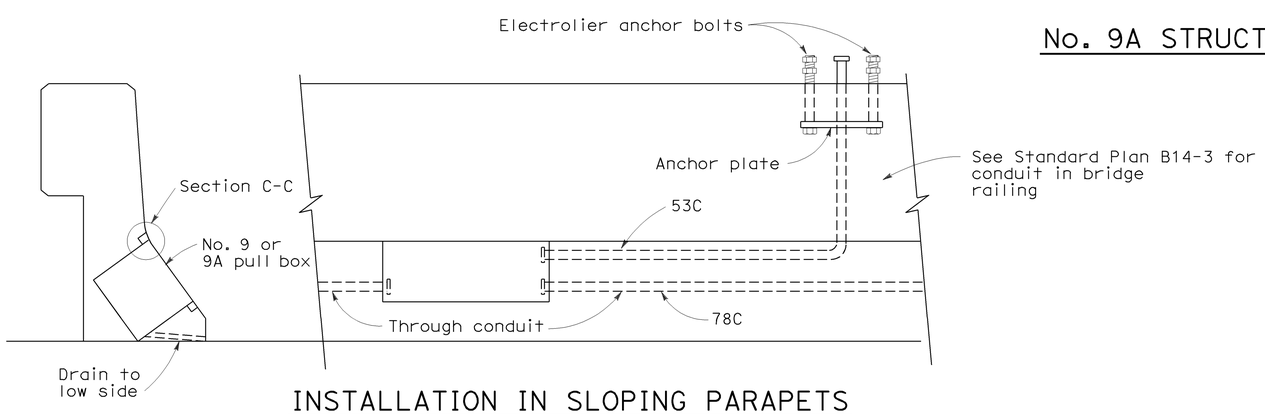

INSTALLATION IN SLOPING PARAPETS

For reinforcement in area of electrolier, see railing sheets. For electrolier anchor bolts, see Standard Plan ES-6B.

NOTES: No. 9 and 9A Pull Box

1. Corner joints shall be lapped and secured by spot welding or riveting.
2. Where cap screws are used to attach cover to box, either of the following methods of providing adequate threading may be used:
   a. Tack weld square nut to bottom of flange (Total 4), or
   b. Tack weld a 6 mm x 16 mm x 200 mm bar beneath flange (Total 2).
3. Pound knockouts flat after punching.
4. Multiple size knockouts shall not be permitted.
5. Pull box covers shall be marked as shown on Revised Standard Plan RSP ES-8.

KNOCKOUT SCHEDULE
No. 9 AND 9A PULL BOX

(A) 53C, 1 each end, 2 on bottom.

(B) 78C, 1 each end, 1 on bottom.

STATE OF CALIFORNIA
DEPARTMENT OF TRANSPORTATION

ELECTRICAL SYSTEMS (ELECTRICAL DETAILS STRUCTURE INSTALLATIONS)

NO SCALE

ALL DIMENSIONS ARE IN MILLIMETERS UNLESS OTHERWISE SHOWN

RSP ES-9C DATED OCTOBER 5, 2007 SUPERSEDES STANDARD PLAN ES-9C DATED JULY 1, 2004-PAGE 470 OF THE STANDARD PLANS BOOK DATED JULY 2004.

REVISED STANDARD PLAN RSP ES-9C

2004 REVISED Std PLAN RSP ES-9C

7-26-07

DIST	COUNTY	ROUTE	KILOMETER POST TOTAL PROJECT	SHEET NO.	TOTAL SHEETS
07	LA	5	42.8/47.3	566	1073

Caltrans Metric

Jeffery G. McRae
REGISTERED ELECTRICAL ENGINEER

October 5, 2007
PLANS APPROVAL DATE

REGISTERED PROFESSIONAL ENGINEER Jeffery G. McRae No. E14512 Exp. 6-30-08 ELECTRICAL STATE OF CALIFORNIA

The State of California or its officers or agents shall not be responsible for the accuracy or completeness of electronic copies of this plan sheet.

To get to the Caltrans web site, go to: http://www.dot.ca.gov

To accompany plans dated 6-8-09

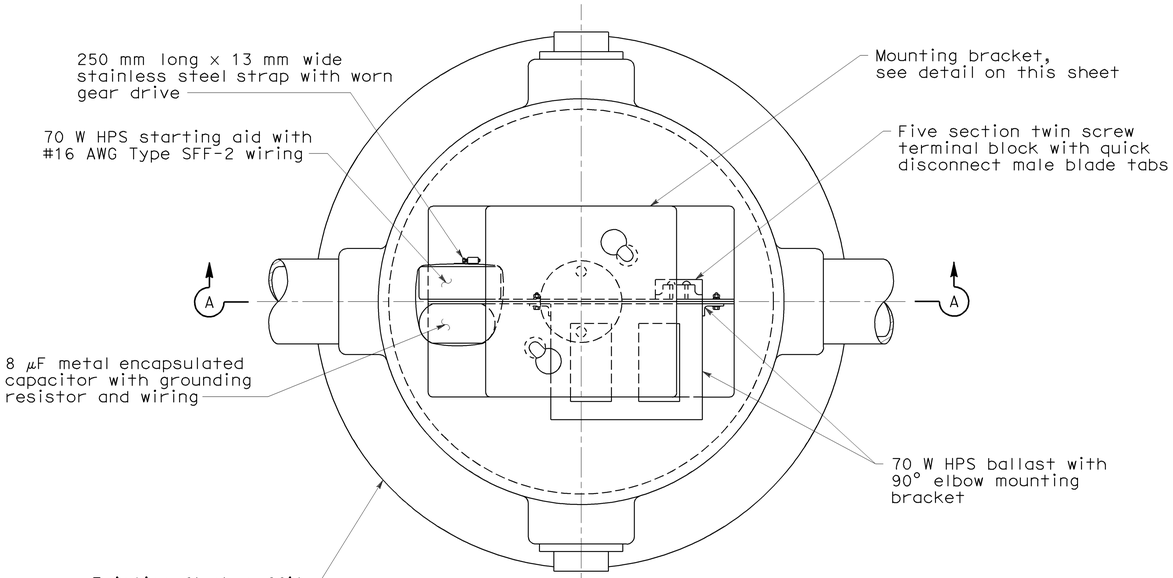

PLAN

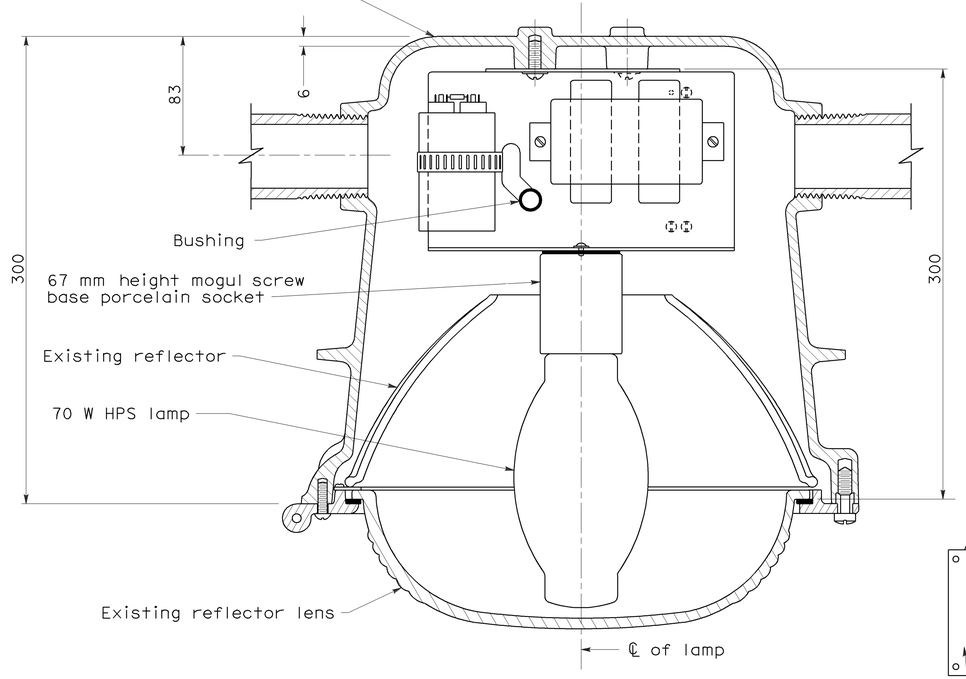

SECTION A-A

FLUSH SOFFIT LUMINAIRE ASSEMBLY

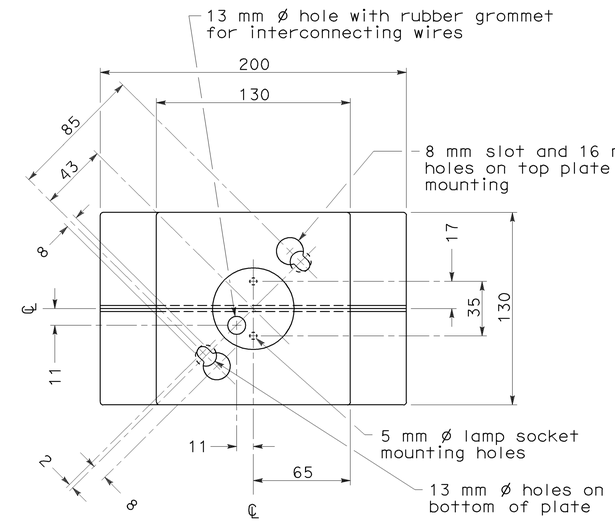

TOP VIEW

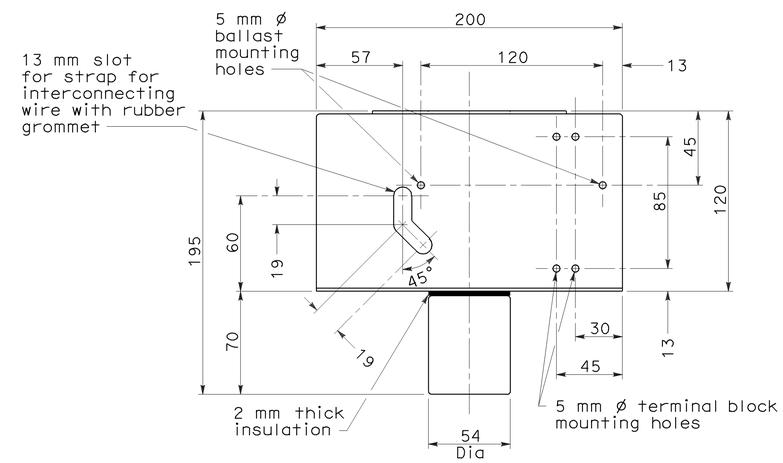

FRONT VIEW

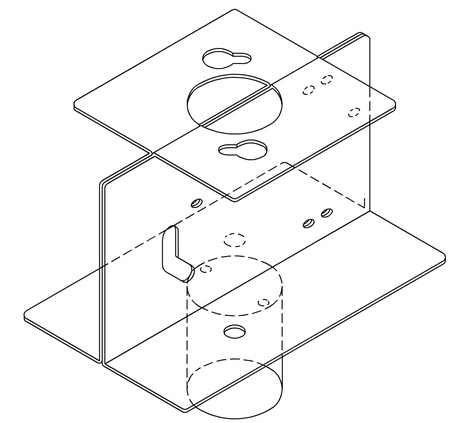

Preform two sheets 1.6 mm mild steel as shown, spotweld together in each corner with four spotwelds.

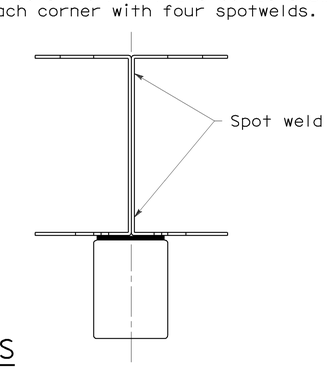

SIDE VIEW

MOUNTING BRACKET DETAILS

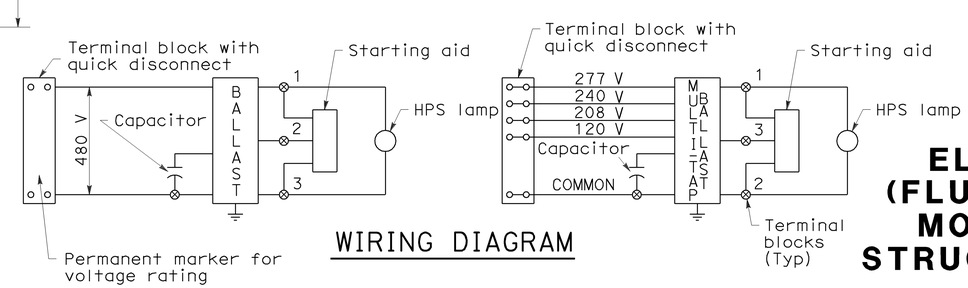

WIRING DIAGRAM

STATE OF CALIFORNIA
DEPARTMENT OF TRANSPORTATION

ELECTRICAL SYSTEMS (FLUSH SOFFIT LUMINAIRE MODIFICATION DETAILS STRUCTURE INSTALLATIONS)

NO SCALE

ALL DIMENSIONS ARE IN MILLIMETERS UNLESS OTHERWISE SHOWN

NOTES

1. Fixture wiring shall be Type SFF-2.
2. Use 4.2 mm ø machine screws, lockwashers and nuts for mounting ballast and terminal strips.
3. In-line fuse as required on Revised Standard Plan RSP ES-13B.

RSP ES-9F DATED OCTOBER 5, 2007 SUPERSEDES STANDARD PLAN ES-9F DATED JULY 1, 2004-PAGE 473 OF THE STANDARD PLANS BOOK DATED JULY 2004.

REVISED STANDARD PLAN RSP ES-9F

2004 REVISED Std PLAN RSP ES-9F

6-27-07

DIST	COUNTY	ROUTE	KILOMETER POST TOTAL PROJECT	SHEET NO.	TOTAL SHEETS
07	LA	5	42.8/47.3	567	1073

Caltrans Metric

Jeffery G. McRae
REGISTERED ELECTRICAL ENGINEER

October 5, 2007
PLANS APPROVAL DATE

REGISTERED PROFESSIONAL ENGINEER Jeffery G. McRae No. E14512 Exp. 6-30-08 ELECTRICAL STATE OF CALIFORNIA

The State of California or its officers or agents shall not be responsible for the accuracy or completeness of electronic copies of this plan sheet.

To get to the Caltrans web site, go to: http://www.dot.ca.gov

To accompany plans dated 6-8-09

2004 REVISED Std PLAN RSP ES-10

ISOLUX CURVE - MINIMUM

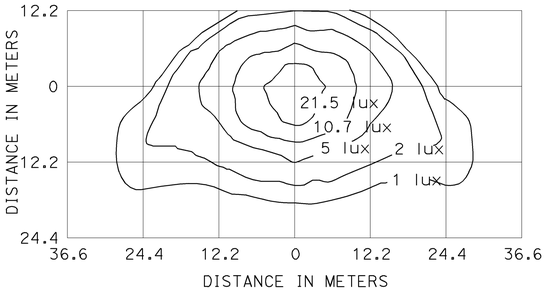

TYPE III MEDIUM CUTOFF

Cutoff Luminaire
10.4 m Mounting Height
LAMP OPERATED AT 22 000 lm
200 W HIGH PRESSURE SODIUM LAMP
ANSI DESIGNATION S66

ISOLUX CURVE - MINIMUM

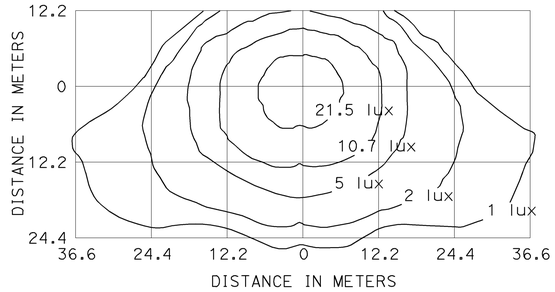

TYPE III MEDIUM CUTOFF

Cutoff Luminaire
12.2 m Mounting Height
LAMP OPERATED AT 37 000 lm
310 W HIGH PRESSURE SODIUM LAMP
ANSI DESIGNATION S67

ISOLUX CURVE - MINIMUM

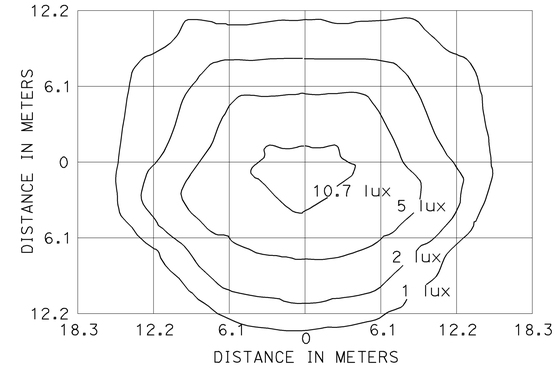

FLUSH SOFFIT LUMINAIRE

5.2 m Mounting Height
LAMP OPERATED AT 5800 lm
70 W HIGH PRESSURE SODIUM LAMP
ANSI DESIGNATION S62

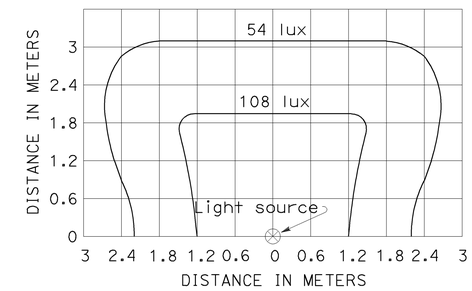

SIGN LIGHTING FIXTURE ISOLUX DIAGRAM

1. Curves represent the minimum lux of initial illumination on a 3 m x 6 m panel.
2. The lux shown are with the fixture attached to the light fixture mounting channel which places the center of the source 1420 mm in front of panel and 300 mm below the bottom edge.
3. Applicable lamp: 85-W fluorescent phosphor coated induction lamp.

ISOLUX CURVE - MINIMUM

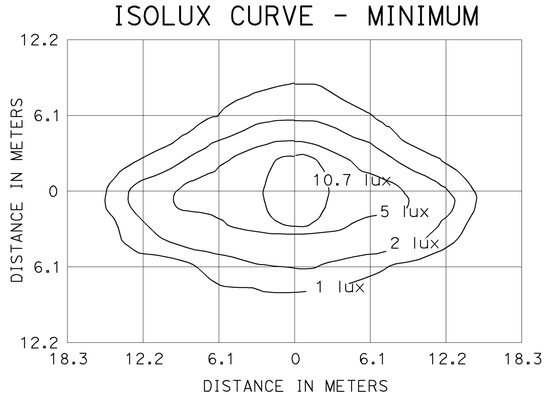

PENDANT SOFFIT LUMINAIRE TYPE III SHORT

5.2 m Mounting Height
LAMP OPERATED AT 5800 lm
70 W HIGH PRESSURE SODIUM LAMP
ANSI DESIGNATION S62

ISOLUX CURVE - MINIMUM

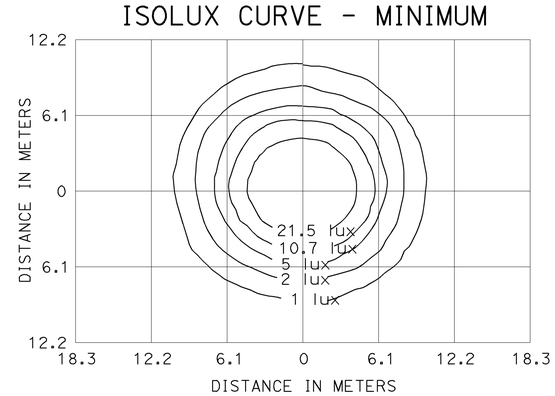

PENDANT SOFFIT LUMINAIRE

5.2 m Mounting Height
LAMP OPERATED AT 5800 lm
70 W HIGH PRESSURE SODIUM LAMP
ANSI DESIGNATION S62

ISOLUX CURVE - MINIMUM

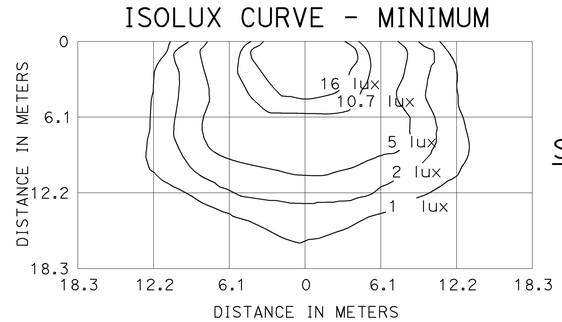

DETAIL ``W'' WALL LUMINAIRE

4.6 m Mounting Height
LAMP OPERATED AT 9500 lm
100 W HIGH PRESSURE SODIUM LAMP
ANSI DESIGNATION S54

ISOLUX CURVE - MINIMUM

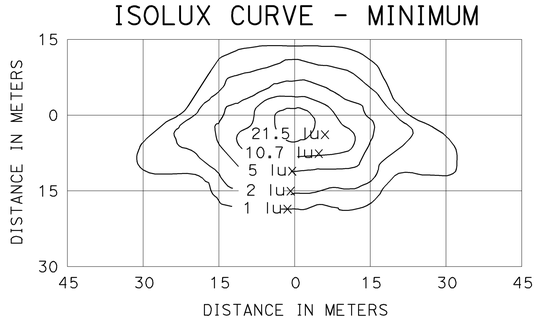

TYPE III MEDIUM CUTOFF

Cutoff Luminaire
9.1 m Mounting Height
LAMP OPERATED AT 16 000 lm
150 W HIGH PRESSURE SODIUM LAMP
ANSI DESIGNATION S55

ISOLUX CURVE - MINIMUM

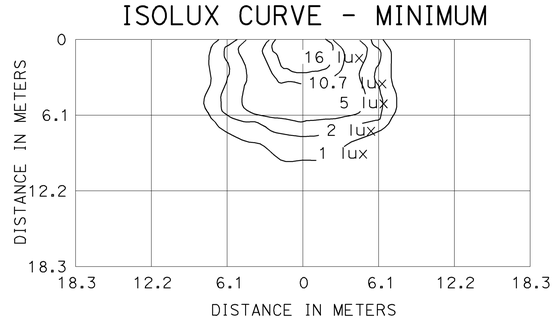

WALL LUMINAIRE

4.6 m Mounting Height
LAMP OPERATED AT 5800 lm
70 W HIGH PRESSURE SODIUM LAMP
ANSI DESIGNATION S62

ISOLUX CURVE - MINIMUM

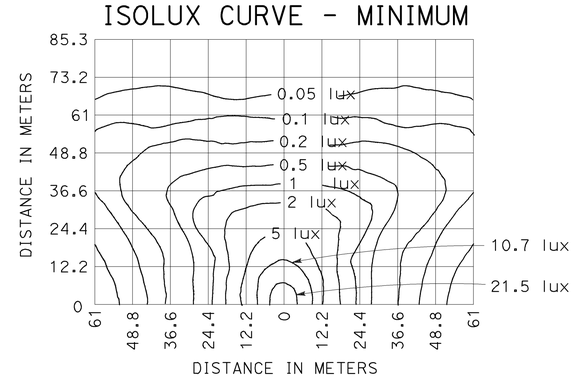

LOW PRESSURE SODIUM LUMINAIRE

12.2 m Mounting Height
LAMP OPERATED AT 33 000 lm
180 W LOW PRESSURE SODIUM LAMP

NOTE

Isolux diagrams show the minimum horizontal lux required.

STATE OF CALIFORNIA
DEPARTMENT OF TRANSPORTATION

ELECTRICAL SYSTEMS (ISOLUX DIAGRAMS)

NO SCALE

ALL DIMENSIONS ARE IN MILLIMETERS UNLESS OTHERWISE SHOWN

RSP ES-10 DATED OCTOBER 5, 2007 SUPERSEDES STANDARD PLAN ES-10 DATED JULY 1, 2004-PAGE 474 OF THE STANDARD PLANS BOOK DATED JULY 2004.

REVISED STANDARD PLAN RSP ES-10

6-27-07

DIST	COUNTY	ROUTE	KILOMETER POST TOTAL PROJECT	SHEET NO.	TOTAL SHEETS
07	LA	5	42.8/47.3	568	1073

REGISTERED CIVIL ENGINEER

October 5, 2007
PLANS APPROVAL DATE

REGISTERED PROFESSIONAL ENGINEER
Stanley P. Johnson
No. C57793
Exp. 03-31-08
CIVIL
STATE OF CALIFORNIA

The State of California or its officers or agents shall not be responsible for the accuracy or completeness of electronic copies of this plan sheet.

To get to the Caltrans web site, go to: http://www.dot.ca.gov

To accompany plans dated 6-8-09

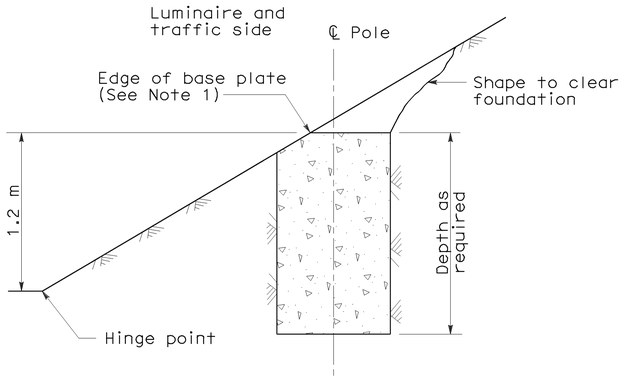

CUT SLOPES
STEEPER THAN 1:4
See Note 2

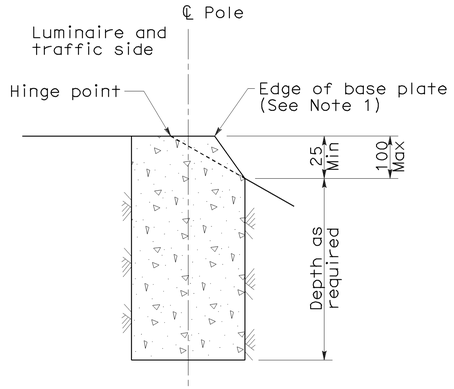

FILL SLOPES
STEEPER THAN 1:4
See Note 2

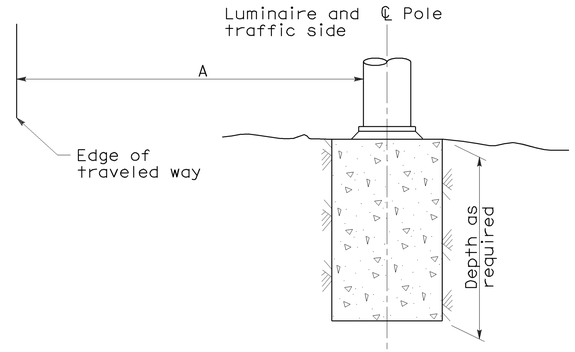

FLAT SECTIONS, CUT OR FILL SLOPES
1:4 OR FLATTER

STANDARD TYPE	SETBACK (DIMENSION A)
32	9 m Min
31, 36-20A	6 m Min
15, 15D, 15-SB, 21, 21D, 30	Mast Arm Length (Min)

FOUNDATIONS ADJACENT TO ALL ROADWAYS EXCEPT
IN SIDEWALK, MEDIAN AND ISLAND AREAS

NOTES:

1. Where a portion of the foundation is above grade, the top edges shall have a 25 mm chamfer.
2. Horizontal setbacks on cut and fill slopes steeper than 1:4 shall not exceed the distance shown for flat sections.

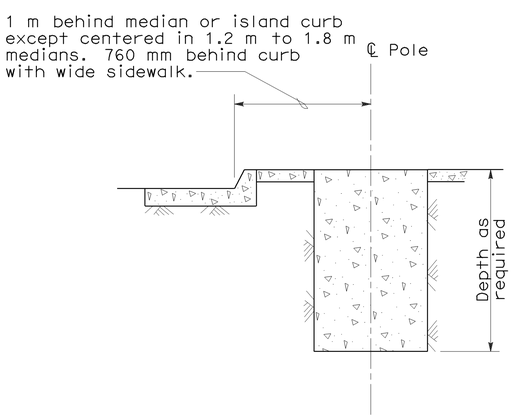

MEDIAN, ISLAND
OR WIDE SIDEWALK
(2 m wide and wider)

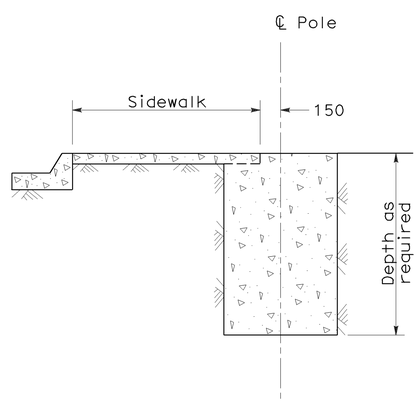

NARROW SIDEWALK
(Less than 2 m wide)

FOUNDATIONS IN SIDEWALK, MEDIAN AND ISLAND AREAS

STATE OF CALIFORNIA
DEPARTMENT OF TRANSPORTATION

ELECTRICAL SYSTEMS (FOUNDATION INSTALLATIONS)

NO SCALE

ALL DIMENSIONS ARE IN MILLIMETERS UNLESS OTHERWISE SHOWN

RSP ES-11 DATED OCTOBER 5, 2007 SUPERSEDES STANDARD PLAN ES-11
DATED JULY 1, 2004-PAGE 475 OF THE STANDARD PLANS BOOK DATED JULY 2004.

REVISED STANDARD PLAN RSP ES-11

2004 REVISED Std PLAN RSP ES-11

10-1-07

DIST	COUNTY	ROUTE	KILOMETER POST TOTAL PROJECT	SHEET NO.	TOTAL SHEETS
07	LA	5	42.8/47.3	569	1073

Caltrans Metric

REGISTERED ELECTRICAL ENGINEER

October 5, 2007
PLANS APPROVAL DATE

REGISTERED PROFESSIONAL ENGINEER
Jeffery G. McRae
No. E14512
Exp. 6-30-08
ELECTRICAL
STATE OF CALIFORNIA

The State of California or its officers or agents shall not be responsible for the accuracy or completeness of electronic copies of this plan sheet.

To get to the Caltrans web site, go to: http://www.dot.ca.gov

To accompany plans dated 6-8-09

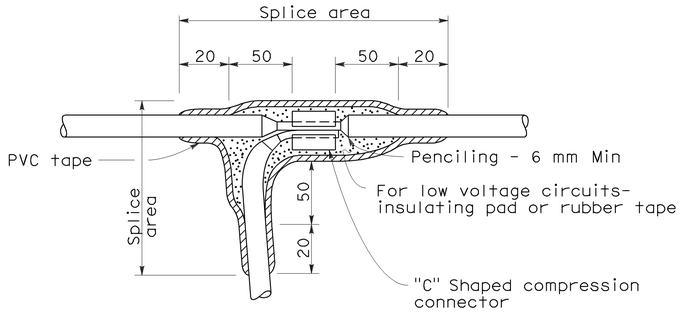

TYPE "C" SPLICE

Between 1 free-end and 1 through conductor

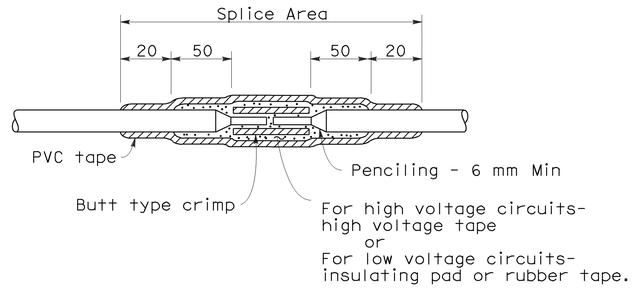

TYPE "S" SPLICE

Between 2 free-ends

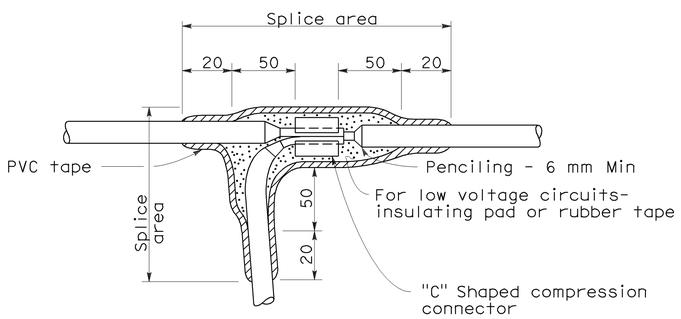

TYPE "T" SPLICE

For 3 free-ends

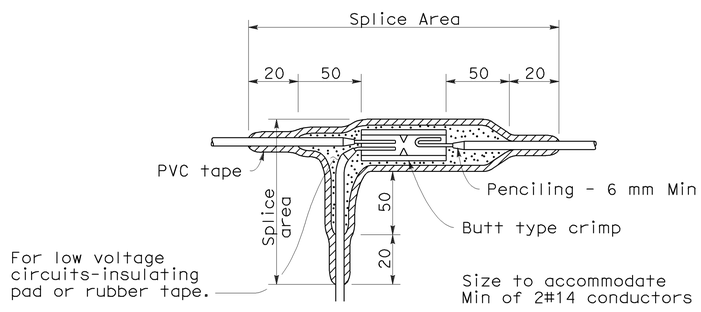

TYPE "ST" SPLICE

NOTES:

1. Dimensions are minimum.
2. Rubber tapes shall be rolled after application.

INSULATION METHODS

Low Voltage Circuits (0-600 V)

METHOD "B"

1. Completely cover the splice area with electrical insulating coating and allow to dry.
2. Apply 2 layers of electrical insulating pad with minimum thickness of 4 mm each layer or 2 layers, half lapped, synthetic oil resistant, self fusing rubber tape.
3. Apply 3 layers half lapped polyvinyl chloride tape.
4. Cover entire splice with electrical insulating coating and allow to dry.

High Voltage Circuits (Over 600 V)

1. Completely cover the splice area with electrical insulating coating and allow to dry.
2. Apply high voltage tape to a minimum thickness equal to original insulation.
3. Apply 3 layers half lapped polyvinyl chloride tape.
4. Cover entire splice with electrical insulating coating and allow to dry.

STATE OF CALIFORNIA
DEPARTMENT OF TRANSPORTATION

ELECTRICAL SYSTEMS (SPLICING DETAILS)

NO SCALE

ALL DIMENSIONS ARE IN MILLIMETERS UNLESS OTHERWISE SHOWN

RSP ES-13A DATED OCTOBER 5, 2007 SUPERSEDES STANDARD PLAN ES-13A DATED JULY 1, 2004-PAGE 478 OF THE STANDARD PLANS BOOK DATED JULY 2004.

REVISED STANDARD PLAN RSP ES-13A

2004 REVISED Std PLAN RSP ES-13A

DIST	COUNTY	ROUTE	KILOMETER POST TOTAL PROJECT	SHEET NO.	TOTAL SHEETS
07	LA	5	42.8/47.3	570	1073

REGISTERED ELECTRICAL ENGINEER

October 5, 2007
PLANS APPROVAL DATE

REGISTERED PROFESSIONAL ENGINEER Jeffery G. McRae No. E14512 Exp. 6-30-08 ELECTRICAL STATE OF CALIFORNIA

The State of California or its officers or agents shall not be responsible for the accuracy or completeness of electronic copies of this plan sheet.

To get to the Caltrans web site, go to: http://www.dot.ca.gov

To accompany plans dated 6-8-09

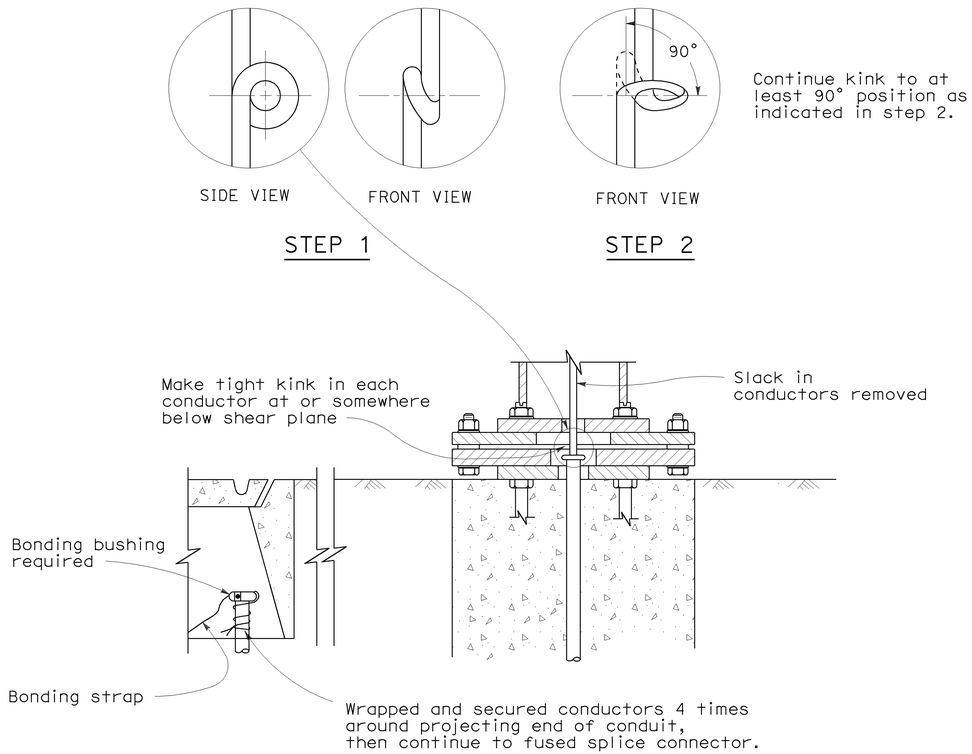

KINKING DETAIL FOR SLIP BASE STANDARDS

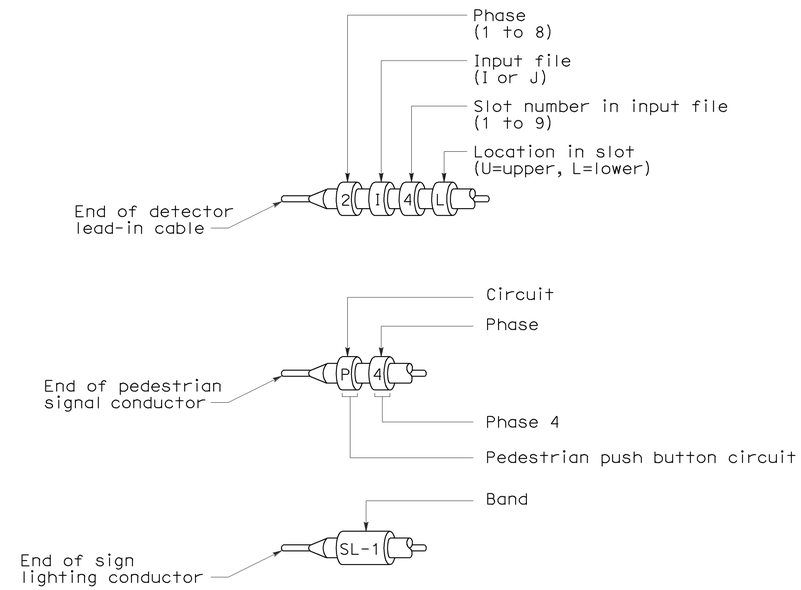

TYPICAL BANDING OF CONDUCTOR ENDS

Primary lines of multiple ballasts shall be provided with fused connectors.
Fuse ratings shall be as noted below.

CIRCUIT VOLTAGE	FUSE VOLTAGE RATING	FUSE CURRENT RATING																
		HPS LAMP BALLAST								LOW PRESSURE SODIUM BALLAST					INDUCTION SIGN LIGHTING	SINGLE PHASE (TWO WIRE) TRANSFORMERS (PRIMARY SIDE)		
		70 W	100 W	150 W	200 W	250 W	310 W	400 W	1000 W	35 W	55 W	90 W	135 W	180 W	85 W	1 kVA	2 kVA	3 kVA
120 V	250 V	5	5	5	5	5	5	5	-	5	5	5	5	5	5	10	20	30
240 V	250 V	5	5	5	5	5	5	5	5	3	3	3	5	5	5	6	10	20
480 V	500-600 V	5	5	5	5	5	5	5	5	2	2	2	3	3	1*	3	6	10

* See Revised Standard Plan RSP ES-15D, Type SC3 Control.

FUSE RATINGS FOR FUSED CONNECTORS

LUMINAIRE BALLAST FUSING

STATE OF CALIFORNIA
DEPARTMENT OF TRANSPORTATION

ELECTRICAL SYSTEMS (WIRING DETAILS AND FUSE RATINGS)

NO SCALE

ALL DIMENSIONS ARE IN MILLIMETERS UNLESS OTHERWISE SHOWN

RSP ES-13B DATED OCTOBER 5, 2007 SUPERSEDES STANDARD PLAN ES-13B DATED JULY 1, 2004-PAGE 479 OF THE STANDARD PLANS BOOK DATED JULY 2004.

REVISED STANDARD PLAN RSP ES-13B

2004 REVISED Std PLAN RSP ES-13B

10-1-07

DIST	COUNTY	ROUTE	KILOMETER POST TOTAL PROJECT	SHEET NO.	TOTAL SHEETS
07	LA	5	42.8/47.3	571	1073

Caltrans Metric

REGISTERED ELECTRICAL ENGINEER

October 5, 2007
PLANS APPROVAL DATE

REGISTERED PROFESSIONAL ENGINEER Jeffery G. McRae No. E14512 Exp. 6-30-08 ELECTRICAL STATE OF CALIFORNIA

The State of California or its officers or agents shall not be responsible for the accuracy or completeness of electronic copies of this plan sheet.

To get to the Caltrans web site, go to: http://www.dot.ca.gov

To accompany plans dated 6-8-09

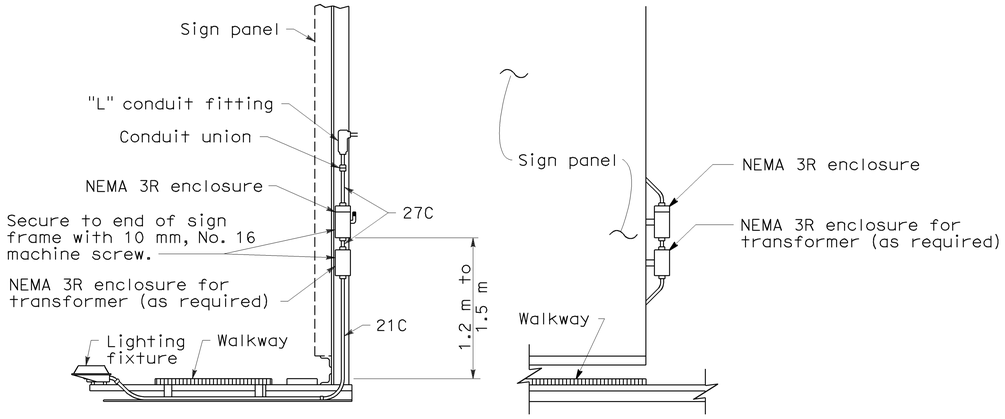

SIDE VIEW FRONT VIEW

TYPICAL SIGN ILLUMINATION EQUIPMENT INSTALLATION FOR OVERHEAD SIGNS BRIDGE MOUNTED

Contactor and test switch enclosure shall be readily accessible from the sign walkway.

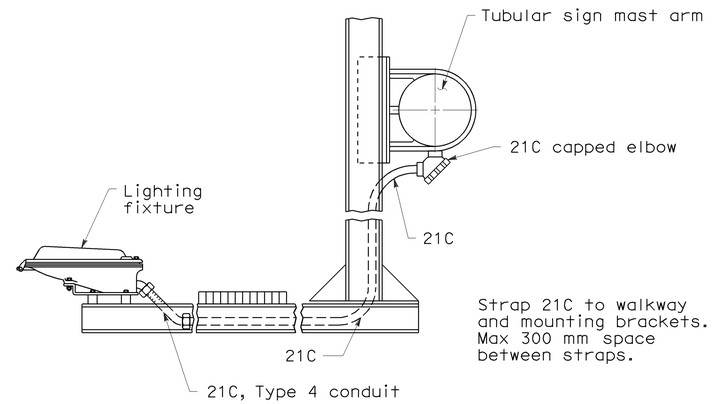

TYPICAL SIGN ILLUMINATION EQUIPMENT INSTALLATION FOR OVERHEAD SIGNS TUBULAR

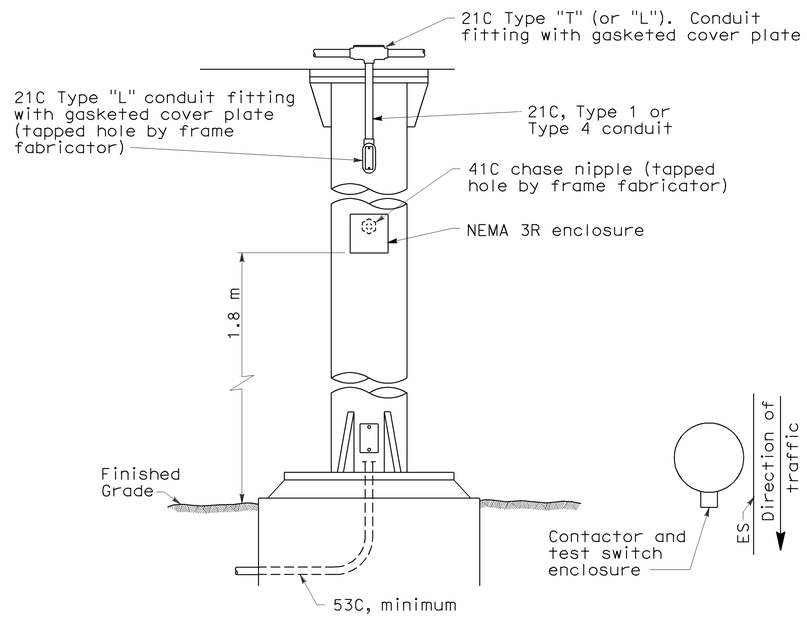

TYPICAL SIGN ILLUMINATION EQUIPMENT INSTALLATION FOR OVERHEAD SIGNS ROUND POST

NOTES:

1. Type 4 conduit shall be secured to the nearest walkway bracket using one-hole galvanized malleable iron or steel straps and brass machine screws tapped into the bracket.
2. See Overhead Signs Standard Plans for overhead signs and frame jucture details for photoelectric unit installation.
3. Enclosures and straps shall be secured by 6 mm maximum size screws.

STATE OF CALIFORNIA
DEPARTMENT OF TRANSPORTATION

ELECTRICAL SYSTEMS (SIGN ILLUMINATION EQUIPMENT)

NO SCALE

ALL DIMENSIONS ARE IN MILLIMETERS UNLESS OTHERWISE SHOWN

RSP ES-15C DATED OCTOBER 5, 2007 SUPERSEDES STANDARD PLAN ES-15C DATED JULY 1, 2004-PAGE 485 OF THE STANDARD PLANS BOOK DATED JULY 2004.

REVISED STANDARD PLAN RSP ES-15C

2004 REVISED Std PLAN RSP ES-15C

6-27-07

DIST	COUNTY	ROUTE	KILOMETER POST TOTAL PROJECT	SHEET NO.	TOTAL SHEETS
07	LA	5	42.8/47.3	572	1073

Caltrans Metric

REGISTERED ELECTRICAL ENGINEER

October 5, 2007
PLANS APPROVAL DATE

REGISTERED PROFESSIONAL ENGINEER Jeffery G. McRae No. E14512 Exp. 6-30-08 ELECTRICAL STATE OF CALIFORNIA

The State of California or its officers or agents shall not be responsible for the accuracy or completeness of electronic copies of this plan sheet.

To get to the Caltrans web site, go to: http://www.dot.ca.gov

To accompany plans dated 6-8-09

2004 REVISED Std PLAN RSP ES-15D

NOTES: (FOR LIGHTING AND SIGN ILLUMINATION CONTROL)

1. The ballast voltages of lighting fixtures and luminaires shall match line service voltages.
2. Voltage rating of photoelectric controls shall conform to the service voltage indicated on the plans.
3. Terminal strip shall be provided for wiring to fixtures.
4. Type SC1A, SC2A, SC3A controls are similar to Types SC1, SC2, SC3 controls respectively except test switch and wiring are not required.

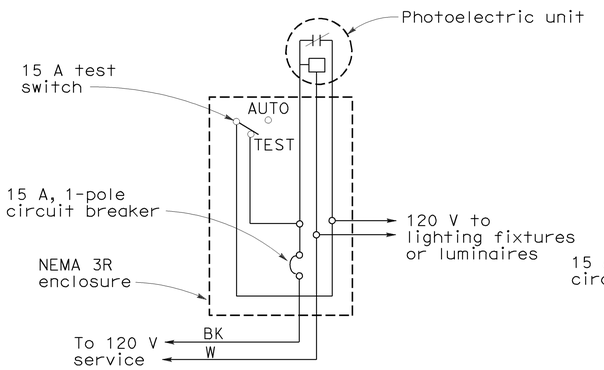

TYPE LC1 CONTROL

For 120 V unswitched circuit with no more than 800 W load.

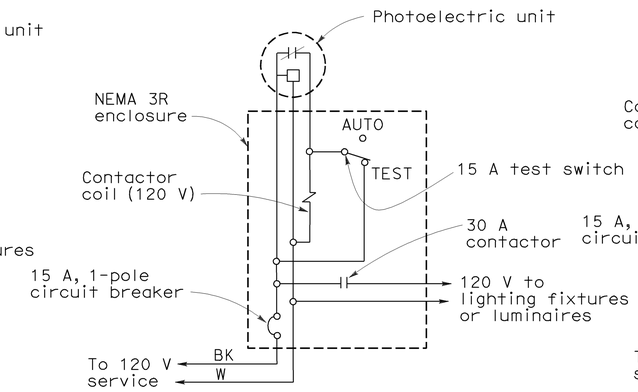

TYPE LC2 CONTROL

For 120 V unswitched circuit

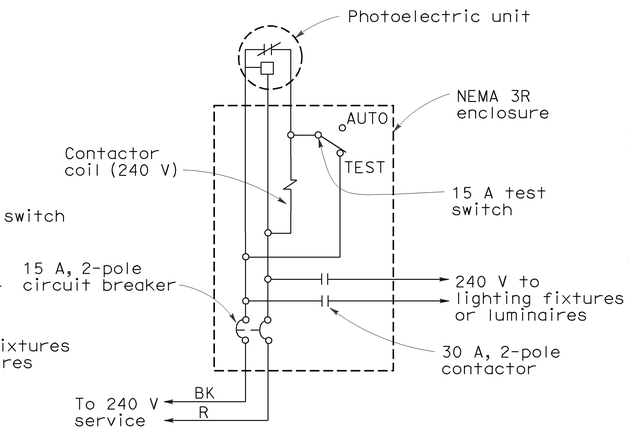

TYPE LC3 CONTROL

For 240 V and 480 V unswitched circuit

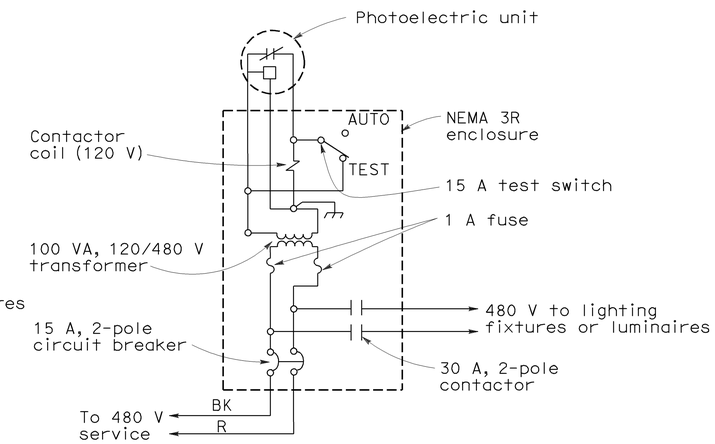

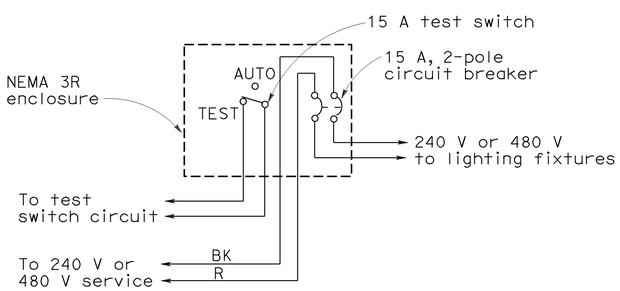

TYPE SC1 CONTROL

For 240 V or 480 V switched circuit, see Note 4 for Type SC1A

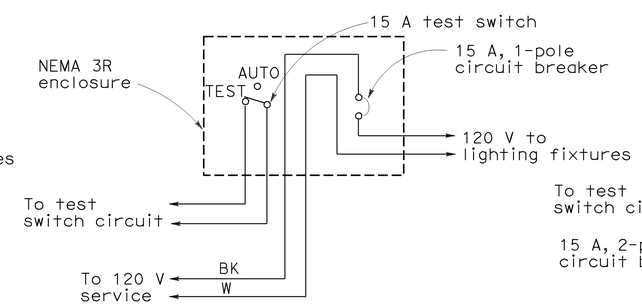

TYPE SC2 CONTROL

For 120 V switched circuit, see Note 4 for Type SC2A

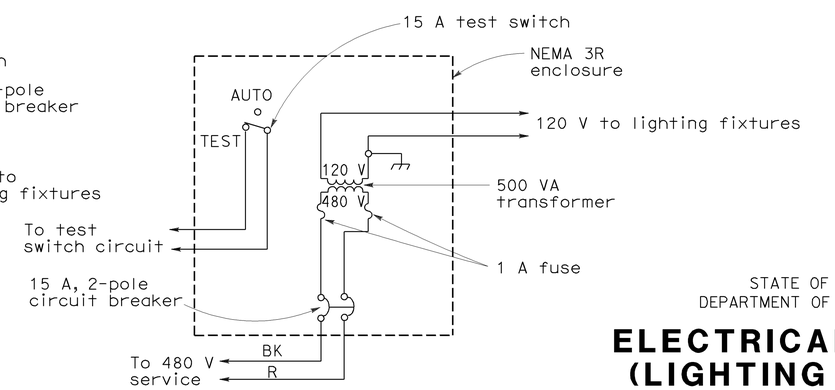

TYPE SC3 CONTROL

For 480 V switched sign circuit, see Note 4 for Type SC3A

STATE OF CALIFORNIA
DEPARTMENT OF TRANSPORTATION

ELECTRICAL SYSTEMS (LIGHTING AND SIGN ILLUMINATION CONTROL)

NO SCALE

ALL DIMENSIONS ARE IN MILLIMETERS UNLESS OTHERWISE SHOWN

RSP ES-15D DATED OCTOBER 5, 2007 SUPERSEDES RSP ES-15D DATED APRIL 28, 2005 AND STANDARD PLAN ES-15D DATED JULY 1, 2004-PAGE 486 OF THE STANDARD PLANS BOOK DATED JULY 2004.

REVISED STANDARD PLAN RSP ES-15D

10-1-07

DIST	COUNTY	ROUTE	KILOMETER POST TOTAL PROJECT	SHEET NO.	TOTAL SHEETS
07	LA	5	42.8/47.3	573	1073

REGISTERED CIVIL ENGINEER

January 24, 2005
PLANS APPROVAL DATE

REGISTERED PROFESSIONAL ENGINEER
Tillat Sattar
No. C42892
Exp. 03-31-2006
CIVIL
STATE OF CALIFORNIA

The State of California or its officers or agents shall not be responsible for the accuracy or completeness of electronic copies of this plan sheet.

To get to the Caltrans web site, go to: http://www.dot.ca.gov

To accompany plans dated 6-8-09

Pole Type	Pole Data				Base Plate Data				"d" 610 mm ø CIDH Pile (m)	Structural Steel kg plus 3.5% Galvanizing
	Height "h" (m)	Min OD (mm)		Thickness (mm)	"C" (mm)	Thickness (mm)	Anchor Bolts (mm)			
		BASE	TOP				SIZE	BC=BOLT CIRCLE		
CCTV 25	7.62	187	98	4.55	305	25.4	25 x 920 x 102	267	1.83	180
CCTV 30	9.14	203	98	4.55	305	25.4	25 x 920 x 102	279	2.13	215
CCTV 35	10.67	219	98	4.55	305	25.4	25 x 920 x 102	305	2.13	250
CCTV 40	12.19	238	98	4.55	330	25.4	32 x 920 x 102	330	2.13	295
CCTV 45	13.72	254	98	4.55	330	25.4	32 x 920 x 102	343	2.44	340

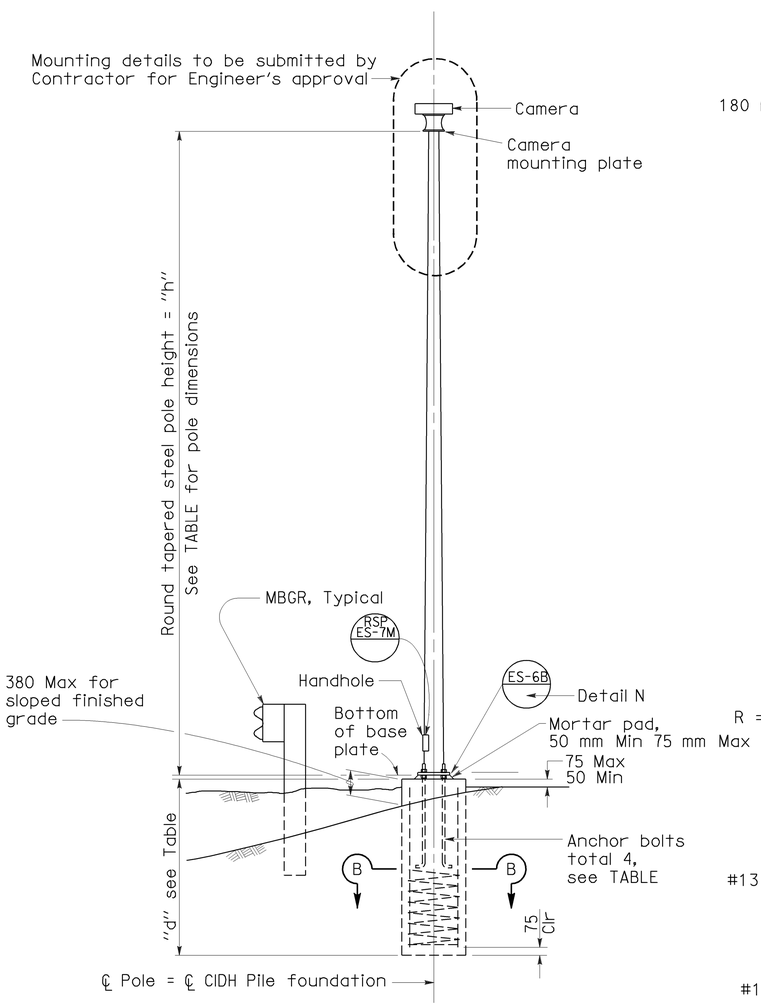

ELEVATION

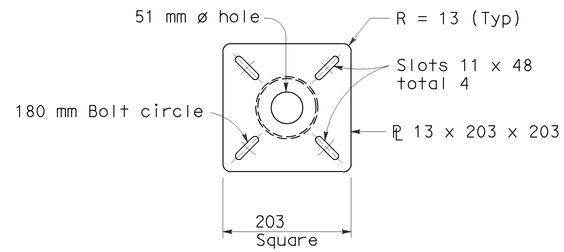

CAMERA MOUNTING PLATE

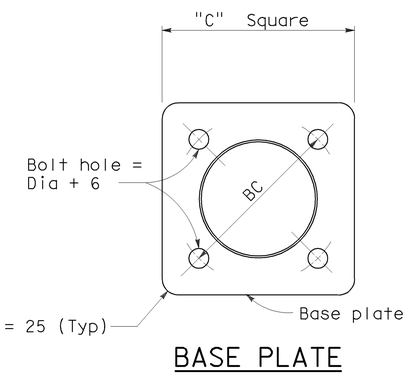

BASE PLATE

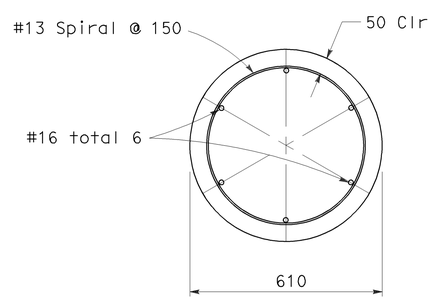

SECTION B-B

GENERAL NOTES:

SPECIFICATIONS

Design : AASHTO Standard specifications for structural supports for highway signs, luminaires and traffic signals dated 2001.

LOADING

Wind Loadings : 161km/h

UNIT STRESSES

Structural Steel : fy = 330 MPa tapered steel tube
fy = 250 MPa unless otherwise noted
Anchor bolts = A307
Reinforced Concrete : f'c = 25 MPa
fy = 415 MPa

NOTES:

1. The Contractor shall verify controlling field dimensions before ordering or fabricating any material.
2. All steel shall be galvanized after fabrication.
3. During pole erection, the post shall be raked as necessary with the use of leveling nuts to provide a plumb pole axis.

STATE OF CALIFORNIA
DEPARTMENT OF TRANSPORTATION

ELECTRICAL SYSTEMS (CLOSED CIRCUIT TELEVISION POLE DETAILS)

NO SCALE

ALL DIMENSIONS ARE IN MILLIMETERS UNLESS OTHERWISE SHOWN

RSP ES-16A DATED JANUARY 24, 2005 SUPERSEDES STANDARD PLAN ES-16A DATED JULY 1, 2004-PAGE 487 OF THE STANDARD PLANS BOOK DATED JULY 2004.

REVISED STANDARD PLAN RSP ES-16A

2004 REVISED Std PLAN RSP ES-16A

DIST	COUNTY	ROUTE	KILOMETER POST TOTAL PROJECT	SHEET No	TOTAL SHEETS
07	LA	5	42.8/47.3	574	1073

Andrew Rittenhouse 12-05-08
REGISTERED CIVIL ENGINEER DATE

6-8-09
PLANS APPROVAL DATE

REGISTERED PROFESSIONAL ENGINEER Andrew P. Rittenhouse No. 61006 Exp. 12-31-10 CIVIL STATE OF CALIFORNIA

The State of California or its officers or agents shall not be responsible for the accuracy or completeness of electronic copies of this plan sheet.

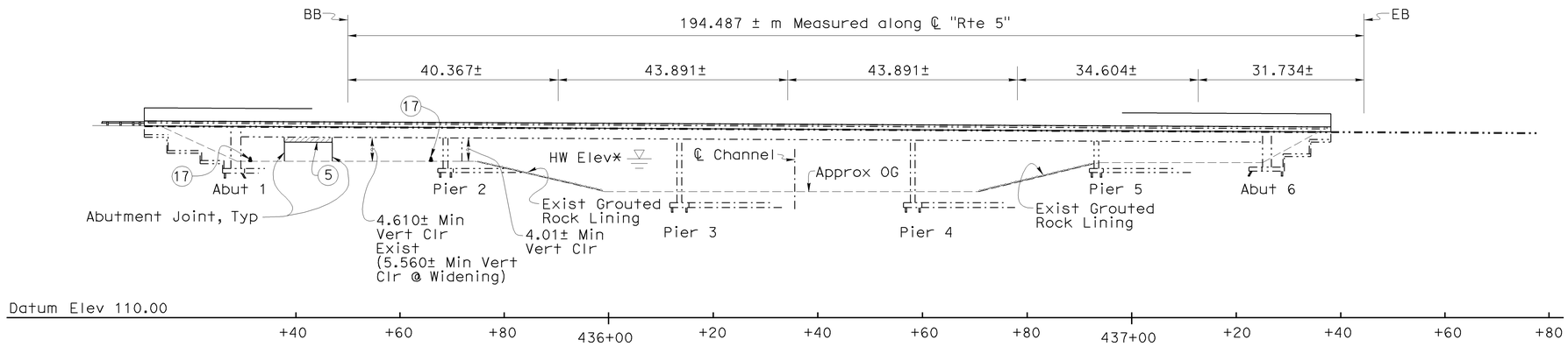

ELEVATION

1:500

QUANTITIES

BRIDGE REMOVAL (PORTION), LOCATION A	LUMP	SUM
STRUCTURE EXCAVATION (BRIDGE)	49	m^3
STRUCTURE BACKFILL (BRIDGE)	12	m^3
STRUCTURAL CONCRETE, BRIDGE	261	m^3
STRUCTURAL CONCRETE, BARRIER SLAB	70	m^3
STRUCTURAL CONCRETE, APPROACH SLAB (TYPE N)	36	m^3
DRILL AND BOND DOWEL	285	m
REFINISH BRIDGE DECK	99	m^2
CORE CONCRETE (101 mm - 150 mm)	10	m
SOUND WALL (RIBBED STEEL PANEL)	347	m^2
JOINT SEAL (MR 13 mm)	28	m
JOINT SEAL (MR 25 mm)	196	m
JOINT SEAL (MR 40 mm)	62	m
BAR REINFORCING STEEL (BRIDGE)	41 600	kg
FURNISH STRUCTURAL STEEL (BRIDGE)	222 000	kg
ERECT STRUCTURAL STEEL (BRIDGE)	222 000	kg
CLEAN AND PAINT STRUCTURAL STEEL	LUMP	SUM
SPOT BLAST CLEAN AND PAINT UNDERCOAT	6	m^2
WORK AREA MONITORING	LUMP	SUM
MISCELLANEOUS METAL (RESTRAINER - CABLE TYPE)	312	kg
MISCELLANEOUS METAL (BRIDGE)	24 200	kg
BRIDGE DECK DRAINAGE SYSTEM	22 500	kg
CONCRETE BARRIER (TYPE 736R MODIFIED)	190	m
CONCRETE BARRIER (TYPE 60A)	218	m
CONCRETE BARRIER (TYPE 736 MODIFIED)	36	m

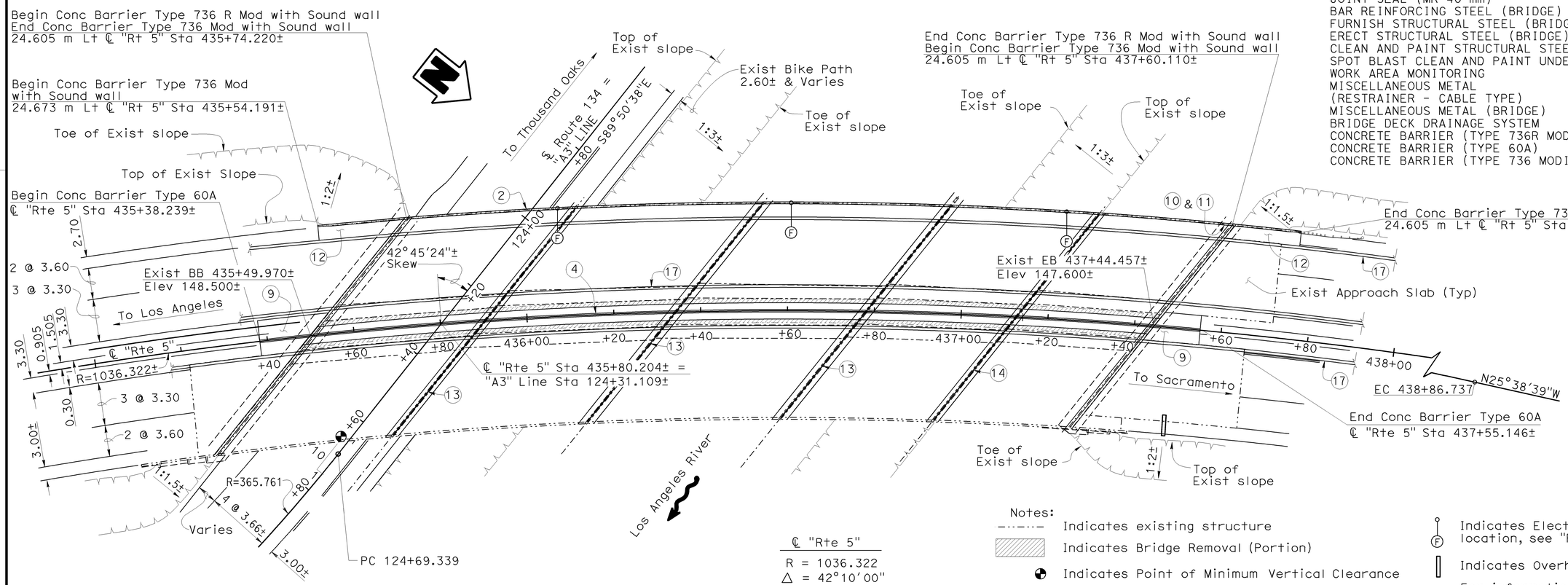

PLAN

1:500

℄ "Rte 5"

R = 1036.322
△ = 42°10'00"
T = 399.537
L = 762.678

Notes:

Indicates existing structure

Indicates Bridge Removal (Portion)

Indicates Point of Minimum Vertical Clearance

* High Water Elevation = 142.6 (Base Flood)

Indicates Electrolier Foundation and Pullbox location, see "Road Plans"

Indicates Overhead Sign, see "Road Plans"

For information and notes not shown, see "GENERAL PLAN NO. 2" sheet.

For "General Notes" & "Index To Plans", see "INDEX TO PLANS" sheet.

KP (PM) Indicates Kilometer Post (Post Mile)

NOTE:
THE CONTRACTOR SHALL VERIFY ALL CONTROLLING FIELD DIMENSIONS BEFORE ORDERING OR FABRICATING ANY MATERIAL.

Caltrans Metric

Traci Menard
DESIGN ENGINEER

	BY	CHECKED
DESIGN	Shervin Pahlavan	Jose Higareda
DETAILS	David Kish	Jose Higareda
QUANTITIES	Jerry Han	Joel Ruiz

LOAD FACTOR DESIGN — LIVE LOADING: HS20-44 AND ALTERNATIVE AND PERMIT DESIGN LOAD

	BY	CHECKED
LAYOUT	Shervin Pahlavan	Jose Higareda
SPECIFICATIONS	Tina Chen	PLANS AND SPECS COMPARED Tina Chen

ALL DIMENSIONS ARE IN METERS UNLESS OTHERWISE SHOWN

ORIGINAL SCALE IN MILLIMETERS FOR REDUCED PLANS 0 10 20 30 40 50 60 70 80 90 100

STATE OF CALIFORNIA
DEPARTMENT OF TRANSPORTATION

DIVISION OF ENGINEERING SERVICES
STRUCTURE DESIGN
DESIGN BRANCH 15

CU 07
EA 121841

BRIDGE NO. 53-1075
KP (PM) 43.6 (27.1)

LOS ANGELES RIVER BRIDGE AND SEPARATION (WIDEN)

GENERAL PLAN NO. 1

DISREGARD PRINTS BEARING EARLIER REVISION DATES

REVISION DATES: 1-22-09 11-25-08 2-4-09 3-16-09 4-3-09 4-28-09 10-27-08 11-25-08 12-2-08

SHEET 1 OF 64

FILE => 53-1075ri-a-gp01.dgn

STRUCTURES DESIGN GENERAL PLAN SHEET (METRIC) (REV.03-17-04)

USERNAME => frmthwest DATE PLOTTED => 12-JUN-2009 TIME PLOTTED => 06:38

DIST	COUNTY	ROUTE	KILOMETER POST TOTAL PROJECT	SHEET No	TOTAL SHEETS
07	LA	5	42.8/47.3	575	1073

Andrew Rittenhouse 12-05-08
REGISTERED CIVIL ENGINEER DATE

6-8-09
PLANS APPROVAL DATE

REGISTERED PROFESSIONAL ENGINEER Andrew P. Rittenhouse No. 61006 Exp. 12-31-10 CIVIL STATE OF CALIFORNIA

The State of California or its officers or agents shall not be responsible for the accuracy or completeness of electronic copies of this plan sheet.

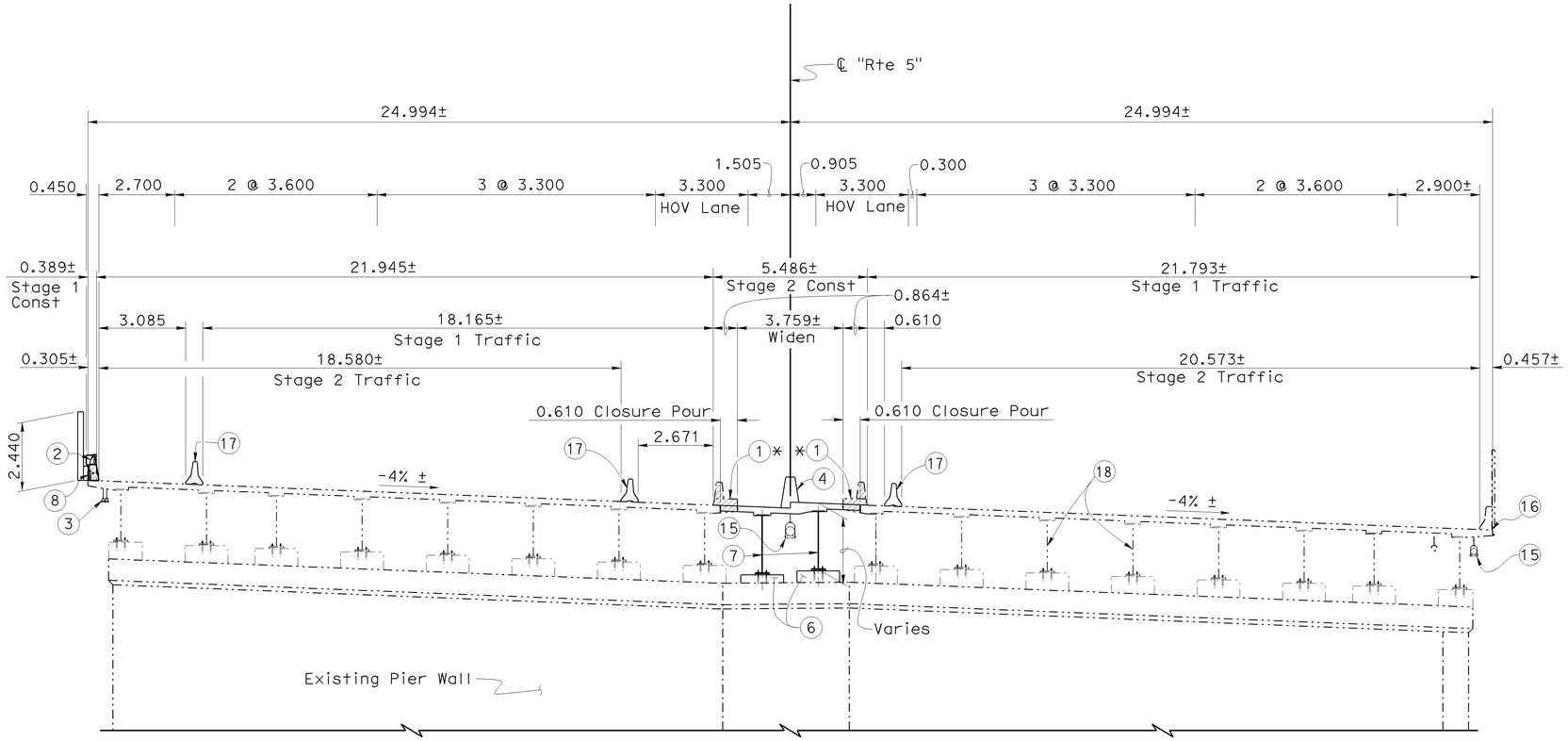

Note:
All dimensions measured radial to ℄ "Rte 5"

TYPICAL SECTION

1:100

Notes:

1. Remove existing Modified Concrete Barrier Type 50, A.C, curb and deck overhang
2. Remove existing Type 1 Railing and replace with Concrete Barrier Type 736R (Mod) with Lighting Conduit and Ribbed Steel Panel Soundwall.
3. 91mm ø Fiber Optic Conduit, see "TYPICAL SECTION" sheet
4. Concrete Barrier Type 60A
5. Modify existing Abutment
6. Modify existing Pier
7. Steel Plate Girder
8. Remove existing communication conduit and cover.
9. Structure Approach Type N(9S)
10. Paint "Br No. 53-1075R/L"
11. Paint "Los Angeles River Bridge"
12. Barrier Slab, see Abutment Details sheets
13. Joint Seal (MR = 25)
14. Joint Seal (MR = 40)
15. Deck Drainage System
16. 53 mm Lighting Conduit, see "ROAD PLANS" and "MISCELLANEOUS DETAILS NO. 1" sheet
17. Temporary Railing, see "ROAD PLANS"
18. Existing Steel Plate Girder, Typ

Legend:

* Match existing cross slope

Indicates existing structure

Indicates Bridge Removal (Portion)

NOTE:
THE CONTRACTOR SHALL VERIFY ALL CONTROLLING FIELD DIMENSIONS BEFORE ORDERING OR FABRICATING ANY MATERIAL.

KP (PM) Indicates Kilometer Post (Post Mile)

Caltrans Metric

Traci Menard
DESIGN ENGINEER

	BY	CHECKED
DESIGN	Shervin Pahlavan	Jose Higareda
DETAILS	D. Kish/D. Kubochi	Jose Higareda
QUANTITIES	Jerry Han	Joel Ruiz

LOAD FACTOR DESIGN — LIVE LOADING: HS20-44 AND ALTERNATIVE AND PERMIT DESIGN LOAD

	BY	CHECKED
LAYOUT	Shervin Pahlavan	Jose Higareda
SPECIFICATIONS	Tina Chen	PLANS AND SPECS COMPARED: Tina Chen

STATE OF CALIFORNIA
DEPARTMENT OF TRANSPORTATION

DIVISION OF ENGINEERING SERVICES
STRUCTURE DESIGN
DESIGN BRANCH 15

CU 07
EA 121841

BRIDGE NO. 53-1075
KP (PM) 43.6 (27.1)

LOS ANGELES RIVER BRIDGE AND SEPARATION (WIDEN)

GENERAL PLAN NO. 2

ALL DIMENSIONS ARE IN METERS UNLESS OTHERWISE SHOWN

ORIGINAL SCALE IN MILLIMETERS FOR REDUCED PLANS 0 10 20 30 40 50 60 70 80 90 100

DISREGARD PRINTS BEARING EARLIER REVISION DATES

REVISION DATES: 3-2-09 4-02-09 5-20-09 6-5-09 6-8-09 6-10-09 11-21-08 12-12-08 1-16-09

SHEET 2 OF 64

FILE => 53-1075rl-a-gp02.dgn

STRUCTURES DESIGN GENERAL PLAN SHEET (METRIC) (REV.03-17-04)

USERNAME => trmikesl DATE PLOTTED => 16-JUN-2009 TIME PLOTTED => 13:19

DIST	COUNTY	ROUTE	KILOMETER POST TOTAL PROJECT	SHEET No	TOTAL SHEETS
07	LA	5	42.8/47.3	576	1073

Andrew Rittenhouse 12-05-08
REGISTERED CIVIL ENGINEER DATE

6-8-09
PLANS APPROVAL DATE

REGISTERED PROFESSIONAL ENGINEER Andrew P. Rittenhouse No. 61006 Exp. 12-31-10 CIVIL STATE OF CALIFORNIA

The State of California or its officers or agents shall not be responsible for the accuracy or completeness of electronic copies of this plan sheet.

STANDARD PLAN SHEET NO.
DETAIL NO.

INDEX TO PLANS

SHEET NO.	TITLE
1	GENERAL PLAN NO. 1
2	GENERAL PLAN NO. 2
3	INDEX TO PLANS
4	FOUNDATION PLAN NO. 1
5	FOUNDATION PLAN NO. 2
6	ABUTMENT 1 LAYOUT
7	ABUTMENT 6 LAYOUT
8	ABUTMENT DETAILS NO. 1
9	ABUTMENT DETAILS NO. 2
10	ABUTMENT DETAILS NO. 3
11	ABUTMENT DETAILS NO. 4
12	ABUTMENT DETAILS NO. 5
13	ABUTMENT DETAILS NO. 6
14	ABUTMENT DETAILS NO. 7
15	ABUTMENT DETAILS NO. 8
16	ABUTMENT DETAILS NO. 9
17	ABUTMENT DETAILS NO. 10
18	ABUTMENT DETAILS NO. 11
19	ABUTMENT DETAILS NO. 12
20	ABUTMENT DETAILS NO. 13
21	ABUTMENT DETAILS NO. 14
22	PIER 2 THRU 5 LAYOUT NO. 1
23	PIER 2 THRU 5 LAYOUT NO. 2
24	PIER 2 PEDESTAL DETAILS
25	PIER 3 PEDESTAL DETAILS
26	PIER 4 PEDESTAL DETAILS
27	PIER 5 PEDESTAL DETAILS
28	MISCELLANEOUS PEDESTAL DETAILS NO. 1
29	MISCELLANEOUS PEDESTAL DETAILS NO. 2
30	MISCELLANEOUS PEDESTAL DETAILS NO. 3
31	PIER DETAILS NO. 1
32	PIER DETAILS NO. 2
33	PIER DETAILS NO. 3
34	PIER DETAILS NO. 4
35	PIER DETAILS NO. 5
36	PIER DETAILS NO. 6
37	PIER DETAILS NO. 7
38	TYPICAL SECTION
39	GIRDER LAYOUT NO. 1
40	GIRDER LAYOUT NO. 2
41	GIRDER DETAILS NO. 1
42	GIRDER DETAILS NO. 2
43	GIRDER DETAILS NO. 3
44	RIBBED STEEL PANEL SW DETAILS NO. 1
45	RIBBED STEEL PANEL SW DETAILS NO. 2
46	RIBBED STEEL PANEL SW DETAILS NO. 3
47	DECK DRAINAGE LAYOUT
48	DECK DRAIN DETAILS NO. 1
49	DECK DRAIN DETAILS NO. 2
50	DECK DRAIN DETAILS NO. 3
51	DECK DRAIN DETAILS NO. 4
52	MISCELLANEOUS DETAILS NO. 1
53	MISCELLANEOUS DETAILS NO. 2
54	MISCELLANEOUS DETAILS NO. 3
55	MISCELLANEOUS DETAILS NO. 4
56	MISCELLANEOUS DETAILS NO. 5
57	CATWALK DETAILS NO. 1
58	CATWALK DETAILS NO. 2
59	STEEL GIRDER DETAILS
60	STRUCTURE APPROACH TYPE N(9S)
61	LOG OF TEST BORINGS 1 OF 4
62	LOG OF TEST BORINGS 2 OF 4
63	LOG OF TEST BORINGS 3 OF 4
64	LOG OF TEST BORINGS 4 OF 4

NOTE:
THE CONTRACTOR SHALL VERIFY ALL CONTROLLING FIELD DIMENSIONS BEFORE ORDERING OR FABRICATING ANY MATERIAL.

STANDARD PLANS DATED JULY 2004

A10A	ACRONYMS AND ABBREVIATIONS (A-L)
A10B	ACRONYMS AND ABBREVIATIONS (M-Z)
A62C	LIMITS OF PAYMENT FOR EXCAVATION AND BACKFILL BRIDGE
A76A	CONCRETE BARRIER TYPE 60
H9	PLANTING AND IRRIGATION DETAILS
T3	TEMPORARY RAILING (TYPE K)
B0-1	BRIDGE DETAILS
B0-3	BRIDGE DETAILS
B0-5	BRIDGE DETAILS
B6-10	UTILITY OPENINGS T-BEAM
RSP B6-21	JOINT SEALS (MAXIMUM MOVEMENT RATING = 50 mm)
B7-8	DECK DRAINAGE DETAILS
B11-56	CONCRETE BARRIER TYPE 736

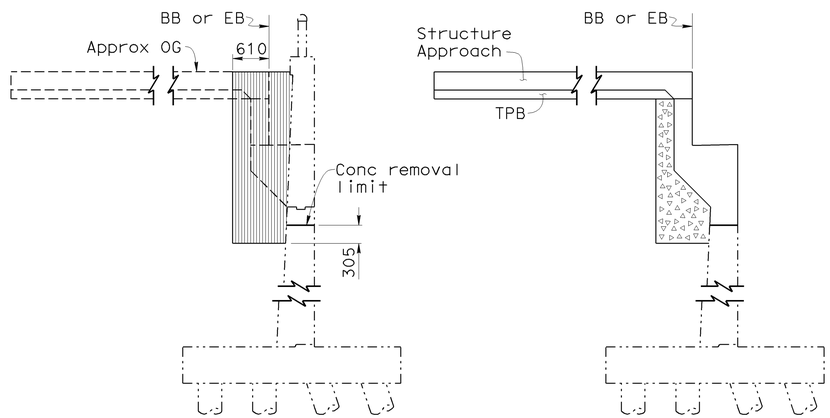

EXCAVATION AND BACKFILL LIMITS AT ABUTMENTS

1:50

Structure Excavation

Structure Backfill

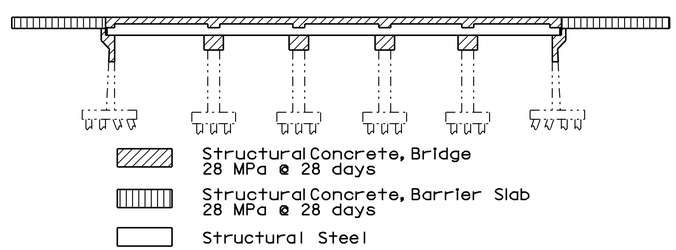

CONCRETE STRENGTH AND TYPE LIMITS

No Scale

GENERAL NOTES
LOAD FACTOR DESIGN

DESIGN:	BRIDGE DESIGN SPECIFICATIONS (1996 AASHTO with Interims and Revisions by CALTRANS)
SEISMIC DESIGN:	Caltrans Seismic Design Criteria (SDC), Version 1.4 June 2006
DEAD LOAD:	Includes 1.675 KPa for future wearing surface.
LIVE LOADING:	HS20-44 and alternative and permit design load.
SEISMIC LOADING:	Site Specific Acceleration Response Spectra Curve
STRUCTURAL STEEL:	f_y = 345 MPa (ASTM A709M Grade 345)
ANCHOR RODS:	All Anchor Rods shall be ASTM F1554, (f_y = 725 MPa)
HS BOLTS:	All ASTM A325 Bolts shall be (f_y = 635 MPa) (with threads excluded from shear plane)
TRANSVERSE DECK SLABS: (working stress design)	f_s = 138 MPa, f_c = 8.3 MPa, n = 10
REINFORCED CONCRETE:	f_y = 420 MPa, f'_c = 25 MPa & 28 MPa, n = 8

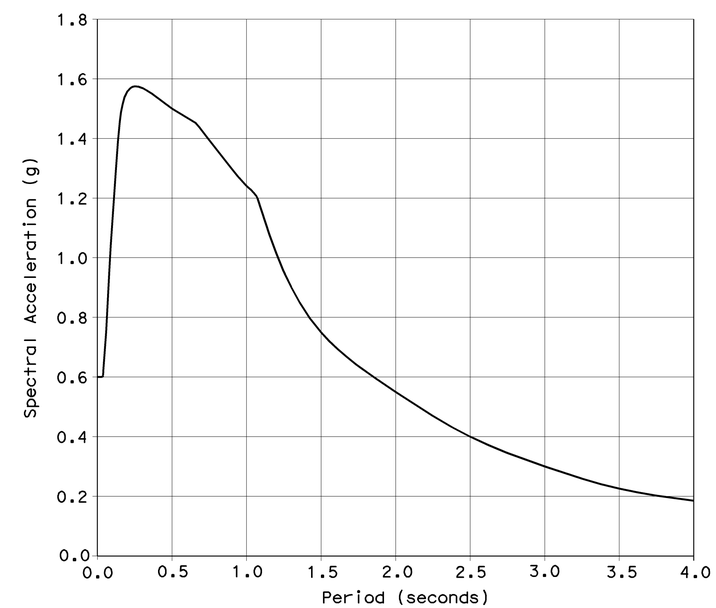

Caltrans Metric

	BY	CHECKED
DESIGN	Shervin Pahlavan	Jose Higareda
DETAILS	Dale Kubochi	Jose Higareda
QUANTITIES	Jerry Han	Joel Ruiz

STATE OF CALIFORNIA
DEPARTMENT OF TRANSPORTATION

DIVISION OF ENGINEERING SERVICES
STRUCTURE DESIGN
DESIGN BRANCH 15

BRIDGE NO. 53-1075
KILOMETER POST 43.6

LOS ANGELES RIVER BRIDGE AND SEPARATION (WIDEN)

INDEX TO PLANS

ALL DIMENSIONS ARE IN MILLIMETERS UNLESS OTHERWISE SHOWN

ORIGINAL SCALE IN MILLIMETERS FOR REDUCED PLANS 0 10 20 30 40 50 60 70 80 90 100

CU 07
EA 121841

DISREGARD PRINTS BEARING EARLIER REVISION DATES 3-2-09

REVISION DATES: 6-14-08 6-30-08 7-7-08 10-31-08 11-14-08 12-22-08 1-14-09 2-14-09

SHEET 3 OF 64

STRUCTURES DESIGN DETAIL SHEET (METRIC) (REV.03-17-04)

FILE => 53-1075ri-a-itp.dgn

USERNAME => trmikes1 DATE PLOTTED => 12-JUN-2009 TIME PLOTTED => 06:39

DIST	COUNTY	ROUTE	KILOMETER POST TOTAL PROJECT	SHEET No	TOTAL SHEETS
07	LA	5	42.8/47.3	577	1073

Andrew Rittenhouse 12-05-08
REGISTERED CIVIL ENGINEER DATE

6-8-09
PLANS APPROVAL DATE

REGISTERED PROFESSIONAL ENGINEER — Andrew P. Rittenhouse — No. 61006 — Exp. 12-31-10 — CIVIL — STATE OF CALIFORNIA

The State of California or its officers or agents shall not be responsible for the accuracy or completeness of electronic copies of this plan sheet.

Caltrans Metric

CURVE DATA

NO	R	Δ	T	L
A	1036.322	42°10'0"	399.537	762.678
B	365.761	19°0'45"	61.248	121.370

NOTE TO DESIGNER:

DISTRICT UTILITY MAP IS PENDING. THE CURRENT DISTRICT UTILITY MAPPING ELEMENTS DO NOT MATCH WITH EXISTING SITE CONDITION.

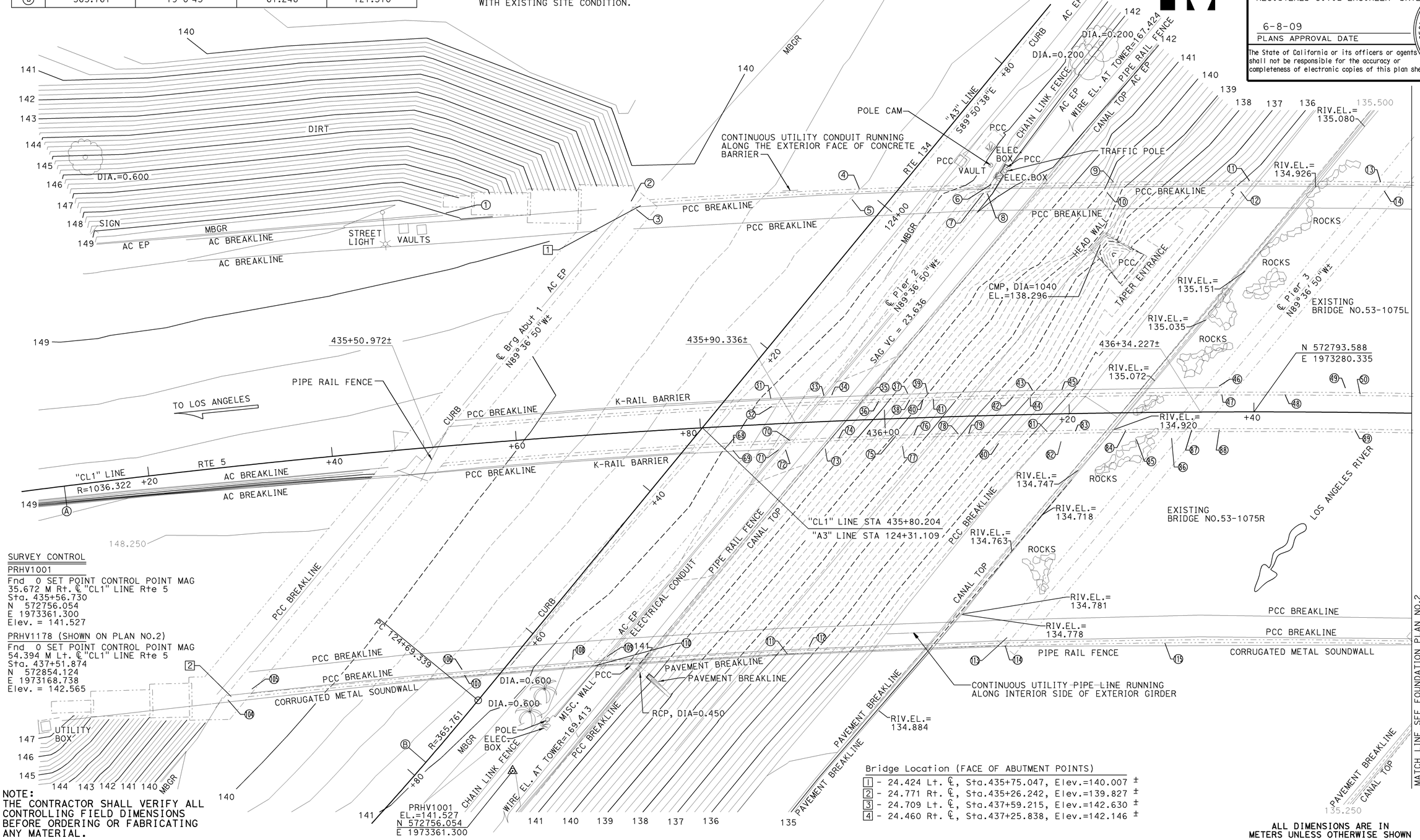

SURVEY CONTROL

PRHV1001
Fnd 0 SET POINT CONTROL POINT MAG
35.672 M Rt. ℄ "CL1" LINE Rte 5
Sta. 435+56.730
N 572756.054
E 1973361.300
Elev. = 141.527

PRHV1178 (SHOWN ON PLAN NO.2)
Fnd 0 SET POINT CONTROL POINT MAG
54.394 M Lt. ℄ "CL1" LINE Rte 5
Sta. 437+51.874
N 572854.124
E 1973168.738
Elev. = 142.565

NOTE:
THE CONTRACTOR SHALL VERIFY ALL CONTROLLING FIELD DIMENSIONS BEFORE ORDERING OR FABRICATING ANY MATERIAL.

Bridge Location (FACE OF ABUTMENT POINTS)

1 - 24.424 Lt. ℄, Sta.435+75.047, Elev.=140.007 ±
2 - 24.771 Rt. ℄, Sta.435+26.242, Elev.=139.827 ±
3 - 24.709 Lt. ℄, Sta.437+59.215, Elev.=142.630 ±
4 - 24.460 Rt. ℄, Sta.437+25.838, Elev.=142.146 ±

ALL DIMENSIONS ARE IN METERS UNLESS OTHERWISE SHOWN

PRELIMINARY INVESTIGATION SECTION

SCALE 1:200	VERT. DATUM NAVD88	PHOTOGRAMMETRY AS OF:			
	HORZ. DATUM NAD83 (1991.35)	SURVEYED	BY H.REDERER 03/2004	DRAFTED	BY T.ZOLNIKOVA 07/2004
	ALIGNMENT TIES DIST.TRAVERSE SHEET	FIELD CHECKED	BY	CHECKED	BY F.BANDA 07/2004

STRUCTURES FOUNDATION PLAN SHEET (METRIC) (REV.12-1-01)

	BY	CHECKED
DESIGN	Shervin Pahlavan	Jose Higareda
DETAILS	Dale Kubochi	Jose Higareda
QUANTITIES	Jerry Han	Joel Ruiz

ORIGINAL SCALE IN MILLIMETERS FOR REDUCED PLANS 0 10 20 30 40 50 60 70 80 90 100

STATE OF CALIFORNIA
DEPARTMENT OF TRANSPORTATION

DIVISION OF STRUCTURES
STRUCTURE DESIGN 15

CU 07
EA 121841

BRIDGE NO. 53-1075
KILOMETER POST 43.6

LOS ANGELES RIVER BRIDGE AND SEPARATION (WIDEN)

FOUNDATION PLAN NO.1

DISREGARD PRINTS BEARING EARLIER REVISION DATES

REVISION DATES (PRELIMINARY STAGE ONLY): 07-02-04 | 01-06-05 | 09-01-06 | 10-31-08 | 11-21-08 | 12-22-08

SHEET 4 OF 64

FILE => 53-1075ri-c-fp01.dgn

USERNAME => frmikest DATE PLOTTED => 12-JUN-2009 TIME PLOTTED => 06:33

DIST	COUNTY	ROUTE	KILOMETER POST TOTAL PROJECT	SHEET No	TOTAL SHEETS
07	LA	5	42.8/47.3	578	1073

Caltrans Metric

Andrew Rittenhouse 12-05-08
REGISTERED CIVIL ENGINEER DATE

6-8-09
PLANS APPROVAL DATE

REGISTERED PROFESSIONAL ENGINEER Andrew P. Rittenhouse No. 61006 Exp. 12-31-10 CIVIL STATE OF CALIFORNIA

The State of California or its officers or agents shall not be responsible for the accuracy or completeness of electronic copies of this plan sheet.

SOFFIT ELEVATIONS

LEFT AND RIGHT BRIDGES

1	148.994	23	145.871	45	145.498	67	147.101	89	147.691	11	117.102
2	148.925	24	148.107	46	145.434	68	148.085	90	147.652	12	144.867
3	146.947	25	145.779	47	147.666	69	145.720	91	145.107	13	144.751
4	148.798	26	146.434	48	147.617	70	148.033	92	145.086	14	146.997
5	146.813	27	147.982	49	145.347	71	145.697	93	147.401	15	146.882
6	148.727	28	146.329	50	147.549	72	145.692	94	145.712	16	146.755
7	146.712	29	147.943	51	147.513	73	145.653	95	145.396	17	146.740
8	146.414	30	146.254	52	147.515	74	148.000	96	145.646	18	144.540
9	148.662	31	145.660	53	147.443	75	147.956	97	147.322	19	146.620
10	146.322	32	147.906	54	145.173	76	147.945	98	147.297	20	144.302
11	148.583	33	145.644	55	145.056	77	145.607	99	145.624	21	144.966
12	146.247	34	145.642	56	145.049	78	147.905	100	145.573	22	146.568
13	148.530	35	145.630	57	145.666	79	147.915	101	145.575	23	146.462
14	146.184	36	147.840	58	147.258	80	145.566	102	147.245	24	144.822
15	148.460	37	145.590	59	145.254	81	147.859	103	147.243	25	144.814
16	146.117	38	147.815	60	145.594	82	145.530	104	147.378	26	146.403
17	148.391	39	145.580	61	147.187	83	147.868	105	145.573	27	146.334
18	146.053	40	147.812	62	145.576	84	147.807	106	145.451		
19	148.290	41	147.801	63	147.167	85	145.509	107	147.260		
20	145.960	42	147.752	64	145.525	86	145.470	108	145.426		
21	148.288	43	145.516	65	147.096	87	147.785	109	144.975		
22	148.157	44	147.743	66	145.640	88	147.790	110	147.209		

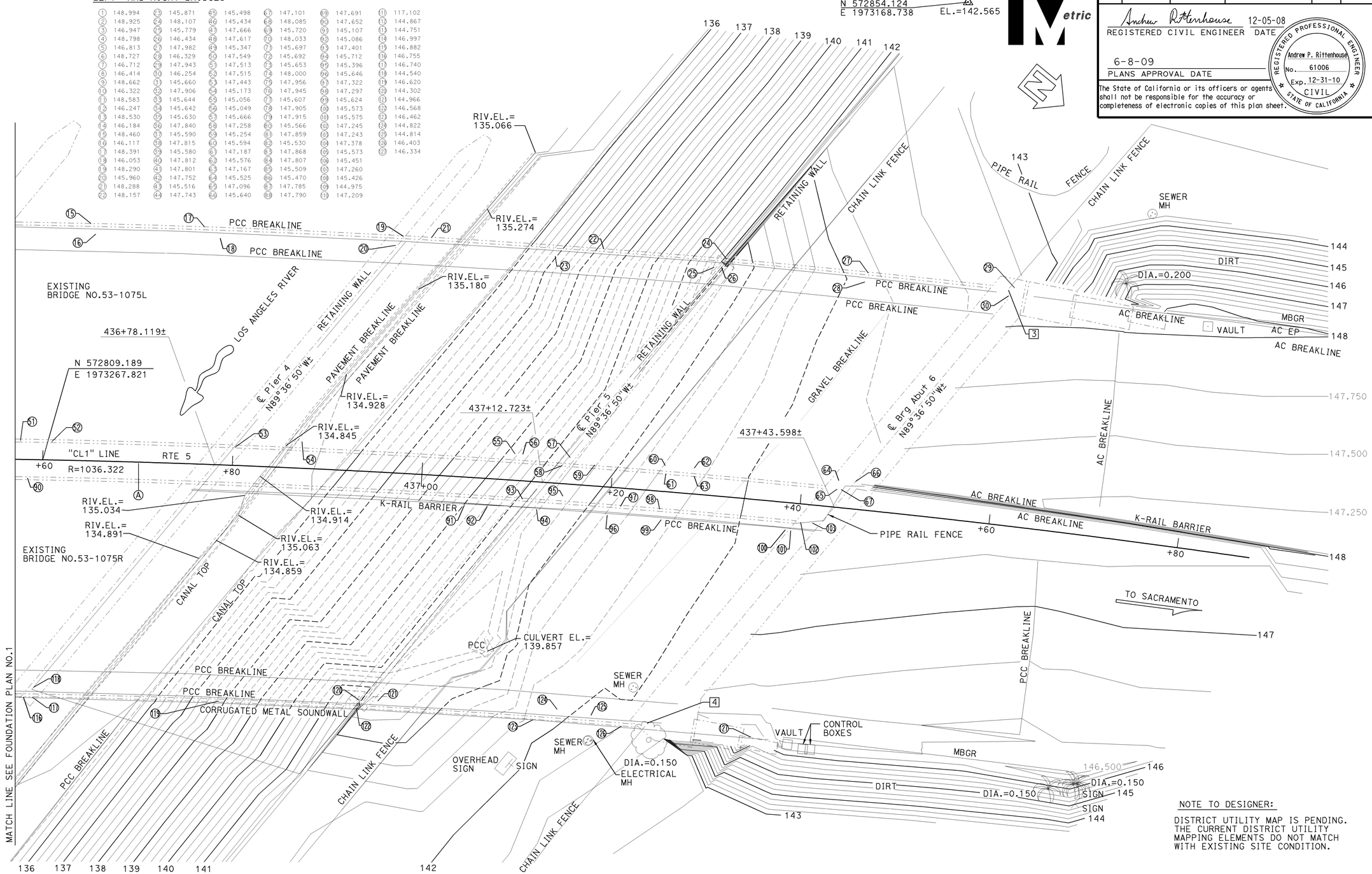

NOTE:
THE CONTRACTOR SHALL VERIFY ALL CONTROLLING FIELD DIMENSIONS BEFORE ORDERING OR FABRICATING ANY MATERIAL.

NOTE TO DESIGNER:

DISTRICT UTILITY MAP IS PENDING. THE CURRENT DISTRICT UTILITY MAPPING ELEMENTS DO NOT MATCH WITH EXISTING SITE CONDITION.

ALL DIMENSIONS ARE IN METERS UNLESS OTHERWISE SHOWN

PRELIMINARY INVESTIGATION SECTION

SCALE 1:200	VERT. DATUM NAVD88	PHOTOGRAMMETRY AS OF:			
	HORZ. DATUM NAD83 (1991.35)	SURVEYED	BY H.REDERER 03/2004	DRAFTED	BY T.ZOLNIKOVA 07/2004
	ALIGNMENT TIES DIST.TRAVERSE SHEET	FIELD CHECKED	BY	CHECKED	BY F.BANDA 07/2004

	BY	CHECKED
DESIGN	Shervin Pahlavan	Jose Higareda
DETAILS	Dale Kubochi	Jose Higareda
QUANTITIES	Jerry Han	Joel Ruiz

STATE OF CALIFORNIA
DEPARTMENT OF TRANSPORTATION

DIVISION OF STRUCTURES
STRUCTURE DESIGN 15

BRIDGE NO. 53-1075
KILOMETER POST 43.6

LOS ANGELES RIVER BRIDGE AND SEPARATION (WIDEN)

FOUNDATION PLAN NO.2

STRUCTURES FOUNDATION PLAN SHEET (METRIC) (REV.12-1-01)

ORIGINAL SCALE IN MILLIMETERS FOR REDUCED PLANS 0 10 20 30 40 50 60 70 80 90 100

CU 07
EA 121841

DISREGARD PRINTS BEARING EARLIER REVISION DATES

REVISION DATES (PRELIMINARY STAGE ONLY) 01/27/04 01/06/05 04/21/08 10-31-08 11-21-08 12-22-08

SHEET 5 OF 64

FILE => 53-1075rl-c-fp02.dgn

USERNAME => trmikesl DATE PLOTTED => 12-JUN-2009 TIME PLOTTED => 06:39

DIST	COUNTY	ROUTE	KILOMETER POST TOTAL PROJECT	SHEET No	TOTAL SHEETS
07	LA	5	42.8/47.3	579	1073

Andrew Rittenhouse 12-05-08
REGISTERED CIVIL ENGINEER DATE

6-8-09
PLANS APPROVAL DATE

REGISTERED PROFESSIONAL ENGINEER
Andrew P. Rittenhouse
No. 61006
Exp. 12-31-10
CIVIL
STATE OF CALIFORNIA

The State of California or its officers or agents shall not be responsible for the accuracy or completeness of electronic copies of this plan sheet.

Notes:
- For "Section A-A" and "Section B-B", see "ABUTMENT DETAILS NO. 1" sheet.
- For "Section E-E", "Section F-F" and "Section G-G", see "ABUTMENT DETAILS NO. 2" sheet.

Indicates Bridge Removal (Portion)

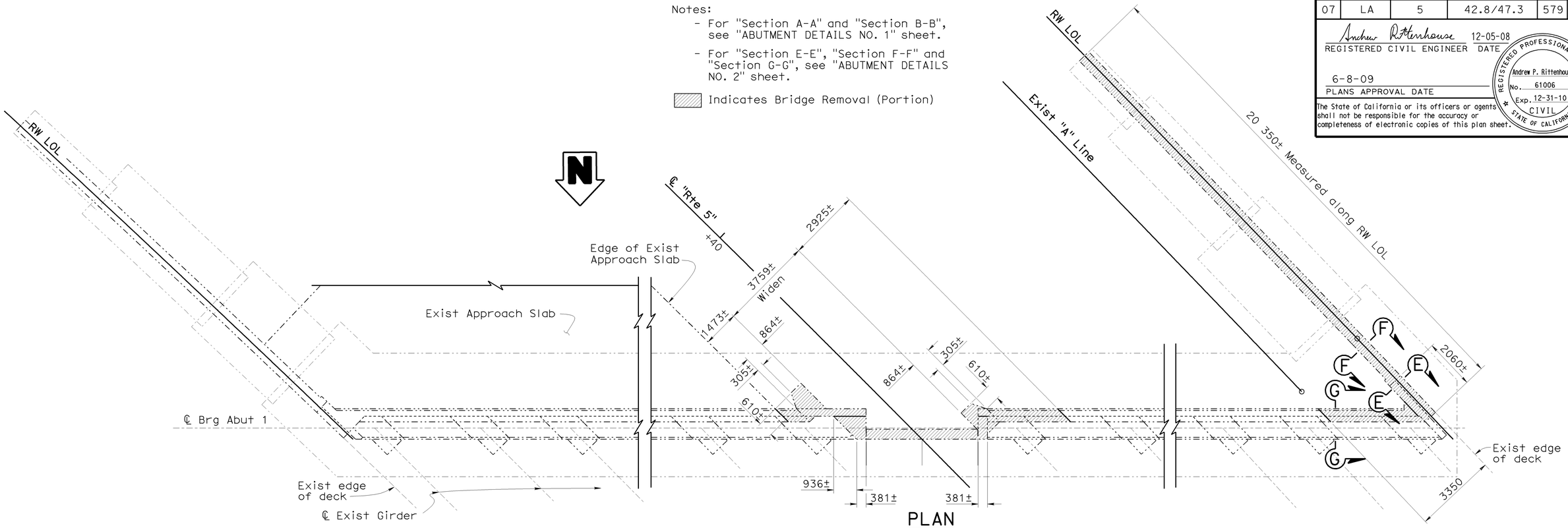

PLAN
1:80

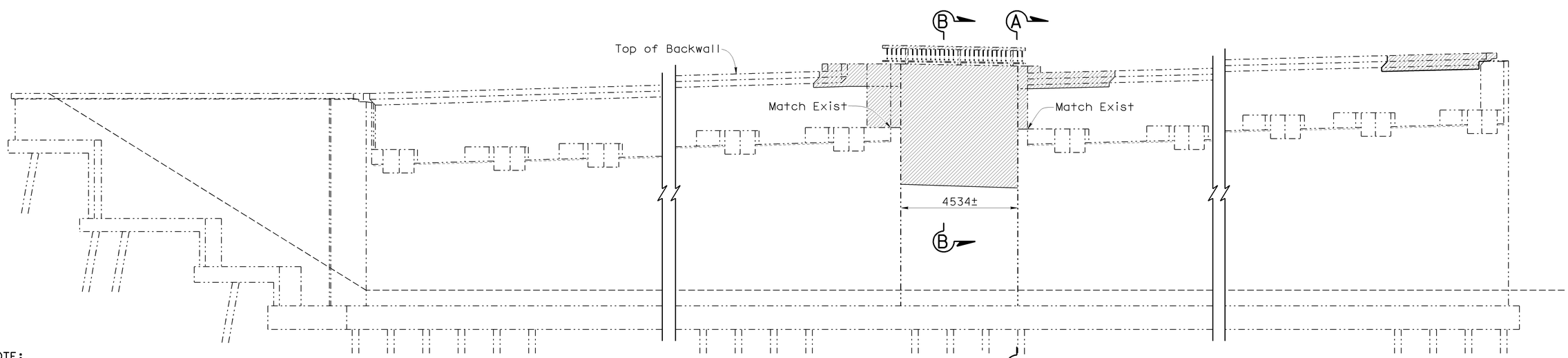

ELEVATION
1:80

NOTE:
THE CONTRACTOR SHALL VERIFY ALL CONTROLLING FIELD DIMENSIONS BEFORE ORDERING OR FABRICATING ANY MATERIAL.

Caltrans Metric

	BY	CHECKED
DESIGN	Shervin Pahlavan	Jose Higareda
DETAILS	D. Kish/D. Kubochi	Jose Higareda
QUANTITIES	Jerry Han	Joel Ruiz

STATE OF CALIFORNIA
DEPARTMENT OF TRANSPORTATION

DIVISION OF ENGINEERING SERVICES
STRUCTURE DESIGN
DESIGN BRANCH 15

BRIDGE NO. 53-1075
KILOMETER POST 43.6

LOS ANGELES RIVER BRIDGE AND SEPARATION (WIDEN)

ABUTMENT 1 LAYOUT

ALL DIMENSIONS ARE IN MILLIMETERS UNLESS OTHERWISE SHOWN

ORIGINAL SCALE IN MILLIMETERS FOR REDUCED PLANS 0 10 20 30 40 50 60 70 80 90 100

CU 07
EA 121841

DISREGARD PRINTS BEARING EARLIER REVISION DATES

REVISION DATES 10-11-07 3-20-08 10-31-08 11-21-08 12-22-08

SHEET 6 OF 64

FILE => 53-1075rl-h-ab1lo.dgn

STRUCTURES DESIGN DETAIL SHEET (METRIC) (REV.03-17-04)

USERNAME => trmikesl DATE PLOTTED => 12-JUN-2009 TIME PLOTTED => 06:39

DIST	COUNTY	ROUTE	KILOMETER POST TOTAL PROJECT	SHEET No	TOTAL SHEETS
07	LA	5	42.8/47.3	580	1073

Andrew Rittenhouse 12-05-08
REGISTERED CIVIL ENGINEER DATE

6-8-09
PLANS APPROVAL DATE

The State of California or its officers or agents shall not be responsible for the accuracy or completeness of electronic copies of this plan sheet.

REGISTERED PROFESSIONAL ENGINEER
Andrew P. Rittenhouse
No. 61006
Exp. 12-31-10
CIVIL
STATE OF CALIFORNIA

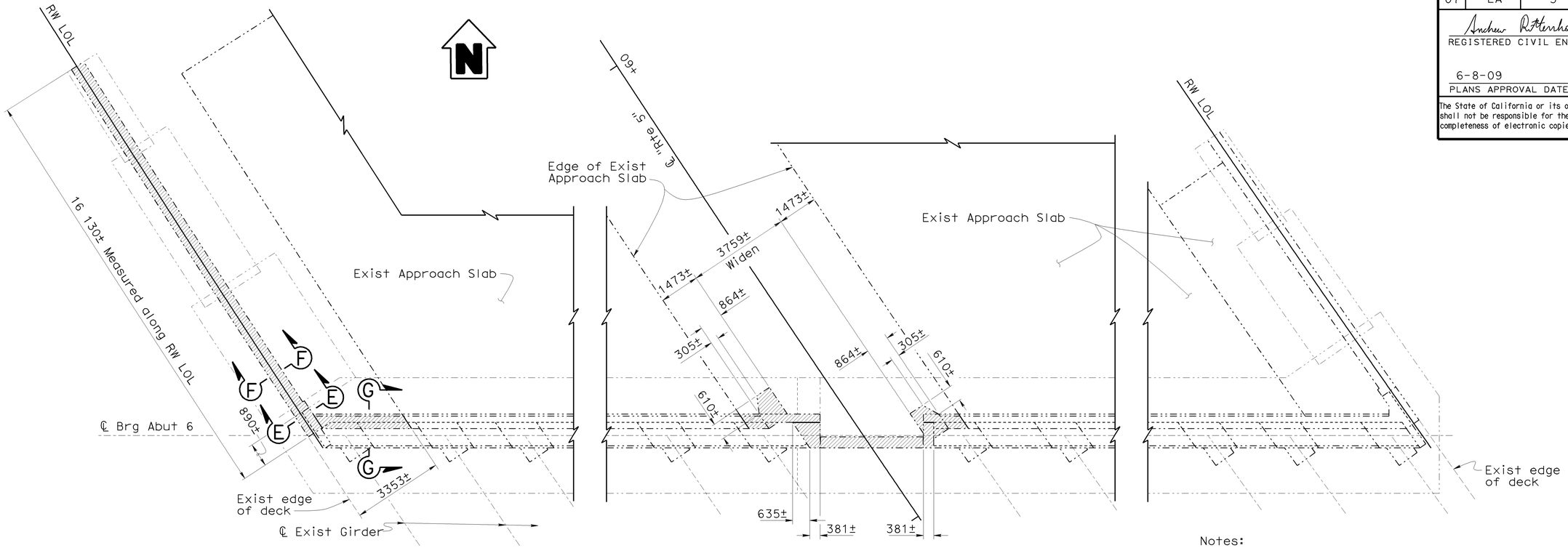

PLAN
1:80

Notes:
- For "Section C-C" and "Section D-D", see "ABUTMENT DETAILS NO. 1" sheet.
- For "Section E-E", "Section F-F" and "Section G-G", see "ABUTMENT DETAILS NO. 2" sheet.

Indicates Bridge Removal (Portion)

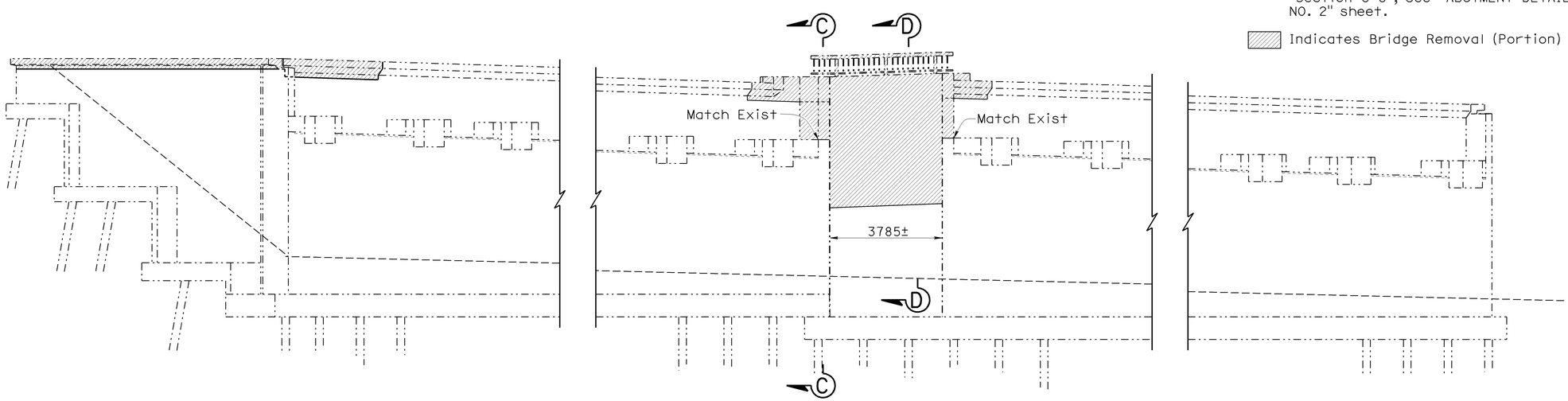

ELEVATION
1:80

NOTE:
THE CONTRACTOR SHALL VERIFY ALL CONTROLLING FIELD DIMENSIONS BEFORE ORDERING OR FABRICATING ANY MATERIAL.

Caltrans Metric

	BY	CHECKED
DESIGN	Shervin Pahlavan	Jose Higareda
DETAILS	D. Kish/D. Kubochi	Jose Higareda
QUANTITIES	Jerry Han	Joel Ruiz

STATE OF CALIFORNIA
DEPARTMENT OF TRANSPORTATION

DIVISION OF ENGINEERING SERVICES
STRUCTURE DESIGN
DESIGN BRANCH 15

BRIDGE NO. 53-1075
KILOMETER POST 43.6

LOS ANGELES RIVER BRIDGE AND SEPARATION (WIDEN)
ABUTMENT 6 LAYOUT

ALL DIMENSIONS ARE IN MILLIMETERS UNLESS OTHERWISE SHOWN

ORIGINAL SCALE IN MILLIMETERS FOR REDUCED PLANS 0 10 20 30 40 50 60 70 80 90 100

CU 07
EA 121841

DISREGARD PRINTS BEARING EARLIER REVISION DATES

REVISION DATES: 3-20-08 10-31-08 11-21-08 12-22-08

SHEET 7 OF 64

FILE => 53-1075rl-h-ab6lo.dgn

STRUCTURES DESIGN DETAIL SHEET (METRIC) (REV.03-17-04)

USERNAME => trmikesl DATE PLOTTED => 12-JUN-2009 TIME PLOTTED => 06:39

DIST	COUNTY	ROUTE	KILOMETER POST TOTAL PROJECT	SHEET No	TOTAL SHEETS
07	LA	5	42.8/47.3	581	1073

Andrew Rittenhouse 12-05-08
REGISTERED CIVIL ENGINEER DATE

6-8-09
PLANS APPROVAL DATE

REGISTERED PROFESSIONAL ENGINEER
Andrew P. Rittenhouse
No. 61006
Exp. 12-31-10
CIVIL
STATE OF CALIFORNIA

The State of California or its officers or agents shall not be responsible for the accuracy or completeness of electronic copies of this plan sheet.

Legend:

Indicates Bridge Removal (Portion)

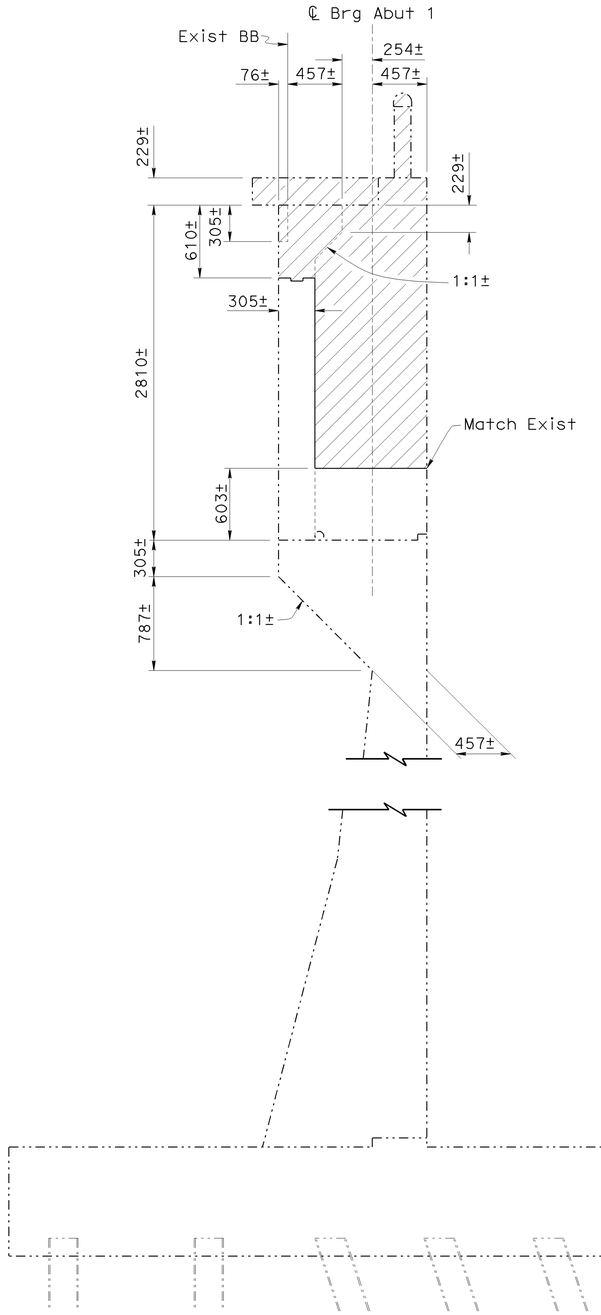

SECTION A-A
1:25

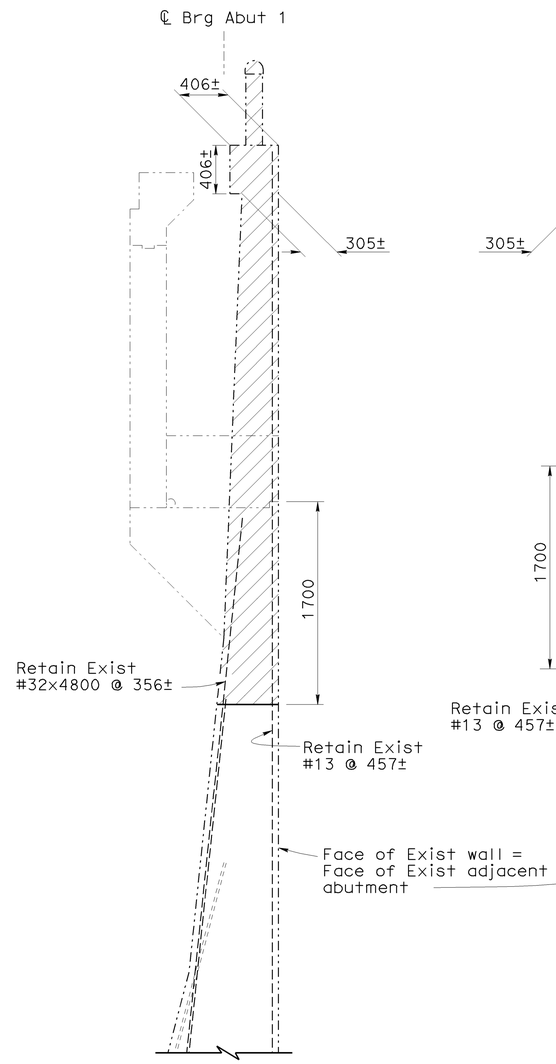

SECTION B-B
1:25

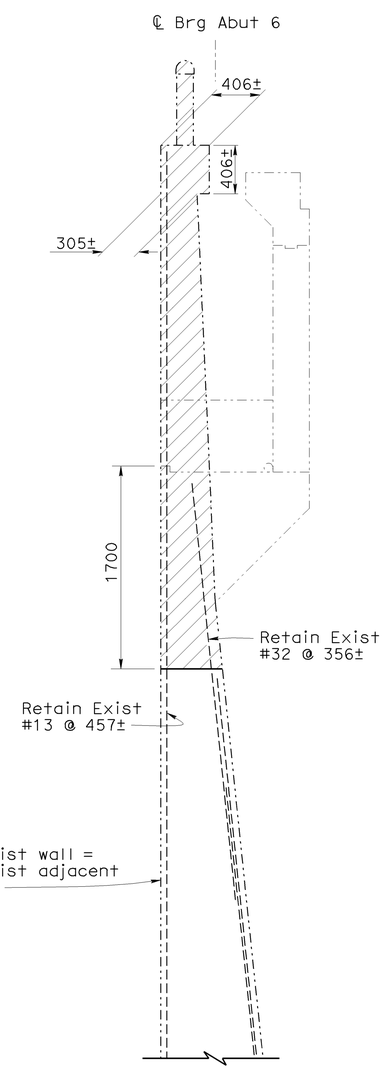

SECTION D-D
1:25

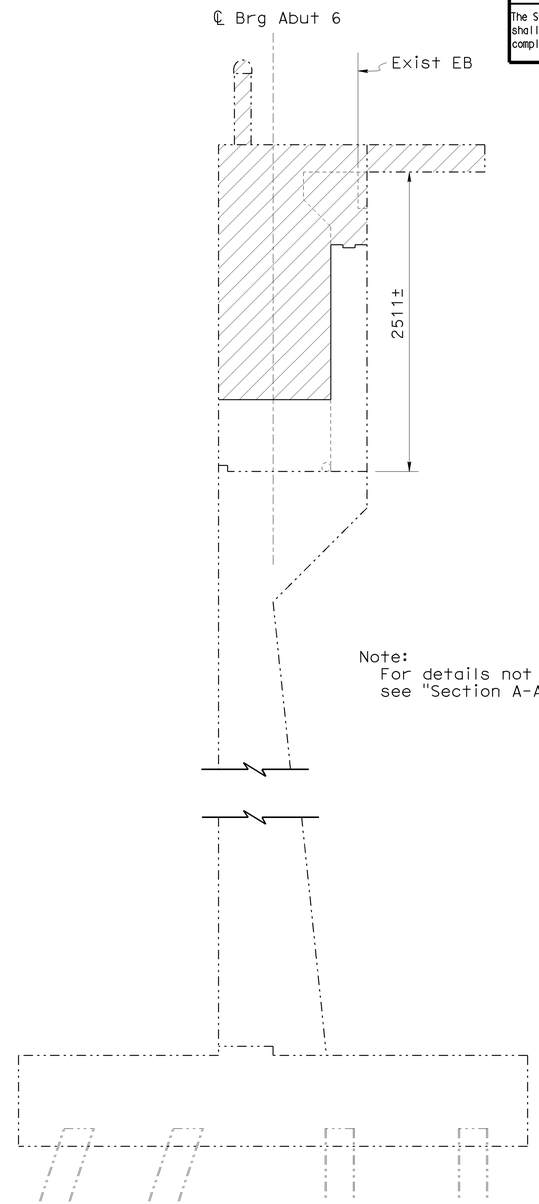

Note:
For details not shown, see "Section A-A"

SECTION C-C
1:25

NOTE:
THE CONTRACTOR SHALL VERIFY ALL CONTROLLING FIELD DIMENSIONS BEFORE ORDERING OR FABRICATING ANY MATERIAL.

Caltrans Metric

	BY	CHECKED
DESIGN	Shervin Pahlavan	Jose Higareda
DETAILS	Dale Kubochi	Jose Higareda
QUANTITIES	Jerry Han	Joel Ruiz

STATE OF CALIFORNIA
DEPARTMENT OF TRANSPORTATION

DIVISION OF ENGINEERING SERVICES
STRUCTURE DESIGN
DESIGN BRANCH 15

BRIDGE NO. 53-1075
KILOMETER POST 43.6

LOS ANGELES RIVER BRIDGE AND SEPARATION (WIDEN)

ABUTMENT DETAILS NO. 1

ALL DIMENSIONS ARE IN MILLIMETERS UNLESS OTHERWISE SHOWN

ORIGINAL SCALE IN MILLIMETERS FOR REDUCED PLANS 0 10 20 30 40 50 60 70 80 90 100

CU 07
EA 121841

DISREGARD PRINTS BEARING EARLIER REVISION DATES

REVISION DATES 3-20-08 4-11-08 10-31-08 11-21-08 12-22-08

SHEET 8 OF 64

STRUCTURES DESIGN DETAIL SHEET (METRIC) (REV.03-17-04)

FILE => 53-1075rl-i-abdet01.dgn

USERNAME => trmikesl DATE PLOTTED => 12-JUN-2009 TIME PLOTTED => 06:39

DIST	COUNTY	ROUTE	KILOMETER POST TOTAL PROJECT	SHEET No	TOTAL SHEETS
07	LA	5	42.8/47.3	582	1073

Andrew Rittenhouse 12-05-08
REGISTERED CIVIL ENGINEER DATE

6-8-09
PLANS APPROVAL DATE

REGISTERED PROFESSIONAL ENGINEER
Andrew P. Rittenhouse
No. 61006
Exp. 12-31-10
CIVIL
STATE OF CALIFORNIA

The State of California or its officers or agents shall not be responsible for the accuracy or completeness of electronic copies of this plan sheet.

Legend:

Indicates Bridge Removal (Portion)

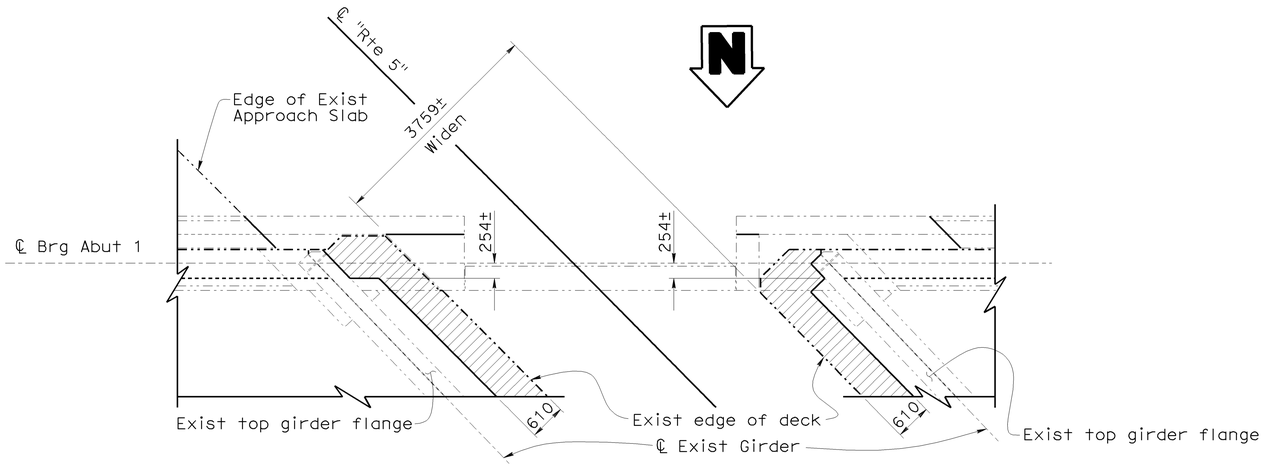

PLAN (Abutment 1)

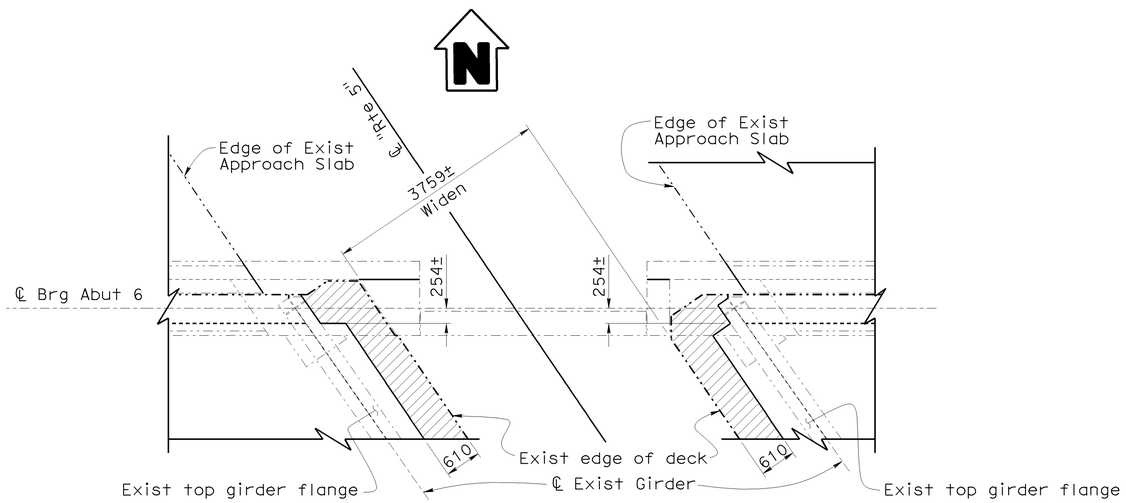

PLAN (Abutment 6)

BRIDGE DECK REMOVAL AT ABUTMENTS

1:50

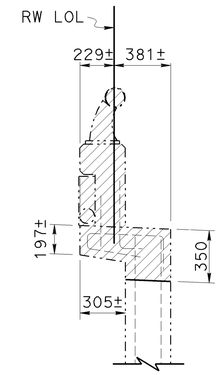

SECTION E-E

1:20

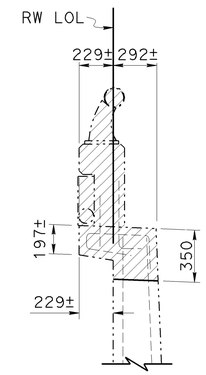

SECTION F-F

1:20

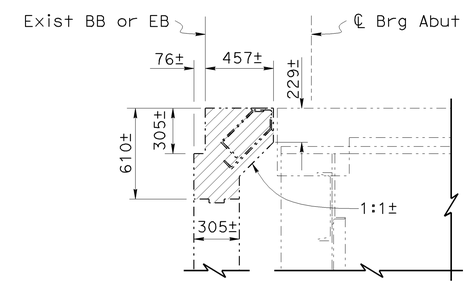

SECTION G-G

1:20

NOTE:
THE CONTRACTOR SHALL VERIFY ALL CONTROLLING FIELD DIMENSIONS BEFORE ORDERING OR FABRICATING ANY MATERIAL.

Caltrans Metric

	BY	CHECKED
DESIGN	Shervin Pahlavan	Jose Higareda
DETAILS	Dale Kubochi	Jose Higareda
QUANTITIES	Jerry Han	Joel Ruiz

STATE OF CALIFORNIA
DEPARTMENT OF TRANSPORTATION

DIVISION OF ENGINEERING SERVICES
STRUCTURE DESIGN
DESIGN BRANCH 15

BRIDGE NO. 53-1075
KILOMETER POST 43.6

LOS ANGELES RIVER BRIDGE AND SEPARATION (WIDEN)

ABUTMENT DETAILS NO. 2

ALL DIMENSIONS ARE IN MILLIMETERS UNLESS OTHERWISE SHOWN

ORIGINAL SCALE IN MILLIMETERS FOR REDUCED PLANS 0 10 20 30 40 50 60 70 80 90 100

CU 07
EA 121841

DISREGARD PRINTS BEARING EARLIER REVISION DATES

REVISION DATES 10-16-07 12-6-07 3-21-08 10-31-08 11-21-08 12-22-08

SHEET 9 OF 64

FILE => 53-1075rl-i-abdet02.dgn

STRUCTURES DESIGN DETAIL SHEET (METRIC) (REV.03-17-04)

USERNAME => trmikesl DATE PLOTTED => 12-JUN-2009 TIME PLOTTED => 06:39

DIST	COUNTY	ROUTE	KILOMETER POST TOTAL PROJECT	SHEET No	TOTAL SHEETS
07	LA	5	42.8/47.3	583	1073

Andrew Rittenhouse 12-05-08
REGISTERED CIVIL ENGINEER DATE

6-8-09
PLANS APPROVAL DATE

REGISTERED PROFESSIONAL ENGINEER Andrew P. Rittenhouse No. 61006 Exp. 12-31-10 CIVIL STATE OF CALIFORNIA

The State of California or its officers or agents shall not be responsible for the accuracy or completeness of electronic copies of this plan sheet.

Notes:

- For "Section B-B" see "ABUTMENT DETAILS NO. 5" sheet.
- For "Section F-F", "Section G-G", "Section K-K" and "Section L-L", see "ABUTMENT DETAILS NO. 14" sheet.

Indicates level all directions

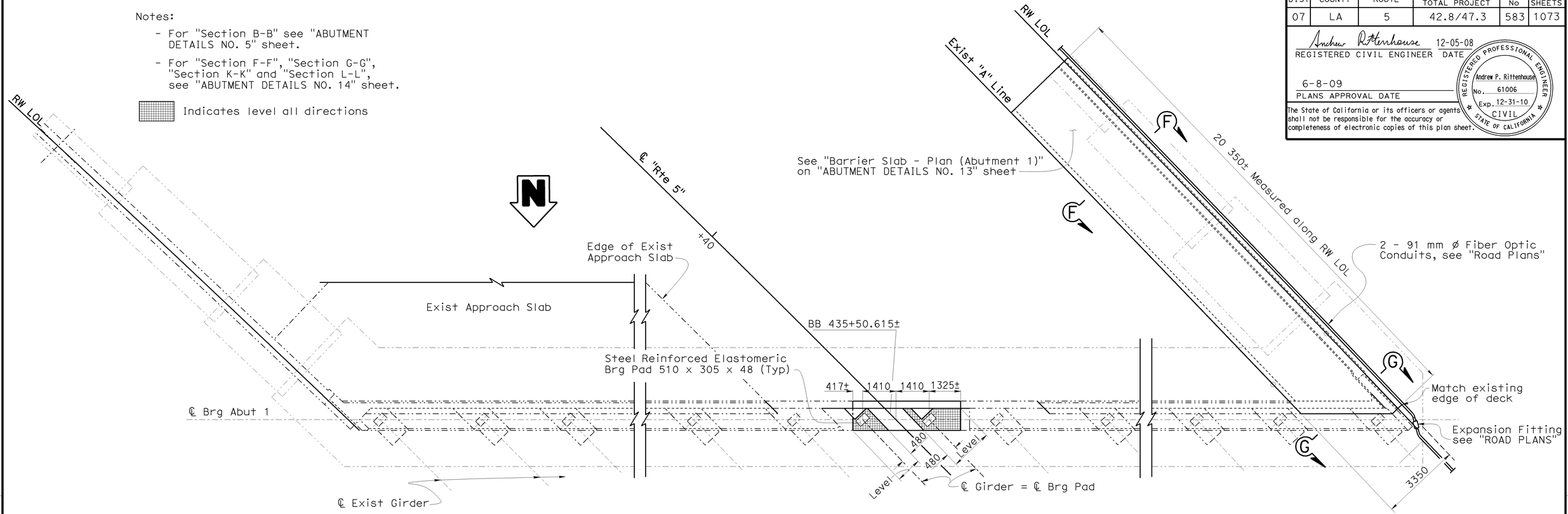

PLAN (ABUTMENT 1)

1:80

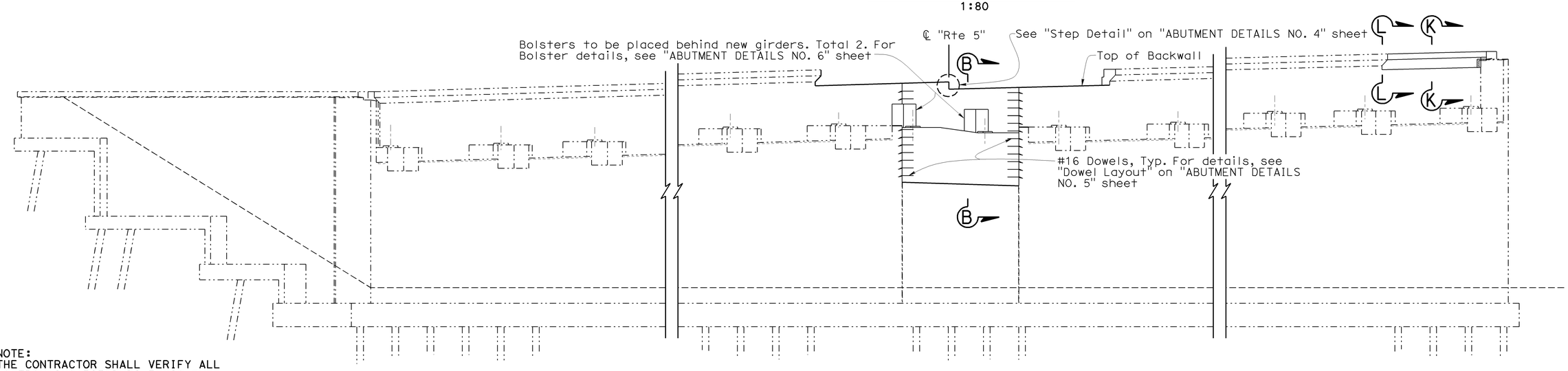

ELEVATION (ABUTMENT 1)

1:80

NOTE:
THE CONTRACTOR SHALL VERIFY ALL CONTROLLING FIELD DIMENSIONS BEFORE ORDERING OR FABRICATING ANY MATERIAL.

Caltrans Metric

	BY	CHECKED
DESIGN	Shervin Pahlavan	Jose Higareda
DETAILS	Dale Kubochi	Jose Higareda
QUANTITIES	Jerry Han	Joel Ruiz

STATE OF CALIFORNIA
DEPARTMENT OF TRANSPORTATION

DIVISION OF ENGINEERING SERVICES
STRUCTURE DESIGN
DESIGN BRANCH 15

BRIDGE NO. 53-1075
KILOMETER POST 43.6

LOS ANGELES RIVER BRIDGE AND SEPARATION (WIDEN)

ABUTMENT DETAILS NO. 3

ALL DIMENSIONS ARE IN MILLIMETERS UNLESS OTHERWISE SHOWN

ORIGINAL SCALE IN MILLIMETERS FOR REDUCED PLANS 0 10 20 30 40 50 60 70 80 90 100

CU 07
EA 121841

DISREGARD PRINTS BEARING EARLIER REVISION DATES

REVISION DATES: 1-16-09 | 1-22-08 | 4-2-08 | 4-11-08 | 4-21-08 | 8-29-08 | 10-31-08 | 11-21-08 | 12-2-08

SHEET 10 OF 64

FILE => 53-1075r1-i-abdet03.dgn

STRUCTURES DESIGN DETAIL SHEET (METRIC) (REV.03-17-04)

USERNAME => ttmirkes1 DATE PLOTTED => 12-JUN-2009 TIME PLOTTED => 06:39

DIST	COUNTY	ROUTE	KILOMETER POST TOTAL PROJECT	SHEET No	TOTAL SHEETS
07	LA	5	42.8/47.3	584	1073

Andrew Rittenhouse 12-05-08
REGISTERED CIVIL ENGINEER DATE

6-8-09
PLANS APPROVAL DATE

REGISTERED PROFESSIONAL ENGINEER
Andrew P. Rittenhouse
No. 61006
Exp. 12-31-10
CIVIL
STATE OF CALIFORNIA

The State of California or its officers or agents shall not be responsible for the accuracy or completeness of electronic copies of this plan sheet.

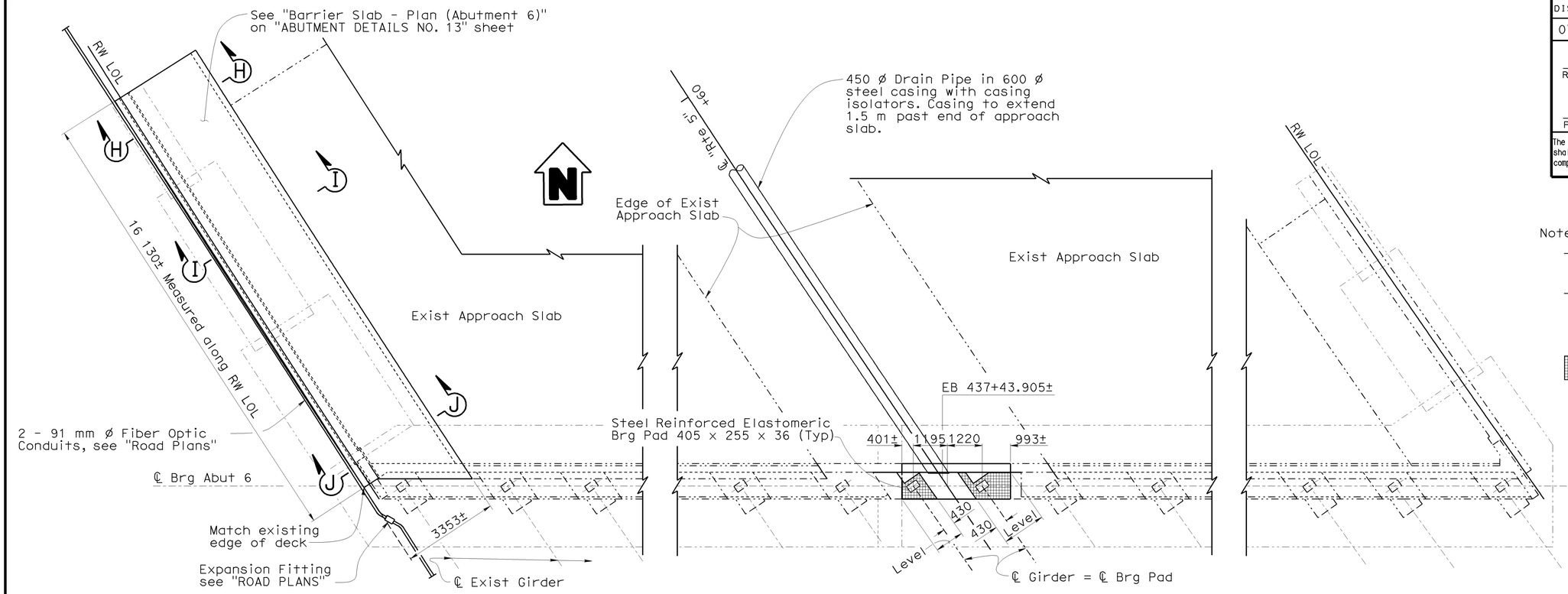

PLAN (ABUTMENT 6)
1:80

Notes:
- For "Section D-D" see "ABUTMENT DETAILS NO. 5" sheet.
- For "Section H-H", "Section I-I", "Section J-J", "Section K-K" and "Section L-L", see "ABUTMENT DETAILS NO. 14" sheet.

Indicates level all directions

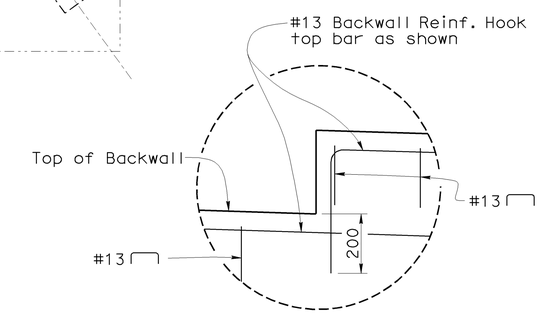

STEP DETAIL
1:10

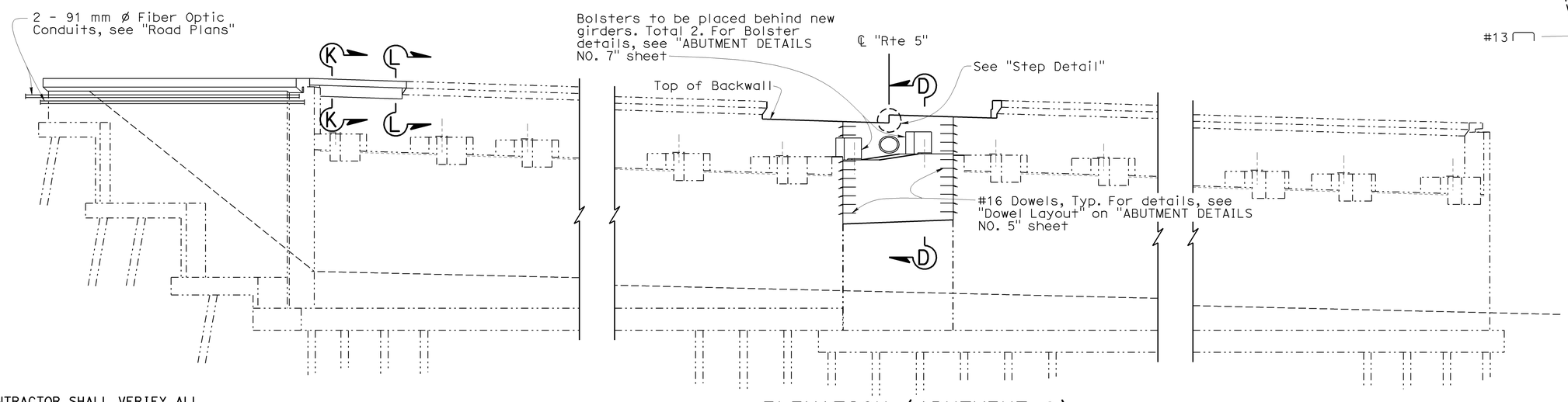

ELEVATION (ABUTMENT 6)
1:80

NOTE:
THE CONTRACTOR SHALL VERIFY ALL CONTROLLING FIELD DIMENSIONS BEFORE ORDERING OR FABRICATING ANY MATERIAL.

Caltrans Metric

	BY	CHECKED
DESIGN	Shervin Pahlavan	Jose Higareda
DETAILS	Dale Kubochi	Jose Higareda
QUANTITIES	Jerry Han	Joel Ruiz

STATE OF CALIFORNIA
DEPARTMENT OF TRANSPORTATION

DIVISION OF ENGINEERING SERVICES
STRUCTURE DESIGN
DESIGN BRANCH 15

BRIDGE NO. 53-1075
KILOMETER POST 43.6

LOS ANGELES RIVER BRIDGE AND SEPARATION (WIDEN)
ABUTMENT DETAILS NO. 4

ALL DIMENSIONS ARE IN MILLIMETERS UNLESS OTHERWISE SHOWN

ORIGINAL SCALE IN MILLIMETERS FOR REDUCED PLANS 0 10 20 30 40 50 60 70 80 90 100

CU 07
EA 121841

DISREGARD PRINTS BEARING EARLIER REVISION DATES

REVISION DATES: 5-6-09 10-9-07 4-2-08 4-12-08 4-21-08 8-30-08 10-31-08 11-21-08 12-22-08 1-16-09

SHEET 11 OF 64

STRUCTURES DESIGN DETAIL SHEET (METRIC) (REV.03-17-04)

FILE => 53-1075rl-i-abdet04.dgn

USERNAME => trmikesl DATE PLOTTED => 12-JUN-2009 TIME PLOTTED => 06:39

DIST	COUNTY	ROUTE	KILOMETER POST TOTAL PROJECT	SHEET No	TOTAL SHEETS
07	LA	5	42.8/47.3	585	1073

Andrew Rittenhouse 12-05-08
REGISTERED CIVIL ENGINEER DATE

6-8-09
PLANS APPROVAL DATE

REGISTERED PROFESSIONAL ENGINEER
Andrew P. Rittenhouse
No. 61006
Exp. 12-31-10
CIVIL
STATE OF CALIFORNIA

The State of California or its officers or agents shall not be responsible for the accuracy or completeness of electronic copies of this plan sheet.

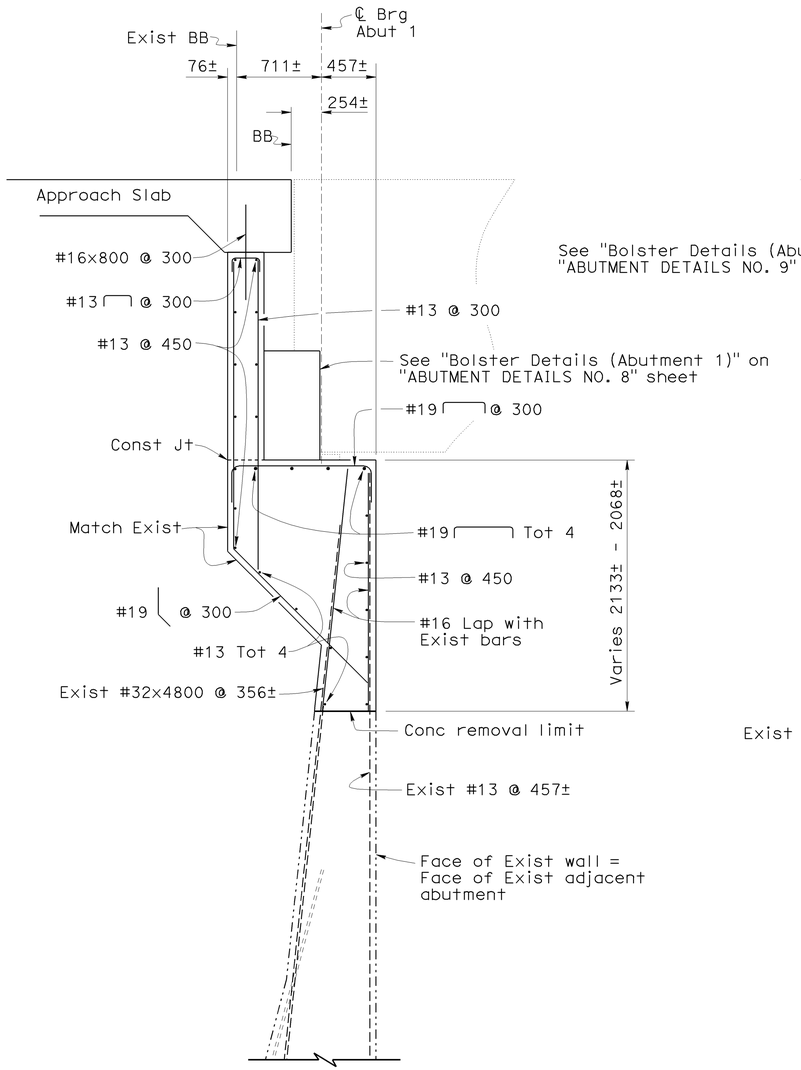

SECTION B-B
1:25

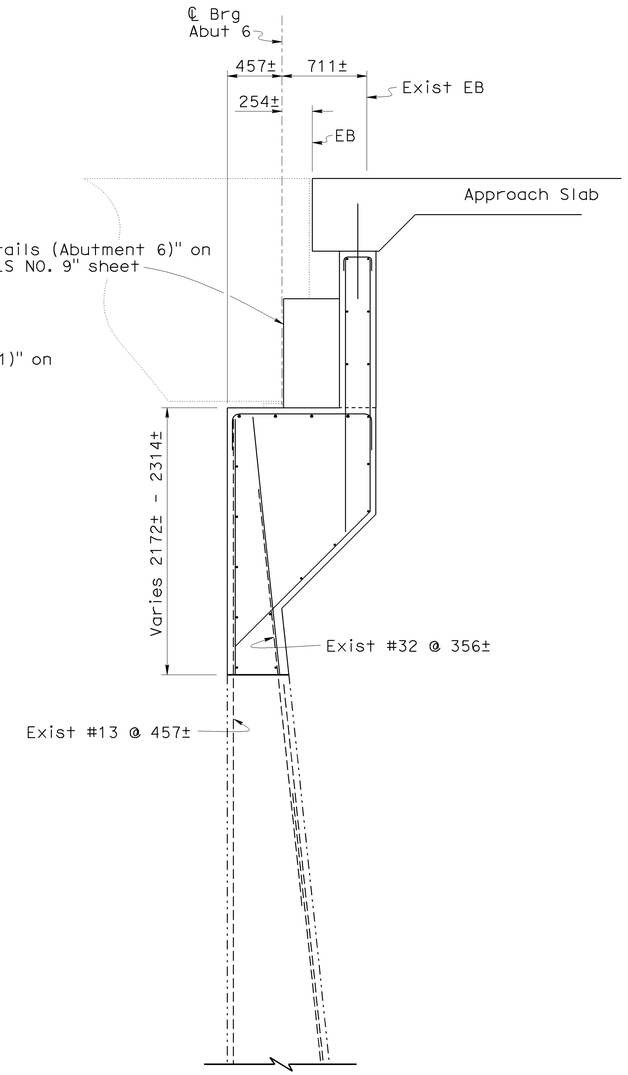

SECTION D-D
1:25

Note:
For details not noted, see "Section B-B"

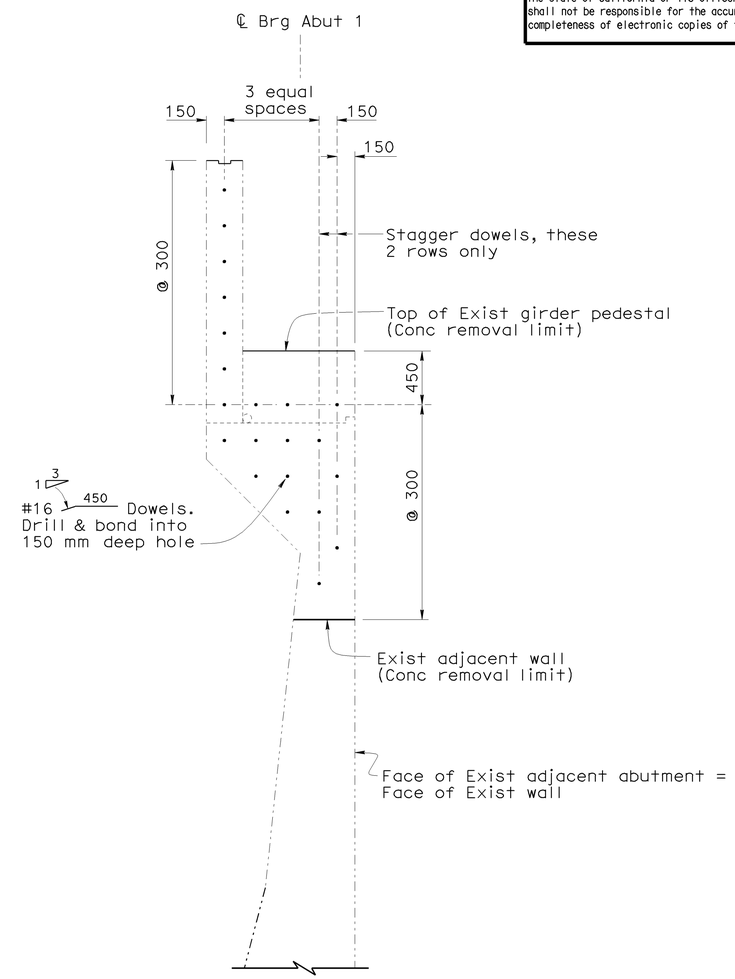

DOWEL LAYOUT
1:25

NOTE:
THE CONTRACTOR SHALL VERIFY ALL CONTROLLING FIELD DIMENSIONS BEFORE ORDERING OR FABRICATING ANY MATERIAL.

Caltrans Metric

	BY	CHECKED
DESIGN	Shervin Pahlavan	Jose Higareda
DETAILS	Dale Kubochi	Jose Higareda
QUANTITIES	Jerry Han	Joel Ruiz

STATE OF CALIFORNIA
DEPARTMENT OF TRANSPORTATION

DIVISION OF ENGINEERING SERVICES
STRUCTURE DESIGN
DESIGN BRANCH 15

BRIDGE NO. 53-1075
KILOMETER POST 43.6

LOS ANGELES RIVER BRIDGE AND SEPARATION (WIDEN)

ABUTMENT DETAILS NO. 5

ALL DIMENSIONS ARE IN MILLIMETERS UNLESS OTHERWISE SHOWN

ORIGINAL SCALE IN MILLIMETERS FOR REDUCED PLANS 0 10 20 30 40 50 60 70 80 90 100

CU 07
EA 121841

DISREGARD PRINTS BEARING EARLIER REVISION DATES

REVISION DATES: 10-23-07 3-22-08 4-11-08 10-31-08 11-21-08 12-22-08

SHEET 12 OF 64

FILE => 53-1075rl-i-abdet05.dgn

STRUCTURES DESIGN DETAIL SHEET (METRIC) (REV.03-17-04)

USERNAME => trmikesl DATE PLOTTED => 12-JUN-2009 TIME PLOTTED => 06:40

DIST	COUNTY	ROUTE	KILOMETER POST TOTAL PROJECT	SHEET No	TOTAL SHEETS
07	LA	5	42.8/47.3	586	1073

Andrew Rittenhouse 12-05-08
REGISTERED CIVIL ENGINEER DATE

6-8-09
PLANS APPROVAL DATE

REGISTERED PROFESSIONAL ENGINEER
Andrew P. Rittenhouse
No. 61006
Exp. 12-31-10
CIVIL
STATE OF CALIFORNIA

The State of California or its officers or agents shall not be responsible for the accuracy or completeness of electronic copies of this plan sheet.

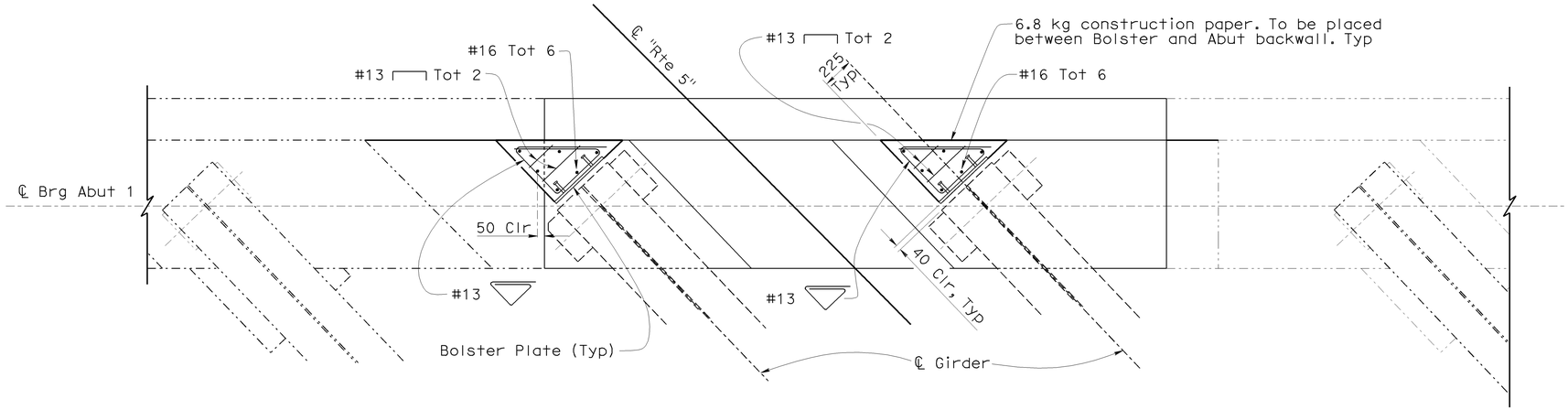

PLAN

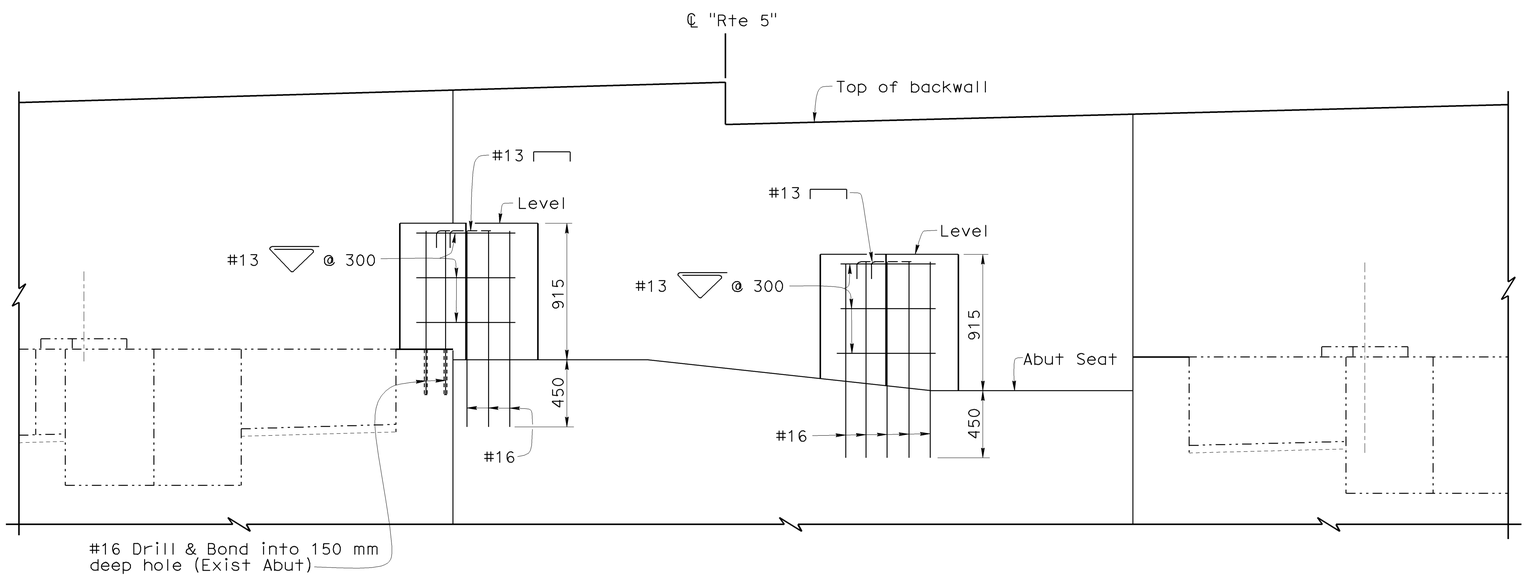

ELEVATION

Note: Girders, Bearing pads & Bolster plates not shown for clarity.

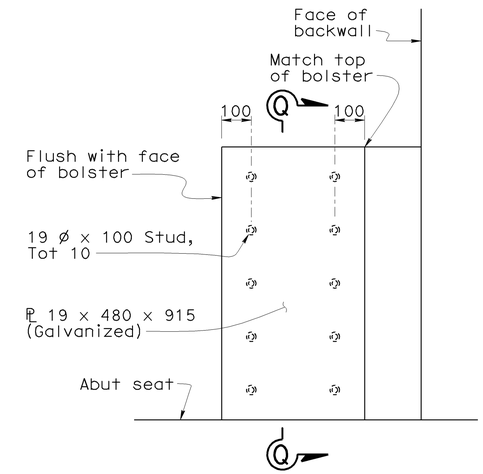

ELEVATION

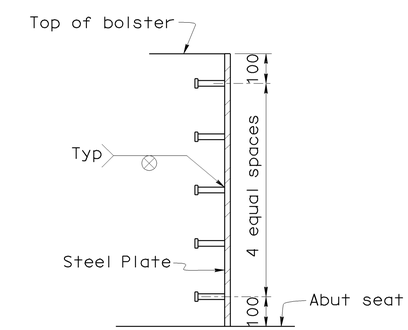

SECTION Q-Q

BOLSTER PLATE
1:10

NOTE:
THE CONTRACTOR SHALL VERIFY ALL CONTROLLING FIELD DIMENSIONS BEFORE ORDERING OR FABRICATING ANY MATERIAL.

BOLSTER DETAILS (ABUTMENT 1)
1:20

Caltrans Metric

	BY	CHECKED
DESIGN	Shervin Pahlavan	Jose Higareda
DETAILS	Dale Kubochi	Jose Higareda
QUANTITIES	Jerry Han	Joel Ruiz

STATE OF CALIFORNIA
DEPARTMENT OF TRANSPORTATION

DIVISION OF ENGINEERING SERVICES
STRUCTURE DESIGN
DESIGN BRANCH 15

BRIDGE NO. 53-1075
KILOMETER POST 43.6

LOS ANGELES RIVER BRIDGE AND SEPARATION (WIDEN)
ABUTMENT DETAILS NO. 6

ALL DIMENSIONS ARE IN MILLIMETERS UNLESS OTHERWISE SHOWN

ORIGINAL SCALE IN MILLIMETERS FOR REDUCED PLANS 0 10 20 30 40 50 60 70 80 90 100

CU 07
EA 121841

DISREGARD PRINTS BEARING EARLIER REVISION DATES

REVISION DATES: 4-27-07 10-9-07 11-13-07 1-30-08 4-14-08 10-31-08 11-21-08 12-22-08 1-16-09

SHEET 13 OF 64

FILE => 53-1075rl-i-abdet06.dgn

STRUCTURES DESIGN DETAIL SHEET (METRIC) (REV.03-17-04)

USERNAME => trmikesl DATE PLOTTED => 12-JUN-2009 TIME PLOTTED => 06:40

DIST	COUNTY	ROUTE	KILOMETER POST TOTAL PROJECT	SHEET No	TOTAL SHEETS
07	LA	5	42.8/47.3	587	1073

Andrew Rittenhouse 12-05-08
REGISTERED CIVIL ENGINEER DATE

6-8-09
PLANS APPROVAL DATE

REGISTERED PROFESSIONAL ENGINEER
Andrew P. Rittenhouse
No. 61006
Exp. 12-31-10
CIVIL
STATE OF CALIFORNIA

The State of California or its officers or agents shall not be responsible for the accuracy or completeness of electronic copies of this plan sheet.

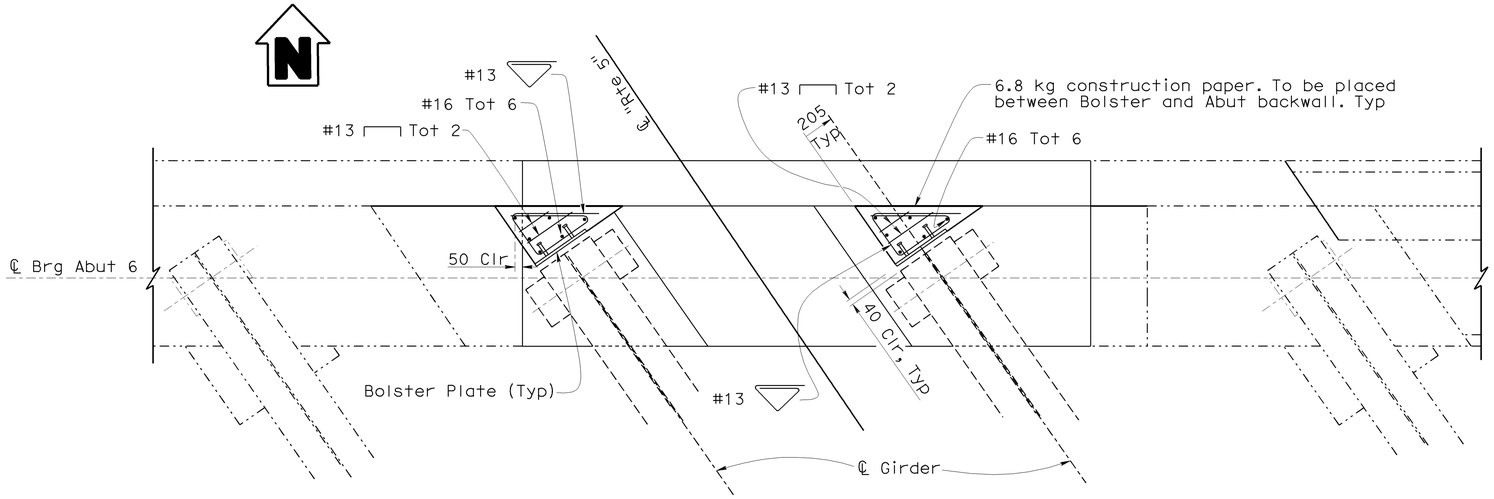

PLAN

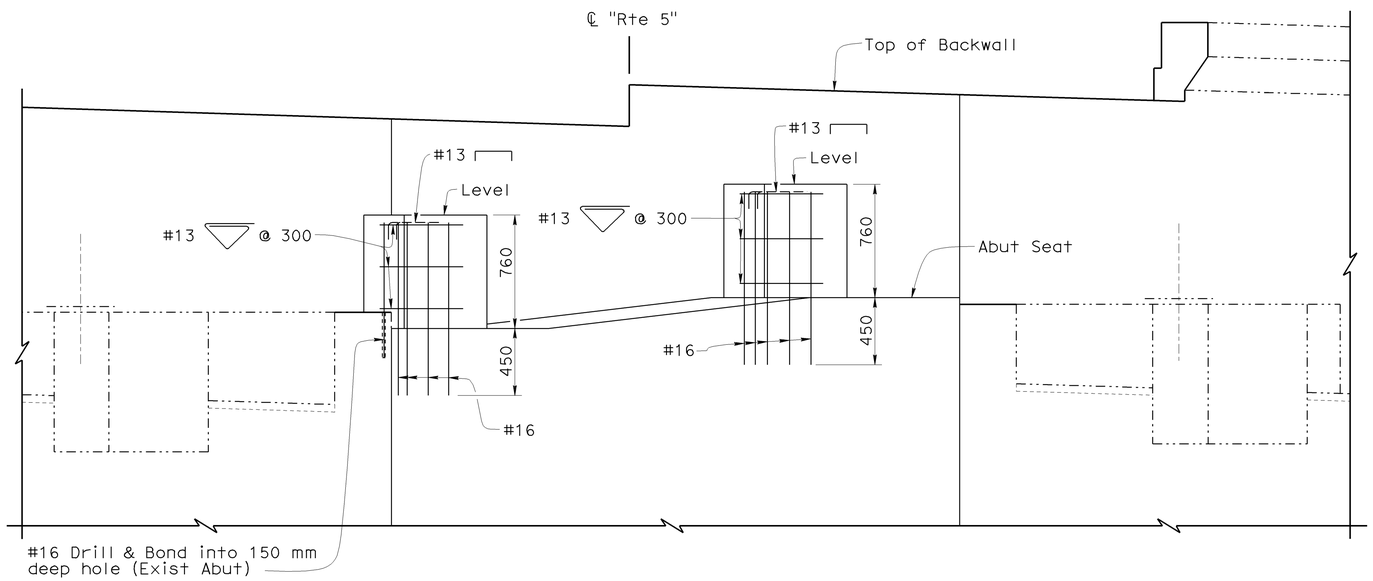

ELEVATION

Note: Girders, Bearing pads & Bolster plates not shown for clarity.

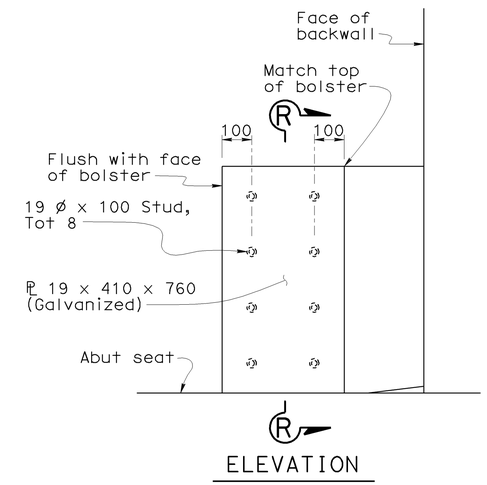

ELEVATION

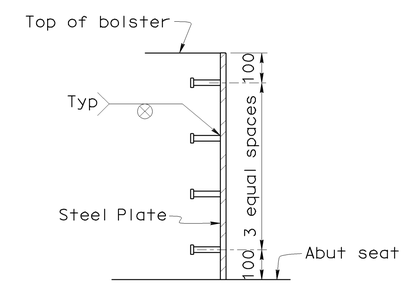

SECTION R-R

BOLSTER PLATE
1:10

NOTE:
THE CONTRACTOR SHALL VERIFY ALL CONTROLLING FIELD DIMENSIONS BEFORE ORDERING OR FABRICATING ANY MATERIAL.

BOLSTER DETAILS (ABUTMENT 6)
1:20

Caltrans Metric

	BY	CHECKED
DESIGN	Shervin Pahlavan	Jose Higareda
DETAILS	Dale Kubochi	Jose Higareda
QUANTITIES	Jerry Han	Joel Ruiz

STATE OF CALIFORNIA
DEPARTMENT OF TRANSPORTATION

DIVISION OF ENGINEERING SERVICES
STRUCTURE DESIGN
DESIGN BRANCH 15

BRIDGE NO. 53-1075
KILOMETER POST 43.6

LOS ANGELES RIVER BRIDGE AND SEPARATION (WIDEN)
ABUTMENT DETAILS NO. 7

ALL DIMENSIONS ARE IN MILLIMETERS UNLESS OTHERWISE SHOWN

ORIGINAL SCALE IN MILLIMETERS FOR REDUCED PLANS 0 10 20 30 40 50 60 70 80 90 100

CU 07
EA 121841

DISREGARD PRINTS BEARING EARLIER REVISION DATES

REVISION DATES: 10-23-07 11-13-07 1-30-08 10-31-08 11-21-08 12-22-08 1-16-09

SHEET 14 OF 64

FILE => 53-1075rl-i-abdet07.dgn

STRUCTURES DESIGN DETAIL SHEET (METRIC) (REV.03-17-04)

USERNAME => trmikesl DATE PLOTTED => 12-JUN-2009 TIME PLOTTED => 06:40

DIST	COUNTY	ROUTE	KILOMETER POST TOTAL PROJECT	SHEET No	TOTAL SHEETS
07	LA	5	42.8/47.3	588	1073

Andrew Rittenhouse 12-05-08
REGISTERED CIVIL ENGINEER DATE

6-8-09
PLANS APPROVAL DATE

REGISTERED PROFESSIONAL ENGINEER Andrew P. Rittenhouse No. 61006 Exp. 12-31-10 CIVIL STATE OF CALIFORNIA

The State of California or its officers or agents shall not be responsible for the accuracy or completeness of electronic copies of this plan sheet.

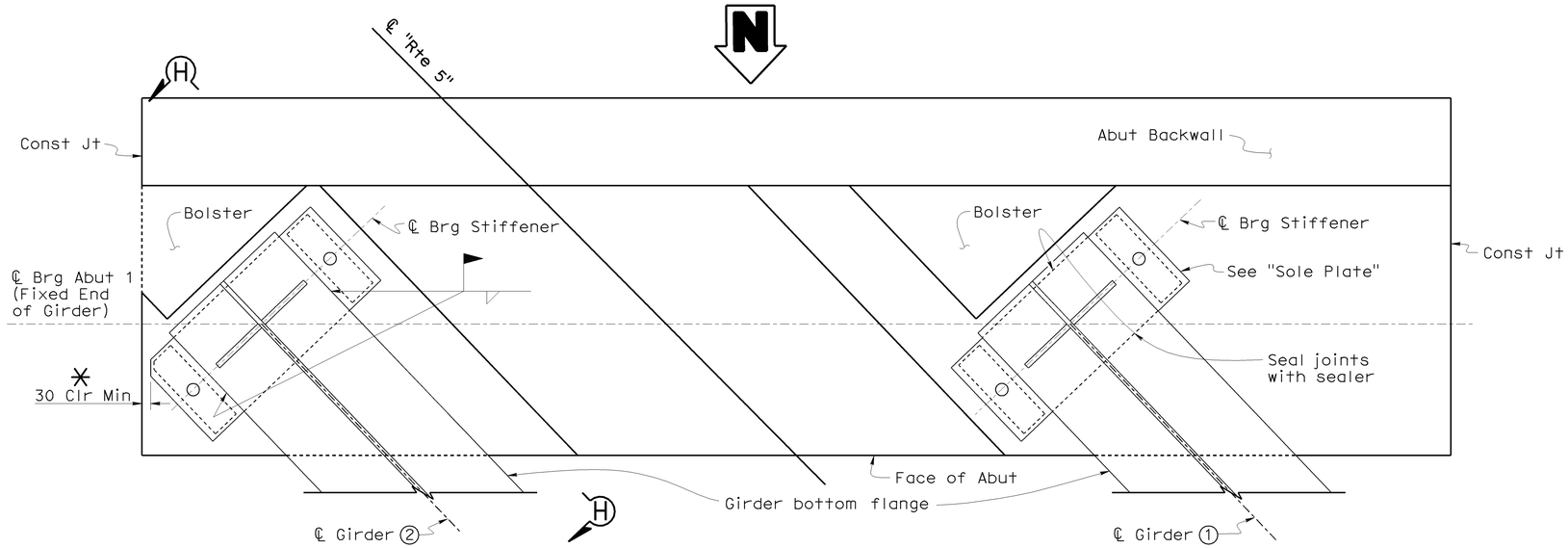

PLAN (ABUTMENT 1)

✳ - Cut plates if required

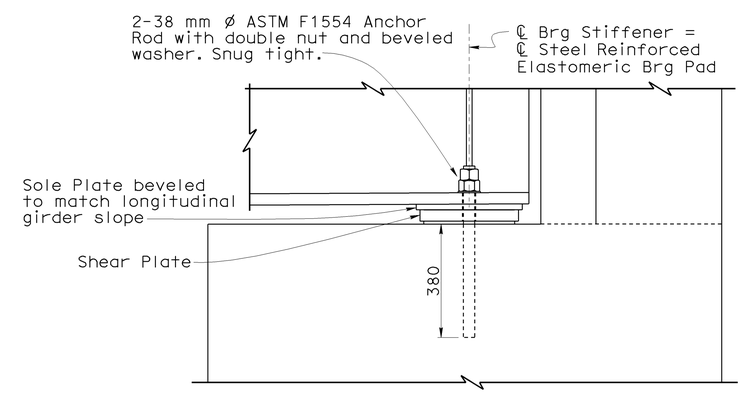

SECTION H-H
1:10

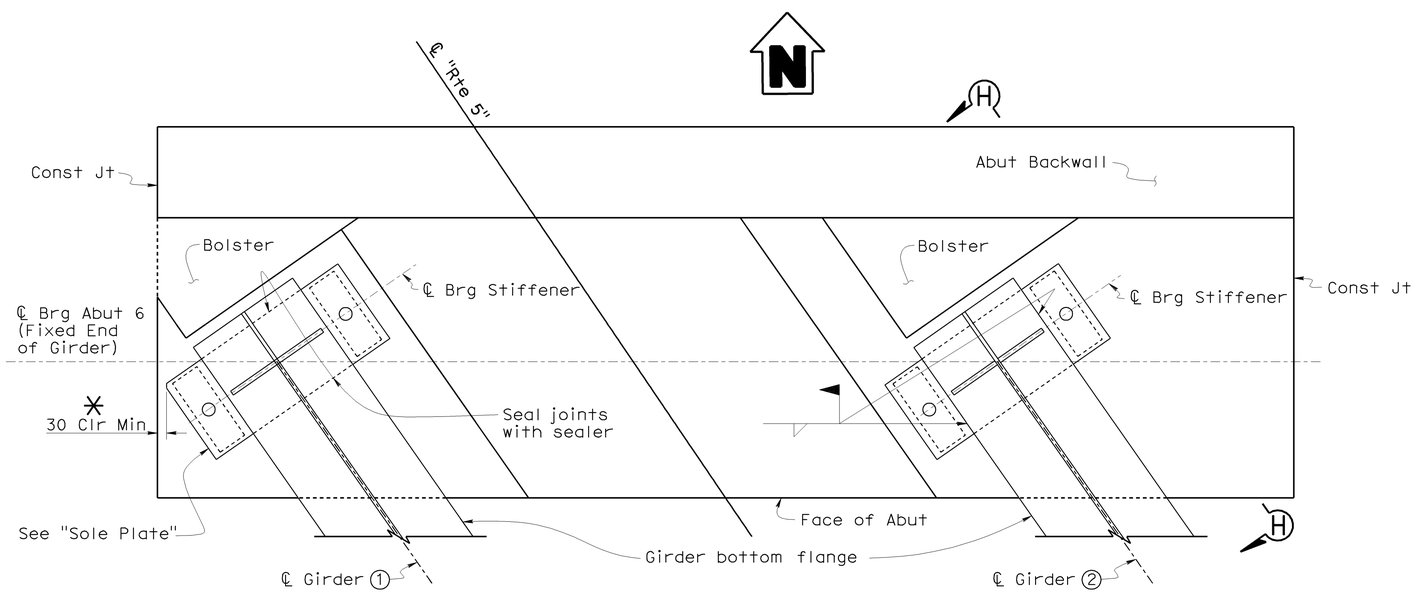

PLAN (ABUTMENT 6)

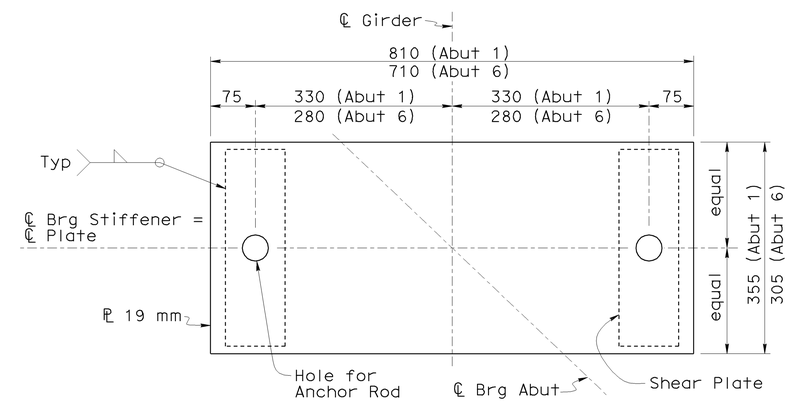

SOLE PLATE
1:5

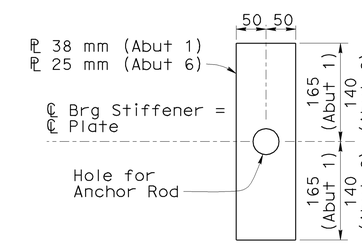

SHEAR PLATE
1:5

NOTE:
THE CONTRACTOR SHALL VERIFY ALL CONTROLLING FIELD DIMENSIONS BEFORE ORDERING OR FABRICATING ANY MATERIAL.

ABUTMENT BEARING DETAILS
1:10

Caltrans Metric

	BY	CHECKED
DESIGN	Shervin Pahlavan	Jose Higareda
DETAILS	Dale Kubochi	Jose Higareda
QUANTITIES	Jerry Han	Joel Ruiz

STATE OF CALIFORNIA
DEPARTMENT OF TRANSPORTATION

DIVISION OF ENGINEERING SERVICES
STRUCTURE DESIGN
DESIGN BRANCH 15

BRIDGE NO. 53-1075
KILOMETER POST 43.6

LOS ANGELES RIVER BRIDGE AND SEPARATION (WIDEN)
ABUTMENT DETAILS NO. 8

ALL DIMENSIONS ARE IN MILLIMETERS UNLESS OTHERWISE SHOWN

ORIGINAL SCALE IN MILLIMETERS FOR REDUCED PLANS 0 10 20 30 40 50 60 70 80 90 100

CU 07
EA 121841

DISREGARD PRINTS BEARING EARLIER REVISION DATES

REVISION DATES: 10-1-07 11-5-07 1-14-08 4-17-08 10-31-08 11-21-08 1-16-09

SHEET 15 OF 64

FILE => 53-1075r1-i-abdet08.dgn

STRUCTURES DESIGN DETAIL SHEET (METRIC) (REV.03-17-04)

USERNAME => trmthest DATE PLOTTED => 12-JUN-2009 TIME PLOTTED => 06:40

DIST	COUNTY	ROUTE	KILOMETER POST TOTAL PROJECT	SHEET No	TOTAL SHEETS
07	LA	5	42.8/47.3	589	1073

Andrew Rittenhouse 12-05-08
REGISTERED CIVIL ENGINEER DATE

6-8-09
PLANS APPROVAL DATE

REGISTERED PROFESSIONAL ENGINEER Andrew P. Rittenhouse No. 61006 Exp. 12-31-10 CIVIL STATE OF CALIFORNIA

The State of California or its officers or agents shall not be responsible for the accuracy or completeness of electronic copies of this plan sheet.

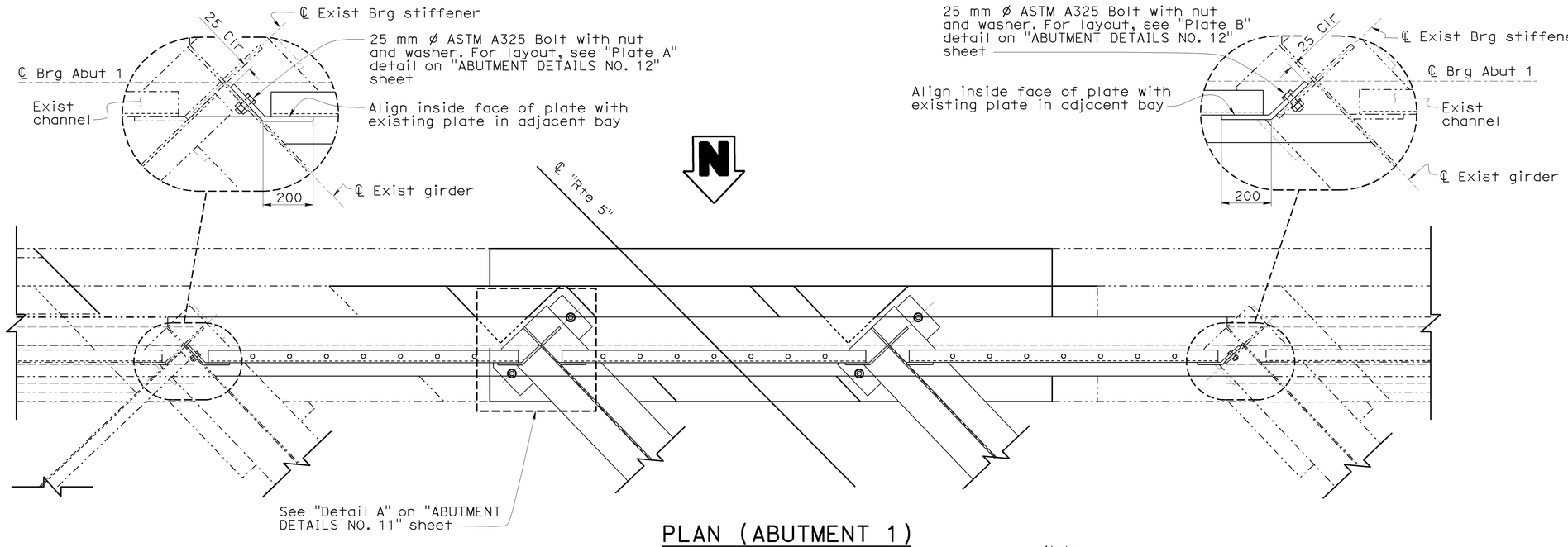

PLAN (ABUTMENT 1)

1:20

Note:
Diaphragm reinforcement not shown for clarity.

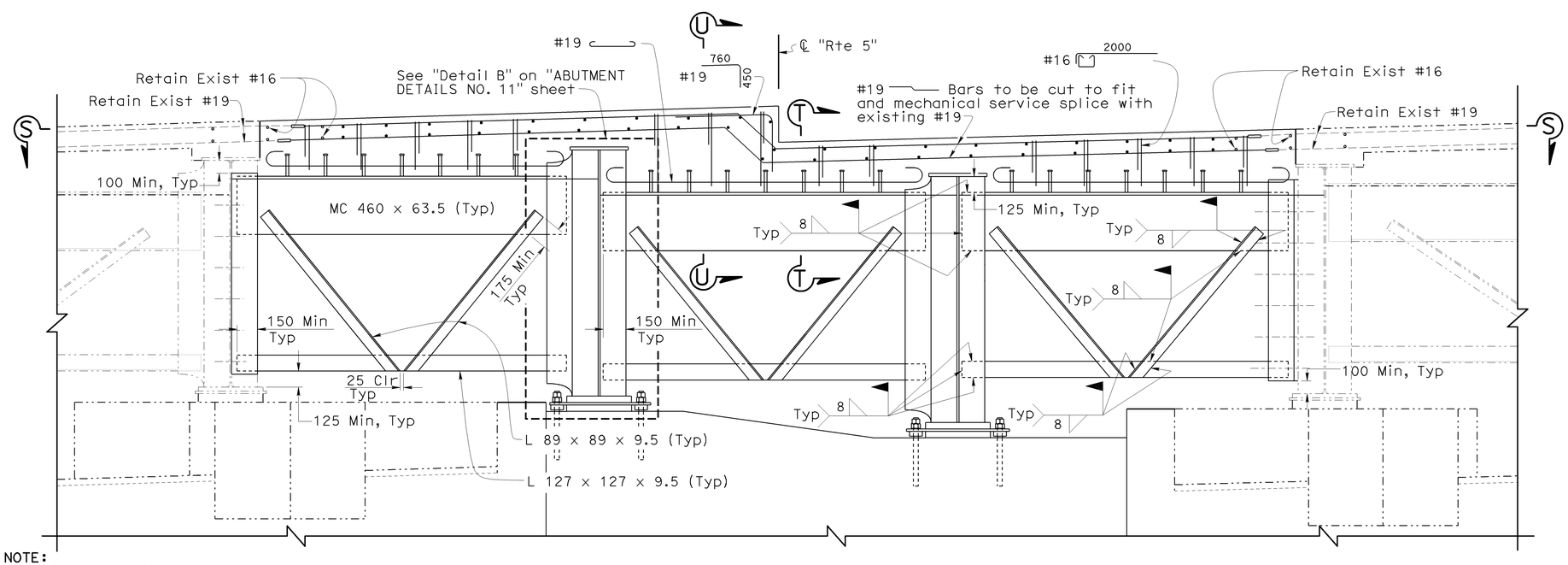

Note:
- For "View S-S", "Section T-T" and "Section U-U", see "ABUTMENT DETAILS NO. 11" sheet

NOTE:
THE CONTRACTOR SHALL VERIFY ALL CONTROLLING FIELD DIMENSIONS BEFORE ORDERING OR FABRICATING ANY MATERIAL.

ELEVATION (ABUTMENT 1)

1:20

	BY	CHECKED
DESIGN	Shervin Pahlavan	Jose Higareda
DETAILS	Dale Kubochi	Jose Higareda
QUANTITIES	Jerry Han	Joel Ruiz

STATE OF CALIFORNIA
DEPARTMENT OF TRANSPORTATION

DIVISION OF ENGINEERING SERVICES
STRUCTURE DESIGN
DESIGN BRANCH 15

BRIDGE NO. 53-1075
KILOMETER POST 43.6

LOS ANGELES RIVER BRIDGE AND SEPARATION (WIDEN)
ABUTMENT DETAILS NO. 9

Caltrans Metric

ALL DIMENSIONS ARE IN MILLIMETERS UNLESS OTHERWISE SHOWN

ORIGINAL SCALE IN MILLIMETERS FOR REDUCED PLANS 0 10 20 30 40 50 60 70 80 90 100

CU 07
EA 121841

DISREGARD PRINTS BEARING EARLIER REVISION DATES

REVISION DATES: 4-15-08 8-25-08 10-17-08 11-17-08 12-12-08 1-16-09

SHEET 16 OF 64

FILE => 53-1075ri-i-abdet09.dgn

STRUCTURES DESIGN DETAIL SHEET (METRIC) (REV.03-17-04)

USERNAME => trmikesl DATE PLOTTED => 12-JUN-2009 TIME PLOTTED => 06:40

DIST	COUNTY	ROUTE	KILOMETER POST TOTAL PROJECT	SHEET No	TOTAL SHEETS
07	LA	5	42.8/47.3	590	1073

Andrew Rittenhouse 12-05-08
REGISTERED CIVIL ENGINEER DATE

6-8-09
PLANS APPROVAL DATE

REGISTERED PROFESSIONAL ENGINEER Andrew P. Rittenhouse No. 61006 Exp. 12-31-10 CIVIL STATE OF CALIFORNIA

The State of California or its officers or agents shall not be responsible for the accuracy or completeness of electronic copies of this plan sheet.

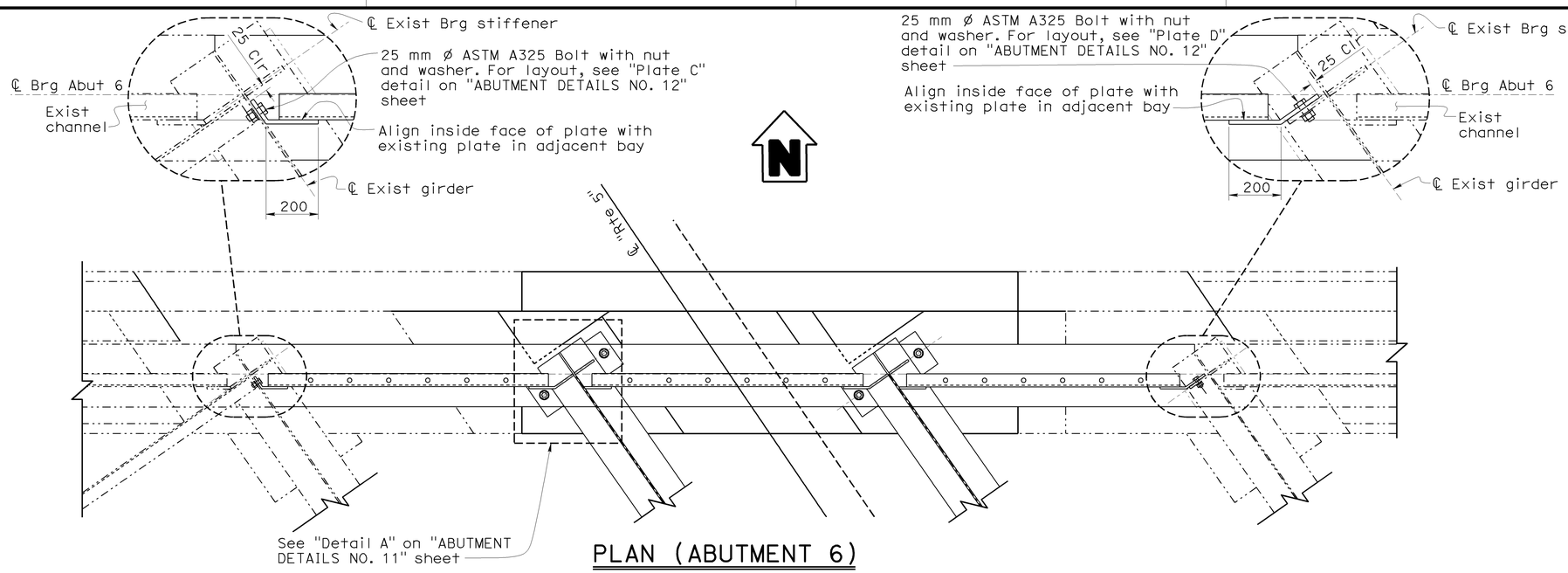

PLAN (ABUTMENT 6)

1:20

Note:
Diaphragm reinforcement not shown for clarity.

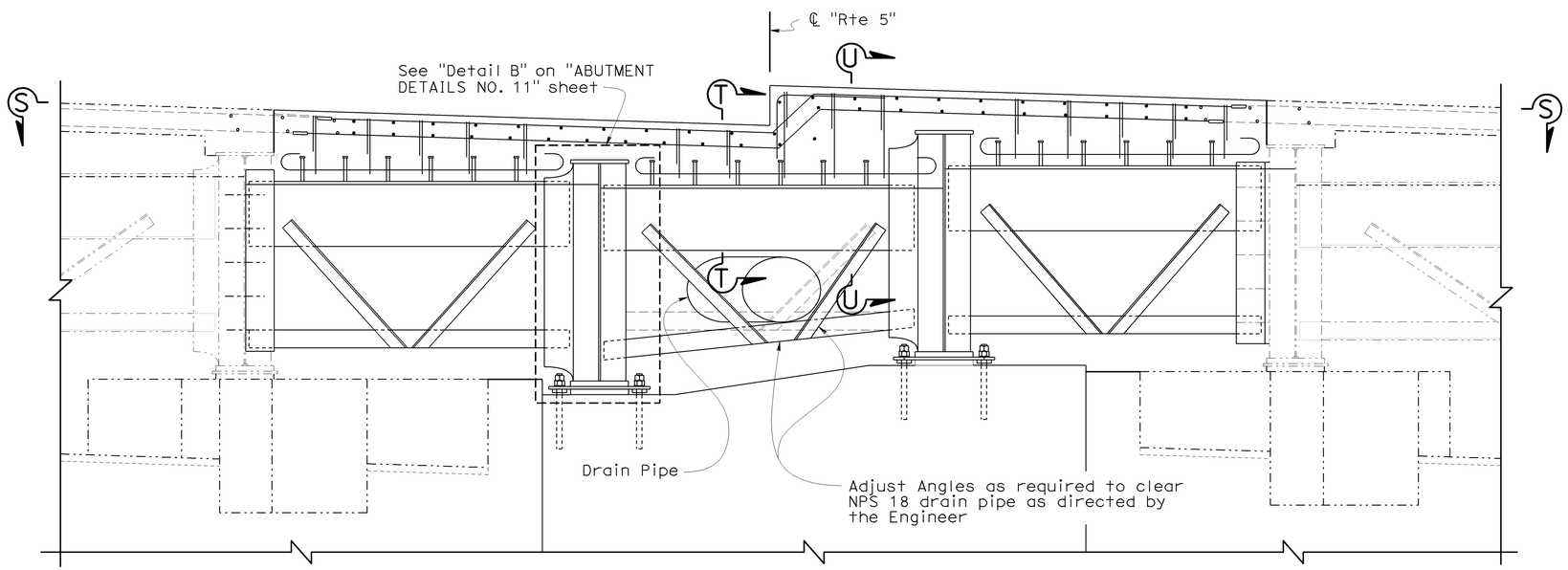

ELEVATION (ABUTMENT 6)

1:20

Notes:
- For details not noted or shown, see "Elevation (Abutment 1)" on "ABUTMENT DETAILS NO. 9" sheet
- For "View S-S", "Section T-T" and "Section U-U", see "ABUTMENT DETAILS NO. 11" sheet

NOTE:
THE CONTRACTOR SHALL VERIFY ALL CONTROLLING FIELD DIMENSIONS BEFORE ORDERING OR FABRICATING ANY MATERIAL.

Caltrans Metric

	BY	CHECKED
DESIGN	Shervin Pahlavan	Jose Higareda
DETAILS	Dale Kubochi	Jose Higareda
QUANTITIES	Jerry Han	Joel Ruiz

STATE OF CALIFORNIA
DEPARTMENT OF TRANSPORTATION

DIVISION OF ENGINEERING SERVICES
STRUCTURE DESIGN
DESIGN BRANCH 15

BRIDGE NO. 53-1075
KILOMETER POST 43.6

LOS ANGELES RIVER BRIDGE AND SEPARATION (WIDEN)

ABUTMENT DETAILS NO. 10

ALL DIMENSIONS ARE IN MILLIMETERS UNLESS OTHERWISE SHOWN

ORIGINAL SCALE IN MILLIMETERS FOR REDUCED PLANS 0 10 20 30 40 50 60 70 80 90 100

CU 07
EA 121841

DISREGARD PRINTS BEARING EARLIER REVISION DATES

REVISION DATES: 4-15-08 5-1-08 10-17-08 11-14-08 12-12-08 1-16-09

SHEET 17 OF 64

FILE => 53-1075ri-i-abdet10.dgn

STRUCTURES DESIGN DETAIL SHEET (METRIC) (REV.03-17-04)

USERNAME => trmikesl DATE PLOTTED => 12-JUN-2009 TIME PLOTTED => 06:40

DIST	COUNTY	ROUTE	KILOMETER POST TOTAL PROJECT	SHEET No	TOTAL SHEETS
07	LA	5	42.8/47.3	591	1073

Andrew Rittenhouse 12-05-08
REGISTERED CIVIL ENGINEER DATE

6-8-09
PLANS APPROVAL DATE

REGISTERED PROFESSIONAL ENGINEER Andrew P. Rittenhouse No. 61006 Exp. 12-31-10 CIVIL STATE OF CALIFORNIA

The State of California or its officers or agents shall not be responsible for the accuracy or completeness of electronic copies of this plan sheet.

Note:
Details shown on this sheet are from Abutment 1. Abutment 6 is similar.

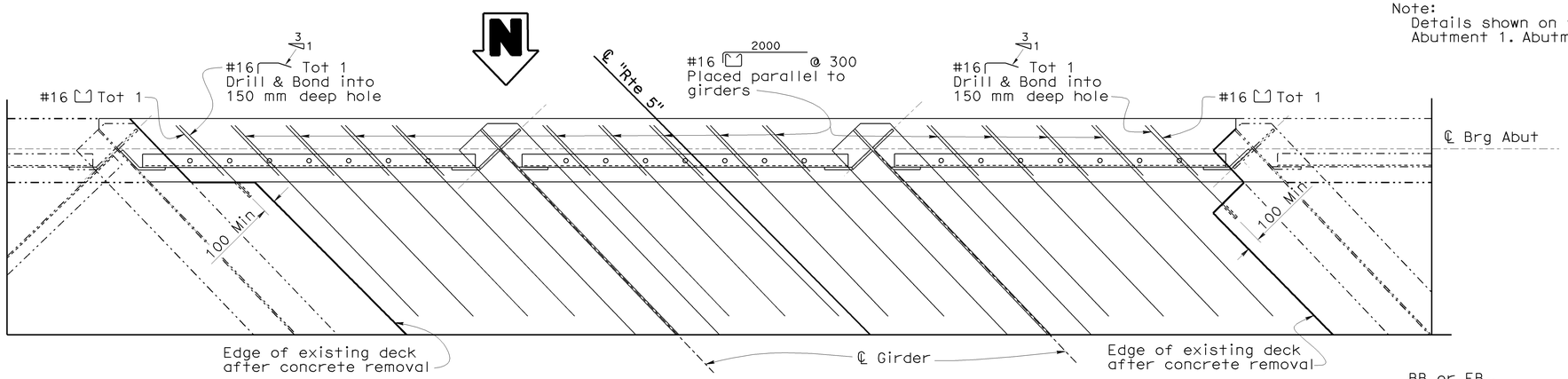

VIEW S-S
1:20

Note: Other reinforcement not shown for clarity.

LOCATION	Dimension "a"		
	Winter	Fall-Spring	Summer
Abut 1	19	19	19
Abut 6	19	19	19

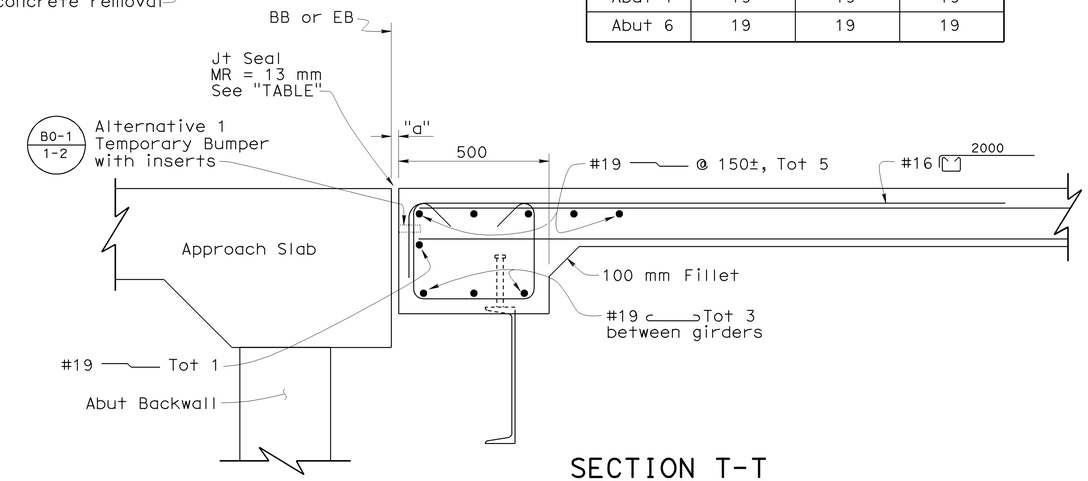

SECTION T-T
1:10

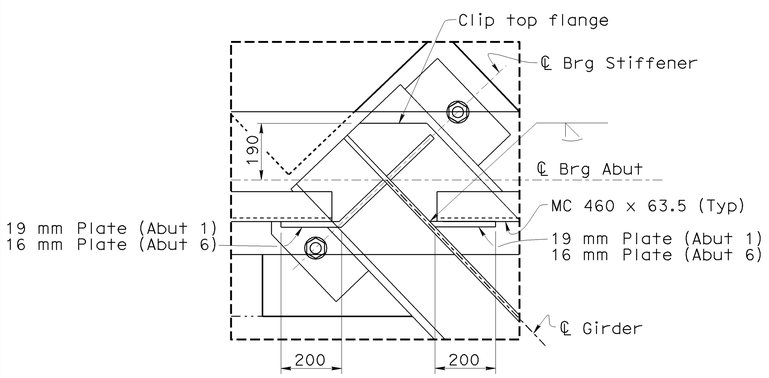

DETAIL A
1:10

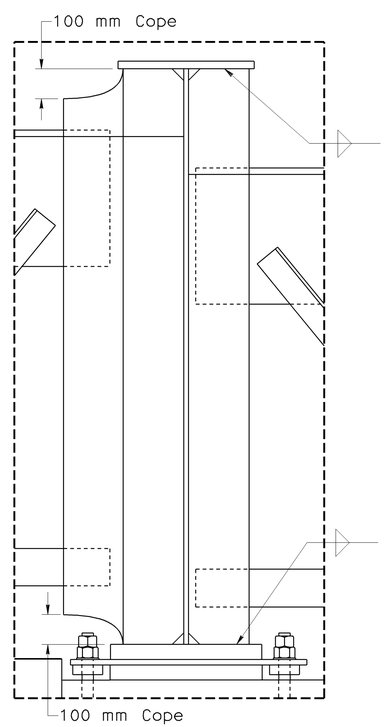

DETAIL B
1:10

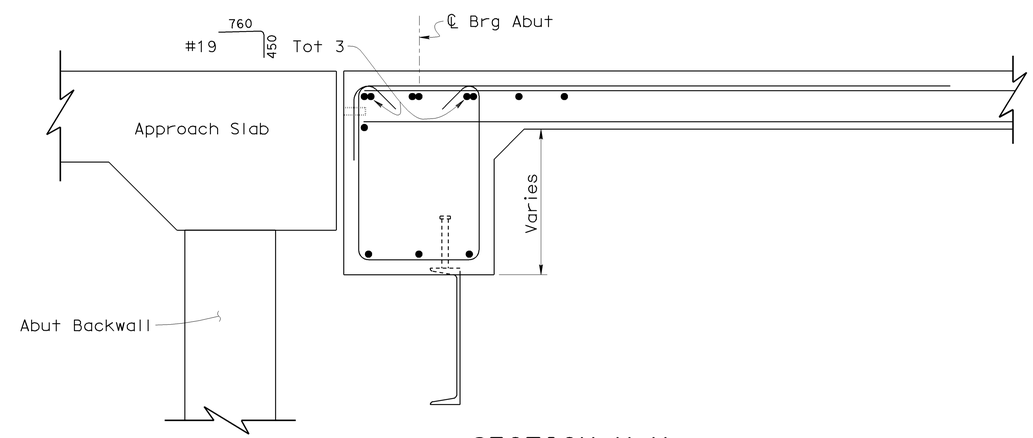

SECTION U-U
1:10

Note: For details not noted, see "Section T-T"

NOTE:
THE CONTRACTOR SHALL VERIFY ALL CONTROLLING FIELD DIMENSIONS BEFORE ORDERING OR FABRICATING ANY MATERIAL.

	BY	CHECKED
DESIGN	Shervin Pahlavan	Jose Higareda
DETAILS	Dale Kubochi	Jose Higareda
QUANTITIES	Jerry Han	Joel Ruiz

STATE OF CALIFORNIA
DEPARTMENT OF TRANSPORTATION

DIVISION OF ENGINEERING SERVICES
STRUCTURE DESIGN
DESIGN BRANCH 15

BRIDGE NO. 53-1075
KILOMETER POST 43.6

LOS ANGELES RIVER BRIDGE AND SEPARATION (WIDEN)

ABUTMENT DETAILS NO. 11

ALL DIMENSIONS ARE IN MILLIMETERS UNLESS OTHERWISE SHOWN

ORIGINAL SCALE IN MILLIMETERS FOR REDUCED PLANS 0 10 20 30 40 50 60 70 80 90 100

CU 07
EA 121841

DISREGARD PRINTS BEARING EARLIER REVISION DATES

REVISION DATES: 4-11-08 4-21-08 10-31-08 11-21-08 12-22-08

SHEET 18 OF 64

FILE => 53-1075rl-i-abdet11.dgn

STRUCTURES DESIGN DETAIL SHEET (METRIC) (REV.03-17-04)

USERNAME => trmikest DATE PLOTTED => 12-JUN-2009 TIME PLOTTED => 07:06

DIST	COUNTY	ROUTE	KILOMETER POST TOTAL PROJECT	SHEET No	TOTAL SHEETS
07	LA	5	42.8/47.3	592	1073

Andrew Rittenhouse 12-05-08
REGISTERED CIVIL ENGINEER DATE

6-8-09
PLANS APPROVAL DATE

REGISTERED PROFESSIONAL ENGINEER
Andrew P. Rittenhouse
No. 61006
Exp. 12-31-10
CIVIL
STATE OF CALIFORNIA

The State of California or its officers or agents shall not be responsible for the accuracy or completeness of electronic copies of this plan sheet.

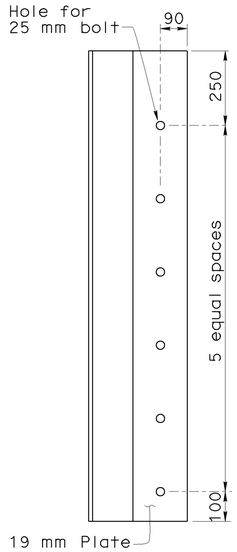

PLATE A
1:10

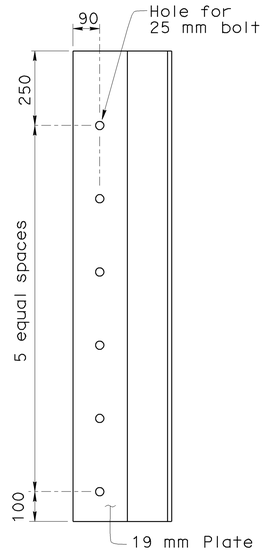

PLATE B
1:10

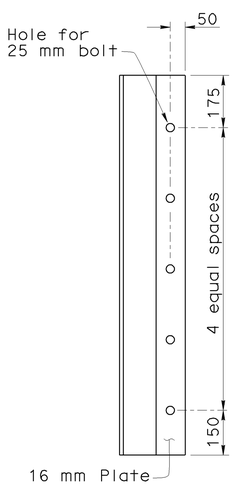

PLATE C
1:10

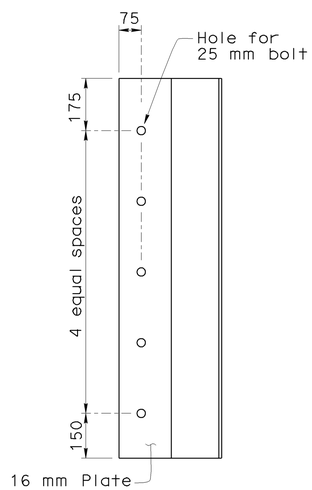

PLATE D
1:10

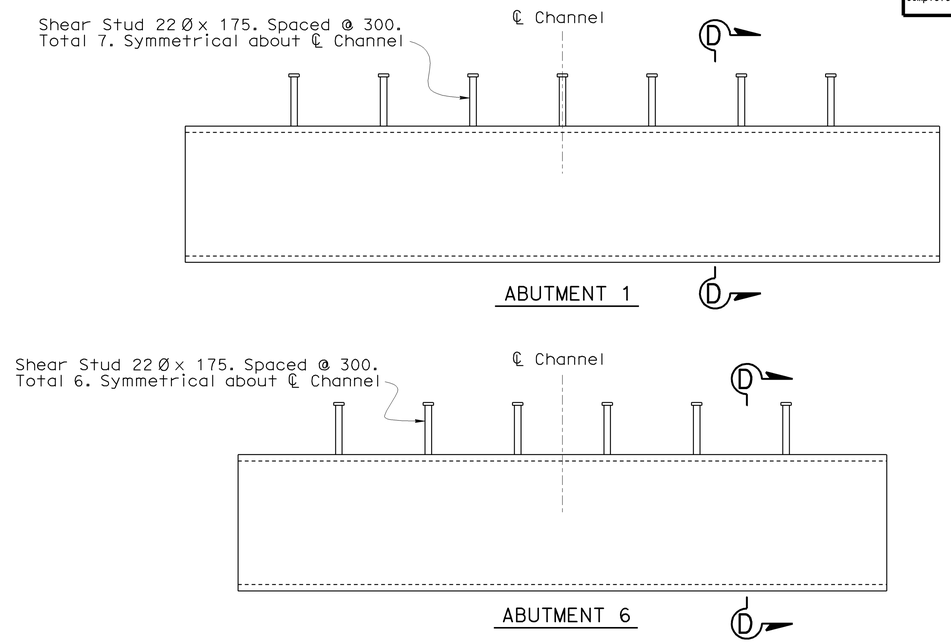

CHANNEL (MC 460 x 63.5)
1:10

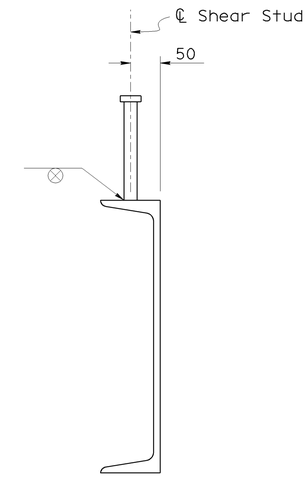

SECTION D-D
1:5

NOTE:
THE CONTRACTOR SHALL VERIFY ALL CONTROLLING FIELD DIMENSIONS BEFORE ORDERING OR FABRICATING ANY MATERIAL.

Caltrans Metric

	BY	CHECKED
DESIGN	Shervin Pahlavan	Jose Higareda
DETAILS	Dale Kubochi	Jose Higareda
QUANTITIES	Jerry Han	Joel Ruiz

ALL DIMENSIONS ARE IN MILLIMETERS UNLESS OTHERWISE SHOWN

ORIGINAL SCALE IN MILLIMETERS FOR REDUCED PLANS 0 10 20 30 40 50 60 70 80 90 100

STATE OF CALIFORNIA
DEPARTMENT OF TRANSPORTATION

DIVISION OF ENGINEERING SERVICES
STRUCTURE DESIGN
DESIGN BRANCH 15

CU 07
EA 121841

BRIDGE NO. 53-1075
KILOMETER POST 43.6

LOS ANGELES RIVER BRIDGE AND SEPARATION (WIDEN)

ABUTMENT DETAILS NO. 12

DISREGARD PRINTS BEARING EARLIER REVISION DATES

REVISION DATES: 1-22-08 10-31-08 11-21-08 12-22-08

SHEET 19 OF 64

STRUCTURES DESIGN DETAIL SHEET (METRIC) (REV.03-17-04)

FILE => 53-1075rl-i-abdet12.dgn

USERNAME => trmikesl DATE PLOTTED => 12-JUN-2009 TIME PLOTTED => 07:06

DIST	COUNTY	ROUTE	KILOMETER POST TOTAL PROJECT	SHEET No	TOTAL SHEETS
07	LA	5	42.8/47.3	593	1073

Andrew Rittenhouse 12-05-08
REGISTERED CIVIL ENGINEER DATE

6-8-09
PLANS APPROVAL DATE

REGISTERED PROFESSIONAL ENGINEER Andrew P. Rittenhouse No. 61006 Exp. 12-31-10 CIVIL STATE OF CALIFORNIA

The State of California or its officers or agents shall not be responsible for the accuracy or completeness of electronic copies of this plan sheet.

Legend:

Expanded Polystyrene

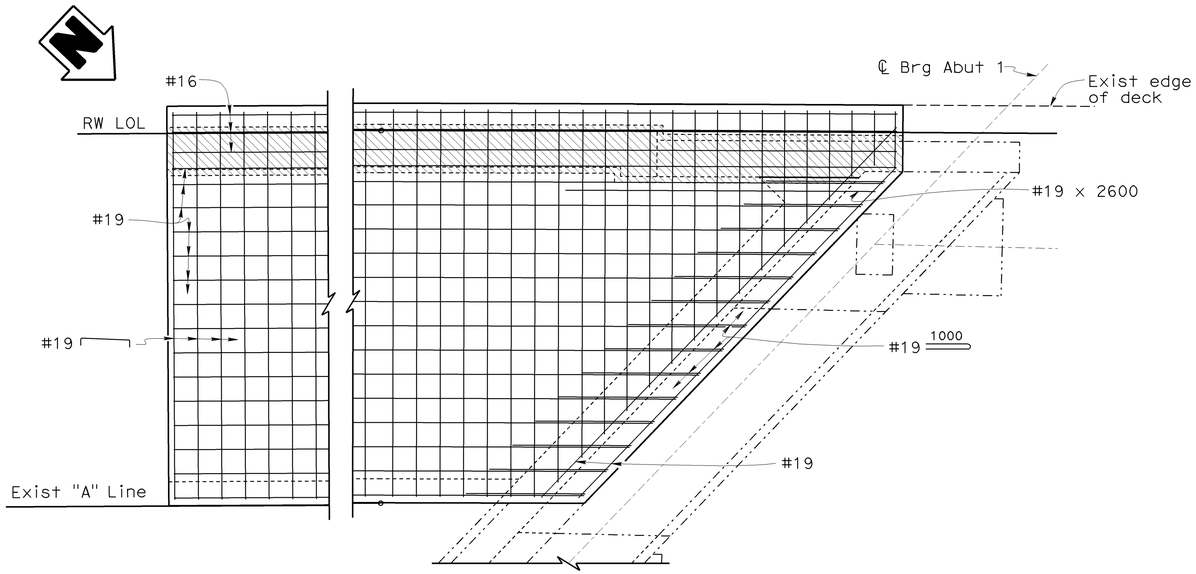

(TOP REINFORCEMENT)

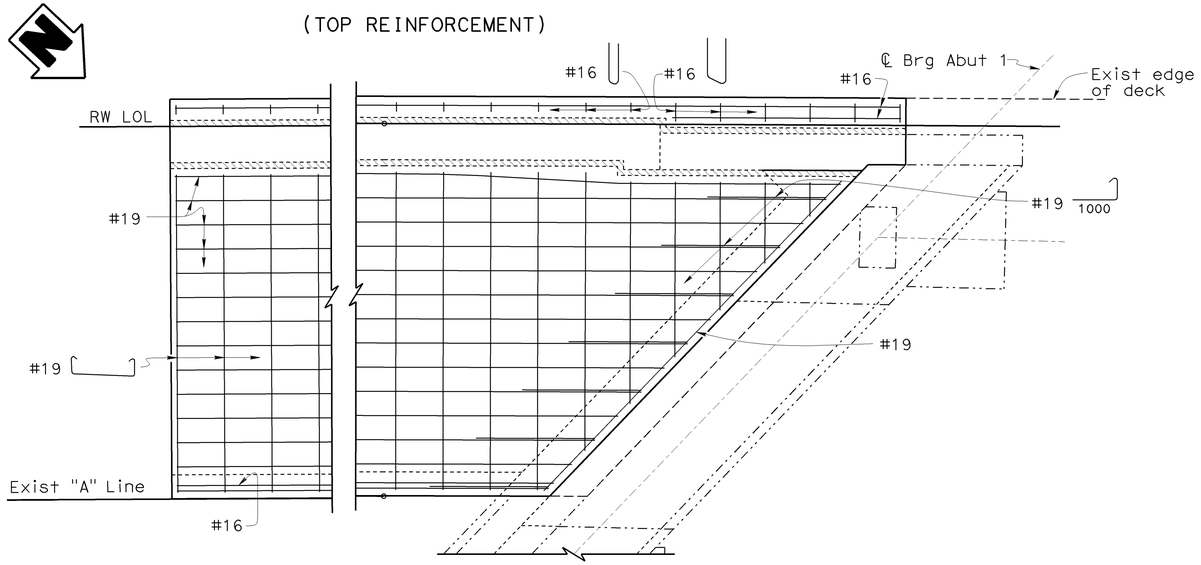

(BOTTOM REINFORCEMENT)

BARRIER SLAB - PLAN (ABUTMENT 1)

1:25

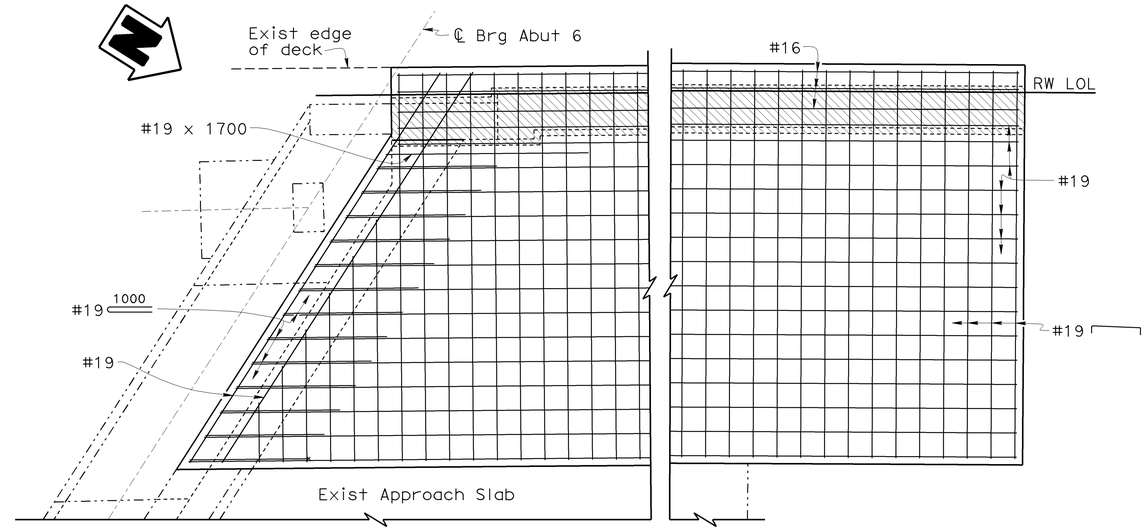

(TOP REINFORCEMENT)

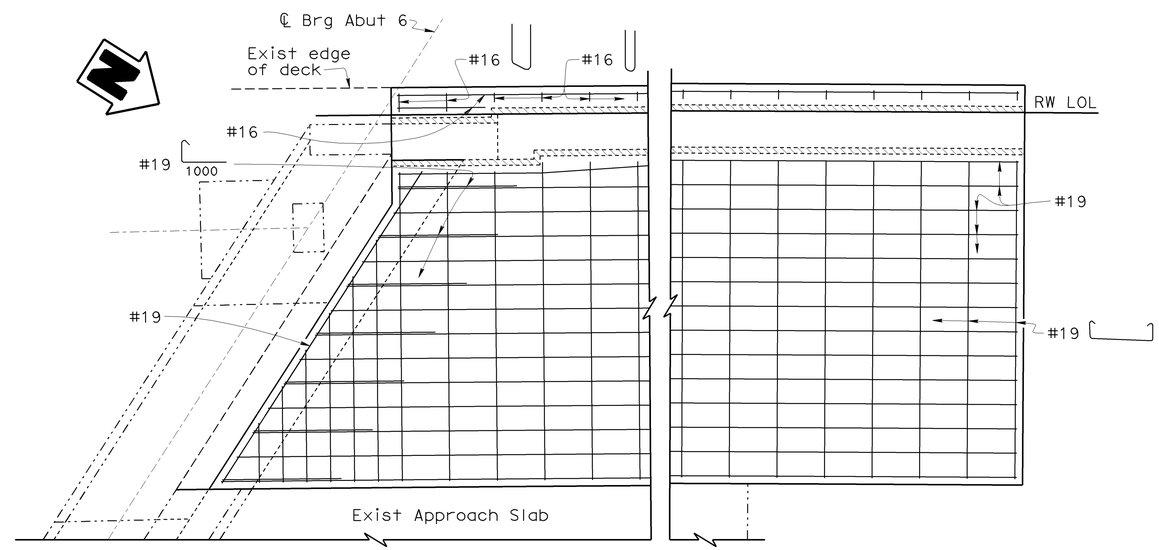

(BOTTOM REINFORCEMENT)

BARRIER SLAB - PLAN (ABUTMENT 6)

1:25

NOTE:
THE CONTRACTOR SHALL VERIFY ALL CONTROLLING FIELD DIMENSIONS BEFORE ORDERING OR FABRICATING ANY MATERIAL.

	BY	CHECKED
DESIGN	James Ralston	Jose Higareda
DETAILS	Dale Kubochi	Jose Higareda
QUANTITIES	Jerry Han	Joel Ruiz

STATE OF CALIFORNIA
DEPARTMENT OF TRANSPORTATION

DIVISION OF ENGINEERING SERVICES
STRUCTURE DESIGN
DESIGN BRANCH 15

BRIDGE NO. 53-1075
KILOMETER POST 43.6

LOS ANGELES RIVER BRIDGE AND SEPARATION (WIDEN)

ABUTMENT DETAILS NO. 13

ALL DIMENSIONS ARE IN MILLIMETERS UNLESS OTHERWISE SHOWN

ORIGINAL SCALE IN MILLIMETERS FOR REDUCED PLANS 0 10 20 30 40 50 60 70 80 90 100

CU 07
EA 121841

DISREGARD PRINTS BEARING EARLIER REVISION DATES

REVISION DATES: 4-2-08 4-11-08 4-14-08 10-31-08 11-21-08 12-22-08

SHEET 20 OF 64

FILE => 53-1075ri-i-abdet13.dgn

STRUCTURES DESIGN DETAIL SHEET (METRIC) (REV.03-17-04)

USERNAME => trmikesl DATE PLOTTED => 12-JUN-2009 TIME PLOTTED => 07:06

DIST	COUNTY	ROUTE	KILOMETER POST TOTAL PROJECT	SHEET No	TOTAL SHEETS
07	LA	5	42.8/47.3	594	1073

REGISTERED CIVIL ENGINEER — DATE 12-05-08

6-8-09
PLANS APPROVAL DATE

REGISTERED PROFESSIONAL ENGINEER — Andrew P. Rittenhouse — No. 61006 — Exp. 12-31-10 — CIVIL — STATE OF CALIFORNIA

The State of California or its officers or agents shall not be responsible for the accuracy or completeness of electronic copies of this plan sheet.

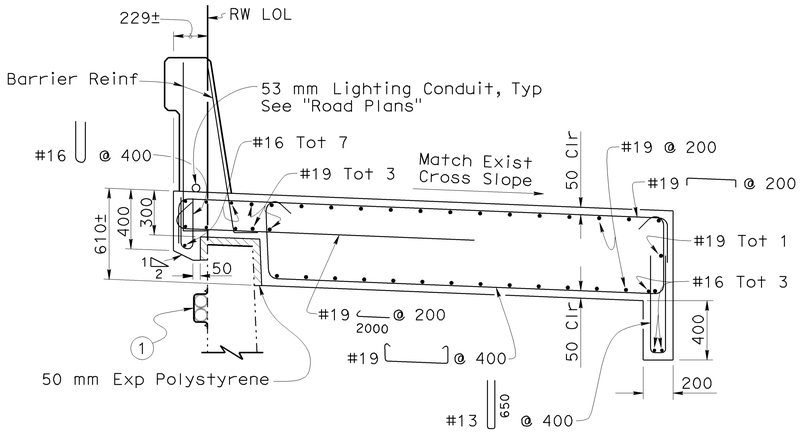

SECTION F-F
1:20

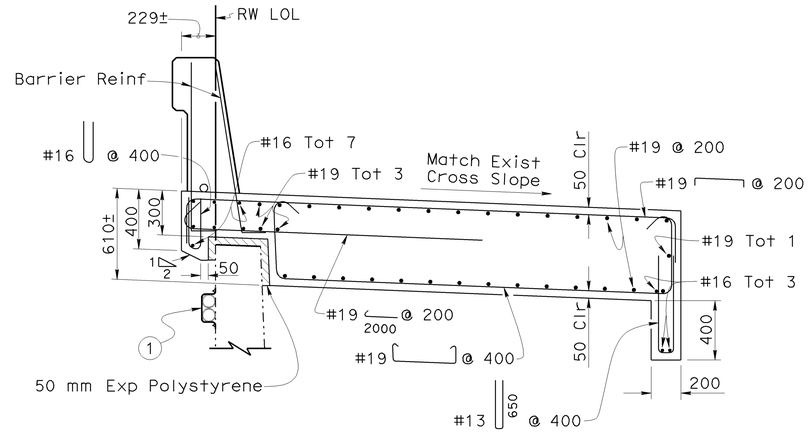

SECTION H-H
1:20

LOCATION	Dimension "a"		
	Winter	Fall-Spring	Summer
Abut 1	19	19	19
Abut 6	19	19	19

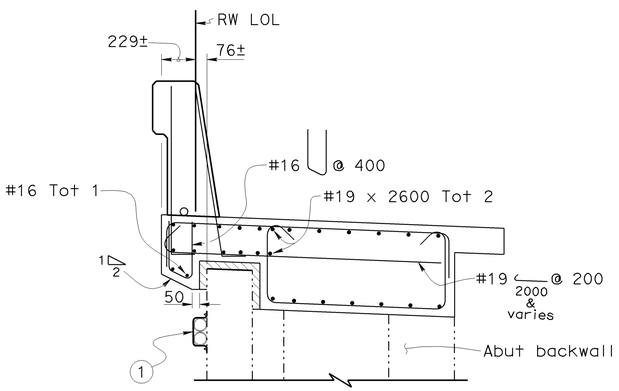

SECTION G-G
1:20

Note:
For details not shown or noted, see "Section F-F"

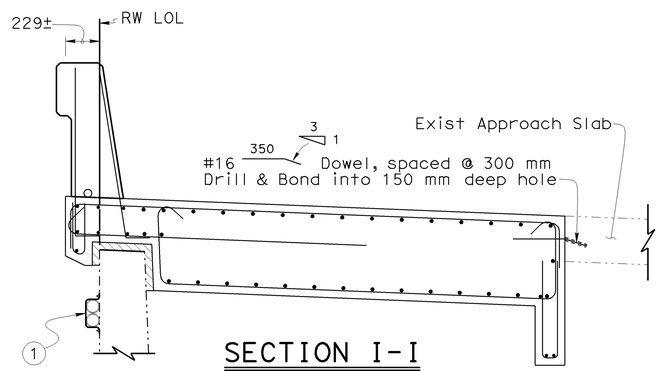

SECTION I-I
1:20

Note: For details not shown or noted, see "Section H-H"

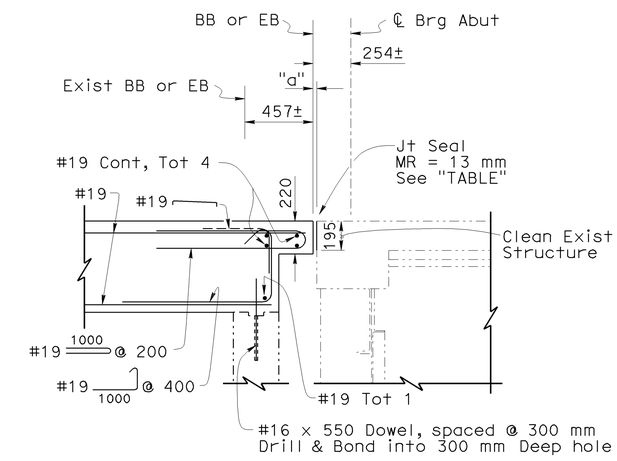

SECTION K-K
1:20

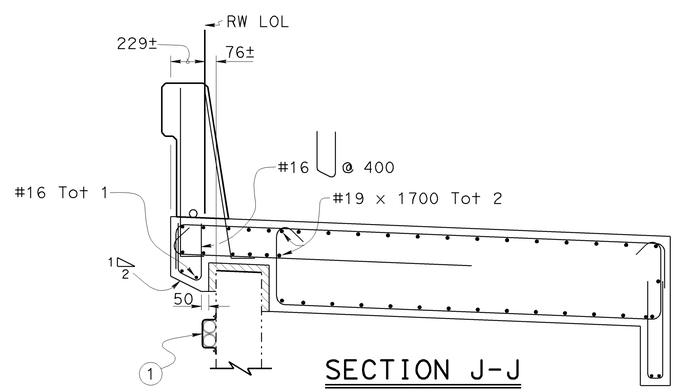

SECTION J-J
1:20

Note: For details not shown or noted, see "Section H-H"

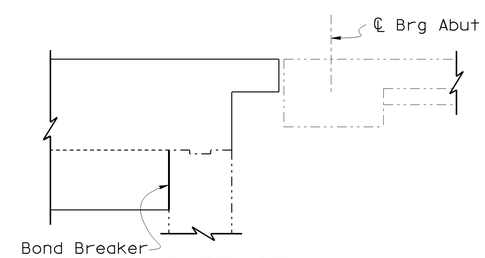

SECTION L-L
1:20

Note: For details not shown or noted, see "Section K-K"

Legend:

(1) Fiber Optic Conduit Strap, see "MISCELLANEOUS DETAILS NO. 5" sheet

Note 1:
Soundwall not shown for clarity.

NOTE:
THE CONTRACTOR SHALL VERIFY ALL CONTROLLING FIELD DIMENSIONS BEFORE ORDERING OR FABRICATING ANY MATERIAL.

Caltrans Metric

	BY	CHECKED
DESIGN	James Ralston	Jose Higareda
DETAILS	Dale Kubochi	Jose Higareda
QUANTITIES	Jerry Han	Joel Ruiz

STATE OF CALIFORNIA
DEPARTMENT OF TRANSPORTATION

DIVISION OF ENGINEERING SERVICES
STRUCTURE DESIGN
DESIGN BRANCH 15

BRIDGE NO. 53-1075
KILOMETER POST 43.6

LOS ANGELES RIVER BRIDGE AND SEPARATION (WIDEN)
ABUTMENT DETAILS NO. 14

ALL DIMENSIONS ARE IN MILLIMETERS UNLESS OTHERWISE SHOWN

ORIGINAL SCALE IN MILLIMETERS FOR REDUCED PLANS 0 10 20 30 40 50 60 70 80 90 100

CU 07
EA 121841

DISREGARD PRINTS BEARING EARLIER REVISION DATES

REVISION DATES: 4-1-08 4-15-08 4-24-08 4-25-08 9-30-08 10-31-08 11-21-08 12-22-08 4-27-09

SHEET 21 OF 64

FILE => 53-1075ri-i-abdet14.dgn

STRUCTURES DESIGN DETAIL SHEET (METRIC) (REV.03-17-04)

USERNAME => trmikesl DATE PLOTTED => 12-JUN-2009 TIME PLOTTED => 07:06

DIST	COUNTY	ROUTE	KILOMETER POST TOTAL PROJECT	SHEET No	TOTAL SHEETS
07	LA	5	42.8/47.3	595	1073

Andrew Rittenhouse 12-05-08
REGISTERED CIVIL ENGINEER DATE

6-8-09
PLANS APPROVAL DATE

REGISTERED PROFESSIONAL ENGINEER Andrew P. Rittenhouse No. 61006 Exp. 12-31-10 CIVIL STATE OF CALIFORNIA

The State of California or its officers or agents shall not be responsible for the accuracy or completeness of electronic copies of this plan sheet.

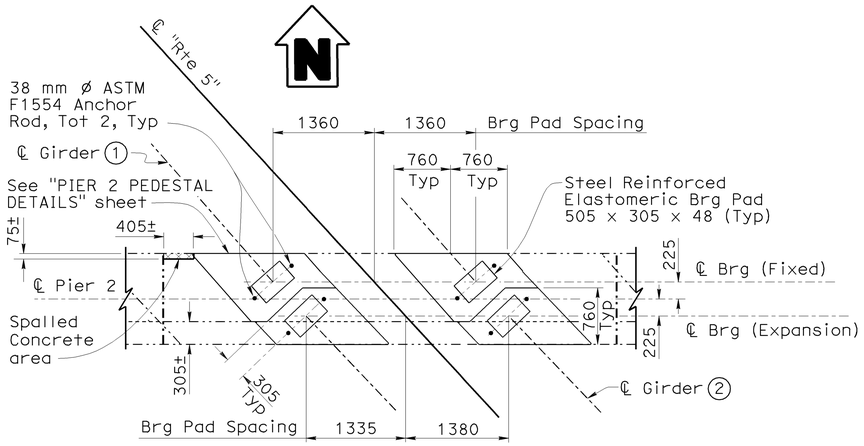

PLAN

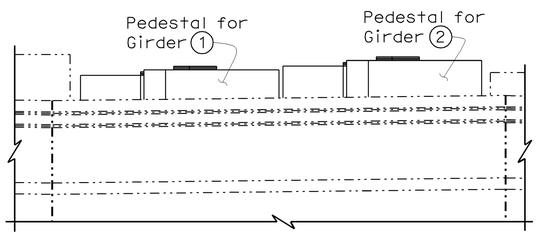

ELEVATION

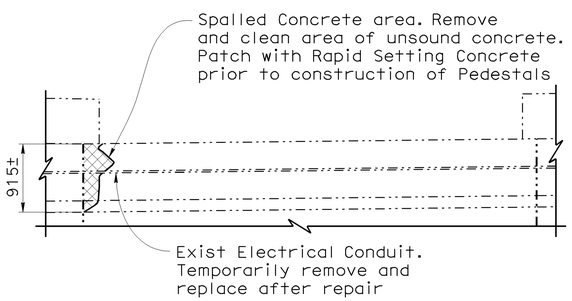

SPALL REPAIR - MIRRORED ELEVATION

PIER 2
1:40

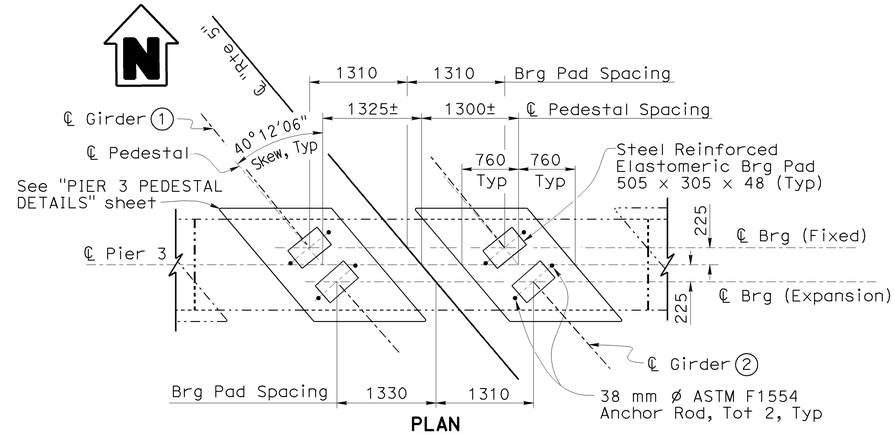

PLAN

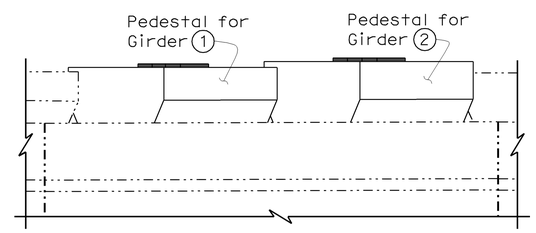

ELEVATION

PIER 3
1:40

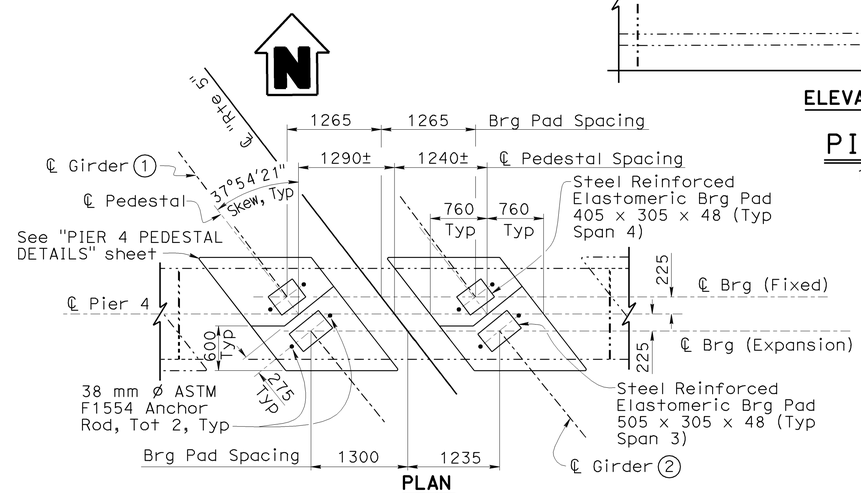

PLAN

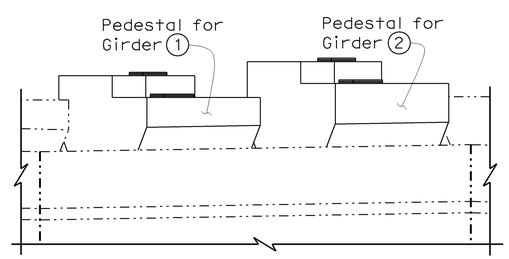

ELEVATION

PIER 4
1:40

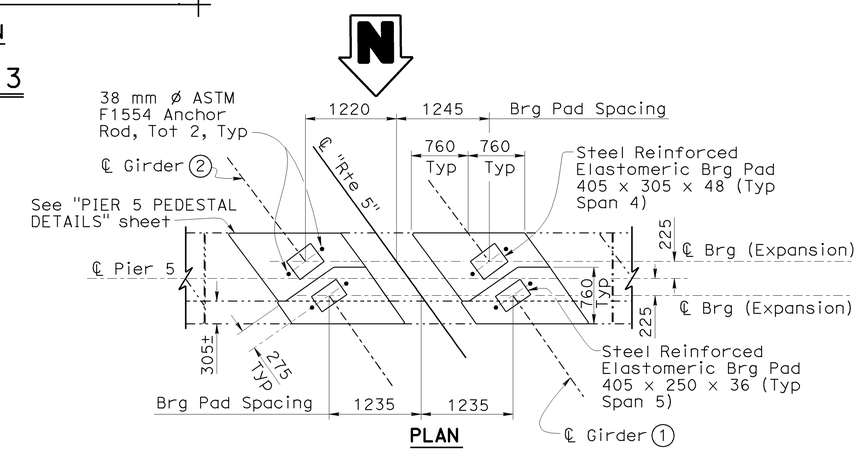

PLAN

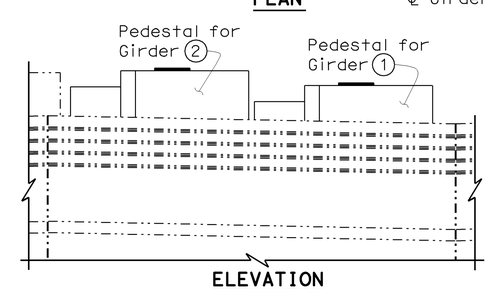

ELEVATION

PIER 5
1:40

NOTE:
THE CONTRACTOR SHALL VERIFY ALL CONTROLLING FIELD DIMENSIONS BEFORE ORDERING OR FABRICATING ANY MATERIAL.

DESIGN	BY Shervin Pahlavan	CHECKED Jose Higareda	
DETAILS	BY Dale Kubochi	CHECKED Jose Higareda	
QUANTITIES	BY Jerry Han	CHECKED Joel Ruiz	

STATE OF CALIFORNIA
DEPARTMENT OF TRANSPORTATION

DIVISION OF ENGINEERING SERVICES
STRUCTURE DESIGN
DESIGN BRANCH 15

BRIDGE NO. 53-1075
KILOMETER POST 43.6

LOS ANGELES RIVER BRIDGE AND SEPARATION (WIDEN)
PIER 2 THRU 5 LAYOUT NO. 1

Caltrans Metric

ALL DIMENSIONS ARE IN MILLIMETERS UNLESS OTHERWISE SHOWN

ORIGINAL SCALE IN MILLIMETERS FOR REDUCED PLANS 0 10 20 30 40 50 60 70 80 90 100

CU 07
EA 121841

DISREGARD PRINTS BEARING EARLIER REVISION DATES

REVISION DATES: 2-14-07 9-14-07 10-26-07 2-5-08 2-29-08 10-24-08 11-24-08 1-16-09

SHEET 22 OF 64

FILE => 53-1075r1-j-bt1o01.dgn

STRUCTURES DESIGN DETAIL SHEET (METRIC) (REV.03-17-04)

USERNAME => trmikesl DATE PLOTTED => 12-JUN-2009 TIME PLOTTED => 07:06

DIST	COUNTY	ROUTE	KILOMETER POST TOTAL PROJECT	SHEET No	TOTAL SHEETS
07	LA	5	42.8/47.3	596	1073

Andrew Rittenhouse 12-05-08
REGISTERED CIVIL ENGINEER DATE

6-8-09
PLANS APPROVAL DATE

REGISTERED PROFESSIONAL ENGINEER
Andrew P. Rittenhouse
No. 61006
Exp. 12-31-10
CIVIL
STATE OF CALIFORNIA

The State of California or its officers or agents shall not be responsible for the accuracy or completeness of electronic copies of this plan sheet.

Legend:

Indicates Bridge Removal (Portion)

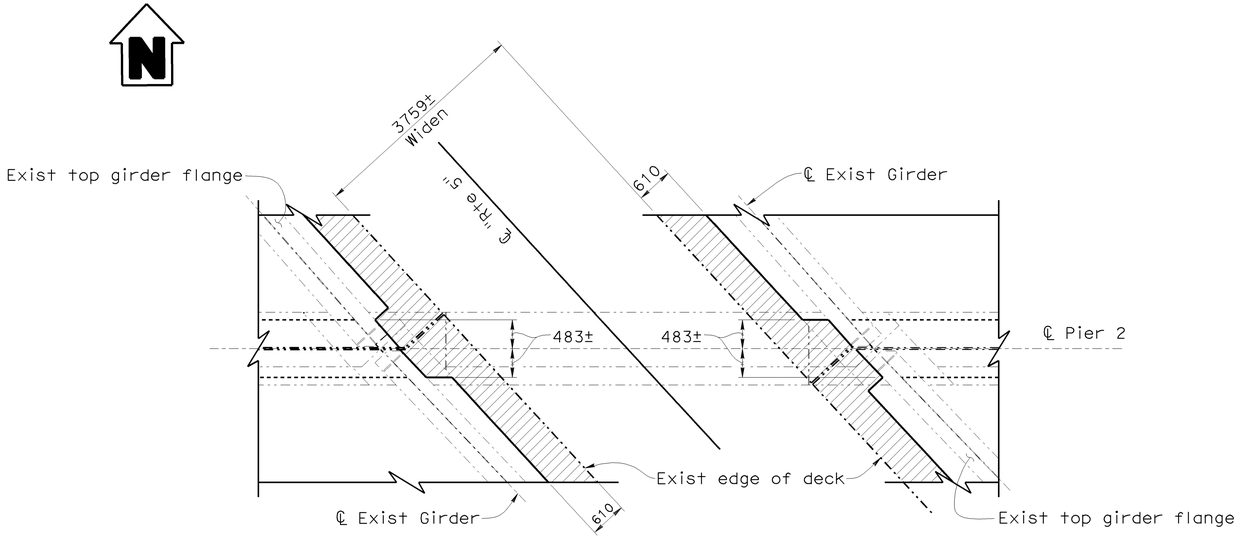

PLAN (Pier 2)

Note: Pier 2 shown, Pier 5 similar

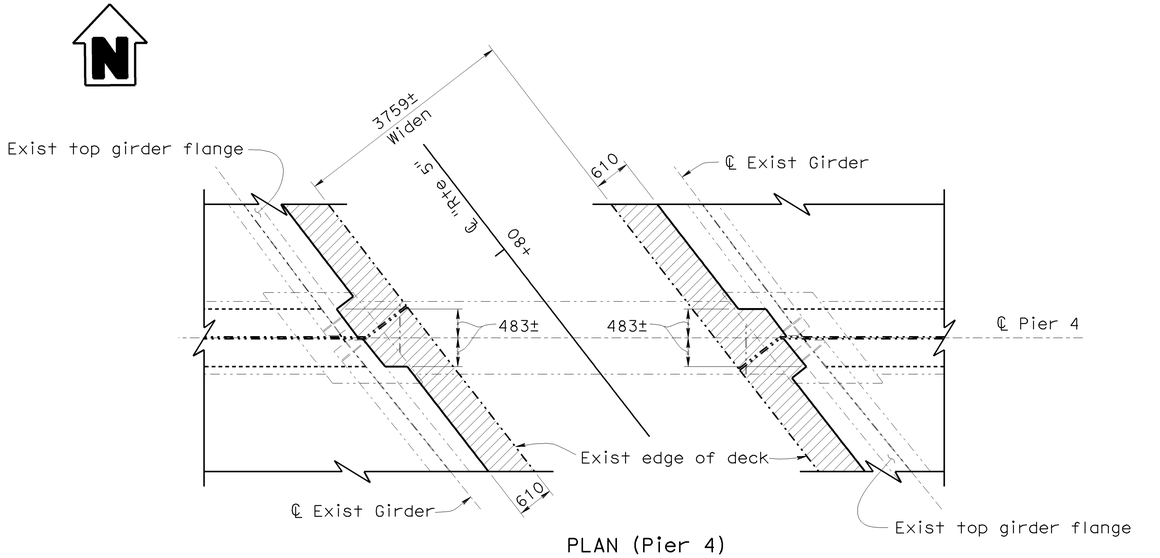

PLAN (Pier 4)

Note: Pier 4 shown, Pier 3 similar

NOTE:
THE CONTRACTOR SHALL VERIFY ALL CONTROLLING FIELD DIMENSIONS BEFORE ORDERING OR FABRICATING ANY MATERIAL.

BRIDGE DECK REMOVAL AT PIERS

1:50

Caltrans Metric

	BY	CHECKED
DESIGN	Shervin Pahlavan	Jose Higareda
DETAILS	Dale Kubochi	Jose Higareda
QUANTITIES	Jerry Han	Joel Ruiz

STATE OF CALIFORNIA
DEPARTMENT OF TRANSPORTATION

DIVISION OF ENGINEERING SERVICES
STRUCTURE DESIGN
DESIGN BRANCH 15

BRIDGE NO. 53-1075
KILOMETER POST 43.6

LOS ANGELES RIVER BRIDGE AND SEPARATION (WIDEN)
PIER 2 THRU 5 LAYOUT NO. 2

ALL DIMENSIONS ARE IN MILLIMETERS UNLESS OTHERWISE SHOWN

ORIGINAL SCALE IN MILLIMETERS FOR REDUCED PLANS 0 10 20 30 40 50 60 70 80 90 100

CU 07
EA 121841

DISREGARD PRINTS BEARING EARLIER REVISION DATES

REVISION DATES 10-17-08 11-17-08 12-22-08

SHEET 23 OF 64

FILE => 53-1075rl-j-bt1o02.dgn

STRUCTURES DESIGN DETAIL SHEET (METRIC) (REV.03-17-04)

USERNAME => trmikes1 DATE PLOTTED => 12-JUN-2009 TIME PLOTTED => 07:06

DIST	COUNTY	ROUTE	KILOMETER POST TOTAL PROJECT	SHEET No	TOTAL SHEETS
07	LA	5	42.8/47.3	597	1073

Andrew Rittenhouse 12-05-08
REGISTERED CIVIL ENGINEER DATE

6-8-09
PLANS APPROVAL DATE

REGISTERED PROFESSIONAL ENGINEER Andrew P. Rittenhouse No. 61006 Exp. 12-31-10 CIVIL STATE OF CALIFORNIA

The State of California or its officers or agents shall not be responsible for the accuracy or completeness of electronic copies of this plan sheet.

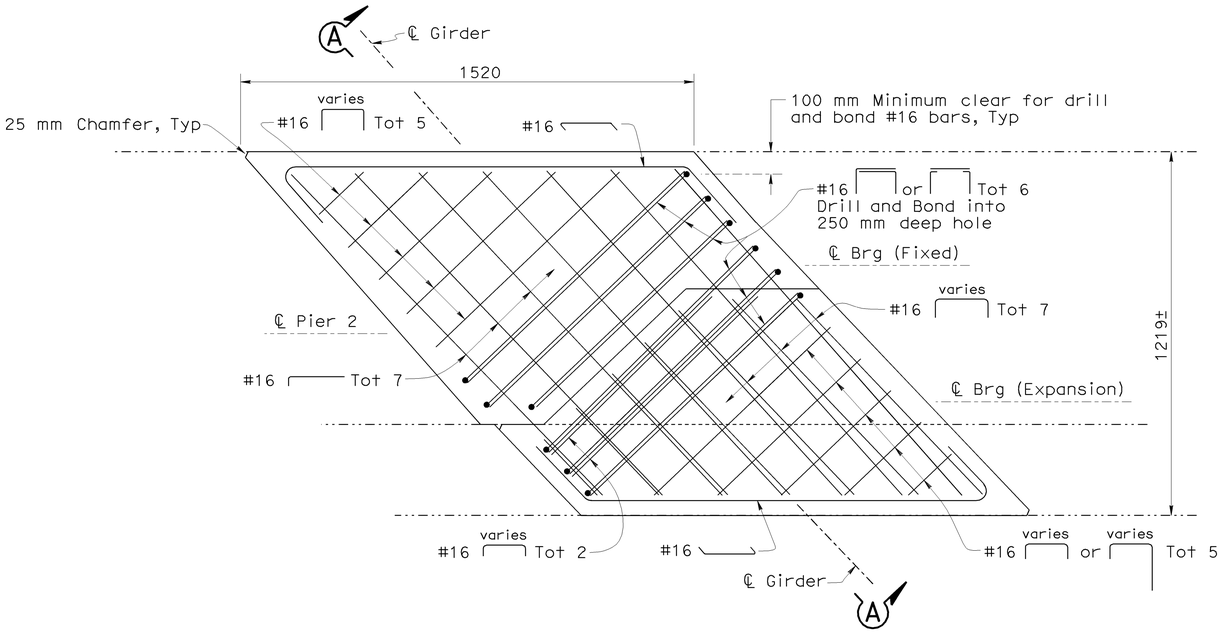

PLAN
1:10

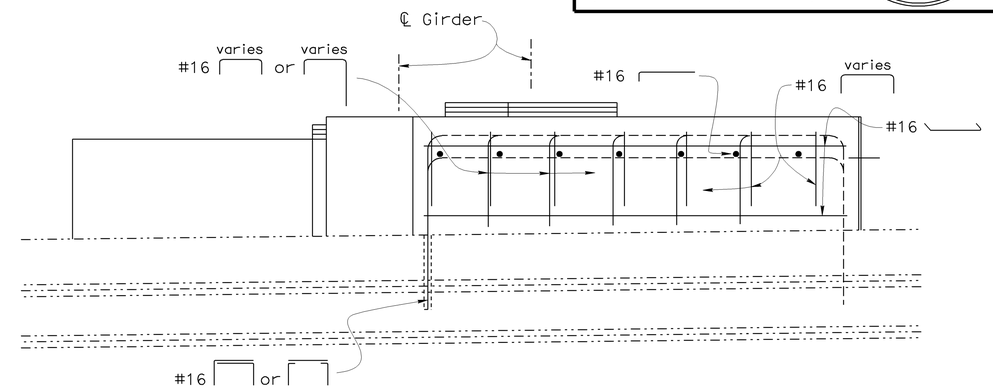

ELEVATION (Expansion Side)
1:10

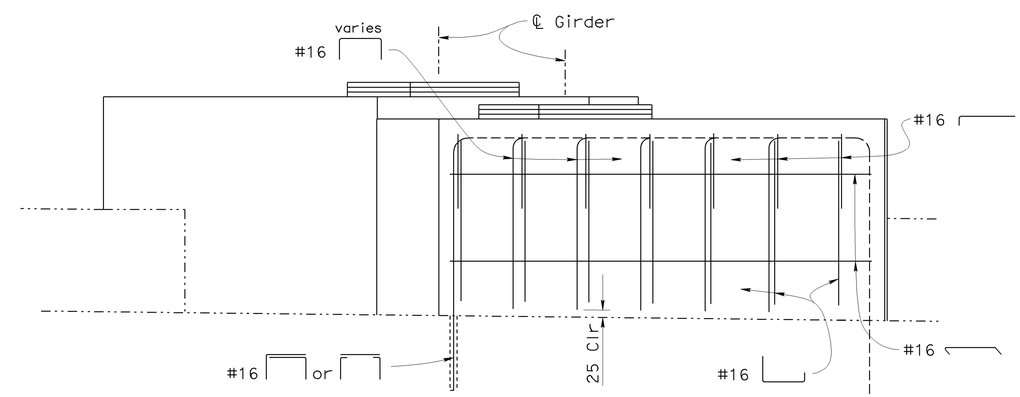

ELEVATION (Fixed Side)
1:10

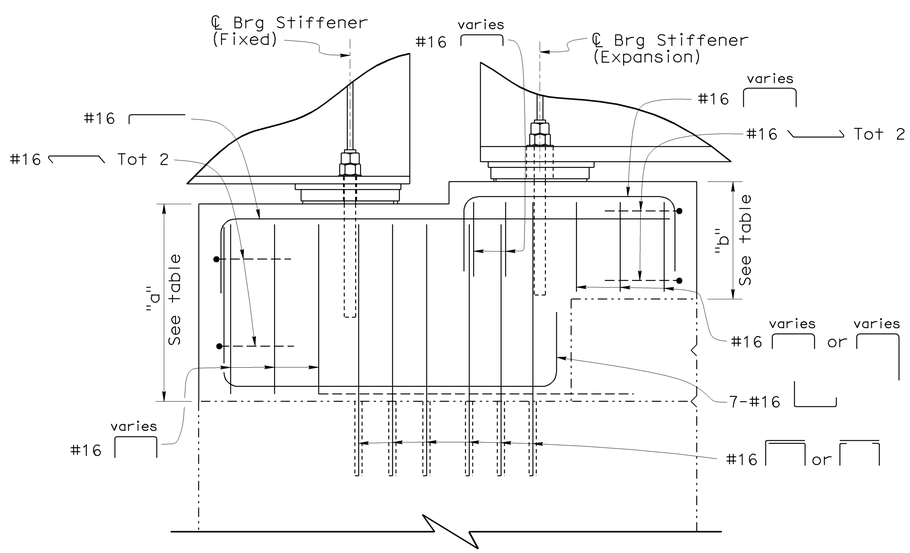

SECTION A-A
1:10

PEDESTAL DESIGNATION	DIMENSION	
	"a"	"b"
Girder 1	680±	415±
Girder 2	750±	485±

Note: Anchor Rods not shown for clarity.

NOTE:
THE CONTRACTOR SHALL VERIFY ALL CONTROLLING FIELD DIMENSIONS BEFORE ORDERING OR FABRICATING ANY MATERIAL.

Caltrans Metric

	BY	CHECKED
DESIGN	Shervin Pahlavan	Jose Higareda
DETAILS	Dale Kubochi	Jose Higareda
QUANTITIES	Jerry Han	Joel Ruiz

STATE OF CALIFORNIA
DEPARTMENT OF TRANSPORTATION

DIVISION OF ENGINEERING SERVICES
STRUCTURE DESIGN
DESIGN BRANCH 15

BRIDGE NO. 53-1075
KILOMETER POST 43.6

LOS ANGELES RIVER BRIDGE AND SEPARATION (WIDEN)

PIER 2 PEDESTAL DETAILS

ALL DIMENSIONS ARE IN MILLIMETERS UNLESS OTHERWISE SHOWN

ORIGINAL SCALE IN MILLIMETERS FOR REDUCED PLANS 0 10 20 30 40 50 60 70 80 90 100

CU 07
EA 121841

DISREGARD PRINTS BEARING EARLIER REVISION DATES

REVISION DATES: 9-11-07 2-5-08 4-11-08 10-31-08 11-21-08

SHEET 24 OF 64

FILE => 53-1075rl-k-bt2ped.dgn

STRUCTURES DESIGN DETAIL SHEET (METRIC) (REV.03-17-04)

USERNAME => trmikes1 DATE PLOTTED => 12-JUN-2009 TIME PLOTTED => 07:06

DIST	COUNTY	ROUTE	KILOMETER POST TOTAL PROJECT	SHEET No	TOTAL SHEETS
07	LA	5	42.8/47.3	598	1073

Andrew Rittenhouse 12-05-08
REGISTERED CIVIL ENGINEER DATE

6-8-09
PLANS APPROVAL DATE

REGISTERED PROFESSIONAL ENGINEER
Andrew P. Rittenhouse
No. 61006
Exp. 12-31-10
CIVIL
STATE OF CALIFORNIA

The State of California or its officers or agents shall not be responsible for the accuracy or completeness of electronic copies of this plan sheet.

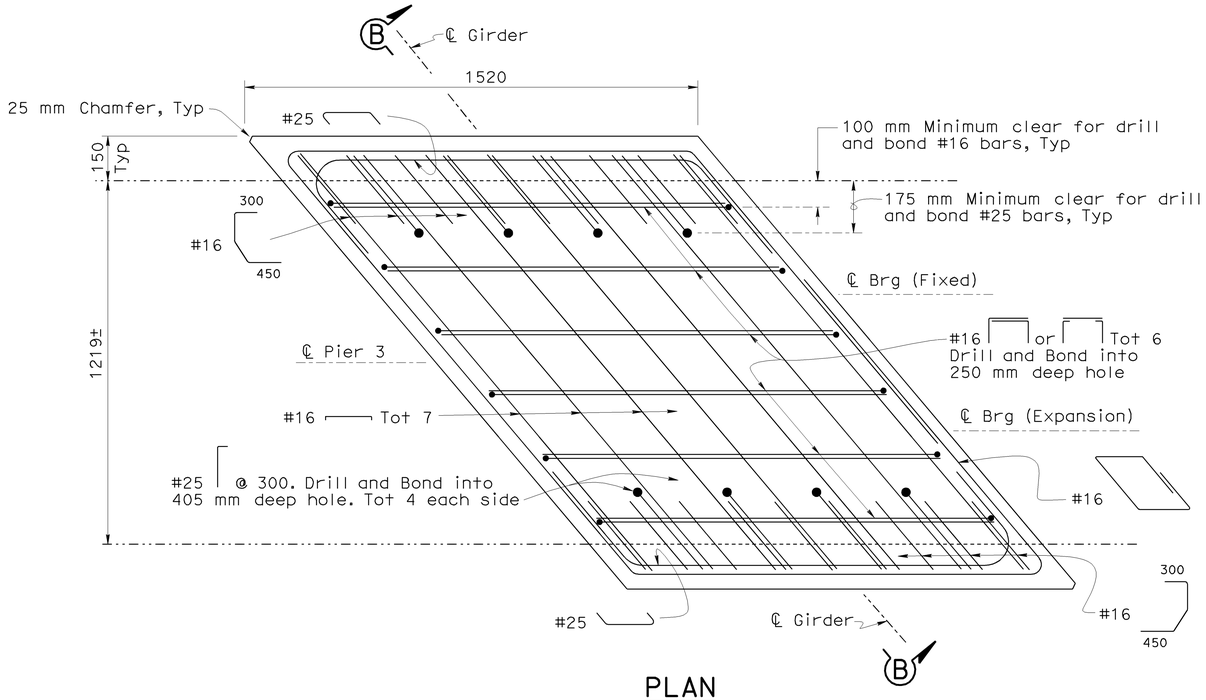

PLAN
1:10

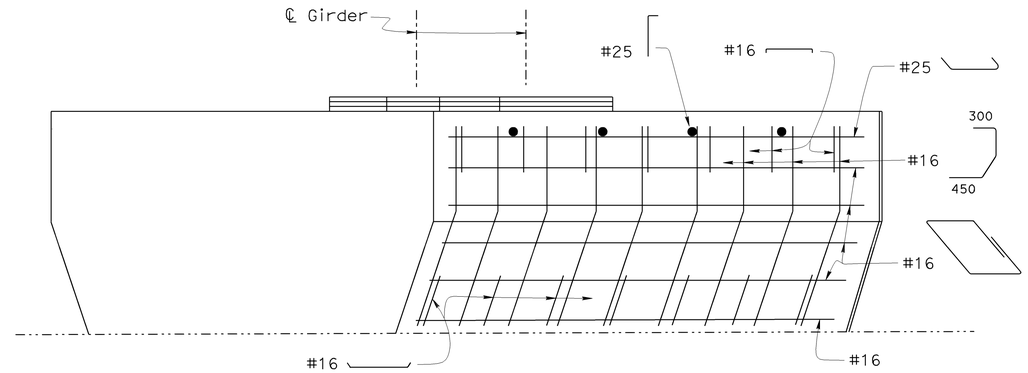

ELEVATION (Expansion Side)
1:10

Note:
Fixed Side similar

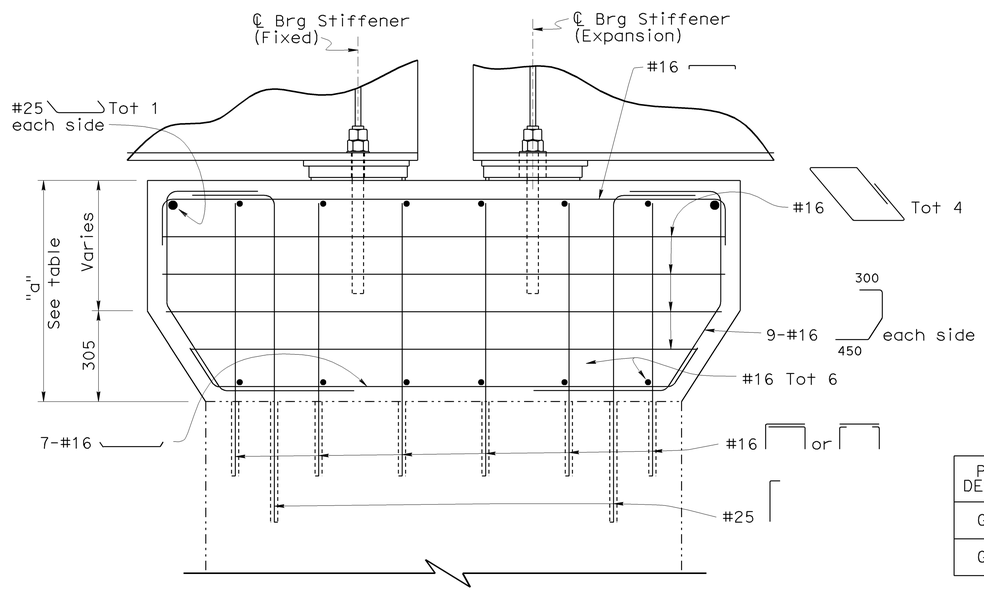

SECTION B-B
1:10

PEDESTAL DESIGNATION	DIMENSION "a"
Girder 1	745±
Girder 2	815±

Note: Anchor Rods not shown for clarity.

NOTE:
THE CONTRACTOR SHALL VERIFY ALL CONTROLLING FIELD DIMENSIONS BEFORE ORDERING OR FABRICATING ANY MATERIAL.

Caltrans Metric

	BY	CHECKED
DESIGN	Shervin Pahlavan	Jose Higareda
DETAILS	Dale Kubochi	Jose Higareda
QUANTITIES	Jerry Han	Joel Ruiz

STATE OF CALIFORNIA
DEPARTMENT OF TRANSPORTATION

DIVISION OF ENGINEERING SERVICES
STRUCTURE DESIGN
DESIGN BRANCH 15

BRIDGE NO. 53-1075
KILOMETER POST 43.6

LOS ANGELES RIVER BRIDGE AND SEPARATION (WIDEN)

PIER 3 PEDESTAL DETAILS

ALL DIMENSIONS ARE IN MILLIMETERS UNLESS OTHERWISE SHOWN

ORIGINAL SCALE IN MILLIMETERS FOR REDUCED PLANS 0 10 20 30 40 50 60 70 80 90 100

CU 07
EA 121841

DISREGARD PRINTS BEARING EARLIER REVISION DATES

REVISION DATES 2-6-08 4-15-08 10-17-08 11-21-08

SHEET 25 OF 64

FILE => 53-1075rl-k-bt3ped.dgn

STRUCTURES DESIGN DETAIL SHEET (METRIC) (REV.03-17-04)

USERNAME => trmikesl DATE PLOTTED => 12-JUN-2009 TIME PLOTTED => 07:06

DIST	COUNTY	ROUTE	KILOMETER POST TOTAL PROJECT	SHEET No	TOTAL SHEETS
07	LA	5	42.8/47.3	599	1073

Andrew Rittenhouse 12-05-08
REGISTERED CIVIL ENGINEER DATE

6-8-09
PLANS APPROVAL DATE

The State of California or its officers or agents shall not be responsible for the accuracy or completeness of electronic copies of this plan sheet.

REGISTERED PROFESSIONAL ENGINEER
Andrew P. Rittenhouse
No. 61006
Exp. 12-31-10
CIVIL
STATE OF CALIFORNIA

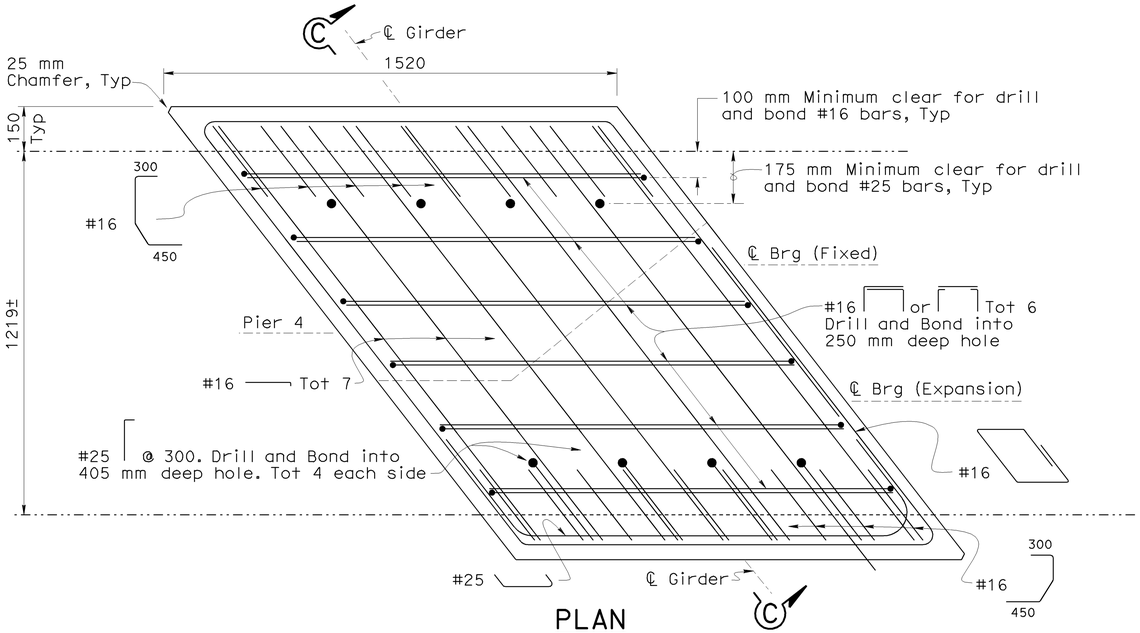

PLAN
1:10

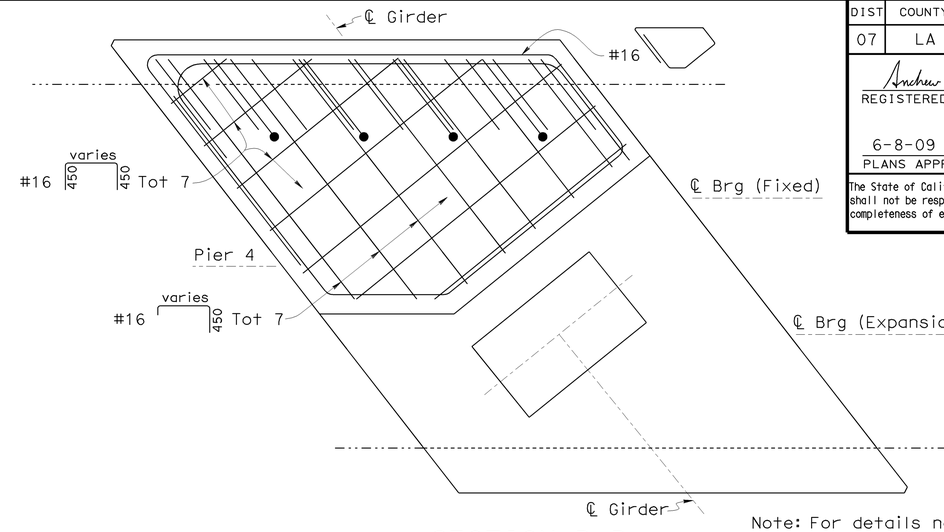

Note: For details not noted, see "Plan" view

SECTION D-D
1:10

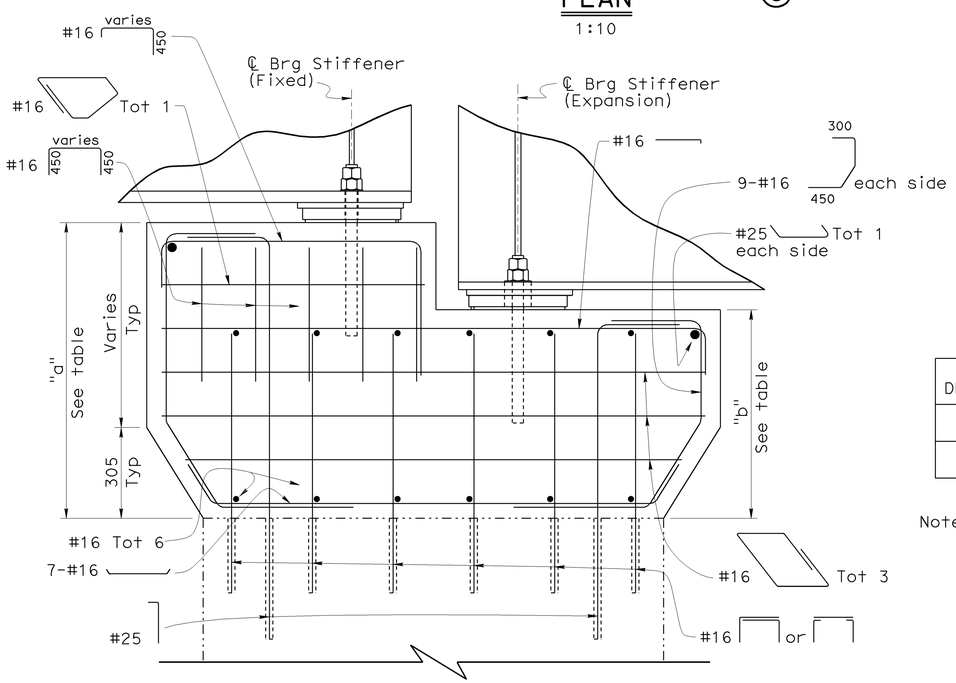

SECTION C-C
1:10

PEDESTAL DESIGNATION	DIMENSION	
	"a"	"b"
Girder 1	940±	700±
Girder 2	1150±	635±

Note: Anchor Rods not shown for clarity.

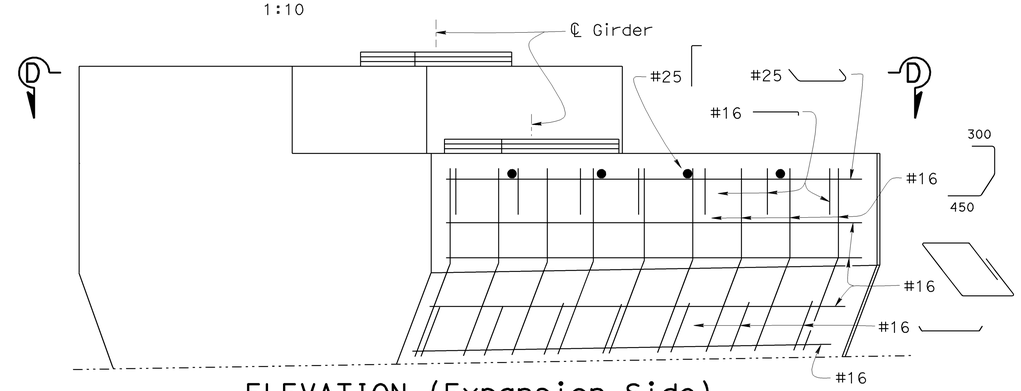

ELEVATION (Expansion Side)
1:10

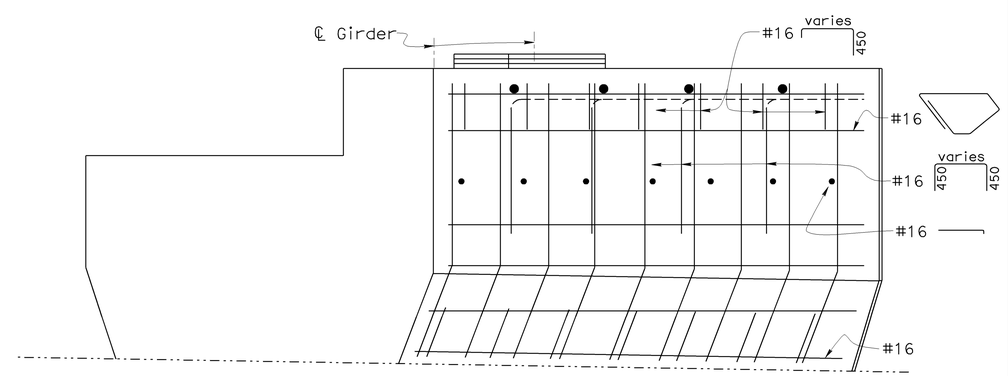

ELEVATION (Fixed Side)
1:10

Note: For reinforcement not noted, see "Elevation (Expansion Side)"

NOTE:
THE CONTRACTOR SHALL VERIFY ALL CONTROLLING FIELD DIMENSIONS BEFORE ORDERING OR FABRICATING ANY MATERIAL.

Caltrans Metric

	BY	CHECKED
DESIGN	Shervin Pahlavan	Jose Higareda
DETAILS	Dale Kubochi	Jose Higareda
QUANTITIES	Jerry Han	Joel Ruiz

STATE OF CALIFORNIA
DEPARTMENT OF TRANSPORTATION

DIVISION OF ENGINEERING SERVICES
STRUCTURE DESIGN
DESIGN BRANCH 15

BRIDGE NO. 53-1075
KILOMETER POST 43.6

LOS ANGELES RIVER BRIDGE AND SEPARATION (WIDEN)

PIER 4 PEDESTAL DETAILS

ALL DIMENSIONS ARE IN MILLIMETERS UNLESS OTHERWISE SHOWN

ORIGINAL SCALE IN MILLIMETERS FOR REDUCED PLANS 0 10 20 30 40 50 60 70 80 90 100

CU 07
EA 121841

DISREGARD PRINTS BEARING EARLIER REVISION DATES

REVISION DATES 9-14-07 4-12-08 8-30-08 10-31-08 11-21-08

SHEET 26 OF 64

FILE => 53-1075rl-k-bt4ped.dgn

STRUCTURES DESIGN DETAIL SHEET (METRIC) (REV.03-17-04)

USERNAME => trmikesl DATE PLOTTED => 12-JUN-2009 TIME PLOTTED => 07:06

DIST	COUNTY	ROUTE	KILOMETER POST TOTAL PROJECT	SHEET No	TOTAL SHEETS
07	LA	5	42.8/47.3	600	1073

Andrew Rittenhouse 12-05-08
REGISTERED CIVIL ENGINEER DATE

6-8-09
PLANS APPROVAL DATE

REGISTERED PROFESSIONAL ENGINEER
Andrew P. Rittenhouse
No. 61006
Exp. 12-31-10
CIVIL
STATE OF CALIFORNIA

The State of California or its officers or agents shall not be responsible for the accuracy or completeness of electronic copies of this plan sheet.

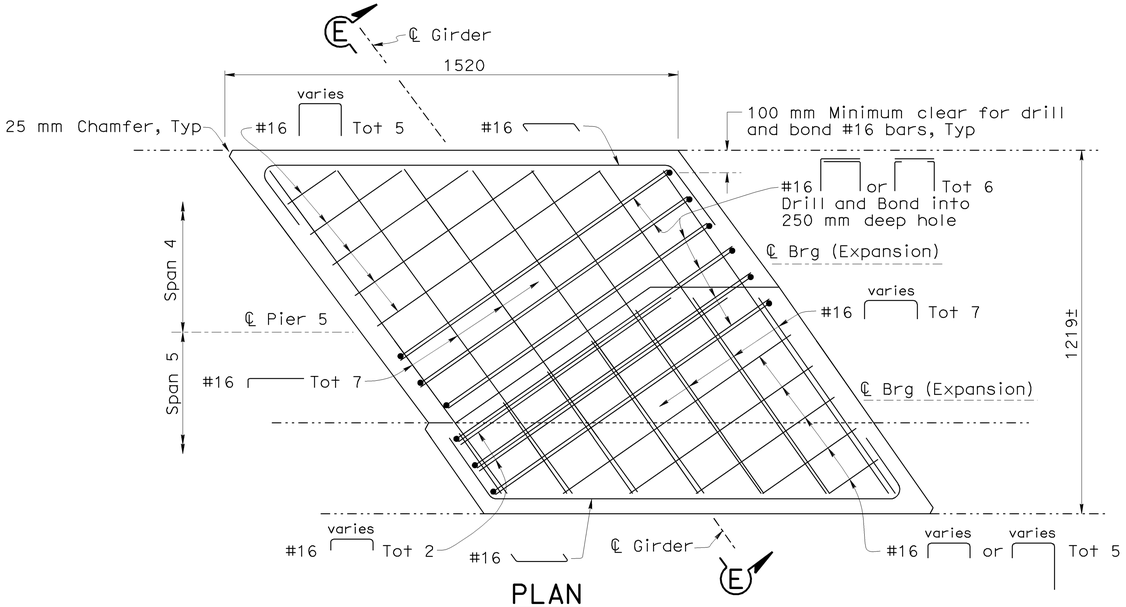

PLAN
1:10

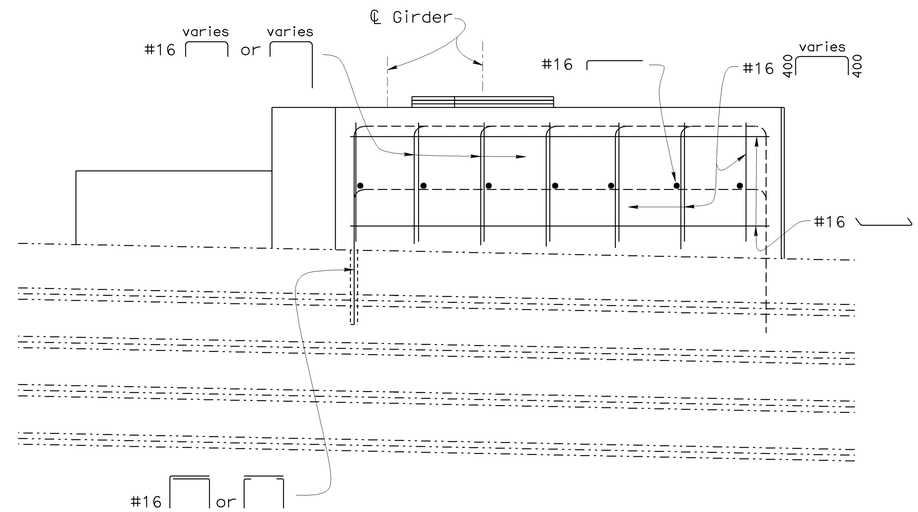

ELEVATION (Span 5 Side)
1:10

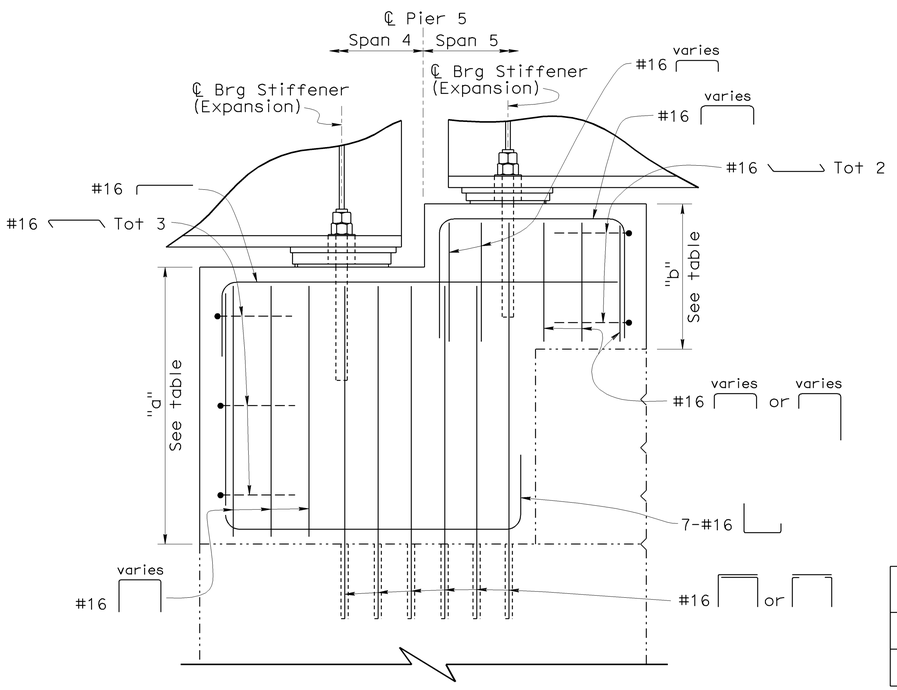

SECTION E-E
1:10

PEDESTAL DESIGNATION	DIMENSION	
	"a"	"b"
Girder 1	930±	485±
Girder 2	1160±	690±

Note: Anchor Rods not shown for clarity.

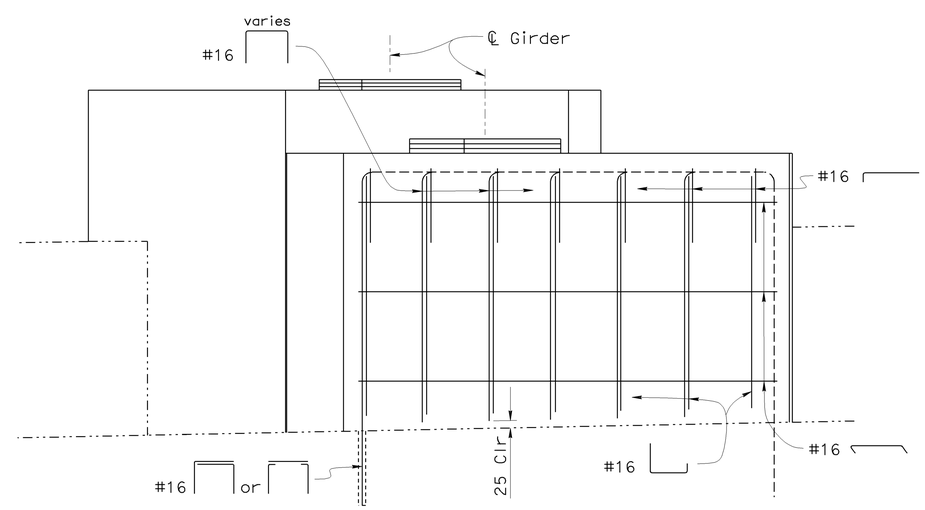

ELEVATION (Span 4 Side)
1:10

NOTE:
THE CONTRACTOR SHALL VERIFY ALL CONTROLLING FIELD DIMENSIONS BEFORE ORDERING OR FABRICATING ANY MATERIAL.

Caltrans Metric

	BY	CHECKED
DESIGN	Shervin Pahlavan	Jose Higareda
DETAILS	Dale Kubochi	Jose Higareda
QUANTITIES	Jerry Han	Joel Ruiz

STATE OF CALIFORNIA
DEPARTMENT OF TRANSPORTATION

DIVISION OF ENGINEERING SERVICES
STRUCTURE DESIGN
DESIGN BRANCH 15

CU 07
EA 121841

BRIDGE NO. 53-1075
KILOMETER POST 43.6

LOS ANGELES RIVER BRIDGE AND SEPARATION (WIDEN)

PIER 5 PEDESTAL DETAILS

ALL DIMENSIONS ARE IN MILLIMETERS UNLESS OTHERWISE SHOWN

ORIGINAL SCALE IN MILLIMETERS FOR REDUCED PLANS 0 10 20 30 40 50 60 70 80 90 100

DISREGARD PRINTS BEARING EARLIER REVISION DATES

REVISION DATES: 9-11-07 4-15-08 10-17-08 11-21-08

SHEET 27 OF 64

FILE => 53-1075ri-k-bt5ped.dgn

STRUCTURES DESIGN DETAIL SHEET (METRIC) (REV.03-17-04)

USERNAME => trmikesl DATE PLOTTED => 12-JUN-2009 TIME PLOTTED => 07:06