Dist	COUNTY	ROUTE	KILOMETER POST TOTAL PROJECT	SHEET No.	TOTAL SHEETS
07	LA	5	42.8/47.3	401	1073

REGISTERED ELECTRICAL ENGINEER 5/5/08

6-8-09
PLANS APPROVAL DATE

REGISTERED PROFESSIONAL ENGINEER CANDACE FUNG No. E16936 Exp. 06/30/09 ELECTRICAL STATE OF CALIFORNIA

THE STATE OF CALIFORNIA OR ITS OFFICERS OR AGENTS SHALL NOT BE RESPONSIBLE FOR THE ACCURACY OR COMPLETENESS OF ELECTRONIC COPIES OF THIS PLAN IS SHEET.

Caltrans Metric

PROJECT NOTES: (THIS SHEET ONLY)

1. SHOWN FOR REFERENCE ONLY. SEE MODIFY COMMUNICATION SYSTEM PLAN FOR DETAILS.
2. INSTALL RELOCATED MODEL 334 CONTROLLER CABINET ON NEW FOUNDATION. INSTALL FOTM, FDU AND INTERFACE CABLES IN RELOCATED CONTROLLER CABINET. CONNECT 12SMFO. SEE SHEET E-31 FOR DETAILS.
3. INSTALL RELOCATED MODEL 500 CMS PANEL ON NEW SIGN STRUCTURE.
4. INSTALL 78C, 2#6, 6#1, 1#8G.
5. INSTALL 78C, 2#6, 1#8G. INSTALL 78C, 12SMFO AND STATE-FURNISHED CONTROL CABLES (6P18, 24P18). INSTALL CONDUITS IN THE SAME TRENCH.
6. INSTALL 78C, 6#1. SEE SHEET E-31 FOR WIRING DETAILS. INSTALL 78C, STATE-FURNISHED CONTROL CABLES (6P18, 24P18). INSTALL CONDUITS IN THE SAME TRENCH.
7. INSTALL 78C, 12SMFO AND SIZE 25 INNERDUCT.
8. TRENCH AND INSTALL CONDUIT(S) IN PAVEMENT. SEE SHEET E-27 FOR DETAILS.
9. JACK CONDUIT(S) UNDER ROADWAY. SEE SHEET E-28 FOR DETAILS.
10. NEW CONDUIT(S) OR PULL BOX(ES) SHOWN FOR REFERENCE ONLY. SEE SHEET E-53 FOR INSTALLATION DETAILS.

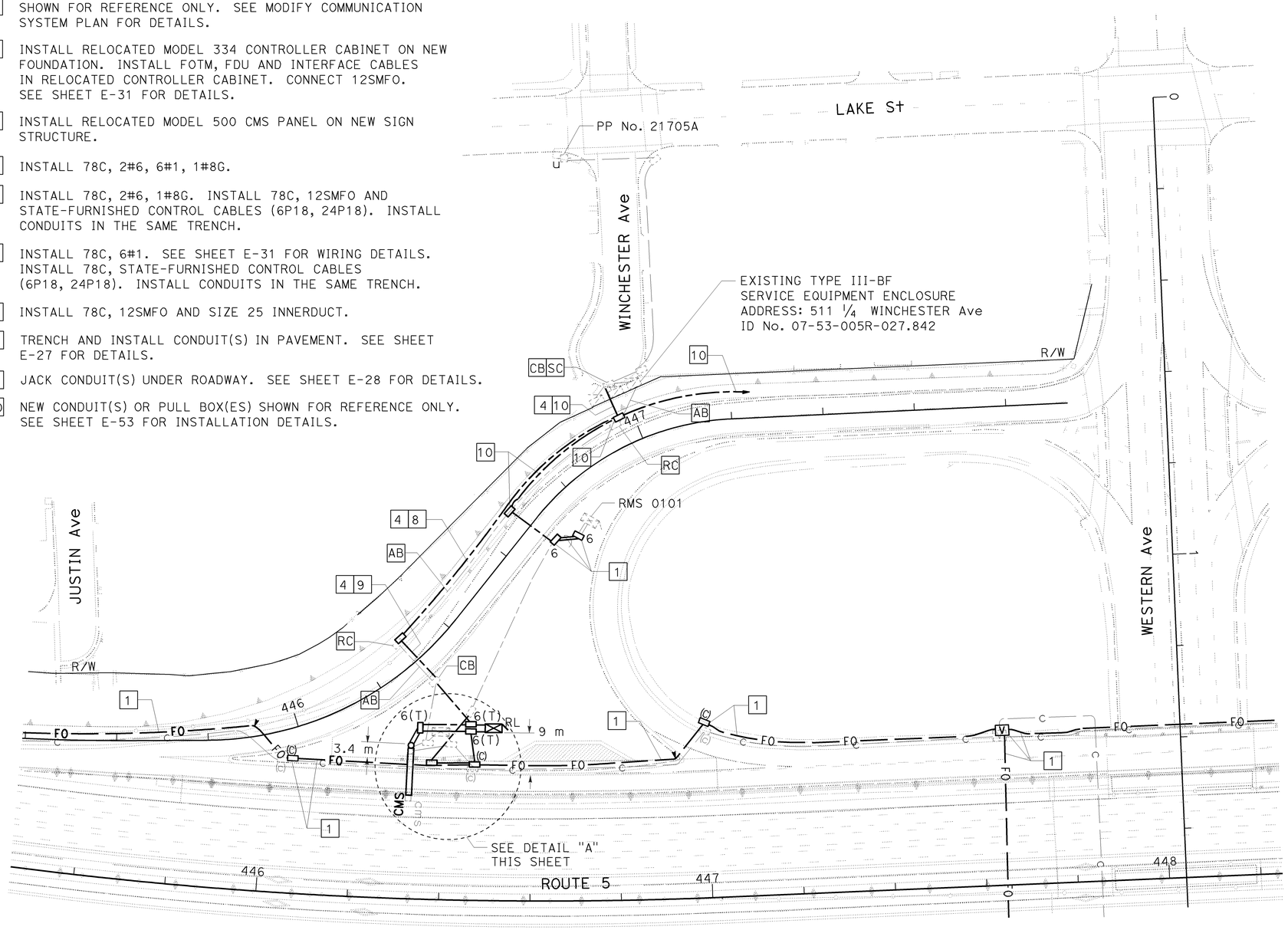

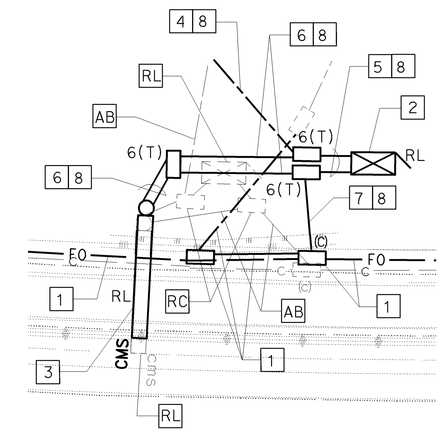

DETAIL "A"
NO SCALE

ALL DIMENSIONS ARE IN METERS UNLESS OTHERWISE SHOWN

MODIFY CHANGEABLE MESSAGE SIGN
(LOCATION No. 40)

SCALE 1:500

THIS PLAN IS ACCURATE FOR ELECTRICAL WORK ONLY.
FOR LEGEND, ABBREVIAIONS AND GENERAL NOTES SEE SHEET E-1.

E-20

STATE OF CALIFORNIA - DEPARTMENT OF TRANSPORTATION
Caltrans **OFFICE OF ITS**

FUNCTIONAL SUPERVISOR: JACQUELINE C. TAN
CALCULATED-DESIGNED BY: CANDACE FUNG
CHECKED BY: JACQUELINE C. TAN
REVISED BY / DATE REVISED

LAST REVISION 00-00-00 | DATE PLOTTED => 12-JUN-2009 | TIME PLOTTED => 13:55

FOR COMPLETE RIGHT OF WAY AND ACCURATE ACCESS DATA,
SEE RIGHT OF WAY RECORD MAPS AT DISTRICT OFFICE.

Dist	COUNTY	ROUTE	KILOMETER POST TOTAL PROJECT	SHEET No.	TOTAL SHEETS
07	LA	5	42.8/47.3	402	1073

REGISTERED ELECTRICAL ENGINEER 5/5/08

6-8-09
PLANS APPROVAL DATE

REGISTERED PROFESSIONAL ENGINEER CANDACE FUNG No. E16936 Exp. 06/30/09 ELECTRICAL STATE OF CALIFORNIA

THE STATE OF CALIFORNIA OR ITS OFFICERS OR AGENTS SHALL NOT BE RESPONSIBLE FOR THE ACCURACY OR COMPLETENESS OF ELECTRONIC COPIES OF THIS PLAN IS SHEET.

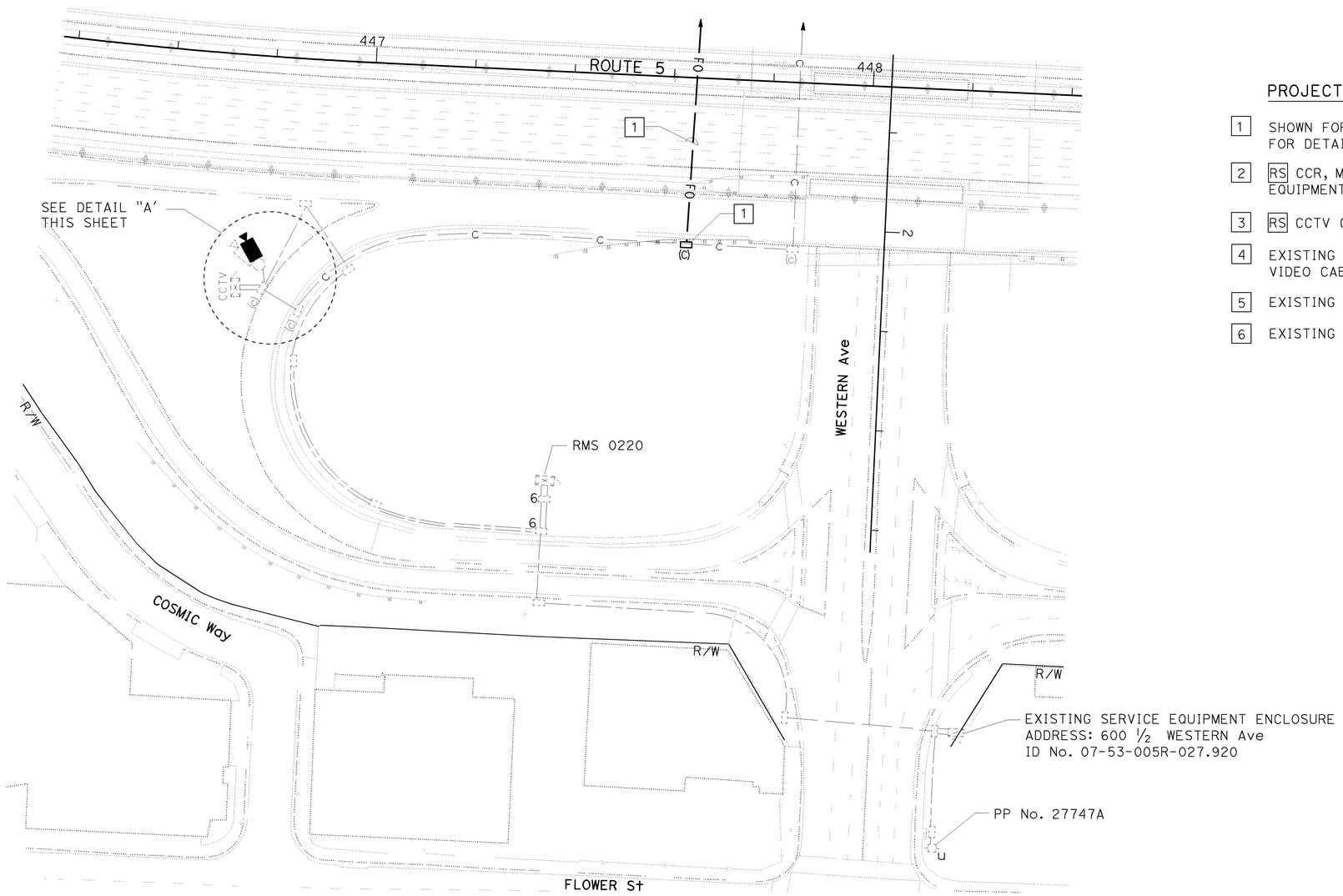

PROJECT NOTES: (THIS SHEET ONLY)

1. SHOWN FOR REFERENCE ONLY. SEE MODIFY COMMUNICATION SYSTEM PLAN FOR DETAILS.
2. RS CCR, MODEM, VIDEO TRANSMITTER AND TERMINAL BLOCK. INSTALL NEW EQUIPMENT IN MODEL 334-TV CONTROLLER CABINET AS PER SHEET E-32.
3. RS CCTV CAMERA ASSEMBLY AND INSTALL NEW CCTV CAMERA ASSEMBLY.
4. EXISTING 78C, RC CABLES. INSTALL 2-12SMFO AND COMPOSITE VIDEO CABLE.
5. EXISTING 78C, 2#6, 2#8.
6. EXISTING 78C, RC CABLES. INSTALL COMPOSITE VIDEO CABLE.

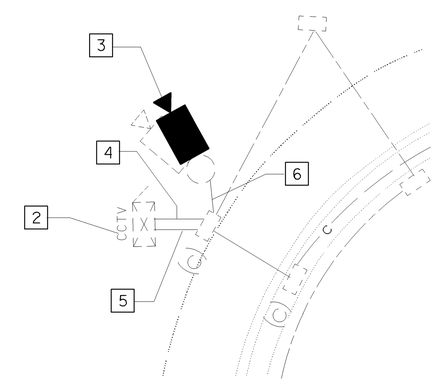

DETAIL "A"
NO SCALE

ALL DIMENSIONS ARE IN
METERS UNLESS OTHERWISE SHOWN

MODIFY CLOSED CIRCUIT TELEVISION CAMERA
(LOCATION GS278)

SCALE 1:500

THIS PLAN IS ACCURATE FOR ELECTRICAL WORK ONLY.
FOR LEGEND, ABBREVIATIONS AND GENERAL NOTES SEE SHEET E-1.

E-21

STATE OF CALIFORNIA - DEPARTMENT OF TRANSPORTATION
Caltrans
OFFICE OF ITS

FUNCTIONAL SUPERVISOR: JACQUELINE C. TAN
CALCULATED-DESIGNED BY: CANDACE FUNG
CHECKED BY: JACQUELINE C. TAN
REVISED BY
DATE REVISED

LAST REVISION 00-00-00
DATE PLOTTED => 15-JUN-2009
TIME PLOTTED => 10:55

FOR COMPLETE RIGHT OF WAY AND ACCURATE ACCESS DATA,
SEE RIGHT OF WAY RECORD MAPS AT DISTRICT OFFICE.

Dist	COUNTY	ROUTE	KILOMETER POST TOTAL PROJECT	SHEET No.	TOTAL SHEETS
07	LA	5	42.8/47.3	403	1073

REGISTERED ELECTRICAL ENGINEER 5/5/08

PLANS APPROVAL DATE 6-8-09

REGISTERED PROFESSIONAL ENGINEER CANDACE FUNG No. E16936 Exp. 06/30/09 ELECTRICAL STATE OF CALIFORNIA

THE STATE OF CALIFORNIA OR ITS OFFICERS OR AGENTS SHALL NOT BE RESPONSIBLE FOR THE ACCURACY OR COMPLETENESS OF ELECTRONIC COPIES OF THIS PLAN IS SHEET.

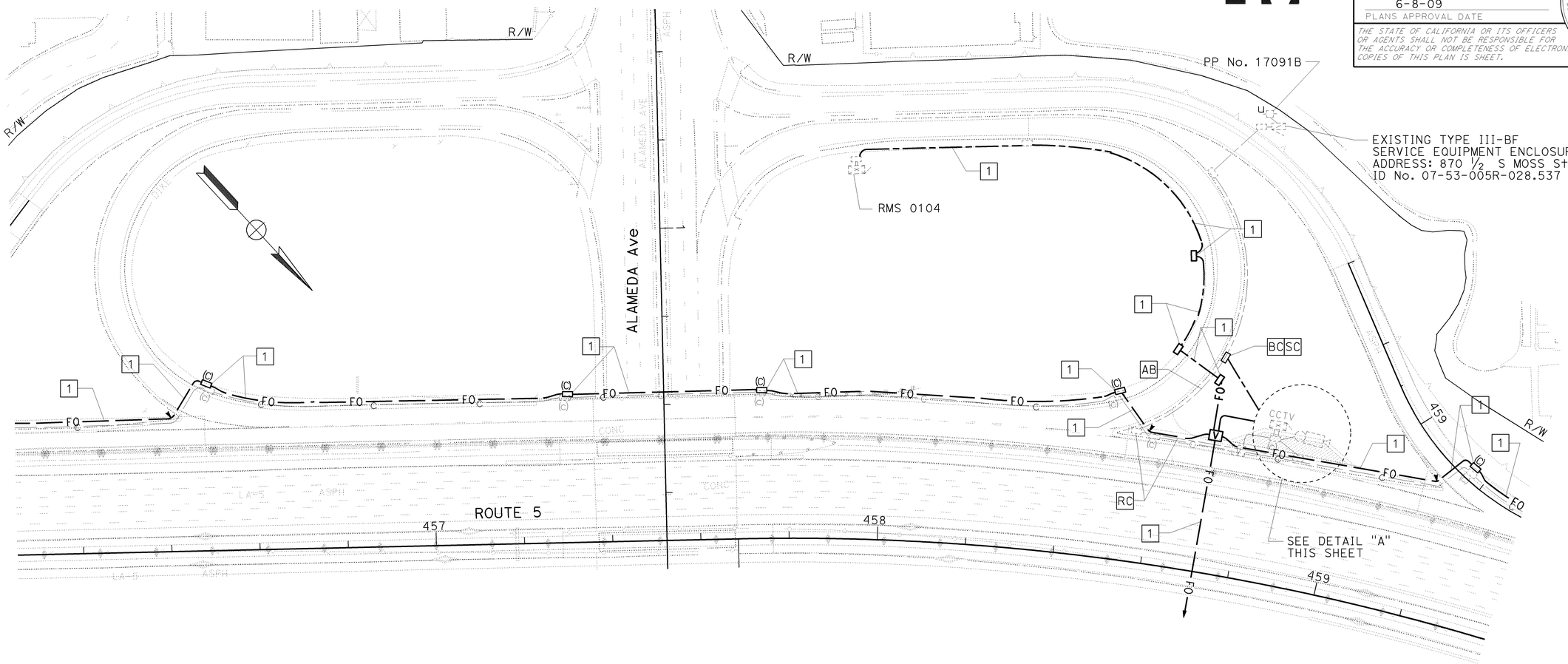

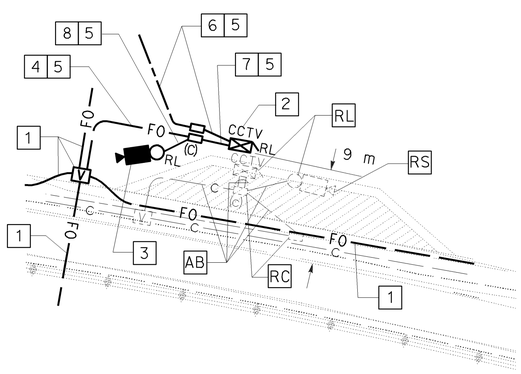

DETAIL "A"
NO SCALE

PROJECT NOTES: (THIS SHEET ONLY)

1. SHOWN FOR REFERENCE ONLY. SEE MODIFY COMMUNICATION SYSTEM PLAN FOR DETAILS.
2. RS CCR, MODEM, VIDEO TRANSMITTER AND TERMINAL BLOCK. INSTALL NEW EQUIPMENT IN MODEL 334-TV CONTROLLER CABINET AS PER SHEET E-32.
3. INSTALL CCTV CAMERA ASSEMBLY ON RELOCATED CCTV POLE ON NEW FOUNDATION.
4. INSTALL 78C, 2-12SMFO AND 2 SIZE 25 INNERDUCT.
5. TRENCH AND INSTALL CONDUIT(S) IN PAVEMENT. SEE SHEET E-27 FOR DETAILS.
6. INSTALL 53C, 2#6, 1#8G.
7. INSTALL 78C, 2-12SMFO AND COMPOSITE VIDEO CABLE IN SIZE 25 INNERDUCT.
8. INSTALL 78C, COMPOSITE VIDEO CABLE.

ALL DIMENSIONS ARE IN
METERS UNLESS OTHERWISE SHOWN

MODIFY CLOSED CIRCUIT TELEVISION CAMERA
(LOCATION GS288)

SCALE 1:500

THIS PLAN IS ACCURATE FOR ELECTRICAL WORK ONLY.
FOR LEGEND, ABBREVIATIONS AND GENERAL NOTES SEE SHEET E-1.

E-22

STATE OF CALIFORNIA - DEPARTMENT OF TRANSPORTATION
Caltrans OFFICE OF ITS

FUNCTIONAL SUPERVISOR JACQUELINE C. TAN
CALCULATED-DESIGNED BY CANDACE FUNG
CHECKED BY JACQUELINE C. TAN
REVISED BY
DATE REVISED

LAST REVISION 00-00-00 DATE PLOTTED => 12-JUN-2009 TIME PLOTTED => 13:55

FOR COMPLETE RIGHT OF WAY AND ACCURATE ACCESS DATA,
SEE RIGHT OF WAY RECORD MAPS AT DISTRICT OFFICE .

Dist	COUNTY	ROUTE	KILOMETER POST TOTAL PROJECT	SHEET No.	TOTAL SHEETS
07	LA	5	42.8/47.3	404	1073

Caltrans Metric

5/5/08
REGISTERED ELECTRICAL ENGINEER

6-8-09
PLANS APPROVAL DATE

REGISTERED PROFESSIONAL ENGINEER CANDACE FUNG No. E16936 Exp. 06/30/09 ELECTRICAL STATE OF CALIFORNIA

THE STATE OF CALIFORNIA OR ITS OFFICERS OR AGENTS SHALL NOT BE RESPONSIBLE FOR THE ACCURACY OR COMPLETENESS OF ELECTRONIC COPIES OF THIS PLAN IS SHEET.

PROJECT NOTES: (THIS SHEET ONLY)

1. SHOWN FOR REFERENCE ONLY. SEE MODIFY COMMUNICATION SYSTEM PLAN FOR DETAILS.
2. INSTALL EXISTING MODEL 334-TV CONTROLLER CABINET ON NEW FOUNDATION. RS CCR, MODEM, VIDEO TRANSMITTER AND TERMINAL BLOCK. INSTALL NEW EQUIPMENT AS PER SHEET E-32.
3. INSTALL CCTV CAMERA ASSEMBLY ON RELOCATED CCTV POLE ON NEW FOUNDATION.
4. INSTALL 78C, 2-12SMFO AND 2 SIZE 25 INNERDUCTS.
5. INSTALL 78C, 2-12SMFO, COMPOSITE VIDEO CABLE AND 2 SIZE 25 INNERDUCTS.
6. INSTALL 78C, 2#6, 1#8G.
7. TRENCH AND INSTALL CONDUIT(S) IN PAVEMENT. SEE SHEET E-27 FOR DETAILS.
8. INSTALL 78C, COMPOSITE VIDEO CABLE.

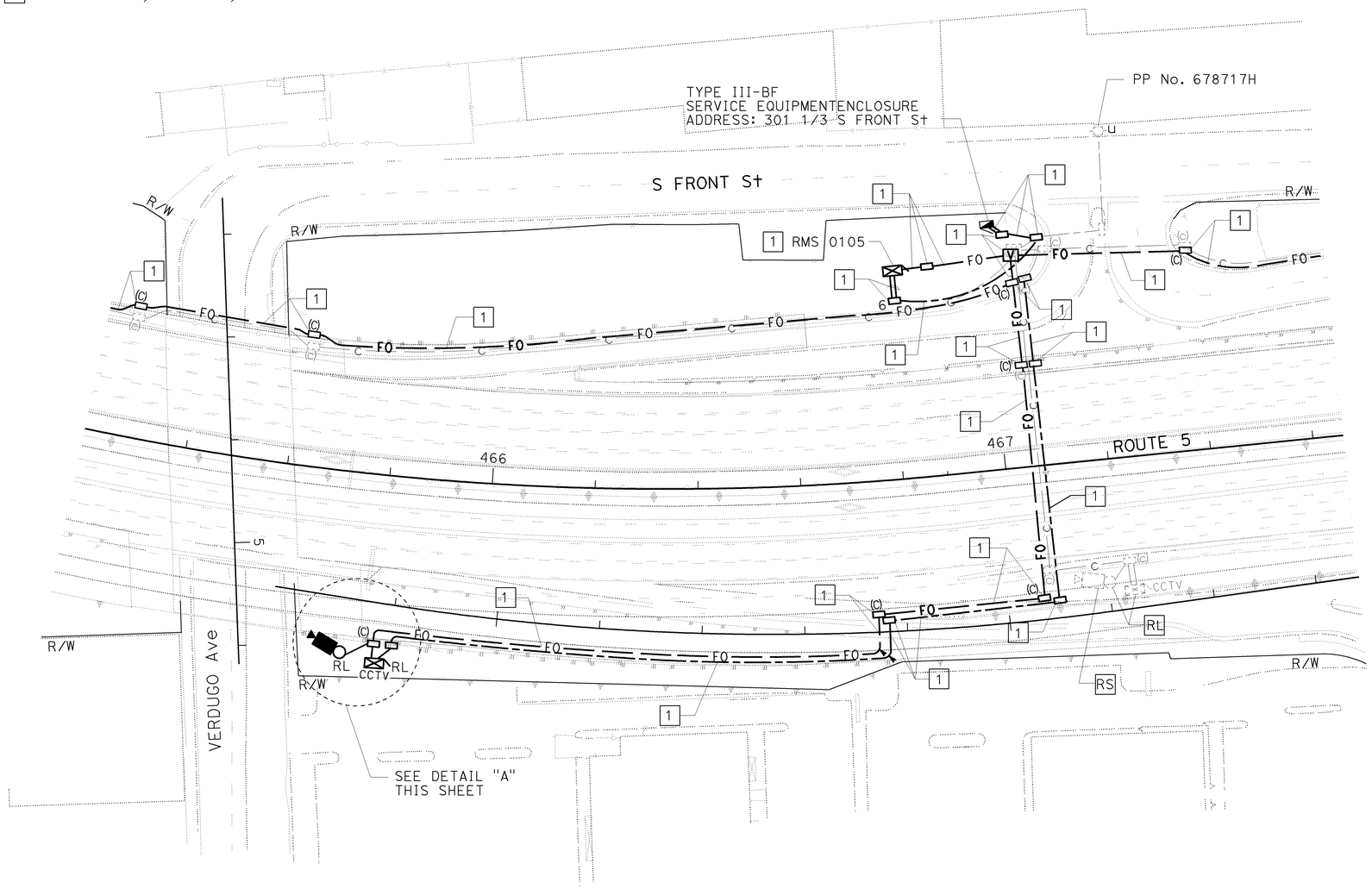

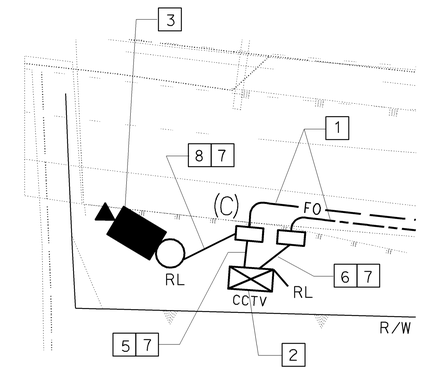

DETAIL "A"
NO SCALE

ALL DIMENSIONS ARE IN
METERS UNLESS OTHERWISE SHOWN

MODIFY CLOSED CIRCUIT TELEVISION CAMERA
(LOCATION GS290)

SCALE 1:500

THIS PLAN IS ACCURATE FOR ELECTRICAL WORK ONLY.
FOR LEGEND, ABBREVIATIONS AND GENERAL NOTES SEE SHEET E-1.

E-23

STATE OF CALIFORNIA - DEPARTMENT OF TRANSPORTATION
Caltrans OFFICE OF ITS

FUNCTIONAL SUPERVISOR: JACQUELINE C. TAN
CALCULATED-DESIGNED BY: CANDACE FUNG
CHECKED BY: JACQUELINE C. TAN
REVISED BY
DATE REVISED

LAST REVISION 00-00-00 | DATE PLOTTED => 12-JUN-2009 | TIME PLOTTED => 13:55

Dist	COUNTY	ROUTE	KILOMETER POST TOTAL PROJECT	SHEET No.	TOTAL SHEETS
07	LA	5	42.8/47.3	405	1073

Caltrans Metric

5/5/08
REGISTERED ELECTRICAL ENGINEER

6-8-09
PLANS APPROVAL DATE

REGISTERED PROFESSIONAL ENGINEER CANDACE FUNG No. E16936 Exp. 06/30/09 ELECTRICAL STATE OF CALIFORNIA

THE STATE OF CALIFORNIA OR ITS OFFICERS OR AGENTS SHALL NOT BE RESPONSIBLE FOR THE ACCURACY OR COMPLETENESS OF ELECTRONIC COPIES OF THIS PLAN IS SHEET.

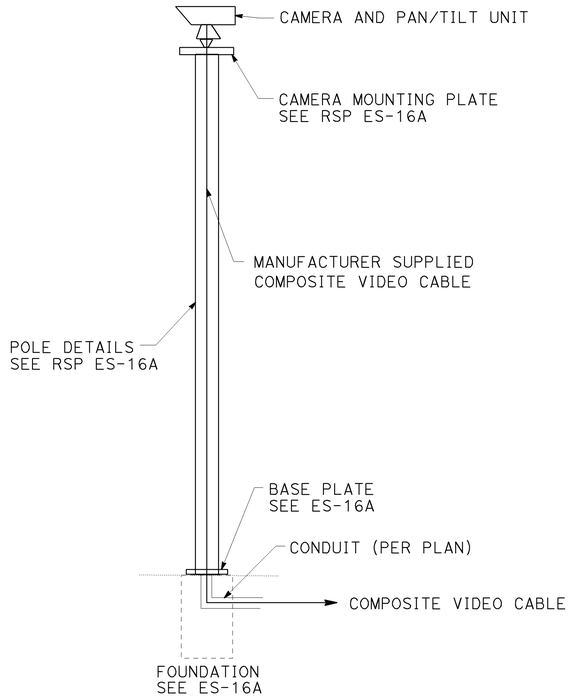

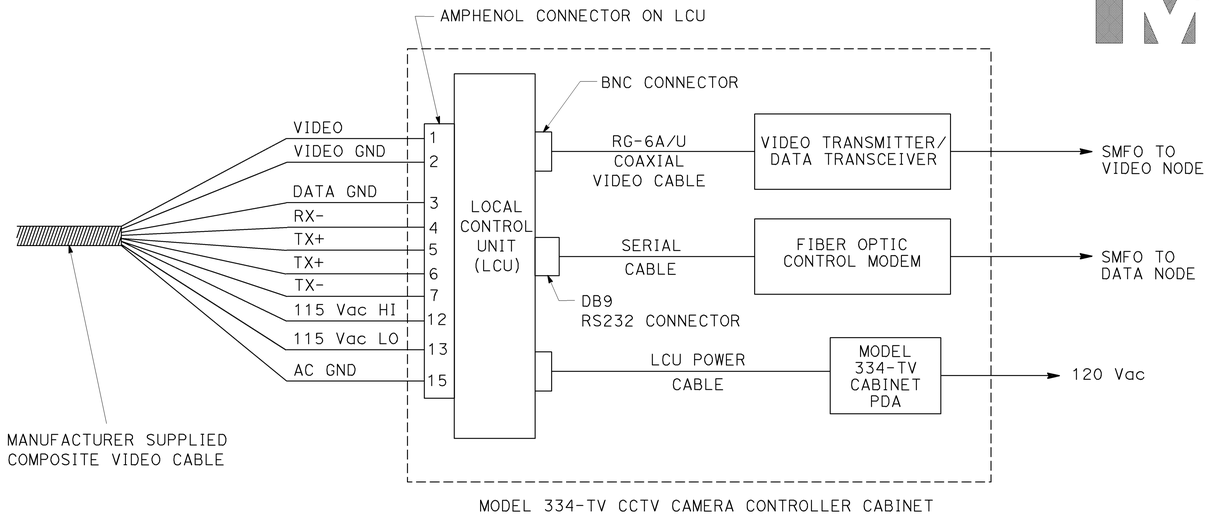

WIRING DIAGRAM

VIDEO BLANKING PRIVACY ZONES TO EXCLUDE NON-TRAFFIC FEATURES WHICH ARE NOT TO BE VIEWED (e.g., RESIDENTIAL HOUSING). THE PRIVACY ZONES SHALL BE ADJUSTED AS DIRECTED BY THE ENGINEER.

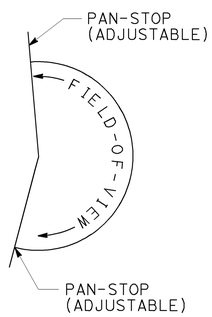

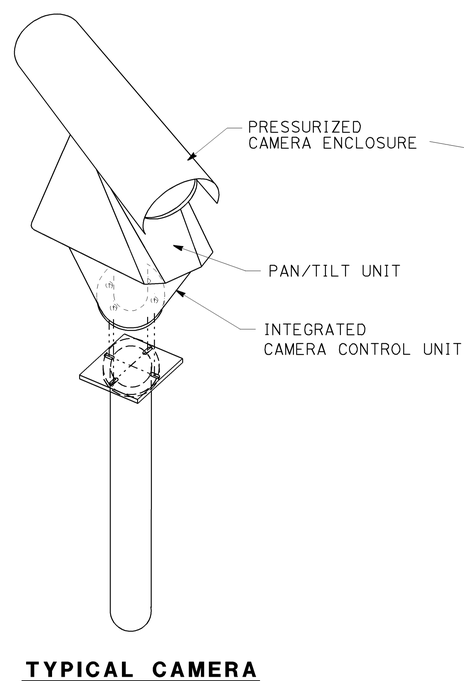

TYPICAL CAMERA WITH PAN/TILT UNIT (TYPE 1)

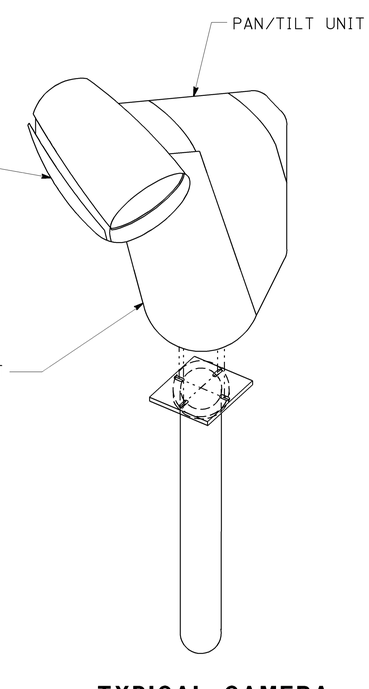

TYPICAL CAMERA WITH PAN/TILT UNIT (TYPE 2)

NOTES: (WIRING DIAGRAM)

1. THE CONTRACTOR TO PROVIDE CABLE LENGTH FROM THE CAMERA ASSEMBLY TO THE LCU INCLUDING AMP CONNECTORS AS SHOWN IN THIS SHEET.
2. THE CONTRACTOR SHALL PROVIDE ALL CABLES FROM THE LCU TO THE FIBER OPTIC VIDEO TRANSMITTER, FIBER OPTIC DATA TRANSCEIVER AND PDA.
3. ALL CABLES SHALL BE ALUMINUM SHIELDED TO PREVENT CROSSTALK.
4. IN THE CCTV CAMERA CABINET, THE NUMBER IDENTIFIES THE SPECIFIC CONDUCTOR TO BE USED FOR THE INDICATED FUNCTION.
5. CONNECT ALL DRAIN WIRES OF SHIELDED-CONDUCTORS TO CABINET GROUND AT THE LCU.
6. INSTALL CONNECTORS IN ACCORDANCE WITH THE MANUFACTURER'S INSTRUCTIONS.
7. WATERPROOF ALL CONNECTORS AND CABLES USING WATER-TIGHT GROMMETS, SEALING COMPOUNDS, AND TAPE.
8. AS REQUIRED, THE CONTRACTOR SHALL INSTALL ADAPTER MOUNTING PLATES TO MOUNT CCTV CAMERA ON EXISTING POLE.

ALL DIMENSIONS ARE IN METERS UNLESS OTHERWISE SHOWN

MODIFY CLOSED CIRCUIT TELEVISION CAMERA (WIRING DIAGRAM WITH PAN/TILT UNIT)

NO SCALE

THIS PLAN IS ACCURATE FOR ELECTRICAL WORK ONLY.
FOR LEGEND, ABBREVIATIONS AND GENERAL NOTES SEE SHEET E-1.

E-24

REVISED BY	DATE REVISED

CALCULATED-DESIGNED BY: CANDACE FUNG
CHECKED BY: JACQUELINE C. TAN
FUNCTIONAL SUPERVISOR: JACQUELINE C. TAN

STATE OF CALIFORNIA - DEPARTMENT OF TRANSPORTATION
Caltrans OFFICE OF ITS

LAST REVISION 00-00-00 | DATE PLOTTED => 15-JUN-2009 | TIME PLOTTED => 10:21

Dist	COUNTY	ROUTE	KILOMETER POST TOTAL PROJECT	SHEET No.	TOTAL SHEETS
07	LA	5	42.8/47.3	406	1073

5/5/08
REGISTERED ELECTRICAL ENGINEER

6-8-09
PLANS APPROVAL DATE

REGISTERED PROFESSIONAL ENGINEER CANDACE FUNG No. E16936 Exp. 06/30/09 ELECTRICAL STATE OF CALIFORNIA

THE STATE OF CALIFORNIA OR ITS OFFICERS OR AGENTS SHALL NOT BE RESPONSIBLE FOR THE ACCURACY OR COMPLETENESS OF ELECTRONIC COPIES OF THIS PLAN IS SHEET.

Caltrans Metric

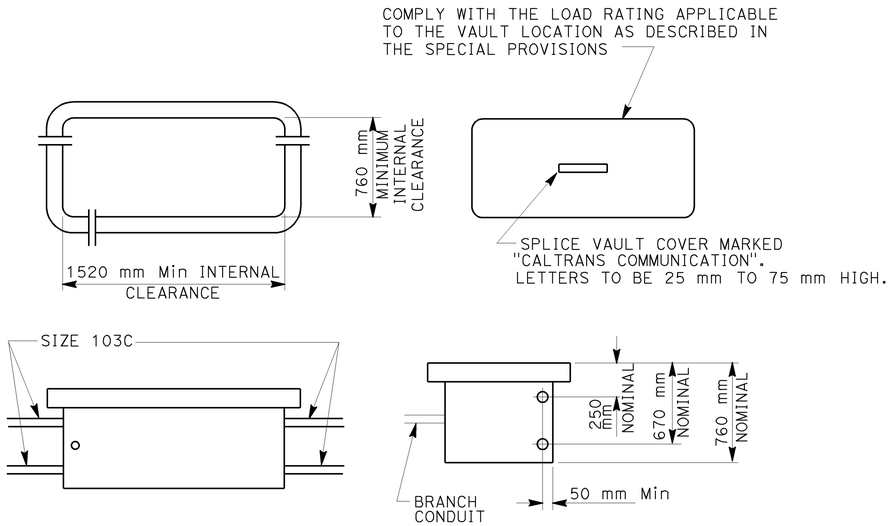

SPLICE VAULT DIMENSIONS

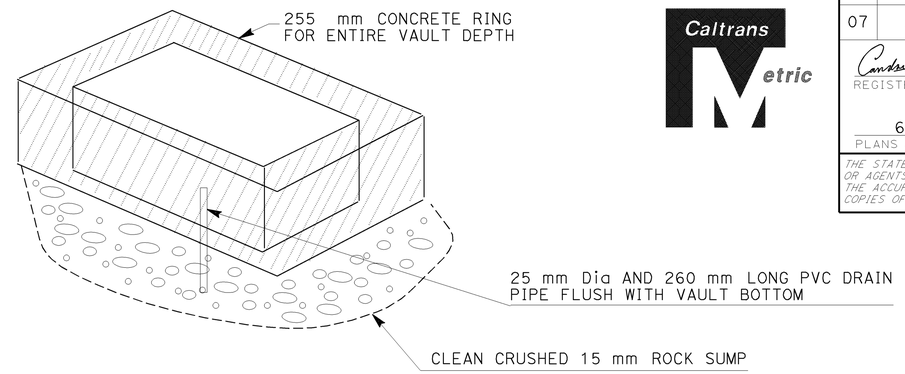

DETAIL A

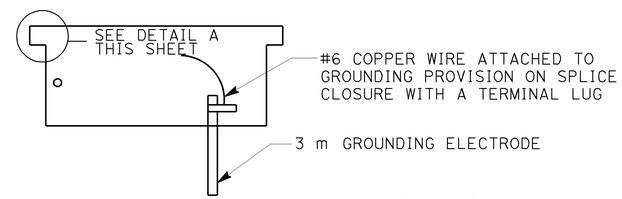

SPLICE VAULT INSTALLATION

INSTALLATION NOTES:

1. CONCRETE RING SHALL BE MINOR CONCRETE.
2. CONCRETE ENCASEMENT RING DIMENSION SHALL BE EQUAL TO DESIGN PAVEMENT DEPTH

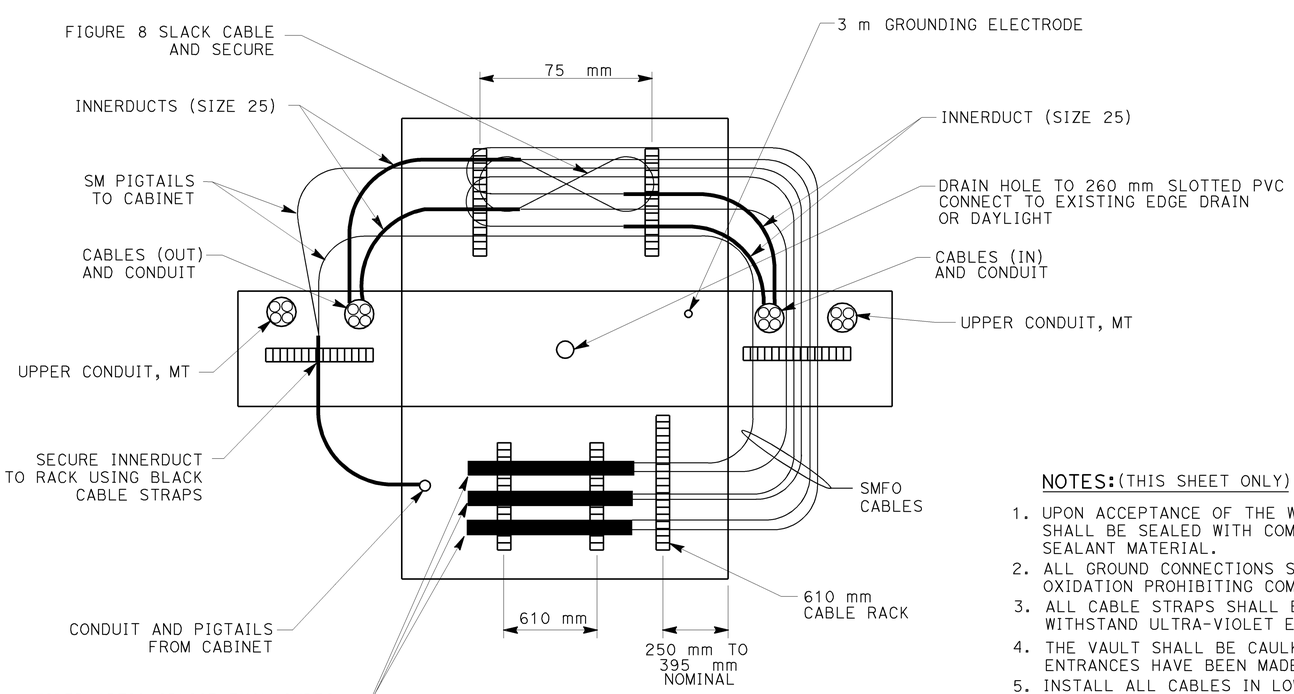

FIBER OPTIC CABLE INSTALLATION

TOP VIEW - WALLS FOLDED DOWN FOR CLARITY

NOTES: (THIS SHEET ONLY)

1. UPON ACCEPTANCE OF THE WORK, ALL CONDUITS SHALL BE SEALED WITH COMPATIBLE SEALANT MATERIAL.
2. ALL GROUND CONNECTIONS SHALL BE COATED WITH OXIDATION PROHIBITING COMPOUND.
3. ALL CABLE STRAPS SHALL BE DESIGNED TO WITHSTAND ULTRA-VIOLET EXPOSURE.
4. THE VAULT SHALL BE CAULKED AFTER ALL KNOWN ENTRANCES HAVE BEEN MADE.
5. INSTALL ALL CABLES IN LOWER SIZE 103 CONDUIT.
6. UPPER SIZE 103 CONDUIT IS MT.
7. VAULT SHALL HAVE INTEGRAL BASE OR SHALL BE GROUTED PER STANDARD SPECIFICATION OF PULL BOXES.
8. NUMBER OF SPLICE CLOSURES AND INNERDUCTS MAY VARY.

THIS PLAN IS ACCURATE FOR ELECTRICAL WORK ONLY.
FOR LEGEND, ABBREVIATIONS AND GENERAL NOTES SEE SHEET E-1.

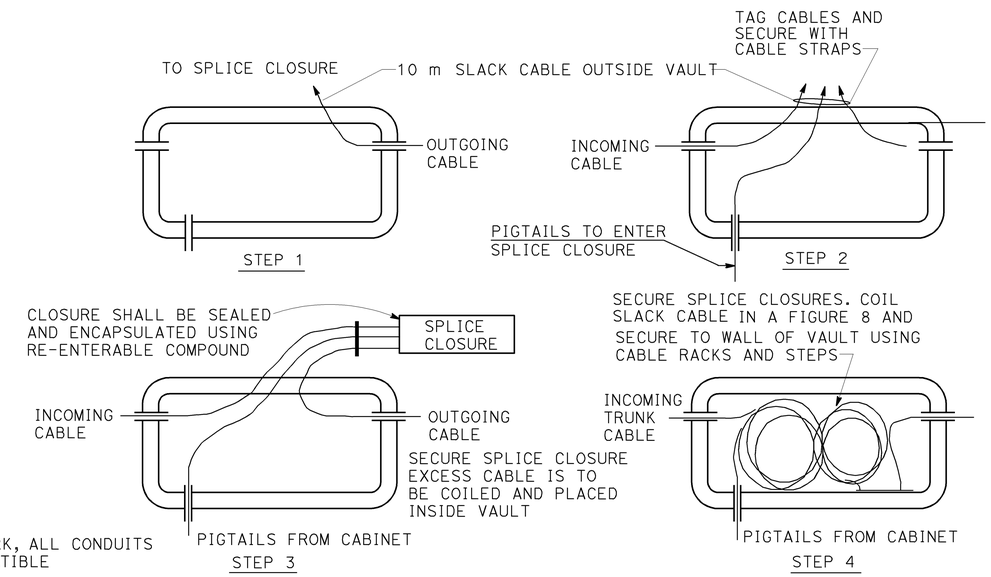

SPLICE PROCEDURE

ALL DIMENSIONS ARE IN METERS UNLESS OTHERWISE SHOWN

MODIFY COMMUNICATION SYSTEM (SPLICE VAULT DETAILS)

NO SCALE

E-25

REVISED BY	DATE REVISED

CANDACE FUNG — JACQUELINE C. TAN

CALCULATED-DESIGNED BY — CHECKED BY

FUNCTIONAL SUPERVISOR — JACQUELINE C. TAN

STATE OF CALIFORNIA - DEPARTMENT OF TRANSPORTATION
Caltrans
OFFICE OF ITS

LAST REVISION 00-00-00 | DATE PLOTTED => 12-JUN-2009 | TIME PLOTTED => 13:55

Dist	COUNTY	ROUTE	KILOMETER POST TOTAL PROJECT	SHEET No.	TOTAL SHEETS
07	LA	5	42.8/47.3	407	1073

Caltrans Metric

5/5/08
REGISTERED ELECTRICAL ENGINEER

6-8-09
PLANS APPROVAL DATE

REGISTERED PROFESSIONAL ENGINEER CANDACE FUNG No. E16936 Exp. 06/30/09 ELECTRICAL STATE OF CALIFORNIA

THE STATE OF CALIFORNIA OR ITS OFFICERS OR AGENTS SHALL NOT BE RESPONSIBLE FOR THE ACCURACY OR COMPLETENESS OF ELECTRONIC COPIES OF THIS PLAN IS SHEET.

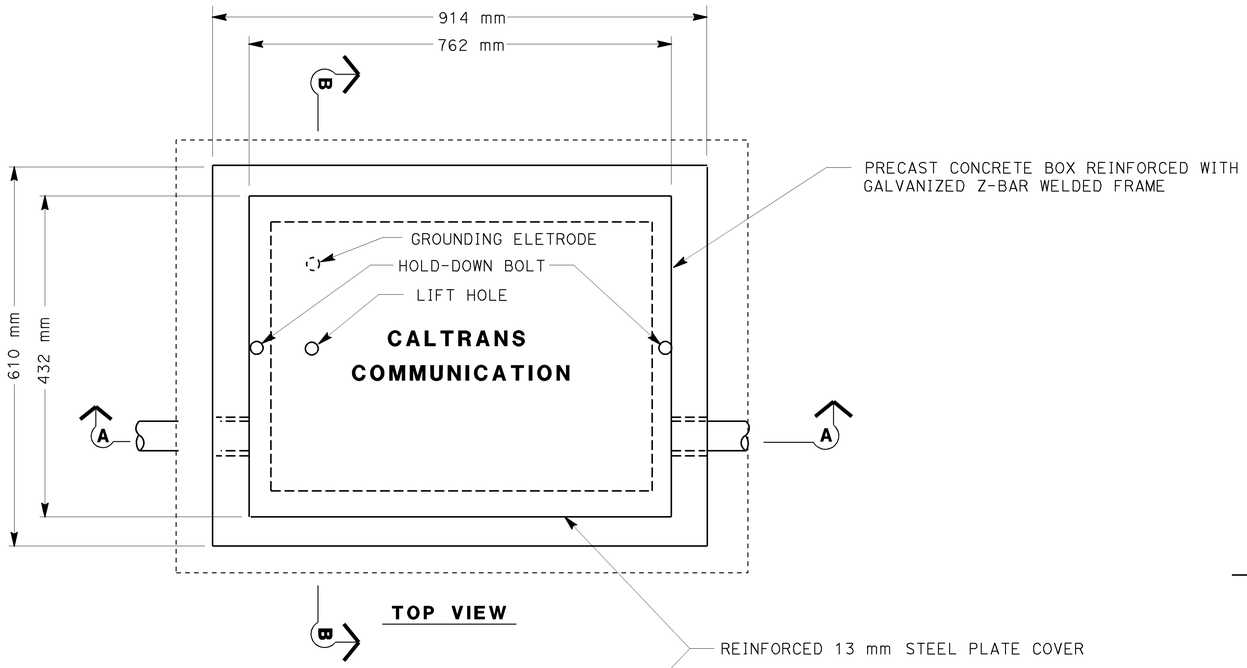

TOP VIEW

NOTES: (THIS SHEET ONLY)

1. FOR DETAILS NOT SHOWN SEE Std PLAN RSP ES-8.
2. CONDUITS SHOWN ARE FOR EXAMPLE ONLY. ADDITIONAL CONDUITS MAY BE REQURIED AS SHOWN ON THE PLAN SHEETS.
3. SEE SPECIAL PROVISIONS REGARDING HOLD-DOWN BOLTS FOR TRAFFIC COVERS.

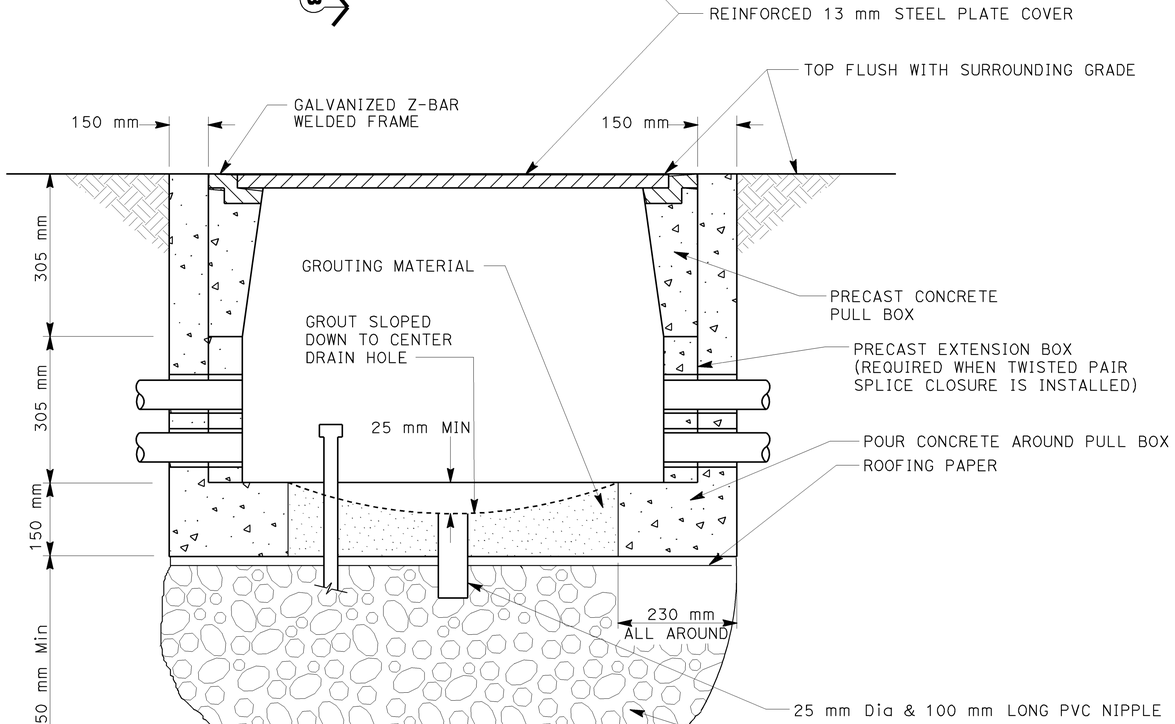

SECTION A-A

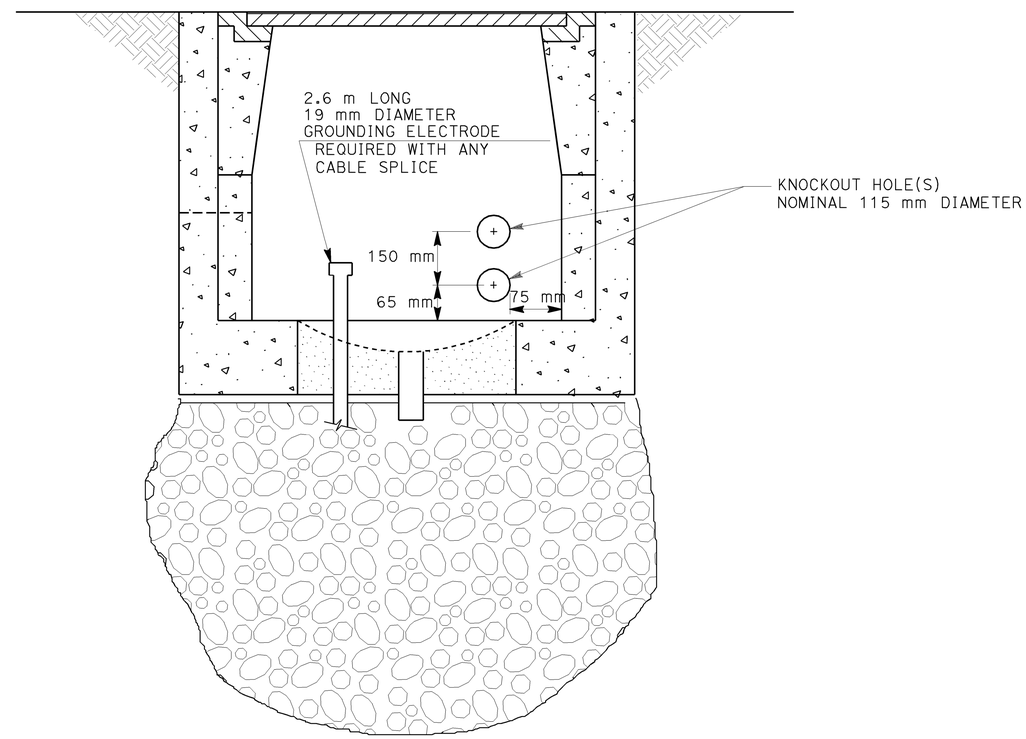

SECTION B-B

ALL DIMENSIONS ARE IN METERS UNLESS OTHERWISE SHOWN

MODIFY COMMUNICATION SYSTEM (COMMUNICATIONS PULL BOX DETAILS)

NO SCALE

THIS PLAN IS ACCURATE FOR ELECTRICAL WORK ONLY.
FOR LEGEND, ABBREVIATIONS AND GENERAL NOTES SEE SHEET E-1.

E-26

STATE OF CALIFORNIA - DEPARTMENT OF TRANSPORTATION
Caltrans **OFFICE OF ITS**

FUNCTIONAL SUPERVISOR: JACQUELINE C. TAN
CALCULATED-DESIGNED BY: CANDACE FUNG
CHECKED BY: JACQUELINE C. TAN
REVISED BY / DATE REVISED

LAST REVISION 00-00-00 | DATE PLOTTED => 12-JUN-2009 | TIME PLOTTED => 13:55

Dist	COUNTY	ROUTE	KILOMETER POST TOTAL PROJECT	SHEET No.	TOTAL SHEETS
07	LA	5	42.8/47.3	408	1073

REGISTERED ELECTRICAL ENGINEER 5/5/08

6-8-09
PLANS APPROVAL DATE

REGISTERED PROFESSIONAL ENGINEER CANDACE FUNG No. E16936 Exp. 06/30/09 ELECTRICAL STATE OF CALIFORNIA

THE STATE OF CALIFORNIA OR ITS OFFICERS OR AGENTS SHALL NOT BE RESPONSIBLE FOR THE ACCURACY OR COMPLETENESS OF ELECTRONIC COPIES OF THIS PLAN IS SHEET.

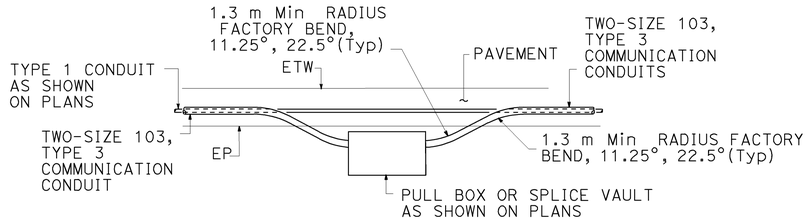

OUTSIDE SHOULDER PULL BOX INSTALLATION (TOP VIEW)

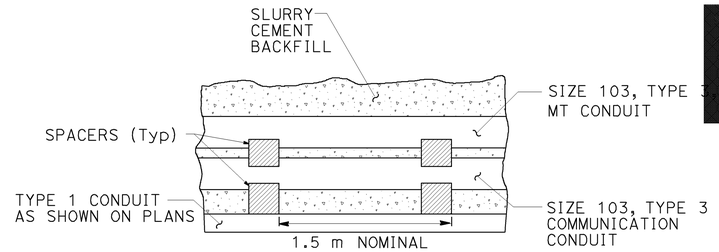

CONDUIT SPACER PLACEMENT (SIDE VIEW)

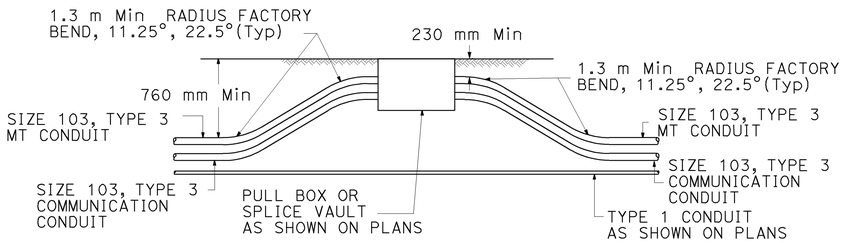

PULL BOX FOR SOIL AREA TRENCHING (ELEVATION)

NOTES: (THIS SHEET ONLY)

1. REPLACE AC DIKE IN KIND, AS NECESSARY.
2. TRENCH SHALL BE CENTERED IN SHOULDER OR AS DIRECTED BY THE ENGINEER.
3. MAINTAIN 600 mm MINIMUM COVER AND BACKFILL TRENCH WITH SLURRY CEMENT BETWEEN PULL BOX AND PAVED SHOULDER.
4. WHERE TRENCH TRANSITIONS FROM ASPHALT TO UNPAVED AREA, EXCEPT AT PULL BOXES, CONDUIT TO GRADUALLY TRANSITION FROM 600 mm MINIMUM DEPTH TO 760 mm MINIMUM DEPTH WITHIN THE ASPHALT AREA.
5. 600 mm MINIMUM COVER MAY BE REDUCED TO 230 mm MINIMUM COVER IF NEEDED TO CLEAR A STORM DRAIN OR OTHER FIXED OBJECT AS DIRECTED BY THE ENGINEER.
6. PROVIDE MINIMUM 1.5 m CLEARANCE BETWEEN ANY CONDUIT AND EXISTING STRUCTURE FOUNDATIONS.
7. ANCHOR/RESTRAIN TOP CONDUIT FROM FLOATING DURING SLURRY CEMENT BACKFILL.
8. CONDUITS SHALL BE INSTALLED IN NEW ASPHALT PAVEMENT AFTER AGGREGATE BASE IS PLACED AND COMPACTED.

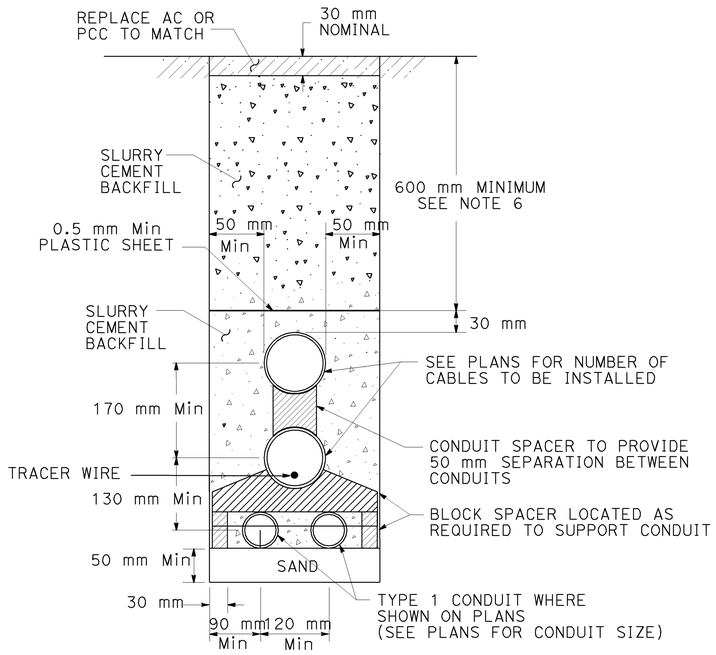

TRENCH IN PAVEMENT (CONCRETE OR ASPHALT) WITH TWO 103C, TYPE 3, AND TWO TYPE 1 CONDUITS

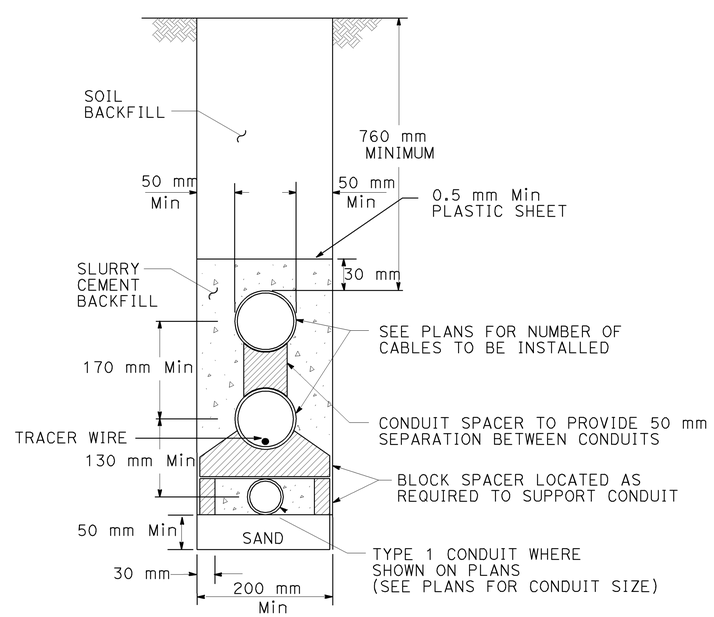

TRENCH IN SOIL WITH TWO 103C, TYPE 1, AND ONE TYPE 1 CONDUITS

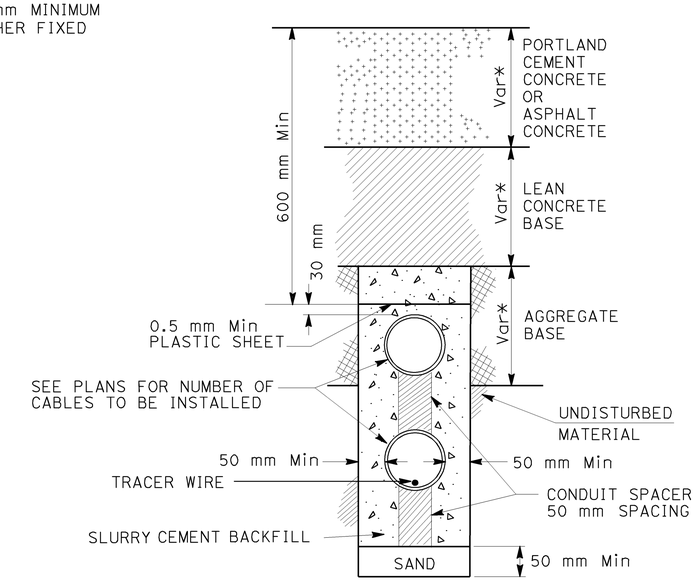

TRENCH IN NEW PAVEMENT (PCC or ASPHALT) WITH TWO 103C, TYPE 3, CONDUITS

(* PAVEMENT THICKNESS, SEE TYPICAL CROSS SECTION PLANS)

THIS PLAN IS ACCURATE FOR ELECTRICAL WORK ONLY.
FOR LEGEND, ABBREVIATIONS AND GENERAL NOTES SEE SHEET E-1.

ALL DIMENSIONS ARE IN METERS UNLESS OTHERWISE SHOWN

MODIFY COMMUNICATION SYSTEM

(TRENCH DETAILS)

NO SCALE

E-27

STATE OF CALIFORNIA - DEPARTMENT OF TRANSPORTATION
Caltrans
OFFICE OF ITS

FUNCTIONAL SUPERVISOR: JACQUELINE C. TAN
CALCULATED-DESIGNED BY: CANDACE FUNG
CHECKED BY: JACQUELINE C. TAN
REVISED BY
DATE REVISED

LAST REVISION DATE PLOTTED => 17-JUN-2009
00-00-00 TIME PLOTTED => 12:47

Dist	COUNTY	ROUTE	KILOMETER POST TOTAL PROJECT	SHEET No.	TOTAL SHEETS
07	LA	5	42.8/47.3	409	1073

REGISTERED ELECTRICAL ENGINEER 5/5/08

6-8-09
PLANS APPROVAL DATE

REGISTERED PROFESSIONAL ENGINEER CANDACE FUNG No. E16936 Exp.06/30/09 ELECTRICAL STATE OF CALIFORNIA

The State of California or its officers or agents shall not be responsible for the accuracy or completeness of electronic copies of THIS PLAN to sheet.

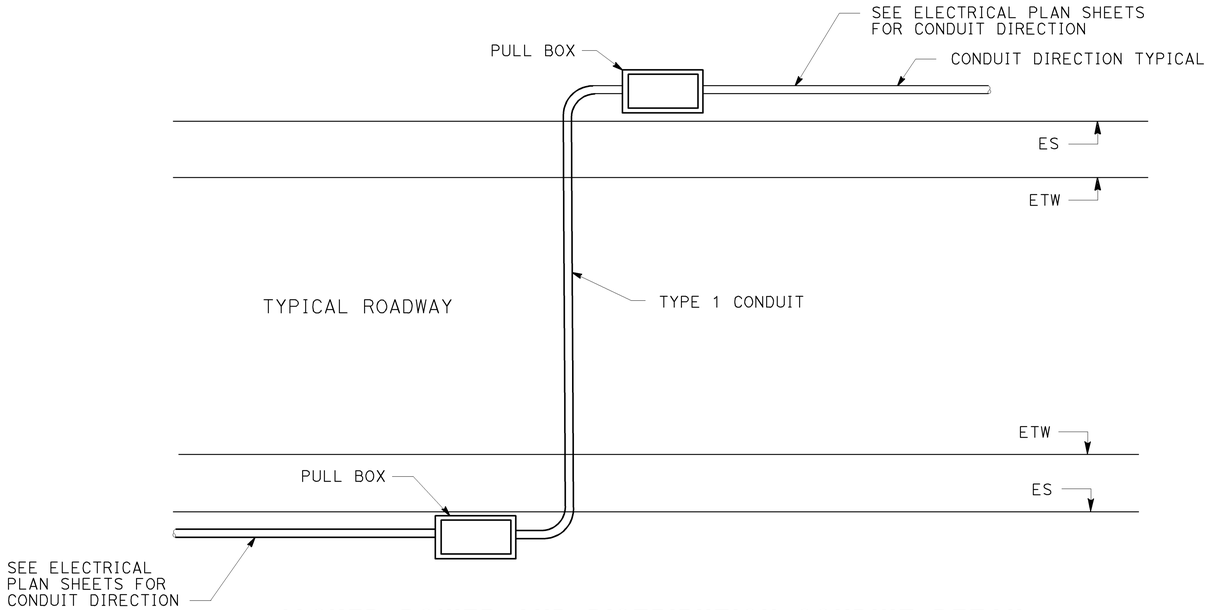

JACKED POWER AND DISTRIBUTION CONDUIT DETAIL

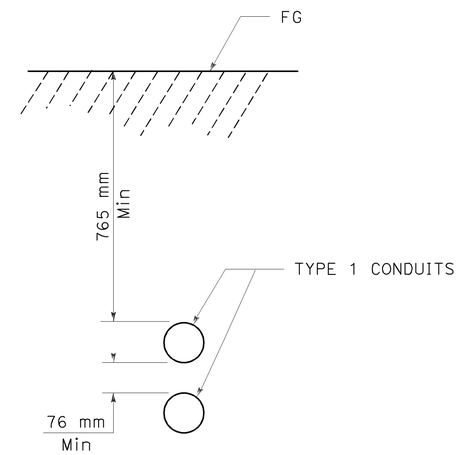

SECTION A-A

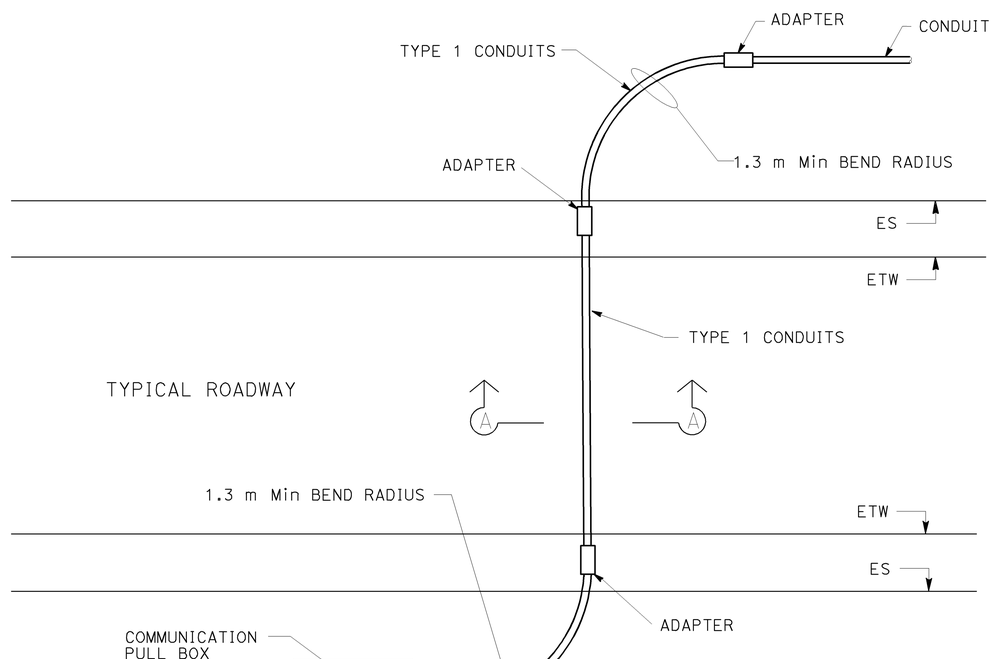

JACKED COMMUNICATION CONDUIT DETAIL

NOTES: (THIS SHEET ONLY)

1. SEE ELECTRICAL PLAN SHEETS E-2 TO E-25 FOR LOCATIONS WHERE THESE DETAILS APPLY.

THIS PLAN IS ACCURATE FOR ELECTRICAL WORK ONLY.
FOR LEGEND, ABBREVIATIONS AND GENERAL NOTES SEE SHEET E-1.

ALL DIMENSIONS ARE IN METERS UNLESS OTHERWISE SHOWN

MODIFY COMMUNICATION SYSTEM (JACKED CONDUIT DETAILS)

NO SCALE

E-28

STATE OF CALIFORNIA - DEPARTMENT OF TRANSPORTATION
Caltrans OFFICE OF ITS

FUNCTIONAL SUPERVISOR: JACQUELINE C. TAN
CALCULATED-DESIGNED BY: CANDACE FUNG
CHECKED BY: JACQUELINE C. TAN
REVISED BY
DATE REVISED

LAST REVISION 00-00-00
DATE PLOTTED => 12-JUN-2009
TIME PLOTTED => 13:56

Dist	COUNTY	ROUTE	KILOMETER POST TOTAL PROJECT	SHEET No.	TOTAL SHEETS
07	LA	5	42.8/47.3	410	1073

REGISTERED ELECTRICAL ENGINEER 5/5/08

6-8-09
PLANS APPROVAL DATE

REGISTERED PROFESSIONAL ENGINEER CANDACE FUNG No. E16936 Exp. 06/30/09 ELECTRICAL STATE OF CALIFORNIA

THE STATE OF CALIFORNIA OR ITS OFFICERS OR AGENTS SHALL NOT BE RESPONSIBLE FOR THE ACCURACY OR COMPLETENESS OF ELECTRONIC COPIES OF THIS PLAN IS SHEET.

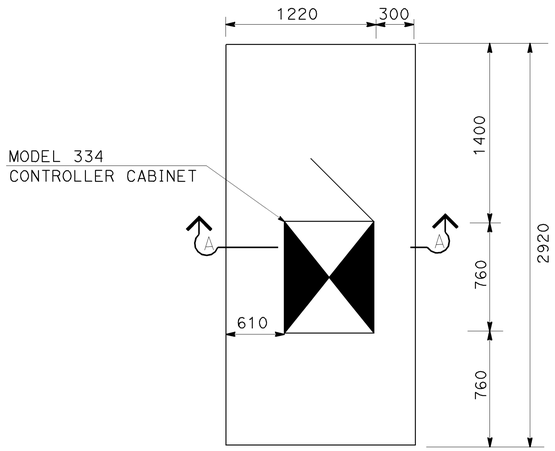

DETAIL A
PLAN VIEW

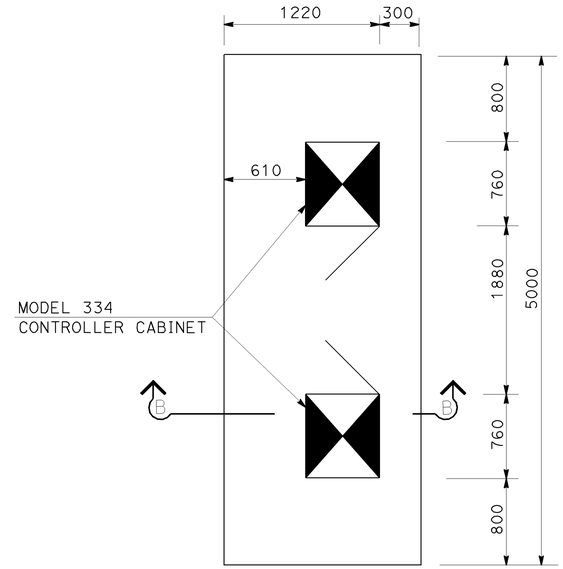

DETAIL B
PLAN VIEW

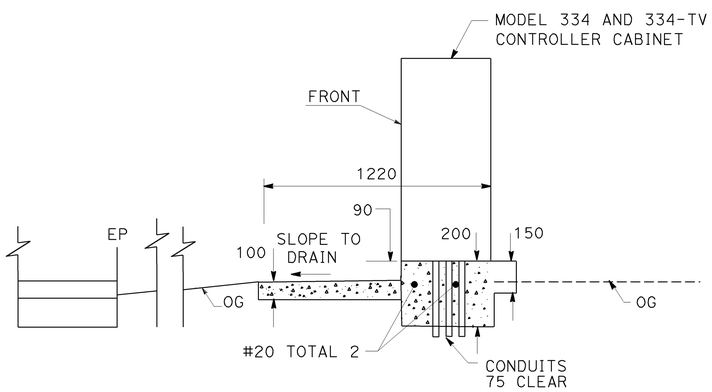

SECTION A-A
ELEVATION VIEW FOR DETAIL A

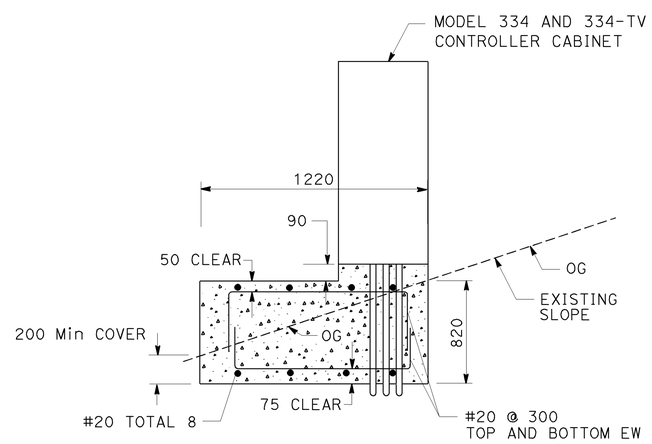

SECTION B-B
ELEVATION VIEW FOR DETAIL B

ALL DIMENSIONS ARE IN METERS UNLESS OTHERWISE SHOWN

MODIFY COMMUNICATION SYSTEM
(CABINET FOUNDATION DETAILS)

NO SCALE

THIS PLAN IS ACCURATE FOR ELECTRICAL WORK ONLY.
FOR LEGEND, ABBREVIATIONS AND GENERAL NOTES SEE SHEET E-1.

E-29

REVISED BY	DATE REVISED

CALCULATED-DESIGNED BY: CANDACE FUNG
CHECKED BY: JACQUELINE C. TAN
FUNCTIONAL SUPERVISOR: JACQUELINE C. TAN

STATE OF CALIFORNIA - DEPARTMENT OF TRANSPORTATION
Caltrans OFFICE OF ITS

LAST REVISION 00-00-00 | DATE PLOTTED => 12-JUN-2009 | TIME PLOTTED => 13:56

Dist	COUNTY	ROUTE	KILOMETER POST TOTAL PROJECT	SHEET No.	TOTAL SHEETS
07	LA	5	42.8/47.3	411	1073

REGISTERED ELECTRICAL ENGINEER 5/5/08

6-8-09
PLANS APPROVAL DATE

REGISTERED PROFESSIONAL ENGINEER CANDACE FUNG No. E16936 Exp. 06/30/09 ELECTRICAL STATE OF CALIFORNIA

THE STATE OF CALIFORNIA OR ITS OFFICERS OR AGENTS SHALL NOT BE RESPONSIBLE FOR THE ACCURACY OR COMPLETENESS OF ELECTRONIC COPIES OF THIS PLAN IS SHEET.

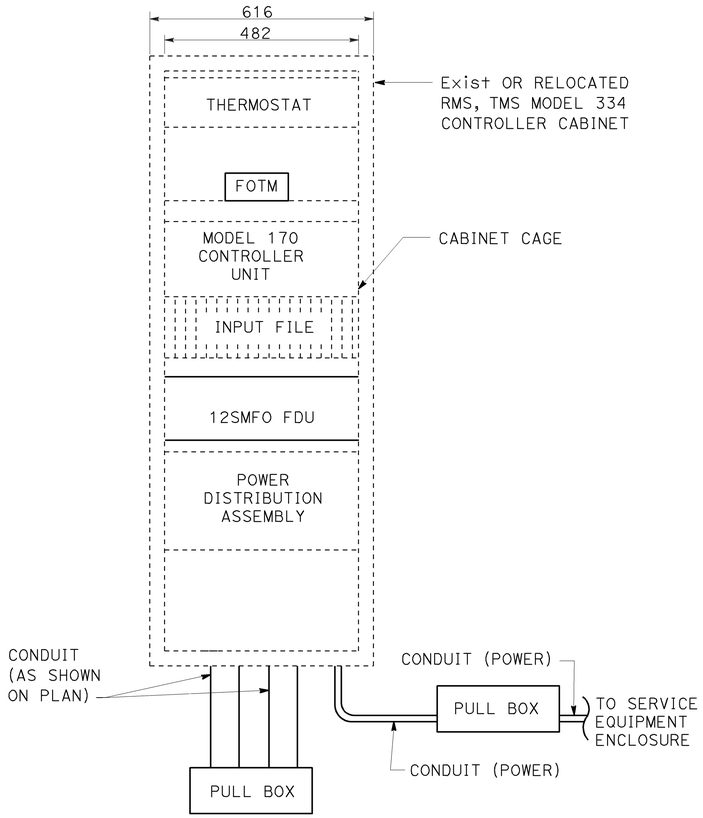

Exist OR RELOCATED MODEL 334 CONTROLLER CABINET EQUIPMENT LAYOUT FOR RMS AND TMS

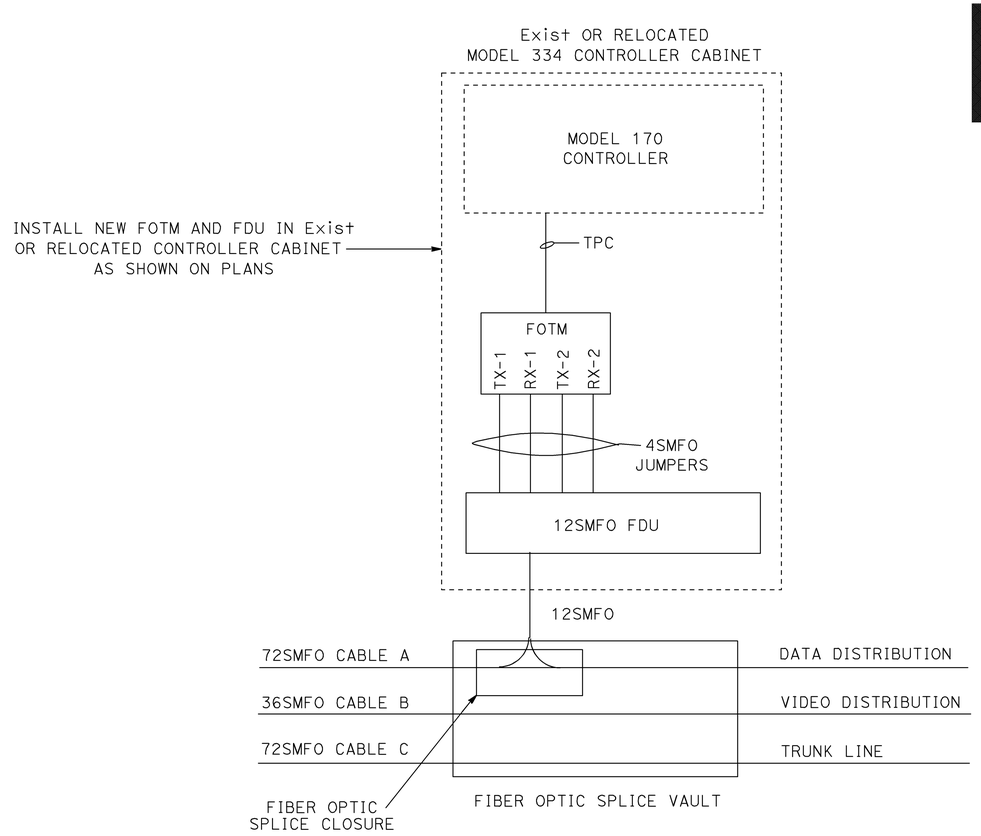

Exist OR RELOCATED MODEL 334 CONTROLLER CABINET WIRING DETAIL FOR RMS AND TMS

LEGEND: (SHEET E-30 THROUGH E-32)

- SURGE PROTECTOR
- CIRCUIT BREAKER
- (HT) HIGH TEMPERATURE RELAY COIL
- HT RELAY CONTACT NORMALLY CLOSED
- 6 WIRE SIZE, IF NOT INDICATED SHALL BE #12 AWG
- (F) FAN
- (L) INDICATOR LAMP
- THERMO THERMOSTATIC CONTROL
- ADJUSTABLE CALIBRATED THERMOSTAT
- R DUPLEX RECEPTACLE
- EQUIPMENT GROUND

ABBREVIATIONS: (SHEET E-30 THROUGH E-32)

W/GFI	WITH GROUND FAULT INTERRUPTOR
UPS	UNINTERRUPTIBLE POWER SUPPLY
HT	HIGH TEMPERATURE

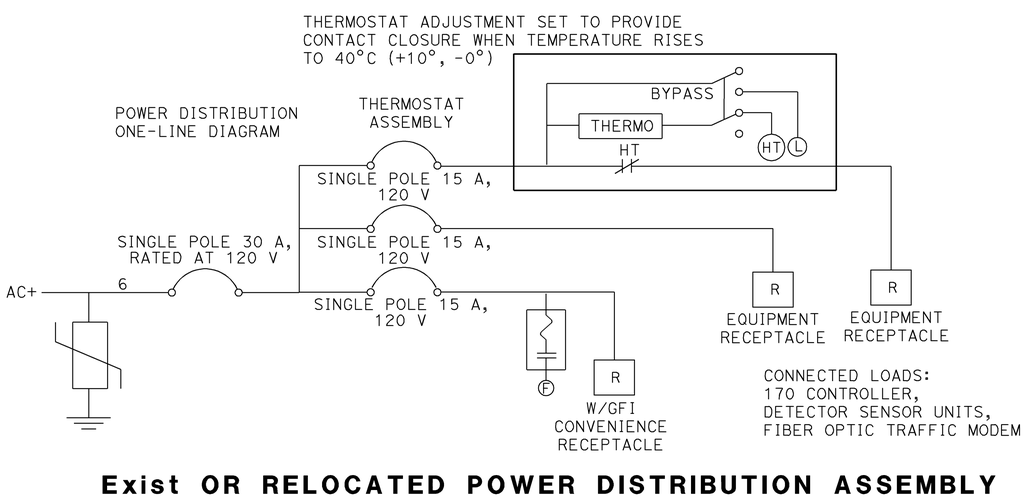

Exist OR RELOCATED POWER DISTRIBUTION ASSEMBLY

ALL DIMENSIONS ARE IN METERS UNLESS OTHERWISE SHOWN

MODIFY COMMUNICATION SYSTEM

(MODEL 334 CONTROLLER CABINET DETAILS FOR RMS AND TMS)

NO SCALE

THIS PLAN IS ACCURATE FOR ELECTRICAL WORK ONLY.
FOR LEGEND, ABBREVIATIONS AND GENERAL NOTES SEE SHEET E-1.

E-30

STATE OF CALIFORNIA - DEPARTMENT OF TRANSPORTATION
Caltrans OFFICE OF ITS

FUNCTIONAL SUPERVISOR: JACQUELINE C. TAN
CALCULATED-DESIGNED BY: CANDACE FUNG
CHECKED BY: JACQUELINE C. TAN
REVISED BY
DATE REVISED

LAST REVISION 00-00-00 DATE PLOTTED => 12-JUN-2009 TIME PLOTTED => 13:56

Dist	COUNTY	ROUTE	KILOMETER POST TOTAL PROJECT	SHEET No.	TOTAL SHEETS
07	LA	5	42.8/47.3	412	1073

REGISTERED ELECTRICAL ENGINEER 5/5/08

PLANS APPROVAL DATE 6-8-09

REGISTERED PROFESSIONAL ENGINEER CANDACE FUNG No. E16936 Exp. 06/30/09 ELECTRICAL STATE OF CALIFORNIA

THE STATE OF CALIFORNIA OR ITS OFFICERS OR AGENTS SHALL NOT BE RESPONSIBLE FOR THE ACCURACY OR COMPLETENESS OF ELECTRONIC COPIES OF THIS PLAN IS SHEET.

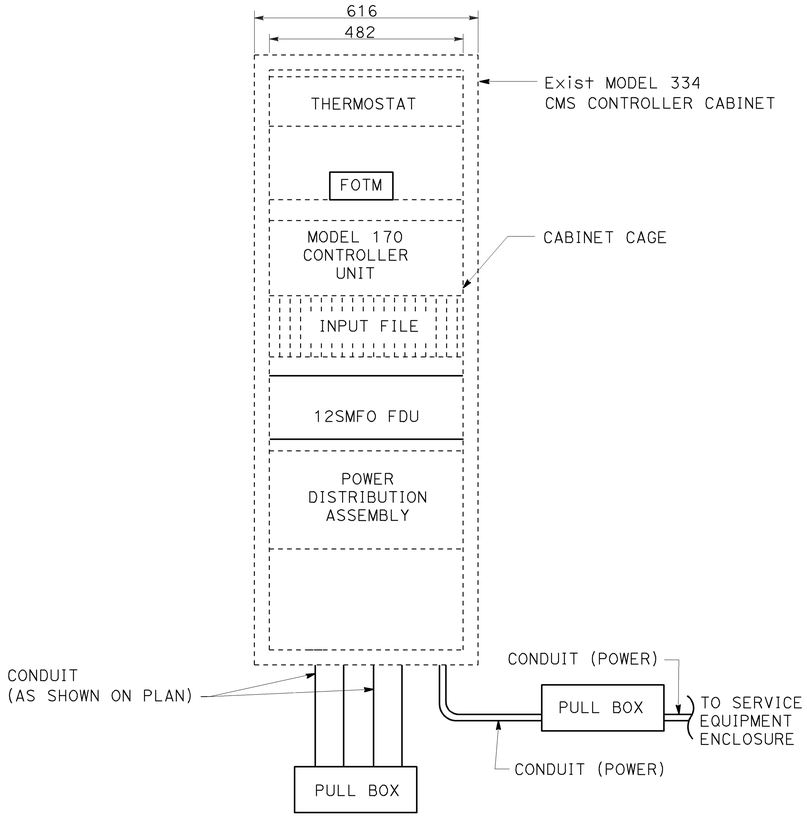

Exist MODEL 334 CMS CONTROLLER CABINET EQUIPMENT LAYOUT

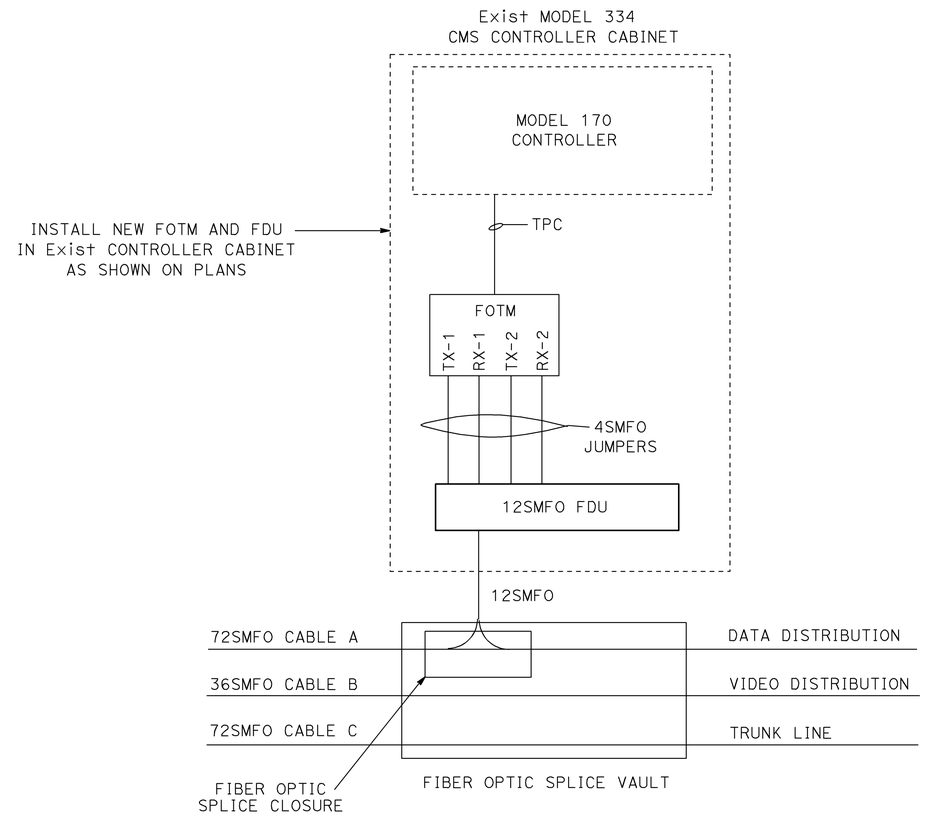

Exist MODEL 334 CMS CONTROLLER CABINET WIRING DETAIL

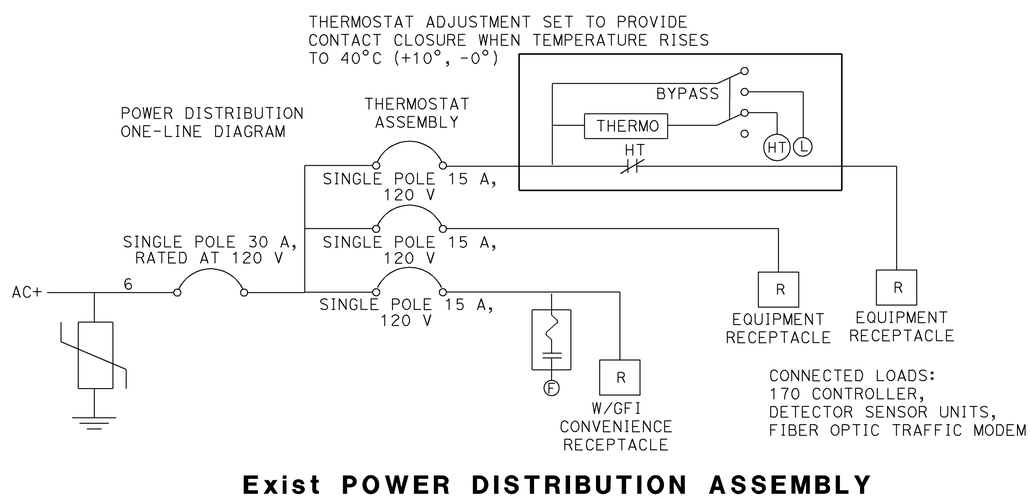

Exist POWER DISTRIBUTION ASSEMBLY

ALL DIMENSIONS ARE IN METERS UNLESS OTHERWISE SHOWN

MODIFY CHANGEABLE MESSAGE SIGN
(LOCATION No. 40)
(MODEL 334 CMS CONTROLLER CABINET DETAILS)

NO SCALE

THIS PLAN IS ACCURATE FOR ELECTRICAL WORK ONLY.
FOR LEGEND, ABBREVIATIONS AND GENERAL NOTES SEE SHEET E-1.

E-31

REVISED BY	DATE REVISED

CALCULATED-DESIGNED BY: CANDACE FUNG
CHECKED BY: JACQUELINE C. TAN
FUNCTIONAL SUPERVISOR: JACQUELINE C. TAN

STATE OF CALIFORNIA - DEPARTMENT OF TRANSPORTATION
Caltrans OFFICE OF ITS

LAST REVISION 00-00-00 | DATE PLOTTED => 12-JUN-2009 | TIME PLOTTED => 13:56

Dist	COUNTY	ROUTE	KILOMETER POST TOTAL PROJECT	SHEET No.	TOTAL SHEETS
07	LA	5	42.8/47.3	413	1073

REGISTERED ELECTRICAL ENGINEER 5/5/08

PLANS APPROVAL DATE 6-8-09

REGISTERED PROFESSIONAL ENGINEER CANDACE FUNG No. E16936 Exp. 06/30/09 ELECTRICAL STATE OF CALIFORNIA

THE STATE OF CALIFORNIA OR ITS OFFICERS OR AGENTS SHALL NOT BE RESPONSIBLE FOR THE ACCURACY OR COMPLETENESS OF ELECTRONIC COPIES OF THIS PLAN IS SHEET.

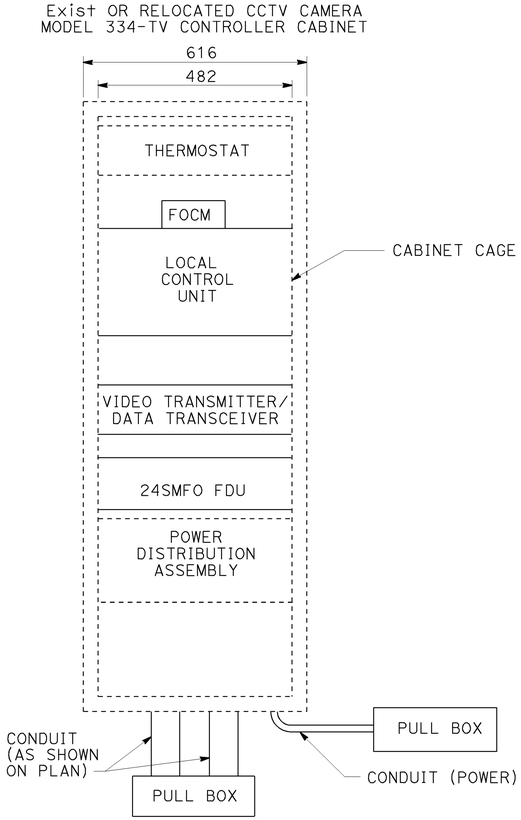

Exist OR RELOCATED CCTV CAMERA MODEL 334-TV CONTROLLER CABINET EQUIPMENT LAYOUT

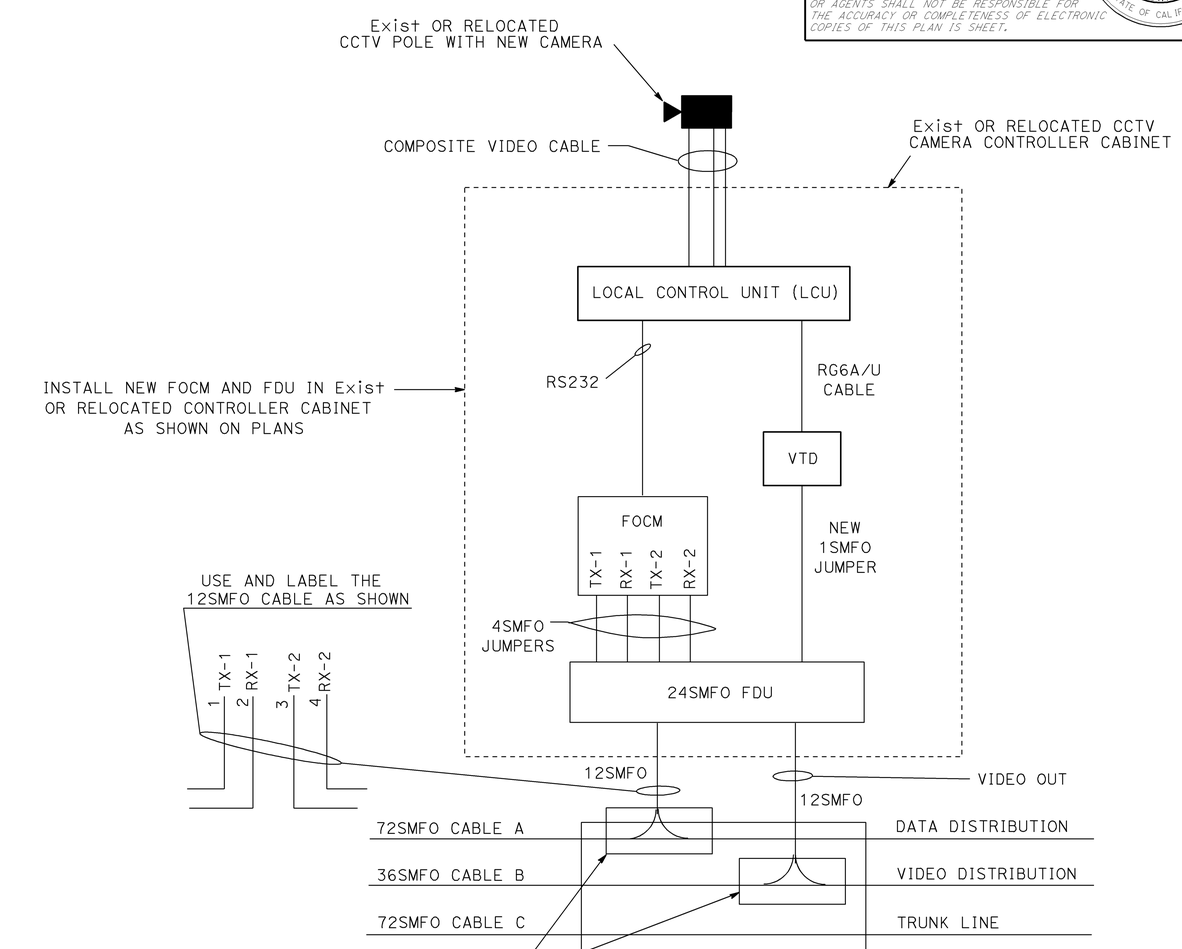

Exist OR RELOCATED CCTV CAMERA MODEL 334-TV CONTROLLER CABINET WIRING DETAIL

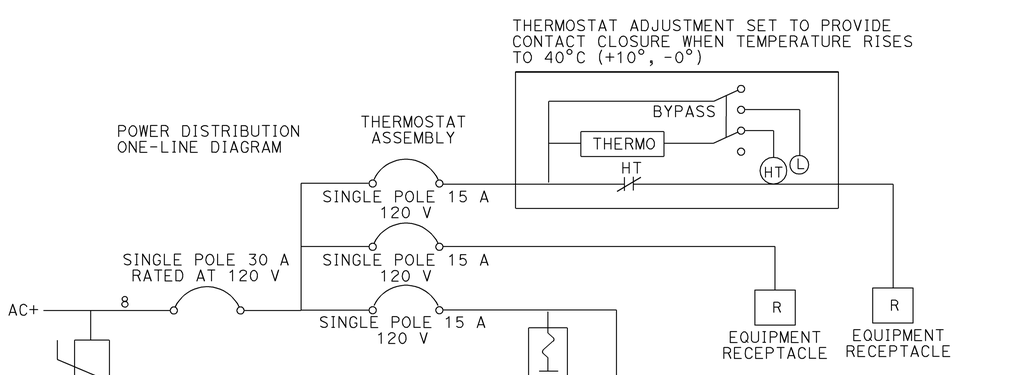

Exist OR RELOCATED POWER DISTRIBUTION ASSEMBLY

ALL DIMENSIONS ARE IN METERS UNLESS OTHERWISE SHOWN

MODIFY CLOSED CIRCUIT TELEVISION CAMERA
(MODEL 334-TV CONTROLLER CABINET DETAILS)

NO SCALE

THIS PLAN IS ACCURATE FOR ELECTRICAL WORK ONLY.
FOR LEGEND, ABBREVIATIONS AND GENERAL NOTES SEE SHEET E-1.

E-32

STATE OF CALIFORNIA - DEPARTMENT OF TRANSPORTATION
Caltrans OFFICE OF ITS

FUNCTIONAL SUPERVISOR: JACQUELINE C. TAN
CALCULATED-DESIGNED BY: CANDACE FUNG
CHECKED BY: JACQUELINE C. TAN
REVISED BY
DATE REVISED

LAST REVISION 00-00-00 | DATE PLOTTED => 12-JUN-2009 | TIME PLOTTED => 13:56

Dist	COUNTY	ROUTE	KILOMETER POST TOTAL PROJECT	SHEET No.	TOTAL SHEETS
07	LA	5	42.8/47.3	414	1073

Caltrans Metric

5/5/08
REGISTERED ELECTRICAL ENGINEER

6-8-09
PLANS APPROVAL DATE

REGISTERED PROFESSIONAL ENGINEER CANDACE FUNG No. E16936 Exp. 06/30/09 ELECTRICAL STATE OF CALIFORNIA

THE STATE OF CALIFORNIA OR ITS OFFICERS OR AGENTS SHALL NOT BE RESPONSIBLE FOR THE ACCURACY OR COMPLETENESS OF ELECTRONIC COPIES OF THIS PLAN IS SHEET.

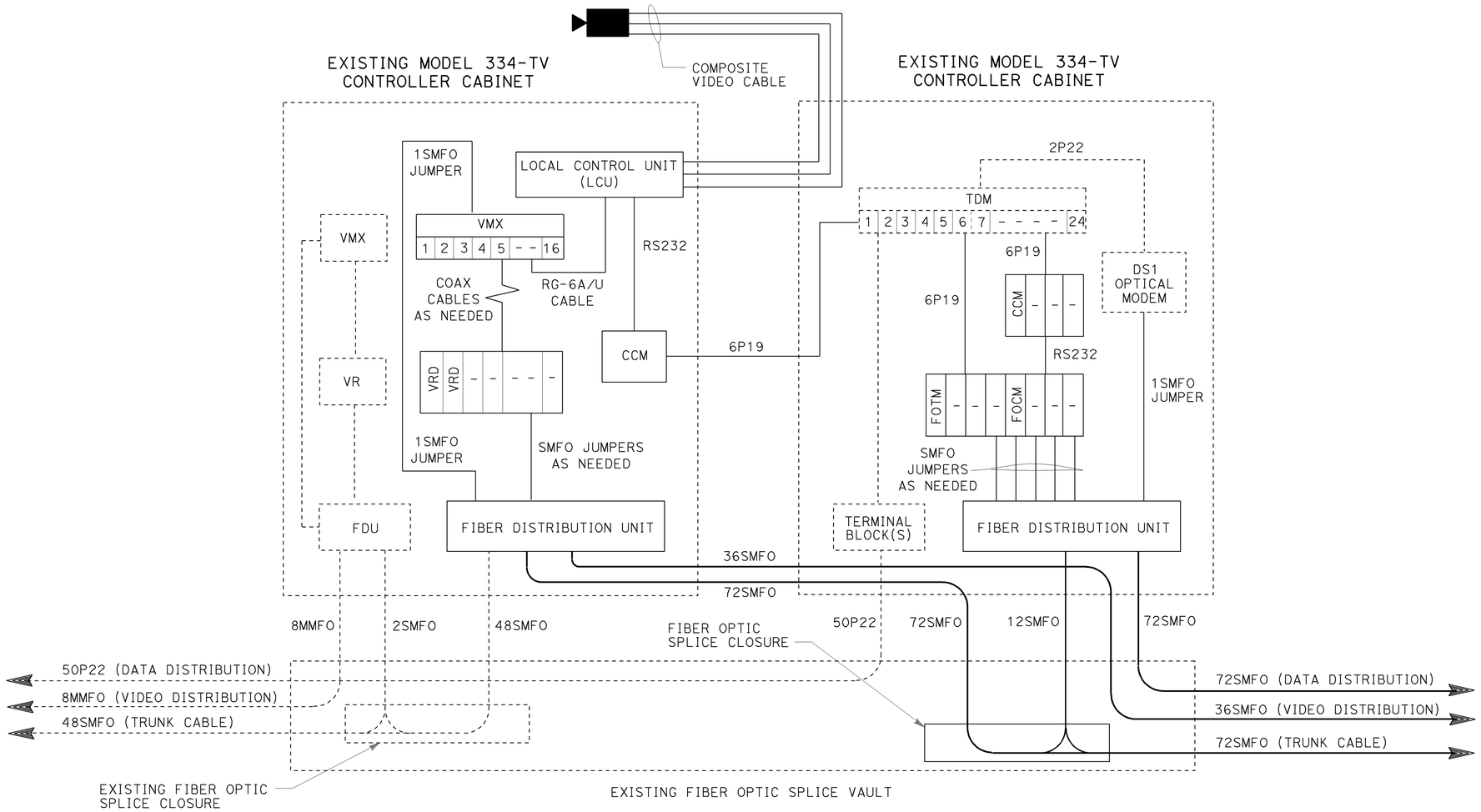

EXISTING VIDEO NODE DETAIL

EXISTING DATA NODE DETAIL

ALL DIMENSIONS ARE IN METERS UNLESS OTHERWISE SHOWN

MODIFY DATA NODE AND VIDEO NODE
(LOCATION GS269)
(CABINET AND WIRING DETAILS)

NO SCALE

THIS PLAN IS ACCURATE FOR ELECTRICAL WORK ONLY.
FOR LEGEND, ABBREVIATIONS AND GENERAL NOTES SEE SHEET E-1.

E-33

REVISED BY	DATE REVISED

CALCULATED-DESIGNED BY	CHECKED BY
CANDACE FUNG	JACQUELINE C. TAN

FUNCTIONAL SUPERVISOR: JACQUELINE C. TAN

STATE OF CALIFORNIA - DEPARTMENT OF TRANSPORTATION
Caltrans OFFICE OF ITS

LAST REVISION DATE PLOTTED => 12-JUN-2009
TIME PLOTTED => 13:56
00-00-00

Dist	COUNTY	ROUTE	KILOMETER POST TOTAL PROJECT	SHEET No.	TOTAL SHEETS
07	LA	5	42.8/47.3	415	1073

REGISTERED ELECTRICAL ENGINEER 5/5/08

6-8-09
PLANS APPROVAL DATE

REGISTERED PROFESSIONAL ENGINEER CANDACE FUNG No. E16936 Exp. 06/30/09 ELECTRICAL STATE OF CALIFORNIA

THE STATE OF CALIFORNIA OR ITS OFFICERS OR AGENTS SHALL NOT BE RESPONSIBLE FOR THE ACCURACY OR COMPLETENESS OF ELECTRONIC COPIES OF THIS PLAN IS SHEET.

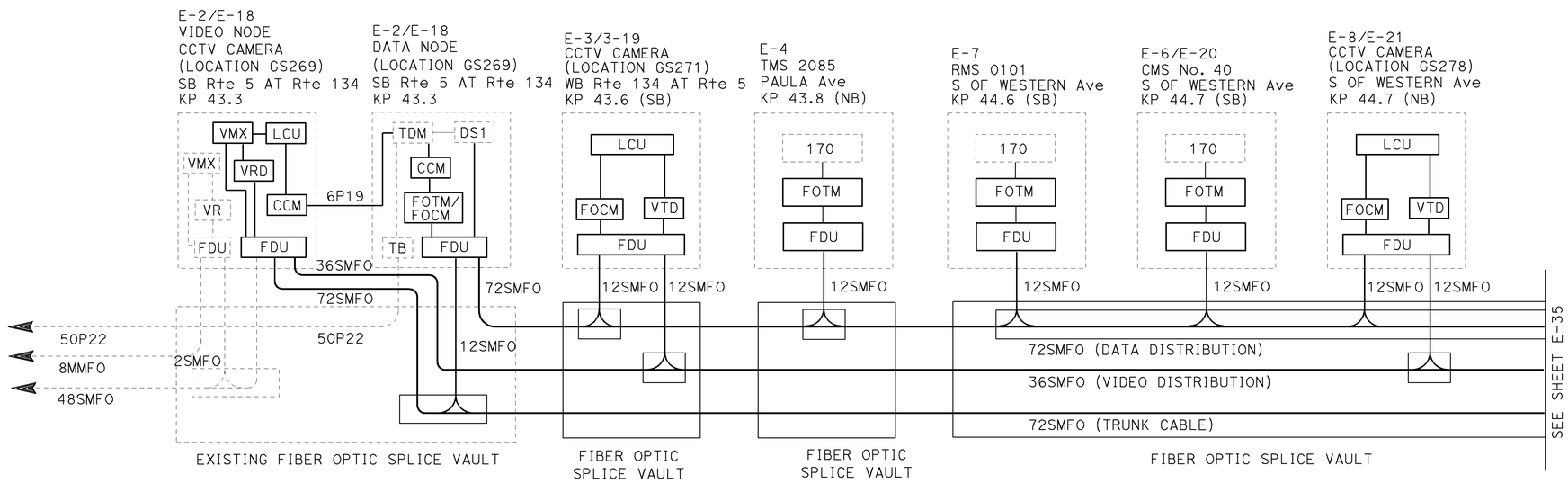

MODIFY COMMUNICATION SYSTEM (BLOCK DIAGRAM)

NO SCALE

THIS PLAN IS ACCURATE FOR ELECTRICAL WORK ONLY.
FOR LEGEND, ABBREVIATIONS AND GENERAL NOTES SEE SHEET E-1.

E-34

STATE OF CALIFORNIA - DEPARTMENT OF TRANSPORTATION
Caltrans OFFICE OF ITS

FUNCTIONAL SUPERVISOR: JACQUELINE C. TAN
CALCULATED-DESIGNED BY: CANDACE FUNG
CHECKED BY: JACQUELINE C. TAN
REVISED BY
DATE REVISED

LAST REVISION DATE PLOTTED => 12-JUN-2009
00-00-00 TIME PLOTTED => 13:56

Dist	COUNTY	ROUTE	KILOMETER POST TOTAL PROJECT	SHEET No.	TOTAL SHEETS
07	LA	5	42.8/47.3	416	1073

REGISTERED ELECTRICAL ENGINEER 5/5/08

6-8-09
PLANS APPROVAL DATE

REGISTERED PROFESSIONAL ENGINEER CANDACE FUNG No. E16936 Exp. 06/30/09 ELECTRICAL STATE OF CALIFORNIA

THE STATE OF CALIFORNIA OR ITS OFFICERS OR AGENTS SHALL NOT BE RESPONSIBLE FOR THE ACCURACY OR COMPLETENESS OF ELECTRONIC COPIES OF THIS PLAN IS SHEET.

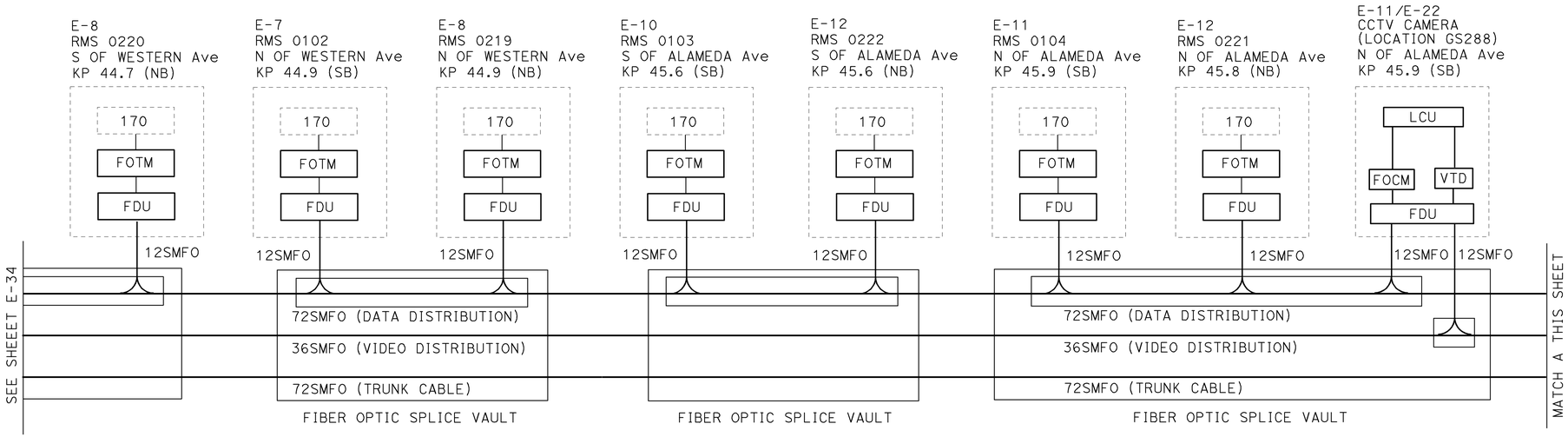

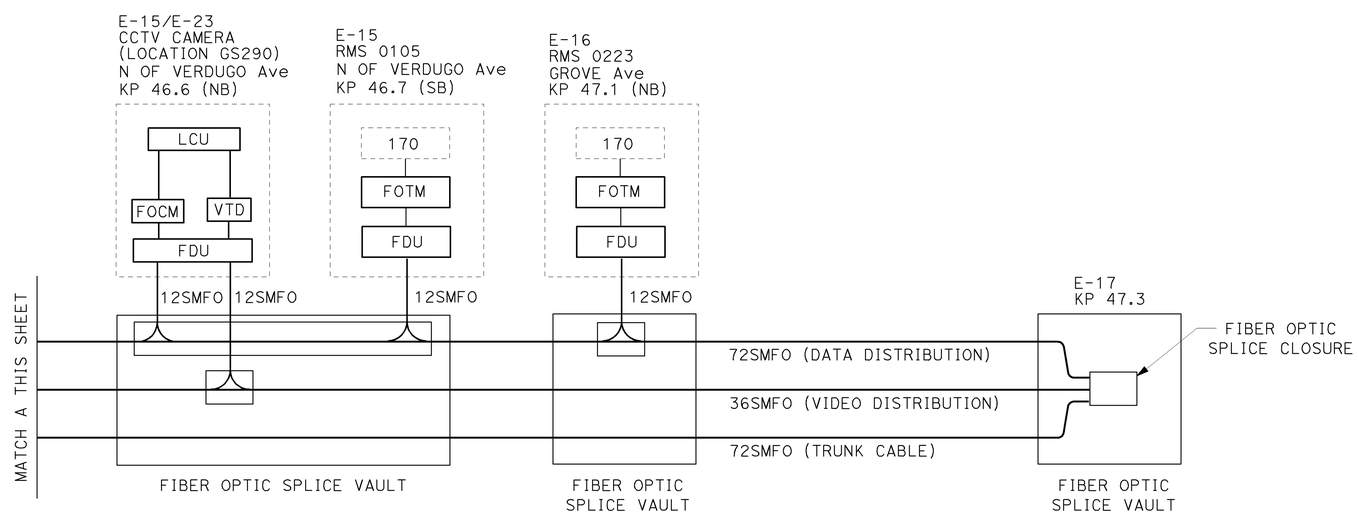

THIS PLAN IS ACCURATE FOR ELECTRICAL WORK ONLY.
FOR LEGEND, ABBREVIATIONS AND GENERAL NOTES SEE SHEET E-1.

MODIFY COMMUNICATION SYSTEM (BLOCK DIAGRAM)

NO SCALE

E-35

STATE OF CALIFORNIA - DEPARTMENT OF TRANSPORTATION
Caltrans
OFFICE OF ITS

FUNCTIONAL SUPERVISOR JACQUELINE C. TAN
CALCULATED-DESIGNED BY CANDACE FUNG
CHECKED BY JACQUELINE C. TAN
REVISED BY
DATE REVISED

LAST REVISION 00-00-00
DATE PLOTTED => 12-JUN-2009
TIME PLOTTED => 13:56

Dist	COUNTY	ROUTE	KILOMETER POST TOTAL PROJECT	SHEET No.	TOTAL SHEETS
07	LA	5	42.8/47.3	417	1073

REGISTERED ELECTRICAL ENGINEER 5/5/08

6-8-09
PLANS APPROVAL DATE

REGISTERED PROFESSIONAL ENGINEER CANDACE FUNG No. E16936 Exp. 06/30/09 ELECTRICAL STATE OF CALIFORNIA

THE STATE OF CALIFORNIA OR ITS OFFICERS OR AGENTS SHALL NOT BE RESPONSIBLE FOR THE ACCURACY OR COMPLETENESS OF ELECTRONIC COPIES OF THIS PLAN IS SHEET.

	EAST LOS ANGELES (ELA) HUB BUILDING	EXISTING VIDEO NODE (LOCATION GS269) (VIDEO NODE 2)	EXISTING DATA NODE (LOCATION GS269) (DATA NODE 3)		
FIBER (E)	USE	KP 43.3	KP 43.3	FIBER (N)	NOTES
1	D4-DN2 TX			1	
2	D4-DN2 RX			2	
3	D4-DN4 TX			3	
4	D4-DN4 RX			4	
5	D4-DN6 TX			5	
6	D4-DN6 RX			6	
7	VDMX-VN1			7	
8	VDMX-VN2	VMX (E)		8	
9	VDMX-VN3			9	
10	VDMX-VN4			10	
11	SPARE			11	
12	SPARE			12	
13	D4-DN3 TX		OM-RX	13	
14	D4-DN3 RX		OM-TX	14	
15	D4-DN5 TX			15	
16	D4-DN5 RX			16	
17	D4-DN7 TX			17	
18	D4-DN7 RX			18	
19	SPARE			19	
20	VDMX-VN2	VMX (N)		20	
21	SPARE			21	
22	SPARE			22	
23	SPARE			23	
24	SPARE			24	
25-48	SPARE			25-48	
				49-72	

LEGEND: (THIS SHEET ONLY)

DN	DATA NODE
VN	VIDEO NODE
OM-RX	CONNECT FIBER TO "RECEIVE" PORT OF DS1 OPTICAL MODEM
OM-TX	CONNECT FIBER TO "TRANSMIT" PORT OF DS1 OPTICAL MODEM
VMX	CONNECT FIBER TO VIDEO MULTIPLEXER
VDMX	CONNECT FIBER TO VIDEO DEMULTIPLEXER
(E)	EXISTING
(N)	NEW

NOTES: (THIS SHEET ONLY)

1. TERMINATE NEW 72SMFO TRUNK CABLE AT VIDEO NODE 2.
2. CONNECT DATA AND VIDEO OUTPUTS TO NEW 72SMFO TRUNK CABLE ACCORDING TO TRUNK CABLE FIBER ASSIGNMENT TABLE.
3. THE CONTRACTOR SHALL CONFIRM WITH THE ENGINEER FOR FINAL SPLICING AND TERMINATION OF EXISTING 48SMFO AND NEW 72SMFO TRUNK CABLES.

MODIFY COMMUNICATION SYSTEM
(FIBER ASSIGNMENT TABLE) (TRUNK CABLE)

NO SCALE

THIS PLAN IS ACCURATE FOR ELECTRICAL WORK ONLY.
FOR LEGEND, ABBREVIATIONS AND GENERAL NOTES SEE SHEET E-1.

E-36

STATE OF CALIFORNIA - DEPARTMENT OF TRANSPORTATION
Caltrans OFFICE OF ITS

FUNCTIONAL SUPERVISOR: JACQUELINE C. TAN
CALCULATED-DESIGNED BY: CANDACE FUNG
CHECKED BY: JACQUELINE C. TAN
REVISED BY
DATE REVISED

LAST REVISION 00-00-00
DATE PLOTTED => 12-JUN-2009
TIME PLOTTED => 13:57

Dist	COUNTY	ROUTE	KILOMETER POST TOTAL PROJECT	SHEET No.	TOTAL SHEETS
07	LA	5	42.8/47.3	418	1073

REGISTERED ELECTRICAL ENGINEER 5/5/08

PLANS APPROVAL DATE 6-8-09

REGISTERED PROFESSIONAL ENGINEER CANDACE FUNG No. E16936 Exp. 06/30/09 ELECTRICAL STATE OF CALIFORNIA

THE STATE OF CALIFORNIA OR ITS OFFICERS OR AGENTS SHALL NOT BE RESPONSIBLE FOR THE ACCURACY OR COMPLETENESS OF ELECTRONIC COPIES OF THIS PLAN IS IS SHEET.

FIBER ASSIGNMENT TABLE FOR DATA DISTRIBUTION CABLE (72SMFO)
KP 43.0 TO KP 47.5

FIBER	USE	VIDEO NODE, CCTV CAMERA AND DATA NODE (LOCATION GS269) SB Rte 5 AT Rte 134	CCTV CAMERA (LOCATION GS271) WB Rte 134 AT Rte 5 (SB)	TMS 2085 PAULA Ave (SB)	RMS 0101 S OF WESTERN Ave (SB)	CMS No. 40 S OF WESTERN Ave (SB)	CCTV CAMERA (LOCATION GS278) S OF WESTERN Ave (NB)	RMS 0220 S OF WESTERN Ave (NB)	RMS 0102 N OF WESTERN Ave (SB)	RMS 0219 N OF WESTERN Ave (NB)	RMS 0103 S OF ALAMEDA Ave (SB)	RMS 0222 S OF ALAMEDA Ave (NB)	RMS 0104 N OF ALAMEDA Ave (SB)	RMS 0221 N OF ALAMEDA Ave (NB)	CCTV CAMERA (LOCATION GS288) N OF ALAMEDA Ave (SB)	CCTV CAMERA (LOCATION GS290) N OF VERDUGO Ave (NB)	RMS 0105 N OF VERDUGO Ave (SB)	RMS 0223 GROVE Ave (NB)	SPLICE VAULT	FIBER
KP		43.3	43.6	43.8	44.6	44.7	44.7	44.7	44.9	44.9	45.6	45.6	45.9	45.8	45.9	46.6	46.7	47.1	47.3	
1	MODEM 13 - TX	X		X				X		X		X		X					X	1
2	MODEM 13 - RX	X		X				X		X		X		X					X	2
3		O																	X	3
4		O																	X	4
5		O																	X	5
6		O																	X	6
7	MODEM 13 - TX	X			X				X		X		X					X	X	7
8	MODEM 13 - RX	X			X				X		X		X					X	X	8
9		O																	X	9
10		O																	X	10
11	CCR 3 - TX	X	X												X				X	11
12	CCR 3 - RX	X	X												X				X	12
13		O																	X	13
14	MODEM 74 - TX	X															X		X	14
15	MODEM 74 - RX	X															X		X	15
16		O																	X	16
17		O																	X	17
18		O																	X	18
19		O																	X	19
20		O																	X	20
21		O																	X	21
22		O																	X	22
23	CCR 4 - TX	X					X									X			X	23
24	CCR 4 - RX	X					X									X			X	24
25		O																	X	25
26		O																	X	26
27		O																	X	27
28		O																	X	28
29		O																	X	29
30		O																	X	30
31		O																	X	31
32		O																	X	32
33		O																	X	33
34		O																	X	34
35		O																	X	35
36		O																	X	36
37		O																	X	37
38		O																	X	38
39		O																	X	39
40	CMS A - TX	X				X													X	40
41	CMS A - RX	X				X													X	41
42		O																	X	42
43		O																	X	43
44		O																	X	44
45		O																	X	45
46		O																	X	46
47		O																	X	47
48		O																	X	48
⋮		O																	X	⋮
72		O																	X	72

LEGEND: (THIS SHEET ONLY)

X - TERMINATED ACTIVE

O - TERMINATED SPARE (FOR FUTURE CONNECTION)

THIS PLAN IS IS ACCURATE FOR ELECTRICAL WORK ONLY.
FOR LEGEND, ABBREVIATIONS AND GENERAL NOTES SEE SHEET E-1.

MODIFY COMMUNICATION SYSTEM
(FIBER ASSIGNMENT TABLE)
(DATA DISTRIBUTION)

NO SCALE

E-37

STATE OF CALIFORNIA - DEPARTMENT OF TRANSPORTATION
Caltrans OFFICE OF ITS

FUNCTIONAL SUPERVISOR: JACQUELINE C. TAN
CALCULATED-DESIGNED BY: CANDACE FUNG
CHECKED BY: JACQUELINE C. TAN
REVISED BY
DATE REVISED

LAST REVISION 00-00-00 DATE PLOTTED => 12-JUN-2009 TIME PLOTTED => 13:57

Dist	COUNTY	ROUTE	KILOMETER POST TOTAL PROJECT	SHEET No.	TOTAL SHEETS
07	LA	5	42.8/47.3	419	1073

REGISTERED ELECTRICAL ENGINEER 5/5/08

6-8-09
PLANS APPROVAL DATE

REGISTERED PROFESSIONAL ENGINEER CANDACE FUNG No. E16936 Exp. 06/30/09 ELECTRICAL STATE OF CALIFORNIA

THE STATE OF CALIFORNIA OR ITS OFFICERS OR AGENTS SHALL NOT BE RESPONSIBLE FOR THE ACCURACY OR COMPLETENESS OF ELECTRONIC COPIES OF THIS PLAN IS SHEET.

FIBER ASSIGNMENT TABLE FOR VIDEO DISTRIBUTION CABLE (36SMFO)
KP 43.0 TO KP 47.5

		VIDEO NODE (LOCATION GS269)						
		CCTV CAMERA (LOCATION GS269)	CCTV CAMERA (LOCATION GS271)	CCTV CAMERA (LOCATION GS278)	CCTV CAMERA (LOCATION GS288)	CCTV CAMERA (LOCATION GS290)	SPLICE VAULT	
FIBER	USE	KP 43.3	KP 43.6	KP 44.7	KP 45.9	KP 46.6	KP 47.3	FIBER
1	CCTV CAMERA (LOCATION GS269	VRD-C					X	1
2	CCTV CAMERA (LOCATION GS271)	VRD-C	VTD-C				X	2
3	CCTV CAMERA (LOCATION GS278)	VRD-C		VTD-C			X	3
4	CCTV CAMERA (LOCATION GS288)	VRD-C			VTD-C		X	4
5	CCTV CAMERA (LOCATION GS290)	VRD-C				VTD-C	X	5
6		C					X	6
7		C					X	7
8		C					X	8
9		C					X	9
10		C					X	10
11		C					X	11
12		C					X	12
13		C					X	13
14		C					X	14
15		C					X	15
16		C					X	16
17		C					X	17
18		C					X	18
19		C					X	19
20		C					X	20
21		C					X	21
22		C					X	22
23		C					X	23
24		C					X	24
⋮		C					X	⋮
36		C					X	36

LEGEND: (THIS SHEET ONLY)

C - CONNECT FIBER TO FIBER DISTRIBUTION UNIT AT EXISTING VIDEO NODE (LOCATION GS269)

X - TERMINATED ACTIVE

VRD-C - CONNECT ASSIGNED FIBER TO VIDEO RECEIVER/DATA TRANSCEIVER AT EXISTING VIDEO NODE (LOCATION GS269)

VTD-C - CONNECT ASSIGNED FIBER TO VIDEO TRANSMITTER/DATA TRANSCEIVER AT CCTV CAMERA LOCATION

THIS PLAN IS ACCURATE FOR ELECTRICAL WORK ONLY.
FOR LEGEND, ABBREVIATIONS AND GENERAL NOTES SEE SHEET E-1.

MODIFY COMMUNICATION SYSTEM
(FIBER ASSIGNMENT TABLE)
(VIDEO DISTRIBUTION)

NO SCALE

E-38

REVISED BY | DATE REVISED

CANDACE FUNG | JACQUELINE C. TAN

CALCULATED-DESIGNED BY | CHECKED BY

FUNCTIONAL SUPERVISOR: JACQUELINE C. TAN

STATE OF CALIFORNIA - DEPARTMENT OF TRANSPORTATION
Caltrans OFFICE OF ITS

LAST REVISION 00-00-00 | DATE PLOTTED => 12-JUN-2009 | TIME PLOTTED => 13:57

Dist	COUNTY	ROUTE	KILOMETER POST TOTAL PROJECT	SHEET No.	TOTAL SHEETS
07	LA	5	42.8/47.3	420	1073

REGISTERED CIVIL ENGINEER 5/5/08 DATE

6-8-09
PLANS APPROVAL DATE

REGISTERED PROFESSIONAL ENGINEER CANDACE FUNG No. E16936 Exp. 06/30/09 ELECTRICAL STATE OF CALIFORNIA

THE STATE OF CALIFORNIA OR ITS OFFICERS OR AGENTS SHALL NOT BE RESPONSIBLE FOR THE ACCURACY OR COMPLETENESS OF ELECTRONIC COPIES OF THIS PLAN IS SHEET.

LEGEND: (THIS SHEET ONLY)

AA-FYXXXYYY

- END POST MILE (TO NEAREST 10TH)
- BEGIN POST MILE (TO NEAREST 10TH)
- FREEWAY NAME SHORT FORM
- CABLE TYPE: FO = FIBER OPTIC

EXISTING DATA NODE (LOCATION GS269)
(SB Rte 5 AT Rte 134, KP 43.3)

CHANNEL NUMBER (TDM)	DATA NODE INTERFACE	TERMINATION DATA DISTRIBUTION		FUNCTION
		CABLE	FIBER(S)	
1	4WTO (E)	FO-GS268302	1,2	MODEM 13
2	4WTO (E)	FO-GS268302	7,8	MODEM 13
3	4WTO (E)	FO-GS268302	11,12	CCR 3
4				
5	4WTO (E)	FO-GS268302	14,15	MODEM 74
6				
7	4WTO (E)	FO-GS268302	23,24	CCR 4
8				
9	4WTO (E)	FO-GS268302	40,41	CMS A
10				
11				
12				
13				
14				
15				
16				
17				
18				
19				
20				
21				
22				
23				
24				

THIS PLAN IS ACCURATE FOR ELECTRICAL WORK ONLY.
FOR LEGEND, ABBREVIATIONS AND GENERAL NOTES SEE SHEET E-1.

MODIFY COMMUNICATION SYSTEM
(DATA NODE)
(CIRCUIT ASSIGNMENT TABLES)

NO SCALE

E-39

STATE OF CALIFORNIA - DEPARTMENT OF TRANSPORTATION
Caltrans OFFICE OF ITS

FUNCTIONAL SUPERVISOR: JACQUELINE C. TAN
CALCULATED-DESIGNED BY: CANDACE FUNG
CHECKED BY: JACQUELINE C. TAN
REVISED BY
DATE REVISED

LAST REVISION 00-00-00
DATE PLOTTED => 12-JUN-2009
TIME PLOTTED => 13:57

Dist	COUNTY	ROUTE	KILOMETER POST TOTAL PROJECT	SHEET No.	TOTAL SHEETS
07	LA	5	42.8/47.3	421	1073

REGISTERED CIVIL ENGINEER 5/5/08 DATE

6-8-09
PLANS APPROVAL DATE

REGISTERED PROFESSIONAL ENGINEER CANDACE FUNG No. E16936 Exp. 06/30/09 ELECTRICAL STATE OF CALIFORNIA

THE STATE OF CALIFORNIA OR ITS OFFICERS OR AGENTS SHALL NOT BE RESPONSIBLE FOR THE ACCURACY OR COMPLETENESS OF ELECTRONIC COPIES OF THIS PLAN IS SHEET.

EXISTING VIDEO NODE (LOCATION GS269)
(SB Rte 5 AT Rte 134, KP 43.3)

CHANNEL NUMBER (VMX)	CAMERA IDENTIFICATION	CAMERA LOCATION	KP
1			
2			
3	MODIFY CCTV CAMERA (LOCATION GS269) (*)	SB Rte 5 AT Rte 134	43.3
4	MODIFY CCTV CAMERA (LOCATION GS271) (*)	WB Rte 134 AT Rte 5	43.6
5	MODIFY CCTV CAMERA (LOCATION GS278) (*)	S OF WESTERN Ave	44.7
6	MODIFY CCTV CAMERA (LOCATION GS286) (*)	N OF ALAMEDA Ave	45.9
7	MODIFY CCTV CAMERA (LOCATION GS290) (*)	N OF VERDUGO Ave	46.6
8	(*)		
9	(*)		
10	(*)		
11	(*)		
12	(*)		
13	(*)		
14	(*)		
15	(*)		
16	(*)		

(*) INSTALL VIDEO RECEIVER/DATA TRANSCEIVER FOR EACH MODIFY CCTV CAMERA LOCATION AND ADDITIONAL TO BE USED IN COOPERATION WITH ADJACENT ONGOING CONTRACTS.

THIS PLAN IS ACCURATE FOR ELECTRICAL WORK ONLY.
FOR LEGEND, ABBREVIATIONS AND GENERAL NOTES SEE SHEET E-1.

MODIFY COMMUNICATION SYSTEM
(VIDEO NODE)
(CIRCUIT ASSIGNMENT TABLES)

NO SCALE

E-40

STATE OF CALIFORNIA - DEPARTMENT OF TRANSPORTATION
Caltrans OFFICE OF ITS

FUNCTIONAL SUPERVISOR: JACQUELINE C. TAN
CALCULATED-DESIGNED BY: CANDACE FUNG
CHECKED BY: JACQUELINE C. TAN
REVISED BY
DATE REVISED

LAST REVISION 00-00-00
DATE PLOTTED => 12-JUN-2009
TIME PLOTTED => 13:57

Dist	COUNTY	ROUTE	KILOMETER POST TOTAL PROJECT	SHEET No.	TOTAL SHEETS
07	LA	5	42.8/47.3	422	1073

REGISTERED ELECT ENGINEER 11/03/08 DATE

6-8-09
PLANS APPROVAL DATE

REGISTERED PROFESSIONAL ENGINEER JESSE RUELAS No. E015604 Exp. 12-31-09 ELECTRICAL STATE OF CALIFORNIA

THE STATE OF CALIFORNIA OR ITS OFFICERS OR AGENTS SHALL NOT BE RESPONSIBLE FOR THE ACCURACY OR COMPLETENESS OF ELECTRONIC COPIES OF THIS PLAN SHEET.

Caltrans Metric

FOR COMPLETE RIGHT OF WAY AND ACCURATE ACCESS DATA,
SEE RIGHT OF WAY RECORD MAPS AT DISTRICT OFFICE.

PROJECT NOTES: (THIS SHEET ONLY)

1. 53C. RC MAIN LINE DLC's.
2. RC CONDUIT. INSTALL 53C.
3. EXISTING 2-78C, 2#8 (SERVICE), TELEPHONE CABLE.
   RC MAIN LINE DLC's.
4. EXISTING TYPE III-BF METERED SERVICE EQUIPMENT ENCLOSURE WITH:
   30 A, 120 V, 1P CB FOR RAMP METERING
   20 A, 120 V, 1P CB FOR TELEPHONE DEMARCATION CABINET
   ID No. 07-53-005-R027.200
   502 ½ PAULA Ave
5. EXISTING MODEL 170 CONTROLLER ASSEMBLY.
   INSTALL MVDS EQUIPMENT.
6. INSTALL 12.2 m WOOD POLE WITH MICROWAVE DETECTION SYSTEM (MVDS) PER DETAIL SHEETS E-48 AND E-50.
7. INSTALL MVDS CABLE PER MANUFACTURER'S RECOMMENDATION.
8. INSTALL 2 MVDS CABLES PER MANUFACTURER'S RECOMMENDATION.
9. CONDUIT OR PULL BOX TO REMAIN AS PART OF PERMANENT INSTALLATION.

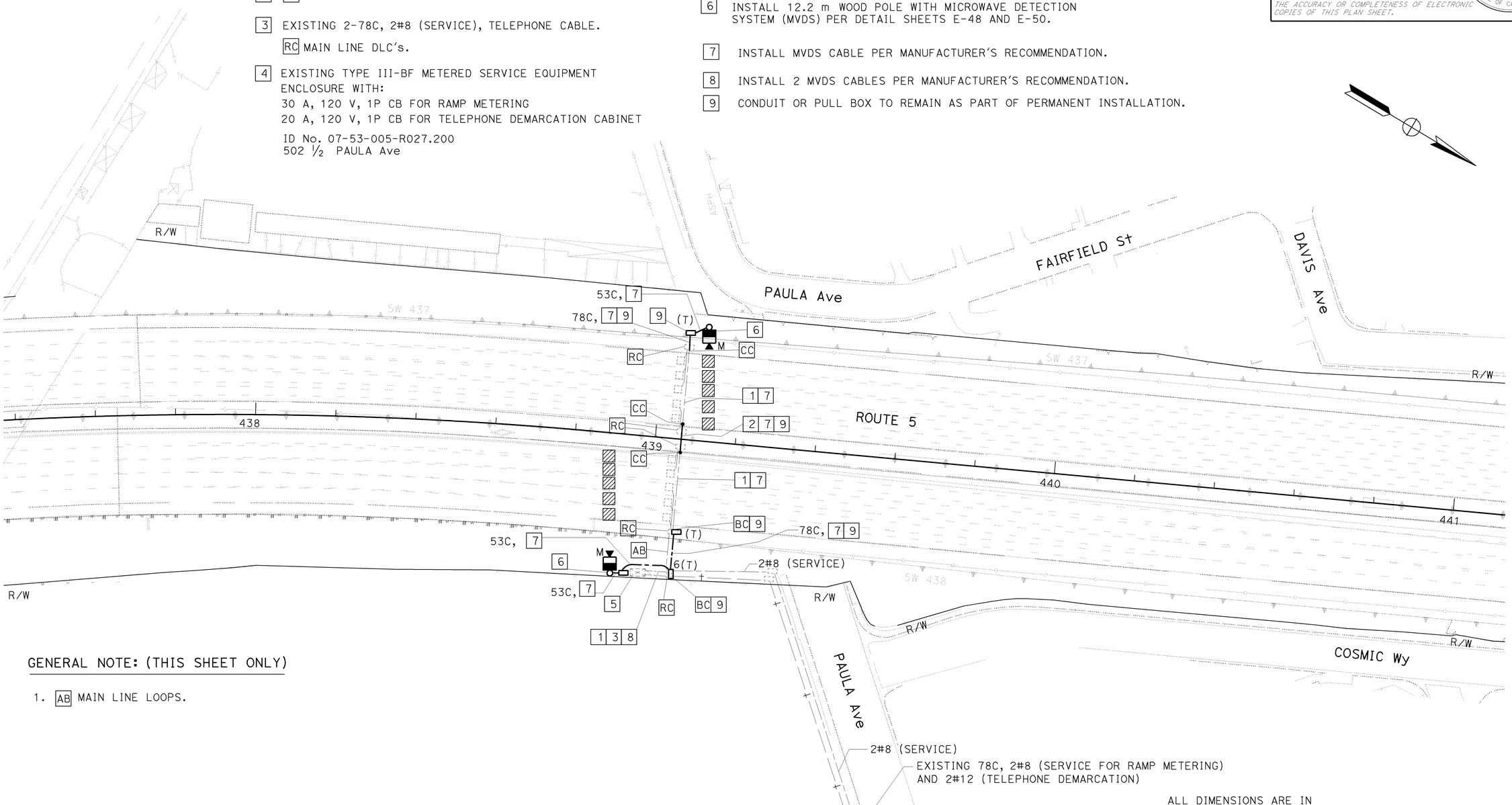

GENERAL NOTE: (THIS SHEET ONLY)

1. AB MAIN LINE LOOPS.

ALL DIMENSIONS ARE IN METERS UNLESS OTHERWISE SHOWN

TEMPORARY TRAFFIC MONITORING STATION

SCALE 1:500

THIS PLAN IS ACCURATE FOR ELECTRICAL WORK ONLY.

E-41

REVISED BY	LIEN VO
DATE REVISED	02/09
CALCULATED-DESIGNED BY	LIEN VO
CHECKED BY	JESSE RUELAS
FUNCTIONAL SUPERVISOR	YI TSAU

STATE OF CALIFORNIA - DEPARTMENT OF TRANSPORTATION
Caltrans **TRAFFIC DESIGN**

LAST REVISION 02-04-09 | DATE PLOTTED => 12-JUN-2009 | TIME PLOTTED => 14:01

FOR COMPLETE RIGHT OF WAY AND ACCURATE ACCESS DATA, SEE RIGHT OF WAY RECORD MAPS AT DISTRICT OFFICE.

Dist	COUNTY	ROUTE	KILOMETER POST TOTAL PROJECT	SHEET No.	TOTAL SHEETS
07	LA	5	42.8/47.3	423	1073

REGISTERED PROJECT ENGINEER Jesse Ruelas 11/03/08 DATE

6-8-09
PLANS APPROVAL DATE

REGISTERED PROFESSIONAL ENGINEER JESSE RUELAS No. E015604 Exp. 12-31-09 ELECTRICAL STATE OF CALIFORNIA

THE STATE OF CALIFORNIA OR ITS OFFICERS OR AGENTS SHALL NOT BE RESPONSIBLE FOR THE ACCURACY OR COMPLETENESS OF ELECTRONIC COPIES OF THIS PLAN SHEET.

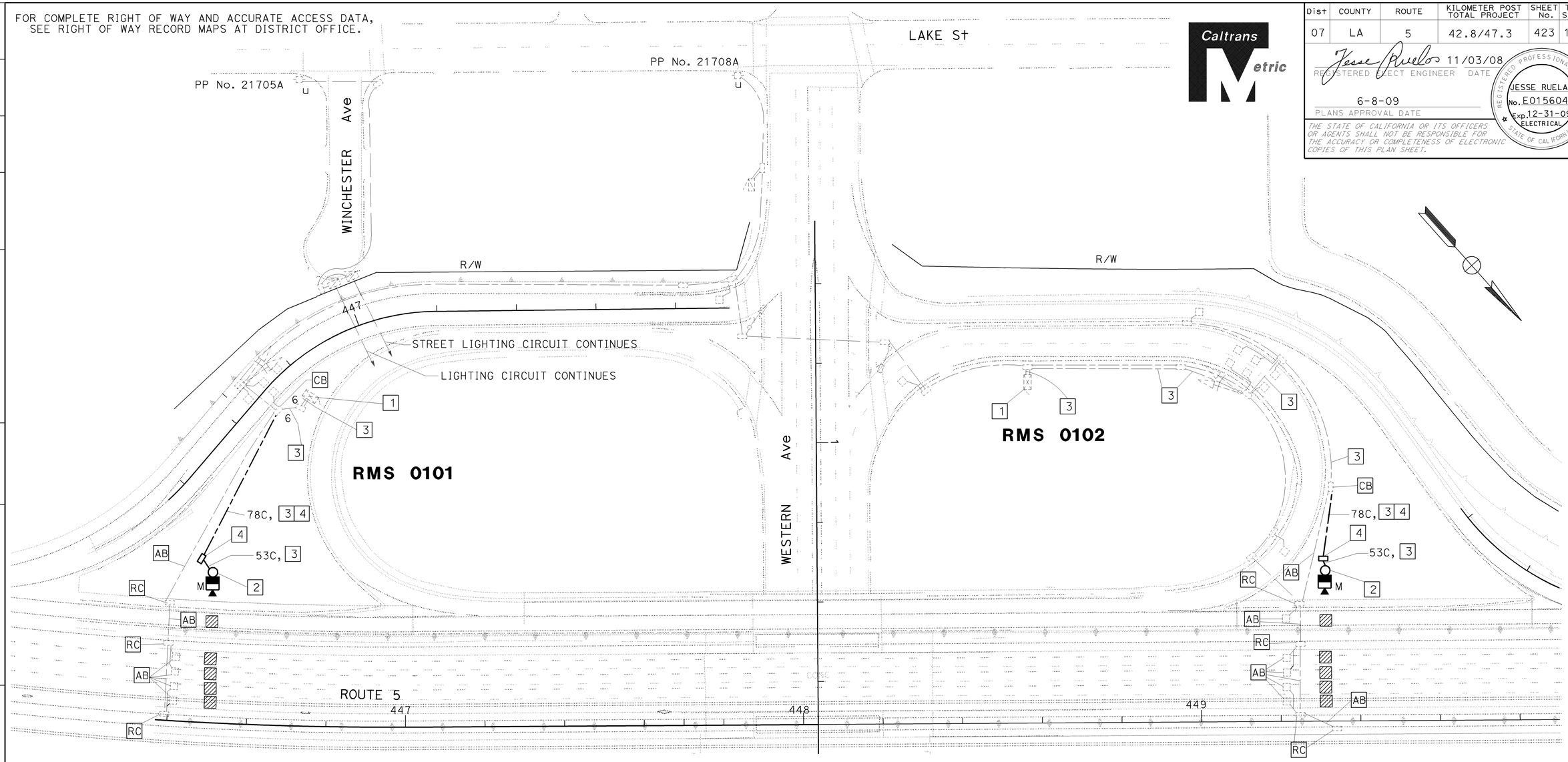

PROJECT NOTES: (THIS SHEET ONLY)

1. EXISTING MODEL 170 CONTROLLER ASSEMBLY.
   INSTALL MVDS EQUIPMENT.
   INSTALL WIRELESS MODEM AND CABLES, SEE DETAILS SHEET E-110.
2. INSTALL 12.2 m WOOD POLE WITH MICROWAVE DETECTION SYSTEM (MVDS) PER DETAIL SHEETS E-48 AND E-50.
3. INSTALL MVDS CABLE PER MANUFACTURER'S RECOMMENDATION.
4. CONDUIT OR PULL BOX TO REMAIN AS PART OF PERMANENT INSTALLATION.

GENERAL NOTE: (THIS SHEET ONLY)

1. RC MAIN LINE DLC's FROM LOOPS TO CONTROLLER.

ALL DIMENSIONS ARE IN METERS UNLESS OTHERWISE SHOWN

THIS PLAN IS ACCURATE FOR ELECTRICAL WORK ONLY.

TEMPORARY RAMP METERING SYSTEM

SCALE 1:500

E-42

CALCULATED-DESIGNED BY	LIEN VO
CHECKED BY	JESSE RUELAS
REVISED BY	LIEN VO
DATE REVISED	02/09
FUNCTIONAL SUPERVISOR	YI TSAU

STATE OF CALIFORNIA - DEPARTMENT OF TRANSPORTATION
Caltrans TRAFFIC DESIGN

LAST REVISION 02-04-09 | DATE PLOTTED => 12-JUN-2009 | TIME PLOTTED => 13:48

FOR COMPLETE RIGHT OF WAY AND ACCURATE ACCESS DATA,
SEE RIGHT OF WAY RECORD MAPS AT DISTRICT OFFICE.

Dist	COUNTY	ROUTE	KILOMETER POST TOTAL PROJECT	SHEET No.	TOTAL SHEETS
07	LA	5	42.8/47.3	424	1073

Jesse Ruelas 11/03/08
REGISTERED ELECT ENGINEER DATE

6-8-09
PLANS APPROVAL DATE

REGISTERED PROFESSIONAL ENGINEER
JESSE RUELAS
No. E015604
Exp. 12-31-09
ELECTRICAL
STATE OF CALIFORNIA

THE STATE OF CALIFORNIA OR ITS OFFICERS OR AGENTS SHALL NOT BE RESPONSIBLE FOR THE ACCURACY OR COMPLETENESS OF ELECTRONIC COPIES OF THIS PLAN SHEET.

Caltrans Metric

PROJECT NOTES: (THIS SHEET ONLY)

1. EXISTING MODEL 170 CONTROLLER ASSEMBLY CABINET.
2. INSTALL 12.2 m WOOD POLE WITH MICROWAVE DETECTION SYSTEM (MVDS) PER DETAIL SHEETS E-48 AND E-50. INSTALL PHOTOVOLTAIC PANEL, SEE DETAIL SHEET E-112.
3. INSTALL 2#6, 1#8G AND MVDS CABLE PER MANUFACTURER'S RECOMMENDATION.
4. INSTALL MICROWAVE DETECTION (MVDS) EQUIPMENT. INSTALL CONTRACTOR-FURNISHED MODEL 334 CONTROLLER CABINET WITH WIRELESS MODEM AND BATTERY BACK UP SYSTEM, SEE DETAIL SHEETS E-110 AND E-111.

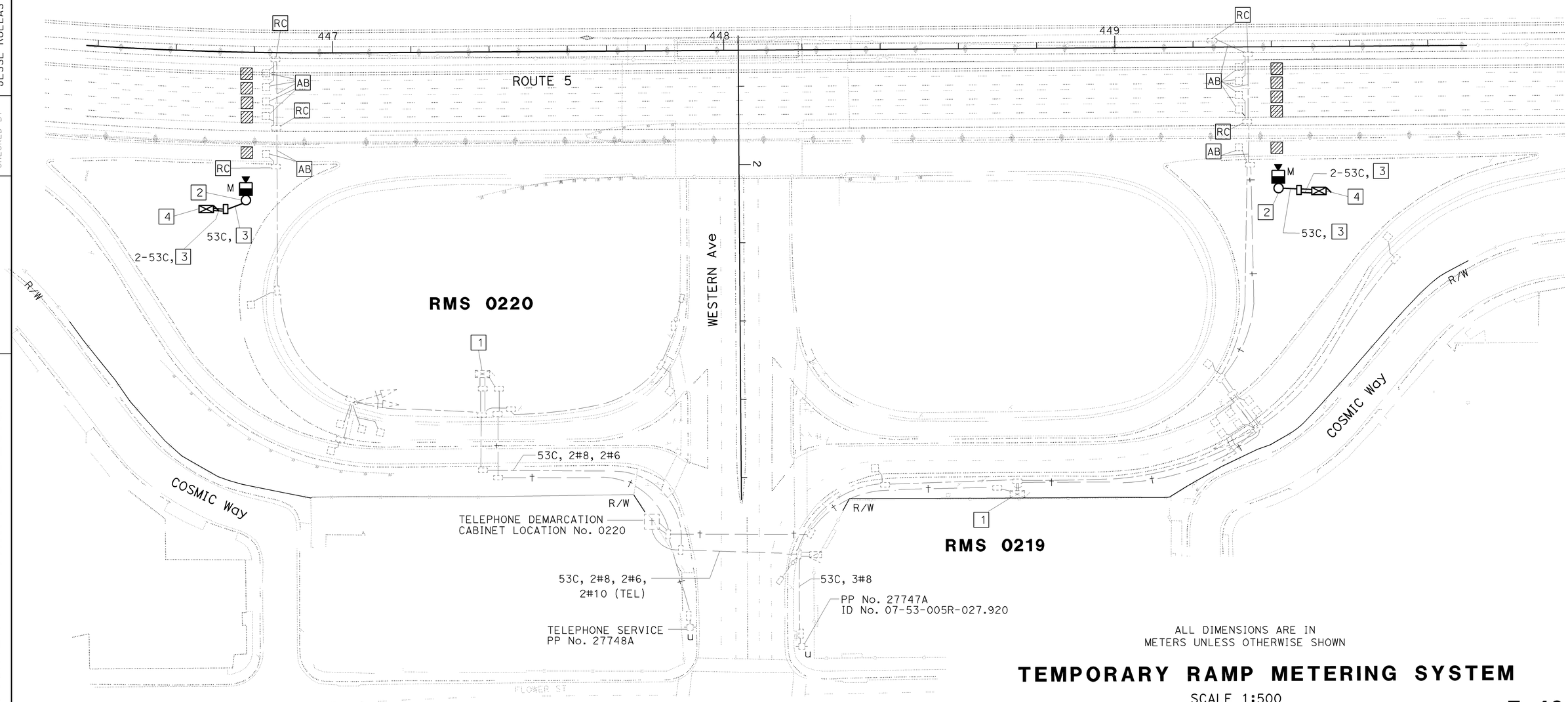

ALL DIMENSIONS ARE IN METERS UNLESS OTHERWISE SHOWN

TEMPORARY RAMP METERING SYSTEM

SCALE 1:500

THIS PLAN IS ACCURATE FOR ELECTRICAL WORK ONLY.

E-43

REVISED BY	DATE REVISED
LIEN VO	02/09

CALCULATED-DESIGNED BY: LIEN VO
CHECKED BY: JESSE RUELAS
FUNCTIONAL SUPERVISOR: YI TSAU

STATE OF CALIFORNIA - DEPARTMENT OF TRANSPORTATION
Caltrans **TRAFFIC DESIGN**

LAST REVISION 02-04-09 DATE PLOTTED => 12-JUN-2009 TIME PLOTTED => 1348

Dist	COUNTY	ROUTE	KILOMETER POST TOTAL PROJECT	SHEET No.	TOTAL SHEETS
07	LA	5	42.8/47.3	425	1073

REGISTERED ELECTRICAL ENGINEER — 11/03/08 DATE

6-8-09
PLANS APPROVAL DATE

REGISTERED PROFESSIONAL ENGINEER — JESSE RUELAS No. E015604 Exp. 12-31-09 ELECTRICAL — STATE OF CALIFORNIA

THE STATE OF CALIFORNIA OR ITS OFFICERS OR AGENTS SHALL NOT BE RESPONSIBLE FOR THE ACCURACY OR COMPLETENESS OF ELECTRONIC COPIES OF THIS PLAN SHEET.

Caltrans Metric

FOR COMPLETE RIGHT OF WAY AND ACCURATE ACCESS DATA, SEE RIGHT OF WAY RECORD MAPS AT DISTRICT OFFICE.

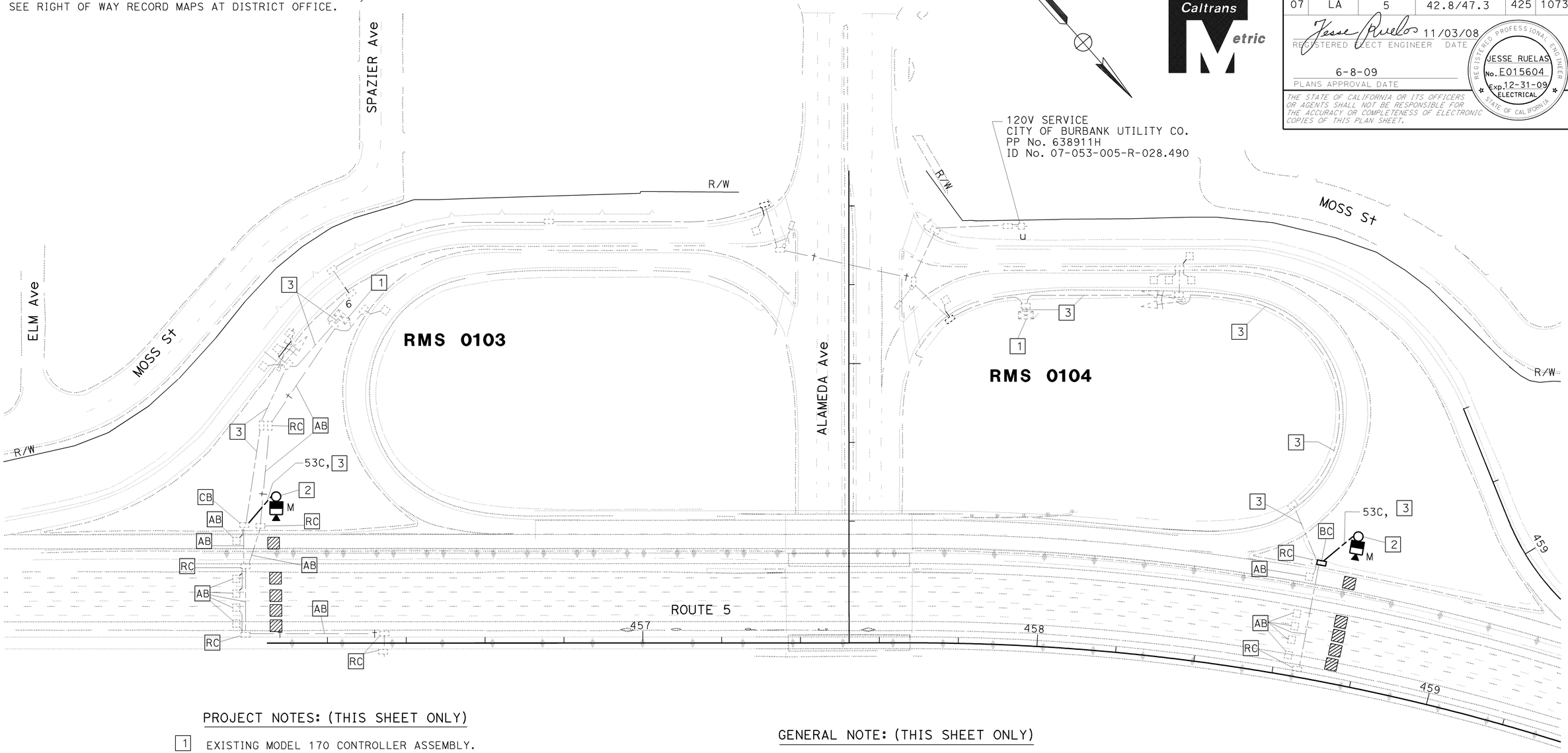

PROJECT NOTES: (THIS SHEET ONLY)

1. EXISTING MODEL 170 CONTROLLER ASSEMBLY. INSTALL MVDS EQUIPMENT. INSTALL WIRELESS MODEM AND CABLES, SEE DETAILSHEET E-110.

2. INSTALL 12.2 m WOOD POLE WITH MICROWAVE DETECTION SYSTEM (MVDS) PER DETAIL SHEETS E-48 AND E-50.

3. INSTALL MVDS CABLE PER MANUFACTURER'S RECOMMENDATION.

GENERAL NOTE: (THIS SHEET ONLY)

1. RC MAIN LINE DLC's FROM LOOPS TO CONTROLLER.

ALL DIMENSIONS ARE IN METERS UNLESS OTHERWISE SHOWN

TEMPORARY RAMP METERING SYSTEM

SCALE 1:500

THIS PLAN IS ACCURATE FOR ELECTRICAL WORK ONLY.

E-44

STATE OF CALIFORNIA - DEPARTMENT OF TRANSPORTATION
Caltrans **TRAFFIC DESIGN**

FUNCTIONAL SUPERVISOR: YI TSAU
CALCULATED-DESIGNED BY: LIEN VO
CHECKED BY: JESSE RUELAS
REVISED BY: LIEN VO
DATE REVISED: 02/09

LAST REVISION DATE PLOTTED => 12-JUN-2009
TIME PLOTTED => 13:48

FOR COMPLETE RIGHT OF WAY AND ACCURATE ACCESS DATA,
SEE RIGHT OF WAY RECORD MAPS AT DISTRICT OFFICE.

Dist	COUNTY	ROUTE	KILOMETER POST TOTAL PROJECT	SHEET No.	TOTAL SHEETS
07	LA	5	42.8/47.3	426	1073

REGISTERED PROJECT ENGINEER 11/03/08 DATE

6-8-09
PLANS APPROVAL DATE

REGISTERED PROFESSIONAL ENGINEER JESSE RUELAS No. E015604 Exp. 12-31-09 ELECTRICAL STATE OF CALIFORNIA

THE STATE OF CALIFORNIA OR ITS OFFICERS OR AGENTS SHALL NOT BE RESPONSIBLE FOR THE ACCURACY OR COMPLETENESS OF ELECTRONIC COPIES OF THIS PLAN SHEET.

PROJECT NOTES: (THIS SHEET ONLY)

1. EXISTING MODEL 170 CONTROLLER ASSEMBLY. INSTALL MVDS EQUIPMENT.
2. INSTALL 12.2 m WOOD POLE WITH MICROWAVE DETECTION SYSTEM (MVDS) PER DETAIL SHEETS E-48 AND E-50.
3. INSTALL MVDS CABLE PER MANUFACTURER'S RECOMMENDATION.

GENERAL NOTE: (THIS SHEET ONLY)

1. RC MAIN LINE DLC's FROM LOOPS TO CONTROLLER.

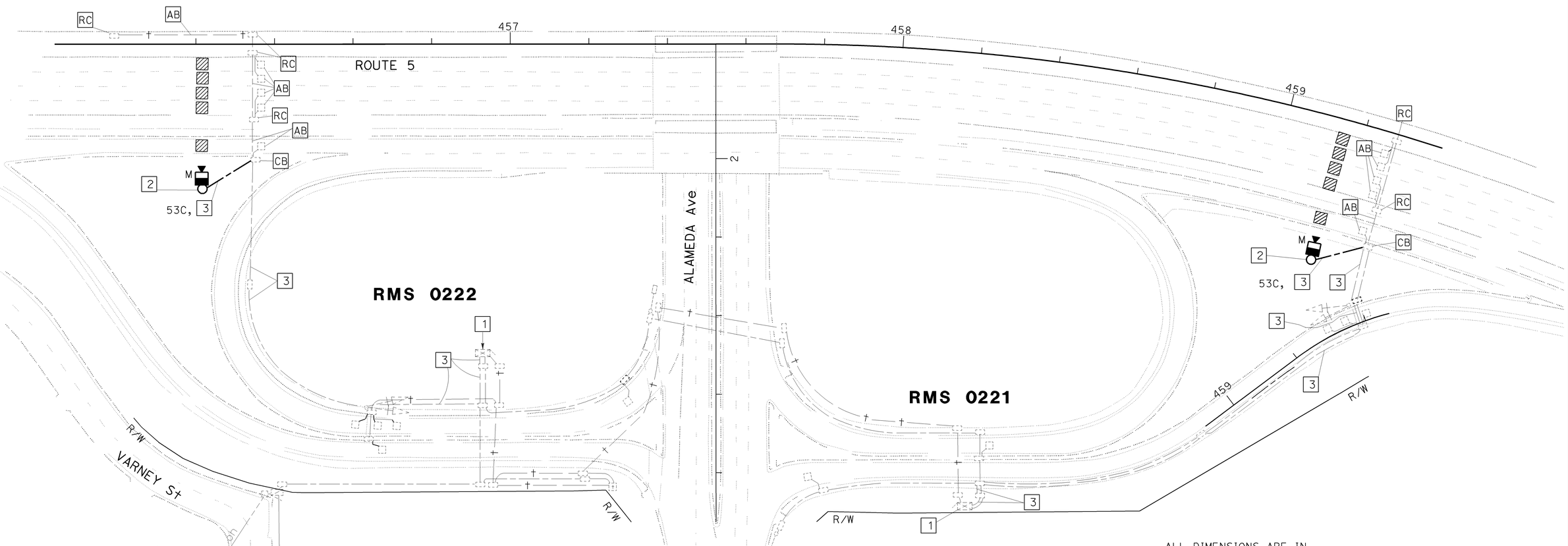

PP No. 1841XB

EXISTING 120/240 V TYPE III-BF METERED SERVICE
EQUIPMENT ENCLOSURE WITH 100 A MAIN CIRCUIT BREAKER AND
(2) 30 A, 120 V, 1P CB FOR RAMP METERING
ADDRESS: 111 1/3 SPAZIER Ave
PP No. 26263B
ID No. 07-053-005-R-028.370

THIS PLAN IS ACCURATE FOR ELECTRICAL WORK ONLY.

ALL DIMENSIONS ARE IN METERS UNLESS OTHERWISE SHOWN

TEMPORARY RAMP METERING SYSTEM

SCALE 1:500

E-45

STATE OF CALIFORNIA - DEPARTMENT OF TRANSPORTATION
Caltrans TRAFFIC DESIGN

FUNCTIONAL SUPERVISOR: YI TSAU
CALCULATED-DESIGNED BY: LIEN VO
CHECKED BY: JESSE RUELAS
REVISED BY: LIEN VO
DATE REVISED: 02/09

LAST REVISION 02-04-09 | DATE PLOTTED => 12-JUN-2009 | TIME PLOTTED => 13:48

FOR COMPLETE RIGHT OF WAY AND ACCURATE ACCESS DATA,
SEE RIGHT OF WAY RECORD MAPS AT DISTRICT OFFICE.

Dist	COUNTY	ROUTE	KILOMETER POST TOTAL PROJECT	SHEET No.	TOTAL SHEETS
07	LA	5	42.8/47.3	427	1073

REGISTERED ELECT ENGINEER 11/03/08 DATE

6-8-09
PLANS APPROVAL DATE

REGISTERED PROFESSIONAL ENGINEER
JESSE RUELAS
No. E015604
Exp. 12-31-09
ELECTRICAL
STATE OF CALIFORNIA

THE STATE OF CALIFORNIA OR ITS OFFICERS OR AGENTS SHALL NOT BE RESPONSIBLE FOR THE ACCURACY OR COMPLETENESS OF ELECTRONIC COPIES OF THIS PLAN SHEET.

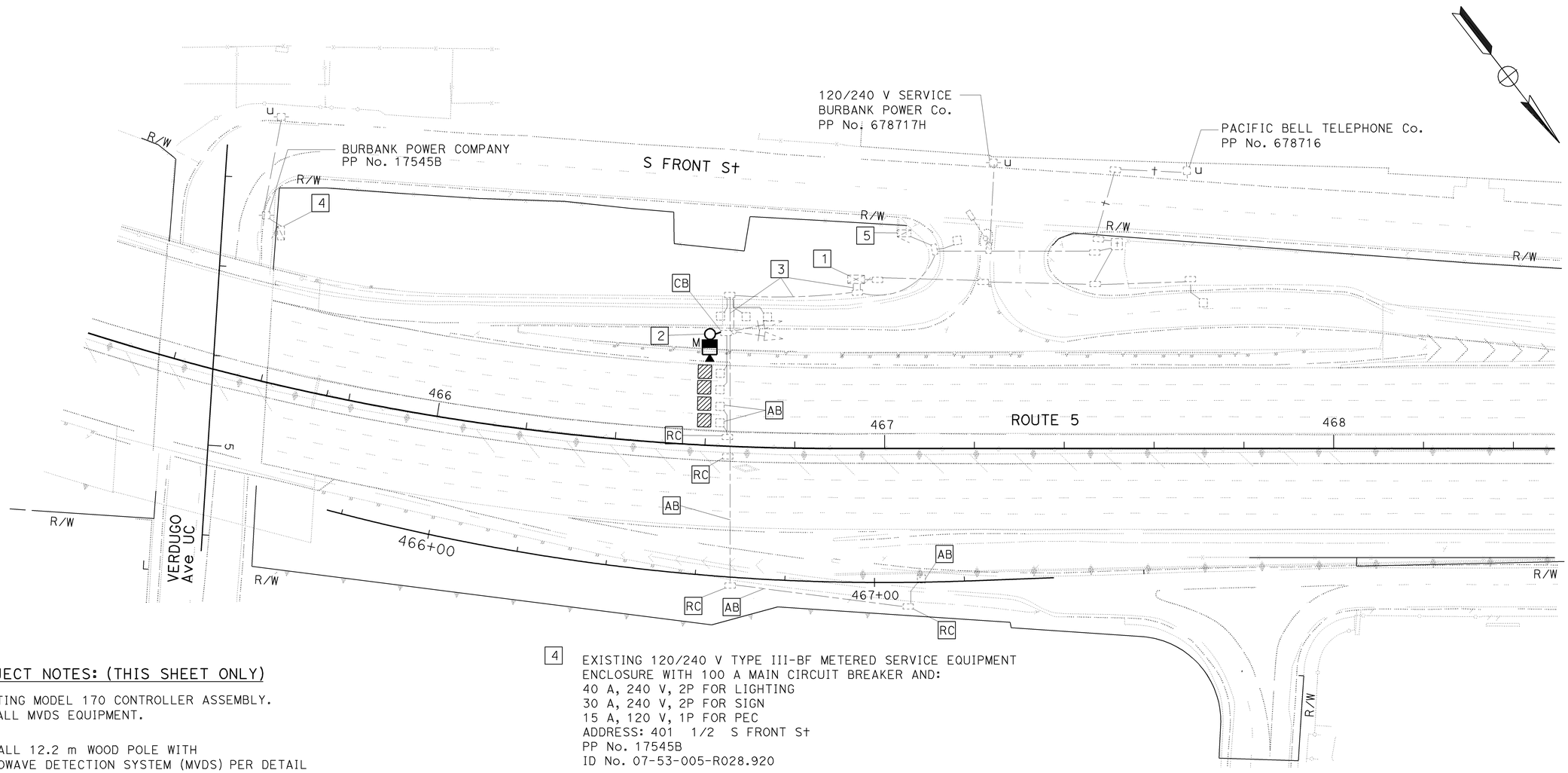

PROJECT NOTES: (THIS SHEET ONLY)

1 EXISTING MODEL 170 CONTROLLER ASSEMBLY.
INSTALL MVDS EQUIPMENT.

2 INSTALL 12.2 m WOOD POLE WITH
MICROWAVE DETECTION SYSTEM (MVDS) PER DETAIL
SHEETS E-48 AND E-50.

3 INSTALL MVDS CABLE PER MANUFACTURER'S RECOMMENDATION.
RC MAIN LINE DLC's, EXCEPT MAIN LINE 3 AND 4 TO REMAIN
FOR TEMPORARY.

4 EXISTING 120/240 V TYPE III-BF METERED SERVICE EQUIPMENT
ENCLOSURE WITH 100 A MAIN CIRCUIT BREAKER AND:
40 A, 240 V, 2P FOR LIGHTING
30 A, 240 V, 2P FOR SIGN
15 A, 120 V, 1P FOR PEC
ADDRESS: 401 1/2 S FRONT St
PP No. 17545B
ID No. 07-53-005-R028.920

5 EXISTING 120/240 V TYPE III-BF METERED SERVICE EQUIPMENT
ENCLOSURE WITH 100 A MAIN CIRCUIT BREAKER AND:
30 A, 240 V, 2P FOR LIGHTING
30 A, 240 V, 2P FOR SIGN
15 A, 120 V, 1P FOR RAMP METERING
15 A, 120 V, 1P FOR CCTV
15 A, 120 V, 1P FOR PEC
ADDRESS: 301 1/3 S FRONT St
PP No. 678717H
ID No. 07-53-005-R-028.940

THIS PLAN IS ACCURATE FOR ELECTRICAL WORK ONLY.

ALL DIMENSIONS ARE IN
METERS UNLESS OTHERWISE SHOWN

TEMPORARY RAMP METERING SYSTEM

SCALE 1:500

E-46

REVISED BY	LIEN VO
DATE REVISED	02/09
CALCULATED-DESIGNED BY	LIEN VO
CHECKED BY	JESSE RUELAS
FUNCTIONAL SUPERVISOR	YI TSAU

STATE OF CALIFORNIA - DEPARTMENT OF TRANSPORTATION
Caltrans TRAFFIC DESIGN

LAST REVISION 02-04-09 | DATE PLOTTED => 12-JUN-2009 | TIME PLOTTED => 14:42

FOR COMPLETE RIGHT OF WAY AND ACCURATE ACCESS DATA,
SEE RIGHT OF WAY RECORD MAPS AT DISTRICT OFFICE.

Dist	COUNTY	ROUTE	KILOMETER POST TOTAL PROJECT	SHEET No.	TOTAL SHEETS
07	LA	5	42.8/47.3	428	1073

REGISTERED ELECT ENGINEER DATE 11/03/08

6-8-09
PLANS APPROVAL DATE

REGISTERED PROFESSIONAL ENGINEER
JESSE RUELAS
No. E015604
Exp. 12-31-09
ELECTRICAL
STATE OF CALIFORNIA

THE STATE OF CALIFORNIA OR ITS OFFICERS OR AGENTS SHALL NOT BE RESPONSIBLE FOR THE ACCURACY OR COMPLETENESS OF ELECTRONIC COPIES OF THIS PLAN SHEET.

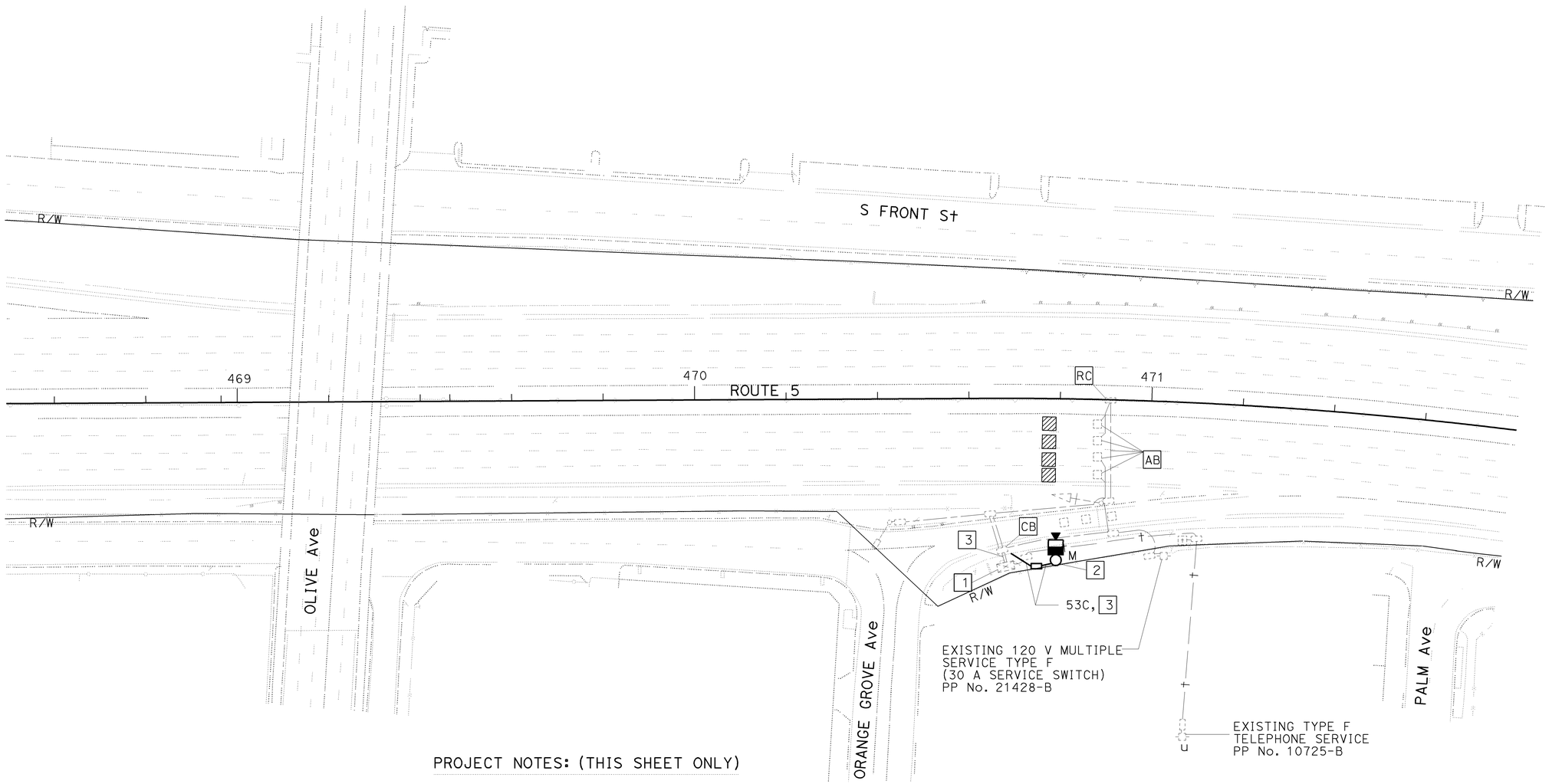

GENERAL NOTE: (THIS SHEET ONLY)

1. RC MAIN LINE DLC's FROM LOOPS TO CONTROLLER.

PROJECT NOTES: (THIS SHEET ONLY)

1. EXISTING MODEL 170 CONTROLLER ASSEMBLY. INSTALL MVDS EQUIPMENT.
2. INSTALL 12.2 m WOOD POLE WITH MICROWAVE DETECTION SYSTEM (MVDS) PER DETAIL SHEETS E-48 AND E-50.
3. INSTALL MVDS CABLE PER MANUFACTURER'S RECOMMENDATION.

ALL DIMENSIONS ARE IN METERS UNLESS OTHERWISE SHOWN

TEMPORARY RAMP METERING SYSTEM

SCALE 1:500

THIS PLAN IS ACCURATE FOR ELECTRICAL WORK ONLY.

E-47

REVISED BY	LIEN VO
DATE REVISED	02/09
CALCULATED-DESIGNED BY	LIEN VO
CHECKED BY	JESSE RUELAS
FUNCTIONAL SUPERVISOR	YI TSAU

STATE OF CALIFORNIA - DEPARTMENT OF TRANSPORTATION
Caltrans
TRAFFIC DESIGN

LAST REVISION 02-04-09 DATE PLOTTED => 15-JUN-2009 TIME PLOTTED => 11:10

Dist	COUNTY	ROUTE	KILOMETER POST TOTAL PROJECT	SHEET No.	TOTAL SHEETS
07	LA	5	42.8/47.3	429	1073

REGISTERED ELECTRICAL ENGINEER — Jesse Ruelas — DATE 11/03/08

PLANS APPROVAL DATE 6-8-09

REGISTERED PROFESSIONAL ENGINEER — JESSE RUELAS No. E015604 Exp. 12-31-09 ELECTRICAL — STATE OF CALIFORNIA

THE STATE OF CALIFORNIA OR ITS OFFICERS OR AGENTS SHALL NOT BE RESPONSIBLE FOR THE ACCURACY OR COMPLETENESS OF ELECTRONIC COPIES OF THIS PLAN SHEET.

Caltrans Metric

WIRE USAGE IN MVDS CABLE

MS CONNECTOR PIN ID	WIRE NUMBER	PAIR NUMBER	FUNCTION	CONNECTS TO MTA PANEL	CONNECTS TO POSITION	SAMPLE LANE ASSIGNMENT
A	1	1	DETECTOR #1	TB 5	1	LANE#1 WB or NB
B	2	1	DETECTOR #1 RETURN	TB 5	2	
C	3	2	DETECTOR #2	TB 5	3	LANE#2 WB or NB
D	4	2	DETECTOR #2 RETURN	TB 5	4	
E	5	3	DETECTOR #3	TB 5	5	LANE#3 WB or NB
F	6	3	DETECTOR #3 RETURN	TB 5	6	
G	7	4	DETECTOR #4	TB 5	7	LANE#4 WB or NB
H	8	4	DETECTOR #4 RETURN	TB 5	8	
J	9	5	DETECTOR #5	TB 6	1	LANE#1 EB or SB
K	10	5	DETECTOR #5 RETURN	TB 6	2	
L	11	6	DETECTOR #6	TB 6	3	LANE#2 EB or SB
M	12	6	DETECTOR #6 RETURN	TB 6	4	
N	13	7	DETECTOR #7	TB 6	5	LANE#3 EB or SB
P	14	7	DETECTOR #7 RETURN	TB 6	6	
R	15	8	DETECTOR #8	TB 6	7	LANE#4 EB or SB
S	16	8	DETECTOR #8 RETURN	TB 6	8	
T	17	9	RS232 RX (RECEIVE)	TB 1	1	
U	18	9	RS232 G (RECEIVE GROUND)	TB 1	2	
V	19	10	RS232 TX (TRANSMIT)	TB 1	3	
W	20	10	RS232 G (TRANSMIT GROUND)	TB 1	4	
f	21	11	12-24 VOLTS AC/DC POWER	TB 1	5	
g	22	11	12-24 VOLTS AC/DC POWER	TB 1	6	

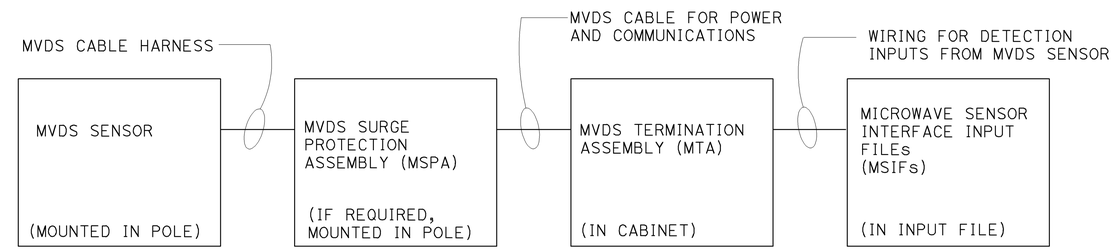

MVDS UNIT CONNECTIONS DETAIL

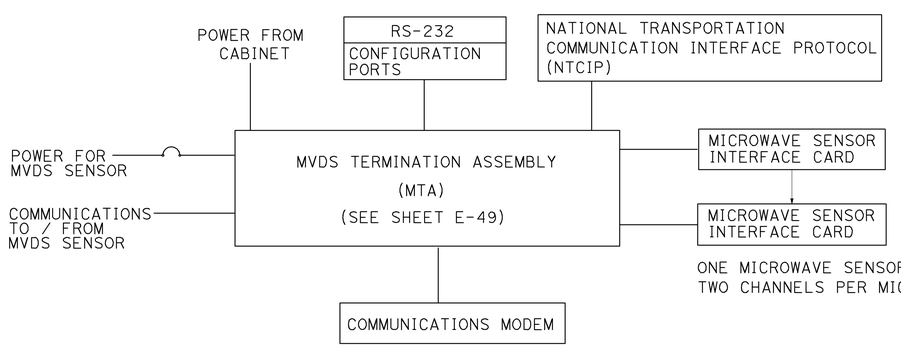

ONE MICROWAVE SENSOR INTERFACE CARD PER INPUT FILE SLOT, TWO CHANNELS PER MICROWAVE SENSOR INTERFACE CARD.

MVDS TERMINATION ASSEMBLY (MTA) DETAIL

ALL DIMENSIONS ARE IN METERS UNLESS OTHERWISE SHOWN

TEMPORARY MICROWAVE VEHICLE DETECTION SYSTEM

(DETAILS)

SCALE 1:500

THIS PLAN IS ACCURATE FOR ELECTRICAL WORK ONLY.

E-48

STATE OF CALIFORNIA - DEPARTMENT OF TRANSPORTATION
Caltrans TRAFFIC DESIGN

FUNCTIONAL SUPERVISOR: YI TSAU
CALCULATED-DESIGNED BY: LIEN VO
CHECKED BY: JESSE RUELAS
REVISED BY: LIEN VO
DATE REVISED: 02/09

LAST REVISION 02-04-09 | DATE PLOTTED => 12-JUN-2009 | TIME PLOTTED => 13:49

Dist	COUNTY	ROUTE	KILOMETER POST TOTAL PROJECT	SHEET No.	TOTAL SHEETS
07	LA	5	42.8/47.3	430	1073

REGISTERED ELECT ENGINEER DATE 11/03/08

6-8-09
PLANS APPROVAL DATE

REGISTERED PROFESSIONAL ENGINEER JESSE RUELAS No. E015604 Exp. 12-31-09 ELECTRICAL STATE OF CALIFORNIA

THE STATE OF CALIFORNIA OR ITS OFFICERS OR AGENTS SHALL NOT BE RESPONSIBLE FOR THE ACCURACY OR COMPLETENESS OF ELECTRONIC COPIES OF THIS PLAN SHEET.

Caltrans Metric

ABBREVIATIONS: (THIS SHEET ONLY)

MTA	MVDS TERMINATION ASSEMBLY
VAC	VOLTS ALTERNATING CURRENT
VDC	VOLTS DIRECT CURRENT
DC	DIRECT CURRENT
TB	TERMINAL BLOCK
RX	RECEIVE
TX	TRANSMIT
COAX	COAXIAL
J-BOX	JUNCTION BOX

MVDS TERMINATION ASSEMBLY (MTA) PANEL

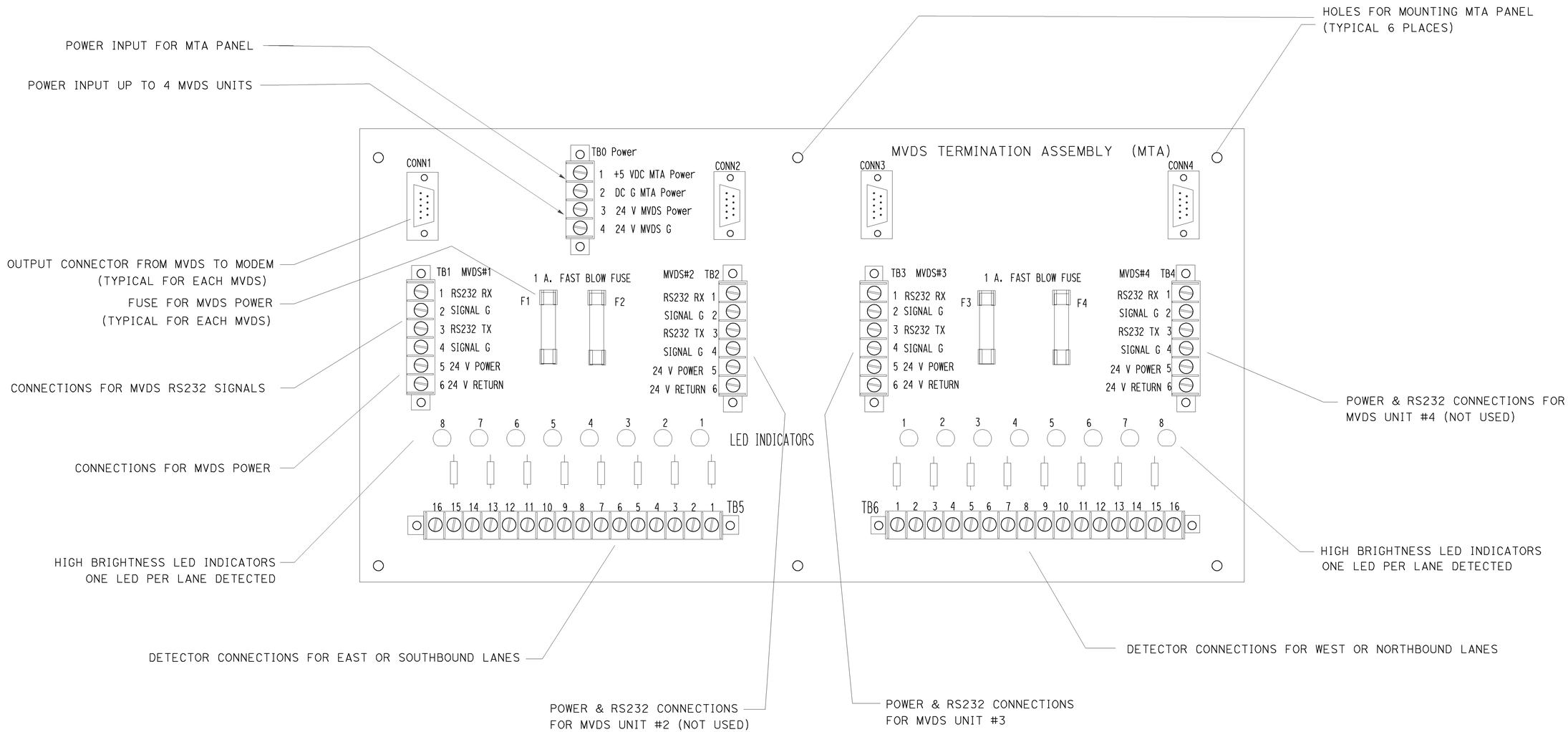

ALL DIMENSIONS ARE IN METERS UNLESS OTHERWISE SHOWN

TEMPORARY MICROWAVE VEHICLE DETECTION SYSTEM (DETAILS)

NO SCALE

THIS PLAN IS ACCURATE FOR ELECTRICAL WORK ONLY.

E-49

STATE OF CALIFORNIA - DEPARTMENT OF TRANSPORTATION
Caltrans TRAFFIC DESIGN

FUNCTIONAL SUPERVISOR: YI TSAU
CALCULATED-DESIGNED BY: LIEN VO
CHECKED BY: JESSE RUELAS
REVISED BY: LIEN VO
DATE REVISED: 02/09

LAST REVISION 02-17-09
DATE PLOTTED => 12-JUN-2009
TIME PLOTTED => 13:49

Dist	COUNTY	ROUTE	KILOMETER POST TOTAL PROJECT	SHEET No.	TOTAL SHEETS
07	LA	5	42.8/47.3	431	1073

Jesse Ruelas 11/03/08
REGISTERED ELECT ENGINEER DATE

6-8-09
PLANS APPROVAL DATE

REGISTERED PROFESSIONAL ENGINEER JESSE RUELAS No. E015604 Exp. 12-31-09 ELECTRICAL STATE OF CALIFORNIA

THE STATE OF CALIFORNIA OR ITS OFFICERS OR AGENTS SHALL NOT BE RESPONSIBLE FOR THE ACCURACY OR COMPLETENESS OF ELECTRONIC COPIES OF THIS PLAN SHEET.

Caltrans Metric

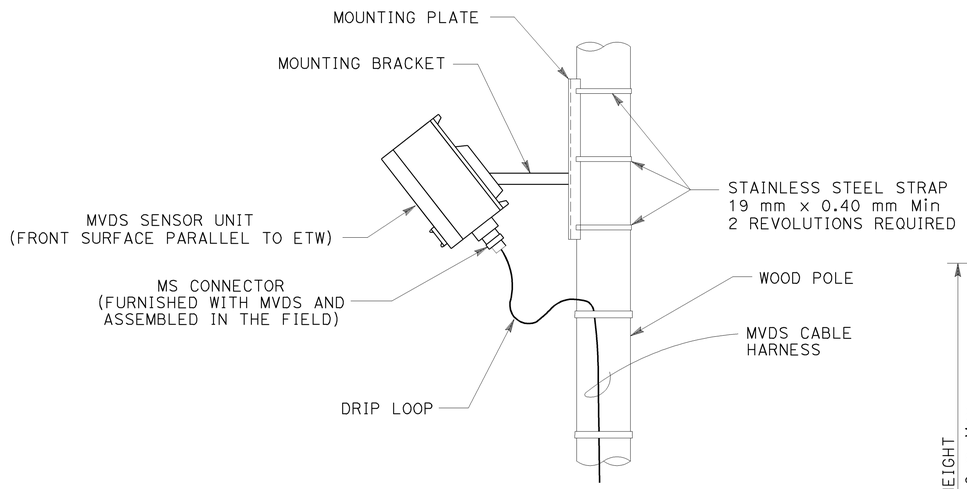

MVDS MOUNTING DETAIL

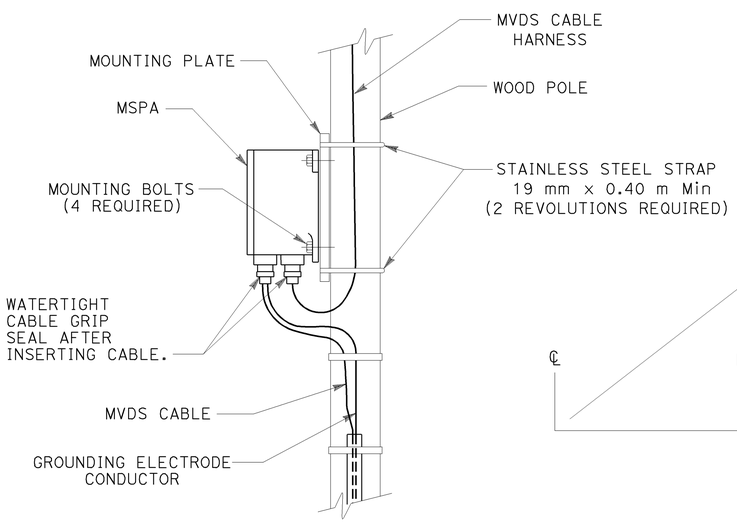

MVDS SURGE PROTECTION ASSEMBLY MOUNTING DETAIL

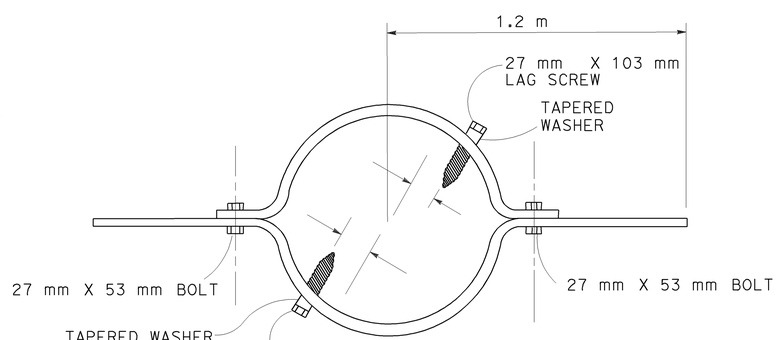

WIND ANCHOR DETAIL

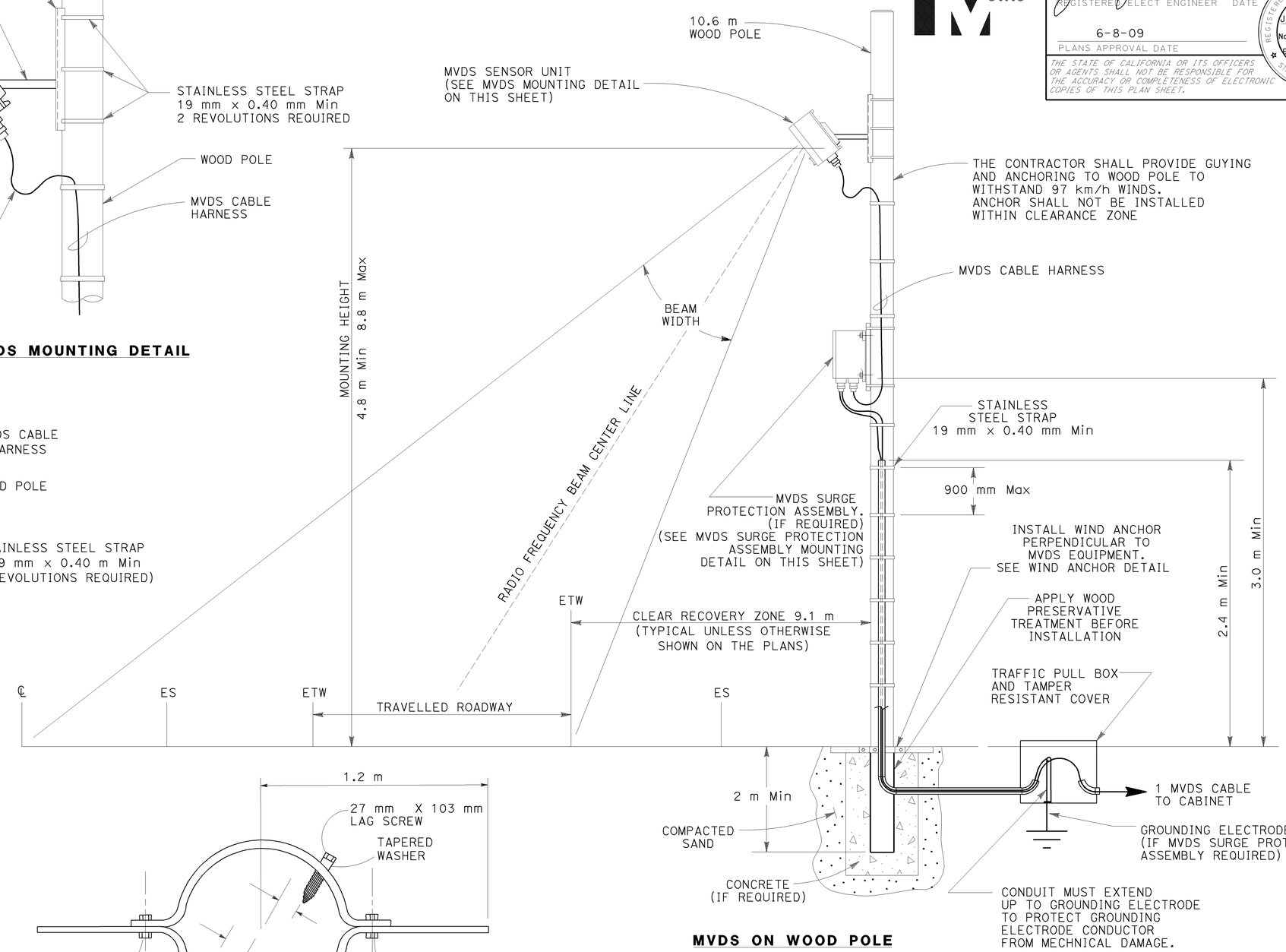

MVDS ON WOOD POLE

ALL DIMENSIONS ARE IN
METERS UNLESS OTHERWISE SHOWN

TEMPORARY MICROWAVE VEHICLE DETECTION SYSTEM
(DETAILS)

NO SCALE

E-50

THIS PLAN IS ACCURATE FOR ELECTRICAL WORK ONLY

	REVISED BY	DATE REVISED
	LIEN VO	02/09

CALCULATED-DESIGNED BY: LIEN VO
CHECKED BY: JESSE RUELAS
FUNCTIONAL SUPERVISOR: YI TSAU

STATE OF CALIFORNIA - DEPARTMENT OF TRANSPORTATION
Caltrans
TRAFFIC DESIGN

LAST REVISION 02-04-09 | DATE PLOTTED => 12-JUN-2009 | TIME PLOTTED => 13:49

FOR COMPLETE RIGHT OF WAY AND ACCURATE ACCESS DATA,
SEE RIGHT OF WAY RECORD MAPS AT DISTRICT OFFICE.

Dist	COUNTY	ROUTE	KILOMETER POST TOTAL PROJECT	SHEET No.	TOTAL SHEETS
07	LA	5	42.8/47.3	432	1073

Jesse Ruelas 11/03/08
REGISTERED ELECT ENGINEER DATE

6-8-09
PLANS APPROVAL DATE

REGISTERED PROFESSIONAL ENGINEER
JESSE RUELAS
No. E015604
Exp. 12-31-09
ELECTRICAL
STATE OF CALIFORNIA

THE STATE OF CALIFORNIA OR ITS OFFICERS OR AGENTS SHALL NOT BE RESPONSIBLE FOR THE ACCURACY OR COMPLETENESS OF ELECTRONIC COPIES OF THIS PLAN SHEET.

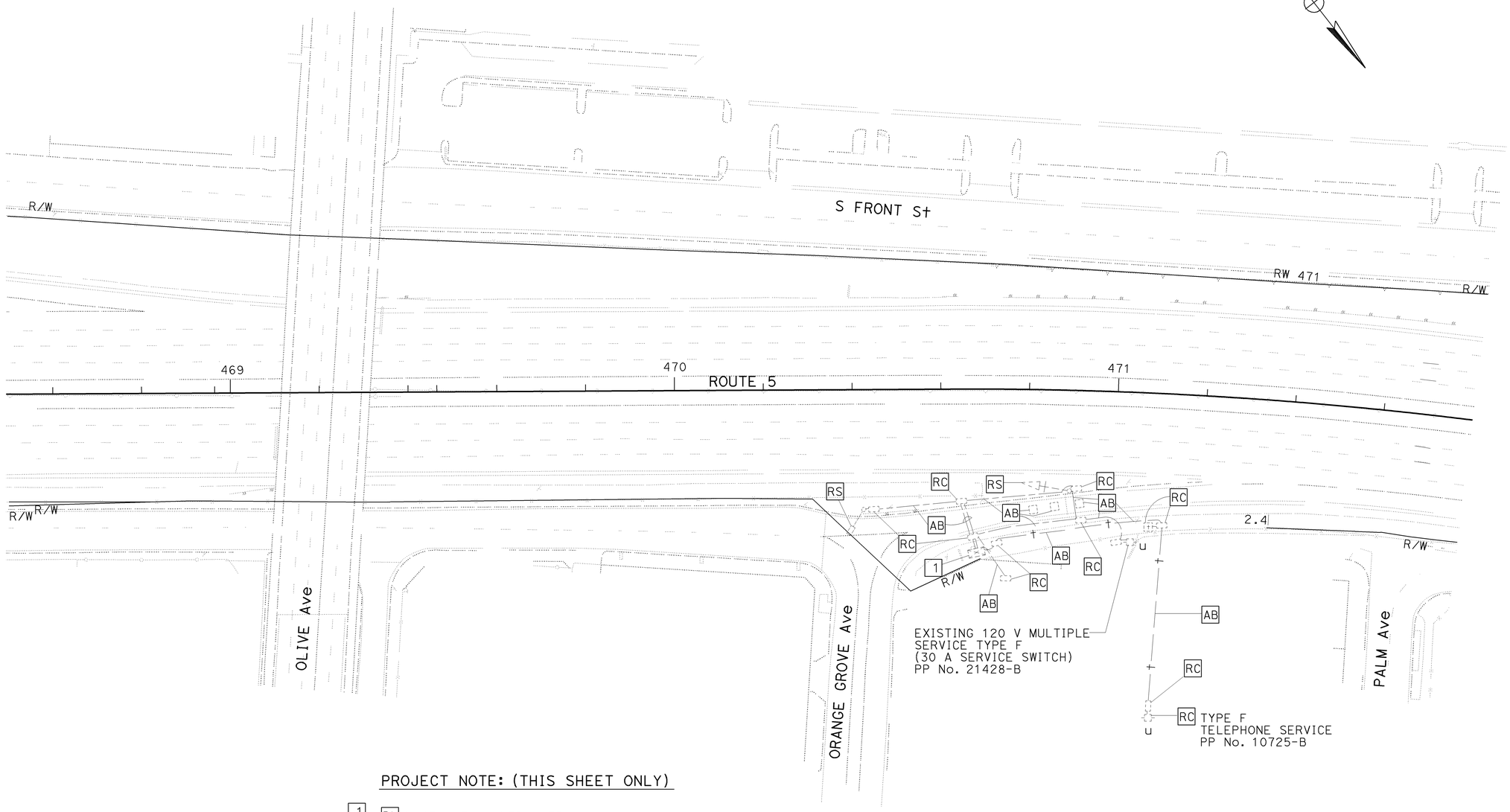

PROJECT NOTE: (THIS SHEET ONLY)

1 RL MODEL 170 CONTROLLER
ASSEMBLY TO NEW LOCATION, SEE SHEET E-58.

ALL DIMENSIONS ARE IN
METERS UNLESS OTHERWISE SHOWN

MODIFY RAMP METERING SYSTEM
(REMOVAL)
SCALE 1:500

THIS PLAN IS ACCURATE FOR ELECTRICAL WORK ONLY.

E-51

REVISED BY	LIEN VO
DATE REVISED	02/09
CALCULATED-DESIGNED BY	LIEN VO
CHECKED BY	JESSE RUELAS
FUNCTIONAL SUPERVISOR	YI TSAU

STATE OF CALIFORNIA - DEPARTMENT OF TRANSPORTATION
Caltrans **TRAFFIC DESIGN**

LAST REVISION 02-04-09 DATE PLOTTED => 12-JUN-2009 TIME PLOTTED => 14:42

FOR COMPLETE RIGHT OF WAY AND ACCURATE ACCESS DATA,
SEE RIGHT OF WAY RECORD MAPS AT DISTRICT OFFICE.

Dist	COUNTY	ROUTE	KILOMETER POST TOTAL PROJECT	SHEET No.	TOTAL SHEETS
07	LA	5	42.8/47.3	433	1073

REGISTERED ELECT ENGINEER 11/10/08 DATE

6-8-09
PLANS APPROVAL DATE

REGISTERED PROFESSIONAL ENGINEER
JESSE RUELAS
No. E015604
Exp. 12-31-09
ELECTRICAL
STATE OF CALIFORNIA

THE STATE OF CALIFORNIA OR ITS OFFICERS OR AGENTS SHALL NOT BE RESPONSIBLE FOR THE ACCURACY OR COMPLETENESS OF ELECTRONIC COPIES OF THIS PLAN SHEET.

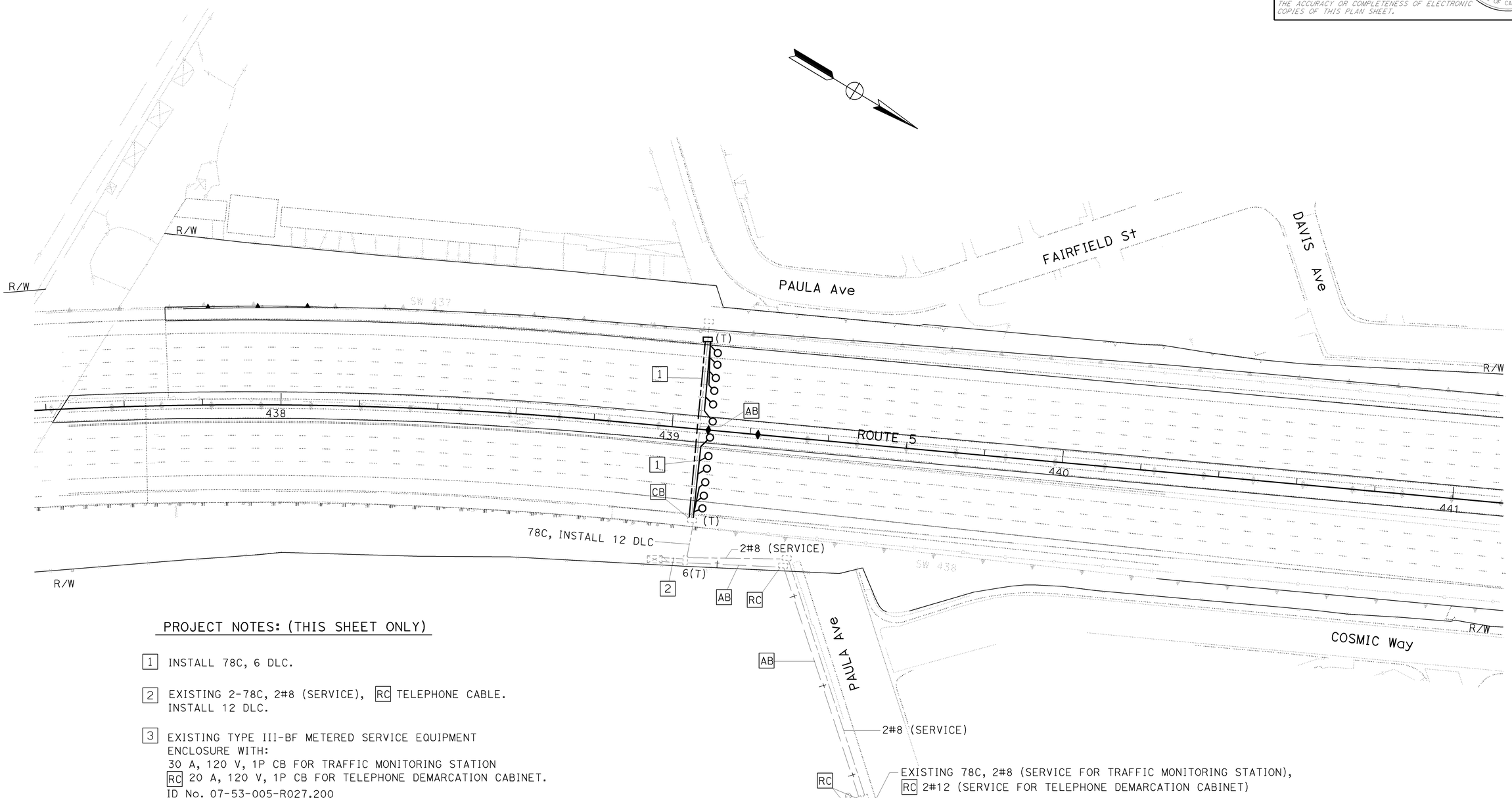

PROJECT NOTES: (THIS SHEET ONLY)

1 INSTALL 78C, 6 DLC.

2 EXISTING 2-78C, 2#8 (SERVICE), RC TELEPHONE CABLE.
INSTALL 12 DLC.

3 EXISTING TYPE III-BF METERED SERVICE EQUIPMENT
ENCLOSURE WITH:
30 A, 120 V, 1P CB FOR TRAFFIC MONITORING STATION
RC 20 A, 120 V, 1P CB FOR TELEPHONE DEMARCATION CABINET.
ID No. 07-53-005-R027.200
502 ½ PAULA Ave

ALL DIMENSIONS ARE IN
METERS UNLESS OTHERWISE SHOWN

MODIFY TRAFFIC MONITORING STATION

SCALE 1:500

THIS PLAN IS ACCURATE FOR ELECTRICAL WORK ONLY.

E-52

STATE OF CALIFORNIA - DEPARTMENT OF TRANSPORTATION
Caltrans
TRAFFIC DESIGN

FUNCTIONAL SUPERVISOR: YI TSAU
CALCULATED-DESIGNED BY: LIEN VO
CHECKED BY: JESSE RUELAS
REVISED BY: LIEN VO
DATE REVISED: 02/09

LAST REVISION 02-04-09 | DATE PLOTTED => 12-JUN-2009 | TIME PLOTTED => 14:47

Dist	COUNTY	ROUTE	KILOMETER POST TOTAL PROJECT	SHEET No.	TOTAL SHEETS
07	LA	5	42.8/47.3	434	1073

REGISTERED ELECT ENGINEER 11/03/08 DATE

6-8-09
PLANS APPROVAL DATE

REGISTERED PROFESSIONAL ENGINEER JESSE RUELAS No. E015604 Exp. 12-31-09 ELECTRICAL STATE OF CALIFORNIA

THE STATE OF CALIFORNIA OR ITS OFFICERS OR AGENTS SHALL NOT BE RESPONSIBLE FOR THE ACCURACY OR COMPLETENESS OF ELECTRONIC COPIES OF THIS PLAN SHEET.

Caltrans Metric

FOR COMPLETE RIGHT OF WAY AND ACCURATE ACCESS DATA, SEE RIGHT OF WAY RECORD MAPS AT DISTRICT OFFICE.

DETAIL 'A'
FRONT VIEW

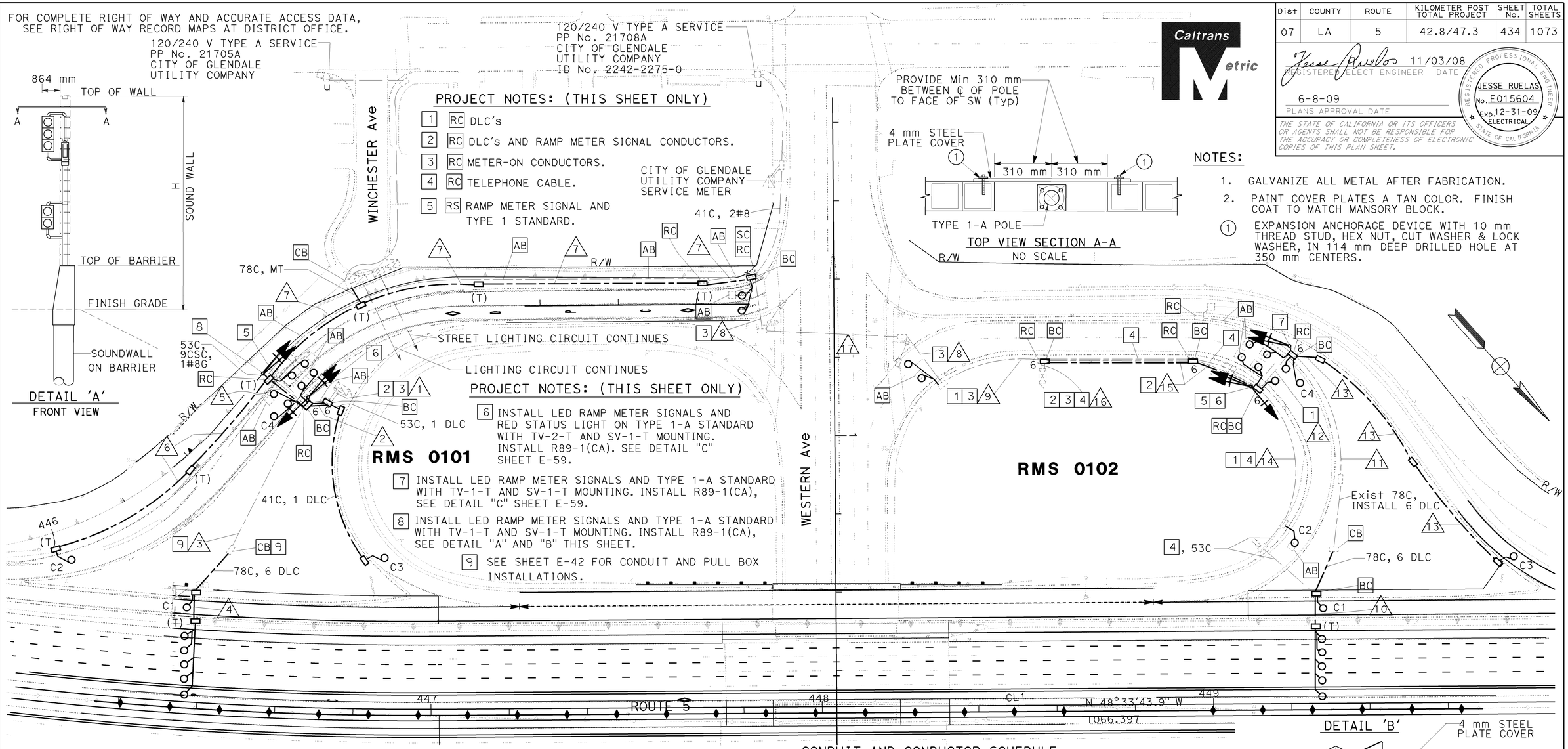

PROJECT NOTES: (THIS SHEET ONLY)

1 RC DLC's

2 RC DLC's AND RAMP METER SIGNAL CONDUCTORS.

3 RC METER-ON CONDUCTORS.

4 RC TELEPHONE CABLE.

5 RS RAMP METER SIGNAL AND TYPE 1 STANDARD.

PROJECT NOTES: (THIS SHEET ONLY)

6 INSTALL LED RAMP METER SIGNALS AND RED STATUS LIGHT ON TYPE 1-A STANDARD WITH TV-2-T AND SV-1-T MOUNTING. INSTALL R89-1(CA). SEE DETAIL "C" SHEET E-59.

7 INSTALL LED RAMP METER SIGNALS AND TYPE 1-A STANDARD WITH TV-1-T AND SV-1-T MOUNTING. INSTALL R89-1(CA), SEE DETAIL "C" SHEET E-59.

8 INSTALL LED RAMP METER SIGNALS AND TYPE 1-A STANDARD WITH TV-1-T AND SV-1-T MOUNTING. INSTALL R89-1(CA), SEE DETAIL "A" AND "B" THIS SHEET.

9 SEE SHEET E-42 FOR CONDUIT AND PULL BOX INSTALLATIONS.

TOP VIEW SECTION A-A
NO SCALE

NOTES:

1. GALVANIZE ALL METAL AFTER FABRICATION.
2. PAINT COVER PLATES A TAN COLOR. FINISH COAT TO MATCH MANSORY BLOCK.

(1) EXPANSION ANCHORAGE DEVICE WITH 10 mm THREAD STUD, HEX NUT, CUT WASHER & LOCK WASHER, IN 114 mm DEEP DRILLED HOLE AT 350 mm CENTERS.

DETAIL 'B'

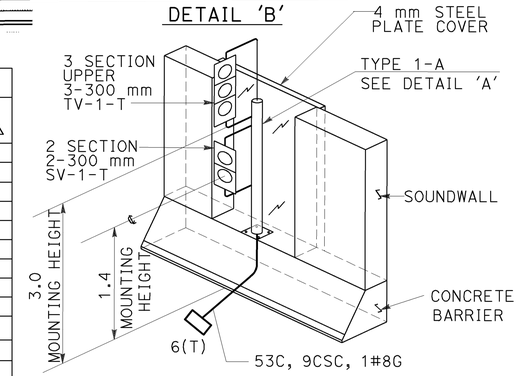

ALL DIMENSIONS ARE IN METERS UNLESS OTHERWISE SHOWN

CONDUIT AND CONDUCTOR SCHEDULE

AWG OR CABLE	CONDUCTOR RUN	CONDUIT RUN NUMBER AND SIZE							
		1	2	3	4	5	6	7	8
9CSC	RAMP SIGNAL	2	2			1			
5CSC	METER-ON SIGN	1	1			1		1	1
#6	SIGNAL SERVICE	2	2			2		2	2
#8G	GROUND	1	1			1		1	1
DLC	COUNT (C1)	1	1	1					
	COUNT DETECTOR (C2 ON-RAMP)	1	1			1	1		
	COUNT DETECTOR (C3 OFF-RAMP)	1							
	COUNT DETECTOR (C4 HOV-RAMP)	1	1						
	DEMAND DETECTOR	2	2			1			
	PASSAGE DETECTOR	2	2			1			
	QUEUE DETECTOR	2	2			2		2	
	MAIN LINE DETECTOR	5	5	5	5				
	CONDUIT SIZE	78(E) 78(E)	2-78	78(E)	78	78	41	53	53(E)

RMS 0101

CONDUIT AND CONDUCTOR SCHEDULE

AWG OR CABLE	CONDUCTOR RUN	CONDUIT RUN NUMBER AND SIZE									
		8	9	10	11	12	13	14	15	16	17
9CSC	RAMP SIGNAL					1			2	2	
5CSC	METER-ON SIGN	1	1							1	
#6	SIGNAL SERVICE	2	2							2	2
#8G	GROUND	1	1			1			1	1	1
DLC	COUNT (C1)				1						
	COUNT DETECTOR (C2 ON-RAMP)							1	1	1	
	COUNT DETECTOR (C3 OFF-RAMP)					1	1		1	1	
	COUNT DETECTOR (C4 HOV-RAMP)					1			1	1	
	DEMAND DETECTOR					1			2	2	
	PASSAGE DETECTOR					1			2	2	
	QUEUE DETECTOR		2							2	
	MAIN LINE DETECTOR			5	5	5			5	5	
	CONDUIT SIZE	53(E)	53(E)	78	53(E)	53(E)	41	53(E)	53(E) 78	78(E) 78(E)	53(E)

RMS 0102

THIS PLAN IS ACCURATE FOR ELECTRICAL WORK ONLY.

MODIFY RAMP METERING SYSTEM

SCALE 1:500

E-53

REVISED BY	LIEN VO
DATE REVISED	02/09
CALCULATED-DESIGNED BY	LIEN VO
CHECKED BY	JESSE RUELAS
FUNCTIONAL SUPERVISOR	YI TSAU

STATE OF CALIFORNIA - DEPARTMENT OF TRANSPORTATION
Caltrans TRAFFIC DESIGN

LAST REVISION 02-17-09 DATE PLOTTED => 12-JUN-2009 TIME PLOTTED => 14:47

FOR COMPLETE RIGHT OF WAY AND ACCURATE ACCESS DATA,
SEE RIGHT OF WAY RECORD MAPS AT DISTRICT OFFICE.

Dist	COUNTY	ROUTE	KILOMETER POST TOTAL PROJECT	SHEET No.	TOTAL SHEETS
07	LA	5	42.8/47.3	435	1073

Jesse Ruelas 11/03/08
REGISTERED ELECT ENGINEER DATE

6-8-09
PLANS APPROVAL DATE

REGISTERED PROFESSIONAL ENGINEER
JESSE RUELAS
No. E015604
Exp. 12-31-09
ELECTRICAL
STATE OF CALIFORNIA

THE STATE OF CALIFORNIA OR ITS OFFICERS OR AGENTS SHALL NOT BE RESPONSIBLE FOR THE ACCURACY OR COMPLETENESS OF ELECTRONIC COPIES OF THIS PLAN SHEET.

Caltrans Metric

PROJECT NOTES: (THIS SHEET ONLY)

1 EXISTING MODEL CONTROLLER ASSEMBLY TO REMAIN.

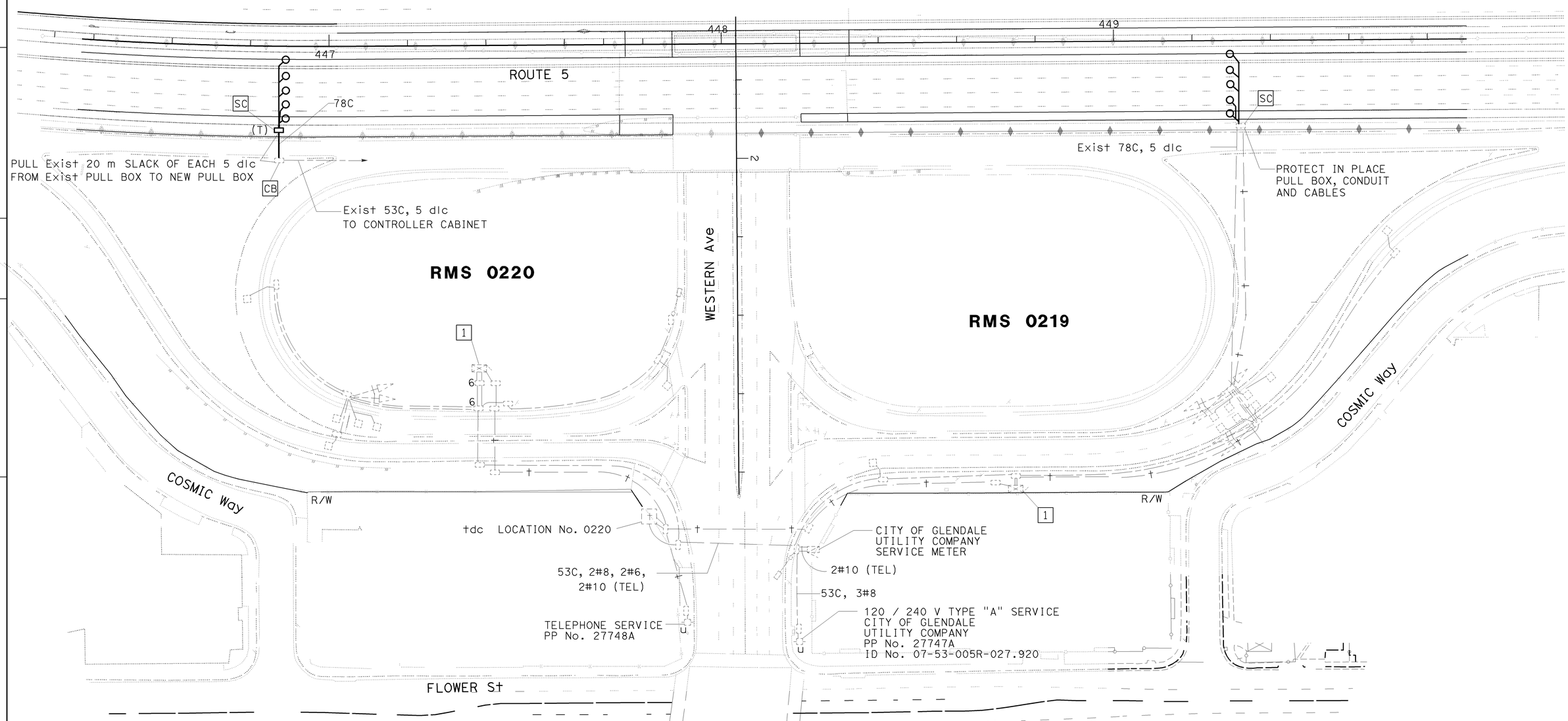

ALL DIMENSIONS ARE IN
METERS UNLESS OTHERWISE SHOWN

MODIFY RAMP METERING SYSTEM

SCALE 1:500

THIS PLAN IS ACCURATE FOR ELECTRICAL WORK ONLY.

E-54

REVISED BY	LIEN VO
DATE REVISED	02/09
CALCULATED-DESIGNED BY	LIEN VO
CHECKED BY	JESSE RUELAS
FUNCTIONAL SUPERVISOR	YI TSAU

STATE OF CALIFORNIA - DEPARTMENT OF TRANSPORTATION
Caltrans
TRAFFIC DESIGN

LAST REVISION 03-16-09 | DATE PLOTTED => 12-JUN-2009 | TIME PLOTTED => 14:47

Dist	COUNTY	ROUTE	KILOMETER POST TOTAL PROJECT	SHEET No.	TOTAL SHEETS
07	LA	5	42.8/47.3	436	1073

REGISTERED ELECT ENGINEER Jesse Ruelas 11/03/08 DATE

6-8-09
PLANS APPROVAL DATE

REGISTERED PROFESSIONAL ENGINEER JESSE RUELAS No. E015604 Exp. 12-31-09 ELECTRICAL STATE OF CALIFORNIA

THE STATE OF CALIFORNIA OR ITS OFFICERS OR AGENTS SHALL NOT BE RESPONSIBLE FOR THE ACCURACY OR COMPLETENESS OF ELECTRONIC COPIES OF THIS PLAN SHEET.

Caltrans Metric

FOR COMPLETE RIGHT OF WAY AND ACCURATE ACCESS DATA, SEE RIGHT OF WAY RECORD MAPS AT DISTRICT OFFICE.

PROJECT NOTES: (THIS SHEET ONLY)

1. RC DLC's
2. RC DLC's AND RAMP METER SIGNAL CONDUCTORS.
3. RC METER-ON CONDUCTORS.
4. RC TELEPHONE CABLE.
5. RL MODEL 170 CONTROLLER ASSEMBLY TO NEW LOCATION.
6. RS RAMP METER SIGNAL AND TYPE 1 STANDARD.

PROJECT NOTES: (THIS SHEET ONLY)

7. INSTALL ONE SECTION SIGNAL FACE WITH 300 mm YELLOW LED SIGNAL INDICATION, BACKPLATE, FBCA, INCANDESCENT LIGHTING AND TYPE 1-A STANDARD, SEE Std PLAN ES-7J. INSTALL NEMA TYPE 3R ENCLOSURE WITH MODIFIED LC2 CONTROL, CIRCUIT DETAIL "G" SHEET E-59. INSTALL W3-3 SIGN, PHOTOELECTRIC CONTROL UNIT AND ADAPTER ON POST.
8. RS EXISTING RAMP METER SIGNALS. INSTALL LED RAMP METER SIGNALS AND RED STATUS LIGHT ON EXISTING TYPE 1-A STANDARD WITH NEW TV-2-T AND SV-1-T MOUNTING. INSTALL R89(CA), SEE DETAIL "C" SHEET E-59.
9. INSTALL LED RAMP METER SIGNALS AND RED STATUS LIGHT ON TYPE 1-A STANDARD WITH TV-2-T AND SV-1-T MOUNTING. INSTALL R89(CA), SEE DETAIL "C" SHEET E-59.

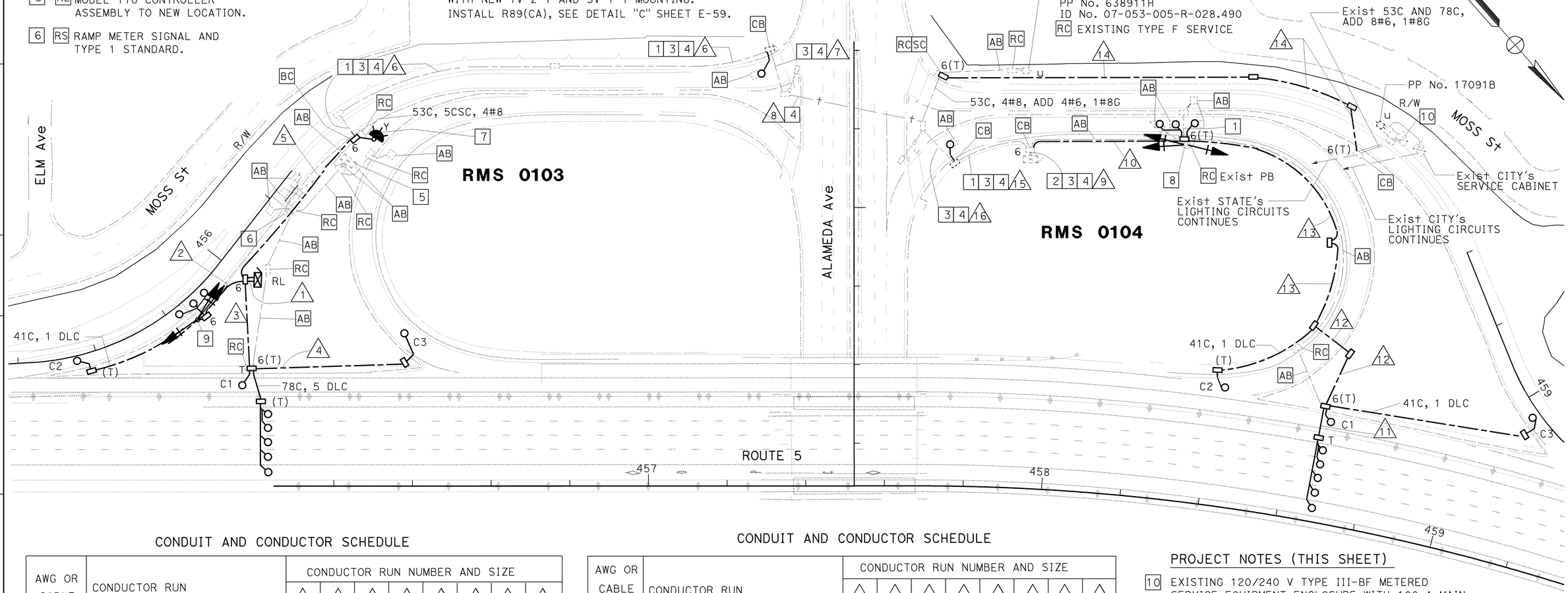

CONDUIT AND CONDUCTOR SCHEDULE

AWG OR CABLE	CONDUCTOR RUN	CONDUCTOR RUN NUMBER AND SIZE							
		1	2	3	4	5	6	7	8
9CSC	RAMP SIGNAL	1	1						
5CSC	METER-ON SIGN & FB CONTROL	2				2	1	1	
#8	FB & SIGN LIGHTING FIXTURE						4	4	4
#6	SIGNAL SERVICE	2				2	2	2	2
#8G	GROUND	1	1			1	1	1	1
DLC	COUNT (C1)	1		1					
	COUNT DETECTOR (C2 ON-RAMP)	1	1						
	COUNT DETECTOR (C3 OFF-RAMP)	1		1	1				
	DEMAND DETECTOR	1	1						
	PASSAGE DETECTOR	1	1						
	QUEUE DETECTOR	1				1	1		
	MAIN LINE DETECTOR	5		5					
	CONDUIT SIZE	2-78	78	78	41	78	53(E)	53(E)	41(E)

RMS 0103

CONDUIT AND CONDUCTOR SCHEDULE

AWG OR CABLE	CONDUCTOR RUN	CONDUCTOR RUN NUMBER AND SIZE							
		9	10	11	12	13	14	15	16
9CSC	RAMP SIGNAL	1	1						
5CSC	METER-ON SIGN	1						1	1
#6	SIGNAL SERVICE	2					4	2	2
#8G	GROUND	1	1				1	1	1
DLC	COUNT (C1)	1	1		1	1			
	COUNT DETECTOR (C2 ON-RAMP)	1	1			1			
	COUNT DETECTOR (C3 OFF-RAMP)	1	1		1	1			
	DEMAND DETECTOR	1	1						
	PASSAGE DETECTOR	1	1						
	QUEUE DETECTOR	1						1	
	MAIN LINE DETECTOR	5	5	5	5	5			
#8	FB & SIGN LIGHTING FIXTURE						4		
	CONDUIT SIZE	2-78 (E)	78	78	78	78	78	53(E)	53(E)

RMS 0104

PROJECT NOTES (THIS SHEET)

10. EXISTING 120/240 V TYPE III-BF METERED SERVICE EQUIPMENT ENCLOSURE WITH 100 A MAIN CIRCUIT BREAKER AND:
40 A, 240 V, 2P CB FOR LIGHTING CIRCUIT A
40 A, 240 V, 2P CB FOR LIGHTING CIRCUIT B
30 A, 240 V, 2P CB FOR SIGN ILLUMINATION C
ADD:
2-30 A, 120 V, 1P CB FOR RAMP METERING
15 A, 120 V, 1P CB FOR FLASHING BEACON
PP No. 17091B
ID No. 07-053-005-R-028.537
ADDRESS: 870 ½ MOSS St

ALL DIMENSIONS ARE IN METERS UNLESS OTHERWISE SHOWN

THIS PLAN IS ACCURATE FOR ELECTRICAL WORK ONLY.

MODIFY RAMP METERING SYSTEM FLASHING BEACON

SCALE 1:500

E-55

REVISED BY	DATE REVISED
LIEN VO	02/09

CALCULATED-DESIGNED BY: LIEN VO
CHECKED BY: JESSE RUELAS
FUNCTIONAL SUPERVISOR: YI TSAU

STATE OF CALIFORNIA - DEPARTMENT OF TRANSPORTATION
Caltrans TRAFFIC DESIGN

LAST REVISION 02-19-09
DATE PLOTTED => 12-JUN-2009
TIME PLOTTED => 14:47

Dist	COUNTY	ROUTE	KILOMETER POST TOTAL PROJECT	SHEET No.	TOTAL SHEETS
07	LA	5	42.8/47.3	437	1073

Jesse Ruelas 11/03/08
REGISTERED ELECT ENGINEER DATE

6-8-09
PLANS APPROVAL DATE

REGISTERED PROFESSIONAL ENGINEER JESSE RUELAS No. E015604 Exp. 12-31-09 ELECTRICAL STATE OF CALIFORNIA

THE STATE OF CALIFORNIA OR ITS OFFICERS OR AGENTS SHALL NOT BE RESPONSIBLE FOR THE ACCURACY OR COMPLETENESS OF ELECTRONIC COPIES OF THIS PLAN SHEET.

Caltrans Metric

FOR COMPLETE RIGHT OF WAY AND ACCURATE ACCESS DATA, SEE RIGHT OF WAY RECORD MAPS AT DISTRICT OFFICE.

PROJECT NOTES: (THIS SHEET ONLY)

1 RC DLC's

2 RC DLC's AND RAMP METER SIGNAL CONDUCTORS.

3 RC METER-ON CONDUCTORS.

4 EXISTING MODEL 170 CONTROLLER ASSEMBLY TO REMAIN.
RS TELEPHONE BRIDGE.

5 INSTALL ONE SECTION SIGNAL FACE WITH 300 mm YELLOW LED SIGNAL INDICATION WITH BACKPLATE, FBCA, INCANDESCENT LIGHTING, TYPE 1-A STANDARD, SEE RSP ES-7J. INSTALL NEMA 3R ENCLOSURE WITH MODIFIED LC2 CONTROL, SEE DETAIL "G" SHEET E-59. INSTALL W3-3 SIGN, PHOTOELECTRIC CONTROL UNIT AND ADAPTER ON POST.

6 RS RAMP METER SIGNALS.
INSTALL LED RAMP METER SIGNALS AND RED STATUS LIGHT ON EXISTING TYPE 1-A STANDARD WITH NEW TV-2-T AND SV-1-T MOUNTING. INSTALL R89(CA), SEE DETAIL "C" SHEET E-59.

CONDUIT AND CONDUCTOR SCHEDULE

		CONDUCTOR RUN NUMBER AND SIZE						
AWG OR CABLE	CONDUCTOR RUN	1	2	3	4	5	6	7
9CSC	RAMP SIGNAL	1				1		
5CSC	METER-ON SIGN	1					1	1
#6	SIGNAL SERVICE	2					2	2
#8	FB & SIGN LIGHTING FIXTURE						4	4
#8G	GROUND	1				1	1	1
DLC	COUNT (C1)	1	1	1	1	1		
	COUNT DETECTOR (C2 ON-RAMP)	1		1	1	1		
	COUNT DETECTOR (C3 OFF-RAMP)	1	1	1	1	1		
	DEMAND DETECTOR	1				1		
	PASSAGE DETECTOR	1				1		
	QUEUE DETECTOR	1					1	
	MAIN LINE DETECTOR	5	5	5	5	5		
	CONDUIT SIZE	78(E) 78(E)	78	78	78	78	53(E)	53(E)

RMS 0222

CONDUIT AND CONDUCTOR SCHEDULE

		CONDUCTOR RUN NUMBER AND SIZE							
AWG OR CABLE	CONDUCTOR RUN	8	9	10	11	12	13	14	15
9CSC	RAMP SIGNAL	1	1	1					1
5CSC	METER-ON SIGN & FB CONTROL	2	1				1	1	
#8	FB & SIGN LIGHTING FIXTURE		4						
#6	SIGNAL SERVICE	2							
#8G	GROUND	1	1	1			1	1	1
DLC	COUNT (C1)	1	1	1	1				1
	COUNT DETECTOR (C2 ON-RAMP)	1	1						1
	COUNT DETECTOR (C3 OFF-RAMP)	1	1	1					1
	DEMAND DETECTOR	1	1						1
	PASSAGE DETECTOR	1	1						1
	QUEUE DETECTOR	1					1		
	MAIN LINE DETECTOR	5	5	5	5	5			5
	CONDUIT SIZE	53(E) 53(E)	78 53(E) 53(E)	78 53(E) 53(E)	78 53(E) 53(E)	78	53(E)	41(E)	78 53(E) 53(E)

RMS 0221

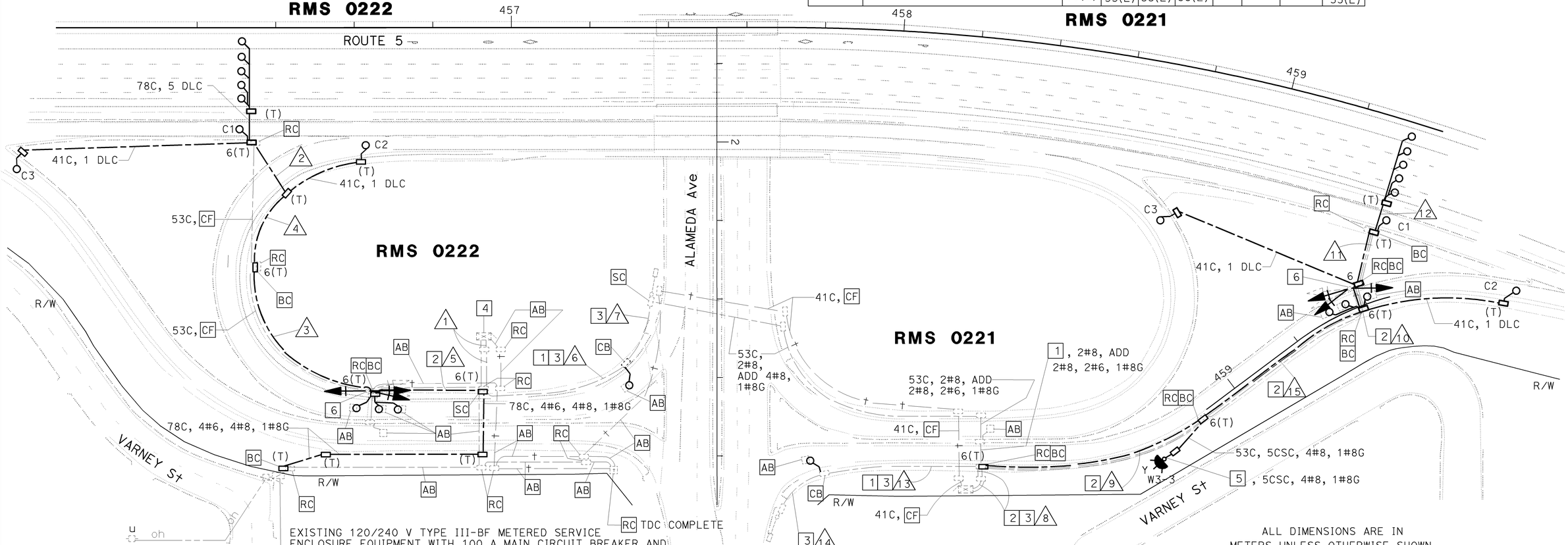

EXISTING 120/240 V TYPE III-BF METERED SERVICE ENCLOSURE EQUIPMENT WITH 100 A MAIN CIRCUIT BREAKER AND
(2) 30 A, 120 V, 1P CB FOR RAMP METERING
ADD: 15 A, 120 V, 1P CB FOR FLASHING BEACON
15 A, 120 V, 1P CB FOR SIGN LIGHTING FIXTURE
ADDRESS: 111 1/3 SPAZIER Ave
PP No. 26263B
ID No. 07-053-005-R-028.370

THIS PLAN IS ACCURATE FOR ELECTRICAL WORK ONLY.

ALL DIMENSIONS ARE IN METERS UNLESS OTHERWISE SHOWN

MODIFY RAMP METERING SYSTEM FLASHING BEACON

SCALE 1:500

E-56

STATE OF CALIFORNIA - DEPARTMENT OF TRANSPORTATION
Caltrans TRAFFIC DESIGN

FUNCTIONAL SUPERVISOR: YI TSAU
CALCULATED-DESIGNED BY: LIEN VO
CHECKED BY: JESSE RUELAS
REVISED BY: LIEN VO
DATE REVISED: 02/09

LAST REVISION DATE PLOTTED => 12-JUN-2009
TIME PLOTTED => 14:47

BORDER LAST REVISED 3/1/2007
RELATIVE BORDER SCALE IS IN MILLIMETERS 0 20 40 60 80
USERNAME => s135318
DGN FILE => 712184ua056.dgn
CU 07383
EA 121841

FOR COMPLETE RIGHT OF WAY AND ACCURATE ACCESS DATA, SEE RIGHT OF WAY RECORD MAPS AT DISTRICT OFFICE.

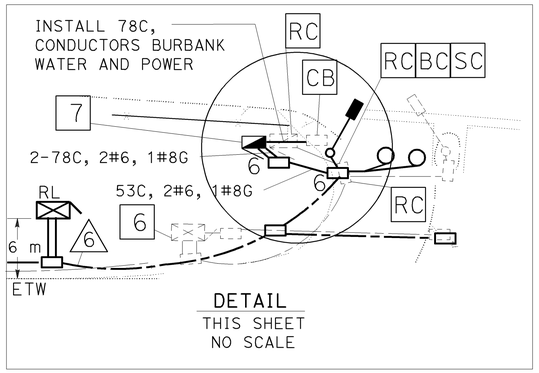

CONDUIT AND CONDUCTOR SCHEDULE

AWG OR CABLE	CONDUCTOR RUN	CONDUIT RUN NUMBER AND SIZE								
		1	2	3	4	5	6	7	8	9
9CSC	RAMP SIGNAL	1	1		1					
5CSC	METER-ON SIGN	1					1	1		
#6	SIGNAL SERVICE	2					2	2		
#8G	GROUND	1	1		1		1	1		
DLC	COUNT (C1 OFF-RAMP)	1					1		1	1
	COUNT DETECTOR (C2 ON-RAMP)	1	1	1						
	DEMAND DETECTOR	1	1							
	PASSAGE DETECTOR	1	1							
	QUEUE DETECTOR	2					2	2		
	MAIN LINE DETECTOR	5	5		5	5				
	CONDUIT SIZE	2-78	78	41	63(E) 78	78	78	78	53	41(E)

RMS 0105

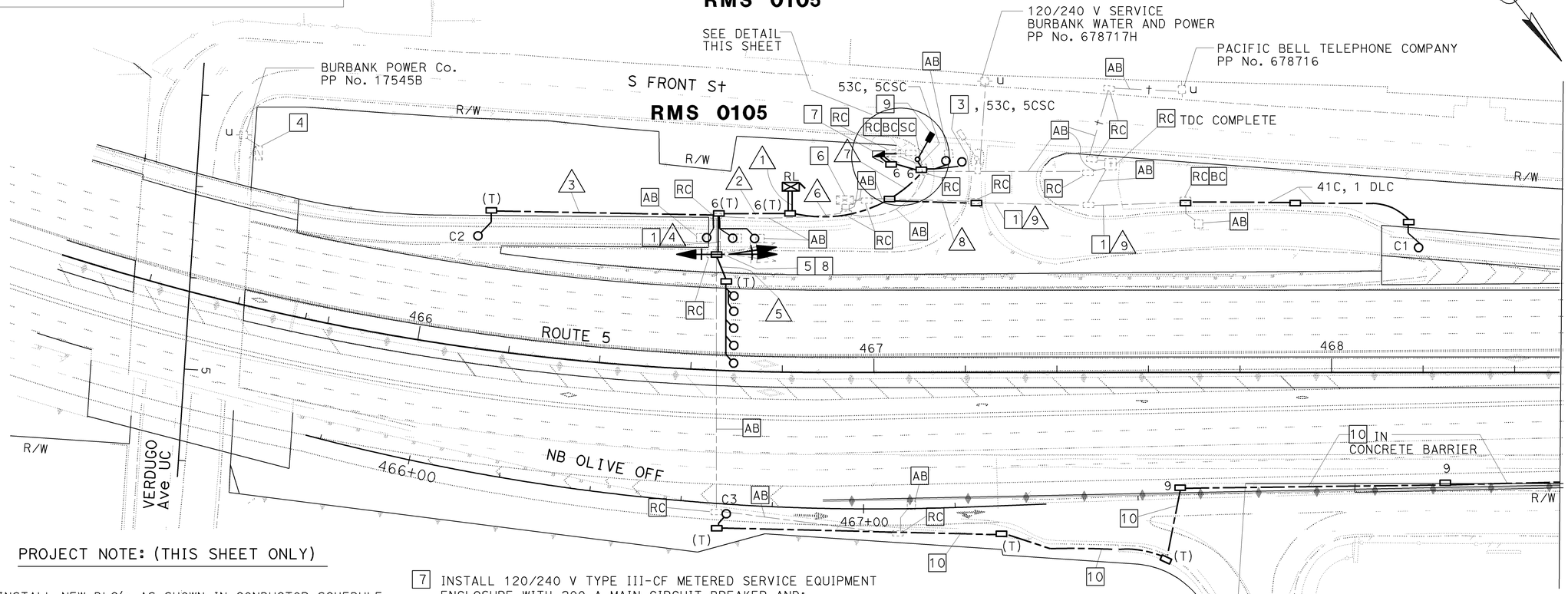

PROJECT NOTE: (THIS SHEET ONLY)

1 RC DLC's. INSTALL NEW DLC's AS SHOWN IN CONDUCTOR SCHEDULE.

2 RC DLC's AND RAMP METER SIGNAL CONDUCTORS.

3 RC METER-ON CONDUCTORS.

4 EXISTING 120/240 V TYPE III-BF METERED SERVICE EQUIPMENT ENCLOSURE WITH 100 A MAIN CIRCUIT BREAKER AND:
40 A, 240 V, 2P FOR LIGHTING.
30 A, 240 V, 2P FOR SIGN.
ADDRESS: 401 ½ S FRONT St
PP No.17545B
ID: 07-53-005-R-028.920

5 RS RAMP METER SIGNALS.

6 RL MODEL 170 CONTROLLER ASSEMBLY.

7 INSTALL 120/240 V TYPE III-CF METERED SERVICE EQUIPMENT ENCLOSURE WITH 200 A MAIN CIRCUIT BREAKER AND:
METER 1:
30 A, 240 V, 2P FOR LIGHTING
30 A, 240 V, 2P FOR SIGN
15 A, 120 V, 1P CB FOR PEC
ADDRESS: 301 1/3 S FRONT St
ID No. 07-53-005-R-028.940
METER 2:
15 A, 120 V, 1P FOR RAMP METERING
15 A, 120 V, 1P FOR CCTV
ADDRESS: 301 2/3 S FRONT St
PP No. 678717H
ID No. 07-53-005-R-028.941

8 INSTALL LED RAMP METER SIGNALS AND RED STATUS LIGHT ON EXISTING TYPE 1-A STANDARD WITH NEW TV-2-T AND SV-1-T MOUNTING, INSTALL R89(CA), SEE DETAIL "C" SHEET E-59.

9 INSTALL LED METER-ON SIGN ON TYPE 1-A STANDARD WITH TV-1-T MOUNTING, SEE FOR DETAILS "D" AND "F" SHEET E-59.

10 INSTALL 53C, 1 DLC. CONDUCTOR FOR LOOP DLC SHALL BE 2#12 STRANDED TINNED COPPER SHIELDED TWISTED PAIR.

THIS PLAN IS ACCURATE FOR ELECTRICAL WORK ONLY.

ALL DIMENSIONS ARE IN METERS UNLESS OTHERWISE SHOWN

MODIFY RAMP METERING SYSTEM

SCALE 1:500

E-57

Dist	COUNTY	ROUTE	KILOMETER POST TOTAL PROJECT	SHEET No.	TOTAL SHEETS
07	LA	5	42.8/47.3	438	1073

Jesse Ruelas 11/03/08
REGISTERED ELECT ENGINEER DATE

6-8-09
PLANS APPROVAL DATE

REGISTERED PROFESSIONAL ENGINEER JESSE RUELAS No. E015604 Exp. 12-31-09 ELECTRICAL STATE OF CALIFORNIA

THE STATE OF CALIFORNIA OR ITS OFFICERS OR AGENTS SHALL NOT BE RESPONSIBLE FOR THE ACCURACY OR COMPLETENESS OF ELECTRONIC COPIES OF THIS PLAN SHEET.

Caltrans Metric

REVISED BY LIEN VO DATE REVISED 02/09
CALCULATED-DESIGNED BY LIEN VO
CHECKED BY JESSE RUELAS
FUNCTIONAL SUPERVISOR YI TSAU

STATE OF CALIFORNIA - DEPARTMENT OF TRANSPORTATION
Caltrans TRAFFIC DESIGN

LAST REVISION 02-18-09 DATE PLOTTED => 17-JUN-2009 TIME PLOTTED => 11:57

FOR COMPLETE RIGHT OF WAY AND ACCURATE ACCESS DATA,
SEE RIGHT OF WAY RECORD MAPS AT DISTRICT OFFICE.

Dist	COUNTY	ROUTE	KILOMETER POST TOTAL PROJECT	SHEET No.	TOTAL SHEETS
07	LA	5	42.8/47.3	439	1073

REGISTERED ELECT ENGINEER Jesse Ruelas 11/03/08 DATE

6-8-09
PLANS APPROVAL DATE

REGISTERED PROFESSIONAL ENGINEER JESSE RUELAS No. E015604 Exp. 12-31-09 ELECTRICAL STATE OF CALIFORNIA

THE STATE OF CALIFORNIA OR ITS OFFICERS OR AGENTS SHALL NOT BE RESPONSIBLE FOR THE ACCURACY OR COMPLETENESS OF ELECTRONIC COPIES OF THIS PLAN SHEET.

Caltrans Metric

CONDUIT AND CONDUCTOR SCHEDULE

AWG OR CABLE	CONDUCTOR RUN	CONDUIT RUN NUMBER AND SIZE					
		1	2	3	4	5	6
9CSC	RAMP SIGNAL	2	2	1		2	
5CSC	METER-ON SIGN	2				2	2
#6	SIGNAL SERVICE	2				2	
#8G	GROUND	1	1	1		1	1
DLC	COUNT (ON-RAMP)	1	1	1	1	1	
	COUNT DETECTOR (OFF-RAMP)*	1				1	
	DEMAND DETECTOR	2	2	1		2	
	PASSAGE DETECTOR	2	2	1		2	
	QUEUE DETECTOR	2				1	1
	MAIN LINE DETECTOR	5	5			5	
	CONDUIT SIZE	2-78	78	78	53	2-78	53

* = 2#12 STRANDED TINTED COPPER, TYPE B

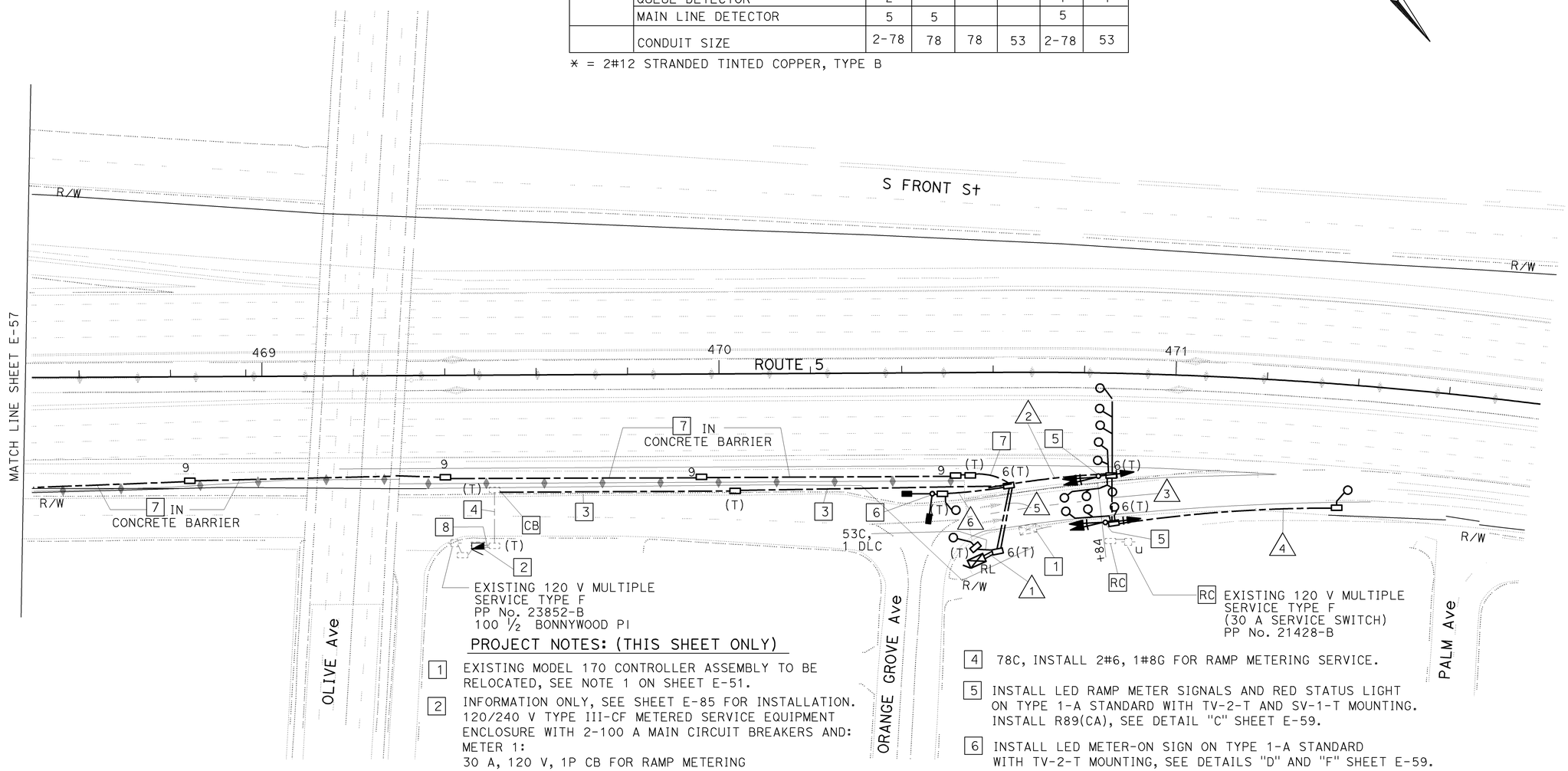

EXISTING 120 V MULTIPLE SERVICE TYPE F
PP No. 23852-B
100 ½ BONNYWOOD PI

RC EXISTING 120 V MULTIPLE SERVICE TYPE F
(30 A SERVICE SWITCH)
PP No. 21428-B

PROJECT NOTES: (THIS SHEET ONLY)

1. EXISTING MODEL 170 CONTROLLER ASSEMBLY TO BE RELOCATED, SEE NOTE 1 ON SHEET E-51.
2. INFORMATION ONLY, SEE SHEET E-85 FOR INSTALLATION. 120/240 V TYPE III-CF METERED SERVICE EQUIPMENT ENCLOSURE WITH 2-100 A MAIN CIRCUIT BREAKERS AND:
   METER 1:
   30 A, 120 V, 1P CB FOR RAMP METERING
   ADDRESS: 100 1/4 BONNYWOOD PL
   ID No. 07-53-005-R-028.990
   METER 2:
   30 A, 240 V, 2P CB FOR LIGHTING
   30 A, 240 V, 2P CB FOR SIGN
   15 A, 120 V, 1P CB FOR PEC
   PP No. 23852-B
   ADDRESS: 100 1/2 BONNYWOOD PL
   ID No. 07-53-005-R-028.991
3. INSTALL 53C, 2#6, 1#8G FOR RAMP METERING SERVICE.
4. 78C, INSTALL 2#6, 1#8G FOR RAMP METERING SERVICE.
5. INSTALL LED RAMP METER SIGNALS AND RED STATUS LIGHT ON TYPE 1-A STANDARD WITH TV-2-T AND SV-1-T MOUNTING. INSTALL R89(CA), SEE DETAIL "C" SHEET E-59.
6. INSTALL LED METER-ON SIGN ON TYPE 1-A STANDARD WITH TV-2-T MOUNTING, SEE DETAILS "D" AND "F" SHEET E-59.
7. INSTALL 53C, 1 DLC.
   CONDUCTOR FOR LOOP DLC SHALL BE 2 No. 12 STRANDED TINNED COPPER SHIELDED TWISTED PAIR.
8. Exist 2-78C. INSTALL 2#6, 1#8G FOR RAMP METERING SERVICE.

THIS PLAN IS ACCURATE FOR ELECTRICAL WORK ONLY.

ALL DIMENSIONS ARE IN METERS UNLESS OTHERWISE SHOWN

MODIFY RAMP METERING SYSTEM

SCALE 1:500

E-58

REVISED BY	LIEN VO
DATE REVISED	02/09
CALCULATED-DESIGNED BY	LIEN VO
CHECKED BY	JESSE RUELAS
FUNCTIONAL SUPERVISOR	YI TSAU

STATE OF CALIFORNIA - DEPARTMENT OF TRANSPORTATION
Caltrans TRAFFIC DESIGN

LAST REVISION 02-25-09 | DATE PLOTTED => 17-JUN-2009 | TIME PLOTTED => 11:57

Dist	COUNTY	ROUTE	KILOMETER POST TOTAL PROJECT	SHEET No.	TOTAL SHEETS
07	LA	5	42.8/47.3	440	1073

Jesse Ruelas 11/03/08
REGISTERED ELECT ENGINEER DATE

6-8-09
PLANS APPROVAL DATE

REGISTERED PROFESSIONAL ENGINEER JESSE RUELAS No. E015604 Exp. 12-31-09 ELECTRICAL STATE OF CALIFORNIA

THE STATE OF CALIFORNIA OR ITS OFFICERS OR AGENTS SHALL NOT BE RESPONSIBLE FOR THE ACCURACY OR COMPLETENESS OF ELECTRONIC COPIES OF THIS PLAN SHEET.

Caltrans Metric

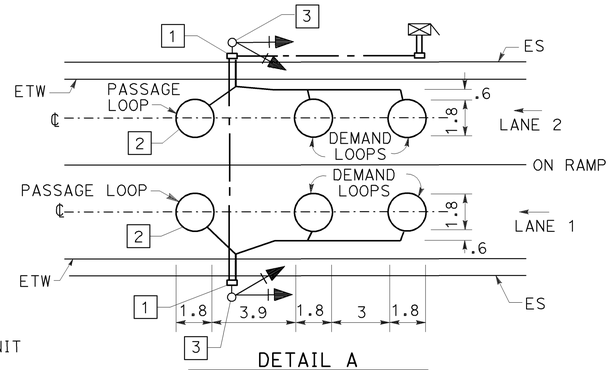

DETAIL A
TYPICAL 2-LANE RAMP
METERING SYSTEM INSTALLATION

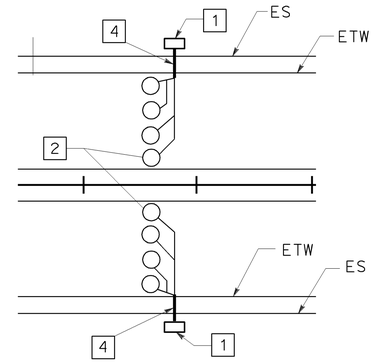

DETAIL B
TYPICAL TRAFFIC
MONITORING LOOP CONFIGURATION

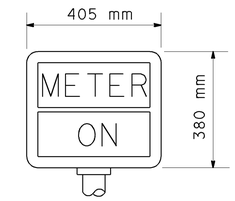

METER-ON SIGN

DETAIL D

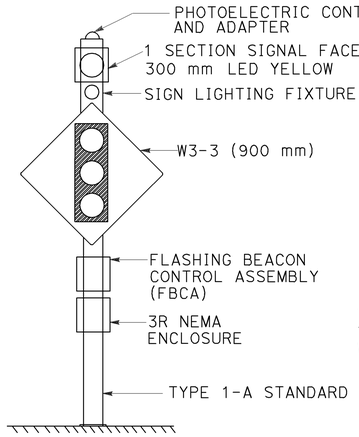

FLASHING BEACON

DETAIL 'H'

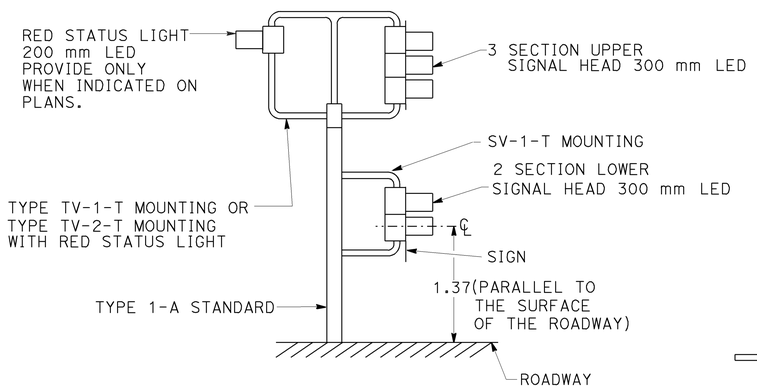

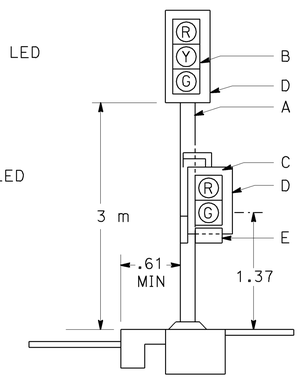

RAMP METER SIGNAL

DETAIL C

A. TYPE 1-A SIGNAL STANDARD.

B. 3-SECTION 300 mm LED SIGNAL HEAD (RED, YELLOW, GREEN).

C. 2-SECTION 300 mm LED SIGNAL HEAD (RED, GREEN).
TYPE SV-1-T MOUNTING ON SIDE OF STANDARD, AWAY FROM TRAFFIC.

D. BACKPLATE.

E. R89(CA)/R89-1(CA) SIGN MOUNT ON BACKPLATE AND CENTER BETWEEN GREEN SECTION AND BOTTOM OF BACKPLATE AND SIDES. ATTACH WITH 7 mm x 19 mm BOLTS, HEX NUTS, PLAIN AND LOCK WASHERS.

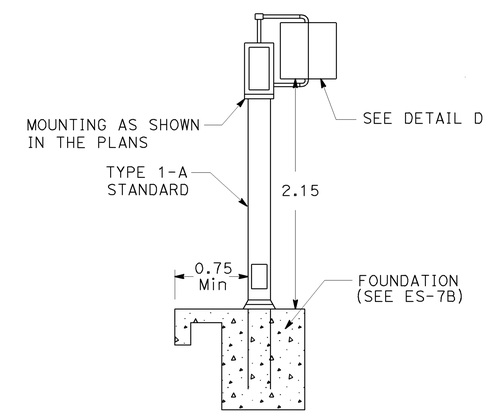

DETAIL F

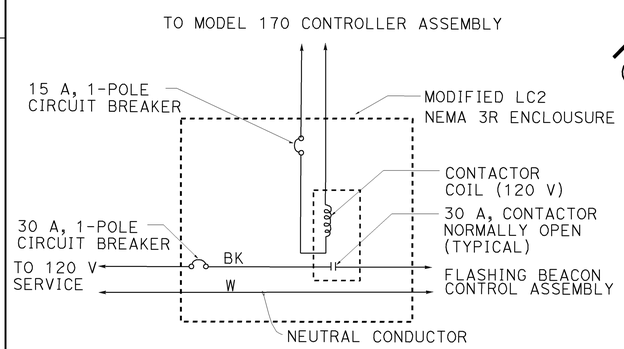

CONTROL CIRCUIT
MODIFIED LC2 CONTROL INSTALLED ON SIGN POLE FOR FLASHING BEACON

DETAIL G

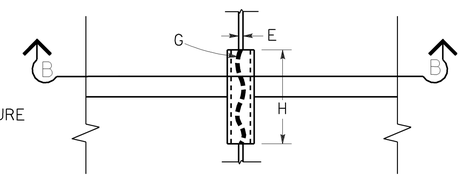

PLAN VIEW

DETAIL E

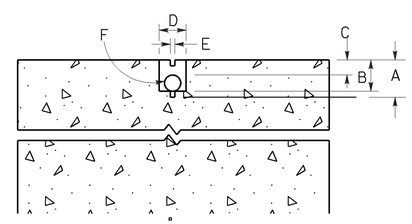

SECTION B-B

A. SAW-CUT DEPTH TO ACCOMMODATE SPECIFIED NUMBER OF CONDUCTORS WITH A MINIMUM OF 13 mm FROM TOP OF WIRE TO PAVEMENT SURFACE (83 mm Max).

B. SLOT SAW-CUT DEPTH TO ACCOMMODATE 27C TYPE 3 CONDUIT WITH 13 mm MINIMUM FROM TOP OF CONDUIT TO PAVEMENT SURFACE.

C. 13 mm MINIMUM BETWEEN TOP OF CONDUIT AND PAVEMENT SURFACE.

D. SAW-CUT WIDTH TO ACCOMMODATE 27C TYPE 3 CONDUIT WITH 3 mm CLEARANCE.

E. SAW-CUT 10 mm WIDE (Max).

F. 27C TYPE 3 CONDUIT, 152 mm LONG, PLUG BOTH ENDS WITH CAULKING COMPOUND TO KEEP OUT EPOXY.

G. CONDUCTORS WITH 13 mm MINIMUM SLACK INSIDE CONDUIT.

H. SAW-CUT LENGTH OF SLOT 3 mm LONGER THAN CONDUIT.

TYPICAL LOOP LEAD-IN
DETAIL AT PAVEMENT JOINT

NOTES: (THIS SHEET ONLY)

1. SEE PLANS FOR CONDUIT SIZES AND TYPES OF PULL BOXES. SEE TYPICAL LOOP LEAD-IN DETAIL AT PAVEMENT JOINT ON THIS SHEET.

2. TYPE E LOOPS.

3. INSTALL RAMP METERING SIGNAL ONLY WHERE SHOWN IN PLANS.

4. SEE RSP ES-5D.

5. THE CONTRACTOR SHALL VERIFY ALL CONTROLLER FIELD DIMENSIONS BEFORE ORDERING OR FABRICATING MATERIAL.

ALL DIMENSIONS ARE IN METERS UNLESS OTHERWISE SHOWN

THIS PLAN IS ACCURATE FOR ELECTRICAL WORK ONLY.

MODIFY RAMP METERING SYSTEM
(DETAILS)
NO SCALE

E-59

REVISED BY	DATE REVISED
LIEN VO	02/09

CALCULATED-DESIGNED BY: LIEN VO
CHECKED BY: JESSE RUELAS
FUNCTIONAL SUPERVISOR: YI TSAU

STATE OF CALIFORNIA - DEPARTMENT OF TRANSPORTATION
Caltrans TRAFFIC DESIGN

LAST REVISION 02-19-09 DATE PLOTTED => 12-JUN-2009 TIME PLOTTED => 14:47

Dist	COUNTY	ROUTE	KILOMETER POST TOTAL PROJECT	SHEET No.	TOTAL SHEETS
07	LA	5	42.8/47.3	441	1073

Jesse Ruelas 11/03/08
REGISTERED ELECT ENGINEER DATE

6-8-09
PLANS APPROVAL DATE

REGISTERED PROFESSIONAL ENGINEER JESSE RUELAS No. E015604 Exp. 12-31-09 ELECTRICAL STATE OF CALIFORNIA

THE STATE OF CALIFORNIA OR ITS OFFICERS OR AGENTS SHALL NOT BE RESPONSIBLE FOR THE ACCURACY OR COMPLETENESS OF ELECTRONIC COPIES OF THIS PLAN SHEET.

Caltrans Metric

FOR COMPLETE RIGHT OF WAY AND ACCURATE ACCESS DATA, SEE RIGHT OF WAY RECORD MAPS AT DISTRICT OFFICE.

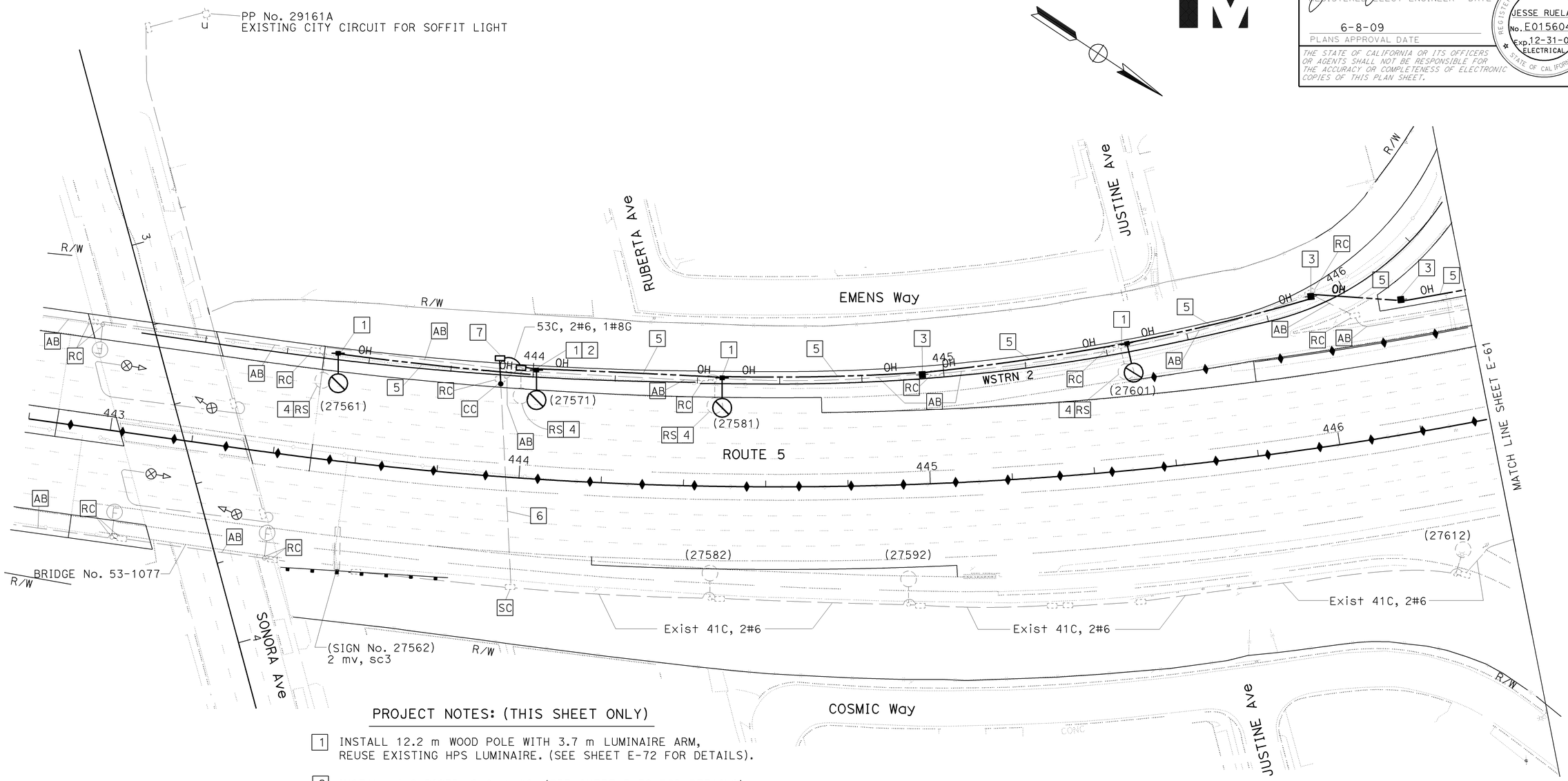

PROJECT NOTES: (THIS SHEET ONLY)

1. INSTALL 12.2 m WOOD POLE WITH 3.7 m LUMINAIRE ARM, REUSE EXISTING HPS LUMINAIRE. (SEE SHEET E-72 FOR DETAILS).
2. INSTALL 41C RISER, 2#6, 1#8G. (SEE SHEET E-72 FOR DETAILS).
3. INSTALL 12.2 m WOOD POLE.
4. REUSE EXISTING LUMINAIRE FOR TEMPORARY LIGHTING.
5. INSTALL 2#6, 1#8G OVERHEAD CONDUCTORS WITH 6.1 m MINIMUM CLEARANCE.
6. EXISTING CONDUIT TO BE PROTECTED IN PLACE FOR TEMPORARY LIGHTING. INSTALL 2#6, 1#8G.
7. CONDUIT OR PULL BOX TO BE REMAIN AS PART OF PERMANENT INSTALLATION.

FOR WIRING DIAGRAM, SEE SHEET E-69
THIS PLAN IS ACCURATE FOR ELECTRICAL WORK ONLY.

ALL DIMENSIONS ARE IN METERS UNLESS OTHERWISE SHOWN

LIGHTING (TEMPORARY)

SCALE 1:500

E-60

STATE OF CALIFORNIA - DEPARTMENT OF TRANSPORTATION
Caltrans **TRAFFIC DESIGN**

FUNCTIONAL SUPERVISOR: YI TSAU
CALCULATED-DESIGNED BY: LIEN VO
CHECKED BY: JESSE RUELAS
REVISED BY: LIEN VO
DATE REVISED: 02/09

LAST REVISION 02-04-09
DATE PLOTTED => 12-JUN-2009
TIME PLOTTED => 14:39

FOR COMPLETE RIGHT OF WAY AND ACCURATE ACCESS DATA,
SEE RIGHT OF WAY RECORD MAPS AT DISTRICT OFFICE.

Dist	COUNTY	ROUTE	KILOMETER POST TOTAL PROJECT	SHEET No.	TOTAL SHEETS
07	LA	5	42.8/47.3	442	1073

Jesse Ruelas 11/03/08
REGISTERED ELECT ENGINEER DATE

6-8-09
PLANS APPROVAL DATE

REGISTERED PROFESSIONAL ENGINEER JESSE RUELAS No. E015604 Exp. 12-31-09 ELECTRICAL STATE OF CALIFORNIA

THE STATE OF CALIFORNIA OR ITS OFFICERS OR AGENTS SHALL NOT BE RESPONSIBLE FOR THE ACCURACY OR COMPLETENESS OF ELECTRONIC COPIES OF THIS PLAN SHEET.

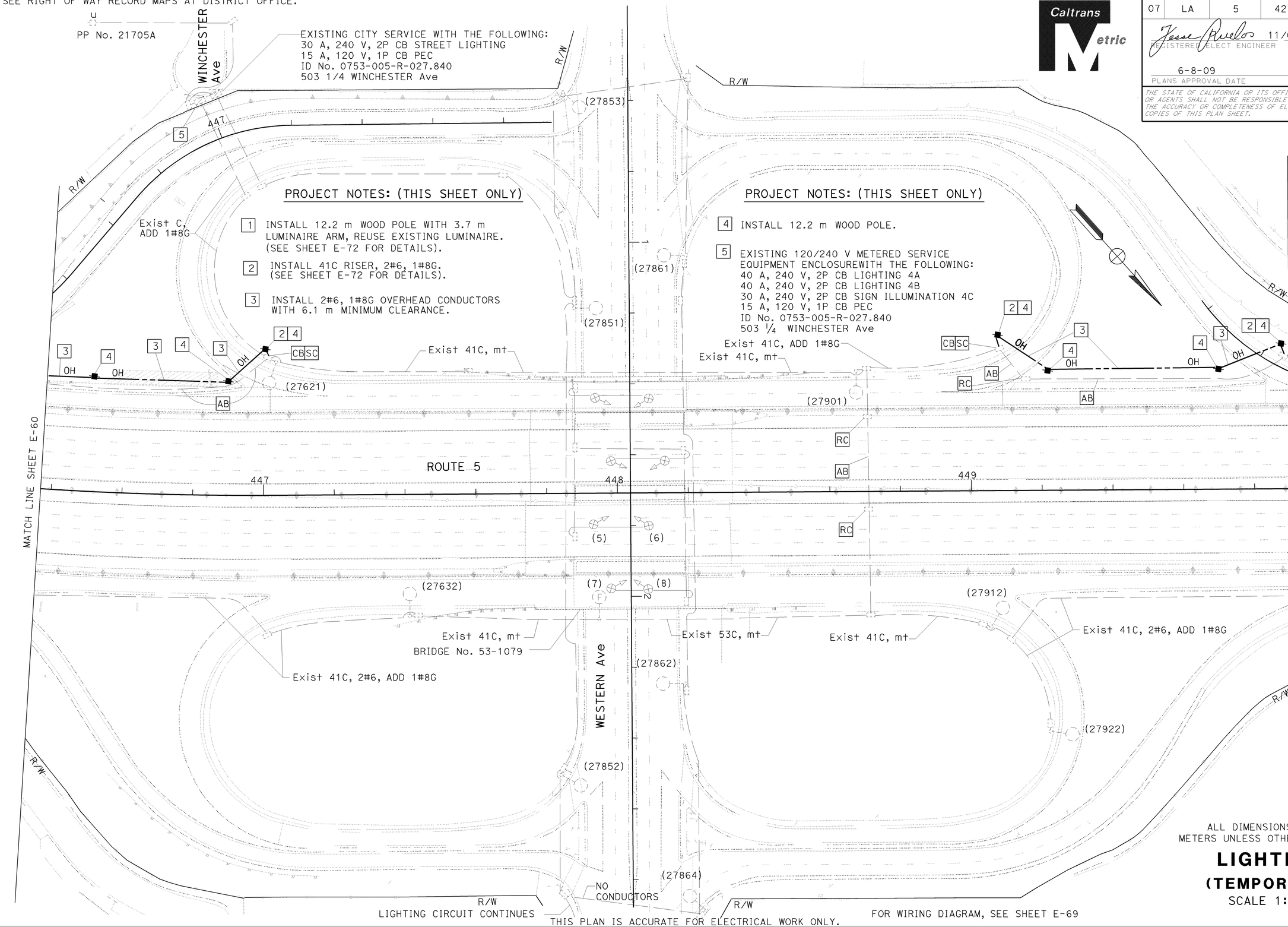

PROJECT NOTES: (THIS SHEET ONLY)

1. INSTALL 12.2 m WOOD POLE WITH 3.7 m LUMINAIRE ARM, REUSE EXISTING LUMINAIRE. (SEE SHEET E-72 FOR DETAILS).
2. INSTALL 41C RISER, 2#6, 1#8G. (SEE SHEET E-72 FOR DETAILS).
3. INSTALL 2#6, 1#8G OVERHEAD CONDUCTORS WITH 6.1 m MINIMUM CLEARANCE.

PROJECT NOTES: (THIS SHEET ONLY)

4. INSTALL 12.2 m WOOD POLE.
5. EXISTING 120/240 V METERED SERVICE EQUIPMENT ENCLOSUREWITH THE FOLLOWING:
   40 A, 240 V, 2P CB LIGHTING 4A
   40 A, 240 V, 2P CB LIGHTING 4B
   30 A, 240 V, 2P CB SIGN ILLUMINATION 4C
   15 A, 120 V, 1P CB PEC
   ID No. 0753-005-R-027.840
   503 1/4 WINCHESTER Ave

ALL DIMENSIONS ARE IN METERS UNLESS OTHERWISE SHOWN

LIGHTING
(TEMPORARY)

SCALE 1:500

THIS PLAN IS ACCURATE FOR ELECTRICAL WORK ONLY.

FOR WIRING DIAGRAM, SEE SHEET E-69

E-61

REVISED BY	LIEN VO
DATE REVISED	02/09
CALCULATED-DESIGNED BY	LIEN VO
CHECKED BY	JESSE RUELAS
FUNCTIONAL SUPERVISOR	YI TSAU

STATE OF CALIFORNIA - DEPARTMENT OF TRANSPORTATION
Caltrans **TRAFFIC DESIGN**

LAST REVISION 02-04-09 | DATE PLOTTED => 12-JUN-2009 | TIME PLOTTED => 14:39

Dist	COUNTY	ROUTE	KILOMETER POST TOTAL PROJECT	SHEET No.	TOTAL SHEETS
07	LA	5	42.8/47.3	443	1073

Jesse Ruelas 11/03/08
REGISTERED ELECT ENGINEER DATE

6-8-09
PLANS APPROVAL DATE

REGISTERED PROFESSIONAL ENGINEER JESSE RUELAS No. E015604 Exp. 12-31-09 ELECTRICAL STATE OF CALIFORNIA

THE STATE OF CALIFORNIA OR ITS OFFICERS OR AGENTS SHALL NOT BE RESPONSIBLE FOR THE ACCURACY OR COMPLETENESS OF ELECTRONIC COPIES OF THIS PLAN SHEET.

Caltrans Metric

FOR COMPLETE RIGHT OF WAY AND ACCURATE ACCESS DATA, SEE RIGHT OF WAY RECORD MAPS AT DISTRICT OFFICE.

PROJECT NOTES: (THIS SHEET ONLY)

1. INSTALL 12.2 m WOOD POLE WITH 3.7 m LUMINAIRE ARM, REUSE EXISTING HPS LUMINAIRE. (SEE SHEET E-72 FOR DETAILS).
2. INSTALL 41C RISER, 2#6, 1#8G. (SEE SHEET E-72 FOR DETAILS).
3. INSTALL 12.2 m WOOD POLE.
4. INSTALL 2#6, 1#8G OVERHEAD CONDUCTORS WITH 6.1 m MINIMUM CLEARANCE.
5. CONDUIT OR PULL BOX TO BE PROTECTED AND REMAIN AS PART OF PERMANENT INSTALLATION. SEE SHEET E-79.
6. EXISTING 53C TO BE PROTECTED IN PLACE. RC CONDUCTORS INSTALL 2#6, 1#8G.
7. REUSE EXISTING LUMINAIRE FOR TEMPORARY LIGHTING.
8. INSTALL 12.2 m WOOD POLE WITH 3.7 m LUMINAIRE ARM AND 310 W HPS LUMINAIRE. (SEE SHEET E-72 FOR DETAILS).

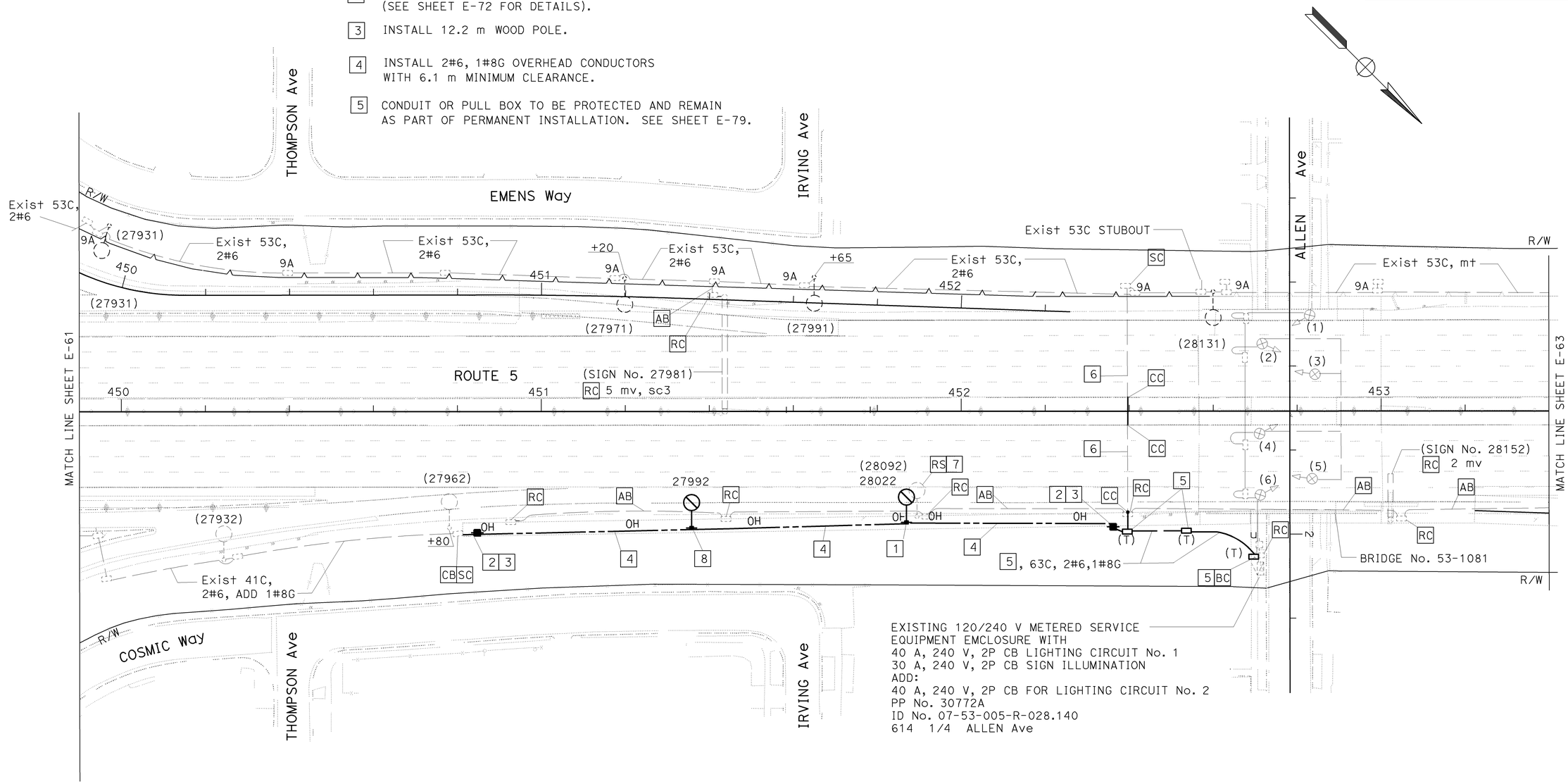

ALL DIMENSIONS ARE IN METERS UNLESS OTHERWISE SHOWN

LIGHTING
(TEMPORARY)
SCALE 1:500

FOR WIRING DIAGRAM, SEE SHEET E-69
THIS PLAN IS ACCURATE FOR ELECTRICAL WORK ONLY.

E-62

STATE OF CALIFORNIA - DEPARTMENT OF TRANSPORTATION
Caltrans **TRAFFIC DESIGN**

FUNCTIONAL SUPERVISOR: YI TSAU
CALCULATED-DESIGNED BY: LIEN VO
CHECKED BY: JESSE RUELAS
REVISED BY: LIEN VO
DATE REVISED: 02/09

LAST REVISION 02-04-09 DATE PLOTTED => 12-JUN-2009 TIME PLOTTED => 14:39

Dist	COUNTY	ROUTE	KILOMETER POST TOTAL PROJECT	SHEET No.	TOTAL SHEETS
07	LA	5	42.8/47.3	444	1073

REGISTERED ELECT ENGINEER 11/03/08 DATE

6-8-09
PLANS APPROVAL DATE

REGISTERED PROFESSIONAL ENGINEER JESSE RUELAS No. E015604 Exp. 12-31-09 ELECTRICAL STATE OF CALIFORNIA

THE STATE OF CALIFORNIA OR ITS OFFICERS OR AGENTS SHALL NOT BE RESPONSIBLE FOR THE ACCURACY OR COMPLETENESS OF ELECTRONIC COPIES OF THIS PLAN SHEET.

Caltrans Metric

FOR COMPLETE RIGHT OF WAY AND ACCURATE ACCESS DATA, SEE RIGHT OF WAY RECORD MAPS AT DISTRICT OFFICE.

PROJECT NOTES: (THIS SHEET ONLY)

1. INSTALL 12.2 m WOOD POLE WITH 3.7 m LUMINAIRE ARM, REUSE EXISTING HPS LUMINAIRE. (SEE SHEET E-72 FOR DETAILS).
2. INSTALL 41C RISER, 2#6, 1#8G. (SEE SHEET E-72 FOR DETAILS).
3. INSTALL 12.2 m WOOD POLE.
4. INSTALL 2#6, 1#8G OVERHEAD CONDUCTORS WITH 6.1 m MINIMUM CLEARANCE.
5. EXISTING 53C, 4#6.
6. REUSE EXISTING LUMINAIRE FOR TEMPORARY LIGHTING.

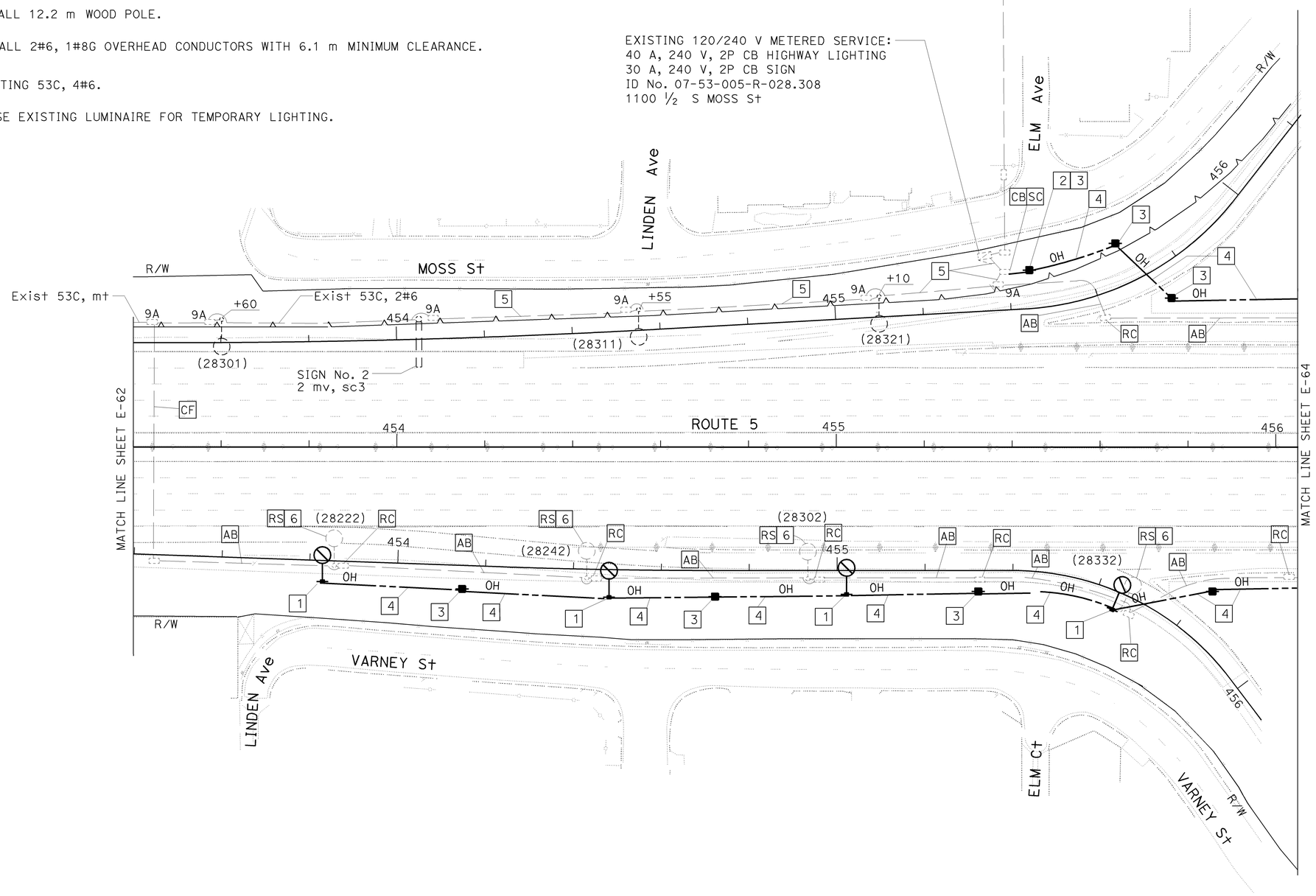

FOR WIRING DIAGRAM, SEE SHEET E-70
THIS PLAN IS ACCURATE FOR ELECTRICAL WORK ONLY.

ALL DIMENSIONS ARE IN METERS UNLESS OTHERWISE SHOWN

LIGHTING
(TEMPORARY)
SCALE 1:500

E-63

REVISED BY	LIEN VO	02/09
DATE REVISED		
CALCULATED-DESIGNED BY	LIEN VO	
CHECKED BY	JESSE RUELAS	
FUNCTIONAL SUPERVISOR	YI TSAU	

STATE OF CALIFORNIA - DEPARTMENT OF TRANSPORTATION
Caltrans **TRAFFIC DESIGN**

LAST REVISION 02-04-09 DATE PLOTTED => 12-JUN-2009 TIME PLOTTED => 14:39

FOR COMPLETE RIGHT OF WAY AND ACCURATE ACCESS DATA,
SEE RIGHT OF WAY RECORD MAPS AT DISTRICT OFFICE.

Dist	COUNTY	ROUTE	KILOMETER POST TOTAL PROJECT	SHEET No.	TOTAL SHEETS
07	LA	5	42.8/47.3	445	1073

REGISTERED ELECT ENGINEER 11/03/08 DATE

6-8-09
PLANS APPROVAL DATE

REGISTERED PROFESSIONAL ENGINEER JESSE RUELAS No. E015604 Exp. 12-31-09 ELECTRICAL STATE OF CALIFORNIA

THE STATE OF CALIFORNIA OR ITS OFFICERS OR AGENTS SHALL NOT BE RESPONSIBLE FOR THE ACCURACY OR COMPLETENESS OF ELECTRONIC COPIES OF THIS PLAN SHEET.

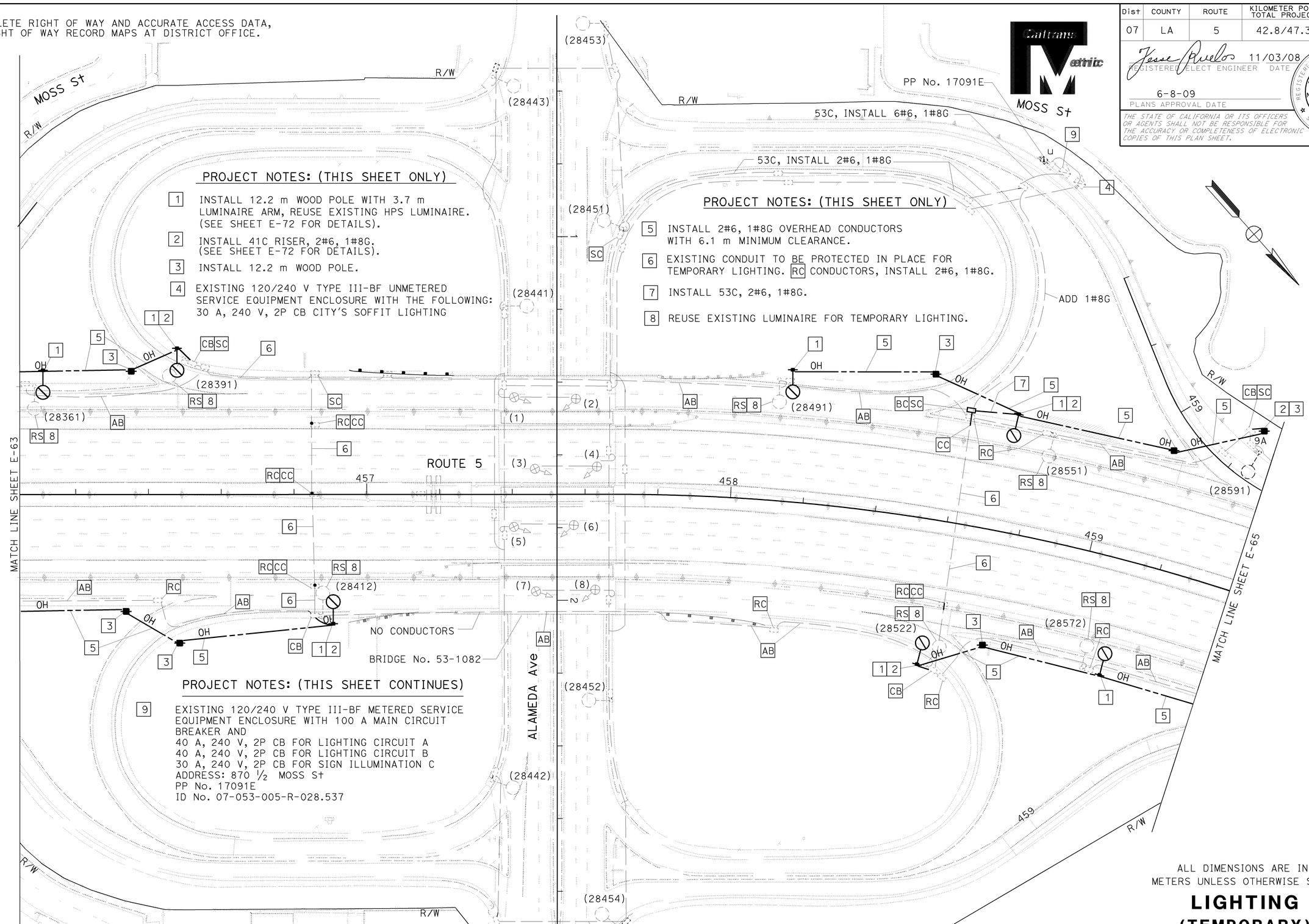

PROJECT NOTES: (THIS SHEET ONLY)

1. INSTALL 12.2 m WOOD POLE WITH 3.7 m LUMINAIRE ARM, REUSE EXISTING HPS LUMINAIRE. (SEE SHEET E-72 FOR DETAILS).
2. INSTALL 41C RISER, 2#6, 1#8G. (SEE SHEET E-72 FOR DETAILS).
3. INSTALL 12.2 m WOOD POLE.
4. EXISTING 120/240 V TYPE III-BF UNMETERED SERVICE EQUIPMENT ENCLOSURE WITH THE FOLLOWING: 30 A, 240 V, 2P CB CITY'S SOFFIT LIGHTING
5. INSTALL 2#6, 1#8G OVERHEAD CONDUCTORS WITH 6.1 m MINIMUM CLEARANCE.
6. EXISTING CONDUIT TO BE PROTECTED IN PLACE FOR TEMPORARY LIGHTING. RC CONDUCTORS, INSTALL 2#6, 1#8G.
7. INSTALL 53C, 2#6, 1#8G.
8. REUSE EXISTING LUMINAIRE FOR TEMPORARY LIGHTING.

PROJECT NOTES: (THIS SHEET CONTINUES)

9. EXISTING 120/240 V TYPE III-BF METERED SERVICE EQUIPMENT ENCLOSURE WITH 100 A MAIN CIRCUIT BREAKER AND
   40 A, 240 V, 2P CB FOR LIGHTING CIRCUIT A
   40 A, 240 V, 2P CB FOR LIGHTING CIRCUIT B
   30 A, 240 V, 2P CB FOR SIGN ILLUMINATION C
   ADDRESS: 870 ½ MOSS St
   PP No. 17091E
   ID No. 07-053-005-R-028.537

THIS PLAN IS ACCURATE FOR ELECTRICAL WORK ONLY.

FOR WIRING DIAGRAM, SEE SHEET E-70.

ALL DIMENSIONS ARE IN METERS UNLESS OTHERWISE SHOWN

LIGHTING (TEMPORARY)

SCALE 1:500

E-64

STATE OF CALIFORNIA - DEPARTMENT OF TRANSPORTATION
Caltrans
TRAFFIC DESIGN

FUNCTIONAL SUPERVISOR: YI TSAU
CALCULATED-DESIGNED BY / CHECKED BY: JESSE RUELAS
REVISED BY: LIEN VO — DATE REVISED: 02/09
LIEN VO

LAST REVISION 02-04-09
DATE PLOTTED => 12-JUN-2009
TIME PLOTTED => 14:39

Dist	COUNTY	ROUTE	KILOMETER POST TOTAL PROJECT	SHEET No.	TOTAL SHEETS
07	LA	5	42.8/47.3	446	1073

REGISTERED ELECT ENGINEER 11/03/08 DATE

6-8-09
PLANS APPROVAL DATE

REGISTERED PROFESSIONAL ENGINEER JESSE RUELAS No. E015604 Exp. 12-31-09 ELECTRICAL STATE OF CALIFORNIA

THE STATE OF CALIFORNIA OR ITS OFFICERS OR AGENTS SHALL NOT BE RESPONSIBLE FOR THE ACCURACY OR COMPLETENESS OF ELECTRONIC COPIES OF THIS PLAN SHEET.

Caltrans Metric

FOR COMPLETE RIGHT OF WAY AND ACCURATE ACCESS DATA, SEE RIGHT OF WAY RECORD MAPS AT DISTRICT OFFICE.

PROJECT NOTES: (THIS SHEET ONLY)

1. INSTALL 12.2 m WOOD POLE WITH 3.7 m LUMINAIRE ARM, REUSE EXISTING HPS LUMINAIRE. (SEE SHEET E-72 FOR DETAILS).
2. EXISTING 53C, 4#6 IN CONCRETE BARRIER TO REMAIN.
3. INSTALL 12.2 m WOOD POLE.
4. INSTALL 12.2 m WOOD POLE WITH 3.7 m LUMINAIRE ARM AND 310 W HPS LUMINAIRE. (SEE SHEET E-72 FOR DETAILS).
5. REUSE EXISTING LUMINAIRE FOR TEMPORARY LIGHTING.
6. INSTALL 2#6, 1#8G OVERHEAD CONDUCTORS WITH 6.1 m MINIMUM CLEARANCE.

LEGEND: (SHEETS 65 THROUGH E-68)

EXISTING CITY OF BURBANK'S ELECTROLIER.

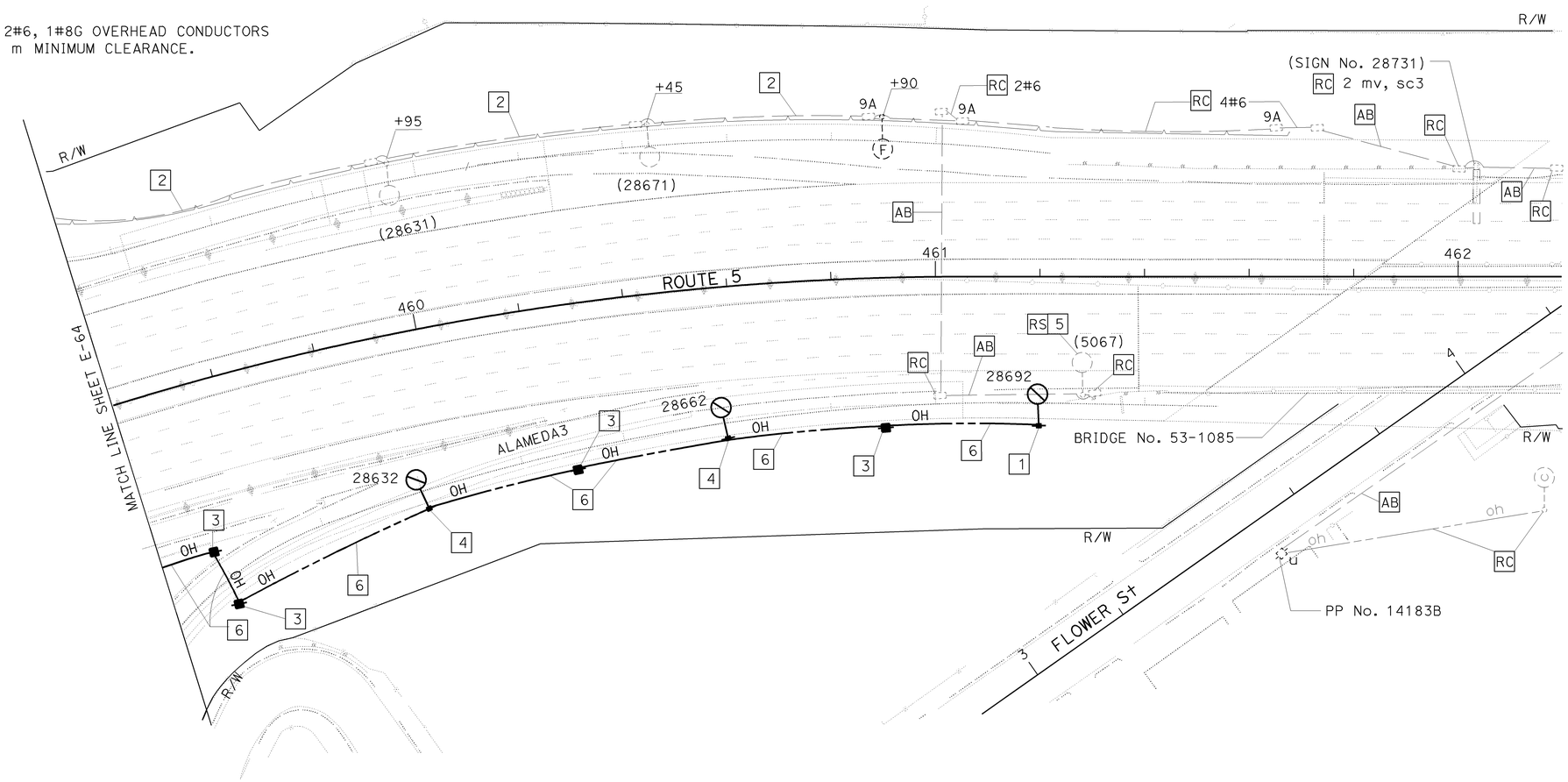

FOR WIRING DIAGRAM, SEE SHEET E-70

THIS PLAN IS ACCURATE FOR ELECTRICAL WORK ONLY.

ALL DIMENSIONS ARE IN METERS UNLESS OTHERWISE SHOWN

LIGHTING
(TEMPORARY)

SCALE 1:500

E-65

CALCULATED-DESIGNED BY	LIEN VO
CHECKED BY	JESSE RUELAS
REVISED BY	LIEN VO
DATE REVISED	02/09
FUNCTIONAL SUPERVISOR	YI TSAU

STATE OF CALIFORNIA - DEPARTMENT OF TRANSPORTATION
Caltrans **TRAFFIC DESIGN**

LAST REVISION 02-18-09 | DATE PLOTTED => 12-JUN-2009 | TIME PLOTTED => 14:39

Dist	COUNTY	ROUTE	KILOMETER POST TOTAL PROJECT	SHEET No.	TOTAL SHEETS
07	LA	5	42.8/47.3	447	1073

Jesse Ruelas 11/03/08
REGISTERED ELECT ENGINEER DATE

6-8-09
PLANS APPROVAL DATE

REGISTERED PROFESSIONAL ENGINEER JESSE RUELAS No. E015604 Exp. 12-31-09 ELECTRICAL STATE OF CALIFORNIA

THE STATE OF CALIFORNIA OR ITS OFFICERS OR AGENTS SHALL NOT BE RESPONSIBLE FOR THE ACCURACY OR COMPLETENESS OF ELECTRONIC COPIES OF THIS PLAN SHEET.

Caltrans Metric

FOR COMPLETE RIGHT OF WAY AND ACCURATE ACCESS DATA, SEE RIGHT OF WAY RECORD MAPS AT DISTRICT OFFICE.

PROJECT NOTES: (THIS SHEET ONLY)

1. INSTALL 12.2 m WOOD POLE WITH 3.7 m LUMINAIRE ARM, REUSE EXISTING HPS LUMINAIRE. (SEE SHEET E-72 FOR DETAILS).
2. INSTALL 41C RISER, 2#6, 1#8G. (SEE SHEET E-72 FOR DETAILS).
3. INSTALL 12.2 m WOOD POLE.
4. EXISTING CITY'S ELECTROLIER. SEE SHEET E-99 FOR RELOCATION.
5. CONDUIT OR PULL BOX TO BE PROTECTED AND REMAIN AS PERMANENT INSTALLATION.
6. INSTALL 2#6, 1#8G OVERHEAD CONDUCTORS WITH 6.1 MINIMUM CLEARANCE.
7. INSTALL 12.2 m WOOD POLE WITH 3.7 m LUMINAIRE ARM AND 310 W HPS LUMINAIRE. (SEE SHEET E-72 FOR DETAILS).
8. REUSE EXISTING LUMINAIRE FOR TEMPORARY LIGHTING.

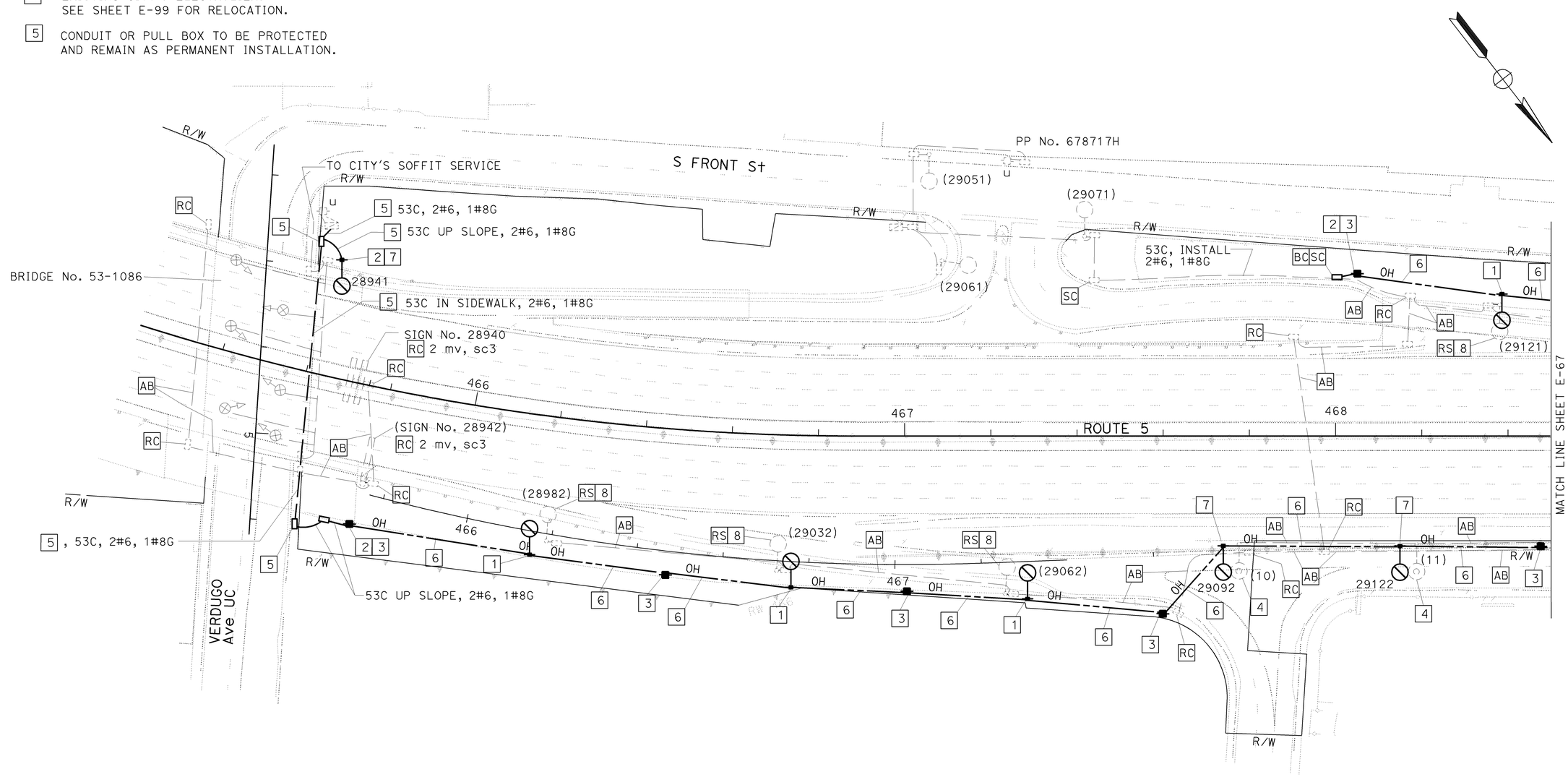

ALL DIMENSIONS ARE IN METERS UNLESS OTHERWISE SHOWN

LIGHTING (TEMPORARY)

SCALE 1:500

FOR WIRING DIAGRAM, SEE SHEET E-71

THIS PLAN IS ACCURATE FOR ELECTRICAL WORK ONLY.

E-66

STATE OF CALIFORNIA - DEPARTMENT OF TRANSPORTATION
Caltrans **TRAFFIC DESIGN**

FUNCTIONAL SUPERVISOR: YI TSAU
CALCULATED-DESIGNED BY: LIEN VO
CHECKED BY: JESSE RUELAS
REVISED BY: LIEN VO
DATE REVISED: 02/09

LAST REVISION 02-17-09 | DATE PLOTTED => 12-JUN-2009 | TIME PLOTTED => 14:40

FOR COMPLETE RIGHT OF WAY AND ACCURATE ACCESS DATA,
SEE RIGHT OF WAY RECORD MAPS AT DISTRICT OFFICE.

Dist	COUNTY	ROUTE	KILOMETER POST TOTAL PROJECT	SHEET No.	TOTAL SHEETS
07	LA	5	42.8/47.3	448	1073

REGISTERED ELECT ENGINEER 11/03/08 DATE

6-8-09
PLANS APPROVAL DATE

REGISTERED PROFESSIONAL ENGINEER JESSE RUELAS No. E015604 Exp. 12-31-09 ELECTRICAL STATE OF CALIFORNIA

THE STATE OF CALIFORNIA OR ITS OFFICERS OR AGENTS SHALL NOT BE RESPONSIBLE FOR THE ACCURACY OR COMPLETENESS OF ELECTRONIC COPIES OF THIS PLAN SHEET.

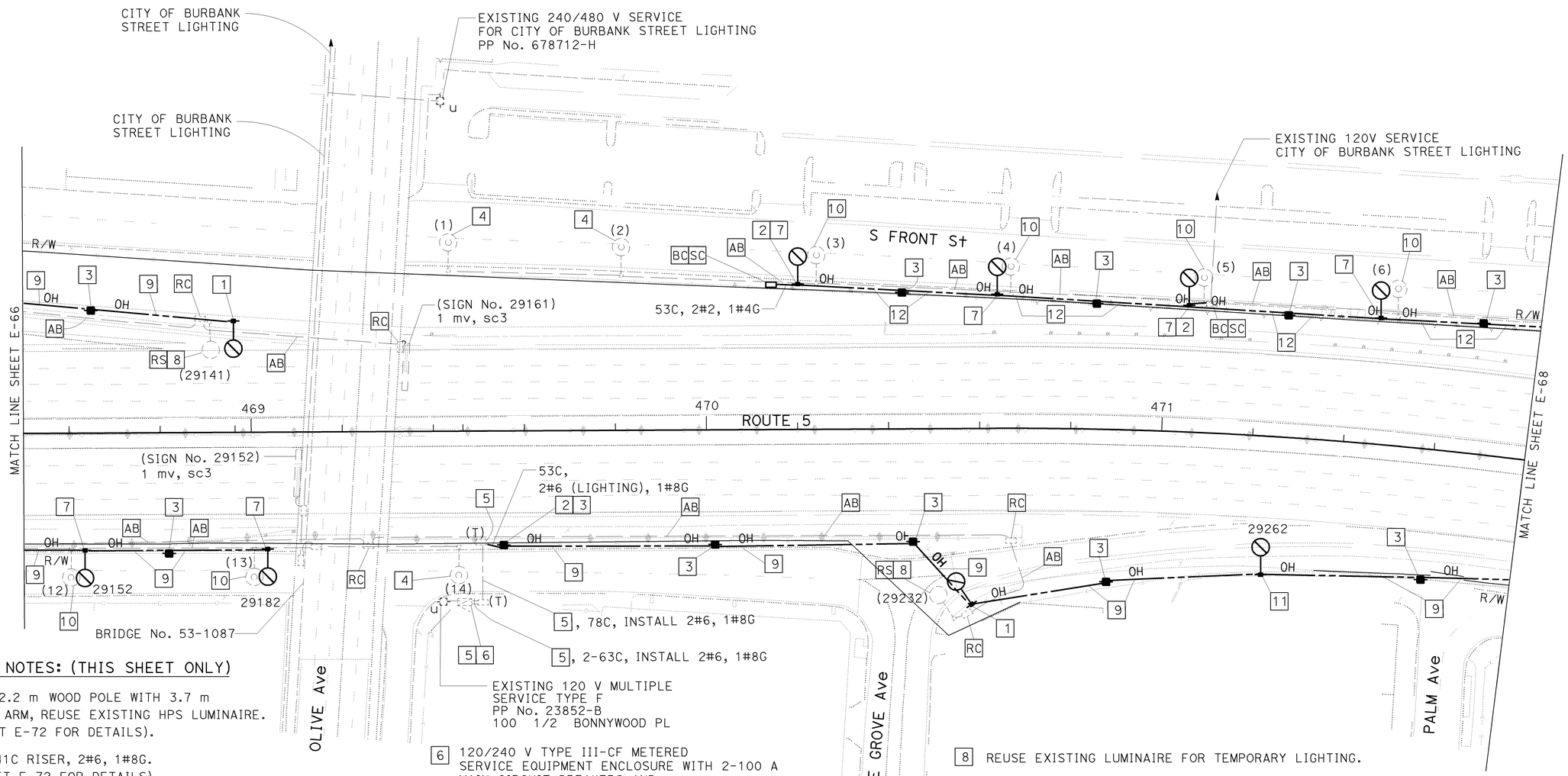

PROJECT NOTES: (THIS SHEET ONLY)

1. INSTALL 12.2 m WOOD POLE WITH 3.7 m LUMINAIRE ARM, REUSE EXISTING HPS LUMINAIRE. (SEE SHEET E-72 FOR DETAILS).
2. INSTALL 41C RISER, 2#6, 1#8G. (SEE SHEET E-72 FOR DETAILS).
3. INSTALL 12.2 m WOOD POLE.
4. EXISTING CITY'S ELECTROLIER TO REMAIN.
5. SERVICE EQUIPMENT ENCLOSURE, CONDUIT AND PULL BOX, SEE SHEET E-85 FOR INSTALLATION.
6. 120/240 V TYPE III-CF METERED SERVICE EQUIPMENT ENCLOSURE WITH 2-100 A MAIN CIRCUIT BREAKERS AND:
   30 A, 120 V, 1P CB FOR RAMP METERING (METER 1)
   ADDRESS: 100 1/4 BONNYWOOD PI
   ID No. 07-53-005-R-028.990
   METER 2:
   30 A, 240 V, 2P CB FOR SIGN
   30 A, 240 V, 2P CB FOR LIGHTING
   15 A, 120 V, 1P CB FOR PEC
   PP No. 23852-B
   ADDRESS: 100 1/2 BONNYWOOD PI
   ID No. 07-53-005-R-028.991
7. AB EXISTING CITY'S LIGHTING CONDUIT.
8. REUSE EXISTING LUMINAIRE FOR TEMPORARY LIGHTING.
9. INSTALL 2#6, 1#8G OVERHEAD CONDUCTORS WITH 6.1 m MINIMUM CLEARANCE.
10. EXISTING CITY'S ELECTROLIER. SEE SHEET E-100 FOR RELOCATION.
11. INSTALL 12.2 m WOOD POLE WITH 3.7 m LUMINAIRE ARM AND 310 W HPS LUMINAIRE. (SEE SHEET E-72 FOR DETAILS).
12. INSTALL 2#2, 1#8G OVERHEAD CONDUCTORS WITH 6.1 m MINIMUM CLEARANCE.

ALL DIMENSIONS ARE IN METERS UNLESS OTHERWISE SHOWN

LIGHTING (TEMPORARY)
SCALE 1:500

FOR WIRING DIAGRAM, SEE SHEET E-71. THIS PLAN IS ACCURATE FOR ELECTRICAL WORK ONLY.

E-67

STATE OF CALIFORNIA - DEPARTMENT OF TRANSPORTATION
Caltrans TRAFFIC DESIGN
FUNCTIONAL SUPERVISOR YI TSAU
CALCULATED-DESIGNED BY LIEN VO
CHECKED BY JESSE RUELAS
REVISED BY LIEN VO
DATE REVISED 02/09
LAST REVISION 02-05-09
DATE PLOTTED => 12-JUN-2009
TIME PLOTTED => 15:04

FOR COMPLETE RIGHT OF WAY AND ACCURATE ACCESS DATA,
SEE RIGHT OF WAY RECORD MAPS AT DISTRICT OFFICE.

Dist	COUNTY	ROUTE	KILOMETER POST TOTAL PROJECT	SHEET No.	TOTAL SHEETS
07	LA	5	42.8/47.3	449	1073

Jesse Ruelas 11/03/08
REGISTERED ELECT ENGINEER DATE

6-8-09
PLANS APPROVAL DATE

REGISTERED PROFESSIONAL ENGINEER JESSE RUELAS No. E015604 Exp. 12-31-09 ELECTRICAL STATE OF CALIFORNIA

THE STATE OF CALIFORNIA OR ITS OFFICERS OR AGENTS SHALL NOT BE RESPONSIBLE FOR THE ACCURACY OR COMPLETENESS OF ELECTRONIC COPIES OF THIS PLAN SHEET.

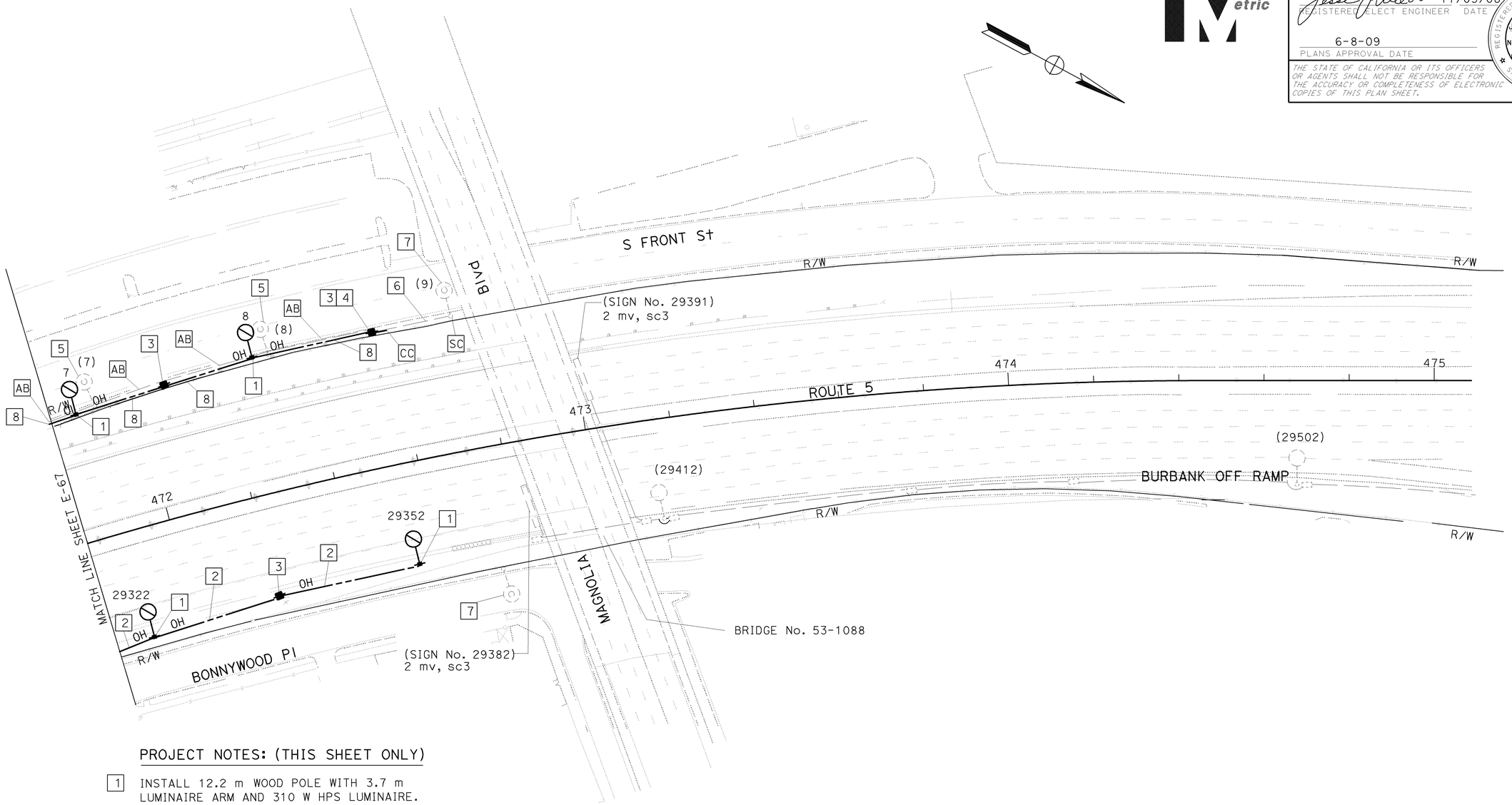

PROJECT NOTES: (THIS SHEET ONLY)

1. INSTALL 12.2 m WOOD POLE WITH 3.7 m LUMINAIRE ARM AND 310 W HPS LUMINAIRE. (SEE SHEET E-72 FOR DETAILS).
2. INSTALL 2#6, 1#8G OVERHEAD CONDUCTORS WITH 6.1 m MINIMUM CLEARANCE.
3. INSTALL 12.2 m WOOD POLE.
4. INSTALL 53C RISER.
5. EXISTING CITY'S ELECTROLIER TO BE REMOVED BY BURBANK WATER AND POWER. SEE SHEET E-101 FOR RE-INSTALLATION.
6. EXISTING 53C, RC CONDUCTORS. INSTALL 2#6, 1#8G.
7. EXISTING CITY'S ELECTROLIER TO REMAIN.
8. INSTALL 2#2, 1#8G OVERHEAD CONDUCTORS WITH 6.1 m MINIMUM CLEARANCE.

FOR WIRING DIAGRAM, SEE SHEET E-71
THIS PLAN IS ACCURATE FOR ELECTRICAL WORK ONLY.

ALL DIMENSIONS ARE IN METERS UNLESS OTHERWISE SHOWN

LIGHTING
(TEMPORARY)
SCALE 1:500

E-68

STATE OF CALIFORNIA - DEPARTMENT OF TRANSPORTATION
Caltrans TRAFFIC DESIGN

FUNCTIONAL SUPERVISOR: YI TSAU
CALCULATED-DESIGNED BY: JESSE RUELAS
CHECKED BY: LIEN VO
REVISED BY: LIEN VO
DATE REVISED: 02/09

LAST REVISION 02-05-09 DATE PLOTTED => 12-JUN-2009 TIME PLOTTED => 15:04

Dist	COUNTY	ROUTE	KILOMETER POST TOTAL PROJECT	SHEET No.	TOTAL SHEETS
07	LA	5	42.8/47.3	450	1073

Jesse Ruelas 11/03/08
REGISTERED ELECT ENGINEER DATE

6-8-09
PLANS APPROVAL DATE

REGISTERED PROFESSIONAL ENGINEER JESSE RUELAS No. E015604 Exp. 12-31-09 ELECTRICAL STATE OF CALIFORNIA

THE STATE OF CALIFORNIA OR ITS OFFICERS OR AGENTS SHALL NOT BE RESPONSIBLE FOR THE ACCURACY OR COMPLETENESS OF ELECTRONIC COPIES OF THIS PLAN SHEET.

Caltrans Metric

WIRING DIAGRAM LEGEND (SHEETS E-69 THROUGH E-71)

- (R) EXISTING HPS LUMINAIRE TO BE RELOCATED.
- (C) EXISTING CITY'S LUMINAIRE TO REMAIN.
- (S) EXISTING CITY'S LUMINAIRE TO BE SALVAGED.
- (T) 310 W HPS TEMPORARY LUMINAIRE TO BE INSTALLED.
- NEW CONDUCTOR TO BE INSTALLED (SIZE AS NOTED).
- CONDUCTOR SPLICE.
- EXISTING No. 6 CONDUCTOR TO REMAIN.
- EXISTING CONDUCTOR TO BE REMOVED.

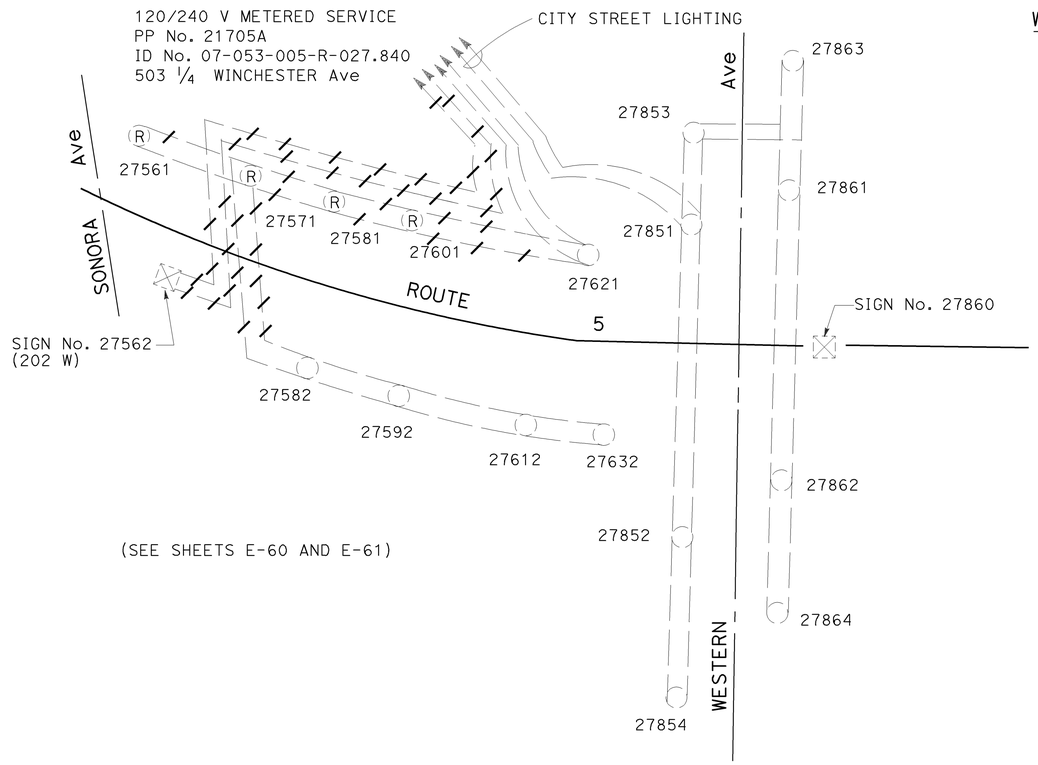

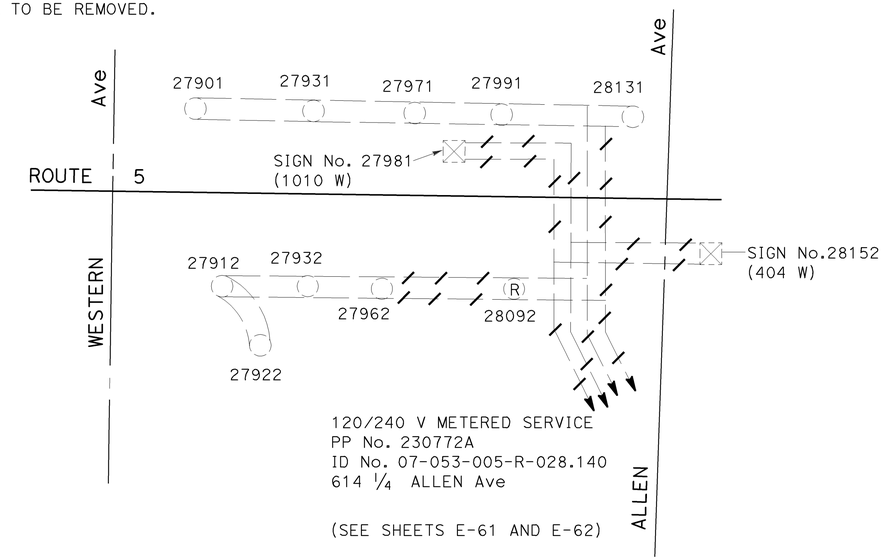

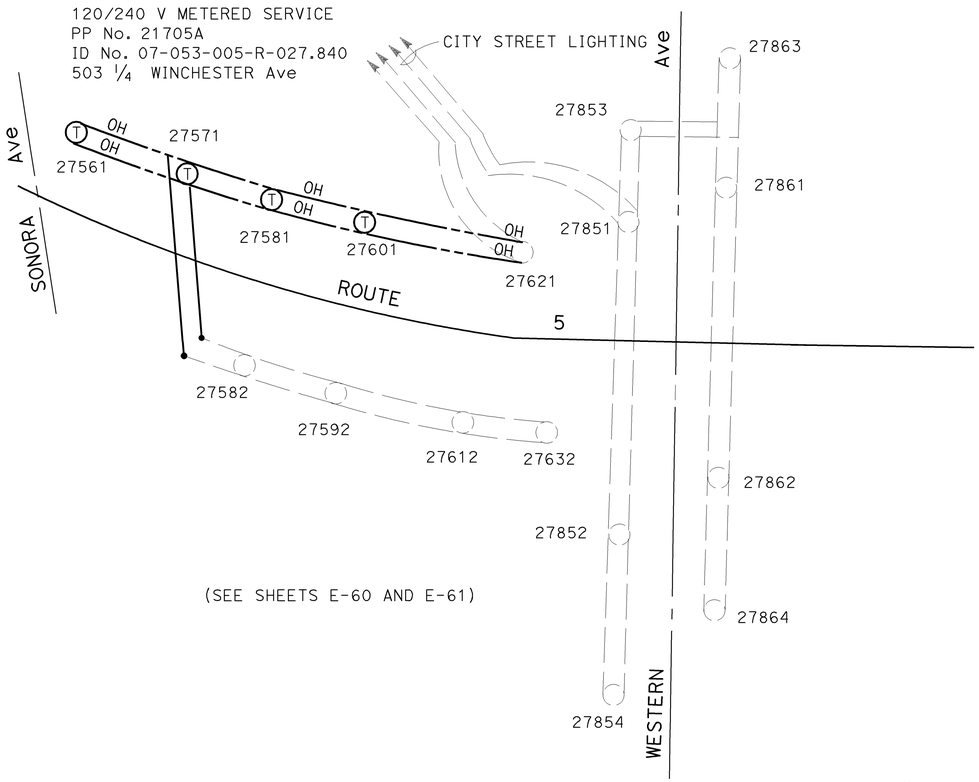

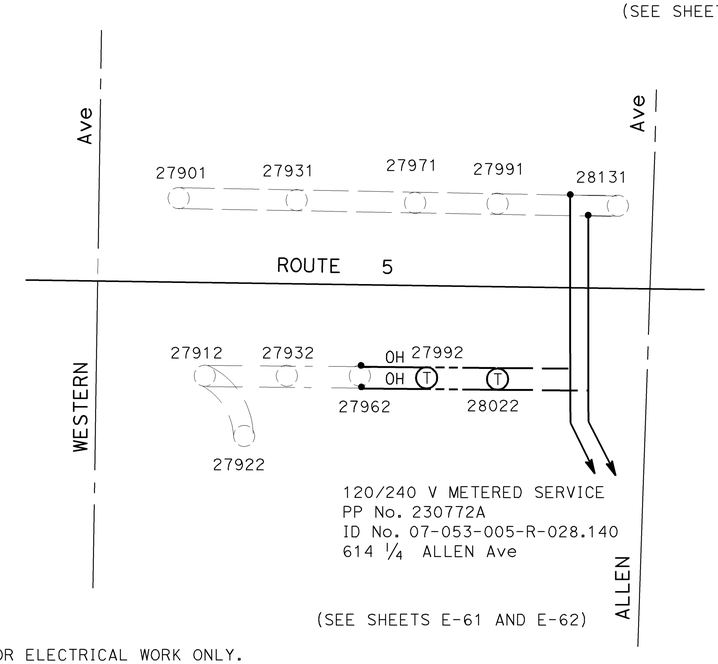

LIGHTING
(TEMPORARY)
(WIRING DIAGRAM)
NO SCALE

THIS PLAN IS ACCURATE FOR ELECTRICAL WORK ONLY.

E-69

CALCULATED-DESIGNED BY	LIEN VO	REVISED BY	LIEN VO
CHECKED BY	JESSE RUELAS	DATE REVISED	02/09

FUNCTIONAL SUPERVISOR: YI TSAU

STATE OF CALIFORNIA - DEPARTMENT OF TRANSPORTATION
Caltrans **TRAFFIC DESIGN**

LAST REVISION 02-23-09 | DATE PLOTTED => 12-JUN-2009 | TIME PLOTTED => 15:05

Dist	COUNTY	ROUTE	KILOMETER POST TOTAL PROJECT	SHEET No.	TOTAL SHEETS
07	LA	5	42.8/47.3	451	1073

REGISTERED ELECT ENGINEER 11/03/08 DATE

6-8-09
PLANS APPROVAL DATE

REGISTERED PROFESSIONAL ENGINEER JESSE RUELAS No. E015604 Exp. 12-31-09 ELECTRICAL STATE OF CALIFORNIA

THE STATE OF CALIFORNIA OR ITS OFFICERS OR AGENTS SHALL NOT BE RESPONSIBLE FOR THE ACCURACY OR COMPLETENESS OF ELECTRONIC COPIES OF THIS PLAN SHEET.

Caltrans Metric

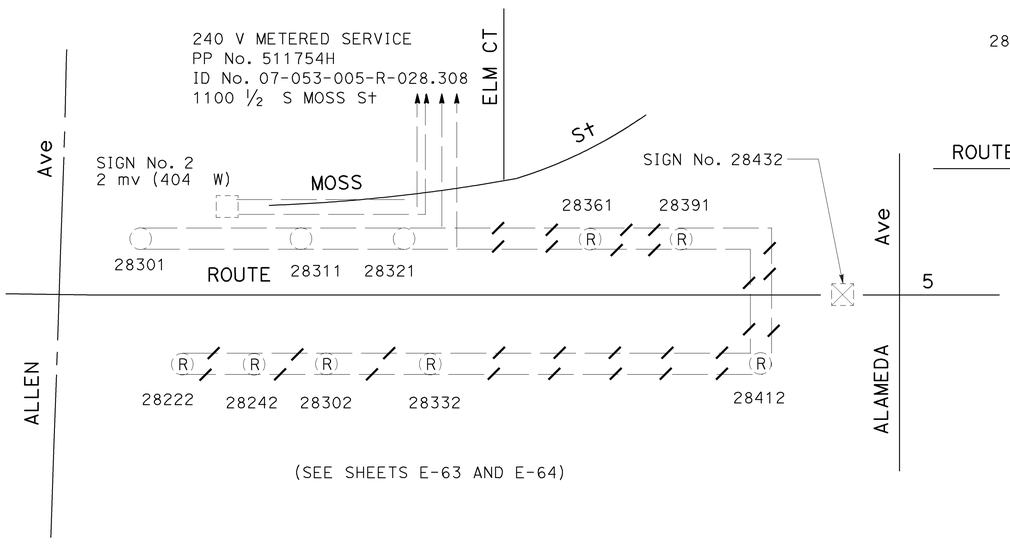

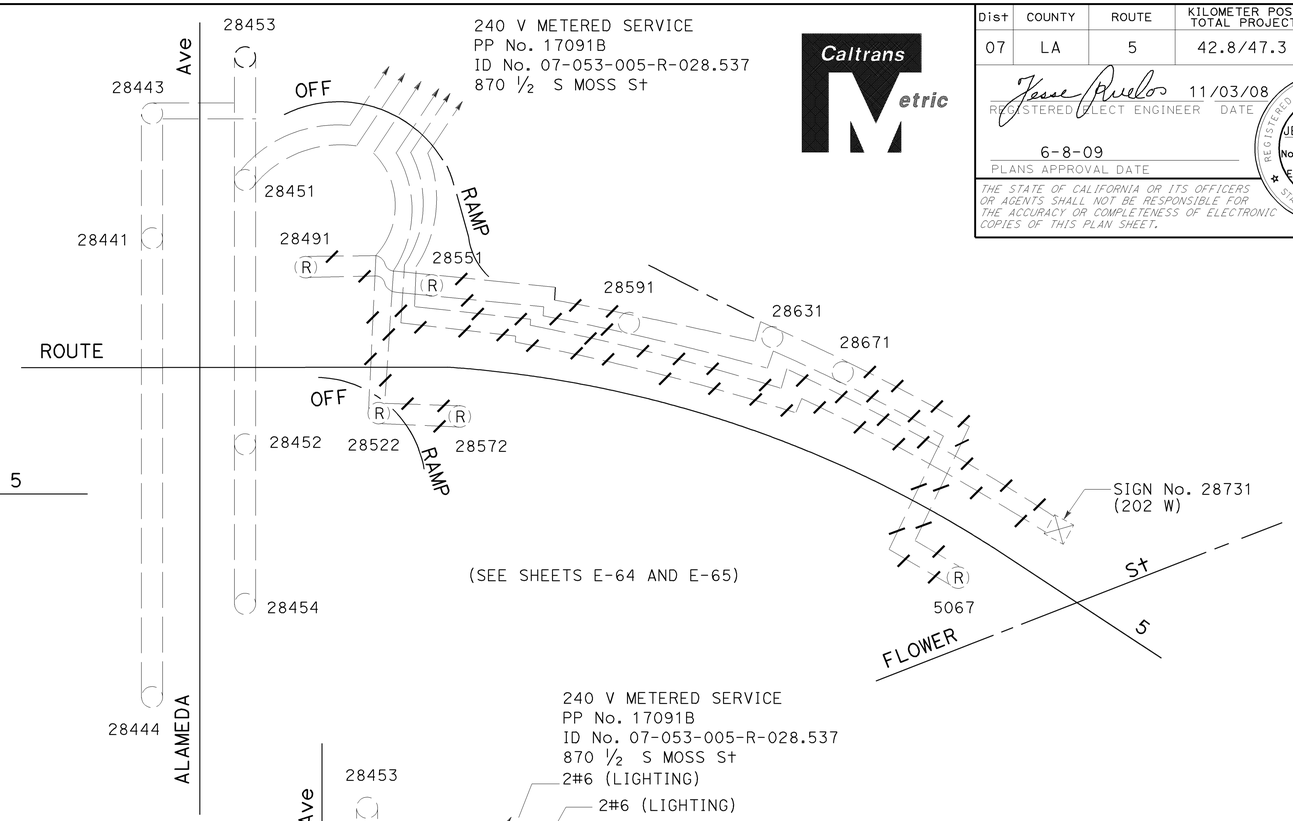

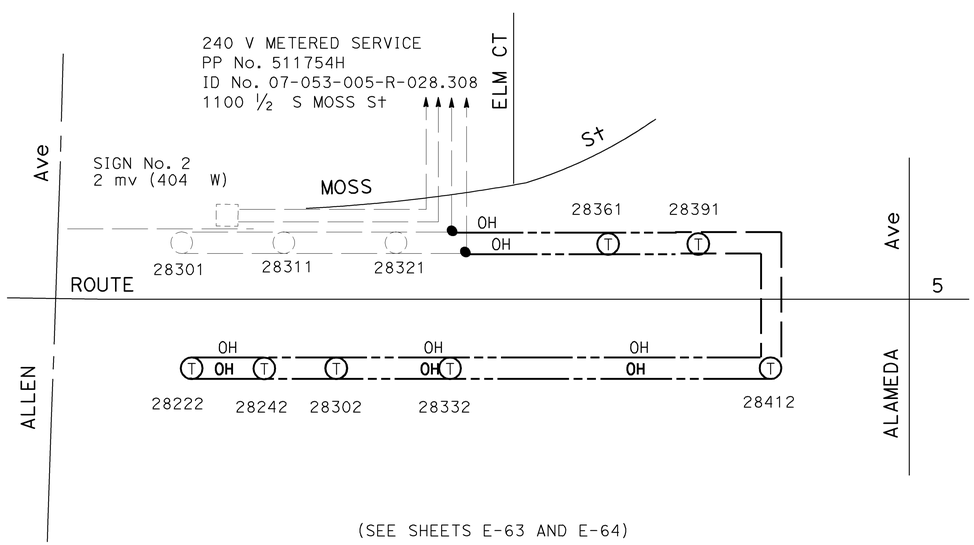

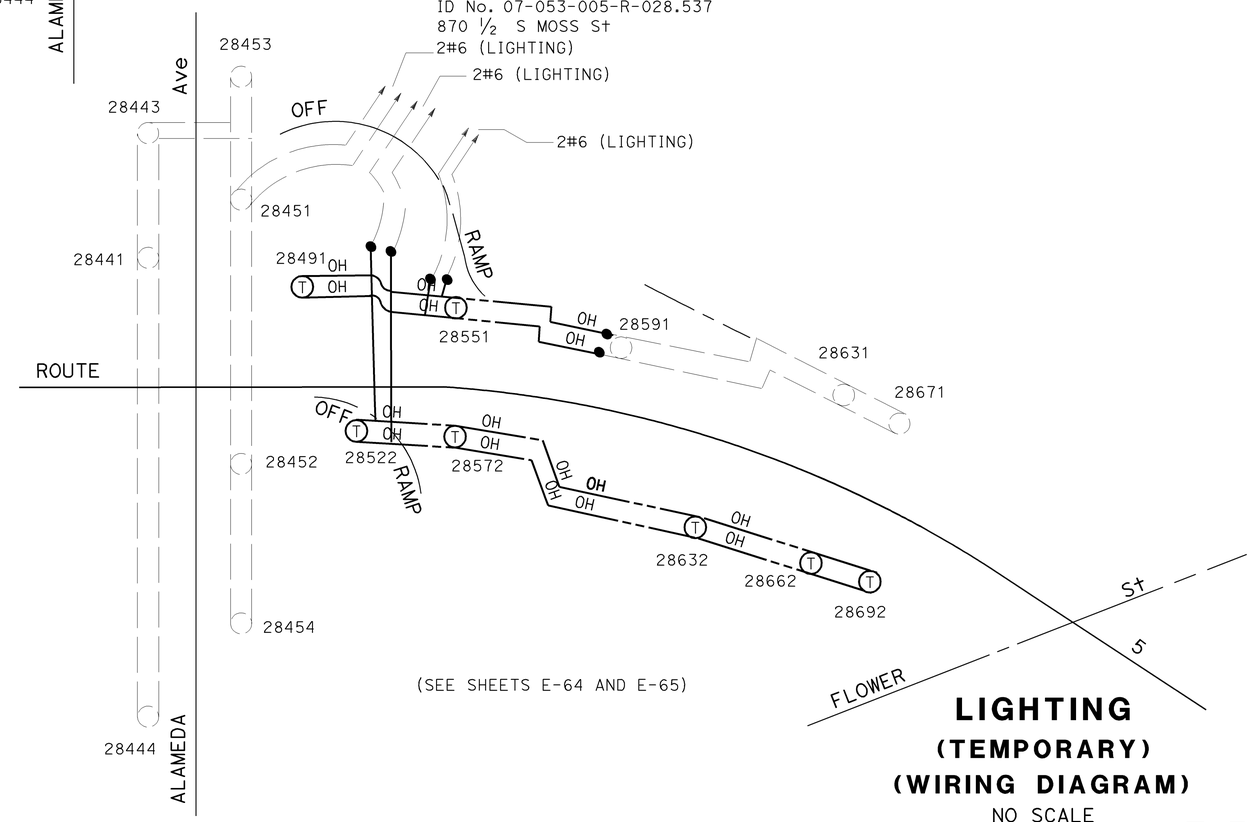

LIGHTING
(TEMPORARY)
(WIRING DIAGRAM)
NO SCALE

E-70

THIS PLAN IS ACCURATE FOR ELECTRICAL WORK ONLY.

CALCULATED-DESIGNED BY	LIEN VO	REVISED BY	LIEN VO
CHECKED BY	JESSE RUELAS	DATE REVISED	02/09

FUNCTIONAL SUPERVISOR: YI TSAU

STATE OF CALIFORNIA - DEPARTMENT OF TRANSPORTATION
Caltrans **TRAFFIC DESIGN**

LAST REVISION 02-05-09 DATE PLOTTED => 12-JUN-2009 TIME PLOTTED => 15:05

Dist	COUNTY	ROUTE	KILOMETER POST TOTAL PROJECT	SHEET No.	TOTAL SHEETS
07	LA	5	42.8/47.3	452	1073

Caltrans Metric

REGISTERED ELECT ENGINEER — DATE 11/03/08

6-8-09
PLANS APPROVAL DATE

REGISTERED PROFESSIONAL ENGINEER — JESSE RUELAS No. E015604 Exp. 12-31-09 ELECTRICAL — STATE OF CALIFORNIA

THE STATE OF CALIFORNIA OR ITS OFFICERS OR AGENTS SHALL NOT BE RESPONSIBLE FOR THE ACCURACY OR COMPLETENESS OF ELECTRONIC COPIES OF THIS PLAN SHEET.

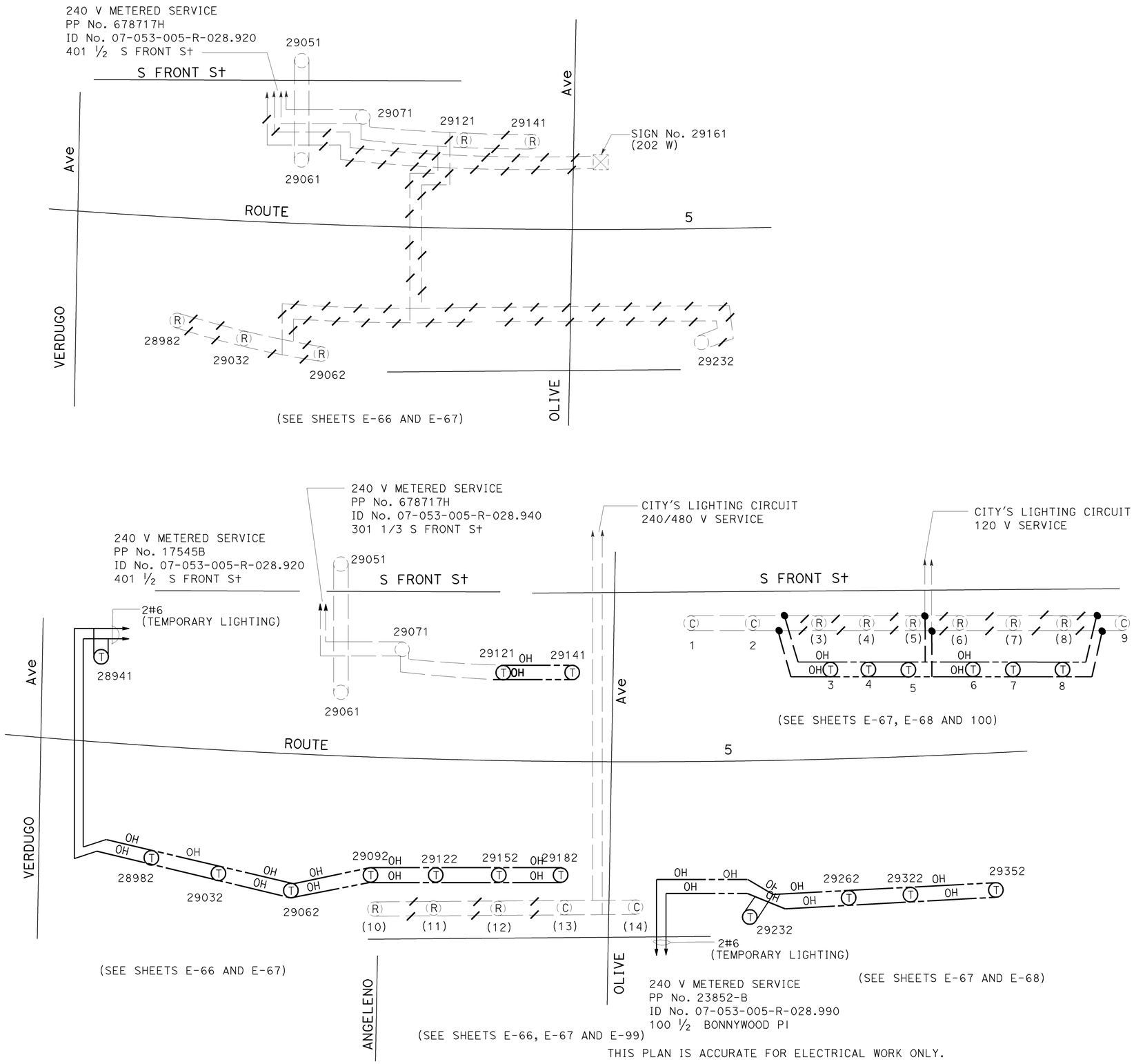

THIS PLAN IS ACCURATE FOR ELECTRICAL WORK ONLY.

LIGHTING
(TEMPORARY)
(WIRING DIAGRAM)

NO SCALE

E-71

CALCULATED-DESIGNED BY	LIEN VO	REVISED BY LIEN VO
CHECKED BY	JESSE RUELAS	DATE REVISED 02/09
FUNCTIONAL SUPERVISOR	YI TSAU	

STATE OF CALIFORNIA - DEPARTMENT OF TRANSPORTATION
Caltrans **TRAFFIC DESIGN**

LAST REVISION 02-23-09 DATE PLOTTED => 12-JUN-2009 TIME PLOTTED => 15:05

Dist	COUNTY	ROUTE	KILOMETER POST TOTAL PROJECT	SHEET No.	TOTAL SHEETS
07	LA	5	42.8/47.3	453	1073

Jesse Ruelas 11/03/08
REGISTERED ELECT ENGINEER DATE

6-8-09
PLANS APPROVAL DATE

REGISTERED PROFESSIONAL ENGINEER JESSE RUELAS No. E015604 Exp. 12-31-09 ELECTRICAL STATE OF CALIFORNIA

THE STATE OF CALIFORNIA OR ITS OFFICERS OR AGENTS SHALL NOT BE RESPONSIBLE FOR THE ACCURACY OR COMPLETENESS OF ELECTRONIC COPIES OF THIS PLAN SHEET.

Caltrans Metric

NOTES:

1. ALL OVERHEAD CABLE SHALL BE SLACK SPANNED WITH 6.1 m MINIMUM OVERHEAD CLEARANCE.
2. COLOR CODING ON MULTI-CONDUCTOR CABLE NEED NOT CONFORM TO THE STANDARD SPECIFICATIONS REQUIREMENT.
3. LUMINAIRE SHALL HAVE INTEGRAL BALLAST.
4. INSTALL WOOD POLE BEHIND EXISTING GUARD RAILING, OR FROM ETW OR AS DIRECTED BY THE ENGINEER.

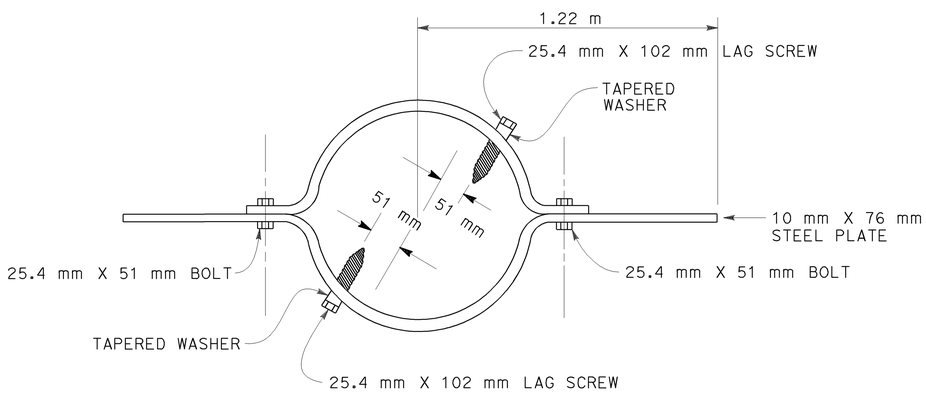

WIND ANCHOR

TO BE INSTALLED PERPENDICULAR TO MAST ARMS AND 0.61 m Min BELOW GRADE

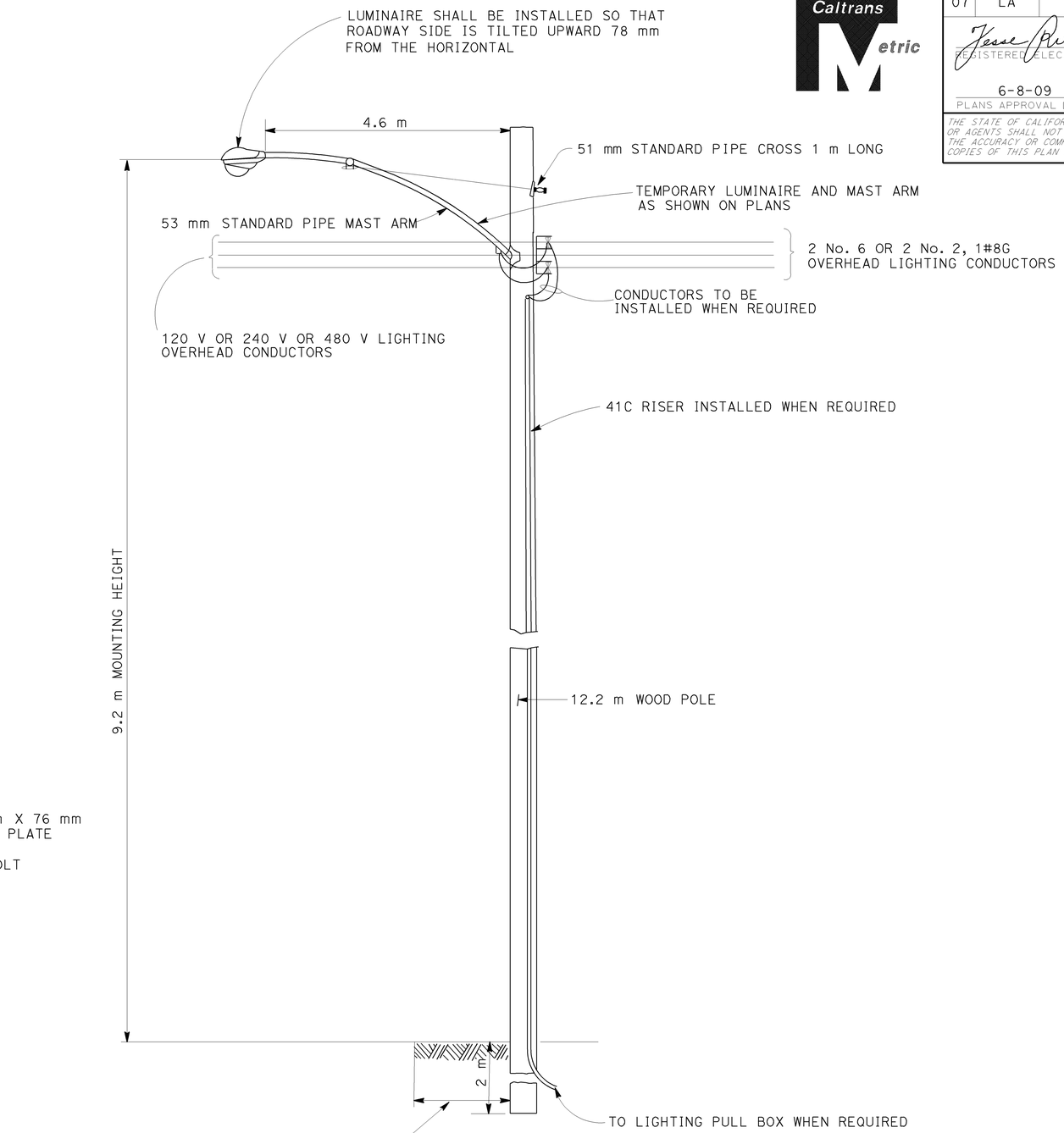

TEMPORARY LIGHTING
WOOD POLE

ALL DIMENSIONS ARE IN METERS UNLESS OTHERWISE SHOWN

THIS PLAN IS ACCURATE FOR ELECTRICAL WORK ONLY.

LIGHTING
(TEMPORARY)
(WOOD POLE INSTALLATION DETAILS)

NO SCALE

E-72

CALCULATED-DESIGNED BY	LIEN VO
CHECKED BY	JESSE RUELAS
REVISED BY	LIEN VO
DATE REVISED	02/09
FUNCTIONAL SUPERVISOR	YI TSAU

STATE OF CALIFORNIA - DEPARTMENT OF TRANSPORTATION
Caltrans TRAFFIC DESIGN

LAST REVISION 02-25-09 | DATE PLOTTED => 12-JUN-2009 | TIME PLOTTED => 15:05

Dist	COUNTY	ROUTE	KILOMETER POST TOTAL PROJECT	SHEET No.	TOTAL SHEETS
07	LA	5	42.8/47.3	454	1073

Jesse Ruelas 11/03/08
REGISTERED CIVIL ENGINEER DATE

6-8-09
PLANS APPROVAL DATE

REGISTERED PROFESSIONAL ENGINEER JESSE RUELAS No. E015604 Exp. 12-31-09 ELECTRICAL STATE OF CALIFORNIA

THE STATE OF CALIFORNIA OR ITS OFFICERS OR AGENTS SHALL NOT BE RESPONSIBLE FOR THE ACCURACY OR COMPLETENESS OF ELECTRONIC COPIES OF THIS PLAN SHEET.

Caltrans Metric

FOR COMPLETE RIGHT OF WAY AND ACCURATE ACCESS DATA, SEE RIGHT OF WAY RECORD MAPS AT DISTRICT OFFICE.

PROJECT NOTES: (THIS SHEET ONLY)

1. EXISTING 120/240 V METERED SERVICE EQUIPMENT ENCLOSURE WITH THE FOLLOWING:
   40 A, 240 V, 2P CB HIGHWAY LIGHTING 2A
   40 A, 240 V, 2P CB HIGHWAY LIGHTING 2B
   RC 40 A, 240 V, 2P CB HIGHWAY LIGHTING 2C
   RC 40 A, 240 V, 2P CB HIGHWAY LIGHTING 2D
   RC 40 A, 240 V, 2P CB HIGHWAY LIGHTING 2E
   30 A, 240 V, 2P CB SIGN ILLUMINATION 2F
   30 A, 240 V, 2P CB SIGN ILLUMINATION 2G
   15 A, 120 V, 1P CB PEC
   ID No. 07-053-005-R-026.540
   ADDRESS: 5170 1/2 ZOO Dr
2. RC CONDUCTORS

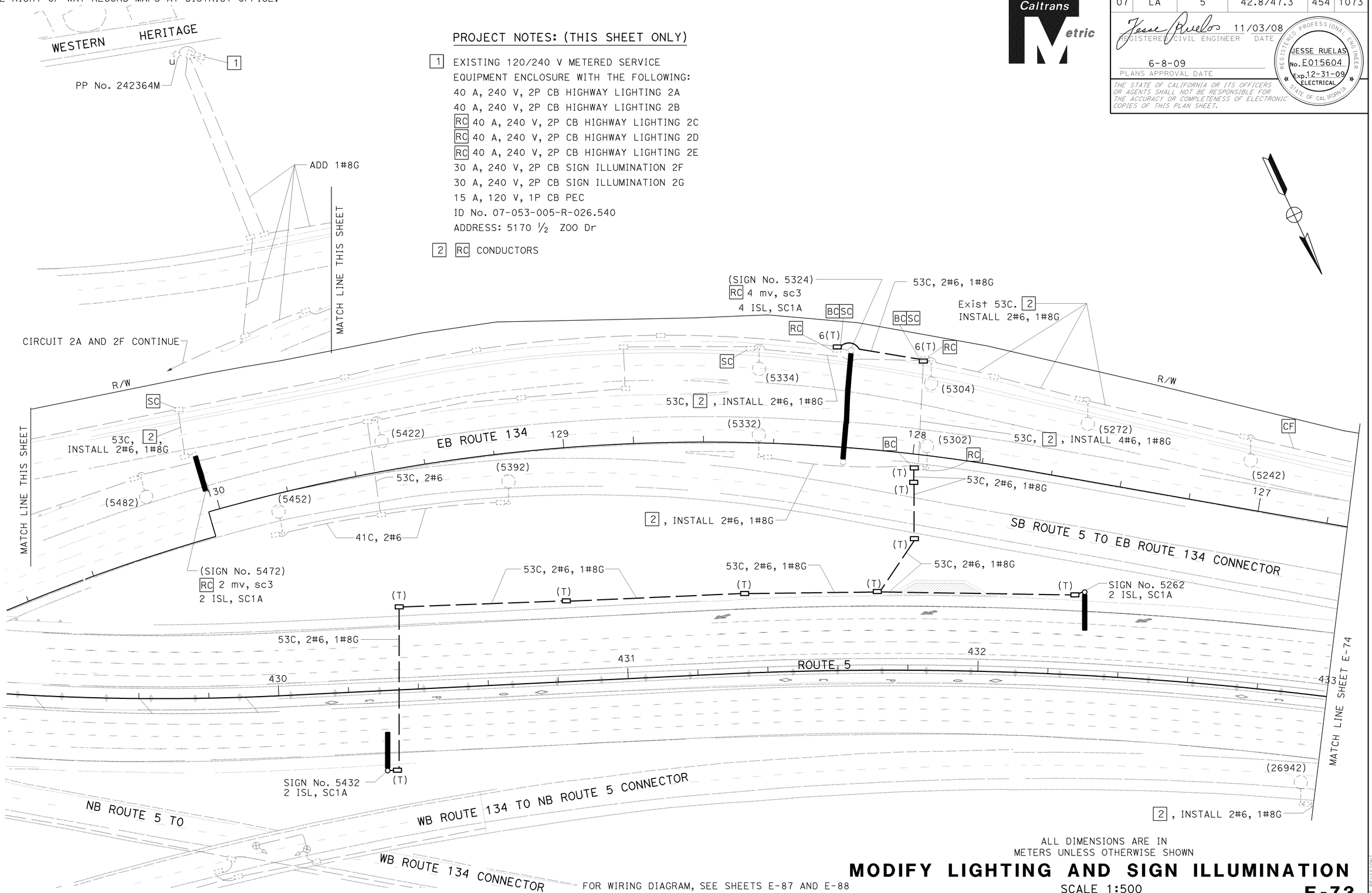

ALL DIMENSIONS ARE IN METERS UNLESS OTHERWISE SHOWN

FOR WIRING DIAGRAM, SEE SHEETS E-87 AND E-88

THIS PLAN IS ACCURATE FOR ELECTRICAL WORK ONLY.

MODIFY LIGHTING AND SIGN ILLUMINATION

SCALE 1:500

E-73

REVISED BY	LIEN VO
DATE REVISED	02/09
CALCULATED-DESIGNED BY	LIEN VO
CHECKED BY	JESSE RUELAS
FUNCTIONAL SUPERVISOR	YI TSAU

STATE OF CALIFORNIA - DEPARTMENT OF TRANSPORTATION
Caltrans **TRAFFIC DESIGN**

LAST REVISION 02-18-09 | DATE PLOTTED => 17-JUN-2009 | TIME PLOTTED => 2229

Dist	COUNTY	ROUTE	KILOMETER POST TOTAL PROJECT	SHEET No.	TOTAL SHEETS
07	LA	5	42.8/47.3	455	1073

Jesse Ruelas 11/03/08
REGISTERED ELECT ENGINEER DATE

6-8-09
PLANS APPROVAL DATE

REGISTERED PROFESSIONAL ENGINEER JESSE RUELAS No. E015604 Exp. 12-31-09 ELECTRICAL STATE OF CALIFORNIA

THE STATE OF CALIFORNIA OR ITS OFFICERS OR AGENTS SHALL NOT BE RESPONSIBLE FOR THE ACCURACY OR COMPLETENESS OF ELECTRONIC COPIES OF THIS PLAN SHEET.

Caltrans Metric

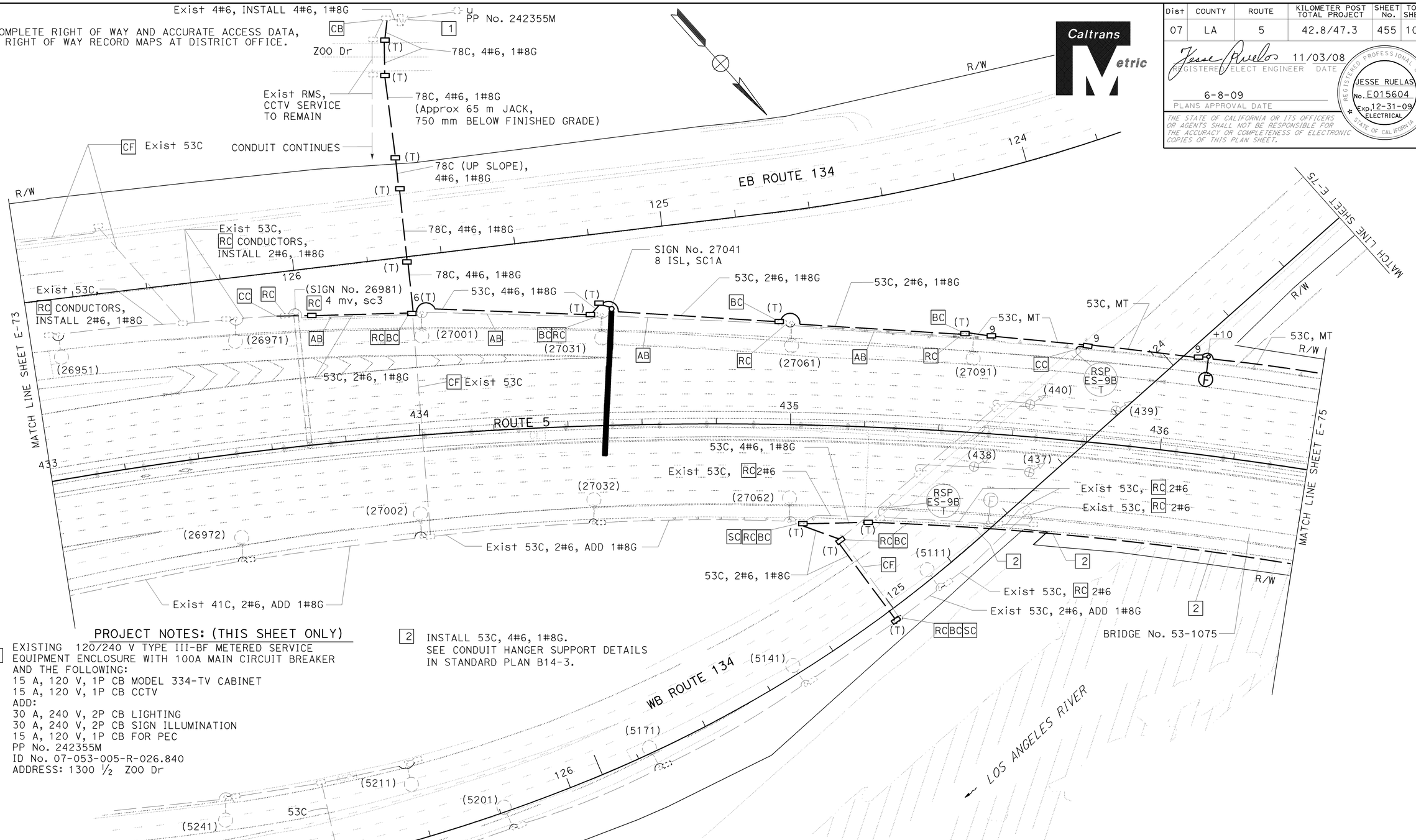

PROJECT NOTES: (THIS SHEET ONLY)

1 EXISTING 120/240 V TYPE III-BF METERED SERVICE EQUIPMENT ENCLOSURE WITH 100A MAIN CIRCUIT BREAKER AND THE FOLLOWING:
15 A, 120 V, 1P CB MODEL 334-TV CABINET
15 A, 120 V, 1P CB CCTV
ADD:
30 A, 240 V, 2P CB LIGHTING
30 A, 240 V, 2P CB SIGN ILLUMINATION
15 A, 120 V, 1P CB FOR PEC
PP No. 242355M
ID No. 07-053-005-R-026.840
ADDRESS: 1300 ½ ZOO Dr

2 INSTALL 53C, 4#6, 1#8G. SEE CONDUIT HANGER SUPPORT DETAILS IN STANDARD PLAN B14-3.

ALL DIMENSIONS ARE IN METERS UNLESS OTHERWISE SHOWN

MODIFY LIGHTING AND SIGN ILLUMINATION

SCALE 1:500

FOR WIRING DIAGRAM, SEE SHEETS E-87 AND E-88
THIS PLAN IS ACCURATE FOR ELECTRICAL WORK ONLY.

E-74

STATE OF CALIFORNIA - DEPARTMENT OF TRANSPORTATION
Caltrans TRAFFIC DESIGN

FUNCTIONAL SUPERVISOR: YI TSAU
CALCULATED-DESIGNED BY / CHECKED BY: LIEN VO / JESSE RUELAS
REVISED BY: LIEN VO — DATE REVISED: 02/09

LAST REVISION 02-18-09 — DATE PLOTTED => 15-JUN-2009 — TIME PLOTTED => 12:50

FOR COMPLETE RIGHT OF WAY AND ACCURATE ACCESS DATA,
SEE RIGHT OF WAY RECORD MAPS AT DISTRICT OFFICE.

Dist	COUNTY	ROUTE	KILOMETER POST TOTAL PROJECT	SHEET No.	TOTAL SHEETS
07	LA	5	42.8/47.3	456	1073

Jesse Ruelas 11/03/08
REGISTERED ELECT ENGINEER DATE

6-8-09
PLANS APPROVAL DATE

REGISTERED PROFESSIONAL ENGINEER JESSE RUELAS No. E015604 Exp. 12-31-09 ELECTRICAL STATE OF CALIFORNIA

THE STATE OF CALIFORNIA OR ITS OFFICERS OR AGENTS SHALL NOT BE RESPONSIBLE FOR THE ACCURACY OR COMPLETENESS OF ELECTRONIC COPIES OF THIS PLAN SHEET.

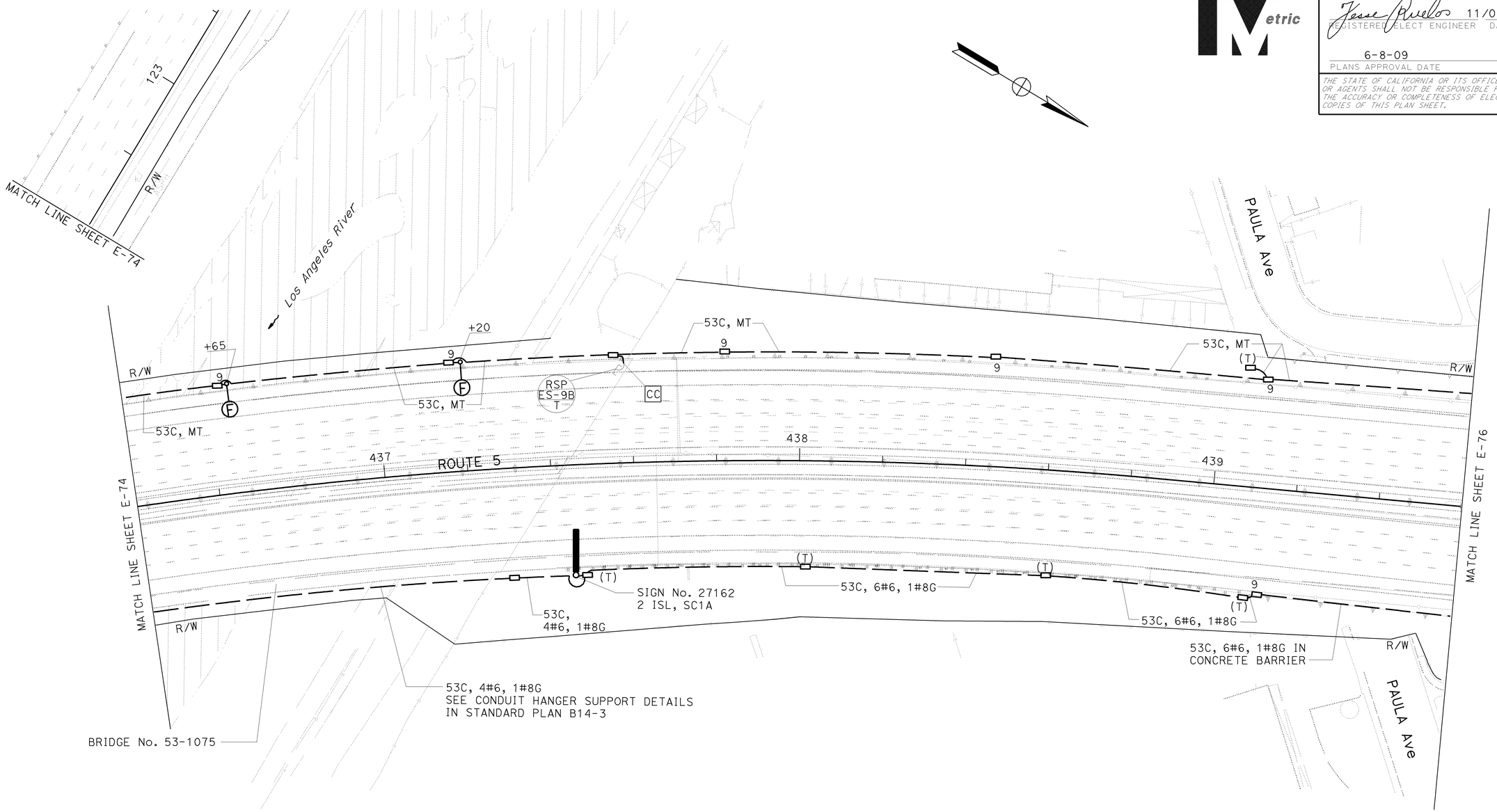

ALL DIMENSIONS ARE IN
METERS UNLESS OTHERWISE SHOWN

MODIFY LIGHTING AND SIGN ILLUMINATION

SCALE 1:500

FOR WIRING DIAGRAM, SEE SHEET E-88

THIS PLAN IS ACCURATE FOR ELECTRICAL WORK ONLY.

E-75

STATE OF CALIFORNIA - DEPARTMENT OF TRANSPORTATION
Caltrans **TRAFFIC DESIGN**

FUNCTIONAL SUPERVISOR: YI TSAU
CALCULATED-DESIGNED BY: LIEN VO
CHECKED BY: JESSE RUELAS
REVISED BY: LIEN VO
DATE REVISED: 02/09

LAST REVISION 02-05-09 DATE PLOTTED => 12-JUN-2009 TIME PLOTTED => 15:05

FOR COMPLETE RIGHT OF WAY AND ACCURATE ACCESS DATA,
SEE RIGHT OF WAY RECORD MAPS AT DISTRICT OFFICE.

Dist	COUNTY	ROUTE	KILOMETER POST TOTAL PROJECT	SHEET No.	TOTAL SHEETS
07	LA	5	42.8/47.3	457	1073

REGISTERED ELECT ENGINEER 11/03/08 DATE

6-8-09
PLANS APPROVAL DATE

REGISTERED PROFESSIONAL ENGINEER JESSE RUELAS No. E015604 Exp. 12-31-09 ELECTRICAL STATE OF CALIFORNIA

THE STATE OF CALIFORNIA OR ITS OFFICERS OR AGENTS SHALL NOT BE RESPONSIBLE FOR THE ACCURACY OR COMPLETENESS OF ELECTRONIC COPIES OF THIS PLAN SHEET.

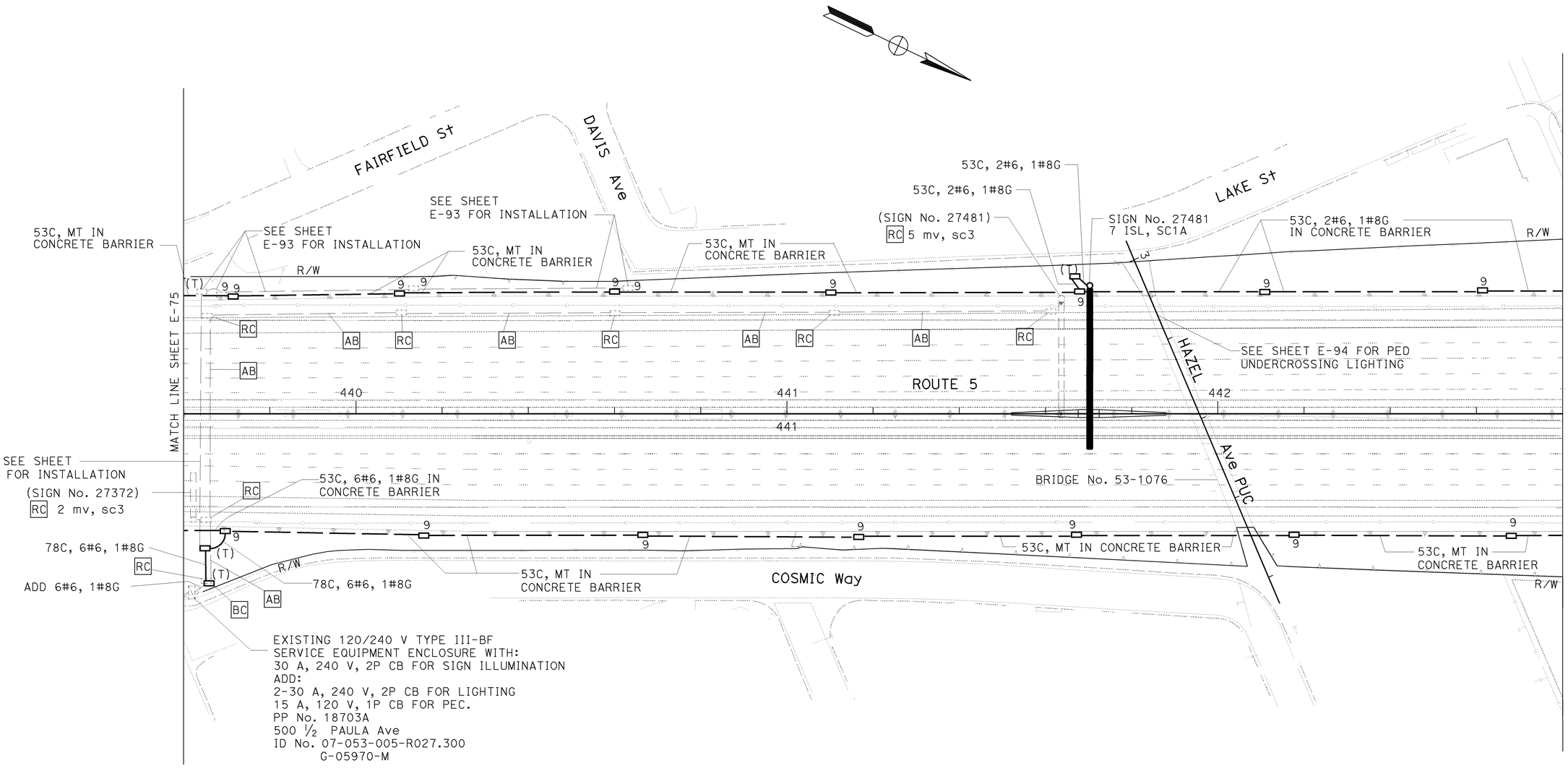

ALL DIMENSIONS ARE IN
METERS UNLESS OTHERWISE SHOWN

MODIFY LIGHTING AND SIGN ILLUMINATION

SCALE 1:500

FOR WIRING DIAGRAM, SEE SHEETS E-88 AND E-89
THIS PLAN IS ACCURATE FOR ELECTRICAL WORK ONLY.

E-76

STATE OF CALIFORNIA - DEPARTMENT OF TRANSPORTATION
Caltrans
TRAFFIC DESIGN

FUNCTIONAL SUPERVISOR: YI TSAU
CALCULATED-DESIGNED BY: LIEN VO
CHECKED BY: JESSE RUELAS
REVISED BY: LIEN VO
DATE REVISED: 02/09

LAST REVISION 02-05-09
DATE PLOTTED => 17-JUN-2009
TIME PLOTTED => 12:29

Dist	COUNTY	ROUTE	KILOMETER POST TOTAL PROJECT	SHEET No.	TOTAL SHEETS
07	LA	5	42.8/47.3	458	1073

REGISTERED ELECT ENGINEER 11/03/08 DATE

6-8-09
PLANS APPROVAL DATE

REGISTERED PROFESSIONAL ENGINEER JESSE RUELAS No. E015604 Exp. 12-31-09 ELECTRICAL STATE OF CALIFORNIA

THE STATE OF CALIFORNIA OR ITS OFFICERS OR AGENTS SHALL NOT BE RESPONSIBLE FOR THE ACCURACY OR COMPLETENESS OF ELECTRONIC COPIES OF THIS PLAN SHEET.

Caltrans Metric

FOR COMPLETE RIGHT OF WAY AND ACCURATE ACCESS DATA,
SEE RIGHT OF WAY RECORD MAPS AT DISTRICT OFFICE.

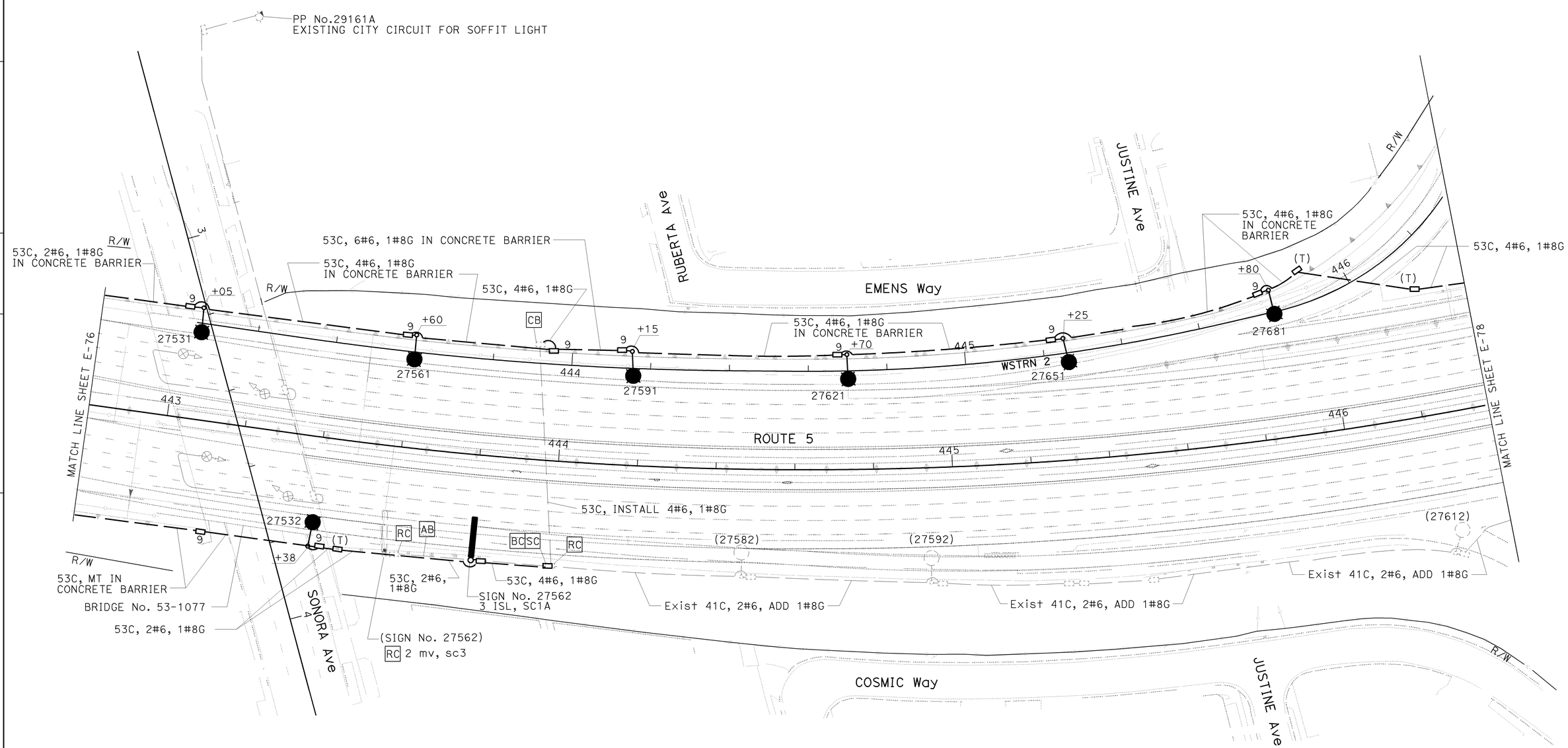

ALL DIMENSIONS ARE IN
METERS UNLESS OTHERWISE SHOWN

MODIFY LIGHTING AND SIGN ILLUMINATION

SCALE 1:500

FOR WIRING DIAGRAM, SEE SHEET E-89
THIS PLAN IS ACCURATE FOR ELECTRICAL WORK ONLY.

E-77

CALCULATED-DESIGNED BY	LIEN VO
CHECKED BY	JESSE RUELAS
REVISED BY	LIEN VO
DATE REVISED	02/09
FUNCTIONAL SUPERVISOR	YI TSAU

STATE OF CALIFORNIA - DEPARTMENT OF TRANSPORTATION
Caltrans **TRAFFIC DESIGN**

LAST REVISION 02-05-09 DATE PLOTTED => 12-JUN-2009 TIME PLOTTED => 15:06

Dist	COUNTY	ROUTE	KILOMETER POST TOTAL PROJECT	SHEET No.	TOTAL SHEETS
07	LA	5	42.8/47.3	459	1073

Jesse Ruelas 11/03/08
REGISTERED ELECT ENGINEER DATE

6-8-09
PLANS APPROVAL DATE

REGISTERED PROFESSIONAL ENGINEER JESSE RUELAS No. E015604 Exp. 12-31-09 ELECTRICAL STATE OF CALIFORNIA

THE STATE OF CALIFORNIA OR ITS OFFICERS OR AGENTS SHALL NOT BE RESPONSIBLE FOR THE ACCURACY OR COMPLETENESS OF ELECTRONIC COPIES OF THIS PLAN SHEET.

Caltrans Metric

FOR COMPLETE RIGHT OF WAY AND ACCURATE ACCESS DATA, SEE RIGHT OF WAY RECORD MAPS AT DISTRICT OFFICE.

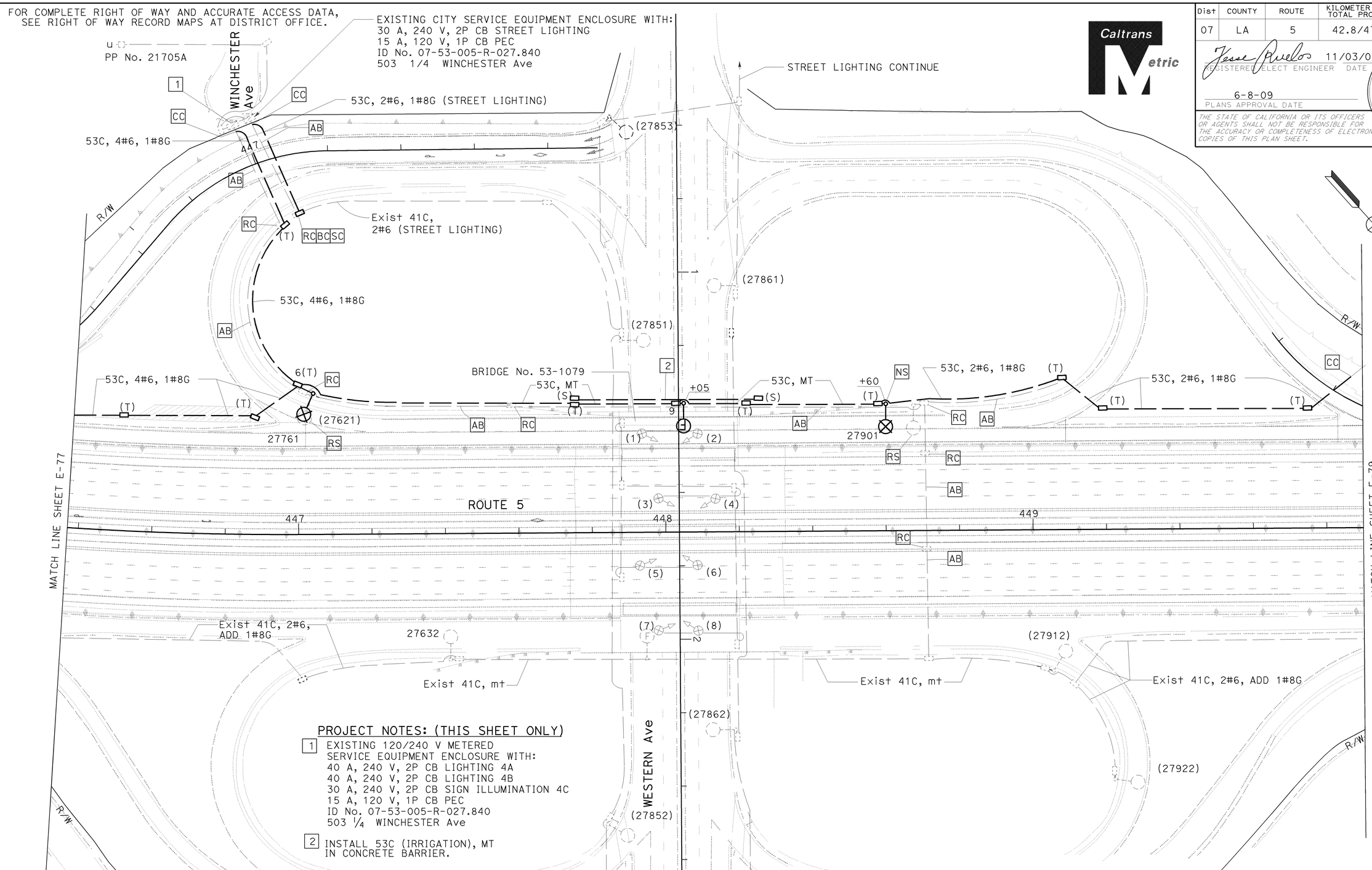

PROJECT NOTES: (THIS SHEET ONLY)

1. EXISTING 120/240 V METERED SERVICE EQUIPMENT ENCLOSURE WITH:
   40 A, 240 V, 2P CB LIGHTING 4A
   40 A, 240 V, 2P CB LIGHTING 4B
   30 A, 240 V, 2P CB SIGN ILLUMINATION 4C
   15 A, 120 V, 1P CB PEC
   ID No. 07-53-005-R-027.840
   503 1/4 WINCHESTER Ave
2. INSTALL 53C (IRRIGATION), MT IN CONCRETE BARRIER.

ALL DIMENSIONS ARE IN METERS UNLESS OTHERWISE SHOWN

R/W FOR WIRING DIAGRAM, SEE SHEETS E-89 AND E-90
THIS PLAN IS ACCURATE FOR ELECTRICAL WORK ONLY.

MODIFY LIGHTING AND SIGN ILLUMINATION
SPRINKLER CONTROL CONDUIT
(BRIDGE)

SCALE 1:500

E-78

REVISED BY	LIEN VO
DATE REVISED	02/09
CALCULATED-DESIGNED BY	LIEN VO
CHECKED BY	JESSE RUELAS
FUNCTIONAL SUPERVISOR	YI TSAU

STATE OF CALIFORNIA - DEPARTMENT OF TRANSPORTATION
Caltrans **TRAFFIC DESIGN**

LAST REVISION 02-05-09 | DATE PLOTTED => 12-JUN-2009 | TIME PLOTTED => 16:39

FOR COMPLETE RIGHT OF WAY AND ACCURATE ACCESS DATA,
SEE RIGHT OF WAY RECORD MAPS AT DISTRICT OFFICE.

Dist	COUNTY	ROUTE	KILOMETER POST TOTAL PROJECT	SHEET No.	TOTAL SHEETS
07	LA	5	42.8/47.3	460	1073

REGISTERED ELECT ENGINEER 11/03/08 DATE

6-8-09
PLANS APPROVAL DATE

REGISTERED PROFESSIONAL ENGINEER JESSE RUELAS No. E015604 Exp. 12-31-09 ELECTRICAL STATE OF CALIFORNIA

THE STATE OF CALIFORNIA OR ITS OFFICERS OR AGENTS SHALL NOT BE RESPONSIBLE FOR THE ACCURACY OR COMPLETENESS OF ELECTRONIC COPIES OF THIS PLAN SHEET.

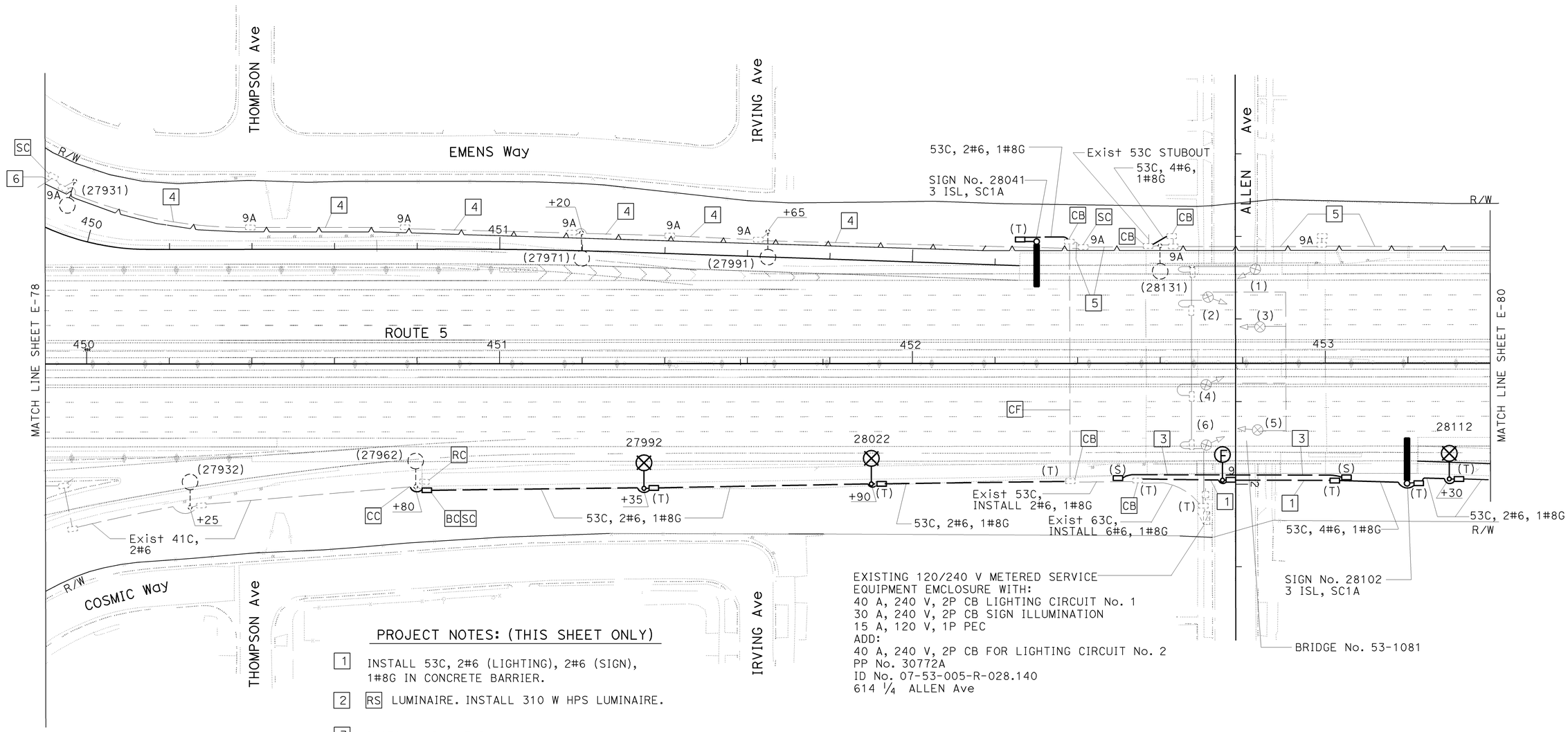

EXISTING 120/240 V METERED SERVICE
EQUIPMENT EMCLOSURE WITH:
40 A, 240 V, 2P CB LIGHTING CIRCUIT No. 1
30 A, 240 V, 2P CB SIGN ILLUMINATION
15 A, 120 V, 1P PEC
ADD:
40 A, 240 V, 2P CB FOR LIGHTING CIRCUIT No. 2
PP No. 30772A
ID No. 07-53-005-R-028.140
614 1/4 ALLEN Ave

PROJECT NOTES: (THIS SHEET ONLY)

1. INSTALL 53C, 2#6 (LIGHTING), 2#6 (SIGN), 1#8G IN CONCRETE BARRIER.
2. RS LUMINAIRE. INSTALL 310 W HPS LUMINAIRE.
3. INSTALL 53C, MT IN CONCRETE BARRIER FOR IRRIGATION.
4. EXISTING 53C, 2#6 IN CONCRETE BARRIER.
5. INSTALL 4#6, 1#8G IN EXISTING CONDUIT.
6. INSTALL 2#6, 1#8G IN EXISTING CONDUIT.

FOR WIRING DIAGRAM, SEE SHEET E-90
THIS PLAN IS ACCURATE FOR ELECTRICAL WORK ONLY.

ALL DIMENSIONS ARE IN
METERS UNLESS OTHERWISE SHOWN

MODIFY LIGHTING AND SIGN ILLUMINATION
SPRINKLER CONTROL CONDUIT
(BRIDGE)

SCALE 1:500

E-79

STATE OF CALIFORNIA - DEPARTMENT OF TRANSPORTATION
Caltrans
TRAFFIC DESIGN

FUNCTIONAL SUPERVISOR: YI TSAU
CALCULATED-DESIGNED BY: JESSE RUELAS
CHECKED BY: LIEN VO
REVISED BY: LIEN VO
DATE REVISED: 02/09

LAST REVISION 02-05-09 | DATE PLOTTED => 12-JUN-2009 | TIME PLOTTED => 16:39

FOR COMPLETE RIGHT OF WAY AND ACCURATE ACCESS DATA,
SEE RIGHT OF WAY RECORD MAPS AT DISTRICT OFFICE.

Dist	COUNTY	ROUTE	KILOMETER POST TOTAL PROJECT	SHEET No.	TOTAL SHEETS
07	LA	5	42.8/47.3	461	1073

REGISTERED ELECT ENGINEER 11/03/08 DATE

6-8-09
PLANS APPROVAL DATE

REGISTERED PROFESSIONAL ENGINEER JESSE RUELAS No. E015604 Exp. 12-31-09 ELECTRICAL STATE OF CALIFORNIA

THE STATE OF CALIFORNIA OR ITS OFFICERS OR AGENTS SHALL NOT BE RESPONSIBLE FOR THE ACCURACY OR COMPLETENESS OF ELECTRONIC COPIES OF THIS PLAN SHEET.

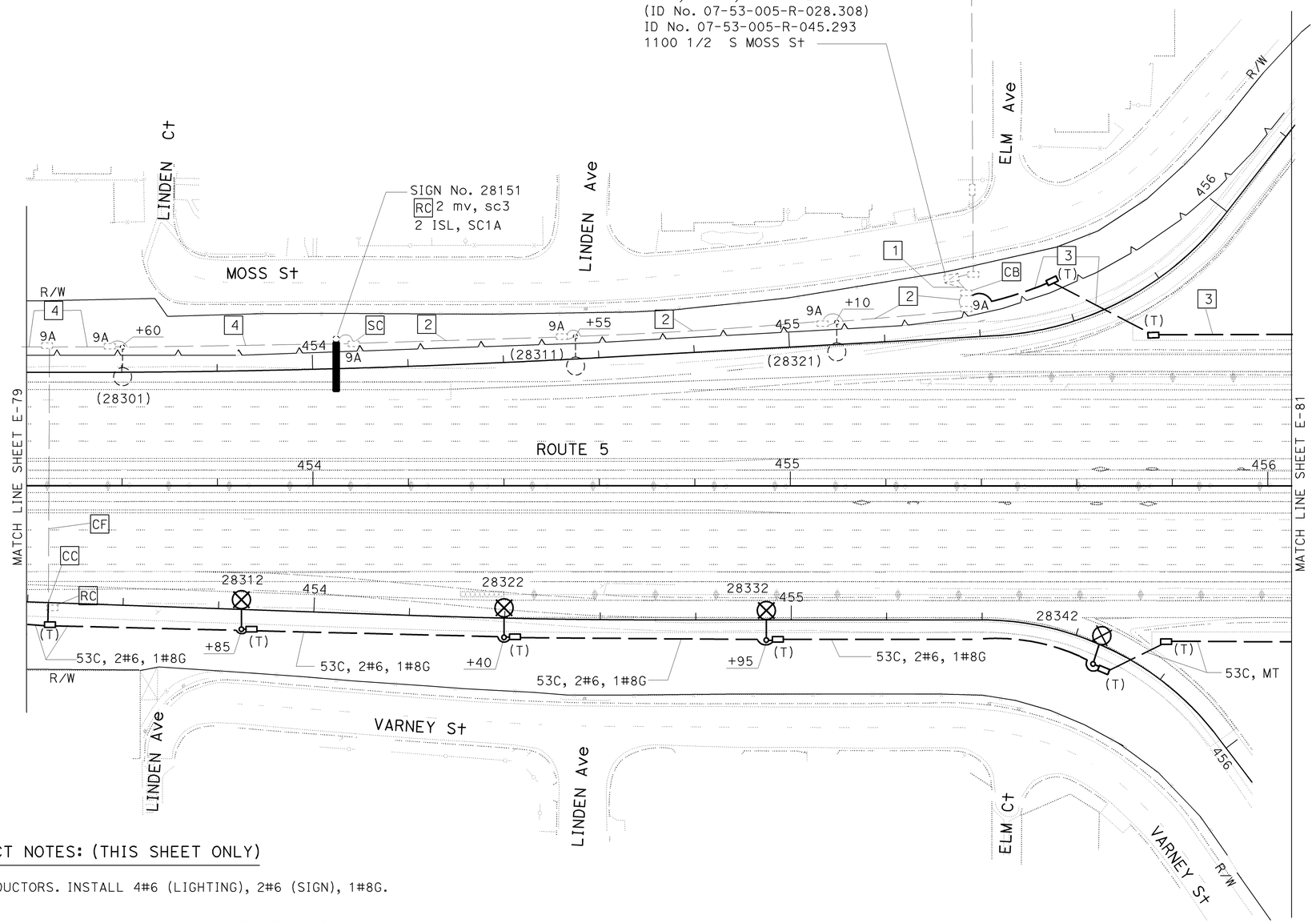

PROJECT NOTES: (THIS SHEET ONLY)

1. RC CONDUCTORS. INSTALL 4#6 (LIGHTING), 2#6 (SIGN), 1#8G.
2. RC CONDUCTORS. INSTALL 4#6, 1#8G IN EXISTING 53C.
3. 53C, 2#6 (LIGHTING), 1#8G.
4. EXISTING 53C IN CONCRETE BARRIER. INSTALL 4#6, 1#8G.

ALL DIMENSIONS ARE IN
METERS UNLESS OTHERWISE SHOWN

MODIFY LIGHTING AND SIGN ILLUMINATION

SCALE 1:500

FOR WIRING DIAGRAM, SEE SHEET E-90

THIS PLAN IS ACCURATE FOR ELECTRICAL WORK ONLY.

E-80

STATE OF CALIFORNIA - DEPARTMENT OF TRANSPORTATION
Caltrans **TRAFFIC DESIGN**

FUNCTIONAL SUPERVISOR: YI TSAU
CALCULATED-DESIGNED BY: LIEN VO
CHECKED BY: JESSE RUELAS
REVISED BY: LIEN VO
DATE REVISED: 02/09

LAST REVISION 02-05-09 | DATE PLOTTED => 12-JUN-2009 | TIME PLOTTED => 16:49

Dist	COUNTY	ROUTE	KILOMETER POST TOTAL PROJECT	SHEET No.	TOTAL SHEETS
07	LA	5	42.8/47.3	462	1073

REGISTERED ELECT ENGINEER Jesse Ruelas 11/03/08 DATE

6-8-09
PLANS APPROVAL DATE

REGISTERED PROFESSIONAL ENGINEER JESSE RUELAS No. E015604 Exp. 12-31-09 ELECTRICAL STATE OF CALIFORNIA

THE STATE OF CALIFORNIA OR ITS OFFICERS OR AGENTS SHALL NOT BE RESPONSIBLE FOR THE ACCURACY OR COMPLETENESS OF ELECTRONIC COPIES OF THIS PLAN SHEET.

Caltrans Metric

FOR COMPLETE RIGHT OF WAY AND ACCURATE ACCESS DATA, SEE RIGHT OF WAY RECORD MAPS AT DISTRICT OFFICE.

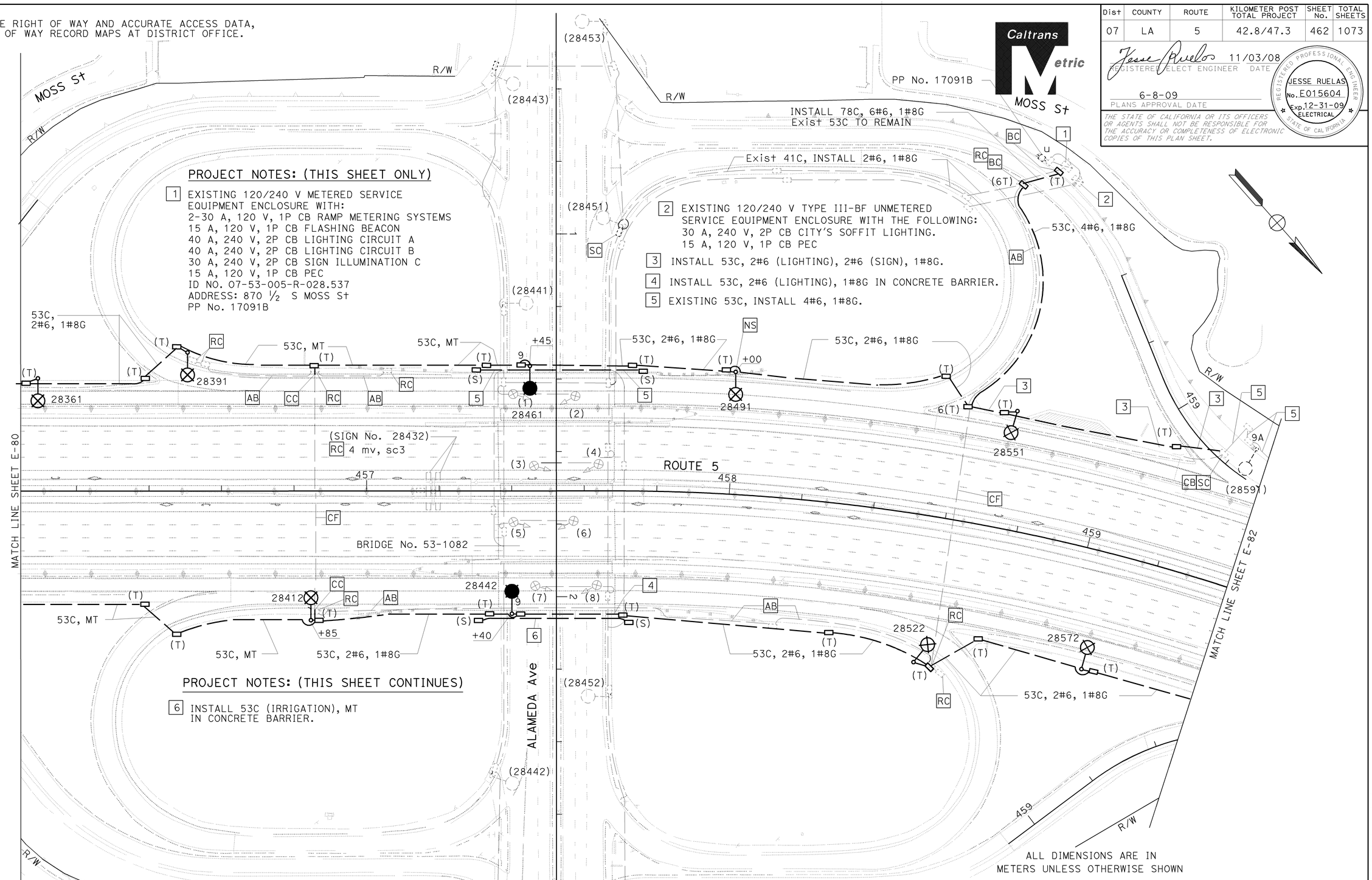

PROJECT NOTES: (THIS SHEET ONLY)

1. EXISTING 120/240 V METERED SERVICE EQUIPMENT ENCLOSURE WITH:
   2-30 A, 120 V, 1P CB RAMP METERING SYSTEMS
   15 A, 120 V, 1P CB FLASHING BEACON
   40 A, 240 V, 2P CB LIGHTING CIRCUIT A
   40 A, 240 V, 2P CB LIGHTING CIRCUIT B
   30 A, 240 V, 2P CB SIGN ILLUMINATION C
   15 A, 120 V, 1P CB PEC
   ID NO. 07-53-005-R-028.537
   ADDRESS: 870 1/2 S MOSS St
   PP No. 17091B
2. EXISTING 120/240 V TYPE III-BF UNMETERED SERVICE EQUIPMENT ENCLOSURE WITH THE FOLLOWING:
   30 A, 240 V, 2P CB CITY'S SOFFIT LIGHTING.
   15 A, 120 V, 1P CB PEC
3. INSTALL 53C, 2#6 (LIGHTING), 2#6 (SIGN), 1#8G.
4. INSTALL 53C, 2#6 (LIGHTING), 1#8G IN CONCRETE BARRIER.
5. EXISTING 53C, INSTALL 4#6, 1#8G.

PROJECT NOTES: (THIS SHEET CONTINUES)

6. INSTALL 53C (IRRIGATION), MT IN CONCRETE BARRIER.

ALL DIMENSIONS ARE IN METERS UNLESS OTHERWISE SHOWN

LIGHTING CIRCUIT CONTINUES

NO CONDUCTORS

THIS PLAN IS ACCURATE FOR ELECTRICAL WORK ONLY.

FOR WIRING DIAGRAM, SEE SHEETS E-90 AND E-91

MODIFY LIGHTING AND SIGN ILLUMINATION
SPRINKLER CONTROL CONDUIT
(BRIDGE)

SCALE 1:500

E-81

CALCULATED-DESIGNED BY	LIEN VO	REVISED BY	LIEN VO
CHECKED BY	JESSE RUELAS	DATE REVISED	02/09

FUNCTIONAL SUPERVISOR: YI TSAU

STATE OF CALIFORNIA - DEPARTMENT OF TRANSPORTATION
Caltrans TRAFFIC DESIGN

LAST REVISION 02-05-09 DATE PLOTTED => 12-JUN-2009 TIME PLOTTED => 16:39

Dist	COUNTY	ROUTE	KILOMETER POST TOTAL PROJECT	SHEET No.	TOTAL SHEETS
07	LA	5	42.8/47.3	463	1073

Jesse Ruelas 11/03/08
REGISTERED ELECT ENGINEER DATE

6-8-09
PLANS APPROVAL DATE

REGISTERED PROFESSIONAL ENGINEER JESSE RUELAS No. E015604 Exp. 12-31-09 ELECTRICAL STATE OF CALIFORNIA

THE STATE OF CALIFORNIA OR ITS OFFICERS OR AGENTS SHALL NOT BE RESPONSIBLE FOR THE ACCURACY OR COMPLETENESS OF ELECTRONIC COPIES OF THIS PLAN SHEET.

Caltrans Metric

FOR COMPLETE RIGHT OF WAY AND ACCURATE ACCESS DATA,
SEE RIGHT OF WAY RECORD MAPS AT DISTRICT OFFICE.

PROJECT NOTES: (THIS SHEET ONLY)

1. INSTALL 120/240 V TYPE III-BF METERED SERVICE EQUIPMENT ENCLOSURE WITH 100 A MAIN BREAKER WITH:
   2-30 A, 240 V, 2P CB FOR LIGHTING CIRCUIT
   30 A, 240 V, 2P CB FOR SIGN ILLUMINATION.
   15 A, 120 V, 1P CB FOR PEC.
   ID No. 07-053-005-R-028.660
   622 ½ FLOWER St
   PP No. 23699B
2. INSTALL 78C, MT (CONDUCTORS BY BURBANK WATER AND POWER).
3. INSTALL 78C TYPE H RISER, FIRST 3 m OF THE POWER POLE ONLY. CONDUCTORS BY BURBANK WATER AND POWER.
4. EXISTING 53C, INSTALL 4#6, 1#8G IN CONCRETE BARRIER.
5. INSTALL TYPE 15 STRUCTURE ON EXISTING FOUNDATION.

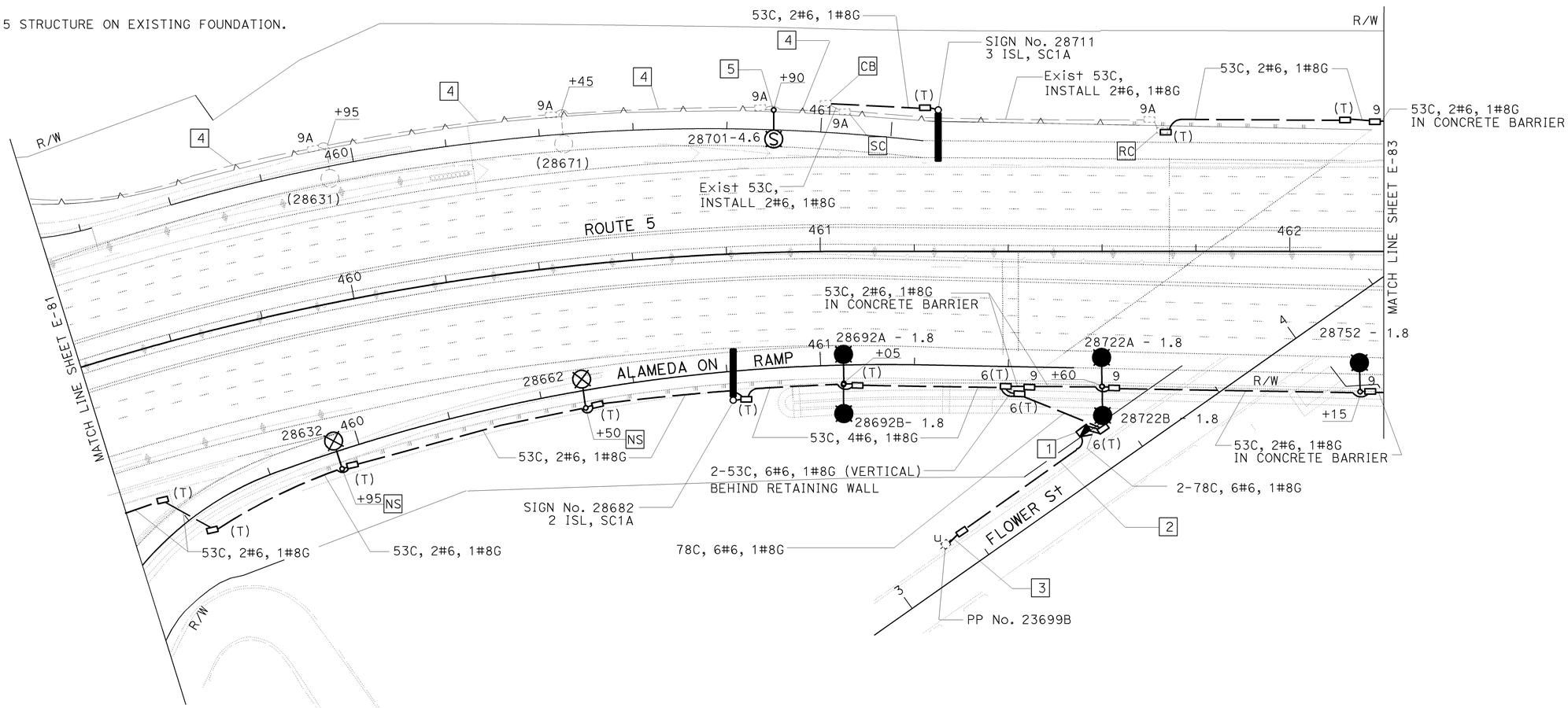

ALL DIMENSIONS ARE IN
MERERS UNLESS OTHERWISE SHOWN

MODIFY LIGHTING AND SIGN ILLUMINATION

SCALE 1:500

FOR WIRING DIAGRAM, SEE SHEETS E-90 AND E-91
THIS PLAN IS ACCURATE FOR ELECTRICAL WORK ONLY.

E-82

LIEN VO	02/09
REVISED BY	DATE REVISED
LIEN VO	JESSE RUELAS
CALCULATED-DESIGNED BY	CHECKED BY
FUNCTIONAL SUPERVISOR	YI TSAU

STATE OF CALIFORNIA - DEPARTMENT OF TRANSPORTATION
Caltrans **TRAFFIC DESIGN**

LAST REVISION 02-05-09 | DATE PLOTTED => 12-JUN-2009 | TIME PLOTTED => 16:39

FOR COMPLETE RIGHT OF WAY AND ACCURATE ACCESS DATA,
SEE RIGHT OF WAY RECORD MAPS AT DISTRICT OFFICE.

Dist	COUNTY	ROUTE	KILOMETER POST TOTAL PROJECT	SHEET No.	TOTAL SHEETS
07	LA	5	42.8/47.3	464	1073

REGISTERED ELECT ENGINEER Jesse Ruelas 11/03/08 DATE

6-8-09
PLANS APPROVAL DATE

REGISTERED PROFESSIONAL ENGINEER JESSE RUELAS No. E015604 Exp. 12-31-09 ELECTRICAL STATE OF CALIFORNIA

THE STATE OF CALIFORNIA OR ITS OFFICERS OR AGENTS SHALL NOT BE RESPONSIBLE FOR THE ACCURACY OR COMPLETENESS OF ELECTRONIC COPIES OF THIS PLAN SHEET.

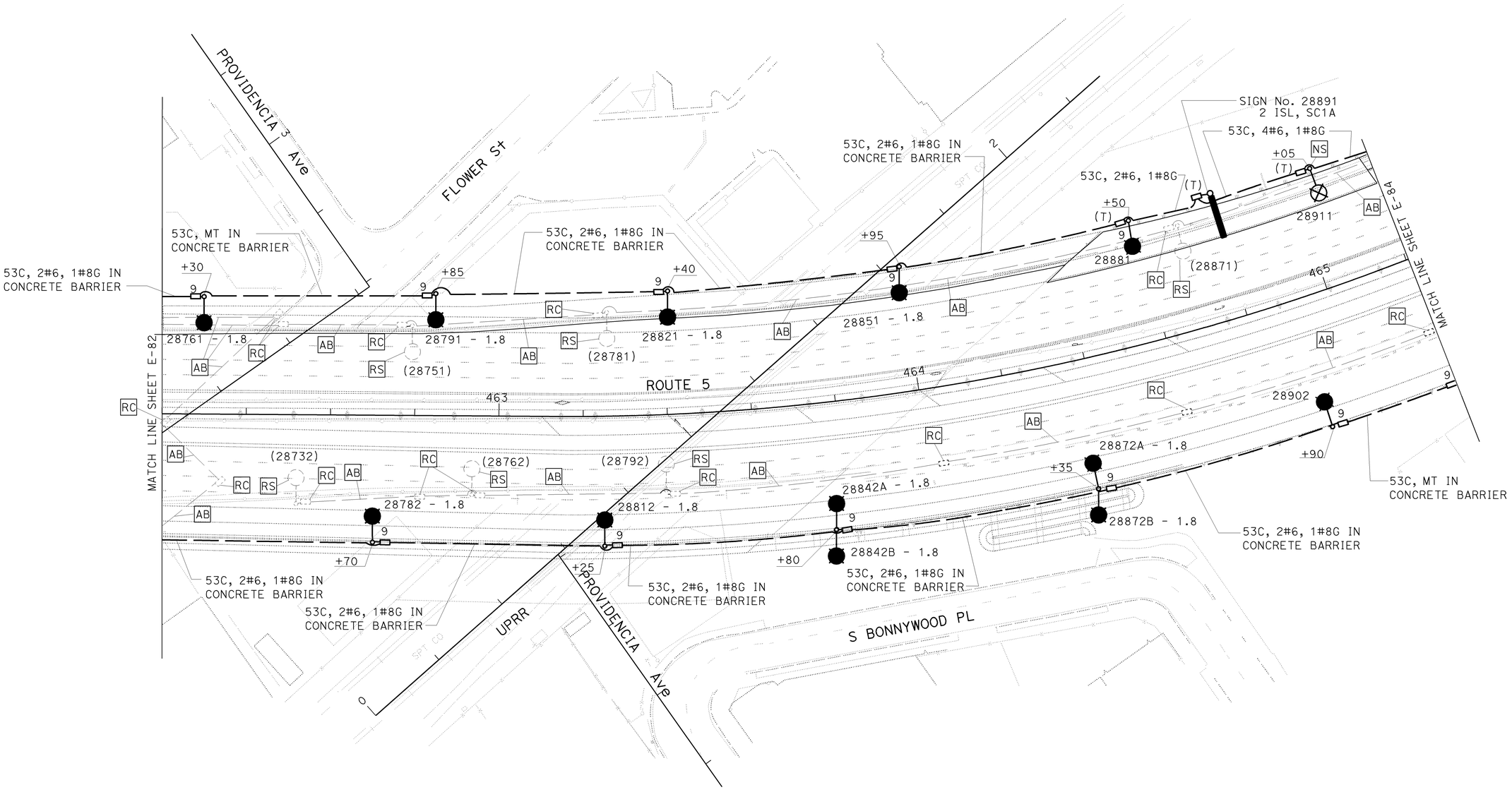

ALL DIMENSIONS ARE IN
METERS UNLESS OTHERWISE SHOWN

MODIFY LIGHTING AND SIGN ILLUMINATION

SCALE 1:500

FOR WIRING DIAGRAM, SEE SHEETS E-90 AND E-91
THIS PLAN IS ACCURATE FOR ELECTRICAL WORK ONLY.

E-83

STATE OF CALIFORNIA - DEPARTMENT OF TRANSPORTATION
Caltrans **TRAFFIC DESIGN**

FUNCTIONAL SUPERVISOR: YI TSAU
CALCULATED-DESIGNED BY: LIEN VO
CHECKED BY: JESSE RUELAS
REVISED BY: LIEN VO
DATE REVISED: 02/09

LAST REVISION 02-05-09 | DATE PLOTTED => 15-JUN-2009 | TIME PLOTTED => 06:15

Dist	COUNTY	ROUTE	KILOMETER POST TOTAL PROJECT	SHEET No.	TOTAL SHEETS
07	LA	5	42.8/47.3	465	1073

REGISTERED ELECT ENGINEER 11/03/08 DATE

6-8-09
PLANS APPROVAL DATE

REGISTERED PROFESSIONAL ENGINEER JESSE RUELAS No. E015604 Exp. 12-31-09 ELECTRICAL STATE OF CALIFORNIA

THE STATE OF CALIFORNIA OR ITS OFFICERS OR AGENTS SHALL NOT BE RESPONSIBLE FOR THE ACCURACY OR COMPLETENESS OF ELECTRONIC COPIES OF THIS PLAN SHEET.

Caltrans Metric

FOR COMPLETE RIGHT OF WAY AND ACCURATE ACCESS DATA, SEE RIGHT OF WAY RECORD MAPS AT DISTRICT OFFICE.

PROJECT NOTES: (THIS SHEET ONLY)

1. INFORMATION ONLY, SEE SHEET E-57 FOR INSTALLATION.
120/240 V TYPE III-CF METERED SERVICE
EQUIPMENT ENCLOSURE WITH 200 A MAIN CIRCUIT BREAKER AND:
METER 1:
30 A, 240 V, 2P FOR LIGHTING.
30 A, 240 V, 2P FOR SIGN ILLUMINATION
15 A, 120 V, 1P CB FOR PEC
ADDRESS: 301 1/3 S FRONT St
ID No.: 07-53-005-R-028.940
METER 2:
15 A, 120 V, 1P FOR CCTV
15 A, 120 V, 1P FOR RMS
ADDRESS: 301 2/3 S FRONT St
PP No. 67871H
ID No. 07-53-005-R-028.941

2. EXISTING 120/240 V TYPE III- BF METERED SERVICE
EQUIPMENT ENCLOSURE WITH 100 A MAIN CIRCUIT BREAKER AND:
30 A, 240 V, 2P FOR LIGHTING.
30 A, 240 V, 2P FOR SIGN ILLUMINATION.
15 A, 120 V, 1P FOR PEC.
ADDRESS: 401 ½ S FRONT St
PP No.17545B
ID No. 07-53-005-R-028.920

3. EXISTING 53C. RC CONDUCTORS.
INSTALL 2#6 (LIGHTING), 2#6 (SIGN), 1#8G.

4. INSTALL 53C, 2#6 (LIGHTING), 2#6 (SIGN), 1#8G.

5. INSTALL 53C (IRRIGATION), MT
IN CONCRETE BARRIER.

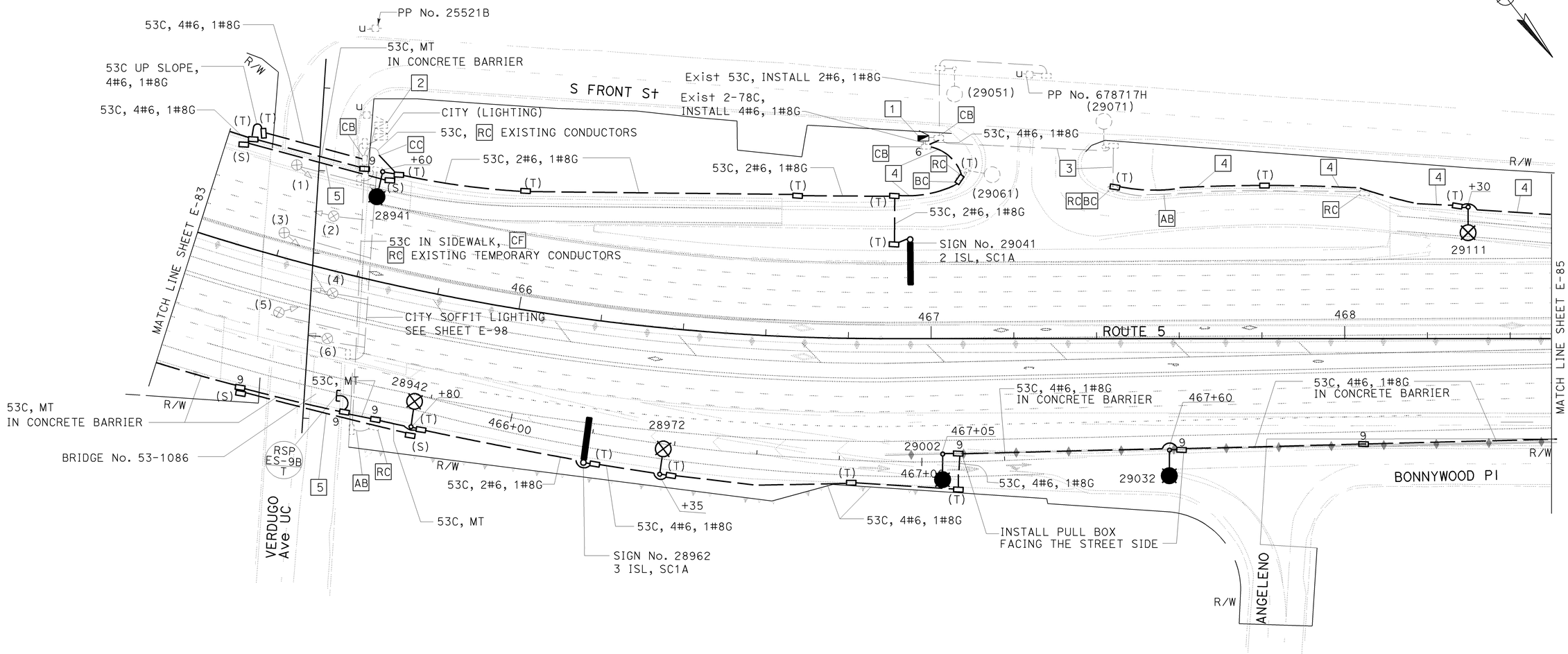

ALL DIMENSIONS ARE IN METERS UNLESS OTHERWISE SHOWN

MODIFY LIGHTING AND SIGN ILLUMINATION
SPRINKLER CONTROL CONDUIT
(BRIDGE)

SCALE 1:500

FOR WIRING DIAGRAM, SEE SHEET E-92
THIS PLAN IS ACCURATE FOR ELECTRICAL WORK ONLY.

E-84

REVISED BY	DATE REVISED
LIEN VO	03/09

CALCULATED-DESIGNED BY: LIEN VO
CHECKED BY: JESSE RUELAS
FUNCTIONAL SUPERVISOR: YI TSAU

STATE OF CALIFORNIA - DEPARTMENT OF TRANSPORTATION
Caltrans TRAFFIC DESIGN

LAST REVISION 03-11-09 DATE PLOTTED => 15-JUN-2009 TIME PLOTTED => 06:15

FOR COMPLETE RIGHT OF WAY AND ACCURATE ACCESS DATA,
SEE RIGHT OF WAY RECORD MAPS AT DISTRICT OFFICE.

Dist	COUNTY	ROUTE	KILOMETER POST TOTAL PROJECT	SHEET No.	TOTAL SHEETS
07	LA	5	42.8/47.3	466	1073

REGISTERED ELECT ENGINEER — DATE 11/03/08

6-8-09
PLANS APPROVAL DATE

REGISTERED PROFESSIONAL ENGINEER — JESSE RUELAS No. E015604 Exp. 12-31-09 ELECTRICAL — STATE OF CALIFORNIA

THE STATE OF CALIFORNIA OR ITS OFFICERS OR AGENTS SHALL NOT BE RESPONSIBLE FOR THE ACCURACY OR COMPLETENESS OF ELECTRONIC COPIES OF THIS PLAN SHEET.

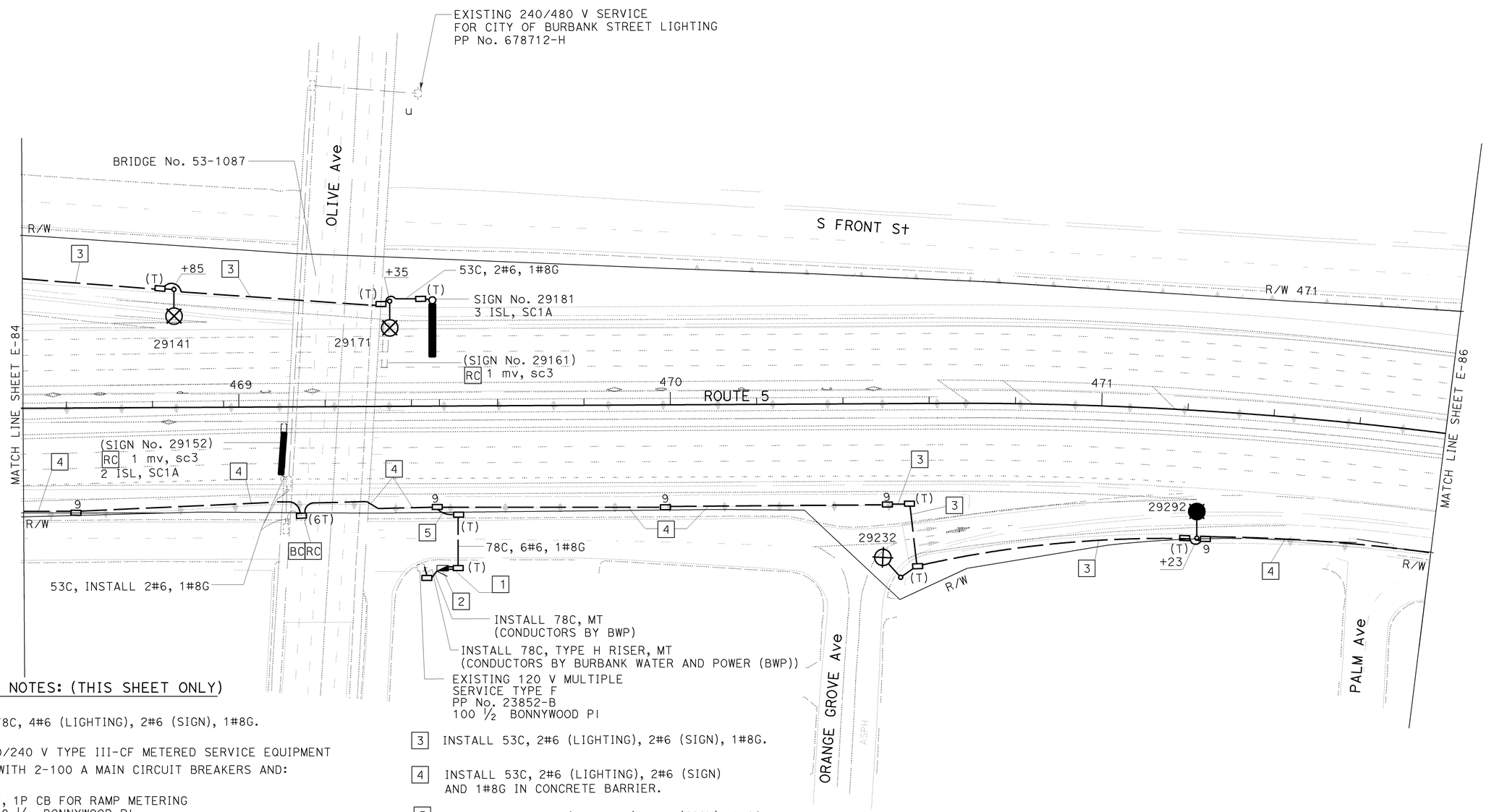

PROJECT NOTES: (THIS SHEET ONLY)

1. INSTALL 2-78C, 4#6 (LIGHTING), 2#6 (SIGN), 1#8G.
2. INSTALL 120/240 V TYPE III-CF METERED SERVICE EQUIPMENT ENCLOSURE WITH 2-100 A MAIN CIRCUIT BREAKERS AND:
   METER 1:
   30 A, 120 V, 1P CB FOR RAMP METERING
   ADDRESS: 100 1/4 BONNYWOOD Pl
   ID No. 07-53-005-R-028.990
   METER 2:
   30 A, 240 V, 2P CB FOR LIGHTING
   30 A, 240 V, 2P CB FOR SIGN
   15 A, 120 V, 1P CB FOR PEC
   PP No. 23852-B
   ADDRESS: 100 1/2 BONNYWOOD Pl
   ID No. 07-53-005-R-028.991
3. INSTALL 53C, 2#6 (LIGHTING), 2#6 (SIGN), 1#8G.
4. INSTALL 53C, 2#6 (LIGHTING), 2#6 (SIGN) AND 1#8G IN CONCRETE BARRIER.
5. INSTALL 53C, 4#6 (LIGHTING), 2#6 (SIGN), 1#8G.

ALL DIMENSIONS ARE IN METERS UNLESS OTHERWISE SHOWN

MODIFY LIGHTING AND SIGN ILLUMINATION

SCALE 1:500

FOR WIRING DIAGRAM, SEE SHEET E-92

THIS PLAN IS ACCURATE FOR ELECTRICAL WORK ONLY.

E-85

STATE OF CALIFORNIA - DEPARTMENT OF TRANSPORTATION
Caltrans
TRAFFIC DESIGN

FUNCTIONAL SUPERVISOR: YI TSAU
CALCULATED-DESIGNED BY: LIEN VO
CHECKED BY: JESSE RUELAS
REVISED BY: LIEN VO
DATE REVISED: 03/09

LAST REVISION DATE PLOTTED => 15-JUN-2009
03-10-09 TIME PLOTTED => 06:15

FOR COMPLETE RIGHT OF WAY AND ACCURATE ACCESS DATA,
SEE RIGHT OF WAY RECORD MAPS AT DISTRICT OFFICE.

Dist	COUNTY	ROUTE	KILOMETER POST TOTAL PROJECT	SHEET No.	TOTAL SHEETS
07	LA	5	42.8/47.3	467	1073

REGISTERED ELECT ENGINEER 11/03/08 DATE

6-8-09
PLANS APPROVAL DATE

REGISTERED PROFESSIONAL ENGINEER
JESSE RUELAS
No. E015604
Exp. 12-31-09
ELECTRICAL
STATE OF CALIFORNIA

THE STATE OF CALIFORNIA OR ITS OFFICERS OR AGENTS SHALL NOT BE RESPONSIBLE FOR THE ACCURACY OR COMPLETENESS OF ELECTRONIC COPIES OF THIS PLAN SHEET.

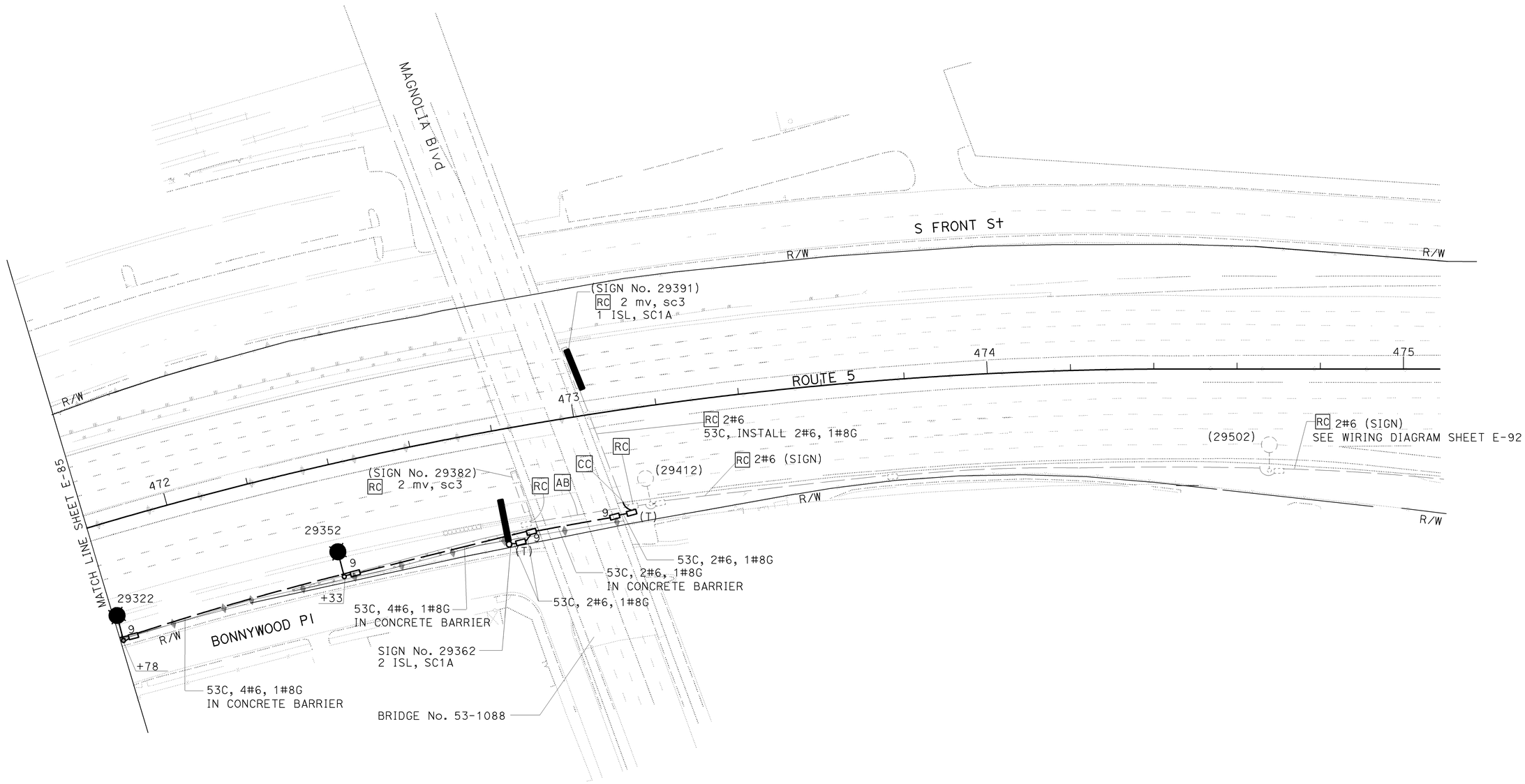

ALL DIMENSIONS ARE IN
METERS UNLESS OTHERWISE SHOWN

MODIFY LIGHTING AND SIGN ILLUMINATION

SCALE 1:500

FOR WIRING DIAGRAM, SEE SHEET E-92
THIS PLAN IS ACCURATE FOR ELECTRICAL WORK ONLY.

E-86

REVISED BY	LIEN VO
DATE REVISED	03/09
CALCULATED-DESIGNED BY	LIEN VO
CHECKED BY	JESSE RUELAS
FUNCTIONAL SUPERVISOR	YI TSAU

STATE OF CALIFORNIA - DEPARTMENT OF TRANSPORTATION
Caltrans **TRAFFIC DESIGN**

LAST REVISION 03-10-09 DATE PLOTTED => 15-JUN-2009 TIME PLOTTED => 06:15

Dist	COUNTY	ROUTE	KILOMETER POST TOTAL PROJECT	SHEET No.	TOTAL SHEETS
07	LA	5	42.8/47.3	468	1073

Caltrans Metric

REGISTERED ELECT ENGINEER — DATE 11/03/08

6-8-09
PLANS APPROVAL DATE

REGISTERED PROFESSIONAL ENGINEER — JESSE RUELAS No. E015604 Exp. 12-31-09 ELECTRICAL — STATE OF CALIFORNIA

THE STATE OF CALIFORNIA OR ITS OFFICERS OR AGENTS SHALL NOT BE RESPONSIBLE FOR THE ACCURACY OR COMPLETENESS OF ELECTRONIC COPIES OF THIS PLAN SHEET.

WIRING DIAGRAM LEGEND (SHEETS E-87 THROUGH E-92)

- 310 W HPS LAMP TO BE INSTALLED.
- EXISTING HPS LAMP TO REMAIN.
- EXISTING HPS LAMP TO BE REMOVED.
- EXISTING 70 W HPS FLUSH SOFFIT LAMP TO REMAIN.
- EXISTING 70 W HPS FLUSH SOFFIT LAMP TO BE REMOVED.
- EXISTING SIGN ILLUMINATION EQUIPMENT TO REMAIN.
- EXISTING SIGN ILLUMINATION EQUIPMENT TO BE REMOVED.
- INDUCTION SIGN ILLUMINATION TO BE INSTALLED AS NOTED.
- 200 W HPS TO BE INSTALLED.
- NEW CONDUCTOR TO BE INSTALLED (SIZE AS NOTED).
- CONDUCTOR SPLICE.
- EXISTING No. 6 CONDUCTOR TO REMAIN.
- EXISTING CONDUCTOR TO BE REMOVED.
- (C) EXISTING CITY'S SOFFIT LAMP TO REMAIN.

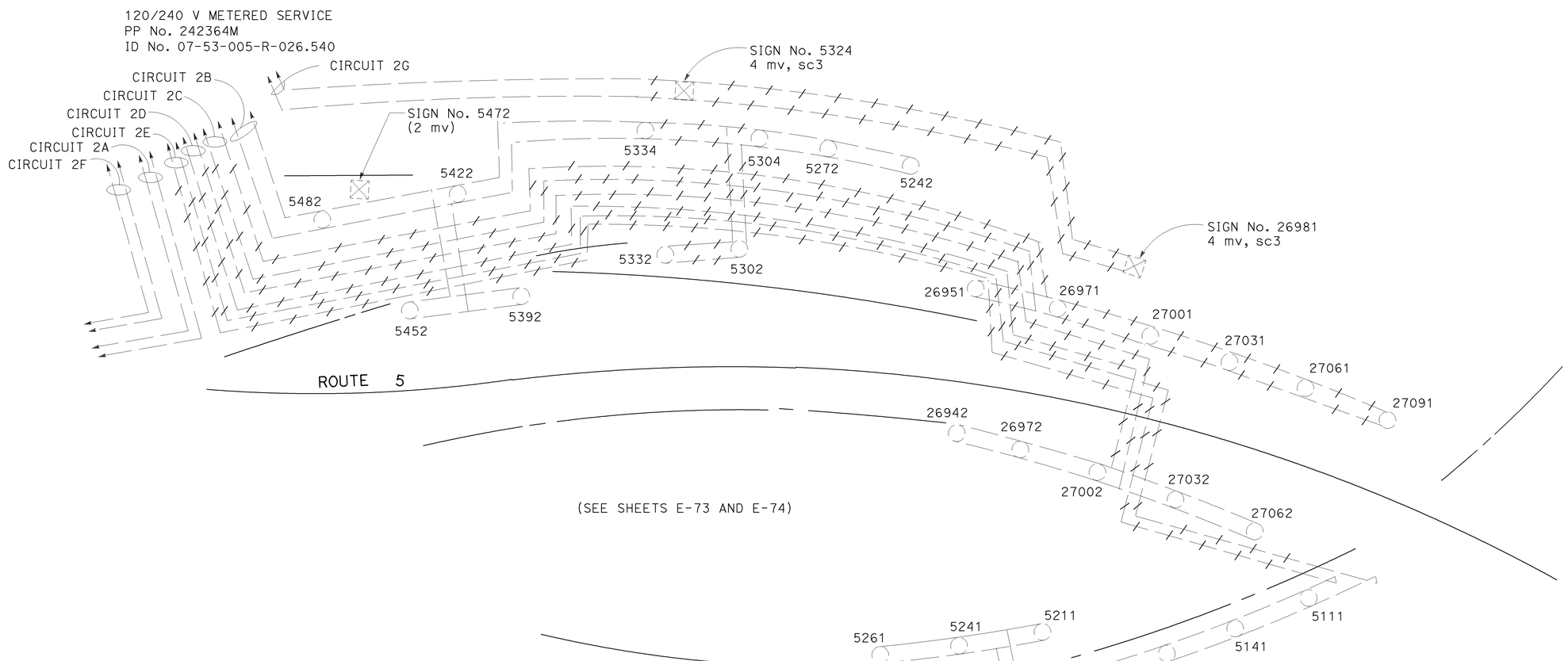

MODIFY LIGHTING AND SIGN ILLUMINATION

(WIRING DIAGRAM)

NO SCALE

E-87

THIS PLAN IS ACCURATE FOR ELECTRICAL WORK ONLY.

REVISED BY	DATE REVISED
LIEN VO	02/09

CALCULATED-DESIGNED BY: LIEN VO
CHECKED BY: JESSE RUELAS
FUNCTIONAL SUPERVISOR: YI TSAU

STATE OF CALIFORNIA - DEPARTMENT OF TRANSPORTATION
Caltrans
TRAFFIC DESIGN

LAST REVISION 02-18-09 | DATE PLOTTED => 12-JUN-2009 | TIME PLOTTED => 15:10

Dist	COUNTY	ROUTE	KILOMETER POST TOTAL PROJECT	SHEET No.	TOTAL SHEETS
07	LA	5	42.8/47.3	469	1073

REGISTERED ELECT ENGINEER 11/03/08 DATE

6-8-09
PLANS APPROVAL DATE

REGISTERED PROFESSIONAL ENGINEER JESSE RUELAS No. E015604 Exp. 12-31-09 ELECTRICAL STATE OF CALIFORNIA

THE STATE OF CALIFORNIA OR ITS OFFICERS OR AGENTS SHALL NOT BE RESPONSIBLE FOR THE ACCURACY OR COMPLETENESS OF ELECTRONIC COPIES OF THIS PLAN SHEET.

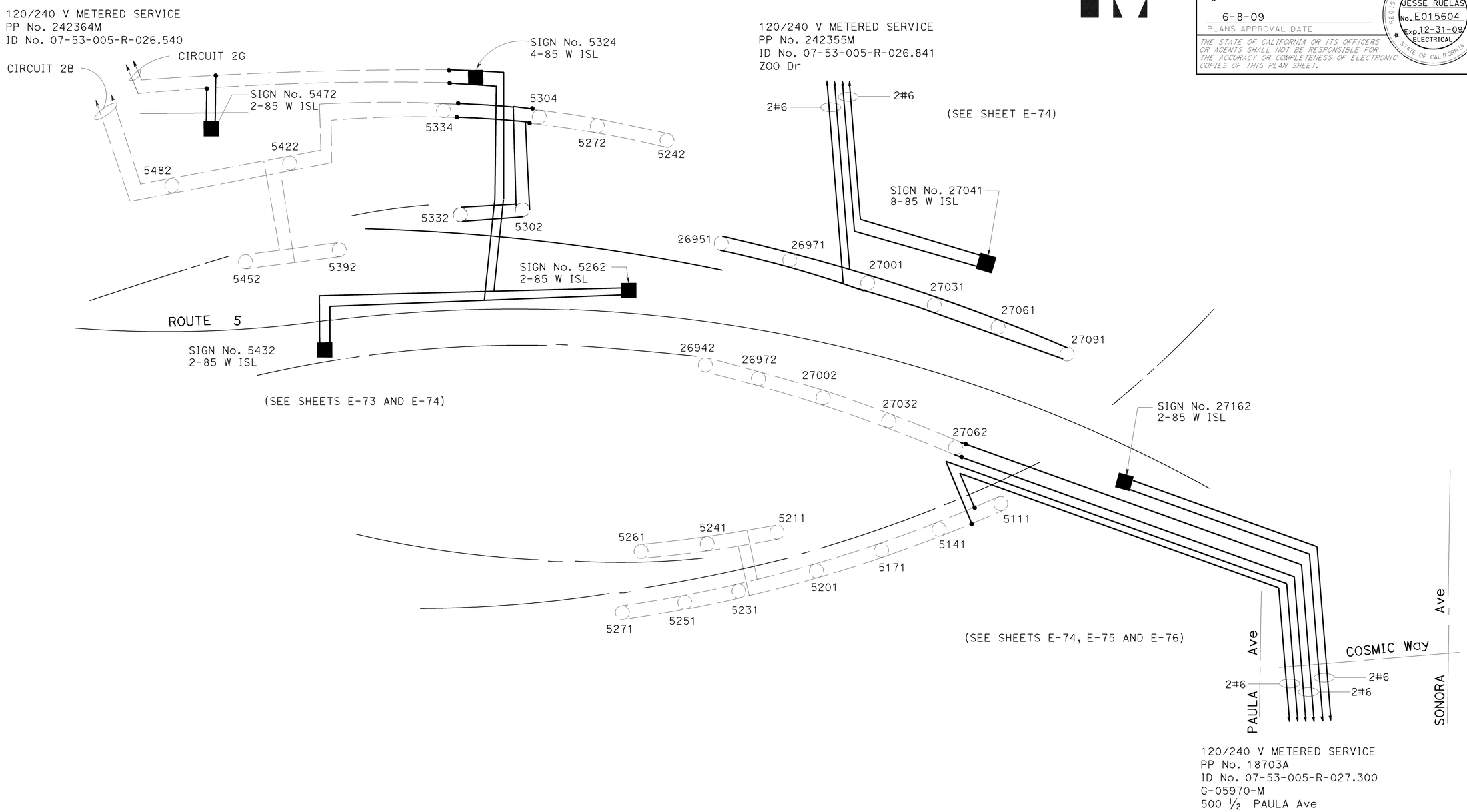

MODIFY LIGHTING AND SIGN ILLUMINATION

(WIRING DIAGRAM)

NO SCALE

THIS PLAN IS ACCURATE FOR ELECTRICAL WORK ONLY.

E-88

REVISED BY	LIEN VO
DATE REVISED	02/09
CALCULATED-DESIGNED BY	LIEN VO
CHECKED BY	JESSE RUELAS
FUNCTIONAL SUPERVISOR	YI TSAU

STATE OF CALIFORNIA - DEPARTMENT OF TRANSPORTATION
Caltrans TRAFFIC DESIGN

LAST REVISION 02-05-09 | DATE PLOTTED => 12-JUN-2009 | TIME PLOTTED => 15:10

Dist	COUNTY	ROUTE	KILOMETER POST TOTAL PROJECT	SHEET No.	TOTAL SHEETS
07	LA	5	42.8/47.3	470	1073

REGISTERED ELECT ENGINEER Jesse Ruelas DATE 11/03/08

PLANS APPROVAL DATE 6-8-09

REGISTERED PROFESSIONAL ENGINEER JESSE RUELAS No. E015604 Exp. 12-31-09 ELECTRICAL STATE OF CALIFORNIA

THE STATE OF CALIFORNIA OR ITS OFFICERS OR AGENTS SHALL NOT BE RESPONSIBLE FOR THE ACCURACY OR COMPLETENESS OF ELECTRONIC COPIES OF THIS PLAN SHEET.

Caltrans Metric

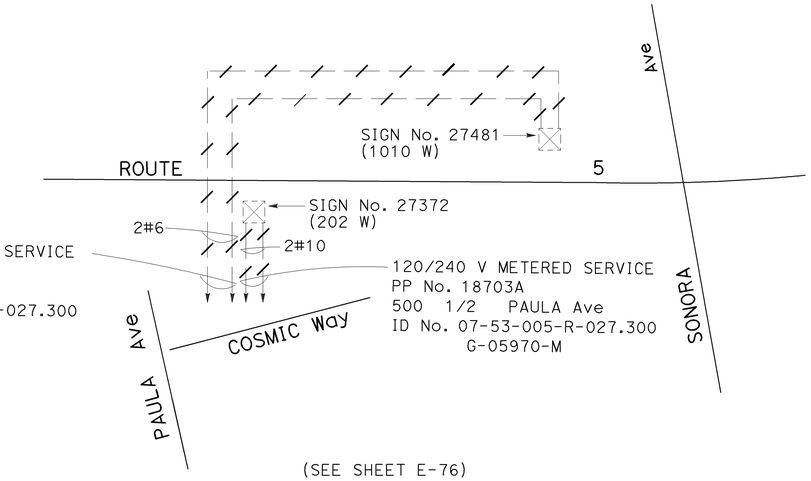

(SEE SHEET E-76)

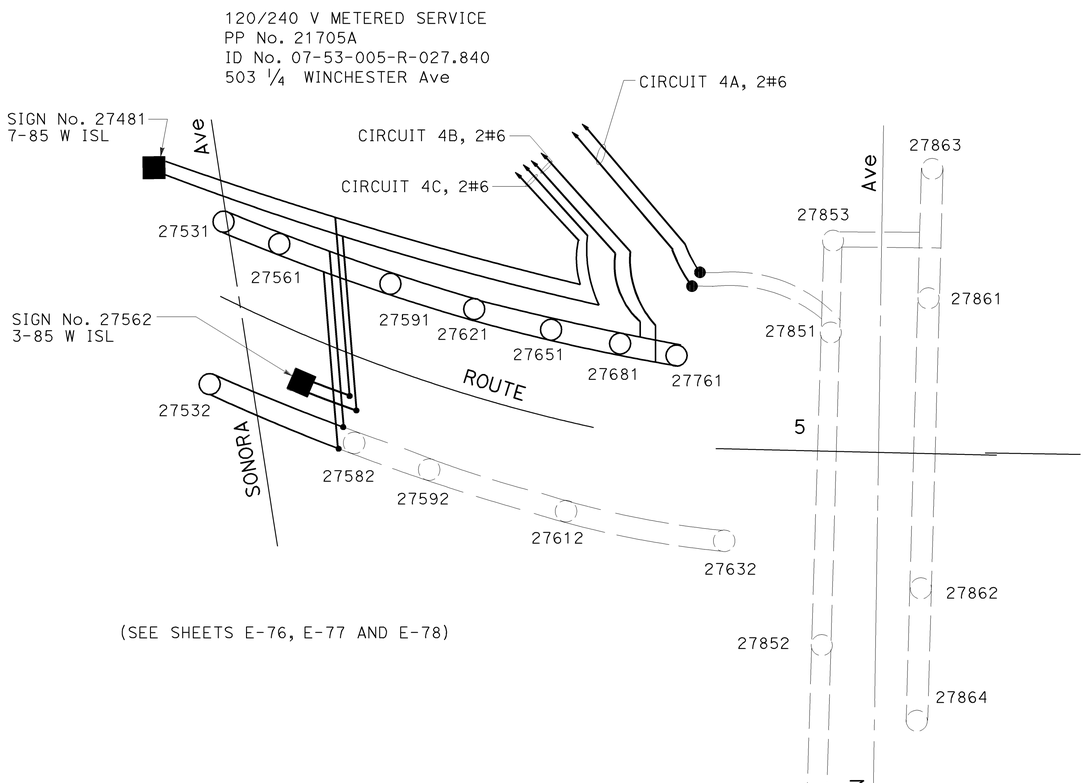

(SEE SHEETS E-76, E-77 AND E-78)

CITY CIRCUIT

EXISTING 240 V UNMETERED
PP No. 21705A

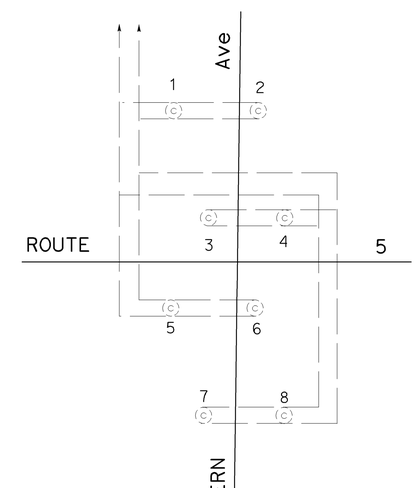

(SEE SHEET E-78)

MODIFY LIGHTING AND SIGN ILLUMINATION

(WIRING DIAGRAM)

NO SCALE

E-89

THIS PLAN IS ACCURATE FOR ELECTRICAL WORK ONLY.

CALCULATED-DESIGNED BY	LIEN VO	REVISED BY	LIEN VO
CHECKED BY	JESSE RUELAS	DATE REVISED	02/09

FUNCTIONAL SUPERVISOR YI TSAU

STATE OF CALIFORNIA - DEPARTMENT OF TRANSPORTATION

Caltrans **TRAFFIC DESIGN**

LAST REVISION 02-04-09 | DATE PLOTTED => 12-JUN-2009 | TIME PLOTTED => 15:10

Dist	COUNTY	ROUTE	KILOMETER POST TOTAL PROJECT	SHEET No.	TOTAL SHEETS
07	LA	5	42.8/47.3	471	1073

REGISTERED ELECT ENGINEER 11/03/08 DATE

6-8-09
PLANS APPROVAL DATE

REGISTERED PROFESSIONAL ENGINEER JESSE RUELAS No. E015604 Exp. 12-31-09 ELECTRICAL STATE OF CALIFORNIA

THE STATE OF CALIFORNIA OR ITS OFFICERS OR AGENTS SHALL NOT BE RESPONSIBLE FOR THE ACCURACY OR COMPLETENESS OF ELECTRONIC COPIES OF THIS PLAN SHEET.

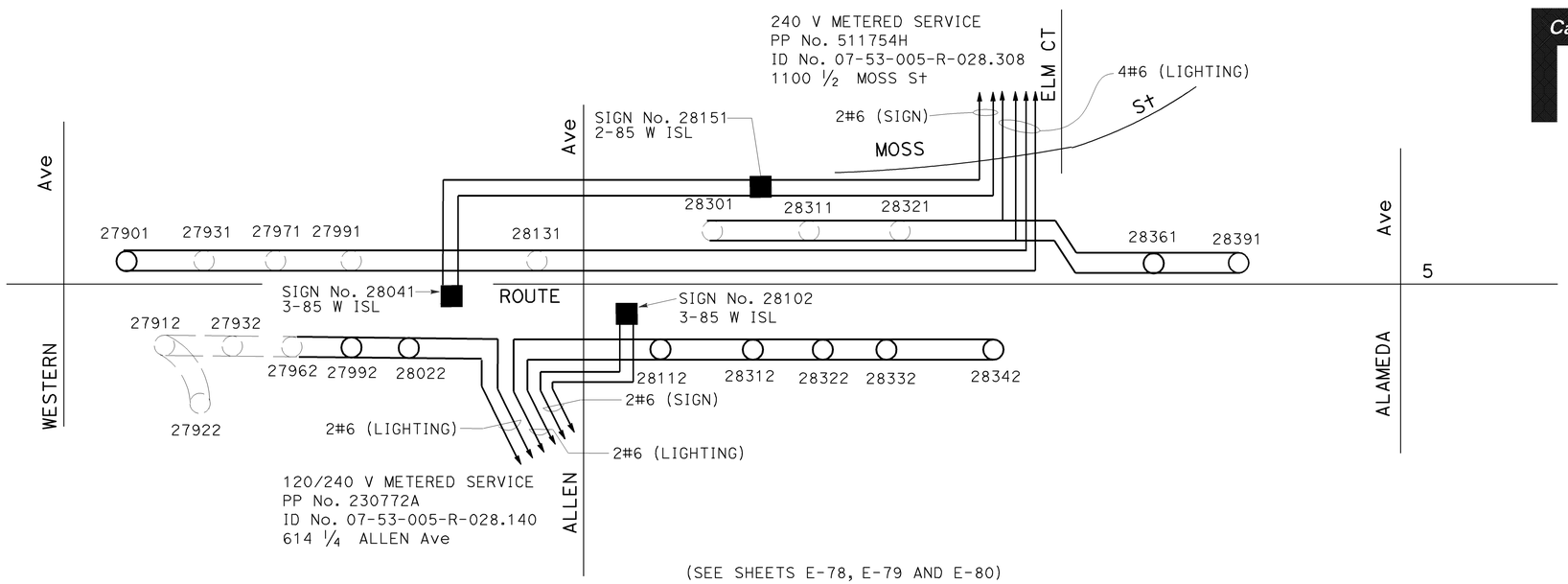

(SEE SHEETS E-78, E-79 AND E-80)

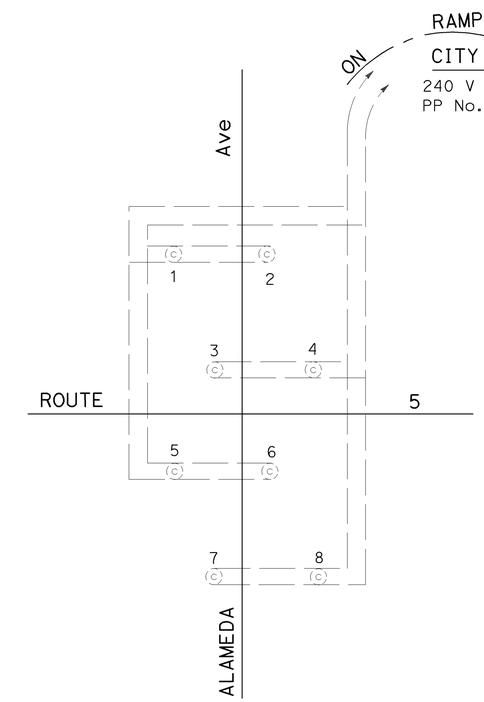

(SEE SHEET E-81)

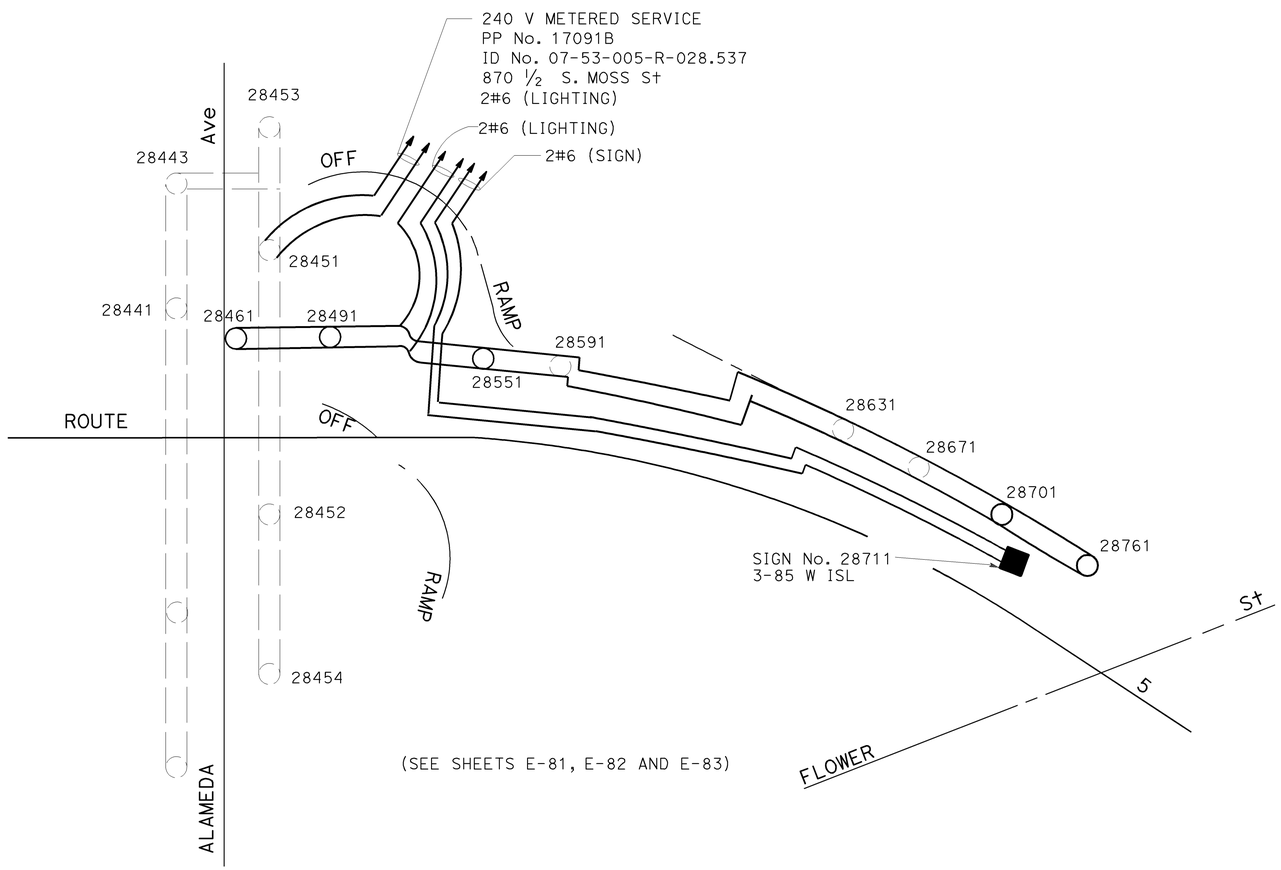

(SEE SHEETS E-81, E-82 AND E-83)

THIS PLAN IS ACCURATE FOR ELECTRICAL WORK ONLY.

MODIFY LIGHTING AND SIGN ILLUMINATION

(WIRING DIAGRAM)

NO SCALE

E-90

STATE OF CALIFORNIA - DEPARTMENT OF TRANSPORTATION
Caltrans
TRAFFIC DESIGN

FUNCTIONAL SUPERVISOR: YI TSAU
CALCULATED-DESIGNED BY: LIEN VO
CHECKED BY: JESSE RUELAS
REVISED BY: LIEN VO
DATE REVISED: 02/09

LAST REVISION 02-05-09
DATE PLOTTED => 17-JUN-2009
TIME PLOTTED => 12:36

Dist	COUNTY	ROUTE	KILOMETER POST TOTAL PROJECT	SHEET No.	TOTAL SHEETS
07	LA	5	42.8/47.3	472	1073

Jesse Ruelas 11/03/08
REGISTERED ELECT ENGINEER DATE

6-8-09
PLANS APPROVAL DATE

REGISTERED PROFESSIONAL ENGINEER JESSE RUELAS No. E015604 Exp. 12-31-09 ELECTRICAL STATE OF CALIFORNIA

THE STATE OF CALIFORNIA OR ITS OFFICERS OR AGENTS SHALL NOT BE RESPONSIBLE FOR THE ACCURACY OR COMPLETENESS OF ELECTRONIC COPIES OF THIS PLAN SHEET.

Caltrans Metric

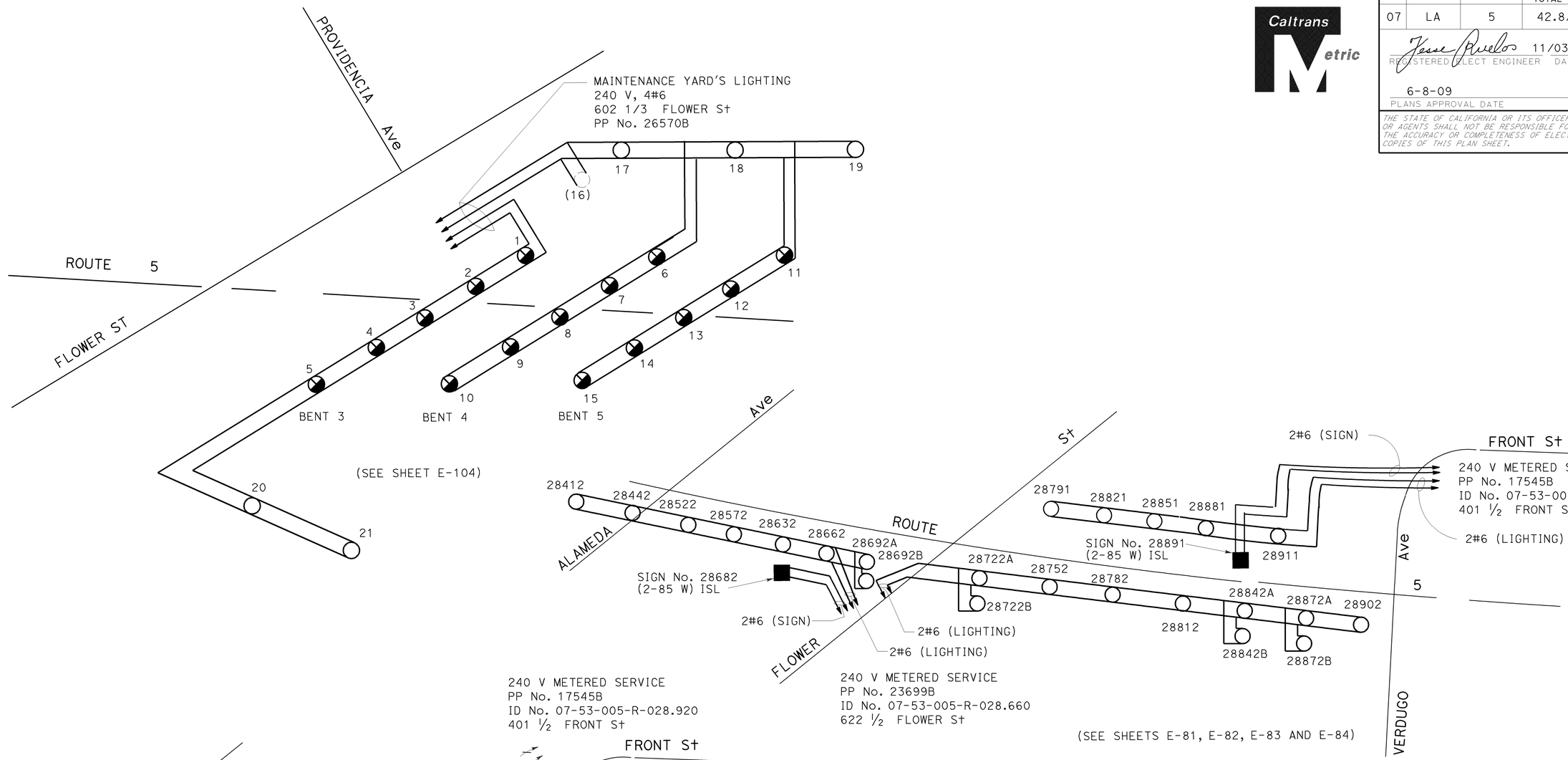

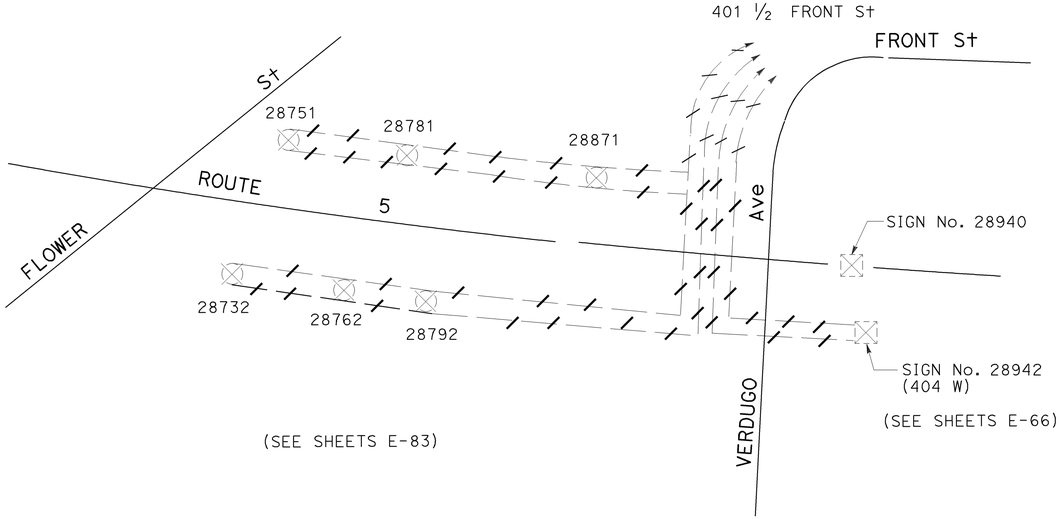

MODIFY LIGHTING AND SIGN ILLUMINATION
(WIRING DIAGRAM)
NO SCALE

E-91

THIS PLAN IS ACCURATE FOR ELECTRICAL WORK ONLY.

CALCULATED-DESIGNED BY	LIEN VO
CHECKED BY	JESSE RUELAS
REVISED BY	LIEN VO
DATE REVISED	02/09
FUNCTIONAL SUPERVISOR	YI TSAU

STATE OF CALIFORNIA - DEPARTMENT OF TRANSPORTATION
Caltrans TRAFFIC DESIGN

LAST REVISION 02-05-09 | DATE PLOTTED => 12-JUN-2009 | TIME PLOTTED => 15:10

Dist	COUNTY	ROUTE	KILOMETER POST TOTAL PROJECT	SHEET No.	TOTAL SHEETS
07	LA	5	42.8/47.3	473	1073

Jesse Ruelas 11/03/08
REGISTERED ELECT ENGINEER DATE

6-8-09
PLANS APPROVAL DATE

REGISTERED PROFESSIONAL ENGINEER JESSE RUELAS No. E015604 Exp. 12-31-09 ELECTRICAL STATE OF CALIFORNIA

THE STATE OF CALIFORNIA OR ITS OFFICERS OR AGENTS SHALL NOT BE RESPONSIBLE FOR THE ACCURACY OR COMPLETENESS OF ELECTRONIC COPIES OF THIS PLAN SHEET.

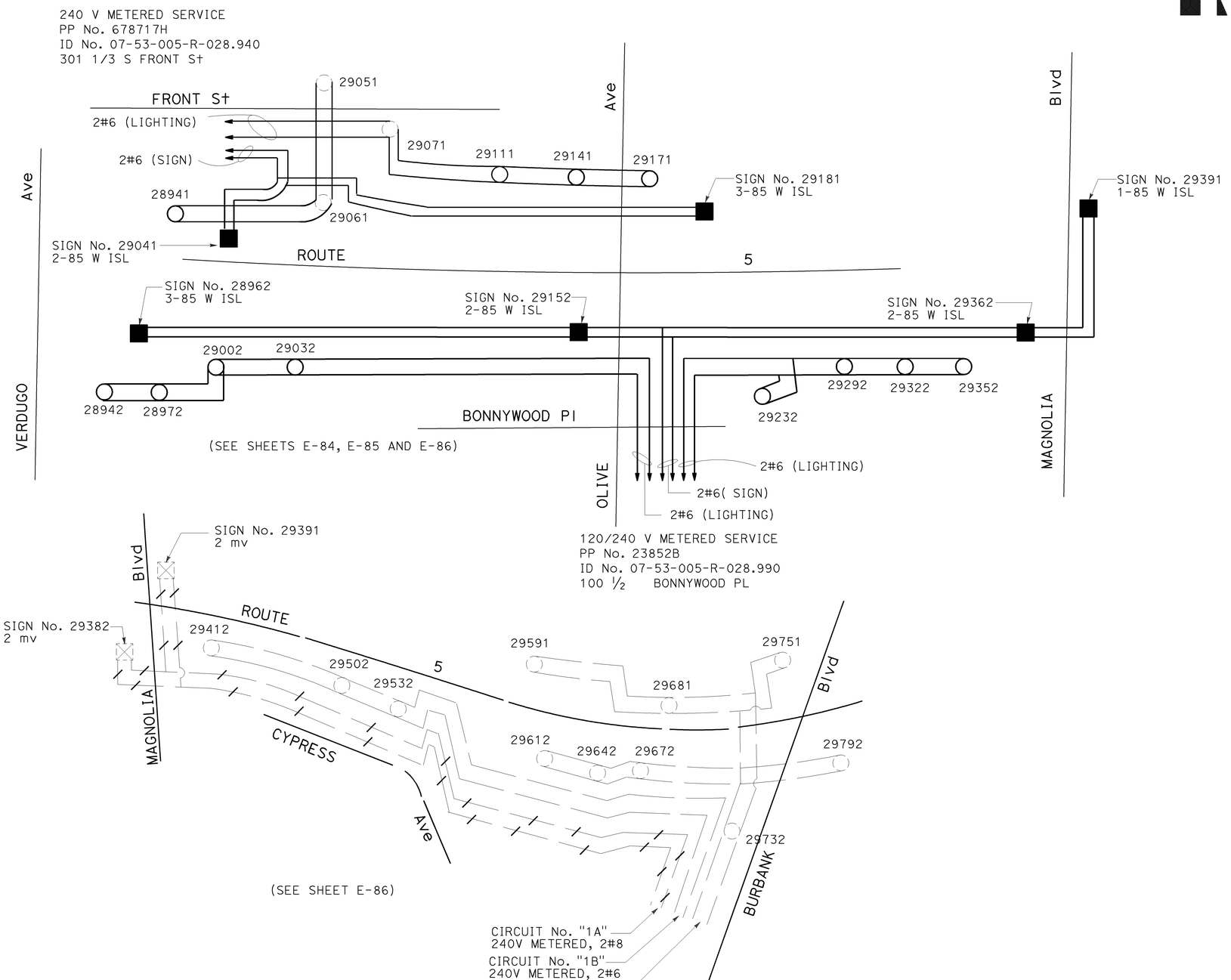

THIS PLAN IS ACCURATE FOR ELECTRICAL WORK ONLY.

MODIFY LIGHTING AND SIGN ILLUMINATION
(WIRING DIAGRAM)

NO SCALE

E-92

CALCULATED-DESIGNED BY	LIEN VO	REVISED BY	LIEN VO
CHECKED BY	JESSE RUELAS	DATE REVISED	02/09
FUNCTIONAL SUPERVISOR	YI TSAU		

STATE OF CALIFORNIA - DEPARTMENT OF TRANSPORTATION
Caltrans
TRAFFIC DESIGN

LAST REVISION 02-25-09 | DATE PLOTTED => 12-JUN-2009 | TIME PLOTTED => 15:10

FOR COMPLETE RIGHT OF WAY AND ACCURATE ACCESS DATA,
SEE RIGHT OF WAY RECORD MAPS AT DISTRICT OFFICE.

Dist	COUNTY	ROUTE	KILOMETER POST TOTAL PROJECT	SHEET No.	TOTAL SHEETS
07	LA	5	42.8/47.3	474	1073

REGISTERED ELECT ENGINEER 11/03/08 DATE

6-8-09
PLANS APPROVAL DATE

REGISTERED PROFESSIONAL ENGINEER JESSE RUELAS No. E015604 Exp. 12-31-09 ELECTRICAL STATE OF CALIFORNIA

THE STATE OF CALIFORNIA OR ITS OFFICERS OR AGENTS SHALL NOT BE RESPONSIBLE FOR THE ACCURACY OR COMPLETENESS OF ELECTRONIC COPIES OF THIS PLAN SHEET.

PROJECT NOTES: (THIS SHEET ONLY)

1. INSTALL 53C, 2#6, 1#8G FOR IRRIGATION CONTROLLER.
2. INSTALL 2#6, 1#8G FOR IRRIGATION CONTROLLER.
3. SEE SHEET E-76 FOR INSTALLATION.

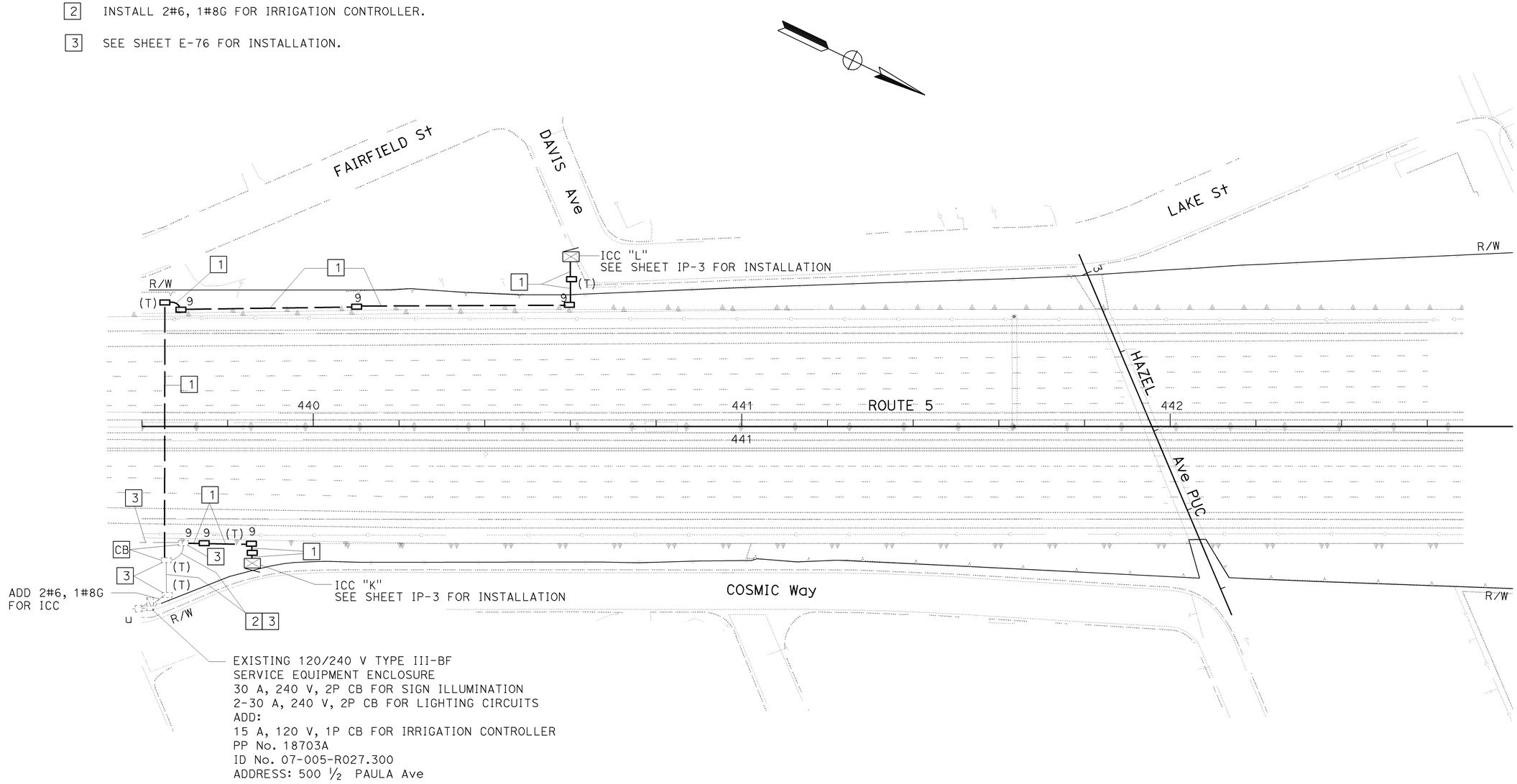

ALL DIMENSIONS ARE IN
METERS UNLESS OTHERWISE SHOWN

ELECTRIC SERVICE (IRRIGATION)

SCALE 1:500

THIS PLAN IS ACCURATE FOR ELECTRICAL WORK ONLY.

E-93

REVISED BY	LIEN VO
DATE REVISED	02/09
CALCULATED-DESIGNED BY	LIEN VO
CHECKED BY	JESSE RUELAS
FUNCTIONAL SUPERVISOR	YI TSAU

STATE OF CALIFORNIA - DEPARTMENT OF TRANSPORTATION
Caltrans TRAFFIC DESIGN

LAST REVISION 02-05-09 | DATE PLOTTED => 12-JUN-2009 | TIME PLOTTED => 15:10

FOR COMPLETE RIGHT OF WAY AND ACCURATE ACCESS DATA,
SEE RIGHT OF WAY RECORD MAPS AT DISTRICT OFFICE.

Dist	COUNTY	ROUTE	KILOMETER POST TOTAL PROJECT	SHEET No.	TOTAL SHEETS
07	LA	5	42.8/47.3	475	1073

Jesse Ruelas 11/03/08
REGISTERED ELECT ENGINEER DATE

6-8-09
PLANS APPROVAL DATE

REGISTERED PROFESSIONAL ENGINEER
JESSE RUELAS
No. E015604
Exp. 12-31-09
ELECTRICAL
STATE OF CALIFORNIA

THE STATE OF CALIFORNIA OR ITS OFFICERS OR AGENTS SHALL NOT BE RESPONSIBLE FOR THE ACCURACY OR COMPLETENESS OF ELECTRONIC COPIES OF THIS PLAN SHEET.

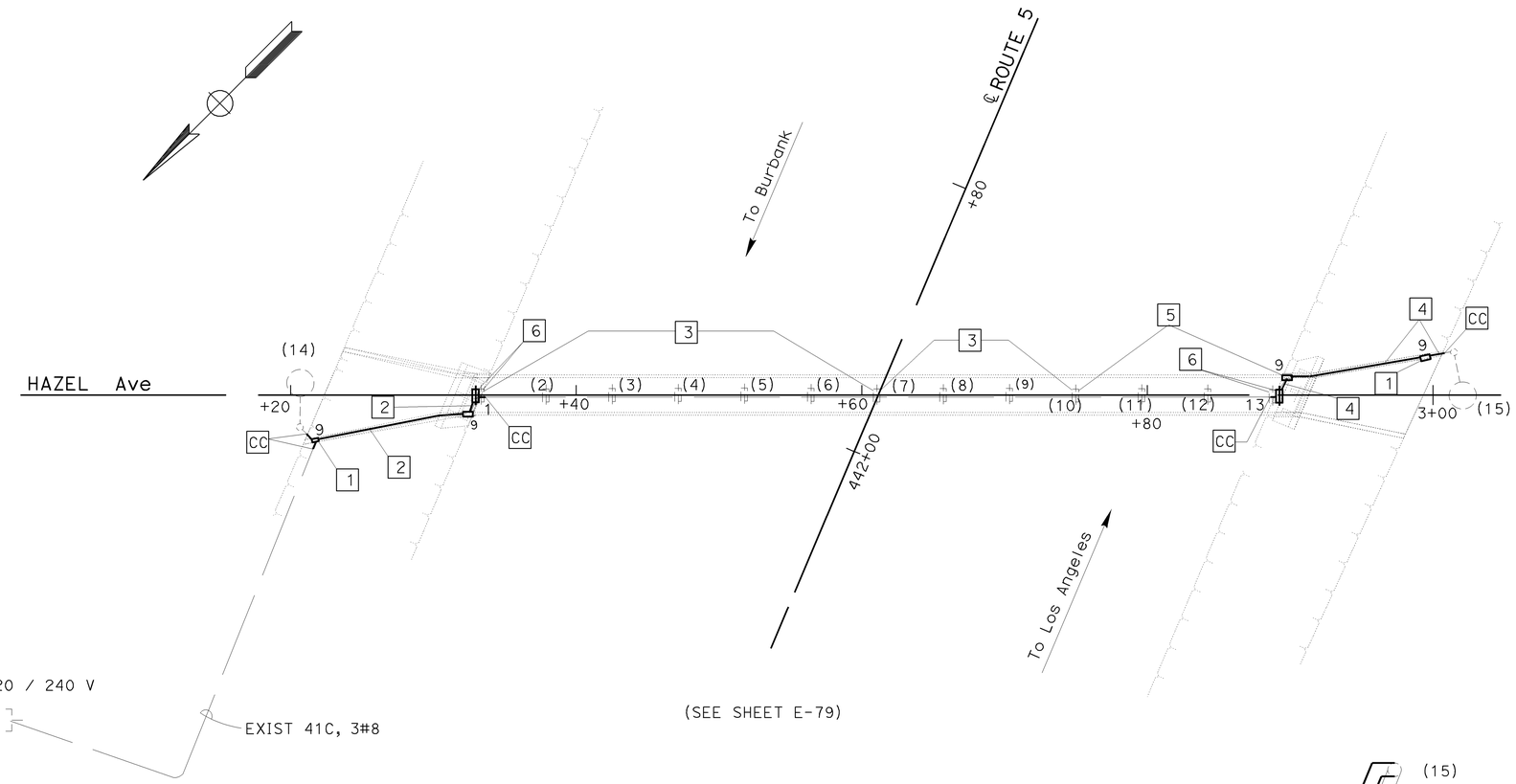

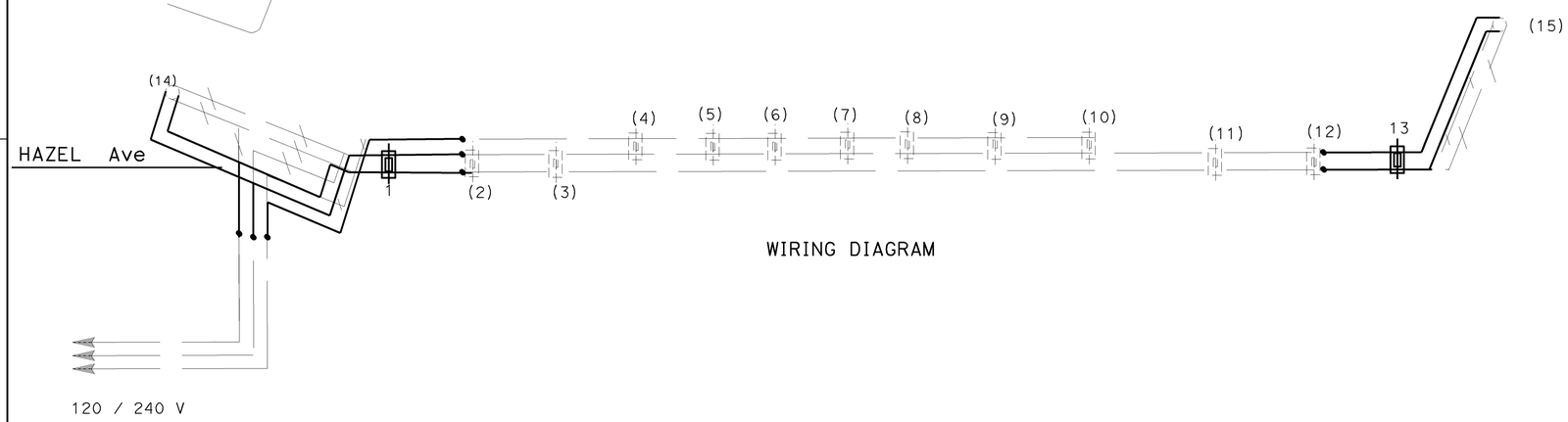

WIRING DIAGRAM

LEGENDS: (THIS SHEET ONLY)

- INSTALL 41C.
- EXISTING PEDESTRIAN LIGHTING FIXTURE TO BE RELOCATED.
- EXISTING PEDESTRIAN LIGHTING FIXTURE TO REMAIN.
- EXISTING 41C TO REMAIN.

WIRING DIAGRAM LEGENDS: (THIS SHEET ONLY)

- SPLICE.
- EXISTING LAMP TO REMAIN.
- EXISTING LAMP TO BE RELOCATED.
- EXISTING LIGHTING TO REMAIN.

GENERAL NOTES: (THIS SHEET ONLY)

1. Nos. 1, 2, 3 AND 11, 12, 13 PEDESTRIAN LIGHTS FOR NIGHT CIRCUIT.

PROJECT NOTES: (THIS SHEET ONLY)

1. INSTALL No. 9 PULL BOX 750 mm ABOVE SIDEWALK SURFACE. PULL BOX SHALL BE BOLTED DOWN, WATER-TIGHT COVER WITH "Street Lighting" INSCRIBED THEREON.
2. AB CONDUIT, INSTALL 41C, 3#8, 1#8G.
3. RC 3#8 CONDUCTORS, INSTALL 3#8, 1#8G.
4. AB CONDUIT, INSTALL 41C, 2#8, 1#8G.
5. RC 2#8 CONDUCTORS, INSTALL 2#8, 1#8G.
6. RL PEDESTRIAN LIGHTING FIXTURE TO NEW LOCATION.

ALL DIMENSIONS ARE IN METERS UNLESS OTHERWISE SHOWN

LIGHTING

HAZEL Ave PUC

(BRIDGE No. 53-1076)

SCALE 1:200

THIS PLAN IS ACCURATE FOR ELECTRICAL WORK ONLY.

E-94

REVISED BY	LIEN VO
DATE REVISED	02/09
CALCULATED-DESIGNED BY	LIEN VO
CHECKED BY	JESSE RUELAS
FUNCTIONAL SUPERVISOR	YI TSAU

STATE OF CALIFORNIA - DEPARTMENT OF TRANSPORTATION
Caltrans TRAFFIC DESIGN

LAST REVISION 02-05-09 | DATE PLOTTED => 12-JUN-2009 | TIME PLOTTED => 15:10

Dist	COUNTY	ROUTE	KILOMETER POST TOTAL PROJECT	SHEET No.	TOTAL SHEETS
07	LA	5	42.8/47.3	476	1073

REGISTERED ELECTRICAL ENGINEER — 11/03/08 DATE

6-8-09
PLANS APPROVAL DATE

REGISTERED PROFESSIONAL ENGINEER — JESSE RUELAS No. E015604 Exp. 12-31-09 ELECTRICAL — STATE OF CALIFORNIA

THE STATE OF CALIFORNIA OR ITS OFFICERS OR AGENTS SHALL NOT BE RESPONSIBLE FOR THE ACCURACY OR COMPLETENESS OF ELECTRONIC COPIES OF THIS PLAN SHEET.

Caltrans Metric

FOR COMPLETE RIGHT OF WAY AND ACCURATE ACCESS DATA, SEE RIGHT OF WAY RECORD MAPS AT DISTRICT OFFICE.

PROJECT NOTES: (THIS SHEET ONLY)

1. INSTALL 41C, 3#6, 1#8G FROM END POST TO ADJACENT PULL BOX, SEE END POST DETAIL IN STANDARD PLAN ES-12A AND DETAIL "A" THIS SHEET.
2. INSTALL 78C. MT (CONDUCTORS BY BURBANK WATER AND POWER).
3. INSTALL 120/240 V TYPE III-BF UNMETERED SERVICE EQUIPMENT ENCLOSURE WITH 100 A MAIN CIRCUIT BREAKER AND:
   15 A, 120 V, 1P CB FOR PEC
   (2) 30 A, 120 V, 1P CB FOR PEDESTRIAN OVERCROSSING (POC) LIGHTING CIRCUITS POC-1 AND POC-2
   30 A, 120 V, 1P CB FOR WALL LUMINAIRE CIRCUIT
   ID No. 07-053-005-R-028.670
   624 1/2 FLOWER St
   PP No. 23699B

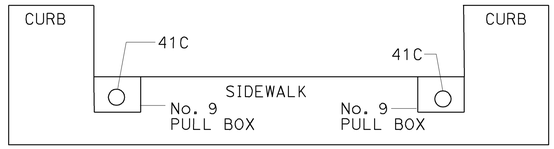

CROSS SECTION

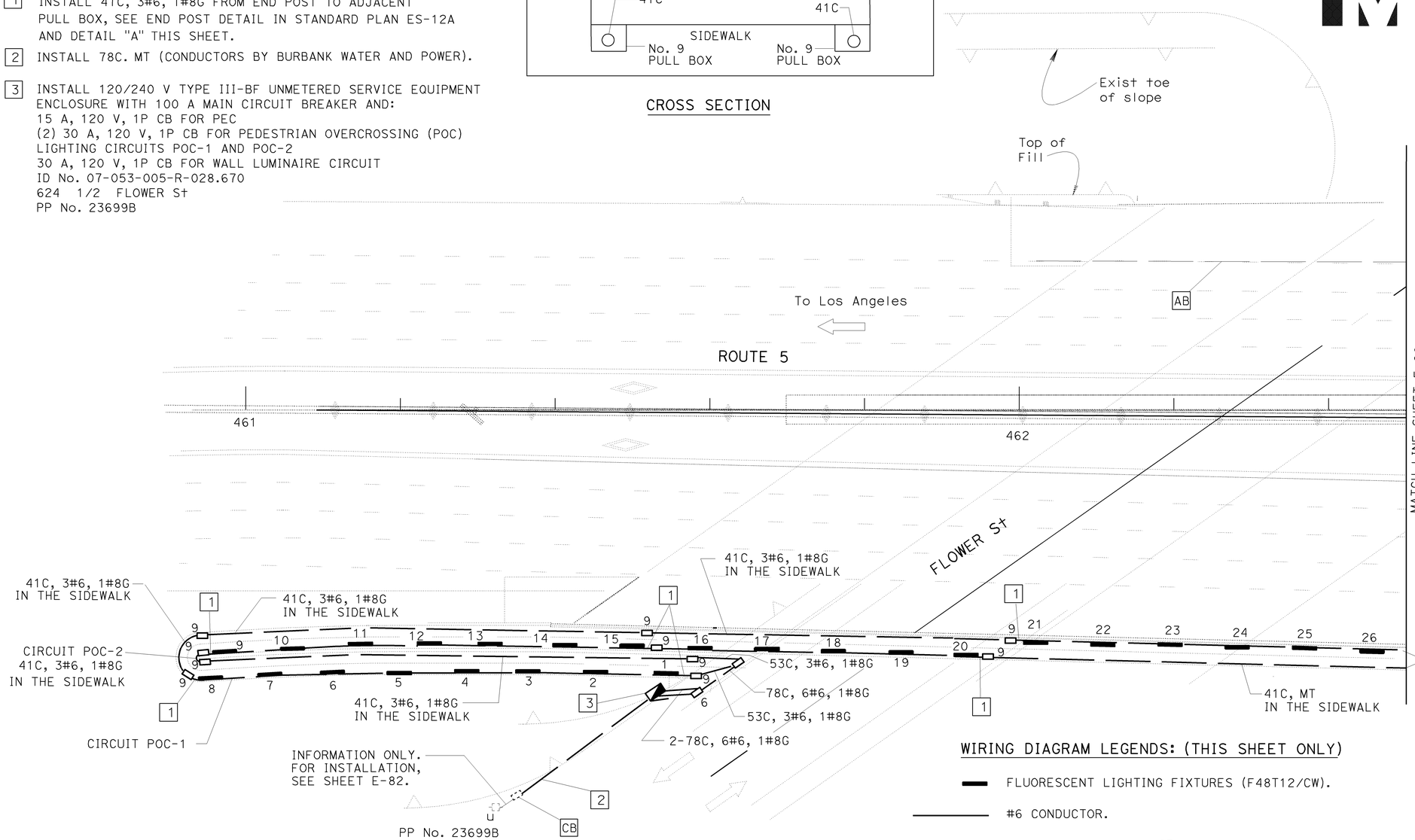

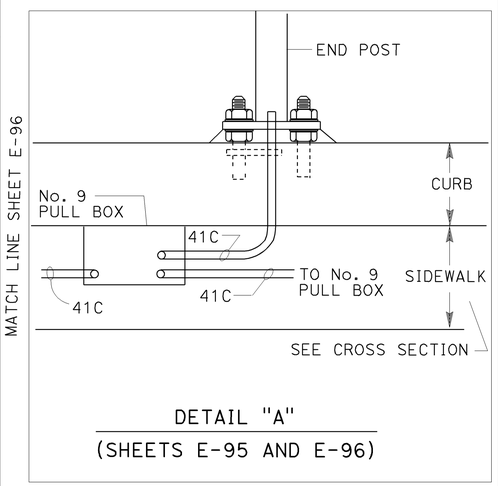

DETAIL "A"
(SHEETS E-95 AND E-96)

WIRING DIAGRAM LEGENDS: (THIS SHEET ONLY)

FLUORESCENT LIGHTING FIXTURES (F48T12/CW).

#6 CONDUCTOR.

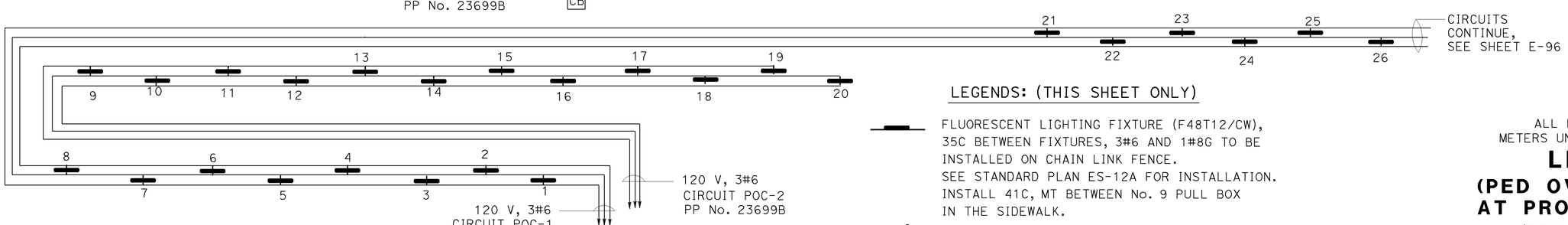

WIRING DIAGRAM

LEGENDS: (THIS SHEET ONLY)

FLUORESCENT LIGHTING FIXTURE (F48T12/CW), 35C BETWEEN FIXTURES, 3#6 AND 1#8G TO BE INSTALLED ON CHAIN LINK FENCE. SEE STANDARD PLAN ES-12A FOR INSTALLATION. INSTALL 41C, MT BETWEEN No. 9 PULL BOX IN THE SIDEWALK.

9 — No. 9 PULL BOX IN THE SIDEWALK.

THIS PLAN IS ACCURATE FOR ELECTRICAL WORK ONLY

ALL DIMENSIONS ARE IN METERS UNLESS OTHERWISE SHOWN

LIGHTING
(PED OVERCROSSING AT PROVIDENCIA Ave)

(BRIDGE No. 53-1085)
SCALE 1:300

E-95

REVISED BY	DATE REVISED
LIEN VO	02/09

CALCULATED-DESIGNED BY: LIEN VO
CHECKED BY: JESSE RUELAS
FUNCTIONAL SUPERVISOR: YI TSAU

STATE OF CALIFORNIA - DEPARTMENT OF TRANSPORTATION
Caltrans TRAFFIC DESIGN

LAST REVISION 02-06-09 | DATE PLOTTED => 12-JUN-2009 | TIME PLOTTED => 15:11

FOR COMPLETE RIGHT OF WAY AND ACCURATE ACCESS DATA, SEE RIGHT OF WAY RECORD MAPS AT DISTRICT OFFICE.

LEGENDS: (THIS SHEET ONLY)

FLUORESCENT LIGHTING FIXTURE (F48T12/CW), 35C BETWEEN FIXTURES, 3#6 AND 1#8G TO BE INSTALLED ON CHAIN LINK FENCE. SEE STANDARD PLAN ES-12A FOR INSTALLATION. INSTALL 41C, MT BETWEEN No. 9 PULL BOX IN THE SIDEWALK.

9 No. 9 PULL BOX IN THE SIDEWALK.

PROJECT NOTES: (THIS SHEET ONLY)

1. INSTALL 41C, 3#6, 1#8G FROM END POST TO ADJACENT PULL BOX, SEE END POST DETAIL IN STANDARD PLAN ES-12A AND DETAIL "A" SHEET E-95.
2. INSTALL 78C MT, (CONDUCTORS BY BURBANK WATER AND POWER).
3. INSTALL 53C, 3#6, 1#8G.
4. INSTALL 120/240 V TYPE III-BF UNMETERED SERVICE EQUIPMENT ENCLOSURE WITH 100 A MAIN CIRCUIT BREAKER AND:
   15 A, 120 V, 1P CB FOR PEC
   30 A, 120 V, 1P CB FOR PEDESTRIAN OVERCROSSING (POC) LIGHTING CIRCUIT POC-3.
   ID No. 07-053-005-R-028.970
   500 ½ S. BONNYWOOD Pl.
   PP No. 20970-B
5. INSTALL 78C, TYPE H RISER, MT, FIRST 3 m OF THE POWER POLE ONLY. (CONDUCTORS BY BURBANK WATER AND POWER).

Dist	COUNTY	ROUTE	KILOMETER POST TOTAL PROJECT	SHEET No.	TOTAL SHEETS
07	LA	5	42.8/47.3	477	1073

Jesse Ruelas 11/03/08
REGISTERED ELECT ENGINEER DATE

6-8-09
PLANS APPROVAL DATE

REGISTERED PROFESSIONAL ENGINEER JESSE RUELAS No. E015604 Exp. 12-31-09 ELECTRICAL STATE OF CALIFORNIA

THE STATE OF CALIFORNIA OR ITS OFFICERS OR AGENTS SHALL NOT BE RESPONSIBLE FOR THE ACCURACY OR COMPLETENESS OF ELECTRONIC COPIES OF THIS PLAN SHEET.

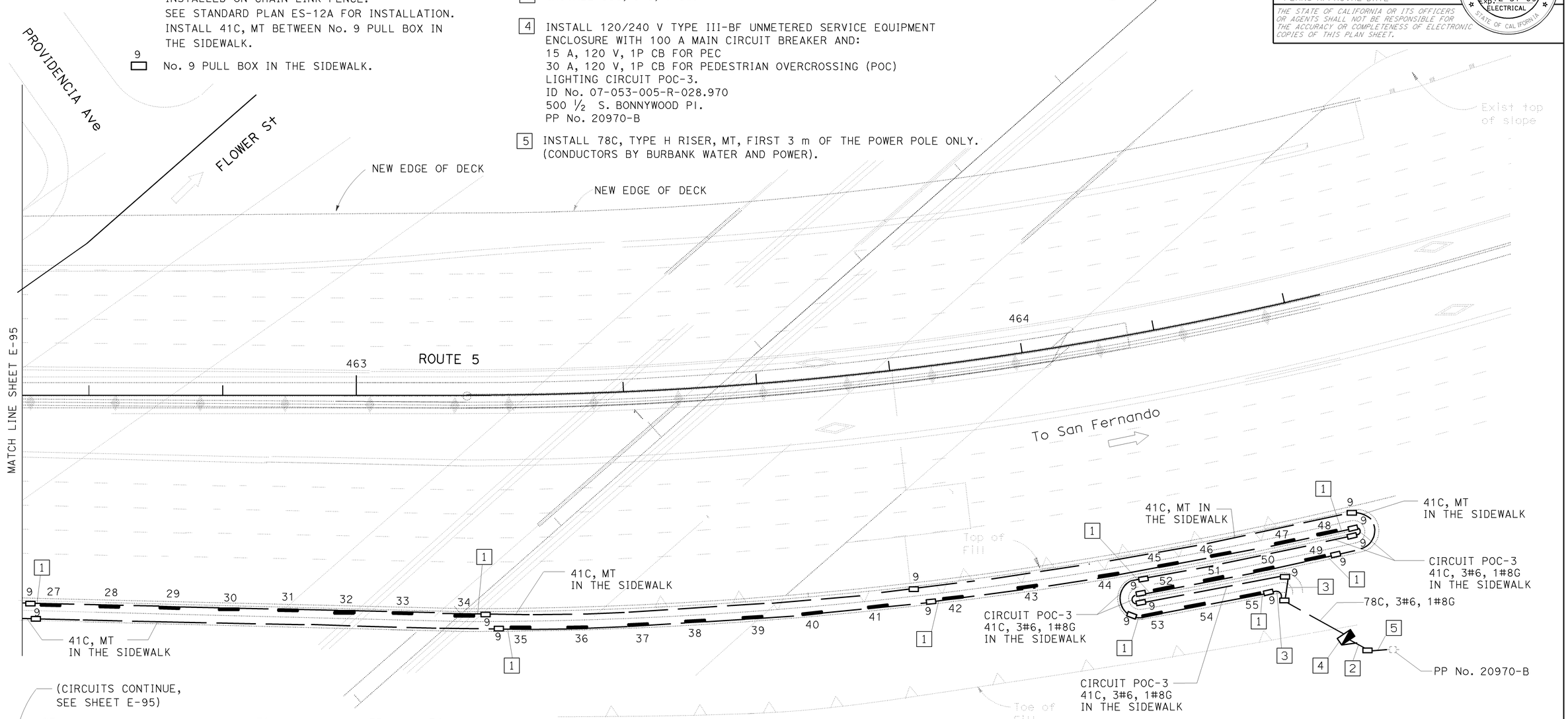

ALL DIMENSIONS ARE IN METERS UNLESS OTHERWISE SHOWN

WIRING DIAGRAM LEGENDS: (THIS SHEET ONLY)

FLUORESCENT LIGHTING FIXTURES (F48T12/CW).

#6 CONDUCTOR.

WIRING DIAGRAM

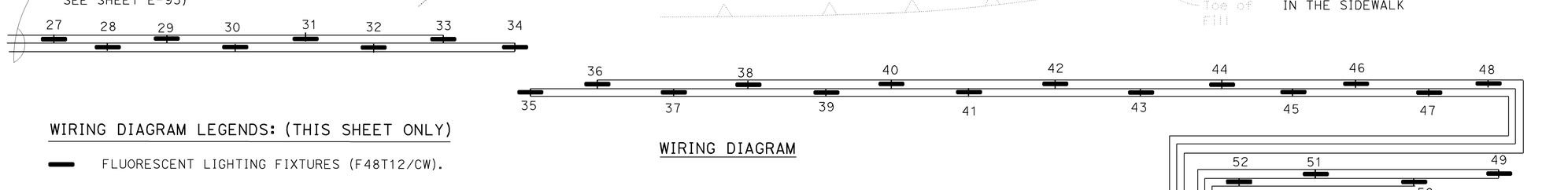

THIS PLAN IS ACCURATE FOR ELECTRICAL WORK ONLY

LIGHTING (PED OVERCROSSING AT PROVIDENCIA Ave)

(BRIDGE No. 53-1085)
SCALE 1:300

E-96

REVISED BY	LIEN VO	DATE REVISED	02/09
CALCULATED-DESIGNED BY	LIEN VO	CHECKED BY	JESSE RUELAS
FUNCTIONAL SUPERVISOR	YI TSAU		

STATE OF CALIFORNIA - DEPARTMENT OF TRANSPORTATION
Caltrans TRAFFIC DESIGN

LAST REVISION 02-08-09 DATE PLOTTED => 15-JUN-2009 TIME PLOTTED => 13:13

Dist	COUNTY	ROUTE	KILOMETER POST TOTAL PROJECT	SHEET No.	TOTAL SHEETS
07	LA	5	42.8/47.3	478	1073

REGISTERED ELECT ENGINEER Jesse Ruelas 11/03/08 DATE

6-8-09
PLANS APPROVAL DATE

REGISTERED PROFESSIONAL ENGINEER JESSE RUELAS No. E015604 Exp. 12-31-09 ELECTRICAL STATE OF CALIFORNIA

THE STATE OF CALIFORNIA OR ITS OFFICERS OR AGENTS SHALL NOT BE RESPONSIBLE FOR THE ACCURACY OR COMPLETENESS OF ELECTRONIC COPIES OF THIS PLAN SHEET.

Caltrans Metric

FOR COMPLETE RIGHT OF WAY AND ACCURATE ACCESS DATA, SEE RIGHT OF WAY RECORD MAPS AT DISTRICT OFFICE.

PROJECT NOTES: (THIS SHEET ONLY)

1. INSTALL 53C, 2#4, 1#8G.
2. INFORMATION ONLY, SEE E-95 FOR INSTALLATION.
   120/240 V TYPE III-BF METERED SERVICE EQUIPMENT
   ENCLOSURE WITH 100 A MAIN BREAKER FOR
   CITY'S LIGHTING CIRCUITS:
   30 A, 120 V, 1P CB FOR PEDESTRIAN OVERCROSSING (POC) CIRCUIT
   15 A, 120 V, 1P CB FOR PEC
   30 A, 120 V, 1P CB FOR WALL LUMINAIRE CIRCUIT
   ID No. 07-053-005-R-028.670
   624 1/2 FLOWER St
   PP No. 23699B

PROJECT NOTES: (THIS SHEET ONLY)

3. INSTALL 53C, 2#4, 1#8G FROM PULL BOX UP INSIDE NEW COLUMN TO WALL LUMINAIRE. SEE DETAIL SHEET E-106 FOR INSTALLATION.
4. INSTALL 41C, 2#4, 1#8G FROM PULL BOX UP (STRAP TO OUTSIDE EXISTING COLUMN) TO WALL LUMINAIRE. SEE DETAIL SHEET E-106 FOR INSTALLATION.
5. INSTALL 2#4, 1#8G FOR CITY'S WALL LUMINAIRE CIRCUIT.

LEGENDS: (THIS SHEET ONLY)

WALL LUMINAIRE, 70 W HPS (120 V) AND JUNCTION BOX TO BE INSTALLED.

53C SHALL BE INSTALLED BETWEEN PULL BOXES,
AND 41C BETWEEN JUNCTION BOXES UNLESS OTHERWISE NOTED.
SEE DETAIL IN SHEET E-106 FOR INSTALLATION.
AND CONDUCTORS TO BE INSTALLED AS SHOWN IN WIRING DIAGRAM.

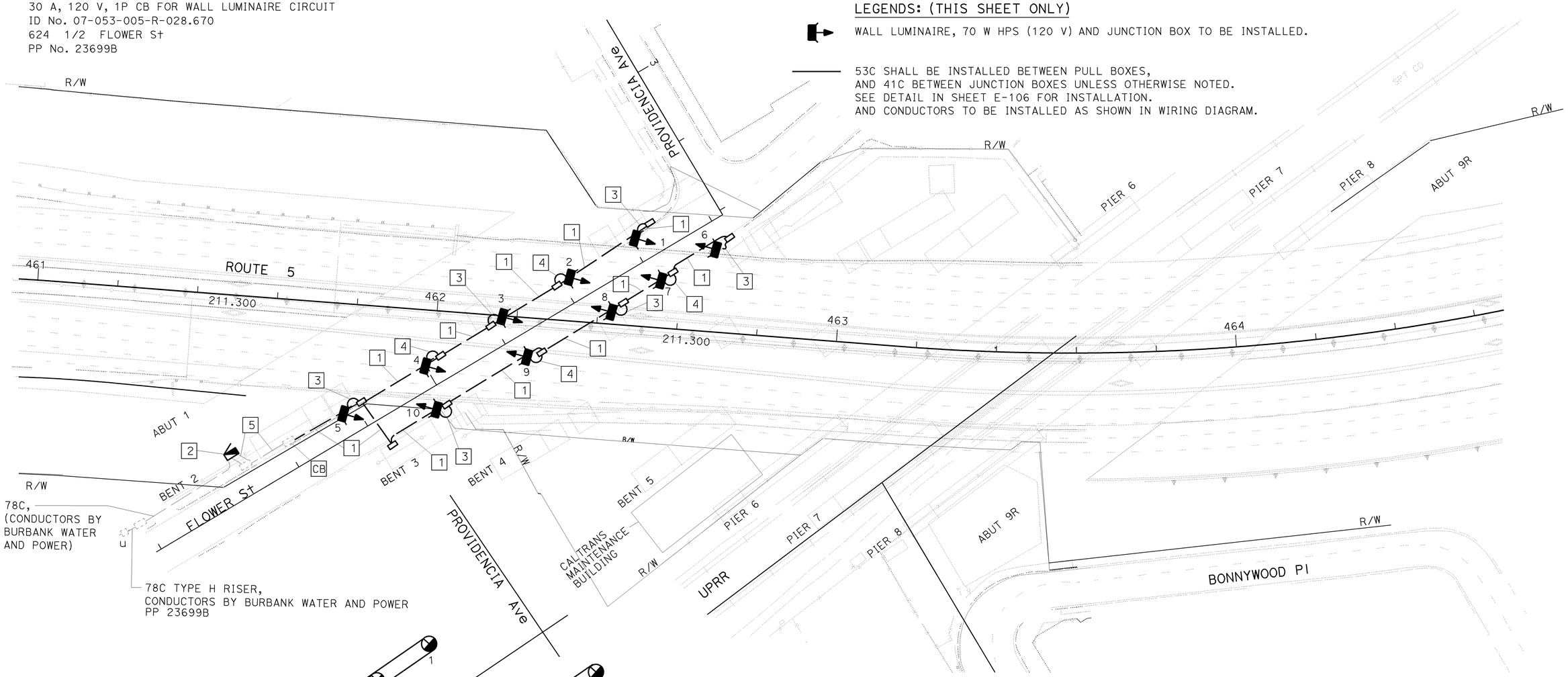

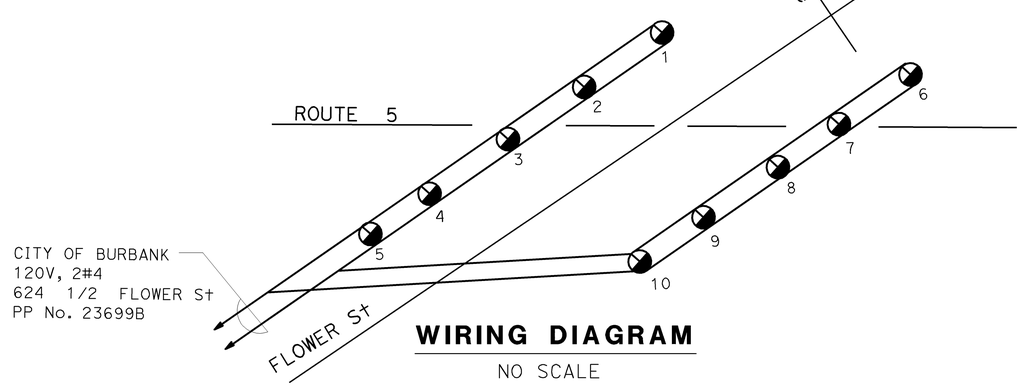

WIRING DIAGRAM

NO SCALE

THIS PLAN IS ACCURATE FOR ELECTRICAL WORK ONLY.

ALL DIMENSIONS ARE IN METERS UNLESS OTHERWISE SHOWN

LIGHTING

SCALE 1:500

E-97

REVISED BY	LIEN VO
DATE REVISED	02/09
CALCULATED-DESIGNED BY	LIEN VO
CHECKED BY	JESSE RUELAS
FUNCTIONAL SUPERVISOR	YI TSAU

STATE OF CALIFORNIA - DEPARTMENT OF TRANSPORTATION
Caltrans TRAFFIC DESIGN

LAST REVISION 02-05-09 | DATE PLOTTED => 12-JUN-2009 | TIME PLOTTED => 15:11

Dist	COUNTY	ROUTE	KILOMETER POST TOTAL PROJECT	SHEET No.	TOTAL SHEETS
07	LA	5	42.8/47.3	479	1073

Jesse Ruelas 11/03/08
REGISTERED ELECT ENGINEER DATE

6-8-09
PLANS APPROVAL DATE

REGISTERED PROFESSIONAL ENGINEER JESSE RUELAS No. E015604 Exp. 12-31-09 ELECTRICAL STATE OF CALIFORNIA

THE STATE OF CALIFORNIA OR ITS OFFICERS OR AGENTS SHALL NOT BE RESPONSIBLE FOR THE ACCURACY OR COMPLETENESS OF ELECTRONIC COPIES OF THIS PLAN SHEET.

FOR COMPLETE RIGHT OF WAY AND ACCURATE ACCESS DATA, SEE RIGHT OF WAY RECORD MAPS AT DISTRICT OFFICE.

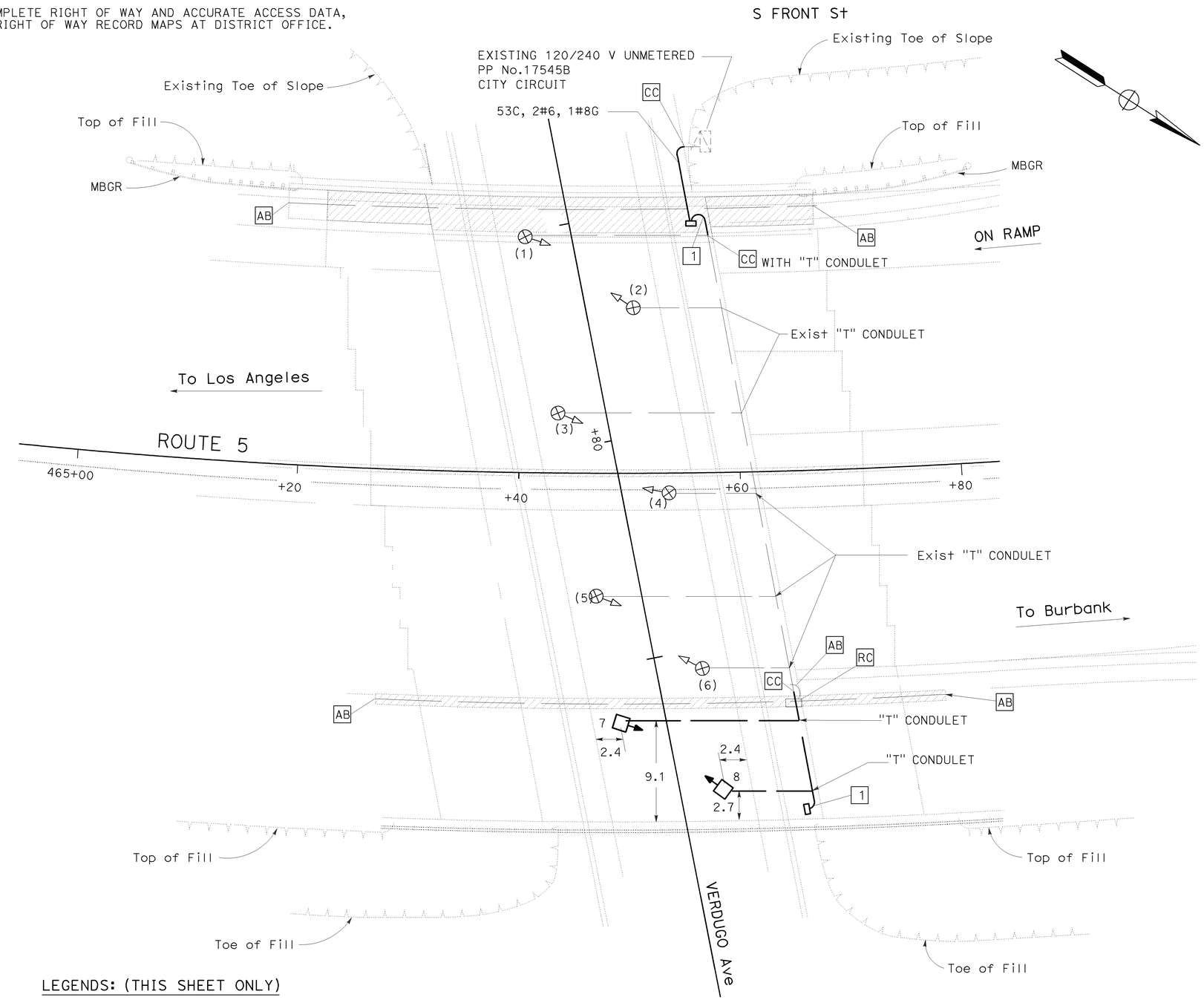

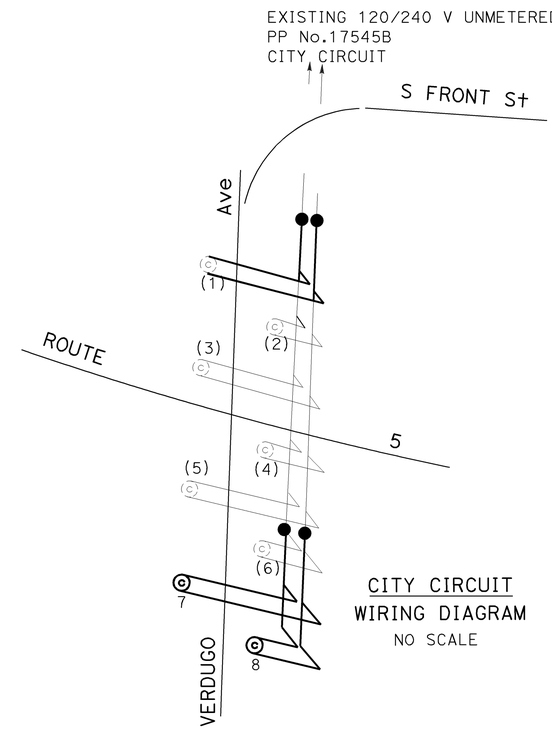

CITY CIRCUIT
WIRING DIAGRAM
NO SCALE

PROJECT NOTES: (THIS SHEET ONLY)

1 INSTALL 41C DOWN AND INSIDE OF ABUTMENT WALL TO PULL BOX IN SIDEWALK.

LEGENDS: (THIS SHEET ONLY)

- TYPE 21 LIGHTING STANDARD FOUNDATION TO BE INSTALLED ON CONCRETE BARRIER.
- EXISTING PENDANT SOFFIT LUMINAIRE.
- EXISTING 41C FOR SOFFIT LIGHTING.
- INSTALL 100 W HPS PENDANT SOFFIT LUMINAIRE.
- INSTALL 41C, 2#6, 1#8G FOR SOFFIT LIGHTING.

THIS PLAN IS ACCURATE FOR ELECTRICAL WORK ONLY.

ALL DIMENSIONS ARE IN METERS UNLESS OTHERWISE SHOWN

LIGHTING
(VERDUGO AVENUE UNDERCROSSING)
(BRIDGE No. 53-1086)
SCALE 1:200

E-98

STATE OF CALIFORNIA - DEPARTMENT OF TRANSPORTATION
Caltrans TRAFFIC DESIGN

FUNCTIONAL SUPERVISOR: YI TSAU
CALCULATED-DESIGNED BY: LIEN VO
CHECKED BY: JESSE RUELAS
REVISED BY: LIEN VO
DATE REVISED: 02/09

LAST REVISION 02-05-09 DATE PLOTTED => 12-JUN-2009 TIME PLOTTED => 15:11

FOR COMPLETE RIGHT OF WAY AND ACCURATE ACCESS DATA,
SEE RIGHT OF WAY RECORD MAPS AT DISTRICT OFFICE.

Dist	COUNTY	ROUTE	KILOMETER POST TOTAL PROJECT	SHEET No.	TOTAL SHEETS
07	LA	5	42.8/47.3	480	1073

Jesse Ruelas 11/03/08
REGISTERED ELECT ENGINEER DATE

6-8-09
PLANS APPROVAL DATE

REGISTERED PROFESSIONAL ENGINEER
JESSE RUELAS
No. E015604
Exp. 12-31-09
ELECTRICAL
STATE OF CALIFORNIA

THE STATE OF CALIFORNIA OR ITS OFFICERS OR AGENTS SHALL NOT BE RESPONSIBLE FOR THE ACCURACY OR COMPLETENESS OF ELECTRONIC COPIES OF THIS PLAN SHEET.

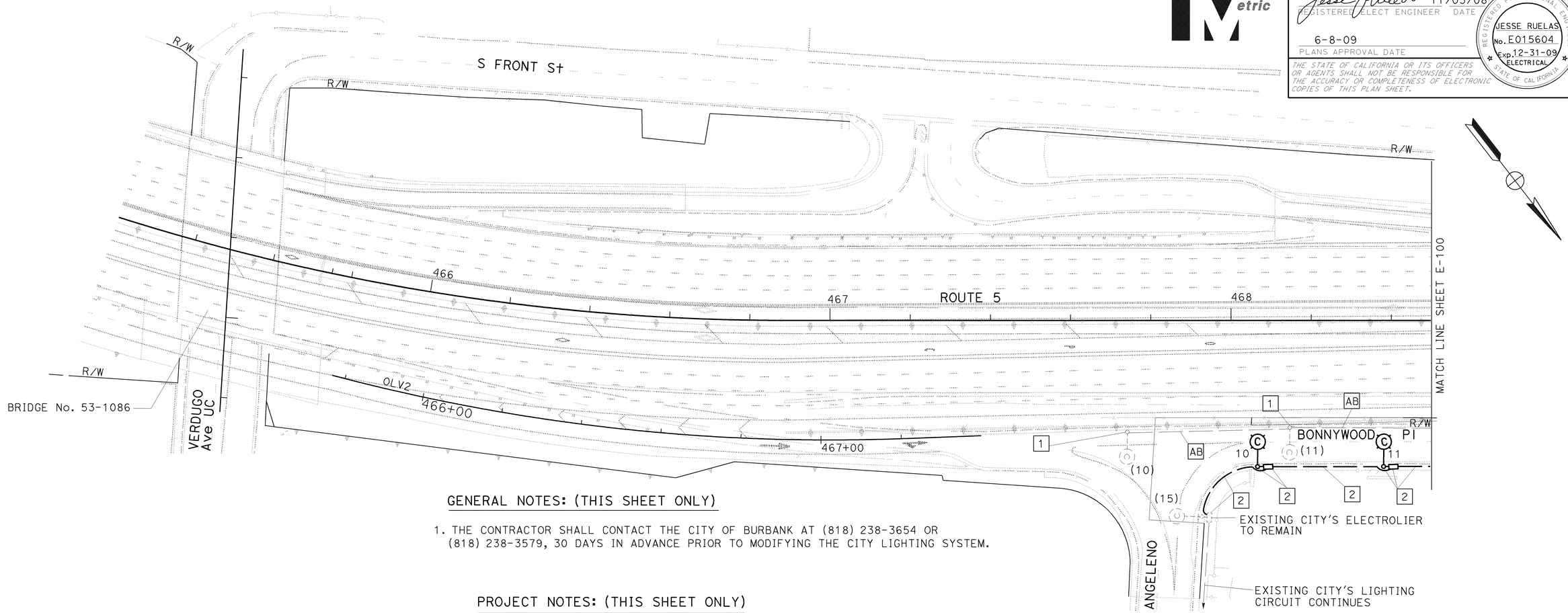

GENERAL NOTES: (THIS SHEET ONLY)

1. THE CONTRACTOR SHALL CONTACT THE CITY OF BURBANK AT (818) 238-3654 OR (818) 238-3579, 30 DAYS IN ADVANCE PRIOR TO MODIFYING THE CITY LIGHTING SYSTEM.

PROJECT NOTES: (THIS SHEET ONLY)

1. EXISTING CITY'S ELECTROLIER WILL BE REMOVED AND RELOCATED BY BURBANK WATER AND POWER.
2. FOR REFERENCE ONLY, INSTALLATION OF FOUNDATIONS, CONDUITS, CONDUCTORS, ELECTROLIERS AND PULL BOXES WILL BE DONE BY BURBANK WATER AND POWER.

LEGENDS: (THIS SHEET ONLY)

EXISTING CITY ELECTROLIER.

NEW OR RELOCATED CITY ELECTROLIER.

FOR WIRING DIAGRAM, SEE SHEET E-71 AND E-100
THIS PLAN IS ACCURATE FOR ELECTRICAL WORK ONLY.

ALL DIMENSIONS ARE IN METERS UNLESS OTHERWISE SHOWN

LIGHTING

SCALE 1:500

E-99

REVISED BY	DATE REVISED
LIEN VO	03/09

CALCULATED-DESIGNED BY: LIEN VO
CHECKED BY: JESSE RUELAS
FUNCTIONAL SUPERVISOR: YI TSAU

STATE OF CALIFORNIA - DEPARTMENT OF TRANSPORTATION
Caltrans **TRAFFIC DESIGN**

LAST REVISION 03-11-09 | DATE PLOTTED => 12-JUN-2009 | TIME PLOTTED => 15:11

Dist	COUNTY	ROUTE	KILOMETER POST TOTAL PROJECT	SHEET No.	TOTAL SHEETS
07	LA	5	42.8/47.3	481	1073

REGISTERED ELECT ENGINEER — DATE 11/03/08

6-8-09
PLANS APPROVAL DATE

REGISTERED PROFESSIONAL ENGINEER — JESSE RUELAS No. E015604 Exp. 12-31-09 ELECTRICAL — STATE OF CALIFORNIA

THE STATE OF CALIFORNIA OR ITS OFFICERS OR AGENTS SHALL NOT BE RESPONSIBLE FOR THE ACCURACY OR COMPLETENESS OF ELECTRONIC COPIES OF THIS PLAN SHEET.

Caltrans Metric

FOR COMPLETE RIGHT OF WAY AND ACCURATE ACCESS DATA, SEE RIGHT OF WAY RECORD MAPS AT DISTRICT OFFICE.

GENERAL NOTES: (THIS SHEET ONLY)

1. THE CONTRACTOR SHALL CONTACT BURBANK WATER AND POWER AT (818) 238-3654 OR (818) 238-3579, 30 DAYS IN ADVANCE PRIOR TO MODIFYING THE CITY LIGHTING SYSTEM.

LEGENDS: (THIS SHEETS ONLY)

EXISTING CITY'S ELECTROLIER TO BE RELOCATED OR REINSTALLED.

EXISTING CITY'S ELECTROLIER.

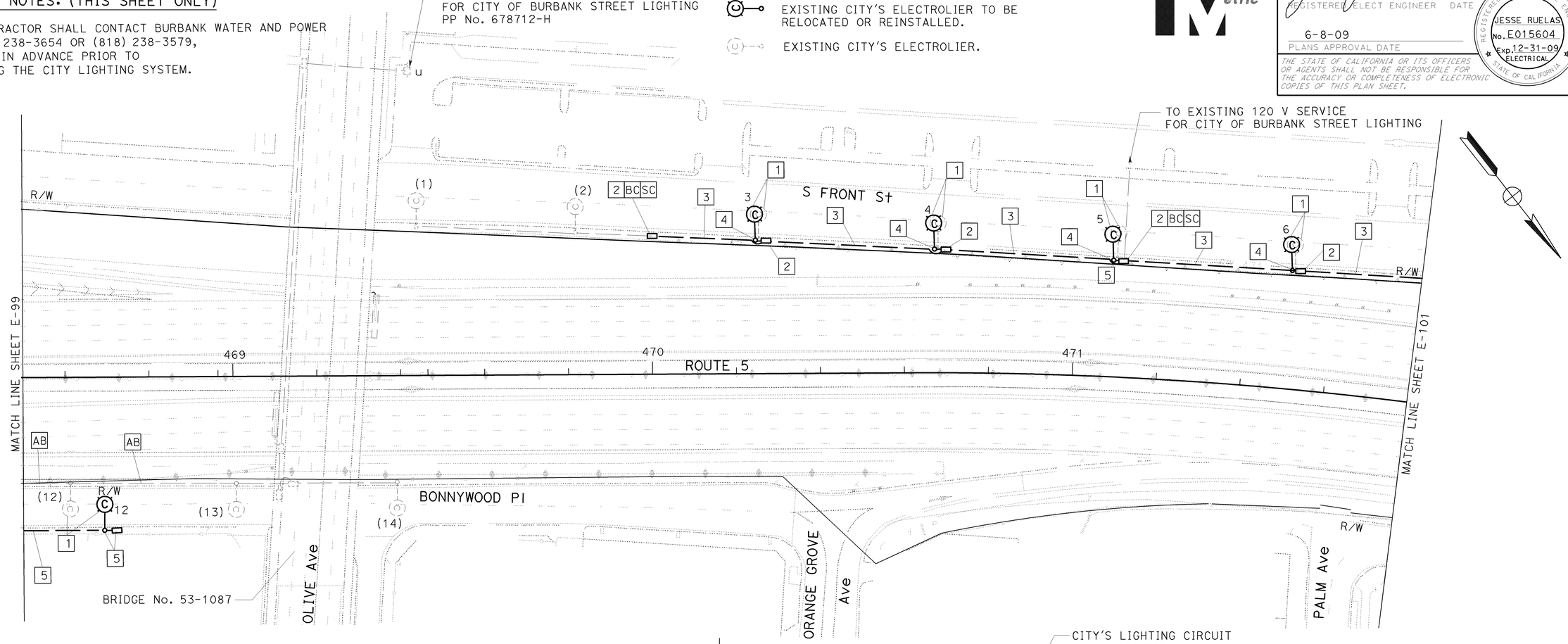

PROJECT NOTES: (THIS SHEET ONLY)

1. EXISTING CITY ELECTROLIER WILL BE REMOVED AND REINSTALLED BY BURBANK WATER AND POWER.
2. INSTALL CITY PULL BOX. SEE SHEET E-99 FOR PULL BOX DETAIL.
3. INSTALL 53C, TYPE 3, SCHEDULE 40, 600 mm BELOW GRADE FOR CITY LIGHTING CIRCUIT. CONDUCTORS BY BURBANK WATER AND POWER.
4. INSTALL NEW FOUNDATION. SEE SHEET E-102 AND E-113 FOR DETAIL.
5. FOR REFERENCE ONLY, INSTALLATION OF FOUNDATIONS, CONDUITS, PULL BOXES, ELECTROLIERS AND CONDUCTORS WILL BE DONE BY BURBANK WATER AND POWER.

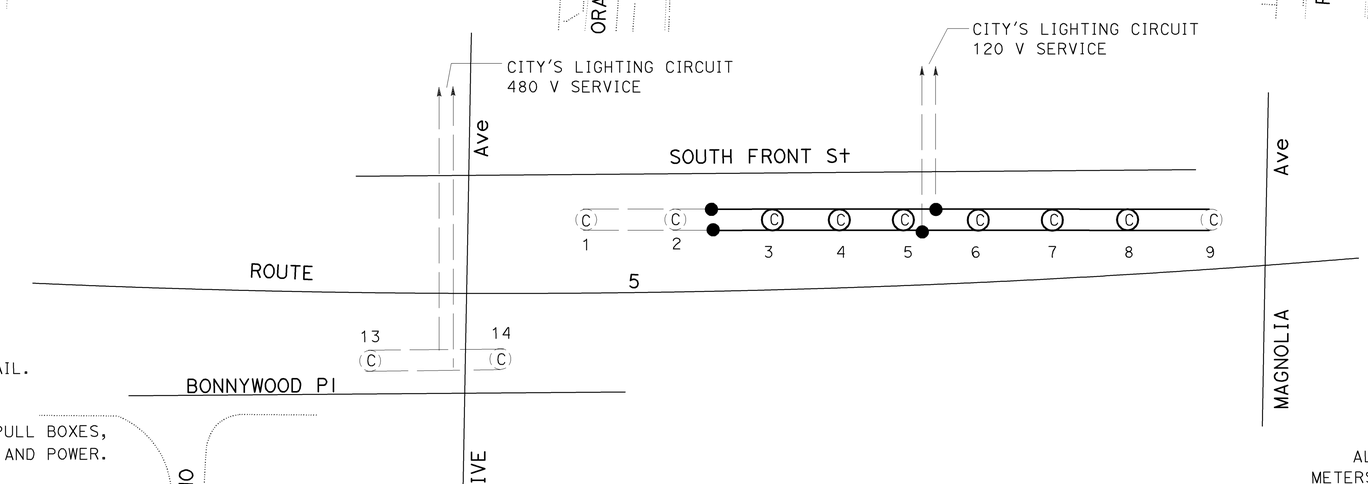

(SEE SHEET E-99, E-100 AND E-101)

THIS PLAN IS ACCURATE FOR ELECTRICAL WORK ONLY.

ALL DIMENSIONS ARE IN METERS UNLESS OTHERWISE SHOWN

LIGHTING

SCALE 1:500

E-100

REVISED BY	DATE REVISED
LIEN VO	03/09

CALCULATED-DESIGNED BY: LIEN VO
CHECKED BY: JESSE RUELAS
FUNCTIONAL SUPERVISOR: YI TSAU

STATE OF CALIFORNIA - DEPARTMENT OF TRANSPORTATION
Caltrans TRAFFIC DESIGN

LAST REVISION 03-11-09 | DATE PLOTTED => 15-JUN-2009 | TIME PLOTTED => 13:23

Dist	COUNTY	ROUTE	KILOMETER POST TOTAL PROJECT	SHEET No.	TOTAL SHEETS
07	LA	5	42.8/47.3	482	1073

Jesse Ruelas 11/03/08
REGISTERED ELECT ENGINEER DATE

6-8-09
PLANS APPROVAL DATE

REGISTERED PROFESSIONAL ENGINEER JESSE RUELAS No. E015604 Exp. 12-31-09 ELECTRICAL STATE OF CALIFORNIA

THE STATE OF CALIFORNIA OR ITS OFFICERS OR AGENTS SHALL NOT BE RESPONSIBLE FOR THE ACCURACY OR COMPLETENESS OF ELECTRONIC COPIES OF THIS PLAN SHEET.

Caltrans Metric

FOR COMPLETE RIGHT OF WAY AND ACCURATE ACCESS DATA, SEE RIGHT OF WAY RECORD MAPS AT DISTRICT OFFICE.

GENERAL NOTES: (THIS SHEET ONLY)

1. THE CONTRACTOR SHALL CONTACT THE CITY OF BURBANK AT (818) 238-3654 OR (818) 238-3579, 30 DAYS IN ADVANCE PRIOR TO MODIFYING THE CITY LIGHTING SYSTEM.

LEGENDS: (THIS SHEET ONLY)

EXISTING CITY'S ELECTROLIER TO BE REINSTALLED.

EXISTING CITY'S ELECTROLIER.

PROJECT NOTES: (THIS SHEET ONLY)

1. INSTALL 53C, TYPE 3, SCHEDULE 40, 600 mm BELOW GRADE FOR CITY'S LIGHTING CIRCUIT. CONDUCTORS BY BURBANK WATER AND POWER.
2. EXISTING CITY'S MARBLELITE ELECTROLIER WILL BE REMOVED AND REINSTALLED BY BURBANK WATER AND POWER.
3. INSTALL CITY'S FOUNDATION AND PULL BOX. SEE SHEET E-99, E-102 AND E-113 FOR DETAIL.

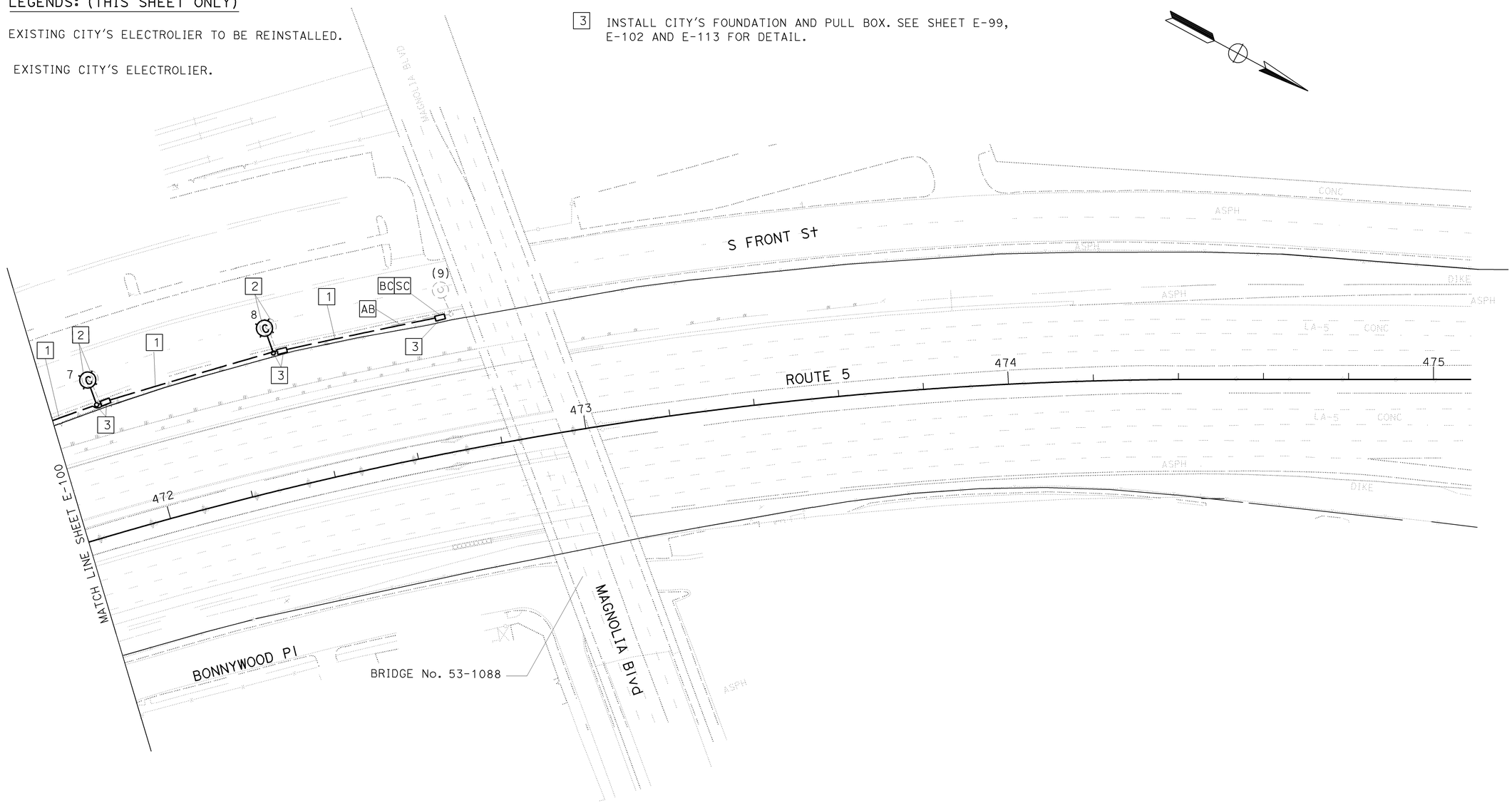

FOR WIRING DIAGRAM, SEE SHEET E-100.
THIS PLAN IS ACCURATE FOR ELECTRICAL WORK ONLY.

ALL DIMENSIONS ARE IN METERS UNLESS OTHERWISE SHOWN

LIGHTING

SCALE 1:500

E-101

CALCULATED-DESIGNED BY	LIEN VO	REVISED BY LIEN VO
CHECKED BY	JESSE RUELAS	DATE REVISED 02/09
FUNCTIONAL SUPERVISOR	YI TSAU	

STATE OF CALIFORNIA - DEPARTMENT OF TRANSPORTATION
Caltrans **TRAFFIC DESIGN**

LAST REVISION 02-05-09 | DATE PLOTTED => 12-JUN-2009 | TIME PLOTTED => 15:11

Dist	COUNTY	ROUTE	KILOMETER POST TOTAL PROJECT	SHEET No.	TOTAL SHEETS
07	LA	5	42.8/47.3	483	1073

Caltrans Metric

Jesse Ruelas 11/03/08
REGISTERED ELECT ENGINEER DATE

6-8-09
PLANS APPROVAL DATE

REGISTERED PROFESSIONAL ENGINEER JESSE RUELAS No. E015604 Exp. 12-31-09 ELECT STATE OF CALIFORNIA

THE STATE OF CALIFORNIA OR ITS OFFICERS OR AGENTS SHALL NOT BE RESPONSIBLE FOR THE ACCURACY OR COMPLETENESS OF ELECTRONIC COPIES OF THIS PLAN SHEET.

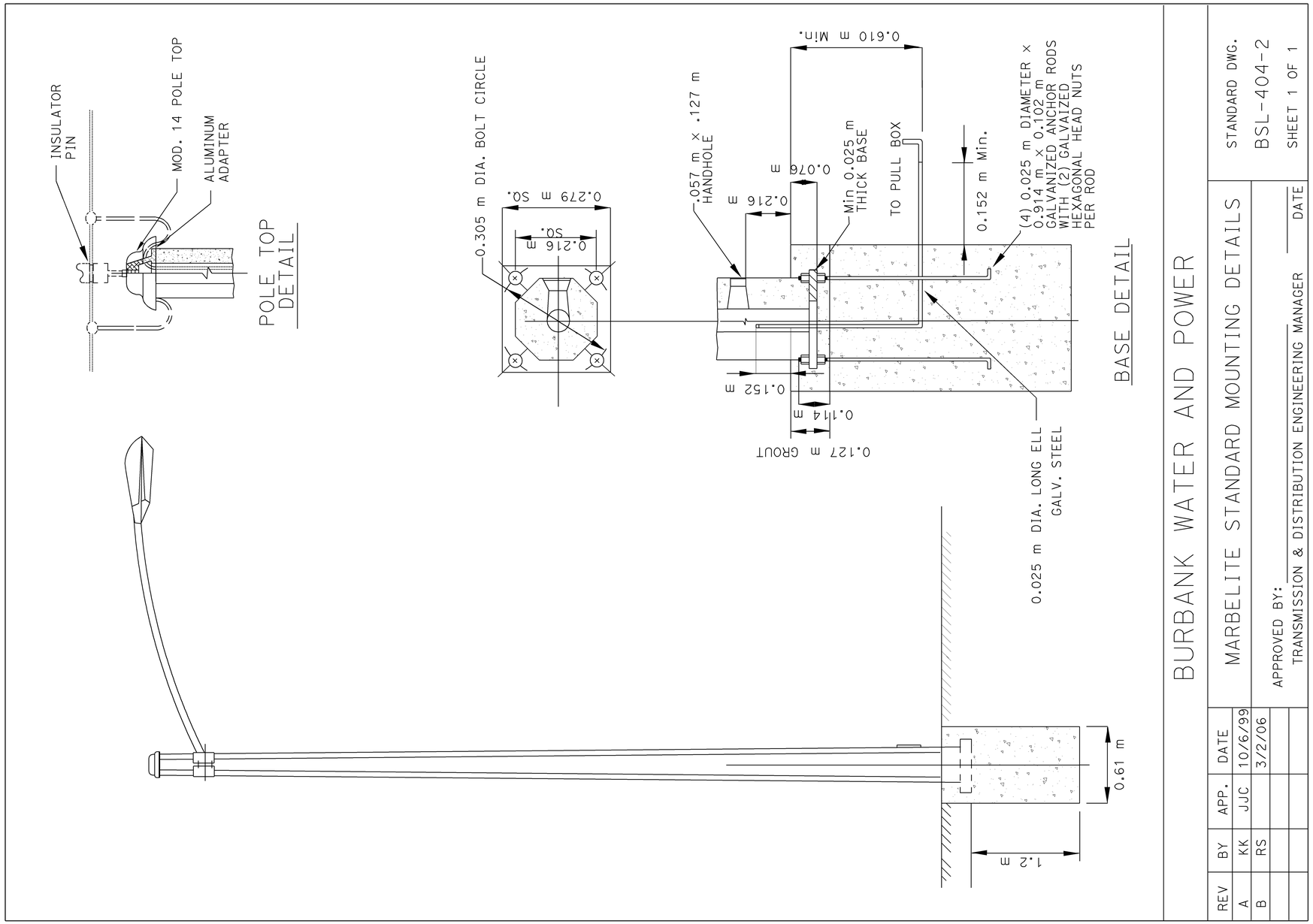

BURBANK WATER AND POWER

MARBELITE STANDARD MOUNTING DETAILS

STANDARD DWG. BSL-404-2

SHEET 1 OF 1

APPROVED BY: TRANSMISSION & DISTRIBUTION ENGINEERING MANAGER DATE

REV	BY	APP.	DATE
A	KK	JJC	10/6/99
B	RS		3/2/06

NOTES:

THIS PLAN SHOWS A CITY OF BURBANK STANDARD DRAWING THAT HAS BEEN CONVERTED FROM IMPERIAL TO METRIC UNITS. THIS PLAN IS APPLIED FOR THIS PROJECT ONLY AND DOES NOT REPLACE THE ORIGINAL CITY OF BURBANK STANDARD DRAWING REFERENCED HERE.

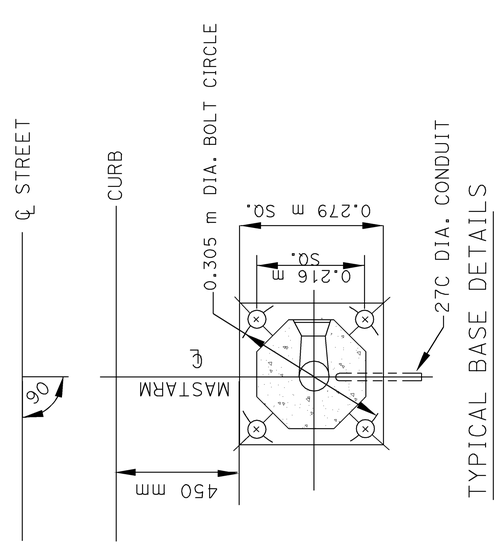

ALL DIMENSIONS ARE IN METERS UNLESS OTHERWISE SHOWN

BURBANK WATER AND POWER
(STANDARD DETAILS)

NO SCALE

E-102

THIS PLAN IS ACCURATE FOR ELECTRICAL WORK ONLY.

STATE OF CALIFORNIA - DEPARTMENT OF TRANSPORTATION
Caltrans **TRAFFIC DESIGN**

FUNCTIONAL SUPERVISOR: YI TSAU
CALCULATED-DESIGNED BY: LIEN VO
CHECKED BY: JESSE RUELAS
REVISED BY: LIEN VO
DATE REVISED: 02/09

LAST REVISION 03-05-09 | DATE PLOTTED => 15-JUN-2009 | TIME PLOTTED => 13:28

FOR COMPLETE RIGHT OF WAY AND ACCURATE ACCESS DATA,
SEE RIGHT OF WAY RECORD MAPS AT DISTRICT OFFICE.

Dist	COUNTY	ROUTE	KILOMETER POST TOTAL PROJECT	SHEET No.	TOTAL SHEETS
07	LA	5	42.8/47.3	484	1073

Jesse Ruelas 11/03/08
REGISTERED ELECT ENGINEER DATE

6-8-09
PLANS APPROVAL DATE

REGISTERED PROFESSIONAL ENGINEER
JESSE RUELAS
No. E015604
Exp. 12-31-09
ELECTRICAL
STATE OF CALIFORNIA

THE STATE OF CALIFORNIA OR ITS OFFICERS OR AGENTS SHALL NOT BE RESPONSIBLE FOR THE ACCURACY OR COMPLETENESS OF ELECTRONIC COPIES OF THIS PLAN SHEET.

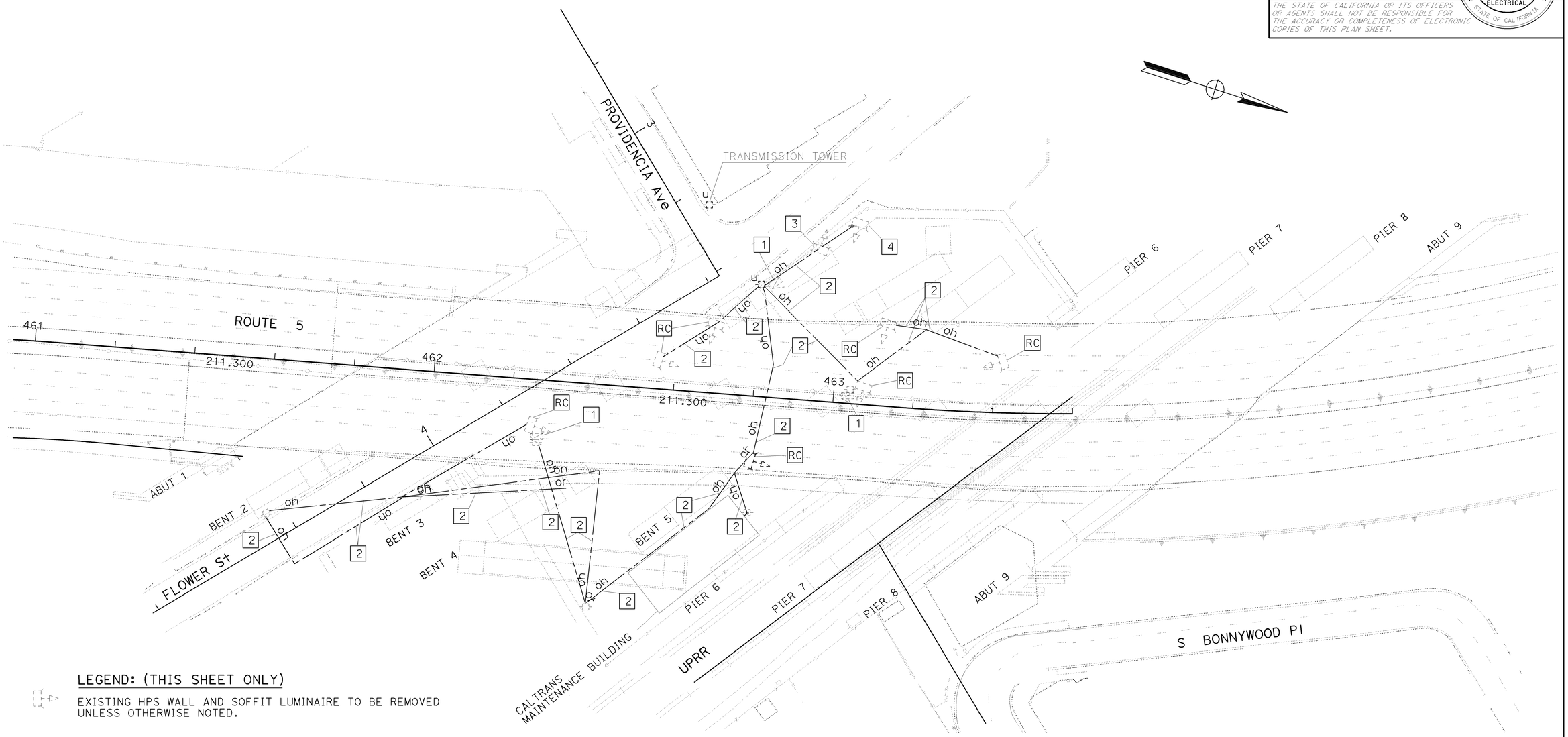

LEGEND: (THIS SHEET ONLY)

EXISTING HPS WALL AND SOFFIT LUMINAIRE TO BE REMOVED UNLESS OTHERWISE NOTED.

PROJECT NOTES: (THIS SHEET ONLY)

1. RC SERVICE ENCLOSURE/SWITCH BOX AND WOOD POLE COMPLETE.
2. RC OVERHEAD CONDUCTORS.
3. EXISTING LUMINAIRE ON FLAG POLE TO REMAIN.
4. RC EXISTING LUMINAIRE AND POLE COMPLETE.

ALL DIMENSIONS ARE IN METERS UNLESS OTHERWISE SHOWN

MODIFY LIGHTING AND SIGN ILLUMINATION

(REMOVE SOFFIT LUMINAIRE)

SCALE 1:500

THIS PLAN IS ACCURATE FOR ELECTRICAL WORK ONLY.

E-103

STATE OF CALIFORNIA - DEPARTMENT OF TRANSPORTATION
Caltrans
TRAFFIC DESIGN

FUNCTIONAL SUPERVISOR: YI TSAU
CALCULATED-DESIGNED BY: LIEN VO
CHECKED BY: JESSE RUELAS
REVISED BY: LIEN VO
DATE REVISED: 02/09

LAST REVISION 02-05-09 DATE PLOTTED => 15-JUN-2009 TIME PLOTTED => 13:32

Dist	COUNTY	ROUTE	KILOMETER POST TOTAL PROJECT	SHEET No.	TOTAL SHEETS
07	LA	5	42.8/47.3	485	1073

REGISTERED ELECT ENGINEER — DATE 11/03/08

6-8-09
PLANS APPROVAL DATE

REGISTERED PROFESSIONAL ENGINEER JESSE RUELAS No. E015604 Exp. 12-31-09 ELECTRICAL STATE OF CALIFORNIA

THE STATE OF CALIFORNIA OR ITS OFFICERS OR AGENTS SHALL NOT BE RESPONSIBLE FOR THE ACCURACY OR COMPLETENESS OF ELECTRONIC COPIES OF THIS PLAN SHEET.

Caltrans Metric

FOR COMPLETE RIGHT OF WAY AND ACCURATE ACCESS DATA, SEE RIGHT OF WAY RECORD MAPS AT DISTRICT OFFICE.

LEGENDS: (THIS SHEET ONLY)

WALL LUMINAIRE, 70 W HPS AND JUNCTION BOX TO BE INSTALLED.

53C SHALL BE INSTALLED BETWEEN PULL BOXES, 41C BETWEEN JUNCTION BOXES UNLESS OTHERWISE NOTED. SEE DETAILS SHEET E-106 FOR INSTALLATION.

DETAIL 'A'
NO SCALE

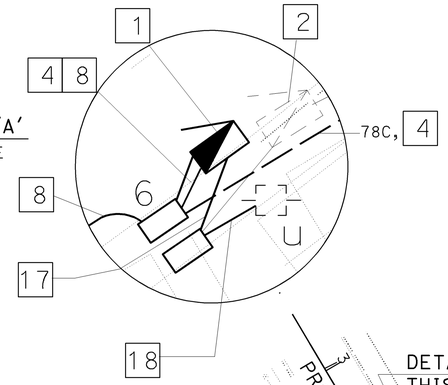

PROJECT NOTES: (THIS SHEET ONLY)

1 INSTALL 120/240 V TYPE III-CF METERED SERVICE EQUIPMENT ENCLOSURE WITH 200 A MAIN BREAKER FOR YARD LIGHTING CIRCUIT:
30 A, 240 V, 2P CB FOR WALL LUMINAIRE AND LIGHTING CIRCUIT.
30 A, 240 V, 2P CB LIGHTING.
15 A, 120 V, 1P CB FOR PEC.
20 A, 120 V, 1P CB FOR TRAILER AND STORAGE CONTAINER LIGHTING.
FOR BUILDING CIRCUIT:
100 A, 240 V, 2P CB FOR MAIN BREAKER PANEL IN MAINTENANCE WAREHOUSE ROOM.
100 A, 240 V, 2P CB FOR BUILDING AIR CONDITIONERS.
ID No. 07-053-005-R-028.671
602 1/3 FLOWER St
PP No. 26570B

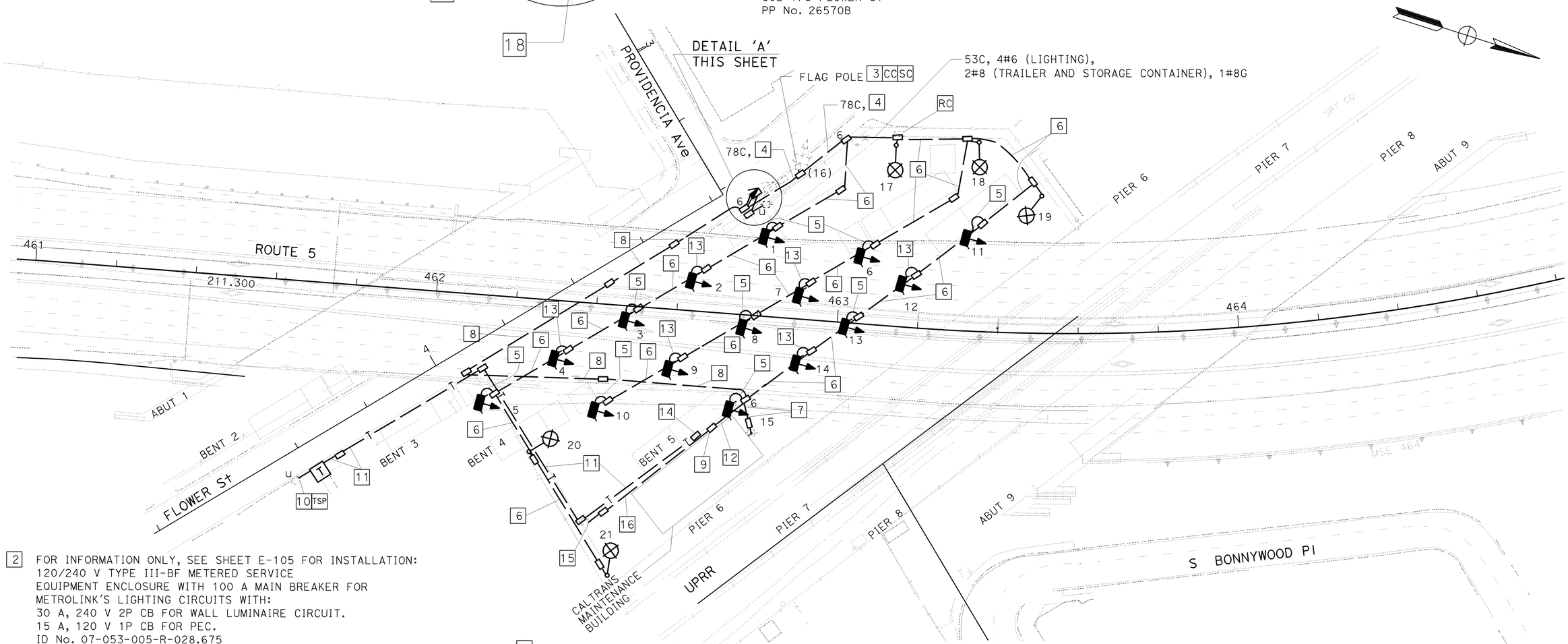

2 FOR INFORMATION ONLY, SEE SHEET E-105 FOR INSTALLATION:
120/240 V TYPE III-BF METERED SERVICE EQUIPMENT ENCLOSURE WITH 100 A MAIN BREAKER FOR METROLINK'S LIGHTING CIRCUITS WITH:
30 A, 240 V 2P CB FOR WALL LUMINAIRE CIRCUIT.
15 A, 120 V 1P CB FOR PEC.
ID No. 07-053-005-R-028.675
604 ½ FLOWER St
PP No. 26570B

3 EXISTING LUMINAIRE ON FLAG POLE (No. 16) TO REMAIN.

4 INSTALL 4#6 (LIGHTING AND WALL LUMINAIRE), 2#8 (TRAILER AND STORAGE CONTAINER LIGHTING CIRCUIT) 1#8G.

5 INSTALL 53C, 2#6, 1#8G FROM PULL BOX UP INSIDE NEW COLUMN TO WALL LUMINAIRE. SEE DETAIL SHEET E-106 FOR INSTALLATION.

6 INSTALL 53C, 2#6 (LIGHTING), 1#8G.

7 INSTALL 78C, 3#4, 1#6G FOR AIR CONDITIONER UNIT.

8 INSTALL 2-78C, 3#4 (AIR CONDITIONER UNIT), 2#8 (STORAGE SHED SUB-PANEL), 3#4 (SERVICE FOR BUILDING), 1#6G.

9 INSTALL 53C RISER AND CC TO EXISTING MAIN BREAKER PANEL IN MAINTENANCE WAREHOUSE ROOM.

10 INSTALL 53C TELEPHONE RISER.

11 INSTALL 53C, 4#22 TWISTED PAIR CABLE.

12 INSTALL 78C, 3#4 (BUILDING), 2#8 (STORAGE SHED SUB-PANEL), 1#6G.

FOR WIRING DIAGRAM, SEE SHEET E-91
THIS PLAN IS ACCURATE FOR ELECTRICAL WORK ONLY.

13 INSTALL 41C, 2#6, 1#8G FROM PULL BOX UP (STRAP OUTSIDE EXISTING COLUMN) TO WALL LUMINAIRE. SEE DETAIL SHEET E-106 FOR INSTALLATION.

14 INSTALL 53C FOR TELEPHONE SERVICE THROUGH BUILDING WALL TO EXISTING TELEPHONE SERVICE PANEL. INSTALL 4#22 TWISTED PAIR CABLE.

15 EXISTING STORAGE SHED SUB-PANEL ON WOOD POLE TO REMAIN.

16 INSTALL 53C, 2#8, 1#8G FOR STORAGE SHED SUB-PANEL MOUNTED ON WOOD POLE.

17 INSTALL 78C, MT, (CONDUCTORS BY BURBANK WATER AND POWER).

18 INSTALL 78C, MT, TYPE H RISER, FIRST 3 m OF THE POWER POLE ONLY. (CONDUCTORS BY BURBANK WATER AND POWER0.

ALL DIMENSIONS ARE IN METERS UNLESS OTHERWISE SHOWN

LIGHTING

(BRIDGE No. 53-1085)

SCALE 1:500

E-104

REVISED BY	LIEN VO
DATE REVISED	02/09
CALCULATED-DESIGNED BY	LIEN VO
CHECKED BY	JESSE RUELAS
FUNCTIONAL SUPERVISOR	YI TSAU

STATE OF CALIFORNIA - DEPARTMENT OF TRANSPORTATION
Caltrans TRAFFIC DESIGN

LAST REVISION 02-05-09 | DATE PLOTTED => 12-JUN-2009 | TIME PLOTTED => 15:11

Dist	COUNTY	ROUTE	KILOMETER POST TOTAL PROJECT	SHEET No.	TOTAL SHEETS
07	LA	5	42.8/47.3	486	1073

Jesse Ruelas 11/03/08
REGISTERED ELECT ENGINEER DATE

6-8-09
PLANS APPROVAL DATE

REGISTERED PROFESSIONAL ENGINEER JESSE RUELAS No. E015604 Exp. 12-31-09 ELECTRICAL STATE OF CALIFORNIA

THE STATE OF CALIFORNIA OR ITS OFFICERS OR AGENTS SHALL NOT BE RESPONSIBLE FOR THE ACCURACY OR COMPLETENESS OF ELECTRONIC COPIES OF THIS PLAN SHEET.

Caltrans Metric

FOR COMPLETE RIGHT OF WAY AND ACCURATE ACCESS DATA, SEE RIGHT OF WAY RECORD MAPS AT DISTRICT OFFICE.

LEGENDS: (THIS SHEET ONLY)

WALL LUMINAIRE, 70 W HPS AND JUNTION BOX TO BE INSTALLED.

41C SHALL BE INSTALLED BETWEEN WALL LUMINAIRES AND BETWEEN JUNCTION BOXES UNLESS OTHERWISE NOTED. SEE DETAIL IN SHEET E-107 AND E-108 FOR INSTALLATION.

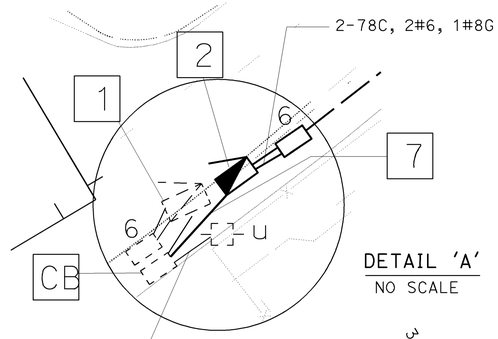

DETAIL 'A'
NO SCALE

PROJECT NOTES: (THIS SHEET ONLY)

1 INFORMATION ONLY, SEE SHEET E-104 FOR INSTALLATION;
120/240 V TYPE III-CF METERED SERVICE
EQUIPMENT ENCLOSURE WITH 200 A MAIN BREAKER
FOR YARD LIGHTING CIRCUIT:
30 A, 240 V, 2P CB FOR WALL LUMINAIRE AND LIGHTING CIRCUIT.
30 A, 240 V, 2P CB LIGHTING.
15 A, 120 V, 1P CB FOR PEC.
20 A, 120 V, 1P CB FOR TRAILER AND STORAGE CONTAINER LIGHTING.
FOR BUILDING CIRCUIT:
100 A, 240 V, 2P CB FOR MAIN BREAKER PANEL IN MAINTENANCE WAREHOUSE ROOM.
100 A, 240 V, 2P CB FOR BUILDING AIR CONDITIONERS.
ID No. 07-053-005-R-028.671
602 1/3 FLOWER St
PP No. 26570B

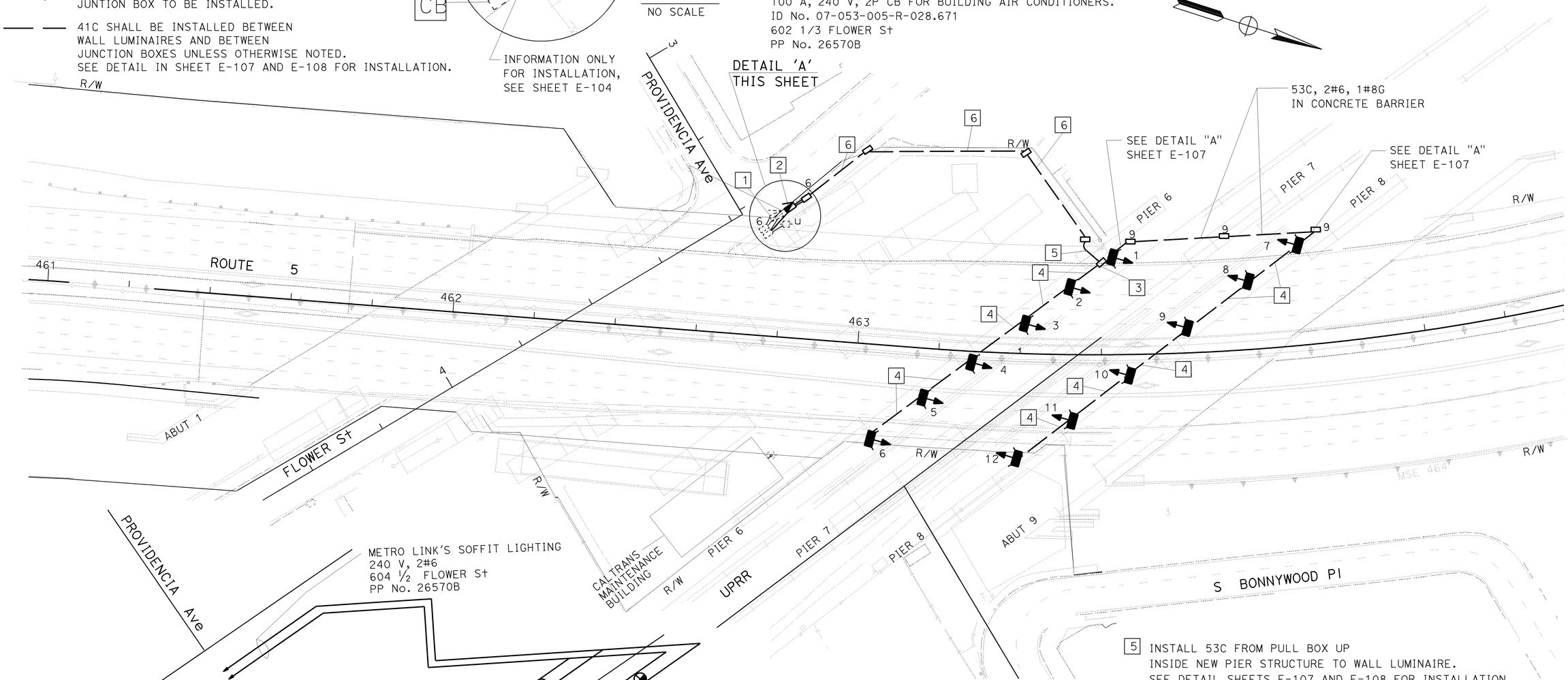

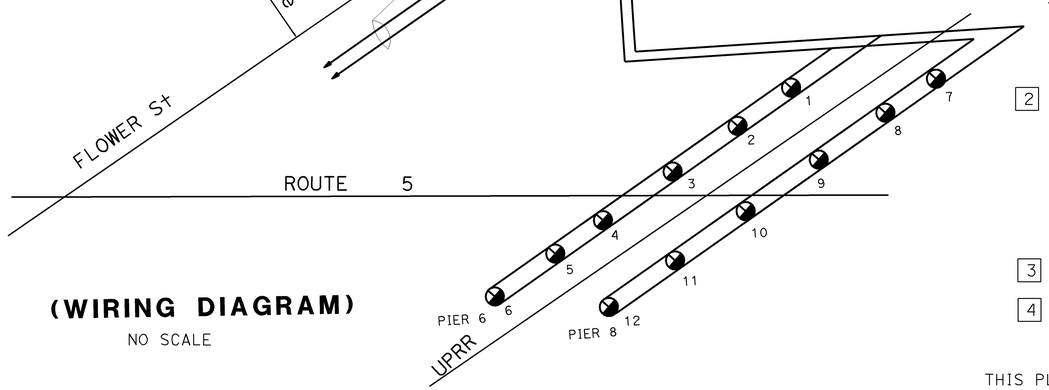

(WIRING DIAGRAM)
NO SCALE

2 INSTALL 120/240 V TYPE III-BF METERED SERVICE EQUIPMENT ENCLOSURE WITH 100 A MAIN BREAKER FOR METROLINK'S LIGHTING CIRCUITS WITH:
30 A, 240 V, 2P CB FOR WALL LUMINAIRE CIRCUIT.
15 A, 120 V, 1P CB FOR PEC.
ID No. 07-053-005-R-028.675
604 1/2 FLOWER St
PP No. 26570B

3 INSTALL NEMA TYPE 4 JUNCTION BOX.

4 INSTALL 41C, 2#6, 1#8G (FOR WALL LUMINAIRE).
SEE DETAIL SHEETS E-107 AND E-108 FOR INSTALLATION.

5 INSTALL 53C FROM PULL BOX UP INSIDE NEW PIER STRUCTURE TO WALL LUMINAIRE.
SEE DETAIL SHEETS E-107 AND E-108 FOR INSTALLATION.
INSTALL 2#6, 1#8G.

6 INSTALL 53C, 2#6, 1#8G (FOR WALL LUMINAIRE).

7 INSTALL 78C, MT (CONDUCTORS BY BURBANK WATER AND POWER).

ALL DIMENSIONS ARE IN METERS UNLESS OTHERWISE SHOWN

LIGHTING
SCALE 1:500

THIS PLAN IS ACCURATE FOR ELECTRICAL WORK ONLY.

E-105

REVISED BY	DATE REVISED
LIEN VO	02/09

CALCULATED-DESIGNED BY: LIEN VO
CHECKED BY: JESSE RUELAS
FUNCTIONAL SUPERVISOR: YI TSAU

STATE OF CALIFORNIA - DEPARTMENT OF TRANSPORTATION
Caltrans TRAFFIC DESIGN

LAST REVISION 02-05-09 DATE PLOTTED => 12-JUN-2009 TIME PLOTTED => 15:11

Dist	COUNTY	ROUTE	KILOMETER POST TOTAL PROJECT	SHEET No.	TOTAL SHEETS
07	LA	5	42.8/47.3	487	1073

Jesse Ruelas 11/03/08
REGISTERED ELECT ENGINEER DATE

6-8-09
PLANS APPROVAL DATE

REGISTERED PROFESSIONAL ENGINEER JESSE RUELAS No. E015604 Exp. 12-31-09 ELECTRICAL STATE OF CALIFORNIA

THE STATE OF CALIFORNIA OR ITS OFFICERS OR AGENTS SHALL NOT BE RESPONSIBLE FOR THE ACCURACY OR COMPLETENESS OF ELECTRONIC COPIES OF THIS PLAN SHEET.

Caltrans Metric

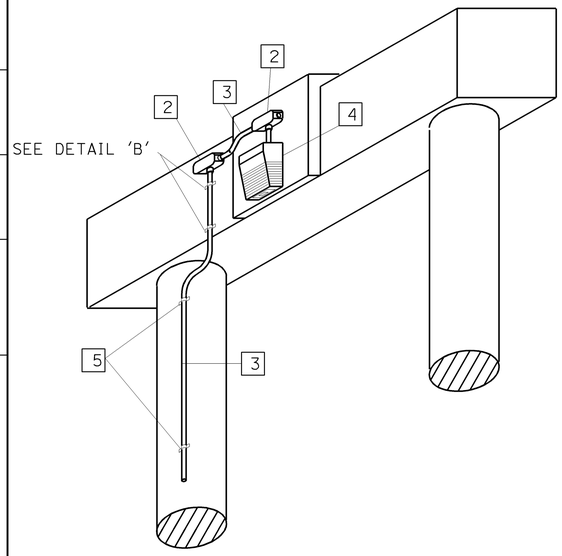

DETAIL 'A' BENT 2, 3, 4 AND 5

NO SCALE

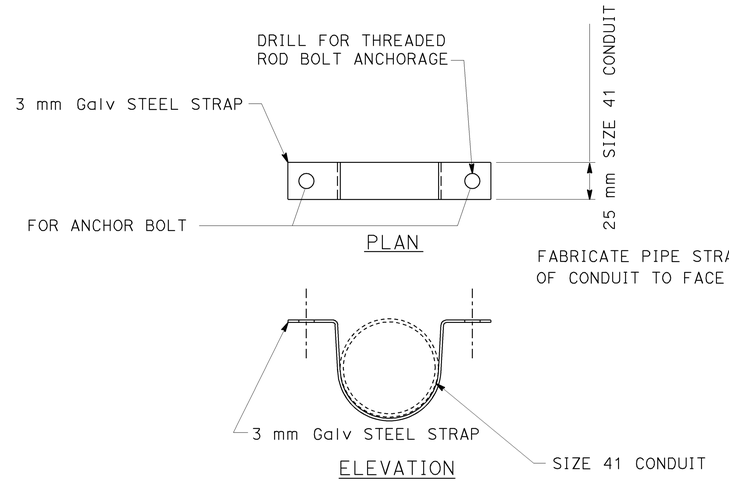

DETAIL 'B'

NO SCALE

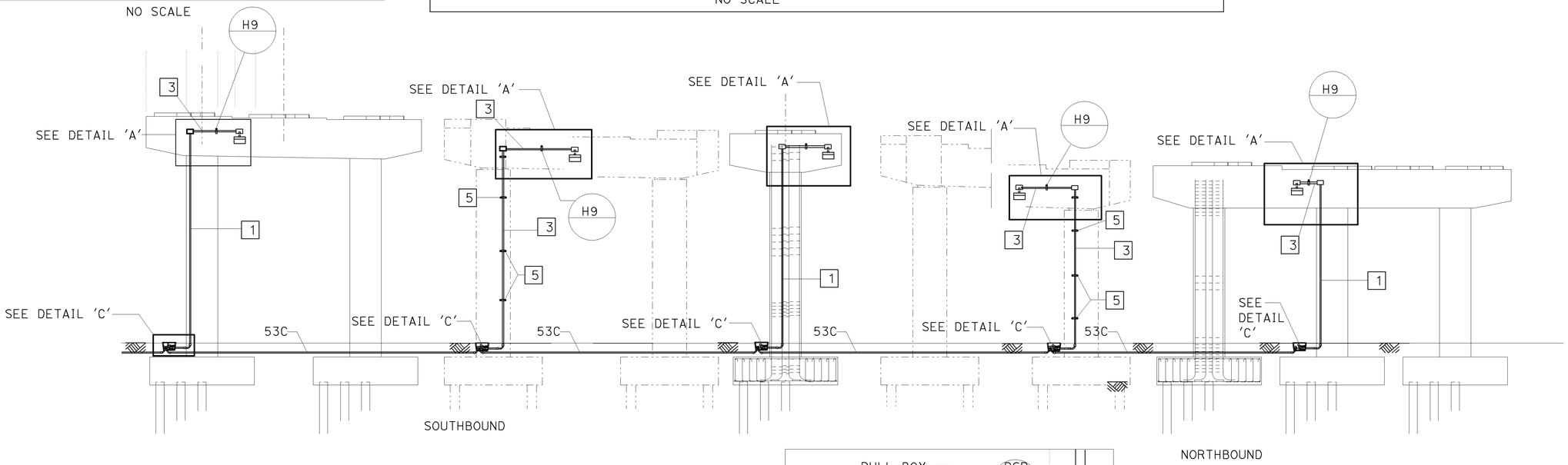

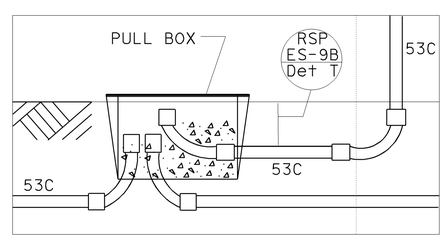

DETAIL 'C'

NO SCALE

TYPICAL ELECTRICAL INSTALLATION ON BENT 2, 3, 4 AND 5

THIS PLAN IS ACCURATE FOR ELECTRICAL WORK ONLY.

PROJECT NOTES: (THIS SHEET ONLY)

1. INSTALL 53C CONDUIT RISER INSIDE COLUMN. SEE DETAIL "T" ES-9B.
2. INSTALL 130 mm × 150 mm × 100 mm JUNCTION BOX, NEMA TYPE 4 ON SURFACE OF STRUCTURE.
3. 41C MOUNT ON SURFACE OF THE STRUCTURE.
4. INSTALL 70 W HPS WALL LUMINAIRE.
5. PREDRILL THROUGH EXISTING 10 mm THICK STEEL CASING, PAINT EXPOSED EDGE OF HOLE WITH ZINC-RICH PAINT. USE PIPE ANCHOR, SEE DETAIL "B".

GENERAL NOTES: (THIS SHEET ONLY)

1. FOR DETAILS NOT SHOWN, SEE STANDARD PLAN H9.

ALL DIMENSIONS ARE IN METERS UNLESS OTHERWISE SHOWN

LIGHTING (CONDUIT ATTACHMENT DETAILS)

NO SCALE

E-106

CALCULATED-DESIGNED BY	LIEN VO
CHECKED BY	JESSE RUELAS
REVISED BY	LIEN VO
DATE REVISED	02/09
FUNCTIONAL SUPERVISOR	YI TSAU

STATE OF CALIFORNIA - DEPARTMENT OF TRANSPORTATION
Caltrans TRAFFIC DESIGN

LAST REVISION 02-05-09 DATE PLOTTED => 12-JUN-2009 TIME PLOTTED => 15:12

Dist	COUNTY	ROUTE	KILOMETER POST TOTAL PROJECT	SHEET No.	TOTAL SHEETS
07	LA	5	42.8/47.3	488	1073

Jesse Ruelas 11/03/08
REGISTERED ELECT ENGINEER DATE

6-8-09
PLANS APPROVAL DATE

REGISTERED PROFESSIONAL ENGINEER JESSE RUELAS No. E015604 Exp. 12-31-09 ELECTRICAL STATE OF CALIFORNIA

THE STATE OF CALIFORNIA OR ITS OFFICERS OR AGENTS SHALL NOT BE RESPONSIBLE FOR THE ACCURACY OR COMPLETENESS OF ELECTRONIC COPIES OF THIS PLAN SHEET.

Caltrans Metric

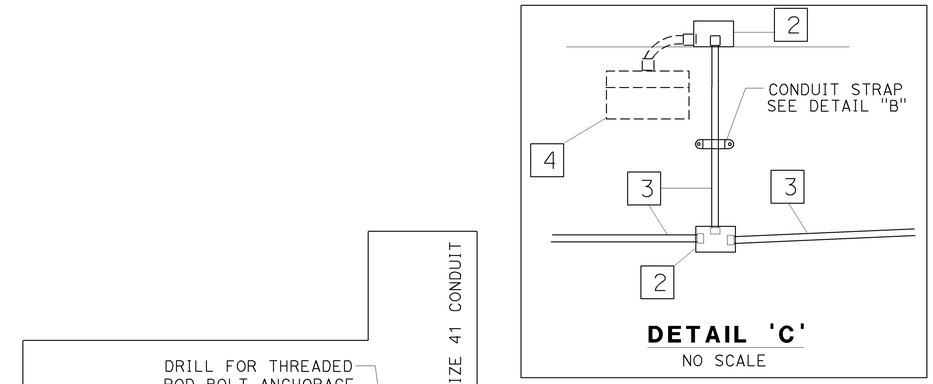

DETAIL 'C'
NO SCALE

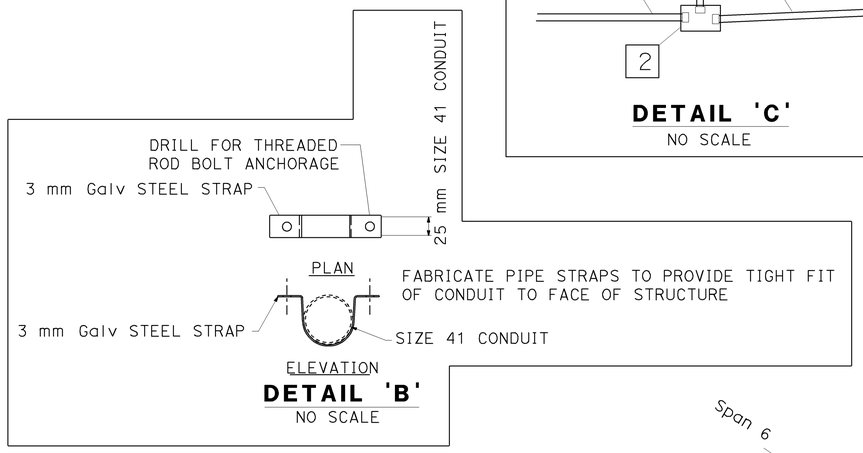

DETAIL 'B'
NO SCALE

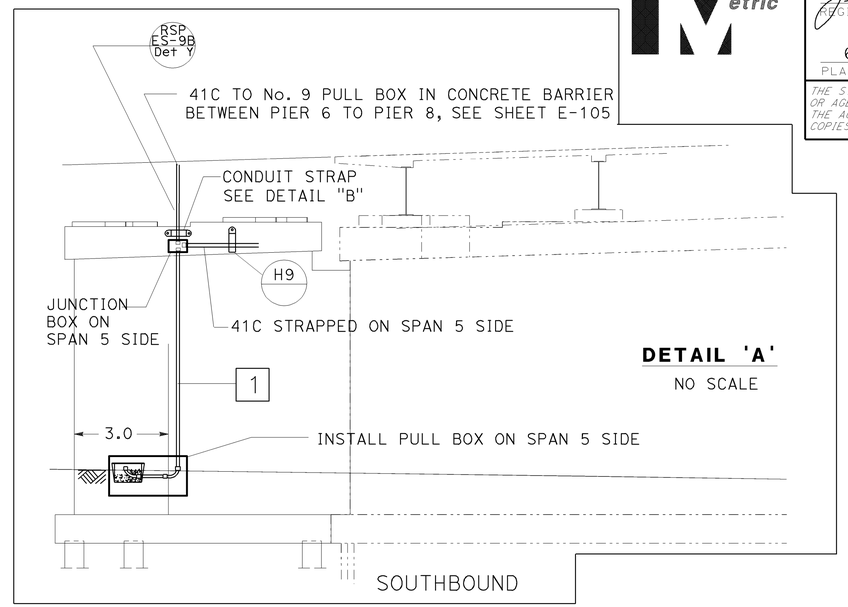

DETAIL 'A'
NO SCALE

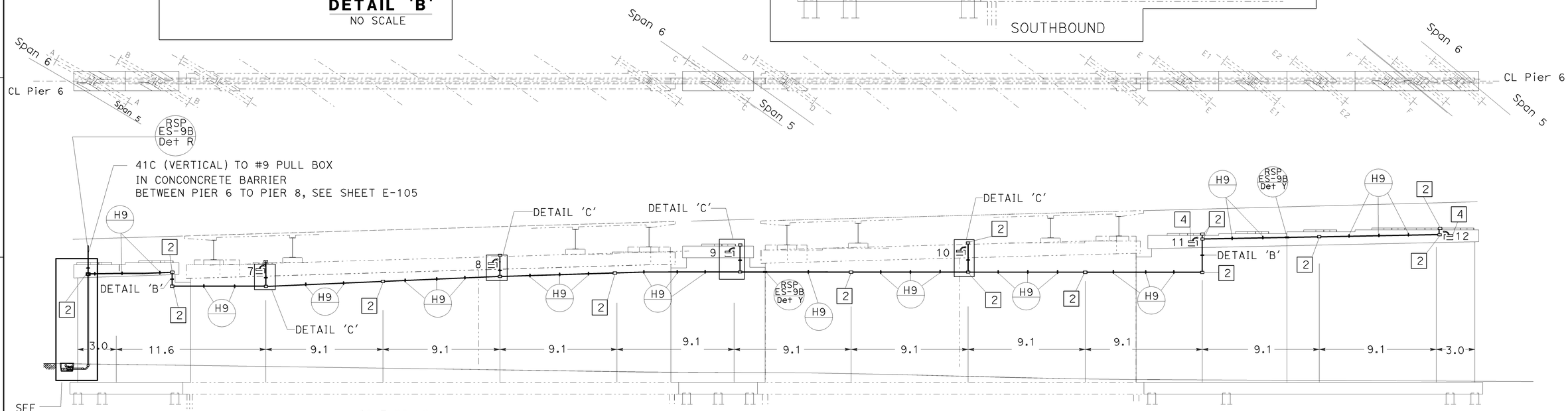

TYPICAL ELECTRICAL INSTALLATION
ON PIER 6, SPAN 5 SIDE

PROJECT NOTES: (THIS SHEET ONLY)

1. INSTALL 53C CONDUIT RISER INSIDE PIER'S WALL. SEE ES-9B, DETAIL "T".
2. INSTALL 130 mm x 150 mm x 100 mm JUNCTION BOX, NEMA TYPE 4 ON SURFACE OF STRUCTURE.
3. 41C MOUNT ON SURFACE OF THE STRUCTURE.
4. INSTALL 70 W HPS WALL LUMINAIRE ON SPAN 6 SIDE.

GENERAL NOTES: (THIS SHEET ONLY)

1. ONE HOLE CONDUIT STRAP TO BE INSTALLED EVERY 1.5 m. SEE STANDARD PLAN H9.
2. FOR DETAILS NOT SHOWN, SEE STANDARD PLAN H9.

ALL DIMENSIONS ARE IN METERS UNLESS OTHERWISE SHOWN

LIGHTING
(CONDUIT ATTACHMENT DETAILS)
NO SCALE

E-107

THIS PLAN IS ACCURATE FOR ELECTRICAL WORK ONLY.

CALCULATED-DESIGNED BY	LIEN VO	REVISED BY LIEN VO
CHECKED BY	JESSE RUELAS	DATE REVISED 02/09
FUNCTIONAL SUPERVISOR	YI TSAU	

STATE OF CALIFORNIA - DEPARTMENT OF TRANSPORTATION
Caltrans **TRAFFIC DESIGN**

LAST REVISION 02-05-09 DATE PLOTTED => 12-JUN-2009 TIME PLOTTED => 15:12

Dist	COUNTY	ROUTE	KILOMETER POST TOTAL PROJECT	SHEET No.	TOTAL SHEETS
07	LA	5	42.8/47.3	489	1073

REGISTERED ELECT ENGINEER Jesse Ruelas 11/03/08 DATE

6-8-09
PLANS APPROVAL DATE

REGISTERED PROFESSIONAL ENGINEER JESSE RUELAS No. E015604 Exp. 12-31-09 ELECTRICAL STATE OF CALIFORNIA

THE STATE OF CALIFORNIA OR ITS OFFICERS OR AGENTS SHALL NOT BE RESPONSIBLE FOR THE ACCURACY OR COMPLETENESS OF ELECTRONIC COPIES OF THIS PLAN SHEET.

Caltrans Metric

PROJECT NOTES: (THIS SHEET ONLY)

1. INSTALL 130 mm x 150 mm x 100 mm JUNCTION BOX, NEMA TYPE 4 ON SURFACE OF STRUCTURE.
2. 41C MOUNT ON SURFACE OF THE STRUCTURE.
3. INSTALL 70 W HPS WALL LUMINAIRE ON SPAN 7 SIDE.

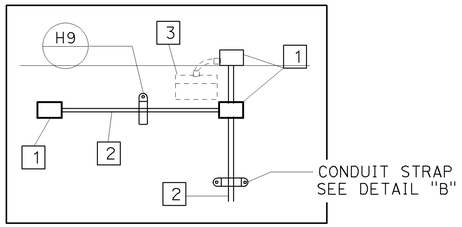

DETAIL 'A'
NO SCALE

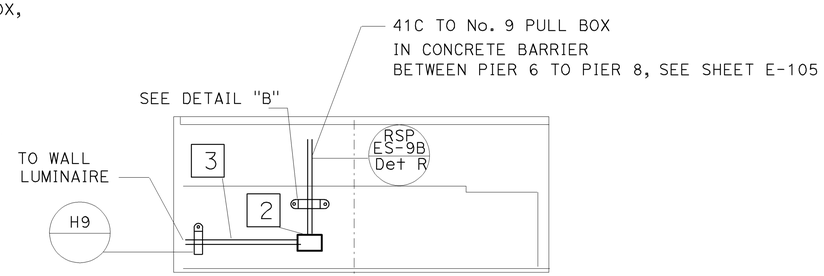

DETAIL 'D'
PIER 8'S SPAN 8 SIDE
NO SCALE

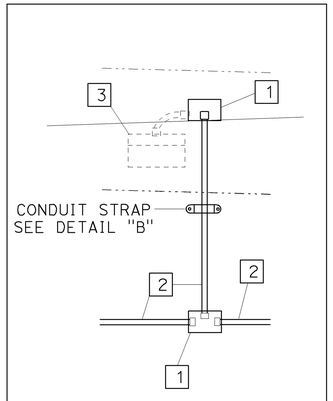

DETAIL 'C'
NO SCALE

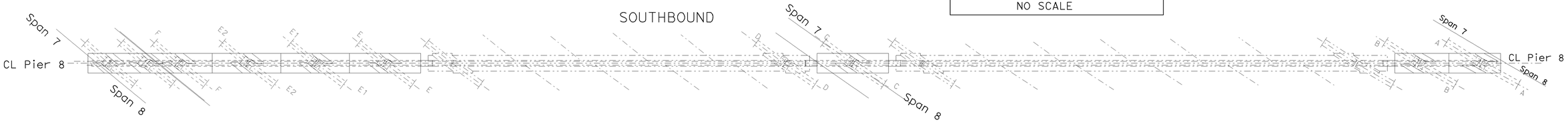

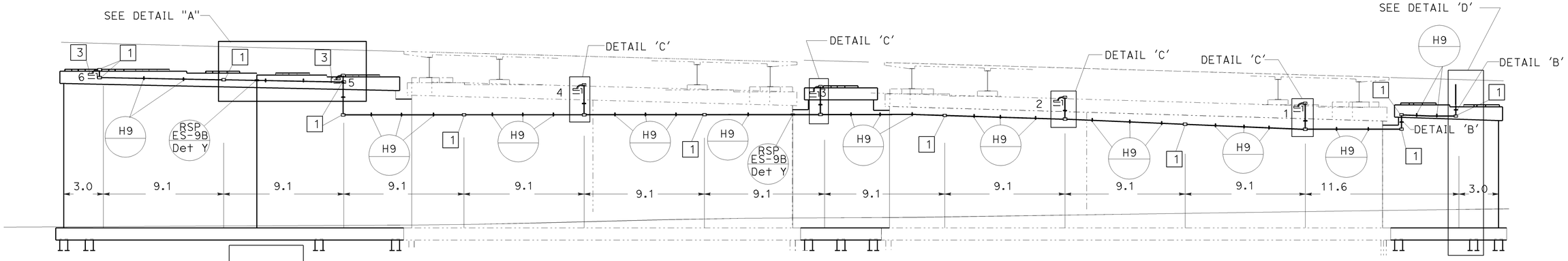

TYPICAL ELECTRICAL INSTALLATION
ON PIER 8, SPAN 8 SIDE

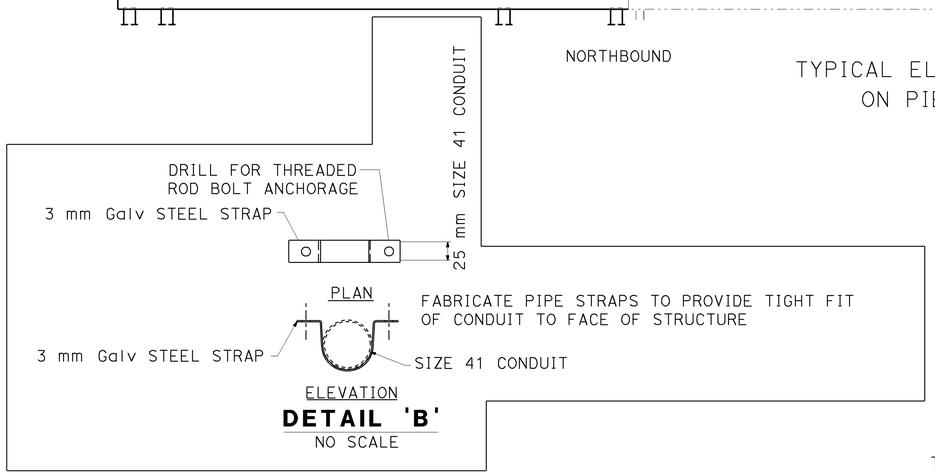

DETAIL 'B'
NO SCALE

GENERAL NOTES: (THIS SHEET ONLY)

1. ONE HOLE CONDUIT STRAP TO BE INSTALLED EVERY 1.5 m APART. SEE STANDARD PLAN H9.
2. FOR DETAILS NOT SHOWN, SEE STANDARD PLAN H9.

ALL DIMENSIONS ARE IN METERS UNLESS OTHERWISE SHOWN

LIGHTING
(CONDUIT ATTACHMENT DETAILS)

NO SCALE

THIS PLAN IS ACCURATE FOR ELECTRICAL WORK ONLY.

E-108

REVISED BY	DATE REVISED
LIEN VO	02/09

CALCULATED-DESIGNED BY: LIEN VO
CHECKED BY: JESSE RUELAS
FUNCTIONAL SUPERVISOR: YI TSAU

STATE OF CALIFORNIA - DEPARTMENT OF TRANSPORTATION
Caltrans **TRAFFIC DESIGN**

LAST REVISION 02-05-09 DATE PLOTTED => 12-JUN-2009 TIME PLOTTED => 15:12

Dist	COUNTY	ROUTE	KILOMETER POST TOTAL PROJECT	SHEET No.	TOTAL SHEETS
07	LA	5	42.8/47.3	490	1073

Caltrans Metric

Jesse Ruelas 11/03/08
REGISTERED ELECT ENGINEER DATE

6-8-09
PLANS APPROVAL DATE

REGISTERED PROFESSIONAL ENGINEER
JESSE RUELAS
No. E015604
Exp. 12-31-09
ELECTRICAL
STATE OF CALIFORNIA

THE STATE OF CALIFORNIA OR ITS OFFICERS OR AGENTS SHALL NOT BE RESPONSIBLE FOR THE ACCURACY OR COMPLETENESS OF ELECTRONIC COPIES OF THIS PLAN SHEET.

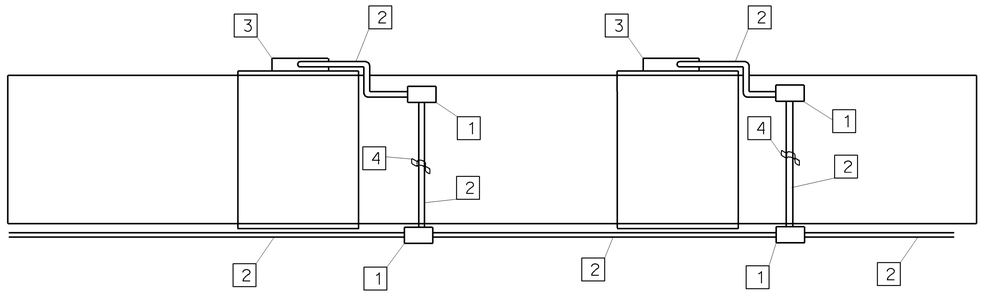

TOP VIEW

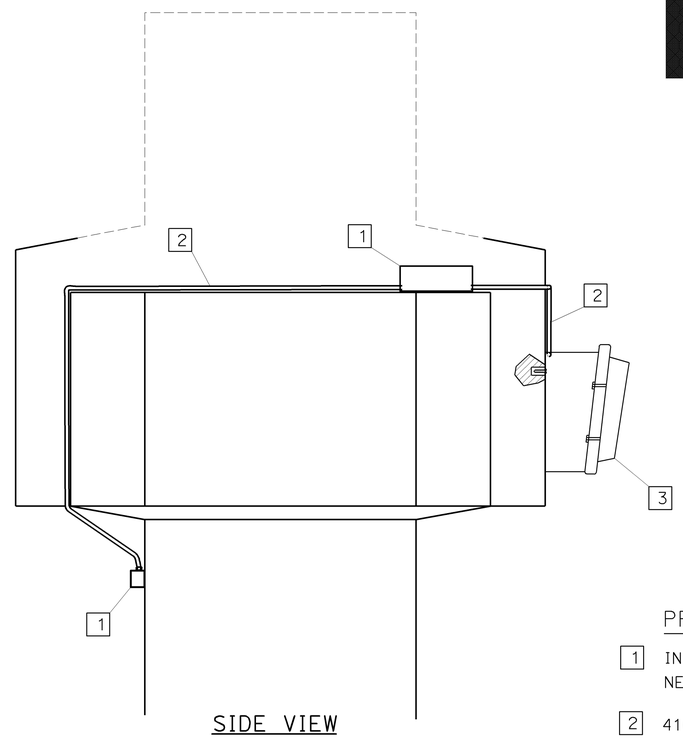

SIDE VIEW

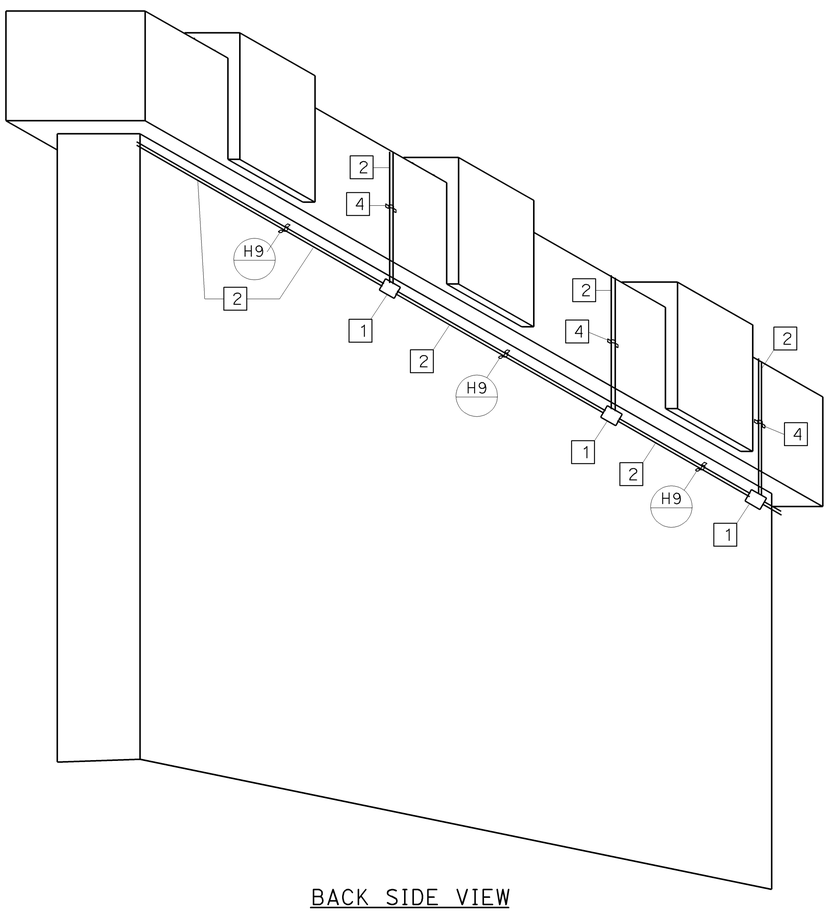

BACK SIDE VIEW

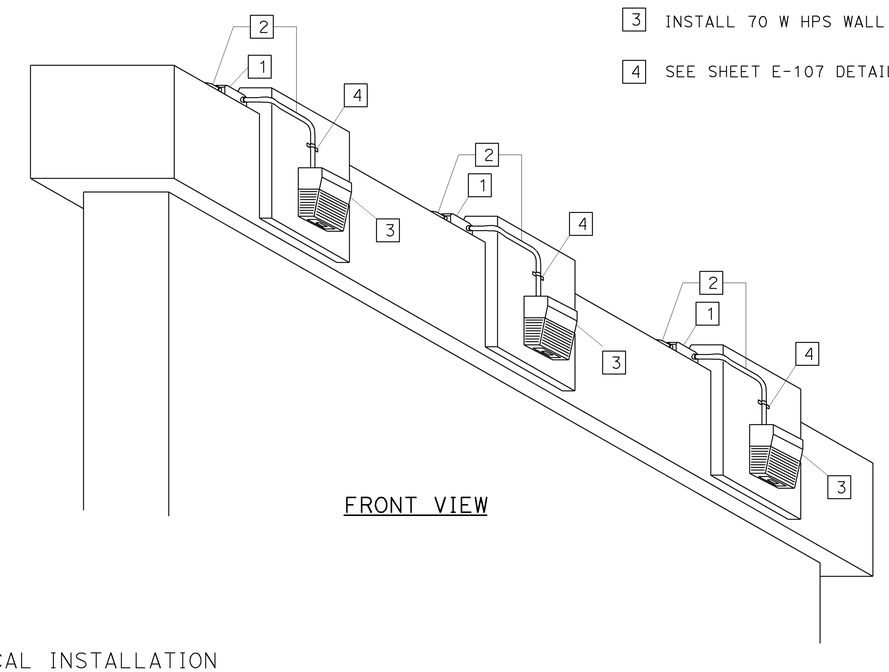

FRONT VIEW

GENERAL NOTES: (THIS SHEET ONLY)

1. ONE HOLE CONDUIT STRAP TO BE INSTALLED EVERY 2 m APART, SEE STANDARD PLAN H9.
2. FOR DETAILS NOT SHOWN, SEE STANDARD PLAN H9.

PROJECT NOTES: (THIS SHEET ONLY)

1. INSTALL 130 mm x 150 mm x 100 mm JUNCTION BOX, NEMA TYPE 4 ON SURFACE OF STRUCTURE.
2. 41C MOUNT ON SURFACE OF THE STRUCTURE.
3. INSTALL 70 W HPS WALL LUMINAIRE.
4. SEE SHEET E-107 DETAIL "B" FOR ADDITIONAL DETAILS.

TYPICAL ELECTRICAL INSTALLATION
ON PIER 6 AND 8

THIS PLAN IS ACCURATE FOR ELECTRICAL WORK ONLY.

LIGHTING
(CONDUIT ATTACHMENT DETAILS)

NO SCALE

E-109

CALCULATED-DESIGNED BY	LIEN VO
CHECKED BY	JESSE RUELAS
FUNCTIONAL SUPERVISOR	YI TSAU
REVISED BY	LIEN VO
DATE REVISED	02/09

STATE OF CALIFORNIA - DEPARTMENT OF TRANSPORTATION
Caltrans **TRAFFIC DESIGN**

LAST REVISION 02-05-09 | DATE PLOTTED => 15-JUN-2009 | TIME PLOTTED => 07:13

Dist	COUNTY	ROUTE	KILOMETER POST TOTAL PROJECT	SHEET No.	TOTAL SHEETS
07	LA	5	42.8/47.3	491	1073

Jesse Ruelas 11/03/08
REGISTERED ELECT ENGINEER DATE

6-8-09
PLANS APPROVAL DATE

REGISTERED PROFESSIONAL ENGINEER JESSE RUELAS No. E015604 Exp. 12-31-09 ELECTRICAL STATE OF CALIFORNIA

THE STATE OF CALIFORNIA OR ITS OFFICERS OR AGENTS SHALL NOT BE RESPONSIBLE FOR THE ACCURACY OR COMPLETENESS OF ELECTRONIC COPIES OF THIS PLAN SHEET.

Caltrans Metric

LEGEND: (THIS SHEET ONLY)

PDA POWER DISTRIBUTION ASSEMBLY

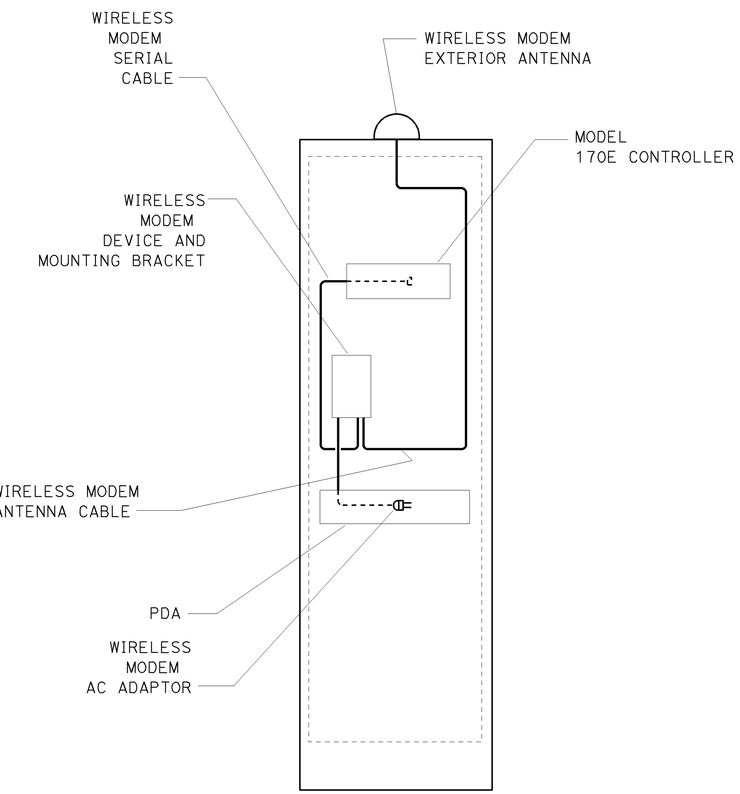

MODEL 334 CONTROLLER CABINET BACK VIEW

WIRELESS MODEM CONNECTION

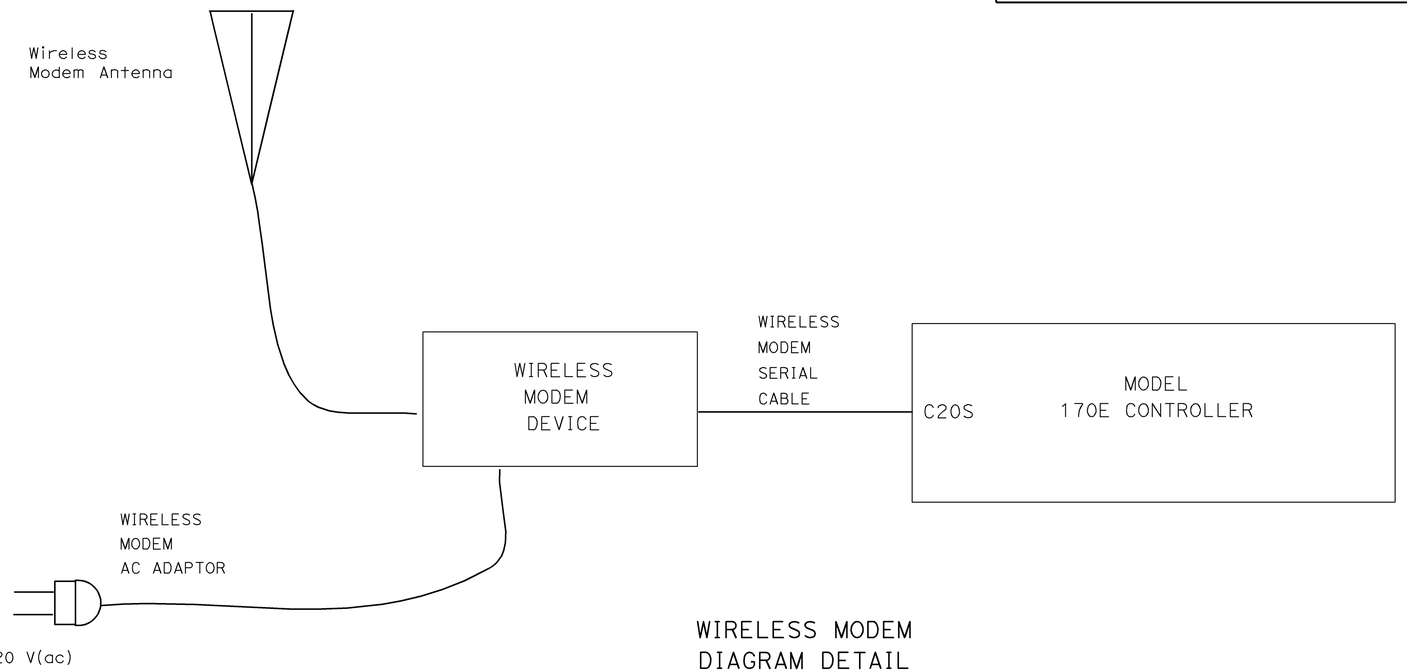

WIRELESS MODEM DIAGRAM DETAIL

THIS PLAN IS ACCURATE FOR ELECTRICAL WORK ONLY.

TEMPORARY RAMP METERING SYSTEM

(DETAILS)

NO SCALE

E-110

STATE OF CALIFORNIA - DEPARTMENT OF TRANSPORTATION
Caltrans **TRAFFIC DESIGN**

FUNCTIONAL SUPERVISOR: YI TSAU

CALCULATED-DESIGNED BY: LIEN VO
CHECKED BY: JESSE RUELAS

REVISED BY: LIEN VO
DATE REVISED: 02/09

LAST REVISION 02-05-09 | DATE PLOTTED => 15-JUN-2009 | TIME PLOTTED => 07:13

Dist	COUNTY	ROUTE	KILOMETER POST TOTAL PROJECT	SHEET No.	TOTAL SHEETS
07	LA	5	42.8/47.3	492	1073

Caltrans Metric

Jesse Ruelas 11/03/08
REGISTERED ELECT ENGINEER DATE

6-8-09
PLANS APPROVAL DATE

REGISTERED PROFESSIONAL ENGINEER JESSE RUELAS No. E015604 Exp. 12-31-09 ELECTRICAL STATE OF CALIFORNIA

THE STATE OF CALIFORNIA OR ITS OFFICERS OR AGENTS SHALL NOT BE RESPONSIBLE FOR THE ACCURACY OR COMPLETENESS OF ELECTRONIC COPIES OF THIS PLAN SHEET.

SOLAR POWER WIRING DIAGRAM

NO SCALE

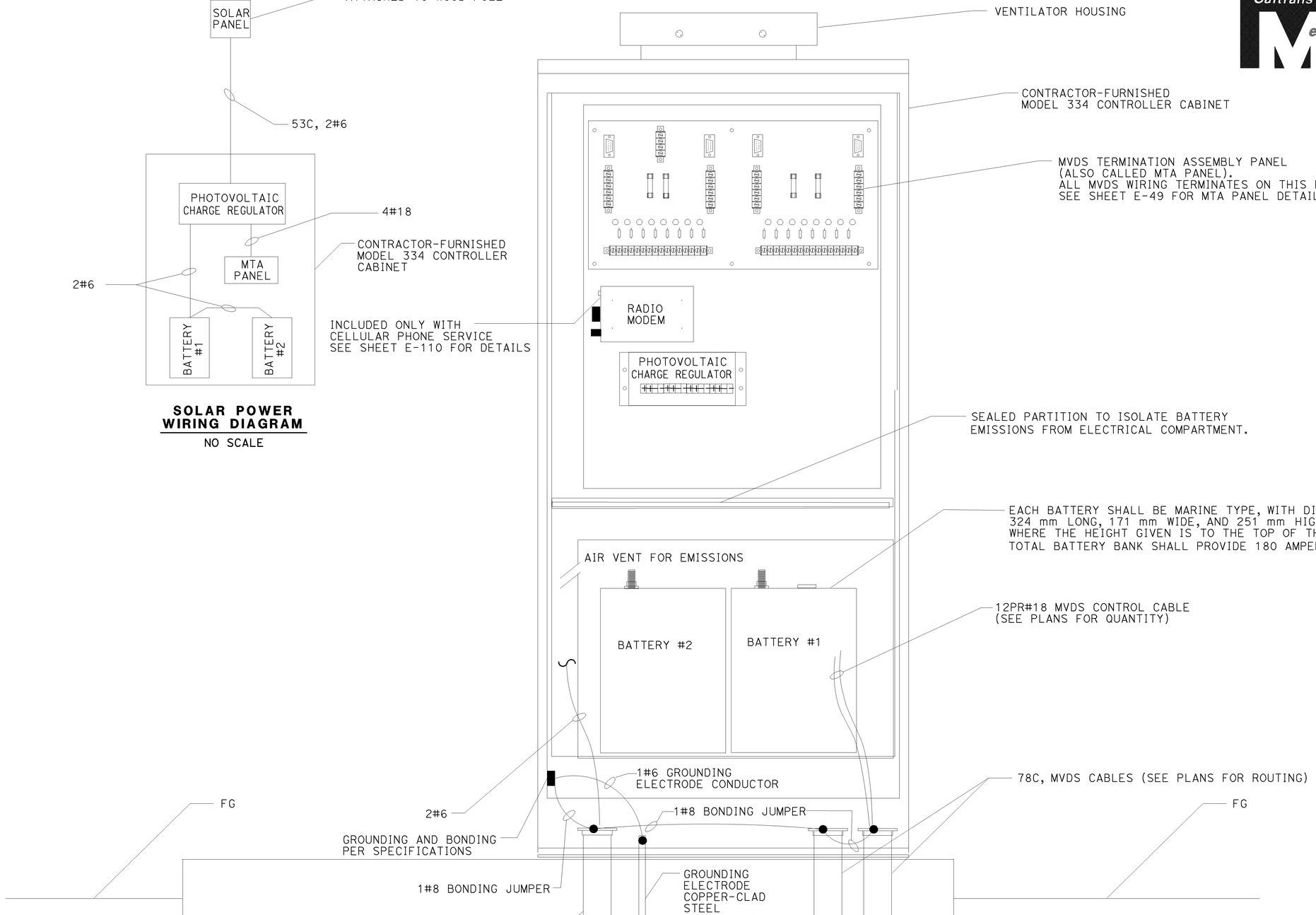

MVDS CONTROLLER CABINET WITH SOLAR POWER

ALL DIMENSIONS ARE IN METERS UNLESS OTHERWISE SHOWN

TEMPORARY RAMP METERING SYSTEM

(DETAILS)

NO SCALE

E-111

THIS PLAN IS ACCURATE FOR ELECTRICAL WORK ONLY.

CALCULATED-DESIGNED BY	LIEN VO	REVISED BY
CHECKED BY	JESSE RUELAS	DATE REVISED 02/09
FUNCTIONAL SUPERVISOR	YI TSAU	

STATE OF CALIFORNIA - DEPARTMENT OF TRANSPORTATION
Caltrans **TRAFFIC DESIGN**

LAST REVISION 02-05-09 | DATE PLOTTED => 15-JUN-2009 | TIME PLOTTED => 07:13

Dist	COUNTY	ROUTE	KILOMETER POST TOTAL PROJECT	SHEET No.	TOTAL SHEETS
07	LA	5	42.8/47.3	493	1073

REGISTERED ELECT ENGINEER 11/03/08 DATE

6-8-09
PLANS APPROVAL DATE

REGISTERED PROFESSIONAL ENGINEER JESSE RUELAS No. E015604 Exp. 12-31-09 ELECTRICAL STATE OF CALIFORNIA

THE STATE OF CALIFORNIA OR ITS OFFICERS OR AGENTS SHALL NOT BE RESPONSIBLE FOR THE ACCURACY OR COMPLETENESS OF ELECTRONIC COPIES OF THIS PLAN SHEET.

Caltrans Metric

PHOTOVOLTAIC POWERED SITE

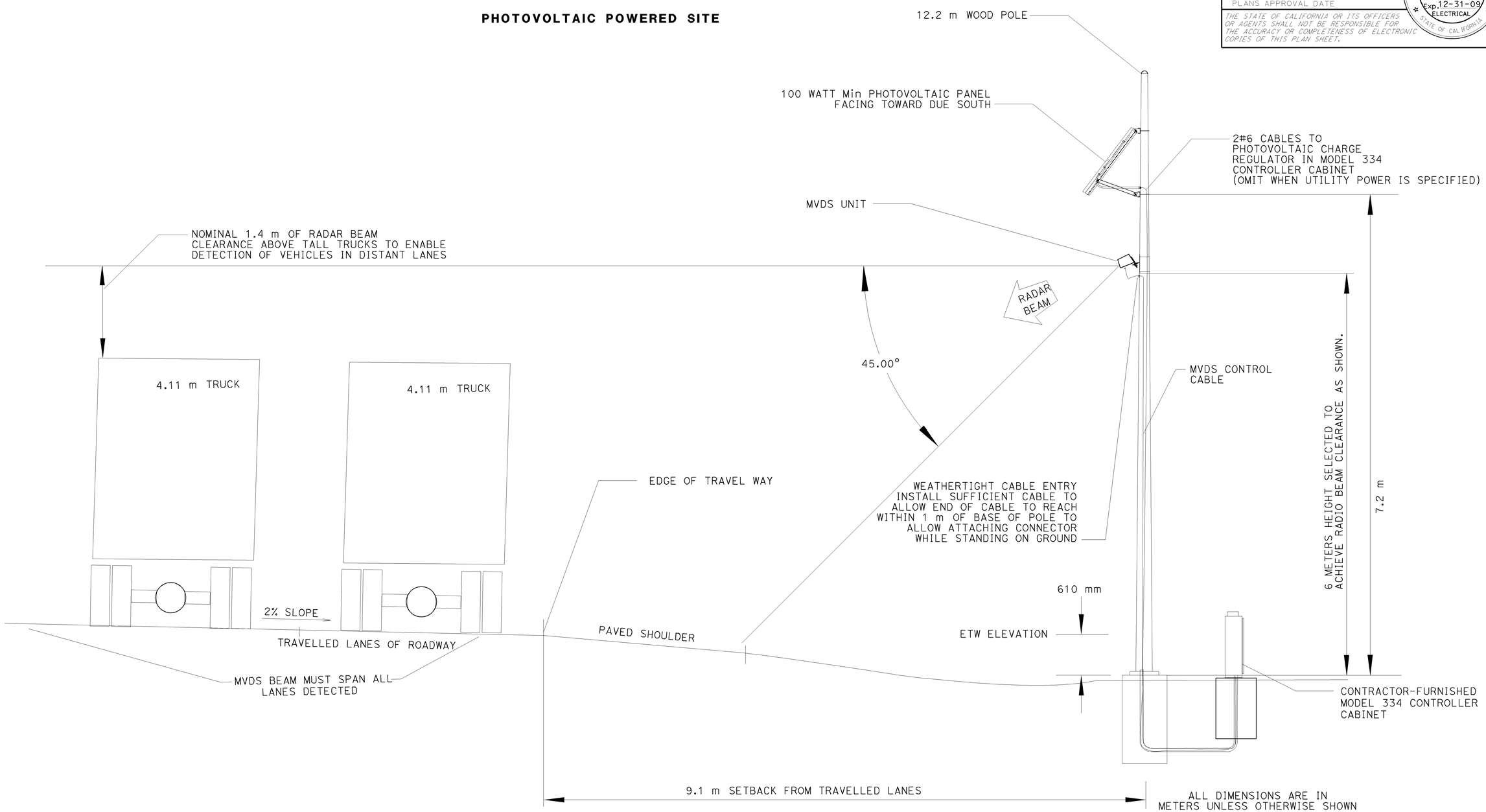

MICROWAVE VEHICLE DETECTION SYSTEM
(DETAILS)

NO SCALE

THIS PLAN IS ACCURATE FOR ELECTRICAL WORK ONLY.

E-112

REVISED BY	LIEN VO
DATE REVISED	02/09
CALCULATED-DESIGNED BY	LIEN VO
CHECKED BY	JESSE RUELAS
FUNCTIONAL SUPERVISOR	YI TSAU

STATE OF CALIFORNIA - DEPARTMENT OF TRANSPORTATION
Caltrans **TRAFFIC DESIGN**

LAST REVISION 02-05-09 | DATE PLOTTED => 15-JUN-2009 | TIME PLOTTED => 07:13

Dist	COUNTY	ROUTE	KILOMETER POST TOTAL PROJECT	SHEET No.	TOTAL SHEETS
07	LA	5	42.8/47.3	494	1073

Jesse Ruelas 11/03/08
REGISTERED ELECT ENGINEER DATE

6-8-09
PLANS APPROVAL DATE

REGISTERED PROFESSIONAL ENGINEER JESSE RUELAS No. E015604 Exp. 12-31-09 ELECT STATE OF CALIFORNIA

THE STATE OF CALIFORNIA OR ITS OFFICERS OR AGENTS SHALL NOT BE RESPONSIBLE FOR THE ACCURACY OR COMPLETENESS OF ELECTRONIC COPIES OF THIS PLAN SHEET.

Caltrans Metric

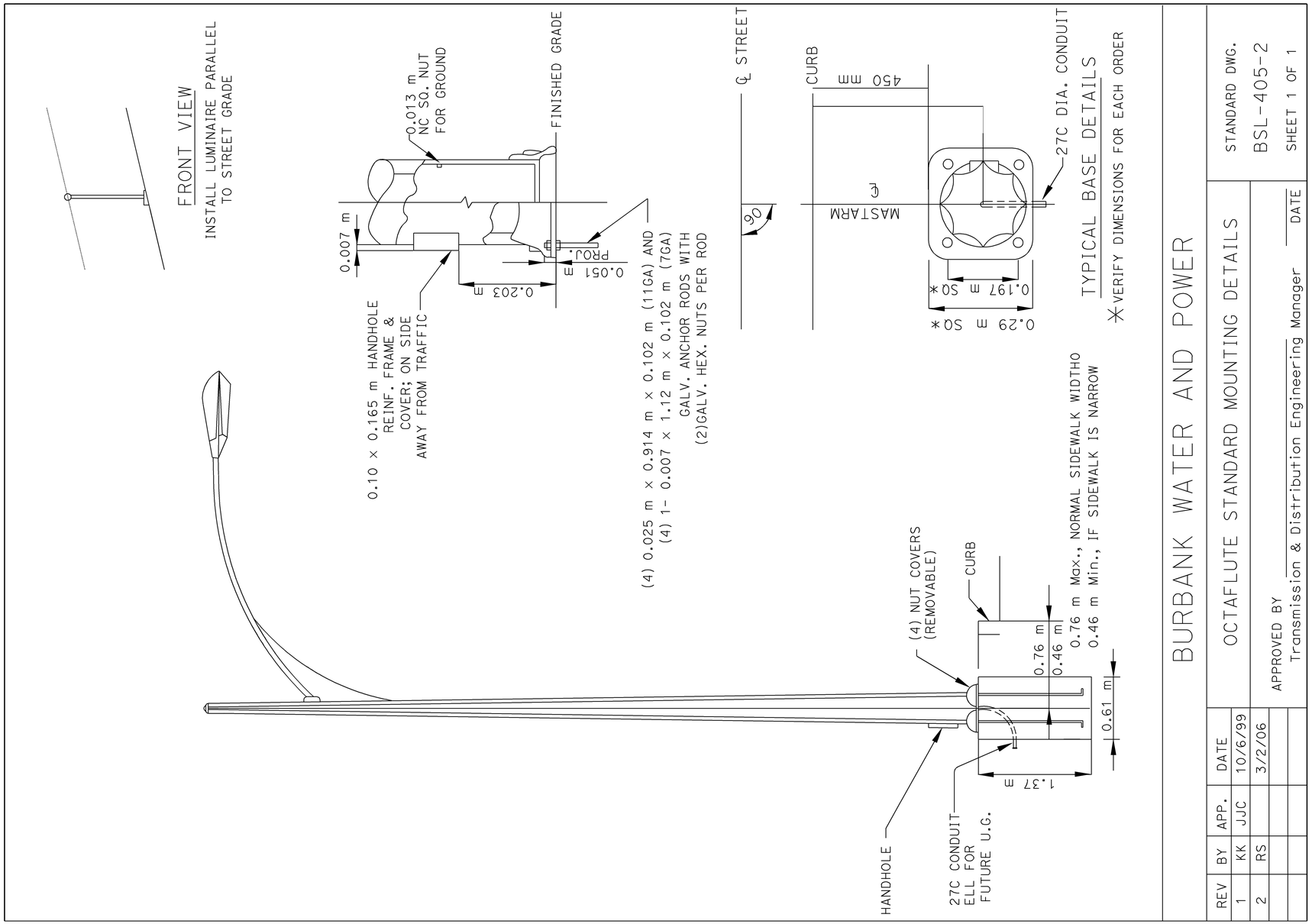

BURBANK WATER AND POWER

OCTAFLUTE STANDARD MOUNTING DETAILS

STANDARD DWG. BSL-405-2
SHEET 1 OF 1

REV	BY	APP.	DATE
1	KK	JJC	10/6/99
2	RS		3/2/06

APPROVED BY
Transmission & Distribution Engineering Manager DATE

NOTES:

THIS PLAN SHOWS A CITY OF BURBANK STANDARD DRAWING THAT HAS BEEN CONVERTED FROM IMPERIAL TO METRIC UNITS. THIS PLAN IS APPLIED FOR THIS PROJECT ONLY AND DOES NOT REPLACE THE ORIGINAL CITY OF BURBANK STANDARD DRAWING REFERENCED HERE.

ALL DIMENSIONS ARE IN METERS UNLESS OTHERWISE SHOWN

BURBANK WATER AND POWER
(STANDARD DETAILS)

NO SCALE

THIS PLAN IS ACCURATE FOR ELECTRICAL WORK ONLY.

E-113

STATE OF CALIFORNIA - DEPARTMENT OF TRANSPORTATION
Caltrans **TRAFFIC DESIGN**

FUNCTIONAL SUPERVISOR: YI TSAU
CALCULATED-DESIGNED BY: LIEN VO
CHECKED BY: JESSE RUELAS
REVISED BY: LIEN VO
DATE REVISED: 02/09

LAST REVISION 02-05-09 | DATE PLOTTED => 15-JUN-2009 | TIME PLOTTED => 07:13

BORDER LAST REVISED 3/1/2007 | RELATIVE BORDER SCALE IS IN MILLIMETERS 0 20 40 60 80 | USERNAME => trmikesl | DGN FILE => 712184ua113.dgn | CU 07383 | EA 121841

DIST	COUNTY	ROUTE	KILOMETER POST TOTAL PROJECT	SHEET NO.	TOTAL SHEETS
07	LA	5	42.8/47.3	495	1073

Caltrans Metric

Donald E Howe
REGISTERED CIVIL ENGINEER

June 6, 2008
PLANS APPROVAL DATE

REGISTERED PROFESSIONAL ENGINEER Donald E. Howe No. C46402 Exp. 3-31-09 CIVIL STATE OF CALIFORNIA

The State of California or its officers or agents shall not be responsible for the accuracy or completeness of electronic copies of this plan sheet.

To get to the Caltrans web site, go to: http://www.dot.ca.gov

To accompany plans dated 6-8-09

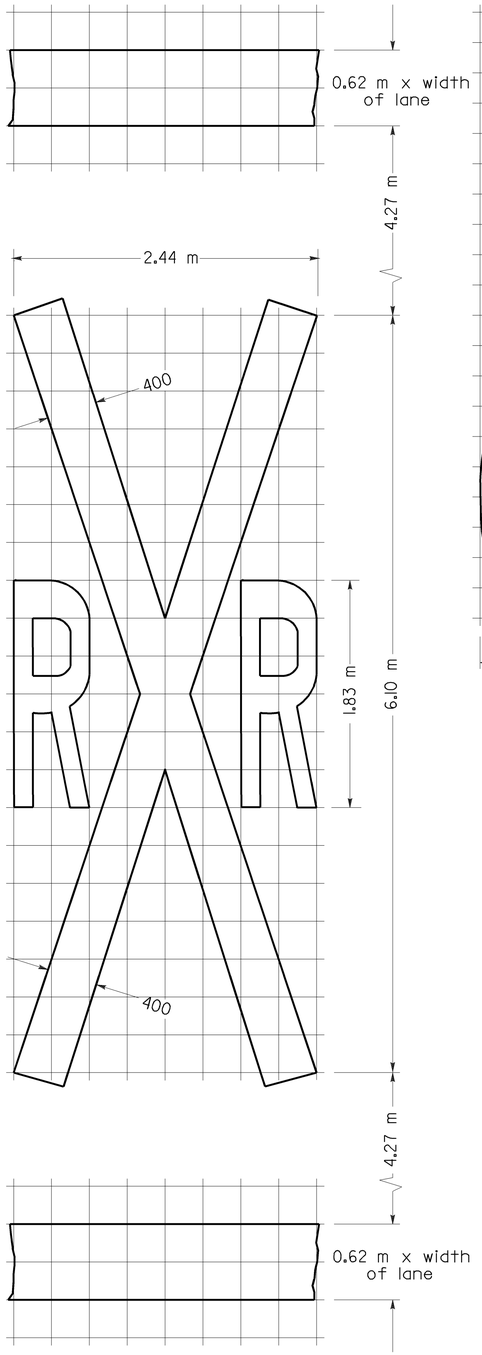

300 mm GRID
A=6.50 m^2 ✳

RAILROAD CROSSING SYMBOL

✳6.5 m^2 DOES NOT INCLUDE THE 0.6 m x VARIABLE WIDTH TRANSVERSE LINES.

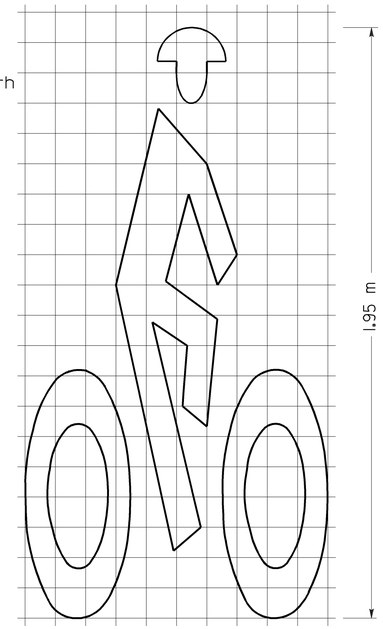

100 mm GRID
1.02 m
A=0.65 m^2

BIKE LANE SYMBOL

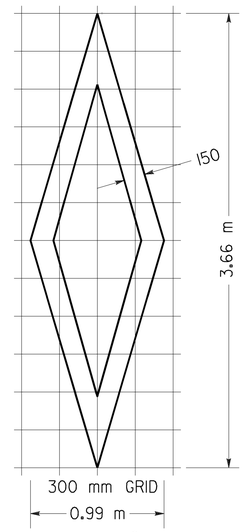

300 mm GRID
0.99 m
A=1.02 m^2

DIAMOND SYMBOL

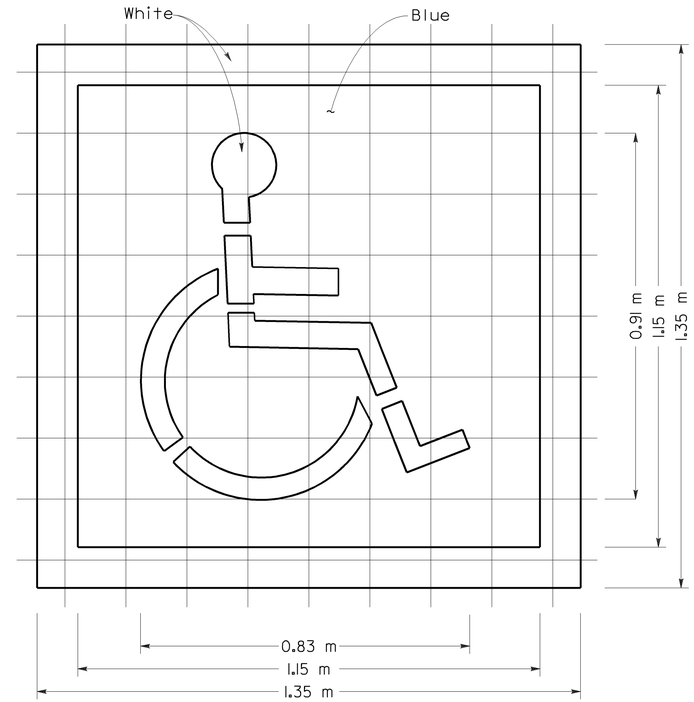

150 mm GRID
A (White) =0.82 m^2
A (Blue) =1.32 m^2

INTERNATIONAL SYMBOL OF ACCESSIBILITY MARKING

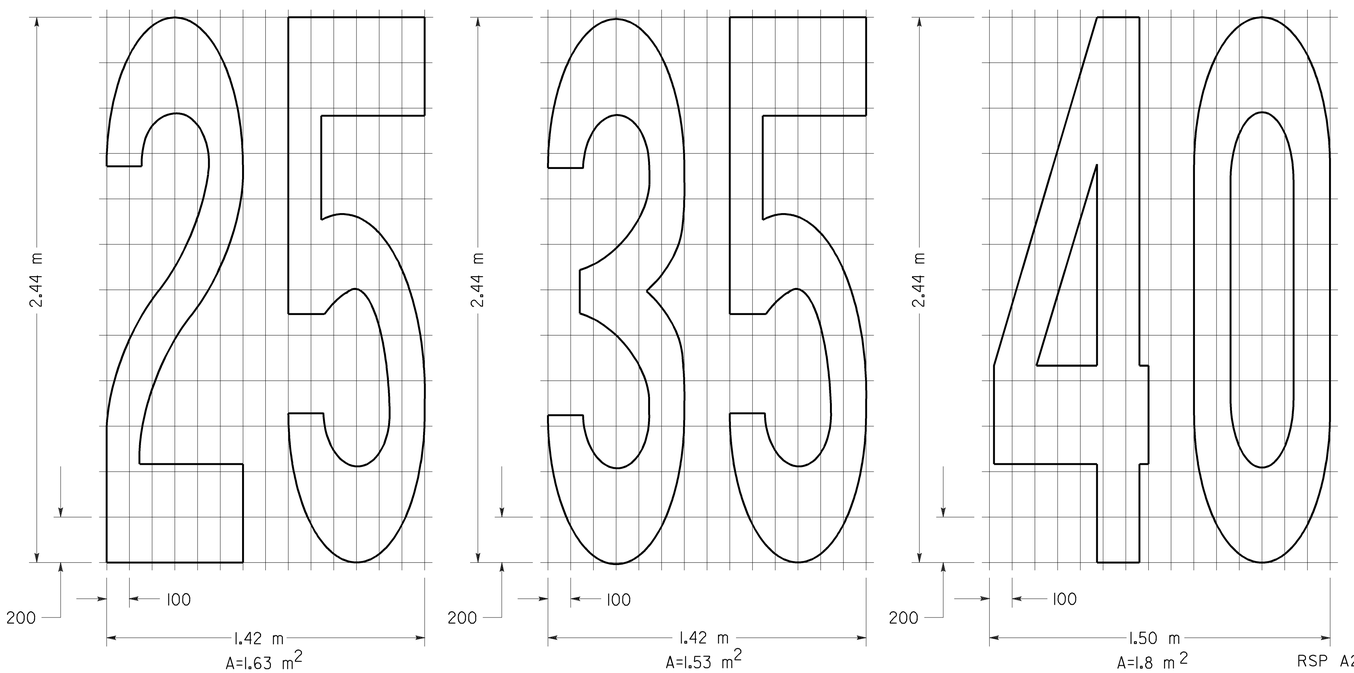

NUMERALS

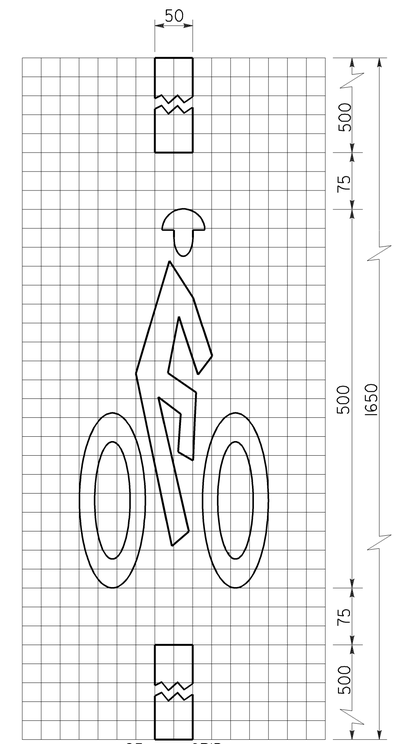

25 mm GRID
250
A=0.19 m^2

BICYCLE LOOP DETECTOR SYMBOL

NOTE:

1. Minor variations in dimensions may be accepted by the Engineer.

STATE OF CALIFORNIA
DEPARTMENT OF TRANSPORTATION

PAVEMENT MARKINGS SYMBOLS AND NUMERALS

NO SCALE

ALL DIMENSIONS ARE IN MILLIMETERS UNLESS OTHERWISE SHOWN

RSP A24C DATED JUNE 6, 2008 SUPERSEDES STANDARD PLAN A24C DATED July 1, 2004 - PAGE 11 OF THE STANDARD PLANS BOOK DATED July 2004.

REVISED STANDARD PLAN RSP A24C

2004 REVISED Std PLAN RSP A24C

5-27-08

DIST	COUNTY	ROUTE	KILOMETER POST TOTAL PROJECT	SHEET NO.	TOTAL SHEETS
07	LA	5	42.8/47.3	496	1073

Caltrans Metric

Randell D. Hiatt
REGISTERED CIVIL ENGINEER

June 6, 2008
PLANS APPROVAL DATE

REGISTERED PROFESSIONAL ENGINEER Randell D. Hiatt No. C50200 Exp. 6-30-09 CIVIL STATE OF CALIFORNIA

The State of California or its officers or agents shall not be responsible for the accuracy or completeness of electronic copies of this plan sheet.

To get to the Caltrans web site, go to: http://www.dot.ca.gov

To accompany plans dated 6-8-09

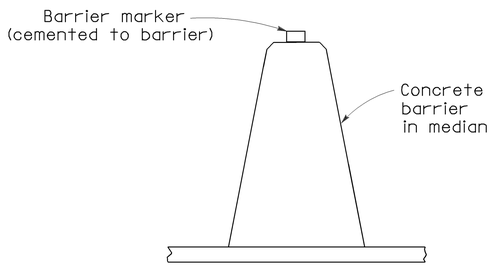

CONCRETE BARRIER TYPE 60 DELINEATION

See Notes 7 and 8

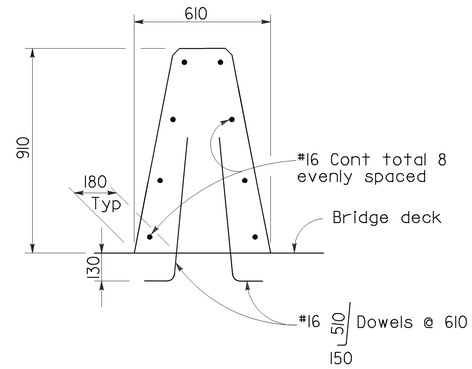

CONCRETE BARRIER TYPE 60A

Details similar to Type 60 except as noted.

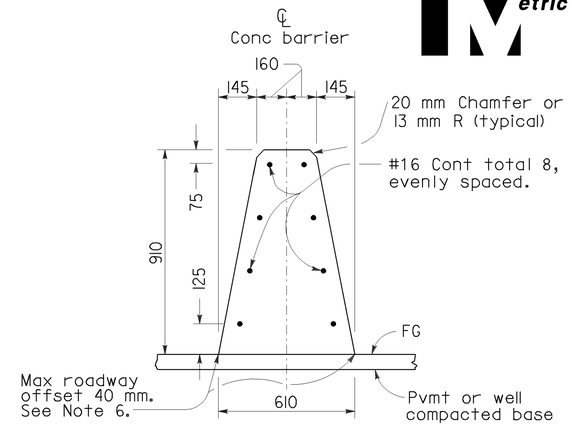

CONCRETE BARRIER TYPE 60

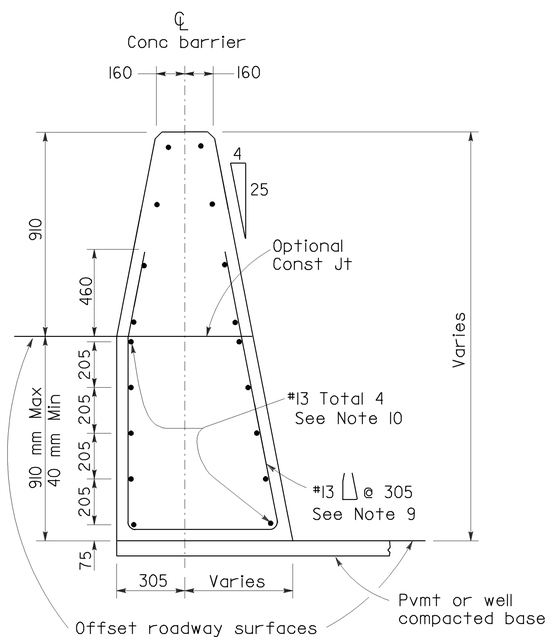

CONCRETE BARRIER TYPE 60C

Details similar to Type 60 except as noted.
Concrete barrier end anchor when necessary.
910 mm roadway surfaces offset shown.

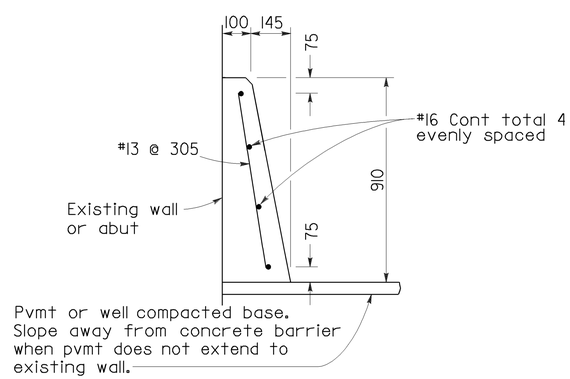

CONCRETE BARRIER TYPE 60D

NOTES

1. See Standard Plan A76B for details of Concrete Barrier Type 60 end anchors, connection to structures and transitions to Concrete Barrier Type 50 and Concrete Barrier Type 60S.
2. See Standard Plan A76C for Concrete Barrier Type 60 transitions at bridge column and sign pedestals.
3. Where glare screen is required on Concrete Barrier Type 60, use Concrete Barrier Type 60G.
4. Where the concrete barrier is added to the face of existing concrete structure, match existing weep holes.
5. Expansion joints in concrete barrier shall be located at all deck, pavement and principal wall joints. Expansion joint filler material shall be the same size as joint or 13 mm minimum.
6. Where roadway offset is greater than 40 mm, see Concrete Barrier Type 60C.
7. Barrier delineation to be used when required by the Special Provisions.
8. Spacing of barrier markers to match spacing of raised pavement markers on the adjacent median edgeline pavement delineation.
9. Reinforcing stirrup not required for roadway offsets less than 305 mm.
10. For roadway surfaces offset greater than 40 mm to 75 mm, no rebars required. For roadway surfaces offset greater than 75 mm to 205 mm, use two #13 rebars at 75 mm above the lower roadway surface. For roadway surfaces offset greater than 205 mm to 305 mm, use two #13 rebars at 75 mm above the lower roadway surface and two #13 rebars at 205 mm above the lower roadway surface. For roadway surfaces offset greater than 305 mm to 910 mm, use two #13 rebars at 75 mm above the lower roadway surface and two #13 rebars at every 205 mm increment vertical spacing above the first two #13 rebars.

STATE OF CALIFORNIA
DEPARTMENT OF TRANSPORTATION

CONCRETE BARRIER TYPE 60

NO SCALE

ALL DIMENSIONS ARE IN
MILLIMETERS UNLESS OTHERWISE SHOWN

RSP A76A DATED JUNE 6, 2008 SUPERSEDES STANDARD PLAN A76A
DATED July 1, 2004 - PAGE 29 OF THE STANDARD PLANS BOOK DATED July 2004.

REVISED STANDARD PLAN RSP A76A

2004 REVISED Std PLAN RSP A76A

5-21-08

DIST	COUNTY	ROUTE	KILOMETER POST TOTAL PROJECT	SHEET NO.	TOTAL SHEETS
07	LA	5	42.8/47.3	497	1073

Caltrans Metric

Randell D. Hiatt
REGISTERED CIVIL ENGINEER

June 6, 2008
PLANS APPROVAL DATE

REGISTERED PROFESSIONAL ENGINEER Randell D. Hiatt No. C50200 Exp. 6-30-09 STATE OF CALIFORNIA

The State of California or its officers or agents shall not be responsible for the accuracy or completeness of electronic copies of this plan sheet.

To get to the Caltrans web site, go to: http://www.dot.ca.gov

To accompany plans dated 6-8-09

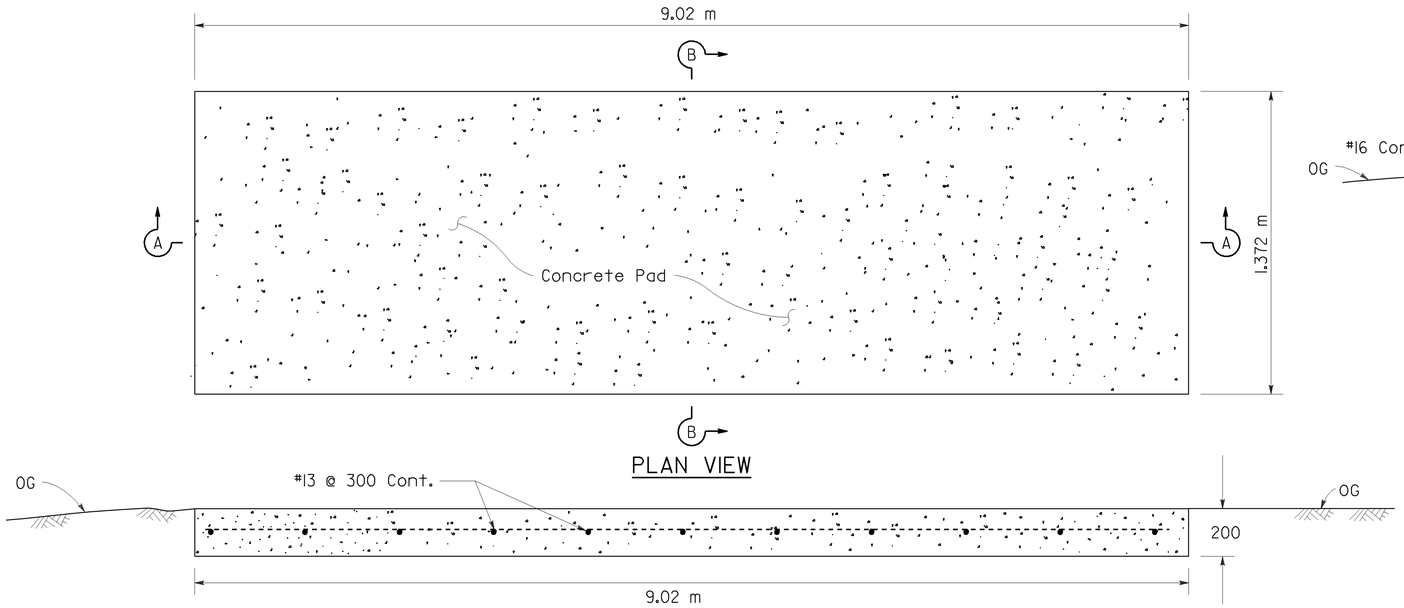

PLAN VIEW

SECTION A-A

CONCRETE ANCHOR SLAB

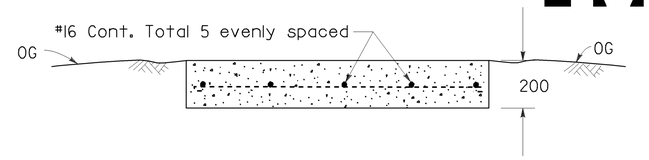

SECTION B-B

NOTES

1. For additional details of this crash cushion, refer to manufacturer's installation instructions.
2. For details of the REACT Crash Cushion with self contained backup support (no concrete backup block), see Standard Plan A82D1.
3. The base track frame with cylinders attached comes from the manufacturer as a completely pre-assembled unit.
4. Place the crash cushion unit on the cured concrete anchor slab and use the base track frame of the crash cushion as a template for drilling anchor bolt holes. Drill holes in slab and attach crash cushion with wedge anchor bolts supplied by the manufacturer.
5. Attach last cylinder to concrete backup block with manufacturer supplied fastener in such manner as recommended by the manufacturer.
6. Attach the manufacturer supplied side cable anchor plates to the cured concrete backup block with the manufacturer supplied bolts in such manner as recommended by the manufacturer.
7. Place manufacturer supplied cover over cylinders and attach cover to cylinders with manufacturer supplied fasteners.

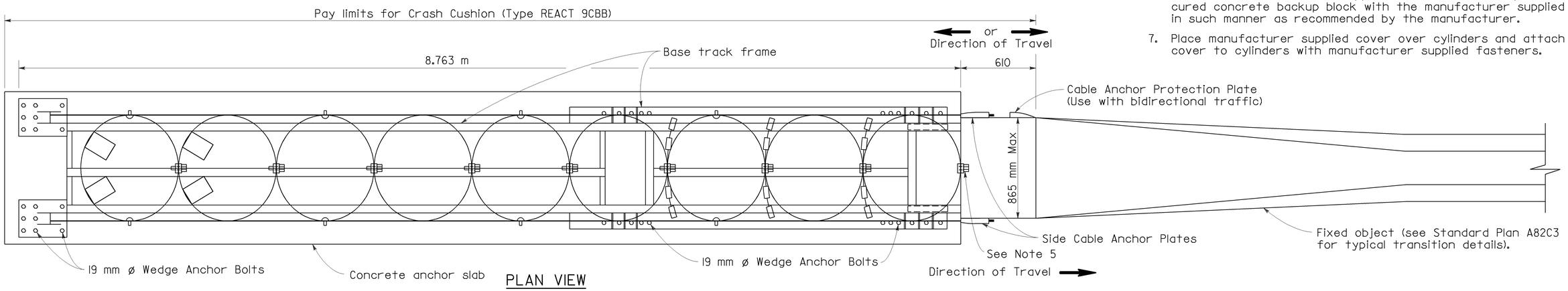

PLAN VIEW

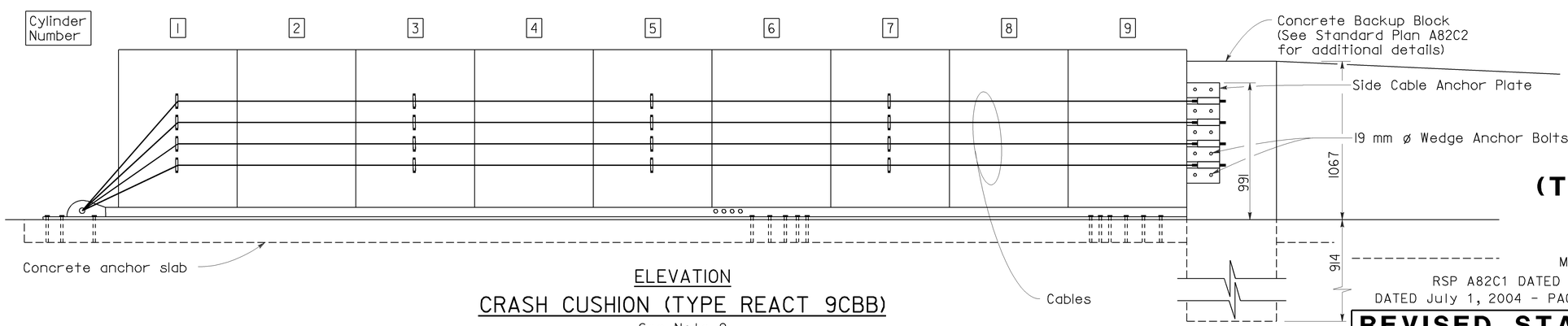

ELEVATION

CRASH CUSHION (TYPE REACT 9CBB)

See Note 2

STATE OF CALIFORNIA
DEPARTMENT OF TRANSPORTATION

CRASH CUSHION (TYPE REACT 9CBB)

NO SCALE

ALL DIMENSIONS ARE IN MILLIMETERS UNLESS OTHERWISE SHOWN

RSP A82C1 DATED JUNE 6, 2008 SUPERSEDES STANDARD PLAN A82C1 DATED July 1, 2004 - PAGE 106 OF THE STANDARD PLANS BOOK DATED July 2004.

REVISED STANDARD PLAN RSP A82C1

2004 REVISED Std PLAN RSP A82C1

5-19-08

To accompany plans dated 6-8-09

Caltrans Metric

DIST	COUNTY	ROUTE	KILOMETER POST TOTAL PROJECT	SHEET NO.	TOTAL SHEETS
07	LA	5	42.8/47.3	498	1073

Randell D. Hiatt
REGISTERED CIVIL ENGINEER

October 20, 2006
PLANS APPROVAL DATE

REGISTERED PROFESSIONAL ENGINEER Randell D. Hiatt No. C50200 Exp. 6-30-07 CIVIL STATE OF CALIFORNIA

The State of California or its officers or agents shall not be responsible for the accuracy or completeness of electronic copies of this plan sheet.

To get to the Caltrans web site, go to: http://www.dot.ca.gov

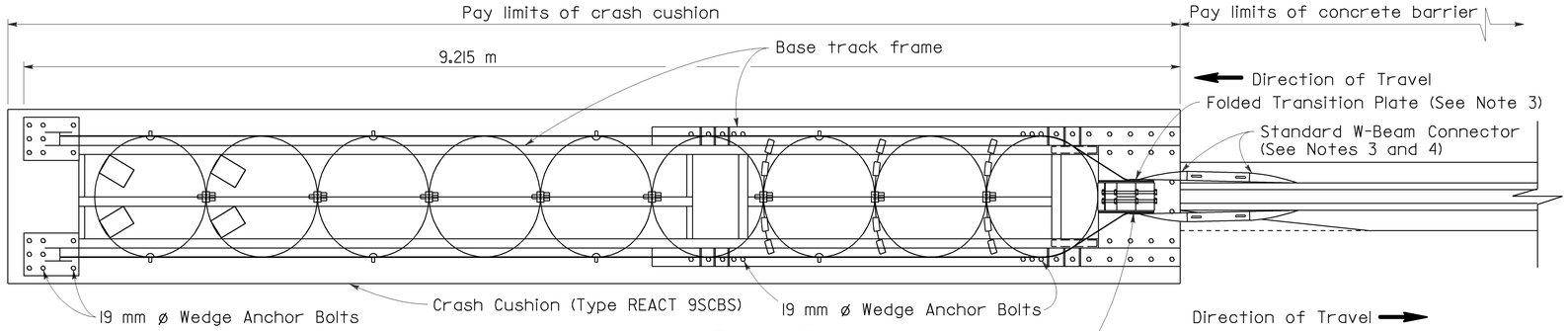

PLAN VIEW

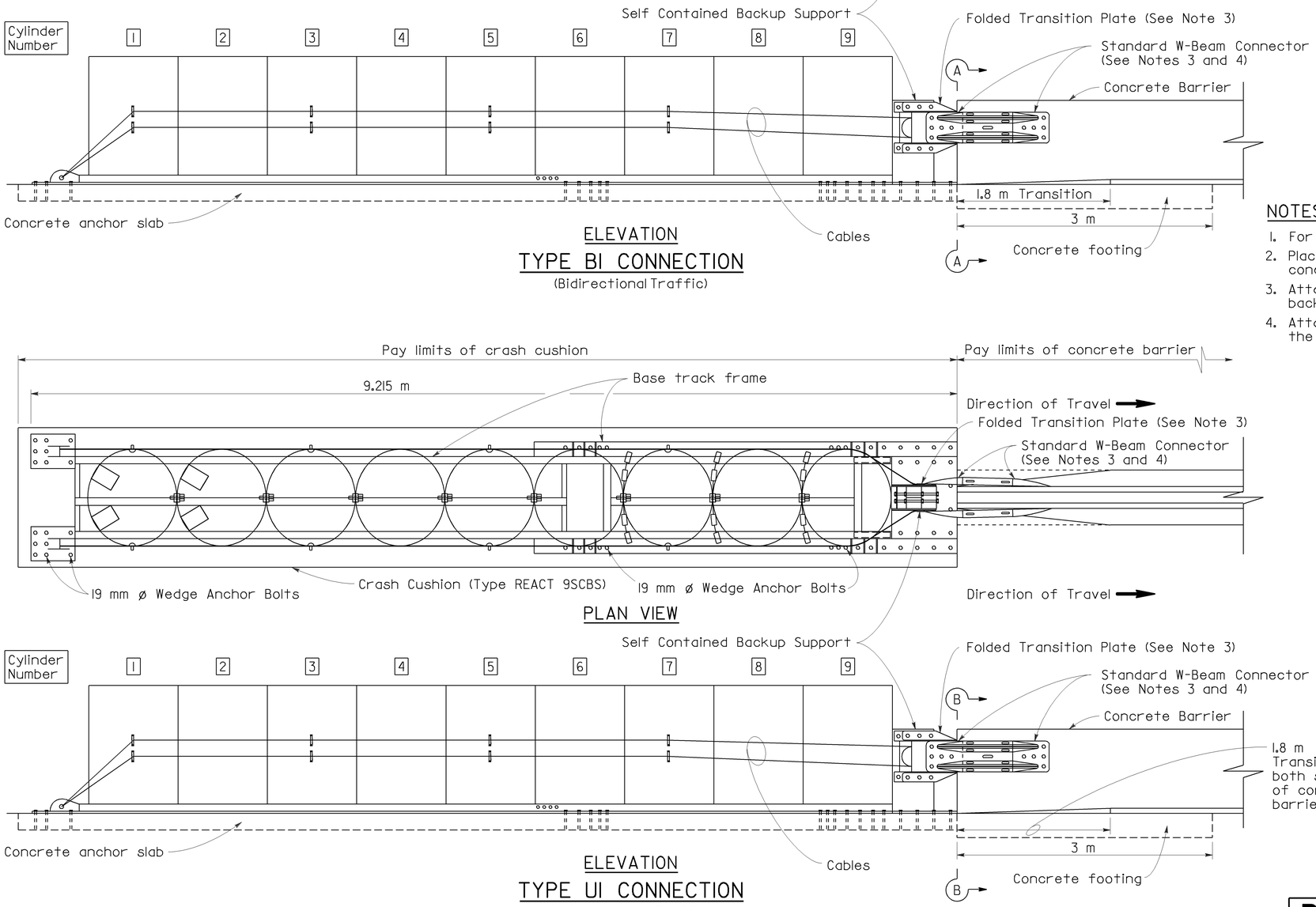

ELEVATION

TYPE BI CONNECTION

(Bidirectional Traffic)

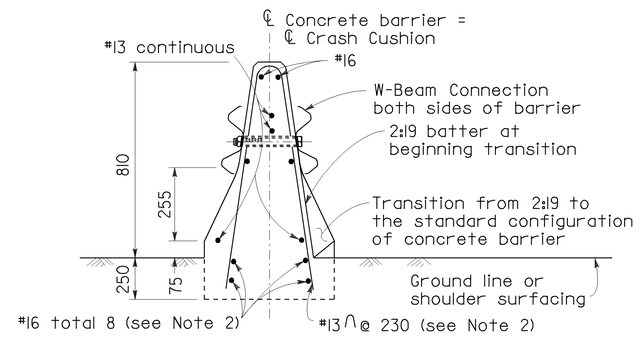

SECTION A-A

(Type 50 Barrier shown)

NOTES

1. For additional details of Crash Cushion (Type REACT 9SCBS), see Standard Plan A82D1.
2. Place this reinforcement for the full 3 meter length of the terminus of the concrete barrier.
3. Attach manufacturer supplied folded transition plates and W-Beam connectors to backup support with manufacturer supplied bolts.
4. Attach W-Beam Connectors to barrier with manufacturer supplied anchor bolts in the manner recommended by the manufacturer.

PLAN VIEW

ELEVATION

TYPE UI CONNECTION

(Unidirectional Traffic)

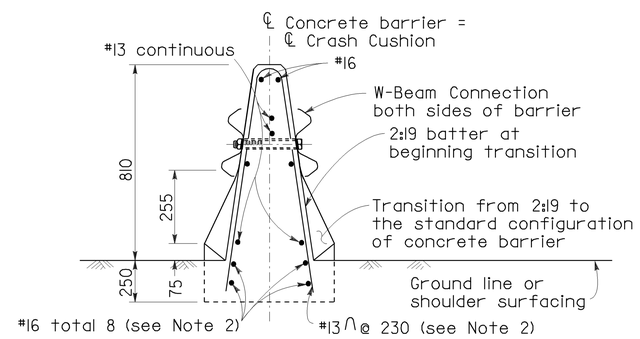

SECTION B-B

(Type 50 Barrier shown)

ALL DIMENSIONS ARE IN MILLIMETERS UNLESS OTHERWISE SHOWN

STATE OF CALIFORNIA
DEPARTMENT OF TRANSPORTATION

CRASH CUSHION (TYPE REACT 9SCBS) CONNECTION TO CONCRETE BARRIER

NO SCALE

RSP A82D2 DATED OCTOBER 20, 2006 SUPERSEDES STANDARD PLAN A82D2 DATED JULY 1, 2004-PAGE 110 OF THE STANDARD PLANS BOOK DATED JULY 2004.

REVISED STANDARD PLAN RSP A82D2

2004 REVISED Std PLAN RSP A82D2

9-13-06

DIST	COUNTY	ROUTE	KILOMETER POST TOTAL PROJECT	SHEET NO.	TOTAL SHEETS
07	LA	5	42.8/47.3	499	1073

Caltrans Metric

REGISTERED CIVIL ENGINEER

November 17, 2006
PLANS APPROVAL DATE

REGISTERED PROFESSIONAL ENGINEER Michael Janzen No. 44788 Exp. 03-31-08 CIVIL STATE OF CALIFORNIA

The State of California or its officers or agents shall not be responsible for the accuracy or completeness of electronic copies of this plan sheet.

To get to the Caltrans web site, go to: http://www.dot.ca.gov

To accompany plans dated 6-8-09

2004 REVISED Std PLAN RSP A87A

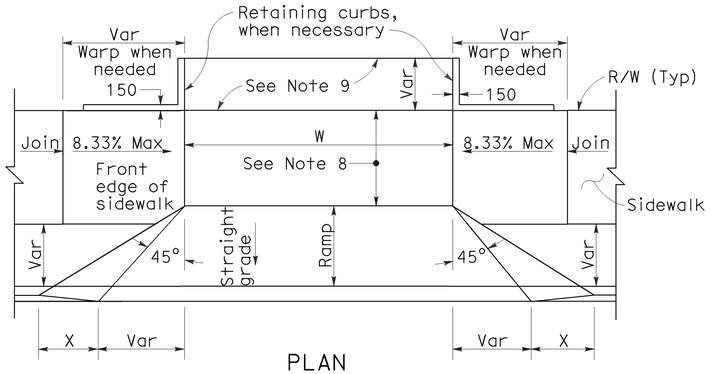

PLAN

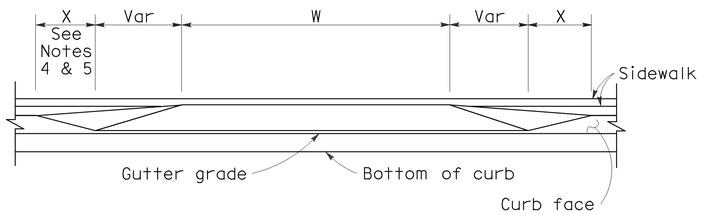

ELEVATION

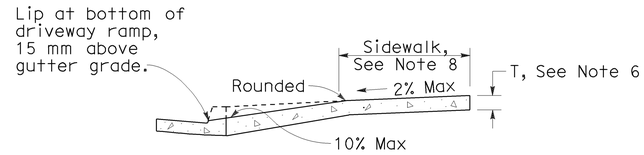

CASE A

Typical driveway, sidewalk not depressed

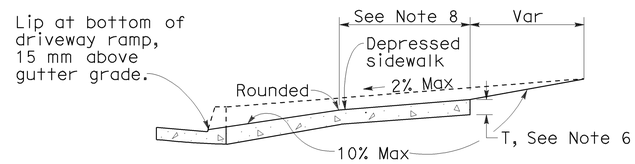

CASE B

Driveway with depressed sidewalk

SECTIONS

DRIVEWAYS

CURB QUANTITIES

TYPE	CUBIC METERS PER METER
A1-150	0.064
A1-200	0.075
A2-150	0.144
A2-200	0.155
A3-150	0.025
A3-200	0.035
B1-100	0.056
B1-150	0.073
B2-100	0.137
B2-150	0.152
B3-100	0.017
B3-150	0.027
B4	0.142
D-100	0.100
D-150	0.162
E	0.161

TABLE A

CURB TYPE	DIMENSIONS "H1"	"H2"	"W1"	"W2"
A1-150	350	150	190	40
A1-200	400	200	200	50
A2-150	300	150	790	40
A2-200	350	200	800	50
A3-150	150	130	185	35
A3-200	200	180	198	48
B1-100	300	100	200	70
B1-150	350	150	230	100
B2-100	250	100	800	70
B2-150	300	150	830	100
B3-100	100	80	185	55
B3-150	150	130	217	87
D-100	250	100	452	322
D-150	300	150	652	522

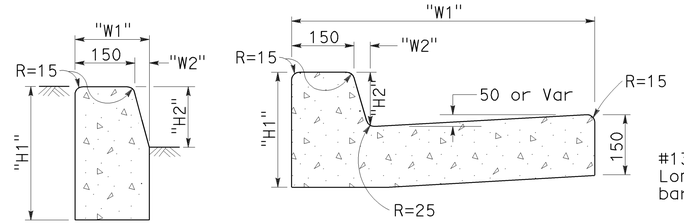

TYPE A1 CURBS

See Table A

TYPE A2 CURBS

See Table A

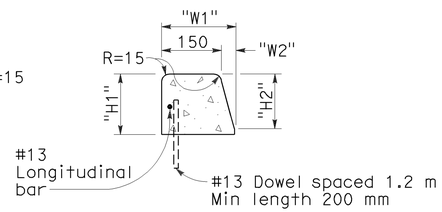

TYPE A3 CURBS

Superimposed on existing pavement
See Table A

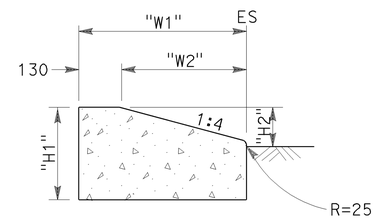

TYPE D CURBS

See Table A

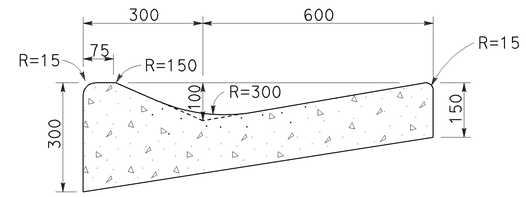

TYPE E CURB

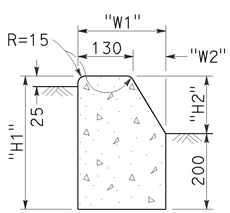

TYPE B1 CURBS

See Table A

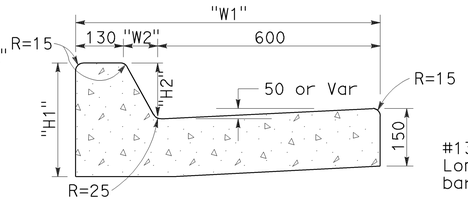

TYPE B2 CURBS

See Table A

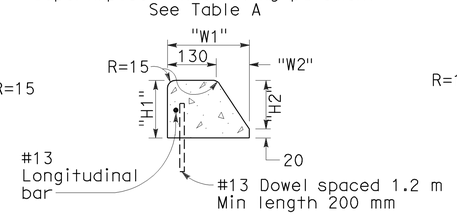

TYPE B3 CURBS

Superimposed on existing pavement
See Table A

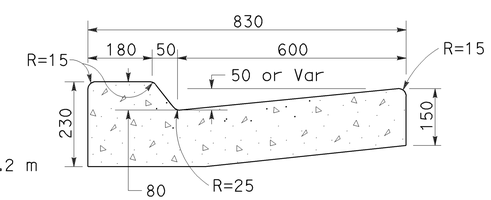

TYPE B4 CURBS

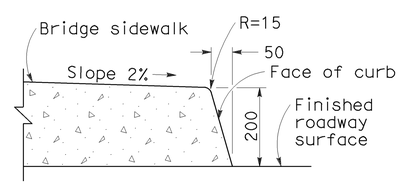

TYPE H CURB

On Bridges

CURBS

NOTES

1. Case A driveway section typically applies.
2. Use Case B driveway section when ramp slopes would exceed 10% in Case A.
3. Use Case B driveway section when sidewalk cross slope would exceed 2% in Case A.
4. X=900 mm except for curb heights over 250 mm where 1:4 slopes shall be used on curb slope.
5. X is a variable when sidewalk is located where wheelchairs may traverse the surface. Slopes shall not exceed 8.33%.
6. Sidewalk and ramp thickness ``T'' at driveway shall be 100 mm for residental and 150 mm for commercial.
7. Difference in slope of the driveway ramp and the slope of a line between the gutter and a point on the roadway 1.5 meters from gutter line shall not exceed 15%. Reduce driveway ramp slope, not gutter slope, where required.
8. Minimum width of clear passageway for sidewalk shall be 1.22 meters.
9. Retaining curbs and acquisition of construction easement may be necessary for narrow sidewalks or curb heights in excess of 150 mm.
10. Across the pedestrian route at curb ramp locations, the gutter pan slope shall not exceed 25 mm of depth for each 600 mm of width.

STATE OF CALIFORNIA
DEPARTMENT OF TRANSPORTATION

CURBS AND DRIVEWAYS

NO SCALE

ALL DIMENSIONS ARE IN MILLIMETERS UNLESS OTHERWISE SHOWN

RSP A87A DATED NOVEMBER 17, 2006 SUPERSEDES STANDARD PLAN A87A DATED JULY 1, 2004-PAGE 115 OF THE STANDARD PLANS BOOK DATED JULY 2004.

REVISED STANDARD PLAN RSP A87A

10-25-06

DIST	COUNTY	ROUTE	KILOMETER POST TOTAL PROJECT	SHEET NO.	TOTAL SHEETS
07	LA	5	42.8/47.3	500	1073

Caltrans Metric

William K. Farnbach
REGISTERED CIVIL ENGINEER

November 17, 2006
PLANS APPROVAL DATE

REGISTERED PROFESSIONAL ENGINEER William K. Farnbach No. 49042 Exp. 09-30-08 CIVIL STATE OF CALIFORNIA

The State of California or its officers or agents shall not be responsible for the accuracy or completeness of electronic copies of this plan sheet.

To get to the Caltrans web site, go to: http://www.dot.ca.gov

To accompany plans dated 6-8-09

2004 REVISED Std PLAN RSP P1

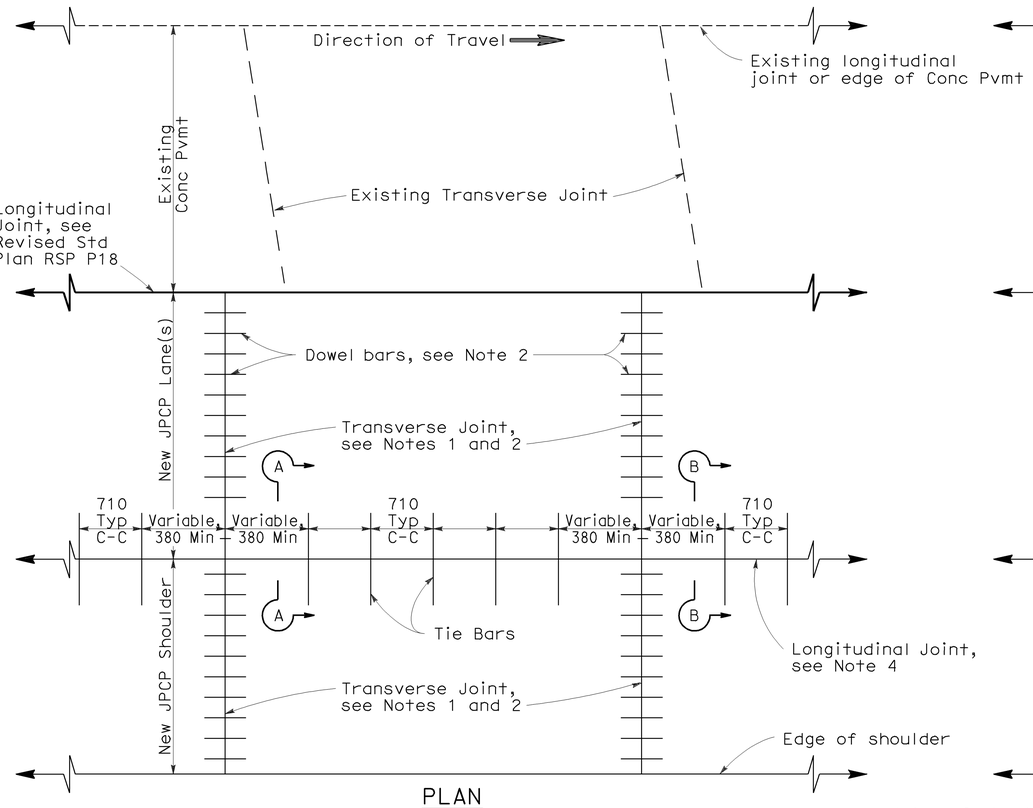

PLAN

LANE/SHOULDER ADDITION OR RECONSTRUCTION

See Notes 6 and 7

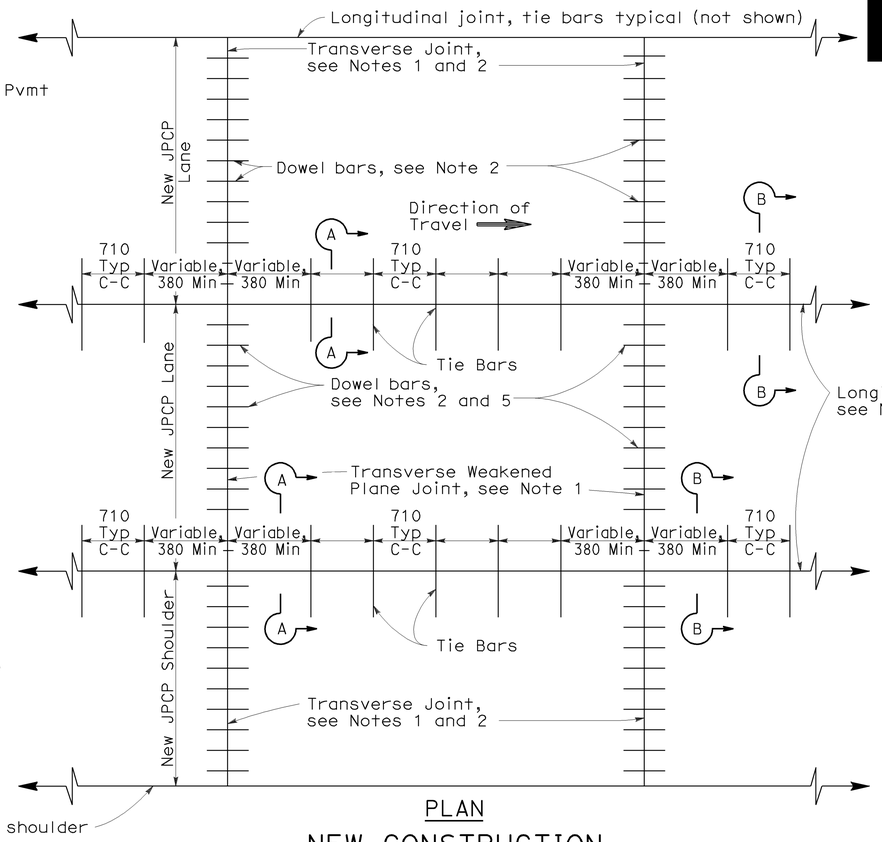

PLAN

NEW CONSTRUCTION

See Notes 6 and 7

NOTES

1. Transverse joints shall be constructed at right angles to the longitudinal pavement joints in new portland cement concrete pavement and spaced at successive repeated intervals of 3.66 m, 4.57 m, 3.96 m and 4.27 m.
2. For transverse joint and dowel bar details not shown, see Revised Standard Plan RSP P10.
3. Construct longitudinal weakened plane joints as shown in Section A-A when more than one lane or shoulder widths are placed at one time. If constructing one lane at a time, use longitudinal contact joint, as shown in Section B-B.
4. For additional longitudinal joint details, see Revised Standard Plan RSP P18.
5. If fresh concrete is placed adjacent to existing concrete, the top corner of the new hardened concrete does not need to be rounded to the 6 mm radius, as shown.
6. Joint spacing patterns do not apply to intersections.
7. Details can also apply to inside widening.

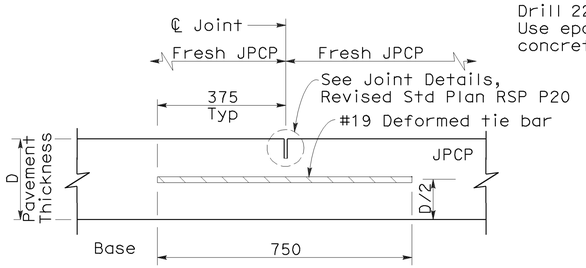

SECTION A-A

LONGITUDINAL WEAKENED PLANE JOINT

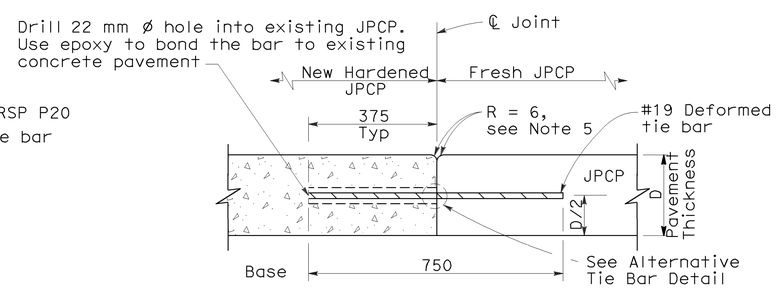

SECTION B-B

LONGITUDINAL CONTACT JOINT

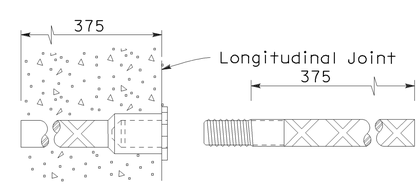

ALTERNATIVE TIE BAR DETAIL

(Dowel Splice Coupler)

TIE BAR DETAILS

STATE OF CALIFORNIA
DEPARTMENT OF TRANSPORTATION

JOINTED PLAIN CONCRETE PAVEMENT

NO SCALE

ALL DIMENSIONS ARE IN MILLIMETERS UNLESS OTHERWISE SHOWN

RSP P1 DATED NOVEMBER 17, 2006 SUPERSEDES STANDARD PLAN P1 DATED JULY 1, 2004-PAGE 121 OF THE STANDARD PLANS BOOK DATED JULY 2004.

REVISED STANDARD PLAN RSP P1

10-24-06