Dist	COUNTY	ROUTE	KILOMETER POST TOTAL PROJECT	SHEET No.	TOTAL SHEETS
07	LA	5	42.8/47.3	1	1073

CMLN-6207(055)

STATE OF CALIFORNIA
DEPARTMENT OF TRANSPORTATION

PROJECT PLANS FOR CONSTRUCTION ON
STATE HIGHWAY
IN LOS ANGELES COUNTY
IN LOS ANGELES, GLENDALE, AND BURBANK
FROM ROUTE 5/134 SEPARATION
TO MAGNOLIA BOULEVARD OVERCROSSING

TO BE SUPPLEMENTED BY STANDARD PLANS DATED JULY 2004

INDEX OF SHEETS

SHEET No.	DESCRIPTION
1	TITLE AND LOCATION MAP
2-8	TYPICAL CROSS SECTIONS
9-23	LAYOUTS
24-41	PROFILES AND SUPERELEVATION DIAGRAM
42-70	CONSTRUCTION DETAILS
71-128	WATER POLLUTION CONTROL PLANS, DETAILS, PROFILES AND QUANTITIES
129-140	CONTOUR GRADING PLANS
141-197	DRAINAGE PLANS, PROFILES, DETAILS AND QUANTITIES
198-211	UTILITY PLANS
212	CONSTRUCTION AREA SIGNS
213-258	STAGE CONSTRUCTION PLANS AND QUANTITIES
259-263	TRAFFIC HANDLING DETAILS
264-273	DETOUR PLANS
274-291	PAVEMENT DELINEATION PLANS, DETAILS AND QUANTITIES
292-328	SIGN PLANS, DETAILS AND QUANTITIES
329-334	SUMMARY OF QUANTITIES
335-337	RETAINING WALL PLANS
338-348	SOUND WALL PLANS
349	PLANT LIST
350-364	PLANTING PLANS
365-379	IRRIGATION PLANS
380-381	LANDSCAPE DETAILS
382-494	ELECTRICAL PLANS
495-573	REVISED AND NEW STANDARD PLANS

STRUCTURE PLANS

574-637	LOS ANGELES RIVER BRIDGE AND SEPARETION (WIDEN) Br No. 53-1075
638-649	HAZEL STREET Ped UC (MODIFY) Br No. 53-1076
650-708	SONORA AVENUE UC (WIDEN) Br No. 53-1077
709-736	WESTERN AVENUE UC (WIDEN) Br No. 53-1079
737-756	ALLEN AVENUE UC (WIDEN) Br No. 53-1081
757-789	ALAMEDA AVENUE UC (WIDEN) Br No. 53-1082
790-941	PROVIDENCIA AVENUE OH (WIDEN) Br No. 53-1085
942-980	VERDUGO AVENUE UC (WIDEN AND RETROFIT) Br No. 53-1086
981-987	RETAINING WALL No. 440
988-999	RETAINING WALL No. 437
1000-1030	SOUTH APPROACH RAMP AND RETAINING WALLS Br No. 53E0127
1031-1071	NORTH APPROACH RAMP AND RETAINING WALLS Br No. 53E0128
1072-1073	RETAINING WALL No. 466 Br No. 53E0138

THE STANDARD PLANS LIST APPLICABLE TO THIS CONTRACT IS INCLUDED IN THE NOTICE TO BIDDERS AND SPECIAL PROVISIONS BOOK.

LOCATION MAP

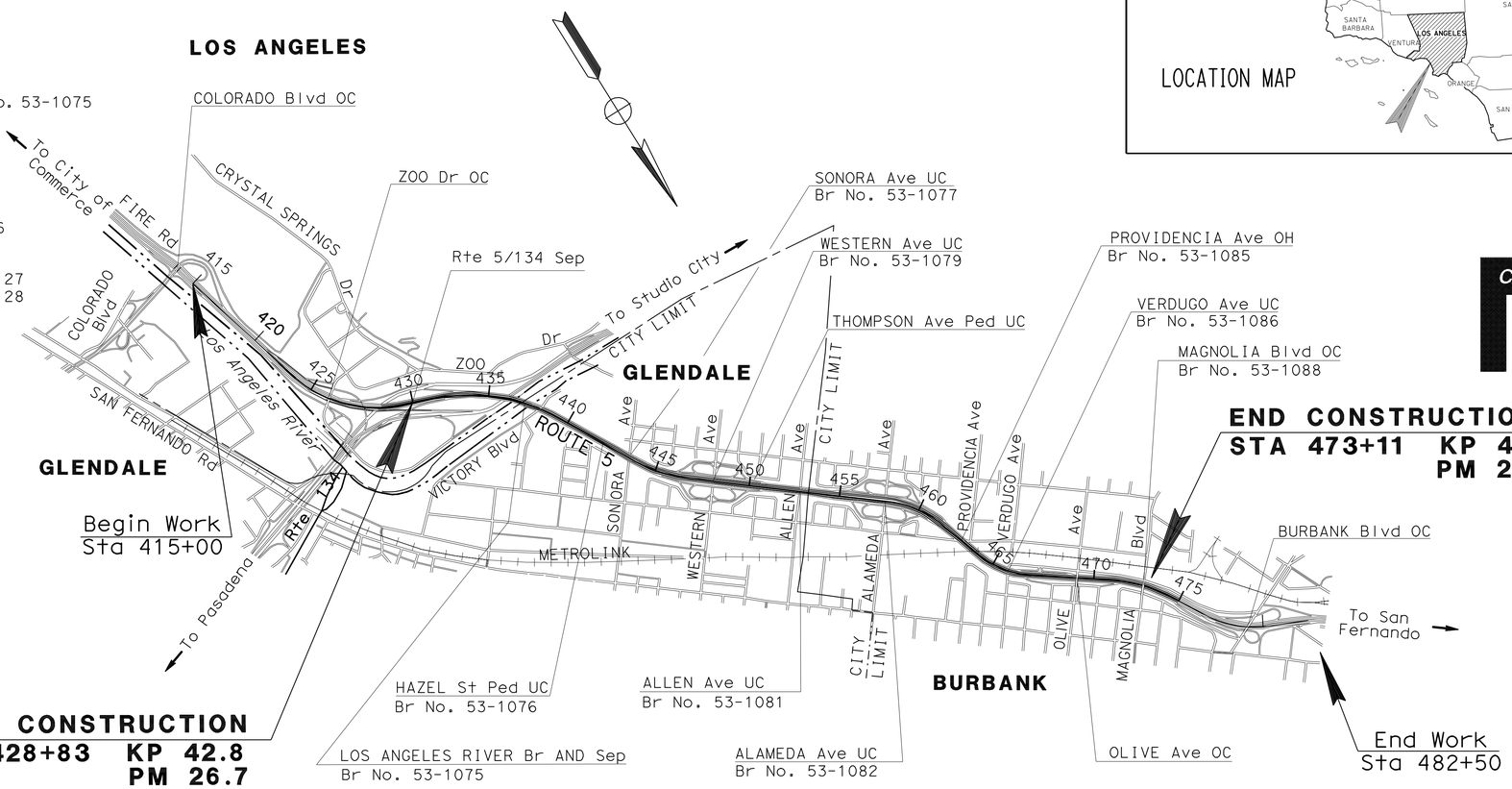

NO SCALE

LOCATIONS OF HUB AND LARTMC FOR SYSTEM TESTING			
ROUTE	KP	LOCATION	DESCRIPTION
5	27.2	NORTHBOUND ROUTE 5 NEAR GARNETT STREET	ELA - EAST LOS ANGELES HUB BUILDING
2	30.1	ROUTE 134 AND ROUTE 2 INTERCHANGE (2901 WEST BROADWAY, LOS ANGELES, CA 90041)	LARTMC (TMC) - LOS ANGELES REGIONAL TRANSPORTATION MANAGEMENT CENTER

THE CONTRACTOR SHALL POSSESS THE CLASS (OR CLASSES) OF LICENSE AS SPECIFIED IN THE ''NOTICE TO BIDDERS''

2-09-09
PROJECT ENGINEER REGISTERED CIVIL ENGINEER — DATE

REGISTERED PROFESSIONAL ENGINEER MUNSHI MOHSIN No. 61916 Exp. 9/30/09 CIVIL STATE OF CALIFORNIA

June 8, 2009
PLANS APPROVAL DATE

THE STATE OF CALIFORNIA OR ITS OFFICERS OR AGENTS SHALL NOT BE RESPONSIBLE FOR THE ACCURACY OR COMPLETENESS OF ELECTRONIC COPIES OF THIS PLAN SHEET.

PROJECT MANAGER M. F-COLE
DESIGN ENGINEER M. MOHSIN

LAST REVISION 12-03-08
DATE PLOTTED => 25-MAY-2010
TIME PLOTTED => 05:45

CONTRACT No. 07-121844

Dist	COUNTY	ROUTE	KILOMETER POST TOTAL PROJECT	SHEET No.	TOTAL SHEETS
07	LA	5	42.8/47.3	2	1073

REGISTERED CIVIL ENGINEER 2-17-09 DATE

6-8-09
PLANS APPROVAL DATE

REGISTERED PROFESSIONAL ENGINEER MUNSHI MOHSIN No. 61916 Exp. 9/30/09 CIVIL STATE OF CALIFORNIA

THE STATE OF CALIFORNIA OR ITS OFFICERS OR AGENTS SHALL NOT BE RESPONSIBLE FOR THE ACCURACY OR COMPLETENESS OF ELECTRONIC COPIES OF THIS PLAN SHEET.

Caltrans Metric

EXISTING STRUCTURAL SECTIONS

A	60 mm AC (TYPE A) 40 mm RUBBERIZED AC 204 mm PCC 101 mm CTB 101 mm AB 204 mm AS
B	60 mm AC (TYPE A) 40 mm RUBBERIZED AC 229 mm PCC 101 mm CTB 76 mm AB 204 mm AS
C	76 mm AC 150 mm AB VARIABLE THICKNESS AS
D	101 mm AC 204 mm CTB 101 mm AB 204 mm AS
E	204 mm PCC 101 mm CTB 101 mm AB 204 mm AS
F	229 mm PCC 101 mm CTB 76 mm AB 204 mm AS

NOTES:

1. DIMENSIONS OF THE STRUCTURAL SECTIONS ARE SUBJECT TO TOLERANCES SPECIFIED IN THE STANDARD SPECIFICATIONS.
2. SUPERELEVATION AS SHOWN OR AS DIRECTED BY THE ENGINEER.
3. PLACE TIE BAR AT JOIN EXISTING FROM STA 464+07.068 TO 473+03.000.
4. BARRIER ALIGNMENT IS 1.5 m RIGHT OF ℄ FROM STA 463+16.52 TO 466+88.690.

DESIGN DESIGNATION (ROUTE 5)

2002 ADT = 188,000 D = 55%
2027 ADT = 410,000 D = 55%
DHV = 32,800 D = 110 Km/h

ABBREVIATION:
RS RAPID SETTING
RSC RAPID STRENGTH CONCRETE

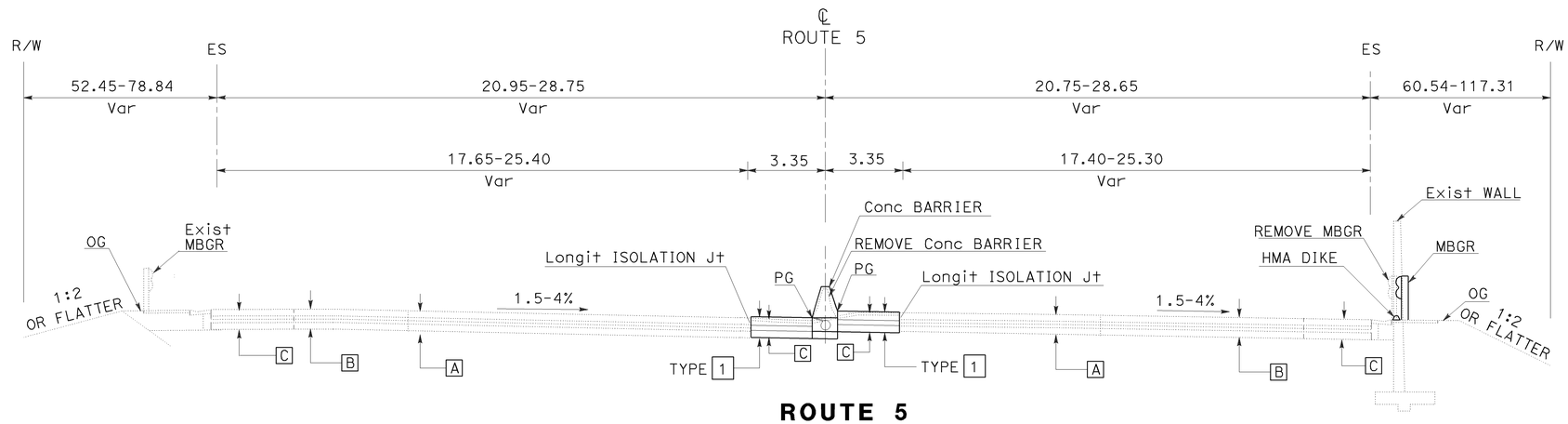

ROUTE 5

STA 430+00.470 TO 435+38.239

TYPICAL STRUCTURAL SECTIONS

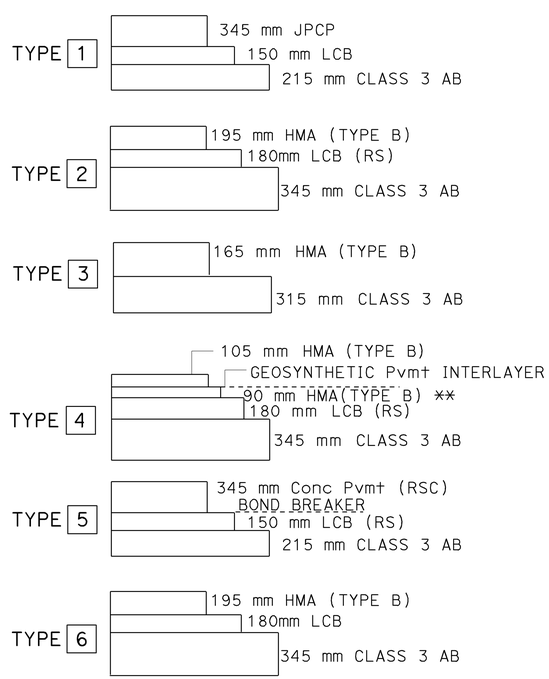

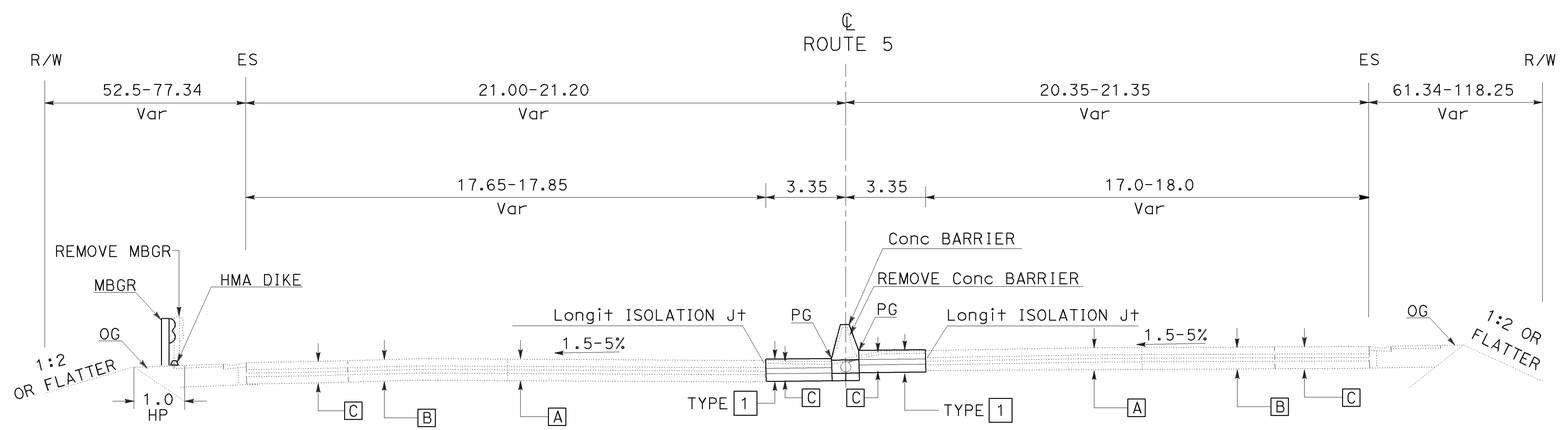

ROUTE 5

STA 428+83.545 TO 430+00.470

** THE TRAFFIC LOOP SHALL BE CUT AND EPOXY FILLED IN THIS LAYER OF HMA PRIOR TO PLACING GEOSYNTHETIC PAVEMENT INTERLAYER AND FINAL LAYER.

* SEE LAYOUT SHEET

ALL DIMENSIONS ARE IN METERS UNLESS OTHERWISE SHOWN

TYPICAL CROSS SECTIONS

NO SCALE

X-1

CTT	02/09		
DP	10/08		
SA	10/08	REVISED BY	DATE REVISED
DAWIT WORKU	MUNSHI MOHSIN	CALCULATED-DESIGNED BY	CHECKED BY
FUNCTIONAL SUPERVISOR	CELINA AVILES		

STATE OF CALIFORNIA - DEPARTMENT OF TRANSPORTATION
Caltrans OFFICE OF DESIGN D

LAST REVISION 02-27-09 | DATE PLOTTED => 12-JUN-2009 | TIME PLOTTED => 07:39

Dist	COUNTY	ROUTE	KILOMETER POST TOTAL PROJECT	SHEET No.	TOTAL SHEETS
07	LA	5	42.8/47.3	3	1073

REGISTERED CIVIL ENGINEER 2-17-09 DATE

6-8-09
PLANS APPROVAL DATE

REGISTERED PROFESSIONAL ENGINEER MUNSHI MOHSIN No. 61916 Exp. 9/30/09 CIVIL STATE OF CALIFORNIA

THE STATE OF CALIFORNIA OR ITS OFFICERS OR AGENTS SHALL NOT BE RESPONSIBLE FOR THE ACCURACY OR COMPLETENESS OF ELECTRONIC COPIES OF THIS PLAN SHEET.

Caltrans Metric

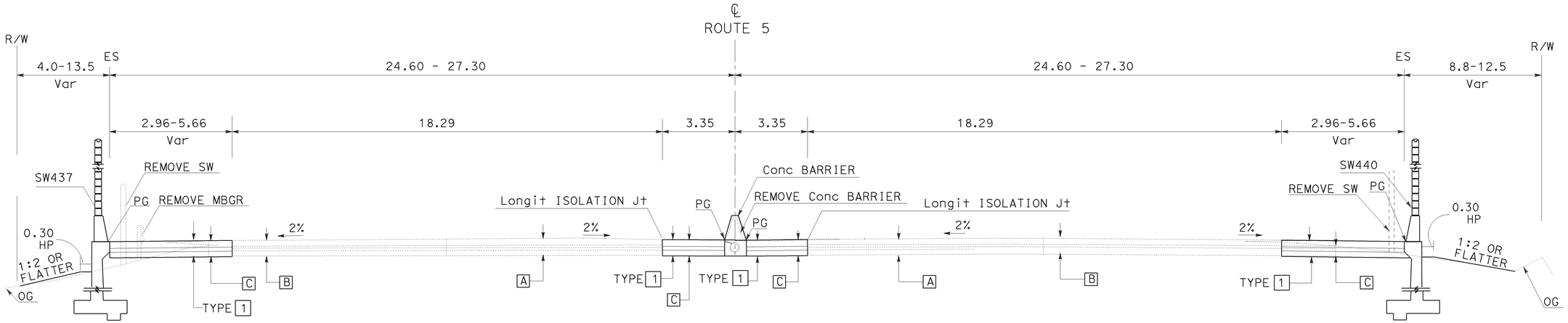

ROUTE 5

STA 438+86.740 TO 442+92.025

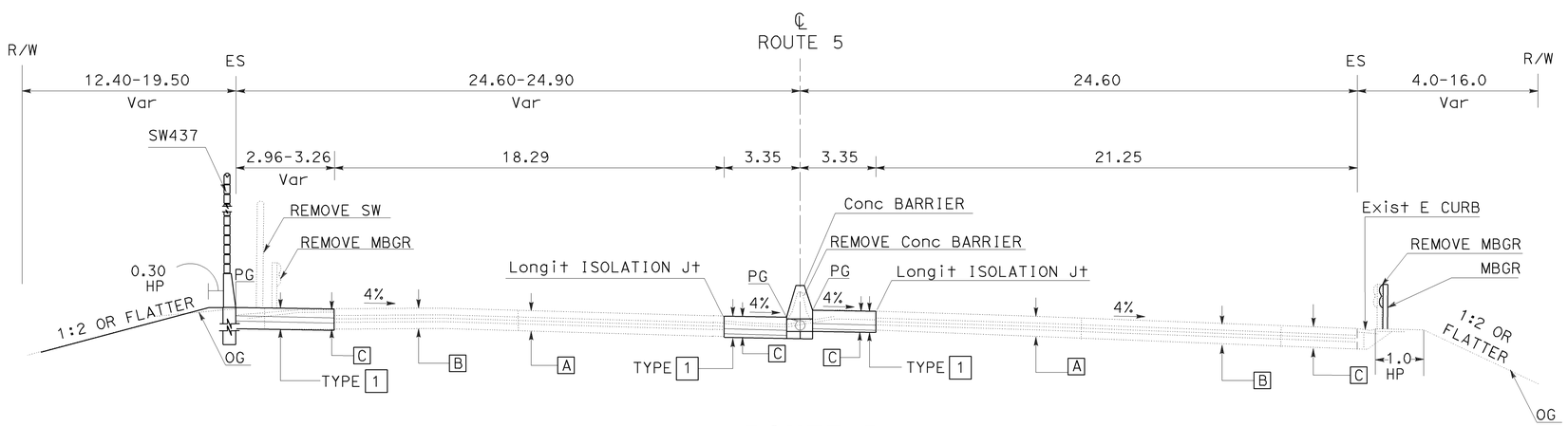

ROUTE 5

STA 437+55.146 TO 438+86.740

ALL DIMENSIONS ARE IN METERS
UNLESS OTHERWISE SHOWN

TYPICAL CROSS SECTIONS

NO SCALE

X-2

* SEE LAYOUT SHEET

STATE OF CALIFORNIA - DEPARTMENT OF TRANSPORTATION
Caltrans OFFICE OF DESIGN D

FUNCTIONAL SUPERVISOR: CELINA AVILES
CALCULATED-DESIGNED BY: DAWIT WORKU
CHECKED BY: MUNSHI MOHSIN
REVISED BY: SA
DATE REVISED: 01/08
CTT 02/09

LAST REVISION 02-27-09
DATE PLOTTED => 12-JUN-2009
TIME PLOTTED => 07:28

Dist	COUNTY	ROUTE	KILOMETER POST TOTAL PROJECT	SHEET No.	TOTAL SHEETS
07	LA	5	42.8/47.3	4	1073

REGISTERED CIVIL ENGINEER 2-17-09 DATE

6-8-09
PLANS APPROVAL DATE

REGISTERED PROFESSIONAL ENGINEER MUNSHI MOHSIN No. 61916 Exp. 9/30/09 CIVIL STATE OF CALIFORNIA

THE STATE OF CALIFORNIA OR ITS OFFICERS OR AGENTS SHALL NOT BE RESPONSIBLE FOR THE ACCURACY OR COMPLETENESS OF ELECTRONIC COPIES OF THIS PLAN SHEET.

Caltrans Metric

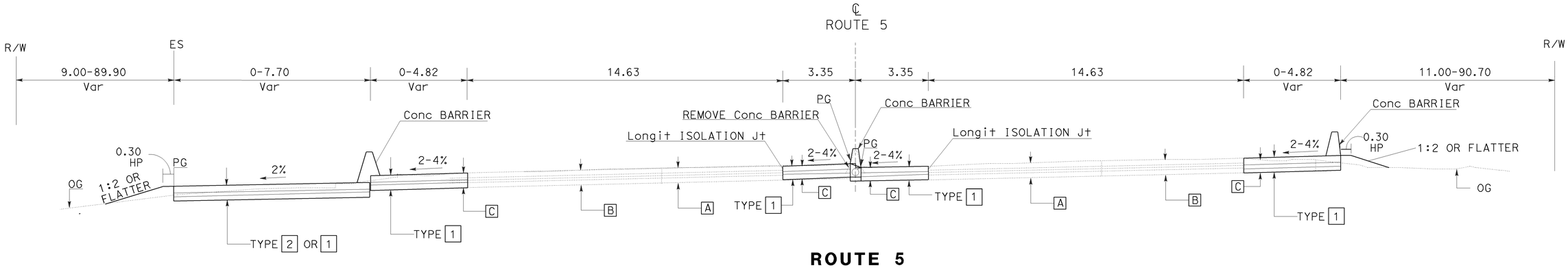

ROUTE 5

STA 444+73.880 TO 447+78.692
STA 448+28.696 TO 450+00.000

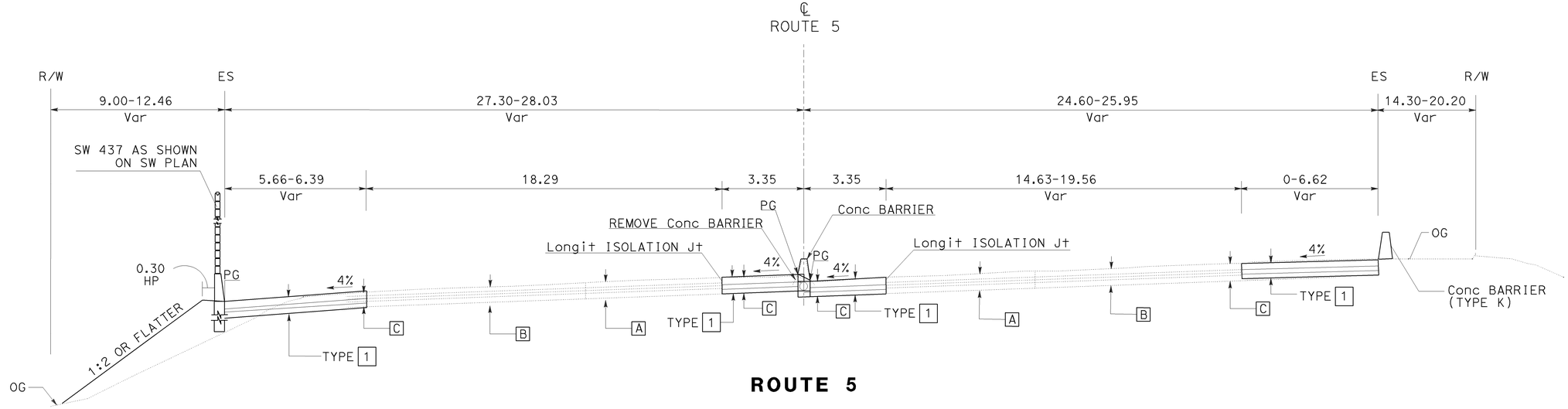

ROUTE 5

STA 443+44.225 TO 444+73.880

ALL DIMENSIONS ARE IN METERS
UNLESS OTHERWISE SHOWN

TYPICAL CROSS SECTIONS

NO SCALE

X-3

* SEE LAYOUT SHEET

STATE OF CALIFORNIA - DEPARTMENT OF TRANSPORTATION
Caltrans OFFICE OF DESIGN D

FUNCTIONAL SUPERVISOR: CELINA AVILES
CALCULATED-DESIGNED BY: DAWIT WORKU
CHECKED BY: MOHSIN MUNSHI
REVISED BY: SA — DATE REVISED: 01/08
CTT 02/09

LAST REVISION 03-02-09 DATE PLOTTED => 12-JUN-2009 TIME PLOTTED => 07:28

Dist	COUNTY	ROUTE	KILOMETER POST TOTAL PROJECT	SHEET No.	TOTAL SHEETS
07	LA	5	42.8/47.3	5	1073

REGISTERED CIVIL ENGINEER 2-17-09 DATE

6-8-09
PLANS APPROVAL DATE

REGISTERED PROFESSIONAL ENGINEER MUNSHI MOHSIN No. 61916 Exp. 9/30/09 CIVIL STATE OF CALIFORNIA

THE STATE OF CALIFORNIA OR ITS OFFICERS OR AGENTS SHALL NOT BE RESPONSIBLE FOR THE ACCURACY OR COMPLETENESS OF ELECTRONIC COPIES OF THIS PLAN SHEET.

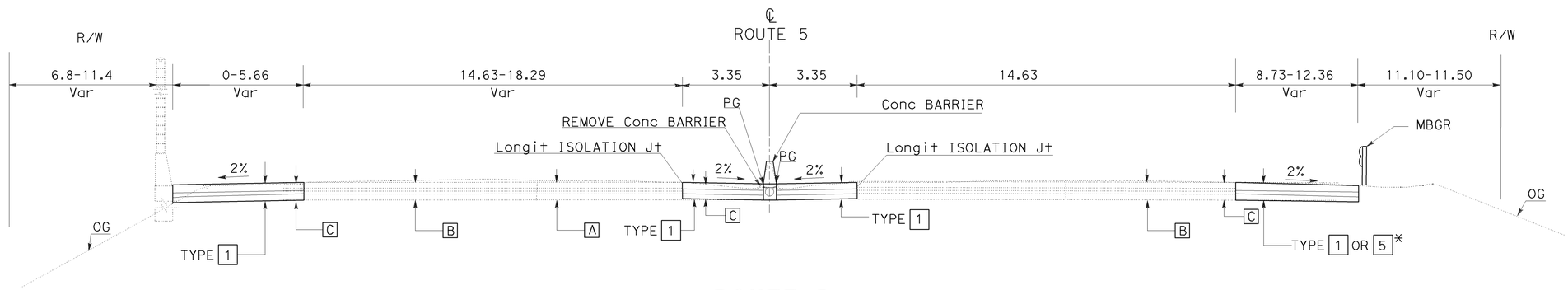

ROUTE 5

STA 451+00.000 TO 452+56.620
STA 453+00.000 TO 454+28.850

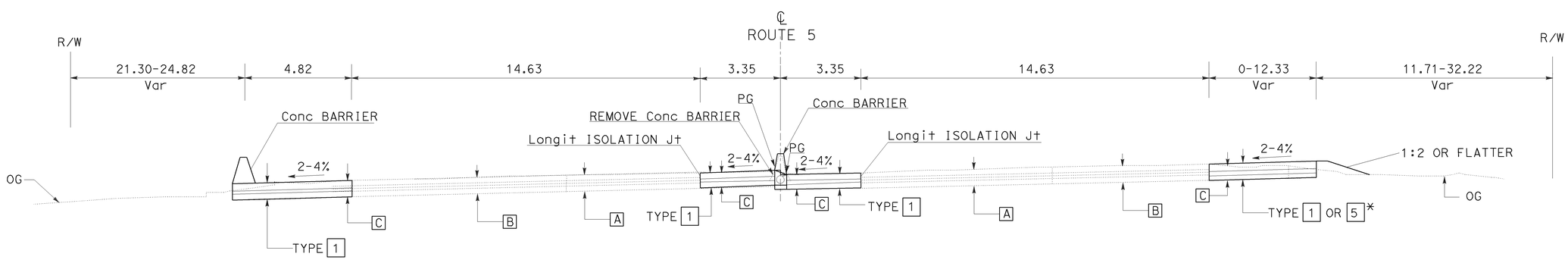

ROUTE 5

STA 450+00.000 TO 451+00.000

ALL DIMENSIONS ARE IN METERS
UNLESS OTHERWISE SHOWN

TYPICAL CROSS SECTIONS

NO SCALE

X-4

* SEE LAYOUT SHEET

STATE OF CALIFORNIA - DEPARTMENT OF TRANSPORTATION
Caltrans OFFICE OF DESIGN D

FUNCTIONAL SUPERVISOR: CELINA AVILES
CALCULATED-DESIGNED BY: DAWIT WORKU
CHECKED BY: MUNSHI MOHSIN
REVISED BY: SA
DATE REVISED: 01/08
CTT 02/09

LAST REVISION 03-02-09
DATE PLOTTED => 12-JUN-2009
TIME PLOTTED => 07:28

Dist	COUNTY	ROUTE	KILOMETER POST TOTAL PROJECT	SHEET No.	TOTAL SHEETS
07	LA	5	42.8/47.3	6	1073

REGISTERED CIVIL ENGINEER 2-17-09 DATE

6-8-09
PLANS APPROVAL DATE

REGISTERED PROFESSIONAL ENGINEER MUNSHI MOHSIN No. 61916 Exp. 9/30/09 CIVIL STATE OF CALIFORNIA

THE STATE OF CALIFORNIA OR ITS OFFICERS OR AGENTS SHALL NOT BE RESPONSIBLE FOR THE ACCURACY OR COMPLETENESS OF ELECTRONIC COPIES OF THIS PLAN SHEET.

Caltrans Metric

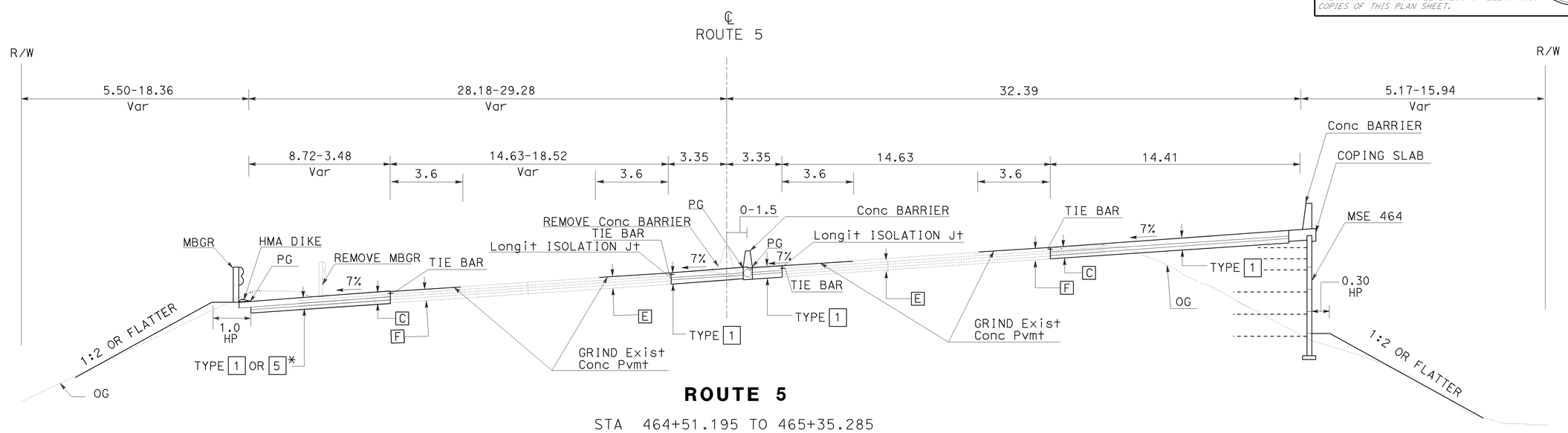

ROUTE 5

STA 464+51.195 TO 465+35.285

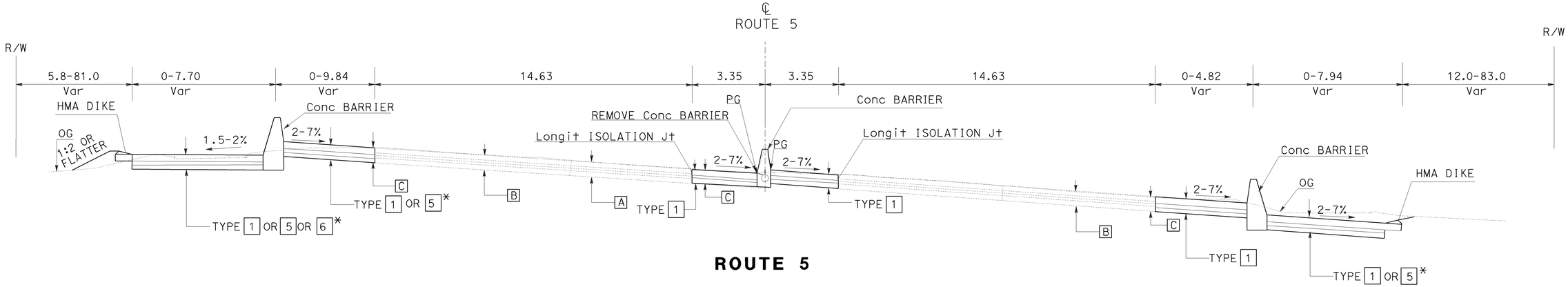

ROUTE 5

STA 454+28.850 TO 457+27.301
STA 457+77.305 TO 461+64.360

ALL DIMENSIONS ARE IN METERS
UNLESS OTHERWISE SHOWN

TYPICAL CROSS SECTIONS

NO SCALE

X-5

* SEE LAYOUT SHEET

	CTT	02/09
REVISED BY	SA	01/08
DATE REVISED		
DAWIT WORKU		
MUNSHI MOHSIN		
CALCULATED-DESIGNED BY		
CHECKED BY		
FUNCTIONAL SUPERVISOR		
CELINA AVILES		

STATE OF CALIFORNIA - DEPARTMENT OF TRANSPORTATION
Caltrans OFFICE OF DESIGN D

LAST REVISION 03-02-09 DATE PLOTTED => 12-JUN-2009 TIME PLOTTED => 07:28

Dist	COUNTY	ROUTE	KILOMETER POST TOTAL PROJECT	SHEET No.	TOTAL SHEETS
07	LA	5	42.8/47.3	7	1073

REGISTERED CIVIL ENGINEER 2-17-09 DATE

6-8-09
PLANS APPROVAL DATE

REGISTERED PROFESSIONAL ENGINEER MUNSHI MOHSIN No. 61916 Exp. 9/30/09 CIVIL STATE OF CALIFORNIA

THE STATE OF CALIFORNIA OR ITS OFFICERS OR AGENTS SHALL NOT BE RESPONSIBLE FOR THE ACCURACY OR COMPLETENESS OF ELECTRONIC COPIES OF THIS PLAN SHEET.

Caltrans Metric

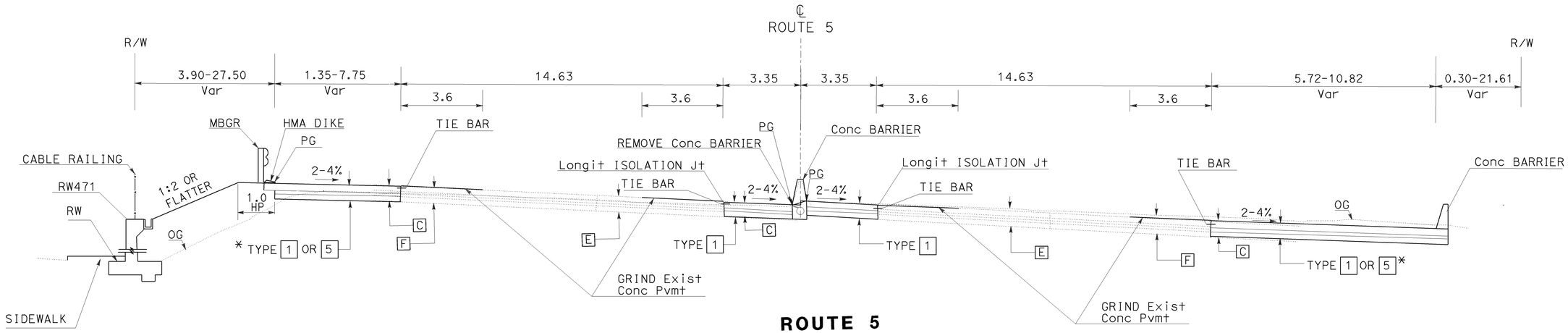

ROUTE 5

STA 466+88.688 TO 473+11.67

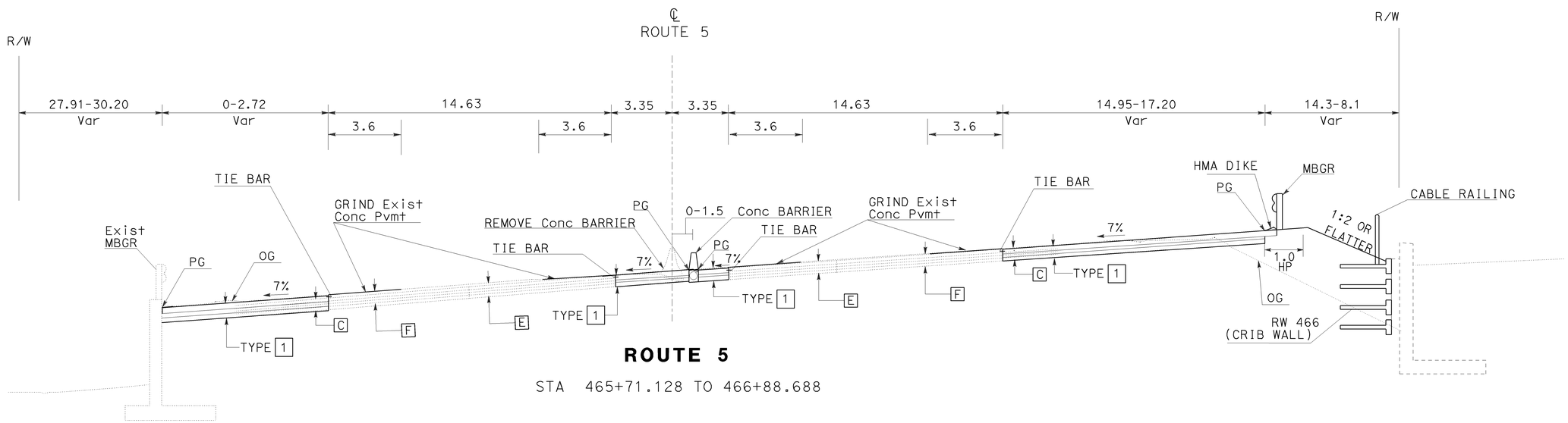

ROUTE 5

STA 465+71.128 TO 466+88.688

ALL DIMENSIONS ARE IN METERS UNLESS OTHERWISE SHOWN

TYPICAL CROSS SECTIONS

NO SCALE

X-6

* SEE LAYOUT SHEET

STATE OF CALIFORNIA - DEPARTMENT OF TRANSPORTATION
Caltrans OFFICE OF DESIGN D

FUNCTIONAL SUPERVISOR: CELINA AVILES
CALCULATED-DESIGNED BY: DAWIT WORKU
CHECKED BY: MUNSHI MOHSIN
REVISED BY: SA
DATE REVISED: 01/08
DP 10/08
CTT 02/09

LAST REVISION 03-02-09
DATE PLOTTED => 12-JUN-2009
TIME PLOTTED => 07:28

Dist	COUNTY	ROUTE	KILOMETER POST TOTAL PROJECT	SHEET No.	TOTAL SHEETS
07	LA	5	42.8/47.3	8	1073

REGISTERED CIVIL ENGINEER 2-17-09 DATE

6-8-09
PLANS APPROVAL DATE

REGISTERED PROFESSIONAL ENGINEER MUNSHI MOHSIN No. 61916 Exp. 9/30/09 CIVIL STATE OF CALIFORNIA

THE STATE OF CALIFORNIA OR ITS OFFICERS OR AGENTS SHALL NOT BE RESPONSIBLE FOR THE ACCURACY OR COMPLETENESS OF ELECTRONIC COPIES OF THIS PLAN SHEET.

Caltrans Metric

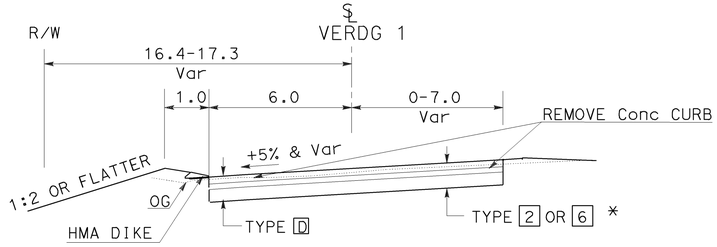

SB VERDUGO Ave OFF RAMP

STA 468+11.000 TO 468+92.691

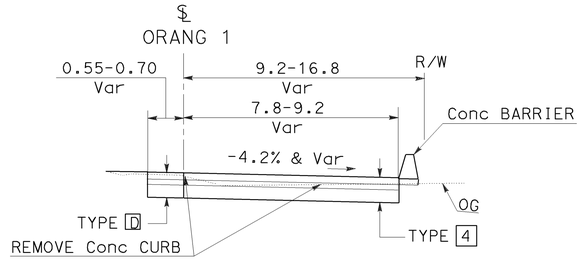

NB ORANGE GROVE Ave ON RAMP

STA 470+54.604 TO 471+14.010

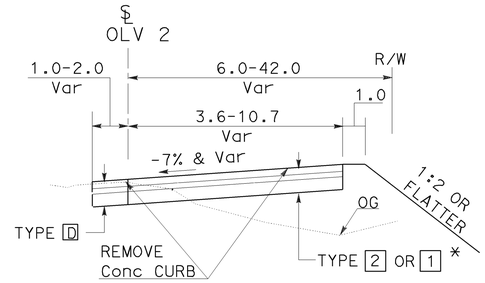

NB OLIVE Ave OFF RAMP

STA 466+90.922 TO 467+76.554

* SEE LAYOUT SHEET

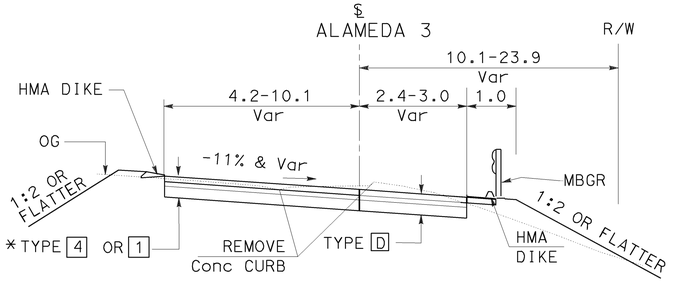

NB ALAMEDA Ave ON RAMP

STA 458+91.002 TO 461+38.893

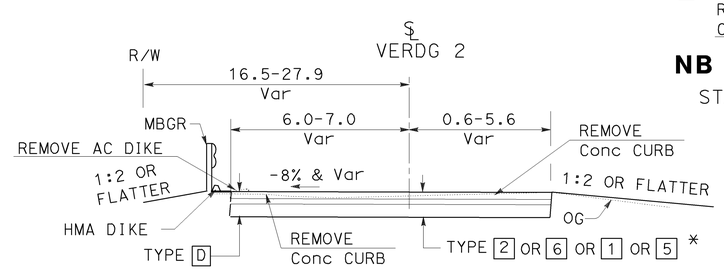

SB VERDUGO Ave ON RAMP

STA 465+58.936 TO 466+60.000

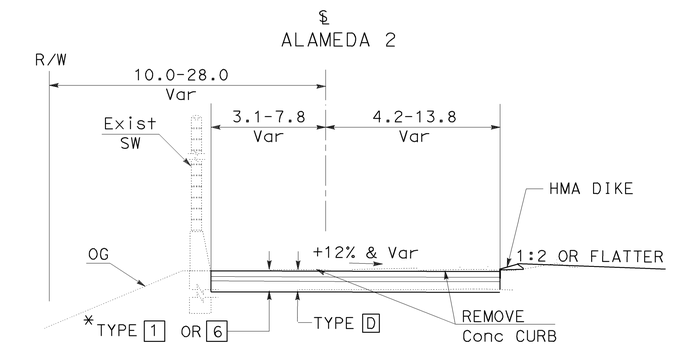

SB ALAMEDA Ave OFF RAMP

STA 458+59.842 TO 461+21.926

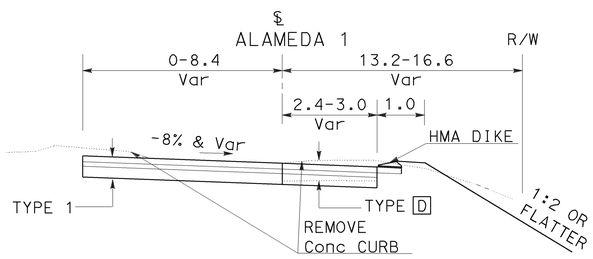

NB ALAMEDA Ave OFF RAMP

STA 454+40.000 TO 455+97.079

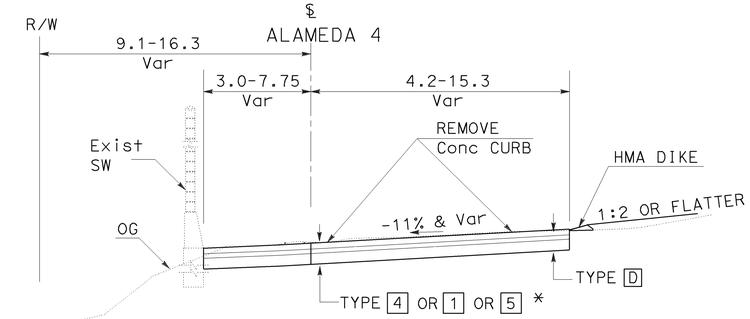

SB ALAMEDA Ave ON RAMP

STA 454+28.850 TO 456+29.083

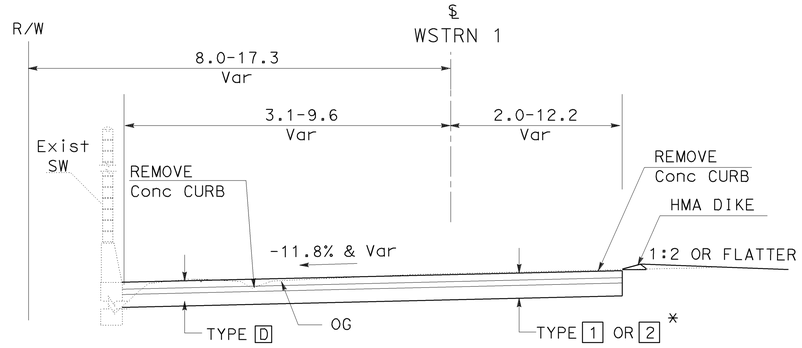

SB WESTERN Ave OFF RAMP

STA 449+57.014 TO 452+25.957

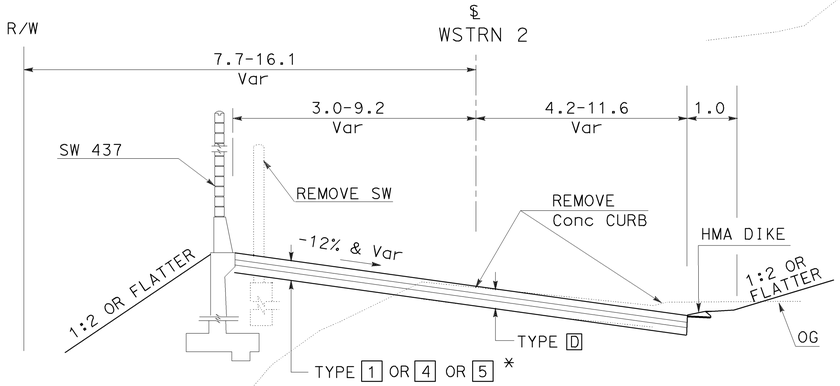

SB WESTERN Ave ON RAMP

STA 444+73.880 TO 447+93.515

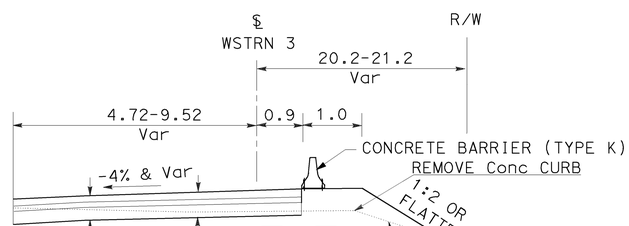

NB WESTERN Ave OFF RAMP

STA 444+47.159 TO 445+73.943

ALL DIMENSIONS ARE IN METERS
UNLESS OTHERWISE SHOWN.

TYPICAL CROSS SECTIONS

NO SCALE

X-7

CTT	02/09		
DP	11/08		
SA	10/08	REVISED BY	DATE REVISED
DAWIT WORKU	MUNSHI MOHSIN		
CALCULATED-DESIGNED BY	CHECKED BY		
FUNCTIONAL SUPERVISOR	CELINA AVILES		

STATE OF CALIFORNIA - DEPARTMENT OF TRANSPORTATION
Caltrans OFFICE OF DESIGN D

LAST REVISION 03-02-09 | DATE PLOTTED => 12-JUN-2009 | TIME PLOTTED => 07:28

Dist	COUNTY	ROUTE	KILOMETER POST TOTAL PROJECT	SHEET No.	TOTAL SHEETS
07	LA	5	42.8/47.3	9	1073

REGISTERED CIVIL ENGINEER 2-24-09 DATE

6-8-09
PLANS APPROVAL DATE

REGISTERED PROFESSIONAL ENGINEER MUNSHI MOHSIN No. 61916 Exp. 9/30/09 CIVIL STATE OF CALIFORNIA

THE STATE OF CALIFORNIA OR ITS OFFICERS OR AGENTS SHALL NOT BE RESPONSIBLE FOR THE ACCURACY OR COMPLETENESS OF ELECTRONIC COPIES OF THIS PLAN SHEET.

Caltrans Metric

NOTE: 1. FOR COMPLETE RIGHT OF WAY AND ACCURATE ACCESS DATA, SEE RIGHT OF WAY RECORD MAPS AT DISTRICT OFFICE.

ABBREVIATIONS:

PFE PERMANENT FOOTING EASEMENT
HMA HOT MIX ASPHALT
MVP MAINTENANCE VEHICLE PULLOUT
TCE TEMPORARY CONSTRUCTION EASEMENT

LEGEND:

MINOR CONCRETE (TEXTURED PAVING)

35 mm COLD PLANE ASPHALT CONCRETE PAVEMENT
35 mm HMA (Type B)
SEE Const DETAILS

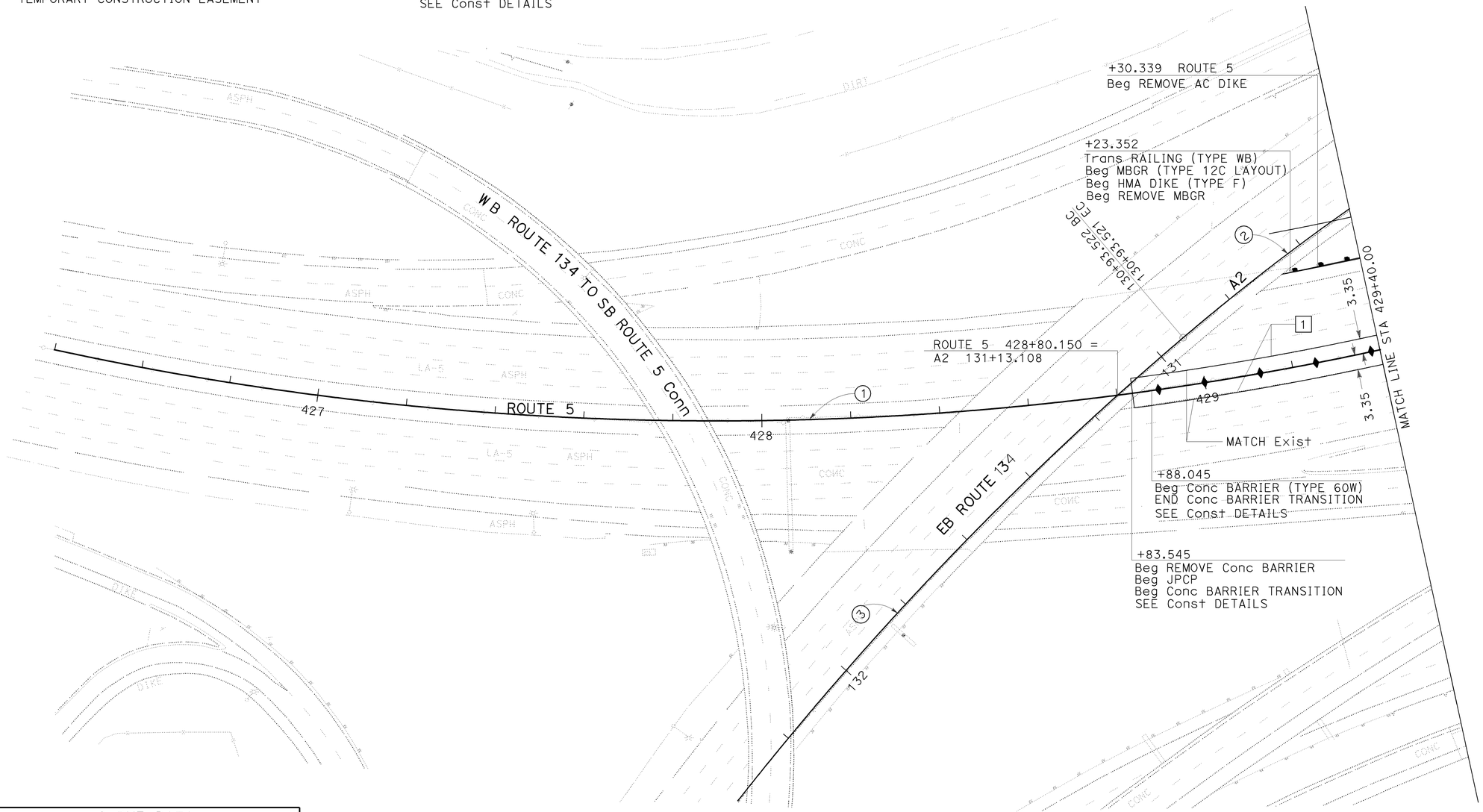

CURVE DATA				
NO	R	Δ	T	L
1	701.04	54°57′32″	364.62	672.45
2	510.84	10°7′7″	45.32	90.22
3	731.52	14°10′41″	90.97	181.02

ALL DIMENSIONS ARE IN METERS UNLESS OTHERWISE SHOWN

LAYOUT
SCALE 1:500

L-1

REVISED BY	DATE REVISED
SA	01/08
MM	11/08

CALCULATED-DESIGNED BY: DAWIT WORKU
CHECKED BY: MUNSHI MOHSIN
FUNCTIONAL SUPERVISOR: CELINA AVILES

STATE OF CALIFORNIA - DEPARTMENT OF TRANSPORTATION
Caltrans OFFICE OF DESIGN D

LAST REVISION 02-23-09
DATE PLOTTED => 12-JUN-2009
TIME PLOTTED => 07:28

Dist	COUNTY	ROUTE	KILOMETER POST TOTAL PROJECT	SHEET No.	TOTAL SHEETS
07	LA	5	42.8/47.3	10	1073

REGISTERED CIVIL ENGINEER 2-24-09 DATE

6-8-09
PLANS APPROVAL DATE

REGISTERED PROFESSIONAL ENGINEER MUNSHI MOHSIN No. 61916 Exp. 9/30/09 CIVIL STATE OF CALIFORNIA

THE STATE OF CALIFORNIA OR ITS OFFICERS OR AGENTS SHALL NOT BE RESPONSIBLE FOR THE ACCURACY OR COMPLETENESS OF ELECTRONIC COPIES OF THIS PLAN SHEET.

Caltrans Metric

NOTE: 1. FOR COMPLETE RIGHT OF WAY AND ACCURATE ACCESS DATA, SEE RIGHT OF WAY RECORD MAPS AT DISTRICT OFFICE.

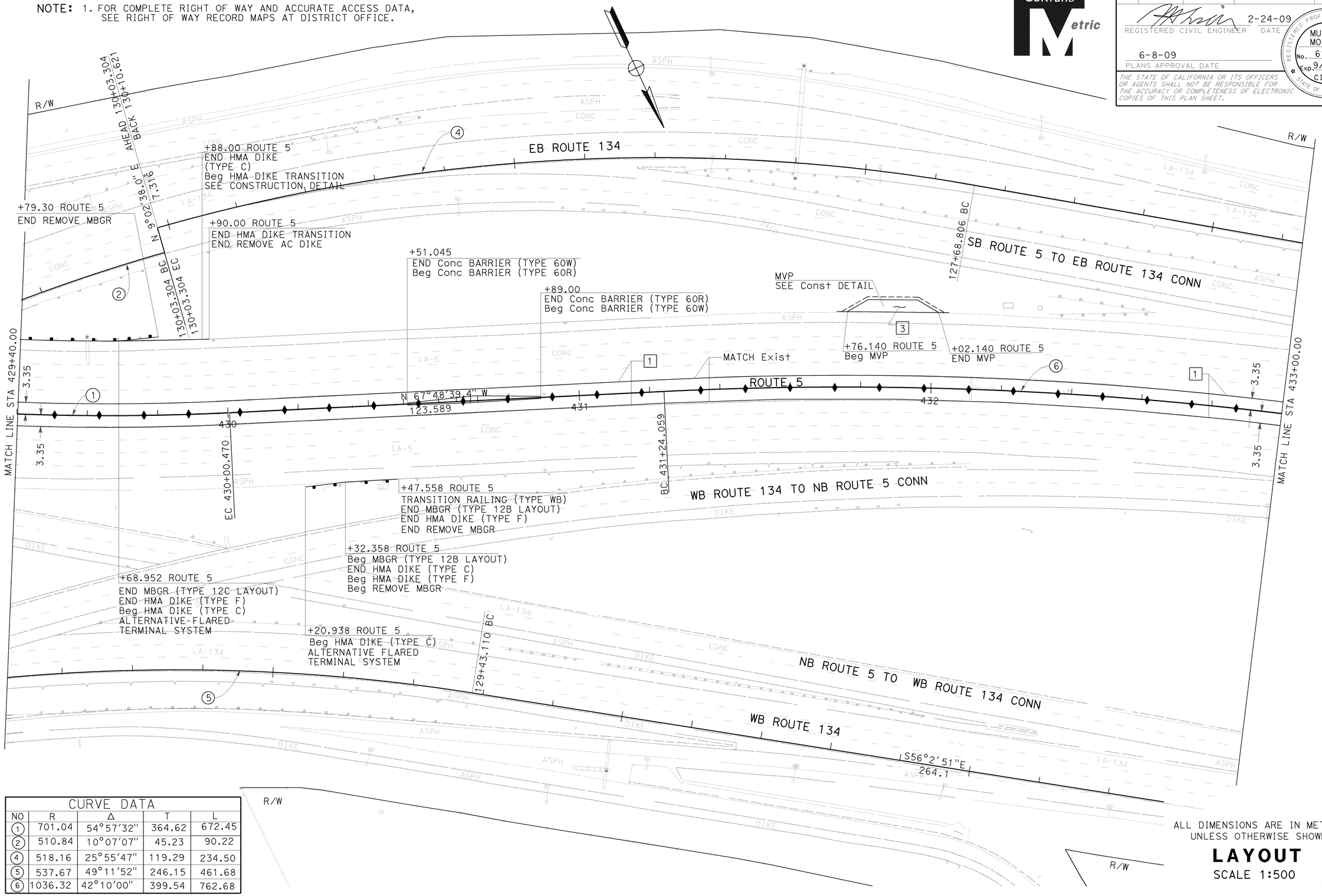

CURVE DATA				
NO	R	Δ	T	L
1	701.04	54°57'32"	364.62	672.45
2	510.84	10°07'07"	45.23	90.22
4	518.16	25°55'47"	119.29	234.50
5	537.67	49°11'52"	246.15	461.68
6	1036.32	42°10'00"	399.54	762.68

ALL DIMENSIONS ARE IN METERS UNLESS OTHERWISE SHOWN

LAYOUT

SCALE 1:500

L-2

STATE OF CALIFORNIA - DEPARTMENT OF TRANSPORTATION
Caltrans OFFICE OF DESIGN D

FUNCTIONAL SUPERVISOR: CELINA AVILES
CALCULATED-DESIGNED BY: DAWIT WORKU
CHECKED BY: MUNSHI MOHSIN
REVISED BY: SA
DATE REVISED: 01/08
MM 12/08

LAST REVISION 01-27-09
DATE PLOTTED => 12-JUN-2009
TIME PLOTTED => 07:29

BORDER LAST REVISED 3/1/2007
RELATIVE BORDER SCALE IS IN MILLIMETERS 0 20 40 60 80
USERNAME => trmnguye
DGN FILE => 712184ea002.dgn
CU 07276
EA 121841

Dist	COUNTY	ROUTE	KILOMETER POST TOTAL PROJECT	SHEET No.	TOTAL SHEETS
07	LA	5	42.8/47.3	11	1073

REGISTERED CIVIL ENGINEER 2-24-09 DATE

6-8-09
PLANS APPROVAL DATE

REGISTERED PROFESSIONAL ENGINEER MUNSHI MOHSIN No. 61916 Exp. 9/30/09 CIVIL STATE OF CALIFORNIA

THE STATE OF CALIFORNIA OR ITS OFFICERS OR AGENTS SHALL NOT BE RESPONSIBLE FOR THE ACCURACY OR COMPLETENESS OF ELECTRONIC COPIES OF THIS PLAN SHEET.

Caltrans Metric

NOTE: 1. FOR COMPLETE RIGHT OF WAY AND ACCURATE ACCESS DATA, SEE RIGHT OF WAY RECORD MAPS AT DISTRICT OFFICE.

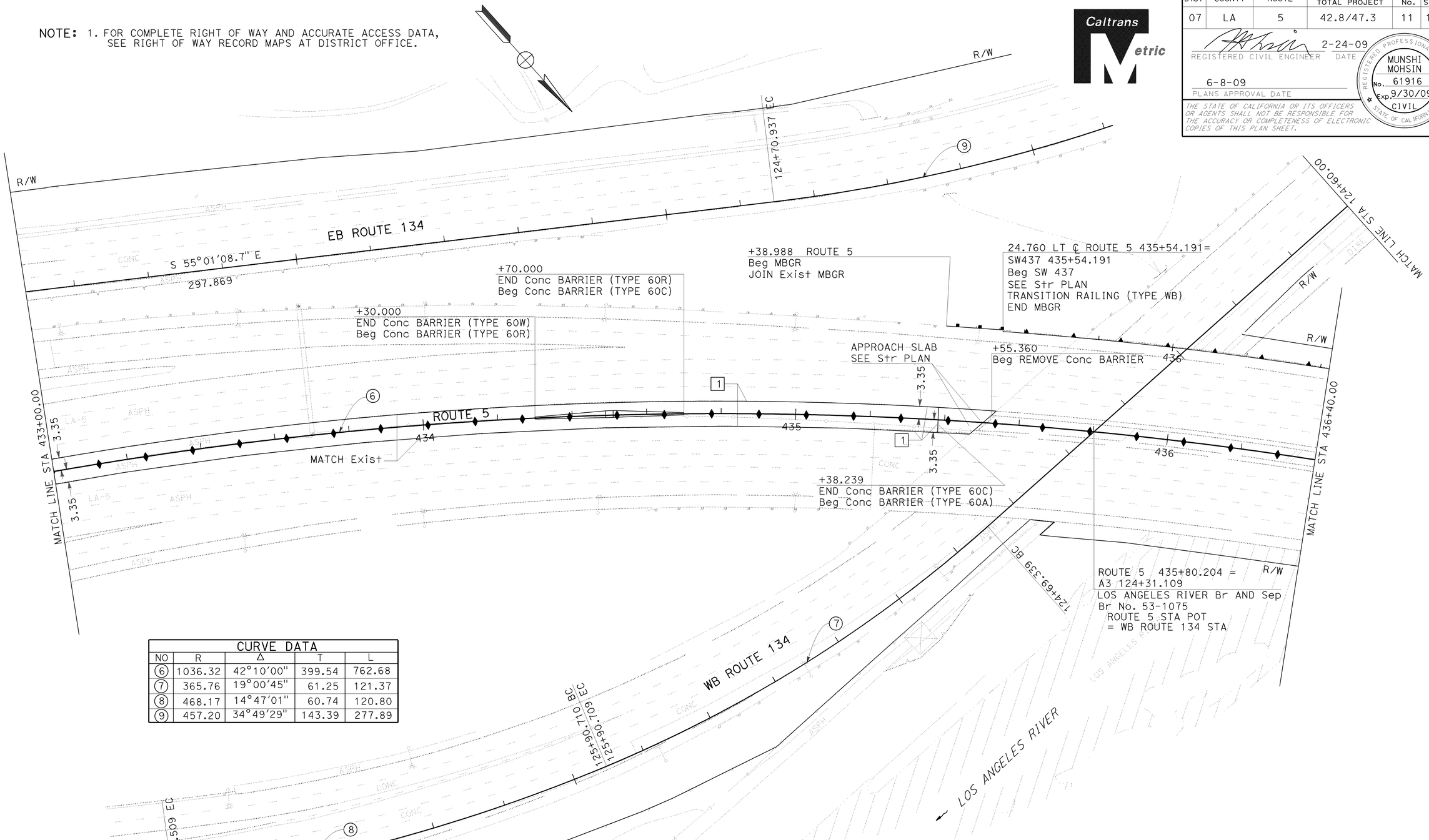

CURVE DATA				
NO	R	Δ	T	L
6	1036.32	42°10'00"	399.54	762.68
7	365.76	19°00'45"	61.25	121.37
8	468.17	14°47'01"	60.74	120.80
9	457.20	34°49'29"	143.39	277.89

ALL DIMENSIONS ARE IN METERS
UNLESS OTHERWISE SHOWN

LAYOUT
SCALE 1:500

L-3

REVISED BY	DATE REVISED
MM	10/08

CALCULATED-DESIGNED BY: DAWIT WORKU
CHECKED BY: MUNSHI MOHSIN

FUNCTIONAL SUPERVISOR: CELINA AVILES

STATE OF CALIFORNIA - DEPARTMENT OF TRANSPORTATION
Caltrans OFFICE OF DESIGN D

LAST REVISION 12-18-08 | DATE PLOTTED => 12-JUN-2009 | TIME PLOTTED => 07:29

Dist	COUNTY	ROUTE	KILOMETER POST TOTAL PROJECT	SHEET No.	TOTAL SHEETS
07	LA	5	42.8/47.3	12	1073

REGISTERED CIVIL ENGINEER 2-24-09 DATE

6-8-09
PLANS APPROVAL DATE

REGISTERED PROFESSIONAL ENGINEER MUNSHI MOHSIN No. 61916 Exp. 9/30/09 CIVIL STATE OF CALIFORNIA

THE STATE OF CALIFORNIA OR ITS OFFICERS OR AGENTS SHALL NOT BE RESPONSIBLE FOR THE ACCURACY OR COMPLETENESS OF ELECTRONIC COPIES OF THIS PLAN SHEET.

Caltrans Metric

NOTE: 1. FOR COMPLETE RIGHT OF WAY AND ACCURATE ACCESS DATA, SEE RIGHT OF WAY RECORD MAPS AT DISTRICT OFFICE.

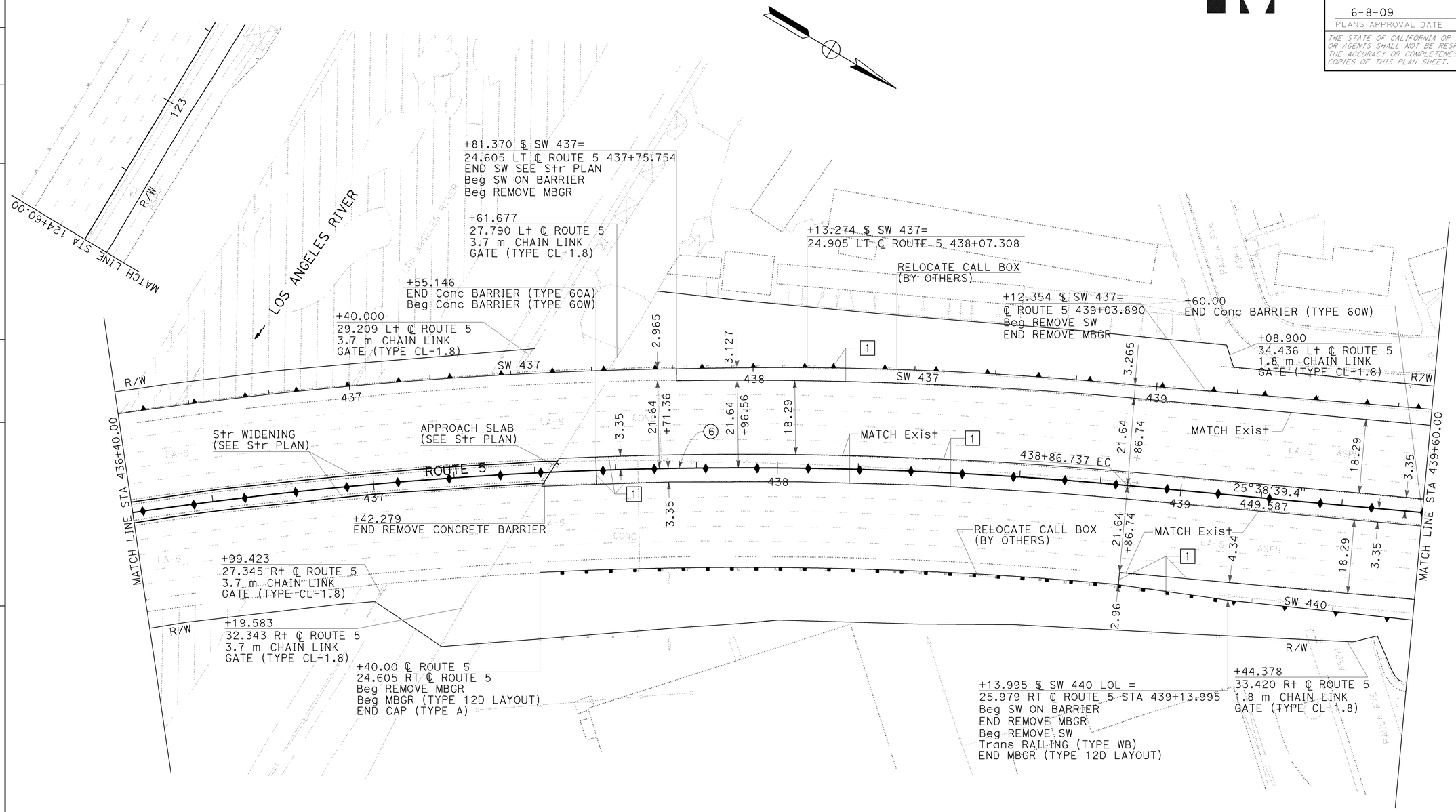

CURVE DATA

NO	R	Δ	T	L
6	1036.32	42°10'0"	399.54	762.68

ALL DIMENSIONS ARE IN METERS UNLESS OTHERWISE SHOWN

LAYOUT

SCALE 1:500

L-4

STATE OF CALIFORNIA - DEPARTMENT OF TRANSPORTATION
Caltrans OFFICE OF DESIGN D

FUNCTIONAL SUPERVISOR: CELINA AVILES
CALCULATED-DESIGNED BY: DAWIT WORKU
CHECKED BY: MUNSHI MOHSIN
REVISED BY: SA
DATE REVISED: 01/08
MM 12/08

LAST REVISION 12-18-08
DATE PLOTTED => 12-JUN-2009
TIME PLOTTED => 07:29

Dist	COUNTY	ROUTE	KILOMETER POST TOTAL PROJECT	SHEET No.	TOTAL SHEETS
07	LA	5	42.8/47.3	13	1073

REGISTERED CIVIL ENGINEER 2-24-09 DATE

6-8-09
PLANS APPROVAL DATE

REGISTERED PROFESSIONAL ENGINEER MUNSHI MOHSIN No. 61916 Exp. 9/30/09 CIVIL STATE OF CALIFORNIA

THE STATE OF CALIFORNIA OR ITS OFFICERS OR AGENTS SHALL NOT BE RESPONSIBLE FOR THE ACCURACY OR COMPLETENESS OF ELECTRONIC COPIES OF THIS PLAN SHEET.

Caltrans Metric

NOTE: 1. FOR COMPLETE RIGHT OF WAY AND ACCURATE ACCESS DATA, SEE RIGHT OF WAY RECORD MAPS AT DISTRICT OFFICE.

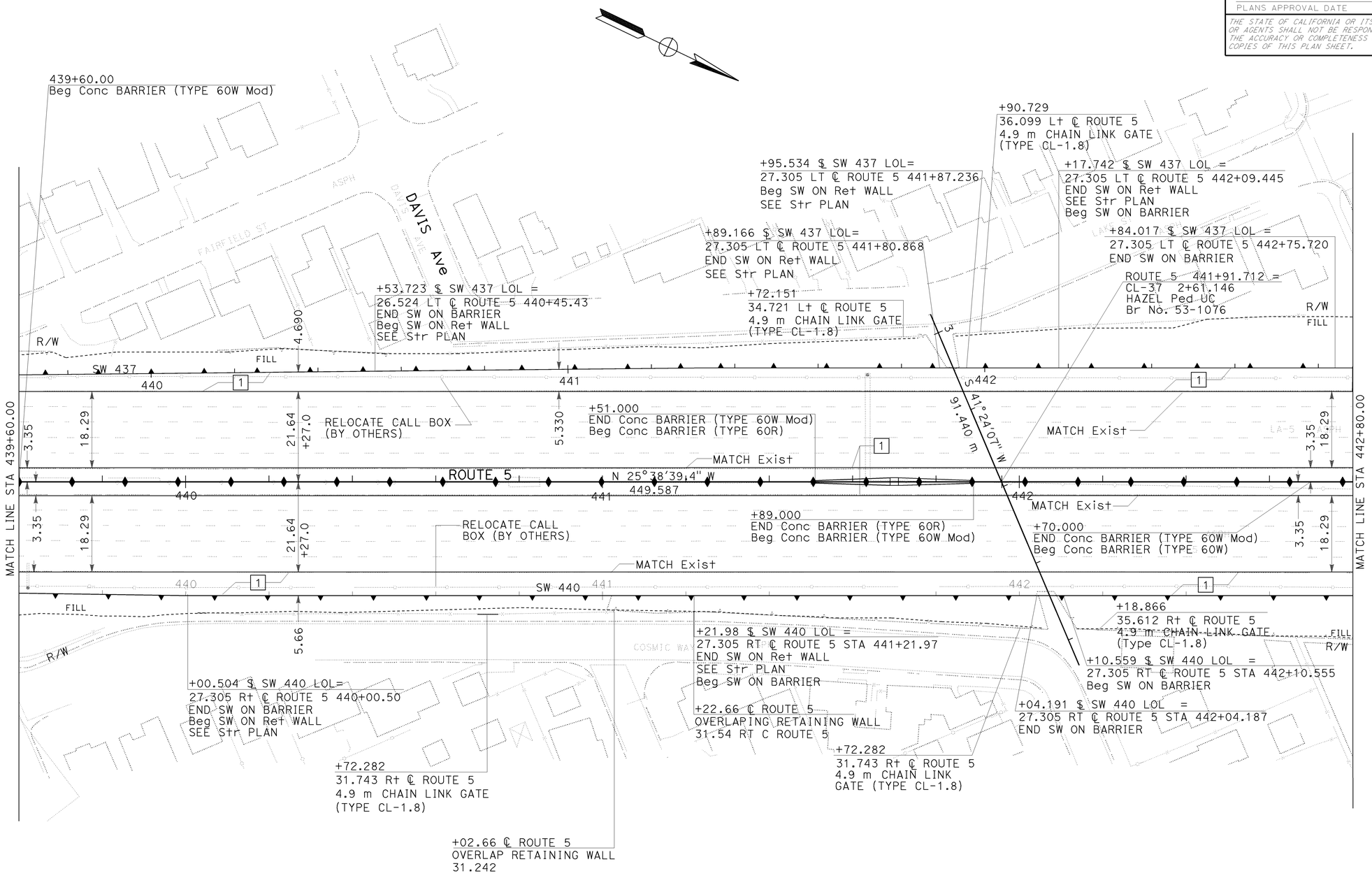

ALL DIMENSIONS ARE IN METERS
UNLESS OTHERWISE SHOWN

LAYOUT

SCALE 1:500

L-5

REVISED BY	DATE REVISED
SA	01/08
MM	12/08

DAWIT WORKU — CALCULATED-DESIGNED BY
MUNSHI MOHSIN — CHECKED BY
CELINA AVILES — FUNCTIONAL SUPERVISOR

STATE OF CALIFORNIA - DEPARTMENT OF TRANSPORTATION
Caltrans OFFICE OF DESIGN D

LAST REVISION 10-24-08 DATE PLOTTED => 12-JUN-2009 TIME PLOTTED => 07:29

Dist	COUNTY	ROUTE	KILOMETER POST TOTAL PROJECT	SHEET No.	TOTAL SHEETS
07	LA	5	42.8/47.3	14	1073

REGISTERED CIVIL ENGINEER 2-24-09 DATE

6-8-09
PLANS APPROVAL DATE

REGISTERED PROFESSIONAL ENGINEER MUNSHI MOHSIN No. 61916 Exp. 9/30/09 CIVIL STATE OF CALIFORNIA

THE STATE OF CALIFORNIA OR ITS OFFICERS OR AGENTS SHALL NOT BE RESPONSIBLE FOR THE ACCURACY OR COMPLETENESS OF ELECTRONIC COPIES OF THIS PLAN SHEET.

Caltrans Metric

NOTE: 1. FOR COMPLETE RIGHT OF WAY AND ACCURATE ACCESS DATA, SEE RIGHT OF WAY RECORD MAPS AT DISTRICT OFFICE.

CURVE DATA

NO	R	Δ	T	L
10	464.84	13°23'42"	54.59	108.68
11	70.00	51°8'32"	33.49	62.48
12	800.01	7°43'53"	54.06	107.95
13	914.40	22°55'4"	185.36	365.75
14	552.53	11°27'52"	55.46	110.56

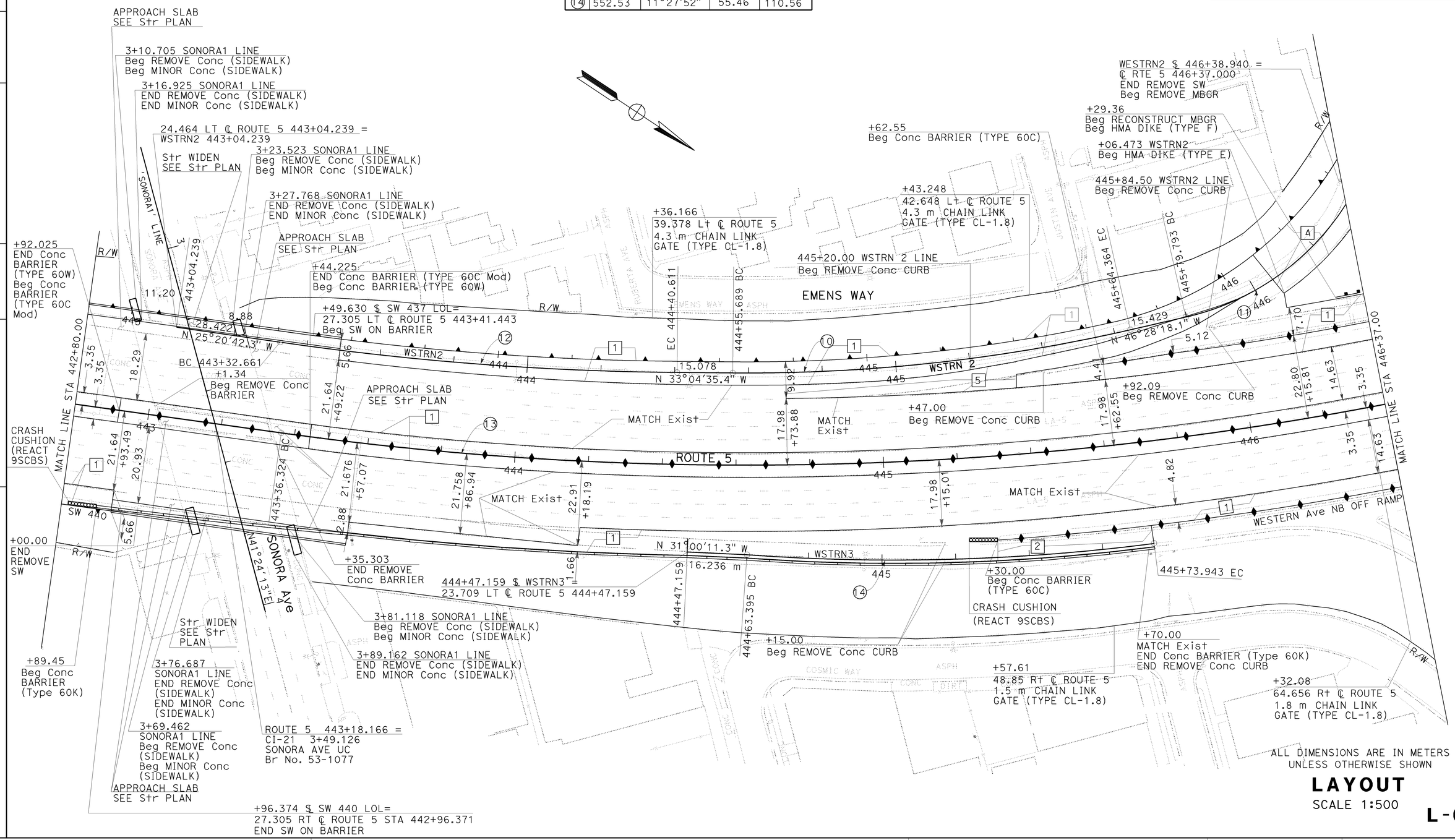

ALL DIMENSIONS ARE IN METERS UNLESS OTHERWISE SHOWN

LAYOUT

SCALE 1:500

L-6

REVISED BY	SA	MM	
DATE REVISED	01/08	12/08	
CALCULATED-DESIGNED BY	DAWIT WORKU		
CHECKED BY	MUNSHI MOHSIN		
FUNCTIONAL SUPERVISOR	CELINA AVILES		

STATE OF CALIFORNIA - DEPARTMENT OF TRANSPORTATION
Caltrans OFFICE OF DESIGN D

LAST REVISION 12-10-08 DATE PLOTTED => 12-JUN-2009 TIME PLOTTED => 07:29

Dist	COUNTY	ROUTE	KILOMETER POST TOTAL PROJECT	SHEET No.	TOTAL SHEETS
07	LA	5	42.8/47.3	15	1073

REGISTERED CIVIL ENGINEER 2-24-09 DATE

6-8-09
PLANS APPROVAL DATE

REGISTERED PROFESSIONAL ENGINEER MUNSHI MOHSIN No. 61916 Exp. 9/30/09 CIVIL STATE OF CALIFORNIA

THE STATE OF CALIFORNIA OR ITS OFFICERS OR AGENTS SHALL NOT BE RESPONSIBLE FOR THE ACCURACY OR COMPLETENESS OF ELECTRONIC COPIES OF THIS PLAN SHEET.

Caltrans Metric

NOTE: 1. FOR COMPLETE RIGHT OF WAY AND ACCURATE ACCESS DATA, SEE RIGHT OF WAY RECORD MAPS AT DISTRICT OFFICE.

+93.515 WSTRN2 LINE
END REMOVE Conc CURB

+96.139 SW 437 LOL =
6.6 LT $ WSTRN2 STA 447+89.310
END SW ON BARRIER
END SW 437
Beg CL FENCE (TYPE CL-1.8)

5.84 m CL FENCE (TYPE CL-1.8)

+62.245 $ SW 437 LOL =
6.976 LT $ WSTRN2 STA 447+55.419
END SW ON Ret WALL
SEE Str PLAN
Beg SW ON BARRIER

+76.62
END REMOVE MBGR

+63.921 $ SW 437 LOL=
$ WSTRN2 446+63.485
END SW ON BARRIER
Beg SW ON Ret WALL
SEE Str PLAN

WESTERN Ave SB ON RAMP
WSTRN2
73.716
N 48°41'39.6" W
WESTERN Ave SB OFF RAMP
+93.515 'WSTRN2' LINE
MATCH Exist
END CURB (TYPE B4)
END REMOVE Conc CURB
447+19.799 EC END HMA DIKE (TYPE E)
Beg CURB (Type B4)
447+93.515
5.0
R/W
446+70.488 BC
S82°23'10.9"W
28.214
446+42.274 EC
MINOR CONCRETE (TEXTURED PAVING) SEE LANDSCAPE PLAN

1+51.724 WESTERN1 LINE
END REMOVE Conc CURB
END REMOVE Conc (SIDEWALK)
END TYPE A2-200 CURB
END MINOR Conc (SIDEWALK)

1+47.779 WESTERN1 LINE
Beg REMOVE Conc CURB
Beg REMOVE Conc (SIDEWALK)
Beg TYPE A2-200 CURB
Beg MINOR Conc (SIDEWALK)

ROUTE 5 448+03.694 =
CI-19 1+70.781
WESTERN AVE UC
Br. No. 53-1019
+19.71
Beg REMOVE Conc CURB

WESTERN Ave SB OFF RAMP
WESTERN Ave SB ON RAMP

MINOR CONCRETE (TEXTURED PAVINGO SEE LANDSCAPE PLAN

449+80 WSTRN 1 LINE
MATCH Exist
Beg REMOVE Conc CURB
DIKE TO CURB Trans

449+84.50 WSTRN 1 LINE
END REMOVE Conc CURB
END HMA DIKE (TYPE E)

BC 449+57.014

1+68.809 WESTERN1 LINE
Beg REMOVE Conc CURB
Beg REMOVE Conc (SIDEWALK)
Beg TYPE A2-200 CURB
Beg MINOR Conc (SIDEWALK)

1+72.754 WESTERN1 LINE
END REMOVE Conc CURB
END REMOVE Conc (SIDEWALK)
END TYPE A2-200 CURB
END MINOR Conc (SIDEWALK)

APPROACH SLAB
SEE Str PLAN

+32.82
TRANSITION RAILING (TYPE WB)
Beg MBGR (TYPE 12A LAYOUT)
Beg HMA DIKE (TYPE F)
Beg REMOVE MBGR

+70.82
END MBGR (TYPE 12A LAYOUT)
END HMA DIKE (TYPE F)
ALTERNATIVE IN-LINE TERMINAL SYSTEM
Beg HMA DIKE (TYPE C)

449+80 WSTRN 1 LINE
Beg REMOVE Conc CURB
Beg HMA DIKE (TYPE E)

+21.37
Beg MBGR (Type 12DD LAYOUT)
END ANCHOR ASSEMBLY (TYPE SFT)

+96.00
END HMA DIKE (E)
END REMOVE Conc CURB

+87.46
END REMOVE Conc CURB

+74.57
END MBGR (TYPE 12DD LAYOUT)
END CAP (TYPE A)

+55.00
END REMOVE MBGR

+09.00
Beg HMA DIKE(TYPE E)
Beg REMOVE Conc CURB

449+83.190
END REMOVE Conc CURB

+18.845
Beg REMOVE MBGR

+86.06
END HMA DIKE (TYPE C)

MINOR CONCRETE (TEXTURED PAVING) SEE LANDSCAPE PLAN

+49.14
END RECONSTRUCT MBGR

MINOR CONCRETE (TEXTURED PAVING) SEE LANDSCAPE PLAN

Str WIDEN APPROACH SLAB
SEE Str PLAN

MATCH Exist

+42.58
END REMOVE MBGR

RELOCATE CALL BOX BY OTHERS

MVP (SEE Const DETAIL)

+28.696
END Conc BARRIER (TYPE 60C Mod)
Beg Conc BARRIER (TYPE 60C)

+83.16
END HMA DIKE(TYPE E)

+55.00
Beg MVP
END HMA DIKE (TYPE F)

+81.00
END MVP
Beg HMA DIKE (TYPE E)

+78.692
END Conc BARRIER (TYPE 60C)
Beg Conc BARRIER (TYPE 60C Mod)

+87.378
Beg REMOVE Conc BARRIER

+28.696
Beg Conc BARRIER (TYPE 60W Mod)
END Conc BARRIER (TYPE 60A)

MATCH Exist

ROUTE 5
N 48°33'43.9" W
1066.397

MATCH Exist

+04.46
Beg HMA DIKE (TYPE C)
ALTERNATIVE IN-LINE TERMINAL SYSTEM

Str WIDEN
SEE Str PLAN

+52.428
END REMOVE Conc BARRIER

+28.696
END Conc BARRIER (TYPE 60C Mod)
Beg Conc BARRIER (TYPE 60C)

MATCH Exist

MATCH LINE STA 446+37.000

MATCH LINE STA 449+90.000

+64.87
Beg REMOVE MBGR

+19.70
Beg MBGR (TYPE 12A LAYOUT)
Beg HMA DIKE (TYPE F)
END HMA DIKE (TYPE C)

+46.70
Beg REMOVE MBGR

+78.692
END Conc BARRIER (TYPE 60C)
Beg Conc BARRIER (TYPE 60C Mod)

+76.70
END REMOVE MBGR
TRANSITION RAILING (TYPE WB)
END MBGR (TYPE 12A LAYOUT)
END HMA DIKE (TYPE F)

+78.692
END Conc BARRIER (TYPE 60W)
Beg Conc BARRIER (TYPE 60A)

APPROACH SLAB
SEE Str PLAN

+87.68
END REMOVE MBGR
END REMOVE Conc CURB

+63.46
END MBGR (TYPE 12DD LAYOUT)
END ANCHOR ASSEMBLY (TYPE SFT)

+29.26
Beg MBGR (TYPE 12DD LAYOUT)
END CAP (TYPE A)
APPROACH SLAB
SEE Str PLAN

+19.879
Beg REMOVE Conc CURB

1+89.839 WESTERN1 LINE
Beg REMOVE Conc CURB
Beg REMOVE Conc (SIDEWALK)
Beg TYPE A2-200 CURB
Beg MINOR Conc (SIDEWALK)

1+93.784 WESTERN1 LINE
END REMOVE Conc CURB
END REMOVE Conc (SIDEWALK)
END TYPE A2-200 CURB
END MINOR Conc (SIDEWALK)

WESTERN Ave NB OFF RAMP
WESTERN Ave NB ON RAMP

N 41°24'40.2" E
WESTERN Ave
'WESTERN1' LINE

CURVE DATA

NO	R	Δ	T	L
11	70.00	51°8'32"	33.49	62.48
13	914.40	22°55'4"	185.36	365.75
15	57.75	48°46'34"	26.18	49.17
16	60.94	54°32'22"	31.41	58.01

ALL DIMENSIONS ARE IN METERS UNLESS OTHERWISE SHOWN

LAYOUT

SCALE 1:500

L-7

MM	12/08	DAWIT WORKU	CALCULATED-DESIGNED BY
SA	01/08	MUNSHI MOHSIN	CHECKED BY
REVISED BY	DATE REVISED	CELINA AVILES	FUNCTIONAL SUPERVISOR

STATE OF CALIFORNIA - DEPARTMENT OF TRANSPORTATION
Caltrans OFFICE OF DESIGN D

LAST REVISION 12-16-08
DATE PLOTTED => 12-JUN-2009
TIME PLOTTED => 07:29

Dist	COUNTY	ROUTE	KILOMETER POST TOTAL PROJECT	SHEET No.	TOTAL SHEETS
07	LA	5	42.8/47.3	16	1073

REGISTERED CIVIL ENGINEER 2-24-09 DATE

6-8-09
PLANS APPROVAL DATE

REGISTERED PROFESSIONAL ENGINEER MUNSHI MOHSIN No. 61916 Exp. 9/30/09 CIVIL STATE OF CALIFORNIA

THE STATE OF CALIFORNIA OR ITS OFFICERS OR AGENTS SHALL NOT BE RESPONSIBLE FOR THE ACCURACY OR COMPLETENESS OF ELECTRONIC COPIES OF THIS PLAN SHEET.

Caltrans Metric

NOTE: 1. FOR COMPLETE RIGHT OF WAY AND ACCURATE ACCESS DATA, SEE RIGHT OF WAY RECORD MAPS AT DISTRICT OFFICE.

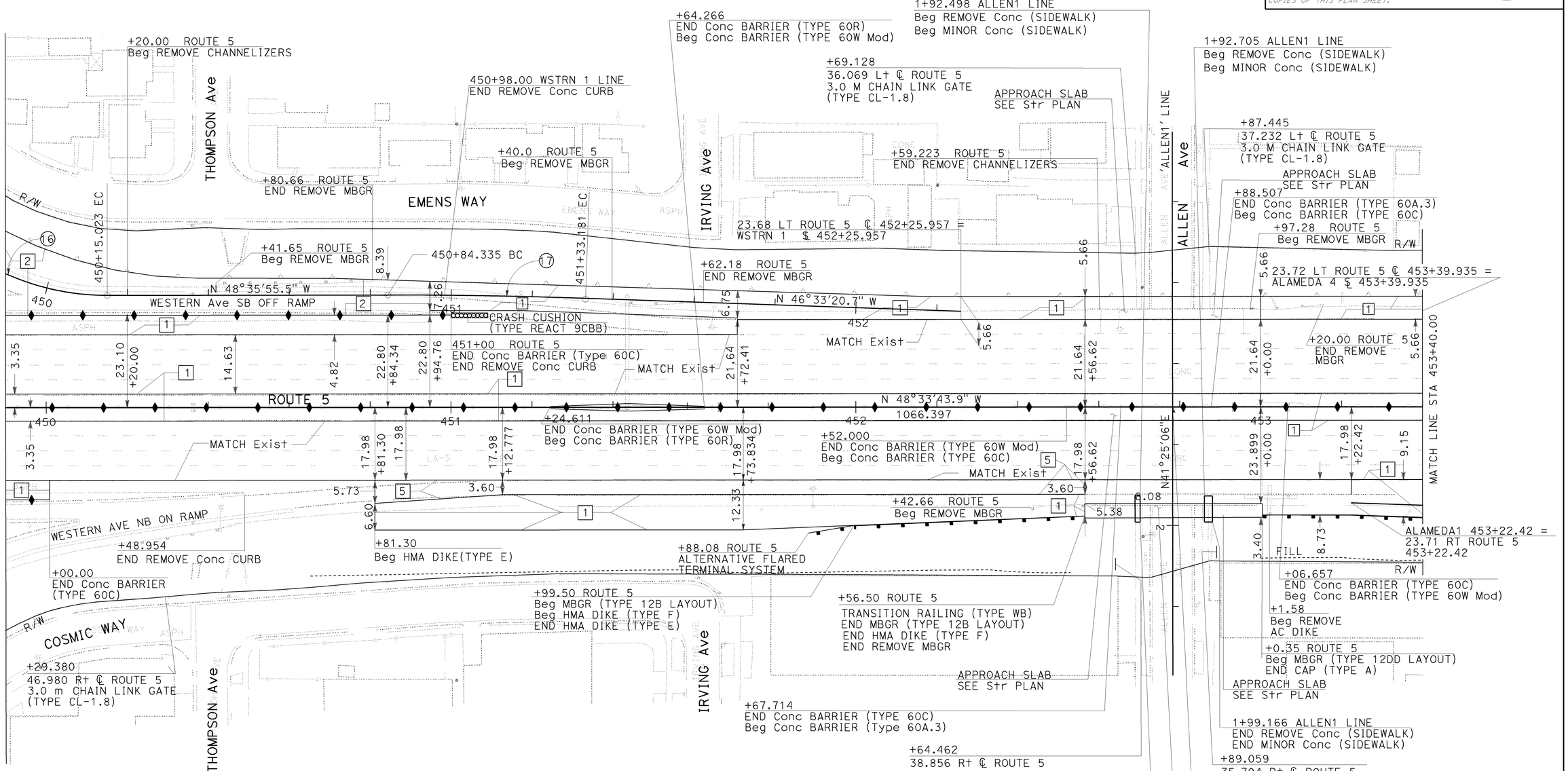

CURVE DATA

No.	R	Δ	T	L
16	60.94	54°32'22.480"	31.41	58.01
17	1369.96	2°2'34.380"	24.43	48.85

ALL DIMENSIONS ARE IN METERS UNLESS OTHERWISE SHOWN

LAYOUT

SCALE 1:500

L-8

REVISED BY	DATE REVISED
MM	12/08
SA	01/08

CALCULATED-DESIGNED BY: DAWIT WORKU
CHECKED BY: MUNSHI MOHSIN
FUNCTIONAL SUPERVISOR: CELINA AVILES

STATE OF CALIFORNIA - DEPARTMENT OF TRANSPORTATION
Caltrans OFFICE OF DESIGN D

LAST REVISION 12-11-08
DATE PLOTTED => 12-JUN-2009
TIME PLOTTED => 07:29

Dist	COUNTY	ROUTE	KILOMETER POST TOTAL PROJECT	SHEET No.	TOTAL SHEETS
07	LA	5	42.8/47.3	17	1073

REGISTERED CIVIL ENGINEER 2-24-09 DATE

6-8-09
PLANS APPROVAL DATE

REGISTERED PROFESSIONAL ENGINEER MUNSHI MOHSIN No. 61916 Exp. 9/30/09 CIVIL STATE OF CALIFORNIA

THE STATE OF CALIFORNIA OR ITS OFFICERS OR AGENTS SHALL NOT BE RESPONSIBLE FOR THE ACCURACY OR COMPLETENESS OF ELECTRONIC COPIES OF THIS PLAN SHEET.

Caltrans Metric

NOTE: 1. FOR COMPLETE RIGHT OF WAY AND ACCURATE ACCESS DATA, SEE RIGHT OF WAY RECORD MAPS AT DISTRICT OFFICE.

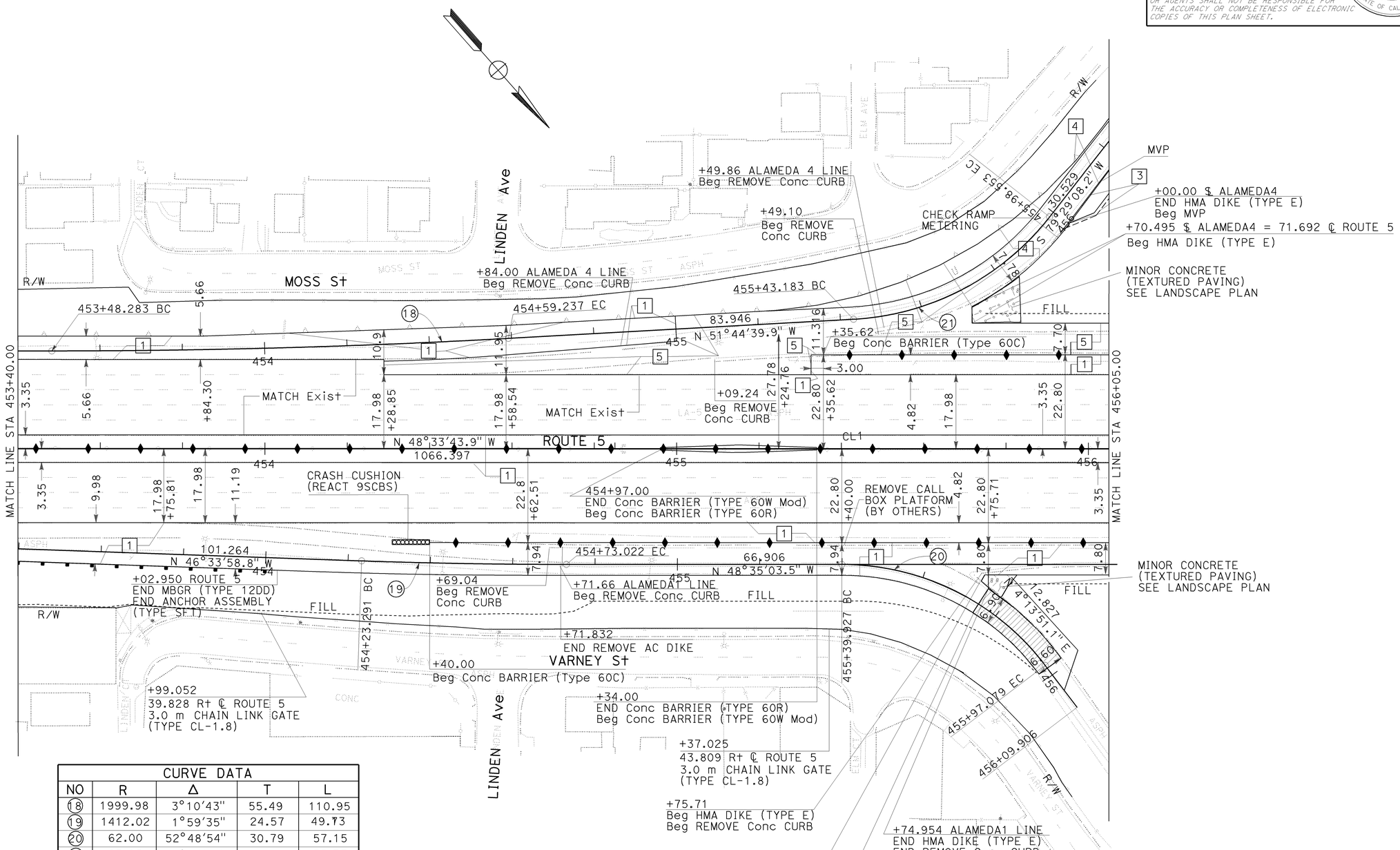

CURVE DATA				
NO	R	Δ	T	L
18	1999.98	3°10'43"	55.49	110.95
19	1412.02	1°59'35"	24.57	49.73
20	62.00	52°48'54"	30.79	57.15
21	65.05	48°46'11"	29.49	55.37

ALL DIMENSIONS ARE IN METERS UNLESS OTHERWISE SHOWN

LAYOUT

SCALE 1:500

L-9

STATE OF CALIFORNIA - DEPARTMENT OF TRANSPORTATION
Caltrans OFFICE OF DESIGN D

FUNCTIONAL SUPERVISOR: CELINA AVILES
CALCULATED-DESIGNED BY: DAWIT WORKU
CHECKED BY: MUNSHI MOHSIN
REVISED BY: SA
DATE REVISED: 01/08
MM 12/08

LAST REVISION 12-11-08
DATE PLOTTED => 12-JUN-2009
TIME PLOTTED => 07:29

Dist	COUNTY	ROUTE	KILOMETER POST TOTAL PROJECT	SHEET No.	TOTAL SHEETS
07	LA	5	42.8/47.3	18	1073

REGISTERED CIVIL ENGINEER 2-24-09 DATE

6-8-09
PLANS APPROVAL DATE

REGISTERED PROFESSIONAL ENGINEER MUNSHI MOHSIN No. 61916 Exp. 9/30/09 CIVIL STATE OF CALIFORNIA

THE STATE OF CALIFORNIA OR ITS OFFICERS OR AGENTS SHALL NOT BE RESPONSIBLE FOR THE ACCURACY OR COMPLETENESS OF ELECTRONIC COPIES OF THIS PLAN SHEET.

Caltrans Metric

NOTE: 1. FOR COMPLETE RIGHT OF WAY AND ACCURATE ACCESS DATA, SEE RIGHT OF WAY RECORD MAPS AT DISTRICT OFFICE.
2. SEE CONSTRUCTION DETAIL FOR MAINTENANCE VEHICLE PULLOUT

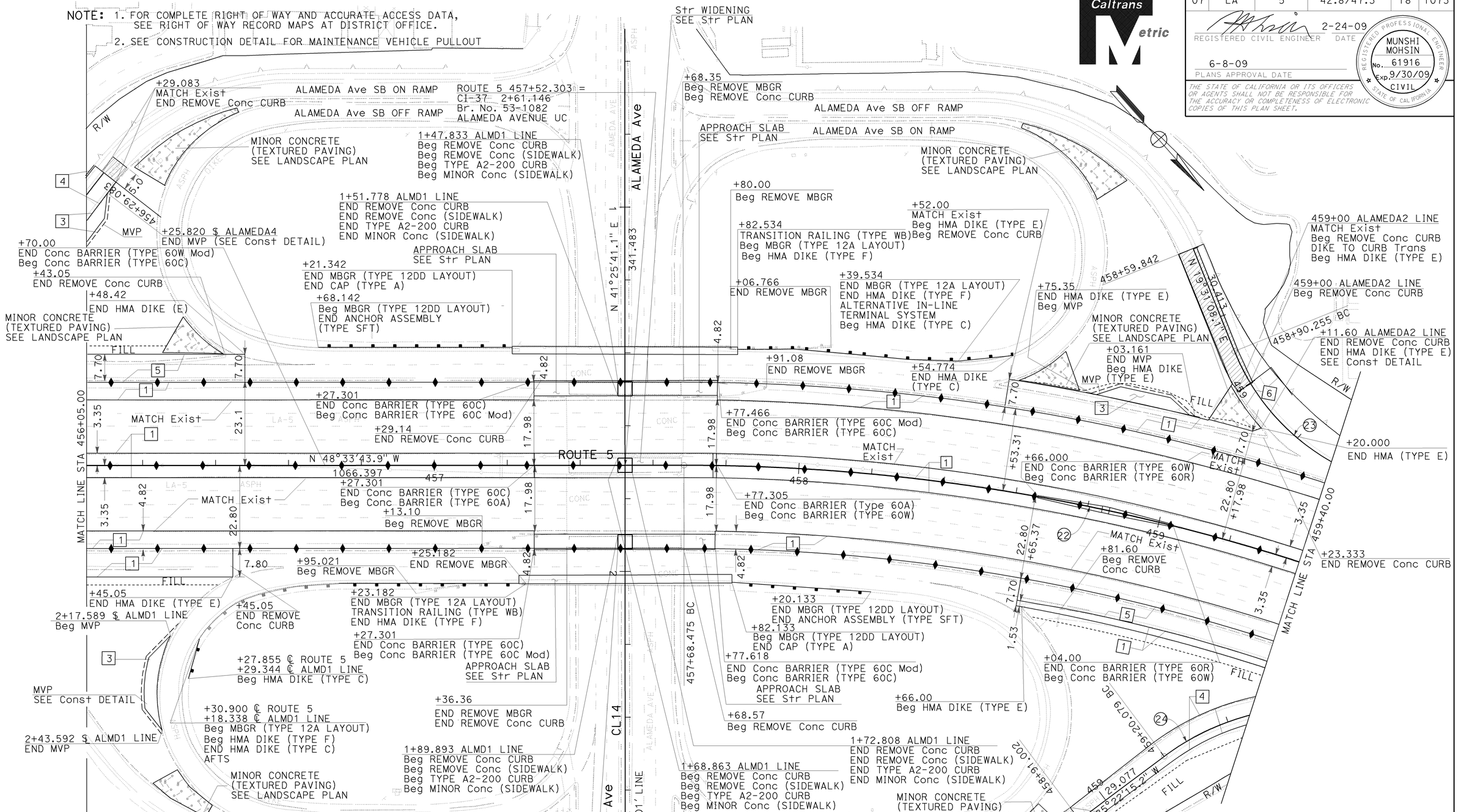

CURVE DATA				
NO	R	Δ	T	L
22	548.64	35°10'0"	173.86	336.74
23	60.96	49°6'32"	27.85	52.25
24	67.45	51°56'24"	32.85	61.14

ALL DIMENSIONS ARE IN METERS UNLESS OTHERWISE SHOWN

LAYOUT

SCALE 1:500

L-10

REVISED BY	DATE REVISED
SA	01/08
MM	12/08

DAWIT WORKU
MUNSHI MOHSIN
CALCULATED-DESIGNED BY
CHECKED BY
FUNCTIONAL SUPERVISOR
CELINA AVILES

STATE OF CALIFORNIA - DEPARTMENT OF TRANSPORTATION
Caltrans OFFICE OF DESIGN D

LAST REVISION 12-10-08
DATE PLOTTED => 12-JUN-2009
TIME PLOTTED => 07:29

Dist	COUNTY	ROUTE	KILOMETER POST TOTAL PROJECT	SHEET No.	TOTAL SHEETS
07	LA	5	42.8/47.3	19	1073

REGISTERED CIVIL ENGINEER 2-24-09 DATE

6-8-09
PLANS APPROVAL DATE

REGISTERED PROFESSIONAL ENGINEER MUNSHI MOHSIN No. 61916 Exp. 9/30/09 CIVIL STATE OF CALIFORNIA

THE STATE OF CALIFORNIA OR ITS OFFICERS OR AGENTS SHALL NOT BE RESPONSIBLE FOR THE ACCURACY OR COMPLETENESS OF ELECTRONIC COPIES OF THIS PLAN SHEET.

Caltrans Metric

NOTE: 1. FOR COMPLETE RIGHT OF WAY AND ACCURATE ACCESS DATA, SEE RIGHT OF WAY RECORD MAPS AT DISTRICT OFFICE

2. WORK AROUND THE AERIAL EASEMENT AND TEMPORARY CONSTRUCTION EASEMENT PARCEL 78706-1 UNTIL FEBRUARY 2010

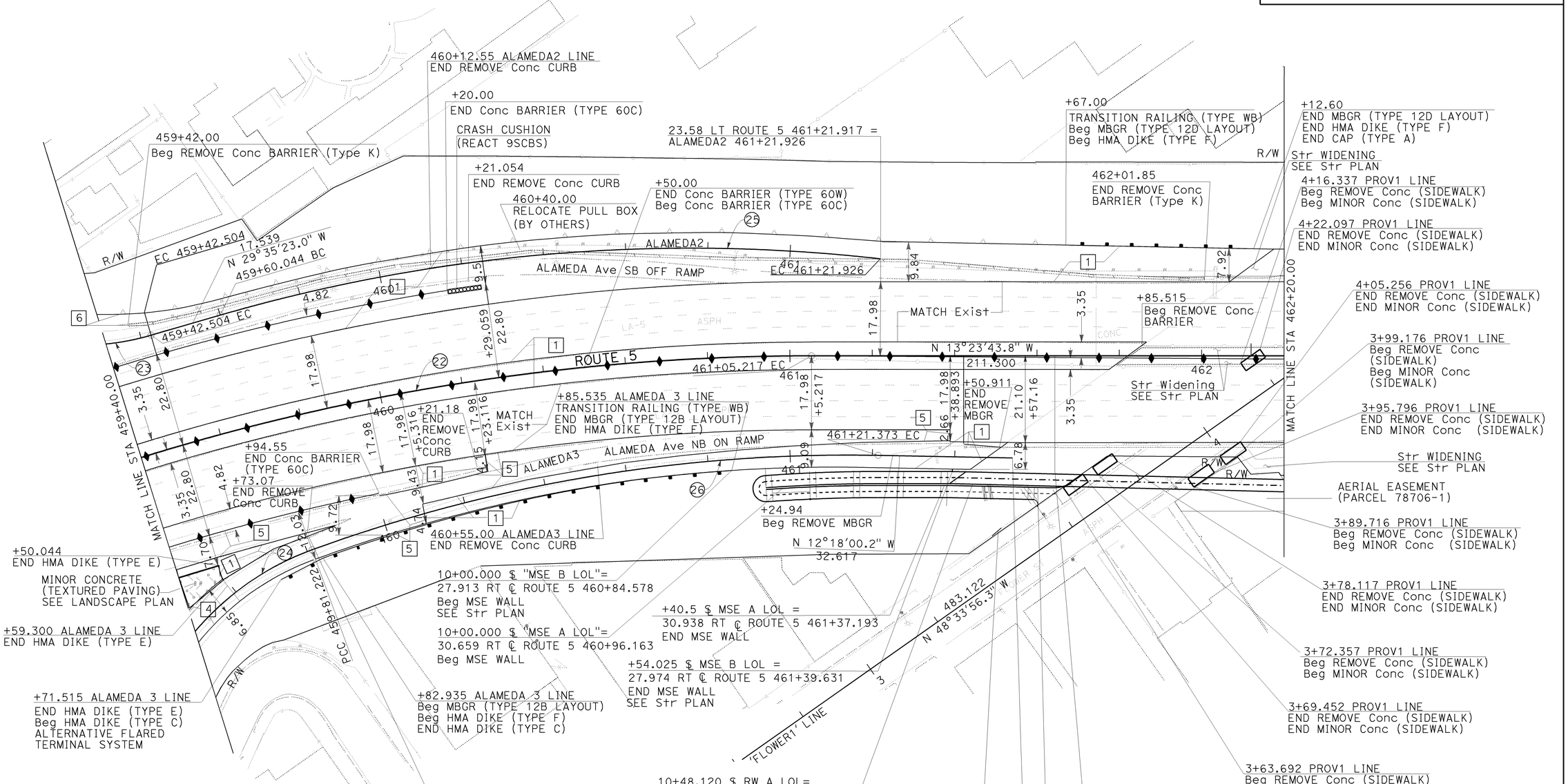

CURVE DATA				
NO	R	Δ	T	L
22	548.64	35°10'0"	173.86	336.74
23	60.96	49°6'32"	27.85	52.25
24	67.45	51°56'24"	32.85	61.14
25	410.00	22°37'20"	82.10	161.88
26	380.04	21°15'21"	71.31	140.15

ALL DIMENSIONS ARE IN METERS UNLESS OTHERWISE SHOWN

LAYOUT

SCALE 1:500

L-11

CALCULATED-DESIGNED BY	DAWIT WORKU	REVISED BY	SA
CHECKED BY	MUNSHI MOHSIN	DATE REVISED	01/08
FUNCTIONAL SUPERVISOR	CELINA AVILES		MM 12/08

STATE OF CALIFORNIA - DEPARTMENT OF TRANSPORTATION
Caltrans OFFICE OF DESIGN D

LAST REVISION 12-17-08 DATE PLOTTED => 12-JUN-2009 TIME PLOTTED => 07:29

Dist	COUNTY	ROUTE	KILOMETER POST TOTAL PROJECT	SHEET No.	TOTAL SHEETS
07	LA	5	42.8/47.3	20	1073

REGISTERED CIVIL ENGINEER 2-24-09 DATE

6-8-09
PLANS APPROVAL DATE

REGISTERED PROFESSIONAL ENGINEER MUNSHI MOHSIN No. 61916 Exp. 9/30/09 CIVIL STATE OF CALIFORNIA

THE STATE OF CALIFORNIA OR ITS OFFICERS OR AGENTS SHALL NOT BE RESPONSIBLE FOR THE ACCURACY OR COMPLETENESS OF ELECTRONIC COPIES OF THIS PLAN SHEET.

Caltrans Metric

NOTE: 1. FOR COMPLETE RIGHT OF WAY AND ACCURATE ACCESS DATA, SEE RIGHT OF WAY RECORD MAPS AT DISTRICT OFFICE.

2. WORK AROUND AERIAL EASEMENT PARCELS 78706 AND 78707 UNTIL JUNE 10, 2010.

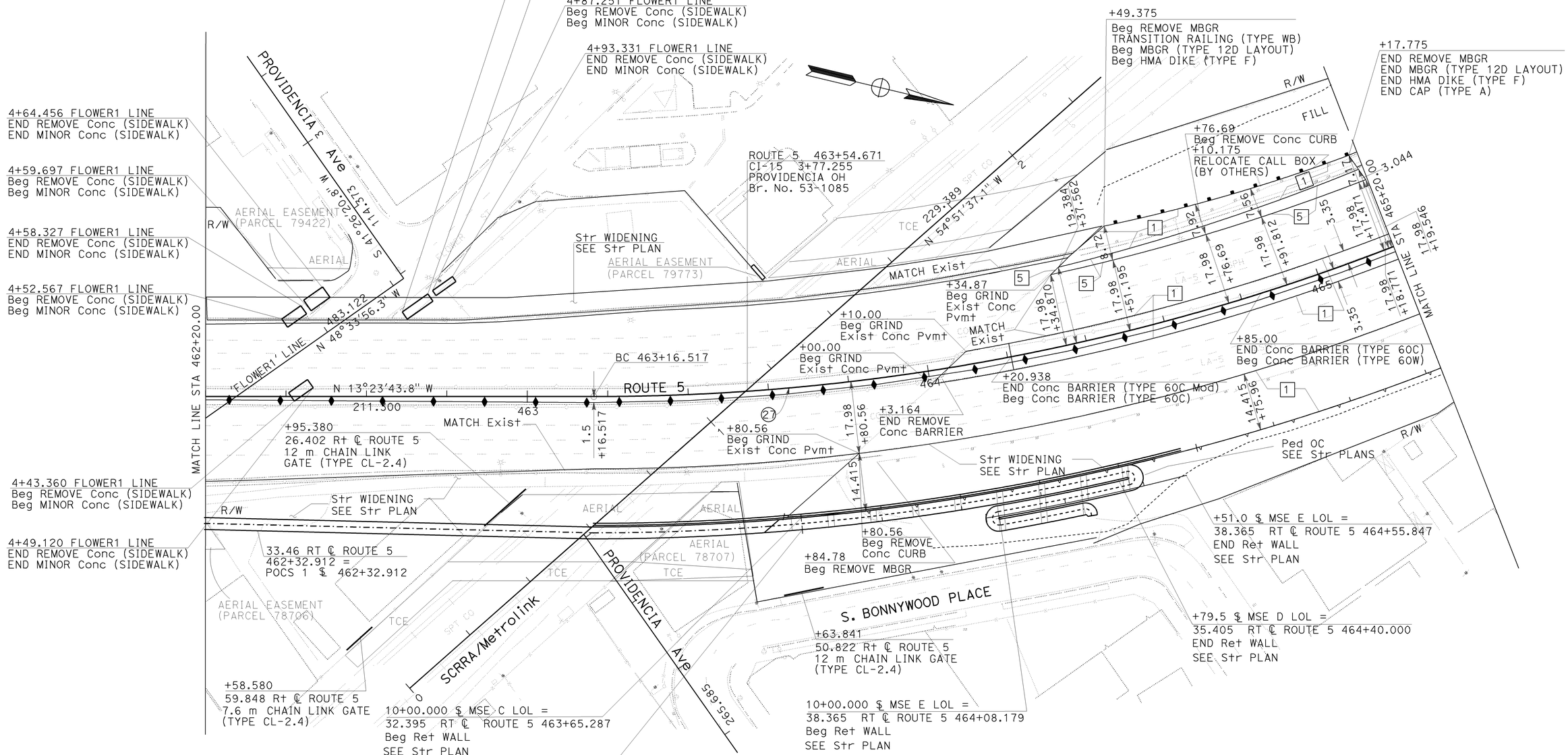

CURVE DATA				
NO	R	Δ	T	L
27	548.64	38°52'0"	193.57	372.17

ALL DIMENSIONS ARE IN METERS UNLESS OTHERWISE SHOWN

LAYOUT

SCALE 1:500

L-12

REVISED BY	DATE REVISED
MM	12/08
SA	01/08

CALCULATED-DESIGNED BY: DAWIT WORKU
CHECKED BY: MUNSHI MOHSIN

FUNCTIONAL SUPERVISOR: CELINA AVILES

STATE OF CALIFORNIA - DEPARTMENT OF TRANSPORTATION
Caltrans OFFICE OF DESIGN D

LAST REVISION 12-29-08 | DATE PLOTTED => 24-JUN-2009 | TIME PLOTTED => 10:59

Dist	COUNTY	ROUTE	KILOMETER POST TOTAL PROJECT	SHEET No.	TOTAL SHEETS
07	LA	5	42.8/47.3	21	1073

REGISTERED CIVIL ENGINEER 2-24-09 DATE

6-8-09
PLANS APPROVAL DATE

REGISTERED PROFESSIONAL ENGINEER MUNSHI MOHSIN No. 61916 Exp. 9/30/09 CIVIL STATE OF CALIFORNIA

THE STATE OF CALIFORNIA OR ITS OFFICERS OR AGENTS SHALL NOT BE RESPONSIBLE FOR THE ACCURACY OR COMPLETENESS OF ELECTRONIC COPIES OF THIS PLAN SHEET.

Caltrans Metric

NOTE: 1. FOR COMPLETE RIGHT OF WAY AND ACCURATE ACCESS DATA, SEE RIGHT OF WAY RECORD MAPS AT DISTRICT OFFICE.

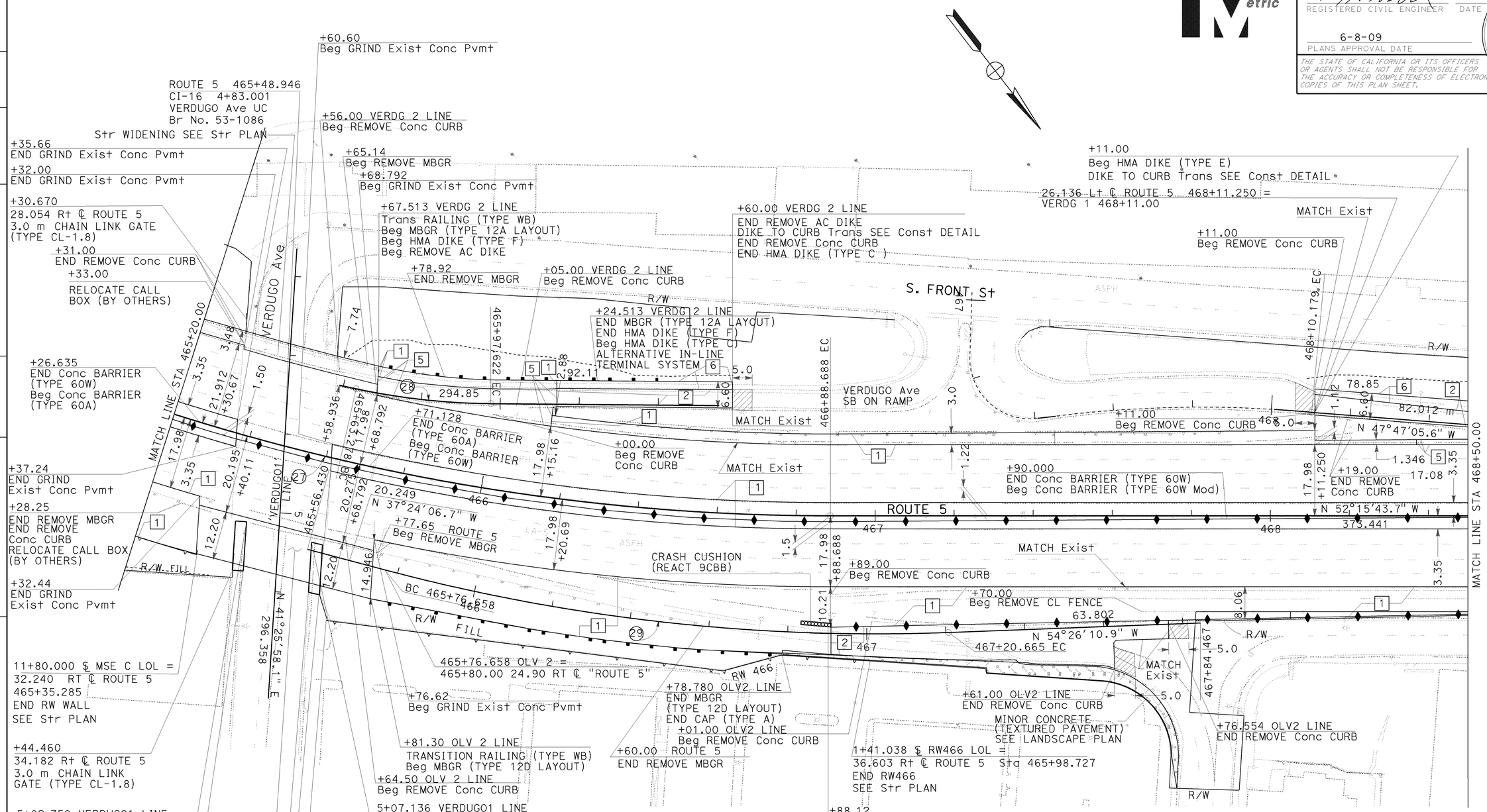

CURVE DATA

NO	R	Δ	T	L
27	548.64	38°52'0"	193.57	372.17
29	484.30	17°02'04"	72.53	143.99
28	169.53	11°36'32"	17.23	34.343

ALL DIMENSIONS ARE IN METERS UNLESS OTHERWISE SHOWN

LAYOUT

SCALE 1:500

L-13

DP	04/09		
MM	12/08		
REVISED BY	DATE REVISED		
DAWIT WORKU	MUNSHI MOHSIN		
CALCULATED-DESIGNED BY	CHECKED BY		
FUNCTIONAL SUPERVISOR	CELINA AVILES		

STATE OF CALIFORNIA - DEPARTMENT OF TRANSPORTATION
Caltrans OFFICE OF DESIGN D

LAST REVISION 04-22-09 | DATE PLOTTED => 12-JUN-2009 | TIME PLOTTED => 07:35

Dist	COUNTY	ROUTE	KILOMETER POST TOTAL PROJECT	SHEET No.	TOTAL SHEETS
07	LA	5	42.8/47.3	22	1073

REGISTERED CIVIL ENGINEER 2-24-09 DATE

6-8-09
PLANS APPROVAL DATE

REGISTERED PROFESSIONAL ENGINEER MUNSHI MOHSIN No. 61916 Exp. 9/30/09 CIVIL STATE OF CALIFORNIA

THE STATE OF CALIFORNIA OR ITS OFFICERS OR AGENTS SHALL NOT BE RESPONSIBLE FOR THE ACCURACY OR COMPLETENESS OF ELECTRONIC COPIES OF THIS PLAN SHEET.

Caltrans Metric

NOTE: 1. FOR COMPLETE RIGHT OF WAY AND ACCURATE ACCESS DATA, SEE RIGHT OF WAY RECORD MAPS AT DISTRICT OFFICE.

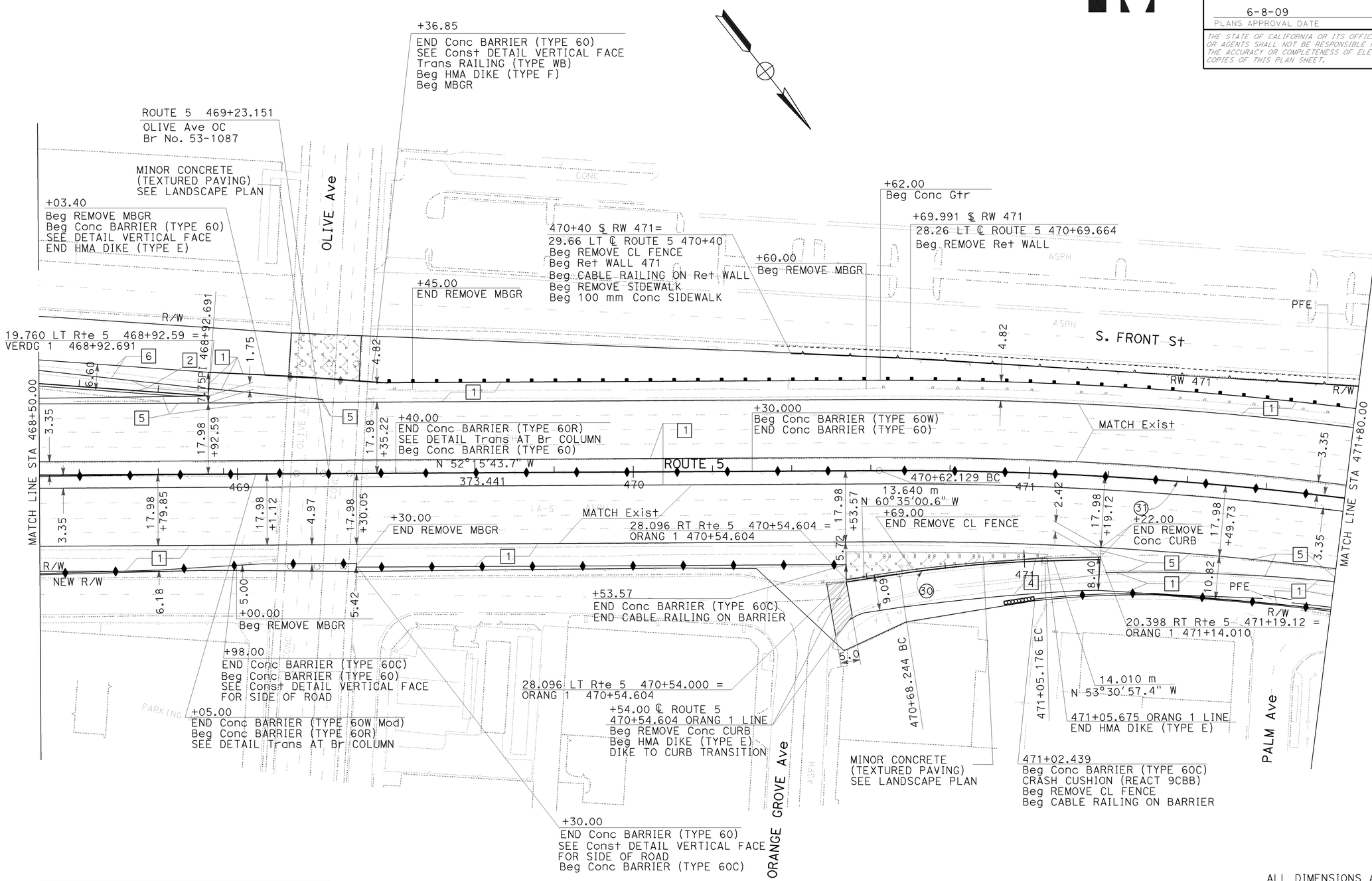

CURVE DATA				
NO	R	Δ	T	L
30	299.39	7°4'04"	18.49	36.93
31	914.40	24°0'47"	194.47	383.23

ALL DIMENSIONS ARE IN METERS UNLESS OTHERWISE SHOWN

LAYOUT

SCALE 1:500

L-14

STATE OF CALIFORNIA - DEPARTMENT OF TRANSPORTATION
Caltrans OFFICE OF DESIGN D

FUNCTIONAL SUPERVISOR: CELINA AVILES
CALCULATED-DESIGNED BY: DAWIT WORKU
CHECKED BY: MUNSHI MOHSIN
REVISED BY: MM
DATE REVISED: 11/08
KDP 12/08

LAST REVISION 11-18-08
DATE PLOTTED => 12-JUN-2009
TIME PLOTTED => 07:35

Dist	COUNTY	ROUTE	KILOMETER POST TOTAL PROJECT	SHEET No.	TOTAL SHEETS
07	LA	5	42.8/47.3	23	1073

REGISTERED CIVIL ENGINEER 2-24-09 DATE

6-8-09
PLANS APPROVAL DATE

REGISTERED PROFESSIONAL ENGINEER MUNSHI MOHSIN No. 61916 Exp. 9/30/09 CIVIL STATE OF CALIFORNIA

THE STATE OF CALIFORNIA OR ITS OFFICERS OR AGENTS SHALL NOT BE RESPONSIBLE FOR THE ACCURACY OR COMPLETENESS OF ELECTRONIC COPIES OF THIS PLAN SHEET.

Caltrans Metric

NOTE: 1. FOR COMPLETE RIGHT OF WAY AND ACCURATE ACCESS DATA, SEE RIGHT OF WAY RECORD MAPS AT DISTRICT OFFICE.

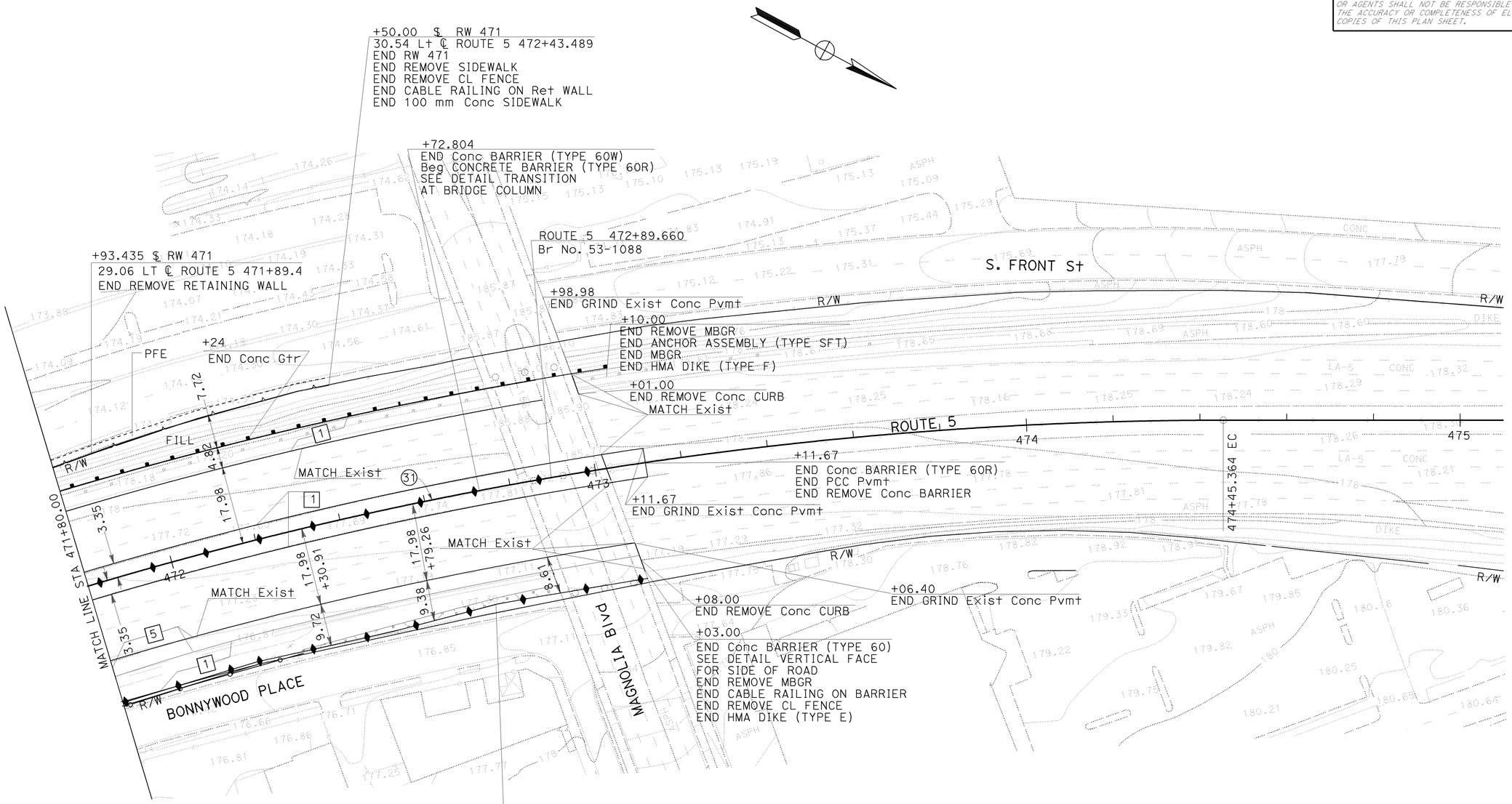

CURVE DATA				
NO	R	Δ	T	L
31	914.40	24°0'47"	194.47	383.23

ALL DIMENSIONS ARE IN METERS
UNLESS OTHERWISE SHOWN

LAYOUT

SCALE 1:500

L-15

CALCULATED-DESIGNED BY	DAWIT WORKU	REVISED BY	SA
CHECKED BY	MUNSHI MOHSIN	DATE REVISED	01/08
FUNCTIONAL SUPERVISOR	CELINA AVILES		MM 12/08

STATE OF CALIFORNIA - DEPARTMENT OF TRANSPORTATION
Caltrans OFFICE OF DESIGN D

LAST REVISION 02-26-09 | DATE PLOTTED => 12-JUN-2009 | TIME PLOTTED => 08:36

Dist	COUNTY	ROUTE	KILOMETER POST TOTAL PROJECT	SHEET No.	TOTAL SHEETS
07	LA	5	42.8/47.3	24	1073

REGISTERED CIVIL ENGINEER 2-24-09 DATE

6-8-09
PLANS APPROVAL DATE

REGISTERED PROFESSIONAL ENGINEER MUNSHI MOHSIN No. 61916 Exp. 9/30/09 CIVIL STATE OF CALIFORNIA

THE STATE OF CALIFORNIA OR ITS OFFICERS OR AGENTS SHALL NOT BE RESPONSIBLE FOR THE ACCURACY OR COMPLETENESS OF ELECTRONIC COPIES OF THIS PLAN SHEET.

Caltrans Metric

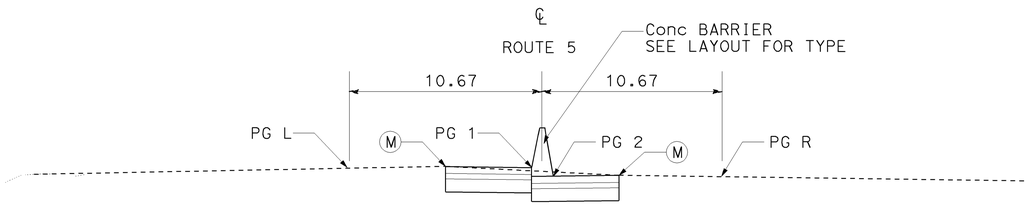

LEGEND:

PG 1 : LEFT BOTTOM OF BARRIER

PG 2 : RIGHT BOTTOM OF BARRIER

PG L : 10.67 m LEFT OF ℄ ROUTE 5 (AXIS OF ROTATION)

PG R : 10.67 m RIGHT OF ℄ ROUTE 5 (AXIS OF ROTATION)

(M) : MATCH EXISTING PAVEMENT

ALL DIMENSIONS ARE IN METERS UNLESS OTHERWISE SHOWN

PROFILE

SCALE: Horiz 1:500
Vert 1:100

P-1

STATE OF CALIFORNIA - DEPARTMENT OF TRANSPORTATION
Caltrans OFFICE OF DESIGN D

FUNCTIONAL SUPERVISOR: CELINA AVILES

CALCULATED-DESIGNED BY: DAWIT WORKU
CHECKED BY: MUNSHI MOSHIN

REVISED BY: DW
DATE REVISED: 12/2008

LAST REVISION DATE PLOTTED => 12-JUN-2009
TIME PLOTTED => 07:35
02-24-09

Dist	COUNTY	ROUTE	KILOMETER POST TOTAL PROJECT	SHEET No.	TOTAL SHEETS
07	LA	5	42.8/47.3	25	1073

REGISTERED CIVIL ENGINEER 2-24-09 DATE

6-8-09
PLANS APPROVAL DATE

REGISTERED PROFESSIONAL ENGINEER MUNSHI MOHSIN No. 61916 Exp. 9/30/09 CIVIL STATE OF CALIFORNIA

THE STATE OF CALIFORNIA OR ITS OFFICERS OR AGENTS SHALL NOT BE RESPONSIBLE FOR THE ACCURACY OR COMPLETENESS OF ELECTRONIC COPIES OF THIS PLAN SHEET.

Caltrans Metric

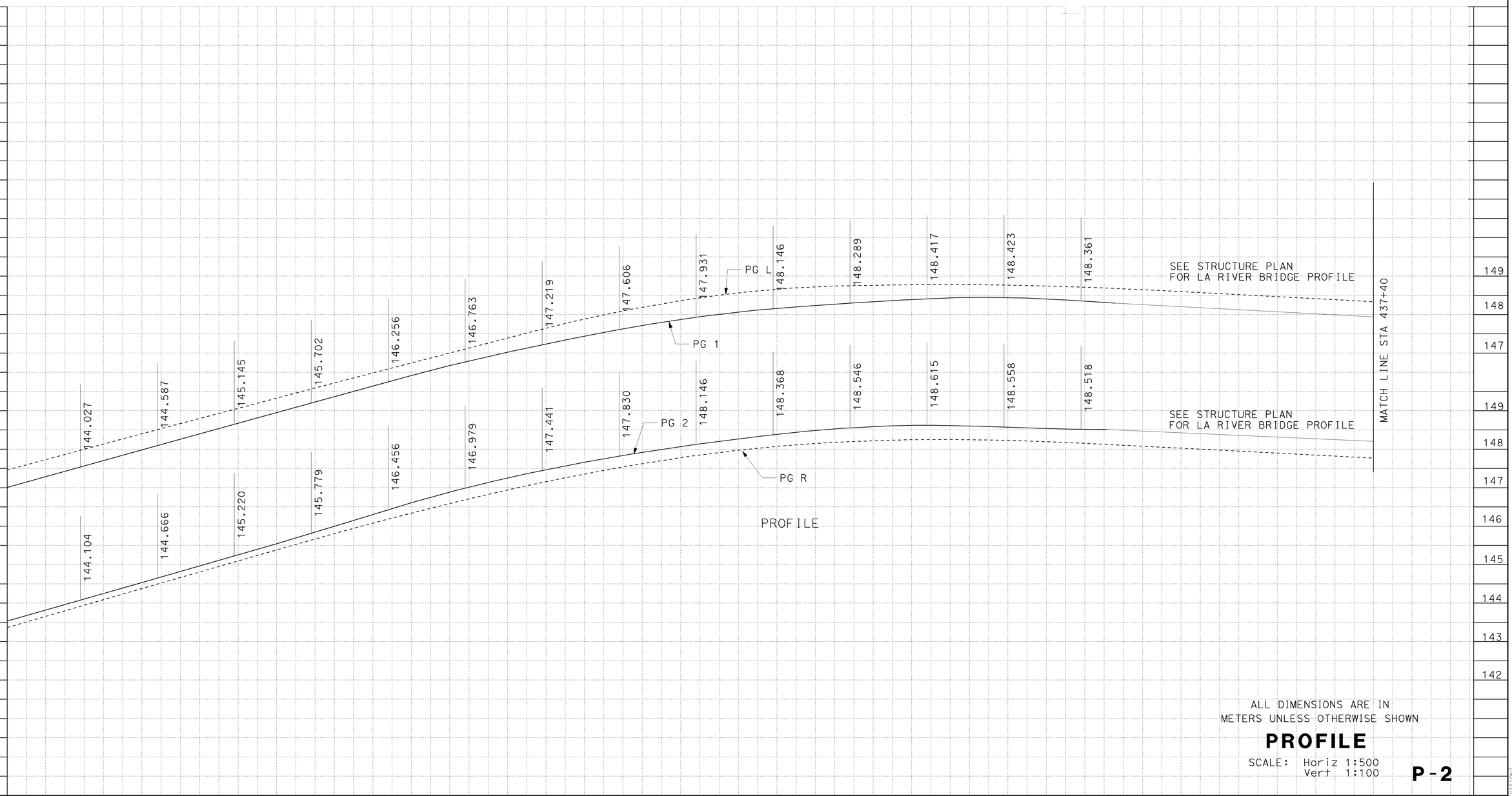

ALL DIMENSIONS ARE IN METERS UNLESS OTHERWISE SHOWN

PROFILE

SCALE: Horiz 1:500
Vert 1:100

P-2

STATE OF CALIFORNIA - DEPARTMENT OF TRANSPORTATION
Caltrans OFFICE OF DESIGN D

FUNCTIONAL SUPERVISOR: CELINA AVILES

CALCULATED-DESIGNED BY: DAWIT WORKU
CHECKED BY: MUNSHI MOSHIN

REVISED BY: DW
DATE REVISED: 12/2008

LAST REVISION 02-24-09
DATE PLOTTED => 12-JUN-2009
TIME PLOTTED => 07:35

Dist	COUNTY	ROUTE	KILOMETER POST TOTAL PROJECT	SHEET No.	TOTAL SHEETS
07	LA	5	42.8/47.3	26	1073

REGISTERED CIVIL ENGINEER 2-24-09 DATE

6-8-09
PLANS APPROVAL DATE

REGISTERED PROFESSIONAL ENGINEER MUNSHI MOHSIN No. 61916 Exp. 9/30/09 CIVIL STATE OF CALIFORNIA

THE STATE OF CALIFORNIA OR ITS OFFICERS OR AGENTS SHALL NOT BE RESPONSIBLE FOR THE ACCURACY OR COMPLETENESS OF ELECTRONIC COPIES OF THIS PLAN SHEET.

Caltrans Metric

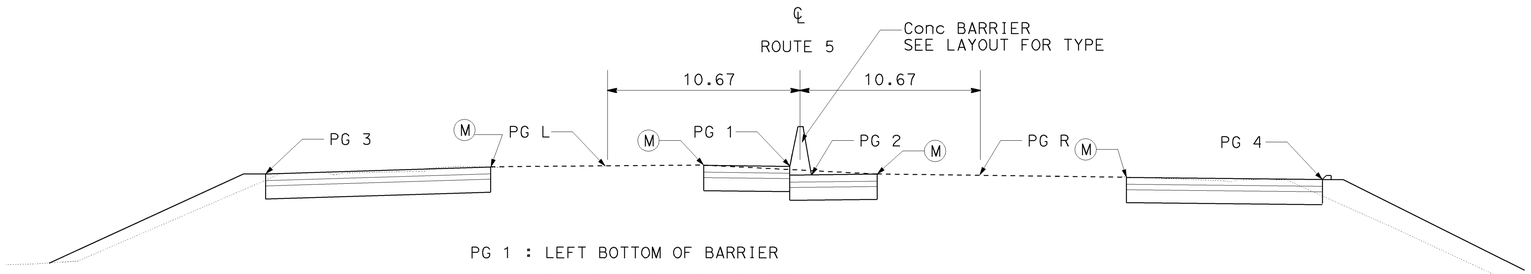

PG 1 : LEFT BOTTOM OF BARRIER

PG 2 : RIGHT BOTTOM OF BARRIER

PG 3 : LEFT PROPOSED OUTSIDE EDGE OF SHOULDER

PG 4 : RIGHT PROPOSED OUTSIDE EDGE OF SHOULDER

(M) : MATCH EXISTING PAVEMENT

PG L : 10.67 m LEFT OF ℄ ROUTE 5 (AXIS OF ROTATION)

PG R : 10.67 m RIGHT OF ℄ ROUTE 5 (AXIS OF ROTATION)

NOTE:
FOR PG 3 AND PG 4 PROFILES NOT SHOWN
SEE SOUND WALL PROFILE PLANS.

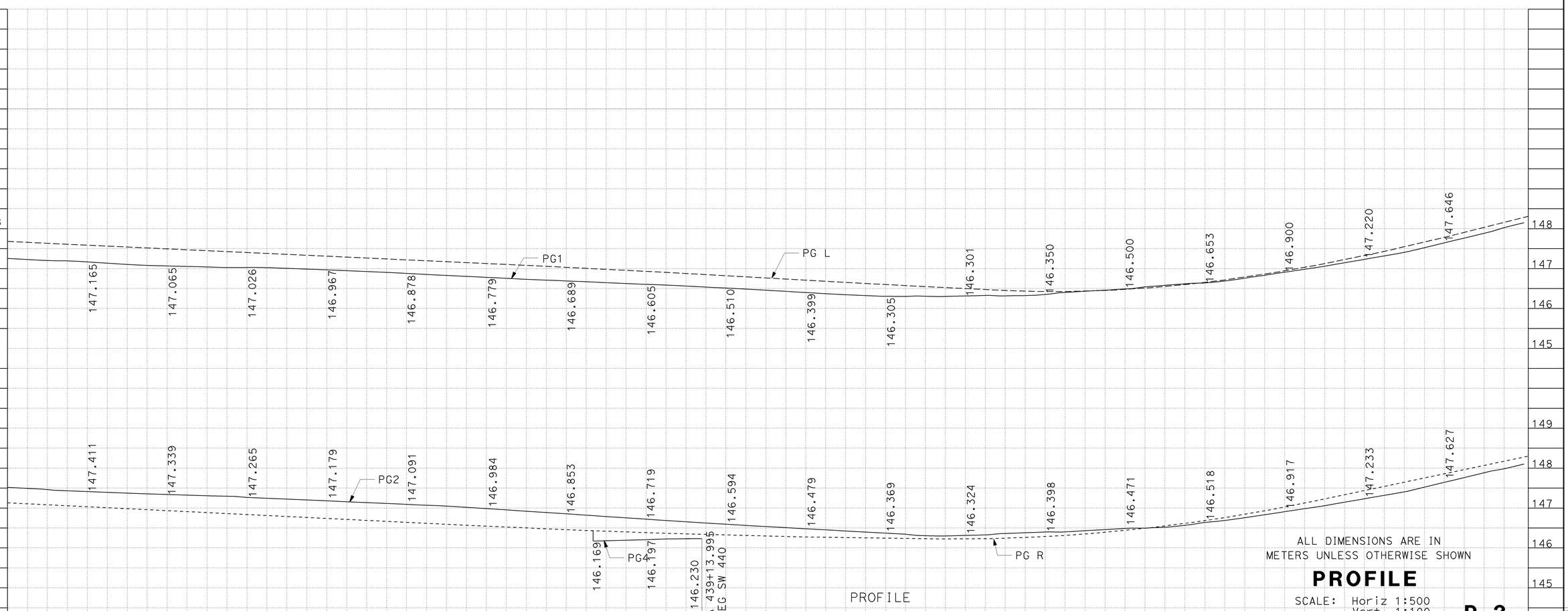

ALL DIMENSIONS ARE IN METERS UNLESS OTHERWISE SHOWN

PROFILE

SCALE: Horiz 1:500
Vert 1:100

P-3

REVISED BY	DATE REVISED
DW	12/2008

DAWIT WORKU
MUNSHI MOSHIN

CALCULATED-DESIGNED BY
CHECKED BY

FUNCTIONAL SUPERVISOR
CELINA AVILES

STATE OF CALIFORNIA - DEPARTMENT OF TRANSPORTATION
Caltrans OFFICE OF DESIGN D

LAST REVISION 02-24-09
DATE PLOTTED => 12-JUN-2009
TIME PLOTTED => 07:35

Dist	COUNTY	ROUTE	KILOMETER POST TOTAL PROJECT	SHEET No.	TOTAL SHEETS
07	LA	5	42.8/47.3	27	1073

REGISTERED CIVIL ENGINEER 2-24-09 DATE

6-8-09
PLANS APPROVAL DATE

REGISTERED PROFESSIONAL ENGINEER
MUNSHI MOHSIN
No. 61916
Exp. 9/30/09
CIVIL
STATE OF CALIFORNIA

THE STATE OF CALIFORNIA OR ITS OFFICERS OR AGENTS SHALL NOT BE RESPONSIBLE FOR THE ACCURACY OR COMPLETENESS OF ELECTRONIC COPIES OF THIS PLAN SHEET.

Caltrans Metric

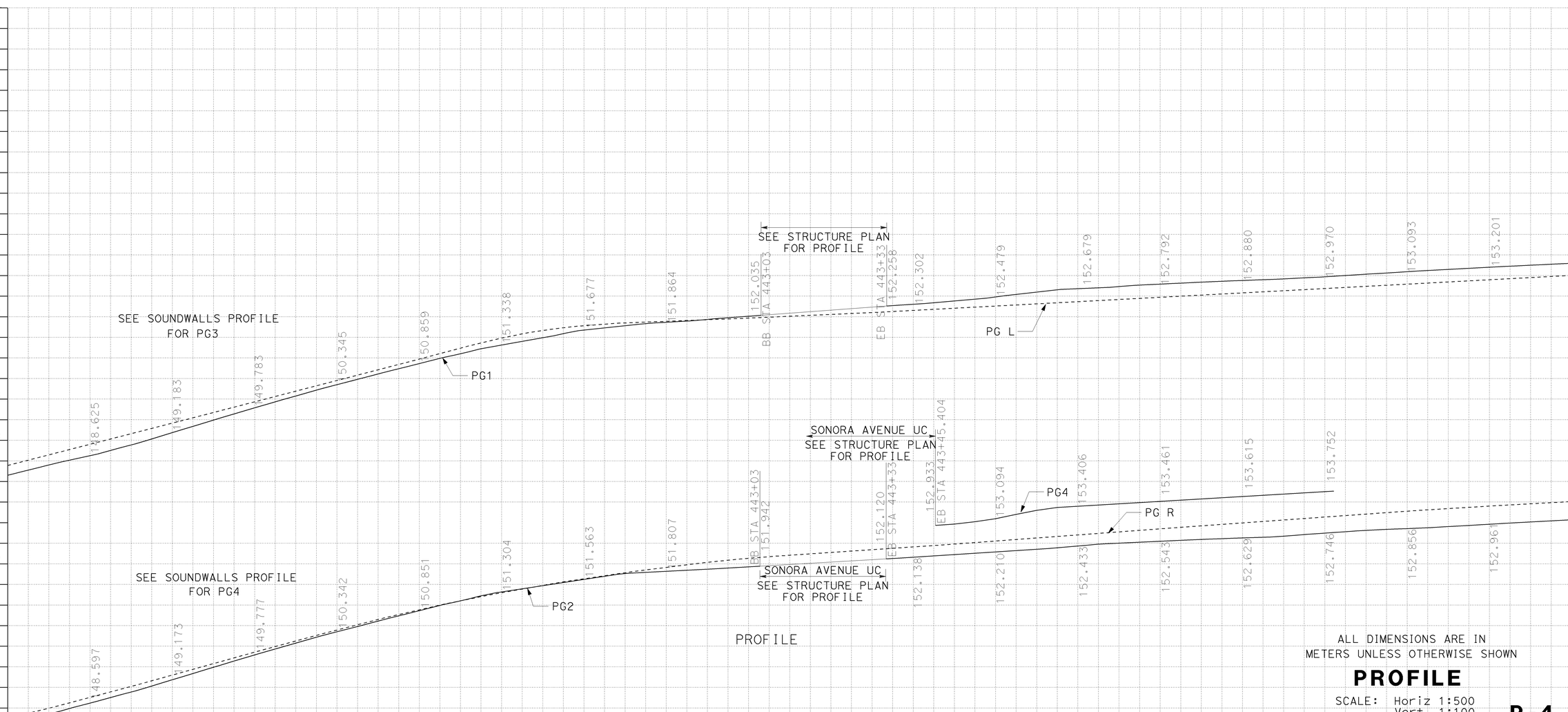

ALL DIMENSIONS ARE IN METERS UNLESS OTHERWISE SHOWN

PROFILE

SCALE: Horiz 1:500
Vert 1:100

P-4

STATE OF CALIFORNIA - DEPARTMENT OF TRANSPORTATION
Caltrans OFFICE OF DESIGN D

FUNCTIONAL SUPERVISOR: CELINA AVILES
CALCULATED-DESIGNED BY: DAWIT WORKU
CHECKED BY: MUNSHI MOSHIN
REVISED BY: DW
DATE REVISED: 12/2008

LAST REVISION 02-24-09
DATE PLOTTED => 12-JUN-2009
TIME PLOTTED => 07:35

Dist	COUNTY	ROUTE	KILOMETER POST TOTAL PROJECT	SHEET No.	TOTAL SHEETS
07	LA	5	42.8/47.3	28	1073

REGISTERED CIVIL ENGINEER 2-24-09 DATE

6-8-09
PLANS APPROVAL DATE

REGISTERED PROFESSIONAL ENGINEER
MUNSHI MOHSIN
No. 61916
Exp. 9/30/09
CIVIL
STATE OF CALIFORNIA

THE STATE OF CALIFORNIA OR ITS OFFICERS OR AGENTS SHALL NOT BE RESPONSIBLE FOR THE ACCURACY OR COMPLETENESS OF ELECTRONIC COPIES OF THIS PLAN SHEET.

Caltrans Metric

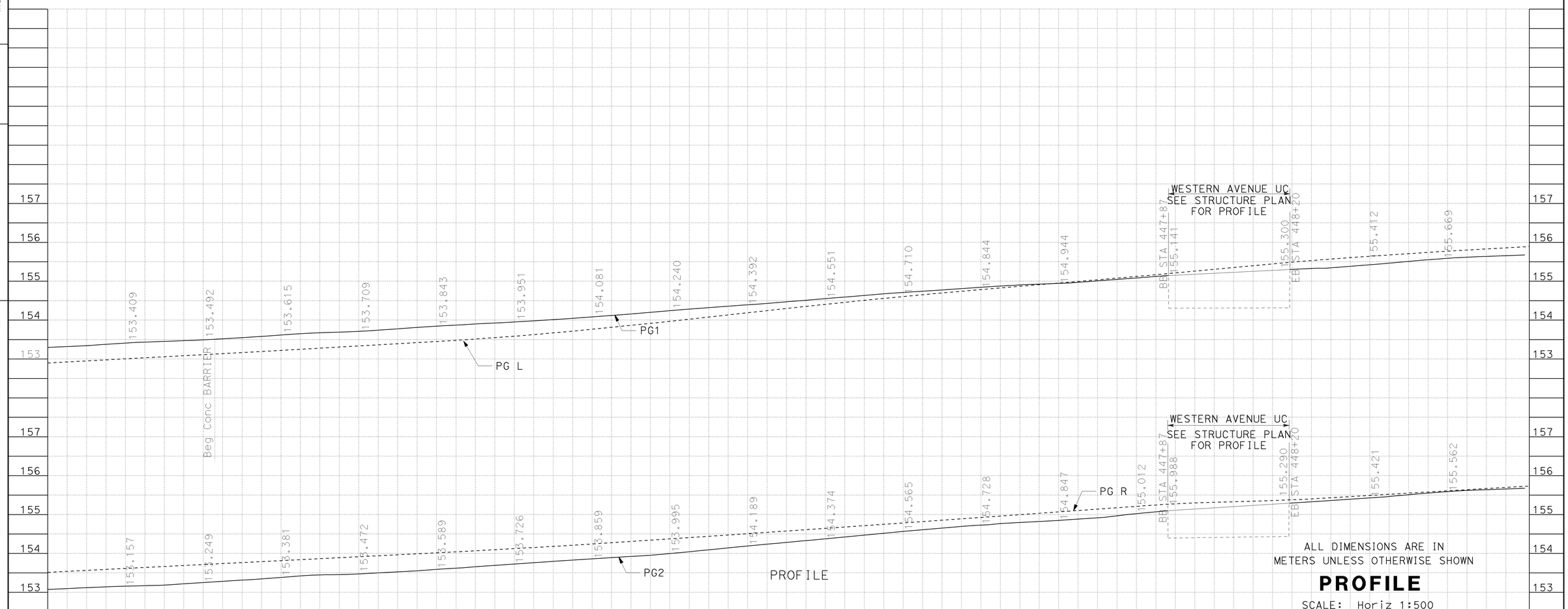

ALL DIMENSIONS ARE IN METERS UNLESS OTHERWISE SHOWN

PROFILE

SCALE: Horiz 1:500
Vert 1:100

P-5

STATE OF CALIFORNIA - DEPARTMENT OF TRANSPORTATION
Caltrans **OFFICE OF DESIGN D**

FUNCTIONAL SUPERVISOR: CELINA AVILES

CALCULATED-DESIGNED BY: DAWIT WORKU
CHECKED BY: MUNSHI MOSHIN

REVISED BY: DW
DATE REVISED: 12/2008

LAST REVISION DATE PLOTTED => 12-JUN-2009
TIME PLOTTED => 07:35
02-24-09

Dist	COUNTY	ROUTE	KILOMETER POST TOTAL PROJECT	SHEET No.	TOTAL SHEETS
07	LA	5	42.8/47.3	29	1073

Caltrans Metric

REGISTERED CIVIL ENGINEER 2-24-09 DATE

6-8-09
PLANS APPROVAL DATE

REGISTERED PROFESSIONAL ENGINEER MUNSHI MOHSIN No. 61916 Exp. 9/30/09 CIVIL STATE OF CALIFORNIA

THE STATE OF CALIFORNIA OR ITS OFFICERS OR AGENTS SHALL NOT BE RESPONSIBLE FOR THE ACCURACY OR COMPLETENESS OF ELECTRONIC COPIES OF THIS PLAN SHEET.

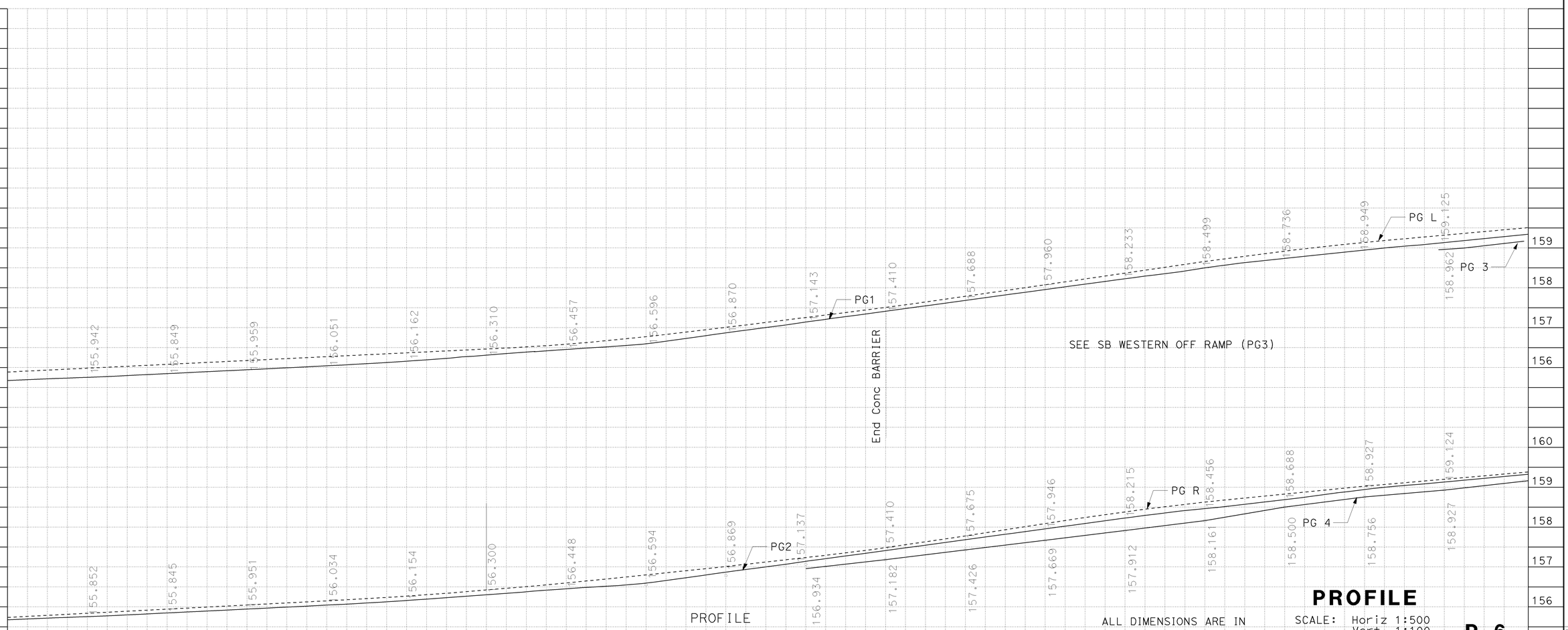

PROFILE

ALL DIMENSIONS ARE IN METERS UNLESS OTHERWISE SHOWN

SCALE: Horiz 1:500 Vert 1:100

P-6

STATE OF CALIFORNIA - DEPARTMENT OF TRANSPORTATION
Caltrans OFFICE OF DESIGN D

FUNCTIONAL SUPERVISOR: CELINA AVILES
CALCULATED-DESIGNED BY: DAWIT WORKU
CHECKED BY: MUNSHI MOSHIN
REVISED BY: DW
DATE REVISED: 12/2008

LAST REVISION 02-24-09
DATE PLOTTED => 12-JUN-2009
TIME PLOTTED => 07:35

BORDER LAST REVISED 3/1/2007

RELATIVE BORDER SCALE IS IN MILLIMETERS 0 20 40 60 80

USERNAME => trphils
DGN FILE => 712184fa006.dgn

CU 07276

EA 121841

Dist	COUNTY	ROUTE	KILOMETER POST TOTAL PROJECT	SHEET No.	TOTAL SHEETS
07	LA	5	42.8/47.3	30	1073

REGISTERED CIVIL ENGINEER 2-24-09 DATE

6-8-09
PLANS APPROVAL DATE

REGISTERED PROFESSIONAL ENGINEER
MUNSHI MOHSIN
No. 61916
Exp. 9/30/09
CIVIL
STATE OF CALIFORNIA

THE STATE OF CALIFORNIA OR ITS OFFICERS OR AGENTS SHALL NOT BE RESPONSIBLE FOR THE ACCURACY OR COMPLETENESS OF ELECTRONIC COPIES OF THIS PLAN SHEET.

Caltrans Metric

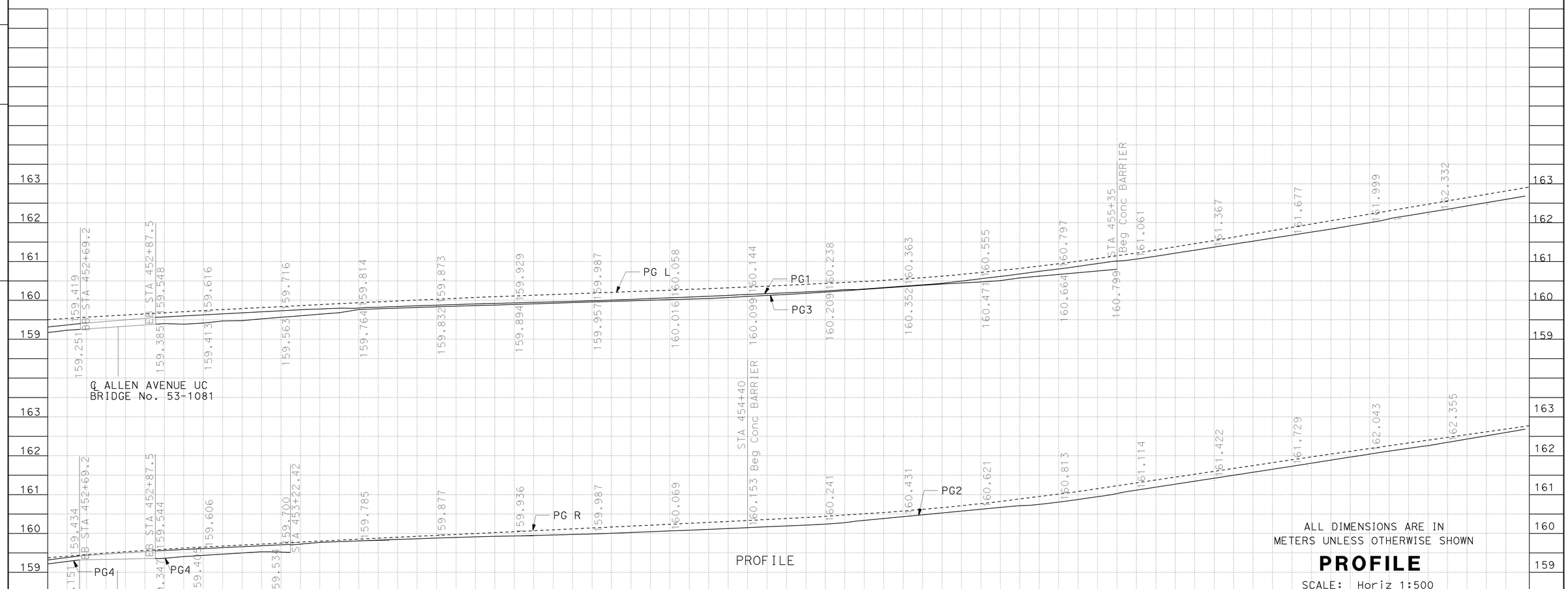

ALL DIMENSIONS ARE IN
METERS UNLESS OTHERWISE SHOWN

PROFILE

SCALE: Horiz 1:500
Vert 1:100

P-7

STATE OF CALIFORNIA - DEPARTMENT OF TRANSPORTATION
Caltrans OFFICE OF DESIGN D

FUNCTIONAL SUPERVISOR: CELINA AVILES

CALCULATED-DESIGNED BY: DAWIT WORKU
CHECKED BY: MUNSHI MOSHIN

REVISED BY: DW
DATE REVISED: 12/2008

LAST REVISION 02-24-09
DATE PLOTTED => 12-JUN-2009
TIME PLOTTED => 07:36

Dist	COUNTY	ROUTE	KILOMETER POST TOTAL PROJECT	SHEET No.	TOTAL SHEETS
07	LA	5	42.8/47.3	31	1073

REGISTERED CIVIL ENGINEER 2-24-09 DATE

6-8-09
PLANS APPROVAL DATE

REGISTERED PROFESSIONAL ENGINEER MUNSHI MOHSIN No. 61916 Exp. 9/30/09 CIVIL STATE OF CALIFORNIA

THE STATE OF CALIFORNIA OR ITS OFFICERS OR AGENTS SHALL NOT BE RESPONSIBLE FOR THE ACCURACY OR COMPLETENESS OF ELECTRONIC COPIES OF THIS PLAN SHEET.

Caltrans Metric

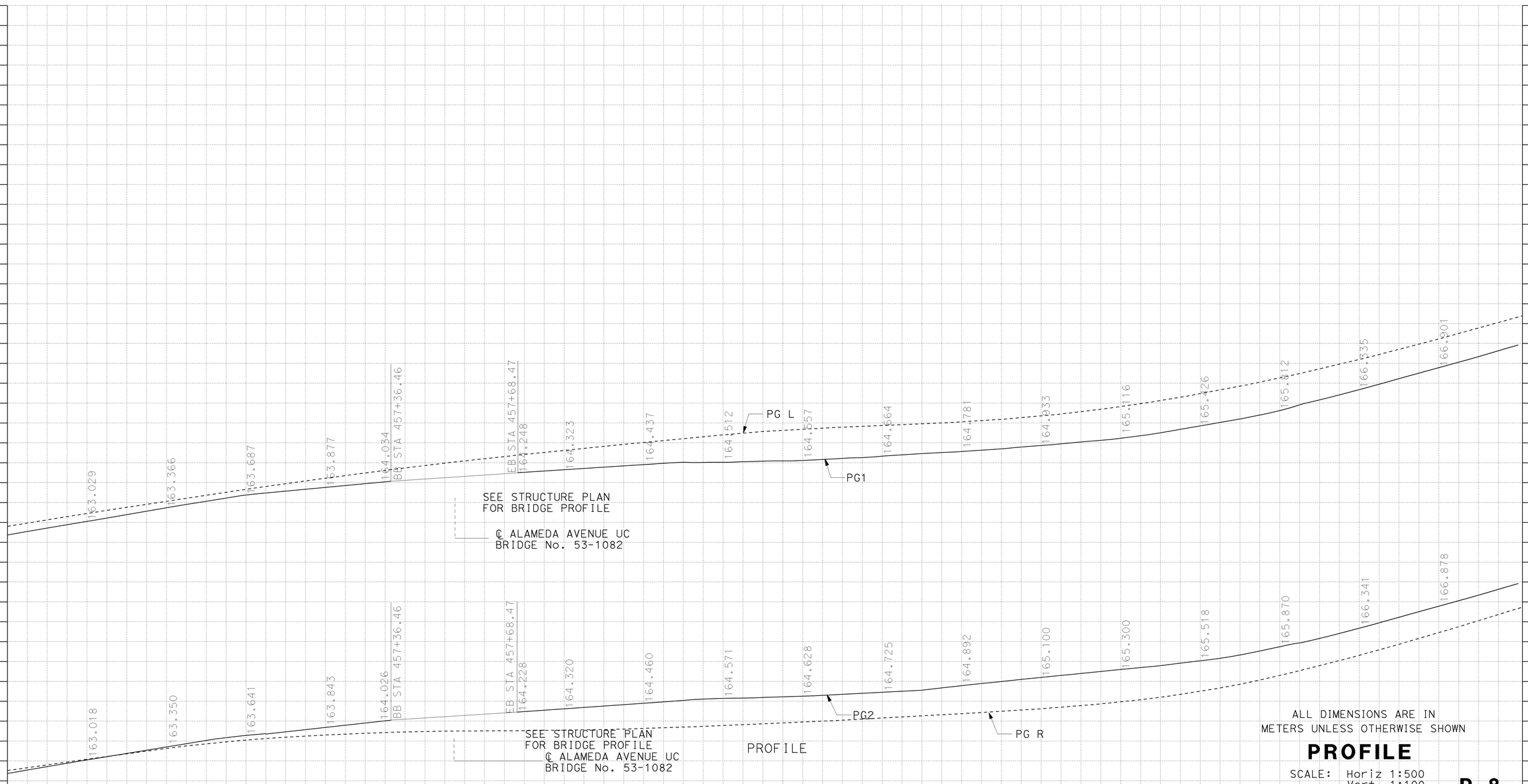

ALL DIMENSIONS ARE IN METERS UNLESS OTHERWISE SHOWN

PROFILE

SCALE: Horiz 1:500
Vert 1:100

P-8

STATE OF CALIFORNIA - DEPARTMENT OF TRANSPORTATION
Caltrans OFFICE OF DESIGN D

FUNCTIONAL SUPERVISOR: CELINA AVILES

CALCULATED-DESIGNED BY: DAWIT WORKU
CHECKED BY: MUNSHI MOSHIN

REVISED BY: DW
DATE REVISED: 12/2008

LAST REVISION 02-24-09
DATE PLOTTED => 12-JUN-2009
TIME PLOTTED => 07:36

Dist	COUNTY	ROUTE	KILOMETER POST TOTAL PROJECT	SHEET No.	TOTAL SHEETS
07	LA	5	42.8/47.3	32	1073

REGISTERED CIVIL ENGINEER DATE 2-24-09

PLANS APPROVAL DATE 6-8-09

REGISTERED PROFESSIONAL ENGINEER MUNSHI MOHSIN No. 61916 Exp. 9/30/09 CIVIL STATE OF CALIFORNIA

THE STATE OF CALIFORNIA OR ITS OFFICERS OR AGENTS SHALL NOT BE RESPONSIBLE FOR THE ACCURACY OR COMPLETENESS OF ELECTRONIC COPIES OF THIS PLAN SHEET.

Caltrans Metric

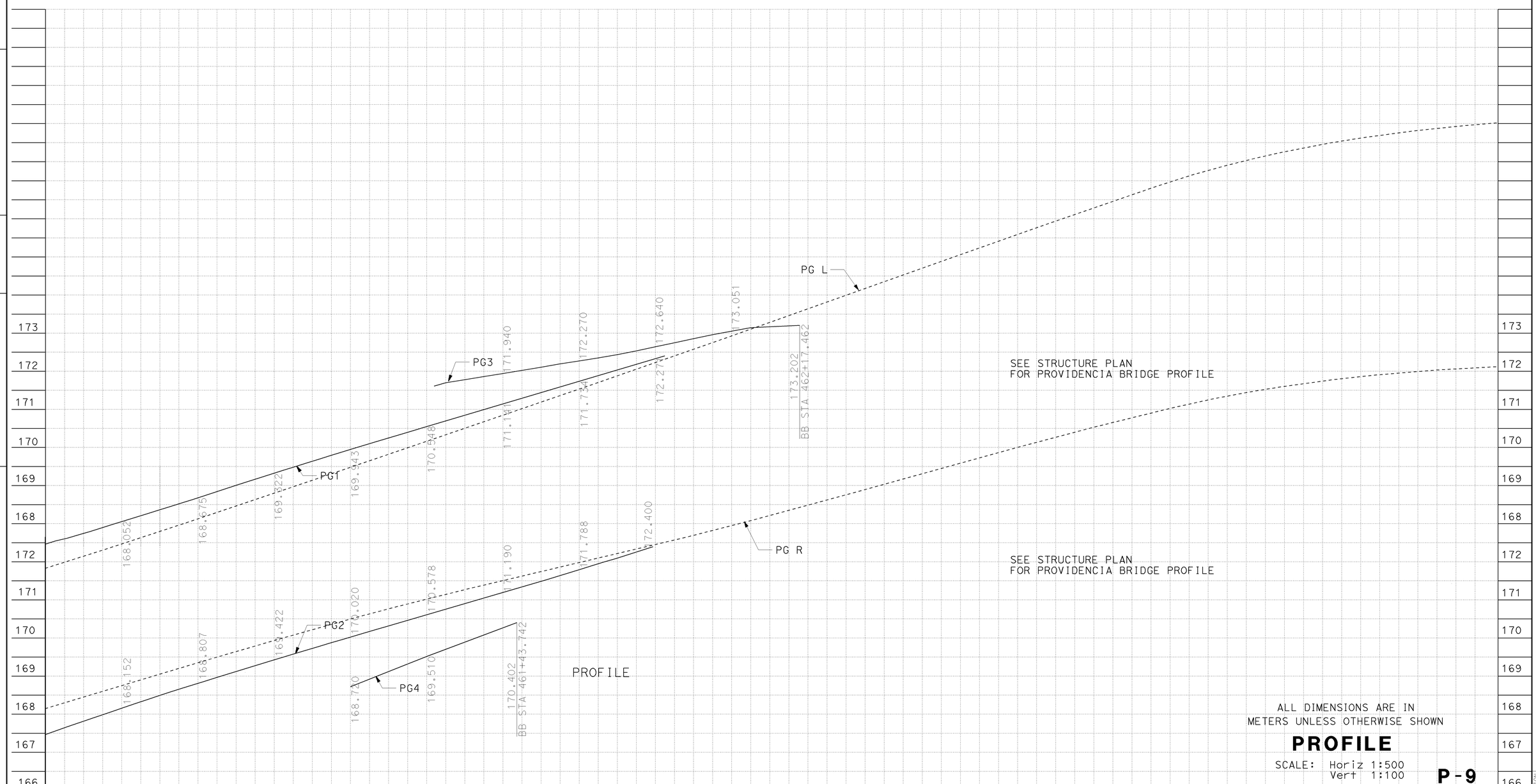

ALL DIMENSIONS ARE IN METERS UNLESS OTHERWISE SHOWN

PROFILE

SCALE: Horiz 1:500
Vert 1:100

P-9

m^3	
Exc	
Emb	

STATE OF CALIFORNIA - DEPARTMENT OF TRANSPORTATION
Caltrans OFFICE OF DESIGN D

FUNCTIONAL SUPERVISOR: CELINA AVILES

CALCULATED-DESIGNED BY: DAWIT WORKU
CHECKED BY: MUNSHI MOSHIN

REVISED BY: DW
DATE REVISED: 12/2008

LAST REVISION 02-24-09
DATE PLOTTED => 12-JUN-2009
TIME PLOTTED => 07:36

Dist	COUNTY	ROUTE	KILOMETER POST TOTAL PROJECT	SHEET No.	TOTAL SHEETS
07	LA	5	42.8/47.3	33	1073

REGISTERED CIVIL ENGINEER 2-24-09 DATE

6-8-09
PLANS APPROVAL DATE

REGISTERED PROFESSIONAL ENGINEER MUNSHI MOHSIN No. 61916 Exp. 9/30/09 CIVIL STATE OF CALIFORNIA

THE STATE OF CALIFORNIA OR ITS OFFICERS OR AGENTS SHALL NOT BE RESPONSIBLE FOR THE ACCURACY OR COMPLETENESS OF ELECTRONIC COPIES OF THIS PLAN SHEET.

Caltrans Metric

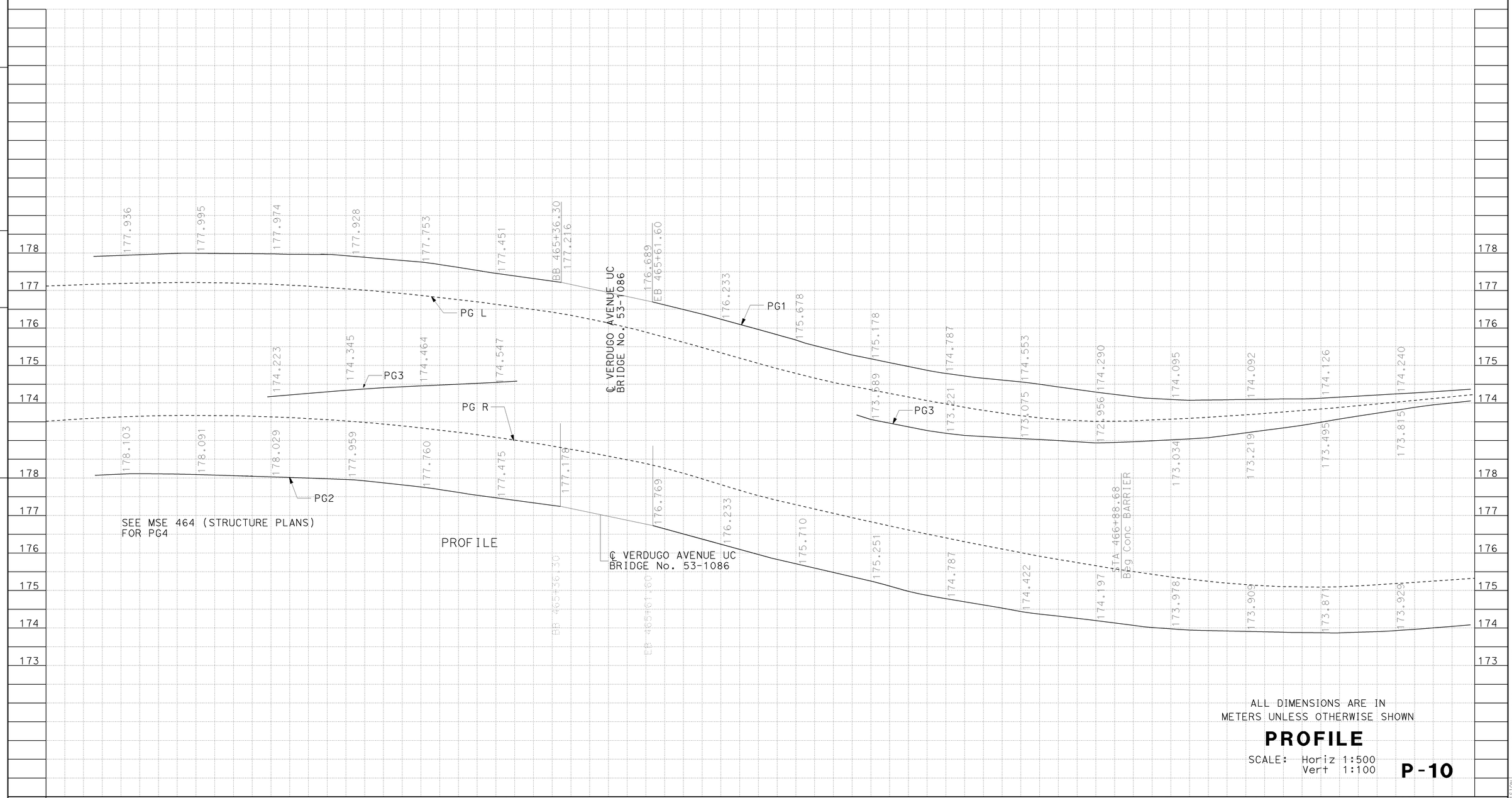

ALL DIMENSIONS ARE IN
METERS UNLESS OTHERWISE SHOWN

PROFILE

SCALE: Horiz 1:500
Vert 1:100

P-10

REVISED BY	DW
DATE REVISED	12/2008
CALCULATED-DESIGNED BY	DAWIT WORKU
CHECKED BY	MUNSHI MOSHIN
FUNCTIONAL SUPERVISOR	CELINA AVILES

STATE OF CALIFORNIA - DEPARTMENT OF TRANSPORTATION
Caltrans OFFICE OF DESIGN D

LAST REVISION 02-24-09 DATE PLOTTED => 12-JUN-2009 TIME PLOTTED => 07:36

Dist	COUNTY	ROUTE	KILOMETER POST TOTAL PROJECT	SHEET No.	TOTAL SHEETS
07	LA	5	42.8/47.3	34	1073

REGISTERED CIVIL ENGINEER 2-24-09 DATE

6-8-09
PLANS APPROVAL DATE

REGISTERED PROFESSIONAL ENGINEER MUNSHI MOHSIN No. 61916 Exp. 9/30/09 CIVIL STATE OF CALIFORNIA

THE STATE OF CALIFORNIA OR ITS OFFICERS OR AGENTS SHALL NOT BE RESPONSIBLE FOR THE ACCURACY OR COMPLETENESS OF ELECTRONIC COPIES OF THIS PLAN SHEET.

Caltrans Metric

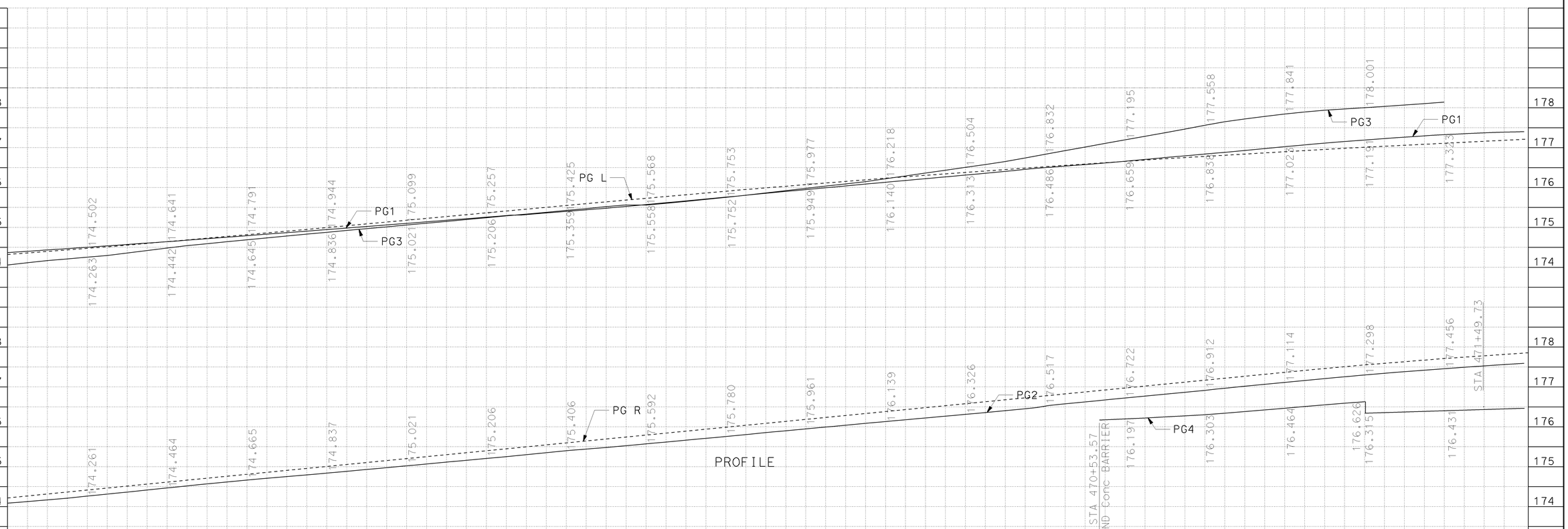

ALL DIMENSIONS ARE IN METERS UNLESS OTHERWISE SHOWN

PROFILE

SCALE: Horiz 1:500
Vert 1:100

P-11

STATE OF CALIFORNIA - DEPARTMENT OF TRANSPORTATION
Caltrans **OFFICE OF DESIGN D**

FUNCTIONAL SUPERVISOR: CELINA AVILES

CALCULATED-DESIGNED BY: DAWIT WORKU
CHECKED BY: MUNSHI MOSHIN

REVISED BY: DW
DATE REVISED: 12/2008

LAST REVISION DATE PLOTTED => 12-JUN-2009
02-24-09 TIME PLOTTED => 07:36

Dist	COUNTY	ROUTE	KILOMETER POST TOTAL PROJECT	SHEET No.	TOTAL SHEETS
07	LA	5	42.8/47.3	35	1073

REGISTERED CIVIL ENGINEER 2-24-09 DATE

6-8-09
PLANS APPROVAL DATE

REGISTERED PROFESSIONAL ENGINEER
MUNSHI MOHSIN
No. 61916
Exp. 9/30/09
CIVIL
STATE OF CALIFORNIA

THE STATE OF CALIFORNIA OR ITS OFFICERS OR AGENTS SHALL NOT BE RESPONSIBLE FOR THE ACCURACY OR COMPLETENESS OF ELECTRONIC COPIES OF THIS PLAN SHEET.

Caltrans Metric

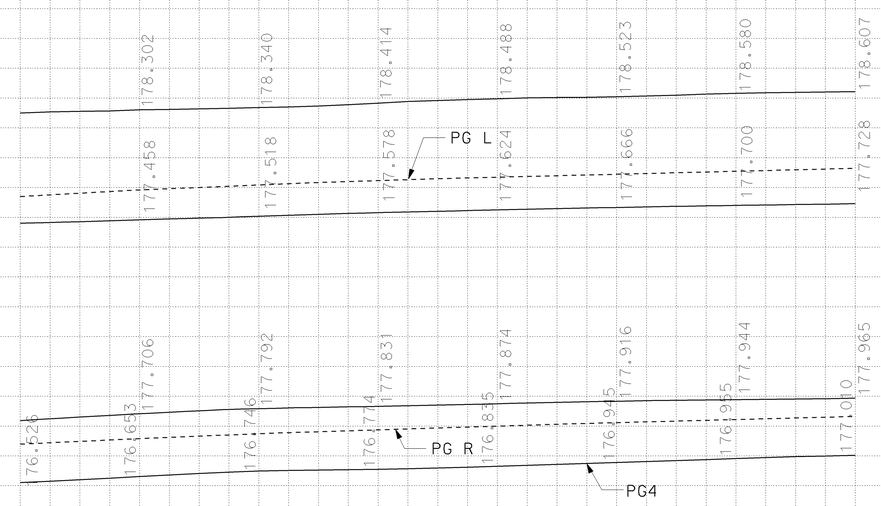

PROFILE

ALL DIMENSIONS ARE IN METERS UNLESS OTHERWISE SHOWN

PROFILE

SCALE: Horiz 1:500
Vert 1:100

P-12

Station	+60	+80	472+00	+20	+40	+60	+80	473+00
m^3 Exc								
m^3 Emb								

STATE OF CALIFORNIA - DEPARTMENT OF TRANSPORTATION
Caltrans OFFICE OF DESIGN D

FUNCTIONAL SUPERVISOR: CELINA AVILES

CALCULATED-DESIGNED BY: DAWIT WORKU
CHECKED BY: MUNSHI MOSHIN

REVISED BY: DW
DATE REVISED: 12/2008

LAST REVISION 02-24-09
DATE PLOTTED => 12-JUN-2009
TIME PLOTTED => 07:36

Dist	COUNTY	ROUTE	KILOMETER POST TOTAL PROJECT	SHEET No.	TOTAL SHEETS
07	LA	5	42.8/47.3	36	1073

REGISTERED CIVIL ENGINEER 2-24-09 DATE

6-8-09
PLANS APPROVAL DATE

REGISTERED PROFESSIONAL ENGINEER MUNSHI MOHSIN No. 61916 Exp. 9/30/09 CIVIL STATE OF CALIFORNIA

THE STATE OF CALIFORNIA OR ITS OFFICERS OR AGENTS SHALL NOT BE RESPONSIBLE FOR THE ACCURACY OR COMPLETENESS OF ELECTRONIC COPIES OF THIS PLAN SHEET.

Caltrans Metric

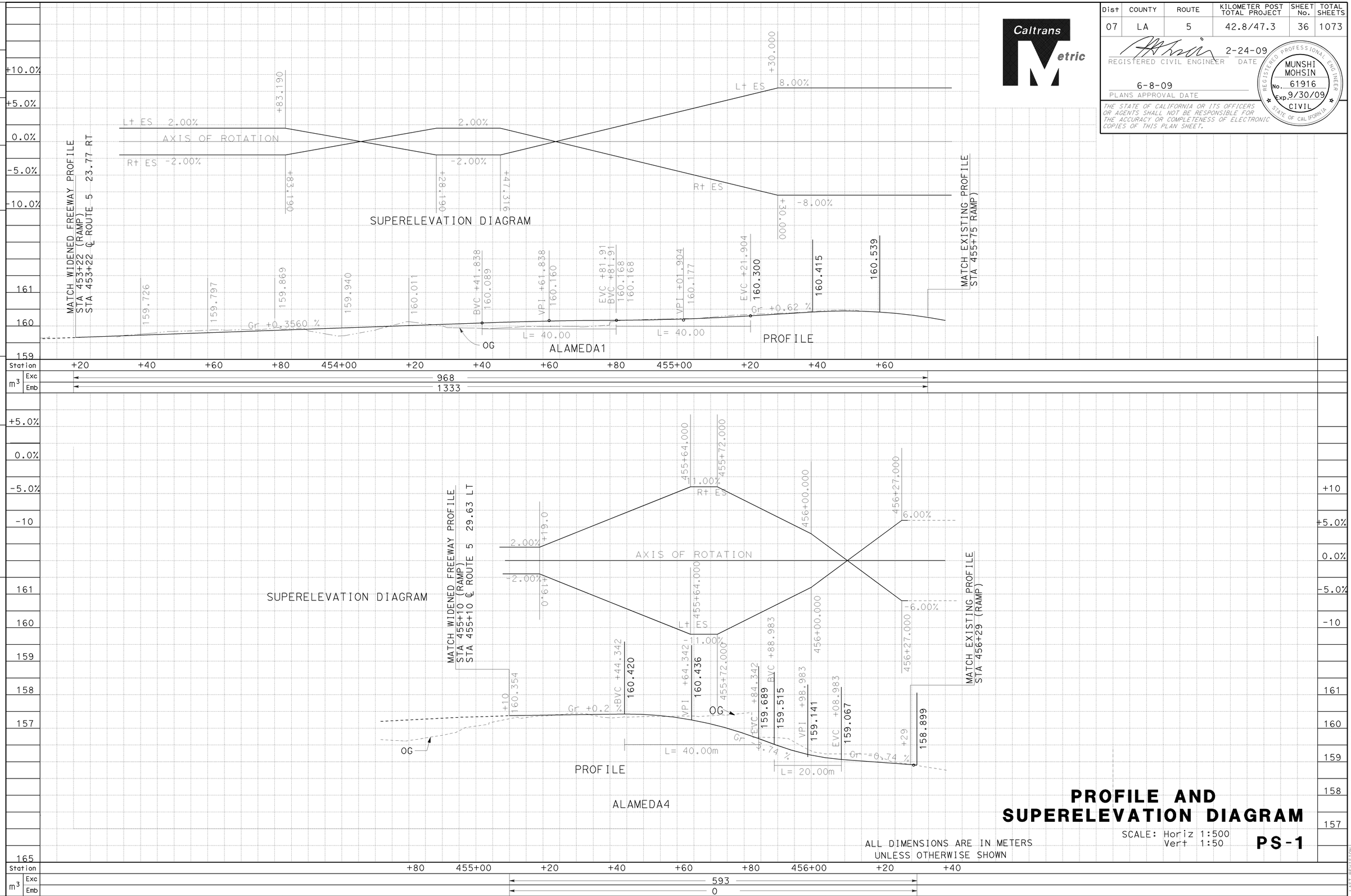

PROFILE AND SUPERELEVATION DIAGRAM

SCALE: Horiz 1:500
Vert 1:50

PS-1

ALL DIMENSIONS ARE IN METERS UNLESS OTHERWISE SHOWN

STATE OF CALIFORNIA - DEPARTMENT OF TRANSPORTATION
Caltrans OFFICE OF DESIGN D

FUNCTIONAL SUPERVISOR: CELINA AVILES

CALCULATED-DESIGNED BY: DAWIT WORKU
CHECKED BY: MUNSHI MOSHIN

REVISED BY: DW
DATE REVISED: 12/2008

LAST REVISION 12-05-08
DATE PLOTTED => 12-JUN-2009
TIME PLOTTED => 08:33

Dist	COUNTY	ROUTE	KILOMETER POST TOTAL PROJECT	SHEET No.	TOTAL SHEETS
07	LA	5	42.8/47.3	37	1073

REGISTERED CIVIL ENGINEER 2-24-09 DATE

6-8-09
PLANS APPROVAL DATE

REGISTERED PROFESSIONAL ENGINEER MUNSHI MOHSIN No. 61916 Exp. 9/30/09 CIVIL STATE OF CALIFORNIA

THE STATE OF CALIFORNIA OR ITS OFFICERS OR AGENTS SHALL NOT BE RESPONSIBLE FOR THE ACCURACY OR COMPLETENESS OF ELECTRONIC COPIES OF THIS PLAN SHEET.

Caltrans Metric

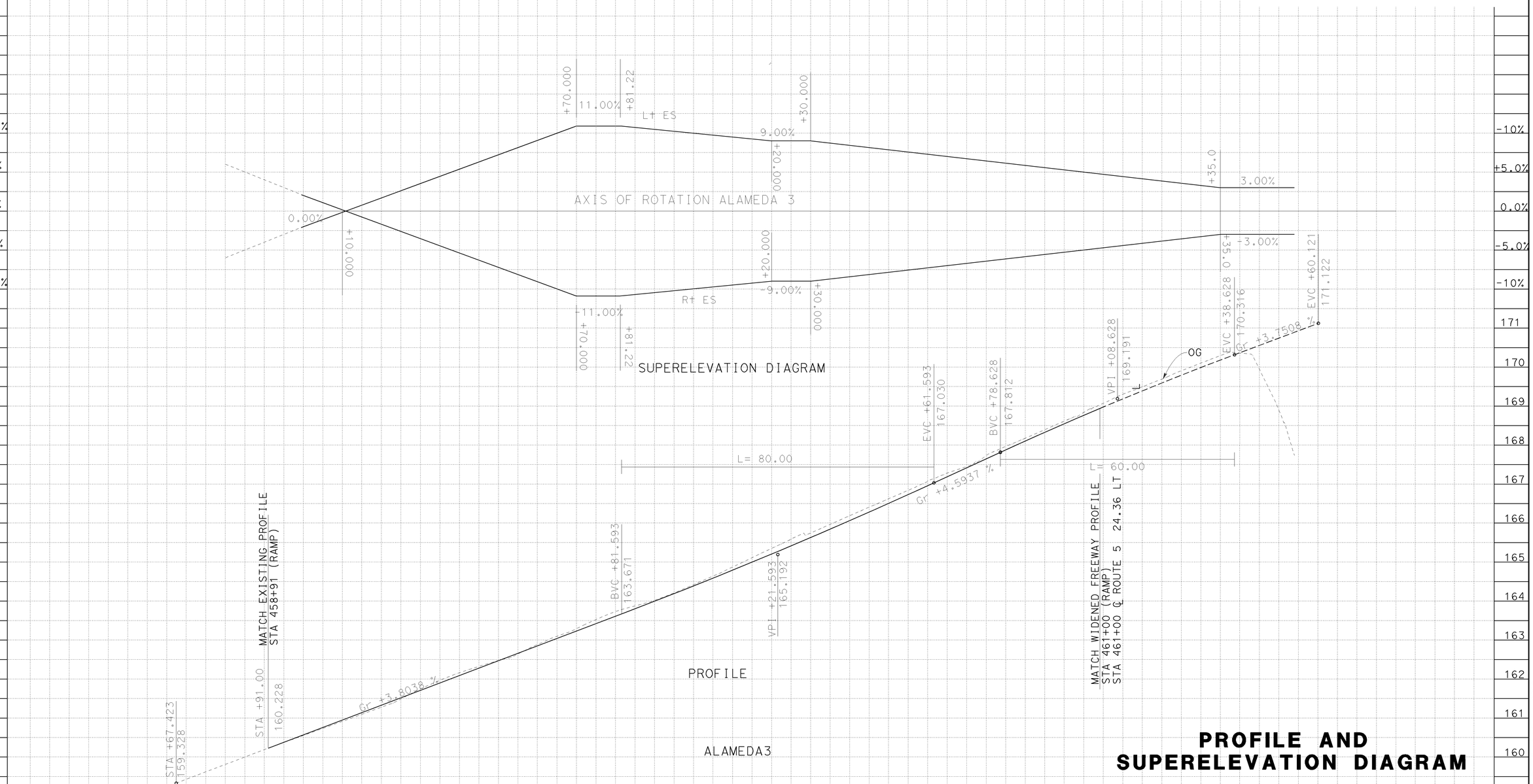

PROFILE AND SUPERELEVATION DIAGRAM

SCALE: Horiz 1:500
Vert 1:50

PS-2

ALL DIMENSIONS ARE IN METERS UNLESS OTHERWISE SHOWN

STATE OF CALIFORNIA - DEPARTMENT OF TRANSPORTATION
Caltrans OFFICE OF DESIGN D

FUNCTIONAL SUPERVISOR: CELINA AVILES

CALCULATED-DESIGNED BY: DAWIT WORKU
CHECKED BY: MUNSHI MOSHIN

REVISED BY: DW
DATE REVISED: 12/2008

LAST REVISION DATE PLOTTED => 12-JUN-2009
12-05-08 TIME PLOTTED => 07:36

BORDER LAST REVISED 3/1/2007

RELATIVE BORDER SCALE IS IN MILLIMETERS 0 20 40 60 80

USERNAME => trphils
DGN FILE => 712184fa014.dgn

CU 07276

EA 121841

Dist	COUNTY	ROUTE	KILOMETER POST TOTAL PROJECT	SHEET No.	TOTAL SHEETS
07	LA	5	42.8/47.3	38	1073

REGISTERED CIVIL ENGINEER 2-24-09 DATE

6-8-09
PLANS APPROVAL DATE

REGISTERED PROFESSIONAL ENGINEER MUNSHI MOHSIN No. 61916 Exp. 9/30/09 CIVIL STATE OF CALIFORNIA

THE STATE OF CALIFORNIA OR ITS OFFICERS OR AGENTS SHALL NOT BE RESPONSIBLE FOR THE ACCURACY OR COMPLETENESS OF ELECTRONIC COPIES OF THIS PLAN SHEET.

Caltrans Metric

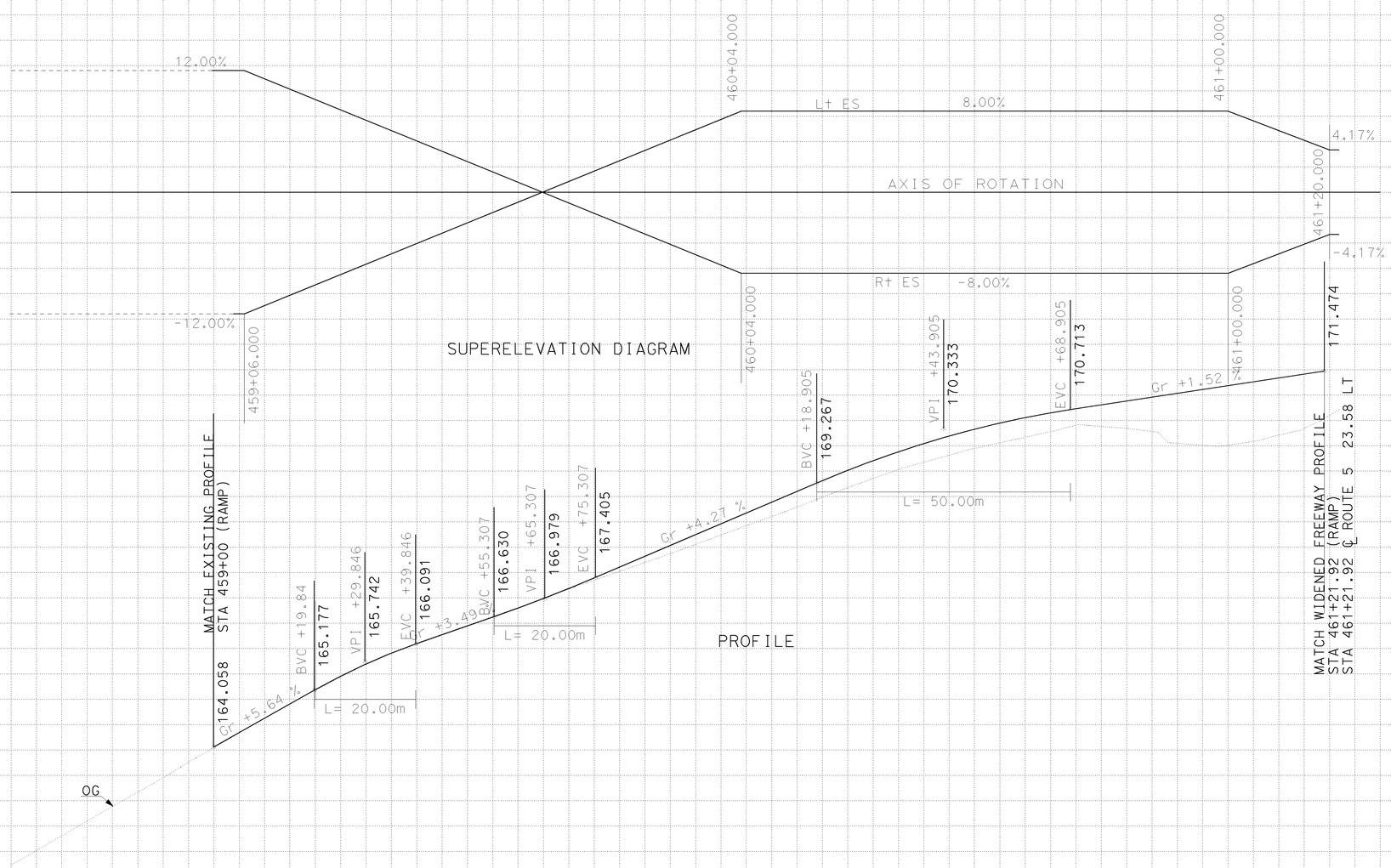

ALL DIMENSIONS ARE IN METERS
UNLESS OTHERWISE SHOWN

PROFILE AND SUPERELEVATION DIAGRAM

SCALE: Horiz 1:500
Vert 1:50

PS-3

REVISED BY	DATE REVISED
DW	12/2008

CALCULATED-DESIGNED BY: DAWIT WORKU
CHECKED BY: MUNSHI MOSHIN

FUNCTIONAL SUPERVISOR: CELINA AVILES

STATE OF CALIFORNIA - DEPARTMENT OF TRANSPORTATION
Caltrans OFFICE OF DESIGN D

LAST REVISION 12-05-08
DATE PLOTTED => 12-JUN-2009
TIME PLOTTED => 07:36

Dist	COUNTY	ROUTE	KILOMETER POST TOTAL PROJECT	SHEET No.	TOTAL SHEETS
07	LA	5	42.8/47.3	39	1073

REGISTERED CIVIL ENGINEER 2-24-09 DATE

6-8-09
PLANS APPROVAL DATE

REGISTERED PROFESSIONAL ENGINEER MUNSHI MOHSIN No. 61916 Exp. 9/30/09 CIVIL STATE OF CALIFORNIA

THE STATE OF CALIFORNIA OR ITS OFFICERS OR AGENTS SHALL NOT BE RESPONSIBLE FOR THE ACCURACY OR COMPLETENESS OF ELECTRONIC COPIES OF THIS PLAN SHEET.

Caltrans Metric

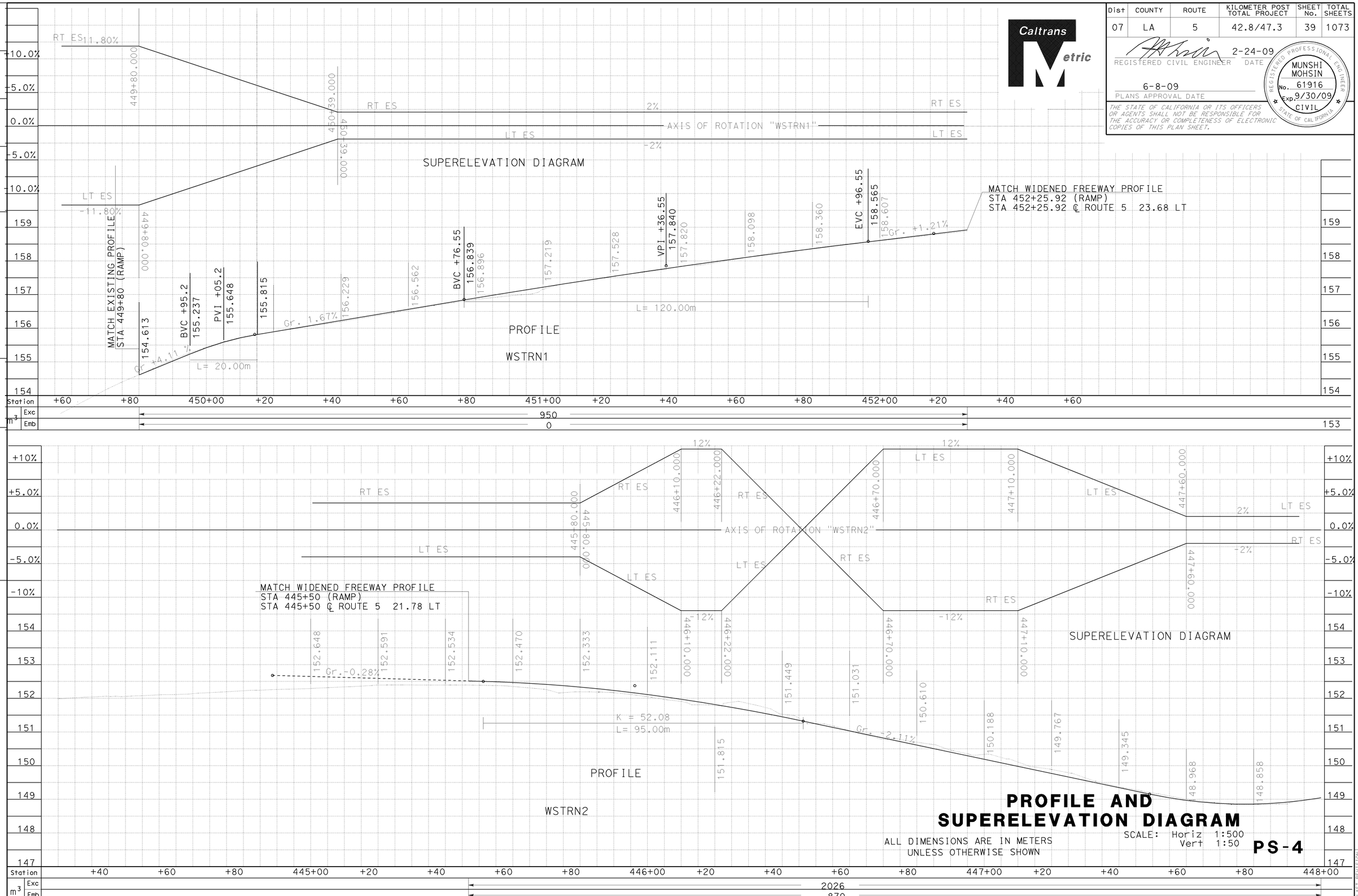

PROFILE AND SUPERELEVATION DIAGRAM

ALL DIMENSIONS ARE IN METERS UNLESS OTHERWISE SHOWN

SCALE: Horiz 1:500 Vert 1:50

PS-4

STATE OF CALIFORNIA - DEPARTMENT OF TRANSPORTATION
Caltrans OFFICE OF DESIGN D

FUNCTIONAL SUPERVISOR: CELINA AVILES

CALCULATED-DESIGNED BY: DAWIT WORKU
CHECKED BY: MUNSHI MOSHIN
REVISED BY: DW
DATE REVISED: 12/2008

LAST REVISION 12-05-08
DATE PLOTTED => 12-JUN-2009
TIME PLOTTED => 07:36

BORDER LAST REVISED 3/1/2007
RELATIVE BORDER SCALE IS IN MILLIMETERS 0 20 40 60 80
USERNAME => trphils
DGN FILE => 712184fa016.dgn
CU 07276
EA 121841

Dist	COUNTY	ROUTE	KILOMETER POST TOTAL PROJECT	SHEET No.	TOTAL SHEETS
07	LA	5	42.8/47.3	40	1073

REGISTERED CIVIL ENGINEER 2-24-09 DATE

6-8-09
PLANS APPROVAL DATE

REGISTERED PROFESSIONAL ENGINEER MUNSHI MOHSIN No. 61916 Exp. 9/30/09 CIVIL STATE OF CALIFORNIA

THE STATE OF CALIFORNIA OR ITS OFFICERS OR AGENTS SHALL NOT BE RESPONSIBLE FOR THE ACCURACY OR COMPLETENESS OF ELECTRONIC COPIES OF THIS PLAN SHEET.

Caltrans Metric

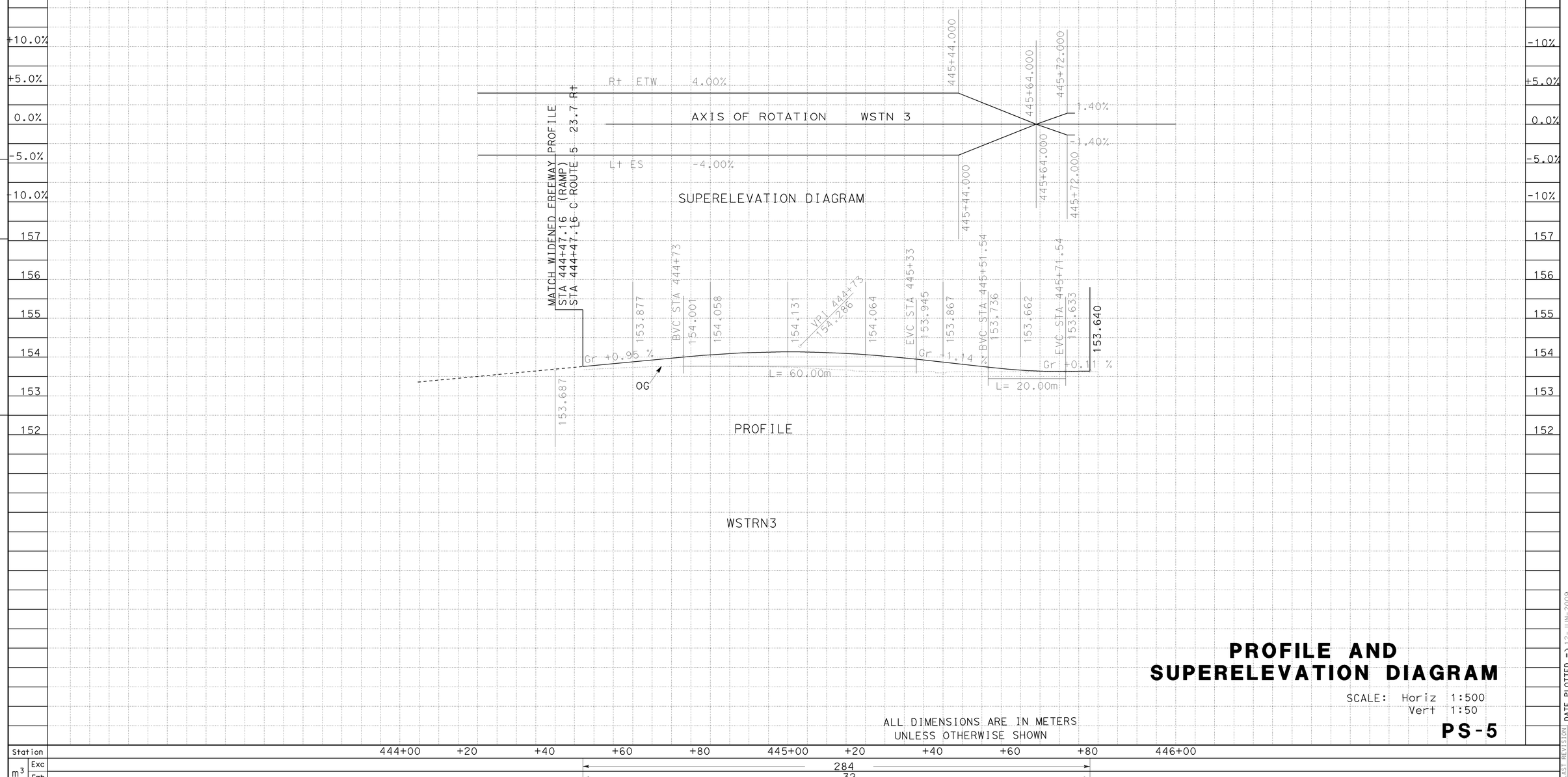

PROFILE AND SUPERELEVATION DIAGRAM

SCALE: Horiz 1:500
Vert 1:50

ALL DIMENSIONS ARE IN METERS UNLESS OTHERWISE SHOWN

PS-5

STATE OF CALIFORNIA - DEPARTMENT OF TRANSPORTATION
Caltrans OFFICE OF DESIGN D

FUNCTIONAL SUPERVISOR: CELINA AVILES

CALCULATED-DESIGNED BY: MUNSHI MOSHIN
CHECKED BY: DAWIT WORKU

REVISED BY: DW
DATE REVISED: 12/2008

LAST REVISION 12-05-08
DATE PLOTTED => 12-JUN-2009
TIME PLOTTED => 07:36

Dist	COUNTY	ROUTE	KILOMETER POST TOTAL PROJECT	SHEET No.	TOTAL SHEETS
07	LA	5	42.8/47.3	41	1073

REGISTERED CIVIL ENGINEER 2-24-09 DATE

6-8-09
PLANS APPROVAL DATE

REGISTERED PROFESSIONAL ENGINEER MUNSHI MOHSIN No. 61916 Exp. 9/30/09 CIVIL STATE OF CALIFORNIA

THE STATE OF CALIFORNIA OR ITS OFFICERS OR AGENTS SHALL NOT BE RESPONSIBLE FOR THE ACCURACY OR COMPLETENESS OF ELECTRONIC COPIES OF THIS PLAN SHEET.

Caltrans Metric

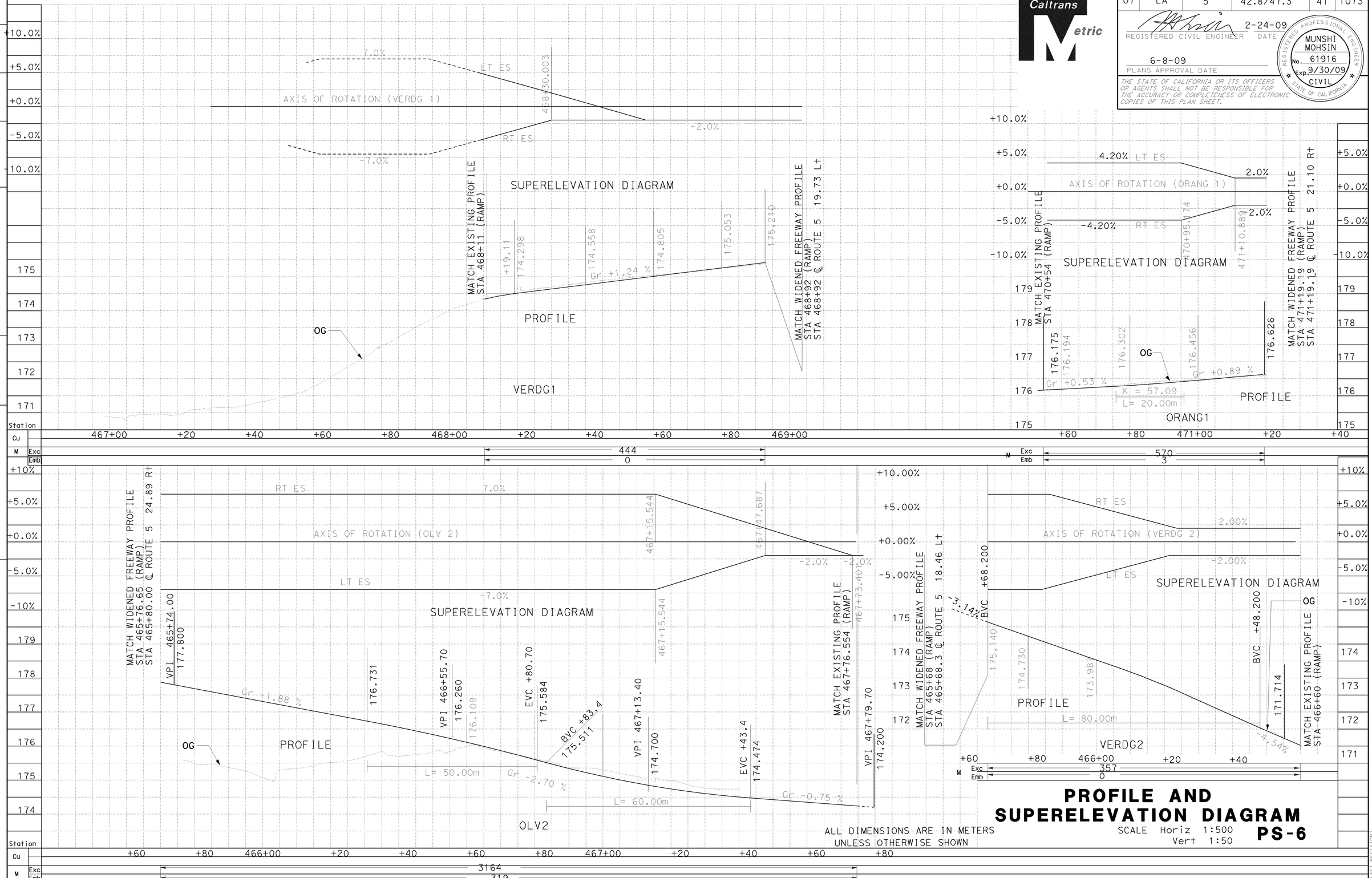

PROFILE AND SUPERELEVATION DIAGRAM

SCALE Horiz 1:500
Vert 1:50

PS-6

ALL DIMENSIONS ARE IN METERS UNLESS OTHERWISE SHOWN

STATE OF CALIFORNIA - DEPARTMENT OF TRANSPORTATION
Caltrans OFFICE OF DESIGN D

FUNCTIONAL SUPERVISOR: CELINA AVILES
CALCULATED-DESIGNED BY: DAWIT WORKU
CHECKED BY: MUNSHI MOSHIN
REVISED BY: DW
DATE REVISED: 12/2008

LAST REVISION 12-05-08
DATE PLOTTED => 12-JUN-2009
TIME PLOTTED => 08:49

DIST.	COUNTY	ROUTE	KILOMETER POST TOTAL PROJECT	SHEET NO.	TOTAL SHEETS
07	LA	5	42.8/47.3	42	1073

Caltrans Metric

REGISTERED ENGINEER - CIVIL

6-8-09
PLANS APPROVAL DATE

REGISTERED PROFESSIONAL ENGINEER MUNSHI MOHSIN No. 61916 Exp. 9/30/09 CIVIL STATE OF CALIFORNIA

The State of California or its officers or agents shall not be responsible for the accuracy or completeness of electronic copies of this plan sheet.

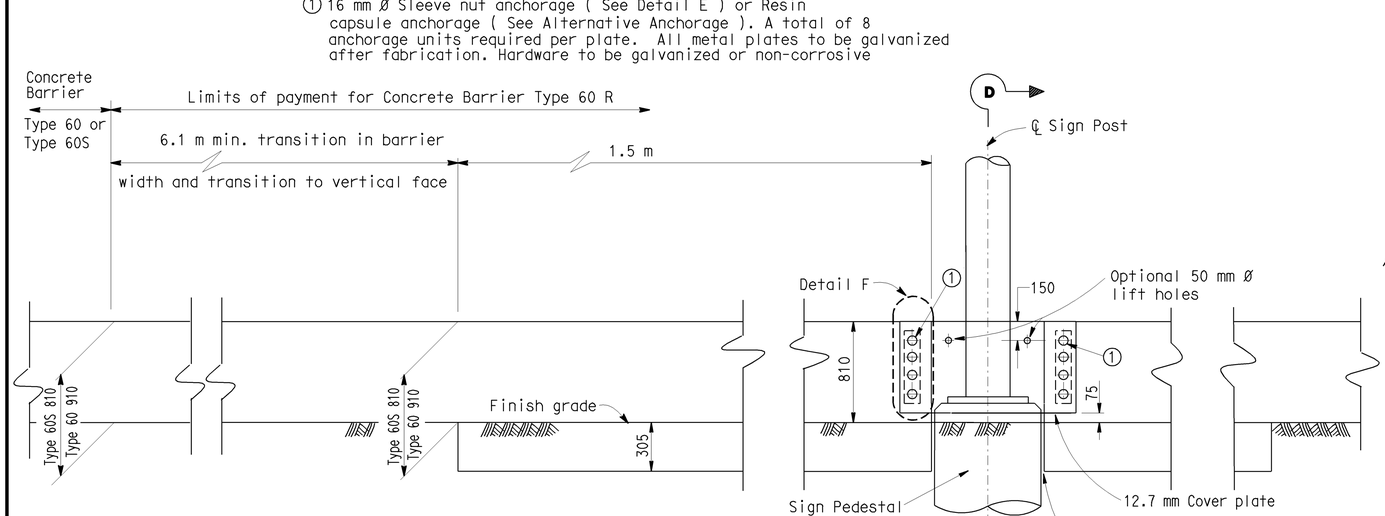

ELEVATION

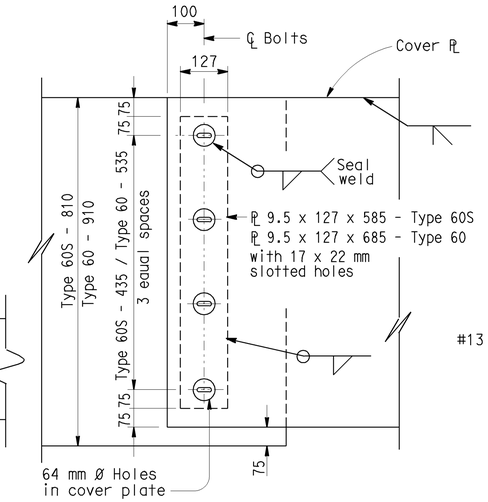

DETAIL F

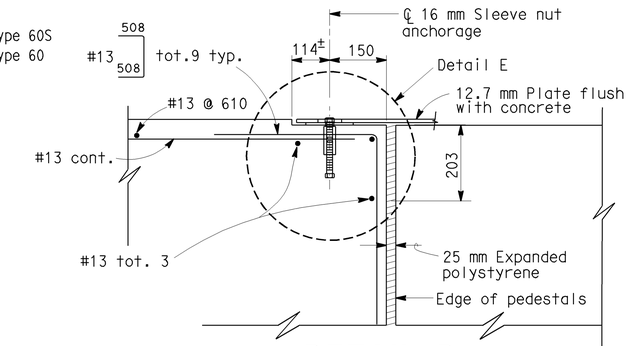

DETAIL D

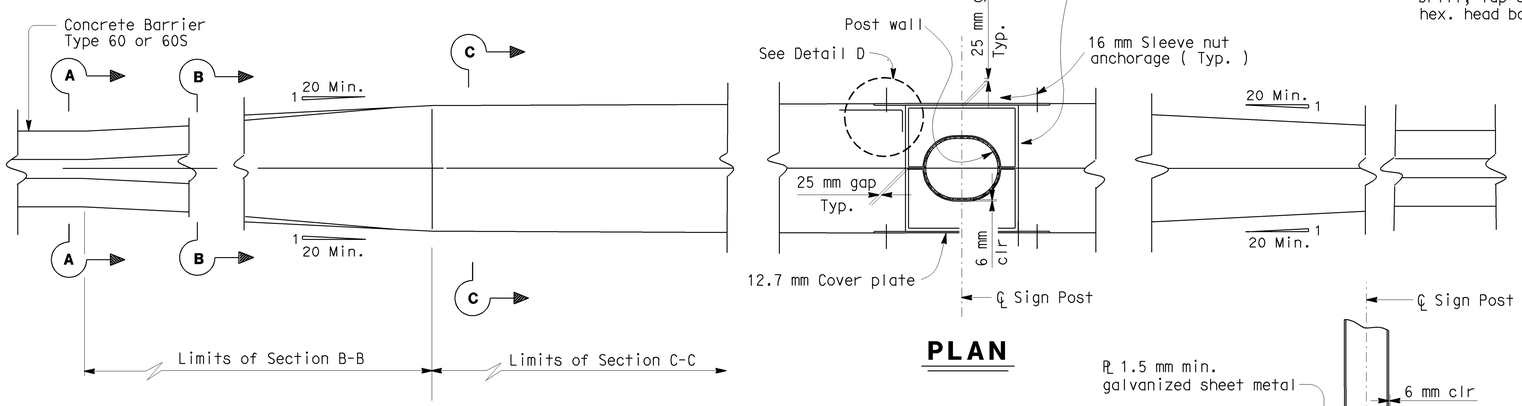

PLAN

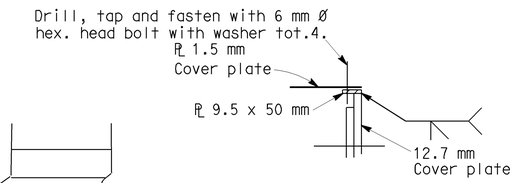

DETAIL G

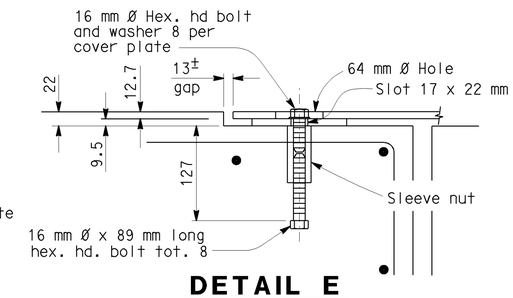

DETAIL E

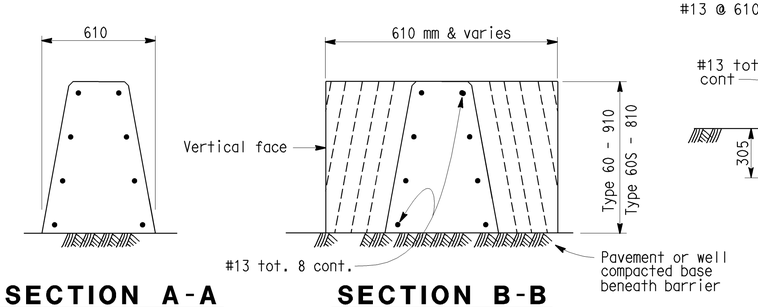

SECTION A-A

SECTION B-B

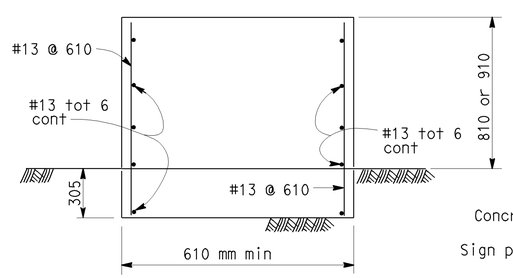

SECTION C-C

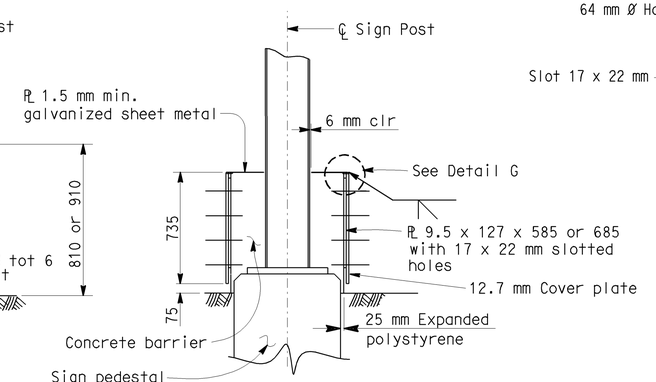

SECTION D-D

Note: Concrete Barrier Type 60 R is symmetrical about ℄ of sign post.

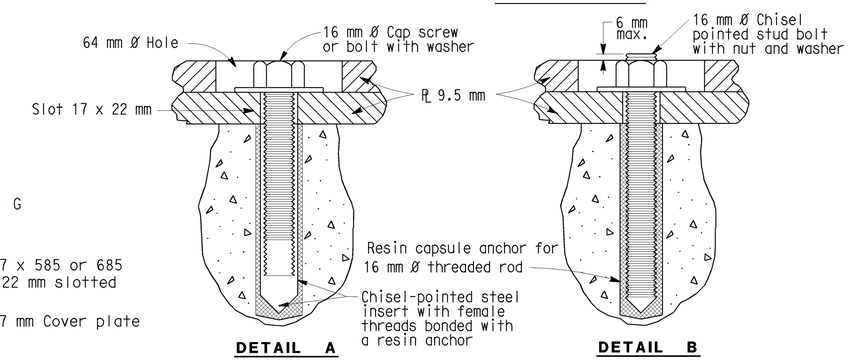

DETAIL A

DETAIL B

ALTERNATIVE ANCHORAGE

NOTES: 1) Resin capsule anchorage is subject to approval of the Engineer. Installation procedures shall comply with manufacturer's instructions.

2) Detail B similar to Detail A except for anchorage devices.

ALL DIMENSIONS ARE IN MILLIMETERS UNLESS OTHERWISE SHOWN

CONSTRUCTION DETAILS

NO SCALE

C-1

STANDARD DRAWING				
RELEASE DATE 8/26/03	DESIGN	BY R. Bishop	CHECKED N ABDIN	RELEASED BY Roberto Tarelli OFFICE CHIEF
FILE NO. xs16-080	DETAILS	BY Ben Matsuo	CHECKED N ABDIN	
	SUBMITTED	BY R.C. Anderson	DRAWING DATE 6/99	

STATE OF CALIFORNIA DEPARTMENT OF TRANSPORTATION

DIVISION OF ENGINEERING SERVICES

BRIDGE NO.

KILOMETER POST

CONCRETE BARRIER (TYPE 60R) TRANSITION AT SIGN POST

DS OSD 2147A (METRIC) (REV. 2/25/97)

ORIGINAL SCALE IN MILLIMETERS FOR REDUCED PLANS 0 10 20 30 40 50 60 70 80 90 100

CU 07276
EA 121841

DISREGARD PRINTS BEARING EARLIER REVISION DATES

REVISION DATES (PRELIMINARY STAGE ONLY) SHEET OF

USERNAME => trpierce

712184ga001.dgn

DATE PLOTTED => 12-JUN-2009 TIME PLOTTED => 08:49

DIST.	COUNTY	ROUTE	KILOMETER POST TOTAL PROJECT	SHEET NO.	TOTAL SHEETS
07	LA	5	42.8/47.3	43	1073

Caltrans Metric

REGISTERED ENGINEER - CIVIL

6-8-09
PLANS APPROVAL DATE

REGISTERED PROFESSIONAL ENGINEER MUNSHI MOHSIN No. 61916 Exp. 9/30/09 CIVIL STATE OF CALIFORNIA

The State of California or its officers or agents shall not be responsible for the accuracy or completeness of electronic copies of this plan sheet.

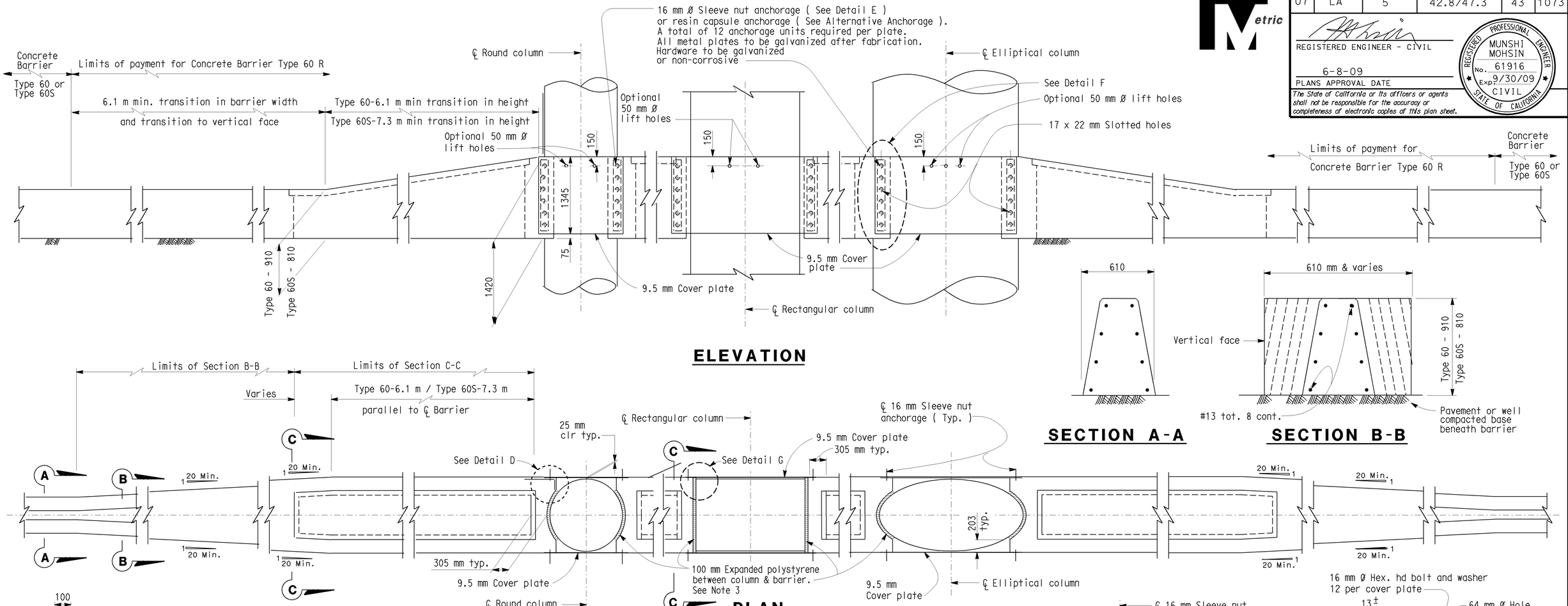

ELEVATION

SECTION A-A

SECTION B-B

PLAN

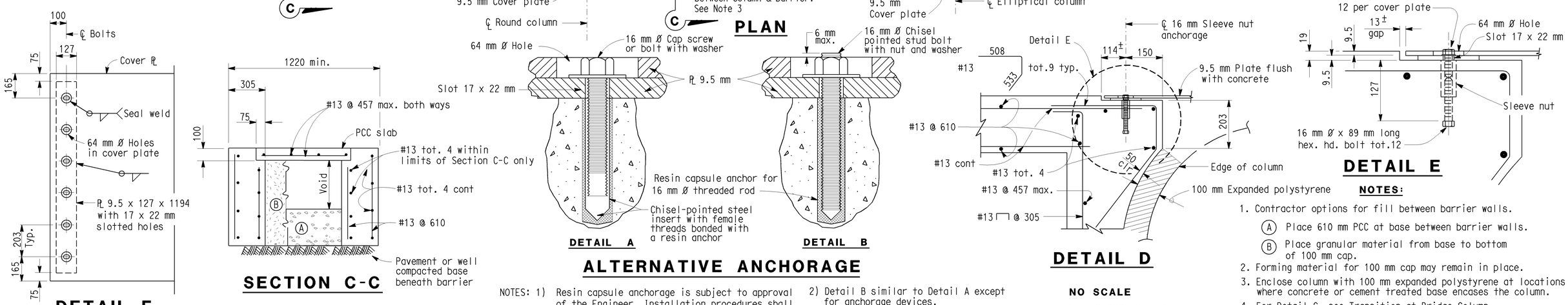

DETAIL F

SECTION C-C

DETAIL A

DETAIL B

ALTERNATIVE ANCHORAGE

DETAIL D

DETAIL E

NOTES: 1) Resin capsule anchorage is subject to approval of the Engineer. Installation procedures shall comply with manufacturer's instructions.

2) Detail B similar to Detail A except for anchorage devices.

NO SCALE

ALL DIMENSIONS ARE IN MILLMETERS UNLESS OTHERWISE SHOWN

NOTES:

1. Contractor options for fill between barrier walls.
   - (A) Place 610 mm PCC at base between barrier walls.
   - (B) Place granular material from base to bottom of 100 mm cap.
2. Forming material for 100 mm cap may remain in place.
3. Enclose column with 100 mm expanded polystyrene at locations where concrete or cement treated base encases the column.
4. For Detail G, see Transition at Bridge Column sheet 2 of 2.

C-2

STANDARD DRAWING					
RELEASE DATE 8/26/03	DESIGN	BY RALPH BISHOP	CHECKED N ABDIN	RELEASED BY	
FILE NO. xs16-090-1	DETAILS	BY BEN MATSUO	CHECKED N ABDIN	OFFICE CHIEF	
	SUBMITTED	BY R.C. ANDERSON	DRAWING DATE 6/99		

STATE OF CALIFORNIA DEPARTMENT OF TRANSPORTATION

DIVISION OF ENGINEERING SERVICES

BRIDGE NO. Var

KILOMETER POST Var

CONCRETE BARRIER (TYPE 60R) TRANSITION AT BRIDGE COLUMN

DS OSD 2147A (METRIC) (REV. 2/25/97)

ORIGINAL SCALE IN MILLIMETERS FOR REDUCED PLANS 0 10 20 30 40 50 60 70 80 90 100

CU 07276
EA 121841

DISREGARD PRINTS BEARING EARLIER REVISION DATES

REVISION DATES (PRELIMINARY STAGE ONLY)

SHEET 1 OF 2

USERNAME => trpierce

712184ga002.dgn

DATE PLOTTED => 12-JUN-2009 TIME PLOTTED => 08:49

DIST.	COUNTY	ROUTE	KILOMETER POST TOTAL PROJECT	SHEET NO.	TOTAL SHEETS
07	LA	5	42.8/47.3	44	1073

REGISTERED ENGINEER - CIVIL

6-8-09

PLANS APPROVAL DATE

The State of California or its officers or agents shall not be responsible for the accuracy or completeness of electronic copies of this plan sheet.

REGISTERED PROFESSIONAL ENGINEER MUNSHI MOHSIN No. 61916 Exp. 9/30/09 CIVIL STATE OF CALIFORNIA

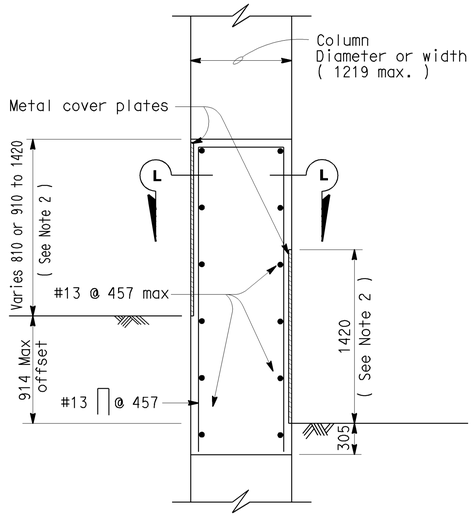

TYPICAL SECTION

Roadway offset 914 mm or less
Column width less than 1219 mm

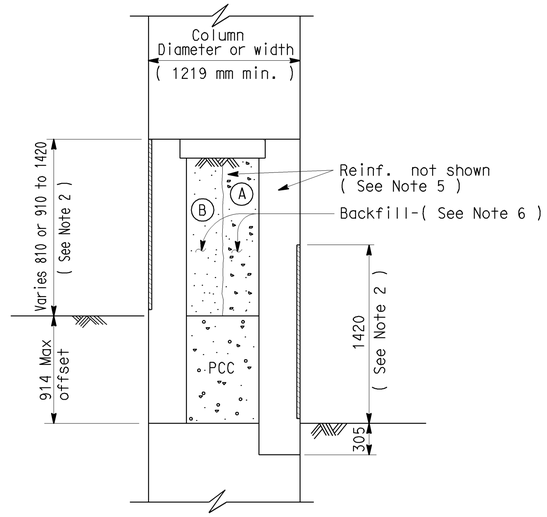

TYPICAL SECTION

Roadway offset 914 mm or less
Column widths greater than 1219 mm

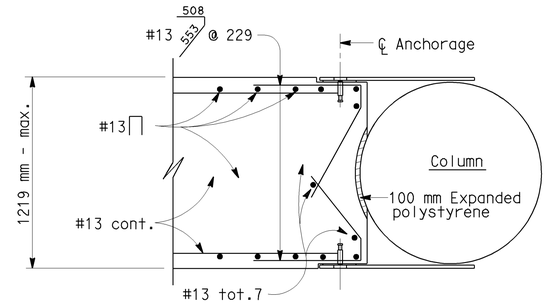

SECTION L-L

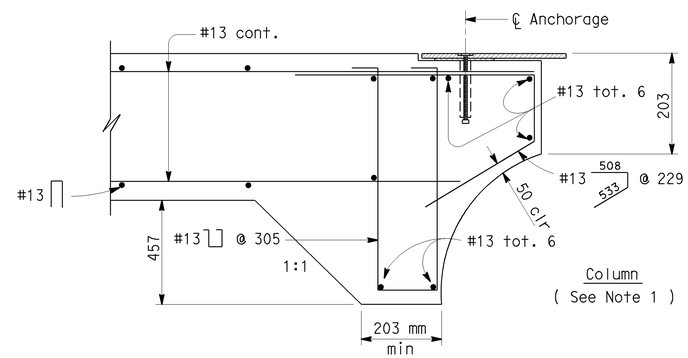

SECTION M-M

NOTES:

1. These details are to be combined with "Concrete Barrier Type 60 R" Sheet No.1. Details not indicated are similar to the details shown elsewhere on said sheet.
2. Metal plate details at columns shown on Concrete Barrier Type 60 R Sheet No.1.
3. For Retaining Wall Type 1A details, see Standard Plans.
4. Extend retaining wall footing dimension "B" to satisfy column width as indicated.
5. Extend reinforcement as shown in Section C-C on Concrete Barrier Type 60 R Sheet No.1.
6. Contractor options for fill between barrier walls:
   - (A) Place PCC between barrier walls, may be placed monolithic.
   - (B) Place granular material from base to bottom of concrete cap.

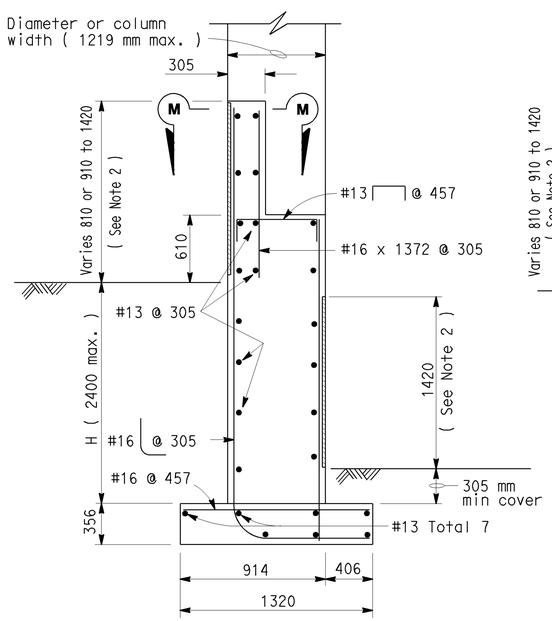

TYPICAL SECTION

Roadway offsets greater than 914 mm
Column widths 1219 mm or less

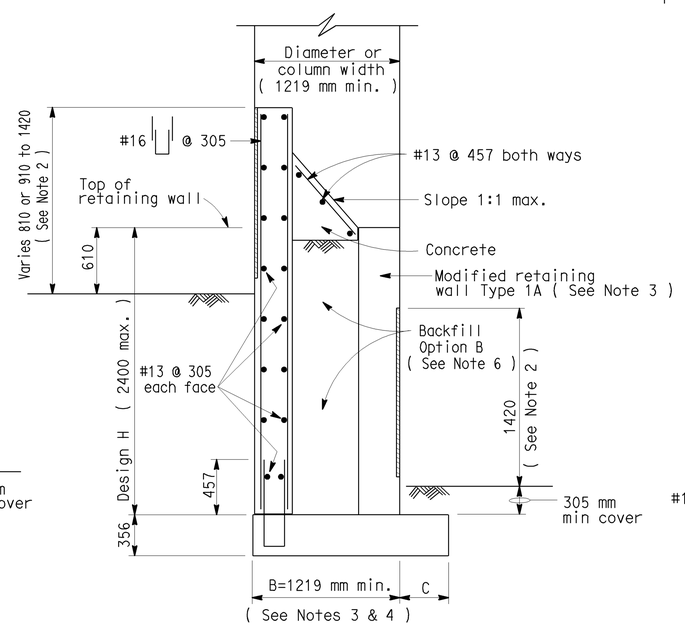

TYPICAL SECTION

Roadway offsets greater than 914 mm
Column widths greater than 1219 mm

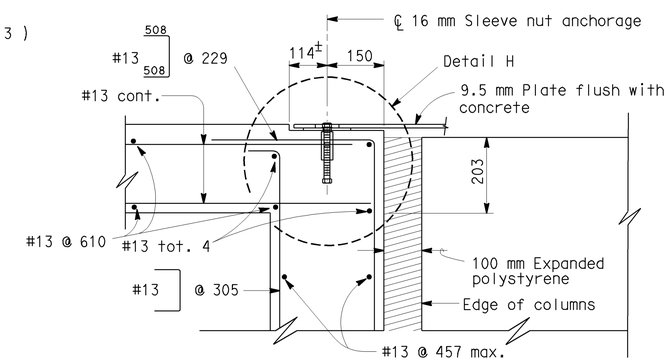

DETAIL G

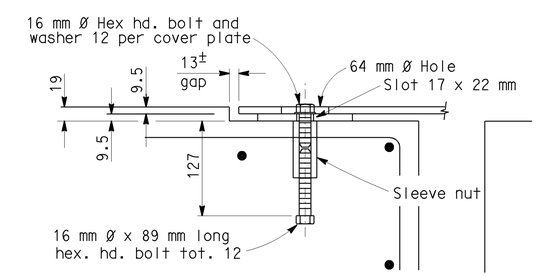

DETAIL H

NO SCALE

ALL DIMENSIONS ARE IN MILLMETERS UNLESS OTHERWISE SHOWN

C-3

STANDARD DRAWING

RELEASE DATE 8/26/03	DESIGN	BY R. BISHOP	CHECKED D. SOON	RELEASED BY
FILE NO. xs16-090-2	DETAILS	BY BEN MATSUO	CHECKED R. BISHOP	OFFICE CHIEF
	SUBMITTED	BY R.C. ANDERSON	DRAWING DATE 6/99	

STATE OF CALIFORNIA
DEPARTMENT OF TRANSPORTATION

DIVISION OF ENGINEERING SERVICES

BRIDGE NO. Var
KILOMETER POST Var

CONCRETE BARRIER (TYPE 60R)
TRANSITION AT BRIDGE COLUMN

DS OSD 2147A (METRIC) (REV. 2/25/97)

ORIGINAL SCALE IN MILLIMETERS FOR REDUCED PLANS 0 10 20 30 40 50 60 70 80 90 100

CU 07276
EA 121841

DISREGARD PRINTS BEARING EARLIER REVISION DATES

REVISION DATES (PRELIMINARY STAGE ONLY)

SHEET 2 OF 2

USERNAME => trpierce

712184ga003.dgn

DATE PLOTTED => 12-JUN-2009 TIME PLOTTED => 08:49

DIST	COUNTY	ROUTE	KILOMETER POST TOTAL PROJECT	SHEET No	TOTAL SHEETS
07	LA	5	42.8/47.3	45	1073

Caltrans Metric

REGISTERED CIVIL ENGINEER

6-8-09
PLANS APPROVAL DATE

REGISTERED PROFESSIONAL ENGINEER MUNSHI MOHSIN No. 61916 Exp. 9/30/09 STATE OF CALIFORNIA

The State of California or its officers or agents shall not be responsible for the accuracy or completeness of electronic copies of this plan sheet.

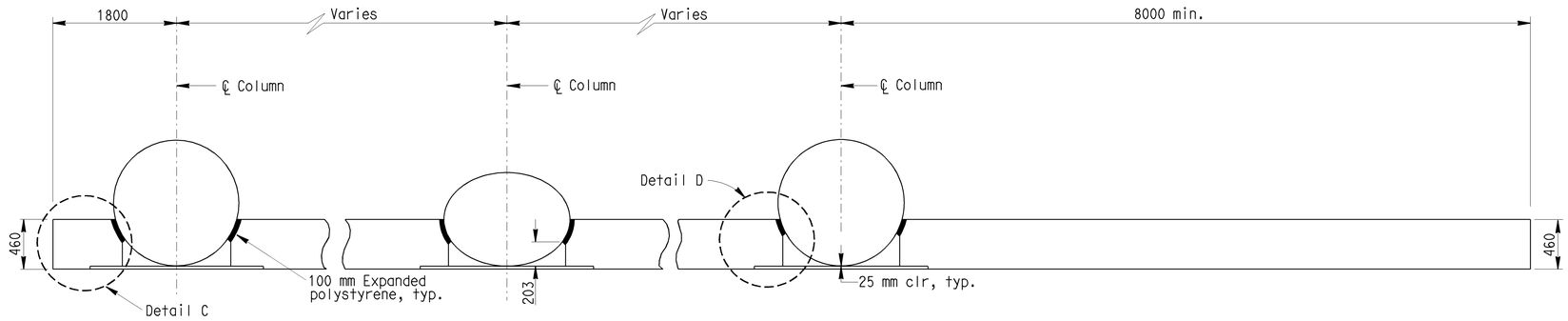

PLAN-CIRCULAR COLUMNS

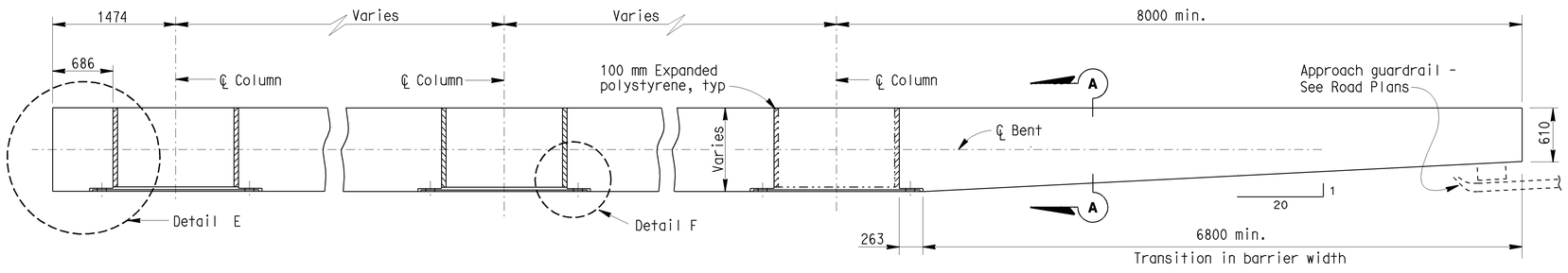

PLAN-RECTANGULAR COLUMNS

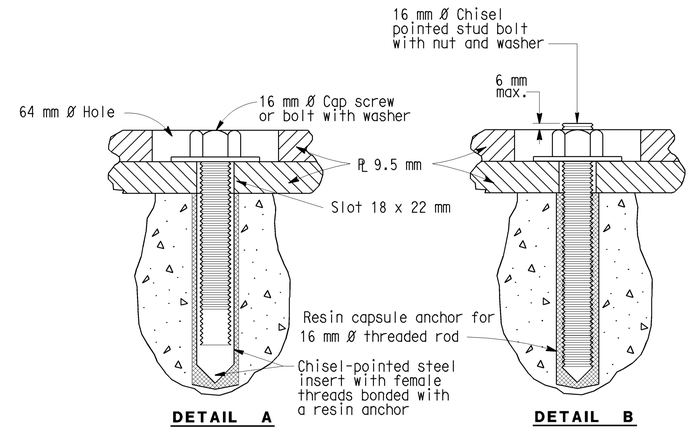

ALTERNATIVE ANCHORAGE

See Notes 1 and 2

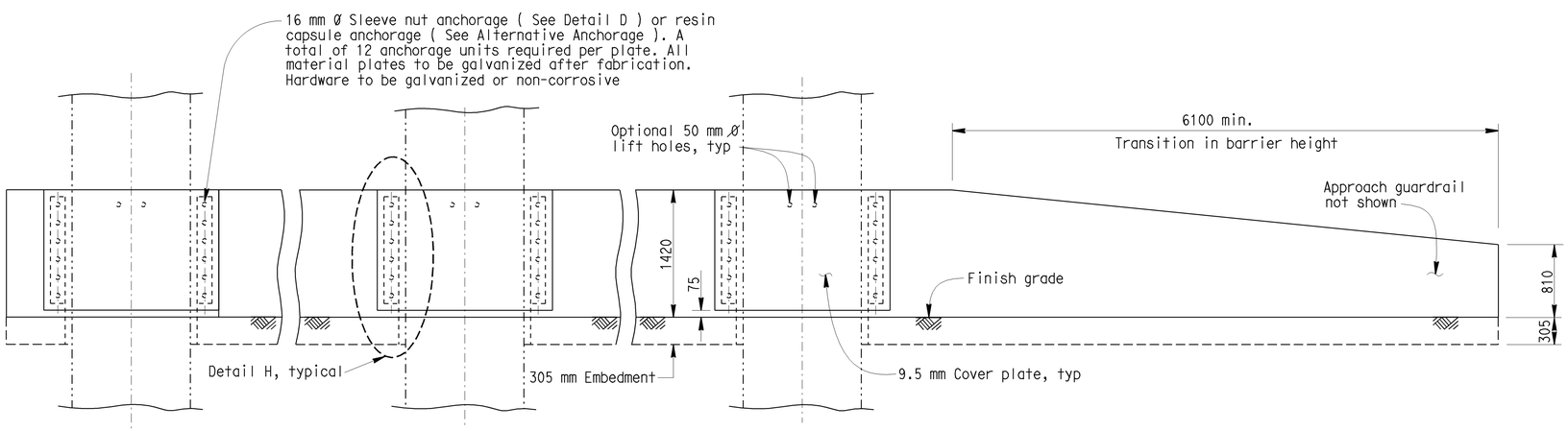

ELEVATION

NOTES:

1. Resin capsule anchorage is subject to approval of the engineer. Installation procedures shall comply with manufacturer's instructions.
2. Detail B similar to Detail A except for anchorage devices.
3. For drainage control, see "Roadway Plans".
4. The contractor shall verify all controlled field dimensions before ordering or fabricating any materials.

NO SCALE

ALL DIMENSIONS ARE IN MILLIMETERS UNLESS OTHERWISE SHOWN

C-4

STANDARD DRAWING

RELEASE DATE 8/26/03	DESIGN	BY N ABDIN	CHECKED FELIX ALTAMIRANO	RELEASED BY
FILE NO. xs16-110-1	DETAILS	BY R YEE	CHECKED N ABDIN	OFFICE CHIEF
	SUBMITTED	BY N ABDIN	DRAWING DATE 8/99	

STRUCTURES STANDARD DRAWING SHEET (METRIC) (REV. 3/1/99)

STATE OF CALIFORNIA DEPARTMENT OF TRANSPORTATION

DIVISION OF ENGINEERING SERVICES

CU 07276
EA 121841

BRIDGE NO. Var
KILOMETER POST Var

BARRIER - CONCRETE TYPE 60 VERTICAL FACE FOR SIDE OF ROAD

ORIGINAL SCALE IN MILLIMETERS FOR REDUCED PLANS 0 10 20 30 40 50 60 70 80 90 100

DISREGARD PRINTS BEARING EARLIER REVISION DATES

REVISION DATES (PRELIMINARY STAGE ONLY)

SHEET 1 OF 2

USERNAME => trmikesl

712184ga004.dgn

USERNAME => trmikesl DATE PLOTTED => 15-JUN-2009 TIME PLOTTED => 10:12

DIST	COUNTY	ROUTE	KILOMETER POST TOTAL PROJECT	SHEET No	TOTAL SHEETS
07	LA	5	42.8/47.3	46	1073

Caltrans Metric

REGISTERED CIVIL ENGINEER

6-8-09
PLANS APPROVAL DATE

REGISTERED PROFESSIONAL ENGINEER MUNSHI MOHSIN No. 61916 Exp. 9/30/09 STATE OF CALIFORNIA

The State of California or its officers or agents shall not be responsible for the accuracy or completeness of electronic copies of this plan sheet.

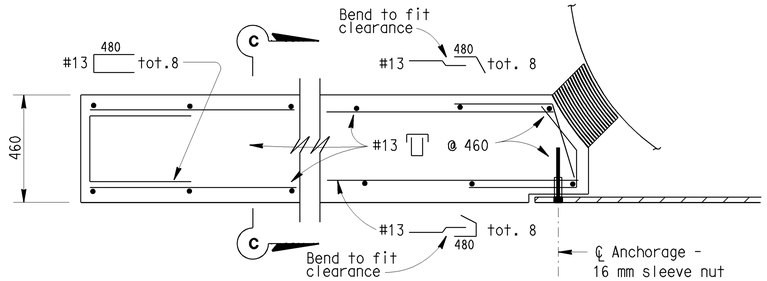

DETAIL C

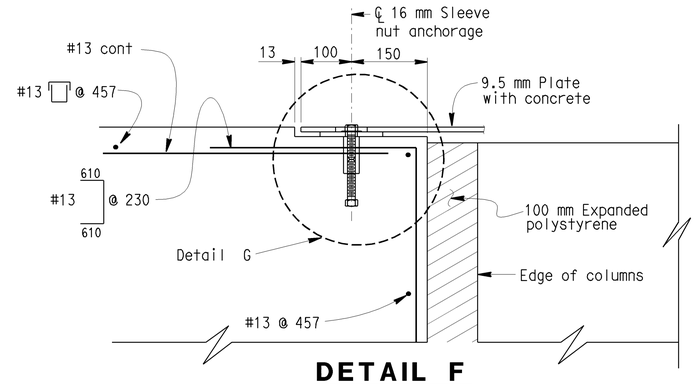

DETAIL F

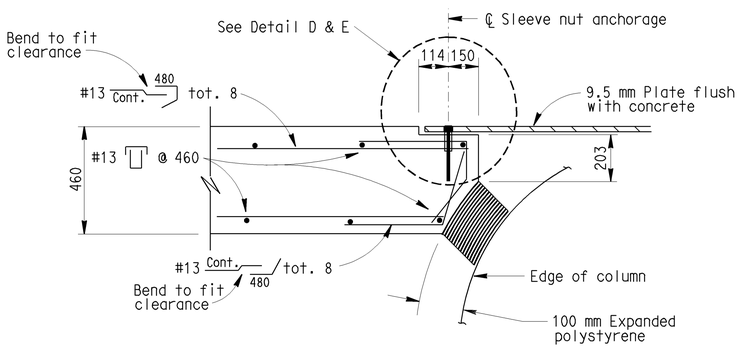

DETAIL D

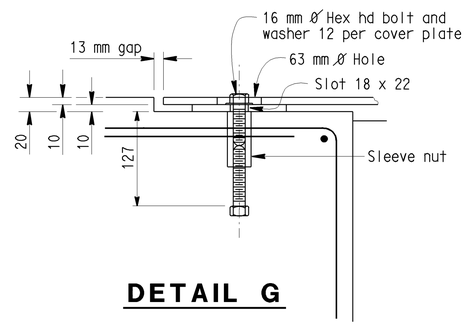

DETAIL G

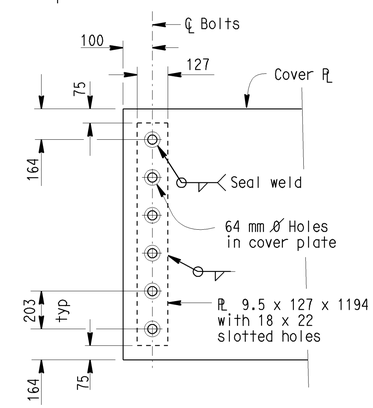

DETAIL H

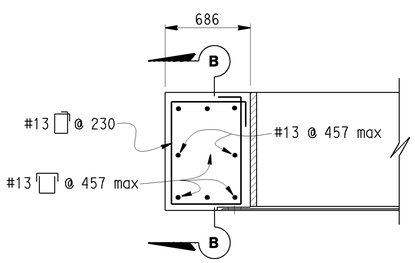

DETAIL E

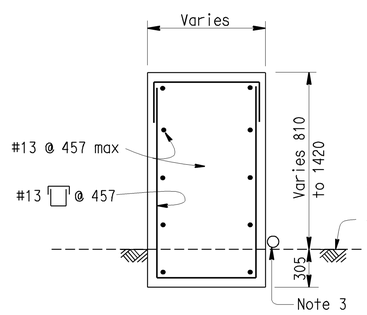

SECTION A-A

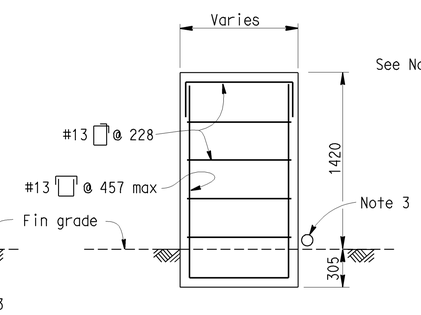

SECTION B-B

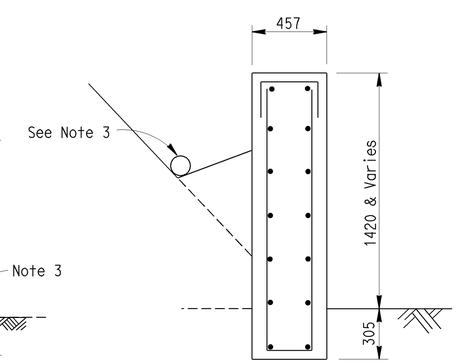

SECTION C-C

NO SCALE

ALL DIMENSIONS ARE IN MILLIMETERS UNLESS OTHERWISE SHOWN

C-5

STANDARD DRAWING				
RELEASE DATE 8/26/03	DESIGN	BY N ABDIN	CHECKED FELIX ALTAMIRANO	RELEASED BY
	DETAILS	BY R YEE	CHECKED N ABDIN	
FILE NO. xs16-110-2	SUBMITTED	BY N ABDIN	DRAWING DATE 8/99	OFFICE CHIEF

STRUCTURES STANDARD DRAWING SHEET (METRIC) (REV. 3/1/99)

STATE OF CALIFORNIA DEPARTMENT OF TRANSPORTATION

DIVISION OF ENGINEERING SERVICES

CU 07276
EA 121841

BRIDGE NO. Var
KILOMETER POST Var

BARRIER - CONCRETE TYPE 60 VERTICAL FACE FOR SIDE OF ROAD

ORIGINAL SCALE IN MILLIMETERS FOR REDUCED PLANS 0 10 20 30 40 50 60 70 80 90 100

DISREGARD PRINTS BEARING EARLIER REVISION DATES

REVISION DATES (PRELIMINARY STAGE ONLY)

SHEET 2 OF 2

USERNAME => trmikesl

712184go005.dgn

TIME PLOTTED => 10:12 DATE PLOTTED => 15-JUN-2009

Dist	COUNTY	ROUTE	KILOMETER POST TOTAL PROJECT	SHEET No.	TOTAL SHEETS
07	LA	5	42.8/47.3	47	1073

REGISTERED CIVIL ENGINEER 2-24-09 DATE

6-8-09
PLANS APPROVAL DATE

REGISTERED PROFESSIONAL ENGINEER MUNSHI MOHSIN No. 61916 Exp. 9/30/09 CIVIL STATE OF CALIFORNIA

THE STATE OF CALIFORNIA OR ITS OFFICERS OR AGENTS SHALL NOT BE RESPONSIBLE FOR THE ACCURACY OR COMPLETENESS OF ELECTRONIC COPIES OF THIS PLAN SHEET.

Caltrans Metric

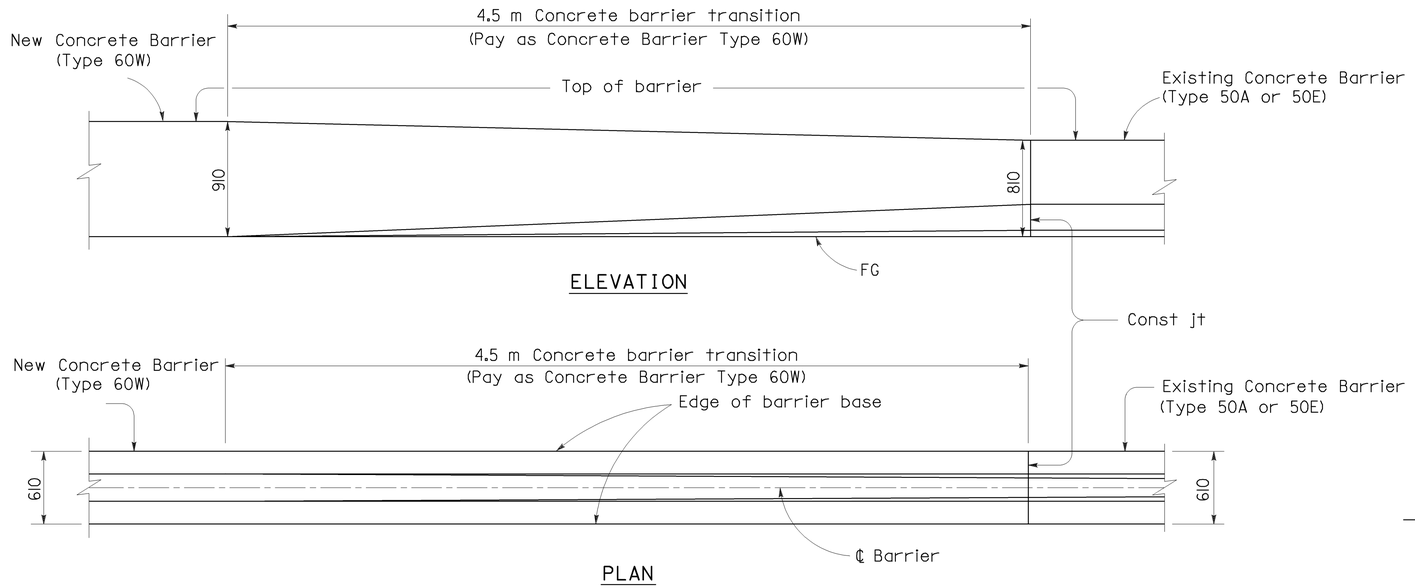

TRANSITION CONCRETE BARRIER (TYPE 60W) TO CONCRETE BARRIER (TYPE 50)

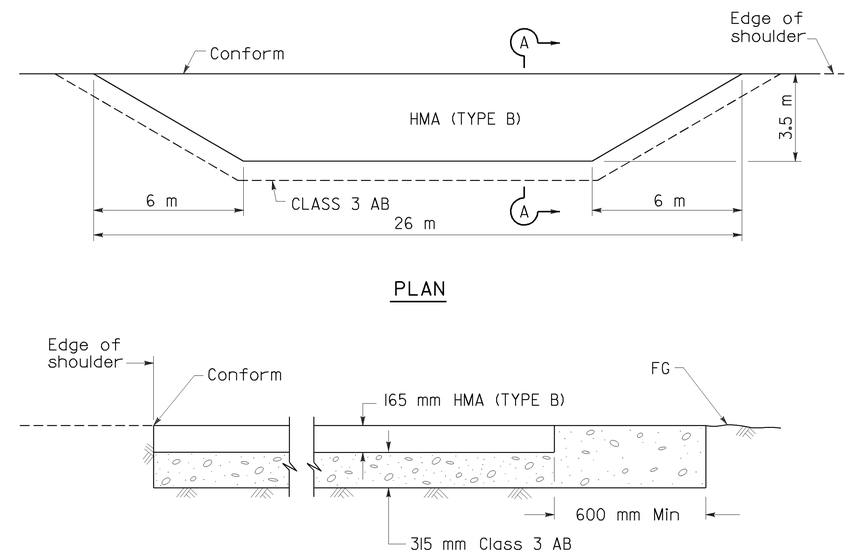

MAINTENANCE VEHICLE PULLOUT

NOTES

1. See Drainage Detail Sheets for Concrete Barrier Type 60W.
2. Footing monolithic or doweled with 2-#25x205 mm @ 610 mm. The footing is required at concrete barrier ends and at interruptions in concrete barrier.
3. Expansion joints in concrete barrier shall be located at all deck, pavement and principal wall joints. Expansion joint filler material shall be the same size as joint or 13 mm minimum.

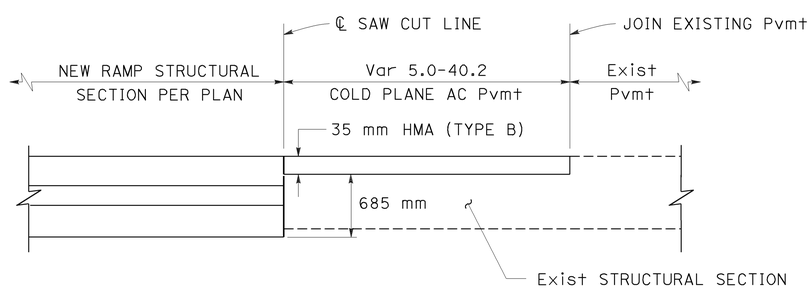

TYPICAL RAMP DETAIL (COLD PLANE)

LONGITUDINAL RAMP COLD PLANE DETAIL

ALL DIMENSIONS ARE IN METERS
UNLESS OTHERWISE SHOWN

CONSTRUCTION DETAILS

NO SCALE

C-6

REVISED BY	DATE REVISED
CTT	03/04/09
KP	11/08

CALCULATED-DESIGNED BY: MUNSHI MOHSIN
CHECKED BY:

FUNCTIONAL SUPERVISOR: CELINA AVILES

STATE OF CALIFORNIA - DEPARTMENT OF TRANSPORTATION
Caltrans OFFICE OF DESIGN D

LAST REVISION 03-04-09 | DATE PLOTTED => 12-JUN-2009 | TIME PLOTTED => 08:50

Dist	COUNTY	ROUTE	KILOMETER POST TOTAL PROJECT	SHEET No.	TOTAL SHEETS
07	LA	5	42.8/47.3	48	1073

REGISTERED CIVIL ENGINEER 2-24-09 DATE

6-8-09
PLANS APPROVAL DATE

REGISTERED PROFESSIONAL ENGINEER MUNSHI MOHSIN No. 61916 Exp. 9/30/09 CIVIL STATE OF CALIFORNIA

THE STATE OF CALIFORNIA OR ITS OFFICERS OR AGENTS SHALL NOT BE RESPONSIBLE FOR THE ACCURACY OR COMPLETENESS OF ELECTRONIC COPIES OF THIS PLAN SHEET.

Caltrans Metric

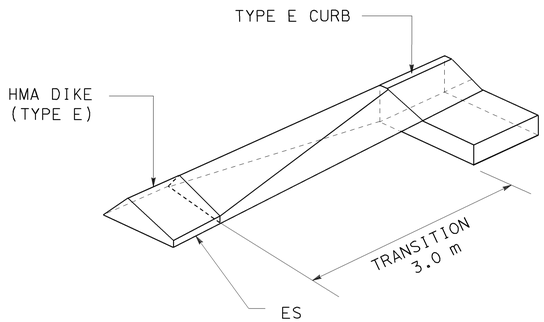

HMA DIKE (TYPE E) TO TYPE E CURB

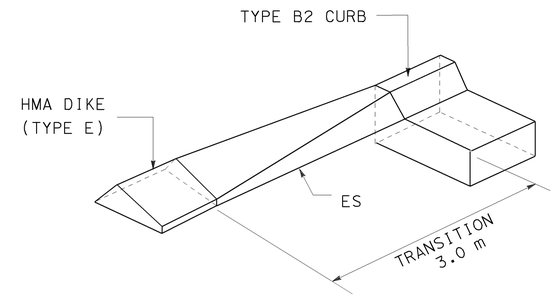

HMA DIKE (TYPE E) TO TYPE B2 CURB

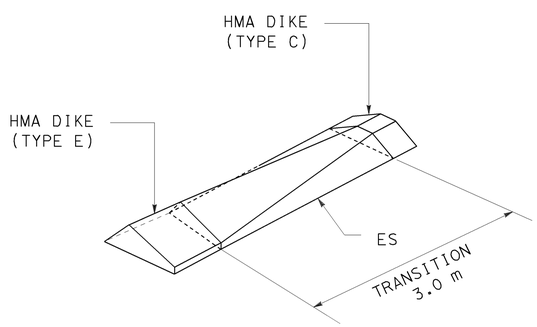

HMA DIKE (TYPE E) TO HMA DIKE (TYPE C)

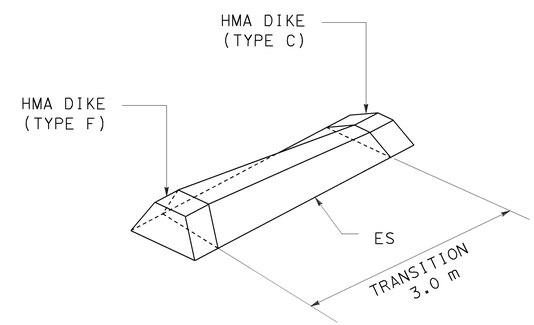

HMA DIKE (TYPE F) TO HMA DIKE (TYPE C)

ALL DIMENSIONS ARE IN METERS
UNLESS OTHERWISE SHOWN

CONSTRUCTION DETAILS

NO SCALE

C-7

STATE OF CALIFORNIA - DEPARTMENT OF TRANSPORTATION
Caltrans OFFICE OF DESIGN D

FUNCTIONAL SUPERVISOR: CELINA AVILES
CALCULATED-DESIGNED BY: CUONG T. TRAN
CHECKED BY: MUNSHI MOHSIN
REVISED BY
DATE REVISED

LAST REVISION 02-10-09
DATE PLOTTED => 12-JUN-2009
TIME PLOTTED => 08:50

Dist	COUNTY	ROUTE	KILOMETER POST TOTAL PROJECT	SHEET No.	TOTAL SHEETS
07	LA	5	42.8/47.3	49	1073

REGISTERED CIVIL ENGINEER 2-24-09 DATE

6-8-09
PLANS APPROVAL DATE

REGISTERED PROFESSIONAL ENGINEER MUNSHI MOHSIN No. 61916 Exp. 9/30/09 CIVIL STATE OF CALIFORNIA

THE STATE OF CALIFORNIA OR ITS OFFICERS OR AGENTS SHALL NOT BE RESPONSIBLE FOR THE ACCURACY OR COMPLETENESS OF ELECTRONIC COPIES OF THIS PLAN SHEET.

Caltrans Metric

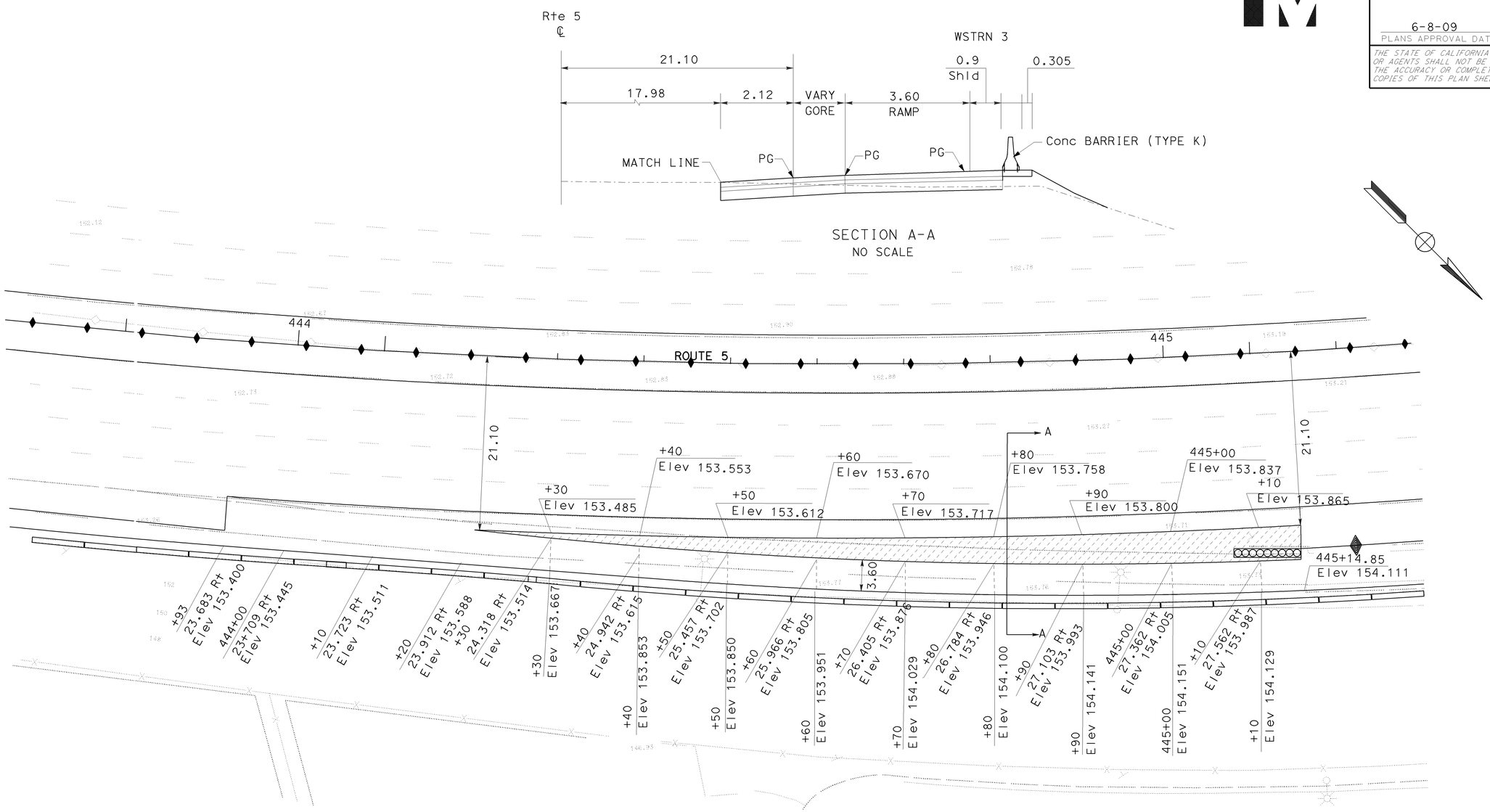

GORE DETAIL
NORTHBOUND WESTERN OFF RAMP

LEGEND:

GORE

ALL DIMENSIONS ARE IN METERS
UNLESS OTHERWISE SHOWN

CONSTRUCTION DETAILS

SCALE 1:250

C-8

THIS PLAN IS ACCURATE FOR GORE AREA ONLY.

STATE OF CALIFORNIA - DEPARTMENT OF TRANSPORTATION
Caltrans OFFICE OF DESIGN D

FUNCTIONAL SUPERVISOR: CELINA AVILES
CALCULATED-DESIGNED BY: DAWIT WORKU
CHECKED BY: MUNSHI MOHSIN
REVISED BY: DW
DATE REVISED: 10/2008
CTT: 02/04/09

LAST REVISION 02-04-09
DATE PLOTTED => 12-JUN-2009
TIME PLOTTED => 08:50

Dist	COUNTY	ROUTE	KILOMETER POST TOTAL PROJECT	SHEET No.	TOTAL SHEETS
07	LA	5	42.8/47.3	50	1073

REGISTERED CIVIL ENGINEER 2-24-09 DATE

6-8-09
PLANS APPROVAL DATE

REGISTERED PROFESSIONAL ENGINEER
MUNSHI MOHSIN
No. 61916
Exp. 9/30/09
CIVIL
STATE OF CALIFORNIA

THE STATE OF CALIFORNIA OR ITS OFFICERS OR AGENTS SHALL NOT BE RESPONSIBLE FOR THE ACCURACY OR COMPLETENESS OF ELECTRONIC COPIES OF THIS PLAN SHEET.

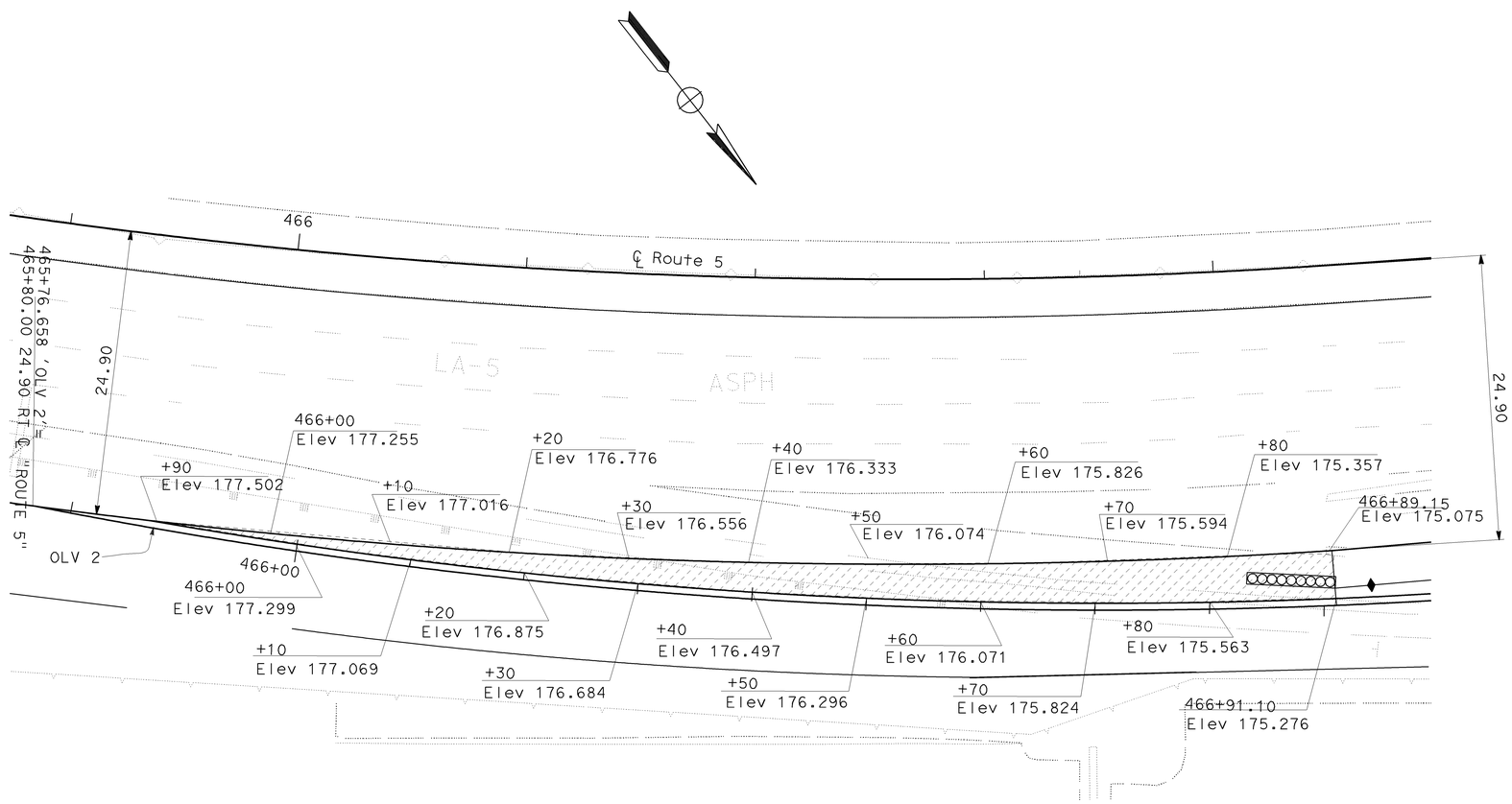

GORE DETAIL
NORTHBOUND OLIVE OFF RAMP

THIS PLAN IS ACCURATE FOR GORE AREA ONLY.

ALL DIMENSIONS ARE IN METERS
UNLESS OTHERWISE SHOWN

CONSTRUCTION DETAILS

SCALE 1:250

C-9

CALCULATED-DESIGNED BY	DAWIT WORKU
CHECKED BY	MUNSHI MOHSIN
REVISED BY	DW
DATE REVISED	10/2008 02/05/09
	CTT
FUNCTIONAL SUPERVISOR	CELINA AVILES

STATE OF CALIFORNIA - DEPARTMENT OF TRANSPORTATION
Caltrans OFFICE OF DESIGN D

LAST REVISION 02-05-09 DATE PLOTTED => 12-JUN-2009 TIME PLOTTED => 08:50

Dist	COUNTY	ROUTE	KILOMETER POST TOTAL PROJECT	SHEET No.	TOTAL SHEETS
07	LA	5	42.8/47.3	51	1073

REGISTERED CIVIL ENGINEER 2-24-09 DATE

6-8-09
PLANS APPROVAL DATE

REGISTERED PROFESSIONAL ENGINEER MUNSHI MOHSIN No. 61916 Exp. 9/30/09 CIVIL STATE OF CALIFORNIA

THE STATE OF CALIFORNIA OR ITS OFFICERS OR AGENTS SHALL NOT BE RESPONSIBLE FOR THE ACCURACY OR COMPLETENESS OF ELECTRONIC COPIES OF THIS PLAN SHEET.

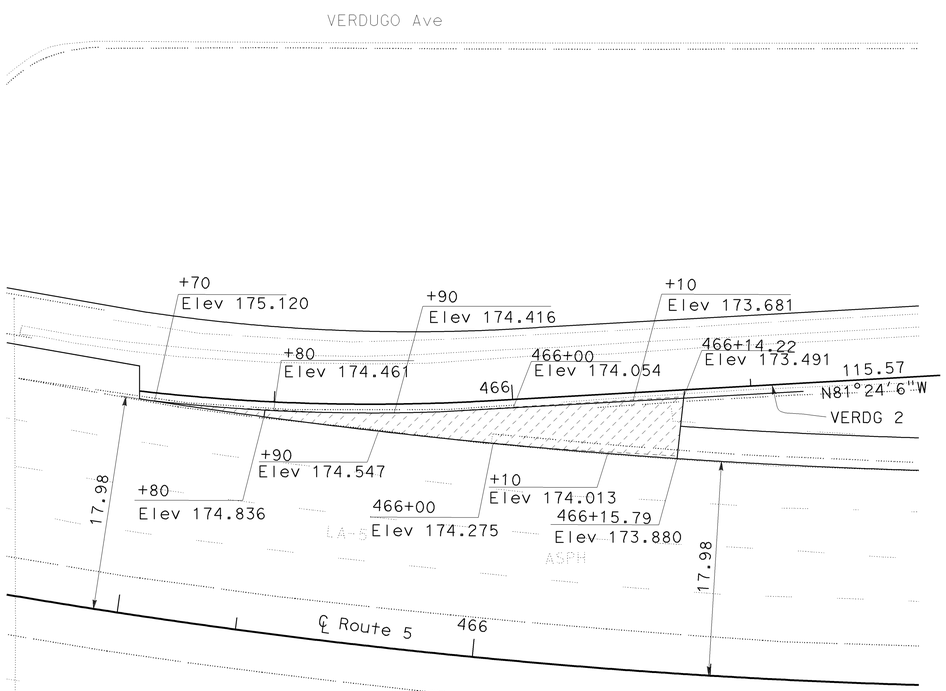

GORE DETAIL
SOUTHBOUND VERDUGO ON RAMP

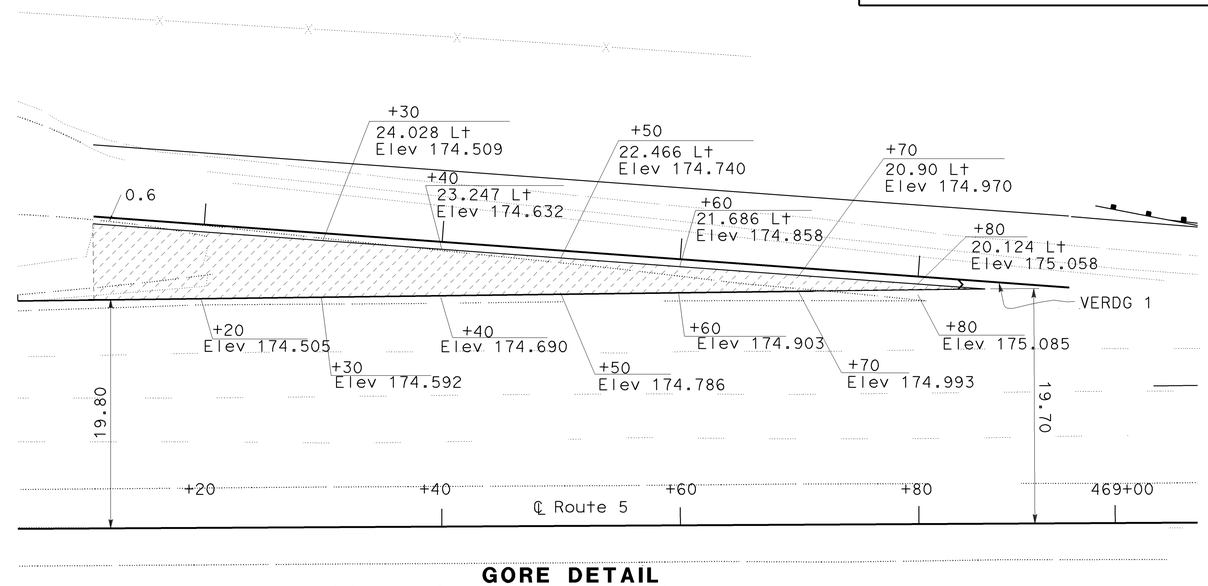

GORE DETAIL
SOUTHBOUND VERDUGO OFF RAMP

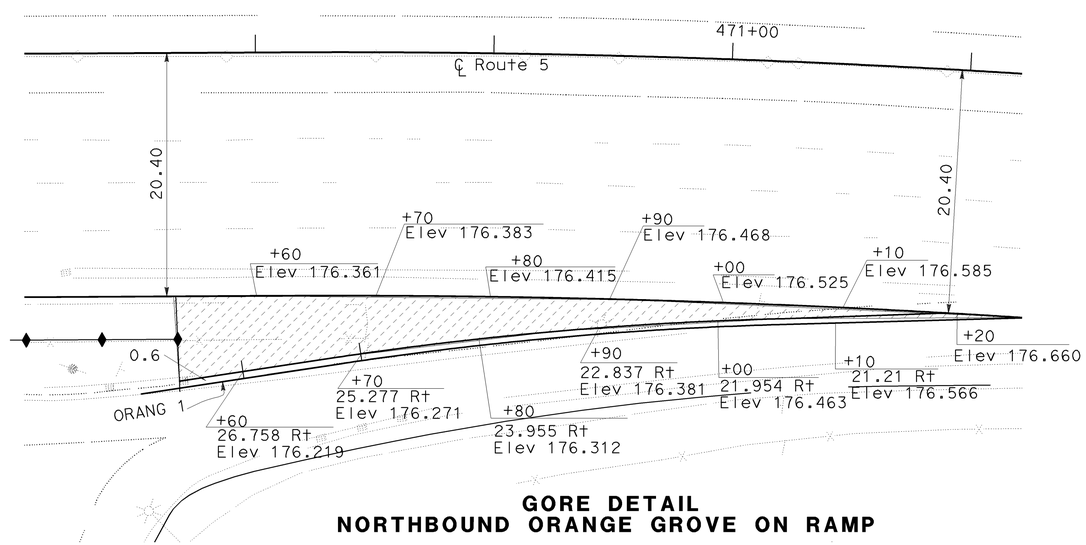

GORE DETAIL
NORTHBOUND ORANGE GROVE ON RAMP

ALL DIMENSIONS ARE IN METERS
UNLESS OTHERWISE SHOWN

CONSTRUCTION DETAILS

SCALE 1:250

C-10

THIS PLAN IS ACCURATE FOR GORE AREA ONLY.

REVISED BY	DATE REVISED
DW	11/2008
CTT	02/05/09

DAWIT WORKU
MUNSHI MOHSIN
CALCULATED-DESIGNED BY
CHECKED BY
FUNCTIONAL SUPERVISOR
CELINA AVILES

STATE OF CALIFORNIA - DEPARTMENT OF TRANSPORTATION
Caltrans OFFICE OF DESIGN D

LAST REVISION 02-05-09
DATE PLOTTED => 12-JUN-2009
TIME PLOTTED => 08:50

Dist	COUNTY	ROUTE	KILOMETER POST TOTAL PROJECT	SHEET No.	TOTAL SHEETS
07	LA	5	42.8/47.3	52	1073

REGISTERED CIVIL ENGINEER 2-24-09 DATE

6-8-09
PLANS APPROVAL DATE

REGISTERED PROFESSIONAL ENGINEER MUNSHI MOHSIN No. 61916 Exp. 9/30/09 CIVIL STATE OF CALIFORNIA

THE STATE OF CALIFORNIA OR ITS OFFICERS OR AGENTS SHALL NOT BE RESPONSIBLE FOR THE ACCURACY OR COMPLETENESS OF ELECTRONIC COPIES OF THIS PLAN SHEET.

Caltrans Metric

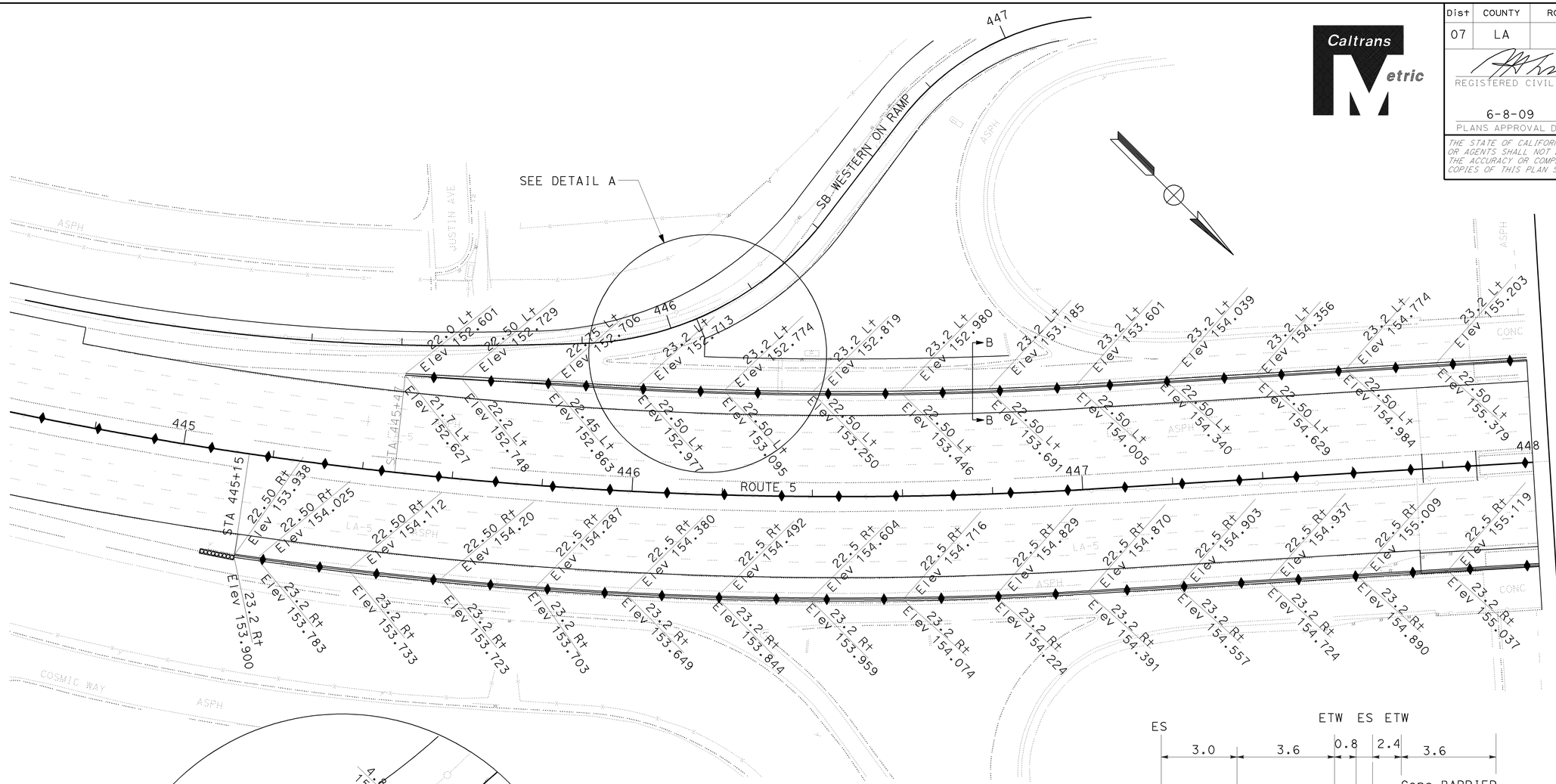

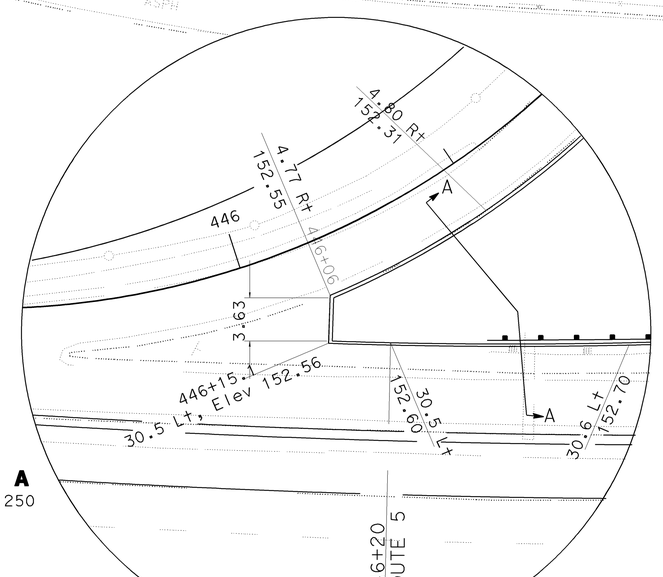

DETAIL A
SCALE: 1:250

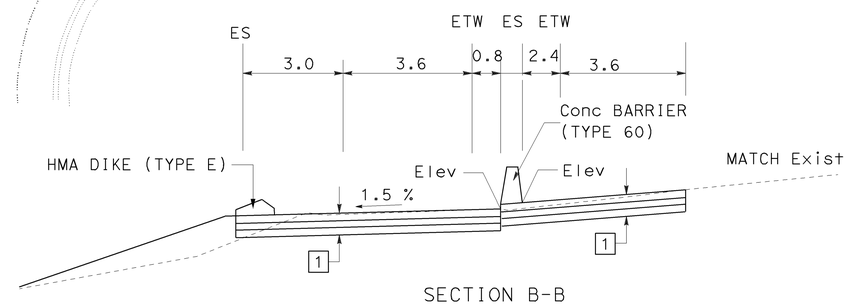

SECTION B-B
NO SCALE

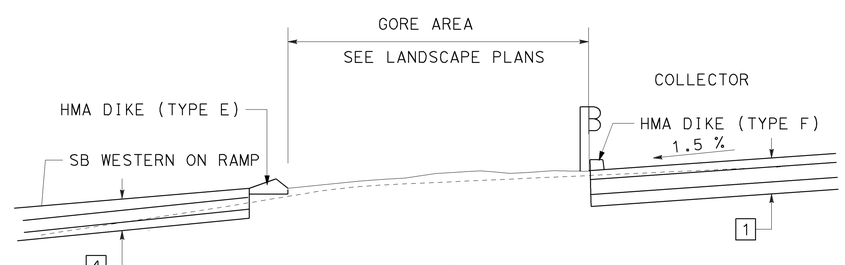

SECTION A-A
NO SCALE

THIS PLAN IS ACCURATE FOR GORE AREA ONLY.

ALL DIMENSIONS ARE IN METERS
UNLESS OTHERWISE SHOWN

CONSTRUCTION DETAILS

SCALE 1:500

C-11

STATE OF CALIFORNIA - DEPARTMENT OF TRANSPORTATION
Caltrans OFFICE OF DESIGN D

FUNCTIONAL SUPERVISOR: CELINA AVILES
CALCULATED-DESIGNED BY: DAWIT WORKU
CHECKED BY: MUNSHI MOHSIN
REVISED BY: KP
DATE REVISED: 11/2008

LAST REVISION 02-05-09
DATE PLOTTED => 12-JUN-2009
TIME PLOTTED => 08:50

BORDER LAST REVISED 3/1/2007
RELATIVE BORDER SCALE IS IN MILLIMETERS 0 20 40 60 80
USERNAME => trpierce
DGN FILE => 712184ga011.dgn
CU 07276
EA 121841

Dist	COUNTY	ROUTE	KILOMETER POST TOTAL PROJECT	SHEET No.	TOTAL SHEETS
07	LA	5	42.8/47.3	53	1073

REGISTERED CIVIL ENGINEER 2-24-09 DATE

6-8-09
PLANS APPROVAL DATE

REGISTERED PROFESSIONAL ENGINEER MUNSHI MOHSIN No. 61916 Exp. 9/30/09 CIVIL STATE OF CALIFORNIA

THE STATE OF CALIFORNIA OR ITS OFFICERS OR AGENTS SHALL NOT BE RESPONSIBLE FOR THE ACCURACY OR COMPLETENESS OF ELECTRONIC COPIES OF THIS PLAN SHEET.

Caltrans Metric

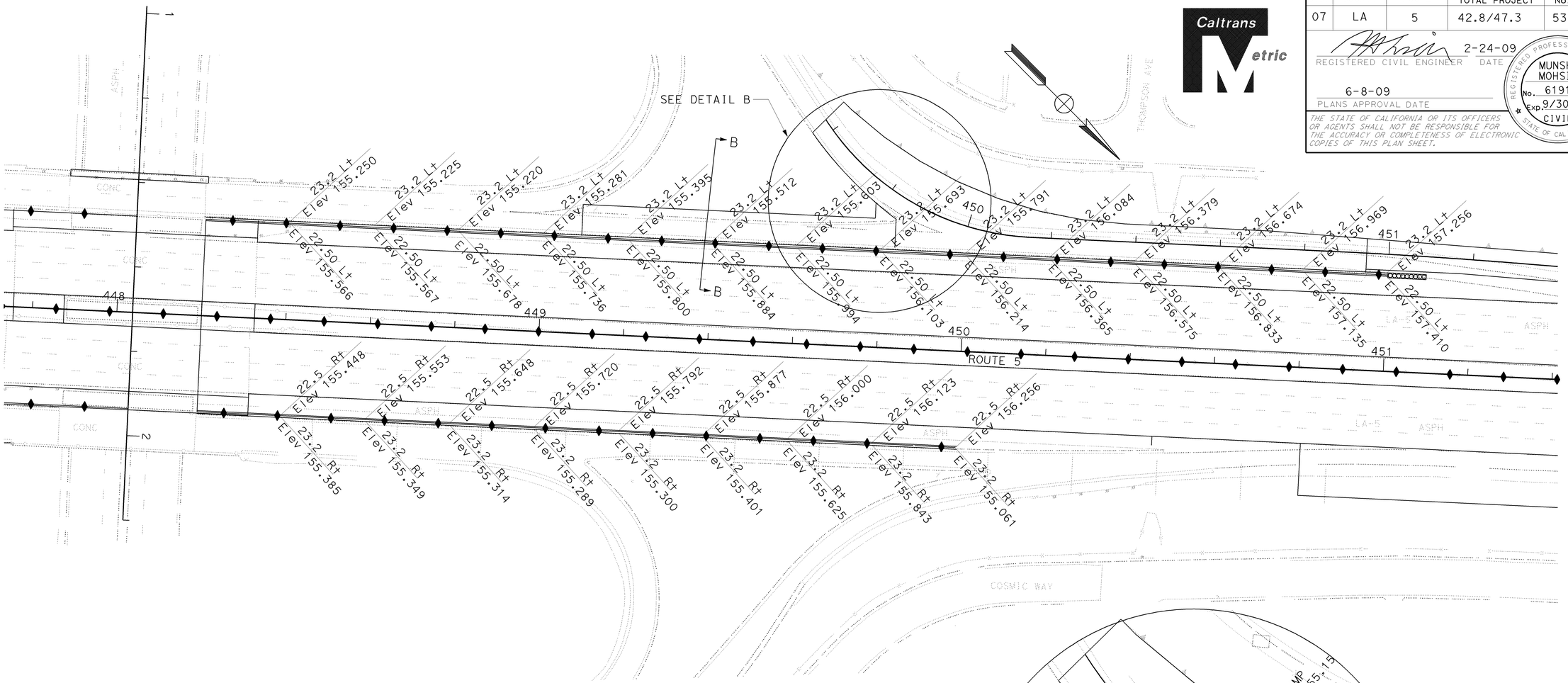

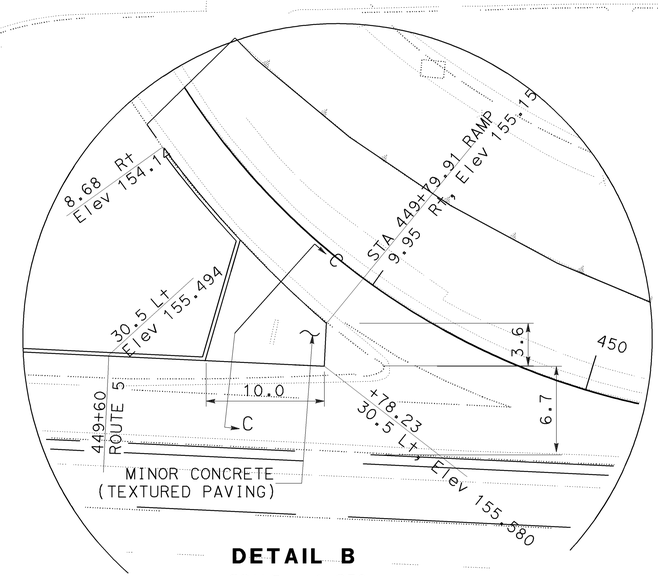

DETAIL B
SCALE: 1:250

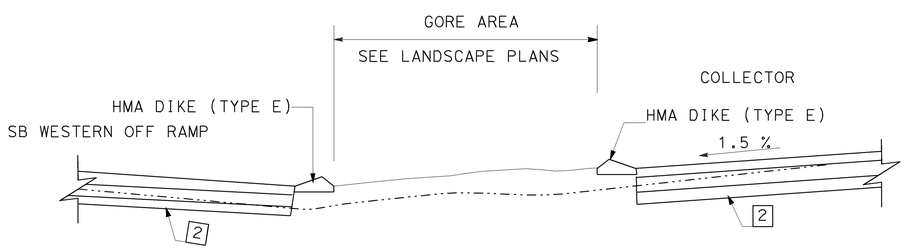

SECTION C-C
NO SCALE

NOTE:
FOR SECTION B-B SEE SHEET C-11

THIS PLAN IS ACCURATE FOR GORE AREA ONLY.

ALL DIMENSIONS ARE IN METERS UNLESS OTHERWISE SHOWN

CONSTRUCTION DETAILS

SCALE 1:500

C-12

CTT	02/05/09
DP	11/2008
DW	10/2008
REVISED BY	DATE REVISED
DAWIT WORKU	
MUNSHI MOHSIN	
CALCULATED-DESIGNED BY	
CHECKED BY	
FUNCTIONAL SUPERVISOR	
CELINA AVILES	

STATE OF CALIFORNIA - DEPARTMENT OF TRANSPORTATION
Caltrans OFFICE OF DESIGN D

LAST REVISION 02-05-09 | DATE PLOTTED => 12-JUN-2009 | TIME PLOTTED => 08:50

Dist	COUNTY	ROUTE	KILOMETER POST TOTAL PROJECT	SHEET No.	TOTAL SHEETS
07	LA	5	42.8/47.3	54	1073

REGISTERED CIVIL ENGINEER 2-24-09 DATE

6-8-09
PLANS APPROVAL DATE

REGISTERED PROFESSIONAL ENGINEER MUNSHI MOHSIN No. 61916 Exp. 9/30/09 CIVIL STATE OF CALIFORNIA

THE STATE OF CALIFORNIA OR ITS OFFICERS OR AGENTS SHALL NOT BE RESPONSIBLE FOR THE ACCURACY OR COMPLETENESS OF ELECTRONIC COPIES OF THIS PLAN SHEET.

Caltrans Metric

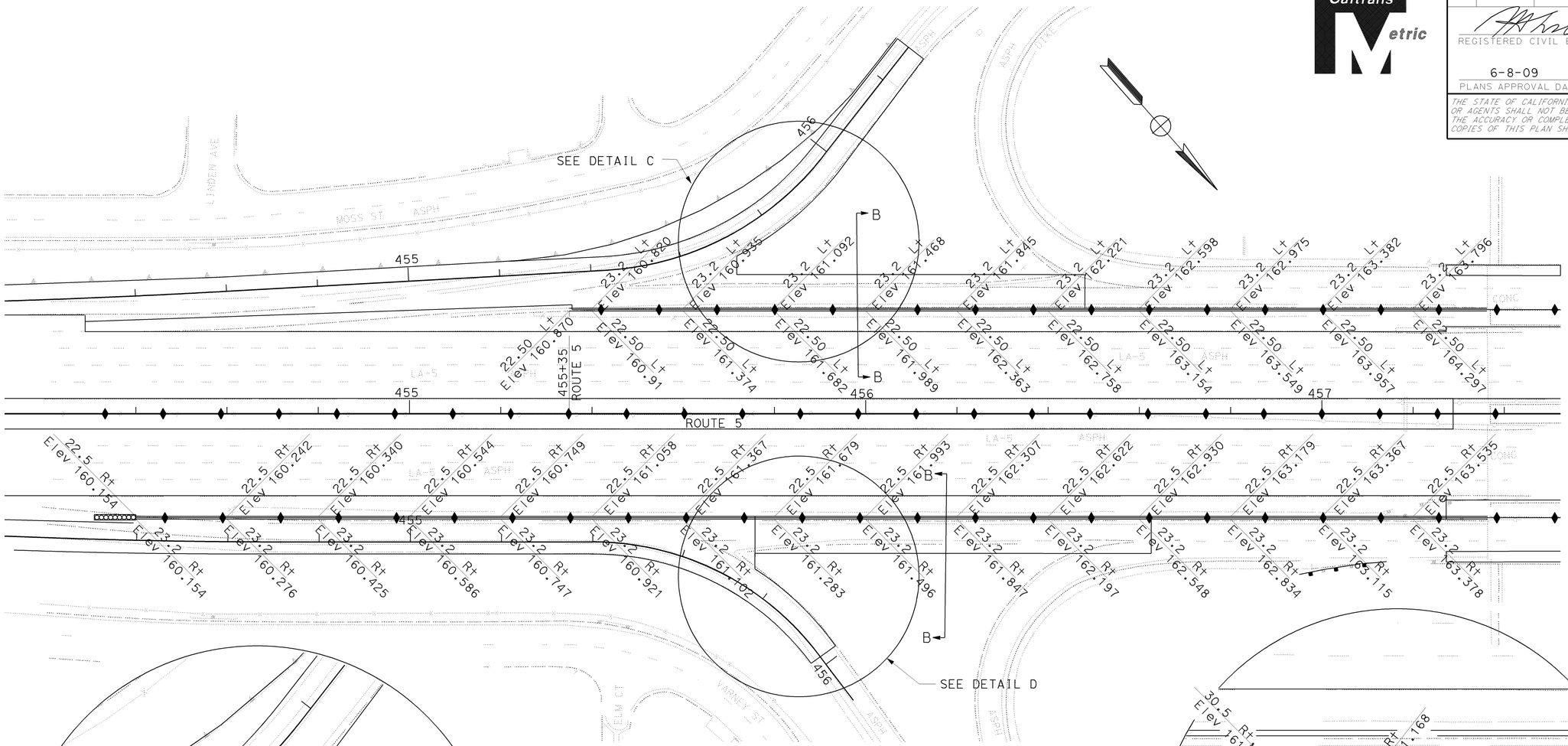

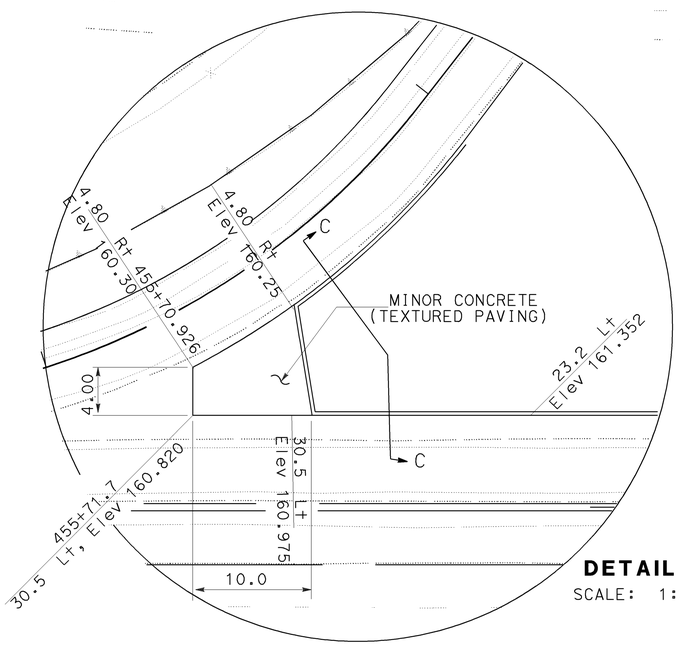

DETAIL C
SCALE: 1:250

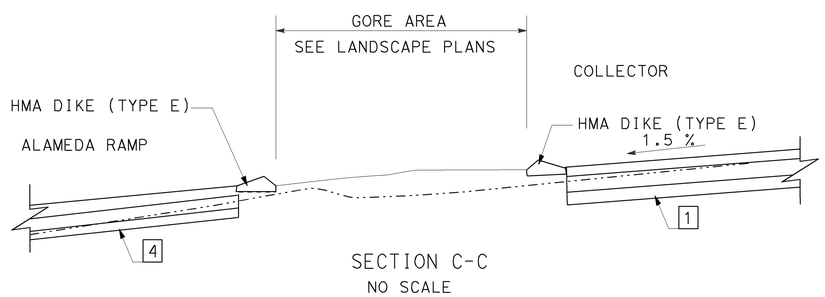

SECTION C-C
NO SCALE

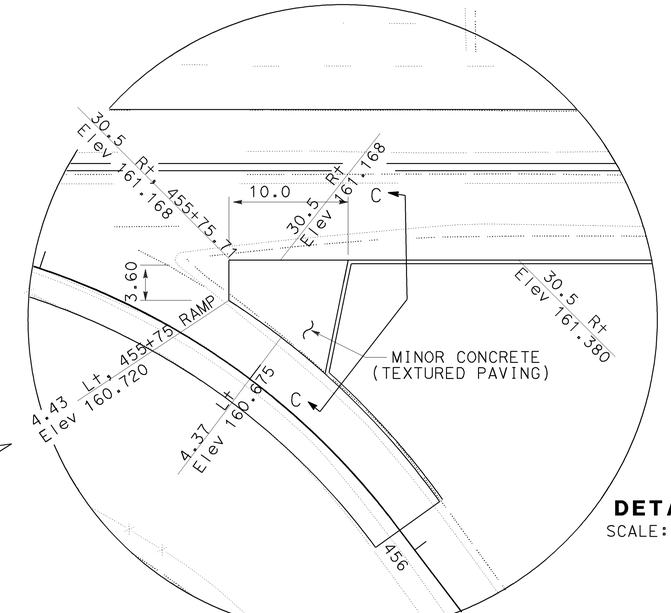

DETAIL D
SCALE: 1:250

NOTE:
FOR SECTION B-B SEE SHEET C-11

THIS PLAN IS ACCURATE FOR GORE AREA ONLY.

ALL DIMENSIONS ARE IN METERS UNLESS OTHERWISE SHOWN

CONSTRUCTION DETAILS

SCALE 1:500

C-13

STATE OF CALIFORNIA - DEPARTMENT OF TRANSPORTATION
Caltrans OFFICE OF DESIGN D

FUNCTIONAL SUPERVISOR: CELINA AVILES
CALCULATED-DESIGNED BY: DAWIT WORKU
CHECKED BY: MUNSHI MOHSIN
REVISED BY: DW
DATE REVISED: 10/2008
DP: 11/2008
CTT: 02-05-09

LAST REVISION 02-05-09
DATE PLOTTED => 12-JUN-2009
TIME PLOTTED => 08:51

Dist	COUNTY	ROUTE	KILOMETER POST TOTAL PROJECT	SHEET No.	TOTAL SHEETS
07	LA	5	42.8/47.3	55	1073

REGISTERED CIVIL ENGINEER 2-24-09 DATE

6-8-09
PLANS APPROVAL DATE

REGISTERED PROFESSIONAL ENGINEER MUNSHI MOHSIN No. 61916 Exp. 9/30/09 CIVIL STATE OF CALIFORNIA

THE STATE OF CALIFORNIA OR ITS OFFICERS OR AGENTS SHALL NOT BE RESPONSIBLE FOR THE ACCURACY OR COMPLETENESS OF ELECTRONIC COPIES OF THIS PLAN SHEET.

Caltrans Metric

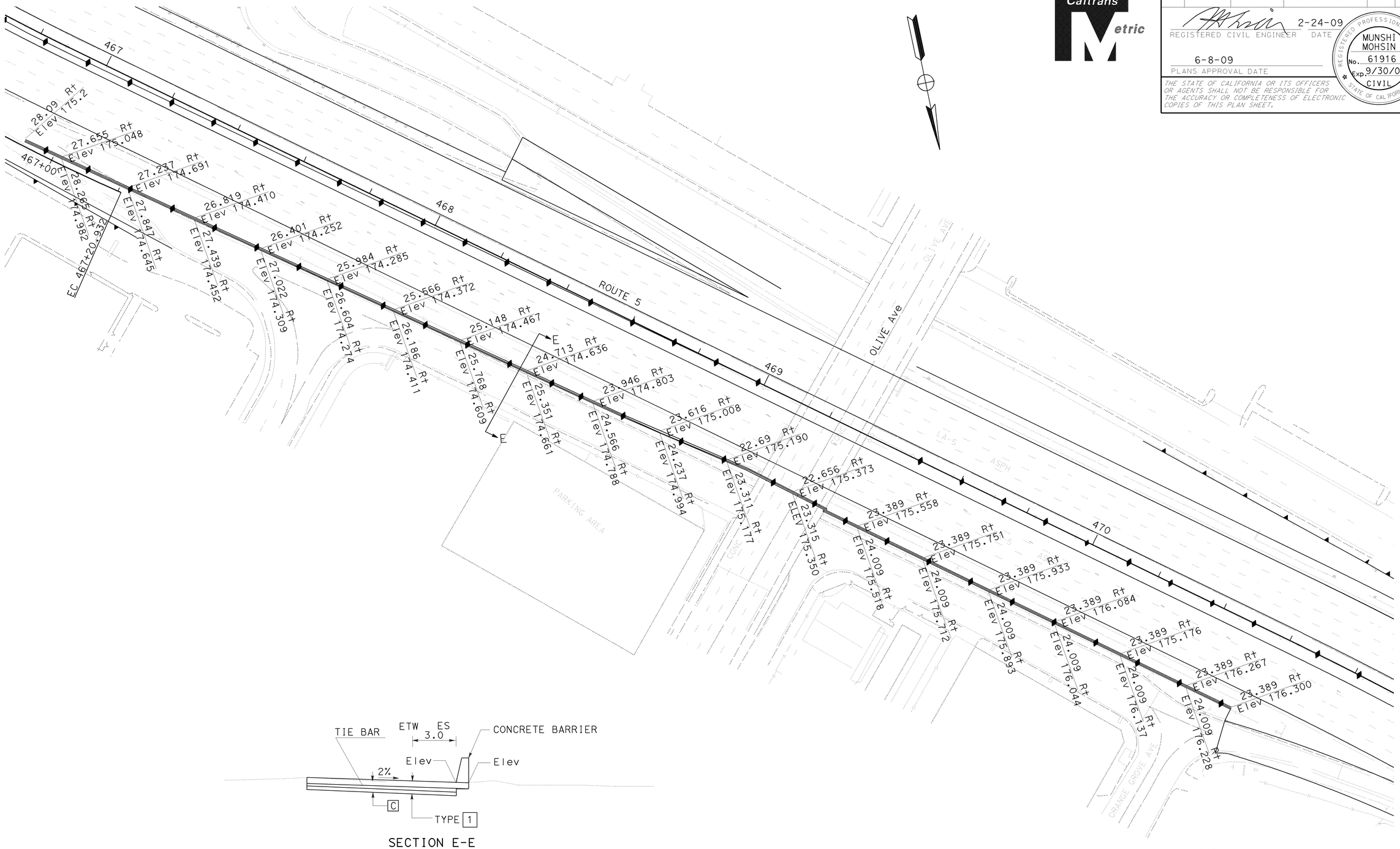

SECTION E-E
NO SCALE

ALL DIMENSIONS ARE IN METERS
UNLESS OTHERWISE SHOWN

CONSTRUCTION DETAILS

SCALE 1:500

C-14

STATE OF CALIFORNIA - DEPARTMENT OF TRANSPORTATION
Caltrans OFFICE OF DESIGN D

FUNCTIONAL SUPERVISOR: CELINA AVILES
CALCULATED-DESIGNED BY: DAWIT WORKU
CHECKED BY: MUNSHI MOHSIN
REVISED BY: MM
DATE REVISED: 11/2008
CTT: 02-05-09

LAST REVISION 02-05-09
DATE PLOTTED => 23-JUN-2009
TIME PLOTTED => 06:17

Dist	COUNTY	ROUTE	KILOMETER POST TOTAL PROJECT	SHEET No.	TOTAL SHEETS
07	LA	5	42.8/47.3	56	1073

REGISTERED CIVIL ENGINEER 2-24-09 DATE

6-8-09
PLANS APPROVAL DATE

REGISTERED PROFESSIONAL ENGINEER MUNSHI MOHSIN No. 61916 Exp. 9/30/09 CIVIL STATE OF CALIFORNIA

THE STATE OF CALIFORNIA OR ITS OFFICERS OR AGENTS SHALL NOT BE RESPONSIBLE FOR THE ACCURACY OR COMPLETENESS OF ELECTRONIC COPIES OF THIS PLAN SHEET.

Caltrans Metric

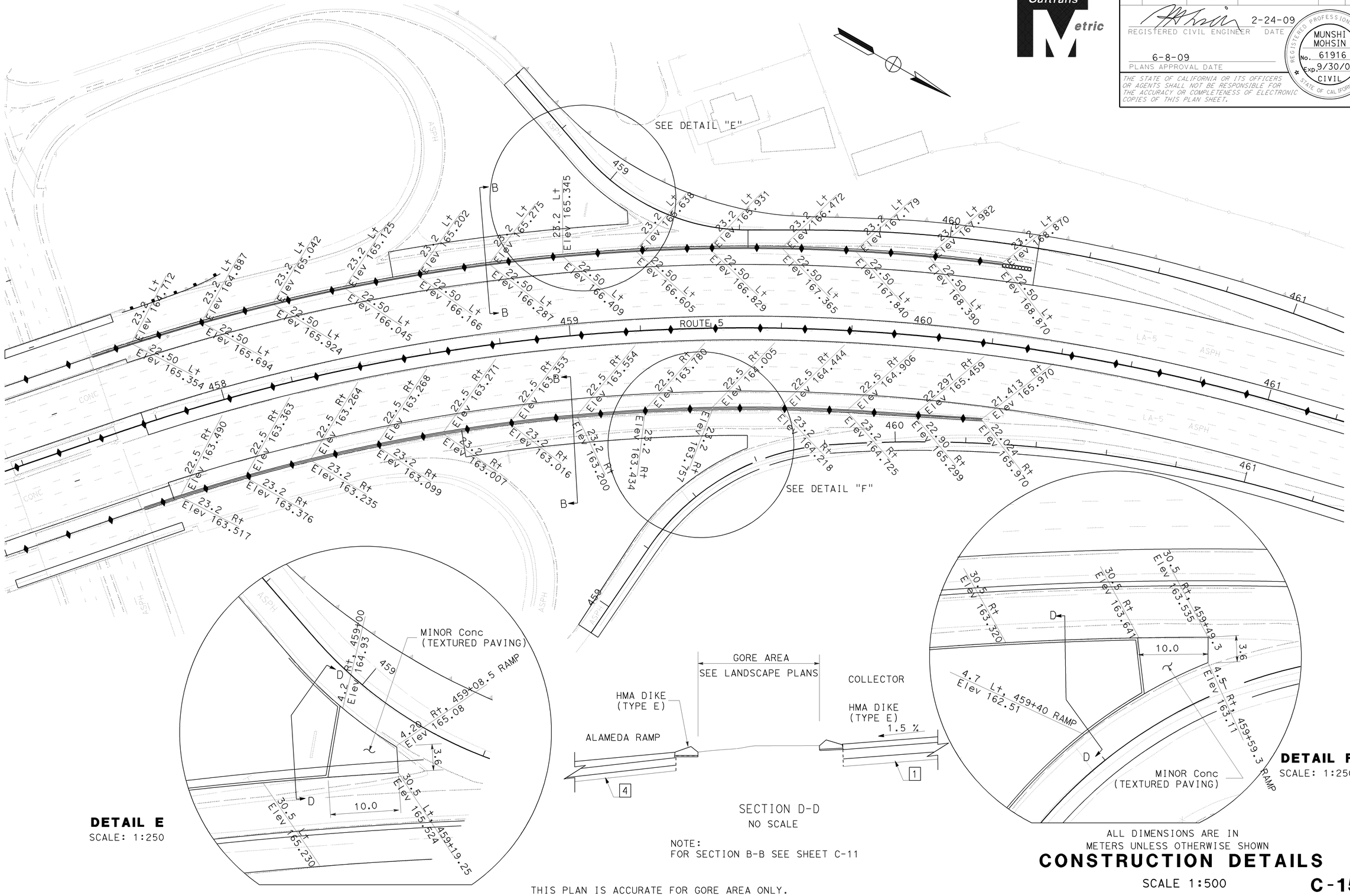

DETAIL E
SCALE: 1:250

SECTION D-D
NO SCALE

NOTE:
FOR SECTION B-B SEE SHEET C-11

DETAIL F
SCALE: 1:250

ALL DIMENSIONS ARE IN METERS UNLESS OTHERWISE SHOWN

CONSTRUCTION DETAILS

SCALE 1:500

C-15

THIS PLAN IS ACCURATE FOR GORE AREA ONLY.

STATE OF CALIFORNIA - DEPARTMENT OF TRANSPORTATION
Caltrans OFFICE OF DESIGN D

FUNCTIONAL SUPERVISOR: CELINA AVILES
CALCULATED-DESIGNED BY: DAWIT WORKU
CHECKED BY: MUNSHI MOHSIN
REVISED BY: DW DP CTT
DATE REVISED: 10/2008 11/2008 02-05-09

LAST REVISION 02-05-09
DATE PLOTTED => 12-JUN-2009
TIME PLOTTED => 08:51

BORDER LAST REVISED 3/1/2007
RELATIVE BORDER SCALE IS IN MILLIMETERS 0 20 40 60 80
USERNAME => trpierce
DGN FILE => 712184ga015.dgn
CU 07276
EA 121841

Dist	COUNTY	ROUTE	KILOMETER POST TOTAL PROJECT	SHEET No.	TOTAL SHEETS
07	LA	5	42.8/47.3	57	1073

REGISTERED CIVIL ENGINEER 2-24-09 DATE

6-8-09
PLANS APPROVAL DATE

REGISTERED PROFESSIONAL ENGINEER MUNSHI MOHSIN No. 61916 Exp. 9/30/09 CIVIL STATE OF CALIFORNIA

THE STATE OF CALIFORNIA OR ITS OFFICERS OR AGENTS SHALL NOT BE RESPONSIBLE FOR THE ACCURACY OR COMPLETENESS OF ELECTRONIC COPIES OF THIS PLAN SHEET.

Caltrans Metric

NOTE:

1. FOR COMPLETE RIGHT OF WAY AND ACCURATE ACCESS DATA, SEE RIGHT OF WAY RECORD MAPS AT DISTRICT OFFICE.

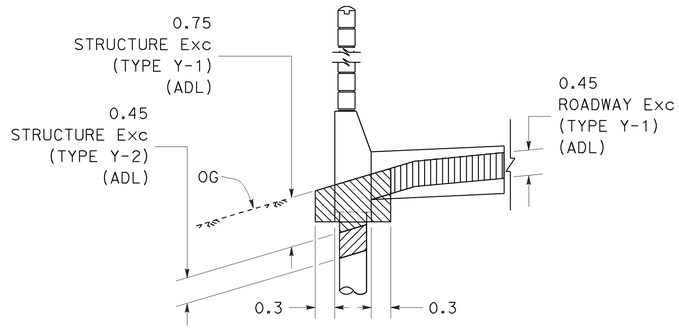

TYPICAL SECTION A-A

NO SCALE
SW STA 437+81.370 TO 440+53.723
SW STA 442+17.742 TO 446+63.921
SW STA 447+62.245 TO 447+96.139

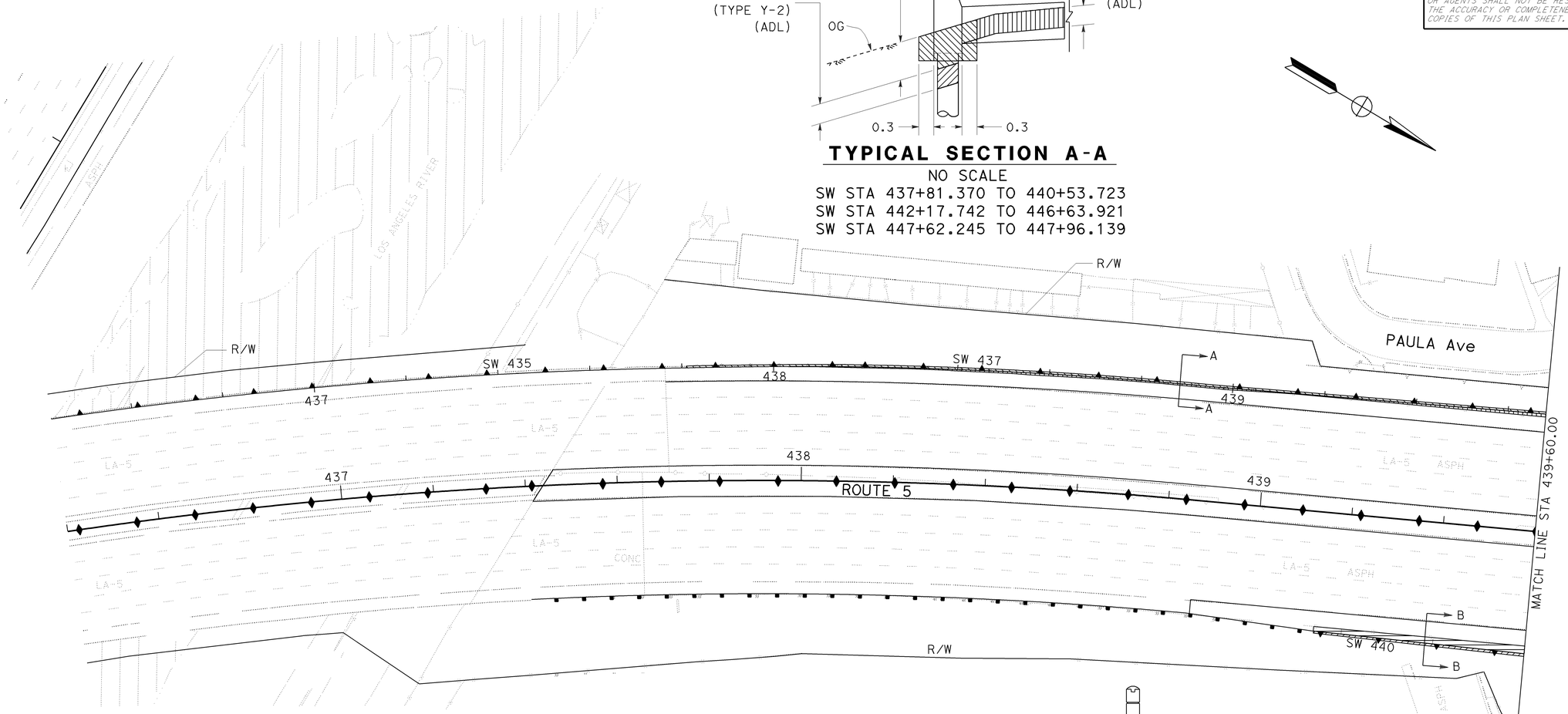

LEGEND:

- STRUCTURE Exc (TYPE Y-1) (AERIALLY DEPOSITED LEAD) SHALL BE USED AS ROADWAY EMBANKMENT
- STRUCTURE Exc (TYPE Y-2) (AERIALLY DEPOSITED LEAD) SHALL BE USED AS ROADWAY EMBANKMENT
- STRUCTURE Exc (TYPE Z-3) (AERIALLY DEPOSITED LEAD)
- ROADWAY Exc (TYPE Y-1) (AERIALLY DEPOSITED LEAD)
- ROADWAY Exc (TYPE Y-2) (AERIALLY DEPOSITED LEAD)
- ROADWAY Exc (TYPE Z-3) (AERIALLY DEPOSITED LEAD)
- ROADWAY EMBANKMENT (TYPE Y-1) (AERIALLY DEPOSITED LEAD) AREA AVAILABLE FOR BACKFILLING MATERIAL WITH AERIALLY DEPOSITED LEAD
- ROADWAY EMBANKMENT (TYPE Y-2) (AERIALLY DEPOSITED LEAD) AREA AVAILABLE FOR BACKFILLING MATERIAL WITH AERIALLY DEPOSITED LEAD

ABBREVIATION:

ADL - AERIALLY DEPOSITED LEAD

THIS PLAN IS ACCURATE FOR AERIALLY DEPOSITED LEAD EXCAVATION AND EMBANKMENT WORK ONLY.

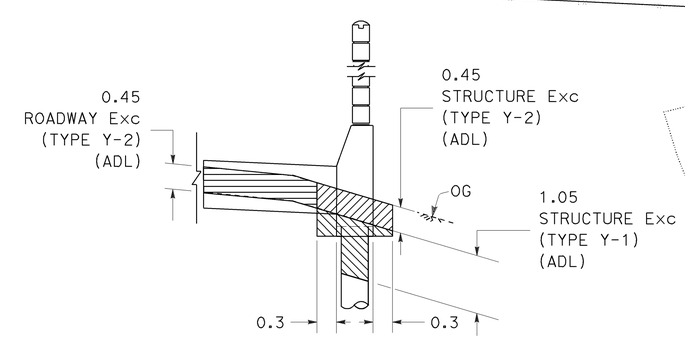

TYPICAL SECTION B-B

NO SCALE
SW STA 439+13.995 TO 440+00.504
SW STA 441+21.980 TO 443+04.008

ALL DIMENSIONS ARE IN METERS UNLESS OTHERWISE SHOWN

CONSTRUCTION DETAILS
LOCATIONS OF EXCAVATION

SCALE 1:500

C-16

STATE OF CALIFORNIA - DEPARTMENT OF TRANSPORTATION
Caltrans OFFICE OF DESIGN D

FUNCTIONAL SUPERVISOR: CELINA AVILES
CALCULATED-DESIGNED BY: CUONG T. TRAN
CHECKED BY: MUNSHI MOHSIN
REVISED BY / DATE REVISED

LAST REVISION 03-15-09 | DATE PLOTTED => 12-JUN-2009 | TIME PLOTTED => 08:51

Dist	COUNTY	ROUTE	KILOMETER POST TOTAL PROJECT	SHEET No.	TOTAL SHEETS
07	LA	5	42.8/47.3	58	1073

REGISTERED CIVIL ENGINEER 2-24-09 DATE

6-8-09
PLANS APPROVAL DATE

REGISTERED PROFESSIONAL ENGINEER MUNSHI MOHSIN No. 61916 Exp. 9/30/09 CIVIL STATE OF CALIFORNIA

THE STATE OF CALIFORNIA OR ITS OFFICERS OR AGENTS SHALL NOT BE RESPONSIBLE FOR THE ACCURACY OR COMPLETENESS OF ELECTRONIC COPIES OF THIS PLAN SHEET.

Caltrans Metric

NOTE:

1. FOR COMPLETE RIGHT OF WAY AND ACCURATE ACCESS DATA, SEE RIGHT OF WAY RECORD MAPS AT DISTRICT OFFICE.

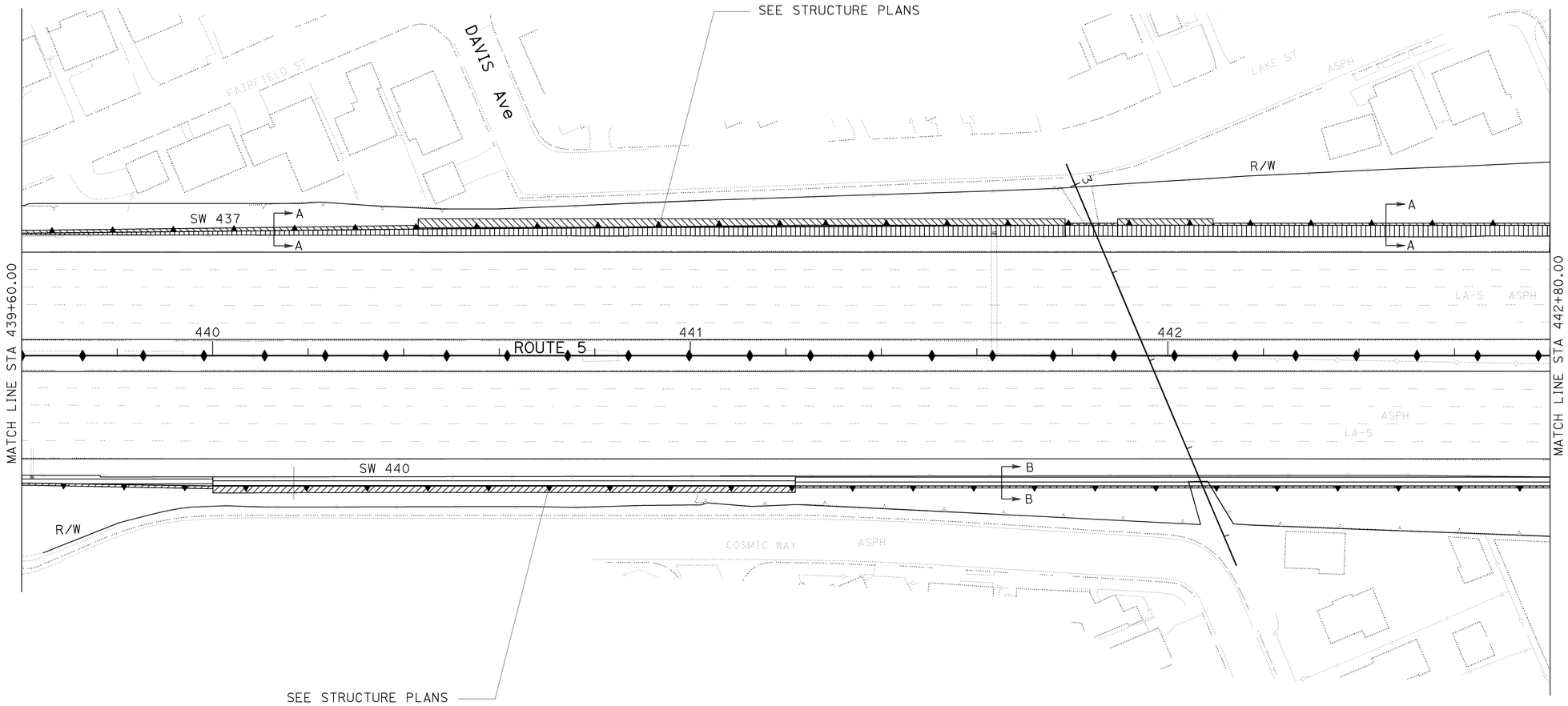

ALL DIMENSIONS ARE IN METERS
UNLESS OTHERWISE SHOWN

CONSTRUCTION DETAILS
LOCATIONS OF EXCAVATION

SCALE 1:500

C-17

THIS PLAN IS ACCURATE FOR AERIALLY DEPOSITED LEAD EXCAVATION AND EMBANKMENT WORK ONLY.

STATE OF CALIFORNIA - DEPARTMENT OF TRANSPORTATION
Caltrans OFFICE OF DESIGN D

FUNCTIONAL SUPERVISOR: CELINA AVILES
CALCULATED-DESIGNED BY: CUONG T. TRAN
CHECKED BY: MUNSHI MOHSIN
REVISED BY
DATE REVISED

LAST REVISION 03-04-09 | DATE PLOTTED => 12-JUN-2009 | TIME PLOTTED => 08:51

Dist	COUNTY	ROUTE	KILOMETER POST TOTAL PROJECT	SHEET No.	TOTAL SHEETS
07	LA	5	42.8/47.3	59	1073

REGISTERED CIVIL ENGINEER 2-24-09 DATE

6-8-09
PLANS APPROVAL DATE

REGISTERED PROFESSIONAL ENGINEER MUNSHI MOHSIN No. 61916 Exp. 9/30/09 CIVIL STATE OF CALIFORNIA

THE STATE OF CALIFORNIA OR ITS OFFICERS OR AGENTS SHALL NOT BE RESPONSIBLE FOR THE ACCURACY OR COMPLETENESS OF ELECTRONIC COPIES OF THIS PLAN SHEET.

Caltrans Metric

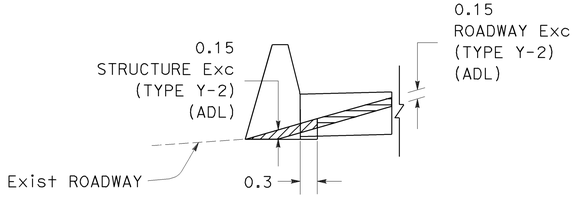

TYPICAL SECTION F-F

NO SCALE
STA 445+47.000 TO 447+37.439
STA 448+57.779 TO 450+94.765

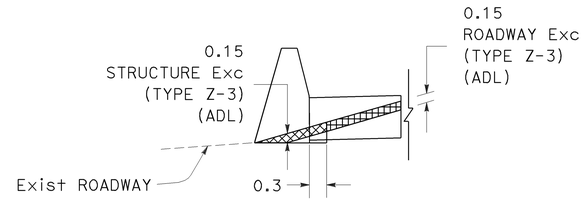

TYPICAL SECTION F1-F1

NO SCALE
STA 447+37.439 TO 448+57.779

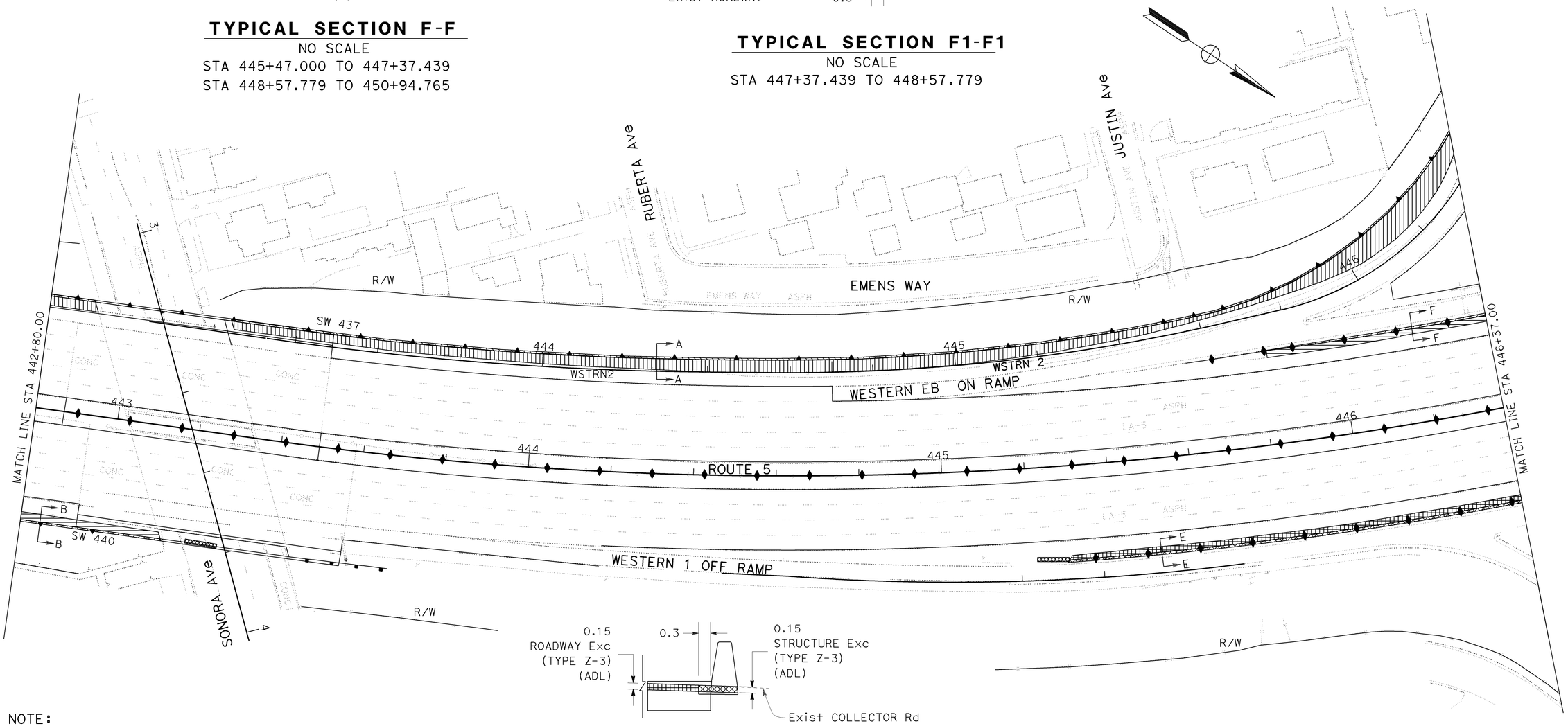

TYPICAL SECTION E-E

NO SCALE
STA 445+15.000 TO 447+87.680

NOTE:

1. FOR COMPLETE RIGHT OF WAY AND ACCURATE ACCESS DATA, SEE RIGHT OF WAY RECORD MAPS AT DISTRICT OFFICE.

THIS PLAN IS ACCURATE FOR AERIALLY DEPOSITED LEAD EXCAVATION AND EMBANKMENT WORK ONLY.

ALL DIMENSIONS ARE IN METERS
UNLESS OTHERWISE SHOWN

CONSTRUCTION DETAILS
LOCATIONS OF EXCAVATION

SCALE 1:500

C-18

STATE OF CALIFORNIA - DEPARTMENT OF TRANSPORTATION
Caltrans OFFICE OF DESIGN D

FUNCTIONAL SUPERVISOR CELINA AVILES
CALCULATED-DESIGNED BY CUONG T. TRAN
CHECKED BY MUNSHI MOHSIN
REVISED BY
DATE REVISED

LAST REVISION 03-04-09
DATE PLOTTED => 12-JUN-2009
TIME PLOTTED => 08:51

Dist	COUNTY	ROUTE	KILOMETER POST TOTAL PROJECT	SHEET No.	TOTAL SHEETS
07	LA	5	42.8/47.3	60	1073

REGISTERED CIVIL ENGINEER 2-24-09 DATE

6-8-09
PLANS APPROVAL DATE

REGISTERED PROFESSIONAL ENGINEER MUNSHI MOHSIN No. 61916 Exp. 9/30/09 CIVIL STATE OF CALIFORNIA

THE STATE OF CALIFORNIA OR ITS OFFICERS OR AGENTS SHALL NOT BE RESPONSIBLE FOR THE ACCURACY OR COMPLETENESS OF ELECTRONIC COPIES OF THIS PLAN SHEET.

Caltrans Metric

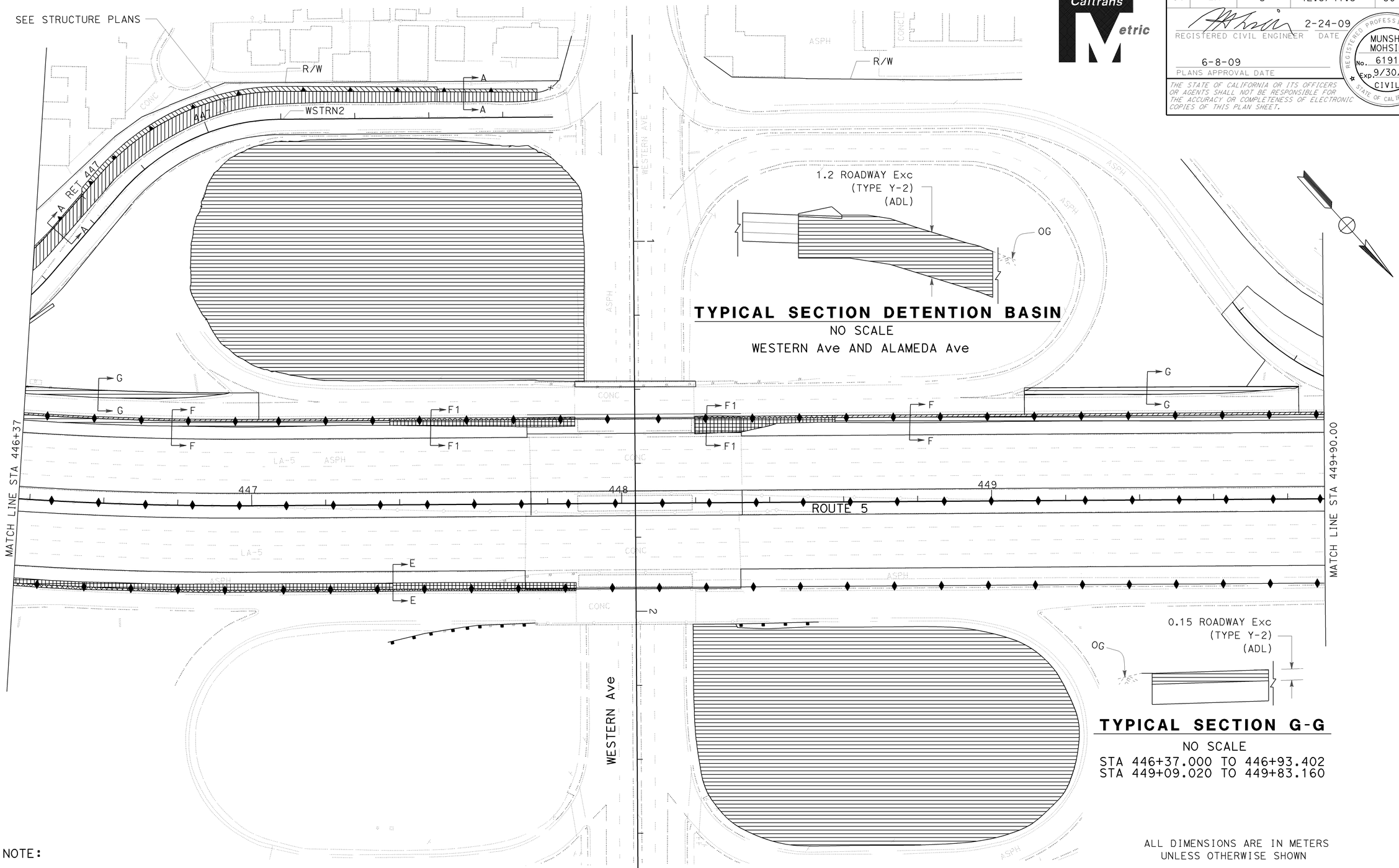

NOTE:

1. FOR COMPLETE RIGHT OF WAY AND ACCURATE ACCESS DATA, SEE RIGHT OF WAY RECORD MAPS AT DISTRICT OFFICE.

ALL DIMENSIONS ARE IN METERS UNLESS OTHERWISE SHOWN

CONSTRUCTION DETAILS
LOCATIONS OF EXCAVATION

SCALE 1:500

THIS PLAN IS ACCURATE FOR AERIALLY DEPOSITED LEAD EXCAVATION AND EMBANKMENT WORK ONLY.

C-19

REVISED BY	DATE REVISED
CUONG T. TRAN	
CALCULATED-DESIGNED BY	
MUNSHI MOHSIN	
CHECKED BY	
FUNCTIONAL SUPERVISOR	
CELINA AVILES	

STATE OF CALIFORNIA - DEPARTMENT OF TRANSPORTATION
Caltrans OFFICE OF DESIGN D

LAST REVISION 02-11-09 DATE PLOTTED => 12-JUN-2009 TIME PLOTTED => 08:51

Dist	COUNTY	ROUTE	KILOMETER POST TOTAL PROJECT	SHEET No.	TOTAL SHEETS
07	LA	5	42.8/47.3	61	1073

REGISTERED CIVIL ENGINEER 2-24-09 DATE

6-8-09
PLANS APPROVAL DATE

REGISTERED PROFESSIONAL ENGINEER MUNSHI MOHSIN No. 61916 Exp. 9/30/09 CIVIL STATE OF CALIFORNIA

THE STATE OF CALIFORNIA OR ITS OFFICERS OR AGENTS SHALL NOT BE RESPONSIBLE FOR THE ACCURACY OR COMPLETENESS OF ELECTRONIC COPIES OF THIS PLAN SHEET.

Caltrans Metric

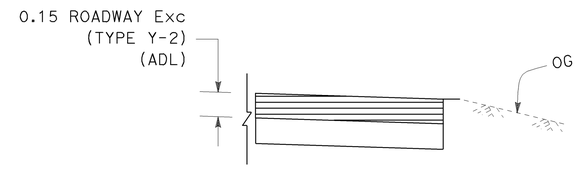

TYPICAL SECTION H-H

NO SCALE

STA 450+81.300 TO 452+15.499

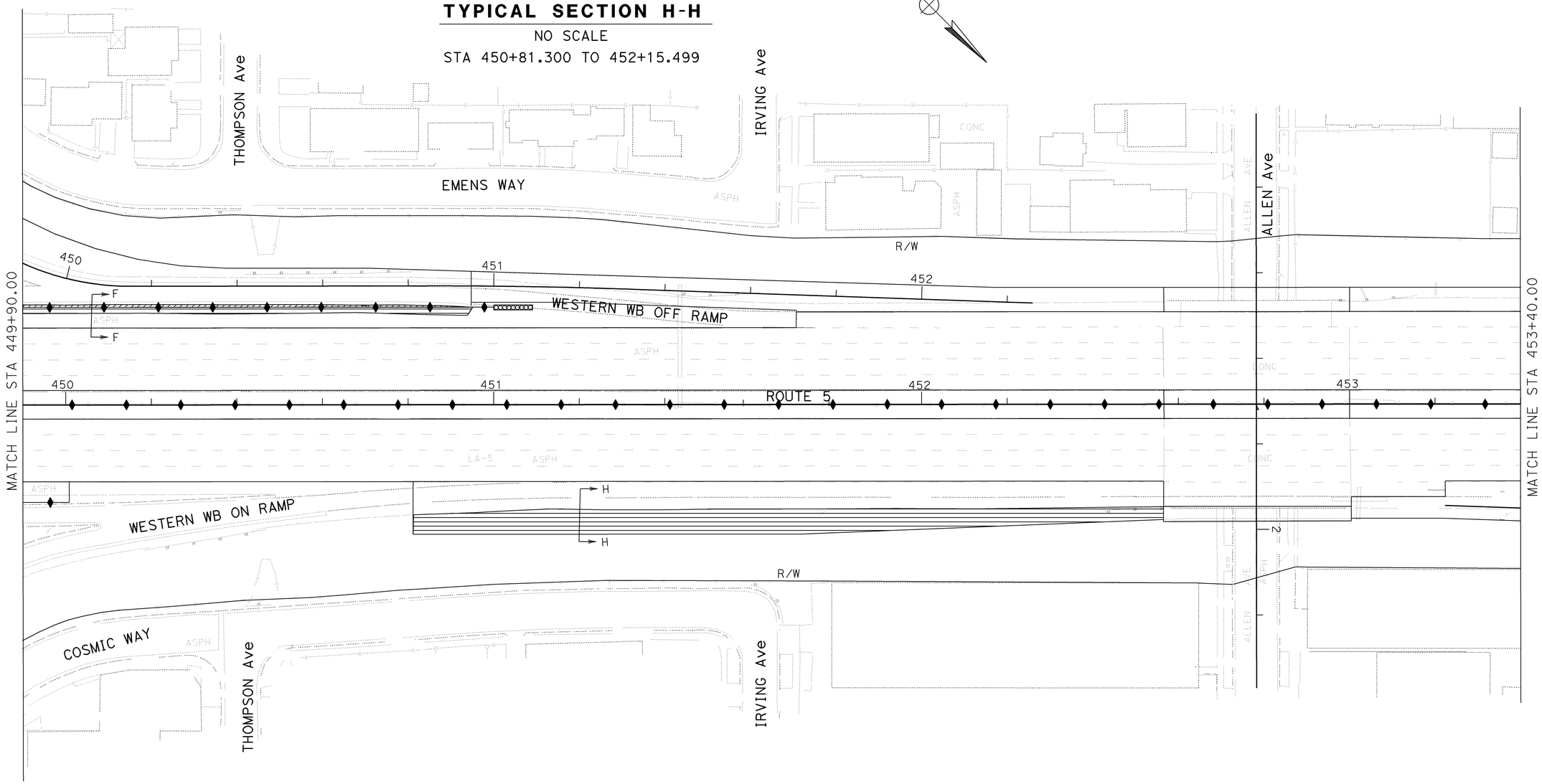

NOTE:

1. FOR COMPLETE RIGHT OF WAY AND ACCURATE ACCESS DATA, SEE RIGHT OF WAY RECORD MAPS AT DISTRICT OFFICE.

ALL DIMENSIONS ARE IN METERS
UNLESS OTHERWISE SHOWN

THIS PLAN IS ACCURATE FOR AERIALLY DEPOSITED LEAD EXCAVATION AND EMBANKMENT WORK ONLY.

CONSTRUCTION DETAILS
LOCATIONS OF EXCAVATION

SCALE 1:500

C-20

REVISED BY	DATE REVISED

CALCULATED-DESIGNED BY: CUONG T TRAN
CHECKED BY: MUNSHI MOHSIN

FUNCTIONAL SUPERVISOR: CELINA AVILES

STATE OF CALIFORNIA - DEPARTMENT OF TRANSPORTATION
Caltrans OFFICE OF DESIGN D

LAST REVISION 03-04-09
DATE PLOTTED => 12-JUN-2009
TIME PLOTTED => 08:51

Dist	COUNTY	ROUTE	KILOMETER POST TOTAL PROJECT	SHEET No.	TOTAL SHEETS
07	LA	5	42.8/47.3	62	1073

REGISTERED CIVIL ENGINEER 2-24-09 DATE

6-8-09
PLANS APPROVAL DATE

REGISTERED PROFESSIONAL ENGINEER MUNSHI MOHSIN No. 61916 Exp. 9/30/09 CIVIL STATE OF CALIFORNIA

THE STATE OF CALIFORNIA OR ITS OFFICERS OR AGENTS SHALL NOT BE RESPONSIBLE FOR THE ACCURACY OR COMPLETENESS OF ELECTRONIC COPIES OF THIS PLAN SHEET.

Caltrans Metric

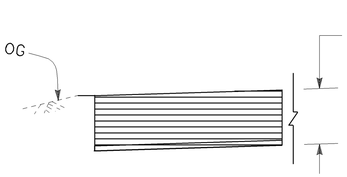

TYPICAL SECTION J-J

NO SCALE

STA 455+71.693 TO 456+48.055

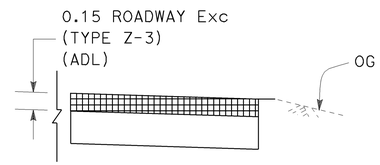

TYPICAL SECTION K-K

NO SCALE

STA 455+72.086 TO 456+14.996

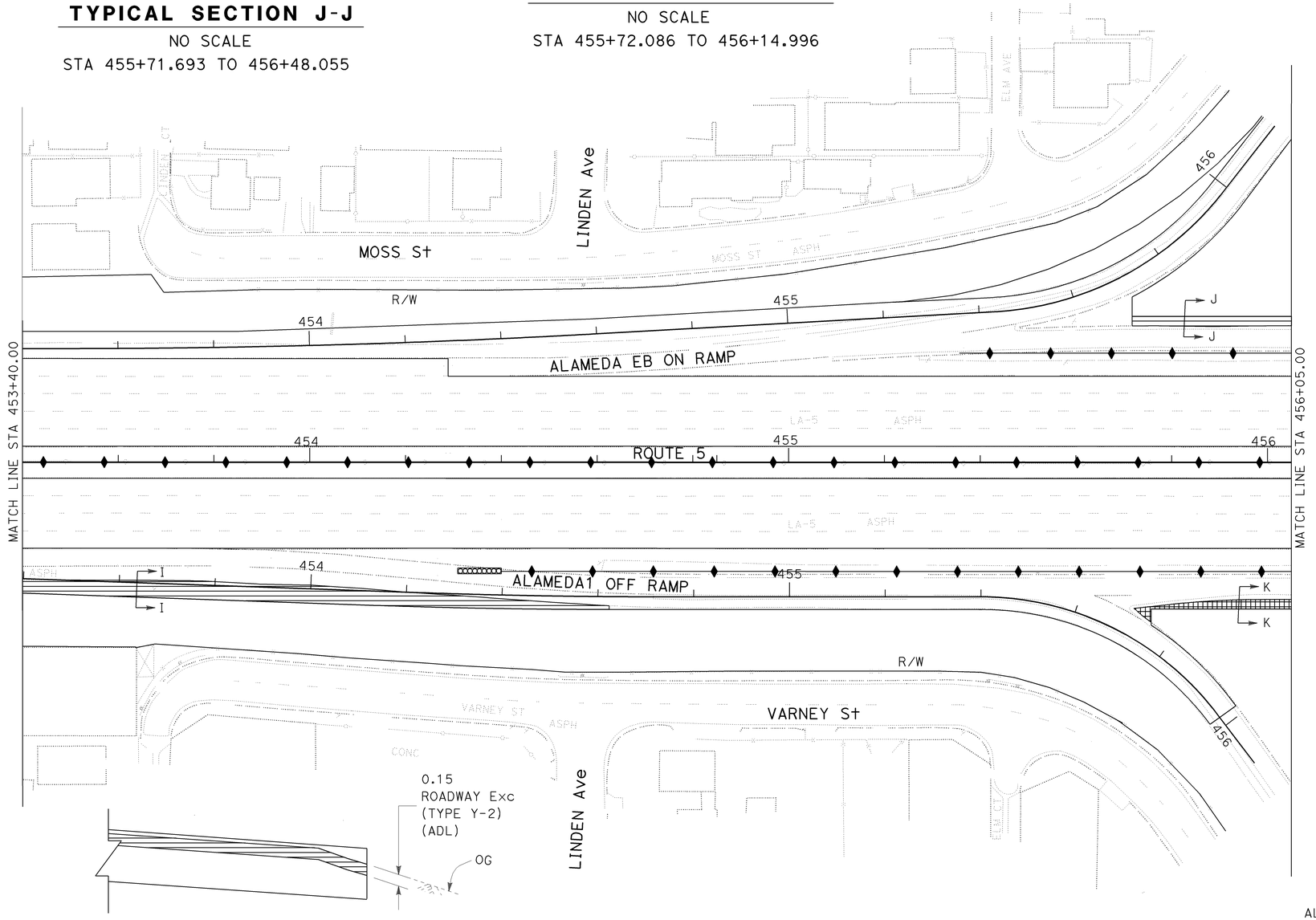

TYPICAL SECTION I-I

NO SCALE

STA 453+40.000 TO 454+62.506

NOTE:

1. FOR COMPLETE RIGHT OF WAY AND ACCURATE ACCESS DATA, SEE RIGHT OF WAY RECORD MAPS AT DISTRICT OFFICE.

ALL DIMENSIONS ARE IN METERS
UNLESS OTHERWISE SHOWN

CONSTRUCTION DETAILS
LOCATIONS OF EXCAVATION

SCALE 1:500

C-21

THIS PLAN IS ACCURATE FOR AERIALLY DEPOSITED LEAD EXCAVATION AND EMBANKMENT WORK ONLY.

STATE OF CALIFORNIA - DEPARTMENT OF TRANSPORTATION
Caltrans OFFICE OF DESIGN D

FUNCTIONAL SUPERVISOR: CELINA AVILES
CALCULATED-DESIGNED BY: CUONG T. TRAN
CHECKED BY: MUNSHI MOHSIN
REVISED BY / DATE REVISED

LAST REVISION 03-04-09 | DATE PLOTTED => 12-JUN-2009 | TIME PLOTTED => 08:51

Dist	COUNTY	ROUTE	KILOMETER POST TOTAL PROJECT	SHEET No.	TOTAL SHEETS
07	LA	5	42.8/47.3	63	1073

REGISTERED CIVIL ENGINEER 2-24-09 DATE

6-8-09
PLANS APPROVAL DATE

REGISTERED PROFESSIONAL ENGINEER MUNSHI MOHSIN No. 61916 Exp. 9/30/09 CIVIL STATE OF CALIFORNIA

THE STATE OF CALIFORNIA OR ITS OFFICERS OR AGENTS SHALL NOT BE RESPONSIBLE FOR THE ACCURACY OR COMPLETENESS OF ELECTRONIC COPIES OF THIS PLAN SHEET.

Caltrans Metric

NOTE:

1. FOR COMPLETE RIGHT OF WAY AND ACCURATE ACCESS DATA, SEE RIGHT OF WAY RECORD MAPS AT DISTRICT OFFICE.

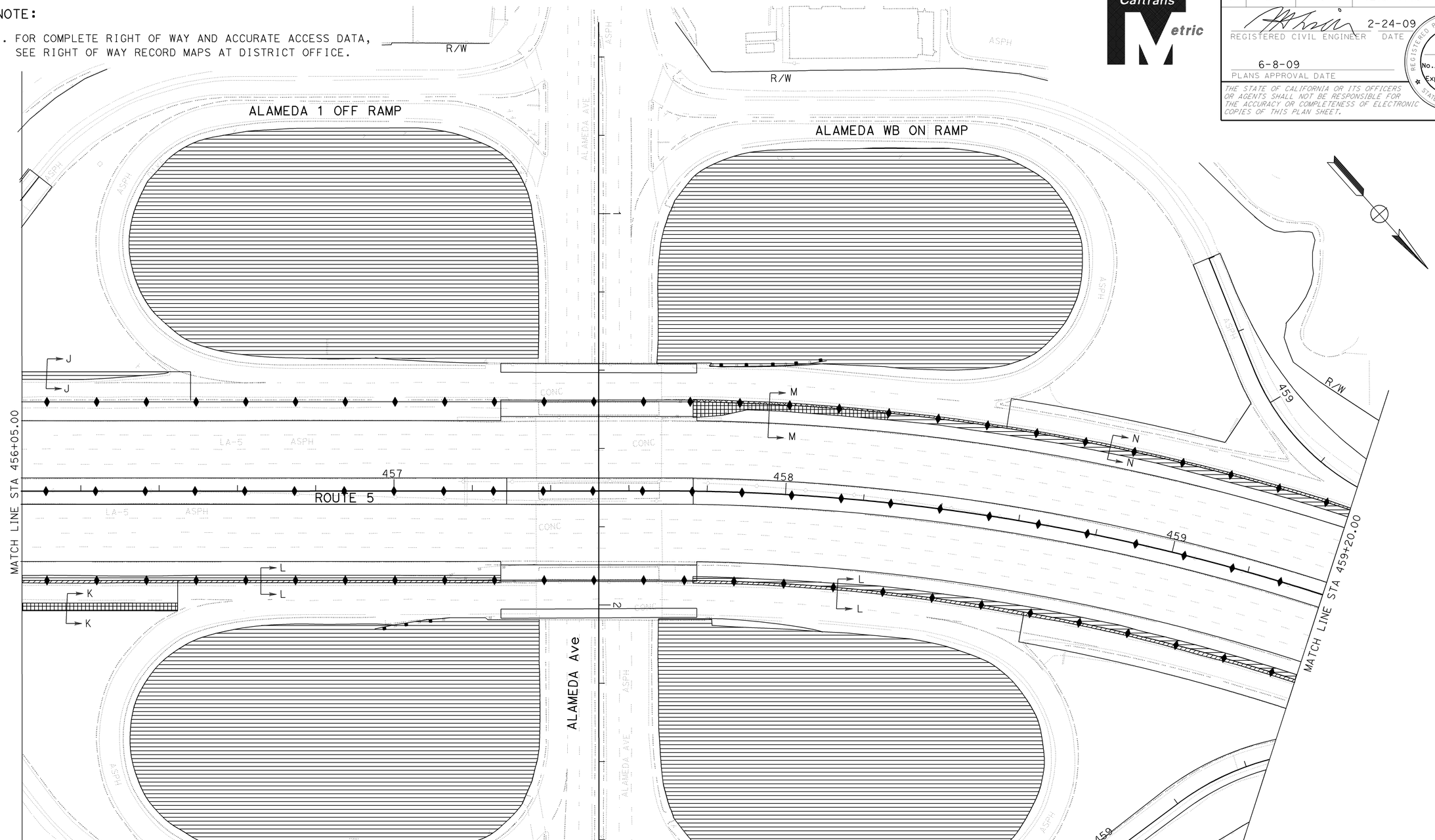

ALL DIMENSIONS ARE IN METERS UNLESS OTHERWISE SHOWN

CONSTRUCTION DETAILS
LOCATIONS OF EXCAVATION

SCALE 1:500

C-22

THIS PLAN IS ACCURATE FOR AERIALLY DEPOSITED LEAD EXCAVATION AND EMBANKMENT WORK ONLY.

STATE OF CALIFORNIA - DEPARTMENT OF TRANSPORTATION
Caltrans OFFICE OF DESIGN D

FUNCTIONAL SUPERVISOR: CELINA AVILES
CALCULATED-DESIGNED BY: CUONG T TRAN
CHECKED BY: MUNSHI MOHSIN
REVISED BY / DATE REVISED

LAST REVISION 02-11-09 | DATE PLOTTED => 12-JUN-2009 | TIME PLOTTED => 08:52

Dist	COUNTY	ROUTE	KILOMETER POST TOTAL PROJECT	SHEET No.	TOTAL SHEETS
07	LA	5	42.8/47.3	64	1073

REGISTERED CIVIL ENGINEER 2-24-09 DATE

6-8-09
PLANS APPROVAL DATE

REGISTERED PROFESSIONAL ENGINEER MUNSHI MOHSIN No. 61916 Exp. 9/30/09 CIVIL STATE OF CALIFORNIA

THE STATE OF CALIFORNIA OR ITS OFFICERS OR AGENTS SHALL NOT BE RESPONSIBLE FOR THE ACCURACY OR COMPLETENESS OF ELECTRONIC COPIES OF THIS PLAN SHEET.

Caltrans Metric

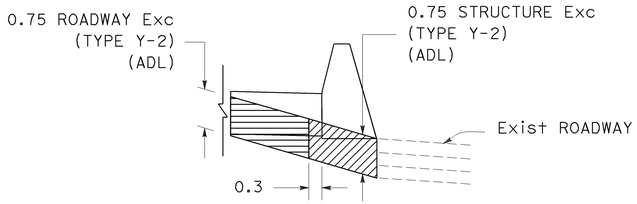

TYPICAL SECTION L-L

NO SCALE
STA 456+05.000 TO 457+24.201
STA 457+76.600 TO 460+00.000

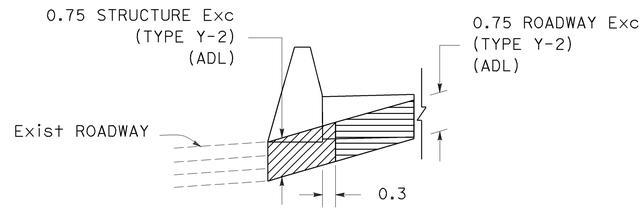

TYPICAL SECTION N-N

NO SCALE
STA 458+23.965 TO 460+29.059

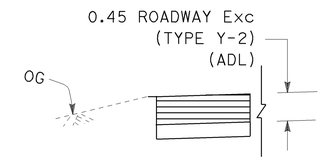

TYPICAL SECTION P-P

NO SCALE
STA 461+67.780 TO 462+17.462

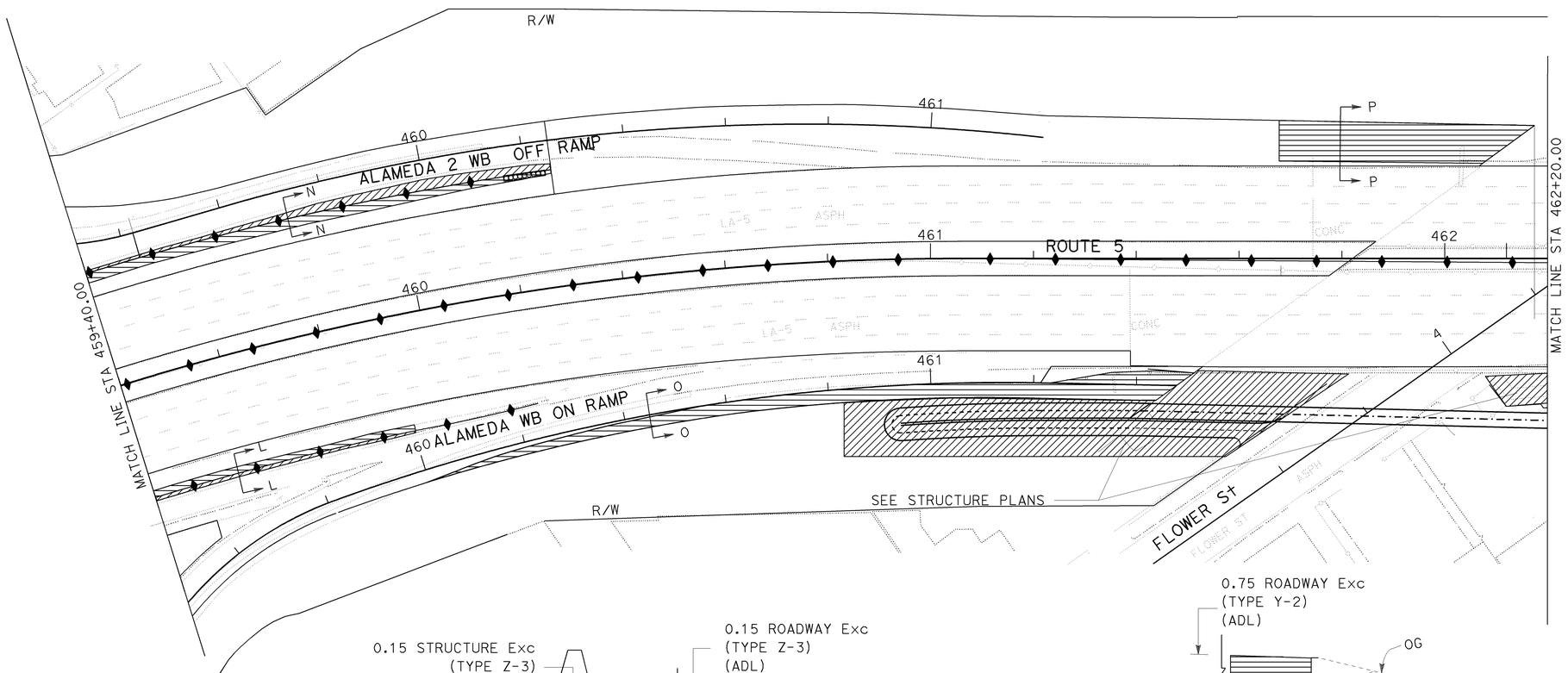

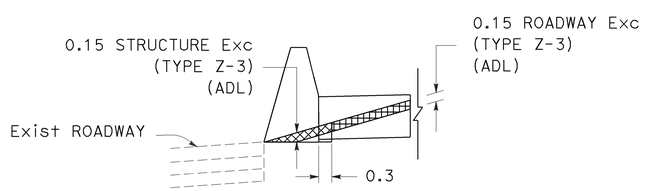

TYPICAL SECTION M-M

NO SCALE
STA 457+77.305 TO 458+23.965

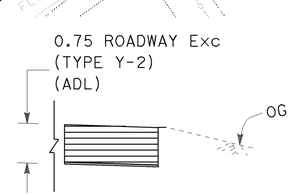

TYPICAL SECTION O-O

NO SCALE
STA 460+00.000 TO 461+00.000

NOTE:

1. FOR COMPLETE RIGHT OF WAY AND ACCURATE ACCESS DATA, SEE RIGHT OF WAY RECORD MAPS AT DISTRICT OFFICE.

ALL DIMENSIONS ARE IN METERS
UNLESS OTHERWISE SHOWN

CONSTRUCTION DETAILS
LOCATIONS OF EXCAVATION

SCALE 1:500

THIS PLAN IS ACCURATE FOR AERIALLY DEPOSITED LEAD EXCAVATION AND EMBANKMENT WORK ONLY.

C-23

STATE OF CALIFORNIA - DEPARTMENT OF TRANSPORTATION
Caltrans OFFICE OF DESIGN D

FUNCTIONAL SUPERVISOR: CELINA AVILES
CALCULATED-DESIGNED BY: CUONG T TRAN
CHECKED BY: MUNSHI MOHSIN
REVISED BY / DATE REVISED

LAST REVISION 03-04-09 DATE PLOTTED => 12-JUN-2009 TIME PLOTTED => 08:52

Dist	COUNTY	ROUTE	KILOMETER POST TOTAL PROJECT	SHEET No.	TOTAL SHEETS
07	LA	5	42.8/47.3	65	1073

REGISTERED CIVIL ENGINEER 2-24-09 DATE

6-8-09
PLANS APPROVAL DATE

REGISTERED PROFESSIONAL ENGINEER MUNSHI MOHSIN No. 61916 Exp. 9/30/09 CIVIL STATE OF CALIFORNIA

THE STATE OF CALIFORNIA OR ITS OFFICERS OR AGENTS SHALL NOT BE RESPONSIBLE FOR THE ACCURACY OR COMPLETENESS OF ELECTRONIC COPIES OF THIS PLAN SHEET.

Caltrans Metric

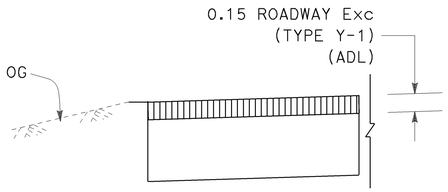

TYPICAL SECTION Q-Q

NO SCALE
STA 464+48.969 TO 465+20.000

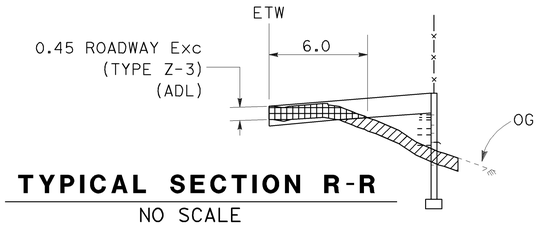

TYPICAL SECTION R-R

NO SCALE
STA 458+23.965 TO 465+33.023

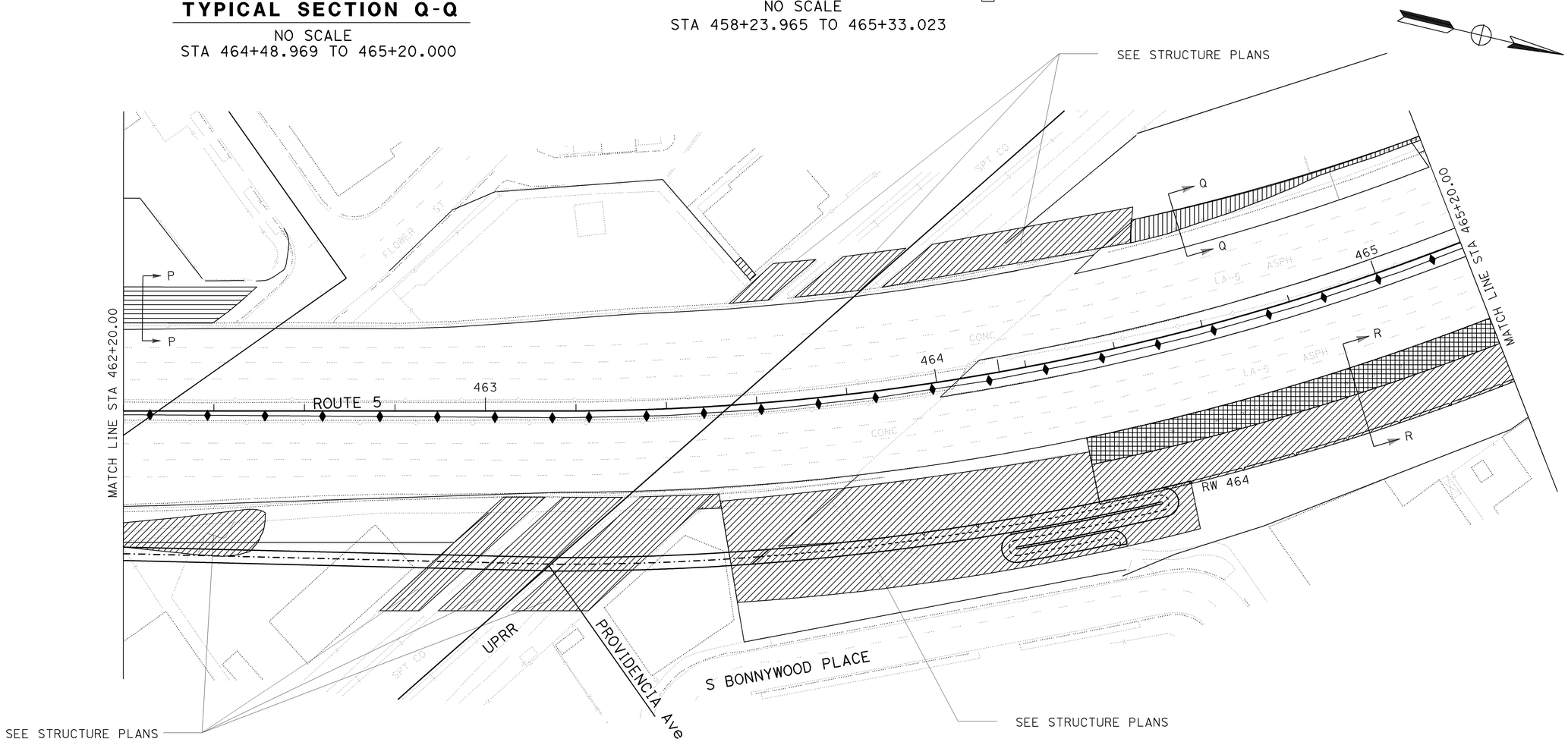

NOTE:

1. FOR COMPLETE RIGHT OF WAY AND ACCURATE ACCESS DATA, SEE RIGHT OF WAY RECORD MAPS AT DISTRICT OFFICE.

ALL DIMENSIONS ARE IN METERS
UNLESS OTHERWISE SHOWN

CONSTRUCTION DETAILS
LOCATIONS OF EXCAVATION

SCALE 1:500

C-24

THIS PLAN IS ACCURATE FOR AERIALLY DEPOSITED LEAD EXCAVATION AND EMBANKMENT WORK ONLY.

STATE OF CALIFORNIA - DEPARTMENT OF TRANSPORTATION
Caltrans OFFICE OF DESIGN D

FUNCTIONAL SUPERVISOR: CELINA AVILES

CALCULATED-DESIGNED BY: CUONG T TRAN
CHECKED BY: MUNSHI MOHSIN

REVISED BY | DATE REVISED

LAST REVISION 02-19-09 | DATE PLOTTED => 12-JUN-2009 | TIME PLOTTED => 08:52

Dist	COUNTY	ROUTE	KILOMETER POST TOTAL PROJECT	SHEET No.	TOTAL SHEETS
07	LA	5	42.8/47.3	66	1073

REGISTERED CIVIL ENGINEER 2-24-09 DATE

6-8-09
PLANS APPROVAL DATE

REGISTERED PROFESSIONAL ENGINEER MUNSHI MOHSIN No. 61916 Exp. 9/30/09 CIVIL STATE OF CALIFORNIA

THE STATE OF CALIFORNIA OR ITS OFFICERS OR AGENTS SHALL NOT BE RESPONSIBLE FOR THE ACCURACY OR COMPLETENESS OF ELECTRONIC COPIES OF THIS PLAN SHEET.

Caltrans Metric

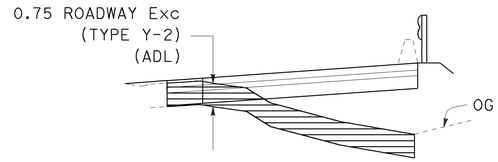

TYPICAL SECTION S1-S1

NO SCALE

STA 465+76.658 TO 467+76.380

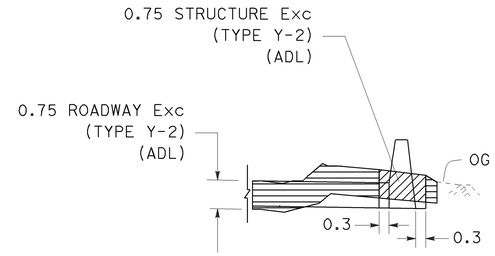

TYPICAL SECTION S2-S2

NO SCALE

STA 466+94.256 TO 470+53.470

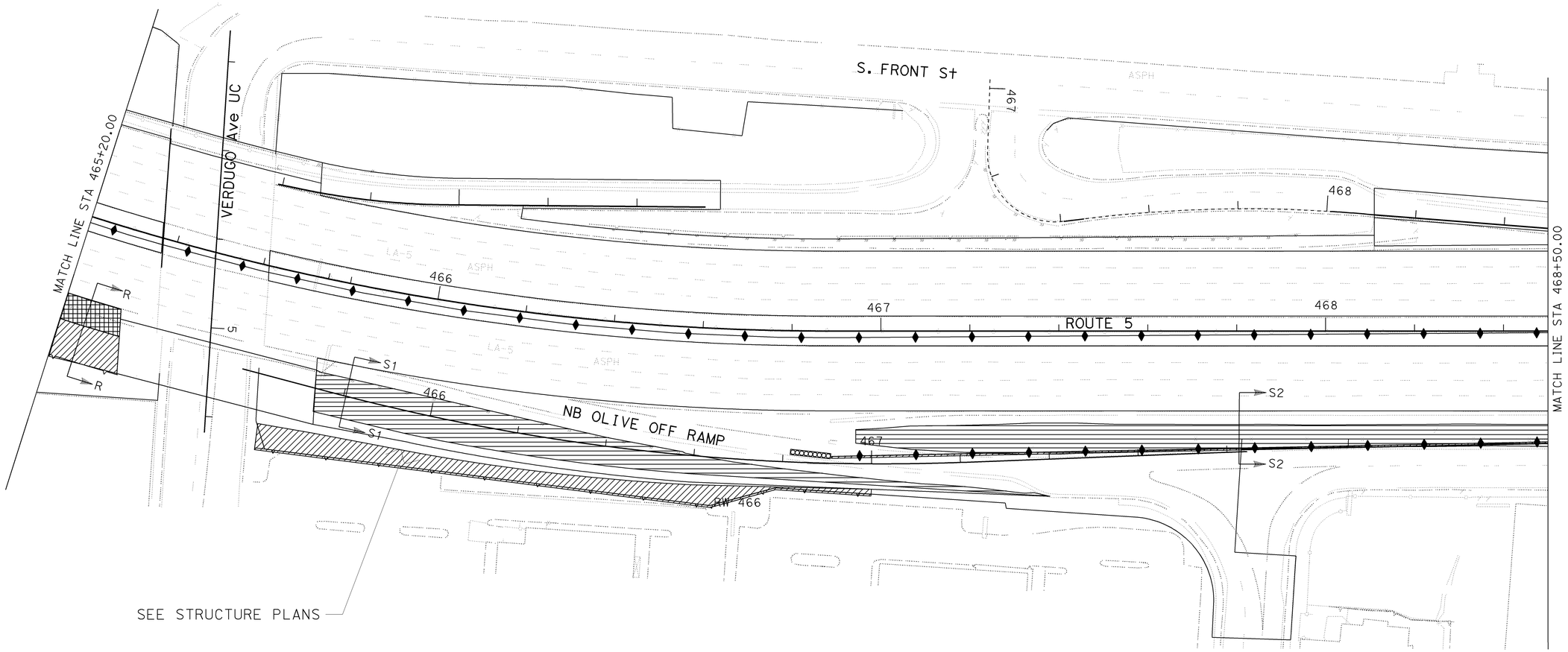

NOTE:

1. FOR COMPLETE RIGHT OF WAY AND ACCURATE ACCESS DATA, SEE RIGHT OF WAY RECORD MAPS AT DISTRICT OFFICE.

ALL DIMENSIONS ARE IN METERS
UNLESS OTHERWISE SHOWN

CONSTRUCTION DETAILS
LOCATIONS OF EXCAVATION

SCALE 1:500

C-25

THIS PLAN IS ACCURATE FOR AERIALLY DEPOSITED LEAD EXCAVATION AND EMBANKMENT WORK ONLY.

STATE OF CALIFORNIA - DEPARTMENT OF TRANSPORTATION
Caltrans OFFICE OF DESIGN D

FUNCTIONAL SUPERVISOR CELINA AVILES
CALCULATED-DESIGNED BY CUONG T TRAN
CHECKED BY MUNSHI MOHSIN
REVISED BY
DATE REVISED

LAST REVISION 03-04-09 DATE PLOTTED => 12-JUN-2009 TIME PLOTTED => 08:52

Dist	COUNTY	ROUTE	KILOMETER POST TOTAL PROJECT	SHEET No.	TOTAL SHEETS
07	LA	5	42.8/47.3	67	1073

REGISTERED CIVIL ENGINEER 2-24-09 DATE

6-8-09
PLANS APPROVAL DATE

REGISTERED PROFESSIONAL ENGINEER MUNSHI MOHSIN No. 61916 Exp. 9/30/09 CIVIL STATE OF CALIFORNIA

THE STATE OF CALIFORNIA OR ITS OFFICERS OR AGENTS SHALL NOT BE RESPONSIBLE FOR THE ACCURACY OR COMPLETENESS OF ELECTRONIC COPIES OF THIS PLAN SHEET.

Caltrans Metric

NOTE:

1. FOR COMPLETE RIGHT OF WAY AND ACCURATE ACCESS DATA, SEE RIGHT OF WAY RECORD MAPS AT DISTRICT OFFICE.

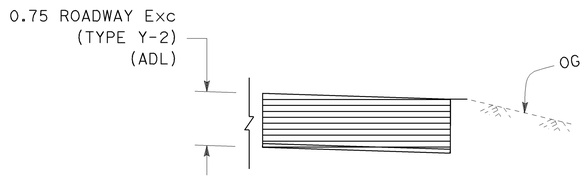

TYPICAL SECTION U-U
NO SCALE
STA 470+60.782 TO 471+49.837
STA 471+80.000 TO 472+29.473

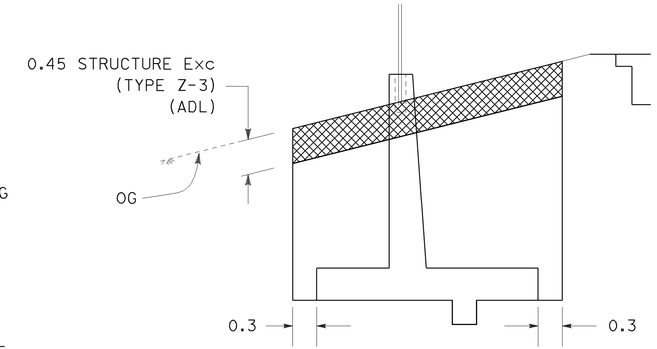

TYPICAL SECTION Y-Y
NO SCALE
STA 470+76.403 TO 471+80.000

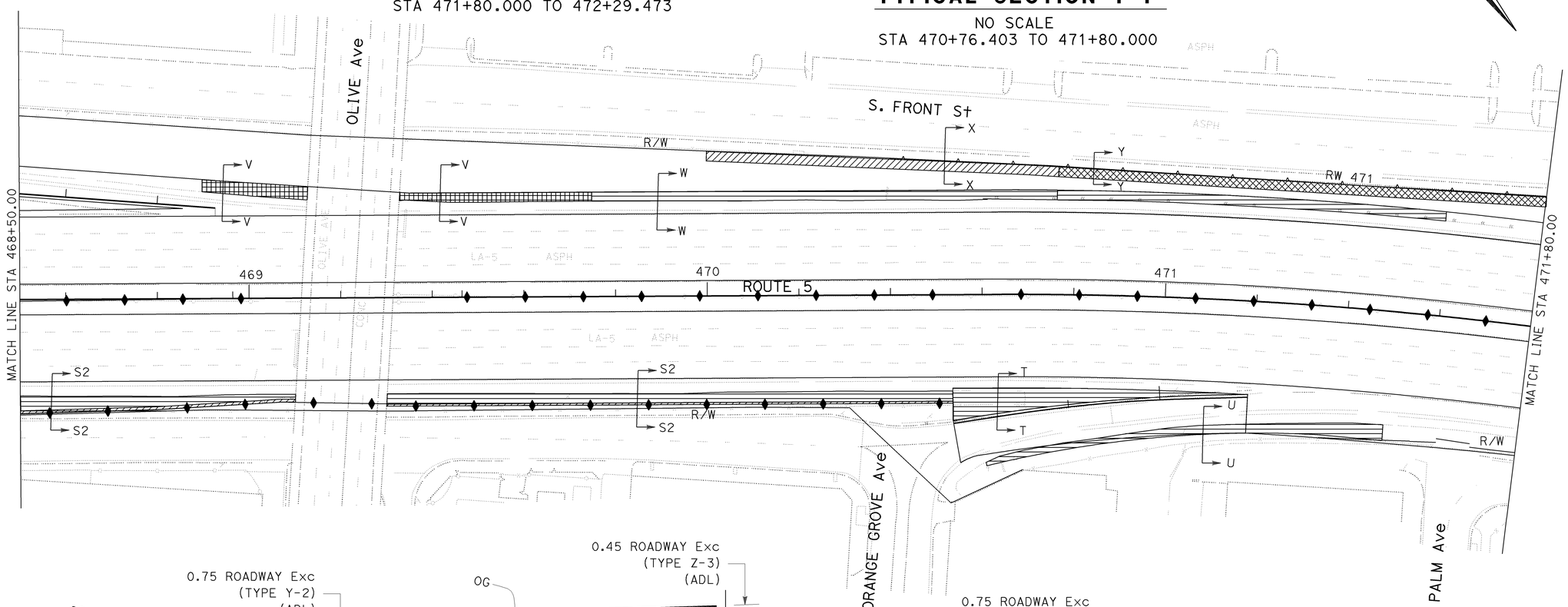

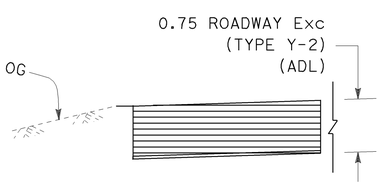

TYPICAL SECTION W-W
NO SCALE
STA 469+74.868 TO 470+76.124

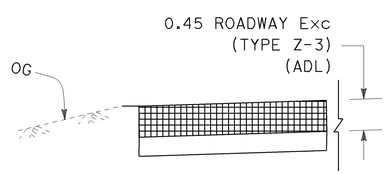

TYPICAL SECTION V-V
NO SCALE
STA 468+89.868 TO 469+74.868

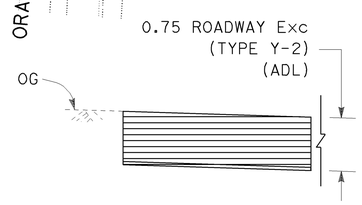

TYPICAL SECTION T-T
NO SCALE
STA 470+53.470 TO 471+19.112

ALL DIMENSIONS ARE IN METERS
UNLESS OTHERWISE SHOWN

CONSTRUCTION DETAILS
LOCATIONS OF EXCAVATION

SCALE 1:500

C-26

THIS PLAN IS ACCURATE FOR AERIALLY DEPOSITED LEAD EXCAVATION AND EMBANKMENT WORK ONLY.

REVISED BY	DATE REVISED

CALCULATED-DESIGNED BY: CUONG T TRAN
CHECKED BY: MUNSHI MOHSIN
FUNCTIONAL SUPERVISOR: CELINA AVILES

STATE OF CALIFORNIA - DEPARTMENT OF TRANSPORTATION
Caltrans OFFICE OF DESIGN D

LAST REVISION 03-04-09 | DATE PLOTTED => 12-JUN-2009 | TIME PLOTTED => 0852

Dist	COUNTY	ROUTE	KILOMETER POST TOTAL PROJECT	SHEET No.	TOTAL SHEETS
07	LA	5	42.8/47.3	68	1073

REGISTERED CIVIL ENGINEER 2-24-09 DATE

6-8-09
PLANS APPROVAL DATE

REGISTERED PROFESSIONAL ENGINEER MUNSHI MOHSIN No. 61916 Exp. 9/30/09 CIVIL STATE OF CALIFORNIA

THE STATE OF CALIFORNIA OR ITS OFFICERS OR AGENTS SHALL NOT BE RESPONSIBLE FOR THE ACCURACY OR COMPLETENESS OF ELECTRONIC COPIES OF THIS PLAN SHEET.

Caltrans Metric

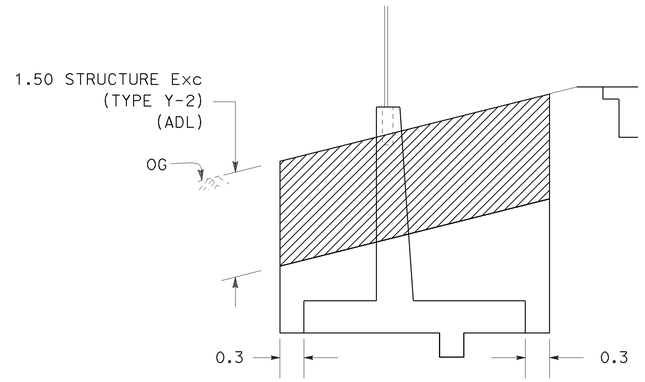

TYPICAL SECTION X-X

NO SCALE
STA 470+00.000 TO 470+76.403
STA 471+80.000 TO 472+53.900

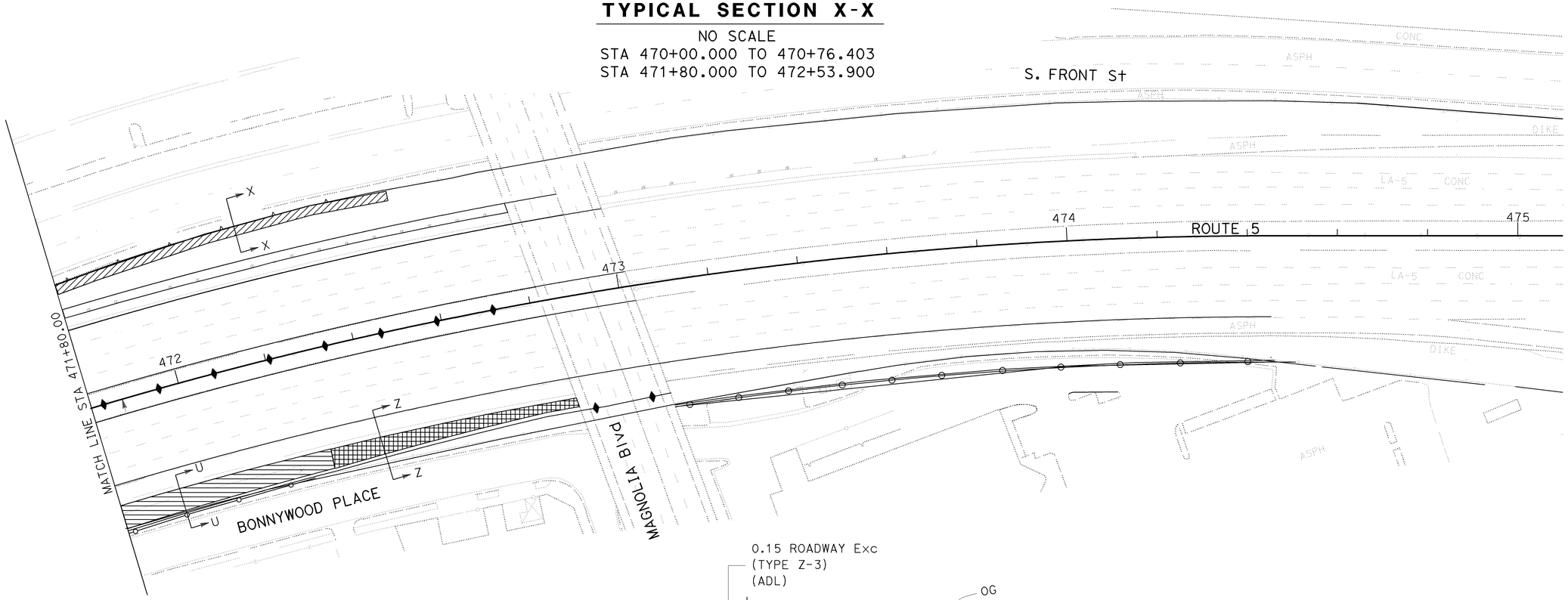

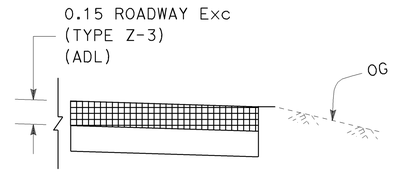

TYPICAL SECTION Z-Z

NO SCALE
STA 472+29.473 TO 472+86.894

NOTE:

1. FOR COMPLETE RIGHT OF WAY AND ACCURATE ACCESS DATA, SEE RIGHT OF WAY RECORD MAPS AT DISTRICT OFFICE.

THIS PLAN IS ACCURATE FOR AERIALLY DEPOSITED LEAD EXCAVATION AND EMBANKMENT WORK ONLY.

ALL DIMENSIONS ARE IN METERS
UNLESS OTHERWISE SHOWN

CONSTRUCTION DETAILS
LOCATIONS OF EXCAVATION

SCALE 1:500

C-27

STATE OF CALIFORNIA - DEPARTMENT OF TRANSPORTATION
Caltrans OFFICE OF DESIGN D

FUNCTIONAL SUPERVISOR: CELINA AVILES

CALCULATED-DESIGNED BY: CUONG T TRAN
CHECKED BY: MUNSHI MOHSIN

REVISED BY
DATE REVISED

LAST REVISION 03-04-09 | DATE PLOTTED => 12-JUN-2009 | TIME PLOTTED => 08:52

Dist	COUNTY	ROUTE	KILOMETER POST TOTAL PROJECT	SHEET No.	TOTAL SHEETS
07	LA	5	42.8/47.3	69	1073

REGISTERED CIVIL ENGINEER 2-24-09 DATE

6-8-09
PLANS APPROVAL DATE

REGISTERED PROFESSIONAL ENGINEER MUNSHI MOHSIN No. 61916 Exp. 9/30/09 CIVIL STATE OF CALIFORNIA

THE STATE OF CALIFORNIA OR ITS OFFICERS OR AGENTS SHALL NOT BE RESPONSIBLE FOR THE ACCURACY OR COMPLETENESS OF ELECTRONIC COPIES OF THIS PLAN SHEET.

Caltrans Metric

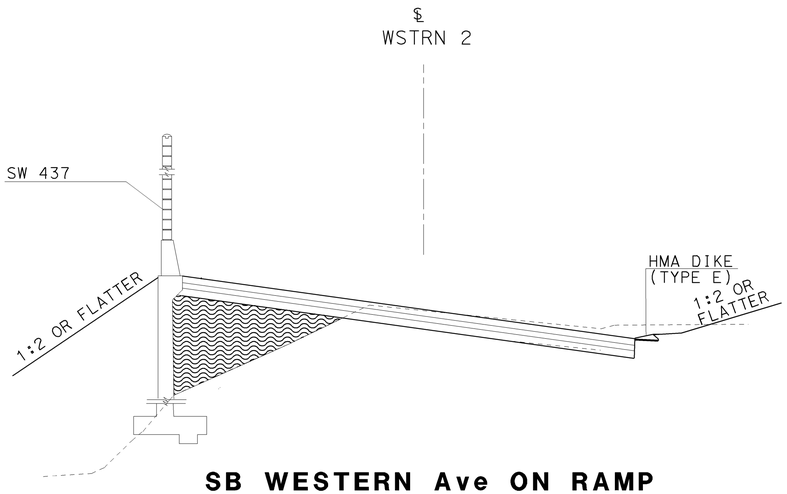

SB WESTERN Ave ON RAMP

STA 443+04.239 TO 447+93.515

(STAGE 1, PHASE 1A)

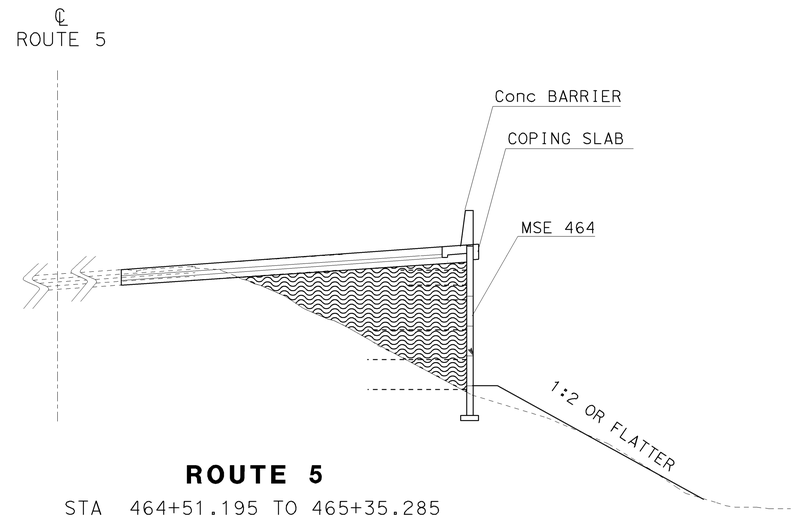

ROUTE 5

STA 464+51.195 TO 465+35.285

(STAGE 1, PHASE 1A)

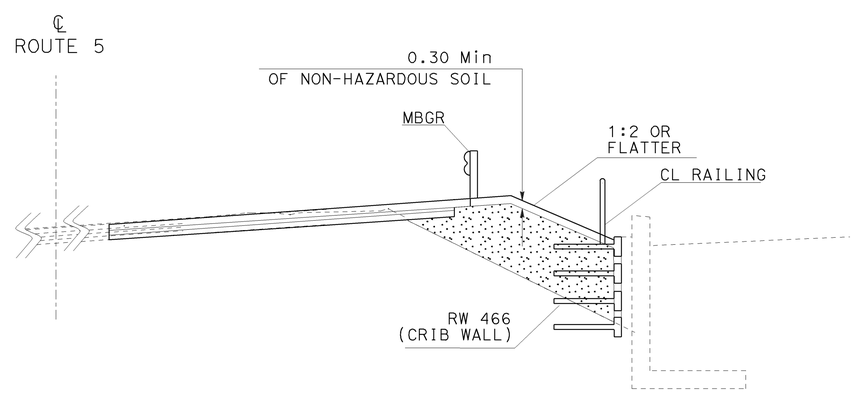

ROUTE 5

STA 465+68.792 TO 466+88.688

(STAGE 1, PHASE 1A)

MATERIAL WITH AERIALLY DEPOSITED LEAD

THIS PLAN IS ACCURATE FOR AERIALLY DEPOSITED LEAD EXCAVATION AND EMBANKMENT WORK ONLY.

ALL DIMENSIONS ARE IN METERS
UNLESS OTHERWISE SHOWN

CONSTRUCTION DETAILS
EMBANKMENT

NO SCALE

C-28

CALCULATED-DESIGNED BY	CUONG T TRAN
CHECKED BY	MUNSHI MOHSIN
REVISED BY	CTT
DATE REVISED	03-09
FUNCTIONAL SUPERVISOR	CELINA AVILES

STATE OF CALIFORNIA - DEPARTMENT OF TRANSPORTATION
Caltrans OFFICE OF DESIGN D

LAST REVISION 03-15-09 | DATE PLOTTED => 12-JUN-2009 | TIME PLOTTED => 08:52

Dist	COUNTY	ROUTE	KILOMETER POST TOTAL PROJECT	SHEET No.	TOTAL SHEETS
07	LA	5	42.8/47.3	70	1073

REGISTERED CIVIL ENGINEER 2-24-09 DATE

6-8-09
PLANS APPROVAL DATE

REGISTERED PROFESSIONAL ENGINEER MUNSHI MOHSIN No. 61916 Exp. 9/30/09 CIVIL STATE OF CALIFORNIA

THE STATE OF CALIFORNIA OR ITS OFFICERS OR AGENTS SHALL NOT BE RESPONSIBLE FOR THE ACCURACY OR COMPLETENESS OF ELECTRONIC COPIES OF THIS PLAN SHEET.

Caltrans Metric

NOTES:

1. SEE STANDARD PLAN T51 FOR TEMPORARY SILT FENCE.
2. DIMENSIONS MAY VARY TO FIT FIELD CONDITIONS.

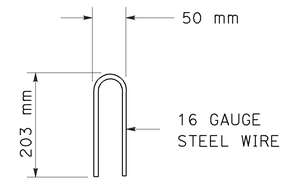

STAPLE DETAIL

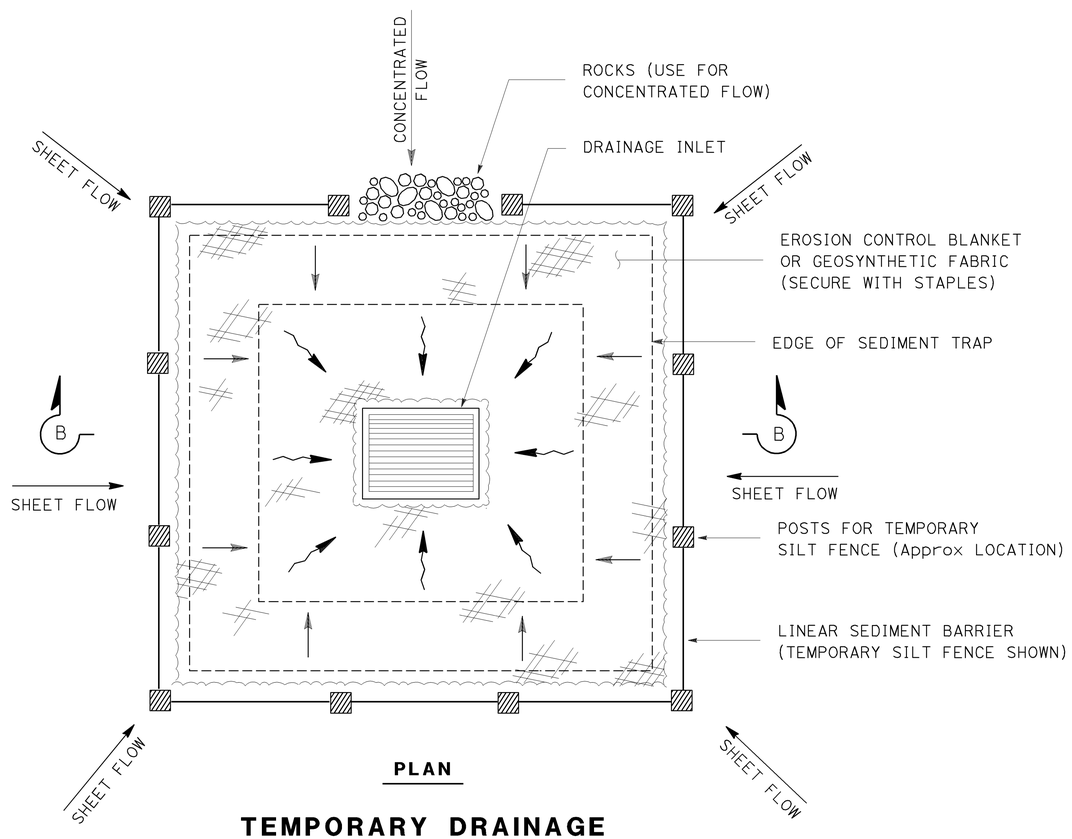

PLAN

TEMPORARY DRAINAGE INLET PROTECTION (TYPE 2) (EXCAVATED SEDIMENT TRAP)

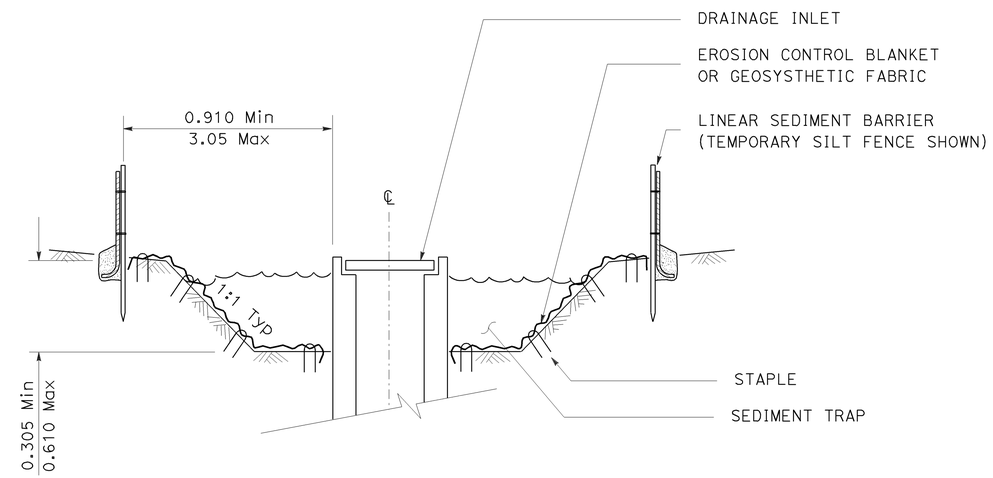

SECTION B-B

ALL DIMENSIONS ARE IN METERS UNLESS OTHERWISE SHOWN

CONSTRUCTION DETAILS

TEMPORARY DRAINAGE INLET PROTECTION

NO SCALE

C-29

STATE OF CALIFORNIA - DEPARTMENT OF TRANSPORTATION
Caltrans OFFICE OF DESIGN D

FUNCTIONAL SUPERVISOR: CELINA AVILES
CALCULATED-DESIGNED BY: CUONG T. TRAN
CHECKED BY: MUNSHI MOHSIN
REVISED BY
DATE REVISED

LAST REVISION 04-28-09
DATE PLOTTED => 12-JUN-2009
TIME PLOTTED => 08:52

Dist	COUNTY	ROUTE	KILOMETER POST TOTAL PROJECT	SHEET No.	TOTAL SHEETS
07	LA	5	42.8/47.3	71	1073

REGISTERED CIVIL ENGINEER 12-17-08 DATE

6-8-09
PLANS APPROVAL DATE

REGISTERED PROFESSIONAL ENGINEER BALDEV K. BHALLA No. 34350 Exp. 9/30/09 CIVIL STATE OF CALIFORNIA

THE STATE OF CALIFORNIA OR ITS OFFICERS OR AGENTS SHALL NOT BE RESPONSIBLE FOR THE ACCURACY OR COMPLETENESS OF ELECTRONIC COPIES OF THIS PLAN SHEET.

Caltrans Metric

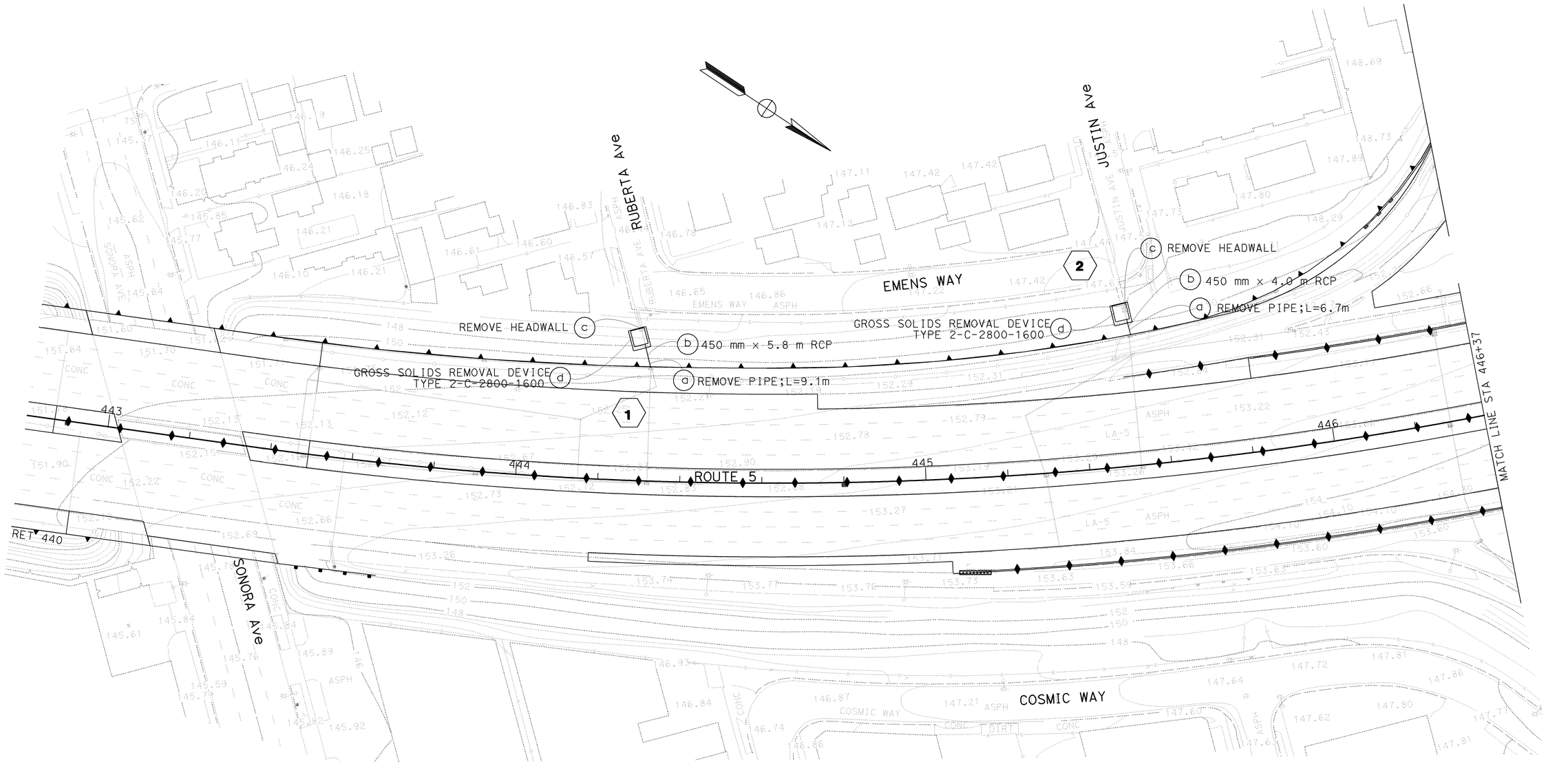

ALL DIMENSIONS ARE IN METERS UNLESS OTHERWISE SHOWN

WATER POLLUTION CONTROL PLAN

SCALE 1:500

W-1

THIS PLAN ACCURATE FOR WATER POLLUTION CONTROL WORK ONLY

STATE OF CALIFORNIA - DEPARTMENT OF TRANSPORTATION
Caltrans
HYDRAULICS

FUNCTIONAL SUPERVISOR: DAVE BHALLA
CALCULATED-DESIGNED BY: C.P.NGUYEN
CHECKED BY: S.THAI
REVISED BY
DATE REVISED

LAST REVISION 00-00-00
DATE PLOTTED => 23-JUN-2009
TIME PLOTTED => 06:17

Dist	COUNTY	ROUTE	KILOMETER POST TOTAL PROJECT	SHEET No.	TOTAL SHEETS
07	LA	5	42.8/47.3	72	1073

REGISTERED CIVIL ENGINEER 12-17-08 DATE

6-8-09
PLANS APPROVAL DATE

REGISTERED PROFESSIONAL ENGINEER BALDEV K. BHALLA No. 34350 Exp. 9/30/09 CIVIL STATE OF CALIFORNIA

THE STATE OF CALIFORNIA OR ITS OFFICERS OR AGENTS SHALL NOT BE RESPONSIBLE FOR THE ACCURACY OR COMPLETENESS OF ELECTRONIC COPIES OF THIS PLAN SHEET.

Caltrans Metric

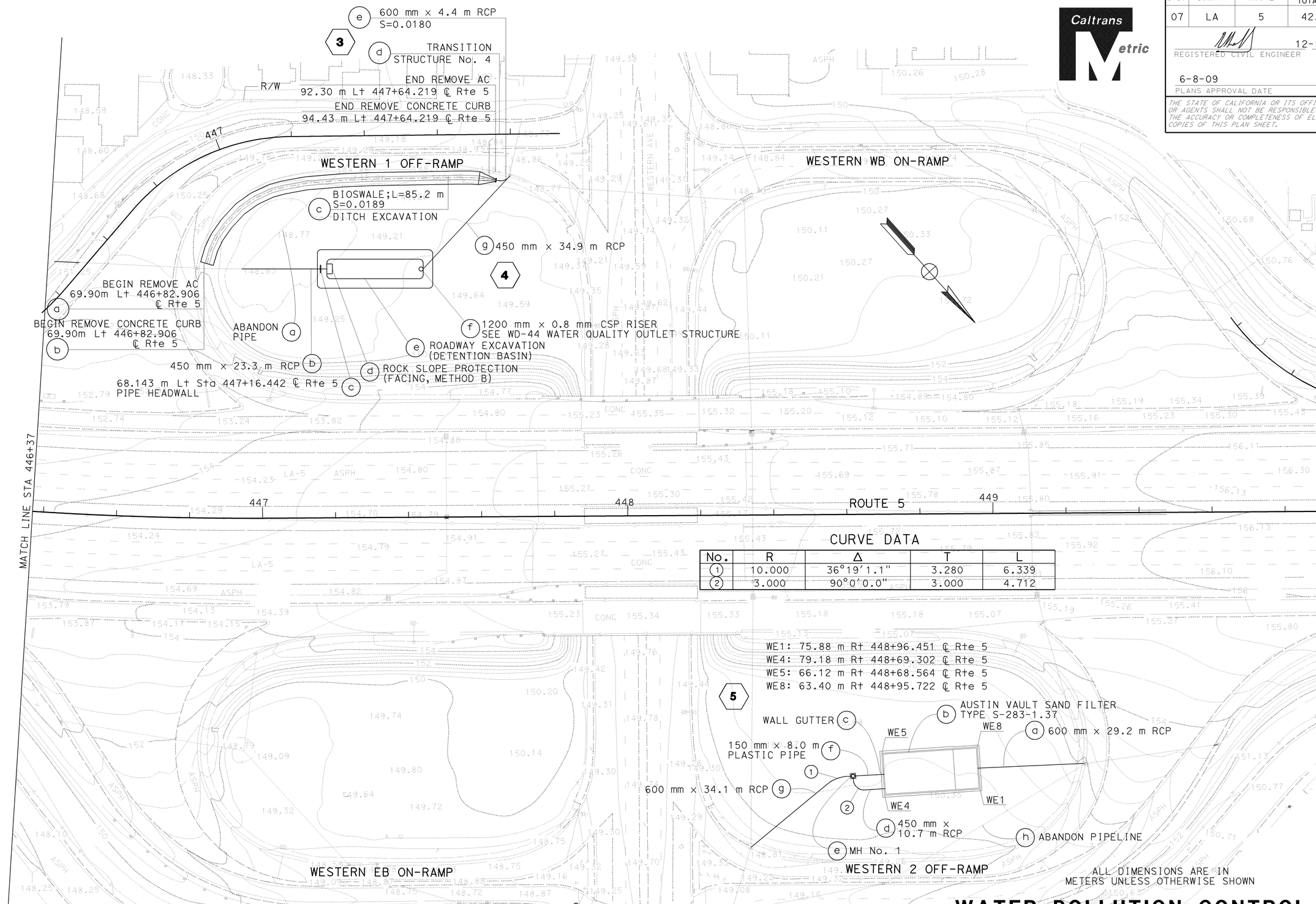

CURVE DATA

No.	R	Δ	T	L
1	10.000	36°19'1.1"	3.280	6.339
2	3.000	90°0'0.0"	3.000	4.712

ALL DIMENSIONS ARE IN METERS UNLESS OTHERWISE SHOWN

WATER POLLUTION CONTROL PLAN

SCALE 1:500

W-2

THIS PLAN ACCURATE FOR WATER POLLUTION CONTROL WORK ONLY

STATE OF CALIFORNIA - DEPARTMENT OF TRANSPORTATION
Caltrans
HYDRAULICS

FUNCTIONAL SUPERVISOR: DAVE BHALLA
CALCULATED-DESIGNED BY: C.P.NGUYEN
CHECKED BY: S.THAI
REVISED BY / DATE REVISED

LAST REVISION 00-00-00 DATE PLOTTED => 12-JUN-2009 TIME PLOTTED => 08:07

Dist	COUNTY	ROUTE	KILOMETER POST TOTAL PROJECT	SHEET No.	TOTAL SHEETS
07	LA	5	42.8/47.3	73	1073

REGISTERED CIVIL ENGINEER 12-17-08 DATE

6-8-09
PLANS APPROVAL DATE

REGISTERED PROFESSIONAL ENGINEER
BALDEV K. BHALLA
No. 34350
Exp. 9/30/09
CIVIL
STATE OF CALIFORNIA

THE STATE OF CALIFORNIA OR ITS OFFICERS OR AGENTS SHALL NOT BE RESPONSIBLE FOR THE ACCURACY OR COMPLETENESS OF ELECTRONIC COPIES OF THIS PLAN SHEET.

Caltrans Metric

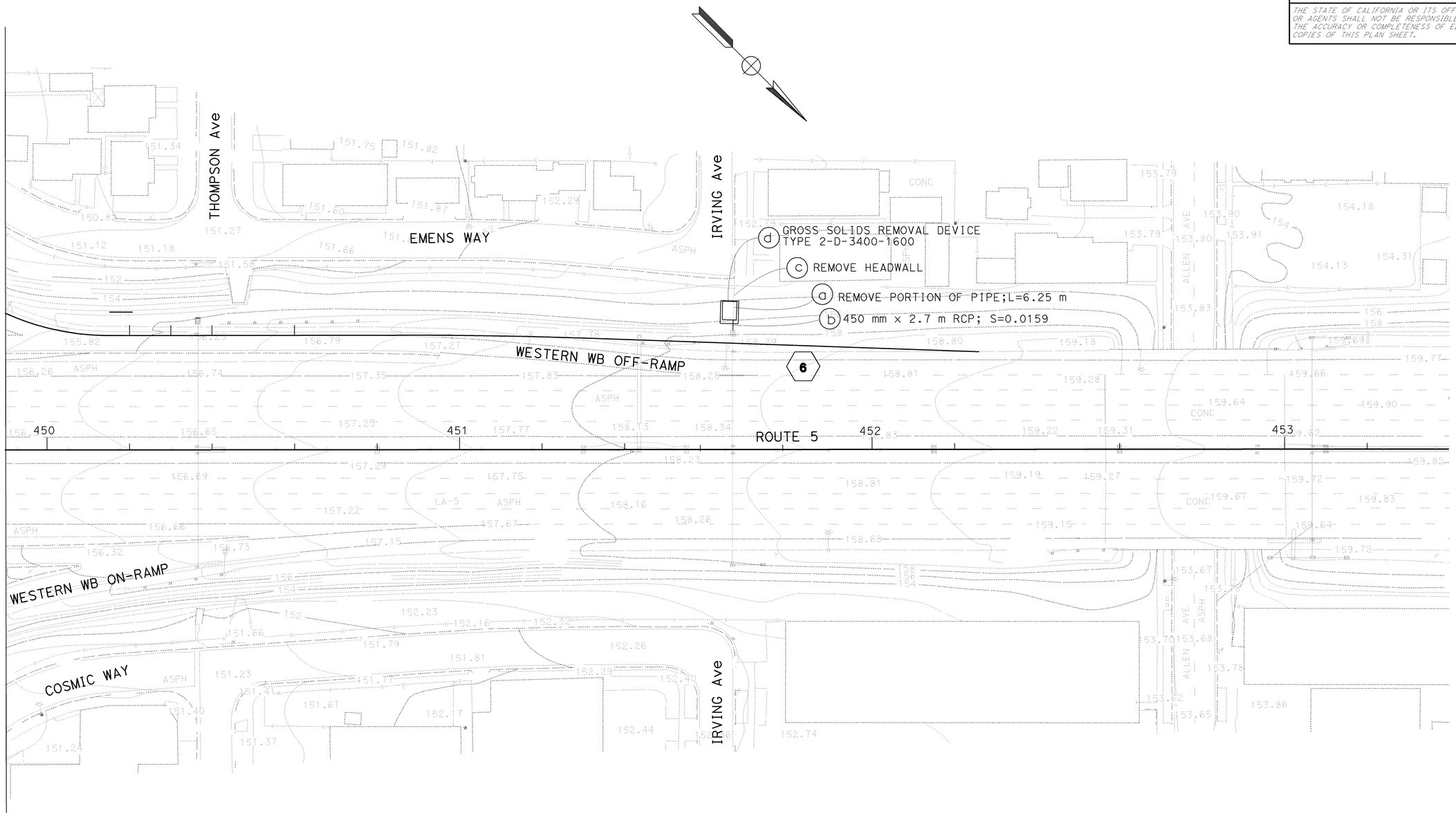

ALL DIMENSIONS ARE IN METERS UNLESS OTHERWISE SHOWN

WATER POLLUTION CONTROL PLAN

SCALE 1:500

THIS PLAN ACCURATE FOR WATER POLLUTION CONTROL WORK ONLY

W-3

CALCULATED-DESIGNED BY	C.P.NGUYEN
CHECKED BY	S.THAI
REVISED BY	
DATE REVISED	
FUNCTIONAL SUPERVISOR	DAVE BHALLA

STATE OF CALIFORNIA - DEPARTMENT OF TRANSPORTATION
Caltrans
HYDRAULICS

LAST REVISION 00-00-00 | DATE PLOTTED => 12-JUN-2009 | TIME PLOTTED => 08:07

Dist	COUNTY	ROUTE	KILOMETER POST TOTAL PROJECT	SHEET No.	TOTAL SHEETS
07	LA	5	42.8/47.3	74	1073

REGISTERED CIVIL ENGINEER 12-17-08 DATE

6-8-09
PLANS APPROVAL DATE

REGISTERED PROFESSIONAL ENGINEER BALDEV K. BHALLA No. 34350 Exp. 9/30/09 CIVIL STATE OF CALIFORNIA

THE STATE OF CALIFORNIA OR ITS OFFICERS OR AGENTS SHALL NOT BE RESPONSIBLE FOR THE ACCURACY OR COMPLETENESS OF ELECTRONIC COPIES OF THIS PLAN SHEET.

Caltrans Metric

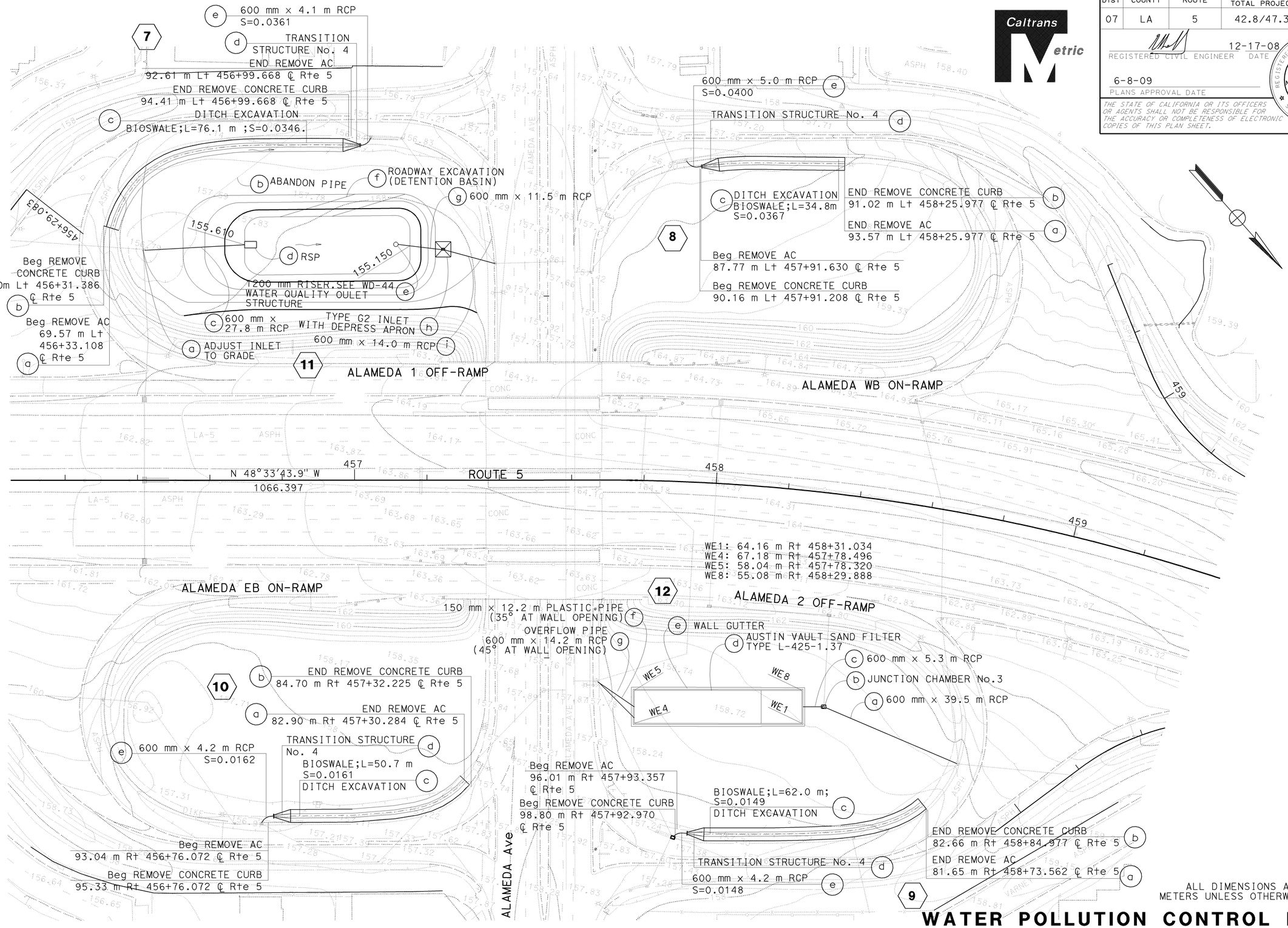

ALL DIMENSIONS ARE IN METERS UNLESS OTHERWISE SHOWN

WATER POLLUTION CONTROL PLAN

SCALE 1:500

W-4

THIS PLAN ACCURATE FOR WATER POLLUTION CONTROL WORK ONLY

STATE OF CALIFORNIA - DEPARTMENT OF TRANSPORTATION
Caltrans
HYDRAULICS

FUNCTIONAL SUPERVISOR: DAVE BHALLA
CALCULATED-DESIGNED BY: C.P.NGUYEN
CHECKED BY: S.THAI
REVISED BY / DATE REVISED

LAST REVISION 00-00-00
DATE PLOTTED => 12-JUN-2009
TIME PLOTTED => 08:07

Dist	COUNTY	ROUTE	KILOMETER POST TOTAL PROJECT	SHEET No.	TOTAL SHEETS
07	LA	5	42.8/47.3	75	1073

REGISTERED CIVIL ENGINEER DATE 12-17-08

PLANS APPROVAL DATE 6-8-09

REGISTERED PROFESSIONAL ENGINEER BALDEV K. BHALLA No. 34350 Exp. 9/30/09 CIVIL STATE OF CALIFORNIA

THE STATE OF CALIFORNIA OR ITS OFFICERS OR AGENTS SHALL NOT BE RESPONSIBLE FOR THE ACCURACY OR COMPLETENESS OF ELECTRONIC COPIES OF THIS PLAN SHEET.

Caltrans Metric

CURVE DATA

No.	R	Δ	T	L
1	4.000	70°55'34.1"	2.849	4.952
2	4.000	82°23'6.0"	3.501	5.752
3	4.000	58°20'14.3"	2.233	4.073

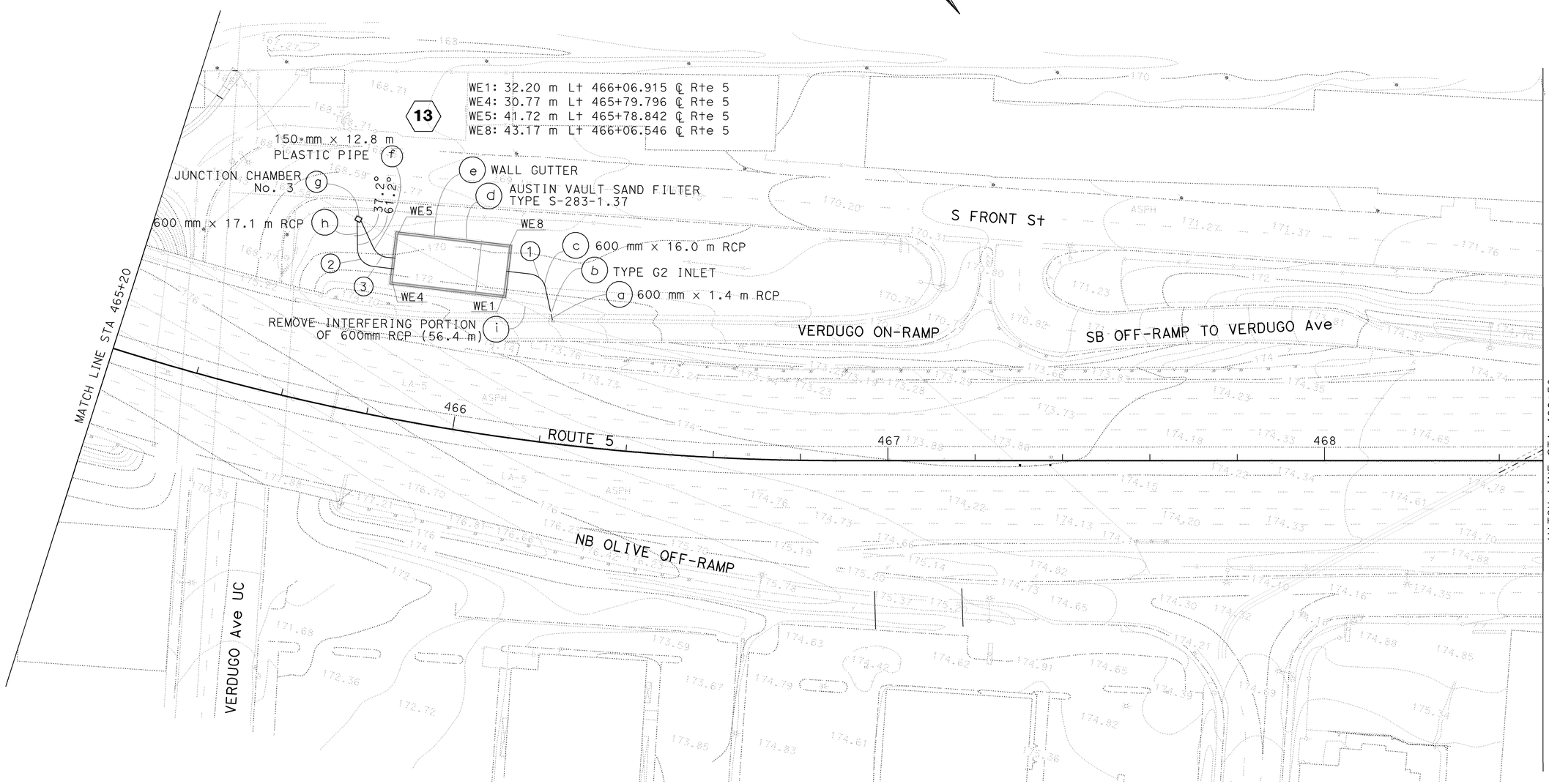

ALL DIMENSIONS ARE IN METERS UNLESS OTHERWISE SHOWN

WATER POLLUTION CONTROL PLAN

SCALE 1:500

THIS PLAN ACCURATE FOR WATER POLLUTION CONTROL WORK ONLY

W-5

STATE OF CALIFORNIA - DEPARTMENT OF TRANSPORTATION

Caltrans **HYDRAULICS**

FUNCTIONAL SUPERVISOR: DAVE BHALLA

CALCULATED-DESIGNED BY: C.P.NGUYEN

CHECKED BY: S.THAI

REVISED BY / DATE REVISED

LAST REVISION 00-00-00 | DATE PLOTTED => 12-JUN-2009 | TIME PLOTTED => 08:07

DIST.	COUNTY	ROUTE	MILE POST TOTAL PROJECT	SHEET NO.	TOTAL SHEETS
07	LA	5	42.8/47.3	76	1073

REGISTERED ENGINEER - CIVIL

6-8-09
PLANS APPROVAL DATE

REGISTERED PROFESSIONAL ENGINEER DOUGLAS DUNRUD No. 47240 Exp. 12/31/09 CIVIL STATE OF CALIFORNIA

The State of California or its officers or agents shall not be responsible for the accuracy or completeness of electronic copies of this plan sheet.

Caltrans Metric

GENERAL NOTES

Designation:
Partial Austin Vault Sand Filters (AVSFs) are open air reinforced concrete vaults utilizing both sedimentation and sand filtration basins. Type designation is based on length configuration, water quality volume to be drained in a 24 hour period, and average depth of water.

Standard configurations are noted for the following design water quality volumes (WQV): 142, 283, and 425 cubic meters. Length configurations are either short (S) or long (L). The average water depth can be either 910 mm, 1370 mm, 1830 mm as designed in Design Water Quality Volumes (WQV) table.

Special Reinforcement Coverage:
AVSF Standard Details are not to be used in a corrosive environment or where there is a severe abrasive flow condition or in freeze-thaw locations.

Special Design:
Required for the following conditions: ground water conditions above bottom of AVSF, surcharge loads exceeding HS20 truck load, design bearing pressures or sizes greater than those on this plan, inlet velocities which exceed 2.44 m/sec at gabion wall, and settlement due to liquefaction.

DESIGN WATER QUALITY VOLUMES (WQV)

AVSF Type*	WQV (m^3)	W(m)	Ls(m)	Lf(m)	Hw(m)
S-142-0.91	142	8.23	4.57	12.80	0.91
L-142-0.91	142	5.49	6.40	19.20	0.91
S-142-1.37	177	8.23	4.57	12.80	1.37
L-142-1.37	177	5.49	6.4	19.20	1.37
S-142-1.83	212	8.23	4.57	12.80	1.83
L-142-1.83	212	5.49	6.40	19.20	1.83
S-283-0.91	283	10.97	6.40	19.20	0.91
L-283-0.91	283	7.32	9.14	28.65	0.91
S-283-1.37	354	10.97	6.40	19.20	1.37
L-283-1.37	354	7.32	9.14	28.65	1.37
S-283-1.83	425	10.97	6.40	19.20	1.83
L-283-1.83	425	7.32	9.14	28.65	1.83
S-425-0.91	425	13.72	7.62	23.16	0.91
L-425-0.91	425	9.14	11.28	35.05	0.91
S-425-1.37	531	13.72	7.62	23.16	1.37
L-425-1.37	531	9.14	11.28	35.05	1.37
S-425-1.83	637	13.72	7.62	23.16	1.83
L-425-1.83	637	9.14	11.28	35.05	1.83

* AVSF Type = Length configuration (S or L) - water quality volume (CM) - design water depth (Hw elevation)

DESIGN NOTES

Specifications:
Design:
Bridge Design Specification April 2000 (LFD)
(1996 AASHTO) with interims and revisions by Caltrans

Wall & Footing (LFD): 1.5 D + 1.5 E + 1.5 W
Where D = Dead Load
E = Earth Load
W = Water Load
Capacity reduction factor is included.

Earth Load:
22 kPa/m vertical,

Water Load:
9.8 kPa/m horizontal/vertical,

Equivalent Fluid Pressure =
15.7 kPa/m horizontal (Case I).

Earth pressure for 1:2 unlimited slope determined from Rankine's formula with ø = 33°42′ (Case II).

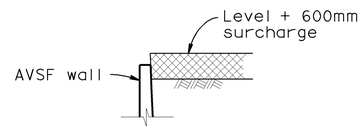

CASE I

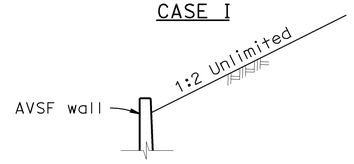

CASE II

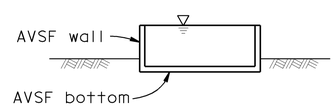

CASE III

DETAIL OF DESIGN LOADING CASES

CASE I Level + 600mm surcharge, AVSF empty
CASE II 1:2 Unlimited slope, AVSF empty
CASE III AVSF full of water, no soil pressure

Design Conditions:
Design H may be exceeded by 150 mm before going to the next size.

Unit Stresses:
f'_c = 25 MPa
fy= 420 MPa

Shear:
Maximum allowable shear, Vc = $0.25\sqrt{f'c}$ Mpa

Design Bearing Pressure = 144 kPa (service)

INDEX TO PLAN

SHEET No.	TITLE
1	GENERAL NOTES
2	LAYOUT No. 1
3	LAYOUT No. 2
4	WALL DETAILS
5	FOOTING DETAILS
6	DETAILS No. 1
7	DETAILS No. 2
8	DETAILS No. 3
9	DETAILS No. 4
10	MISCELLANEOUS DETAILS No. 1
11	MISCELLANEOUS QUANTITIES

CONSTRUCTION NOTES

Expansion joints:
Inverts and sidewalls - Place 50 mm expansion joint filler at 9145 mm + centers with waterstop, see "Details No. 2" sheet for specific wall & invert details.

Construction Joints:
Temporary joints may be permitted if normal (or radial) to ℄ of AVSF. Otherwise, the contractor is to submit a proposal for consideration.

Backfill:
See Standard Specifications, except the difference in backfill shall not exceed 2.40m between side walls and inlet and outlet walls.

Earthwork:
Limits of payment for excavation and backfill.

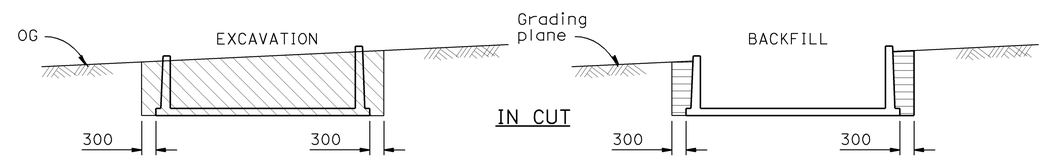

IN CUT

LEGEND:
Structure excavation (AVSF)
Structure backfill (AVSF)
Original ground, OG

NOTES:
1. Slope or shore excavation sides as necessary.
2. Dimensions shown are minimum.

STANDARD PLANS DATED JULY 2004

B0-3	BRIDGE DETAILS
B3-9	RETAINING WALL DETAILS No. 2
B6-21	JOINT SEALS (MAXIMUM MOVEMENT RATING = 50 mm)
B11-47	CABLE RAILING
D100A	GABION BASKET DETAILS No. 1
D100B	GABION BASKET DETAILS No. 2

STANDARD PLAN SHEET No.
DETAIL No.

ALL DIMENSIONS ARE IN MILLIMETERS UNLESS OTHERWISE SHOWN

WATER POLLUTION CONTROL DETAILS
WD-1

RELEASE DATE ---
FILE NO. ---
DESIGN BY D.Dunrud CHECKED J&P Peterson
DETAILS BY J&P Peterson CHECKED J&P Peterson
SUBMITTED BY J&P Peterson DRAWING DATE 8/07

STATE OF CALIFORNIA
DEPARTMENT OF TRANSPORTATION

DIVISION OF ENGINEERING SERVICES

BRIDGE NO.
MILE POST

AUSTIN VAULT SAND FILTER
GENERAL NOTES

ORIGINAL SCALE IN MILLIMETERS FOR REDUCED PLANS 0 10 20 30 40 50 60 70 80 90 100

CU 07
EA 121841

DISREGARD PRINTS BEARING EARLIER REVISION DATES

REVISION DATES (PRELIMINARY STAGE ONLY)

SHEET 1 OF 11

USERNAME => trannda
DGN FILE => 712184in001.dgn

DATE PLOTTED => 12-JUN-2009 08:07

DIST.	COUNTY	ROUTE	MILE POST TOTAL PROJECT	SHEET NO.	TOTAL SHEETS
07	LA	5	42.8/47.3	77	1073

REGISTERED ENGINEER - CIVIL

6-8-09
PLANS APPROVAL DATE

REGISTERED PROFESSIONAL ENGINEER DOUGLAS DUNRUD No. 47240 Exp. 12/31/09 CIVIL STATE OF CALIFORNIA

The State of California or its officers or agents shall not be responsible for the accuracy or completeness of electronic copies of this plan sheet.

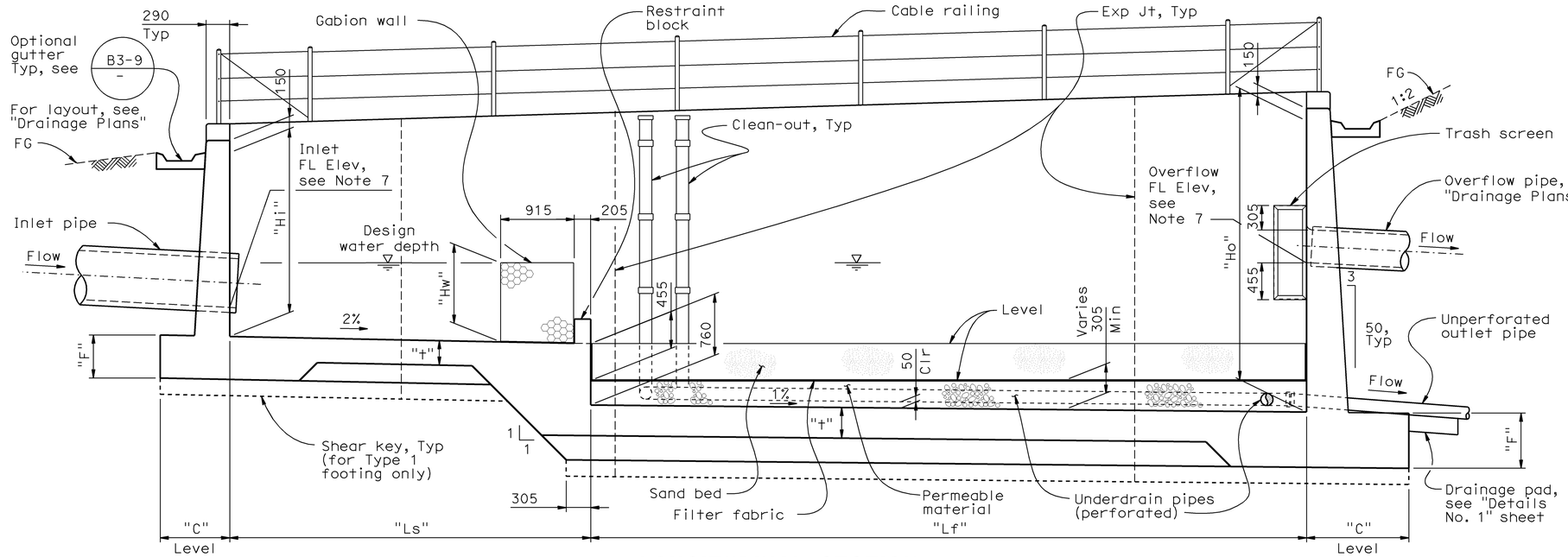

LONGITUDINAL SECTION

No Scale

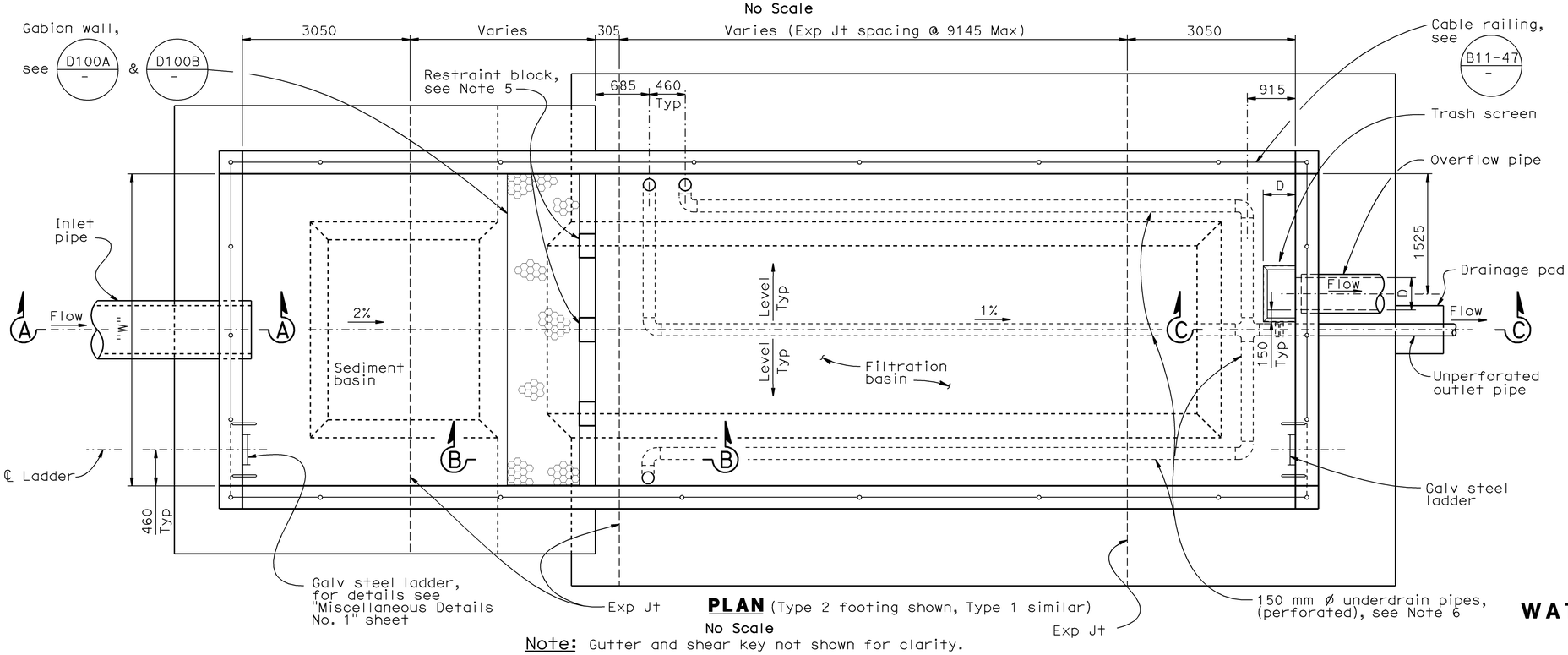

PLAN (Type 2 footing shown, Type 1 similar)

No Scale

Note: Gutter and shear key not shown for clarity.

NOTES:

1. For dimensions "W", "Ls", "Lf" and "Hw", see Design WQV table on "General Notes" sheet.
2. For dimensions "C" and "F", see "Wall Details" sheet.
3. For Typical Section, see "Wall Details" sheet.
4. For Section A - A, B - B and C - C, see "Details No. 1" sheet.
5. For restraint block details, see "Details No. 1" and "Details No. 2" sheets.
6. For details of underdrain (sand filter), see "Details No. 4" sheet.
7. FL elevation, see "Drainage Plans".
8. For Type 1 and Type 2 footing, see "Footing Details" sheet.
9. For slope of unperforated outlet pipe, see "Drainage Plans".
10. For dimension "t", see "Footing Details" sheet.
11. For trash screen details (frame and perforated metal skin), see "Details No 3" sheet.

Austin Type	Allowable Wall Heights	
	Sediment Basin (Hi)	Filtration Basin (Ho)
S-142-0.91	1830-3660	3050-4880
L-142-0.91	1830-3660	3050-4880
S-142-1.37	2440-3660	3660-4880
L-142-1.37	2440-3660	3660-4880
S-142-1.83	3050-3660	4270-4880
L-142-1.83	3050-3660	4270-4880
S-283-0.91	1830-3660	3050-4880
L-283-0.91	1830-3660	3050-4880
S-283-1.37	2440-3660	3660-4880
L-283-1.37	2440-3660	3660-4880
S-283-1.83	3050-3660	4270-4880
L-283-1.83	3050-3660	4270-4880
S-425-0.91	1830-3660	3050-4880
L-425-0.91	1830-3660	3050-4880
S-425-1.37	2440-3660	3660-4880
L-425-1.37	2440-3660	3660-4880
S-425-1.83	3050-3660	4270-4880
L-425-1.83	3050-3660	4270-4880

WATER POLLUTION CONTROL DETAILS

ALL DIMENSIONS ARE IN MILLIMETERS UNLESS OTHERWISE SHOWN

WD-2

RELEASE DATE ---	DESIGN	BY D.Dunrud	CHECKED J&P Peterson
FILE NO. ---	DETAILS	BY J&P Peterson	CHECKED J&P Peterson
	SUBMITTED	BY J&P Peterson	DRAWING DATE 8/07

STATE OF CALIFORNIA
DEPARTMENT OF TRANSPORTATION

DIVISION OF ENGINEERING SERVICES

BRIDGE NO.

MILE POST

AUSTIN VAULT SAND FILTER
LAYOUT No. 1

ORIGINAL SCALE IN MILLIMETERS FOR REDUCED PLANS 0 10 20 30 40 50 60 70 80 90 100

CU 07
EA 121841

DISREGARD PRINTS BEARING EARLIER REVISION DATES

REVISION DATES (PRELIMINARY STAGE ONLY)

SHEET 2 OF 11

USERNAME => trannda
DGN FILE => 712184ih002.dgn

DATE PLOTTED => 12-JUN-2009 08:33

DIST.	COUNTY	ROUTE	MILE POST TOTAL PROJECT	SHEET NO.	TOTAL SHEETS
07	LA	5	42.8/47.3	78	1073

REGISTERED ENGINEER - CIVIL

6-8-09
PLANS APPROVAL DATE

REGISTERED PROFESSIONAL ENGINEER DOUGLAS DUNRUD No. 47240 Exp. 12/31/09 CIVIL STATE OF CALIFORNIA

The State of California or its officers or agents shall not be responsible for the accuracy or completeness of electronic copies of this plan sheet.

Caltrans Metric

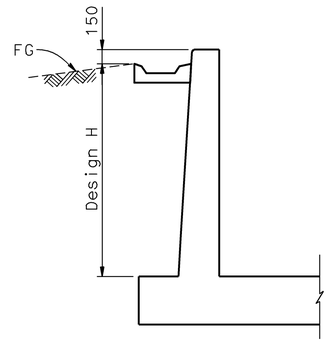

TYPICAL WALL SECTION
(INLET, OUTLET, AND SIDEWALL)
No scale

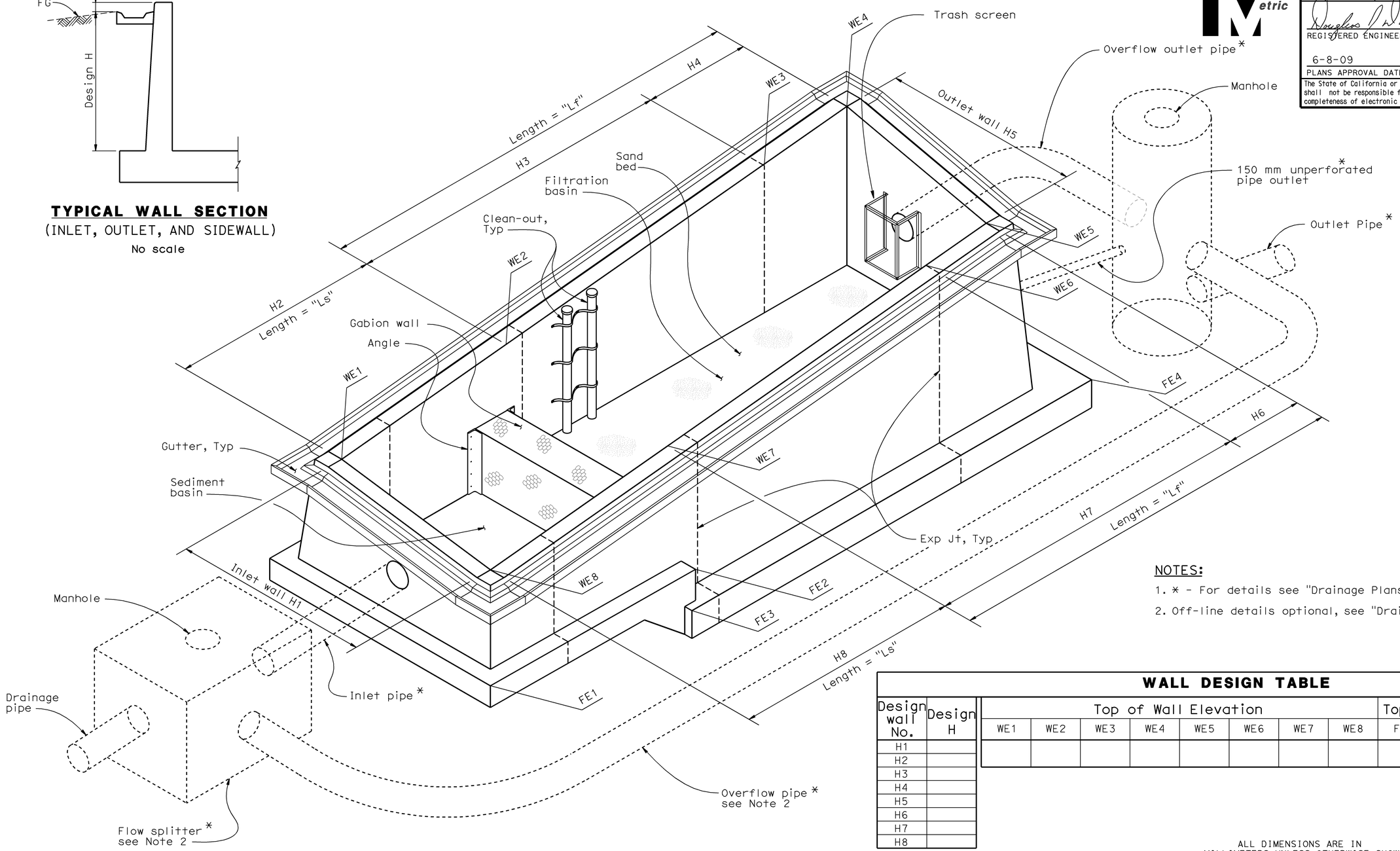

NOTES:

1. * - For details see "Drainage Plans"
2. Off-line details optional, see "Drainage Plans".

WALL DESIGN TABLE

Design wall No.	Design H	Top of Wall Elevation								Top of Footing Elevation			
		WE1	WE2	WE3	WE4	WE5	WE6	WE7	WE8	FE1	FE2	FE3	FE4
H1													
H2													
H3													
H4													
H5													
H6													
H7													
H8													

ISOMETRIC VIEW - AUSTIN VAULT SAND FILTER DRAINAGE SYSTEM
No Scale

NOTE: Steel ladders and cable railings not shown for clarity.

ALL DIMENSIONS ARE IN MILLIMETERS UNLESS OTHERWISE SHOWN

WATER POLLUTION CONTROL DETAILS
WD-3

DATE PLOTTED => 12-JUN-2009 08:33

RELEASE DATE ---	DESIGN	BY D.Dunrud	CHECKED J&P Peterson	---
FILE NO. ---	DETAILS	BY J&P Peterson	CHECKED J&P Peterson	
	SUBMITTED	BY J&P Peterson	DRAWING DATE 8/07	

STATE OF CALIFORNIA
DEPARTMENT OF TRANSPORTATION

DIVISION OF ENGINEERING SERVICES

BRIDGE NO.
MILE POST

AUSTIN VAULT SAND FILTER
LAYOUT No. 2

ORIGINAL SCALE IN MILLIMETERS FOR REDUCED PLANS 0 10 20 30 40 50 60 70 80 90 100

CU 07
EA 121841

DISREGARD PRINTS BEARING EARLIER REVISION DATES

REVISION DATES (PRELIMINARY STAGE ONLY)

SHEET 3 OF 11

USERNAME => trannda
DGN FILE => 712184ih003.dgn

DIST.	COUNTY	ROUTE	MILE POST TOTAL PROJECT	SHEET NO.	TOTAL SHEETS
07	LA	5	42.8/47.3	79	1073

REGISTERED ENGINEER - CIVIL

6-8-09

PLANS APPROVAL DATE

REGISTERED PROFESSIONAL ENGINEER DOUGLAS DUNRUD No. 47240 Exp. 12/31/09 CIVIL STATE OF CALIFORNIA

The State of California or its officers or agents shall not be responsible for the accuracy or completeness of electronic copies of this plan sheet.

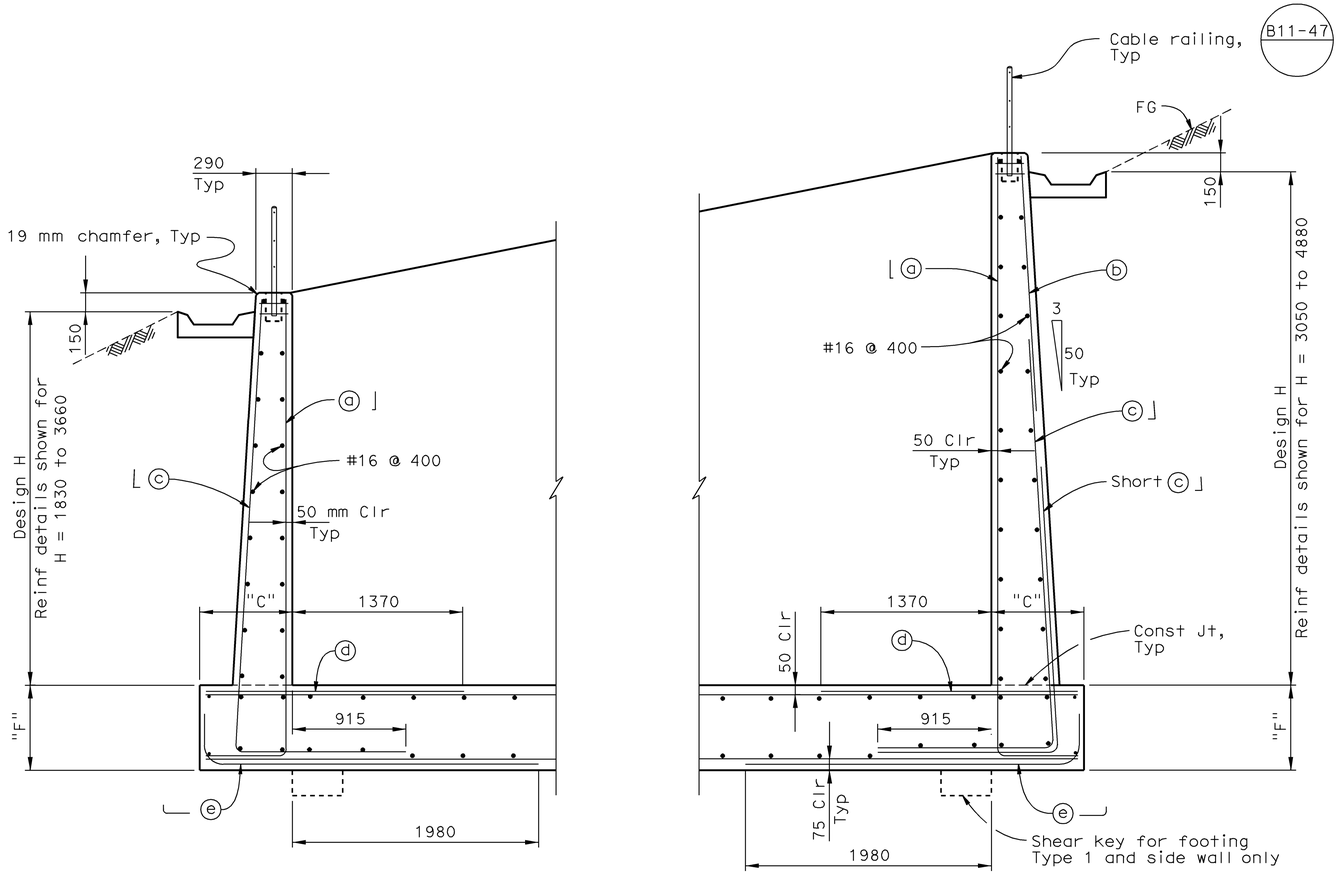

TYPICAL SECTION

No Scale

NOTES:

1. For dimension W, see "General Notes" sheet.
2. Design "H" may be exceed by 150 mm before going to next size.
3. For footing details not shown, see "Footing Details" sheet.
4. Concrete and steel quantities noted are based on foot of wall length.

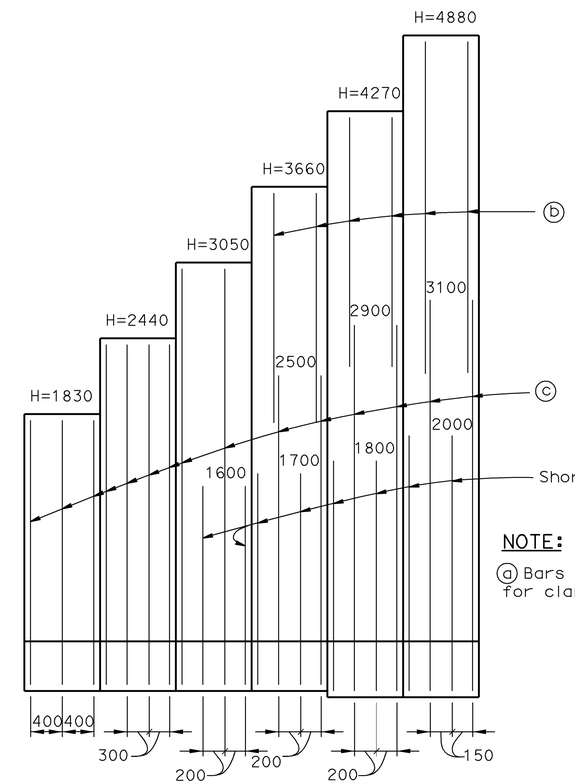

ELEVATION

No Scale

NOTE:

ⓐ Bars not shown for clarity.

TABLE OF REINFORCING STEEL DIMENSIONS AND DATA FOR WALL

Design H	1830	2440	3050	3660	4270	4880
Batter V:H	100:6	100:6	100:6	100:6	100:6	100:6
C	760	760	760	760	840	840
F	535	535	535	535	685	685
⌋ ⓐ bars # @ "	16 @ 400	16 @ 300	19 @ 400	16 @ 200	19 @ 200	16 @ 150
ⓑ bars # @ "	-	-	-	16 @ 400	16 @ 400	16 @ 300
⌊ ⓒ bars # @ "	16 @ 400	19 @ 300	19 @ 200	22 @ 200	25 @ 200	25 @ 150
ⓓ bars # @ "	19 @ 400	19 @ 300	16 @ 200	19 @ 200	19 @ 200	19 @ 150
⌊ ⓔ bars # @ "	19 @ 400	19 @ 300	22 @ 200	25 @ 200	25 @ 200	29 @ 150
Concrete (m^3/m)	0.70	0.95	1.25	1.56	1.88	2.23
* Steel (kg/m)	74.41	116.08	165.19	226.20	287.22	391.39

* Including all wall stem reinforcement and footing slab ⓓ, ⓔ bars.

ALL DIMENSIONS ARE IN MILLIMETERS UNLESS OTHERWISE SHOWN

WATER POLLUTION CONTROL DETAILS
WD-4

DATE PLOTTED => 12-JUN-2009 08:45

RELEASE DATE ---	DESIGN	BY D.Dunrud	CHECKED J&P Peterson
	DETAILS	BY J&P Peterson	CHECKED J&P Peterson
FILE NO. ---	SUBMITTED	BY J&P Peterson	DRAWING DATE 8/07

STATE OF CALIFORNIA DEPARTMENT OF TRANSPORTATION

DIVISION OF ENGINEERING SERVICES

BRIDGE NO.

MILE POST

AUSTIN VAULT SAND FILTER

WALL DETAILS

ORIGINAL SCALE IN MILLIMETERS FOR REDUCED PLANS 0 10 20 30 40 50 60 70 80 90 100

CU 07
EA 121841

DISREGARD PRINTS BEARING EARLIER REVISION DATES

REVISION DATES (PRELIMINARY STAGE ONLY)

SHEET 4 OF 11

USERNAME => trannda
DGN FILE => 7121841h004.dgn

DIST.	COUNTY	ROUTE	MILE POST TOTAL PROJECT	SHEET NO.	TOTAL SHEETS
07	LA	5	42.8/47.3	80	1073

REGISTERED ENGINEER - CIVIL

6-8-09
PLANS APPROVAL DATE

REGISTERED PROFESSIONAL ENGINEER DOUGLAS DUNRUD No. 47240 Exp. 12/31/09 CIVIL STATE OF CALIFORNIA

The State of California or its officers or agents shall not be responsible for the accuracy or completeness of electronic copies of this plan sheet.

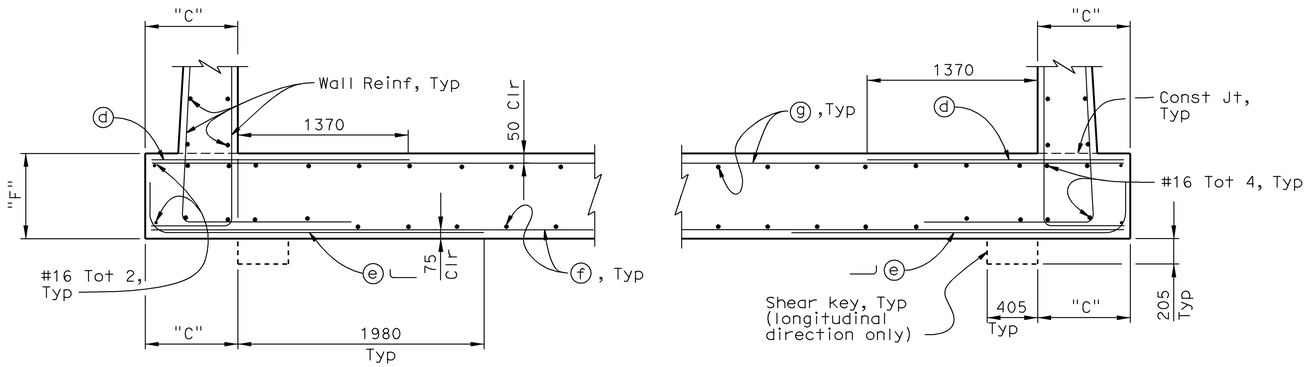

TYPICAL FOOTING (TYPE 1)

No Scale

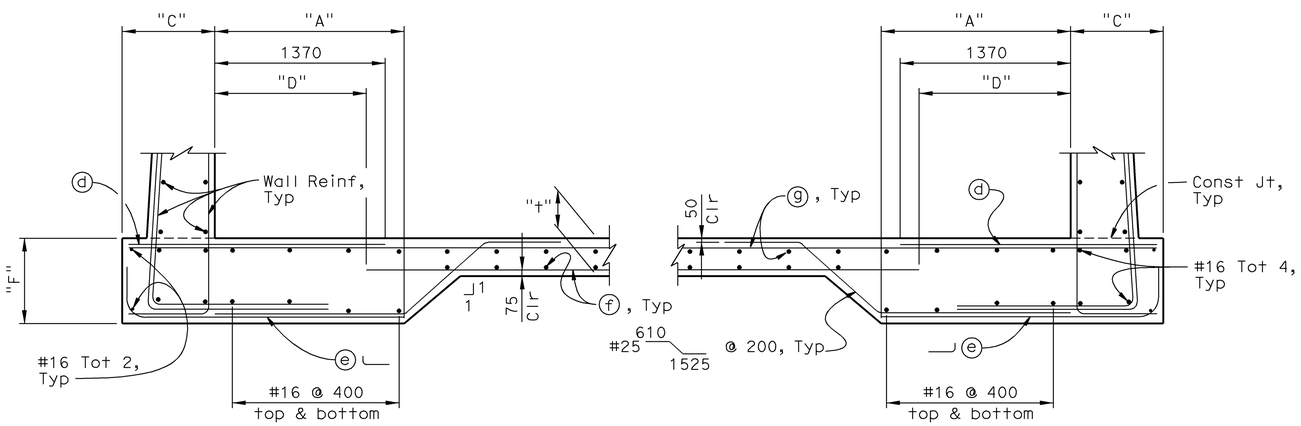

TYPICAL FOOTING (TYPE 2)

No Scale

"t" - 380 for Sediment Basin
380 for Filtration Basin if all adjacent walls H ≤ 3660
535 for Filtration Basin if any adjacent walls H = 4270 or 4880

TABLE OF REINFORCING STEEL DIMENSIONS AND DATA FOR INVERT

W		5485	7315	8230	9145	10975	13715
A		-	-	1830	1830	1830	1830
D		1220	1220	1220	1220	1220	1220
Footing Type		1	1	2	2	2	2
Sediment basin	(f) bars # @ "	19 @ 200	19 @ 200	19 @ 200	16 @ 200	19 @ 200	19 @ 200
	(g) bars # @ "	16 @ 200	16 @ 200	16 @ 200	16 @ 200	16 @ 200	16 @ 200
Filtration basin	(f) bars # @ "	29 @ 150	29 @ 150	22 @ 150	22 @ 150	22 @ 150	22 @ 150
	(g) bars # @ "	19 @ 150	19 @ 150	16 @ 150	16 @ 150	16 @ 150	16 @ 150
Concrete (m^3/basin type) see Note 2	Sediment basin	31.4	52.8	32.1	67.3	50.5	69.6
	Filtration basin if H ≤3660	78.0	143.7	64.2	178.1	116.2	165.1
	Filtration basin if H = 4270or4880	101.7	186.6	85.6	240.1	156.0	222.5
Steel (kg/basin type) see Note 2	Sediment basin	2113	3498	2131	5222	3700	5281
	Filtration basin if H ≤3660	12554	23763	6530	20148	13202	19830
	Filtration basin if H = 4270or4880	12722	24009	6616	20368	13334	19993

NOTES:

1. For dimensions "C" and "F", and reinforcement "d" and "e", see "Wall Details" sheet.
2. Quantities noted are for the full length and width of each basin type. For total invert quantities of each AVSF type, combine quantities of sedimentation basin and appropriate filtration basin.

ALL DIMENSIONS ARE IN MILLIMETERS UNLESS OTHERWISE SHOWN

WATER POLLUTION CONTROL DETAILS
WD-5

DATE PLOTTED => 12-JUN-2009 08:34

RELEASE DATE ---	DESIGN	BY D.Dunrud	CHECKED J&P Peterson
FILE NO. ---	DETAILS	BY J&P Peterson	CHECKED J&P Peterson
	SUBMITTED	BY J&P Peterson	DRAWING DATE 8/07

STATE OF CALIFORNIA DEPARTMENT OF TRANSPORTATION

DIVISION OF ENGINEERING SERVICES

BRIDGE NO.

MILE POST

AUSTIN VAULT SAND FILTER
FOOTING DETAILS

ORIGINAL SCALE IN MILLIMETERS FOR REDUCED PLANS 0 10 20 30 40 50 60 70 80 90 100

CU 07
EA 121841

DISREGARD PRINTS BEARING EARLIER REVISION DATES

REVISION DATES (PRELIMINARY STAGE ONLY)

SHEET 5 OF 11

USERNAME => trannda
DGN FILE => 712184ih005.dgn

DIST.	COUNTY	ROUTE	MILE POST TOTAL PROJECT	SHEET NO.	TOTAL SHEETS
07	LA	5	42.8/47.3	81	1073

REGISTERED ENGINEER - CIVIL

6-8-09
PLANS APPROVAL DATE

REGISTERED PROFESSIONAL ENGINEER DOUGLAS DUNRUD No. 47240 Exp. 12/31/09 CIVIL STATE OF CALIFORNIA

The State of California or its officers or agents shall not be responsible for the accuracy or completeness of electronic copies of this plan sheet.

Caltrans Metric

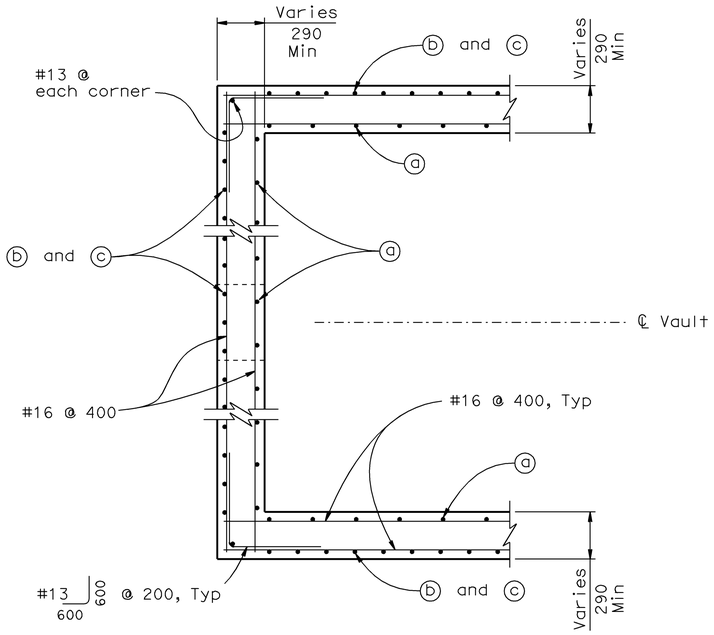

PARTIAL PLAN

No Scale

NOTE: Inlet wall shown, outlet wall similar.

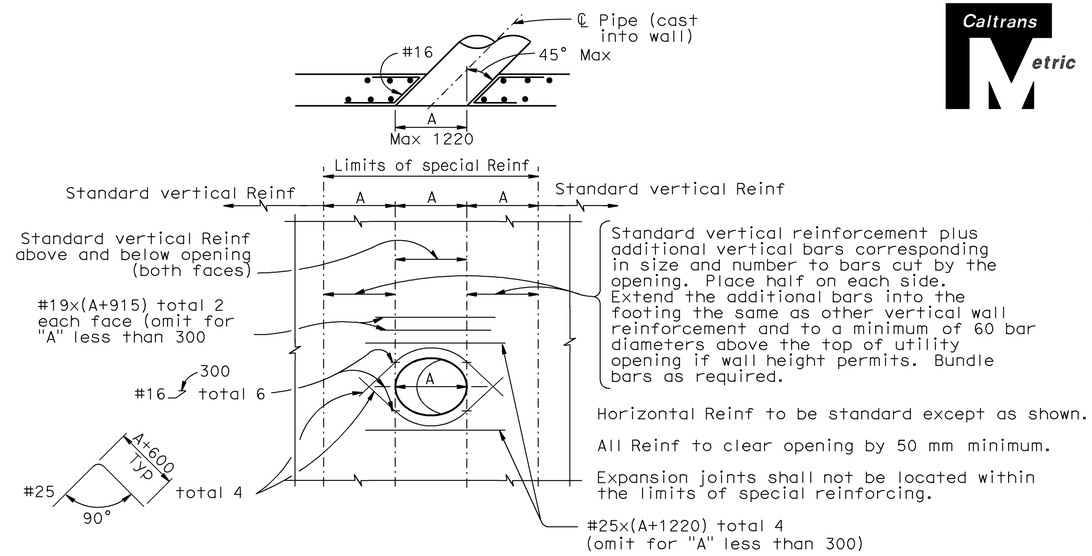

WALL OPENING DETAIL

No Scale

To be used at inlet, outlet and overflow pipe locations

NOTE: The rebar lengths shown are maximum and shall be adjusted due to the limitations of space.

NOTES:

1. For section locations, see "Layout No. 1 " sheet.
2. For wall and footing reinforcement details, see Typical Section on "Wall Details" sheet.

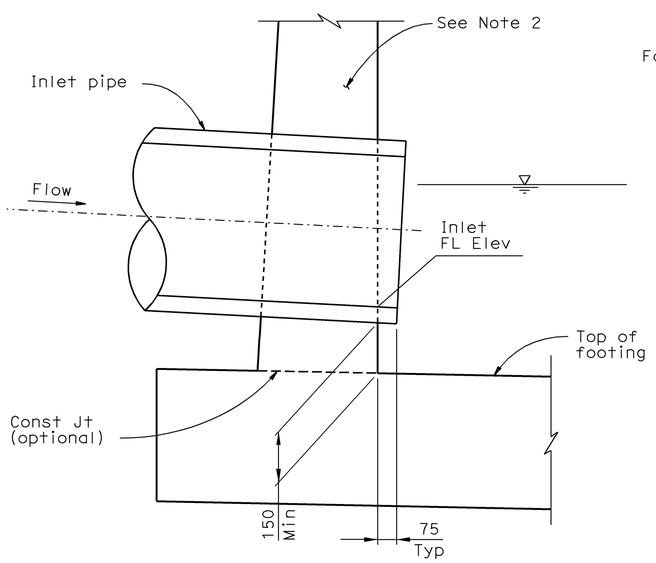

SECTION A - A

No Scale

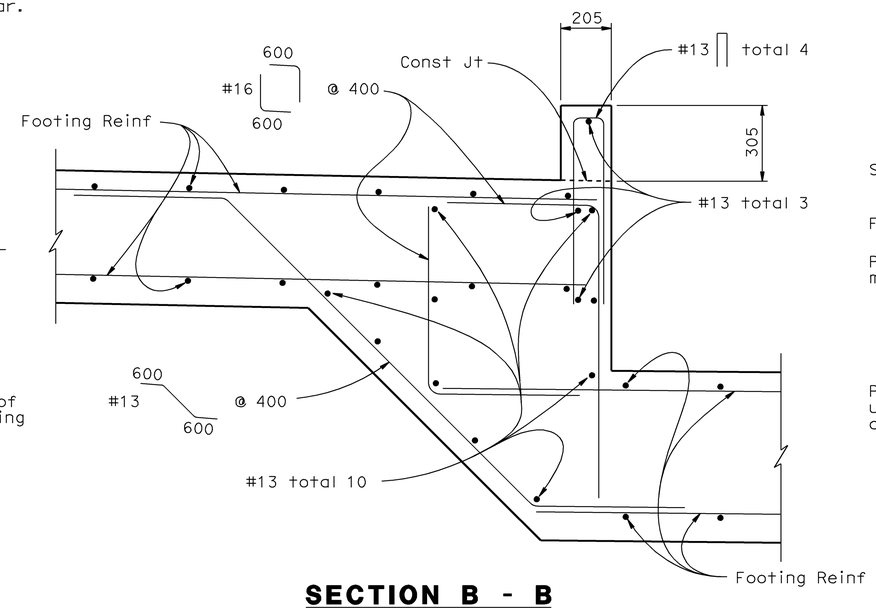

SECTION B - B

No Scale

(Gabion wall and other details not shown for clarity)

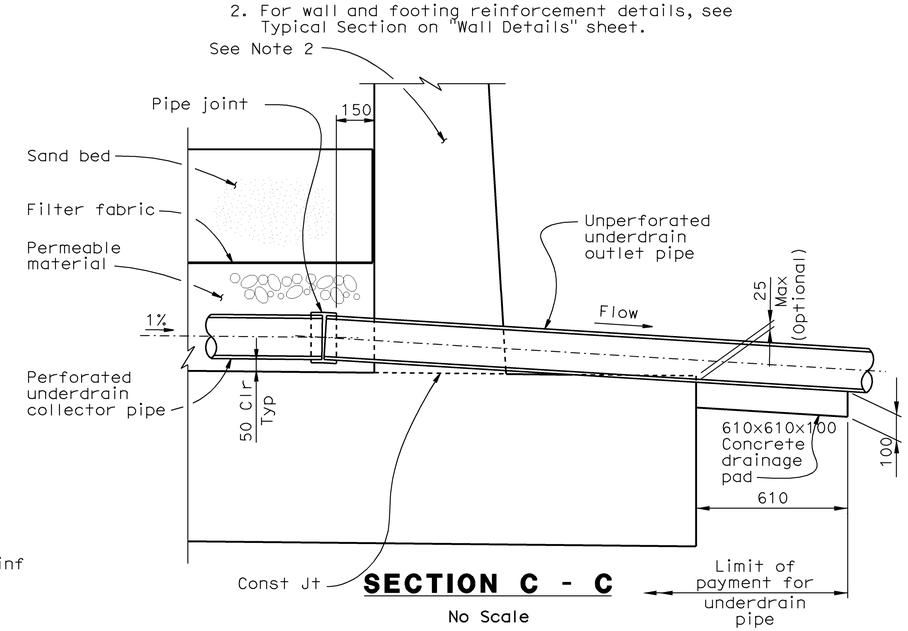

SECTION C - C

No Scale

WATER POLLUTION CONTROL DETAILS

ALL DIMENSIONS ARE IN MILLIMETERS UNLESS OTHERWISE SHOWN

WD-6

RELEASE DATE ---	DESIGN	BY D.Dunrud	CHECKED J&P Peterson
FILE NO. ---	DETAILS	BY J&P Peterson	CHECKED J&P Peterson
	SUBMITTED	BY J&P Peterson	DRAWING DATE 8/07

STATE OF CALIFORNIA DEPARTMENT OF TRANSPORTATION

DIVISION OF ENGINEERING SERVICES

BRIDGE NO.

MILE POST

AUSTIN VAULT SAND FILTER

DETAILS No. 1

ORIGINAL SCALE IN MILLIMETERS FOR REDUCED PLANS 0 10 20 30 40 50 60 70 80 90 100

CU 07
EA 121841

DISREGARD PRINTS BEARING EARLIER REVISION DATES

REVISION DATES (PRELIMINARY STAGE ONLY)

SHEET 6 OF 11

USERNAME => trannda
DGN FILE => 712184ih006.dgn

DATE PLOTTED => 12-JUN-2009 08:34

DIST.	COUNTY	ROUTE	MILE POST TOTAL PROJECT	SHEET NO.	TOTAL SHEETS
07	LA	5	42.8/47.3	82	1073

REGISTERED ENGINEER - CIVIL

6-8-09
PLANS APPROVAL DATE

REGISTERED PROFESSIONAL ENGINEER DOUGLAS DUNRUD No. 47240 Exp. 12/31/09 CIVIL STATE OF CALIFORNIA

The State of California or its officers or agents shall not be responsible for the accuracy or completeness of electronic copies of this plan sheet.

Caltrans Metric

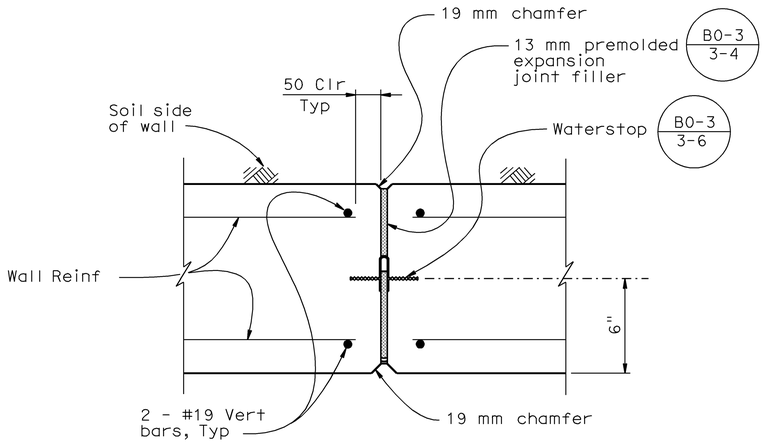

WALL EXPANSION JOINT DETAIL - PLAN SECTION

No Scale

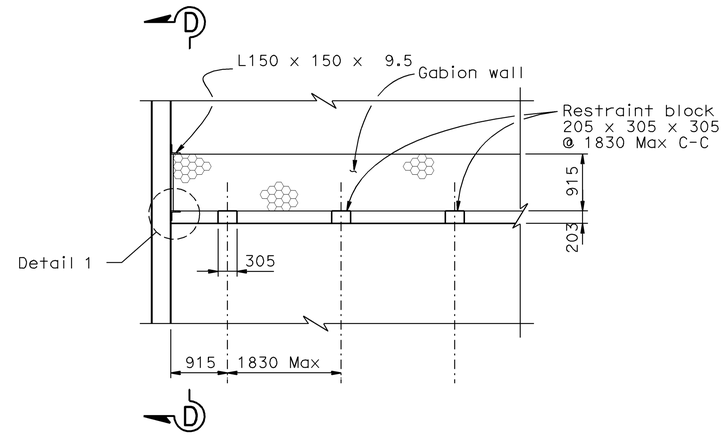

RESTRAINT BLOCK DETAIL

No Scale

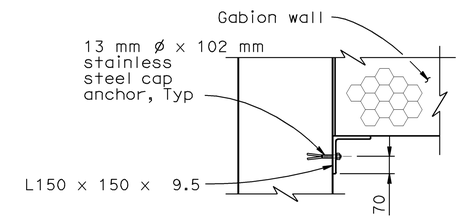

DETAIL 1

1:10

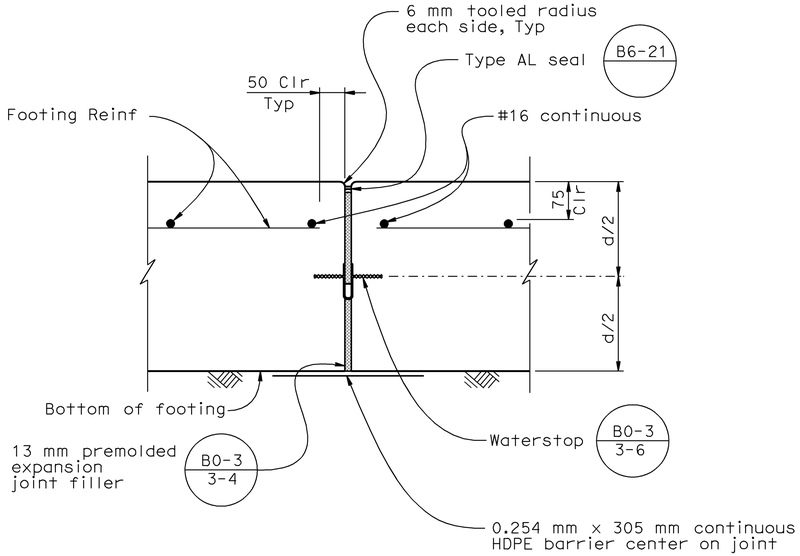

FOOTING EXPANSION JOINT DETAIL

No Scale

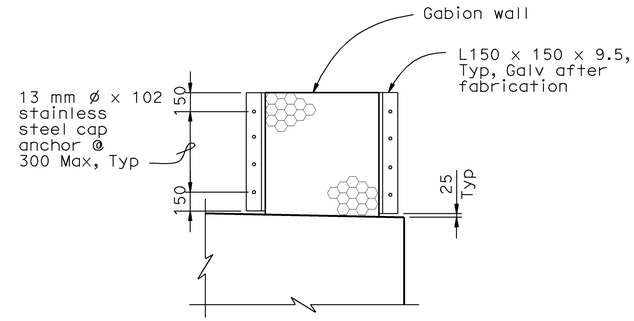

SECTION D - D

No Scale

ALL DIMENSIONS ARE IN MILLIMETERS UNLESS OTHERWISE SHOWN

WATER POLLUTION CONTROL DETAILS

WD-7

RELEASE DATE ---	DESIGN	BY D.Dunrud	CHECKED J&P Peterson	
FILE NO. ---	DETAILS	BY J&P Peterson	CHECKED J&P Peterson	
	SUBMITTED	BY J&P Peterson	DRAWING DATE 8/07	

STATE OF CALIFORNIA DEPARTMENT OF TRANSPORTATION

DIVISION OF ENGINEERING SERVICES

BRIDGE NO.

MILE POST

AUSTIN VAULT SAND FILTER

DETAILS No. 2

ORIGINAL SCALE IN MILLIMETERS FOR REDUCED PLANS 0 10 20 30 40 50 60 70 80 90 100

CU 07
EA 121841

DISREGARD PRINTS BEARING EARLIER REVISION DATES

REVISION DATES (PRELIMINARY STAGE ONLY)

SHEET 7 OF 11

USERNAME => trannda
DGN FILE => 712184ih007.dgn

DATE PLOTTED => 12-JUN-2009 08:34

DIST.	COUNTY	ROUTE	MILE POST TOTAL PROJECT	SHEET NO.	TOTAL SHEETS
07	LA	5	42.8/47.3	83	1073

REGISTERED ENGINEER - CIVIL

6-8-09
PLANS APPROVAL DATE

REGISTERED PROFESSIONAL ENGINEER DOUGLAS DUNRUD No. 47240 Exp. 12/31/09 CIVIL STATE OF CALIFORNIA

The State of California or its officers or agents shall not be responsible for the accuracy or completeness of electronic copies of this plan sheet.

Caltrans Metric

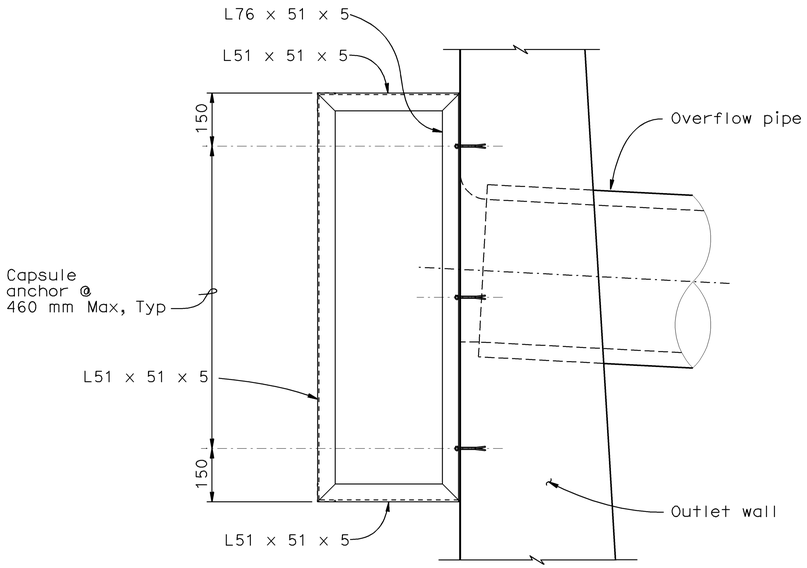

TRASH SCREEN - SIDE ELEVATION
No scale

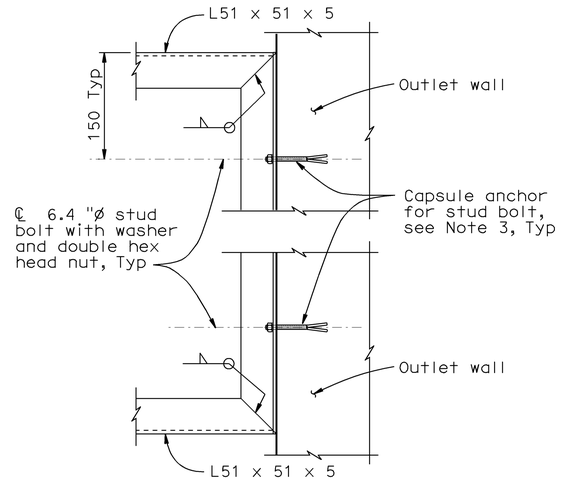

SECTION F - F
No Scale

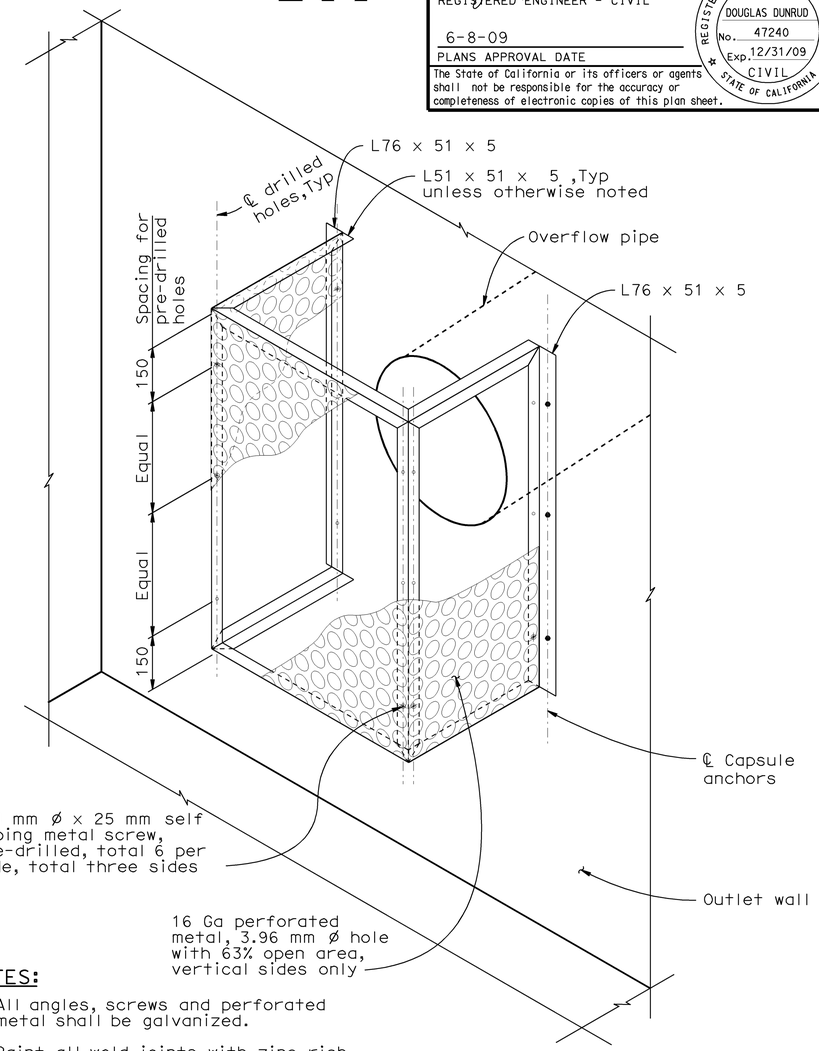

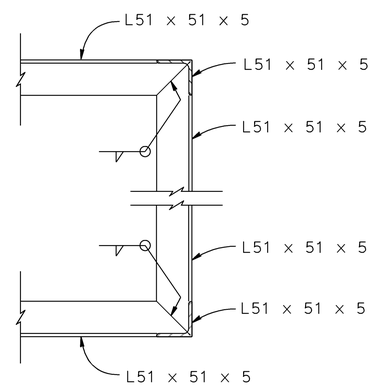

SECTION E - E
No Scale

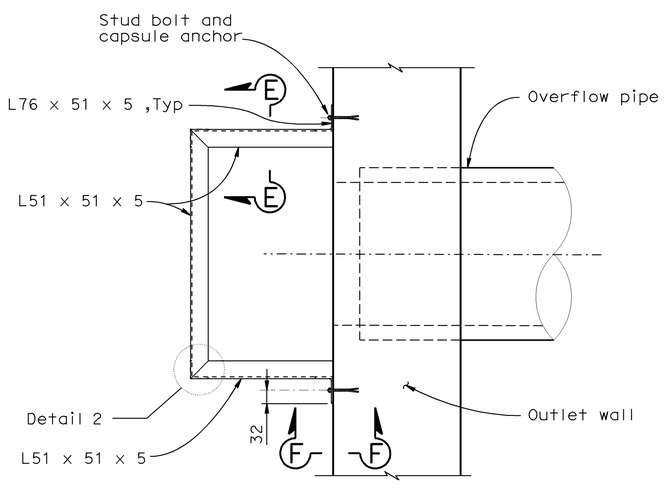

TRASH SCREEN - PLAN
No Scale

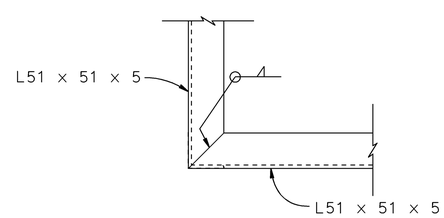

DETAIL 2
No Scale

NOTES:

1. All angles, screws and perforated metal shall be galvanized.
2. Paint all weld joints with zinc rich paint or galvanize after welding.
3. Resin capsule type bolt anchorage is subject to approval by the Engineer. Installation procedures shall comply with the manufacturers instructions.

ISOMETRIC VIEW - TRASH SCREEN
No scale

NOTE: Metal hole Ø exaggerated for emphasis.

ALL DIMENSIONS ARE IN MILLIMETERS UNLESS OTHERWISE SHOWN

WATER POLLUTION CONTROL DETAILS
WD-8

DATE PLOTTED => 12-JUN-2009 08:34

RELEASE DATE ---	DESIGN	BY D.Dunrud	CHECKED J&P Peterson
FILE NO. ---	DETAILS	BY J&P Peterson	CHECKED J&P Peterson
	SUBMITTED	BY J&P Peterson	DRAWING DATE 8/07

STATE OF CALIFORNIA
DEPARTMENT OF TRANSPORTATION

DIVISION OF ENGINEERING SERVICES

BRIDGE NO.
MILE POST

AUSTIN VAULT SAND FILTER
DETAILS No. 3

ORIGINAL SCALE IN MILLIMETERS FOR REDUCED PLANS 0 10 20 30 40 50 60 70 80 90 100

CU 07
EA 121841

DISREGARD PRINTS BEARING EARLIER REVISION DATES

REVISION DATES (PRELIMINARY STAGE ONLY)

SHEET 8 OF 11

USERNAME => trannda
DGN FILE => 7121841h008.dgn

DIST.	COUNTY	ROUTE	MILE POST TOTAL PROJECT	SHEET NO.	TOTAL SHEETS
07	LA	5	42.8/47.3	84	1073

REGISTERED ENGINEER - CIVIL

6-8-09
PLANS APPROVAL DATE

REGISTERED PROFESSIONAL ENGINEER DOUGLAS DUNRUD No. 47240 Exp. 12/31/09 CIVIL STATE OF CALIFORNIA

The State of California or its officers or agents shall not be responsible for the accuracy or completeness of electronic copies of this plan sheet.

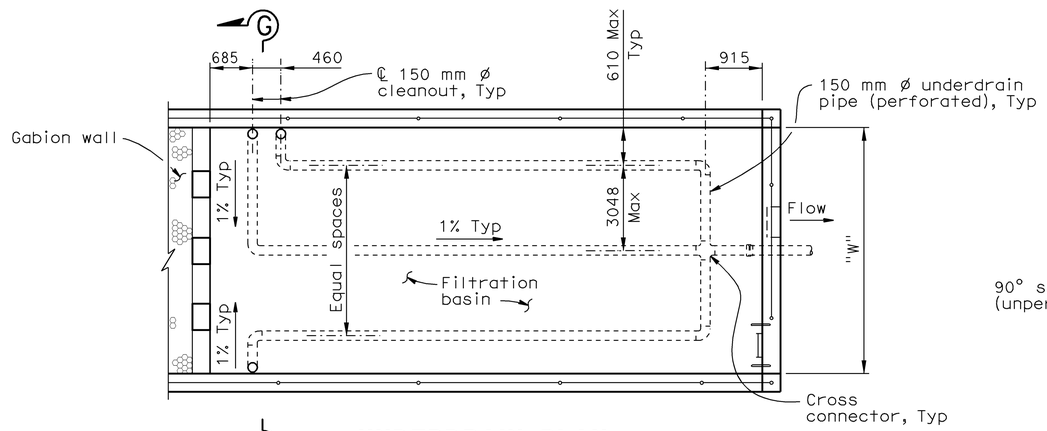

UNDERDRAIN PLAN (FILTRATION BASIN)

"W" = 5490 - 7320
No Scale

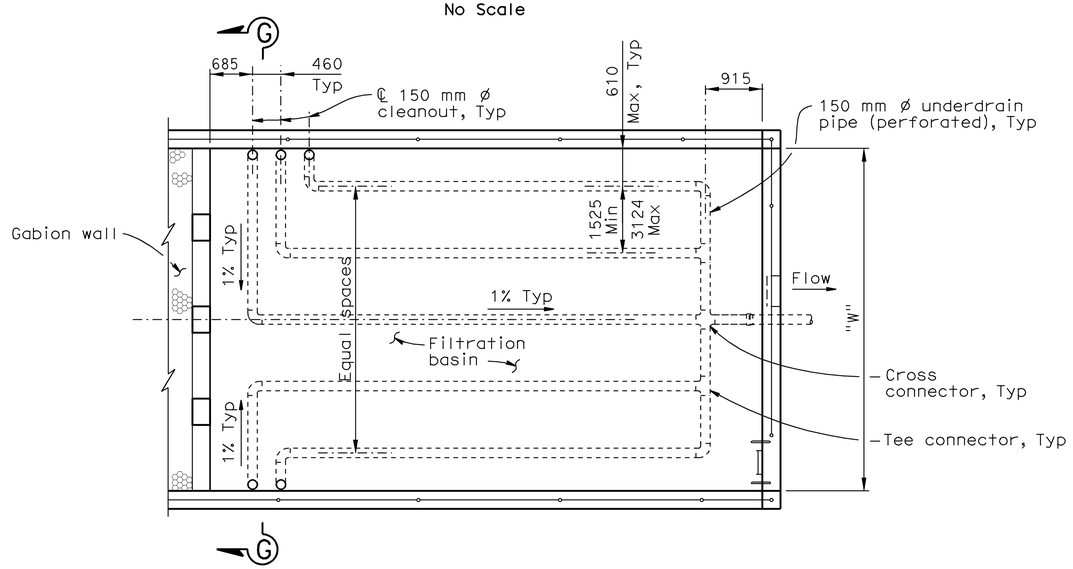

UNDERDRAIN PLAN (FILTRATION BASIN)

"W" = 8230 - 9140 - 10970 - 13720
No Scale

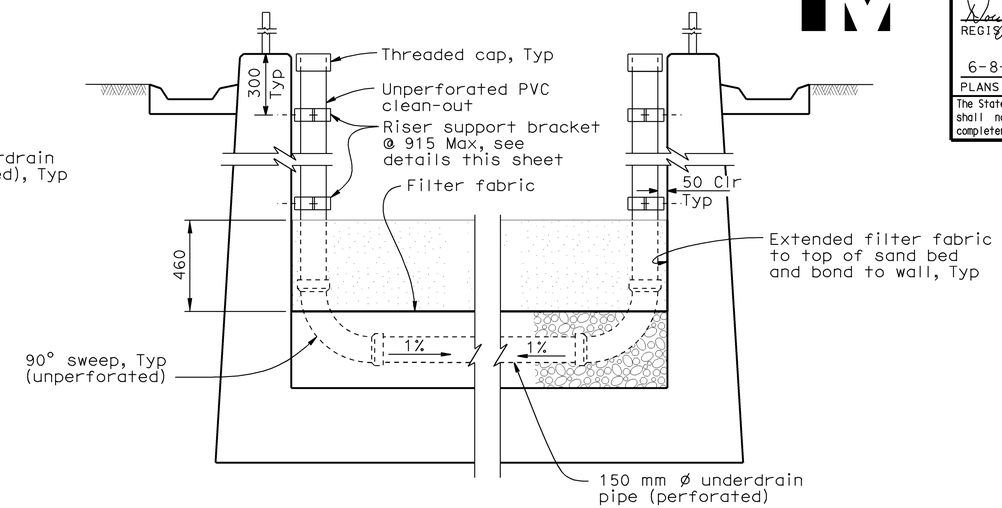

SECTION G - G

No Scale

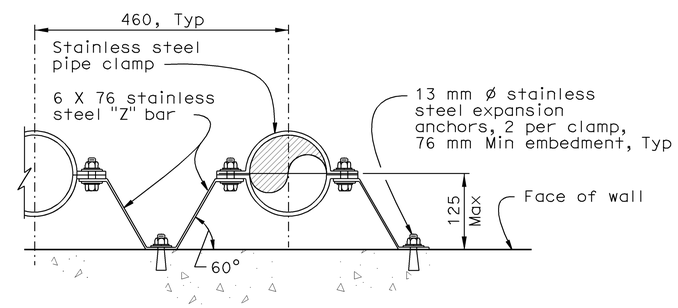

RISER SUPPORT BRACKET DETAIL

No Scale

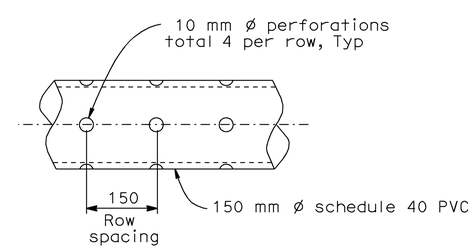

PERFORATED UNDERDRAIN PIPE

No Scale

NOTE:

1. See "Layout No. 1" sheet for Typical cover and depth of sand bed.

ALL DIMENSIONS ARE IN MILLIMETERS UNLESS OTHERWISE SHOWN

WATER POLLUTION CONTROL DETAILS

WD-9

RELEASE DATE ---	DESIGN	BY D.Dunrud	CHECKED J&P Peterson
FILE NO. ---	DETAILS	BY J&P Peterson	CHECKED J&P Peterson
	SUBMITTED	BY J&P Peterson	DRAWING DATE 8/07

STATE OF CALIFORNIA
DEPARTMENT OF TRANSPORTATION

DIVISION OF ENGINEERING SERVICES

BRIDGE NO.
MILE POST

AUSTIN VAULT SAND FILTER
DETAILS No. 4

ORIGINAL SCALE IN MILLIMETERS FOR REDUCED PLANS 0 10 20 30 40 50 60 70 80 90 100

CU 07
EA 121841

DISREGARD PRINTS BEARING EARLIER REVISION DATES

REVISION DATES (PRELIMINARY STAGE ONLY)

SHEET 9 OF 11

USERNAME => trannda
DGN FILE => 712184ih009.dgn

DATE PLOTTED => 12-JUN-2009 08:45

DIST.	COUNTY	ROUTE	MILE POST TOTAL PROJECT	SHEET NO.	TOTAL SHEETS
07	LA	5	42.8/47.3	85	1073

REGISTERED ENGINEER - CIVIL

6-8-09
PLANS APPROVAL DATE

REGISTERED PROFESSIONAL ENGINEER DOUGLAS DUNRUD No. 47240 Exp. 12/31/09 CIVIL STATE OF CALIFORNIA

The State of California or its officers or agents shall not be responsible for the accuracy or completeness of electronic copies of this plan sheet.

Caltrans Metric

NOTES:

1. The distance between rungs shall not exceed 300 mm and shall be uniform throughout the length of wall.
2. Hardware shall be galvanized after fabrication.
3. Grind exposed corners to 5 mm radius.

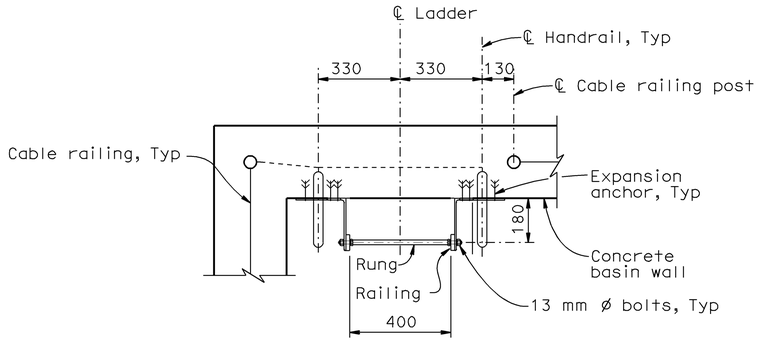

PLAN

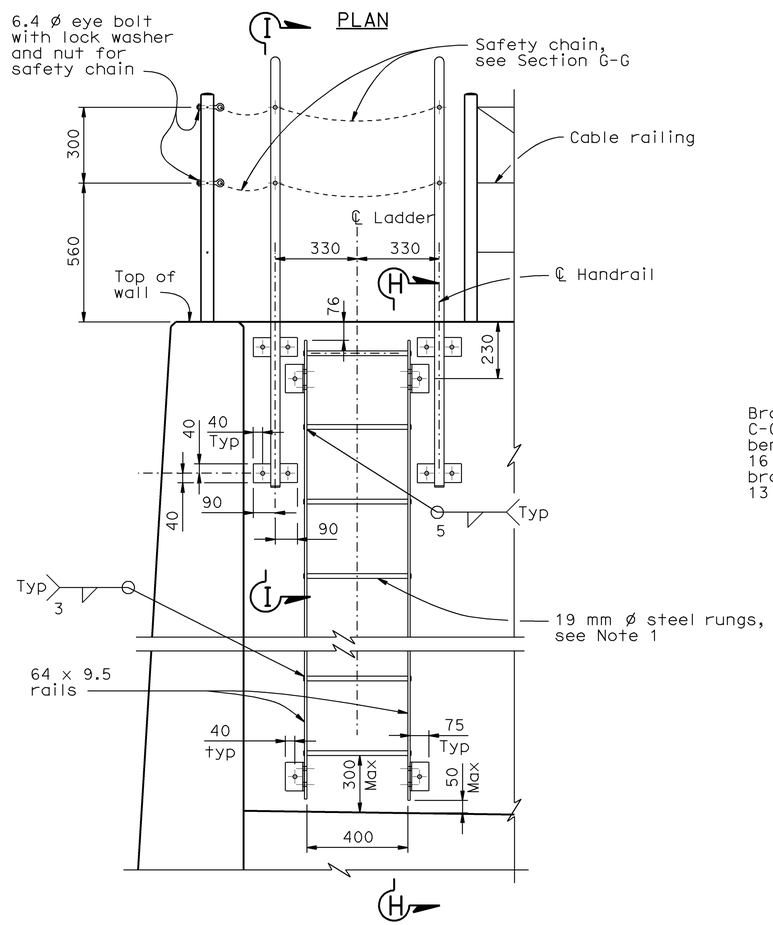

ELEVATION

LADDER

No Scale

NOTE: Cable railing not shown for clarity.

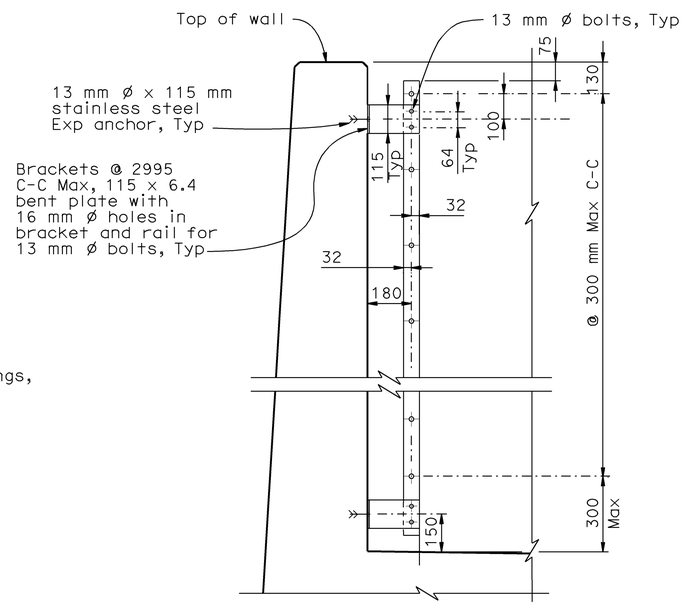

SECTION H - H

No Scale

NOTE: Handrail and cable railing not shown for clarity.

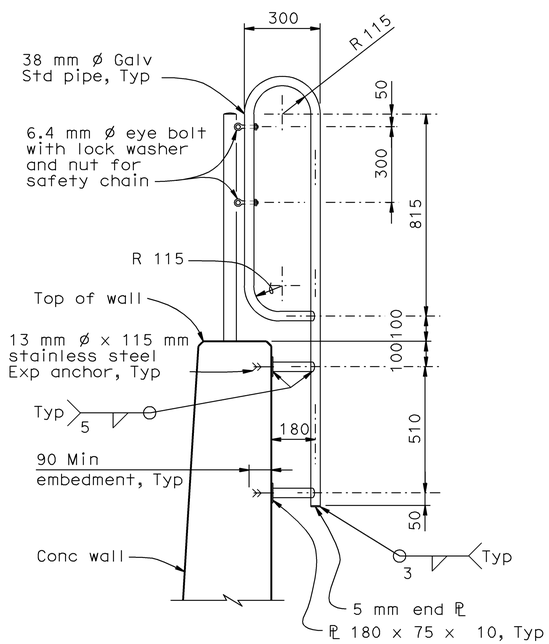

SECTION I - I

No Scale

ALL DIMENSIONS ARE IN MILLIMETERS UNLESS OTHERWISE SHOWN

WATER POLLUTION CONTROL DETAILS

WD-10

RELEASE DATE ---	DESIGN	BY D.Dunrud	CHECKED J&P Peterson
FILE NO. ---	DETAILS	BY J&P Peterson	CHECKED J&P Peterson
	SUBMITTED	BY J&P Peterson	DRAWING DATE 8/07

STATE OF CALIFORNIA
DEPARTMENT OF TRANSPORTATION

DIVISION OF ENGINEERING SERVICES

BRIDGE NO.

MILE POST

AUSTIN VAULT SAND FILTER

MISCELLANEOUS DETAILS No. 1

ORIGINAL SCALE IN MILLIMETERS FOR REDUCED PLANS 0 10 20 30 40 50 60 70 80 90 100

CU 07
EA 121841

DISREGARD PRINTS BEARING EARLIER REVISION DATES

REVISION DATES (PRELIMINARY STAGE ONLY)

SHEET 10 OF 11

USERNAME => trannda
DGN FILE => 7121841h010.dgn

DATE PLOTTED => 12-JUN-2009 08:45

DIST.	COUNTY	ROUTE	MILE POST TOTAL PROJECT	SHEET NO.	TOTAL SHEETS
07	LA	5	42.8/47.3	86	1073

REGISTERED ENGINEER - CIVIL

6-8-09
PLANS APPROVAL DATE

REGISTERED PROFESSIONAL ENGINEER DOUGLAS DUNRUD No. 47240 Exp. 12/31/09 CIVIL STATE OF CALIFORNIA

The State of California or its officers or agents shall not be responsible for the accuracy or completeness of electronic copies of this plan sheet.

Caltrans Metric

MISCELLANEOUS ITEMS

Austin Type	Gabion Wall (m^3)	Cable Railing (m)	Sand Bed (m^3)	Permeable Material (m^3)	Filter Fabric (m^2)
S-142-0.91	6.9	50.29	48.2	39.0	124.58
L-142-0.91	4.6	61.26	48.2	42.1	127.93
S-142-1.37	10.7	50.29	48.2	39.0	124.58
L-142-1.37	6.9	61.26	48.2	42.1	127.93
S-142-1.83	13.8	50.29	48.2	39.0	124.58
L-142-1.83	9.2	61.26	48.2	42.1	127.93
S-283-0.91	9.2	72.24	96.3	84.1	238.30
L-283-0.91	6.1	89.31	95.6	94.0	242.48
S-283-1.37	13.8	72.24	96.3	84.1	238.30
L-283-1.37	9.2	89.31	95.6	94.0	242.48
S-283-1.83	18.3	72.24	96.3	84.1	238.30
L-283-1.83	12.2	89.31	95.6	94.0	242.48
S-425-0.91	11.5	88.09	145.3	133.8	351.17
L-425-0.91	7.6	110.03	146.8	153.7	361.21
S-425-1.37	17.6	88.09	145.3	133.8	351.17
L-425-1.37	11.5	110.03	146.8	153.7	361.21
S-425-1.83	22.9	88.09	145.3	133.8	351.17
L-425-1.83	15.3	110.03	146.8	153.7	361.21

NOTES:

1. For Invert concrete and reinforcing steel quantities, see "Footing Details" sheet.
2. For wall concrete and reinforcing steel quantities, see "Wall Details" sheet.
3. Misc metal & steel = 53 kg for all vault configurations. Includes trash screen only and is based on a 610 mm ø overflow outlet pipe.

ALL DIMENSIONS ARE IN MILLIMETERS UNLESS OTHERWISE SHOWN

WATER POLLUTION CONTROL DETAILS
WD-11

RELEASE DATE ---	DESIGN	BY D.Dunrud	CHECKED J&P Peterson	
FILE NO. ---	DETAILS	BY J&P Peterson	CHECKED J&P Peterson	
	SUBMITTED	BY J&P Peterson	DRAWING DATE 8/07	

STATE OF CALIFORNIA DEPARTMENT OF TRANSPORTATION

DIVISION OF ENGINEERING SERVICES

BRIDGE NO.

MILE POST

AUSTIN VAULT SAND FILTER
MISCELLANEOUS QUANTITIES

ORIGINAL SCALE IN MILLIMETERS FOR REDUCED PLANS 0 10 20 30 40 50 60 70 80 90 100

CU 07
EA 121841

DISREGARD PRINTS BEARING EARLIER REVISION DATES

REVISION DATES (PRELIMINARY STAGE ONLY)

SHEET 11 OF 11

USERNAME => trmartin
DGN FILE => 712184ih011.dgn

DATE PLOTTED => 12-JUN-2009 TIME PLOTTED => 08:15

DIST.	COUNTY	ROUTE	MILE POST TOTAL PROJECT	SHEET NO.	TOTAL SHEETS
07	LA	5	42.8/47.3	87	1073

REGISTERED ENGINEER - CIVIL

6-8-09
PLANS APPROVAL DATE

REGISTERED PROFESSIONAL ENGINEER DOUGLAS DUNRUD No. 47240 Exp. 12/31/09 CIVIL STATE OF CALIFORNIA

The State of California or its officers or agents shall not be responsible for the accuracy or completeness of electronic copies of this plan sheet.

Caltrans Metric

B0-1
1-3

GENERAL NOTES

Designation:
Types of Gross Solids Removal Devices (GSRDs) are Linear Radial (LR) and Inclined Screen (Types 1and 2). The Linear Radial has either a standard or high velocity configuration noted as Linear Radial or Linear Radial (HV). The Type 1 has either a level or sloped sidewall configuration noted as Type 1L or Type 1S.

Special Reinforcement Coverage:
GSRD Standard Details are not to be used in a corrosive environment or where there is a severe abrasive flow condition or in freeze-thaw locations.

Special Design:
Required for ground water conditions above bottom of GSRD, surcharge loads exceeding HS20 truck load, design bearing pressures or sizes greater than those on this plan.

Traffic Loading:
No traffic load is allowed over GSRDs. As determined by the Engineer, barriers or MBGR shall be provided between GSRDs and traffic lanes.

All GSRD BMP Detail Drawings are applicable for velocities up to 6.1 m/sec.

DESIGN FLOW

LINEAR RADIAL ✳			
GSRD Type	Total Screen Length, m	Flow Rate (m^3/sec)	Debris Area (hectares)
LR-1	1.5	0.10	0.32
LR-2	3.0	0.20	0.64
LR-3	4.6	0.31	0.91
LR-4	6.1	0.41	1.28
LR-5	7.6	0.52	1.60
LR-6	9.1	0.62	1.92

✳ When maximum inlet velocity exceeds 2.5 m/sec, High Velocity (HV) details, are required.

INCLINED SCREEN - TYPE 1			
GSRD Type	Total Screen Length, m	Flow Rate (m^3/sec)	Debris Area (hectares)
1-A	4	0.27	1.00
1-B	6	0.41	2.08
1-C	8	0.55	3.55

INCLINED SCREEN - TYPE 2			
GSRD Type	Total Screen Length, m	Flow Rate (m^3/sec)	Debris Area (hectares)
2-A	1.0	0.08	0.57
2-B	1.5	0.12	0.86
2-C	2.0	0.17	1.15
2-D	2.5	0.21	1.43

DESIGN NOTES

Specifications:
Design:
Bridge Design Specification April 2000 (LFD) (1996 AASHTO) with interims and revisions by Caltrans

Wall (LFD) : 1.5 D + 1.5 E
Footing (LFD): D + PYM
Where D = Dead Load
E = Earth Load
PYM= Probable Yield Moment, (1.3 x nominal yield moment of stem)

Capacity reduction factor is included.

Earth Load:
22.0 kPa/m vertical,

Water Load:
9.8 kPa/m horizontal,

Equivalent Fluid Pressure =
15.7 kPa/m horizontal (Case I).

Earth pressure for 1:2 unlimited slope determined from Rankine's formula with ø = 33°42' (Case II).

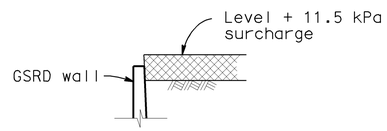

CASE I

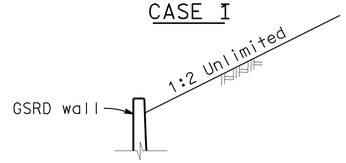

CASE II

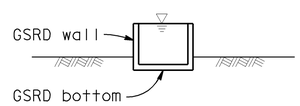

CASE III

DETAIL OF DESIGN LOADING CASES

CASE I Level + 11.5 kPa surcharge, GSRD empty
CASE II 1:2 Unlimited slope, GSRD empty
CASE III GSRD full of water, no soil pressure

Grating (LL) Load :
3.5 kPa

Design Conditions:
Design H may be exceeded by 150 mm before going to the next size.

Unit Stresses:
$f'c$ = 25 MPa
fy = 420 MPa (bar reinforcing)
fy = 210 MPa (grating)

Shear:
Maximum allowable shear,
$Vc = 0.25\sqrt{f'c}$ Mpa

Design Bearing Pressure = 125 kPa

CONSTRUCTION NOTES

Expansion joints:
Inverts - No expansion joints shall be permitted.
Walls - Place 13 mm expansion joint filler vertically at 9 m± centers with strip water stop.

Construction Joints:
Temporary joints may be permitted if normal (or radial) to ℄ of GSRD. Otherwise, the contractor is to submit a proposal for consideration.

Backfill:
See Standard Specifications, except the difference in backfill shall not exceed 1.2 m between side walls and shall not exceed the lesser of wall height "H" or 2.4 m between inlet and outlet walls.

Cable Railing:
As determined by the Engineer, cable railing may be added at top of wall of the Linear Radial GSRD. See "Road Plans" for quantities, and "Linear Radial Details No. 1" sheet for details.

Earthwork:
Excavation and Backfill with Cut and Exposed conditions -

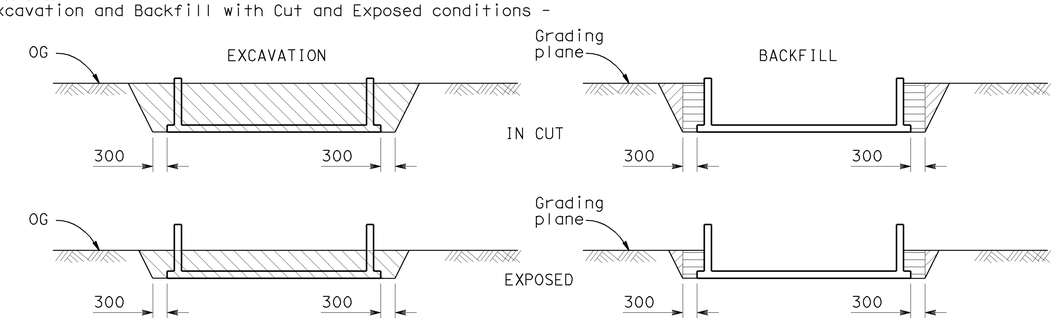

LINEAR RADIAL

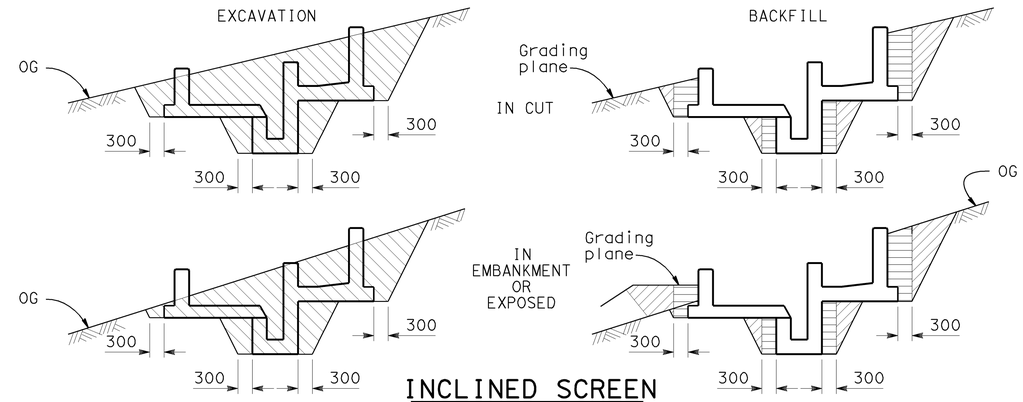

INCLINED SCREEN
(Type 1S shown, Type 1L and 2 similar)

LEGEND:
Structure excavation (culvert)
Structure backfill (culvert)
90% relative compaction
Roadway embankment
Original ground, OG

NOTES:
1. Slope or shore excavation sides as necessary.
2. Dimensions shown are minimum.
3. Use Structure Backfill (culvert) except where slurry backfill is required around outlet pipes.

WATER POLLUTION CONTROL DETAILS

ALL DIMENSIONS ARE IN MILLIMETERS UNLESS OTHERWISE SHOWN

WD-12

RELEASE DATE ---	DESIGN	BY D.Dunrud	CHECKED J&P Peterson
FILE NO. ---	DETAILS	BY J&P Peterson	CHECKED J&P Peterson
	SUBMITTED	BY D.Forester	DRAWING DATE 02/07

STATE OF CALIFORNIA
DEPARTMENT OF TRANSPORTATION

DIVISION OF ENGINEERING SERVICES

BRIDGE NO.
MILE POST

GROSS SOLIDS REMOVAL DEVICE
GENERAL NOTES

ORIGINAL SCALE IN MILLIMETERS FOR REDUCED PLANS 0 10 20 30 40 50 60 70 80 90 100

CU 07314
EA 121841

DISREGARD PRINTS BEARING EARLIER REVISION DATES

REVISION DATES (PRELIMINARY STAGE ONLY)

SHEET 1 OF 32

USERNAME => trmartin
DGN FILE => 712184ih012.dgn

DATE PLOTTED => 12-JUN-2009 TIME PLOTTED => 08:16

DIST.	COUNTY	ROUTE	MILE POST TOTAL PROJECT	SHEET NO.	TOTAL SHEETS
07	LA	5	42.8/47.3	88	1073

REGISTERED ENGINEER - CIVIL

6-8-09

PLANS APPROVAL DATE

REGISTERED PROFESSIONAL ENGINEER DOUGLAS DUNRUD No. 47240 Exp. 12/31/09 CIVIL STATE OF CALIFORNIA

The State of California or its officers or agents shall not be responsible for the accuracy or completeness of electronic copies of this plan sheet.

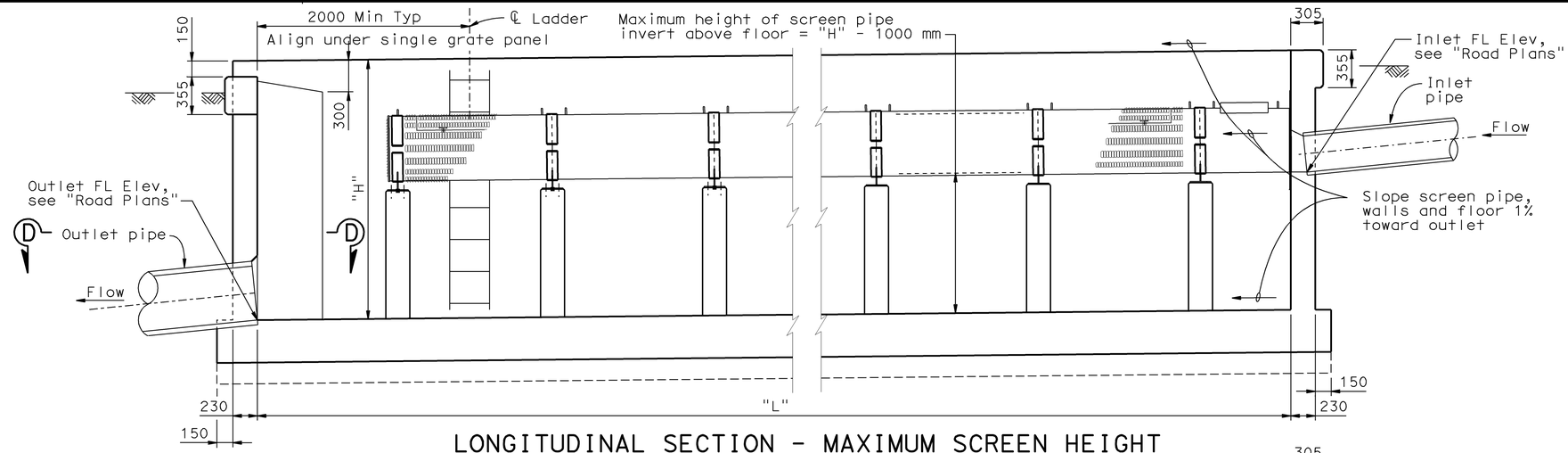

LONGITUDINAL SECTION - MAXIMUM SCREEN HEIGHT

1:25

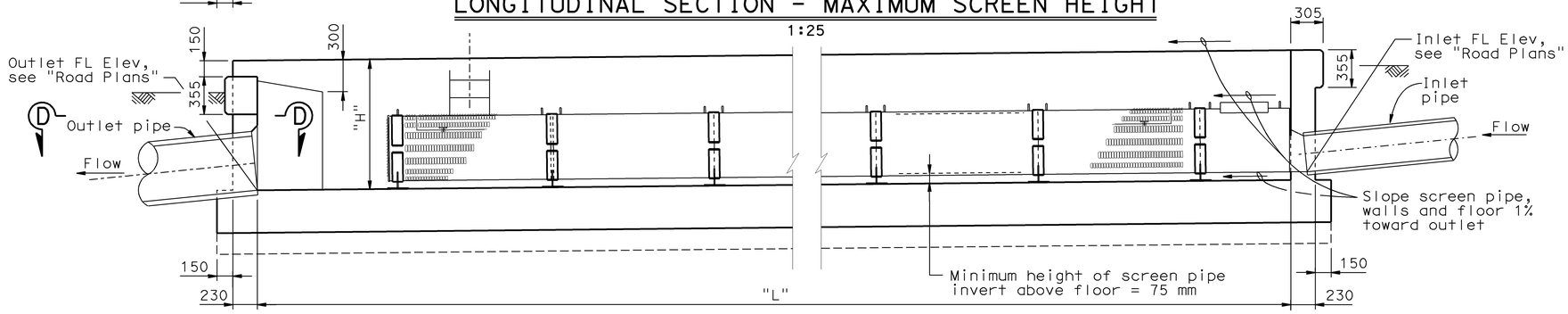

LONGITUDINAL SECTION - MINIMUM SCREEN HEIGHT

1:25

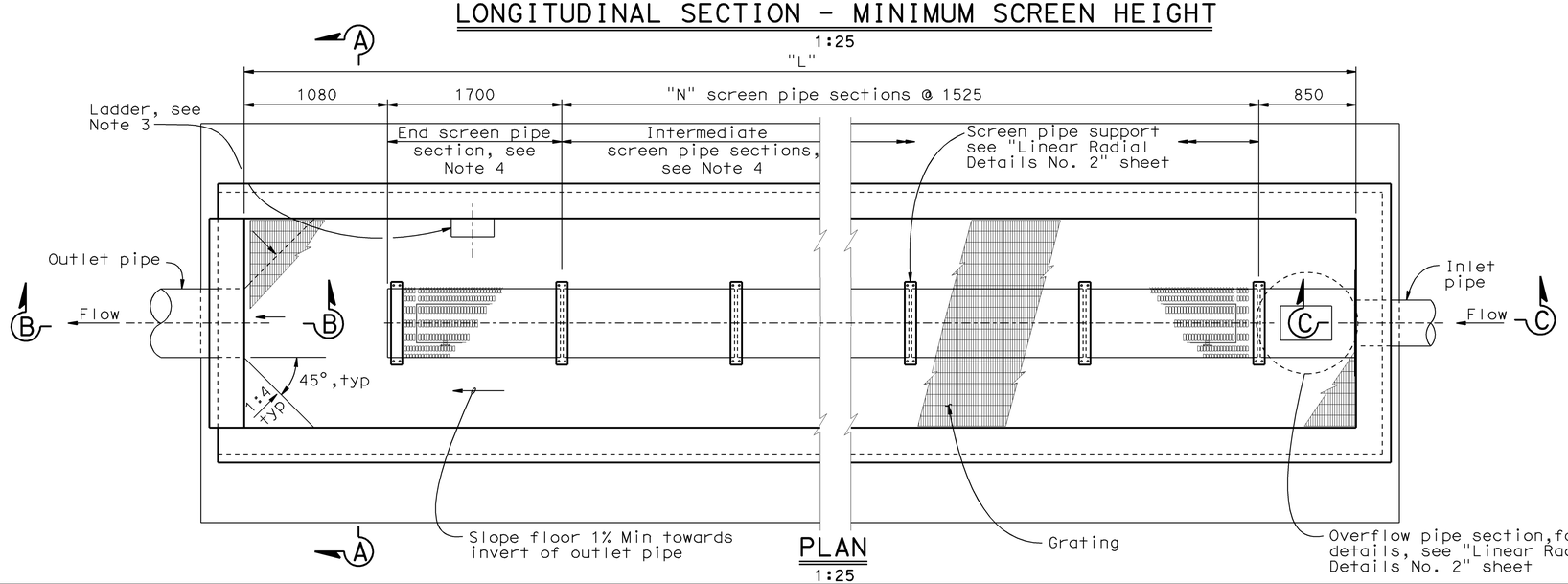

PLAN

1:25

NOTES:

1. For typical section, see "Linear Radial - Details No. 1" sheet.
2. For Section B-B, C-C and D-D, see "Linear Radial - Details No. 1" sheet.
3. For ladder details see "Miscellaneous Details No. 1" sheet.
4. For end screen and intermediate screen pipe details, see "Linear Radial - Details No. 3" sheet.
5. For "N", "H" and other design data, see "Linear Radial - Quantities" sheet.
6. For High Velocity details, see "Linear Radial (HV) - Layout" sheet.
7. For Grating details, see "Linear Radial Details No. 4" sheet.
8. For quantities and additional GSRD data, see table on "Linear Radial - Quantities" sheet.
9. For inlet and outlet pipe details not shown, see "Road Plans"

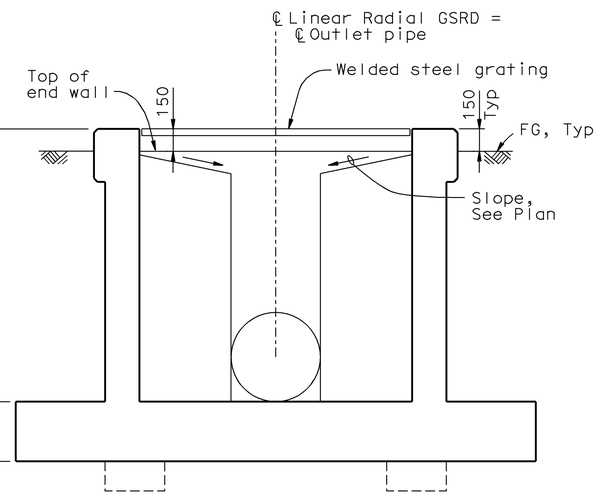

SECTION A-A

1:20

ALL DIMENSIONS ARE IN MILLIMETERS UNLESS OTHERWISE SHOWN

WATER POLLUTION CONTROL DETAILS

WD-13

RELEASE DATE ---	DESIGN	BY D.Dunrud	CHECKED J&P Peterson	
FILE NO. ---	DETAILS	BY J&P Peterson	CHECKED J&P Peterson	
	SUBMITTED	BY D.Forester	DRAWING DATE 02/07	

STATE OF CALIFORNIA DEPARTMENT OF TRANSPORTATION

DIVISION OF ENGINEERING SERVICES

BRIDGE NO.

MILE POST

GROSS SOLIDS REMOVAL DEVICE

LINEAR RADIAL - LAYOUT

ORIGINAL SCALE IN MILLIMETERS FOR REDUCED PLANS 0 10 20 30 40 50 60 70 80 90 100

CU 07314
EA 121841

DISREGARD PRINTS BEARING EARLIER REVISION DATES

REVISION DATES (PRELIMINARY STAGE ONLY)

SHEET 2 OF 32

USERNAME => trmartin
DGN FILE => 712184ih013.dgn

DATE PLOTTED => 12-JUN-2009 TIME PLOTTED => 08:16

DIST.	COUNTY	ROUTE	MILE POST TOTAL PROJECT	SHEET NO.	TOTAL SHEETS
07	LA	5	42.8/47.3	89	1073

REGISTERED ENGINEER - CIVIL

6-8-09
PLANS APPROVAL DATE

REGISTERED PROFESSIONAL ENGINEER DOUGLAS DUNRUD No. 47240 Exp. 12/31/09 CIVIL STATE OF CALIFORNIA

The State of California or its officers or agents shall not be responsible for the accuracy or completeness of electronic copies of this plan sheet.

Caltrans Metric

TABLE OF REINFORCING STEEL FOR LINEAR RADIAL GSRD

Design "H"	1220	1830	2440
"a" bars	#13 @ 450	#16 @ 300	#16 @ 200
"b" bars	#13 @ 450	#13 @ 450	#16 @ 400
"c" bars	#16 @ 350	#16 @ 230	#16 @ 100
"d" bars	#16 @ 350	#16 @ 350	#16 @ 300

NOTES:

1. For section locations, see "Linear Radial - Layout" sheet.
2. For invert elevation differential between inlet and outlet, see "Linear Radial - Quantities" sheet.
3. All metal components of screen pipe including connections to concrete shall be stainless steel.
4. All metal components of grating including connections to wall shall be galvanized.

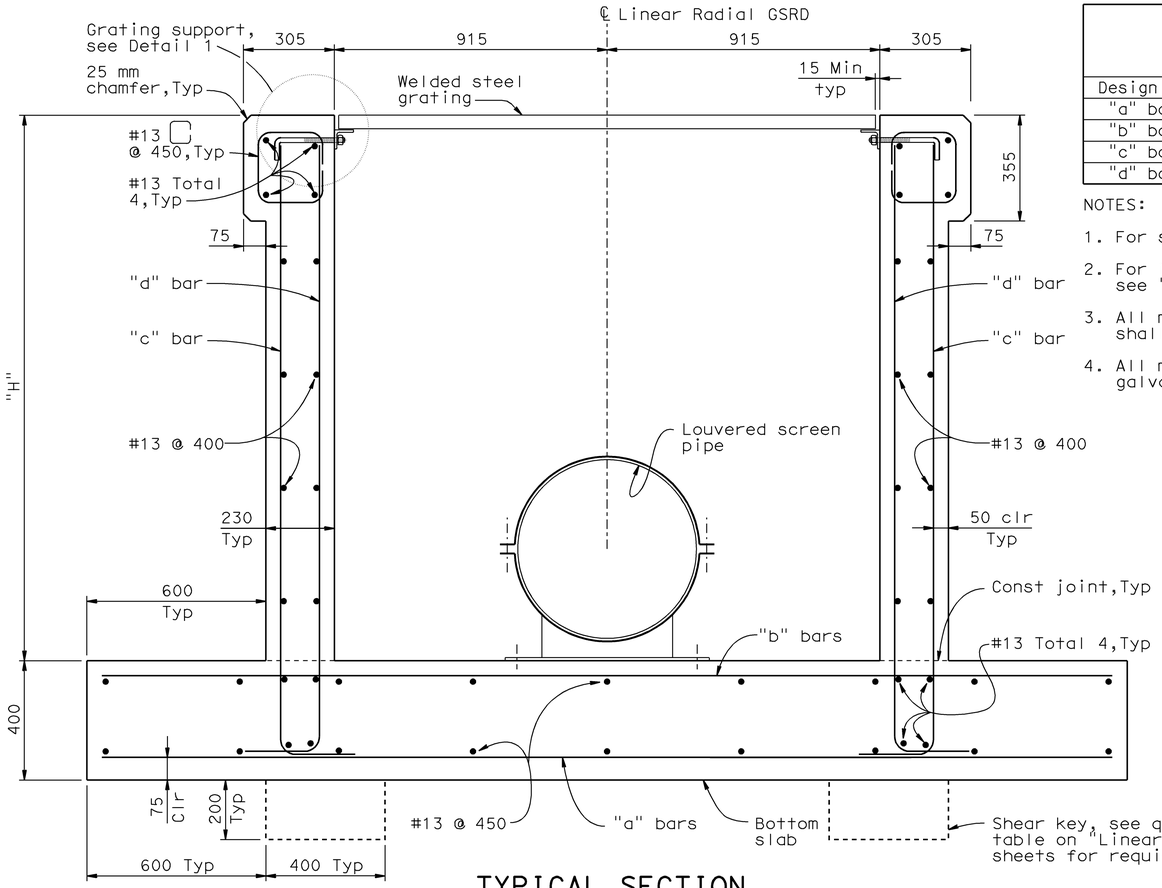

TYPICAL SECTION
1:10

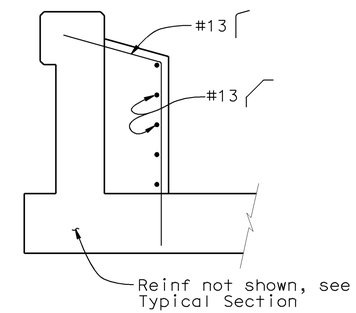

VIEW E-E
1:20
(Outlet end only)

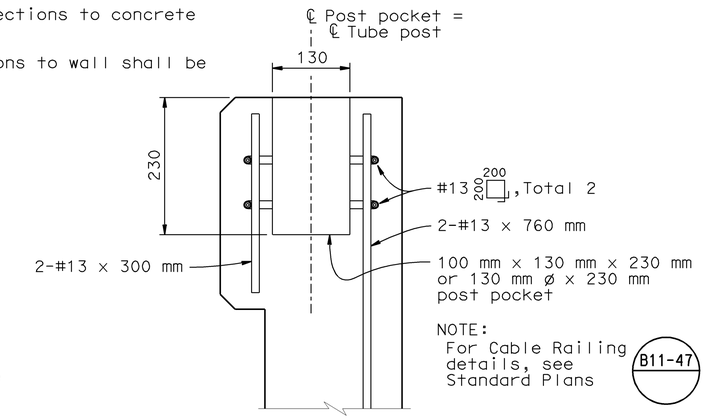

POST ANCHORAGE DETAIL (OPTIONAL)
1:5

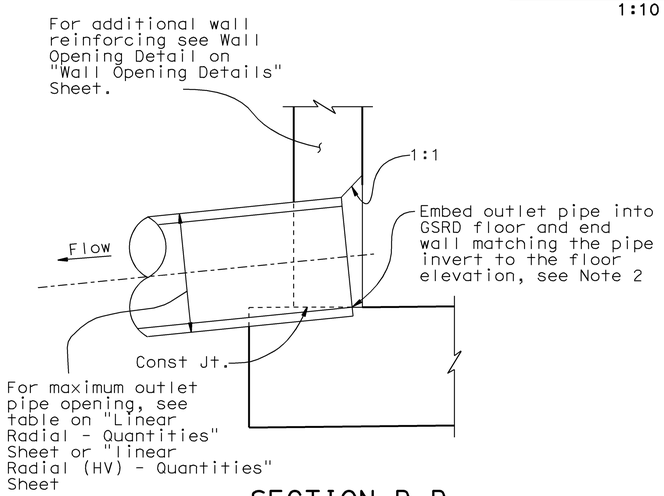

SECTION B-B
1:10

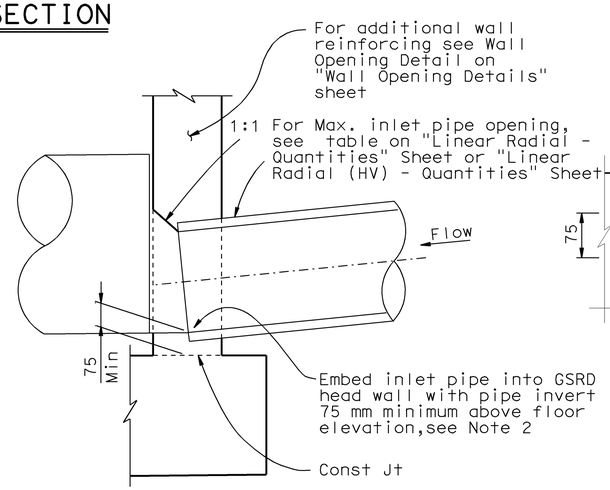

SECTION C-C
1:10

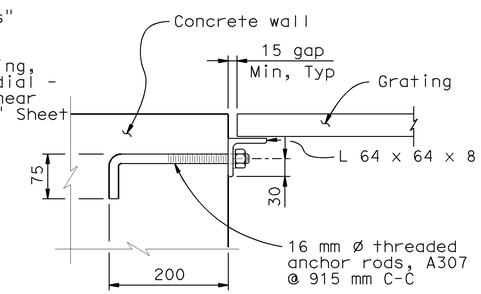

DETAIL 1
1:5

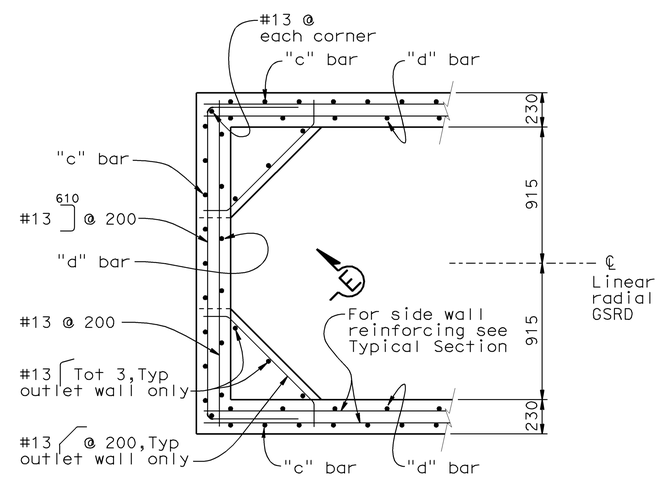

SECTION D-D
1:20
NOTE: Outlet wall shown, inlet wall similar.

WATER POLLUTION CONTROL DETAILS

ALL DIMENSIONS ARE IN MILLIMETERS UNLESS OTHERWISE SHOWN

WD-14

RELEASE DATE ---	DESIGN	BY D.Dunrud	CHECKED J&P Peterson
FILE NO. ---	DETAILS	BY J&P Peterson	CHECKED J&P Peterson
	SUBMITTED	BY D.Forester	DRAWING DATE 02/07

STATE OF CALIFORNIA
DEPARTMENT OF TRANSPORTATION

DIVISION OF ENGINEERING SERVICES

BRIDGE NO.
MILE POST

GROSS SOLIDS REMOVAL DEVICE
LINEAR RADIAL - DETAILS NO. 1

ORIGINAL SCALE IN MILLIMETERS FOR REDUCED PLANS 0 10 20 30 40 50 60 70 80 90 100

CU 07314
EA 121841

DISREGARD PRINTS BEARING EARLIER REVISION DATES

REVISION DATES (PRELIMINARY STAGE ONLY)

SHEET 3 OF 32

USERNAME => trmartin
DGN FILE => 712184ih014.dgn

DATE PLOTTED => 12-JUN-2009 TIME PLOTTED => 08:16

DIST.	COUNTY	ROUTE	MILE POST TOTAL PROJECT	SHEET NO.	TOTAL SHEETS
07	LA	5	42.8/47.3	90	1073

REGISTERED ENGINEER - CIVIL

6-8-09
PLANS APPROVAL DATE

REGISTERED PROFESSIONAL ENGINEER DOUGLAS DUNRUD No. 47240 Exp. 12/31/09 CIVIL STATE OF CALIFORNIA

The State of California or its officers or agents shall not be responsible for the accuracy or completeness of electronic copies of this plan sheet.

Caltrans Metric

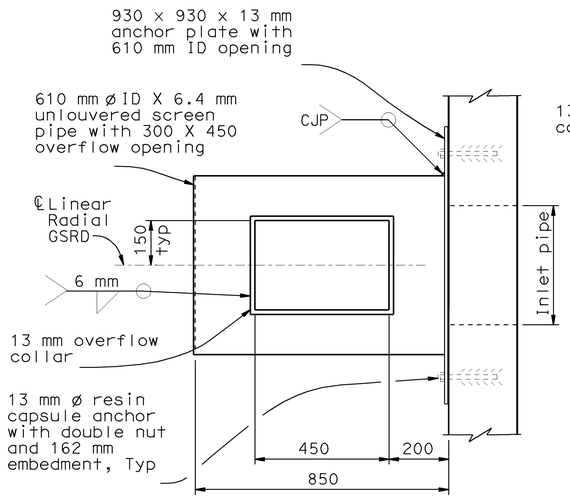

TOP VIEW

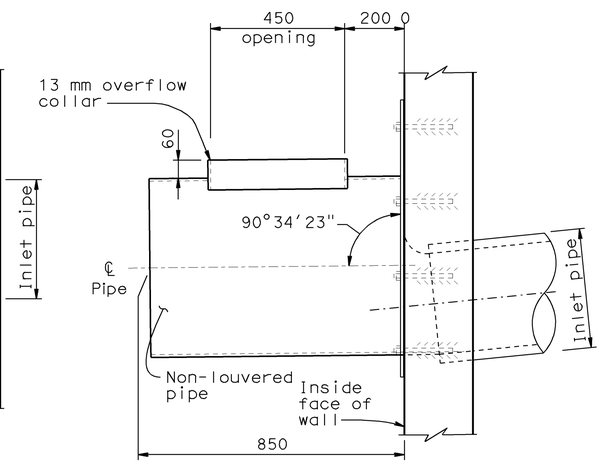

SIDE VIEW

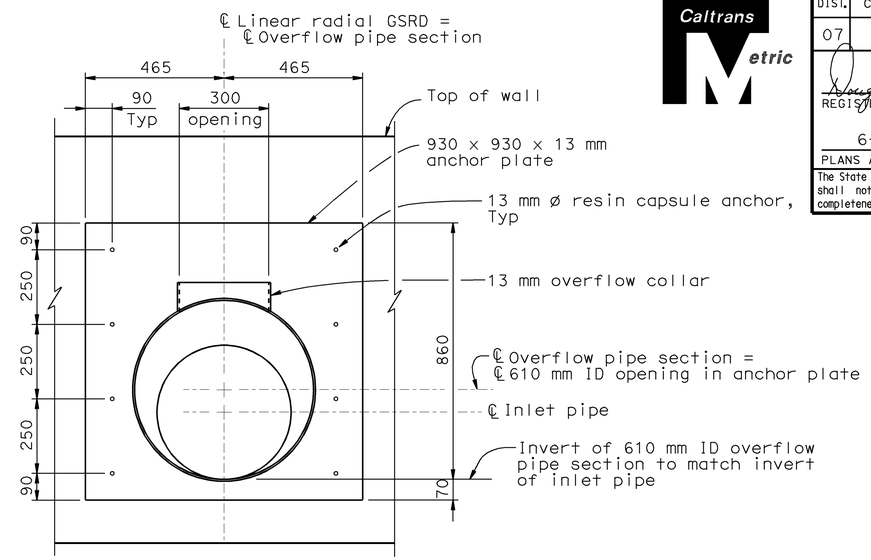

END VIEW

OVERFLOW PIPE SECTION DETAILS

1:10

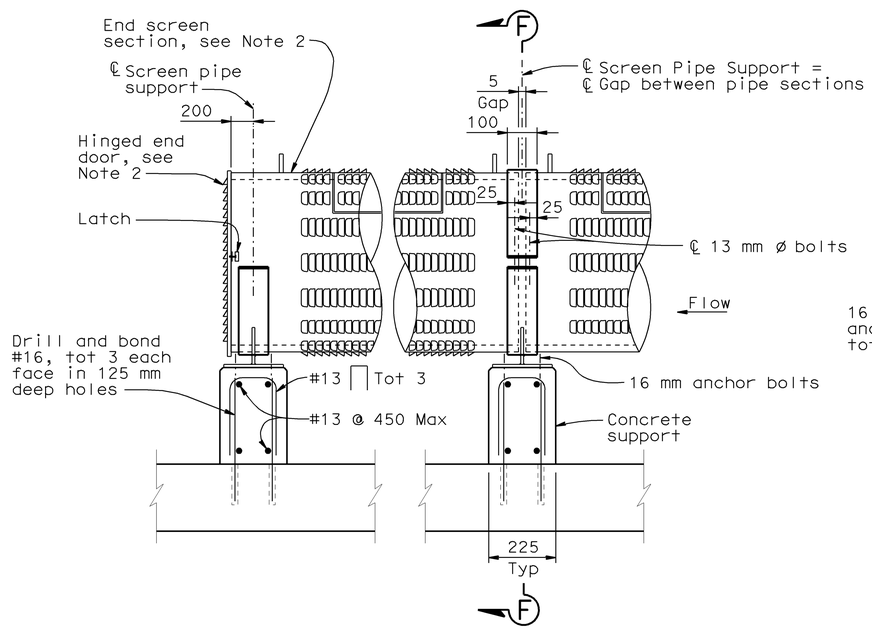

SIDE VIEW

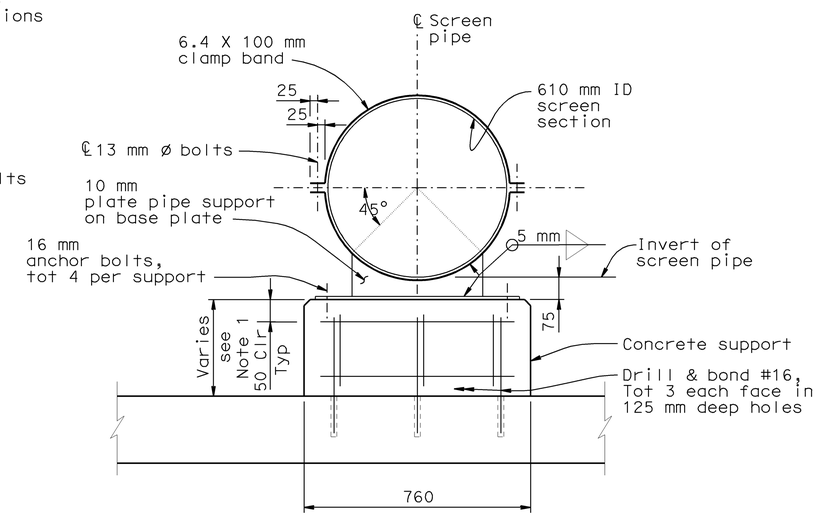

SECTION F-F

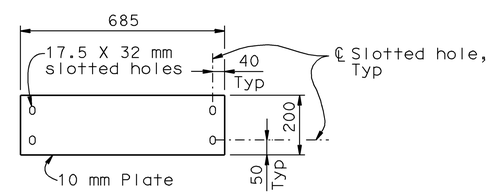

BASE PLATE DETAIL

SCREEN PIPE SUPPORT

1:10

NOTES:

1. If inlet invert height above floor is at the minimum 75 mm height, use anchor bolts to mount the pipe support base plate to the floor. Otherwise, construct concrete support as shown.
2. For End Screen and Intermediate Screen pipe details, see "Linear Radial - Details No. 3" sheet.
3. All metal components of screen pipe including connections to concrete shall be stainless steel.

WATER POLLUTION CONTROL DETAILS

ALL DIMENSIONS ARE IN MILLIMETERS UNLESS OTHERWISE SHOWN

WD-15

RELEASE DATE ---	DESIGN	BY D.Dunrud	CHECKED J&P Peterson
FILE NO. ---	DETAILS	BY J&P Peterson	CHECKED J&P Peterson
	SUBMITTED	BY D.Forester	DRAWING DATE 02/07

STATE OF CALIFORNIA DEPARTMENT OF TRANSPORTATION

DIVISION OF ENGINEERING SERVICES

BRIDGE NO.

MILE POST

GROSS SOLIDS REMOVAL DEVICE

LINEAR RADIAL - DETAILS NO. 2

ORIGINAL SCALE IN MILLIMETERS FOR REDUCED PLANS 0 10 20 30 40 50 60 70 80 90 100

CU 07314
EA 121841

DISREGARD PRINTS BEARING EARLIER REVISION DATES

REVISION DATES (PRELIMINARY STAGE ONLY)

SHEET 4 OF 32

USERNAME => trmartin
DGN FILE => 712184ih015.dgn

DATE PLOTTED => 12-JUN-2009 TIME PLOTTED => 08:19

DIST.	COUNTY	ROUTE	MILE POST TOTAL PROJECT	SHEET NO.	TOTAL SHEETS
07	LA	5	42.8/47.3	91	1073

REGISTERED ENGINEER - CIVIL

6-8-09

PLANS APPROVAL DATE

REGISTERED PROFESSIONAL ENGINEER DOUGLAS DUNRUD No. 47240 Exp. 12/31/09 CIVIL STATE OF CALIFORNIA

The State of California or its officers or agents shall not be responsible for the accuracy or completeness of electronic copies of this plan sheet.

Caltrans Metric

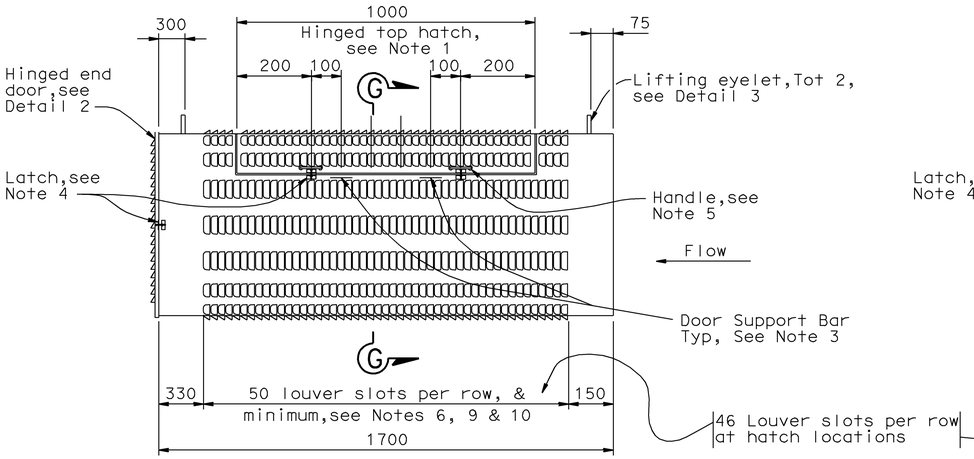

END SCREEN DETAIL

1:10

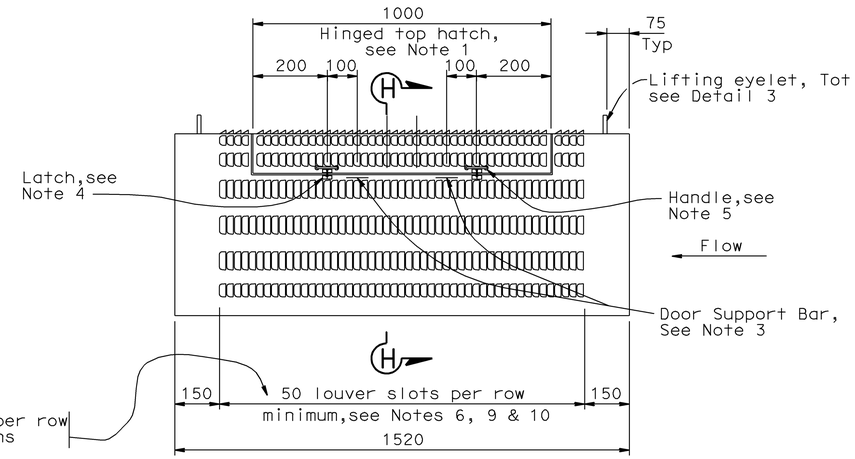

INTERMEDIATE SCREEN DETAIL

1:10

NOTES:

1. Provide 25 x 5 mm stainless steel bar at all cut edges to provide a seat and support for all doors when closed.
2. Provide stainless steel 6.4 mm thick heavy duty hinges 101x101 mm thick with 15.8 mm Dia pin. Use fillet weld at cover and frame. Total two each door, evenly spaced.
3. Attach 2-25 x 25 x 75 mm stainless steel bars (or fabricator equivalent design) to support doors when in an open position. Mechanical Stops can be welded on hinges.
4. Provide latch. Latch shall have threaded U-bolt for adjustment. Latch to have 10 mm total adjustability and 30 mm drawing movement and be rated at 163 KG.
5. Provide stainless steel handles at locations indicated.
6. The aperature size of each louver slot shall be 5.1 mm wide X 63.5 mm long.
7. End door to secured to end screen with 10mm Dia x 250 mm continuous bolt with lock nut through flat bars.
8. All metal components of screen pipe shall be stainless steel.
9. Louver slot apertures shall meet the following requirements:

Width (mm)	% of Total
4.8-5.3	90
4.6-5.3	95
4.3-5.3	100

Length (mm)	% of Total
57-70	90
50-75	100

10. A Certificate of Compliance conforming to the provisions in Section 6-1.07, "Certificate of Compliance," shall be furnished to Engineer, prior to installing Linear Radial GSRD device, certifying that louver slot apertures being furnished conforms to above requirements

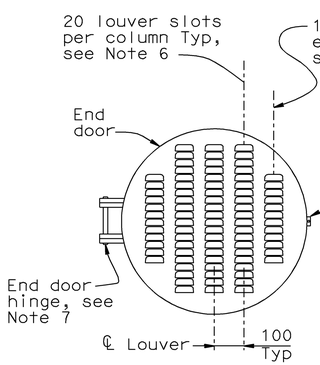

DETAIL 2

1:10

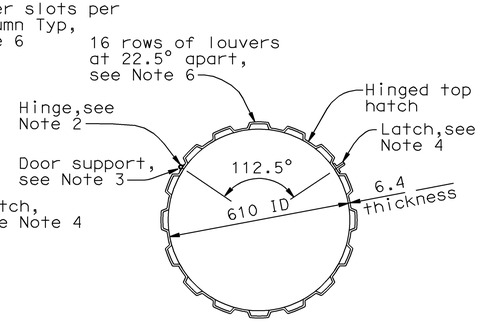

SECTION G-G

1:10

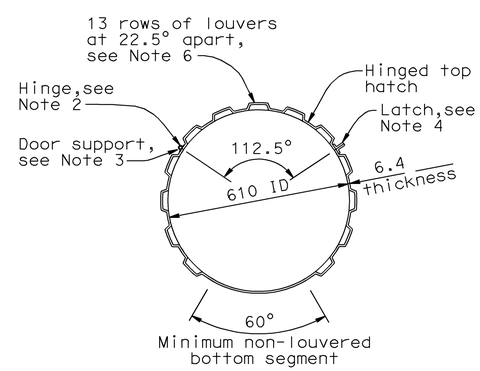

SECTION H-H

1:10

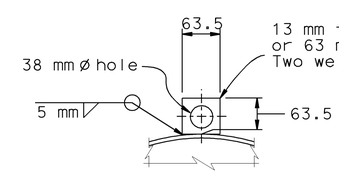

DETAIL 3

1:10

ALL DIMENSIONS ARE IN MILLIMETERS UNLESS OTHERWISE SHOWN

WATER POLLUTION CONTROL DETAILS

WD-16

RELEASE DATE ---	DESIGN	BY D.Dunrud	CHECKED J&P Peterson
FILE NO. ---	DETAILS	BY J&P Peterson	CHECKED J&P Peterson
	SUBMITTED	BY D.Forester	DRAWING DATE 02/07

STATE OF CALIFORNIA DEPARTMENT OF TRANSPORTATION

DIVISION OF ENGINEERING SERVICES

BRIDGE NO.

MILE POST

GROSS SOLIDS REMOVAL DEVICE

LINEAR RADIAL - DETAILS NO. 3

ORIGINAL SCALE IN MILLIMETERS FOR REDUCED PLANS 0 10 20 30 40 50 60 70 80 90 100

CU 07314
EA 121841

DISREGARD PRINTS BEARING EARLIER REVISION DATES

REVISION DATES (PRELIMINARY STAGE ONLY)

SHEET 5 OF 32

USERNAME => trmartin
DGN FILE => 712184ih016.dgn

DATE PLOTTED => 12-JUN-2009 TIME PLOTTED => 08:16

DIST.	COUNTY	ROUTE	MILE POST TOTAL PROJECT	SHEET NO.	TOTAL SHEETS
07	LA	5	42.8/47.3	92	1073

REGISTERED ENGINEER - CIVIL

6-8-09

PLANS APPROVAL DATE

REGISTERED PROFESSIONAL ENGINEER DOUGLAS DUNRUD No. 47240 Exp. 12/31/09 CIVIL STATE OF CALIFORNIA

The State of California or its officers or agents shall not be responsible for the accuracy or completeness of electronic copies of this plan sheet.

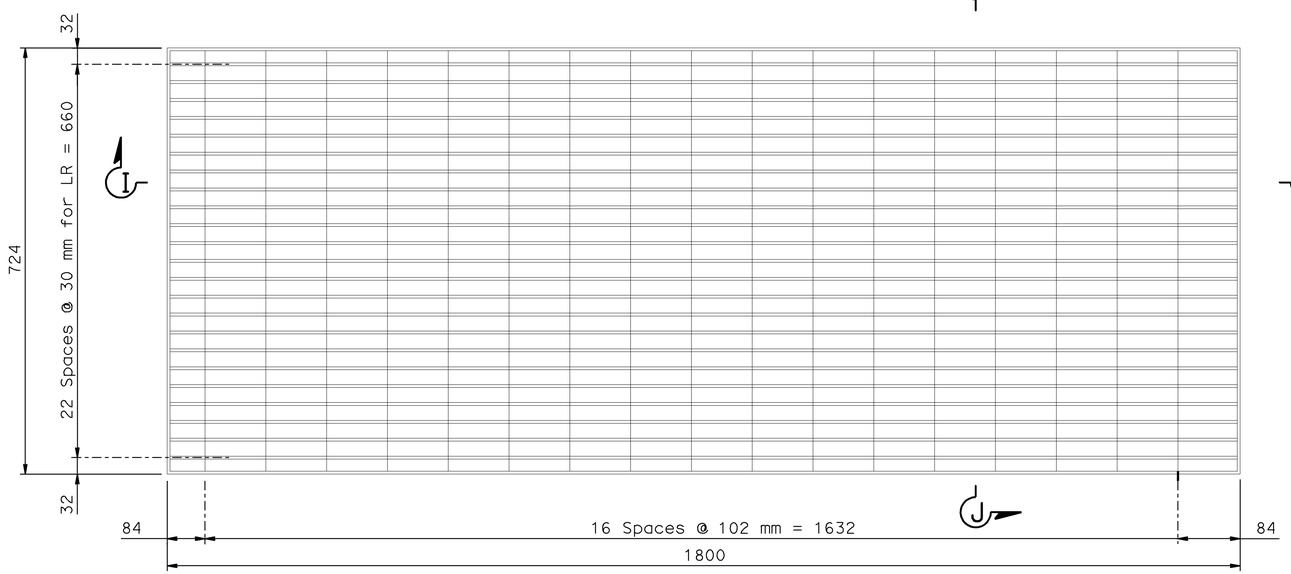

GRATE PANEL
1:5

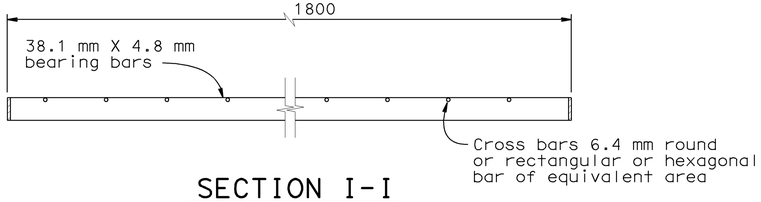

SECTION I-I
1:5

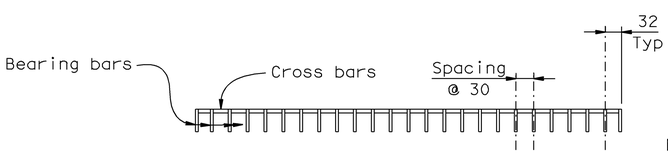

SECTION J-J
1:5

NOTES:

1. For Linear Radial dimension "L" and total number of grate panels, see Quantity Summary Table on "Linear Radial - Quantities" sheet.
2. For Linear Radial (HV) dimension "L" and total number of grate panels, see Quantity Summary Table (HV) on "Linear Radial (HV) - Quantities" sheet.
3. Gap between grate panels shall be equal, 22 Min, 40 Max.
4. All metal components of grating shall be galvanized.

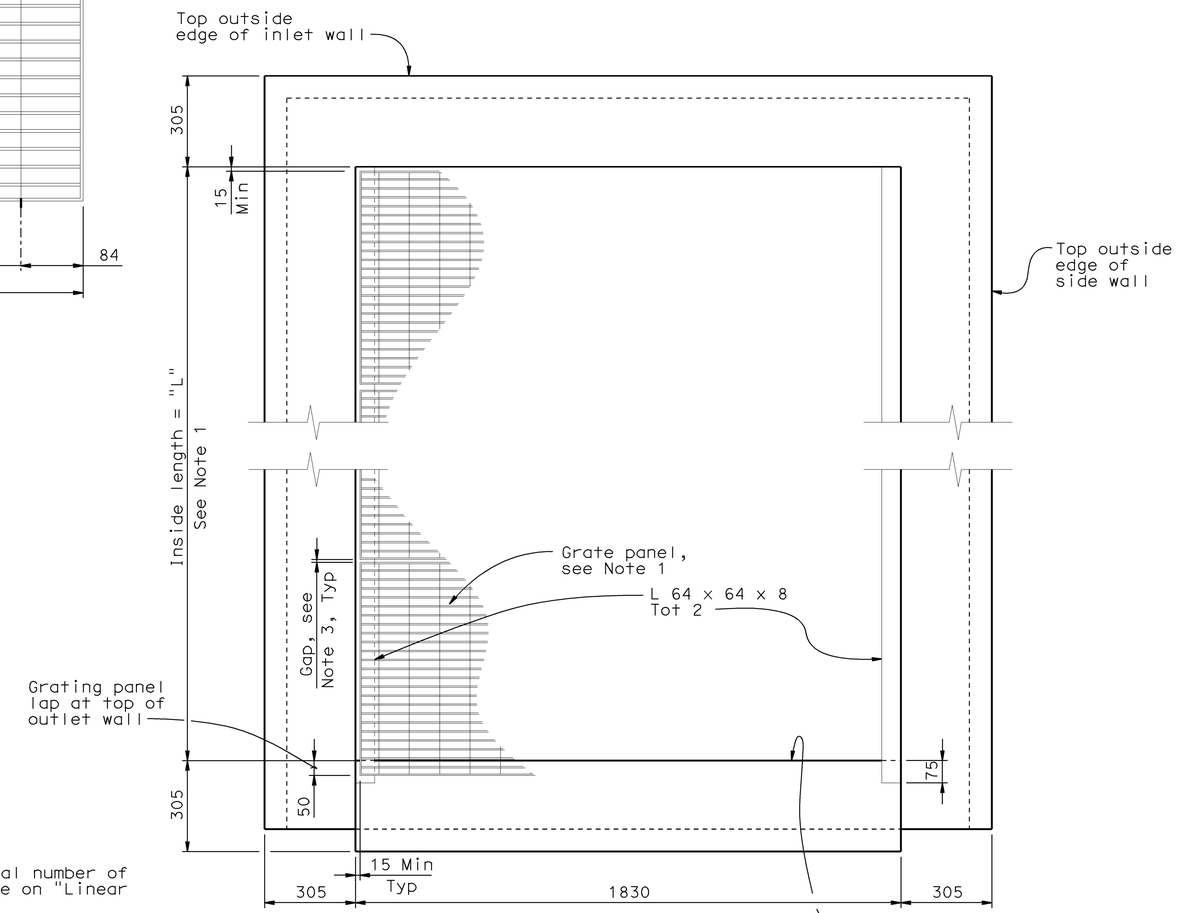

GRATE LAYOUT
(see Note 1)
1:10

WATER POLLUTION CONTROL DETAILS

ALL DIMENSIONS ARE IN
MILLIMETERS UNLESS OTHERWISE SHOWN

WD-17

RELEASE DATE ---	DESIGN	BY D.Dunrud	CHECKED J&P Peterson	---
FILE NO. ---	DETAILS	BY J&P Peterson	CHECKED J&P Peterson	
	SUBMITTED	BY D.Forester	DRAWING DATE 02/07	

STATE OF CALIFORNIA
DEPARTMENT OF TRANSPORTATION

DIVISION OF ENGINEERING SERVICES

BRIDGE NO.

MILE POST

GROSS SOLIDS REMOVAL DEVICE

LINEAR RADIAL - DETAILS NO.4

ORIGINAL SCALE IN MILLIMETERS FOR REDUCED PLANS 0 10 20 30 40 50 60 70 80 90 100

CU 07314
EA 121841

DISREGARD PRINTS BEARING EARLIER REVISION DATES

REVISION DATES (PRELIMINARY STAGE ONLY)

SHEET 6 OF 32

USERNAME => trmartin
DGN FILE => 712184ih017.dgn

DATE PLOTTED => 12-JUN-2009 TIME PLOTTED => 08:16

DIST.	COUNTY	ROUTE	MILE POST TOTAL PROJECT	SHEET NO.	TOTAL SHEETS
07	LA	5	42.8/47.3	93	1073

REGISTERED ENGINEER - CIVIL

6-8-09

PLANS APPROVAL DATE

REGISTERED PROFESSIONAL ENGINEER DOUGLAS DUNRUD No. 47240 Exp. 12/31/09 CIVIL STATE OF CALIFORNIA

The State of California or its officers or agents shall not be responsible for the accuracy or completeness of electronic copies of this plan sheet.

Caltrans Metric

QUANTITY SUMMARY TABLE FOR LINEAR RADIAL GSRD

GSRD Configuration (Type - H)	Wall Height "H"	No. of Intermediate Pipe Screen Sections "N"	Length Inside of Walls "L"	Out-to-Out Concrete Dimensions			Invert Elevation Differential Between Inlet and Outlet		Shear Keys Required	No. of Grate Panels	Stainless Steel Screen (kg)	Concrete (m3)	Bar Reinf Steel (kg)	Misc Metal (kg)	Maximum Pipe Opening	
				Height	Length	Width	Minimum	Maximum							Inlet Wall	Outlet Wall
LR-1-1220	1220	0	3630	1620	4390	3490	111	257	-	5	314	10.1	795	447	785 *	710
LR-2-1220	1220	1	5155	1620	5915	3490	126	272	-	7	495	13.1	939	619		
LR-3-1220	1220	2	6680	1620	7440	3490	141	287	-	9	676	16.2	1097	789		
LR-4-1220	1220	3	8205	1620	8965	3490	157	303	-	11	857	19.3	1237	961		
LR-5-1220	1220	4	9730	1620	10490	3490	172	318	-	13	1038	22.4	1380	1131		
LR-6-1220	1220	5	11255	1620	12015	3490	187	333	-	15	1219	25.5	1533	1302		
LR-1-1830	1830	0	3630	2230	4390	3490	111	867	-	5	314	12.0	1081	455	1295 *	1295
LR-2-1830	1830	1	5155	2230	5915	3490	126	882	-	7	495	15.5	1266	627		
LR-3-1830	1830	2	6680	2230	7440	3490	141	897	Yes	9	676	20.3	1496	797		
LR-4-1830	1830	3	8205	2230	8965	3490	157	913	Yes	11	857	24.0	1704	969		
LR-5-1830	1830	4	9730	2230	10490	3490	172	928	Yes	13	1038	27.8	1902	1139		
LR-6-1830	1830	5	11255	2230	12015	3490	187	943	Yes	15	1219	31.6	2112	1310		
LR-1-2440	2440	0	3630	2840	4390	3490	111	1477	Yes	5	314	14.7	1713	463	1295 *	1295
LR-2-2440	2440	1	5155	2840	5915	3490	126	1492	Yes	7	495	18.9	2043	635		
LR-3-2440	2440	2	6680	2840	7440	3490	141	1507	Yes	9	676	23.1	2360	805		
LR-4-2440	2440	3	8205	2840	8965	3490	157	1523	Yes	11	857	27.3	2712	977		
LR-5-2440	2440	4	9730	2840	10490	3490	172	1538	Yes	13	1038	31.5	3055	1147		
LR-6-2440	2440	5	11255	2840	12015	3490	187	1553	Yes	15	1219	35.7	3399	1318		

* See Note 3

NOTES:

1. Bar reinforcing steel and concrete quantities assume minimum screen height for all configurations.
2. Pipe opening size is equal to pipe outside diameter.
3. Maximum inlet inside pipe diameter shall not exceed 610 mm which is the size of louvered screen. Minimum screen height is assumed for maximum inlet pipe opening.

ALL DIMENSIONS ARE IN MILLIMETERS UNLESS OTHERWISE SHOWN

WATER POLLUTION CONTROL DETAILS
WD-18

RELEASE DATE ---	DESIGN	BY D.Dunrud	CHECKED J&P Peterson	
FILE NO. ---	DETAILS	BY J&P Peterson	CHECKED J&P Peterson	
	SUBMITTED	BY D.Forester	DRAWING DATE 02/07	

STATE OF CALIFORNIA DEPARTMENT OF TRANSPORTATION

DIVISION OF ENGINEERING SERVICES

BRIDGE NO.

MILE POST

GROSS SOLIDS REMOVAL DEVICE

LINEAR RADIAL - QUANTITIES

ORIGINAL SCALE IN MILLIMETERS FOR REDUCED PLANS 0 10 20 30 40 50 60 70 80 90 100

CU 07314
EA 121841

DISREGARD PRINTS BEARING EARLIER REVISION DATES

REVISION DATES (PRELIMINARY STAGE ONLY)

SHEET 7 OF 32

USERNAME => trmartin
DGN FILE => 712184ih018.dgn

DATE PLOTTED => 12-JUN-2009 TIME PLOTTED => 08:19

DIST.	COUNTY	ROUTE	MILE POST TOTAL PROJECT	SHEET NO.	TOTAL SHEETS
07	LA	5	42.8/47.3	94	1073

REGISTERED ENGINEER - CIVIL

6-8-09

PLANS APPROVAL DATE

REGISTERED PROFESSIONAL ENGINEER DOUGLAS DUNRUD No. 47240 Exp. 12/31/09 CIVIL STATE OF CALIFORNIA

The State of California or its officers or agents shall not be responsible for the accuracy or completeness of electronic copies of this plan sheet.

Caltrans Metric

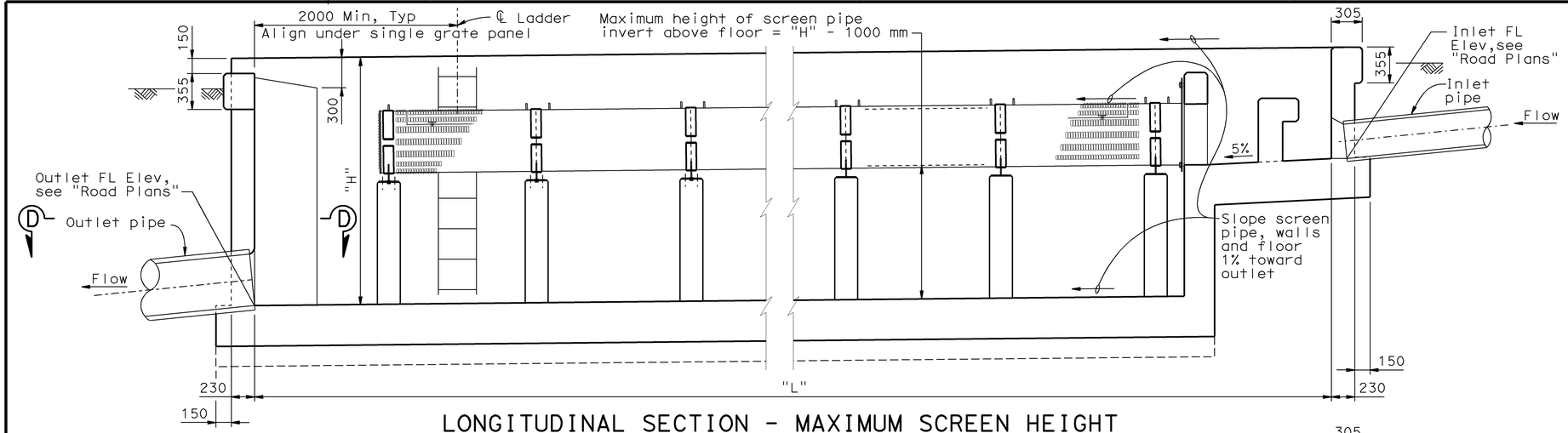

LONGITUDINAL SECTION - MAXIMUM SCREEN HEIGHT

1:25

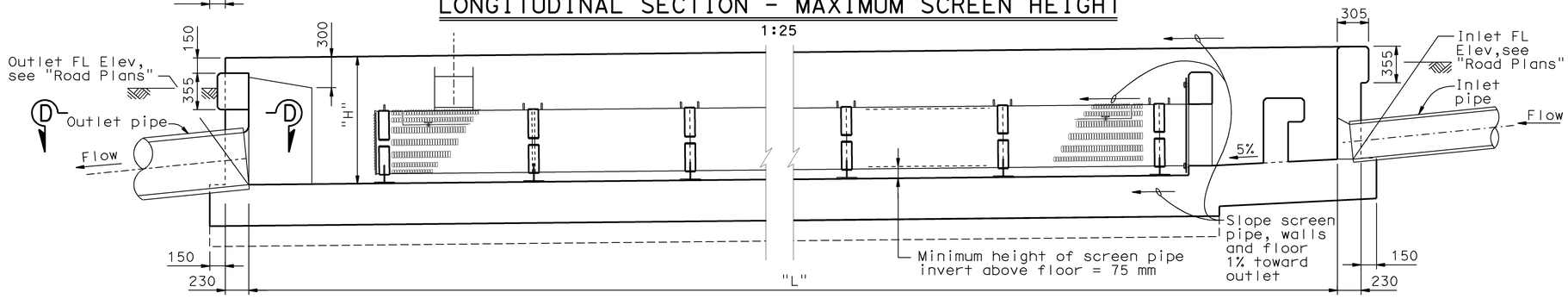

LONGITUDINAL SECTION - MINIMUM SCREEN HEIGHT

1:25

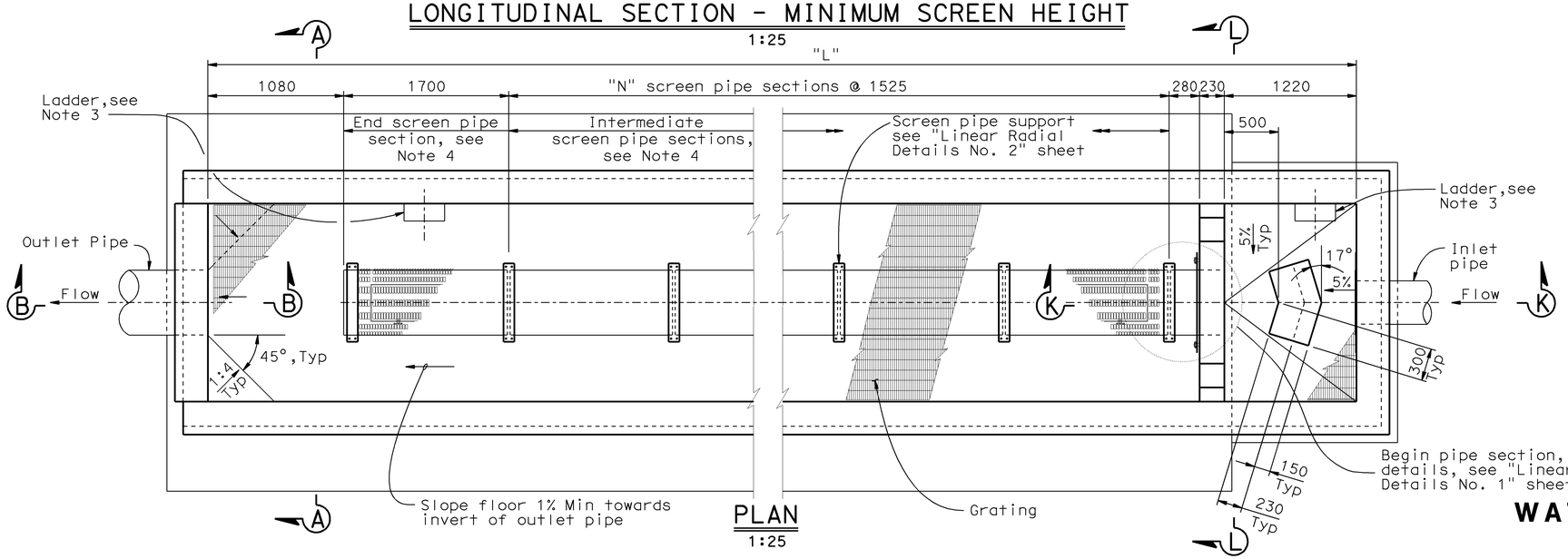

PLAN

1:25

NOTES:

1. For Typical Section, see "Linear Radial - Details No. 1" sheet.
2. For Section B-B and D-D, see "Linear Radial - Details No. 1" sheet.
3. For ladder details see "Miscellaneous Details No. 1" sheet.
4. For end screen and intermediate screen pipe details, see "Linear Radial - Details No. 3" sheet.
5. For "N", "H" and other design data, see "Linear Radial (HV) - Quantities" sheet.
6. For Section K-K and L-L, see "Linear Radial (HV) - Details No. 1" sheet.
7. For Grating details, see "Linear Radial Details No. 4" sheet.
8. For inlet and outlet pipe details not shown, see "Road Plans".

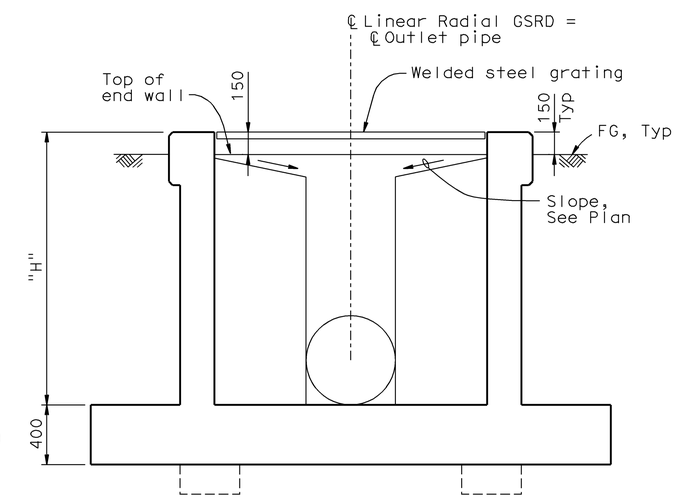

SECTION A-A

1:20

ALL DIMENSIONS ARE IN MILLIMETERS UNLESS OTHERWISE SHOWN

WATER POLLUTION CONTROL DETAILS

HIGH VELOCITY

WD-19

RELEASE DATE ---	DESIGN	BY D.Dunrud	CHECKED J&P Peterson
FILE NO. ---	DETAILS	BY J&P Peterson	CHECKED J&P Peterson
	SUBMITTED	BY D.Forester	DRAWING DATE 02/07

STATE OF CALIFORNIA DEPARTMENT OF TRANSPORTATION

DIVISION OF ENGINEERING SERVICES

BRIDGE NO.

MILE POST

GROSS SOLIDS REMOVAL DEVICE

LINEAR RADIAL (HV) - LAYOUT

ORIGINAL SCALE IN MILLIMETERS FOR REDUCED PLANS 0 10 20 30 40 50 60 70 80 90 100

CU 07314
EA 121841

DISREGARD PRINTS BEARING EARLIER REVISION DATES

REVISION DATES (PRELIMINARY STAGE ONLY)

SHEET 8 OF 32

USERNAME => trmartin
DGN FILE => 712184in019.dgn

DATE PLOTTED => 12-JUN-2009 TIME PLOTTED => 08:16

DIST.	COUNTY	ROUTE	MILE POST TOTAL PROJECT	SHEET NO.	TOTAL SHEETS
07	LA	5	42.8/47.3	95	1073

REGISTERED ENGINEER - CIVIL

6-8-09
PLANS APPROVAL DATE

REGISTERED PROFESSIONAL ENGINEER DOUGLAS DUNRUD No. 47240 Exp. 12/31/09 CIVIL STATE OF CALIFORNIA

The State of California or its officers or agents shall not be responsible for the accuracy or completeness of electronic copies of this plan sheet.

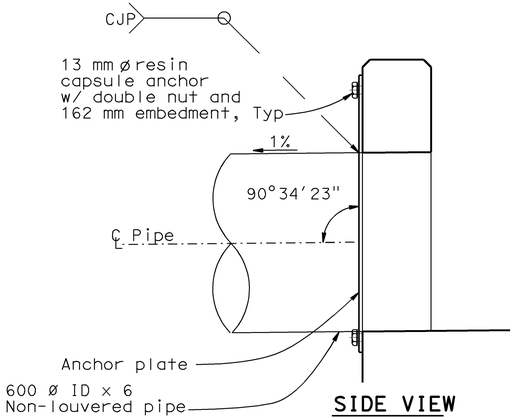

SIDE VIEW

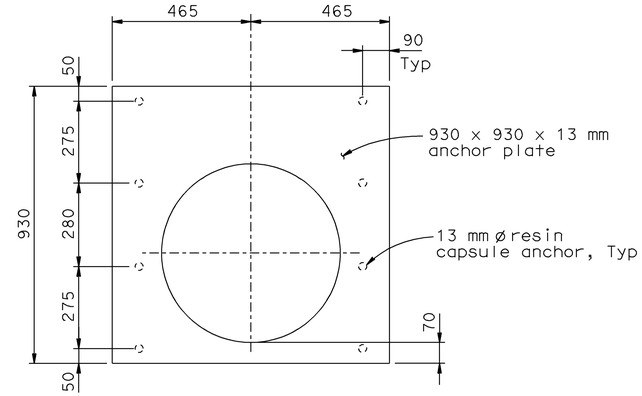

END VIEW
(Anchor Plate only)

ANCHOR PLATE DETAILS
1:10

NOTES:

1. For location of sections K-K and L-L, see "Linear Radial (HV) - Layout" sheet.
2. For bottom slab details and grating support not shown, see Typical Section on "Linear Radial Details No. 1" sheet.
3. All metal components of screen pipe including connections to concrete shall be stainless steel.
4. All metal components of grating including connections to wall shall be galvanized.

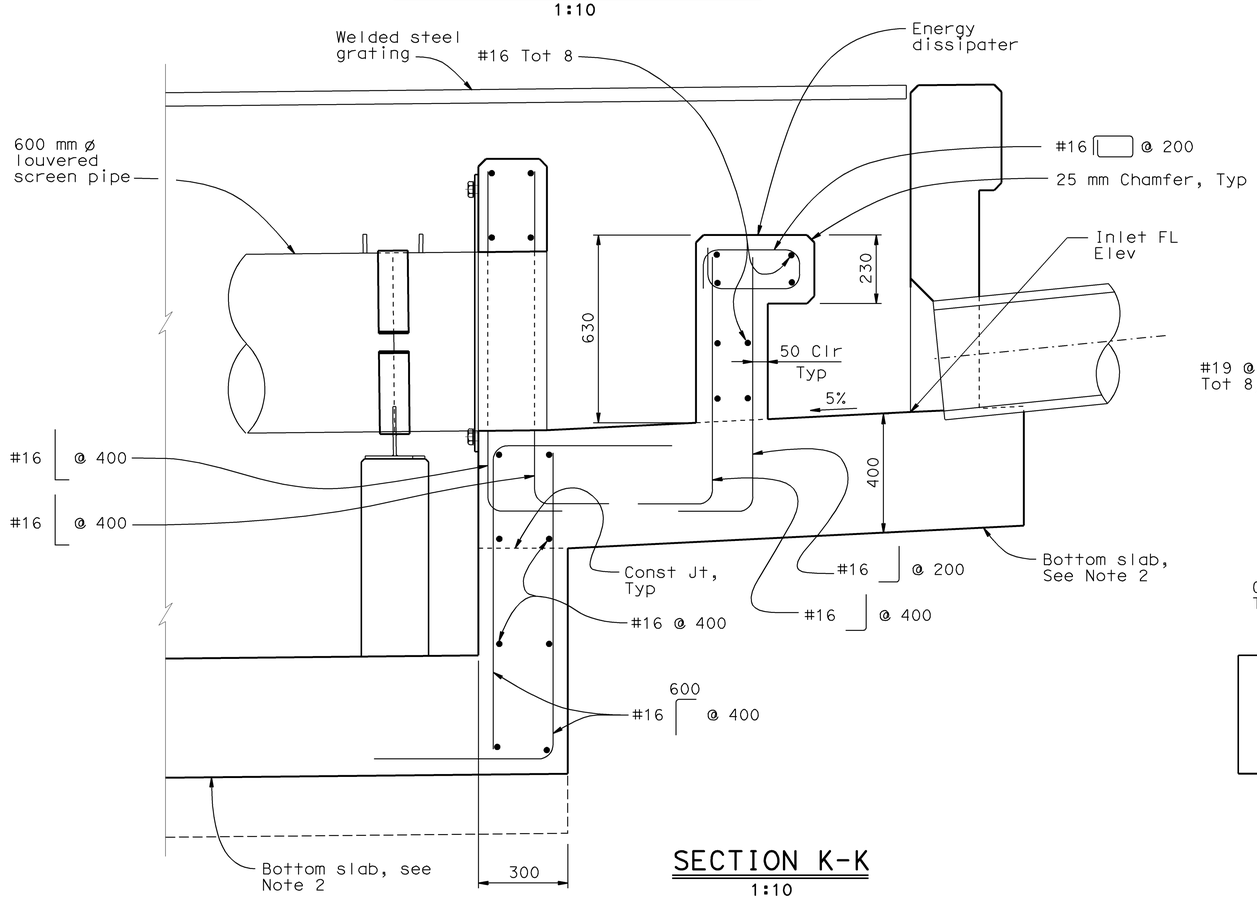

SECTION K-K
1:10

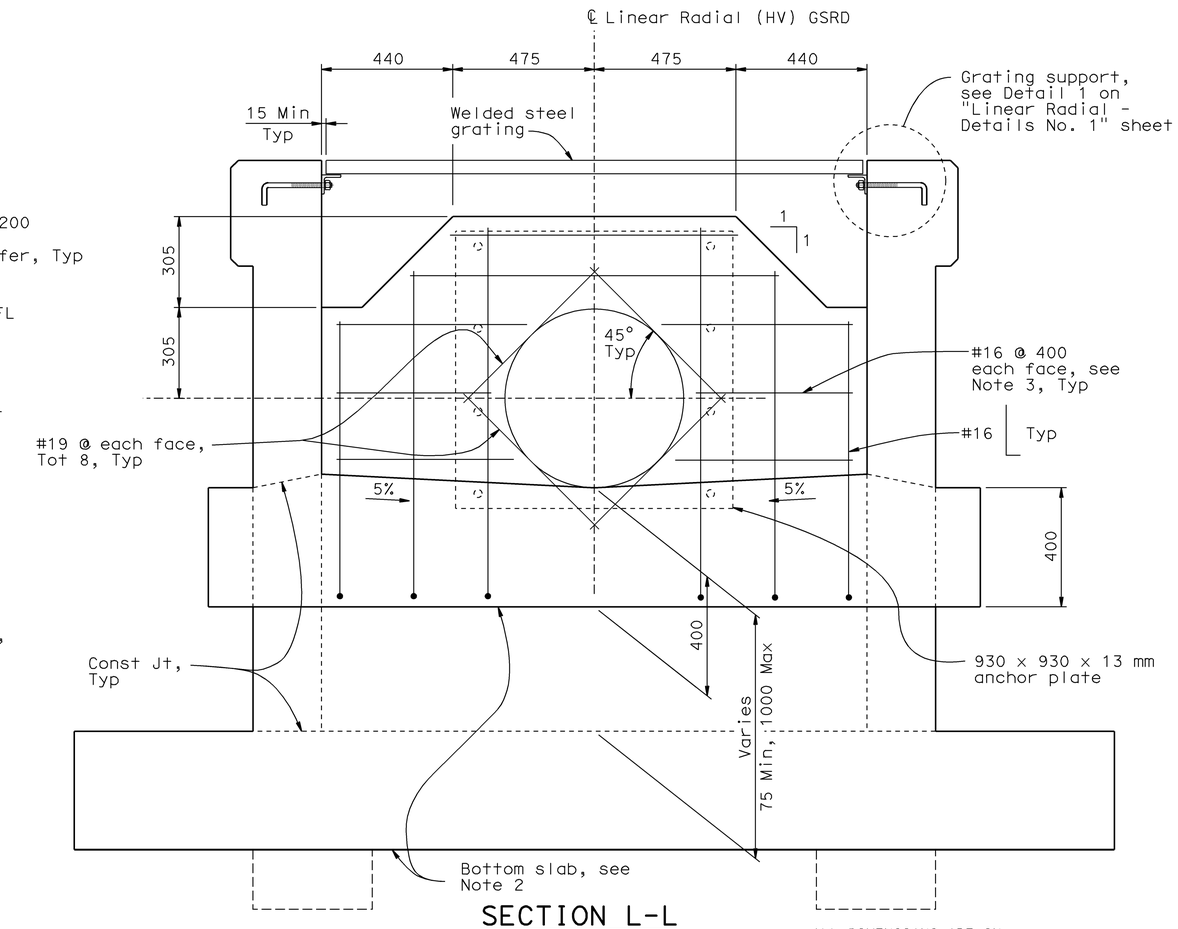

SECTION L-L
1:10

ALL DIMENSIONS ARE IN MILLIMETERS UNLESS OTHERWISE SHOWN

WATER POLLUTION CONTROL DETAILS
HIGH VELOCITY

WD-20

RELEASE DATE ---	DESIGN	BY D.Dunrud	CHECKED J&P Peterson
FILE NO. ---	DETAILS	BY J&P Peterson	CHECKED J&P Peterson
	SUBMITTED	BY D.Forester	DRAWING DATE 02/07

STATE OF CALIFORNIA
DEPARTMENT OF TRANSPORTATION

DIVISION OF ENGINEERING SERVICES

BRIDGE NO.
MILE POST

GROSS SOLIDS REMOVAL DEVICE
LINEAR RADIAL (HV) - DETAILS NO. 1

ORIGINAL SCALE IN MILLIMETERS FOR REDUCED PLANS 0 10 20 30 40 50 60 70 80 90 100

CU 07314
EA 121841

DISREGARD PRINTS BEARING EARLIER REVISION DATES

REVISION DATES (PRELIMINARY STAGE ONLY)

SHEET 9 OF 32

USERNAME => trmartin
DGN FILE => 712184ih020.dgn

DATE PLOTTED => 12-JUN-2009 TIME PLOTTED => 08:16

DIST.	COUNTY	ROUTE	MILE POST TOTAL PROJECT	SHEET NO.	TOTAL SHEETS
07	LA	5	42.8/47.3	96	1073

REGISTERED ENGINEER - CIVIL

6-8-09

PLANS APPROVAL DATE

REGISTERED PROFESSIONAL ENGINEER DOUGLAS DUNRUD No. 47240 Exp. 12/31/09 CIVIL STATE OF CALIFORNIA

The State of California or its officers or agents shall not be responsible for the accuracy or completeness of electronic copies of this plan sheet.

Caltrans Metric

QUANTITY SUMMARY TABLE FOR LINEAR RADIAL (HV) GSRD

GSRD Configuration (Type - H)	Wall Height "H"	No. of Intermediate Pipe Screen Sections "N"	Length Inside of Walls "L"	Out-to-Out Concrete Dimensions			Invert Elevation Differential Between Inlet and Outlet		Shear Key Reqd.	No. of Grate Panels	Stainless Steel Screen (kg)	Concrete (m3)	Bar Reinf Steel (kg)	Misc Metal (kg)	Maximum Pipe Opening	
				Height	Length	Width	Minimum	Maximum							Inlet Wall	Outlet Wall
LR(HV)-1-1220	1220	0	4510	1620	5270	3490	111	257	-	6	284	11.8	1089	552	685	710
LR(HV)-2-1220	1220	1	6035	1620	6795	3490	126	272	-	8	465	14.9	1245	729		
LR(HV)-3-1220	1220	2	7560	1620	8320	3490	141	287	-	10	646	17.9	1361	905		
LR(HV)-4-1220	1220	3	9085	1620	9845	3490	157	303	-	12	828	21.0	1520	1083		
LR(HV)-5-1220	1220	4	10610	1620	11370	3490	172	318	-	14	1009	24.1	1676	1260		
LR(HV)-6-1220	1220	5	12135	1620	12895	3490	187	333	-	16	1190	27.2	1818	1436		
LR(HV)-1-1830	1830	0	4510	2230	5270	3490	111	867	-	6	284	13.9	1416	560	1270	1270
LR(HV)-2-1830	1830	1	6035	2230	6795	3490	126	882	-	8	465	17.4	1613	737		
LR(HV)-3-1830	1830	2	7560	2230	8320	3490	141	897	Yes	10	646	22.3	1813	913		
LR(HV)-4-1830	1830	3	9085	2230	9845	3490	157	913	Yes	12	828	26.0	2021	1091		
LR(HV)-5-1830	1830	4	10610	2230	11370	3490	172	928	Yes	14	1009	29.8	2226	1268		
LR(HV)-6-1830	1830	5	12135	2230	12895	3490	187	943	Yes	16	1190	33.6	2407	1444		
LR(HV)-1-2440	2440	0	4510	2840	5270	3490	111	1477	Yes	6	284	16.9	2094	568	1270	1270
LR(HV)-2-2440	2440	1	6035	2840	6795	3490	126	1492	Yes	8	465	21.1	2425	745		
LR(HV)-3-2440	2440	2	7560	2840	8320	3490	141	1507	Yes	10	646	25.3	2786	921		
LR(HV)-4-2440	2440	3	9085	2840	9845	3490	157	1523	Yes	12	828	29.4	3120	1099		
LR(HV)-5-2440	2440	4	10610	2840	11370	3490	172	1538	Yes	14	1009	33.6	3477	1276		
LR(HV)-6-2440	2440	5	12135	2840	12895	3490	187	1553	Yes	16	1190	37.8	3819	1452		

NOTES:

1. Bar reinforcing steel and concrete quantities assume minimum screen height for all configurations.
2. Pipe opening size is equal to pipe outside diameter.
3. Minimum screen height is assumed for maximum inlet pipe opening.

ALL DIMENSIONS ARE IN MILLIMETERS UNLESS OTHERWISE SHOWN

WATER POLLUTION CONTROL DETAILS

HIGH VELOCITY

WD-21

RELEASE DATE ---	DESIGN	BY D.Dunrud	CHECKED J&P Peterson	---
FILE NO. ---	DETAILS	BY J&P Peterson	CHECKED J&P Peterson	
	SUBMITTED	BY D.Forester	DRAWING DATE 02/07	

STATE OF CALIFORNIA DEPARTMENT OF TRANSPORTATION

DIVISION OF ENGINEERING SERVICES

BRIDGE NO.

MILE POST

GROSS SOLIDS REMOVAL DEVICE

LINEAR RADIAL (HV) - QUANTITIES

ORIGINAL SCALE IN MILLIMETERS FOR REDUCED PLANS 0 10 20 30 40 50 60 70 80 90 100

CU 07314
EA 121841

DISREGARD PRINTS BEARING EARLIER REVISION DATES

REVISION DATES (PRELIMINARY STAGE ONLY)

SHEET 10 OF 32

USERNAME => trmartin
DGN FILE => 712184ih021.dgn

DATE PLOTTED => 12-JUN-2009 TIME PLOTTED => 08:16

DIST.	COUNTY	ROUTE	MILE POST TOTAL PROJECT	SHEET NO.	TOTAL SHEETS
07	LA	5	42.8/47.3	97	1073

REGISTERED ENGINEER - CIVIL

6-8-09
PLANS APPROVAL DATE

REGISTERED PROFESSIONAL ENGINEER DOUGLAS DUNRUD No. 47240 Exp. 12/31/09 CIVIL STATE OF CALIFORNIA

The State of California or its officers or agents shall not be responsible for the accuracy or completeness of electronic copies of this plan sheet.

Caltrans Metric

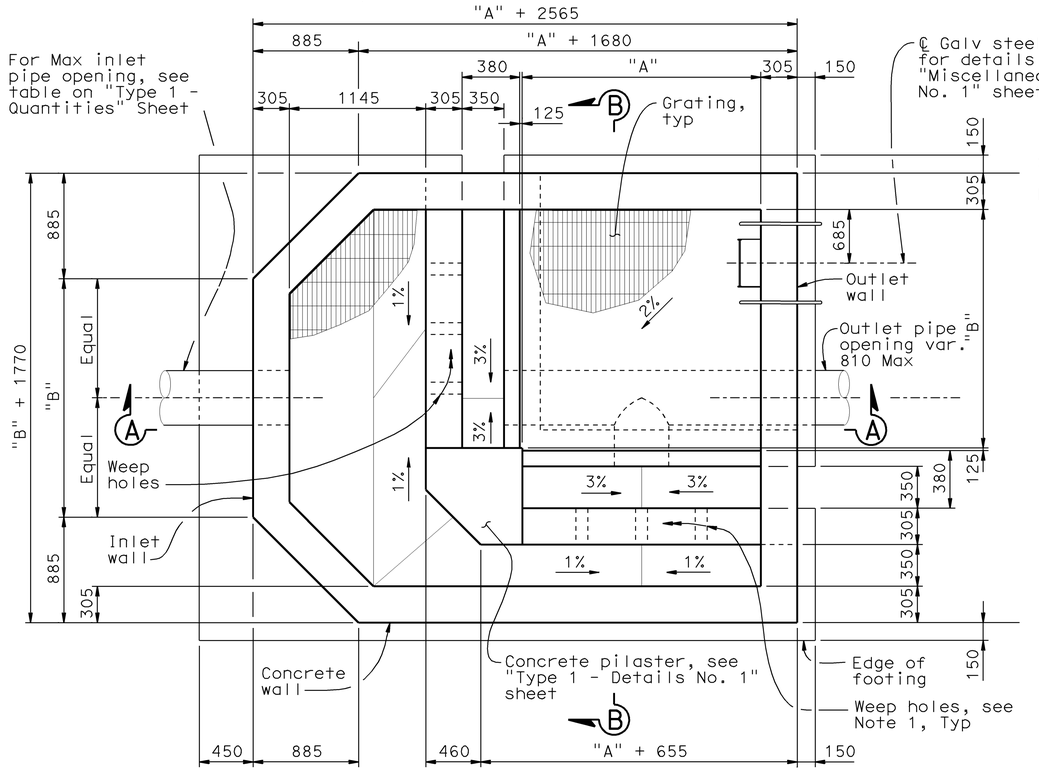

PLAN - TYPE 1L

1:25

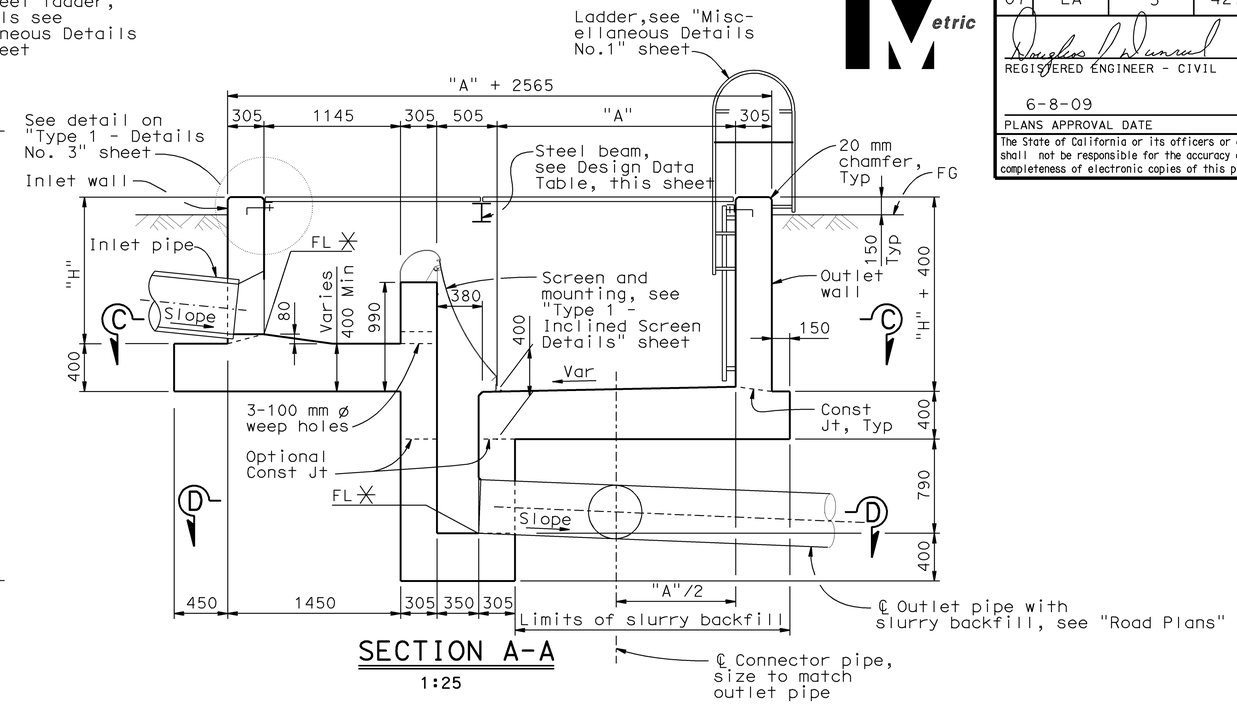

SECTION A-A

1:25

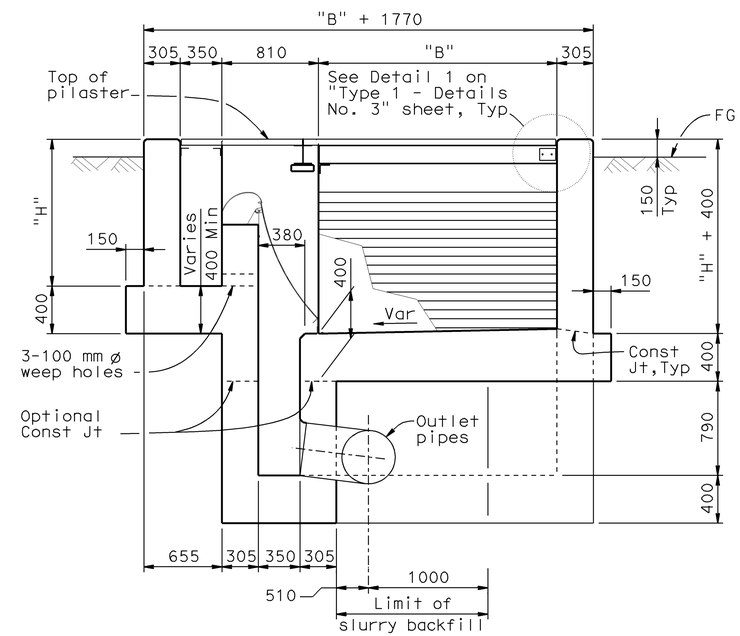

SECTION B-B

1:25

NOTES:

1. For weep hole details, see "Type 1 - Details No. 2" sheet.
2. For Views C-C & D-D see "Type 1 - Details No. 2" sheet.
3. For reinforcing details not shown see "Type 1 - Details No. 1" sheet.
4. ✳ - FL elevations, see "Road Plans".
5. For inlet and outlet pipe details not shown, see "Road Plans".

DESIGN DATA TABLE - TYPE 1 GSRD

Screen Length (mm)		"A"	2000			3000			4000		
		"B"	2000			3000			4000		
		Total	4000			6000			8000		
Concrete Wall	Inlet Wall Height "H" (mm)		4000	3400	2800	4000	3400	2800	4000	3400	2800
	"a" bars		#22 @ 150	#19 @ 150	#16 @ 150	#22 @ 150	#19 @ 150	#16 @ 150	#22 @ 150	#19 @ 150	#16 @ 150
	"b" bars		#22 @ 300	#19 @ 300	#16 @ 300	#22 @ 300	#19 @ 300	#16 @ 300	#22 @ 300	#19 @ 300	#16 @ 300
	"c" bars		#25 @ 150	#22 @ 150	#19 @ 150	#25 @ 150	#22 @ 150	#19 @ 150	#25 @ 150	#22 @ 150	#19 @ 150
	"d" bars		#25 @ 300	#22 @ 300	#19 @ 300	#25 @ 300	#22 @ 300	#19 @ 300	#25 @ 300	#22 @ 300	#19 @ 300
Footing	"e" bars		#16 @ 200	#19 @ 300	#16 @ 300	#16 @ 200	#19 @ 300	#16 @ 300	#16 @ 200	#19 @ 300	#16 @ 300
	"f" bars		#19 @ 150	#16 @ 150	#16 @ 150	#19 @ 150	#16 @ 150	#16 @ 150	#19 @ 150	#16 @ 150	#16 @ 150
	"g" bars		#19 @ 200	#19 @ 300	#19 @ 300	#19 @ 200	#19 @ 300	#19 @ 300	#19 @ 200	#19 @ 300	#19 @ 300
	"h" bars		#22 @ 150	#19 @ 150	#16 @ 150	#22 @ 150	#19 @ 150	#16 @ 150	#22 @ 150	#19 @ 150	#16 @ 150
Grating	Supporting Beam	W Section	W150x22.5			W150x22.5			W150x29.8		
		C Section	NA			NA			C230x19.9		

TYPE 1L - LEVEL SIDE WALL CONFIGURATION

WATER POLLUTION CONTROL DETAILS

ALL DIMENSIONS ARE IN MILLIMETERS UNLESS OTHERWISE SHOWN

WD-22

RELEASE DATE ---	DESIGN	BY D.Dunrud	CHECKED J&P Peterson
FILE NO. ---	DETAILS	BY J&P Peterson	CHECKED J&P Peterson
	SUBMITTED	BY D.Forester	DRAWING DATE 02/07

STATE OF CALIFORNIA DEPARTMENT OF TRANSPORTATION

DIVISION OF ENGINEERING SERVICES

BRIDGE NO.

MILE POST

GROSS SOLIDS REMOVAL DEVICE

TYPE 1 - LAYOUT NO. 1

ORIGINAL SCALE IN MILLIMETERS FOR REDUCED PLANS 0 10 20 30 40 50 60 70 80 90 100

CU 07314
EA 121841

DISREGARD PRINTS BEARING EARLIER REVISION DATES

REVISION DATES (PRELIMINARY STAGE ONLY)

SHEET 11 OF 32

USERNAME => trmnguye
DGN FILE => 712184ih022.dgn

DATE PLOTTED => 12-JUN-2008 TIME PLOTTED => 08:15

DIST.	COUNTY	ROUTE	MILE POST TOTAL PROJECT	SHEET NO.	TOTAL SHEETS
07	LA	5	42.8/47.3	98	1073

REGISTERED ENGINEER - CIVIL

6-8-09

PLANS APPROVAL DATE

REGISTERED PROFESSIONAL ENGINEER DOUGLAS DUNRUD No. 47240 Exp. 12/31/09 CIVIL STATE OF CALIFORNIA

The State of California or its officers or agents shall not be responsible for the accuracy or completeness of electronic copies of this plan sheet.

Caltrans Metric

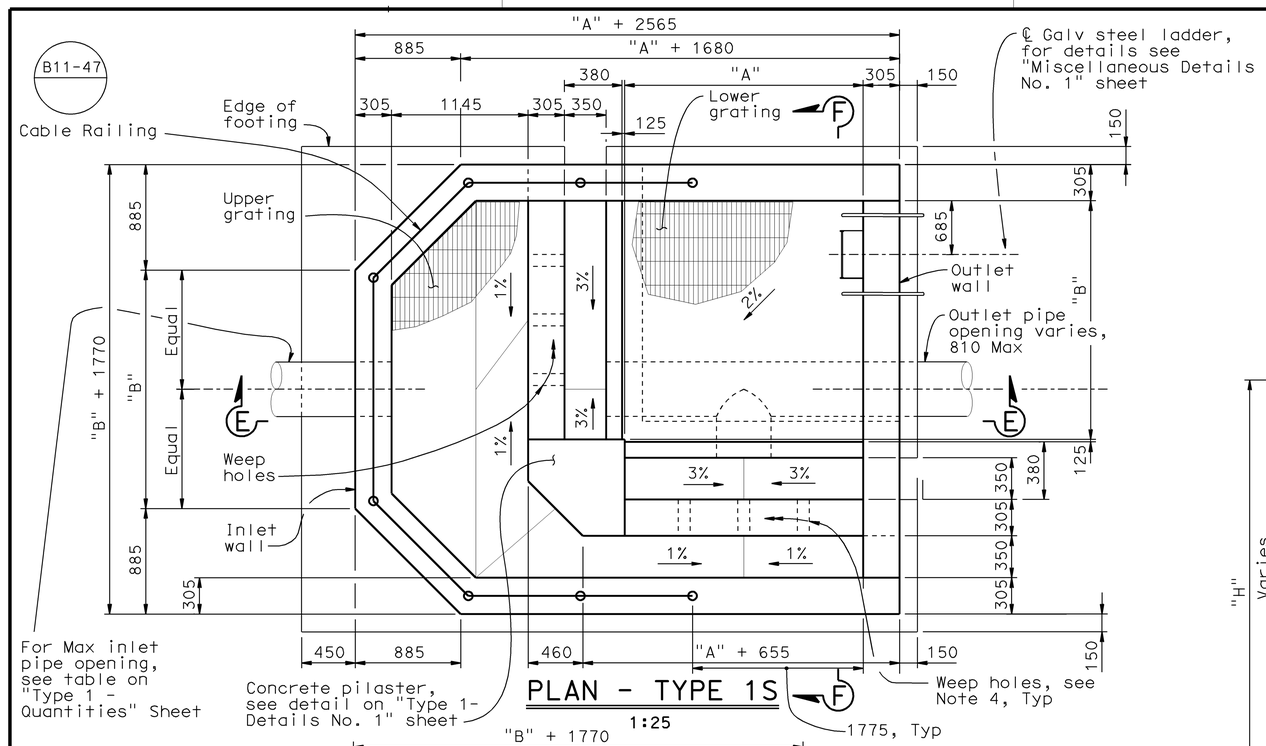

PLAN - TYPE 1S

1:25

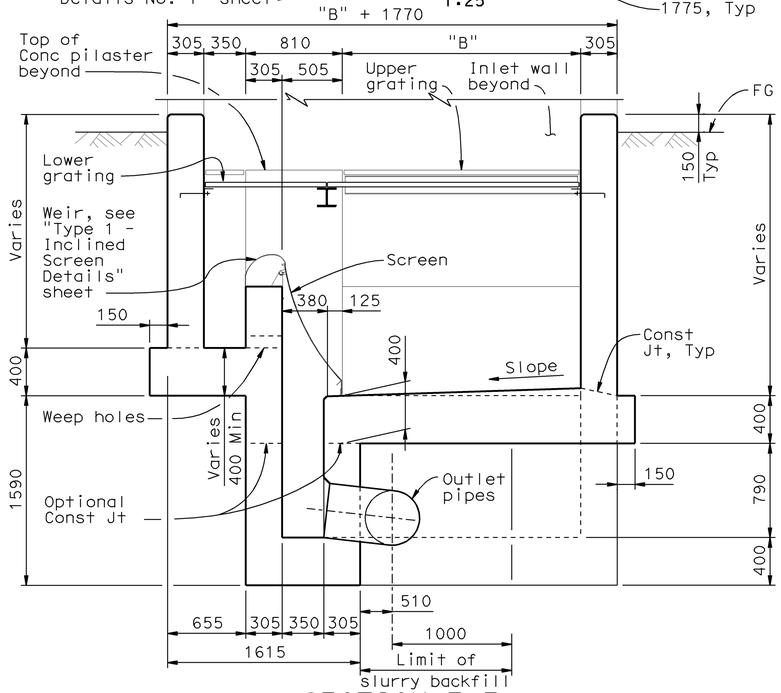

SECTION F-F

1:25

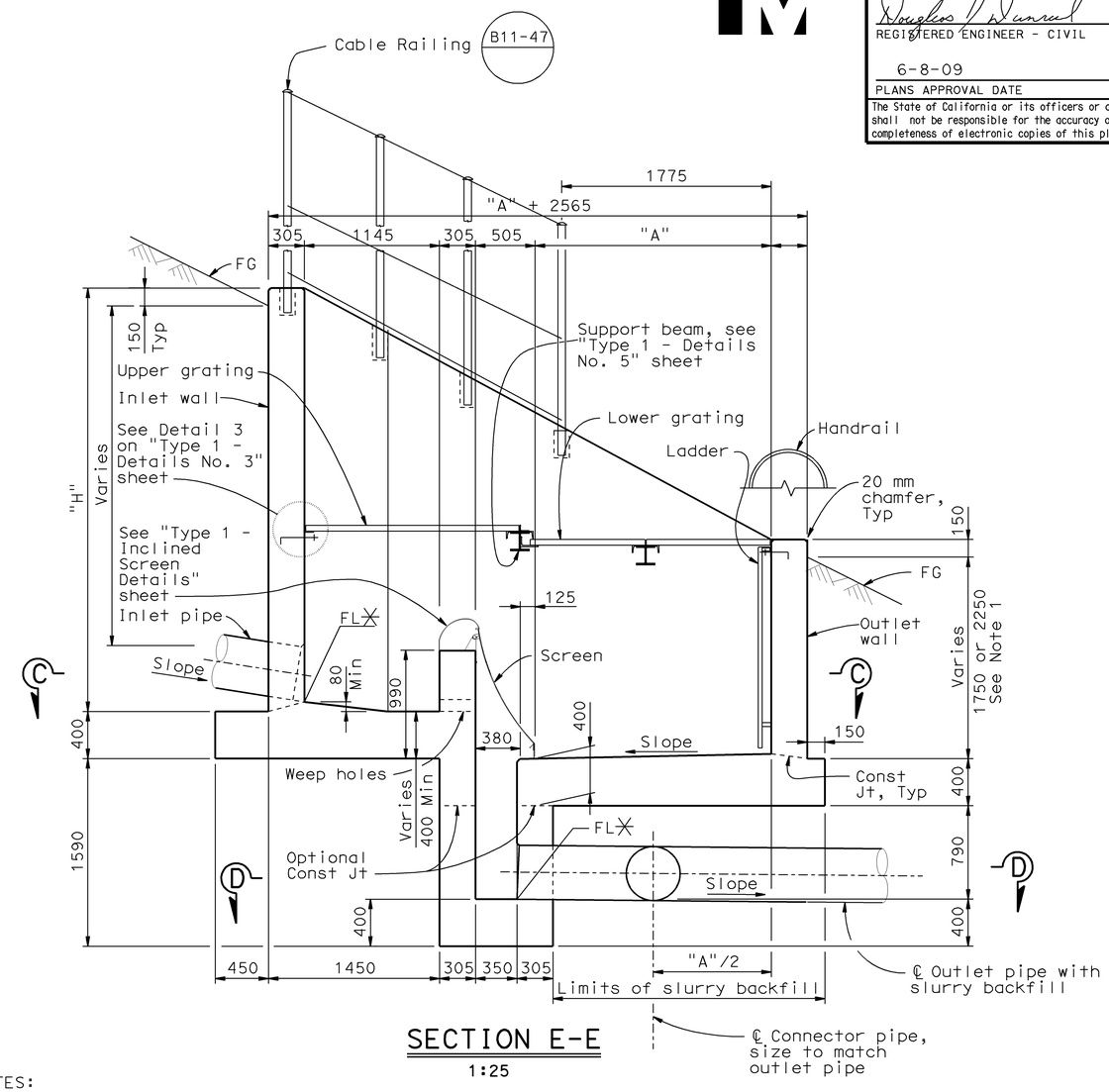

SECTION E-E

1:25

NOTES:

1. The Engineer to determine outlet wall height according to configuration of existing grade. See Road Plans for details.
2. See "Type 1- Details No. 2" sheet for Views C-C & D-D.
3. For reinforcing details see "Type 1 - Details No. 1" sheet.
4. For weep hole details, see "Type 1 - Details No. 2" sheet.
5. ✳ - FL elevation, see Road Plans.
6. For quantities and additional GSRD data, see "Type 1 - Quantities" sheet.
7. For inlet and outlet pipe details not shown, see "Road Plans".

TYPE 1S - SLOPED SIDE WALL CONFIGURATION

ALL DIMENSIONS ARE IN MILLIMETERS UNLESS OTHERWISE SHOWN

WATER POLLUTION CONTROL DETAILS

WD-23

RELEASE DATE ---	DESIGN	BY D.Dunrud	CHECKED J&P Peterson
FILE NO. ---	DETAILS	BY J&P Peterson	CHECKED J&P Peterson
	SUBMITTED	BY D.Forester	DRAWING DATE 02/07

STATE OF CALIFORNIA DEPARTMENT OF TRANSPORTATION

DIVISION OF ENGINEERING SERVICES

CU 07314
EA 121841

BRIDGE NO.

MILE POST

GROSS SOLIDS REMOVAL DEVICE

TYPE 1 - LAYOUT NO. 2

ORIGINAL SCALE IN MILLIMETERS FOR REDUCED PLANS 0 10 20 30 40 50 60 70 80 90 100

DISREGARD PRINTS BEARING EARLIER REVISION DATES

REVISION DATES (PRELIMINARY STAGE ONLY)

SHEET 12 OF 32

USERNAME => trmnguye
DGN FILE => 712184ih023.dgn

DATE PLOTTED => 12-JUN-2009 TIME PLOTTED => 08:15

DIST.	COUNTY	ROUTE	MILE POST TOTAL PROJECT	SHEET NO.	TOTAL SHEETS
07	LA	5	42.8/47.3	99	1073

REGISTERED ENGINEER - CIVIL

6-8-09

PLANS APPROVAL DATE

REGISTERED PROFESSIONAL ENGINEER DOUGLAS DUNRUD No. 47240 Exp. 12/31/09 CIVIL STATE OF CALIFORNIA

The State of California or its officers or agents shall not be responsible for the accuracy or completeness of electronic copies of this plan sheet.

Caltrans Metric

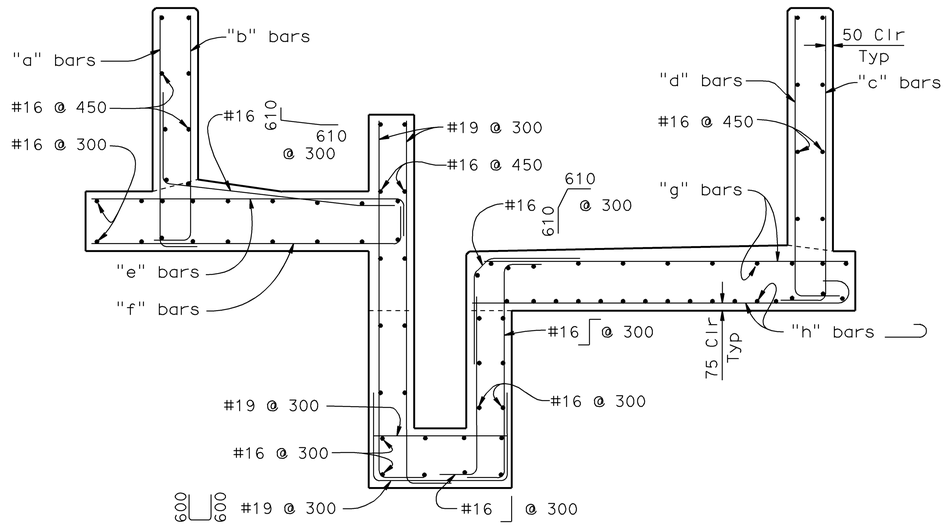

SECTION A-A - REINF DETAIL

1:20

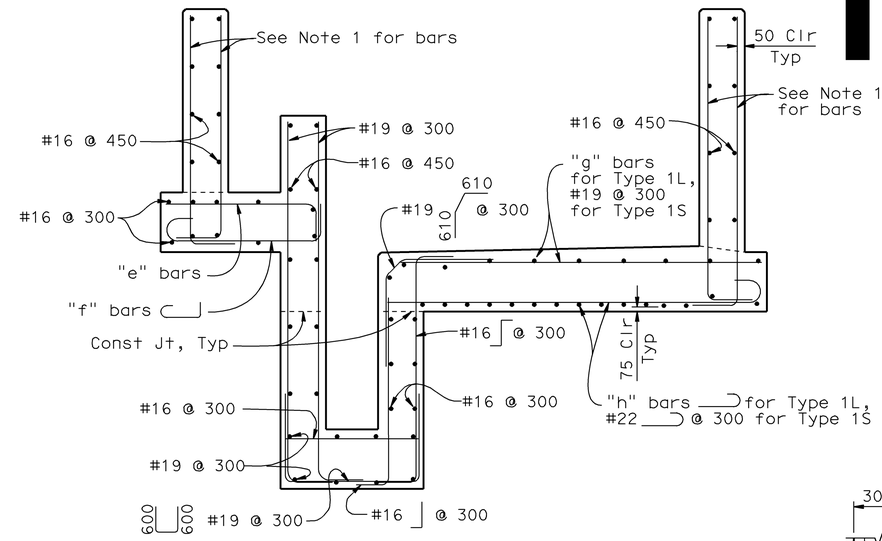

SECTION B-B - REINF DETAIL

Section B-B of Type 1L shown, Section F-F of Type 1S similar

1:20

NOTE:

Use #16 @ 300 when wall height is 2500 or below. Use "a" and "b" bars shown in the table when wall height exceedes 2500. "a" bars indicate exterior bars, "b" bars indicate interior bars.

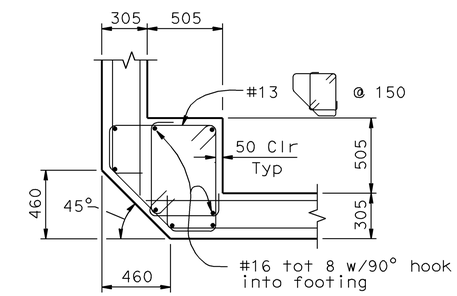

PILASTER DETAIL

1:20

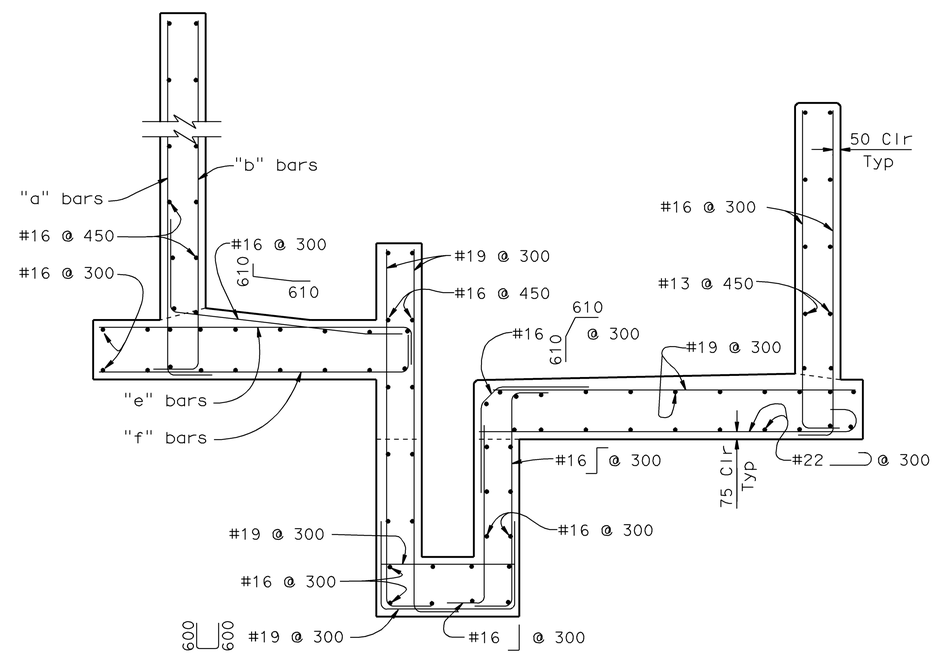

SECTION E-E - REINF DETAIL

1:20

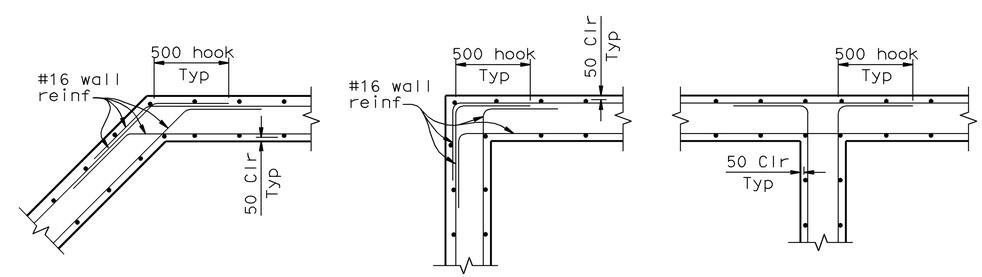

PLAN - REINFORCING DETAILS AT WALL CORNERS AND TRANSITIONS

1:20

WATER POLLUTION CONTROL DETAILS

ALL DIMENSIONS ARE IN MILLIMETERS UNLESS OTHERWISE SHOWN

WD-24

RELEASE DATE ---	DESIGN	BY D.Dunrud	CHECKED J&P Peterson	
	DETAILS	BY J&P Peterson	CHECKED J&P Peterson	
FILE NO. ---	SUBMITTED	BY D.Forester	DRAWING DATE 02/07	

STATE OF CALIFORNIA DEPARTMENT OF TRANSPORTATION

DIVISION OF ENGINEERING SERVICES

BRIDGE NO.

MILE POST

GROSS SOLIDS REMOVAL DEVICE

TYPE 1 - DETAILS NO. 1

ORIGINAL SCALE IN MILLIMETERS FOR REDUCED PLANS 0 10 20 30 40 50 60 70 80 90 100

CU 07314
EA 121841

DISREGARD PRINTS BEARING EARLIER REVISION DATES

REVISION DATES (PRELIMINARY STAGE ONLY)

SHEET 13 OF 32

USERNAME => trmnguye
DGN FILE => 712184ih024.dgn

DATE PLOTTED => 12-JUN-2009 TIME PLOTTED => 08:15

DIST.	COUNTY	ROUTE	MILE POST TOTAL PROJECT	SHEET NO.	TOTAL SHEETS
07	LA	5	42.8/47.3	100	1073

REGISTERED ENGINEER - CIVIL

6-8-09
PLANS APPROVAL DATE

REGISTERED PROFESSIONAL ENGINEER DOUGLAS DUNRUD No. 47240 Exp. 12/31/09 CIVIL STATE OF CALIFORNIA

The State of California or its officers or agents shall not be responsible for the accuracy or completeness of electronic copies of this plan sheet.

Caltrans Metric

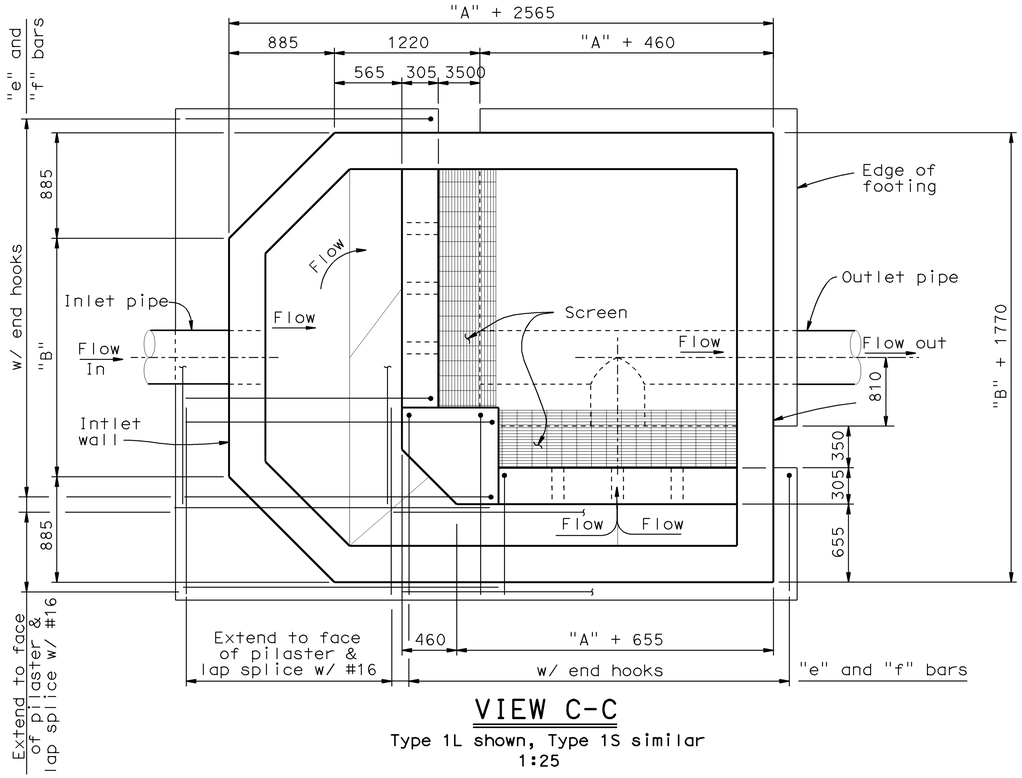

VIEW C-C

Type 1L shown, Type 1S similar
1:25

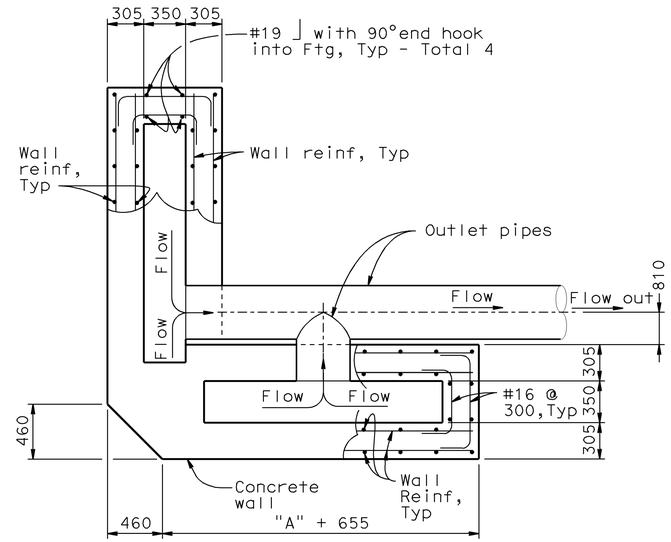

VIEW D-D

1:25

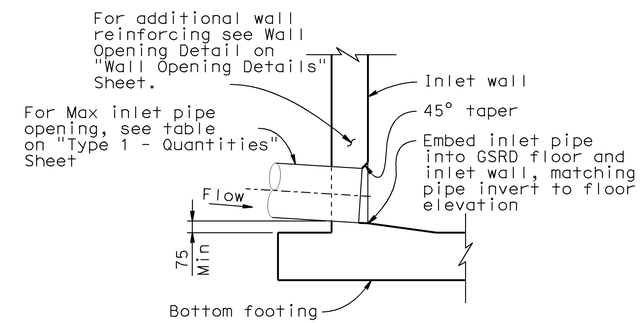

INLET DETAIL

PIPE ENTRANCE AT WALL - TYPE 1
1:25

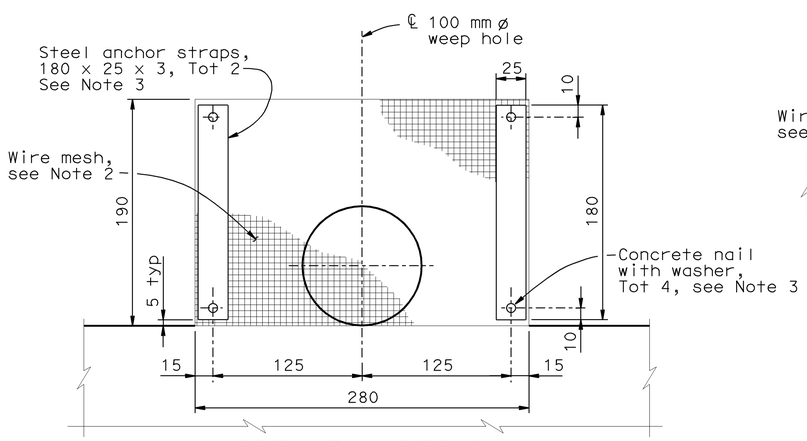

WIRE MESH DETAIL

1:2.5

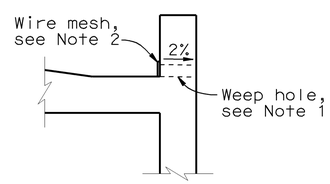

SECTION S-S

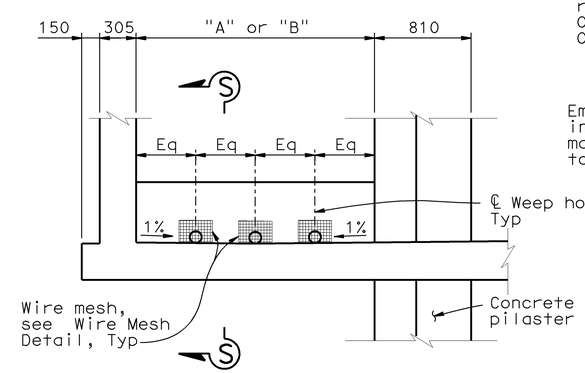

ELEVATION

WEEP HOLE DETAIL

1:25
("B" direction shown, "A" direction similar but opposite hand)

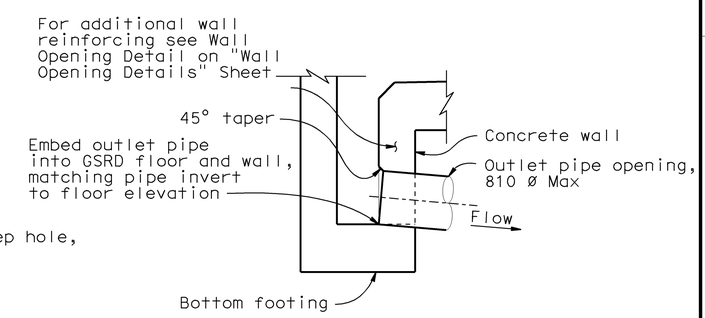

OUTLET DETAIL

PIPE EXIT AT WALL - TYPE 1
1:25

NOTES:

1. 100 mm ø drains at spacing shown.
2. 280 x 190 mm aluminum or galvanized steel wire 6 mm mesh hardware cloth (minimum wire ø 0.64 mm). Anchor firmly to concrete as shown.
3. Concrete nails to be 3 mm ø, 75 mm long with washers. Anchor straps, concrete nails and washers to be galvanized.
4. For Section locations, see "Type 1 - Layout No. 1" sheet.

WATER POLLUTION CONTROL DETAILS

ALL DIMENSIONS ARE IN MILLIMETERS UNLESS OTHERWISE SHOWN

WD-25

RELEASE DATE ---	DESIGN	BY D.Dunrud	CHECKED J&P Peterson	---
FILE NO. ---	DETAILS	BY J&P Peterson	CHECKED J&P Peterson	
	SUBMITTED	BY D.Forester	DRAWING DATE 02/07	

STATE OF CALIFORNIA
DEPARTMENT OF TRANSPORTATION

DIVISION OF ENGINEERING SERVICES

BRIDGE NO.
MILE POST

GROSS SOLIDS REMOVAL DEVICE
TYPE 1 - DETAILS NO. 2

ORIGINAL SCALE IN MILLIMETERS FOR REDUCED PLANS 0 10 20 30 40 50 60 70 80 90 100

CU 07314
EA 121841

DISREGARD PRINTS BEARING EARLIER REVISION DATES

REVISION DATES (PRELIMINARY STAGE ONLY)

SHEET 14 OF 32

USERNAME => trmnguye
DGN FILE => 712184ih025.dgn

DATE PLOTTED => 12-JUN-2009 TIME PLOTTED => 08:15