DIST	COUNTY	ROUTE	POST MILES TOTAL PROJECT	SHEET No.	TOTAL SHEETS
07	LA	10	37.2/42.4	1601	2313

REGISTERED CIVIL ENGINEER 10/01/14 DATE

6-1-15
PLANS APPROVAL DATE

REGISTERED PROFESSIONAL ENGINEER Dawit T Worku No. C60711 Exp. 12-31-14 CIVIL STATE OF CALIFORNIA

The State of California or its officers or agents shall not be responsible for the accuracy or completeness of electronic copies of this plan sheet.

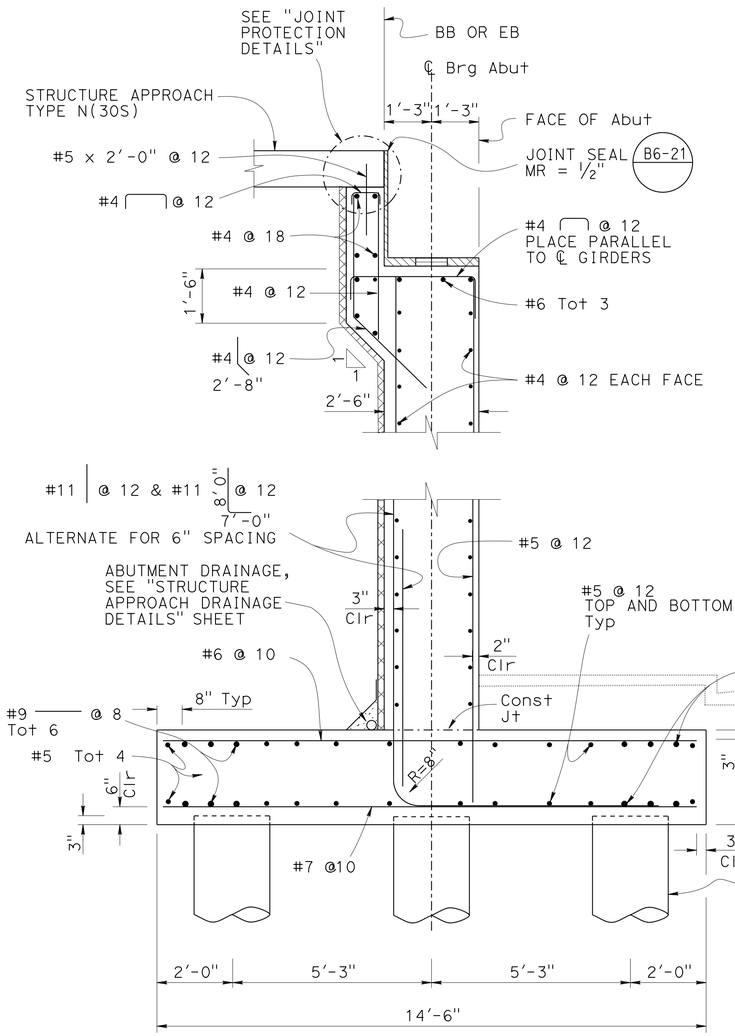

ABUTMENT SECTION

1/2" = 1'-0"

NOTE:
Abutment 1 shown, Abutment 3 similar

NOTE:
THE CONTRACTOR SHALL VERIFY ALL CONTROLLING FIELD DIMENSIONS BEFORE ORDERING OR FABRICATING ANY MATERIAL.

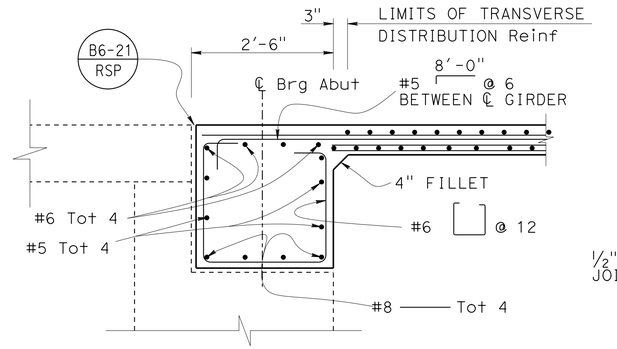

END DIAPHRAGM DETAIL

3/4" = 1'-0"

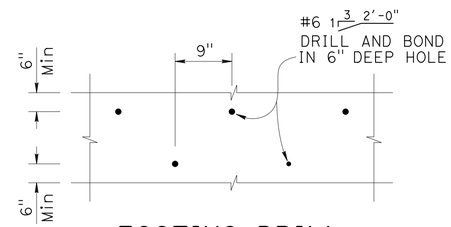

FOOTING DRILL & BOND DETAIL

NO SCALE

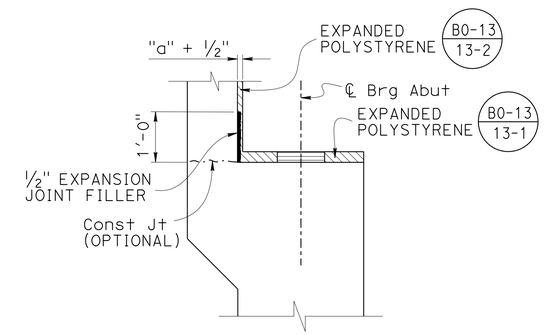

BACK WALL BASE DETAIL

3/4" = 1'-0"

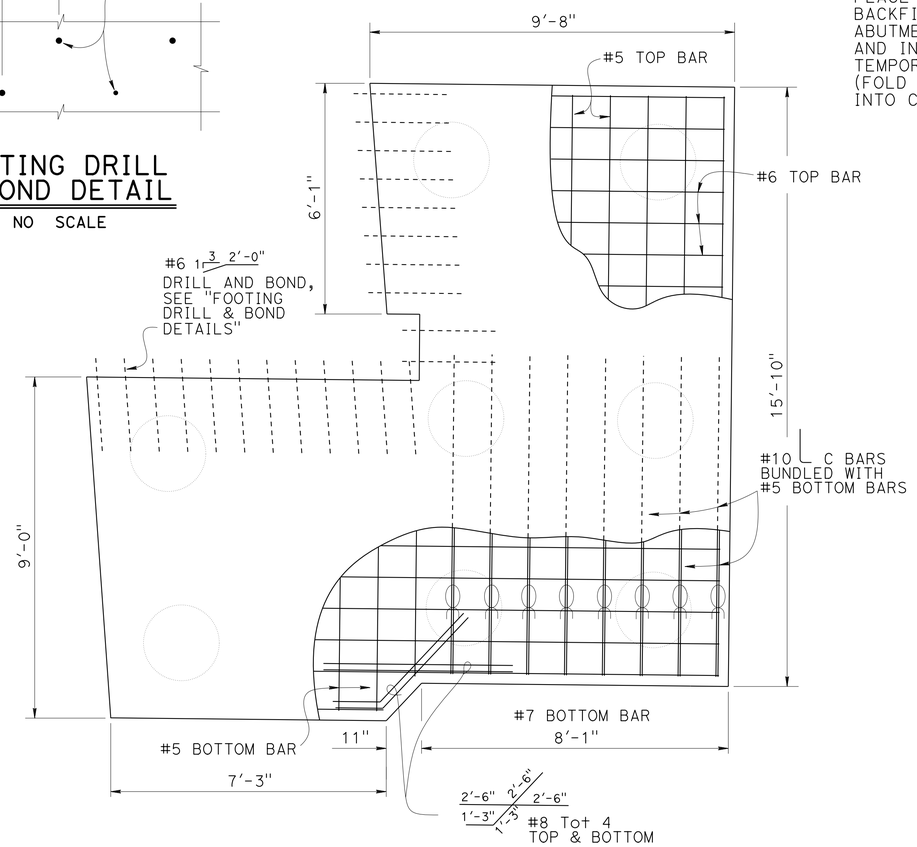

FOOTING DETAIL

1/2" = 1'-0"

NOTE:
Abutment 3 shown, Abutment 1 similar

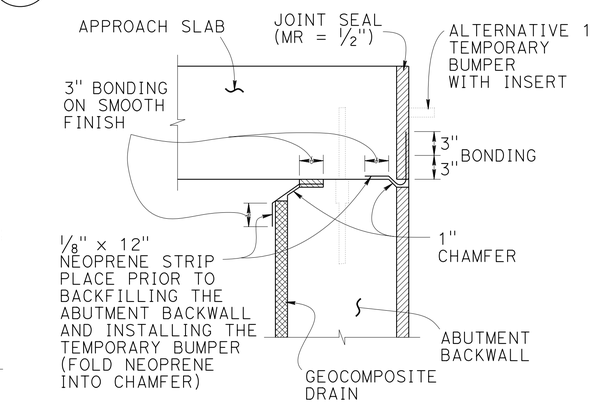

JOINT PROTECTION DETAILS

NO SCALE

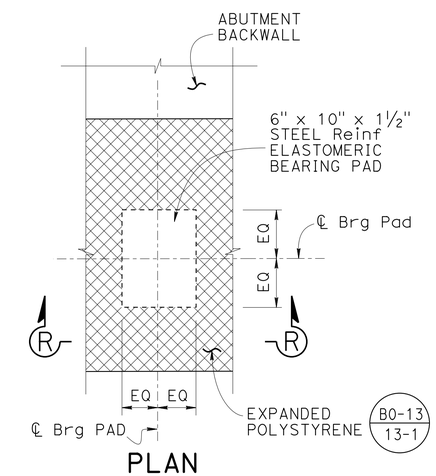

PLAN

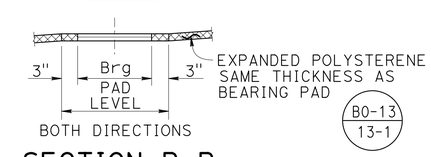

SECTION R-R

BEARING PAD DETAIL

NO SCALE

DETAILS TYPICAL AT ALL BEARING PADS

DESIGN	BY MOHAMMAD MUQTADIR	CHECKED FEIRUZ ABERRA	
DETAILS	BY ANTONETTE L. ONG	CHECKED M. MUQTADIR/F. ABERRA	
QUANTITIES	BY MOHAMMAD MUQTADIR	CHECKED FEIRUZ ABERRA	

STATE OF CALIFORNIA
DEPARTMENT OF TRANSPORTATION

DIVISION OF ENGINEERING SERVICES
STRUCTURE DESIGN
DESIGN BRANCH 20

BRIDGE NO. 53-1528
POST MILE 38.51

GRAND AVENUE UC (WIDEN)
ABUTMENT DETAILS NO. 1

STRUCTURES DESIGN DETAIL SHEET (ENGLISH) (REV. 09-01-10)

ORIGINAL SCALE IN INCHES FOR REDUCED PLANS 0 1 2 3

UNIT: 3622
PROJECT NUMBER & PHASE: 0713000007-1
CONTRACT NO.: 07-1193U1

DISREGARD PRINTS BEARING EARLIER REVISION DATES

REVISION DATES 10/31/13 11/08/13 02/24/14

SHEET 9 OF 28

FILE => 53-1528-f-ad+01.dgn

USERNAME => s123624 DATE PLOTTED => 18-MAY-2015 TIME PLOTTED => 14:06

DIST	COUNTY	ROUTE	POST MILES TOTAL PROJECT	SHEET No.	TOTAL SHEETS
07	LA	10	37.2/42.4	1602	2313

REGISTERED CIVIL ENGINEER — DATE 10/01/14

6-1-15
PLANS APPROVAL DATE

REGISTERED PROFESSIONAL ENGINEER — Dawit T Worku — No. C60711 — Exp. 12-31-14 — CIVIL — STATE OF CALIFORNIA

The State of California or its officers or agents shall not be responsible for the accuracy or completeness of electronic copies of this plan sheet.

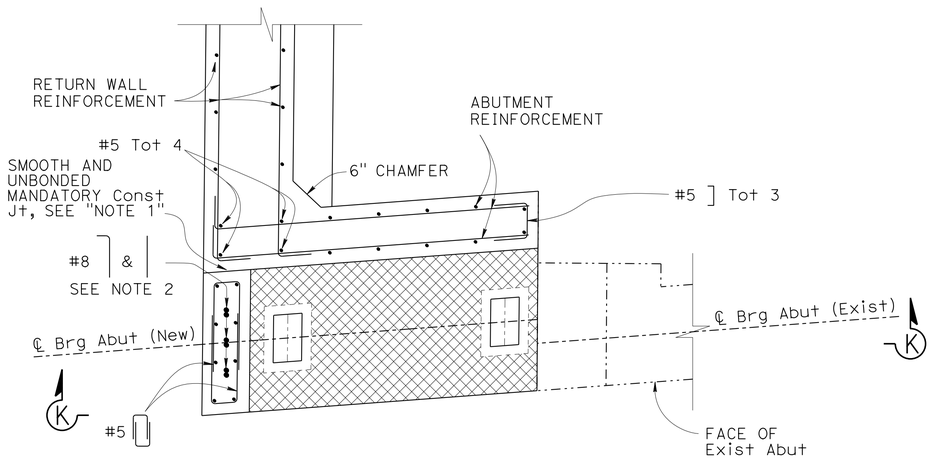

SECTION B-B
¾" = 1'-0"

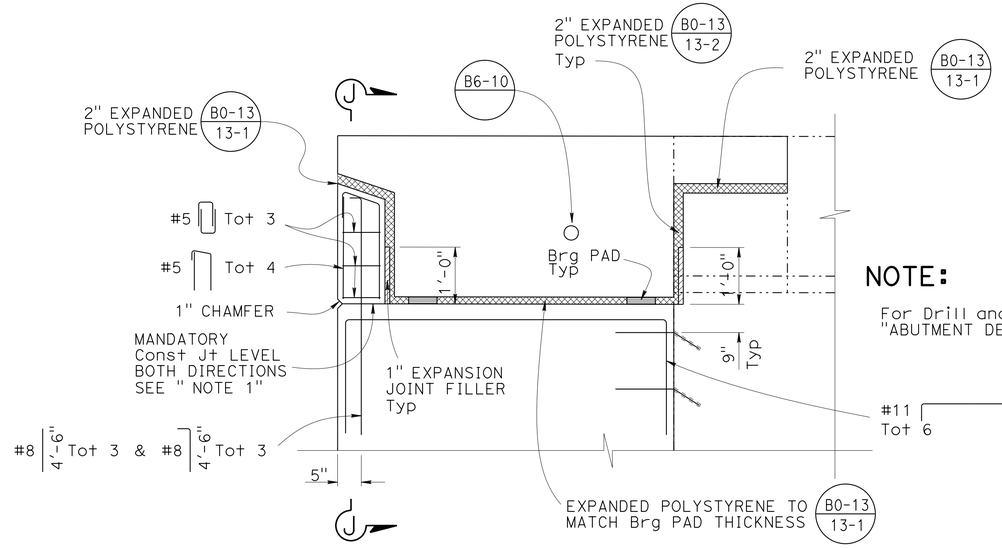

PART SECTION K-K
¾" = 1'-0"

NOTE:

For Drill and Bond details, see "ABUTMENT DETAILS NO. 3" sheet

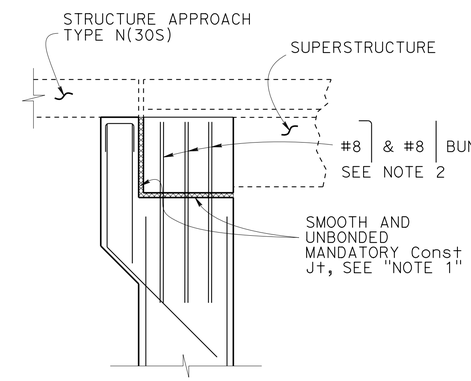

SECTION J-J
½" = 1'-0"

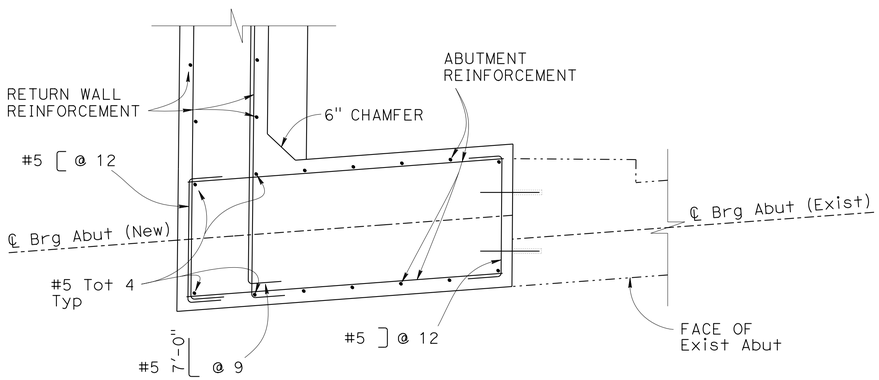

SECTION C-C
¾" = 1'-0"

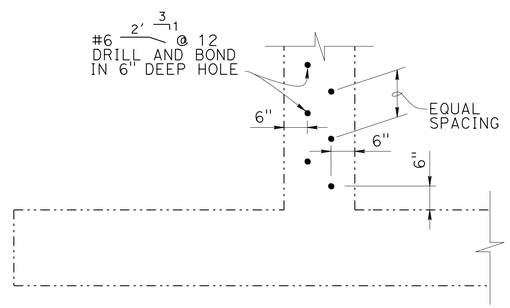

SECTION D-D
½" = 1'-0"

NOTE:

For section location, see "ABUTMENT 1 & 3 LAYOUT" sheet

NOTES:

1. Mandatory construction joint surface to be smooth finished and lined with 15 lbs Construction Paper
2. Vertical Shear Key reinforcement (#8 Bar) to be Galvanized
3. Abutment 1 shown, Abutment 3 similar
4. For section "C-C" and "B-B" location, see "ABUTMENT 1 & 3 LAYOUT" sheets

LEGEND:

——— Indicates New Construction
—·—·— Indicates Existing Structure

NOTE:
THE CONTRACTOR SHALL VERIFY ALL CONTROLLING FIELD DIMENSIONS BEFORE ORDERING OR FABRICATING ANY MATERIAL.

	BY	CHECKED
DESIGN	MOHAMMAD MUQTADIR	FEIRUZ ABERRA
DETAILS	ANTONETTE L. ONG	M. MUQTADIR/F. ABERRA
QUANTITIES	MOHAMMAD MUQTADIR	FEIRUZ ABERRA

STATE OF CALIFORNIA
DEPARTMENT OF TRANSPORTATION

DIVISION OF ENGINEERING SERVICES
STRUCTURE DESIGN
DESIGN BRANCH 20

BRIDGE NO. 53-1528
POST MILE 38.51

GRAND AVENUE UC (WIDEN)
ABUTMENT DETAILS NO. 2

STRUCTURES DESIGN DETAIL SHEET (ENGLISH) (REV. 09-01-10)

ORIGINAL SCALE IN INCHES FOR REDUCED PLANS 0 1 2 3

UNIT: 3622
PROJECT NUMBER & PHASE: 0713000007-1
CONTRACT NO.: 07-1193U1

DISREGARD PRINTS BEARING EARLIER REVISION DATES
REVISION DATES: 05/20/14 07/24/14 02/24/14

SHEET 10 OF 28

FILE => 53-1528-f-adt02.dgn

USERNAME => s125624 DATE PLOTTED => 18-MAY-2015 TIME PLOTTED => 14:06

DIST	COUNTY	ROUTE	POST MILES TOTAL PROJECT	SHEET No.	TOTAL SHEETS
07	LA	10	37.2/42.4	1603	2313

REGISTERED CIVIL ENGINEER 10/01/14 DATE

6-1-15
PLANS APPROVAL DATE

REGISTERED PROFESSIONAL ENGINEER Dawit T Worku No. C60711 Exp. 12-31-14 CIVIL STATE OF CALIFORNIA

The State of California or its officers or agents shall not be responsible for the accuracy or completeness of electronic copies of this plan sheet.

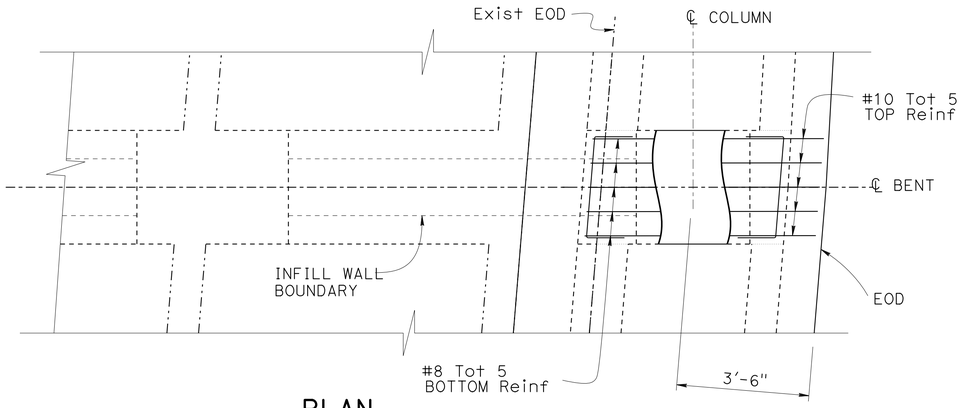

PLAN
½" = 1'

NOTE:
Not all reinforcement are shown

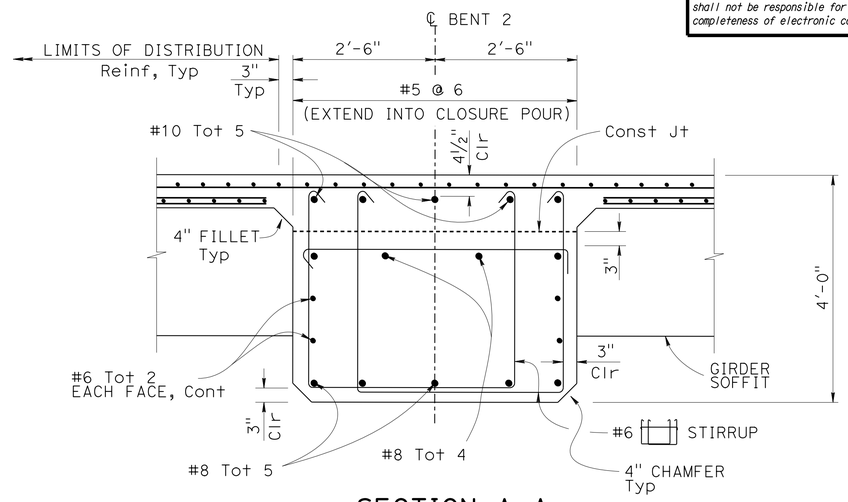

SECTION A-A
¾" = 1'-0"

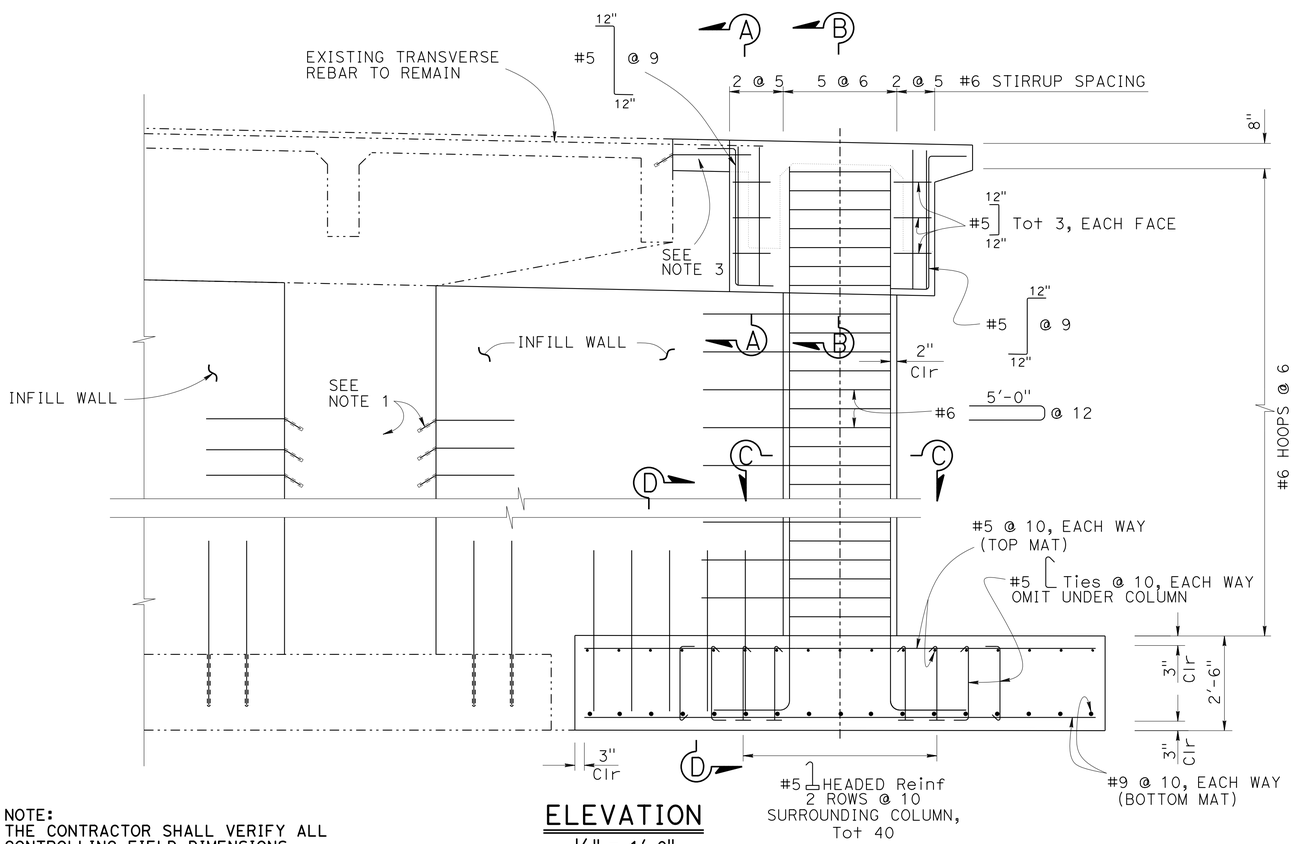

ELEVATION
½" = 1'-0"

NOTE:
THE CONTRACTOR SHALL VERIFY ALL CONTROLLING FIELD DIMENSIONS BEFORE ORDERING OR FABRICATING ANY MATERIAL.

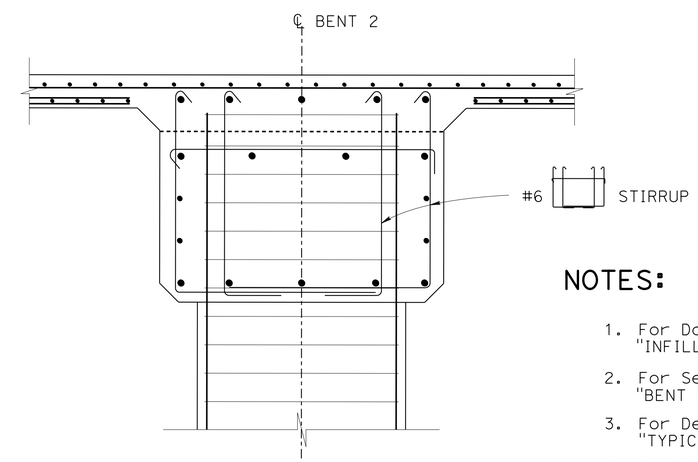

SECTION B-B
¾" = 1'-0"

NOTE:
For details not shown, see "SECTION A-A"

NOTES:

1. For Dowel detail, see "INFILL SHEAR WALL DETAILS" sheet
2. For Sections "C-C", "D-D", see "BENT DETAIL NO. 1" sheet
3. For Deck Closure details, see "TYPICAL SECTION" sheet
4. No Splice allowed for main Column Reinf

LEGEND:

——— Indicates New Construction
—·—·— Indicates Existing Structure

DESIGN	BY MOHAMMAD MUQTADIR	CHECKED FEIRUZ ABERRA	
DETAILS	BY ANTONETTE L. ONG	CHECKED FEIRUZ ABERRA	
QUANTITIES	BY MOHAMMAD MUQTADIR	CHECKED FEIRUZ ABERRA	

STATE OF CALIFORNIA
DEPARTMENT OF TRANSPORTATION

DIVISION OF ENGINEERING SERVICES
STRUCTURE DESIGN
DESIGN BRANCH 20

BRIDGE NO. 53-1528
POST MILE 38.51

GRAND AVENUE UC (WIDEN)
BENT 2 LAYOUT

STRUCTURES DESIGN DETAIL SHEET (ENGLISH) (REV. 09-01-10)

ORIGINAL SCALE IN INCHES FOR REDUCED PLANS 0 1 2 3

UNIT: 3622
PROJECT NUMBER & PHASE: 0713000007-1
CONTRACT NO.: 07-1193U1

DISREGARD PRINTS BEARING EARLIER REVISION DATES

REVISION DATES 02/25/14 11/04/13 11/18/13

SHEET 11 OF 28

FILE => 53-1528-h-b02_lo01.dgn

USERNAME => s125624 DATE PLOTTED => 18-MAY-2015 TIME PLOTTED => 14:06

DIST	COUNTY	ROUTE	POST MILES TOTAL PROJECT	SHEET No.	TOTAL SHEETS
07	LA	10	37.2/42.4	1604	2313

REGISTERED CIVIL ENGINEER 10/01/14 DATE

6-1-15
PLANS APPROVAL DATE

REGISTERED PROFESSIONAL ENGINEER Dawit T Worku No. C60711 Exp. 12-31-14 CIVIL STATE OF CALIFORNIA

The State of California or its officers or agents shall not be responsible for the accuracy or completeness of electronic copies of this plan sheet.

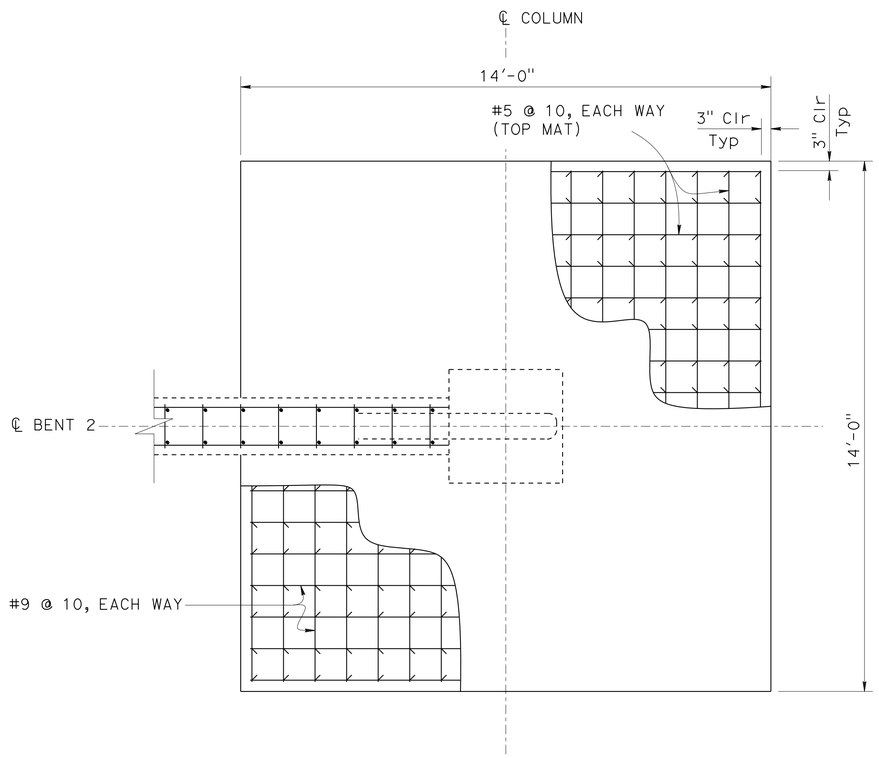

FOOTING PLAN
½" = 1'-0"

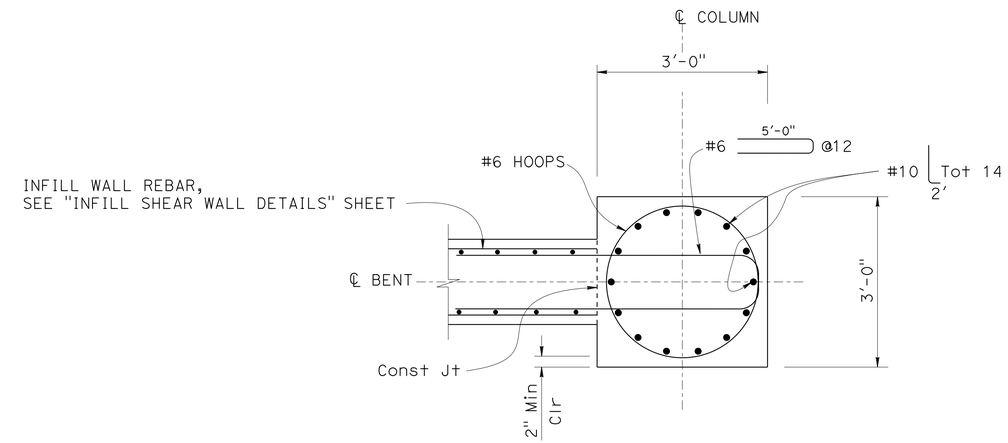

SECTION C-C
¾" : 1'

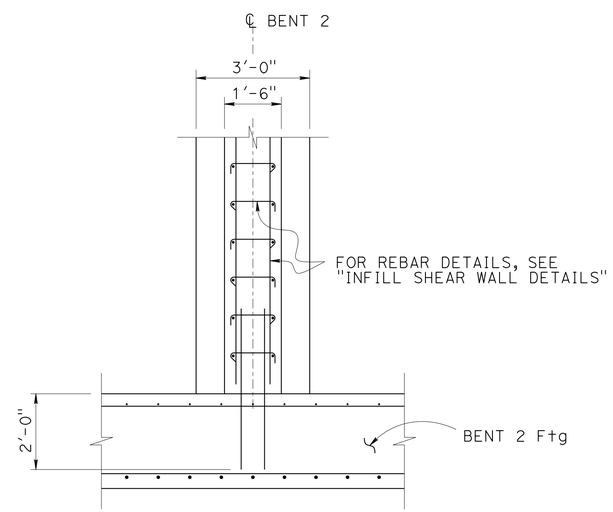

SECTION D-D
½" = 1'-0"

NOTE:
THE CONTRACTOR SHALL VERIFY ALL CONTROLLING FIELD DIMENSIONS BEFORE ORDERING OR FABRICATING ANY MATERIAL.

DESIGN	BY MOHAMMAD MUQTADIR	CHECKED FEIRUZ ABERRA	
DETAILS	BY ANTONETTE L. ONG	CHECKED FEIRUZ ABERRA	
QUANTITIES	BY MOHAMMAD MUQTADIR	CHECKED FEIRUZ ABERRA	

STATE OF CALIFORNIA
DEPARTMENT OF TRANSPORTATION

DIVISION OF ENGINEERING SERVICES
STRUCTURE DESIGN
DESIGN BRANCH 20

BRIDGE NO. 53-1528
POST MILE 38.51

GRAND AVENUE UC (WIDEN)
BENT DETAILS NO. 1

STRUCTURES DESIGN DETAIL SHEET (ENGLISH) (REV. 09-01-10)

ORIGINAL SCALE IN INCHES FOR REDUCED PLANS 0 1 2 3

UNIT: 3622
PROJECT NUMBER & PHASE: 0713000007-1
CONTRACT NO.: 07-1193U1

DISREGARD PRINTS BEARING EARLIER REVISION DATES

REVISION DATES 03/07/12 05/20/14 01/27/11

SHEET 12 OF 28

FILE => 53-1528-n-bdt01.dgn

USERNAME => s125624 DATE PLOTTED => 18-MAY-2015 TIME PLOTTED => 14:06

DIST	COUNTY	ROUTE	POST MILES TOTAL PROJECT	SHEET No.	TOTAL SHEETS
07	LA	10	37.2/42.4	1605	2313

REGISTERED CIVIL ENGINEER 10/01/14 DATE

6-1-15
PLANS APPROVAL DATE

REGISTERED PROFESSIONAL ENGINEER Dawit T Worku No. C60711 Exp. 12-31-14 CIVIL STATE OF CALIFORNIA

The State of California or its officers or agents shall not be responsible for the accuracy or completeness of electronic copies of this plan sheet.

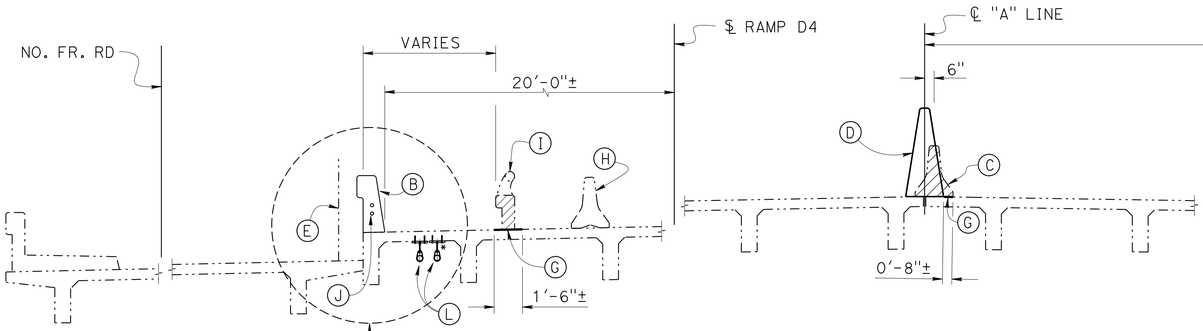

TYPICAL SECTION

1/4" = 1'-0"

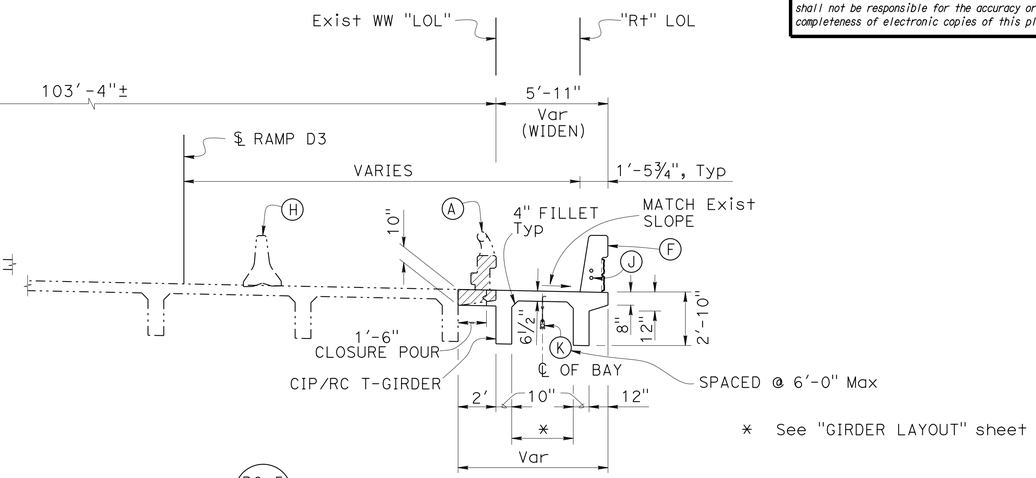

* See "GIRDER LAYOUT" sheet

#5 @ 12 (B0-5 / 5-11)

PLACE PERPENDICULAR TO & SPACED ALONG ℄ GIRDER

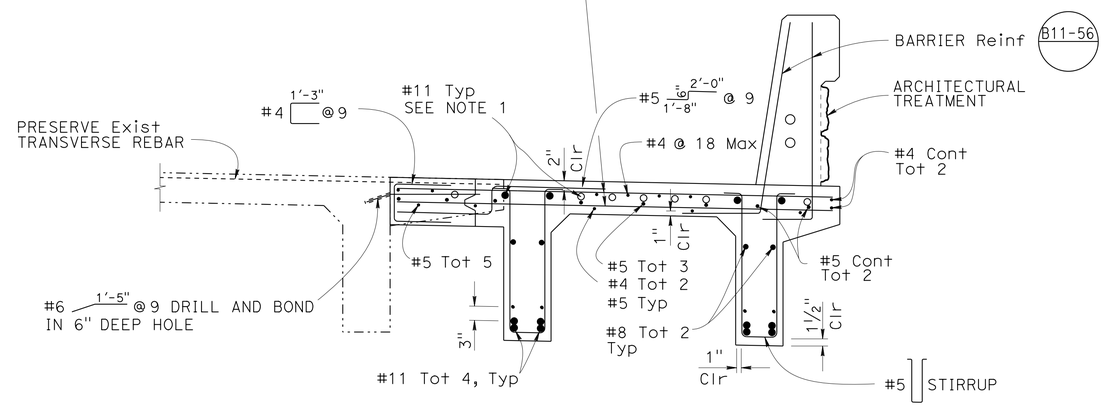

NOTES:

- Falsework shall be released as soon as permitted by the specification. Closure pour shall not be placed sooner than 60 days after the falsework has been released.

(A) Remove Existing Bridge Railing and overhang Salvage Metal Bridge Railing

(B) Concrete Barrier Type 736 (Mod 3)

(C) Remove Concrete Barrier (Type 50A)

(D) Concrete Barrier Type 60 GA (Mod)

(E) Existing Fence, see "ROAD PLANS"

(F) Concrete Barrier Type 736 (Mod 4)

(G) Refinish Bridge Deck

(H) Temporary Railing Type K, see "ROAD PLANS"

(I) Remove Existing Concrete Bridge Rail Salvage Metal Bridge Railing

(J) 2-2" ø conduits, see "ROAD PLANS"

(K) 2" Water Supply Line (B14-5)

(L) 2-3½" Communication Conduit, see "MISCELLANEOUS DETAILS" sheet, see "ROAD PLANS"

NOTE:

1. For Additional Top Longitudinal Reinforcement see "GIRDER REINFORCEMENT" sheet

LEGEND:

Indicates New Construction

Indicates Existing Structure

Bridge Removal (Portion)

PART TYPICAL SECTION

3/4" = 1'-0"

NOTE:
THE CONTRACTOR SHALL VERIFY ALL CONTROLLING FIELD DIMENSIONS BEFORE ORDERING OR FABRICATING ANY MATERIAL.

	BY	CHECKED
DESIGN	MOHAMMAD MUQTADIR	FEIRUZ ABERRA
DETAILS	ANTONETTE L. ONG	M. MUQTADIR/F. ABERRA
QUANTITIES	MOHAMMAD MUQTADIR	FEIRUZ ABERRA

STATE OF CALIFORNIA
DEPARTMENT OF TRANSPORTATION

DIVISION OF ENGINEERING SERVICES
STRUCTURE DESIGN
DESIGN BRANCH 20

BRIDGE NO. 53-1528
POST MILE 38.51

GRAND AVENUE UC (WIDEN)
TYPICAL SECTION

STRUCTURES DESIGN DETAIL SHEET (ENGLISH) (REV. 09-01-10)

ORIGINAL SCALE IN INCHES FOR REDUCED PLANS 0 1 2 3

UNIT: 3622
PROJECT NUMBER & PHASE: 0713000007-4
CONTRACT NO.: 07-1193U1

DISREGARD PRINTS BEARING EARLIER REVISION DATES

REVISION DATES 02/25/14 05/14/14 07/23/14

SHEET 13 OF 28

FILE => 53-1528-k-ts01.dgn

USERNAME => s125624 DATE PLOTTED => 18-MAY-2015 TIME PLOTTED => 14:06

DIST	COUNTY	ROUTE	POST MILES TOTAL PROJECT	SHEET No.	TOTAL SHEETS
07	LA	10	37.2/42.4	1606	2313

REGISTERED CIVIL ENGINEER — DATE 10/01/14

6-1-15
PLANS APPROVAL DATE

REGISTERED PROFESSIONAL ENGINEER — Dawit T Worku — No. C60711 — Exp. 12-31-14 — CIVIL — STATE OF CALIFORNIA

The State of California or its officers or agents shall not be responsible for the accuracy or completeness of electronic copies of this plan sheet.

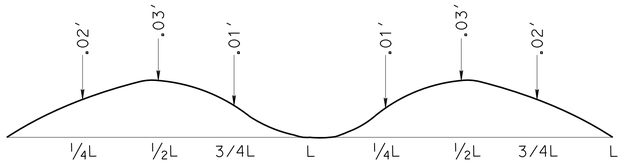

CAMBER DIAGRAM

NO SCALE

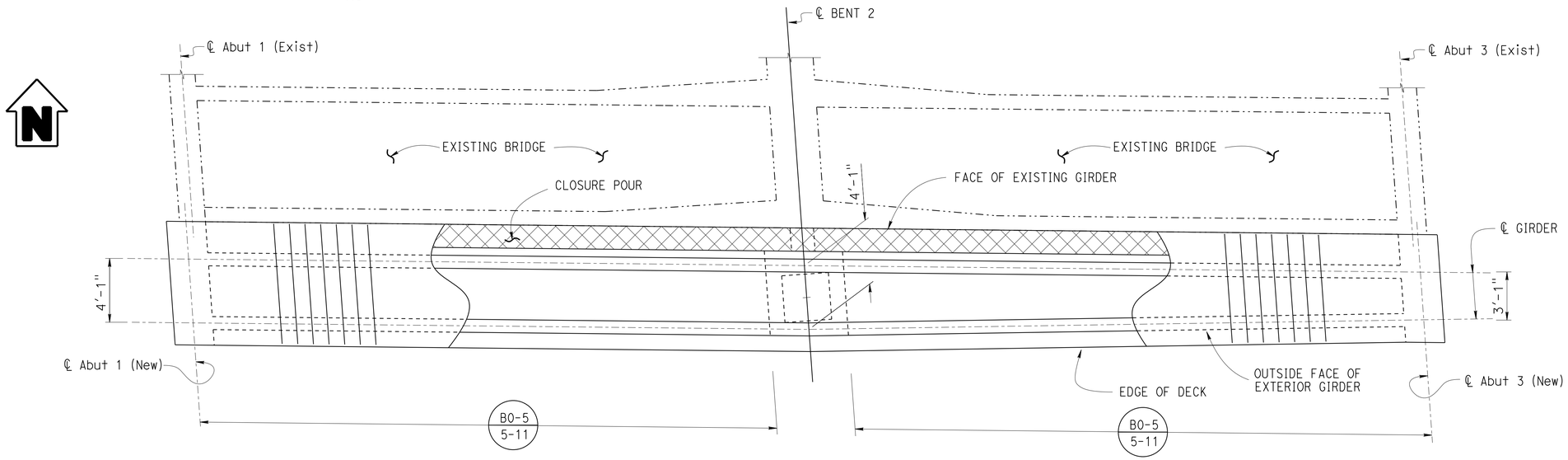

GIRDER LAYOUT

1/4" = 1'-0"

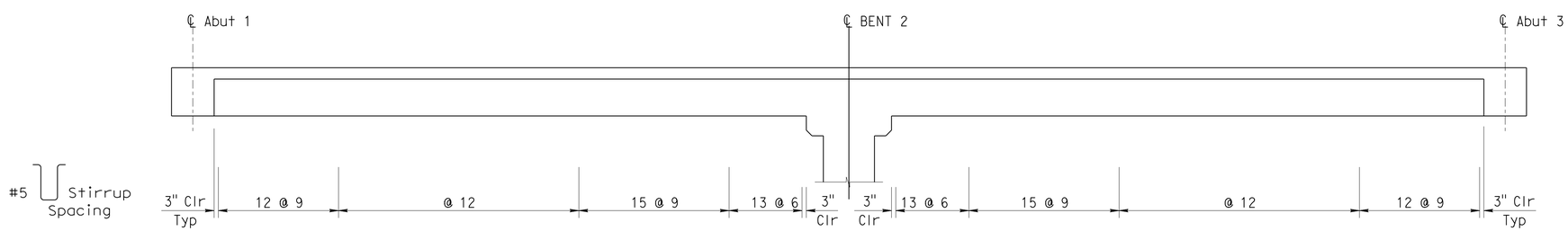

LONGITUDINAL SECTION

NO SCALE

NOTE:
THE CONTRACTOR SHALL VERIFY ALL CONTROLLING FIELD DIMENSIONS BEFORE ORDERING OR FABRICATING ANY MATERIAL.

LEGEND:

- Indicates New Construction
- Indicates Existing Structure
- Indicates Closure Pour

	BY	CHECKED
DESIGN	MOHAMMAD MUQTADIR	FEIRUZ ABERRA
DETAILS	ANTONETTE L. ONG	M. MUQTADIR/F. ABERRA
QUANTITIES	MOHAMMAD MUQTADIR	FEIRUZ ABERRA

STATE OF CALIFORNIA
DEPARTMENT OF TRANSPORTATION

DIVISION OF ENGINEERING SERVICES
STRUCTURE DESIGN
DESIGN BRANCH 20

BRIDGE NO. 53-1528
POST MILE 38.51

GRAND AVENUE UC (WIDEN)
GIRDER LAYOUT

STRUCTURES DESIGN DETAIL SHEET (ENGLISH) (REV. 09-01-10)

ORIGINAL SCALE IN INCHES FOR REDUCED PLANS 0 1 2 3

UNIT: 3622
PROJECT NUMBER & PHASE: 0713000007-1
CONTRACT NO.: 07-1193U1

DISREGARD PRINTS BEARING EARLIER REVISION DATES

REVISION DATES: 03/08/12 11/08/13 02/25/14

SHEET 14 OF 28

FILE => 53-1528-I-g_lo01.dgn

USERNAME => s125624 DATE PLOTTED => 18-MAY-2015 TIME PLOTTED => 14:06

DIST	COUNTY	ROUTE	POST MILES TOTAL PROJECT	SHEET No.	TOTAL SHEETS
07	LA	10	37.2/42.4	1607	2313

REGISTERED CIVIL ENGINEER 10/01/14 DATE

6-1-15
PLANS APPROVAL DATE

REGISTERED PROFESSIONAL ENGINEER
Dawit T Worku
No. C60711
Exp. 12-31-14
CIVIL
STATE OF CALIFORNIA

The State of California or its officers or agents shall not be responsible for the accuracy or completeness of electronic copies of this plan sheet.

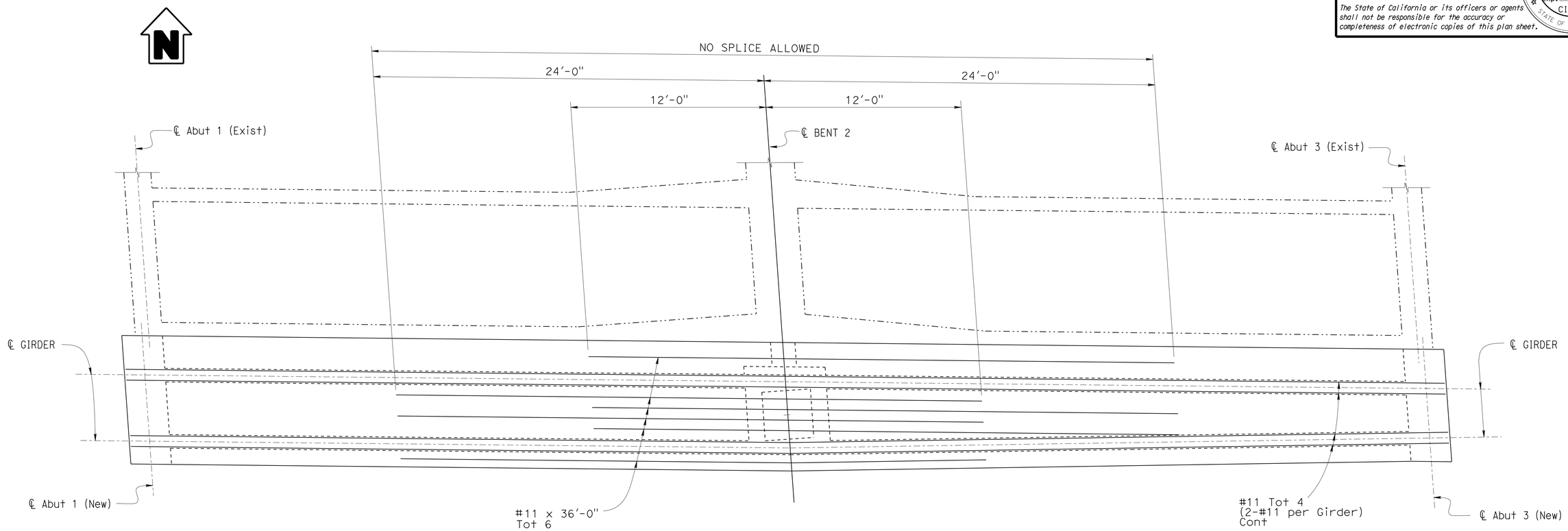

TOP LONGITUDINAL REINFORCEMENT

5/16" = 1'-0"

NOTE:
THE CONTRACTOR SHALL VERIFY ALL CONTROLLING FIELD DIMENSIONS BEFORE ORDERING OR FABRICATING ANY MATERIAL.

LEGEND:

——— Indicates New Construction

—·—·— Indicates Existing Structure

	BY	CHECKED
DESIGN	MOHAMMAD MUQTADIR	FEIRUZ ABERRA
DETAILS	ANTONETTE L. ONG	M. MUQTADIR/F. ABERRA
QUANTITIES	MOHAMMAD MUQTADIR	FEIRUZ ABERRA

STATE OF CALIFORNIA
DEPARTMENT OF TRANSPORTATION

DIVISION OF ENGINEERING SERVICES
STRUCTURE DESIGN
DESIGN BRANCH 20

BRIDGE NO. 53-1528
POST MILE 38.51

GRAND AVENUE UC (WIDEN)
GIRDER REINFORCEMENT

STRUCTURES DESIGN DETAIL SHEET (ENGLISH) (REV. 09-01-10)

ORIGINAL SCALE IN INCHES FOR REDUCED PLANS 0 1 2 3

UNIT: 3622
PROJECT NUMBER & PHASE: 0713000007-1
CONTRACT NO.: 07-1193U1

DISREGARD PRINTS BEARING EARLIER REVISION DATES

REVISION DATES 11/08/13 02/28/14 01/23/18

SHEET 15 OF 28

FILE => 53-1528-o-gir_rf01.dgn

USERNAME => s125624 DATE PLOTTED => 18-MAY-2015 TIME PLOTTED => 14:06

DIST	COUNTY	ROUTE	POST MILES TOTAL PROJECT	SHEET No.	TOTAL SHEETS
07	LA	10	37.2/42.4	1608	2313

REGISTERED CIVIL ENGINEER 10/01/14 DATE

6-1-15
PLANS APPROVAL DATE

REGISTERED PROFESSIONAL ENGINEER — Dawit T Worku — No. C60711 — Exp. 12-31-14 — CIVIL — STATE OF CALIFORNIA

The State of California or its officers or agents shall not be responsible for the accuracy or completeness of electronic copies of this plan sheet.

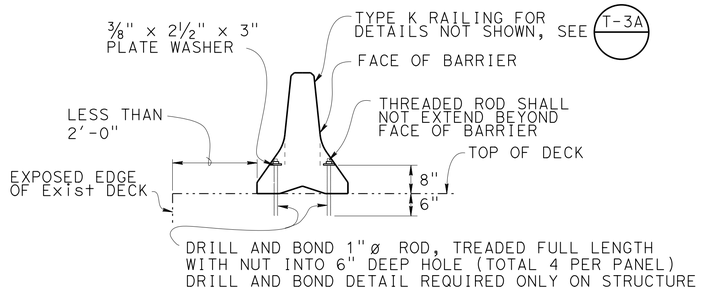

TYPE K RAILING ATTACHMENT DETAIL

NO SCALE

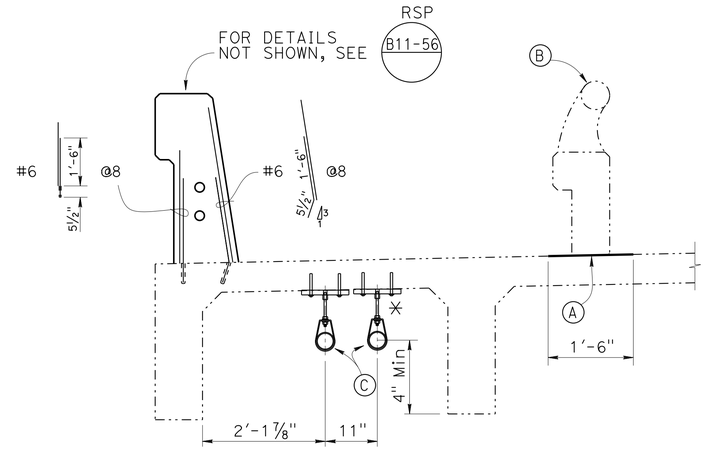

CONCRETE BARRIER TYPE 736 (MOD 3)

3/4" = 1'-0"

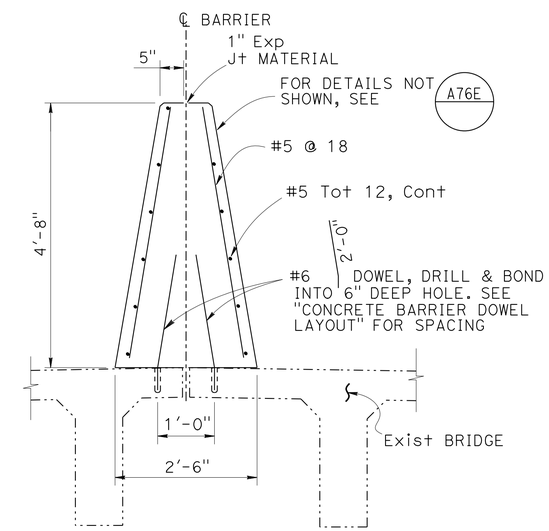

CONCRETE BARRIER TYPE 60GA (MOD)

3/4" = 1'-0"

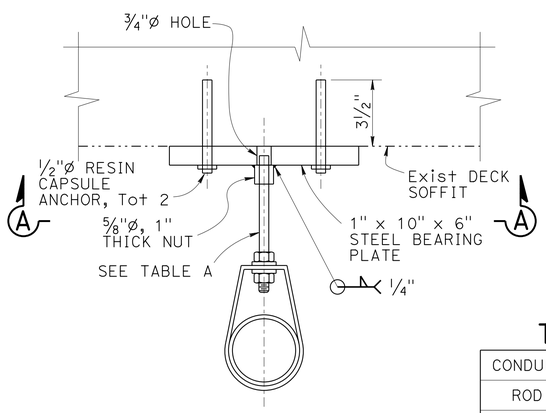

CONDUIT HANGER SUPPORT DETAIL

3" = 1'-0"

TABLE A

CONDUIT	3 1/2"
ROD	5/8"ø
STRAP	0.105" x 1 1/2"
SUPPORT SPACING	10'-0"

NOTES:

(A) Refinish Bridge Deck

(B) Remove Existing Concrete Bridge Rail
Salvage Metal Bridge Railing

(C) 2-3 1/2"* Communication Conduits, see "ROAD PLANS"
* Hangers to be placed at staggered spacing

1. All Steel Pipes and Pipe Support Hardware shall be Galvanized
2. Core Hole Diameter at Abutments and Bent equal to 5 1/2"
3. Seal Utility at Abutment with Concrete or Mortar, after tightly wrapping utility with two layers of 15 lb Building Paper

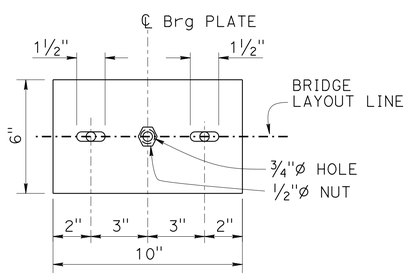

VIEW A-A BEARING PLATE

3" = 1'-0"

NOTE:
THE CONTRACTOR SHALL VERIFY ALL CONTROLLING FIELD DIMENSIONS BEFORE ORDERING OR FABRICATING ANY MATERIAL.

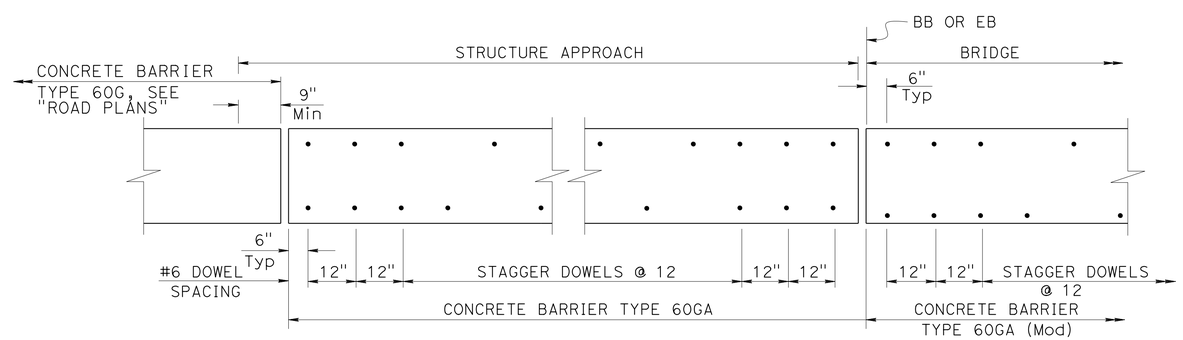

CONCRETE BARRIER DOWEL LAYOUT

NO SCALE

DESIGN	BY MOHAMMAD MUQTADIR	CHECKED FEIRUZ ABERRA	
DETAILS	BY ANTONETTE L. ONG	CHECKED FEIRUZ ABERRA	
QUANTITIES	BY MOHAMMAD MUQTADIR	CHECKED FEIRUZ ABERRA	

STATE OF CALIFORNIA
DEPARTMENT OF TRANSPORTATION

DIVISION OF ENGINEERING SERVICES
STRUCTURE DESIGN
DESIGN BRANCH 20

BRIDGE NO. 53-1528
POST MILE 38.51

GRAND AVENUE UC (WIDEN)
MISCELLANEOUS DETAILS

STRUCTURES DESIGN DETAIL SHEET (ENGLISH) (REV. 09-01-10)

ORIGINAL SCALE IN INCHES FOR REDUCED PLANS 0 1 2 3

UNIT: 3622
PROJECT NUMBER & PHASE: 0713000007-4
CONTRACT NO.: 07-1193U1

DISREGARD PRINTS BEARING EARLIER REVISION DATES

REVISION DATES 02/19/14 04/28/14 05/07/14

SHEET 16 OF 28

FILE => 53-1528-p-miscdt01.dgn

USERNAME => s125624 DATE PLOTTED => 18-MAY-2015 TIME PLOTTED => 14:06

DIST	COUNTY	ROUTE	POST MILES TOTAL PROJECT	SHEET No.	TOTAL SHEETS
07	LA	10	37.2/42.4	1609	2313

REGISTERED CIVIL ENGINEER 10/01/14 DATE

6-1-15
PLANS APPROVAL DATE

REGISTERED PROFESSIONAL ENGINEER Dawit T Worku No. C60711 Exp. 12-31-14 CIVIL STATE OF CALIFORNIA

The State of California or its officers or agents shall not be responsible for the accuracy or completeness of electronic copies of this plan sheet.

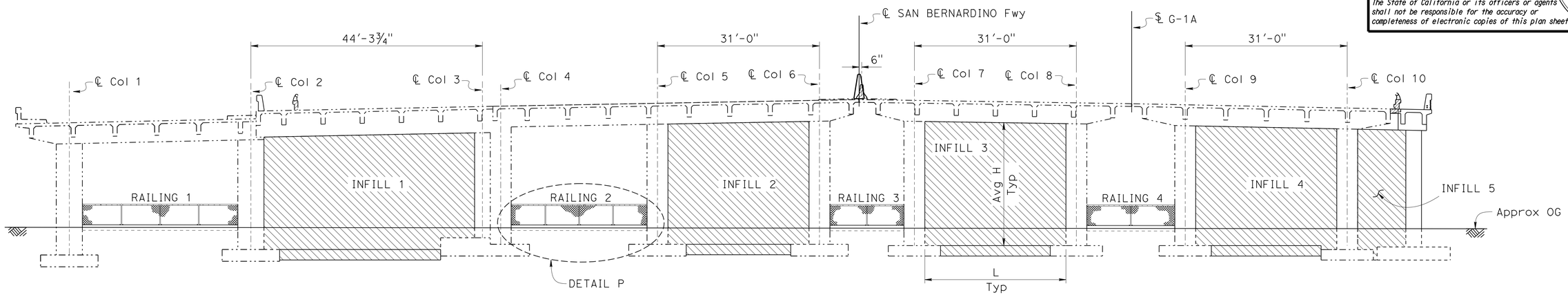

INFILL WALL ELEVATION

1" = 10'-0"

INFILL WALL DIMENSIONS (APPROXIMATE)

WALL	L (ft)	Avg H (ft)
INFILL 1	40.31	21.19
INFILL 2	27.00	23.17
INFILL 3	27.00	23.59
INFILL 4	27.00	22.98
INFILL 5	9.21	22.22

RAILING LENGTH (APPROXIMATE)

LOCATION	L_R (ft)
RAILING 1	27.54
RAILING 2	26.00
RAILING 3	14.17
RAILING 4	16.83

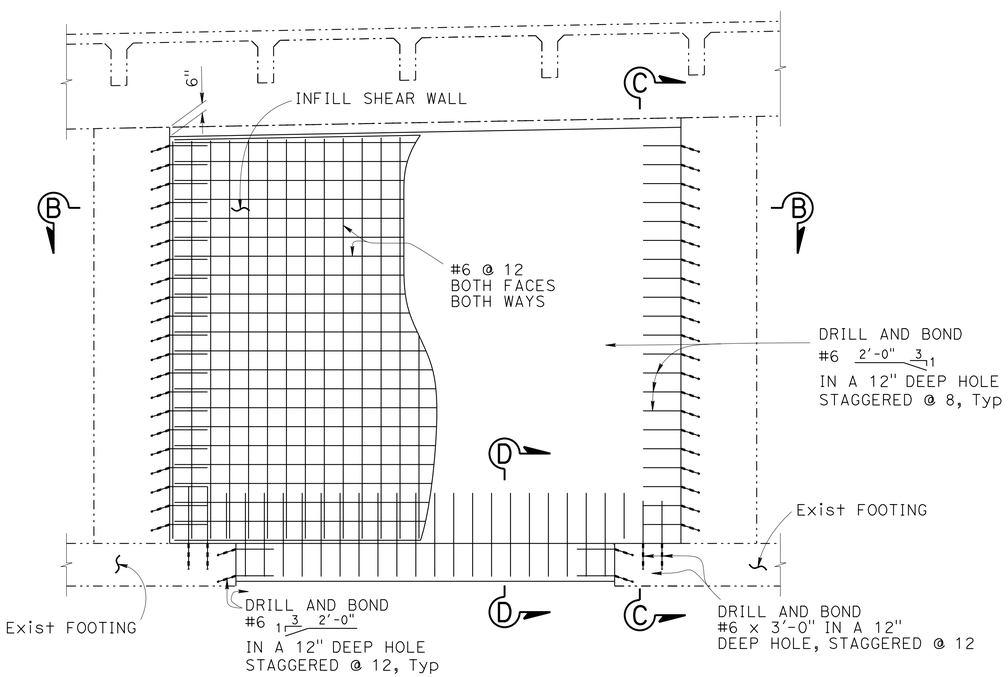

NOTE:
THE CONTRACTOR SHALL VERIFY ALL CONTROLLING FIELD DIMENSIONS BEFORE ORDERING OR FABRICATING ANY MATERIAL.

PART ELEVATION

¼" = 1'-0"

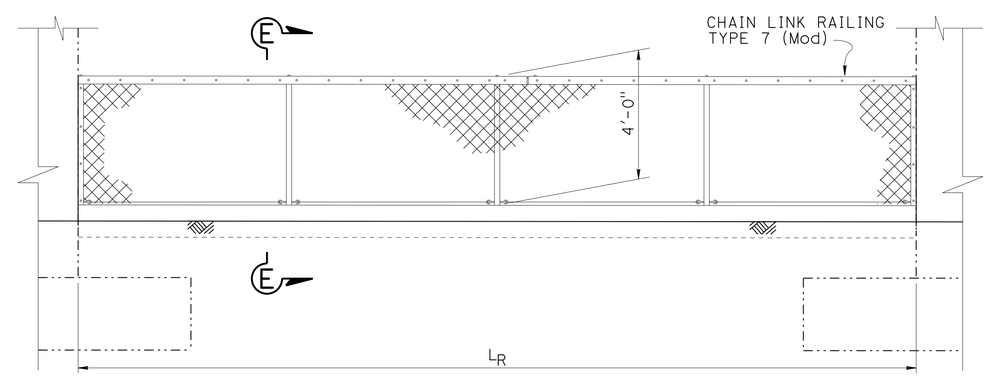

DETAIL P

1" = 5'-0"

NOTE:
For details not shown, see B11-52

NOTE:
For Section B-B, Section C-C, Section D-D and Section E-E, see"INFILL SHEAR WALL DETAILS NO. 2" sheet

LEGEND:

- Indicates Existing Structure
- Indicates Infill Shear Wall
- Bridge Removal (Portion)

	BY	CHECKED
DESIGN	MOHAMMAD MUQTADIR	FEIRUZ ABERRA
DETAILS	R. PALO/ C. LE/A. ONG	M. MUQTADIR/F. ABERRA
QUANTITIES	MOHAMMAD MUQTADIR	FEIRUZ ABERRA

STATE OF CALIFORNIA
DEPARTMENT OF TRANSPORTATION

DIVISION OF ENGINEERING SERVICES
STRUCTURE DESIGN
DESIGN BRANCH 20

BRIDGE NO. 53-1528
POST MILE 38.51

GRAND AVENUE UC (WIDEN)
INFILL SHEAR WALL DETAILS NO. 1

STRUCTURES DESIGN DETAIL SHEET (ENGLISH) (REV. 09-01-10)

ORIGINAL SCALE IN INCHES FOR REDUCED PLANS 0 1 2 3

UNIT: 3622
PROJECT NUMBER & PHASE: 0713000007-4
CONTRACT NO.: 07-1193U1

DISREGARD PRINTS BEARING EARLIER REVISION DATES

REVISION DATES 05/22/14 06/03/14 05/20/14

SHEET 17 OF 28

FILE => 53-1528-q-lswdt01.dgn

USERNAME => s125624 DATE PLOTTED => 18-MAY-2015 TIME PLOTTED => 14:06

DIST	COUNTY	ROUTE	POST MILES TOTAL PROJECT	SHEET No.	TOTAL SHEETS
07	LA	10	37.2/42.4	1610	2313

REGISTERED CIVIL ENGINEER 10/01/14 DATE

6-1-15
PLANS APPROVAL DATE

REGISTERED PROFESSIONAL ENGINEER Dawit T Worku No. C60711 Exp. 12-31-14 CIVIL STATE OF CALIFORNIA

The State of California or its officers or agents shall not be responsible for the accuracy or completeness of electronic copies of this plan sheet.

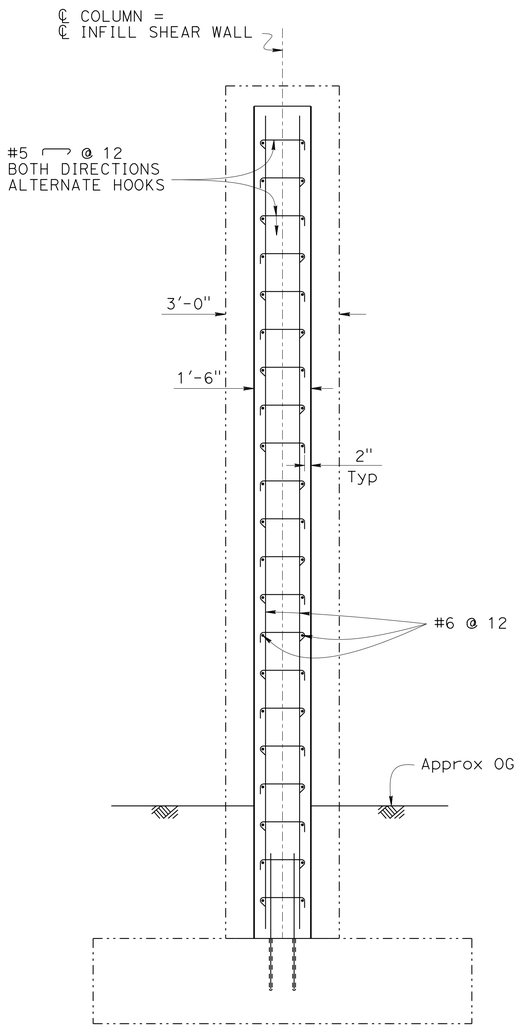

SECTION C-C
½" = 1'-0"

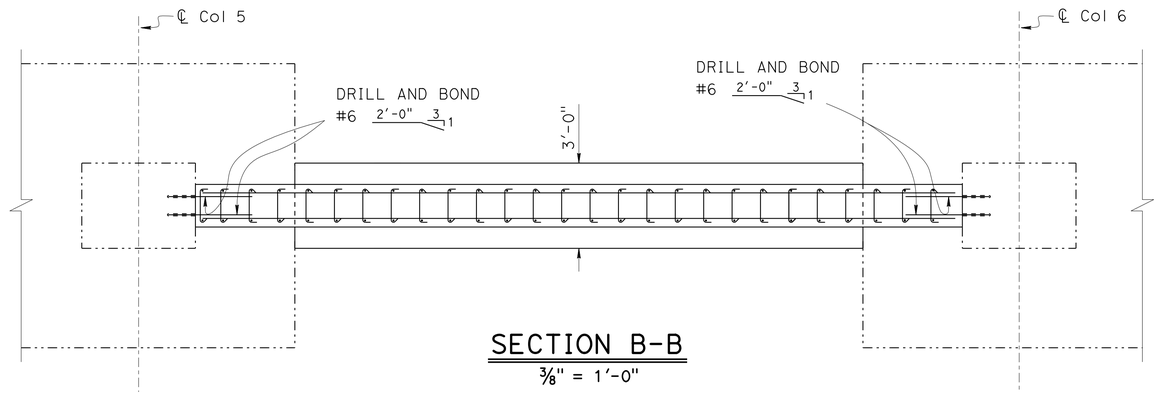

SECTION B-B
⅜" = 1'-0"

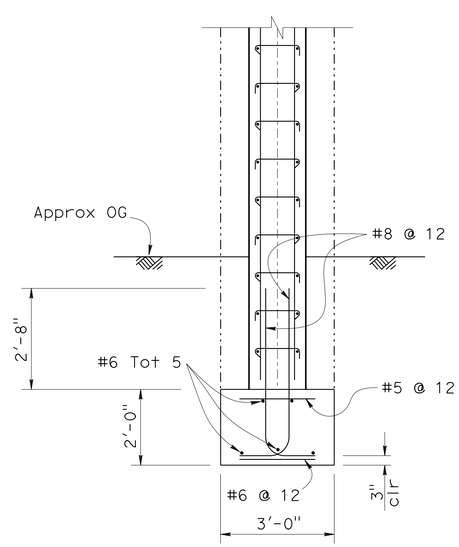

SECTION D-D
½" = 1'-0"

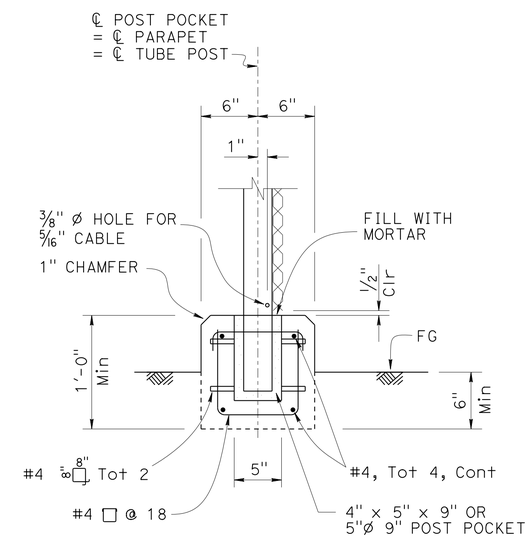

SECTION E-E
POST ANCHORAGE DETAIL
1½" = 1'-0"

NOTE:
THE CONTRACTOR SHALL VERIFY ALL CONTROLLING FIELD DIMENSIONS BEFORE ORDERING OR FABRICATING ANY MATERIAL.

LEGEND:

——— Indicates New Construction

–·–·– Indicates Existing Structure

DESIGN	BY MOHAMMAD MUQTADIR	CHECKED FEIRUZ ABERRA	
DETAILS	BY R. PALO/ C. LE/A. ONG	CHECKED M. MUQTADIR/F. ABERRA	
QUANTITIES	BY MOHAMMAD MUQTADIR	CHECKED FEIRUZ ABERRA	

STATE OF CALIFORNIA
DEPARTMENT OF TRANSPORTATION

DIVISION OF ENGINEERING SERVICES
STRUCTURE DESIGN
DESIGN BRANCH 20

BRIDGE NO. 53-1528
POST MILE 38.51

GRAND AVENUE UC (WIDEN)
INFILL SHEAR WALL DETAILS NO. 2

STRUCTURES DESIGN DETAIL SHEET (ENGLISH) (REV. 09-01-10)

ORIGINAL SCALE IN INCHES FOR REDUCED PLANS 0 1 2 3

UNIT: 3622
PROJECT NUMBER & PHASE: 0713000007-1
CONTRACT NO.: 07-1193U1

DISREGARD PRINTS BEARING EARLIER REVISION DATES →

REVISION DATES 11/23/13 02/25/14

SHEET 18 OF 28

FILE => 53-1528-q-iswdt02.dgn

USERNAME => s125624 DATE PLOTTED => 18-MAY-2015 TIME PLOTTED => 14:06

DIST	COUNTY	ROUTE	POST MILES TOTAL PROJECT	SHEET No.	TOTAL SHEETS
07	LA	10	37.2/42.4	1611	2313

REGISTERED CIVIL ENGINEER — DATE 10/01/14

6-1-15
PLANS APPROVAL DATE

REGISTERED PROFESSIONAL ENGINEER — Dawit T Worku — No. C60711 — Exp. 12-31-14 — CIVIL — STATE OF CALIFORNIA

The State of California or its officers or agents shall not be responsible for the accuracy or completeness of electronic copies of this plan sheet.

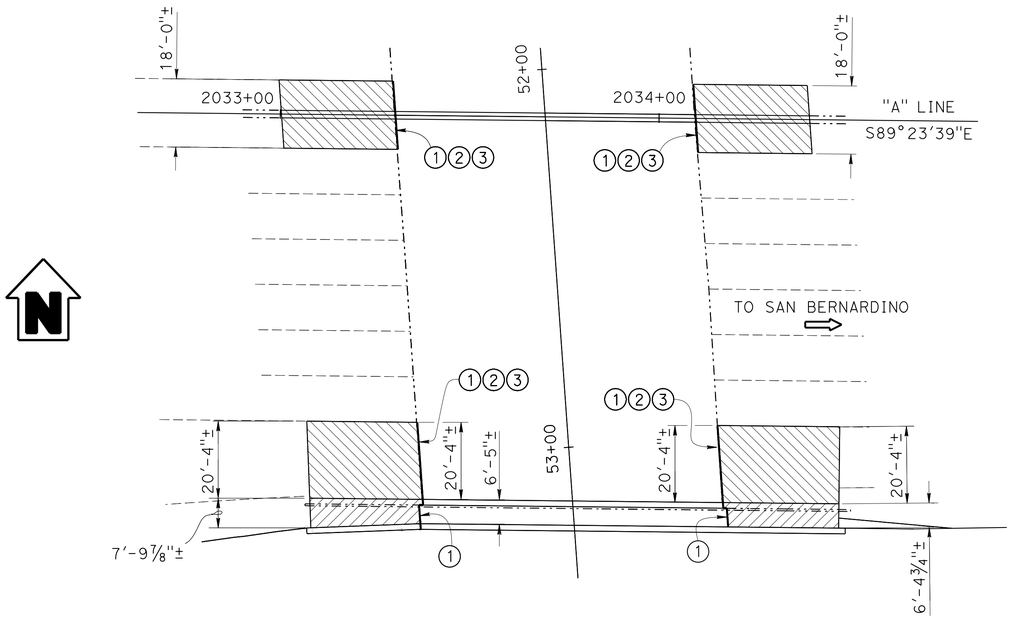

APPROACH SLAB LAYOUT

1" = 20'

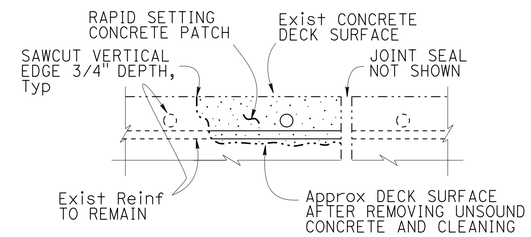

JOINT SPALL REPAIR DETAIL

NO SCALE

NOTE: REINFORCEMENT MAY BE ENCOUNTERED DURING DECK CONCRETE REMOVAL AND IS TO REMAIN UNDAMAGED. LOCATIONS TO BE DETERMINED BY THE ENGINEER

JOINT SPALL REPAIR TABLE

LOCATION	APPROX DEPTH OF JOINT SPALLS (Inch)	APPROX WIDTH OF JOINT SPALLS (Inch)	APPROX LENGTH OF JOINT SPALLS (Feet)
Abut 1	3	6	4
Abut 3	3	6	4

NOTES:

1. Joint seal MR = 1/2"
2. Prior to placement of new joint seal, remove unsound concrete and patch with rapid setting concrete
3. Paving Notch extension

LEGEND:

- Indicates New Construction
- Indicates Existing Structure
- Indicates Joint Seal
- Indicates Structure Approach Type N(30S)
- Indicates Structure Approach Type R(30D)

NOTE:
THE CONTRACTOR SHALL VERIFY ALL CONTROLLING FIELD DIMENSIONS BEFORE ORDERING OR FABRICATING ANY MATERIAL.

DESIGN	BY MOHAMMAD MUQTADIR	CHECKED FEIRUZ ABERRA	
DETAILS	BY ANTONETTE L. ONG	CHECKED FEIRUZ ABERRA	
QUANTITIES	BY MOHAMMAD MUQTADIR	CHECKED FEIRUZ ABERRA	

STATE OF CALIFORNIA
DEPARTMENT OF TRANSPORTATION

DIVISION OF ENGINEERING SERVICES
STRUCTURE DESIGN
DESIGN BRANCH 20

BRIDGE NO. 53-1528
POST MILE 38.51

GRAND AVENUE UC (WIDEN)
APPROACH SLAB LAYOUT

STRUCTURES DESIGN DETAIL SHEET (ENGLISH) (REV. 09-01-10)

ORIGINAL SCALE IN INCHES FOR REDUCED PLANS 0 1 2 3

UNIT: 3622
PROJECT NUMBER & PHASE: 0713000007-1
CONTRACT NO.: 07-1193U1

DISREGARD PRINTS BEARING EARLIER REVISION DATES

REVISION DATES: 02/14/14 02/28/14 05/14/14

SHEET 19 OF 28

FILE => 53-1528-r-as-1a01.dgn

USERNAME => s125624 DATE PLOTTED => 18-MAY-2015 TIME PLOTTED => 14:06

DIST	COUNTY	ROUTE	POST MILES TOTAL PROJECT	SHEET No.	TOTAL SHEETS
07	LA	10	37.2/42.4	1612	2313

REGISTERED CIVIL ENGINEER 10/01/14 DATE

6-1-15
PLANS APPROVAL DATE

REGISTERED PROFESSIONAL ENGINEER — Dawit T Worku — No. C60711 — Exp. 12-31-14 — CIVIL — STATE OF CALIFORNIA

The State of California or its officers or agents shall not be responsible for the accuracy or completeness of electronic copies of this plan sheet.

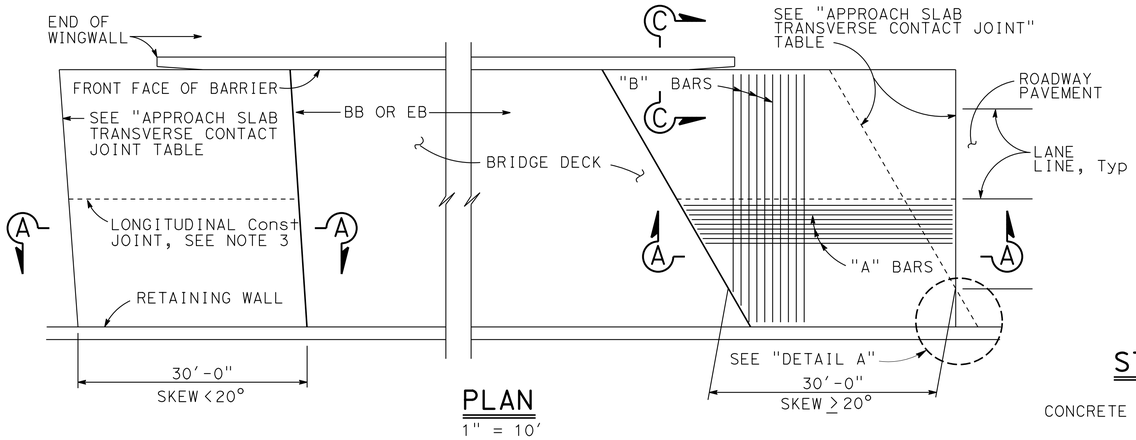

PLAN
1" = 10'

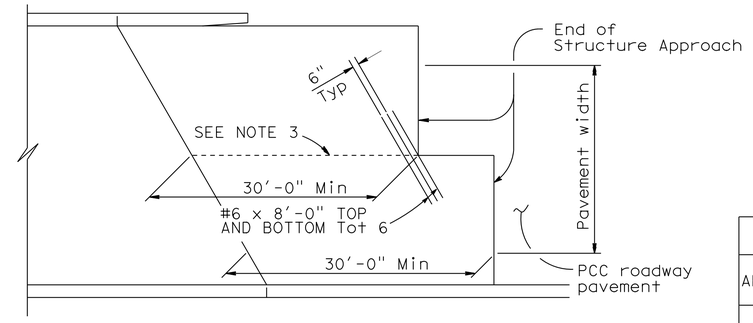

STRUCTURE APPROACH - END STAGGER DETAIL
No Scale

APPROACH SLAB TRANSVERSE CONTACT JOINT		
APPROACH SKEW	WITH AC ROADWAY PAVEMENT	WITH PCC ROADWAY PAVEMENT
< 20°	PARALLEL TO FACE OF PN	PARALLEL TO FACE OF PN
20° - 45°	PARALLEL TO FACE OF PN USE "DETAIL A"	STAGGER LINES 24' TO 36' APART
> 45°	PARALLEL TO FACE OF PN USE "DETAIL A"	STAGGER AT EACH LANE LINE

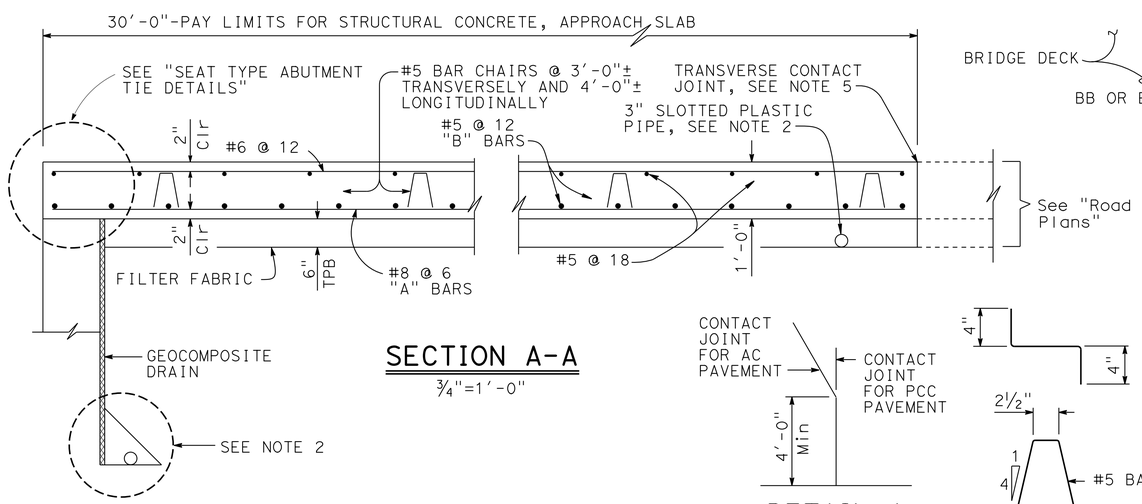

SECTION A-A
¾"=1'-0"

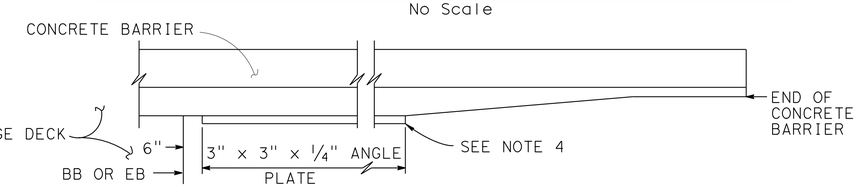

EDGE ANGLE DETAIL
½"=1'-0"

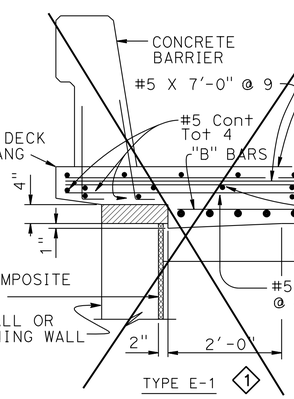

SECTION C-C
¾"=1'-0"
(Type E-1 to be used, unless otherwise shown on plans)

DETAIL A
No Scale

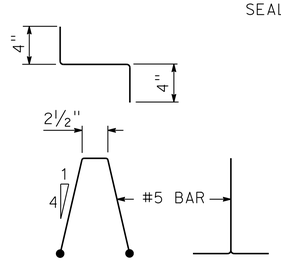

BAR CHAIR DETAIL
1½"=1'-0"

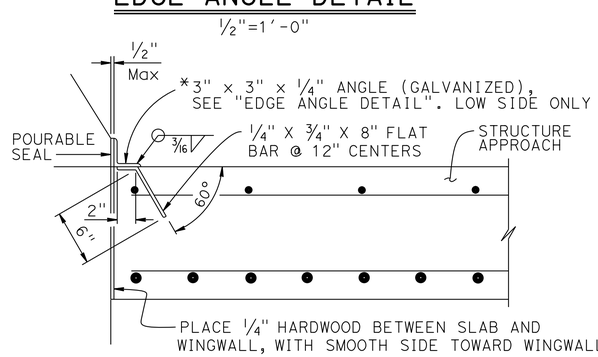

*(TO BE USED WITH CONCRETE BARRIER WITH VERTICAL FACE)

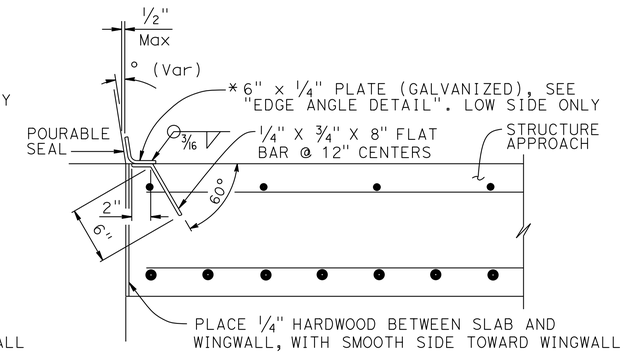

*(TO BE USED WITH CONCRETE BARRIER WITH SLOPING FACE)

DETAIL B
1½" = 1'-0"

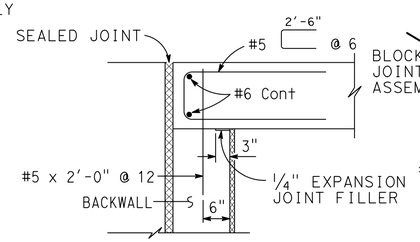

MR ≤ 2"

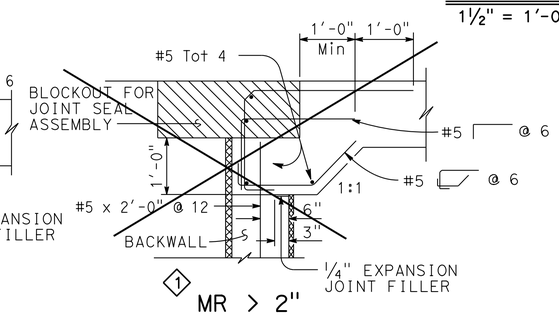

MR > 2"

SEAT TYPE ABUTMENT TIE DETAILS (SEE NOTE 1)
¾"=1'-0"

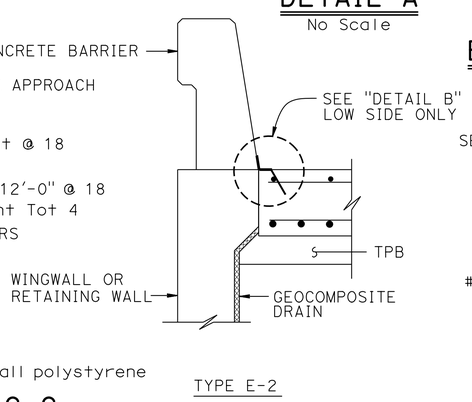

NOTES:

1. For details not shown, see Structure Plans. For MR ≤ 2", adjust bar reinforcement to clear a sawcut for sealed joint, when required
2. For drainage details, see "STRUCTURE APPROACH DRAINAGE DETAILS" sheet
3. Longitudinal construction joints, when permitted by the Engineer, shall be located on lane lines
4. End angle or plate at beginning of barrier transition, end of wingwall or end of structure approach as applicable
5. For transverse contact joint with new PCC paving, refer to Standard Plan P10
6. At the Contractor's option, approach slab transverse reinforcement may be placed parallel to paving notch. Spacing of transverse reinforcement is measured along ℄ roadway

STANDARD DRAWING
FILE NO. xs3-120
APPROVAL DATE July 2011

1 Deleted Detail

STATE OF CALIFORNIA
DEPARTMENT OF TRANSPORTATION

DIVISION OF ENGINEERING SERVICES

BRIDGE NO. 53-1528
POST MILE 38.51

GRAND AVENUE UC (WIDEN)
STRUCTURE APPROACH TYPE N(30S)

DS OSD 2147A (ENGLISH STANDARD DRAWING "XS" BORDER REV. (02-02-11)

ORIGINAL SCALE IN INCHES FOR REDUCED PLANS 0 1 2 3

UNIT: 3622
PROJECT NUMBER & PHASE: 0713000007-1
CONTRACT NO.: 07-1193U1

DISREGARD PRINTS BEARING EARLIER REVISION DATES

REVISION DATES 06/14/10

SHEET 20 OF 28

FILE => 53-1528-s-sap-N(30S).dgn

USERNAME => s125624 DATE PLOTTED => 18-MAY-2015 TIME PLOTTED => 14:06

DIST	COUNTY	ROUTE	POST MILES TOTAL PROJECT	SHEET No.	TOTAL SHEETS
07	LA	10	37.2/42.4	1613	2313

REGISTERED CIVIL ENGINEER 10/01/14 DATE

6-1-15
PLANS APPROVAL DATE

The State of California or its officers or agents shall not be responsible for the accuracy or completeness of electronic copies of this plan sheet.

REGISTERED PROFESSIONAL ENGINEER — Dawit T Worku — No. C60711 — Exp. 12-31-14 — CIVIL — STATE OF CALIFORNIA

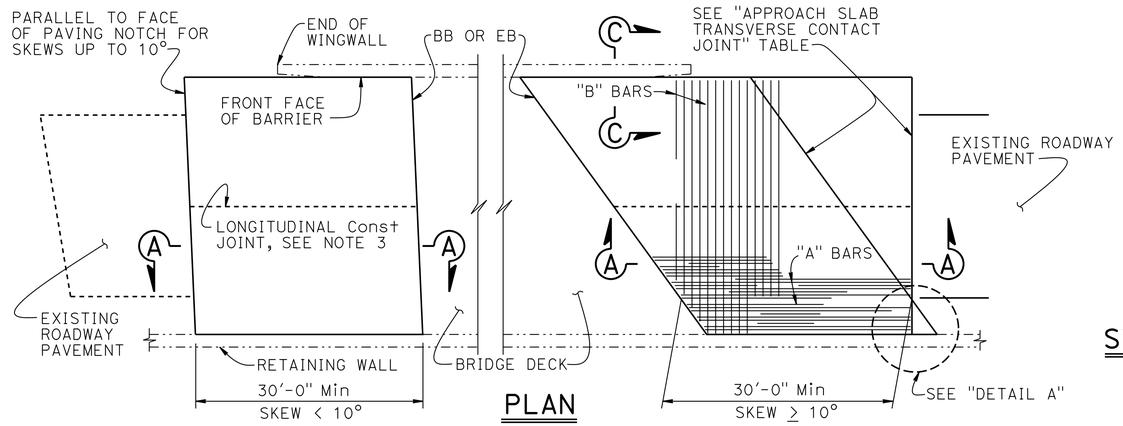

PLAN
1" = 10'

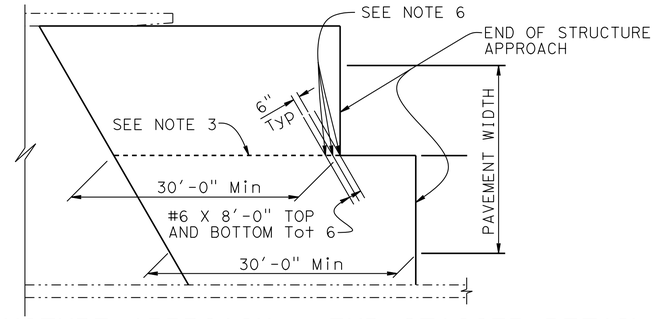

STRUCTURE APPROACH - END STAGGER DETAIL
NO SCALE

APPROACH SLAB TRANSVERSE CONTACT JOINT		
APPROACH SKEW	WITH AC ROADWAY PAVEMENT	WITH PCC ROADWAY PAVEMENT
< 10°	PARALLEL TO FACE OF PN	PARALLEL TO FACE OF PAVING NOTCH
10° - 45°	PARALLEL TO FACE OF PN USE "DETAIL A"	STAGGER LINES 24' TO 36' APART
> 45°	PARALLEL TO FACE OF PN USE "DETAIL A"	STAGGER AT EACH LANE LINE

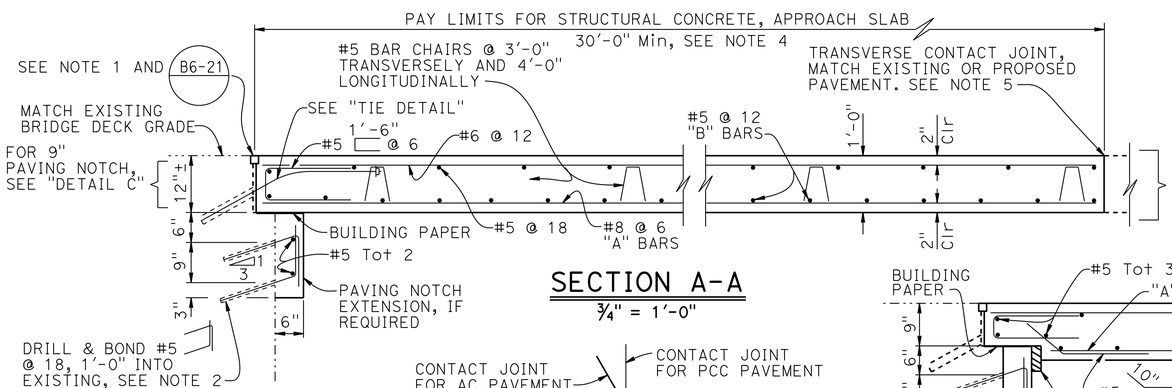

SECTION A-A
¾" = 1'-0"

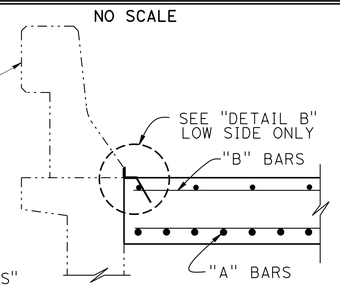

SECTION C-C
¾" = 1'-0"

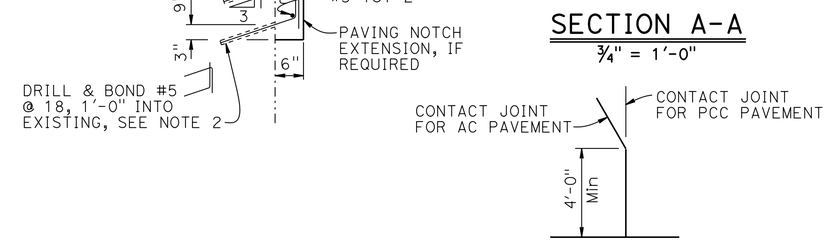

DETAIL A
No Scale

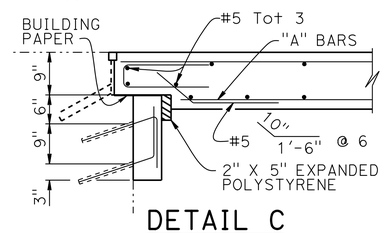

DETAIL C
¾" = 1'-0"

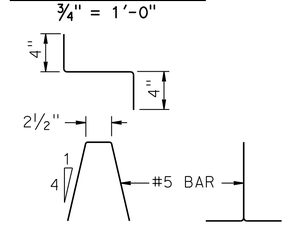

BAR CHAIR DETAIL
1½" = 1'-0"

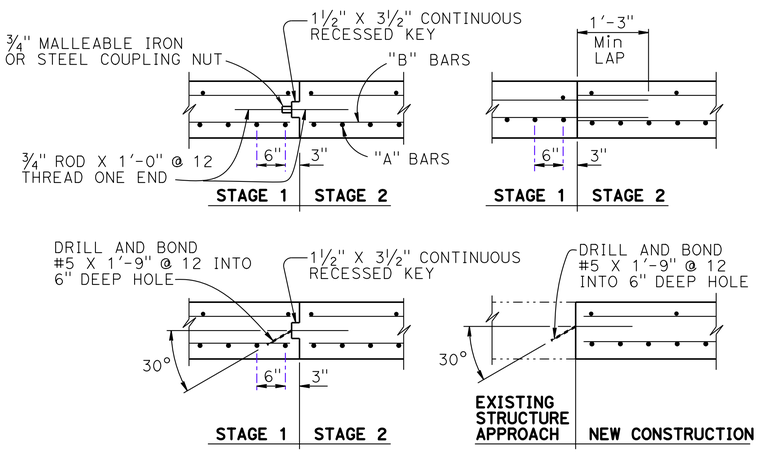

LONGITUDINAL CONSTRUCTION JOINT ALTERNATIVES
¾" = 1'-0"

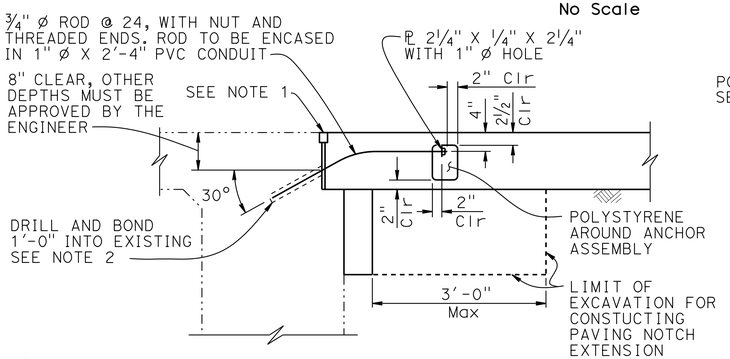

NOTE:
THE CONTRACTOR SHALL VERIFY ALL CONTROLLING FIELD DIMENSIONS BEFORE ORDERING OR FABRICATING ANY MATERIAL.

TIE DETAIL
¾" = 1'-0"

NOTE: For details not shown, see "SECTION A-A"

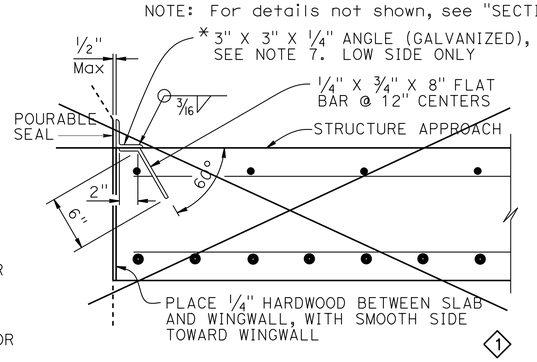

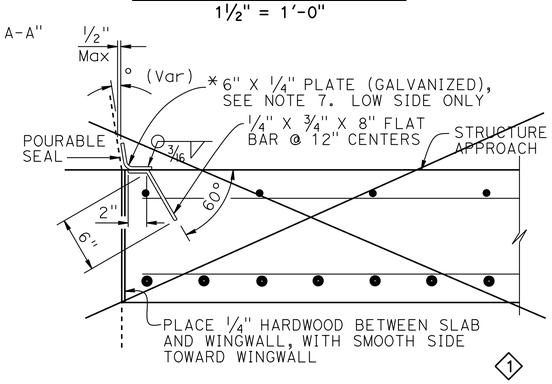

DETAIL B
1½" = 1'-0"

NOTES:
1. For details not shown or noted, see Structure Plans. Adjust bar reinforcement to clear a sawcut for sealed joint, when required
2. Space to avoid existing prestress anchorages and main reinforcement
3. Longitudinal construction joints, when permitted by the Engineer, shall be located on lane lines
4. Transverse contact joint shall be a minimum of 5'-0" from an existing or constructed weakened plane joint
5. For transverse contact joint with new PCC paving. refer to Standard Plan P10
6. Couplers are required for stage construction
7. End angle or plate at beginning of barrier transition, end of wingwall or end of structure approach as applicable

STANDARD DRAWING
FILE NO. xs3-150
APPROVAL DATE July 2011

1 Deleted Detail

STATE OF CALIFORNIA
DEPARTMENT OF TRANSPORTATION

DIVISION OF ENGINEERING SERVICES

BRIDGE NO. 53-1528
POST MILE 38.51

GRAND AVENUE UC (WIDEN)
STRUCTURE APPROACH TYPE R(30D)

DS OSD 2147A (ENGLISH STANDARD DRAWING "XS" BORDER REV. (02-02-11)

ORIGINAL SCALE IN INCHES FOR REDUCED PLANS 0 1 2 3

UNIT: 3622
PROJECT NUMBER & PHASE: 0713000007-1
CONTRACT NO.: 07-1193U1

DISREGARD PRINTS BEARING EARLIER REVISION DATES

REVISION DATES

SHEET 21 OF 28

FILE => 53-1528-s-sap-R(30D).dgn

USERNAME => s125624 DATE PLOTTED => 18-MAY-2015 TIME PLOTTED => 14:06

DIST	COUNTY	ROUTE	POST MILES TOTAL PROJECT	SHEET No.	TOTAL SHEETS
07	LA	10	37.2/42.4	1614	2313

REGISTERED CIVIL ENGINEER 10/01/14 DATE

6-1-15
PLANS APPROVAL DATE

The State of California or its officers or agents shall not be responsible for the accuracy or completeness of electronic copies of this plan sheet.

REGISTERED PROFESSIONAL ENGINEER Dawit T Worku No. C60711 Exp. 12-31-14 CIVIL STATE OF CALIFORNIA

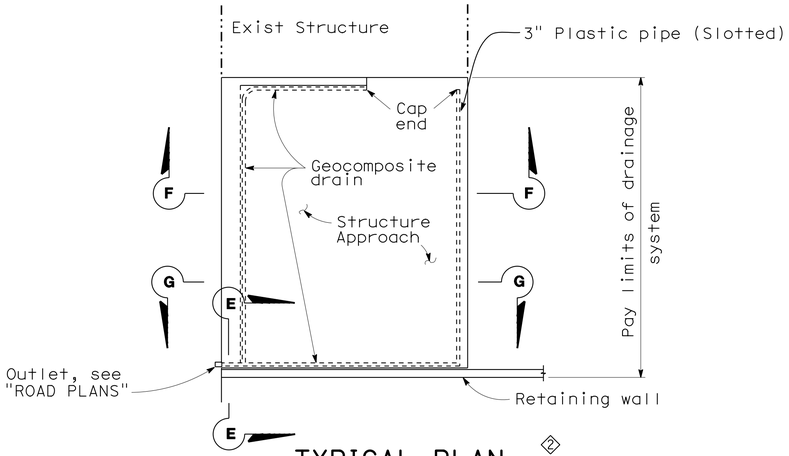

TYPICAL PLAN

1" = 10'-0"

*For pipe layout at staggered end, see "Detail B".

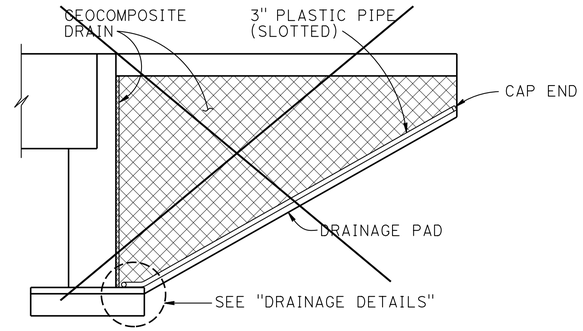

CANTILEVER WINGWALL

SECTION F-F

1/4" = 1'-0"

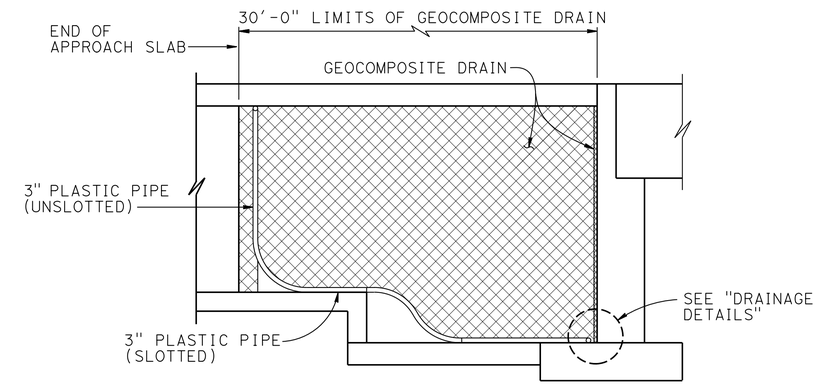

RETAINING WALL WINGWALL DRAINAGE DETAILS

SECTION G-G

1/4" = 1'-0"

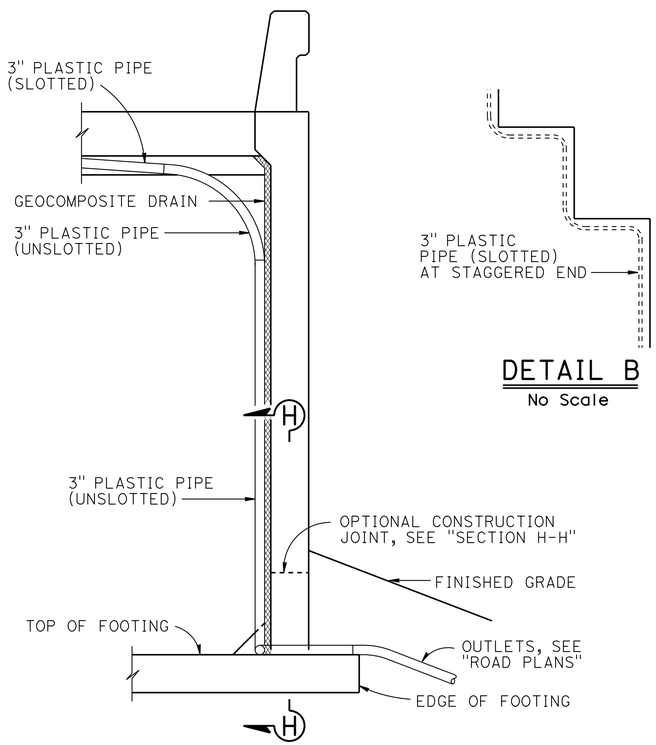

SECTION E-E

1/2" = 1'-0"

NOTE: Bends and junctions in 3" plastic pipe are 30" radius Min

DETAIL B

No Scale

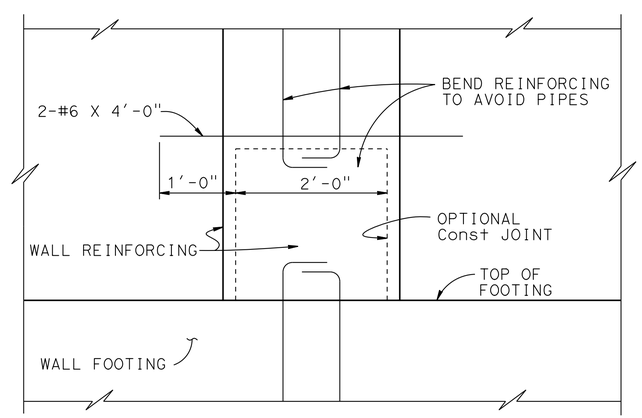

SECTION H-H

1" = 1'-0"

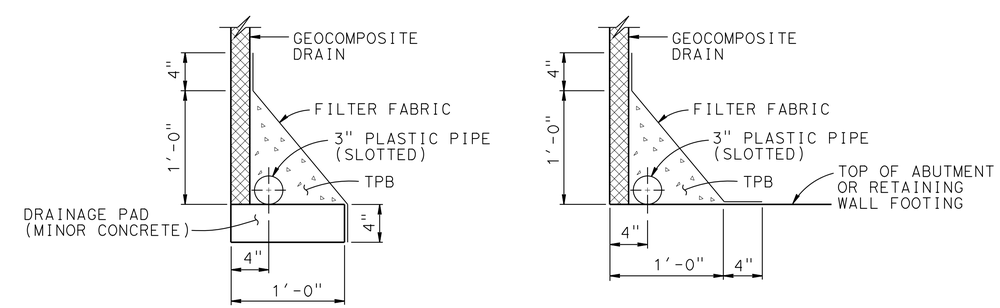

WITHOUT FOOTING

WITH FOOTING

DRAINAGE DETAILS

1 1/2" = 1'-0"

REVISED STANDARD DRAWING

FILE NO. xs3-110

APPROVAL DATE July 2011

1 Deleted Detail
2 Modified Detail

STATE OF CALIFORNIA DEPARTMENT OF TRANSPORTATION

DIVISION OF ENGINEERING SERVICES

BRIDGE NO. 53-1528
POST MILE 38.51

GRAND AVENUE UC (WIDEN)

STRUCTURE APPROACH DRAINAGE DETAILS

DS OSD 2147A (ENGLISH STANDARD DRAWING "XS" BORDER REV. (02-02-11)

ORIGINAL SCALE IN INCHES FOR REDUCED PLANS 0 1 2 3

UNIT: 3622
PROJECT NUMBER & PHASE: 0713000007-1
CONTRACT NO.: 07-1193U1

DISREGARD PRINTS BEARING EARLIER REVISION DATES

REVISION DATES

SHEET 22 OF 28

FILE => 53-1528-u-saddt.dgn

USERNAME => s125624 DATE PLOTTED => 18-MAY-2015 TIME PLOTTED => 14:06

DIST	COUNTY	ROUTE	POST MILES TOTAL PROJECT	SHEET No.	TOTAL SHEETS
07	LA	10	37.2/42.4	1615	2313

REGISTERED CIVIL ENGINEER 10/01/14 DATE

6-1-15
PLANS APPROVAL DATE

REGISTERED PROFESSIONAL ENGINEER
Dawit T Worku
No. C60711
Exp. 12-31-14
CIVIL
STATE OF CALIFORNIA

The State of California or its officers or agents shall not be responsible for the accuracy or completeness of electronic copies of this plan sheet.

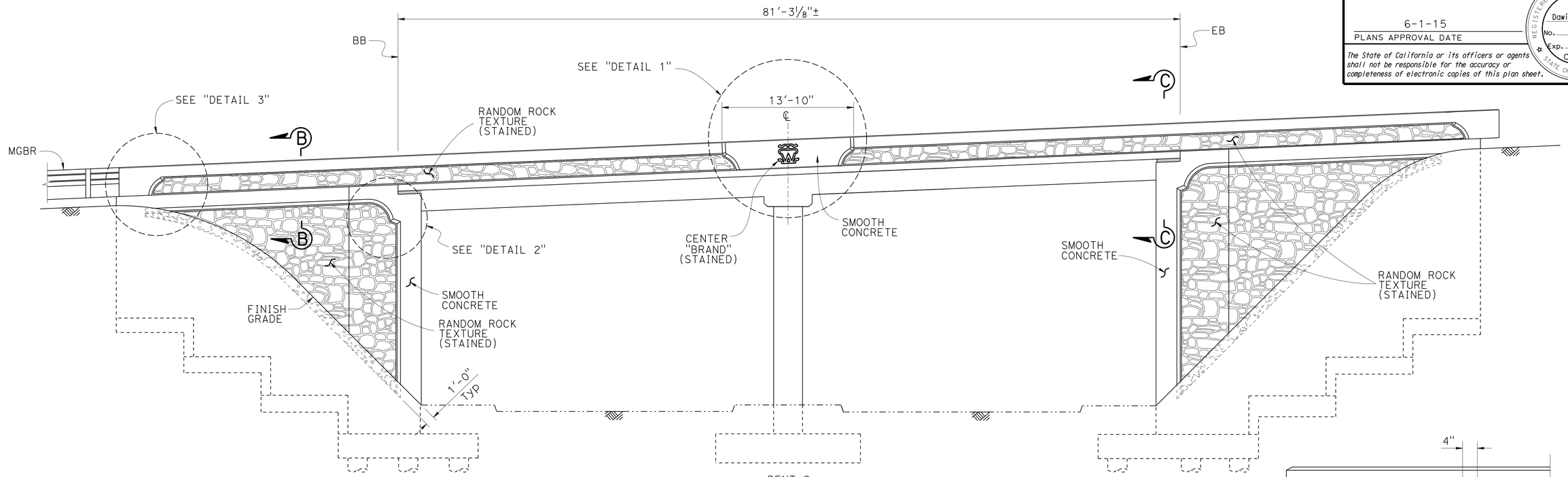

ELEVATION
NO SCALE

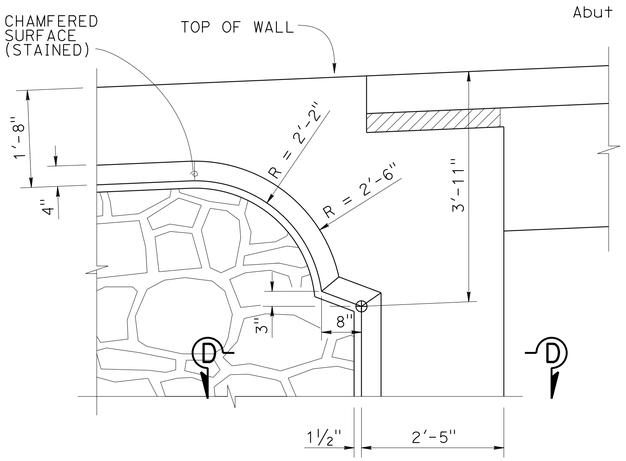

DETAIL 2
NO SCALE

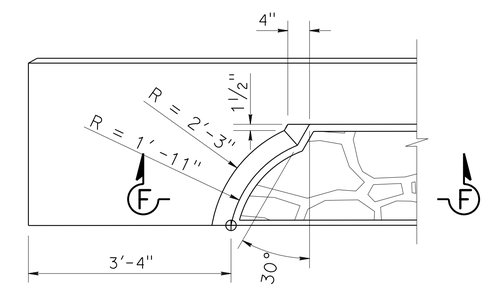

DETAIL 3-TYPICAL FOR BARRIER END
NO SCALE

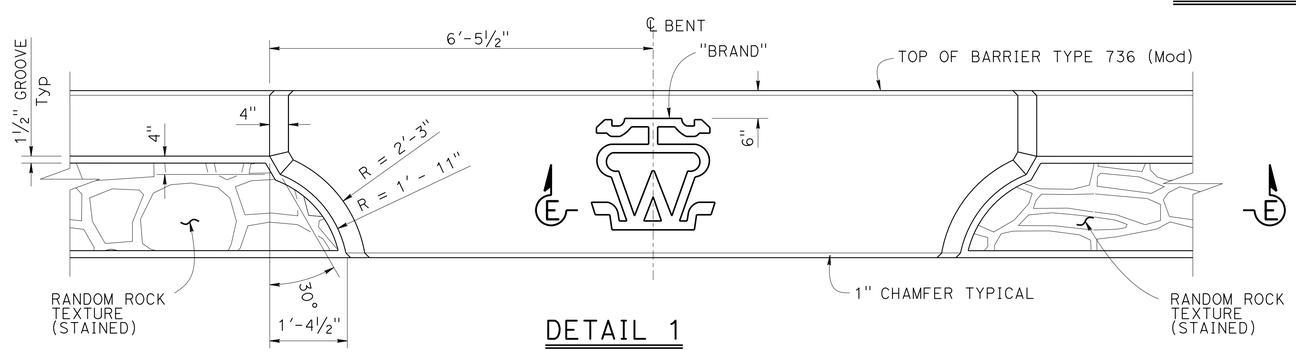

DETAIL 1
NO SCALE

NOTE:
THE CONTRACTOR SHALL VERIFY ALL CONTROLLING FIELD DIMENSIONS BEFORE ORDERING OR FABRICATING ANY MATERIAL.

	BY	CHECKED
DESIGN	VALERIE MOORE	MOHAMMAD MUQTADIR
DETAILS	ANTONETTE L. ONG	MOHAMMAD MUQTADIR
QUANTITIES	MOHAMMAD MUQTADIR	FEIRUZ ABERRA

STATE OF CALIFORNIA
DEPARTMENT OF TRANSPORTATION

DIVISION OF ENGINEERING SERVICES
STRUCTURE DESIGN
DESIGN BRANCH 20

BRIDGE NO. 53-1528
POST MILE 38.51

GRAND AVENUE UC (WIDEN)
ARCHITECTURAL TREATMENT

STRUCTURES DESIGN DETAIL SHEET (ENGLISH) (REV. 09-01-10)

ORIGINAL SCALE IN INCHES FOR REDUCED PLANS 0 1 2 3

UNIT: 3622
PROJECT NUMBER & PHASE: 0713000007-1
CONTRACT NO.: 07-1193U1

DISREGARD PRINTS BEARING EARLIER REVISION DATES

REVISION DATES: 05/20/14 11/26/13 01/08/14

SHEET 23 OF 28

FILE => 53-1528-v_aesth01.dgn

USERNAME => s125624 DATE PLOTTED => 18-MAY-2015 TIME PLOTTED => 14:06

DIST	COUNTY	ROUTE	POST MILES TOTAL PROJECT	SHEET No.	TOTAL SHEETS
07	LA	10	37.2/42.4	1616	2313

Dawit Tadelle Worku 10/01/14
REGISTERED CIVIL ENGINEER DATE

6-1-15
PLANS APPROVAL DATE

REGISTERED PROFESSIONAL ENGINEER
Dawit T Worku
No. C60711
Exp. 12-31-14
CIVIL
STATE OF CALIFORNIA

The State of California or its officers or agents shall not be responsible for the accuracy or completeness of electronic copies of this plan sheet.

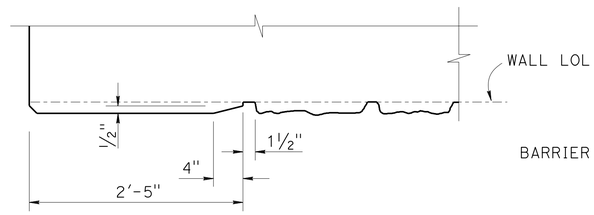

PARTIAL SECTION D-D

NO SCALE

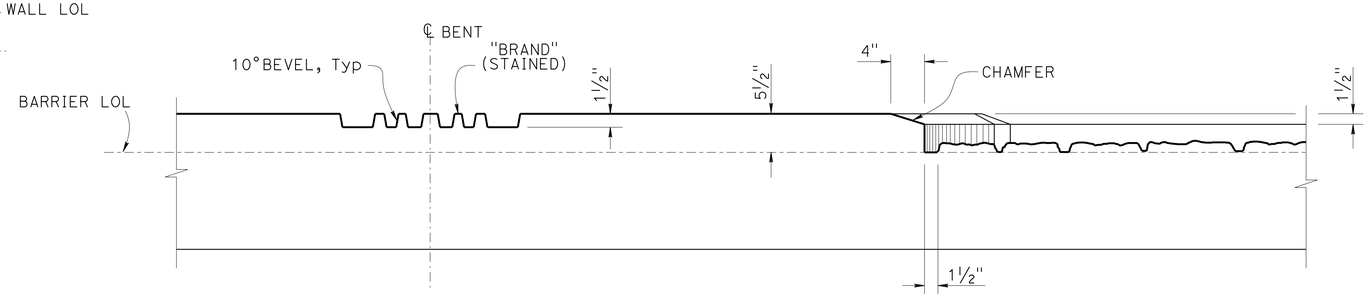

PARTIAL SECTION E-E

NO SCALE

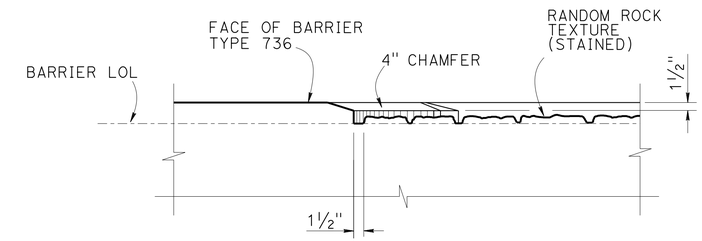

PARTIAL SECTION F-F

NO SCALE

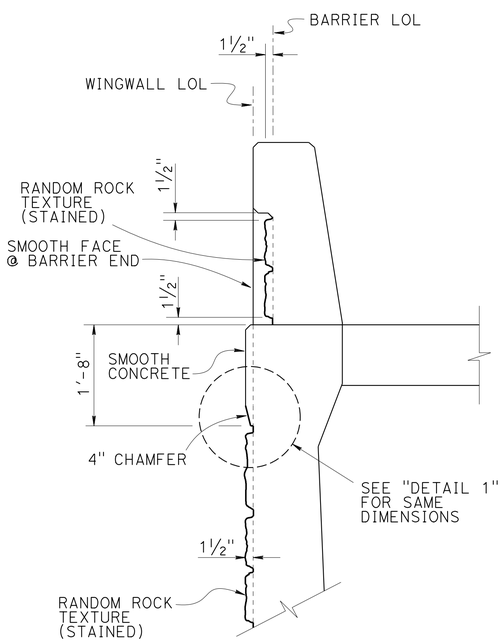

SECTION B-B

NO SCALE

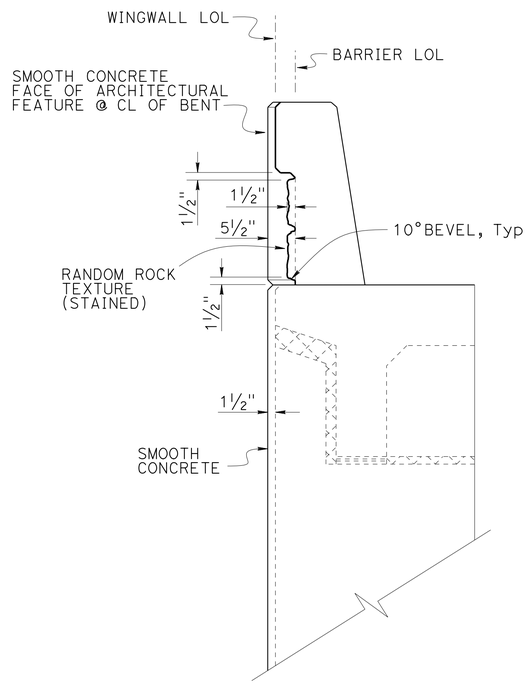

SECTION C-C

NO SCALE

NOTE:

Seamless random rock pattern to have a minimum of 2 to maximum of 4 match points (denoted by "M") for each side (top to bottom and side to side).

STAINED RANDOM ROCK
FS# 33578, 30372, 30257, 30117, 30099
FS (denotes Federal Standard Color)

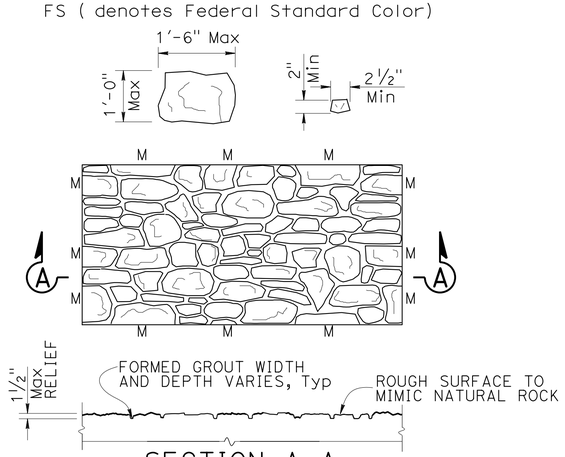

SECTION A-A

RANDOM ROCK TEXTURE

NO SCALE

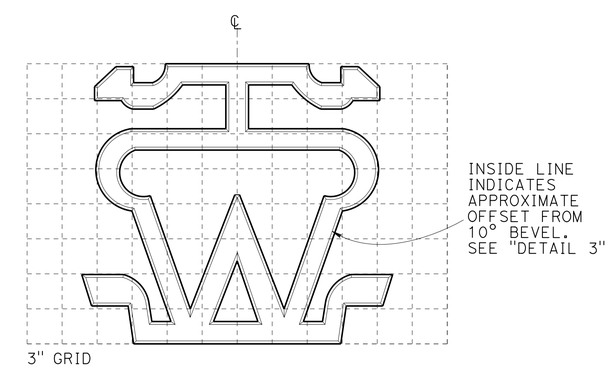

ARCHITECTURAL SURFACE TREATMENT (CATTLE BRAND PATTERN)

NOTE:

1. Stain Federal Color 30117

NOTE:
THE CONTRACTOR SHALL VERIFY ALL CONTROLLING FIELD DIMENSIONS BEFORE ORDERING OR FABRICATING ANY MATERIAL.

	BY	CHECKED
DESIGN	VALERIE MOORE	MOHAMMAD MUQTADIR
DETAILS	ANTONETTE L. ONG	MOHAMMAD MUQTADIR
QUANTITIES	MOHAMMAD MUQTADIR	FEIRUZ ABERRA

STATE OF CALIFORNIA
DEPARTMENT OF TRANSPORTATION

DIVISION OF ENGINEERING SERVICES
STRUCTURE DESIGN
DESIGN BRANCH 20

BRIDGE NO. 53-1528
POST MILE 38.51

GRAND AVENUE UC (WIDEN)
ARCHITECTURAL TREATMENT DETAILS

STRUCTURES DESIGN DETAIL SHEET (ENGLISH) (REV. 09-01-10)

ORIGINAL SCALE IN INCHES FOR REDUCED PLANS 0 1 2 3

UNIT: 3622
PROJECT NUMBER & PHASE: 0713000007-1
CONTRACT NO.: 07-1193U1

DISREGARD PRINTS BEARING EARLIER REVISION DATES

REVISION DATES: 02/20/14 05/20/14 01/16/14

SHEET 24 OF 28

FILE => 53-1528-v_aesth02.dgn

USERNAME => s125624 DATE PLOTTED => 18-MAY-2015 TIME PLOTTED => 14:06

DIST	COUNTY	ROUTE	POST MILES TOTAL PROJECT	SHEET No	TOTAL SHEETS
07	LA	10	37.2/42.4	1617	2313

REGISTERED CIVIL ENGINEER 1-13-14

6-1-15
PLANS APPROVAL DATE

The State of California or its officers or agents shall not be responsible for the accuracy or completeness of electronic copies of this plan sheet.

REGISTERED PROFESSIONAL ENGINEER Yoojoong Choi No. C71480 Exp. 12-31-15 CIVIL STATE OF CALIFORNIA

This LOTB sheet was prepared in accordance with the Caltrans Soil & Rock Logging, Classification, & Presentation Manual (2010 Edition).

See 2010 Standard Plans A10F and A10G for Soil Legend, and A10H for Rock Legend.

BENCH MARK

Elev 525.710′
Fd PK N in E/TC Grand Ave S of Rte 10
Northing : 1848418.660
Easting : 6600354.940
NAVD 88

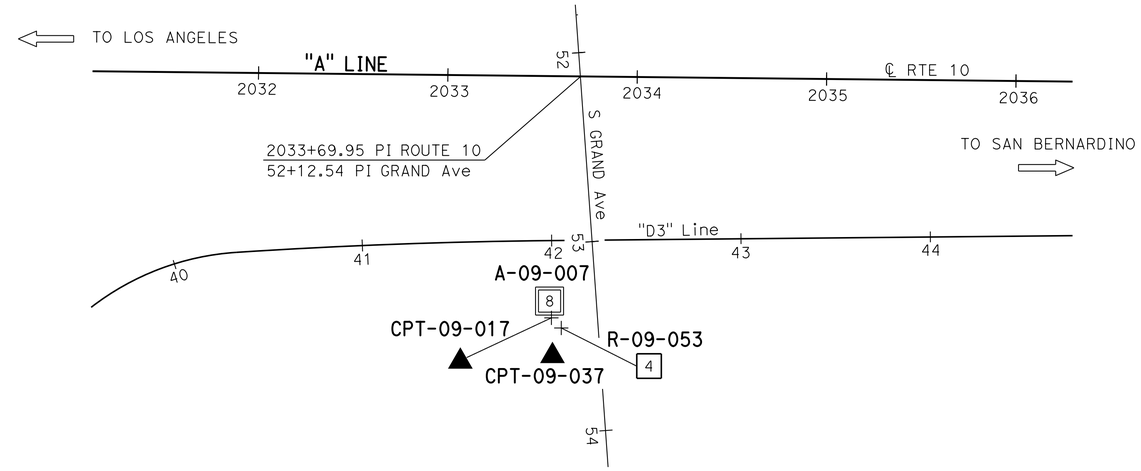

PLAN

1" = 40′

Note: No ground water encountered during drilling of A-09-007.

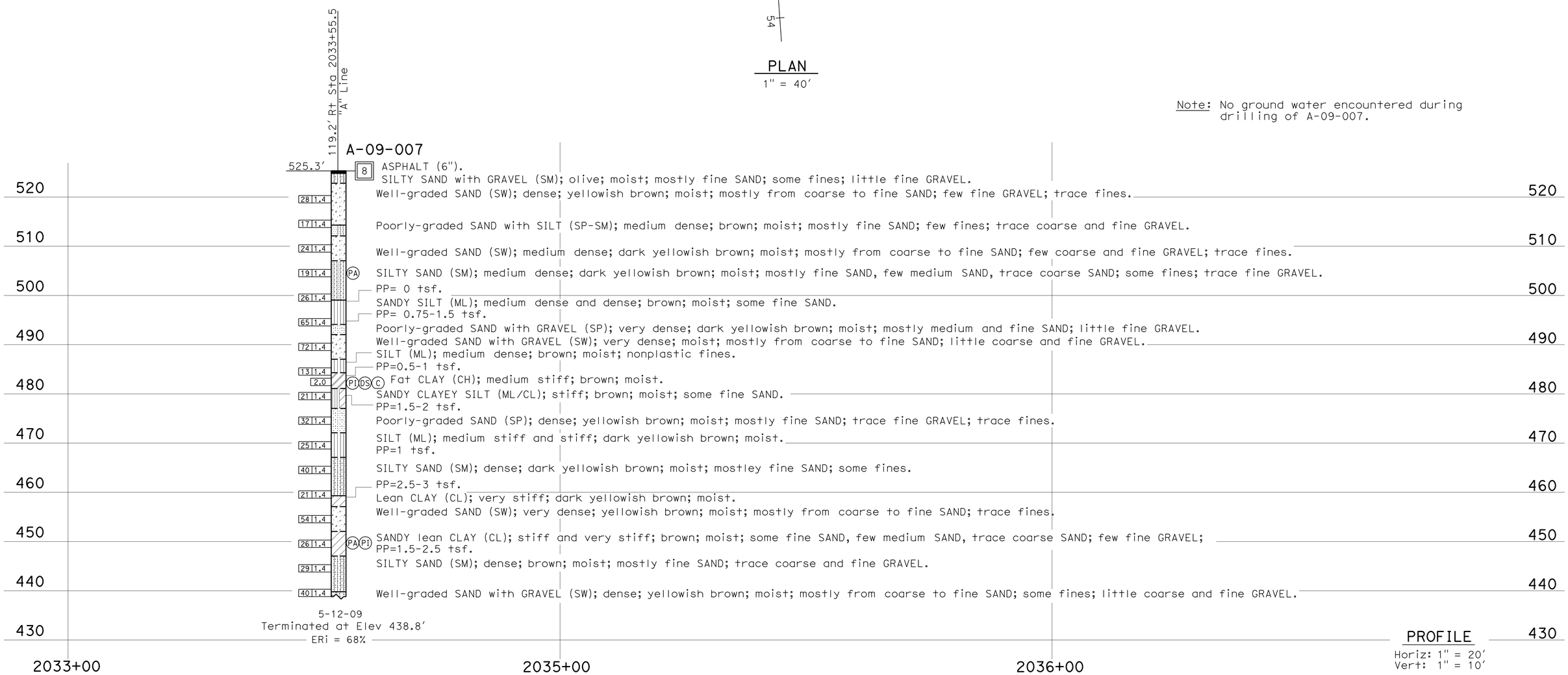

PROFILE

Horiz: 1" = 20′
Vert: 1" = 10′

ENGINEERING SERVICES	MATERIALS AND GEOTECHNICAL SERVICES	STATE OF CALIFORNIA DEPARTMENT OF TRANSPORTATION	DIVISION OF ENGINEERING SERVICES STRUCTURE DESIGN DESIGN BRANCH 20	BRIDGE NO. 53-1528 POST MILE 38.51	GRAND AVE UC WIDENING LOG OF TEST BORINGS 1 OF 4
FUNCTIONAL SUPERVISOR NAME: D. Jang	DRAWN BY: W. Tang 8/10, I.G-Remmen 12/13 CHECKED BY: M. Salisbury	FIELD INVESTIGATION BY: Y. Choi			

OGS CIVIL LOG OF TEST BORINGS SHEET

ORIGINAL SCALE IN INCHES FOR REDUCED PLANS 0 1 2 3

UNIT: 3643
PROJECT NUMBER & PHASE: 07130000071-1 CONTRACT NO.: 07-1193U1

DISREGARD PRINTS BEARING EARLIER REVISION DATES

REVISION DATES 08/31/10 11/15/10 01/10/14 SHEET 25 OF 28

FILE => 53-1528-z-ltb01.dgn

USERNAME => s125624 DATE PLOTTED => 18-MAY-2015 TIME PLOTTED => 14:06

DIST	COUNTY	ROUTE	POST MILES TOTAL PROJECT	SHEET No	TOTAL SHEETS
07	LA	10	37.2/42.4	1618	2313

REGISTERED CIVIL ENGINEER 1-13-14

6-1-15
PLANS APPROVAL DATE

REGISTERED PROFESSIONAL ENGINEER Yoojoong Choi No. C71480 Exp. 12-31-15 CIVIL STATE OF CALIFORNIA

The State of California or its officers or agents shall not be responsible for the accuracy or completeness of electronic copies of this plan sheet.

This LOTB sheet was prepared in accordance with the Caltrans Soil & Rock Logging, Classification, & Presentation Manual (2010 Edition).

See 2010 Standard Plans A10F and A10G for Soil Legend, and A10H for Rock Legend.

FOR PLAN VIEW, SEE
"LOG OF TEST BORINGS 1 OF 4"

NOTE: R-09-053 drilled as a supplement to A-09-007.

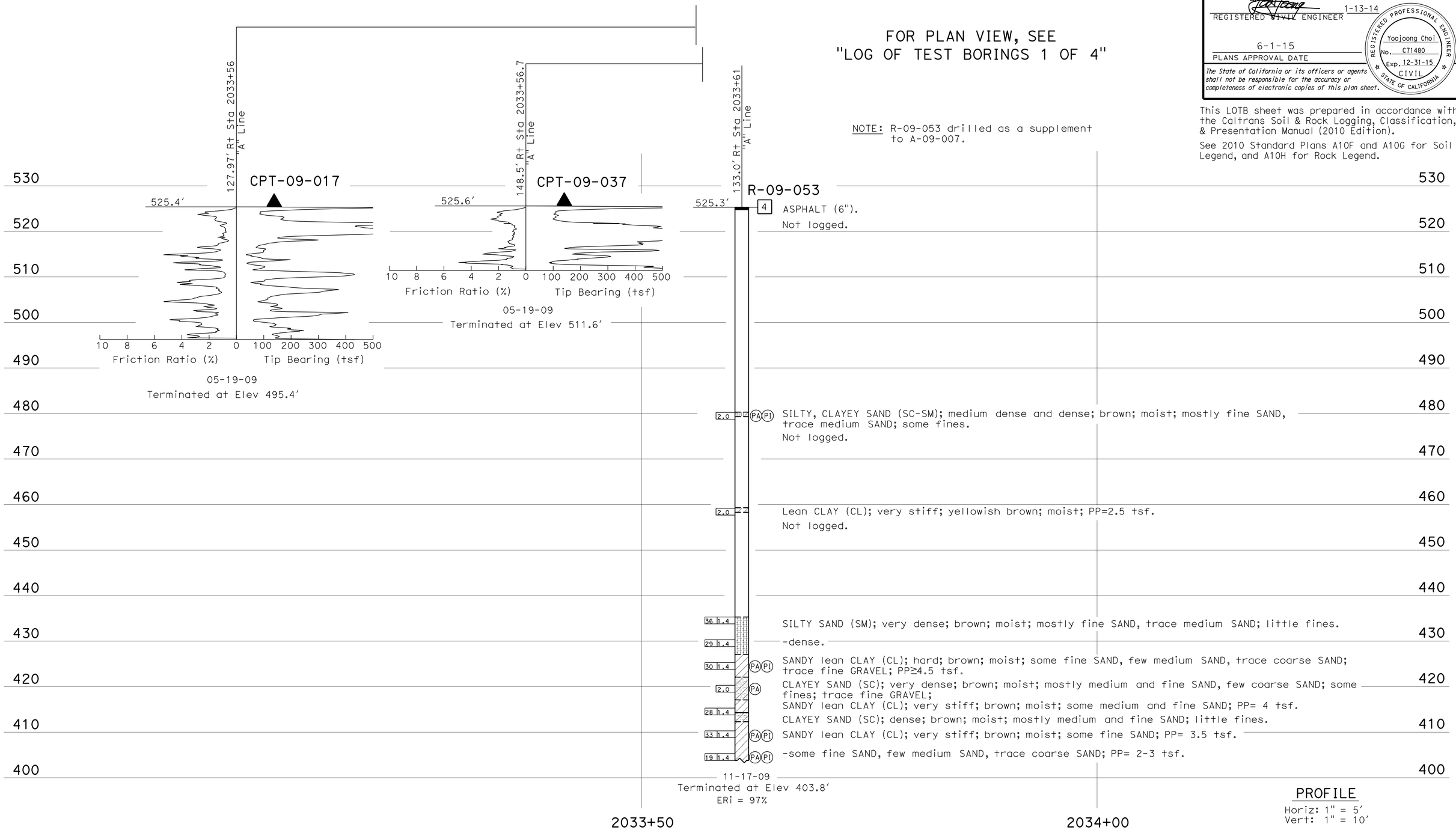

PROFILE
Horiz: 1" = 5'
Vert: 1" = 10'

ENGINEERING SERVICES	MATERIALS AND GEOTECHNICAL SERVICES	STATE OF CALIFORNIA DEPARTMENT OF TRANSPORTATION	DIVISION OF ENGINEERING SERVICES STRUCTURE DESIGN DESIGN BRANCH 20	BRIDGE NO. 53-1528 POST MILE 38.51	GRAND AVE UC WIDENING LOG OF TEST BORINGS 2 OF 4
FUNCTIONAL SUPERVISOR NAME: D. Jang	DRAWN BY: W. Tang 08/10, I.G-Remmen CHECKED BY: M. Salisbury	FIELD INVESTIGATION BY: Y. Choi			

OGS CIVIL LOG OF TEST BORINGS SHEET

ORIGINAL SCALE IN INCHES FOR REDUCED PLANS 0 1 2 3

UNIT: 3643
PROJECT NUMBER & PHASE: 0713000007-1 CONTRACT NO.: 07-1193U1

DISREGARD PRINTS BEARING EARLIER REVISION DATES

REVISION DATES 08/31/10 11/15/10 01/10/14 SHEET 26 OF 28

FILE => 53-1528-z-lltb02.dgn

USERNAME => s125624 DATE PLOTTED => 18-MAY-2015 TIME PLOTTED => 14:06

DIST.	COUNTY	ROUTE	POST MILES—TOTAL PROJECT	SHEET NO.	TOTAL SHEETS
07	LA	10	33.2/40.9	609	749

DESIGN SECTION SUPERVISOR — REGISTERED CIVIL ENGINEER NO. D-108

DATE APPROVED November 29, 1971

BENCH MARKS

B.M. #215-J-67 Elev. 516.89'
Found L.S. tag on east curb of median of Grand Ave., 500 feet north of ℄ of Route 010.

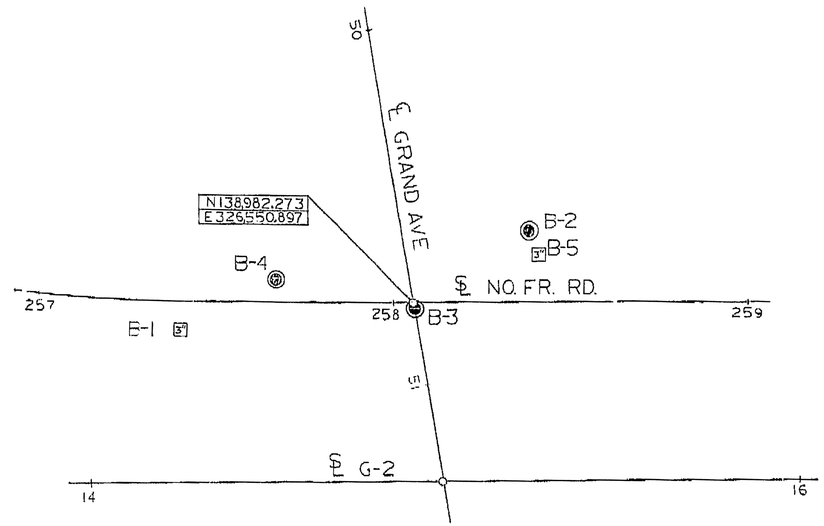

PLAN
Scale: 1" = 20'

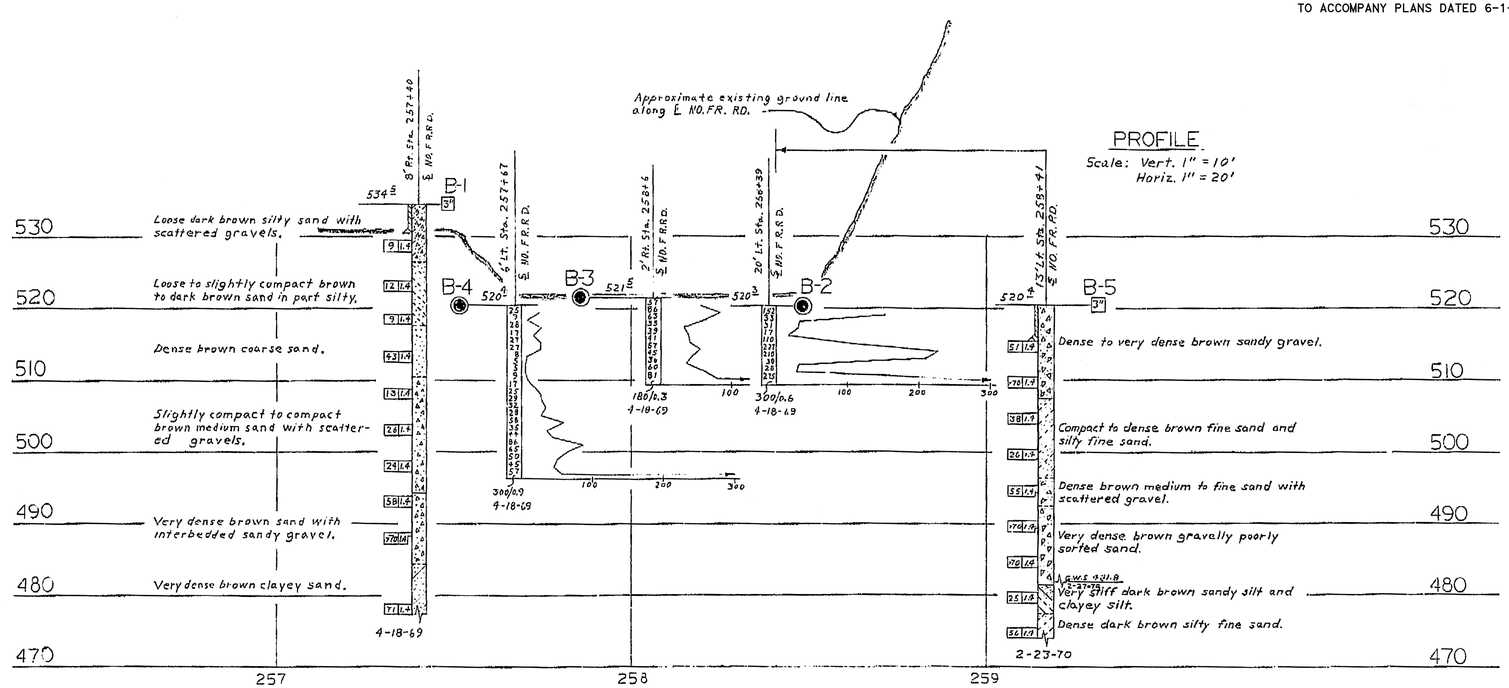

PROFILE
Scale: Vert. 1" = 10'
Horiz. 1" = 20'

DIVISION OF ENGINEERING SERVICES - MATERIALS AND GEOTECHNICAL SERVICES

As-Built Log of Test Borings sheet is considered an informational document only. As such, the State of California registration seal with signature, license number and registration certificate expiration date confirm that this is a true and accurate copy of the original document. It does not attest to the accuracy or validity of the information contained in the original document. This drawing is available and presented only for the convenience of any bidder, contractor or other interested party.

DIST.	COUNTY	ROUTE	POST MILE-TOTAL PROJECT	Sheet No.	Total Sheets
07	LA	10	37.2/42.4	1619	2313

REGISTERED CIVIL ENGINEER — DATE 1/13/2014

REGISTERED PROFESSIONAL ENGINEER — Yoojoong Choi — No. C71480 — Exp. 12-31-15 — CIVIL — STATE OF CALIFORNIA

GRAND AVE UC WIDENING

LOG OF TEST BORINGS 3 OF 4

UNIT: 3643	CONTRACT No.	BRIDGE No.
PROJ. No. & PHASE: 07130000071	07-1193U1	53-1528
AS-BUILT VERT DATUM: N/A — CONVERSION: N/A	Sheet	of

NOTE: A COPY OF THIS LOG OF TEST BORINGS IS AVAILABLE AT OFFICE OF STRUCTURE MAINTENANCE AND INVESTIGATIONS, SACRAMENTO, CALIFORNIA

TO ACCOMPANY PLANS DATED 6-1-15

AS BUILT None
CORRECTIONS BY Paul Vuconich
CONTRACT NO. 07-038824
DATE 8-6-75

LEGEND OF BORING OPERATIONS

Penetrometer; 2½" Cone Penetrometer; Sampler Boring (Grav); Rotary Boring (WET); Auger Boring (Grav); Jet Boring; Core Boring; Test Pit

Penetration Boring; Rotary Boring; 1" Soil Tube

LEGEND OF EARTH MATERIALS

Gravel; Sand; Silt; Clay; Silty Clay or Clayey Silt; Sandy Clay or Clayey Sand; Sandy Silt or Silty Sand; Peat or Organic Matter; Fill Material; Igneous Rock; Sedimentary Rock; Metamorphic Rock

CLASSIFICATION OF MATERIAL (BASED ON STANDARD GRADE SIZE LIMITS)

Diagram shows the basis for estimates of grade size distribution used in determination of class names.
Adjacent to the diagram is a procedure which defines the terms "gravelly" may be added to the class name, viz. "gravelly sand". The terms "gravel" and "sand" are used instead of "coarse" and "fine" when used to describe sand, silt and gravel. Refer to standard grade size limits.

Approval Recommended by: Charles E. Yount, Engineering Geologist

NOTE: Classification of earth material as shown on this sheet is based upon field inspection and is not to be construed to imply mechanical analysis.

BRIDGE DEPARTMENT
ENGINEERING GEOLOGY SECTION

AS BUILT PLANS
Contract No. 07-038824
Date Completed —
Document No. 71007344

STATE OF CALIFORNIA
TRANSPORTATION AGENCY
DEPARTMENT OF PUBLIC WORKS
DIVISION OF HIGHWAYS

GRAND AVENUE UNDERCROSSING
(MODIFY)

LOG OF TEST BORINGS

BRIDGE NO.	POST MILE	DRAWING NO.	SHEET	OF
53-1528	38.52		12	12

REVISION DATES (PRELIMINARY STAGE ONLY) 3/13/90

WO 038821
CU 07213

Disregard prints bearing earlier revision dates

S-860 (1)

FED. ROAD DIV. NO.	STATE	PROJ. NO.	FISCAL YEAR	SHEET NO.	TOTAL SHEETS
7	CAL.			52	52

DIST.	COUNTY	ROUTE	SECTION	SHEET NO.	TOTAL SHEETS
VII	LA	2.6 mi	W.Cov	mi 1.5 Int	mi 1.5 Int

UNDER LICENSE — CIVIL ENGINEER — LICENSE 5585

DATE APPROVED August 29, 1960

BRIDGE DEPARTMENT

BENCH MARK

Spike in telephone pole #57052E, 104' Rt. Sta. 215+92 ℄ San Bernardino Frwy.; 23' Rt. Sta. 15+33 ℄ So. Frontage Road.

ELEV. 548.37

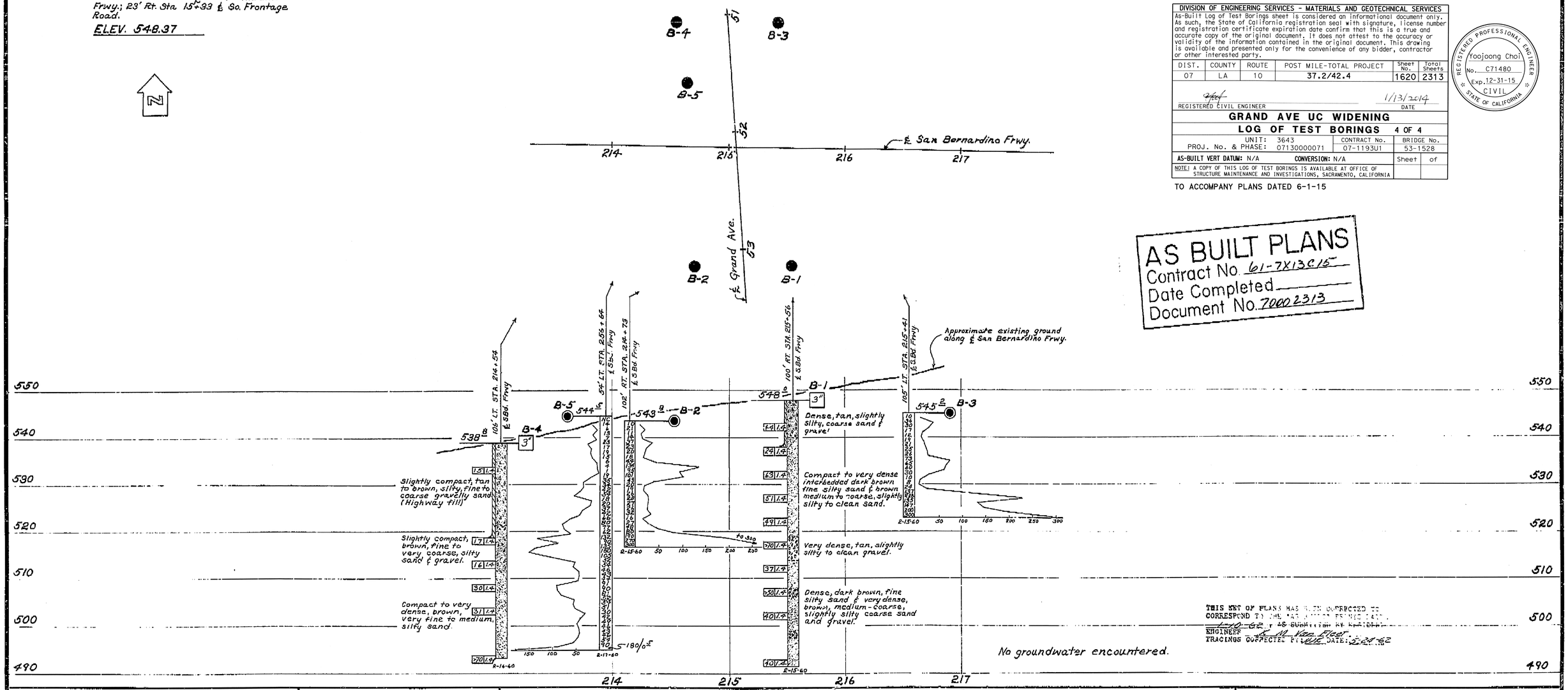

THIS SET OF PLANS HAS BEEN CORRECTED TO CORRESPOND TO THE AS BUILT CONDITION.
6-9-62 AS SUBMITTED BY RESIDENT ENGINEER
ENGINEER
TRACINGS CORRECTED BY DATE 6-27-62

DIVISION OF ENGINEERING SERVICES - MATERIALS AND GEOTECHNICAL SERVICES
As-Built Log of Test Borings sheet is considered an informational document only. As such, the State of California registration seal with signature, license number and registration certificate expiration date confirm that this is a true and accurate copy of the original document. It does not attest to the accuracy or validity of the information contained in the original document. This drawing is available and presented only for the convenience of any bidder, contractor or other interested party.

DIST.	COUNTY	ROUTE	POST MILE-TOTAL PROJECT	Sheet No.	Total Sheets
07	LA	10	37.2/42.4	1620	2313

REGISTERED CIVIL ENGINEER — DATE 1/13/2014

REGISTERED PROFESSIONAL ENGINEER — Yoojoong Choi — No. C71480 — Exp. 12-31-15 — CIVIL — STATE OF CALIFORNIA

GRAND AVE UC WIDENING

LOG OF TEST BORINGS 4 OF 4

UNIT:	3643	CONTRACT No.	BRIDGE No.
PROJ. No. & PHASE:	07130000071	07-1193U1	53-1528

AS-BUILT VERT DATUM: N/A CONVERSION: N/A Sheet of

NOTE: A COPY OF THIS LOG OF TEST BORINGS IS AVAILABLE AT OFFICE OF STRUCTURE MAINTENANCE AND INVESTIGATIONS, SACRAMENTO, CALIFORNIA

TO ACCOMPANY PLANS DATED 6-1-15

AS BUILT PLANS
Contract No. 61-7X13C15
Date Completed
Document No. 70002313

CHECKED

Approval Recommended by

Approved by

CLASSIFICATION OF MATERIAL BASED ON STANDARD GRADE SIZE LIMITS

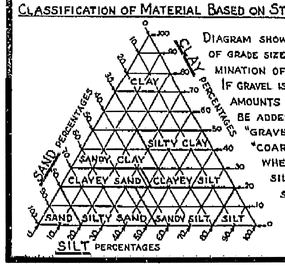

DIAGRAM SHOWING THE BASIS FOR ESTIMATES OF GRADE SIZE DISTRIBUTION USED IN DETERMINATION OF CLASS NAMES.

IF GRAVEL IS PRESENT IN APPRECIABLE AMOUNTS THE TERM "GRAVELLY" MAY BE ADDED TO THE CLASS NAME, VIZ. "GRAVELLY SAND." THE TERMS "COARSE", "MEDIUM" AND "FINE" WHEN USED TO DESCRIBE SAND, SILT AND GRAVEL REFER TO STANDARD GRADE SIZE LIMITS.

LEGEND OF EARTH MATERIALS

- GRAVEL
- SAND
- SILT
- CLAY
- SANDY CLAY OR CLAYEY SAND
- SANDY SILT OR SILTY SAND
- SILTY CLAY OR CLAYEY SILT
- PEAT AND/OR ORGANIC MATTER
- FILL MATERIAL
- IGNEOUS ROCK
- SEDIMENTARY ROCK
- METAMORPHIC ROCK

LEGEND OF BORING OPERATIONS

- PLAN OF ANY BORING
- PENETROMETER
- 2¼" CONE PENETROMETER
- SAMPLER BORING (DRY)
- ROTARY BORING (WET)
- AUGER BORING (DRY)
- JET BORING
- CORE BORING
- TEST PIT

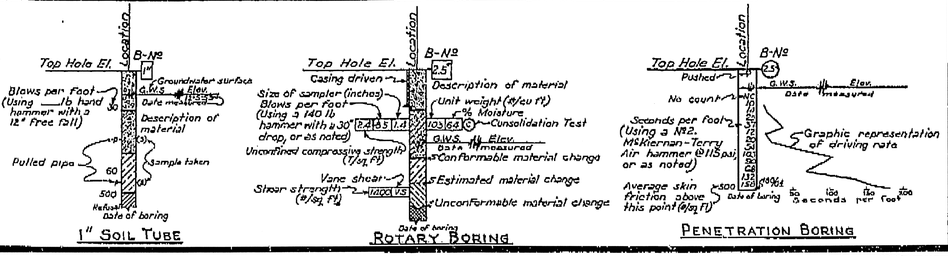

NOTES

The contractor's attention is directed to Section 2, Article (c) of the Standard Specifications and to the Special Provisions accompanying this set of plans.

Classification of earth material as shown on this sheet is based upon field inspection and is not to be construed to imply mechanical analysis.

STATE OF CALIFORNIA
DEPARTMENT OF PUBLIC WORKS
DIVISION OF HIGHWAYS

GRAND AVENUE UNDERCROSSING

LOG OF TEST BORINGS

SCALE	BRIDGE	FILE	DRAWING
Vert: 1"=10' Horiz: 1"=40'	53-1528	E-53	C-6668-16

52

REL. DRAWING NO. P-666847

213

DIST	COUNTY	ROUTE	POST MILES TOTAL PROJECT	SHEET No.	TOTAL SHEETS
07	LA	10	37.2/42.4	1621	2313

REGISTERED CIVIL ENGINEER — DATE 10/01/14

6-1-15
PLANS APPROVAL DATE

REGISTERED PROFESSIONAL ENGINEER — Dawit T Worku — No. C60711 — Exp 12-31-14 — CIVIL — STATE OF CALIFORNIA

The State of California or its officers or agents shall not be responsible for the accuracy or completeness of electronic copies of this plan sheet.

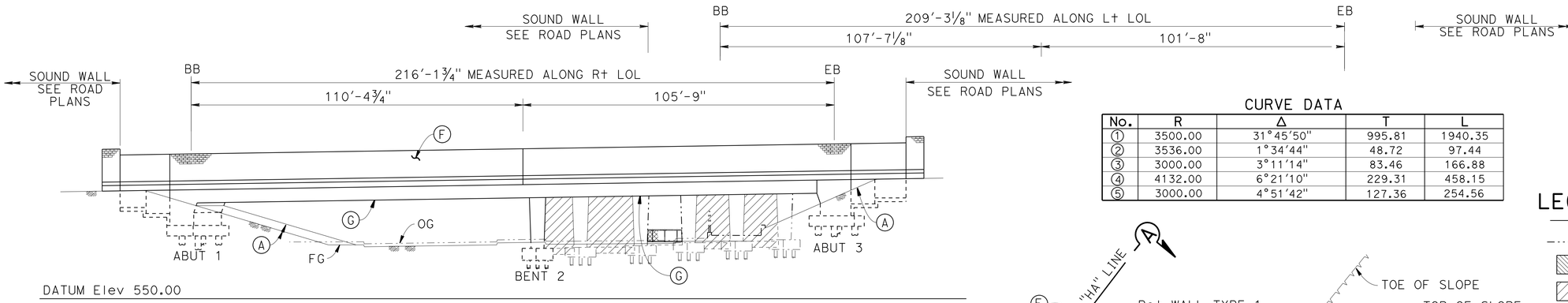

CURVE DATA

No.	R	Δ	T	L
1	3500.00	31°45'50"	995.81	1940.35
2	3536.00	1°34'44"	48.72	97.44
3	3000.00	3°11'14"	83.46	166.88
4	4132.00	6°21'10"	229.31	458.15
5	3000.00	4°51'42"	127.36	254.56

LEGEND:

- Indicate: New Structure
- Indicate: Existing Structure
- Bridge Removal (Portion)
- Infill Wall
- Point of Minimum Vertical Clearance (15'-0" Min Vert Clr)

NOTES:

- (A) Slope Paving
- (B) Paint "Bridge No 53-0671"
- (C) Paint "Holt Ave Undercrossing"
- (D) Structure Approach Type N(30D)
- (E) Structure Approach Type R(30D)
- (F) SOUND WALL Masonry Block
- (G) Soffit lighting, see "ROAD PLANS"
- (H) For 'SECTION A-A" see "SIESMIC RETROFIT DETAIL NO. 1" sheet.
- (J) Concrete Barrier Type 60A (MOD)

ELEVATION

1" = 20'

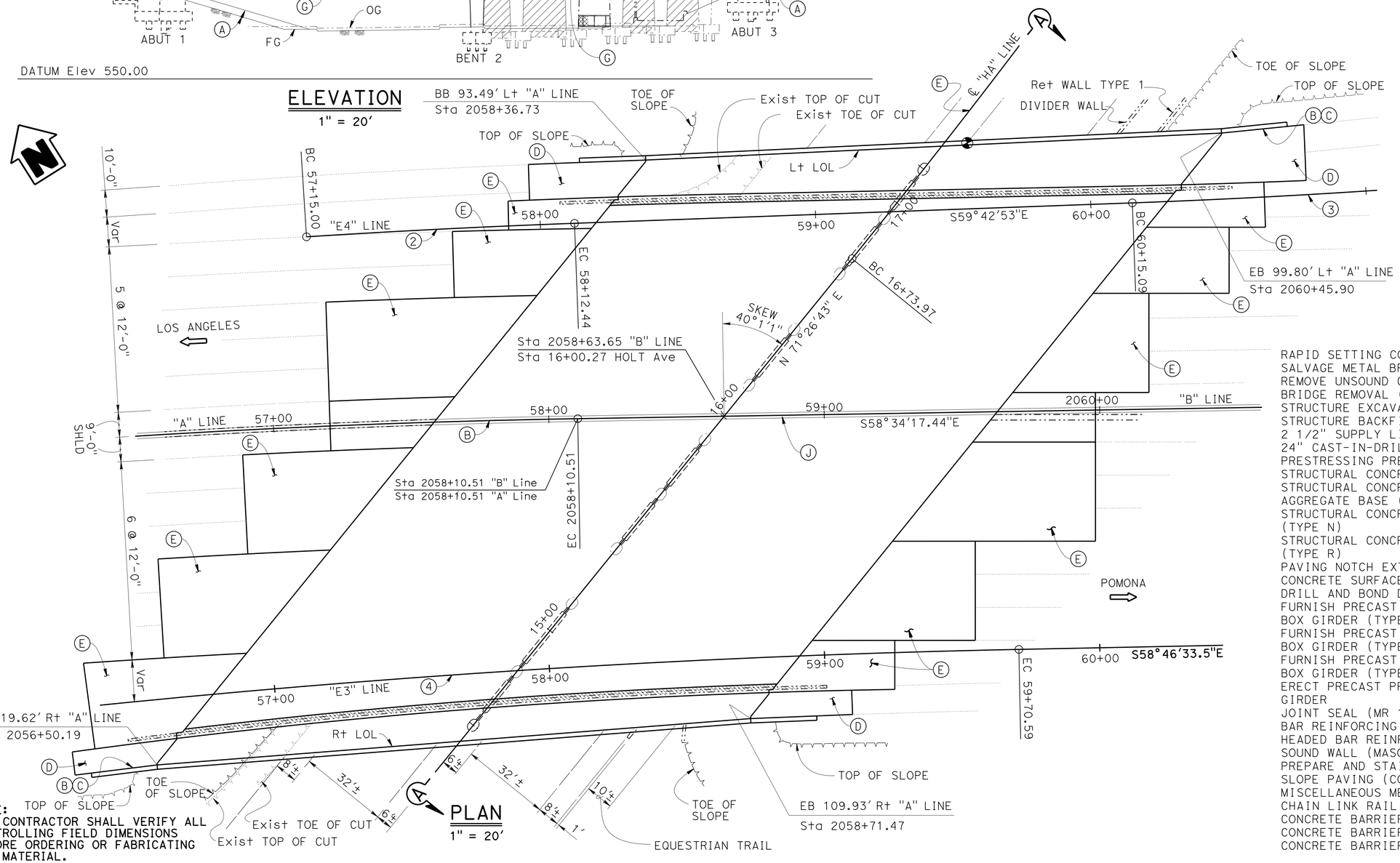

PLAN

1" = 20'

NOTE:
THE CONTRACTOR SHALL VERIFY ALL CONTROLLING FIELD DIMENSIONS BEFORE ORDERING OR FABRICATING ANY MATERIAL.

QUANTITIES

RAPID SETTING CONCRETE (PATCH)	2	CF
SALVAGE METAL BRIDGE RAILING	504	LF
REMOVE UNSOUND CONCRETE	2	CF
BRIDGE REMOVAL (PORTION), LOCATION C	LUMP	SUM
STRUCTURE EXCAVATION (BRIDGE)	721	CY
STRUCTURE BACKFILL (BRIDGE)	530	CY
2 1/2" SUPPLY LINE (BRIDGE)	292	LF
24" CAST-IN-DRILLED-HOLE CONCRETE PILING	1,975	LF
PRESTRESSING PRECAST GIRDER	LUMP	SUM
STRUCTURAL CONCRETE, BRIDGE FOOTING	202	CY
STRUCTURAL CONCRETE, BRIDGE	548	CY
AGGREGATE BASE (APPROACH SLAB)	63	CY
STRUCTURAL CONCRETE, APPROACH SLAB (TYPE N)	73	CY
STRUCTURAL CONCRETE, APPROACH SLAB (TYPE R)	627	CY
PAVING NOTCH EXTENSION	367	CF
CONCRETE SURFACE TEXTURE	5,533	SQFT
DRILL AND BOND DOWEL	588	LF
FURNISH PRECAST PRESTRESSED CONCRETE BOX GIRDER (TYPE B-36) (90'-100')	2	EA
FURNISH PRECAST PRESTRESSED CONCRETE BOX GIRDER (TYPE B-54) (90'-100')	4	EA
FURNISH PRECAST PRESTRESSED CONCRETE BOX GIRDER (TYPE B-36) (100'-110')	2	EA
ERECT PRECAST PRESTRESSED CONCRETE BOX GIRDER	8	EA
JOINT SEAL (MR 1 1/2")	567	LF
BAR REINFORCING STEEL (BRIDGE)	238,350	LB
HEADED BAR REINFORCEMENT	156	EA
SOUND WALL (MASONRY BLOCK)	4,707	SQFT
PREPARE AND STAIN CONCRETE	5,629	SQFT
SLOPE PAVING (CONCRETE) (MODIFIED)	102	CY
MISCELLANEOUS METAL (BRIDGE)	129	LB
CHAIN LINK RAILING (TYPE 7 MODIFIED)	61	LF
CONCRETE BARRIER (TYPE 60A MODIFIED)	277	LF
CONCRETE BARRIER (TYPE 736 MODIFIED)	427	LF
CONCRETE BARRIER (TYPE 736S MODIFIED)	96	LF

X HOWARD NG
DESIGN ENGINEER

	BY	CHECKED
DESIGN	Shrareh Bikaee	Jason Fang
DETAILS	Lan T Tran/ J. Valencia	Jason Fang
QUANTITIES	Shrareh Bikaee	Edward B. Mu

LOAD & RESISTANCE FACTOR DESIGN — LIVE LOADING: HL93 W/"LOW-BOY": PERMIT DESIGN VEHICLE

	BY	CHECKED
LAYOUT	Shrareh Bikaee	Jason Fang
SPECIFICATIONS	Xiaodong Chen	PLANS AND SPECS COMPARED Xiaodong Chen

ORIGINAL SCALE IN INCHES FOR REDUCED PLANS 0 1 2 3

STATE OF CALIFORNIA
DEPARTMENT OF TRANSPORTATION

DIVISION OF ENGINEERING SERVICES
STRUCTURE DESIGN
DESIGN BRANCH 20

BRIDGE NO. 53-0671
POST MILE 38.97

HOLT AVENUE UNDERCROSSING (WIDEN)
GENERAL PLAN NO. 1

UNIT: 3622
PROJECT NUMBER & PHASE: 0713000007-4
CONTRACT NO.: 07-1193U1

DISREGARD PRINTS BEARING EARLIER REVISION DATES
REVISION DATES: 3-16-14 3-11-14 5-28-14 09/09/14
SHEET 01 OF 42

USERNAME => s125624 DATE PLOTTED => 18-MAY-2015 TIME PLOTTED => 14:07

STRUCTURES DESIGN GENERAL PLAN SHEET (ENGLISH) (REV.09-01-10)

FILE => 53-0671-a-gp01.dgn

DIST	COUNTY	ROUTE	POST MILES TOTAL PROJECT	SHEET No.	TOTAL SHEETS
07	LA	10	37.2/42.4	1622	2313

REGISTERED CIVIL ENGINEER 10/01/14 DATE

6-1-15
PLANS APPROVAL DATE

REGISTERED PROFESSIONAL ENGINEER
Dawit T Worku
No. C60711
Exp 12-31-14
CIVIL
STATE OF CALIFORNIA

The State of California or its officers or agents shall not be responsible for the accuracy or completeness of electronic copies of this plan sheet.

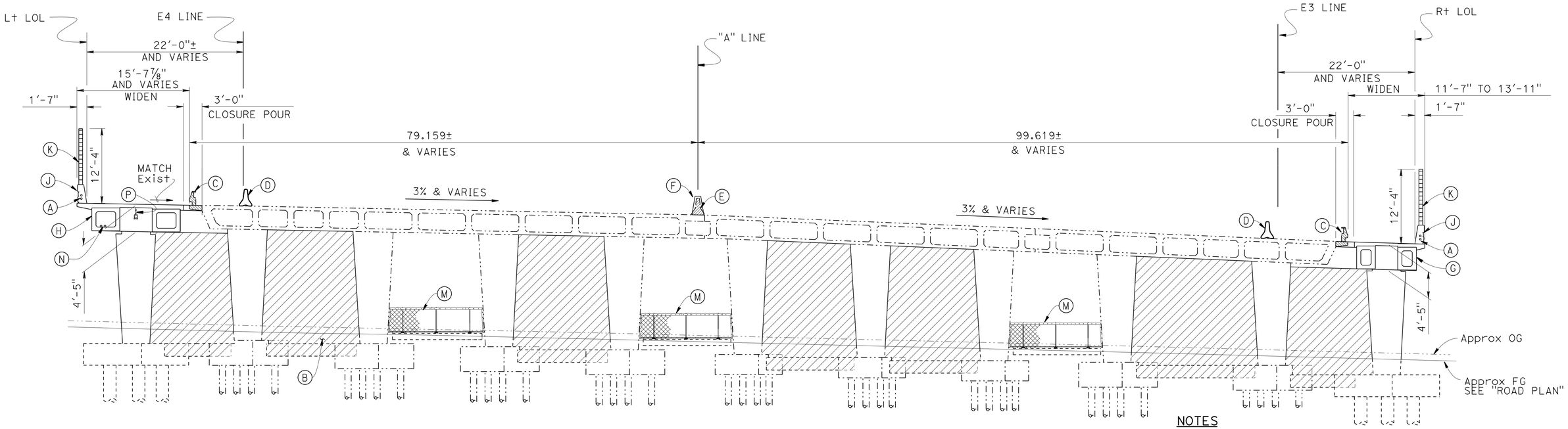

TYPICAL SECTION

⅛" = 1'-0"

NOTES

(A) 2-2" Sprinkler Control Conduit, see "ROAD PLANS"
(B) Infill shear wall
(C) Bridge Removal portion and Salvage Metal Bridge Railing
(D) Temporary Railing Type K, see "Road Plans"
(E) Remove Concrete Barrier Type 50
(F) Concrete Barrier Type 60A (Mod)
(G) Precast Prestressed concrete box girder 36X44 with longitudinal post tension
(H) Precast Prestressed concrete box girder 54x44 with longitudinal post tension
(J) Concrete Barrier Type 736 (Mod 1)
(K) Massonry Block Soundwall
(M) Chain Link Railing Type 7 (Mod)
(N) 2-3½" ø Communication Conduite, see "ROAD PLANS"
(P) 1-NPS 2½" GSP water supply line (B14-5)

LEGEND

New Structure
Existing Structure
Bridge removal (portion)
Infill shear wall

NOTE:
THE CONTRACTOR SHALL VERIFY ALL CONTROLLING FIELD DIMENSIONS BEFORE ORDERING OR FABRICATING ANY MATERIAL.

X HOWARD NG
DESIGN ENGINEER

	BY	CHECKED
DESIGN	Shararch Bikaee	Jason Fang
DETAILS	Lan T Tran/ J. Valencia	Jason Fang
QUANTITIES	Shararch Bikaee	Edward B. Mu

LOAD & RESISTANCE FACTOR DESIGN — LIVE LOADING: HL93 W/"LOW-BOY": PERMIT DESIGN VEHICLE

	BY	CHECKED
LAYOUT	Shararch Bikaee	Jason Fang
SPECIFICATIONS	Xiaodong Chen	PLANS AND SPECS COMPARED Xiaodong Chen

ORIGINAL SCALE IN INCHES FOR REDUCED PLANS 0 1 2 3

STATE OF CALIFORNIA
DEPARTMENT OF TRANSPORTATION

DIVISION OF ENGINEERING SERVICES
STRUCTURE DESIGN
DESIGN BRANCH 20

BRIDGE NO. 53-0671
POST MILE 38.97

HOLT AVENUE UNDERCROSSING (WIDEN)
GENERAL PLAN NO. 2

UNIT: 3622
PROJECT NUMBER & PHASE: 0713000007-1
CONTRACT NO.: 07-1193U1

DISREGARD PRINTS BEARING EARLIER REVISION DATES

REVISION DATES: 2-26-14 5-21-14 2-25-14

SHEET 02 OF 42

STRUCTURES DESIGN GENERAL PLAN SHEET (ENGLISH) (REV.09-01-10)

FILE => 53-0671-a-gp02.dgn

USERNAME => s125624 DATE PLOTTED => 18-MAY-2015 TIME PLOTTED => 14:07

DIST	COUNTY	ROUTE	POST MILES TOTAL PROJECT	SHEET No.	TOTAL SHEETS
07	LA	10	37.2/42.4	1623	2313

Dawit Tadelle Worku 10/01/14
REGISTERED CIVIL ENGINEER DATE

6-1-15
PLANS APPROVAL DATE

REGISTERED PROFESSIONAL ENGINEER Dawit T Worku No. C60711 Exp 12-31-14 CIVIL STATE OF CALIFORNIA

The State of California or its officers or agents shall not be responsible for the accuracy or completeness of electronic copies of this plan sheet.

INDEX TO PLANS

SHEET NO.	TITLE
1	GENERAL PLAN NO. 1
2	GENERAL PLAN NO. 2
3	INDEX TO PLANS
4	CONSTRUCTION SEQUENCE
5	FOUNDATION PLAN
6	ABUTMENT 1 LAYOUT
7	ABUTMENT 3 LAYOUT
8	ABUTMENT DETAILS NO.1
9	ABUTMENT DETAILS NO.2
10	RETAINING WALL LAYOUT (LEFT WIDEN)
11	RETAINING WALL LAYOUT (RIGHT WIDEN)
12	RETAINING WALL DETAILS
13	BENT LAYOUT (LEFT WIDEN)
14	BENT LAYOUT (RIGHT WIDEN)
15	BENT 2 DETAILS NO. 1
16	BENT 2 DETAILS NO. 2
17	TYPICAL SECTION
18	GIRDER LAYOUT
19	PRECAST GIRDER DETAILS NO.1
20	PRECAST GIRDER DETAILS NO.2
21	PRECAST GIRDER DETAILS NO.3
22	GIRDER REINFORCEMENT
23	SLOPE PAVING-FULL SLOPE
24	SLOPE PAVING
25	STRUCTURE APPROACH DRAINAGE DETAILS
26	STRUCTURE APPROACH TYPE N(30D)
27	STRUCTURE APPROACH TYPE R(30D)
28	CONCRETE BARRIER TYPE 60A & 60SA MODIFIED
29	SOUNDWALL-MASONRY BLOCK ON BRIDGE
30	SOUNDWALL-MASONRY BLOCK WITH BARRIER ON RETAINING WALL DETAILS NO. 1
31	SOUNDWALL-MASONRY BLOCK WITH BARRIER ON RETAINING WALL DETAILS NO. 2
32	RETAINING WALL TYPE 1SWB-DETAILS NO. 1
33	RETAINING WALL TYPE 1SWB-DETAILS NO. 2
34	SEISMIC RETROFIT DETAILS NO. 1
35	SEISMIC RETROFIT DETAILS NO. 2
36	ARCHITECTURAL TREATMENT DETAILS NO. 1
37	ARCHITECTURAL TREATMENT DETAILS NO. 2
38	ARCHITECTURAL TREATMENT DETAILS NO. 3
39	LOG OF TEST BORINGS 1 OF 4
40	LOG OF TEST BORINGS 2 OF 4
41	LOG OF TEST BORINGS 3 OF 4
42	LOG OF TEST BORINGS 4 OF 4

STANDARD PLANS Dated 2010

A10A	ABBREVIATIONS (SHEET 1 OF 2)
RSP A10B	ABBREVIATIONS (SHEET 2 OF 2)
A10C	LINES AND SYMBOLS (SHEET 1 OF 3)
A10D	LINES AND SYMBOLS (SHEET 2 OF 3)
A10E	LINES AND SYMBOLS (SHEET 3 OF 3)
A10F	LEGEND- SOIL (SHEET 1 OF 2)
A10G	LEGEND- SOIL (SHEET 2 OF 2)
A10H	LEGEND-ROCK
A62B	LIMITS OF PAYMENT FOR EXCAVATION AND BACKFILL BRIDGE SURCHARGE AND WALL
A62C	LIMITS OF PAYMENT FOR EXCAVATION AND BACKFILL BRIDGE
A76A	CONCRETE BARRIER TYPE 60
B0-1	BRIDGE DETAILS
B0-3	BRIDGE DETAILS
B0-5	BRIDGE DETAILS
B0-13	BRIDGE DETAILS
B2-3	16" AND 24" CAST-IN-DRILLED-HOLE CONCRETE PILE
B3-5	RETAINING WALL DETAILS NO.1
B6-10	UTILITY OPENINGS T-BEAM
B6-21	JOINT SEALS (MAXIMUM MOVEMENT RATING = 2")
RSP B8-5	CAST-IN-PLACE PRESTRESSED GIRDER DETAILS
RSP B11-56	CONCRETE BARRIER TYPE 736
B14-3	COMMUNICATION AND SPRINKLER CONDUITS (CONDUIT LESS THAN 4")
B14-4	WATER SUPPLY LINE (BRIDGE) (PIPE SIZE LESS THAN 4")
B14-5	WATER SUPPLY LINE (DETAILS) (PIPE SIZE LESS THAN 4")

Standard Plan Sheet No.
Detail No.

GENERAL NOTES
LOAD AND RESISTANCE FACTOR DESIGN

DESIGN: AASHTO LRFD BRIDGE SPECIFICATIONS,4th Edition with California Amendments Preface dated Nov 2011;

SEISMIC DESIGN: Caltrans Seismic Design Criteria (SDC), Version 1.6 Nov 2010

DEAD LOADING: Include 35 psf for future wearing surface
The deck load between the girders has been increased by factor of 10% to allow for the use of steel deck forms.

LIVE LOADING: HL-93 and Permit Design Load

SEISMIC LOADING: Soil Profile: Shear wave Velocity of top 100 ft of soil
V_S = 240 m/s
Morment magnitude M_{max} = 7.7
Peak Ground Acceleration = 0.6g

REINFORCED CONCRETE: f_y = 60 Ksi
f'_c = 3.6 ksi (Except as shown on "CONCRETE STRENGTH AND TYPE LIMITS"),
n = 8

PRESTRESSED CONCRETE: See PRESTRESSING NOTES on "PRECAST GIRDER DETAILS NO. 3" sheet

SOUNDWALL: For soundwall weight, see "SOUNDWALL-MASONRY BLOCK ON BRIDGE" sheet, distributed as shown below

Girder	Right Exterior	Interior
Shear	100%	100%
Moment	100%	100%

Girder	Left Exterior	Interior
Shear	100%	100%
Moment	100%	100%

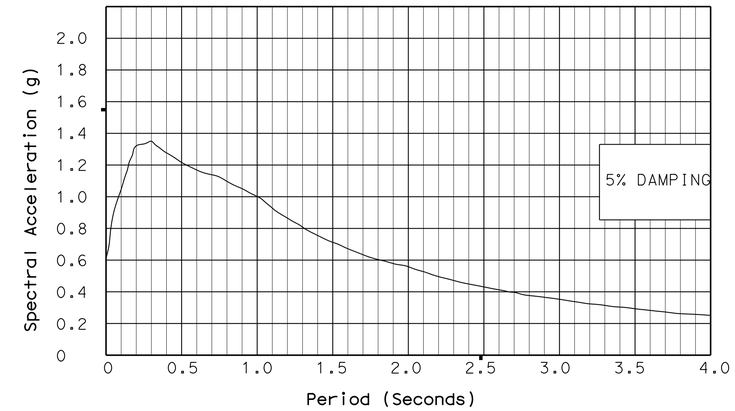

MODIFIED ARS CURVE
No Scale

PILE DATA TABLE

LOCATION	PILE TYPE	NOMINAL RESISTANCE (kips) COMPRESSION	TENSION	DESIGN TIP ELEV (Ft)	SPECIFIED TIP ELEV (Ft)
Abut 1 LEFT WIDEN	24 in CIDH	340	0	533 (a) 550 (c) 552 (d)	533
Abut 1 RIGHT WIDEN	24 in CIDH	310	0	527 (a) 549 (c) 546 (d)	527
Bent 2 LEFT WIDEN	24 in CIDH	380	80	522 (a) 545 (b) 544 (c) 539 (d)	522
Bent 2 RIGHT WIDEN	24 in CIDH	390	110	506 (a) 536 (b) 534 (c) 536 (d)	506
Abut 3 LEFT WIDEN	24 in CIDH	380	0	532 (a) 548 (c) 552 (d)	532
Abut 3 RIGHT WIDEN	24 in CIDH	310	0	528 (a) 550 (c) 546 (d)	528

1. Design Tip Elevation are controlled by:
   (a) Compression, (b) Tension, (c) Settlement, (d) Lateral Load
2. CIDH Piles specified tip elevation shall not be raised.

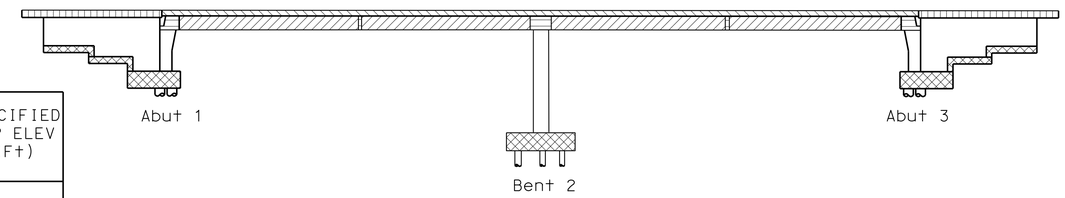

LEGEND

- Structural Concrete, Bridge (f'c = 4 ksi @ 28 days)
- Precast Prestressed Concrete Box Girder, see "GIRDER LAYOUT" sheet (f'c = 6 ksi @ 28 days)
- Structural Concrete, Bridge (f'c = 5 ksi @ 28 days)
- Structural Concrete, Bridge Footing (f'c = 4 ksi @ 28 days)
- Structural Concrete, Approach Slab
- Structural Concrete, Bridge (f'c = 6 ksi @ 28 days)

CONCRETE STRENGTH AND TYPE LIMITS
No Scale

NOTE:
THE CONTRACTOR SHALL VERIFY ALL CONTROLLING FIELD DIMENSIONS BEFORE ORDERING OR FABRICATING ANY MATERIAL.

	BY	CHECKED
DESIGN	Shargreh Bikaee	Jason Fang
DETAILS	Lan T Tran/ J. Valencia	Jason Fang
QUANTITIES	Shargreh Bikaee	Edward B. Mu

STATE OF CALIFORNIA
DEPARTMENT OF TRANSPORTATION

DIVISION OF ENGINEERING SERVICES
STRUCTURE DESIGN
DESIGN BRANCH 20

BRIDGE NO. 53-0671
POST MILE 38.97

HOLT AVENUE UNDERCROSSING (WIDEN)
INDEX TO PLANS

STRUCTURES DESIGN DETAIL SHEET (ENGLISH) (REV. 09-01-10)

ORIGINAL SCALE IN INCHES FOR REDUCED PLANS 0 1 2 3

UNIT: 3622
PROJECT NUMBER & PHASE: 0713000007-1
CONTRACT NO.: 07-1193U1

DISREGARD PRINTS BEARING EARLIER REVISION DATES

REVISION DATES 2-26-14 3-03-14 5-21-14 5-28-14

SHEET 03 OF 42

FILE => 53-0671-a-itp.dgn

USERNAME => s125624 DATE PLOTTED => 18-MAY-2015 TIME PLOTTED => 14:07

DIST	COUNTY	ROUTE	POST MILES TOTAL PROJECT	SHEET No.	TOTAL SHEETS
07	LA	10	37.2/42.4	1624	2313

REGISTERED CIVIL ENGINEER 10/01/14 DATE

6-1-15
PLANS APPROVAL DATE

REGISTERED PROFESSIONAL ENGINEER Dawit T Worku No. C60711 Exp 12-31-14 CIVIL STATE OF CALIFORNIA

The State of California or its officers or agents shall not be responsible for the accuracy or completeness of electronic copies of this plan sheet.

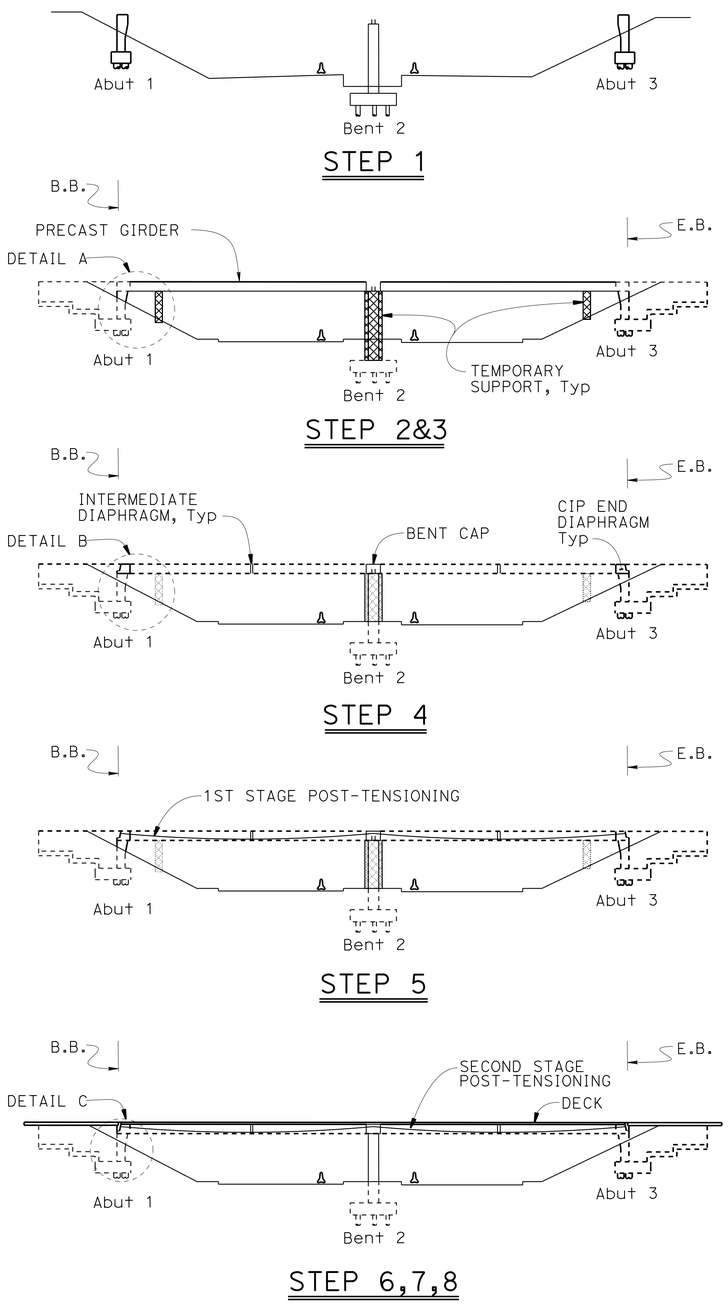

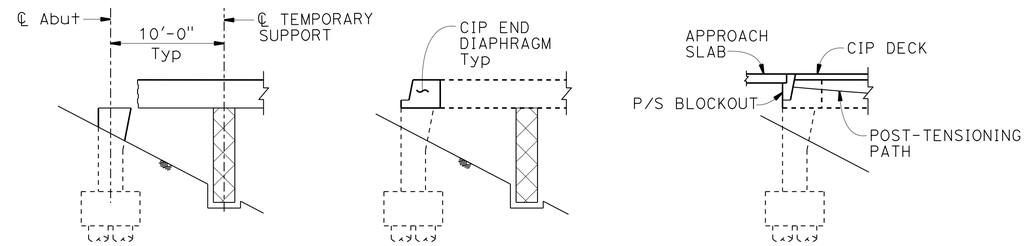

DETAIL A
No Scale

DETAIL B
No Scale

DETAIL C
No Scale

BRIDGE CONSTRUCTION SEQUENCE

Step 1. Construct abutment footings, stems, bent footing and column.

Step 2. Erect temporary supports at abutments and bent. Temporary supports shall be capable of supporting a minimum girder and deck load reaction of 290 kips per girder end. This reaction does not include forces due to wind, impact, or construction loads.

Step 3. Erect precast/prestressed girders on temporary supports.

Step 4. Construct cast-in-place end diaphragms, bent cap, and intermediate diaphragms. Allow cast-in-place end diaphragms, bentcap and intermediate diaphragms to reach min strength of 6 ksi.

Step 5. First stage, longitudinal prestressing (750 kips per box girder).

Step 6. Place deck concrete.

Step 7. Second stage, longitudinal prestressing (830 kips per box girder). Longitudinal prestressing must not be permitted less than 10 days after deck concrete has been placed and the concrete compressive strength at time of stressing has reached the specified f'_{ci} = 4 ksi

Step 8. Construct abutment closure pour. Remove temporary supports. Complete abutment construction and approach slab.

Step 9. Install barrier, soundwall, and temporary railing Type K per "ROAD PLANS".

Step 10. Construct closure pour. Closure pour must not be placed sooner than 14 days after completion of longitudinal prestressing (post-tensioning).

NOTE:
THE CONTRACTOR SHALL VERIFY ALL CONTROLLING FIELD DIMENSIONS BEFORE ORDERING OR FABRICATING ANY MATERIAL.

	BY	CHECKED
DESIGN	Sharareh Bikaee	Jason Fang
DETAILS	Lan T Tran/ J. Valencia	Jason Fang
QUANTITIES	Sharareh Bikaee	Edward B. Mu

STATE OF CALIFORNIA
DEPARTMENT OF TRANSPORTATION

DIVISION OF ENGINEERING SERVICES
STRUCTURE DESIGN
DESIGN BRANCH 20

BRIDGE NO. 53-0671
POST MILE 38.97

HOLT AVENUE UNDERCROSSING (WIDEN)
CONSTRUCTION SEQUENCE

STRUCTURES DESIGN DETAIL SHEET (ENGLISH) (REV. 09-01-10)

ORIGINAL SCALE IN INCHES FOR REDUCED PLANS 0 1 2 3

UNIT: 3622
PROJECT NUMBER & PHASE: 0713000007-1
CONTRACT NO.: 07-1193U1

DISREGARD PRINTS BEARING EARLIER REVISION DATES

REVISION DATES: 04-14-11 12-10-12 5-15-13 5-28-13

SHEET 04 OF 42

FILE => 53-0671-e-cstg.dgn

USERNAME => s125624 DATE PLOTTED => 18-MAY-2015 TIME PLOTTED => 14:07

DIST	COUNTY	ROUTE	POST MILES TOTAL PROJECT	SHEET No.	TOTAL SHEETS
07	LA	10	37.2/42.4	1625	2313

REGISTERED CIVIL ENGINEER 03/07/14 DATE

6-1-15
PLANS APPROVAL DATE

REGISTERED PROFESSIONAL ENGINEER Dawit T Worku No. C60711 Exp 12-31-14 CIVIL STATE OF CALIFORNIA

The State of California or its officers or agents shall not be responsible for the accuracy or completeness of electronic copies of this plan sheet.

CURVE DATA

No.	R	Δ	T	L
①	3500.00	31°45'50"	995.81	1940.35
②	3536.00	1°34'44"	48.72	97.44
③	3000.00	3°11'14"	83.46	166.88
④	4132.00	6°21'10"	229.31	458.15
⑤	3000.00	4°51'42"	127.36	254.56

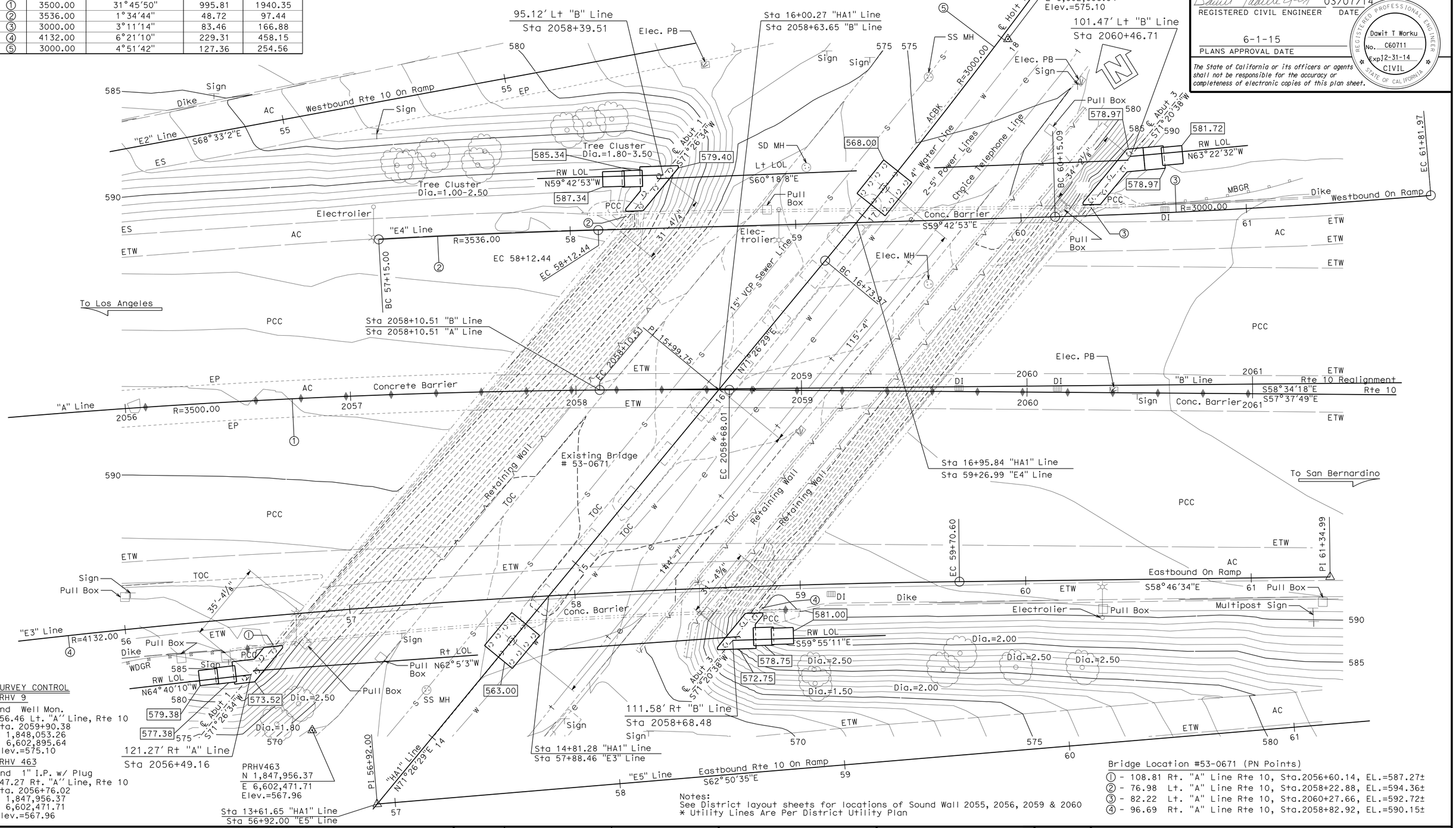

SURVEY CONTROL

PRHV 9
Fnd Well Mon.
156.46 Lt. "A" Line, Rte 10
Sta. 2059+90.38
N 1,848,053.26
E 6,602,895.64
Elev.=575.10

PRHV 463
Fnd 1" I.P. w/ Plug
147.27 Rt. "A" Line, Rte 10
Sta. 2056+76.02
N 1,847,956.37
E 6,602,471.71
Elev.=567.96

Notes:
See District layout sheets for locations of Sound Wall 2055, 2056, 2059 & 2060
* Utility Lines Are Per District Utility Plan

Bridge Location #53-0671 (PN Points)
① - 108.81 Rt. "A" Line Rte 10, Sta.2056+60.14, EL.=587.27±
② - 76.98 Lt. "A" Line Rte 10, Sta.2058+22.88, EL.=594.36±
③ - 82.22 Lt. "A" Line Rte 10, Sta.2060+27.66, EL.=592.72±
④ - 96.69 Rt. "A" Line Rte 10, Sta.2058+82.92, EL.=590.15±

PRELIMINARY INVESTIGATION SECTION

SCALE 1"=20'	VERT.DATUM NAVD88	PHOTOGRAMMETRY AS OF: X			
	HORZ.DATUM NAD83 (1991.35)	SURVEYED	BY District	CHECKED	BY C.Fassett 11/2009
ALIGNMENT TIES Dist. Traverse Sheet		DRAFTED	BY J.Martinez 11/2009	CHECKED	BY C.Fassett 11/2009

	BY	CHECKED
DESIGN	Sharareh Bikaee	Jason Fang/ Dawit Worku
DETAILS	Lan T Tran/ J. Valencia	Jason Fang/ Dawit Worku
QUANTITIES	Sharareh Bikaee	Edward B. Mu

STATE OF CALIFORNIA
DEPARTMENT OF TRANSPORTATION

DIVISION OF ENGINEERING SERVICES
STRUCTURE DESIGN
DESIGN BRANCH 20

BRIDGE NO. 53-0671
POST MILE 38.97

HOLT AVENUE UC
FOUNDATION PLAN

STRUCTURES FOUNDATION PLAN SHEET (ENGLISH) (REV. 09-01-10)

ORIGINAL SCALE IN INCHES FOR REDUCED PLANS 0 1 2 3

UNIT: 3646
PROJECT NUMBER & PHASE: 0713000007 1 CONTRACT NO.: 1193U

DISREGARD PRINTS BEARING EARLIER REVISION DATES → 05/20/13 05/26/13 06/17/13

SHEET 5 OF 42

FILE => 53-0671-e-fp101.dgn

DIST	COUNTY	ROUTE	POST MILES TOTAL PROJECT	SHEET No.	TOTAL SHEETS
07	LA	10	37.2/42.4	1626	2313

REGISTERED CIVIL ENGINEER — DATE 10/01/14

6-1-15
PLANS APPROVAL DATE

REGISTERED PROFESSIONAL ENGINEER — Dawit T Worku — No. C60711 — Exp 12-31-14 — CIVIL — STATE OF CALIFORNIA

The State of California or its officers or agents shall not be responsible for the accuracy or completeness of electronic copies of this plan sheet.

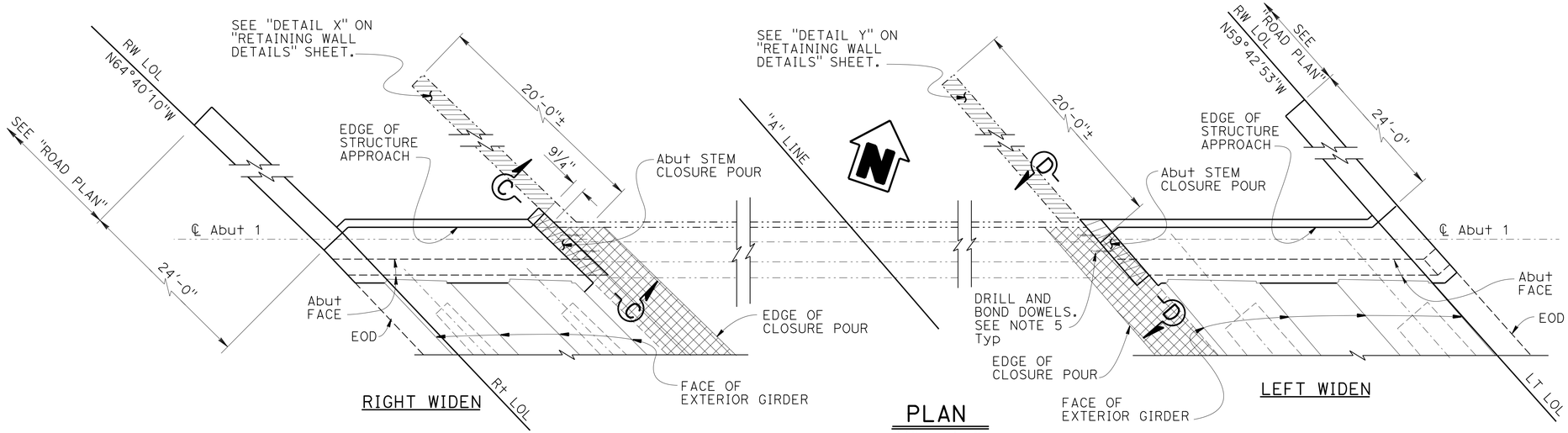

PLAN
¼" = 1'-0"

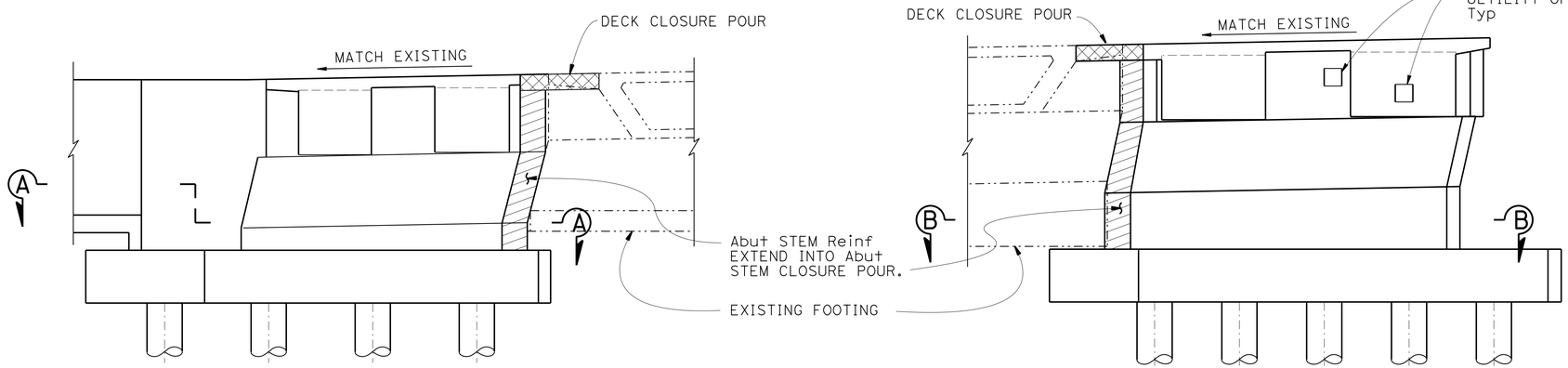

ELEVATION
¼" = 1'-0"

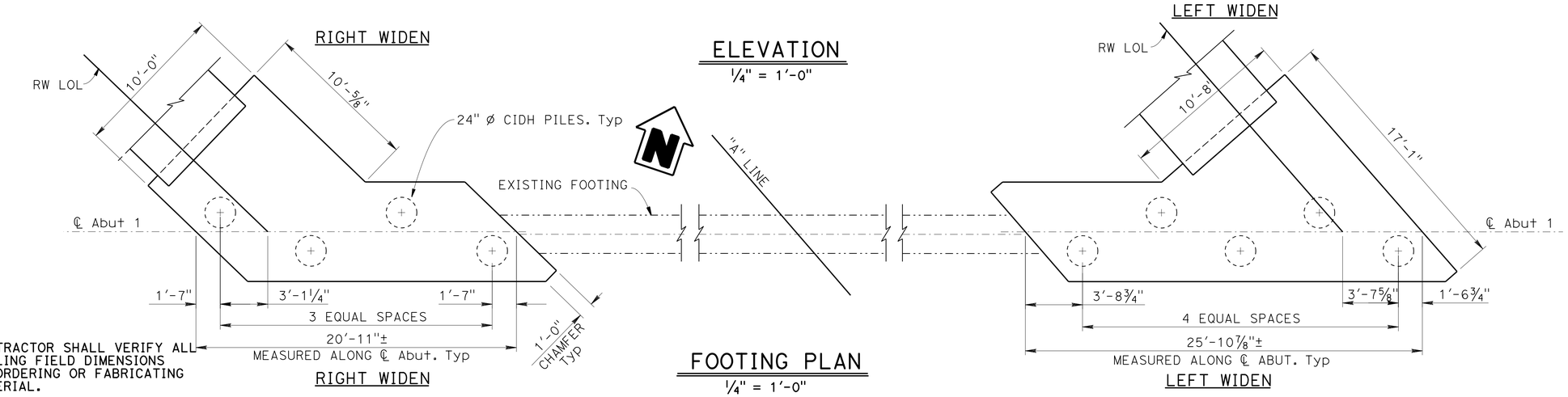

FOOTING PLAN
¼" = 1'-0"

NOTE:
THE CONTRACTOR SHALL VERIFY ALL CONTROLLING FIELD DIMENSIONS BEFORE ORDERING OR FABRICATING ANY MATERIAL.

LEGEND:

- Bridge removal (portion)
- Closure pour
- Abutment closure pour
- Indicates New Structure
- Indicates Existing Structure

NOTES:

1. For section " A-A", "B-B", "C-C", "D-D", see "ABUTMENT DETAILS NO. 2" sheet.
2. For retaining wall details, see "RETAINING WALL LAYOUT" sheets.
3. For concrete removal details, see "RETAINING WALL DETAILS" sheet.
4. For "FOOTING CORNER DETAIL", see "ABUTMENT DETAILS NO. 2" sheet.
5. For drill and bond details, see "ABUTMENT DETAILS NO. 2" sheet.

	BY	CHECKED
DESIGN	Sharareh Bikaee	Jason Fang/ Dawit Worku
DETAILS	Lan T Tran/ J. Valencia	Jason Fang/ Dawit Worku
QUANTITIES	Sharareh Bikaee	Edward B. Mu

STATE OF CALIFORNIA
DEPARTMENT OF TRANSPORTATION

DIVISION OF ENGINEERING SERVICES
STRUCTURE DESIGN
DESIGN BRANCH 20

BRIDGE NO. 53-0671
POST MILE 38.97

HOLT AVENUE UNDERCROSSING (WIDEN)
ABUTMENT 1 LAYOUT

STRUCTURES DESIGN DETAIL SHEET (ENGLISH) (REV. 09-01-10)

ORIGINAL SCALE IN INCHES FOR REDUCED PLANS 0 1 2 3

UNIT: 3622
PROJECT NUMBER & PHASE: 0713000007-1
CONTRACT NO.: 07-1193U1

DISREGARD PRINTS BEARING EARLIER REVISION DATES

REVISION DATES: 5-15-13 10-28-13 2-25-14 5-28-14

SHEET 06 OF 42

FILE => 53-0671-f-a01__lo1B.dgn

USERNAME => s125624 DATE PLOTTED => 18-MAY-2015 TIME PLOTTED => 14:07

DIST	COUNTY	ROUTE	POST MILES TOTAL PROJECT	SHEET No.	TOTAL SHEETS
07	LA	10	37.2/42.4	1627	2313

REGISTERED CIVIL ENGINEER 10/01/14 DATE

6-1-15
PLANS APPROVAL DATE

REGISTERED PROFESSIONAL ENGINEER Dawit T Worku No. C60711 Exp 12-31-14 CIVIL STATE OF CALIFORNIA

The State of California or its officers or agents shall not be responsible for the accuracy or completeness of electronic copies of this plan sheet.

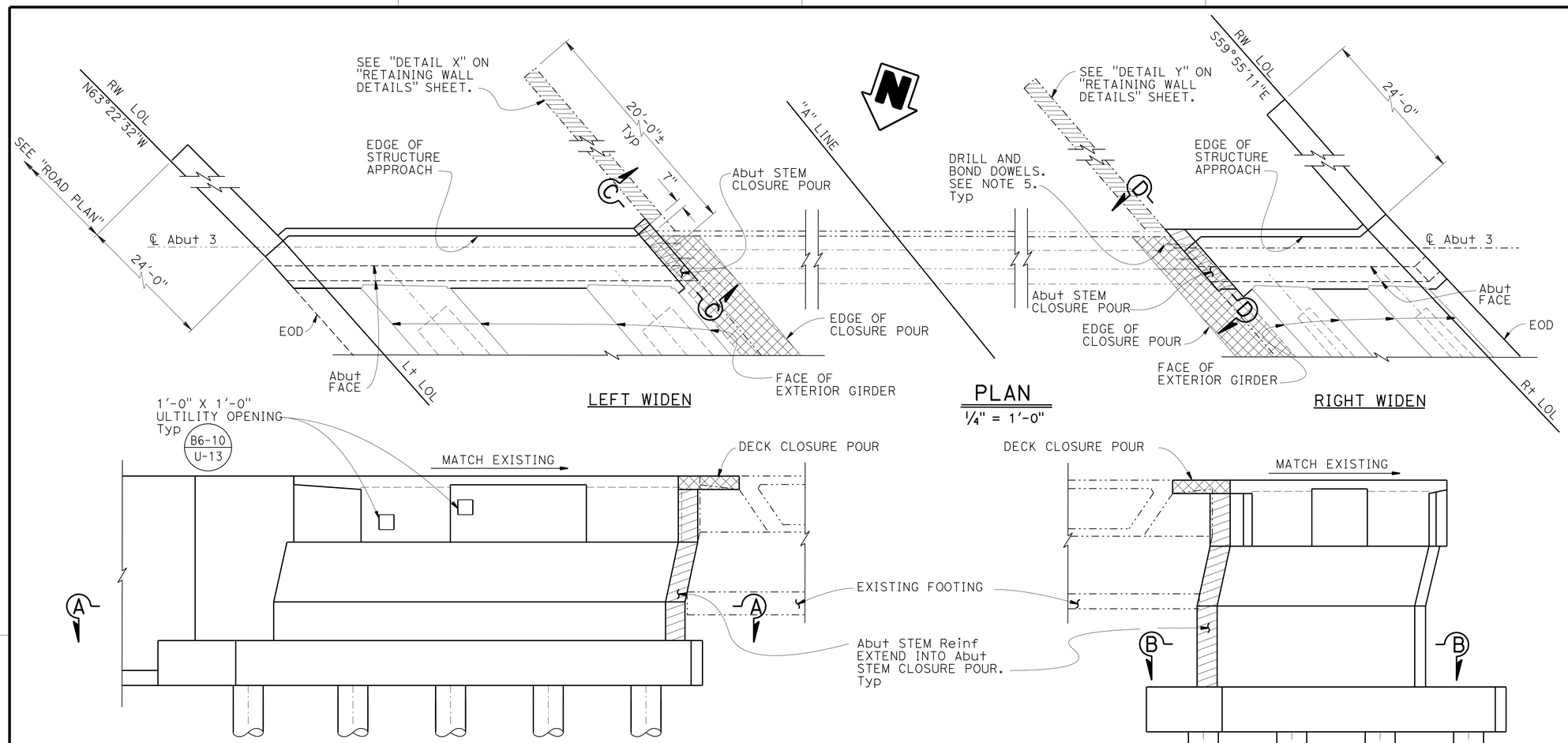

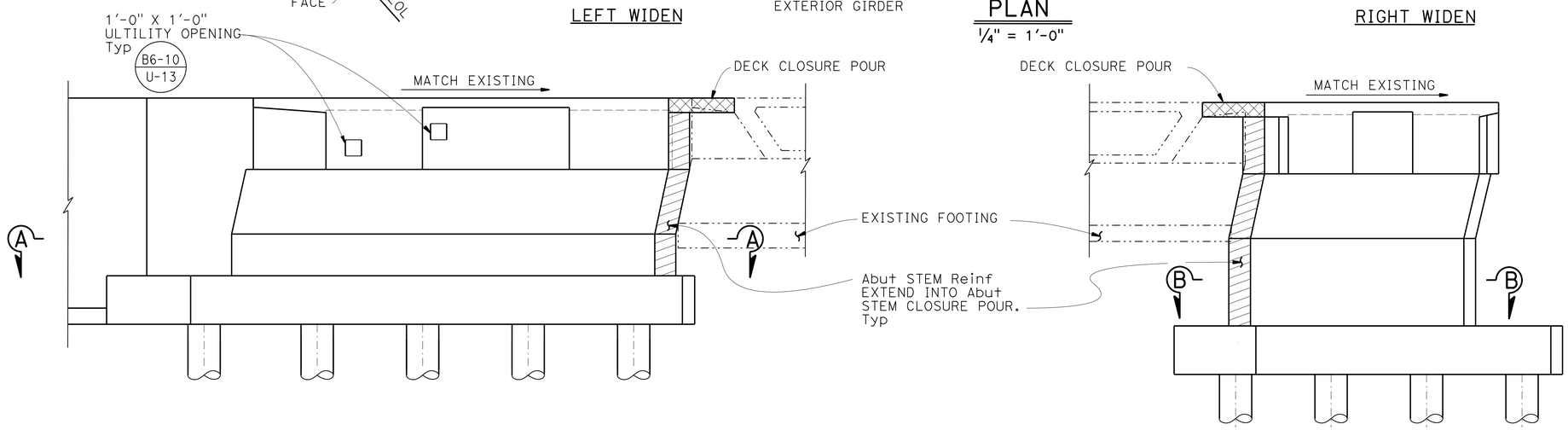

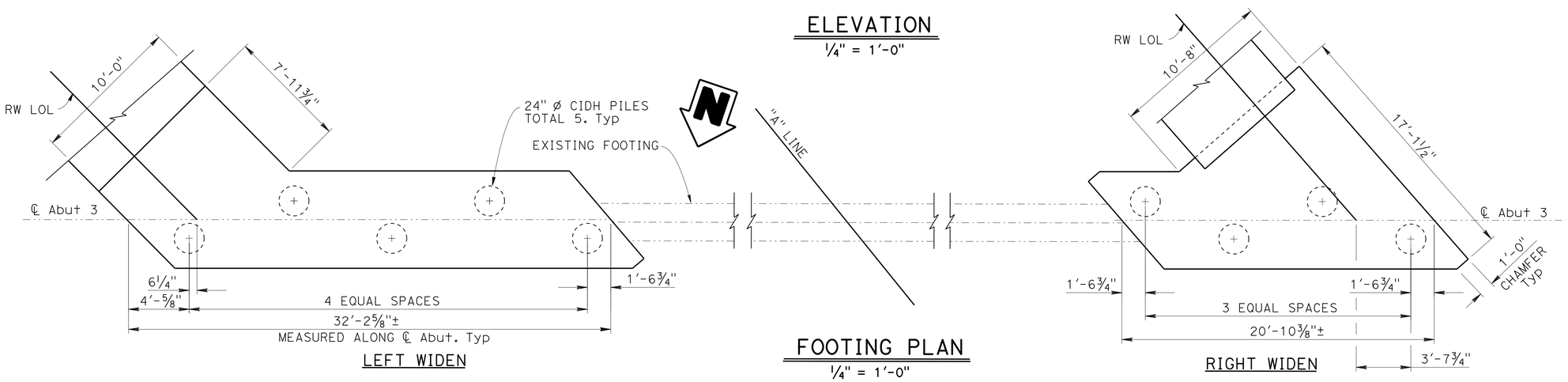

LEGEND:

- Bridge removal (portion)
- Closure pour
- Abutment closure pour
- Indicates New Structure
- Indicates Existing Structure

NOTES:

1. For section " A-A", "B-B", "C-C", "D-D", see "ABUTMENT DETAILS NO. 2" sheet.
2. For retaining wall details, see "RETAINING WALL LAYOUT" sheets.
3. For concrete removal details, see "RETAINING WALL DETAILS" sheet.
4. For "FOOTING CORNER DETAIL", see "ABUTMENT DETAILS NO. 2" sheet.
5. For drill and bond details, see "ABUTMENT DETAILS NO. 2" sheet.

NOTE:
THE CONTRACTOR SHALL VERIFY ALL CONTROLLING FIELD DIMENSIONS BEFORE ORDERING OR FABRICATING ANY MATERIAL.

	BY	CHECKED
DESIGN	Shrareh Bikaee	Jason Fang/ Dawit Worku
DETAILS	Lan T Tran/ J. Valencia	Jason Fang/ Dawit Worku
QUANTITIES	Shrareh Bikaee	Edward B. Mu

STATE OF CALIFORNIA
DEPARTMENT OF TRANSPORTATION

DIVISION OF ENGINEERING SERVICES
STRUCTURE DESIGN
DESIGN BRANCH 20

BRIDGE NO. 53-0671
POST MILE 38.97

HOLT AVENUE UNDERCROSSING (WIDEN)
ABUTMENT 3 LAYOUT

STRUCTURES DESIGN DETAIL SHEET (ENGLISH) (REV. 09-01-10)

ORIGINAL SCALE IN INCHES FOR REDUCED PLANS 0 1 2 3

UNIT: 3622
PROJECT NUMBER & PHASE: 0713000007-1 CONTRACT NO.: 07-1193U1

DISREGARD PRINTS BEARING EARLIER REVISION DATES

REVISION DATES: 7-21-14 | 2-25-15 | 5-28-15

SHEET 07 OF 42

FILE => 53-0671-f-a03__lo1B.dgn

USERNAME => s123624 DATE PLOTTED => 18-MAY-2015 TIME PLOTTED => 14:07

DIST	COUNTY	ROUTE	POST MILES TOTAL PROJECT	SHEET No.	TOTAL SHEETS
07	LA	10	37.2/42.4	1628	2313

REGISTERED CIVIL ENGINEER 10/01/14 DATE

6-1-15
PLANS APPROVAL DATE

REGISTERED PROFESSIONAL ENGINEER Dawit T Worku No. C60711 Exp 12-31-14 CIVIL STATE OF CALIFORNIA

The State of California or its officers or agents shall not be responsible for the accuracy or completeness of electronic copies of this plan sheet.

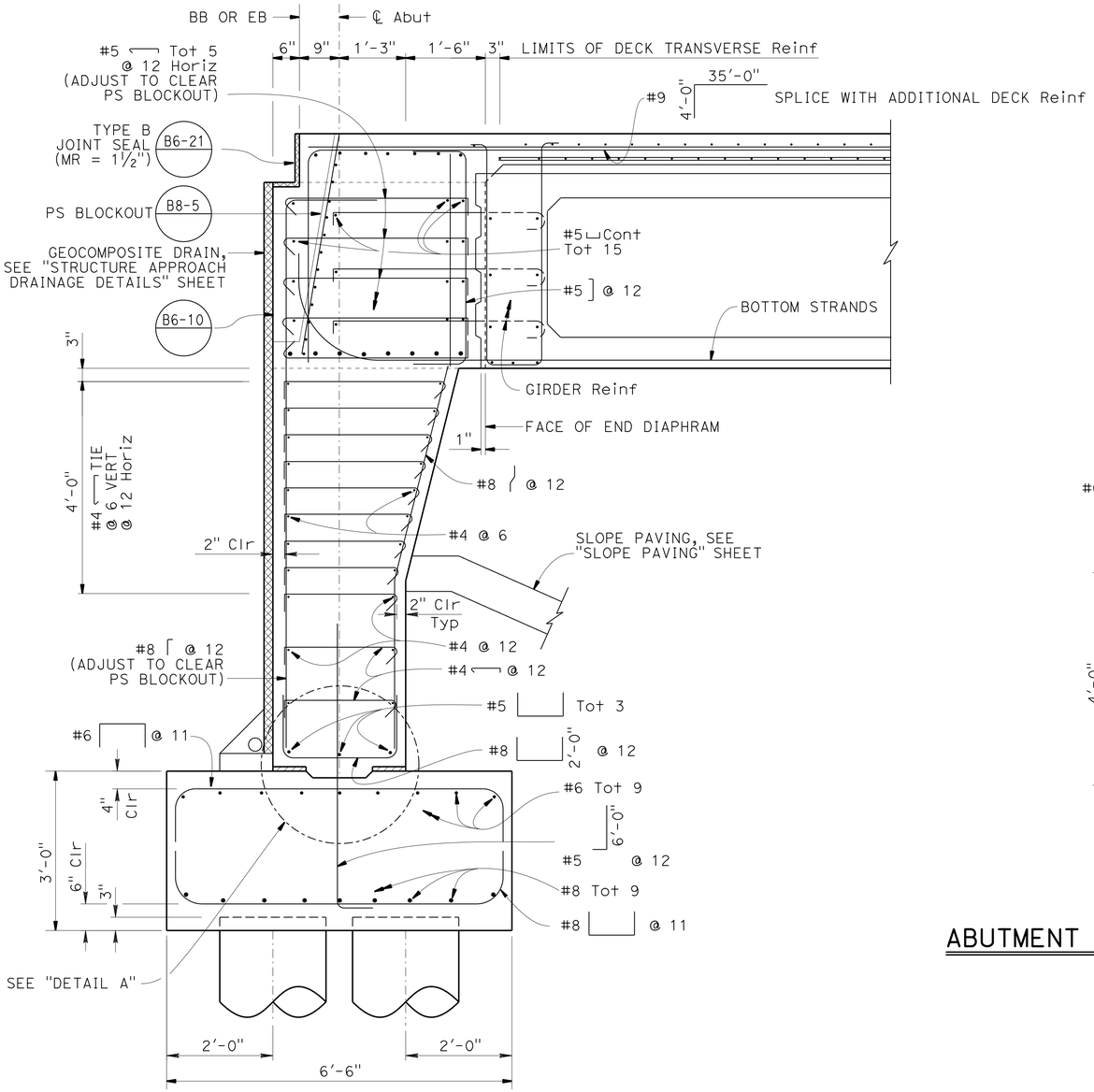

ABUTMENT TYPICAL SECTION (AT GIRDER)

¾" = 1'-0"

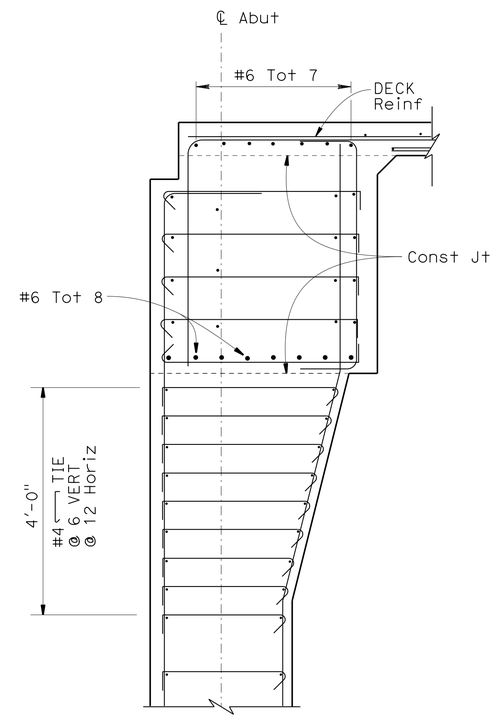

ABUTMENT TYPICAL SECTION (BETWEEN GIRDERS)

¾" = 1'-0"

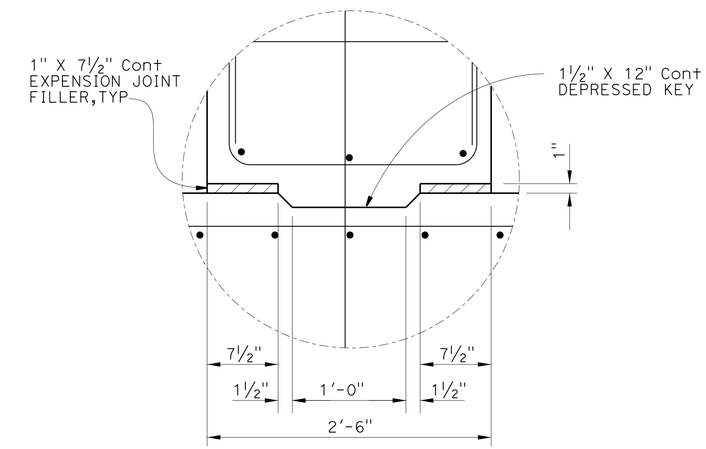

DETAIL A

1½" = 1'-0"

NOTE:

1. For reinforcement not shown, see "PRESTRESSED GIRDER DETAILS NO. 1" and "GIRDER REINFORCEMENT DETAILS" sheets.

NOTE:
THE CONTRACTOR SHALL VERIFY ALL CONTROLLING FIELD DIMENSIONS BEFORE ORDERING OR FABRICATING ANY MATERIAL.

	BY	CHECKED
DESIGN	Sharareh Bikaee	Jason Fang/ Dawit Worku
DETAILS	Lan T Tran/ J. Valencia	Jason Fang/ Dawit Worku
QUANTITIES	Sharareh Bikaee	Edward B. Mu

STATE OF CALIFORNIA
DEPARTMENT OF TRANSPORTATION

DIVISION OF ENGINEERING SERVICES
STRUCTURE DESIGN
DESIGN BRANCH 20

BRIDGE NO. 53-0671
POST MILE 38.97

HOLT AVENUE UNDERCROSSING (WIDEN)

ABUTMENT DETAILS NO. 1

STRUCTURES DESIGN DETAIL SHEET (ENGLISH) (REV. 09-01-10)

ORIGINAL SCALE IN INCHES FOR REDUCED PLANS 0 1 2 3

UNIT: 3622
PROJECT NUMBER & PHASE: 0713000007-1
CONTRACT NO.: 07-1193U1

DISREGARD PRINTS BEARING EARLIER REVISION DATES

REVISION DATES: 5-21-14 07-22-11 5-15-13

SHEET 08 OF 42

FILE => 53-0671-f-a03d+01.dgn

USERNAME => s125624 DATE PLOTTED => 18-MAY-2015 TIME PLOTTED => 14:07

DIST	COUNTY	ROUTE	POST MILES TOTAL PROJECT	SHEET No.	TOTAL SHEETS
07	LA	10	37.2/42.4	1629	2313

REGISTERED CIVIL ENGINEER 10/01/14 DATE

6-1-15
PLANS APPROVAL DATE

REGISTERED PROFESSIONAL ENGINEER Dawit T Worku No. C60711 Exp 12-31-14 CIVIL STATE OF CALIFORNIA

The State of California or its officers or agents shall not be responsible for the accuracy or completeness of electronic copies of this plan sheet.

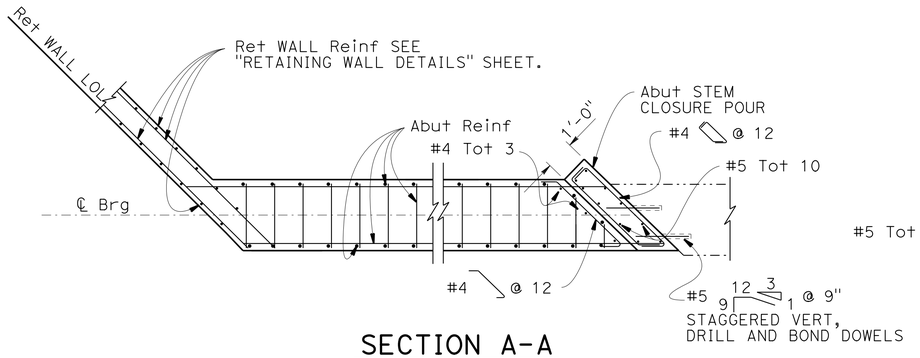

SECTION A-A
3/8" = 1'-0"

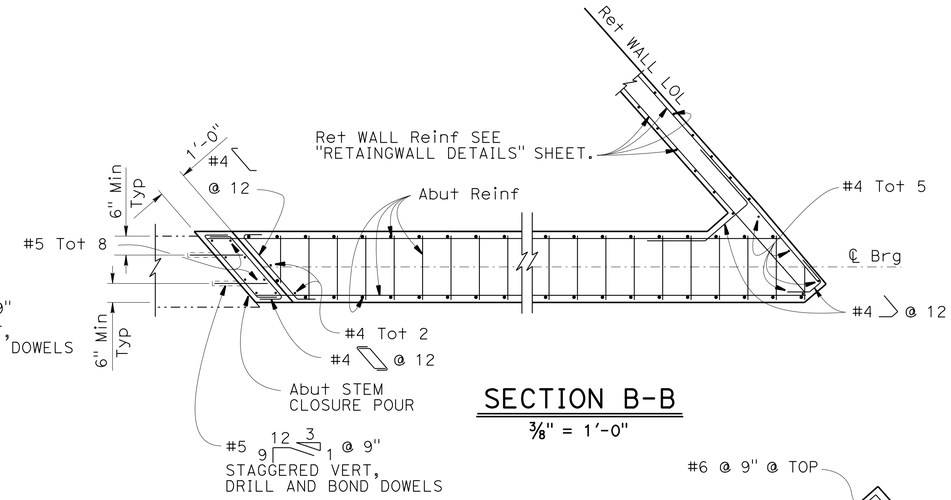

SECTION B-B
3/8" = 1'-0"

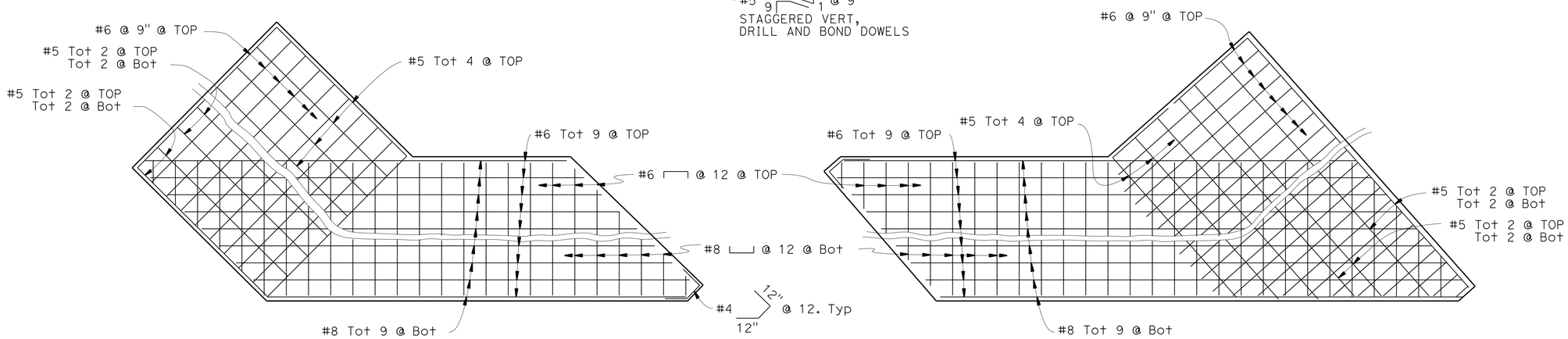

FOOTING CORNER DETAIL
3/8" = 1'-0"

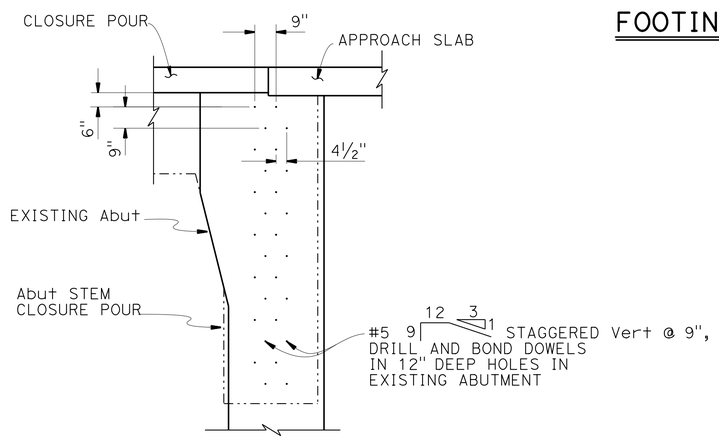

SECTION D-D
3/8" = 1'-0"

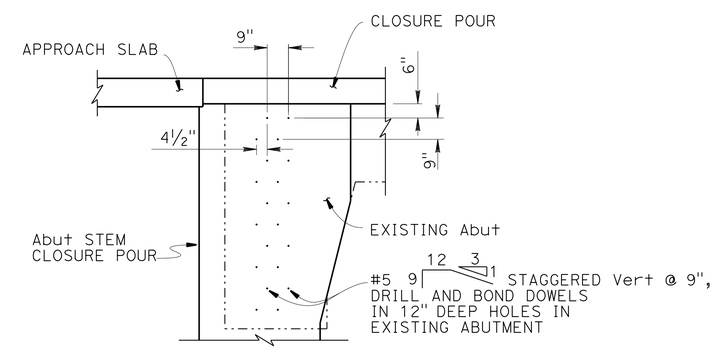

SECTION C-C
3/8" = 1'-0"

NOTE:
1. For spacing see "RETAINING WALL DETAILS"

NOTE:
THE CONTRACTOR SHALL VERIFY ALL CONTROLLING FIELD DIMENSIONS BEFORE ORDERING OR FABRICATING ANY MATERIAL.

	BY	CHECKED
DESIGN	Sharareh Bikaee	Jason Fang/ Dawit Worku
DETAILS	Lan T Tran/ J. Valencia	Jason Fang/ Dawit Worku
QUANTITIES	Sharareh Bikaee	Edward B. Mu

STATE OF CALIFORNIA
DEPARTMENT OF TRANSPORTATION

DIVISION OF ENGINEERING SERVICES
STRUCTURE DESIGN
DESIGN BRANCH 20

BRIDGE NO. 53-0671
POST MILE 38.97

HOLT AVENUE UNDERCROSSING (WIDEN)
ABUTMENT DETAILS NO. 2

STRUCTURES DESIGN DETAIL SHEET (ENGLISH) (REV. 09-01-10)

ORIGINAL SCALE IN INCHES FOR REDUCED PLANS 0 1 2 3

UNIT: 3622
PROJECT NUMBER & PHASE: 0713000007-1
CONTRACT NO.: 07-1193U1

DISREGARD PRINTS BEARING EARLIER REVISION DATES

REVISION DATES: 7-25-14 | 04/24/11 | 12/19/12

SHEET 09 OF 42

FILE => 53-0671-f-a03dt02.dgn

USERNAME => s125624 DATE PLOTTED => 18-MAY-2015 TIME PLOTTED => 14:07

DIST	COUNTY	ROUTE	POST MILES TOTAL PROJECT	SHEET No.	TOTAL SHEETS
07	LA	10	37.2/42.4	1630	2313

REGISTERED CIVIL ENGINEER — DATE 10/01/14

6-1-15
PLANS APPROVAL DATE

REGISTERED PROFESSIONAL ENGINEER — Dawit T Worku — No. C60711 — Exp 12-31-14 — CIVIL — STATE OF CALIFORNIA

The State of California or its officers or agents shall not be responsible for the accuracy or completeness of electronic copies of this plan sheet.

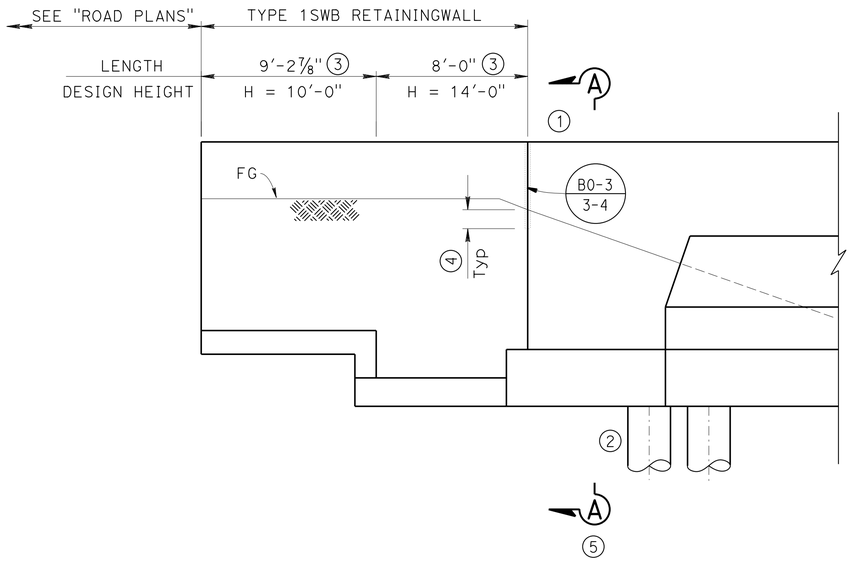

ELEVATION
¼" = 1'-0"

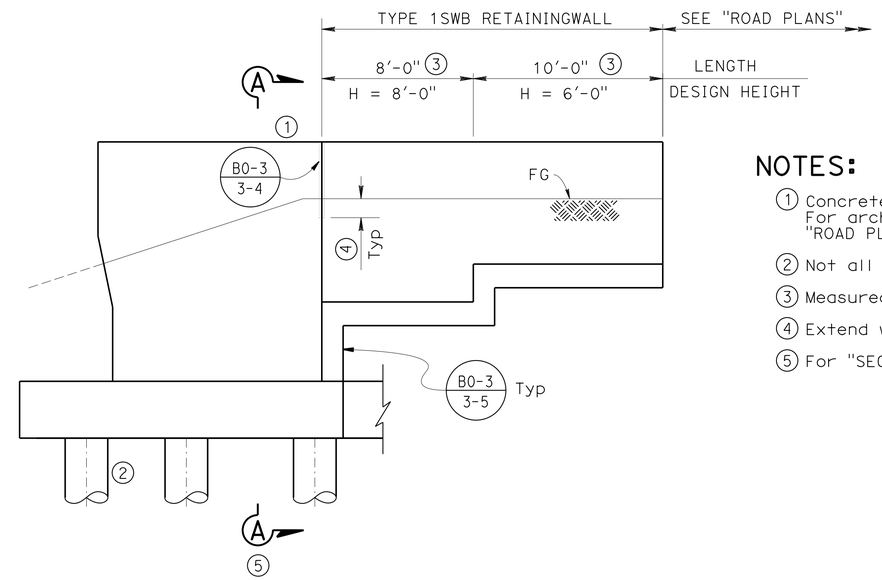

NOTES:

1. Concrete barier type 736 (Mod) and SW not shown. For architectural details on sound walls see "ROAD PLANS"
2. Not all piles are shown.
3. Measured along Ret wall LOL
4. Extend water stop 12" below FG
5. For "SECTION A-A", see "RETAINING WALL DETAILS" sheet.

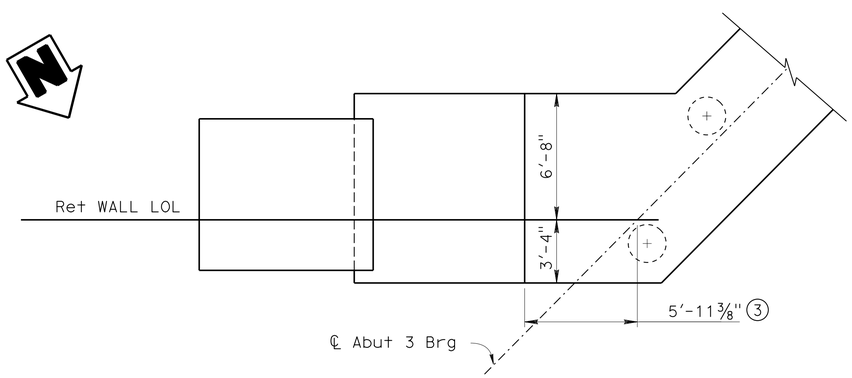

ABUTMENT 3 RETAINING WALL
¼" = 1'-0"

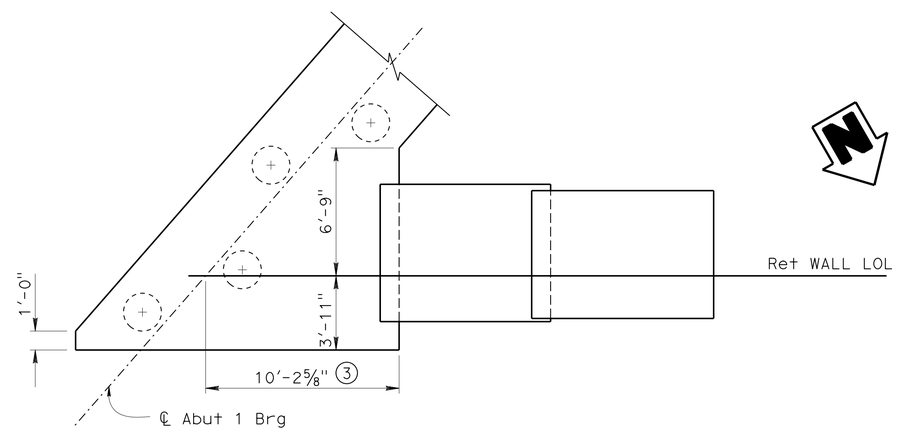

FOOTING PLAN
¼" = 1'-0"

ABUTMENT 1 RETAINING WALL
¼" = 1'-0"

NOTE:
THE CONTRACTOR SHALL VERIFY ALL CONTROLLING FIELD DIMENSIONS BEFORE ORDERING OR FABRICATING ANY MATERIAL.

	BY	CHECKED
DESIGN	Shargreh Bikaee	Jason Fang/ Dawit Worku
DETAILS	Lan T Tran/ J. Valencia	Jason Fang/ Dawit Worku
QUANTITIES	Shargreh Bikaee	Edward B. Mu

STATE OF CALIFORNIA
DEPARTMENT OF TRANSPORTATION

DIVISION OF ENGINEERING SERVICES
STRUCTURE DESIGN
DESIGN BRANCH 20

BRIDGE NO. 53-0671
POST MILE 38.97

HOLT AVENUE UNDERCROSSING (WIDEN)
RETAINING WALL LAYOUT (LEFT WIDEN)

STRUCTURES DESIGN DETAIL SHEET (ENGLISH) (REV. 09-01-10)

ORIGINAL SCALE IN INCHES FOR REDUCED PLANS 0 1 2 3

UNIT: 3622
PROJECT NUMBER & PHASE: 0713000007-1
CONTRACT NO.: 07-1193U1

DISREGARD PRINTS BEARING EARLIER REVISION DATES

REVISION DATES: 06-17-13 08-09-13 9-18-13 5-28-14

SHEET 10 OF 42

FILE => 53-0671-g-rw_lo01.dgn

USERNAME => s125624 DATE PLOTTED => 18-MAY-2015 TIME PLOTTED => 14:07

DIST	COUNTY	ROUTE	POST MILES TOTAL PROJECT	SHEET No.	TOTAL SHEETS
07	LA	10	37.2/42.4	1631	2313

REGISTERED CIVIL ENGINEER 10/01/14 DATE

6-1-15
PLANS APPROVAL DATE

REGISTERED PROFESSIONAL ENGINEER Dawit T Worku No. C60711 Exp 12-31-14 CIVIL STATE OF CALIFORNIA

The State of California or its officers or agents shall not be responsible for the accuracy or completeness of electronic copies of this plan sheet.

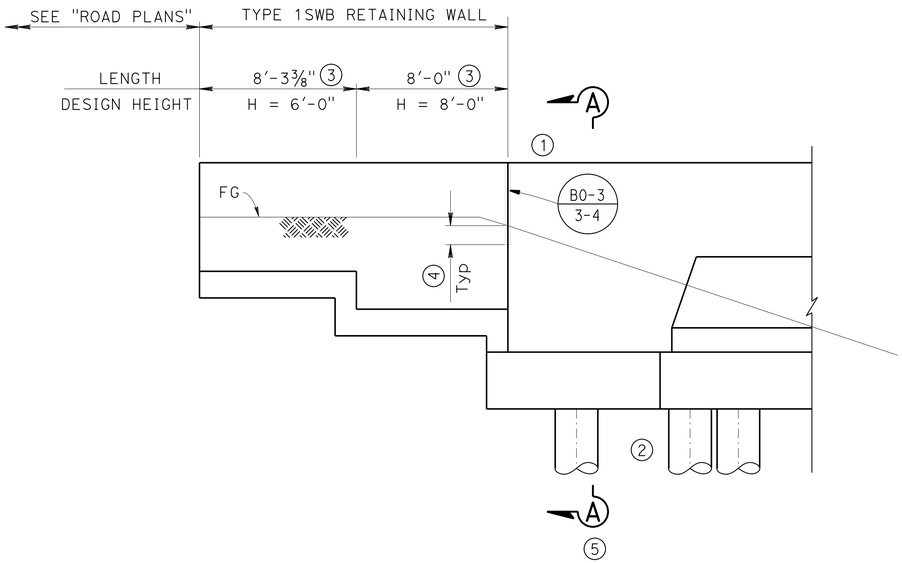

ELEVATION
¼" = 1'-0"

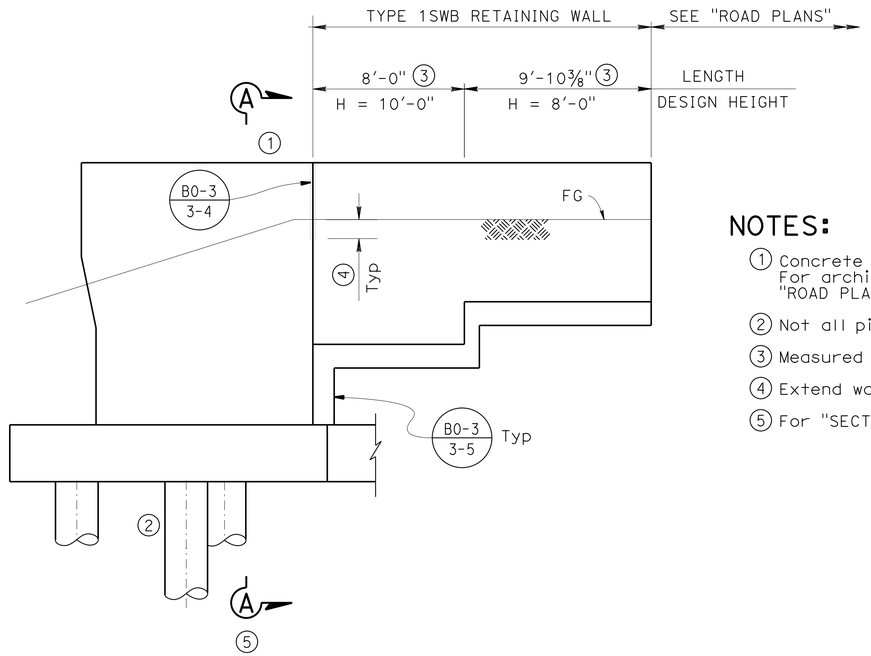

NOTES:

1. Concrete barier type 736 (Mod) and SW not shown. For architectural details on sound walls see "ROAD PLANS"
2. Not all piles are shown.
3. Measured along Ret wall LOL
4. Extend water stop 12" below FG
5. For "SECTION A-A", see "RETAINING WALL DETAILS" sheet.

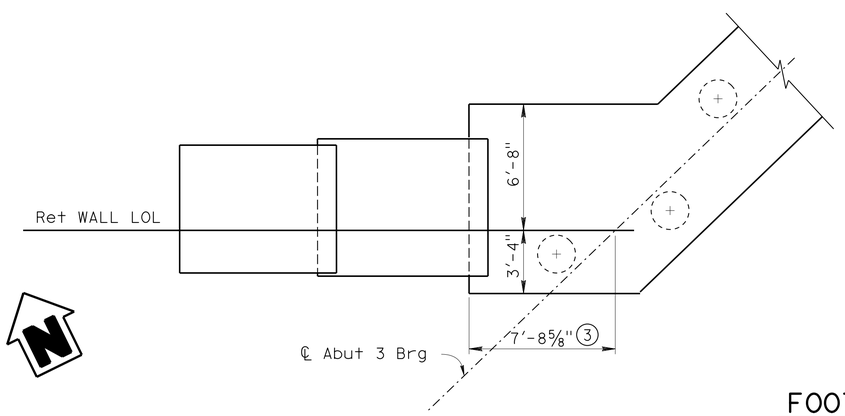

ABUTMENT 1 RETAINING WALL
¼" = 1'-0"

FOOTING PLAN
¼" = 1'-0"

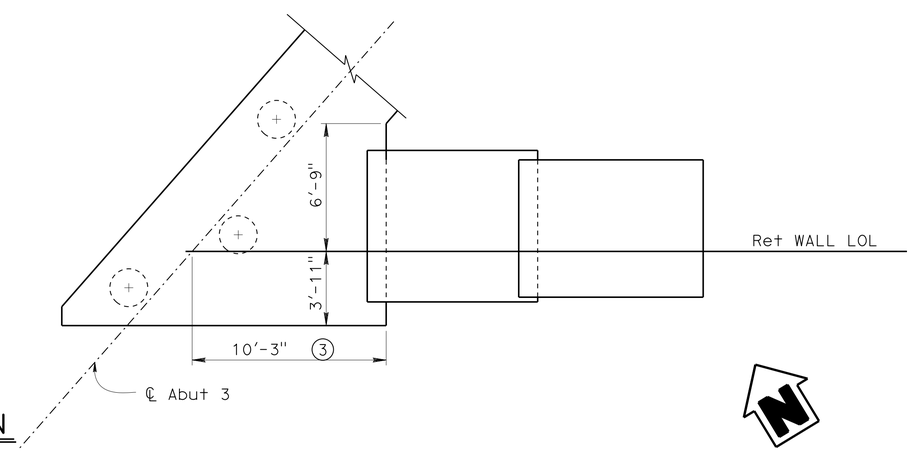

ABUTMENT 3 RETAINING WALL
¼" = 1'-0"

NOTE:
THE CONTRACTOR SHALL VERIFY ALL CONTROLLING FIELD DIMENSIONS BEFORE ORDERING OR FABRICATING ANY MATERIAL.

	BY	CHECKED
DESIGN	Sharareh Bikaee	Jason Fang/ Dawit Worku
DETAILS	Lan T Tran/ J. Valencia	Jason Fang/ Dawit Worku
QUANTITIES	Sharareh Bikaee	Edward B. Mu

STATE OF CALIFORNIA
DEPARTMENT OF TRANSPORTATION

DIVISION OF ENGINEERING SERVICES
STRUCTURE DESIGN
DESIGN BRANCH 20

BRIDGE NO. 53-0671
POST MILE 38.97

HOLT AVENUE UNDERCROSSING (WIDEN)
RETAINING WALL LAYOUT (RIGHT WIDEN)

STRUCTURES DESIGN DETAIL SHEET (ENGLISH) (REV. 09-01-10)

ORIGINAL SCALE IN INCHES FOR REDUCED PLANS 0 1 2 3

UNIT: 3622
PROJECT NUMBER & PHASE: 0713000007-1
CONTRACT NO.: 07-1193U1

DISREGARD PRINTS BEARING EARLIER REVISION DATES

REVISION DATES: 09/09/13 09/16/13 5-28-14

SHEET 11 OF 42

FILE => 53-0671-g-rw_lo02.dgn

USERNAME => s125624 DATE PLOTTED => 18-MAY-2015 TIME PLOTTED => 14:07

DIST	COUNTY	ROUTE	POST MILES TOTAL PROJECT	SHEET No.	TOTAL SHEETS
07	LA	10	37.2/42.4	1632	2313

REGISTERED CIVIL ENGINEER — DATE 10/01/14

6-1-15
PLANS APPROVAL DATE

REGISTERED PROFESSIONAL ENGINEER — Dawit T Worku — No. C60711 — Exp 12-31-14 — CIVIL — STATE OF CALIFORNIA

The State of California or its officers or agents shall not be responsible for the accuracy or completeness of electronic copies of this plan sheet.

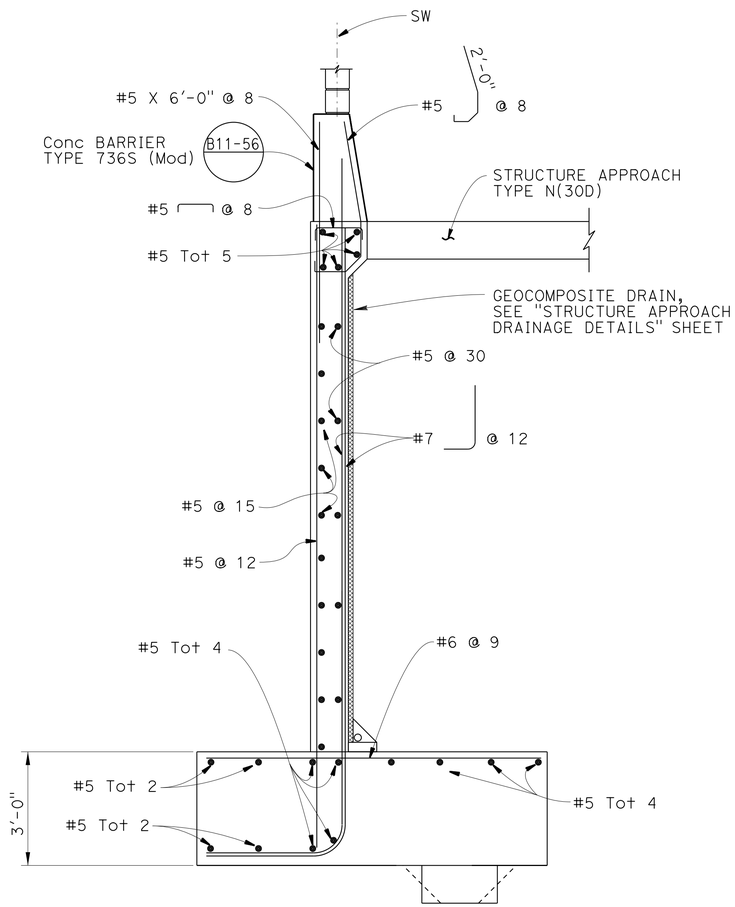

NOTE:
For details not shown,
see "RETAINING WALL TYPE 1SWB" H = 14'-0"

SECTION A-A
½" = 1'-0"

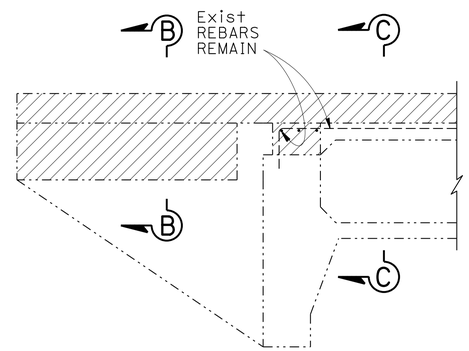

DETAIL X
NO SCALE

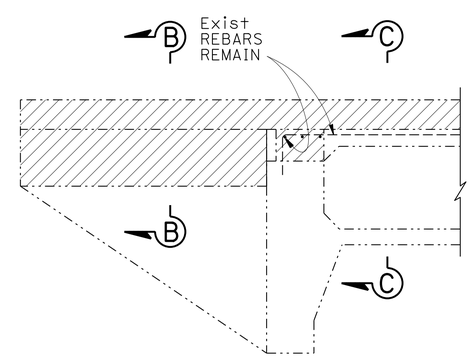

DETAIL Y
NO SCALE

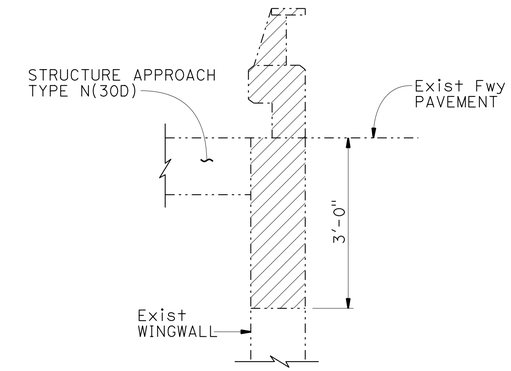

SECTION B-B
NO SCALE

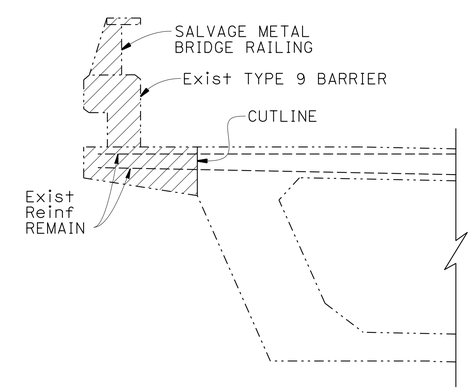

SECTION C-C
NO SCALE

LEGEND

- New Structure
- Existing Structure
- Bridge removal (portion)

CONCRETE REMOVAL

NOTE:
THE CONTRACTOR SHALL VERIFY ALL CONTROLLING FIELD DIMENSIONS BEFORE ORDERING OR FABRICATING ANY MATERIAL.

	BY	CHECKED
DESIGN	Sharareh Bikaee	Jason Fang/ Dawit Worku
DETAILS	Lan T Tran/ J. Valencia	Jason Fang/ Dawit Worku
QUANTITIES	Sharareh Bikaee	Edward B. Mu

STATE OF CALIFORNIA
DEPARTMENT OF TRANSPORTATION

DIVISION OF ENGINEERING SERVICES
STRUCTURE DESIGN
DESIGN BRANCH 20

BRIDGE NO. 53-0671
POST MILE 38.97

HOLT AVENUE UNDERCROSSING (WIDEN)
RETAINING WALL DETAILS

STRUCTURES DESIGN DETAIL SHEET (ENGLISH) (REV. 09-01-10)

ORIGINAL SCALE IN INCHES FOR REDUCED PLANS 0 1 2 3

UNIT: 3622
PROJECT NUMBER & PHASE: 0713000007-1
CONTRACT NO.: 07-1193U1

DISREGARD PRINTS BEARING EARLIER REVISION DATES

REVISION DATES: 7-25-14 7-28-14 7-24-14

SHEET 12 OF 42

FILE => 53-0671-g-rwdt01.dgn

USERNAME => s125624 DATE PLOTTED => 18-MAY-2015 TIME PLOTTED => 14:07

DIST	COUNTY	ROUTE	POST MILES TOTAL PROJECT	SHEET No.	TOTAL SHEETS
07	LA	10	37.2/42.4	1633	2313

REGISTERED CIVIL ENGINEER 10/01/14 DATE

6-1-15
PLANS APPROVAL DATE

REGISTERED PROFESSIONAL ENGINEER Dawit T Worku No. C60711 Exp 12-31-14 CIVIL STATE OF CALIFORNIA

The State of California or its officers or agents shall not be responsible for the accuracy or completeness of electronic copies of this plan sheet.

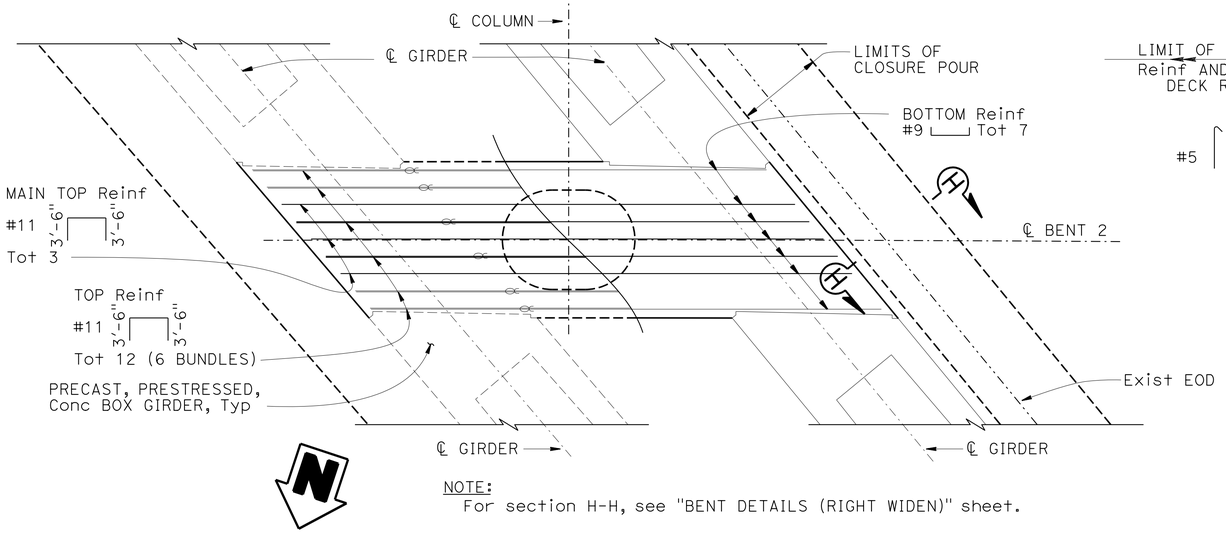

NOTE:
For section H-H, see "BENT DETAILS (RIGHT WIDEN)" sheet.

PARTIAL PLAN (LEFT WIDEN)

3/8" = 1'-0"

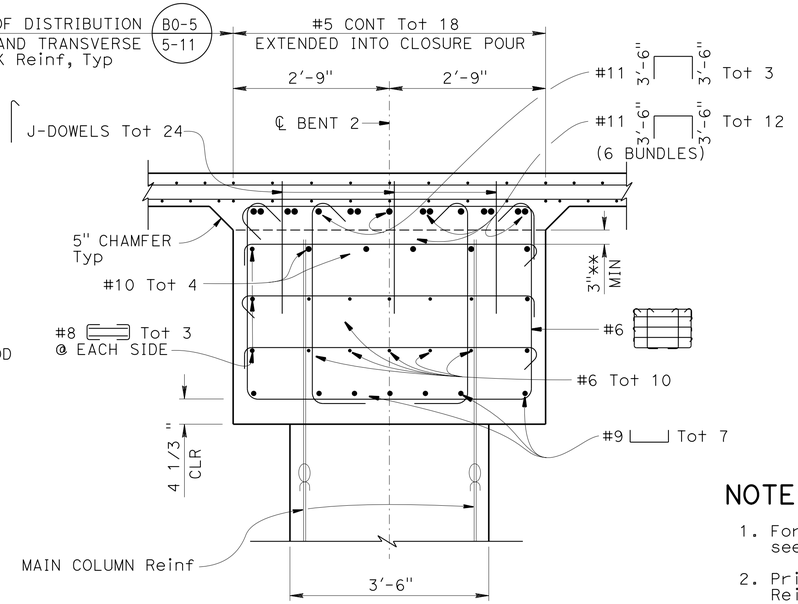

SECTION A-A

3/4" = 1'-0"

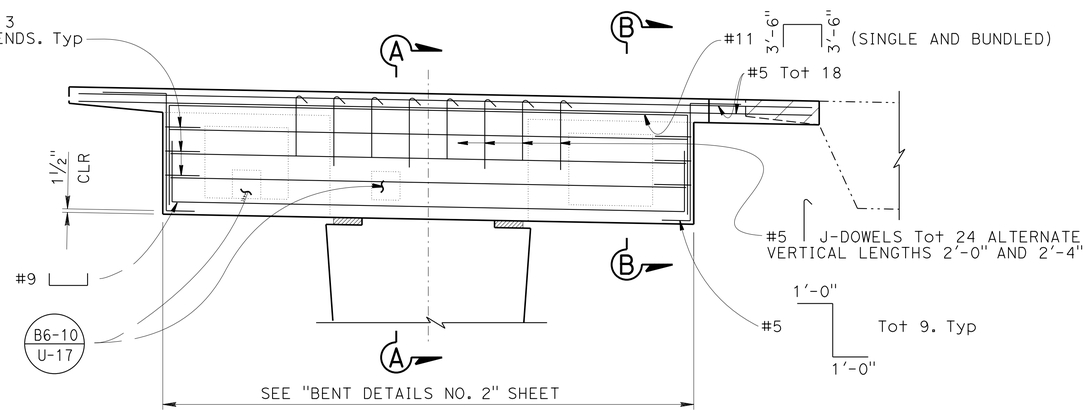

ELEVATION BENT 2 (LEFT WIDEN)

3/8" = 1'-0"

NOTES:

1. For column flare Reinf and column geometry, see "BENT 2 DETAILS NO. 1" sheet.
2. Prior to placing the column, column main Reinf may be aligned to accommodate Reinf from PC/PS girder and bent cap Reinf.
3. For reinforcement not shown, see "PRESTRESSED GIRDER DETAILS NO. 1" sheet.
4. No splices allowed in main cap top and bottom Reinf.

** Reinforcement may be adjusted to clear prestressing duct

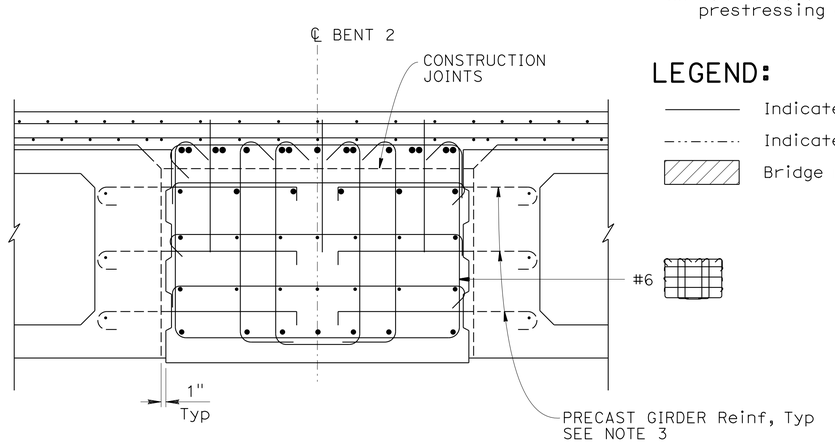

LEGEND:

- Indicates new Structure
- Indicates existing Structure
- Bridge removal (portion)

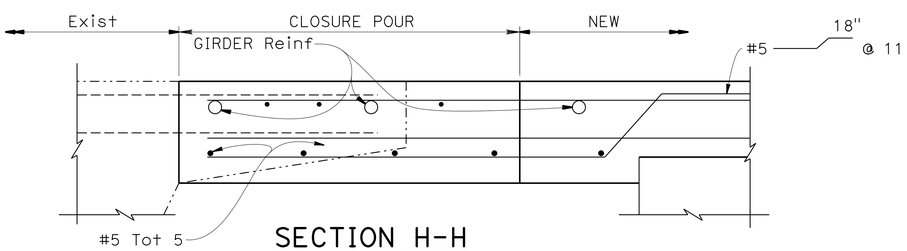

SECTION H-H

1 1/2" = 1'-0"

SECTION B-B

3/4" = 1'-0"

NOTE:
THE CONTRACTOR SHALL VERIFY ALL CONTROLLING FIELD DIMENSIONS BEFORE ORDERING OR FABRICATING ANY MATERIAL.

	BY	CHECKED
DESIGN	Shargreh Bikaee	Jason Fang/ Dawit Worku
DETAILS	Lan T Tran/ J. Valencia	Jason Fang/ Dawit Worku
QUANTITIES	Shargreh Bikaee	Edward B. Mu

STATE OF CALIFORNIA
DEPARTMENT OF TRANSPORTATION

DIVISION OF ENGINEERING SERVICES
STRUCTURE DESIGN
DESIGN BRANCH 20

BRIDGE NO. 53-0671
POST MILE 38.97

HOLT AVENUE UNDERCROSSING (WIDEN)
BENT LAYOUT (LEFT WIDEN)

STRUCTURES DESIGN DETAIL SHEET (ENGLISH) (REV. 09-01-10)

ORIGINAL SCALE IN INCHES FOR REDUCED PLANS 0 1 2 3

UNIT: 3622
PROJECT NUMBER & PHASE: 0713000007-1
CONTRACT NO.: 07-1193U1

DISREGARD PRINTS BEARING EARLIER REVISION DATES

REVISION DATES 3-05-14 5-28-14 2-25-14

SHEET 13 OF 42

FILE => 53-0671-h-b02_1001.dgn

USERNAME => s125624 DATE PLOTTED => 18-MAY-2015 TIME PLOTTED => 14:07

DIST	COUNTY	ROUTE	POST MILES TOTAL PROJECT	SHEET No.	TOTAL SHEETS
07	LA	10	37.2/42.4	1634	2313

REGISTERED CIVIL ENGINEER 10/01/14 DATE

6-1-15
PLANS APPROVAL DATE

REGISTERED PROFESSIONAL ENGINEER Dawit T Worku No. C60711 Exp 12-31-14 CIVIL STATE OF CALIFORNIA

The State of California or its officers or agents shall not be responsible for the accuracy or completeness of electronic copies of this plan sheet.

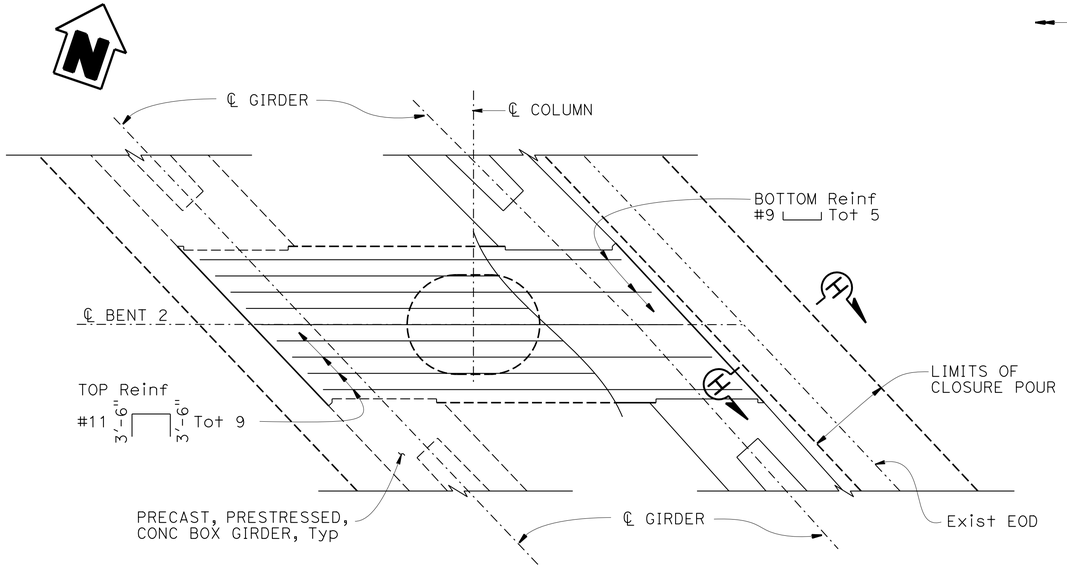

PARTIAL PLAN (RIGHT WIDEN)

3/8" = 1'-0"

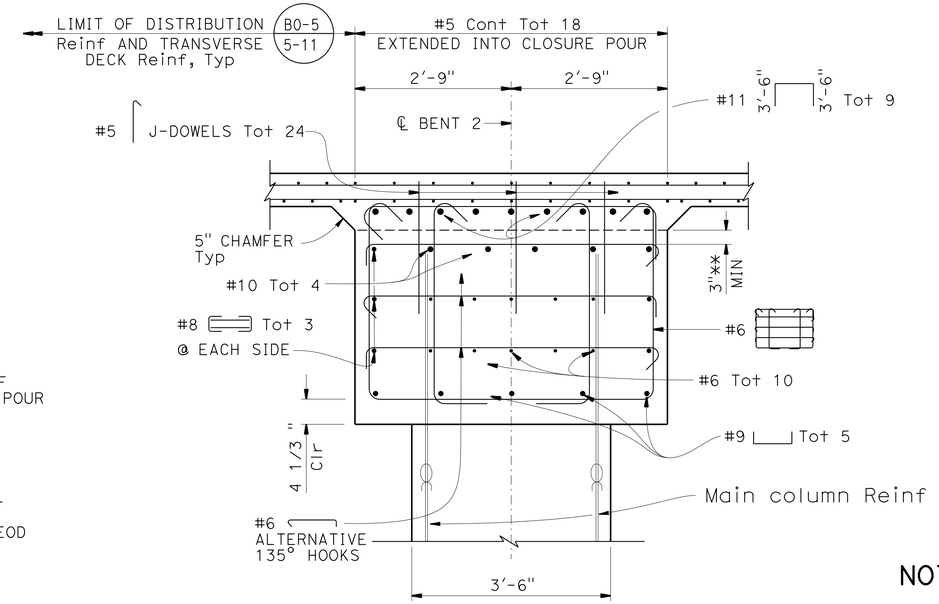

SECTION C-C

3/4" = 1'-0"

NOTES:

1. For column flare Reinf and column geometry, see "BENT 2 DETAILS NO. 1" sheet.
2. Prior to placing the column, column main Reinf may be aligned to accommodate Reinf from PC/PS girder and bent cap Reinf.
3. For reinforcement not shown, see "PRESTRESSED GIRDER DETAILS NO. 1" sheet.
4. No splices allowed in main cap top and bottom Reinf.

** Reinforcement may be adjusted to clear prestressing duct

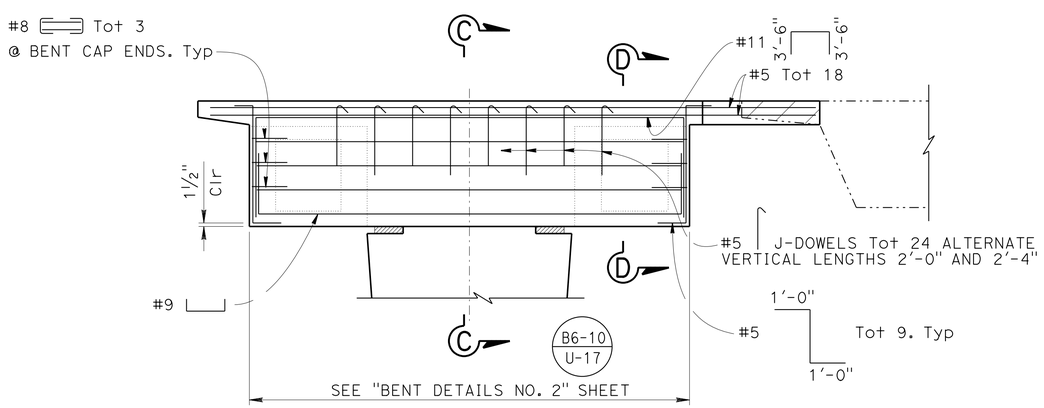

ELEVATION (RIGHT WIDEN)

3/8" = 1'-0"

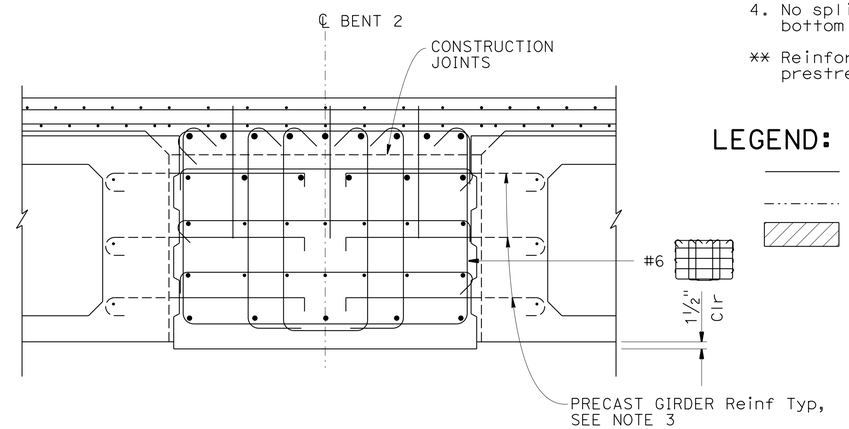

SECTION D-D

3/4" = 1'-0"

LEGEND:

- Indicates new Structure
- Indicates existing Structure
- Bridge removal (portion)

NOTE:
THE CONTRACTOR SHALL VERIFY ALL CONTROLLING FIELD DIMENSIONS BEFORE ORDERING OR FABRICATING ANY MATERIAL.

	BY	CHECKED
DESIGN	Sharareh Bikaee	Jason Fang/ Dawit Worku
DETAILS	Lan T Tran/ J. Valencia	Jason Fang/ Dawit Worku
QUANTITIES	Sharareh Bikaee	Edward B. Mu

STATE OF CALIFORNIA
DEPARTMENT OF TRANSPORTATION

DIVISION OF ENGINEERING SERVICES
STRUCTURE DESIGN
DESIGN BRANCH 20

BRIDGE NO. 53-0671
POST MILE 38.97

HOLT AVENUE UNDERCROSSING (WIDEN)
BENT LAYOUT (RIGHT WIDEN)

STRUCTURES DESIGN DETAIL SHEET (ENGLISH) (REV. 09-01-10)

ORIGINAL SCALE IN INCHES FOR REDUCED PLANS 0 1 2 3

UNIT: 3622
PROJECT NUMBER & PHASE: 0713000007-1
CONTRACT NO.: 07-1193U1

DISREGARD PRINTS BEARING EARLIER REVISION DATES

REVISION DATES: 5-16-13 2-25-14 3-05-14 5-28-14

SHEET 14 OF 42

FILE => 53-0671-h-b02_lo02.dgn

USERNAME => s129624 DATE PLOTTED => 18-MAY-2015 TIME PLOTTED => 14:07

DIST	COUNTY	ROUTE	POST MILES TOTAL PROJECT	SHEET No.	TOTAL SHEETS
07	LA	10	37.2/42.4	1635	2313

REGISTERED CIVIL ENGINEER — DATE 10/01/14

6-1-15
PLANS APPROVAL DATE

REGISTERED PROFESSIONAL ENGINEER — Dawit T Worku — No. C60711 — Exp 12-31-14 — CIVIL — STATE OF CALIFORNIA

The State of California or its officers or agents shall not be responsible for the accuracy or completeness of electronic copies of this plan sheet.

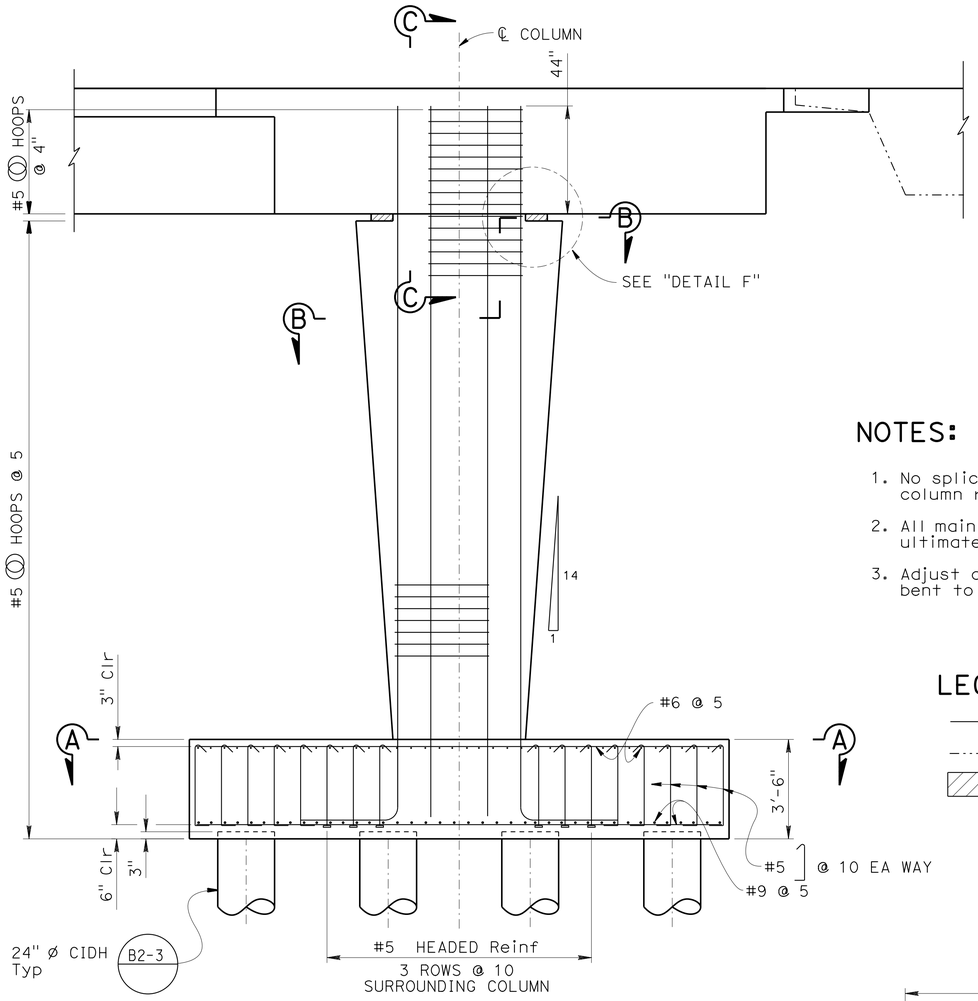

ELEVATION

3/8" = 1'-0"

NOTES:

1. No splices in main longitudinal column reinforcement
2. All main reinforcement hoops are ultimate butt spliced continuous.
3. Adjust column reinforcement at bent to clear prestressing ducts.

LEGEND:

- New Structure
- Existing Structure
- Expanded Polystyrene

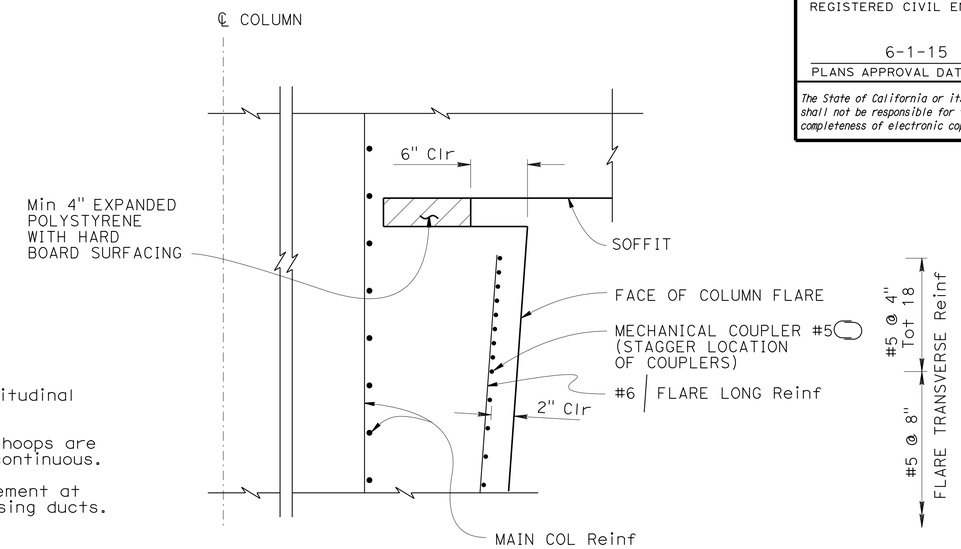

DETAIL F

1 1/2" = 1'-0"

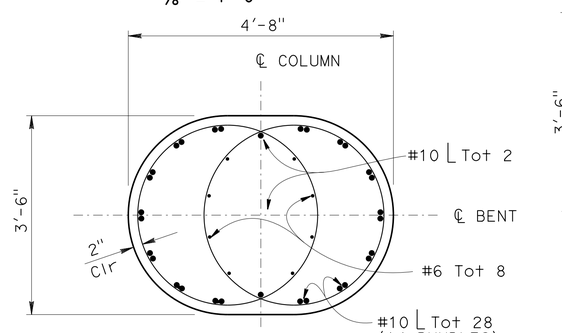

SECTION A-A

3/4" = 1'-0"

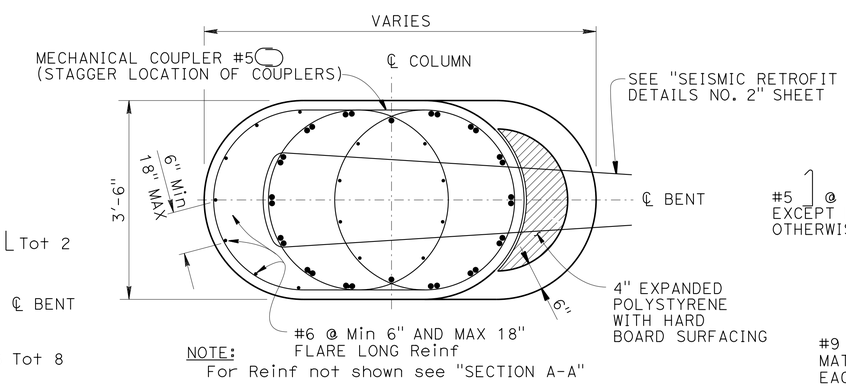

NOTE:
For Reinf not shown see "SECTION A-A"

SECTION B-B

3/4" = 1'-0"

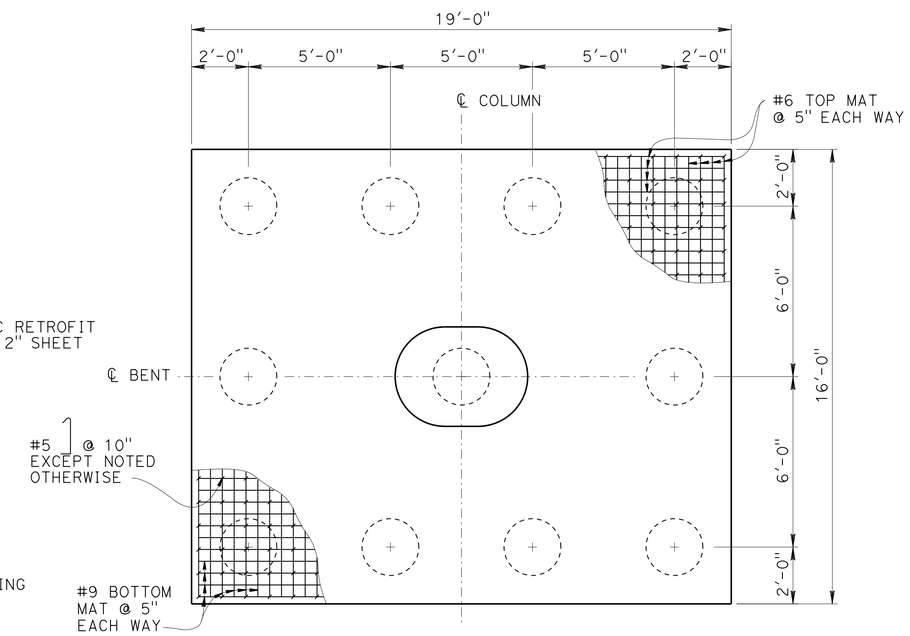

FOOTING PLAN

3/8" = 1'-0"

NOTE:
THE CONTRACTOR SHALL VERIFY ALL CONTROLLING FIELD DIMENSIONS BEFORE ORDERING OR FABRICATING ANY MATERIAL.

	BY	CHECKED
DESIGN	Shargreh Bikaee	Jason Fang/ Dawit Worku
DETAILS	Lan T Tran/ J. Valencia	Jason Fang/ Dawit Worku
QUANTITIES	Shargreh Bikaee	Edward B. Mu

STATE OF CALIFORNIA
DEPARTMENT OF TRANSPORTATION

DIVISION OF ENGINEERING SERVICES
STRUCTURE DESIGN
DESIGN BRANCH 20

BRIDGE NO. 53-0671
POST MILE 38.97

HOLT AVENUE UNDERCROSSING (WIDEN)

BENT 2 DETAILS NO. 1

STRUCTURES DESIGN DETAIL SHEET (ENGLISH) (REV. 09-01-10)

ORIGINAL SCALE IN INCHES FOR REDUCED PLANS 0 1 2 3

UNIT: 3622
PROJECT NUMBER & PHASE: 0713000007-1
CONTRACT NO.: 07-1193U1

DISREGARD PRINTS BEARING EARLIER REVISION DATES

REVISION DATES: 3-05-14 7-24-14 2-25-14

SHEET 15 OF 42

FILE => 53-0671-h-bd+01.dgn

USERNAME => s125624 DATE PLOTTED => 18-MAY-2015 TIME PLOTTED => 14:07

DIST	COUNTY	ROUTE	POST MILES TOTAL PROJECT	SHEET No.	TOTAL SHEETS
07	LA	10	37.2/42.4	1636	2313

REGISTERED CIVIL ENGINEER 10/01/14 DATE

6-1-15
PLANS APPROVAL DATE

REGISTERED PROFESSIONAL ENGINEER
Dawit T Worku
No. C60711
Exp 12-31-14
CIVIL
STATE OF CALIFORNIA

The State of California or its officers or agents shall not be responsible for the accuracy or completeness of electronic copies of this plan sheet.

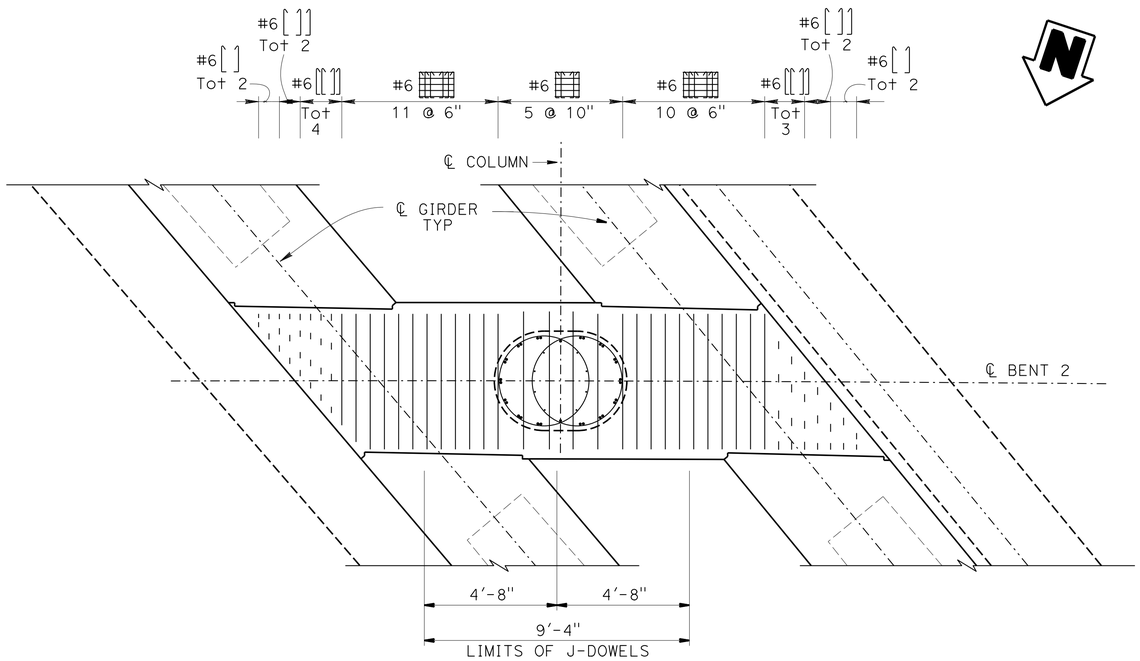

PLAN (LEFT WIDEN)

3/8" = 1'-0"

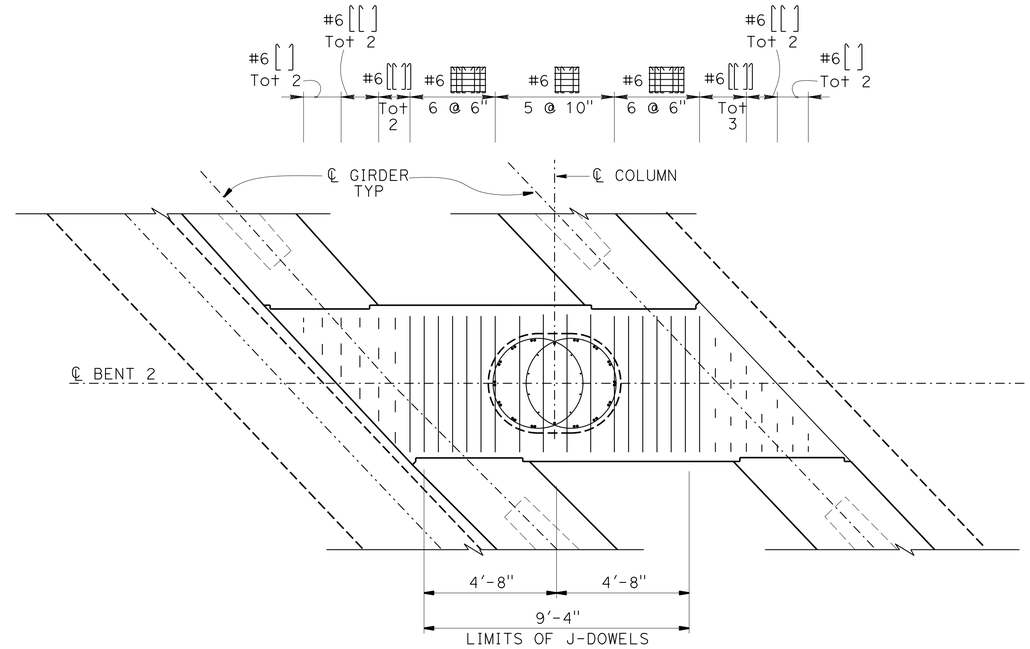

PLAN (RIGHT WIDEN)

3/8" = 1'-0"

JOINT REINFORCEMENT

NOTE:

For reinforcement not shown, see "BENT DETAILS (LEFT WIDEN)", "BENT DETAILS (RIGHT WIDEN)" and "PRESTRESS GIRDER DETAILS NO. 1" sheets.

LEGEND:

——— New Structure

—·—·— Existing Structure

NOTE:
THE CONTRACTOR SHALL VERIFY ALL CONTROLLING FIELD DIMENSIONS BEFORE ORDERING OR FABRICATING ANY MATERIAL.

	BY	CHECKED
DESIGN	Sharareh Bikaee	Jason Fang/ Dawit Worku
DETAILS	Lan T Tran/ J. Valencia	Jason Fang/ Dawit Worku
QUANTITIES	Sharareh Bikaee	Edward B. Mu

STATE OF CALIFORNIA
DEPARTMENT OF TRANSPORTATION

DIVISION OF ENGINEERING SERVICES
STRUCTURE DESIGN
DESIGN BRANCH 20

BRIDGE NO. 53-0671
POST MILE 38.97

HOLT AVENUE UNDERCROSSING (WIDEN)

BENT DETAILS NO. 2

STRUCTURES DESIGN DETAIL SHEET (ENGLISH) (REV. 09-01-10)

ORIGINAL SCALE IN INCHES FOR REDUCED PLANS 0 1 2 3

UNIT: 3622
PROJECT NUMBER & PHASE: 0713000007-1
CONTRACT NO.: 07-1193U1

DISREGARD PRINTS BEARING EARLIER REVISION DATES

REVISION DATES 5-16-13 10-28-13 3-05-14

SHEET 16 OF 42

FILE => 53-0671-h-bdt02.dgn

USERNAME => s125624 DATE PLOTTED => 18-MAY-2015 TIME PLOTTED => 14:07

DIST	COUNTY	ROUTE	POST MILES TOTAL PROJECT	SHEET No.	TOTAL SHEETS
07	LA	10	37.2/42.4	1637	2313

REGISTERED CIVIL ENGINEER 10/01/14 DATE

6-1-15
PLANS APPROVAL DATE

REGISTERED PROFESSIONAL ENGINEER Dawit T Worku No. C60711 Exp 12-31-14 CIVIL STATE OF CALIFORNIA

The State of California or its officers or agents shall not be responsible for the accuracy or completeness of electronic copies of this plan sheet.

NOTES:

(A) Masonry block soundwall.
(B) Concrete Barrier Type 736 (Mod 1)
(C) Temporary Railing Type K. See "Road Plans"
(D) 2-2" * Conduits. See "Road Plans"
(E) Remove Exist Concrete Barrier Type 50
(F) Remove Overhang, Barrier and salvage Metal Bridge Railing. Transverse deck Reinf remain in place.
(G) Concrete Barrier Type 60A (Mod)
(H) 2-3½" Communication conduit, see "ROAD PLAN"
(J) 1-NPS 2½" GSP water supply line B14-5

LEGEND

New structure
Existing structure
Bridge removal (portion)

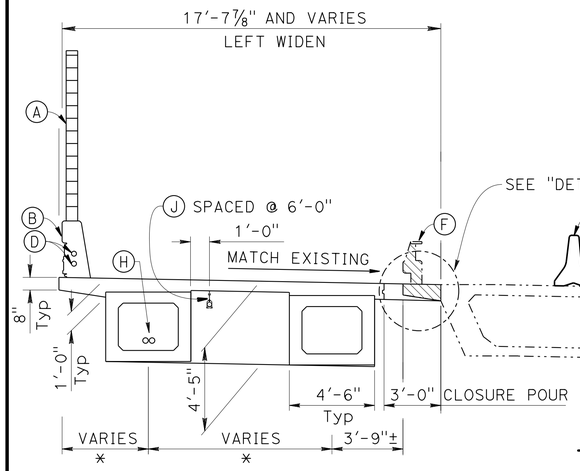

*For dimensions see "GIRDER LAYOUT SHEET"

TYPICAL SECTION

¼" = 1'-0"

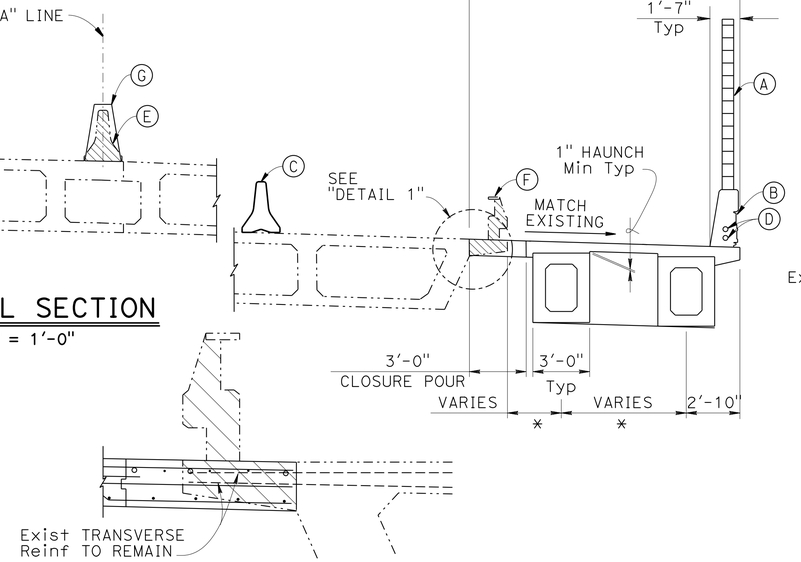

DETAIL 1

¾" = 1'-0"

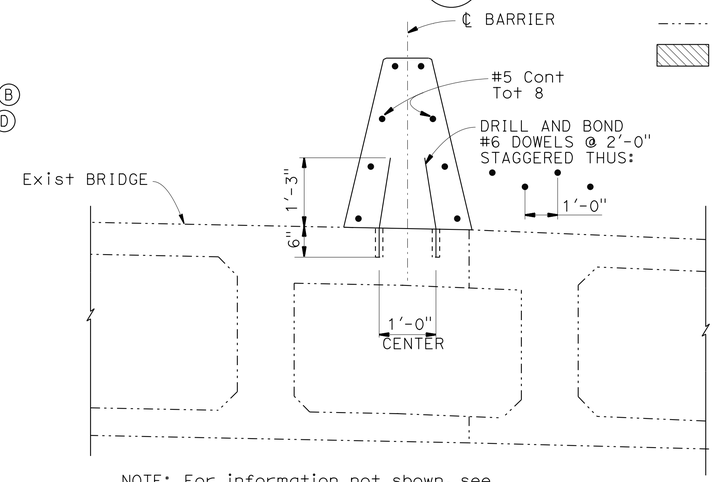

NOTE: For information not shown, see "BARRIER CONCRETE TYPE 60A & 60SA MODIFIED"

CONCRETE BARRIER TYPE 60A (Mod)

NO SCALE

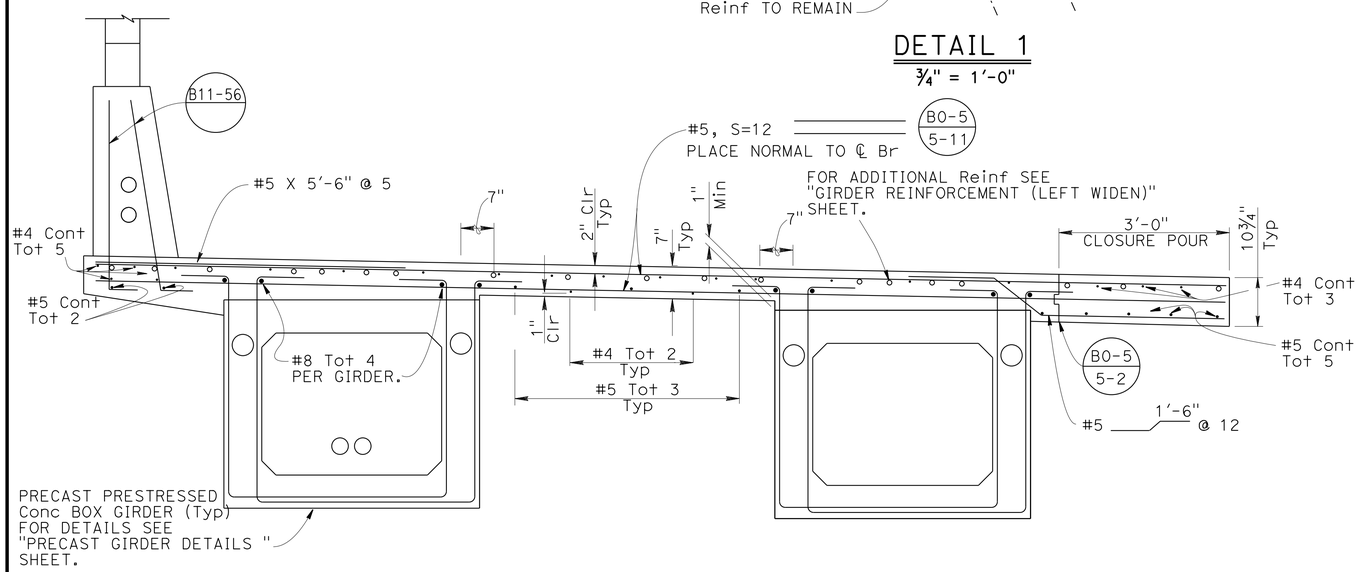

NOTE:
THE CONTRACTOR SHALL VERIFY ALL CONTROLLING FIELD DIMENSIONS BEFORE ORDERING OR FABRICATING ANY MATERIAL.

PART TYPICAL SECTION (LEFT WIDEN)

¾" = 1'-0"

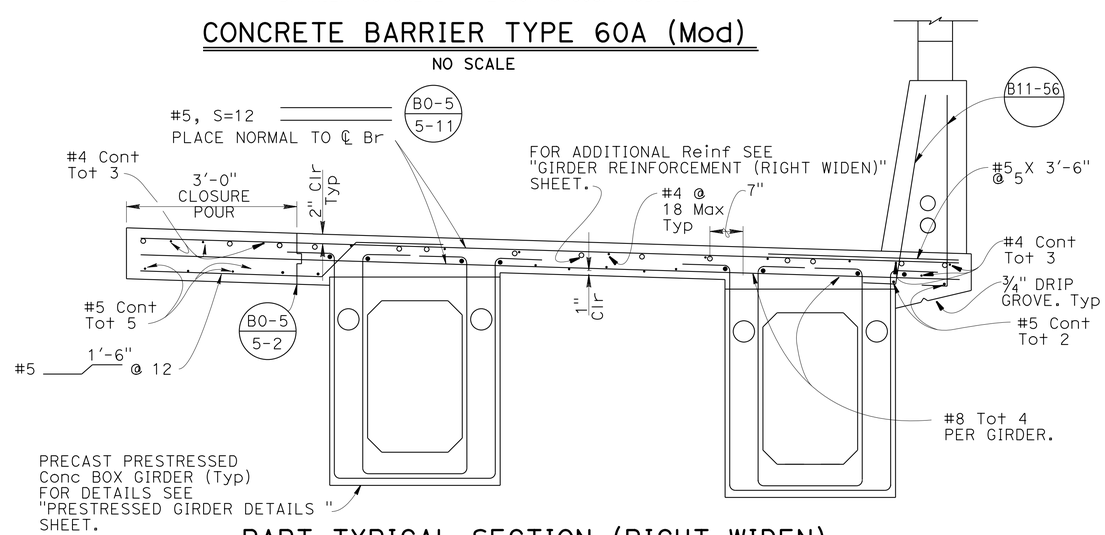

PART TYPICAL SECTION (RIGHT WIDEN)

¾" = 1'-0"

	BY	CHECKED
DESIGN	Shargreh Bikaee	Jason Fang/ Dawit Worku
DETAILS	Lan T Tran/ J. Valencia	Jason Fang/ Dawit Worku
QUANTITIES	Shargreh Bikaee	Edward B. Mu

STATE OF CALIFORNIA
DEPARTMENT OF TRANSPORTATION

DIVISION OF ENGINEERING SERVICES
STRUCTURE DESIGN
DESIGN BRANCH 20

BRIDGE NO. 53-0671
POST MILE 38.97

HOLT AVENUE UNDERCROSSING (WIDEN)
TYPICAL SECTION

STRUCTURES DESIGN DETAIL SHEET (ENGLISH) (REV. 09-01-10)

ORIGINAL SCALE IN INCHES FOR REDUCED PLANS 0 1 2 3

UNIT: 3622
PROJECT NUMBER & PHASE: 0713000007-4
CONTRACT NO.: 07-1193U1

DISREGARD PRINTS BEARING EARLIER REVISION DATES

REVISION DATES 3-05-14 3-21-14 5-28-14

SHEET 17 OF 42

FILE => 53-0671-k-ts01.dgn

USERNAME => s125624 DATE PLOTTED => 18-MAY-2015 TIME PLOTTED => 14:07

DIST	COUNTY	ROUTE	POST MILES TOTAL PROJECT	SHEET No.	TOTAL SHEETS
07	LA	10	37.2/42.4	1638	2313

REGISTERED CIVIL ENGINEER — DATE 10/01/14

6-1-15
PLANS APPROVAL DATE

The State of California or its officers or agents shall not be responsible for the accuracy or completeness of electronic copies of this plan sheet.

REGISTERED PROFESSIONAL ENGINEER — Dawit T Worku — No. C60711 — Exp 12-31-14 — CIVIL — STATE OF CALIFORNIA

LEGEND

(XX) Girder designation.

——— New Structure

-·-·-·- Existing Structure

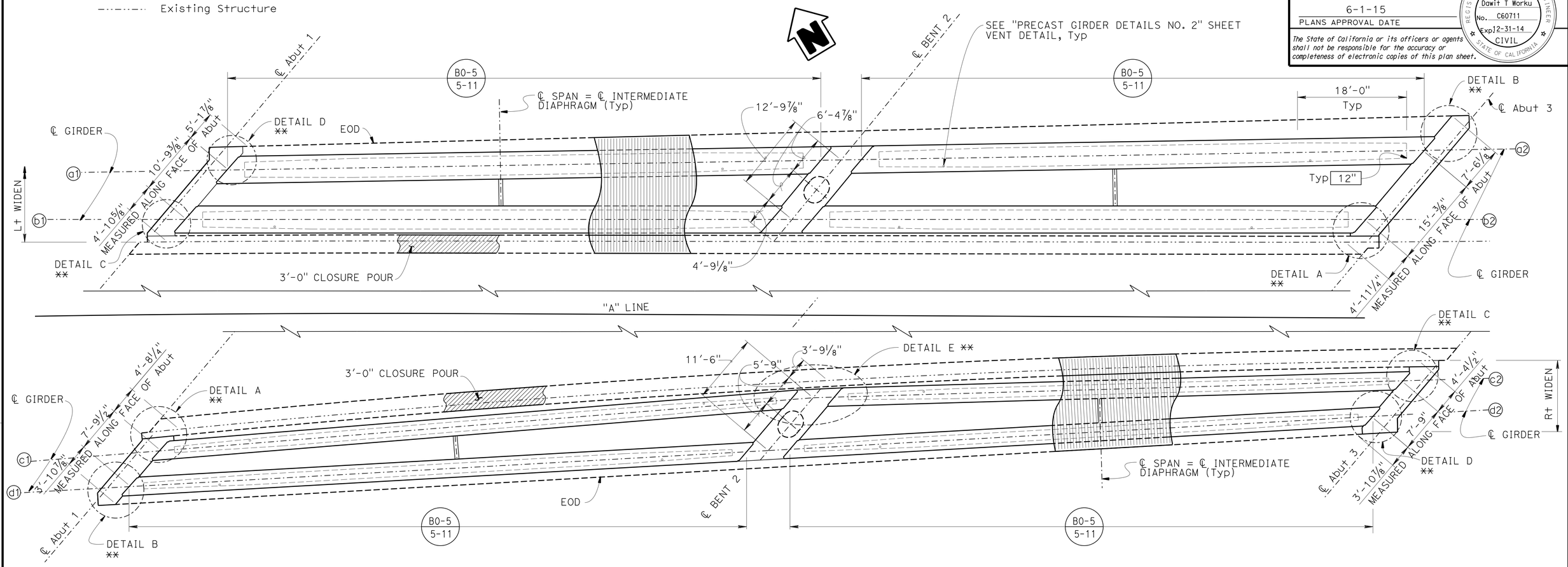

GIRDER LAYOUT

⅛" = 1'-0"

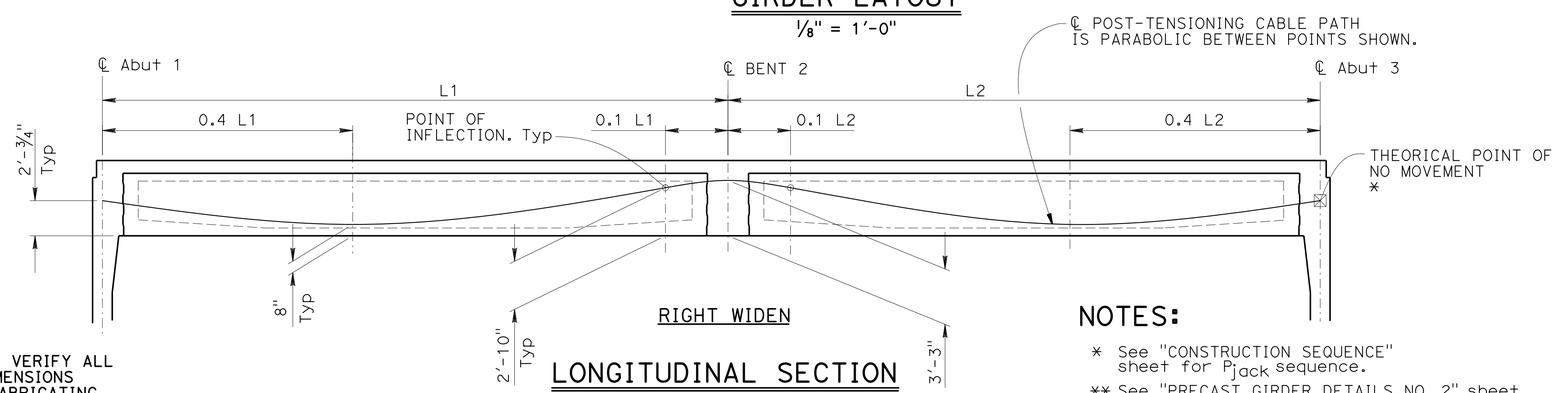

RIGHT WIDEN

LONGITUDINAL SECTION

No Scale

NOTE:
THE CONTRACTOR SHALL VERIFY ALL CONTROLLING FIELD DIMENSIONS BEFORE ORDERING OR FABRICATING ANY MATERIAL.

NOTES:

* See "CONSTRUCTION SEQUENCE" sheet for P_{jack} sequence.

** See "PRECAST GIRDER DETAILS NO. 2" sheet for details "A", "B", "C", "D", and "E"

PRESTRESSING NOTES (POST-TENSIONING)

270 KSI Low Relaxation Strand:

* P_{jack} = 1580 Kips per box girder.

Anchor set = ⅜ in

Total Number of Box Girders = 8

Design is based on μ = 0.15, (k = 0.0002/ft)

Concrete: f'_c = 6 ksi @ 28 days

f'_{ci} = 4.8 ksi @ time of stressing

Desk Slab:

f'_c = 5 ksi @ 28 days

f'_{ci} = 4 ksi @ time of stressing

Contractor shall submit elongation calculations based on initial stress at ⊠ = 0.9 times jacking stress. One end stressing shall be performed from either end

	BY	CHECKED
DESIGN	Sharareh Bikaee	Jason Fang/ Dawit Worku
DETAILS	Lan T Tran/ J. Valencia	Jason Fang/ Dawit Worku
QUANTITIES	Sharareh Bikaee	Edward B. Mu

STATE OF CALIFORNIA
DEPARTMENT OF TRANSPORTATION

DIVISION OF ENGINEERING SERVICES
STRUCTURE DESIGN
DESIGN BRANCH 20

BRIDGE NO. 53-0671
POST MILE 38.97

HOLT AVENUE UNDERCROSSING (WIDEN)

GIRDER LAYOUT

STRUCTURES DESIGN DETAIL SHEET (ENGLISH) (REV. 09-01-10)

ORIGINAL SCALE IN INCHES FOR REDUCED PLANS 0 1 2 3

UNIT: 3622
PROJECT NUMBER & PHASE: 0713000007-1
CONTRACT NO.: 07-119301

DISREGARD PRINTS BEARING EARLIER REVISION DATES

REVISION DATES: 10-29-13 10-30-13 3-05-14

SHEET 18 OF 42

FILE => 53-0671-1-g_lo01.dgn

USERNAME => s125624 DATE PLOTTED => 18-MAY-2015 TIME PLOTTED => 14:07

DIST	COUNTY	ROUTE	POST MILES TOTAL PROJECT	SHEET No.	TOTAL SHEETS
07	LA	10	37.2/42.4	1639	2313

REGISTERED CIVIL ENGINEER — DATE 10/01/14

6-1-15
PLANS APPROVAL DATE

REGISTERED PROFESSIONAL ENGINEER — Dawit T Worku — No. C60711 — Exp 12-31-14 — CIVIL — STATE OF CALIFORNIA

The State of California or its officers or agents shall not be responsible for the accuracy or completeness of electronic copies of this plan sheet.

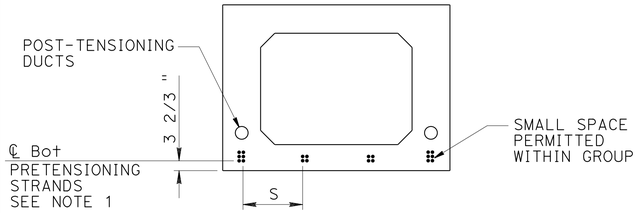

CLEARANCES FOR PRETENSIONED STRANDS

NO SCALE

1. If necessary strands may be bundled in groups consisting of up to 3 vertically 2 horizontally, and separated at the ends.
2. The min distance "S" between groups or individual strands is 1½" for ⅜" strands. 1¾" for 7/16" strands, and 2" for ½" and 9/16" strands.
3. "S" if measured between centers of adjacent strands.
4. Approval of Engineer is required for deviation.

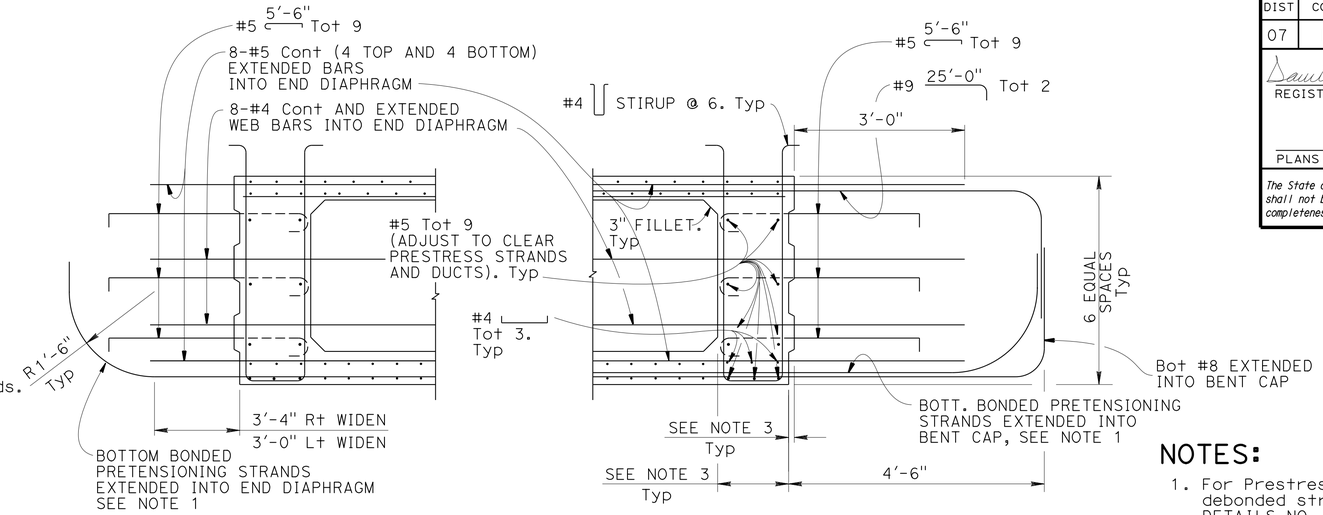

(AT ABUTMENT) (AT BENT CAP)

GIRDER END DIAPHRAGM

¾" = 1'-0"

NOTES:

1. For Prestressing Notes, No. of bonded and debonded strands see "PRECAST GIRDER DETAILS NO. 3" sheet.
2. For detail of intermediate diaphragm, see "PRECAST GIRDER DETAILS NO. 2" sheet.
3. See PLAN-END DIAPHRAGM detail in "PRECAST GIRDER DETAILS NO. 2" sheet.

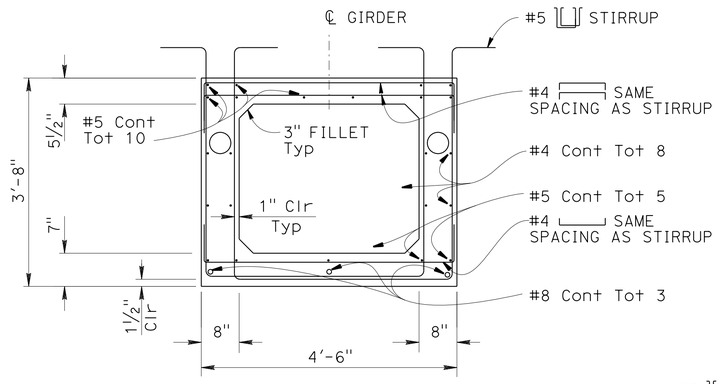

SECTION A-A Lt WIDEN (TYPE B-54)

¾" = 1'-0"

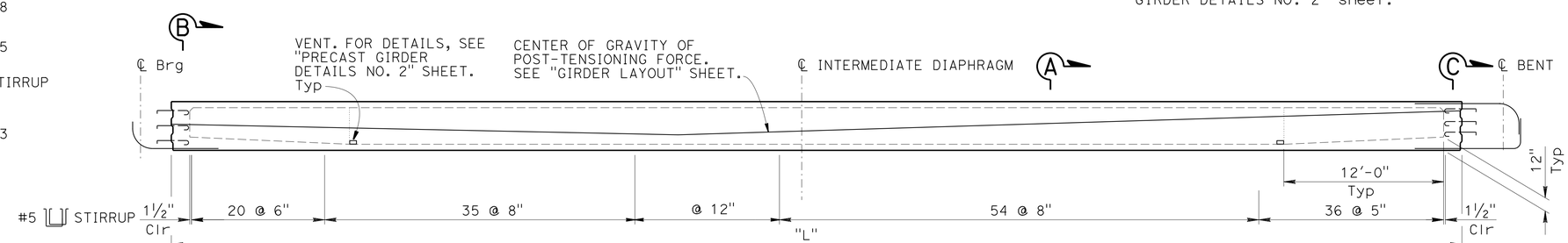

ELEVATION

1" = 5'

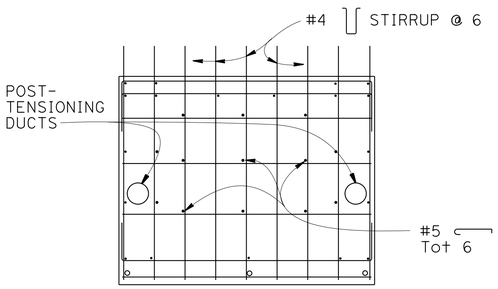

NOTE:
FOR REINFORCEMENT INFORMATION NOT SHOWN, SEE "SECTION A-A LEFT WIDEN"

SECTION B-B LEFT WIDEN (TYPE B-54)

¾" = 1'-0"

NOTE:
THE CONTRACTOR SHALL VERIFY ALL CONTROLLING FIELD DIMENSIONS BEFORE ORDERING OR FABRICATING ANY MATERIAL.

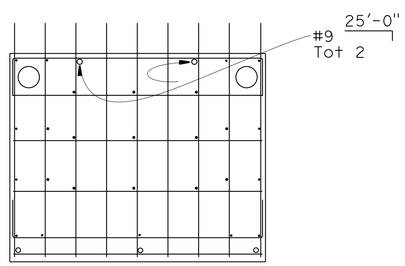

NOTE:
FOR REINFORCEMENT INFORMATION NOT SHOWN, SEE "SECTION B-B LEFT WIDEN"

SECTION C-C LEFT WIDEN (TYPE B-54)

¾" = 1'-0"

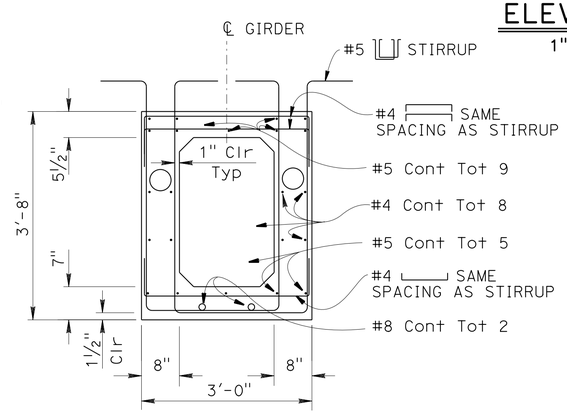

SECTION A-A RIGHT WIDEN (TYPE B-36)

¾" = 1'-0"

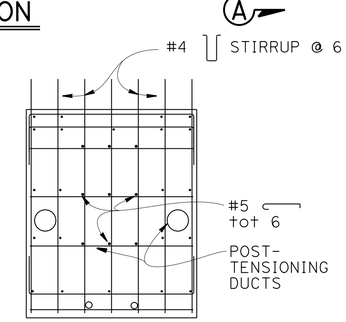

NOTE:
For reinforcement information not shown, see "SECTION A-A RIGHT WIDEN"

SECTION B-B RIGHT WIDEN (TYPE B-36)

¾" = 1'-0"

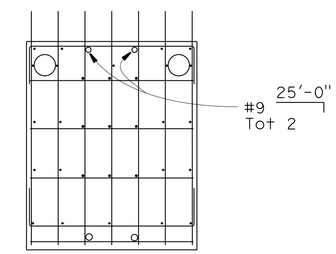

NOTE:
For reinforcement information not shown, see "SECTION B-B RIGHT WIDEN"

SECTION C-C RIGHT WIDEN (TYPE B-36)

¾" = 1'-0"

DESIGN	BY Shargreh Bikaee	CHECKED Jason Fang/ Dawit Worku	
DETAILS	BY Lan T Tran/ J. Valencia	CHECKED Jason Fang/ Dawit Worku	
QUANTITIES	BY Shargreh Bikaee	CHECKED Edward B. Mu	

STATE OF CALIFORNIA
DEPARTMENT OF TRANSPORTATION

DIVISION OF ENGINEERING SERVICES
STRUCTURE DESIGN
DESIGN BRANCH 20

BRIDGE NO. 53-0671
POST MILE 38.97

HOLT AVENUE UNDERCROSSING (WIDEN)
PRECAST GIRDER DETAILS NO. 1

STRUCTURES DESIGN DETAIL SHEET (ENGLISH) (REV. 09-01-10)

ORIGINAL SCALE IN INCHES FOR REDUCED PLANS 0 1 2 3

UNIT: 3622
PROJECT NUMBER & PHASE: 0713000007-1
CONTRACT NO.: 07-1193U1

DISREGARD PRINTS BEARING EARLIER REVISION DATES

REVISION DATES: 06-12-13 09-09-13 9-24-13 10-28-13

SHEET 19 OF 42

FILE => 53-0671-I-gdt01.dgn

USERNAME => s125624 DATE PLOTTED => 18-MAY-2015 TIME PLOTTED => 14:07

DIST	COUNTY	ROUTE	POST MILES TOTAL PROJECT	SHEET No.	TOTAL SHEETS
07	LA	10	37.2/42.4	1640	2313

REGISTERED CIVIL ENGINEER 10/01/14 DATE

6-1-15
PLANS APPROVAL DATE

REGISTERED PROFESSIONAL ENGINEER Dawit T Worku No. C60711 Exp 12-31-14 CIVIL STATE OF CALIFORNIA

The State of California or its officers or agents shall not be responsible for the accuracy or completeness of electronic copies of this plan sheet.

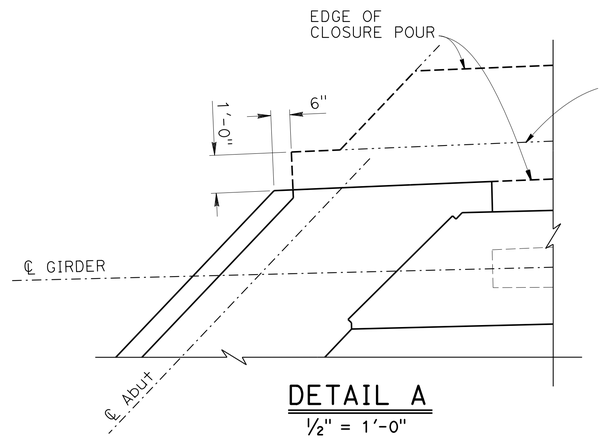

DETAIL A
½" = 1'-0"

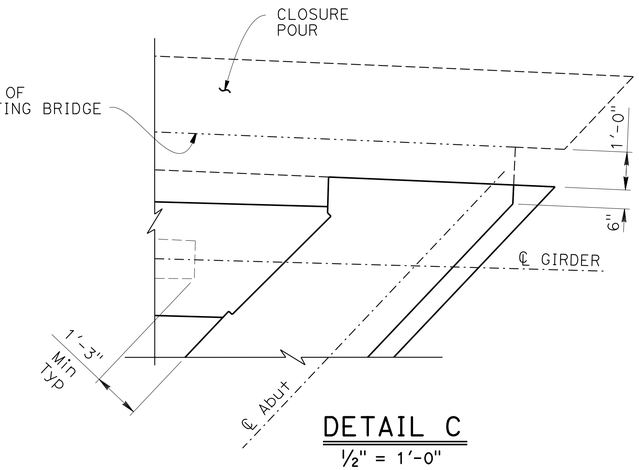

DETAIL C
½" = 1'-0"

LEGEND:

——— Indicates new Structure

-·-·- Indicates existing Structure

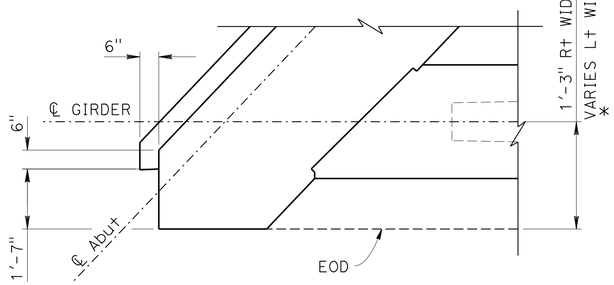

DETAIL B
½" = 1'-0"

NOTE: RIGHT WIDEN IS SHOWN.
LEFT WIDEN IS SIMILAR

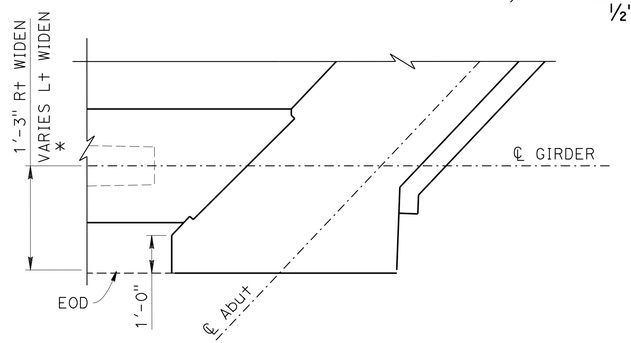

DETAIL D
½" = 1'-0"

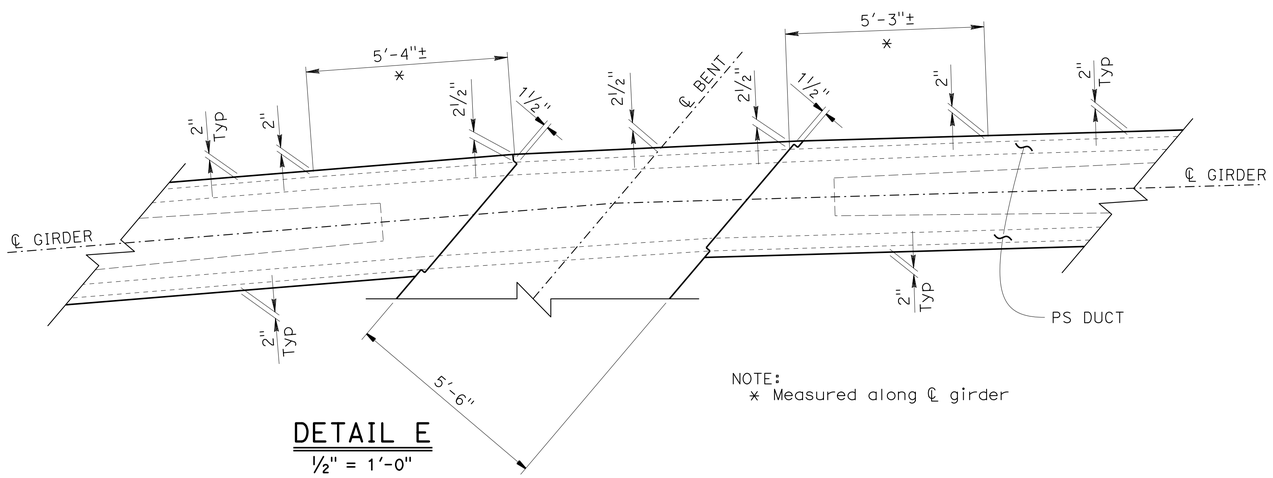

NOTE:
* Measured along ℄ girder

DETAIL E
½" = 1'-0"

NOTE:
THE CONTRACTOR SHALL VERIFY ALL CONTROLLING FIELD DIMENSIONS BEFORE ORDERING OR FABRICATING ANY MATERIAL.

	BY	CHECKED
DESIGN	Sharareh Bikaee	Jason Fang/ Dawit Worku
DETAILS	Lan T Tran/ J. Valencia	Jason Fang/ Dawit Worku
QUANTITIES	Sharareh Bikaee	Edward B. Mu

STATE OF CALIFORNIA
DEPARTMENT OF TRANSPORTATION

DIVISION OF ENGINEERING SERVICES
STRUCTURE DESIGN
DESIGN BRANCH 20

BRIDGE NO. 53-0671
POST MILE 38.97

HOLT AVENUE UNDERCROSSING (WIDEN)
PRECAST GIRDER DETAILS NO. 2

STRUCTURES DESIGN DETAIL SHEET (ENGLISH) (REV. 09-01-10)

ORIGINAL SCALE IN INCHES FOR REDUCED PLANS 0 1 2 3

UNIT: 3622
PROJECT NUMBER & PHASE: 0713000007-1
CONTRACT NO.: 07-1193U1

DISREGARD PRINTS BEARING EARLIER REVISION DATES

REVISION DATES: 5-28-14 10-28-13 2-25-14

SHEET 20 OF 42

FILE => 53-0671-1-gdt02.dgn

USERNAME => s125624 DATE PLOTTED => 18-MAY-2015 TIME PLOTTED => 14:07

DIST	COUNTY	ROUTE	POST MILES TOTAL PROJECT	SHEET No.	TOTAL SHEETS
07	LA	10	37.2/42.4	1641	2313

REGISTERED CIVIL ENGINEER 10/01/14 DATE

6-1-15
PLANS APPROVAL DATE

REGISTERED PROFESSIONAL ENGINEER Dawit T Worku No. C60711 Exp 12-31-14 CIVIL STATE OF CALIFORNIA

The State of California or its officers or agents shall not be responsible for the accuracy or completeness of electronic copies of this plan sheet.

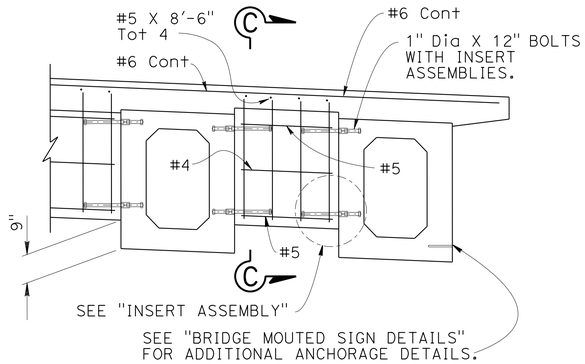

INTERMEDIATE DIAPHRAGM

½" = 1'-0"

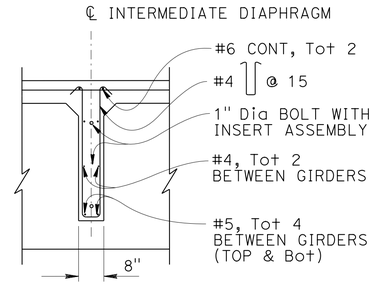

SECTION C-C

½" = 1'-0"

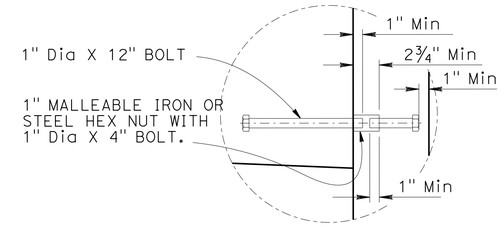

INSERT ASSEMBLY

1½" = 1'-0"

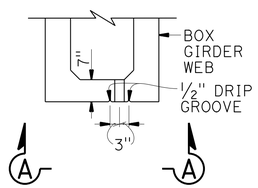

VENT DETAIL

½" = 1'-0"

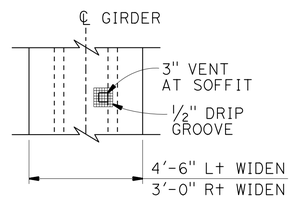

VIEW A-A

½" = 1'-0"

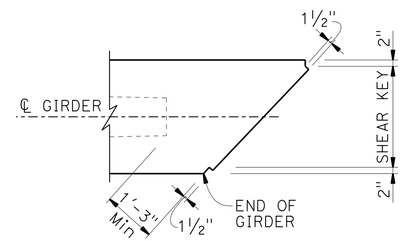

PLAN-END DIAPHRAGM

½" = 1'-0"

NOTE:
Right Widen shown, Left Widen similar

Girder		Length "L"	Number of strands			Deflection @ mid span (In)				
			Top	Bottom						
Location	Designation			Bonded	Debonded	Load Pretensioning	Girder	CIP Deck	Post Tensioning	Sound Wall
Span 1	a_1	98'-7⅜"	-	14	4	0.64	-1.02	-0.19	1.06	-1.09
Span 1	b_1	97'-5⅜"	-	14	4	0.64	-1.01	-0.19	1.06	-0.31
Span 1	c_1	105'-2¼"	-	14	4	1.06	-1.58	-0.32	1.53	-1.13
Span 1	d_1	102'-8⅜"	-	14	4	1.00	-1.42	-0.24	1.51	-1.45
Span 2	a_2	93'-5½"	-	14	4	0.58	-0.82	-0.15	0.93	-0.75
Span 2	b_2	91'-11⅛"	-	14	4	0.58	-0.82	-0.14	0.93	-0.37
Span 2	c_2	94'-5¾"	-	14	4	0.84	-1.00	-0.20	1.25	-0.51
Span 2	d_2	96'-11⅜"	-	14	4	0.87	-1.10	-0.19	1.38	-0.62

PRESTRESSING NOTES (PRETENTIONING)

Number of prestressing strands based on:
Strand Size = ø0.6"
Fpu = 270 ksi, low laxation strands.
Strand Presstressing tensile stress = 202.5 ksi

Concrete Strength: f'_{ci} = 4.8 ksi @ time of stressing,
f'_c = 6.0 ksi @ 28 days

Deflection components: informational - to be used in setting screed line elevations

Screed line elevation for deck concrete will be determined

Debonded strands shall be placed symmetrically along ℄ of girders. Debonded length shall be 10'-0" from end of the girders.

NOTES:

1. Minimum of two vents per span in each precast girder. Both vents to be located at 12' from inside face of girder.

LEGEND OF LOAD TYPE FOR DEFLECTION:

Pretensioning:
-Estimated Prestressing deflection at release due to prestressing only.

Girder:
-Precast girder deflection at release due to selfweight.

CIP Deck:
-Deflection of composit girder due to cast in place deck, overhang and intermediate diaphragm after removal temporary support

Post tensioning:
-Estimated Post tensioning deflection of composit girder due to the effect of post tensioning after removal of temporary support.

Sound wall:
-Deflection of composit girder due to bridge barrier, sound wall and closure pour.

NOTE:
THE CONTRACTOR SHALL VERIFY ALL CONTROLLING FIELD DIMENSIONS BEFORE ORDERING OR FABRICATING ANY MATERIAL.

	BY	CHECKED
DESIGN	Sharareh Bikaee	Jason Fang/ Dawit Worku
DETAILS	Lan T Tran/ J. Valencia	Jason Fang/ Dawit Worku
QUANTITIES	Sharareh Bikaee	Edward B. Mu

STATE OF CALIFORNIA
DEPARTMENT OF TRANSPORTATION

DIVISION OF ENGINEERING SERVICES
STRUCTURE DESIGN
DESIGN BRANCH 20

BRIDGE NO. 53-0671
POST MILE 38.97

HOLT AVENUE UNDERCROSSING (WIDEN)
PRECAST GIRDER DETAILS NO. 3

STRUCTURES DESIGN DETAIL SHEET (ENGLISH) (REV. 09-01-10)

ORIGINAL SCALE IN INCHES FOR REDUCED PLANS 0 1 2 3

UNIT: 3622
PROJECT NUMBER & PHASE: 0713000007-1 CONTRACT NO.: 07-1193U1

DISREGARD PRINTS BEARING EARLIER REVISION DATES

REVISION DATES 9-09-13 9-24-13 6-17-13

SHEET 21 OF 42

FILE => 53-0671-1-gdt03.dgn

USERNAME => s125624 DATE PLOTTED => 18-MAY-2015 TIME PLOTTED => 14:07

DIST	COUNTY	ROUTE	POST MILES TOTAL PROJECT	SHEET No.	TOTAL SHEETS
07	LA	10	37.2/42.4	1642	2313

REGISTERED CIVIL ENGINEER 10/01/14 DATE

6-1-15
PLANS APPROVAL DATE

REGISTERED PROFESSIONAL ENGINEER Dawit T Worku No. C60711 Exp 12-31-14 CIVIL STATE OF CALIFORNIA

The State of California or its officers or agents shall not be responsible for the accuracy or completeness of electronic copies of this plan sheet.

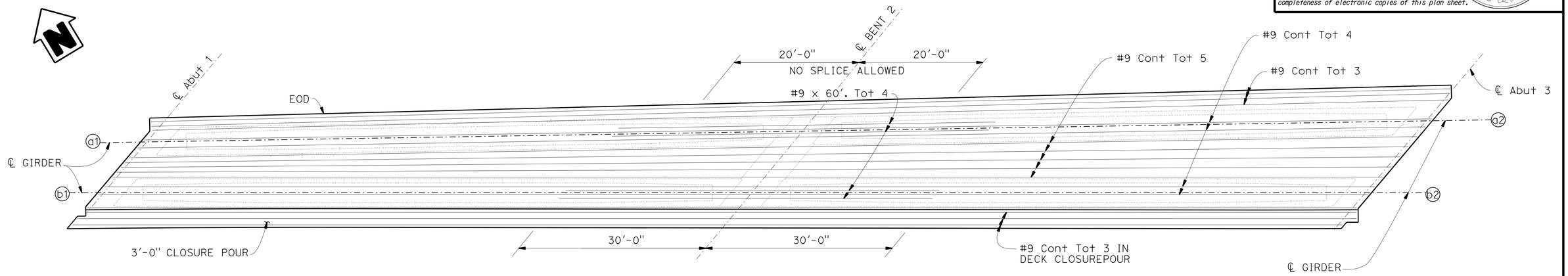

TOP LONGITUDINAL REINFORCEMENT (LEFT WIDEN)

1/8" = 1'-0"

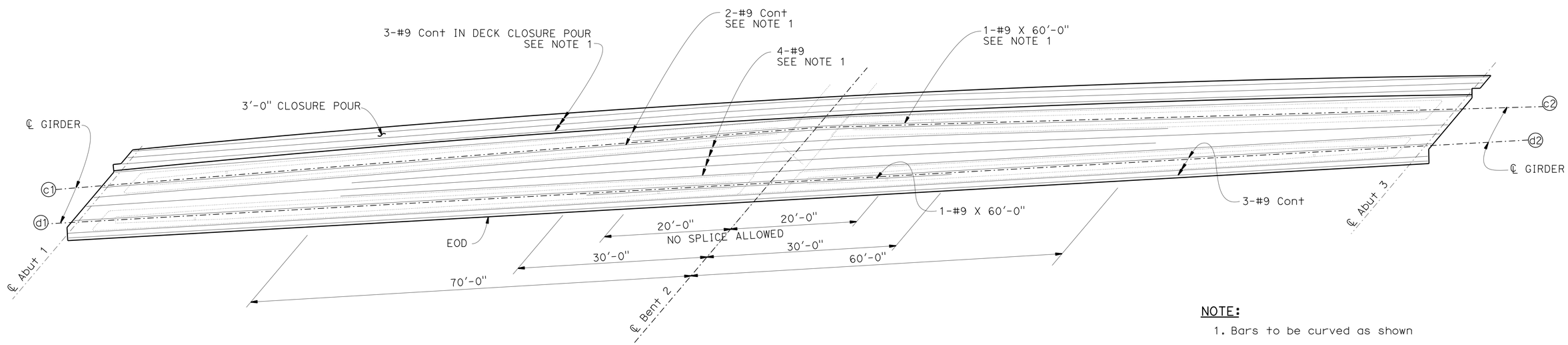

TOP LONGITUDINAL REINFORCEMENT (RIGHT WIDEN)

1/8" = 1'-0"

NOTE:
1. Bars to be curved as shown

NOTE:
THE CONTRACTOR SHALL VERIFY ALL CONTROLLING FIELD DIMENSIONS BEFORE ORDERING OR FABRICATING ANY MATERIAL.

	BY	CHECKED
DESIGN	Sharareh Bikaee	Jason Fang/ Dawit Worku
DETAILS	Lan T Tran/ J. Valencia	Jason Fang/ Dawit Worku
QUANTITIES	Sharareh Bikaee	Edward B. Mu

STATE OF CALIFORNIA
DEPARTMENT OF TRANSPORTATION

DIVISION OF ENGINEERING SERVICES
STRUCTURE DESIGN
DESIGN BRANCH 20

BRIDGE NO. 53-0671
POST MILE 38.97

HOLT AVENUE UNDERCROSSING (WIDEN)
GIRDER REINFORCEMENT

STRUCTURES DESIGN DETAIL SHEET (ENGLISH) (REV. 09-01-10)

ORIGINAL SCALE IN INCHES FOR REDUCED PLANS 0 1 2 3

UNIT: 3622
PROJECT NUMBER & PHASE: 0713000007-1
CONTRACT NO.: 07-1193U1

DISREGARD PRINTS BEARING EARLIER REVISION DATES

REVISION DATES 12/12/12 5-16-13 10-29-13

SHEET 22 OF 42

FILE => 53-0671-o-gir_rf01.dgn

USERNAME => s125624 DATE PLOTTED => 18-MAY-2015 TIME PLOTTED => 14:07

DIST	COUNTY	ROUTE	POST MILES TOTAL PROJECT	SHEET No.	TOTAL SHEETS
07	LA	10	37.2/42.4	1643	2313

REGISTERED CIVIL ENGINEER 10/01/14 DATE

6-1-15
PLANS APPROVAL DATE

The State of California or its officers or agents shall not be responsible for the accuracy or completeness of electronic copies of this plan sheet.

REGISTERED PROFESSIONAL ENGINEER — Dawit T Worku — No. C60711 — Exp 12-31-14 — CIVIL — STATE OF CALIFORNIA

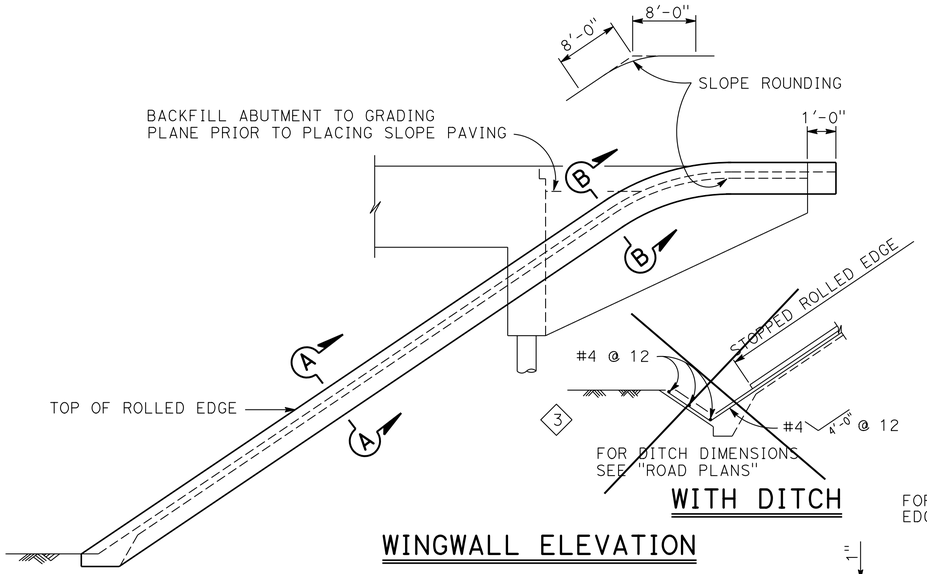

WITH DITCH

WINGWALL ELEVATION

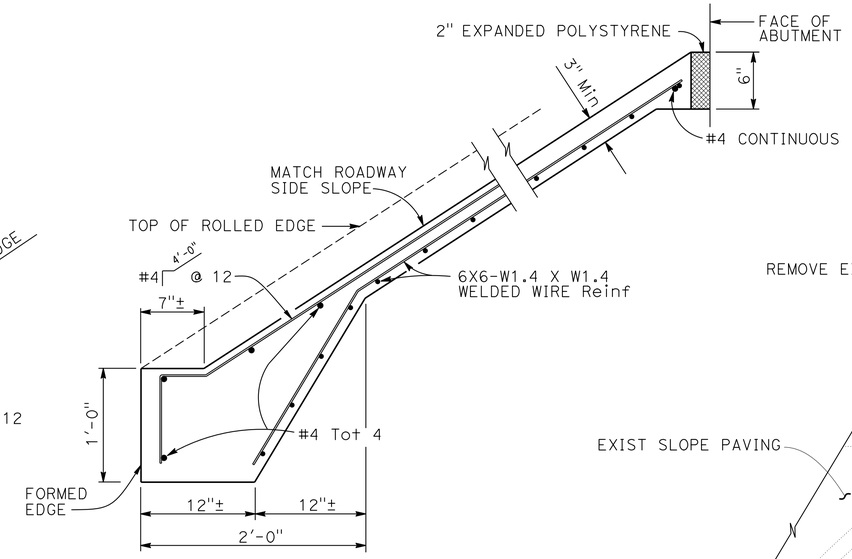

TYPICAL SECTION - CONCRETE PAVING

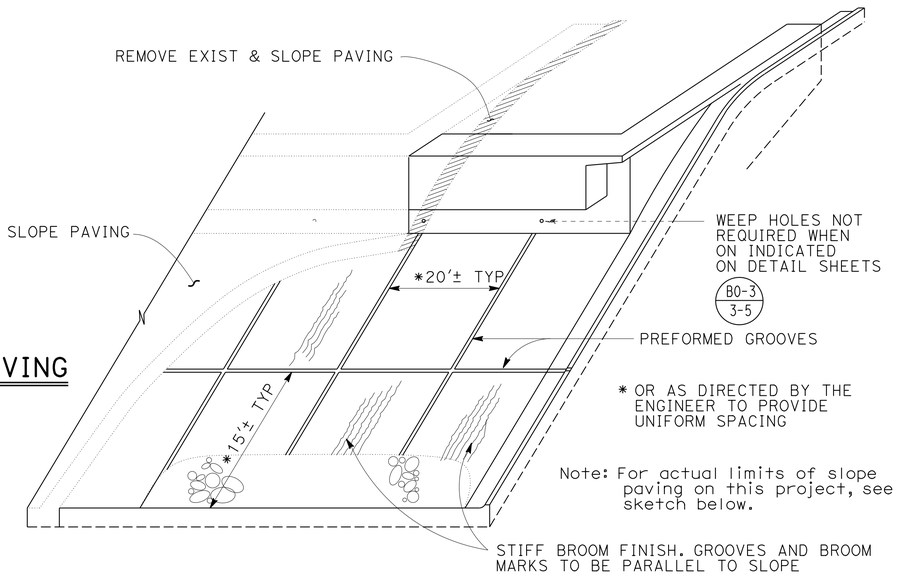

1 PICTORIAL VIEW OF TYPICAL INSTALLATION

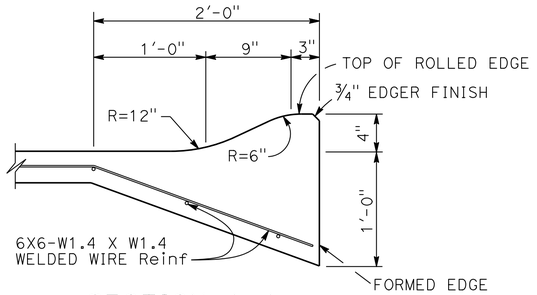

SECTION A-A

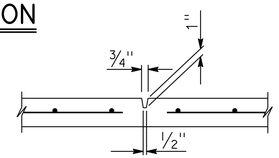

PREFORMED GROOVE

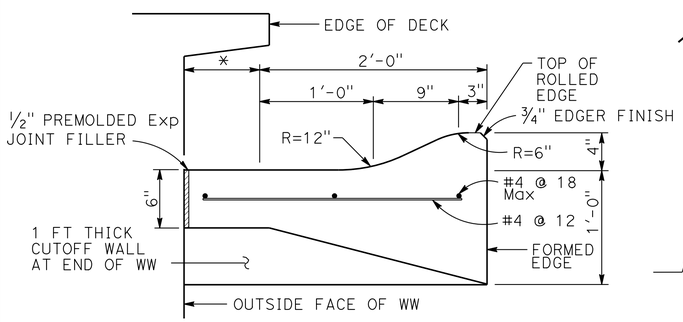

SECTION B-B

* THIS DIMENSION BECOMES ZERO WHEN EDGE OF DECK IS AT OUTSIDE FACE OF WW

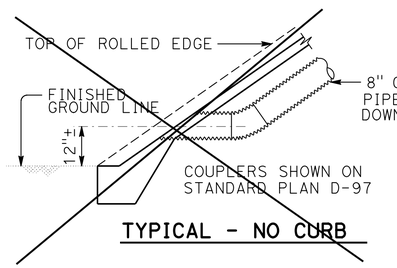

TYPICAL - NO CURB

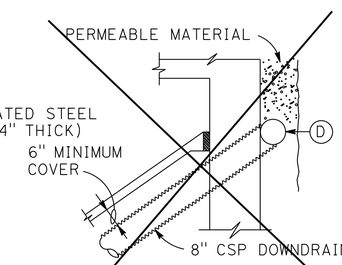

TYPICAL - DRAIN CONNECTION

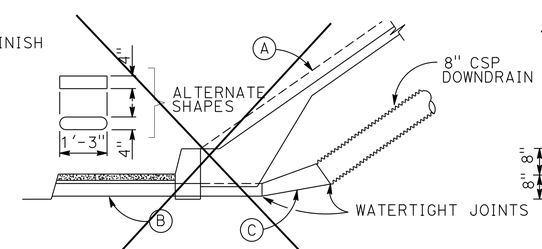

TYPICAL - WITH SIDEWALK

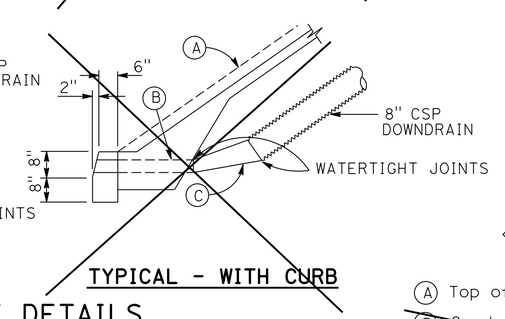

TYPICAL - WITH CURB

DRAINAGE DETAILS

3

NOTE:
Drainage details are only applicable when B0-3 / 3-5 is indicated on detail sheets.

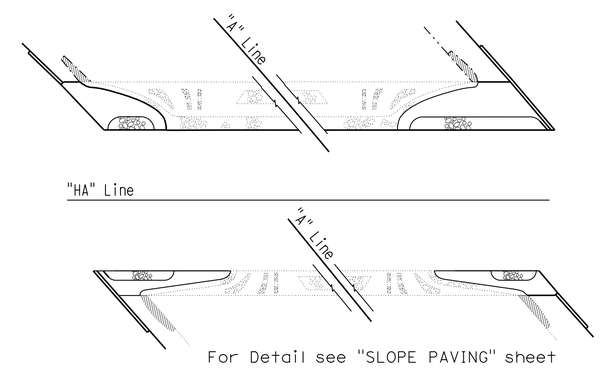

2 LIMITS OF SLOPE PAVING & DRAINAGE LAYOUT

4

(A) Top of rolled edge

(B) Conduit: 0.064" galv corrugated steel or 0.109" smooth galv steel

(C) Taper: 0.064" galv corrugated steel or 0.109" smooth galv steel

(D) 8" perforated steel pipe (0.064" thick) underdrain behind abutment. Connect to downdrain as shown on limits of Slope Paving & Drainage layout.

NO SCALE

REVISED STANDARD DRAWING

FILE NO. xs4-210

APPROVAL DATE July 2011

1 Modified Detail
2 Added Detail
3 Deleted Detail
4 Deleted Legend

STATE OF CALIFORNIA
DEPARTMENT OF TRANSPORTATION

DIVISION OF ENGINEERING SERVICES

BRIDGE NO. 53-0671
POST MILE 38.97

HOLT AVENUE UNDERCROSSING (WIDEN)
SLOPE PAVING-FULL SLOPE

DS OSD 2147A (ENGLISH STANDARD DRAWING "XS" BORDER REV. (02-02-11)

ORIGINAL SCALE IN INCHES FOR REDUCED PLANS 0 1 2 3

UNIT: 3622
PROJECT NUMBER & PHASE: 0713000007-1
CONTRACT NO.: 1193U1

DISREGARD PRINTS BEARING EARLIER REVISION DATES

REVISION DATES: 05/20/14 | 07/22/11 | 9-18-13

SHEET 23 OF 42

FILE => 53-0671-s-slpav01.dgn

USERNAME => s125624 DATE PLOTTED => 18-MAY-2015 TIME PLOTTED => 14:07

DIST	COUNTY	ROUTE	POST MILES TOTAL PROJECT	SHEET No.	TOTAL SHEETS
07	LA	10	37.2/42.4	1644	2313

REGISTERED CIVIL ENGINEER 10/01/14 DATE

6-1-15
PLANS APPROVAL DATE

REGISTERED PROFESSIONAL ENGINEER Dawit T Worku No. C60711 Exp 12-31-14 CIVIL STATE OF CALIFORNIA

The State of California or its officers or agents shall not be responsible for the accuracy or completeness of electronic copies of this plan sheet.

JOINT SPALL REPAIR TABLE

LOCATION	APPROX DEPTH OF JOINT SPALLS (Inch)	APPROX WIDTH OF JOINT SPALLS (Inch)	APPROX LENGTH OF JOINT SPALLS (FEET)
ABUT 1	3	6	8
ABUT 2	3	6	8

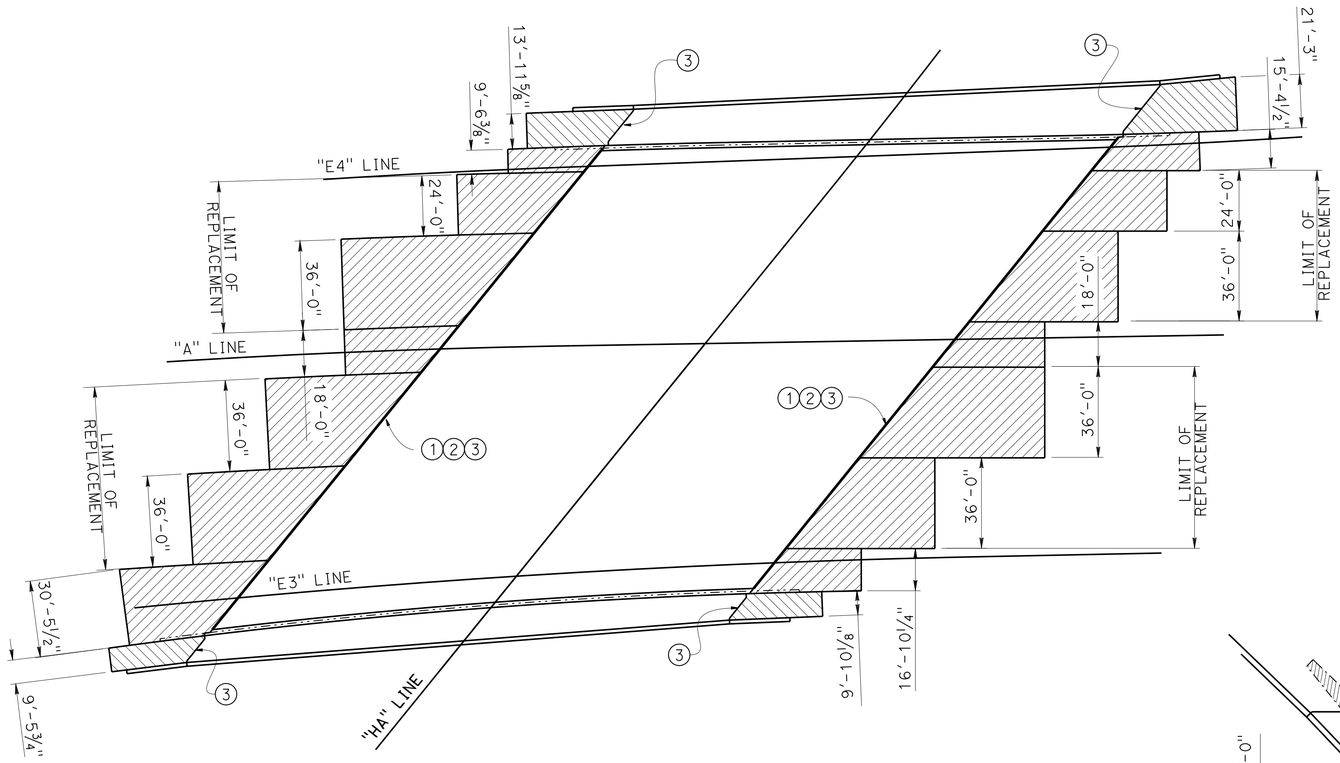

LIMIT OF STRUCTURE APPROACH

1" = 30'

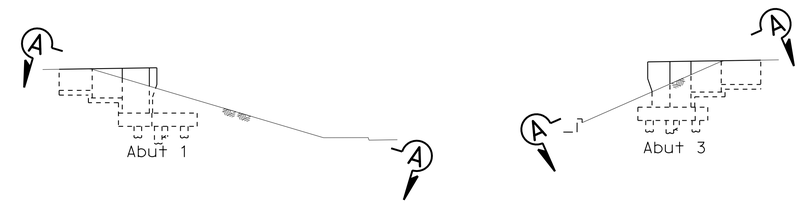

TIPYCAL SECTION

NO SCALE

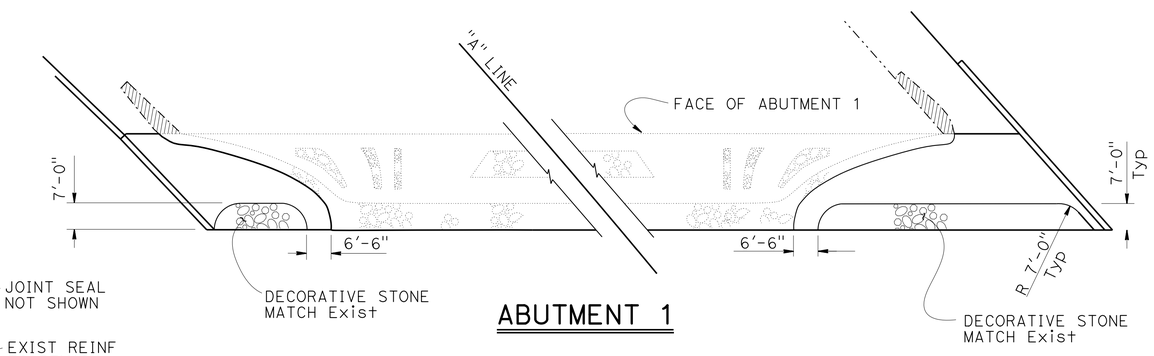

ABUTMENT 1

LEGEND:

- R(30D)
- N(30D)
- Bridge removal (portion)
- Existing Decorative Stone
- New Decorative Stone
- Joint Seal removal and replace with new Joint Seal.
- Indicates new Structure
- Indicates existing Structure

NOTE:

1. Paving Notch Extension
2. Prior to placement of new joint seal, remove unsound concrete and patch with rapid setting concrete
3. Joint Seal MR = 1½

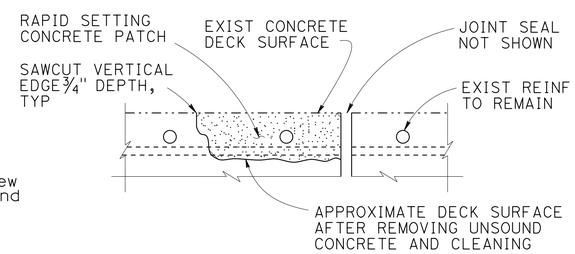

JOINT SPALL REPAIR DETAIL

REINFORCEMENT MAY BE ENCOUNTERED DURING DECK CONCRETE REMOVAL AND IS TO REMAIN UNDAMAGED. LOCATIONS TO BE DETERMINED BY THE ENGINEER.

NO SCALE

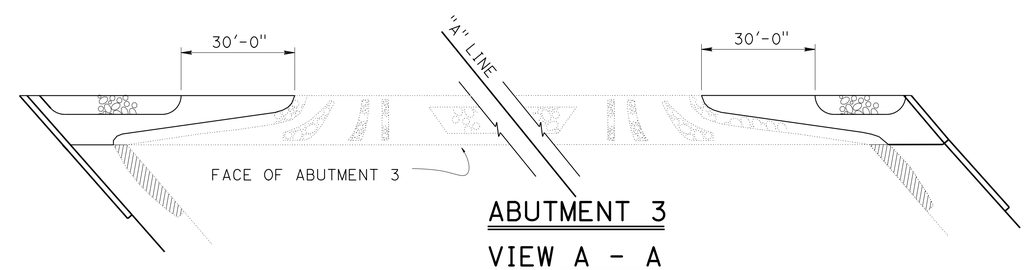

ABUTMENT 3

VIEW A - A

SLOPE PAVING LIMIT

NO SCALE

NOTE:
THE CONTRACTOR SHALL VERIFY ALL CONTROLLING FIELD DIMENSIONS BEFORE ORDERING OR FABRICATING ANY MATERIAL.

	BY	CHECKED
DESIGN	Shargreh Bikaee	Jason Fang/ Dawit Worku
DETAILS	Lan T Tran/ J. Valencia	Jason Fang/ Dawit Worku
QUANTITIES	Shargreh Bikaee	Edward B. Mu

STATE OF CALIFORNIA
DEPARTMENT OF TRANSPORTATION

DIVISION OF ENGINEERING SERVICES
STRUCTURE DESIGN
DESIGN BRANCH 20

BRIDGE NO. 53-0671
POST MILE 38.97

HOLT AVENUE UNDERCROSSING (WIDEN)

SLOPE PAVING

STRUCTURES DESIGN DETAIL SHEET (ENGLISH) (REV. 09-01-10)

ORIGINAL SCALE IN INCHES FOR REDUCED PLANS 0 1 2 3

UNIT: 3622
PROJECT NUMBER & PHASE: 0713000007-1
CONTRACT NO.: 07-1193U1

DISREGARD PRINTS BEARING EARLIER REVISION DATES

REVISION DATES 1-29-14 2-25-14 5-28-14

SHEET 24 OF 42

FILE => 53-0671-s-slpav02.dgn

USERNAME => s125624 DATE PLOTTED => 18-MAY-2015 TIME PLOTTED => 14:07

DIST	COUNTY	ROUTE	POST MILES TOTAL PROJECT	SHEET No.	TOTAL SHEETS
07	LA	10	37./42.4	1645	2313

REGISTERED CIVIL ENGINEER 10/01/14 DATE

6-1-15
PLANS APPROVAL DATE

REGISTERED PROFESSIONAL ENGINEER Dawit T Worku No. C60711 Exp 12-31-14 CIVIL STATE OF CALIFORNIA

The State of California or its officers or agents shall not be responsible for the accuracy or completeness of electronic copies of this plan sheet.

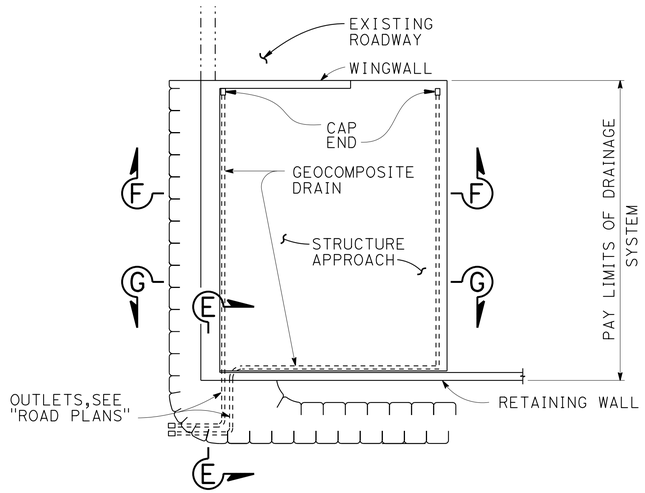

TYPICAL PLAN ①

1" = 10'

* FOR PIPE LAYOUT AT STAGGERED END, SEE "DETAIL B"

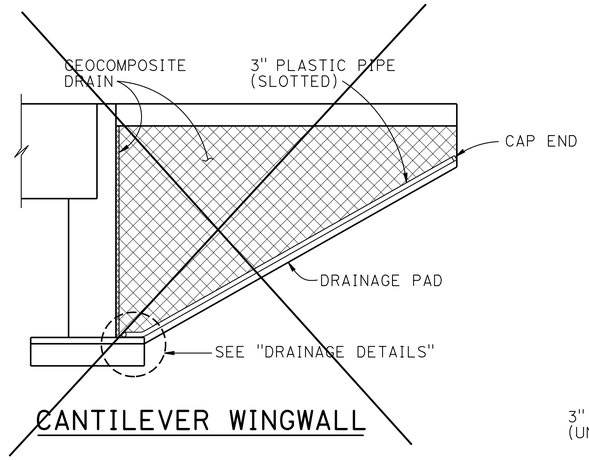

② SECTION F-F

1/4" = 1'-0"

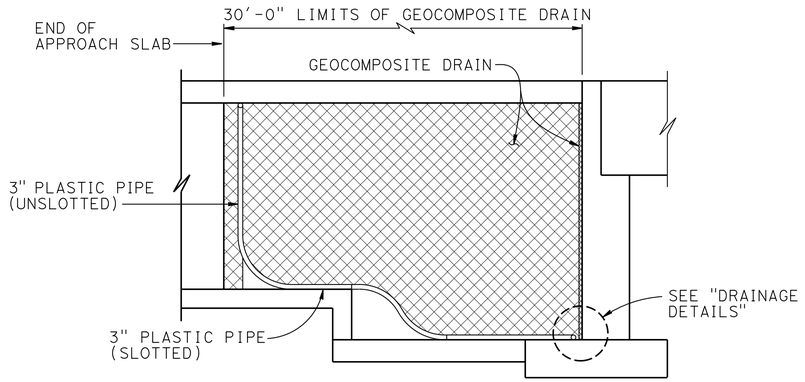

RETAINING WALL WINGWALL DRAINAGE DETAILS

SECTION G-G

1/4" = 1'-0"

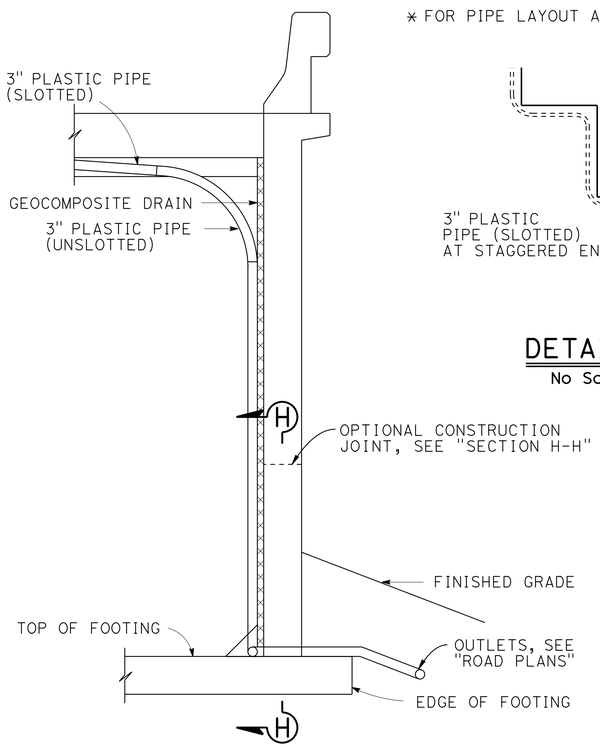

① SECTION E-E

1/2" = 1'-0"

NOTE: Bends and junctions in 3" plastic pipe are 30" radius Min

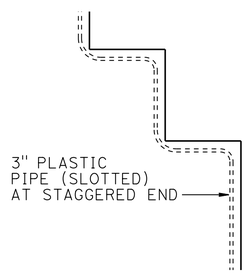

DETAIL B

No Scale

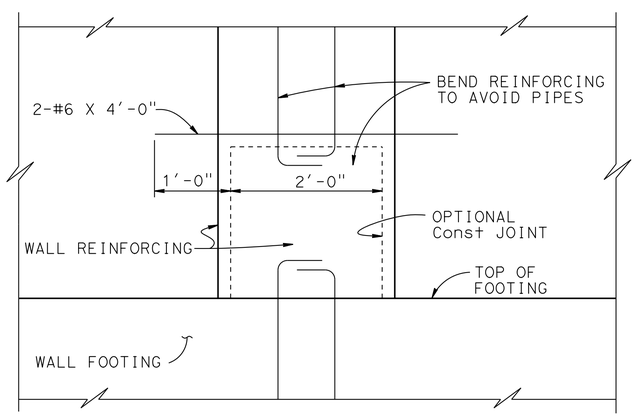

SECTION H-H

1" = 1'-0"

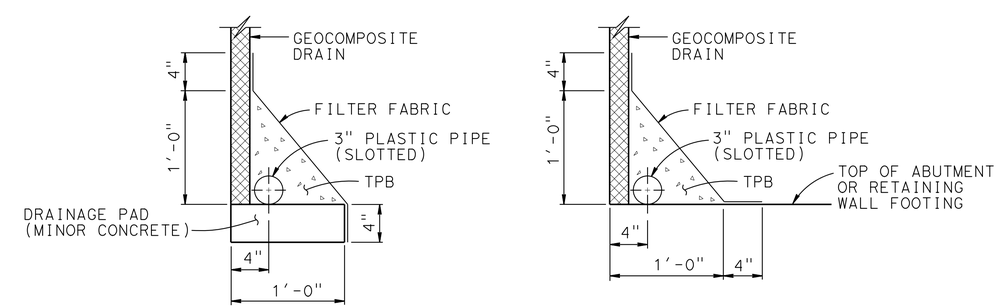

DRAINAGE DETAILS

1 1/2" = 1'-0"

REVISED STANDARD DRAWING

FILE NO. xs3-110

APPROVAL DATE July 2011

① Modified Detail
② Deleted Detail

STATE OF CALIFORNIA DEPARTMENT OF TRANSPORTATION

DIVISION OF ENGINEERING SERVICES

BRIDGE NO. 53-0671

POST MILE 38.97

HOLT AVENUE UNDERCROSSING (WIDEN)

STRUCTURE APPROACH DRAINAGE DETAILS

DS OSD 2147A (ENGLISH STANDARD DRAWING "XS" BORDER REV. (02-02-11)

ORIGINAL SCALE IN INCHES FOR REDUCED PLANS 0 1 2 3

UNIT: 3622
PROJECT NUMBER & PHASE: 0713000007-1
CONTRACT NO.: 07-1193U1

DISREGARD PRINTS BEARING EARLIER REVISION DATES

REVISION DATES 11/02/10 02/02/11 05/31/14 05/28/15

SHEET 25 OF 42

FILE => 53-0671-t-sadd01.dgn

USERNAME => s125624 DATE PLOTTED => 18-MAY-2015 TIME PLOTTED => 14:07

DIST	COUNTY	ROUTE	POST MILES TOTAL PROJECT	SHEET No.	TOTAL SHEETS
07	LA	10	37.2/42.4	1646	2313

REGISTERED CIVIL ENGINEER 10/01/14 DATE

6-1-15
PLANS APPROVAL DATE

The State of California or its officers or agents shall not be responsible for the accuracy or completeness of electronic copies of this plan sheet.

REGISTERED PROFESSIONAL ENGINEER — Dawit T Worku — No. C60711 — Exp 12-31-14 — CIVIL — STATE OF CALIFORNIA

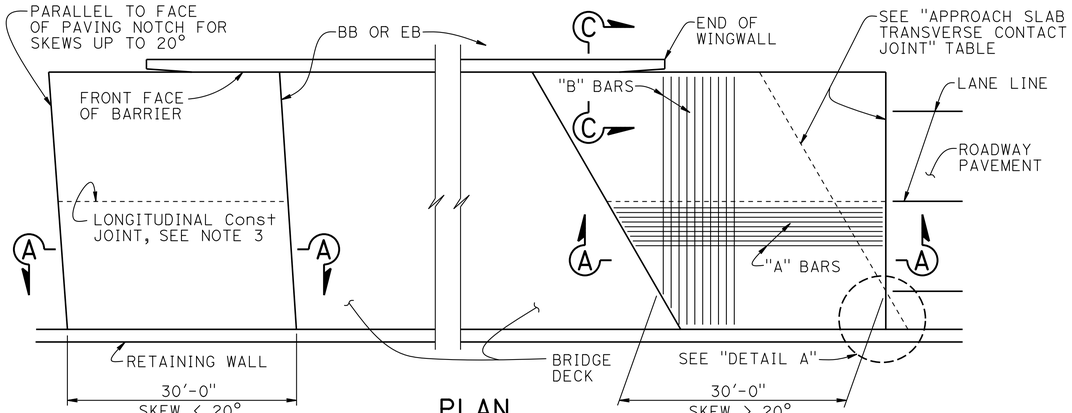

PLAN
1" = 10'

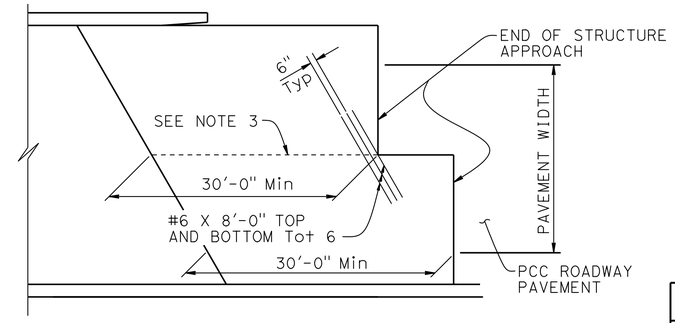

STRUCTURE APPROACH - END STAGGER DETAIL
NO SCALE

APPROACH SLAB TRANSVERSE CONTACT JOINT		
APPROACH SKEW	WITH AC ROADWAY PAVEMENT	WITH PCC ROADWAY PAVEMENT
< 20°	PARALLEL TO FACE OF PN	PARALLEL TO FACE OF PN
20° - 45°	PARALLEL TO FACE OF PN USE "DETAIL A"	STAGGER LINES 24' TO 36' APART
> 45°	PARALLEL TO FACE OF PN USE "DETAIL A"	STAGGER AT EACH LANE LINE

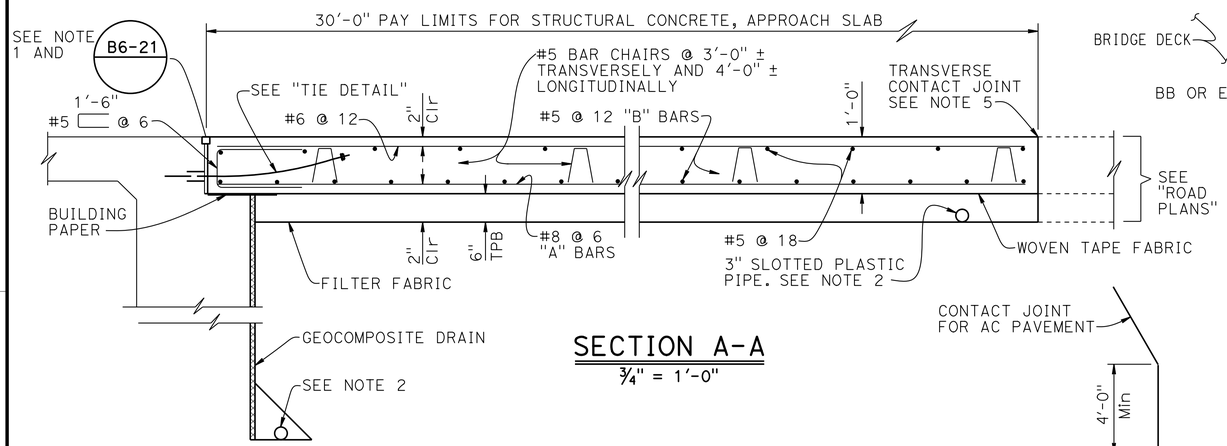

SECTION A-A
¾" = 1'-0"

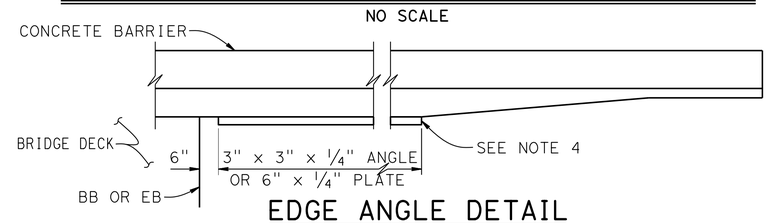

EDGE ANGLE DETAIL
½" = 1'-0"

DETAIL A
NO SCALE

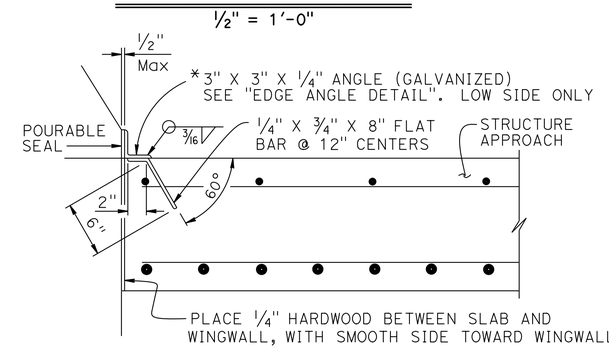

*(TO BE USED WITH CONCRETE BARRIER WITH VERTICAL FACE)

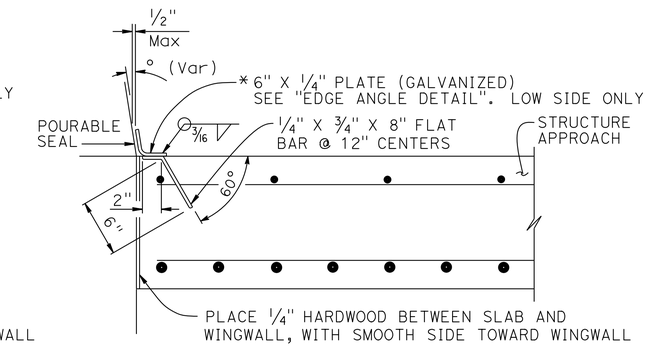

*(TO BE USED WITH CONCRETE BARRIER WITH SLOPING FACE)

DETAIL B
1½" = 1'-0"

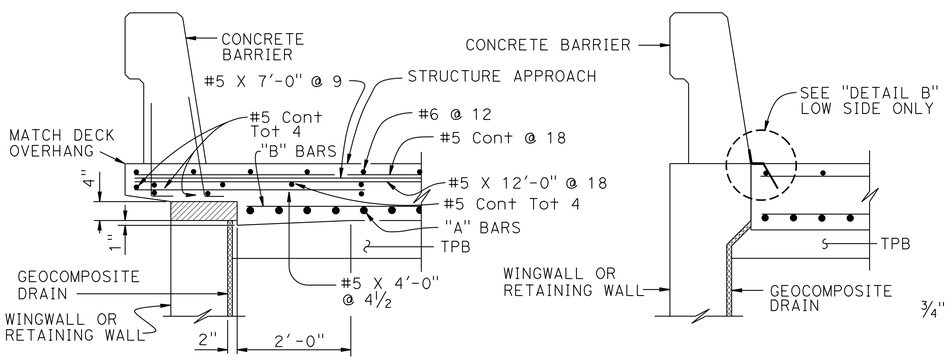

SECTION C-C
¾" = 1'-0"
(Type E-1 to be used, unless otherwise shown on plans)

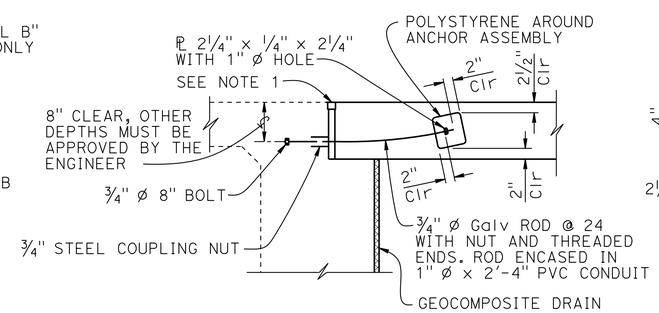

TIE DETAIL
¾" = 1'-0"

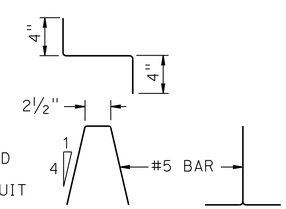

BAR CHAIR DETAIL
1½" = 1'-0"

NOTES:
1. For details not noted or shown, see Structure Plans
2. For drainage details, see "STRUCTURE APPROACH DRAINAGE DETAILS" sheet
3. Longitudinal construction joints, when permitted by the Engineer, shall be located on lane lines
4. End angle or plate at beginning of barrier transition, end of wingwall or end of structure approach, as applicable
5. For transverse contact joint with new PCC paving, refer to Standard Plan P10
6. At the contractor's option, approach slab transverse reinforcement may be placed parallel to paving notch. Spacing of transverse reinforcement is measured along ℄ roadway

STANDARD DRAWING
FILE NO. xs3-140
APPROVAL DATE July 2011

STATE OF CALIFORNIA
DEPARTMENT OF TRANSPORTATION

DIVISION OF ENGINEERING SERVICES

BRIDGE NO. 53-0671
POST MILE 38.97

HOLT AVENUE UNDERCROSSING (WIDEN)
STRUCTURE APPROACH TYPE N(30D)

DS OSD 2147A (ENGLISH STANDARD DRAWING "XS" BORDER REV. (02-02-11))

ORIGINAL SCALE IN INCHES FOR REDUCED PLANS 0 1 2 3

UNIT: 3622
PROJECT NUMBER & PHASE: 0713000007-1
CONTRACT NO.: 07-1193U1

DISREGARD PRINTS BEARING EARLIER REVISION DATES
REVISION DATES 11/02/10

SHEET 26 OF 42

FILE => 53-0671-t-sadd02.dgn

USERNAME => s125624 DATE PLOTTED => 18-MAY-2015 TIME PLOTTED => 14:07

DIST	COUNTY	ROUTE	POST MILES TOTAL PROJECT	SHEET No.	TOTAL SHEETS
07	LA	10	37.2/42.4	1647	2313

REGISTERED CIVIL ENGINEER 10/01/14 DATE

6-1-15
PLANS APPROVAL DATE

REGISTERED PROFESSIONAL ENGINEER Dawit T Worku No. C60711 Exp 12-31-14 CIVIL STATE OF CALIFORNIA

The State of California or its officers or agents shall not be responsible for the accuracy or completeness of electronic copies of this plan sheet.

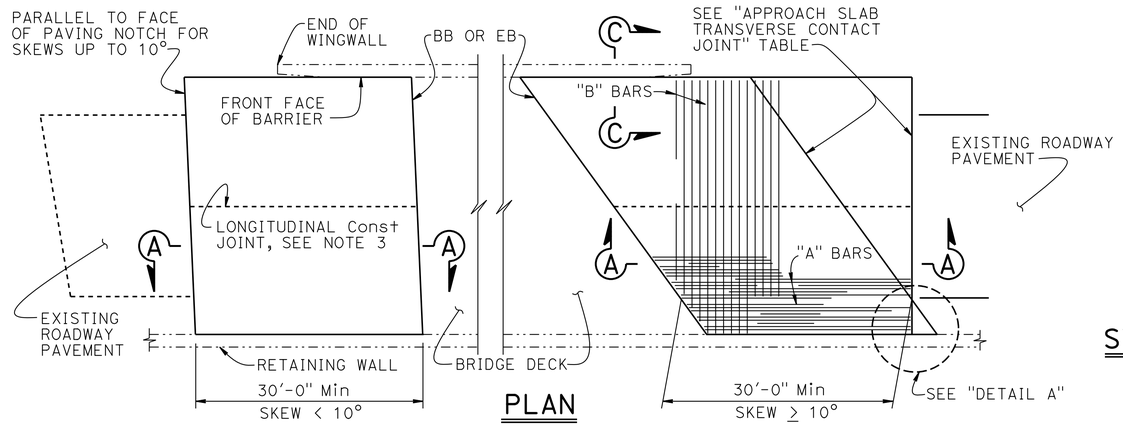

PLAN
1" = 10'

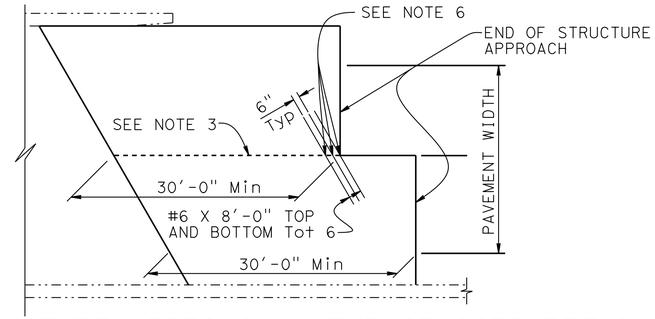

STRUCTURE APPROACH - END STAGGER DETAIL
NO SCALE

APPROACH SLAB TRANSVERSE CONTACT JOINT		
APPROACH SKEW	WITH AC ROADWAY PAVEMENT	WITH PCC ROADWAY PAVEMENT
< 10°	PARALLEL TO FACE OF PN	PARALLEL TO FACE OF PAVING NOTCH
10° - 45°	PARALLEL TO FACE OF PN USE "DETAIL A"	STAGGER LINES 24' TO 36' APART
> 45°	PARALLEL TO FACE OF PN USE "DETAIL A"	STAGGER AT EACH LANE LINE

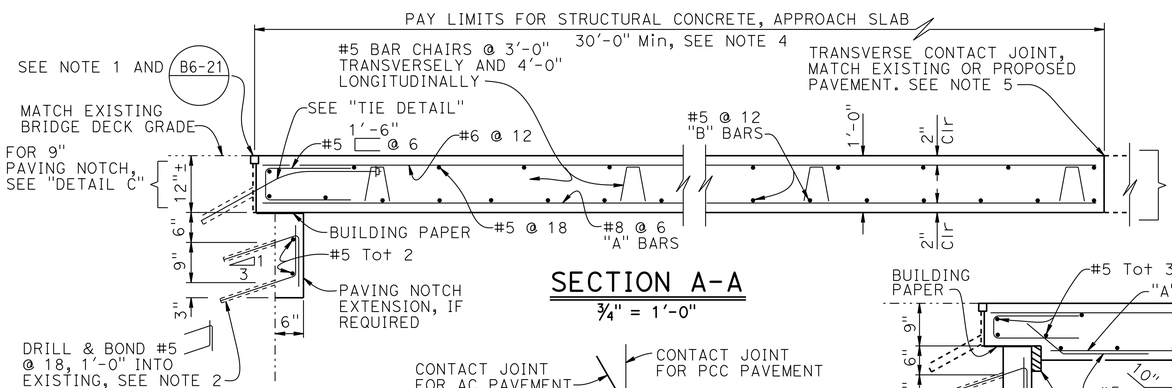

SECTION A-A
¾" = 1'-0"

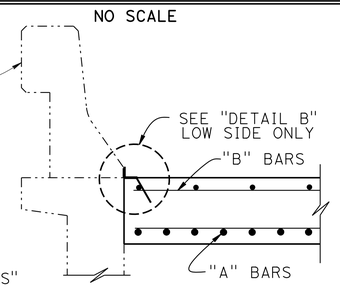

SECTION C-C
¾" = 1'-0"

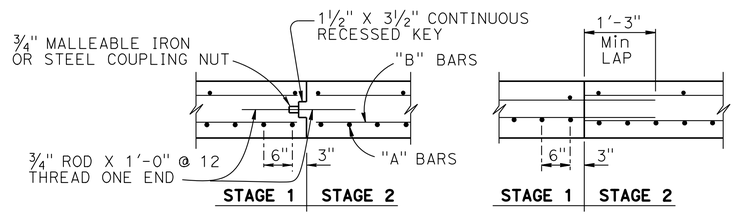

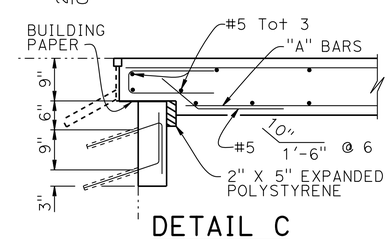

DETAIL C
¾" = 1'-0"

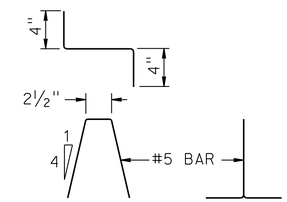

BAR CHAIR DETAIL
1½" = 1'-0"

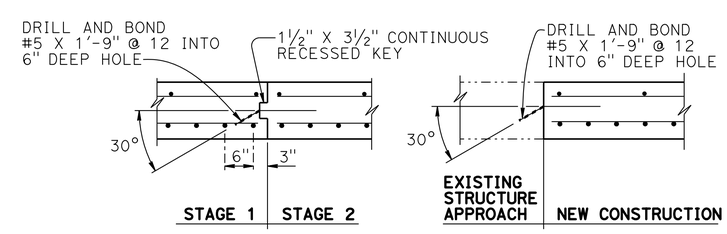

LONGITUDINAL CONSTRUCTION JOINT ALTERNATIVES
¾" = 1'-0"

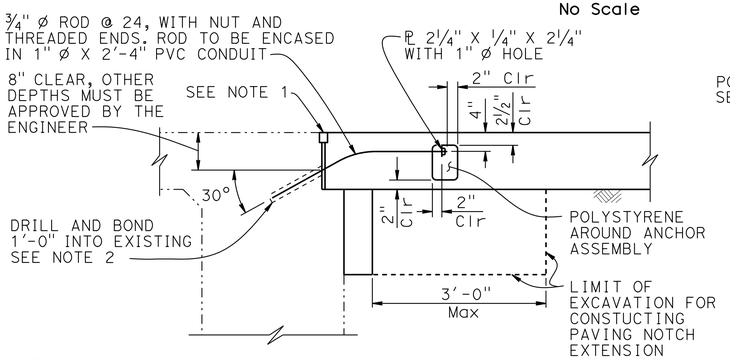

NOTE:
THE CONTRACTOR SHALL VERIFY ALL CONTROLLING FIELD DIMENSIONS BEFORE ORDERING OR FABRICATING ANY MATERIAL.

TIE DETAIL
¾" = 1'-0"

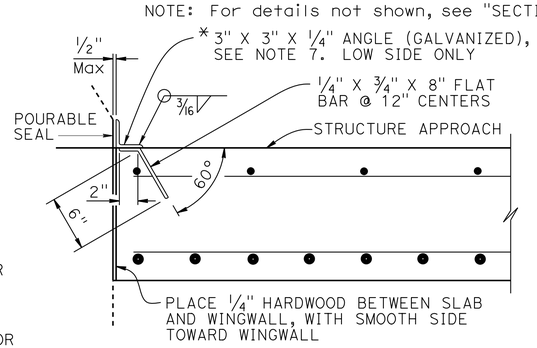

*(TO BE USED WITH CONCRETE BARRIER WITH VERTICAL FACE)

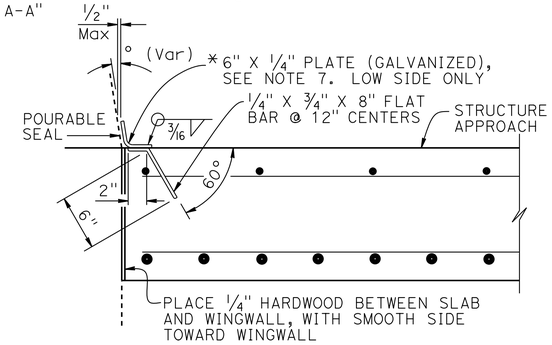

*(TO BE USED WITH CONCRETE BARRIER WITH SLOPING FACE)

DETAIL B
1½" = 1'-0"

NOTE: For details not shown, see "SECTION A-A"

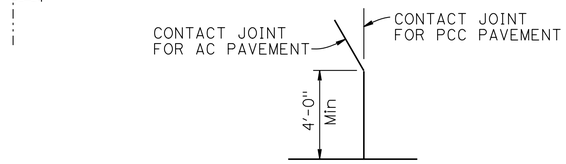

DETAIL A
No Scale

NOTES:
1. For details not shown or noted, see Structure Plans. Adjust bar reinforcement to clear a sawcut for sealed joint, when required
2. Space to avoid existing prestress anchorages and main reinforcement
3. Longitudinal construction joints, when permitted by the Engineer, shall be located on lane lines
4. Transverse contact joint shall be a minimum of 5'-0" from an existing or constructed weakened plane joint
5. For transverse contact joint with new PCC paving. refer to Standard Plan P10
6. Couplers are required for stage construction
7. End angle or plate at beginning of barrier transition, end of wingwall or end of structure approach as applicable

STANDARD DRAWING
FILE NO. xs3-150
APPROVAL DATE July 2011

STATE OF CALIFORNIA
DEPARTMENT OF TRANSPORTATION

DIVISION OF ENGINEERING SERVICES

BRIDGE NO. 53-0671
POST MILE 38.97

HOLT AVENUE UNDERCROSSING (WIDEN)
STRUCTURE APPROACH TYPE R(30D)

DS OSD 2147A (ENGLISH STANDARD DRAWING "XS" BORDER REV. (02-02-11)

ORIGINAL SCALE IN INCHES FOR REDUCED PLANS 0 1 2 3

UNIT: 3622
PROJECT NUMBER & PHASE: 0713000007-1
CONTRACT NO.: 07-1193U1

DISREGARD PRINTS BEARING EARLIER REVISION DATES

REVISION DATES

SHEET 27 OF 42

FILE => 53-0671-t-sadd03.dgn

USERNAME => s125624 DATE PLOTTED => 18-MAY-2015 TIME PLOTTED => 14:07

DIST	COUNTY	ROUTE	POST MILES TOTAL PROJECT	SHEET No.	TOTAL SHEETS
07	LA	10	37.2/42.4	1648	2313

REGISTERED CIVIL ENGINEER — DATE 10/01/14

6-1-15
PLANS APPROVAL DATE

The State of California or its officers or agents shall not be responsible for the accuracy or completeness of electronic copies of this plan sheet.

REGISTERED PROFESSIONAL ENGINEER — Dawit T Worku — No. C60711 — Exp 12-31-14 — CIVIL — STATE OF CALIFORNIA

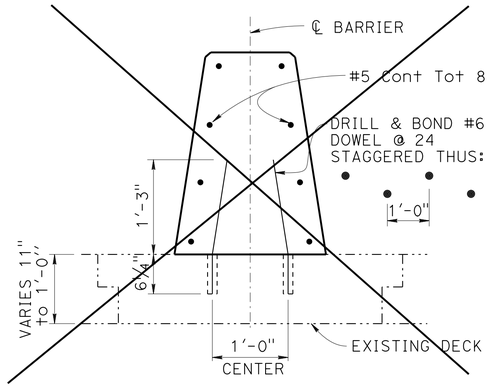

MODIFIED TYPE 60A.1 OR 60SA.1

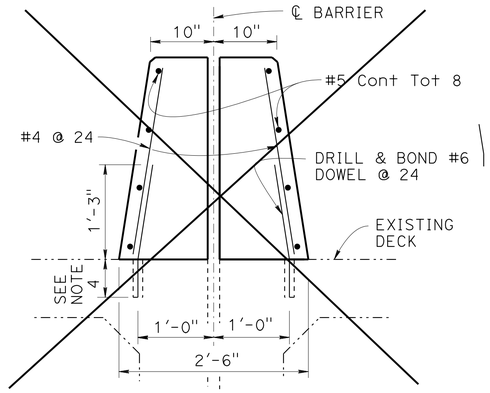

MODIFIED TYPE 60A.4 OR 60SA.4

ONLY VERTICAL DIMENSION VARIES ACCORDING TO RESPECTIVE BARRIER HEIGHT. SEE NOTE 9.

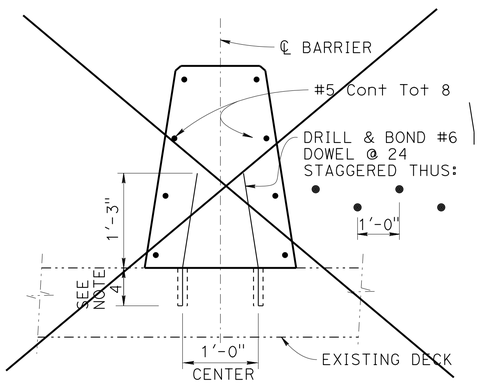

MODIFIED TYPE 60A.2 OR 60SA.2

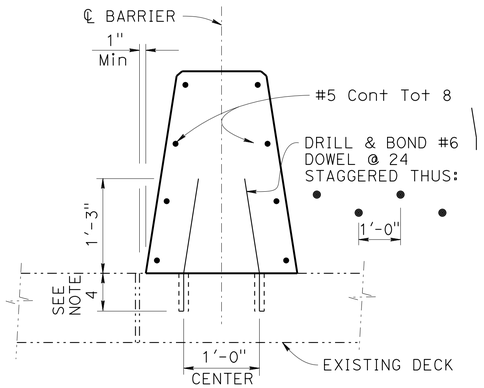

MODIFIED TYPE 60A.5 OR 60SA.5

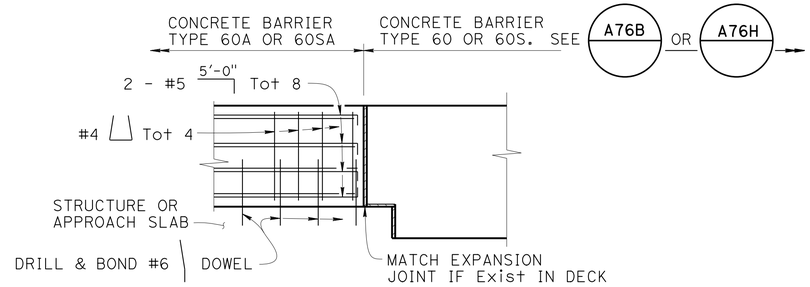

ELEVATION

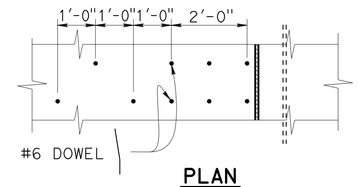

PLAN

CONNECTION TO STRUCTURE

½" = 1'-0"

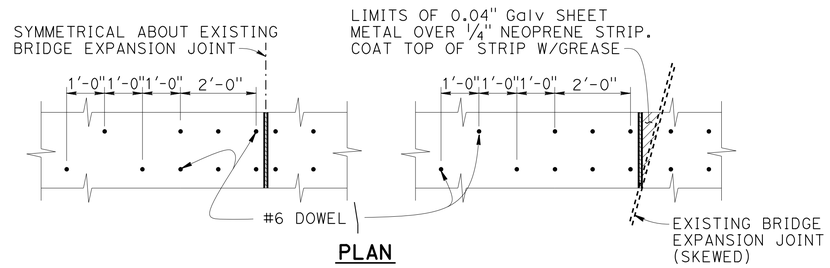

PLAN

DOWEL SPACING AT EXPANSION JOINT

½" = 1'-0"

NOTES:

1. Transverse expansion joints in concrete barrier shall match all deck joints
2. Remove all existing curbs and dikes
3. Existing components of Cable Barrier may be altered and incorporated in Concrete Barriers as indicated. The existing Cable Barrier shall be removed when it is not on the centerline of the new Concrete Barrier
4. Depth of drilled hole equals depth of slab minus 1½", up to 6" maximum
5. Minor adjustments may be made in dowel spacing to clear main reinforcement
6. Transitions to match adjacent "Type 60A" Barrier shall have minimum flare of 20:1 off the structure
7. Barrier to be doweled on either side of deck joints.
8. For Concrete Barrier Type 60A details not shown, see STANDARD PLAN A76A. For Concrete Barrier Type 60SA details not shown, see STANDARD PLANS A76G.
9. Barrier Dimensions-Type 60A & 60SA, see sketch below:

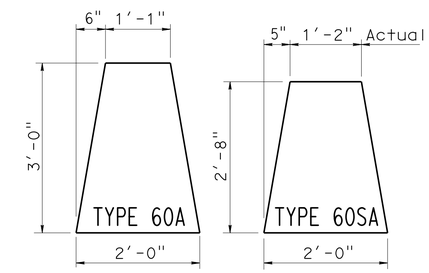

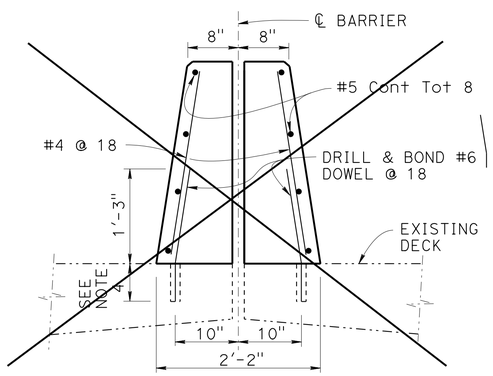

MODIFIED TYPE 60A.3 OR 60SA.3

ONLY VERTICAL DIMENSION VARIES ACCORDING TO RESPECTIVE BARRIER HEIGHT. SEE NOTE 9.

NOTE:
THE CONTRACTOR SHALL VERIFY ALL CONTROLLING FIELD DIMENSIONS BEFORE ORDERING OR FABRICATING ANY MATERIAL.

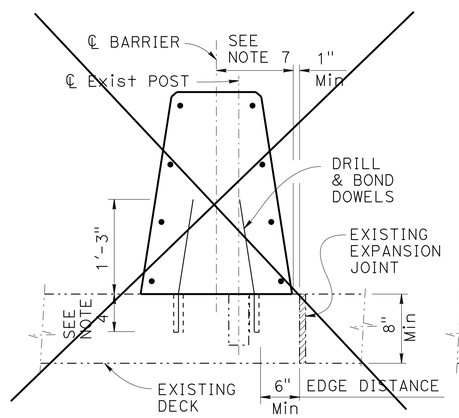

TYPE 1

EXISTING POST HOLE

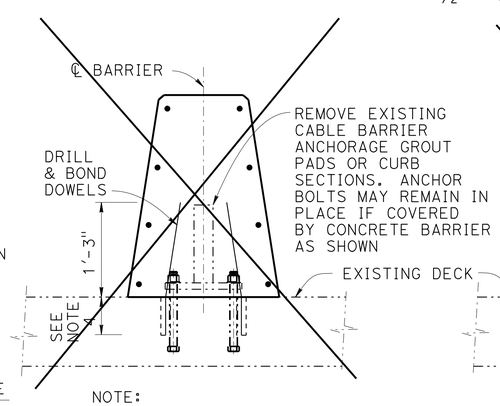

NOTE:
For details not shown, see "TYPE 60A.1 OR 60SA.1"

TYPE 2

AT BOLTED ANCHORAGE PLATE

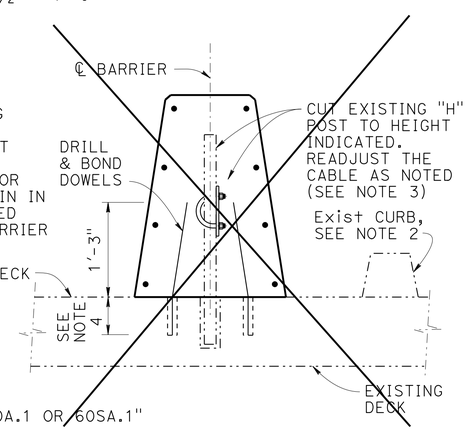

TYPE 3

AT POST HOLES

ASSUMED EXISTING ANCHORAGE CONDITIONS AND DETAILS

LEGEND:

- - - - - Indicates existing structure
——— Indicates new structure

SCALE: 1" = 1'-0" except as noted

REVISED STANDARD DRAWING

FILE NO. xs16-100 — APPROVAL DATE July 2011

STATE OF CALIFORNIA — DEPARTMENT OF TRANSPORTATION

DIVISION OF ENGINEERING SERVICES

BRIDGE NO. 53-0671 — POST MILE 38.97

HOLT AVENUE UNDERCROSSING (WIDEN)

CONCRETE BARRIER TYPE 60A & TYPE 60SA MOD

DS OSD 2147A (ENGLISH STANDARD DRAWING "XS" BORDER REV. (02-02-11)

ORIGINAL SCALE IN INCHES FOR REDUCED PLANS 0 1 2 3

UNIT: 3622
PROJECT NUMBER & PHASE: 0713000007-1 CONTRACT NO.: 07-1193U1

DISREGARD PRINTS BEARING EARLIER REVISION DATES

REVISION DATES 02/22/11 — SHEET 28 OF 42

FILE => 53-0671-u-brdt.dgn

USERNAME => s125624 DATE PLOTTED => 18-MAY-2015 TIME PLOTTED => 14:07

DIST	COUNTY	ROUTE	POST MILES TOTAL PROJECT	SHEET No.	TOTAL SHEETS
07	LA	10	37.2/42.4	1649	2313

REGISTERED CIVIL ENGINEER — DATE 10/01/14

6-1-15
PLANS APPROVAL DATE

REGISTERED PROFESSIONAL ENGINEER — Dawit T Worku — No. C60711 — Exp 12-31-14 — CIVIL — STATE OF CALIFORNIA

The State of California or its officers or agents shall not be responsible for the accuracy or completeness of electronic copies of this plan sheet.

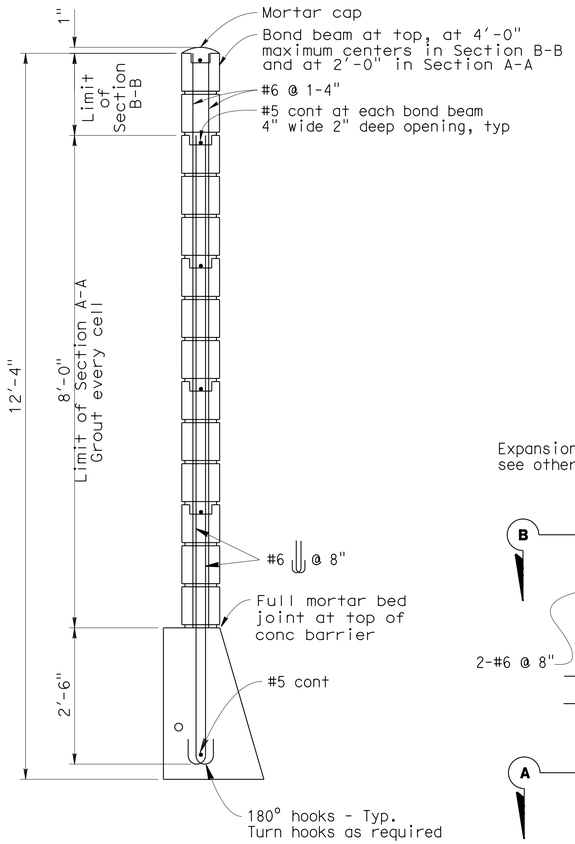

SOUNDWALL SECTION

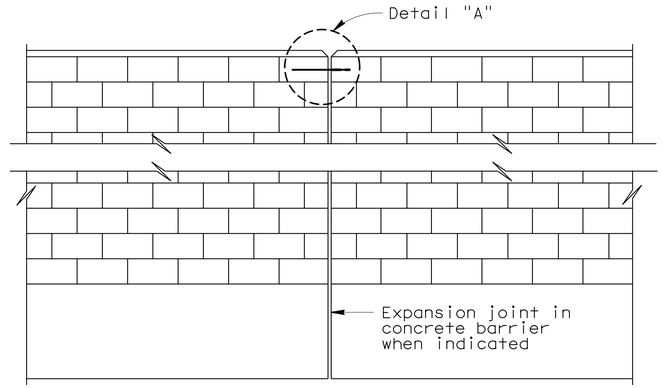

ALIGNMENT KEY DETAIL

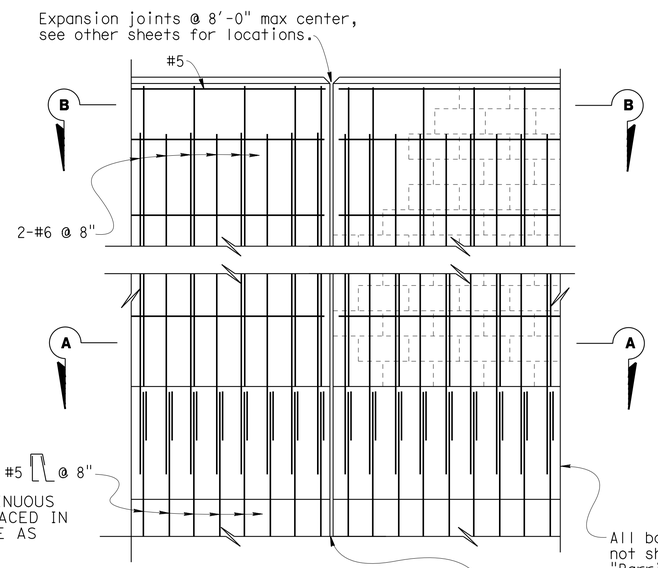

DECK AND WALL JOINT ELEVATION

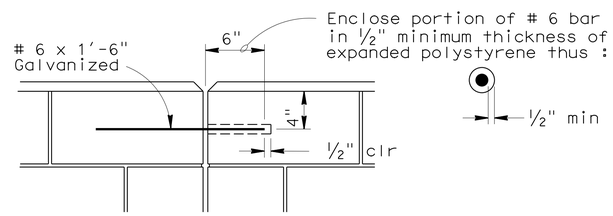

DETAIL A

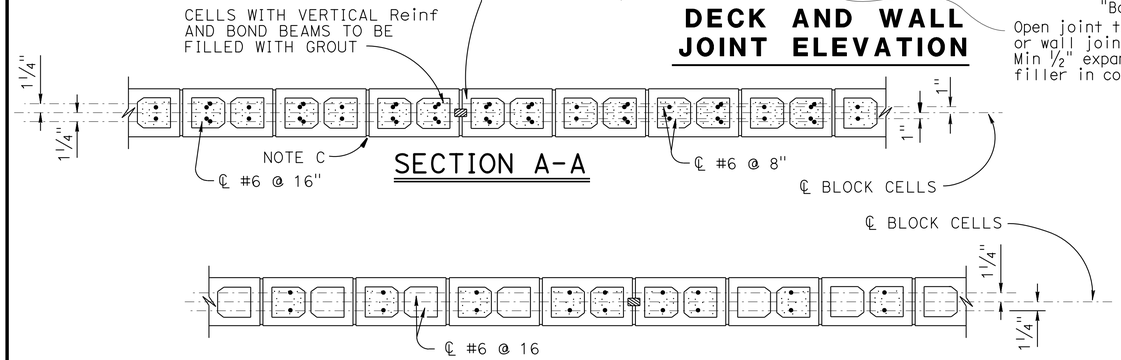

SECTION A-A

SECTION B-B

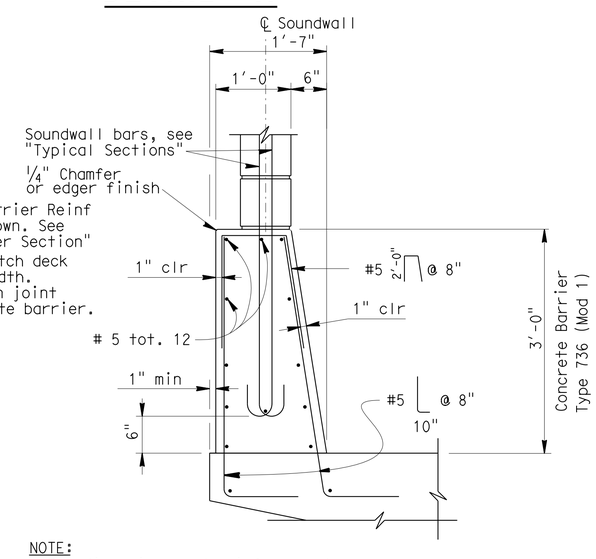

NOTE:
For dimensions and reinforcement not shown, see RSP B11-56

BARRIER SECTION

GENERAL NOTES

Note A: For type of block and joint finish, See other sheets.

Note B: When blocks are laid in stacked bond, ladder type, galvanized joint reinforcement shall be provided. A minimum of 2 - 9 gauge wires continuous at 4'-0" maximum to be used. Locate reinforcement in joints that are at the approximate midpoint between bond beams.

Note C: Horizontal joints shall be tooled concave or may be weathered.
Vertical joints shall be tooled concave or may be raked.

Note D: All masonry to be high strength unless otherwise noted.

Note E: Concrete to be used for the barrier must contain not less than 590 pounds of cementitous material per cubic yard.

Note F: Expansion joints in concrete barrier and masonry block to match deck joints and at ends of wing walls.

Note G: Expansion joints in Soundwall (Masonry Block) shall be at each support, center of span, and at ends of wingwalls.

Note H: For dimensions and reinforcement not shown see "Typical Section" sheet.

DESIGN NOTES

DESIGN DATA

Design: AASHTO LRFD Bridge Design Specifications, 4th edition with California Amendments and Uniform Building Code 1997
CT = 54 kip maximum traffic impact loading evenly distributed over 10 feet at tip of the barrier and 1:1 distributed down and outward

DESIGN WIND LOAD
37 psf

DESIGN SEISMIC LOAD
2.0 Dead load

CONCRETE MASONRY
HIGH STRENGTH
f'm = 2500 psi
fy = 60 kpsi

REINFORCED CONCRETE
f'c = 3.6 ksi
fy = 60 ksi

LOAD COMBINATION AND LIMIT STATES

SERVICE	Q = 1.0 Dc + 1.0 Dw + 0.3 Ws
STRENGTH I	Q = a Dc + 1.5 Dw + 1.75 U
STRENGTH III	Q = a Dc + a Dw + 1.4 Ws
STRENGTH V	Q = a Dc + a Dw + 0.3 Dw
EXTREAM EVENT I	Q = 1.0 Dc + 1.0 Dw + 1.0 EQD
EXTREAM EVENT II	Q = 1.0 Dc + 1.0 Dw + 0.5 LL + 1.0 CT

WHERE:
Q = FORCE EFRECT
a = 1.25 OR 0.9, WHICHEVER CONTROL DESIGN
Ws = WIND ON STRUCTURE
Dc = DEAD LOAD STRUCTURE COMPONENT
Dw = ADDED DEAD LOAD
LL = LIVE LOAD
EQD = SEISMIC DEAD LOAD
CT = VEHICULAR COLLISION FORCE

STRENGTH REDUCTION FACTORS, Ø

Reinforced concrete:
For flexure — Ø=0.90
For shear — Ø=0.85

Concrete masonry:
For flexure — Ø=0.80
For shear — Ø=0.60

Note 1:
Barrier, Deck and Concrete Masonry are designed by the Strength Design Method.

	BY	CHECKED
DESIGN	Shararch Bikaee	Jason Fang
DETAILS	Lan T Tran/ J. Valencia	Jason Fang
QUANTITIES	Shararch Bikaee	Edward B. Mu

STATE OF CALIFORNIA
DEPARTMENT OF TRANSPORTATION

DIVISION OF ENGINEERING SERVICES
STRUCTURE DESIGN
DESIGN BRANCH 20

BRIDGE NO. 53-0671
POST MILE 38.97

HOLT AVENUE UNDERCROSSING (WIDEN)
SOUNDWALL - MASONRY BLOCK ON BRIDGE

STRUCTURES DESIGN DETAIL SHEET (ENGLISH) (REV. 09-01-10)

ORIGINAL SCALE IN INCHES FOR REDUCED PLANS 0 1 2 3

UNIT: 3622
PROJECT NUMBER & PHASE: 0713000007-1
CONTRACT NO.: 07-1193U1

DISREGARD PRINTS BEARING EARLIER REVISION DATES

REVISION DATES: 10-29-13 12-12-13 1-29-14 12-16-14

SHEET 29 OF 42

FILE => 53-0671-v-swobr.dgn

USERNAME => s125624 DATE PLOTTED => 18-MAY-2015 TIME PLOTTED => 14:07

DIST	COUNTY	ROUTE	POST MILES TOTAL PROJECT	SHEET No.	TOTAL SHEETS
07	LA	10	37.2/42.4	1650	2313

REGISTERED CIVIL ENGINEER 10/01/14 DATE

6-1-15
PLANS APPROVAL DATE

REGISTERED PROFESSIONAL ENGINEER — Dawit T Worku — No. C60711 — Exp 12-31-14 — CIVIL — STATE OF CALIFORNIA

The State of California or its officers or agents shall not be responsible for the accuracy or completeness of electronic copies of this plan sheet.

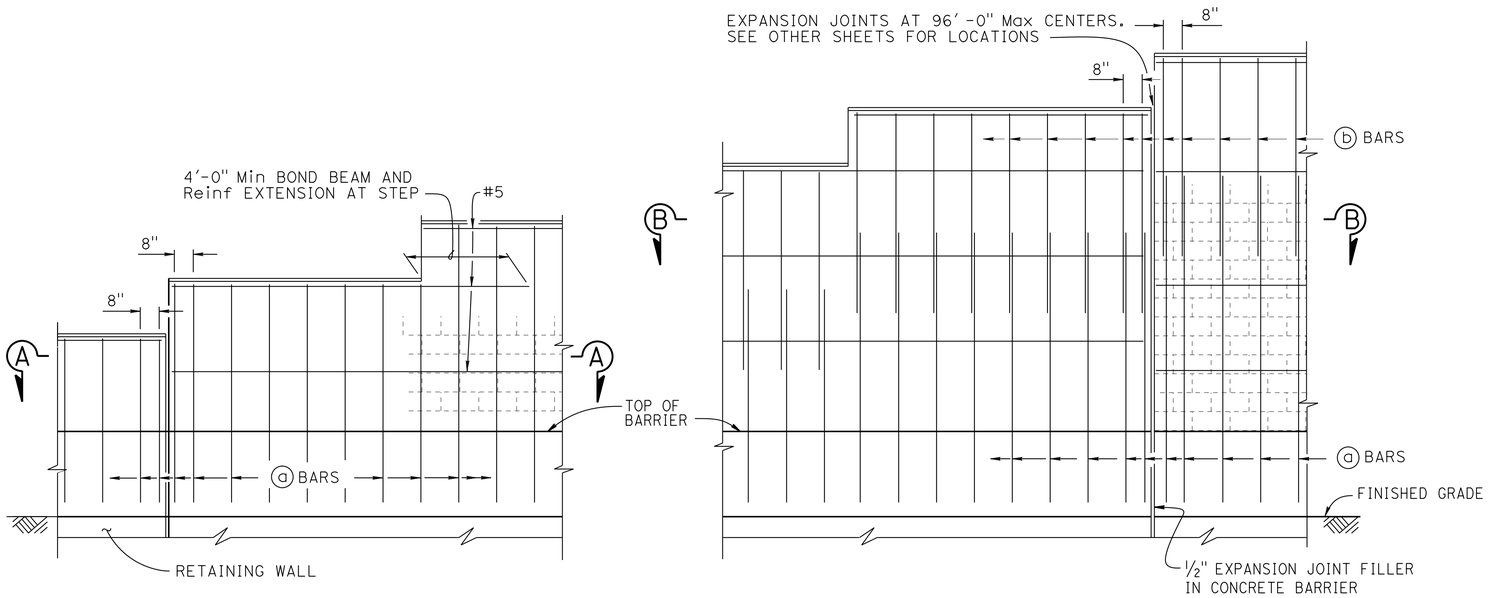

H=6'-4" THRU H=10'-4"

H=12'-4" THRU H=16'-4"

PART ELEVATION

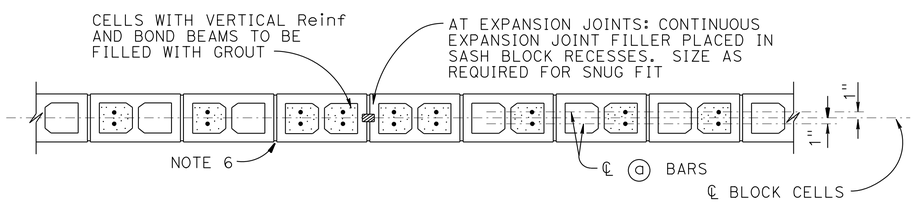

SECTION A-A

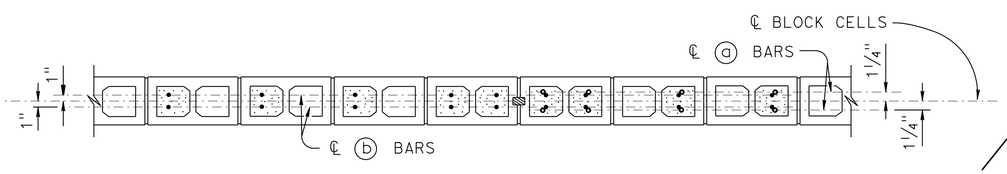

SECTION B-B

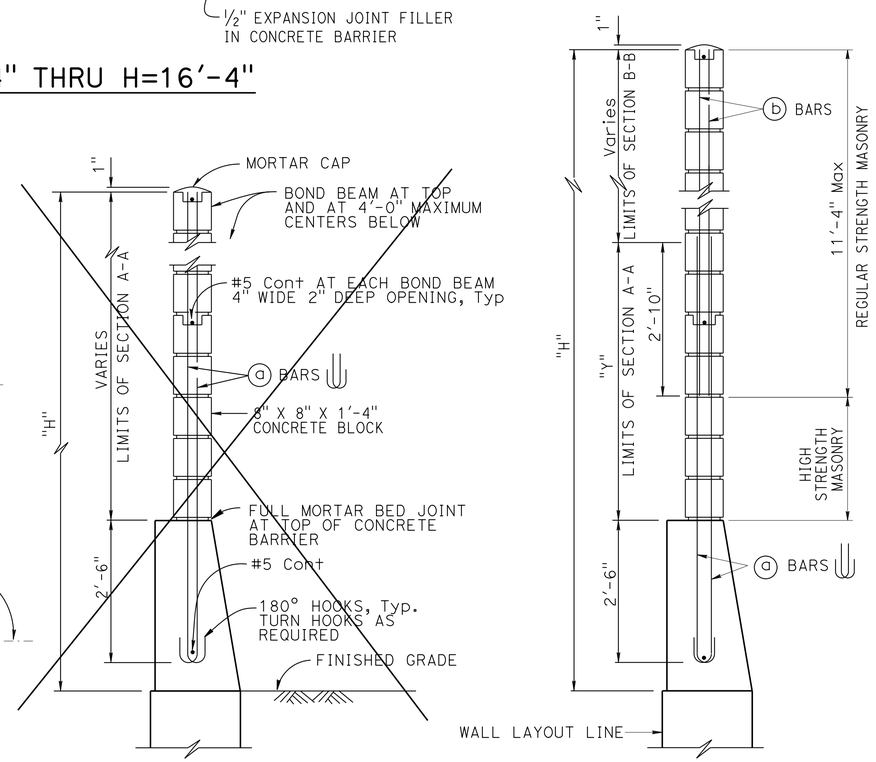

1 H=6'-4" THRU H=10'-4"
For details not shown, see H=12'-4" thru H=16'-4"

H=12'-4" THRU H=16'-4"
For details not shown, see H=6'-4" thru H=10'-4"

TYPICAL SECTION

SOUND WALL REINFORCEMENT TABLE						
MAXIMUM "H"	ⓐ BARS @ 1'-4" Max	ⓑ BARS @ 1'-4" Max	"Y"	f'm (psi)	COMPRESSIVE STRENGTH OF CMU (psi)	MAXIMUM "H"
6'-4"	#4	———	———	1500	1900	6'-4"
8'-4"	#4	———	———	1500	1900	8'-4"
10'-4"	#4	———	———	1500	1900	10'-4"
12'-4"	#5	#4	5'-0"	1500	1900	12'-4"
14'-4"	#6	#4	7'-0"	1500	1900	14'-4"
16'-4"	#6	#4	9'-0"	2500	3700	16'-4"

NOTES:

1. For details not shown, see "SOUND WALL - MASONRY BLOCK WITH BARRIER ON RETAINING WALL - DETAILS NO. 2" sheet
2. Slope ground at traffic side of barrier to drain. Maximum slope ±10%
3. See STANDARD PLANS B15-9 for other details
4. For type of block and joint finish, see other sheets
5. When blocks are laid in stacked bond, ladder type, galvanized joint reinforcement shall be provided. A minimum of 2-9 gauge wire continuous at 4'-0" maximum to be used. Locate reinforcement in joints that are at the approximate midpoint between bond beams
6. Horizontal joints shall be tooled concave or may be weathered. Vertical joints shall be tooled concave or may be raked
7. For intermediate wall heights that are between the "H's" given, use the tabular information for the next higher "H"
8. Masonry strengths are listed in "SOUND WALL REINFORCEMENT TABLE"
9. Concrete to be used for the barrier shall contain not less than 590 pounds of cementitious material per cubic yard

NO SCALE

REVISED STANDARD DRAWING

FILE NO. xs15-130-1

APPROVAL DATE July 2012

1 Delete Details

STATE OF CALIFORNIA
DEPARTMENT OF TRANSPORTATION

DIVISION OF ENGINEERING SERVICES

BRIDGE NO. 53-0671
POST MILE 38.97

HOLT AVENUE UNDERCROSSING (WIDEN)

MASONRY BLOCK SOUND WALL WITH BARRIER ON RETAINING WALL

DETAILS NO. 1

DS OSD 2147A (ENGLISH STANDARD DRAWING "XS" BORDER REV. (02-02-11)

ORIGINAL SCALE IN INCHES FOR REDUCED PLANS 0 1 2 3

UNIT: 3622
PROJECT NUMBER & PHASE: 0713000007-1
CONTRACT NO.: 07-1193U1

DISREGARD PRINTS BEARING EARLIER REVISION DATES

REVISION DATES 5-20-13

SHEET 30 OF 42

FILE => 53-0671-v-swortw01.dgn

USERNAME => s125624 DATE PLOTTED => 18-MAY-2015 TIME PLOTTED => 14:07

DIST	COUNTY	ROUTE	POST MILES TOTAL PROJECT	SHEET No.	TOTAL SHEETS
07	LA	10	37.2/42.4	1651	2313

REGISTERED CIVIL ENGINEER 10/01/14 DATE

6-1-15
PLANS APPROVAL DATE

REGISTERED PROFESSIONAL ENGINEER Dawit T Worku No. C60711 Exp 12-31-14 CIVIL STATE OF CALIFORNIA

The State of California or its officers or agents shall not be responsible for the accuracy or completeness of electronic copies of this plan sheet.

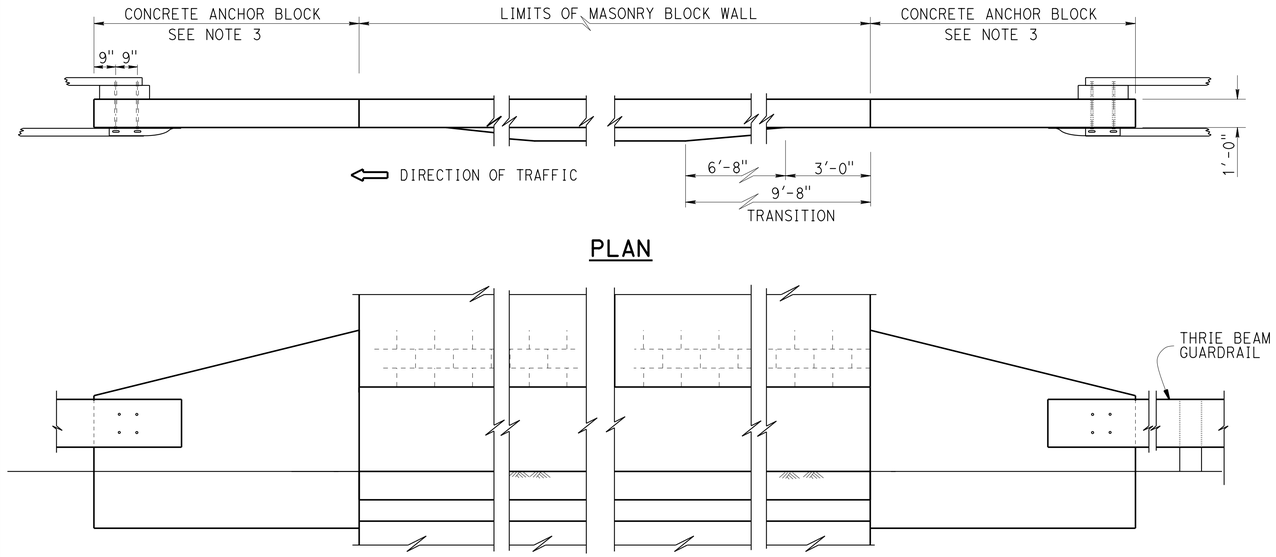

PLAN

ELEVATION

METAL BEAM GUARDRAIL ANCHORAGE

For details not shown, see STANDARD PLAN B11-56

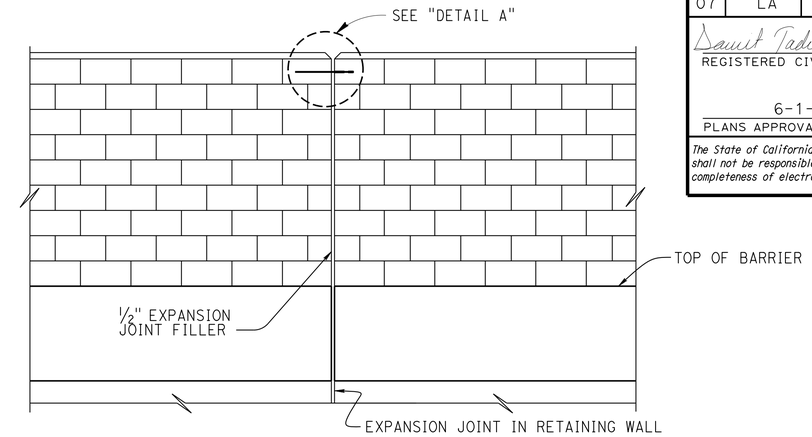

ALIGNMENT KEY DETAIL

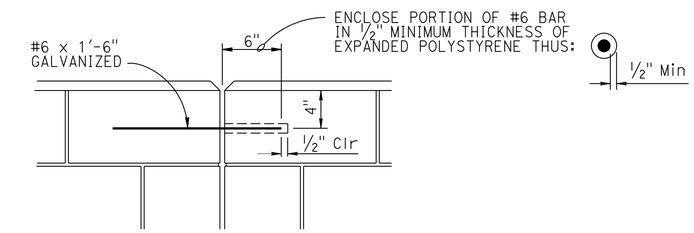

DETAIL A

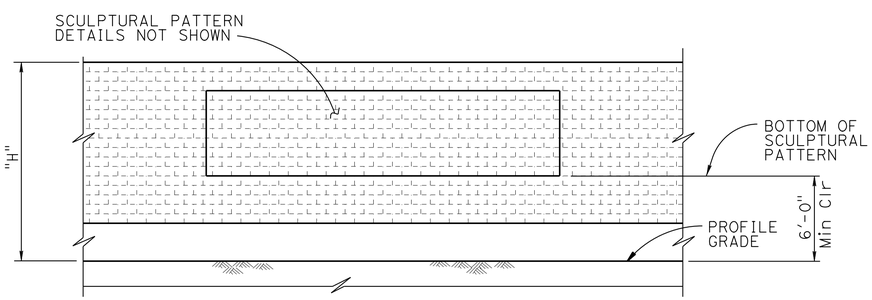

CLEARANCE DETAIL

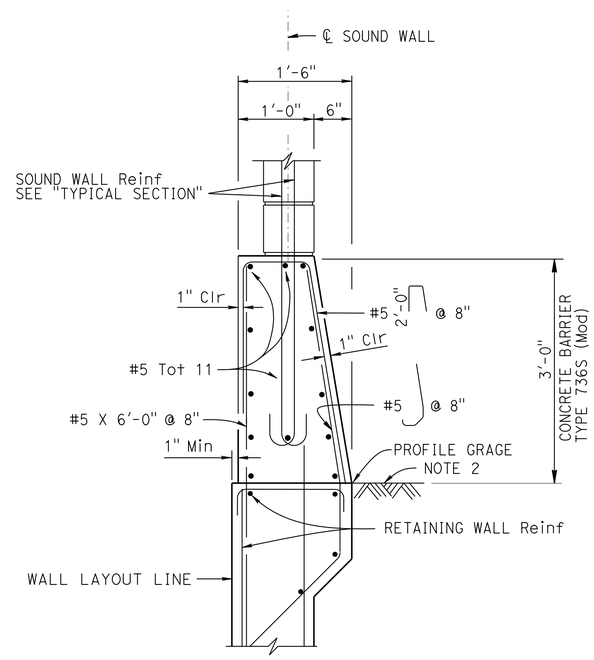

BARRIER SECTION

DESIGN NOTES

DESIGN
Uniform Building Code, 1997 Edition and the Bridge Design Specifications

DESIGN WIND LOAD
33 psf

DESIGN SEISMIC LOAD
0.57 Dead load

REINFORCED CONCRETE
f'c = 3600 psi
fy = 60 ksi

CONCRETE MASONRY

REGULAR STRENGTH	HIGH STRENGTH	
f'm = 1500 psi	f'm = 2000 psi	f'm = 2500 psi
fb = 495 psi	fb = 660 psi	fb = 830 psi
fs = 24,000 psi	fs = 24,000 psi	fs = 24,000 psi
n = 25.8	n = 19.3	n = 15.5

NOTES:

1. For details not shown, see STANDARD PLAN B15-6
2. Slope ground at traffic side of barrier to drain. Maximum slope ±10% See STANDARD PLAN B11-56, Note D
3. For Concrete Anchor Block and connection details, see "CONNNECTION DETAIL DD" on STANDARD PLAN A77J3

NO SCALE

HOLT AVENUE UNDERCROSSING (WIDEN)

MASONRY BLOCK SOUND WALL W/BARRIER ON RETAINING WALL

DETAILS NO. 2

STANDARD DRAWING
FILE NO. xs15-130-2
APPROVAL DATE July 2011

STATE OF CALIFORNIA DEPARTMENT OF TRANSPORTATION

DIVISION OF ENGINEERING SERVICES

BRIDGE NO. 53-0671
POST MILE 38.97

DS OSD 2147A (ENGLISH STANDARD DRAWING "XS" BORDER REV. (02-02-11)

ORIGINAL SCALE IN INCHES FOR REDUCED PLANS 0 1 2 3

UNIT: 3622
PROJECT NUMBER & PHASE: 0713000007-1
CONTRACT NO.: 07-1193U1

DISREGARD PRINTS BEARING EARLIER REVISION DATES

REVISION DATES 5-20-13 6-17-13

SHEET 31 OF 42

FILE => 53-0671-v-swortw02.dgn

USERNAME => s125624 DATE PLOTTED => 18-MAY-2015 TIME PLOTTED => 14:07

DIST	COUNTY	ROUTE	POST MILES TOTAL PROJECT	SHEET No.	TOTAL SHEETS
07	LA	10	37.2/42.4	1652	2313

REGISTERED CIVIL ENGINEER 10/01/14 DATE

6-1-15
PLANS APPROVAL DATE

REGISTERED PROFESSIONAL ENGINEER Dawit T Worku No. C60711 Exp 12-31-14 CIVIL STATE OF CALIFORNIA

The State of California or its officers or agents shall not be responsible for the accuracy or completeness of electronic copies of this plan sheet.

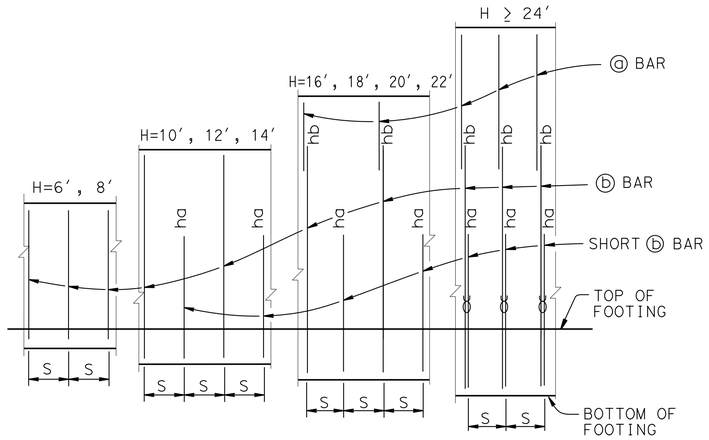

ELEVATION
No Scale

NOTES:
"ha" and "hb" above ⓑ bars indicate distance from top of footing to upper end of ⓑ bars, see table.
"S" is ⓑ bar spacing, see table.
℧ : 2 bar bundle

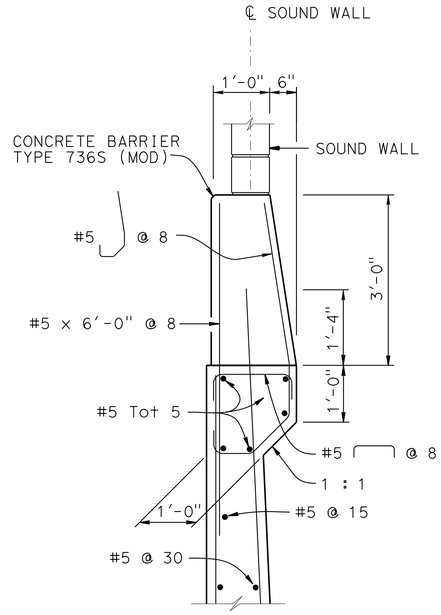

DETAIL A
¾ = 1′-0"

DESIGN DATA

Design: AASHTO LRFD Bridge Design Specifications, 4th edition with California Amendments

WS: 33 psf on Sound Wall and Barrier

LS: Varied surcharge on level ground surface

CT: 54 kip maximum traffic impact loading evenly distributed over 10 feet at top of the barrier and 1:1 distribution down and outward

EQE: Mononabe-Okabe Method
K_h = 0.3
K_v = 0.0

Soil: ϕ = 34°
γ = 120 pcf

Reinforced Concrete: f′c = 3600 psi
fy = 60,000 psi

Load Combinations and Limit States

Service I	Q=1.00DC+1.00EV+1.00EH+1.00LS+0.30WS
Service II	Q=1.00DC+1.00EV+1.00EH+1.00WS
Strength I	Q=αDC+βEV+1.50EH+1.75LS
Strength III	Q=αDC+βEV+1.50EH+1.40WS
Strength V	Q=αDC+βEV+1.50EH+1.35LS+0.40WS
Extreme I	Q=1.00DC+1.00EV+1.00EH+1.00EQD+1.00EQE
Extreme II	Q=1.00DC+1.00EV+1.00EH+1.00CT

Where:
Q: Force Effects
α: 1.25 or 0.90, Which ever Controls Design
β: 1.35 or 1.00, which ever Controls Design
DC: Dead Load of Structure Components
EV: Vertical Earth Fill Pressure
LS: Live Load Surcharge
EQE: Seismic Earth Pressure
EQD: Soil and Structure Components Inertia. Soil inertia ignored for stem design
WS: Wind Load on Sound Wall and Barrier
CT: Vehicular Collision Force

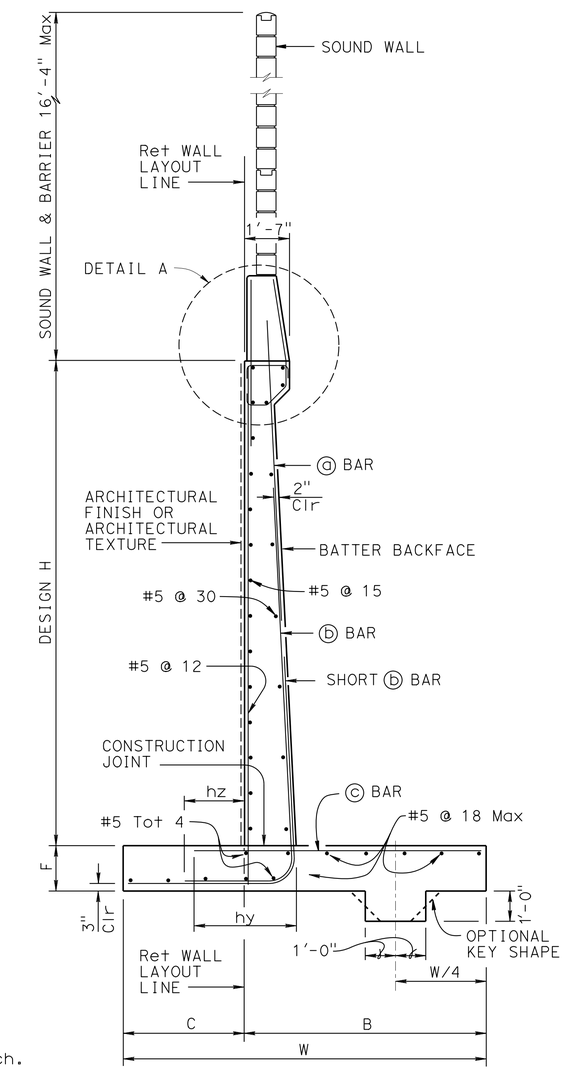

SPREAD FOOTING SECTION
No Scale

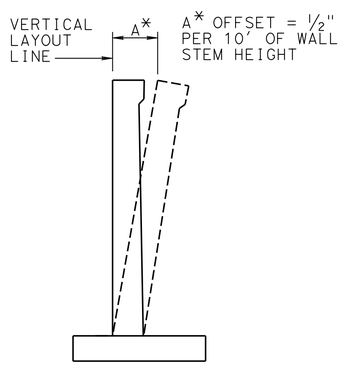

WALL OFFSET
No Scale

Values for offsetting forms to be determined by the Engineer

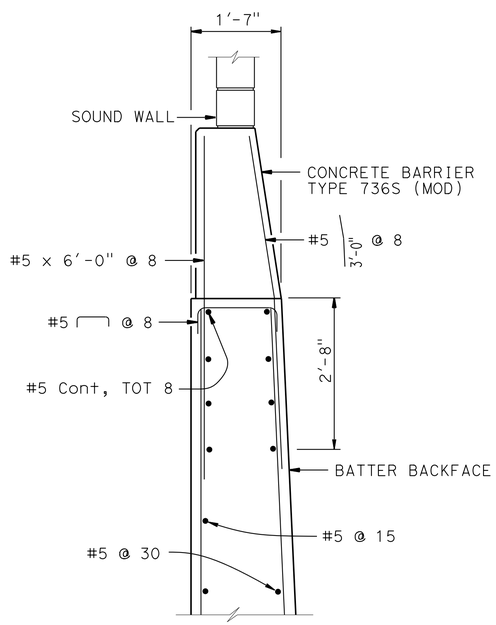

OPTIONAL DETAIL A
¾ = 1′-0"

For Details not shown, see "DETAIL A"

NOTES:
1. For sound wall and retaining wall Architectural finish or texture see details elsewhere in Project Plans
2. For details not shown and drainage notes see B3-5
3. Footing cover, 1′-6" minimum.
4. For sound wall and barrier reinforcement details, see "SOUND WALL - MASONRY BLOCK WITH BARRIER ON RETAINING WALL" sheet.
5. For H = 6′ through 14′, extend ⓑ bars into Barrier for stem with haunch.
6. For H ≥ 16′, extend ⓐ bars into Barrier for stem with haunch.

STANDARD DRAWING
FILE NO. xs14-220-1
APPROVAL DATE July 2011

STATE OF CALIFORNIA
DEPARTMENT OF TRANSPORTATION

DIVISION OF ENGINEERING SERVICES

BRIDGE NO. 53-0671
POST MILE 38.97

HOLT AVENUE UNDERCROSSING (WIDEN)
RETAINING WALL TYPE 1SWB-DETAILS NO. 1

DS OSD 2147A (ENGLISH STANDARD DRAWING "XS" BORDER REV. (02-02-11)

ORIGINAL SCALE IN INCHES FOR REDUCED PLANS 0 1 2 3

UNIT: 3622
PROJECT NUMBER & PHASE: 0713000007-1
CONTRACT NO.: 07-1193U1

DISREGARD PRINTS BEARING EARLIER REVISION DATES

REVISION DATES

SHEET 32 OF 42

FILE => 53-0671-w-rtw01.dgn

USERNAME => s128624 DATE PLOTTED => 18-MAY-2015 TIME PLOTTED => 14:07

DIST	COUNTY	ROUTE	POST MILES TOTAL PROJECT	SHEET No.	TOTAL SHEETS
07	LA	10	37.2/42.4	1653	2313

REGISTERED CIVIL ENGINEER 10/01/14 DATE

6-1-15
PLANS APPROVAL DATE

REGISTERED PROFESSIONAL ENGINEER
Dawit T Worku
No. C60711
Exp 12-31-14
CIVIL
STATE OF CALIFORNIA

The State of California or its officers or agents shall not be responsible for the accuracy or completeness of electronic copies of this plan sheet.

TABLE OF REINFORCING STEEL DIMENSIONS AND DATA

DESIGN H	6′	8′	10′	12′	14′	16′	18′	20′	22′	24′	26′	28′	30′	32′
W	6′-9″	7′-3″	8′-0″	8′-9″	10′-0″	11′-6″	12′-9″	14′-0″	15′-9″	18′-0″	19′-9″	21′-9″	23′-3″	25′-3″
C	2′-3″	2′-5″	2′-8″	2′-11″	3′-4″	3′-10″	4′-3″	4′-8″	5′-3″	6′-0″	6′-7″	7′-3″	7′-9″	8′-5″
B	4′-6″	4′-10″	5′-4″	5′-10″	6′-8″	7′-8″	8′-6″	9′-4″	10′-6″	12′-0″	13′-2″	14′-6″	15′-6″	16′-10″
F SPREAD FOOTING	1′-3″	1′-3″	1′-3″	1′-3″	1′-6″	1′-9″	1′-9″	2′-3″	2′-6″	2′-6″	2′-9″	3′-0″	3′-6″	3′-9″
STEM WITH HAUNCH, BATTER	0	½:12	½:12	½:12	½:12	½:12	½:12	½:12	½:12	⅝:12	¾:12	⅞:12	1:12	1:12
STEM WITHOUT HAUNCH, BATTER	0	0	0	0	0	0	0	0	¼:12	¼:12	½:12	¾:12	¾:12	¾:12
ⓐ BARS						#7 @ 15	#7 @ 12	#7 @ 12	#8 @ 12	#6 @ 6	#6 @ 6	#6 @ 6	#8 @ 9	#9 @ 9
ⓑ BARS	#8 @ 12	#8 @ 12	#7 @ 6	#7 @ 6	#7 @ 6	#9 @ 7.5	#9 @ 6	#10 @ 6	#10 @ 6	#8 @ 6ȣ	#8 @ 6ȣ	#8 @ 6ȣ	#10 @ 9ȣ	#11 @ 9ȣ
ha			5′-0″	6′-0″	7′-0″	7′-0″	6′-0″	7′-0″	7′-6″	7′-6″	8′-6″	9′-3″	15′-0″	11′-3″
hb						11′-6″	12′-0″	13′-3″	16′-0″	15′-6″	17′-6″	18′-9″	21′-0″	20′-9″
hy	2′-0″	2′-4″	1′-8″	2′-0″	2′-4″	2′-10″	2′-10″	3′-7″	3′-7″	4′-6″	5′-6″	2′-10″	4′-6″	5′-6″
hz			0	0	3′-1″	3′-7″	4′-0″	4′-5″	5′-0″	3′-0″	3′-0″	3′-6″	5′-6″	3′-0″
ⓒ BARS	#6 @ 12	#7 @ 12	#5 @ 6	#6 @ 6	#7 @ 6	#8 @ 7.5	#8 @ 6	#9 @ 6	#9 @ 6	#10 @ 6	#11 @ 6	#8 @ 6ȣ	#10 @ 9ȣ	#11 @ 9ȣ
SER I: B′(ft), q_0'(ksf)	5.9, 1.2	6.0, 1.4	6.5, 1.6	7.0, 1.8	8.1, 1.9	9.7, 2.0	11.0, 2.1	12.1, 2.3	13.8, 2.4	16.6, 2.4	18.5, 2.6	20.7, 2.7	22.1, 2.9	24.3, 3.0
STR Ia: B′(ft), q_0(ksf)	6.3, 1.9	6.3, 2.3	6.7, 2.5	7.0, 2.9	8.1, 3.1	9.5, 3.2	10.8, 3.4	11.8, 3.7	13.4, 4.0	16.2, 4.0	18.0, 4.2	20.2, 4.4	21.5, 5.0	23.7, 5.0
STR, Ib: B′(ft), q_0(ksf)	4.3, 1.6	4.3, 2.0	4.3, 2.4	4.3, 2.8	4.3, 2.9	4.3, 2.9	4.3, 3.0	4.3, 3.4	4.3, 3.5	4.3, 3.4	4.3, 3.5	4.3, 3.6	4.3, 3.9	4.3, 4.1
STR, IIIa: B′(ft), q_0(ksf)	4.3, 2.1	4.3, 2.4	4.3, 2.5	4.3, 2.8	4.3, 2.9	4.3, 3.0	4.3, 3.2	4.3, 3.7	4.3, 3.7	4.3, 3.8	4.3, 4.0	4.3, 4.2	4.3, 4.6	4.3, 4.9
STR, IIIb: B′(ft), q_0(ksf)	3.2, 2.1	3.2, 2.3	3.2, 2.4	3.2, 2.6	3.2, 2.7	3.2, 2.7	3.2, 2.8	3.2, 3.1	3.2, 3.0	3.2, 3.2	3.2, 3.8	3.2, 3.4	3.2, 3.7	3.2, 3.9
STR, Va: B′(ft), q_0(ksf)	5.9, 2.0	5.9, 2.3	5.9, 2.6	5.9, 2.9	5.9, 3.1	5.9, 3.2	5.9, 3.4	5.9, 3.9	5.9, 3.9	5.9, 4.0	5.9, 4.2	5.9, 4.5	5.9, 4.9	5.9, 5.1
STR, Vb: B′(ft), q_0(ksf)	3.8, 1.7	3.8, 2.1	3.8, 2.5	3.8, 2.8	3.8, 2.9	3.8, 2.9	3.8, 3.0	3.8, 3.3	3.8, 3.4	3.8, 3.3	3.8, 3.5	3.8, 3.6	3.8, 3.9	3.8, 4.0
Ext I: B′(ft), q_0(ksf)	2.5, 2.8	2.5, 4.3	2.5, 6.4	2.5, 10.9	2.5, 13.3	2.5, 12.4	2.5, 13.2	2.5, 17.6	2.5, 15.0	2.5, 10.2	2.5, 10.0	2.5, 9.6	2.5, 10.8	2.5, 10.5
Ext II: B′(ft), q_0(ksf)	1.4, 4.9	1.4, 3.5	1.4, 2.8	1.4, 2.7	1.4, 2.5	1.4, 2.5	1.4, 2.5	1.4, 2.6	1.4, 2.8	1.4, 2.8	1.4, 2.9	1.4, 3.1	1.4, 3.3	1.4, 3.5

LEGEND:
SER: service limit state
STR: strength limit state
EXT: extreme event limit state
B′ : effective footing width (ft)
q_0' : net bearing stress (ksf)

q_0 : gross uniform bearing stress (ksf)

ȣ : 2 bar bundle

STANDARD DRAWING
FILE NO. xs14-220-2
APPROVAL DATE January 2012

STATE OF CALIFORNIA
DEPARTMENT OF TRANSPORTATION

DIVISION OF ENGINEERING SERVICES

BRIDGE NO. 53-0671
POST MILE 38.97

HOLT AVENUE UNDERCROSSING (WIDEN)
RETAINING WALL TYPE 1 SWB-DETAILS NO. 2

DS OSD 2147A (ENGLISH STANDARD DRAWING "XS" BORDER REV. (02-02-11)

ORIGINAL SCALE IN INCHES FOR REDUCED PLANS 0 1 2 3

UNIT: 3622
PROJECT NUMBER & PHASE: 0713000007-1
CONTRACT NO.: 07-1193U1

DISREGARD PRINTS BEARING EARLIER REVISION DATES

REVISION DATES

SHEET 33 OF 42

FILE => 53-0671-w-rtw02.dgn

USERNAME => s125624 DATE PLOTTED => 18-MAY-2015 TIME PLOTTED => 14:07

DIST	COUNTY	ROUTE	POST MILES TOTAL PROJECT	SHEET No.	TOTAL SHEETS
07	LA	10	37.2/42.4	1654	2313

REGISTERED CIVIL ENGINEER 10/01/14 DATE

6-1-15
PLANS APPROVAL DATE

REGISTERED PROFESSIONAL ENGINEER Dawit T Worku No. C60711 Exp 12-31-14 CIVIL STATE OF CALIFORNIA

The State of California or its officers or agents shall not be responsible for the accuracy or completeness of electronic copies of this plan sheet.

LEGEND

- Infill Shear Wall Footing
- Infill Shear Wall
- Existing structure
- New structure

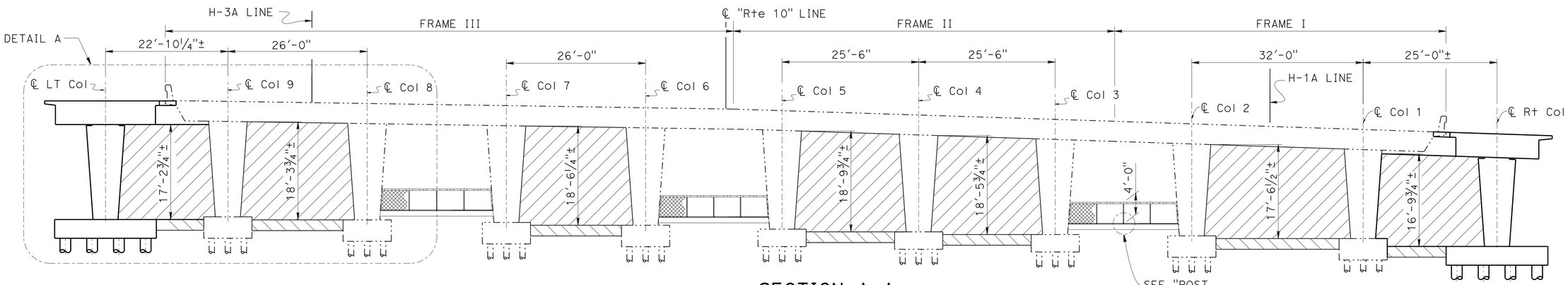

SECTION A-A

1" = 10'

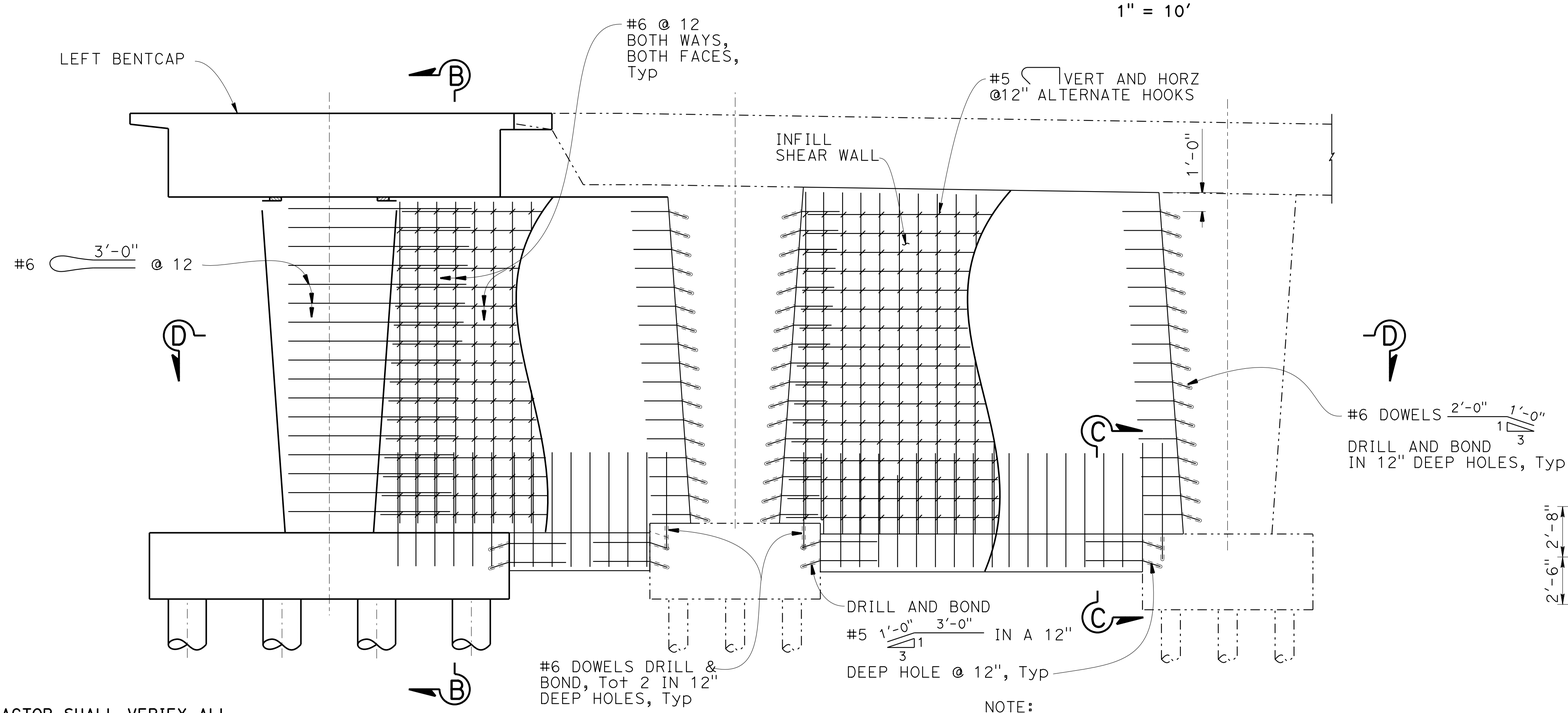

DETAIL A

¼" = 1'-0"

NOTE:
THE CONTRACTOR SHALL VERIFY ALL CONTROLLING FIELD DIMENSIONS BEFORE ORDERING OR FABRICATING ANY MATERIAL.

NOTE:
For Section C-C, Section D-D & "POST ANCHORAGE DETAIL" see "INFILL SHEAR WALL DETAILS #2" sheet.

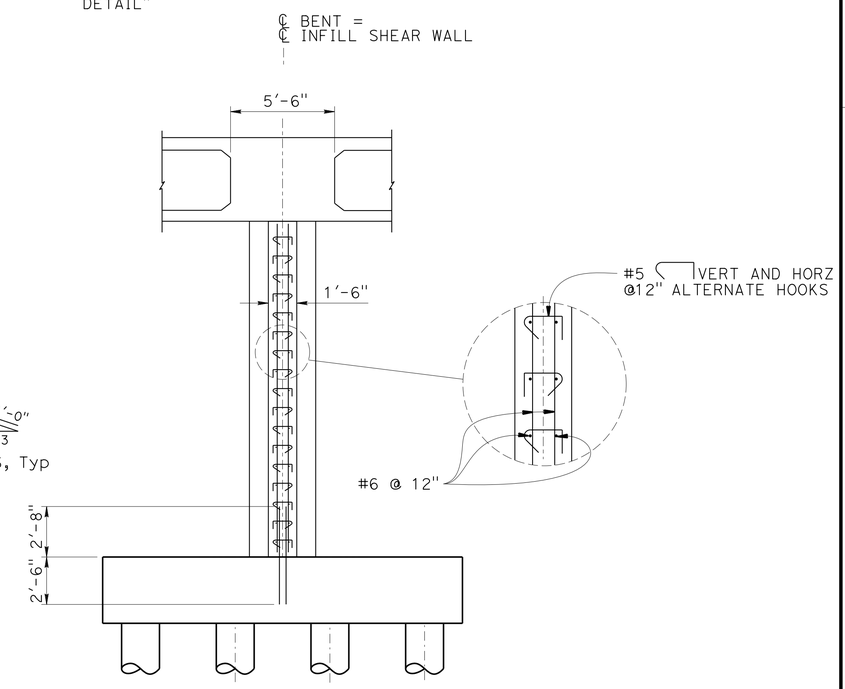

SECTION B-B

¼" = 1'-0"

DESIGN	BY Shargreh Bikaee	CHECKED Jason Fang/ Dawit Worku	
DETAILS	BY Lan T Tran/ J. Valencia	CHECKED Jason Fang/ Dawit Worku	
QUANTITIES	BY Shargreh Bikaee	CHECKED Edward B. Mu	

STATE OF CALIFORNIA
DEPARTMENT OF TRANSPORTATION

DIVISION OF ENGINEERING SERVICES
STRUCTURE DESIGN
DESIGN BRANCH 20

BRIDGE NO. 53-0671
POST MILE 38.97

HOLT AVENUE UNDERCROSSING (WIDEN)
SIESMIC RETROFIT DETAIL NO. 1

STRUCTURES DESIGN DETAIL SHEET (ENGLISH) (REV. 09-01-10)

ORIGINAL SCALE IN INCHES FOR REDUCED PLANS 0 1 2 3

UNIT: 3622
PROJECT NUMBER & PHASE: 0713000007-1
CONTRACT NO.: 07-1193U1

DISREGARD PRINTS BEARING EARLIER REVISION DATES

REVISION DATES: 10-28-13 3-05-14 5-20-14

SHEET 34 OF 42

FILE => 53-0671-x-srdt01.dgn

USERNAME => s125624 DATE PLOTTED => 18-MAY-2015 TIME PLOTTED => 14:07

DIST	COUNTY	ROUTE	POST MILES TOTAL PROJECT	SHEET No.	TOTAL SHEETS
07	LA	10	37.2/42.4	1655	2313

REGISTERED CIVIL ENGINEER 10/01/14 DATE

6-1-15
PLANS APPROVAL DATE

REGISTERED PROFESSIONAL ENGINEER
Dawit T Worku
No. C60711
Exp 12-31-14
CIVIL
STATE OF CALIFORNIA

The State of California or its officers or agents shall not be responsible for the accuracy or completeness of electronic copies of this plan sheet.

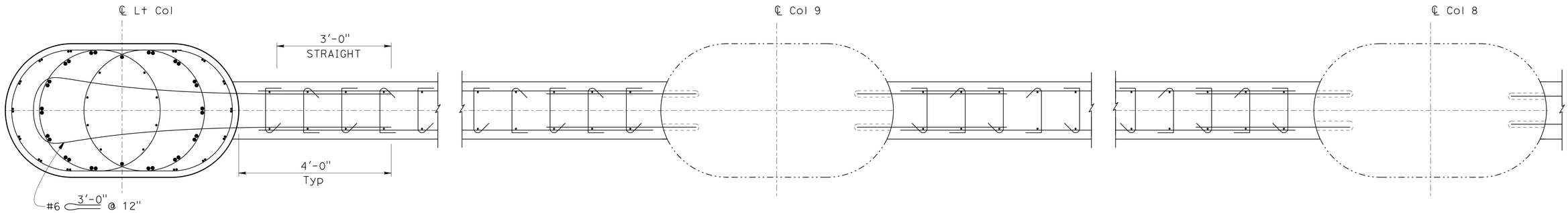

SECTION D-D

3/4" = 1'-0"

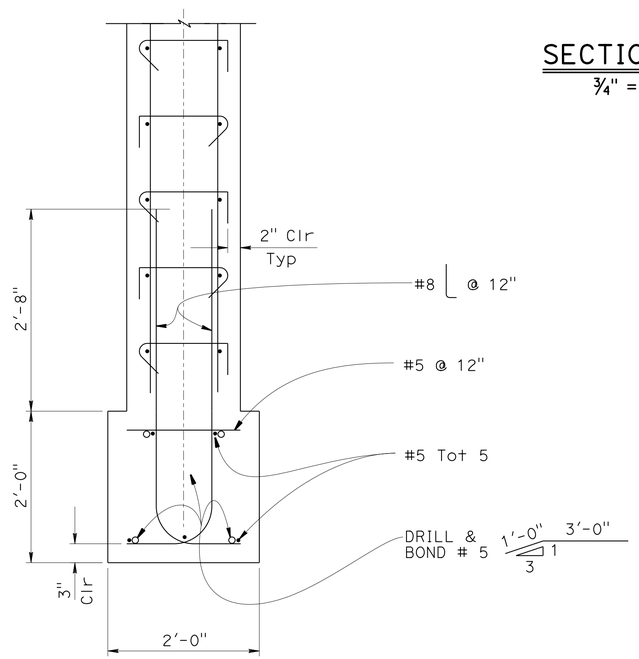

SECTION C-C

1" = 1'-0"

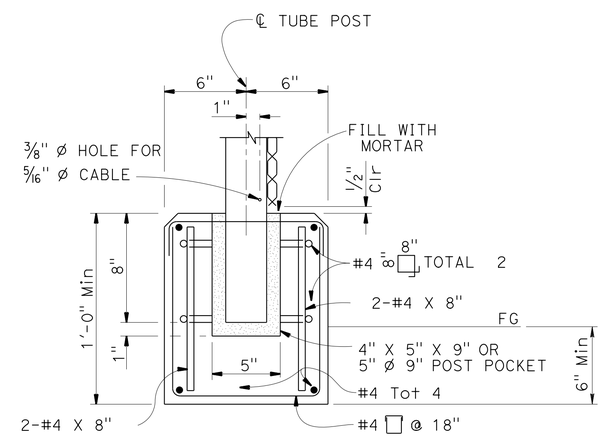

POST ANCHORAGE DETAIL

NO SCALE

LEGEND

-·-·-·- Existing structure

——— New structure

	BY	CHECKED
DESIGN	Shrareh Bikaee	Jason Fang/ Dawit Worku
DETAILS	Lan T Tran/ J. Valencia	Jason Fang/ Dawit Worku
QUANTITIES	Shrareh Bikaee	Edward B. Mu

STATE OF CALIFORNIA
DEPARTMENT OF TRANSPORTATION

DIVISION OF ENGINEERING SERVICES
STRUCTURE DESIGN
DESIGN BRANCH 20

BRIDGE NO. 53-0671
POST MILE 38.97

HOLT AVENUE UNDERCROSSING (WIDEN)
SIESMIC RETROFIT DETAIL NO. 2

STRUCTURES DESIGN DETAIL SHEET (ENGLISH) (REV. 09-01-10)

ORIGINAL SCALE IN INCHES FOR REDUCED PLANS 0 1 2 3

UNIT: 3622
PROJECT NUMBER & PHASE: 0713000007-1
CONTRACT NO.: 07-1193U1

DISREGARD PRINTS BEARING EARLIER REVISION DATES

REVISION DATES: 3-05-14 | 03/30/11 | 9-09-13

SHEET 35 OF 42

FILE => 53-0671-x-srdt02.dgn

USERNAME => s125624 DATE PLOTTED => 18-MAY-2015 TIME PLOTTED => 14:07

DIST	COUNTY	ROUTE	POST MILES TOTAL PROJECT	SHEET No.	TOTAL SHEETS
07	LA	10	37.2/42.4	1656	2313

REGISTERED CIVIL ENGINEER — DATE 10/01/14

6-1-15
PLANS APPROVAL DATE

REGISTERED PROFESSIONAL ENGINEER — Dawit T Worku — No. C60711 — Exp 12-31-14 — CIVIL — STATE OF CALIFORNIA

The State of California or its officers or agents shall not be responsible for the accuracy or completeness of electronic copies of this plan sheet.

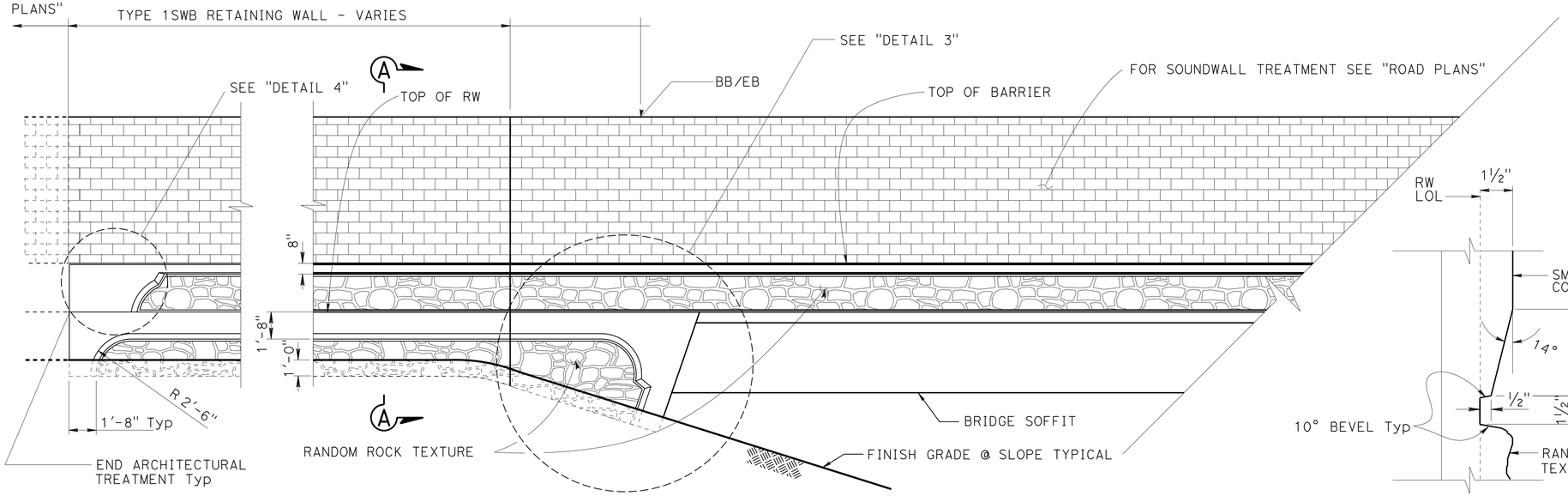

NOTES AND DIMENSIONS TYPICAL FOR ALL ELEVATIONS AT ABUTMENTS 1 AND 3

ELEVATION AT ABUTMENT-TYPICAL
NO SCALE

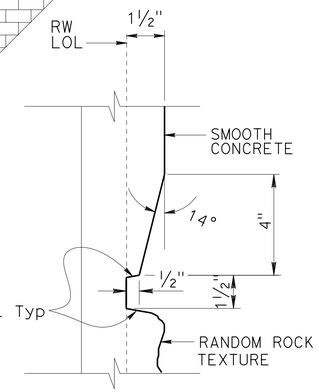

DETAIL 1
NO SCALE

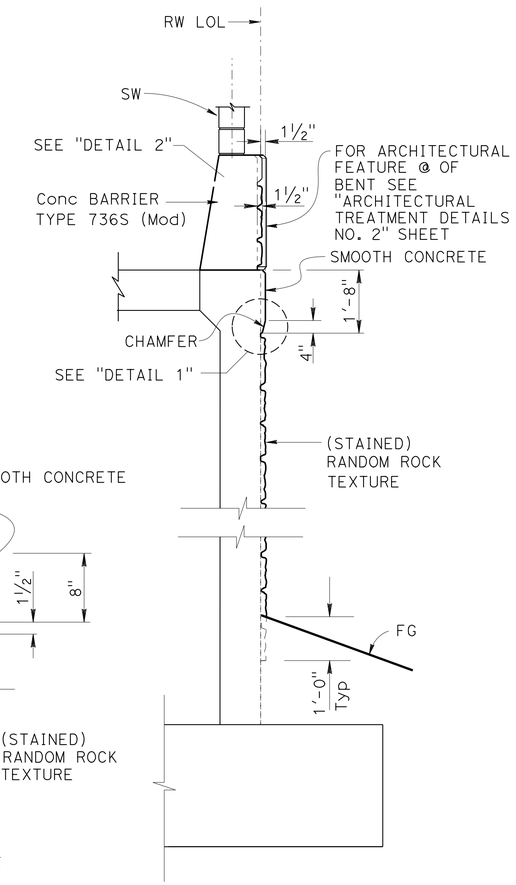

SECTION A-A
NO SCALE

NOTE:
Seamless random rock pattern to have a minimum of 2 to maximum of 4 match points (denoted by "M") for each side (top to bottom and side to side).

* STAINED RANDOM ROCK
FS# 33578, 30372, 30251, 30117, 30099
FS (denotes Federal Standard Color)

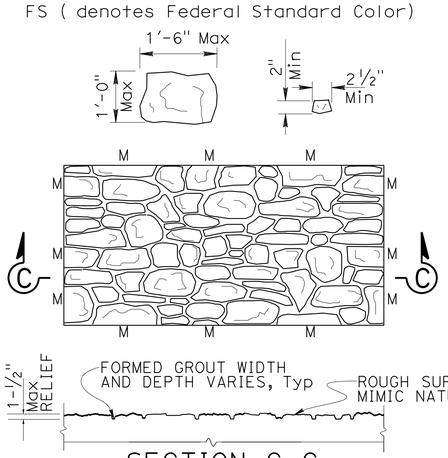

SECTION C-C
RANDOM ROCK TEXTURE
NO SCALE

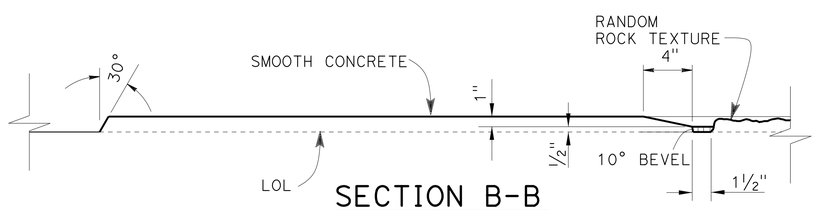

SECTION B-B
NO SCALE

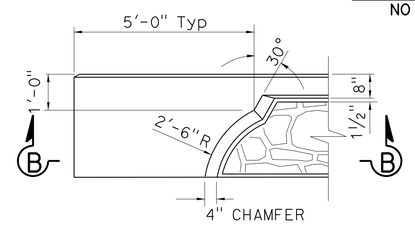

DETAIL 4
NO SCALE

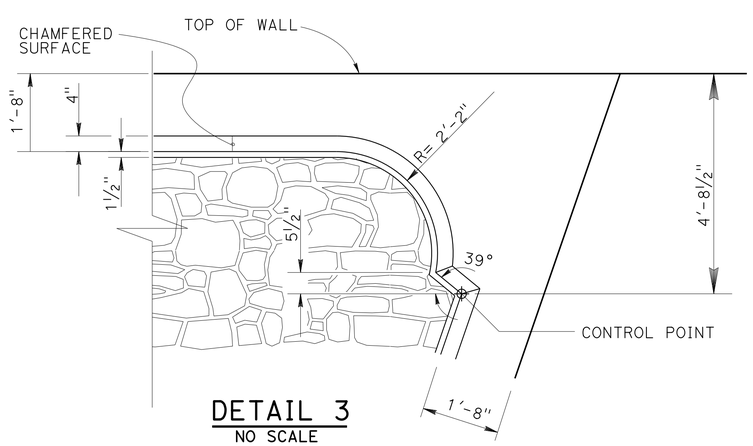

DETAIL 3
NO SCALE

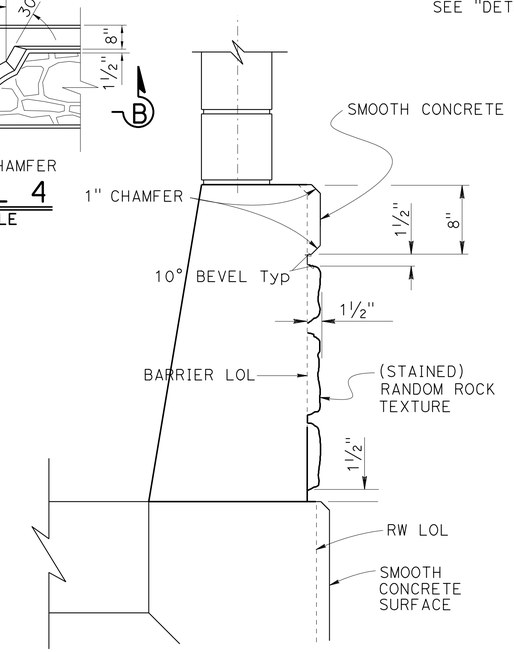

DETAIL 2
NO SCALE

	BY	CHECKED
DESIGN	Varerie Moove	Sharareh Bikaee
DETAILS	Lan T Tran/ J. Valencia	Sharareh Bikaee
QUANTITIES	Sharareh Bikaee	Edward B. Mu

STATE OF CALIFORNIA
DEPARTMENT OF TRANSPORTATION

DIVISION OF ENGINEERING SERVICES
STRUCTURE DESIGN
DESIGN BRANCH 20

BRIDGE NO. 53-0671
POST MILE 38.97

HOLT AVENUE UNDERCROSSING (WIDEN)
ARCHITECTURAL TREATMENT DETAILS NO. 1

STRUCTURES DESIGN DETAIL SHEET (ENGLISH) (REV. 09-01-10)

ORIGINAL SCALE IN INCHES FOR REDUCED PLANS 0 1 2 3

UNIT: 3622
PROJECT NUMBER & PHASE: 0713000007-1
CONTRACT NO.: 07-1193U1

DISREGARD PRINTS BEARING EARLIER REVISION DATES

REVISION DATES: 3-05-14 2-09-14 2-26-14

SHEET 36 OF 42

FILE => 53-0671-y-archtreatment01.dgn

USERNAME => s125624 DATE PLOTTED => 18-MAY-2015 TIME PLOTTED => 14:07

DIST	COUNTY	ROUTE	POST MILES TOTAL PROJECT	SHEET No.	TOTAL SHEETS
07	LA	10	37.2/42.4	1657	2313

Dawit Tadelle Gebre 10/01/14
REGISTERED CIVIL ENGINEER DATE

6-1-15
PLANS APPROVAL DATE

REGISTERED PROFESSIONAL ENGINEER Dawit T Worku No. C60711 Exp12-31-14 CIVIL STATE OF CALIFORNIA

The State of California or its officers or agents shall not be responsible for the accuracy or completeness of electronic copies of this plan sheet.

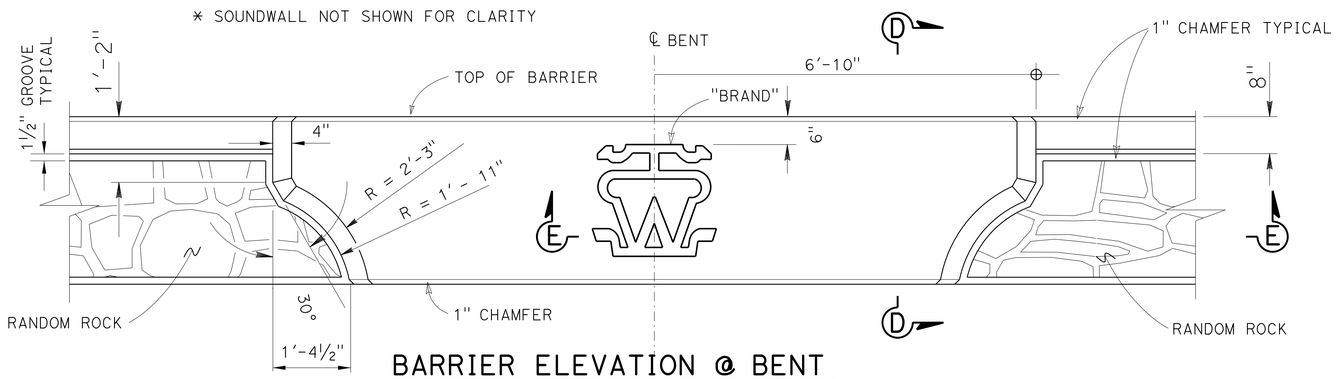

BARRIER ELEVATION @ BENT

NO SCALE

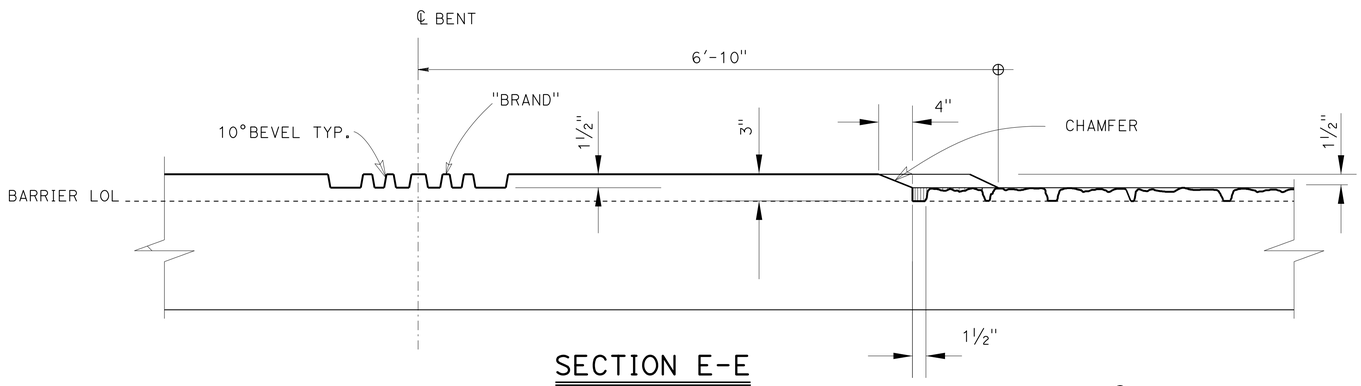

SECTION E-E

NO SCALE

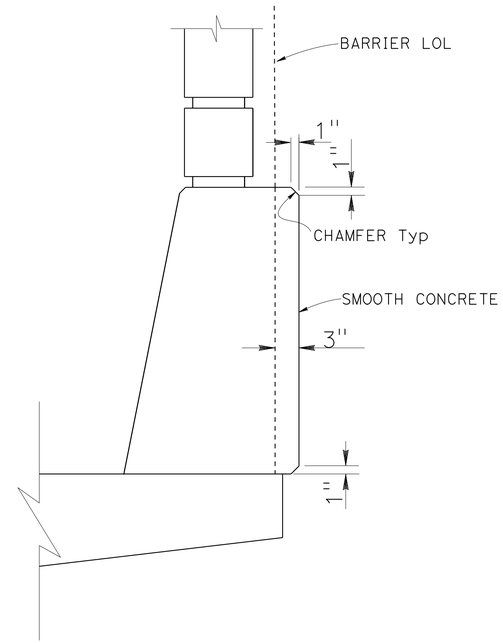

SECTION D-D

NO SCALE

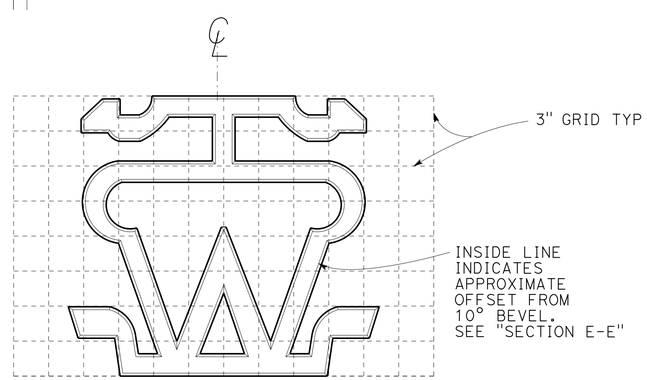

BRAND PATTERN

NOTE:
1. Stain Federal color 30117

NOTE:
THE CONTRACTOR SHALL VERIFY ALL CONTROLLING FIELD DIMENSIONS BEFORE ORDERING OR FABRICATING ANY MATERIAL.

	BY	CHECKED
DESIGN	Varerie Moove	Sharareh Bikaee
DETAILS	Lan T Tran/ J. Valencia	Sharareh Bikaee
QUANTITIES	Sharareh Bikaee	Edward B. Mu

STATE OF CALIFORNIA
DEPARTMENT OF TRANSPORTATION

DIVISION OF ENGINEERING SERVICES
STRUCTURE DESIGN
DESIGN BRANCH 20

BRIDGE NO. 53-0671
POST MILE 38.97

HOLT AVENUE UNDERCROSSING (WIDEN)

ARCHITECTURAL TREATMENT DETAILS NO. 2

STRUCTURES DESIGN DETAIL SHEET (ENGLISH) (REV. 09-01-10)

ORIGINAL SCALE IN INCHES FOR REDUCED PLANS 0 1 2 3

UNIT: 3622
PROJECT NUMBER & PHASE: 0713000007-1
CONTRACT NO.: 07-1193U1

DISREGARD PRINTS BEARING EARLIER REVISION DATES

REVISION DATES: 1-16-14 1-29-14 2-26-14

SHEET 37 OF 42

FILE => 53-0671-y-archtreatment02.dgn

USERNAME => s126624 DATE PLOTTED => 18-MAY-2015 TIME PLOTTED => 14:07

DIST	COUNTY	ROUTE	POST MILES TOTAL PROJECT	SHEET No.	TOTAL SHEETS
07	LA	10	37.2/42.4	1658	2313

REGISTERED CIVIL ENGINEER 10/01/14 DATE

6-1-15
PLANS APPROVAL DATE

REGISTERED PROFESSIONAL ENGINEER Dawit T Worku No. C60711 Exp 12-31-14 CIVIL STATE OF CALIFORNIA

The State of California or its officers or agents shall not be responsible for the accuracy or completeness of electronic copies of this plan sheet.

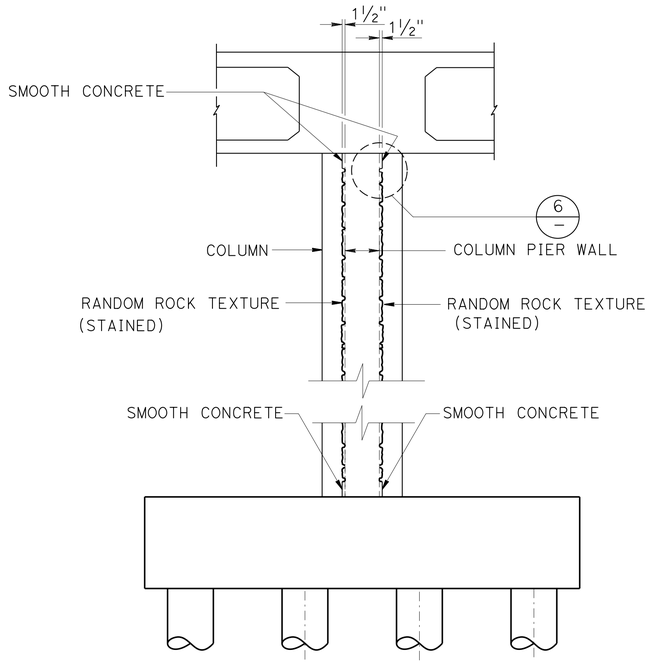

SECTION F-F
NO SCALE

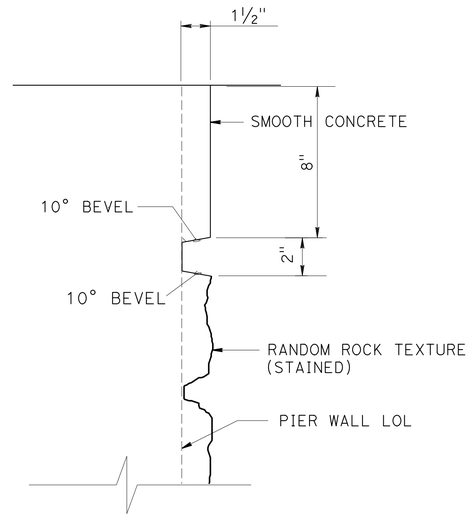

DETAIL 6
NO SCALE

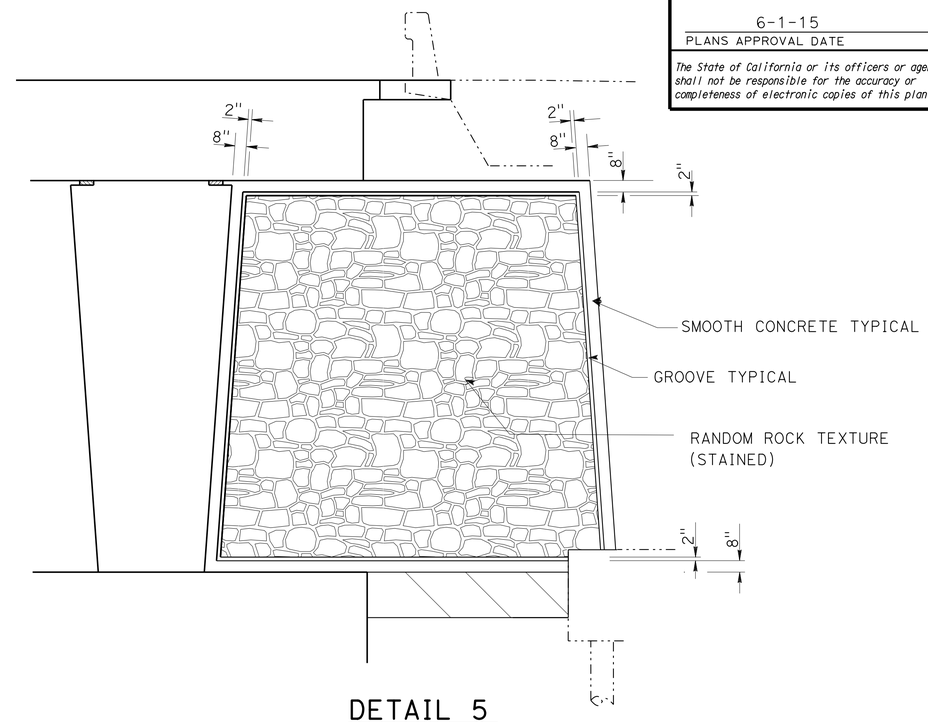

DETAIL 5
NO SCALE

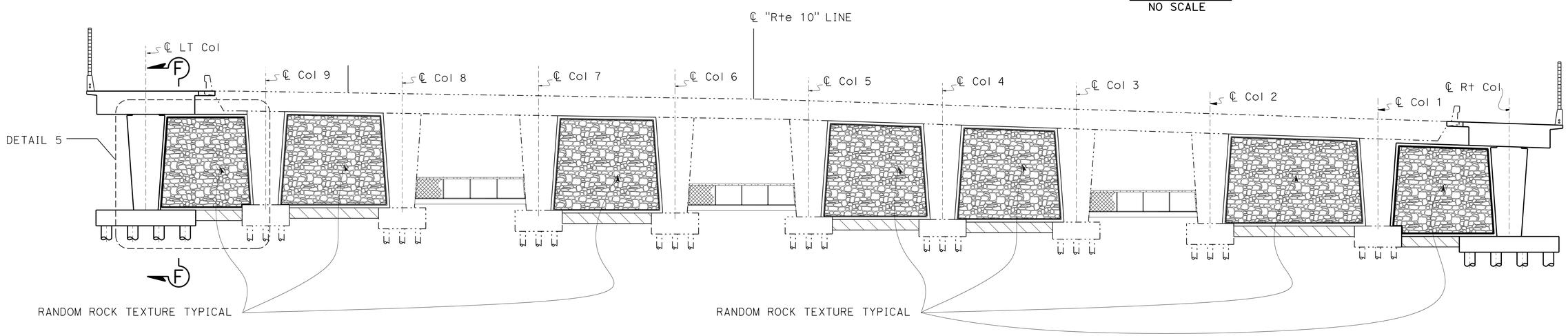

SECTION A-A
NO SCALE

NOTE:
THE CONTRACTOR SHALL VERIFY ALL CONTROLLING FIELD DIMENSIONS BEFORE ORDERING OR FABRICATING ANY MATERIAL.

	BY	CHECKED
DESIGN	Varerie Moove	Sharareh Bikaee
DETAILS	Lan T Tran/ J. Valencia	Sharareh Bikaee
QUANTITIES	Sharareh Bikaee	Edward B. Mu

STATE OF CALIFORNIA
DEPARTMENT OF TRANSPORTATION

DIVISION OF ENGINEERING SERVICES
STRUCTURE DESIGN
DESIGN BRANCH 20

BRIDGE NO. 53-0671
POST MILE 38.97

HOLT AVENUE UNDERCROSSING (WIDEN)
ARCHITECTURAL TREATMENT DETAILS NO. 3

STRUCTURES DESIGN DETAIL SHEET (ENGLISH) (REV. 09-01-10)

ORIGINAL SCALE IN INCHES FOR REDUCED PLANS 0 1 2 3

UNIT: 3622
PROJECT NUMBER & PHASE: 0713000007-1
CONTRACT NO.: 07-1193U1

DISREGARD PRINTS BEARING EARLIER REVISION DATES

REVISION DATES 1-16-14 1-29-14 2-26-14

SHEET 38 OF 42

FILE => 53-0671-y-archtreatment03.dgn

USERNAME => s123624 DATE PLOTTED => 18-MAY-2015 TIME PLOTTED => 14:07

DIST	COUNTY	ROUTE	POST MILES TOTAL PROJECT	SHEET No.	TOTAL SHEETS
07	LA	10	37.2/42.4	1659	2313

REGISTERED CIVIL ENGINEER 1-14-14 DATE

6-1-15
PLANS APPROVAL DATE

PROFESSIONAL GEOLOGIST Michael A. Salisbury No. 2462 Exp. 2-28-15 CERTIFIED ENGINEERING GEOLOGIST STATE OF CALIFORNIA

The State of California or its officers or agents shall not be responsible for the accuracy or completeness of electronic copies of this plan sheet.

This LOTB sheet was prepared in accordance with the Caltrans Soil & Rock Logging, Classification, & Presentation Manual (2010 Edition).

See 2010 Standard Plans A10F and A10G for Soil Legend, and A10H for Rock Legend.

BENCH MARKS

SUHV 463 Elev 567.943′
Fd 1" IP & CT plug at Toe of Slope W of Holt Ave. "A" Line 147.286′ Rt Sta 2056+75.995
NADV88

PRHV 9 Elev 575.097′
Fd Well Mon. 156.479′ Lt Sta 2059+90.391 "A" Line
NADV88

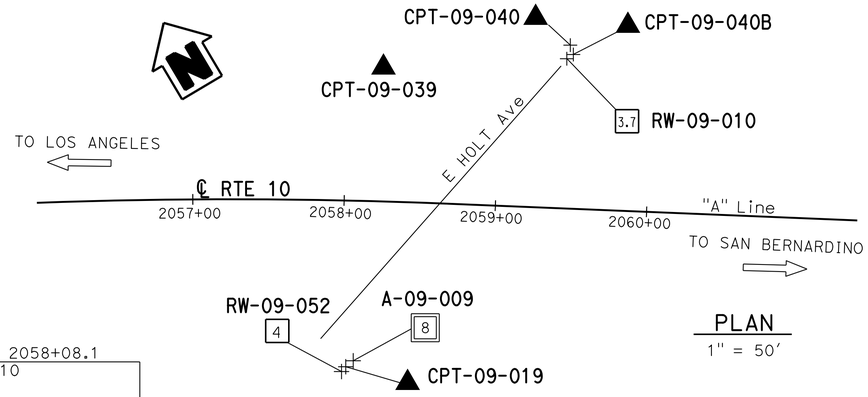

PLAN
1" = 50′

Note: Groundwater was not measured during field investigation.

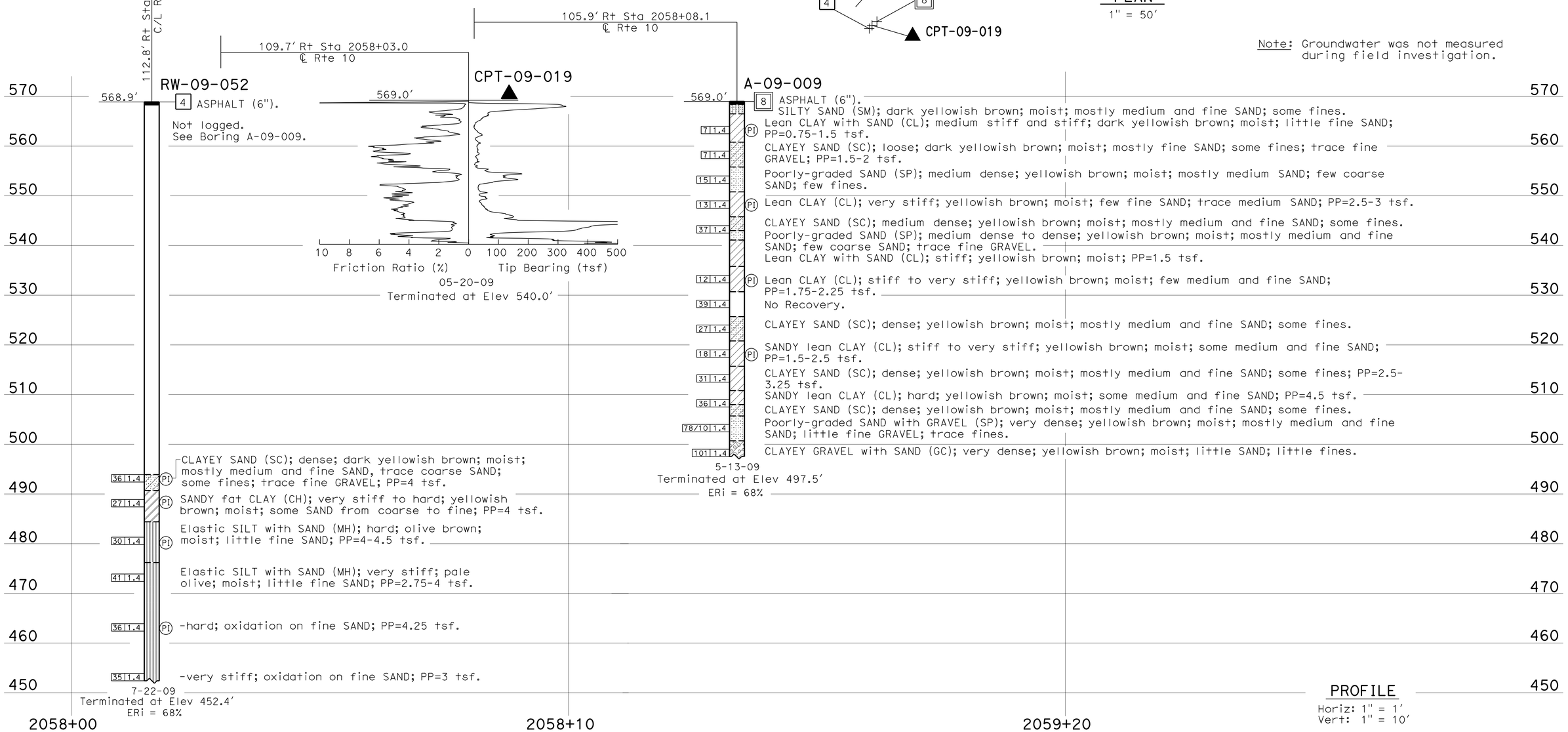

PROFILE
Horiz: 1" = 1′
Vert: 1" = 10′

ENGINEERING SERVICES	MATERIALS AND GEOTECHNICAL SERVICES	STATE OF CALIFORNIA DEPARTMENT OF TRANSPORTATION	DIVISION OF ENGINEERING SERVICES STRUCTURE DESIGN DESIGN BRANCH 20	BRIDGE NO. 53-0671 POST MILE 38.9/39.0	HOLT AVENUE UNDERCROSSING (WIDEN)
FUNCTIONAL SUPERVISOR NAME: D. Jang	DRAWN BY: I. G-Remmen CHECKED BY: XX	FIELD INVESTIGATION BY: Y. Choi			LOG OF TEST BORINGS 1 OF 4

OGS CIVIL LOG OF TEST BORINGS SHEET

ORIGINAL SCALE IN INCHES FOR REDUCED PLANS 0 1 2 3

UNIT: 3643
PROJECT NUMBER & PHASE: 07130000071 CONTRACT NO.: 07-1193U1

DISREGARD PRINTS BEARING EARLIER REVISION DATES

REVISION DATES 10-19-10 11-29-10 10-21-13 01-14-14 SHEET 39 OF 42

FILE => 53-0671-z-ltb01.dgn

USERNAME => s125624 DATE PLOTTED => 18-MAY-2015 TIME PLOTTED => 14:07

DIST	COUNTY	ROUTE	POST MILES TOTAL PROJECT	SHEET No.	TOTAL SHEETS
07	LA	10	37.2/42.4	1660	2313

REGISTERED CIVIL ENGINEER 1-14-14 DATE

6-1-15
PLANS APPROVAL DATE

PROFESSIONAL GEOLOGIST Michael A. Salisbury No. 2462 Exp. 2-28-15 CERTIFIED ENGINEERING GEOLOGIST STATE OF CALIFORNIA

The State of California or its officers or agents shall not be responsible for the accuracy or completeness of electronic copies of this plan sheet.

This LOTB sheet was prepared in accordance with the Caltrans Soil & Rock Logging, Classification, & Presentation Manual (2010 Edition).

See 2010 Standard Plans A10F and A10G for Soil Legend, and A10H for Rock Legend.

FOR PLAN VIEW, SEE
"LOG OF TEST BORINGS 1 OF 4"

Note: Groundwater was not measured during field investigation.

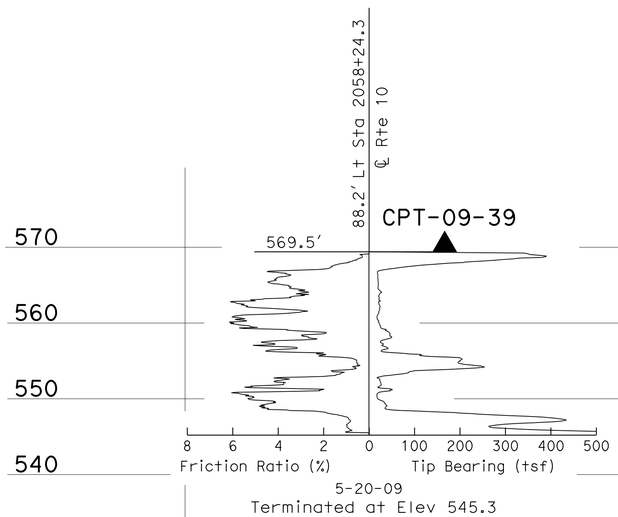

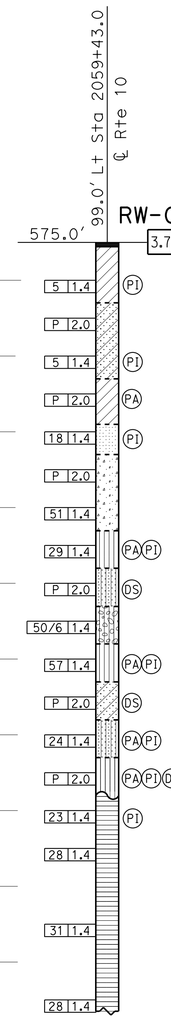

3.7 Asphalt (6").

Lean CLAY with SAND (CL); soft; brown; moist; mostly fines; few SAND; from coarse to fine. — 570

CLAYEY SAND (SC); loose; brown; moist; mostly SAND from fine to coarse; some fines.

-loose; wet. — 560

SANDY lean CLAY (CL); soft; brown; moist; some fine and medium SAND.

Poorly-graded SAND (SP); medium dense; light brown; moist; mostly coarse SAND; trace fines. — 550

Well-graded SAND with GRAVEL (SW); loose; light brown; moist; mostly coarse and medium SAND; little fine GRAVEL; trace fines. — 540

SANDY SILT (ML); stiff to very stiff; light brown; moist; some fine SAND.

SILTY SAND (SM); very dense; light brown; moist; mostly fine and medium SAND; some fines. — 530

SILTY GRAVEL with SAND (GM); very dense; light brown; moist; mostly fine GRAVEL; little SAND, from fine to coarse; some fines.

SANDY SILT with GRAVEL (ML); very stiff; light brown; moist; some medium SAND; little coarse GRAVEL; PP= 4 tsf. — 520

CLAYEY SAND (SC); medium dense; brown; moist; mostly fine and medium SAND; some fines.

SILTY SAND (SM); medium dense; light brown; wet; mostly fine SAND; some fines. — 510

SILT with SAND (ML); stiff; light brown; moist; little fine SAND.

SEDIMENTARY ROCK (CLAYSTONE); thinly bedded; pale olive; moderately weathered; very soft; poorly indurated; (SANDY CLAY (CL); stiff; moist; some fine SAND). — 500

-moderately bedded; PP= 2.25 tsf. — 490

-trace fine SAND. — 480

8-12-09
Terminated at Elev 473.5
ERi = 87%

470

2058+00 2059+00 2060+00

PROFILE
Horiz: 1" = 10'
Vert: 1" = 10'

ENGINEERING SERVICES	MATERIALS AND GEOTECHNICAL SERVICES	STATE OF CALIFORNIA DEPARTMENT OF TRANSPORTATION	DIVISION OF ENGINEERING SERVICES STRUCTURE DESIGN DESIGN BRANCH 20	BRIDGE NO. 53-0671 POST MILE 38.9/39.0	HOLT AVENUE UNDERCROSSING (WIDEN)
FUNCTIONAL SUPERVISOR NAME: D. Jang	DRAWN BY: I. G-Remmen CHECKED BY: XX	FIELD INVESTIGATION BY: Y. Choi			LOG OF TEST BORINGS 2 OF 4

OGS CIVIL LOG OF TEST BORINGS SHEET

ORIGINAL SCALE IN INCHES FOR REDUCED PLANS 0 1 2 3

UNIT: 3643
PROJECT NUMBER & PHASE: 07130000071 CONTRACT NO.: 07-1193U1

DISREGARD PRINTS BEARING EARLIER REVISION DATES → REVISION DATES 10-19-10 11-29-10 10-21-13 01-14-14 SHEET 40 OF 42

FILE => 53-0671-z-ltb02.dgn

USERNAME => s125624 DATE PLOTTED => 18-MAY-2015 TIME PLOTTED => 14:07

DIST	COUNTY	ROUTE	POST MILES TOTAL PROJECT	SHEET No.	TOTAL SHEETS
07	LA	10	37.2/42.4	1661	2313

REGISTERED CIVIL ENGINEER 1-14-14 DATE

6-1-15
PLANS APPROVAL DATE

PROFESSIONAL GEOLOGIST Michael A. Salisbury No. 2462 Exp. 2-28-15 CERTIFIED ENGINEERING GEOLOGIST STATE OF CALIFORNIA

The State of California or its officers or agents shall not be responsible for the accuracy or completeness of electronic copies of this plan sheet.

This LOTB sheet was prepared in accordance with the Caltrans Soil & Rock Logging, Classification, & Presentation Manual (2010 Edition).

See 2010 Standard Plans A10F and A10G for Soil Legend, and A10H for Rock Legend.

FOR PLAN VIEW, SEE
"LOG OF TEST BORINGS 1 OF 4"

Note: Groundwater was not measured during field investigation.

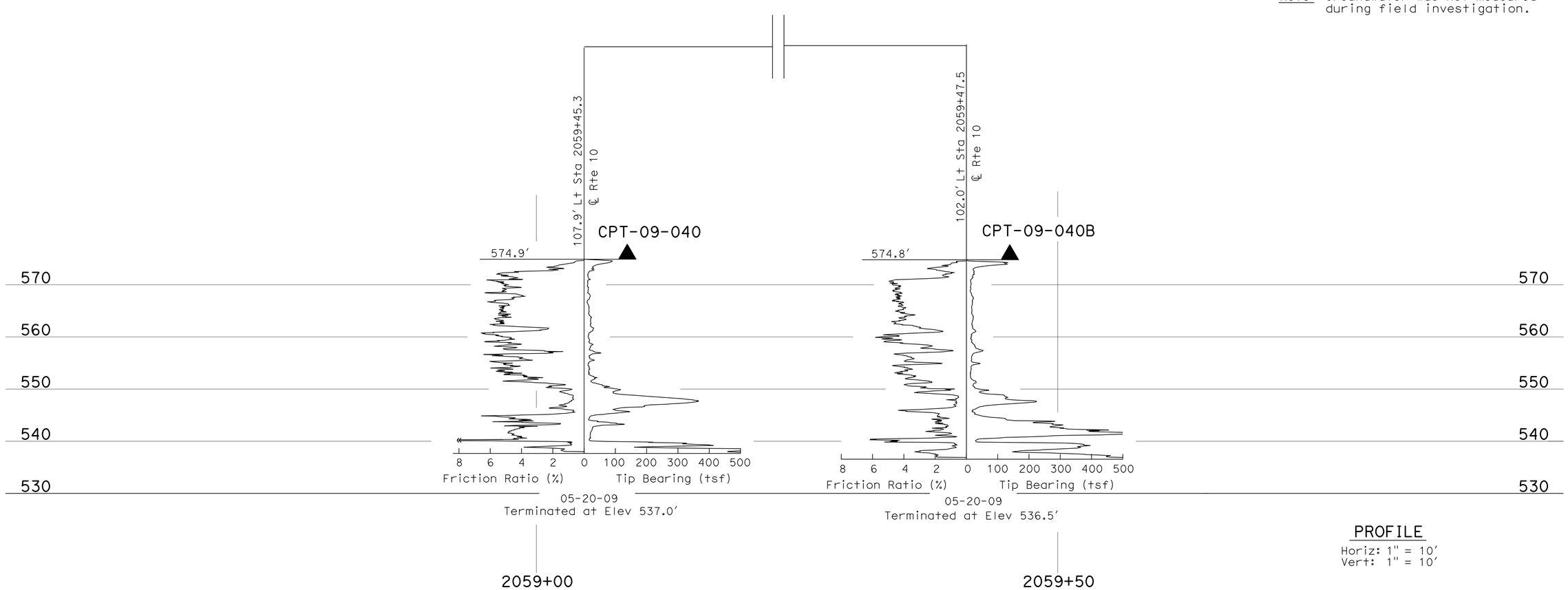

PROFILE
Horiz: 1" = 10'
Vert: 1" = 10'

ENGINEERING SERVICES	MATERIALS AND GEOTECHNICAL SERVICES	STATE OF CALIFORNIA DEPARTMENT OF TRANSPORTATION	DIVISION OF ENGINEERING SERVICES STRUCTURE DESIGN DESIGN BRANCH 20	BRIDGE NO. 53-0671 POST MILE 38.9/39.0	HOLT AVENUE UNDERCROSSING (WIDEN)
FUNCTIONAL SUPERVISOR NAME: D. Jang	DRAWN BY: I. G-Remmen CHECKED BY: XX	FIELD INVESTIGATION BY: Y. Choi			LOG OF TEST BORINGS 3 OF 4

OGS CIVIL LOG OF TEST BORINGS SHEET

ORIGINAL SCALE IN INCHES FOR REDUCED PLANS 0 1 2 3

UNIT: 3643
PROJECT NUMBER & PHASE: 07130000071 CONTRACT NO.: 07-1193U1

DISREGARD PRINTS BEARING EARLIER REVISION DATES

REVISION DATES: 10-14-10 11-28-10 10-21-13 01-14-14

SHEET 41 OF 42

FILE => 53-0671-z-1tb03.dgn

USERNAME => s125624 DATE PLOTTED => 18-MAY-2015 TIME PLOTTED => 14:07

DIST.	COUNTY	ROUTE	POST MILES—TOTAL PROJECT	SHEET NO.	TOTAL SHEETS
07	L.A.	10	33.8 / 40.9	623	749

R. E. Hawkhamp
DISTRICT BRIDGE ENGINEER
DATE November 29, 1971

DIVISION OF ENGINEERING SERVICES - MATERIALS AND GEOTECHNICAL SERVICES					
As-Built Log of Test Borings sheet is considered an informational document only. As such, the State of California registration seal with signature, license number and registration certificate expiration date confirm that this is a true and accurate copy of the original document. It does not attest to the accuracy or validity of the information contained in the original document. This drawing is available and presented only for the convenience of any bidder, contractor or other interested party.					
DIST.	COUNTY	ROUTE	POST MILE-TOTAL PROJECT	Sheet No.	Total Sheets
07	LA	10	37.2/42.4	1662	2313
CERTIFIED ENGINEERING GEOLOGIST			01/10/2014 DATE		
HOLT AVE UC WIDENING					
LOG OF TEST BORINGS 4 OF 4					
UNIT: 3643			CONTRACT No.	BRIDGE No.	
PROJ. No. & PHASE: 07130000071			07-1193U1	53-0671	
AS-BUILT VERT DATUM: N/A	CONVERSION: N/A			Sheet	of
NOTE: A COPY OF THIS LOG OF TEST BORINGS IS AVAILABLE AT OFFICE OF STRUCTURE MAINTENANCE AND INVESTIGATIONS, SACRAMENTO, CALIFORNIA					

TO ACCOMPANY PLANS DATED 6-1-15

PROFESSIONAL GEOLOGIST
Michael A. Salisbury
No. 2462
Exp. 2-28-15
CERTIFIED ENGINEERING GEOLOGIST
STATE OF CALIFORNIA

NO GROUND WATER ENCOUNTERED DURING THIS INVESTIGATION BY BRIDGE DEPT. GEOLOGY SECTION
DATE June, 1969

BENCH MARKS

BM # 235-J-67 Elev. 572.63
A brass cap Monument in well 80' south of intersection of Holt Ave. and Garvey St. 12' west of flow line of curb.

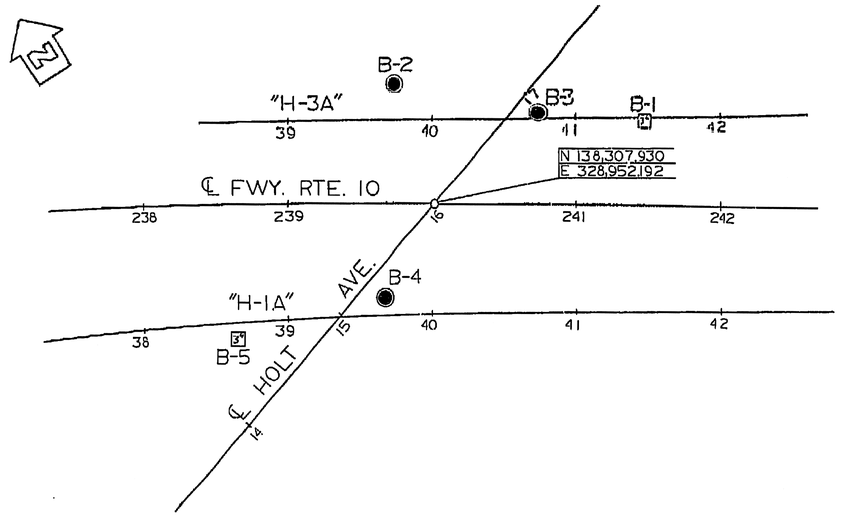

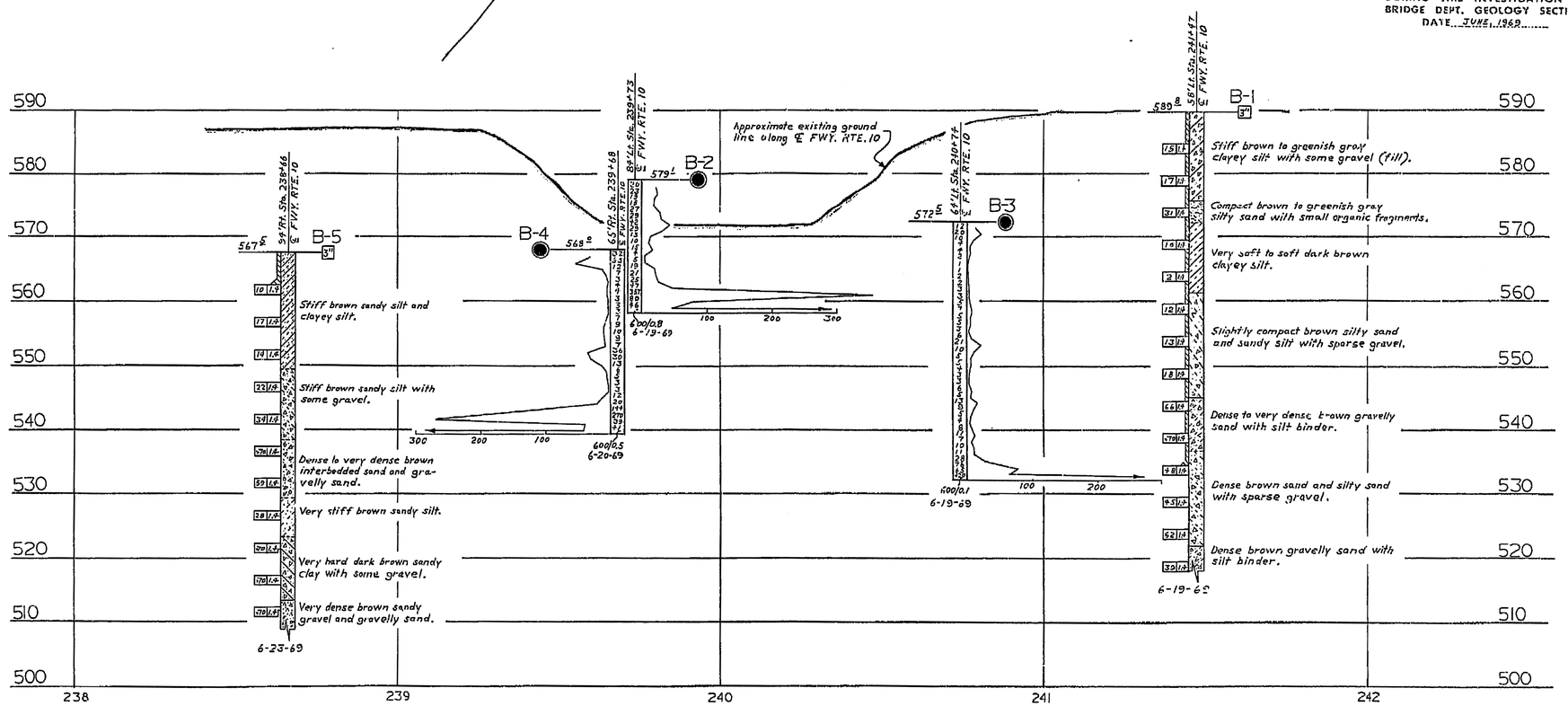

LEGEND OF BORING OPERATIONS

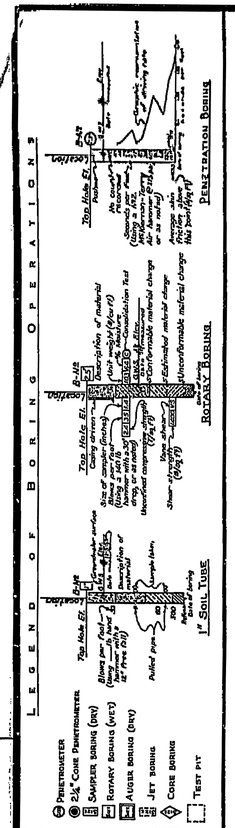

LEGEND OF EARTH MATERIALS

Gravel; Sand; Silt; Clay; Sandy Clay or Clayey Sand; Silty Clay or Clayey Silt; Organic Matter; Fill Material; Igneous Rock; Sedimentary Rock; Sandy Silt or Silty Sand; Metamorphic Rock

CLASSIFICATION OF MATERIAL BASED ON STANDARD GRADE SIZE LIMITS

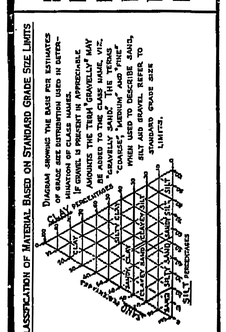

NOTE: Classification of earth material as shown on this sheet is based upon field inspection and is not to be construed to imply mechanical analysis.

DRAWN	E.S. JIMENEZ	7-8-69
CHECKED	O. MUNOZ	7-14-69

Approval Recommended by: Bridge Geologist

BRIDGE DEPARTMENT
ENGINEERING GEOLOGY SECTION

AS BUILT PLANS
Contract No. 07-038824
Date Completed —
Document No. 7000130141

AS BUILT None
CORRECTIONS BY Paul Vucovich
CONTRACT NO 07-038824
DATE 8-6-75

STATE OF CALIFORNIA
TRANSPORTATION AGENCY
DEPARTMENT OF PUBLIC WORKS
DIVISION OF HIGHWAYS

HOLT AVENUE UNDERCROSSING

LOG OF TEST BORINGS

BRIDGE NO.	POST MILE	DRAWING NO.	SHEET	OF
53-671	39.0		14	14

REVISION DATES (PRELIMINARY STAGE ONLY)

WO 038821
CU 07213

Disregard prints bearing earlier revision dates

623

DIST	COUNTY	ROUTE	POST MILES TOTAL PROJECT	SHEET No.	TOTAL SHEETS
07	LA	10	37.2/42.4	1663	2313

REGISTERED CIVIL ENGINEER — DATE 10/01/14

6-1-15
PLANS APPROVAL DATE

REGISTERED PROFESSIONAL ENGINEER — Dawit T Worku — No. C60711 — Exp. 12-31-14 — CIVIL — STATE OF CALIFORNIA

The State of California or its officers or agents shall not be responsible for the accuracy or completeness of electronic copies of this plan sheet.

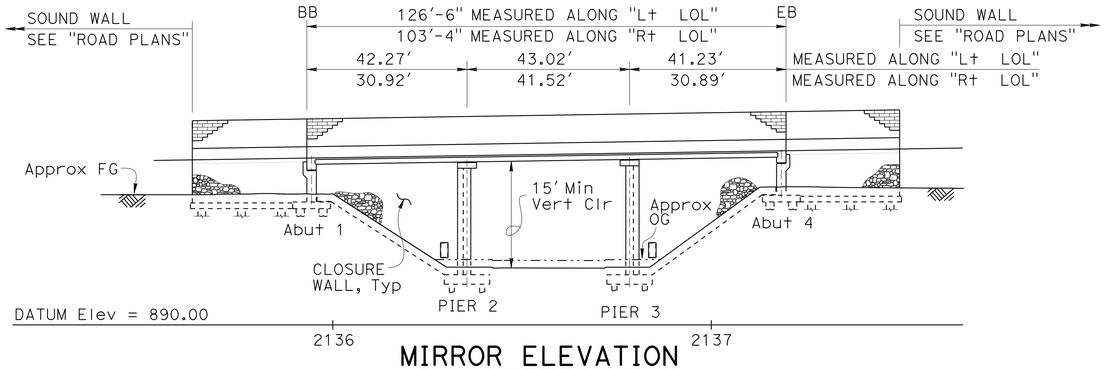

MIRROR ELEVATION

1" = 20'-0"

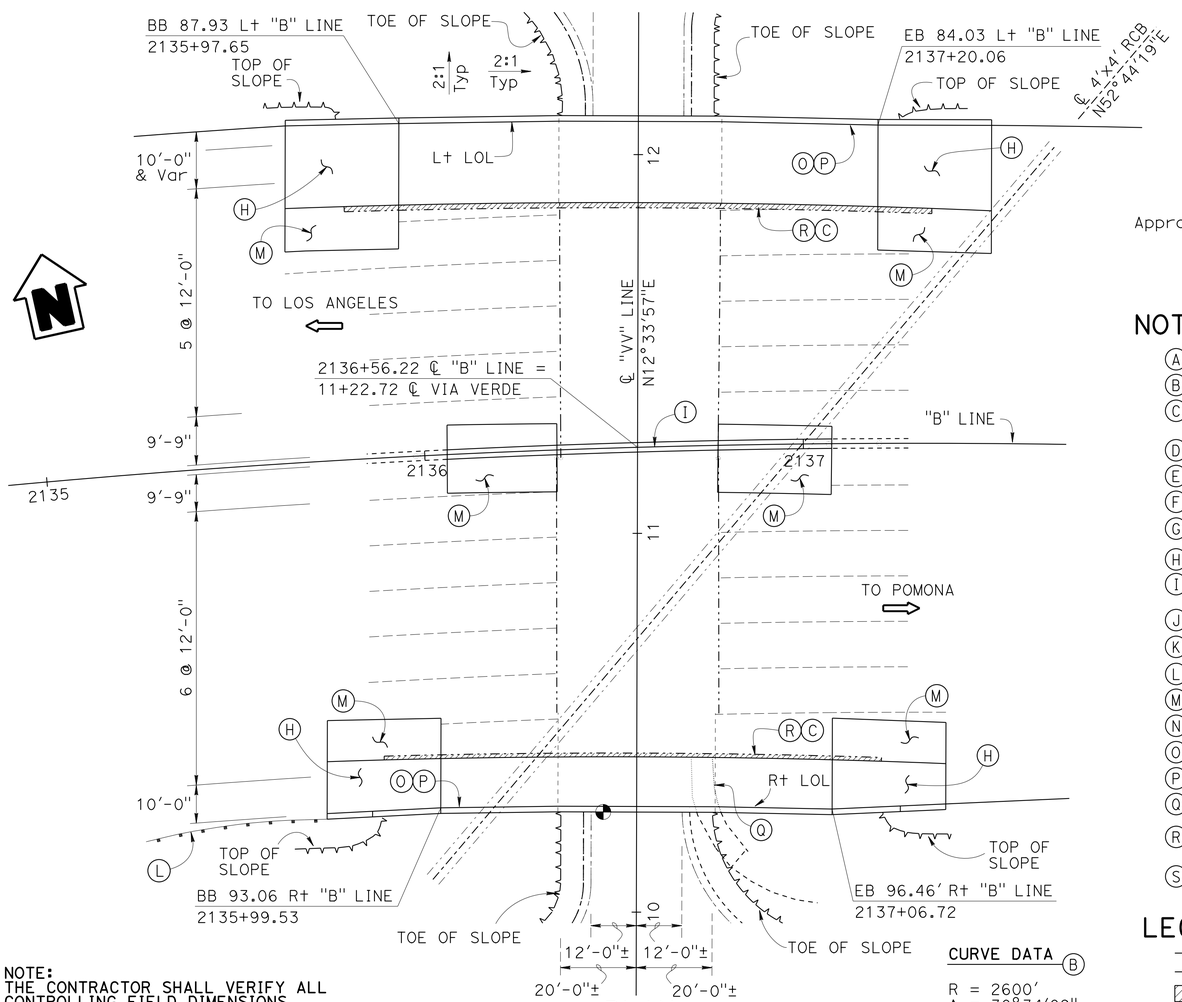

PLAN

1" = 20'

NOTE:
THE CONTRACTOR SHALL VERIFY ALL CONTROLLING FIELD DIMENSIONS BEFORE ORDERING OR FABRICATING ANY MATERIAL.

CURVE DATA (B)

R = 2600'
Δ = 30°34'09"
T = 710.53'
L = 1387.17'

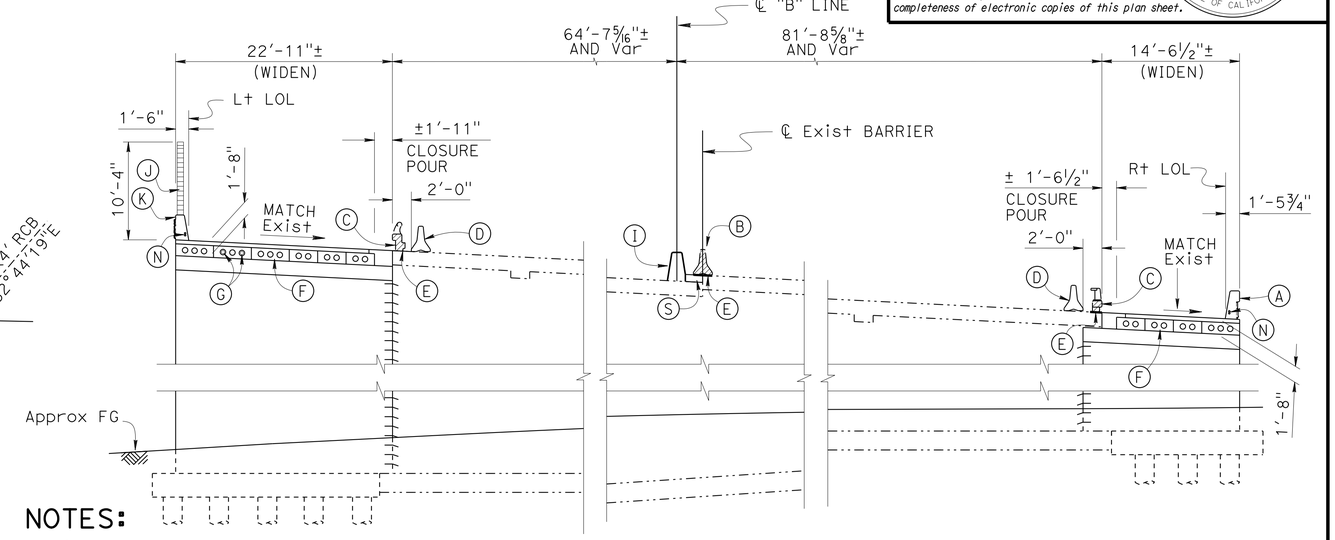

TYPICAL SECTION

1/8" = 1'-0"

NOTES:

(A) Concrete Barrier Type 736 (Mod 4)
(B) Remove Concrete Barrier Type 50B (Mod)
(C) Remove Bridge Railing and Salvage Metal Bridge Railing
(D) Temporary Railing Type K, see "ROAD PLANS"
(E) Refinish Bridge Deck
(F) PC/PS Concrete Slab with 5" Concrete Topping
(G) 2-3 1/2"Ø Communication Conduits, see "ROAD PLANS"
(H) Structure Approach Slab Type N(30S)
(I) Concrete Barrier Type 60A (Mod), see "TYPICAL SECTION" sheet
(J) Soundwall (Masonry Block)
(K) Concrete Barrier Type 736 (Mod 1)
(L) Midwest Guardrail System, see "ROAD PLANS"
(M) Structure Approach Slab Type R(30D)
(N) 2-2"Ø Conduit, see "ROAD PLANS"
(O) Paint "VIA VERDE UC"
(P) Paint "Br NO. 53-0870"
(Q) Existing RW & Footing to be removed,see "DETAIL Q" on "ABUTMENT DETAILS NO. 4" sheet
(R) Remove existing Closure Wall for detail see "ABUTMENT DETAILS NO. 3" sheet
(S) Concrete Slab, see "TYPICAL SECTION" sheet

LEGEND:

Indicates New Construction
Indicates Existing Structure
Bridge Removal (Portion)
Indicate Point of Minimum Vertical Clearance
Indicate Direction of traffic

QUANTITIES

RAPID SETTING CONCRETE (PATCH)	1	CF
SALVAGE METAL BRIDGE RAILING	290	LF
REMOVE UNSOUND CONCRETE	1	CF
REFINISH BRIDGE DECK	546	SQFT
BRIDGE REMOVAL (PORTION), LOCATION D	LUMP	SUM
STRUCTURE EXCAVATION (BRIDGE)	687	CY
STRUCTURE BACKFILL (BRIDGE)	376	CY
24" CAST-IN-DRILLED-HOLE CONCRETE PILING	2,530	LF
FURNISH PILING (CLASS 90) (ALTERNATIVE X)	853	LF
DRIVE PILE (CLASS 90)(ALTERNATIVE X)	18	EA
STRUCTURAL CONCRETE, BRIDGE FOOTING	171	CY
STRUCTURAL CONCRETE, BRIDGE	416	CY
AGGREGATE BASE (APPROACH SLAB)	9	CY
STRUCTURAL CONCRETE, APPROACH SLAB (TYPE N)	77	CY
STRUCTURAL CONCRETE, APPROACH SLAB (TYPE R)	89	CY
PAVING NOTCH EXTENSION	61	CF
CONCRETE SURFACE TEXTURE	4,325	SQFT
DRILL AND BOND DOWEL	590	LF
FURNISH PRECAST PRESTRESSED CONCRETE SLAB (TYPE SII) (MODIFIED)	3,690	SQFT
ERECT PRECAST PRESTRESSED CONCRETE DECK UNIT	30	EA
JOINT SEAL (MR 1")	156	LF
BAR REINFORCING STEEL (BRIDGE)	153,934	LB
SOUND WALL (MASONRY BLOCK)	1,367	SQFT
PREPARE AND STAIN CONCRETE	3,932	SQFT
MISCELLANEOUS METAL (BRIDGE)	1,430	LB
CONCRETE BARRIER (TYPE 60A MODIFIED)	103	LF
CONCRETE BARRIER (TYPE 736 MODIFIED)	267	LF
CONCRETE BARRIER (TYPE 736S MODIFIED)	60	LF

HOWARD NG
DESIGN ENGINEER

	BY	CHECKED
DESIGN	HOMA IRANINEJADIAN	SHARAREH BIKAEE
DETAILS	K. FARAHZADIYAZDI/A. ONG	SHARAREH BIKAEE
QUANTITIES	HOMA IRANINEJADIAN	BRIJESH PATEL

LOAD & RESISTANCE FACTOR DESIGN — LIVE LOADING: HL93 W/"LOW-BOY": PERMIT DESIGN VEHICLE
LAYOUT — BY HOMA IRANINEJADIAN — CHECKED SHARAREH BIKAEE
SPECIFICATIONS — BY XIAODONG CHEN — PLANS AND SPECS COMPARED XIAODONG CHEN

ORIGINAL SCALE IN INCHES FOR REDUCED PLANS 0 1 2 3

STATE OF CALIFORNIA
DEPARTMENT OF TRANSPORTATION

DIVISION OF ENGINEERING SERVICES
STRUCTURE DESIGN
DESIGN BRANCH 20

BRIDGE NO. 53-0870
POST MILE 40.46

VIA VERDE UNDERCROSSING (WIDEN)
GENERAL PLAN

UNIT: 3622
PROJECT NUMBER & PHASE: 0713000007-4
CONTRACT NO.: 07-1193U1

DISREGARD PRINTS BEARING EARLIER REVISION DATES
REVISION DATES 09/08/14 01/26/15 02/09/15
SHEET 1 OF 35

USERNAME => s125624 DATE PLOTTED => 18-MAY-2015 TIME PLOTTED => 14:08

STRUCTURES DESIGN GENERAL PLAN SHEET (ENGLISH) (REV.09-01-10)

FILE => 53-0870-a-gp01.dgn

DIST	COUNTY	ROUTE	POST MILES TOTAL PROJECT	SHEET No.	TOTAL SHEETS
07	LA	10	37.2/42.4	1664	2313

REGISTERED CIVIL ENGINEER 10/01/14 DATE

6-1-15
PLANS APPROVAL DATE

REGISTERED PROFESSIONAL ENGINEER Dawit T Worku No. C60711 Exp. 12-31-14 CIVIL STATE OF CALIFORNIA

The State of California or its officers or agents shall not be responsible for the accuracy or completeness of electronic copies of this plan sheet.

INDEX TO PLANS

SHEET NO.	TITLE
1.	GENERAL PLAN
2.	INDEX TO PLANS
3.	FOUNDATION PLAN
4.	ABUTMENT 1 LAYOUT
5.	ABUTMENT 4 LAYOUT
6.	ABUTMENT DETAILS NO. 1
7.	ABUTMENT DETAILS NO. 2
8.	ABUTMENT DETAILS NO. 3
9.	ABUTMENT DETAILS NO. 4
10.	PIER WALL DETAILS NO. 1
11.	PIER WALL DETAILS NO. 2
12.	PIER WALL DETAILS NO. 3
13.	TYPICAL SECTION
14.	SLAB LAYOUT
15.	TOP SLAB REINFORCEMENT
16.	PRESTRESSED CONCRETE SLAB DETAILS
17.	MISCELLANEOUS DETAILS
18.	RETAINING WALL TYPE 1SWBP-DETAILS NO. 1
19.	RETAINING WALL TYPE 1SWBP-DETAILS NO. 2
20.	MASONARY BLOCK SOUNDWALL WITH BARRIER ON RETAINING WALL, DETAILS NO. 1
21.	MASONARY BLOCK SOUNDWALL WITH BARRIER ON RETAINING WALL, DETAILS NO. 2
22.	MASONARY BLOCK SOUNDWALL ON BRIDGE
23.	STRUCTURE APPROACH SLAB LAYOUT
24.	STRUCTURE APPROACH DRAINAGE DETAILS
25.	STRUCTURE APPROACH TYPE N(30S)
26.	STRUCTURE APPROACH TYPE R(30D)
27.	ARCHITECTURAL TREATMENT (LEFT WIDEN)
28.	ARCHITECTURAL TREATMENT DETAILS (LEFT WIDEN)
29.	ARCHITECTURAL TREATMENT (RIGHT WIDEN)
30.	ARCHITECTURAL TREATMENT DETAILS (RIGHT WIDEN)
31.	LOG OF TEST BORINGS 1 OF 3
32.	LOG OF TEST BORINGS 2 OF 3
33.	LOG OF TEST BORINGS 3 OF 3
34.	LOG OF TEST BORINGS 4 OF 5
35.	LOG OF TEST BORINGS 5 OF 5

STANDARD PLANS Dated 2010

	A10A	ABBREVIATIONS (SHEET 1 OF 2)
(RSP)	A10B	ABBREVIATIONS (SHEET 2 OF 2)
	A10C	LINES AND SYMBOLS (SHEET 1 OF 3)
	A10D	LINES AND SYMBOLS (SHEET 2 OF 3)
	A10E	LINES AND SYMBOLS (SHEET 3 OF 3)
	A10F	LEGEND - SOIL (SHEET 1 OF 2)
	A10G	LEGEND - SOIL (SHEET 2 OF 2)
	A10H	LEGEND - ROCK
	A62B	LIMITS OF PAYMENT FOR EXCAVATION AND BACKFILL BRIDGE SURCHARGE AND WALL
	A62C	LIMITS OF PAYMENT FOR EXCAVATION AND BACKFILL BRIDGE
	A76A	CONCRETE BARRIER TYPE 60
	B0-1	BRIDGE DETAILS
	B0-3	BRIDGE DETAILS
	B0-5	BRIDGE DETAILS
	B0-13	BRIDGE DETAILS
	B2-3	16" AND 24" CAST-IN-DRILLED-HOLE CONCRETE PILE
	B2-5	PILE DETAILS CLASS 90 AND CLASS 140
	B6-21	JOINT SEALS (MAXIMUM MOVEMENT RATING = 1")
(RSP)	B11-56	CONCRETE BARRIER TYPE 736
	B14-3	COMMUNICATION AND SPRINKLER CONDUITS (CONDUIT LESS THAN 4")

NOTE:
THE CONTRACTOR SHALL VERIFY ALL CONTROLLING FIELD DIMENSIONS BEFORE ORDERING OR FABRICATING ANY MATERIAL.

STANDARD PLAN SHEET NO.

DETAIL NO.

GENERAL NOTES
LOAD AND RESISTANCE FACTOR DESIGN

DESIGN: AASHTO LRFD BRIDGE DESIGN SPECIFICATIONS,4th Edition with Caltrans Amendments, preface dated November 2011

SEISMIC DESIGN: Caltrans Seismic Design Criteria (SDC), Version 1.6 November 2010

DEAD LOADING: Include 35 psf for future wearing surface

LIVE LOADING: HL-93 and Permit Design Load

SEISMIC LOADING: Soil profile:
Shear Wave Velocity of top 100 ft soil V_S=240 m/sec
Moment Magnitude M_{max} = 6.6
Peak Ground Acceleration = 0.6g

REINFORCED CONCRETE: fy = 60 ksi
f'_c = 3.6 ksi (Except as shown on Concrete Strength and Type Limits Diagram)
n = 8

PRESTRESSED CONCRETE: See PRESTRESSING NOTES on "PRESTERSSED CONCRETE SLAB DETAILS" sheet

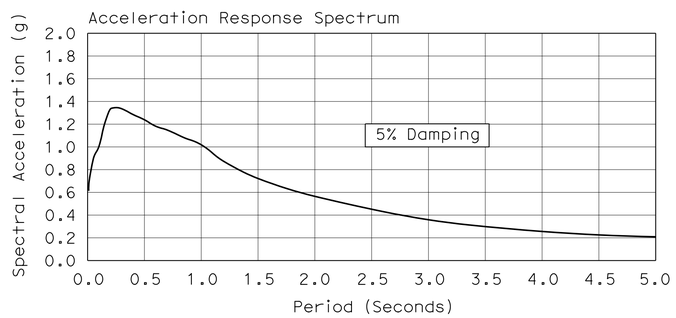

ARS CURVE

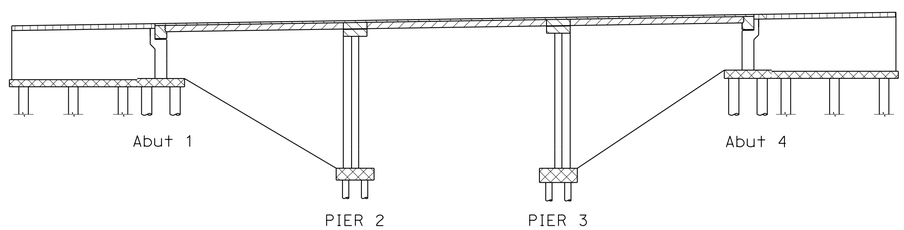

Structural Concrete, Bridge (f'_c = 4 ksi @ 28 days)

Precast Prestressed Concrete Slab, see "PRESTRESSED CONCRETE SLAB DETAIL" sheet

Structural Concrete, Bridge (f'_c = 5 ksi @ 28 days)

Structural Concrete, Bridge Footing

Structural Concrete, Approach Slab Type N(30S)

CONCRETE STRENGTH AND TYPE LIMITS

NO SCALE

PILE DATA TABLE

LOCATION		PILE TYPE	NOMINAL RESISTANCE (Kips) COMPRESSION	NOMINAL RESISTANCE (Kips) TENSION	DESIGN TIP ELEV (Ft)	SPECIFIED TIP ELEV (Ft)	REQUIRED NORMAL DRIVING RESISTANCE (Kips)
Abut 1 (L)	STEP 1 STEP 2	24" CIDH	180	0	879 (a) 898 (c) 893 (d)	879	N/A
WINGWALL Abut 1 (L)		* CLASS 90	140	0	876 (d)	876	180
Abut 1(R)		24" CIDH	140	0	866 (a) 904 (c) 889 (d)	886	N/A
PIER 2 (L)		24" CIDH	320	190	860 (a) 864 (b) 884 (c) 874 (d)	860	N/A
PIER 2 (R)		24" CIDH	220	90	865 (a) 880 (b) 886 (c) 878 (d)	865	N/A
PIER 3 (L)		24" CIDH	320	190	860 (a) 864 (b) 884 (c) 874 (d)	860	N/A
PIER 3 (R)		24" CIDH	220	90	865 (a) 880 (b) 886 (c) 879 (d)	865	N/A
Abut 4 (L)	STEP 1 STEP 2	24" CIDH	180	0	879 (a) 900 (c) 894 (d)	879	N/A
WINGWALL Abut 4 (L)		* CLASS 90	140	0	876 (d)	876	180
Abut 4 (R)		24" CIDH	140	0	886 (a) 905 (c) 891 (d)	886	N/A

NOTES:

Design Tip Elevation are controlled by:(a) Compression, (b) Tension, (c) Settlement, (d) Lateral load.

The specified tip elevation for CIDH piles shall not be raised.
* Class 90 Alternative "X" Piles shall have dimension "T" not less than 12".

	BY	CHECKED
DESIGN	HOMA IRANINEJADIAN	SHARAREH BIKAEE
DETAILS	ANTONETTE L. ONG	SHARAREH BIKAEE
QUANTITIES	HOMA IRANINEJADIAN	BRIJESH PATEL

STATE OF CALIFORNIA
DEPARTMENT OF TRANSPORTATION

DIVISION OF ENGINEERING SERVICES
STRUCTURE DESIGN
DESIGN BRANCH 20

BRIDGE NO. 53-0870
POST MILE 40.46

VIA VERDE UNDERCRSSING (WIDEN)
INDEX TO PLANS

STRUCTURES DESIGN DETAIL SHEET (ENGLISH) (REV. 09-01-10)

ORIGINAL SCALE IN INCHES FOR REDUCED PLANS 0 1 2 3

UNIT: 3622
PROJECT NUMBER & PHASE: 0713000007-1
CONTRACT NO.: 07-1193U1

DISREGARD PRINTS BEARING EARLIER REVISION DATES 02/28/14 05/23/14 02/28/14

SHEET 2 OF 35

FILE => 53-0870-a-itp.dgn

USERNAME => s125624 DATE PLOTTED => 18-MAY-2015 TIME PLOTTED => 14:08

DIST	COUNTY	ROUTE	POST MILES TOTAL PROJECT	SHEET No.	TOTAL SHEETS
07	LA	10	37.2/42.4	1665	2313

REGISTERED CIVIL ENGINEER 10/01/14 DATE

6-1-15
PLANS APPROVAL DATE

REGISTERED PROFESSIONAL ENGINEER Dawit T Worku No. C60711 Exp. 12-31-14 CIVIL STATE OF CALIFORNIA

The State of California or its officers or agents shall not be responsible for the accuracy or completeness of electronic copies of this plan sheet.

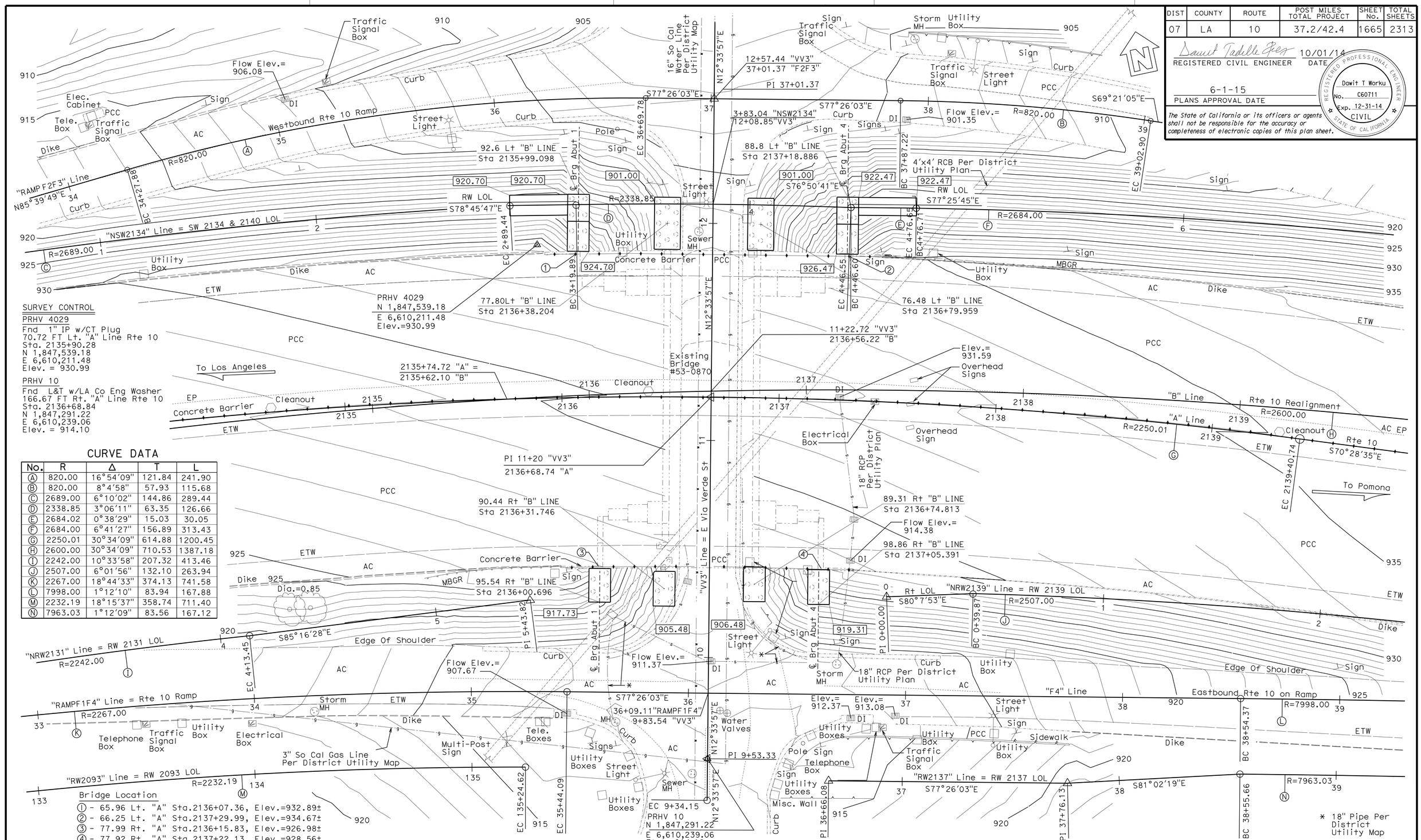

CURVE DATA

No.	R	Δ	T	L
Ⓐ	820.00	16°54'09"	121.84	241.90
Ⓑ	820.00	8°4'58"	57.93	115.68
Ⓒ	2689.00	6°10'02"	144.86	289.44
Ⓓ	2338.85	3°06'11"	63.35	126.66
Ⓔ	2684.02	0°38'29"	15.03	30.05
Ⓕ	2684.00	6°41'27"	156.89	313.43
Ⓖ	2250.01	30°34'09"	614.88	1200.45
Ⓗ	2600.00	30°34'09"	710.53	1387.18
Ⓘ	2242.00	10°33'58"	207.32	413.46
Ⓙ	2507.00	6°01'56"	132.10	263.94
Ⓚ	2267.00	18°44'33"	374.13	741.58
Ⓛ	7998.00	1°12'10"	83.94	167.88
Ⓜ	2232.19	18°15'37"	358.74	711.40
Ⓝ	7963.03	1°12'09"	83.56	167.12

Bridge Location
① - 65.96 Lt. "A" Sta.2136+07.36, Elev.=932.89±
② - 66.25 Lt. "A" Sta.2137+29.99, Elev.=934.67±
③ - 77.99 Rt. "A" Sta.2136+15.83, Elev.=926.98±
④ - 77.92 Rt. "A" Sta.2137+22.13, Elev.=928.56±

PRELIMINARY INVESTIGATION SECTION

SCALE	VERT.DATUM NAVD88	PHOTOGRAMMETRY AS OF: X			
1"=20'	HORZ.DATUM NAD83 (1991.35)	SURVEYED	BY District	CHECKED	BY C.Fassett 06/2010
ALIGNMENT TIES Dist. Traverse Sheet		DRAFTED	BY T.Zolnikov 06/2010	CHECKED	BY T.Schmalz 06/2010

STRUCTURES FOUNDATION PLAN SHEET (ENGLISH) (REV. 09-01-10)

	BY	CHECKED
DESIGN	HOMA IRANINEJADIAN	SHAREREH BIKAEE
DETAILS	ANTONETTE L. ONG	SHAREREH BIKAEE
QUANTITIES	HOMA IRANINEJADIAN	BRIJESH PATEL

ORIGINAL SCALE IN INCHES FOR REDUCED PLANS 0 1 2 3

STATE OF CALIFORNIA
DEPARTMENT OF TRANSPORTATION

DIVISION OF ENGINEERING SERVICES
STRUCTURE DESIGN
DESIGN BRANCH 20

BRIDGE NO. 53-0870
POST MILE 40.46

VIA VERDE UC (WIDENING)
FOUNDATION PLAN

UNIT: 3622
PROJECT NUMBER & PHASE: 0713000007-1
CONTRACT NO.: 07-1193U1

DISREGARD PRINTS BEARING EARLIER REVISION DATES

REVISION DATES: ~~06/28/10~~ ~~07/21/10~~ ~~05/26/11~~ 04/8/13

SHEET 3 OF 35

FILE => 53-0870-e-fpl01.dgn

DIST	COUNTY	ROUTE	POST MILES TOTAL PROJECT	SHEET No.	TOTAL SHEETS
07	LA	10	37.2/42.4	1666	2313

REGISTERED CIVIL ENGINEER 10/01/14 DATE

6-1-15
PLANS APPROVAL DATE

REGISTERED PROFESSIONAL ENGINEER Dawit T Worku No. C60711 Exp. 12-31-14 CIVIL STATE OF CALIFORNIA

The State of California or its officers or agents shall not be responsible for the accuracy or completeness of electronic copies of this plan sheet.

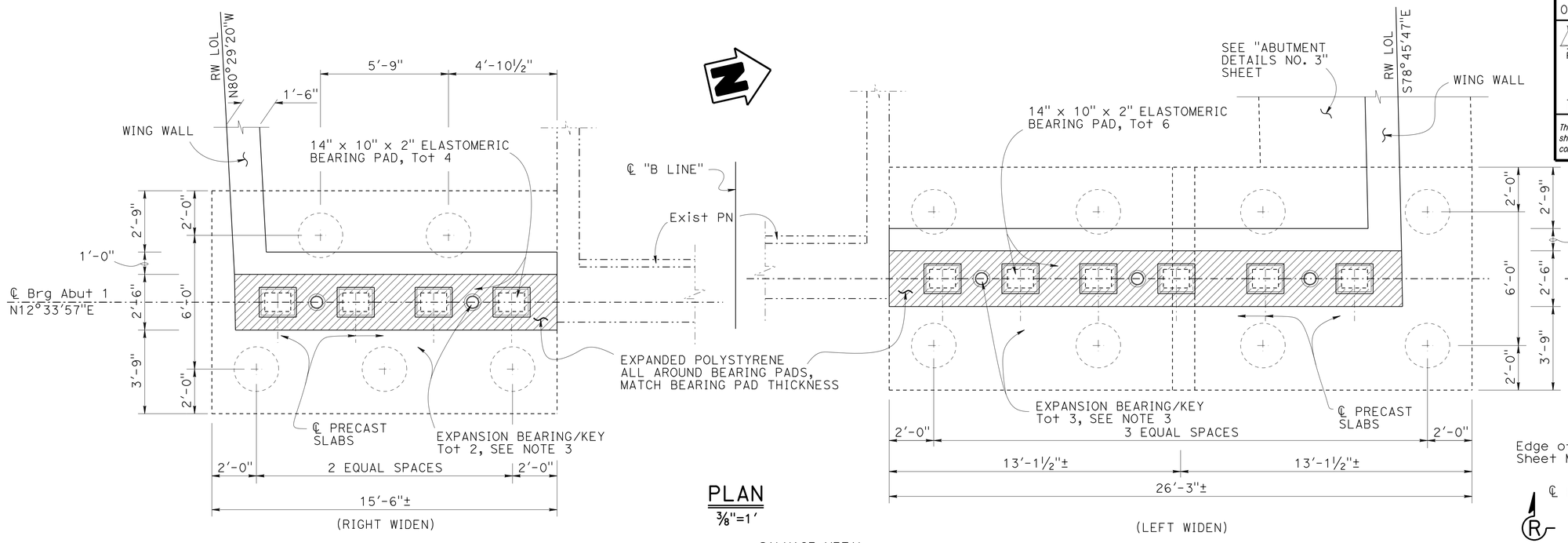

PLAN
3/8"=1'

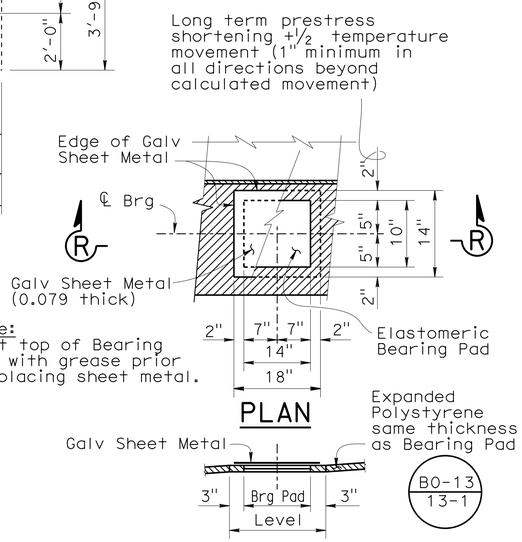

Note:
Coat top of Bearing Pad with grease prior to placing sheet metal.

PLAN

SECTION R-R
BEARING PAD DETAIL
No Scale
Details typical at all bearing pads

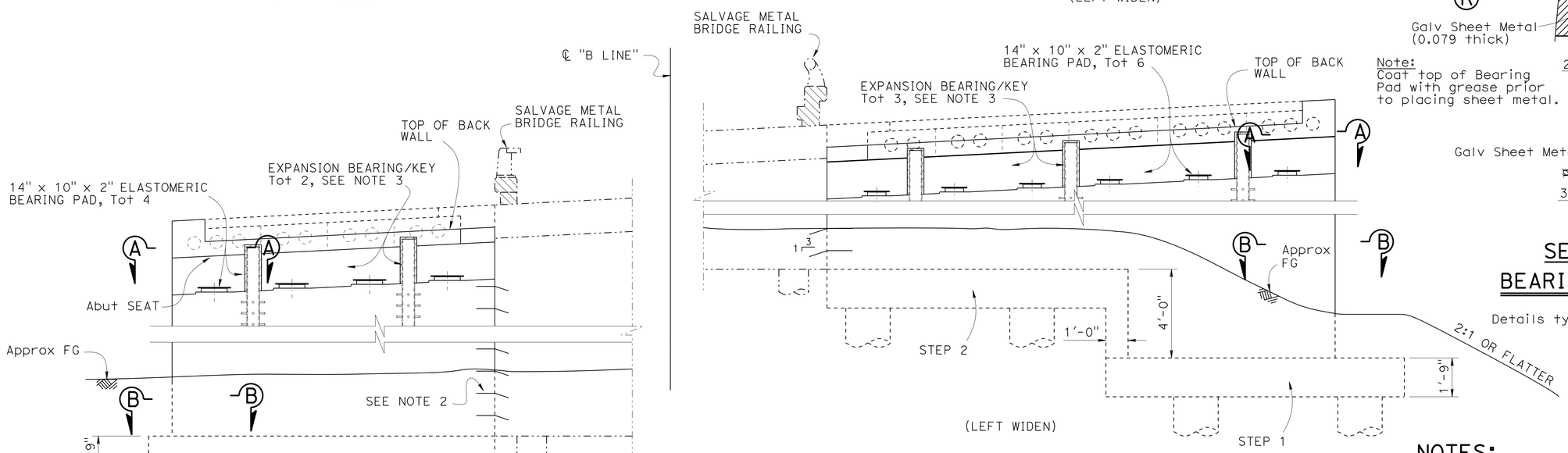

ELEVATION
3/8" = 1'-0"

NOTE:
THE CONTRACTOR SHALL VERIFY ALL CONTROLLING FIELD DIMENSIONS BEFORE ORDERING OR FABRICATING ANY MATERIAL.

LEGEND:

- Indicates New Construction
- Indicates Existing Structure
- Indicates Expanded Polystyrene
- Bridge Removal (Portion)

NOTES:

1. For Section A-A and Section B-B, see "ABUTMENT DETAILS NO. 2" sheet
2. For Drill and Bond details, see "MISCELLANEOUS DETAILS" sheet
3. For Expansion Bearing /Key details, see " ABUTMENT DETAILS NO. 2" sheet

	BY	CHECKED
DESIGN	HOMA IRANINEJADIAN	SHARAREH BIKAEE
DETAILS	ANTONETTE L. ONG	SHARAREH BIKAEE
QUANTITIES	HOMA IRANINEJADIAN	BRIJESH PATEL

STATE OF CALIFORNIA
DEPARTMENT OF TRANSPORTATION

DIVISION OF ENGINEERING SERVICES
STRUCTURE DESIGN
DESIGN BRANCH 20

BRIDGE NO. 53-0870
POST MILE 40.46

VIA VERDE UNDERCROSSING (WIDEN)
ABUTMENT 1 LAYOUT

STRUCTURES DESIGN DETAIL SHEET (ENGLISH) (REV. 09-01-10)

ORIGINAL SCALE IN INCHES FOR REDUCED PLANS 0 1 2 3

UNIT: 3622
PROJECT NUMBER & PHASE: 0713000007-1
CONTRACT NO.: 07-1193U1

DISREGARD PRINTS BEARING EARLIER REVISION DATES

REVISION DATES 01/21/14 05/23/14 11/19/15

SHEET 4 OF 35

FILE => 53-0870-f-a01_lo1.dgn

USERNAME => s125624 DATE PLOTTED => 18-MAY-2015 TIME PLOTTED => 14:08

DIST	COUNTY	ROUTE	POST MILES TOTAL PROJECT	SHEET No.	TOTAL SHEETS
07	LA	10	37.2/42.4	1667	2313

REGISTERED CIVIL ENGINEER 10/01/14 DATE

6-1-15
PLANS APPROVAL DATE

REGISTERED PROFESSIONAL ENGINEER Dawit T Worku No. C60711 Exp. 12-31-14 CIVIL STATE OF CALIFORNIA

The State of California or its officers or agents shall not be responsible for the accuracy or completeness of electronic copies of this plan sheet.

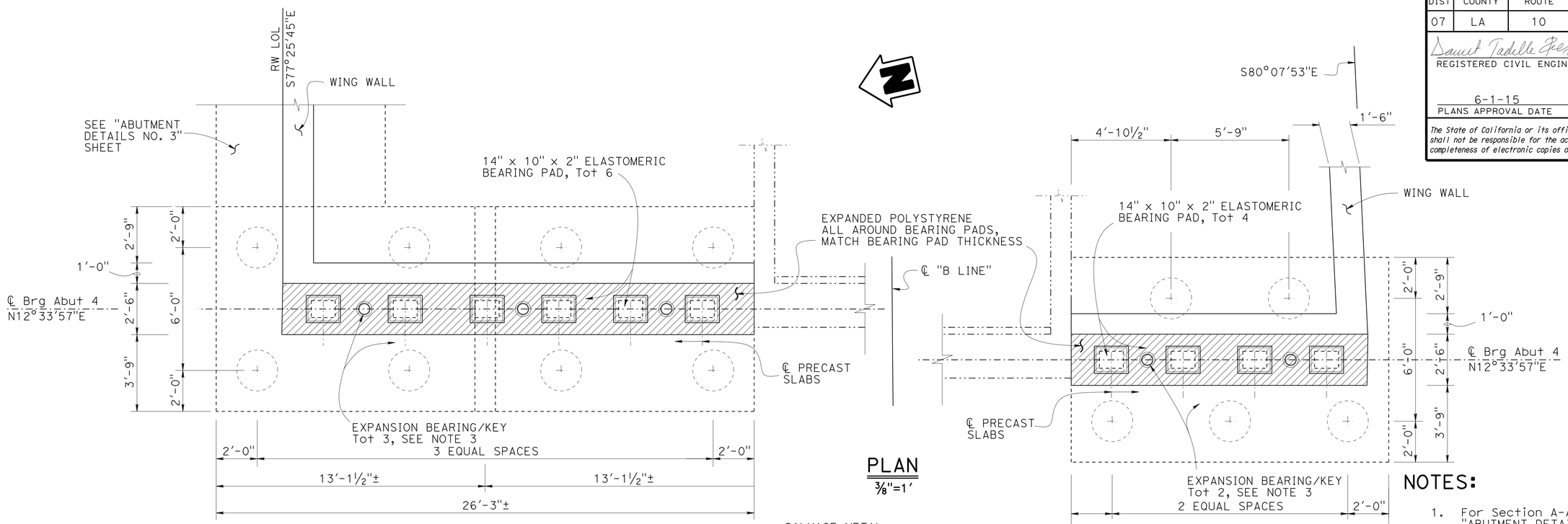

PLAN
3/8"=1'

NOTES:

1. For Section A-A and Section B-B, see "ABUTMENT DETAILS NO. 2" sheet
2. For Drill and Bond details, see "MISCELLANEOUS DETAILS" sheet
3. For Expansion Bearing /Key details, see " ABUTMENT DETAILS NO. 2" sheet

LEGEND:

- Indicates New Construction
- Indicates Existing Structure
- Indicates Expanded Polystyrene
- Bridge Removal (Portion)

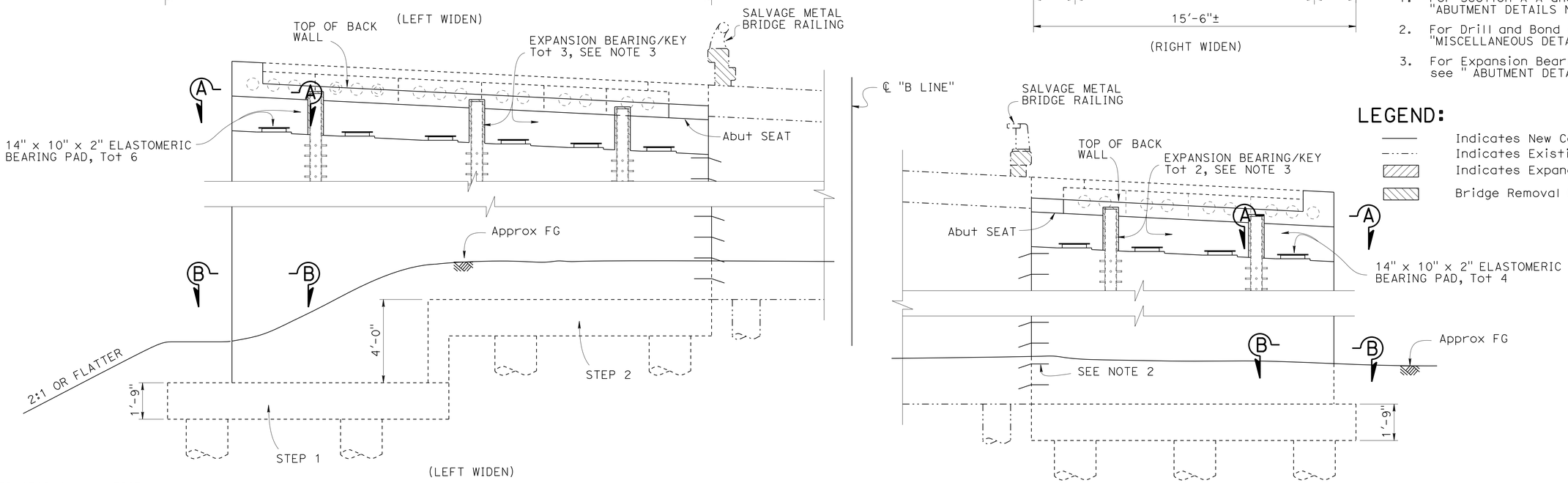

ELEVATION
3/8" = 1'-0"

NOTE:
THE CONTRACTOR SHALL VERIFY ALL CONTROLLING FIELD DIMENSIONS BEFORE ORDERING OR FABRICATING ANY MATERIAL.

	BY	CHECKED
DESIGN	HOMA IRANINEJADIAN	SHARAREH BIKAEE
DETAILS	ANTONETTE L. ONG	SHARAREH BIKAEE
QUANTITIES	HOMA IRANINEJADIAN	BRIJESH PATEL

STATE OF CALIFORNIA
DEPARTMENT OF TRANSPORTATION

DIVISION OF ENGINEERING SERVICES
STRUCTURE DESIGN
DESIGN BRANCH 20

BRIDGE NO. 53-0870
POST MILE 40.46

VIA VERDE UNDERCROSSING (WIDEN)
ABUTMENT 4 LAYOUT

STRUCTURES DESIGN DETAIL SHEET (ENGLISH) (REV. 09-01-10)

ORIGINAL SCALE IN INCHES FOR REDUCED PLANS 0 1 2 3

UNIT: 3622
PROJECT NUMBER & PHASE: 0713000007-1
CONTRACT NO.: 07-1193U1

DISREGARD PRINTS BEARING EARLIER REVISION DATES

REVISION DATES 05/23/14 11/07/13 01/22/14

SHEET 5 OF 35

FILE => 53-0870-f-a01_lo2.dgn

USERNAME => s125624 DATE PLOTTED => 18-MAY-2015 TIME PLOTTED => 14:08

DIST	COUNTY	ROUTE	POST MILES TOTAL PROJECT	SHEET No.	TOTAL SHEETS
07	LA	10	37.2/42.4	1668	2313

REGISTERED CIVIL ENGINEER 10/01/14 DATE

6-1-15
PLANS APPROVAL DATE

REGISTERED PROFESSIONAL ENGINEER Dawit T Worku No. C60711 Exp. 12-31-14 CIVIL STATE OF CALIFORNIA

The State of California or its officers or agents shall not be responsible for the accuracy or completeness of electronic copies of this plan sheet.

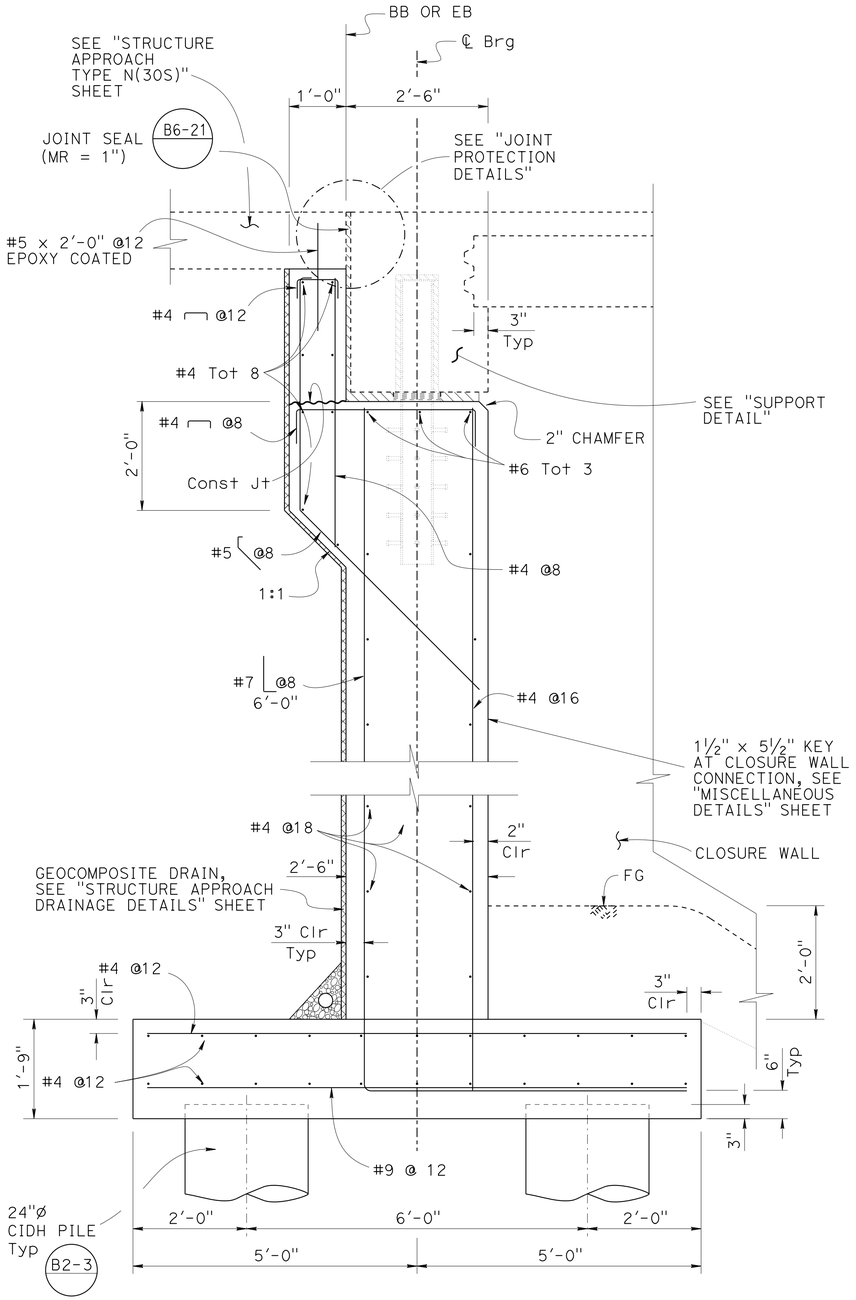

LEFT WIDEN ABUTMENT TYPICAL SECTION

¾" = 1'-0"

NOTE:
THE CONTRACTOR SHALL VERIFY ALL CONTROLLING FIELD DIMENSIONS BEFORE ORDERING OR FABRICATING ANY MATERIAL.

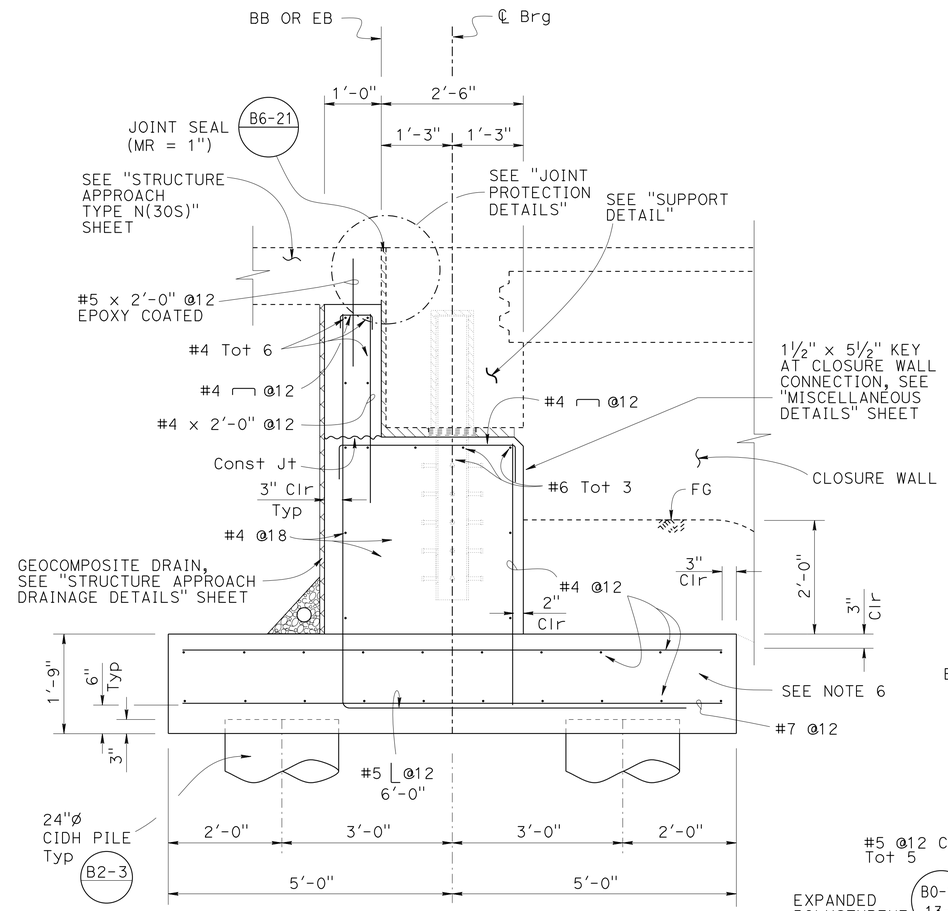

RIGHT WIDEN ABUTMENT TYPICAL SECTION

¾" = 1'-0"

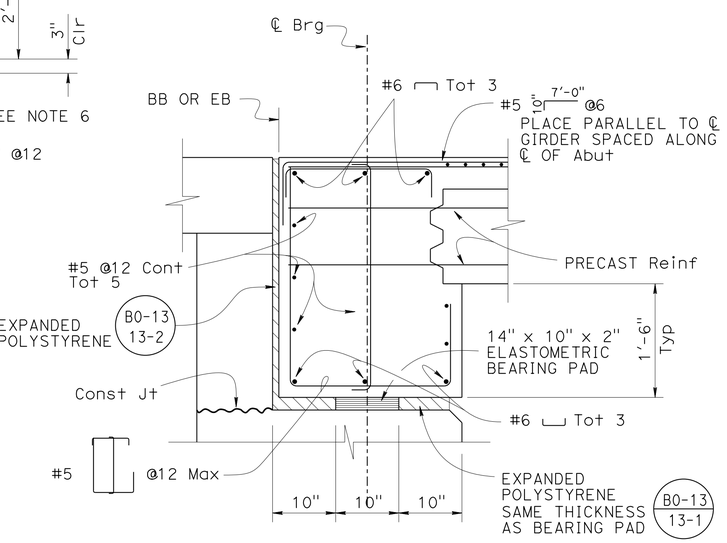

SUPPORT DETAIL

1" = 1'-0"

NOTES:

1. Abutment 1 shown, Abutment 4 similar
2. For Closure Wall details, see "MISCELLANEOUS DETAILS" sheet
3. For Drainage details See, "ABUTMENT DETAILS NO. 3" and "STRUCTURE APPROACH DRAINAGE DETAILS" sheet
4. For Utility detail, see "ABUTMENT DETAILS NO. 3" sheet
5. Max height of fill material behind and in front of Closure Wall not exceed 2 ft
6. For Joint Protection details, see "ABUTMENT DETAILS NO. 4" sheet

LEGEND:

——— Indicates New Construction
–·–·– Indicates Existing Structure

DESIGN	BY HOMA IRANINEJADIAN	CHECKED SHARAREH BIKAEE	
DETAILS	BY ANTONETTE L. ONG	CHECKED SHARAREH BIKAEE	
QUANTITIES	BY HOMA IRANINEJADIAN	CHECKED BRIJESH PATEL	

STATE OF CALIFORNIA
DEPARTMENT OF TRANSPORTATION

DIVISION OF ENGINEERING SERVICES
STRUCTURE DESIGN
DESIGN BRANCH 20

BRIDGE NO. 53-0870
POST MILE 40.46

VIA VERDE UNDERCROSSING (WIDEN)
ABUTMENT DETAILS NO. 1

STRUCTURES DESIGN DETAIL SHEET (ENGLISH) (REV. 09-01-10)

ORIGINAL SCALE IN INCHES FOR REDUCED PLANS 0 1 2 3

UNIT: 3622
PROJECT NUMBER & PHASE: 0713000007-1
CONTRACT NO.: 07-1193U1

DISREGARD PRINTS BEARING EARLIER REVISION DATES

REVISION DATES: 05/23/14 07/24/14 01/26/14

SHEET 6 OF 35

FILE => 53-0870-f-a01dt01.dgn

USERNAME => s123624 DATE PLOTTED => 18-MAY-2015 TIME PLOTTED => 14:08

DIST	COUNTY	ROUTE	POST MILES TOTAL PROJECT	SHEET No.	TOTAL SHEETS
07	LA	10	37.2/42.4	1669	2313

REGISTERED CIVIL ENGINEER — DATE 10/01/14

6-1-15
PLANS APPROVAL DATE

The State of California or its officers or agents shall not be responsible for the accuracy or completeness of electronic copies of this plan sheet.

REGISTERED PROFESSIONAL ENGINEER — Dawit T Worku — No. C60711 — Exp. 12-31-14 — CIVIL — STATE OF CALIFORNIA

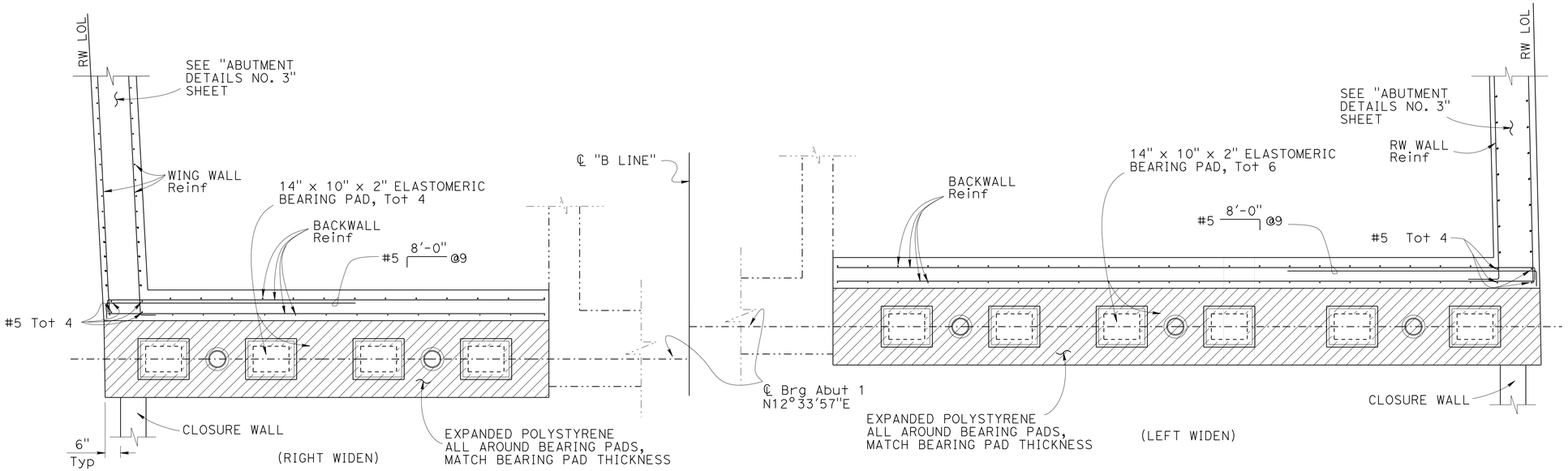

SECTION A-A
½" = 1'-0"

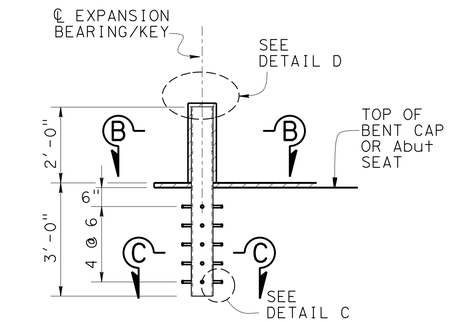

EXPANSION BEARING/KEY
½" = 1'-0"

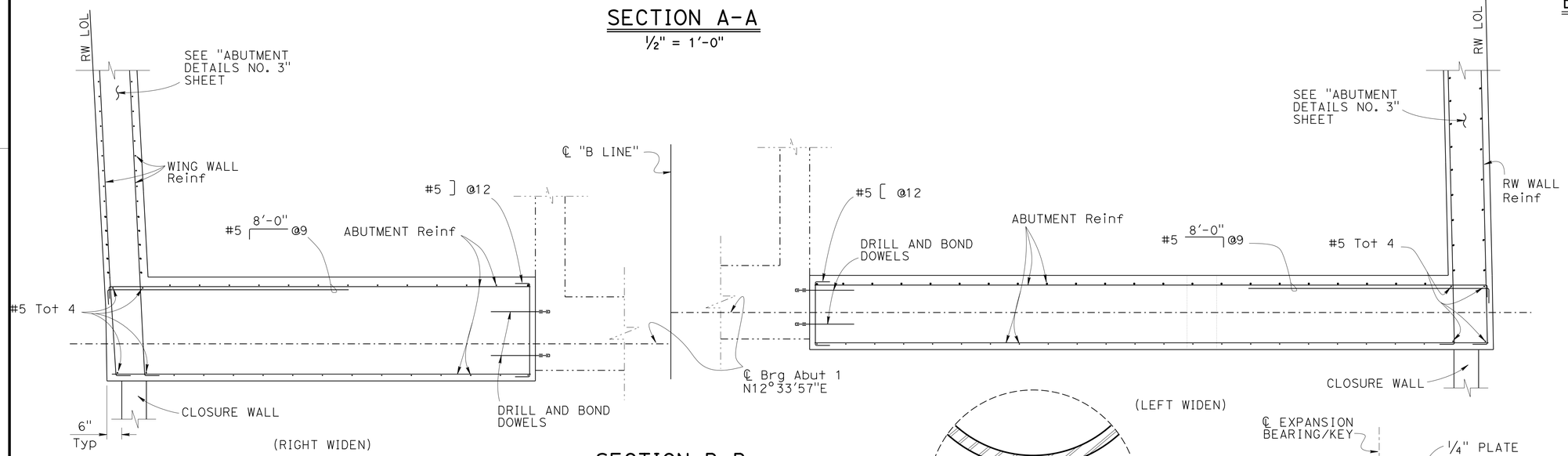

SECTION B-B
½" = 1'-0"

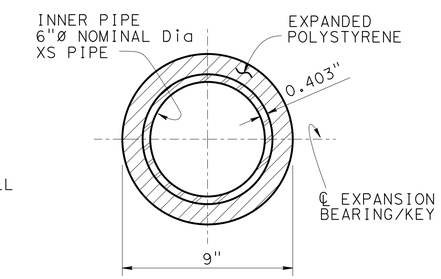

SECTION B-B
3" = 1'-0"

NOTE:
Abutment 1 shown, Abutment 4 similar

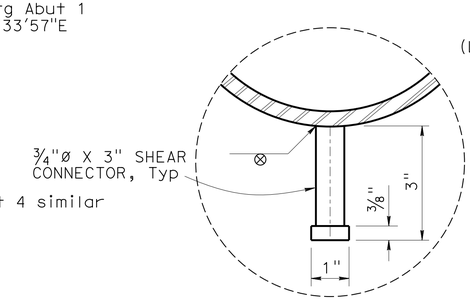

DETAIL C
1" = 6"

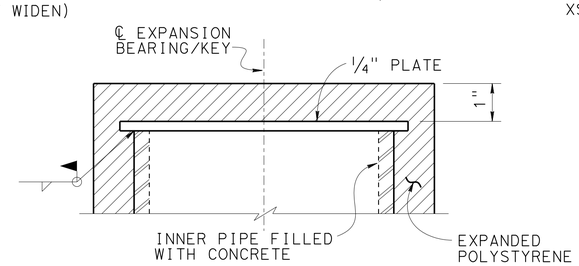

DETAIL D
1" = 6"

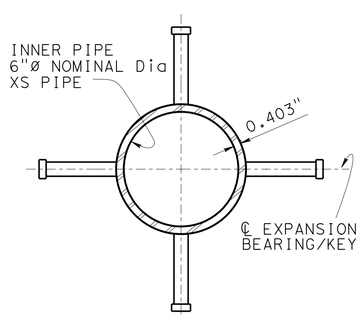

SECTION C-C
3" = 1'-0"

LEGEND:

———	Indicates New Construction
—·—·—	Indicates Existing Structure
▨	Indicates Expanded Polystyrene

NOTE:
THE CONTRACTOR SHALL VERIFY ALL CONTROLLING FIELD DIMENSIONS BEFORE ORDERING OR FABRICATING ANY MATERIAL.

	BY	CHECKED
DESIGN	HOMA IRANINEJADIAN	SHARAREH BIKAEE
DETAILS	ANTONETTE L. ONG	SHARAREH BIKAEE
QUANTITIES	HOMA IRANINEJADIAN	BRIJESH PATEL

STATE OF CALIFORNIA
DEPARTMENT OF TRANSPORTATION

DIVISION OF ENGINEERING SERVICES
STRUCTURE DESIGN
DESIGN BRANCH 20

BRIDGE NO. 53-0870
POST MILE 40.46

VIA VERDE UNDERCROSSING (WIDEN)
ABUTMENT DETAILS NO. 2

STRUCTURES DESIGN DETAIL SHEET (ENGLISH) (REV. 09-01-10)

ORIGINAL SCALE IN INCHES FOR REDUCED PLANS 0 1 2 3

UNIT: 3622
PROJECT NUMBER & PHASE: 0713000007-1
CONTRACT NO.: 07-1193U1

DISREGARD PRINTS BEARING EARLIER REVISION DATES
REVISION DATES 01/23/14 05/23/14 09/25/13
SHEET 7 OF 35

FILE => 53-0870-f-a02d102.dgn

USERNAME => s125624 DATE PLOTTED => 18-MAY-2015 TIME PLOTTED => 14:08

DIST	COUNTY	ROUTE	POST MILES TOTAL PROJECT	SHEET No.	TOTAL SHEETS
07	LA	10	37.2/42.4	1670	2313

REGISTERED CIVIL ENGINEER 10/01/14 DATE

6-1-15
PLANS APPROVAL DATE

REGISTERED PROFESSIONAL ENGINEER Dawit T Worku No. C60711 Exp. 12-31-14 CIVIL STATE OF CALIFORNIA

The State of California or its officers or agents shall not be responsible for the accuracy or completeness of electronic copies of this plan sheet.

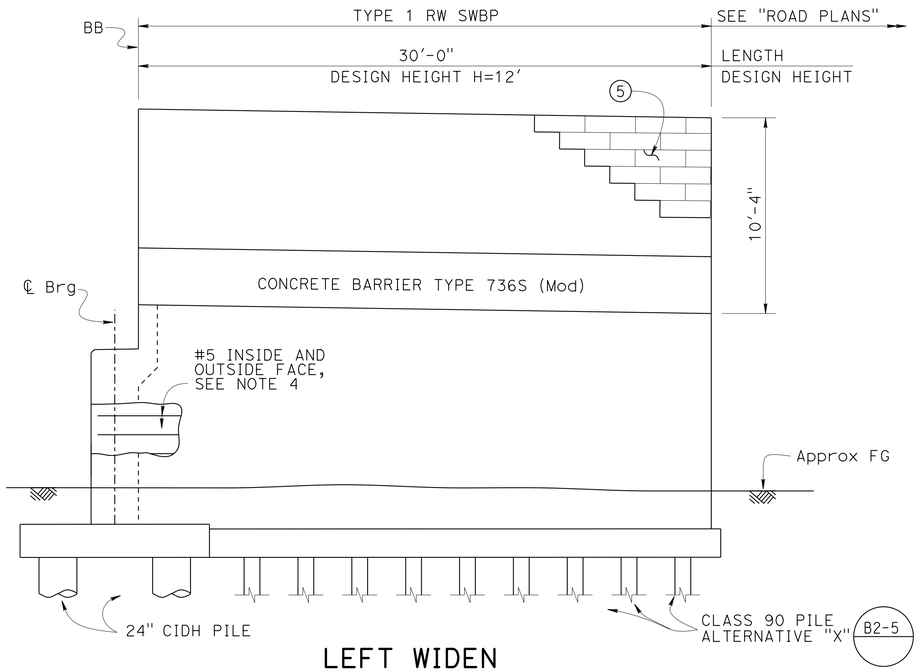

LEFT WIDEN
1/4" = 1'-0"

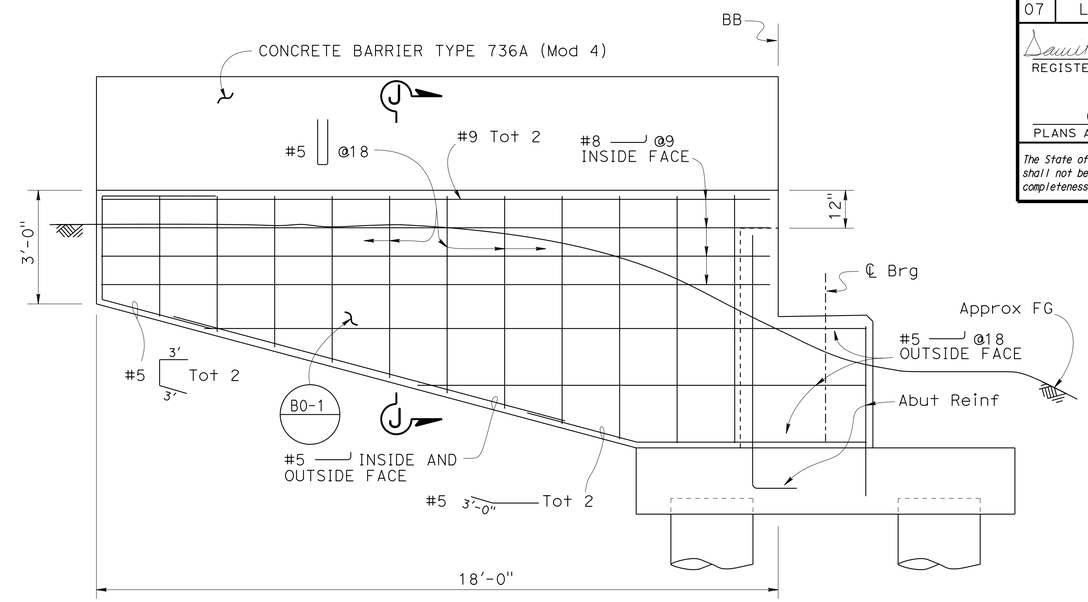

RIGHT WIDEN
1/2" = 1'-0"

ABUTMENT 1 RETAINING WALL ELEVATION

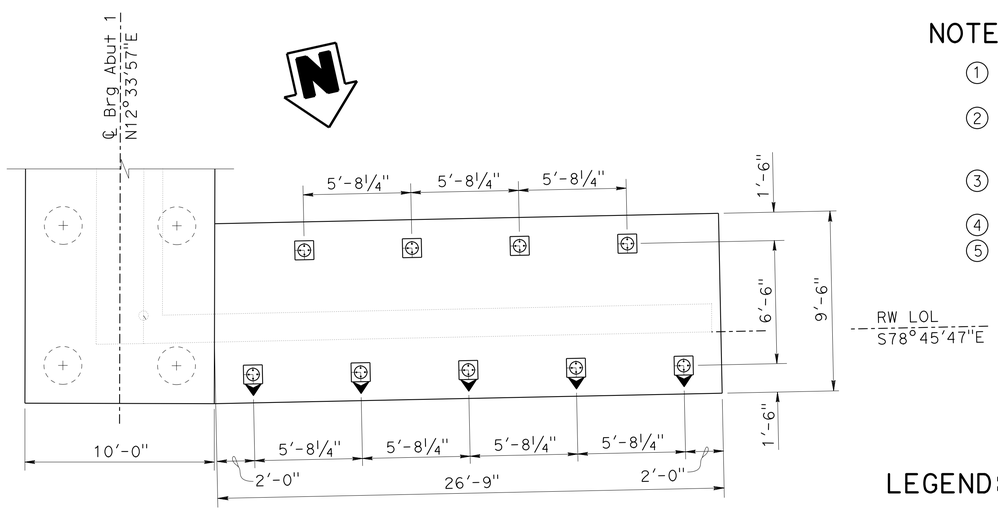

LEFT WIDEN, ABUTMENT 1 RETAINING WALL FOOTING
1/4" = 1'-0"

NOTE:
THE CONTRACTOR SHALL VERIFY ALL CONTROLLING FIELD DIMENSIONS BEFORE ORDERING OR FABRICATING ANY MATERIAL.

NOTES:

1. Abutment 1 Left shown, Abutment 4 Left similar
   Abutment 1 Right shown, Abutment 4 Right similar
2. For Retaining Wall details and Concrete Barrier Type 736S (Mod) details, see "RETAINING WALL TYPE 1SWBP - DETAILS NO. 1 & 2" sheets
3. For Reinforcing bars, see "RETAINING WALL TYPE 1SWBP-DETAILS NO. 1 & 2" sheets
4. Continue #5 horizontal bars into the Abutment stem
5. For Architectural details on Sound Wall, see "ROAD PLANS"

LEGEND:

Indicates Class 90 Pile Alternative "X" Battered Piles 3:1 (B2-5)

Indicates Class 90 Pile Alternative "X" Straight Piles (B2-5)

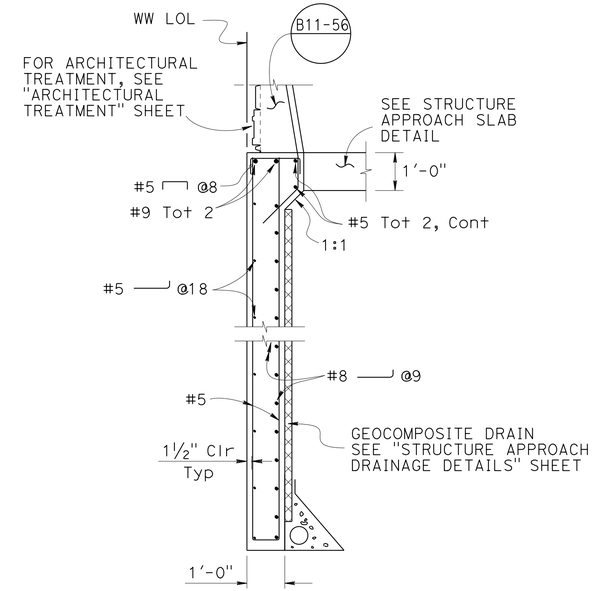

SECTION J-J
1/2" = 1'-0"

	BY	CHECKED
DESIGN	HOMA IRANINEJADIAN	SHARAREH BIKAEE
DETAILS	K. FARAHZADIYAZDI/A. ONG	SHARAREH BIKAEE
QUANTITIES	HOMA IRANINEJADIAN	BRIJESH PATEL

STATE OF CALIFORNIA
DEPARTMENT OF TRANSPORTATION

DIVISION OF ENGINEERING SERVICES
STRUCTURE DESIGN
DESIGN BRANCH 20

BRIDGE NO. 53-0870
POST MILE 40.46

VIA VERDE UNDERCROSSING (WIDEN)
ABUTMENT DETAILS NO. 3

STRUCTURES DESIGN DETAIL SHEET (ENGLISH) (REV. 09-01-10)

ORIGINAL SCALE IN INCHES FOR REDUCED PLANS 0 1 2 3

UNIT: 3622
PROJECT NUMBER & PHASE: 0713000007-1
CONTRACT NO.: 07-1193U1

DISREGARD PRINTS BEARING EARLIER REVISION DATES

REVISION DATES 05/23/14 01/22/14 01/24/14

SHEET 8 OF 35

FILE => 53-0870-f-a03d+03.dgn

USERNAME => s125624 DATE PLOTTED => 18-MAY-2015 TIME PLOTTED => 14:08

DIST	COUNTY	ROUTE	POST MILES TOTAL PROJECT	SHEET No.	TOTAL SHEETS
07	LA	10	37.2/42.4	1671	2313

REGISTERED CIVIL ENGINEER 10/01/14 DATE

6-1-15
PLANS APPROVAL DATE

REGISTERED PROFESSIONAL ENGINEER Dawit T Worku No. C60711 Exp. 12-31-14 CIVIL STATE OF CALIFORNIA

The State of California or its officers or agents shall not be responsible for the accuracy or completeness of electronic copies of this plan sheet.

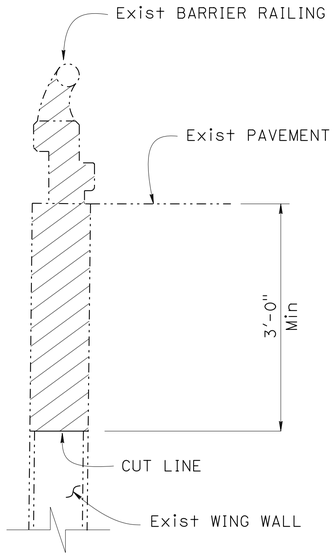

SECTION B-B

NO SCALE

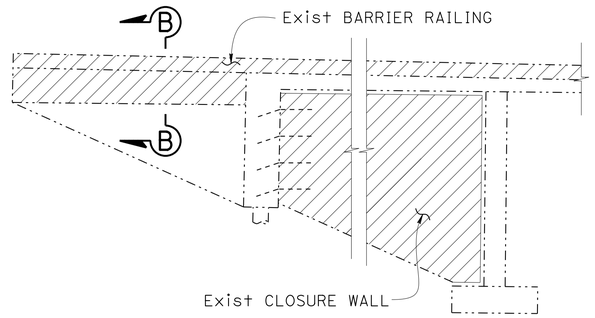

EXISTING WINGWALL AND CLOSURE WALL ELEVATION

NO SCALE

NOTES:

Remove all existing Closure Wall Left and Right Widen Pier 2 and 3

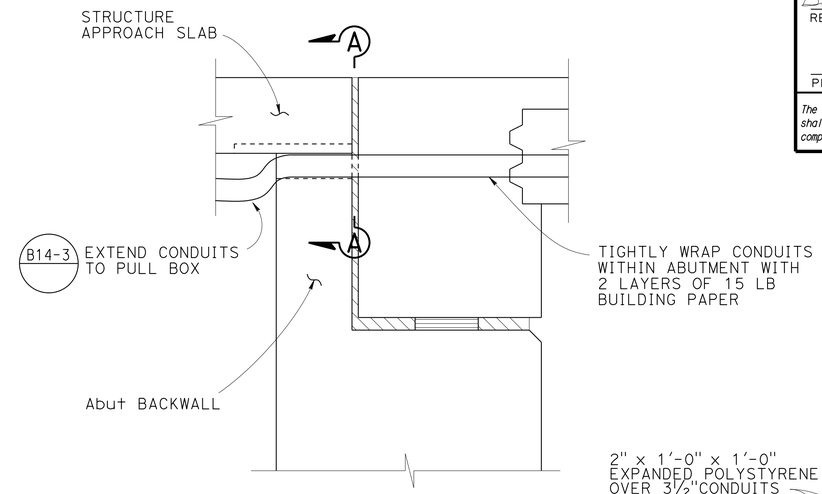

UTILITY DETAIL (LEFT WIDEN)

1" = 1'-0"

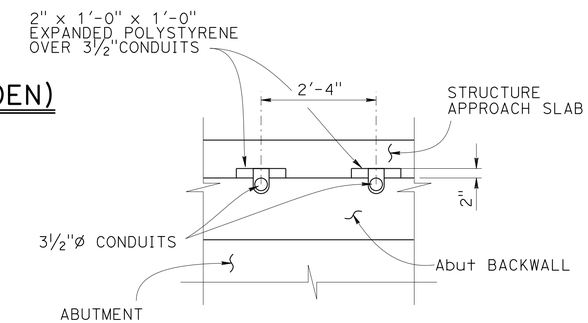

SECTION A-A

NO SCALE

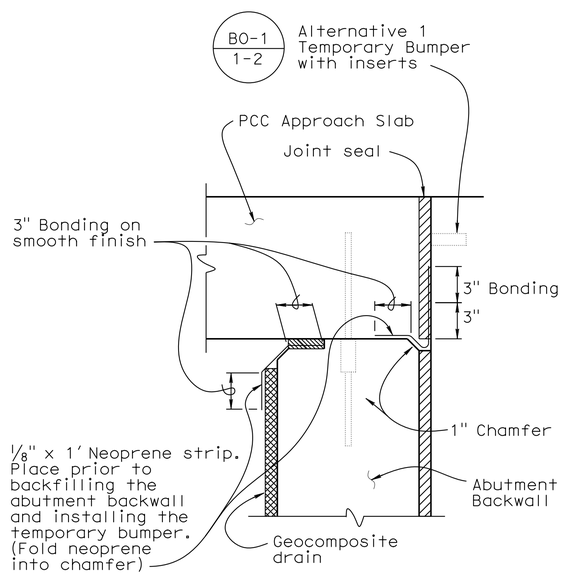

JOINT PROTECTION DETAIL

No Scale

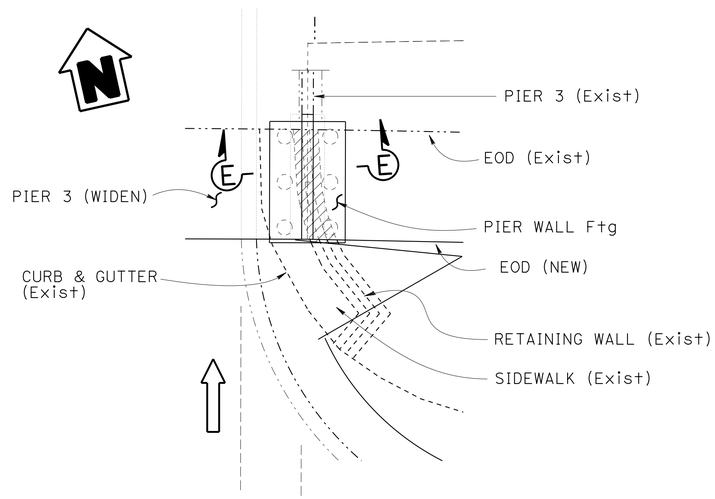

EXISTING RW PARTIAL PLAN

1" = 10'-0"

NOTE:

Existing Retaining Wall and Footing @ Pier 3 Right Widen to be removed

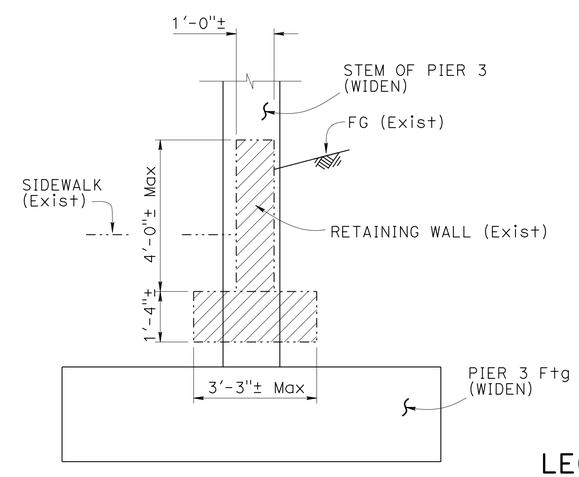

SECTION E-E

NO SCALE

LEGEND:

- Indicates New Costruction
- Indicates Existing Structure
- Indicates Bridge Removal (Portion)

NOTE:
THE CONTRACTOR SHALL VERIFY ALL CONTROLLING FIELD DIMENSIONS BEFORE ORDERING OR FABRICATING ANY MATERIAL.

	BY	CHECKED
DESIGN	HOMA IRANINEJADIAN	SHARAREH BIKAEE
DETAILS	ANTONETTE L. ONG	SHARAREH BIKAEE
QUANTITIES	HOMA IRANINEJADIAN	BRIJESH PATEL

STATE OF CALIFORNIA
DEPARTMENT OF TRANSPORTATION

DIVISION OF ENGINEERING SERVICES
STRUCTURE DESIGN
DESIGN BRANCH 20

BRIDGE NO. 53-0870
POST MILE 40.46

VIA VERDE UNDERCRSSING (WIDEN)
ABUTMENT DETAILS NO. 4

STRUCTURES DESIGN DETAIL SHEET (ENGLISH) (REV. 09-01-10)

ORIGINAL SCALE IN INCHES FOR REDUCED PLANS 0 1 2 3

UNIT: 3622
PROJECT NUMBER & PHASE: 0713000007-1
CONTRACT NO.: 07-1193U1

DISREGARD PRINTS BEARING EARLIER REVISION DATES → 01-24-14 03-03-14 12-17-14

SHEET 9 OF 35

FILE => 53-0870-f-a04dt04.dgn

USERNAME => s125624 DATE PLOTTED => 18-MAY-2015 TIME PLOTTED => 14:08

DIST	COUNTY	ROUTE	POST MILES TOTAL PROJECT	SHEET No.	TOTAL SHEETS
07	LA	10	37.2/42.4	1672	2313

REGISTERED CIVIL ENGINEER 10/01/14 DATE

6-1-15
PLANS APPROVAL DATE

REGISTERED PROFESSIONAL ENGINEER Dawit T Worku No. C60711 Exp. 12-31-14 CIVIL STATE OF CALIFORNIA

The State of California or its officers or agents shall not be responsible for the accuracy or completeness of electronic copies of this plan sheet.

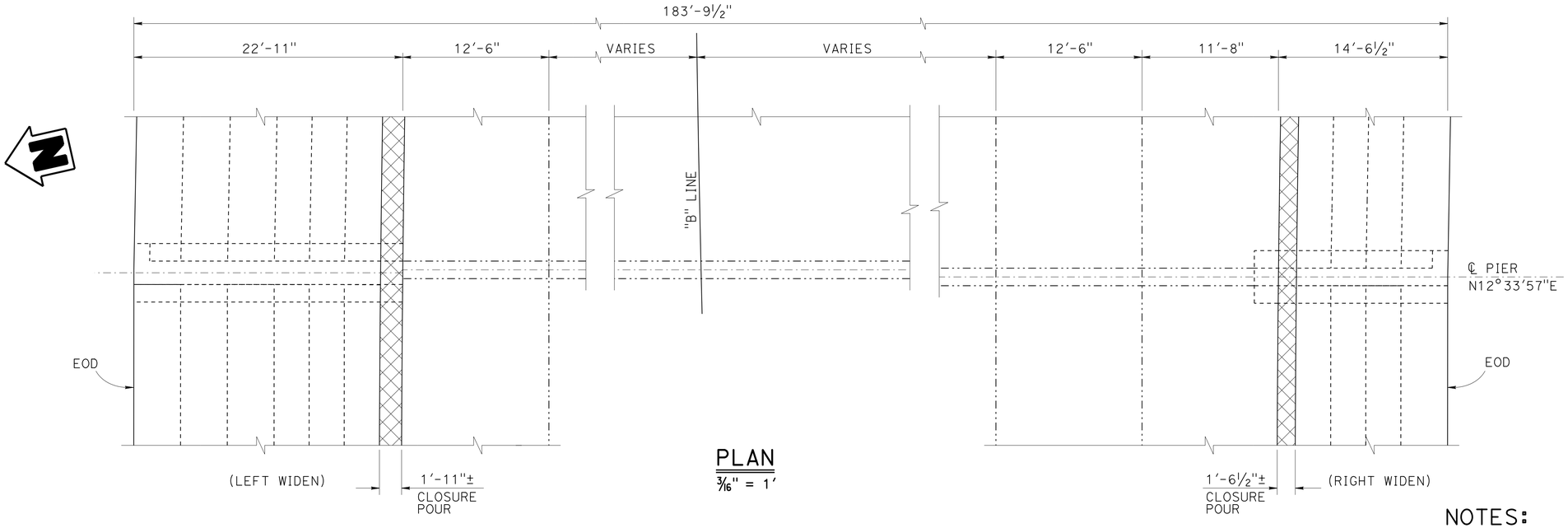

PLAN
3/16" = 1'

LEGEND:

- Indicates New Construction
- Indicates Existing Structure
- Indicates Closure Pour
- Bridge Removal (Portion)

NOTES:

1. Pier 2 shown, Pier 3 similar
2. For Section A-A , Section C-C and Section B-B, see "PIER WALL DETAILS NO. 2" sheet
3. For Section D-D and Section E-E, see "PIER WALL DETAILS NO. 3" sheet
4. For Joint detail, see "MISCELLANEOUS DETAILS" sheet
5. For Support detail, see " PIER WALL DETAILS No. 2" Sheet

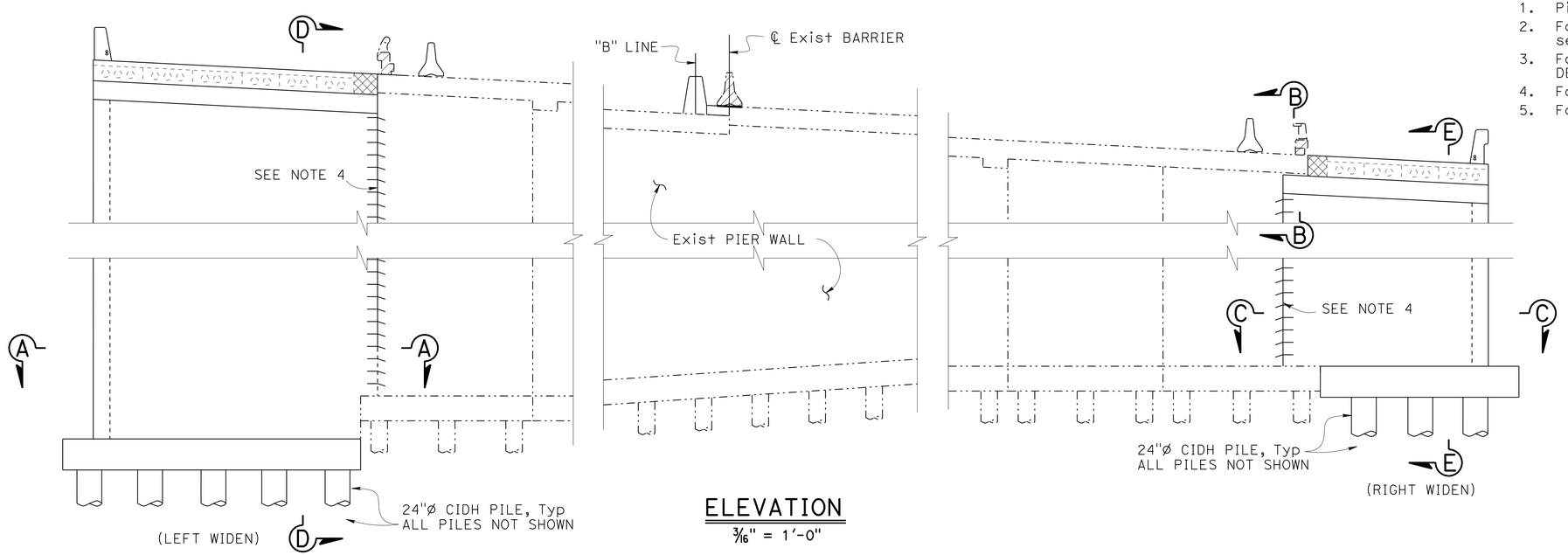

ELEVATION
3/16" = 1'-0"

NOTE:
THE CONTRACTOR SHALL VERIFY ALL CONTROLLING FIELD DIMENSIONS BEFORE ORDERING OR FABRICATING ANY MATERIAL.

	BY	CHECKED
DESIGN	HOMA IRANINEJADIAN	SHARAREH BIKAEE
DETAILS	K. FARAHZADIYAZDI/A. ONG	SHARAREH BIKAEE
QUANTITIES	HOMA IRANINEJADIAN	BRIJESH PATEL

STATE OF CALIFORNIA
DEPARTMENT OF TRANSPORTATION

DIVISION OF ENGINEERING SERVICES
STRUCTURE DESIGN
DESIGN BRANCH 20

BRIDGE NO. 53-0870
POST MILE 40.46

VIA VERDE UNDERCROSSING (WIDEN)
PIER WALL DETAILS NO. 1

STRUCTURES DESIGN DETAIL SHEET (ENGLISH) (REV. 09-01-10)

ORIGINAL SCALE IN INCHES FOR REDUCED PLANS 0 1 2 3

UNIT: 3622
PROJECT NUMBER & PHASE: 0713000007-1
CONTRACT NO.: 07-1193U1

DISREGARD PRINTS BEARING EARLIER REVISION DATES

REVISION DATES: 10/24/13 01/28/14 05/23/14

SHEET 10 OF 35

FILE => 53-0870-1-p01dt01.dgn

USERNAME => s125624 DATE PLOTTED => 18-MAY-2015 TIME PLOTTED => 14:08

DIST	COUNTY	ROUTE	POST MILES TOTAL PROJECT	SHEET No.	TOTAL SHEETS
07	LA	10	37.2/42.4	1673	2313

REGISTERED CIVIL ENGINEER — DATE 10/01/14

6-1-15
PLANS APPROVAL DATE

REGISTERED PROFESSIONAL ENGINEER — Dawit T Worku — No. C60711 — Exp. 12-31-14 — CIVIL — STATE OF CALIFORNIA

The State of California or its officers or agents shall not be responsible for the accuracy or completeness of electronic copies of this plan sheet.

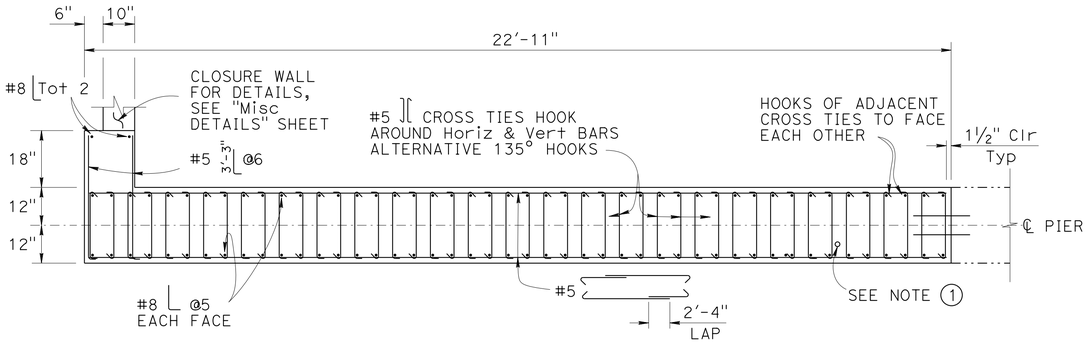

SECTION A-A (LEFT WIDEN)

½" = 1'-0"

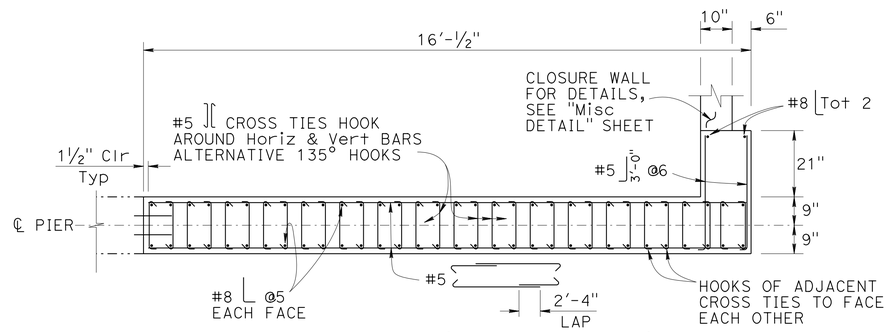

SECTION C-C (RIGHT WIDEN)

½" = 1'-0"

LEGEND:

——— Indicates New Construction

–·–·– Indicates Existing Structure

NOTE:

1. 1½" Conduit @ Left Widen only, Pier 2 & 3 adjust to avoid Vertical and Horizontal Pier Wall reinforcement, see "ROAD PLANS"
2. No two adjacent Piles shall be installed at the same time

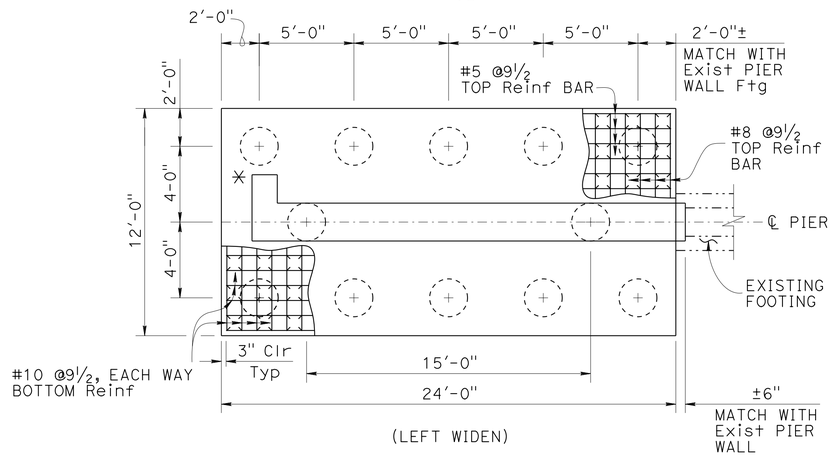

(LEFT WIDEN)

PIER 2 AND PIER 3 FOOTING

¼" = 1'-0"

✳ PIER 3 SHOWN, PIER 2 REVERSE DIRECTION

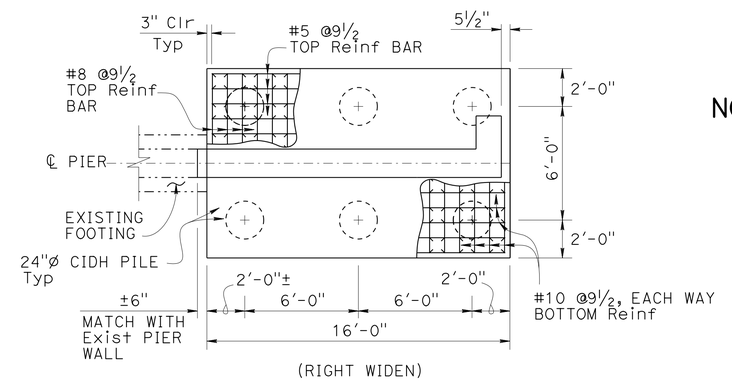

(RIGHT WIDEN)

PIER 3 FOOTING

¼" = 1'-0"

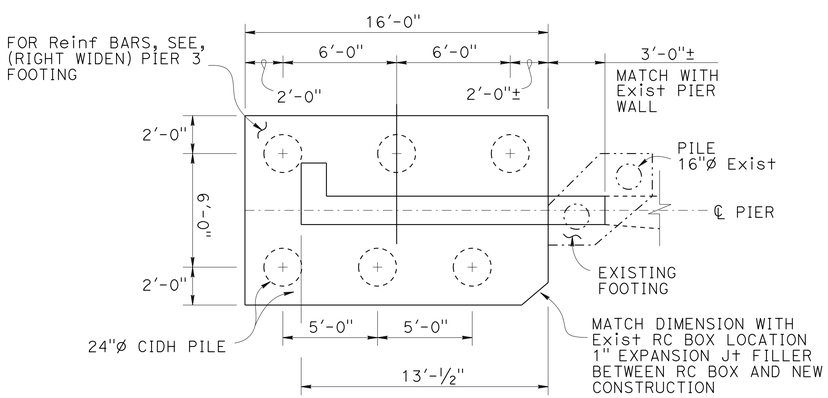

(RIGHT WIDEN)

PIER 2 FOOTING

¼" = 1'-0"

NOTE:
THE CONTRACTOR SHALL VERIFY ALL CONTROLLING FIELD DIMENSIONS BEFORE ORDERING OR FABRICATING ANY MATERIAL.

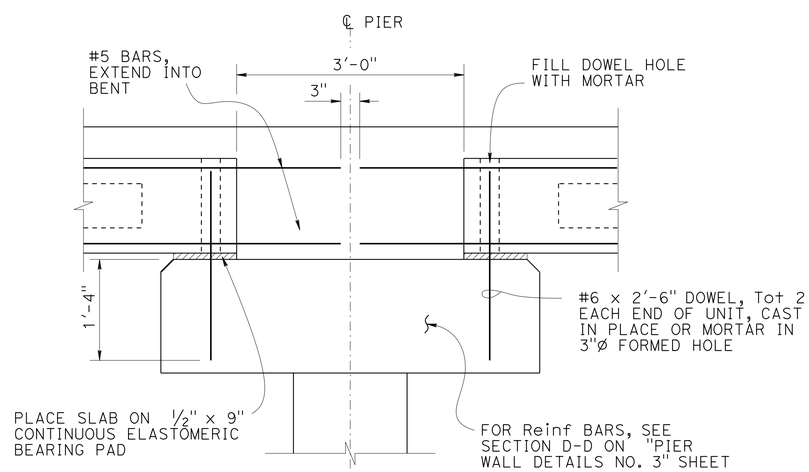

PIER WALL SUPPORT DETAIL

1" = 1'-0"

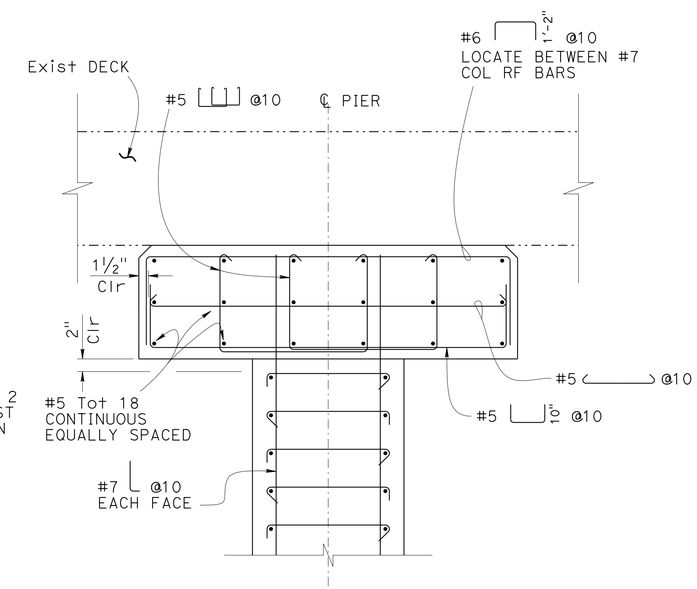

SECTION B-B

1" = 1'-0"

DESIGN	BY HOMA IRANINEJADIAN	CHECKED SHARAREH BIKAEE	
DETAILS	BY K. FARAHZADIYAZDI/A. ONG	CHECKED SHARAREH BIKAEE	
QUANTITIES	BY HOMA IRANINEJADIAN	CHECKED BRIJESH PATEL	

STATE OF CALIFORNIA
DEPARTMENT OF TRANSPORTATION

DIVISION OF ENGINEERING SERVICES
STRUCTURE DESIGN
DESIGN BRANCH 20

BRIDGE NO. 53-0870
POST MILE 40.46

VIA VERDE UNDERCROSSING (WIDEN)
PIER WALL DETAILS NO. 2

STRUCTURES DESIGN DETAIL SHEET (ENGLISH) (REV. 09-01-10)

ORIGINAL SCALE IN INCHES FOR REDUCED PLANS 0 1 2 3

UNIT: 3622
PROJECT NUMBER & PHASE: 0713000007-1
CONTRACT NO.: 07-1193U1

DISREGARD PRINTS BEARING EARLIER REVISION DATES

REVISION DATES 10/24/13 11/19/13 07/24/14

SHEET 11 OF 35

FILE => 53-0870-1-p02dt02.dgn

USERNAME => s125624 DATE PLOTTED => 18-MAY-2015 TIME PLOTTED => 14:08

DIST	COUNTY	ROUTE	POST MILES TOTAL PROJECT	SHEET No.	TOTAL SHEETS
07	LA	10	37.2/42.4	1674	2313

REGISTERED CIVIL ENGINEER 10/01/14 DATE

6-1-15
PLANS APPROVAL DATE

REGISTERED PROFESSIONAL ENGINEER Dawit T Worku No. C60711 Exp. 12-31-14 CIVIL STATE OF CALIFORNIA

The State of California or its officers or agents shall not be responsible for the accuracy or completeness of electronic copies of this plan sheet.

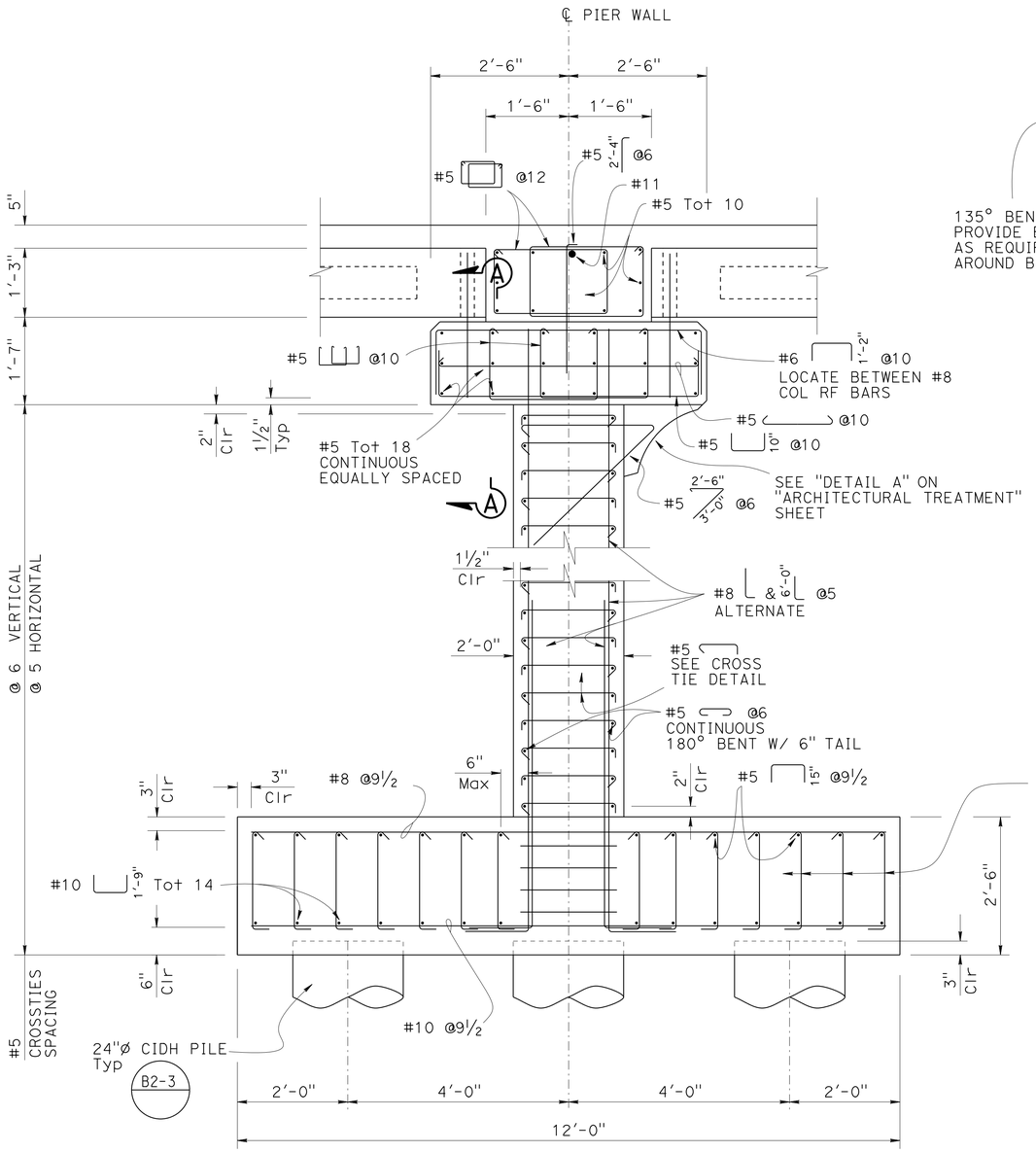

SECTION D-D (LEFT WIDEN)

¾" = 1'-0"

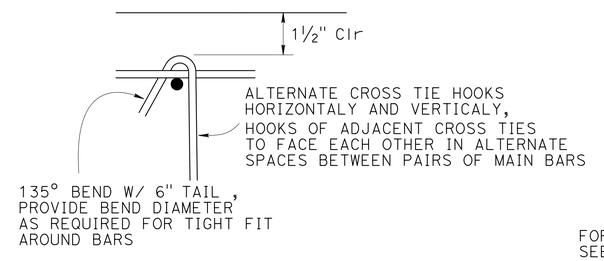

CROSS TIE DETAIL

NO SCALE

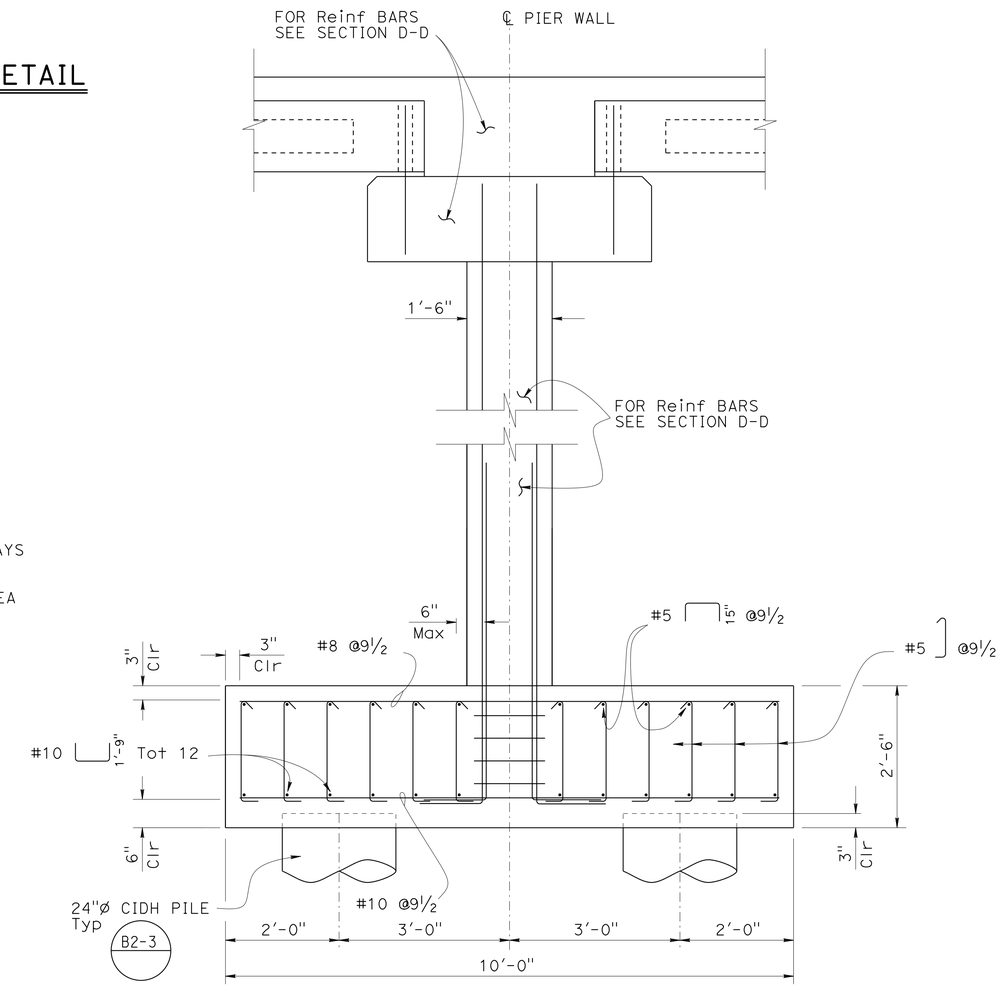

SECTION E-E (RIGHT WIDEN)

¾" = 1'-0"

NOTE:
THE CONTRACTOR SHALL VERIFY ALL CONTROLLING FIELD DIMENSIONS BEFORE ORDERING OR FABRICATING ANY MATERIAL.

NOTE:

1. No splice allowed for vertical and horizontal Pier Wall reinforcement bars
2. See "MISCELLANEOUS DETAILS" sheet for Closure Wall connection detail
3. See "PIER WALL DETAILS NO. 2" sheet for Pier Wall end detail

	BY	CHECKED
DESIGN	HOMA IRANINEJADIAN	SHARAREH BIKAEE
DETAILS	ANTONETTE L. ONG	SHARAREH BIKAEE
QUANTITIES	HOMA IRANINEJADIAN	BRIJESH PATEL

STATE OF CALIFORNIA
DEPARTMENT OF TRANSPORTATION

DIVISION OF ENGINEERING SERVICES
STRUCTURE DESIGN
DESIGN BRANCH 20

BRIDGE NO. 53-0870
POST MILE 40.46

VIA VERDE UNDERCROSSING (WIDEN)
PIER WALL DETAILS NO. 3

STRUCTURES DESIGN DETAIL SHEET (ENGLISH) (REV. 09-01-10)

ORIGINAL SCALE IN INCHES FOR REDUCED PLANS 0 1 2 3

UNIT: 3622
PROJECT NUMBER & PHASE: 0713000007-1
CONTRACT NO.: 07-1193U1

DISREGARD PRINTS BEARING EARLIER REVISION DATES

REVISION DATES 11/18/13 07/24/14 10/06/15

SHEET 12 OF 35

FILE => 53-0870-i-p03dt03.dgn

USERNAME => s125624 DATE PLOTTED => 18-MAY-2015 TIME PLOTTED => 14:08

DIST	COUNTY	ROUTE	POST MILES TOTAL PROJECT	SHEET No.	TOTAL SHEETS
07	LA	10	37.2/42.4	1675	2313

REGISTERED CIVIL ENGINEER 10/01/14 DATE

6-1-15
PLANS APPROVAL DATE

REGISTERED PROFESSIONAL ENGINEER Dawit T Worku No. C60711 Exp. 12-31-14 CIVIL STATE OF CALIFORNIA

The State of California or its officers or agents shall not be responsible for the accuracy or completeness of electronic copies of this plan sheet.

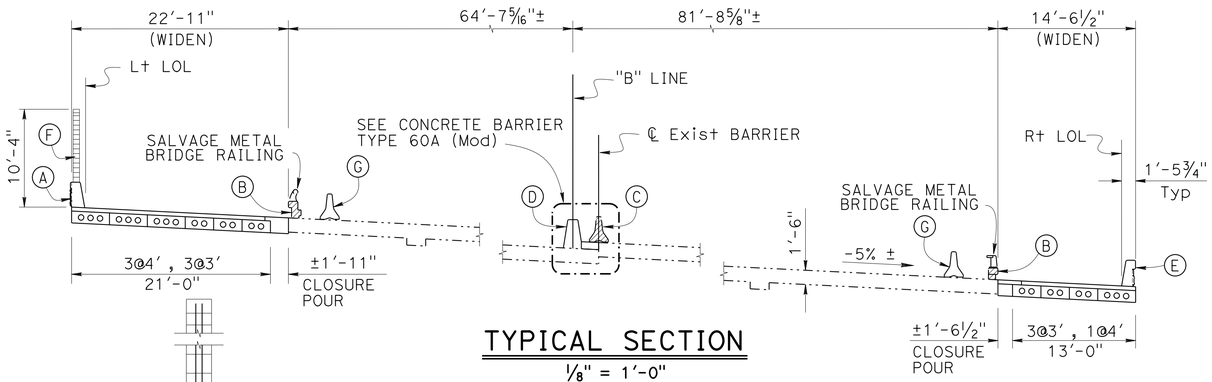

TYPICAL SECTION

1/8" = 1'-0"

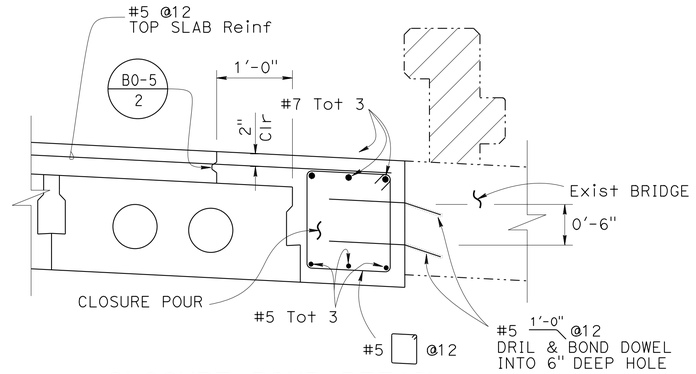

CLOSURE POUR DETAIL

1" = 1'-0"

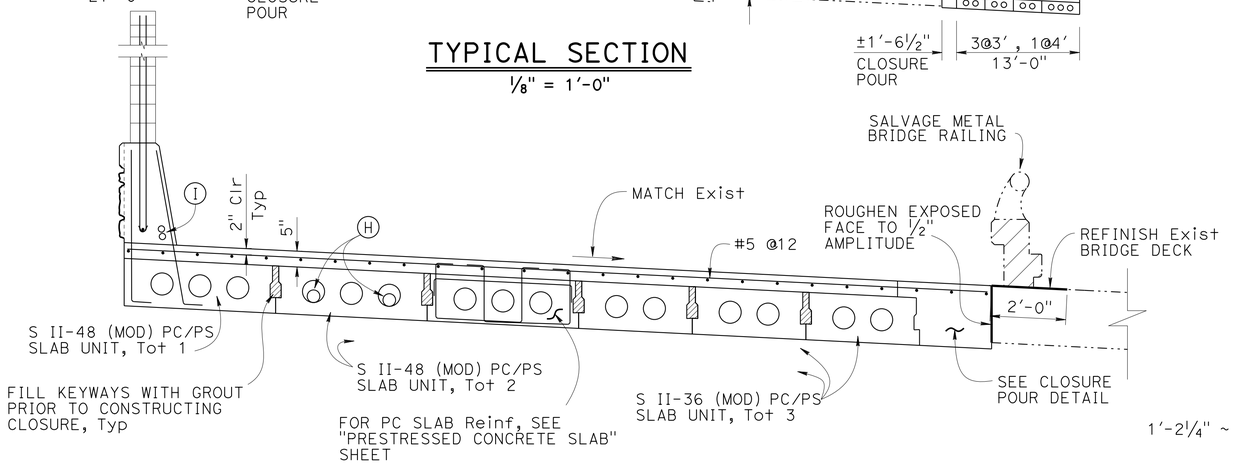

PARTIAL TYPICAL SECTION LEFT WIDEN

1/2" = 1'-0"

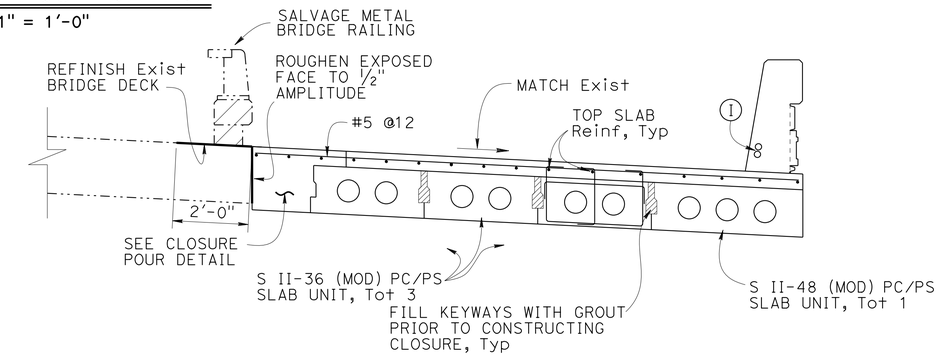

PARTIAL TYPICAL SECTION RIGHT WIDEN

NOTE: 1/2" = 1'-0"

Right Widen shown, Left Widen similar

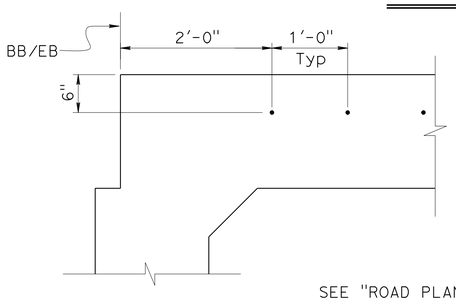

SECTION A-A

NO SCALE

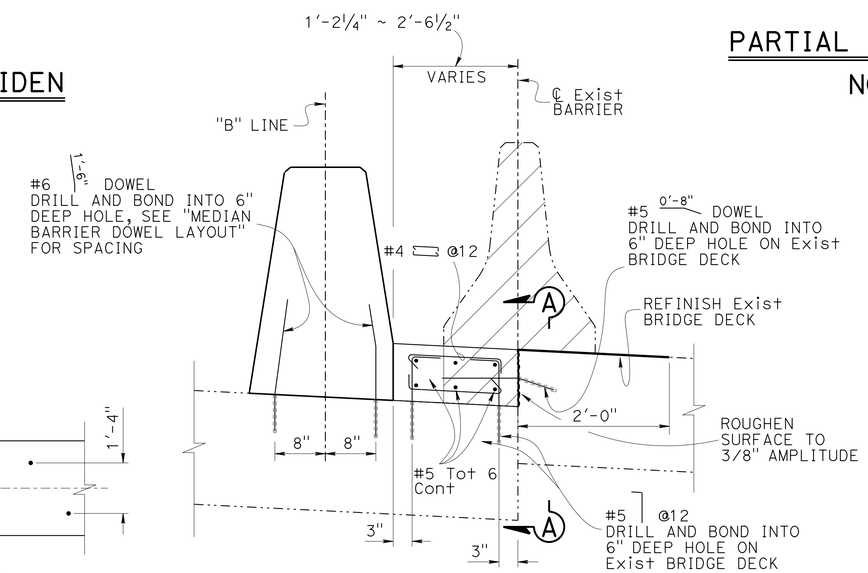

CONCRETE BARRIER TYPE 60A (MOD)

1" = 1'-0"

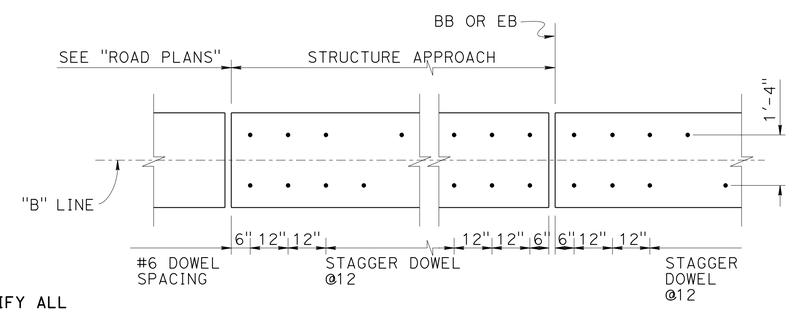

MEDIAN BARRIER DOWEL LAYOUT

1/2" = 1'-0"

NOTE:
THE CONTRACTOR SHALL VERIFY ALL CONTROLLING FIELD DIMENSIONS BEFORE ORDERING OR FABRICATING ANY MATERIAL.

LEGEND:

- Indicates New Construction
- Indicates Existing Structure
- Bridge Removal (Portion)

NOTES:

(A) Concrete Barrier Type 736 (Mod 1), for details, see "MASONRY BLOCK SOUNDWALL ON BRIDGE" and "PRESTRESSED CONCRETE SLAB DETAILS" sheet

(B) Remove existing Concrete Barrier, for details, see "ABUTMENT DETAILS NO. 3" sheet

(C) Remove existing Concrete Barrier Type 50B (Mod)

(D) Concrete Barrier Type 60A (Mod) (A76A)

(E) Concrete Barrier Type 736 (Mod 4), for details, see "PRESTRESS CONCRETE SLAB DETAILS" sheet, for Architectural treatment, see "ARCHITECTURAL TREATMENT (RIGHT WIDEN)" sheet

(F) Sound Wall Masonary Block, for details, see "MASONRY BLOCK SOUNDWALL ON BRIDGE" sheet

(G) Temporary Railing Type K, see "ROAD PLANS" sheet

(H) 2-3 1/2"Ø Conduit, for details, see "ABUTMENT DETAILS NO. 4" sheet

(I) 2-2"Ø Conduit, see "ROAD PLANS"

	BY	CHECKED
DESIGN	HOMA IRANINEJADIAN	SHARAREH BIKAEE
DETAILS	K. FARAHZADIYAZDI/A. ONG	SHARAREH BIKAEE
QUANTITIES	HOMA IRANINEJADIAN	BRIJESH PATEL

STATE OF CALIFORNIA
DEPARTMENT OF TRANSPORTATION

DIVISION OF ENGINEERING SERVICES
STRUCTURE DESIGN
DESIGN BRANCH 20

BRIDGE NO. 53-0870
POST MILE 40.46

VIA VERDE UNDERCROSSING (WIDEN)

TYPICAL SECTION

STRUCTURES DESIGN DETAIL SHEET (ENGLISH) (REV. 09-01-10)

ORIGINAL SCALE IN INCHES FOR REDUCED PLANS 0 1 2 3

UNIT: 3622
PROJECT NUMBER & PHASE: 0713000007-4
CONTRACT NO.: 07-1193U1

DISREGARD PRINTS BEARING EARLIER REVISION DATES

REVISION DATES 03/05/14 05/23/14 02/13/14

SHEET 13 OF 35

FILE => 53-0870-k-ts01.dgn

USERNAME => s125624 DATE PLOTTED => 18-MAY-2015 TIME PLOTTED => 14:08

DIST	COUNTY	ROUTE	POST MILES TOTAL PROJECT	SHEET No.	TOTAL SHEETS
07	LA	10	37.2/42.4	1676	2313

REGISTERED CIVIL ENGINEER — DATE 10/01/14

6-1-15
PLANS APPROVAL DATE

REGISTERED PROFESSIONAL ENGINEER — Dawit T Worku — No. C60711 — Exp. 12-31-14 — CIVIL — STATE OF CALIFORNIA

The State of California or its officers or agents shall not be responsible for the accuracy or completeness of electronic copies of this plan sheet.

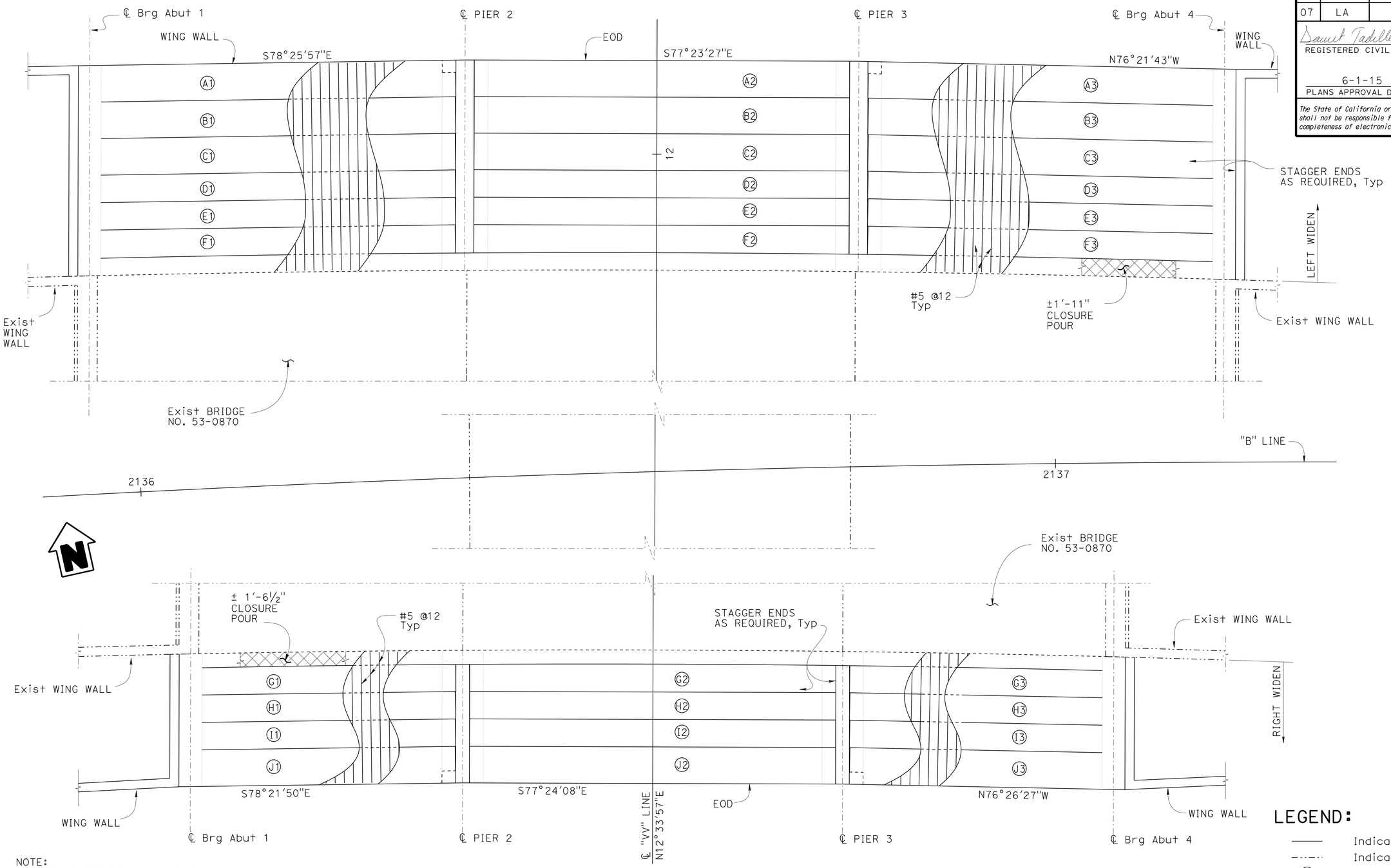

NOTE:
THE CONTRACTOR SHALL VERIFY ALL CONTROLLING FIELD DIMENSIONS BEFORE ORDERING OR FABRICATING ANY MATERIAL.

SLAB LAYOUT

3/16" = 1'-0"

LEGEND:

- Indicates New Construction
- Indicates Existing Structure
- Indicates Slab Unit Designation
- Indicates Closure Pour

	BY	CHECKED
DESIGN	HOMA IRANINEJADIAN	SHARAREH BIKAEE
DETAILS	K. FARAHZADIYAZDI/A. ONG	SHARAREH BIKAEE
QUANTITIES	HOMA IRANINEJADIAN	BRIJESH PATEL

STATE OF CALIFORNIA
DEPARTMENT OF TRANSPORTATION

DIVISION OF ENGINEERING SERVICES
STRUCTURE DESIGN
DESIGN BRANCH 20

BRIDGE NO. 53-0870
POST MILE 40.46

VIA VERDE UNDERCROSSING (WIDEN)

SLAB LAYOUT

STRUCTURES DESIGN DETAIL SHEET (ENGLISH) (REV. 09-01-10)

ORIGINAL SCALE IN INCHES FOR REDUCED PLANS 0 1 2 3

UNIT: 3622
PROJECT NUMBER & PHASE: 0713000007-1
CONTRACT NO.: 07-1193U1

DISREGARD PRINTS BEARING EARLIER REVISION DATES

REVISION DATES 10/24/13 11/14/13 01/23/18

SHEET 14 OF 35

FILE => 53-0870-1-sa01_to01.dgn

USERNAME => s125624 DATE PLOTTED => 18-MAY-2015 TIME PLOTTED => 14:08

DIST	COUNTY	ROUTE	POST MILES TOTAL PROJECT	SHEET No.	TOTAL SHEETS
07	LA	10	37.2/42.4	1677	2313

REGISTERED CIVIL ENGINEER 10/01/14 DATE

6-1-15
PLANS APPROVAL DATE

REGISTERED PROFESSIONAL ENGINEER
Dawit T Worku
No. C60711
Exp. 12-31-14
CIVIL
STATE OF CALIFORNIA

The State of California or its officers or agents shall not be responsible for the accuracy or completeness of electronic copies of this plan sheet.

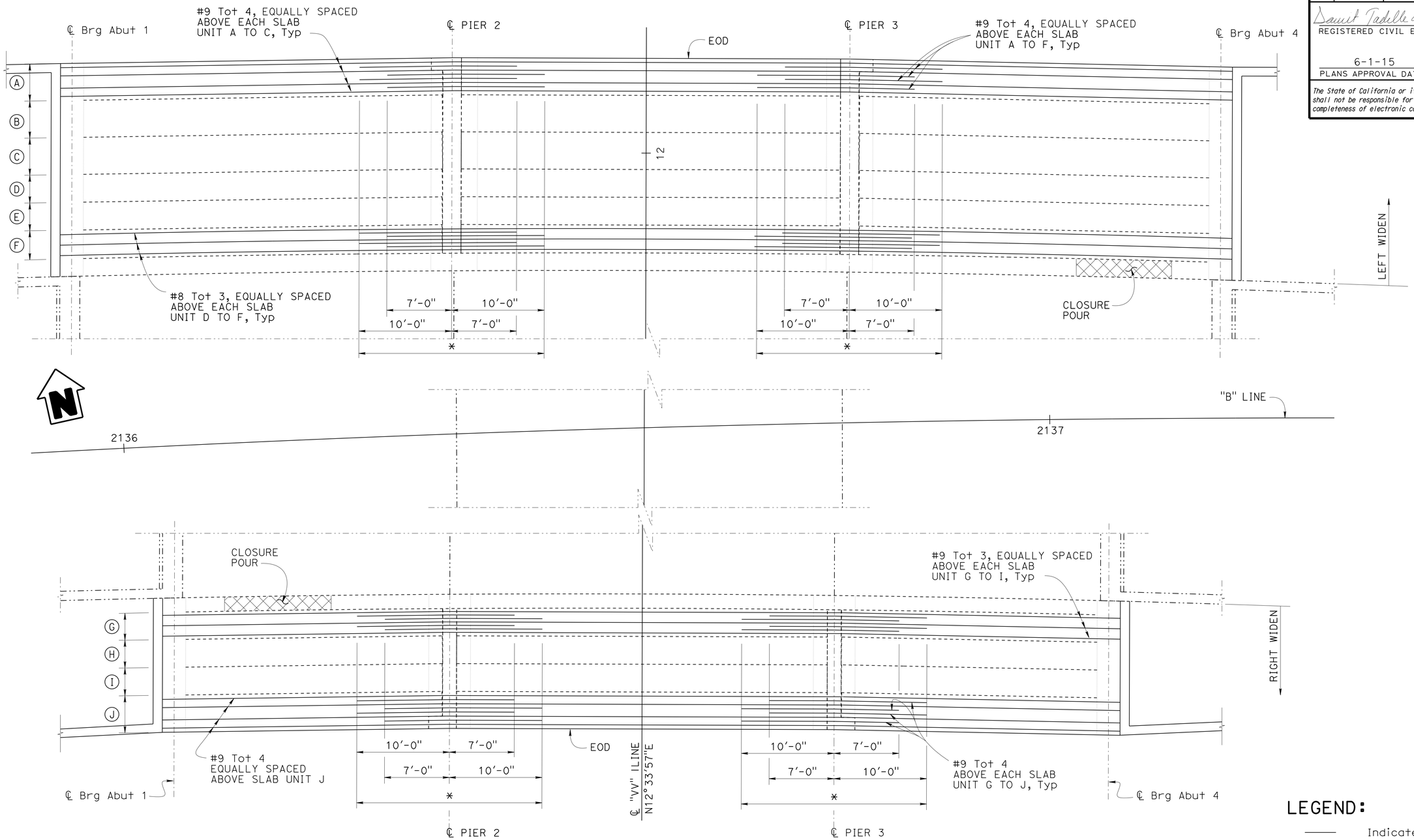

TOP SLAB REINFORCEMENT

3/16" = 1'-0"

NOTE:
THE CONTRACTOR SHALL VERIFY ALL CONTROLLING FIELD DIMENSIONS BEFORE ORDERING OR FABRICATING ANY MATERIAL.

LEGEND:

- Indicates New Construction
- Indicates Existing Structure
- * Indicate No Splice Zone
- Indicates Closure Pour

DESIGN	BY HOMA IRANINEJADIAN	CHECKED SHARAREH BIKAEE	
DETAILS	BY K. FARAHZADIYAZDI/A. ONG	CHECKED SHARAREH BIKAEE	
QUANTITIES	BY HOMA IRANINEJADIAN	CHECKED BRIJESH PATEL	

STATE OF CALIFORNIA
DEPARTMENT OF TRANSPORTATION

DIVISION OF ENGINEERING SERVICES
STRUCTURE DESIGN
DESIGN BRANCH 20

BRIDGE NO. 53-0870
POST MILE 40.46

VIA VERDE UNDERCROSSING (WIDEN)
TOP SLAB REINFORCEMENT

STRUCTURES DESIGN DETAIL SHEET (ENGLISH) (REV. 09-01-10)

ORIGINAL SCALE IN INCHES FOR REDUCED PLANS 0 1 2 3

UNIT: 3622
PROJECT NUMBER & PHASE: 0713000007-1
CONTRACT NO.: 07-1193U1

DISREGARD PRINTS BEARING EARLIER REVISION DATES

REVISION DATES 01/23/14 07/09/13 10/08/13

SHEET 15 OF 35

FILE => 53-0870-o-tslab-rf01.dgn

USERNAME => s125624 DATE PLOTTED => 18-MAY-2015 TIME PLOTTED => 14:08

DIST	COUNTY	ROUTE	POST MILES TOTAL PROJECT	SHEET No.	TOTAL SHEETS
07	LA	10	37.2/42.4	1678	2313

REGISTERED CIVIL ENGINEER 10/01/14 DATE

6-1-15
PLANS APPROVAL DATE

REGISTERED PROFESSIONAL ENGINEER Dawit T Worku No. C60711 Exp. 12-31-14 CIVIL STATE OF CALIFORNIA

The State of California or its officers or agents shall not be responsible for the accuracy or completeness of electronic copies of this plan sheet.

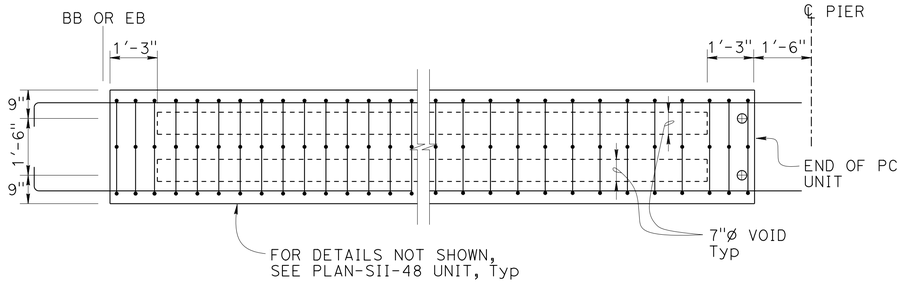

PLAN-SII-36 (MOD) UNIT, TYPICAL

½" = 1'-0"

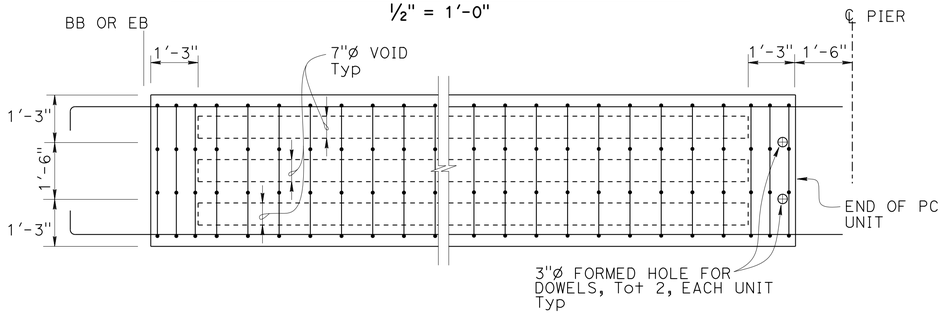

PLAN-SII-48 (MOD) UNIT, TYPICAL

½" = 1'-0"

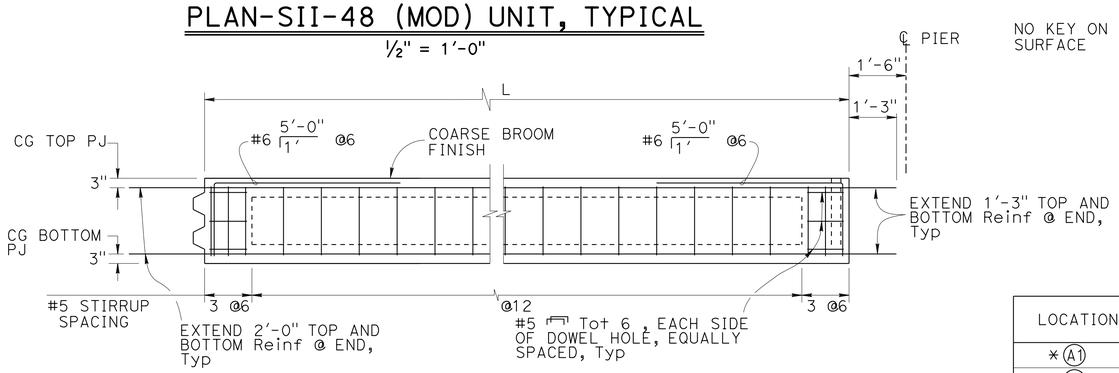

ELEVATION-TYPICAL

NO SCALE

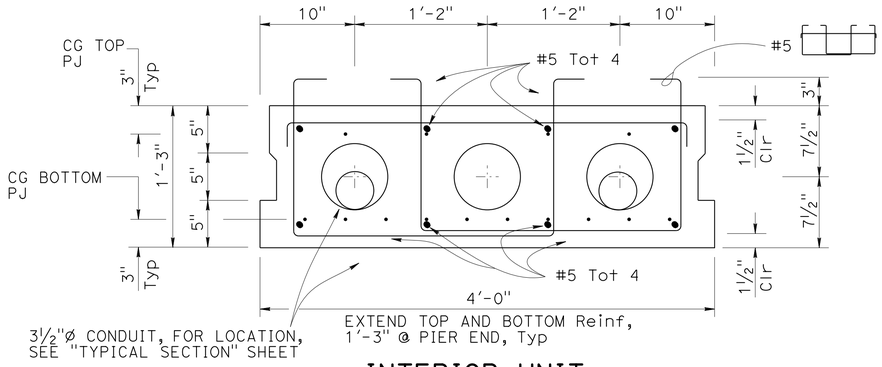

INTERIOR UNIT SII-48 (MOD), TYPICAL

1½" = 1'-0"

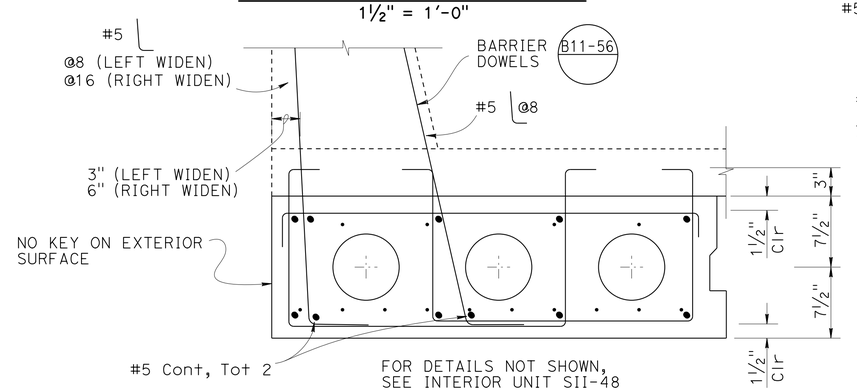

EXTERIOR UNIT SII-48 (MOD), TYPICAL

1½" = 1'-0"

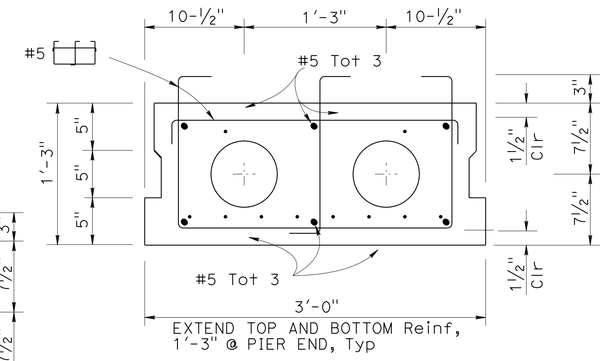

INTERIOR UNIT SII-36 (MOD), TYPICAL

1½" = 1'-0"

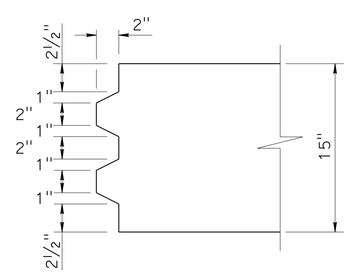

PRECAST END DETAIL AT ABUTMENT

NOT TO SCALE

LOCATION	LENGTH	TYPE	PJ (Kips)	NO OF STRANDS (BOTTOM)	NO OF STRANDS (TOP)
* A1	38'-5¾"	SII-48 (Mod)	879	14	6
* A2	41'-5⅝"				
* A3	37'-5¼"				
B1, C1	38'-5¾"	SII-48 (Mod)	703	12	4
B2, C2	41'-5⅝"	SII-48 (Mod)	616	10	4
B3, C3	37'-5¼"				
D1, E1, F1	38'-5¾"	SII-36 (Mod)	616	10	4
D2, E2, F2	41'-5⅝"	SII-36 (Mod)	440	8	2
D3, E3, F3	37'-5¼"				
G1, G3, H1, H3, I1, I3	27'-1½"	SII-36 (Mod)	352	6	2
G2, H2, I2	39'-11¾"	SII-36 (Mod)	440	8	2
* J1, J3	27'-1½"	SII-48 (Mod)	352	6	2
* J2	39'-11¾"	SII-48 (Mod)	528	10	2

* UNITS A1, A2, A3 AND J1, J2, J3 ARE EXTERIOR UNITS SEE TYPICAL EXTERIOR UNIT SII-48 (MOD) FOR DETAILS

GENERAL NOTES:

1. The Jacking Force (P) is the jacking force required at the point of control along the span. The jacking force does not include any fabrication specific losses
2. The maximum tensile stress in the prestressing steel upon release shall not exceed 75% of the specified minimum ultimate tensile strength of the prestressing steel
3. The maximum temporary tensile stress (jacking stress) in the prestressing steel shall not exceed 80% of the specified minimum ultimate tensile strength of the prestressing steel
4. Keyways to be filled with grout
5. Concrete Strenght:
   f'ci = 5 ksi at time of stressing
   f'c = 6 ksi at 28 days
6. Number of prestressing strands based on:
   Strand Size = ø 0.6"
   Fpu = 270 ksi, low laxation strands
   Strand Prestressing tensile stress = 202.50 ksi

NOTE:
THE CONTRACTOR SHALL VERIFY ALL CONTROLLING FIELD DIMENSIONS BEFORE ORDERING OR FABRICATING ANY MATERIAL.

	BY	CHECKED
DESIGN	HOMA IRANINEJADIAN	SHARAREH BIKAEE
DETAILS	ANTONETTE L. ONG	SHARAREH BIKAEE
QUANTITIES	HOMA IRANINEJADIAN	BRIJESH PATEL

STATE OF CALIFORNIA
DEPARTMENT OF TRANSPORTATION

DIVISION OF ENGINEERING SERVICES
STRUCTURE DESIGN
DESIGN BRANCH 20

BRIDGE NO. 53-0870
POST MILE 40.46

VIA VERDE UNDERCROSSING (WIDEN)
PRESTRESSED CONCRETE SLAB DETAILS

STRUCTURES DESIGN DETAIL SHEET (ENGLISH) (REV. 09-01-10)

ORIGINAL SCALE IN INCHES FOR REDUCED PLANS 0 1 2 3

UNIT: 3622
PROJECT NUMBER & PHASE: 0713000007-1
CONTRACT NO.: 07-1193U1

DISREGARD PRINTS BEARING EARLIER REVISION DATES
REVISION DATES 03/05/15 05/05/14 07/24/14

SHEET 16 OF 35

FILE => 53-0870-p-pcsdt01.dgn

USERNAME => s125624 DATE PLOTTED => 18-MAY-2015 TIME PLOTTED => 14:08

DIST	COUNTY	ROUTE	POST MILES TOTAL PROJECT	SHEET No.	TOTAL SHEETS
07	LA	10	37.2/42.4	1679	2313

REGISTERED CIVIL ENGINEER 10/01/14 DATE

6-1-15
PLANS APPROVAL DATE

REGISTERED PROFESSIONAL ENGINEER Dawit T Worku No. C60711 Exp. 12-31-14 CIVIL STATE OF CALIFORNIA

The State of California or its officers or agents shall not be responsible for the accuracy or completeness of electronic copies of this plan sheet.

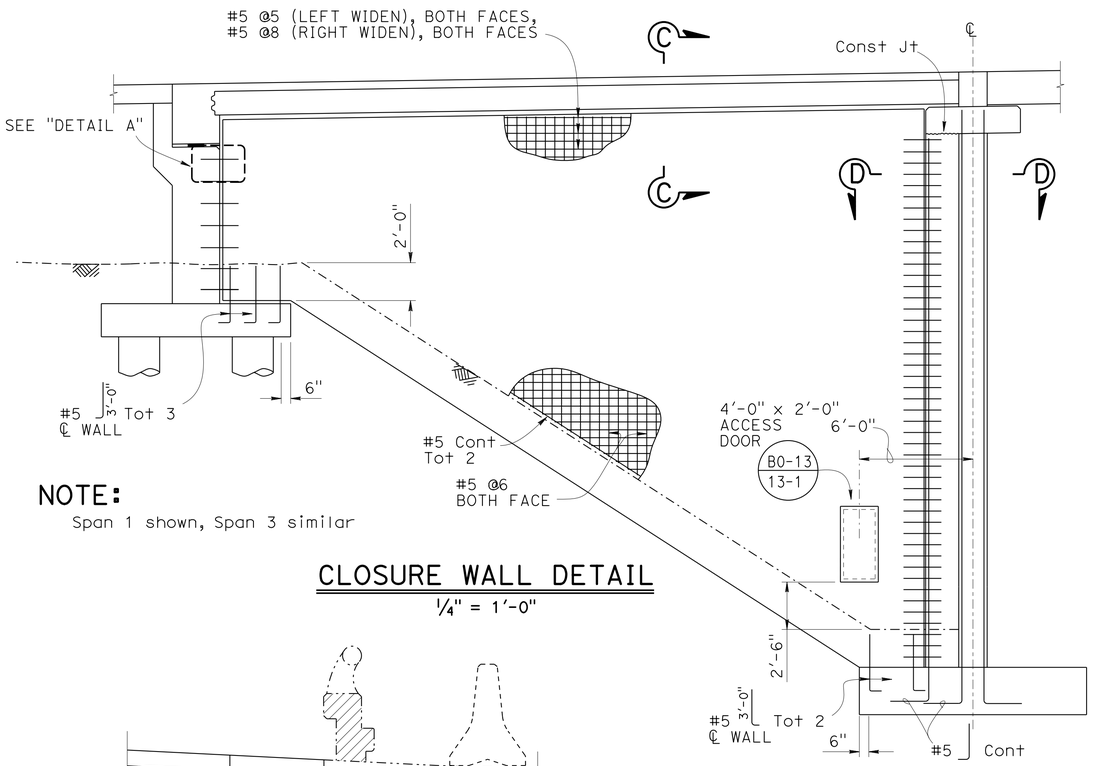

NOTE:
Span 1 shown, Span 3 similar

CLOSURE WALL DETAIL
1/4" = 1'-0"

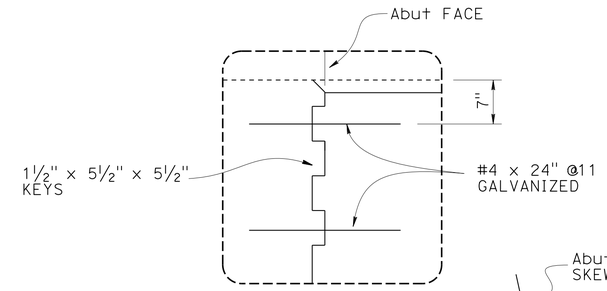

DETAIL A
1" = 1'-0"

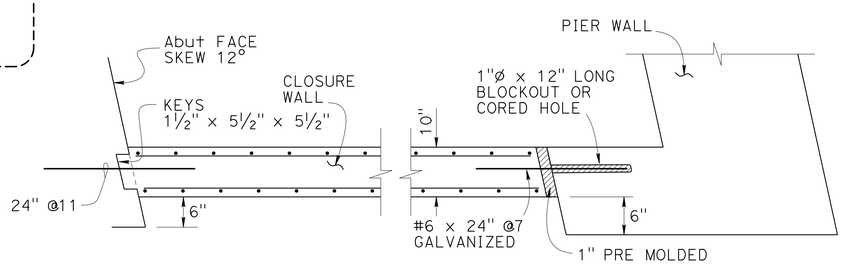

PLAN
NO SCALE

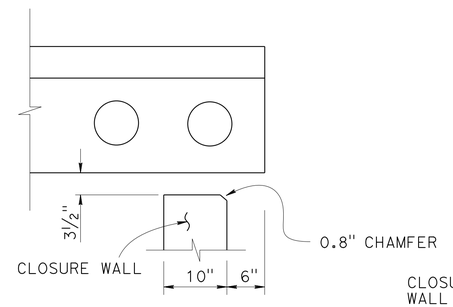

SECTION C-C
1" = 1'

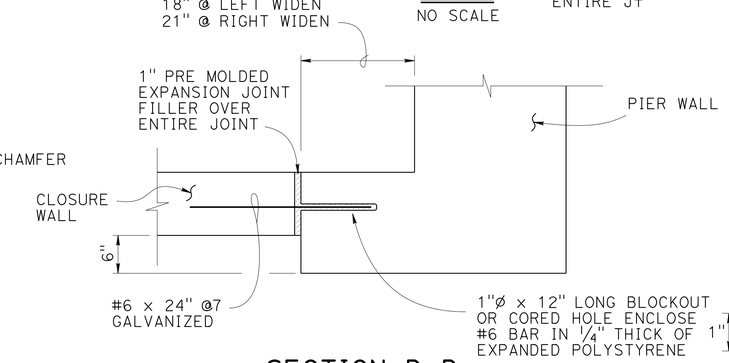

SECTION D-D
NO SCALE

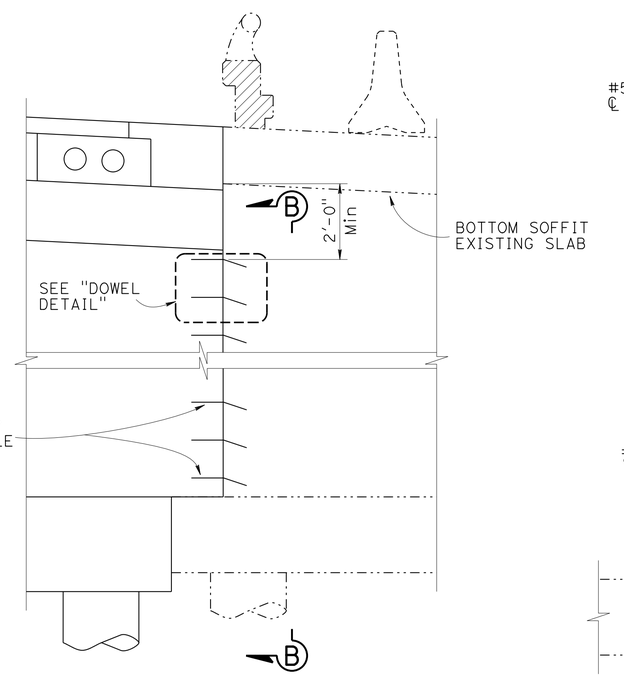

PIER WALL JOINT DETAIL
1/2" = 1'-0"

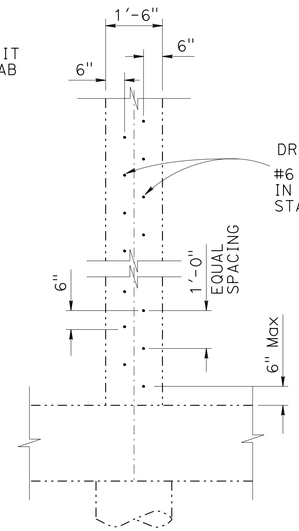

SECTION B-B
1/2" = 1'-0"

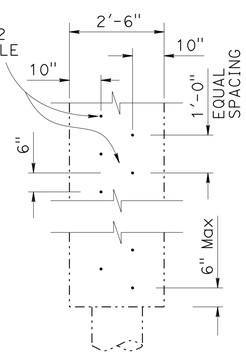

SECTION A-A
1/2" = 1'-0"

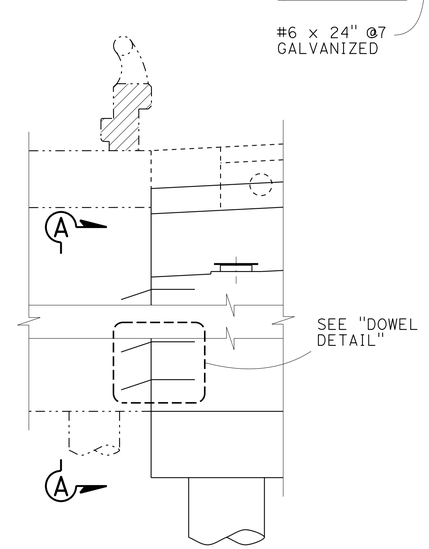

ABUTMENT JOINT DETAIL
1/2" = 1'-0"

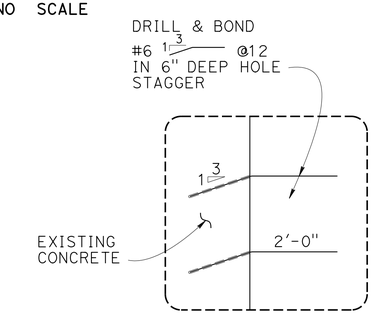

DOWEL DETAIL
1" = 1'-0"

NOTE:
THE CONTRACTOR SHALL VERIFY ALL CONTROLLING FIELD DIMENSIONS BEFORE ORDERING OR FABRICATING ANY MATERIAL.

LEGEND:

- Indicates New Construction
- Indicates Existing Structure
- Bridge Removal (Portion)

	BY	CHECKED
DESIGN	HOMA IRANINEJADIAN	SHARAREH BIKAEE
DETAILS	K. FARAHZADIYAZDI/A. ONG	SHARAREH BIKAEE
QUANTITIES	HOMA IRANINEJADIAN	BRIJESH PATEL

STATE OF CALIFORNIA
DEPARTMENT OF TRANSPORTATION

DIVISION OF ENGINEERING SERVICES
STRUCTURE DESIGN
DESIGN BRANCH 20

BRIDGE NO. 53-0870
POST MILE 40.46

VIA VERDE UNDERCROSSING (WIDEN)
MISCELLANEOUS DETAILS

STRUCTURES DESIGN DETAIL SHEET (ENGLISH) (REV. 09-01-10)

ORIGINAL SCALE IN INCHES FOR REDUCED PLANS 0 1 2 3

UNIT: 3622
PROJECT NUMBER & PHASE: 0713000007-1
CONTRACT NO.: 07-1193U1

DISREGARD PRINTS BEARING EARLIER REVISION DATES

REVISION DATES: 01/23/14 03/05/14 05/23/14

SHEET 17 OF 35

FILE => 53-0870-q-miscdt01.dgn

USERNAME => s125624 DATE PLOTTED => 18-MAY-2015 TIME PLOTTED => 14:08

DIST	COUNTY	ROUTE	POST MILES TOTAL PROJECT	SHEET No.	TOTAL SHEETS
07	LA	10	37.2/42.4	1680	2313

REGISTERED CIVIL ENGINEER 10/01/14 DATE

6-1-15
PLANS APPROVAL DATE

REGISTERED PROFESSIONAL ENGINEER Dawit T Worku No. C60711 Exp. 12-31-14 CIVIL STATE OF CALIFORNIA

The State of California or its officers or agents shall not be responsible for the accuracy or completeness of electronic copies of this plan sheet.

TABLE 1: TABLE OF REINFORCING STEEL DIMENSIONS AND DATA

DESIGN H	6′	8′	10′	12′	14′	16′	18′	20′	22′	24′	26′	28′	30′	32′
W	8′- 3"	8′- 6"	9′- 0"	9′- 6"	10′- 0"	10′- 9"	11′- 3"	12′- 0"	13′- 3"	14′- 3"	15′- 9"	16′- 9"	18′- 0"	19′- 9"
C	2′- 9"	2′- 9"	3′- 0"	3′- 3"	3′- 4"	3′- 6"	3′- 9"	4′- 0"	4′- 3"	4′- 9"	5′- 3"	5′- 6"	5′- 9"	6′- 7"
B	5′- 6"	5′- 9"	6′- 0"	6′- 3"	6′- 8"	7′- 3"	7′- 6"	8′- 0"	9′- 0"	9′- 6"	10′- 6"	11′- 3"	12′- 3"	13′- 2"
F PILE FOOTING	1′- 6"	1′- 6"	1′- 6"	1′- 6"	1′- 9"	2′- 0"	2′- 0"	2′- 6"	2′- 9"	2′- 9"	3′- 0"	3′- 3"	3′- 9"	4′- 0"
M	1′- 3"	1′- 6"	1′- 6"	1′- 9"	1′- 10"	2′- 0"	2′- 3"	2′- 6"	2′- 9"	3′- 3"	3′- 9"	4′- 0"	4′- 3"	5′- 1"
N	4′- 0"	4′- 3"	4′- 6"	4′- 9"	5′- 2"	5′- 9"	6′- 0"	6′- 6"	7′- 6"	8′-0"	9′-0"	9′- 9"	10′- 9"	11′- 8"
ROW 1 SPACING ◇1	12′- 3"	10′- 3"	8′- 9"	5′-8¼"	6′- 3"	5′- 3"	4′- 9"	4′- 0"	3′- 9"	3′- 9"	4′-0"	3′- 9"	3′- 9"	3′- 9"
ROW 2 SPACING ◇1	14′- 0"	12′- 9"	11′- 6"	5′-8¼"	9′- 3"	8′- 3"	7′- 9"	6′- 6"	7′- 6"	6′- 0"	4′- 0"	4′- 0"	3′- 9"	3′-9"
ROW 3 SPACING				◇1					6′- 0"	5′- 3"	5′-0"	4′- 0"	6′- 0"	4′- 0"
ROW 4 SPACING													3′- 9"	3′-9"
STEM WITH HAUNCH, BATTER	0	½:12	½:12	½:12	½:12	½:12	½:12	½:12	½:12	⅝:12	¾:12	⅞:12	1:12	1:12
STEM WITHOUT HAUNCH, BATTER	0	0	0	0	0	0	0	0	¼:12	¼:12	½:12	¾:12	¾:12	¾:12
ⓐ BARS						#7 @ 15	#7 @ 12	#7 @ 12	#8 @ 12	#6 @ 6	#6 @ 6	#6 @ 6	#8 @ 9	#9 @ 9
ⓑ BARS	#8 @ 12	#7 @ 9	#7 @ 6	#7 @ 6	#7 @ 6	#9 @ 7.5	#9 @ 6	#10 @ 6	#10 @ 6	#8 @ 6ȣ	#8 @ 6ȣ	#8 @ 6ȣ	#10 @ 9ȣ	#11 @ 9ȣ
ha			5′- 0"	6′- 0"	7′- 0"	7′ - 0"	6′- 0"	7′- 0"	7′- 0"	7′- 6"	8′- 6"	9′- 3"	15′- 0"	11′- 3"
hb						11′ - 6"	12′- 0"	13′- 3"	16′- 0"	15′- 6"	17′- 6"	18′- 9"	21′- 0"	20′- 9"
ⓒ BARS	#6 @ 12	#6 @ 9	#6 @ 6	#6 @ 6	#6 @ 6	#8 @ 7.5	#8 @ 6	#9 @ 6	#9 @ 6	#10 @ 6	#10 @ 6	#11 @ 6	#10 @ 9ȣ	#10 @ 9ȣ
ⓓ BARS	#5 @ 12	#5 @ 9	#5 @ 12	#5 @ 12	#5 @ 12	#6 @ 15	#5 @ 12	#5 @ 12	#6 @ 12	#6 @ 12	#6 @ 12	#7 @ 12	#6 @ 9	#9 @ 9
ⓔ BARS	10-#7 @ 6	8-#7 @ 7	10-#6 @ 6	8-#6 @ 6	6-#6 @ 12	6-#5 @ 12	6-#5 @ 12	6-#5 @ 15	#5 @ 18	#5 @ 18	#5 @ 18	#5 @ 18	#5 @ 18	#5 @ 18
ⓕ BARS	10-#8 @ 7	10-#8 @ 6	10-#7 @ 8	12-#6 @ 7	8-#7 @ 11	7-#6 @ 13	8-#6 @ 12	8-#5 @ 15	#5 @ 18	#5 @ 18	#5 @ 18	#5 @ 18	#5 @ 18	#5 @ 18

NOTE:

Total ⓔ bars and ⓕ bars shown are total number of top and bottom bars combined.

LEGEND:

ȣ : 2 bar bundle

NOTES:

1. Class 90 concrete piles were used for design.
2. Pile batter shown are 1:3.
3. Minimum distance between center pile and edge of footing is 1′-6".
4. Lateral resistance of each pile:
   30 kip for strength limit states.
   40 kip for extreme limit states.
5. Maximum spacing between piles is shown in the table. Reduce to suit the length of footing.
6. Minimum distance between any two piles is 3′-0". Reduce to suit the length of footing.
7. For sound wall and retaining wall architectural finish or texture, see details elsewhere in Project Plans.
8. For details not shown and drainage notes, see B3-5
9. Footing cover, 1′-6" minimum.
10. For sound wall and Barrier reinforcements see "SOUND WALL - MASONRY BLOCK WITH BARRIER ON RETAINING WALL" sheets.
11. For H=6′ through 14′, extend ⓑ bars into Barrier for stem with haunch.
12. For H≥16′, extend ⓐ bars into Barrier for stem with haunch.

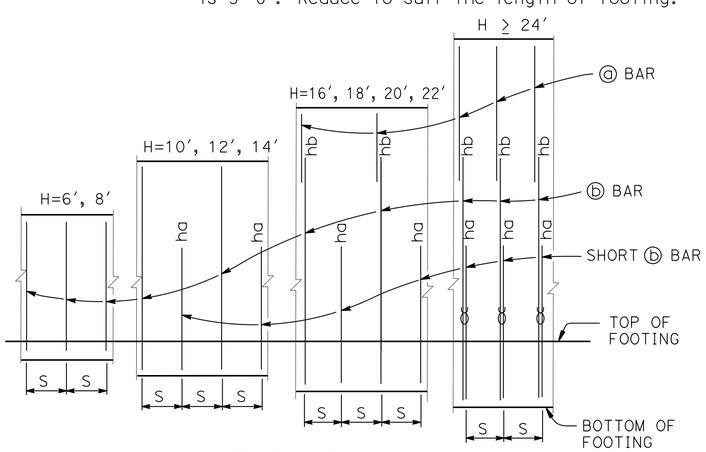

ELEVATION
No Scale

NOTE:
"ha" and "hb" above ⓑ bars indicate distance from top of footing to upper end of ⓑ bars, see table.
"S" is ⓑ bar spacing, see table.
ȣ : 2 bar bundle

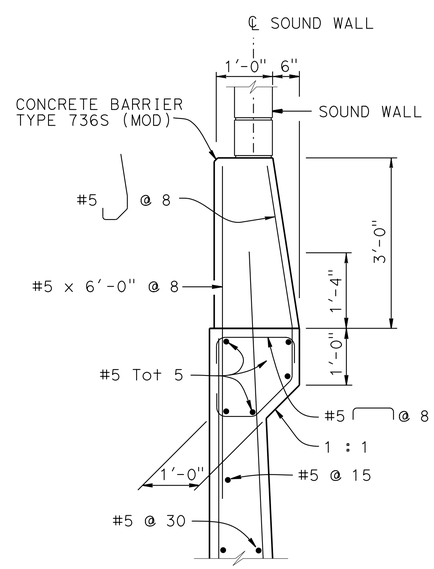

DETAIL A
¾ = 1′-0"

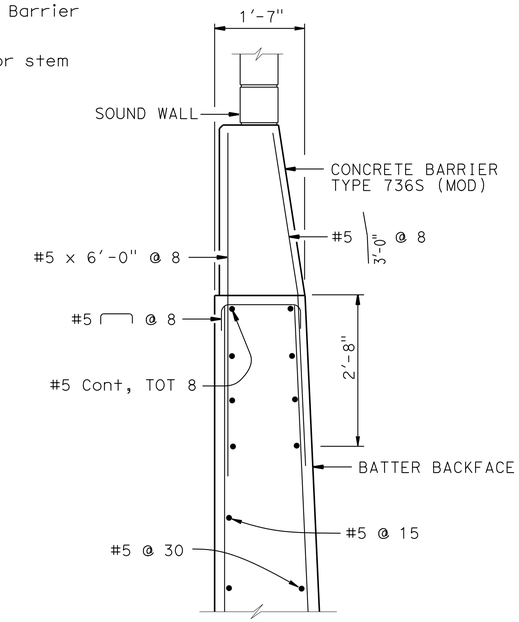

OPTIONAL DETAIL A
¾ = 1′-0"

For Details not shown, see "DETAIL A"

DESIGN DATA

Design: AASHTO LRFD Bridge Design Specifications 4th edition with California Amendments

WS: 33 psf on Sound Wall and Barrier

LS: Varied surcharge on level ground surface

CT: 54 kip maximum traffic impact loading evenly distributed over 10 feet at top of the barrier and 1:1 distribution down and outward

EQE: Mononabe-Okabe Method
K_h = 0.3
K_v = 0.0

Soil: Ø = 34°
γ = 120 pcf

Reinforced Concrete: f′c = 3600 psi
fy = 60,000 psi

Load Combinations and Limit States

Service I	Q=1.00DC+1.00EV+1.00EH+1.00LS+0.30WS
Service II	Q=1.00DC+1.00EV+1.00EH+1.00WS
Strength I	Q=aDC+βEV+1.50EH+1.75LS Q=1.25DC + 1.35EV + 0.90EH +1.75LS (for piles at heel)
Strength III	Q=aDC+βEV+1.50EH+1.40WS
Strength V	Q=aDC+βEV+1.50EH+1.35LS+0.40WS
Extreme I	Q=1.00DC+1.00EV+1.00EH+1.00EQD+1.00EQE
Extreme II	Q=1.00DC+1.00EV+1.00EH+1.00CT

Where:

Q: Force Effects
a: 1.25 or 0.90, Which ever Controls Design
β: 1.35 or 1.00, which ever Controls Design
DC: Dead Load of Structure Components
EV: Vertical Earth Fill Pressure
LS: Live Load Surcharge
EQE: Seismic Earth Pressure
EQD: Soil and Structure Components Inertia. Soil inertia ignored for stem design
WS: Wind Load on Sound Wall and Barrier
CT: Vehicular Collision Force

STANDARD DRAWING
FILE NO. xs14-320-1
APPROVAL DATE July 2011

◇1 Modified detail

STATE OF CALIFORNIA
DEPARTMENT OF TRANSPORTATION

DIVISION OF ENGINEERING SERVICES

BRIDGE NO. 53-0870
POST MILE 40.46

VIA VERDE UNDERCROSSING (WIDEN)
RETAINING WALL TYPE 1SWBP-DETAILS NO. 1

DS OSD 2147A (ENGLISH STANDARD DRAWING "XS" BORDER REV. (02-02-11)

ORIGINAL SCALE IN INCHES FOR REDUCED PLANS 0 1 2 3

UNIT: 3622
PROJECT NUMBER & PHASE: 0713000007-1
CONTRACT NO.: 07-1193U1

DISREGARD PRINTS BEARING EARLIER REVISION DATES

REVISION DATES 02/20/13 10/29/13 11/19/13

SHEET 18 OF 35

FILE => 53-0870-u2-rw-1swdt01.dgn

USERNAME => s125624 DATE PLOTTED => 18-MAY-2015 TIME PLOTTED => 14:08

DIST	COUNTY	ROUTE	POST MILES TOTAL PROJECT	SHEET No.	TOTAL SHEETS
07	LA	10	37.2/42.4	1681	2313

REGISTERED CIVIL ENGINEER 10/01/14 DATE

6-1-15
PLANS APPROVAL DATE

REGISTERED PROFESSIONAL ENGINEER Dawit T Worku No. C60711 Exp. 12-31-14 CIVIL STATE OF CALIFORNIA

The State of California or its officers or agents shall not be responsible for the accuracy or completeness of electronic copies of this plan sheet.

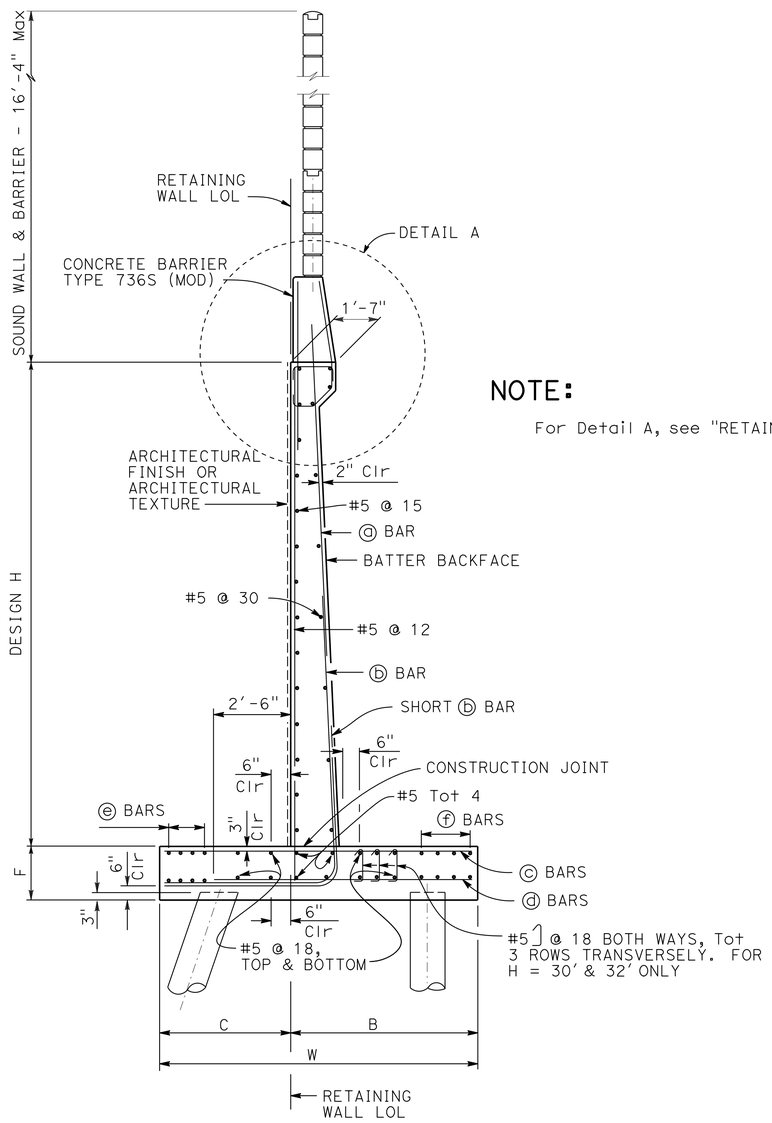

PILE FOOTING SECTION

No scale
All piles not shown

NOTE:

For Detail A, see "RETAINING WALL 1SWBP-DETAILS NO. 1" sheet

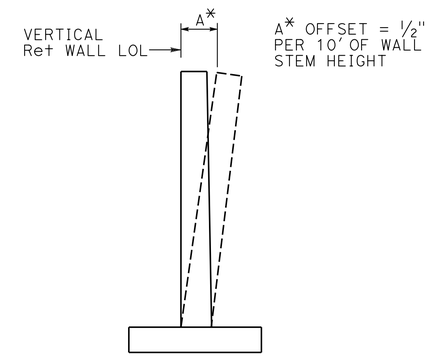

WALL OFFSET

No scale

Values for offsetting forms to be determined by the engineer

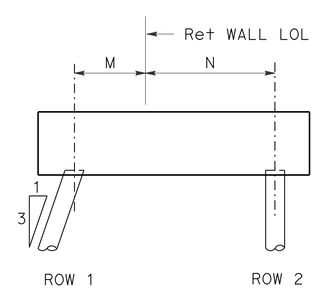

H = 6' THROUGH 20'

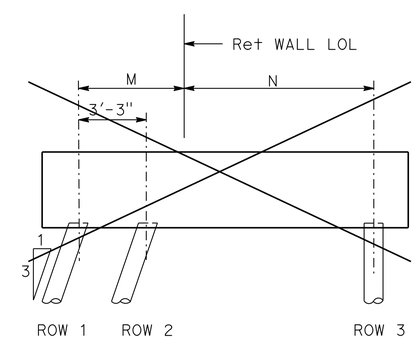

H = 22' THROUGH 28' ⟨1⟩

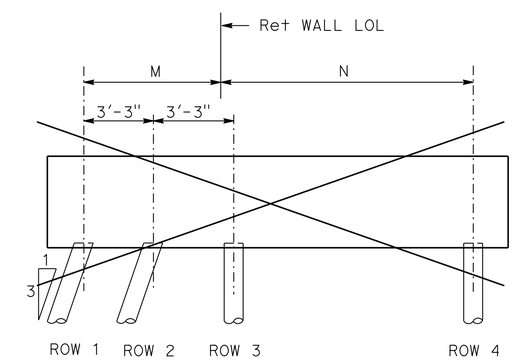

H = 30' AND 32' ⟨1⟩

PILE PATTERN

No scale

STANDARD DRAWING		
FILE NO. xs14-320-2	APPROVAL DATE July 2011	⟨1⟩ Deleted Details

STATE OF CALIFORNIA DEPARTMENT OF TRANSPORTATION

DIVISION OF ENGINEERING SERVICES

BRIDGE NO. 53-0870
POST MILE 40.46

VIA VERDE UNDERCROSSING (WIDEN)

RETAINING WALL TYPE 1SWBP-DETAILS NO. 2

DS OSD 2147A (ENGLISH STANDARD DRAWING "XS" BORDER REV. (02-02-11)

ORIGINAL SCALE IN INCHES FOR REDUCED PLANS 0 1 2 3

UNIT: 3622
PROJECT NUMBER & PHASE: 0713000007-1
CONTRACT NO.: 07-1193U1

DISREGARD PRINTS BEARING EARLIER REVISION DATES

REVISION DATES 05/23/14 07/09/13 10/24/13

SHEET 19 OF 35

FILE => 53-0870-u3-rw-2swdt02.dgn

USERNAME => s125624 DATE PLOTTED => 18-MAY-2015 TIME PLOTTED => 14:08

DIST	COUNTY	ROUTE	POST MILES TOTAL PROJECT	SHEET No.	TOTAL SHEETS
07	LA	10	37.2/42.4	1682	2313

REGISTERED CIVIL ENGINEER 10/01/14 DATE

6-1-15
PLANS APPROVAL DATE

The State of California or its officers or agents shall not be responsible for the accuracy or completeness of electronic copies of this plan sheet.

REGISTERED PROFESSIONAL ENGINEER — Dawit T Worku No. C60711 Exp. 12-31-14 CIVIL — STATE OF CALIFORNIA

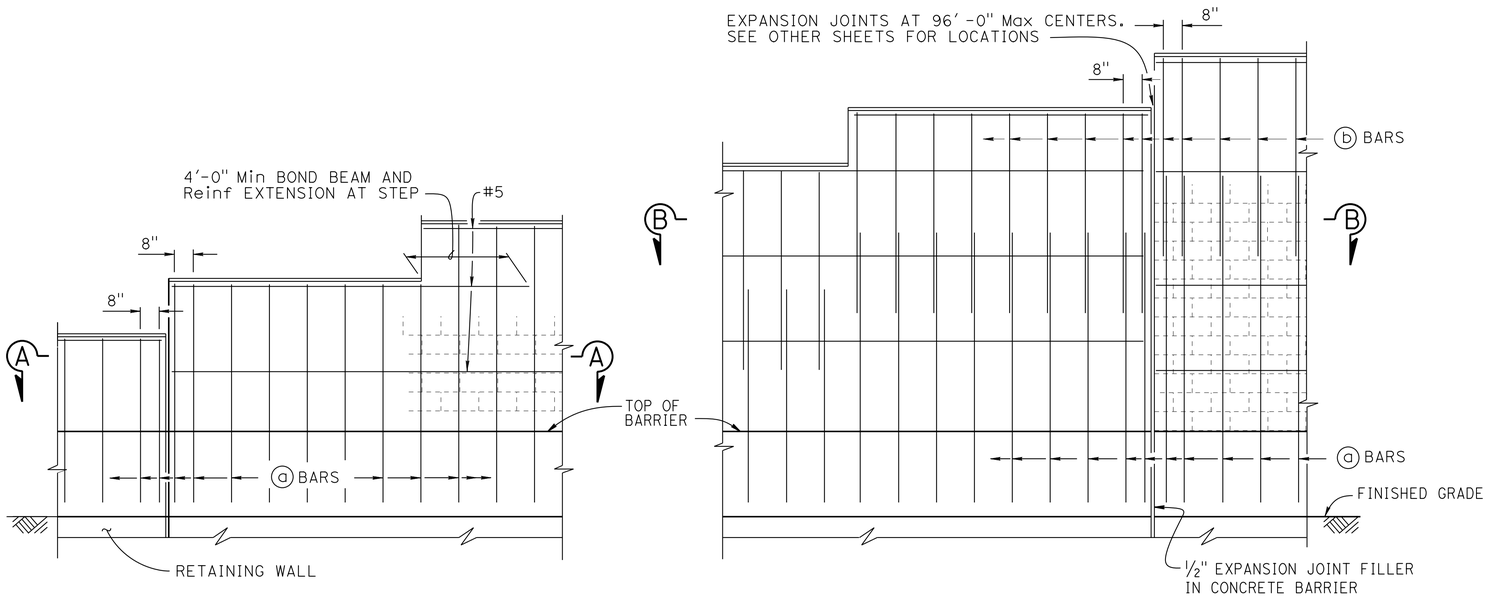

H=6'-4" THRU H=10'-4"

H=12'-4" THRU H=16'-4"

PART ELEVATION

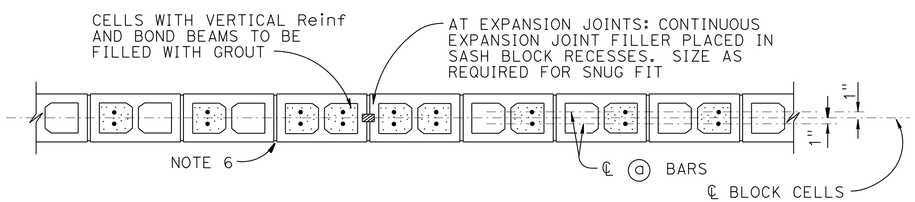

SECTION A-A

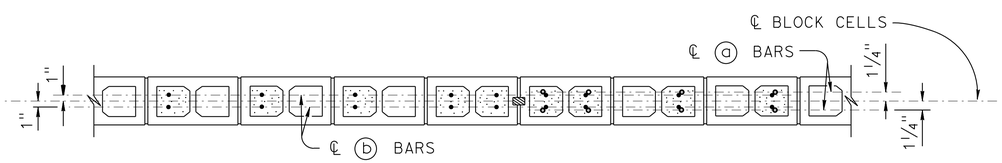

SECTION B-B

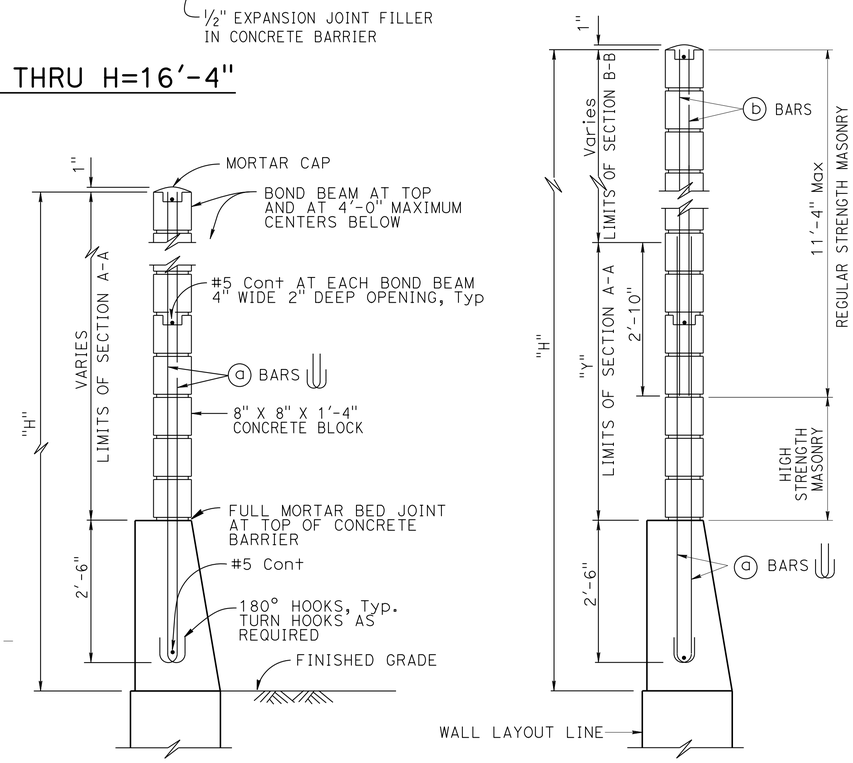

H=6'-4" THRU H=10'-4"
For details not shown, see H=12'-4" thru H=16'-4"

H=12'-4" THRU H=16'-4"
For details not shown, see H=6'-4" thru H=10'-4"

TYPICAL SECTION

NO SCALE

SOUND WALL REINFORCEMENT TABLE						
MAXIMUM "H"	ⓐ BARS @ 1'-4" Max	ⓑ BARS @ 1'-4" Max	"Y"	f'm (psi)	COMPRESSIVE STRENGTH OF CMU (psi)	MAXIMUM "H"
6'-4"	#4	———	———	1500	1900	6'-4"
8'-4"	#4	———	———	1500	1900	8'-4"
10'-4"	#4	———	———	1500	1900	10'-4"
12'-4"	#5	#4	5'-0"	1500	1900	12'-4"
14'-4"	#6	#4	7'-0"	1500	1900	14'-4"
16'-4"	#6	#4	9'-0"	2500	3700	16'-4"

NOTES:

1. For details not shown, see "MASONRY BLOCK SOUNDWALL WITH BARRIER ON RETAINING WALL - DETAILS NO. 2" sheet
2. Slope ground at traffic side of barrier to drain. Maximum slope ±10%
3. See STANDARD PLANS B15-9 for other details
4. For type of block and joint finish, see other sheets
5. When blocks are laid in stacked bond, ladder type, galvanized joint reinforcement shall be provided. A minimum of 2-9 gauge wire continuous at 4'-0" maximum to be used. Locate reinforcement in joints that are at the approximate midpoint between bond beams
6. Horizontal joints shall be tooled concave or may be weathered. Vertical joints shall be tooled concave or may be raked
7. For intermediate wall heights that are between the "H's" given, use the tabular information for the next higher "H"
8. Masonry strengths are listed in "SOUND WALL REINFORCEMENT TABLE"
9. Concrete to be used for the barrier shall contain not less than 590 pounds of cementitious material per cubic yard

STANDARD DRAWING

FILE NO. xs15-130-1

APPROVAL DATE July 2012

STATE OF CALIFORNIA
DEPARTMENT OF TRANSPORTATION

DIVISION OF ENGINEERING SERVICES

BRIDGE NO. 53-0870

POST MILE 40.46

VIA VERDE UNDERCROSSING (WIDEN)

MASONRY BLOCK SOUND WALL WITH BARRIER ON RETAINING WALL

DETAILS NO. 1

DS OSD 2147A (ENGLISH STANDARD DRAWING "XS" BORDER REV. (02-02-11)

ORIGINAL SCALE IN INCHES FOR REDUCED PLANS 0 1 2 3

UNIT: 3622
PROJECT NUMBER & PHASE: 0713000007-1 CONTRACT NO.: 07-1193U1

DISREGARD PRINTS BEARING EARLIER REVISION DATES

REVISION DATES 7/19/12 02/04/13 07/10/13

SHEET 20 OF 35

FILE => 53-0870-u4-rw-3sw-mbwithbrdt01.dgn

USERNAME => s125624 DATE PLOTTED => 18-MAY-2015 TIME PLOTTED => 14:08

DIST	COUNTY	ROUTE	POST MILES TOTAL PROJECT	SHEET No.	TOTAL SHEETS
07	LA	10	37.2/42.4	1683	2313

REGISTERED CIVIL ENGINEER 10/01/14 DATE

6-1-15
PLANS APPROVAL DATE

The State of California or its officers or agents shall not be responsible for the accuracy or completeness of electronic copies of this plan sheet.

REGISTERED PROFESSIONAL ENGINEER — Dawit T Worku — No. C60711 — Exp. 12-31-14 — CIVIL — STATE OF CALIFORNIA

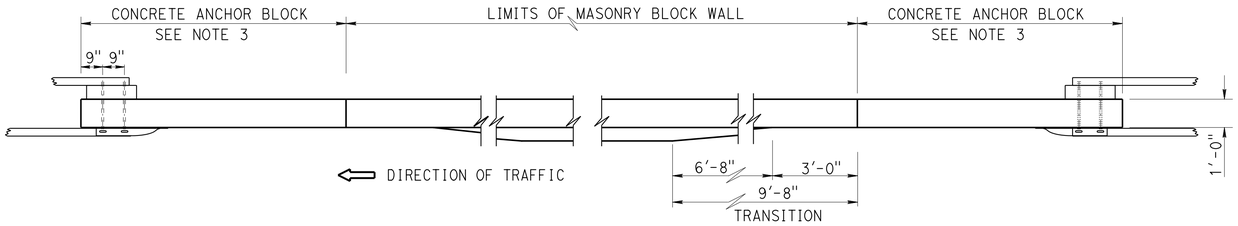

PLAN

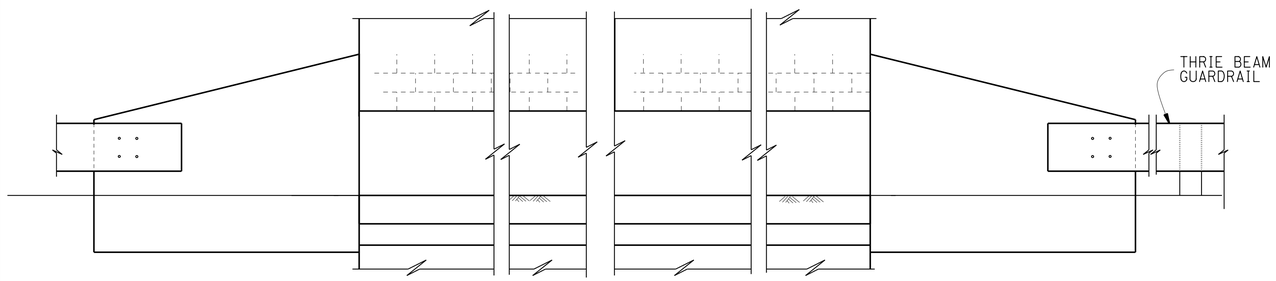

ELEVATION

METAL BEAM GUARDRAIL ANCHORAGE

For details not shown, see STANDARD PLAN B11-56

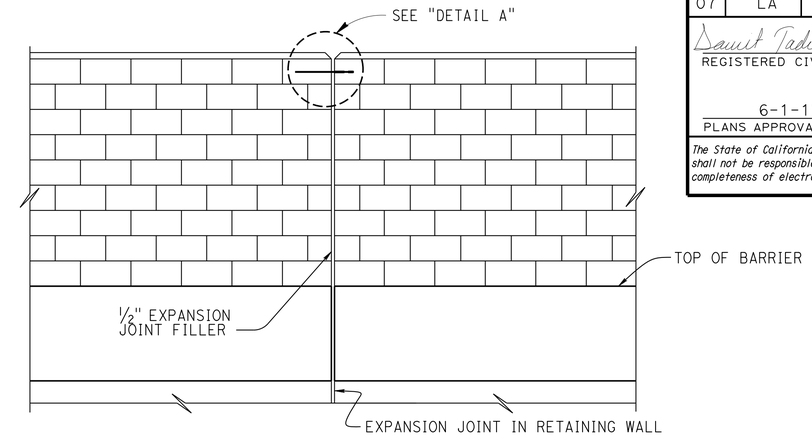

ALIGNMENT KEY DETAIL

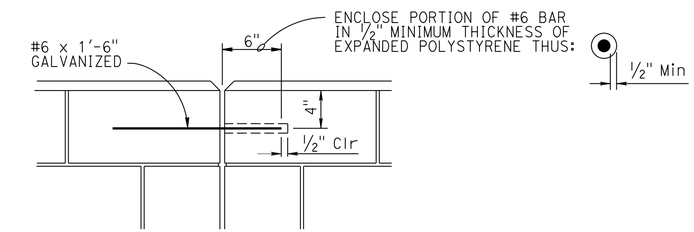

DETAIL A

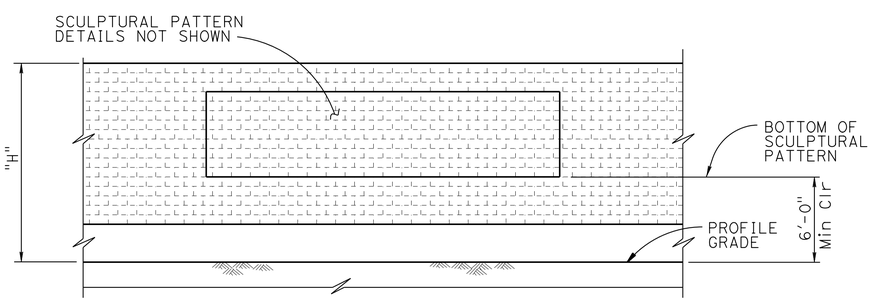

CLEARANCE DETAIL

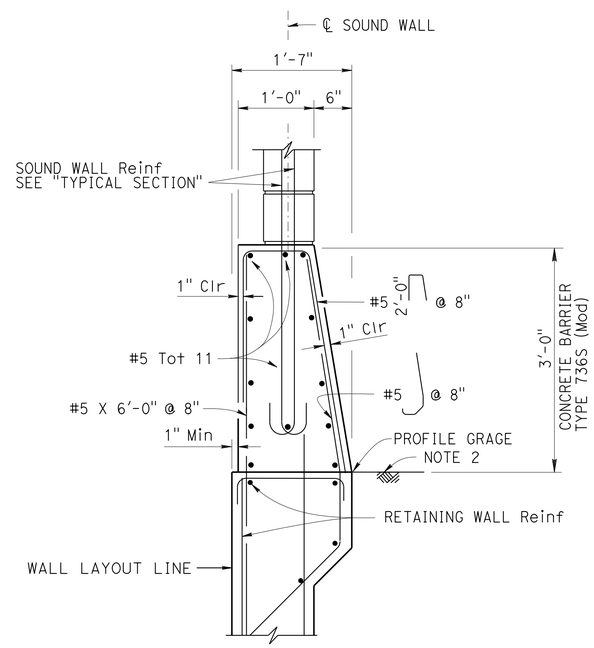

BARRIER SECTION

DESIGN NOTES

DESIGN
Uniform Building Code, 1997 Edition and the Bridge Design Specifications

DESIGN WIND LOAD
33 psf

DESIGN SEISMIC LOAD
0.57 Dead load

REINFORCED CONCRETE
f'c = 3600 psi
fy = 60 ksi

CONCRETE MASONRY

REGULAR STRENGTH	HIGH STRENGTH	
f'm = 1500 psi	f'm = 2000 psi	f'm = 2500 psi
fb = 495 psi	fb = 660 psi	fb = 830 psi
fs = 24,000 psi	fs = 24,000 psi	fs = 24,000 psi
n = 25.8	n = 19.3	n = 15.5

NOTES:

1. For details not shown, see STANDARD PLAN B15-6
2. Slope ground at traffic side of barrier to drain.
   Maximum slope ±10%
   See STANDARD PLAN B11-56, Note D
3. For Concrete Anchor Block and connection details,
   see "CONNNECTION DETAIL DD" on STANDARD PLAN A77J3

NO SCALE

STANDARD DRAWING
FILE NO. xs15-130-2
APPROVAL DATE July 2011

STATE OF CALIFORNIA
DEPARTMENT OF TRANSPORTATION

DIVISION OF ENGINEERING SERVICES

BRIDGE NO. 53-0870
POST MILE 40.46

VIA VERDE UNDERCROSSING (WIDEN)
MASONRY BLOCK SOUNDWALL W/BARRIER ON RETAINING WALL
DETAILS NO. 2

DS OSD 2147A (ENGLISH STANDARD DRAWING "XS" BORDER REV. (02-02-11)

ORIGINAL SCALE IN INCHES FOR REDUCED PLANS 0 1 2 3

UNIT: 3622
PROJECT NUMBER & PHASE: 0713000007-1
CONTRACT NO.: 07-1193U1

DISREGARD PRINTS BEARING EARLIER REVISION DATES
REVISION DATES 02/24/13 07/09/13 10/24/13

SHEET 21 OF 35

FILE => 53-0870-u5-rw-4sw-mbdt02.dgn

USERNAME => s125624 DATE PLOTTED => 18-MAY-2015 TIME PLOTTED => 14:08

DIST	COUNTY	ROUTE	POST MILES TOTAL PROJECT	SHEET No.	TOTAL SHEETS
07	LA	10	37.2/42.4	1684	2313

REGISTERED CIVIL ENGINEER 10/01/14 DATE

6-1-15
PLANS APPROVAL DATE

REGISTERED PROFESSIONAL ENGINEER Dawit T Worku No. C60711 Exp. 12-31-14 CIVIL STATE OF CALIFORNIA

The State of California or its officers or agents shall not be responsible for the accuracy or completeness of electronic copies of this plan sheet.

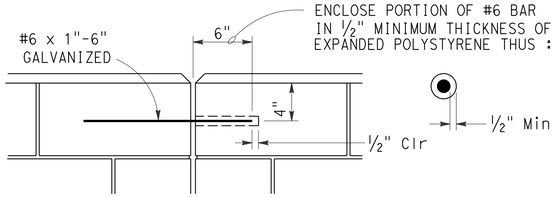

DETAIL A

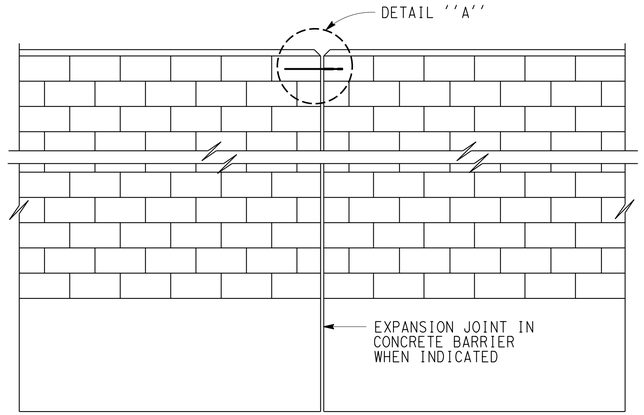

ALIGNMENT KEY DETAIL

GENERAL NOTES

Note A: For type of block and joint finish, See other sheets.

Note B: When blocks are laid in stacked bond, ladder type, galvanized joint reinforcement shall be provided. A minimum of 2 - 9 gauge wires continuous at 4'-0" maximum to be used. Locate reinforcement in joints that are at the approximate midpoint between bond beams.

Note C: Horizontal joints shall be tooled concave or may be weathered.
Vertical joints shall be tooled concave or may be raked.

Note D: All masonry to be high strength unless otherwise noted.

Note E: Concrete to be used for the barrier must contain not less than 590 pounds of cementitious material per cubic yard.

Note F: Expansion joints in concrete barrier and masonry block to match deck joints and at ends of wing walls.

Note G: Expansion joints in Soundwall (Masonry Block) shall be at each support, center of span, and at ends of wingwalls.

Note H: For dimensions and reinforcement not shown see "Typical Section" sheet.

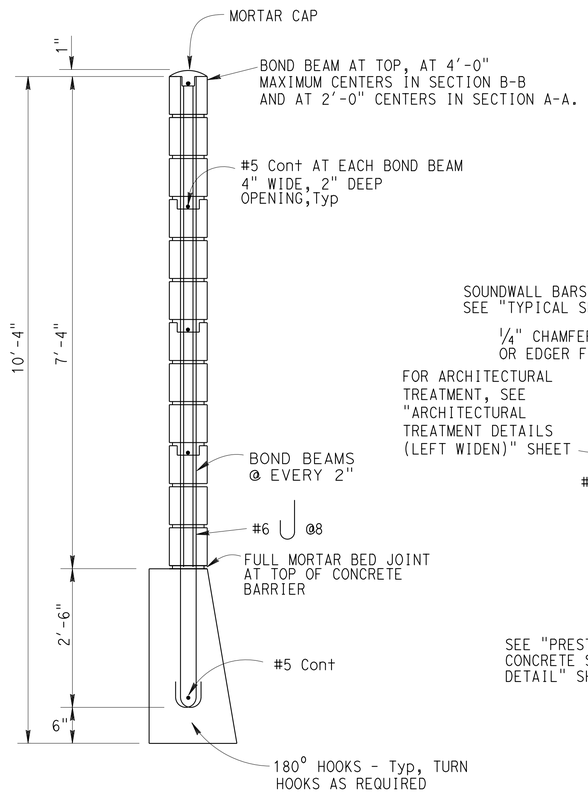

SOUND WALL SECTION

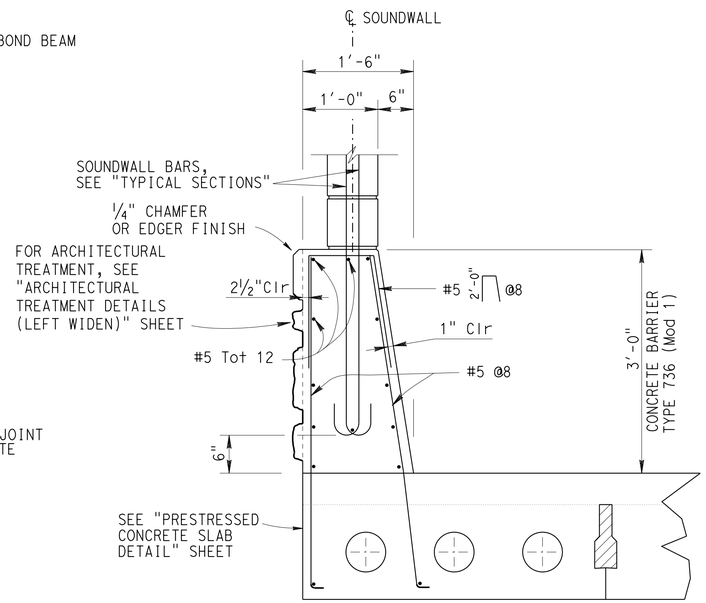

BARRIER SECTION

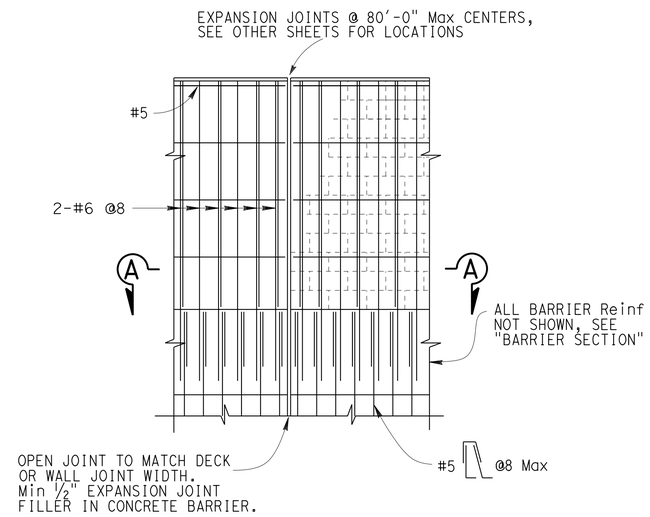

DECK AND WALL JOINT ELEVATION

DESIGN NOTES

DESIGN DATA

Design: AASHTO LRFD Bridge Design Specifications, 4th edition with California Amendments and Uniform Building Code 1997
CT = 54 kip maximum traffic impact loading evenly distributed over 10 feet at tip of the barrier and 1:1 distributed down and outward

DESIGN WIND LOAD

37 psf

DESIGN SEISMIC LOAD

2.0 Dead load

CONCRETE MASONRY

HIGH STRENGTH

f'm = 2500 psi
fy = 60 kpsi

REINFORCED CONCRETE

f'c = 3.6 ksi
fy = 60 ksi

LOAD COMBINATION AND LIMIT STATES

SERVICE	Q = 1.0 Dc + 1.0 Dw + 0.3 Ws
STRENGTH I	Q = a Dc + 1.5 Dw + 1.75 U
STRENGTH III	Q = a Dc + a Dw + 1.4 Ws
STRENGTH V	Q = a Dc + a Dw + 0.3 Dw
EXTREAM EVENT I	Q = 1.0 Dc + 1.0 Dw + 1.0 EQD
EXTREAM EVENT II	Q = 1.0 Dc + 1.0 Dw + 0.5 LL + 1.0 CT

WHERE:

Q = FORCE EFRECT
a = 1.25 OR 0.9, WHICHEVER CONTROL DESIGN
Ws = WIND ON STRUCTURE
Dc = DEAD LOAD STRUCTURE COMPONENT
Dw = ADDED DEAD LOAD
LL = LIVE LOAD
EQD = SEISMIC DEAD LOAD
CT = VEHICULAR COLLISION FORCE

STRENGTH REDUCTION FACTORS, Ø

Reinforced concrete:
For flexure ——— Ø=0.90
For shear ——— Ø=0.85

Concrete masonry:
For flexure ——— Ø=0.80
For shear ——— Ø=0.60

Note 1:
Barrier, Deck and Concrete Masonry are designed by the Strength Design Method.

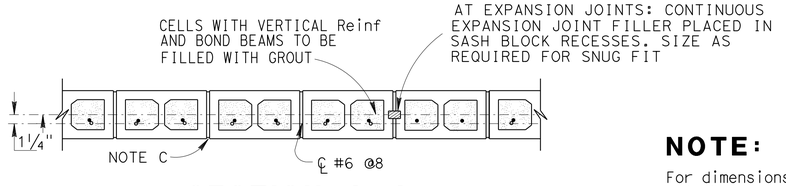

SECTION A A

NOTE:
THE CONTRACTOR SHALL VERIFY ALL CONTROLLING FIELD DIMENSIONS BEFORE ORDERING OR FABRICATING ANY MATERIAL.

NOTE:

For dimensions and reinforcement not shown, see RSP b11-56

DESIGN	BY HOMA IRANINEJADIAN	CHECKED SHARAREH BIKAEE	
DETAILS	BY ANTONETTE L. ONG	CHECKED SHARAREH BIKAEE	
QUANTITIES	BY HOMA IRANINEJADIAN	CHECKED BRIJESH PATEL	

STATE OF CALIFORNIA
DEPARTMENT OF TRANSPORTATION

DIVISION OF ENGINEERING SERVICES
STRUCTURE DESIGN
DESIGN BRANCH 20

BRIDGE NO. 53-0870
POST MILE 40.46

VIA VERDE UNDERCROSSING (WIDEN)
MASONRY BLOCK SOUNDWALL ON BRIDGE

STRUCTURES DESIGN DETAIL SHEET (ENGLISH) (REV. 09-01-10)

ORIGINAL SCALE IN INCHES FOR REDUCED PLANS 0 1 2 3

UNIT: 3622
PROJECT NUMBER & PHASE: 0713000007-1
CONTRACT NO.: 07-1193U1

DISREGARD PRINTS BEARING EARLIER REVISION DATES

REVISION DATES 12/16/14 01/27/14 06/27/14

SHEET 22 OF 35

FILE => 53-0870-U6-sw-mbonb.dgn

USERNAME => s125624 DATE PLOTTED => 18-MAY-2015 TIME PLOTTED => 14:08

DIST	COUNTY	ROUTE	POST MILES TOTAL PROJECT	SHEET No.	TOTAL SHEETS
07	LA	10	37.2/42.4	1685	2313

REGISTERED CIVIL ENGINEER 10/01/14 DATE

6-1-15
PLANS APPROVAL DATE

REGISTERED PROFESSIONAL ENGINEER Dawit T Worku No. C60711 Exp. 12-31-14 CIVIL STATE OF CALIFORNIA

The State of California or its officers or agents shall not be responsible for the accuracy or completeness of electronic copies of this plan sheet.

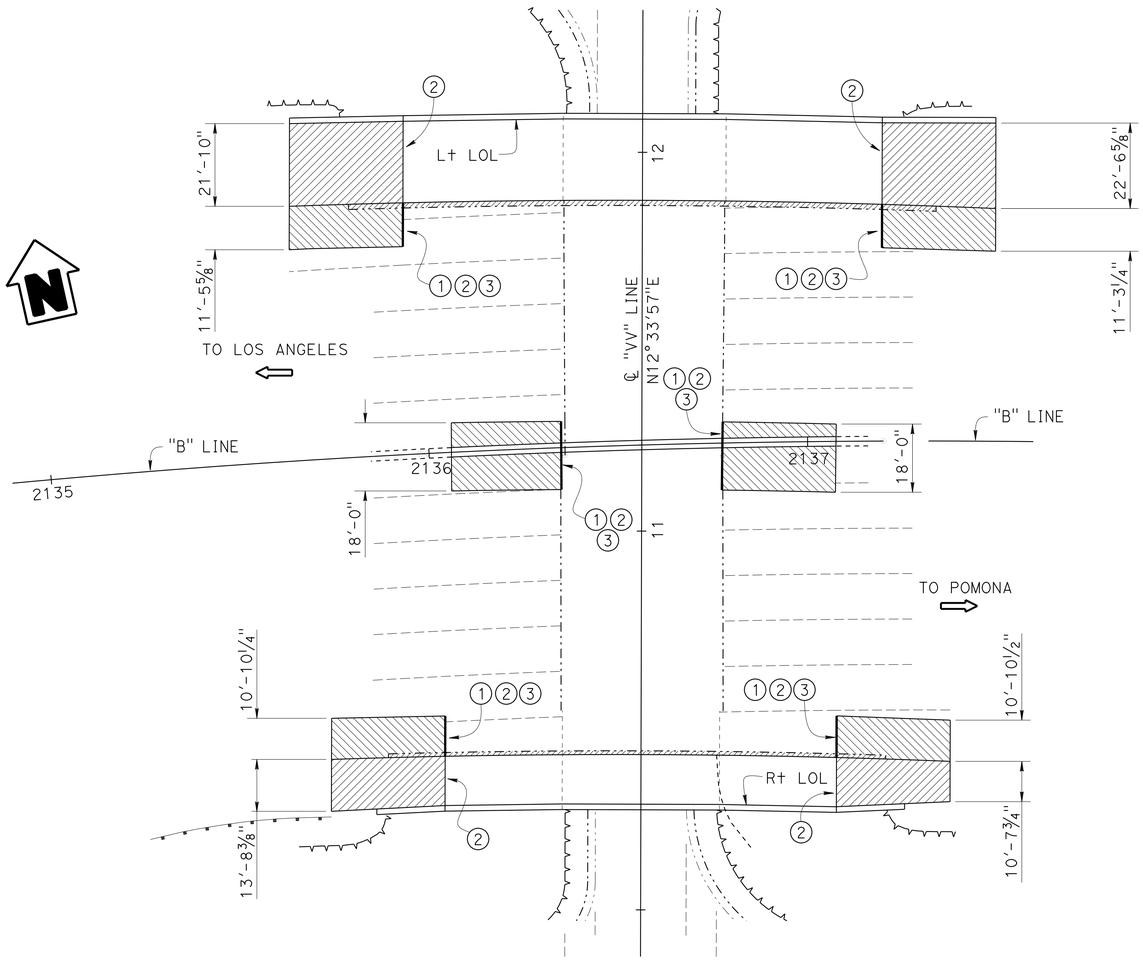

PLAN

1" = 20'

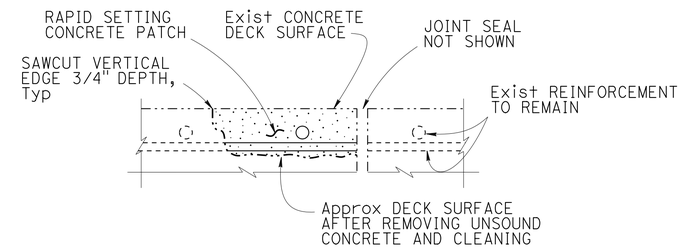

JOINT SPALL REPAIR DETAIL

NO SCALE

NOTE: REINFORCEMENT MAY BE ENCOUNTERED DURING DECK CONCRETE REMOVAL AND IS TO REMAIN UNDAMAGED. LOCATIONS TO BE DETERMINED BY THE ENGINEER.

JOINT SPALL REPAIR TABLE

LOCATION	APPROX DEPTH OF JOINT SPALLS (Inch)	APPROX WIDTH OF JOINT SPALLS (Inch)	APPROX LENGTH OF JOINT SPALLS (Feet)
Abut 1, 2 (EXISTING MEDIAN)	3	6	4
Abut 1, 4 (EXISTING OUTSIDE SHOULDER)	3	6	4

NOTES:

1. Paving Notch extension
2. Joint seal MR = 1"
3. Prior to placement of new joint seal, remove unsound concrete and patch with rapid setting concrete

LEGEND:

- Indicates New Construction
- Indicates Existing Structure
- Indicates Joint Seal
- Indicates Structure Approach Type N(30S)
- Indicates Structure Approach Type R(30D)

NOTE:
THE CONTRACTOR SHALL VERIFY ALL CONTROLLING FIELD DIMENSIONS BEFORE ORDERING OR FABRICATING ANY MATERIAL.

	BY	CHECKED
DESIGN	HOMA IRANINEJADIAN	SHARAREH BIKAEE
DETAILS	ANTONETTE L. ONG	SHARAREH BIKAEE
QUANTITIES	HOMA IRANINEJADIAN	BRIJESH PATEL

STATE OF CALIFORNIA
DEPARTMENT OF TRANSPORTATION

DIVISION OF ENGINEERING SERVICES
STRUCTURE DESIGN
DESIGN BRANCH 20

BRIDGE NO. 53-0870
POST MILE 40.46

VIA VERDE UNDERCROSSING (WIDEN)
STRUCTURE APPROACH SLAB LAYOUT

STRUCTURES DESIGN DETAIL SHEET (ENGLISH) (REV. 09-01-10)

ORIGINAL SCALE IN INCHES FOR REDUCED PLANS 0 1 2 3

UNIT: 3622
PROJECT NUMBER & PHASE: 0713000007-1
CONTRACT NO.: 07-1193U1

DISREGARD PRINTS BEARING EARLIER REVISION DATES

REVISION DATES: 02/18/14 06/05/14 01/24/14

SHEET 23 OF 35

FILE => 53-0870-v1-sas01-1o01.dgn

USERNAME => S125624 DATE PLOTTED => 18-MAY-2015 TIME PLOTTED => 14:08

DIST	COUNTY	ROUTE	POST MILES TOTAL PROJECT	SHEET No.	TOTAL SHEETS
07	LA	10	37.2/42.4	1686	2313

REGISTERED CIVIL ENGINEER 10/01/14 DATE

6-1-15
PLANS APPROVAL DATE

The State of California or its officers or agents shall not be responsible for the accuracy or completeness of electronic copies of this plan sheet.

REGISTERED PROFESSIONAL ENGINEER — Dawit T Worku — No. C60711 — Exp. 12-31-14 — CIVIL — STATE OF CALIFORNIA

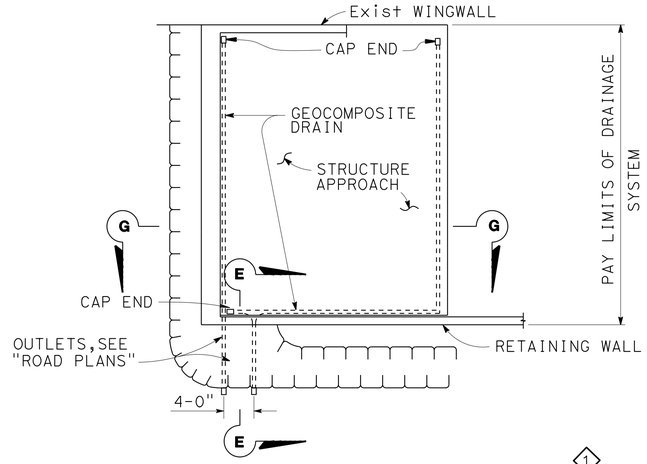

TYPICAL PLAN (LEFT WIDEN) ◇1

1" = 10'-0"

FOR PIPE LAYOUT AT STAGGERED END, SEE "DETAIL B"

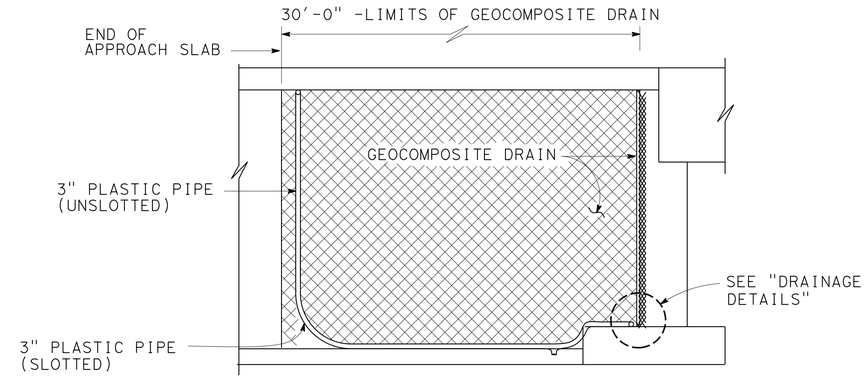

RETAINING WALL WINGWALL (LEFT WIDEN) ◇1

SECTION G-G

¼" = 1'-0"

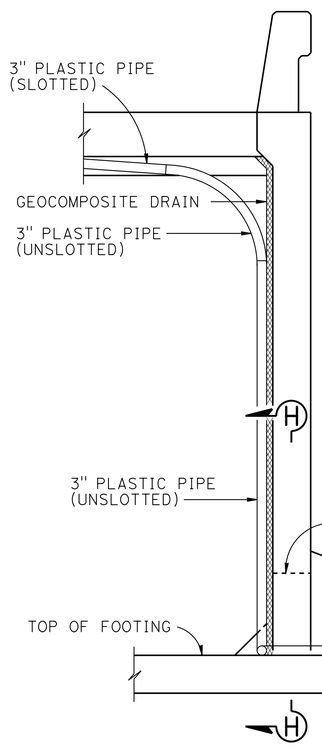

SECTION E-E ◇1

½" = 1'-0"

NOTE: Bends and junctions in 3" plastic pipe are 30" radius Min

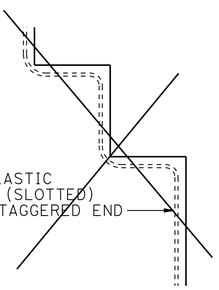

DETAIL B

No Scale

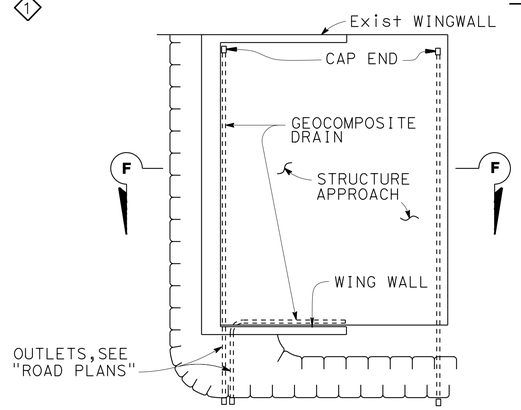

TYPICAL PLAN (RIHT WIDEN) ◇2

1" = 10'-0"

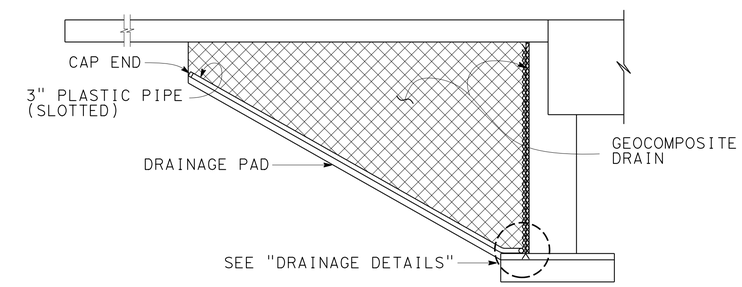

CANTILEVER WINGWALL (RIGHT WIDEN) ◇1

SECTION F-F

¼" = 1'-0"

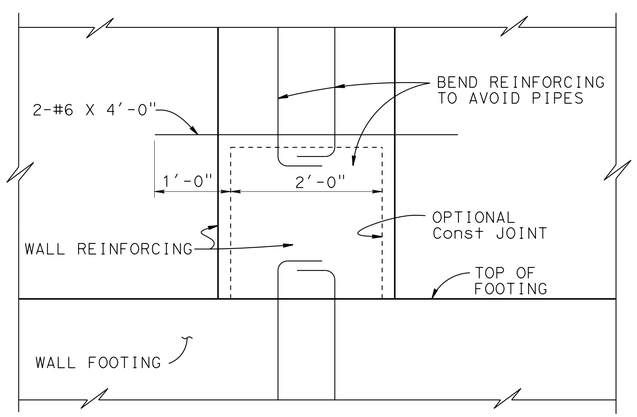

SECTION H-H

NO SCALE

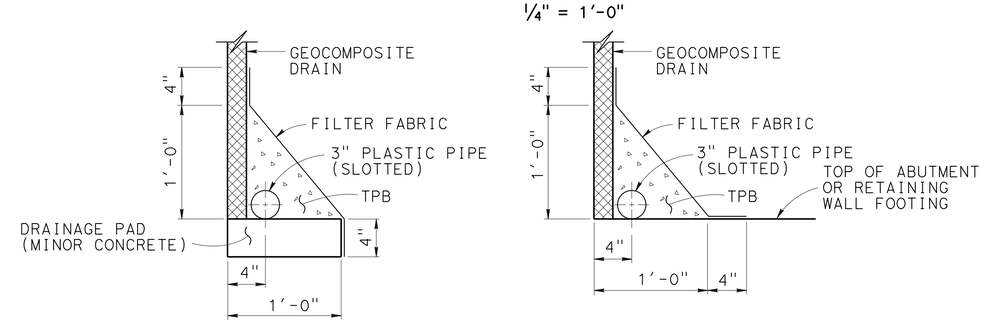

WITHOUT FOOTING **WITH FOOTING**

DRAINAGE DETAILS

1½" = 1'-0"

NOTE: ◇3

See weep hole and geocomposite drain at "ABUTMENT DETAILS NO. 2" sheet

NOTE:
THE CONTRACTOR SHALL VERIFY ALL CONTROLLING FIELD DIMENSIONS BEFORE ORDERING OR FABRICATING ANY MATERIAL.

STANDARD DRAWING

FILE NO. **xs3-110**

APPROVAL DATE July 2011

◇1 Modified detail
◇2 Added detail
◇3 Added note

STATE OF **CALIFORNIA** DEPARTMENT OF TRANSPORTATION

DIVISION OF ENGINEERING SERVICES

BRIDGE NO. 53-0870
POST MILE 40.46

VIA VERDE UNDERCROSSING (WIDEN)
STRUCTURE APPROACH DRAINAGE DETAILS

DS OSD 2147A (ENGLISH STANDARD DRAWING "XS" BORDER REV. (02-02-11)

ORIGINAL SCALE IN INCHES FOR REDUCED PLANS 0 1 2 3

UNIT: 3622
PROJECT NUMBER & PHASE: 0713000007-1
CONTRACT NO.: 07-1193U1

DISREGARD PRINTS BEARING EARLIER REVISION DATES

REVISION DATES: 02/14/13 07/10/13

SHEET 24 OF 35

FILE => 53-0870-v2-smadd.dgn

USERNAME => s125624 DATE PLOTTED => 18-MAY-2015 TIME PLOTTED => 14:08

DIST	COUNTY	ROUTE	POST MILES TOTAL PROJECT	SHEET No.	TOTAL SHEETS
07	LA	10	37.2/42.4	1687	2313

Dawit Tadelle Worku 10/01/14
REGISTERED CIVIL ENGINEER DATE

6-1-15
PLANS APPROVAL DATE

REGISTERED PROFESSIONAL ENGINEER Dawit T Worku No. C60711 Exp. 12-31-14 CIVIL STATE OF CALIFORNIA

The State of California or its officers or agents shall not be responsible for the accuracy or completeness of electronic copies of this plan sheet.

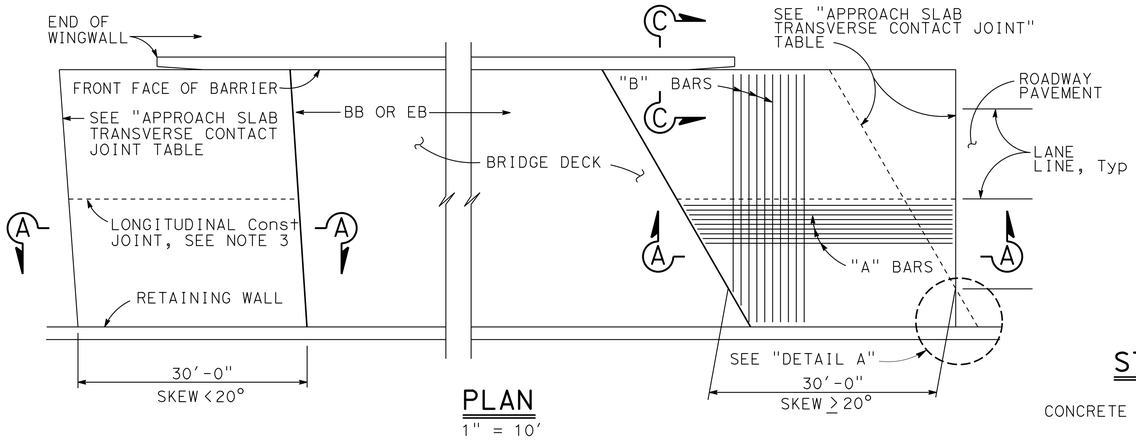

PLAN
1" = 10'

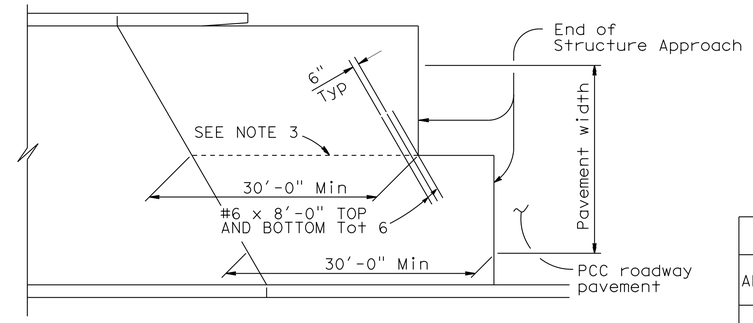

STRUCTURE APPROACH - END STAGGER DETAIL
No Scale

APPROACH SLAB TRANSVERSE CONTACT JOINT		
APPROACH SKEW	WITH AC ROADWAY PAVEMENT	WITH PCC ROADWAY PAVEMENT
< 20°	PARALLEL TO FACE OF PN	PARALLEL TO FACE OF PN
20° - 45°	PARALLEL TO FACE OF PN USE "DETAIL A"	STAGGER LINES 24' TO 36' APART
> 45°	PARALLEL TO FACE OF PN USE "DETAIL A"	STAGGER AT EACH LANE LINE

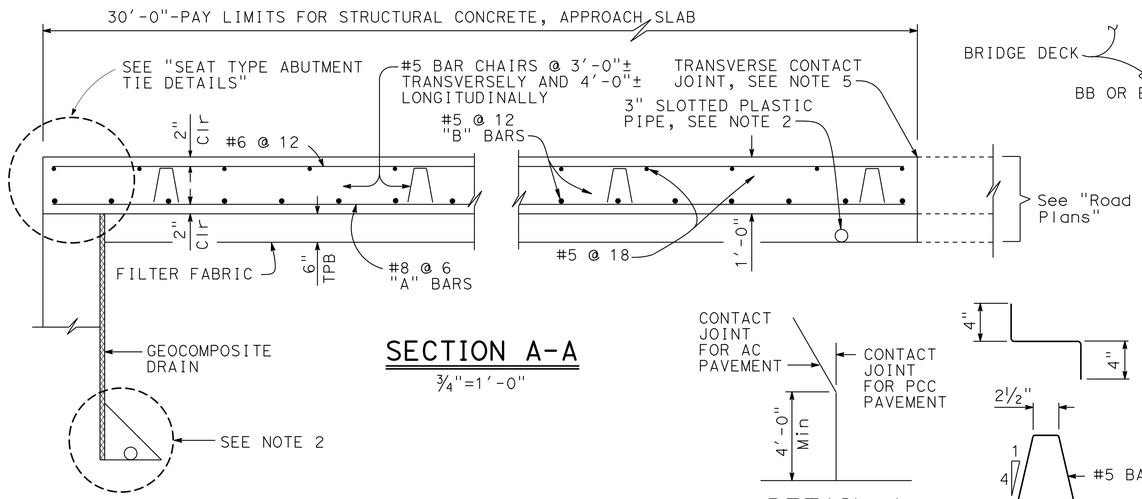

SECTION A-A
¾"=1'-0"

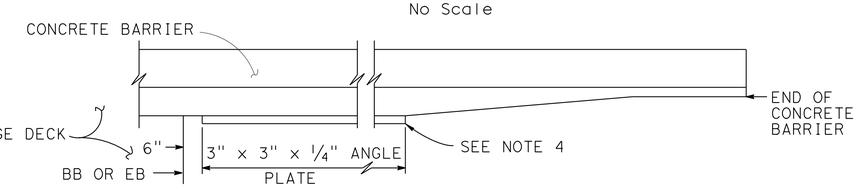

EDGE ANGLE DETAIL
½"=1'-0"

DETAIL A
No Scale

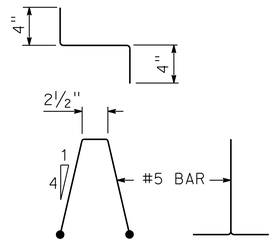

BAR CHAIR DETAIL
1½"=1'-0"

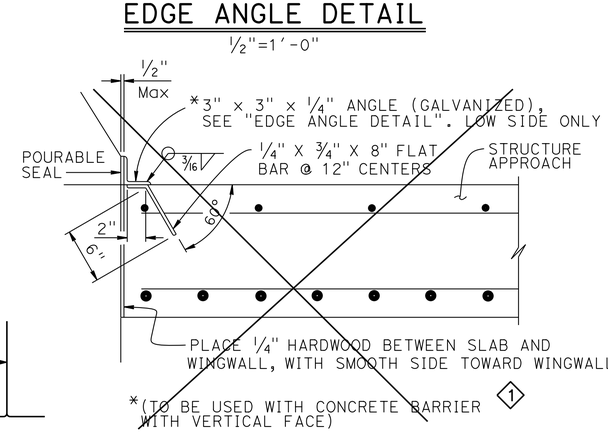

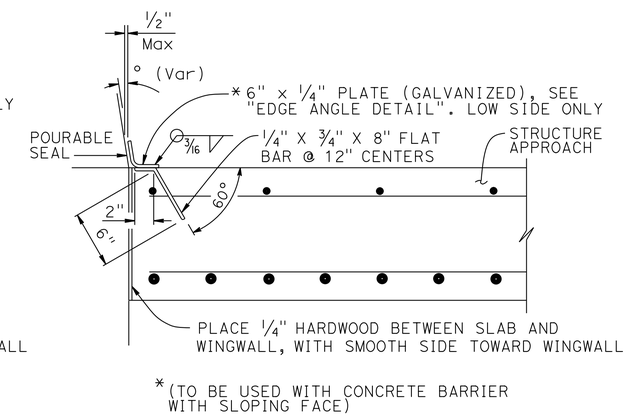

DETAIL B
1½" = 1'-0"

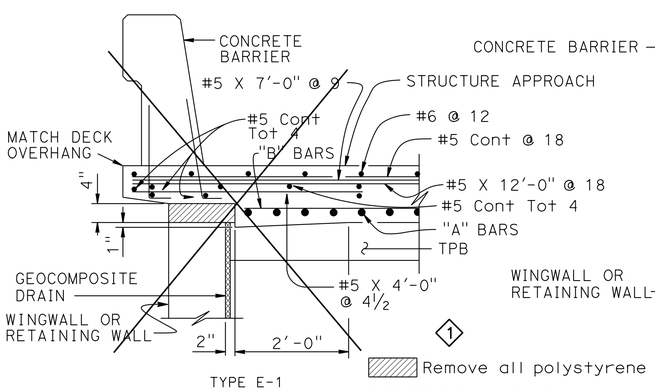

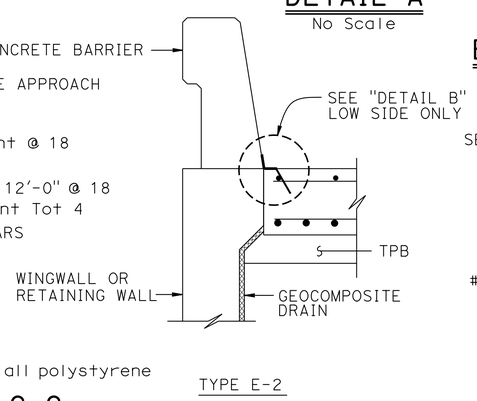

SECTION C-C
¾"=1'-0"

(Type E-1 to be used, unless otherwise shown on plans)

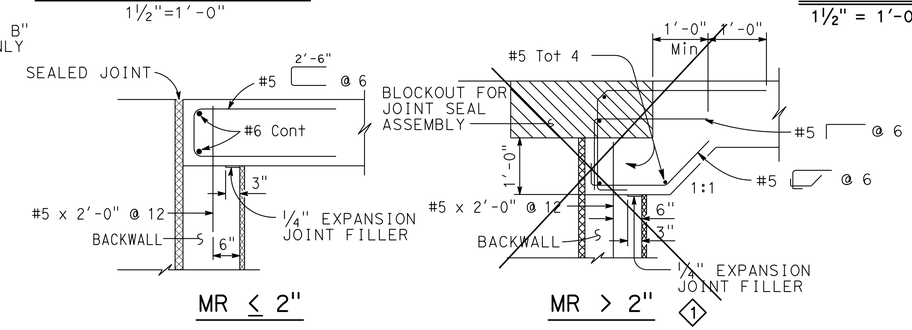

SEAT TYPE ABUTMENT TIE DETAILS (SEE NOTE 1)
¾"=1'-0"

NOTES:

1. For details not shown, see Structure Plans. For MR ≤ 2", adjust bar reinforcement to clear a sawcut for sealed joint, when required
2. For drainage details, see "STRUCTURE APPROACH DRAINAGE DETAILS" sheet
3. Longitudinal construction joints, when permitted by the Engineer, shall be located on lane lines
4. End angle or plate at beginning of barrier transition, end of wingwall or end of structure approach as applicable
5. For transverse contact joint with new PCC paving, refer to Standard Plan P10
6. At the Contractor's option, approach slab transverse reinforcement may be placed parallel to paving notch. Spacing of transverse reinforcement is measured along ℄ roadway

STANDARD DRAWING
FILE NO. xs3-120
APPROVAL DATE July 2011

1 Deleted detail

STATE OF CALIFORNIA
DEPARTMENT OF TRANSPORTATION

DIVISION OF ENGINEERING SERVICES

BRIDGE NO. 53-0870
POST MILE 40.46

VIA VERDE UNDERCROSSING (WIDEN)
STRUCTURE APPROACH TYPE N(30S)

DS OSD 2147A (ENGLISH STANDARD DRAWING "XS" BORDER REV. (02-02-11)

ORIGINAL SCALE IN INCHES FOR REDUCED PLANS 0 1 2 3

UNIT: 3622
PROJECT NUMBER & PHASE: 0713000007-1
CONTRACT NO.: 07-1193U1

DISREGARD PRINTS BEARING EARLIER REVISION DATES
REVISION DATES 01/08/13 01/04/13 02/20/13

SHEET 25 OF 35

FILE => 53-0870-v3-saN(30S).dgn

USERNAME => s125624 DATE PLOTTED => 18-MAY-2015 TIME PLOTTED => 14:08

DIST	COUNTY	ROUTE	POST MILES TOTAL PROJECT	SHEET No.	TOTAL SHEETS
07	LA	10	37.2/42.4	1688	2313

REGISTERED CIVIL ENGINEER 10/01/14 DATE

6-1-15
PLANS APPROVAL DATE

REGISTERED PROFESSIONAL ENGINEER — Dawit T Worku — No. C60711 — Exp. 12-31-14 — CIVIL — STATE OF CALIFORNIA

The State of California or its officers or agents shall not be responsible for the accuracy or completeness of electronic copies of this plan sheet.

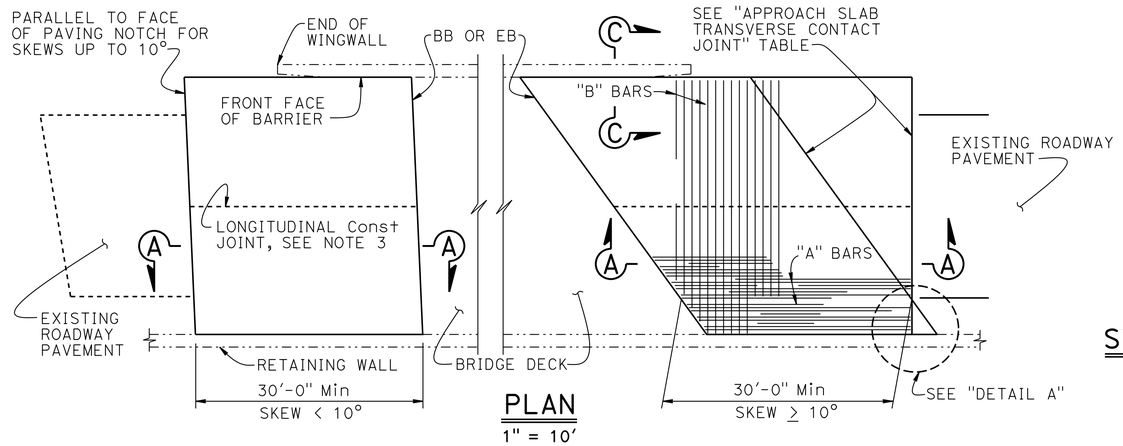

PLAN
1" = 10'

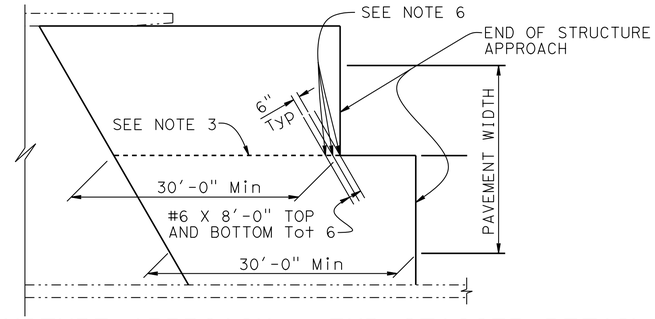

STRUCTURE APPROACH - END STAGGER DETAIL
NO SCALE

APPROACH SLAB TRANSVERSE CONTACT JOINT		
APPROACH SKEW	WITH AC ROADWAY PAVEMENT	WITH PCC ROADWAY PAVEMENT
< 10°	PARALLEL TO FACE OF PN	PARALLEL TO FACE OF PAVING NOTCH
10° - 45°	PARALLEL TO FACE OF PN USE "DETAIL A"	STAGGER LINES 24' TO 36' APART
> 45°	PARALLEL TO FACE OF PN USE "DETAIL A"	STAGGER AT EACH LANE LINE

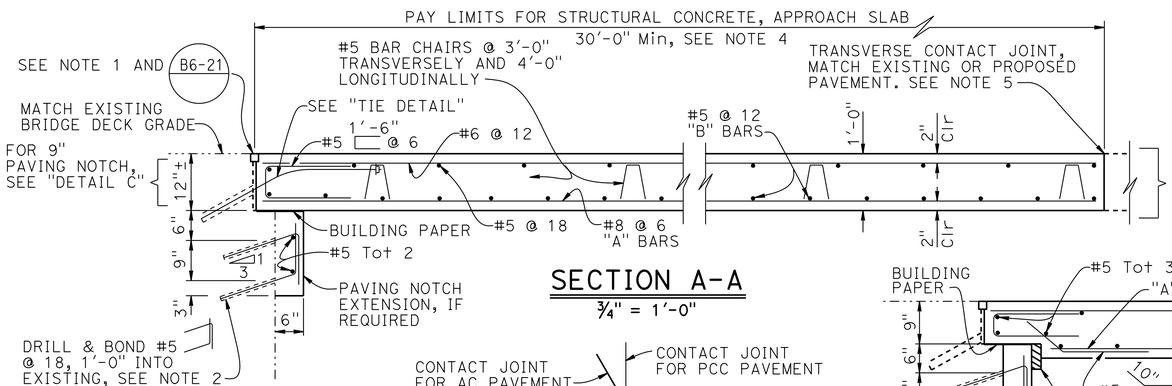

SECTION A-A
¾" = 1'-0"

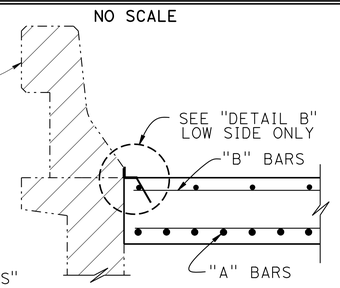

SECTION C-C
¾" = 1'-0"

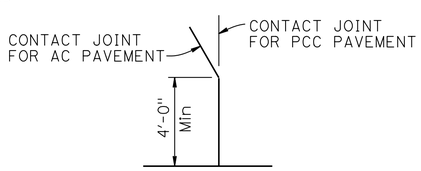

DETAIL A
No Scale

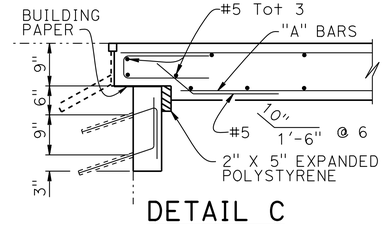

DETAIL C
¾" = 1'-0"

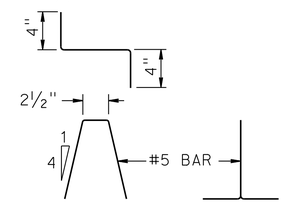

BAR CHAIR DETAIL
1½" = 1'-0"

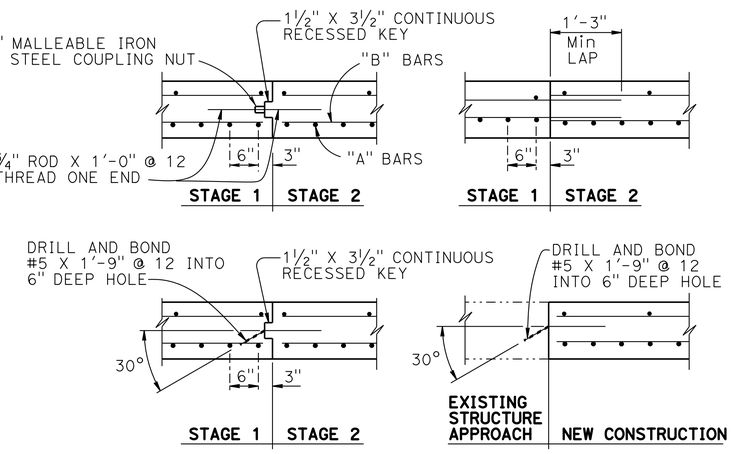

LONGITUDINAL CONSTRUCTION JOINT ALTERNATIVES
¾" = 1'-0"

NOTES:
1. For details not shown or noted, see Structure Plans. Adjust bar reinforcement to clear a sawcut for sealed joint, when required
2. Space to avoid existing prestress anchorages and main reinforcement
3. Longitudinal construction joints, when permitted by the Engineer, shall be located on lane lines
4. Transverse contact joint shall be a minimum of 5'-0" from an existing or constructed weakened plane joint
5. For transverse contact joint with new PCC paving. refer to Standard Plan P10
6. Couplers are required for stage construction
7. End angle or plate at beginning of barrier transition, end of wingwall or end of structure approach as applicable

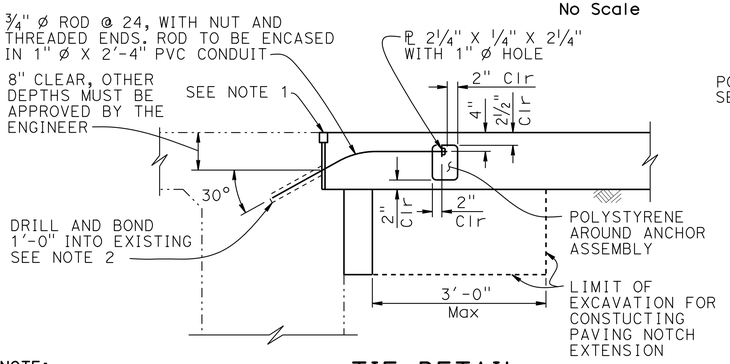

NOTE:
THE CONTRACTOR SHALL VERIFY ALL CONTROLLING FIELD DIMENSIONS BEFORE ORDERING OR FABRICATING ANY MATERIAL.

TIE DETAIL
¾" = 1'-0"

NOTE: For details not shown, see "SECTION A-A"

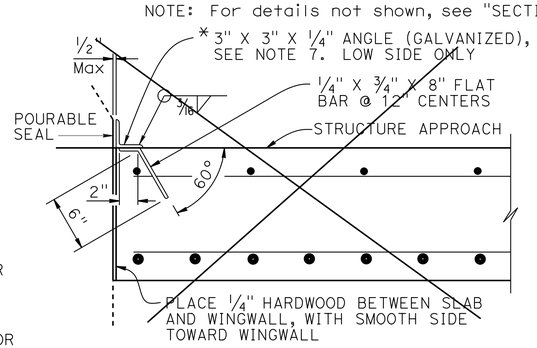

*(TO BE USED WITH CONCRETE BARRIER WITH VERTICAL FACE)

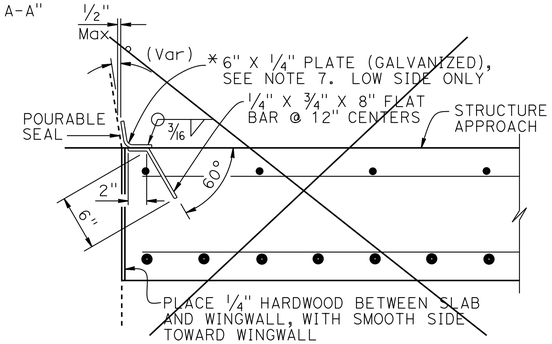

*(TO BE USED WITH CONCRETE BARRIER WITH SLOPING FACE)

DETAIL B
1½" = 1'-0"

STANDARD DRAWING
FILE NO. xs3-150
APPROVAL DATE July 2011

1 Deleted detail
2 Modified detail

STATE OF CALIFORNIA
DEPARTMENT OF TRANSPORTATION

DIVISION OF ENGINEERING SERVICES

BRIDGE NO. 53-0870
POST MILE 40.46

VIA VERDE UNDERCROSSING (WIDEN)
STRUCTURE APPROACH TYPE R(30D)

DS OSD 2147A (ENGLISH STANDARD DRAWING "XS" BORDER REV. (02-02-11)

ORIGINAL SCALE IN INCHES FOR REDUCED PLANS 0 1 2 3

UNIT: 3622
PROJECT NUMBER & PHASE: 0713000007-1
CONTRACT NO.: 07-1193U1

DISREGARD PRINTS BEARING EARLIER REVISION DATES
REVISION DATES 01/14/13 02/20/13 11/19/13
SHEET 26 OF 35

FILE => 53-0870-v4-saR(30D).dgn

USERNAME => s125624 DATE PLOTTED => 18-MAY-2015 TIME PLOTTED => 14:08

DIST	COUNTY	ROUTE	POST MILES TOTAL PROJECT	SHEET No.	TOTAL SHEETS
07	LA	10	37.2/42.4	1689	2313

REGISTERED CIVIL ENGINEER 10/01/14 DATE

6-1-15
PLANS APPROVAL DATE

REGISTERED PROFESSIONAL ENGINEER Dawit T Worku No. C60711 Exp. 12-31-14 CIVIL STATE OF CALIFORNIA

The State of California or its officers or agents shall not be responsible for the accuracy or completeness of electronic copies of this plan sheet.

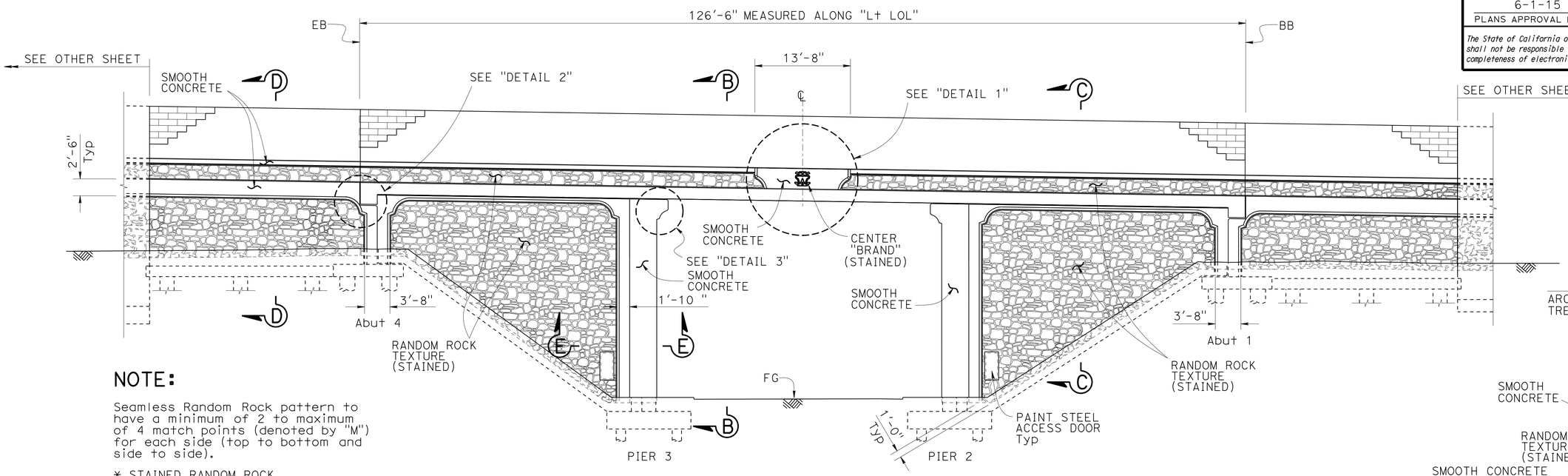

MIRROR ELEVATION (LEFT WIDEN)

1/8" = 1'-0"

NOTE:

Seamless Random Rock pattern to have a minimum of 2 to maximum of 4 match points (denoted by "M") for each side (top to bottom and side to side).

* STAINED RANDOM ROCK
FS# 33578, 30372, 30257, 30117, 30099
FS (denotes Federal Standard Color)

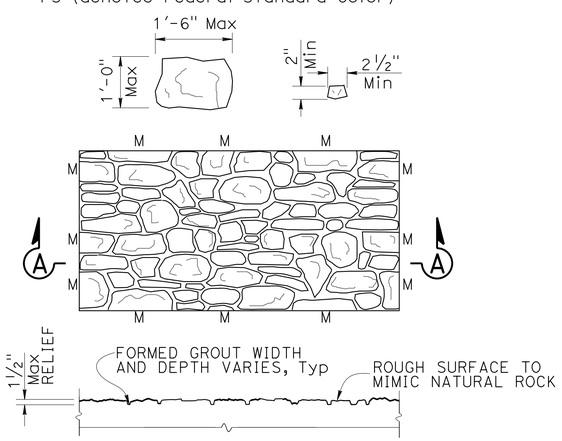

SECTION A-A

RANDOM ROCK TEXTURE

NO SCALE

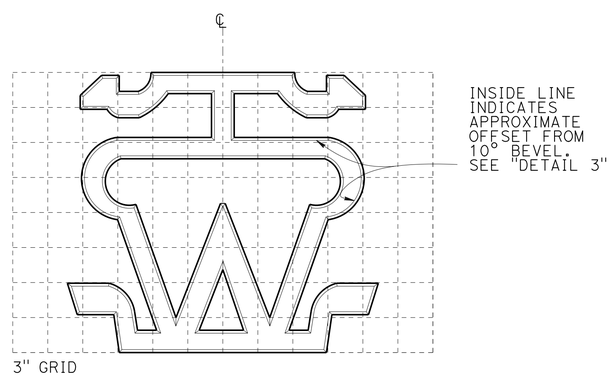

ARCHITECTURAL SURFACE TREATMENT (CATTLE BRAND PATTERN)

NOTE:

1. Stain Federal Color 30117

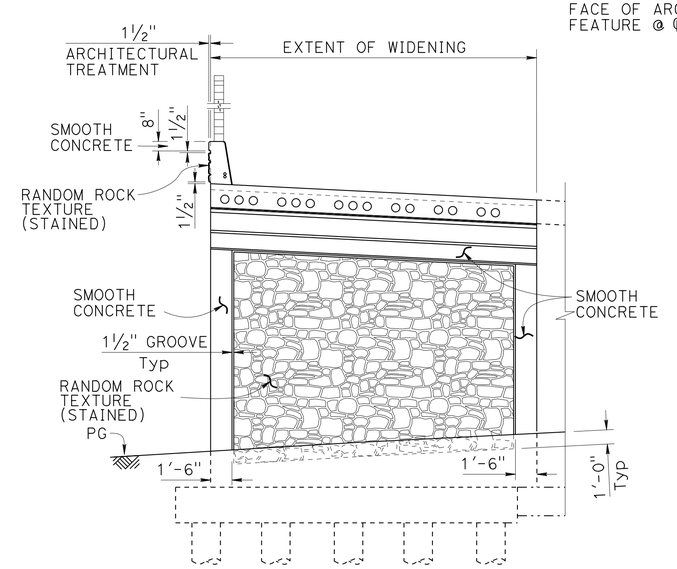

SECTION B-B

NO SCALE

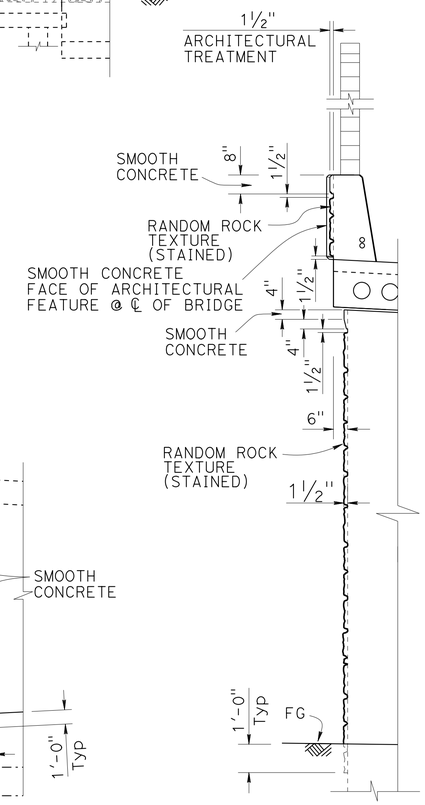

SECTION C-C

NO SCALE

NOTE:
THE CONTRACTOR SHALL VERIFY ALL CONTROLLING FIELD DIMENSIONS BEFORE ORDERING OR FABRICATING ANY MATERIAL.

DESIGN	BY VALERIE MOORE	CHECKED HOMA IRANINEJADIAN	
DETAILS	BY ANTONETTE L. ONG	CHECKED SHARAREH BIKAEE	
QUANTITIES	BY HOMA IRANINEJADIAN	CHECKED BRIJESH PATEL	

STATE OF CALIFORNIA
DEPARTMENT OF TRANSPORTATION

DIVISION OF ENGINEERING SERVICES
STRUCTURE DESIGN
DESIGN BRANCH 20

BRIDGE NO. 53-0870
POST MILE 40.46

VIA VERDE UNDERCROSSING (WIDEN)

ARCHITECTURAL TREATMENT (LEFT WIDEN)

STRUCTURES DESIGN DETAIL SHEET (ENGLISH) (REV. 09-01-10)

ORIGINAL SCALE IN INCHES FOR REDUCED PLANS 0 1 2 3

UNIT: 3622
PROJECT NUMBER & PHASE: 0713000007-1
CONTRACT NO.: 07-1193U1

DISREGARD PRINTS BEARING EARLIER REVISION DATES

REVISION DATES 02/20/14 03/05/14 05/28/14

SHEET 27 OF 35

FILE => 53-0870-w_aesth_lw01.dgn

USERNAME => s125624 DATE PLOTTED => 18-MAY-2015 TIME PLOTTED => 14:08

DIST	COUNTY	ROUTE	POST MILES TOTAL PROJECT	SHEET No.	TOTAL SHEETS
07	LA	10	37.2/42.4	1690	2313

REGISTERED CIVIL ENGINEER 10/01/14 DATE

6-1-15
PLANS APPROVAL DATE

REGISTERED PROFESSIONAL ENGINEER Dawit T Worku No. C60711 Exp. 12-31-14 CIVIL STATE OF CALIFORNIA

The State of California or its officers or agents shall not be responsible for the accuracy or completeness of electronic copies of this plan sheet.

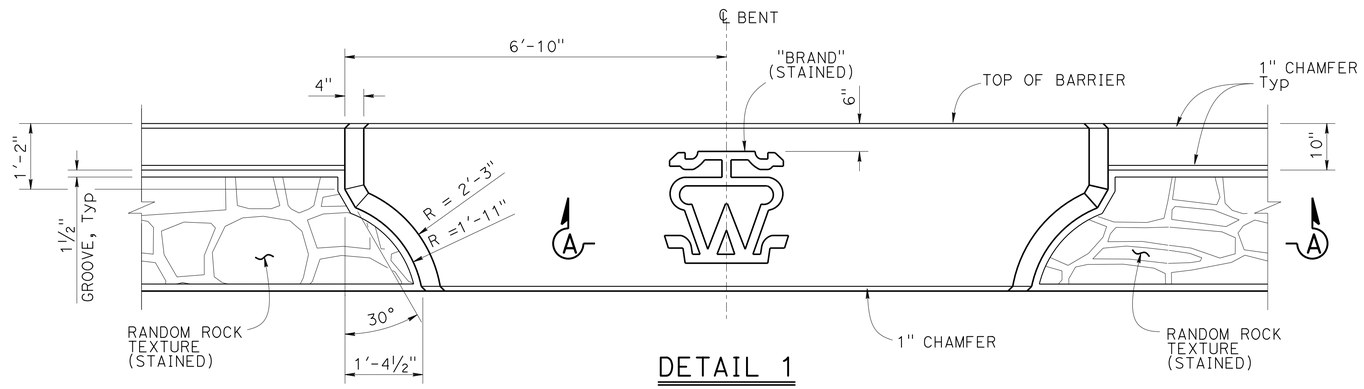

DETAIL 1
NO SCALE

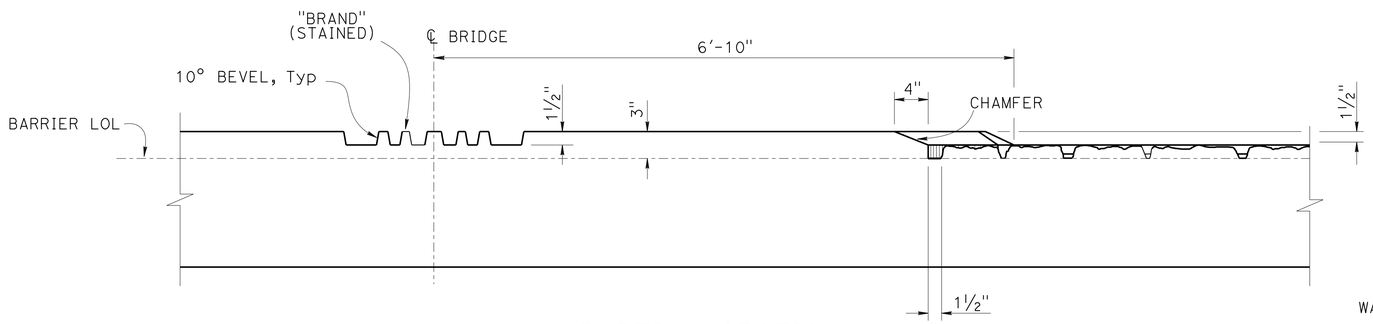

PARTIAL SECTION A-A
NO SCALE

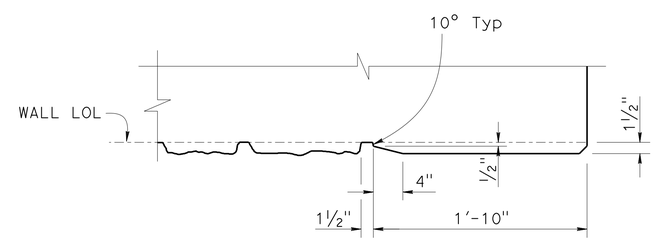

PARTIAL SECTION B-B
NO SCALE

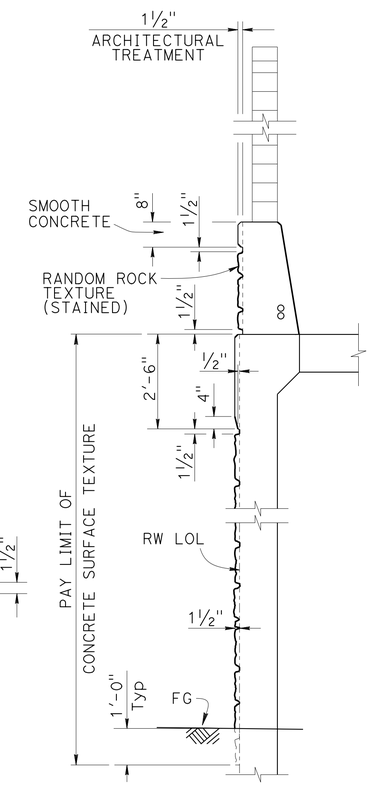

SECTION D-D
NO SCALE

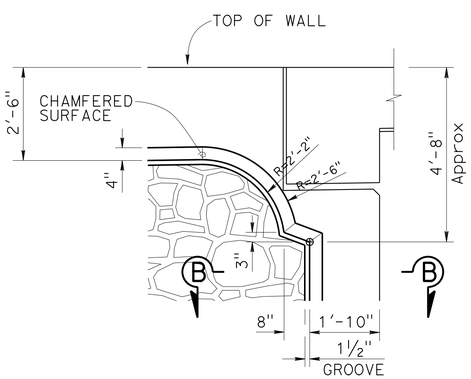

DETAIL 2
NO SCALE

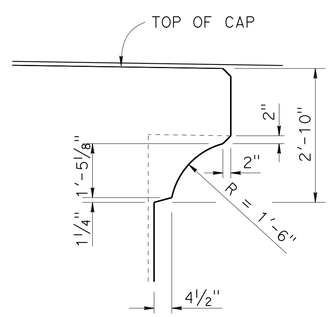

DETAIL 3
NO SCALE

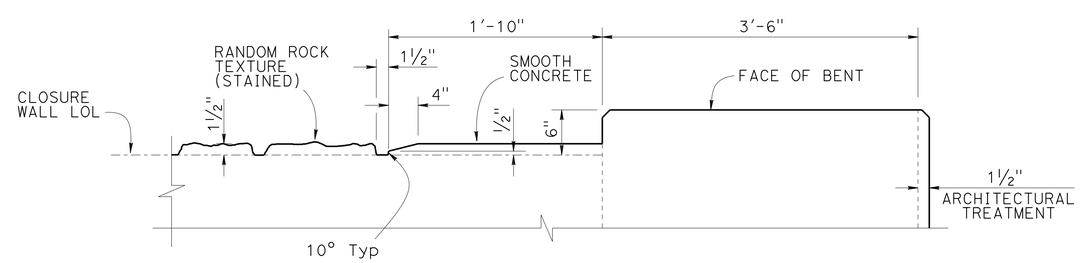

PARTIAL SECTION E-E
NO SCALE

NOTE:
THE CONTRACTOR SHALL VERIFY ALL CONTROLLING FIELD DIMENSIONS BEFORE ORDERING OR FABRICATING ANY MATERIAL.

	BY	CHECKED
DESIGN	VALERIE MOORE	HOMA IRANINEJADIAN
DETAILS	ANTONETTE L. ONG	SHARAREH BIKAEE
QUANTITIES	HOMA IRANINEJADIAN	BRIJESH PATEL

STATE OF CALIFORNIA
DEPARTMENT OF TRANSPORTATION

DIVISION OF ENGINEERING SERVICES
STRUCTURE DESIGN
DESIGN BRANCH 20

BRIDGE NO. 53-0870
POST MILE 40.46

VIA VERDE UNDERCROSSING (WIDEN)
ARCHITECTURAL TREATMENT DETAILS (LEFT WIDEN)

STRUCTURES DESIGN DETAIL SHEET (ENGLISH) (REV. 09-01-10)

ORIGINAL SCALE IN INCHES FOR REDUCED PLANS 0 1 2 3

UNIT: 3622
PROJECT NUMBER & PHASE: 0713000007-1
CONTRACT NO.: 07-1193U1

DISREGARD PRINTS BEARING EARLIER REVISION DATES

REVISION DATES 01/06/14 02/20/14 05/28/14

SHEET 28 OF 35

FILE => 53-0870-w_aesth_lwd+01.dgn

USERNAME => s125624 DATE PLOTTED => 18-MAY-2015 TIME PLOTTED => 14:08

DIST	COUNTY	ROUTE	POST MILES TOTAL PROJECT	SHEET No.	TOTAL SHEETS
07	LA	10	37.2/42.4	1691	2313

REGISTERED CIVIL ENGINEER 10/01/14 DATE

6-1-15
PLANS APPROVAL DATE

REGISTERED PROFESSIONAL ENGINEER Dawit T Worku No. C60711 Exp. 12-31-14 CIVIL STATE OF CALIFORNIA

The State of California or its officers or agents shall not be responsible for the accuracy or completeness of electronic copies of this plan sheet.

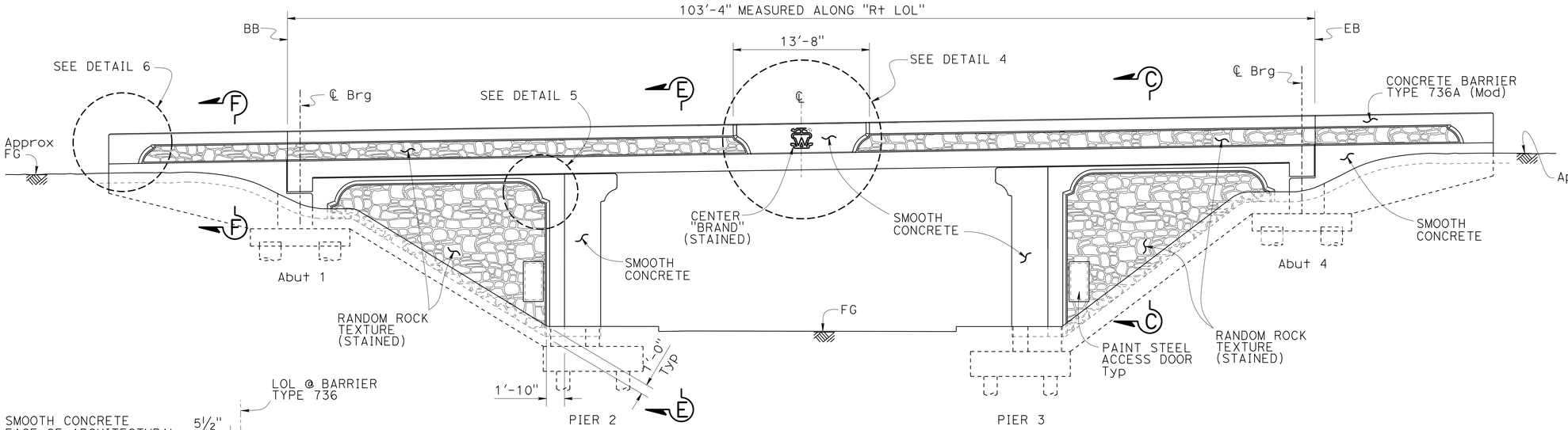

ELEVATION (RIGHT WIDEN)

NO SCALE

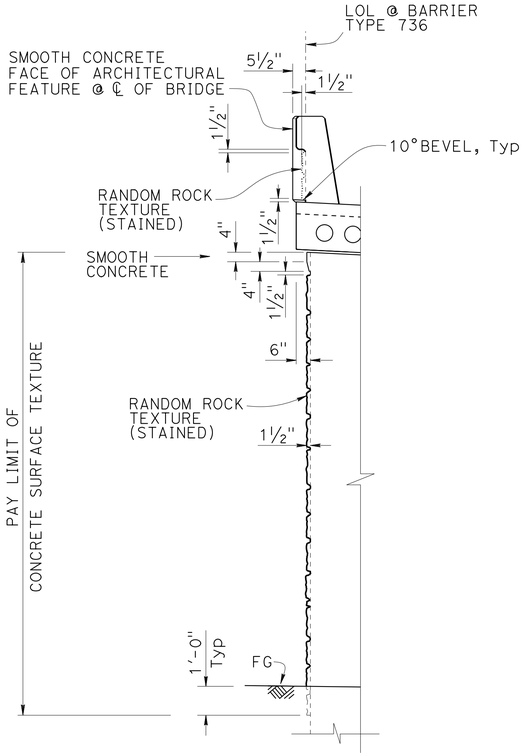

SECTION C-C

NO SCALE

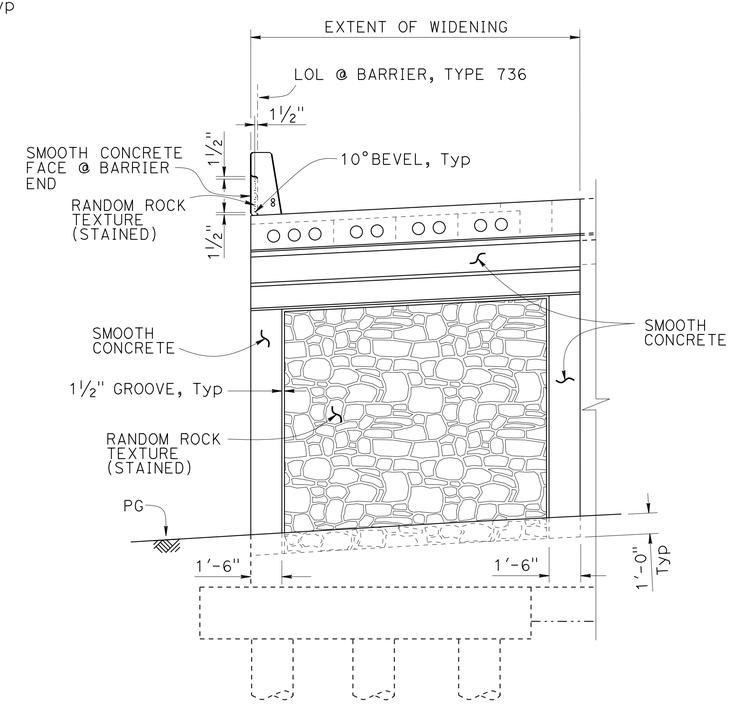

SECTION E-E

NO SCALE

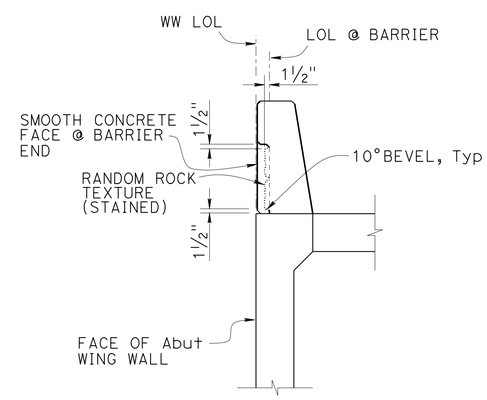

SECTION F-F

NO SCALE

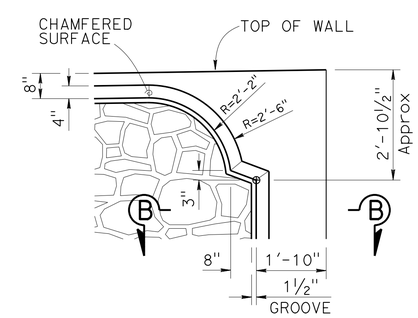

DETAIL 5

NO SCALE

NOTE:
THE CONTRACTOR SHALL VERIFY ALL CONTROLLING FIELD DIMENSIONS BEFORE ORDERING OR FABRICATING ANY MATERIAL.

	BY	CHECKED
DESIGN	VALERIE MOORE	HOMA IRANINEJADIAN
DETAILS	ANTONETTE L. ONG	SHARAREH BIKAEE
QUANTITIES	HOMA IRANINEJADIAN	BRIJESH PATEL

STATE OF CALIFORNIA
DEPARTMENT OF TRANSPORTATION

DIVISION OF ENGINEERING SERVICES
STRUCTURE DESIGN
DESIGN BRANCH 20

BRIDGE NO. 53-0870
POST MILE 40.46

VIA VERDE UNDERCROSSING (WIDEN)
ARCHITECTURAL TREATMENT (RIGHT WIDEN)

STRUCTURES DESIGN DETAIL SHEET (ENGLISH) (REV. 09-01-10)

ORIGINAL SCALE IN INCHES FOR REDUCED PLANS 0 1 2 3

UNIT: 3622
PROJECT NUMBER & PHASE: 0713000007-1
CONTRACT NO.: 07-1193U1

DISREGARD PRINTS BEARING EARLIER REVISION DATES

REVISION DATES: 03/05/14 05/28/14 06/03/14

SHEET 29 OF 35

FILE => 53-0870-x_aesth_Rw01.dgn

USERNAME => s125624 DATE PLOTTED => 18-MAY-2015 TIME PLOTTED => 14:08

DIST	COUNTY	ROUTE	POST MILES TOTAL PROJECT	SHEET No.	TOTAL SHEETS
07	LA	10	37.2/42.4	1692	2313

REGISTERED CIVIL ENGINEER — DATE 10/01/14

6-1-15
PLANS APPROVAL DATE

REGISTERED PROFESSIONAL ENGINEER — Dawit T Worku — No. C60711 — Exp. 12-31-14 — CIVIL — STATE OF CALIFORNIA

The State of California or its officers or agents shall not be responsible for the accuracy or completeness of electronic copies of this plan sheet.

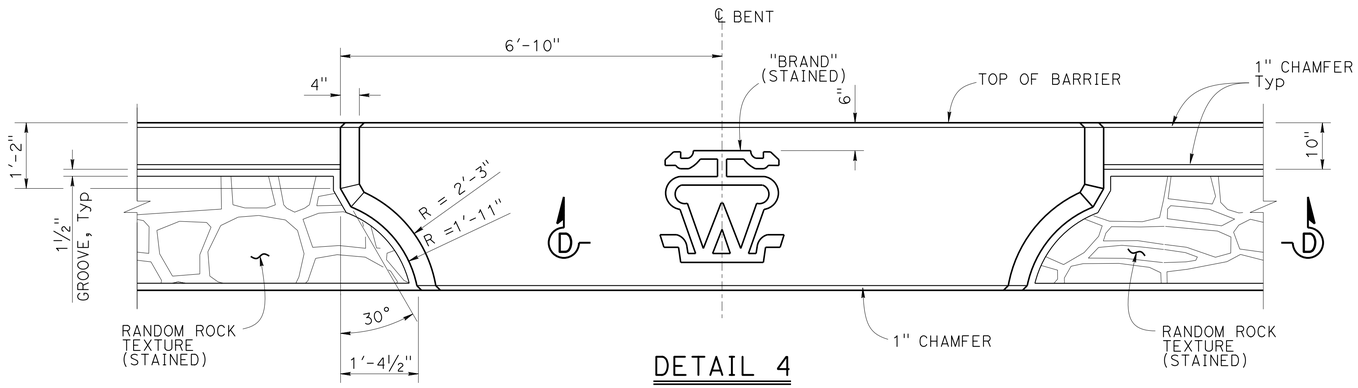

DETAIL 4
NO SCALE

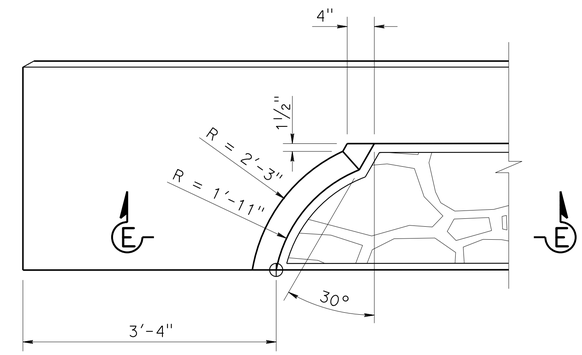

DETAIL 6-TYPICAL FOR BARRIER END
NO SCALE

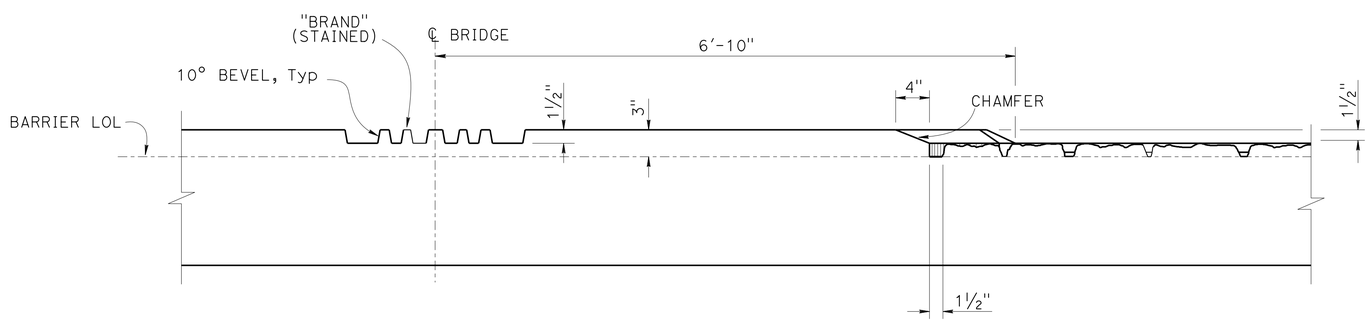

PARTIAL SECTION D-D
NO SCALE

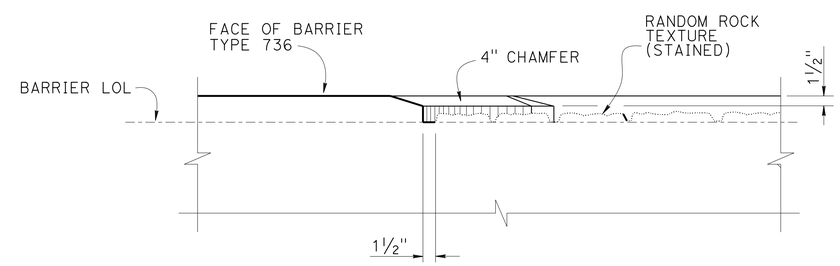

PARTIAL SECTION E-E
NO SCALE

NOTE:
THE CONTRACTOR SHALL VERIFY ALL CONTROLLING FIELD DIMENSIONS BEFORE ORDERING OR FABRICATING ANY MATERIAL.

	BY	CHECKED
DESIGN	VALERIE MOORE	HOMA IRANINEJADIAN
DETAILS	ANTONETTE L. ONG	SHARAREH BIKAEE
QUANTITIES	HOMA IRANINEJADIAN	BRIJESH PATEL

STATE OF CALIFORNIA
DEPARTMENT OF TRANSPORTATION

DIVISION OF ENGINEERING SERVICES
STRUCTURE DESIGN
DESIGN BRANCH 20

BRIDGE NO. 53-0870
POST MILE 40.46

VIA VERDE UNDERCROSSING (WIDEN)
ARCHITECTURAL TREATMENT DETAILS (RIGHT WIDEN)

STRUCTURES DESIGN DETAIL SHEET (ENGLISH) (REV. 09-01-10)

ORIGINAL SCALE IN INCHES FOR REDUCED PLANS 0 1 2 3

UNIT: 3622
PROJECT NUMBER & PHASE: 0713000007-1
CONTRACT NO.: 07-1193U1

DISREGARD PRINTS BEARING EARLIER REVISION DATES

REVISION DATES 01/08/14 02/06/14 05/28/14

SHEET 30 OF 35

FILE => 53-0870-x_aesth_Rwdt01.dgn

USERNAME => s125624 DATE PLOTTED => 18-MAY-2015 TIME PLOTTED => 14:08

DIST	COUNTY	ROUTE	POST MILES TOTAL PROJECT	SHEET No.	TOTAL SHEETS
07	LA	10	37.2/42.4	1693	2313

CERTIFIED ENGINEERING GEOLOGIST 2-4-14 DATE

6-1-15
PLANS APPROVAL DATE

PROFESSIONAL GEOLOGIST Michael A. Salisbury No. 2462 Exp. 2-28-15 CERTIFIED ENGINEERING GEOLOGIST STATE OF CALIFORNIA

The State of California or its officers or agents shall not be responsible for the accuracy or completeness of electronic copies of this plan sheet.

This LOTB sheet was prepared in accordance with the Caltrans Soil & Rock Logging, Classification, & Presentation Manual (2010 Edition).

See 2010 Standard Plans A10F and A10G for Soil Legend, and A10H for Rock Legend.

BENCH MARK

PRHV 10
Fd L&T with LA Co Eng Washr
162.0′ Lt Sta 2136+67.0
NAVD 88

SUHV 123
Fd PK N in Areal Target Via Verde
On-Ramp W/B 10
159.5 Lt Sta 2136+45.5
NAVD 88

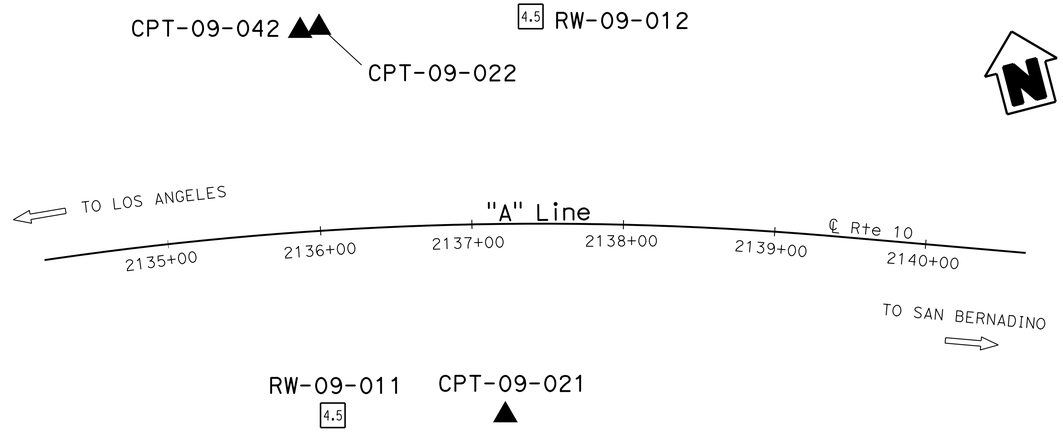

PLAN

1" = 50′

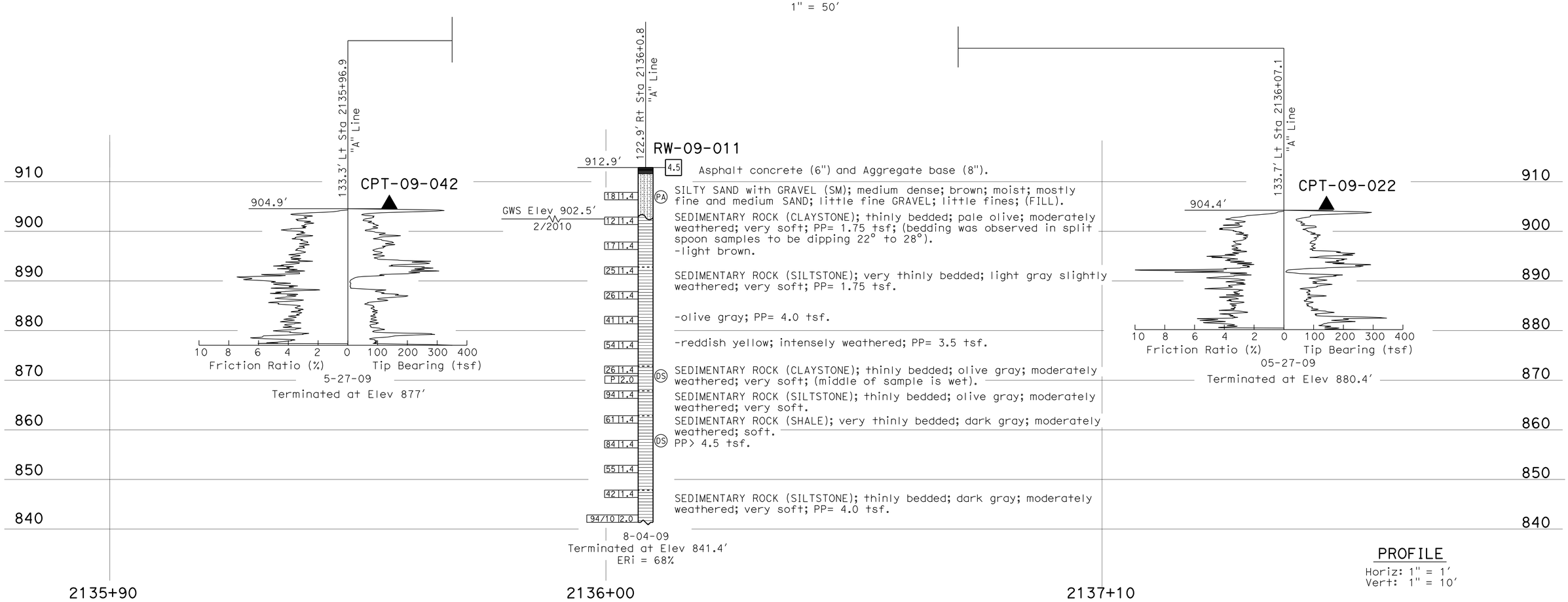

PROFILE

Horiz: 1" = 1′
Vert: 1" = 10′

ENGINEERING SERVICES	MATERIALS AND GEOTECHNICAL SERVICES	STATE OF CALIFORNIA DEPARTMENT OF TRANSPORTATION	DIVISION OF ENGINEERING SERVICES STRUCTURE DESIGN DESIGN BRANCH 20	BRIDGE NO. 53-0870 POST MILE 40.4/40.5	VIA VERDE UC WIDEN LOG OF TEST BORINGS 1 OF 5
FUNCTIONAL SUPERVISOR NAME: D-J. Jang	DRAWN BY: W. Tang 6/12, I.G-Remmen 12/13 CHECKED BY: H. Liu	FIELD INVESTIGATION BY: M. Salisbury			

OGS CIVIL LOG OF TEST BORINGS SHEET

ORIGINAL SCALE IN INCHES FOR REDUCED PLANS 0 1 2 3

UNIT: 3643
PROJECT NUMBER & PHASE: 0700000097-1 CONTRACT NO.: 07-1193U1

DISREGARD PRINTS BEARING EARLIER REVISION DATES

REVISION DATES 01/13/12 01/25/12 08/07/12 02/04/14 SHEET 31 OF 35

FILE => 53-0870-z-1tb01.dgn

USERNAME => s125624 DATE PLOTTED => 18-MAY-2015 TIME PLOTTED => 14:08

DIST	COUNTY	ROUTE	POST MILES TOTAL PROJECT	SHEET No.	TOTAL SHEETS
07	LA	10	37.2/42.4	1694	2313

CERTIFIED ENGINEERING GEOLOGIST — 2-4-14 DATE

6-1-15
PLANS APPROVAL DATE

PROFESSIONAL GEOLOGIST — Michael Salisbury No. 2462 Exp. 2-28-13 — CERTIFIED ENGINEERING GEOLOGIST — STATE OF CALIFORNIA

The State of California or its officers or agents shall not be responsible for the accuracy or completeness of electronic copies of this plan sheet.

This LOTB sheet was prepared in accordance with the Caltrans Soil & Rock Logging, Classification, & Presentation Manual (2010 Edition).
See 2010 Standard Plans A10F and A10G for Soil Legend, and A10H for Rock Legend.

FOR PLAN VIEW, SEE
"LOG OF TEST BORINGS 1 OF 5"

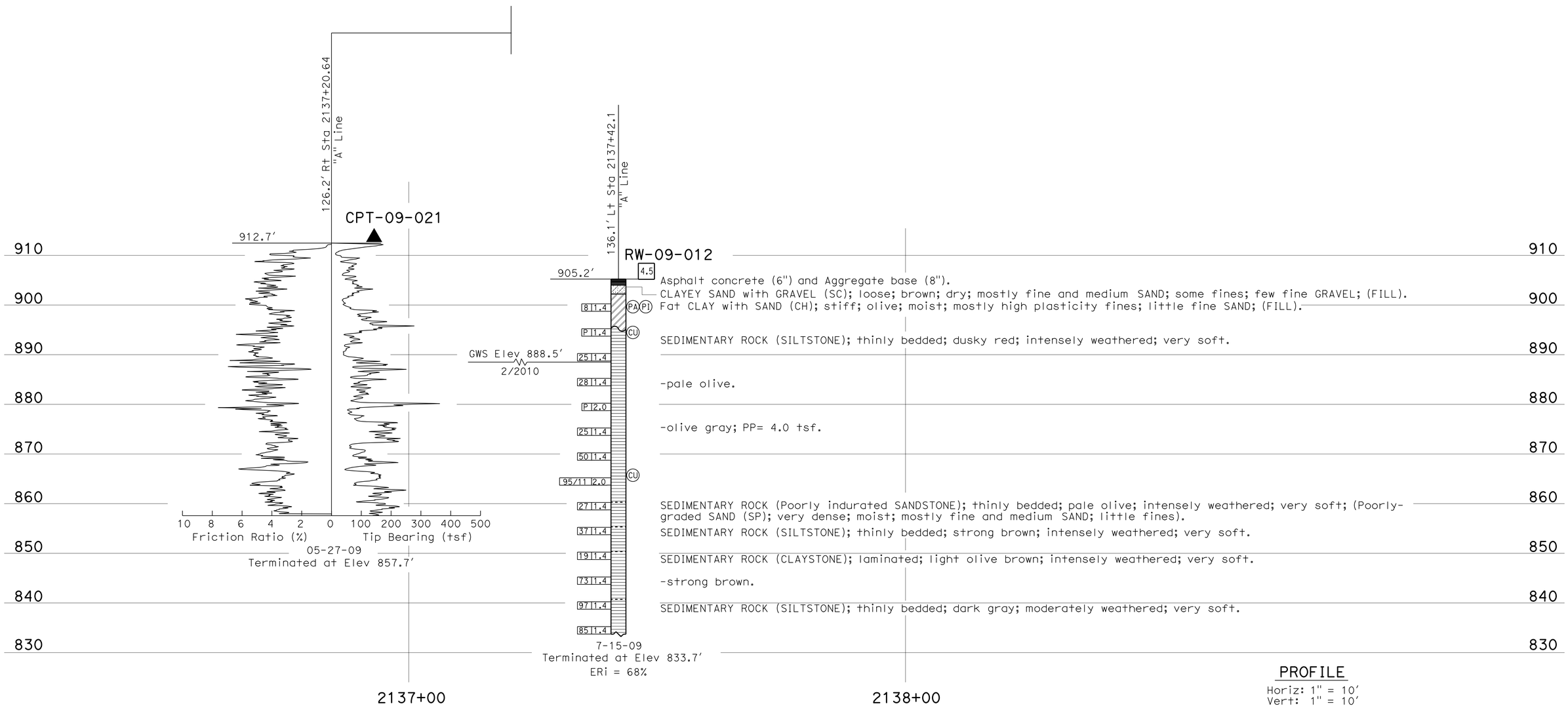

ENGINEERING SERVICES	MATERIALS AND GEOTECHNICAL SERVICES	STATE OF CALIFORNIA DEPARTMENT OF TRANSPORTATION	DIVISION OF ENGINEERING SERVICES STRUCTURE DESIGN DESIGN BRANCH 20	BRIDGE NO. 53-0870 POST MILE 40.4/40.5	VIA VERDE UC WIDEN LOG OF TEST BORINGS 2 OF 5
FUNCTIONAL SUPERVISOR NAME: D-J. Jang	DRAWN BY: W. Tang 06/12 CHECKED BY: H. Liu	FIELD INVESTIGATION BY: M. Salisbury			

OGS CIVIL LOG OF TEST BORINGS SHEET — ORIGINAL SCALE IN INCHES FOR REDUCED PLANS 0 1 2 3

UNIT: 3643
PROJECT NUMBER & PHASE: 0700000097-1 CONTRACT NO.: 07-1193U1

DISREGARD PRINTS BEARING EARLIER REVISION DATES → REVISION DATES 07/13/12 08/07/12 01/13/14 02/04/14 — SHEET 32 OF 35

FILE => 53-0870-z-lltb02.dgn

USERNAME => s125624 DATE PLOTTED => 18-MAY-2015 TIME PLOTTED => 14:08

DIST.	COUNTY	ROUTE	POST MILES—TOTAL PROJECT	Sheet No.	TOTAL SHEETS
07	LA	10	33.2/40.9	629	749

DESIGN SECTION SUPERVISOR — REGISTERED CIVIL ENGINEER NO. 21180

DATE APPROVED November 29, 1971

DIVISION OF ENGINEERING SERVICES - MATERIALS AND GEOTECHNICAL SERVICES

As-Built Log of Test Borings sheet is considered an informational document only. As such, the State of California registration seal with signature, license number and registration certificate expiration date confirm that this is a true and accurate copy of the original document. It does not attest to the accuracy or validity of the information contained in the original document. This drawing is available and presented only for the convenience of any bidder, contractor or other interested party.

DIST.	COUNTY	ROUTE	POST MILE-TOTAL PROJECT	Sheet No.	Total Sheets
07	LA	10	37.2/42.4	1695	2313

PROFESSIONAL GEOLOGIST — DATE 01/13/2014

PROFESSIONAL GEOLOGIST — Michael A. Salisbury — No. 2462 — Exp. 2-28-15 — CERTIFIED ENGINEERING GEOLOGIST — STATE OF CALIFORNIA

VIA VERDE UC WIDEN

LOG OF TEST BORINGS

3 OF 5

UNIT: 3643 — CONTRACT No. 07-1193U1 — BRIDGE No. 53-0870

PROJ. No. & PHASE: 07130000071

AS-BUILT VERT DATUM: N/A — CONVERSION: N/A — Sheet ___ of ___

NOTE: A COPY OF THIS LOG OF TEST BORINGS IS AVAILABLE AT OFFICE OF STRUCTURE MAINTENANCE AND INVESTIGATIONS, SACRAMENTO, CALIFORNIA

TO ACCOMPANY PLANS DATED 6-1-15

LEGEND OF BORING OPERATIONS

- PENETROMETER
- 2¼" CORE PENETROMETER
- SAMPLER BORING (DRY)
- ROTARY BORING (WET)
- AUGER BORING (DRY)
- JET BORING
- CORE BORING
- TEST PIT

Top Hole El. — Blows per foot (Blows per foot 2 hammer only) — Pulled pipe — Sample taken — Date of boring — Description of material — Size of complete casing — Casing driven — Blows per foot (Blows per foot 2 hammer only) — Using a 140 lb. hammer falling 30 in. (or as noted) — Unconfined compressive strength (tsf) — Unconfined compressive strength (tsf) — Shear strength (tsf) — Description of material — Unit weight (lb/cu ft) — Moisture content (%) — Liquid limit — Plastic limit — Plasticity index — Consolidation test — Comfortable material change — Established material change — Uncomfortable material change — Water level — Date — Ground surface — Elev. — Date measured — Graphic representation of driving rate — Penetrometer — Penetrometer — Blows per foot — Penetrometer — Blows per foot — Penetrometer — Blows per foot

I-010-V35U38

FED. ROAD DIV. NO.	STATE	PROJ. NO.	FISCAL YEAR	SHEET NO.	TOTAL SHEETS
7	CAL.			86	86

DIST.	COUNTY	ROUTE	SECTION	SHEET NO.	TOTAL SHEETS
VII	LA	26	G	9	9

BRIDGE ENGINEER — CIVIL ENGINEER—LICENSE 8888

DATE APPROVED: 1961

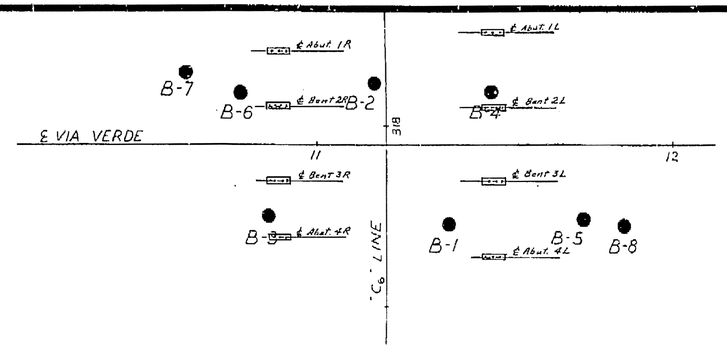

BENCH MARKS

~~T.B.M. - "C6" Line Sta. 318+05.93 Elev. 903.11~~

~~B.M. - Pt. on ℄ Via Verde (existing) @ Sta. 10+51 Elev. 909.73~~

Reference L 72.1
T.B.M. "C6" line Sta. 293+50 Elev. 834.14

T.B.M. - "C6" line Sta. 333+10 Elev. 957.31

DIVISION OF ENGINEERING SERVICES - MATERIALS AND GEOTECHNICAL SERVICES

As-Built Log of Test Borings sheet is considered an informational document only. As such, the State of California registration seal with signature, license number and registration certificate expiration date confirm that this is a true and accurate copy of the original document. It does not attest to the accuracy or validity of the information contained in the original document. This drawing is available and presented only for the convenience of any bidder, contractor or other interested party.

PROFESSIONAL GEOLOGIST — Michael A. Salisbury — No. 2462 — Exp. 2-28-15 — CERTIFIED ENGINEERING GEOLOGIST — STATE OF CALIFORNIA

DIST.	COUNTY	ROUTE	POST MILE-TOTAL PROJECT	Sheet No.	Total Sheets
07	LA	10	37.2/42.4	1696	2313

PROFESSIONAL GEOLOGIST — DATE 01/18/2014

VIA VERDE UC WIDEN

LOG OF TEST BORINGS 4 OF 5

UNIT: 3643	CONTRACT No.	BRIDGE No.
PROJ. No. & PHASE: 07130000071	07-1193U1	53-0870

AS-BUILT VERT DATUM: N/A — CONVERSION: N/A — Sheet of

NOTE: A COPY OF THIS LOG OF TEST BORINGS IS AVAILABLE AT OFFICE OF STRUCTURE MAINTENANCE AND INVESTIGATIONS, SACRAMENTO, CALIFORNIA

TO ACCOMPANY PLANS DATED 6-1-15

Design Pile Loading: 45 Ton
Type Pile: Cast-in-drill-hole
Diameter: 18"
Total No. Piles: 22 ea.
"As Built" Linear Ft.: 925.7 LF
"Plans" Linear Ft.: 752.0 LF
Remarks: Pile closest to ℄ freeway in Bent 3 left was eliminated. Existing pile was used in its place. Small rocks @ Elev. 892± in Abut. 4 Left. Concrete & re-steel found in Abut. 1 left Elev. 915±

AS BUILT PLANS
Contract No. 63-7V13C2
Date Completed
Document No. 70002317

63-7V13C2-I
3-14-62

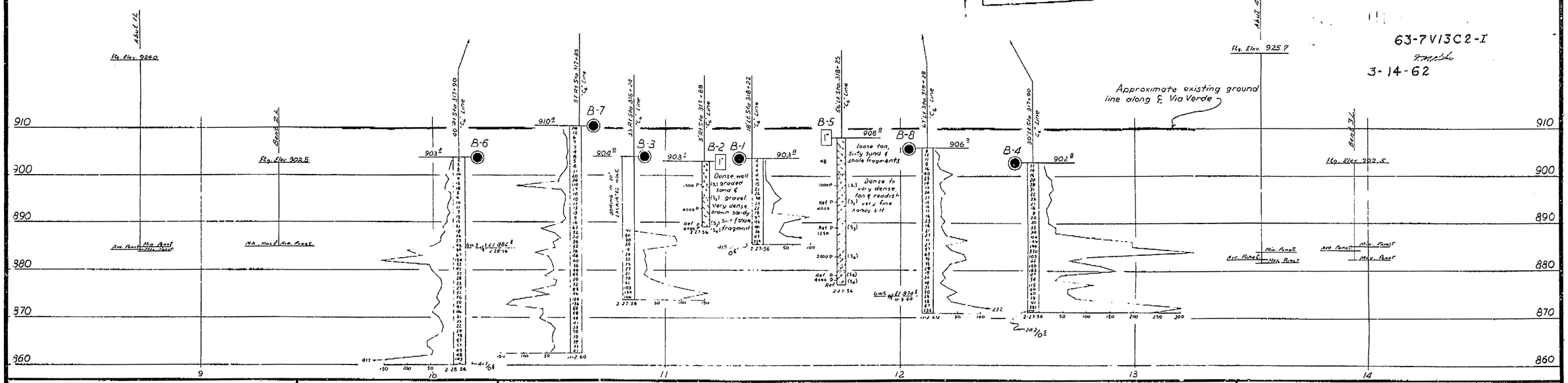

CLASSIFICATION OF MATERIAL BASED ON STANDARD GRADE SIZE LIMITS

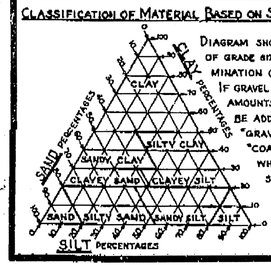

DIAGRAM SHOWING THE BASIS FOR ESTIMATES OF GRADE SIZE DISTRIBUTION USED IN DETERMINATION OF CLASS NAMES.
IF GRAVEL IS PRESENT IN APPRECIABLE AMOUNTS THE TERM "GRAVELLY" MAY BE ADDED TO THE CLASS NAME, VIZ. "GRAVELLY SAND". THE TERMS "COARSE", "MEDIUM" AND "FINE" WHEN USED TO DESCRIBE SAND, SILT AND GRAVEL REFER TO STANDARD GRADE SIZE LIMITS.

LEGEND OF EARTH MATERIALS

- GRAVEL
- SAND
- SILT
- CLAY
- SANDY CLAY OR CLAYEY SAND
- SANDY SILT OR SILTY SAND
- SILTY CLAY OR CLAYEY SILT
- PEAT AND/OR ORGANIC MATTER
- FILL MATERIAL
- IGNEOUS ROCK
- SEDIMENTARY ROCK
- METAMORPHIC ROCK

LEGEND OF BORING OPERATIONS

- PLAN OF ANY BORING
- PENETROMETER
- 2½" CONE PENETROMETER
- SAMPLER BORING (DRY)
- ROTARY BORING (WET)
- AUGER BORING (DRY)
- JET BORING
- CORE BORING
- TEST PIT

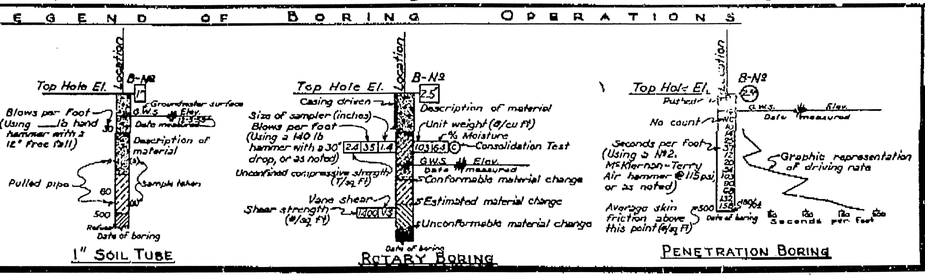

NOTES

~~The estimated classification is directed to Section 9, Article (a) of the Standard Specifications and to the Special Provisions accompanying this set of plans.~~

Classification of earth material as shown on this sheet is based upon field inspection and is not to be construed to imply mechanical analysis.

STATE OF CALIFORNIA
DEPARTMENT OF PUBLIC WORKS
DIVISION OF HIGHWAYS

VIA VERDE UNDERCROSSING WIDENING

LOG OF TEST BORINGS

SCALE Horiz.: 1"=20' Vert.: 1"=10' — BRIDGE 53-870 — FILE — DRAWING C-53870-9

PREL. DRAWING NO. P-53870-8 2/9/61

Bridge Dept.

BRIDGE DEPARTMENT

CHECKED — Approval Recommended by — Approved — Bridge Engineer

98

FED. ROAD DIST. NO.	STATE	FISCAL YEAR	SHEET NO.	TOTAL SHEETS
2	CAL	IN-211(34)	128	129

Dept.	Company	Sheet No.	Total Sheets
VII	LA	8	9

DECEMBER 27 1954

B.M. 50-C-43 & 27-C-37
1½" x ¼" IRON STK FLUSH WITH GROUND SURFACE & IN A ROCK CAIRN 76' LT LA-26-C STA. 311+31.
ELEV. 918.29

B.M 51-C-43
LEAD & TACK IN A PARTIALLY BURIED BOULDER 25'± N. OF FENCE LINE & ON TOP OF A SMALL KNOLL IN A PASTURE 80.5' LT. LA-26-C STA. 315+62.
ELEV. 922.17

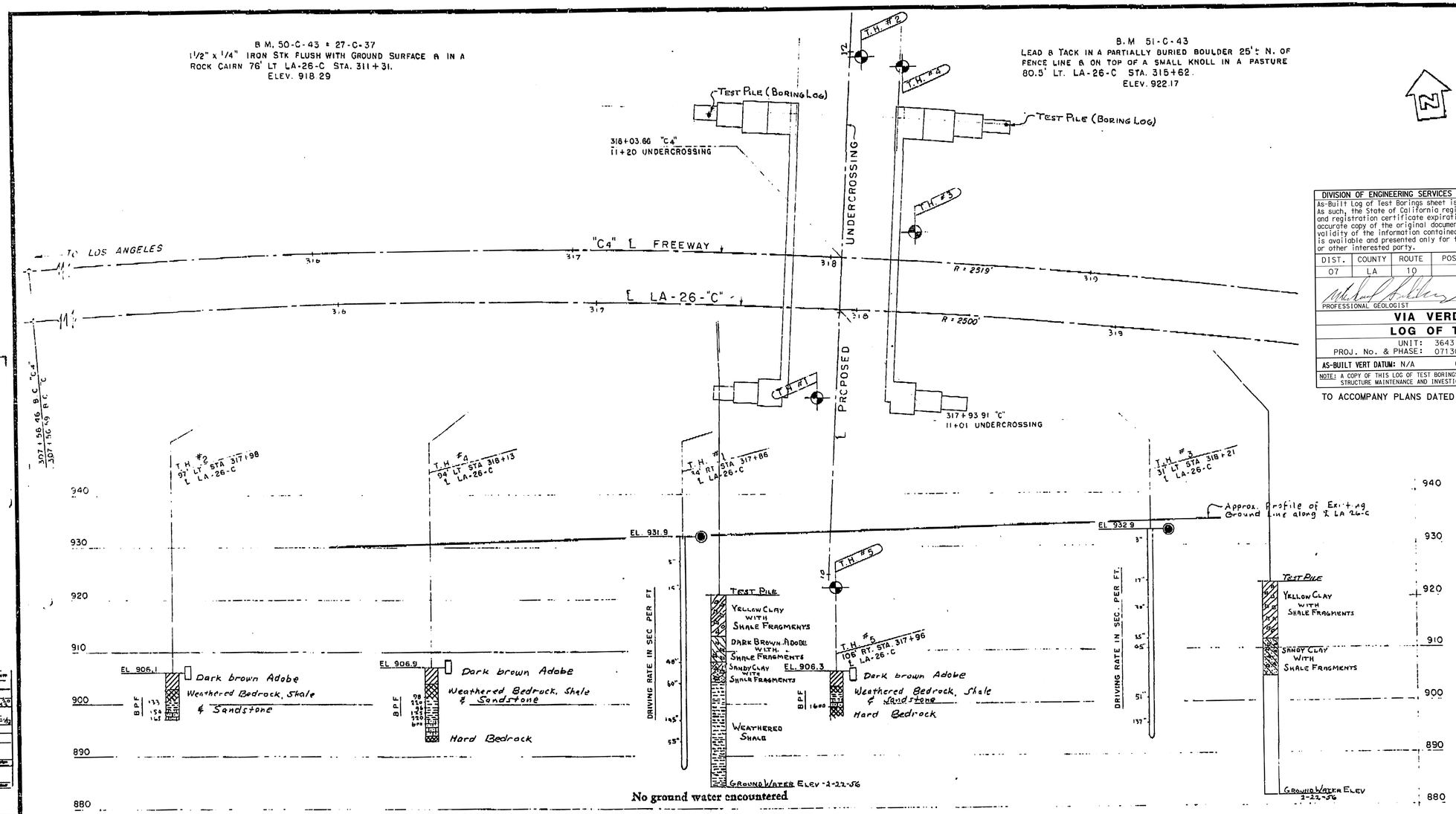

No ground water encountered

Test Boring By Bridge Dept.

Core Drill, April 1952

NOTE: Blows per foot are those required to drive a 1 inch test pipe 0.6 foot with a 32 # drop hammer from a free fall of 12 inches.

AS BUILT
CORRECTIONS BY J.B. Blume
DATE 3/29/57
55-70L43-F

DIVISION OF ENGINEERING SERVICES - MATERIALS AND GEOTECHNICAL SERVICES					
As-Built Log of Test Borings sheet is considered an informational document only. As such, the State of California registration seal with signature, license number and registration certificate expiration date confirm that this is a true and accurate copy of the original document. It does not attest to the accuracy or validity of the information contained in the original document. This drawing is available and presented only for the convenience of any bidder, contractor or other interested party.					
DIST.	COUNTY	ROUTE	POST MILE-TOTAL PROJECT	Sheet No.	Total Sheets
07	LA	10	37.2/42.4	1697	2313
PROFESSIONAL GEOLOGIST			01/13/2014 DATE		
VIA VERDE UC WIDEN					
LOG OF TEST BORINGS				5 OF 5	
UNIT: 3643			CONTRACT No. 07-1193U1	BRIDGE No. 53-0870	
PROJ. No. & PHASE: 07130000071					
AS-BUILT VERT DATUM: N/A		CONVERSION: N/A		Sheet	of
NOTE: A COPY OF THIS LOG OF TEST BORINGS IS AVAILABLE AT OFFICE OF STRUCTURE MAINTENANCE AND INVESTIGATIONS, SACRAMENTO, CALIFORNIA					

TO ACCOMPANY PLANS DATED 6-1-15

PROFESSIONAL GEOLOGIST Michael A. Salisbury No. 2462 Exp. 2-28-15 CERTIFIED ENGINEERING GEOLOGIST STATE OF CALIFORNIA

CLASSIFICATION OF MATERIAL BASED ON STANDARD GRADE SIZE LIMITS

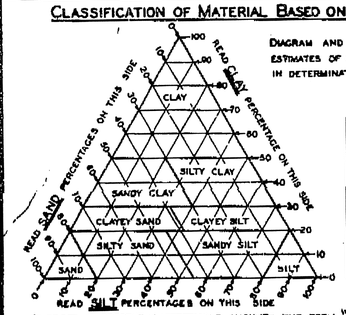

DIAGRAM AND TABLE SHOWING THE BASIS FOR ESTIMATES OF GRADE SIZE DISTRIBUTION USED IN DETERMINATION OF CLASS NAMES.

GROUPING USED IN TRIANGULAR CLASSIFICATION			
CLASS NAME	PERCENTAGE OF SIZES PRESENT		
	SAND	SILT	CLAY
SAND	80-100	0-20	0-20
SILTY SAND	45-80	0-55	0-20
SANDY SILT	0-45	35-80	0-20
SILT	0-20	80-100	0-20
CLAYEY SAND	35-80	0-45	20-35
CLAYEY SILT	0-35	55-80	20-60
SANDY CLAY	30-70	0-40	30-60
SILTY CLAY	0-30	40-70	30-60
CLAY	0-50	0-50	50-100

IF GRAVEL IS PRESENT IN APPRECIABLE AMOUNTS THE TERM "GRAVELLY" MAY BE ADDED TO THE CLASS NAME, VIZ. "GRAVELLY SAND". THE TERMS "COARSE", "MEDIUM" AND "FINE" WHEN USED TO DESCRIBE GRAVEL, SAND AND SILT REFER TO STANDARD GRADE SIZE LIMITS.

LEGEND OF BORING OPERATIONS

- PLAN OF ANY BORING
- 1" SAMPLER BORING
- ROTARY WASH BORING
- 1" CLOSED SAMPLER DRIVEN
- CORE BORING
- 2½" PENETROMETER DRIVEN
- 1⅜" SAMPLER BORING
- 2"TO5" AUGER BORING
- 6"TO20" AUGER BORING
- CASING DRIVEN
- JET BORING
- (S) SAMPLE TAKEN
- 1⅜" A-ROD DRIVEN

THE APPROPRIATE BORING SYMBOLS DESIGNATING THE METHOD OF OPERATION ARE SHOWN AT THE UPPER RIGHT-HAND CORNER OF THE RESPECTIVE BORING. TOOL CHANGES DURING THE BORING OPERATION SYMBOLS ARE SHOWN AT THE POINT OF CHANGE.

LEGEND OF EARTH MATERIALS

- GRAVEL— G
- SAND— S
- SILT— SI
- CLAY— C
- SILTY SAND— SI S
- CLAYEY SAND— C S
- SANDY SILT— S SI
- CLAYEY SILT— C SI
- SANDY CLAY— SC
- SILTY CLAY— SI C
- PEAT and/or ORGANIC CLAY— O
- SANDSTONE— SS
- SHALE— SH
- BROKEN ROCK (FRAGMENTS)— BR
- ROCK— R
- FILL MATERIAL

ABBREVIATIONS

EL. 69.4	ELEVATION OF GROUND AT TEST HOLE
bpf	BLOWS PER FOOT—(SEE NOTE ABOVE)
P	PULLED PIPE
M	MOISTURE AS % DRY WEIGHT
EL. 44.3 8-12-49	ELEVATION OF GROUND WATER AND DATE

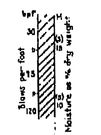

NOTES

THE CONTRACTOR'S ATTENTION IS DIRECTED TO SECTION 2, ARTICLE (c) OF THE STANDARD SPECIFICATIONS AND TO THE SPECIAL PROVISIONS ACCOMPANYING THIS SET OF PLANS.

CLASSIFICATION OF EARTH MATERIAL AS SHOWN ON THIS SHEET IS BASED UPON FIELD INSPECTION AND IS NOT TO BE CONSTRUED TO IMPLY MECHANICAL ANALYSIS.

Via Verde Undercrossing	
LOG OF TEST BORINGS	
SCALE HORIZ. 1" = 20' VERT. 1" = 10'	FILE NO.
BRIDGE No. 53-870	DRAWING NO. 0-8

PREL. DRAWING NO. P-3050 42

BRIDGE DEPARTMENT

STATE OF CALIFORNIA DEPARTMENT OF PUBLIC WORKS DIVISION OF HIGHWAYS

J.M. 5-5-57

M.S. 5/13/57

Bridge Engineer

125

DIST	COUNTY	ROUTE	POST MILES TOTAL PROJECT	SHEET No.	TOTAL SHEETS
07	LA	10	37.2/42.4	1698	2313

Dawit Tadelle Gebre 10/01/14
REGISTERED CIVIL ENGINEER DATE

6-1-15
PLANS APPROVAL DATE

REGISTERED PROFESSIONAL ENGINEER Dawit T Worku No. C60711 Exp. 12-31-14 CIVIL STATE OF CALIFORNIA

The State of California or its officers or agents shall not be responsible for the accuracy or completeness of electronic copies of this plan sheet.

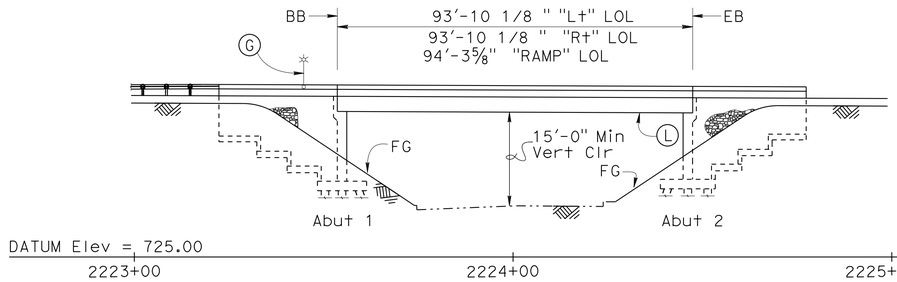

ELEVATION
1" = 20'-0"

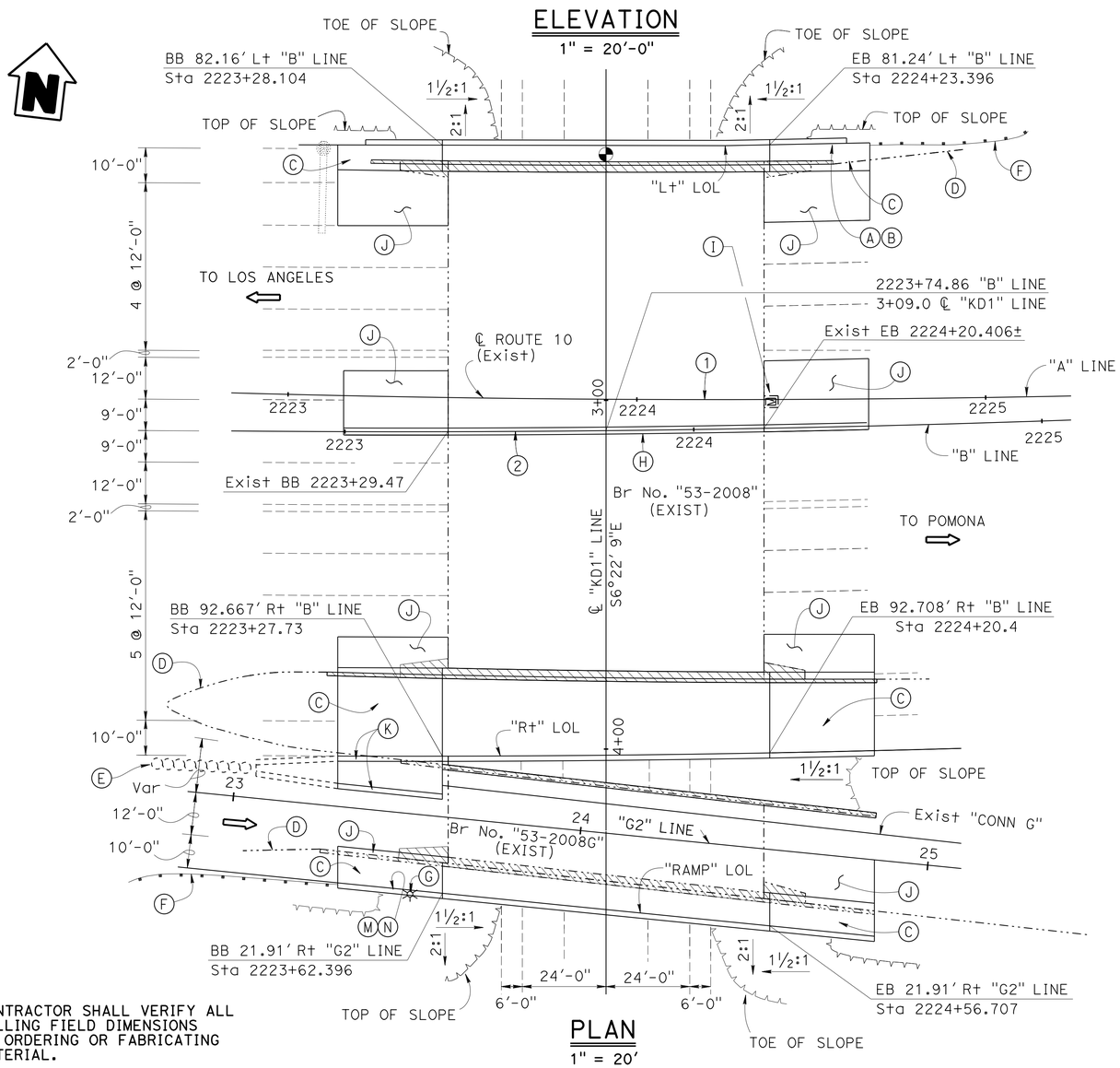

PLAN
1" = 20'

NOTE:
THE CONTRACTOR SHALL VERIFY ALL CONTROLLING FIELD DIMENSIONS BEFORE ORDERING OR FABRICATING ANY MATERIAL.

QUANTITIES

RAPID SETTING CONCRETE (PATCH)	1	CF
SALVAGE METAL BRIDGE RAILING	610	LF
REMOVE UNSOUND CONCRETE	1	CF
REFINISH BRIDGE DECK	182	SQFT
BRIDGE REMOVAL (PORTION), LOCATION E	LUMP	SUM
STRUCTURE EXCAVATION (BRIDGE)	942	CY
STRUCTURE BACKFILL (BRIDGE)	1,146	CY
JACKING SUPERSTRUCTURE	LUMP	SUM
FURNISH STEEL PILING (HP 14 X 89)	2,990	LF
DRIVE STEEL PILE (HP 14 X 89)	48	EA
PRESTRESSING CAST-IN-PLACE CONCRETE	LUMP	SUM
STRUCTURAL CONCRETE, BRIDGE FOOTING	255	CY
STRUCTURAL CONCRETE, BRIDGE	560	CY
AGGREGATE BASE (APPROACH SLAB)	14	CY
STRUCTURAL CONCRETE, APPROACH SLAB (TYPE N)	95	CY
STRUCTURAL CONCRETE, APPROACH SLAB (TYPE R)	133	CY
PAVING NOTCH EXTENSION	85	CF
CONCRETE SURFACE TEXTURE	995	SQFT
DRILL AND BOND DOWEL	417	LF
CLEAN EXPANSION JOINT	94	LF
JOINT SEAL (MR 1")	113	LF
JOINT SEAL (TYPE AL)	94	LF
BAR REINFORCING STEEL (BRIDGE)	130,179	LB
PREPARE AND STAIN CONCRETE	1,135	SQFT
CONCRETE BARRIER (TYPE 60GA MODIFIED)	154	LF
CONCRETE BARRIER (TYPE 736)	154	LF
CONCRETE BARRIER (TYPE 736 MODIFIED)	417	LF

NOTES:

- Left Widen shall be constructed above final grade to provide for required false work clearance and shall be lowered to grade upon removal of falsework
- For Typical Section, see "GENERAL PLAN NO. 2" sheet
- For Index to Plans and Piles details, see "INDEX TO PLANS " sheet

(A) Paint "Kellogg Drive UC"
(B) Paint Bridge No. "53-2008"
(C) Structure Approach Type N(30S)
(D) Remove MBGR, see "ROAD PLANS"
(E) Barrier and Crash Cushion, see "ROAD PLANS"
(F) Midwest Guardrail System, see "ROAD PLANS"
(G) Electrolier, see "ROAD PLANS"
(H) Concrete Barrier Type 60GA (Mod)
(I) Existing Storm Drain, see "ROAD PLANS"
(J) Structure Approch Type R(30D)
(K) Concrete Barrier Type 736, see "MISCELLANEOUS DETAILS" sheet
(L) Soffit Luminaire, see "ROAD PLANS"
(M) Paint "E10-S57 & N57 Connector"
(N) Paint Bridge No. "53-2008G"

CURVE DATA

LINE	R	Δ	T	L
1	5000.00	26°19'23"	1169.20	2297.12
2	5426.36	14°34'31"	693.95	1380.40

LEGEND:

- Indicates New Construction
- Indicates Existing Structure
- Bridge Removal (Portion)
- Indicates Point of Minimum Vertical Clearance
- Indicates Traffic Direction

HOWARD NG
DESIGN ENGINEER

	BY	CHECKED
DESIGN	MOHAMMAD MUQTADIR	FEIRUZ ABERRA
DETAILS	A. ONG/K. FARAHZADI	FEIRUZ ABERRA
QUANTITIES	MOHAMMAD MUQTADIR	FEIRUZ ABERRA

LOAD & RESISTANCE FACTOR DESIGN — LIVE LOADING: HL93 W/"LOW-BOY": PERMIT DESIGN VEHICLE
LAYOUT — BY MOHAMMAD MUQTADIR — CHECKED FEIRUZ ABERRA
SPECIFICATIONS — BY XIAODONG CHEN — PLANS AND SPECS COMPARED XIAODONG CHEN

ORIGINAL SCALE IN INCHES FOR REDUCED PLANS 0 1 2 3

STATE OF CALIFORNIA
DEPARTMENT OF TRANSPORTATION

DIVISION OF ENGINEERING SERVICES
STRUCTURE DESIGN
DESIGN BRANCH 20

BRIDGE NO. 53-2008 53-2008G
POST MILE 42.12

KELLOGG DRIVE UC (WIDEN)
GENERAL PLAN NO. 1

UNIT: 3622
PROJECT NUMBER & PHASE: 0713000007-4
CONTRACT NO.: 07-1193U1

DISREGARD PRINTS BEARING EARLIER REVISION DATES
REVISION DATES 09/09/14 06/25/14 06/27/14
SHEET 1 OF 31

USERNAME => s125624 DATE PLOTTED => 18-MAY-2015 TIME PLOTTED => 14:08

DIST	COUNTY	ROUTE	POST MILES TOTAL PROJECT	SHEET No.	TOTAL SHEETS
07	LA	10	37.2/42.4	1699	2313

REGISTERED CIVIL ENGINEER 10/01/14 DATE

6-1-15
PLANS APPROVAL DATE

REGISTERED PROFESSIONAL ENGINEER
Dawit T Worku
No. C60711
Exp. 12-31-14
CIVIL
STATE OF CALIFORNIA

The State of California or its officers or agents shall not be responsible for the accuracy or completeness of electronic copies of this plan sheet.

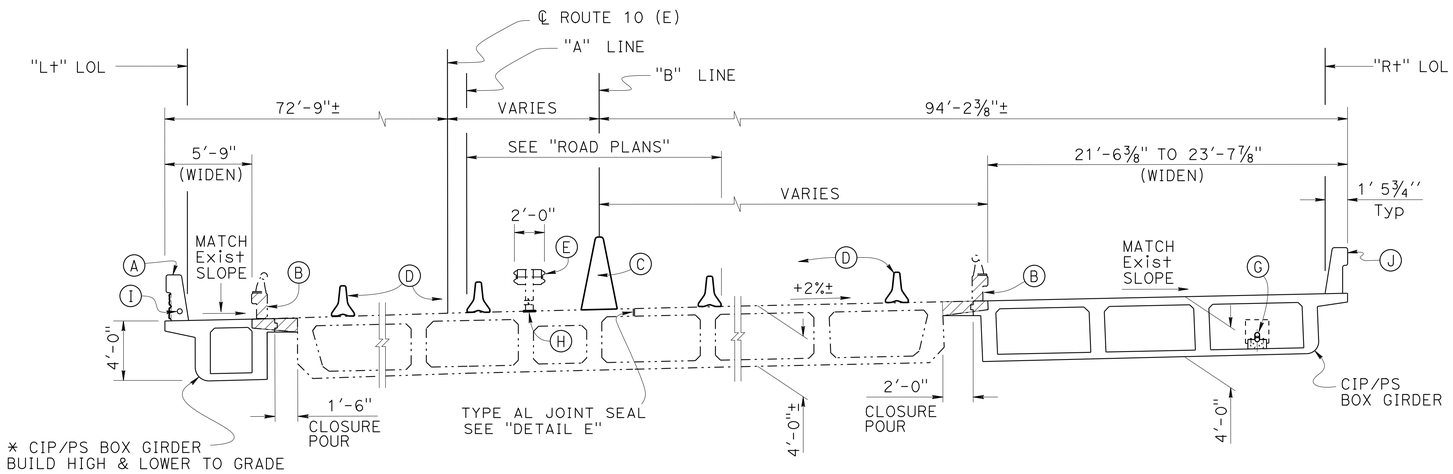

Br No. 53-2008

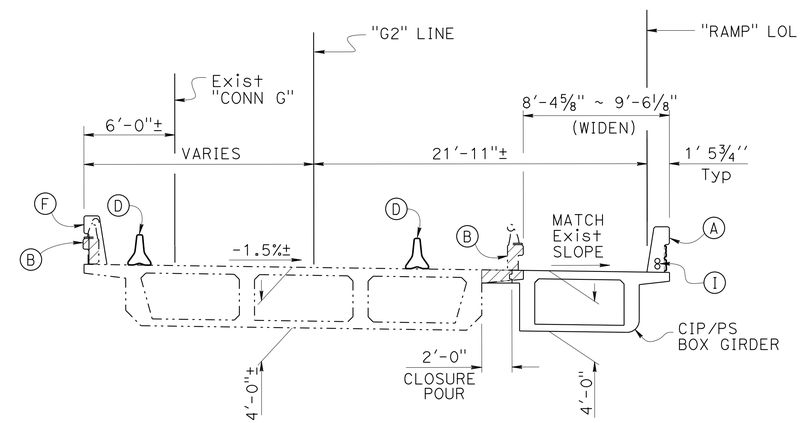

Br No. 53-2008G

TYPICAL SECTION

1" = 5'-0"

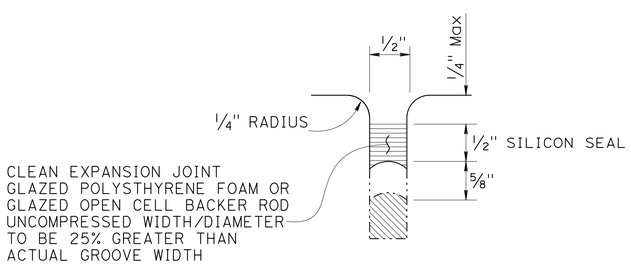

DETAIL E

NO SCALE

NOTES:

(A) Concrete Barrier Type 736 (Mod 4)

(B) Remove Barrier Railing (Type 9)
Salvage Metal Bridge Railing

(C) Concrete Barrier Type 60GA (Mod), see "MISCELLANEOUS DETAILS" sheet

(D) Temporary Railing (Type K), see "ROAD PLANS" and "MISCELLANEOUS DETAILS" sheet for Anchor details

(E) Remove MBGR, see "ROAD PLANS"

(F) Concrete Barrier Type 736 (Mod 3), see "MISCELLANEOUS DETAILS" sheet

(G) 2-3½" ø Communication Conduits, see "ROAD PLANS"

(H) Refinish Bridge Deck

(I) 2" ø Electrical Conduit, see "ROAD PLANS"

(J) Concrete Barrier Type 736

LEGEND:

——— Indicates New Construction

–·–·– Indicates Existing Structure

▨ Bridge Removal (Portion)

NOTE:
THE CONTRACTOR SHALL VERIFY ALL CONTROLLING FIELD DIMENSIONS BEFORE ORDERING OR FABRICATING ANY MATERIAL.

HOWARD NG
DESIGN ENGINEER

	BY	CHECKED
DESIGN	MOHAMMAD MUQTADIR	FEIRUZ ABERRA
DETAILS	A. ONG/K. FARAZHADI	FEIRUZ ABERRA
QUANTITIES	MOHAMMAD MUQTADIR	FEIRUZ ABERRA

LOAD & RESISTANCE FACTOR DESIGN — LIVE LOADING: HL93 W/"LOW-BOY": PERMIT DESIGN VEHICLE

	BY	CHECKED
LAYOUT	MOHAMMAD MUQTADIR	FEIRUZ ABERRA
SPECIFICATIONS	XIAODONG CHEN	PLANS AND SPECS COMPARED XIAODONG CHEN

ORIGINAL SCALE IN INCHES FOR REDUCED PLANS 0 1 2 3

STATE OF CALIFORNIA
DEPARTMENT OF TRANSPORTATION

DIVISION OF ENGINEERING SERVICES
STRUCTURE DESIGN
DESIGN BRANCH 20

BRIDGE NO. 53-2008 53-2008G
POST MILE 42.12

KELLOGG DRIVE UC (WIDEN)
GENERAL PLAN NO. 2

UNIT: 3622
PROJECT NUMBER & PHASE: 0713000007-4
CONTRACT NO.: 07-1193U1

DISREGARD PRINTS BEARING EARLIER REVISION DATES → 04/29/14 05/05/14 05/21/14

SHEET 2 OF 31

USERNAME => s125624 DATE PLOTTED => 18-MAY-2015 TIME PLOTTED => 14:08

STRUCTURES DESIGN GENERAL PLAN SHEET (ENGLISH) (REV.09-01-10)

FILE => 53-2008-a-gp02.dgn

DIST	COUNTY	ROUTE	POST MILES TOTAL PROJECT	SHEET No.	TOTAL SHEETS
07	LA	10	37.2/42.4	1700	2313

REGISTERED CIVIL ENGINEER 10/01/14 DATE

6-1-15
PLANS APPROVAL DATE

REGISTERED PROFESSIONAL ENGINEER Dawit T Worku No. C60711 Exp. 12-31-14 CIVIL STATE OF CALIFORNIA

The State of California or its officers or agents shall not be responsible for the accuracy or completeness of electronic copies of this plan sheet.

INDEX TO PLANS

NO.	SHEET NAME
1.	GENERAL PLAN NO. 1
2.	GENERAL PLAN NO. 2
3.	INDEX TO PLANS
4.	FOUNDATION PLAN
5.	CONCRETE REMOVAL DETAILS NO. 1
6.	CONCRETE REMOVAL DETAILS NO. 2
7.	ABUTMENT 1 LAYOUT
8.	ABUTMENT 2 LAYOUT
9.	ABUTMENT DETAILS NO. 1
10.	ABUTMENT DETAILS NO. 2
11.	ABUTMENT DETAILS NO. 3
12.	ABUTMENT DETAILS NO. 4
13.	RETAINING WALL LAYOUT NO. 1
14.	RETAINING WALL LAYOUT NO. 2
15.	BRIDGE JACKING DETAILS (LEFT WIDEN)
16.	TYPICAL SECTION
17.	GIRDER LAYOUT NO. 1
18.	GIRDER LAYOUT NO. 2
19.	GIRDER REINFORCEMENT NO. 1
20.	GIRDER REINFORCEMENT NO. 2
21.	MISCELLANEOUS DETAILS
22.	APPROACH SLAB LAYOUT
23.	STRUCTURE APPROACH DRAINAGE DETAILS
24.	STRUCTURE APPROACH TYPE N(30S)
25.	STRUCTURE APPROACH TYPE R(30D)
26.	ARCHITECTURAL TREATMENT
27.	ARCHITECTURAL TREATMENT DETAILS
28.	LOG OF TEST BORINGS 1 OF 4
29.	LOG OF TEST BORINGS 2 OF 4
30.	LOG OF TEST BORINGS 3 OF 4
31.	LOG OF TEST BORINGS 4 OF 4

GENERAL NOTES

LOAD AND RESISTANCE FACTOR DESIGN

DESIGN: AASHTO LRFD BRIDGE DESIGN SPECIFICATIONS, 4th Edition dated with the Caltrans Amendments, preface dated November 2011

SEISMIC DESIGN: Caltrans Seismic Design Criteria (SDC) version 1.6 dated November 2010

DEAD LOAD: Includes 35 psf for future wearing surface

LIVE LOAD: HL-93 and permit design Load

SEISMIC LOADING: Soil Profile: Shear Wave Velocity of top 100 ft of Soil
V_{S30} = 290 m/sec
Moment Magnitude M_{max} = 6.9
Peak Ground Acceleration = 0.64 g

REINFORCED CONCRETE: f_y = 60 ksi (Except as shown on Concrete Strength and Type Limits Diagram)
f'_c = 3.6 ksi
n = 8

PRESTRESSED CONCRETE: See "PRESTRESSING NOTES" on "GIRDER LAYOUT No. 1" and "GIRDER LAYOUT No. 2" sheets

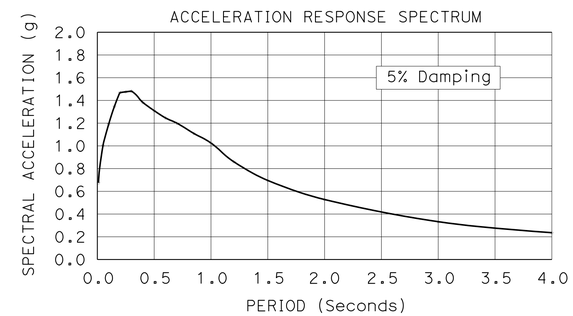

MODIFIED ARS CURVE

STANDARD PLANS 2010

A10A	ABBREVIATIONS (SHEET 1 OF 2)
RSP A10B	ABBREVIATIONS (SHEET 2 OF 2)
A10C	LINES AND SYMBOLS (SHEET 1 OF 3)
A10D	LINES AND SYMBOLS (SHEET 2 OF 3)
A10E	LINES AND SYMBOLS (SHEET 3 OF 3)
A10F	LEGEND - SOIL (SHEET 1 OF 2)
A10G	LEGEND - SOIL (SHEET 2 OF 2)
A10H	LEGEND - ROCK
A62B	LIMITS OF PAYMENT FOR EXCAVATION AND BACKFILL BRIDGE SURCHARGE AND WALL
A62C	LIMITS OF PAYMENT FOR EXCAVATION AND BACKFILL BRIDGE
A76A	CONCRETE BARRIER TYPE 60
A76D	CONCRETE BARRIER TYPE 60G
B0-3	BRIDGE DETAILS
B0-5	BRIDGE DETAILS
B0-13	BRIDGE DETAILS
RSP B3-1A	RETAINING WALL TYPE 1 (CASE 1)
RSP B3-5	RETAINING WALL DETAILS NO. 1
B6-21	JOINT SEALS (MAXIMUM MOVEMENT RATING = 2")
B7-1	BOX GIRDER DETAILS
B7-10	UTILITY OPENING BOX GIRDER
B8-5	CAST IN PLACE PRESTRESSED GIRDER DETAILS
RSP B11-56	CONCRETE BARRIER TYE 736
B14-3	COMMUNICATION AND SPRINKLER CONTROL CONDUITS (CONDUIT LESS THAN 4")

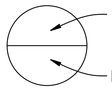

NOTE:
THE CONTRACTOR SHALL VERIFY ALL CONTROLLING FIELD DIMENSIONS BEFORE ORDERING OR FABRICATING ANY MATERIAL.

PILE DATA TABLE

SUPPORT LOCATION	PILE TYPE	NOMINAL RESISTANCE (Kps)		DESIGN TIP Elev (ft)	SPECIFIC TIP Elev (ft)	NOMINAL DRIVING RESISTANCE REQUIRED (Kips)
		COMPRESSION	TENSION			
Abut 1 LEFT WIDEN	HP 14X89	280	0	704(a) 722(d)	704	280
Abut 1 RIGHT WIDEN	HP 14X89	380	0	675(a) 719(d)	675	380
Abut 1 RAMP WIDEN	HP 14X89	320	0	682(a) 718(d)	682	320
Abut 2 LEFT WIDEN	HP 14X89	260	0	706(a) 723(d)	706	260
Abut 2 RIGHT WIDEN	HP 14X89	300	0	683(a) 719(d)	683	300
Abut 2 RAMP WIDEN	HP 14X89	320	0	682(a) 719(d)	682	320

NOTES:
1. Design Tip Elevations are controlled by:
   (a) Compression (d) Lateral Load
2. The Specified Tip Elevation shall not be raised Above Design Tip Elevations for Lateral

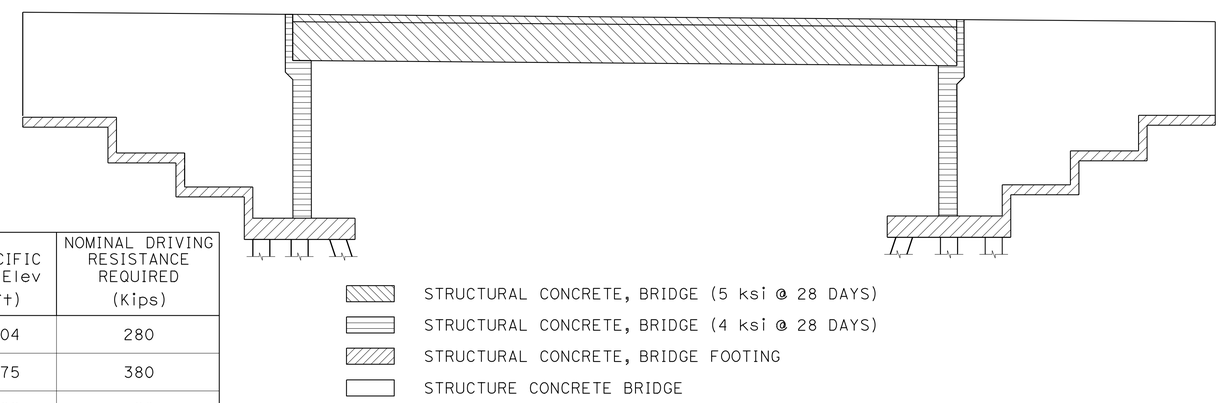

CONCRETE STRENGTH AND TYPE LIMITS

NO SCALE

	BY	CHECKED
DESIGN	MOHAMMAD MUQTADIR	FEIRUZ ABERRA
DETAILS	K. FARAZHI/A. ONG	FEIRUZ ABERRA
QUANTITIES	MOHAMMAD MUQTADIR	FEIRUZ ABERRA

STATE OF CALIFORNIA
DEPARTMENT OF TRANSPORTATION

DIVISION OF ENGINEERING SERVICES
STRUCTURE DESIGN
DESIGN BRANCH 20

BRIDGE NO. 53-2008 53-2008G
POST MILE 42.12

KELLOGG DRIVE UC (WIDEN)
INDEX TO PLANS

STRUCTURES DESIGN DETAIL SHEET (ENGLISH) (REV. 09-01-10)

ORIGINAL SCALE IN INCHES FOR REDUCED PLANS 0 1 2 3

UNIT: 3622
PROJECT NUMBER & PHASE: 0713000007-1 CONTRACT NO.: 07-1193U1

DISREGARD PRINTS BEARING EARLIER REVISION DATES

REVISION DATES 01/22/14 05/27/14 06/03/14

SHEET 3 OF 31

FILE => 53-2008-a-itp.dgn

USERNAME => s125624 DATE PLOTTED => 18-MAY-2015 TIME PLOTTED => 14:08