Dist	COUNTY	LOCATION CODE	POST MILES TOTAL PROJECT	SHEET No.	TOTAL SHEETS
07	LA	5722		1	7

STATE OF CALIFORNIA

DEPARTMENT OF TRANSPORTATION

PROJECT PLANS FOR BUILDING CONSTRUCTION

IN LOS ANGELES COUNTY
IN VALENCIA
AT THE NEWHALL MAINTENANCE STATION
AT 28820 NORTH THE OLD ROAD

TO BE SUPPLEMENTED BY STANDARD PLANS DATED MAY 2006

INDEX OF PLANS

SHEET No.	DESCRIPTION
1	TITLE AND LOCATION MAP
STRUCTURE PLANS	
2	GENERAL PLAN AND LEGEND
3-7	ELECTRICAL PLANS

THE STANDARD PLANS LIST APPLICABLE TO THIS CONTRACT IS INCLUDED IN THE NOTICE TO BIDDERS AND SPECIAL PROVISIONS BOOK.

LOCATION MAP

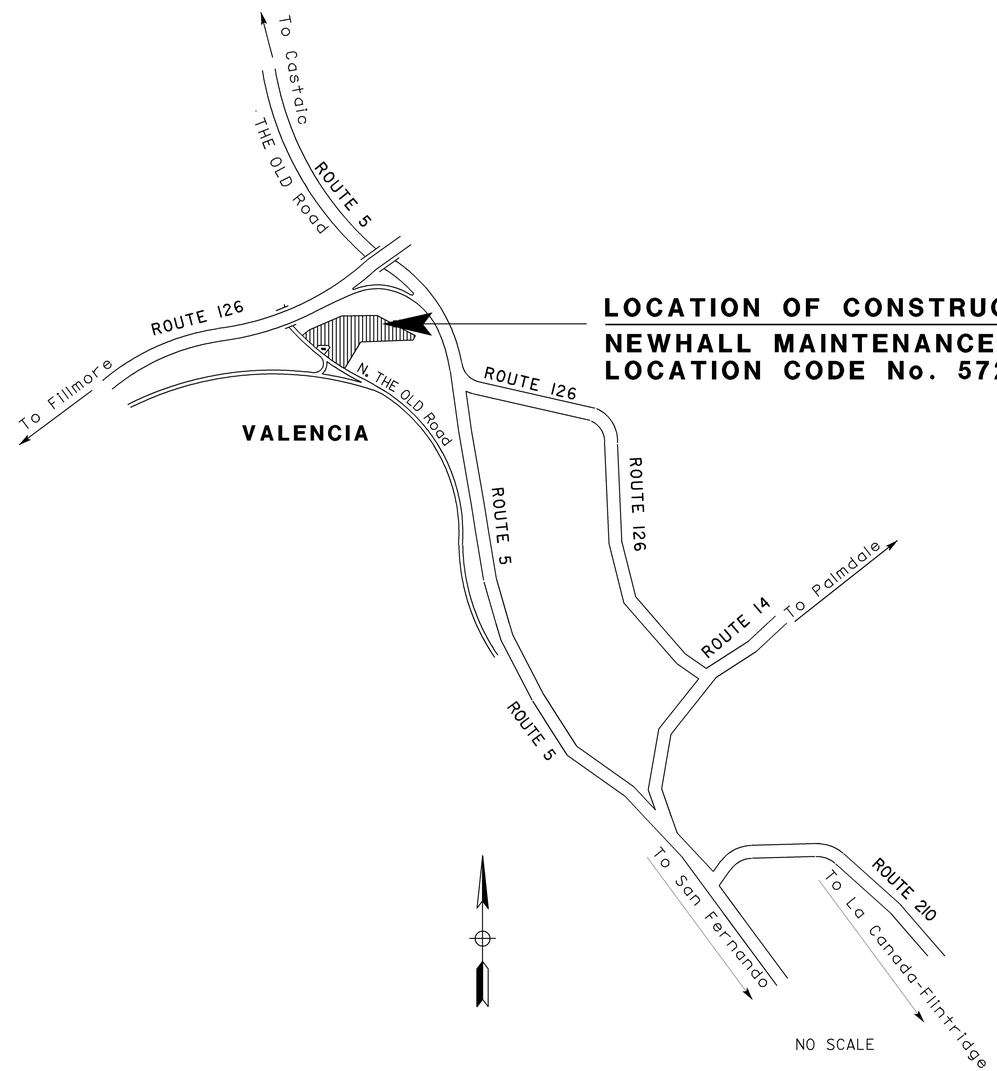

LOCATION OF CONSTRUCTION
NEWHALL MAINTENANCE STATION
LOCATION CODE No. 5722

NO SCALE

CALIFORNIA STATE FIRE MARSHAL
APPROVED
Approval of this plan does not authorize or approve any omission or deviation from applicable regulations. Final approval is subject to field inspection. One set of approved plans shall be available on the project site at all times.
Reviewed by: MIKE TANAKA
Approval date: 12-21-09

PHOTOVOLTAIC SYSTEM
CSFM FILE #01-19-11-0142

PROJECT MANAGER: DANA HENDRIX
DESIGN ENGINEER: CHI WU

THE CONTRACTOR SHALL POSSESS THE CLASS (OR CLASSES) OF LICENSE AS SPECIFIED IN THE "NOTICE TO BIDDERS."

12-2-09
PROJECT ENGINEER DATE
REGISTERED ELECTRICAL ENGINEER

REGISTERED PROFESSIONAL ENGINEER
CHI WU
No. E 10773
Exp. 6-30-11
ELEC
STATE OF CALIFORNIA

12-02-09
PLANS APPROVAL DATE

THE STATE OF CALIFORNIA OR ITS OFFICERS OR AGENTS SHALL NOT BE RESPONSIBLE FOR THE ACCURACY OR COMPLETENESS OF SCANNED COPIES OF THIS PLAN SHEET.

LAST REVISION 12-2-09
DATE PLOTTED => 29-JAN-2010
TIME PLOTTED => 09:55

CONTRACT No. **07-0AA024**

DIST.	COUNTY	LOCATION CODE	POST MILES TOTAL PROJECT	SHEET NO.	TOTAL SHEETS
07	LA	5722		2	7

REGISTERED ELECTRICAL ENGINEER — 12-2-09 DATE

REGISTERED PROFESSIONAL ENGINEER — CHI WU — No. E 10773 — Exp. 6-30-11 — ELEC — STATE OF CALIFORNIA

12-02-09
PLANS APPROVAL DATE

The State of California or its officers or agents shall not be responsible for the accuracy or completeness of electronic copies of this plan sheet.

INDEX OF SHEETS

SHEET NO.	DESCRIPTION
GP	GENERAL PLAN AND LEGEND
ELECTRICAL	
EE-0	EXISTING PARTIAL UTILITY SITE PLAN
EE-1	PARTIAL SITE PLAN
EE-2	SINGLE LINE DIAGRAM GRID-TIED PV SYSTEM
EE-3	ROOF PLAN
EE-4	ELEVATION AND DETAILS

APPLICABLE CODES
2007 California Building Code (CBC) Title 24, Part 2 CCR
2007 California Electrical Code (CEC) Title 24, Part 3 CCR
2007 California Fire Code (CEC) Title 24, Part 9 CCR

EXISTING BUILDING DATA

1995/1998 CBC

BUILDING/ PORTION	OCCUPANCY GROUP	CONSTRUCTION TYPE	ALLOWABLE AREA	ACTUAL AREA	YEAR BUILT
	H-4	V-N	* 15,300 SF	6,099 SF	1998
	S-2: HERBICIDE	V-N	12,000 SF	151 SF	
	S-2: STORAGE	V-N	12,000 SF	354 SF	

* ALLOWABLE SF: 5,100 SF x (3) FIRE SPRINKLERED = 15,300 SF

ROOF DATA : PREFINISHED METAL ROOFING OVER BUILDING FELT OVER PLYWOOD DECK SHEATHING OVER WOOD TRUSS

CALIFORNIA STATE FIRE MARSHAL APPROVED
Approval of this plan does not authorize or approve any omission or deviation from applicable regulations. Final approval is subject to field inspection. One set of approved plans shall be available on the project site at all times.
Reviewed by: MIKE TANAKA
Approval date: 12-21-09

LOCATION OF WORK

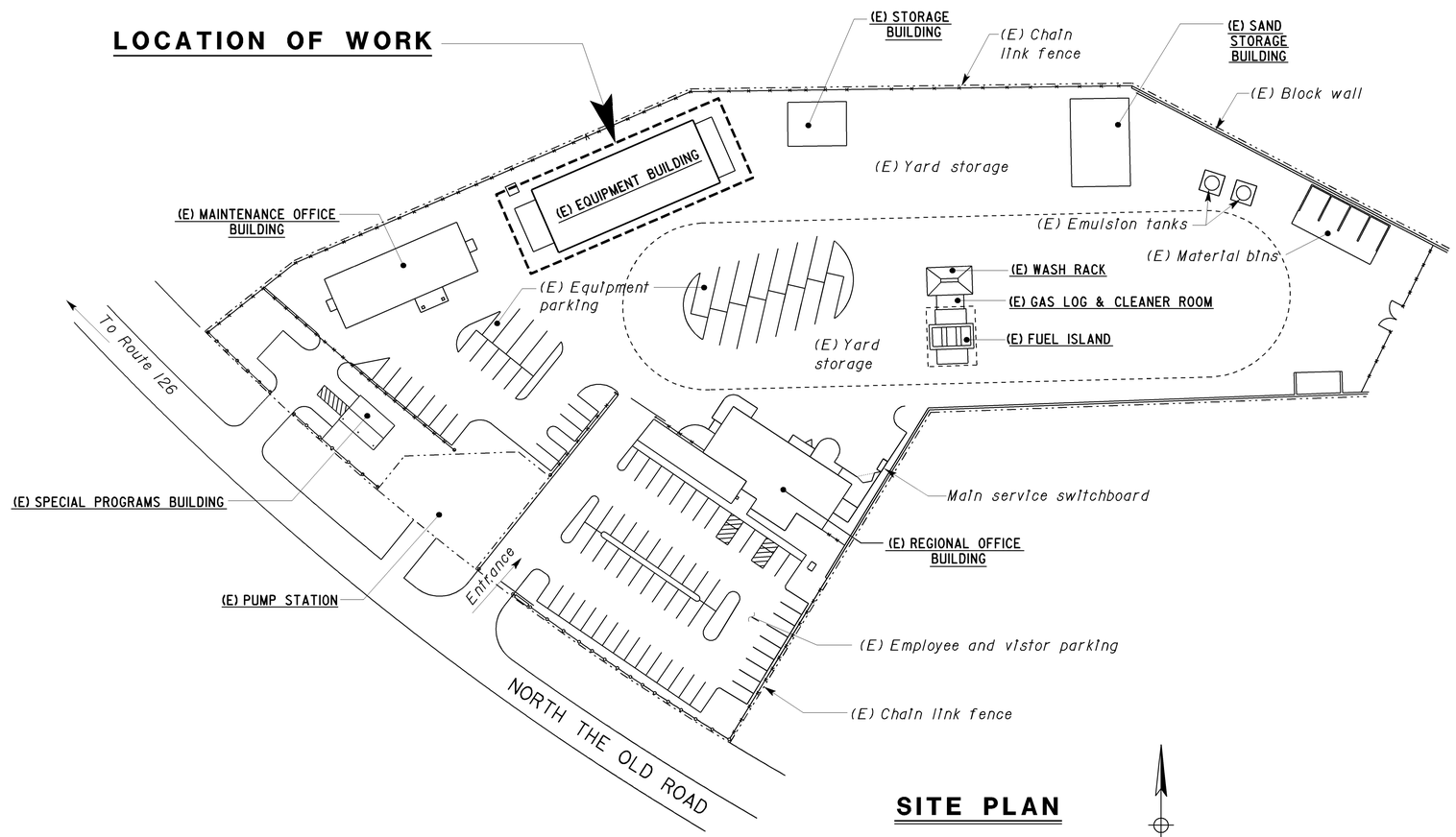

SITE PLAN

SCALE 1" = 50'-0"

LEGEND

SYMBOL	DESCRIPTION
(2) 1/2"C, PVC, 2#12	CONDUCTOR INFO (PER CONDUIT)
	CONDUIT TYPE
	CONDUIT SIZE
	NUMBER OF CONDUITS (NO NUMBER INDICATES ONE CONDUIT)
—MC—	CONDUIT, RIGID STEEL, UNDERGROUND
—PVC—	CONDUIT, POLYVINYL CHLORIDE, UNDERGROUND
	CONDUIT, FLEXIBLE
	CONDUIT, TURN UP
	CONDUIT, TURN DOWN
A / EE-2	SECTION/ELEVATION LETTER / SHEET NUMBER
1 / EE-2	DETAIL NUMBER / SHEET NUMBER
—E—E—	EXISTING CONDUIT AND CONDUCTORS-TO REMAIN UNLESS OTHERWISE NOTED
—×—×—	CONDUIT EXPOSED
BC	INSTALL PULL BOX IN EXISTING CONDUIT RUN
	CIRCUIT BREAKER, SINGLE POLE
	CIRCUIT BREAKER, DOUBLE POLE
	CONTACT, NORMALLY OPEN
	SWITCH, DOUBLE-POLE
	FUSE
	GROUNDING ELECTRODE
	ENCLOSURE BOND
	SURGE ARRESTOR

ABBREVIATIONS

A	AMPERES
AC	ALTERNATE CURRENT
C	CONDUIT
DC	DIRECT CURRENT
(E)	EXISTING
G	GROUND
JB	JUNCTION BOX
MC	METALLIC CONDUIT
MT	EMPTY CONDUIT
MIN	MINIMUM
(N)	NEW
P	POLE
PB	PULL BOX
PTC	PV USA TEST CONDITIONS
PVC	POLYVINYL CHLORIDE
PV	PHOTOVOLTAIC
SPS	STRUCTURE PLYWOOD SHEATHING
STC	STANDARD TEST CONDITIONS
TYP	TYPICAL
V	VOLT

THIS DRAWING ACCURATE FOR ELECTRICAL WORK ONLY.

DESIGN SUPERVISOR — DESIGN ENGINEER

	BY	CHECKED
DESIGN	Johnny Wu	Tech Ngov
DETAILS	Linda Monson	Johnny Wu
QUANTITIES	Johnny Wu	Tech Ngov

STATE OF CALIFORNIA
DEPARTMENT OF TRANSPORTATION

DIVISION OF ENGINEERING SERVICES
ELECTRICAL-MECHANICAL-WATER AND WASTEWATER DESIGN

BRIDGE NO. 52M5722
POST MILE

NEWHALL MAINTENANCE STATION PHOTOVOLTAIC SYSTEM
GENERAL PLAN AND LEGEND

SHEET GP

DOES SD Imperial Rev. 1/07

ORIGINAL SCALE IN INCHES FOR REDUCED PLANS 0 1 2 3

CU 07604
EA 0AA021

DISREGARD PRINTS BEARING EARLIER REVISION DATES → REVISION DATES (PRELIMINARY STAGE ONLY) 8/10/09 8/15/09 10/15/09 11/19/09 12/2/09 SHEET OF

29-JAN-2010 09:56
gp.dgn

General Notes:

A. For complete right of way, see Right of Way Record Maps at District office.

B. This plan accurate for Utility Information only.

C. Location of Utility Facilities shown are approximate and shall be verified during construction.

CALIFORNIA STATE FIRE MARSHAL APPROVED

Approval of this plan does not authorize or approve any omission or deviation from applicable regulations. Final approval is subject to field inspection. One set of approved plans shall be available on the project site at all times.

Reviewed by: MIKE TANAKA

Approval date: 12-21-09

DIST.	COUNTY	LOCATION CODE	POST MILES TOTAL PROJECT	SHEET NO.	TOTAL SHEETS
07	LA	5722		3	7

REGISTERED ELECTRICAL ENGINEER — 12-2-09 DATE

REGISTERED PROFESSIONAL ENGINEER — CHI WU — No. E 10773 — Exp. 6-30-11 — ELEC — STATE OF CALIFORNIA

12-02-09
PLANS APPROVAL DATE

The State of California or its officers or agents shall not be responsible for the accuracy or completeness of electronic copies of this plan sheet.

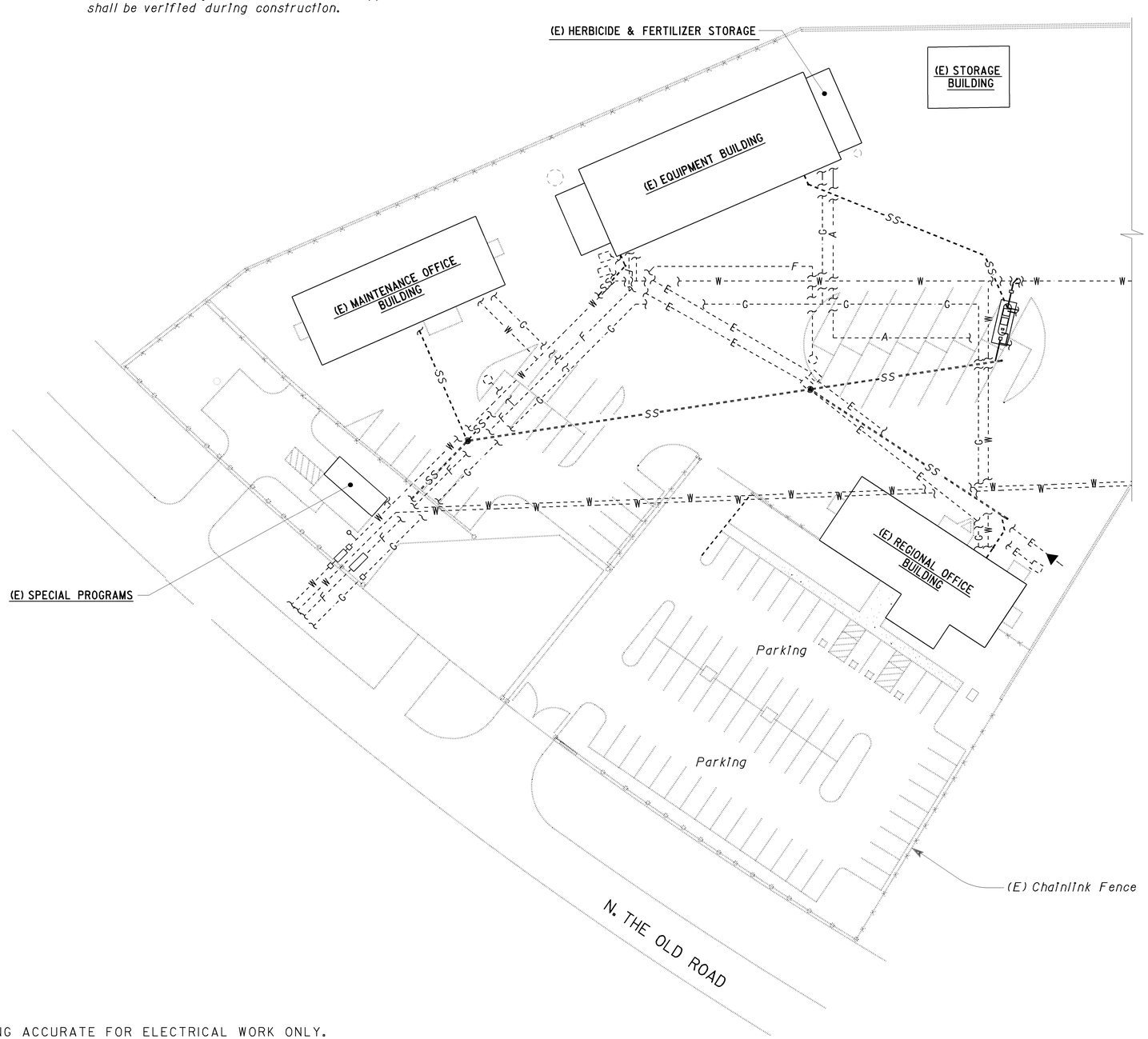

GRAPHIC SYMBOLS (THIS SHEET)

SYMBOL	DESCRIPTION
—E—	POWER AND TELEPHONE CONDUITS AND CONDUCTORS
—G—	GAS
—S—	SEWER
—W—	WATER

PARTIAL UTILITY PLAN

SCALE 1" = 30'-0"

THIS DRAWING ACCURATE FOR ELECTRICAL WORK ONLY.

	BY	CHECKED
DESIGN	Johnny Wu	Tech Ngov
DETAILS	Linda Monson	Johnny Wu
QUANTITIES	Johnny Wu	Tech Ngov

STATE OF CALIFORNIA DEPARTMENT OF TRANSPORTATION

DIVISION OF ENGINEERING SERVICES
ELECTRICAL-MECHANICAL-WATER AND WASTEWATER DESIGN

BRIDGE NO. 53M5722
POST MILE

NEWHALL MAINTENANCE STATION PHOTOVOLTAIC SYSTEM

EXISTING PARTIAL UTILITY SITE PLAN

SHEET EE-0

DOES SD Imperial Rev. 1/07

ORIGINAL SCALE IN INCHES FOR REDUCED PLANS 0 1 2 3

CU 07604
EA 0AA021

DISREGARD PRINTS BEARING EARLIER REVISION DATES → REVISION DATES (PRELIMINARY STAGE ONLY) 8/31/09 9/3/09 9/16/09 9/29/09 11/19/09 12/2/09 SHEET OF

29-JAN-2010 09:57

ee_00.dgn

DIST.	COUNTY	LOCATION CODE	POST MILES TOTAL PROJECT	SHEET NO.	TOTAL SHEETS
07	LA	5722		4	7

REGISTERED ELECTRICAL ENGINEER — 12-2-09 DATE

REGISTERED PROFESSIONAL ENGINEER — CHI WU — No. E 10773 — Exp. 6-30-11 — ELEC — STATE OF CALIFORNIA

12-02-09
PLANS APPROVAL DATE

The State of California or its officers or agents shall not be responsible for the accuracy or completeness of electronic copies of this plan sheet.

CALIFORNIA STATE FIRE MARSHAL APPROVED
Approval of this plan does not authorize or approve any omission or deviation from applicable regulations. Final approval is subject to field inspection. One set of approved plans shall be available on the project site at all times.
Reviewed by: MIKE TANAKA
Approval date: 12-21-09

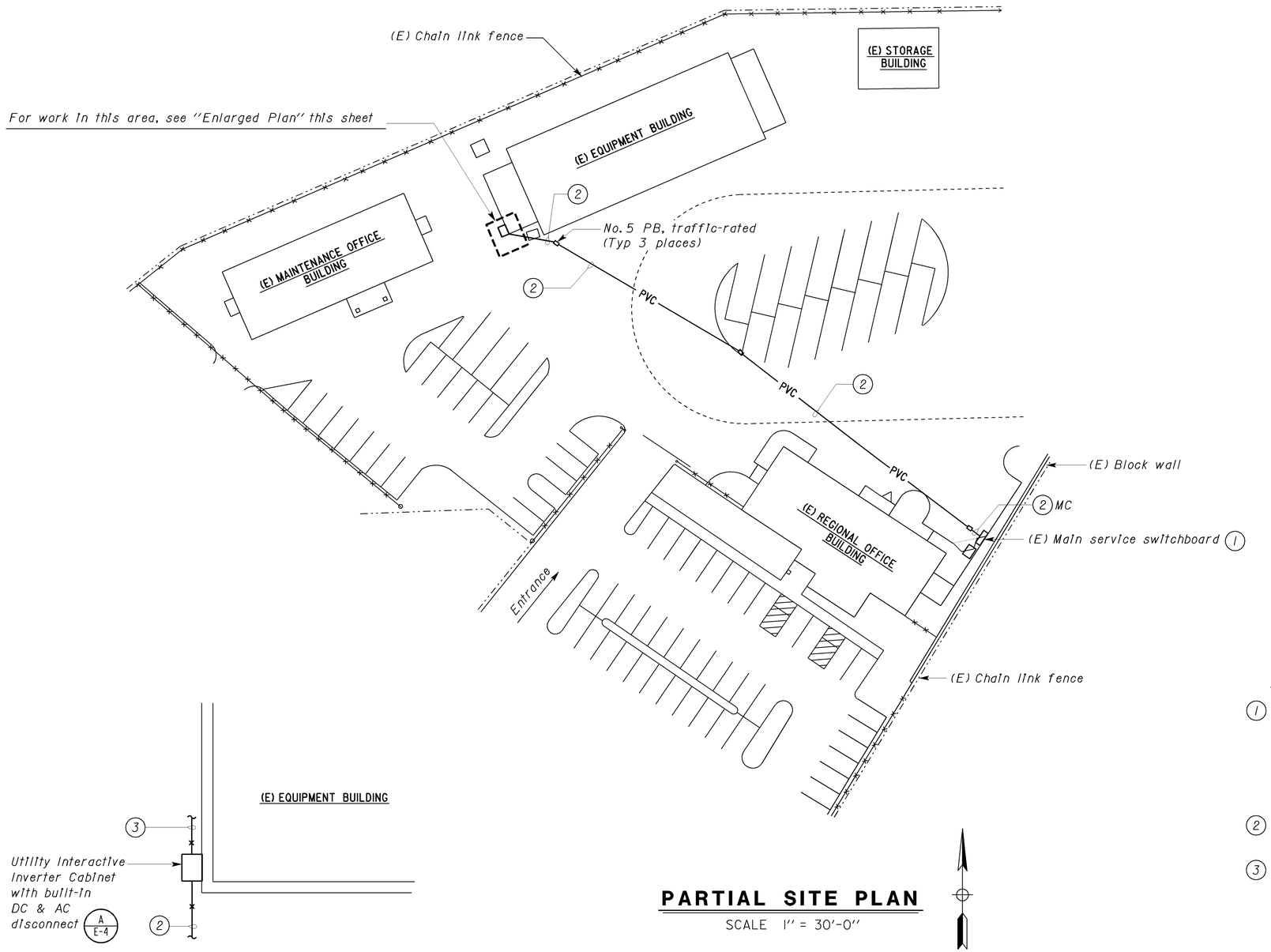

PARTIAL SITE PLAN
SCALE 1" = 30'-0"

ENLARGED PLAN
SCALE 1/4" = 1'-0"

General Notes:

A. The Contractor shall verify true north prior to installation of PV system.

B. All AC/DC feeder conductors and equipment grounding conductors shall be sized to meet or exceed the following:

- Total net voltage drop of the PV electrical power generation system from PV source to the existing Panel EDP shall not exceed 2%.
- Upon occurrence of any kind of fault at any point in the system, over current protective devices shall trip within 1/2 cycle.

C. Not all electrical/mechanical equipment and conduit systems are shown.

D. Location of all existing equipment and conduit systems as shown are approximate only. Contractor shall verify the exact location of all equipment and conduit systems in the field where required.

E. Saw cut existing paved surfaces at places where required for installation of underground conduit system and repair disturbed surfaces to match existing.

F. For photovoltaic system single line diagram, see sheet EE-2.

G. For graphic symbols and abbreviations, see sheet GP.

Notes:

1. Existing MSB is Siemens, 208/120 volt, 3-phase, 4-wire, with 400 ampere main circuit breaker. Install 3-pole molded case circuit breaker, in lowest available space, for connecting PV system. New circuit breaker shall have interrupting capacity (AIC) of 42,000 symmetrical at 240 volts. Install screw-on type nameplate, with letter height of 1/4", to read "PHOTOVOLTAIC SYSTEM" at the side of new 3-pole circuit breaker. Install screw-on type sign, on existing Panel MSB, with letter height of 1/2" to read "THIS PANEL FED BY MULTIPLE SOURCES (UTILITY AND SOLAR)".

2. 2"C, MC, five conductors (Three phase, one neutral and one equipment grounding conductor), to 3-pole circuit breaker, for PV system inside the existing MSB.

3. (2) 2"C, MC, with DC conductors and equipment grounding conductor, from PV Array Circuit Combiner Boxes #1 and #2 to Fused Sub-Array Combiner, inside Utility Interactive Inverter Cabinet. For location of PV Array Circuit Combiner Boxes #1 and #2, see sheet EE-3.

THIS DRAWING ACCURATE FOR ELECTRICAL WORK ONLY.

	BY	CHECKED
DESIGN	Johnny Wu	Tech Ngov
DETAILS	Linda Monson	Johnny Wu
QUANTITIES	Johnny Wu	Tech Ngov

STATE OF CALIFORNIA
DEPARTMENT OF TRANSPORTATION

DIVISION OF ENGINEERING SERVICES
ELECTRICAL-MECHANICAL-WATER AND WASTEWATER DESIGN

BRIDGE NO. 53M5722
POST MILE

NEWHALL MAINTENANCE STATION PHOTOVOLTAIC SYSTEM
PARTIAL SITE PLAN

SHEET **EE-1**

DOES SD Imperial Rev. 1/07

ORIGINAL SCALE IN INCHES FOR REDUCED PLANS 0 1 2 3

CU 07604
EA 0AA021

DISREGARD PRINTS BEARING EARLIER REVISION DATES → REVISION DATES (PRELIMINARY STAGE ONLY) 8/31/09 9/3/09 9/16/09 9/29/09 11/19/09 12/2/09 SHEET OF

29-JAN-2010 10:01
ee_01.dgn

DIST.	COUNTY	LOCATION CODE	POST MILES TOTAL PROJECT	SHEET NO.	TOTAL SHEETS
07	LA	5722		5	7

REGISTERED ELECTRICAL ENGINEER — 12-2-09 DATE

REGISTERED PROFESSIONAL ENGINEER — CHI WU — No. E 10773 — Exp. 6-30-11 — ELEC — STATE OF CALIFORNIA

12-02-09
PLANS APPROVAL DATE

The State of California or its officers or agents shall not be responsible for the accuracy or completeness of electronic copies of this plan sheet.

Photovoltaic Module

PV modules shall be polycrystalline silicon cell type module, with interconnection connectors rated for 90°C. PV modules shall be UL 1703 listed, with a maximum system voltage of 600 VDC.
PV module manufacturer shall be one of those manufacturers listed as an eligible California Solar Initiative (CSI) PV module manufacturer.

Photovoltaic Array Circuit Combiner Box

PV array circuit combiner box shall be factory assembled, 600 VDC rated combiner box, with fused input circuits, two isolated DC bus bars, ground bus bar, all enclosed inside NEMA 3R lockable cover enclosure. The combiner box shall be UL 1741 listed.

PV array circuit combiner box shall have the following components:
- DIN rail mounted touch safe fuse holder with fuse.
- Positive DC bus bar, negative DC bus bar and ground bus bar.
- DIN rail mounted Grid-Tie surge arrestor: The surge arrestor shall be rated to withstand 20 kA (8/20 micro second) induced transient surge type, and compatible to use with grounded PV arrays

Utility Interactive Inverter Cabinet

Utility interactive inverter cabinet shall be outdoor type, factory assembled cabinet consisting of the following equipment:
- DC/AC Inverter:
  DC/AC inverter rated at continuous output power of 33 kW, 208/120 VAC.
  3-phase, 4-wire, at a power factor of 0.99 or greater, efficiency 95.5%, with input operating voltage range between 305 to 600 VDC.
  Inverter shall be capable of operating at ambient temperature range (Full power) of -4°F to +122°F. DC/AC inverter manufacturer shall be one of those manufacturers listed as an eligible California Solar Initiative (CSI) DC/AC inverter manufacturer.
- Fused sub-array combiner, with minimum of 4 array inputs each for positive DC, negative DC, and DC ground bus bars. Positive array input fuse shall be sized to match loading.
- Built-in DC and AC disconnect switches, size to match loading.
- Integrated 33 kVA, 208/120 V, 3-phase, 4-wire, output isolation type transformer.
- Ground fault protection.
- Integrated AC and DC surge protections.
- Integrated AC and DC contactors.
- Pre-charge circuit.
- Human Machine Interface (HMI):
  AC/DC inverter's HMI shall be equipped with LCD and keypad displaying main menu. HMI main menu shall display system monitoring, status and faults, and operation. Monitoring menu shall display system status, metering, daily, weekly and monthly energy production. Status and faults menu shall display status messages, system output, and number of faults. Operation menu shall display control and settings.
- Local and remote monitoring system capabilities.
- AC ground bus bars.
- NEMA 3R enclosure:
  Enclosure shall be NEMA 3R, 14-gauge, and powder-coated standard factory finish steel enclosure. All screws, latches, hinge pins and similar hardware shall be stainless steel. HMI, AC and DC disconnect switches and equipment rating labels shall be mounted on the exterior door. Exterior door shall have interlock switch and be lockable with a padlock. The cabinet shall have MEV13 rated filtered, top entry forced air cooling system with one fan, sloped roof, and shall be suitable for Seismic Design Category D compliance.

General Notes:

A. Provide and install all necessary warning labels/markings, per Article 690 of California Electrical Code (CEC), and the State Fire Marshal's guideline for solar PV installation.

B. Solar PV installation shall comply with the latest guideline from California Department of Forestry & Fire Protection, Office of the State Fire Marshal and latest Program Handbook from California Solar Initiative (CSI).

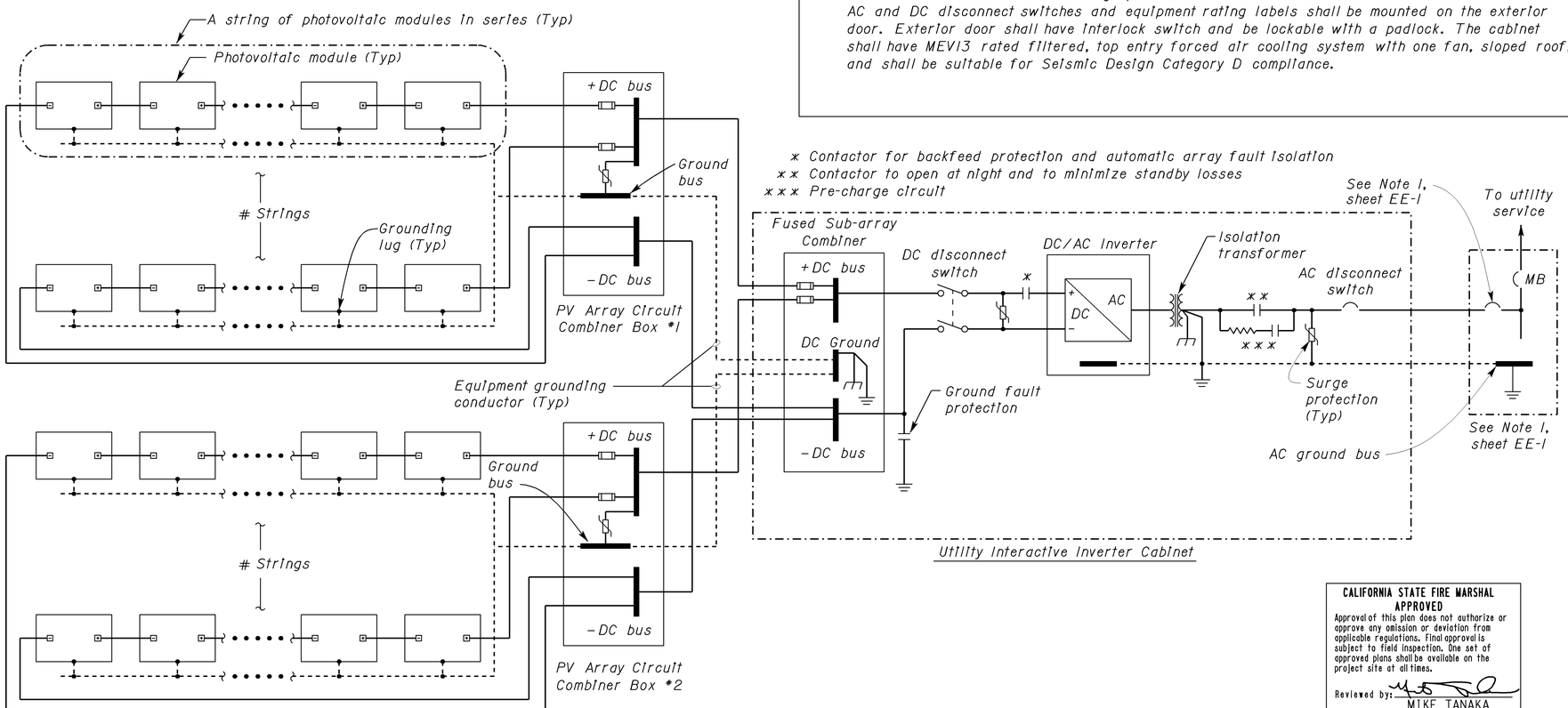

CALIFORNIA STATE FIRE MARSHAL
APPROVED
Approval of this plan does not authorize or approve any omission or deviation from applicable regulations. Final approval is subject to field inspection. One set of approved plans shall be available on the project site at all times.
Reviewed by: MIKE TANAKA
Approval date: 12-21-09

Photovoltaic System Requirements

Photovoltaic system complete design and installation details, inclusive of all Engineering calculations signed by a Professional Engineer of the respective field (both Electrical and Civil Engineering) in the State of California, shall be submitted for approval by the Contractor.
The PV design shall meet or exceed the following requirements:

1) Total designed capacity of photovoltaic system shall have CEC-AC rating of 33 kW. Number of PV modules per string shall be arranged in a manner to meet or exceed the following:
   - Maximum system voltage based on lowest expected ambient temperature at the site (Voc maximum on coldest day) shall be no less than 1% of the inverter's maximum input DC voltage range.
   - Maximum system voltage, based on highest continuous ambient temperature at the site (Vmp on warmest day), shall be 20% greater than the inverter's minimum input DC voltage range.

2) Photovoltaic system module row spacing shall be designed to prevent shading from adjacent module.

3) All wiring, except at module interconnection, shall be concealed inside conduit system.

4) Photovoltaic system modules structural support system shall be designed to withstand wind force of 85-mile per hour.

5) Photovoltaic system wiring and protective devices shall meet or exceed the requirements of all applicable codes.

6) PV Array Circuit Combiner Boxes locations as shown are arbitrary only. Contractor shall install the combiner boxes at locations that best suit the photovoltaic system strings layout.

	BY	CHECKED
DESIGN	Johnny Wu	Tech Ngov
DETAILS	Linda Monson	Johnny Wu
QUANTITIES	Johnny Wu	Tech Ngov

STATE OF CALIFORNIA
DEPARTMENT OF TRANSPORTATION

DIVISION OF ENGINEERING SERVICES
ELECTRICAL-MECHANICAL-WATER AND WASTEWATER DESIGN

BRIDGE NO. 53M5722
POST MILE

NEWHALL MAINTENANCE STATION PHOTOVOLTAIC SYSTEM
SINGLE LINE DIAGRAM
GRID-TIED PV SYSTEM

SHEET **EE-2**

DOES SD Imperial Rev.1/07

ORIGINAL SCALE IN INCHES FOR REDUCED PLANS 0 1 2 3

CU 07604
EA 0AA021

DISREGARD PRINTS BEARING EARLIER REVISION DATES → 8/24/09 9/8/09 9/14/09 9/29/09 11/19/09 12/2/09

REVISION DATES (PRELIMINARY STAGE ONLY) SHEET OF

29-JAN-2010 10:00

ee_02.dgn

DIST.	COUNTY	LOCATION CODE	POST MILES TOTAL PROJECT	SHEET NO.	TOTAL SHEETS
07	LA	5722		6	7

REGISTERED ELECTRICAL ENGINEER — 12-2-09 DATE

REGISTERED PROFESSIONAL ENGINEER — CHI WU — No. E 10773 — Exp. 6-30-11 — ELEC — STATE OF CALIFORNIA

12-02-09
PLANS APPROVAL DATE

The State of California or its officers or agents shall not be responsible for the accuracy or completeness of electronic copies of this plan sheet.

CALIFORNIA STATE FIRE MARSHAL APPROVED
Approval of this plan does not authorize or approve any omission or deviation from applicable regulations. Final approval is subject to field inspection. One set of approved plans shall be available on the project site at all times.
Reviewed by: MIKE TANAKA
Approval date: 12-21-09

Note:

(1) *2"C, MC, with DC conductors and equipment grounding conductor, to Utility Interactive Inverter Cabinet. For continuation, see sheet EE-1.*

General Notes:

A. *Provide and install approved conduit support on top of the roof to support conduit system and junction boxes. Conduit support shall be one-piece and non metallic type. For conduit support details, see Detail 1 on sheet EE-4.*

B. *All exposed conduits shall be galvanized rigid steel, with minimum size 3/4".*

C. *Size conduits to allow for 50% future capacity.*

D. *No DC wiring except at the module connector shall be exposed.*

E. *Use Type CGB connectors at conduit terminations to exposed conductors.*

F. *DC conduit/conductors between PV modules and PV Array Circuit Combiner Boxes are not shown.*

G. *Existing Equipment Building height from ground to the highest edge of the roof is approximately 23'.*

H. *For graphic symbols and abbreviations, see sheet GP.*

I. *For PV rack attachment detail, see Detail 1 on sheet EE-4.*

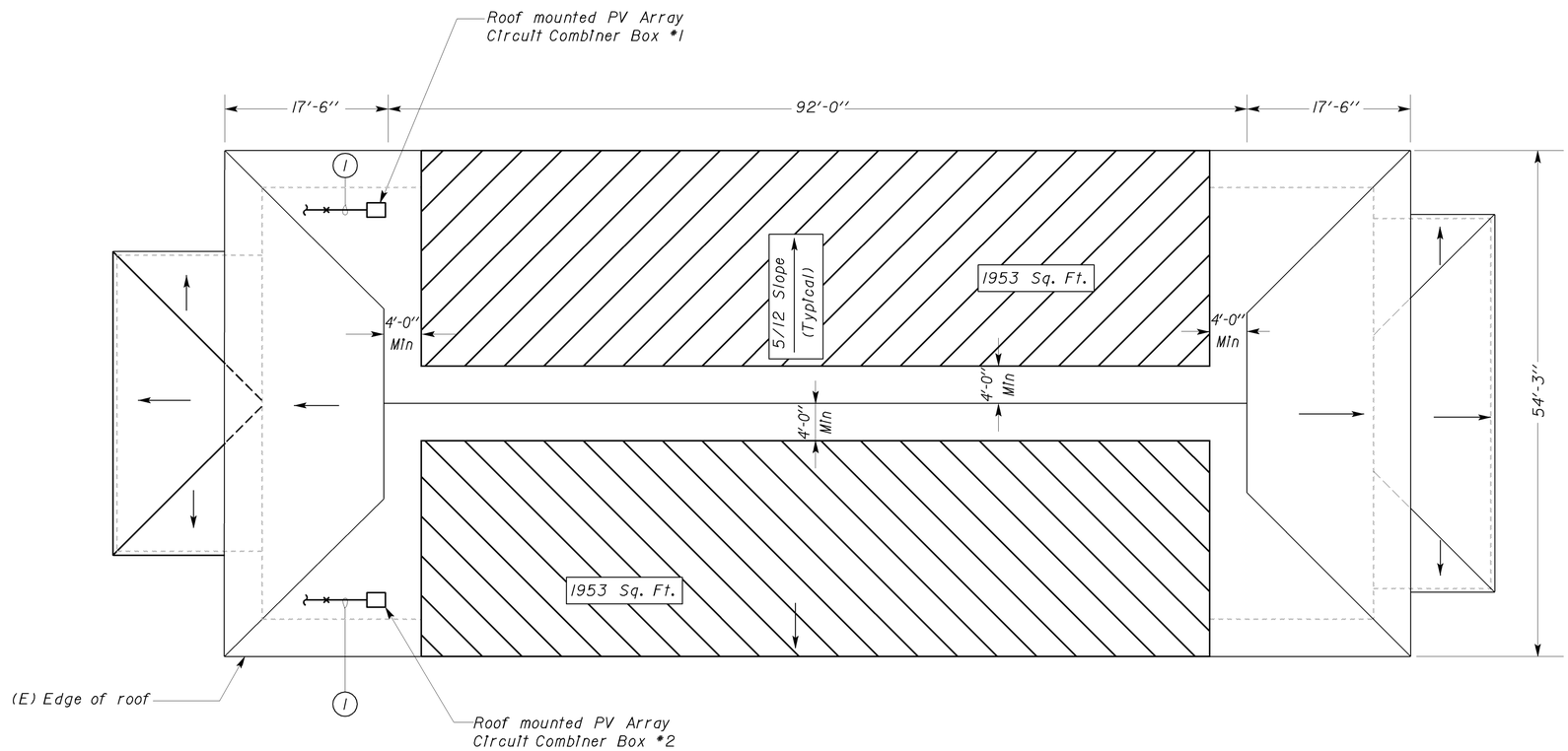

ROOF PLAN

SCALE 1/8" = 1'-0"

THIS DRAWING ACCURATE FOR ELECTRICAL WORK ONLY.

	BY	CHECKED
DESIGN	Johnny Wu	Tech Ngov
DETAILS	Linda Monson	Johnny Wu
QUANTITIES	Johnny Wu	Tech Ngov

STATE OF CALIFORNIA
DEPARTMENT OF TRANSPORTATION

DIVISION OF ENGINEERING SERVICES
ELECTRICAL-MECHANICAL-WATER AND WASTEWATER DESIGN

BRIDGE NO. 53M5722
POST MILE

NEWHALL MAINTENANCE STATION PHOTOVOLTAIC SYSTEM
ROOF PLAN

SHEET **EE-3**

DOES SD Imperial Rev. 1/07

ORIGINAL SCALE IN INCHES FOR REDUCED PLANS 0 1 2 3

CU 07604
EA 0AA021

DISREGARD PRINTS BEARING EARLIER REVISION DATES → REVISION DATES (PRELIMINARY STAGE ONLY) 8/25/09 9/8/09 9/10/09 9/29/09 11/19/09 12/2/09 SHEET OF

29-JAN-2010 10:00
ee_03.dgn

DIST.	COUNTY	LOCATION CODE	POST MILES TOTAL PROJECT	SHEET NO.	TOTAL SHEETS
07	LA	5722		7	7

REGISTERED ELECTRICAL ENGINEER — 12-2-09 DATE

REGISTERED PROFESSIONAL ENGINEER — CHI WU — No. E 10773 — Exp. 6-30-11 — ELEC — STATE OF CALIFORNIA

12-02-09
PLANS APPROVAL DATE

The State of California or its officers or agents shall not be responsible for the accuracy or completeness of electronic copies of this plan sheet.

CALIFORNIA STATE FIRE MARSHAL APPROVED
Approval of this plan does not authorize or approve any omission or deviation from applicable regulations. Final approval is subject to field inspection. One set of approved plans shall be available on the project site at all times.
Reviewed by: MIKE TANAKA
Approval date: 12-21-09

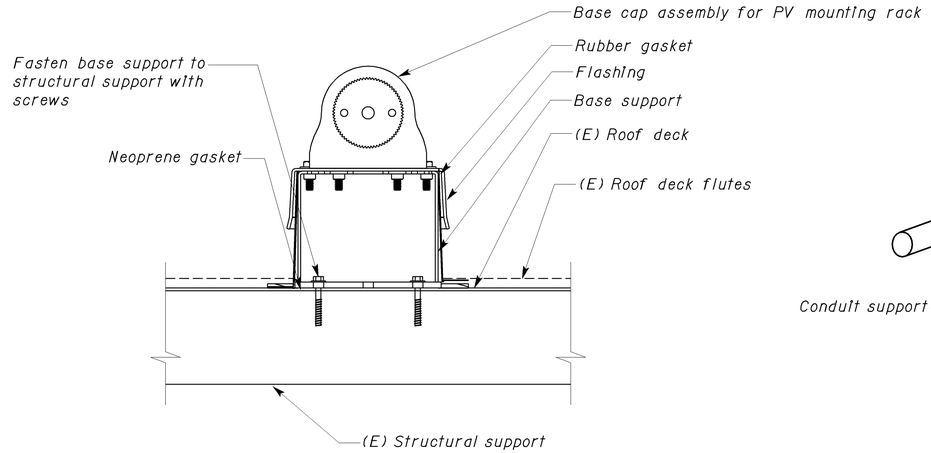

1 ROOF ATTACHMENT

NO SCALE

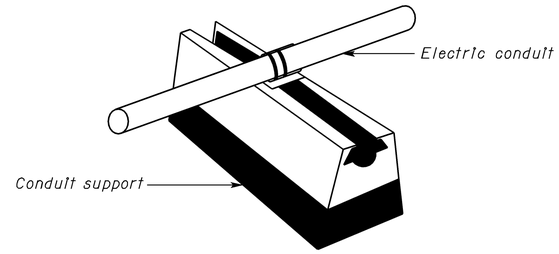

2 ROOF EXPOSED CONDUIT SUPPORT

NO SCALE

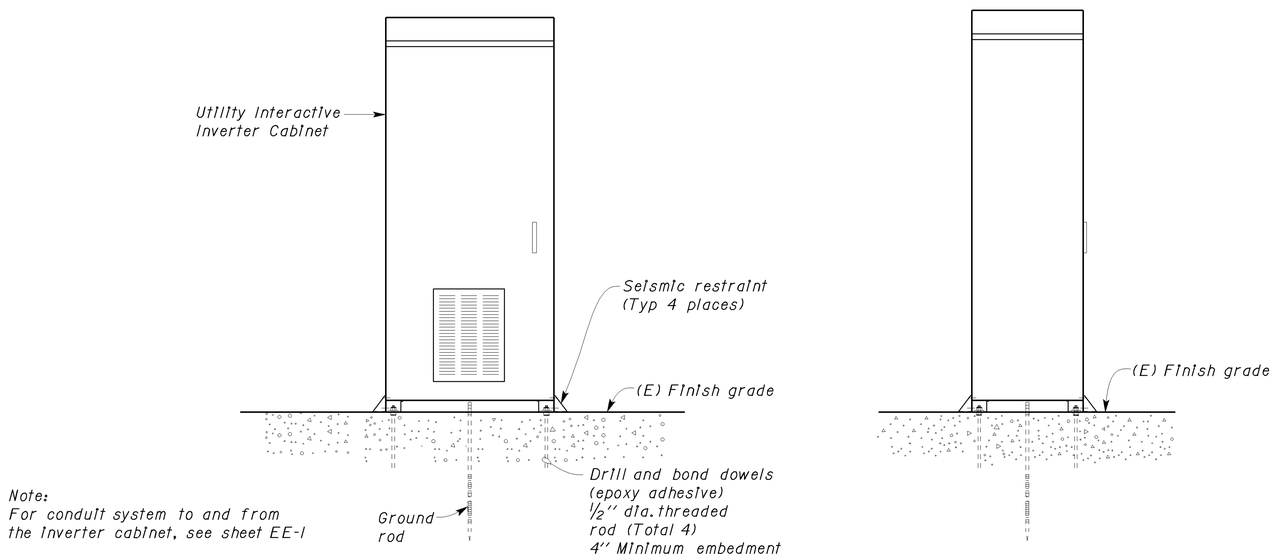

A UTILITY INTERACTIVE INVERTER CABINET

NO SCALE

	BY	CHECKED
DESIGN	Johnny Wu	Tech Ngov
DETAILS	Linda Monson	Johnny Wu
QUANTITIES	Johnny Wu	Tech Ngov

STATE OF CALIFORNIA
DEPARTMENT OF TRANSPORTATION

DIVISION OF ENGINEERING SERVICES
ELECTRICAL-MECHANICAL-WATER AND WASTEWATER DESIGN

BRIDGE NO. 53M5722
POST MILE

NEWHALL MAINTENANCE STATION PHOTOVOLTAIC SYSTEM

ELEVATION AND DETAILS

SHEET EE-4

DOES SD Imperial Rev. 1/07

ORIGINAL SCALE IN INCHES FOR REDUCED PLANS 0 1 2 3

CU 07604
EA 0AA021

DISREGARD PRINTS BEARING EARLIER REVISION DATES → REVISION DATES (PRELIMINARY STAGE ONLY) 8/24/09 9/29/09 11/19/09 12/2/09 SHEET OF

29-JAN-2010 10:00

ee_04.dgn