Dist	COUNTY	ROUTE	POST MILES TOTAL PROJECT	SHEET No.	TOTAL SHEETS
07	LA	710	22.6	1	100

NH-710-1(801)E

STATE OF CALIFORNIA
DEPARTMENT OF TRANSPORTATION

PROJECT PLANS FOR CONSTRUCTION ON
STATE HIGHWAY
IN LOS ANGELES COUNTY
IN THE CITY OF COMMERCE
AT WASHINGTON BOULEVARD UNDERCROSSING

TO BE SUPPLEMENTED BY STANDARD PLANS DATED MAY 2006

INDEX OF PLANS

SHEET No.	DESCRIPTION
1	TITLE AND LOCATION MAP
2-3	TYPICAL CROSS SECTIONS
4-5	LAYOUTS
6-7	CONSTRUCTION DETAILS
8-21	DRAINAGE PLANS, PROFILES, DETAILS AND QUANTITIES
22	EXISTING UTILITY PLAN
23	CONSTRUCTION AREA SIGNS
24-25	TRAFFIC HANDLING PLANS
26	TRAFFIC HANDLING QUANTITIES
27-28	PAVEMENT DELINEATION AND SIGN PLANS
29	PAVEMENT DELINEATION AND SIGN QUANTITIES
30	SUMMARY OF QUANTITIES
31	PLANT LIST
32-33	PLANTING PLANS
34-35	IRRIGATION PLANS
36	SPRINKLER SCHEDULE
37-56	REVISED AND NEW STANDARD PLANS

STRUCTURE PLANS

57-78	SOUND WALL No. 1190
79-100	SOUND WALL No. 1191

THE STANDARD PLANS LIST APPLICABLE TO THIS CONTRACT IS INCLUDED IN THE NOTICE TO BIDDERS AND SPECIAL PROVISIONS BOOK.

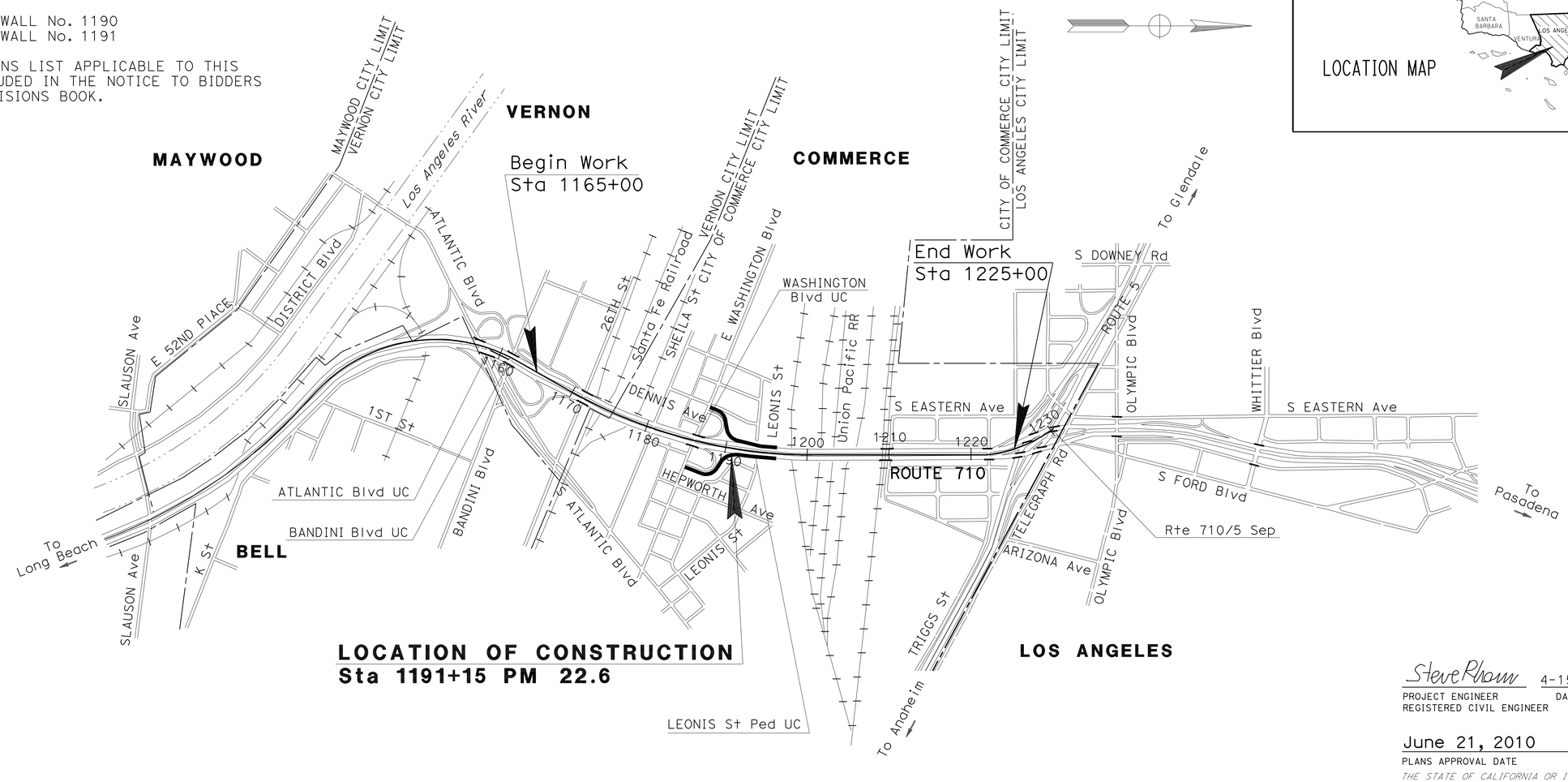

LOCATION OF CONSTRUCTION
Sta 1191+15 PM 22.6

LOCATION MAP

Steve Pham 4-15-10
PROJECT ENGINEER DATE
REGISTERED CIVIL ENGINEER

June 21, 2010
PLANS APPROVAL DATE

REGISTERED PROFESSIONAL ENGINEER
STEVE PHAM
No. 67183
Exp. 9/30/10
CIVIL
STATE OF CALIFORNIA

THE STATE OF CALIFORNIA OR ITS OFFICERS OR AGENTS SHALL NOT BE RESPONSIBLE FOR THE ACCURACY OR COMPLETENESS OF SCANNED COPIES OF THIS PLAN SHEET.

NO SCALE

THE CONTRACTOR SHALL POSSESS THE CLASS (OR CLASSES) OF LICENSE AS SPECIFIED IN THE "NOTICE TO BIDDERS."

PROJECT MANAGER: ZAREH SHABAZIAN
DESIGN ENGINEER: STEVE PHAM

CONTRACT No.	07-002344
PROJECT ID	0700000001

LAST REVISION 10-18-09
DATE PLOTTED => 12-OCT-2010
TIME PLOTTED => 12:44

Dist	COUNTY	ROUTE	POST MILES TOTAL PROJECT	SHEET No.	TOTAL SHEETS
07	LA	710	22.6	2	100

Steve Pham 4-15-10
REGISTERED CIVIL ENGINEER DATE

6-21-10
PLANS APPROVAL DATE

REGISTERED PROFESSIONAL ENGINEER
STEVE PHAM
No. 67183
Exp. 9/30/10
CIVIL
STATE OF CALIFORNIA

THE STATE OF CALIFORNIA OR ITS OFFICERS OR AGENTS SHALL NOT BE RESPONSIBLE FOR THE ACCURACY OR COMPLETENESS OF SCANNED COPIES OF THIS PLAN SHEET.

NOTES:

1. CROSS SLOPE AS SHOWN OR AS DIRECTED BY THE ENGINEER.
2. DIMENSIONS OF THE STRUCTURAL SECTIONS ARE SUBJECT TO TOLERANCES SPECIFIED IN THE STANDARD SPECIFICATIONS.
3. SUPERELEVATION AS SHOWN OR DIRECTED BY ENGINEER.

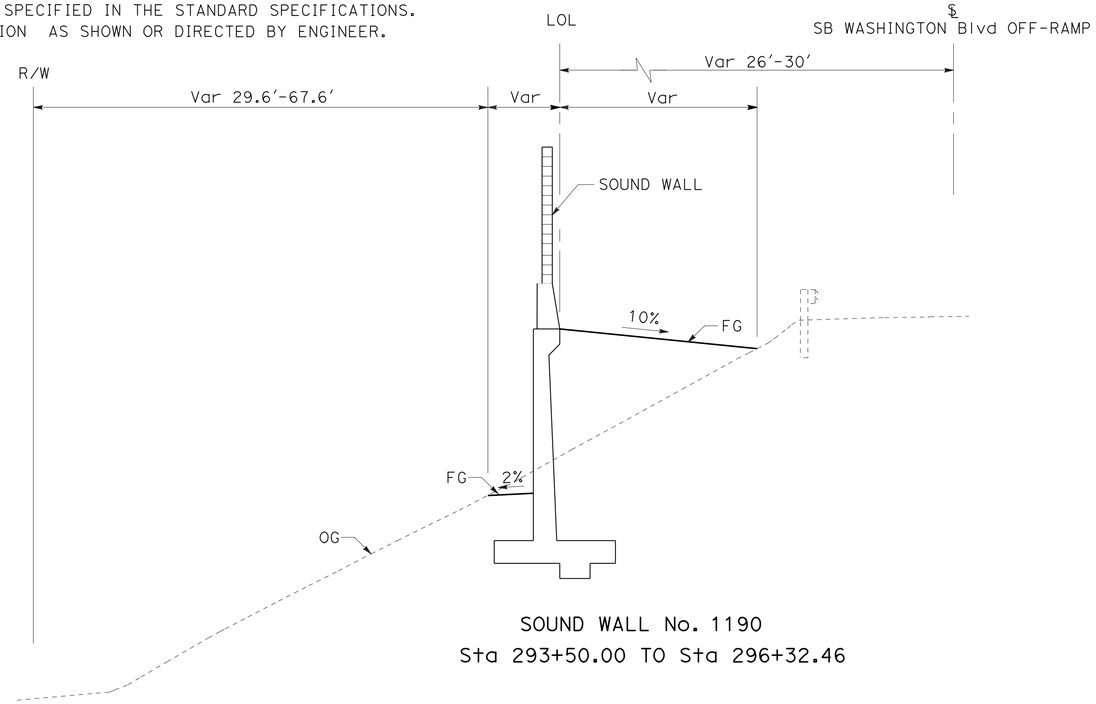

SOUND WALL No. 1190
Sta 293+50.00 TO Sta 296+32.46

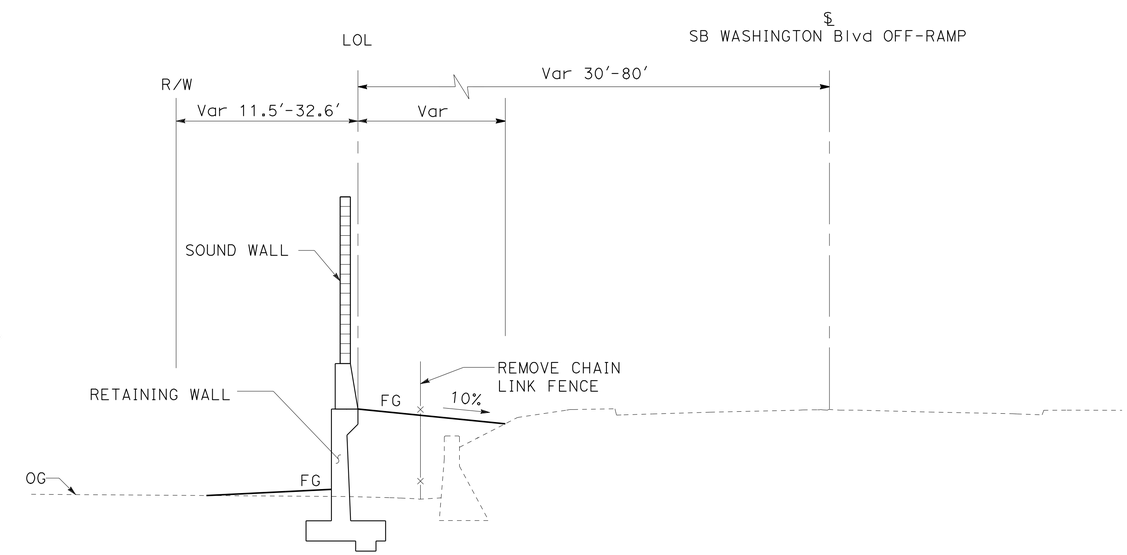

SOUND WALL No. 1190
Sta 289+30.00 TO Sta 293+50.00

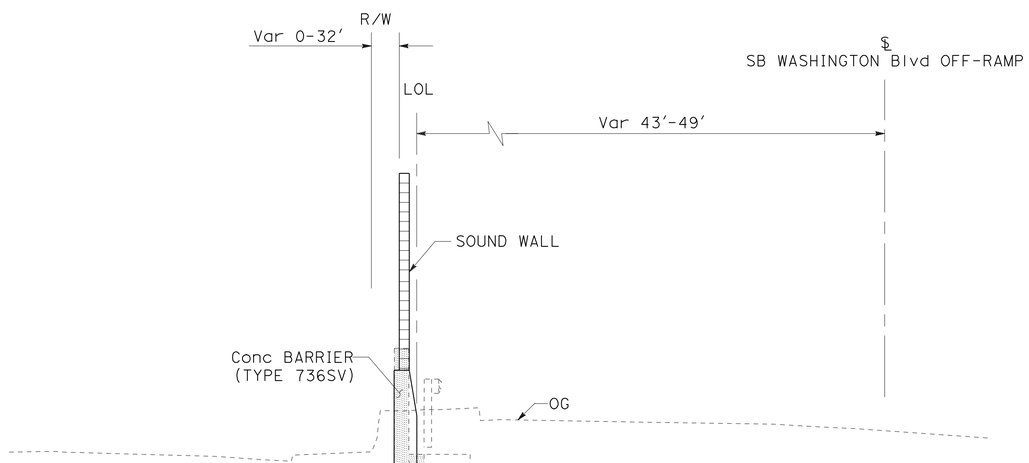

SOUND WALL No. 1190
Sta 287+12.26 TO Sta 289+30.00

TYPICAL CROSS SECTIONS

NO SCALE

X-1

STATE OF CALIFORNIA - DEPARTMENT OF TRANSPORTATION
Caltrans® OFFICE OF DESIGN B

FUNCTIONAL SUPERVISOR: MANSOOR A. KHAN
CALCULATED-DESIGNED BY: STEVE PHAM
CHECKED BY: MANSOOR A. KHAN
REVISED BY
DATE REVISED

LAST REVISION 10-10-09
DATE PLOTTED => 23-JUN-2010
TIME PLOTTED => 08:20

Dist	COUNTY	ROUTE	POST MILES TOTAL PROJECT	SHEET No.	TOTAL SHEETS
07	LA	710	22.6	3	100

Steve Pham 4-15-10
REGISTERED CIVIL ENGINEER DATE

6-21-10
PLANS APPROVAL DATE

REGISTERED PROFESSIONAL ENGINEER
STEVE PHAM
No. 67183
Exp 9/30/10
CIVIL
STATE OF CALIFORNIA

THE STATE OF CALIFORNIA OR ITS OFFICERS OR AGENTS SHALL NOT BE RESPONSIBLE FOR THE ACCURACY OR COMPLETENESS OF SCANNED COPIES OF THIS PLAN SHEET.

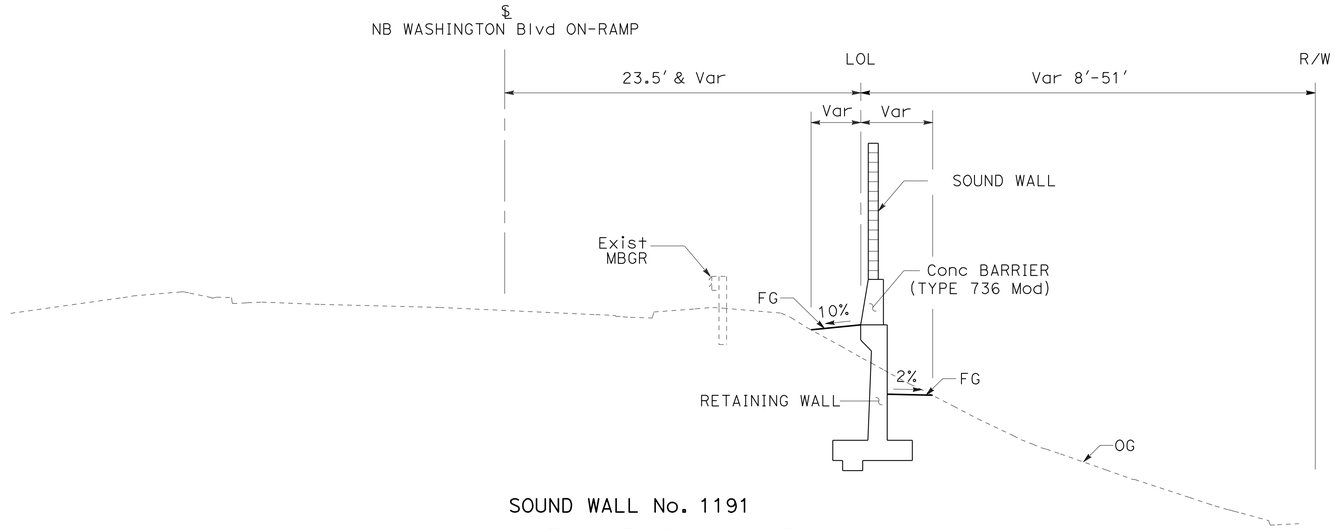

SOUND WALL No. 1191
Sta 189+70.00 TO Sta 196+27.28

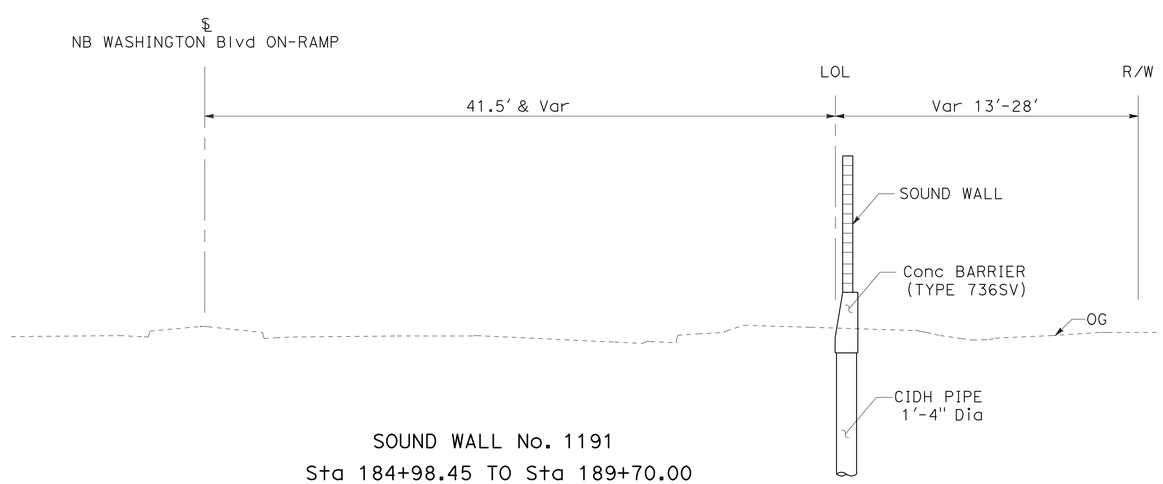

SOUND WALL No. 1191
Sta 184+98.45 TO Sta 189+70.00

TYPICAL CROSS SECTIONS

NO SCALE

X-2

STATE OF CALIFORNIA - DEPARTMENT OF TRANSPORTATION
Caltrans® OFFICE OF DESIGN B

FUNCTIONAL SUPERVISOR: MANSOOR A. KHAN
CALCULATED-DESIGNED BY: STEVE PHAM
CHECKED BY: MANSOOR A. KHAN
REVISED BY
DATE REVISED

LAST REVISION 10-10-09
DATE PLOTTED => 23-JUN-2010
TIME PLOTTED => 08:20

Dist	COUNTY	ROUTE	POST MILES TOTAL PROJECT	SHEET No.	TOTAL SHEETS
07	LA	710	22.6	4	100

Steve Pham 1-11-10
REGISTERED CIVIL ENGINEER DATE

6-21-10
PLANS APPROVAL DATE

REGISTERED PROFESSIONAL ENGINEER
STEVE PHAM
No. 67183
Exp. 9/30/10
CIVIL
STATE OF CALIFORNIA

THE STATE OF CALIFORNIA OR ITS OFFICERS OR AGENTS SHALL NOT BE RESPONSIBLE FOR THE ACCURACY OR COMPLETENESS OF SCANNED COPIES OF THIS PLAN SHEET.

NOTE:
FOR ACCURATE RIGHT OF WAY AND ACCESS DATA,
CONTACT RIGHT OF WAY ENGINEERING AT THE DISTRICT OFFICE.

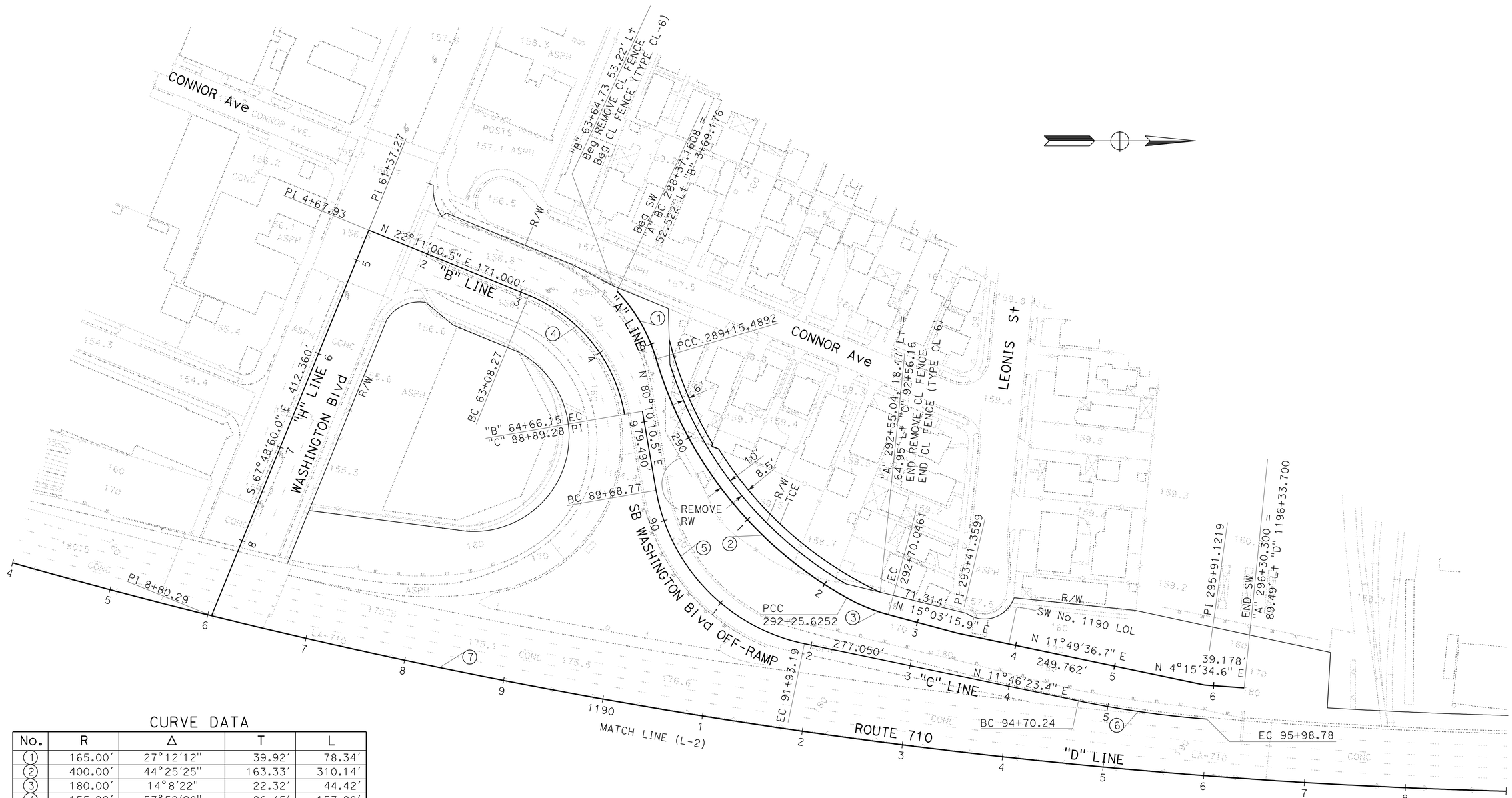

CURVE DATA

No.	R	Δ	T	L
1	165.00′	27°12′12"	39.92′	78.34′
2	400.00′	44°25′25"	163.33′	310.14′
3	180.00′	14°8′22"	22.32′	44.42′
4	155.99′	57°59′20"	86.45′	157.88′
5	188.00′	68°23′46"	127.75′	224.42′
6	1000.07′	7°21′52"	64.36′	128.54′
7	6000.00′	14°28′51"	762.28′	1516.43′

LAYOUT

SCALE: 1" = 50"

L-1

STATE OF CALIFORNIA - DEPARTMENT OF TRANSPORTATION
Caltrans® OFFICE OF DESIGN B

FUNCTIONAL SUPERVISOR: MANSOOR A. KHAN
CALCULATED-DESIGNED BY: STEVE PHAM
CHECKED BY: MANSOOR A. KHAN
REVISED BY
DATE REVISED

LAST REVISION 10-10-09 | DATE PLOTTED => 23-JUN-2010 | TIME PLOTTED => 08:20

Dist	COUNTY	ROUTE	POST MILES TOTAL PROJECT	SHEET No.	TOTAL SHEETS
07	LA	710	22.6	5	100

Steve Pham 1-11-10
REGISTERED CIVIL ENGINEER DATE

6-21-10
PLANS APPROVAL DATE

REGISTERED PROFESSIONAL ENGINEER
STEVE PHAM
No. 67183
Exp. 9/30/10
CIVIL
STATE OF CALIFORNIA

THE STATE OF CALIFORNIA OR ITS OFFICERS OR AGENTS SHALL NOT BE RESPONSIBLE FOR THE ACCURACY OR COMPLETENESS OF ELECTRONIC COPIES OF THIS PLAN SHEET.

NOTE:
FOR ACCURATE RIGHT OF WAY AND ACCESS DATA,
CONTACT RIGHT OF WAY ENGINEERING AT THE DISTRICT OFFICE.

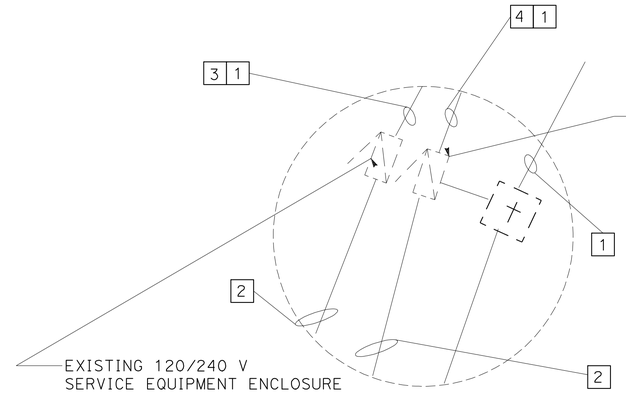

DETAIL "A"

LEGENDS:

1. PROTECT CONDUIT IN PLACE
2. TO EXISTING P.P. No. 1069199E
3. TO EXISTING LIGHTING
4. TO EXISTING RAMP METERING, CCTV, CMS

CURVE DATA

No.	R	Δ	T	L
7	6000.00′	14°28′51"	762.28′	1516.43′
8	136.00′	81°34′27"	117.34′	193.63′
9	200.01′	51°10′17"	95.77′	178.63′
10	399.98′	16°9′24"	56.77′	112.79′
11	6031.28′	1°39′20"	87.14′	174.26′
12	175.00′	81°34′28"	150.99′	249.16′
13	176.00′	61°35′40"	104.91′	189.20′

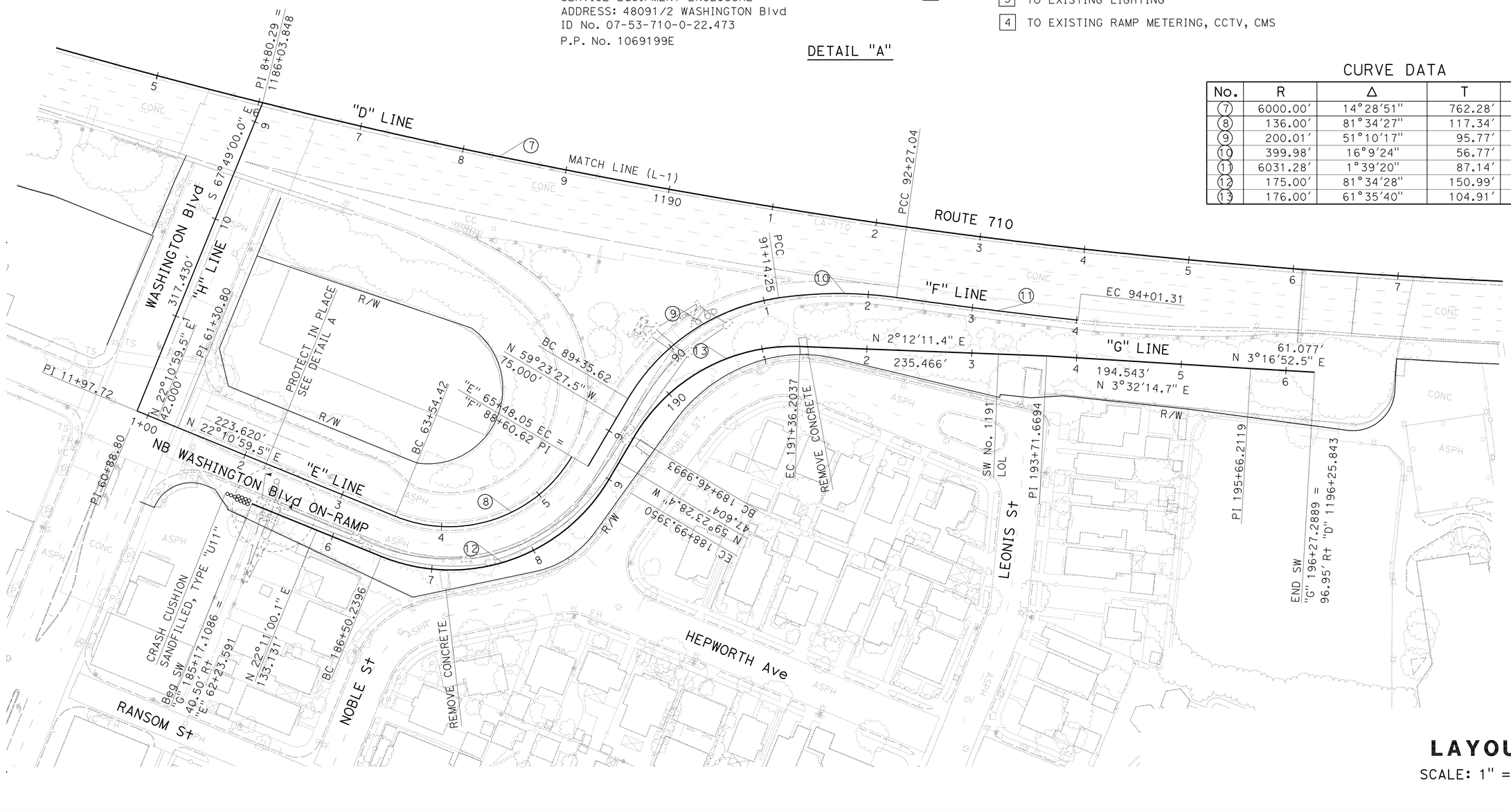

LAYOUT
SCALE: 1" = 50"

L-2

STATE OF CALIFORNIA - DEPARTMENT OF TRANSPORTATION
Caltrans OFFICE OF DESIGN B

FUNCTIONAL SUPERVISOR: MANSOOR A. KHAN
CALCULATED-DESIGNED BY: STEVE PHAM
CHECKED BY: MANSOOR A. KHAN
REVISED BY
DATE REVISED

LAST REVISION 10-18-09
DATE PLOTTED => 23-JUN-2010
TIME PLOTTED => 08:20

Dist	COUNTY	ROUTE	POST MILES TOTAL PROJECT	SHEET No.	TOTAL SHEETS
07	LA	710	22.6	6	100

Steve Pham 1-11-10
REGISTERED CIVIL ENGINEER DATE

6-21-10
PLANS APPROVAL DATE

REGISTERED PROFESSIONAL ENGINEER STEVE PHAM No. 67183 Exp. 9/30/10 CIVIL STATE OF CALIFORNIA

THE STATE OF CALIFORNIA OR ITS OFFICERS OR AGENTS SHALL NOT BE RESPONSIBLE FOR THE ACCURACY OR COMPLETENESS OF SCANNED COPIES OF THIS PLAN SHEET.

LEGEND:

- STRUCTURE EXCAVATION (TYPE Y-1) (AERIALLY DEPOSITED LEAD)
- STRUCTURE BACKFILL (TYPE Y-1) (AERIALLY DEPOSITED LEAD)
- STRUCTURE BACKFILL, NON-HAZARDOUS SOIL(SIFT COVER)

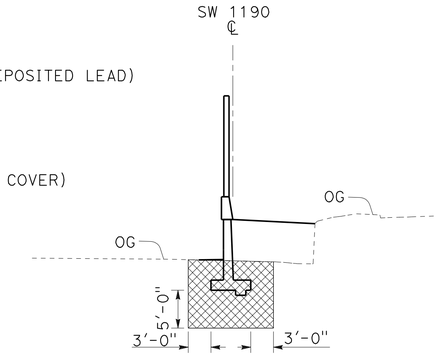

TYPICAL SECTION EXCAVATION
Sta 289+27.16 TO Sta 291+60.00

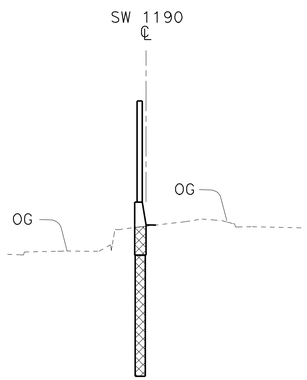

TYPICAL SECTION EXCAVATION
Sta 288+37.16 TO Sta 289+27.16

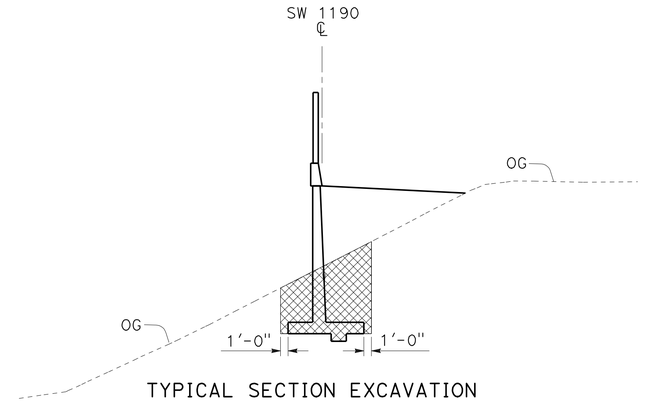

TYPICAL SECTION EXCAVATION
Sta 291+60.00 TO Sta 293+49.40
Sta 293+80.90 TO Sta 296+30.30

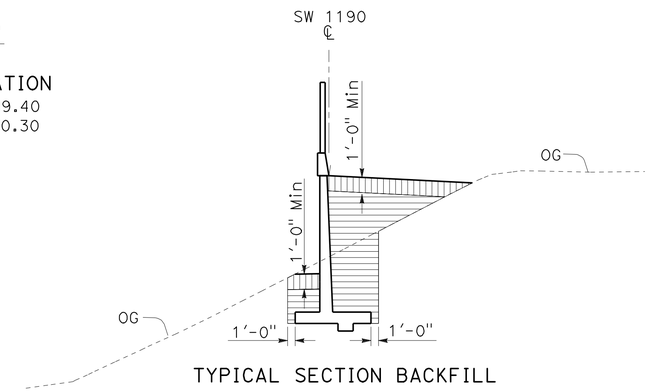

TYPICAL SECTION BACKFILL
Sta 291+60.00 TO Sta 293+49.40
Sta 293+80.90 TO Sta 296+30.30

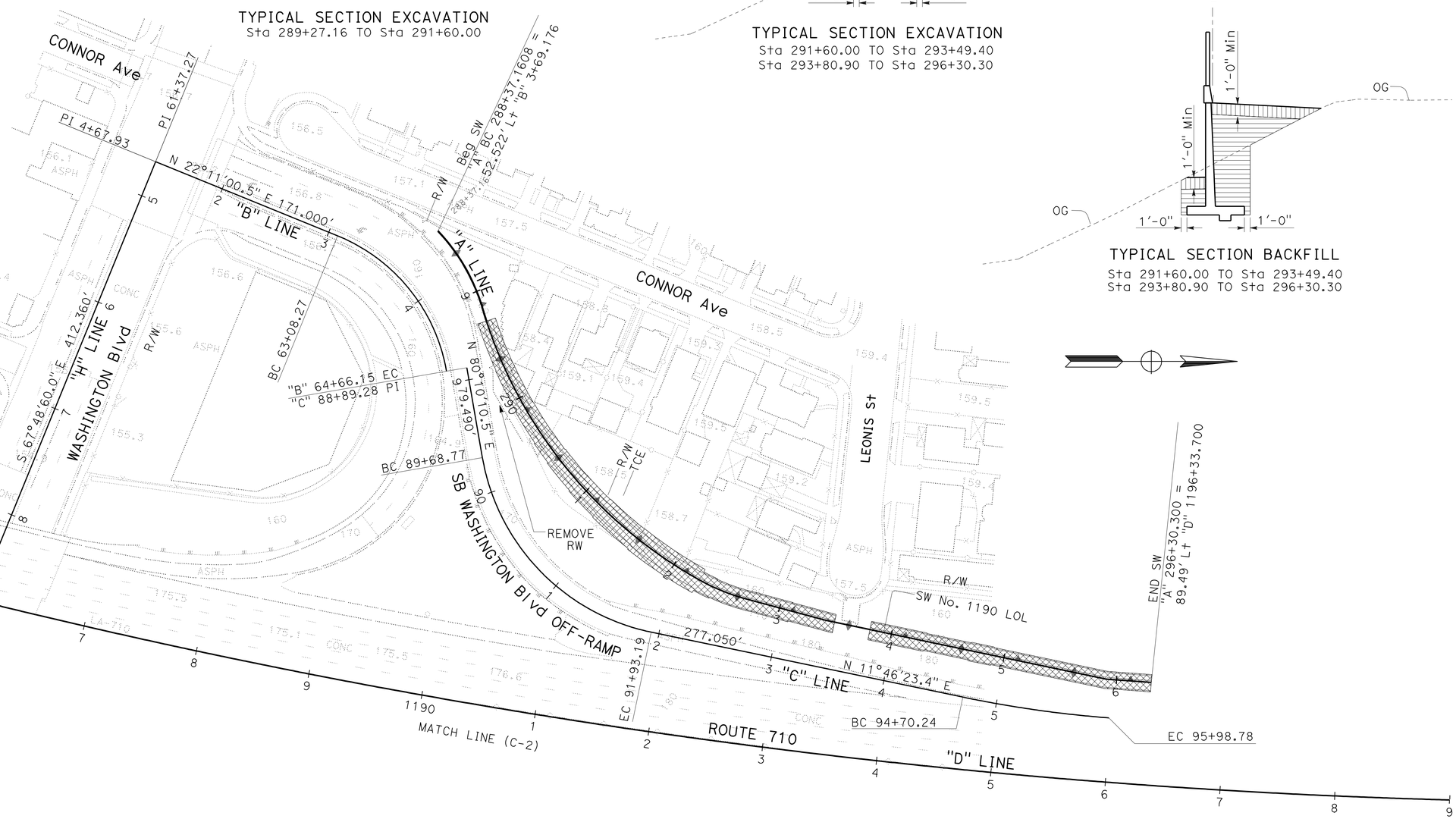

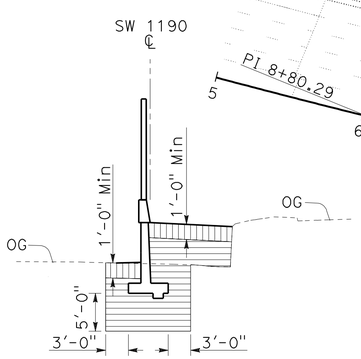

TYPICAL SECTION BACKFILL
Sta 289+27.16 TO Sta 291+60.00

CONSTRUCTION DETAILS

NO SCALE

C-1

STATE OF CALIFORNIA - DEPARTMENT OF TRANSPORTATION
Caltrans® OFFICE OF DESIGN B

FUNCTIONAL SUPERVISOR: MANSOOR A. KHAN
CALCULATED-DESIGNED BY: STEVE PHAM
CHECKED BY: MANSOOR A. KHAN
REVISED BY
DATE REVISED

LAST REVISION 10-10-09
DATE PLOTTED => 23-JUN-2010
TIME PLOTTED => 08:20

Dist	COUNTY	ROUTE	POST MILES TOTAL PROJECT	SHEET No.	TOTAL SHEETS
07	LA	710	22.6	7	100

Steve Pham 4-15-10
REGISTERED CIVIL ENGINEER DATE

6-21-10
PLANS APPROVAL DATE

REGISTERED PROFESSIONAL ENGINEER
STEVE PHAM
No. 67183
Exp. 9/30/10
CIVIL
STATE OF CALIFORNIA

THE STATE OF CALIFORNIA OR ITS OFFICERS OR AGENTS SHALL NOT BE RESPONSIBLE FOR THE ACCURACY OR COMPLETENESS OF ELECTRONIC COPIES OF THIS PLAN SHEET.

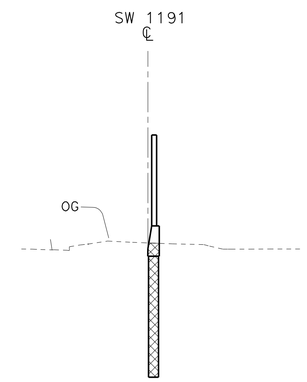

TYPICAL SECTION EXCAVATION
Sta 185+17.11 TO Sta 189+80.00

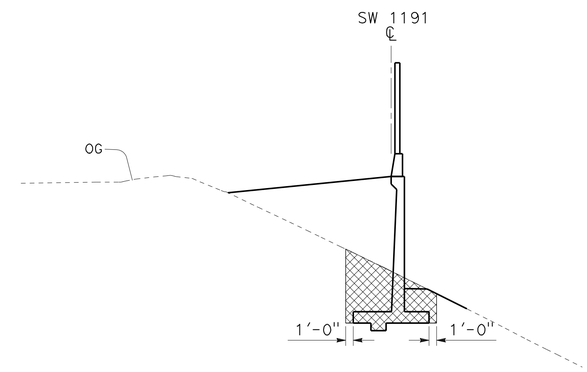

TYPICAL SECTION EXCAVATION
Sta 189+80.00 TO Sta 193+47.71
Sta 194+30.00 TO Sta 196+27.29

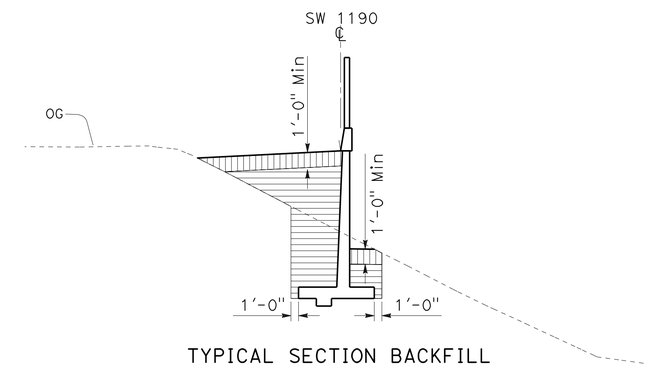

TYPICAL SECTION BACKFILL
Sta 189+80.00 TO Sta 193+47.71
Sta 194+30.00 TO Sta 196+27.29

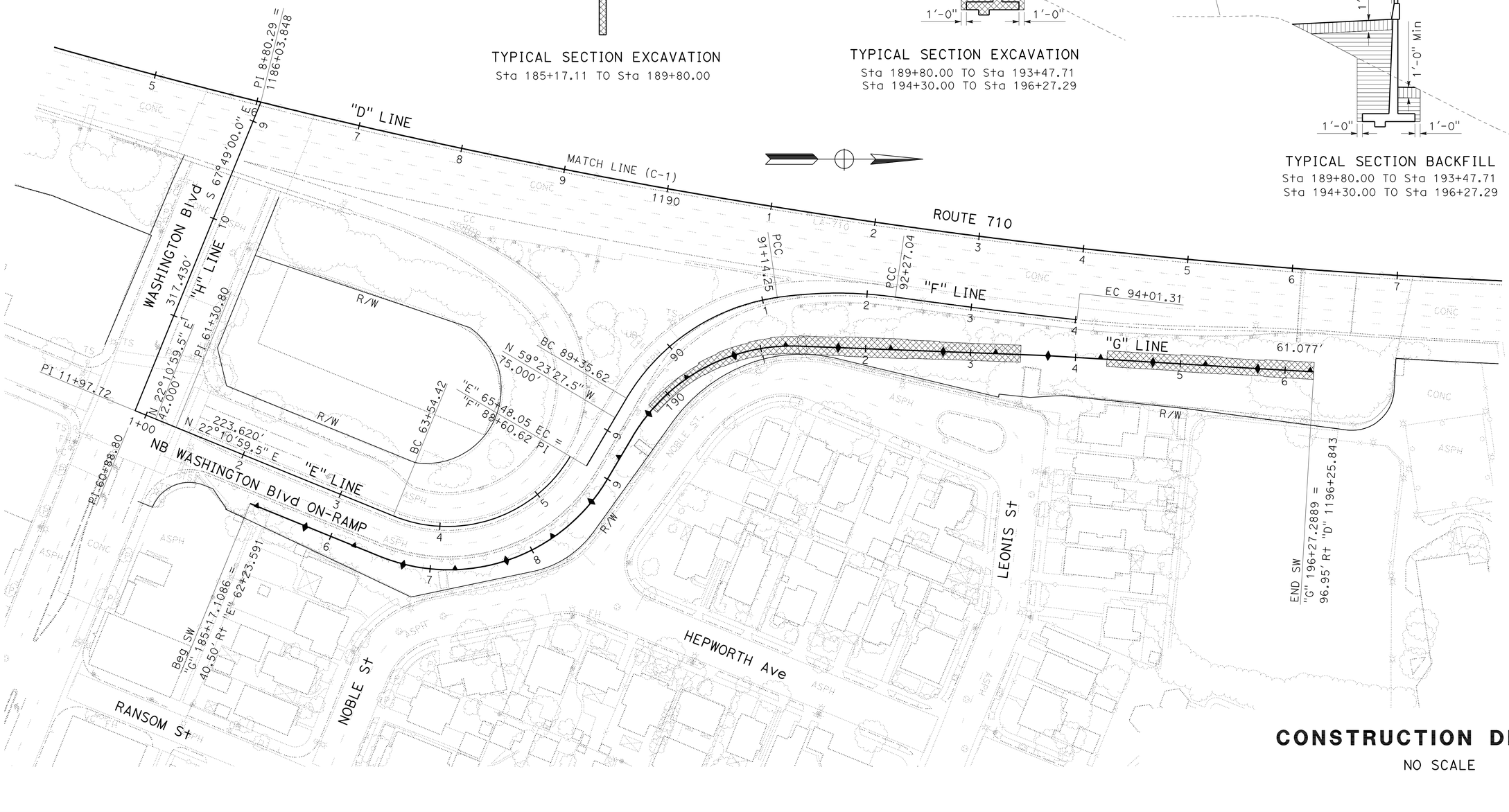

CONSTRUCTION DETAILS

NO SCALE

C-2

STATE OF CALIFORNIA - DEPARTMENT OF TRANSPORTATION
Caltrans OFFICE OF DESIGN B

FUNCTIONAL SUPERVISOR: MANSOOR A. KHAN
CALCULATED-DESIGNED BY: STEVE PHAM
CHECKED BY: MANSOOR A. KHAN
REVISED BY
DATE REVISED

LAST REVISION 10-18-09
DATE PLOTTED => 23-JUN-2010
TIME PLOTTED => 08:20

Dist	COUNTY	ROUTE	POST MILES TOTAL PROJECT	SHEET No.	TOTAL SHEETS
07	LA	710	22.6	8	100

Edgardo D. Gata 4-29-10
REGISTERED CIVIL ENGINEER DATE

6-21-10
PLANS APPROVAL DATE

REGISTERED PROFESSIONAL ENGINEER
ED GATA
No. C40706
Exp. 3-31-11
CIVIL
STATE OF CALIFORNIA

THE STATE OF CALIFORNIA OR ITS OFFICERS OR AGENTS SHALL NOT BE RESPONSIBLE FOR THE ACCURACY OR COMPLETENESS OF ELECTRONIC COPIES OF THIS PLAN SHEET.

NOTE:

1. THE CONTRACTOR SHALL VERIFY LOCATIONS AND ELEVATIONS OF THE EXISTING DRAINAGE FACILITIES BEFORE COMMENCEMENT OF WORK.

LEGEND:

⬡ DRAINAGE SYSTEM No.

◯ DRAINAGE UNIT

ABBREVIATIONS:

CB - CATCH BASIN
GSRD - GROSS SOLID REMOVAL DEVICE

1 (a) JC-3C WITH 5' Conc Trans
(b) 24" RCP

2 (a) CONCRETE TRANSITION
(b) 24" RCP
(c) GD-1 INLET (CAP)
(d) 24" RCP

3 (a) JC-3C WITH 5' Conc Trans
(b) 24" RCP

4 (a) REMOVE 12" RCP
(a) JC-3C WITH 5' Conc Trans

5 (a) REMOVE TYPE B DRAIN

6 (a) TYPE B DRAIN
(b) TYPE B DRAIN

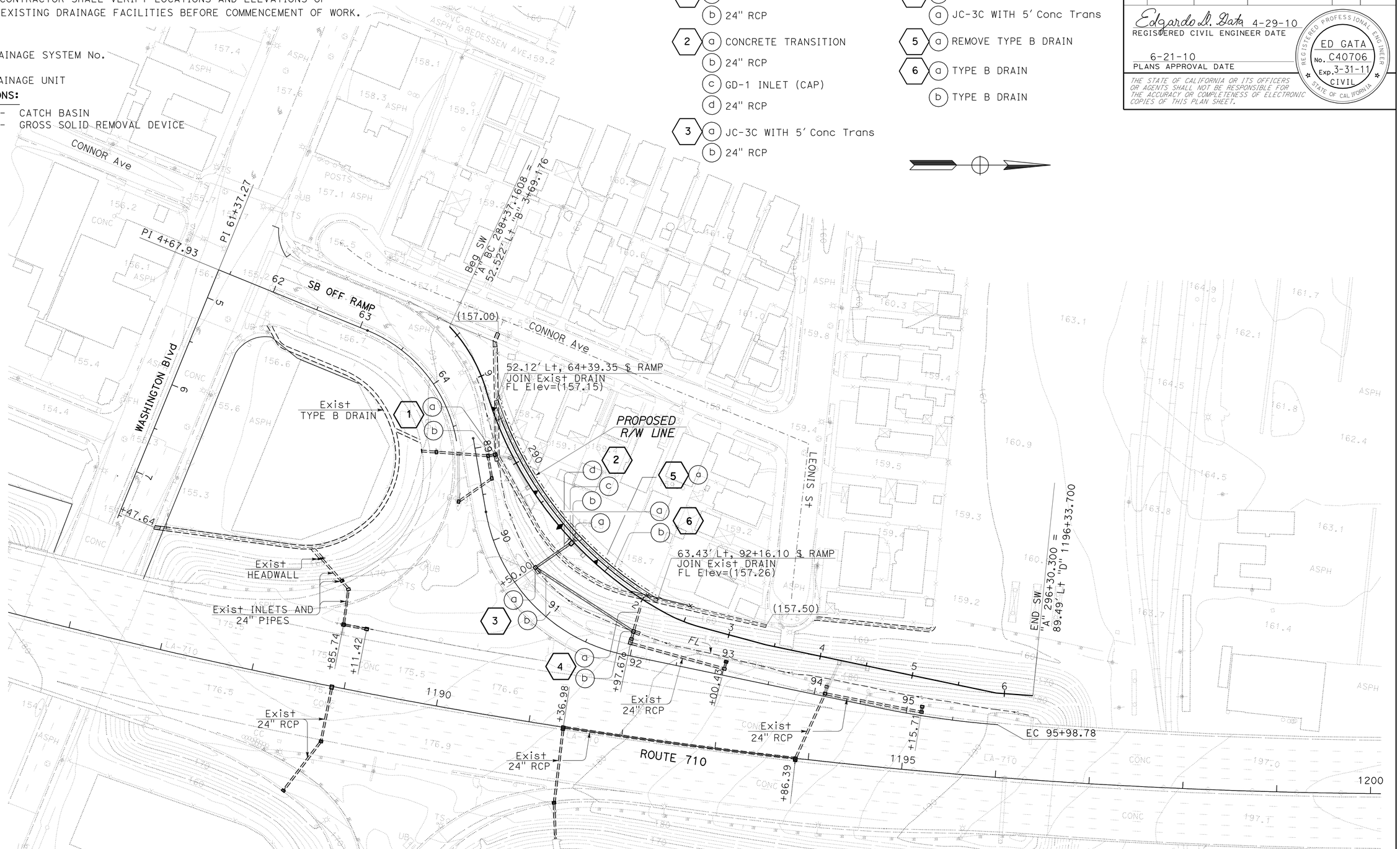

DRAINAGE PLAN

SCALE: 1" = 50"

D-1

THIS PLAN ACCURATE FOR DRAINAGE WORK ONLY

STATE OF CALIFORNIA - DEPARTMENT OF TRANSPORTATION
Caltrans
HYDRAULICS

FUNCTIONAL SUPERVISOR: RALPH M. SASAKI
CALCULATED-DESIGNED BY: VIC VALIDO
CHECKED BY: ED GATA
REVISED BY
DATE REVISED

LAST REVISION 00-00-00
DATE PLOTTED => 23-JUN-2010
TIME PLOTTED => 08:21

Dist	COUNTY	ROUTE	POST MILES TOTAL PROJECT	SHEET No.	TOTAL SHEETS
07	LA	710	22.6	9	100

Edgardo D. Gata 4-29-10
REGISTERED CIVIL ENGINEER DATE

6-21-10
PLANS APPROVAL DATE

REGISTERED PROFESSIONAL ENGINEER
ED GATA
No. C40706
Exp. 3-31-11
CIVIL
STATE OF CALIFORNIA

THE STATE OF CALIFORNIA OR ITS OFFICERS OR AGENTS SHALL NOT BE RESPONSIBLE FOR THE ACCURACY OR COMPLETENESS OF ELECTRONIC COPIES OF THIS PLAN SHEET.

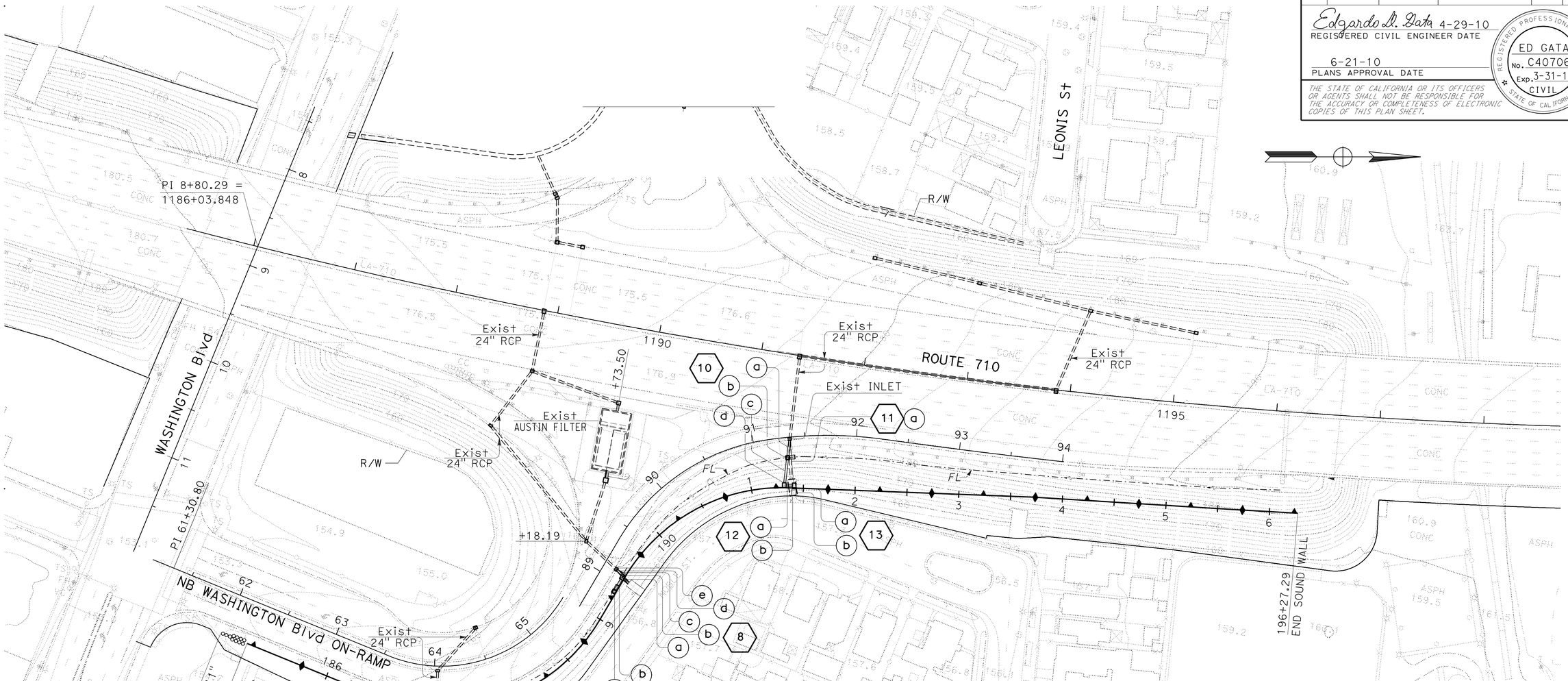

7 a REMOVE 24" RCP
b TYPE G2 INLET (Rev) CAP
c 24" RCP
d REMOVE Conc TRANSITION
e 24" CONCRETE FES

8 a 24" RCP
b REMOVE 24" RCP
c TYPE G2 INLET (CAP)
d 24" RCP

9 a JC-3C WITH 5' Conc Trans
b 24" RCP

10 a 24" RCP
b JC-3C WITH 5' Conc Trans
c 24" RCP
d GD-1 INLET (CAP)

11 a REMOVE 24" RCP

12 a 24" RCP
b GD-1 INLET (CAP)

13 a 24" RCP
b Sdwk CULVERT TRANSITION

DRAINAGE PLAN

SCALE: 1" = 50'

D-2

THIS PLAN ACCURATE FOR DRAINAGE WORK ONLY

STATE OF CALIFORNIA - DEPARTMENT OF TRANSPORTATION
Caltrans
HYDRAULICS

FUNCTIONAL SUPERVISOR: RALPH M. SASAKI
CALCULATED-DESIGNED BY: VIC VALIDO
CHECKED BY: ED GATA
REVISED BY
DATE REVISED

LAST REVISION 00-00-00
DATE PLOTTED => 23-JUN-2010
TIME PLOTTED => 08:21

BORDER LAST REVISED 3/1/2007
RELATIVE BORDER SCALE IS IN INCHES 0 1 2 3
USERNAME => trpierce
DGN FILE => 700234ia002.dgn
CU 07312
EA 002341

Dist	COUNTY	ROUTE	POST MILES TOTAL PROJECT	SHEET No.	TOTAL SHEETS
07	LA	710	22.6	10	100

Edgardo D. Gata 4-29-10
REGISTERED CIVIL ENGINEER DATE

6-21-10
PLANS APPROVAL DATE

REGISTERED PROFESSIONAL ENGINEER
ED GATA
No. C40706
Exp. 3-31-11
CIVIL
STATE OF CALIFORNIA

THE STATE OF CALIFORNIA OR ITS OFFICERS OR AGENTS SHALL NOT BE RESPONSIBLE FOR THE ACCURACY OR COMPLETENESS OF ELECTRONIC COPIES OF THIS PLAN SHEET.

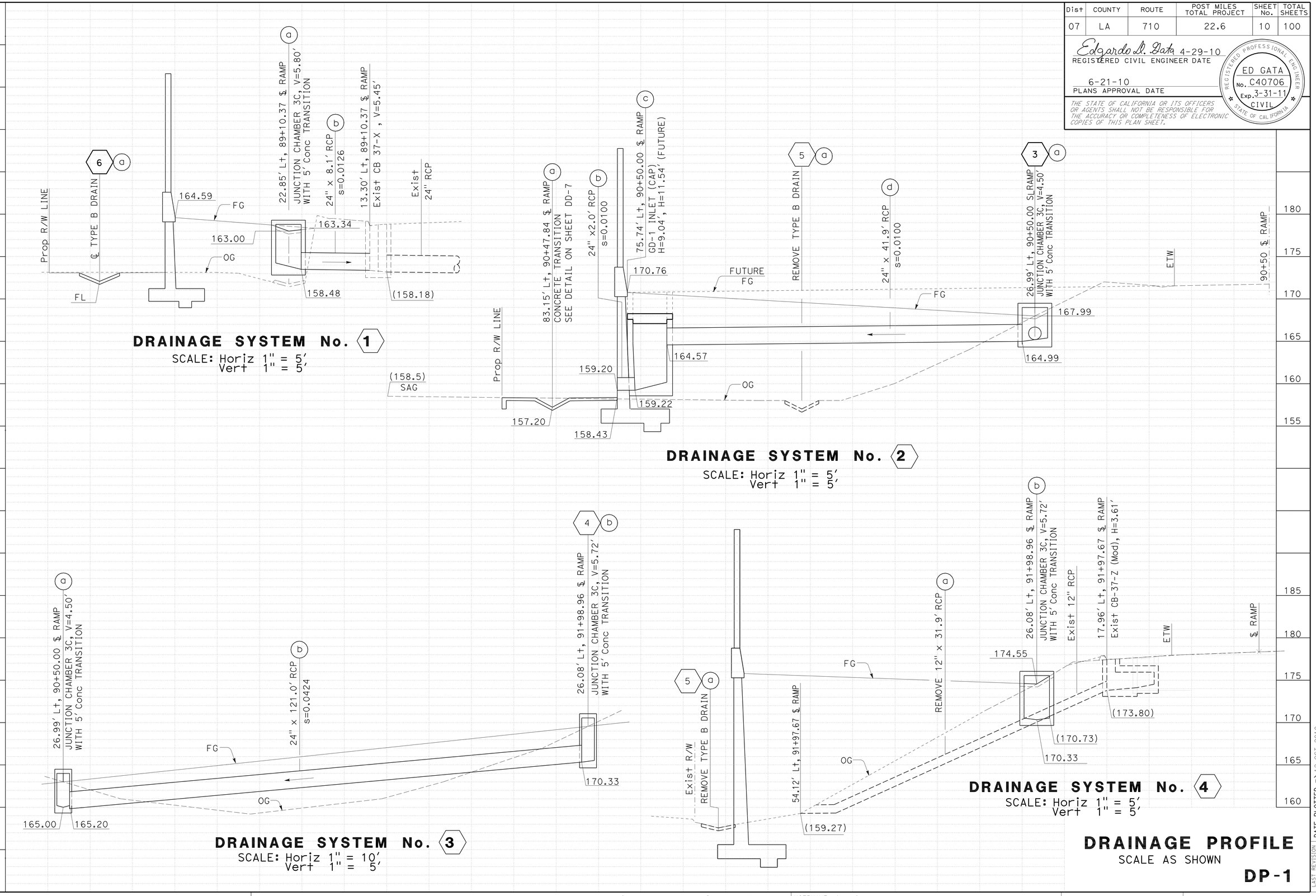

DRAINAGE PROFILE

SCALE AS SHOWN

DP-1

STATE OF CALIFORNIA - DEPARTMENT OF TRANSPORTATION	FUNCTIONAL SUPERVISOR	CALCULATED-DESIGNED BY	CHECKED BY	REVISED BY	DATE REVISED
Caltrans HYDRAULICS	RALPH M. SASAKI	VIC VALIDO	ED GATA		

LAST REVISION 00-00-00 | DATE PLOTTED => 12-OCT-2010 | TIME PLOTTED => 12:52

Dist	COUNTY	ROUTE	POST MILES TOTAL PROJECT	SHEET No.	TOTAL SHEETS
07	LA	710	22.6	11	100

Edgardo D. Gata 4-29-10
REGISTERED CIVIL ENGINEER DATE

6-21-10
PLANS APPROVAL DATE

REGISTERED PROFESSIONAL ENGINEER
ED GATA
No. C40706
Exp. 3-31-11
CIVIL
STATE OF CALIFORNIA

THE STATE OF CALIFORNIA OR ITS OFFICERS OR AGENTS SHALL NOT BE RESPONSIBLE FOR THE ACCURACY OR COMPLETENESS OF ELECTRONIC COPIES OF THIS PLAN SHEET.

NOTE:
FOR DRAINAGE SYSTEM Nos. 5
AND 6, SEE SHEET DD-7.

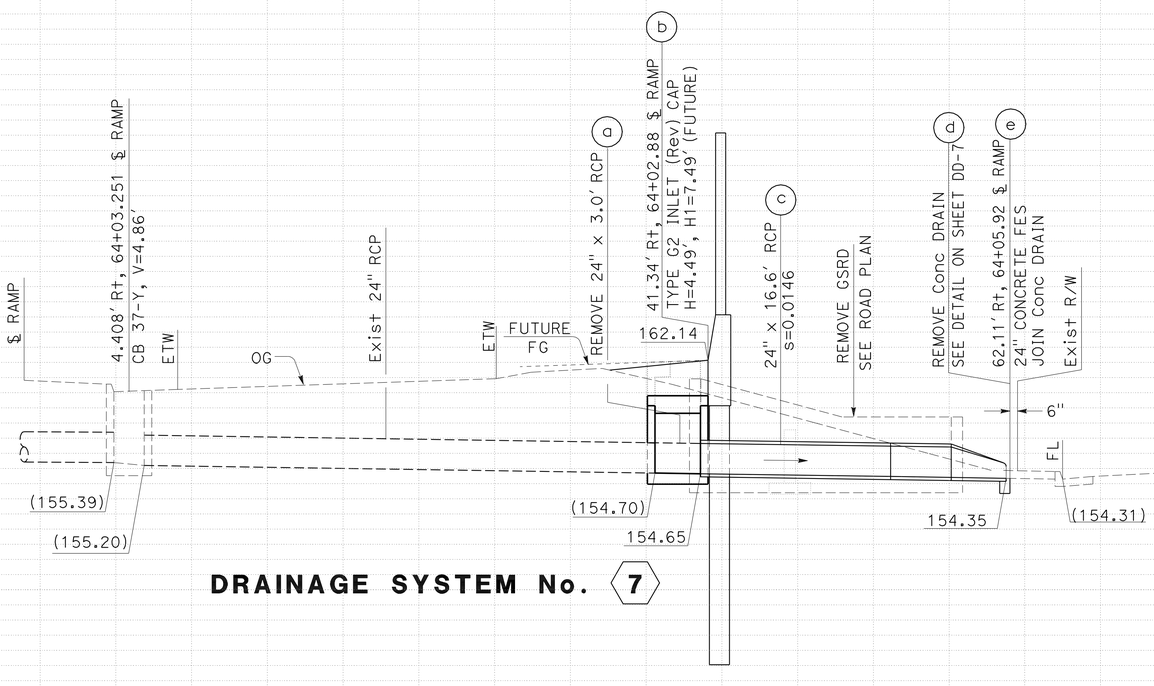

DRAINAGE SYSTEM No. 7

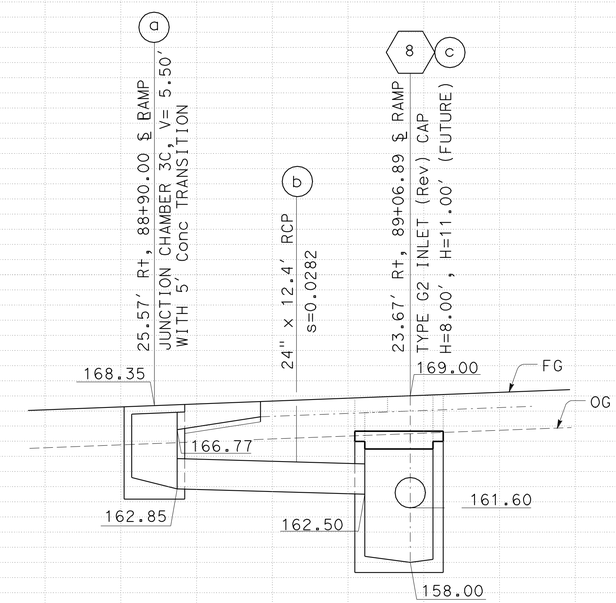

DRAINAGE SYSTEM No. 9

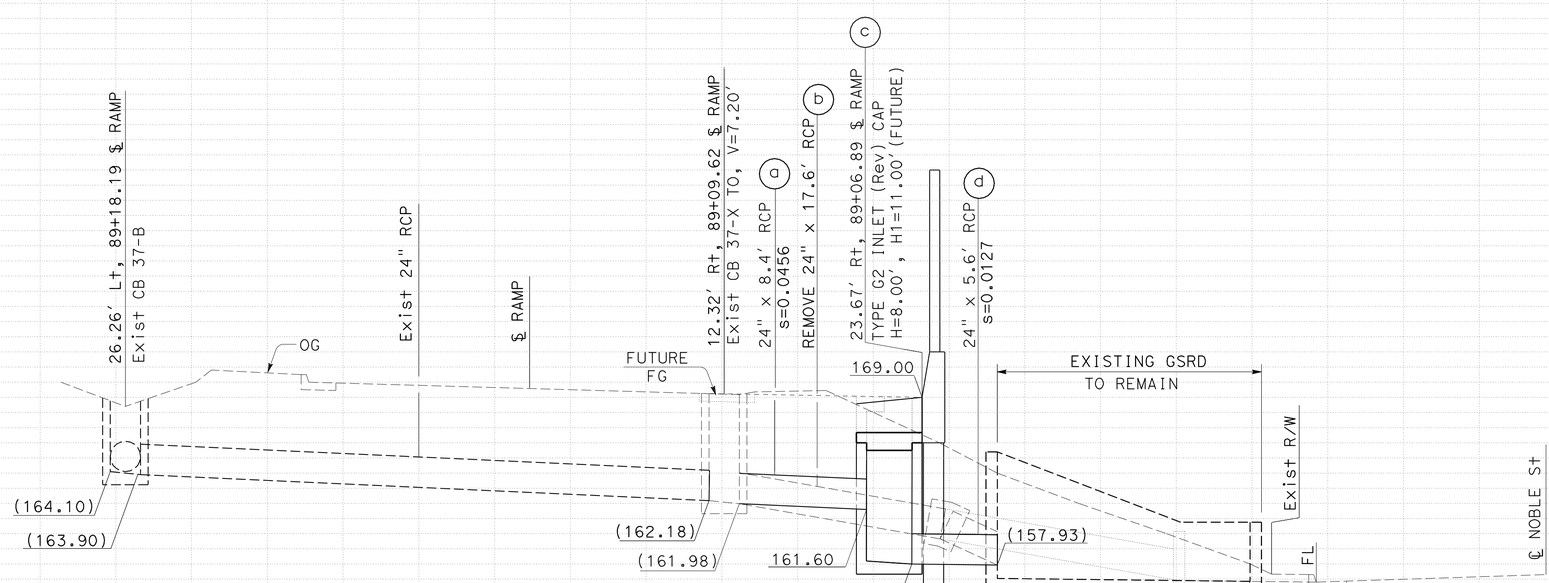

DRAINAGE SYSTEM No. 8

DRAINAGE PROFILE

SCALE: Horiz 1" = 5′
Vert 1" = 5′

DP-2

STATE OF CALIFORNIA - DEPARTMENT OF TRANSPORTATION
Caltrans **HYDRAULICS**

FUNCTIONAL SUPERVISOR: RALPH M. SASAKI

CALCULATED-DESIGNED BY: VIC VALIDO
CHECKED BY: ED GATA

REVISED BY
DATE REVISED

LAST REVISION 00-00-00
DATE PLOTTED => 23-JUN-2010
TIME PLOTTED => 08:21

Dist	COUNTY	ROUTE	POST MILES TOTAL PROJECT	SHEET No.	TOTAL SHEETS
07	LA	710	22.6	12	100

Edgardo D. Gata 4-29-10
REGISTERED CIVIL ENGINEER DATE

6-21-10
PLANS APPROVAL DATE

REGISTERED PROFESSIONAL ENGINEER
ED GATA
No. C40706
Exp. 3-31-11
CIVIL
STATE OF CALIFORNIA

THE STATE OF CALIFORNIA OR ITS OFFICERS OR AGENTS SHALL NOT BE RESPONSIBLE FOR THE ACCURACY OR COMPLETENESS OF ELECTRONIC COPIES OF THIS PLAN SHEET.

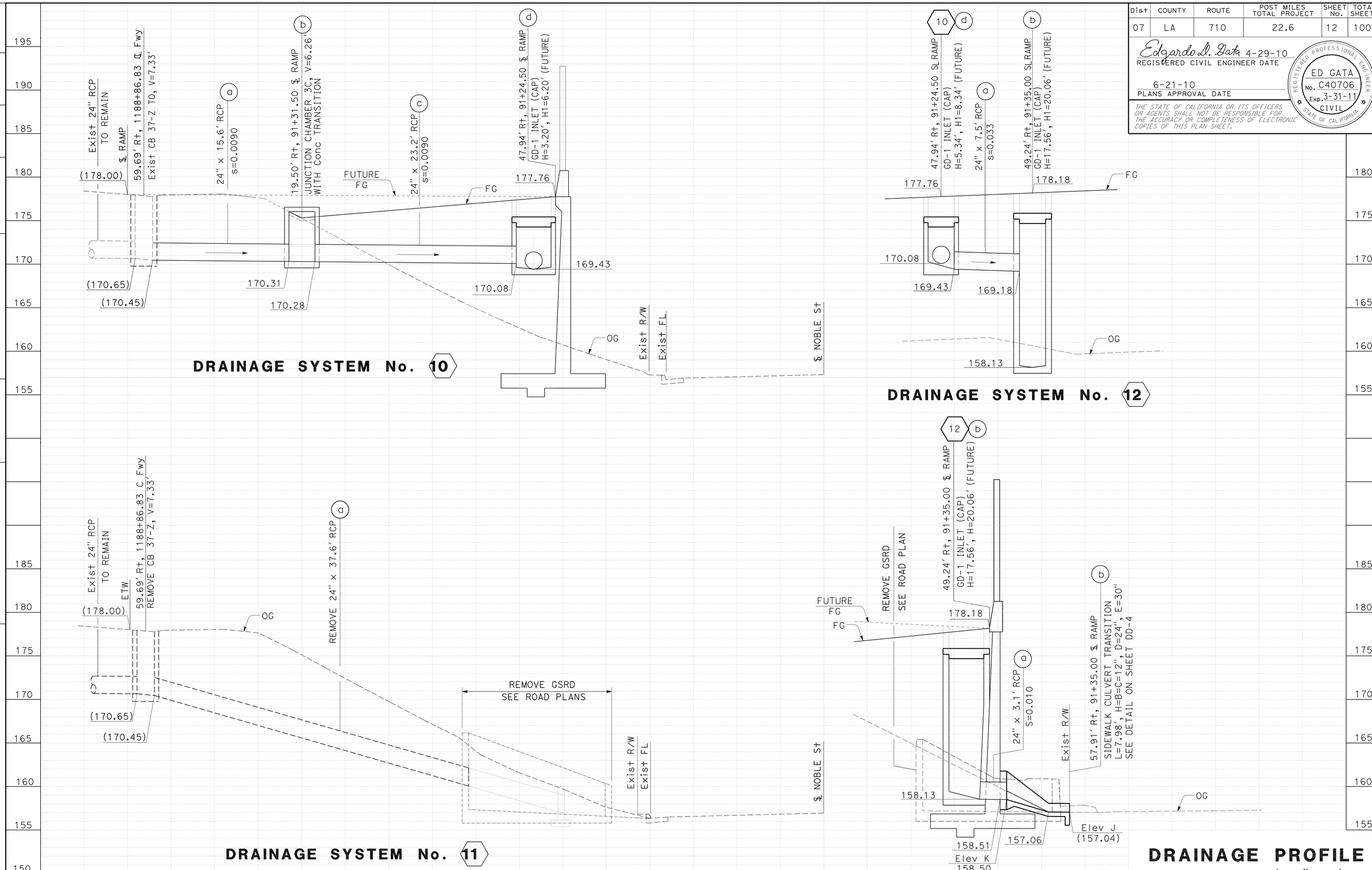

DRAINAGE PROFILE

SCALE: Horiz 1" = 5'
Vert 1" = 5'

DP-3

STATE OF CALIFORNIA - DEPARTMENT OF TRANSPORTATION
Caltrans
HYDRAULICS

FUNCTIONAL SUPERVISOR: RALPH M. SASAKI
CALCULATED-DESIGNED BY: VIC VALIDO
CHECKED BY: ED GATA
REVISED BY / DATE REVISED

LAST REVISION 00-00-00
DATE PLOTTED => 12-OCT-2010
TIME PLOTTED => 12:54

Dist	COUNTY	ROUTE	POST MILES TOTAL PROJECT	SHEET No.	TOTAL SHEETS
07	LA	710	22.6	13	100

Edgardo L. Gata 4-29-10
REGISTERED CIVIL ENGINEER DATE

6-21-10
PLANS APPROVAL DATE

REGISTERED PROFESSIONAL ENGINEER ED GATA No. C40706 Exp. 3-31-11 CIVIL STATE OF CALIFORNIA

THE STATE OF CALIFORNIA OR ITS OFFICERS OR AGENTS SHALL NOT BE RESPONSIBLE FOR THE ACCURACY OR COMPLETENESS OF ELECTRONIC COPIES OF THIS PLAN SHEET.

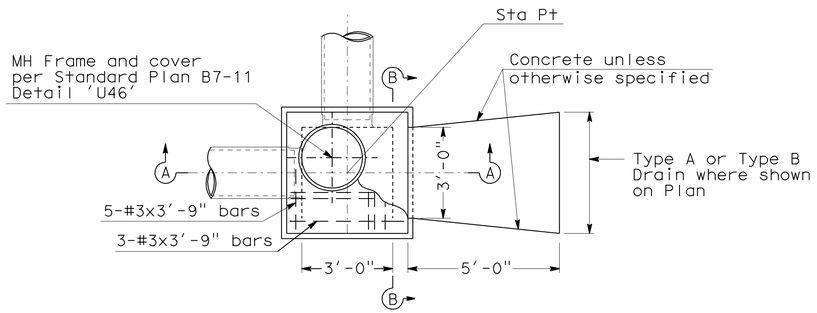

PLAN

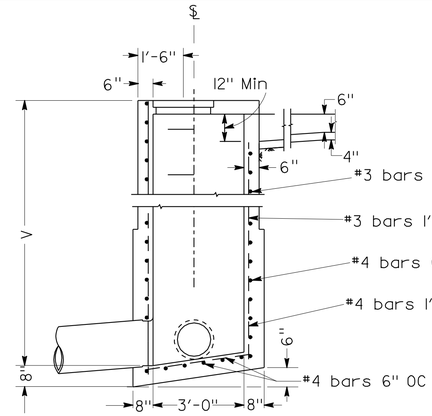

SECTION A-A

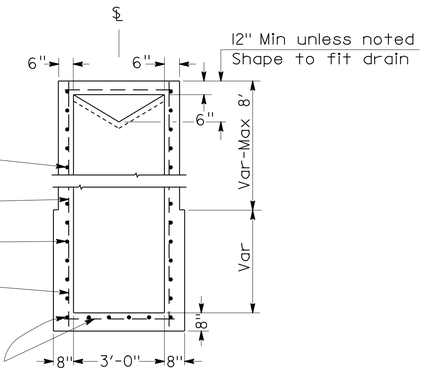

SECTION B-B

JUNCTION CHAMBER NO 3-C (JC 3-C)

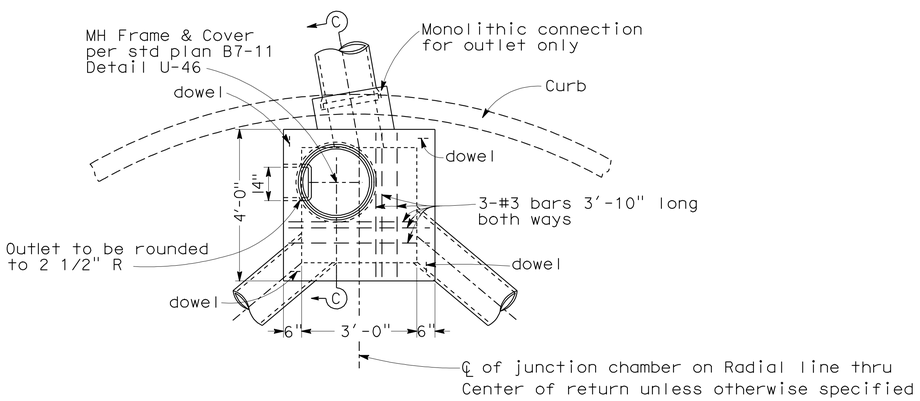

PLAN

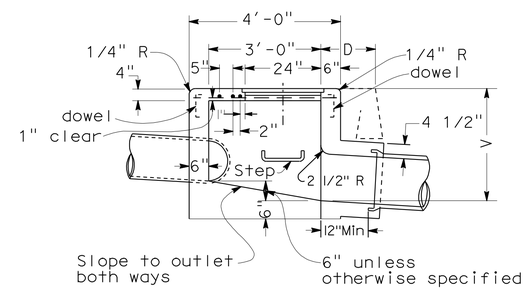

SECTION C-C

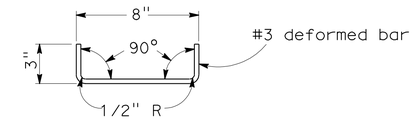

DETAIL OF DOWEL

One at each corner to be used
when top is poured separate

JUNCTION CHAMBER No. 3 (JC 3)

NOTES

1. CONNECTION pipes may be placed in any position around the walls provided they point in the proper direction and the position is otherwise consistent with the Drainage Plan.
2. DIMENSIONS: D=18" unless otherwise specified.
   V=3'-6" unless otherwise specified.
3. EXPOSED SURFACE of the Junction Chamber shall conform in slope, grade, color, finish and scoring to existing sidewalk adjacent to the Junction Chamber. Where no sidewalk exists, the top shall be finished to conform to standard sidewalk slopeand finish, and scoring lines shall conform as nearly as possible to 20" squares.
4. FLOOR of chamber shall be given a steel-troweled finish and shall slope from all directions to outlet.
5. MANHOLE shall be placed in corner nearest outlet.
6. OUTLET pipe shall be connected to Junction Chamber with Monolithic Connection.
7. REINFORCING steel not required in walls when V=6' or less.
8. STEPS: None required where V=3'-6" or less.
   Install one step 16"± above floor when V is more than 3'-6" and less than 5'-0".
   Where V is more than 5'-0" steps shall be evenly spaced at 12"± intervals from 16"± above floor to within 12"± of the top of the box.

DRAINAGE DETAILS
NO SCALE
DD-1

STATE OF CALIFORNIA - DEPARTMENT OF TRANSPORTATION
Caltrans HYDRAULICS
FUNCTIONAL SUPERVISOR RALPH M. SASAKI
CALCULATED-DESIGNED BY VIC VALIDO
CHECKED BY ED GATA
REVISED BY
DATE REVISED

LAST REVISION 00-00-00 | DATE PLOTTED => 23-JUN-2010 | TIME PLOTTED => 08:21

Dist	COUNTY	ROUTE	POST MILES TOTAL PROJECT	SHEET No.	TOTAL SHEETS
07	LA	710	22.6	14	100

Edgardo S. Gata 4-29-10
REGISTERED CIVIL ENGINEER DATE

6-21-10
PLANS APPROVAL DATE

REGISTERED PROFESSIONAL ENGINEER ED GATA No. C40706 Exp. 3-31-11 CIVIL STATE OF CALIFORNIA

THE STATE OF CALIFORNIA OR ITS OFFICERS OR AGENTS SHALL NOT BE RESPONSIBLE FOR THE ACCURACY OR COMPLETENESS OF ELECTRONIC COPIES OF THIS PLAN SHEET.

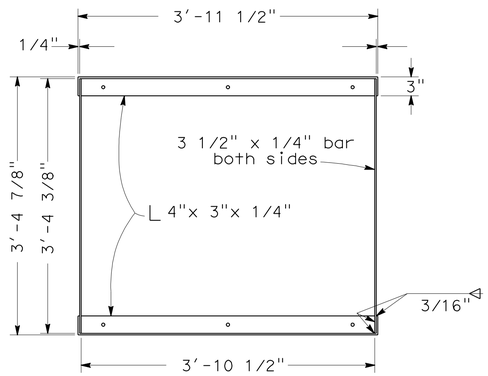

GRATE FRAME DETAIL

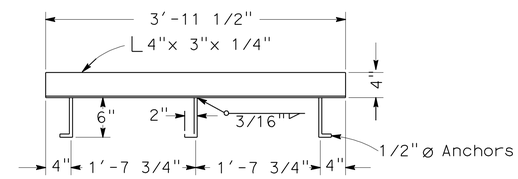

ANCHOR PLACEMENT DETAIL

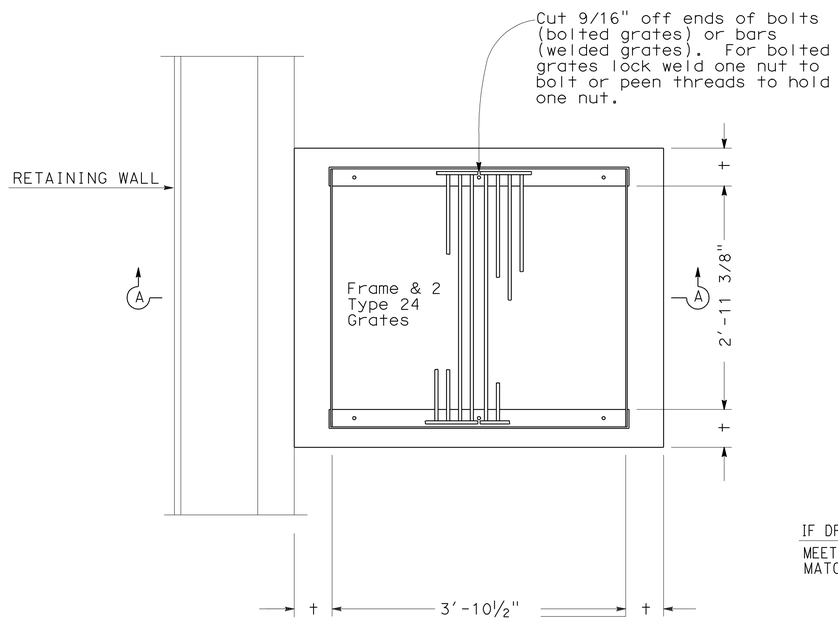

PLAN

For grate, frame and anchor placement details see Standard Plans RSP D77-A and D77-B

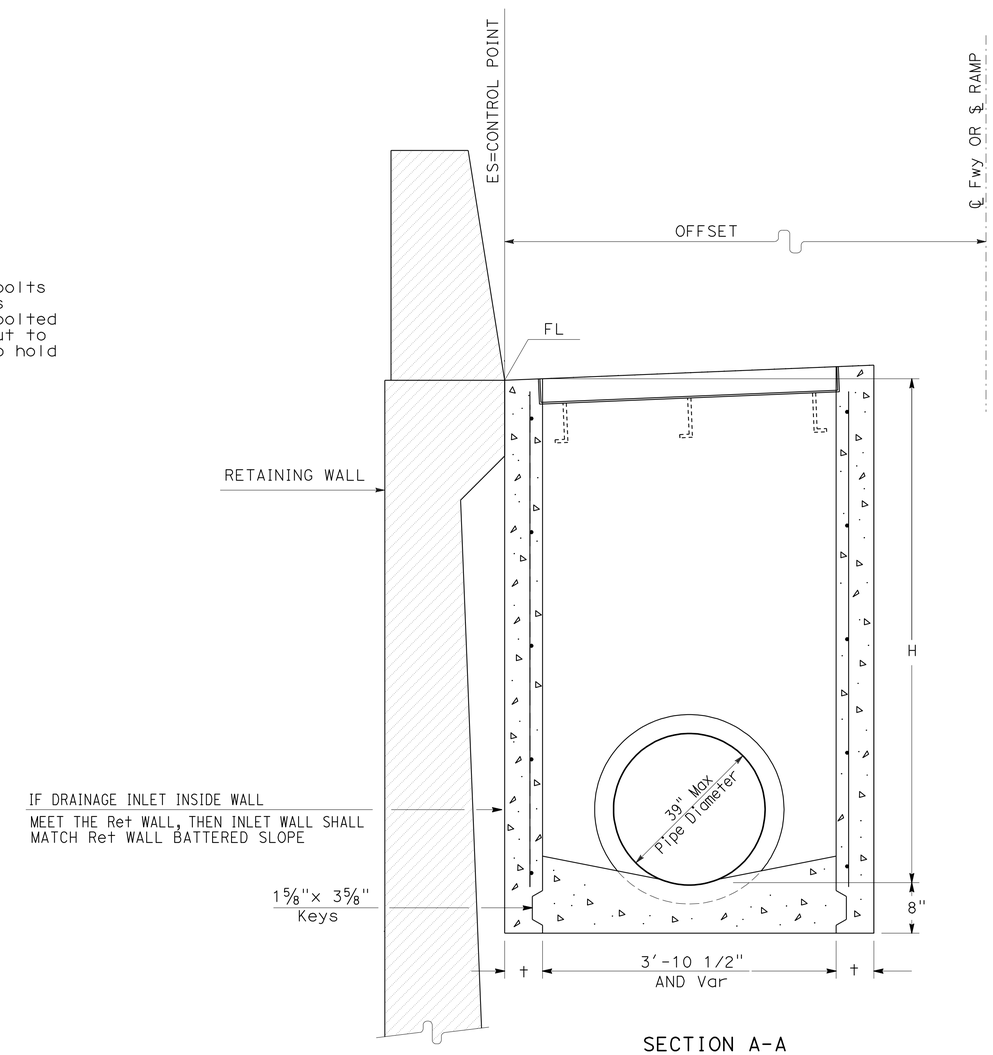

SECTION A-A

(For pipe diameters 39" or less)

GD-1 INLET

NOTES:

1. 'H' is the difference in elevation between the outlet pipe flow line and the flow line of the grates.
2. Steps - None required when 'H' is 3'-6" or less. Install one step 16"± above floor when 'H' is more than 3'-6" and less than 5'-0". Where 'H' is more than 5'-0" steps shall be evenly spaced @ 12"± intervals from 16"± above floor to within 12"± of the top of the box. Place steps in wall without pipe openings. See Standard Plan D74C for step detail.
3. Pipe(s) can be placed in any wall.
4. Reinforcing steel not required in walls when H=6' or less.
5. Reinforcing steel in walls shall be #4 bars @ 18"± centers placed 1 1/2" clear to inside of box.

MISCELLANEOUS IRON & STEEL

Inlet Type	Grate Type	Weight
GD-1	24 - 12	580

H	t
8'-0" or less	6"
8'-1" to 20'- 0"	8"
20'-1" to 24'- 0"	10"

DRAINAGE DETAILS

NO SCALE

DD-2

STATE OF CALIFORNIA - DEPARTMENT OF TRANSPORTATION
Caltrans HYDRAULICS
FUNCTIONAL SUPERVISOR RALPH M. SASAKI
CALCULATED-DESIGNED BY VIC VALIDO
CHECKED BY ED GATA
REVISED BY
DATE REVISED

LAST REVISION 00-00-00
DATE PLOTTED => 23-JUN-2010
TIME PLOTTED => 08:21

Dist	COUNTY	ROUTE	POST MILES TOTAL PROJECT	SHEET No.	TOTAL SHEETS
07	LA	710	22.6	15	100

Edgardo M. Gata 4-29-10
REGISTERED CIVIL ENGINEER DATE

6-21-10
PLANS APPROVAL DATE

REGISTERED PROFESSIONAL ENGINEER
ED GATA
No. C40706
Exp. 3-31-11
CIVIL
STATE OF CALIFORNIA

THE STATE OF CALIFORNIA OR ITS OFFICERS OR AGENTS SHALL NOT BE RESPONSIBLE FOR THE ACCURACY OR COMPLETENESS OF ELECTRONIC COPIES OF THIS PLAN SHEET.

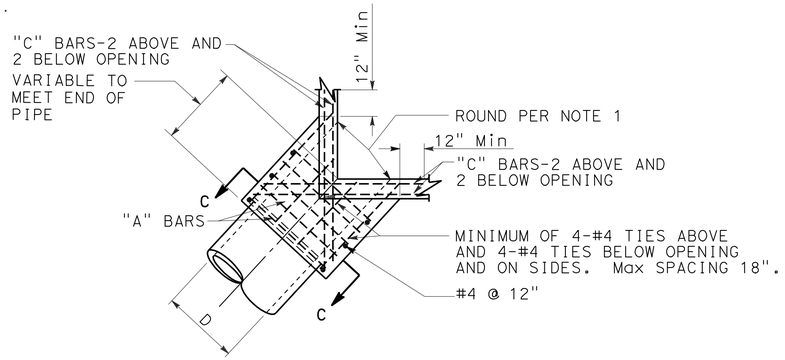

PLAN
CORNER CONNECTION

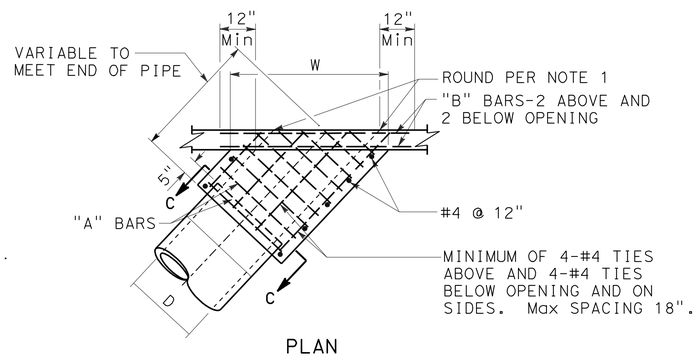

PLAN
SIDE CONNECTION

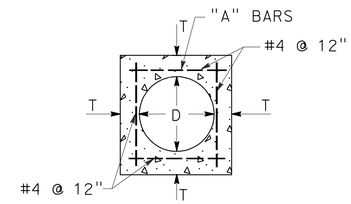

SECTION C-C

D	T	"A"	"B"-"C"
12"	4-½"	#4 @ 6"	#5
15"	4-½"		
18"	5"		
21"	5-½"		
24"	6"		
27"	6-½"		
30"	7"		
33"	7"		
36"	7-½"		
39"	8"		
42"	8"		
45"	8"	#5 @ 6"	#6
48"	8"		
51"	8"		
54"	8"		
57"	10"		
60"	10"		
63"	10"		
66"	11"		
69"	11"		
72"	11"		

NOTES:

1. ROUND EDGE OF OUTLET TO 3" RADIUS.
2. REINFORCEMENT SHALL BE 1½" CLEAR FROM THE FACE OF CONCRETE.
3. IN CONNECTING TO AN EXISTING STRUCTURE BREAK OUT PORTIONS OF THE EXISTING STRUCTURE SIX INCHES OUTSIDE ITS INTERSECTION WITH THE NEW CONNECTION. BEND ENDS OF #4 BARS OVER CONNECTION OPENING AS REQUIRED.

MONOLITHIC CONNECTION
FOR PIPES 12" TO 72" INCLUSIVE

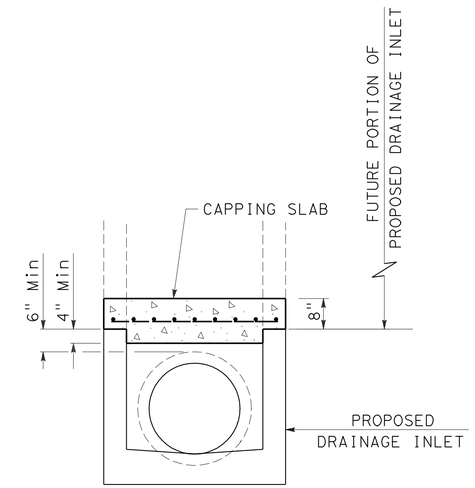

SECTION A-A

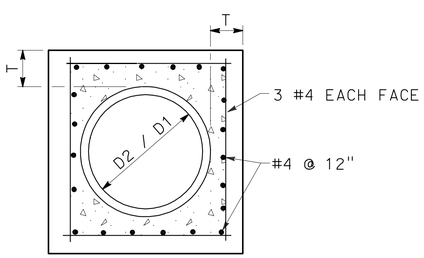

SECTION B-B

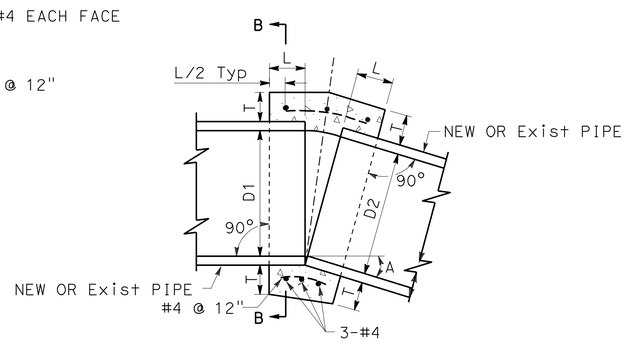

CONCRETE COLLAR

D	L	T
12"	1.0'	4"
18"	1.0'	5"
24"	1.0'	6"
36"	1.5'	8"
48"	1.5'	10"
54"	1.5'	10"
60"	1.75'	11"
66"	1.75'	11"
72"	2.0'	12"

NOTES:

1. WHERE PIPES OF DIFFERENT DIAMETERS ARE JOINED WITH A CONCRETE COLLAR, `L' AND `T' SHALL BE THOSE OF THE LARGER PIPE. D=D1 OR D2, WHICHEVER IS GREATER.
2. FOR PIPE SIZE NOT LISTED USE NEXT SIZE LARGER.
3. OMIT REINFORCING ON PIPES 24" AND LESS IN DIAMETER AND ON ALL PIPES WHERE ANGLE A IS LESS THAN 10°.
4. JOIN PIPES AT INVERTS.
5. REINFORCEMENT SHALL BE PLACED 1½" CLEAR FROM OUTSIDE DIAMETER OF PIPE.

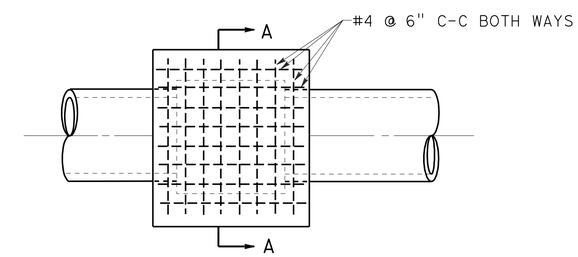

PLAN
CAP INLET DETAIL

DRAINAGE DETAILS
NO SCALE
DD-3

STATE OF CALIFORNIA - DEPARTMENT OF TRANSPORTATION
Caltrans
HYDRAULICS
FUNCTIONAL SUPERVISOR: RALPH M. SASAKI
CALCULATED-DESIGNED BY: VIC VALIDO
CHECKED BY: ED GATA
REVISED BY
DATE REVISED

LAST REVISION 00-00-00
DATE PLOTTED => 23-JUN-2010
TIME PLOTTED => 08:21

Dist	COUNTY	ROUTE	POST MILES TOTAL PROJECT	SHEET No.	TOTAL SHEETS
07	LA	710	22.6	16	100

Edgardo D. Gata 4-29-10
REGISTERED CIVIL ENGINEER DATE

6-21-10
PLANS APPROVAL DATE

REGISTERED PROFESSIONAL ENGINEER ED GATA No. C40706 Exp. 3-31-11 CIVIL STATE OF CALIFORNIA

THE STATE OF CALIFORNIA OR ITS OFFICERS OR AGENTS SHALL NOT BE RESPONSIBLE FOR THE ACCURACY OR COMPLETENESS OF ELECTRONIC COPIES OF THIS PLAN SHEET.

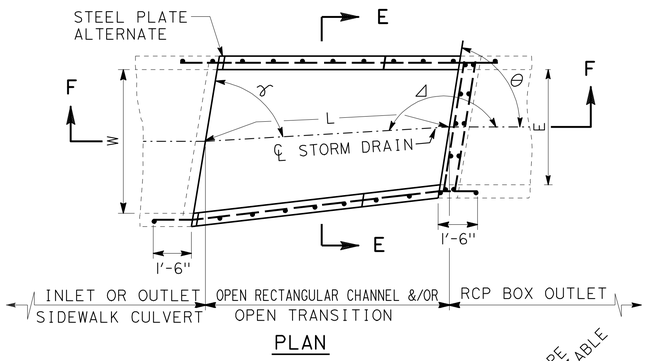

PLAN

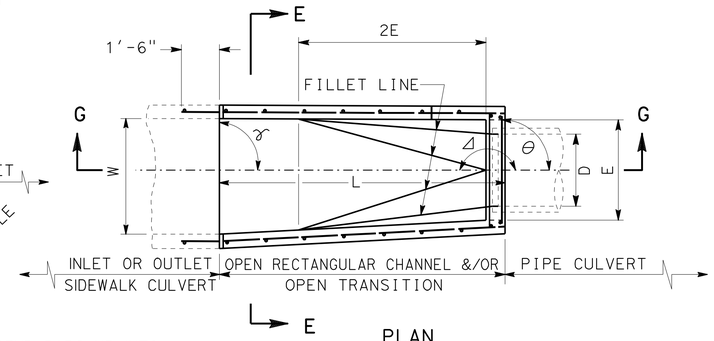

PLAN

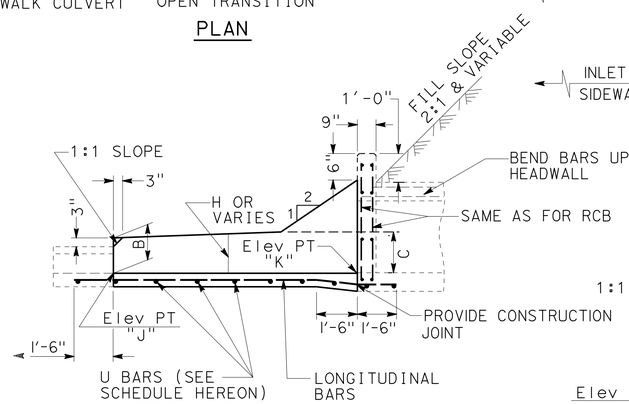

SECTION F-F

NOTE: H=B=C AND γ=90°, θ=90° AND Δ =180° UNLESS OTHERWISE SPECIFIED ON PLANS

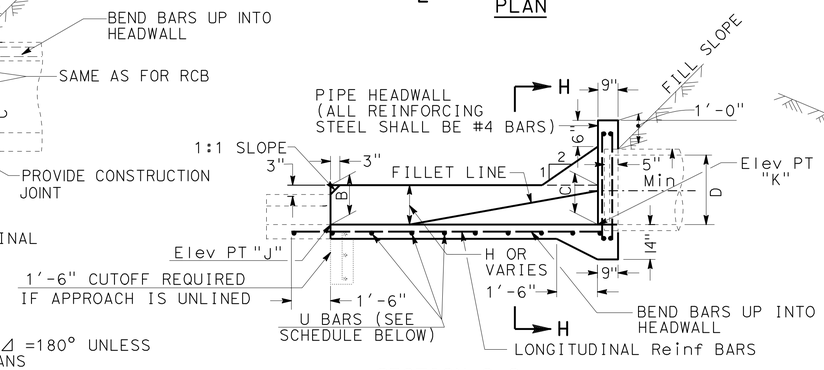

SECTION G-G

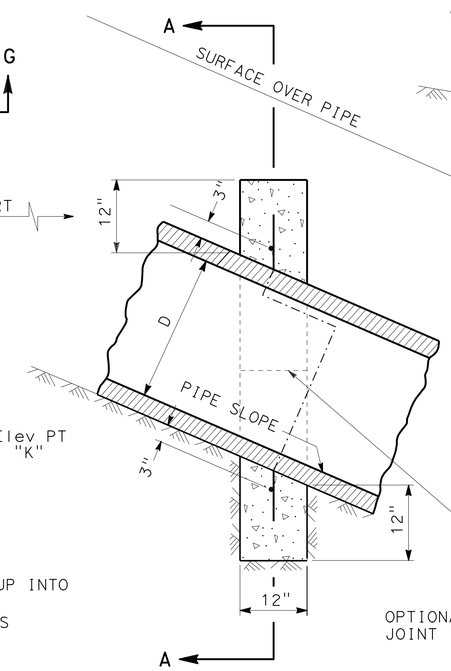

SECTION B-B

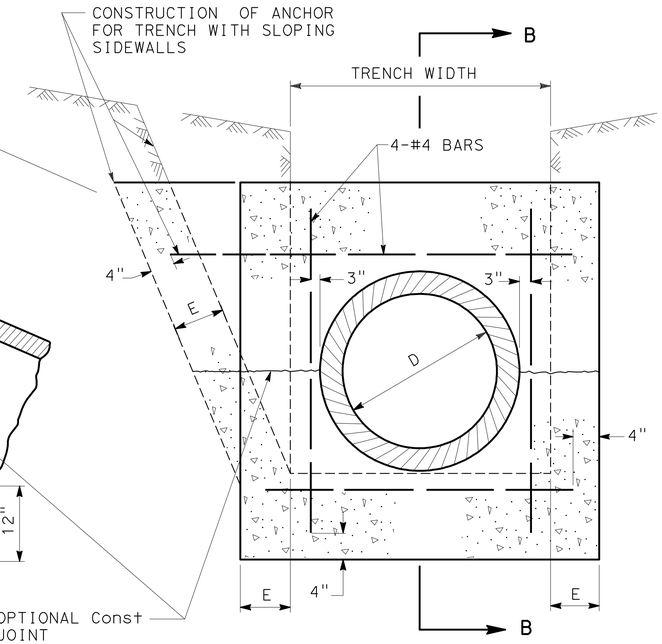

SECTION A-A

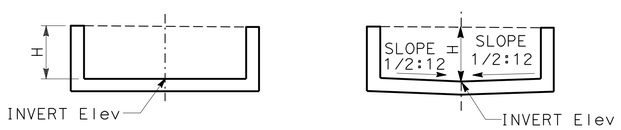

FLAT INVERT "V" INVERT

ALTERNATE INVERTS

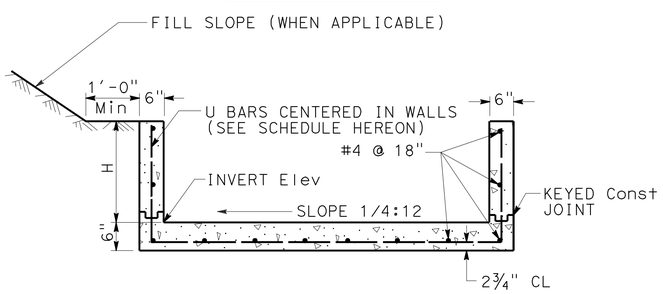

SECTION E-E

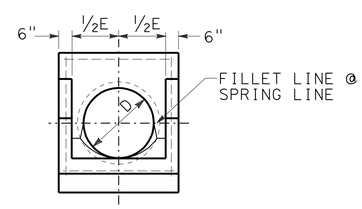

SECTION H-H

OPEN RECTANGULAR CHANNEL &/OR OPEN TRANSITION REINFORCEMENT	
H	U BARS
0'-0" TO 2'-0"	#3 @ 18"
2'-1" TO 2'-6"	#3 @ 15"
2'-7" TO 3'-0"	#3 @ 12"
3'-1" TO 3'-6"	#3 @ 7"
3'-7" TO 4'-0"	#3 @ 5"

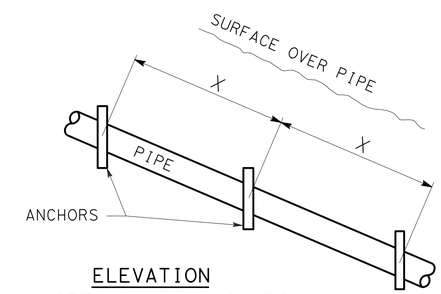

ELEVATION
CONCRETE PIPE ANCHORS

PIPE SLOPE	X DISTANCE
1:1	12'
1½:1	14'
2:1	16'
2½:1	18'
3:1	20'

NOTES:

1. H=B=C AND E=D AND γ=90°, θ=90°, AND Δ=180° UNLESS OTHERWISE SPECIFIED ON PLANS.
2. OMIT FLOW LINE FILLETS AT DOWNSTREAM END OF CULVERT.
3. CONSTRUCT ALTERNATE INVERT WHEN SPECIFIED ON PLANS.
4. U BAR SPACING THROUGHOUT THE STRUCTURE SHALL BE DETERMINED BY SPACING REQUIREMENTS FOR THE HIGHER END.
5. ALL EXPOSED EDGE SHALL BE CONSTRUCTED WITH ¾" CHAMFERS.

NOTES:

1- PIPE ANCHORS REQUIRED ON ALL SLOPES OF 3:1 OR STEEPER.
2- ALL REINFORCING STEEL SHALL BE NUMBER 4 BARS.
3- "E" SHALL BE 8 INCHES UNLESS OTHERWISE SPECIFIED.

SIDEWALK CULVERT TRANSITION

CONCRETE PIPE ANCHORS

DRAINAGE DETAILS

NO SCALE

DD-4

STATE OF CALIFORNIA - DEPARTMENT OF TRANSPORTATION
Caltrans
HYDRAULICS
FUNCTIONAL SUPERVISOR: RALPH M. SASAKI
CALCULATED-DESIGNED BY: VIC VALIDO
CHECKED BY: ED GATA
REVISED BY / DATE REVISED

LAST REVISION 00-00-00
DATE PLOTTED => 23-JUN-2010
TIME PLOTTED => 08:22

Dist	COUNTY	ROUTE	POST MILES TOTAL PROJECT	SHEET No.	TOTAL SHEETS
07	LA	710	22.6	17	100

Edgardo M. Gata 4-29-10
REGISTERED CIVIL ENGINEER DATE

6-21-10
PLANS APPROVAL DATE

REGISTERED PROFESSIONAL ENGINEER
ED GATA
No. C40706
Exp. 3-31-11
CIVIL
STATE OF CALIFORNIA

THE STATE OF CALIFORNIA OR ITS OFFICERS OR AGENTS SHALL NOT BE RESPONSIBLE FOR THE ACCURACY OR COMPLETENESS OF ELECTRONIC COPIES OF THIS PLAN SHEET.

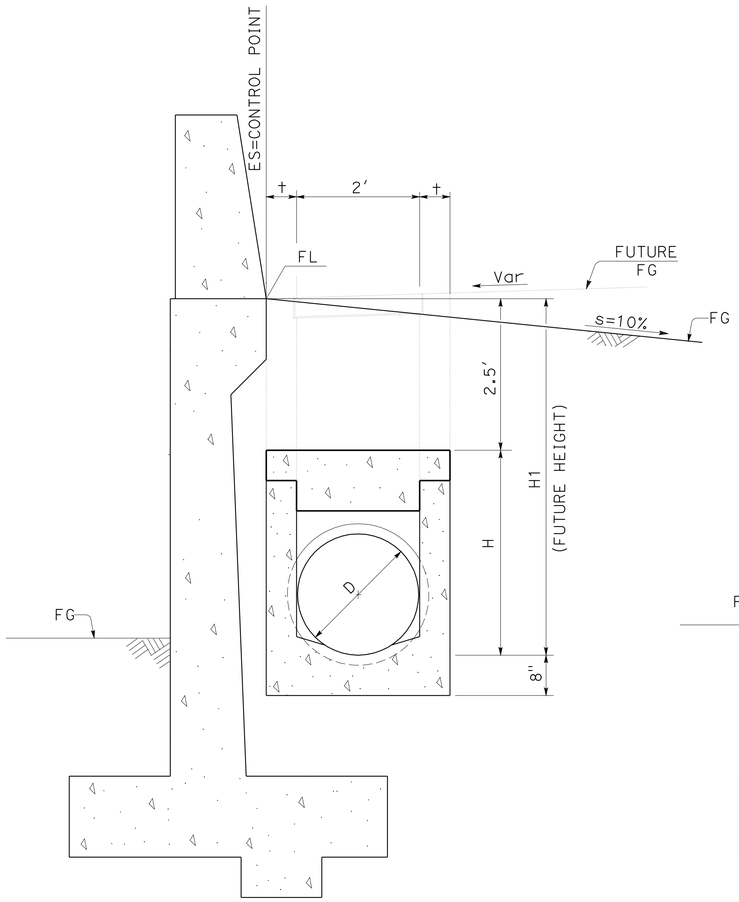

TYPE G1 INLET

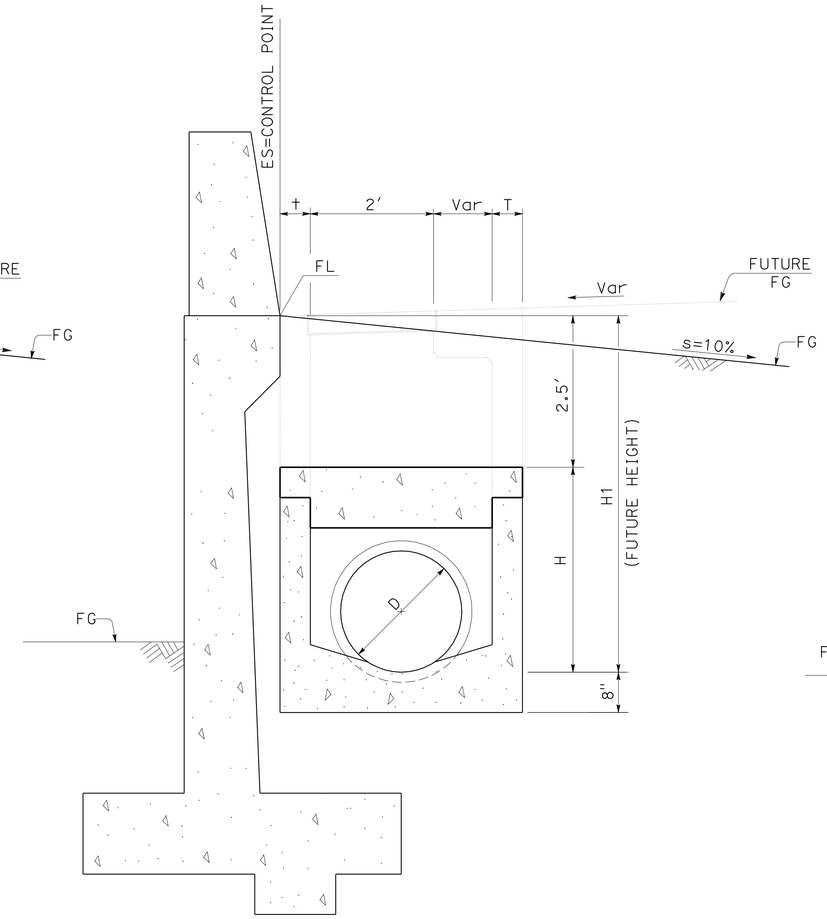

TYPE G2 INLET

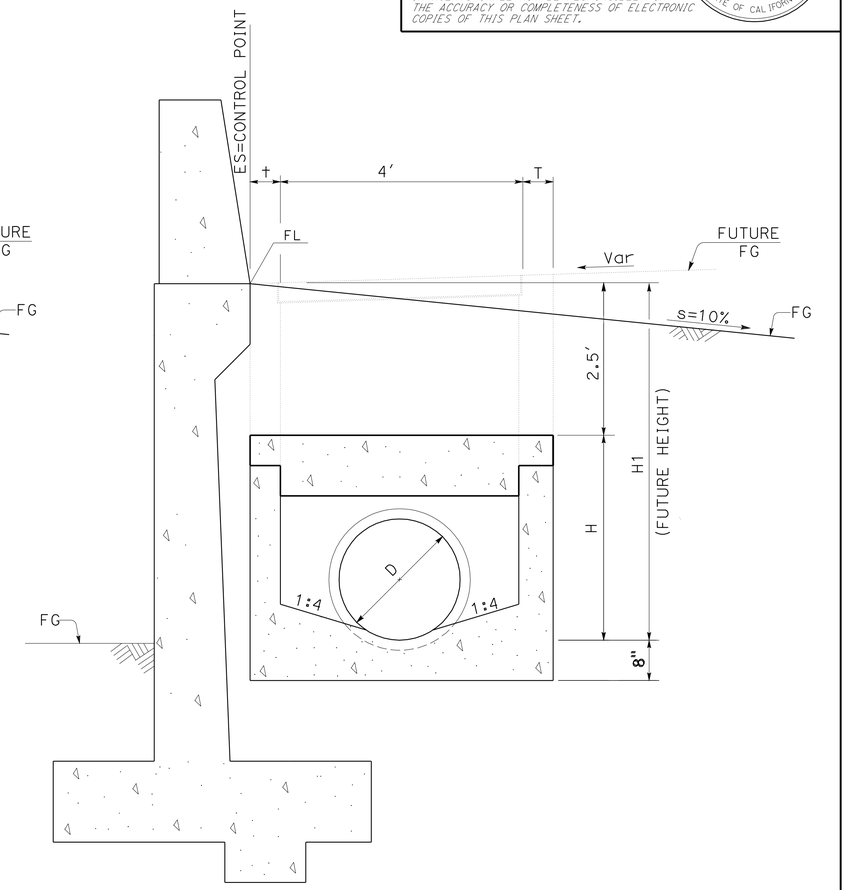

GD-1 INLET

DRAINAGE INLET AT WALL

1. THE REINFORCEMENT AND THICKNESS OF THE WALLS SHALL BE DESIGNED BASE ON FUTURE HEIGHT (H1),
2. THE TOP PORTION OF THE CONSTRUCTED INLET SHALL BE CAPPED PER DETAIL ON SHEET DD-3.

DRAINAGE DETAILS
NO SCALE

DD-5

STATE OF CALIFORNIA - DEPARTMENT OF TRANSPORTATION
Caltrans
HYDRAULICS

FUNCTIONAL SUPERVISOR: RALPH M. SASAKI
CALCULATED-DESIGNED BY: VIC VALIDO
CHECKED BY: ED GATA
REVISED BY
DATE REVISED

LAST REVISION 00-00-00
DATE PLOTTED => 23-JUN-2010
TIME PLOTTED => 08:22

Dist	COUNTY	ROUTE	POST MILES TOTAL PROJECT	SHEET No.	TOTAL SHEETS
07	LA	710	22.6	18	100

Edgardo M. Gata 4-29-10
REGISTERED CIVIL ENGINEER DATE

6-21-10
PLANS APPROVAL DATE

REGISTERED PROFESSIONAL ENGINEER
ED GATA
No. C040706
Exp. 3-31-11
CIVIL
STATE OF CALIFORNIA

THE STATE OF CALIFORNIA OR ITS OFFICERS OR AGENTS SHALL NOT BE RESPONSIBLE FOR THE ACCURACY OR COMPLETENESS OF ELECTRONIC COPIES OF THIS PLAN SHEET.

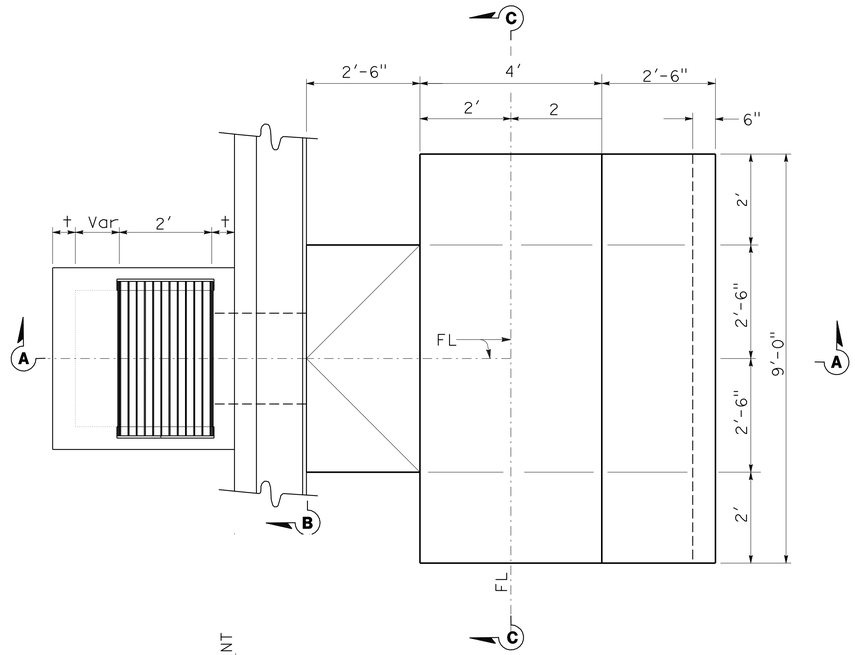

PLAN

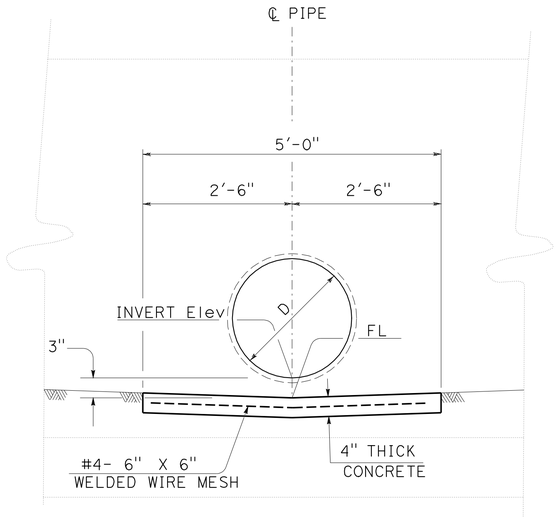

SECTION B-B

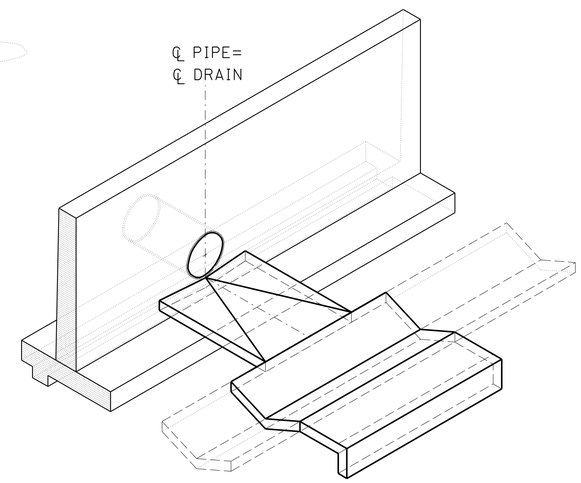

ISOMETRIC

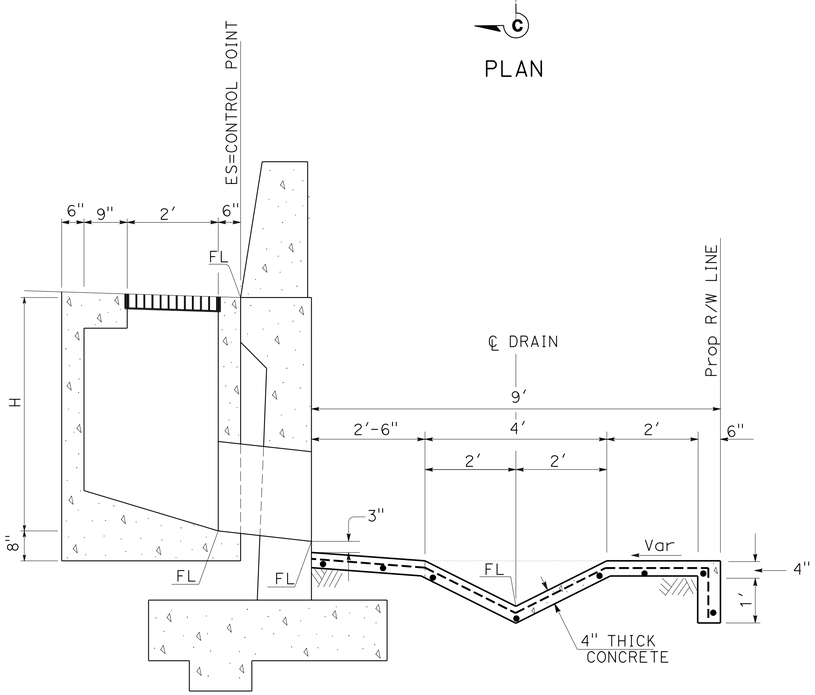

SECTION A-A

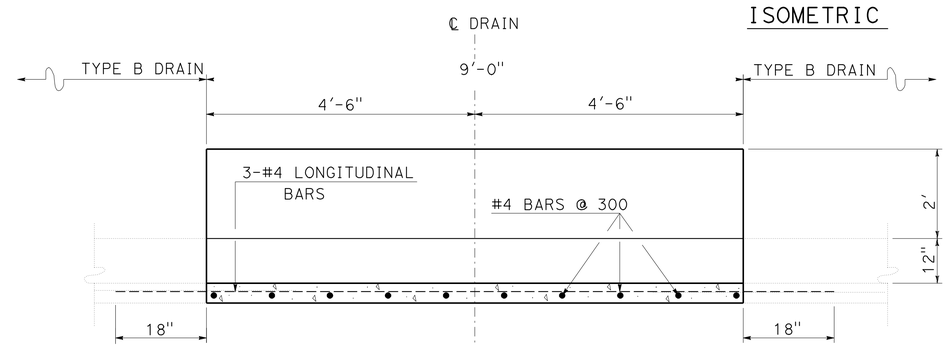

SECTION C-C

CONCRETE TRANSITION TO TYPE B DRAIN

DRAINAGE SYSTEM No. 8 a

DRAINAGE DETAILS

NO SCALE

DD-6

STATE OF CALIFORNIA - DEPARTMENT OF TRANSPORTATION
Caltrans
HYDRAULICS

FUNCTIONAL SUPERVISOR: RALPH M. SASAKI
CALCULATED-DESIGNED BY: VIC VALIDO
CHECKED BY: ED GATA
REVISED BY
DATE REVISED

LAST REVISION 00-00-00
DATE PLOTTED => 23-JUN-2010
TIME PLOTTED => 08:22

Dist	COUNTY	ROUTE	POST MILES TOTAL PROJECT	SHEET No.	TOTAL SHEETS
07	LA	710	22.6	19	100

Edgardo D. Gata 4-29-10
REGISTERED CIVIL ENGINEER DATE

6-21-10
PLANS APPROVAL DATE

REGISTERED PROFESSIONAL ENGINEER
ED GATA
No. C40706
Exp. 3-31-11
CIVIL
STATE OF CALIFORNIA

THE STATE OF CALIFORNIA OR ITS OFFICERS OR AGENTS SHALL NOT BE RESPONSIBLE FOR THE ACCURACY OR COMPLETENESS OF ELECTRONIC COPIES OF THIS PLAN SHEET.

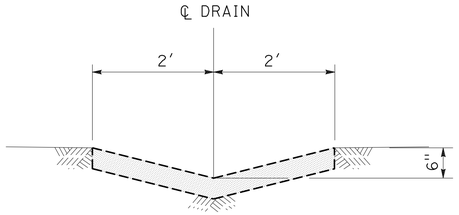

FROM 52.66′ Lt, 64+37.85 ⅊ RAMP
TO 63.39′ Lt, 94+17.75 ⅊ RAMP

DRAINAGE SYSTEM No. 5 a

REMOVE CONCRETE DRAIN

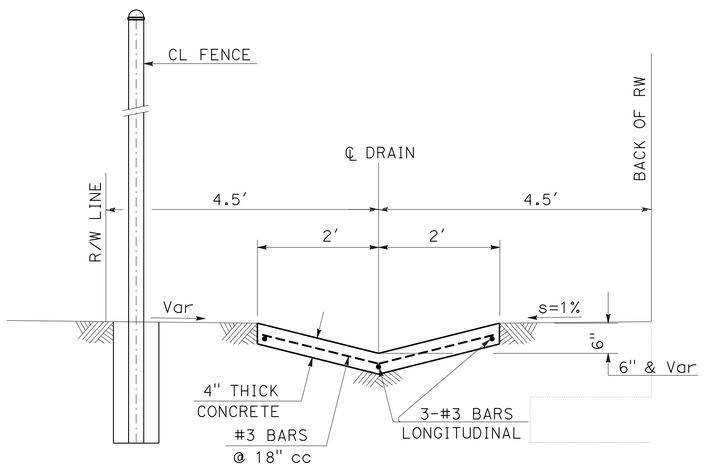

TYPE B DRAIN

DRAINAGE SYSTEM No. 6

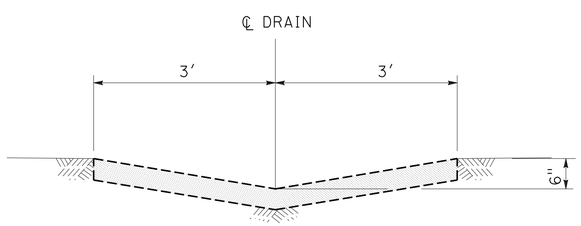

DRAINAGE SYSTEM No. 7 a

REMOVE 3 LF CONCRETE DRAIN

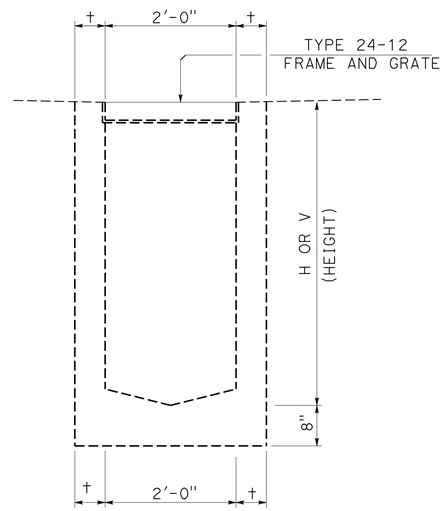

CASE 1

CATCH BASIN No. 37-B (Mod)

NOTES:

1. † = 6" IF V OR H IS 4′ OR LESS
   † = 8" IF V OR H IS BETWEEN 4′ AND 8′
   † = 10" IF V OR H IS OVER 8′

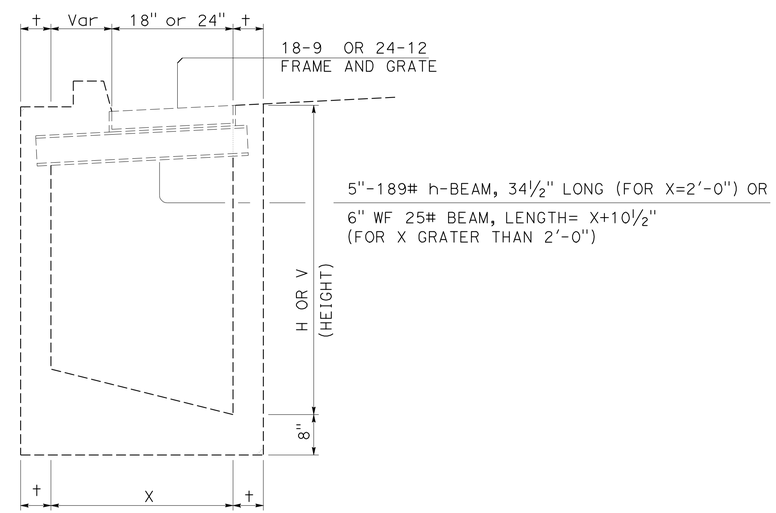

CASE 2

CATCH BASIN No. 37-X
CATCH BASIN No. 37-Y
CATCH BASIN No. 37-Z

NOTES:

1. CATCH BASIN No. 37-X USED WITH TYPE A2 CURBS
   CATCH BASIN No. 37-Y USED WITH TYPE B2 CURBS
   CATCH BASIN No. 37-Z USED WITH TYPE E CURBS
2. †= 6" IF V OR H is 4′ OR LESS
   †= 8" IF V OR H IS BETWEEN 4′ AND 8′
   †= 10" IF V OR H IS 8′ OR OVER
3. W= 2′-11⅜" FOR ONE GRATE.
   ADD 3′-5⅜" FOR EACH ADDITIONAL GRATE

EXISTING CATCH BASINS

DRAINAGE DETAILS

NO SCALE

DD-7

STATE OF CALIFORNIA - DEPARTMENT OF TRANSPORTATION
Caltrans
HYDRAULICS

FUNCTIONAL SUPERVISOR: RALPH M. SASAKI
CALCULATED-DESIGNED BY: VIC VALIDO
CHECKED BY: ED GATA
REVISED BY
DATE REVISED

LAST REVISION 00-00-00
DATE PLOTTED => 23-JUN-2010
TIME PLOTTED => 08:22

Dist	COUNTY	ROUTE	POST MILES TOTAL PROJECT	SHEET No.	TOTAL SHEETS
07	LA	710	22.6	20	100

Edgardo N. Gata 4-29-10
REGISTERED CIVIL ENGINEER DATE

6-21-10
PLANS APPROVAL DATE

REGISTERED PROFESSIONAL ENGINEER
ED GATA
No. C40706
Exp. 3-31-11
CIVIL
STATE OF CALIFORNIA

THE STATE OF CALIFORNIA OR ITS OFFICERS OR AGENTS SHALL NOT BE RESPONSIBLE FOR THE ACCURACY OR COMPLETENESS OF ELECTRONIC COPIES OF THIS PLAN SHEET.

NOTE:
PIPE JOINTS ARE STANDARD
OR AS NOTED ON PLANS

ABBREVIATIONS:
(N) INDICATES NOT A SEPARATE PAY ITEM,
FOR INFORMATION ONLY

SUMMARY OF DRAINAGE QUANTITIES

DRAINAGE SHEET No.	DRAINAGE SYSTEM No.	DRAINAGE UNIT	H OR V (HEIGHT) FT	MINOR CONCRETE (MINOR STRUCTURE) CY	CONCRETE (DITCH LINING) CY	MISCELLANEOUS IRON AND STEEL LBS	24" RCP LF	24" CONCRETE FES EA	REMOVE PIPE LF	REMOVE CONCRETE CY	(N) 24" MANHOLE FRAME AND COVER EA	MAXIMUM COVER FT	PIPE JOINT CLASSIFICATION	DESCRIPTION	LOCATION	DRAINAGE SHEET No.	DRAINAGE SYSTEM No.	DRAINAGE UNIT
1	1	a	5.74	2.65	0.22	110					1			JUNCTION CHAMBER 3C WITH 5' Conc TRANSITION	22.85' Lt, 89+10.37 ℄ RAMP	1	1	a
		b					8.1					4.5	S	24" RCP				b
	2	a			1.18									CONCRETE TRANSITION	83.15' Lt, 90+47.84 ℄ RAMP		2	a
		b					2.0					12.0	S	24" RCP				b
		c	9.04	5.01										GD-1 INLET (CAP)	75.74' Lt, 90+50.00 ℄ RAMP			c
		d					41.9					6.5	S	24" RCP				d
	3	a	4.50	2.20	0.22	110					1			JUNCTION CHAMBER 3C WITH 5' Conc TRANSITION	26.99' Lt, 90+50.00 ℄ RAMP		3	a
		b					121.0					4.5	S	24" RCP				b
	4	a							31.9					REMOVE 12" RCP			4	a
		b	5.72	2.64	0.22	110					1			JUNCTION CHAMBER 3C WITH 5' Conc TRANSITION	26.08' Lt, 91+98.96 ℄ RAMP			b
	5	a								16.77				REMOVE TYPE B DRAIN	52.12' Lt, 64+39.35 ℄ RAMP TO 63.43' Lt, 92+16.10 ℄ RAMP		5	a
	6	a			9.26									TYPE B DRAIN	52.12' Lt, 64+39.35 ℄ RAMP TO 82.14' Lt, 90+37.08 ℄ RAMP		6	a
1		b			5.82									TYPE B DRAIN	83.32' Lt, 90+55.96 ℄ RAMP TO 63.43' Lt, 92+16.10 ℄ RAMP	1		b
2	7	a							3.0					REMOVE 24" RCP		2	7	a
		b	4.49	2.84										TYPE G2 INLET (CAP)	41.34' Rt, 64+02.88 ℄ RAMP			b
		c					16.6					3.0	S	24" RCP				c
		d								0.25				REMOVE CONCRETE TRANSITION	62.11' Rt, 64+05.92 ℄ RAMP			d
		e						1						24" CONCRETE FES	62.11' Rt, 64+05.92 ℄ RAMP			e
	8	a					8.4					6.0		24" RCP			8	a
		b							17.6					REMOVE 24" RCP				b
		c	8.00	4.11										TYPE G2 INLET (CAP)	23.67' Rt, 89+06.89 ℄ RAMP			c
2		d					5.6					6.0	S	24" RCP		2		d
SHEET TOTAL				19.45	16.92	330	203.6	1	52.5	17.02	3							

DRAINAGE QUANTITIES
DQ-1

VIC VALIDO — REVISED BY
ED GATA — DATE REVISED
CALCULATED-DESIGNED BY
CHECKED BY
FUNCTIONAL SUPERVISOR
RALPH M. SASAKI
STATE OF CALIFORNIA - DEPARTMENT OF TRANSPORTATION
Caltrans
HYDRAULICS

LAST REVISION 00-00-00 | DATE PLOTTED => 24-JUN-2010 | TIME PLOTTED => 08:23

Dist	COUNTY	ROUTE	POST MILES TOTAL PROJECT	SHEET No.	TOTAL SHEETS
07	LA	710	22.6	21	100

Edgardo D. Gata 4-15-10
REGISTERED CIVIL ENGINEER DATE

6-21-10
PLANS APPROVAL DATE

REGISTERED PROFESSIONAL ENGINEER
ED GATA
No. C40706
Exp. 3-31-11
CIVIL
STATE OF CALIFORNIA

THE STATE OF CALIFORNIA OR ITS OFFICERS OR AGENTS SHALL NOT BE RESPONSIBLE FOR THE ACCURACY OR COMPLETENESS OF ELECTRONIC COPIES OF THIS PLAN SHEET.

NOTE:
PIPE JOINTS ARE STANDARD
OR AS NOTED ON PLANS

ABBREVIATIONS:
(N) INDICATES NOT A SEPARATE PAY ITEM,
FOR INFORMATION ONLY

SUMMARY OF DRAINAGE QUANTITIES

DRAINAGE SHEET No.	DRAINAGE SYSTEM No.	DRAINAGE UNIT	H OR V (HEIGHT) FT	MINOR CONCRETE (MINOR STRUCTURE) CY	CONCRETE (DITCH LINING) CY	MISCELLANEOUS IRON AND STEEL LBS	24" RCP LF	24" CONCRETE FES EA	REMOVE PIPE LF	REMOVE CONCRETE CY	(N) 24" MANHOLE FRAME AND COVER EA	MAXIMUM COVER FT	PIPE JOINT CLASSIFICATION	DESCRIPTION	LOCATION	DRAINAGE SHEET No.	DRAINAGE SYSTEM No.	DRAINAGE UNIT
2	9	a	5.50	2.56	0.22	110								JUNCTION CHAMBER 3C WITH 5' Conc TRANSITION	25.57' Rt, 88+90.00 ℄ RAMP	2	9	a
		b					12.4					4.5	S	24" RCP				b
	10	a					15.6					6.0		24" RCP			10	a
		b	6.26	2.84	0.22	110								JUNCTION CHAMBER 3C WITH 5' Conc TRANSITION	19.50' Rt, 91+31.50 ℄ RAMP			b
		c					23.2					6.0	S	24" RCP				c
		d	3.20	2.65										GD-1 INLET (CAP)	47.94' Rt, 91+24.50 ℄ RAMP			d
	11	a							37.6					REMOVE 24" RCP			11	a
	12	a					7.5					7.0	S	24" RCP			12	a
		b	17.56	8.46										GD-1 INLET (CAP)	49.24' Rt, 91+35.00 ℄ RAMP			b
	13	a					3.1					21.0	S	24" RCP			13	a
2		b		1.58										CULVERT TRANSITION	57.91' Rt, 91+35.00 ℄ RAMP	2		b
SHEET TOTAL				18.09	0.44	220	61.8		37.6		2							
GRAND TOTAL				37.54	17.36	550	265.4	1	90.1	17.02								

REVISED BY | DATE REVISED
VIC VALIDO | ED GATA
CALCULATED-DESIGNED BY | CHECKED BY
FUNCTIONAL SUPERVISOR
RALPH M. SASAKI
STATE OF CALIFORNIA - DEPARTMENT OF TRANSPORTATION
Caltrans HYDRAULICS

DRAINAGE QUANTITIES
DQ-2

LAST REVISION 00-00-00 | DATE PLOTTED => 24-JUN-2010 | TIME PLOTTED => 08:34

Dist	COUNTY	ROUTE	POST MILES TOTAL PROJECT	SHEET No.	TOTAL SHEETS
07	LA	710	22.6	22	100

REGISTERED CIVIL ENGINEER 4-29-10 DATE

6-21-10
PLANS APPROVAL DATE

REGISTERED PROFESSIONAL ENGINEER HAYKAZ AGHAJANIAN No. C53866 Exp. 12-31-11 CIVIL STATE OF CALIFORNIA

THE STATE OF CALIFORNIA OR ITS OFFICERS OR AGENTS SHALL NOT BE RESPONSIBLE FOR THE ACCURACY OR COMPLETENESS OF SCANNED COPIES OF THIS PLAN SHEET.

NOTES:

1. FOR ACCURATE RIGHT OF WAY AND ACCESS DATA, CONTACT RIGHT OF WAY ENGINEERING AT THE DISTRICT OFFICE.
2. LOCATIONS OF UTILITY FACILITIES SHOWN ON THESE PLANS ARE APPROXIMATE AND SHALL BE VERIFIED BY THE CONTRACTOR PRIOR TO CONSTRUCTION.
3. UTILITY OWNERSHIP ON THIS PROJECT:
   - GAS - SOUTHERN CALIFORNIA GAS COMPANY
   - WATER - CALIFORNIA WATER SERVICES
   - TELEPHONE - AMERICAN TELEPHONE & TELEGRAPH
   - SEWER - THE CITY OF COMMERCE

ABBREVIATIONS:

Tr Du - TRANSITE DUCT
AT&T - AMERICAN TELEPHONE & TELEGRAPH
Du - Duct
Ca Wtr Serv - CALIFORNIA WATER SERVICE
CL & C - CEMENT LINED AND COATED PIPE
San Swr (City of Commerce) - SANITARY SEWER
MTD - MULTIPLE TILE DUCT
Bu Ca - BURIED CABLE
So Cal GAS - SOUTHERN CALIFORNIA GAS
Sti - STEEL
LACFCD - LOS ANGELES COUNTY FLOOD CONTROL DISTRICT
WE - WEST OF EAST PROPERTY LINE
SN - SOUTH OF NORTH PROPERTY LINE
Csg- Casing

POTHOLE INFORMATION TABLE

ⓧ	UTILITY COMPANY	NORTHING	EASTING	GROUND ELEVATION	DEPTH
1	City of Commerce	1824892.334	6509632.095	156.49′	6.86′
2	California Water Services	1824893.978	6509558.043	156.35′	5.70′
3	California Water Services	1824887.216	6509537.509	157.42′	3.72′
4	California Water Services	1824917.085	6509257.486	158.19′	2.52′
5	California Water Services	1824925.746	6509246.292	157.92′	5.80′
6	City of Commerce	1824931.684	6509257.175	158.29′	7.26′

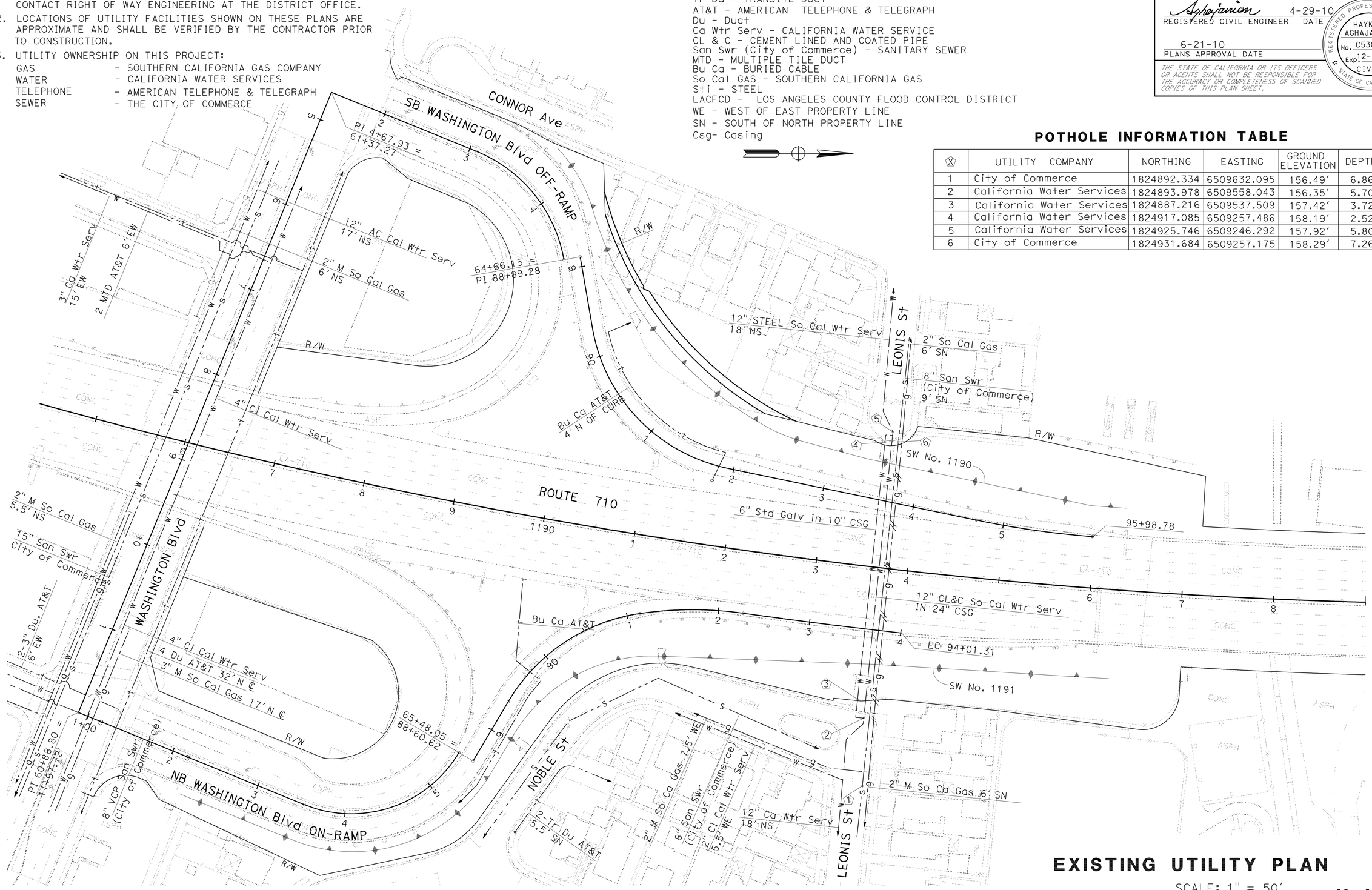

EXISTING UTILITY PLAN

SCALE: 1" = 50′

U-1

THIS PLAN ACCURATE FOR UTILITY INFORMATION ONLY.

STATE OF CALIFORNIA - DEPARTMENT OF TRANSPORTATION
Caltrans® UTILITY ENGINEERING

FUNCTIONAL SUPERVISOR: MANSOOR A. KHAN
CALCULATED-DESIGNED BY: STEVE PHAM
CHECKED BY: MANSOOR A. KHAN
REVISED BY / DATE REVISED

LAST REVISION 10-10-09 | DATE PLOTTED => 23-JUN-2010 | TIME PLOTTED => 08:22

Dist	COUNTY	ROUTE	POST MILES TOTAL PROJECT	SHEET No.	TOTAL SHEETS
07	LA	710	22.6	23	100

Steve Pham 4-15-10
REGISTERED CIVIL ENGINEER DATE

6-21-10
PLANS APPROVAL DATE

REGISTERED PROFESSIONAL ENGINEER STEVE PHAM No. 67183 Exp. 9/30/10 CIVIL STATE OF CALIFORNIA

THE STATE OF CALIFORNIA OR ITS OFFICERS OR AGENTS SHALL NOT BE RESPONSIBLE FOR THE ACCURACY OR COMPLETENESS OF SCANNED COPIES OF THIS PLAN SHEET.

NOTES:

1. LOCATIONS OF CONSTRUCTION AREA SIGNS SHOWN ARE APPROXIMATE. EXACT LOCATIONS WILL BE DETERMINED BY THE ENGINEER.
2. "TRAFFIC FINES DOUBLED IN CONSTRUCTION ZONES" SIGN SHALL BE PLACED APPROXIMATELY 500 FEET IN ADVANCE OF "ROAD WORK AHEAD" SIGN OR AS DIRECTED BY THE ENGINEER.
3. FOR ADDITIONAL CONSTRUCTION AREA SIGNS, SEE TRAFFIC HANDLING PLANS.
4. THIS PLAN ACCURATE FOR CONSTRUCTION AREA SIGN WORK ONLY.

STATIONARY MOUNTED CONSTRUCTION AREA SIGNS

SIGN No.	SIGN CODE	PANEL SIZE	SIGN MESSAGE	No. OF POSTS AND SIZE	No. OF SIGNS
Ⓐ	W20-1	30" x 30"	ROAD WORK AHEAD	1-4" x 6"	2
Ⓑ	W20-1	48" x 48"	ROAD WORK AHEAD	2-4" x 6"	2
Ⓒ	G20-2	48" x 24"	END ROAD WORK	2-4" x 6"	2
Ⓓ	G20-2	36" x 18"	END ROAD WORK	1-4" x 6"	2
Ⓔ	C40 (CA)	144" x 60"	TRAFFIC FINE DOUBLED IN CONSTRUCTION ZONES	2-6" x 8"	2
Ⓕ	SEE SPECIAL PROVISION	132" x 84"	CONSTRUCTION PROJECT FUNDING IDENTIFICATION	2-6" x 8"	2

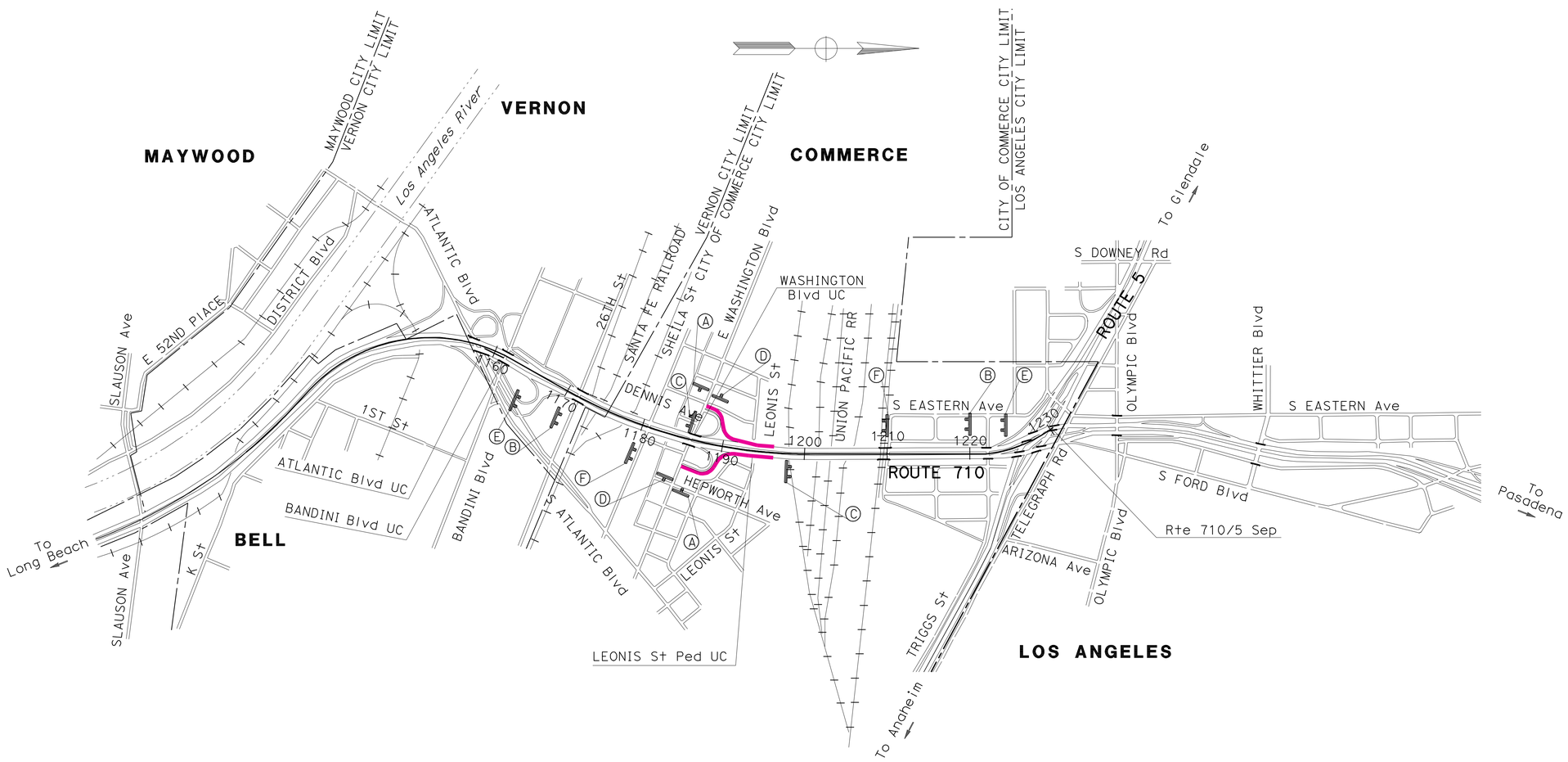

CONSTRUCTION AREA SIGNS

NO SCALE

CS-1

STATE OF CALIFORNIA - DEPARTMENT OF TRANSPORTATION
Caltrans® OFFICE OF DESIGN B

FUNCTIONAL SUPERVISOR: MANSOOR A. KHAN
CALCULATED-DESIGNED BY: STEVE PHAM
CHECKED BY: MANSOOR A. KHAN
REVISED BY
DATE REVISED

LAST REVISION 10-10-09
DATE PLOTTED => 23-JUN-2010
TIME PLOTTED => 08:22

Dist	COUNTY	ROUTE	POST MILES TOTAL PROJECT	SHEET No.	TOTAL SHEETS
07	LA	710	22.6	24	100

REGISTERED CIVIL ENGINEER 5/6/10 DATE

6-21-10
PLANS APPROVAL DATE

REGISTERED PROFESSIONAL ENGINEER MOHAMMED HAIDER No. C61335 Exp. 9-30-11 CIVIL STATE OF CALIFORNIA

THE STATE OF CALIFORNIA OR ITS OFFICERS OR AGENTS SHALL NOT BE RESPONSIBLE FOR THE ACCURACY OR COMPLETENESS OF SCANNED COPIES OF THIS PLAN SHEET.

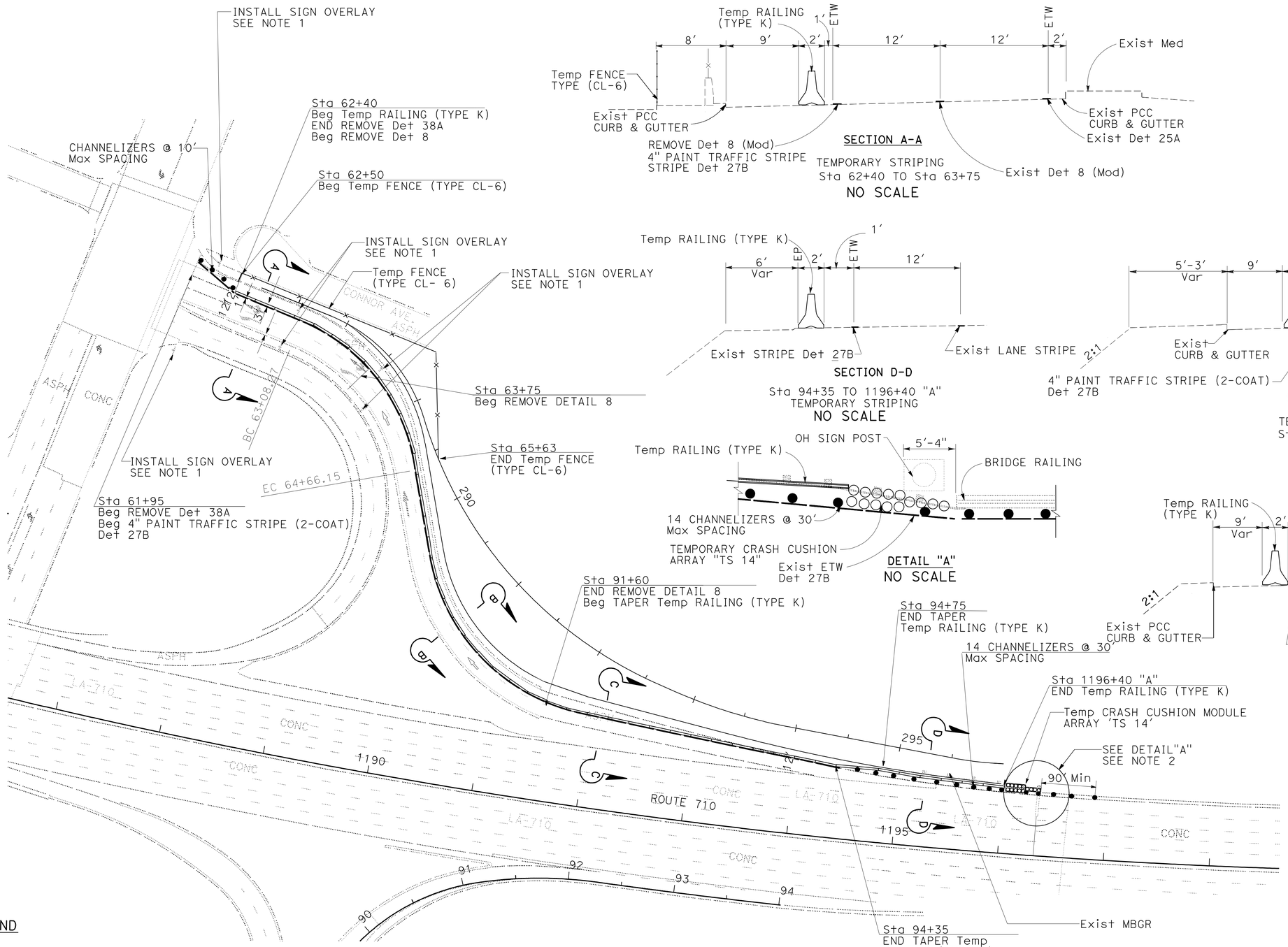

SECTION A-A

TEMPORARY STRIPING
Sta 62+40 TO Sta 63+75

NO SCALE

SECTION D-D

Sta 94+35 TO 1196+40 "A"
TEMPORARY STRIPING

NO SCALE

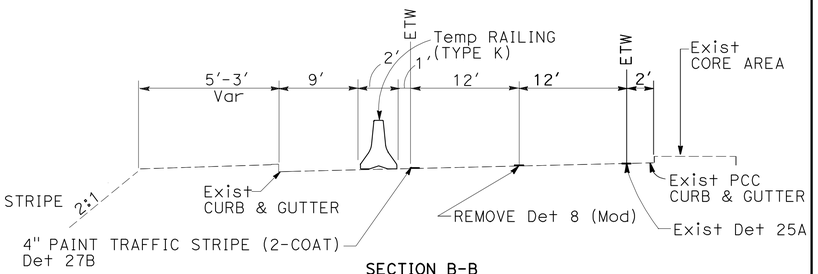

SECTION B-B

TEMPORARY STRIPING
Sta 63+75 TO 91+60

NO SCALE

DETAIL "A"

NO SCALE

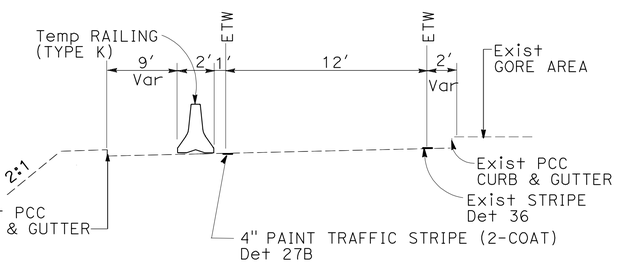

SECTION C-C

TEMPORARY STRIPING
Sta 91+60 TO 94+35

NO SCALE

NOTES:

1. INSTALL SIGN OVERLAY ON EXISTING SIGN PANELS TO COVER 2nd "RIGHT TURN ARROW" AND WORD "ONLY"
2. USE STANDARD PLAN T10 FOR SHOULDER CLOSURE

LEGEND

- Temp CONSTRUCTION FENCE (TYPE CL-6)
- TEMPORARY RAILING (TYPE K)
- DIRECTION OF TRAFFIC
- CHANNELIZER
- TEMPORARY SIGN

TRAFFIC HANDLING PLAN

SCALE: 1" = 50'

TH-1

THIS PLAN ACCURATE FOR TRAFFIC HANDLING WORK ONLY.

STATE OF CALIFORNIA - DEPARTMENT OF TRANSPORTATION
Caltrans TRAFFIC DESIGN

FUNCTIONAL SUPERVISOR: MOHAMMED CHOWDHURY
CALCULATED-DESIGNED BY: MOHAMMED HAIDER
CHECKED BY: MOHAMMED CHOWDHURY
REVISED BY / DATE REVISED

LAST REVISION 00-00-00
DATE PLOTTED => 23-JUN-2010
TIME PLOTTED => 08:34

Dist	COUNTY	ROUTE	POST MILES TOTAL PROJECT	SHEET No.	TOTAL SHEETS
07	LA	710	22.6	25	100

REGISTERED CIVIL ENGINEER 5/6/10 DATE

6-21-10
PLANS APPROVAL DATE

REGISTERED PROFESSIONAL ENGINEER MOHAMMED HAIDER No. C61335 Exp. 9-30-11 CIVIL STATE OF CALIFORNIA

THE STATE OF CALIFORNIA OR ITS OFFICERS OR AGENTS SHALL NOT BE RESPONSIBLE FOR THE ACCURACY OR COMPLETENESS OF SCANNED COPIES OF THIS PLAN SHEET.

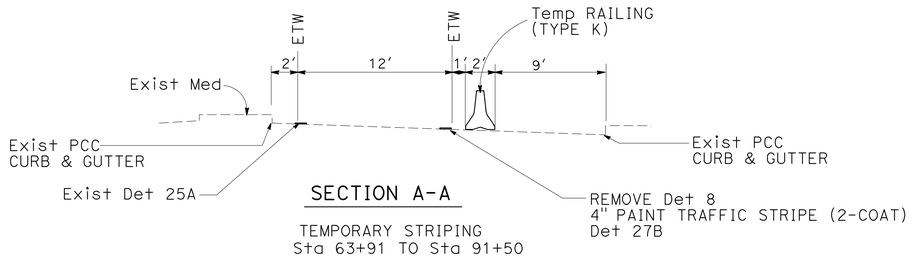

SECTION A-A

TEMPORARY STRIPING
Sta 63+91 TO Sta 91+50
NO SCALE

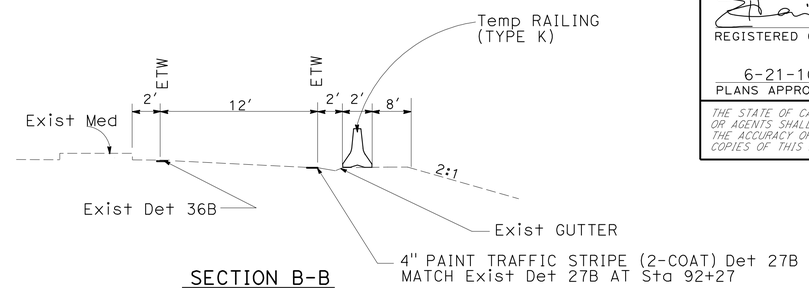

SECTION B-B

Sta 91+50 TO Sta 93+50
TEMPORARY STRIPING
NO SCALE

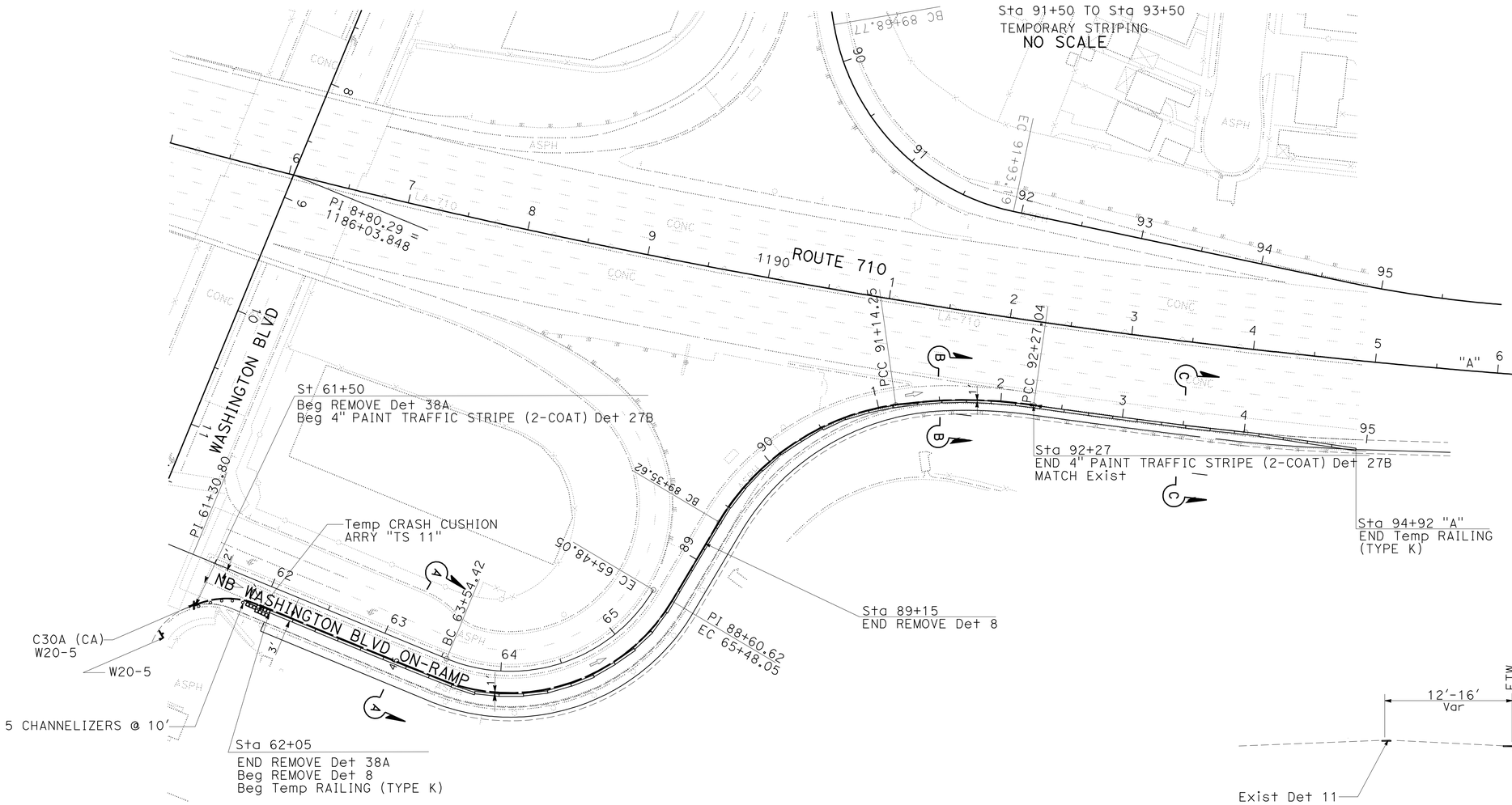

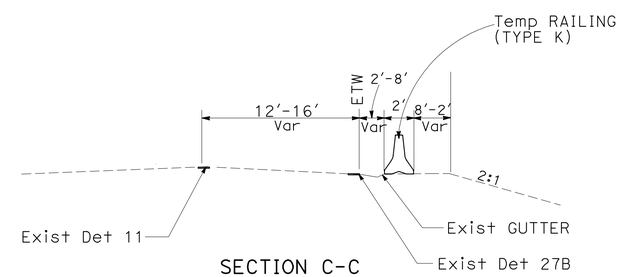

SECTION C-C

Sta 93+50 TO Sta 94+92
TEMPORARY STRIPING
NO SCALE

TRAFFIC HANDLING PLAN

SCALE: 1" = 50'

THIS PLAN ACCURATE FOR TRAFFIC HANDLING WORK ONLY.

TH-2

STATE OF CALIFORNIA - DEPARTMENT OF TRANSPORTATION
Caltrans® **TRAFFIC DESIGN**

FUNCTIONAL SUPERVISOR: MOHAMMED CHOWDHURY
CALCULATED-DESIGNED BY: MOHAMMED HAIDER
CHECKED BY: MOHAMMED CHOWDHURY
REVISED BY
DATE REVISED

LAST REVISION 00-00-00 | DATE PLOTTED => 23-JUN-2010 | TIME PLOTTED => 08:34

Dist	COUNTY	ROUTE	POST MILES TOTAL PROJECT	SHEET No.	TOTAL SHEETS
07	LA	710	22.6	26	100

REGISTERED CIVIL ENGINEER 5/6/10 DATE

6-21-10
PLANS APPROVAL DATE

REGISTERED PROFESSIONAL ENGINEER MOHAMMED HAIDER No. C61335 Exp. 9-30-11 CIVIL STATE OF CALIFORNIA

THE STATE OF CALIFORNIA OR ITS OFFICERS OR AGENTS SHALL NOT BE RESPONSIBLE FOR THE ACCURACY OR COMPLETENESS OF SCANNED COPIES OF THIS PLAN SHEET.

TRAFFIC HANDLING QUANTITIES

SHEET No.	STATION	PAINT TRAFFIC STRIPE (2-COAT) / 4" PAINT TRAFFIC STRIPE (2 COAT) DETAIL 27B	TEMPORARY RAILLING (TYPE K)	CHANNELIZER (SURFACE MOUNTED)	TEMPORARY CRASH CUSHION MODULE ARRAY 'TS14'	TEMPORARY CRASH CUSHION MODULE ARRAY 'TS11'	TEMPORARY FENCE (TYPE CL-6)	REMOVE THERMOPLASTIC TRAFFIC STRIPE 4" DETAIL 8	REMOVE THERMOPLASTIC TRAFFIC STRIPE 8" DETAIL 38A	REMOVE PAVEMENT MARKER
		LF	LF	EA	EA	EA	LF	LF	LF	EA
TH-1	61+95 TO 1196+40 "A"	817	977	14	14		313	328	100	19
TH-2	61+50 TO 1194+92 "A"	765	1065	5		11	–	152	100	10
	SUB TOTAL	1582	2042	19	14	11	313	342	200	29
	TOTAL	1582	2042	19	25		313	542		29

NOTE: 8" WIDE STRIPES ARE MEASURED AS 2 TRAFFIC STRIPES.

CONSTRUCTION AREA SIGNS QUANTITIES

SHEET No.	SIGN CODE	SIGN OVERLAY PANEL	SIGN OVERLAY PANEL AREA	PANEL SIZE	SIGN AREA	SINGLE FACED	BACKGROUND SHEETING COLOR	BACKGROUND RETROREFLECTIVE ASTM TYPE	LEGEND SHEETING COLOR	LEGEND RETROREFLECTIVE ASTM TYPE	GRAFFITI FILM PREMIUM	ROADSIDE SIGN SINGLE SHEET UNFRAMED ALUMINUM	ROADSIDE SIGN INSTALL ONE POST	TOTAL NUMBER INSTALLED SIGN PANELS	FURNISH SINGLE SHEET ALUMINUM SIGN (0.063 in UNFRAMED)	INSTALL SIGN OVERLAY
			SQFT	in X in	SQFT							0.063 in	EA	EA	SQFT	SQFT
TH-1	R61-28 (CA)	SEE DETAIL 1	2												12	12
TH-2	W20-5			36x36	9	●	Y	III	B	III	●	●	1	2	18	
	C30A (CA)			36x36	9	●	Y	III	B	III	●	●	1	1	9	

NOTES:

(1) NOT A SEPARATE PAY ITEM, FOR INFORMATION ONLY.
(2) SEE ADDITIONAL SIGNS ON CONSTRUCTION AREA SIGN PLAN.
(3) SEE "INSTALL SIGN OVERLAY" ON PAVEMENT DELINEATION AND SIGN QUANTITY SHEET.

DETAIL 1:

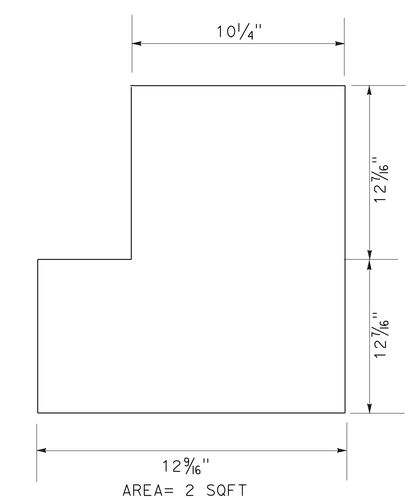

AREA= 2 SQFT

SIGN OVERLAY PANEL
NO SCALE

TRAFFIC HANDLING QUANTITIES

THQ-1

STATE OF CALIFORNIA - DEPARTMENT OF TRANSPORTATION
Caltrans® TRAFFIC DESIGN

FUNCTIONAL SUPERVISOR: MOHAMMED CHOWDHURY
CALCULATED-DESIGNED BY: MOHAMMED HAIDER
CHECKED BY: MOHAMMED CHOWDHURY
REVISED BY
DATE REVISED

LAST REVISION 00-00-00
DATE PLOTTED => 23-JUN-2010
TIME PLOTTED => 08:23

Dist	COUNTY	ROUTE	POST MILES TOTAL PROJECT	SHEET No.	TOTAL SHEETS
07	LA	710	22.6	27	100

REGISTERED CIVIL ENGINEER 5/6/10 DATE

6-21-10
PLANS APPROVAL DATE

REGISTERED PROFESSIONAL ENGINEER MOHAMMED HAIDER No. C61335 Exp. 9-30-11 CIVIL STATE OF CALIFORNIA

THE STATE OF CALIFORNIA OR ITS OFFICERS OR AGENTS SHALL NOT BE RESPONSIBLE FOR THE ACCURACY OR COMPLETENESS OF SCANNED COPIES OF THIS PLAN SHEET.

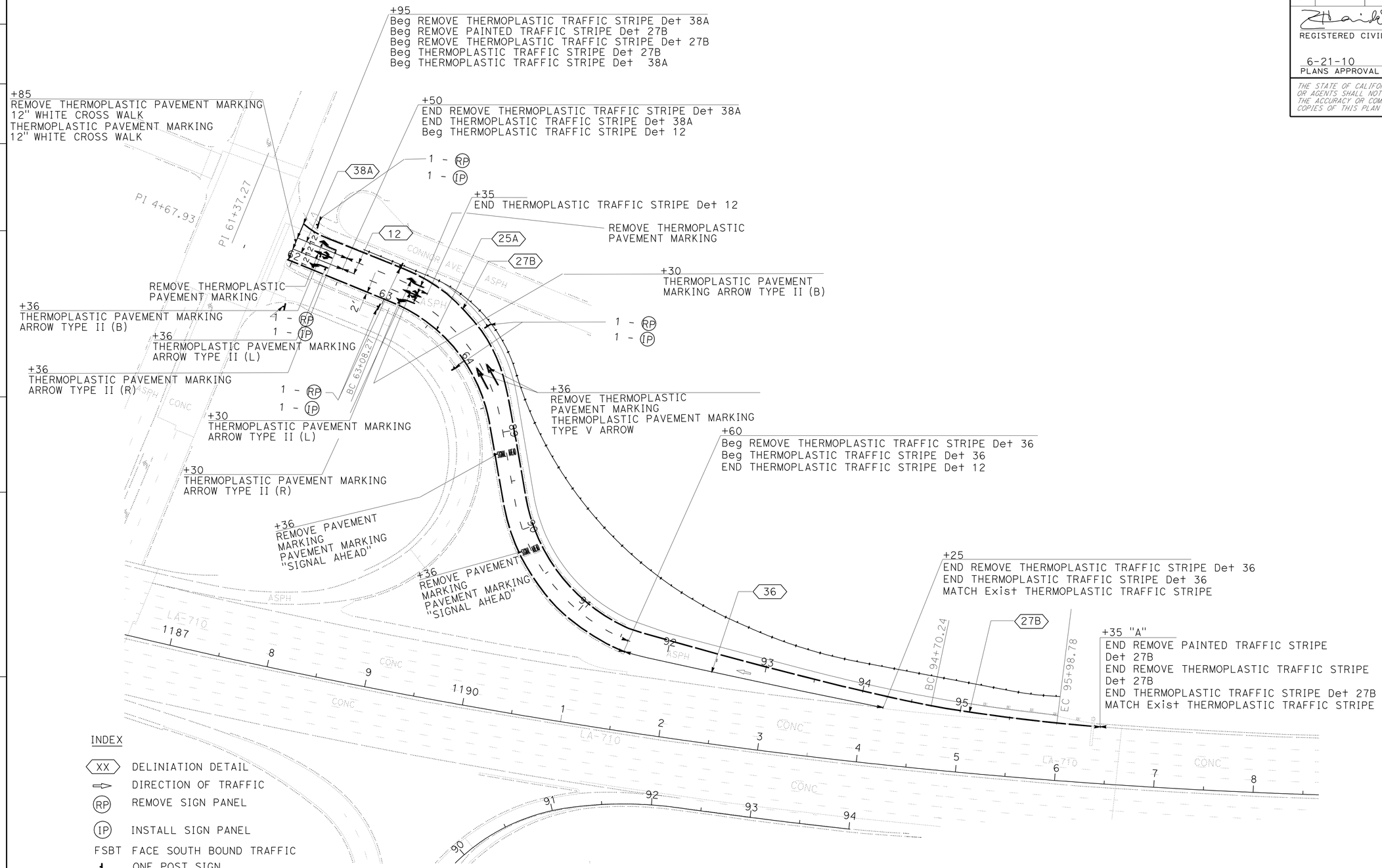

THIS PLAN ACCURATE FOR PAVEMENT DELINEATION AND SIGNING ONLY

PAVEMENT DELINEATION AND SIGN PLAN

SCALE: 1" = 50'

PD-1

STATE OF CALIFORNIA - DEPARTMENT OF TRANSPORTATION
Caltrans® **TRAFFIC DESIGN**

FUNCTIONAL SUPERVISOR: MOHAMMED CHOWDHURY
CALCULATED-DESIGNED BY: MOHAMMED HAIDER
CHECKED BY: MOHAMMED CHOWDHURY
REVISED BY / DATE REVISED

LAST REVISION 00-00-00 | DATE PLOTTED => 23-JUN-2010 | TIME PLOTTED => 08:44

Dist	COUNTY	ROUTE	POST MILES TOTAL PROJECT	SHEET No.	TOTAL SHEETS
07	LA	710	22.6	28	100

REGISTERED CIVIL ENGINEER 5/6/10 DATE

6-21-10
PLANS APPROVAL DATE

REGISTERED PROFESSIONAL ENGINEER MOHAMMED HAIDER No. C61335 Exp. 9-30-11 CIVIL STATE OF CALIFORNIA

THE STATE OF CALIFORNIA OR ITS OFFICERS OR AGENTS SHALL NOT BE RESPONSIBLE FOR THE ACCURACY OR COMPLETENESS OF SCANNED COPIES OF THIS PLAN SHEET.

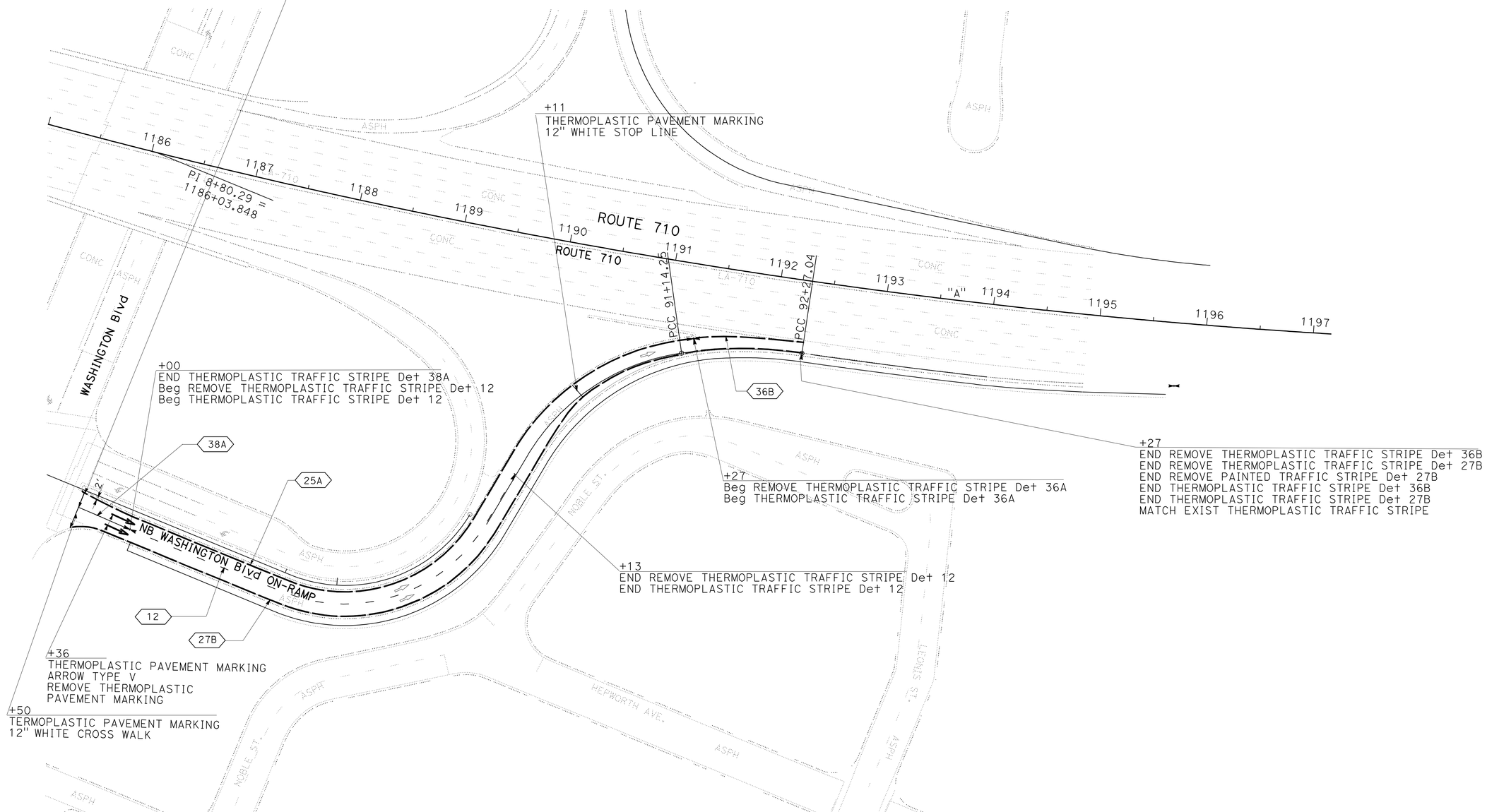

PAVEMENT DELINEATION AND SIGN PLAN

SCALE: 1" = 50'

THIS PLAN ACCURATE FOR PAVEMENT DELINEATION WORK ONLY.

PD-2

REVISED BY	DATE REVISED

CALCULATED-DESIGNED BY: MOHAMMED HAIDER
CHECKED BY: MOHAMMED CHOWDHURY
FUNCTIONAL SUPERVISOR: MOHAMMED CHOWDHURY

STATE OF CALIFORNIA - DEPARTMENT OF TRANSPORTATION
Caltrans® TRAFFIC DESIGN

LAST REVISION 00-00-00 | DATE PLOTTED => 23-JUN-2010 | TIME PLOTTED => 08:44

Dist	COUNTY	ROUTE	POST MILES TOTAL PROJECT	SHEET No.	TOTAL SHEETS
07	LA	710	22.6	29	100

REGISTERED CIVIL ENGINEER 5/6/10 DATE

6-21-10
PLANS APPROVAL DATE

REGISTERED PROFESSIONAL ENGINEER MOHAMMED HAIDER No. C61335 Exp. 9-30-11 CIVIL STATE OF CALIFORNIA

THE STATE OF CALIFORNIA OR ITS OFFICERS OR AGENTS SHALL NOT BE RESPONSIBLE FOR THE ACCURACY OR COMPLETENESS OF SCANNED COPIES OF THIS PLAN SHEET.

PAVEMENT DELINEATION QUANTITIES

SHEET NO.	STATION	REMOVE THERMOPLASTIC TRAFFIC STRIPE Det 8 4"	REMOVE THERMOPLASTIC TRAFFIC STRIPE Det 27B 4"	REMOVE THERMOPLASTIC TRAFFIC STRIPE Det 36 8"	REMOVE THERMOPLASTIC TRAFFIC STRIPE Det 36B 8"	REMOVE THERMOPLASTIC TRAFFIC STRIPE Det 38A 8"	REMOVE PAINTED TRAFFIC STRIPE Det 27B 4"	REMOVE PAVEMENT MARKER	REMOVE THERMOPLASTICE PAVMENT MARKING	THERMOPLASTIC TRAFFIC STRIPE Det 12 4" BROKEN (36 ft - 12 ft)	THERMOPLASTIC TRAFFIC STRIPE Det 27B 4"	THERMOPLASTIC TRAFFIC STRIPE Det 38A 8"	THERMOPLASTIC TRAFFIC STRIPE Det 36B 8"	THERMOPLASTIC TRAFFIC STRIPE Det 36 8"	THERMOPLASTIC PAVEMENT MARKING WORDS	THERMOPLASTIC PAVEMENT MARKING ARROW	THERMOPLASTIC PAVEMENT MARKING CROSS WALK/ STOP LINE	PAVEMENT MARKER (RETRO-REFLECTIVE) TYPE G	TEMPORARY RAILING (TYPE K)	CHANNELIZER (SURFACE MOUNTED)	TEMPORARY CRASH CUSHION MODULE	TEMPORARY FENCE (TYPE CL- 6)	PAINT TRAFFIC STRIPE (2-COAT)
		LF	LF	LF	LF	LF	LF	EA	SQFT	LF	LF	LF	LF	LF	SQFT	SQFT	SQFT	EA	LF	EA	EA	LF	LF
PD-1	61+95 TO 96+35		1022	530		100	817	48	533	487	1022	200		530	126	352	55	48					
PD-2	61+50 TO 92+27		765		200		765	43	100	401	765	100	200			64	36	43					
THQ-1		342				200		29											2042	19	25	313	1582
	SUB-TOTAL	342	1787	530	200	300	1582	120	633	888	1787	300	200	530	126	416	91	91	2042	19	25	313	1582
	TOTAL	3159					1582	120	633	888	2817				633			91	2042	19	25	313	1582

NOTE: 8" WIDE STRIPES ARE MEASURED AS 2 TRAFFIC STRIPES.

ROADSIDE SIGN QUANTITIES

SHEET No.	SIGN CODE	PANEL SIZE	SIGN AREA	SINGLE FACED	BACKGROUND SHEETING COLOR	BACKGROUND RETRORE-FLECTIVE ASTM TYPE	LEGEND SHEETING COLOR	LEGEND RETRORE-FLECTIVE ASTM TYPE	GRAFFITI FILM PREMIUM	ROADSIDE SIGN SINGLE SHEET UNFRAMED ALUMINUM	INSTALL ROADSIDE SIGN PANEL ON EXISTING POST	INSTALL SIGN (STRAP & SADDLE BRACKET METHOD)	FURNISH SINGLE SHEET ALUMINUM SIGN (0.063 in UNFRAMED)	REMOVE SIGN PANEL ONE POST	REMOVE SIGN PANEL STRAP & SADDLE BRACKET METHOD	INSTALL SIGN OVERLAY
		in X in	SQFT							0.063 in	EA	EA	SQFT	EA	EA	SQFT
PD-1	R61-28 (CA)	48x30	10											5	1	
	R61-28 (CA)	48x30	10	●	Y	III	B	III	●	●	5	1	60			
THQ-1													12			12
TOTAL											5	1	72	6		12

PAVEMENT DELINEATION AND SIGN QUANTITIES

PDQ-1

STATE OF CALIFORNIA - DEPARTMENT OF TRANSPORTATION
Caltrans TRAFFIC DESIGN

FUNCTIONAL SUPERVISOR: MOHAMMED CHOWDHURY
CALCULATED-DESIGNED BY: MOHAMMED HAIDER
CHECKED BY: MOHAMMED CHOWDHURY
REVISED BY
DATE REVISED

LAST REVISION 00-00-00
DATE PLOTTED => 23-JUN-2010
TIME PLOTTED => 08:44

Dist	COUNTY	ROUTE	POST MILES TOTAL PROJECT	SHEET No.	TOTAL SHEETS
07	LA	710	22.6	30	100

Steve Pham 4-15-10
REGISTERED CIVIL ENGINEER DATE

6-21-10
PLANS APPROVAL DATE

REGISTERED PROFESSIONAL ENGINEER
STEVE PHAM
No. 67183
Exp. 9/30/10
CIVIL
STATE OF CALIFORNIA

THE STATE OF CALIFORNIA OR ITS OFFICERS OR AGENTS SHALL NOT BE RESPONSIBLE FOR THE ACCURACY OR COMPLETENESS OF SCANNED COPIES OF THIS PLAN SHEET.

SUMMARY OF QUANTITIES

SHEET No.	SOUND WALL No.	STATION TO STATION	REMOVE CHAIN LINK FENCE	REMOVE CONCRETE	REMOVE RETAINING WALL	CHAIN LINK FENCE (TYPE CL-6)	STRUCTURE EXCAVATION (TYPE Y-1) (AERIALLY DEPOSITED LEAD)	STRUCTURE BACKFILL (RETAINING WALL)	16" CAST-IN-DRILLED-HOLE CONCRETE PILING	30" CAST-IN-DRILLED-HOLE CONCRETE PILING	TIEBACK ANCHOR	STRUCTURAL CONCRETE, RETAINING WALL	SOUND WALL (MASONRY BLOCK)	BAR REINFORCING STEEL (RETAINING WALL)	CONCRETE BARRIER (TYPE 736A MOD)	CONCRETE BARRIER (TYPE 736SV MOD)	CONCRETE BARRIER (TYPE 736SV)	CRASH CUSHION, SAND FILLED
			LF	CY	LF	LF	CY	CY	LF	LF	EA	CY	SQFT	LB	LF	LF	LF	EA
L-1	SW 1190	"A" Sta 288+37.16 TO Sta 296+30.30	529		104	458	3,595	9,000	550	84	4	1,205	9,520	150,900	673	32	90	
L-2	SW 1191	"G" Sta 185+17.11 TO Sta 196+27.29		1,080			2,685	5,470	2,474	76	4	1,175	13,322	148,900	617	31	462	1
SUBTOTAL			529	1,080	104	458	6,280	14,470	3,024	160	8	2,380	22,842	299,800	1,290	63	552	1
DRAINAGE QUANTITIES				17														1
GRAND TOTAL			529	1,097	104	458	6,280	14,470	3,024	160	8	2,380	22,842	299,800	1,290	63	552	1

SUMMARY OF QUANTITIES
Q-1

STATE OF CALIFORNIA - DEPARTMENT OF TRANSPORTATION
Caltrans® OFFICE OF DESIGN B

FUNCTIONAL SUPERVISOR: MANSOOR A. KHAN
CALCULATED-DESIGNED BY: SHAO-CHIANG LIU
CHECKED BY: STEVE PHAM
REVISED BY
DATE REVISED

LAST REVISION 00-00-00
DATE PLOTTED => 23-JUN-2010
TIME PLOTTED => 08:45

Dist	COUNTY	ROUTE	POST MILES TOTAL PROJECT	SHEET No.	TOTAL SHEETS
07	LA	710	22.6	31	100

LICENSED LANDSCAPE ARCHITECT

6-21-10
PLANS APPROVAL DATE

LICENSED LANDSC PE ARCHITECT
JENNIFER TAIRA
No. 4625
Signature
08-31-11
Renewal Date
Date
STATE OF CALIFORNIA

THE STATE OF CALIFORNIA OR ITS OFFICERS OR AGENTS SHALL NOT BE RESPONSIBLE FOR THE ACCURACY OR COMPLETENESS OF ELECTRONIC COPIES OF THIS PLAN SHEET.

ABBREVIATIONS

AMEND — amendment
B & B — balled and burlapped
Dia — diameter
EA — each
lb — pound
oz. — ounce
Ft — foot/feet
SQFT — square feet
CF — cubic feet
Max — maximum
Min — minimum
NCN — no common name
No. — number
Pkt — packet
PLT ESTB — plant establishment
Pvmt — pavement
R/W — right of way
SF — state furnished
TRVD — traveled

PLANT LIST AND PLANTING SPECIFICATIONS

PLANT GROUP	PLANT No.	SYMBOL	BOTANICAL NAME	COMMON NAME	SIZE	QUANTITY EACH	HOLE SIZE (INCH) Dia	HOLE SIZE (INCH) DEPTH	BASIN TYPE	IRON SULFATE ①	SOIL AMEND ①	COMMERCIAL FERTILIZER ① PLANTING	COMMERCIAL FERTILIZER ① PLT ESTB	BASIN MULCH	STAKING	PLANTING LIMITS MINIMUM DISTANCE (Ft) FROM TRVD WAY	PVMT	FENCE	WALL	PAVED DITCH	EARTH DITCH	ON CENTER (Ft)	REMARKS
A	1		PARTHENOCISSUS TRICUSPIDATA	BOSTON IVY	1 GAL	252	②	②	I	—	—	0.5 OZ.	0.5 OZ.	0.05 CY	⑥	—	—	—	—	4	15	5	VINE
	2		DISTICTIS BUCCINATORIA	BLOOD-RED TRUMPET VINE	1 GAL	126	②	②	I	—	—	0.5 OZ.	0.5 OZ.	0.05 CY	⑥	—	—	—	—	8	10	5	VINE
	3		PHOTINIA FRASERI	PHOTINIA	1 GAL	14	②	②	I	—	—	0.5 OZ.	0.5 OZ.	0.05 CY	—	—	15	15	10	10	12	5	SHRUB
H	4		CARPOBROTUS EDULIS	HOTTENTOT FIG	CUTTINGS	43929	—	—	—	—	—	15 OZ/ 100 f^2	15 OZ/ 100 f^2	—	—	—	6	6	6	6	8	1.5	GROUND COVER
U	5		KOELREUTERIA BIPINNATA	CHINESE FLAME TREE	15 GAL	20	②	②	I	—	—	10 OZ.	7 OZ.	0.078 CY	⑥	30	—	10	10	10	12	④	TREE
	6		LAGERSTROEMIA INDICA 'TUSCARORA'	CRAPE MYRTLE	15 GAL	49	②	②	I	—	—	10 OZ.	7 OZ.	0.078 CY	⑥	30	—	15	15	15	17	④	TREE PINK/RED COLOR
	7		PLATANUS RACEMOSA	CALIFORNIA SYCAMORE	15 GAL	14	②	②	I	—	—	10 OZ.	7 OZ.	0.078 CY	⑥	40	—	20	20	10	12	④	TREE
	8		LIRIODENDRON TULIPIFERA	TULIP TREE	15 GAL	20	②	②	I	—	—	10 OZ.	7 OZ.	0.078 CY	⑥	30	—	20	15	15	17	④	TREE

APPLICABLE WHEN CIRCLED:

① - Quantities shown are "per plant" unless shown as SQFT or SQYD application rates.
② - Sufficient to receive root ball.
3 - Does not apply to mulch areas.
④ - As shown on plans.
5 - Unless otherwise shown on plans.
⑥ - See detail.
7 - See Special Provisions.

NOTE:

Underlined portions of botanical name indicate abbreviations used on Planting Plans.

PLANT LIST

PL-1

REVISED BY | DATE REVISED
XW | JENNIFER TAIRA
CALCULATED-DESIGNED BY | CHECKED BY
SENIOR LANDSCAPE ARCHITECT | JENNIFER TAIRA
STATE OF CALIFORNIA - DEPARTMENT OF TRANSPORTATION
Caltrans LANDSCAPE ARCHITECTURE

LAST REVISION 00-00-00 | DATE PLOTTED => 23-JUN-2010 | TIME PLOTTED => 08:45

Dist	COUNTY	ROUTE	POST MILES TOTAL PROJECT	SHEET No.	TOTAL SHEETS
07	LA	710	22.6	32	100

LICENSED LANDSCAPE ARCHITECT

6-21-10
PLANS APPROVAL DATE

LICENSED LANDSCAPE ARCHITECT
JENNIFER TAIRA
No. 4625
Signature
08-31-11
Renewal Date
Date
STATE OF CALIFORNIA

THE STATE OF CALIFORNIA OR ITS OFFICERS OR AGENTS SHALL NOT BE RESPONSIBLE FOR THE ACCURACY OR COMPLETENESS OF ELECTRONIC COPIES OF THIS PLAN SHEET.

NOTE:

FOR ACCURATE RIGHT OF WAY AND ACCESS DATA,
CONTACT RIGHT OF WAY ENGINEERING AT THE DISTRICT OFFICE.

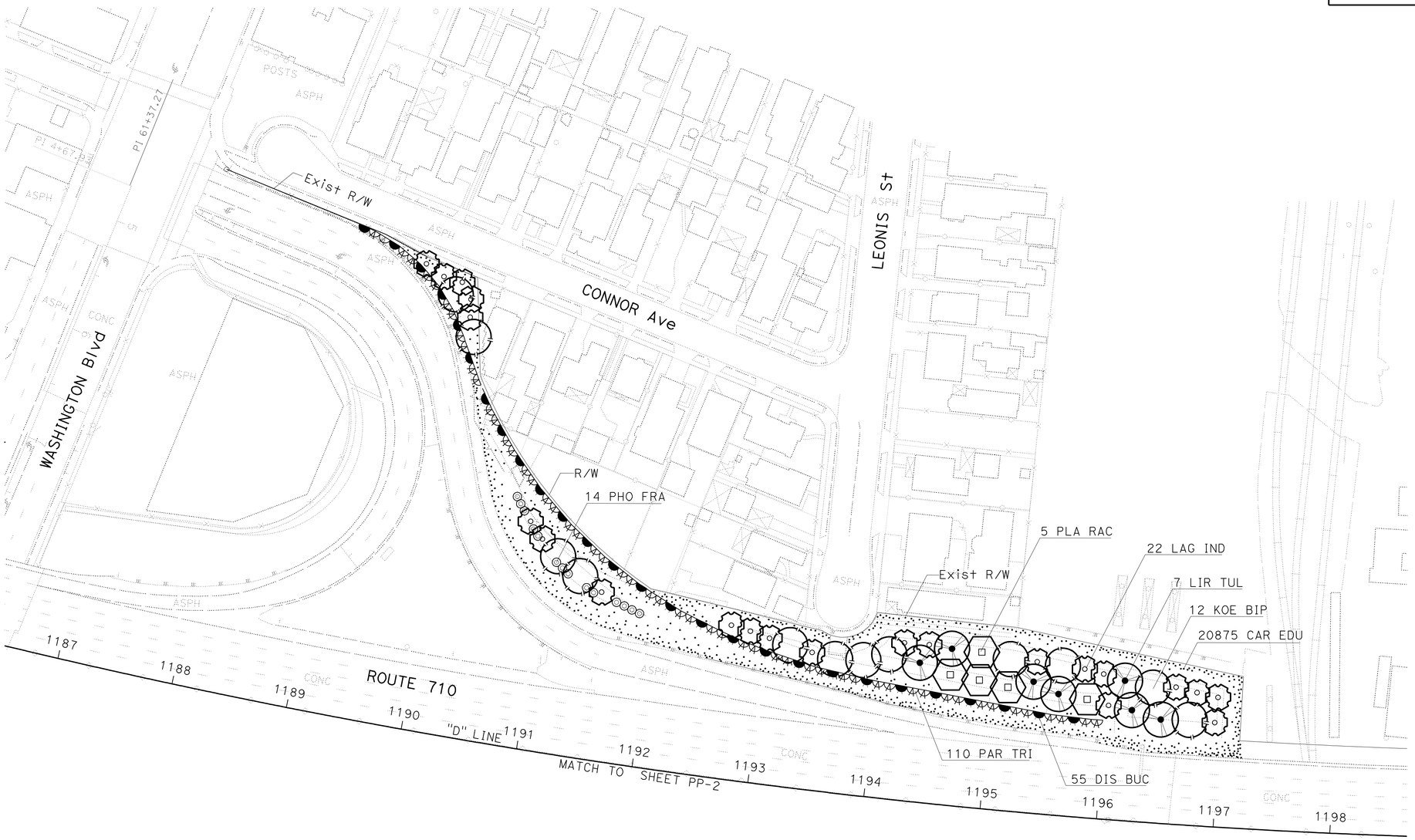

PLANTING PLAN

SCALE: 1" = 50'

PP-1

THIS PLAN ACCURATE FOR PLANTING WORK ONLY

STATE OF CALIFORNIA - DEPARTMENT OF TRANSPORTATION
Caltrans® LANDSCAPE ARCHITECTURE

SENIOR LANDSCAPE ARCHITECT: JENNIFER TAIRA
CALCULATED-DESIGNED BY / CHECKED BY
REVISED BY / DATE REVISED

LAST REVISION 00-00-00
DATE PLOTTED => 23-JUN-2010
TIME PLOTTED => 08:45

Dist	COUNTY	ROUTE	POST MILES TOTAL PROJECT	SHEET No.	TOTAL SHEETS
07	LA	710	22.6	33	100

LICENSED LANDSCAPE ARCHITECT

6-21-10
PLANS APPROVAL DATE

LICENSED LANDSCAPE ARCHITECT
JENNIFER TAIRA
No. 4625
Signature
08-31-11
Renewal Date
Date
STATE OF CALIFORNIA

THE STATE OF CALIFORNIA OR ITS OFFICERS OR AGENTS SHALL NOT BE RESPONSIBLE FOR THE ACCURACY OR COMPLETENESS OF ELECTRONIC COPIES OF THIS PLAN SHEET.

NOTE:

FOR ACCURATE RIGHT OF WAY AND ACCESS DATA,
CONTACT RIGHT OF WAY ENGINEERING AT THE DISTRICT OFFICE.

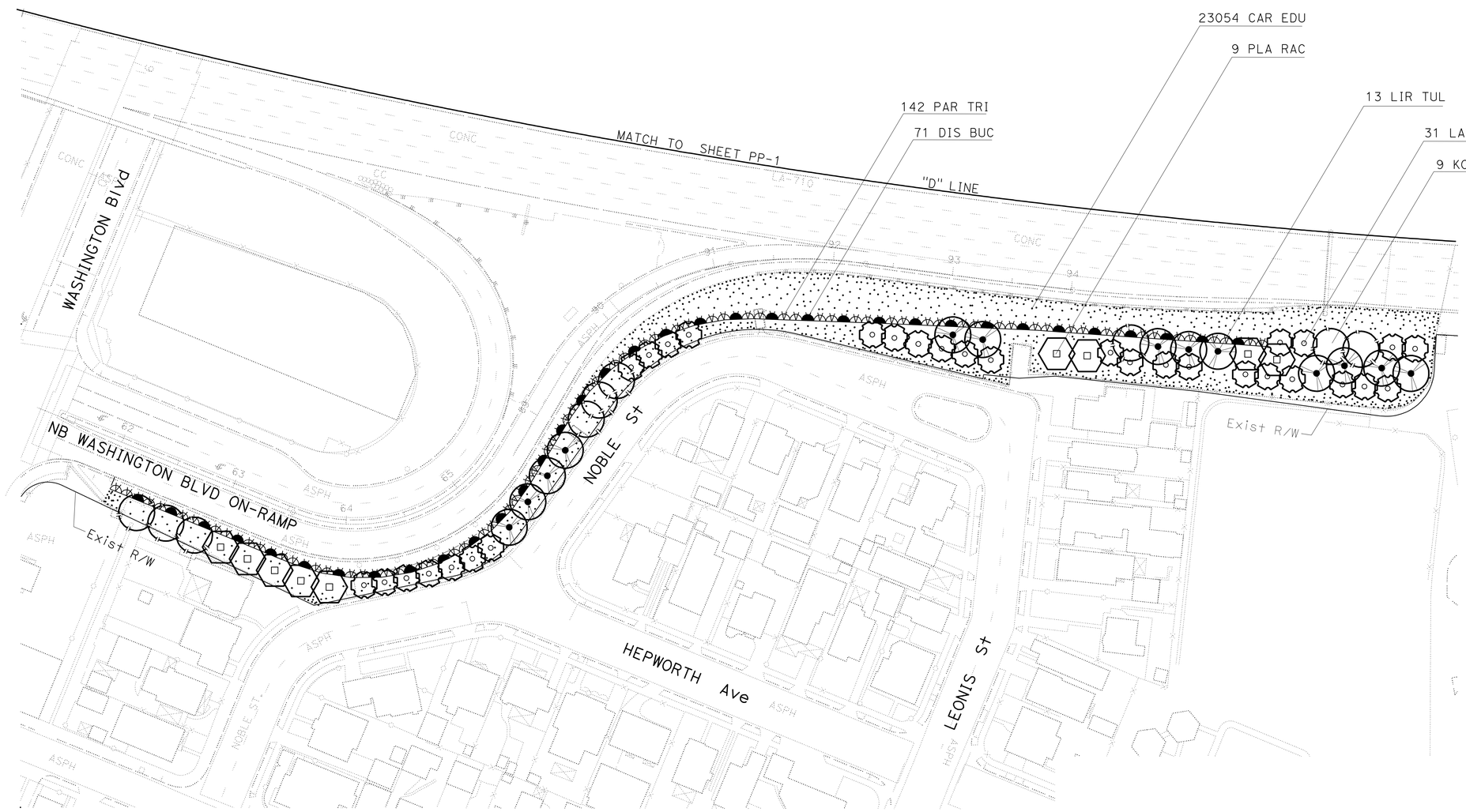

PLANTING PLAN

SCALE: 1" = 50'

PP-2

THIS PLAN ACCURATE FOR PLANTING WORK ONLY

STATE OF CALIFORNIA - DEPARTMENT OF TRANSPORTATION
Caltrans® LANDSCAPE ARCHITECTURE

SENIOR LANDSCAPE ARCHITECT: JENNIFER TAIRA
CALCULATED-DESIGNED BY: JENNIFER TAIRA
CHECKED BY
REVISED BY
DATE REVISED

LAST REVISION 00-00-00
DATE PLOTTED => 23-JUN-2010
TIME PLOTTED => 08:45

Dist	COUNTY	ROUTE	POST MILES TOTAL PROJECT	SHEET No.	TOTAL SHEETS
07	LA	710	22.6	34	100

LICENSED LANDSCAPE ARCHITECT

6-21-10
PLANS APPROVAL DATE

LICENSED LANDSCAPE ARCHITECT
JENNIFER TAIRA
No. 4625
Signature
08-31-11
Renewal Date
Date
STATE OF CALIFORNIA

THE STATE OF CALIFORNIA OR ITS OFFICERS OR AGENTS SHALL NOT BE RESPONSIBLE FOR THE ACCURACY OR COMPLETENESS OF ELECTRONIC COPIES OF THIS PLAN SHEET.

NOTE:

FOR ACCURATE RIGHT OF WAY AND ACCESS DATA,
CONTACT RIGHT OF WAY ENGINEERING AT THE DISTRICT OFFICE.

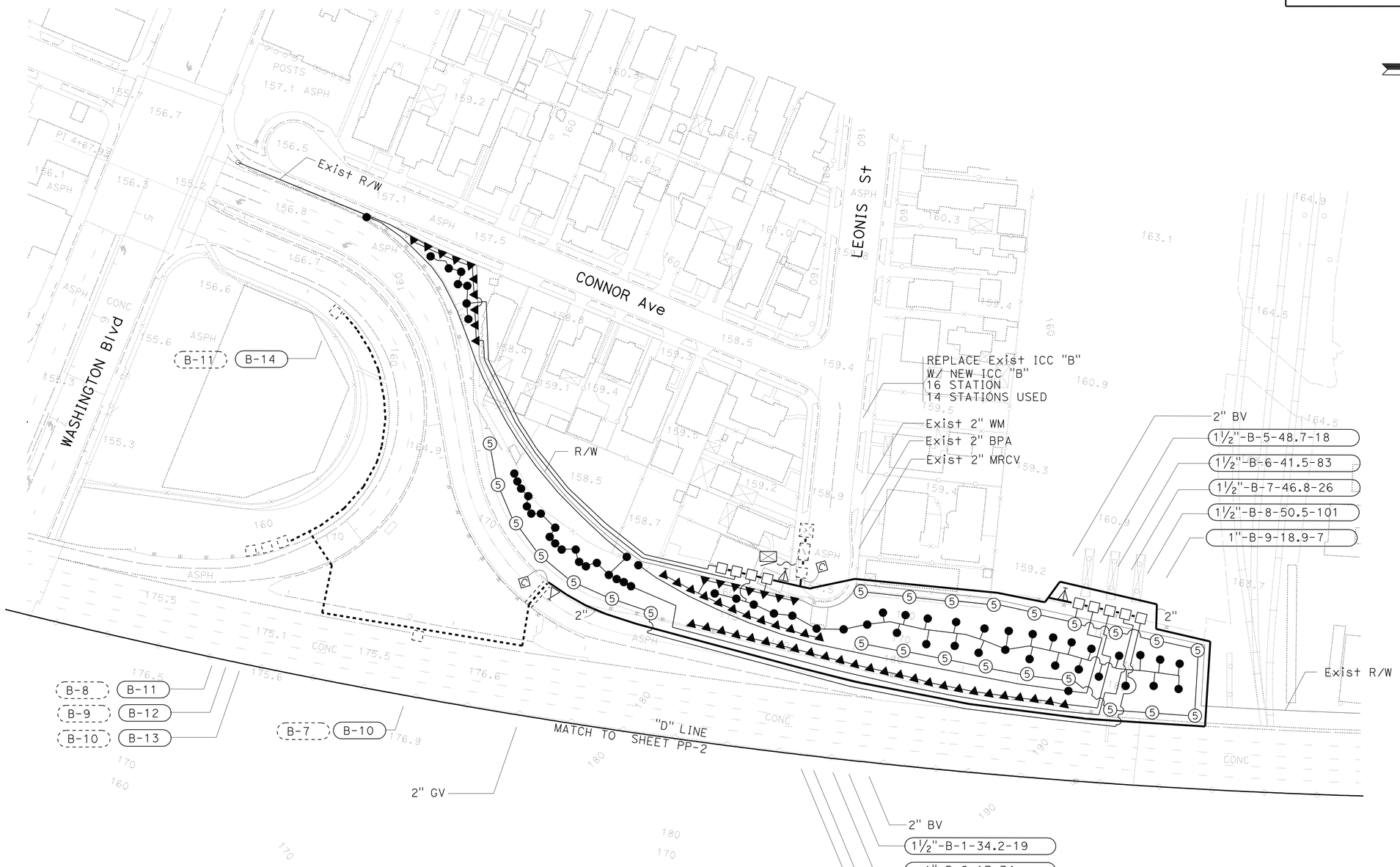

IRRIGATION PLAN

SCALE: 1" = 50'

IP-1

THIS PLAN ACCURATE FOR PLANTING WORK ONLY

STATE OF CALIFORNIA - DEPARTMENT OF TRANSPORTATION
Caltrans® LANDSCAPE ARCHITECTURE

SENIOR LANDSCAPE ARCHITECT: JENNIFER TAIRA

CALCULATED-DESIGNED BY / CHECKED BY: JENNIFER TAIRA

REVISED BY / DATE REVISED

LAST REVISION 00-00-00 | DATE PLOTTED => 23-JUN-2010 | TIME PLOTTED => 08:45

Dist	COUNTY	ROUTE	POST MILES TOTAL PROJECT	SHEET No.	TOTAL SHEETS
07	LA	710	22.6	35	100

LICENSED LANDSCAPE ARCHITECT

6-21-10
PLANS APPROVAL DATE

LICENSED LANDSCAPE ARCHITECT
JENNIFER TAIRA
No. 4625
Signature
08-31-11
Renewal Date
Date
STATE OF CALIFORNIA

THE STATE OF CALIFORNIA OR ITS OFFICERS OR AGENTS SHALL NOT BE RESPONSIBLE FOR THE ACCURACY OR COMPLETENESS OF ELECTRONIC COPIES OF THIS PLAN SHEET.

NOTE:

FOR ACCURATE RIGHT OF WAY AND ACCESS DATA,
CONTACT RIGHT OF WAY ENGINEERING AT THE DISTRICT OFFICE.

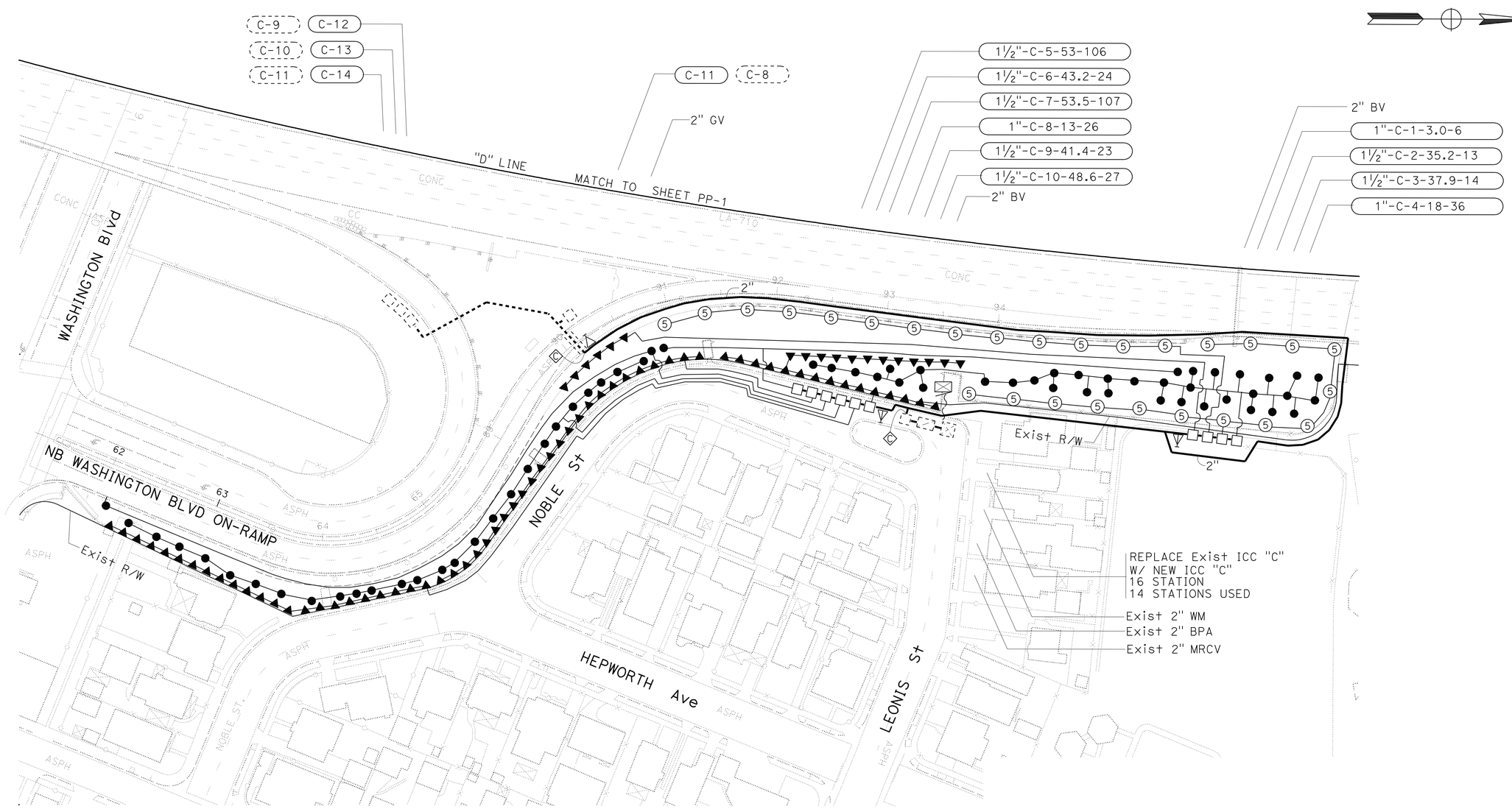

IRRIGATION PLAN

SCALE: 1" = 50'

IP-2

THIS PLAN ACCURATE FOR PLANTING WORK ONLY

STATE OF CALIFORNIA - DEPARTMENT OF TRANSPORTATION
Caltrans LANDSCAPE ARCHITECTURE

SENIOR LANDSCAPE ARCHITECT: JENNIFER TAIRA

CALCULATED-DESIGNED BY: JENNIFER TAIRA
CHECKED BY

REVISED BY
DATE REVISED

LAST REVISION 00-00-00
DATE PLOTTED => 23-JUN-2010
TIME PLOTTED => 08:45

Dist	COUNTY	ROUTE	POST MILES TOTAL PROJECT	SHEET No.	TOTAL SHEETS
07	LA	710	22.6	36	100

LICENSED LANDSCAPE ARCHITECT

6-21-10
PLANS APPROVAL DATE

LICENSED LANDSCAPE ARCHITECT JENNIFER TAIRA NO. 4625 STATE OF CALIFORNIA
Signature
08-31-11
Renewal Date
Date

THE STATE OF CALIFORNIA OR ITS OFFICERS OR AGENTS SHALL NOT BE RESPONSIBLE FOR THE ACCURACY OR COMPLETENESS OF ELECTRONIC COPIES OF THIS PLAN SHEET.

SPRINKLER SCHEDULE

SYMBOL	TYPE	DESCRIPTION	SPRAY PATTERN	OPERATING PRESSURE (PSI)	PRESSURE COMPENSATING	PLUS/MINUS 5% ② DISCHARGE: GALLONS PER MINUTE (GPM)	GALLONS PER HOUR (GPH)	RADIUS (Ft)	WIDTH x LENGTH (Ft)	MATERIAL	NOZZLE SIZE (INCH)	INLET CONNECTION (NPT INCH)	POSITIVE-LOCKING ADJ ARC STOP	BACKSPLASH PREVENTER	DIFFUSER PIN	DISTANCE CONTROL FLAP	ADJ DISCHARGE	RISER: TYPE	MATERIAL: PLASTIC	GALVANIZED	SIZE (IPS INCH)	HEIGHT (INCH)	FLOW SHUTOFF DEVICE	⑤ SWING JOINT (TYPE)	RISER SUPPORT	SPRINKLER PROTECTOR (TYPE)	REMARKS
⑤	A-5	GEAR DRIVEN	P	35	—	2.71	—	38	—	PL	—	¾	—	—	—	—	X	IV	—	X	—	18	X	III	X	—	①
▲	B-2	SHRUB SPRAY	P	30	—	1.8	—	14	—	PL	—	½	—	—	—	—	—	—	X	—	—	—	—	II	—	—	12" POP UP
●	C-2	FLOOD BUBBLER	—	30	X	.50	—	—	—	PL	—	½	—	—	—	—	X	V	X	—	—	4	X	—	—	—	

X IN BOX DENOTES REQUIREMENT

APPLICABLE WHEN CIRCLED BELOW:

① - See Special Provisions.
② - If a pressure compensating device is specified, the discharge and radii shown reflect its use.
3 - Arc Stop shall be fitted with a nut and bolt.
4 - Vinyl-coated cast iron housing.
⑤ - Swing Joints required adjacent to shoulders, curbs, sidewalks, and dikes.
6 - Unless otherwise shown on plans.

ABBREVIATIONS

F — full circle
P — part circle
F/P — full/part circle
Q — quarter circle
T — third circle
H — half circle
TT — two third circle
TQ — three quarter circle
CST — center strip
SST — side strip
EST — end strip
Ft — feet/foot
GPM — gallons per minute
GPH — gallons per hour
Adj — adjustable
PL — plastic
B/B — brass/bronze
B/PL — brass/plastic
B/B/PL — brass/bronze/plastic
NPT — national pipe thread
IPS — iron pipe size
PSI — pounds per square inch

SPRINKLERS SIZING CHART (2.71 GPM) (A-5)

NUMBER OF SPRINKLERS	SIZE OF PIPE
1---3	¾ In
4---6	1 In
7---10	1¼ In
11---15	1½ In

SPRINKLERS SIZING CHART (1.8 GPM) (B-2)

NUMBER OF SPRINKLERS	SIZE OF PIPE
1---5	¾ In
6---9	1 In
10---15	1¼ In
16---20	1½ In

SPRINKLERS SIZING CHART (0.5 GPM) (C-2)

NUMBER OF SPRINKLERS	SIZE OF PIPE
1---20	¾ In
21---32	1 In
33---52	1¼ In
53---72	1½ In

EXISTING	PROPOSED	ITEM DESCRIPTION
		WATER METER (BY OTHERS) (WM)
		BACKFLOW PREVENTER ASSEMBLY (BPA)
		IRRIGATION CONTROLLER(S) IN CONTROLLER ENCLOSURE CABINET (ICC)
		CONTROL AND NEUTRAL CONDUCTORS (CNC)
		CONDUIT (COND)
		PLASTIC PIPE (PR 200) (SUPPLY LINE) (MAIN)
		PLASTIC PIPE (PR 200) (SUPPLY LINE) (LATERAL)
		REMOTE CONTROL VALVE (RCV) REMOTE CONTROL VALVE (MASTER) (RCVM)
		BALL VALVE (BV)
		GATE VALVE (GV)

RCV SIZE (INCH)
IRRIGATION CONTROLLER
CONTROLLER STATION
VALVE IN PARALLEL (IF APPLICABLE)
GPM
QUANTITY OF SPRINKLERS (WHEN SHOWN)

2½"-A-2b-50 -60

VALVE CODE

SPRINKLER SCHEDULE

NO SCALE

LD-1

STATE OF CALIFORNIA - DEPARTMENT OF TRANSPORTATION
Caltrans® LANDSCAPE ARCHITECTURE
SENIOR LANDSCAPE ARCHITECT JENNIFER TAIRA
CALCULATED-DESIGNED BY XW JENNIFER TAIRA
CHECKED BY
REVISED BY
DATE REVISED

LAST REVISION 00-00-00 | DATE PLOTTED => 23-JUN-2010 TIME PLOTTED => 08:45

DIST	COUNTY	ROUTE	POST MILES TOTAL PROJECT	SHEET NO.	TOTAL SHEETS
07	LA	710	22.6	37	100

REGISTERED CIVIL ENGINEER

November 17, 2006
PLANS APPROVAL DATE

REGISTERED PROFESSIONAL ENGINEER Dallas Forester No. C37765 Exp. 12-31-06 CIVIL STATE OF CALIFORNIA

The State of California or its officers or agents shall not be responsible for the accuracy or completeness of electronic copies of this plan sheet.

To accompany plans dated 6-21-10

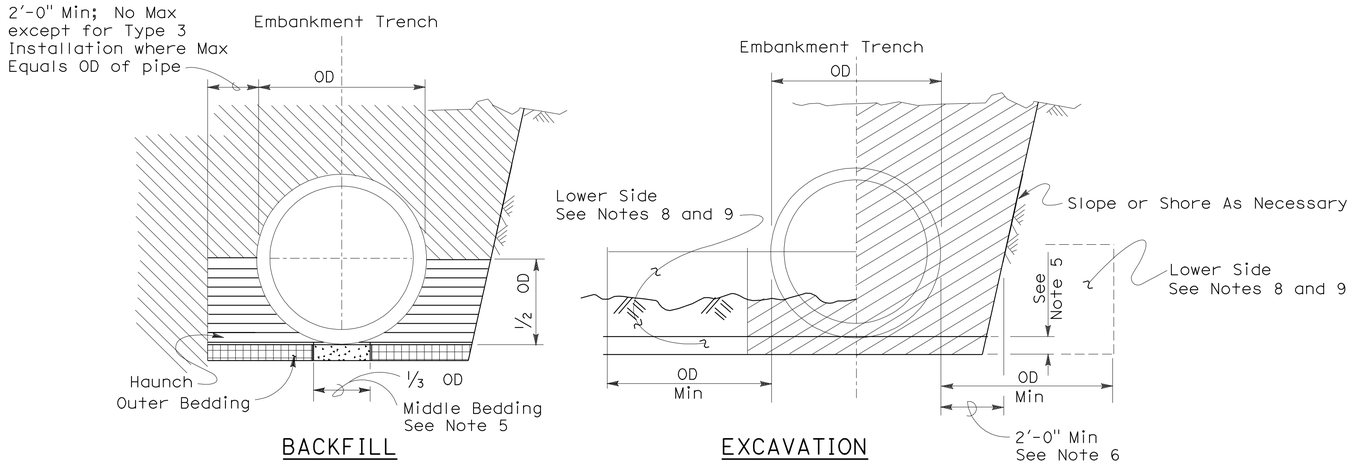

Roadway Embankment

Structure Backfill (Culvert) See Note 6

Structure Backfill (Culvert) See Note 6

Loose Backfill

Excavation Structure (Culvert)

TYPE 1 INSTALLATION:

The haunch and outer bedding shall be compacted to a minimum 90 percent relative compaction. In addition, the minimum sand equivalent in these areas shall be 30 and the maximum percentage passing the 75 μm sieve size shall be 12.

TYPE 2 INSTALLATION:

The haunch and outer bedding shall be compacted to a minimum 90 percent relative compaction. In addition, the minimum sand equivalent in these areas shall be 25.

TYPE 3 INSTALLATION:

The haunch and outer bedding shall be compacted to a minimum 85 percent relative compaction. 90 percent relative compaction will be required where the fill over the pipe is less than 4'-0" or 1/2 OD.

NOTES:

1. Unless otherwise shown on the plans or specified in the special provision, the Contractor shall have the option of selecting the class of RCP and the type of installation to be used, provided the height of cover does not exceed the value shown for the RCP selected.
   Example: 24" RCP culvert with maximum cover of 19'-0" the options are:
   a) Class III or stronger with Installation Type 1.
   b) Class III Special or stronger with Installation Type 2.
   c) Class IV Special or stronger with Installation Type 3.
   Cover is defined as the maximum vertical distance from top of the pipe to finished grade within the length of any given culvert.
2. The class of RCP and Installation Type selected shall be the same throughout the length of any given culvert.
3. The "length of any culvert" is defined as the culvert between:
   a) Successive drainage structure (inlets, junction boxes, headwalls, etc.).
   b) A drainage structure and the inlet or outlet end of the culvert.
   c) The inlet and outlet end of the culvert when there are no intervening drainage structures.
4. Oval and arch shaped RCP shall not be used.
5. 1/25 OD Min, not less than 3".
6. Slurry cement backfill may be substituted for backfill in the outer bedding and haunch areas. If slurry is used the outer and middle beddings shall be omitted. Prior to installation the soil under the middle 1/3 of the outside diameter of the pipe shall be softened by scarifying or other means to a minimum depth of 1/25 OD, but not less than 3". Where slurry cement backfill is used clear distance to trench wall may be reduced as set forth in Section 19-3.062 of the Standard Specifications.
7. Backfill shall be placed full width of excavation except where dimensions are shown for backfill width or thickness. Dimensions shown are minimums.
8. Lower side shall be suitable material as determined by the Engineer. Otherwise it shall be considered unsuitable as set forth in Section 19-2.02 of the Standard Specifications. See Note 9.
9. Where the pipe is placed in a trench, if the trench walls are sloped at 5 vertical to 1 horizontal or steeper for at least 90 percent of the trench height or up to not less than 12" from the grading plane, the firmness of the soil in the lower side need not be considered.
10. Non-reinforced precast concrete pipe sizes 3'-0" or smaller may be placed under installation Types 1, 2 or 3.

INSTALLATION TYPE 1

MINIMUM CLASS AND D-LOAD	COVER	
	108" Dia AND SMALLER	OVER 108" Dia
Class II 1000D	14.9'	12.9'
Class III 1350D	15.0' - 20.9'	13.0' - 18.9'
Class III Special 1700D	21.0' - 26.9'	19.0' - 24.9'
Class IV 2000D	27.0' - 31.9'	25.0' - 29.9'
Class IV Special 2500D	32.0' - 40.9'	30.0' - 38.9'
Class V 3000D	41.0' - 49.9'	39.0' - 46.9'
Class V Special 3600D	50.0' - 59.0'	47.0' - 58.0'

INSTALLATION TYPE 2

MINIMUM CLASS AND D-LOAD	COVER
Class II 1000D	9.9'
Class III 1350D	10.0'- 14.9'
Class III Special 1700D	15.0' - 19.9'
Class IV 2000D	20.0' - 24.9'
Class IV Special 2500D	25.0' - 31.9'
Class V 3000D	32.0' - 38.9'
Class V Special 3600D	39.0' - 47.0'

INSTALLATION TYPE 3

MINIMUM CLASS AND D-LOAD	COVER	
	48" Dia AND SMALLER	OVER 48" Dia
Class II 1000D	7.9'	5.9'
Class III 1350D	8.0' - 10.9'	6.0' - 8.9'
Class III Special 1700D	11.0' - 14.9'	9.0' - 12.9'
Class IV 2000D	15.0' - 17.9'	13.0' - 15.9'
Class IV Special 2500D	18.0' - 21.9'	16.0' - 19.9'
Class V 3000D	22.0' - 26.9'	20.0' - 24.9'
Class V Special 3600D	30.0' - 33.0'	25.0' - 31.0'

STATE OF CALIFORNIA
DEPARTMENT OF TRANSPORTATION

EXCAVATION AND BACKFILL CONCRETE PIPE CULVERTS

NO SCALE

RSP A62DA DATED NOVEMBER 17, 2006 SUPERSEDES STANDARD PLAN A62DA DATED MAY 1, 2006 - PAGE 20 OF THE STANDARD PLANS BOOK DATED MAY 2006.

REVISED STANDARD PLAN RSP A62DA

2006 REVISED STANDARD PLAN RSP A62DA

10-26-06

DIST	COUNTY	ROUTE	POST MILES TOTAL PROJECT	SHEET NO.	TOTAL SHEETS
07	LA	710	22.6	38	100

REGISTERED CIVIL ENGINEER

June 5, 2009
PLANS APPROVAL DATE

REGISTERED PROFESSIONAL ENGINEER Glenn DeCou No. C34547 Exp. 9-30-09 CIVIL STATE OF CALIFORNIA

The State of California or its officers or agents shall not be responsible for the accuracy or completeness of electronic copies of this plan sheet.

To accompany plans dated 6-21-10

2006 REVISED STANDARD PLAN RSP A85

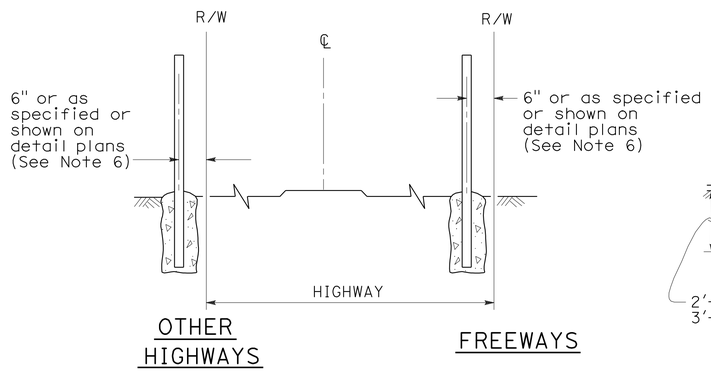

FENCE LOCATION

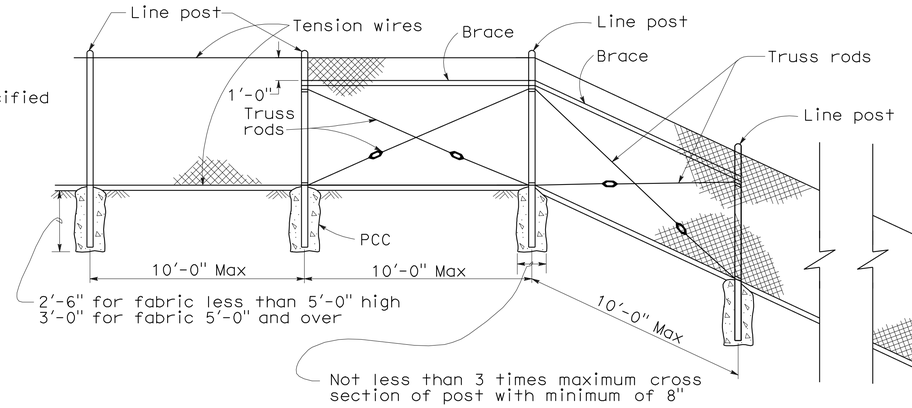

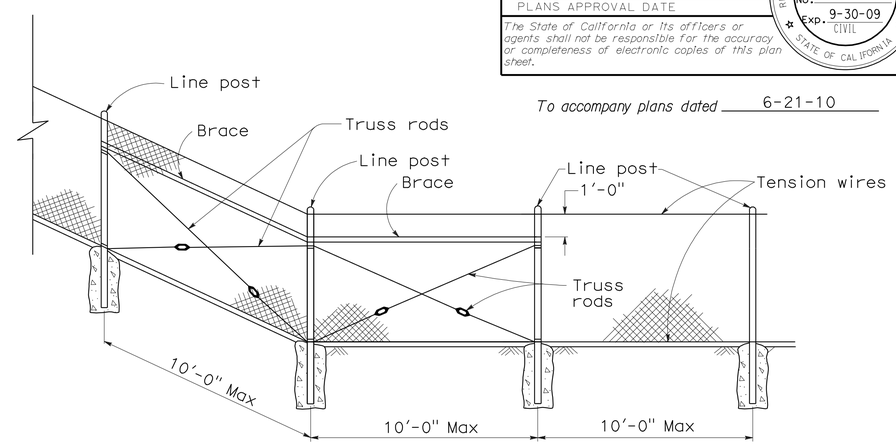

CHAIN LINK FENCE ON SHARP BREAK IN GRADE

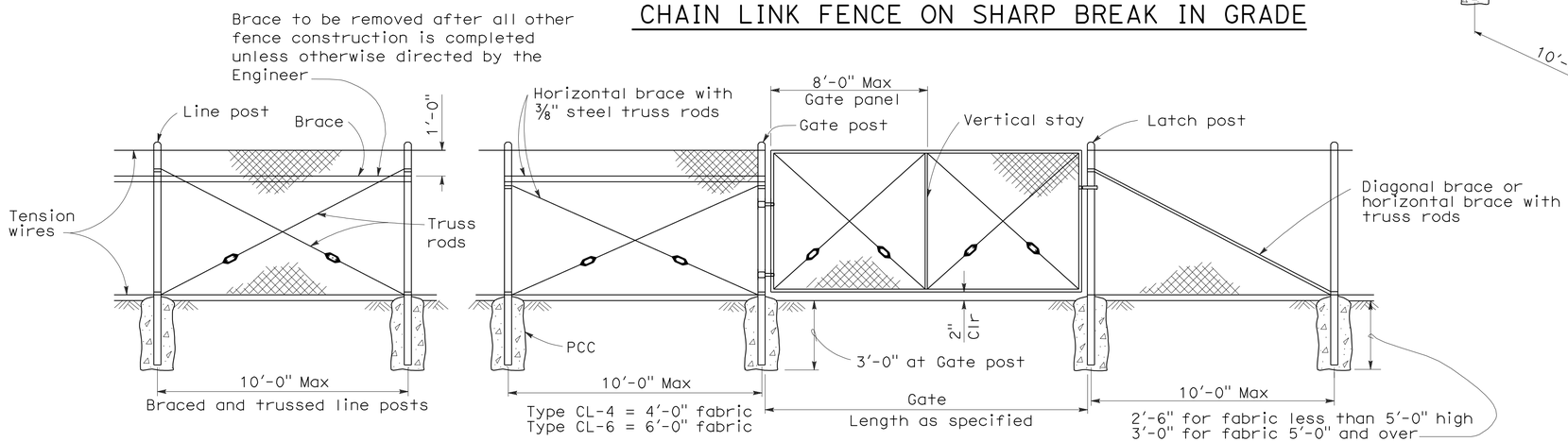

CHAIN LINK GATE INSTALLATION

GATE POST			
FENCE HEIGHT	GATE WIDTHS	NOMINAL ID	WEIGHT PER FOOT
6'-0" and Less	Up thru 6'-0"	2½"	4.95 LB
	Over 6'-0" thru 12'-0"	4"	10.79 LB
	Over 12'-0" thru 18'-0"	5"	14.62 LB
	Over 18'-0" to 24'-0" Max	6"	18.97 LB
Over 6'-0"	Up thru 6'-0"	3"	7.58 LB
	Over 6'-0" thru 12'-0"	5"	14.62 LB
	Over 12'-0" thru 18'-0"	6"	18.97 LB
	Over 18'-0" to 24'-0" Max	8"	28.55 LB

Above post dimensions and weights are minimums. Larger sizes may be used on approval of the Engineer.

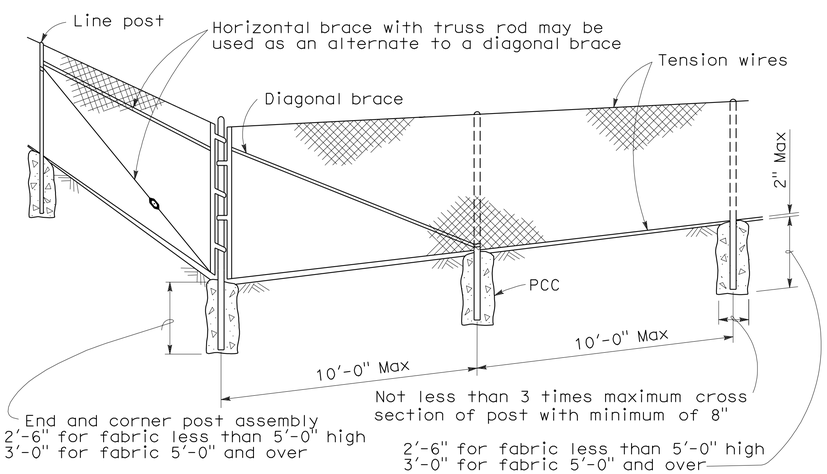

CORNER POST

NOTES:

1. The below table shows examples of post and brace sections which may comply with the Specifications.
2. Sections shown in the tables must also comply with the strength requirements and other provisions of the Specifications.
3. Other sections which comply with the strength requirements and other provisions of the Specifications may be used on approval of the Engineer.
4. Options exercised shall be uniform on any one project.
5. Dimensions shown are nominal.
6. Offset to be 2'-0" at monument locations, measured at right angles to R/W lines. Taper to achieve offset to be at least 20'-0" long.

TYPICAL MEMBER DIMENSIONS (See Notes)											
FENCE HEIGHT	LINE POSTS			END, LATCH & CORNER POSTS				BRACES			
	ROUND ID	H	ROLL FORMED	ROUND ID	ROLL FORMED			ROUND ID	H	ROLL FORMED	
6' & less	1½"	1⅞" × 1⅝"	1⅞" × 1⅝"	2"	3½" × 3½"	2" × 1¾"		1¼"	1½" × 1 5/16"	1⅝" × 1¼"	1¾" × 1¼"
Over 6'	2"	2¼" × 2"	2" × 1¾"	2½"	3½" × 3½"	2½" × 2½"		1¼"	1½" × 1 5/16"	1⅝" × 1¼"	1¾" × 1¼"

STATE OF CALIFORNIA
DEPARTMENT OF TRANSPORTATION

CHAIN LINK FENCE

NO SCALE

RSP A85 DATED JUNE 5, 2009 SUPERSEDES STANDARD PLAN A85
DATED MAY 1, 2006 - PAGE 111 OF THE STANDARD PLANS BOOK DATED MAY 2006.

REVISED STANDARD PLAN RSP A85

5-7-09

DIST	COUNTY	ROUTE	POST MILES TOTAL PROJECT	SHEET NO.	TOTAL SHEETS
07	LA	710	22.6	39	100

Raymond Don Tsztoo
REGISTERED CIVIL ENGINEER

January 18, 2008
PLANS APPROVAL DATE

REGISTERED PROFESSIONAL ENGINEER
Raymond Don Tsztoo
No. C37332
Exp. 6-30-08
CIVIL
STATE OF CALIFORNIA

The State of California or its officers or agents shall not be responsible for the accuracy or completeness of electronic copies of this plan sheet.

To accompany plans dated 6-21-10

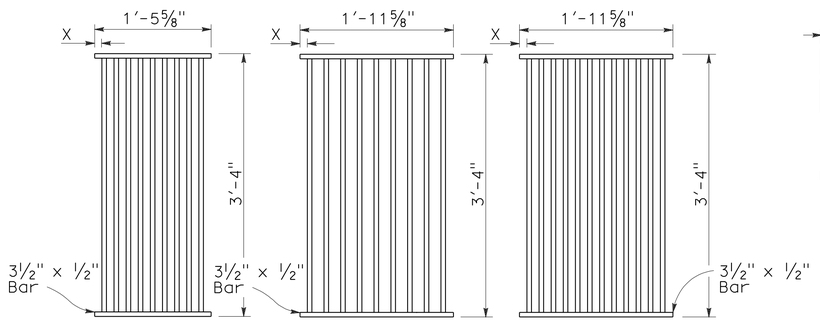

TYPE 18-9

1⅜" Clear spacing. Use within the roadbed on highways where bicycles and pedestrians are excluded.

TYPE 24-9

2" Clear spacing. Use in locations off the roadbed on all types of highways.

TYPE 24-12

1⅜" Clear spacing. Use within the roadbed on highways where bicycles and pedestrians are excluded.

RECTANGULAR GRATE DETAILS

(See table below)

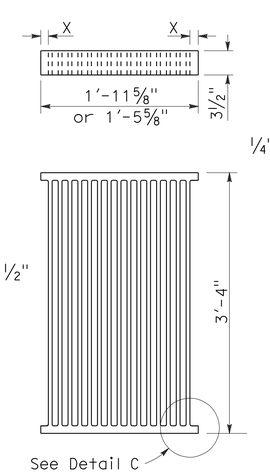

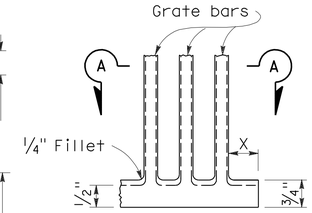

DETAIL C

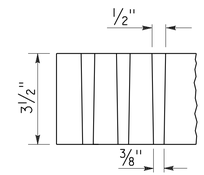

SECTION A-A

ALTERNATIVE CAST NODULAR IRON GRATE OR CAST STEEL GRATE

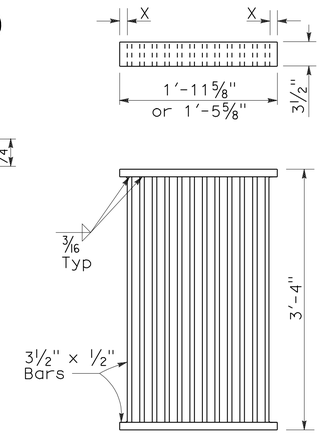

ALTERNATIVE WELDED GRATE

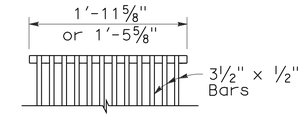

CAST END BLOCK

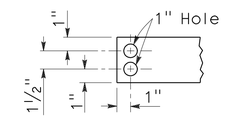

END OF BAR

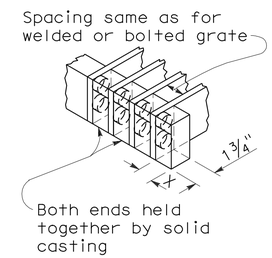

ALTERNATIVE CAST NODULAR IRON OR CAST STEEL END BLOCK GRATE

NOTES:

1. Grate type numbers refer to approximate width of grate in inches and number of bars, respectively.
2. Contractor has the option of using cast nodular iron, cast steel, welded, bolted, or cast end block grate.
3. See Special Provisions for requirements pertaining to galvanizing or asphalt dipping of grates and frames.
4. Rounded top of bars optional on all grates.
5. Pipe inlets with a grate shall be placed so that bars parallel direction of principle surface flow.
6. Full penetration butt welds may be substituted for the fillet welds on all anchors.
7. Standard square, hexagon, round or equivalent headed anchors may be substituted for the right angle hooks on the anchors shown on this plan.
8. Grate and frame weights are based on welded grates (weights of face angles, steps, protection bars, etc. are not included).

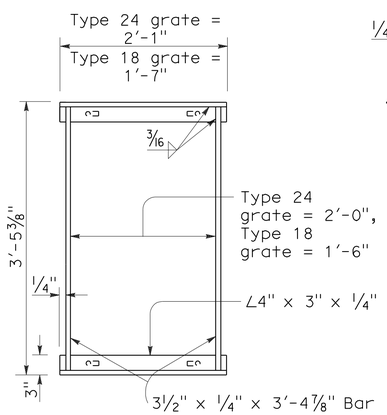

TYPICAL FRAME

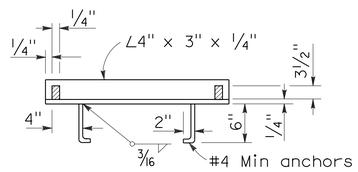

CROSS SECTION

(Thru frame)

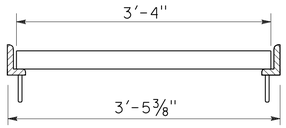

LONGITUDINAL SECTION

(Thru frame and grate)

RECTANGULAR FRAME DETAILS

(For all rectangular grates)

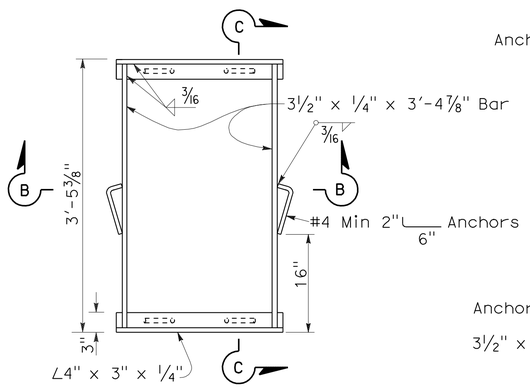

TYPICAL FRAME

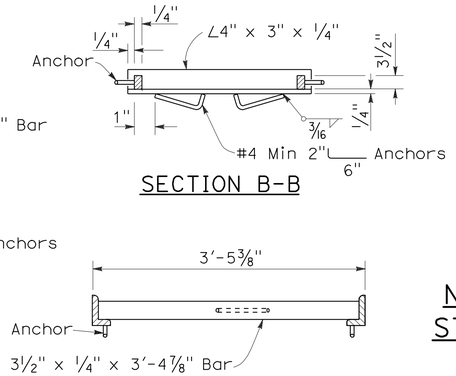

SECTION B-B

SECTION C-C

ALTERNATIVE ANCHOR FOR RECTANGULAR FRAME

(For details not shown, See Rectangular Frame Details)

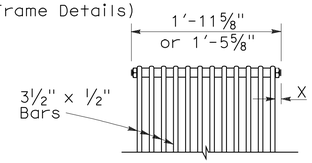

BOLTED END BLOCK

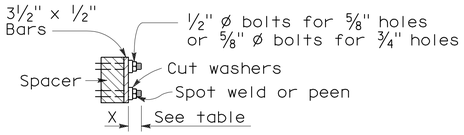

BOLTING DETAIL

ALTERNATIVE BOLTED GRATE

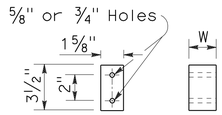

BAR SPACER

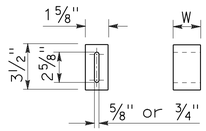

ALTERNATIVE SPACER

W = 1⅜" or 2"

GRATE BAR SPACING TABLE

TYPE	No. OF BARS	CLEAR BAR SPACING	X
18-9	9	1⅜"	1 1/16"
24-9	9	2"	1 9/16"
24-12	12	1⅜"	1¼"

INLET TYPE	COVER TYPE	WEIGHT LB
OS	PLATE	174
OL-7	PLATE	170
OL-10	PLATE	170
OL-14	PLATE	170
OL-21	PLATE	170
OCP	PLATE	112
OCPI	PLATE	112
OCPI	REDWOOD	42
OMP	PLATE	177
OMPI	PLATE	177

INLET TYPE	GRATE TYPE	No. OF GRATES	WEIGHT LB
GDO	24-12	2	634
GOL-7	24-12	1	326
GOL-10	24-12	1	326
GO,G1,G2,G3,G4 (TYPE 24)	24-9	1	263
	24-12	1	326
G4 (TYPE 18),G5,G6	18-9	1	249
GT1	18-9	2	498
GT2	18-9	2	498
GT3	24-12	2	652
GT4	24-12	2	652
TRASH RACK			22

BASIS FOR MISC IRON & STEEL FINAL PAY WEIGHTS FOR DRAINAGE INLETS

(See General Notes, No 8)

STATE OF CALIFORNIA
DEPARTMENT OF TRANSPORTATION

GRATE DETAILS

NO SCALE

RSP D77A DATED JANUARY 18, 2008 SUPERSEDES STANDARD PLAN D77A
DATED MAY 1, 2006 - PAGE 155 OF THE STANDARD PLANS BOOK DATED MAY 2006.

REVISED STANDARD PLAN RSP D77A

2006 REVISED STANDARD PLAN RSP D77A

12-14-07

DIST	COUNTY	ROUTE	POST MILES TOTAL PROJECT	SHEET NO.	TOTAL SHEETS
07	LA	710	22.6	40	100

LICENSED LANDSCAPE ARCHITECT

June 5, 2009
PLANS APPROVAL DATE

LICENSED LANDSCAPE ARCHITECT
Gregory A. Balzer 2576
10 January
2-28-11
Renewal Date
5-14-09
Date
STATE OF CALIFORNIA

The State of California or its officers or agents shall not be responsible for the accuracy or completeness of electronic copies of this plan sheet.

To accompany plans dated 6-21-10

A

AB	aggregate base
ABS	acrylonitrile-butadiene-styrene
AC	asphalt concrete
Adj	adjacent/adjustable
AIC	auxiliary irrigation controller
Alt	alternative
AMEND	amendment
ARV	air release valve
AUTO	automatic
AUX	auxiliary
AVB	atmospheric vacuum breaker

B

B&B	balled and burlapped
B/B	brass/bronze
B/B/PL	brass/bronze/plastic
B/PL	brass/plastic
BFM	bonded fiber matrix
Bit Ctd	bituminous coated
BP	booster pump
BPA	backflow preventer assembly
BPAE	backflow preventer assembly in enclosure
BPE	backflow preventer enclosure
BV	ball valve

C

CAP	corrugated aluminum pipe
CARV	combination air release valve
CCA	cam coupler assembly
CEC	controller enclosure cabinet
CHDPE	corrugated high density polyethylene
CL	chain link
CNC	control and neutral conductors
Conc	concrete
Cond	conduit
CSP	corrugated steel pipe
CST	center strip
CV	check valve

D

Dia	diameter
DIP	ductile iron pipe
DN	diameter nominal

E

EA	each
Elect	electric/electrical
Elev	elevation
ENCL	enclosure
EP	edge of pavement
ES	edge of shoulder
EST	end strip
ESTB	establishment
ETW	edge of traveled way

F

F	full circle
F/P	full/part circle
FAU	filter assembly unit
FCV	flow control valve
FERT	fertilizer
FG	finished grade
FIPT	female iron pipe thread
FIS	fertilizer injector system
FL	flow line
FM	flow monitor
FS	flow sensor
Ft	foot/feet
FV	flush valve

G

GAL	Gallon(s)
Galv	galvanized
GARV	garden valve
GPH	gallons per hour
GPM	gallons per minute
GSP	galvanized steel pipe
GV	gate valve

H

H	half circle
HB	hose bib
HDPE	high density polyethylene
HP	horsepower/hinge point
HPL	high pressure line
Hwy	highway

I

IC	irrigation controller
ICC	irrigation controller(s) in controller enclosure cabinet
ID	inside diameter
In	inches
IFS	irrigation filtration system
IPS	iron pipe size
IPT	iron pipe thread
Irr	irrigation

L

L	length
LF	linear foot

M

Max	maximum
MBGR	metal beam guard railing
MCV	manual control valve
MIC	master irrigation controller
Min	minimum
MIPT	male iron pipe thread
Misc	miscellaneous
Mtl	material
MVP	maintenance vehicle pullout

N

NCN	no common name
NL	nozzle line
No.	number
NPT	national pipe thread

O

O/C	on center
OD	outside diameter
Oz	ounce

P

P	part circle
PB	pull box
PCC	portland cement concrete
PE	polyethylene
Pkt	packet
PL	plastic
PLT	plant/planting
PLT ESTB	plant establishment
PM	post mile
PR	pressure rated
PRLV	pressure relief valve
PSFM	polymer stabilized fiber matrix
PSI	pounds per square inch
PRV	pressure reducing valve
PVC	polyvinyl chloride
Pvmt	pavement

Q

Q	quarter circle
QCV	quick coupling valve

R

R	radius
RCP	reinforced concrete pipe
RCV	remote control valve
RCVM	remote control valve (master)
RCVMF	remote control valve (master) w/ flow meter
RCW	recycled/reclaimed water
RECP	rolled erosion control product
REQ	required
R/W	right of way

S

S	slip
SCC	sprinkler control conduit
SCH	schedule
SF	state-furnished
Shld	shoulder
SQFT	square foot/feet
SQYD	square yard(s)
SST	side strip
Sta	station
Std	standard
SW	sidewalk/sound wall

T

T	third circle/thread
TLS	truck loading standpipe
TQ	three quarter circle
TRM	turf reinforcement mat
TRVD	traveled
TT	two third circle
Typ	typical

U

UG	underground

V

VAU	valve assembly unit

W

W	width
W/	with
WM	water meter
WS	wye strainer
WSP	welded steel pipe
WWM	welded wire mesh

NOTE:

FOR ADDITIONAL ABBREVIATIONS, SEE STANDARD PLANS A10A AND A10B.

STATE OF CALIFORNIA
DEPARTMENT OF TRANSPORTATION

PLANTING AND IRRIGATION ABBREVIATIONS

NO SCALE

RSP H1 DATED JUNE 5, 2009 SUPERSEDES STANDARD PLAN H1
DATED MAY 1, 2006 - PAGE 201 OF THE STANDARD PLANS BOOK DATED MAY 2006.

REVISED STANDARD PLAN RSP H1

2006 REVISED STANDARD PLAN RSP H1

DIST	COUNTY	ROUTE	POST MILES TOTAL PROJECT	SHEET NO.	TOTAL SHEETS
07	LA	710	22.6	41	100

LICENSED LANDSCAPE ARCHITECT

June 5, 2009
PLANS APPROVAL DATE

The State of California or its officers or agents shall not be responsible for the accuracy or completeness of electronic copies of this plan sheet.

LICENSED LANDSCAPE ARCHITECT — Gregory A. Balzer — 2516 — 10 January — 2-28-11 (Renewal Date) — 5-14-09 (Date) — STATE OF CALIFORNIA

To accompany plans dated 6-21-10

EXISTING	PROPOSED	ITEM DESCRIPTION
		WATER METER (WM)
		BACKFLOW PREVENTER ASSEMBLY (BPA)
		BACKFLOW PREVENTER ASSEMBLY IN ENCLOSURE (BPAE)
		BACKFLOW PREVENTER ENCLOSURE (BPE)
		BOOSTER PUMP (BP)
		TRUCK LOADING STANDPIPE (TLS)
FS	FS	FLOW SENSOR (FS)
X	X	MASTER IRRIGATION CONTROLLER (MIC)
		AUXILIARY IRRIGATION CONTROLLER (AIC)
		IRRIGATION CONTROLLER (IC)/ IRRIGATION CONTROLLER (IC) (BATTERY) IRRIGATION CONTROLLER (IC) (SOLAR)
		IRRIGATION CONTROLLER(S) IN CONTROLLER ENCLOSURE CABINET (ICC)
		CONTROL AND NEUTRAL CONDUCTORS (CNC)
SCC	SCC	SPRINKLER CONTROL CONDUIT (SCC)
		IRRIGATION CROSSOVER
		EXTEND IRRIGATION CROSSOVER
		IRRIGATION SLEEVE
dip	DIP	DUCTILE IRON PIPE (SUPPLY LINE) (MAIN) (DIP)
		GALVANIZED STEEL PIPE (SUPPLY LINE) (MAIN) (GSP)
		GALVANIZED STEEL PIPE (SUPPLY LINE) (LATERAL) (GSP)
		PLASTIC PIPE (PR 200) (SUPPLY LINE) (MAIN)
		PLASTIC PIPE (PR 200) (SUPPLY LINE) (LATERAL)
		PLASTIC PIPE (IRRIGATION LINE)
		REMOTE CONTROL VALVE (RCV) REMOTE CONTROL VALVE (MASTER) (RCVM) REMOTE CONTROL VALVE (MASTER) W/FLOW METER (RCVMF)
		MANUAL CONTROL VALVE (MCV)
		VALVE ASSEMBLY UNIT (VAU)
		WYE STRAINER (WS)
		FILTER ASSEMBLY UNIT (FAU)
		GATE VALVE (GV)
		BALL VALVE (BV)

EXISTING	PROPOSED	ITEM DESCRIPTION
		QUICK COUPLING VALVE (QCV)
		CAM COUPLER ASSEMBLY (CCA)
		PRESSURE REDUCING VALVE (PRV)
		PRESSURE RELIEF VALVE (PRLV)
		FLOW CONTROL VALVE (FCV)
		COMBINATION AIR RELEASE VALVE (CARV)
		CHECK VALVE (CV)
		FLUSH VALVE (FV)
		NOZZLE LINE W/TURNING UNION
		IRRIGATION SYSTEM
		IRRIGATION SYSTEM TO BE REMOVED
		CHAIN LINK GATE
		QUICK COUPLING VALVE W/SPRINKLER PROTECTOR
3	3	SPRINKLER W/SPRINKLER PROTECTOR
	C	CONNECT TO EXISTING SYSTEM
		CAP
		CAP EXISTING

VALVE CODE

RCV SIZE
IRRIGATION CONTROLLER
CONTROLLER STATION
VALVE IN PARALLEL (IF APPLICABLE)
GPM
QUANTITY OF SPRINKLERS (WHEN SHOWN)

* 2½"-A-2b-40 -60

MCV SIZE
VALVE NUMBER
GPM
QUANTITY OF TYPE SPRINKLERS (WHEN SHOWN)

* 2"-3-30 -50

* VALVE CODES FOR EXISTING VALVES ARE SHOWN IN A DASHED ENCLOSURE.

STATE OF CALIFORNIA
DEPARTMENT OF TRANSPORTATION

PLANTING AND IRRIGATION SYMBOLS

NO SCALE

RSP H2 DATED JUNE 5, 2009 SUPERSEDES RSP H2 DATED MARCH 7, 2008 AND STANDARD PLAN H2 DATED MAY 1, 2006 - PAGE 202 OF THE STANDARD PLANS BOOK DATED MAY 2006.

REVISED STANDARD PLAN RSP H2

2006 REVISED STANDARD PLAN RSP H2

DIST	COUNTY	ROUTE	POST MILES TOTAL PROJECT	SHEET NO.	TOTAL SHEETS
07	LA	710	22.6	42	100

LICENSED LANDSCAPE ARCHITECT

June 5, 2009
PLANS APPROVAL DATE

LICENSED LANDSCAPE ARCHITECT — Gregory A. Balzer 2516 — 10 January — 2-28-11 Renewal Date — 5-14-09 Date — STATE OF CALIFORNIA

The State of California or its officers or agents shall not be responsible for the accuracy or completeness of electronic copies of this plan sheet.

To accompany plans dated 6-21-10

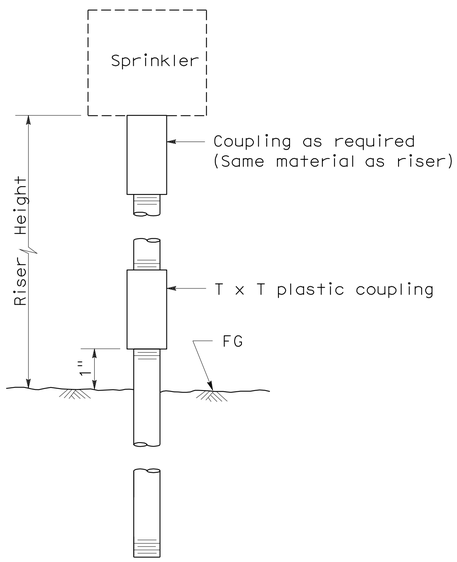

ELEVATION
RISER TYPE I

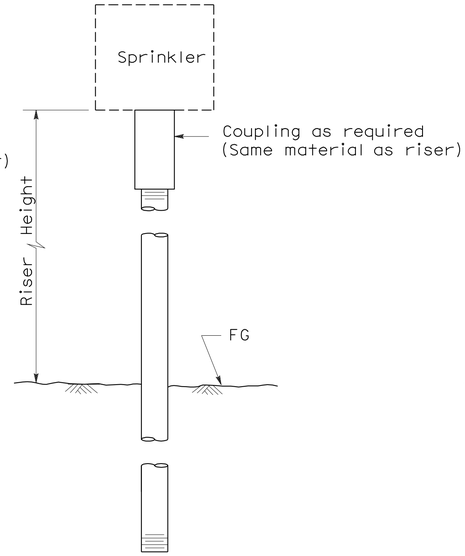

ELEVATION
RISER TYPE II

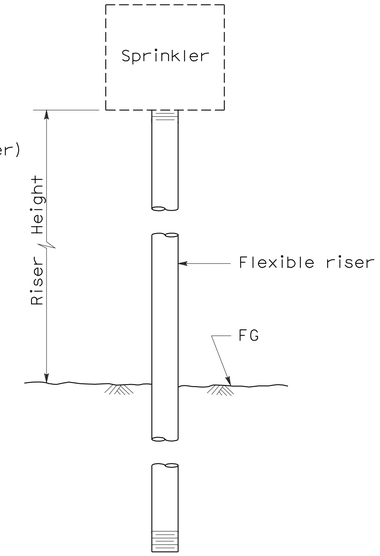

ELEVATION
RISER TYPE III

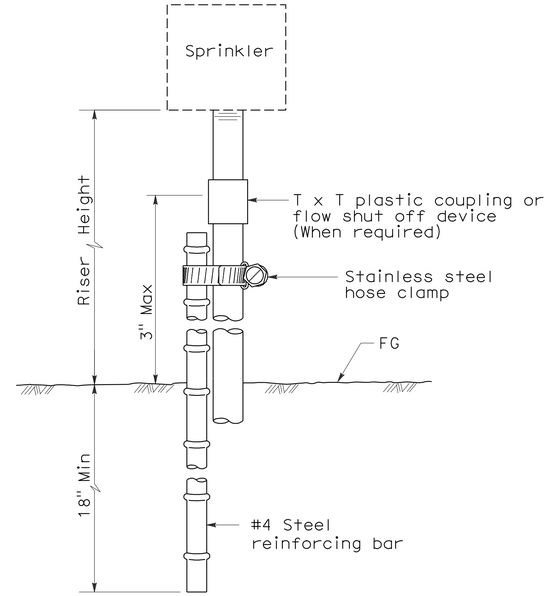

ELEVATION
RISER TYPE IV

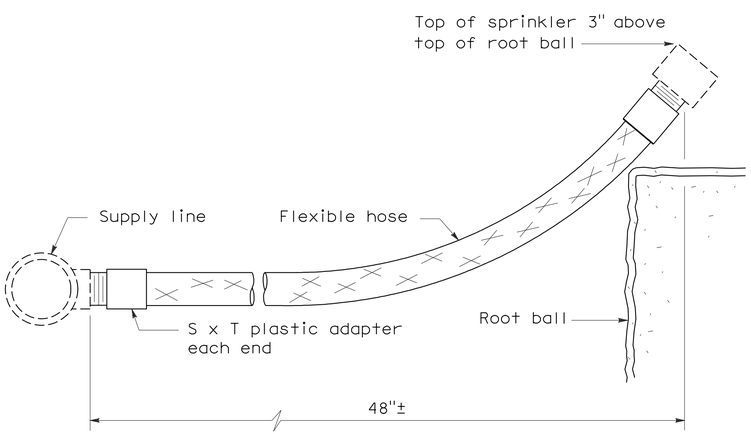

ELEVATION
RISER TYPE V

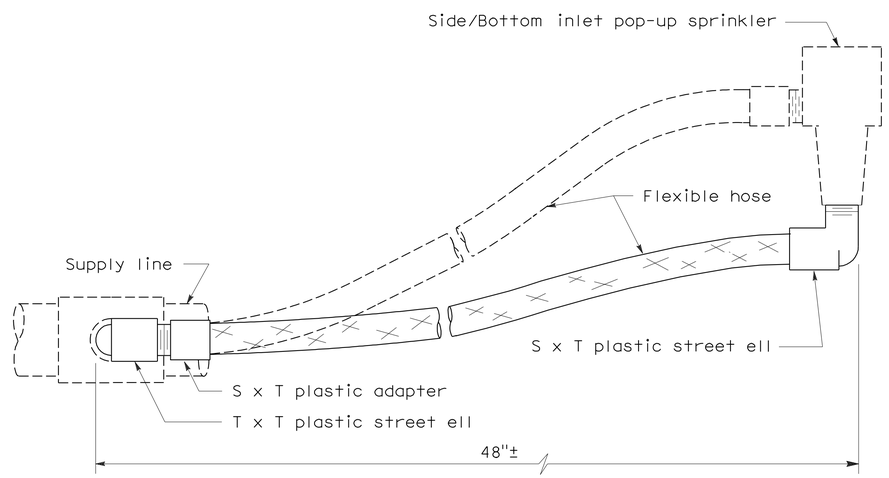

ELEVATION
RISER TYPE VI

STATE OF CALIFORNIA
DEPARTMENT OF TRANSPORTATION

PLANTING AND IRRIGATION DETAILS

NO SCALE

RSP H5 DATED JUNE 5, 2009 SUPERSEDES STANDARD PLAN H5
DATED MAY 1, 2006 - PAGE 205 OF THE STANDARD PLANS BOOK DATED MAY 2006.

REVISED STANDARD PLAN RSP H5

2006 REVISED STANDARD PLAN RSP H5

5-28-09

DIST	COUNTY	ROUTE	POST MILES TOTAL PROJECT	SHEET NO.	TOTAL SHEETS
07	LA	710	22.6	43	100

LICENSED LANDSCAPE ARCHITECT

June 5, 2009
PLANS APPROVAL DATE

The State of California or its officers or agents shall not be responsible for the accuracy or completeness of electronic copies of this plan sheet.

LICENSED LANDSCAPE ARCHITECT Gregory A. Balzer 2576 STATE OF CALIFORNIA
10-01-09 Renewal Date
2-28-11 Renewal Date
5-14-09 Date

To accompany plans dated 6-21-10

2006 REVISED STANDARD PLAN RSP H7

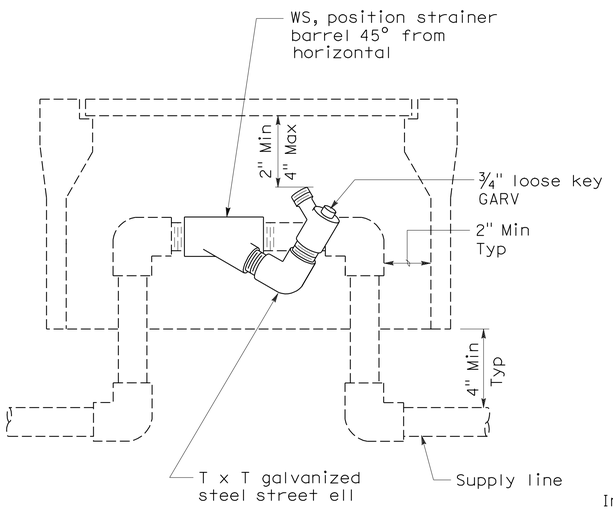

ELEVATION
WYE STRAINER

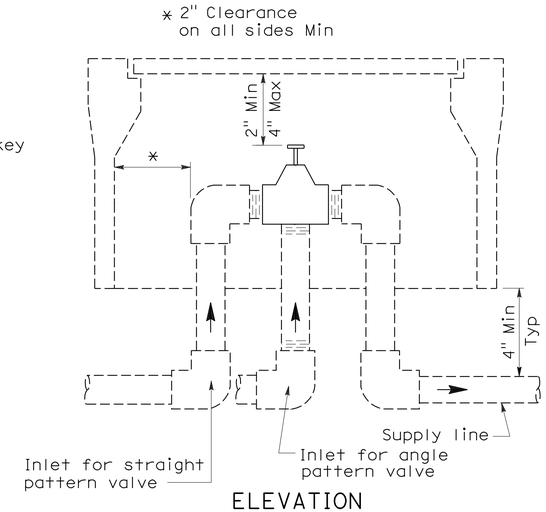

ELEVATION
VALVE

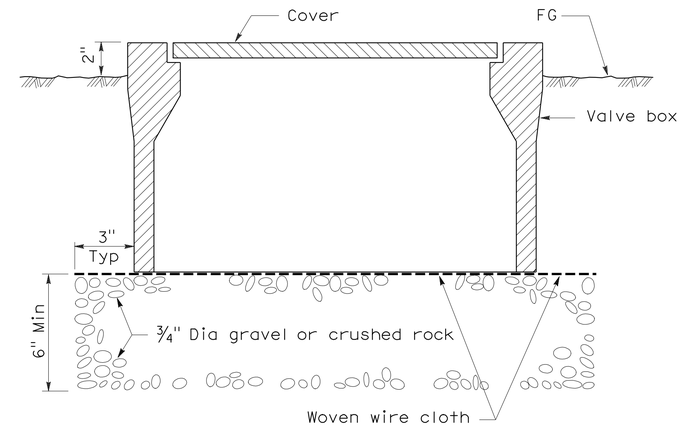

SECTION
VALVE BOX

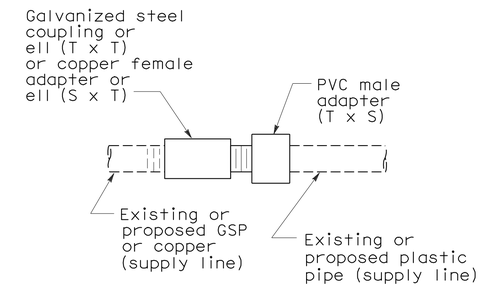

PLAN
GALVANIZED OR COPPER PIPE CONNECTION TO PLASTIC PIPE

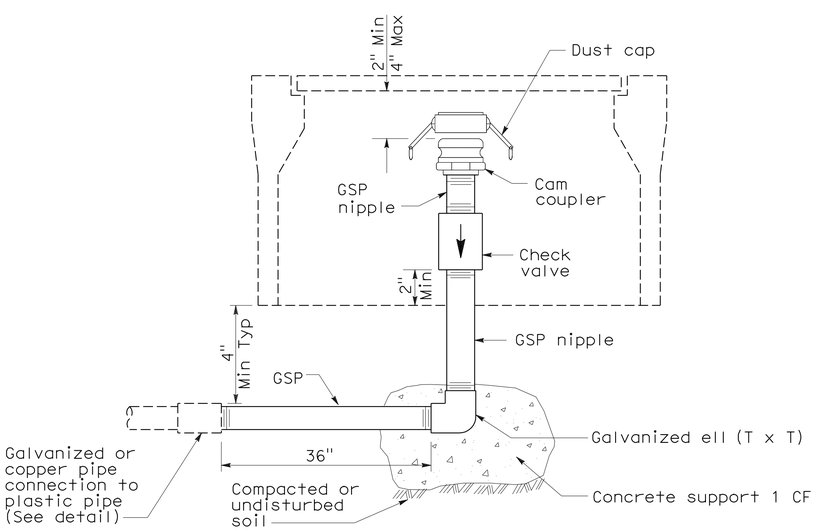

ELEVATION
CAM COUPLER ASSEMBLY

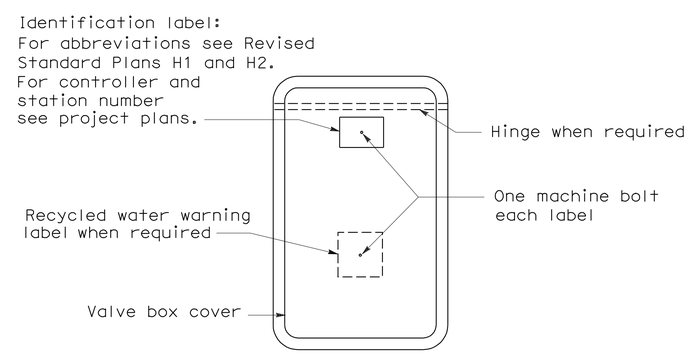

PLAN

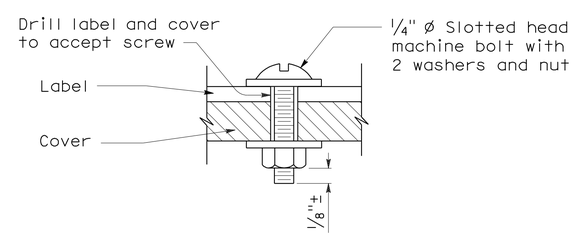

SECTION
VALVE BOX IDENTIFICATION

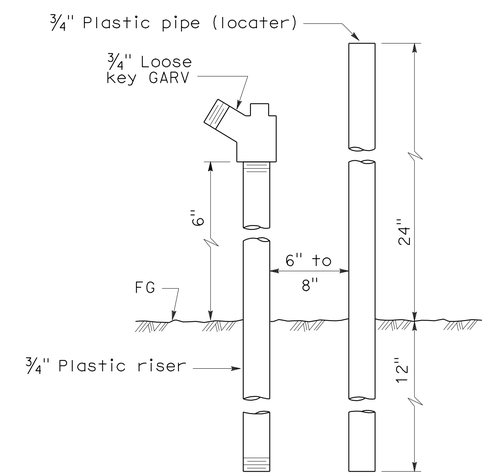

ELEVATION
FLUSH VALVE

STATE OF CALIFORNIA
DEPARTMENT OF TRANSPORTATION

PLANTING AND IRRIGATION DETAILS

NO SCALE

RSP H7 DATED JUNE 5, 2009 SUPERSEDES STANDARD PLAN H7
DATED MAY 1, 2006 - PAGE 207 OF THE STANDARD PLANS BOOK DATED MAY 2006.

REVISED STANDARD PLAN RSP H7

5-28-09

DIST	COUNTY	ROUTE	POST MILES TOTAL PROJECT	SHEET NO.	TOTAL SHEETS
07	LA	710	22.6	44	100

Randell D. Hiatt
REGISTERED CIVIL ENGINEER

June 6, 2008
PLANS APPROVAL DATE

REGISTERED PROFESSIONAL ENGINEER
Randell D. Hiatt
No. C50200
Exp. 6-30-09
CIVIL
STATE OF CALIFORNIA

The State of California or its officers or agents shall not be responsible for the accuracy or completeness of electronic copies of this plan sheet.

To accompany plans dated 6-21-10

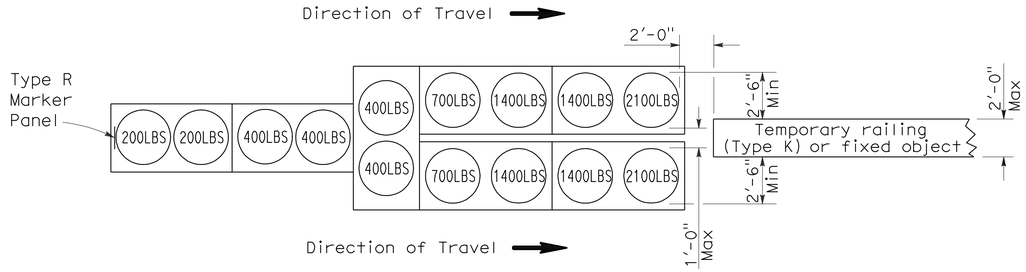

ARRAY 'TU14'

Approach speed 45 mph or more

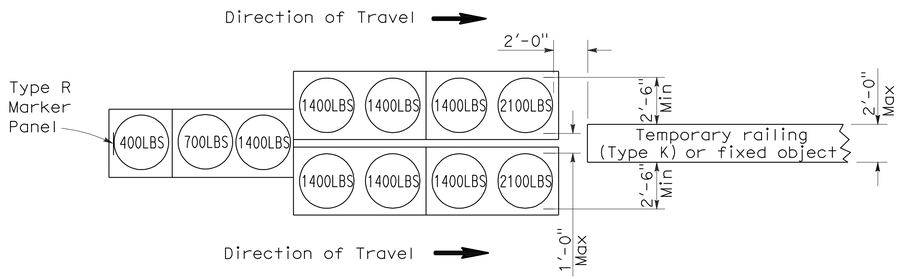

ARRAY 'TU11'

Approach speed less than 45 mph

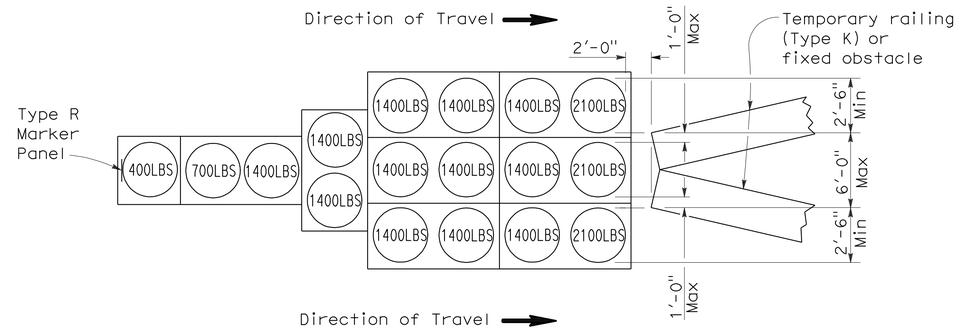

ARRAY 'TU17'

Approach speed less than 45 mph

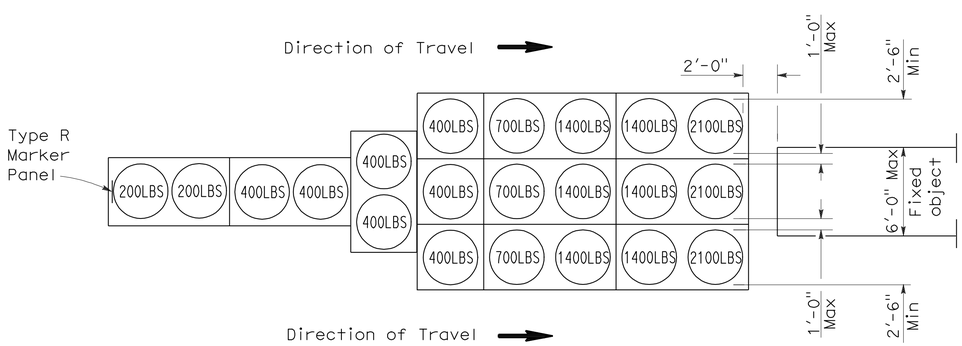

ARRAY 'TU21'

Approach speed 45 mph or more

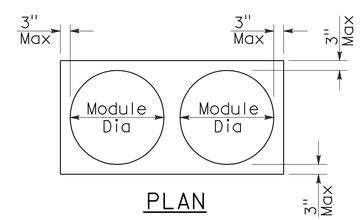

PLAN

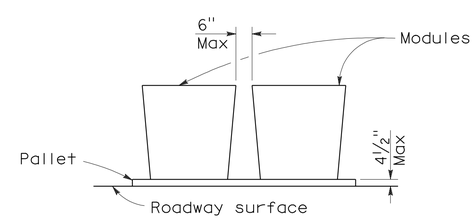

ELEVATION

CRASH CUSHION PALLET DETAIL

See Note 7

NOTES:

1. (XXX) Indicates sand filled module location and weight of sand in pounds for each module. Module spacing is based on the greater diameter of the module.
2. All sand weights are nominal.
3. Temporary crash cushion arrays shall not encroach on the traveled way.
4. Place the top of Type R marker panel 1" below the module lid.
5. Refer to Standard Plan A73B for marker details.
6. Approach speeds indicated conform to NCHRP 350 Report criteria.
7. Use of pallets is optional.

STATE OF CALIFORNIA
DEPARTMENT OF TRANSPORTATION

TEMPORARY CRASH CUSHION, SAND FILLED (UNIDIRECTIONAL)

NO SCALE

RSP T1A DATED JUNE 6, 2008 SUPERSEDES STANDARD PLAN T1A
DATED MAY 1, 2006 - PAGE 211 OF THE STANDARD PLANS BOOK DATED MAY 2006.

REVISED STANDARD PLAN RSP T1A

2006 REVISED STANDARD PLAN RSP T1A

DIST	COUNTY	ROUTE	POST MILES TOTAL PROJECT	SHEET NO.	TOTAL SHEETS
07	LA	710	22.6	45	100

Randell D. Hiatt
REGISTERED CIVIL ENGINEER

June 6, 2008
PLANS APPROVAL DATE

REGISTERED PROFESSIONAL ENGINEER
Randell D. Hiatt
No. C50200
Exp. 6-30-09
CIVIL
STATE OF CALIFORNIA

The State of California or its officers or agents shall not be responsible for the accuracy or completeness of electronic copies of this plan sheet.

To accompany plans dated 6-21-10

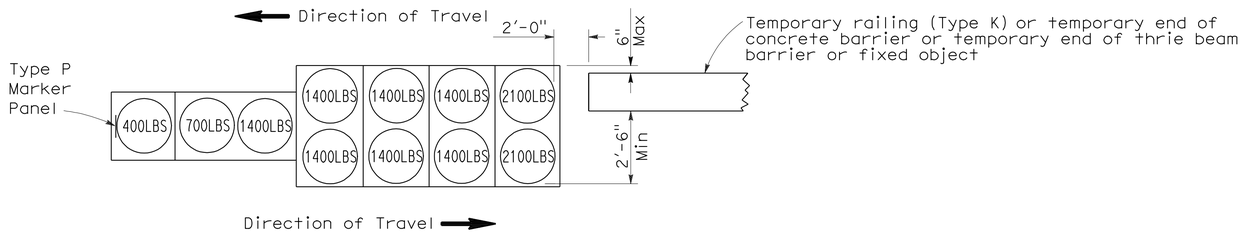

ARRAY 'TB11'

Approach speed less than 45 mph

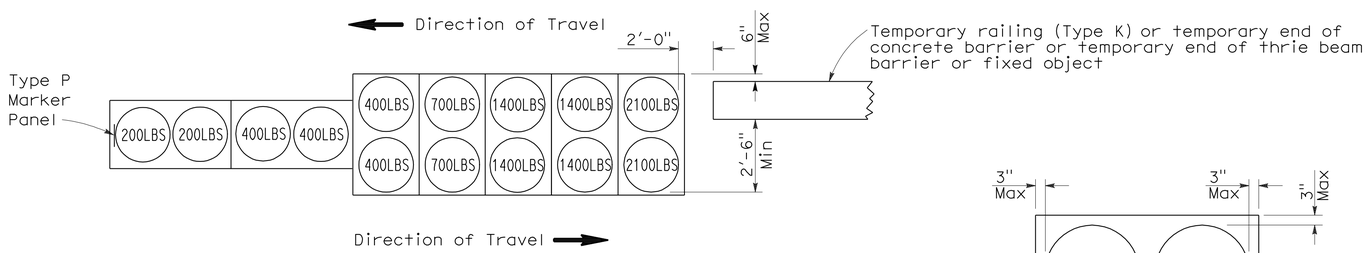

ARRAY 'TB14'

Approach speed 45 mph or more

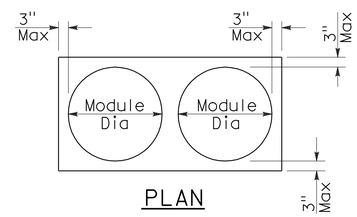

PLAN

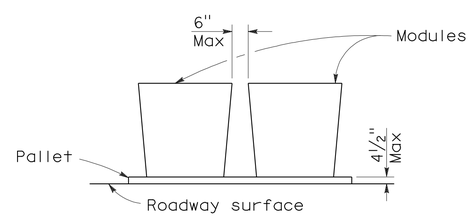

ELEVATION

CRASH CUSHION PALLET DETAIL

See Note 7

NOTES:

1. (XXX) Indicates sand filled module location and weight of sand in pounds for each module. Module spacing is based on the greater diameter of the module.
2. All sand weights are nominal.
3. Temporary crash cushion arrays shall not encroach on the traveled way.
4. Place the Type P marker panel so that the bottom of the panel rests upon the pallet.
5. Refer to Standard Plan A73B for marker details.
6. Approach speeds indicated conform to NCHRP 350 Report criteria.
7. Use of pallets is optional.

STATE OF CALIFORNIA
DEPARTMENT OF TRANSPORTATION

TEMPORARY CRASH CUSHION, SAND FILLED (BIDIRECTIONAL)

NO SCALE

RSP T1B DATED JUNE 6, 2008 SUPERSEDES STANDARD PLAN T1B
DATED MAY 1, 2006 - PAGE 212 OF THE STANDARD PLANS BOOK DATED MAY 2006.

REVISED STANDARD PLAN RSP T1B

2006 REVISED STANDARD PLAN RSP T1B

5-15-08

DIST	COUNTY	ROUTE	POST MILES TOTAL PROJECT	SHEET NO.	TOTAL SHEETS
07	LA	710	22.6	46	100

Randell D. Hiatt
REGISTERED CIVIL ENGINEER

June 6, 2008
PLANS APPROVAL DATE

REGISTERED PROFESSIONAL ENGINEER
Randell D. Hiatt
No. C50200
Exp. 6-30-09
CIVIL
STATE OF CALIFORNIA

The State of California or its officers or agents shall not be responsible for the accuracy or completeness of electronic copies of this plan sheet.

To accompany plans dated 6-21-10

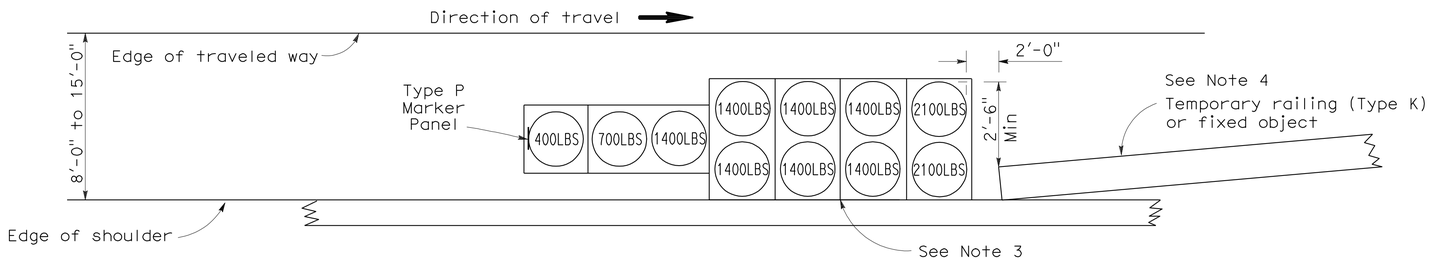

ARRAY 'TS11'

Approach speed less than 45 mph
See Note 9

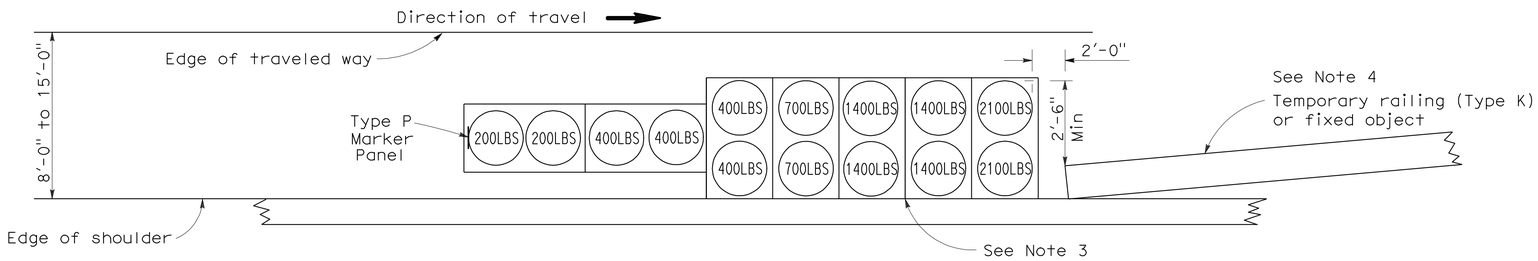

ARRAY 'TS14'

Approach speed 45 mph or more
See Note 9

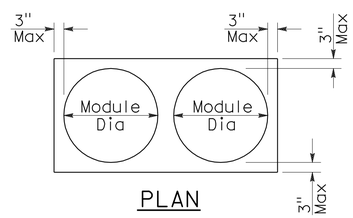

PLAN

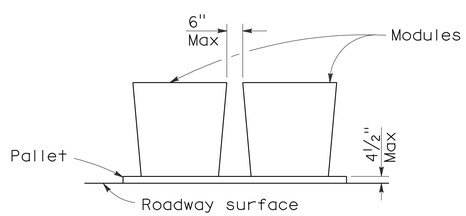

ELEVATION

CRASH CUSHION PALLET DETAIL

See Note 11

NOTES:

1. (XXX) Indicates sand filled module location and weight of sand in pounds for each module. Module spacing is based on the greater diameter of the module.
2. All sand weights are nominal.
3. The temporary crash cushion arrays shown on this plan shall be used only in locations where there will be traffic on one side of the temporary crash cushion array.
4. If the fixed object or approach end of the temporary railing is less than 15'-0" from the edge of traveled way, a temporary crash cushion is required in a construction or work zone.
5. Temporary crash cushion arrays shall not encroach on the traveled way.
6. Arrays for median shoulders shall conform to details shown on this plan for outside shoulders.
7. Place the Type P marker panel so that the bottom of the panel rests upon the pallet and faces traffic.
8. Refer to Standard Plan A73B for marker details.
9. For shoulder widths less than 8'-0", appropriate approved crash cushion protection, other than sand filled modules, shall be provided at fixed objects and at approach ends of temporary railing. The specific type of crash cushion shall be as shown on the project plans or as specified in the Special Provisions, or if not shown on the project plans or specified in the Special Provisions, shall be as approved by the Engineer.
10. Approach speeds indicated conform to NCHRP 350 Report criteria.
11. Use of pallets is optional.

STATE OF CALIFORNIA
DEPARTMENT OF TRANSPORTATION

TEMPORARY CRASH CUSHION, SAND FILLED (SHOULDER INSTALLATIONS)

NO SCALE

RSP T2 DATED JUNE 6, 2008 SUPERSEDES STANDARD PLAN T2
DATED MAY 1, 2006 - PAGE 213 OF THE STANDARD PLANS BOOK DATED MAY 2006.

REVISED STANDARD PLAN RSP T2

2006 REVISED STANDARD PLAN RSP T2

5-15-08

DIST	COUNTY	ROUTE	POST MILES TOTAL PROJECT	SHEET NO.	TOTAL SHEETS
07	LA	710	22.6	47	100

REGISTERED CIVIL ENGINEER

November 17, 2006
PLANS APPROVAL DATE

REGISTERED PROFESSIONAL ENGINEER — Greg W. Edwards — No. C36386 — Exp. 6-30-08 — CIVIL — STATE OF CALIFORNIA

The State of California or its officers or agents shall not be responsible for the accuracy or completeness of electronic copies of this plan sheet.

To accompany plans dated 6-21-10

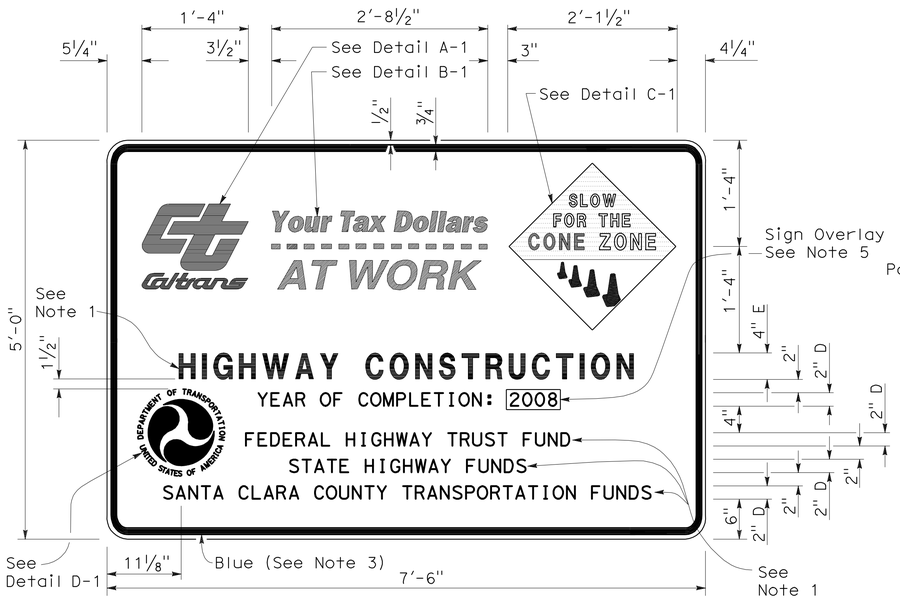

TYPE 1

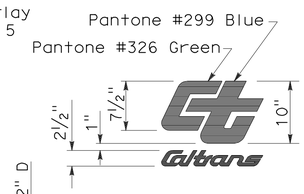

DETAIL A-1

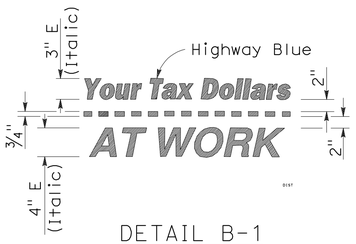

DETAIL B-1
(See Note 3)

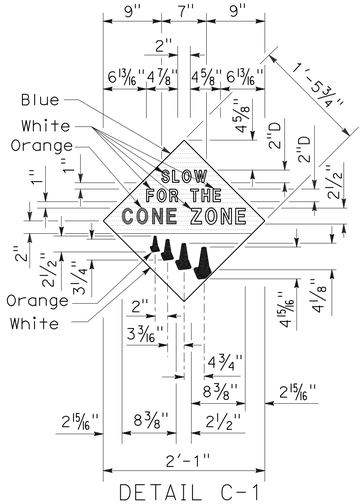

DETAIL C-1
(See Note 4)

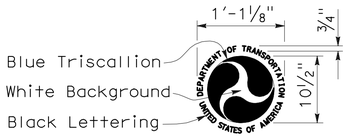

DETAIL D-1
(See Note 6)

NOTES:

1. The sign messages shown for type of project and fund types are examples only. See the Special Provisions for the applicable type of project and fund type messages to be used.
2. Except as otherwise shown, the legend of sign shall be black on a white background (non-reflective).
3. The border of the signs and details "B-1" and "B-2" shall be blue (non-reflective).
4. The diamond in details "C-1" and "C-2" shall be blue for the background of message, " SLOW FOR THE CONE ZONE", and white background for the orange cones. The color and type of font for the "SLOW FOR THE CONE ZONE" message shall be: "SLOW" white D; "FOR THE" white D; "CONE" orange Arial font; "ZONE" white Arial font.
5. Year of completion of project construction shown on the overlay is an example only. See the Special Provisions.
6. Use when the Project involves Federal Highway Trust Fund.

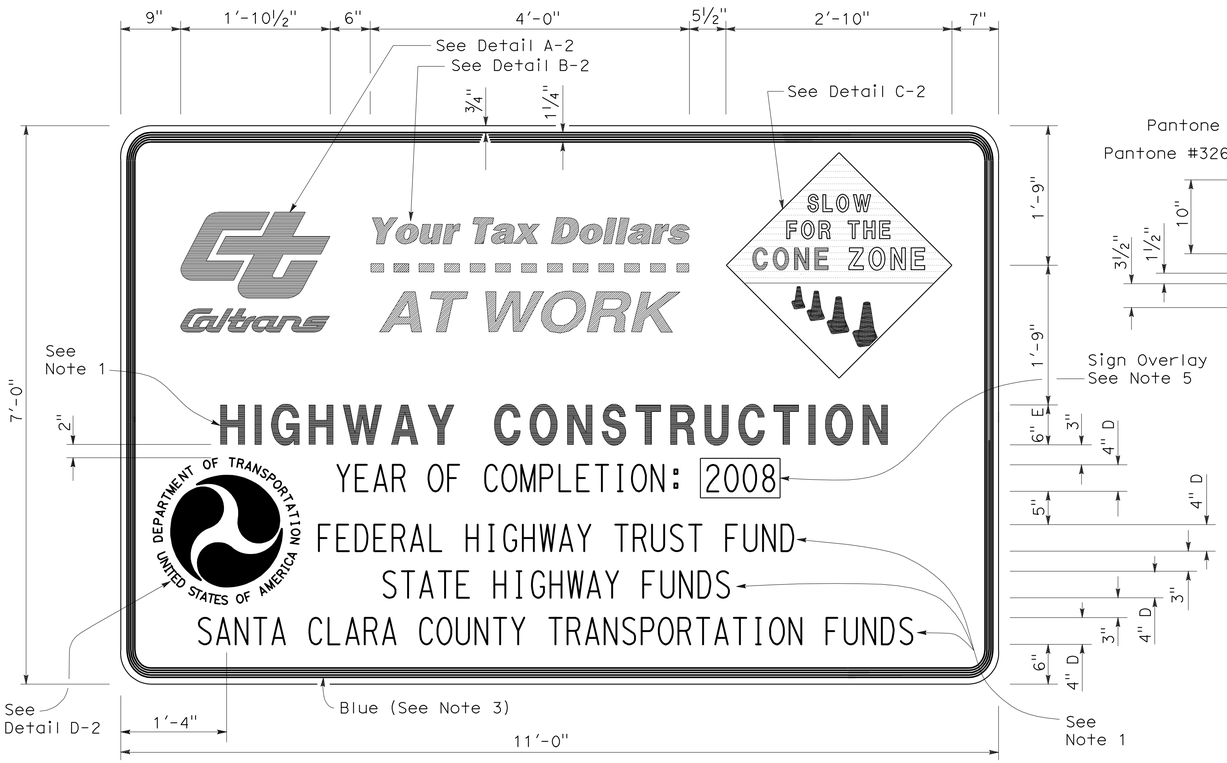

TYPE 2

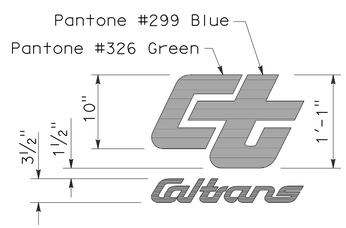

DETAIL A-2

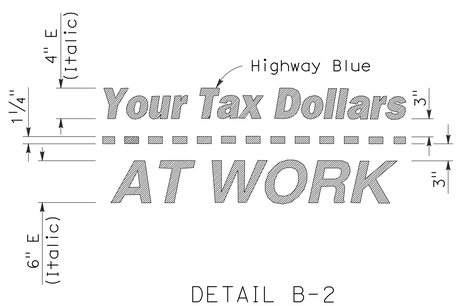

DETAIL B-2
(See Note 3)

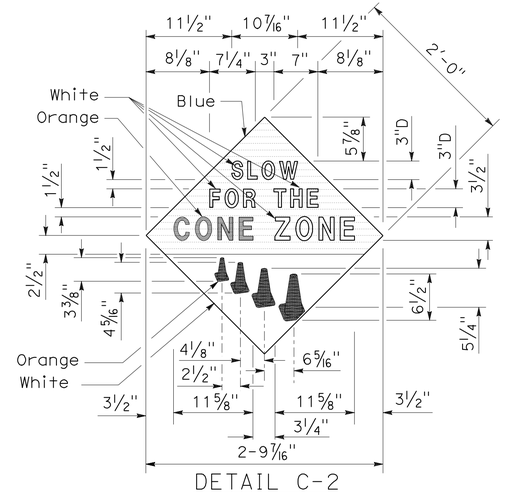

DETAIL C-2
(See Note 4)

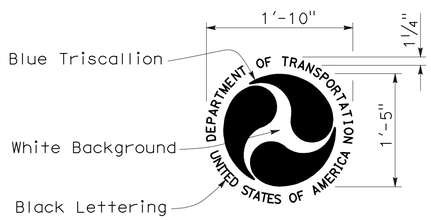

DETAIL D-2
(See Note 6)

STATE OF CALIFORNIA
DEPARTMENT OF TRANSPORTATION

CONSTRUCTION PROJECT FUNDING IDENTIFICATION SIGNS

NO SCALE

RSP T7 DATED NOVEMBER 17, 2006 SUPERSEDES STANDARD PLAN T7
DATED MAY 1, 2006 - PAGE 217 OF THE STANDARD PLANS BOOK DATED MAY 2006.

REVISED STANDARD PLAN RSP T7

2006 REVISED STANDARD PLAN RSP T7

9-7-06

DIST	COUNTY	ROUTE	POST MILES TOTAL PROJECT	SHEET NO.	TOTAL SHEETS
07	LA	710	22.6	48	100

LICENSED LANDSCAPE ARCHITECT

April 3, 2009
PLANS APPROVAL DATE

LICENSED LANDSCAPE ARCHITECT — Robert B. Schott 3025 — Signature — 11-30-10 Renewal Date — 2-25-09 Date — STATE OF CALIFORNIA

The State of California or its officers or agents shall not be responsible for the accuracy or completeness of electronic copies of this plan sheet.

To accompany plans dated 6-21-10

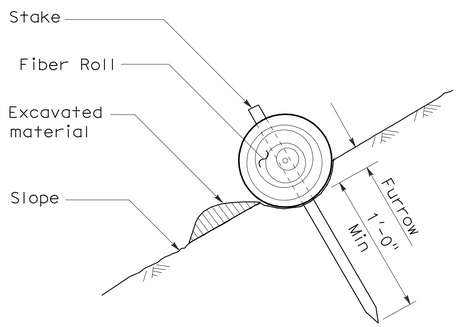

SECTION

TEMPORARY FIBER ROLL (TYPE 1)

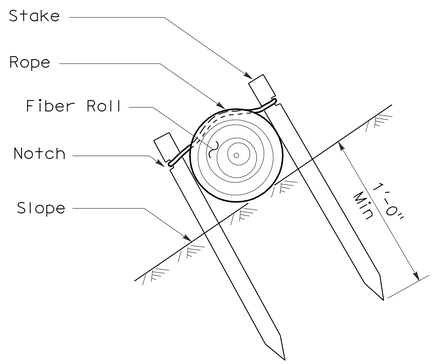

SECTION

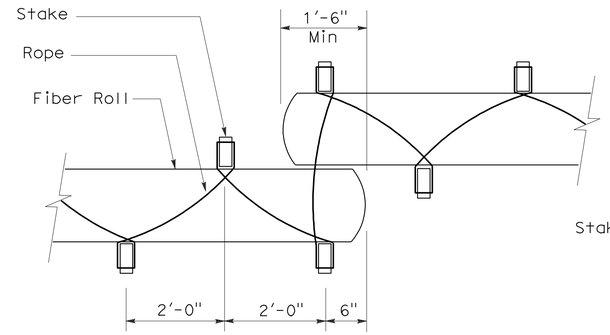

PLAN

TEMPORARY FIBER ROLL (TYPE 2)

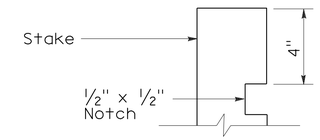

ELEVATION

STAKE NOTCH DETAIL

NOTES:

1. Temporary fiber roll spacing varies depending upon slope inclination.
2. Installations shown in the perspectives are for slope inclination of 10:1 and steeper.

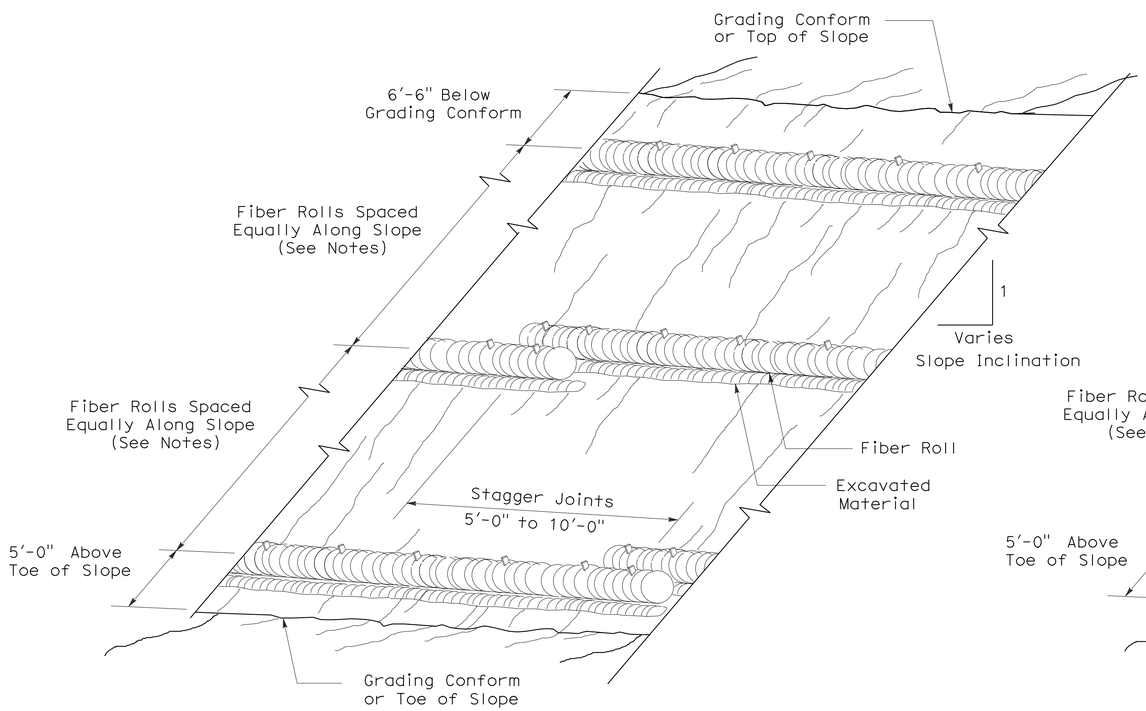

PERSPECTIVE

TEMPORARY FIBER ROLL (TYPE 1)

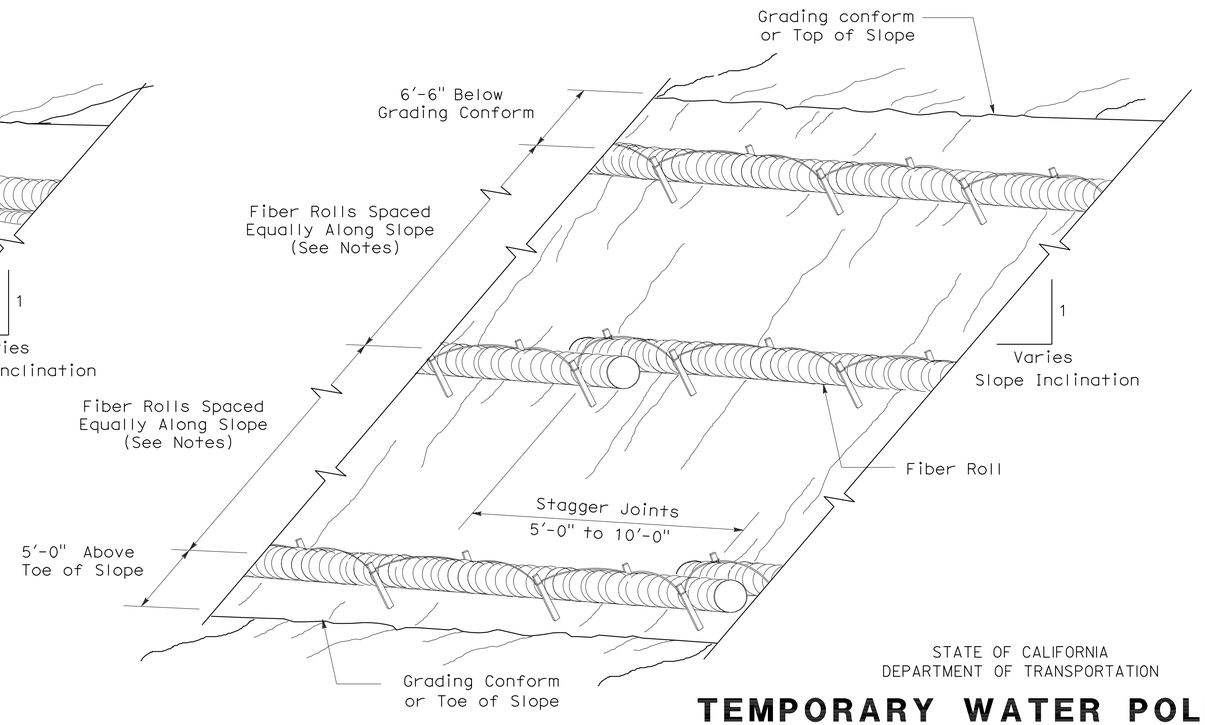

PERSPECTIVE

TEMPORARY FIBER ROLL (TYPE 2)

STATE OF CALIFORNIA
DEPARTMENT OF TRANSPORTATION

TEMPORARY WATER POLLUTION CONTROL DETAILS (TEMPORARY FIBER ROLL)

NO SCALE

RSP T56 DATED APRIL 3, 2009 SUPERSEDES STANDARD PLAN T56
DATED MAY 1, 2006 - PAGE 232 OF THE STANDARD PLANS BOOK DATED MAY 2006.

REVISED STANDARD PLAN RSP T56

2006 REVISED STANDARD PLAN RSP T56

DIST	COUNTY	ROUTE	POST MILES TOTAL PROJECT	SHEET NO.	TOTAL SHEETS
07	LA	710	22.6	49	100

LICENSED LANDSCAPE ARCHITECT

August 15, 2008
PLANS Approval DATE

The State of California or its officers or agents shall not be responsible for the accuracy or completeness of electronic copies of this plan sheet.

LICENSED LANDSCAPE ARCHITECT Robert B. Schott 3625 Signature 11-04-08 Renewal Date 08-11-08 Date STATE OF CALIFORNIA

To accompany plans dated 6-21-10

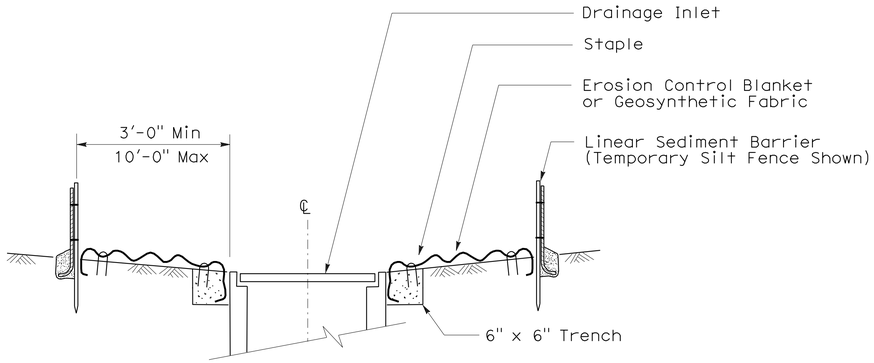

SECTION A-A

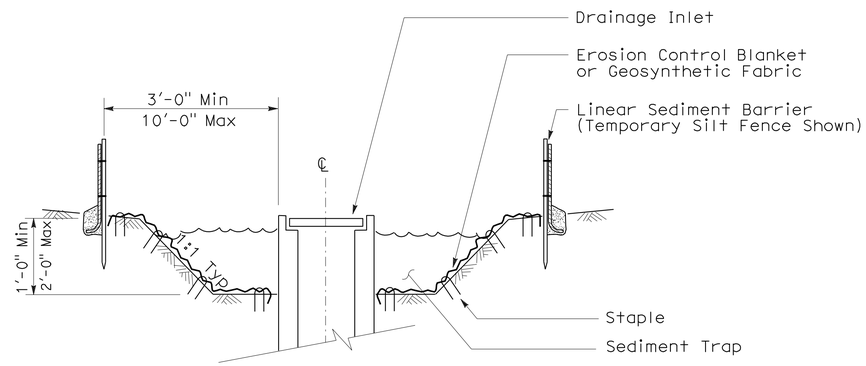

SECTION B-B

NOTES:

1. See Standard Plan T51 for Temporary Silt Fence.
2. Dimensions may vary to fit field conditions.

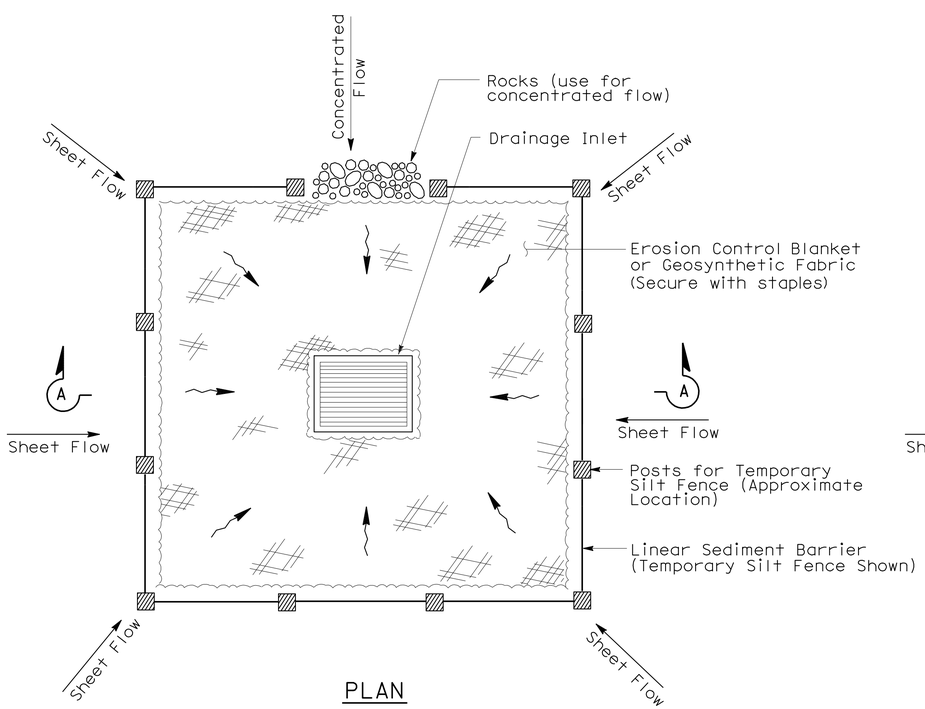

PLAN

TEMPORARY DRAINAGE INLET PROTECTION (TYPE 1)

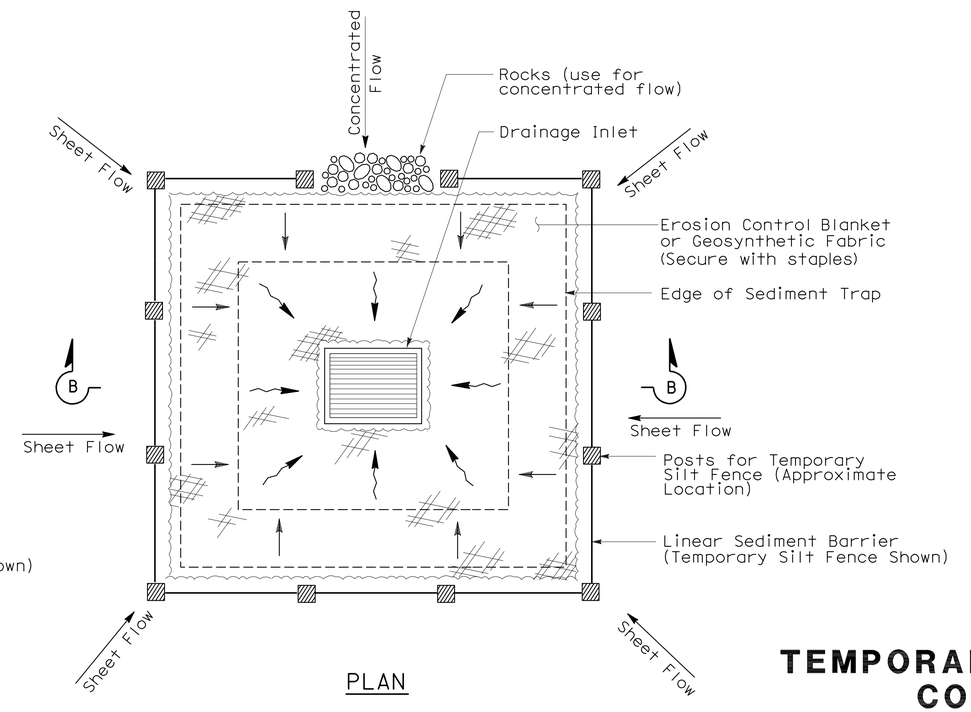

PLAN

TEMPORARY DRAINAGE INLET PROTECTION (TYPE 2) (EXCAVATED SEDIMENT TRAP)

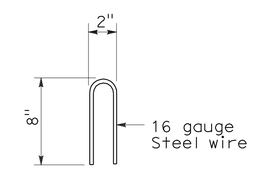

STAPLE DETAIL

STATE OF CALIFORNIA
DEPARTMENT OF TRANSPORTATION

TEMPORARY WATER POLLUTION CONTROL DETAILS (TEMPORARY DRAINAGE INLET PROTECTION)

NO SCALE

NSP T61 DATED AUGUST 15, 2008 SUPPLEMENTS THE STANDARD PLANS BOOK DATED MAY 2006.

NEW STANDARD PLAN NSP T61

2006 NEW STANDARD PLAN NSP T61

7-11-08

DIST	COUNTY	ROUTE	POST MILES TOTAL PROJECT	SHEET NO.	TOTAL SHEETS
07	LA	710	22.6	50	100

LICENSED LANDSCAPE ARCHITECT

August 15, 2008
PLANS APPROVAL DATE

The State of California or its officers or agents shall not be responsible for the accuracy or completeness of electronic copies of this plan sheet.

LICENSED LANDSCAPE ARCHITECT — Robert B. Schott — Signature — 11-04-08 Renewal Date — 08-11-08 Date — STATE OF CALIFORNIA

To accompany plans dated 6-21-10

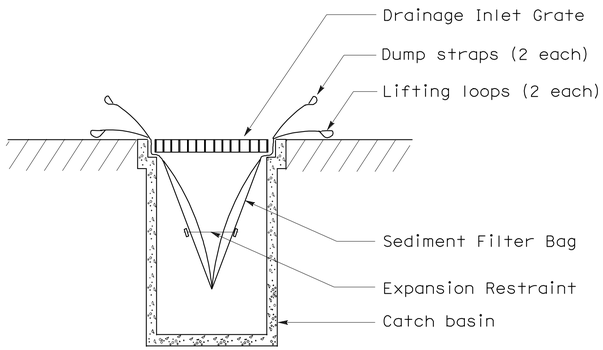

SECTION B-B

SEDIMENT FILTER BAG DETAIL

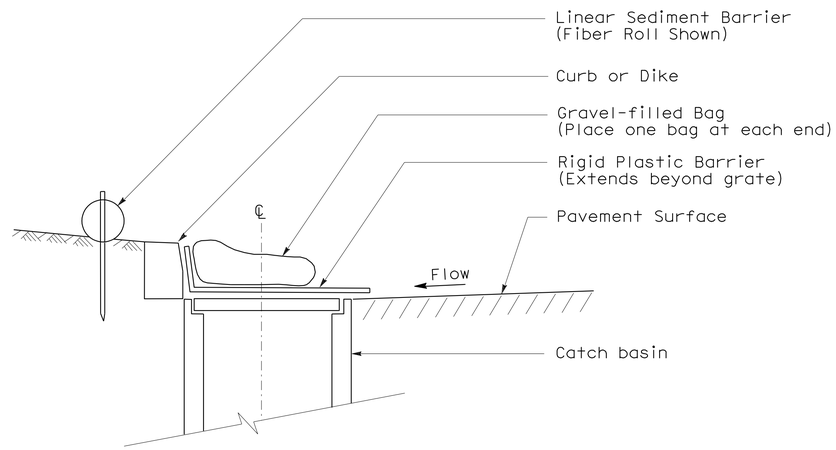

SECTION

TEMPORARY DRAINAGE INLET PROTECTION (TYPE 6A) (CATCH BASIN WITH GRATE)

NOTES:

1. See Standard Plan T51 for Temporary Silt Fence.
2. Dimensions may vary to fit field conditions.

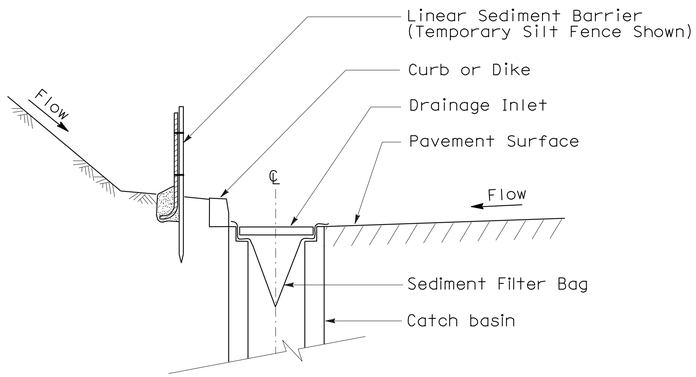

SECTION A-A

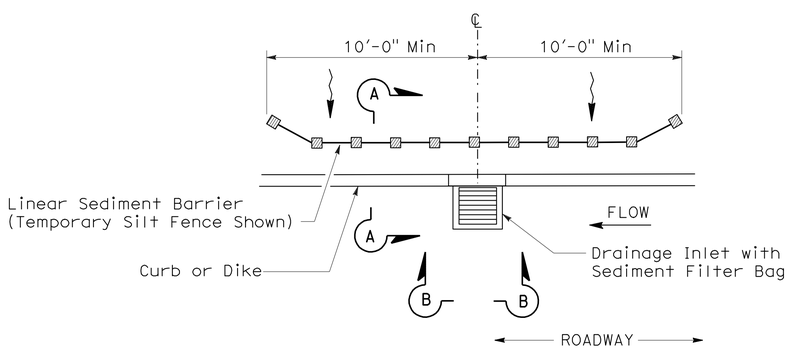

PLAN

TEMPORARY DRAINAGE INLET PROTECTION (TYPE 5) (SEDIMENT FILTER BAG)

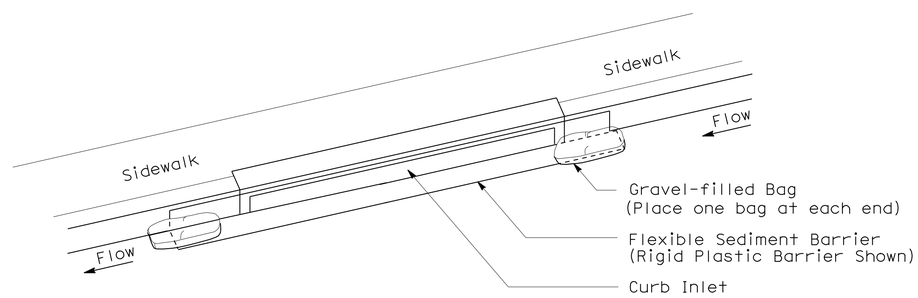

PERSPECTIVE

TEMPORARY DRAINAGE INLET PROTECTION (TYPE 6B) (CURB INLET WITHOUT GRATE)

STATE OF CALIFORNIA
DEPARTMENT OF TRANSPORTATION

TEMPORARY WATER POLLUTION CONTROL DETAILS (TEMPORARY DRAINAGE INLET PROTECTION)

NO SCALE

NSP T64 DATED AUGUST 15, 2008 SUPPLEMENTS THE STANDARD PLANS BOOK DATED MAY 2006.

NEW STANDARD PLAN NSP T64

2006 NEW STANDARD PLAN NSP T64

7-11-08

DIST	COUNTY	ROUTE	POST MILES TOTAL PROJECT	SHEET NO.	TOTAL SHEETS
07	LA	710	22.6	51	100

REGISTERED CIVIL ENGINEER

June 5, 2009
PLANS APPROVAL DATE

REGISTERED PROFESSIONAL ENGINEER
Tillat satter
No. C42892
Exp. 03-31-10
CIVIL
STATE OF CALIFORNIA

The State of California or its officers or agents shall not be responsible for the accuracy or completeness of electronic copies of this plan sheet.

To accompany plans dated 6-21-10

2006 REVISED STANDARD PLAN RSP B15-6

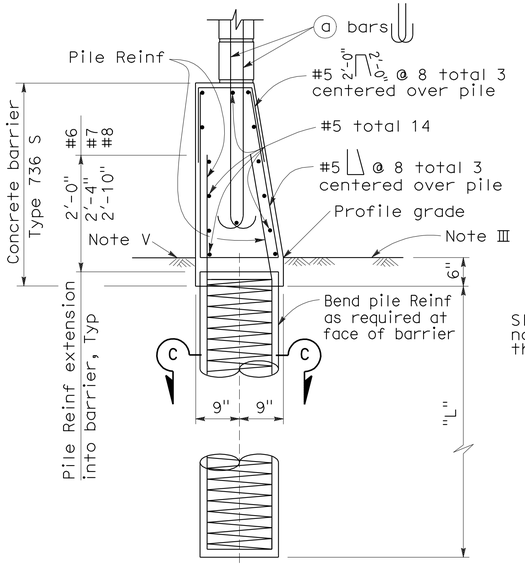

CASE 1

For details not shown, See Case 2.
Level ground ±10% on both sides of barrier.

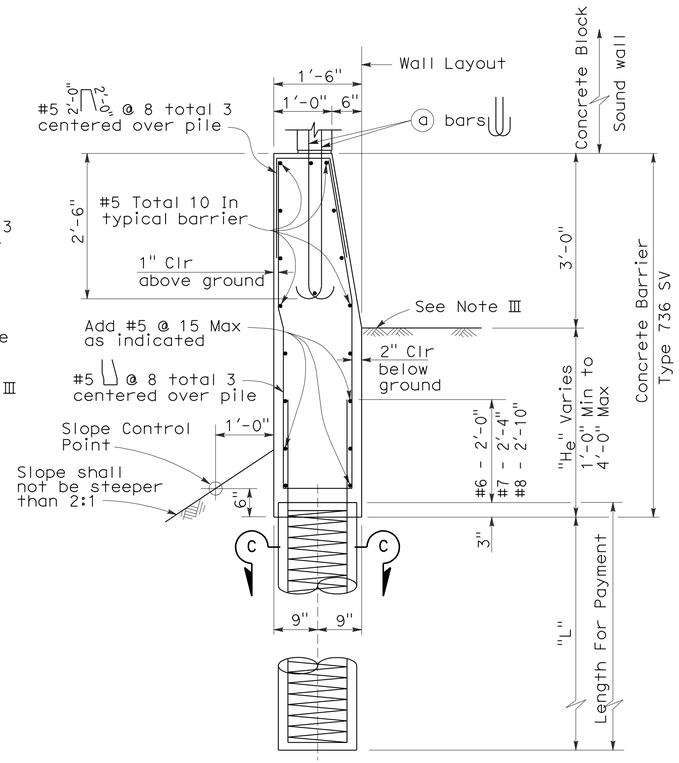

CASE 2

For details not shown, See Case 1.
Level ground ±10% at the traffic side of barrier and sloping ground on the opposite side.

BARRIER SECTIONS

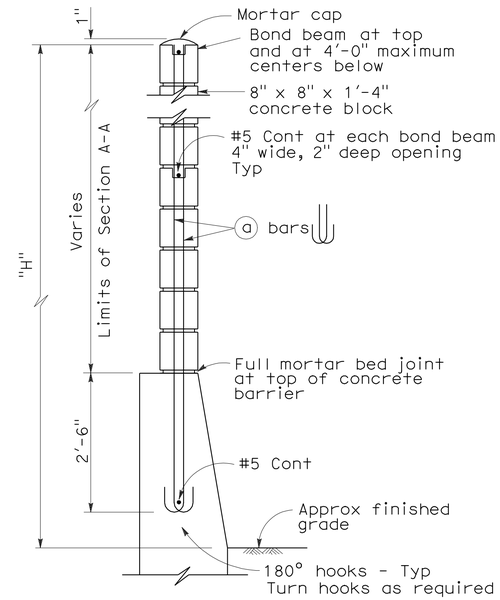

H=6'-4" THRU H=10'-4"

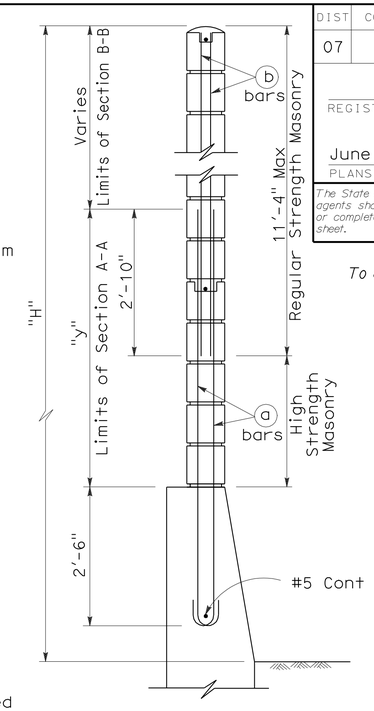

H=12'-4" THRU H=16'-4"

For details not shown, see H=6'-4" thru H=10'-4".

TYPICAL SECTIONS

See Revised Standard Plan RSP B15-8 for pile details.

SOUND WALL REINFORCEMENT TABLE

Maximum H	ⓐ bars @ 1'-4" Max	ⓑ bars @ 1'-4" Max	"y"	f'm (psi)	Compressive Strength of CMU (psi)	H
6'-4"	#4	---	---	1500	1900	6'-4"
8'-4"	#4	---	---	1500	1900	8'-4"
10'-4"	#4	---	---	1500	1900	10'-4"
12'-4"	#5	#4	5'-0"	1500	1900	12'-4"
14'-4"	#6	#4	7'-0"	1500	1900	14'-4"
16'-4"	#6	#4	9'-0"	2500	3750	16'-4"

NOTES I THROUGH VI:

I. Details shown are primarily to conform design of sound walls to Type 736S and Type 736 SV Concrete Barriers. For sound wall details conforming with barriers see Standard Plan B15-7 and Revised Standard Plan RSP B15-8.

II. For details and sections not shown, see Standard Plan B15-7 and Revised Standard Plan RSP B15-8.

III. Slope ground at traffic side of barrier to drain. Maximum slope ±10%. See Std Plan B11-56, Note D.

IV. Pile spacing may be varied, but shall not exceed the tabular values. See Revised Standard Plan RSP B15-8.

V. For Case 1 - ground line to be at the same elevation on both sides of the barrier. Barrier shall not be used to retain earth.

VI. See Standard Plan B15-9 for other details.

NOTES A THROUGH G:

A. For type of block, type of block bond, and joint finish, see other sheets.

B. When blocks are laid in stacked bond, ladder type, galvanized joint reinforcement shall be provided. A minimum of 2-9 gauge wires continuous at 4'-0" maximum to be used. Locate reinforcement in joints that are at the approximate midpoint between bond beams.

C. Horizontal joints shall be tooled concave or may be weathered. Vertical joints shall be tooled concave or may be raked.

D. For intermediate wall heights (H), or barrier depths (H_e), that are between the values given, use the tabular information for the next higher (H) or (H_e).

E. Concrete to be used for the barrier shall contain not less than 590 pounds of cementitious material per cubic yard.

F. Masonry strengths are listed in the "SOUND WALL REINFORCEMENT TABLE".

STATE OF CALIFORNIA
DEPARTMENT OF TRANSPORTATION

SOUND WALL MASONRY BLOCK ON TYPE 736S/SV BARRIER DETAILS (1)

NO SCALE

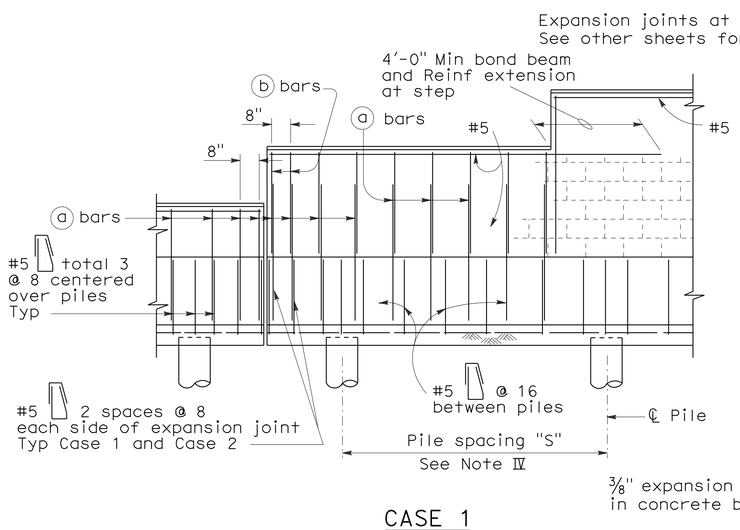

CASE 1

For details not shown, See Case 2.

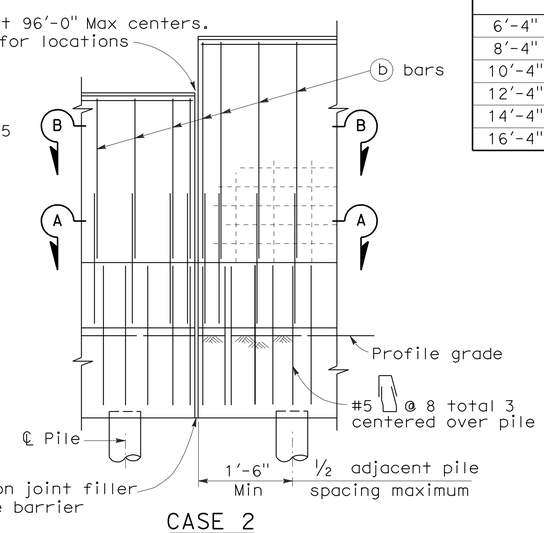

CASE 2

For details not shown, See Case 1.

PARTIAL ELEVATIONS

RSP B15-6 DATED JUNE 5, 2009 SUPERSEDES
RSP B15-6 DATED OCTOBER 5, 2007 AND STANDARD PLAN B15-6
DATED MAY 1, 2006 - PAGE 296 OF THE STANDARD PLANS BOOK DATED MAY 2006.

REVISED STANDARD PLAN RSP B15-6

4-15-09

DIST	COUNTY	ROUTE	POST MILES TOTAL PROJECT	SHEET NO.	TOTAL SHEETS
07	LA	710	22.6	52	100

REGISTERED CIVIL ENGINEER

June 6, 2008
PLANS APPROVAL DATE

REGISTERED PROFESSIONAL ENGINEER
Tillat Satter
No. C42892
Exp. 03-31-10
CIVIL
STATE OF CALIFORNIA

The State of California or its officers or agents shall not be responsible for the accuracy or completeness of electronic copies of this plan sheet.

To accompany plans dated 6-21-10

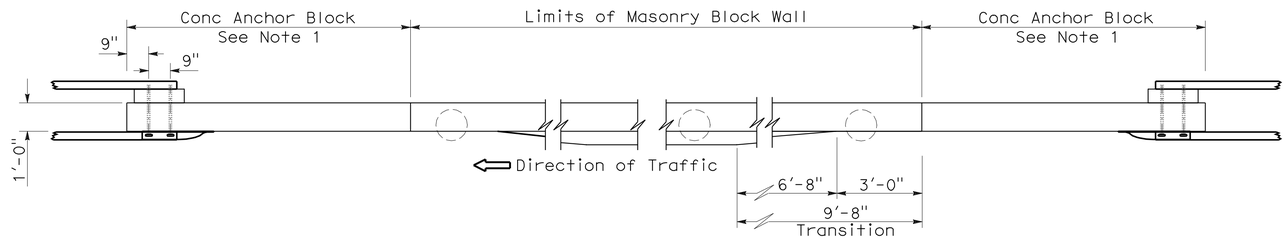

PLAN

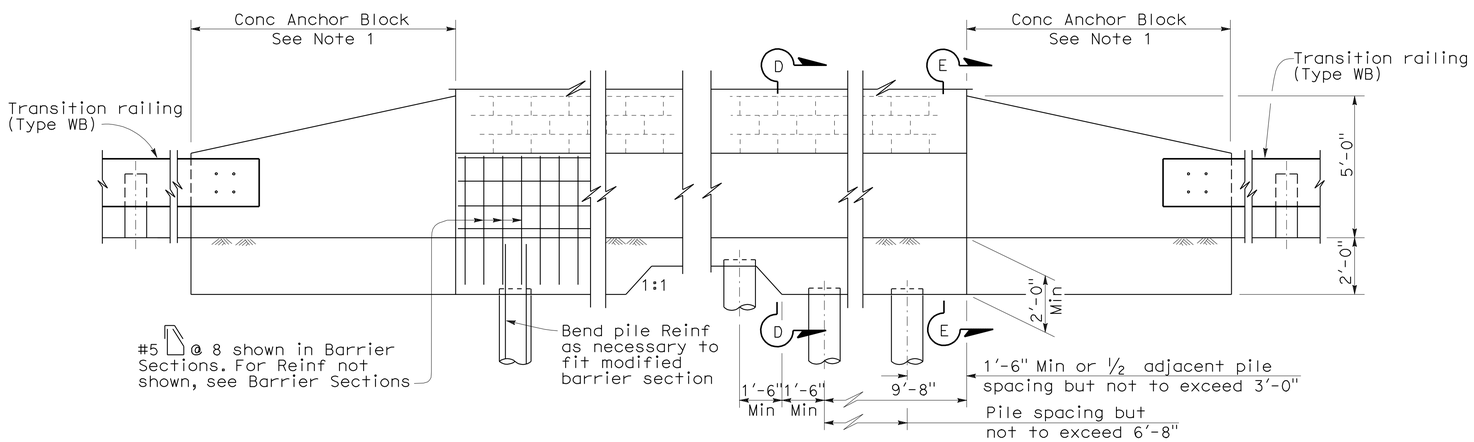

ELEVATION

METAL BEAM GUARDRAIL ANCHORAGE

For details not shown, see Standard Plan B11-56.

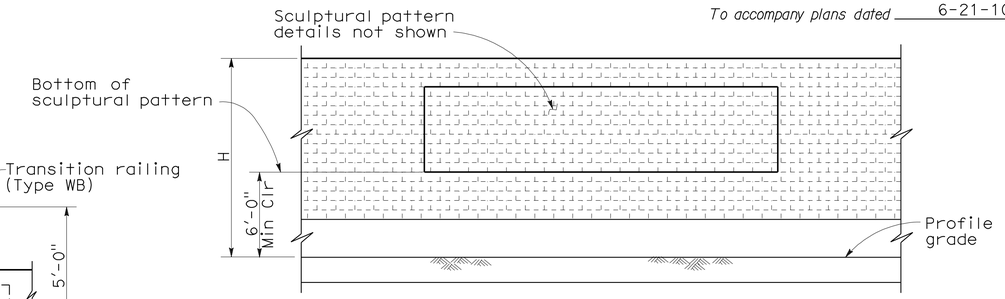

CLEARANCE DETAIL

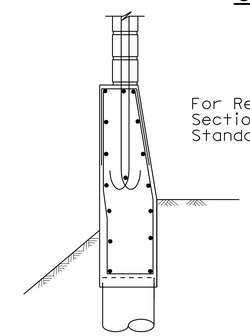

SECTION D-D

For Reinf, see "Barrier Sections Case 2" on Standard plan B15-6

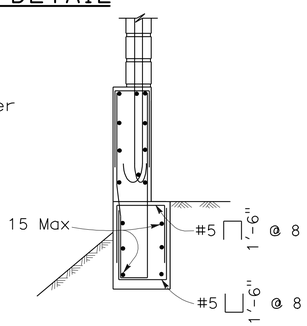

SECTION E-E

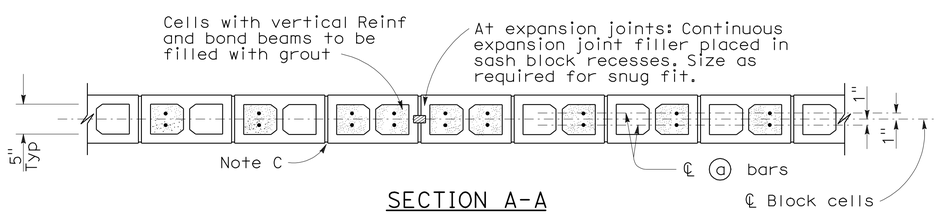

SECTION A-A

For details not shown, see other details.

H=6'-4" THRU H=10-4"

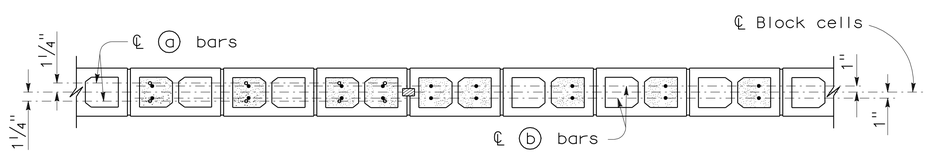

SECTION A-A SECTION B-B

For details not shown, see other details.

H=12'-4" THRU H=16'-4"

DESIGN NOTES:

DESIGN

Uniform Building Code, 1997 Edition
and the Bridge Design Specifications.

DESIGN WIND LOAD

27 psf

DESIGN SEISMIC LOAD

0.57 Dead load

REINFORCED CONCRETE

f'c = 3.6 ksi
fy = 60 ksi

CONCRETE MASONRY

REGULAR STRENGTH	HIGH STRENGTH	
f'm = 1500 psi	f'm = 2000 psi	f'm = 2500 psi
fb = 495 psi	fb = 660 psi	fb = 830 psi
fs = 24,000 psi	fs = 24,000 psi	fs = 24,000 psi
n = 25.8	n = 19.3	n = 15.5

NOTE:

1. For Concrete Anchor Block and connection details, see "Connection Detail DD" on Standard Plan A77J3.

STATE OF CALIFORNIA
DEPARTMENT OF TRANSPORTATION

SOUND WALL MASONRY BLOCK ON TYPE 736S/SV BARRIER DETAILS (2)

NO SCALE

RSP B15-7 DATED JUNE 6, 2008 SUPERSEDES STANDARD PLAN B15-7
DATED MAY 1, 2006 - PAGE 297 OF THE STANDARD PLANS BOOK DATED MAY 2006.

REVISED STANDARD PLAN RSP B15-7

2006 REVISED STANDARD PLAN RSP B15-7

4-23-08

DIST	COUNTY	ROUTE	POST MILES TOTAL PROJECT	SHEET NO.	TOTAL SHEETS
07	LA	710	22.6	53	100

REGISTERED CIVIL ENGINEER

October 5, 2007
PLANS APPROVAL DATE

REGISTERED PROFESSIONAL ENGINEER
Douglas J. Dunrud
No. C47240
Exp. 12-31-07
CIVIL
STATE OF CALIFORNIA

The State of California or its officers or agents shall not be responsible for the accuracy or completeness of electronic copies of this plan sheet.

To accompany plans dated 6-21-10

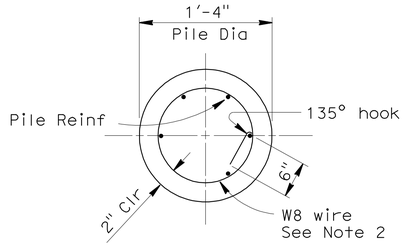

SECTION C-C

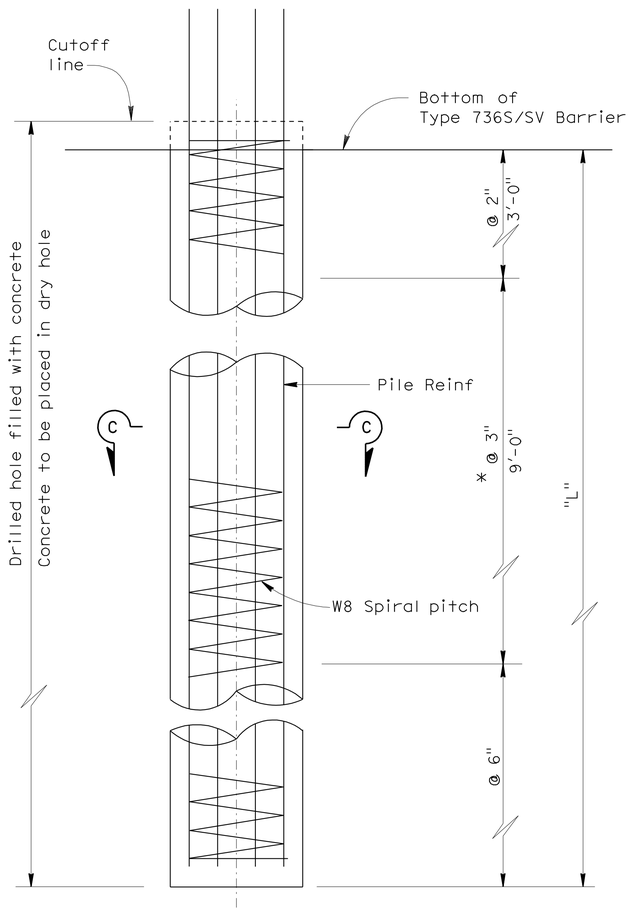

ELEVATION

* @ 2" at option of Contractor.

CASE 1: PILE DATA TABLE

Maximum H	ø = 25 Min			ø = 30 Min			ø = 35 Min			Maximum H
	S	L	Pile Reinf	S	L	Pile Reinf	S	L	Pile Reinf	
6'-4"	10'-0"	8'-6"	#6 Tol 6	10'-0"	7'-0"	#6 Tol 6	10'-0"	6'-0"	#6 Tol 6	6'-4"
8'-4"	10'-0"	9'-6"	#6 Tol 6	10'-0"	8'-0"	#6 Tol 6	10'-0"	7'-0"	#6 Tol 6	8'-4"
10'-4"	10'-0"	10'-6"	#6 Tol 6	10'-0"	9'-0"	#6 Tol 6	10'-0"	7'-6"	#6 Tol 6	10'-4"
12'-4"	10'-0"	11'-6"	#7 Tol 6	10'-0"	9'-6"	#7 Tol 6	10'-0"	8'-6"	#6 Tol 6	12'-4"
14'-4"	10'-0"	12'-6"	#7 Tol 7	10'-0"	10'-6"	#7 Tol 7	10'-0"	9'-0"	#7 Tol 7	14'-4"
16'-4"	10'-0"	13'-0"	#8 Tol 7	10'-0"	11'-6"	#8 Tol 7	10'-0"	9'-6"	#7 Tol 7	16'-4"

CASE 2: PILE DATA TABLE

H_e	Maximum H	ø = 30 Min			ø = 35 Min			Maximum H
		S	L	Pile Reinf	S	L	Pile Reinf	
1'-0"	6'-4"	10'-0"	15'-0"	#7 Tol 6	10'-0"	12'-0"	#6 Tol 6	6'-4"
	8'-4"	9'-9"	16'-0'	#7 Tol 6	10'-0"	13'-0"	#7 Tol 6	8'-4"
	10'-4"	8'-0"	16'-0"	#7 Tol 6	10'-0"	14'-0"	#7 Tol 6	10'-4"
	12'-4"	6'-9"	16'-0"	#7 Tol 6	10'-0"	15'-0"	#8 Tol 7	12'-4"
	14'-4"	5'-9"	16'-0"	#7 Tol 6	9'-6"	15'-6'	#8 Tol 7	14'-4"
	16'-4"	5'-0"	16'-0"	#7 Tol 6	8'-9"	16'-0"	#8 Tol 7	16'-4"
2'-0"	6'-4"	8'-3"	16'-0"	#7 Tol 6	10'-0"	13'-6"	#7 Tol 6	6'-4"
	8'-4"	7'-0"	16'-0"	#7 Tol 6	10'-0"	14'-6"	#7 Tol 7	8'-4"
	10'-4"	6'-0"	16'-0"	#7 Tol 6	10'-0"	15'-3'	#8 Tol 7	10'-4"
	12'-4"	5'-3"	16'-0"	#7 Tol 6	9'-9"	16'-0"	#8 Tol 7	12'-4"
	14'-4"	4'-6"	16'-0"	#7 Tol 6	8'-4"	16'-0"	#8 Tol 7	14'-4"
	16'-4"	4'-0"	16'-0"	#7 Tol 6	7'-4"	16'-0"	#8 Tol 7	16'-4"
3'-0"	6'-4"	6'-0"	16'-0"	#7 Tol 6	10'-0"	15'-3"	#8 Tol 7	6'-4"
	8'-4"	5'-3"	16'-0"	#7 Tol 6	10'-0"	16'-0"	#8 Tol 7	8'-4"
	10'-4"	4'-6"	16'-0"	#7 Tol 6	8'-10"	16'-0"	#8 Tol 7	10'-4"
	12'-4"	4'-0"	16'-0"	#7 Tol 6	7'-10"	16'-0"	#8 Tol 7	12'-4"
	14'-4"	3'-6'	16'-0"	#7 Tol 6	6'-10"	16'-0"	#8 Tol 7	14'-4"
	16'-4"	3'-3"	16'-0"	#7 Tol 6	6'-2"	16'-0"	#8 Tol 7	16'-4"
4'-0"	6'-4"	4'-3"	16'-0"	#7 Tol 6	8'-0"	15'-6"	#8 Tol 7	6'-4"
	8'-4"	3'-10"	16'-0"	#7 Tol 6	7'-4"	15'-9"	#8 Tol 7	8'-4"
	10'-4"	3'-6"	16'-0"	#7 Tol 6	6'-10"	16'-0"	#8 Tol 7	10'-4"
	12'-4"	3'-2"	16'-0"	#7 Tol 6	6'-3"	16'-0"	#8 Tol 7	12'-4"
	14'-4"	3'-0"	16'-3"	#7 Tol 6	5'-8"	16'-0"	#8 Tol 7	14'-4"
	16'-4"	2'-10"	16'-6"	#7 Tol 6	5'-0"	16'-0"	#8 Tol 7	16'-4"

NOTES:

1. For details not shown, see Revised Standard Plan RSP B15-6 and Standard Plan B15-7.

2. Lapped splices in spiral reinforcement shall be lapped at least 80 wire diameters. Spiral reinforcement at splices and at ends shall be terminated with a 135° hook with a 6" tail hooked around a longitudinal bar.

STATE OF CALIFORNIA
DEPARTMENT OF TRANSPORTATION

SOUND WALL MASONRY BLOCK ON TYPE 736S/SV BARRIER DETAILS (3)

NO SCALE

RSP B15-8 DATED OCTOBER 5, 2007 SUPERSEDES STANDARD PLAN B15-8
DATED MAY 1, 2006 - PAGE 298 OF THE STANDARD PLANS BOOK DATED MAY 2006.

REVISED STANDARD PLAN RSP B15-8

2006 REVISED STANDARD PLAN RSP B15-8

DIST	COUNTY	ROUTE	POST MILES TOTAL PROJECT	SHEET NO.	TOTAL SHEETS
07	LA	710	22.6	54	100

REGISTERED ELECTRICAL ENGINEER

October 5, 2007
PLANS APPROVAL DATE

REGISTERED PROFESSIONAL ENGINEER Jeffery G. McRae No. E14512 Exp. 6-30-08 ELECTRICAL STATE OF CALIFORNIA

The State of California or its officers or agents shall not be responsible for the accuracy or completeness of electronic copies of this plan sheet.

To accompany plans dated 6-21-10

2006 REVISED STANDARD PLAN RSP ES-1A

ELECTROLIERS

STANDARD TYPES
15, 15D
15 STRUCTURE
21, 21D STRUCTURE
30
31
32
35
36-20A

High mast light pole

Double Arm lighting standard

Existing electrolier

Electrolier foundation (Future installation)

NOTES:

1. Luminaires shall be 310 W HPS when installed on Type 21, 21D, 30, 31, 32, 35 and 36-20A Standards, unless otherwise specified. Luminaires shall be 200 W HPS when installed on other type standards or poles, unless otherwise specified.
2. Luminaires shall be the cutoff type, ANSI Type Ⅲ medium cutoff lighting distribution, unless otherwise specified.
3. Variations noted adjacent to symbol on project plans.

Electrolier (see project notes or project plans)

Luminaire on wood pole

STANDARD NOTES:

- AB Abandon. If applied to conduit, remove conductors.
- BC Install pull box in existing conduit run.
- BP Pedestrian barricade, type as indicated on plan.
- CB Install conduit into existing pull box.
- CC Connect new and existing conduit. Remove existing conductors and install conductors as indicated.
- CF Conduit to remain for future use. Remove conductors. Install pull wire or rope.
- DH Detector handhole.
- FA Foundation to be abandoned.
- IS Install sign on signal mast arm.
- NS No slip base on standard.
- PEC Photoelectric control.
- PEU Photoelectric unit.
- RC Equipment or material to be removed and become the property of the Contractor.
- RE Remove electrolier, fuses and ballast. Tape ends of conductors.
- RL Relocate equipment.
- RR Remove and reuse equipment.
- RS Remove and salvage equipment.
- SC Splice new to existing conductors.
- SD Service disconnect.
- SF Standard to remain for future use. Remove luminaire, pole conductors, fuses and ballast.
- TSP Telephone service point.

ABBREVIATIONS AND EQUIPMENT DESIGNATIONS

PROPOSED	EXISTING	
BBS	bbs	Battery backup system
BC	bc	Bolt circle
C	C	Conduit
CCTV	cctv	Closed circuit television
CKT	ckt	Circuit
CMS	cms	Changeable message sign
DLC	dlc	Loop detector lead-in cable
EMS	ems	Extinguishable message sign
EVC	evc	Emergency vehicle cable
EVD	evd	Emergency vehicle detector
FB	fb	Flashing beacon
FBCA	fbca	Flashing beacon control assembly
FBS	fbs	Flashing beacon with slip base
FO	fo	Fiber optic
G	G	Ground (Equipment Grounding Conductor)
GFCI	GFCI	Ground fault circuit interrupt
HAR	har	Highway advisory radio
HEX	hex	Hexagonal
HPS	hps	High pressure sodium
IISNS	iisns	Internally illuminated street name sign
ISL	isl	Induction sign lighting
LED	led	Light emitting diode
LMA	lma	Luminaire mast arm
LPS	lps	Low pressure sodium
LTG	ltg	Lighting
LUM	lum	Luminaire
MAT	mat	Mast arm mounting vehicle signal faces, top attachment
MAS	mas	Mast arm mounting vehicle signal faces, side attachment
MAS-4A	mas-4A	Mast arm mounting vehicle signal faces, side attachment - 4 signal section
MAS-4B	mas-4B	
MAS-4C	mas-4C	
MAS-5A	mas-5A	Mast arm mounting vehicle signal faces, side attachment - 5 signal section
MAS-5B	mas-5B	
MC	mc	Mercury contactor
M/M	m/m	Multiple to multiple transformer
MT	mt	Conduit with pull wire or rope only
MTG	mtg	Mounting
	mv	Mercury vapor lighting fixture
N	N	Neutral (Grounded Conductor)
NC	NC	Normally closed
NO	NO	Normally open
PB	pb	Pull box
PEC	pec	Photoelectric control (Type Ⅰ, Ⅱ, Ⅲ, Ⅳ or Ⅴ as shown)
PED	ped	Pedestrian
PEU	peu	Photoelectric unit
PPB	ppb	Pedestrian push button
RL		Relocated equipment
RM	rm	Ramp metering
SB	sb	Slip base
SIC	sic	Signal interconnect cable
SIG	sig	Signal
SMA	sma	Signal mast arm
SNS	sns	Street name sign
SP	sp	Service point
TDC	tdc	Telephone demarcation cabinet
TMS	tms	Traffic monitoring station
TOS	tos	Traffic Operations System
VEH	veh	Vehicle
XFMR	xfmr	Transformer
COMM	comm	Communication
RWIS	rwis	Roadway weather information system

SOFFIT AND WALL MOUNTED LUMINAIRES

Pendant, 70 W HPS unless otherwise specified.

Flush, 70 W HPS unless otherwise specified.

Wall surface, 70 W HPS unless otherwise specified.

Existing soffit or wall luminaire to remain unmodified.

Existing soffit or wall luminaire to be modified as specified.

NOTE:

Arrow indicates "street side" of luminaire.

STATE OF CALIFORNIA
DEPARTMENT OF TRANSPORTATION

ELECTRICAL SYSTEMS (SYMBOLS AND ABBREVIATIONS)

NO SCALE

RSP ES-1A DATED OCTOBER 5, 2007 SUPERSEDES STANDARD PLAN ES-1A DATED MAY 1, 2006 - PAGE 400 OF THE STANDARD PLANS BOOK DATED MAY 2006.

REVISED STANDARD PLAN RSP ES-1A

DIST	COUNTY	ROUTE	POST MILES TOTAL PROJECT	SHEET NO.	TOTAL SHEETS
07	LA	710	22.6	55	100

REGISTERED ELECTRICAL ENGINEER

October 5, 2007
PLANS APPROVAL DATE

REGISTERED PROFESSIONAL ENGINEER Jeffery G. McRae No. E14512 Exp. 6-30-08 ELECTRICAL STATE OF CALIFORNIA

The State of California or its officers or agents shall not be responsible for the accuracy or completeness of electronic copies of this plan sheet.

To accompany plans dated 6-21-10

CONDUIT

PROPOSED	EXISTING	
		Lighting Conduit, unless otherwise indicated or noted
		Traffic signal conduit
C	c	Communication conduit
T	t	Telephone conduit
F	f	Fire alarm conduit
FO	fo	Fiber optic conduit
		Conduit termination (RSP ES-9A C)
R	r	Conduit riser in/on structure or service pole

SERVICE EQUIPMENT

PROPOSED	EXISTING	
OH	oh	Overhead lines
U	U	Wood pole "U" indicates utility owned
		Pole guy with anchor
		Utility transformer - ground mounted
III		Service equipment enclosure type
		Service equipment enclosure door indicates front of enclosure
T	t	Telephone demarcation cabinet

POLE-MOUNTED SERVICE DESIGNATION

Type of installation

TYPE H SERVICE - 28'-10" ← Pole height above grade

ILLUMINATED OVERHEAD SIGN

PROPOSED	EXISTING	
		Overhead sign - Single post
		Overhead sign - Two post
		Overhead sign - Mounted on structure
		Overhead sign with electrolier

SIGNAL EQUIPMENT

PROPOSED	EXISTING	
		Pedestrian signal face
		Pedestrian push button post
		Pedestrian barricade
		Vehicle signal face (with backplate, 3-Section: red, yellow and green)
		Vehicle signal face with angle visors
PV	PV	Modifications of basic symbols: "L" indicates all non-arrow sections louvered "LG" indicates louvered green section only "PV" indicates 12" programmed visibility sections "8" indicates all 8" sections (only when specified)
		Type 15TS and Vehicle signal face
		Vehicle signal face with red, yellow and green left arrow sections
		Vehicle signal face with red and yellow sections and up green arrow
		Vehicle signal face (5 Section) with red, yellow and green sections and yellow and green right arrows
		Type 1 Standard and attached vehicle signal faces
		Standard with signal mast arm only and attached vehicle signal faces and internally illuminated street name sign
		Type 33 Standard, Left-turn vehicle signal face and sign
		Standard with luminaire and signal mast arms and attached vehicle signal faces
		Cantilever flashing beacon Type 9 Frame, with a sign unless otherwise specified or indicated
		Type 15-FBS Standard with two vehicle signal face sections with lens, backplate and visor with a sign
R	Y	Flashing beacon. One vehicle signal face section with lens, backplate and visor. "R" indicates red indication, "Y" indicates yellow indication
		Controller assembly. Door indicates front of cabinet

SIGNAL EQUIPMENT Cont

PROPOSED	EXISTING	
		Guard post
		Type 1 Standard with "Meter On" sign
		Emergency Vehicle detector

NOTES:

1. All signal sections shall be 12" unless shown otherwise.
2. Signal heads shall be provided with backplates unless shown otherwise.
3. Signal indication shall be LED.

STATE OF CALIFORNIA
DEPARTMENT OF TRANSPORTATION

ELECTRICAL SYSTEMS (SYMBOLS AND ABBREVIATIONS)

NO SCALE

RSP ES-1B DATED OCTOBER 5, 2007 SUPERCEDES STANDARD PLAN ES-1B DATED MAY 1, 2006 - PAGE 401 OF THE STANDARD PLANS BOOK DATED MAY 2006.

REVISED STANDARD PLAN RSP ES-1B

2006 REVISED STANDARD PLAN RSP ES-1B

7-10-07

DIST	COUNTY	ROUTE	POST MILES TOTAL PROJECT	SHEET NO.	TOTAL SHEETS
07	LA	710	22.6	56	100

REGISTERED ELECTRICAL ENGINEER

October 5, 2007
PLANS APPROVAL DATE

REGISTERED PROFESSIONAL ENGINEER
Jeffery G. McRae
No. E14512
Exp. 6-30-08
ELECTRICAL
STATE OF CALIFORNIA

The State of California or its officers or agents shall not be responsible for the accuracy or completeness of electronic copies of this plan sheet.

To accompany plans dated 6-21-10

EQUIPMENT IDENTIFICATION

ILLUMINATED SIGN IDENTIFICATION NUMBER:

Sign No. 12345 — Sign number - Place on post or structure

10 ISL SCI 1.0

- 1.0 — Transformer rating (kVA)
- SCI — Lighting control type
- ISL — Number and type of fixtures

Do NOT place on standard or structure

ELECTROLIER OR EQUIPMENT IDENTIFICATION NUMBER:

12345 - 15'-0"

- 15'-0" — Mast arm length, if shown. Do not place on standard or structure.
- 12345 — Equipment number - Place on standard or structure. Existing equipment numbers are shown in parenthesis

CONDUIT AND CONDUCTOR IDENTIFICATION:

1½"C, 2#10, 15#14, 2 DLC

- 2#10, 15#14, 2 DLC — Number and size of conductors and cables
- 1½"C — Size of conduit in inches

Ø1, Ø2, Ø2P, etc.	Traffic phase identification for signal faces, detectors and phase diagrams
1 2 3	Project note numbers
A B C	Equipment description, installation or item numbers
1 2 3	Conduit run numbers

SIGNAL AND LIGHTING STANDARD (TYPICAL DESIGNATION):

19A - 3 - 100

- 100 — Wind velocity = 100 mph
- 3 — Case 3 arm loading
- 19A — Standard type
- Standard Plan sheet number
- Detail number or letter

MISCELLANEOUS EQUIPMENT

PROPOSED	EXISTING	
CMS	cms	Changeable message sign
		Closed circuit television camera
		Highway advisory radio pole and antenna
EMS	ems	Extinguishable message sign
M V	m v	Detection device M = Microwave sensor V = Video image sensor

WIRING DIAGRAM LEGEND

P	Pole
CB	Circuit breaker
A	Ampere
V	Volt
M	Metered
UM	Unmetered
NB	Neutral bus
GB	Ground bus
G	Equipment grounding conductor
N	Grounded conductor (Neutral)

- External conductor
- Conductor or bus
- Tie point
- Contactor coil
- Contactor, Contact NO
- Terminal blocks
- Contactor, Contact NC
- Enclosure bond
- Grounding electrode
- Circuit breaker
- Receptacle

PULL BOXES

PROPOSED EXISTING

Pull box-No. 5 unless otherwise indicated or noted.

3 — 9A(21)

Pull box-Additional designations or descriptions

3	= No. 3½ pull box
5	= No. 5 pull box
6	= No. 6 pull box
7	= No. 7 (Ceiling pull box)
8	= No. 8 (Pendant soffit pull box)
9	= No. 9 pull box
9A	= No. 9A pull box

(C) = Communications pull box
(E) = Pull box with extension
(S) = Sprinkler control pull box
(21) = Anchor bolts and conduit for future installation of Type 21 Standard
(T) = Traffic pull box

VEHICLE DETECTORS

5 J 9 U

- U = Upper
- L = Lower
- Slot number in input file
- Input file (I or J)
- Phase

PROPOSED	EXISTING	
		Type A detector loop. Outline of sawcut shown.
		Type B detector loop. Outline of sawcut shown.
		Type C detector loop. Outline of sawcut shown.
		Type D detector loop. Outline of sawcut shown.
		Type E detector loop. Outline of sawcut shown.
		Type Q detector loop. Outline of sawcut shown.
		Magnetic detector
DH	dh	Detector handhole
		Microwave or video detection zone

STATE OF CALIFORNIA
DEPARTMENT OF TRANSPORTATION

ELECTRICAL SYSTEMS (SYMBOLS AND ABBREVIATIONS)

NO SCALE

RSP ES-1C DATED OCTOBER 5, 2007 SUPERCEDES STANDARD PLAN ES-1C DATED MAY 1, 2006 - PAGE 402 OF THE STANDARD PLANS BOOK DATED MAY 2006.

REVISED STANDARD PLAN RSP ES-1C

2006 REVISED STANDARD PLAN RSP ES-1C

DIST	COUNTY	ROUTE	POST MILES TOTAL PROJECT	SHEET No	TOTAL SHEETS
07	LA	710	22.6	57	100

Fred Feng 4-15-10
REGISTERED CIVIL ENGINEER DATE

6-21-10
PLANS APPROVAL DATE

REGISTERED PROFESSIONAL ENGINEER Fred Y. Feng No. C 32992 Exp. 6-30-2010 CIVIL STATE OF CALIFORNIA

The State of California or its officers or agents shall not be responsible for the accuracy or completeness of electronic copies of this plan sheet.

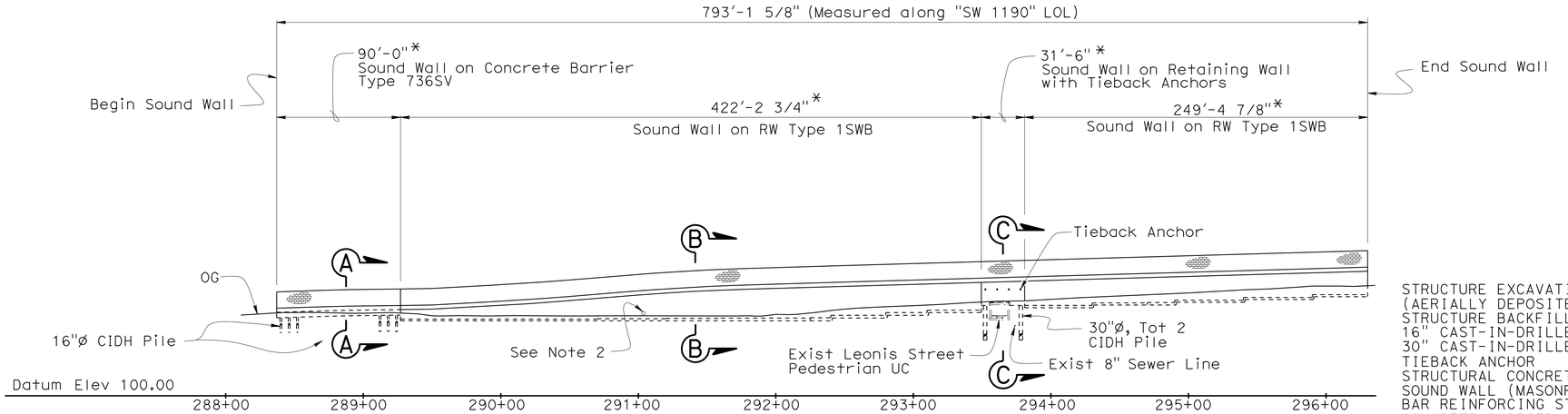

ELEVATION (MIRRORED & DEVELOPED)

1"= 50'

QUANTITIES

STRUCTURE EXCAVATION (TYPE Y-1) (AERIALLY DEPOSITED LEAD)	3,595	CY
STRUCTURE BACKFILL (RETAINING WALL)	9,000	CY
16" CAST-IN-DRILLED-HOLE CONCRETE PILING	550	LF
30" CAST-IN-DRILLED-HOLE CONCRETE PILING	84	LF
TIEBACK ANCHOR	4	EA
STRUCTURAL CONCRETE, RETAINING WALL	1,205	CY
SOUND WALL (MASONRY BLOCK)	9,520	SQFT
BAR REINFORCING STEEL (RETAINING WALL)	150,900	LB
CONCRETE BARRIER (TYPE 736A MOD)	673	LF
CONCRETE BARRIER (TYPE 736SV MOD)	32	LF
CONCRETE BARRIER (TYPE 736SV)	90	LF

Notes:

1. For "SECTION A-A", "SECTION B-B", and "SECTION C-C", see "GENERAL PLAN NO. 2" sheet.
2. Drainage System, see "ROAD PLANS"

Legend:

Indicates Exist Pedestrian UC

* Measured along "SW 1190" LOL

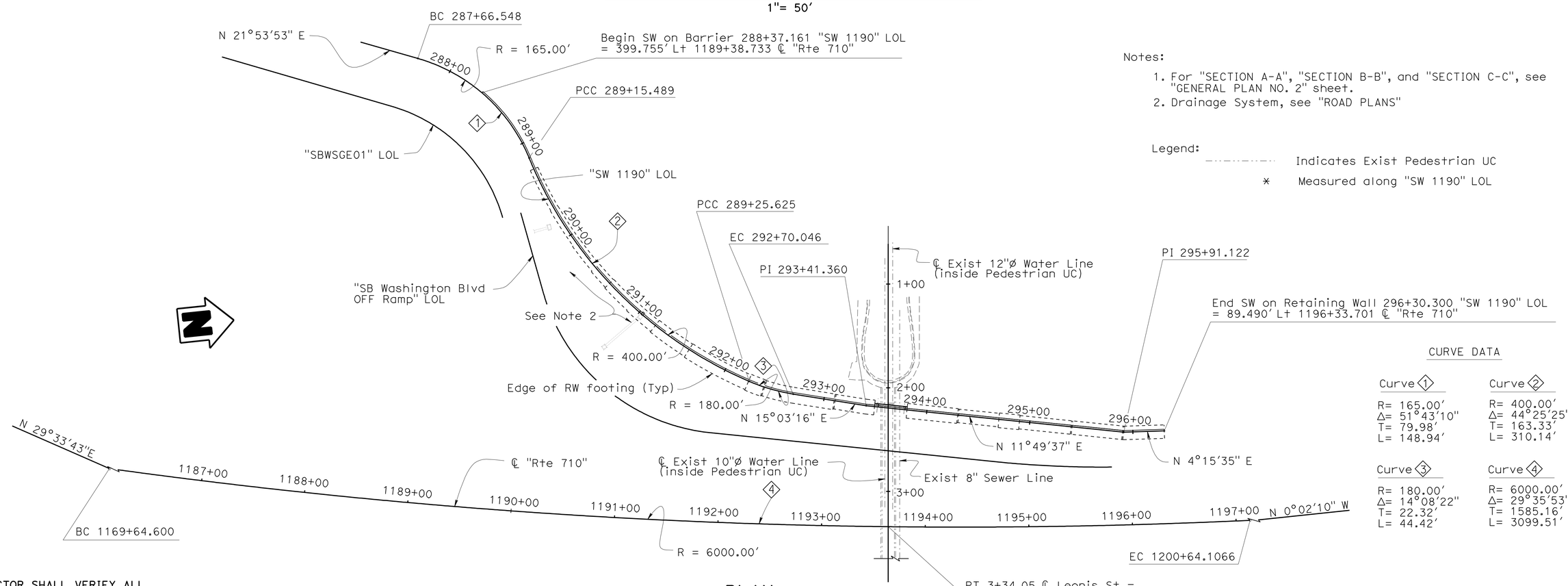

CURVE DATA

Curve 1	Curve 2
R= 165.00'	R= 400.00'
Δ= 51°43'10"	Δ= 44°25'25"
T= 79.98'	T= 163.33'
L= 148.94'	L= 310.14'

Curve 3	Curve 4
R= 180.00'	R= 6000.00'
Δ= 14°08'22"	Δ= 29°35'53"
T= 22.32'	T= 1585.16'
L= 44.42'	L= 3099.51'

NOTE:
THE CONTRACTOR SHALL VERIFY ALL CONTROLLING FIELD DIMENSIONS BEFORE ORDERING OR FABRICATING ANY MATERIAL.

PLAN

1"= 50'

Traci Menard
DESIGN ENGINEER

	BY	CHECKED		BY	CHECKED
DESIGN	F. Feng	T. Vang/D. Vargas			
DETAILS	S. Cholda	T. Menard	LAYOUT	F. Feng	D. Vargas
QUANTITIES	S. Yip/F. Feng	D. Vargas/S. Moradi	SPECIFICATIONS	B. Sharma/K. Ellingson	PLANS AND SPECS COMPARED F. Feng

ORIGINAL SCALE IN INCHES FOR REDUCED PLANS 0 1 2 3

STATE OF CALIFORNIA
DEPARTMENT OF TRANSPORTATION

DIVISION OF ENGINEERING SERVICES
STRUCTURE DESIGN
DESIGN BRANCH 15

CU 07
EA 002341

BRIDGE NO. 53E0136
POST MILE 22.5

SOUND WALL NO. 1190
GENERAL PLAN NO. 1

DISREGARD PRINTS BEARING EARLIER REVISION DATES

REVISION DATES: 3-13-09 01-15-10 01-25-10 3-26-10 4-07-10 4-12-10 4-19-10 4-20-10 4-23-10 12-01-09

SHEET 1 OF 22

STRUCTURES DESIGN GENERAL PLAN SHEET (ENGLISH) (REV.07-24-06)

FILE => 53e0136-a-gp01.dgn

USERNAME => tvcarol DATE PLOTTED => 23-JUN-2010 TIME PLOTTED => 08:15

DIST	COUNTY	ROUTE	POST MILES TOTAL PROJECT	SHEET No	TOTAL SHEETS
07	LA	710	22.6	58	100

Fred Feng 4-15-10
REGISTERED CIVIL ENGINEER DATE

6-21-10
PLANS APPROVAL DATE

The State of California or its officers or agents shall not be responsible for the accuracy or completeness of electronic copies of this plan sheet.

REGISTERED PROFESSIONAL ENGINEER Fred Y. Feng No. C 32992 Exp. 6-30-2010 CIVIL STATE OF CALIFORNIA

Notes:

1. For Dimensions not shown, see "SOUND WALL DETAILS NO. 4" sheet.
2. For Geocomposite Drain, see "SOUNDWALL DETAILS NO. 8" sheet.

Legend:

Indicates Exist Pedestrian UC

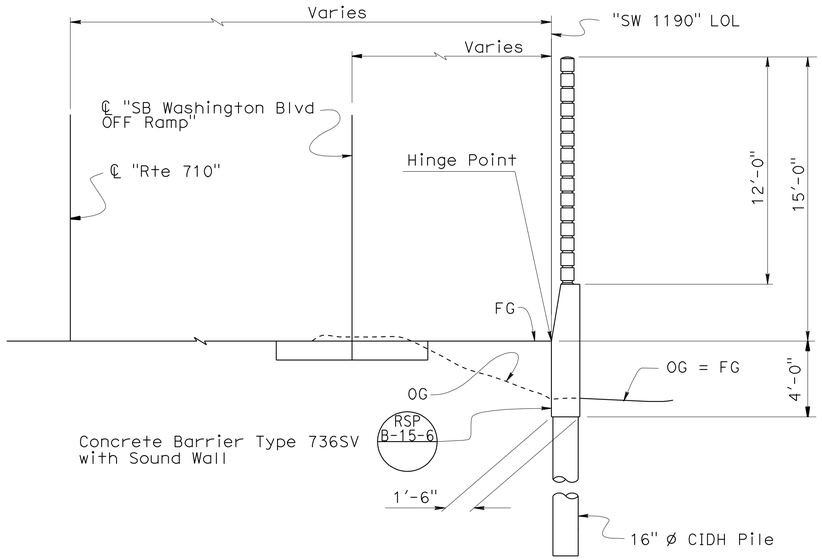

SECTION A-A

1/4" = 1'

SOUND WALL ON CONCRETE BARRIER

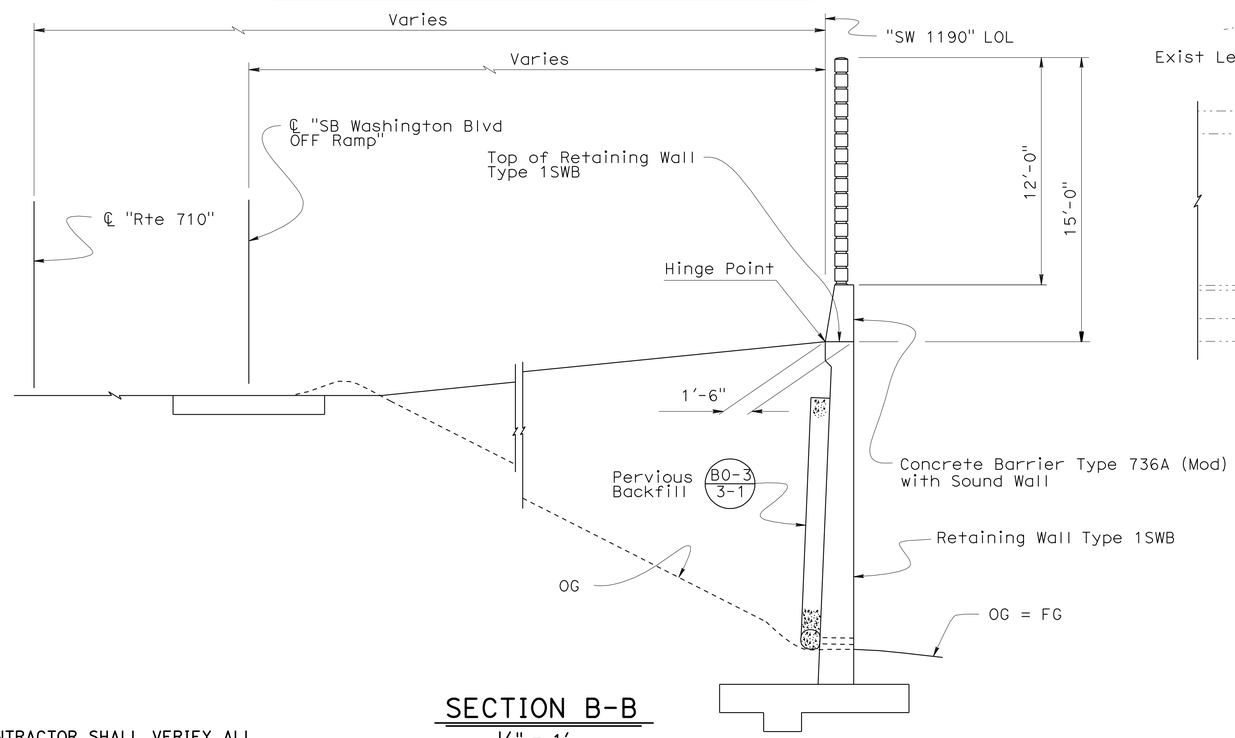

SECTION B-B

1/4" = 1'

SOUND WALL ON RETAINING WALL

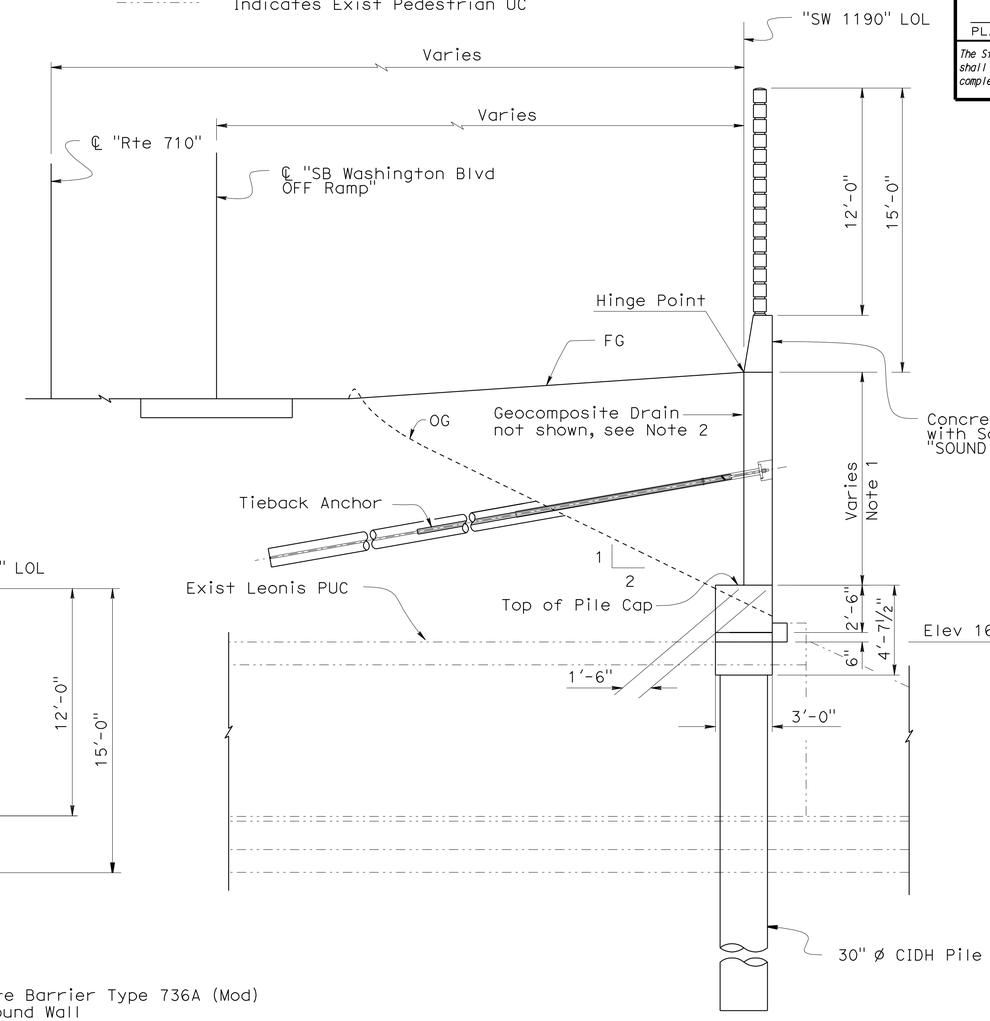

SECTION C-C

1/4" = 1'

SOUND WALL ON RETAINING WALL WITH TIEBACK ANCHORS

NOTE:
THE CONTRACTOR SHALL VERIFY ALL CONTROLLING FIELD DIMENSIONS BEFORE ORDERING OR FABRICATING ANY MATERIAL.

Traci Menard DESIGN ENGINEER	DESIGN	BY A. Logus	CHECKED D. Vargas/J. Higareda	LIVE LOADING: HL93 W/"LOW-BOY"; PERMIT DESIGN VEHICLE	
	DETAILS	BY S. Cholda	CHECKED T. Menard	LAYOUT BY F. Feng	CHECKED D. Vargas
	QUANTITIES	BY S. Yip/F. Feng	CHECKED D. Vargas/S. Moradi	SPECIFICATIONS BY B. Sharma/K. Ellingson	PLANS AND SPECS COMPARED F. Feng

STATE OF CALIFORNIA
DEPARTMENT OF TRANSPORTATION

DIVISION OF ENGINEERING SERVICES
STRUCTURE DESIGN
DESIGN BRANCH 15

BRIDGE NO. 53E0136
POST MILE 22.5

SOUND WALL NO. 1190
GENERAL PLAN NO. 2

ORIGINAL SCALE IN INCHES FOR REDUCED PLANS 0 1 2 3

CU 07
EA 002341

DISREGARD PRINTS BEARING EARLIER REVISION DATES

REVISION DATES: 3-12-09 12-15-09 1-20-10 2-26-10 4-07-10 4-14-10 4-19-10 4-20-10 12-01-09 12-14-09

SHEET 2 OF 22

STRUCTURES DESIGN GENERAL PLAN SHEET (ENGLISH) (REV.07-24-06)

FILE => 53e0136-a-gp02.dgn

USERNAME => trcarol DATE PLOTTED => 23-JUN-2010 TIME PLOTTED => 08:15

DIST	COUNTY	ROUTE	POST MILES TOTAL PROJECT	SHEET No	TOTAL SHEETS
07	LA	710	22.6	59	100

Fred Feng 4-15-10
REGISTERED CIVIL ENGINEER DATE

6-21-10
PLANS APPROVAL DATE

REGISTERED PROFESSIONAL ENGINEER Fred Y. Feng No. C 32992 Exp. 6-30-2010 CIVIL STATE OF CALIFORNIA

The State of California or its officers or agents shall not be responsible for the accuracy or completeness of electronic copies of this plan sheet.

INDEX TO PLANS

SHEET NO.	TITLE
1.	GENERAL PLAN NO. 1
2.	GENERAL PLAN NO. 2
3.	INDEX TO PLANS
4.	FOUNDATION PLAN
5.	SOUND WALL DETAILS NO. 1
6.	SOUND WALL DETAILS NO. 2
7.	SOUND WALL DETAILS NO. 3
8.	SOUND WALL DETAILS NO. 4
9.	SOUND WALL DETAILS NO. 5
10.	SOUND WALL DETAILS NO. 6
11.	SOUND WALL DETAILS NO. 7
12.	SOUND WALL DETAILS NO. 8
13.	SOUND WALL DETAILS NO. 9
14.	SOUND WALL DETAILS NO. 10
15.	RETAINING WALL TYPE 1SWB
16.	SOUNDWALL - MASONARY BLOCK WITH BARRIER ON RETAINING WALL DETAILS NO. 1
17.	SOUNDWALL - MASONARY BLOCK WITH BARRIER ON RETAINING WALL DETAILS NO. 2
18.	EXCAVATION AND BACKFILL
19.	LOG OF TEST BORINGS 1 OF 4
20.	LOG OF TEST BORINGS 2 OF 4
21.	LOG OF TEST BORINGS 3 OF 4
22.	LOF OF TEST BORINGS 4 OF 4

STANDARD PLANS DATED MAY 2006

A10A	ACRONYMS AND ABBREVIATIONS (A - L)
A10B	ACRONYMS AND ABBREVIATIONS (M - Z)
A62B	LIMITS OF PAYMENT FOR EXCAVATION AND BACKFILL - BRIDGE SURCHARGE AND WALL
B0-3	BRIDGE DETAILS
B0-13	BRIDGE DETAILS
B3-8	RETAINING WALL DETAILS NO. 1
B3-9	RETAINING WALL DETAILS NO. 2
B11-56	CONCRETE BARRIER TYPE 736
RSP B15-6	SOUND WALL MASONRY BLOCK ON TYPE 736S/SV BARRIER DETAILS (1)
RSP B15-7	SOUND WALL MASONRY BLOCK ON TYPE 736S/SV BARRIER DETAILS (2)
RSP B15-8	SOUND WALL MASONRY BLOCK ON TYPE 736S/SV BARRIER DETAILS (3)
B15-9	SOUND WALL MASONRY BLOCK MISCELLANEOUS DETAILS

STANDARD PLAN SHEET NO.

DETAIL NO.

GENERAL NOTES

DESIGN: BRIDGE DESIGN SPECIFICATIONS - APRIL 2000 (1996 AASHTO with Interims and Revisions by CALTRANS)

SOUNDWALL MASONRY BLOCK ON TYPE 736S/SV BARRIER:

See 'DESIGN NOTES' in Standard Plans. Use ϕ=25 deg. Min for CASE 1, and ϕ=30 deg. Min for CASE 2.

SOUNDWALL ON RETAINING WALL WITH TIEBACKS:

Sound Wall Masonry Block:

See Standard Plans for SOUNDWALL MASONARY BLOCK ON TYPE 736S/SV BARRIER:.

Reinforced Concrete: fy = 60,000 psi

Prestressing Steel: (Tiebacks)

Rods - ASTM Designation: A722, Type II

T = Design force per Tieback = 60 kips

f_{pu} = Minimum tensile strength of prestressing steel (kips per in^2)

A_s (min) = Minimum cross sectional area of prestressing steel in Tieback tendon

$$A_s \text{ (min)} = \frac{1.5\ T}{0.75\ f_{pu}}$$

Structural Steel: (Working Stress Design)

ASTM Designation: A709/A709M, Grade 36

fy = 36 psi (Yield strength of steel)

fs = 20 psi (Allowable stress in steel)

Soil Parameters: (For determination of lateral earth pressures)

γ = 130 pcf

ϕ = 30 deg.

γ = Unit weight of soil

ϕ = Soil angle of internal friction

Wind Load: 30 psf

Seismic Load (Soil):

PGA = 0.55g
Kh = PGA/3
Kv = 0.0
Kae : Mononobe-Okabe Method

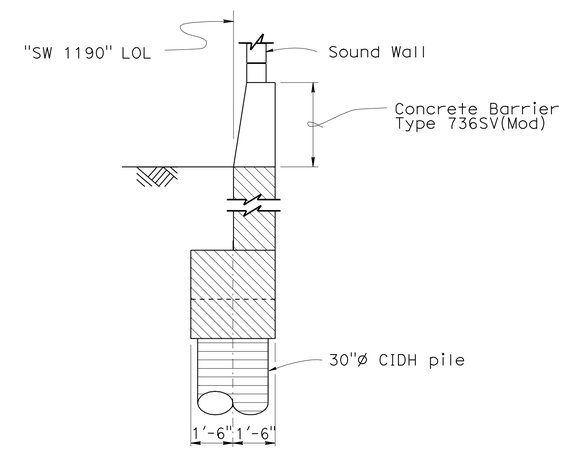

CONCRETE TYPE LIMITS (SOUND WALL ON RETAINING WALL WITH TIEBACK ANCHORS)

NO SCALE

Legend:

Indicates Structural Concrete (Retaining Wall) - 4000 psi at 28 days)

Indicates CIDH Pile Concrete

PILE DATA TABLE

LOCATION	PILE TYPE	DESIGN LOADING	NOMINAL RESISTANCE		DESIGN TIP ELEVATION (ft)	SPECIFIED TIP ELEVATION (ft)
			COMPRESSION	TENSION		
Sound Wall 1190	30" Dia CIDH	110 Kip	220 Kip	N/A	124.00	124.00

NOTE:
THE CONTRACTOR SHALL VERIFY ALL CONTROLLING FIELD DIMENSIONS BEFORE ORDERING OR FABRICATING ANY MATERIAL.

	BY	CHECKED
DESIGN	A. Logus	D. Vargas/J. Higareda
DETAILS	S. Cholda	T. Menard
QUANTITIES	S. Yip/F. Feng	D. Vargas/S. Moradi

STATE OF CALIFORNIA
DEPARTMENT OF TRANSPORTATION

DIVISION OF ENGINEERING SERVICES
STRUCTURE DESIGN
DESIGN BRANCH 15

BRIDGE NO. 53E0136
POST MILE 22.5

SOUND WALL NO. 1190
INDEX TO PLANS

STRUCTURES DESIGN DETAIL SHEET (ENGLISH) (REV. 10/25/05)

ORIGINAL SCALE IN INCHES FOR REDUCED PLANS 0 1 2 3

CU 07
EA 002341

DISREGARD PRINTS BEARING EARLIER REVISION DATES

REVISION DATES: 12-05-09 12-14-09 12-15-09 12-16-09 01-28-10 02-26-10 04-12-10 04-19-10 04-20-10

SHEET 3 OF 22

FILE => 53e0136-a-itp.dgn

USERNAME => trcarol DATE PLOTTED => 23-JUN-2010 TIME PLOTTED => 08:15

DIST	COUNTY	ROUTE	POST MILES TOTAL PROJECT	SHEET No	TOTAL SHEETS
07	LA	710	22.6	60	100

Fred Feng 4-15-10
REGISTERED CIVIL ENGINEER DATE

6-21-10
PLANS APPROVAL DATE

REGISTERED PROFESSIONAL ENGINEER Fred Y. Feng No. C 32992 Exp. 6-30-2010 CIVIL STATE OF CALIFORNIA

The State of California or its officers or agents shall not be responsible for the accuracy or completeness of electronic copies of this plan sheet.

Headwall Soffit Points

1 - 118.990 Lt. ℄ Rte 710, Sta 1193+68.340, Elev 165.441
2 - 118.735 Lt. ℄ Rte 710, Sta 1193+56.140, Elev 165.431
3 - 120.179 Rt. ℄ Rte 710, Sta 1193+59.990, Elev 164.879
4 - 119.871 Rt. ℄ Rte 710, Sta 1193+71.730, Elev 164.825

A 2+60.895 ℄ Leonis = 93+65.104 ℄ Proposed SB Washington Off Ramp

B 3+34.050 ℄ Leonis = 1193+64.260 ℄ Rte 710

C 4+02.174 ℄ Leonis = 93+64.630 ℄ Proposed NB Washington On Ramp

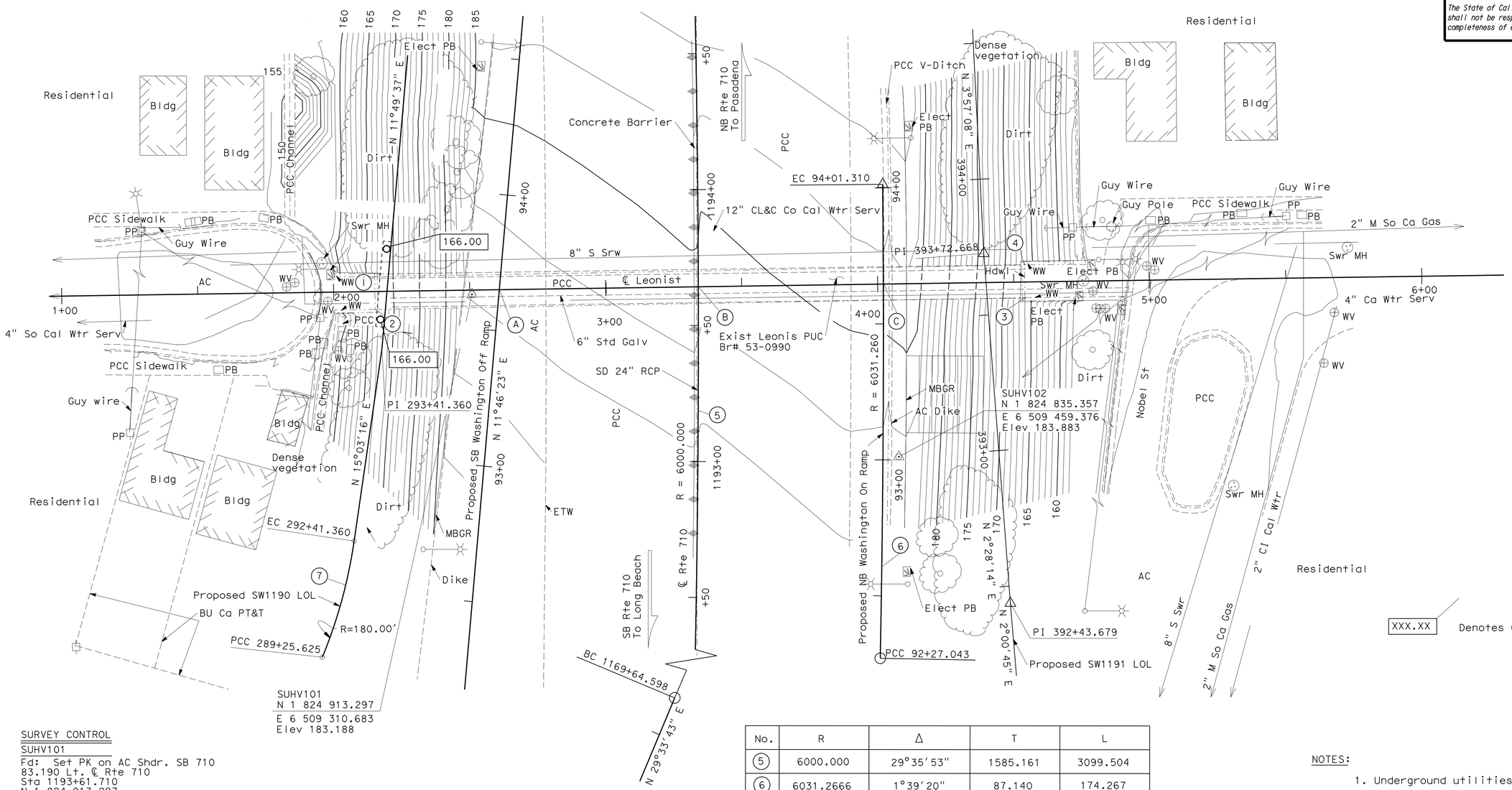

SURVEY CONTROL

SUHV101
Fd: Set PK on AC Shdr. SB 710
83.190 Lt. ℄ Rte 710
Sta 1193+61.710
N 1 824 913.297
E 6 509 310.683
Elev 183.188

SUHV102
Fd: Set PK on AC Shdr NB 710
73.848 Rt. ℄ Rte 710
Sta 1193+02.300
N 1 824 835.357
E 6 509 459.376
Elev 183.883

No.	R	Δ	T	L
5	6000.000	29°35'53"	1585.161	3099.504
6	6031.2666	1°39'20"	87.140	174.267
7	180.000	14°08'22"	22.32'	44.42'

NOTES:

1. Underground utilities as shown are approximate.
2. See "ROAD PLANS" for superseded utility information.
3. For Pile Cap layout information not shown, see "SOUND WALL DETAILS NO. 4" sheet.

SOUND WALL NO. 1190

LEONIS PUC

FOUNDATION PLAN

PRELIMINARY INVESTIGATION SECTION

SCALE	VERT.DATUM NAVD88	PHOTOGRAMMETRY AS OF: X			
1:20	HORZ.DATUM NAD83	SURVEYED	BY T.Phung/ C.Stewart	CHECKED	BY E. Viajar
ALIGNMENT TIES Dist Traverse Sheets		DRAFTED	BY C. Pham	CHECKED	BY E. Viajar

	BY	CHECKED
DESIGN	F. Feng	T. Vang/ D. Vargas
DETAILS	S. Cholda	T. Menard
QUANTITIES	S. Yip/F. Feng	D. Vargas/S. Moradi

STATE OF CALIFORNIA DEPARTMENT OF TRANSPORTATION

DIVISION OF ENGINEERING SERVICES STRUCTURE DESIGN DESIGN BRANCH 15

BRIDGE NO. 53E0136
POST MILE 22.5

STRUCTURES FOUNDATION PLAN SHEET (ENGLISH) (REV. 10/25/05)

ORIGINAL SCALE IN INCHES FOR REDUCED PLANS 0 1 2 3

CU 07
EA 002341

DISREGARD PRINTS BEARING EARLIER REVISION DATES

REVISION DATES 12-04-08 12-18-09 01-28-10 1-29-10 4-14-10

SHEET 4 OF 22

FILE => 53e0136-d-fp101.dgn

USERNAME => trcarro; DATE PLOTTED => 23-JUN-2010 TIME PLOTTED => 08:15

DIST	COUNTY	ROUTE	POST MILES TOTAL PROJECT	SHEET No	TOTAL SHEETS
07	LA	710	22.6	61	100

Fred Feng 4-15-10
REGISTERED CIVIL ENGINEER DATE

6-21-10
PLANS APPROVAL DATE

The State of California or its officers or agents shall not be responsible for the accuracy or completeness of electronic copies of this plan sheet.

REGISTERED PROFESSIONAL ENGINEER
Fred Y. Feng
No. C 32992
Exp. 6-30-2010
CIVIL
STATE OF CALIFORNIA

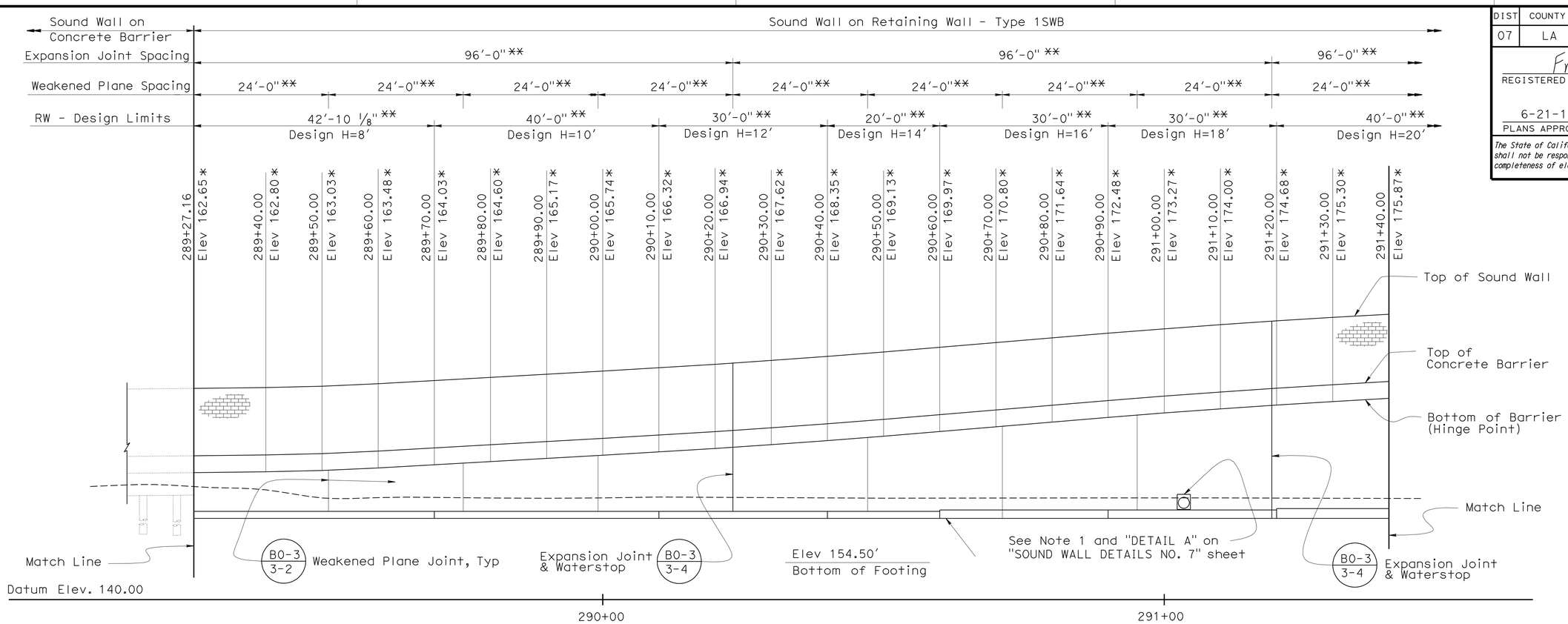

MIRRORED & DEVELOPED ELEVATION

1" = 10'

Legend:

* Elevations are given at Hinge Point

** Measured along "SW 1190" LOL

Note:

1. Drainage System, see "ROAD PLANS"

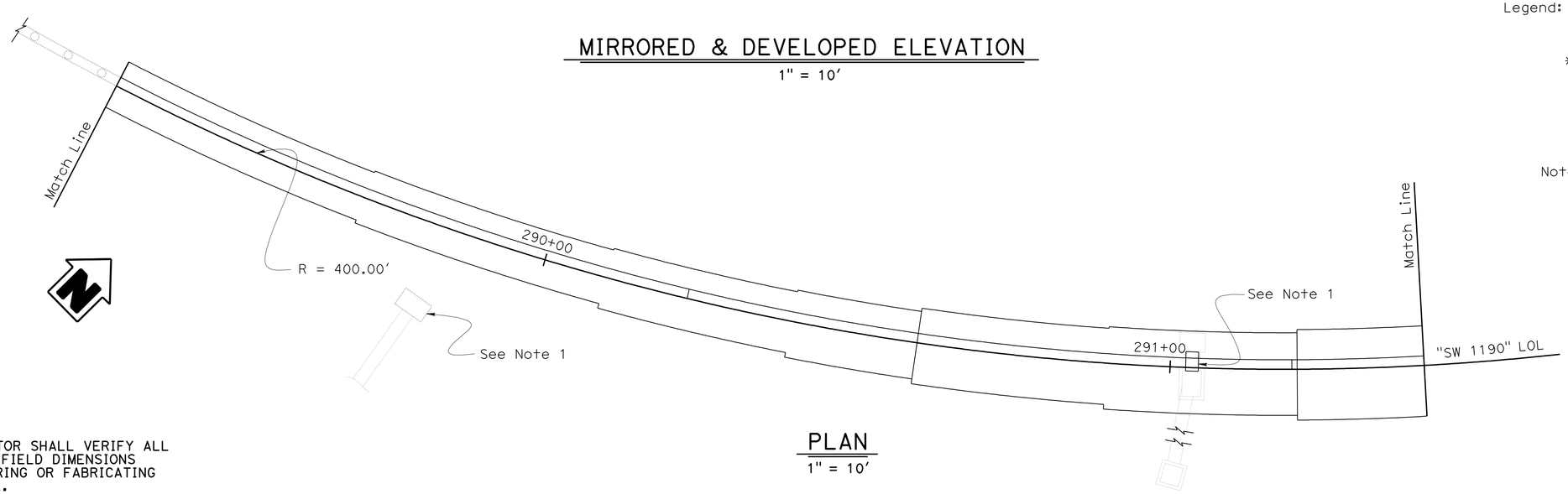

PLAN

1" = 10'

NOTE:
THE CONTRACTOR SHALL VERIFY ALL CONTROLLING FIELD DIMENSIONS BEFORE ORDERING OR FABRICATING ANY MATERIAL.

	BY	CHECKED
DESIGN	F. Feng	T. Vang/D. Vargas
DETAILS	S. Cholda	T. Menard
QUANTITIES	S. Yip/F. Feng	D. Vargas/S. Moradi

STATE OF CALIFORNIA
DEPARTMENT OF TRANSPORTATION

DIVISION OF ENGINEERING SERVICES
STRUCTURE DESIGN
DESIGN BRANCH 15

BRIDGE NO. 53E0136
POST MILE 22.5

SOUND WALL NO. 1190
SOUND WALL DETAILS NO. 2

STRUCTURES DESIGN DETAIL SHEET (ENGLISH) (REV. 10/25/05)

ORIGINAL SCALE IN INCHES FOR REDUCED PLANS 0 1 2 3

CU 07
EA 002341

DISREGARD PRINTS BEARING EARLIER REVISION DATES

REVISION DATES: 4-1-09 01-04-10 01-19-10 01-27-10 03-26-10 04-01-10 04-19-10 04-23-10

SHEET 6 OF 22

FILE => 53e0136-g-sw_1o02.dgn

USERNAME => trmnguye DATE PLOTTED => 23-JUN-2010 TIME PLOTTED => 07:20

DIST	COUNTY	ROUTE	POST MILES TOTAL PROJECT	SHEET No	TOTAL SHEETS
07	LA	710	22.6	62	100

Fred Feng 4-15-10
REGISTERED CIVIL ENGINEER DATE

6-21-10
PLANS APPROVAL DATE

REGISTERED PROFESSIONAL ENGINEER Fred Y. Feng No. C 32992 Exp. 6-30-2010 CIVIL STATE OF CALIFORNIA

The State of California or its officers or agents shall not be responsible for the accuracy or completeness of electronic copies of this plan sheet.

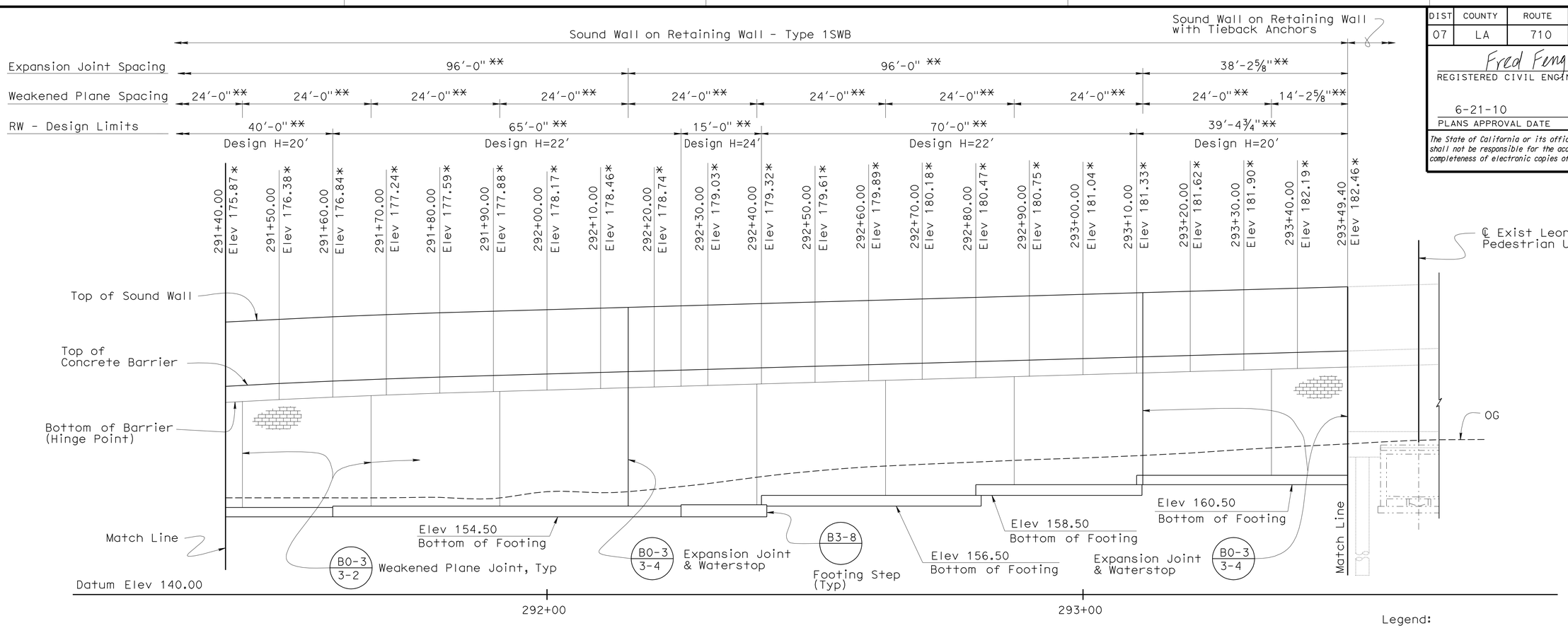

MIRRORED & DEVELOPED ELEVATION

1" = 10'

Legend:

* Elevations are given at Hinge Point

** Measured along "SW 1190" LOL

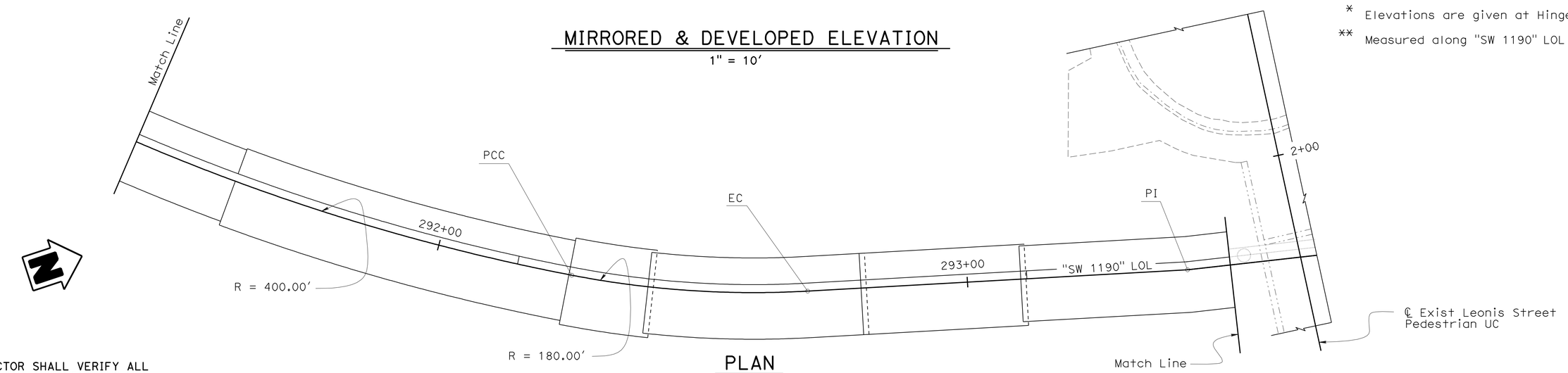

PLAN

1" = 10'

Legend:

Indicates existing PUC Structure

NOTE:
THE CONTRACTOR SHALL VERIFY ALL CONTROLLING FIELD DIMENSIONS BEFORE ORDERING OR FABRICATING ANY MATERIAL.

	BY	CHECKED
DESIGN	F. Feng	T. Vang/D. Vargas
DETAILS	S. Cholda	T. Menard
QUANTITIES	S. Yip/F. Feng	D. Vargas/S. Moradi

STATE OF CALIFORNIA
DEPARTMENT OF TRANSPORTATION

DIVISION OF ENGINEERING SERVICES
STRUCTURE DESIGN
DESIGN BRANCH 15

BRIDGE NO. 53E0136
POST MILE 22.5

SOUND WALL NO. 1190
SOUND WALL DETAILS NO. 3

STRUCTURES DESIGN DETAIL SHEET (ENGLISH) (REV. 10/25/05)

ORIGINAL SCALE IN INCHES FOR REDUCED PLANS 0 1 2 3

CU 07
EA 002341

DISREGARD PRINTS BEARING EARLIER REVISION DATES

REVISION DATES: 4-8-09 4-23-10 6-18-09 01-04-10 01-26-10 03-29-10 04-01-10 04-06-10 04-12-10 04-19-10

SHEET 7 OF 22

FILE => 53e0136-g-sw_1o03.dgn

USERNAME => trmguye DATE PLOTTED => 23-JUN-2010 TIME PLOTTED => 07:20

DIST	COUNTY	ROUTE	POST MILES TOTAL PROJECT	SHEET No	TOTAL SHEETS
07	LA	710	22.6	63	100

Fred Feng 4-15-10
REGISTERED CIVIL ENGINEER DATE

6-21-10
PLANS APPROVAL DATE

REGISTERED PROFESSIONAL ENGINEER Fred Y. Feng No. C 32992 Exp. 6-30-2010 CIVIL STATE OF CALIFORNIA

The State of California or its officers or agents shall not be responsible for the accuracy or completeness of electronic copies of this plan sheet.

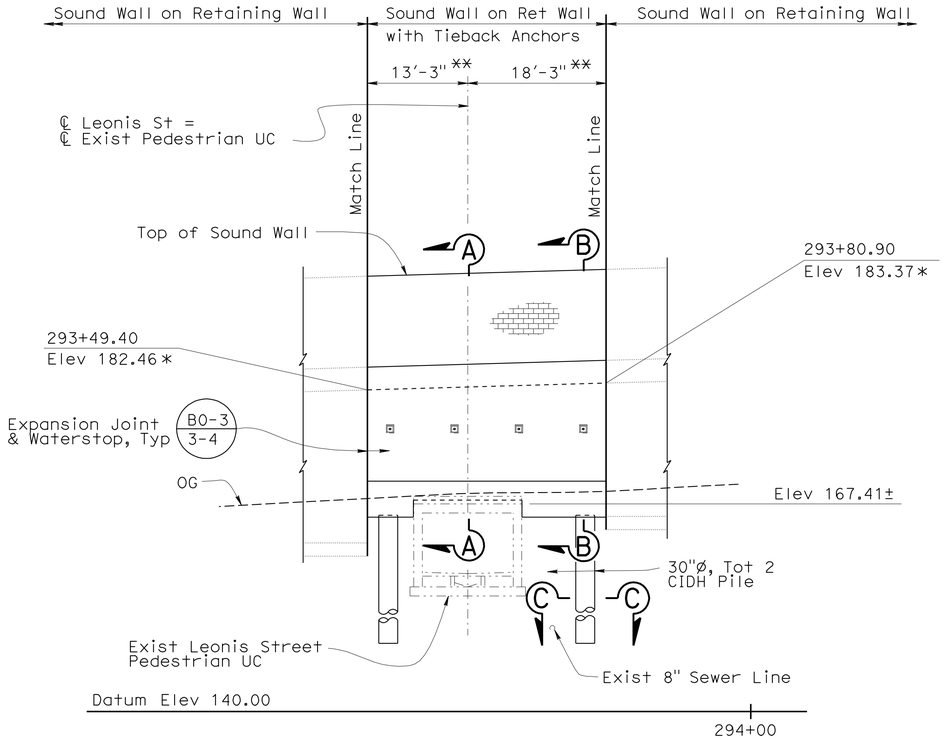

MIRRORED & DEVELOPED ELEVATION

1" = 10'

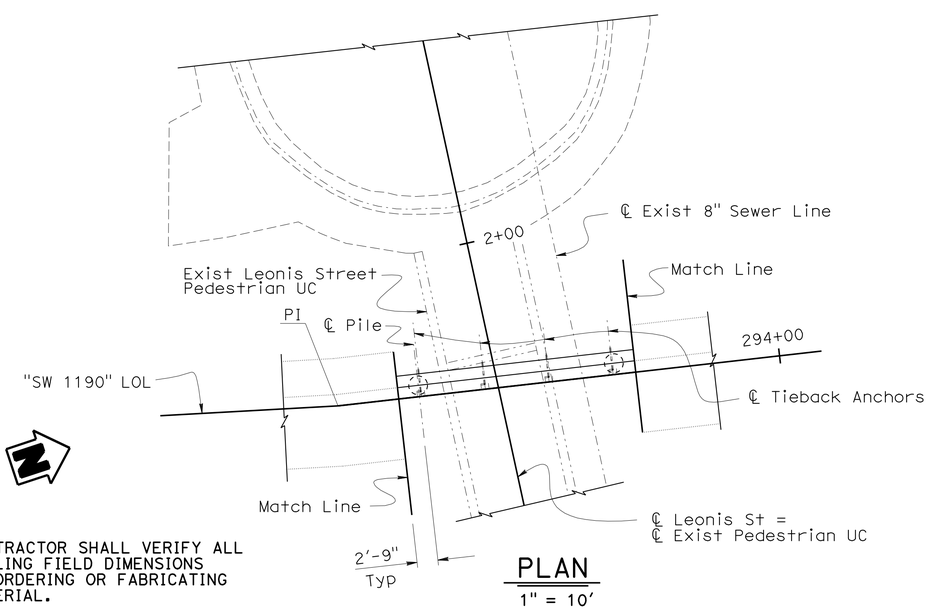

PLAN

1" = 10'

NOTE:
THE CONTRACTOR SHALL VERIFY ALL CONTROLLING FIELD DIMENSIONS BEFORE ORDERING OR FABRICATING ANY MATERIAL.

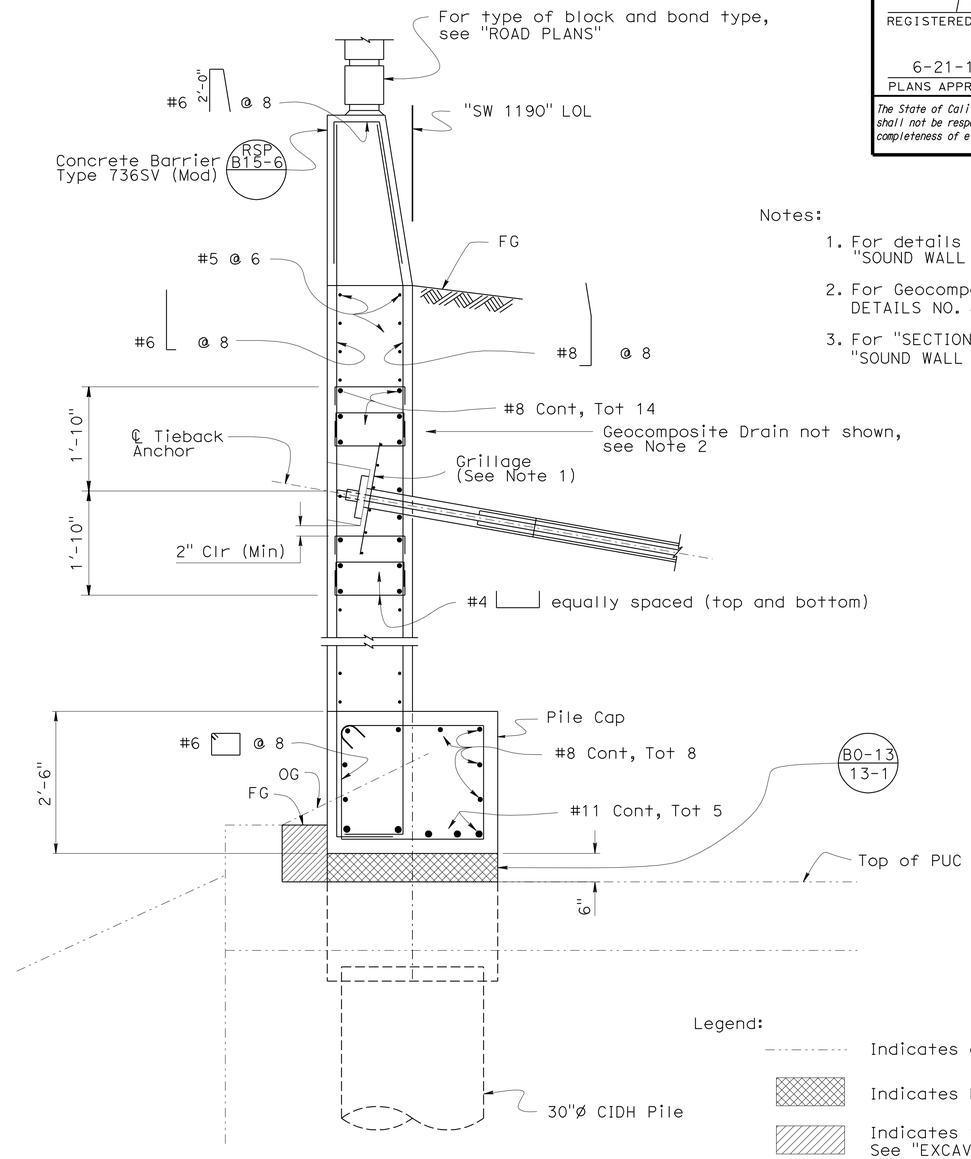

Notes:

1. For details not shown, see "SOUND WALL DETAILS NO. 6" sheet.
2. For Geocomposite Drain, see "SOUND WALL DETAILS NO. 8" sheet.
3. For "SECTION B-B" and "SECTION C-C", see "SOUND WALL DETAILS NO. 5" sheet.

Legend:

- Indicates existing PUC Structure
- Indicates Expanded Polystyrene
- Indicates Stucture Backfill (Retaining Wall). See "EXCAVATION AND BACKFILL" sheet
- * Elevations are given at Hinge Point
- ** Measured along "SW 1190" LOL

SECTION A-A

¾" = 1'-0"

SOUNDWALL ON RETAINING WALL WITH TIEBACK ANCHORS

	BY	CHECKED
DESIGN	F. Feng/A. Logus	D. Vargas/J. Higareda
DETAILS	S. Cholda	T. Menard
QUANTITIES	S. Yip/F. Feng	D. Vargas/S. Moradi

STATE OF CALIFORNIA DEPARTMENT OF TRANSPORTATION

DIVISION OF ENGINEERING SERVICES STRUCTURE DESIGN DESIGN BRANCH 15

BRIDGE NO. 53E0136
POST MILE 22.5

SOUND WALL NO. 1190
SOUND WALL DETAILS NO. 4

STRUCTURES DESIGN DETAIL SHEET (ENGLISH) (REV. 10/25/05)

ORIGINAL SCALE IN INCHES FOR REDUCED PLANS 0 1 2 3

CU 07
EA 002341

DISREGARD PRINTS BEARING EARLIER REVISION DATES

REVISION DATES: 4-09-09 4-20-10 4-21-10 6-18-09 12-14-09 12-15-09 01-04-10 01-20-10 02-25-10 04-01-10

SHEET 8 OF 22

FILE => 53e0136-g-sw_1o04.dgn

USERNAME => trmnguye DATE PLOTTED => 23-JUN-2010 TIME PLOTTED => 07:20

DIST	COUNTY	ROUTE	POST MILES TOTAL PROJECT	SHEET No	TOTAL SHEETS
07	LA	710	22.6	64	100

Fred Feng 4-15-10
REGISTERED CIVIL ENGINEER DATE

6-21-10
PLANS APPROVAL DATE

REGISTERED PROFESSIONAL ENGINEER
Fred Y. Feng
No. C 32992
Exp. 6-30-2010
CIVIL
STATE OF CALIFORNIA

The State of California or its officers or agents shall not be responsible for the accuracy or completeness of electronic copies of this plan sheet.

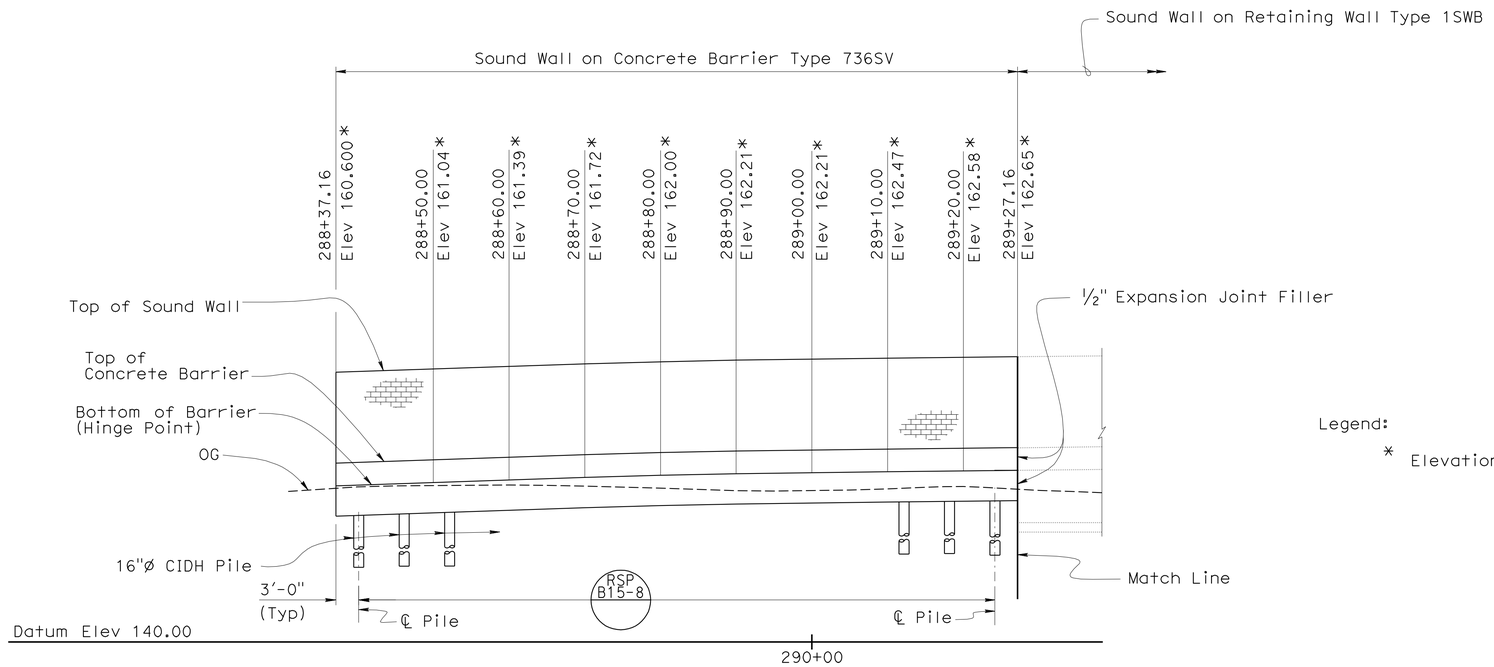

Legend:

* Elevations are given at Hinge Point

MIRRORED & DEVELOPED ELEVATION

1" = 10'

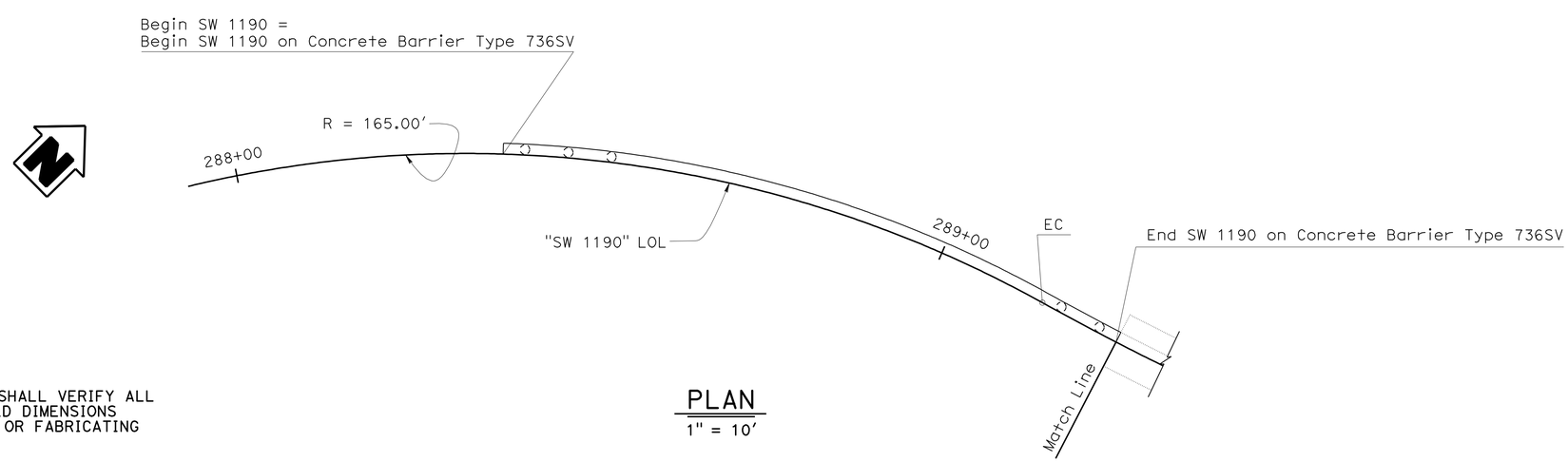

PLAN

1" = 10'

NOTE:
THE CONTRACTOR SHALL VERIFY ALL CONTROLLING FIELD DIMENSIONS BEFORE ORDERING OR FABRICATING ANY MATERIAL.

	BY	CHECKED
DESIGN	F. Feng	T. Vang/D. Vargas
DETAILS	S. Cholda	T. Menard
QUANTITIES	S. Yip/F. Feng	D. Vargas/S. Moradi

STATE OF CALIFORNIA
DEPARTMENT OF TRANSPORTATION

DIVISION OF ENGINEERING SERVICES
STRUCTURE DESIGN
DESIGN BRANCH 15

BRIDGE NO. 53E0136
POST MILE 22.5

SOUND WALL NO. 1190
SOUND WALL DETAILS NO. 1

STRUCTURES DESIGN DETAIL SHEET (ENGLISH) (REV. 10/25/05)

ORIGINAL SCALE IN INCHES FOR REDUCED PLANS 0 1 2 3

CU 07
EA 002341

DISREGARD PRINTS BEARING EARLIER REVISION DATES

REVISION DATES: ~~4-6-09~~ ~~4-10-09~~ ~~5-15-09~~ ~~6-23-09~~ ~~12-28-09~~ ~~03-26-10~~ ~~04-14-10~~ ~~04-20-10~~ 04-23-10

SHEET 5 OF 22

FILE => 53e0136-g-sw_1o01.dgn

USERNAME => ttmnguye DATE PLOTTED => 23-JUN-2010 TIME PLOTTED => 07:21

DIST	COUNTY	ROUTE	POST MILES TOTAL PROJECT	SHEET No	TOTAL SHEETS
07	LA	710	22.6	65	100

Fred Feng 4-15-10
REGISTERED CIVIL ENGINEER DATE

6-21-10
PLANS APPROVAL DATE

REGISTERED PROFESSIONAL ENGINEER
Fred Y. Feng
No. C 32992
Exp. 6-30-2010
CIVIL
STATE OF CALIFORNIA

The State of California or its officers or agents shall not be responsible for the accuracy or completeness of electronic copies of this plan sheet.

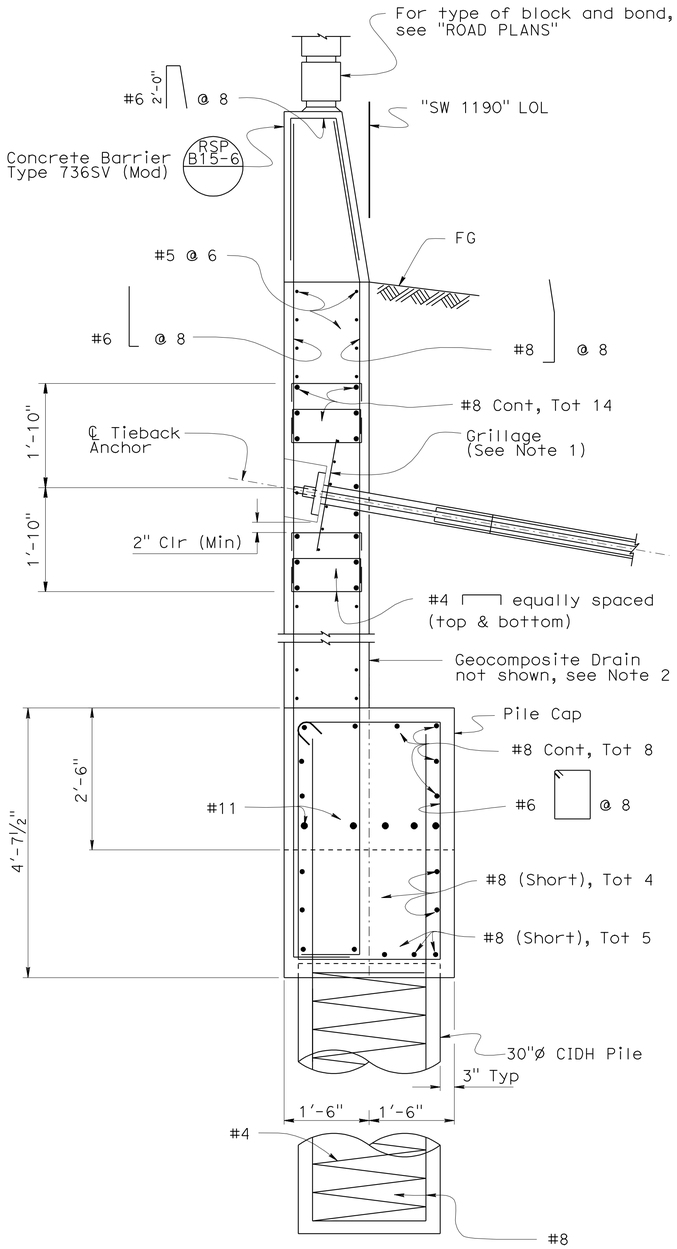

SECTION B-B

¾" = 1'-0"

Notes:

1. For details not shown, see "SOUND WALL DETAILS NO. 6" sheet.
2. For Geocomposite Drain, see "SOUND WALL DETAILS NO. 8" sheet.

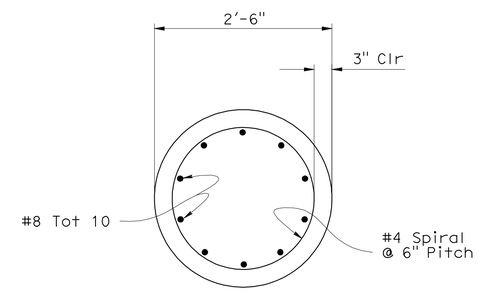

SECTION C-C

1" = 1'

NOTE:
THE CONTRACTOR SHALL VERIFY ALL CONTROLLING FIELD DIMENSIONS BEFORE ORDERING OR FABRICATING ANY MATERIAL.

SOUNDWALL ON RETAINING WALL WITH ANCHORS

	BY	CHECKED
DESIGN	A. Logus	J. Higareda
DETAILS	S. Cholda	T. Menard
QUANTITIES	S. Yip/F. Feng	D. Vargas/S. Moradi

STATE OF CALIFORNIA
DEPARTMENT OF TRANSPORTATION

DIVISION OF ENGINEERING SERVICES
STRUCTURE DESIGN
DESIGN BRANCH 15

BRIDGE NO. 53E0136
POST MILE 22.5

SOUND WALL NO. 1190
SOUND WALL DETAILS NO. 5

STRUCTURES DESIGN DETAIL SHEET (ENGLISH) (REV. 10/25/05)

ORIGINAL SCALE IN INCHES FOR REDUCED PLANS 0 1 2 3

CU 07
EA 002341

DISREGARD PRINTS BEARING EARLIER REVISION DATES → 4-06-10 4-21-10

REVISION DATES

SHEET 9 OF 22

FILE => 53e0136-g-sw_1o05.dgn

USERNAME => trmguye DATE PLOTTED => 23-JUN-2010 TIME PLOTTED => 07:21

DIST	COUNTY	ROUTE	POST MILES TOTAL PROJECT	SHEET No	TOTAL SHEETS
07	LA	710	22.6	66	100

Fred Feng 4-15-10
REGISTERED CIVIL ENGINEER DATE

6-21-10
PLANS APPROVAL DATE

REGISTERED PROFESSIONAL ENGINEER Fred Y. Feng No. C 32992 Exp. 6-30-2010 CIVIL STATE OF CALIFORNIA

The State of California or its officers or agents shall not be responsible for the accuracy or completeness of electronic copies of this plan sheet.

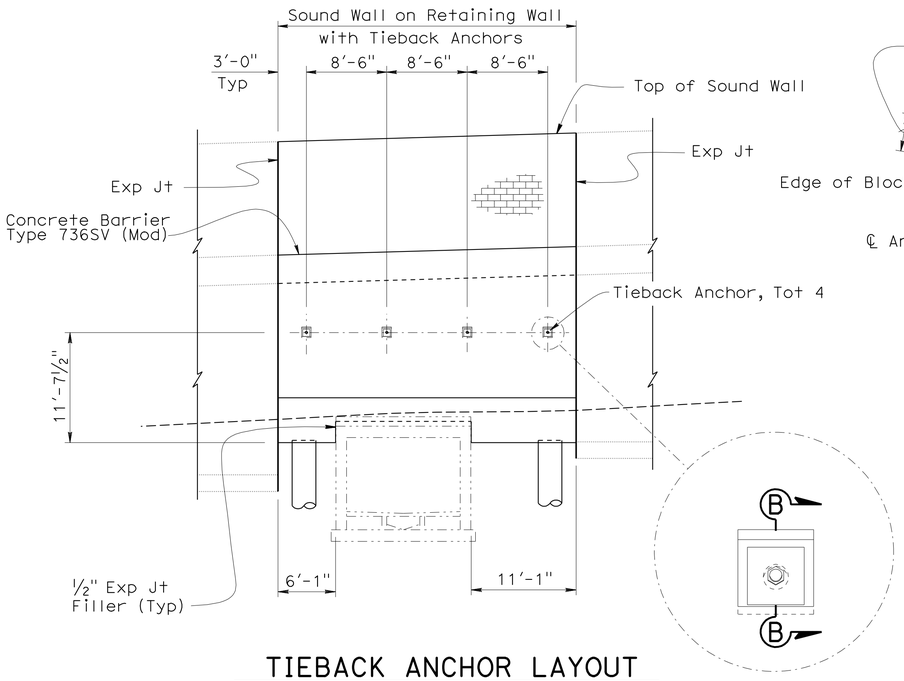

TIEBACK ANCHOR LAYOUT

⅛" = 1'-0"

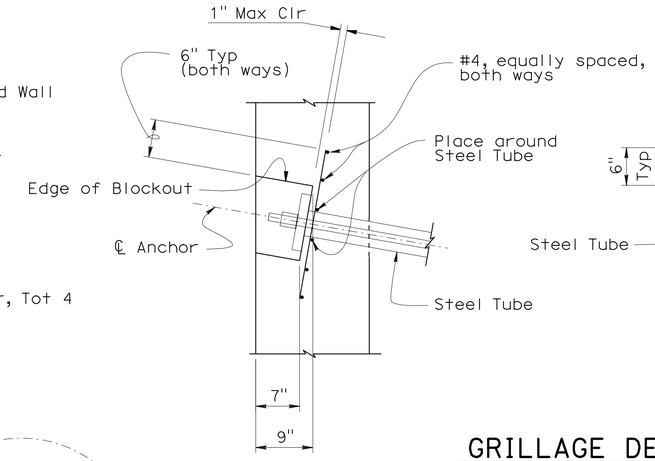

GRILLAGE DETAIL

1" = 1'-0"

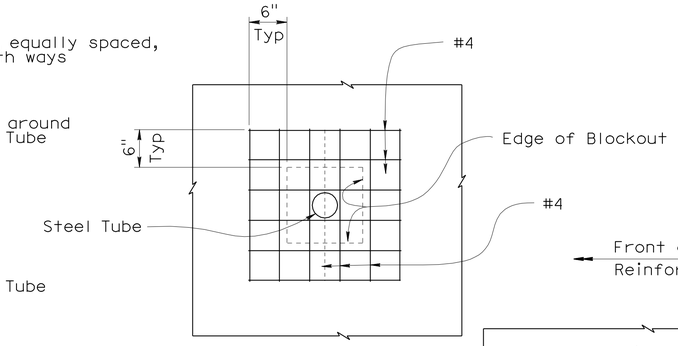

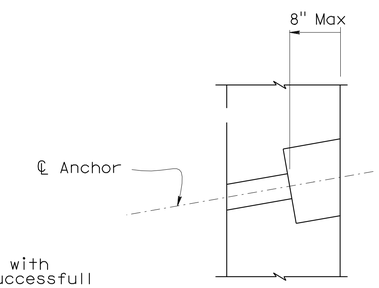

SECTION B-B

1" = 1'-0"

Note:

Fill Blockout void with concrete after successfull anchorage

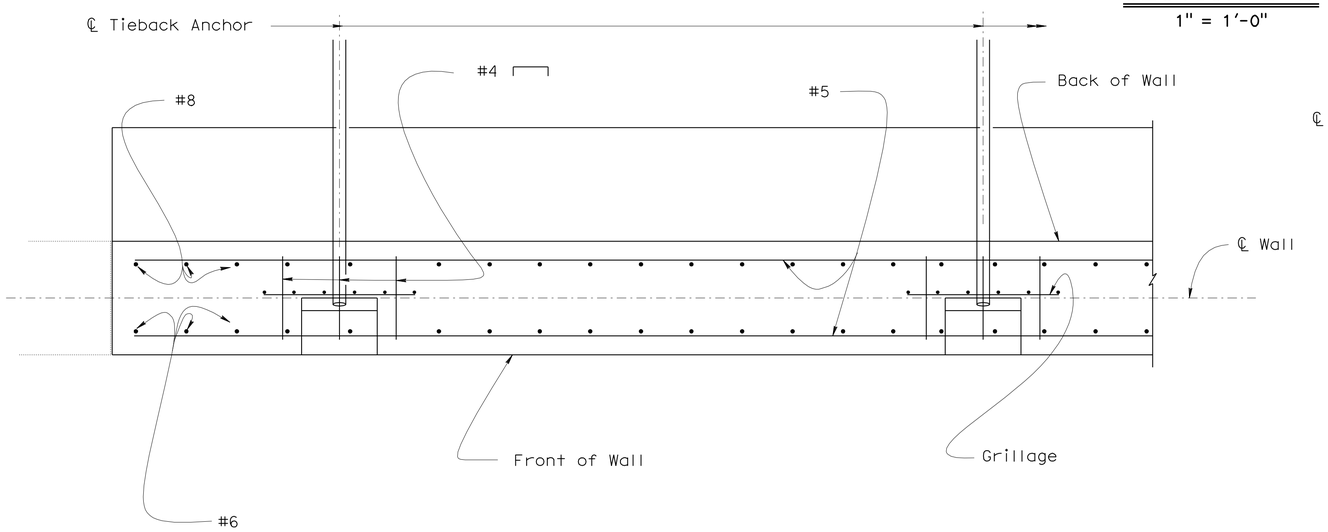

SECTION A-A

1" = 1'-0"

NOTE:
THE CONTRACTOR SHALL VERIFY ALL CONTROLLING FIELD DIMENSIONS BEFORE ORDERING OR FABRICATING ANY MATERIAL.

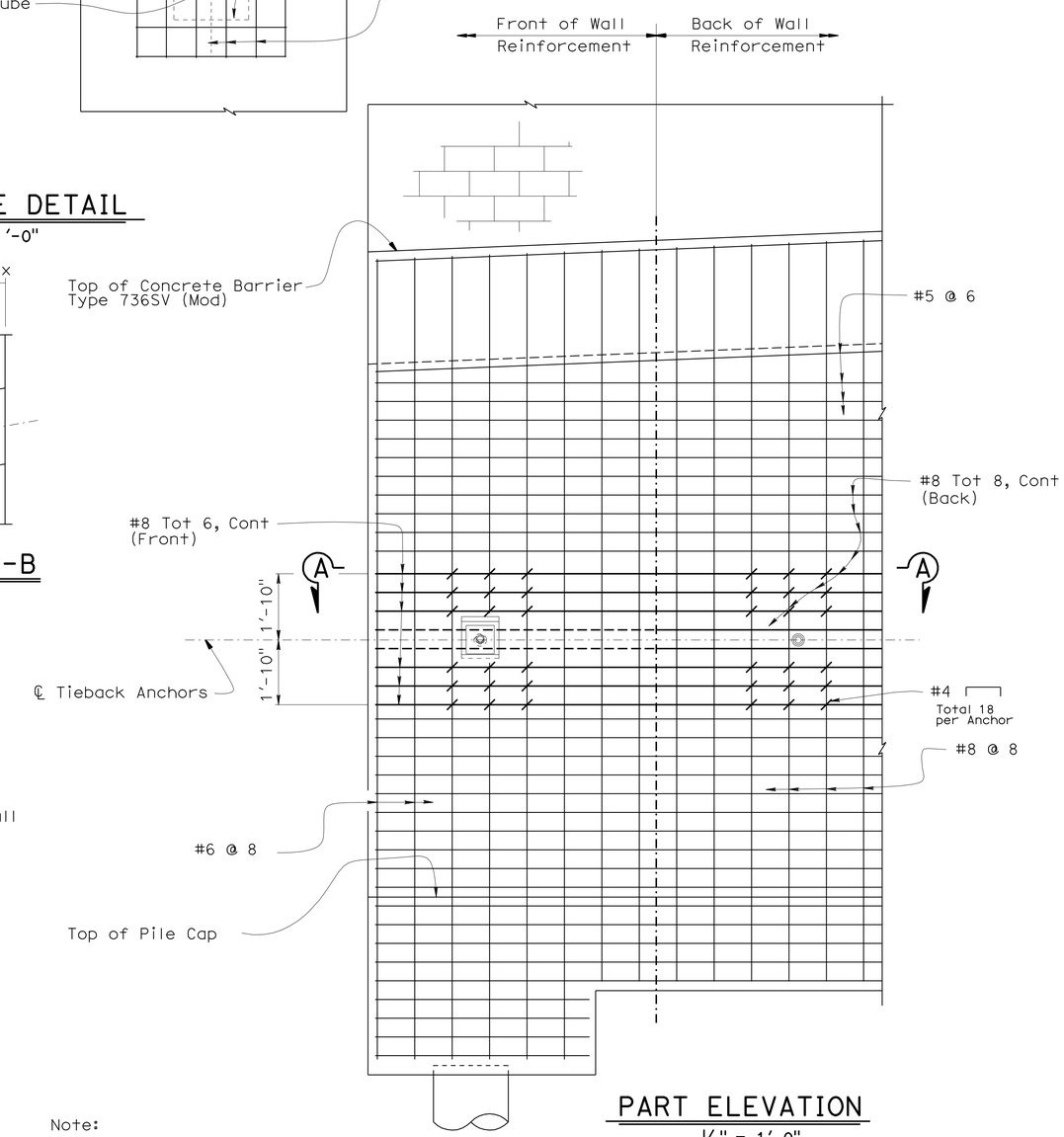

PART ELEVATION

½" = 1'-0"

Note:

1. Grillage not shown for clarity

	BY	CHECKED
DESIGN	A. Logus	J. Higareda
DETAILS	S. Cholda	T. Menard
QUANTITIES	S. Yip/F. Feng	D. Vargas/S. Moradi

STATE OF CALIFORNIA
DEPARTMENT OF TRANSPORTATION

DIVISION OF ENGINEERING SERVICES
STRUCTURE DESIGN
DESIGN BRANCH 15

BRIDGE NO. 53E0136
POST MILE 22.5

SOUND WALL NO. 1190
SOUND WALL DETAILS NO. 6

STRUCTURES DESIGN DETAIL SHEET (ENGLISH) (REV. 10/25/05)

ORIGINAL SCALE IN INCHES FOR REDUCED PLANS 0 1 2 3

CU 07
EA 002341

DISREGARD PRINTS BEARING EARLIER REVISION DATES

REVISION DATES: 02-26-10 04-13-10 04-21-10 04-23-10

SHEET 10 OF 22

FILE => 53e0136-g-sw_1o06.dgn

USERNAME => trmnguye DATE PLOTTED => 23-JUN-2010 TIME PLOTTED => 07:21

DIST	COUNTY	ROUTE	POST MILES TOTAL PROJECT	SHEET No	TOTAL SHEETS
07	LA	710	22.6	67	100

Fred Feng 4-15-10
REGISTERED CIVIL ENGINEER DATE

6-21-10
PLANS APPROVAL DATE

REGISTERED PROFESSIONAL ENGINEER Fred Y. Feng No. C 32992 Exp. 6-30-2010 CIVIL STATE OF CALIFORNIA

The State of California or its officers or agents shall not be responsible for the accuracy or completeness of electronic copies of this plan sheet.

NOTES:

1. Anchorage enclosure shall have provisions to allow injecting grout at low end and venting at high end. Galvanize after fabrication.
2. Steel tube welded to bearing plate (Min thickness = ¼"). Galvanize assembly after fabrication.
3. Steel tube welded to bearing plate inside diameter of steel tube to be 1" greater than outside diameter of smooth sheathing (Min thickness = ¼") Galvanize assembly after fabrication.
4. Schedule 40, same outside diameter as anchorage assembly steel tube.
5. For other wall details, see Structural Plans.

LEGEND:

1. Level of initial grouting drill hole 6" diameter or larger
2. Level of secondary grouting
3. Bonded length shall be determined by the contractor
4. Unbonded length = 15'-0" Min
5. Final grout

ABBREVIATIONS:

FF - Front Face of Wall
BF - Back Face of Wall
(See "TIEBACK ANCHOR DETAIL")

* Limits of standard Type 1 Retaining Wall reinforcing, see "RETAINING WALL TYPE 1SWB" sheet.

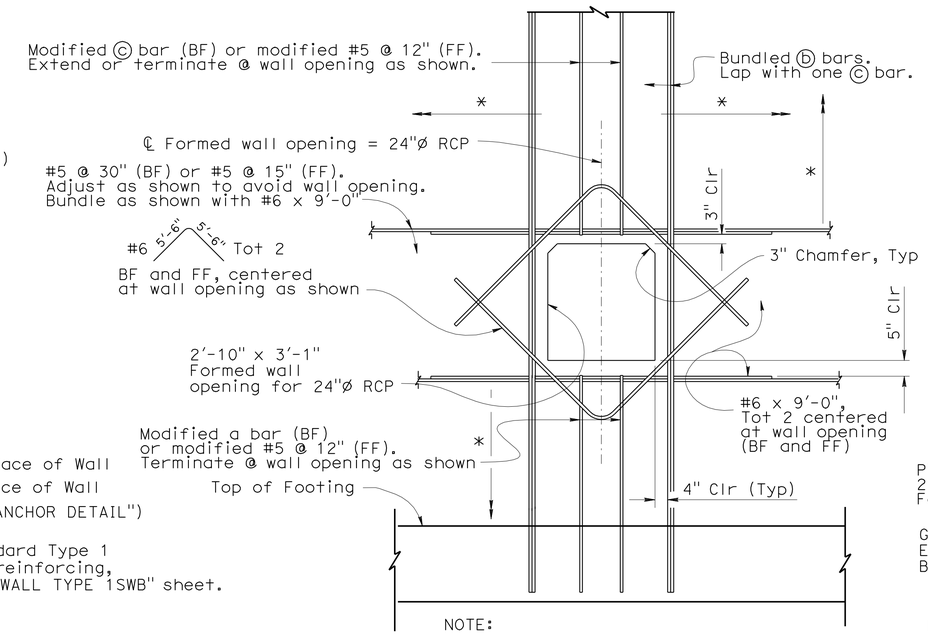

NOTE:
Cover Plate not shown for clarity

DETAIL A
½" = 1'-0"

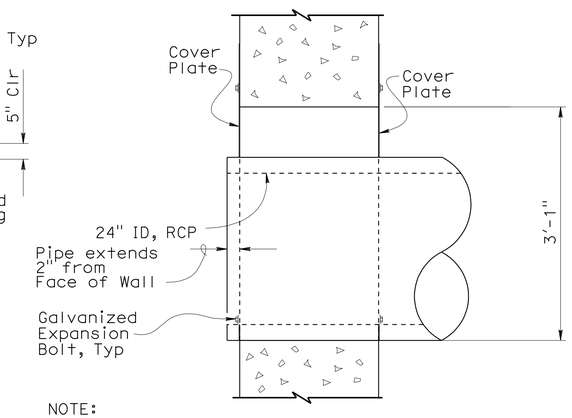

NOTE:
Footing not shown for clarity, see Drainage Plans for more details.

SECTION A-A
1" = 1'

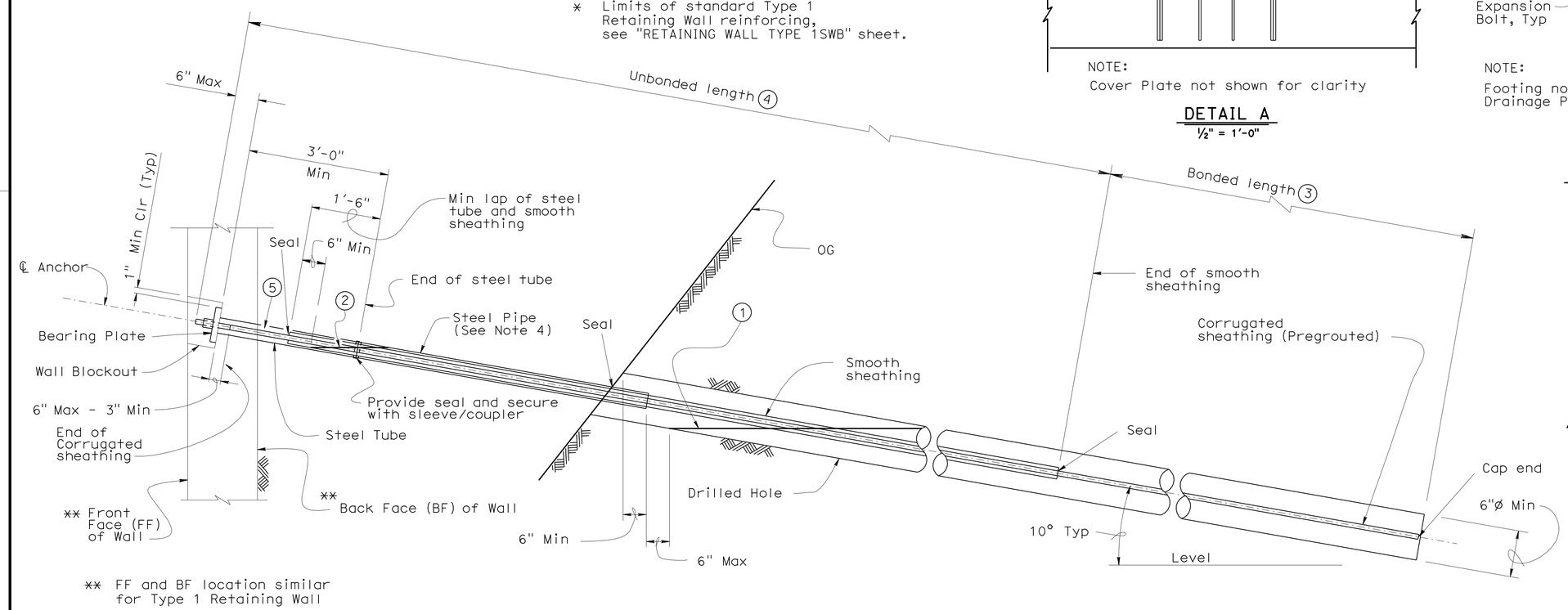

** FF and BF location similar for Type 1 Retaining Wall

TIEBACK ANCHOR DETAIL
NO SCALE

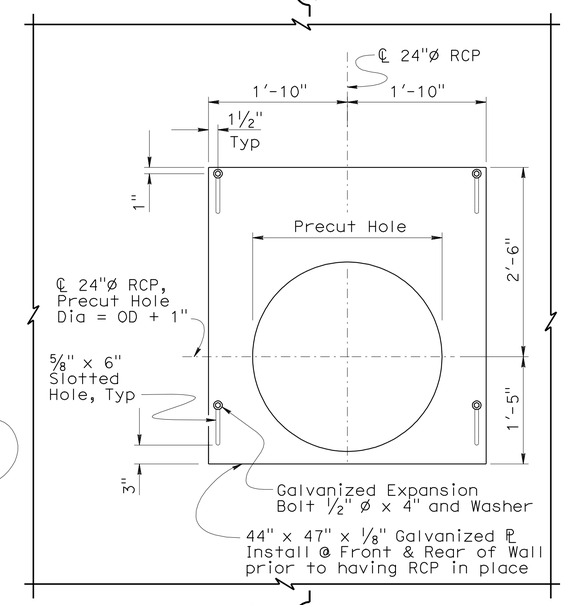

NOTE:
Reinforcement not shown for clarity

COVER PLATE ELEVATION
1" = 1'

NOTE:
THE CONTRACTOR SHALL VERIFY ALL CONTROLLING FIELD DIMENSIONS BEFORE ORDERING OR FABRICATING ANY MATERIAL.

	BY	CHECKED
DESIGN	A. Logus/F.Feng	J. Higareda
DETAILS	S. Cholda	A. Logus
QUANTITIES	F. Feng/S. Yip	D. Vargas/S. Maradi

STATE OF CALIFORNIA
DEPARTMENT OF TRANSPORTATION

DIVISION OF ENGINEERING SERVICES
STRUCTURE DESIGN
DESIGN BRANCH 15

BRIDGE NO. 53E0136
POST MILE 22.5

SOUND WALL NO. 1190
SOUND WALL DETAILS NO. 7

STRUCTURES DESIGN DETAIL SHEET (ENGLISH) (REV. 10/25/05)

ORIGINAL SCALE IN INCHES FOR REDUCED PLANS 0 1 2 3

CU 07
EA 002341

DISREGARD PRINTS BEARING EARLIER REVISION DATES

REVISION DATES: 02-25-10 03-11-10 04-13-10 04-21-10 04-23-10 4-29-10

SHEET 11 OF 22

FILE => 53e0136-g-sw_1o07.dgn

USERNAME => rmartin DATE PLOTTED => 23-JUN-2010 TIME PLOTTED => 08:08

DIST	COUNTY	ROUTE	POST MILES TOTAL PROJECT	SHEET No	TOTAL SHEETS
07	LA	710	22.6	68	100

Fred Feng 4-15-10
REGISTERED CIVIL ENGINEER DATE

6-21-10
PLANS APPROVAL DATE

REGISTERED PROFESSIONAL ENGINEER Fred Y. Feng No. C 32992 Exp. 6-30-2010 CIVIL STATE OF CALIFORNIA

The State of California or its officers or agents shall not be responsible for the accuracy or completeness of electronic copies of this plan sheet.

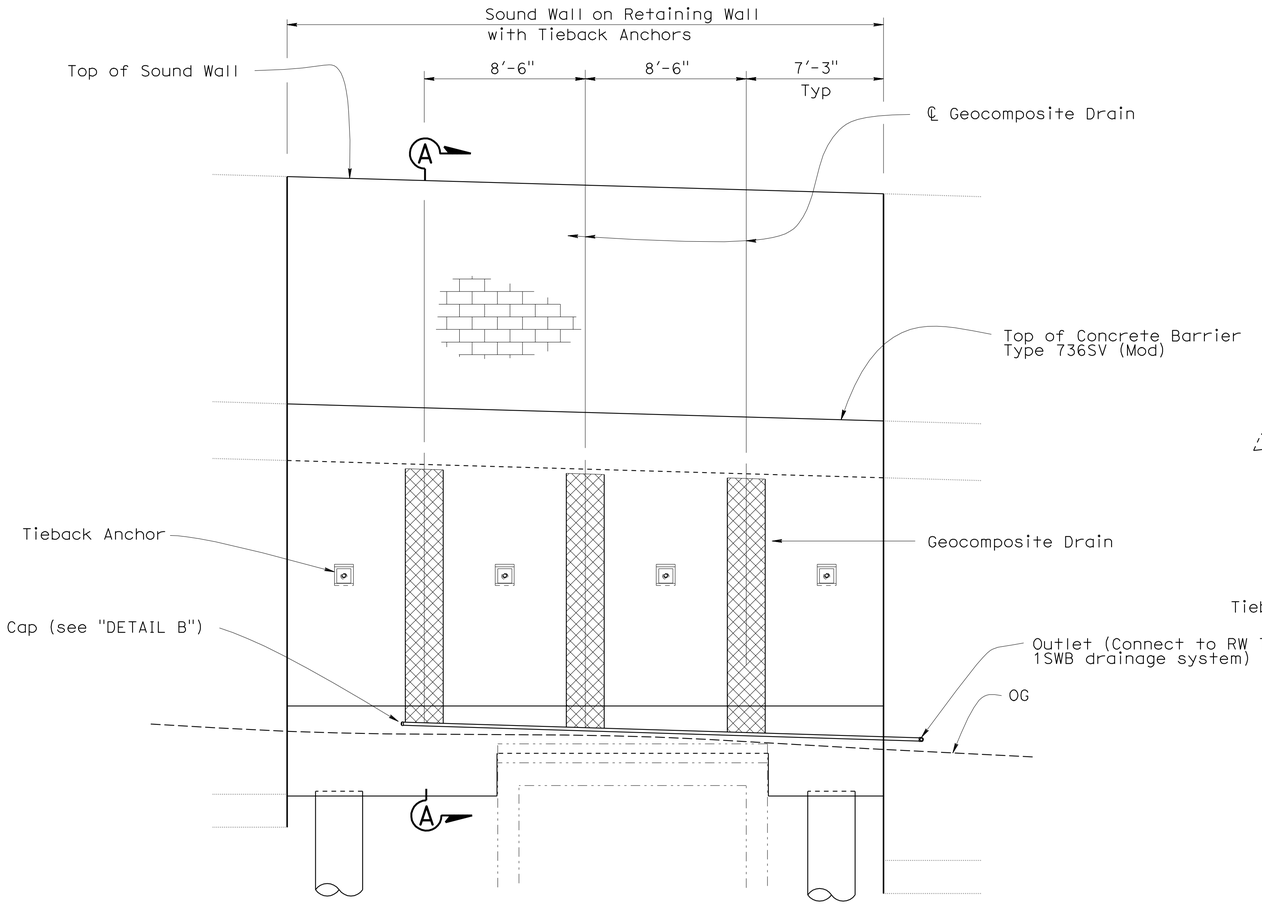

ELEVATION (BACK OF WALL)
1/4" = 1'-0"

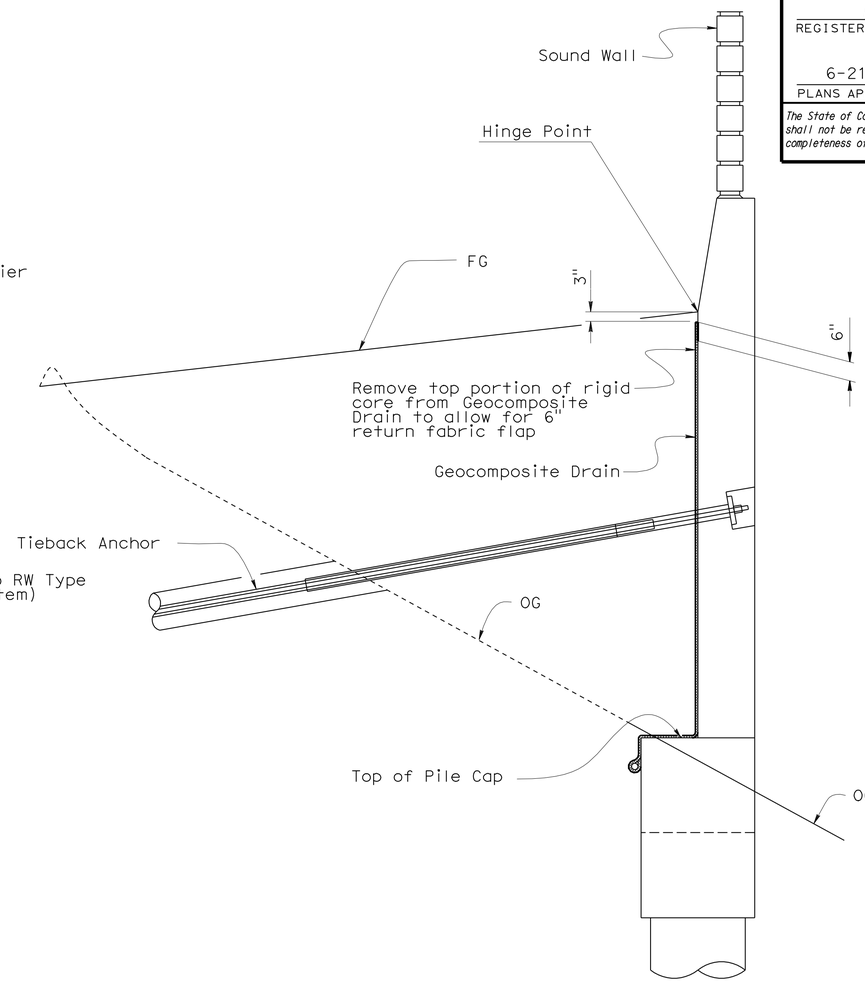

SECTION A-A
1/2" = 1'-0"

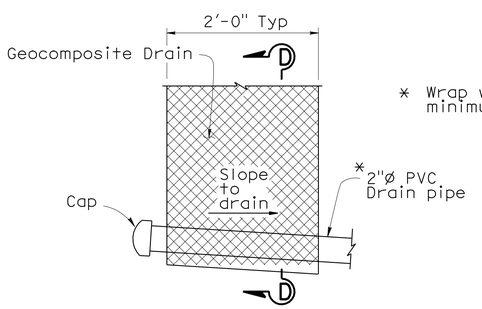

* Wrap with filter fabric two full turns minimum full length of pipe

DETAIL B
1" = 1'-0"

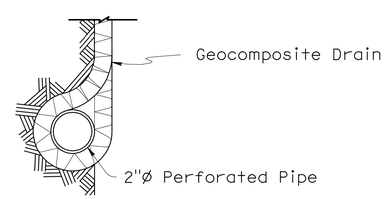

SECTION D-D
1 1/2" = 1'-0"

Note:

1. See "ROAD PLANS" for exact drainage outlet.

SOUND WALL ON RETAINING WALL WITH TIEBACK ANCHORS - DRAINAGE DETAILS

	BY	CHECKED
DESIGN	A. Logus	D. Vargas/J. Higareda
DETAILS	S. Cholda	T. Menard
QUANTITIES	F. Feng/S. Yip	D Vargas/S. Moradi

STATE OF CALIFORNIA
DEPARTMENT OF TRANSPORTATION

DIVISION OF ENGINEERING SERVICES
STRUCTURE DESIGN
DESIGN BRANCH 15

BRIDGE NO. 53E0136
POST MILE 22.5

SOUND WALL NO. 1190
SOUND WALL DETAILS NO. 8

STRUCTURES DESIGN DETAIL SHEET (ENGLISH) (REV. 10/25/05)

ORIGINAL SCALE IN INCHES FOR REDUCED PLANS 0 1 2 3

CU 07
EA 002341

DISREGARD PRINTS BEARING EARLIER REVISION DATES

REVISION DATES: 02-25-10 04-21-10 04-22-10

SHEET 12 OF 22

FILE => 53e0136-g-sw_1o08.dgn

USERNAME => frmartin DATE PLOTTED => 23-JUN-2010 TIME PLOTTED => 08:03

DIST	COUNTY	ROUTE	POST MILES TOTAL PROJECT	SHEET No	TOTAL SHEETS
07	LA	710	22.6	69	100

Fred Feng 4-15-10
REGISTERED CIVIL ENGINEER DATE

6-21-10
PLANS APPROVAL DATE

REGISTERED PROFESSIONAL ENGINEER Fred Y. Feng No. C 32992 Exp. 6-30-2010 CIVIL STATE OF CALIFORNIA

The State of California or its officers or agents shall not be responsible for the accuracy or completeness of electronic copies of this plan sheet.

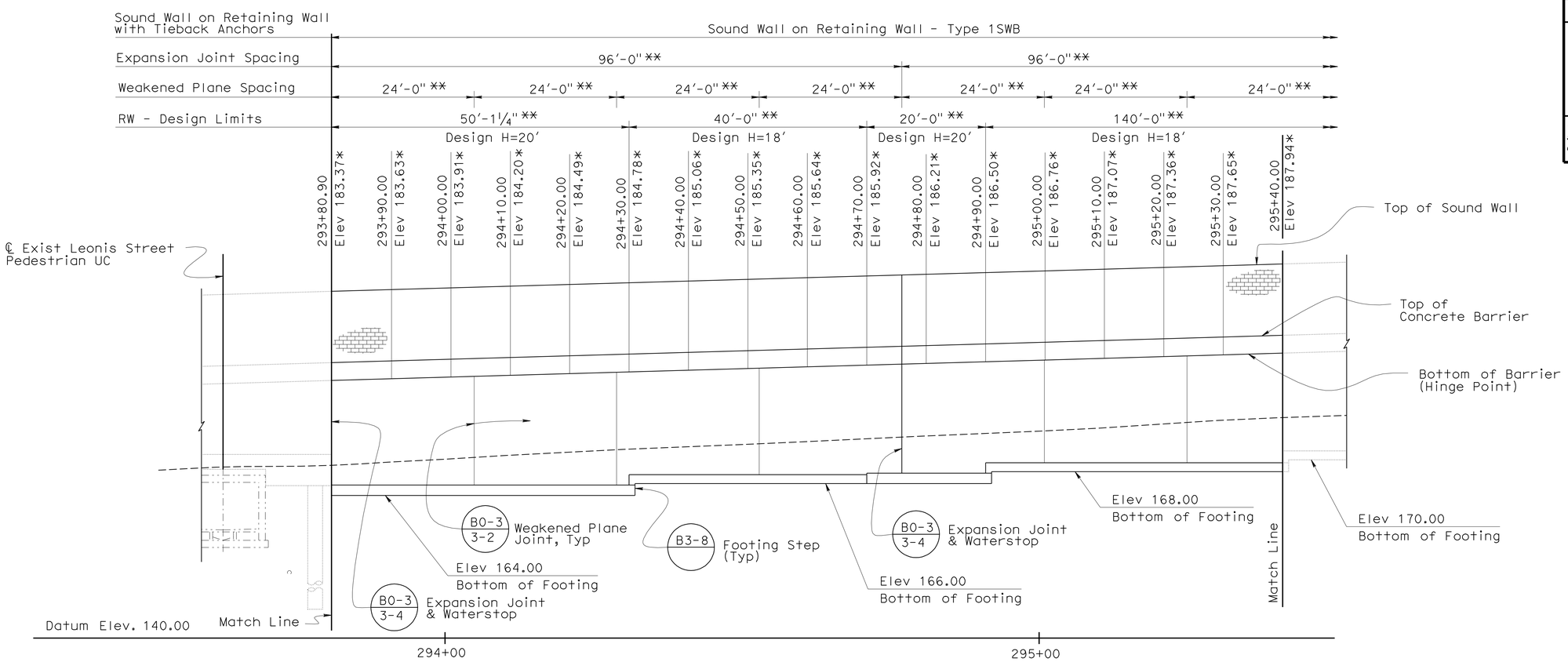

MIRRORED & DEVELOPED ELEVATION

1" = 10'

Legend:

- - - - - - Indicates existing PUC Structure

* Elevations are given at Hinge Point

** Measured along "SW 1190" LOL

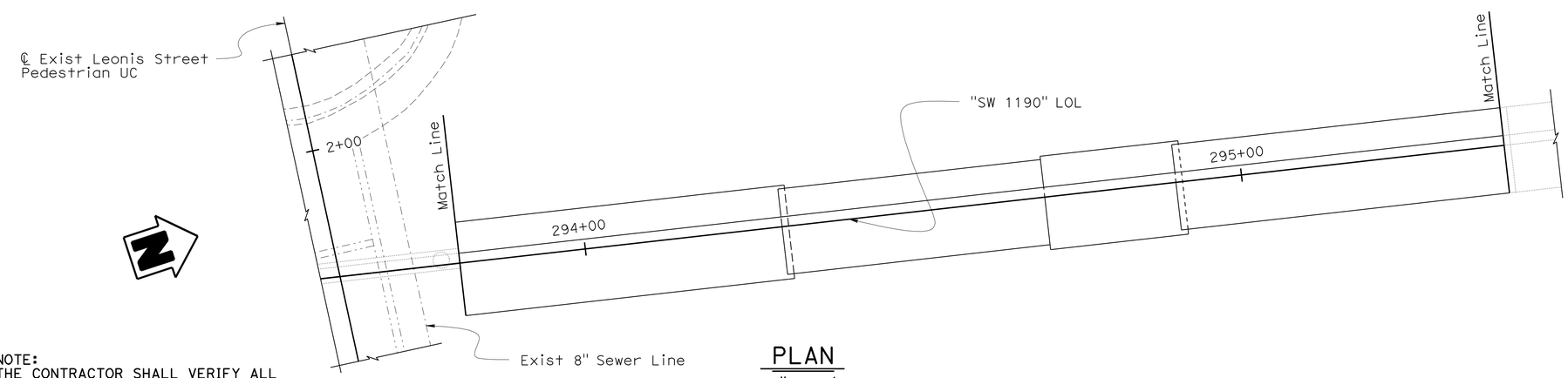

PLAN

1" = 10'

NOTE:
THE CONTRACTOR SHALL VERIFY ALL CONTROLLING FIELD DIMENSIONS BEFORE ORDERING OR FABRICATING ANY MATERIAL.

	BY	CHECKED
DESIGN	F. Feng	T. Vang/D. Vargas
DETAILS	S. Cholda	T. Menard
QUANTITIES	S. Yip/F. Feng	D. Vargas/S. Moradi

STATE OF CALIFORNIA
DEPARTMENT OF TRANSPORTATION

DIVISION OF ENGINEERING SERVICES
STRUCTURE DESIGN
DESIGN BRANCH 15

BRIDGE NO. 53E0136
POST MILE 22.5

SOUND WALL NO. 1190
SOUND WALL DETAILS NO. 9

STRUCTURES DESIGN DETAIL SHEET (ENGLISH) (REV. 10/25/05)

ORIGINAL SCALE IN INCHES FOR REDUCED PLANS 0 1 2 3

CU 07
EA 002341

DISREGARD PRINTS BEARING EARLIER REVISION DATES

REVISION DATES: 4-09-09 4-16-09 6-18-09 01-07-10 01-28-10 04-01-10

SHEET 13 OF 22

FILE => 53e0136-g-sw_1o09.dgn

USERNAME => rmartin DATE PLOTTED => 23-JUN-2010 TIME PLOTTED => 08:03

DIST	COUNTY	ROUTE	POST MILES TOTAL PROJECT	SHEET No	TOTAL SHEETS
07	LA	710	22.6	70	100

Fred Feng 4-15-10
REGISTERED CIVIL ENGINEER DATE

6-21-10
PLANS APPROVAL DATE

REGISTERED PROFESSIONAL ENGINEER Fred Y. Feng No. C 32992 Exp. 6-30-2010 CIVIL STATE OF CALIFORNIA

The State of California or its officers or agents shall not be responsible for the accuracy or completeness of electronic copies of this plan sheet.

Legend:

* Elevations are given at Hinge Point

** Measured along "SW 1190" LOL

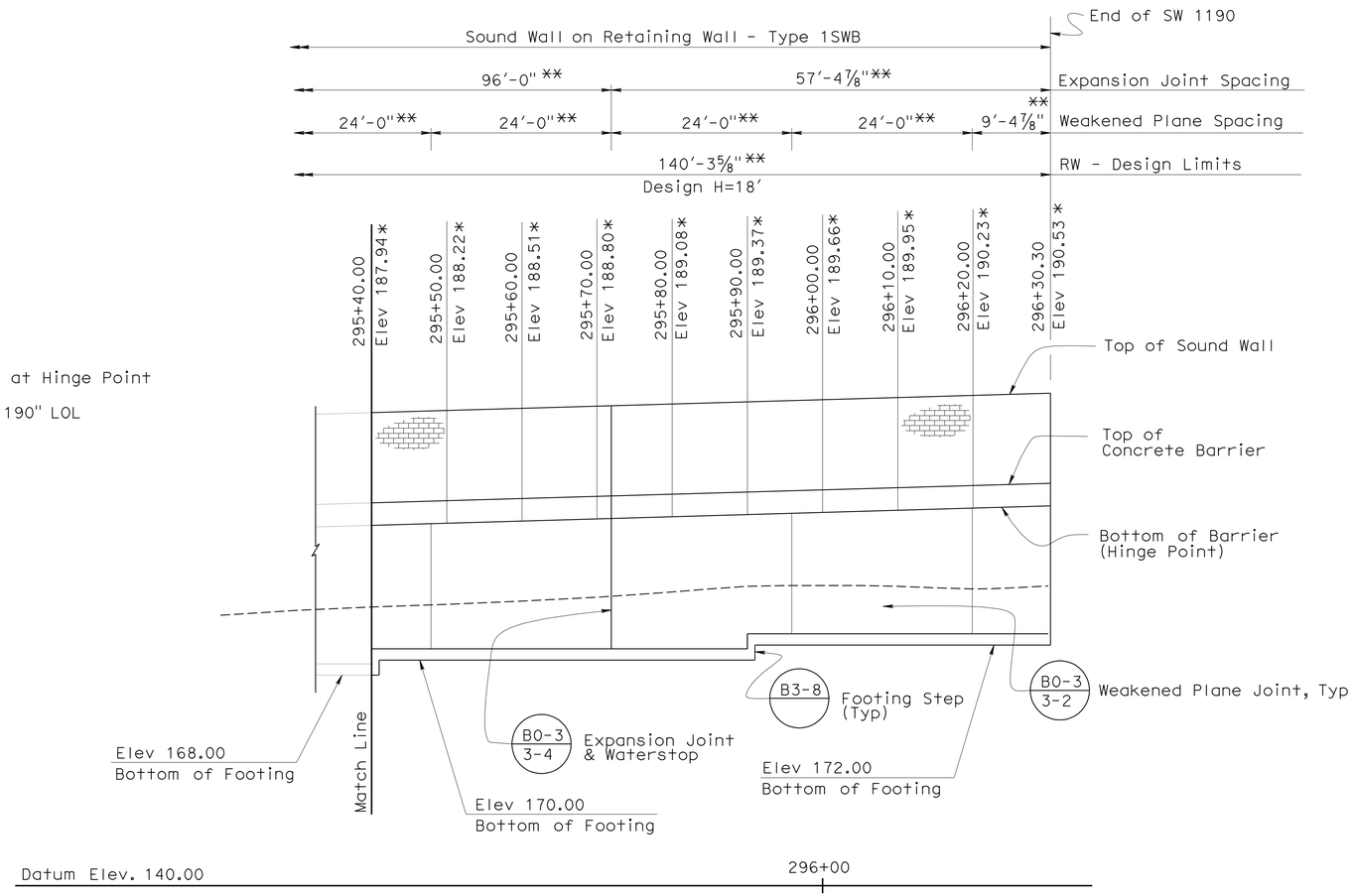

MIRRORED & DEVELOPED ELEVATION

1" = 10'

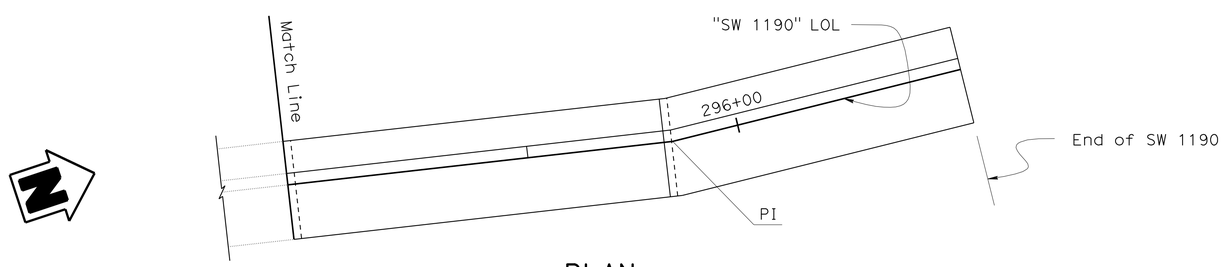

PLAN

1" = 10'

NOTE:
THE CONTRACTOR SHALL VERIFY ALL CONTROLLING FIELD DIMENSIONS BEFORE ORDERING OR FABRICATING ANY MATERIAL.

	BY	CHECKED
DESIGN	F. Feng	T. Vang/D. Vargas
DETAILS	S. Cholda	T. Menard
QUANTITIES	S. Yip/F. Feng	D. Vargas/S. Moradi

STATE OF CALIFORNIA
DEPARTMENT OF TRANSPORTATION

DIVISION OF ENGINEERING SERVICES
STRUCTURE DESIGN
DESIGN BRANCH 15

BRIDGE NO. 53E0136
POST MILE 22.5

SOUND WALL NO. 1190
SOUND WALL DETAILS NO. 10

STRUCTURES DESIGN DETAIL SHEET (ENGLISH) (REV. 10/25/05)

ORIGINAL SCALE IN INCHES FOR REDUCED PLANS 0 1 2 3

CU 07
EA 002341

DISREGARD PRINTS BEARING EARLIER REVISION DATES

REVISION DATES: 4-30-09 4-30-09 6-30-09 01-04-10 01-28-10 04-01-10 4-19-10 4-23-10

SHEET 14 OF 22

FILE => 53e0136-g-sw_1o10.dgn

USERNAME => trmartin DATE PLOTTED => 23-JUN-2010 TIME PLOTTED => 08:03

DIST.	COUNTY	ROUTE	POST MILES TOTAL PROJECT	SHEET NO.	TOTAL SHEETS
07	LA	710	22.6	71	100

Fred Feng 4-15-10
REGISTERED ENGINEER - CIVIL

6-21-10
PLANS APPROVAL DATE

REGISTERED PROFESSIONAL ENGINEER Fred Y. Feng No. C 32992 Exp. 6-30-2010 CIVIL STATE OF CALIFORNIA

The State of California or its officers or agents shall not be responsible for the accuracy or completeness of electronic copies of this plan sheet.

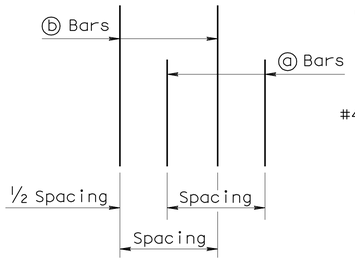

DETAIL B

No Scale

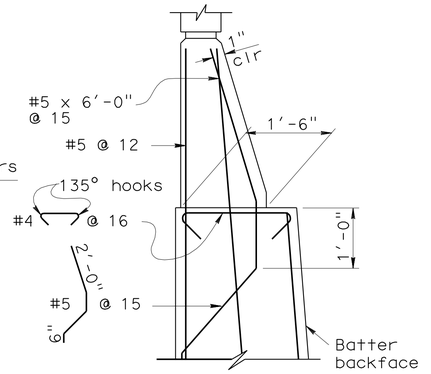

⟨1⟩ DETAIL A WITHOUT HAUNCH

No Scale

GENERAL NOTES:

1. For soundwall and retaining wall architectural finish or texture, see details elsewhere in project plans.
2. For details not shown and drainage notes, see (B3-8)
3. Footing cover, 1'-6" minimum.
4. Limit of no splicing rebars = 3 times the bottom thickness of the stem.
5. Placement of reinforcements :
   - ⓑ & ⓒ bars are spliced together.
   - ✳ ⓐ & ⓑ bars are bundled together.
   - ✳✳ Alternate ⓐ & ⓑ bars are shown in "Detail B".
   - Cont = Continuous.
6. For Soundwall & Barrier reinforcement, see "Soundwall Masonry Block on Barriers" sheets in Standard Plans.

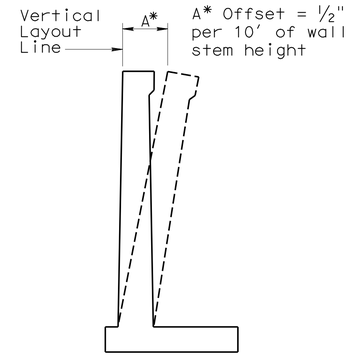

WALL OFFSET

No Scale

Values for offsetting forms to be determined by the Engineer.

TABLE 1: TABLE OF REINFORCING STEEL DIMENSIONS AND DATA

	Stem With Haunch													
Design H	6'	8'	10'	12'	14'	16'	18'	20'	22'	24'	26'	28'	30'	32'
W	7'-9"	8'-0"	8'-9"	9'-9"	10'-9"	12'-0"	13'-0"	14'-3"	15'-3"	16'-6"	18'-6"	19'-9"	21'-3"	22'-6"
C	2'-9"	2'-9"	3'-0"	3'-3"	3'-6"	4'-0"	4'-3"	4'-9"	5'-0"	5'-6"	6'-3"	6'-9"	7'-3"	7'-9"
B	5'-0"	5'-3"	5'-9"	6'-6"	7'-3"	8'-0"	8'-9"	9'-6"	10'-3"	11'-0"	12'-3"	13'-0"	14'-0"	14'-9"
F Spread footing	1'-3"	1'-3"	1'-3"	1'-3"	1'-3"	1'-6"	1'-6"	1'-9"	2'-0"	2'-3"	2'-9"	3'-0"	3'-3"	3'-9"
Batter	0	½ :12	½ :12	½ :12	½ :12	½ :12	½ :12	½ :12	½ :12	⅝ :12	¾ :12	⅞ :12	1 :12	1 :12
Stem thickn. @ Haunch	1'-0"	1'-0"	1'-0"	1'-0"	1'-0"	1'-0"	1'-0"	1'-0"	1'-0"	1'-0"	1'-0"	1'-0"	1'-0"	1'-0"
ⓐ Bars				#6 @18✳✳	#7 @18✳✳	#8 @18✳✳	#9 @18✳✳	#10 @18✳✳	#8 @ 9✳	#8 @ 9✳	#7 @ 6✳	#10 @12✳✳	#9 @ 9✳	#11@12✳✳
X				Cont	Cont	Cont	Cont	Cont	Cont	Cont	Cont	Cont	Cont	Cont
Y				8'-0"	6'-6"	7'-6"	8'-6"	9'-6"	9'-6"	11'-0"	11'-6"	13'-0"	14'-0"	15'-6"
ⓑ Bars	#5 @12	#5 @12	#5 @ 9	#6 @18✳✳	#7 @18✳✳	#8 @18✳✳	#9 @18✳✳	#10 @18✳✳	#8 @ 9✳	#8 @ 9✳	#7 @ 6✳	#10 @12✳✳	#9 @ 9✳	#11@12✳✳
X	Cont	Cont	Cont	Cont	Cont	Cont	Cont	Cont	Cont	5'-6"	6'-6"	7'-0"	8'-0"	8'-6"
Y	Cont	Cont	Cont	Cont	10'-6"	13'-0"	15'-0"	17'-6"	19'-6"	21'-0"	18'-6"	19'-0"	25'-6"	23'-6"
ⓒ Bars					#6 @18	#6 @18	#6 @18	#6 @18	#6 @18	#6 @18	#6 @12	#7 @12	#7 @18	#7 @12
ⓓ Bars	#5 @12	#5 @12	#5 @12	#5 @ 9	#6 @ 9	#6 @ 9	#6 @ 6	#8 @ 9	#8 @ 9	#8 @ 9	#7 @ 6	#7 @ 6	#9 @ 9	#9 @ 9
Ultimate Bearing Capacity Req'd k/sf	4.6	5.5	6.1	6.6	7.3	8.1	9.0	9.9	11.3	12.2	12.5	13.4	14.1	15.4

TABLE 2: TABLE OF REINFORCING STEEL DIMENSIONS AND DATA

	Stem With Haunch						Stem Without Haunch						
Design H	8'	10'	12'	14'	16'	18'	20'	22'	24'	26'	28'	30'	32'
W	8'-0"	8'-6"	9'-3"	10'-3"	11'-3"	13'-0"	13'-9"	16'-0"	16'-6"	18'-6"	20'-0"	20'-6"	21'-9"
C	2'-9"	2'-9"	3'-0"	3'-6"	3'-9"	4'-3"	4'-6"	5'-3"	5'-6"	6'-3"	6'-9"	6'-9"	7'-6"
B	5'-3"	5'-9"	6'-3"	6'-9"	7'-6"	8'-9"	9'-3"	10'-9"	11'-0"	12'-3"	13'-3"	13'-9"	14'-3"
F Spread footing	1'-3"	1'-3"	1'-3"	1'-3"	1'-6"	1'-6"	1'-9"	2'-0"	2'-3"	2'-9"	3'-0"	3'-3"	3'-6"
Batter	0	0	0	0	0	0	0	0	0	¼ :12	½ :12	½ :12	½ :12
Stem thickn. @ Haunch	1'-0"	1'-0"	1'-0"	1'-0"	1'-3"	1'-3"							
Stem thickn. @ top							1'-6"	2'-0"	2'-0"	2'-0"	2'-0"	2'-0"	2'-0"
ⓐ Bars			#6 @12✳✳	#5 @ 6✳	#9 @18✳✳	#9 @12✳✳	#9 @12✳✳	#9 @12✳✳	#7 @ 6✳	#7 @ 6✳	#7 @ 6✳	#9 @ 9✳	#11@12✳✳
X			Cont	Cont	Cont	Cont	Cont	Cont	Cont	Cont	Cont	Cont	Cont
Y			5'-6"	5'-6"	8'-6"	8'-6"	8'-6"	8'-6"	9'-6"	11'-0"	12'-6"	13'-6"	14'-6"
ⓑ Bars	#5 @ 9	#6 @ 9	#6 @12✳✳	#5 @ 6✳	#9 @18✳✳	#9 @12✳✳	#9 @12✳✳	#9 @12✳✳	#7 @ 6✳	#7 @ 6✳	#7 @ 6✳	#9 @ 9✳	#11@12✳✳
X	Cont	Cont	Cont	Cont	Cont	Cont	Cont	Cont	5'-6"	6'-0"	7'-6"	7'-6"	8'-0"
Y	Cont	Cont	Cont	Cont	11'-6"	11'-6"	12'-0"	12'-0"	17'-6"	20'-0"	21'-6"	24'-0"	24'-0"
ⓒ Bars					#7 @18	#7 @12	#7 @12	#7 @12	#6 @ 12	#6 @ 12	#6 @12	#7 @18	#7 @12
ⓓ Bars	#5 @12	#5 @ 9	#5 @9	#6 @9	#6 @ 9	#9 @12	#9 @12	#7 @#7	6 @ 6	#7 @ 6	#7 @ 6	#9 @ 9	#9 @ 9
Ultimate Bearing Capacity Req'd k/sf	5.5	6.5	7.3	7.6	9.0	9.0	10.6	10.5	12.2	12.6	13.3	15.4	16.0

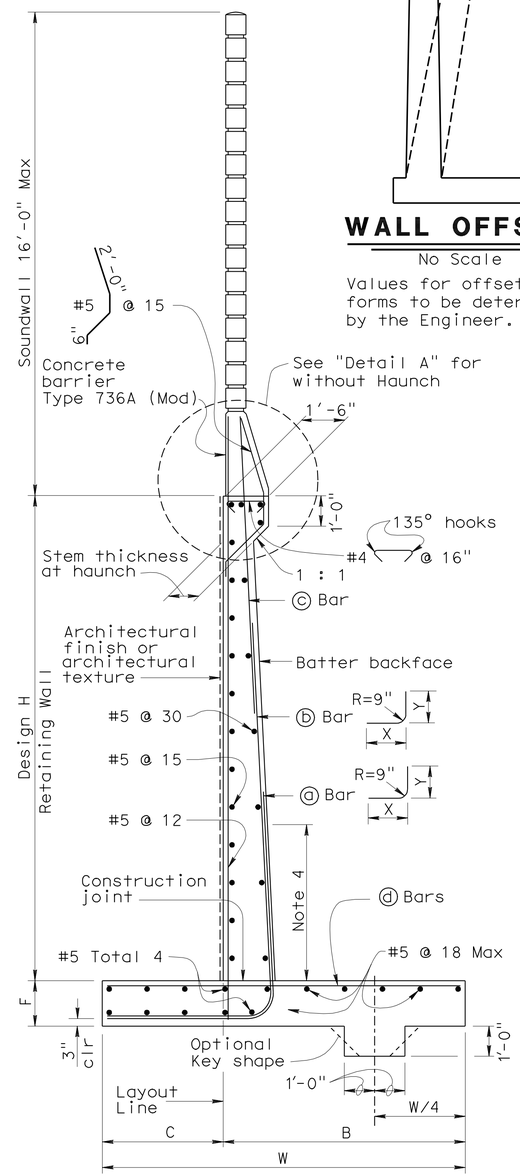

⟨1⟩ SPREAD FOOTING SECTION

No Scale

DESIGN DATA

DESIGN: Load Factor Design (LFD)

CONCRETE: Reinforced Concrete, f'c = 3600 psi
fy = 60,000 psi

LOADING CASE:
Level ground with 240 psf surcharge and 16' Soundwall

Seismic Load = 0.3 Dead Load
Wind Load = 30 psf
Dead Load of Soundwall = 1414 lb/ft
Dead Load of Barrier = 372 lb/ft

SEISMIC LOAD: SOIL
Kh = 0.3g
Kv = 0.0
Kae : Mononobe-Okabe Method

SOIL: Ø = 34° γ = 120 pcf
Equivalent fluid pressure:
= 36 pcf for determination of toe pressure
= 27 pcf for determination of heel pressure

EXTERNAL STABILITY:
Group 1 : D + E + SC
Group 2 : D + E + SC + W
Group 3 : D + PYM

INTERNAL STABILITY (LFD):
Group A : βD + 1.7E + 1.7SC
Group B : βD + 1.7E + 1.3W
Group C (stem) : 1.0D + 1.0E + 1.0EQD + 1.0EQE
Group C (footing) : D + PYM

Where : β = 1.0 or 1.3 whichever controls design
D = Dead Load
E = Lateral Earth Pressure
SC = Surcharge
W = Wind load
EQD = Seismic Dead Load
EQE = Seismic Lateral Earth Pressure
PYM = Probable Yield Moment (1.3 x Nominal Yield Moment of Stem)

STANDARD DRAWING

FILE NO. Revised xs14-220e

APPROVED BY G. WANG — RESPONSIBLE TECHNICAL SPECIALIST
APPROVAL DATE 5-19-08

RELEASED BY ROBERTO LACALLE — RESPONSIBLE OFFICE CHIEF
RELEASE DATE 5-19-08

⟨1⟩ Modified Detail

STATE OF CALIFORNIA DEPARTMENT OF TRANSPORTATION

DIVISION OF ENGINEERING SERVICES

BRIDGE NO. 53E0136
POST MILE 22.5

SOUND WALL NO. 1190
RETAINING WALL TYPE 1SWB

DS OSD 2147A (ENGLISH STANDARD DRAWING "XS" BORDER REV. 01/11/08)

ORIGINAL SCALE IN INCHES FOR REDUCED PLANS 0 1 2 3

CU 07
EA 002341

DISREGARD PRINTS BEARING EARLIER REVISION DATES

REVISION DATES (PRELIMINARY STAGE ONLY) 6-24-09 1-20-10 4-19-10 4-20-10

SHEET 15 OF 22

USERNAME => trmartin

DATE PLOTTED => 23-JUN-2010 TIME PLOTTED => 08:03

53e0136-u-xs14-220e.dgn

DIST.	COUNTY	ROUTE	POST MILES TOTAL PROJECT	SHEET NO.	TOTAL SHEETS
07	LA	710	22.6	72	100

Fred Feng 4-15-10
REGISTERED ENGINEER - CIVIL

6-21-10
PLANS APPROVAL DATE

REGISTERED PROFESSIONAL ENGINEER Fred Y. Feng No. C 32992 Exp. 6-30-2010 CIVIL STATE OF CALIFORNIA

The State of California or its officers or agents shall not be responsible for the accuracy or completeness of electronic copies of this plan sheet.

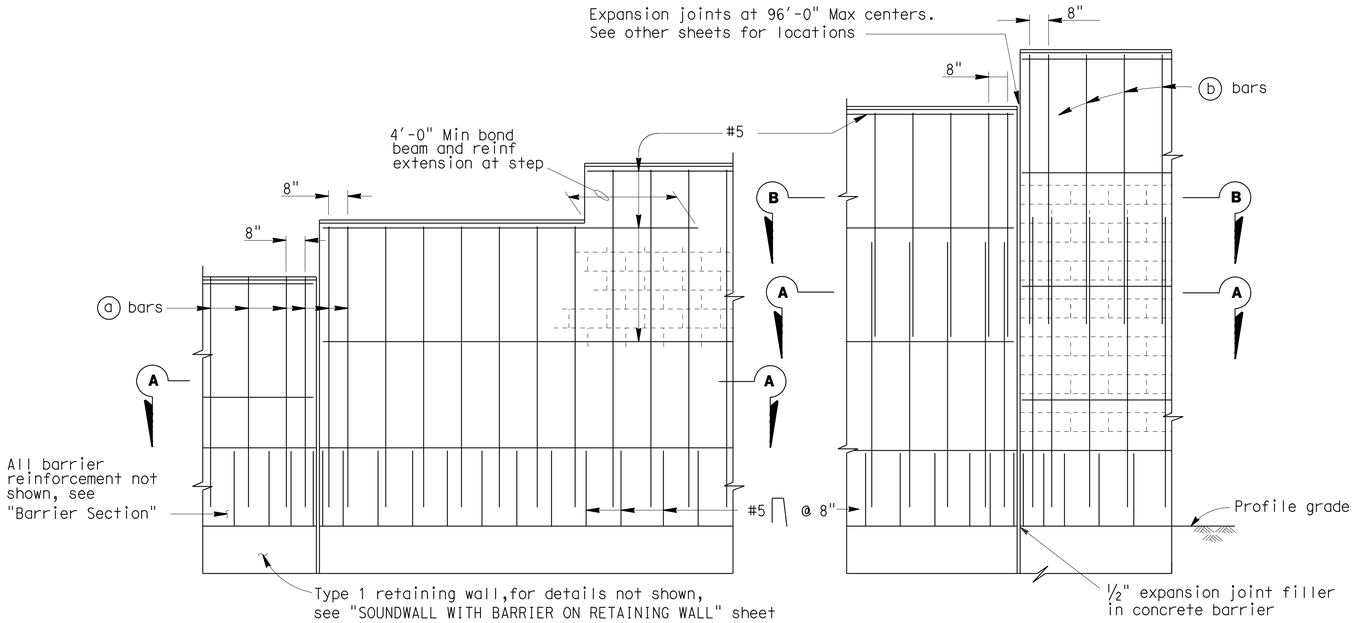

PART ELEVATIONS

SOUNDWALL REINFORCEMENT TABLE

Maximum H	ⓐ bars @ 1'-4" Max	ⓑ bars @ 1'-4" Max	"y"	f'm (KSI)	Compressive Strength of CMU (KSI)	Maximum H
6'-4"	# 4	———	———	1.5	1.9	6'-4"
8'-4"	# 4	———	———	1.5	1.9	8'-4"
10'-4"	# 4	———	———	1.5	1.9	10'-4"
12'-4"	# 5	# 4	5'-0"	1.5	1.9	12'-4"
14'-4"	# 6	# 4	7'-0"	1.5	1.9	14'-4"
16'-4"	# 6	# 4	9'-0"	2.5	3.7	16'-4"

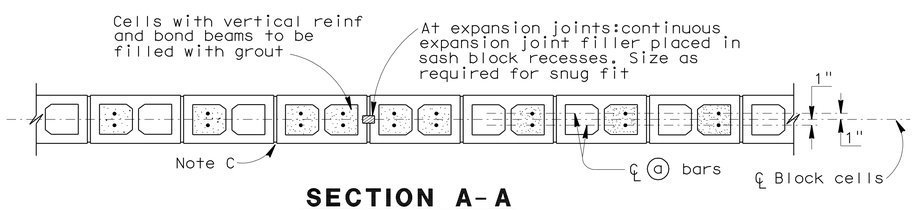

SECTION A-A

For details not shown, see other details

H=6'-4" THRU H=10'-4"

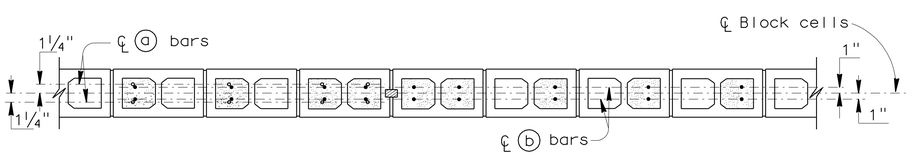

SECTION A-A

SECTION B-B

For details not shown, see other details

H=12'-4" THRU H=16'-4"

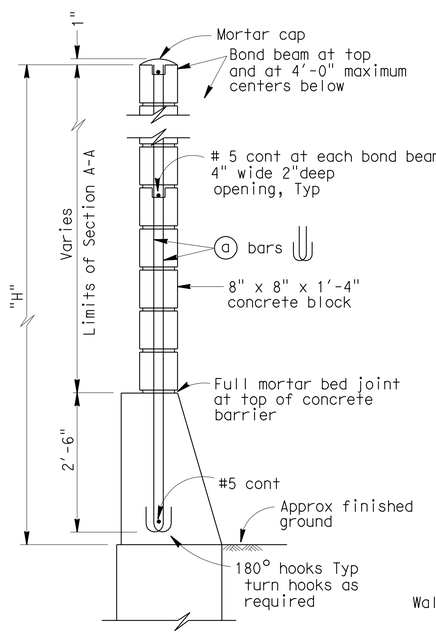

H=6'-4" THRU H=10'-4"

For details not shown, see H=12'-4" thru H=16'-4"

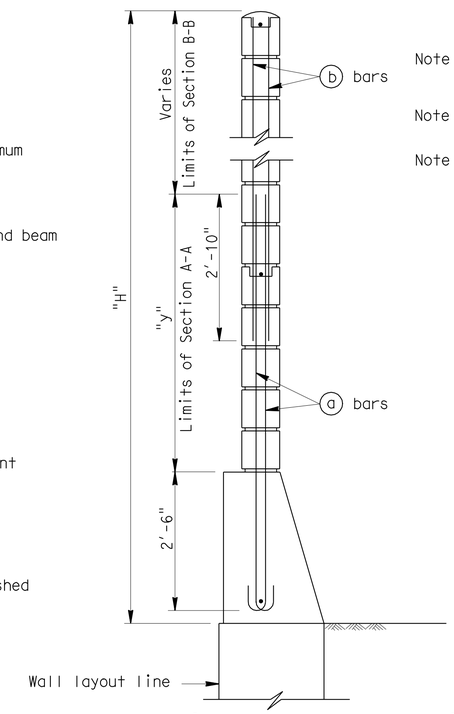

H=12'-4" THRU H=16'-4"

For details not shown, see H=6'-4" thru H=10'-4"

TYPICAL SECTIONS

Note I : For details not shown, see "SOUNDWALL WITH BARRIER ON RETAINING WALL - MASONRY BLOCK -- DETAILS NO.2" sheet.

Note II : Slope ground at traffic side of barrier to drain. Maximum slope ±10%.

Note III: See "SOUNDWALL MASONRY BLOCK - MISCELLANEOUS DETAILS" sheet for other details.

GENERAL NOTES:

Note A: For type of block and joint finish, see other sheets.

Note B: When blocks are laid in stacked bond, ladder type, galvanized joint reinforcement shall be provided. A minimum of 0.07"-0.14" wire continuous at 4'-0" maximum to be used. Locate reinforcement in joints that are at the approximate midpoint between bond beams.

Note C: Horizontal joints shall be tooled concave or may be weathered.
Vertical joints shall be tooled concave or may be raked.

Note D: For intermediate wall heights that are between the "H's" given. Use the tabular information for the next higher "H".

Note E: Masonry strengths are listed in "SOUNDWALL REINFORCEMENT TABLE".

1

STANDARD DRAWING

FILE NO. xs15-130-1e

APPROVED BY T SATTER
RESPONSIBLE TECHNICAL SPECIALIST
APPROVAL DATE 9-2-08

RELEASED BY ROBERTO LACALLE
RESPONSIBLE OFFICE CHIEF
RELEASE DATE 9-2-08

1 Removed Note

STATE OF CALIFORNIA
DEPARTMENT OF TRANSPORTATION

DIVISION OF ENGINEERING SERVICES

BRIDGE NO. 53E0136
POST MILE 22.5

SOUND WALL 1190

SOUNDWALL - MASONRY BLOCK WITH BARRIER ON RETAINING WALL

DETAILS NO. 1

DS OSD 2147A (ENGLISH STANDARD DRAWING "XS" BORDER REV. 01/11/08)

ORIGINAL SCALE IN INCHES FOR REDUCED PLANS 0 1 2 3

CU 07
EA 002341

DISREGARD PRINTS BEARING EARLIER REVISION DATES 6-24-09 1-20-10

REVISION DATES (PRELIMINARY STAGE ONLY)

SHEET 16 OF 22

USERNAME => trmartin

53e0136-u-xs15-130-1e

DATE PLOTTED => 23-JUN-2010 TIME PLOTTED => 08:03

DIST.	COUNTY	ROUTE	POST MILES TOTAL PROJECT	SHEET NO.	TOTAL SHEETS
07	LA	710	22.6	73	100

Fred Feng 4-15-10
REGISTERED ENGINEER - CIVIL

6-21-10
PLANS APPROVAL DATE

REGISTERED PROFESSIONAL ENGINEER Fred Y. Feng No. C 32992 Exp. 6-30-2010 CIVIL STATE OF CALIFORNIA

The State of California or its officers or agents shall not be responsible for the accuracy or completeness of electronic copies of this plan sheet.

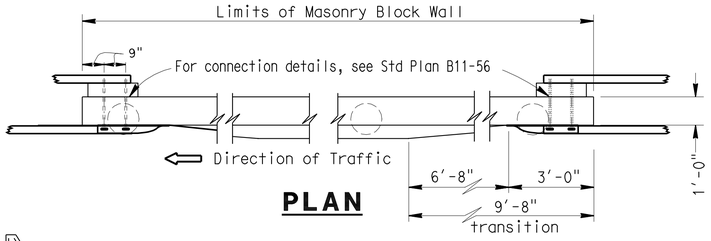

PLAN

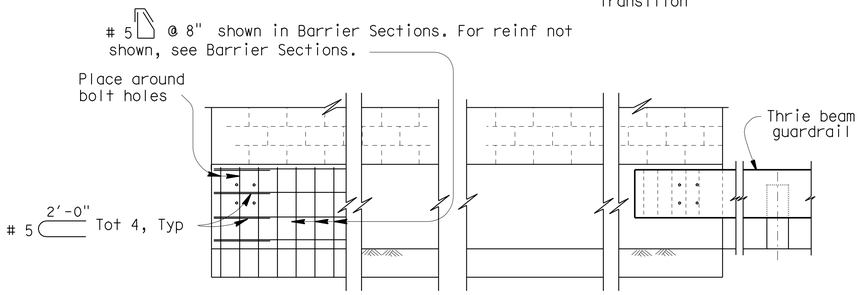

ELEVATION
METAL BEAM GUARDRAIL ANCHORAGE

For details not shown, see Std Plan B11-56.

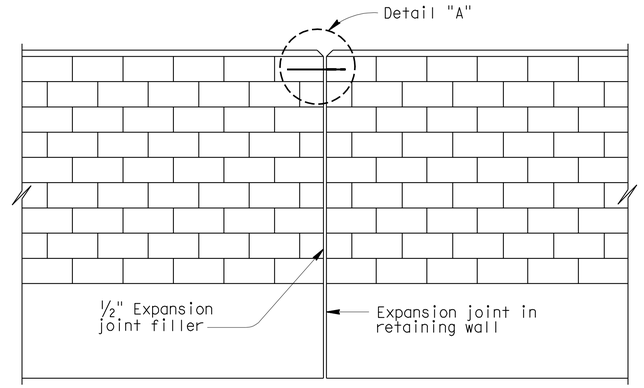

ALIGNMENT KEY DETAIL

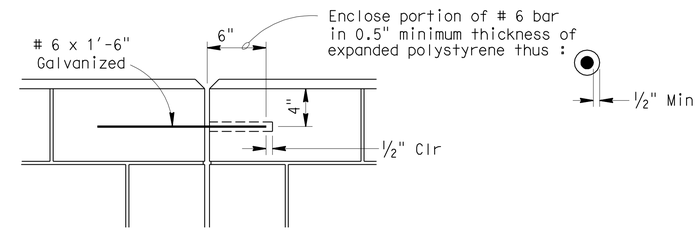

DETAIL A

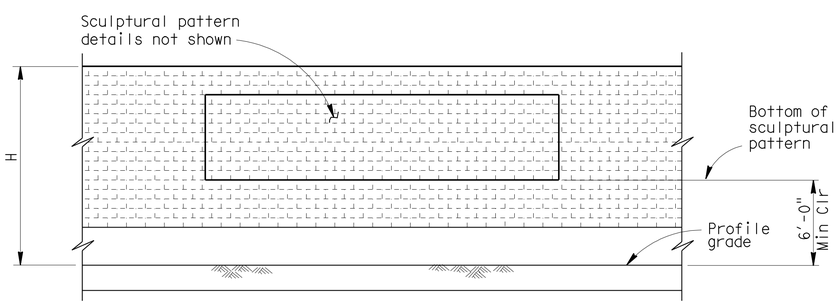

CLEARANCE DETAIL

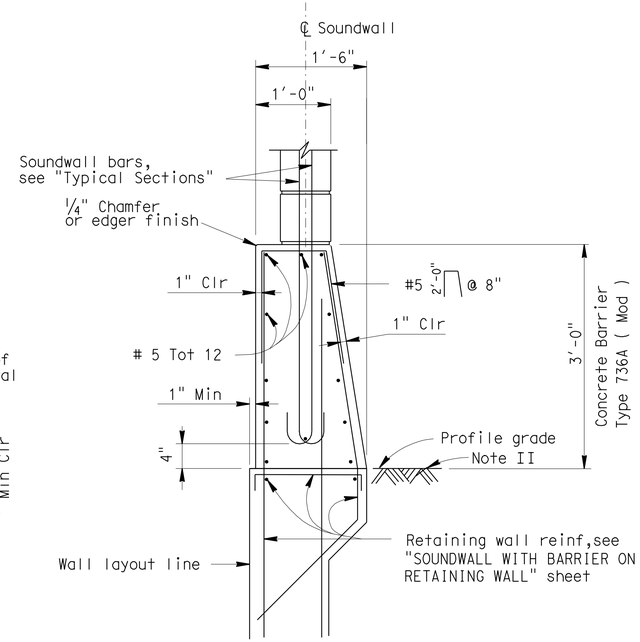

1 BARRIER SECTION

NOTES:

I : For details not shown, see "RETAINING WALL WITH SOUNDWALL" sheets.

II : Slope ground at traffic side of barrier to drain. Maximum slope ±10%. See Standard Plan B11-56, Note D.

DESIGN NOTES

DESIGN

Uniform Building Code, 1997 Edition and the Bridge Design Specifications.

DESIGN WIND LOAD

33 PSF

DESIGN SEISMIC LOAD

0.57 Dead load

REINFORCED CONCRETE

f'c = 3250 PSI
fy = 60 KSI

CONCRETE MASONRY

REGULAR STRENGTH	HIGH STRENGTH	
f'm = 1500 PSI	f'm = 2000 PSI	f'm = 2500 PSI
f_b = 1500 PSI	f_b = 660 PSI	f_b = 830 PSI
fs = 24.0 KSI	fs = 24.0 KSI	fs = 24000 PSI
n = 25.8	n = 19.3	n = 15.5

LOAD FACTORS AND LOAD COMBINATIONS

Working Stress Design (WSD) Percentage of unit stress

Group 1: D + E + SC 100%
Group 2: D + W + SC + E 100%
Group 3: D + 0.71 EQD + E 100%

Where:

D = Dead load
E = Lateral earth pressure
SC = Live load surcharge
W = Wind load
EQD = Seismic dead load

Load Factor Design (LFD)

Group A: βD +1.7 E + 1.7 SC
Group B: βD +1.7 E + 1.3 W
Group C: βD +1.3 E + 1.0 EQE
Group D: βD +1.3 E + 1.0 EQD
Group E: βD +1.1 E + 0.85 (EQE + EQD)

Where : β = 0.9 or 1.2, whichever controls in design
D = Dead load
E = Lateral earth pressure
SC = Live load surcharge
W = Wind load
EQD = Seismic dead load
EQE = Seismic earth load

STRENGTH REDUCTION FACTORS, Ø

Reinforced concrete:
For flexure ---------- Ø=0.90
For shear ---------- Ø=0.85

Concrete masonry:
For flexure ---------- Ø=0.80
For shear ---------- Ø=0.60

Foundations :

See "RETAINING WALL WITH SOUNDWALL" sheets.

STANDARD DRAWING

FILE NO. Revised xs15-130-2e

APPROVED BY T SATTER
RESPONSIBLE TECHNICAL SPECIALIST
APPROVAL DATE 4-15-08

RELEASED BY ROBERTO LACALLE
RESPONSIBLE OFFICE CHIEF
RELEASE DATE 4-15-08

1 Modified Detail

STATE OF CALIFORNIA
DEPARTMENT OF TRANSPORTATION

DIVISION OF ENGINEERING SERVICES

BRIDGE NO. 53E0136
POST MILE 22.5

SOUND WALL 1190

SOUNDWALL - MASONRY BLOCK WITH BARRIER ON RETAINING WALL

DETAILS NO. 2

DS OSD 2147A (ENGLISH STANDARD DRAWING "XS" BORDER REV. 01/11/08)

ORIGINAL SCALE IN INCHES FOR REDUCED PLANS 0 1 2 3

CU 07
EA 002341

DISREGARD PRINTS BEARING EARLIER REVISION DATES

REVISION DATES (PRELIMINARY STAGE ONLY) 12-08 01-20-10

SHEET 17 OF 22

USERNAME => trmartin

53e0136-u-xs15-130-2e

DATE PLOTTED => 23-JUN-2010 TIME PLOTTED => 08:08

DIST	COUNTY	ROUTE	POST MILES TOTAL PROJECT	SHEET No	TOTAL SHEETS
07	LA	710	22.6	74	100

Fred Feng 4-15-10
REGISTERED CIVIL ENGINEER DATE

6-21-10
PLANS APPROVAL DATE

REGISTERED PROFESSIONAL ENGINEER Fred Y. Feng No. C 32992 Exp. 6-30-2010 CIVIL STATE OF CALIFORNIA

The State of California or its officers or agents shall not be responsible for the accuracy or completeness of electronic copies of this plan sheet.

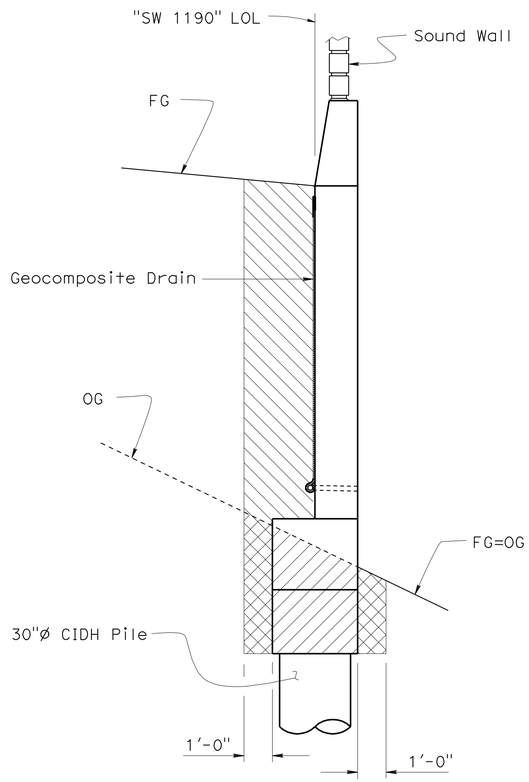

SOUND WALL ON RETAINING WALL WITH TIEBACK ANCHORS

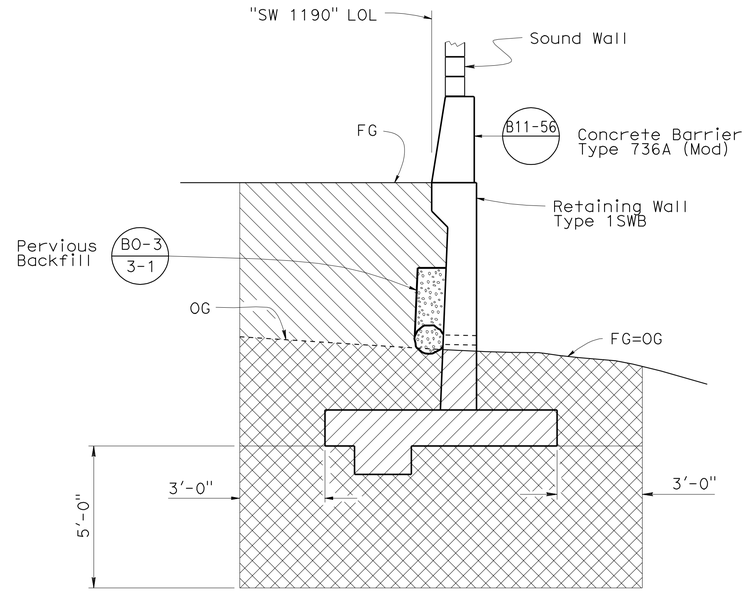

SOUND WALL ON RETAINING WALL

* Sta 289+30.00 to Sta 292+30.00

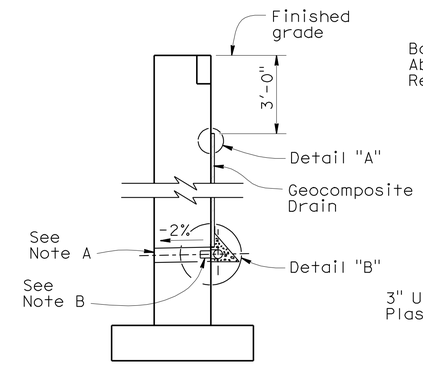

WALL SECTION

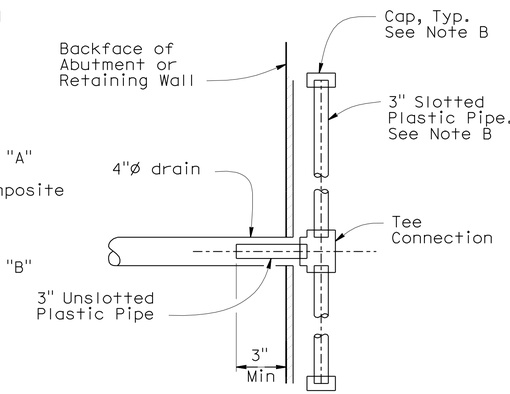

SECTION A-A

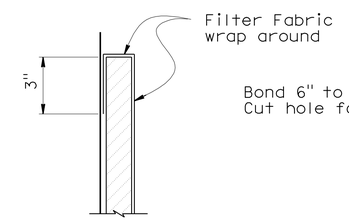

DETAIL "A"

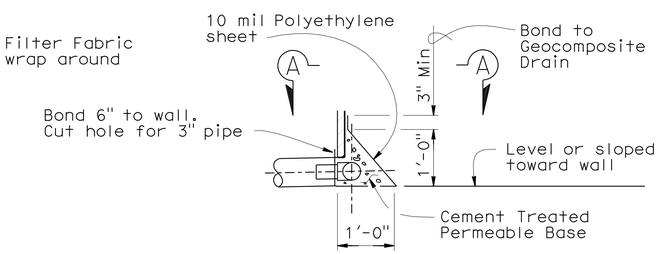

DETAIL "B"

WEEP HOLE AND GEOCOMPOSITE DRAIN

ALTERNATIVE TO BRIDGE DETAIL B0-3 / 3-1

NOTES:

A. 4"Ø drains at intermediate sag points and at 25' max center to center (9' c-c for Type 3 and 9'-3" c-c for Type 4 retaining walls).
For walls adjacent to sidewalks or curbs, provide 4" cast iron or asbestos cement pipe under the sidewalk to discharge through curb face.
Exposed wall drains shall be located 3"± above finished grade.

B. Geocomposite drain, cement treated permeable base, and 3"Ø slotted plastic pipe continuous behind retaining wall or abutment. Cap ends of pipe. Provide "Tee" connection at each 4"Ø drain.

C. Connect the low end of plastic pipe to the main outlet pipe as applicable.

NOTE:

1. For details of Structure Excavation (Type Y-1) (Aerially Deposited Lead) not shown elsewhere, see Road Plans.

LEGEND:

Structure Excavation (Type Y-1) (Aerially Deposited Lead)

Structure Backfill (Retaining Wall)

* For limits of Excavation (Type Y-1) and Backfill before and after these stations, use Standard Plan A62B

LIMITS OF EXCAVATION AND BACKFILL

No Scale

NOTE:
THE CONTRACTOR SHALL VERIFY ALL CONTROLLING FIELD DIMENSIONS BEFORE ORDERING OR FABRICATING ANY MATERIAL.

	BY	CHECKED
DESIGN	F. Feng	D. Chung/D. Vargas
DETAILS	S. Cholda	T. Menard
QUANTITIES	F. Feng/S. Yip	D Vargas/S. Moradi

STATE OF CALIFORNIA
DEPARTMENT OF TRANSPORTATION

DIVISION OF ENGINEERING SERVICES
STRUCTURE DESIGN
DESIGN BRANCH 15

BRIDGE NO. 53E0136
POST MILE 22.5

SOUND WALL NO. 1190
EXCAVATION AND BACKFILL

STRUCTURES DESIGN DETAIL SHEET (ENGLISH) (REV. 10/25/05)

ORIGINAL SCALE IN INCHES FOR REDUCED PLANS 0 1 2 3

CU 07
EA 002341

DISREGARD PRINTS BEARING EARLIER REVISION DATES

REVISION DATES: 02-25-10 03-18-10 04-12-10 04-14-10 04-20-10

SHEET 18 OF 22

FILE => 53e0136-w-misc.dgn

USERNAME => trmartin DATE PLOTTED => 23-JUN-2010 TIME PLOTTED => 08:03

DIST	COUNTY	ROUTE	POST MILES TOTAL PROJECT	SHEET No	TOTAL SHEETS
07	LA	710	22.6	75	100

REGISTERED CIVIL ENGINEER 11-5-09

6-21-10
PLANS APPROVAL DATE

REGISTERED PROFESSIONAL ENGINEER
Nadeem Srour
No. C57648
Exp. 12-31-09
CIVIL
STATE OF CALIFORNIA

The State of California or its officers or agents shall not be responsible for the accuracy or completeness of electronic copies of this plan sheet.

This LOTB sheet was prepared in accordance with the Caltrans Soil & Rock Logging; Classification; & Presentation Manual (June 2007).

BENCH MARK

No. CP1114
SET PK NAIL @ GORE AREA OF SB 710 FWY
OFF-RAMP TO WASHINGTON BLVD; 15.5′ N/O AC EDGE.
N 1824678.291
E 6509291.942
ELEV 176.93′

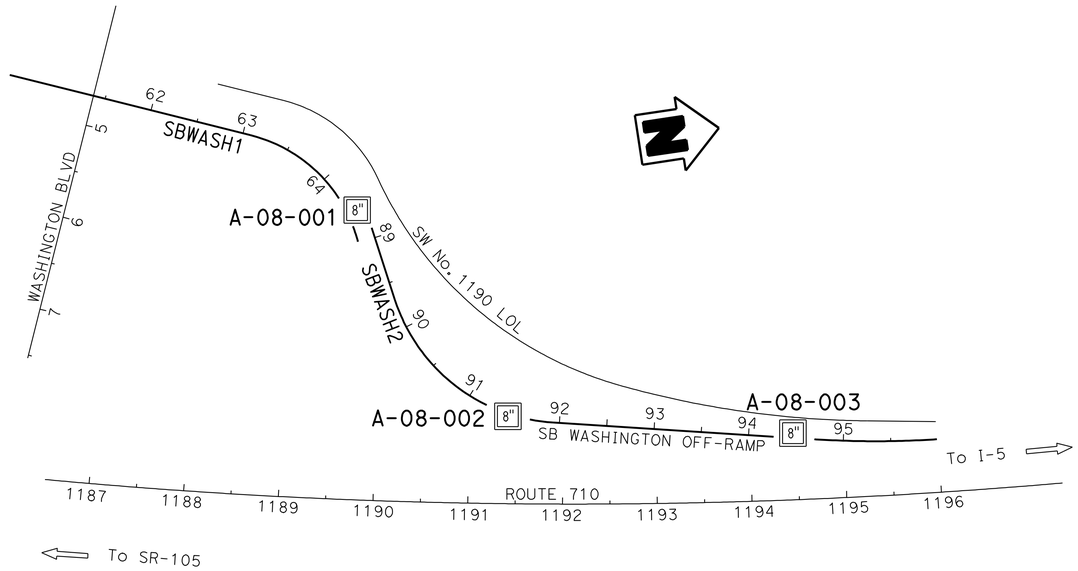

PLAN
1"=80′

NOTE:

No groundwater encountered during field investigation.

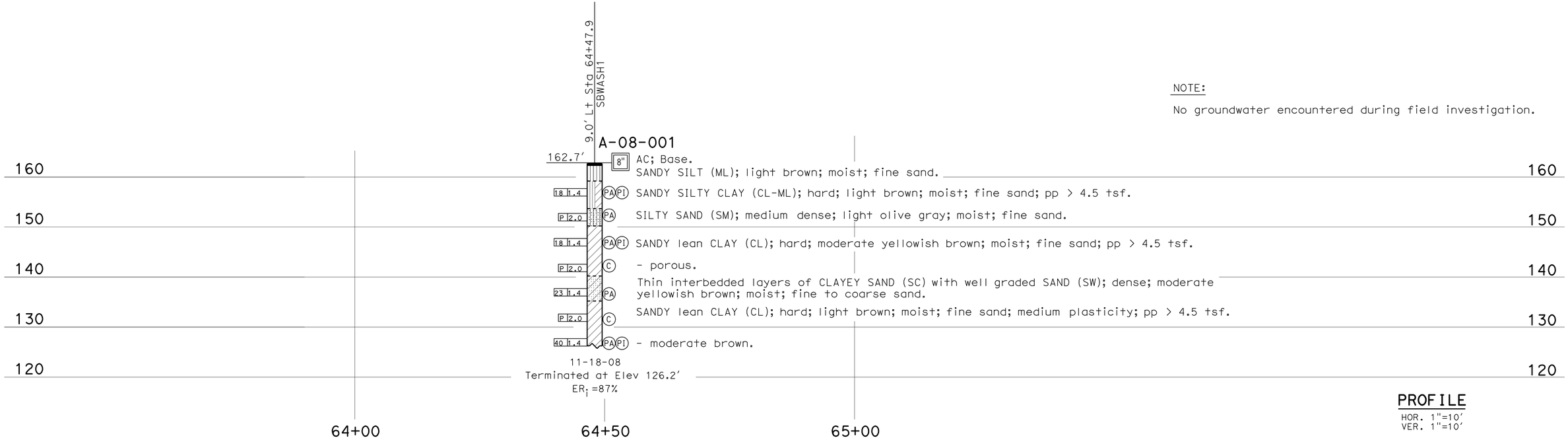

PROFILE
HOR. 1"=10′
VER. 1"=10′

ENGINEERING SERVICES	GEOTECHNICAL SERVICES	STATE OF CALIFORNIA DEPARTMENT OF TRANSPORTATION	DIVISION OF ENGINEERING SERVICES STRUCTURE DESIGN DESIGN BRANCH	BRIDGE NO. 53E0136 / POST MILES 22.5	SOUND WALL NO. 1190 LOG OF TEST BORINGS 1 OF 4
FUNCTIONAL SUPERVISOR NAME: S. Sukiasian	DRAWN BY: W. Tang 08/09 CHECKED BY: Q. Liao	FIELD INVESTIGATION BY: N. Srour			

OGS CIVIL LOG OF TEST BORINGS SHEET

ORIGINAL SCALE IN INCHES FOR REDUCED PLANS 0 1 2 3

CU 07
EA 002341

DISREGARD PRINTS BEARING EARLIER REVISION DATES

REVISION DATES: 09-08-09 09-24-09 10-23-09 01-20-10

SHEET 19 OF 22

FILE => 53e0136-z-1tb01.dgn

USERNAME => trmartin DATE PLOTTED => 23-JUN-2010 TIME PLOTTED => 08:04

DIST	COUNTY	ROUTE	POST MILES TOTAL PROJECT	SHEET No	TOTAL SHEETS
07	LA	710	22.6	76	100

REGISTERED CIVIL ENGINEER 11-5-09

6-21-10
PLANS APPROVAL DATE

REGISTERED PROFESSIONAL ENGINEER
Nadeem Srour
No. C57648
Exp. 12-31-09
CIVIL
STATE OF CALIFORNIA

The State of California or its officers or agents shall not be responsible for the accuracy or completeness of electronic copies of this plan sheet.

This LOTB sheet was prepared in accordance with the Caltrans Soil & Rock Logging; Classification; & Presentation Manual (June 2007).

FOR PLAN VIEW; SEE
"LOG OF TEST BORINGS 1 OF 4"

NOTE:

No groundwater encountered during field investigation.

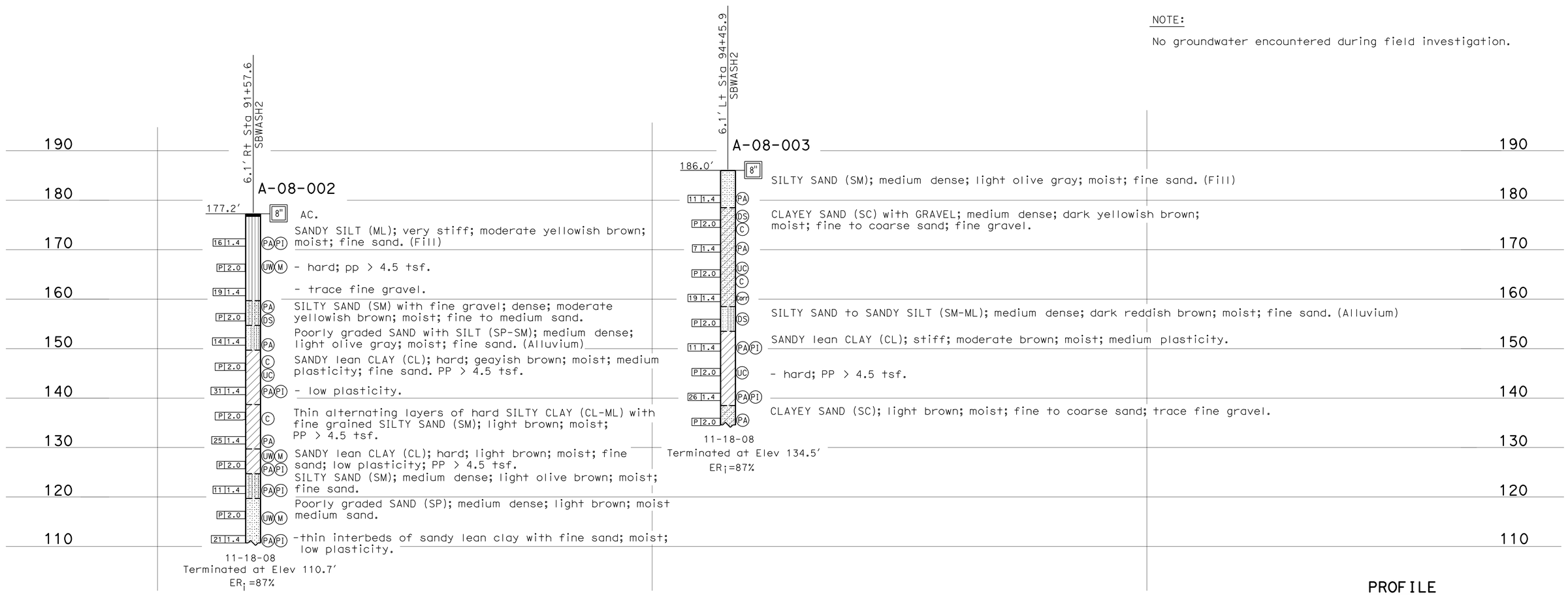

PROFILE
HOR. 1"=30'
VER. 1"=10'

ENGINEERING SERVICES	GEOTECHNICAL SERVICES	STATE OF CALIFORNIA DEPARTMENT OF TRANSPORTATION	DIVISION OF ENGINEERING SERVICES STRUCTURE DESIGN DESIGN BRANCH	BRIDGE NO. 53E0136	SOUND WALL NO. 1190
FUNCTIONAL SUPERVISOR NAME: S. Sukiasian	DRAWN BY: W. Tang 08/09 CHECKED BY: Q. Liao	FIELD INVESTIGATION BY: N. Srour		POST MILES 22.5	LOG OF TEST BORINGS 2 OF 4

OGS CIVIL LOG OF TEST BORINGS SHEET

ORIGINAL SCALE IN INCHES FOR REDUCED PLANS 0 1 2 3

CU 07
EA 002341

DISREGARD PRINTS BEARING EARLIER REVISION DATES

REVISION DATES: 09-08-09 09-24-09 10-23-09 01-20-10

SHEET 20 OF 22

FILE => 53e0136-z-1tb02.dgn

USERNAME => trmartin DATE PLOTTED => 23-JUN-2010 TIME PLOTTED => 08:04

REFERENCE: CALTRANS SOIL & ROCK LOGGING, CLASSIFICATION, AND PRESENTATION MANUAL (JUNE 2007)

DIST	COUNTY	ROUTE	POST MILES TOTAL PROJECT	SHEET No	TOTAL SHEETS
07	LA	710	22.6	77	100

REGISTERED CIVIL ENGINEER 11-5-09

6-21-10
PLANS APPROVAL DATE

REGISTERED PROFESSIONAL ENGINEER Nadeem Srour No. C57648 Exp. 12-31-09 CIVIL STATE OF CALIFORNIA

The State of California or its officers or agents shall not be responsible for the accuracy or completeness of electronic copies of this plan sheet.

CEMENTATION

Description	Criteria
Weak	Crumbles or breaks with handling or little finger pressure.
Moderate	Crumbles or breaks with considerable finger pressure.
Strong	Will not crumble or break with finger pressure.

CONSISTENCY OF COHESIVE SOILS

Description	Unconfined Compressive Strength (tsf)	Pocket Penetrometer Measurement (tsf)	Torvane Measurement (tsf)	Field Approximation
Very Soft	< 0.25	< 0.25	< 0.12	Easily penetrated several inches by fist
Soft	0.25 to 0.50	0.25 to 0.50	0.12 to 0.25	Easily penetrated several inches by thumb
Medium Stiff	0.50 to 1.0	0.50 to 1.0	0.25 to 0.50	Penetrated several inches by thumb with moderate effort
Stiff	1 to 2	1 to 2	0.50 to 1.0	Readily indented by thumb but penetrated only with great effort
Very Stiff	2 to 4	2 to 4	1.0 to 2.0	Readily indented by thumbnail
Hard	> 4.0	> 4.0	> 2.0	Indented by thumbnail with difficulty

BOREHOLE IDENTIFICATION

Symbol	Hole Type	Description
Size	A	Auger Boring
Size	R P	Rotary drilled boring Rotary percussion boring (air)
Size	R	Rotary drilled diamond core
Size	HD HA	Hand driven (1-inch soil tube) Hand Auger
●	D	Dynamic Cone Penetration Boring
▲	CPT	Cone Penetration Test (ASTM D 5778-95)
⬚	O	Other

Note: Size in inches.

PLASTICITY OF FINE-GRAINED SOILS

Description	Criteria
Nonplastic	A 1/8-inch thread cannot be rolled at any water content.
Low	The thread can barely be rolled and the lump cannot be formed when drier than the plastic limit.
Medium	The thread is easy to roll and not much time is required to reach the plastic limit. The thread cannot be rerolled after reaching the plastic limit. The lump crumbles when drier than the plastic limit.
High	It takes considerable time rolling and kneading to reach the plastic limit. The thread can be rerolled several times after reaching the plastic limit. The lump can be formed without crumbling when drier than the plastic limit.

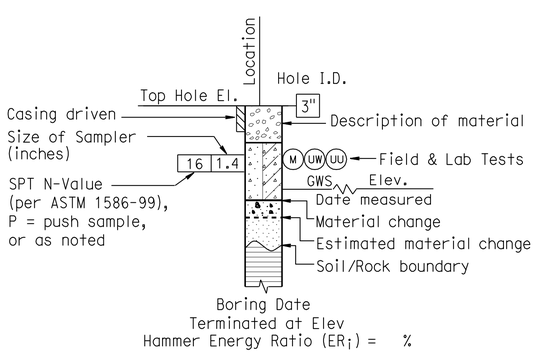

ROTARY BORING

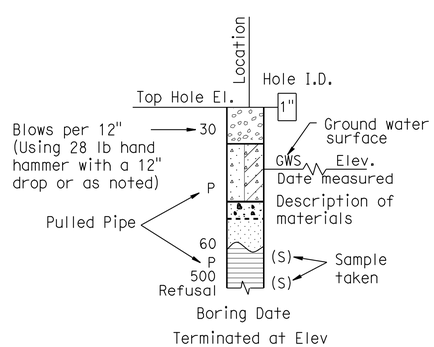

HAND BORING

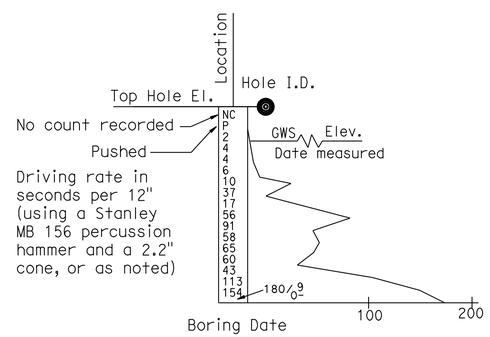

DYNAMIC CONE PENETRATION BORING

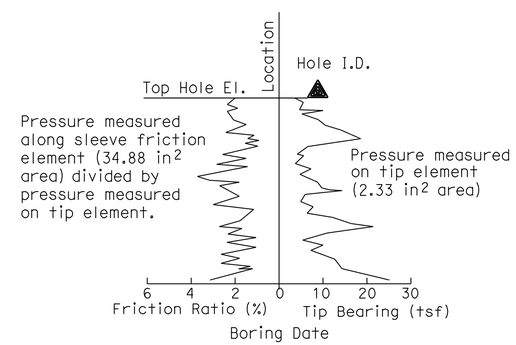

CONE PENETRATION TEST (CPT) SOUNDING

ENGINEERING SERVICES	GEOTECHNICAL SERVICES	STATE OF CALIFORNIA DEPARTMENT OF TRANSPORTATION	DIVISION OF ENGINEERING SERVICES STRUCTURE DESIGN DESIGN BRANCH	BRIDGE NO. 53E0136 / POST MILE 22.5	SOUND WALL NO. 1190 LOG OF TEST BORINGS 3 OF 4
	PREPARED BY: W. Tang 08/09				

GS LOTB SOIL LEGEND

ORIGINAL SCALE IN INCHES FOR REDUCED PLANS 0 1 2 3

CU 07
EA 002341

DISREGARD PRINTS BEARING EARLIER REVISION DATES

REVISION DATES 01-20-10

SHEET 21 OF 22

FILE => 53e0136-z-1tb03.dgn

USERNAME => trienard DATE PLOTTED => 23-JUN-2010 TIME PLOTTED => 07:40

REFERENCE: CALTRANS SOIL & ROCK LOGGING, CLASSIFICATION, AND PRESENTATION MANUAL (JUNE 2007)

DIST	COUNTY	ROUTE	POST MILES TOTAL PROJECT	SHEET No	TOTAL SHEETS
07	LA	710	22.6	78	100

REGISTERED CIVIL ENGINEER 11-5-09

6-21-10
PLANS APPROVAL DATE

The State of California or its officers or agents shall not be responsible for the accuracy or completeness of electronic copies of this plan sheet.

REGISTERED PROFESSIONAL ENGINEER
Nadeem Srour
No. C57648
Exp. 12-31-09
CIVIL
STATE OF CALIFORNIA

GROUP SYMBOLS AND NAMES

Graphic/Symbol	Group Names	Graphic/Symbol	Group Names
GW	Well-graded GRAVEL Well-graded GRAVEL with SAND	CL	Lean CLAY Lean CLAY with SAND Lean CLAY with GRAVEL SANDY lean CLAY SANDY lean CLAY with GRAVEL GRAVELLY lean CLAY GRAVELLY lean CLAY with SAND
GP	Poorly graded GRAVEL Poorly graded GRAVEL with SAND		
GW-GM	Well-graded GRAVEL with SILT Well-graded GRAVEL with SILT and SAND	CL-ML	SILTY CLAY SILTY CLAY with SAND SILTY CLAY with GRAVEL SANDY SILTY CLAY SANDY SILTY CLAY with GRAVEL GRAVELLY SILTY CLAY GRAVELLY SILTY CLAY with SAND
GW-GC	Well-graded GRAVEL with CLAY (or SILTY CLAY) Well-graded GRAVEL with CLAY and SAND (or SILTY CLAY and SAND)		
GP-GM	Poorly graded GRAVEL with SILT Poorly graded GRAVEL with SILT and SAND	ML	SILT SILT with SAND SILT with GRAVEL SANDY SILT SANDY SILT with GRAVEL GRAVELLY SILT GRAVELLY SILT with SAND
GP-GC	Poorly graded GRAVEL with CLAY (or SILTY CLAY) Poorly graded GRAVEL with CLAY and SAND (or SILTY CLAY and SAND)		
GM	SILTY GRAVEL SILTY GRAVEL with SAND	OL	ORGANIC lean CLAY ORGANIC lean CLAY with SAND ORGANIC lean CLAY with GRAVEL SANDY ORGANIC lean CLAY SANDY ORGANIC lean CLAY with GRAVEL GRAVELLY ORGANIC lean CLAY GRAVELLY ORGANIC lean CLAY with SAND
GC	CLAYEY GRAVEL CLAYEY GRAVEL with SAND		
GC-GM	SILTY, CLAYEY GRAVEL SILTY, CLAYEY GRAVEL with SAND	OL	ORGANIC SILT ORGANIC SILT with SAND ORGANIC SILT with GRAVEL SANDY ORGANIC SILT SANDY ORGANIC SILT with GRAVEL GRAVELLY ORGANIC SILT GRAVELLY ORGANIC SILT with SAND
SW	Well-graded SAND Well-graded SAND with GRAVEL		
SP	Poorly graded SAND Poorly graded SAND with GRAVEL	CH	Fat CLAY Fat CLAY with SAND Fat CLAY with GRAVEL SANDY fat CLAY SANDY fat CLAY with GRAVEL GRAVELLY fat CLAY GRAVELLY fat CLAY with SAND
SW-SM	Well-graded SAND with SILT Well-graded SAND with SILT and GRAVEL		
SW-SC	Well-graded SAND with CLAY (or SILTY CLAY) Well-graded SAND with CLAY and GRAVEL (or SILTY CLAY and GRAVEL)	MH	Elastic SILT Elastic SILT with SAND Elastic SILT with GRAVEL SANDY elastic SILT SANDY elastic SILT with GRAVEL GRAVELLY elastic SILT GRAVELLY elastic SILT with SAND
SP-SM	Poorly graded SAND with SILT Poorly graded SAND with SILT and GRAVEL		
SP-SC	Poorly graded SAND with CLAY (or SILTY CLAY) Poorly graded SAND with CLAY and GRAVEL (or SILTY CLAY and GRAVEL)	OH	ORGANIC fat CLAY ORGANIC fat CLAY with SAND ORGANIC fat CLAY with GRAVEL SANDY ORGANIC fat CLAY SANDY ORGANIC fat CLAY with GRAVEL GRAVELLY ORGANIC fat CLAY GRAVELLY ORGANIC fat CLAY with SAND
SM	SILTY SAND SILTY SAND with GRAVEL		
SC	CLAYEY SAND CLAYEY SAND with GRAVEL	OH	ORGANIC elastic SILT ORGANIC elastic SILT with SAND ORGANIC elastic SILT with GRAVEL SANDY ORGANIC elastic SILT SANDY ORGANIC elastic SILT with GRAVEL GRAVELLY ORGANIC elastic SILT GRAVELLY ORGANIC elastic SILT with SAND
SC-SM	SILTY, CLAYEY SAND SILTY, CLAYEY SAND with GRAVEL		
PT	PEAT	OL/OH	ORGANIC SOIL ORGANIC SOIL with SAND ORGANIC SOIL with GRAVEL SANDY ORGANIC SOIL SANDY ORGANIC SOIL with GRAVEL GRAVELLY ORGANIC SOIL GRAVELLY ORGANIC SOIL with SAND
	COBBLES COBBLES and BOULDERS BOULDERS		

FIELD AND LABORATORY TESTING

- (C) Consolidation (ASTM D 2435)
- (CL) Collapse Potential (ASTM D 5333)
- (CP) Compaction Curve (CTM 216)
- (CR) Corrosivity Testing (CTM 643, CTM 422, CTM 417)
- (CU) Consolidated Undrained Triaxial (ASTM D 4767)
- (DS) Direct Shear (ASTM D 3080)
- (EI) Expansion Index (ASTM D 4829)
- (M) Moisture Content (ASTM D 2216)
- (OC) Organic Content-% (ASTM D 2974)
- (P) Permeability (CTM 220)
- (PA) Particle Size Analysis (ASTM D 422)
- (PI) Plasticity Index (AASHTO T 90) Liquid Limit (AASHTO T 89)
- (PL) Point Load Index (ASTM D 5731)
- (PM) Pressure Meter
- (PP) Pocket Penetrometer
- (R) R-Value (CTM 301)
- (SE) Sand Equivalent (CTM 217)
- (SG) Specific Gravity (AASHTO T 100)
- (SL) Shrinkage Limit (ASTM D 427)
- (SW) Swell Potential (ASTM D 4546)
- (TV) Pocket Torvane
- (UC) Unconfined Compression-Soil (ASTM D 2166) Unconfined Compression-Rock (ASTM D 2938)
- (UU) Unconsolidated Undrained Triaxial (ASTM D 2850)
- (UW) Unit Weight (ASTM D 4767)
- (VS) Vane Shear (AASHTO T 223)

APPARENT DENSITY OF COHESIONLESS SOILS

Description	SPT N_{60} (Blows / 12 inches)
Very loose	0 - 4
Loose	5 - 10
Medium Dense	11 - 30
Dense	31 - 50
Very Dense	> 50

MOISTURE

Description	Criteria
Dry	Absence of moisture, dusty, dry to the touch
Moist	Damp but no visible water
Wet	Visible free water, usually soil is below water table

PERCENT OR PROPORTION OF SOILS

Description	Criteria
Trace	Particles are present but estimated to be less than 5%
Few	5 to 10%
Little	15 to 25%
Some	30 to 45%
Mostly	50 to 100%

PARTICLE SIZE

Description		Size
Boulder		> 12"
Cobble		3" to 12"
Gravel	Coarse	3/4" to 3"
	Fine	No. 4 to 3/4"
Sand	Coarse	No. 10 to No. 4
	Medium	No. 40 to No. 10
	Fine	No. 200 to No. 40

ENGINEERING SERVICES

GEOTECHNICAL SERVICES
PREPARED BY:
W. Tang 08/09

STATE OF CALIFORNIA
DEPARTMENT OF TRANSPORTATION

DIVISION OF ENGINEERING SERVICES
STRUCTURE DESIGN
DESIGN BRANCH

BRIDGE NO. 53E0136
POST MILE 22.5

SOUND WALL NO. 1190
LOG OF TEST BORINGS 4 OF 4

GS LOTB SOIL LEGEND

ORIGINAL SCALE IN INCHES FOR REDUCED PLANS 0 1 2 3

CU 07
EA 002341

DISREGARD PRINTS BEARING EARLIER REVISION DATES
REVISION DATES: 05-21-09 01-20-10

SHEET 22 OF 22

FILE => 53e0136-z-ltb04.dgn

USERNAME => rtrenard DATE PLOTTED => 23-JUN-2010 TIME PLOTTED => 07:40

DIST	COUNTY	ROUTE	POST MILES TOTAL PROJECT	SHEET No	TOTAL SHEETS
07	LA	710	22.6	79	100

Fred Feng 4-15-10
REGISTERED CIVIL ENGINEER DATE

6-21-10
PLANS APPROVAL DATE

REGISTERED PROFESSIONAL ENGINEER Fred Y. Feng No. C 32992 Exp. 6-30-2010 CIVIL STATE OF CALIFORNIA

The State of California or its officers or agents shall not be responsible for the accuracy or completeness of electronic copies of this plan sheet.

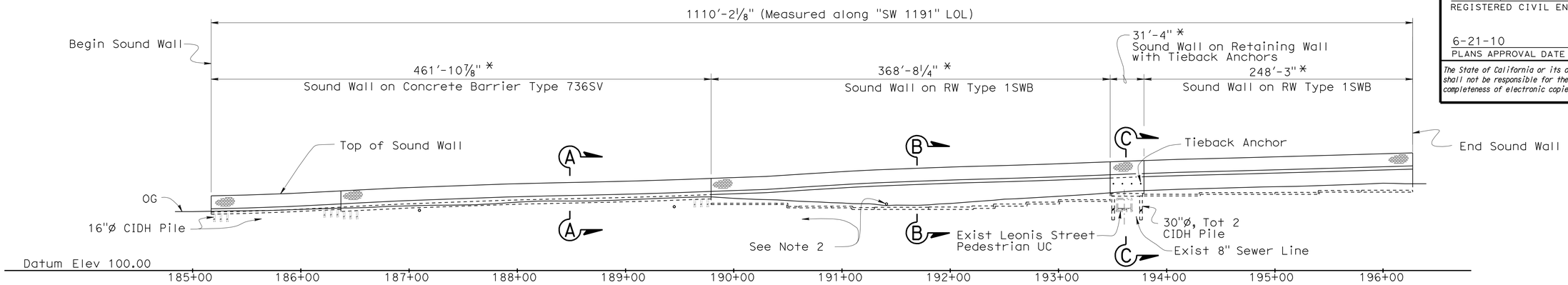

ELEVATION (DEVELOPED)

1"=50'

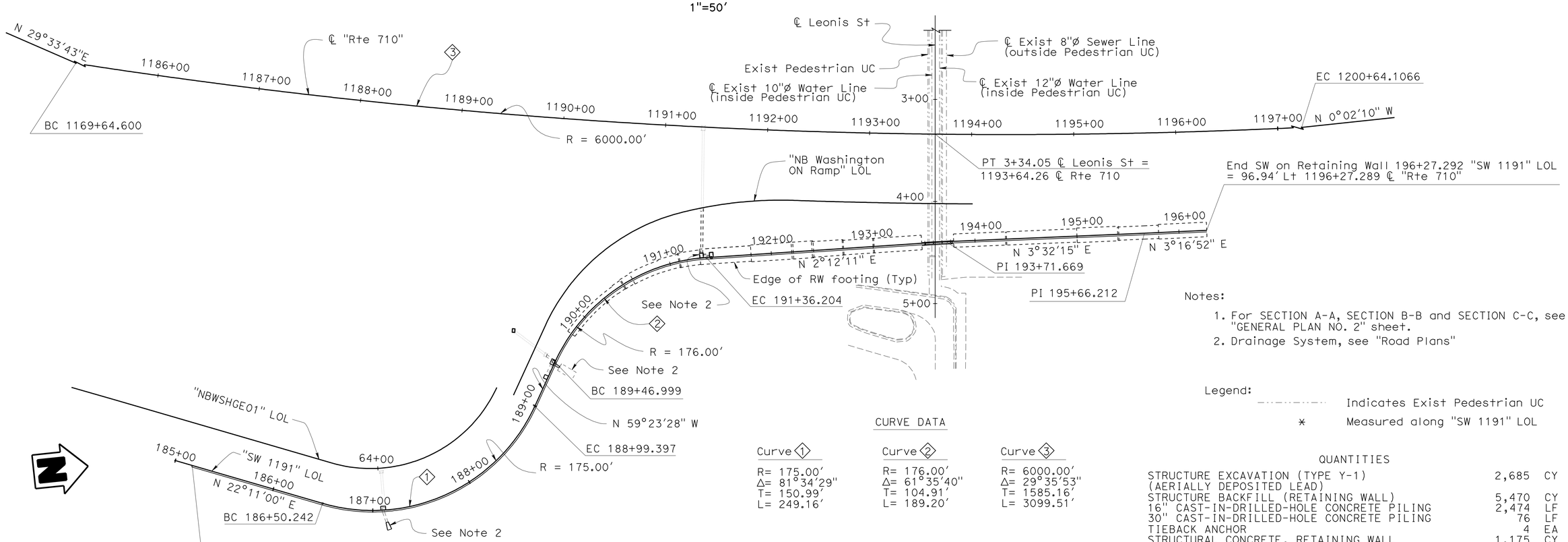

PLAN

1"=50'

Notes:

1. For SECTION A-A, SECTION B-B and SECTION C-C, see "GENERAL PLAN NO. 2" sheet.
2. Drainage System, see "Road Plans"

Legend:

Indicates Exist Pedestrian UC

* Measured along "SW 1191" LOL

CURVE DATA

Curve 1	Curve 2	Curve 3
R= 175.00'	R= 176.00'	R= 6000.00'
Δ= 81°34'29"	Δ= 61°35'40"	Δ= 29°35'53"
T= 150.99'	T= 104.91'	T= 1585.16'
L= 249.16'	L= 189.20'	L= 3099.51'

QUANTITIES

STRUCTURE EXCAVATION (TYPE Y-1) (AERIALLY DEPOSITED LEAD)	2,685	CY
STRUCTURE BACKFILL (RETAINING WALL)	5,470	CY
16" CAST-IN-DRILLED-HOLE CONCRETE PILING	2,474	LF
30" CAST-IN-DRILLED-HOLE CONCRETE PILING	76	LF
TIEBACK ANCHOR	4	EA
STRUCTURAL CONCRETE, RETAINING WALL	1,175	CY
SOUND WALL (MASONRY BLOCK)	13,322	SQFT
BAR REINFORCING STEEL (RETAINING WALL)	148,900	LB
CONCRETE BARRIER (TYPE 736A MOD)	617	LF
CONCRETE BARRIER (TYPE 736SV MOD)	31	LF
CONCRETE BARRIER (TYPE 736SV)	462	LF

NOTE:
THE CONTRACTOR SHALL VERIFY ALL CONTROLLING FIELD DIMENSIONS BEFORE ORDERING OR FABRICATING ANY MATERIAL.

Traci Menard
DESIGN ENGINEER

	BY	CHECKED		BY	CHECKED
DESIGN	F. Feng	D. Chung/D. Vargas			
DETAILS	S. Cholda	T. Menard	LAYOUT	F. Feng	D. Vargas
QUANTITIES	F. Feng/S. Yip	D. Vargas/S. Moradi	SPECIFICATIONS	B. Sharma/K. Ellingson	PLANS AND SPECS COMPARED F. Feng

STATE OF CALIFORNIA
DEPARTMENT OF TRANSPORTATION

DIVISION OF ENGINEERING SERVICES
STRUCTURE DESIGN
DESIGN BRANCH 15

BRIDGE NO. 53E0137
POST MILE 22.5

SOUND WALL NO. 1191
GENERAL PLAN NO. 1

ORIGINAL SCALE IN INCHES FOR REDUCED PLANS 0 1 2 3

CU 07
EA 002341

DISREGARD PRINTS BEARING EARLIER REVISION DATES

REVISION DATES: 3-18-09 3-12-10 3-22-10 4-06-10 4-13-10 4-12-10 04-19-10 04-20-10 04-22-10 04-23-10

SHEET 1 OF 22

STRUCTURES DESIGN GENERAL PLAN SHEET (ENGLISH) (REV.07-24-06)

FILE => 53e0137-a-gp01.dgn

USERNAME => trlenard DATE PLOTTED => 23-JUN-2010 TIME PLOTTED => 07:40

DIST	COUNTY	ROUTE	POST MILES TOTAL PROJECT	SHEET No	TOTAL SHEETS
07	LA	710	22.6	80	100

Fred Feng 4-15-10
REGISTERED CIVIL ENGINEER DATE

6-21-10
PLANS APPROVAL DATE

REGISTERED PROFESSIONAL ENGINEER Fred Y. Feng No. C 32992 Exp. 6-30-2010 CIVIL STATE OF CALIFORNIA

The State of California or its officers or agents shall not be responsible for the accuracy or completeness of electronic copies of this plan sheet.

Notes:

1. 2′ - (Sta 185+17.109 "SW 1191" LOL to Sta 186+37.018 "SW 1191" LOL)
   4′ - (Sta 186+37.018 "SW 1191" LOL to Sta 189+79.021 "SW 1191" LOL)
2. For Dimensions not shown, see "SOUND WALL DETAILS NO. 5" sheet.
3. For Geocomposite Drain, see "SOUNDWALL DETAILS NO. 10" sheet.

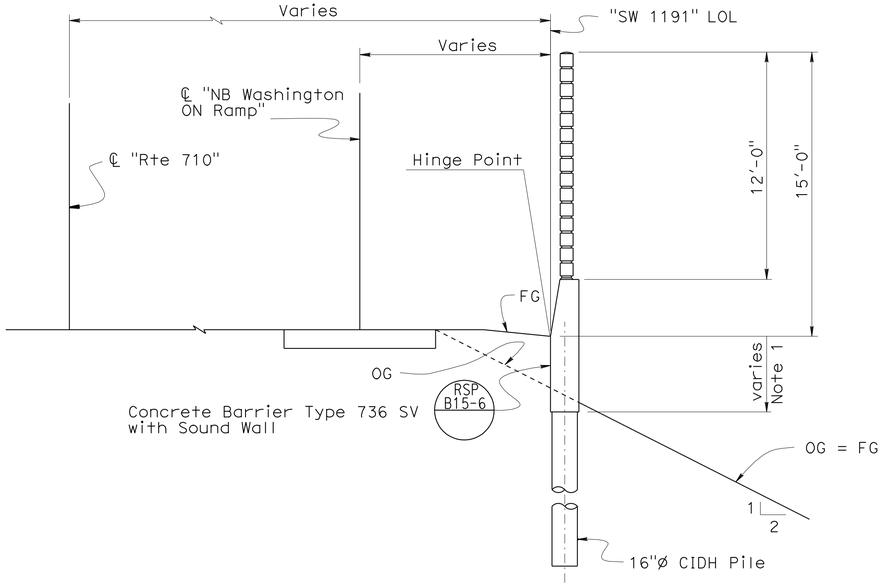

SECTION A-A

1/4" = 1′

SOUND WALL ON CONCRETE BARRIER

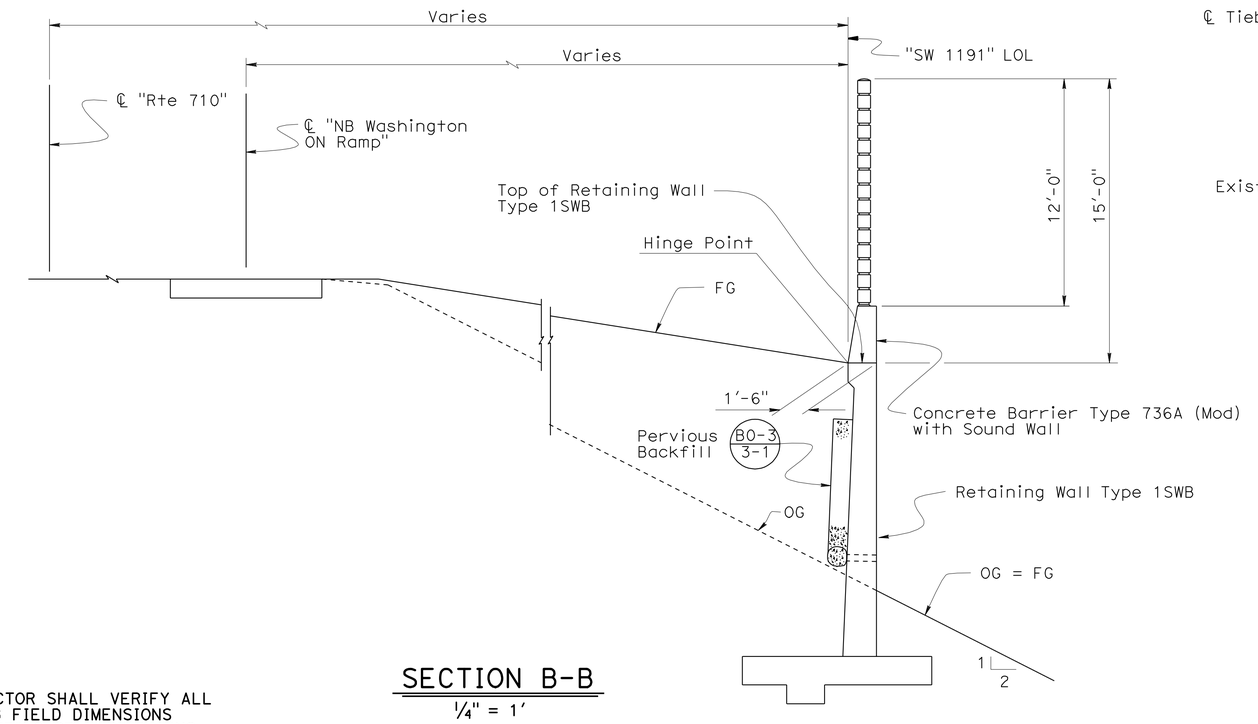

SECTION B-B

1/4" = 1′

SOUND WALL ON RETAINING WALL

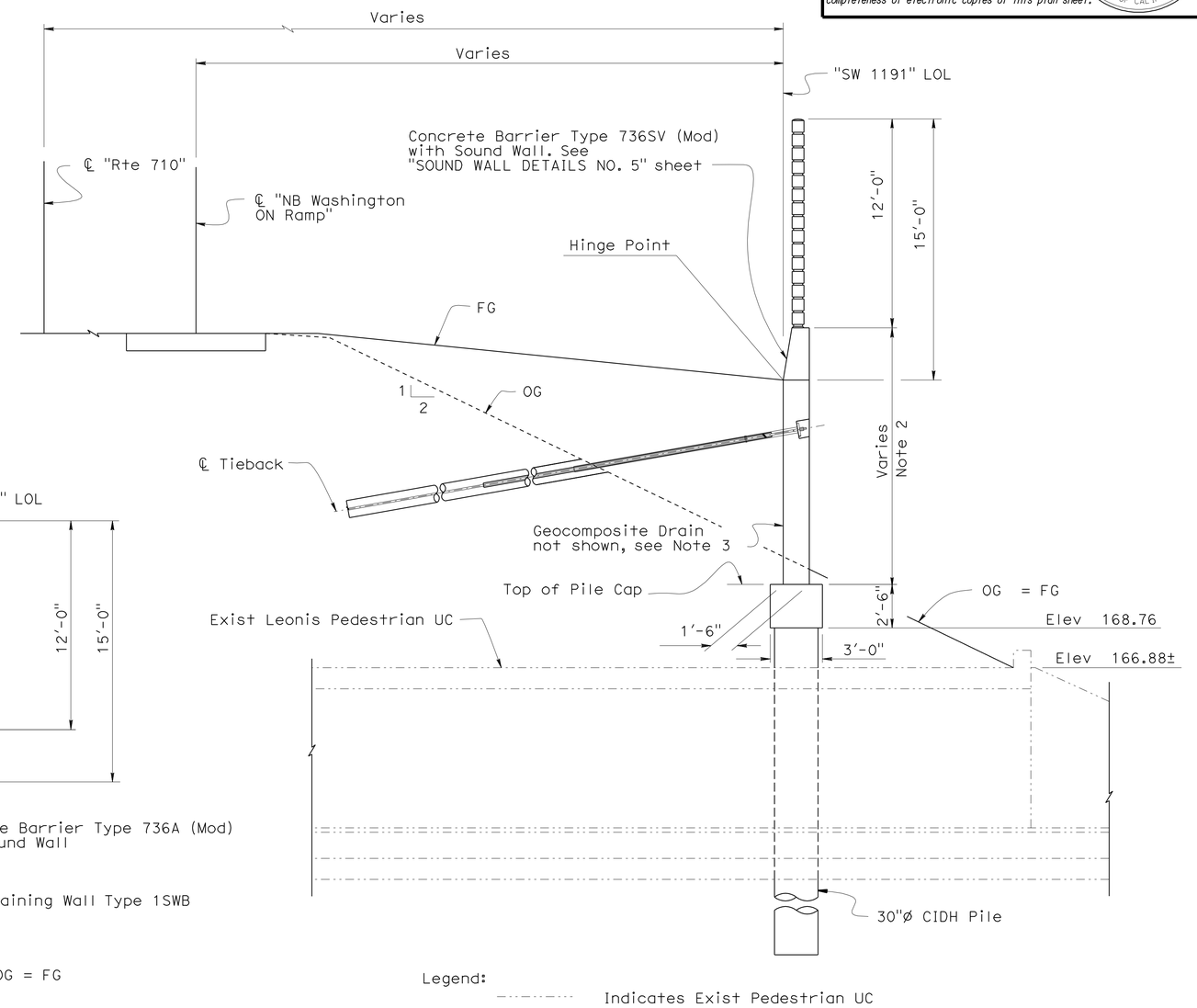

SECTION C-C

1/4" = 1′

SOUND WALL ON RETAINING WALL WITH TIEBACK ANCHORS

NOTE:
THE CONTRACTOR SHALL VERIFY ALL CONTROLLING FIELD DIMENSIONS BEFORE ORDERING OR FABRICATING ANY MATERIAL.

Traci Menard
DESIGN ENGINEER

	BY	CHECKED
DESIGN	A. Logus/F. Feng	D. Vargas/J. Higareda
DETAILS	S. Cholda	T. Menard
QUANTITIES	F. Feng/S. Yip	D. Vargas/S. Moradi

LIVE LOADING: HL93 W/"LOW-BOY"; PERMIT DESIGN VEHICLE

	BY	CHECKED
LAYOUT	F. Feng	D. Vargas
SPECIFICATIONS	B. Sharma/K. Ellingson	PLANS AND SPECS COMPARED F. Feng

ORIGINAL SCALE IN INCHES FOR REDUCED PLANS 0 1 2 3

STATE OF CALIFORNIA
DEPARTMENT OF TRANSPORTATION

DIVISION OF ENGINEERING SERVICES
STRUCTURE DESIGN
DESIGN BRANCH 15

CU 07
EA 002341

BRIDGE NO. 53E0137
POST MILE 22.5

SOUND WALL NO. 1191
GENERAL PLAN NO. 2

DISREGARD PRINTS BEARING EARLIER REVISION DATES

REVISION DATES: 3-12-09 3-17-10 4-13-10 4-19-10 4-20-10 5-06-09 6-24-09 12-14-09 01-14-10 01-28-10

SHEET 2 OF 22

USERNAME => tfrenard DATE PLOTTED => 23-JUN-2010 TIME PLOTTED => 07:40

STRUCTURES DESIGN GENERAL PLAN SHEET (ENGLISH) (REV.07-24-06)

FILE => 53e0137-a-gp02.dgn

DIST	COUNTY	ROUTE	POST MILES TOTAL PROJECT	SHEET No	TOTAL SHEETS
07	LA	710	22.6	81	100

Fred Feng 4-15-10
REGISTERED CIVIL ENGINEER DATE

6-21-10
PLANS APPROVAL DATE

REGISTERED PROFESSIONAL ENGINEER Fred Y. Feng No. C 32992 Exp. 6-30-2010 CIVIL STATE OF CALIFORNIA

The State of California or its officers or agents shall not be responsible for the accuracy or completeness of electronic copies of this plan sheet.

INDEX TO PLANS

SHEET NO.	TITLE
1.	GENERAL PLAN NO. 1
2.	GENERAL PLAN NO. 2
3.	INDEX TO PLANS
4.	FOUNDATION PLAN
5.	SOUND WALL DETAILS NO. 1
6.	SOUND WALL DETAILS NO. 2
7.	SOUND WALL DETAILS NO. 3
8.	SOUND WALL DETAILS NO. 4
9.	SOUND WALL DETAILS NO. 5
10.	SOUND WALL DETAILS NO. 6
11.	SOUND WALL DETAILS NO. 7
12.	SOUND WALL DETAILS NO. 8
13.	SOUND WALL DETAILS NO. 9
14.	SOUND WALL DETAILS NO. 10
15.	RETAINING WALL TYPE 1SWB
16.	SOUNDWALL - MASONARY BLOCK WITH BARRIER ON RETAINING WALL DETAILS NO. 1
17.	SOUNDWALL - MASONARY BLOCK WITH BARRIER ON RETAINING WALL DETAILS NO. 2
18.	EXCAVATION AND BACKFILL
19.	LOG OF TEST BORINGS 1 OF 4
20.	LOG OF TEST BORINGS 2 OF 4
21.	LOG OF TEST BORINGS 3 OF 4
22.	LOF OF TEST BORINGS 4 OF 4

STANDARD PLANS DATED MAY 2006

A10A	ACRONYMS AND ABBREVIATIONS (A - L)
A10B	ACRONYMS AND ABBREVIATIONS (M - Z)
A62B	LIMITS OF PAYMENT FOR EXCAVATION AND BACKFILL - BRIDGE SURCHARGE AND WALL
B0-3	BRIDGE DETAILS
B3-8	RETAINING WALL DETAILS NO. 1
B3-9	RETAINING WALL DETAILS NO. 2
B11-56	CONCRETE BARRIER TYPE 736
RSP B15-6	SOUND WALL MASONRY BLOCK ON TYPE 736S/SV BARRIER DETAILS (1)
RSP B15-7	SOUND WALL MASONRY BLOCK ON TYPE 736S/SV BARRIER DETAILS (2)
RSP B15-8	SOUND WALL MASONRY BLOCK ON TYPE 736S/SV BARRIER DETAILS (3)
B15-9	SOUND WALL MASONRY BLOCK MISCELLANEOUS DETAILS

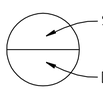

PILE DATA TABLE

LOCATION	PILE TYPE	DESIGN LOADING	NOMINAL RESISTANCE		DESIGN TIP ELEVATION (ft)	SPECIFIED TIP ELEVATION (ft)
			COMPRESSION	TENSION		
Sound Wall 1191	30" Dia CIDH	100 Kip	200 Kip	N/A	131.01	131.01

NOTE:
THE CONTRACTOR SHALL VERIFY ALL CONTROLLING FIELD DIMENSIONS BEFORE ORDERING OR FABRICATING ANY MATERIAL.

GENERAL NOTES

DESIGN: BRIDGE DESIGN SPECIFICATIONS - APRIL 2000 (1996 AASHTO with Interims and Revisions by CALTRANS).

SOUNDWALL MASONRY BLOCK ON TYPE 736S/SV BARRIER:

See 'DESIGN NOTES' in Standard Plans.
Use ϕ=25 deg. Min for CASE 1,
and ϕ=30 deg. Min for CASE 2.

SOUNDWALL ON RETAINING WALL WITH TIEBACKS:

Sound Wall Masonry Block:

See Standard Plans for SOUNDWALL MASONARY BLOCK ON TYPE 736S/SV BARRIER:.

Reinforced Concrete: fy = 60,000 psi

Prestressing Steel: (Tiebacks)

Rods - ASTM Designation: A722, Type II

T = Design force per Tieback = 60 kips

f_{pu} = Minimum tensile strength of prestressing steel (kips per in^2)

A_s (min) = Minimum cross sectional area of prestressing steel in Tieback tendon

$$A_s \text{ (min)} = \frac{1.5\ T}{0.75\ f_{pu}}$$

Structural Steel: (Working Stress Design)

ASTM Designation: A709/A709M, Grade 36

fy = 36 psi (Yield strength of steel)

fs = 20 psi (Allowable stress in steel)

Soil Parameters: (For determination of lateral earth pressures)

γ = 130 pcf

ϕ = 30 deg.

γ = Unit weight of soil

ϕ = Soil angle of internal friction

Wind Load: 30 psf

Seismic Load (Soil):

PGA = 0.55g
Kh = PGA/3
Kv = 0.0
Kae : Mononobe-Okabe Method

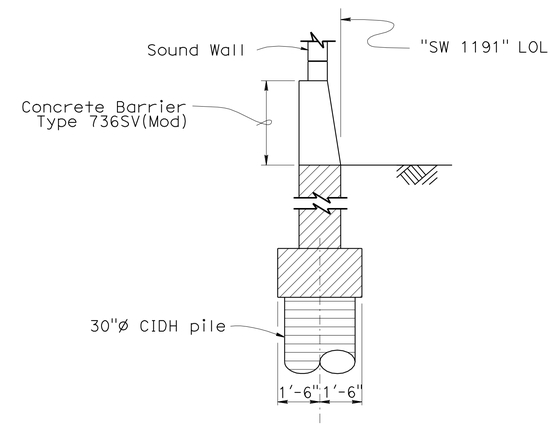

CONCRETE TYPE LIMITS (SOUND WALL ON RETAINING WALL WITH TIEBACK ANCHORS)

NO SCALE

Legend:

Indicates Structural Concrete (Retaining Wall) - 4000 psi at 28 days)

Indicates CIDH Pile Concrete

	BY	CHECKED
DESIGN	A. Logus	J. Higareda
DETAILS	S. Cholda	T. Menard
QUANTITIES	F. Feng/S. Yip	D Vargas/S. Moradi

STATE OF CALIFORNIA
DEPARTMENT OF TRANSPORTATION

DIVISION OF ENGINEERING SERVICES
STRUCTURE DESIGN
DESIGN BRANCH 15

BRIDGE NO. 53E0137
POST MILE 22.5

SOUND WALL NO. 1191
INDEX TO PLANS

STRUCTURES DESIGN DETAIL SHEET (ENGLISH) (REV. 10/25/05)

ORIGINAL SCALE IN INCHES FOR REDUCED PLANS 0 1 2 3

CU 07
EA 002341

DISREGARD PRINTS BEARING EARLIER REVISION DATES

REVISION DATES: 12-05-09 04-13-10 04-14-10 04-20-10 01-14-10 01-20-10 01-25-10 01-27-10 03-16-10 03-22-10

SHEET 3 OF 22

FILE => 53e0137-a-itp.dgn

USERNAME => trlenard DATE PLOTTED => 23-JUN-2010 TIME PLOTTED => 07:40

DIST	COUNTY	ROUTE	POST MILES TOTAL PROJECT	SHEET No	TOTAL SHEETS
07	LA	710	22.6	82	100

Fred Feng 4-15-10
REGISTERED CIVIL ENGINEER DATE

6-21-10
PLANS APPROVAL DATE

The State of California or its officers or agents shall not be responsible for the accuracy or completeness of electronic copies of this plan sheet.

REGISTERED PROFESSIONAL ENGINEER Fred Y. Feng No. C 32992 Exp. 6-30-2010 CIVIL STATE OF CALIFORNIA

Headwall Soffit Points

1 - 118.990 Lt. ℄ Rte 710, Sta 1193+68.340, Elev 165.441
2 - 118.735 Lt. ℄ Rte 710, Sta 1193+56.140, Elev 165.431
3 - 120.179 Rt. ℄ Rte 710, Sta 1193+59.990, Elev 164.879
4 - 119.871 Rt. ℄ Rte 710, Sta 1193+71.730, Elev 164.825

A 2+60.895 ℄ Leonis = 93+65.104 ℄ Proposed SB Washington Off Ramp

B 3+34.050 ℄ Leonis = 1193+64.260 ℄ Rte 710

C 4+02.174 ℄ Leonis = 93+64.630 ℄ Proposed NB Washington On Ramp

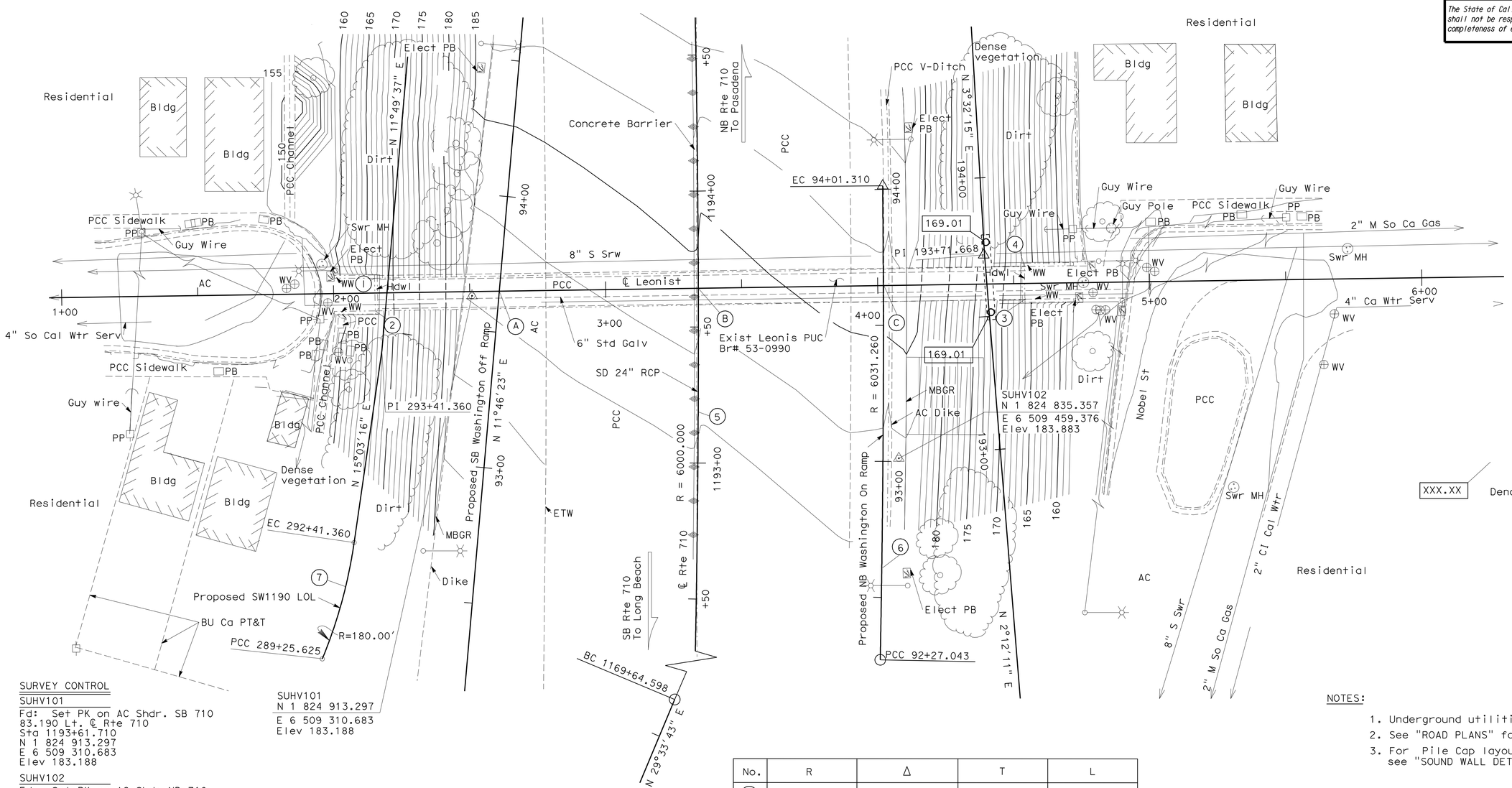

SURVEY CONTROL

SUHV101
Fd: Set PK on AC Shdr. SB 710
83.190 Lt. ℄ Rte 710
Sta 1193+61.710
N 1 824 913.297
E 6 509 310.683
Elev 183.188

SUHV102
Fd: Set PK on AC Shdr NB 710
73.848 Rt. ℄ Rte 710
Sta 1193+02.300
N 1 824 835.357
E 6 509 459.376
Elev 183.883

SUHV101
N 1 824 913.297
E 6 509 310.683
Elev 183.188

No.	R	Δ	T	L
5	6000.000	29°35'53"	1585.161	3099.504
6	6031.2666	1°39'20"	87.140	174.267
7	180.000	14°08'22"	22.32'	44.42'

NOTES:

1. Underground utilities as shown are approximate.
2. See "ROAD PLANS" for superseded utility information.
3. For Pile Cap layout information not shown, see "SOUND WALL DETAILS NO. 5" sheet.

NOTE:
THE CONTRACTOR SHALL VERIFY ALL CONTROLLING FIELD DIMENSIONS BEFORE ORDERING OR FABRICATING ANY MATERIAL.

PRELIMINARY INVESTIGATION SECTION

SCALE 1:20	VERT.DATUM NAVD88	PHOTOGRAMMETRY AS OF: X		
	HORZ.DATUM NAD83	SURVEYED	BY T.Phung/ C.Stewart	CHECKED BY E. Viajar
	ALIGNMENT TIES Dist Traverse Sheets	DRAFTED	BY C. Pham	CHECKED BY E. Viajar

DESIGN	BY F. Feng	CHECKED D. Chung/D. Vargas
DETAILS	BY S. Cholda	CHECKED T. Menard
QUANTITIES	BY F. Feng/S. Yip	CHECKED D. Vargas/S. Moradi

STATE OF CALIFORNIA
DEPARTMENT OF TRANSPORTATION

DIVISION OF ENGINEERING SERVICES
STRUCTURE DESIGN
DESIGN BRANCH 15

BRIDGE NO. 53E0137
POST MILE 22.5

SOUND WALL NO. 1191
LEONIS PUC
FOUNDATION PLAN

STRUCTURES FOUNDATION PLAN SHEET (ENGLISH) (REV. 10/25/05)

ORIGINAL SCALE IN INCHES FOR REDUCED PLANS 0 1 2 3

CU 07
EA 002341

DISREGARD PRINTS BEARING EARLIER REVISION DATES

REVISION DATES: 12/30/08 01-29-10 03-17-10 04-13-10 04-14-10

SHEET 4 OF 22

FILE => 53e0137-e-fdpl.dgn

USERNAME => trlenard DATE PLOTTED => 23-JUN-2010 TIME PLOTTED => 07:40

DIST	COUNTY	ROUTE	POST MILES TOTAL PROJECT	SHEET No	TOTAL SHEETS
07	LA	710	22.6	83	100

Fred Feng 4-15-10
REGISTERED CIVIL ENGINEER DATE

6-21-10
PLANS APPROVAL DATE

The State of California or its officers or agents shall not be responsible for the accuracy or completeness of electronic copies of this plan sheet.

REGISTERED PROFESSIONAL ENGINEER
Fred Y. Feng
No. C 32992
Exp. 6-30-2010
CIVIL
STATE OF CALIFORNIA

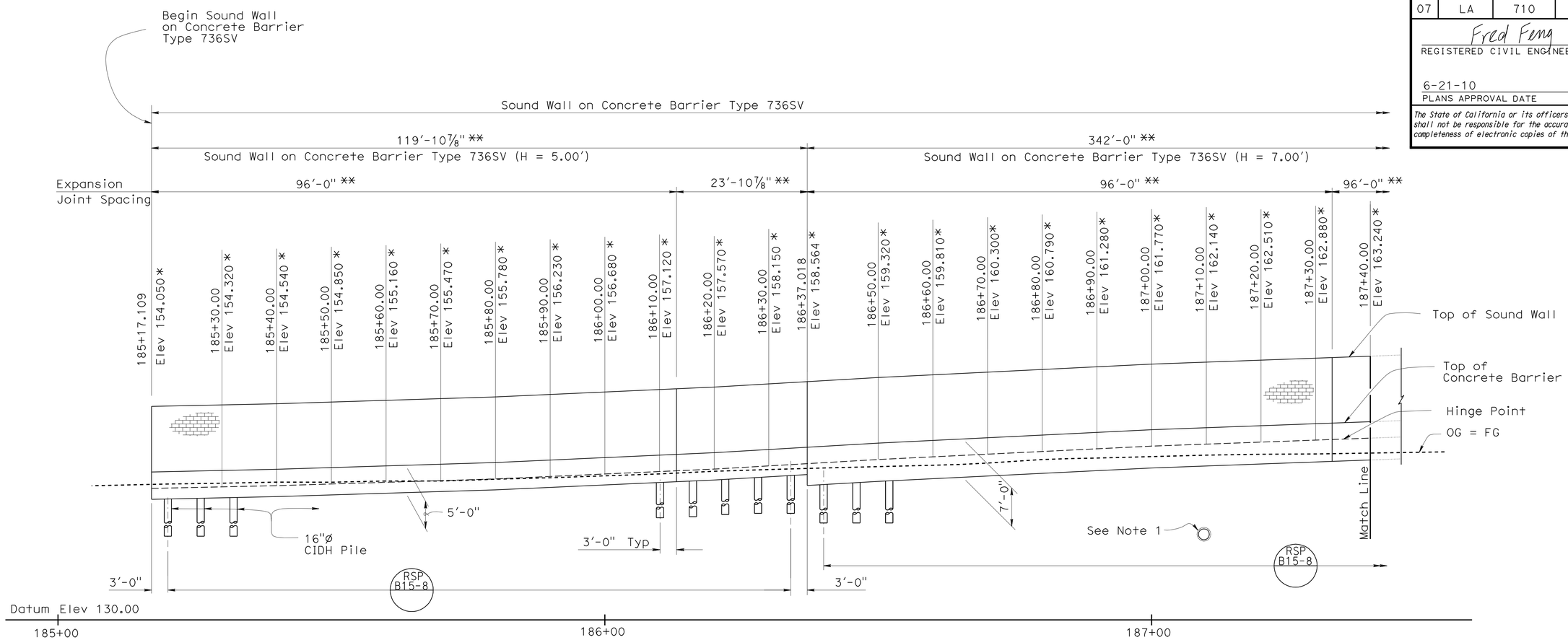

DEVELOPED ELEVATION
1" = 10'

Note:
1. Drainage System, see "ROAD PLANS".

Legend:
* Elevations are given at Hinge Point
** Measured along "SW 1191" LOL

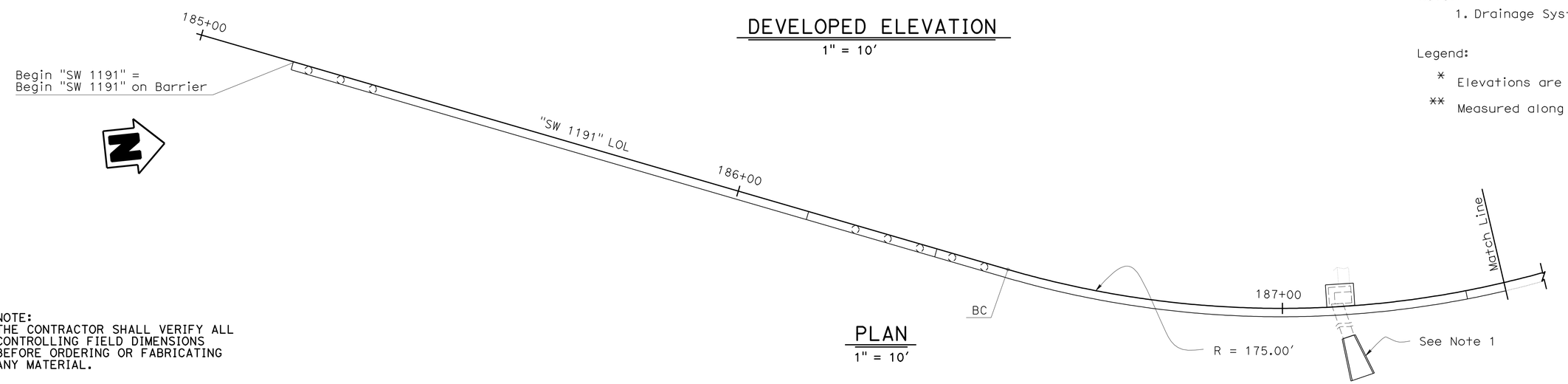

PLAN
1" = 10'

NOTE:
THE CONTRACTOR SHALL VERIFY ALL CONTROLLING FIELD DIMENSIONS BEFORE ORDERING OR FABRICATING ANY MATERIAL.

	BY	CHECKED
DESIGN	F. Feng	D. Chung/D. Vargas
DETAILS	S. Cholda	T. Menard
QUANTITIES	F. Feng/S. Yip	D Vargas/S. Moradi

STATE OF CALIFORNIA
DEPARTMENT OF TRANSPORTATION

DIVISION OF ENGINEERING SERVICES
STRUCTURE DESIGN
DESIGN BRANCH 15

BRIDGE NO. 53E0137
POST MILE 22.5

SOUND WALL NO. 1191
SOUND WALL DETAILS NO. 1

STRUCTURES DESIGN DETAIL SHEET (ENGLISH) (REV. 10/25/05)

ORIGINAL SCALE IN INCHES FOR REDUCED PLANS 0 1 2 3

CU 07
EA 002341

DISREGARD PRINTS BEARING EARLIER REVISION DATES

REVISION DATES: 4-23-09 12-08-09 01-11-10 01-20-10 03-17-10 04-05-10 04-12-10 04-19-10 04-20-10

SHEET 5 OF 22

FILE => 53e0137-q-sw_1o01.dgn

USERNAME => trlenard DATE PLOTTED => 23-JUN-2010 TIME PLOTTED => 07:40

DIST	COUNTY	ROUTE	POST MILES TOTAL PROJECT	SHEET No	TOTAL SHEETS
07	LA	710	22.6	84	100

Fred Feng 4-15-10
REGISTERED CIVIL ENGINEER DATE

6-21-10
PLANS APPROVAL DATE

The State of California or its officers or agents shall not be responsible for the accuracy or completeness of electronic copies of this plan sheet.

REGISTERED PROFESSIONAL ENGINEER Fred Y. Feng No. C 32992 Exp. 6-30-2010 CIVIL STATE OF CALIFORNIA

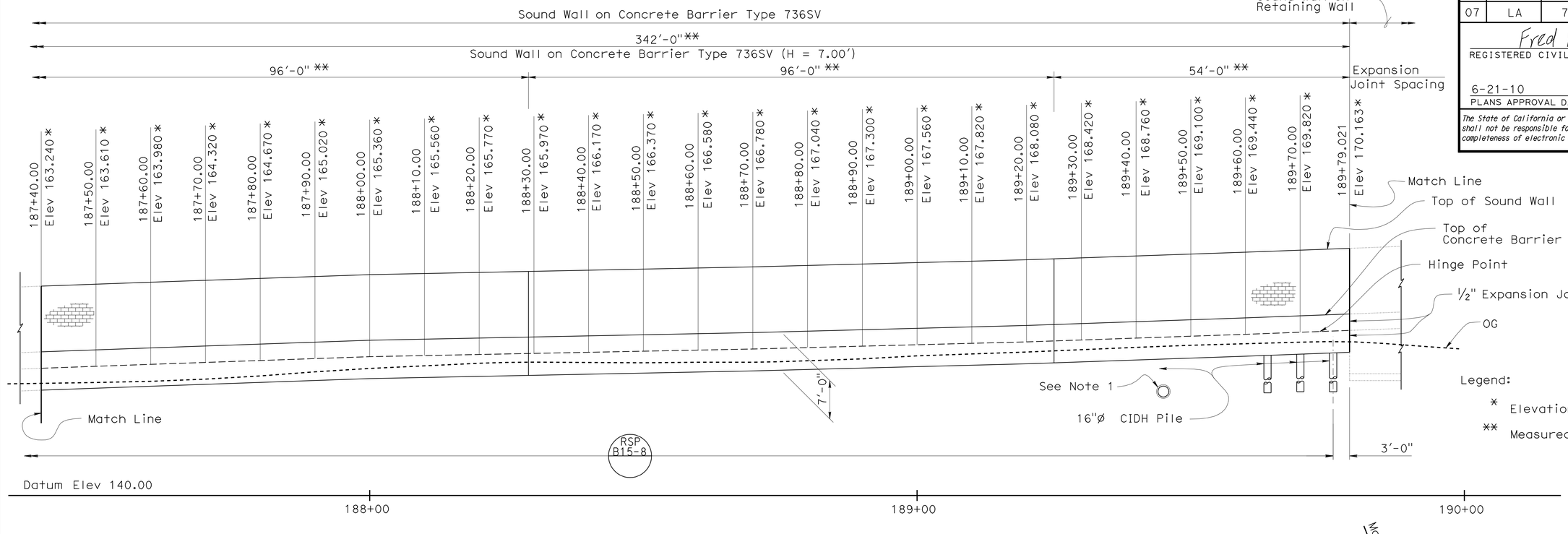

Legend:

* Elevations are given at Hinge Point

** Measured along "SW 1190" LOL

DEVELOPED ELEVATION

1" = 10'

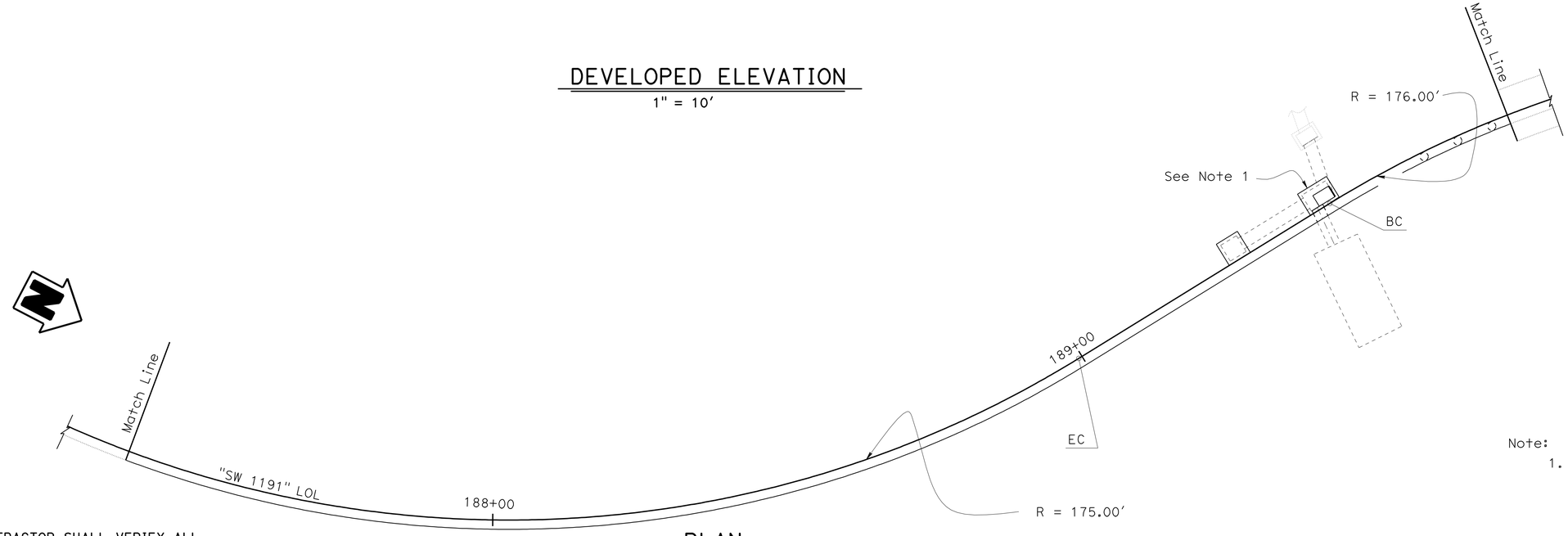

PLAN

1" = 10'

Note:

1. Drainage System, see "ROAD PLANS".

NOTE:
THE CONTRACTOR SHALL VERIFY ALL CONTROLLING FIELD DIMENSIONS BEFORE ORDERING OR FABRICATING ANY MATERIAL.

	BY	CHECKED
DESIGN	F. Feng	D. Chung/D. Vargas
DETAILS	S. Cholda	T. Menard
QUANTITIES	F. Feng/S. Yip	D Vargas/S. Moradi

STATE OF CALIFORNIA
DEPARTMENT OF TRANSPORTATION

DIVISION OF ENGINEERING SERVICES
STRUCTURE DESIGN
DESIGN BRANCH 15

BRIDGE NO. 53E0137
POST MILE 22.5

SOUND WALL NO. 1191
SOUND WALL DETAILS NO. 2

STRUCTURES DESIGN DETAIL SHEET (ENGLISH) (REV. 10/25/05)

ORIGINAL SCALE IN INCHES FOR REDUCED PLANS 0 1 2 3

CU 07
EA 002341

DISREGARD PRINTS BEARING EARLIER REVISION DATES

REVISION DATES: 4-22-09 6-23-09 12-04-09 01-11-10 01-14-10 01-20-10 01-26-10 03-17-10 04-20-10

SHEET 6 OF 22

FILE => 53e0137-q-sw_1o02.dgn

USERNAME => trlenard DATE PLOTTED => 23-JUN-2010 TIME PLOTTED => 07:40

DIST	COUNTY	ROUTE	POST MILES TOTAL PROJECT	SHEET No	TOTAL SHEETS
07	LA	710	22.6	85	100

Fred Feng 4-15-10
REGISTERED CIVIL ENGINEER DATE

6-21-10
PLANS APPROVAL DATE

REGISTERED PROFESSIONAL ENGINEER Fred Y. Feng No. C 32992 Exp. 6-30-2010 CIVIL STATE OF CALIFORNIA

The State of California or its officers or agents shall not be responsible for the accuracy or completeness of electronic copies of this plan sheet.

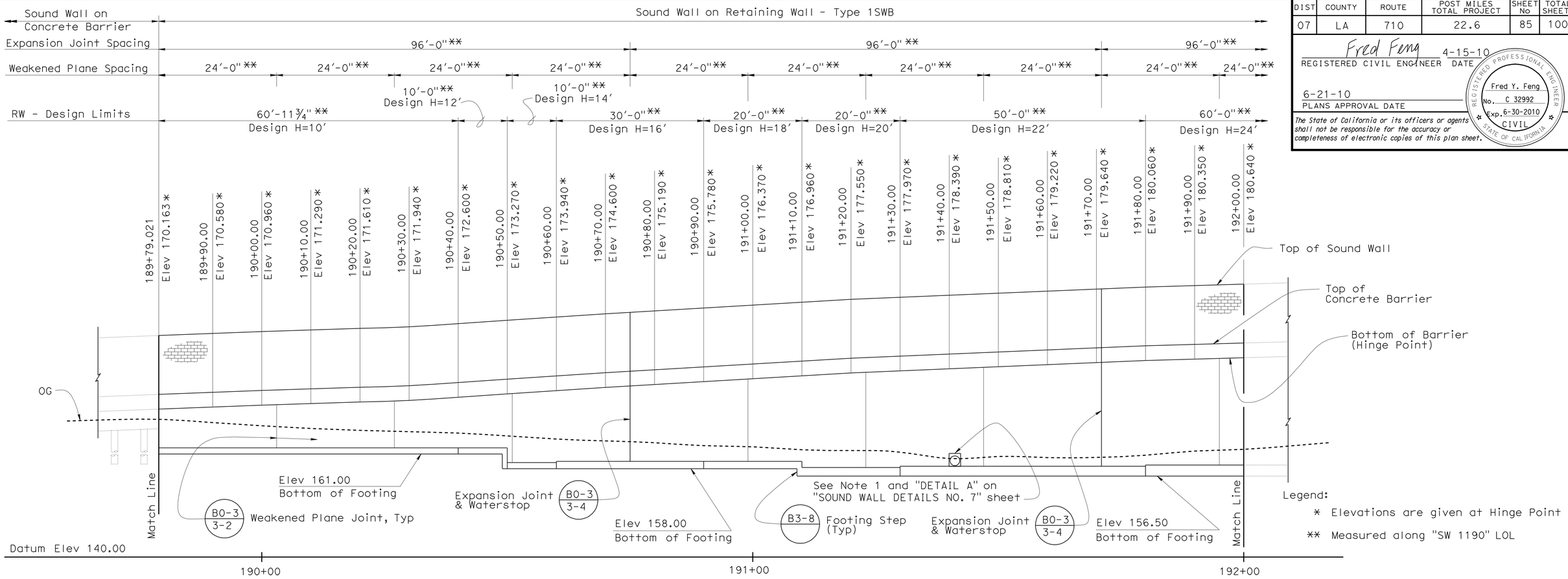

DEVELOPED ELEVATION
1" = 10'

Note:
1. Drainage System, see "ROAD PLANS".

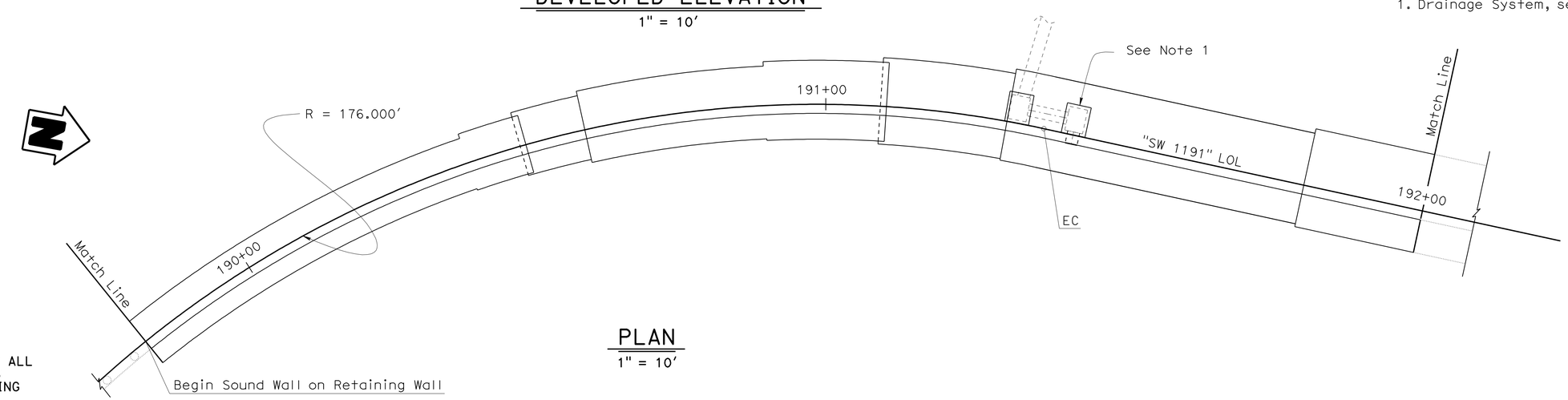

PLAN
1" = 10'

NOTE:
THE CONTRACTOR SHALL VERIFY ALL CONTROLLING FIELD DIMENSIONS BEFORE ORDERING OR FABRICATING ANY MATERIAL.

	BY	CHECKED
DESIGN	F. Feng	D. Chung/D. Vargas
DETAILS	S. Cholda	T. Menard
QUANTITIES	F. Feng/S. Yip	D Vargas/S. Moradi

STATE OF CALIFORNIA
DEPARTMENT OF TRANSPORTATION

DIVISION OF ENGINEERING SERVICES
STRUCTURE DESIGN
DESIGN BRANCH 15

BRIDGE NO. 53E0137
POST MILE 22.5

SOUND WALL NO. 1191
SOUND WALL DETAILS NO. 3

STRUCTURES DESIGN DETAIL SHEET (ENGLISH) (REV. 10/25/05)

ORIGINAL SCALE IN INCHES FOR REDUCED PLANS 0 1 2 3

CU 07
EA 002341

DISREGARD PRINTS BEARING EARLIER REVISION DATES

REVISION DATES: 5-06-09 01-26-10 02-03-10 03-17-10 04-20-10 04-23-10

SHEET 7 OF 22

FILE => 53e0137-q-sw_1o03.dgn

USERNAME => trlenard DATE PLOTTED => 23-JUN-2010 TIME PLOTTED => 07:41

DIST	COUNTY	ROUTE	POST MILES TOTAL PROJECT	SHEET No	TOTAL SHEETS
07	LA	710	22.6	86	100

Fred Feng 4-15-10
REGISTERED CIVIL ENGINEER DATE

6-21-10
PLANS APPROVAL DATE

REGISTERED PROFESSIONAL ENGINEER Fred Y. Feng No. C 32992 Exp. 6-30-2010 CIVIL STATE OF CALIFORNIA

The State of California or its officers or agents shall not be responsible for the accuracy or completeness of electronic copies of this plan sheet.

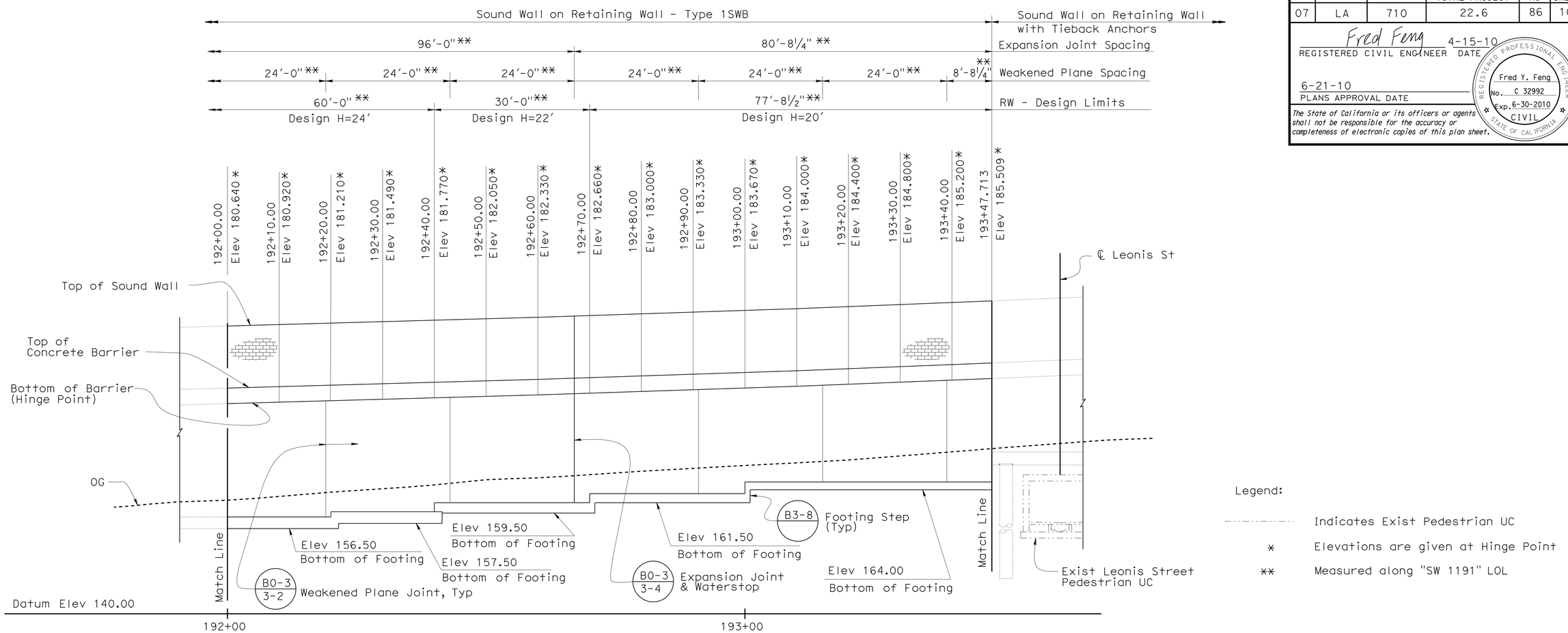

DEVELOPED ELEVATION

1" = 10'

Legend:

- Indicates Exist Pedestrian UC
- * Elevations are given at Hinge Point
- ** Measured along "SW 1191" LOL

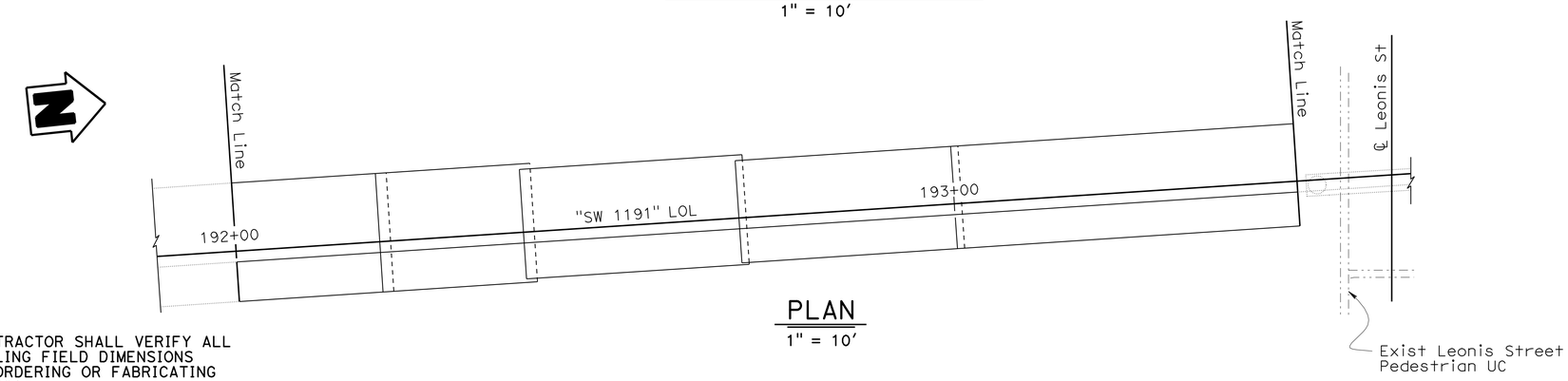

PLAN

1" = 10'

NOTE:
THE CONTRACTOR SHALL VERIFY ALL CONTROLLING FIELD DIMENSIONS BEFORE ORDERING OR FABRICATING ANY MATERIAL.

	BY	CHECKED
DESIGN	F. Feng	D. Chung/D. Vargas
DETAILS	S. Cholda	T. Menard
QUANTITIES	F. Feng/S. Yip	D Vargas/S. Moradi

STATE OF CALIFORNIA
DEPARTMENT OF TRANSPORTATION

DIVISION OF ENGINEERING SERVICES
STRUCTURE DESIGN
DESIGN BRANCH 15

BRIDGE NO. 53E0137
POST MILE 22.5

SOUND WALL NO. 1191
SOUND WALL DETAILS NO. 4

STRUCTURES DESIGN DETAIL SHEET (ENGLISH) (REV. 10/25/05)

ORIGINAL SCALE IN INCHES FOR REDUCED PLANS 0 1 2 3

CU 07
EA 002341

DISREGARD PRINTS BEARING EARLIER REVISION DATES

REVISION DATES: 4-24-09 6-24-09 01-14-10 01-20-10 01-26-10 03-22-10 04-20-10

SHEET 8 OF 22

FILE => 53e0137-q-sw_1o04.dgn

USERNAME => trienard DATE PLOTTED => 23-JUN-2010 TIME PLOTTED => 07:41

DIST	COUNTY	ROUTE	POST MILES TOTAL PROJECT	SHEET No	TOTAL SHEETS
07	LA	710	22.6	87	100

Fred Feng 4-15-10
REGISTERED CIVIL ENGINEER DATE

6-21-10
PLANS APPROVAL DATE

The State of California or its officers or agents shall not be responsible for the accuracy or completeness of electronic copies of this plan sheet.

REGISTERED PROFESSIONAL ENGINEER Fred Y. Feng No. C 32992 Exp. 6-30-2010 CIVIL STATE OF CALIFORNIA

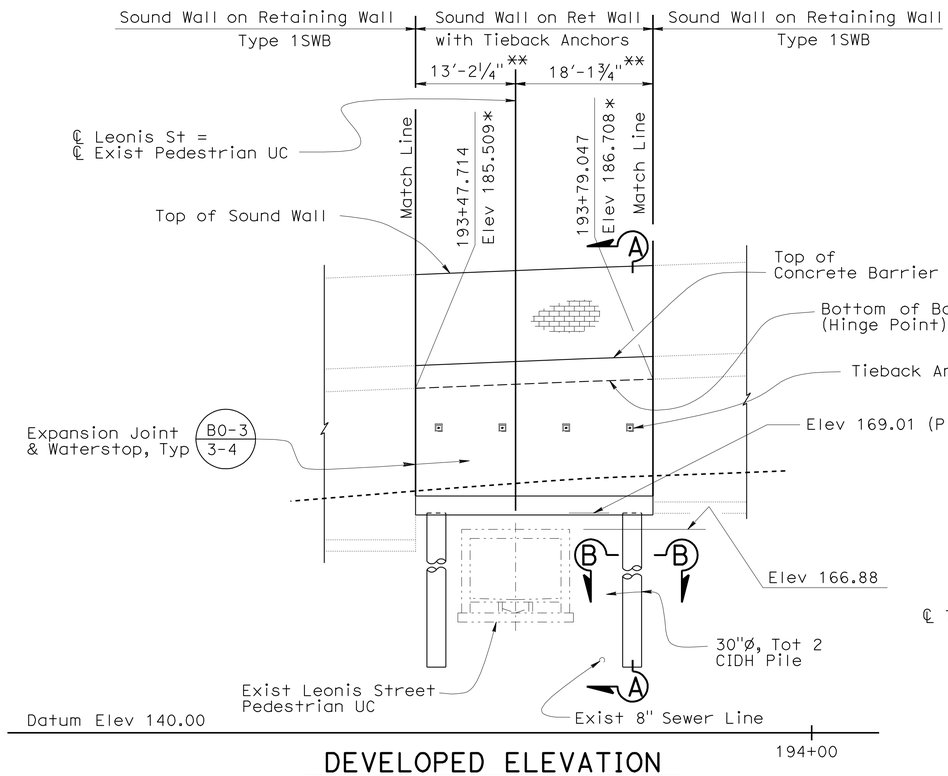

DEVELOPED ELEVATION

1" = 10'

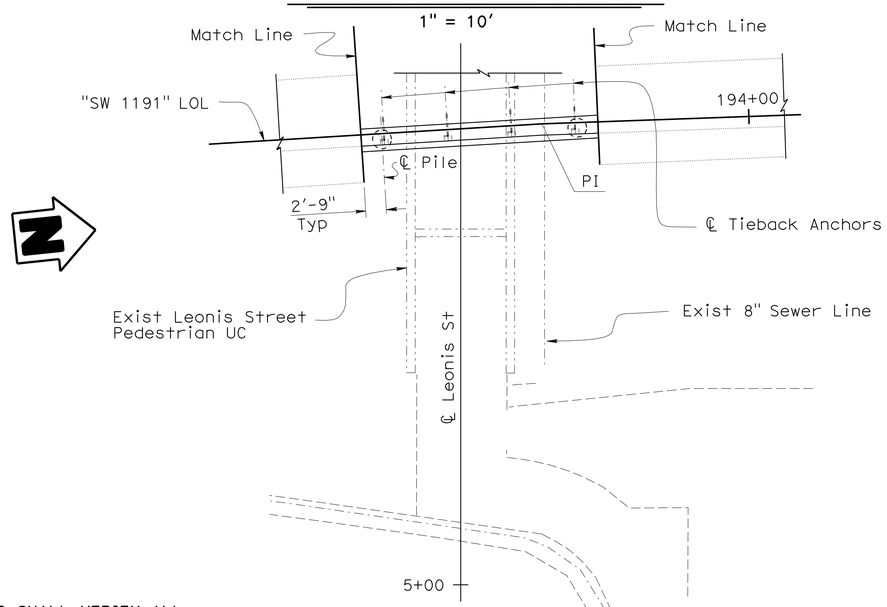

PLAN

1" = 10'

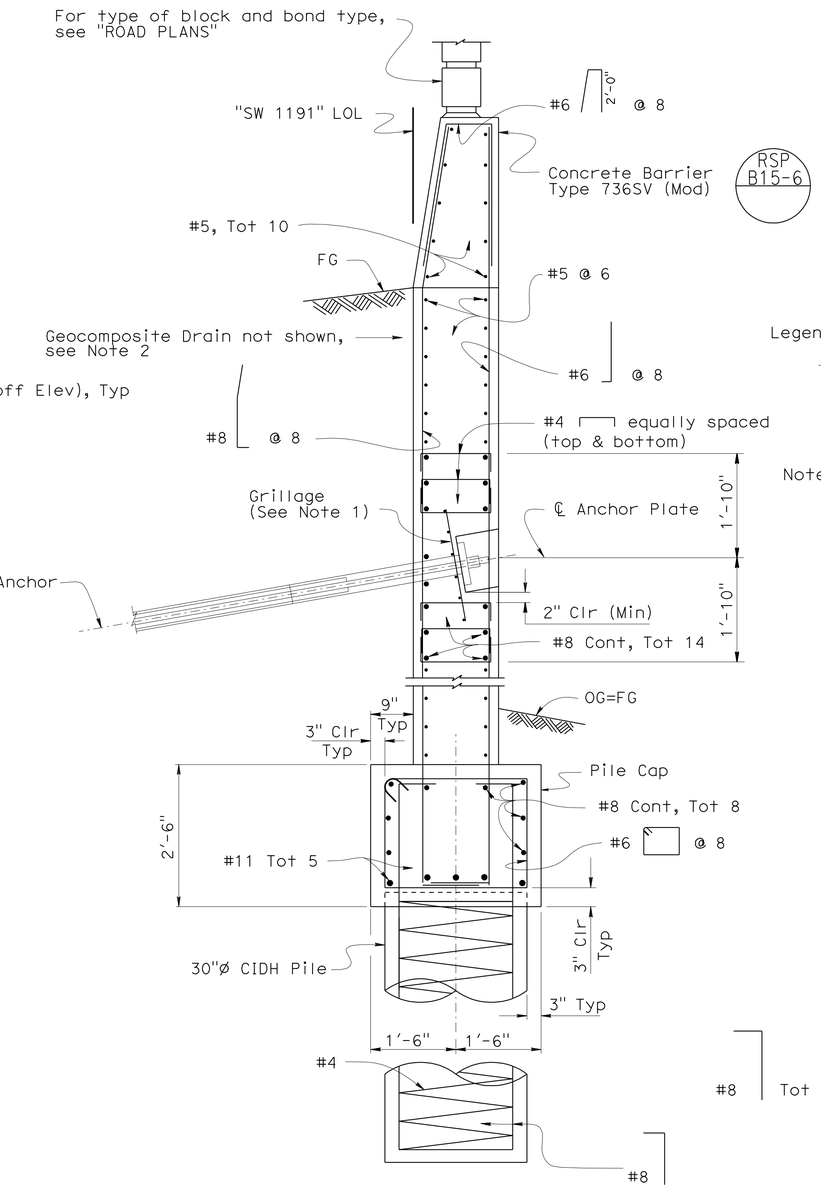

SECTION A-A

¾" = 1'

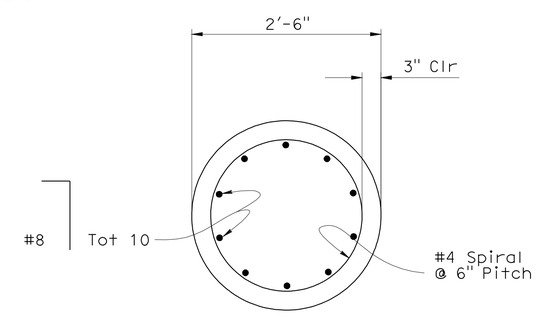

SECTION B-B

1" = 1'

Legend:

- - - - - Indicates existing PUC Structure

* Elevations are given at Hinge Point

** Measured along "SW 1191" LOL

Notes:

1. For details not shown, see "SOUND WALL DETAILS NO. 6" sheet.
2. For Geocomposite Drain, see "SOUND WALL DETAILS NO. 10" sheet.

NOTE:
THE CONTRACTOR SHALL VERIFY ALL CONTROLLING FIELD DIMENSIONS BEFORE ORDERING OR FABRICATING ANY MATERIAL.

SOUNDWALL ON RETAINING WALL WITH TIEBACK ANCHORS

	BY	CHECKED
DESIGN	A. Logus	D. Vargas/J. Higareda
DETAILS	S. Cholda	T. Menard
QUANTITIES	F. Feng/S. Yip	D Vargas/S. Moradi

STATE OF CALIFORNIA
DEPARTMENT OF TRANSPORTATION

DIVISION OF ENGINEERING SERVICES
STRUCTURE DESIGN
DESIGN BRANCH 15

BRIDGE NO. 53E0137
POST MILE 22.5

SOUND WALL NO. 1191
SOUND WALL DETAILS NO. 5

STRUCTURES DESIGN DETAIL SHEET (ENGLISH) (REV. 10/25/05)

ORIGINAL SCALE IN INCHES FOR REDUCED PLANS 0 1 2 3

CU 07
EA 002341

DISREGARD PRINTS BEARING EARLIER REVISION DATES

REVISION DATES: 4-23-09 04-20-10 12-14-09 12-16-09 01-07-10 01-14-10 01-20-10 01-26-10 03-17-10 04-13-10

SHEET 9 OF 22

FILE => 53e0137-q-sw_lo05.dgn

USERNAME => trlenard DATE PLOTTED => 23-JUN-2010 TIME PLOTTED => 09:00

DIST	COUNTY	ROUTE	POST MILES TOTAL PROJECT	SHEET No	TOTAL SHEETS
07	LA	710	22.6	88	100

Fred Feng 4-15-10
REGISTERED CIVIL ENGINEER DATE

6-21-10
PLANS APPROVAL DATE

REGISTERED PROFESSIONAL ENGINEER Fred Y. Feng No. C 32992 Exp. 6-30-2010 CIVIL STATE OF CALIFORNIA

The State of California or its officers or agents shall not be responsible for the accuracy or completeness of electronic copies of this plan sheet.

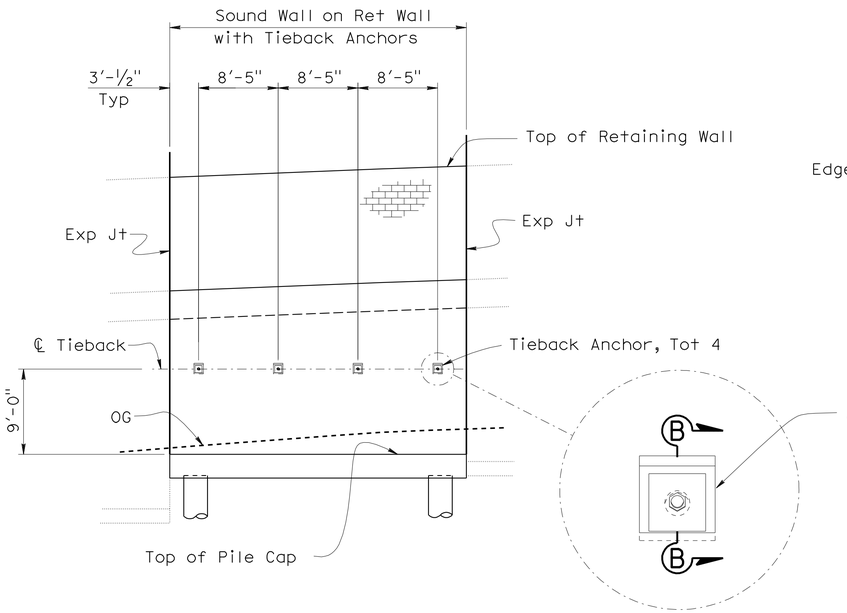

TIEBACK ANCHOR LAYOUT

1/8" = 1'-0"

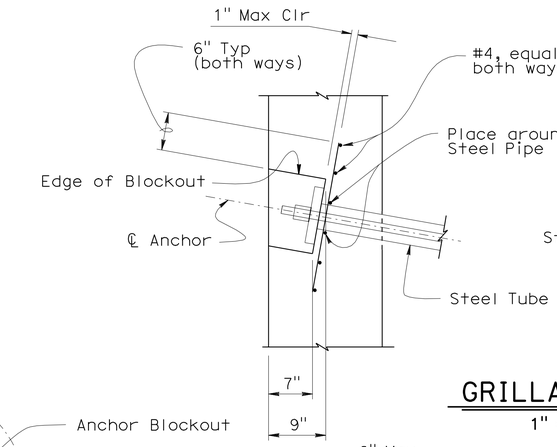

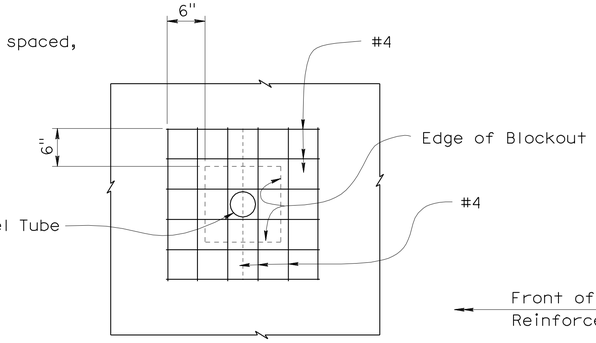

GRILLAGE DETAIL

1" = 1'-0"

Note:

Fill Blockout, void with concrete after successfull anchorage

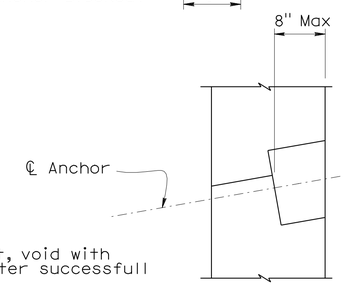

SECTION B-B

1" = 1'-0"

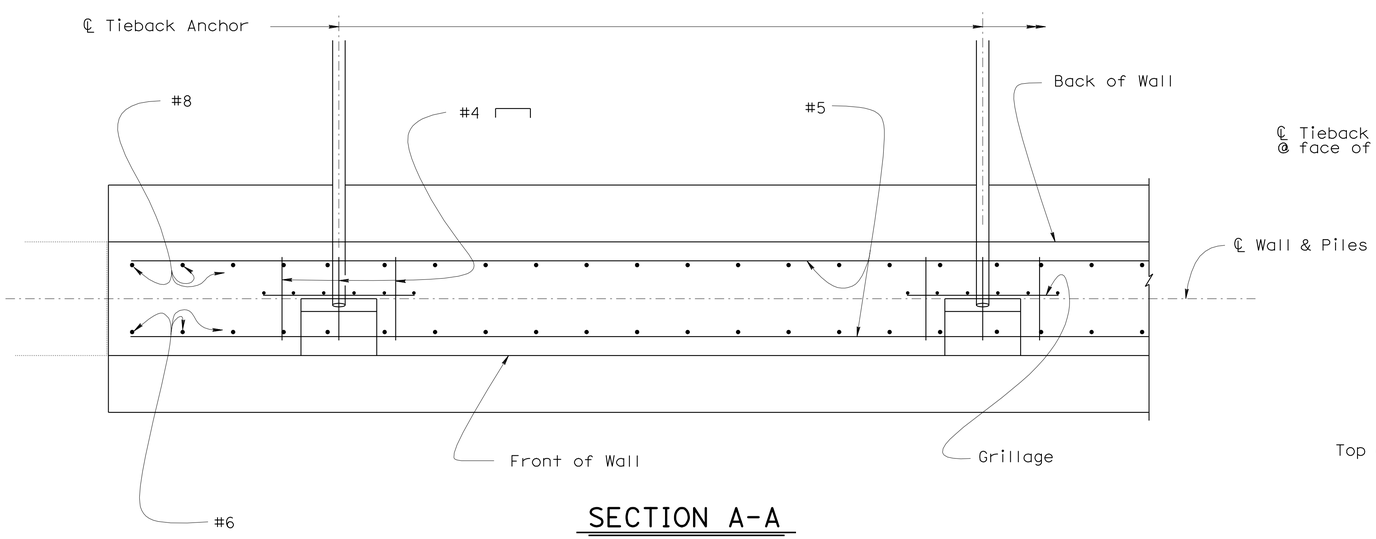

SECTION A-A

1" = 1'-0"

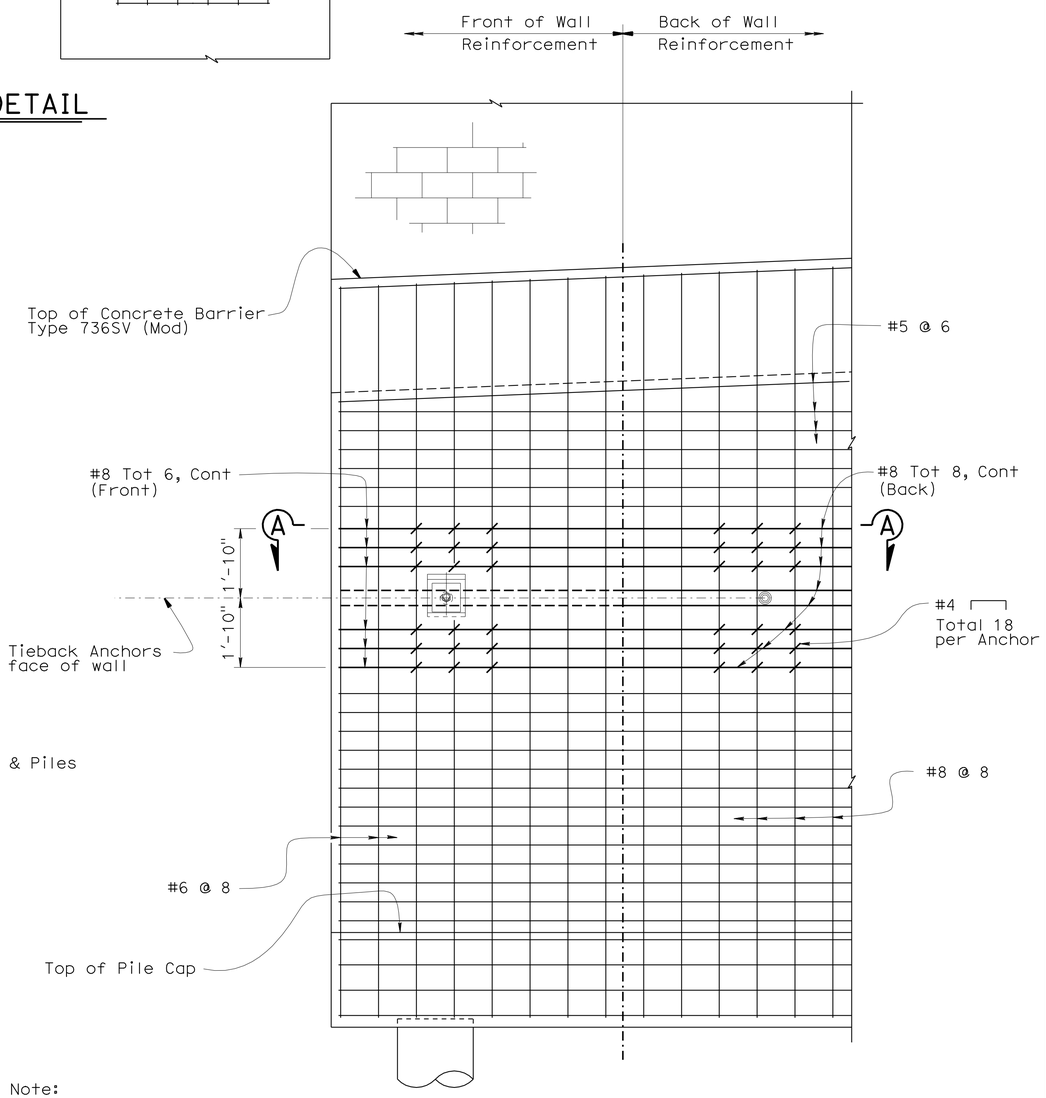

Note:

1. Grillage not shown for clarity

PART ELEVATION

1/2" = 1'-0"

NOTE:
THE CONTRACTOR SHALL VERIFY ALL CONTROLLING FIELD DIMENSIONS BEFORE ORDERING OR FABRICATING ANY MATERIAL.

	BY	CHECKED
DESIGN	A. Logus	D. Vargas/J. Higareda
DETAILS	S. Cholda	T. Menard
QUANTITIES	F. Feng/S. Yip	D. Vargas/S. Maradi

STATE OF CALIFORNIA
DEPARTMENT OF TRANSPORTATION

DIVISION OF ENGINEERING SERVICES
STRUCTURE DESIGN
DESIGN BRANCH 15

BRIDGE NO. 53E0137
POST MILE 22.5

SOUND WALL NO. 1191
SOUND WALL DETAILS NO. 6

STRUCTURES DESIGN DETAIL SHEET (ENGLISH) (REV. 10/25/05)

ORIGINAL SCALE IN INCHES FOR REDUCED PLANS 0 1 2 3

CU 07
EA 002341

DISREGARD PRINTS BEARING EARLIER REVISION DATES 02-25-10 03-17-10

REVISION DATES

SHEET 10 OF 22

FILE => 53e0137-q-sw_1o06.dgn

USERNAME => trlenard DATE PLOTTED => 23-JUN-2010 TIME PLOTTED => 07:41

DIST	COUNTY	ROUTE	POST MILES TOTAL PROJECT	SHEET No	TOTAL SHEETS
07	LA	710	22.6	89	100

Fred Feng 4-15-10
REGISTERED CIVIL ENGINEER DATE

6-21-10
PLANS APPROVAL DATE

REGISTERED PROFESSIONAL ENGINEER Fred Y. Feng No. C 32992 Exp. 6-30-2010 CIVIL STATE OF CALIFORNIA

The State of California or its officers or agents shall not be responsible for the accuracy or completeness of electronic copies of this plan sheet.

Notes:

1. Anchorage enclosure shall have provisions to allow injecting grout at low end and venting at high end. Galvanize after fabrication.
2. Steel tube welded to bearing plate (Min thickness = 1/4"). Galvanize assembly after fabrication.
3. Steel tube welded to bearing plate inside diameter of steel tube to be 1" greater than outside diameter of smooth sheathing (Min thickness = 1/4") Galvanize assembly after fabrication.
4. Schedule 40, same outside diameter as anchorage assembly steel tube.
5. For other wall details, see Structural Plans.

Legend:

(1) Level of initial grouting drill hole 6" diameter or larger

(2) Level of secondary grouting

(3) Bonded length shall be determined by the contractor

(4) Unbonded length = 15'-0" Min

(5) Final grout

Abbreviations:

FF - Front Face of Wall

BF - Back Face of Wall

(See "TIEBACK ANCHOR DETAIL")

* Limits of standard Type 1 Retaining Wall reinforcing, see "RETAINING WALL TYPE 1SWB" sheet.

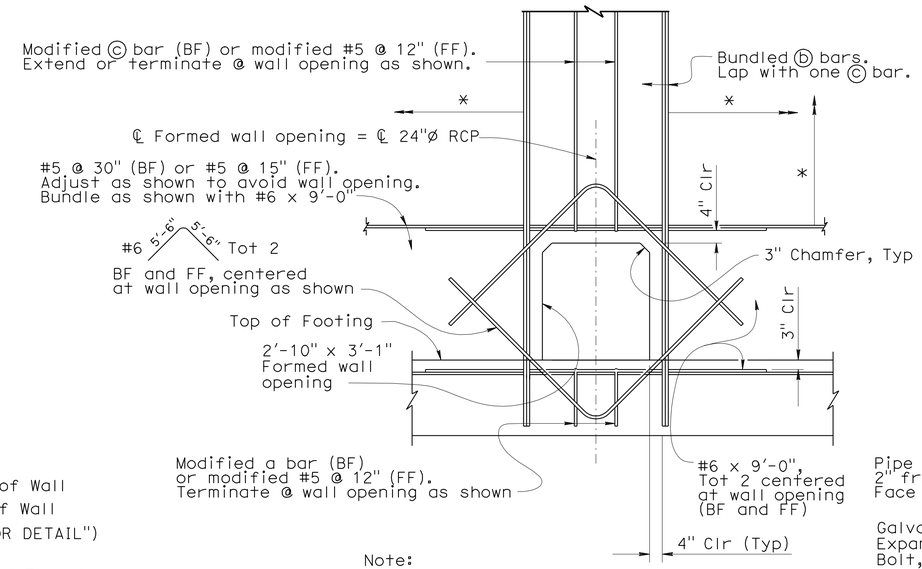

Note:

Cover Plate and RCP not shown for clarity

DETAIL A
1/2" = 1'-0"

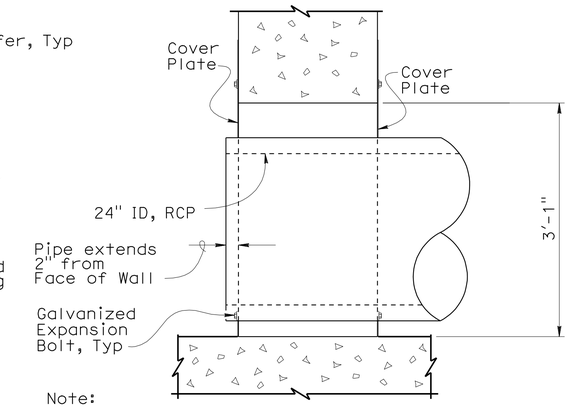

Note:

Footing not shown for clarity, see Drainage Plans for more details.

SECTION A-A
1" = 1'

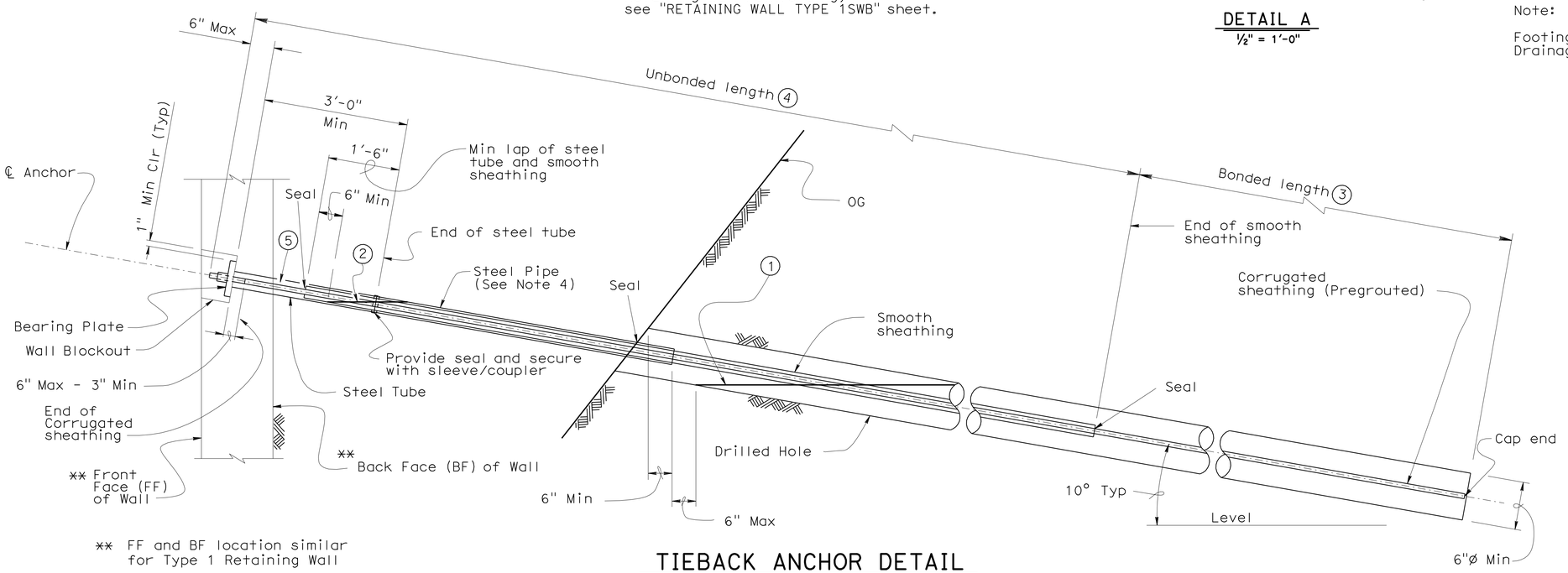

** FF and BF location similar for Type 1 Retaining Wall

TIEBACK ANCHOR DETAIL
NO SCALE

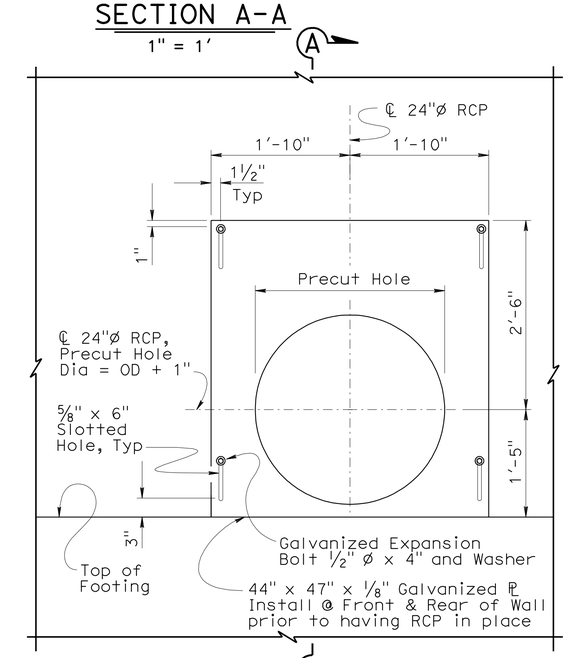

Note:

Reinforcement not shown for clarity (A)

COVER PLATE ELEVATION
1" = 1'

NOTE:
THE CONTRACTOR SHALL VERIFY ALL CONTROLLING FIELD DIMENSIONS BEFORE ORDERING OR FABRICATING ANY MATERIAL.

	BY	CHECKED
DESIGN	A. Logus/F. Feng	J. Higareda
DETAILS	S. Cholda	A. Logus
QUANTITIES	S. Yip/F. Feng	D. Vargas/S. Moradi

STATE OF CALIFORNIA
DEPARTMENT OF TRANSPORTATION

DIVISION OF ENGINEERING SERVICES
STRUCTURE DESIGN
DESIGN BRANCH 15

BRIDGE NO. 53E0137
POST MILE 22.5

SOUND WALL NO. 1191
SOUND WALL DETAILS NO. 7

STRUCTURES DESIGN DETAIL SHEET (ENGLISH) (REV. 10/25/05)

ORIGINAL SCALE IN INCHES FOR REDUCED PLANS 0 1 2 3

CU 07
EA 002341

DISREGARD PRINTS BEARING EARLIER REVISION DATES

REVISION DATES: 02-26-10 03-15-10 04-13-10 04-21-10 04-28-10 4-29-10

SHEET 11 OF 22

FILE => 53e0137-q-sw_1o07.dgn

USERNAME => friehard DATE PLOTTED => 23-JUN-2010 TIME PLOTTED => 07:41

DIST	COUNTY	ROUTE	POST MILES TOTAL PROJECT	SHEET No	TOTAL SHEETS
07	LA	710	22.6	90	100

Fred Feng 4-15-10
REGISTERED CIVIL ENGINEER DATE

6-21-10
PLANS APPROVAL DATE

REGISTERED PROFESSIONAL ENGINEER Fred Y. Feng No. C 32992 Exp. 6-30-2010 CIVIL STATE OF CALIFORNIA

The State of California or its officers or agents shall not be responsible for the accuracy or completeness of electronic copies of this plan sheet.

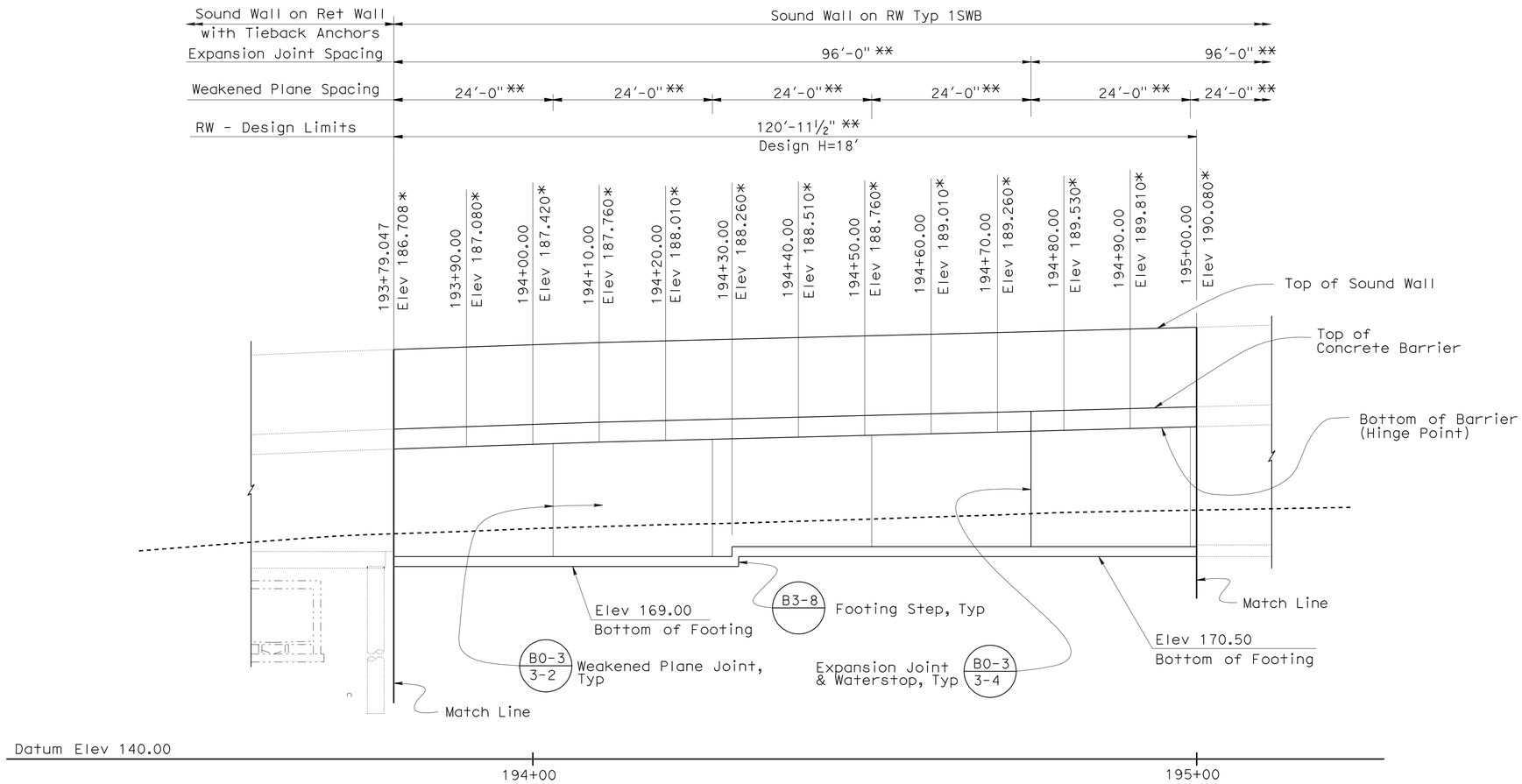

DEVELOPED ELEVATION

1" = 10'

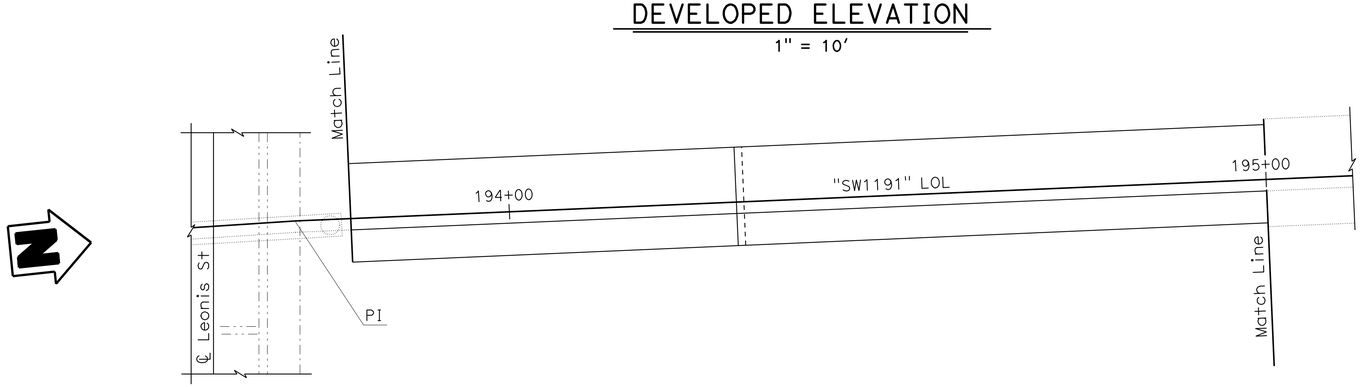

PLAN

1" = 10'

Legend:

—·—·—	Indicates existing PUC Structure
*	Elevations are given at Hinge Point
**	Measured along "SW 1191" LOL

NOTE:
THE CONTRACTOR SHALL VERIFY ALL CONTROLLING FIELD DIMENSIONS BEFORE ORDERING OR FABRICATING ANY MATERIAL.

	BY	CHECKED
DESIGN	F. Feng	D. Chung/D. Vargas
DETAILS	S. Cholda	T. Menard
QUANTITIES	F. Feng/S. Yip	D Vargas/S. Moradi

STATE OF CALIFORNIA DEPARTMENT OF TRANSPORTATION

DIVISION OF ENGINEERING SERVICES STRUCTURE DESIGN DESIGN BRANCH 15

BRIDGE NO. 53E0137
POST MILE 22.5

SOUND WALL NO. 1191
SOUND WALL DETAILS NO. 8

STRUCTURES DESIGN DETAIL SHEET (ENGLISH) (REV. 10/25/05)

ORIGINAL SCALE IN INCHES FOR REDUCED PLANS 0 1 2 3

CU 07
EA 002341

DISREGARD PRINTS BEARING EARLIER REVISION DATES → 4-23-09 01-14-10 01-26-10 01-28-10 04-22-10

REVISION DATES

SHEET 12 OF 22

FILE => 53e0137-q-sw_1o08.dgn

USERNAME => trienard DATE PLOTTED => 23-JUN-2010 TIME PLOTTED => 07:41

DIST	COUNTY	ROUTE	POST MILES TOTAL PROJECT	SHEET No	TOTAL SHEETS
07	LA	710	22.6	91	100

Fred Feng 4-15-10
REGISTERED CIVIL ENGINEER DATE

6-21-10
PLANS APPROVAL DATE

REGISTERED PROFESSIONAL ENGINEER Fred Y. Feng No. C 32992 Exp. 6-30-2010 CIVIL STATE OF CALIFORNIA

The State of California or its officers or agents shall not be responsible for the accuracy or completeness of electronic copies of this plan sheet.

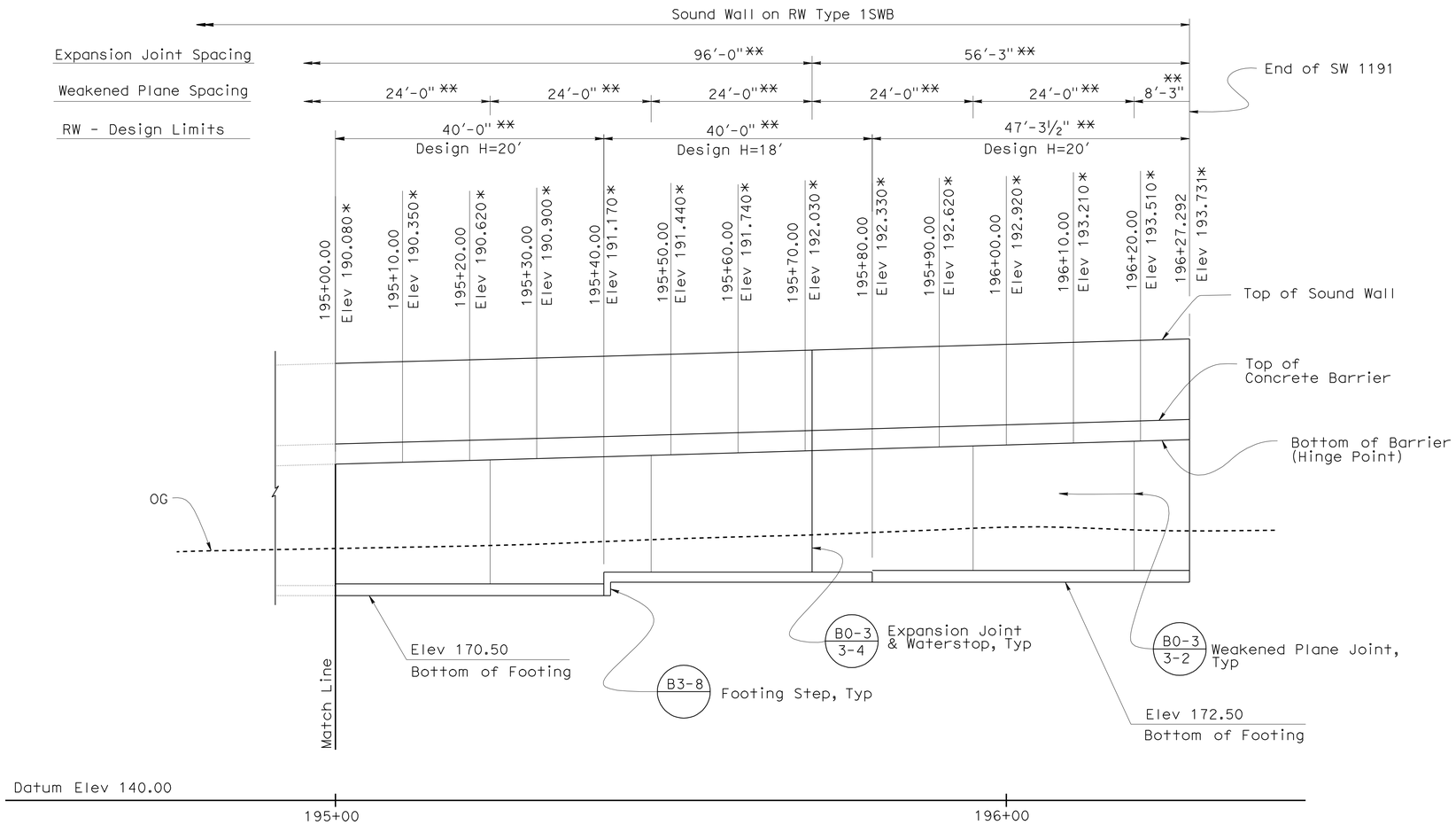

DEVELOPED ELEVATION

1" = 10'

Legend:

* Elevations are given at Hinge Point

** Measured along "SW 1191" LOL

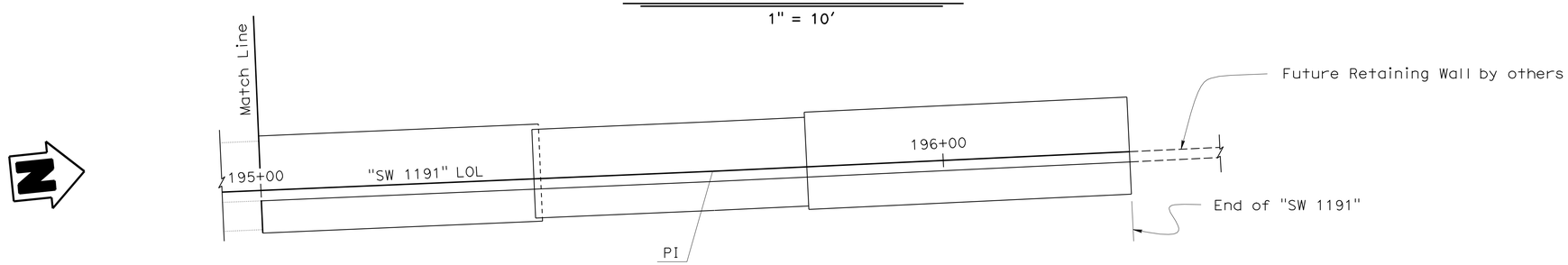

PLAN

1" = 10'

NOTE:
THE CONTRACTOR SHALL VERIFY ALL CONTROLLING FIELD DIMENSIONS BEFORE ORDERING OR FABRICATING ANY MATERIAL.

DESIGN	BY F. Feng	CHECKED D. Chung/D. Vargas	
DETAILS	BY S. Cholda	CHECKED T. Menard	
QUANTITIES	BY F. Feng/S. Yip	CHECKED D Vargas/S. Moradi	

STATE OF CALIFORNIA
DEPARTMENT OF TRANSPORTATION

DIVISION OF ENGINEERING SERVICES
STRUCTURE DESIGN
DESIGN BRANCH 15

BRIDGE NO. 53E0137
POST MILE 22.5

SOUND WALL NO. 1191
SOUND WALL DETAILS NO. 9

STRUCTURES DESIGN DETAIL SHEET (ENGLISH) (REV. 10/25/05)

ORIGINAL SCALE IN INCHES FOR REDUCED PLANS 0 1 2 3

CU 07
EA 002341

DISREGARD PRINTS BEARING EARLIER REVISION DATES

REVISION DATES: ~~12-07-09~~ ~~01-14-10~~ 01-20-10

SHEET 13 OF 22

FILE => 53e0137-q-sw_1o09.dgn

USERNAME => trienord DATE PLOTTED => 23-JUN-2010 TIME PLOTTED => 07:41

DIST	COUNTY	ROUTE	POST MILES TOTAL PROJECT	SHEET No	TOTAL SHEETS
07	LA	710	22.6	92	100

Fred Feng 4-15-10
REGISTERED CIVIL ENGINEER DATE

6-21-10
PLANS APPROVAL DATE

REGISTERED PROFESSIONAL ENGINEER Fred Y. Feng No. C 32992 Exp. 6-30-2010 CIVIL STATE OF CALIFORNIA

The State of California or its officers or agents shall not be responsible for the accuracy or completeness of electronic copies of this plan sheet.

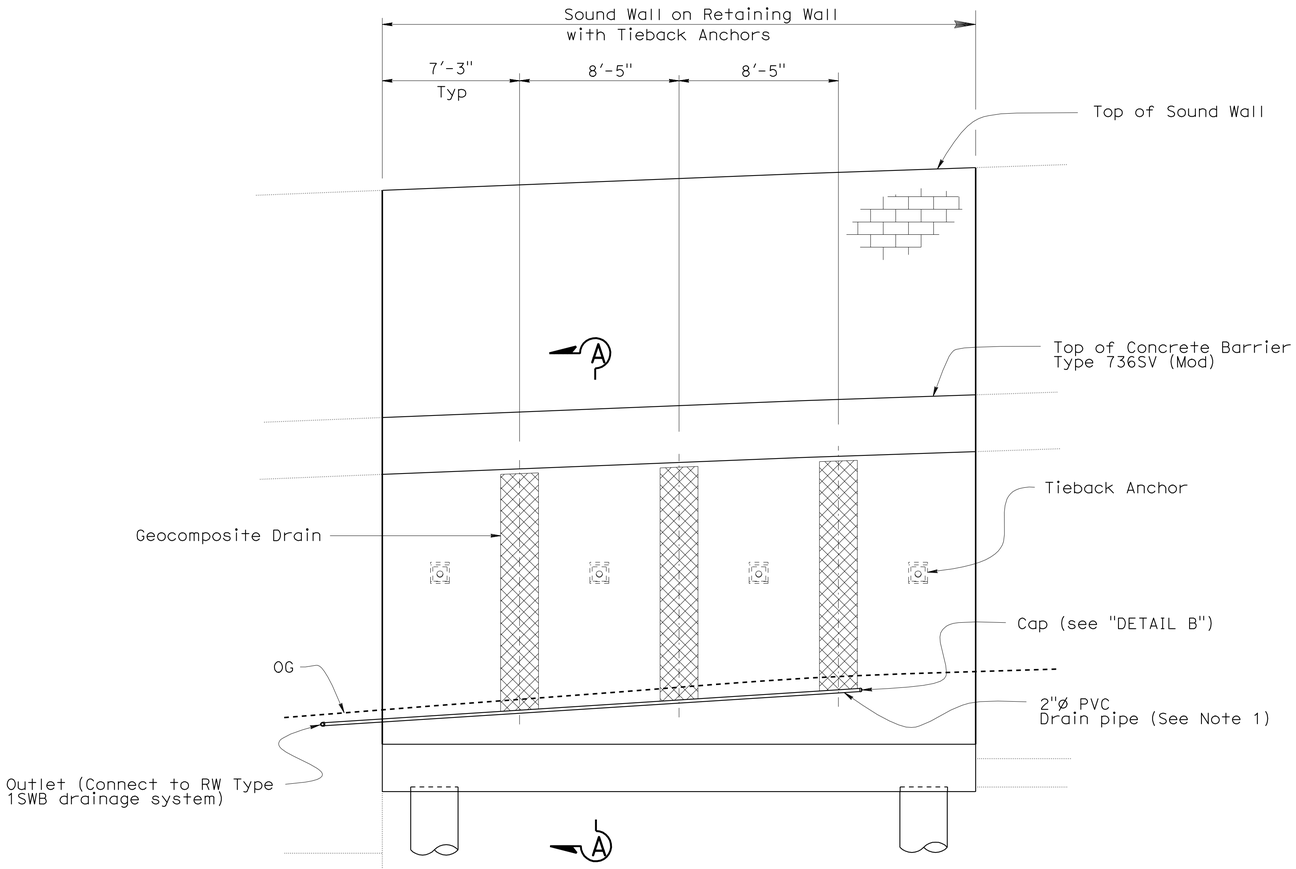

ELEVATION (BACK OF WALL)
1/4" = 1'-0"

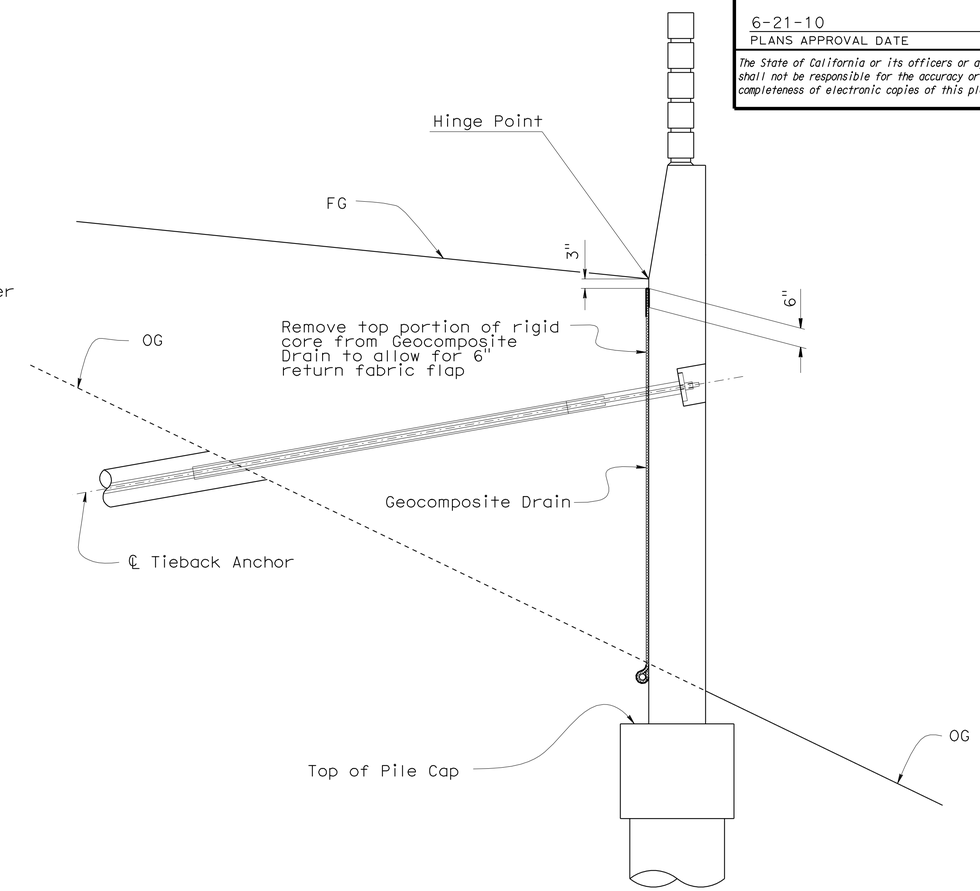

SECTION A-A
1/2" = 1'-0"

Note:

1. See "ROAD PLANS" for exact drainage outlet.

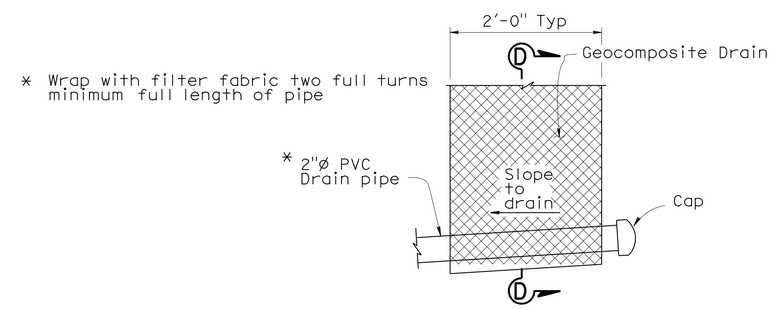

DETAIL B
1" = 1'-0"

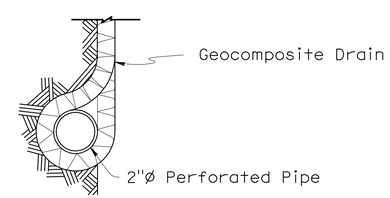

SECTION D-D
1 1/2" = 1'-0"

NOTE:
THE CONTRACTOR SHALL VERIFY ALL CONTROLLING FIELD DIMENSIONS BEFORE ORDERING OR FABRICATING ANY MATERIAL.

SOUND WALL ON RETAINING WALL WITH TIEBACK ANCHORS - DRAINAGE DETAILS

	BY	CHECKED
DESIGN	A. Logus	D. Vargas/J. Higareda
DETAILS	S. Cholda	T. Menard
QUANTITIES	F. Feng/S. Yip	D Vargas/S. Moradi

STATE OF CALIFORNIA
DEPARTMENT OF TRANSPORTATION

DIVISION OF ENGINEERING SERVICES
STRUCTURE DESIGN
DESIGN BRANCH 15

BRIDGE NO. 53E0137
POST MILE 22.5

SOUND WALL NO. 1191
SOUND WALL DETAILS NO. 10

STRUCTURES DESIGN DETAIL SHEET (ENGLISH) (REV. 10/25/05)

ORIGINAL SCALE IN INCHES FOR REDUCED PLANS 0 1 2 3

CU 07
EA 002341

DISREGARD PRINTS BEARING EARLIER REVISION DATES

REVISION DATES: 02-25-10 03-17-10 04-13-10 04-21-10

SHEET 14 OF 22

FILE => 53e0137-q-sw_lo10.dgn

USERNAME => trlenard DATE PLOTTED => 23-JUN-2010 TIME PLOTTED => 07:41

DIST.	COUNTY	ROUTE	POST MILES TOTAL PROJECT	SHEET NO.	TOTAL SHEETS
07	LA	710	22.6	93	100

Fred Feng 4-15-10
REGISTERED ENGINEER - CIVIL

6-21-10
PLANS APPROVAL DATE

REGISTERED PROFESSIONAL ENGINEER Fred Y. Feng No. C 32992 Exp. 6-30-2010 CIVIL STATE OF CALIFORNIA

The State of California or its officers or agents shall not be responsible for the accuracy or completeness of electronic copies of this plan sheet.

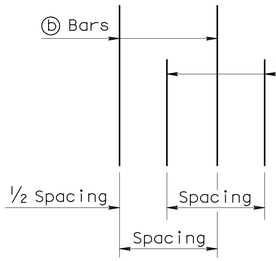

DETAIL B

No Scale

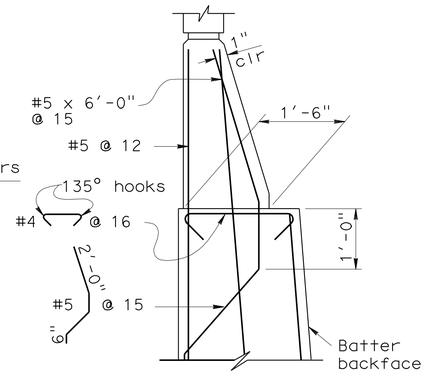

① DETAIL A WITHOUT HAUNCH

No Scale

GENERAL NOTES

1. For soundwall and retaining wall architectural finish or texture, see details elsewhere in project plans.
2. For details not shown and drainage notes, see (B3-8)
3. Footing cover, 1'-6" minimum.
4. Limit of no splicing rebars = 3 times the bottom thickness of the stem.
5. Placement of reinforcements :
   - ⓑ & ⓒ bars are spliced together.
   - * ⓐ & ⓑ bars are bundled together.
   - ** Alternate ⓐ & ⓑ bars are shown in "Detail B".
   - Cont = Continuous.
6. For Soundwall & Barrier reinforcement, see "Soundwall Masonry Block on Barriers" sheets in Standard Plans.

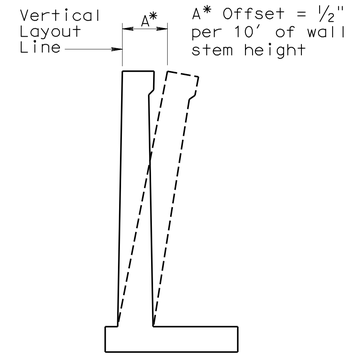

WALL OFFSET

No Scale

Values for offsetting forms to be determined by the Engineer.

TABLE 1: TABLE OF REINFORCING STEEL DIMENSIONS AND DATA

	Stem With Haunch													
Design H	6'	8'	10'	12'	14'	16'	18'	20'	22'	24'	26'	28'	30'	32'
W	7'-9"	8'-0"	8'-9"	9'-9"	10'-9"	12'-0"	13'-0"	14'-3"	15'-3"	16'-6"	18'-6"	19'-9"	21'-3"	22'-6"
C	2'-9"	2'-9"	3'-0"	3'-3"	3'-6"	4'-0"	4'-3"	4'-9"	5'-0"	5'-6"	6'-3"	6'-9"	7'-3"	7'-9"
B	5'-0"	5'-3"	5'-9"	6'-6"	7'-3"	8'-0"	8'-9"	9'-6"	10'-3"	11'-0"	12'-3"	13'-0"	14'-0"	14'-9"
F Spread footing	1'-3"	1'-3"	1'-3"	1'-3"	1'-3"	1'-6"	1'-6"	1'-9"	2'-0"	2'-3"	2'-9"	3'-0"	3'-3"	3'-9"
Batter	0	½:12	½:12	½:12	½:12	½:12	½:12	½:12	½:12	⅝:12	¾:12	⅞:12	1:12	1:12
Stem thickn. @ Haunch	1'-0"	1'-0"	1'-0"	1'-0"	1'-0"	1'-0"	1'-0"	1'-0"	1'-0"	1'-0"	1'-0"	1'-0"	1'-0"	1'-0"
ⓐ Bars				#6 @18**	#7 @18**	#8 @18**	#9 @18**	#10 @18**	#8 @ 9*	#8 @ 9*	#7 @ 6*	#10 @12**	#9 @ 9*	#11@12**
X				Cont	Cont	Cont	Cont	Cont	Cont	Cont	Cont	Cont	Cont	Cont
Y				8'-0"	6'-6"	7'-6"	8'-6"	9'-6"	9'-6"	11'-0"	11'-6"	13'-0"	14'-0"	15'-6"
ⓑ Bars	#5 @12	#5 @12	#5 @ 9	#6 @18**	#7 @18**	#8 @18**	#9 @18**	#10 @18**	#8 @ 9*	#8 @ 9*	#7 @ 6*	#10 @12**	#9 @ 9*	#11@12**
X	Cont	Cont	Cont	Cont	Cont	Cont	Cont	Cont	Cont	5'-6"	6'-6"	7'-0"	8'-0"	8'-6"
Y	Cont	Cont	Cont	Cont	10'-6"	13'-0"	15'-0"	17'-6"	19'-6"	21'-0"	18'-6"	19'-0"	25'-6"	23'-6"
ⓒ Bars					#6 @18	#6 @18	#6 @18	#6 @18	#6 @18	#6 @18	#6 @12	#7 @12	#7 @18	#7 @12
ⓓ Bars	#5 @12	#5 @12	#5 @12	#5 @ 9	#6 @ 9	#6 @ 9	#6 @ 6	#8 @ 9	#8 @ 9	#8 @ 9	#7 @ 6	#7 @ 6	#9 @ 9	#9 @ 9
Ultimate Bearing Capacity Req'd k/sf	4.6	5.5	6.1	6.6	7.3	8.1	9.0	9.9	11.3	12.2	12.5	13.4	14.1	15.4

TABLE 2: TABLE OF REINFORCING STEEL DIMENSIONS AND DATA

	Stem With Haunch						Stem Without Haunch						
Design H	8'	10'	12'	14'	16'	18'	20'	22'	24'	26'	28'	30'	32'
W	8'-0"	8'-6"	9'-3"	10'-3"	11'-3"	13'-0"	13'-9"	16'-0"	16'-6"	18'-6"	20'-0"	20'-6"	21'-9"
C	2'-9"	2'-9"	3'-0"	3'-6"	3'-9"	4'-3"	4'-6"	5'-3"	5'-6"	6'-3"	6'-9"	6'-9"	7'-6"
B	5'-3"	5'-9"	6'-3"	6'-9"	7'-6"	8'-9"	9'-3"	10'-9"	11'-0"	12'-3"	13'-3"	13'-9"	14'-3"
F Spread footing	1'-3"	1'-3"	1'-3"	1'-3"	1'-6"	1'-6"	1'-9"	2'-0"	2'-3"	2'-9"	3'-0"	3'-3"	3'-6"
Batter	0	0	0	0	0	0	0	0	0	¼:12	½:12	½:12	½:12
Stem thickn. @ Haunch	1'-0"	1'-0"	1'-0"	1'-0"	1'-3"	1'-3"							
Stem thickn. @ top							1'-6"	2'-0"	2'-0"	2'-0"	2'-0"	2'-0"	2'-0"
ⓐ Bars			#6 @12**	#5 @ 6*	#9 @18**	#9 @12**	#9 @12**	#9 @12**	#7 @ 6*	#7 @ 6*	#7 @ 6*	#9 @ 9*	#11@12**
X			Cont	Cont	Cont	Cont	Cont	Cont	Cont	Cont	Cont	Cont	Cont
Y			5'-6"	5'-6"	8'-6"	8'-6"	8'-6"	8'-6"	9'-6"	11'-0"	12'-6"	13'-6"	14'-6"
ⓑ Bars	#5 @ 9	#6 @ 9	#6 @12**	#5 @ 6*	#9 @18**	#9 @12**	#9 @12**	#9 @12**	#7 @ 6*	#7 @ 6*	#7 @ 6*	#9 @ 9*	#11@12**
X	Cont	Cont	Cont	Cont	Cont	Cont	Cont	Cont	5'-6"	6'-0"	7'-6"	7'-6"	8'-0"
Y	Cont	Cont	Cont	Cont	11'-6"	11'-6"	12'-0"	12'-0"	17'-6"	20'-0"	21'-6"	24'-0"	24'-0"
ⓒ Bars					#7 @18	#7 @12	#7 @12	#7 @12	#6 @ 12	#6 @ 12	#6 @12	#7 @18	#7 @12
ⓓ Bars	#5 @12	#5 @ 9	#5 @9	#6 @9	#6 @ 9	#9 @12	#9 @12	#7 @#7	6 @ 6	#7 @ 6	#7 @ 6	#9 @ 9	#9 @ 9
Ultimate Bearing Capacity Req'd k/sf	5.5	6.5	7.3	7.6	9.0	9.0	10.6	10.5	12.2	12.6	13.3	15.4	16.0

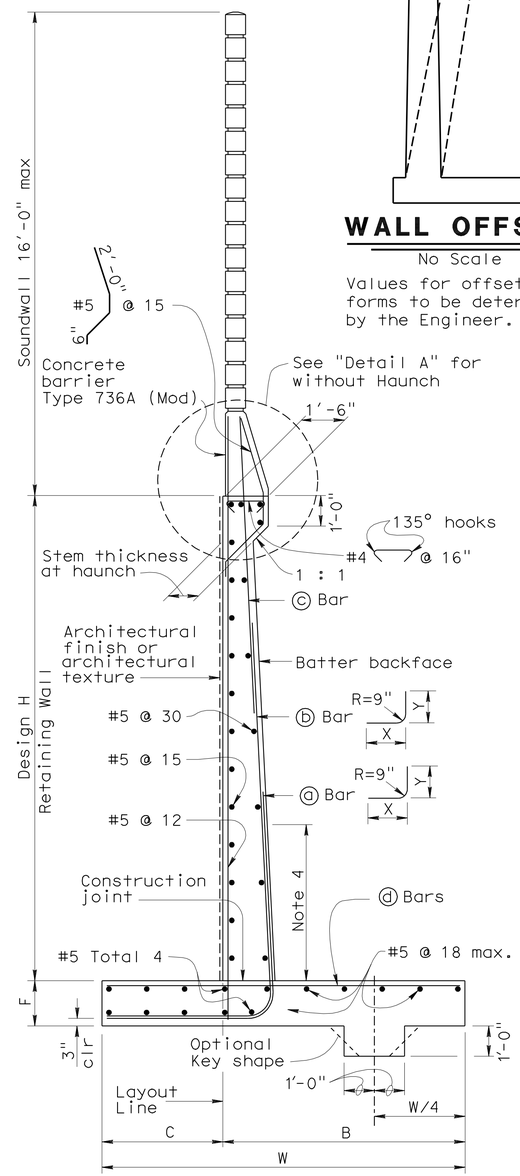

① SPREAD FOOTING SECTION

No Scale

DESIGN DATA

DESIGN: Load Factor Design (LFD)

CONCRETE: Reinforced Concrete, f'c = 3600 psi
fy = 60,000 psi

LOADING CASE:
Level ground with 240 psf surcharge and 16' Soundwall

Seismic Load = 0.3 Dead Load
Wind Load = 30 psf
Dead Load of Soundwall = 1414 lb/ft
Dead Load of Barrier = 372 lb/ft

SEISMIC LOAD: SOIL
Kh = 0.3g
Kv = 0.0
Kae : Mononobe-Okabe Method

SOIL: Ø = 34° γ = 120 pcf
Equivalent fluid pressure:
= 36 pcf for determination of toe pressure
= 27 pcf for determination of heel pressure

EXTERNAL STABILITY:
Group 1 : D + E + SC
Group 2 : D + E + SC + W
Group 3 : D + PYM

INTERNAL STABILITY (LFD):
Group A : βD + 1.7E + 1.7SC
Group B : βD + 1.7E + 1.3W
Group C (stem) : 1.0D + 1.0E + 1.0EQD + 1.0EQE
Group C (footing) : D + PYM

Where : β = 1.0 or 1.3 whichever controls design
D = Dead Load
E = Lateral Earth Pressure
SC = Surcharge
W = Wind load
EQD = Seismic Dead Load
EQE = Seismic Lateral Earth Pressure

(1.3 x Nominal Yield Moment of Stem)

STANDARD DRAWING

FILE NO. Revised xs14-220e

APPROVED BY G. WANG
RESPONSIBLE TECHNICAL SPECIALIST
APPROVAL DATE 5-19-08

RELEASED BY ROBERTO LACALLE
RESPONSIBLE OFFICE CHIEF
RELEASE DATE 5-19-08

① Modified Detail

STATE OF CALIFORNIA
DEPARTMENT OF TRANSPORTATION

DIVISION OF ENGINEERING SERVICES

BRIDGE NO. 53E0137
POST MILE 22.5

SOUND WALL NO. 1191
RETAINING WALL TYPE 1SWB

DS OSD 2147A (ENGLISH STANDARD DRAWING "XS" BORDER REV. 01/11/08)

ORIGINAL SCALE IN INCHES FOR REDUCED PLANS 0 1 2 3

CU 07
EA 002341

DISREGARD PRINTS BEARING EARLIER REVISION DATES
REVISION DATES (PRELIMINARY STAGE ONLY) 6-24-09 1-20-10 1-26-10 4-20-10

SHEET 15 OF 22

USERNAME => trlenard

DATE PLOTTED => 23-JUN-2010 TIME PLOTTED => 07:41

53e0137-u-xs14-220e.dg

DIST.	COUNTY	ROUTE	POST MILES TOTAL PROJECT	SHEET NO.	TOTAL SHEETS
07	LA	710	22.6	94	100

Fred Feng 4-15-10
REGISTERED ENGINEER - CIVIL

6-21-10
PLANS APPROVAL DATE

REGISTERED PROFESSIONAL ENGINEER Fred Y. Feng No. C 32992 Exp. 6-30-2010 CIVIL STATE OF CALIFORNIA

The State of California or its officers or agents shall not be responsible for the accuracy or completeness of electronic copies of this plan sheet.

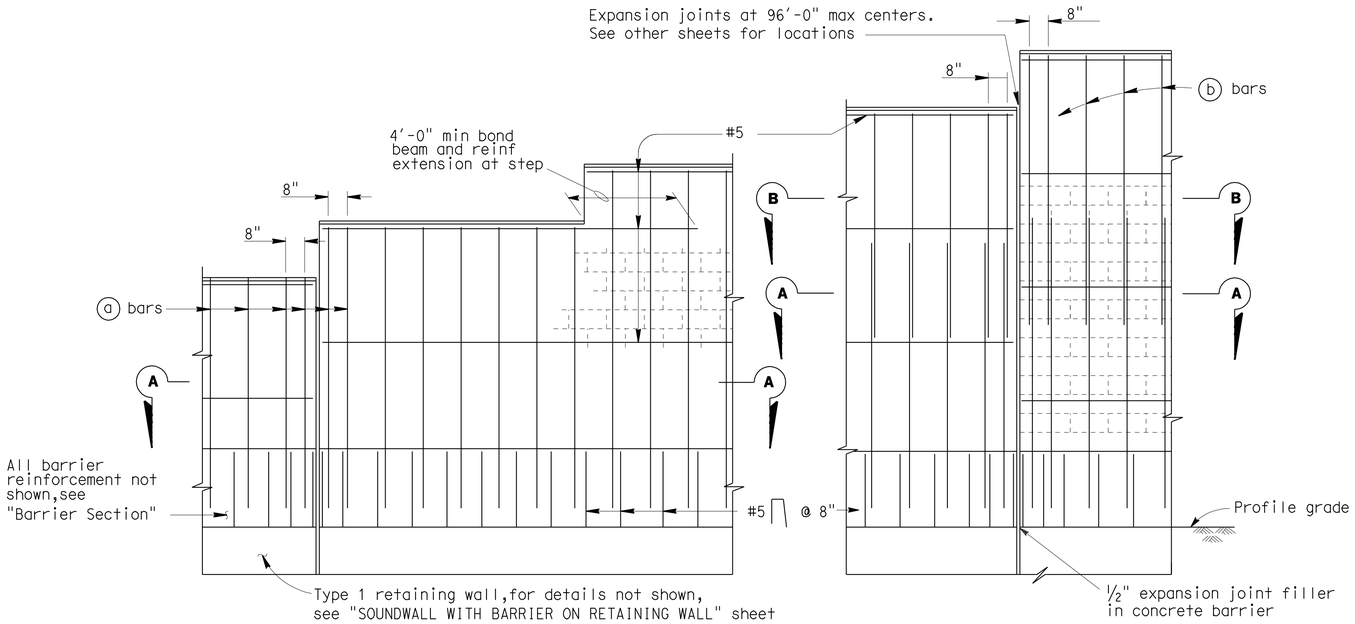

PART ELEVATIONS

SOUNDWALL REINFORCEMENT TABLE

Maximum H	ⓐ bars @ 1'-4" max	ⓑ bars @ 1'-4" max	"y"	f'm (KSI)	Compressive Strength of CMU (KSI)	Maximum H
6'-4"	# 4	———	———	1.5	1.9	6'-4"
8'-4"	# 4	———	———	1.5	1.9	8'-4"
10'-4"	# 4	———	———	1.5	1.9	10'-4"
12'-4"	# 5	# 4	5'-0"	1.5	1.9	12'-4"
14'-4"	# 6	# 4	7'-0"	1.5	1.9	14'-4"
16'-4"	# 6	# 4	9'-0"	2.5	3.7	16'-4"

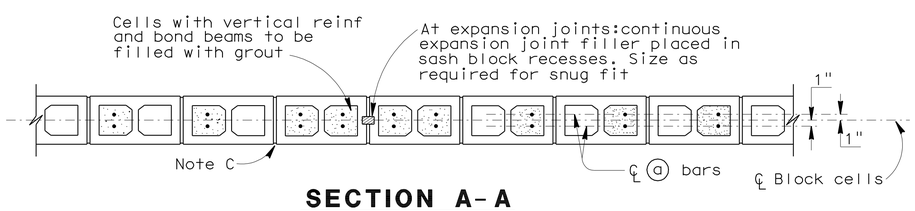

SECTION A-A

For details not shown, see other details

H=6'-4" THRU H=10'-4"

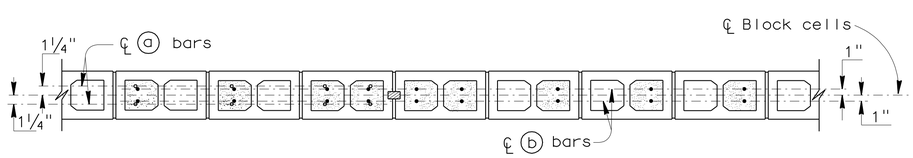

SECTION A-A

SECTION B-B

For details not shown, see other details

H=12'-4" THRU H=16'-4"

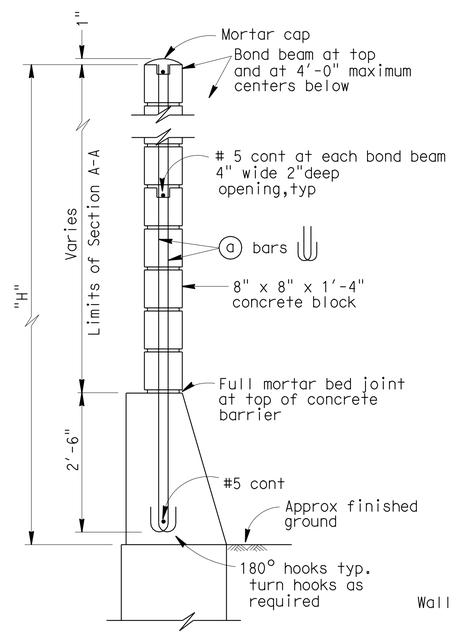

H=6'-4" THRU H=10'-4"

For details not shown, see H=12'-4" thru H=16'-4"

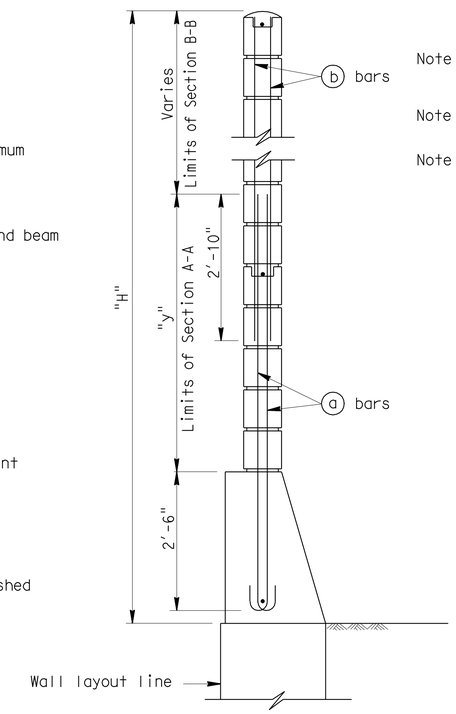

H=12'-4" THRU H=16'-4"

For details not shown, see H=6'-4" thru H=10'-4"

TYPICAL SECTIONS

Note I : For details not shown, see "SOUNDWALL WITH BARRIER ON RETAINING WALL - MASONRY BLOCK -- DETAILS NO.2" sheet.

Note II : Slope ground at traffic side of barrier to drain. Maximum slope ±10%.

Note III : See "SOUNDWALL MASONRY BLOCK - MISCELLANEOUS DETAILS" sheet for other details.

GENERAL NOTES

Note A: For type of block and joint finish, see other sheets.

Note B: When blocks are laid in stacked bond, ladder type, galvanized joint reinforcement shall be provided. A minimum of 0.07"-0.14" wire continuous at 4'-0" maximum to be used. Locate reinforcement in joints that are at the approximate midpoint between bond beams.

Note C: Horizontal joints shall be tooled concave or may be weathered.
Vertical joints shall be tooled concave or may be raked.

Note D: For intermediate wall heights that are between the "H's" given. Use the tabular information for the next higher "H".

Note E: Masonry strengths are listed in "SOUNDWALL REINFORCEMENT TABLE".

1

STANDARD DRAWING

FILE NO. xs15-130-1e

APPROVED BY T SATTER
RESPONSIBLE TECHNICAL SPECIALIST
APPROVAL DATE 9-2-08

RELEASED BY ROBERTO LACALLE
RESPONSIBLE OFFICE CHIEF
RELEASE DATE 9-2-08

1 REMOVED NOTE

STATE OF CALIFORNIA
DEPARTMENT OF TRANSPORTATION

DIVISION OF ENGINEERING SERVICES

BRIDGE NO. 53E0137
POST MILE 22.5

SOUND WALL NO. 1191

SOUNDWALL - MASONRY BLOCK WITH BARRIER ON RETAINING WALL

DETAILS NO. 1

DS OSD 2147A (ENGLISH STANDARD DRAWING "XS" BORDER REV. 01/11/08)

ORIGINAL SCALE IN INCHES FOR REDUCED PLANS 0 1 2 3

CU 07
EA 002341

DISREGARD PRINTS BEARING EARLIER REVISION DATES

REVISION DATES (PRELIMINARY STAGE ONLY) 6-24-09 1-20-10 1-26-10

SHEET 16 OF 22

USERNAME => trrichf

53e0137-u-xs15-130-1e

DATE PLOTTED => 23-JUN-2010 TIME PLOTTED => 15:33

DIST.	COUNTY	ROUTE	POST MILES TOTAL PROJECT	SHEET NO.	TOTAL SHEETS
07	LA	710	22.6	95	100

Fred Feng 4-15-10
REGISTERED ENGINEER - CIVIL

6-21-10
PLANS APPROVAL DATE

REGISTERED PROFESSIONAL ENGINEER Fred Y. Feng No. C 32992 Exp. 6-30-2010 CIVIL STATE OF CALIFORNIA

The State of California or its officers or agents shall not be responsible for the accuracy or completeness of electronic copies of this plan sheet.

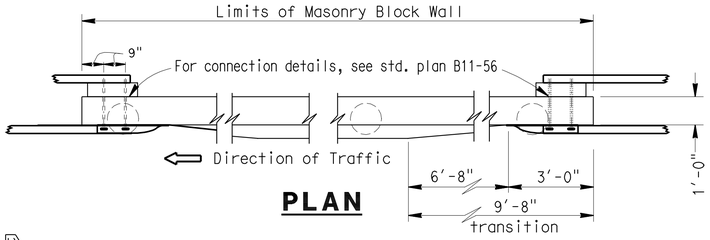

PLAN

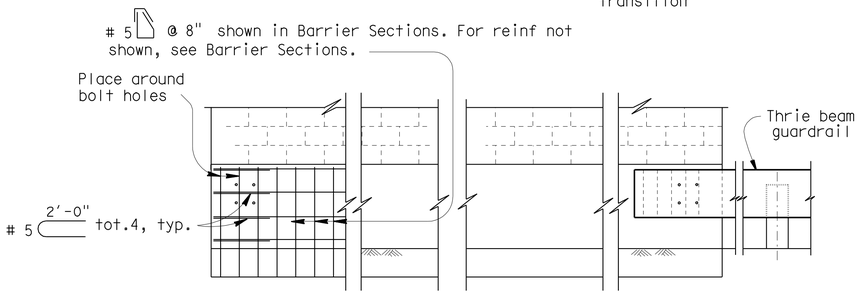

ELEVATION
METAL BEAM GUARDRAIL ANCHORAGE

For details not shown, see std. plan B11-56.

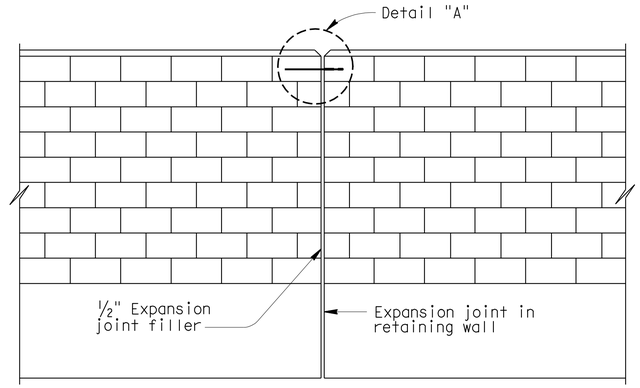

ALIGNMENT KEY DETAIL

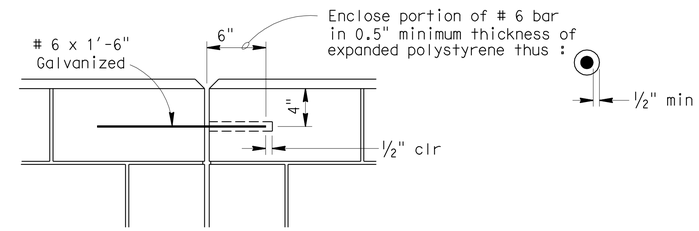

DETAIL A

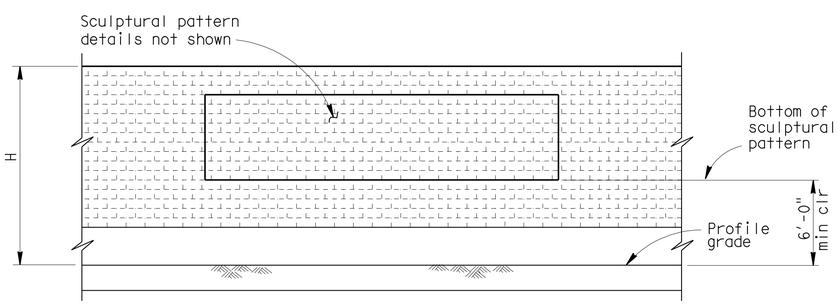

CLEARANCE DETAIL

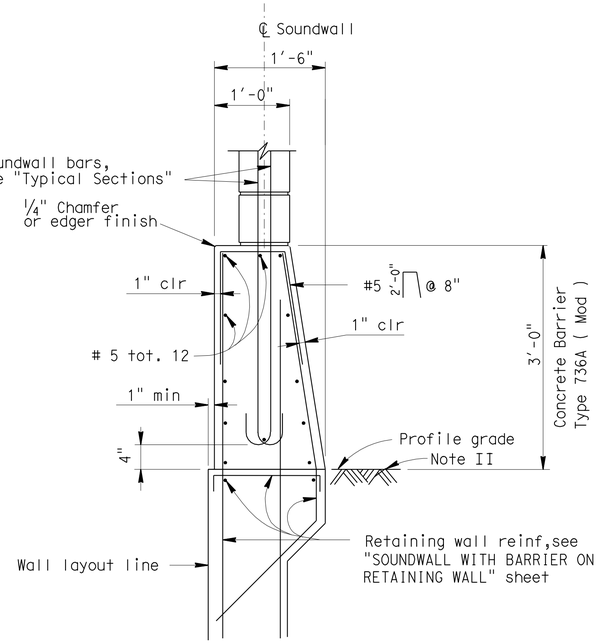

⟨1⟩ BARRIER SECTION

NOTES:

I : For details not shown, see "RETAINING WALL WITH SOUNDWALL" sheets.

II : Slope ground at traffic side of barrier to drain. Maximum slope ±10%. See Standard Plan B11-56, Note D.

DESIGN NOTES

DESIGN

Uniform Building Code, 1997 Edition and the Bridge Design Specifications.

DESIGN WIND LOAD

33 PSF

DESIGN SEISMIC LOAD

0.57 Dead load

REINFORCED CONCRETE

f'c = 3250 PSI
fy = 60 KSI

CONCRETE MASONRY

REGULAR STRENGTH	HIGH STRENGTH	
f'm = 1500 PSI	f'm = 2000 PSI	f'm = 2500 PSI
f_b = 1500 PSI	f_b = 660 PSI	f_b = 830 PSI
fs = 24.0 KSI	fs = 24.0 KSI	fs = 24000 PSI
n = 25.8	n = 19.3	n = 15.5

LOAD FACTORS AND LOAD COMBINATIONS

Working Stress Design (WSD) — Percentage of unit stress

Group 1: D + E + SC	100%
Group 2: D + W + SC + E	100%
Group 3: D + 0.71 EQD + E	100%

Where:

D = Dead load
E = Lateral earth pressure
SC = Live load surcharge
W = Wind load
EQD = Seismic dead load

Load Factor Design (LFD)

Group A: βD +1.7 E + 1.7 SC
Group B: βD +1.7 E + 1.3 W
Group C: βD +1.3 E + 1.0 EQE
Group D: βD +1.3 E + 1.0 EQD
Group E: βD +1.1 E + 0.85 (EQE + EQD)

Where : β = 0.9 or 1.2, whichever controls in design
D = Dead load
E = Lateral earth pressure
SC = Live load surcharge
W = Wind load
EQD = Seismic dead load
EQE = Seismic earth load

STRENGTH REDUCTION FACTORS, Ø

Reinforced concrete:
For flexure ---------- Ø=0.90
For shear ---------- Ø=0.85

Concrete masonry:
For flexure ---------- Ø=0.80
For shear ---------- Ø=0.60

Foundations :

See "RETAINING WALL WITH SOUNDWALL" sheets.

STANDARD DRAWING

FILE NO. Revised xs15-130-2e

APPROVED BY T SATTER — RESPONSIBLE TECHNICAL SPECIALIST
APPROVAL DATE 4-15-08

RELEASED BY ROBERTO LACALLE — RESPONSIBLE OFFICE CHIEF
RELEASE DATE 4-15-08

⟨1⟩ Modified Detail

STATE OF CALIFORNIA DEPARTMENT OF TRANSPORTATION

DIVISION OF ENGINEERING SERVICES

BRIDGE NO. 53E0137
POST MILE 22.5

SOUND WALL NO. 1191

SOUNDWALL - MASONRY BLOCK WITH BARRIER ON RETAINING WALL

DETAILS NO. 2

DS OSD 2147A (ENGLISH STANDARD DRAWING "XS" BORDER REV. 01/11/08)

ORIGINAL SCALE IN INCHES FOR REDUCED PLANS 0 1 2 3

CU 07
EA 002341

DISREGARD PRINTS BEARING EARLIER REVISION DATES

REVISION DATES (PRELIMINARY STAGE ONLY) 12-08-09 01-20-10 01-26-10 04-19-10 04-20-10

SHEET 17 OF 22

USERNAME => trlenard

53e0137-u-xs15-130-2e

DATE PLOTTED => 23-JUN-2010 TIME PLOTTED => 07:24:11

DIST	COUNTY	ROUTE	POST MILES TOTAL PROJECT	SHEET No	TOTAL SHEETS
07	LA	710	22.6	96	100

Fred Feng 4-15-10
REGISTERED CIVIL ENGINEER DATE

6-21-10
PLANS APPROVAL DATE

REGISTERED PROFESSIONAL ENGINEER Fred Y. Feng No. C 32992 Exp. 6-30-2010 CIVIL STATE OF CALIFORNIA

The State of California or its officers or agents shall not be responsible for the accuracy or completeness of electronic copies of this plan sheet.

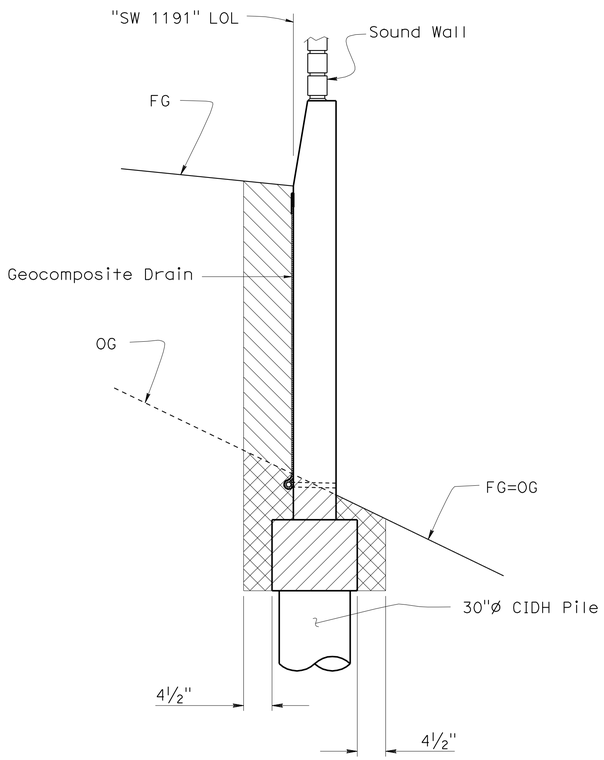

SOUND WALL ON RETAINING WALL WITH TIEBACK ANCHORS

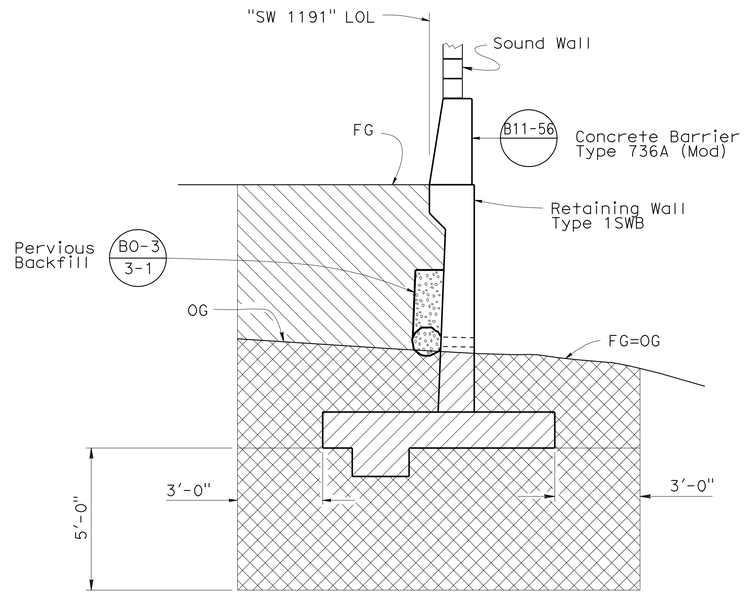

SOUND WALL ON RETAINING WALL

* Sta 191+30.00 to Sta 191+80.00

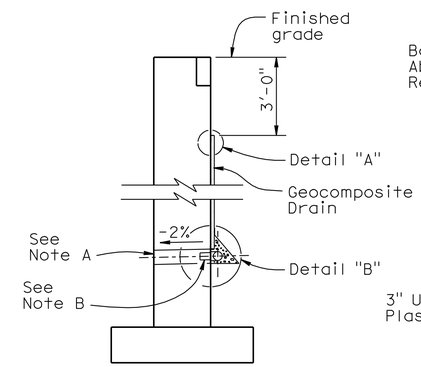

WALL SECTION

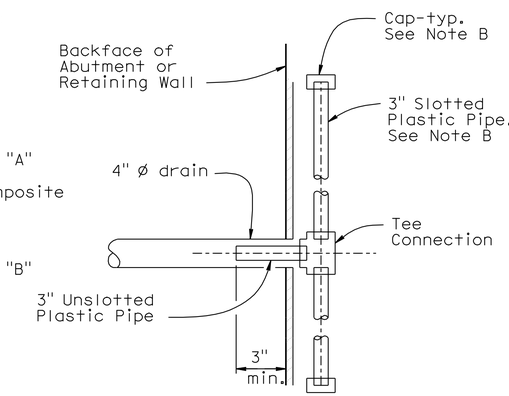

SECTION A-A

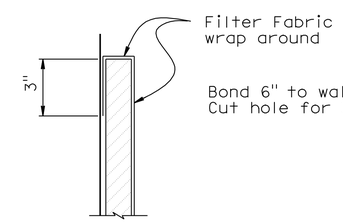

DETAIL "A"

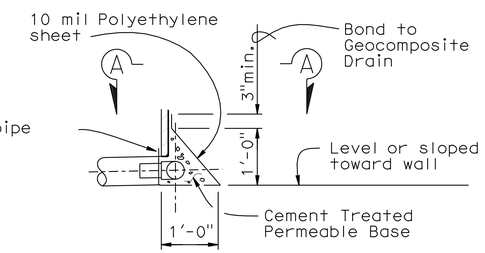

DETAIL "B"

WEEP HOLE AND GEOCOMPOSITE DRAIN

ALTERNATIVE TO BRIDGE DETAIL B0-3 / 3-1

Note:

1. For details of Structure Excavation (Type Y-1) (Aerially Deposited Lead) not shown elsewhere, see Road Plans.

Legend:

Structure Excavation (Type Y-1) (Aerially Deposited Lead)

Structure Backfill (Retaining Wall)

* For limits of Excavation (Type Y-1) and Backfill before and after these stations , use Standard Plan A62B

LIMITS OF EXCAVATION AND BACKFILL

No Scale

Notes:

A. 4" ø drains at intermediate sag points and at 25' max center to center (9' c-c for Type 3 and 9'-3" c-c for Type 4 retaining walls).
For walls adjacent to sidewalks or curbs, provide 4" cast iron or asbestos cement pipe under the sidewalk to discharge through curb face.
Exposed wall drains shall be located 3"± above finished grade.

B. Geocomposite drain, cement treated permeable base, and 3"ø slotted plastic pipe continuous behind retaining wall or abutment. Cap ends of pipe. Provide "Tee" connection at each 4" ø drain.

C. Connect the low end of plastic pipe to the main outlet pipe as apprlicable.

NOTE:
THE CONTRACTOR SHALL VERIFY ALL CONTROLLING FIELD DIMENSIONS BEFORE ORDERING OR FABRICATING ANY MATERIAL.

	BY	CHECKED
DESIGN	F. Feng	D. Chung/D. Vargas
DETAILS	S. Cholda	T. Menard
QUANTITIES	F. Feng/S. Yip	D Vargas/S. Moradi

STATE OF CALIFORNIA
DEPARTMENT OF TRANSPORTATION

DIVISION OF ENGINEERING SERVICES
STRUCTURE DESIGN
DESIGN BRANCH 15

BRIDGE NO. 53E0137
POST MILE 22.5

SOUND WALL NO. 1191
EXCAVATION AND BACKFILL

STRUCTURES DESIGN DETAIL SHEET (ENGLISH) (REV. 10/25/05)

ORIGINAL SCALE IN INCHES FOR REDUCED PLANS 0 1 2 3

CU 07
EA 002341

DISREGARD PRINTS BEARING EARLIER REVISION DATES

REVISION DATES: 12-05-09 04-20-10 12-15-09 12-16-09 01-14-10 01-20-10 01-25-10 01-27-10 03-16-10 4-15-10

SHEET 18 OF 22

FILE => 53e0137-w-misc.dgn

USERNAME => Trenard DATE PLOTTED => 23-JUN-2010 TIME PLOTTED => 07:41

DIST	COUNTY	ROUTE	POST MILES TOTAL PROJECT	SHEET No	TOTAL SHEETS
07	LA	710	22.6	97	100

REGISTERED CIVIL ENGINEER 11-5-09

6-21-10
PLANS APPROVAL DATE

REGISTERED PROFESSIONAL ENGINEER
Nadeem Srour
No. C57648
Exp. 12-31-09
CIVIL
STATE OF CALIFORNIA

The State of California or its officers or agents shall not be responsible for the accuracy or completeness of electronic copies of this plan sheet.

This LOTB sheet was prepared in accordance with the Caltrans Soil & Rock Logging; Classification; & Presentation Manual (June 2007).

BENCH MARK

#PRHV 1303
SET PK NAIL AT NB 710 FWY SHOULDER
AT NB 710 WASHINGTON BLVD ON-RAMP
N 1824624.842
E 6509423.175
Elev 178.81′

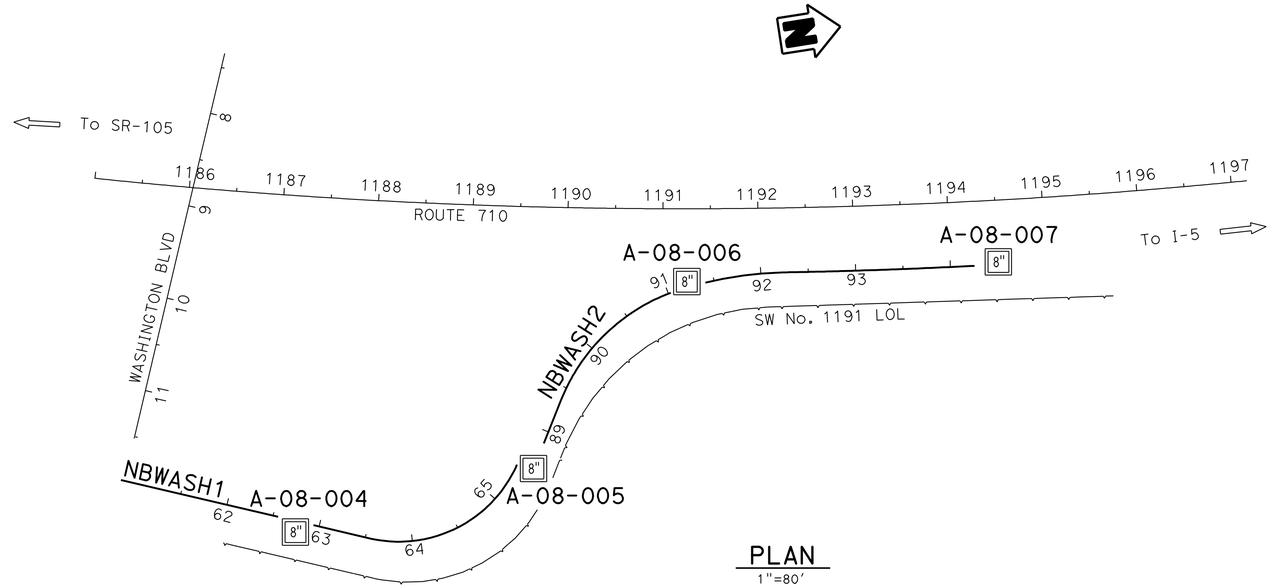

PLAN
1"=80′

Note:
No groundwater encountered during field investigation.

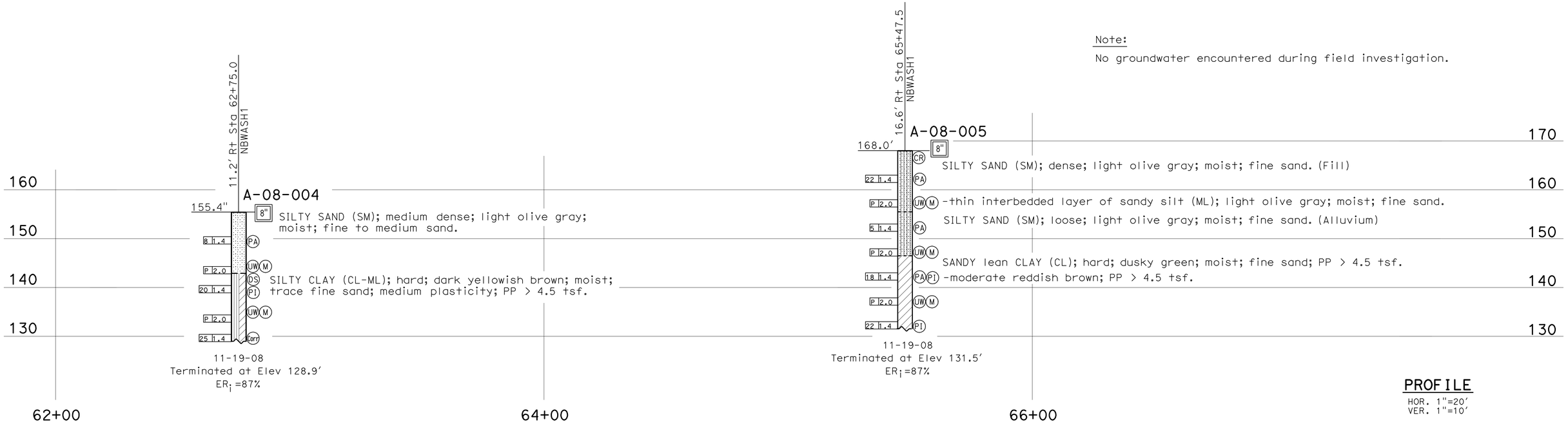

PROFILE
HOR. 1"=20′
VER. 1"=10′

ENGINEERING SERVICES		GEOTECHNICAL SERVICES	STATE OF CALIFORNIA DEPARTMENT OF TRANSPORTATION	DIVISION OF ENGINEERING SERVICES STRUCTURE DESIGN DESIGN BRANCH	BRIDGE NO. 53E0137 POST MILES 22.5	SOUND WALL NO. 1191
FUNCTIONAL SUPERVISOR NAME: S. Sukiasian	DRAWN BY: W. Tang 08/09 CHECKED BY: Q. Liao	FIELD INVESTIGATION BY: N. Srour				LOG OF TEST BORINGS 1 OF 4

OGS CIVIL LOG OF TEST BORINGS SHEET

ORIGINAL SCALE IN INCHES FOR REDUCED PLANS 0 1 2 3

CU 07
EA 002341

DISREGARD PRINTS BEARING EARLIER REVISION DATES

REVISION DATES: 09-08-09 09-24-09 10-23-09 01-26-10

SHEET 19 OF 22

FILE => 53e0137-z-ltb01.dgn

USERNAME => trlenard DATE PLOTTED => 23-JUN-2010 TIME PLOTTED => 07:42

DIST	COUNTY	ROUTE	POST MILES TOTAL PROJECT	SHEET No	TOTAL SHEETS
07	LA	710	22.6	98	100

REGISTERED CIVIL ENGINEER 11-5-09

6-21-10
PLANS APPROVAL DATE

REGISTERED PROFESSIONAL ENGINEER
Nadeem Srour
No. C57648
Exp. 12-31-09
CIVIL
STATE OF CALIFORNIA

The State of California or its officers or agents shall not be responsible for the accuracy or completeness of electronic copies of this plan sheet.

This LOTB sheet was prepared in accordance with the Caltrans Soil & Rock Logging, Classification, & Presentation Manual (June 2007).

FOR PLAN VIEW, SEE
"LOG OF TEST BORINGS 1 OF 4"

Note:

No groundwater encountered during field investigation.

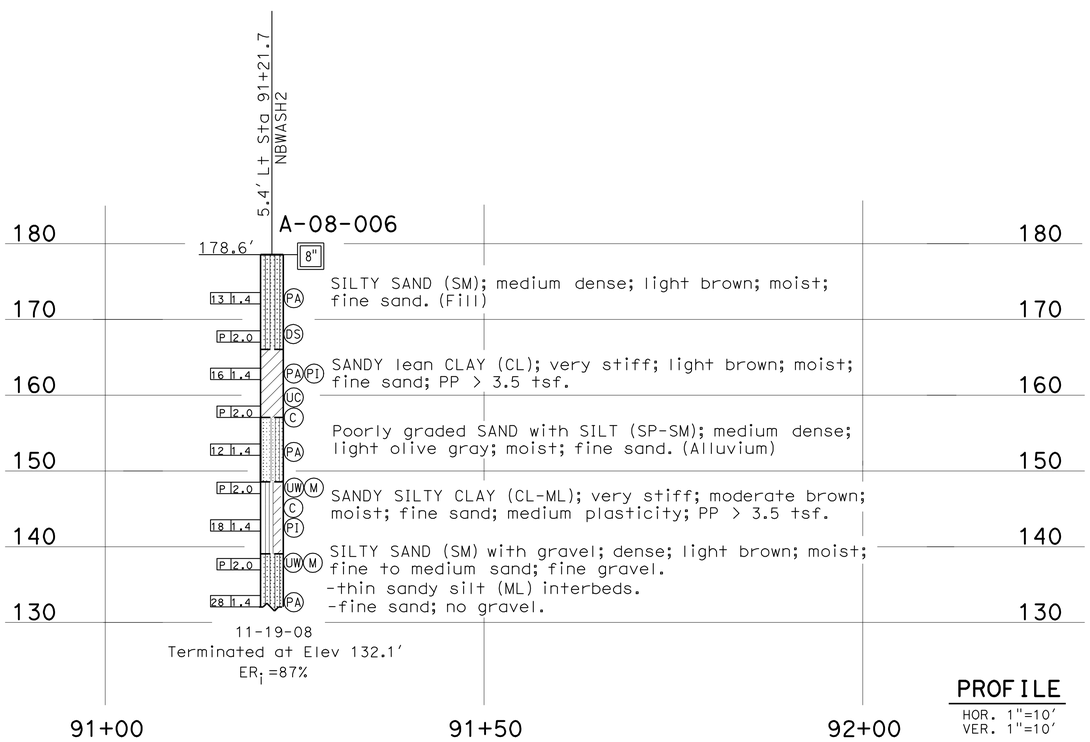

PROFILE
HOR. 1"=10'
VER. 1"=10'

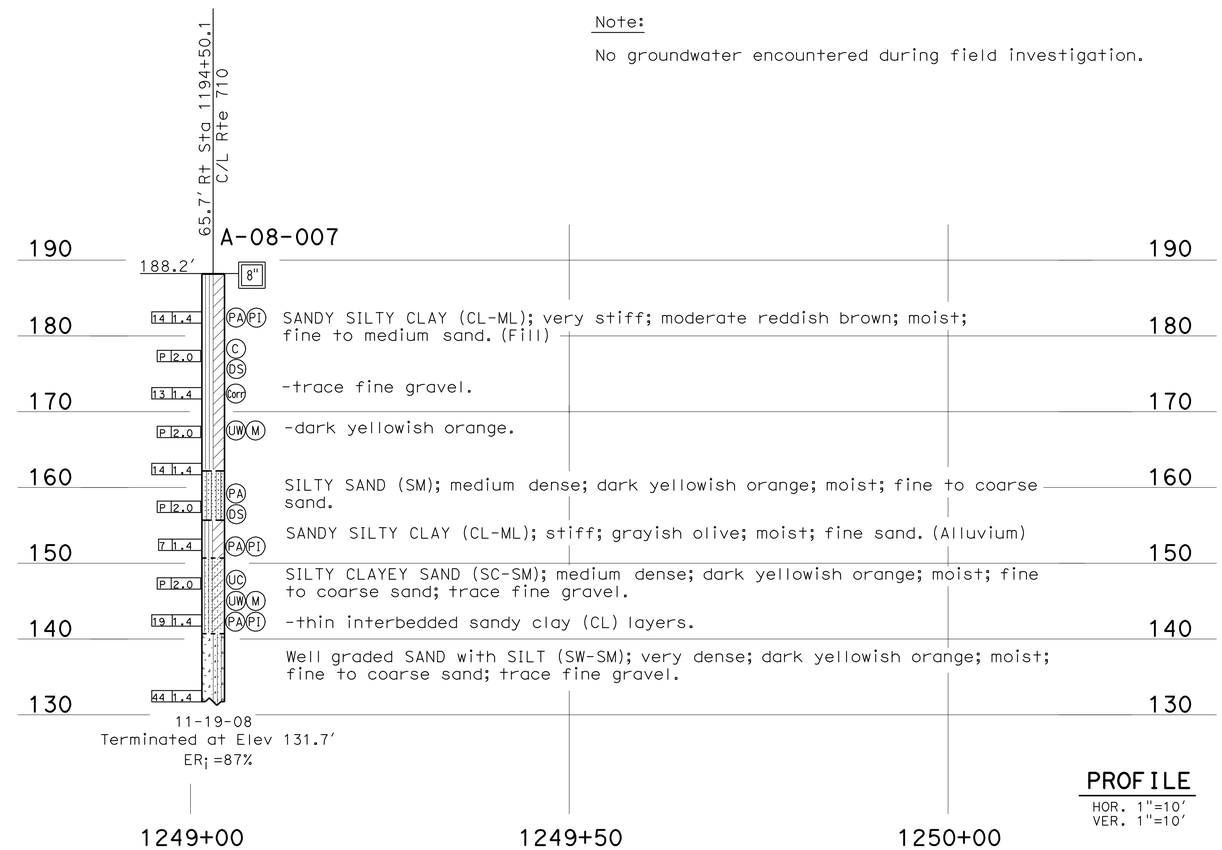

PROFILE
HOR. 1"=10'
VER. 1"=10'

ENGINEERING SERVICES	GEOTECHNICAL SERVICES	STATE OF CALIFORNIA DEPARTMENT OF TRANSPORTATION	DIVISION OF ENGINEERING SERVICES STRUCTURE DESIGN DESIGN BRANCH	BRIDGE NO. 53E0137 / POST MILES 22.5	SOUND WALL NO. 1191
FUNCTIONAL SUPERVISOR	DRAWN BY: W. Tang 08/09	FIELD INVESTIGATION BY:			LOG OF TEST BORINGS 2 OF 4
NAME: S. Sukiasian	CHECKED BY: Q. Liao	N. Srour			

OGS CIVIL LOG OF TEST BORINGS SHEET

ORIGINAL SCALE IN INCHES FOR REDUCED PLANS 0 1 2 3

CU 07
EA 002341

DISREGARD PRINTS BEARING EARLIER REVISION DATES

REVISION DATES: 09-08-09 09-24-09 10-23-09 01-20-10 01-26-10

SHEET 20 OF 22

FILE => 53e0137-z-1tb02.dgn

USERNAME => trienard DATE PLOTTED => 23-JUN-2010 TIME PLOTTED => 07:42

DIST	COUNTY	ROUTE	POST MILES TOTAL PROJECT	SHEET No	TOTAL SHEETS
07	LA	710	22.6	99	100

REGISTERED CIVIL ENGINEER 11-5-09

6-21-10
PLANS APPROVAL DATE

REGISTERED PROFESSIONAL ENGINEER Nadeem Srour No. C57648 Exp. 12-31-09 CIVIL STATE OF CALIFORNIA

The State of California or its officers or agents shall not be responsible for the accuracy or completeness of electronic copies of this plan sheet.

REFERENCE: CALTRANS SOIL & ROCK LOGGING, CLASSIFICATION, AND PRESENTATION MANUAL (JUNE 2007)

CEMENTATION

Description	Criteria
Weak	Crumbles or breaks with handling or little finger pressure.
Moderate	Crumbles or breaks with considerable finger pressure.
Strong	Will not crumble or break with finger pressure.

CONSISTENCY OF COHESIVE SOILS

Description	Unconfined Compressive Strength (tsf)	Pocket Penetrometer Measurement (tsf)	Torvane Measurement (tsf)	Field Approximation
Very Soft	< 0.25	< 0.25	< 0.12	Easily penetrated several inches by fist
Soft	0.25 to 0.50	0.25 to 0.50	0.12 to 0.25	Easily penetrated several inches by thumb
Medium Stiff	0.50 to 1.0	0.50 to 1.0	0.25 to 0.50	Penetrated several inches by thumb with moderate effort
Stiff	1 to 2	1 to 2	0.50 to 1.0	Readily indented by thumb but penetrated only with great effort
Very Stiff	2 to 4	2 to 4	1.0 to 2.0	Readily indented by thumbnail
Hard	> 4.0	> 4.0	> 2.0	Indented by thumbnail with difficulty

BOREHOLE IDENTIFICATION

Symbol	Hole Type	Description
Size	A	Auger Boring
Size	R P	Rotary drilled boring Rotary percussion boring (air)
Size	R	Rotary drilled diamond core
Size	HD HA	Hand driven (1-inch soil tube) Hand Auger
●	D	Dynamic Cone Penetration Boring
▲	CPT	Cone Penetration Test (ASTM D 5778-95)
⬚	O	Other

Note: Size in inches.

PLASTICITY OF FINE-GRAINED SOILS

Description	Criteria
Nonplastic	A 1/8-inch thread cannot be rolled at any water content.
Low	The thread can barely be rolled and the lump cannot be formed when drier than the plastic limit.
Medium	The thread is easy to roll and not much time is required to reach the plastic limit. The thread cannot be rerolled after reaching the plastic limit. The lump crumbles when drier than the plastic limit.
High	It takes considerable time rolling and kneading to reach the plastic limit. The thread can be rerolled several times after reaching the plastic limit. The lump can be formed without crumbling when drier than the plastic limit.

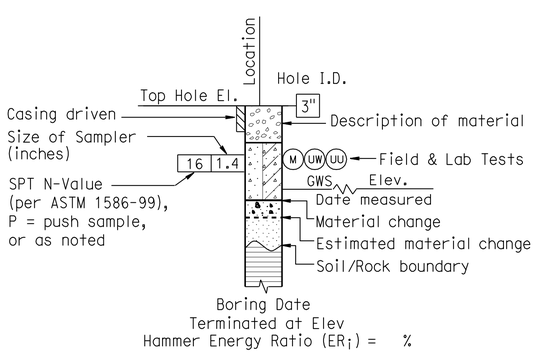

ROTARY BORING

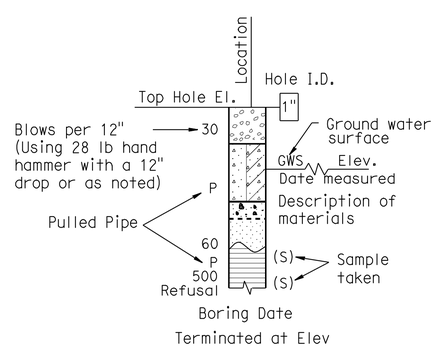

HAND BORING

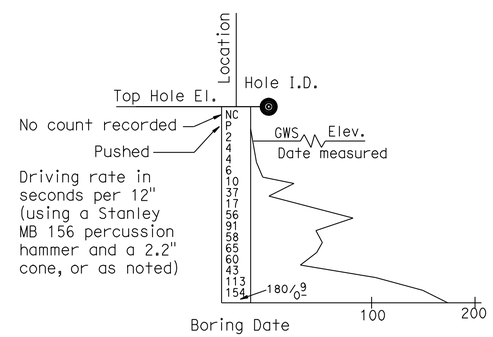

DYNAMIC CONE PENETRATION BORING

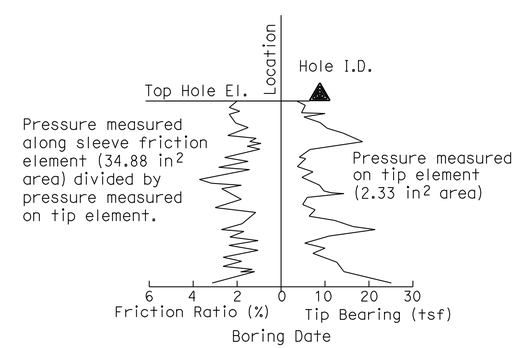

CONE PENETRATION TEST (CPT) SOUNDING

ENGINEERING SERVICES	GEOTECHNICAL SERVICES	STATE OF CALIFORNIA DEPARTMENT OF TRANSPORTATION	DIVISION OF ENGINEERING SERVICES STRUCTURE DESIGN DESIGN BRANCH	BRIDGE NO. 53E0137 / POST MILE 22.5	SOUND WALL NO. 1191 LOG OF TEST BORINGS 3 OF 4
	PREPARED BY: I.G-Remmen 10/09				

GS LOTB SOIL LEGEND

ORIGINAL SCALE IN INCHES FOR REDUCED PLANS 0 1 2 3

CU 07
EA 002341

DISREGARD PRINTS BEARING EARLIER REVISION DATES 12-08-09 01-26-10 01-26-10

REVISION DATES

SHEET 21 OF 22

FILE => 53e0137-z-lttb03.dgn

USERNAME => tfrienard DATE PLOTTED => 23-JUN-2010 TIME PLOTTED => 07:42

REFERENCE: CALTRANS SOIL & ROCK LOGGING, CLASSIFICATION, AND PRESENTATION MANUAL (JUNE 2007)

DIST	COUNTY	ROUTE	POST MILES TOTAL PROJECT	SHEET No	TOTAL SHEETS
07	LA	710	22.6	100	100

REGISTERED CIVIL ENGINEER 11-5-09

6-21-10
PLANS APPROVAL DATE

The State of California or its officers or agents shall not be responsible for the accuracy or completeness of electronic copies of this plan sheet.

REGISTERED PROFESSIONAL ENGINEER
Nadeem Srour
No. C57648
Exp. 12-31-09
CIVIL
STATE OF CALIFORNIA

GROUP SYMBOLS AND NAMES

Graphic/Symbol	Group Names
GW	Well-graded GRAVEL Well-graded GRAVEL with SAND
GP	Poorly graded GRAVEL Poorly graded GRAVEL with SAND
GW-GM	Well-graded GRAVEL with SILT Well-graded GRAVEL with SILT and SAND
GW-GC	Well-graded GRAVEL with CLAY (or SILTY CLAY) Well-graded GRAVEL with CLAY and SAND (or SILTY CLAY and SAND)
GP-GM	Poorly graded GRAVEL with SILT Poorly graded GRAVEL with SILT and SAND
GP-GC	Poorly graded GRAVEL with CLAY (or SILTY CLAY) Poorly graded GRAVEL with CLAY and SAND (or SILTY CLAY and SAND)
GM	SILTY GRAVEL SILTY GRAVEL with SAND
GC	CLAYEY GRAVEL CLAYEY GRAVEL with SAND
GC-GM	SILTY, CLAYEY GRAVEL SILTY, CLAYEY GRAVEL with SAND
SW	Well-graded SAND Well-graded SAND with GRAVEL
SP	Poorly graded SAND Poorly graded SAND with GRAVEL
SW-SM	Well-graded SAND with SILT Well-graded SAND with SILT and GRAVEL
SW-SC	Well-graded SAND with CLAY (or SILTY CLAY) Well-graded SAND with CLAY and GRAVEL (or SILTY CLAY and GRAVEL)
SP-SM	Poorly graded SAND with SILT Poorly graded SAND with SILT and GRAVEL
SP-SC	Poorly graded SAND with CLAY (or SILTY CLAY) Poorly graded SAND with CLAY and GRAVEL (or SILTY CLAY and GRAVEL)
SM	SILTY SAND SILTY SAND with GRAVEL
SC	CLAYEY SAND CLAYEY SAND with GRAVEL
SC-SM	SILTY, CLAYEY SAND SILTY, CLAYEY SAND with GRAVEL
PT	PEAT
	COBBLES COBBLES and BOULDERS BOULDERS

Graphic/Symbol	Group Names
CL	Lean CLAY Lean CLAY with SAND Lean CLAY with GRAVEL SANDY lean CLAY SANDY lean CLAY with GRAVEL GRAVELLY lean CLAY GRAVELLY lean CLAY with SAND
CL-ML	SILTY CLAY SILTY CLAY with SAND SILTY CLAY with GRAVEL SANDY SILTY CLAY SANDY SILTY CLAY with GRAVEL GRAVELLY SILTY CLAY GRAVELLY SILTY CLAY with SAND
ML	SILT SILT with SAND SILT with GRAVEL SANDY SILT SANDY SILT with GRAVEL GRAVELLY SILT GRAVELLY SILT with SAND
OL	ORGANIC lean CLAY ORGANIC lean CLAY with SAND ORGANIC lean CLAY with GRAVEL SANDY ORGANIC lean CLAY SANDY ORGANIC lean CLAY with GRAVEL GRAVELLY ORGANIC lean CLAY GRAVELLY ORGANIC lean CLAY with SAND
OL	ORGANIC SILT ORGANIC SILT with SAND ORGANIC SILT with GRAVEL SANDY ORGANIC SILT SANDY ORGANIC SILT with GRAVEL GRAVELLY ORGANIC SILT GRAVELLY ORGANIC SILT with SAND
CH	Fat CLAY Fat CLAY with SAND Fat CLAY with GRAVEL SANDY fat CLAY SANDY fat CLAY with GRAVEL GRAVELLY fat CLAY GRAVELLY fat CLAY with SAND
MH	Elastic SILT Elastic SILT with SAND Elastic SILT with GRAVEL SANDY elastic SILT SANDY elastic SILT with GRAVEL GRAVELLY elastic SILT GRAVELLY elastic SILT with SAND
OH	ORGANIC fat CLAY ORGANIC fat CLAY with SAND ORGANIC fat CLAY with GRAVEL SANDY ORGANIC fat CLAY SANDY ORGANIC fat CLAY with GRAVEL GRAVELLY ORGANIC fat CLAY GRAVELLY ORGANIC fat CLAY with SAND
OH	ORGANIC elastic SILT ORGANIC elastic SILT with SAND ORGANIC elastic SILT with GRAVEL SANDY ORGANIC elastic SILT SANDY ORGANIC elastic SILT with GRAVEL GRAVELLY ORGANIC elastic SILT GRAVELLY ORGANIC elastic SILT with SAND
OL/OH	ORGANIC SOIL ORGANIC SOIL with SAND ORGANIC SOIL with GRAVEL SANDY ORGANIC SOIL SANDY ORGANIC SOIL with GRAVEL GRAVELLY ORGANIC SOIL GRAVELLY ORGANIC SOIL with SAND

FIELD AND LABORATORY TESTING

- (C) Consolidation (ASTM D 2435)
- (CL) Collapse Potential (ASTM D 5333)
- (CP) Compaction Curve (CTM 216)
- (CR) Corrosivity Testing (CTM 643, CTM 422, CTM 417)
- (CU) Consolidated Undrained Triaxial (ASTM D 4767)
- (DS) Direct Shear (ASTM D 3080)
- (EI) Expansion Index (ASTM D 4829)
- (M) Moisture Content (ASTM D 2216)
- (OC) Organic Content-% (ASTM D 2974)
- (P) Permeability (CTM 220)
- (PA) Particle Size Analysis (ASTM D 422)
- (PI) Plasticity Index (AASHTO T 90) Liquid Limit (AASHTO T 89)
- (PL) Point Load Index (ASTM D 5731)
- (PM) Pressure Meter
- (PP) Pocket Penetrometer
- (R) R-Value (CTM 301)
- (SE) Sand Equivalent (CTM 217)
- (SG) Specific Gravity (AASHTO T 100)
- (SL) Shrinkage Limit (ASTM D 427)
- (SW) Swell Potential (ASTM D 4546)
- (TV) Pocket Torvane
- (UC) Unconfined Compression-Soil (ASTM D 2166) Unconfined Compression-Rock (ASTM D 2938)
- (UU) Unconsolidated Undrained Triaxial (ASTM D 2850)
- (UW) Unit Weight (ASTM D 4767)
- (VS) Vane Shear (AASHTO T 223)

APPARENT DENSITY OF COHESIONLESS SOILS

Description	SPT N_{60} (Blows / 12 inches)
Very loose	0 - 4
Loose	5 - 10
Medium Dense	11 - 30
Dense	31 - 50
Very Dense	> 50

MOISTURE

Description	Criteria
Dry	Absence of moisture, dusty, dry to the touch
Moist	Damp but no visible water
Wet	Visible free water, usually soil is below water table

PERCENT OR PROPORTION OF SOILS

Description	Criteria
Trace	Particles are present but estimated to be less than 5%
Few	5 to 10%
Little	15 to 25%
Some	30 to 45%
Mostly	50 to 100%

PARTICLE SIZE

Description		Size
Boulder		> 12"
Cobble		3" to 12"
Gravel	Coarse	3/4" to 3"
	Fine	No. 4 to 3/4"
Sand	Coarse	No. 10 to No. 4
	Medium	No. 40 to No. 10
	Fine	No. 200 to No. 40

ENGINEERING SERVICES	GEOTECHNICAL SERVICES	STATE OF CALIFORNIA DEPARTMENT OF TRANSPORTATION	DIVISION OF ENGINEERING SERVICES STRUCTURE DESIGN DESIGN BRANCH	BRIDGE NO. 53E0137 POST MILE 22.5	SOUND WALL NO. 1191 LOG OF TEST BORINGS 4 OF 4
	PREPARED BY: I.G-Remmen 10/09				

GS LOTB SOIL LEGEND

ORIGINAL SCALE IN INCHES FOR REDUCED PLANS 0 1 2 3

CU 07
EA 002341

DISREGARD PRINTS BEARING EARLIER REVISION DATES 05-21-09 01-26-10

REVISION DATES

SHEET 22 OF 22

FILE => 53e0137-z-ltb04.dgn

USERNAME => trlenard DATE PLOTTED => 23-JUN-2010 TIME PLOTTED => 07:42