| Dist | COUNTY | ROUTE | POST MILES TOTAL PROJECT | SHEET No. | TOTAL SHEETS |
|---|---|---|---|---|---|
| 06 | Tul | 65 | R9.3/R14.0 | 1 | 57 |

STATE OF CALIFORNIA

# DEPARTMENT OF TRANSPORTATION

NHP-P065(105)E

## PROJECT PLANS FOR CONSTRUCTION ON

# STATE HIGHWAY

## IN TULARE COUNTY
## IN AND NEAR TERRA BELLA
## FROM 0.7 MILE SOUTH OF AVENUE 80
## TO 0.1 MILE SOUTH OF AVENUE 112

TO BE SUPPLEMENTED BY STANDARD PLANS DATED 2010

INDEX OF PLANS


| SHEET No. | DESCRIPTION |
|---|---|
| 1 | TITLE AND LOCATION MAP |
| 2 | TYPICAL CROSS SECTIONS |
| 3-7 | CONSTRUCTION DETAILS PLANS |
| 8 | CONSTRUCTION AREA SIGNS |
| 9 | PAVEMENT DELINEATION PLAN |
| 10 | PAVEMENT DELINEATION QUANTITIES |
| 11 | SUMMARY OF QUANTITIES |
| 12-20 | MODIFY SIGNAL AND LIGHTING PLANS |
| 21-57 | REVISED STANDARD PLANS |


THE STANDARD PLANS LIST APPLICABLE TO THIS CONTRACT IS INCLUDED IN THE NOTICE TO BIDDERS AND SPECIAL PROVISIONS BOOK.

LOCATION MAP

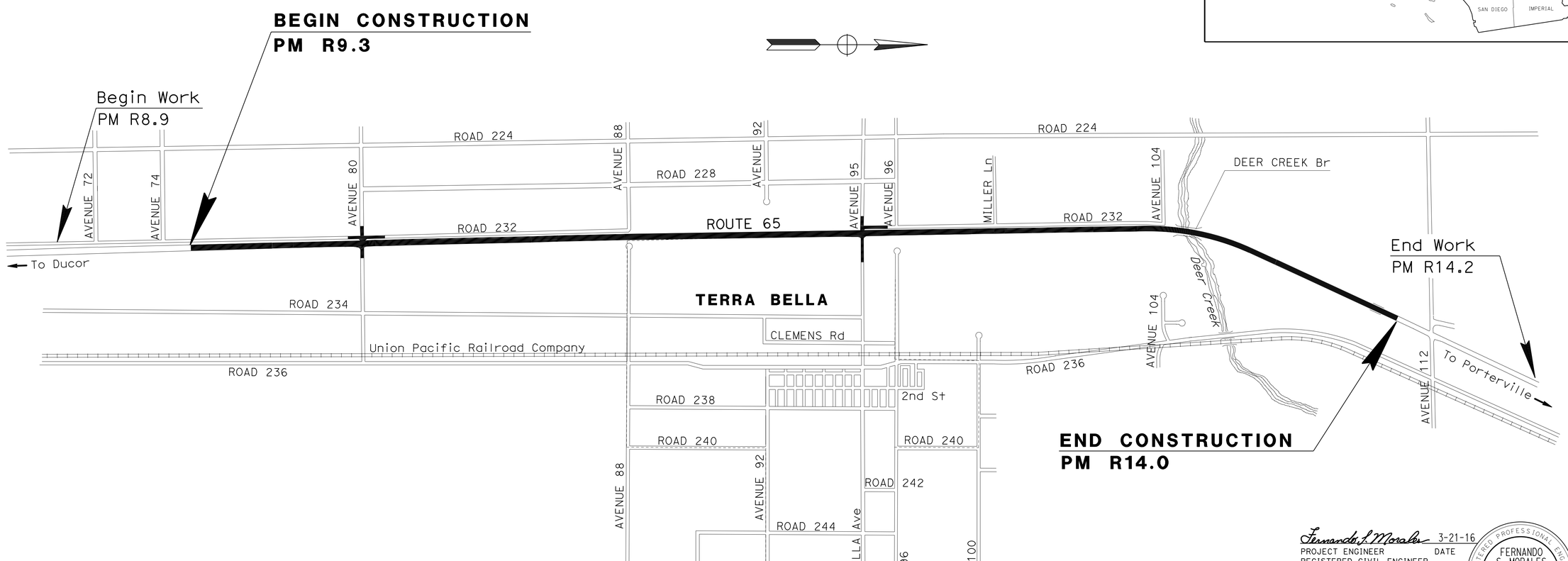


NO SCALE

THE CONTRACTOR SHALL POSSESS THE CLASS (OR CLASSES) OF LICENSE AS SPECIFIED IN THE "NOTICE TO BIDDERS."

Fernando S. Morales 3-21-16
PROJECT ENGINEER DATE
REGISTERED CIVIL ENGINEER

March 21, 2016
PLANS APPROVAL DATE

REGISTERED PROFESSIONAL ENGINEER FERNANDO S. MORALES No. C 84642 Exp. 03-31-18 CIVIL STATE OF CALIFORNIA

*THE STATE OF CALIFORNIA OR ITS OFFICERS OR AGENTS SHALL NOT BE RESPONSIBLE FOR THE ACCURACY OR COMPLETENESS OF SCANNED COPIES OF THIS PLAN SHEET.*

| | |
|---|---|
| CONTRACT No. | 06-0S4804 |
| PROJECT ID | 0615000049 |

PROJECT MANAGER CURT HATTON
DESIGN ENGINEER ALI ALQATAMI

LAST REVISION 03-21-16
DATE PLOTTED => 26-MAY-2016
TIME PLOTTED => 13:42

| Dist | COUNTY | ROUTE | POST MILES TOTAL PROJECT | SHEET No. | TOTAL SHEETS |
|---|---|---|---|---|---|
| 06 | Tul | 65 | R9.3/R14.0 | 2 | 57 |

Fernando J. Morales 3-21-16
REGISTERED CIVIL ENGINEER DATE

3-21-16
PLANS APPROVAL DATE

REGISTERED PROFESSIONAL ENGINEER FERNANDO S. MORALES No. C 84642 Exp 03-31-18 CIVIL STATE OF CALIFORNIA

*THE STATE OF CALIFORNIA OR ITS OFFICERS OR AGENTS SHALL NOT BE RESPONSIBLE FOR THE ACCURACY OR COMPLETENESS OF SCANNED COPIES OF THIS PLAN SHEET.*

NOTES:

1. DIMENSIONS OF THE PAVEMENT STRUCTURES (STRUCTURAL SECTIONS) ARE SUBJECT TO TOLERANCES SPECIFIED IN THE STANDARD SPECIFICATIONS.
2. FOR LOCATIONS AND QUANTITIES OF COLD PLANE AC Pvmt, HMA (TYPE A), AND RHMA (GAP GRADED) SEE SUMMARY OF QUANTITIES SHEETS.

ABBREVIATION:

CS - CHIP SEAL

DESIGN DESIGNATION

| | | | |
|---|---|---|---|
| 2016 ADT | 13,800 | DHV | 2,800 |
| 2036 ADT | 21,900 | D | 90% |
| 2056 ADT | 34,500 | TRUCKS | 19% |
| 2036 TI | 11.5 | V | 55 MPH |
| 2036 ESAL | 8,990,000 | | |
| 2056 TI | 13.0 | | |
| 2056 ESAL | 24,420,000 | | |

PAVEMENT CLIMATE REGION

INLAND VALLEY

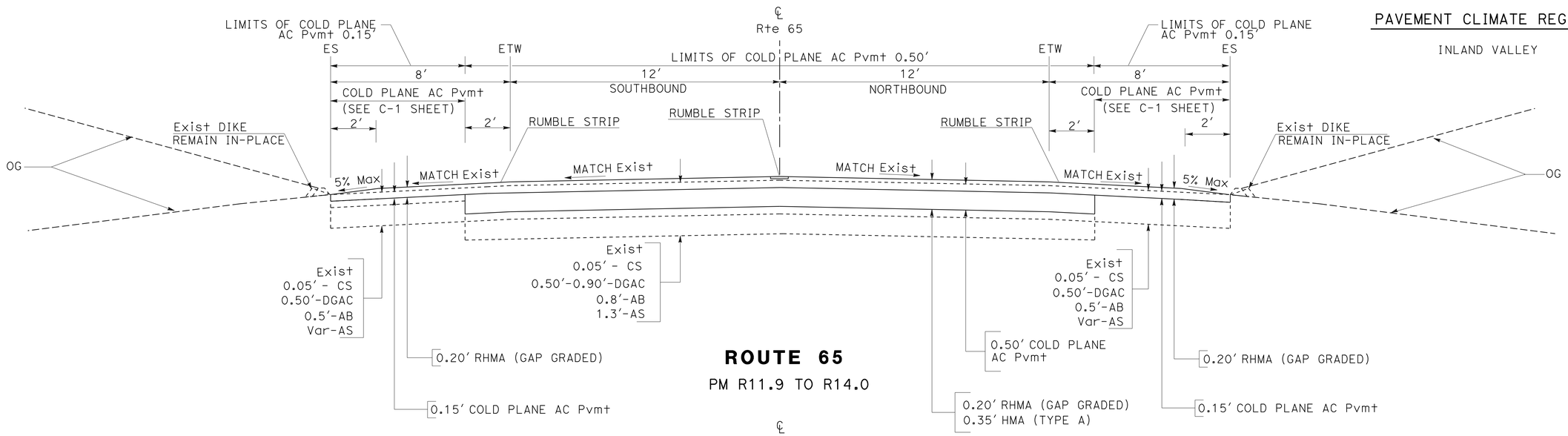


**ROUTE 65**

PM R11.9 TO R14.0

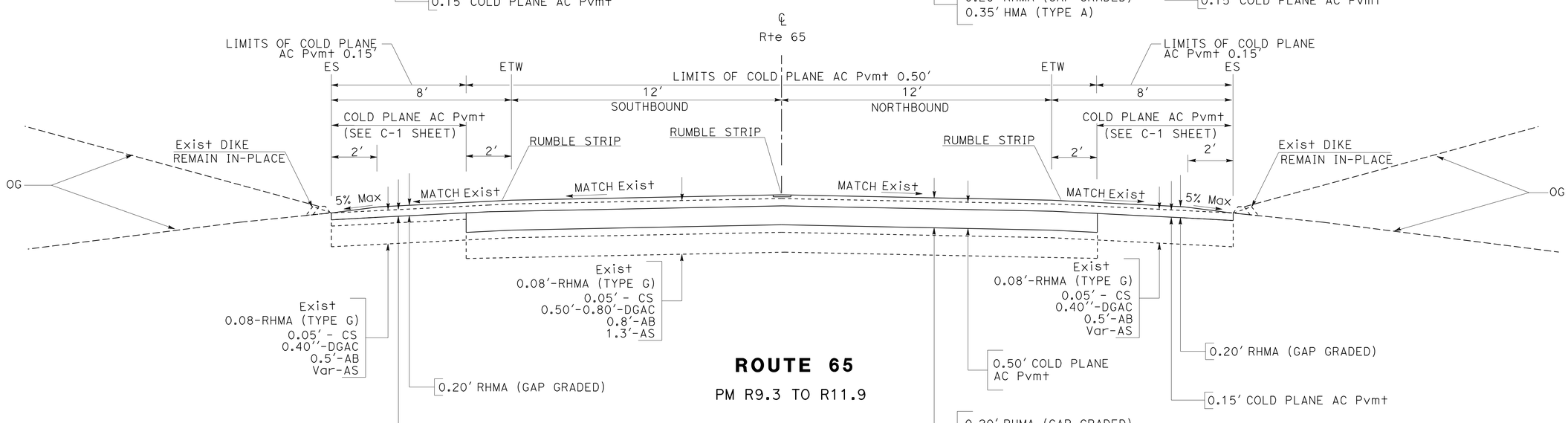


**ROUTE 65**

PM R9.3 TO R11.9

# TYPICAL CROSS SECTIONS

NO SCALE

**X-1**

REVISED BY | DATE REVISED
FERNANDO MORALES | ALI ALQATAMI
CALCULATED-DESIGNED BY | CHECKED BY
FUNCTIONAL SUPERVISOR | ALI ALQATAMI

STATE OF CALIFORNIA - DEPARTMENT OF TRANSPORTATION
Caltrans
DESIGN

LAST REVISION 03-21-16 | DATE PLOTTED => 26-MAY-2016 | TIME PLOTTED => 13:24

| Dist | COUNTY | ROUTE | POST MILES TOTAL PROJECT | SHEET No. | TOTAL SHEETS |
|---|---|---|---|---|---|
| 06 | Tul | 65 | R9.3/R14.0 | 3 | 57 |

Fernando J. Morales 3-21-16
REGISTERED CIVIL ENGINEER DATE

3-21-16
PLANS APPROVAL DATE

REGISTERED PROFESSIONAL ENGINEER
FERNANDO S. MORALES
No. C 84642
Exp 03-31-18
CIVIL
STATE OF CALIFORNIA

*THE STATE OF CALIFORNIA OR ITS OFFICERS OR AGENTS SHALL NOT BE RESPONSIBLE FOR THE ACCURACY OR COMPLETENESS OF SCANNED COPIES OF THIS PLAN SHEET.*

LEGEND

COLD PLANE AC Pvmt

PLACE HMA (TYPE A)

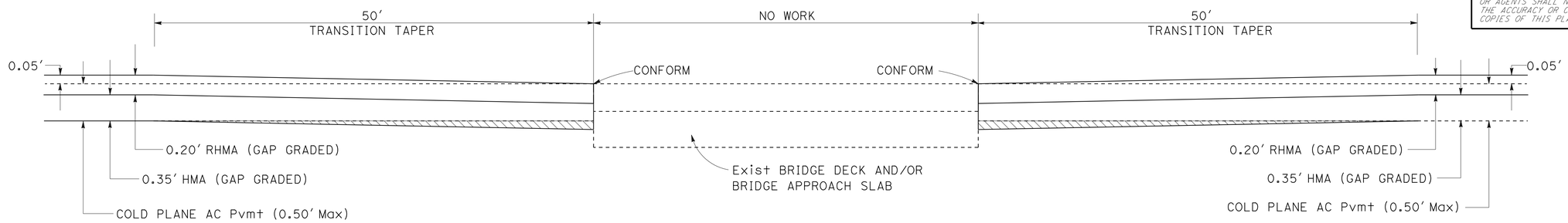


## TYPICAL TRANSITION TAPER DETAIL AT BRIDGE APPROACH

PM R13.05 (DEER CREEK Br)

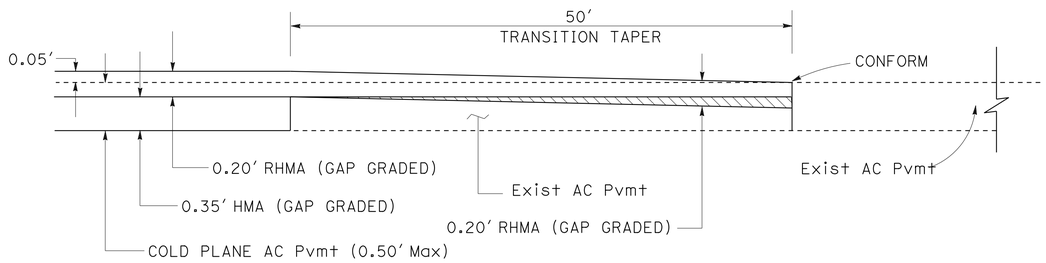


## LONGITUDINAL TRANSITION TAPER DETAIL

AT BEGIN AND END CONSTRUCTION
PM R9.36 AND PM R14.00

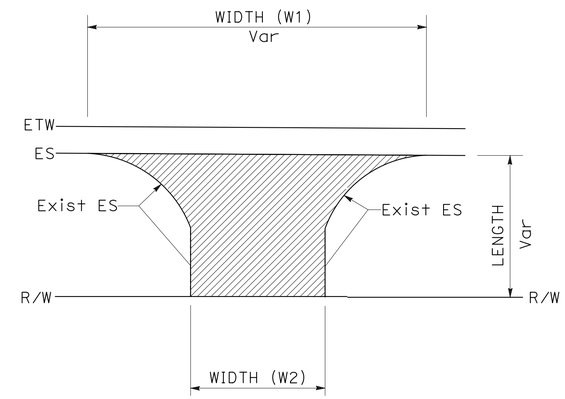


## PLAN

PLACE HMA DIKE (TYPE E)

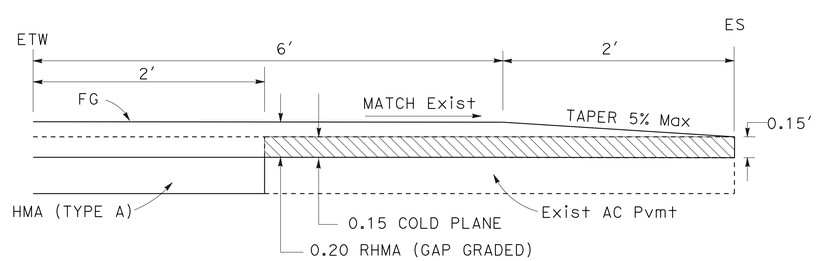


## SHOULDER COLD PLANE AC Pvmt

PUBLIC ROADS

| LOCATION PM | SIDE | DESCRIPTION | LENGTH* FT | WIDTH FT W1 | WIDTH FT W2 |
|---|---|---|---|---|---|
| R10.0 | Lt | AVENUE 80 | 40.0 | 375.0 | 65.0 |
| R10.0 | Rt | AVENUE 80 | 40.0 | 430.0 | 55.0 |
| R11.9 | Lt | AVENUE 95 | 40.0 | 220.0 | 55.0 |
| R11.9 | Rt | AVENUE 95 | 40.0 | 220.0 | 55.0 |

## TRANSITION TAPER DETAIL AT PUBLIC ROAD DRIVEWAYS

# CONSTRUCTION DETAILS

NO SCALE

C-1

STATE OF CALIFORNIA - DEPARTMENT OF TRANSPORTATION
DESIGN
Caltrans

FUNCTIONAL SUPERVISOR: ALI ALQATAMI
CALCULATED-DESIGNED BY: FERNANDO MORALES
CHECKED BY: ALI ALQATAMI
REVISED BY
DATE REVISED

LAST REVISION 03-21-16
DATE PLOTTED => 19-MAY-2016
TIME PLOTTED => 14:24

| Dist | COUNTY | ROUTE | POST MILES TOTAL PROJECT | SHEET No. | TOTAL SHEETS |
|---|---|---|---|---|---|
| 06 | Tul | 65 | R9.3/R14.0 | 4 | 57 |

Fernando J. Morales 3-21-16
REGISTERED CIVIL ENGINEER DATE

3-21-16
PLANS APPROVAL DATE

REGISTERED PROFESSIONAL ENGINEER
FERNANDO S. MORALES
No. C 84642
Exp 03-31-18
CIVIL
STATE OF CALIFORNIA

*THE STATE OF CALIFORNIA OR ITS OFFICERS OR AGENTS SHALL NOT BE RESPONSIBLE FOR THE ACCURACY OR COMPLETENESS OF SCANNED COPIES OF THIS PLAN SHEET.*

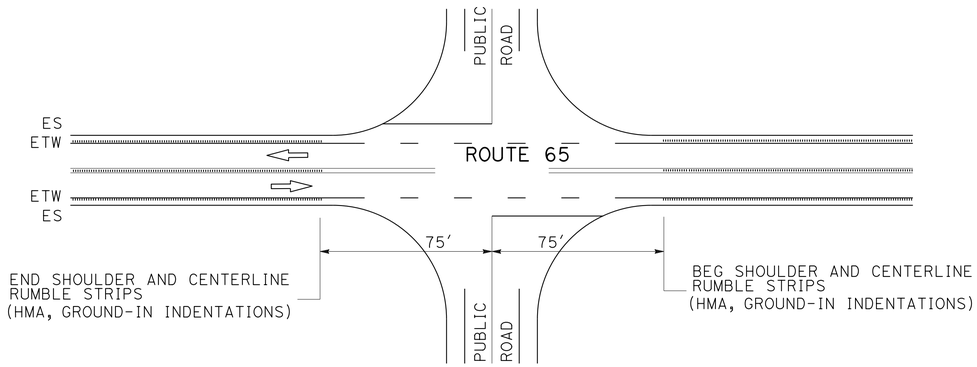


## RUMBLE STRIP DETAILS AT PUBLIC ROAD INTERSECTIONS

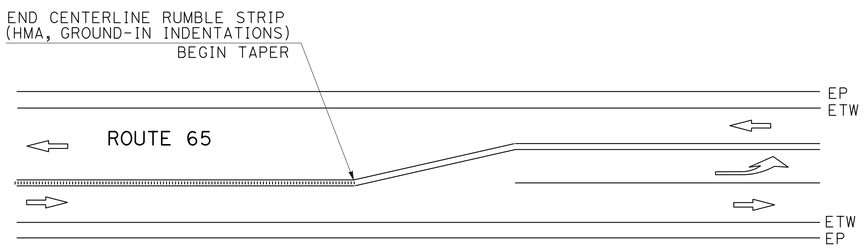


## RUMBLE STRIP DETAILS AT LEFT TURN POCKETS

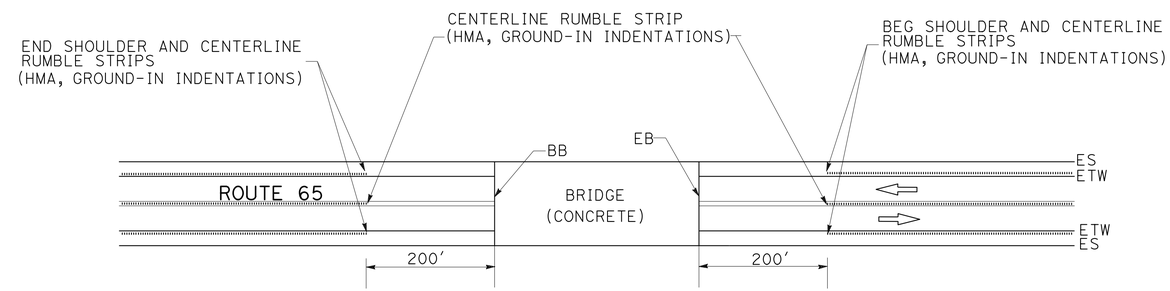


## RUMBLE STRIP DETAILS AT BRIDGE (PM R13.05)

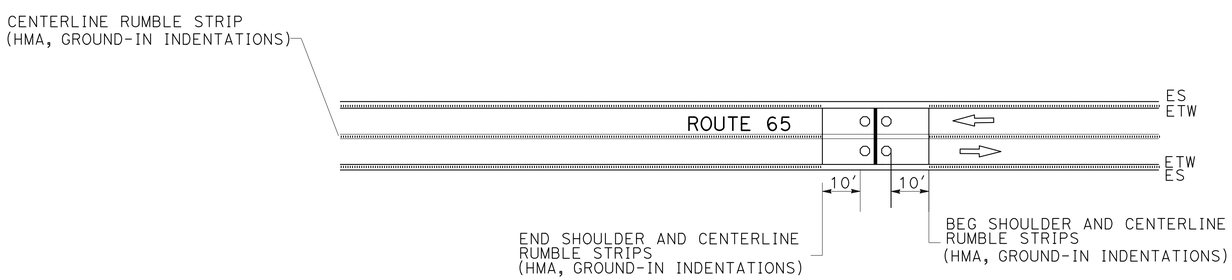


## RUMBLE STRIP DETAILS AT VEHICLE DETECTION SYSTEM (AT PM R11.7 AND PM R12.1)

# CONSTRUCTION DETAILS

NO SCALE

C-2

REVISED BY | DATE REVISED
FERNANDO MORALES | ALI ALQATAMI
CALCULATED-DESIGNED BY | CHECKED BY
FUNCTIONAL SUPERVISOR: ALI ALQATAMI
STATE OF CALIFORNIA - DEPARTMENT OF TRANSPORTATION
Caltrans 06-DESIGN

LAST REVISION 03-07-16 | DATE PLOTTED => 19-MAY-2016 | TIME PLOTTED => 14:24

| Dist | COUNTY | ROUTE | POST MILES TOTAL PROJECT | SHEET No. | TOTAL SHEETS |
|---|---|---|---|---|---|
| 06 | Tul | 65 | R9.3/R14.0 | 5 | 57 |

Fernando J. Morales 3-21-16
REGISTERED CIVIL ENGINEER DATE

3-21-16
PLANS APPROVAL DATE

REGISTERED PROFESSIONAL ENGINEER
FERNANDO S. MORALES
No. C 84642
Exp 03-31-18
CIVIL
STATE OF CALIFORNIA

*THE STATE OF CALIFORNIA OR ITS OFFICERS OR AGENTS SHALL NOT BE RESPONSIBLE FOR THE ACCURACY OR COMPLETENESS OF SCANNED COPIES OF THIS PLAN SHEET.*

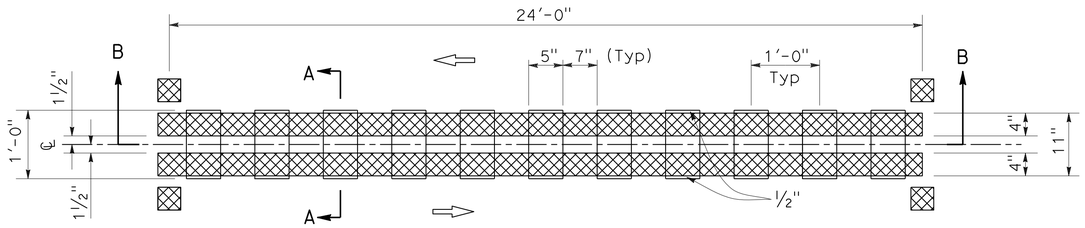


PLAN

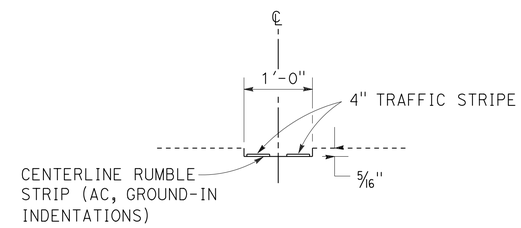


SECTION A-A

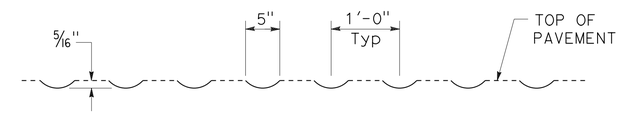


SECTION B-B

## CENTERLINE RUMBLE STRIPS WITH DETAIL 22 TRAFFIC LINE

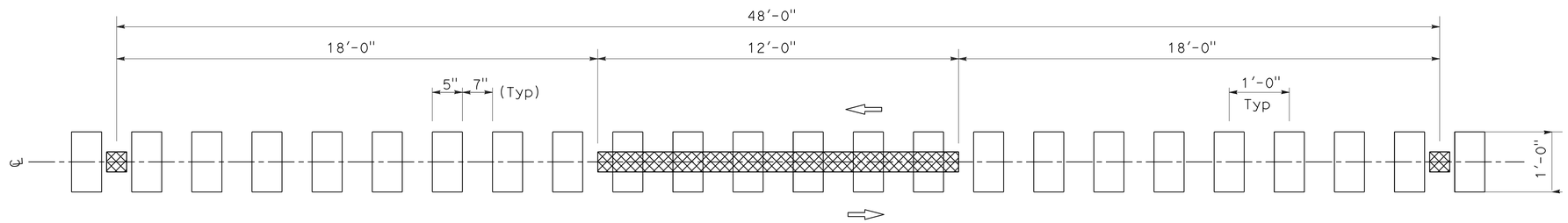


## CENTERLINE RUMBLE STRIPS WITH DETAIL 6 TRAFFIC LINE

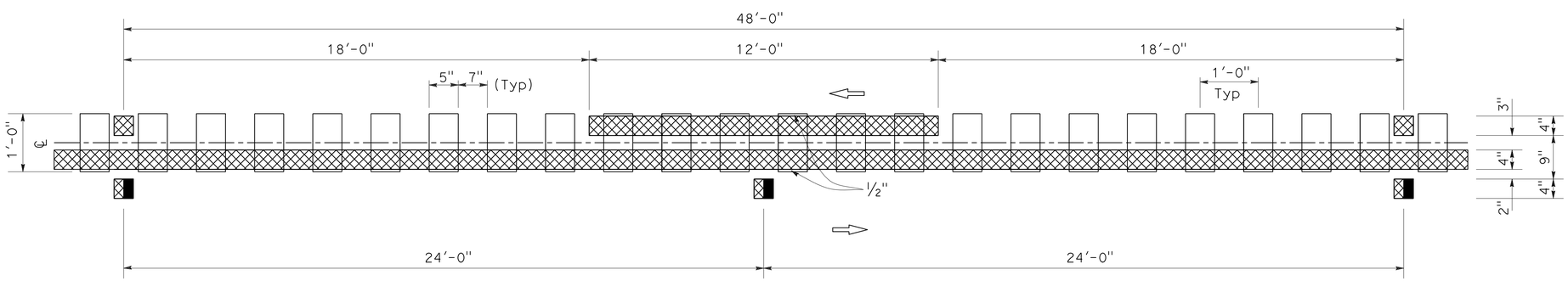


## CENTERLINE RUMBLE STRIPS WITH DETAIL 19 TRAFFIC LINE

# CONSTRUCTION DETAILS

NO SCALE

C-3

STATE OF CALIFORNIA - DEPARTMENT OF TRANSPORTATION
Caltrans 06-DESIGN

FUNCTIONAL SUPERVISOR: ALI ALQATAMI
CALCULATED-DESIGNED BY: FERNANDO MORALES
CHECKED BY: ALI ALQATAMI
REVISED BY
DATE REVISED

LAST REVISION 03-07-16
DATE PLOTTED => 19-MAY-2016
TIME PLOTTED => 14:24

| Dist | COUNTY | ROUTE | POST MILES TOTAL PROJECT | SHEET No. | TOTAL SHEETS |
|---|---|---|---|---|---|
| 06 | Tul | 65 | R9.3/R14.0 | 6 | 57 |

Fernando J. Morales 3-21-16
REGISTERED CIVIL ENGINEER DATE

3-21-16
PLANS APPROVAL DATE

REGISTERED PROFESSIONAL ENGINEER
FERNANDO S. MORALES
No. C 84642
Exp 03-31-18
CIVIL
STATE OF CALIFORNIA

*THE STATE OF CALIFORNIA OR ITS OFFICERS OR AGENTS SHALL NOT BE RESPONSIBLE FOR THE ACCURACY OR COMPLETENESS OF SCANNED COPIES OF THIS PLAN SHEET.*

LEGEND

0.30' COLD PLANE AC Pvmt
0.30' HMA (TYPE A)




## LONGITUDINAL TRANSITION DETAIL

AT BEGIN AND END CONSTRUCTION ON AVE 80 and ROAD 232

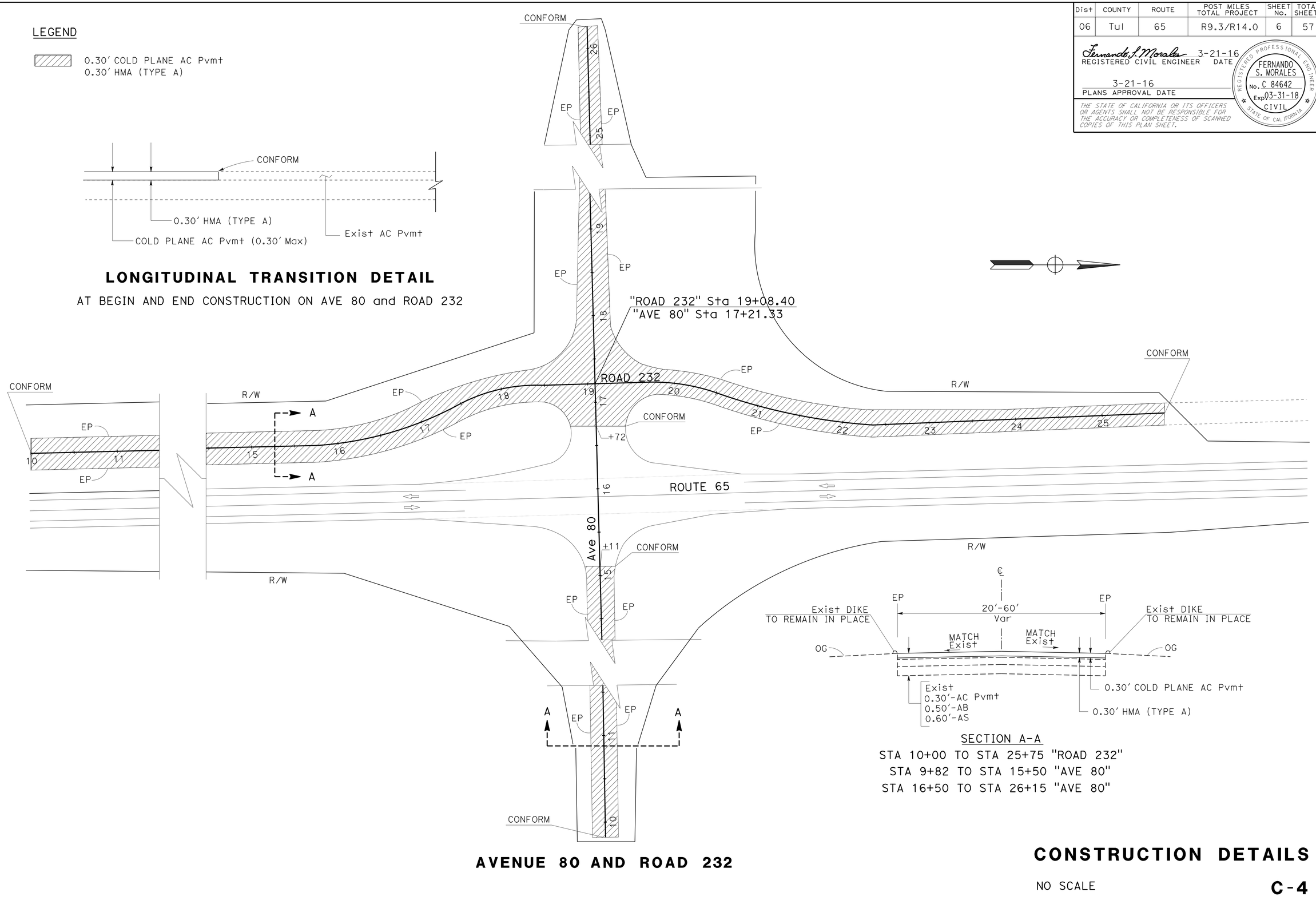


SECTION A-A

STA 10+00 TO STA 25+75 "ROAD 232"
STA 9+82 TO STA 15+50 "AVE 80"
STA 16+50 TO STA 26+15 "AVE 80"

## AVENUE 80 AND ROAD 232

## CONSTRUCTION DETAILS

NO SCALE

C-4

STATE OF CALIFORNIA - DEPARTMENT OF TRANSPORTATION
Caltrans 06-DESIGN

FUNCTIONAL SUPERVISOR: ALI ALQATAMI
CALCULATED-DESIGNED BY: FERNANDO MORALES
CHECKED BY: ALI ALQATAMI
REVISED BY
DATE REVISED

LAST REVISION 03-21-16
DATE PLOTTED => 19-MAY-2016
TIME PLOTTED => 14:24

| Dist | COUNTY | ROUTE | POST MILES TOTAL PROJECT | SHEET No. | TOTAL SHEETS |
|---|---|---|---|---|---|
| 06 | Tul | 65 | R9.3/R14.0 | 7 | 57 |

Fernando J. Morales 3-21-16
REGISTERED CIVIL ENGINEER DATE

3-21-16
PLANS APPROVAL DATE

REGISTERED PROFESSIONAL ENGINEER
FERNANDO S. MORALES
No. C 84642
Exp 03-31-18
CIVIL
STATE OF CALIFORNIA

*THE STATE OF CALIFORNIA OR ITS OFFICERS OR AGENTS SHALL NOT BE RESPONSIBLE FOR THE ACCURACY OR COMPLETENESS OF SCANNED COPIES OF THIS PLAN SHEET.*

LEGEND

0.25' COLD PLANE AC Pvmt
0.25' HMA (TYPE A)

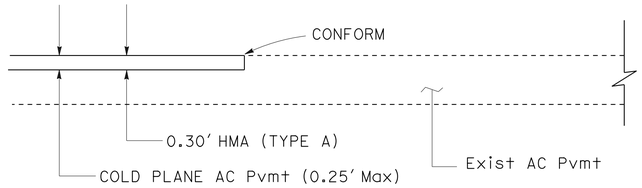


## LONGITUDINAL TRANSITION DETAIL

AT BEGIN AND END CONSTRUCTION ON AVE 95 AND ROAD 232

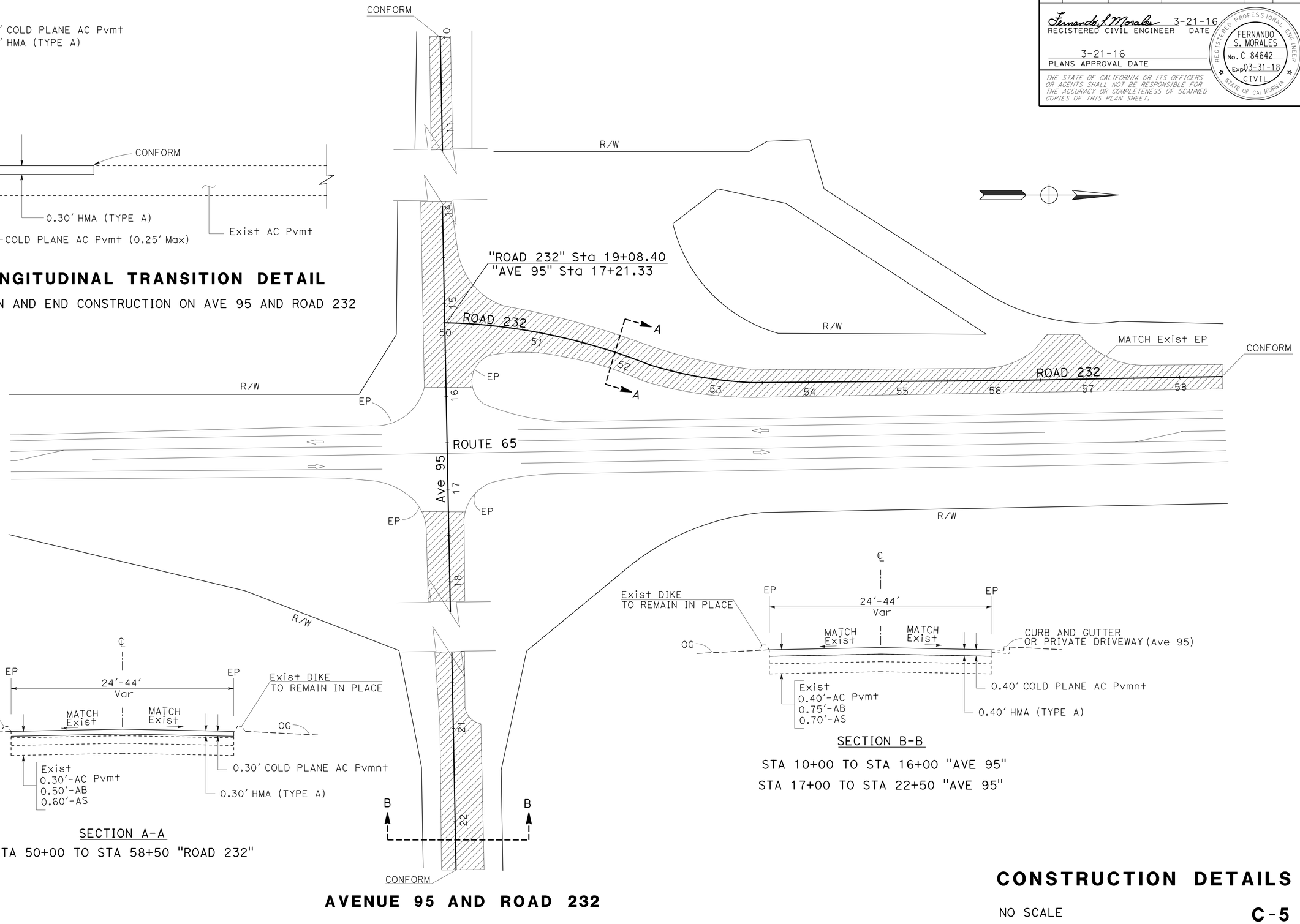


SECTION B-B

STA 10+00 TO STA 16+00 "AVE 95"

STA 17+00 TO STA 22+50 "AVE 95"

SECTION A-A

STA 50+00 TO STA 58+50 "ROAD 232"

## AVENUE 95 AND ROAD 232

## CONSTRUCTION DETAILS

NO SCALE

C-5

| REVISED BY | DATE REVISED |
|---|---|
| FERNANDO MORALES | ALI ALQATAMI |
| CALCULATED-DESIGNED BY | CHECKED BY |
| FUNCTIONAL SUPERVISOR | ALI ALQATAMI |

STATE OF CALIFORNIA - DEPARTMENT OF TRANSPORTATION
Caltrans 06-DESIGN

LAST REVISION 03-21-16
DATE PLOTTED => 19-MAY-2016
TIME PLOTTED => 14:24

| Dist | COUNTY | ROUTE | POST MILES TOTAL PROJECT | SHEET No. | TOTAL SHEETS |
|---|---|---|---|---|---|
| 06 | Tul | 65 | R9.3/R14.0 | 8 | 57 |

Hassan Taha 12-15-15
REGISTERED CIVIL ENGINEER DATE

3-21-16
PLANS APPROVAL DATE

REGISTERED PROFESSIONAL ENGINEER HASSAN M. TAHA No. 60130 Exp. 06/30/16 CIVIL STATE OF CALIFORNIA

*THE STATE OF CALIFORNIA OR ITS OFFICERS OR AGENTS SHALL NOT BE RESPONSIBLE FOR THE ACCURACY OR COMPLETENESS OF SCANNED COPIES OF THIS PLAN SHEET.*

LEGEND:

Ⓧ CONSTRUCTION AREA SIGN NUMBER

NOTES:

1. EXACT LOCATIONS TO BE DETERMINED BY THE ENGINEER.
2. FOR SIGN "C40" (TRAFFIC FINES DOUBLED IN CONSTRUCTION ZONES), ALL LETTERS MUST BE BLACK ON WHITE BACKGROUND.

## STATIONARY MOUNTED CONSTRUCTION AREA SIGNS

| SIGN No. | SIGN CODE FEDERAL | SIGN CODE CALIFORNIA | PANEL SIZE | SIGN MESSAGE | No. OF POST AND POST SIZE | No. OF SIGN |
|---|---|---|---|---|---|---|
| A | W20-1 | | 60" x 60" | ROAD WORK AHEAD | 2 - 6" x 6" | 2 |
| B | W20-1 | | 48" x 48" | ROAD WORK AHEAD | 1 - 6" x 6" | 10 |
| C | G20-2 | | 36" x 18" | END ROAD WORK | 1 - 4" x 4" | 12 |
| D | | C40 | 108" x 42" | TRAFFIC FINES DOUBLED IN CONSTRUCTION ZONES | 2 - 6" x 6" | 2 |

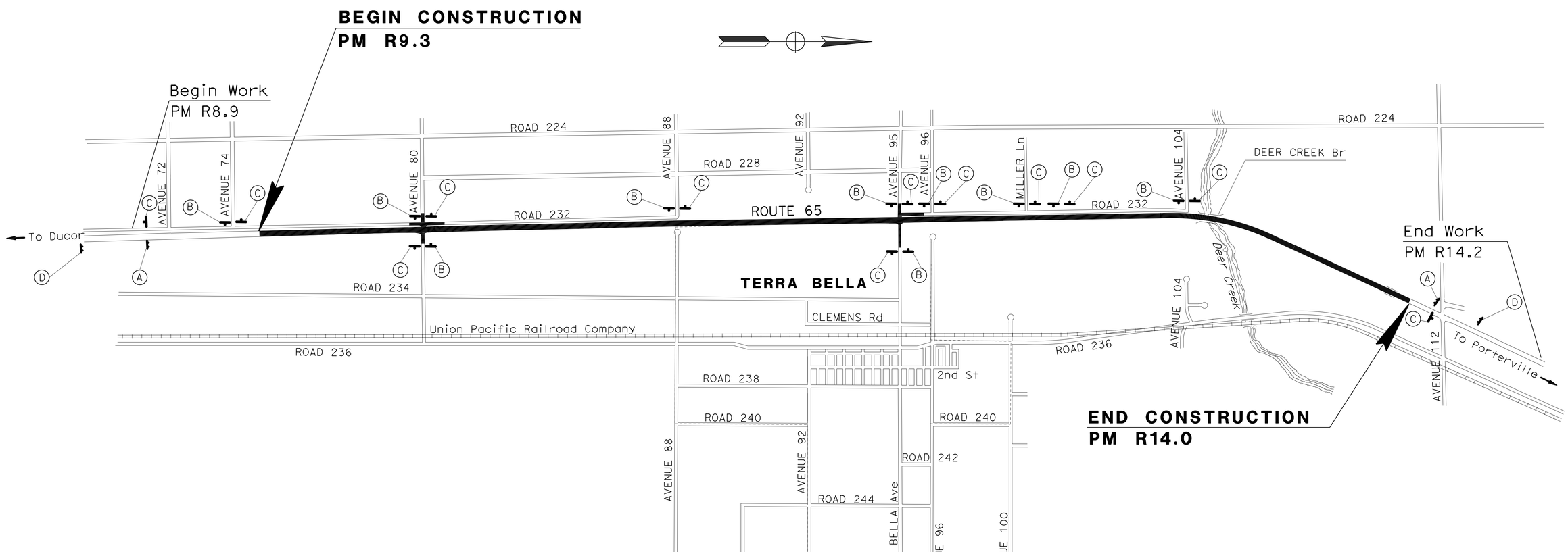


*APPROVED FOR CONSTRUCTION AREA SIGN WORK ONLY*

NO SCALE

## CONSTRUCTION AREA SIGNS
## CS-1

STATE OF CALIFORNIA - DEPARTMENT OF TRANSPORTATION
Caltrans® TRAFFIC DESIGN

FUNCTIONAL SUPERVISOR: MOHAMMED QATAMI
CALCULATED-DESIGNED BY: GURMIT GILL
CHECKED BY: HASSAN TAHA
REVISED BY
DATE REVISED

LAST REVISION 12-30-15
DATE PLOTTED => 19-MAY-2016
TIME PLOTTED => 14:24

| Dist | COUNTY | ROUTE | POST MILES TOTAL PROJECT | SHEET No. | TOTAL SHEETS |
|---|---|---|---|---|---|
| 06 | Tul | 65 | R9.3/R14.0 | 9 | 57 |

Hassan Taha 12-15-15
REGISTERED CIVIL ENGINEER DATE

3-21-16
PLANS APPROVAL DATE

REGISTERED PROFESSIONAL ENGINEER HASSAN M. TAHA No. 60130 Exp. 06/30/16 CIVIL STATE OF CALIFORNIA

*THE STATE OF CALIFORNIA OR ITS OFFICERS OR AGENTS SHALL NOT BE RESPONSIBLE FOR THE ACCURACY OR COMPLETENESS OF SCANNED COPIES OF THIS PLAN SHEET.*

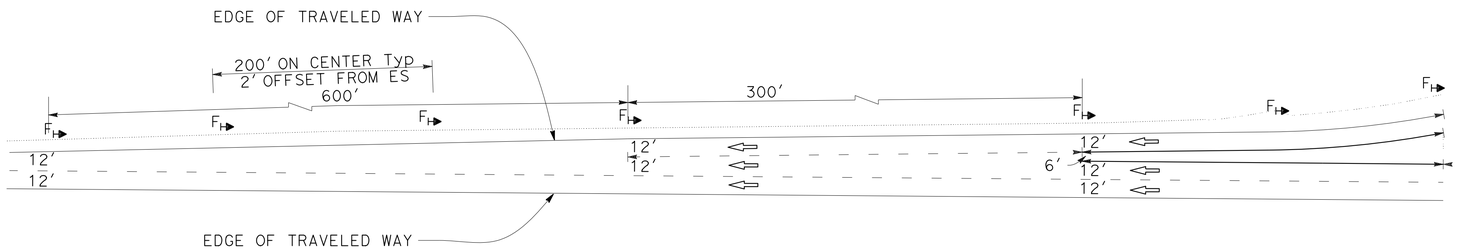


## ADVANCE DELINEATORS DETAIL

(Typ)

NO SCALE

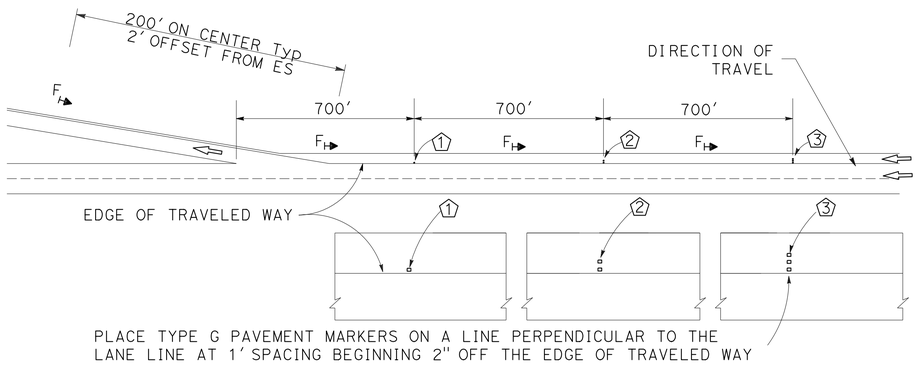


## ADVANCE MARKERS DETAIL

(3-2-1 FOG MARKER)

(Typ)

NO SCALE

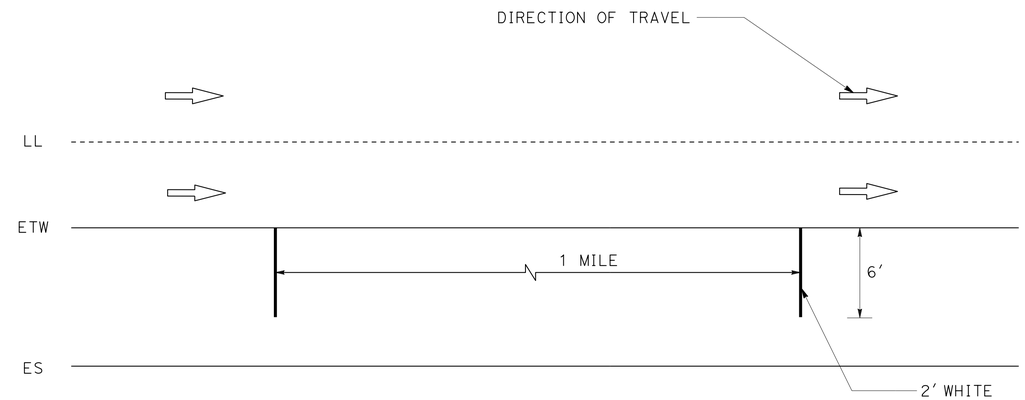


## SPEED MEASUREMENT MARKING

(Typ)

NO SCALE

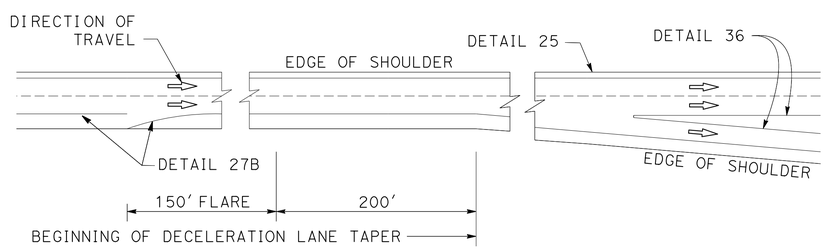


## TYPICAL RIGHT EDGELINE FLARE DETAIL

(Typ)

NO SCALE

*APPROVED FOR PAVEMENT DELINEATION WORK ONLY*

# PAVEMENT DELINEATION DETAILS

NO SCALE

**PDD-1**

STATE OF CALIFORNIA - DEPARTMENT OF TRANSPORTATION
Caltrans® 06-TRAFFIC DESIGN

FUNCTIONAL SUPERVISOR: MOHAMMED QATAMI
CALCULATED-DESIGNED BY: GURMIT GILL
CHECKED BY: HASSAN TAHA
REVISED BY / DATE REVISED

LAST REVISION 12-30-15 | DATE PLOTTED => 19-MAY-2016 | TIME PLOTTED => 14:24

| Dist | COUNTY | ROUTE | POST MILES TOTAL PROJECT | SHEET No. | TOTAL SHEETS |
|---|---|---|---|---|---|
| 06 | Tul | 65 | R9.3/R14.0 | 10 | 57 |

Hassan Taha 2-10-16
REGISTERED CIVIL ENGINEER DATE

3-21-16
PLANS APPROVAL DATE

REGISTERED PROFESSIONAL ENGINEER HASSAN M. TAHA No. 60130 Exp. 06/30/16 CIVIL STATE OF CALIFORNIA

*THE STATE OF CALIFORNIA OR ITS OFFICERS OR AGENTS SHALL NOT BE RESPONSIBLE FOR THE ACCURACY OR COMPLETENESS OF SCANNED COPIES OF THIS PLAN SHEET.*

# PAVEMENT DELINEATION QUANTITIES

| LOCATION FROM | LOCATION TO | DIRECTION | DETAIL No. | INSTALL/REMOVE | PAVEMENT MARKER (RETROREFLECTIVE) TYPE D EA | TYPE G EA | TYPE H EA | THERMOPLASTIC TRAFFIC STRIPE SOLID YELLOW 4" LF | SOLID WHITE 4" LF | SOLID WHITE 8" LF | (BROKEN 36-12) 4" LF | (BROKEN 12-3) 4" LF | PAVEMENT MARKING DESCRIPTION | No. | THERMO-PLASTIC PAVEMENT MARKING SQFT |
|---|---|---|---|---|---|---|---|---|---|---|---|---|---|---|---|
| 9.30 | 9.84 | NB | 27B | I | | | | | 2,867 | | | | STOP | 2 | 44 |
| 9.30 | 9.37 | NB | 12 | I | | 8 | | | | | 343 | | SIGNAL | 2 | 64 |
| 9.30 | 9.37 | NB | 22 | I | 32 | | | 686 | | | | | AHEAD | 2 | 62 |
| 9.37 | 9.59 | NB | 29 | I | 100 | | | 4,668 | | | | | XWALK&LL | 452 | 452 |
| 9.59 | 9.66 | NB | 22 | I | 36 | | | 781 | | | | | TYPE III | 11 | 462 |
| 9.66 | 9.92 | NB | 6 | I | 30 | | | | | | 1,373 | | TYPE IV | 2 | 30 |
| 9.92 | 9.98 | NB | 19 | I | 10 | | 14 | 301 | | | 301 | | TYPE V | 4 | 132 |
| 9.94 | 10.02 | NB | 27C | I | | | | | | | | 428 | TYPE VI | 2 | 84 |
| 9.99 | 10.05 | NB | 19 | I | 10 | | 15 | 343 | | | 343 | | SPEED | | |
| 10.02 | 11.85 | NB | 27B | I | | | | | 9,625 | | | | MEASUREMENT | 5 | 60 |
| 10.05 | 11.64 | NB | 6 | I | 175 | | | | | | 8,374 | | | | |
| 11.64 | 11.69 | NB | 19 | I | 8 | | 12 | 253 | | | 253 | | | | |
| 11.69 | 11.85 | NB | 22 | I | 74 | | | 1,711 | | | | | | | |
| 11.79 | 11.85 | NB | 38 | I | | 14 | | | | 301 | | | | | |
| 11.87 | 11.98 | SB | 38 | I | | 23 | | | | 539 | | | | | |
| 11.87 | 12.14 | NB | 22 | I | 120 | | | 2,788 | | | | | | | |
| 11.87 | 14.00 | NB | 27B | I | | | | | 11,231 | | | | | | |
| 12.14 | 12.85 | NB | 6 | I | 79 | | | | | | 3,754 | | | | |
| 12.85 | 13.06 | NB | 19 | I | 26 | | 47 | 1,093 | | | 1,093 | | | | |
| 13.06 | 13.21 | NB | 22 | I | 72 | | | 1,668 | | | | | | | |
| 13.21 | 13.42 | NB | 19 | I | 26 | | 46 | 1,082 | | | 1,082 | | | | |
| 13.42 | 14.00 | NB | 6 | I | 65 | | | | | | 3,073 | | | | |
| 9.30 | 9.94 | SB | 27B | I | | | | | 3,390 | | | | | | |
| 9.30 | 9.37 | SB | 12 | I | | 8 | | | | | 343 | | | | |
| 9.94 | 10.01 | SB | 27C | I | | | | | | | | 370 | | | |
| 10.01 | 11.85 | SB | 27B | I | | | | | 9,689 | | | | | | |
| 11.87 | 14.00 | NB | 27B | I | | | | | 11,231 | | | | | | |
| AVE 80 | | NB | 22 | I/R | 52 | | | 1,200 | | | | | | | |
| AVE 80 | | NB | 22 | I/R | 52 | | | 1,200 | | | | | | | |
| AVE 95 | | NB | 22 | I/R | 52 | | | 1,200 | | | | | | | |
| AVE 95 | | NB | 22 | I/R | 52 | | | 1,200 | | | | | | | |
| AVE 95 | | NB | 38 | I/R | | | | | | 600 | | | | | |
| AVE 95 | | NB | 38 | I/R | | | | | | 600 | | | | | |
| SUBTOTAL | | | | | 1,071 | 53 | 134 | 20,174 | 48,033 | 2,040 | 20,332 | 798 | | | 1,390 |
| TOTAL | | | | | 1,258 | | | 68,206 | | 2,040 | 20,332 | 798 | | | 1,390 |

## DELINEATOR

| LOCATIION | DELINEATOR (CLASS-1) | GUARD RAILING DELINEATOR (CLASS-1) |
|---|---|---|
| | EA | EA |
| ROUTE 65 | 65 | 12 |
| TOTAL | 65 | 12 |

## OBJECT MARKER

| LOCATIION | OBJECT MARKER |
|---|---|
| | EA |
| ROUTE 65 | 15 |
| TOTAL | 15 |

# PAVEMENT DELINEATION QUANTITIES

## PDQ-1

STATE OF CALIFORNIA - DEPARTMENT OF TRANSPORTATION
Caltrans® TRAFFIC DESIGN

FUNCTIONAL SUPERVISOR: MOHAMMED QATAMI
CALCULATED-DESIGNED BY: GURMIT GILL
CHECKED BY: HASSAN TAHA
REVISED BY
DATE REVISED

LAST REVISION 02-22-16 | DATE PLOTTED => 19-MAY-2016 | TIME PLOTTED => 14:24

| Dist | COUNTY | ROUTE | POST MILES TOTAL PROJECT | SHEET No. | TOTAL SHEETS |
|---|---|---|---|---|---|
| 06 | Tul | 65 | R9.3/R14.0 | 11 | 57 |

Fernando J. Morales 3-21-16
REGISTERED CIVIL ENGINEER DATE

3-21-16
PLANS APPROVAL DATE

REGISTERED PROFESSIONAL ENGINEER FERNANDO S. MORALES No. C 84642 Exp 03-31-18 CIVIL STATE OF CALIFORNIA

*THE STATE OF CALIFORNIA OR ITS OFFICERS OR AGENTS SHALL NOT BE RESPONSIBLE FOR THE ACCURACY OR COMPLETENESS OF SCANNED COPIES OF THIS PLAN SHEET.*

## TEMPORARY GRAVEL BAG BERM

| PM | DIRECTION | OFFSET (FROM ETW) | LF |
|---|---|---|---|
| R 9.30 | SB | 8.0′ R+ | 8 |
| R 9.55 | SB | 8.0′ R+ | 8 |
| R 9.63 | NB | 8.0′ R+ | 8 |
| R 9.66 | NB | 8.0′ R+ | 8 |
| R 9.96 | SB | 20.0′ R+ | 8 |
| R 9.97 | NB | 65.0′ R+ | 8 |
| R 10.32 | SB | 8.0′ R+ | 8 |
| R 10.33 | NB | 8.0′ R+ | 8 |
| R 10.42 | NB | 8.0′ R+ | 8 |
| R 10.42 | SB | 8.0′ R+ | 8 |
| R 10.52 | SB | 8.0′ R+ | 8 |
| R 10.54 | NB | 8.0′ R+ | 8 |
| R 10.63 | NB | 8.0′ R+ | 8 |
| R 10.66 | SB | 8.0′ R+ | 8 |
| R 10.71 | SB | 8.0′ R+ | 8 |
| R 10.71 | NB | 8.0′ R+ | 8 |
| R 10.82 | SB | 8.0′ R+ | 8 |
| R 11.15 | SB | 8.0′ R+ | 8 |
| R 11.23 | SB | 8.0′ R+ | 8 |
| R 11.38 | SB | 8.0′ R+ | 8 |
| R 11.38 | NB | 8.0′ R+ | 8 |
| R 11.45 | SB | 8.0′ R+ | 8 |
| R 11.50 | NB | 8.0′ R+ | 8 |
| R 11.54 | SB | 8.0′ R+ | 8 |
| R 11.60 | SB | 8.0′ R+ | 8 |
| R 11.64 | NB | 8.0′ R+ | 8 |
| R 11.67 | SB | 8.0′ R+ | 8 |
| R 11.71 | NB | 8.0′ R+ | 8 |
| R 12.18 | NB | 8.0′ R+ | 8 |
| R 12.43 | NB | 8.0′ R+ | 8 |
| R 12.78 | SB | 8.0′ R+ | 8 |
| R 12.87 | SB | 8.0′ R+ | 8 |
| R 13.79 | SB | 8.0′ R+ | 8 |
| R 13.90 | SB | 8.0′ R+ | 8 |
| R 13.90 | NB | 8.0′ R+ | 8 |
| R 13.98 | SB | 8.0′ R+ | 8 |
| | | TOTAL | 288 |

## SURVEY MONUMENT*

| PM | DIRECTION | OFFSET (FROM ETW) | SURVEY MONUMENT (TYPE B) |
|---|---|---|---|
| | | | EA |
| R 9.45 | SB | 3.0′ R+ | 1 |
| R 9.60 | NB | 4.4′ R+ | 1 |
| R 9.79 | NB | 4.0′ R+ | 1 |
| R 9.95 | SB | 68.0′ L+ | 1 |
| R 9.95 | NB | 36.0 R+ | 1 |
| R 10.17 | NB | 4.3′ R+ | 1 |
| R 10.55 | NB | 4.3′ R+ | 1 |
| R 10.80 | NB | 4.3′ R+ | 1 |
| R 11.01 | NB | 4.3′ R+ | 1 |
| R 11.17 | NB | 2.1′ R+ | 1 |
| R 11.36 | NB | 4.3′ R+ | 1 |
| R 11.55 | NB | 4.3′ R+ | 1 |
| R 11.74 | NB | 4.3′ R+ | 1 |
| R 11.89 | NB | 0.5′ R+ | 1 |
| R 12.01 | SB | 19′ R+ | 1 |
| R 12.01 | NB | 4.8′ R+ | 1 |
| R 12.10 | NB | 4.4′ R+ | 1 |
| R 12.29 | NB | 4.4′ R+ | 1 |
| R 12.48 | NB | 4.4′ R+ | 1 |
| R 12.67 | NB | 3.0′ R+ | 1 |
| R 12.92 | NB | 3.2′ R+ | 1 |
| R 13.35 | NB | 3.8′ R+ | 1 |
| R 13.43 | NB | 3.8′ R+ | 1 |
| R 13.62 | NB | 3.8′ R+ | 1 |
| R 13.78 | NB | 3.0′ R+ | 1 |
| R 13.97 | NB | 3.0′ R+ | 1 |
| | | TOTAL | 27 |

*EXISTING SURVEY MONUMENT DISKS TO REMAIN IN PLACE.
EXACT LOCATIONS AS DIRECTED BY THE ENGINEER.

## ROADWAY QUANTITIES

| LOCATION* | RHMA (GAP GRADED) | HMA (TYPE A) | TACK COAT | COLD PLANE AC PAVEMENT (0.50′) | COLD PLANE AC PAVEMENT (0.30′) | COLD PLANE AC PAVEMENT (0.15′) |
|---|---|---|---|---|---|---|
| | TON | TON | TON | SQYD | SQYD | SQYD |
| PM R9.3 TO PM R9.99 | 2,000 | 2,700 | 12.6 | 9,450 | | 5,450 |
| PM R9.99 TO PM R10.02 (Ave 80) | 400 | 1,410 | 4.9 | 7,250 | | 750 |
| PM R9.99 TO PM R10.02 (ROAD 232) | | 1,100 | 3.5 | | 6,500 | |
| PM R10.02 TO PM R11.89 | 5,800 | 7,700 | 33.9 | 26,700 | | 17,200 |
| PM R11.89 TO PM R11.92 (Ave 95) | 300 | 1,450 | 4.6 | 7,000 | | 550 |
| PM R11.89 TO PM R11.92 (ROAD 232) | | 500 | 1.9 | | 3,000 | |
| PM R11.92 TO PM R13.04 | 3,500 | 4,850 | 21.8 | 16,450 | | 11,200 |
| PM R13.09 TO PM R14.00 | 3,000 | 3,790 | 16.7 | 12,850 | | 8,650 |
| SUBTOTAL | 15,000 | 23,500 | 99.9 | 79,700 | 9,500 | 43,800 |
| TOTAL | 15,000 | 23,500 | 99.9 | 133,000 | | |

*EXACT LOCATIONS AS DIRECTED BY THE ENGINEER.

## RUMBLE STRIP

| LOCATION | SHOULDER RUMBLE STRIP (HMA, GROUND-IN INDENTATIONS) STA DIRECTION | | CENTERLINE RUMBLE STRIP (HMA, GROUND-IN INDENTATIONS) STA |
|---|---|---|---|
| | SB | NB | |
| PM R9.3 TO PM R9.99 | 36.4 | 36.4 | 36.4 |
| PM R10.05 TO PM R11.89 | 99.3 | 99.3 | 99.8 |
| PM R11.91 TO PM R13.01 | 58.8 | 58.0 | 58.1 |
| PM R13.05 TO PM R14.00 | 50.7 | 50.1 | 50.7 |
| SUBTOTAL | 245.2 | 243.8 | 245.0 |
| TOTAL | 489.0 | | 245.0 |

# SUMMARY OF QUANTITIES
## Q-1

STATE OF CALIFORNIA - DEPARTMENT OF TRANSPORTATION
Caltrans 06-DESIGN
FUNCTIONAL SUPERVISOR: ALI ALQATAMI
CALCULATED-DESIGNED BY: FERNANDO MORALES
CHECKED BY: ALI ALQATAMI
REVISED BY / DATE REVISED

LAST REVISION 03-21-16
DATE PLOTTED => 26-MAY-2016
TIME PLOTTED => 13:24

| Dist | COUNTY | ROUTE | POST MILES TOTAL PROJECT | SHEET No. | TOTAL SHEETS |
|---|---|---|---|---|---|
| 06 | Tul | 65 | R9.3/R14.0 | 12 | 57 |

REGISTERED ELECTRICAL ENGINEER 03-15-16 DATE

3-21-16
PLANS APPROVAL DATE

REGISTERED PROFESSIONAL ENGINEER PAUL MATOS No. 18757 Exp. 6/30/17 ELECTRICAL STATE OF CALIFORNIA

*THE STATE OF CALIFORNIA OR ITS OFFICERS OR AGENTS SHALL NOT BE RESPONSIBLE FOR THE ACCURACY OR COMPLETENESS OF SCANNED COPIES OF THIS PLAN SHEET.*

## LEGEND: (FOR SHEETS E-2 THRU E-5)

1. Exist MODEL 332 CONTROLLER CABINET. FURNISH AND INSTALL WIRELESS MODEM.
2. Exist 120 /240 V, 1Ø, TYPE III-BF SERVICE EQUIPMENT ENCLOSURE WITH THE FOLOWWING CIRCUIT BREAKERS:

Ctid No. (064606500120800)

| AMPERES | VOLTS | POLES | LOAD | METER | PHOTOELECTRIC CONTROL TYPE |
|---|---|---|---|---|---|
| 100 | 240 | 4 | MAIN BREAKER | YES | ——— |
| 70 | 120 | 1 | TRAFFIC SIGNAL | YES | ——— |
| 40 | 240 | 2 | HIGHWAY LIGHTING | NO | IV |
| 15 | 120 | 1 | FLASHING BEACON | YES | ——— |

3. RC Exist Ø4 Sig HEAD. FURNISH AND INSTALL 3 SECTION Sig HEAD WITH ARROW FACES FOR Ø7.
4. RC Exist Ø8 Sig HEAD. FURNISH AND INSTALL 3 SECTION Sig HEAD WITH ARROW FACES FOR Ø3.
5. IP CAMERA ON SIGNAL POLE.
6. AB Exist LOOP DETECTORS.
7. RS Exist HPS Lum. FURNISH AND INSTALL LED Lum WITH TYPE IV PEC.

## SYMBOLS:

(x) Exist SIGNAL POLE.

(x) Exist CONDUIT RUN. RC Exist CONDUCTORS. FURNISH AND INSTALL CONDUCTORS AS INDICATED IN THE CONDUIT AND CONDUCTOR SCHEDULE.

## ABBREVIATIONS:

| | |
|---|---|
| CAT5E | CATAGORY 5E CABLE |
| AL | ALUMINUM |
| CU | COPPER |
| PATC | PORTABLE AUTOMATED TRAFFIC COUNTER |

## POLE AND EQUIPMENT SCHEDULE

| No. | STANDARD TYPE | STANDARD SMA | STANDARD LMA | Veh Sig Mtg MAST ARM | Veh Sig Mtg POLE | Ped Sig Mtg | PBA Ø | PBA ARROW | LED LUM | SPECIAL REQUIREMENTS |
|---|---|---|---|---|---|---|---|---|---|---|
| a | 1-A | - | - | - | TV-2-T | - | - | | - | 3 |
| b | 17-2-100 | 20 | 12 | MAS | SV-1-T | - | - | | 165 W | RS SIGNAL POLE. |
| B | 24-4-100 | 35 | 12 | MAS MAS | SV-1-T | - | - | | 165 W | F=14′. |
| c | 1-A | - | - | - | TV-2-T | SP-1-T | 4 | → | - | RC Exist PBA AND Ø4P Ped Sig HEAD. |
| d | 26-3-80 | 40 | 12 | MAS MAT | SV-1-T | SP-1-T | 4 | ← | 165 W | RC Exist PBA AND Ø4P Ped Sig HEAD. 7 |
| E | PBA POST | - | - | - | - | - | 4 | ← | - | |
| f | 1-A | - | - | - | TV-2-T | - | - | | - | 4 |
| g | 19-2-80 | 30 | 12 | MAS | SV-1-T | - | - | | 165 W | RS SIGNAL POLE |
| G | 26-4-100 | 45 | 12 | MAS MAS | SV-1-T | - | - | | 165 W | F=15′ 5 |
| h | 1-A | - | - | - | TV-2-T | - | - | | - | |
| i | 26-3-80 | 45 | 12 | MAS MAT | SV-1-T | - | - | | 165 W | 7 |
| J | PBA POST | - | - | - | - | - | 4 | → | - | |
| k | 1-A | - | - | - | TV-2-T | - | - | | - | RS SIGNAL POLE. RL Exist SIGN TO POLE K. |
| K | 15-FBS | - | - | - | 2 SV-1 | - | - | | - | INSTALL SIGN FROM POLE k. |
| l | 1-A | - | - | - | TV-2-T | - | - | | - | RS SIGNAL POLE. RL Exist SIGN TO POLE L. |
| L | 15-FBS | - | - | - | 2 SV-1 | - | - | | - | INSTALL SIGN FROM POLE l. |

## CONDUIT AND CONDUCTOR SCHEDULE

| CABLE SCHEDULE | | | CONDUIT RUN NUMBER AND SIZE | | | | | | | | |
|---|---|---|---|---|---|---|---|---|---|---|---|
| CABLE TYPE | POLE | PHASE | 1 / 2-3" | 2 / 3" | 3 / 3" | 4 / 3" | 5 / 4" | 6 / 4" | 7 / 3" | 8 / 3" | 9 / 3" |
| Veh-Ped 12CSC | a | 7,8 | 1 | 1 | | | | | | | |
| | B | 4,7 | 1 | 1 | 1 | | | | | | |
| | c | 1,2,4P | 1 | 1 | 1 | 1 | | | | | |
| | d | 1,6,4P | 1 | | | | 1 | 1 | 1 | 1 | 1 |
| | E | 4 | 1 | | | | 1 | 1 | 1 | 1 | 1 |
| | f | 3,4 | 1 | | | | 1 | 1 | 1 | 1 | |
| | G | 3,8 | 1 | | | | 1 | 1 | 1 | | |
| | h | 5,6 | 1 | | | | 1 | 1 | | | |
| | i | 2,5 | 1 | | | | 1 | | | | |
| PBA 3CSC | J | 4 | 1 | 1 | 1 | 1 | | | | | |
| | | TOTAL | 8 / 2 | 3 / 1 | 2 / 1 | 1 / 1 | 5 / 1 | 4 / 1 | 3 / 1 | 2 / 1 | 1 / 1 |
| AWG | CIRCUIT | | | | | | | | | | |
| #6 | LIGHTING | | | 2 | 2 | | 2 | 2 | 2 | 2 | 2 |
| #6 | FLASHING BEACON | | | 2 | 2 | 2 | 2 | 2 | | | |
| CAT5E | | | 1 | | | | 1 | 1 | 1 | | |
| CAMERA POWER CABLE | | | 1 | | | | 1 | 1 | 1 | | |
| DETECTORS-TYPE B DLC | | | | | | | | | | | |
| PHASE | | | | | | | | | | | |
| Ø1 | | | 2 | | | | 2 | 2 | | | |
| Ø2 | | | 3 | 3 | 3 | 3 | | | | | |
| Ø2 MID | | | 1 | 1 | 1 | 1 | | | | | |
| Ø2 ADV | | | 1 | 1 | 1 | 1 | | | | | |
| Ø3 | | | 2 | 2 | | | | | | | |
| Ø4 | | | 2 | | | | 2 | 2 | 2 | 2 | |
| Ø4 MID | | | 1 | | | | 1 | 1 | 1 | 1 | |
| Ø4 ADV | | | 1 | | | | 1 | 1 | 1 | 1 | |
| Ø5 | | | 2 | 2 | 2 | 2 | | | | | |
| Ø6 | | | 3 | | | | 3 | 3 | | | |
| Ø6 MID | | | 1 | | | | 1 | 1 | | | |
| Ø6 ADV | | | 1 | | | | 1 | 1 | | | |
| Ø7 | | | 2 | | | | 2 | 2 | 2 | 2 | |
| Ø8 | | | 2 | 2 | | | | | | | |
| Ø8 ADV | | | 1 | 1 | | | | | | | |
| | TOTAL | | 21 | 10 | 6 | 6 | 11 | 11 | 5 | 5 | |

# MODIFYING EXISTING ELECTRICAL SYSTEMS
# E-1

STATE OF CALIFORNIA - DEPARTMENT OF TRANSPORTATION
Caltrans® ELECTRICAL DESIGN

FUNCTIONAL SUPERVISOR: ALI BAKHDOUD
CALCULATED-DESIGNED BY: PAUL MATOS
CHECKED BY: KARIM ABDOLLAHIAN
REVISED BY / DATE REVISED

LAST REVISION: DATE PLOTTED => 19-MAY-2016 03-04-16 TIME PLOTTED => 16:01

| Dist | COUNTY | ROUTE | POST MILES TOTAL PROJECT | SHEET No. | TOTAL SHEETS |
|---|---|---|---|---|---|
| 06 | Tul | 65 | R9.3/R14.0 | 13 | 57 |

REGISTERED ELECTRICAL ENGINEER 03-15-16 DATE

3-21-16
PLANS APPROVAL DATE

REGISTERED PROFESSIONAL ENGINEER PAUL MATOS No. 18757 Exp. 6/30/17 ELECTRICAL STATE OF CALIFORNIA

*THE STATE OF CALIFORNIA OR ITS OFFICERS OR AGENTS SHALL NOT BE RESPONSIBLE FOR THE ACCURACY OR COMPLETENESS OF SCANNED COPIES OF THIS PLAN SHEET.*

## NOTES:

1. FOR ACCURATE RIGHT OF WAY DATA, CONTACT RIGHT OF WAY ENGINEERING AT THE DISTRICT OFFICE.
2. ALL PULL BOXES MUST BE No. 5(T)(E) UNLESS OTHERWISE INDICATED.
3. FOR LEGEND SEE SHEET E-1.

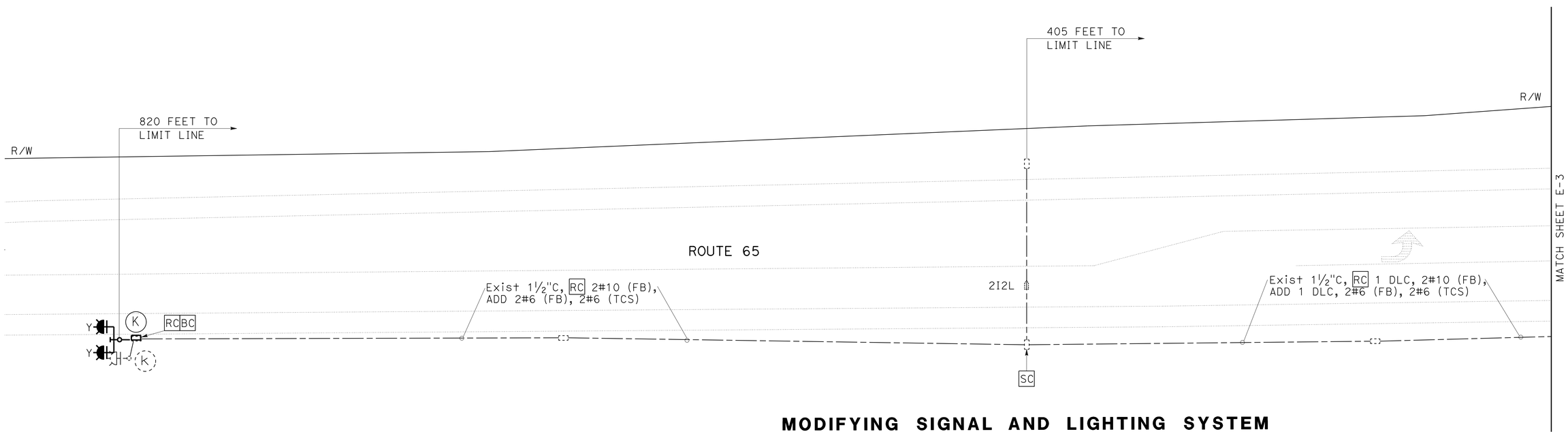


**MODIFYING SIGNAL AND LIGHTING SYSTEM**

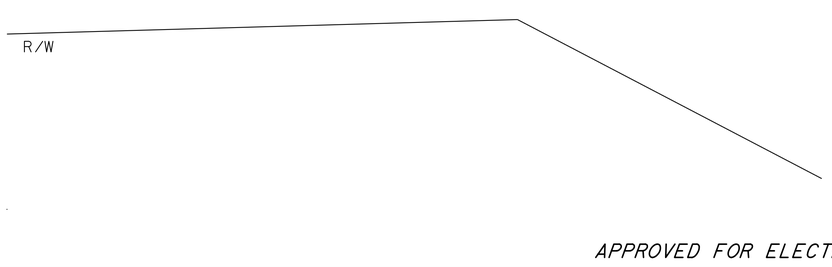


# MODIFYING EXISTING ELECTRICAL SYSTEMS

**E-2**

*APPROVED FOR ELECTRICAL WORK ONLY*

SCALE: 1" = 20'

STATE OF CALIFORNIA - DEPARTMENT OF TRANSPORTATION
Caltrans® ELECTRICAL DESIGN

FUNCTIONAL SUPERVISOR: ALI BAKHDOUD
CALCULATED-DESIGNED BY: PAUL MATOS
CHECKED BY: KARIM ABDOLLAHIAN
REVISED BY
DATE REVISED

LAST REVISION 03-04-16
DATE PLOTTED => 19-MAY-2016
TIME PLOTTED => 16:01

| Dist | COUNTY | ROUTE | POST MILES TOTAL PROJECT | SHEET No. | TOTAL SHEETS |
|---|---|---|---|---|---|
| 06 | Tul | 65 | R9.3/R14.0 | 14 | 57 |

REGISTERED ELECTRICAL ENGINEER 03-15-16 DATE

3-21-16
PLANS APPROVAL DATE

REGISTERED PROFESSIONAL ENGINEER PAUL MATOS No. 18757 Exp. 6/30/17 ELECTRICAL STATE OF CALIFORNIA

*THE STATE OF CALIFORNIA OR ITS OFFICERS OR AGENTS SHALL NOT BE RESPONSIBLE FOR THE ACCURACY OR COMPLETENESS OF SCANNED COPIES OF THIS PLAN SHEET.*

## NOTES:

1. FOR ACCURATE RIGHT OF WAY DATA, CONTACT RIGHT OF WAY ENGINEERING AT THE DISTRICT OFFICE.
2. ALL PULL BOXES MUST BE No. 5(T)(E) UNLESS OTHERWISE INDICATED.
3. FOR LEGEND SEE SHEET E-1.

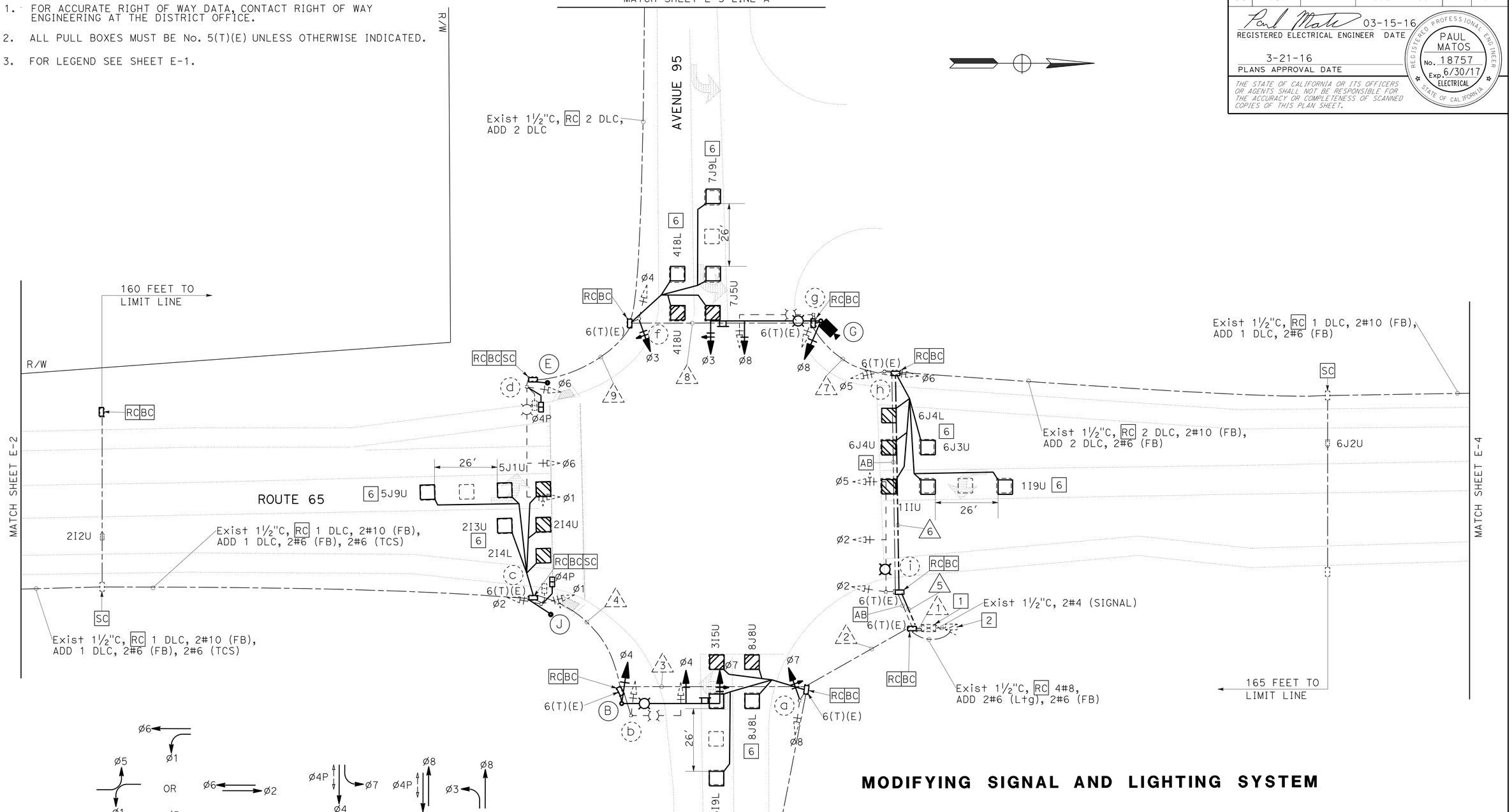


## MODIFYING SIGNAL AND LIGHTING SYSTEM

## MODIFYING EXISTING ELECTRICAL SYSTEMS

*APPROVED FOR ELECTRICAL WORK ONLY*

SCALE: 1" = 20'

E-3

STATE OF CALIFORNIA - DEPARTMENT OF TRANSPORTATION
Caltrans ELECTRICAL DESIGN

FUNCTIONAL SUPERVISOR: ALI BAKHDOUD
CALCULATED-DESIGNED BY: PAUL MATOS
CHECKED BY: KARIM ABDOLLAHIAN
REVISED BY
DATE REVISED

LAST REVISION 03-04-16 | DATE PLOTTED => 19-MAY-2016 | TIME PLOTTED => 16:01

| Dist | COUNTY | ROUTE | POST MILES TOTAL PROJECT | SHEET No. | TOTAL SHEETS |
|---|---|---|---|---|---|
| 06 | Tul | 65 | R9.3/R14.0 | 15 | 57 |

REGISTERED ELECTRICAL ENGINEER 03-15-16 DATE

3-21-16
PLANS APPROVAL DATE

REGISTERED PROFESSIONAL ENGINEER
PAUL MATOS
No. 18757
Exp. 6/30/17
ELECTRICAL
STATE OF CALIFORNIA

*THE STATE OF CALIFORNIA OR ITS OFFICERS OR AGENTS SHALL NOT BE RESPONSIBLE FOR THE ACCURACY OR COMPLETENESS OF SCANNED COPIES OF THIS PLAN SHEET.*

## NOTES:

1. FOR ACCURATE RIGHT OF WAY DATA, CONTACT RIGHT OF WAY ENGINEERING AT THE DISTRICT OFFICE.
2. ALL PULL BOXES MUST BE No. 5(T)(E) UNLESS OTHERWISE INDICATED.
3. FOR LEGEND SEE SHEET E-1.

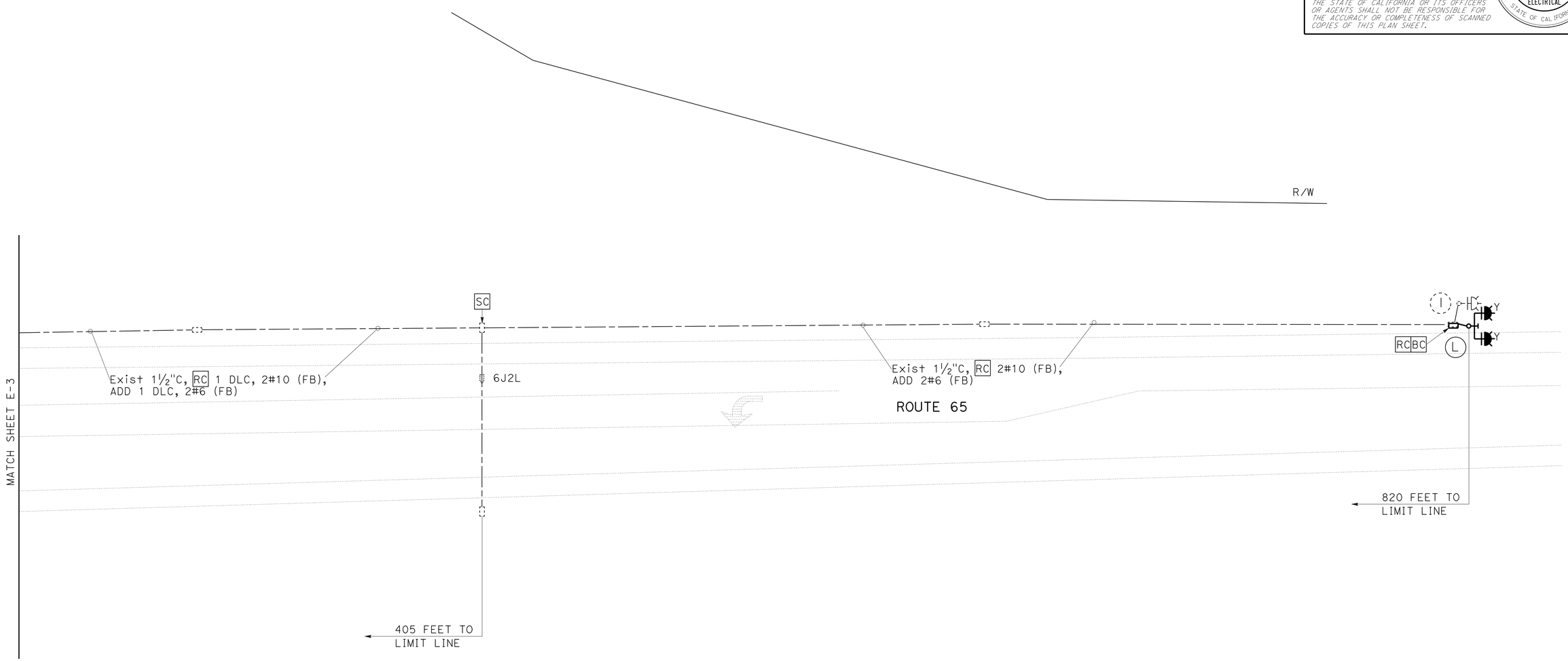


R/W

**MODIFYING SIGNAL AND LIGHTING SYSTEM**

# MODIFYING EXISTING ELECTRICAL SYSTEMS

**E-4**

*APPROVED FOR ELECTRICAL WORK ONLY*

SCALE: 1" = 20'

STATE OF CALIFORNIA - DEPARTMENT OF TRANSPORTATION
Caltrans® ELECTRICAL DESIGN

FUNCTIONAL SUPERVISOR: ALI BAKHDOUD
CALCULATED-DESIGNED BY: PAUL MATOS
CHECKED BY: KARIM ABDOLLAHIAN
REVISED BY
DATE REVISED

LAST REVISION 03-04-16 | DATE PLOTTED => 19-MAY-2016 | TIME PLOTTED => 16:01

| Dist | COUNTY | ROUTE | POST MILES TOTAL PROJECT | SHEET No. | TOTAL SHEETS |
|---|---|---|---|---|---|
| 06 | Tul | 65 | R9.3/R14.0 | 16 | 57 |

REGISTERED ELECTRICAL ENGINEER 03-15-16 DATE

PLANS APPROVAL DATE 3-21-16

REGISTERED PROFESSIONAL ENGINEER PAUL MATOS No. 18757 Exp. 6/30/17 ELECTRICAL STATE OF CALIFORNIA

*THE STATE OF CALIFORNIA OR ITS OFFICERS OR AGENTS SHALL NOT BE RESPONSIBLE FOR THE ACCURACY OR COMPLETENESS OF SCANNED COPIES OF THIS PLAN SHEET.*

NOTES:

1. FOR ACCURATE RIGHT OF WAY DATA, CONTACT RIGHT OF WAY ENGINEERING AT THE DISTRICT OFFICE.
2. ALL PULL BOXES MUST BE No. 5(T)(E) UNLESS OTHERWISE INDICATED.
3. FOR LEGEND SEE SHEET E-1.

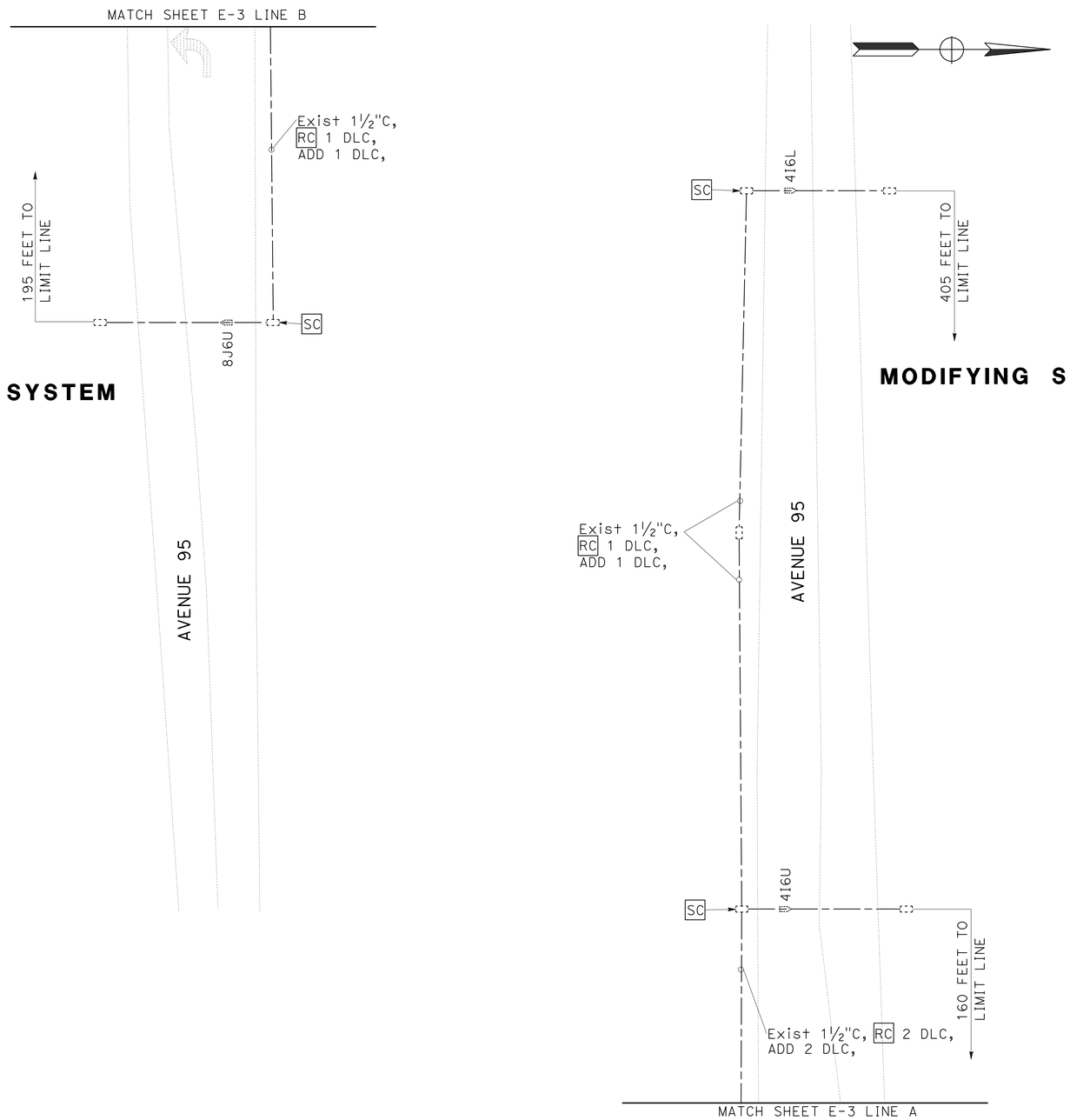


# MODIFYING EXISTING ELECTRICAL SYSTEMS

E-5

*APPROVED FOR ELECTRICAL WORK ONLY*

SCALE: 1" = 20'

STATE OF CALIFORNIA - DEPARTMENT OF TRANSPORTATION

Caltrans® ELECTRICAL DESIGN

FUNCTIONAL SUPERVISOR: ALI BAKHDOUD

CALCULATED-DESIGNED BY: PAUL MATOS

CHECKED BY: KARIM ABDOLLAHIAN

REVISED BY | DATE REVISED

LAST REVISION 03-04-16

DATE PLOTTED => 19-MAY-2016
TIME PLOTTED => 16:01

| Dist | COUNTY | ROUTE | POST MILES TOTAL PROJECT | SHEET No. | TOTAL SHEETS |
|---|---|---|---|---|---|
| 06 | Tul | 65 | R9.3/R14.0 | 17 | 57 |

REGISTERED ELECTRICAL ENGINEER 03-15-16 DATE

3-21-16
PLANS APPROVAL DATE

REGISTERED PROFESSIONAL ENGINEER
PAUL MATOS
No. 18757
Exp. 6/30/17
ELECTRICAL
STATE OF CALIFORNIA

*THE STATE OF CALIFORNIA OR ITS OFFICERS OR AGENTS SHALL NOT BE RESPONSIBLE FOR THE ACCURACY OR COMPLETENESS OF SCANNED COPIES OF THIS PLAN SHEET.*

## NOTES:

1. FOR ACCURATE RIGHT OF WAY DATA, CONTACT RIGHT OF WAY ENGINEERING AT THE DISTRICT OFFICE.
2. ALL PULL BOXES MUST BE No. 5(T)(E) UNLESS OTHERWISE INDICATED.

## LEGEND: (FOR THIS SHEET ONLY)

1 TYPE B TDC WITH PATC. SEE DETAILS ON SHEET E-8.

2 SEE DETAILS ON SHEET E-7 FOR PIEZO AXLE SENSOR AND LOOP DETECTOR INSTALLATION.

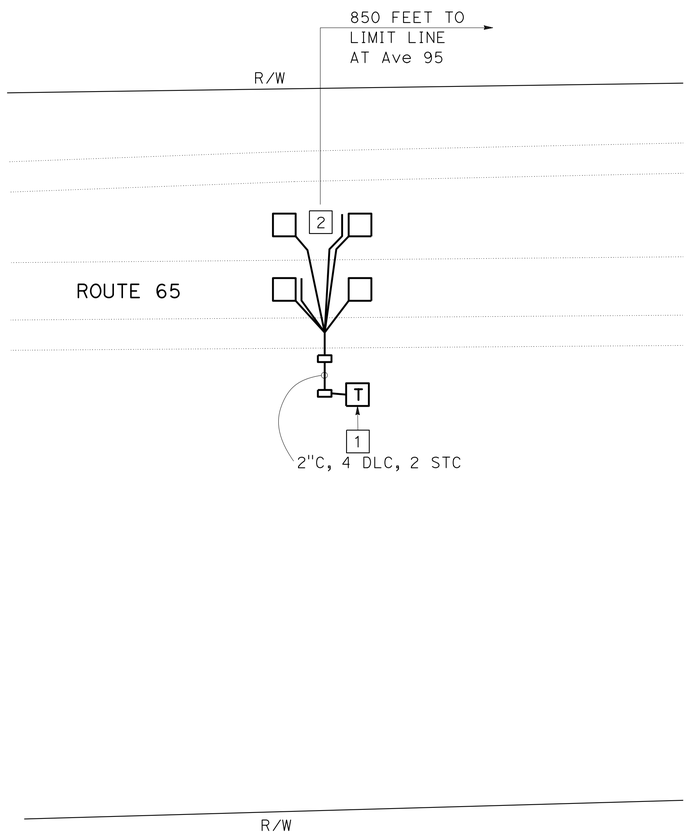


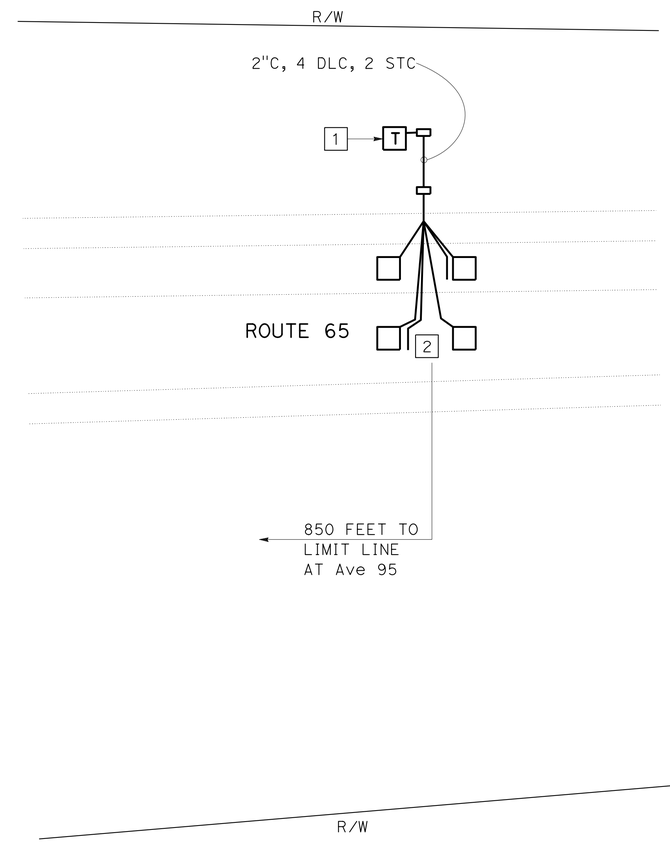


*APPROVED FOR ELECTRICAL WORK ONLY*

# TRAFFIC MONITORING STATION SYSTEM

SCALE: 1" = 20'

**E-6**

STATE OF CALIFORNIA - DEPARTMENT OF TRANSPORTATION
Caltrans® **ELECTRICAL DESIGN**

FUNCTIONAL SUPERVISOR: ALI BAKHDOUD
CALCULATED-DESIGNED BY: PAUL MATOS
CHECKED BY: KARIM ABDOLLAHIAN
REVISED BY
DATE REVISED

LAST REVISION 03-04-16
DATE PLOTTED => 19-MAY-2016
TIME PLOTTED => 16:01

| Dist | COUNTY | ROUTE | POST MILES TOTAL PROJECT | SHEET No. | TOTAL SHEETS |
|---|---|---|---|---|---|
| 06 | Tul | 65 | R9.3/R14.0 | 18 | 57 |

REGISTERED ELECTRICAL ENGINEER 03-15-16 DATE

3-21-16
PLANS APPROVAL DATE

REGISTERED PROFESSIONAL ENGINEER PAUL MATOS No. 18757 Exp. 6/30/17 ELECTRICAL STATE OF CALIFORNIA

*THE STATE OF CALIFORNIA OR ITS OFFICERS OR AGENTS SHALL NOT BE RESPONSIBLE FOR THE ACCURACY OR COMPLETENESS OF SCANNED COPIES OF THIS PLAN SHEET.*

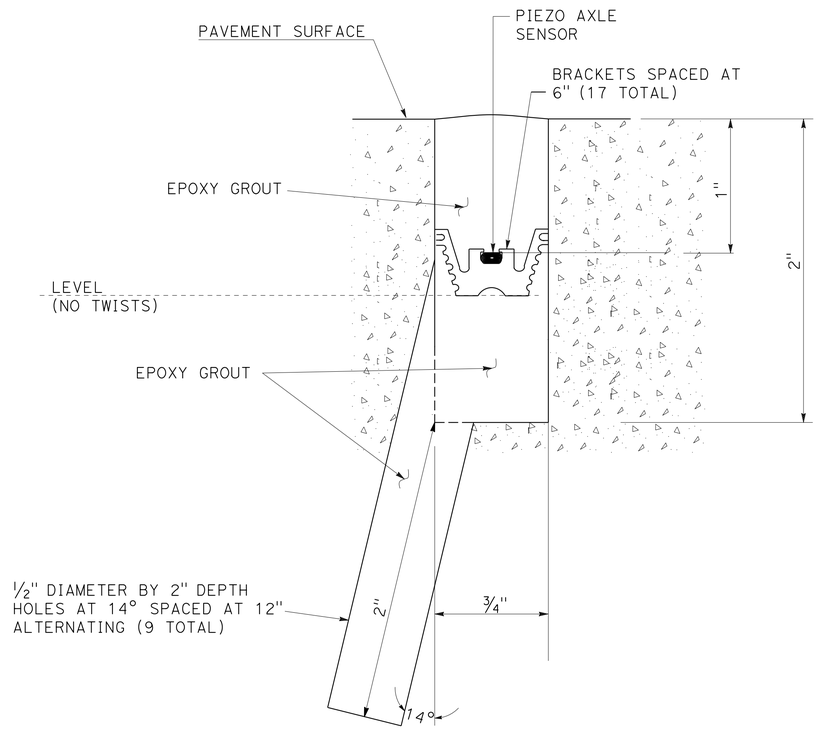


SECTION A-A

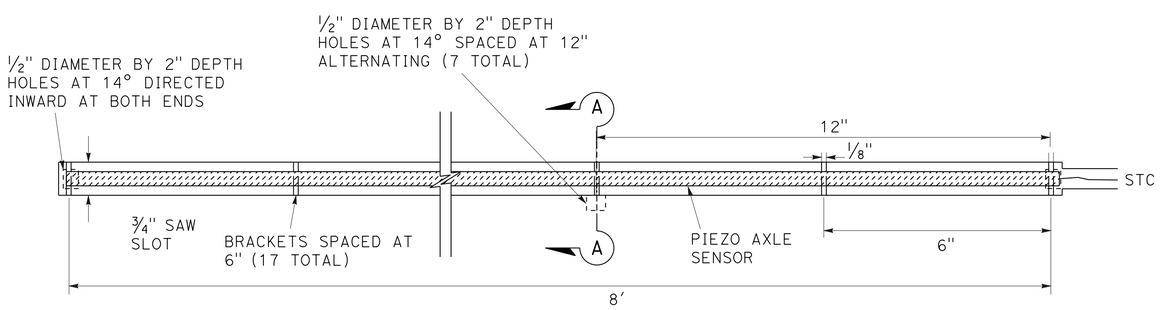


PIEZO AXLE SENSOR INSTALLATION

**TOP VIEW**
**DETAIL A**

## INDUCTIVE LOOP DETECTOR SENSOR DESIGNATION

N-1-2

- DIRECTION OF TRAFFIC
  - N - NORTHBOUND , S - SOUTHBOUND
  - E - EASTBOUND , W - WESTBOUND
- 1 - ENTERING
- 2 - LEAVING
- LANE NUMBER
  - 1 - FIRST LANE FROM LEFT
  - 2 - SECOND LANE

## PIEZO AXLE SENSOR DESIGNATION

N-P-1-1

- DIRECTION OF TRAFFIC
  - N - NORTHBOUND, S - SOUTHBOUND
  - E - EASTBOUND, W - WESTBOUND
- PIEZO AXLE SENSOR
- 1 - FOR ALL PIEZO AXLE SENSORS
- LANE NUMBER
  - 1 - FIRST LANE FROM LEFT
  - 2 - SECOND LANE

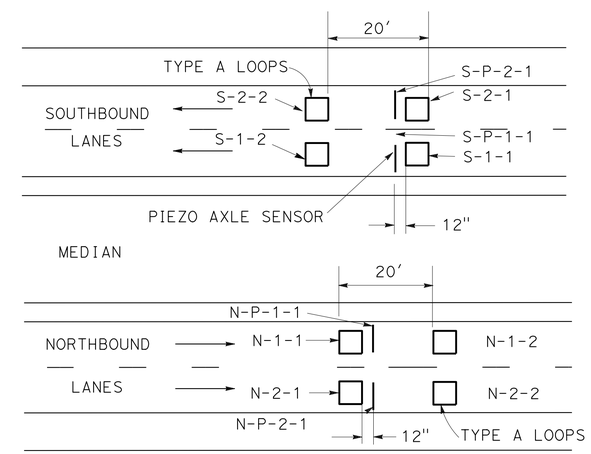


LOOP DETECTOR AND PIEZO AXLE SENSOR PLACEMENT AND DESIGNATION

**DETAIL B**

# ELECTRICAL DETAILS
# E-7

| REVISED BY | DATE REVISED |
|---|---|
| | |

| CALCULATED-DESIGNED BY | CHECKED BY |
|---|---|
| PAUL MATOS | KARIM ABDOLLAHIAN |

FUNCTIONAL SUPERVISOR: ALI BAKHDOUD

STATE OF CALIFORNIA - DEPARTMENT OF TRANSPORTATION
Caltrans® ELECTRICAL DESIGN

LAST REVISION 03-04-16 | DATE PLOTTED => 19-MAY-2016 | TIME PLOTTED => 16:01

| Dist | COUNTY | ROUTE | POST MILES TOTAL PROJECT | SHEET No. | TOTAL SHEETS |
|---|---|---|---|---|---|
| 06 | Tul | 65 | R9.3/R14.0 | 19 | 57 |

REGISTERED ELECTRICAL ENGINEER 03-15-16 DATE

3-21-16
PLANS APPROVAL DATE

REGISTERED PROFESSIONAL ENGINEER PAUL MATOS No. 18757 Exp. 6/30/17 ELECTRICAL STATE OF CALIFORNIA

*THE STATE OF CALIFORNIA OR ITS OFFICERS OR AGENTS SHALL NOT BE RESPONSIBLE FOR THE ACCURACY OR COMPLETENESS OF SCANNED COPIES OF THIS PLAN SHEET.*

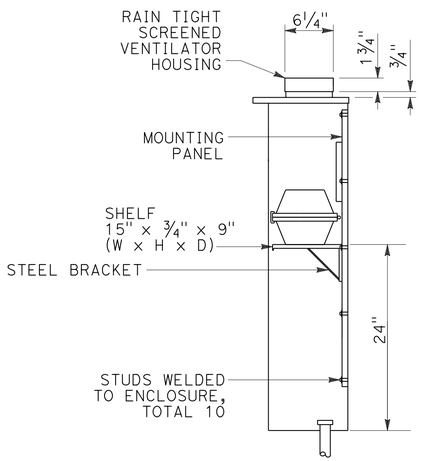


SECTION A-A

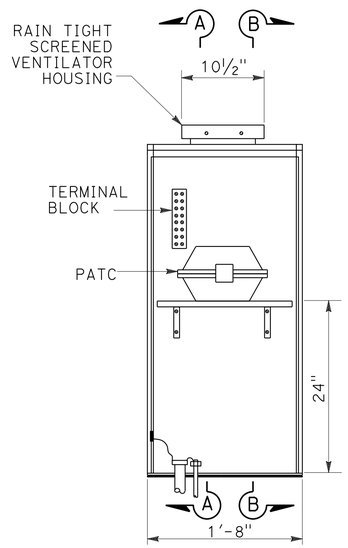


FRONT VIEW

INTERIOR
**DETAIL A**

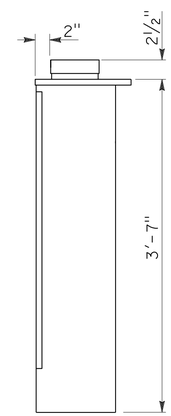


SECTION B-B

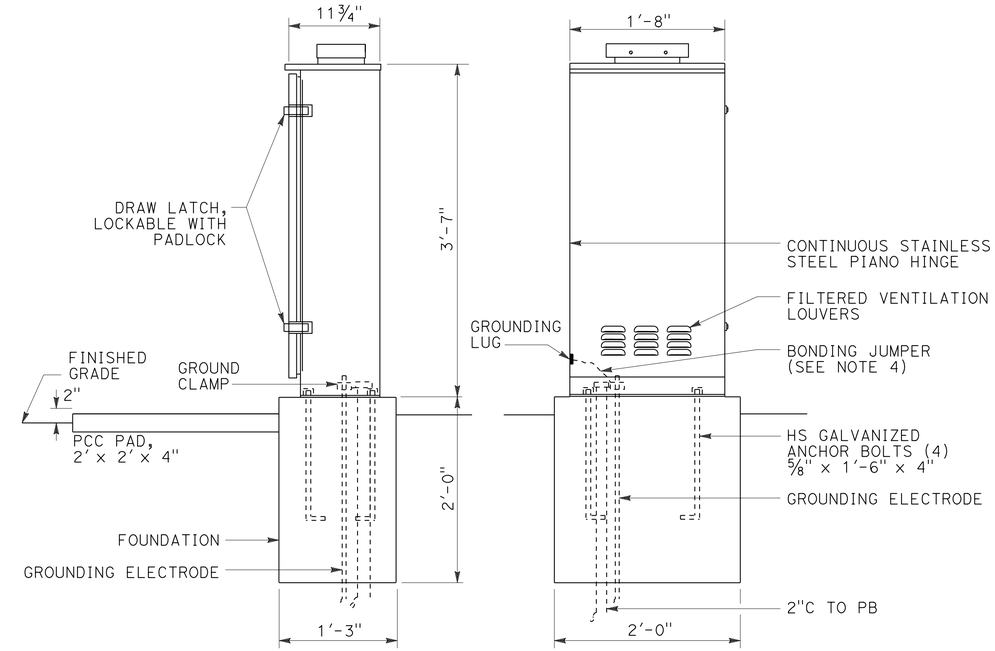


SIDE VIEW FRONT VIEW

EXTERIOR
**DETAIL B**

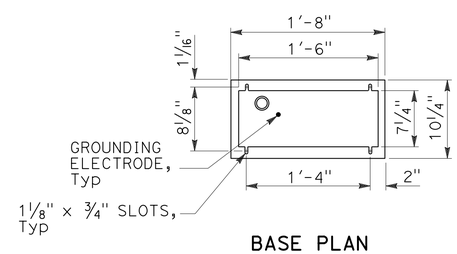


BASE PLAN
**DETAIL C**

# ELECTRICAL DETAILS
# E-8

| REVISED BY | DATE REVISED |
|---|---|
| | |

| CALCULATED-DESIGNED BY | CHECKED BY |
|---|---|
| PAUL MATOS | KARIM ABDOLLAHIAN |

| FUNCTIONAL SUPERVISOR |
|---|
| ALI BAKHDOUD |

STATE OF CALIFORNIA - DEPARTMENT OF TRANSPORTATION
Caltrans
**ELECTRICAL DESIGN**

LAST REVISION 03-04-16 | DATE PLOTTED => 19-MAY-2016 | TIME PLOTTED => 16:01

| Dist | COUNTY | ROUTE | POST MILES TOTAL PROJECT | SHEET No. | TOTAL SHEETS |
|---|---|---|---|---|---|
| 06 | Tul | 65 | R9.3/R14.0 | 20 | 57 |

Paul Matos 03-15-16
REGISTERED ELECTRICAL ENGINEER DATE

3-21-16
PLANS APPROVAL DATE

REGISTERED PROFESSIONAL ENGINEER PAUL MATOS No. 18757 Exp. 6/30/17 ELECTRICAL STATE OF CALIFORNIA

*THE STATE OF CALIFORNIA OR ITS OFFICERS OR AGENTS SHALL NOT BE RESPONSIBLE FOR THE ACCURACY OR COMPLETENESS OF SCANNED COPIES OF THIS PLAN SHEET.*

NOTE:

THE QUANTITIES IN THE TABLE ARE NOT SEPARATE PAY ITEMS, FOR INFORMATION ONLY.
FOR COMPLETE ELECTRICAL WORK, SEE ELECTRICAL PLAN SHEETS.

## MODIFYING EXISTING ELECTRICAL SYSTEMS

| SHEET No. | No. 5(T)(E) PB | No. 6(T)(E) PB | DETECTOR LOOP, TYPE A | DETECTOR LOOP, TYPE D | 165W LED Lum WITH TYPE IV PEC | TYPE 24-4-100 STANDARD WITH 35' SMA, 12' LMA, AND Sig AND L+g EQUIPMENT | TYPE 26-4-100 STANDARD WTIH 45' SMA, 12' LMA, AND Sig AND L+g EQUIPMENT | TYPE 24-4-100 POLE FOUNDATION | TYPE 26-4-100 POLE FOUNDATION | COUNTDOWN Ped Sig HEAD | PBA POST | PBA POST FOUNDATION | APS ASSEMBLY | 3 SECTION Sig HEAD | TYPE 15-FBS POLE WITH FB EQUIPMENT | TYPE 15-FBS FOUNDATION | WIRELESS MODEM | IP CAMERA ASSEMBLY | 2"C, TYPE 1 | 4"C, TYPE 3 | No. 8 CONDUCTOR (G) (CU) | No. 6 CONDUCTOR (AL) | 12CSC | 3CSC | CAT5E | APS CABLE | DLC |
|---|---|---|---|---|---|---|---|---|---|---|---|---|---|---|---|---|---|---|---|---|---|---|---|---|---|---|---|
| | EA | | | | | | | | | | | | | | | | | | LF | | | | | | | | |
| E-2 | 1 | | | | | | | | | | | | | | 1 | 1 | | | 10 | | 600 | 1200 | | | | | 300 |
| E-3 | 2 | 8 | 12 | 10 | 2 | 1 | 1 | 1 | 1 | 2 | 2 | 2 | 2 | 2 | | | 1 | 1 | 40 | 120 | 1300 | 2500 | 1600 | 500 | 170 | 100 | 6600 |
| E-4 | 1 | | | | | | | | | | | | | | 1 | 1 | | | 10 | | 600 | 1200 | | | | | 300 |
| E-5 | | | | | | | | | | | | | | | | | | | | | 400 | | | | | | 500 |

## TRAFFIC MONITORING STATION SYSTEM

| SHEET No. | No. 5(T)(E) PB | DETECTOR LOOP, TYPE A | TYPE B TDC FOUNDATION | TYPE B TDC | PATC | PIEZO AXLE SENSOR WITH STC | 2"C, TYPE 1 | 2"C, TYPE 3 | DLC |
|---|---|---|---|---|---|---|---|---|---|
| | EA | | | | | | LF | | |
| E-6 | 4 | 8 | 2 | 2 | 2 | 4 | 20 | 40 | 200 |

# ELECTRICAL QUANTITIES
# E-9

| | | | |
|---|---|---|---|
| REVISED BY | PAUL MATOS | CALCULATED-DESIGNED BY | FUNCTIONAL SUPERVISOR |
| DATE REVISED | KARIM ABDOLLAHIAN | CHECKED BY | ALI BAKHDOUD |

STATE OF CALIFORNIA - DEPARTMENT OF TRANSPORTATION
Caltrans® ELECTRICAL DESIGN

LAST REVISION 03-04-16 | DATE PLOTTED => 19-MAY-2016 TIME PLOTTED => 16:01

## M

| | |
|---|---|
| Maint | MAINTENANCE |
| Max | MAXIMUM |
| MB | METAL BEAM |
| MBB | METAL BEAM BARRIER |
| MBGR | METAL BEAM GUARD RAILING |
| Med | MEDIAN |
| MGS | MIDWEST GUARDRAIL SYSTEM |
| MH | MANHOLE |
| Min | MINIMUM |
| Misc | MISCELLANEOUS |
| Misc I & S | MISCELLANEOUS IRON AND STEEL |
| Mkr | MARKER |
| Mod | MODIFIED, |
| | MODIFY |
| Mon | MONUMENT |
| MP | METAL PLATE |
| MPGR | METAL PLATE GUARD RAILING |
| MR | MOVEMENT RATING |
| MSE | MECHANICALLY STABILIZED EMBANKMENT |
| Mt | MOUNTAIN, MOUNT |
| Mtl | MATERIAL |
| MVP | MAINTENANCE VEHICLE PULLOUT |

## N

| | |
|---|---|
| N | NORTH |
| NB | NORTHBOUND |
| No. | NUMBER (MUST HAVE PERIOD) |
| Nos. | NUMBERS (MUST HAVE PERIOD) |
| NPS | NOMINAL PIPE SIZE |
| NS | NEAR SIDE |
| NSP | NEW STANDARD PLAN |
| NTS | NOT TO SCALE |

## O

| | |
|---|---|
| Oblr | OBLITERATE |
| OC | OVERCROSSING |
| OD | OUTSIDE DIAMETER |
| OF | OUTSIDE FACE |
| OG | ORIGINAL GROUND |
| OGAC | OPEN GRADED ASPHALT CONCRETE |
| OGFC | OPEN GRADED FRICTION COURSE |
| OH | OVERHEAD |
| OHWM | ORDINARY HIGH WATER MARK |
| O-O | OUT TO OUT |
| Opp | OPPOSITE |
| OSD | OVERSIDE DRAIN |

## P

| | |
|---|---|
| P | PAGE |
| PAP | PERFORATED ALUMINUM PIPE |
| PB | PULL BOX |
| PC | POINT OF CURVATURE, |
| | PRECAST |
| PCC | POINT OF COMPOUND CURVE, |
| | PORTLAND CEMENT CONCRETE |
| PCMS | PORTABLE CHANGEABLE MESSAGE SIGN |
| PCP | PERFORATED CONCRETE PIPE, |
| | PRESTRESSED CONCRETE PIPE |
| PCVC | POINT OF COMPOUND VERTICAL CURVE |
| PEC | PERMIT TO ENTER AND CONSTRUCT |
| Ped | PEDESTRIAN |
| Ped OC | PEDESTRIAN OVERCROSSING |
| Ped UC | PEDESTRIAN UNDERCROSSING |
| Perm Mtl | PERMEABLE MATERIAL |

## P continued

| | |
|---|---|
| PG | PROFILE GRADE |
| PI | POINT OF INTERSECTION |
| PJP | PARTIAL JOINT PENETRATION |
| Pkwy | PARKWAY |
| ℙ,PL | PLATE |
| P/L | PROPERTY LINE |
| PM | POST MILE, |
| | TIME FROM NOON TO MIDNIGHT |
| PN | PAVING NOTCH |
| POC | POINT OF HORIZONTAL CURVE |
| POT | POINT OF TANGENT |
| POVC | POINT OF VERTICAL CURVE |
| PP | PIPE PILE, |
| | PLASTIC PIPE, |
| | POWER POLE |
| PPL | PREFORMED PERMEABLE LINER |
| PPP | PERFORATED PLASTIC PIPE |
| PRC | POINT OF REVERSE CURVE |
| PRF | PAVEMENT REINFORCING FABRIC |
| PRVC | POINT OF REVERSE VERTICAL CURVE |
| PS&E | PLANS, SPECIFICATIONS AND ESTIMATES |
| PS, P/S | PRESTRESSED |
| PSP | PERFORATED STEEL PIPE |
| PT | POINT OF TANGENCY |
| PVC | POLYVINYL CHLORIDE |
| Pvmt | PAVEMENT |

## Q

| | |
|---|---|
| Qty | QUANTITY |

## R

| | |
|---|---|
| R | RADIUS |
| R & D | REMOVE AND DISPOSE |
| R & S | REMOVE AND SALVAGE |
| R/C | RATE OF CHANGE |
| RCA | REINFORCED CONCRETE ARCH |
| RCB | REINFORCED CONCRETE BOX |
| RCP | REINFORCED CONCRETE PIPE |
| RCPA | REINFORCED CONCRETE PIPE ARCH |
| Rd | ROAD |
| Reinf | REINFORCED, |
| | REINFORCEMENT, |
| | REINFORCING |
| Rel | RELOCATE |
| Repl | REPLACEMENT |
| Ret | RETAINING |
| Rev | REVISED, REVISION |
| Rdwy | ROADWAY |
| RHMA | RUBBERIZED HOT MIX ASPHALT |
| Riv | RIVER |
| RM | ROAD-MIXED |
| RP | RADIUS POINT, |
| | REFERENCE POINT |
| RR | RAILROAD |
| RSP | ROCK SLOPE PROTECTION, |
| | REVISED STANDARD PLAN |
| Rt | RIGHT |
| Rte | ROUTE |
| RW | REDWOOD, |
| | RETAINING WALL |
| R/W | RIGHT OF WAY |
| Rwy | RAILWAY |

## S

| | |
|---|---|
| S | SOUTH, |
| | SUPPLEMENT |
| SAE | STRUCTURE APPROACH EMBANKMENT |
| Salv | SALVAGE |
| SAPP | STRUCTURAL ALUMINUM PLATE PIPE |
| SB | SOUTHBOUND |
| SC | SAND CUSHION |
| SCSP | SLOTTED CORRUGATED STEEL PIPE |
| SD | STORM DRAIN |
| Sec | SECOND, |
| | SECTION |
| Sep | SEPARATION |
| SG | SUBGRADE |
| Shld | SHOULDER |
| Sht | SHEET |
| Sim | SIMILAR |
| ₤ | STATION LINE |
| SM | SELECTED MATERIAL |
| Spec | SPECIAL, |
| | SPECIFICATIONS |
| SPP | SLOTTED PLASTIC PIPE |
| SS | SLOPE STAKE |
| SSBM | STRAP AND SADDLE BRACKET METHOD |
| SSD | STRUCTURAL SECTION DRAIN |
| SSPA | STRUCTURAL STEEL PLATE ARCH |
| SSPP | STRUCTURAL STEEL PLATE PIPE |
| SSPPA | STRUCTURAL STEEL PLATE PIPE ARCH |
| SSRP | STEEL SPIRAL RIB PIPE |
| St | STREET |
| Sta | STATION |
| STBB | SINGLE THRIE BEAM BARRIER |
| Std | STANDARD |
| Str | STRUCTURE |
| Surf | SURFACING |
| SW | SIDEWALK, |
| | SOUND WALL |
| Swr | SEWER |
| Sym | SYMMETRICAL |
| S4S | SURFACE 4 SIDES |

## T

| | |
|---|---|
| T | SEMI-TANGENT |
| Tan | TANGENT |
| TBB | THRIE BEAM BARRIER |
| Tbr | TIMBER |
| TC | TOP OF CURB |
| TCB | TRAFFIC CONTROL BOX |
| TCE | TEMPORARY CONSTRUCTION EASEMENT |
| Tel | TELEPHONE |
| Temp | TEMPORARY |
| TG | TOP OF GRADE |
| Tot | TOTAL |
| TP | TELEPHONE POLE |
| TPB | TREATED PERMEABLE BASE |
| TPM | TREATED PERMEABLE MATERIAL |
| Trans | TRANSITION |

## T continued

| | |
|---|---|
| TS | TRANSVERSE, |
| | TRAFFIC SIGNAL, |
| | TUBULAR STEEL |
| Typ | TYPICAL |

## U

| | |
|---|---|
| UC | UNDERCROSSING |
| UD | UNDERDRAIN |
| UG | UNDERGROUND |
| UON | UNLESS OTHERWISE NOTED |
| UP | UNDERPASS |

## V

| | |
|---|---|
| V | VALVE, |
| | DESIGN SPEED |
| Var | VARIABLE, |
| | VARIES |
| VC | VERTICAL CURVE |
| VCP | VITRIFIED CLAY PIPE |
| Vert | VERTICAL |
| Via | VIADUCT |
| Vol | VOLUME |

## W

| | |
|---|---|
| W | WEST, |
| | WIDTH |
| WB | WESTBOUND |
| WH | WEEP HOLE |
| WM | WIRE MESH |
| WS | WATER SURFACE |
| WSP | WELDED STEEL PIPE |
| Wt | WEIGHT |
| WV | WATER VALVE |
| WW | WINGWALL |
| WWLOL | WINGWALL LAYOUT LINE |

## X

| | |
|---|---|
| X Sec | CROSS SECTION |
| Xing | CROSSING |

## Y

| | |
|---|---|
| Yr | YEAR |
| Yrs | YEARS |

| Dist | COUNTY | ROUTE | POST MILES TOTAL PROJECT | SHEET No. | TOTAL SHEETS |
|---|---|---|---|---|---|
| 06 | Tul | 65 | R9.3/R14.0 | 21 | 57 |

Grace M. Tsushima
REGISTERED CIVIL ENGINEER

July 19, 2013
PLANS APPROVAL DATE

REGISTERED PROFESSIONAL ENGINEER
Grace M. Tsushima
No. C49814
Exp. 9-30-14
CIVIL
STATE OF CALIFORNIA

*THE STATE OF CALIFORNIA OR ITS OFFICERS OR AGENTS SHALL NOT BE RESPONSIBLE FOR THE ACCURACY OR COMPLETENESS OF SCANNED COPIES OF THIS PLAN SHEET.*

TO ACCOMPANY PLANS DATED 3-21-16

### UNIT OF MEASUREMENT SYMBOLS:

Some of the symbols used in the project plan quantity tables and in the Bid Item List are:

TABLE A

| SYMBOL USED | DEFINITIONS |
|---|---|
| ACRE | ACRE |
| CF | CUBIC FOOT |
| CY | CUBIC YARD |
| EA | EACH |
| GAL | GALLON |
| LB | POUND |
| LF | LINEAR FOOT |
| SQFT | SQUARE FOOT |
| SQYD | SQUARE YARD |
| STA | 100 FEET |
| TAB | TABLET |
| TON | 2,000 POUNDS |

Some of the symbols used in the plans other than in the project plan quantity tables are:

TABLE B

| SYMBOL USED | DEFINITIONS |
|---|---|
| ksi | KIPS PER SQUARE INCH |
| ksf | KIPS PER SQUARE FOOT |
| psi | POUNDS PER SQUARE INCH |
| psf | POUNDS PER SQUARE FOOT |
| $lb/ft^3$, pcf | POUNDS PER CUBIC FOOT |
| tsf | TONS PER SQUARE FOOT |
| mph, MPH * | MILES PER HOUR |
| ø | NOMINAL DIAMETER |
| oz | OUNCE |
| lb | POUND |
| kip | 1,000 POUNDS |
| cal | CALORIE |
| ft | FOOT OR FEET |
| gal | GALLON |

* For use on a sign panel only

STATE OF CALIFORNIA
DEPARTMENT OF TRANSPORTATION

# ABBREVIATIONS (SHEET 2 OF 2)

NO SCALE

RSP A10B DATED JULY 19, 2013 SUPERSEDES STANDARD PLAN A10B DATED MAY 20, 2011 - PAGE 2 OF THE STANDARD PLANS BOOK DATED 2010.

**REVISED STANDARD PLAN RSP A10B**

**2010 REVISED STANDARD PLAN RSP A10B**

6-7-13

| Dist | COUNTY | ROUTE | POST MILES TOTAL PROJECT | SHEET No. | TOTAL SHEETS |
|---|---|---|---|---|---|
| 06 | Tul | 65 | R9.3/R14.0 | 22 | 57 |

REGISTERED CIVIL ENGINEER

July 19, 2013
PLANS APPROVAL DATE

REGISTERED PROFESSIONAL ENGINEER Roberta L. McLaughlin No. C40375 Exp. 3-31-15 CIVIL STATE OF CALIFORNIA

*THE STATE OF CALIFORNIA OR ITS OFFICERS OR AGENTS SHALL NOT BE RESPONSIBLE FOR THE ACCURACY OR COMPLETENESS OF SCANNED COPIES OF THIS PLAN SHEET.*

TO ACCOMPANY PLANS DATED 3-21-16

## EXIT RAMP NEUTRAL AREA (GORE) TREATMENT

DETAIL 36

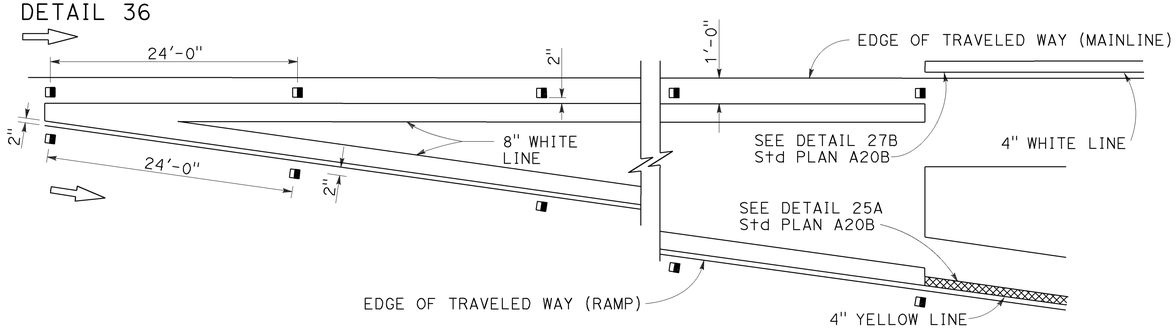


## ENTRANCE RAMP NEUTRAL AREA (MERGE) TREATMENT

DETAIL 36A

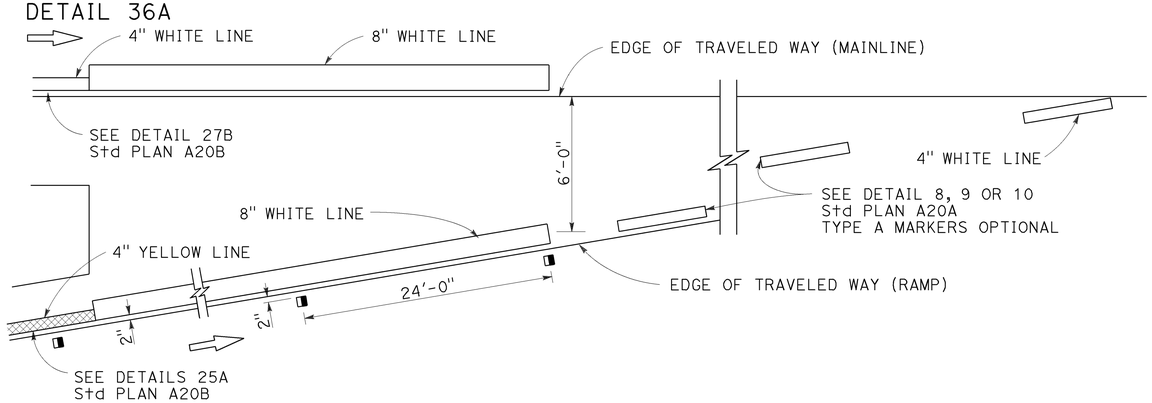


## ENTRANCE RAMP NEUTRAL AREA (ACCELERATION LANE) TREATMENT

DETAIL 36B

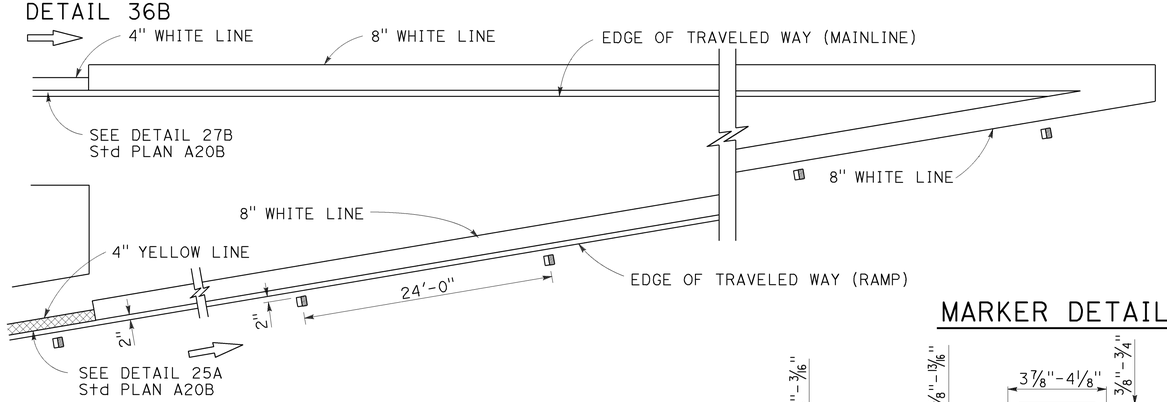


## LANE DROP AT EXIT RAMPS

DETAIL 37

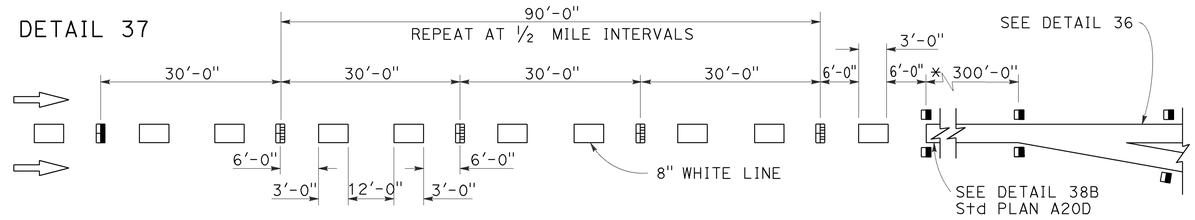


DETAIL 37A

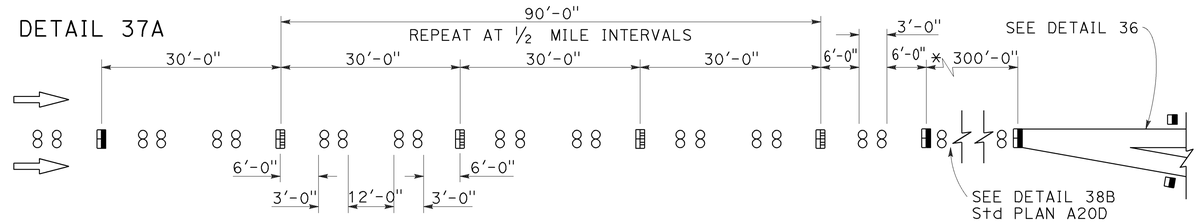


* The solid channelizing line shown may be omitted on short auxiliary lanes where weaving length is critical.

## LANE DROP AT INTERSECTIONS

DETAIL 37B

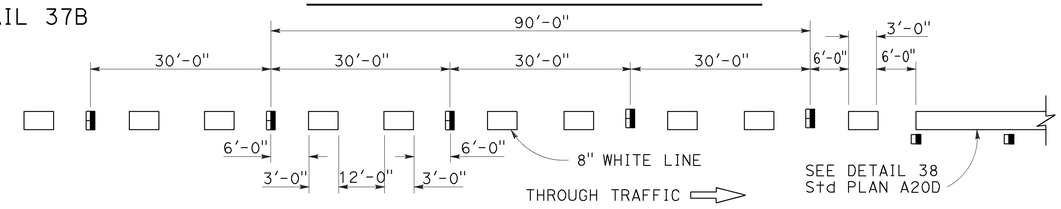


DETAIL 37C

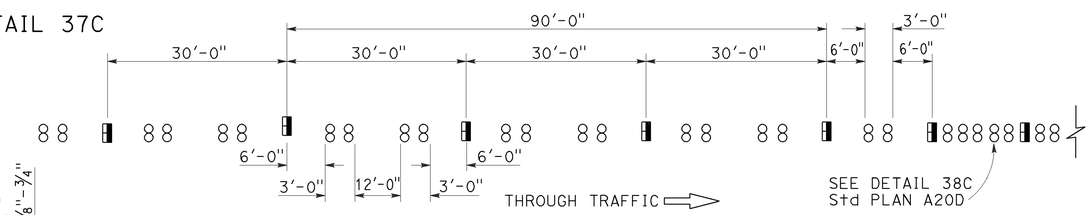


## MARKER DETAILS

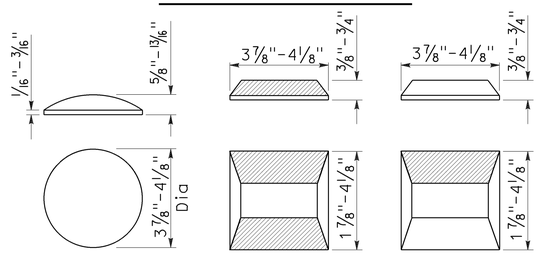


RETROREFLECTIVE FACE

**LEGEND:**

MARKERS

- ○ TYPE A WHITE NON-REFLECTIVE
- TYPE C RED-CLEAR RETROREFLECTIVE
- TYPE G ONE-WAY CLEAR RETROREFLECTIVE

STATE OF CALIFORNIA
DEPARTMENT OF TRANSPORTATION

# PAVEMENT MARKERS AND TRAFFIC LINE TYPICAL DETAILS

NO SCALE

RSP A20C DATED JULY 19, 2013 SUPERSEDES STANDARD PLAN A20C DATED MAY 20, 2011 - PAGE 11 OF THE STANDARD PLANS BOOK DATED 2010.

**REVISED STANDARD PLAN RSP A20C**

**2010 REVISED STANDARD PLAN RSP A20C**

4-29-13

| Dist | COUNTY | ROUTE | POST MILES TOTAL PROJECT | SHEET No. | TOTAL SHEETS |
|---|---|---|---|---|---|
| 06 | Tul | 65 | R9.3/R14.0 | 23 | 57 |

REGISTERED CIVIL ENGINEER

April 20, 2012
PLANS APPROVAL DATE

REGISTERED PROFESSIONAL ENGINEER
Roberta L. McLaughlin
No. C40375
Exp. 3-31-13
CIVIL
STATE OF CALIFORNIA

*THE STATE OF CALIFORNIA OR ITS OFFICERS OR AGENTS SHALL NOT BE RESPONSIBLE FOR THE ACCURACY OR COMPLETENESS OF SCANNED COPIES OF THIS PLAN SHEET.*

TO ACCOMPANY PLANS DATED 3-21-16

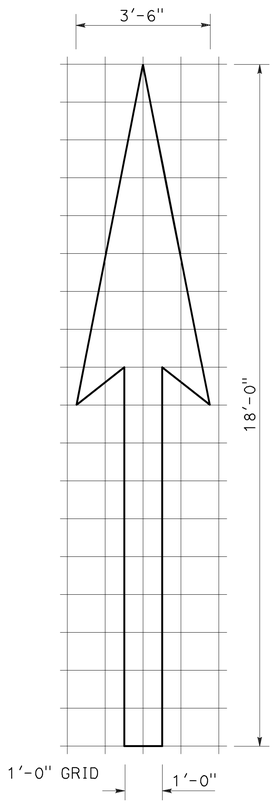


A=25 ft$^2$

TYPE I 18'-0" ARROW

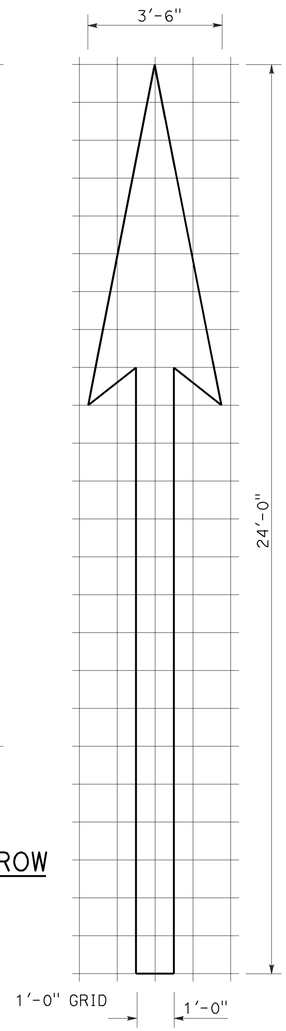


A=31 ft$^2$

TYPE I 24'-0" ARROW

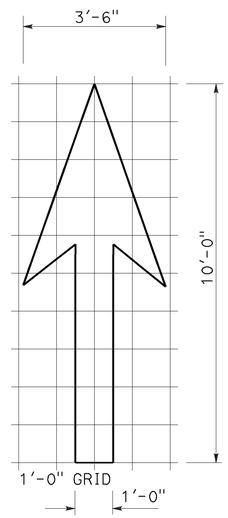


A=14 ft$^2$

TYPE I 10'-0" ARROW

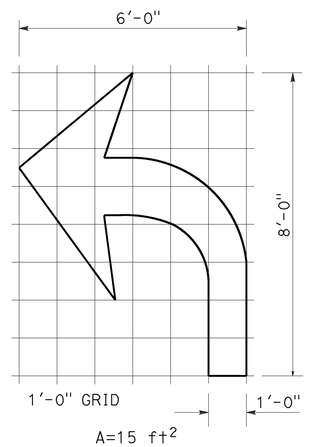


A=15 ft$^2$

TYPE IV (L) ARROW

(For Type IV (R) arrow, use mirror image)

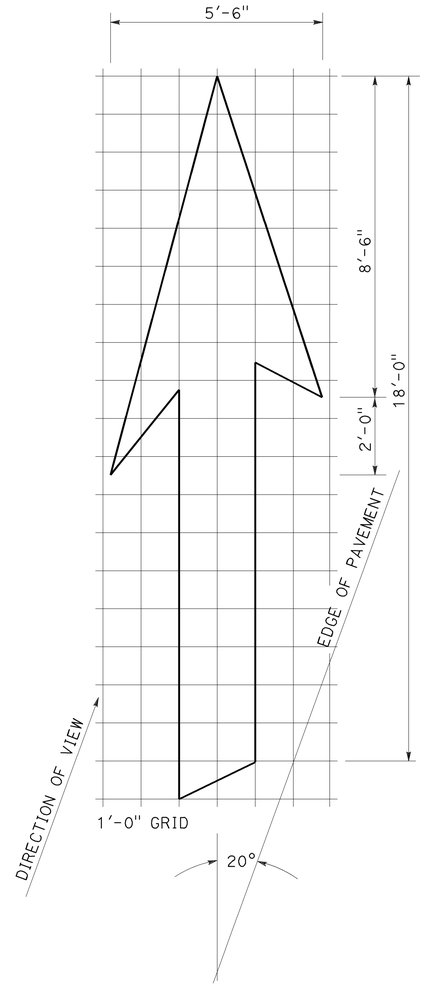


A=42 ft$^2$

TYPE VI ARROW

Right lane drop arrow
(For left lane, use mirror image)

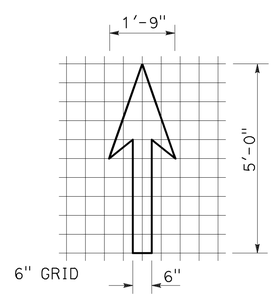


A=3.5 ft$^2$

BIKE LANE ARROW

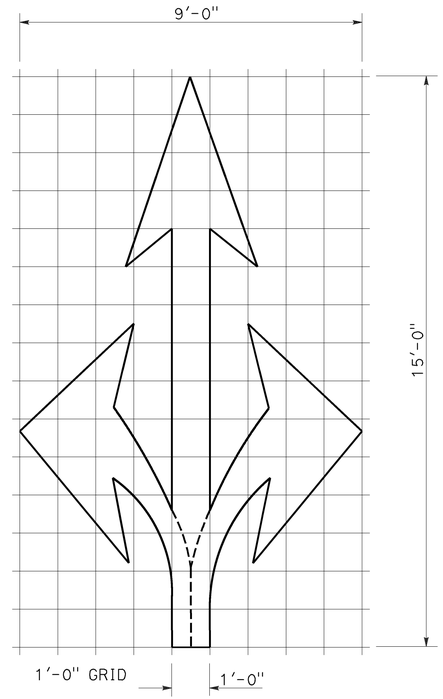


A=36 ft$^2$

TYPE VIII ARROW

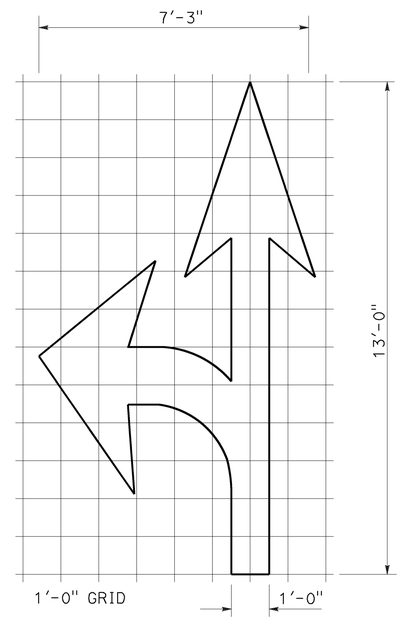


A=27 ft$^2$

TYPE VII (L) ARROW

(For Type VII (R) arrow, use mirror image)

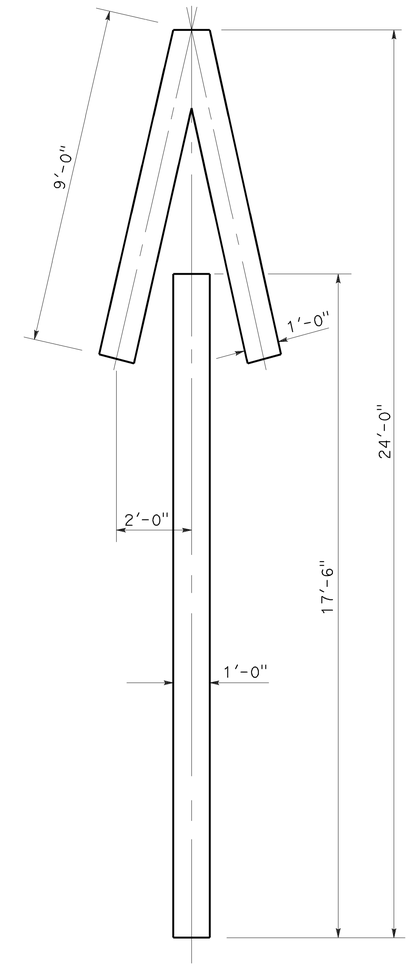


A=33 ft$^2$

TYPE V ARROW

NOTE:
Minor variations in dimensions may be accepted by the Engineer.

STATE OF CALIFORNIA
DEPARTMENT OF TRANSPORTATION

**PAVEMENT MARKINGS ARROWS**

NO SCALE

RSP A24A DATED APRIL 20, 2012 SUPERSEDES STANDARD PLAN A24A DATED MAY 20, 2011 - PAGE 13 OF THE STANDARD PLANS BOOK DATED 2010.

**REVISED STANDARD PLAN RSP A24A**

**2010 REVISED STANDARD PLAN RSP A24A**

3-14-12

| Dist | COUNTY | ROUTE | POST MILES TOTAL PROJECT | SHEET No. | TOTAL SHEETS |
|---|---|---|---|---|---|
| 06 | Tul | 65 | R9.3/R14.0 | 24 | 57 |

REGISTERED CIVIL ENGINEER

October 19, 2012
PLANS APPROVAL DATE

REGISTERED PROFESSIONAL ENGINEER
Roberta L. McLaughlin
No. C40375
Exp. 3-31-13
CIVIL
STATE OF CALIFORNIA

*THE STATE OF CALIFORNIA OR ITS OFFICERS OR AGENTS SHALL NOT BE RESPONSIBLE FOR THE ACCURACY OR COMPLETENESS OF SCANNED COPIES OF THIS PLAN SHEET.*

**NOTE:** TO ACCOMPANY PLANS DATED 3-21-16

Minor variations in dimensions may be accepted by the Engineer.

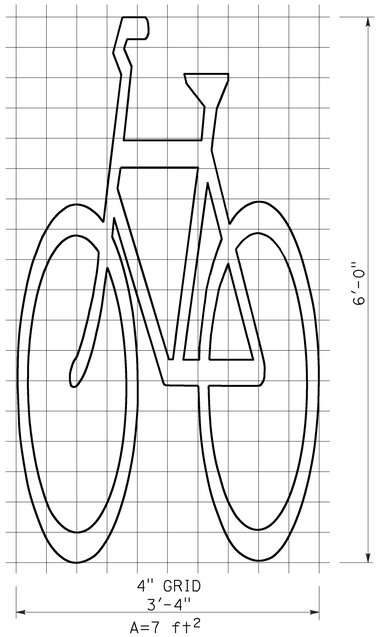


BIKE LANE SYMBOL WITHOUT PERSON

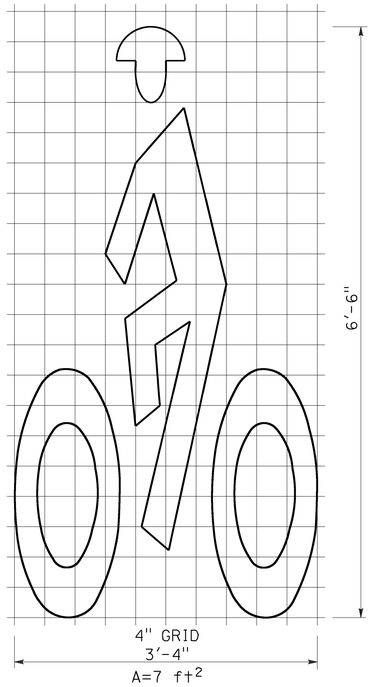


BIKE LANE SYMBOL WITH PERSON

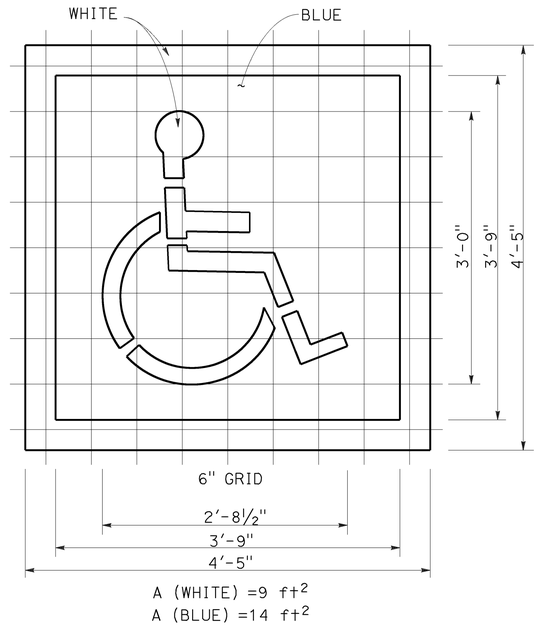


INTERNATIONAL SYMBOL OF ACCESSIBILITY (ISA) MARKING

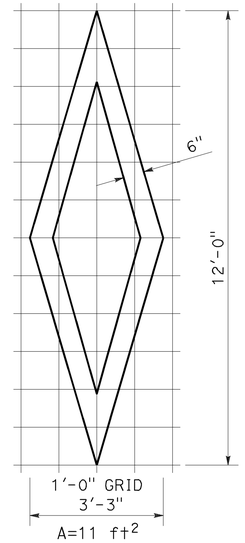


DIAMOND SYMBOL

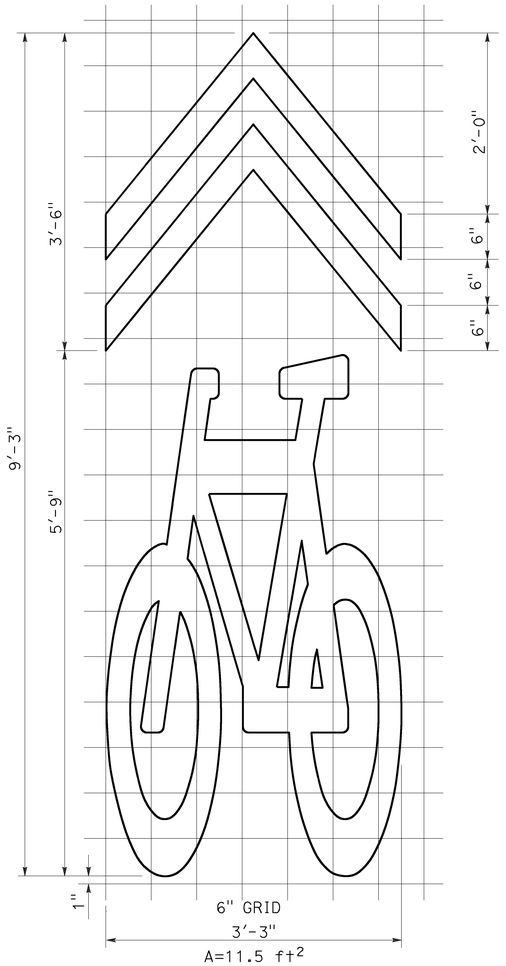


SHARED ROADWAY BICYCLE MARKING

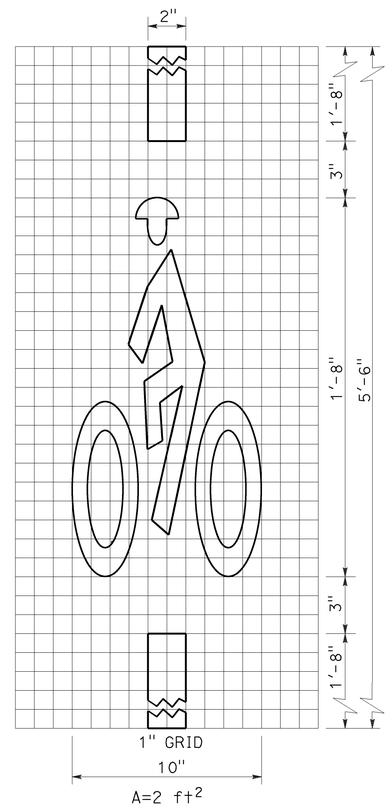


BICYCLE LOOP DETECTOR SYMBOL

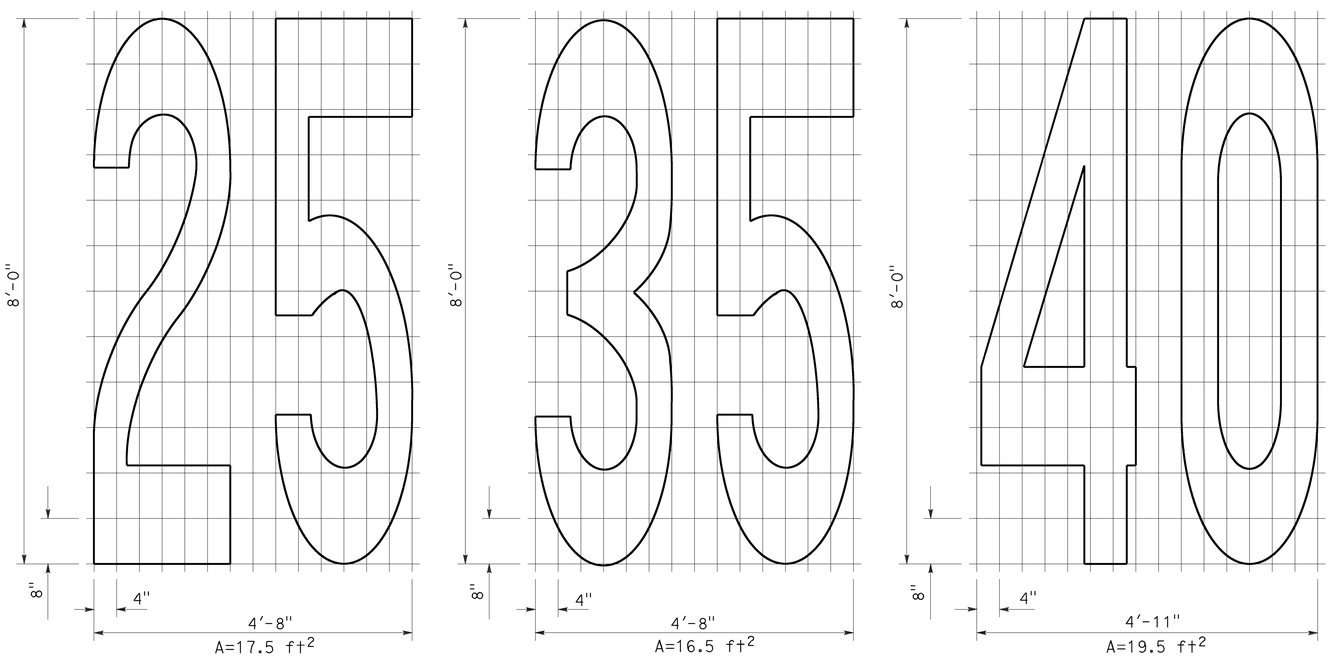


NUMERALS

STATE OF CALIFORNIA
DEPARTMENT OF TRANSPORTATION

# PAVEMENT MARKINGS SYMBOLS AND NUMERALS

NO SCALE

RSP A24C DATED OCTOBER 19, 2012 SUPERSEDES STANDARD PLAN A24C DATED MAY 20, 2011 - PAGE 15 OF THE STANDARD PLANS BOOK DATED 2010.

**REVISED STANDARD PLAN RSP A24C**

**2010 REVISED STANDARD PLAN RSP A24C**

6-28-12

| Dist | COUNTY | ROUTE | POST MILES TOTAL PROJECT | SHEET No. | TOTAL SHEETS |
|---|---|---|---|---|---|
| 06 | Tul | 65 | R9.3/R14.0 | 25 | 57 |

REGISTERED CIVIL ENGINEER

July 20, 2012
PLANS APPROVAL DATE

REGISTERED PROFESSIONAL ENGINEER
Roberta L. McLaughlin
No. C40375
Exp. 3-31-13
CIVIL
STATE OF CALIFORNIA

*THE STATE OF CALIFORNIA OR ITS OFFICERS OR AGENTS SHALL NOT BE RESPONSIBLE FOR THE ACCURACY OR COMPLETENESS OF SCANNED COPIES OF THIS PLAN SHEET.*

TO ACCOMPANY PLANS DATED 3-21-16

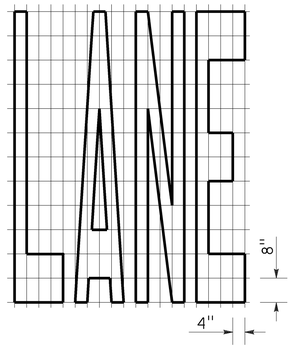


A=24 ft²

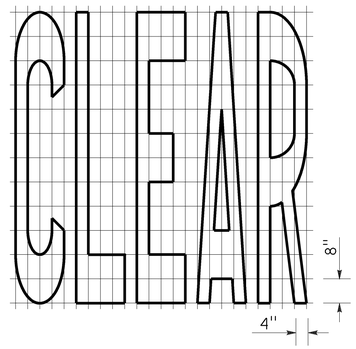


A=27 ft²

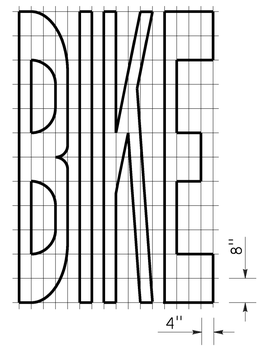


A=21 ft²

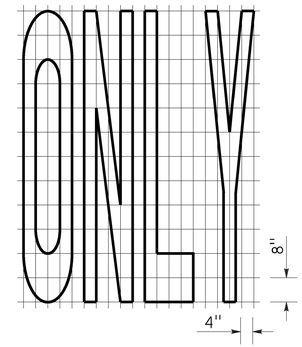


A=22 ft²

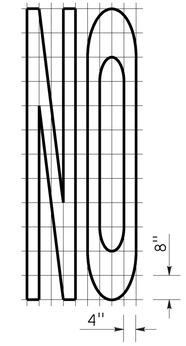


A=14 ft²

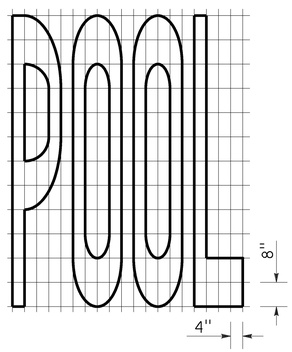


A=23 ft²

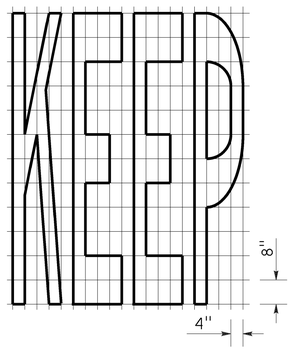


A=24 ft²

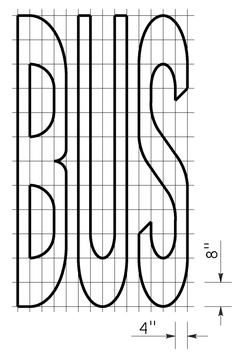


A=20 ft²

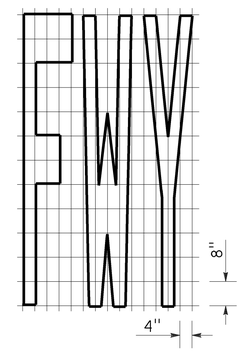


A=16 ft²

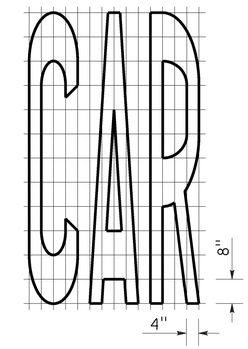


A=17 ft²

| WORD MARKINGS | | | |
|---|---|---|---|
| ITEM | ft² | ITEM | ft² |
| LANE | 24 | NO | 14 |
| POOL | 23 | BIKE | 21 |
| CAR | 17 | BUS | 20 |
| CLEAR | 27 | ONLY | 22 |
| KEEP | 24 | FWY | 16 |

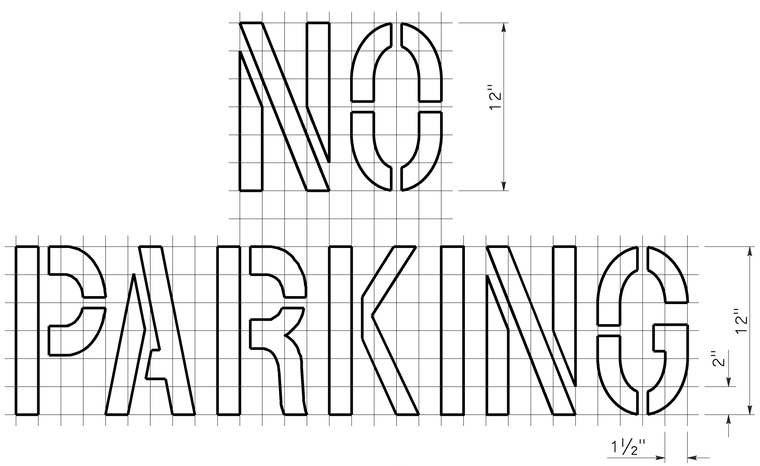


A=2 ft²
See Notes 6 and 7

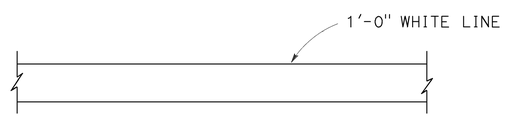


LIMIT LINE (STOP LINE)

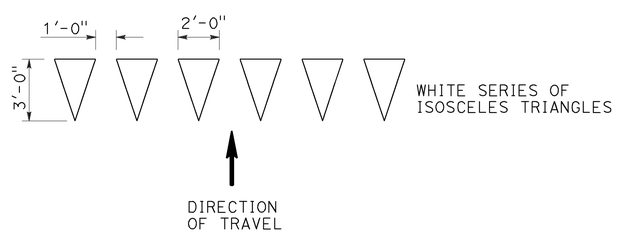


YIELD LINE

NOTES:

1. If a message consists of more than one word, it should read "UP", i.e., the first word should be nearest the driver.
2. The space between words should be at least four times the height of the characters for low speed roads, but not more than ten times the height of the characters. The space may be reduced appropriately where there is limited space because of local conditions.
3. Minor variations in dimensions may be accepted by the Engineer.
4. Portions of a letter, number or symbol may be separated by connecting segments not to exceed 2" in width.
5. The words "NO PARKING" pavement marking is to be used for parking facilities. For typical locations of markings, see Standard Plans A90A and A90B.
6. The words "NO PARKING", shall be painted in white letters no less than 1'-0" high on a contrasting background and located so that it is visible to traffic enforcement officials.

STATE OF CALIFORNIA
DEPARTMENT OF TRANSPORTATION

# PAVEMENT MARKINGS WORDS, LIMIT AND YIELD LINES

NO SCALE

RSP A24E DATED JULY 20, 2012 SUPERSEDES STANDARD PLAN A24E
DATED MAY 20, 2011 - PAGE 17 OF THE STANDARD PLANS BOOK DATED 2010.

**REVISED STANDARD PLAN RSP A24E**

**2010 REVISED STANDARD PLAN RSP A24E**

6-12-12

| Dist | COUNTY | ROUTE | POST MILES TOTAL PROJECT | SHEET No. | TOTAL SHEETS |
|---|---|---|---|---|---|
| 06 | Tul | 65 | R9.3/R14.0 | 26 | 57 |

REGISTERED CIVIL ENGINEER

July 20, 2012
PLANS APPROVAL DATE

REGISTERED PROFESSIONAL ENGINEER
Roberta L. McLaughlin
No. C40375
Exp. 3-31-13
CIVIL
STATE OF CALIFORNIA

*THE STATE OF CALIFORNIA OR ITS OFFICERS OR AGENTS SHALL NOT BE RESPONSIBLE FOR THE ACCURACY OR COMPLETENESS OF SCANNED COPIES OF THIS PLAN SHEET.*

TO ACCOMPANY PLANS DATED 3-21-16

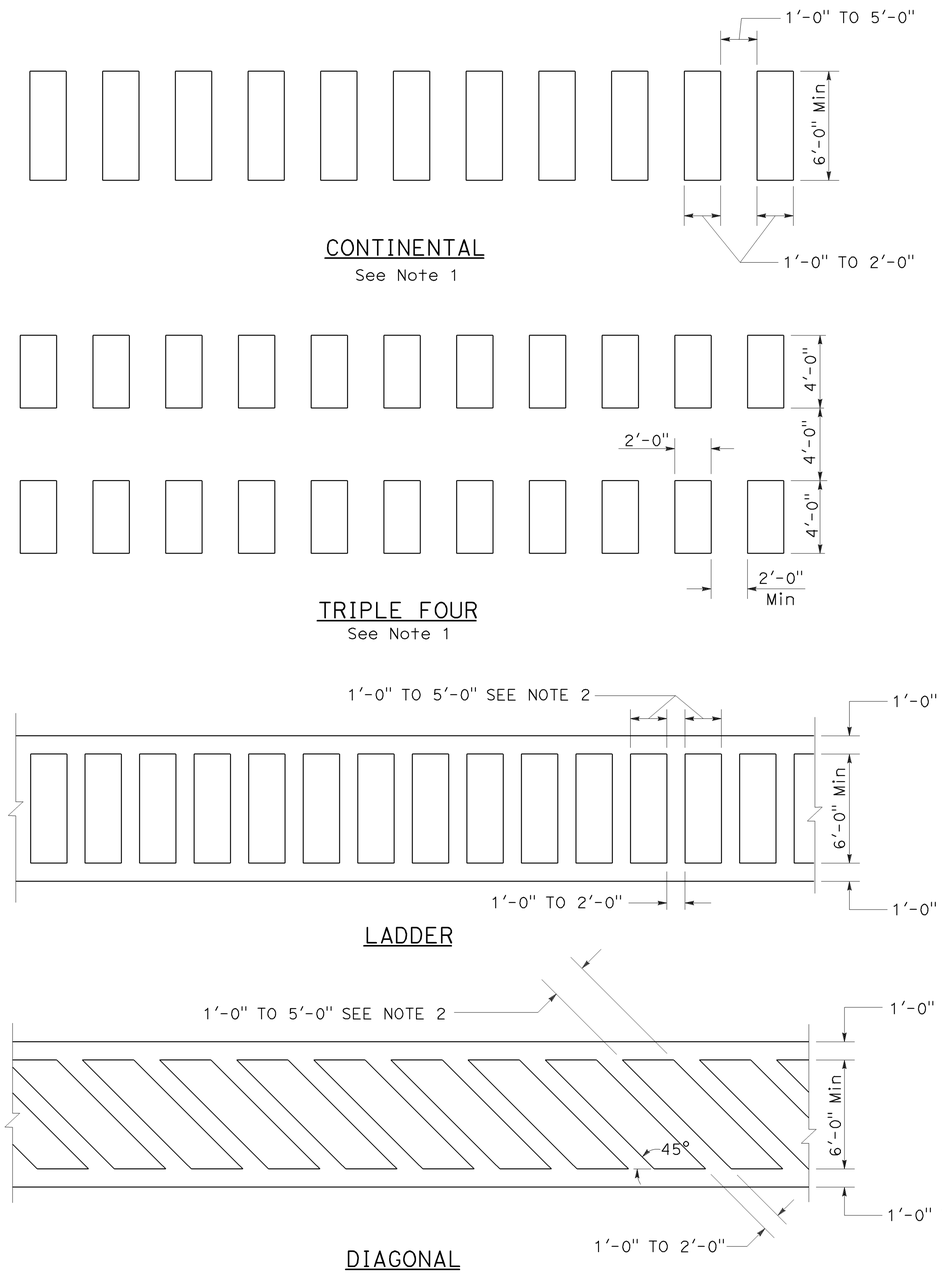


HIGHER VISIBILITY CROSSWALKS

NOTES:

1. Spaces between markings should be placed in wheel tracks of each lane.
2. Spacings not to exceed 2.5 times width of longitudinal line.
3. All crosswalk markings must be white except for those near schools must be yellow.

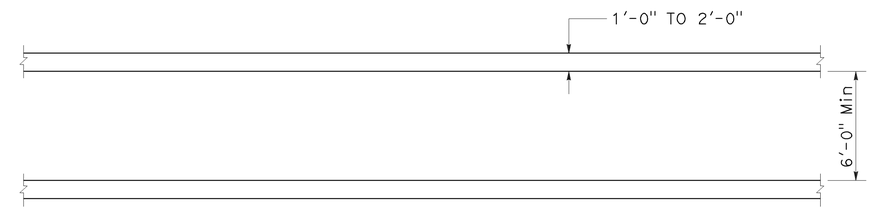


BASIC

STATE OF CALIFORNIA
DEPARTMENT OF TRANSPORTATION

# PAVEMENT MARKINGS CROSSWALKS

NO SCALE

RSP A24F DATED JULY 20, 2012 SUPPLEMENTS THE STANDARD PLANS BOOK DATED 2010.

**REVISED STANDARD PLAN RSP A24F**

**2010 REVISED STANDARD PLAN RSP A24F**

6-28-12

| Dist | COUNTY | ROUTE | POST MILES TOTAL PROJECT | SHEET No. | TOTAL SHEETS |
|---|---|---|---|---|---|
| 06 | Tul | 65 | R9.3/R14.0 | 27 | 57 |

REGISTERED CIVIL ENGINEER

July 19, 2013
PLANS APPROVAL DATE

REGISTERED PROFESSIONAL ENGINEER
Michael Janzen
No. 44788
Exp. 03-31-14
CIVIL
STATE OF CALIFORNIA

*THE STATE OF CALIFORNIA OR ITS OFFICERS OR AGENTS SHALL NOT BE RESPONSIBLE FOR THE ACCURACY OR COMPLETENESS OF SCANNED COPIES OF THIS PLAN SHEET.*

TO ACCOMPANY PLANS DATED 3-21-16

**2010 REVISED STANDARD PLAN RSP A87A**

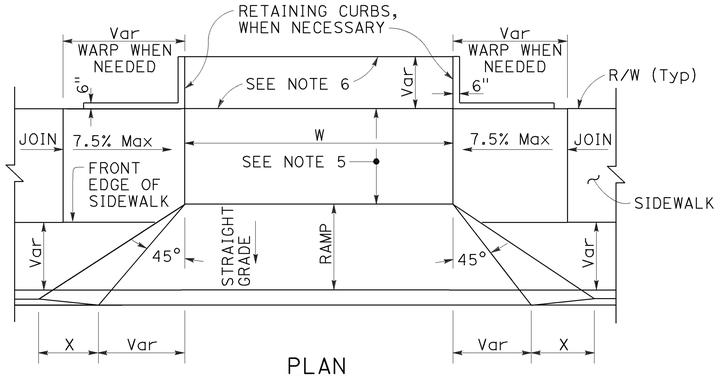


PLAN

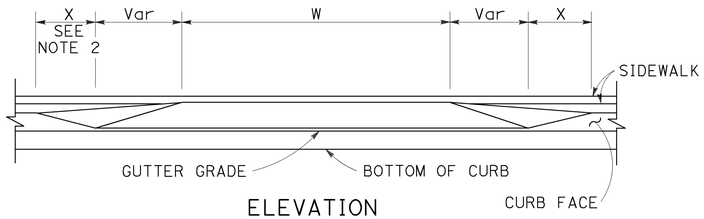


ELEVATION

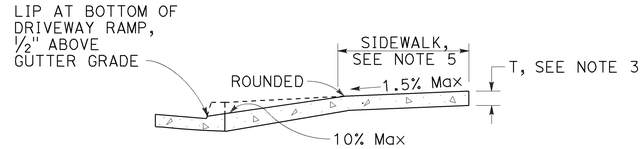


CASE A

Typical driveway, sidewalk not depressed

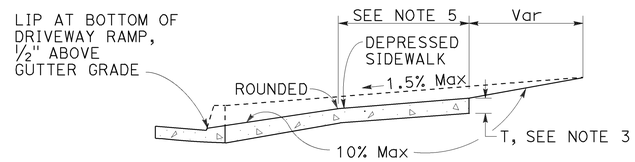


CASE B

Driveway with depressed sidewalk

SECTIONS

## DRIVEWAYS

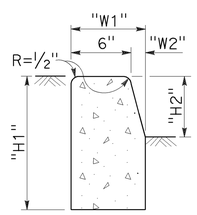


TYPE A1 CURBS

See Table A

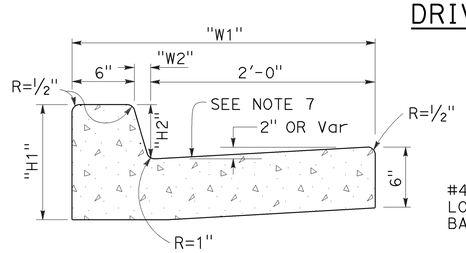


TYPE A2 CURBS

See Table A

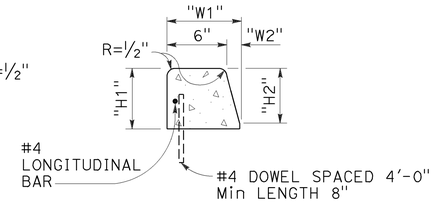


TYPE A3 CURBS

Superimposed on existing pavement
See Table A

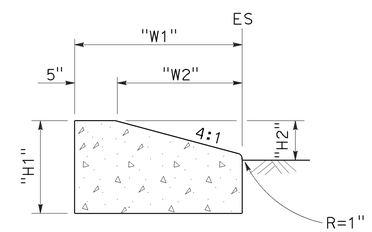


TYPE D CURBS

See Table A

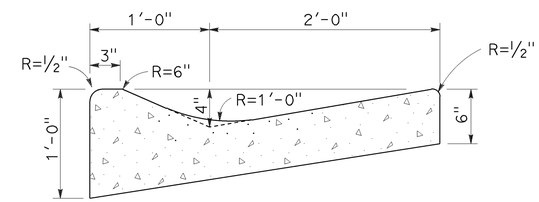


TYPE E CURB

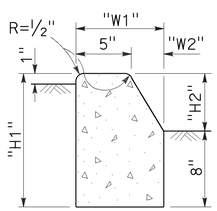


TYPE B1 CURBS

See Table A

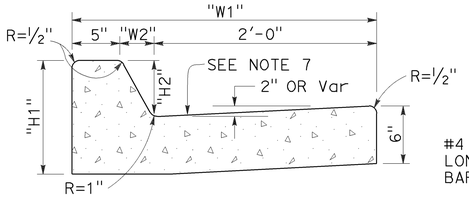


TYPE B2 CURBS

See Table A

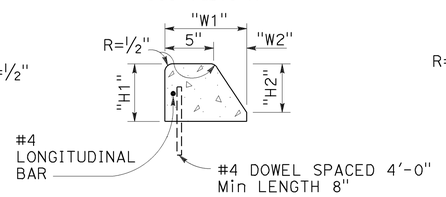


TYPE B3 CURBS

Superimposed on existing pavement
See Table A

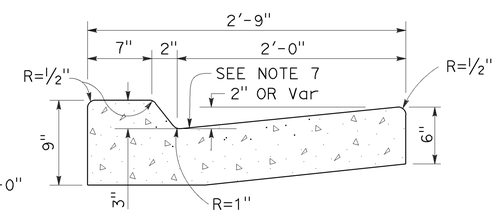


TYPE B4 CURBS

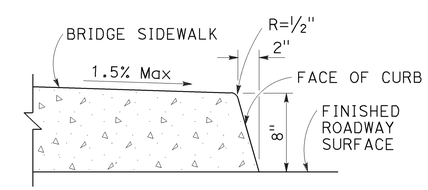


TYPE H CURB

On Bridges

## CURBS

### TABLE A

| CURB TYPE | DIMENSIONS | | | |
|---|---|---|---|---|
| | "H1" | "H2" | "W1" | "W2" |
| A1-6 | 1'-2" | 6" | 7½" | 1½" |
| A1-8 | 1'-4" | 8" | 8" | 2" |
| A2-6 | 1'-0" | 6" | 2'-7½" | 1½" |
| A2-8 | 1'-2" | 8" | 2'-8" | 2" |
| A3-6 | 6" | 5" | 7¼" | 1¼" |
| A3-8 | 8" | 7" | 7¾" | 1¾" |
| B1-4 | 1'-0" | 4" | 7½" | 2½" |
| B1-6 | 1'-2" | 6" | 9" | 4" |
| B2-4 | 10" | 4" | 2'-7½" | 2½" |
| B2-6 | 1'-0" | 6" | 2'-9" | 4" |
| B3-4 | 4" | 3" | 7" | 2" |
| B3-6 | 6" | 5" | 8½" | 3½" |
| D-4 | 10" | 4" | 1'-6" | 1'-1" |
| D-6 | 1'-0" | 6" | 2'-2" | 1'-9" |

### CURB QUANTITIES

| TYPE | CUBIC YARDS PER LINEAR FOOT |
|---|---|
| A1-6 | 0.02585 |
| A1-8 | 0.03084 |
| A2-6 | 0.05903 |
| A2-8 | 0.06379 |
| A3-6 | 0.01036 |
| A3-8 | 0.01435 |
| B1-4 | 0.02185 |
| B1-6 | 0.02930 |
| B2-4 | 0.05515 |
| B2-6 | 0.06171 |
| B3-4 | 0.00641 |
| B3-6 | 0.01074 |
| B4 | 0.05709 |
| D-4 | 0.04083 |
| D-6 | 0.06804 |
| E | 0.06661 |

### NOTES:

1. Case A driveway section typically applies.
2. X=3'-0" except for curb heights over 10" where 4:1 slopes shall be used on curb slope.
3. Sidewalk and ramp thickness "T" at driveway shall be 4" for residental and 6" for commercial.
4. Difference in slope of the driveway ramp and the slope of a line between the gutter and a point on the roadway 5'-0" from gutter line shall not exceed 15%. Reduce driveway ramp slope, not gutter slope, where required.
5. Minimum width of clear passageway for sidewalk shall be 4'-2".
6. Retaining curbs and acquisition of construction easement may be necessary for narrow sidewalks or curb heights in excess of 6".
7. Across the pedestrian route at curb ramp locations, the gutter pan slope shall not exceed 1" of depth for each 2'-0" of width.

STATE OF CALIFORNIA
DEPARTMENT OF TRANSPORTATION

# CURBS AND DRIVEWAYS

NO SCALE

RSP A87A DATED JULY 19, 2013 SUPERSEDES STANDARD PLAN A87A
DATED MAY 20, 2011 - PAGE 119 OF THE STANDARD PLANS BOOK DATED 2010.

**REVISED STANDARD PLAN RSP A87A**

7-8-13

| Dist | COUNTY | ROUTE | POST MILES TOTAL PROJECT | SHEET No. | TOTAL SHEETS |
|---|---|---|---|---|---|
| 06 | Tul | 65 | R9.3/R14.0 | 28 | 57 |

REGISTERED CIVIL ENGINEER

January 15, 2016
PLANS APPROVAL DATE

REGISTERED PROFESSIONAL ENGINEER
Michael Janzen
No. 44788
Exp. 3-31-16
CIVIL
STATE OF CALIFORNIA

*THE STATE OF CALIFORNIA OR ITS OFFICERS OR AGENTS SHALL NOT BE RESPONSIBLE FOR THE ACCURACY OR COMPLETENESS OF SCANNED COPIES OF THIS PLAN SHEET.*

TO ACCOMPANY PLANS DATED 3-21-16

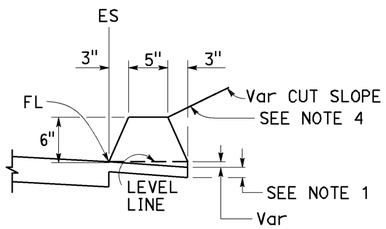


**TYPE A**
See Notes 3 and 5

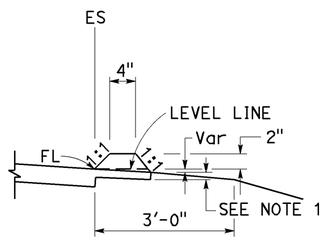


**TYPE C**

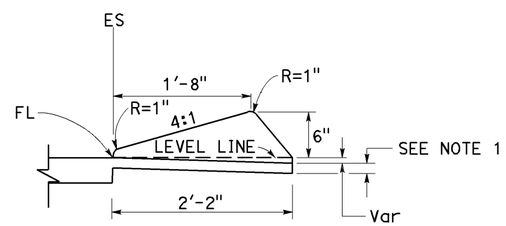


**TYPE D**

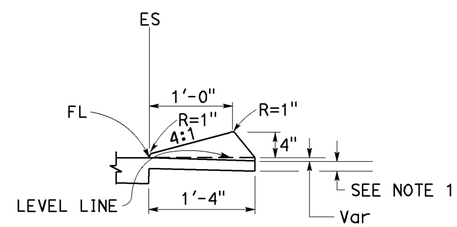


**TYPE E**

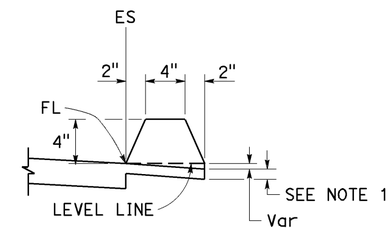


**TYPE F**
See Note 5

## DIKES

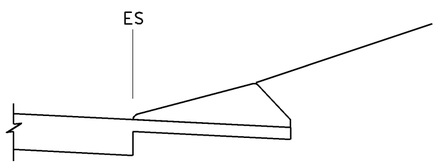


**CASE C-1**
Cut Slope

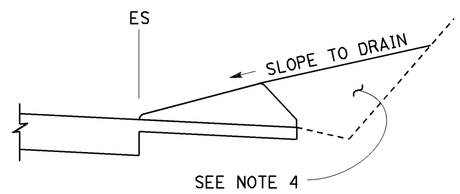


**CASE C-2**
Cut Slope

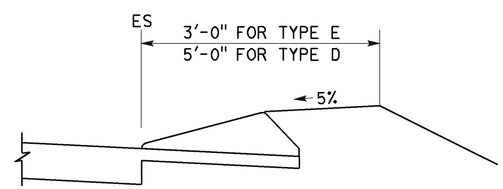


**CASE F**

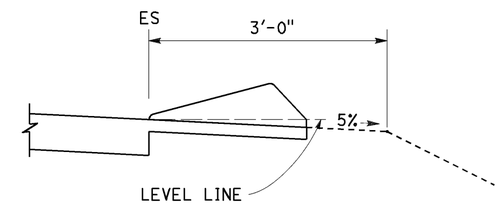


**CASE R**
See Note 2

## TYPE D AND E BACKFILL DETAILS

### NOTES:

1. For HMA shoulders only, extend top layer of HMA placed on the shoulder under dike with no joint at the ES. For projects with OGFC shoulders, do not extend OGFC under dike. See project plans for modified dike detail.
2. Case R applies to retrofit only projects where restrictive conditions do not provide enough width for Case F backfill.
3. Type A dike only to be used where restrictive slope conditions do not provide enough width to use Type D or Type E dike.
4. Fill and compact with excavated material to top of dike.
5. Use Type A or F dike, where dike is required with guardrail installations. See Revised Standard Plan RSP A77N4 for dike positioning details. See Revised Standard Plan RSP A77N3 for hinge point offsets with guardrail.

### DIKE QUANTITIES

| TYPE | CUBIC YARDS PER LINEAR FOOT |
|---|---|
| A | 0.0135 |
| C | 0.0038 |
| D | 0.0293 |
| E | 0.0130 |
| F | 0.0066 |

Quantities based on 5% cross slope.

STATE OF CALIFORNIA
DEPARTMENT OF TRANSPORTATION

# HOT MIX ASPHALT DIKES

NO SCALE

RSP A87B DATED JANUARY 15, 2016 SUPERSEDES RSP A87B DATED JULY 19, 2013 AND STANDARD PLAN A87B DATED MAY 20, 2011 - PAGE 120 OF THE STANDARD PLANS BOOK DATED 2010.

**REVISED STANDARD PLAN RSP A87B**

**2010 REVISED STANDARD PLAN RSP A87B**

11-17-15

| Dist | COUNTY | ROUTE | POST MILES TOTAL PROJECT | SHEET No. | TOTAL SHEETS |
|---|---|---|---|---|---|
| 06 | Tul | 65 | R9.3/R14.0 | 29 | 57 |

REGISTERED CIVIL ENGINEER

July 3, 2015
PLANS APPROVAL DATE

Hector David Cordova No. C41957 Exp. 3-31-16 CIVIL — REGISTERED PROFESSIONAL ENGINEER — STATE OF CALIFORNIA

*THE STATE OF CALIFORNIA OR ITS OFFICERS OR AGENTS SHALL NOT BE RESPONSIBLE FOR THE ACCURACY OR COMPLETENESS OF SCANNED COPIES OF THIS PLAN SHEET.*

TO ACCOMPANY PLANS DATED 3-21-16

**2010 REVISED STANDARD PLAN RSP A88A**

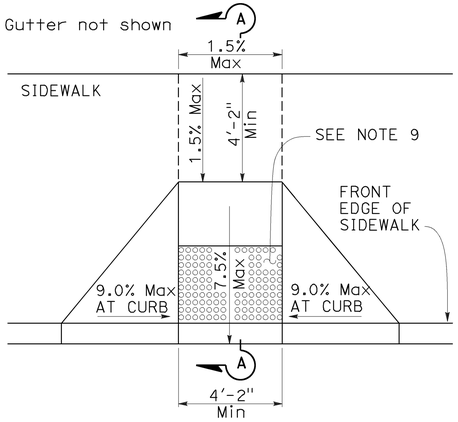


CASE A

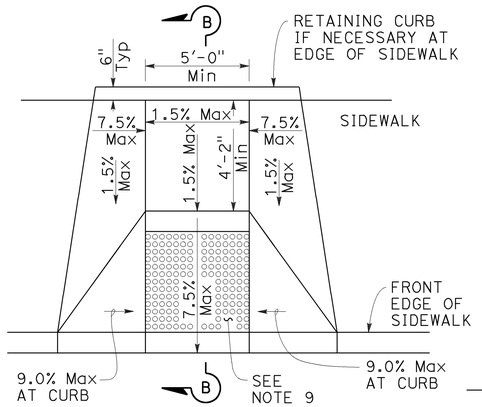


CASE B

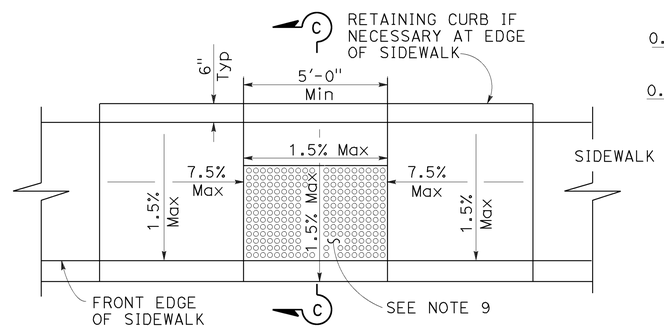


CASE C

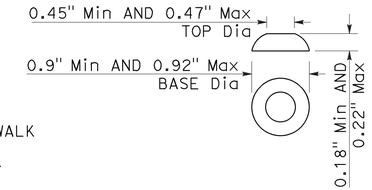


RAISED TRUNCATED DOME

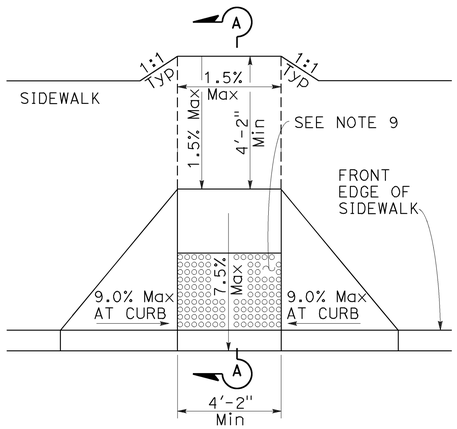


CASE D

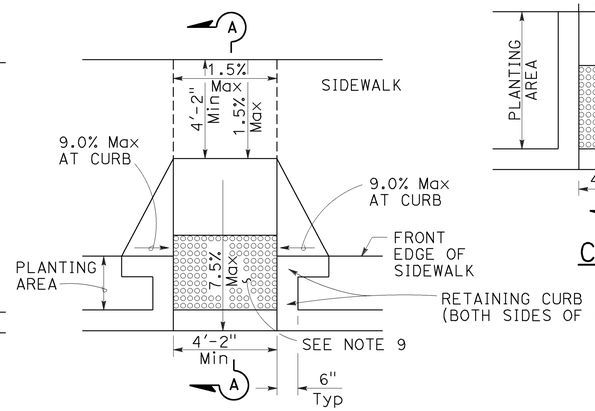


CASE E

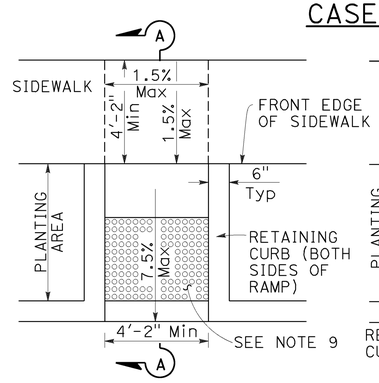


CASE F

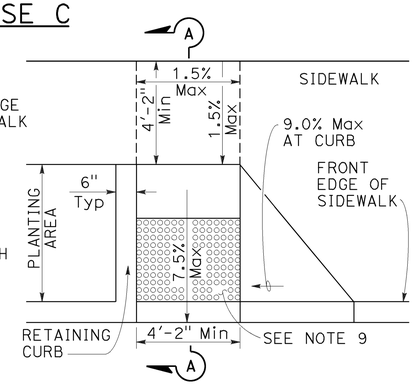


CASE G
See Note 4

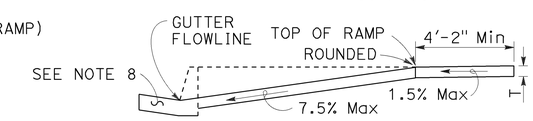


SECTION A-A

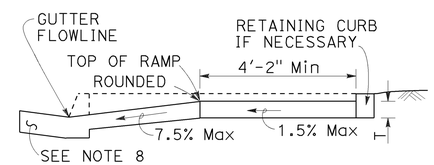


SECTION B-B
Depress entire sidewalk as required

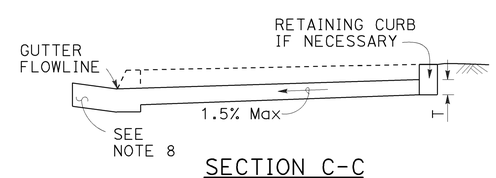


SECTION C-C

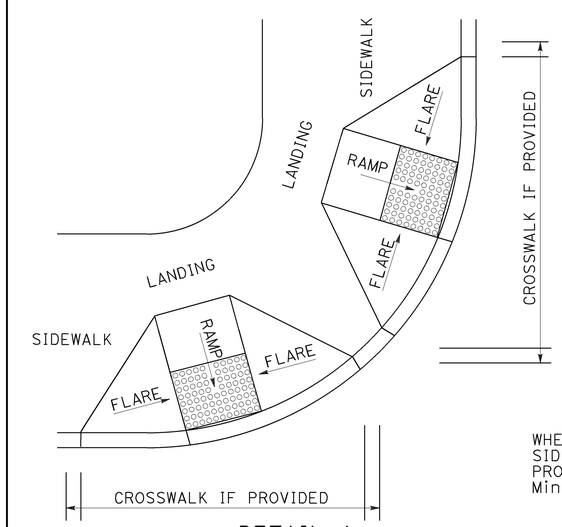


DETAIL A

TYPICAL TWO-RAMP CORNER INSTALLATION

See Note 1

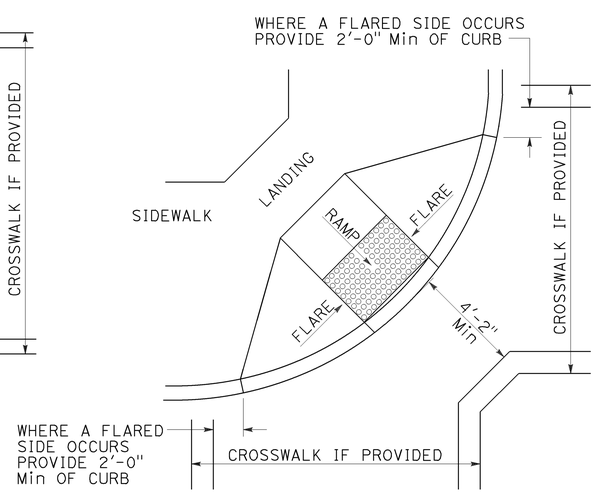


DETAIL B

TYPICAL ONE-RAMP CORNER INSTALLATION

See Notes 1 and 3

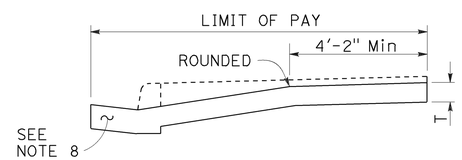


RETROFIT PAY LIMITS

Existing curb and sidewalk

## NOTES:

1. As site conditions dictate, Case A through Case G curb ramps may be used for corner installations similar to those shown in Detail A and Detail B. The case of curb ramps used in Detail A do not have to be the same. Case A through Case G curb ramps also may be used at mid block locations, as site conditions dictate.
2. If distance from curb to back of sidewalk is too short to accommodate ramp and 4'-2" platform (landing) as shown in Case A, the sidewalk may be depressed longitudinally as in Case B, or C or may be widened as in Case D.
3. When ramp is located in center of curb return, crosswalk configuration must be similar to that shown for Detail B.
4. As site conditions dictate, the retaining curb side and the flared side of the Case G ramp shall be constructed in reversed position.
5. If located on a curve, the sides of the ramp need not be parallel, but the minimum width of the ramp shall be 4'-2".
6. Side slope of ramp flares vary uniformly from a maximum of 9.0% at curb to conform with longitudinal sidewalk slope adjacent to top of the ramp, except in Case C and Case F.
7. Transitions from ramps and landing to walks, gutters or streets shall be flush (no lip) and free of abrupt changes.
8. Counter slopes of adjoining gutters and road surfaces immediately adjacent to and within 24 inches of the curb ramp shall not be steeper than 1:20 (5.0%). Gutter pan slope shall not exceed 1" of depth for each 2'-0" of width.
9. Curb ramps shall have a detectable warning surface that extends the full width and 3'-0" depth of the ramp. A 4'-0" wide detectable warning surface may be used on a 4'-2" wide curb ramp. Detectable Warning Surfaces shall conform to the requirements in the Standard Specifications.
10. Sidewalk and ramp thickness, "T", shall be 3½" minimum.
11. Utility pull boxes, manholes, vaults and all other utility facilities within the boundaries of the curb ramp will be relocated or adjusted to grade by the owner prior to, or in conjunction with, curb ramp construction.
12. Detectable warning surface may have to be cut to allow removal of utility covers while maintaining full detectable warning width and depth.

RAISED TRUNCATED DOME PATTERN (IN-LINE)

DETECTABLE WARNING SURFACE

See Note 9

STATE OF CALIFORNIA
DEPARTMENT OF TRANSPORTATION

# CURB RAMP DETAILS

NO SCALE

RSP A88A DATED JULY 3, 2015 SUPERSEDES RSP A88A DATED MARCH 21, 2014 AND RSP A88A DATED JULY 19, 2013 AND STANDARD PLAN A88A DATED MAY 20, 2011 - PAGE 121 OF THE STANDARD PLANS BOOK DATED 2010.

**REVISED STANDARD PLAN RSP A88A**

6-30-15

| Dist | COUNTY | ROUTE | POST MILES TOTAL PROJECT | SHEET No. | TOTAL SHEETS |
|---|---|---|---|---|---|
| 06 | Tul | 65 | R9.3/R14.0 | 30 | 57 |

REGISTERED CIVIL ENGINEER

July 3, 2015
PLANS APPROVAL DATE

REGISTERED PROFESSIONAL ENGINEER
Hector David Cordova
No. C41957
Exp. 3-31-16
CIVIL
STATE OF CALIFORNIA

*THE STATE OF CALIFORNIA OR ITS OFFICERS OR AGENTS SHALL NOT BE RESPONSIBLE FOR THE ACCURACY OR COMPLETENESS OF SCANNED COPIES OF THIS PLAN SHEET.*

TO ACCOMPANY PLANS DATED 3-21-16

Gutter not shown

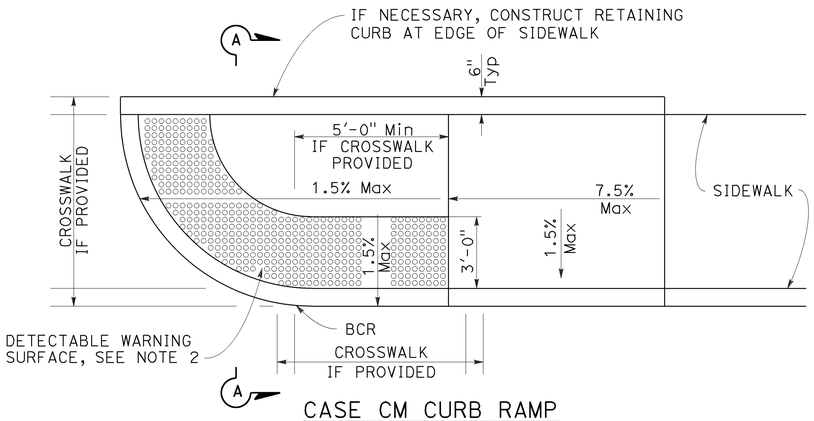


CASE CM CURB RAMP

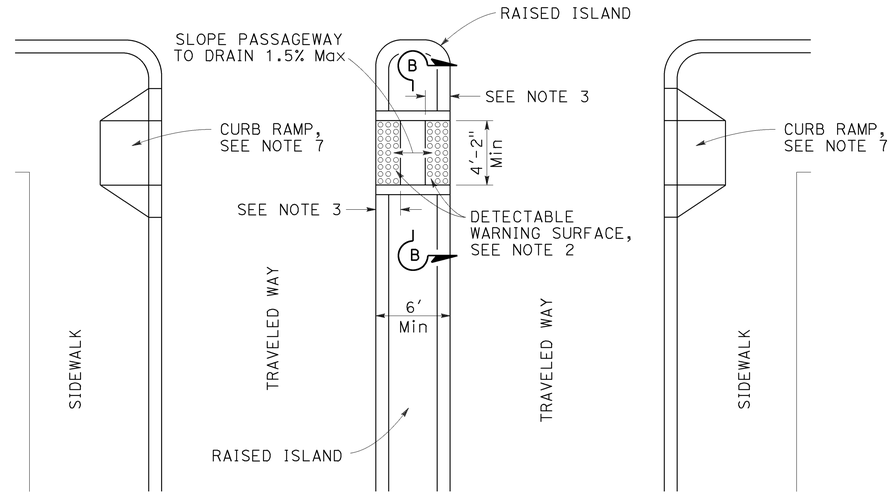


TYPE A PASSAGEWAY

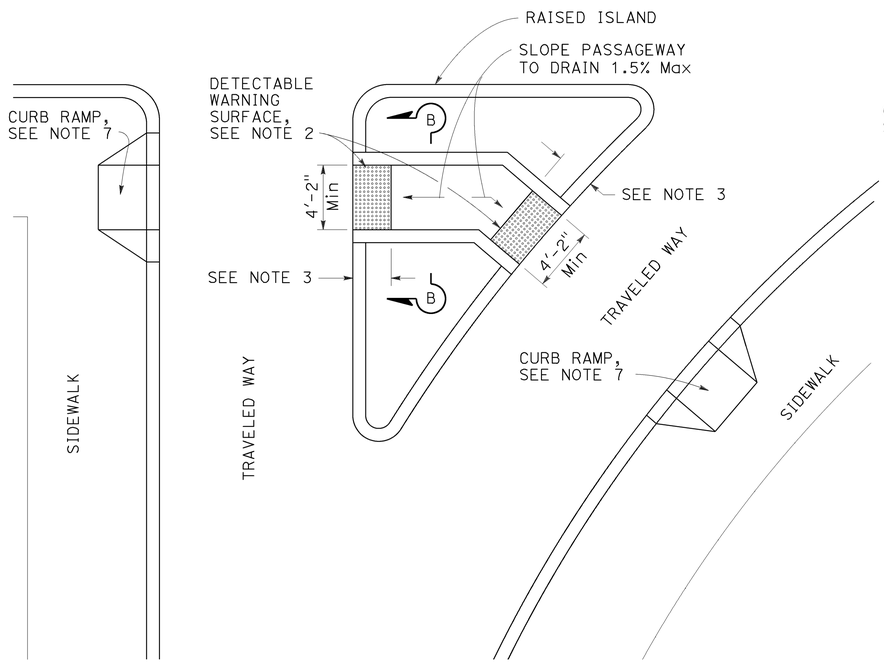


TYPE B PASSAGEWAY

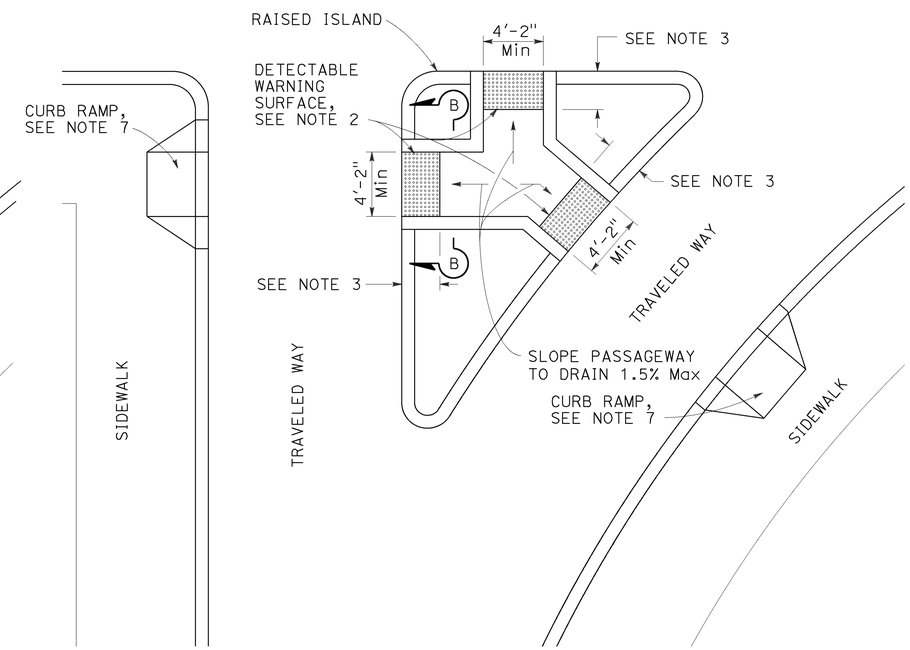


TYPE C PASSAGEWAY

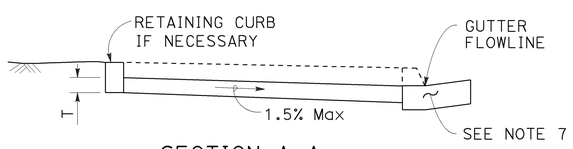


SECTION A-A

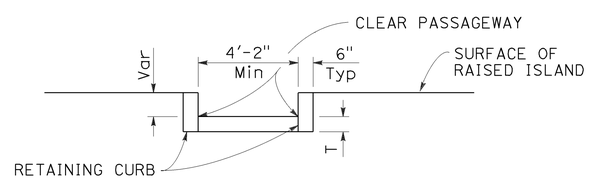


SECTION B-B

## NOTES:

1. Sidewalk, ramp and passageway thickness, "T", shall be 3½" minimum.
2. For details of detectable warning surfaces, see Revised Standard Plan RSP A88A.
3. Where an island passageway length is greater than or equal to 6'-0", but less than 8'-0", each detectable warning surface shall extend the full width and 2'-0" depth of the passageway length. Where an island passageway length is greater than or equal to 8'-0", each detectable warning surface shall extend the full width and 3'-0" depth of the passageway length. A 4'-0" wide detectable warning surface may be used on a 4'-2" wide island passageway.
4. Transitions from ramps to walks, gutters or streets shall be flush (no lip) and free of abrupt changes.
5. Utility pull boxes, manholes, vaults and all other utility facilities within the boundaries of the curb ramp will be relocated or adjusted to grade by the owner prior to, or in conjunction with, curb ramp construction.
6. Detectable warning surface may have to be cut to allow removal of utility covers while maintaining full detectable warning width and depth.
7. For additional curb ramp details, see Revised Standard Plan RSP A88A.

STATE OF CALIFORNIA
DEPARTMENT OF TRANSPORTATION

# CURB RAMP AND ISLAND PASSAGEWAY DETAILS

NO SCALE

RSP A88B DATED JULY 3, 2015 SUPERSEDES RSP A88B DATED MARCH 21, 2014 AND RSP A88B DATED JULY 19, 2013 AND STANDARD PLAN A88B DATED MAY 20, 2011 - PAGE 122 OF THE STANDARD PLANS BOOK DATED 2010.

**REVISED STANDARD PLAN RSP A88B**

**2010 REVISED STANDARD PLAN RSP A88B**

4-28-15

| Dist | COUNTY | ROUTE | POST MILES TOTAL PROJECT | SHEET No. | TOTAL SHEETS |
|---|---|---|---|---|---|
| 06 | Tul | 65 | R9.3/R14.0 | 31 | 57 |

Theresa Gabriel
REGISTERED ELECTRICAL ENGINEER

October 30, 2015
PLANS APPROVAL DATE

REGISTERED PROFESSIONAL ENGINEER Theresa Aziz Gabriel No. E15129 Exp. 6-30-16 ELECTRICAL STATE OF CALIFORNIA

*THE STATE OF CALIFORNIA OR ITS OFFICERS OR AGENTS SHALL NOT BE RESPONSIBLE FOR THE ACCURACY OR COMPLETENESS OF SCANNED COPIES OF THIS PLAN SHEET.*

TO ACCOMPANY PLANS DATED 3-21-16

## LEGEND:

| | |
|---|---|
| AB | ABANDON. IF APPLIED TO CONDUIT, REMOVE CONDUCTORS |
| BC | INSTALL PULL BOX IN EXISTING CONDUIT RUN |
| BP | PEDESTRIAN BARRICADE, TYPE AS INDICATED ON PLAN |
| CB | INSTALL CONDUIT INTO EXISTING PULL BOX |
| CC | CONNECT NEW AND EXISTING CONDUIT. REMOVE EXISTING CONDUCTORS AND INSTALL CONDUCTORS AS INDICATED |
| CF | CONDUIT TO REMAIN FOR FUTURE USE. REMOVE CONDUCTORS. INSTALL PULL TAPE |
| DH | DETECTOR HANDHOLE |
| FA | FOUNDATION TO BE ABANDONED |
| IS | INSTALL SIGN ON SIGNAL MAST ARM |
| NS | NO SLIP BASE ON STANDARD |
| PEC | PHOTOELECTRIC CONTROL |
| PEU | PHOTOELECTRIC UNIT |
| RC | EQUIPMENT OR MATERIAL TO BE REMOVED AND BECOME THE PROPERTY OF THE CONTRACTOR |
| RE | REMOVE ELECTROLIER, FUSES AND BALLAST. TAPE ENDS OF CONDUCTORS |
| RL | RELOCATE EQUIPMENT |
| RR | REMOVE AND REUSE EQUIPMENT |
| RS | REMOVE AND SALVAGE EQUIPMENT |
| SC | SPLICE NEW TO EXISTING CONDUCTORS |
| SD | SERVICE DISCONNECT |
| TSP | TELEPHONE SERVICE POINT |

## ABBREVIATIONS

| | |
|---|---|
| AC+ | UNDERGROUNDED CONDUCTOR |
| APS | ACCESSIBLE PEDESTRIAN SIGNAL |
| Batt | BATTERY |
| BBS | BATTERY BACKUP SYSTEM |
| BC | BOLT CIRCLE |
| Blk | BLACK |
| BP | BYPASS |
| BPB | BICYCLE PUSH BUTTON |
| C | CONDUIT |
| CB | CIRCUIT BREAKER |
| CCTV | CLOSED CIRCUIT TELEVISION |
| Ckt | CIRCUIT |
| CMS | CHANGEABLE MESSAGE SIGN |
| Ctid | CALTRANS IDENTIFICATION |
| Comm | COMMUNICATION |
| Cntl | CONTROL |
| DF | DEPARTMENT-FURNISHED |
| DLC | LOOP DETECTOR LEAD-IN CABLE |
| EMS | EXTINGUISHABLE MESSAGE SIGN |
| EVUC | EMERGENCY VEHICLE UNIT CABLE |
| EVUD | EMERGENCY VEHICLE UNIT DETECTOR |
| FB | FLASHING BEACON |
| FBCA | FLASHING BEACON CONTROL ASSEMBLY |
| FBS | FLASHING BEACON WITH SLIP BASE |
| FO | FIBER OPTIC |
| G | EQUIPMENT GROUNDING CONDUCTOR |
| GB | GROUND BUS |
| GFCI | GROUND FAULT CIRCUIT INTERRUPTER |
| Grn | GREEN |
| HAR | HIGHWAY ADVISORY RADIO |
| Hex | HEXAGONAL |
| HPS | HIGH PRESSURE SODIUM |
| IISNS | INTERNALLY ILLUMINATED STREET NAME SIGN |
| ISL | INDUCTION SIGN LIGHTING |
| LED | LIGHT EMITTING DIODE |
| LMA | LUMINAIRE MAST ARM |
| LPS | LOW PRESSURE SODIUM |
| Ltg | LIGHTING |
| Lum | LUMINAIRE |
| M | METERED |
| MAT | MAST ARM MOUNTING TOP ATTACHMENT |
| MAS | MAST ARM MOUNTING SIDE ATTACHMENT |
| MBPS | MANUAL BYPASS SWITCH |
| M/M | MULTIPLE TO MULTIPLE TRANSFORMER |
| Mtg | MOUNTING |
| MV | MERCURY VAPOR LIGHTING FIXTURE |
| MVDS | MICROWAVE VEHICLE DETECTION SYSTEM |
| N | NEUTRAL (GROUNDED CONDUCTOR) |
| NB | NEUTRAL BUS |
| NC | NORMALLY CLOSE |
| NO | NORMALLY OPEN |
| P | CIRCUIT BREAKER'S POLE |
| PB | PULL BOX |
| PBA | PUSH BUTTON ASSEMBLY |
| PEC | PHOTOELECTRIC CONTROL |
| Ped | PEDESTRIAN |
| PEU | PHOTOELECTRIC UNIT |
| PT | CONDUIT WITH PULL TAPE |
| PTR | POWER TRANSFER RELAY |
| RE | RELOCATED EQUIPMENT |
| RM | RAMP METERING |
| RWIS | ROADSIDE WEATHER INFORMATION SYSTEM |
| SB | SLIP BASE |
| SIC | SIGNAL INTERCONNECT CABLE |
| Sig | SIGNAL |
| SMA | SIGNAL MAST ARM |
| SNS | STREET NAME SIGN |
| SP | SERVICE POINT |
| TB | TERMINAL BOARD |
| TDC | TELEPHONE DEMARCATION CABINET |
| Temp | TEMPERATURE |
| TMS | TRAFFIC MONITORING STATION |
| TOS | TRAFFIC OPERATIONS SYSTEM |
| UPS | UNINTERRUPTABLE POWER SUPPLY |
| UPSC | UNINTERRUPTABLE POWER SUPPLY CONTROLLER |
| Veh | VEHICLE |
| VIVDS | VIDEO IMAGE VEHICLE DETECTION SYSTEM |
| Wht | WHITE |
| WIM | WEIGH-IN-MOTION |
| Xfmr | TRANSFORMER |

## SOFFIT AND WALL-MOUNTED LUMINAIRES

PENDANT SOFFIT LUMINAIRE, 70 W HPS UNLESS OTHERWISE SPECIFIED

FLUSH-MOUNTED SOFFIT LUMINAIRE, 70 W HPS UNLESS OTHERWISE SPECIFIED

WALL-MOUNTED LUMINAIRE, 70 W HPS UNLESS OTHERWISE SPECIFIED

EXISTING SOFFIT OR WALL-MOUNTED LUMINAIRE TO REMAIN UNMODIFIED

EXISTING SOFFIT OR WALL-MOUNTED LUMINAIRE TO BE MODIFIED AS SPECIFIED

**NOTE:**
Arrow indicates "street side" of luminaire.

COMMONLY USED SYMBOLS FOR UNITED STATES CUSTOMARY UNITS OF MEASUREMENT:

| SYMBOL | DEFINITIONS |
|---|---|
| Ω | OHMS |
| min | MINUTE |
| s | SECOND |
| bps | BITS PER SECOND |
| Bps | BYTES PER SECOND |
| A | AMPERE |
| V | VOLT |
| V(dc) | VOLT (DIRECT CURRENT) |
| V(ac) | VOLT (ALTERNATING CURRENT) |
| FC | FOOT - CANDLE |
| W | WATTS |
| VA | VOLT-AMPERE |
| M | MEGA |
| k | KILO |
| m | MILLI |
| μ | MICRO |
| P | PICO |
| Hz | HERTZ |

## MISCELLANEOUS ELECTROLIERS

| NEW | EXISTING | |
|---|---|---|
| | | LUMINAIRE ON WOOD POLE |
| | | NON-STANDARD ELECTROLIER (SEE PROJECT LEGEND) |
| | | CITY ELECTROLIER |
| | | ELECTROLIER FOUNDATION (FUTURE INSTALLATION) |

**NOTES:**

1. LED luminaires shall be 235 W when installed on Type 21, 21D, 30, 31 and 32 Standards, unless otherwise specified. LED luminaires shall be 165 W when installed on other type standards or poles, unless otherwise specified.
2. Luminaires shall be the cutoff type, ANSI Type III medium cutoff lighting distribution, unless otherwise specified.

## STANDARD ELECTROLIER

| NEW | EXISTING | STANDARD TYPE |
|---|---|---|
| | | 15 |
| | | 15D |
| | | 15 STRUCTURE |
| | | 15D STRUCTURE |
| | | 21 |
| | | 21D |
| | | 21 STRUCTURE |
| | | 21D STRUCTURE |
| | | 30 |
| | | 31 |
| | | 32 |

STATE OF CALIFORNIA
DEPARTMENT OF TRANSPORTATION

# ELECTRICAL SYSTEMS (LEGEND AND ABBREVIATIONS)

NO SCALE

RSP ES-1A DATED OCTOBER 30, 2015 SUPERSEDES RSP ES-1A DATED JULY 19, 2013 AND STANDARD PLAN ES-1A DATED MAY 20, 2011 - PAGE 425 OF THE STANDARD PLANS BOOK DATED 2010.

**REVISED STANDARD PLAN RSP ES-1A**

**2010 REVISED STANDARD PLAN RSP ES-1A**

9-29-15

| Dist | COUNTY | ROUTE | POST MILES TOTAL PROJECT | SHEET No. | TOTAL SHEETS |
|---|---|---|---|---|---|
| 06 | Tul | 65 | R9.3/R14.0 | 32 | 57 |

Theresa Gabriel
REGISTERED ELECTRICAL ENGINEER

October 30, 2015
PLANS APPROVAL DATE

REGISTERED PROFESSIONAL ENGINEER Theresa Aziz Gabriel No. E15129 Exp. 6-30-16 ELECTRICAL STATE OF CALIFORNIA

*THE STATE OF CALIFORNIA OR ITS OFFICERS OR AGENTS SHALL NOT BE RESPONSIBLE FOR THE ACCURACY OR COMPLETENESS OF SCANNED COPIES OF THIS PLAN SHEET.*

TO ACCOMPANY PLANS DATED 3-21-16

## CONDUIT

| NEW | EXISTING | |
|---|---|---|
| | | LIGHTING CONDUIT, UNLESS OTHERWISE INDICATED OR NOTED |
| | | TRAFFIC SIGNAL CONDUIT |
| C | c | COMMUNICATION CONDUIT |
| T | t | TELEPHONE CONDUIT |
| F | f | FIRE ALARM CONDUIT |
| FO | fo | FIBER OPTIC CONDUIT |
| | | CONDUIT TERMINATION |
| R | r | CONDUIT RISER ATTACHED TO THE STRUCTURE OR SERVICE POLE |

## SERVICE EQUIPMENT

| NEW | EXISTING | |
|---|---|---|
| OH | oh | OVERHEAD LINES |
| U | U | WOOD POLE, "U" INDICATES UTILITY OWNED |
| | | POLE GUY WITH ANCHOR |
| | | UTILITY TRANSFORMER - GROUND MOUNTED |
| III | III | SERVICE EQUIPMENT ENCLOSURE TYPE. DOOR INDICATES FRONT OF ENCLOSURE |
| T | t | TELEPHONE DEMARCATION CABINET |

## POLE-MOUNTED SERVICE DESIGNATION

TYPE H SERVICE, 28'-10" — TYPE OF INSTALLATION AND POLE HEIGHT ABOVE GRADE

## FLASHING BEACON

| NEW | EXISTING | |
|---|---|---|
| R | R | FLASHING BEACON (ONE VEHICLE SIGNAL HEAD WITH BACKPLATE AND VISOR) "R" INDICATES RED INDICATION, "Y" INDICATES YELLOW INDICATION |
| Y Y | Y Y | FLASHING BEACON WITH TYPE 15-FBS STANDARD AND A SIGN. |
| R R | R R | FLASHING BEACON WITH TYPES 9, 9A OR 9B SIGN UNLESS OTHERWISE SPECIFIED OR INDICATED |

## SIGNAL EQUIPMENT

| NEW | EXISTING | |
|---|---|---|
| | | PEDESTRIAN SIGNAL HEAD |
| | | PUSH BUTTON ASSEMBLY POST |
| | | PEDESTRIAN BARRICADE |
| | | VEHICLE SIGNAL HEAD (WITH BACKPLATE AND 3-SECTIONS: RED, YELLOW AND GREEN) |
| | | VEHICLE SIGNAL HEAD WITH ANGLE VISOR |
| PV | PV | MODIFICATIONS OF BASIC SYMBOL: "L" INDICATES ALL NON-ARROW SECTIONS LOUVERED "LG" INDICATES LOUVERED GREEN SECTION ONLY "PV" INDICATES ALL 12" SECTIONS PROGRAMMED VISIBILITY "8" INDICATES ALL 8" SECTIONS (ONLY WHEN SPECIFIED) |
| | | VEHICLE SIGNAL HEAD CONSISTING OF RED, YELLOW AND GREEN LEFT ARROW SECTIONS |
| | | VEHICLE SIGNAL HEAD CONSISTING OF RED AND YELLOW SECTIONS WITH AN UP GREEN ARROW SECTION |
| | | VEHICLE SIGNAL HEAD (5 SECTION) CONSISTING OF RED, YELLOW AND GREEN SECTIONS WITH YELLOW AND GREEN RIGHT ARROW SECTIONS |
| | | TYPE 15TS STANDARD WITH VEHICLE SIGNAL HEAD AND LUMINAIRE |
| | | TYPE 21TS STANDARD WITH VEHICLE SIGNAL HEAD AND LUMINAIRE |
| | | STANDARD WITH LUMINAIRE AND SIGNAL MAST ARMS AND ATTACHED VEHICLE SIGNAL HEADS |
| | | TYPE 1 STANDARD WITH ATTACHED VEHICLE SIGNAL HEADS |
| | | STANDARD WITH A SIGNAL MAST ARM, ATTACHED VEHICLE SIGNAL HEADS AND INTERNALLY ILLUMINATED STREET NAME SIGN |
| | | CONTROLLER ASSEMBLY. DOOR INDICATES FRONT OF CABINET |

## SIGNAL EQUIPMENT Cont

| NEW | EXISTING | |
|---|---|---|
| | | GUARD POST |
| | | TYPE 1 STANDARD WITH RAMP METERING SIGN |
| | | OPTICAL DETECTOR FOR THE EMERGENCY VEHICLE DETECTION |

### NOTES:

1. All signal sections shall be 12" unless shown otherwise.
2. Signal heads shall be provided with backplates unless shown otherwise.

## ILLUMINATED OVERHEAD SIGN

| NEW | EXISTING | |
|---|---|---|
| | | SINGLE POST, SINGLE ILLUMINATED SIGN, BALANCED BUTTERFLY |
| | | SINGLE POST, DOUBLE ILLUMINATED SIGN, BALANCED BUTTERFLY |
| | | SINGLE POST, SINGLE ILLUMINATED SIGN, FULL CANTILEVER |
| | | DOUBLE POST, SINGLE ILLUMINATED SIGN |
| | | SINGLE ILLUMINATED SIGN MOUNTED ON STRUCTURE |
| | | DOUBLE POST, SINGLE ILLUMINATED SIGN WITH ELECTROLIER |

STATE OF CALIFORNIA
DEPARTMENT OF TRANSPORTATION

# ELECTRICAL SYSTEMS (LEGEND AND ABBREVIATIONS)

NO SCALE

RSP ES-1B DATED OCTOBER 30, 2015 SUPERSEDES RSP ES-1B DATED JULY 19, 2013 AND STANDARD PLAN ES-1B DATED MAY 20, 2011 - PAGE 426 OF THE STANDARD PLANS BOOK DATED 2010.

**REVISED STANDARD PLAN RSP ES-1B**

**2010 REVISED STANDARD PLAN RSP ES-1B**

8-19-15

| Dist | COUNTY | ROUTE | POST MILES TOTAL PROJECT | SHEET No. | TOTAL SHEETS |
|---|---|---|---|---|---|
| 06 | Tul | 65 | R9.3/R14.0 | 33 | 57 |

Theresa Gabriel
REGISTERED ELECTRICAL ENGINEER

April 15, 2016
PLANS APPROVAL DATE

REGISTERED PROFESSIONAL ENGINEER
Theresa Aziz Gabriel
No. E15129
Exp. 6-30-16
ELECTRICAL
STATE OF CALIFORNIA

*THE STATE OF CALIFORNIA OR ITS OFFICERS OR AGENTS SHALL NOT BE RESPONSIBLE FOR THE ACCURACY OR COMPLETENESS OF SCANNED COPIES OF THIS PLAN SHEET.*

TO ACCOMPANY PLANS DATED 3-21-16

# EQUIPMENT IDENTIFICATION

## ILLUMINATED SIGN IDENTIFICATION:

SIGN No. 12345
10 ISL SCI 1.0

- SIGN EQUIPMENT IDENTIFICATION CHARACTERS - PLACE ON POST OR STRUCTURE
- TRANSFORMER RATING (kVA)
- LIGHTING CONTROL TYPE
- NUMBER AND TYPE OF FIXTURES

} DO NOT PLACE ON STANDARD OR STRUCTURE

## ELECTROLIER OR EQUIPMENT IDENTIFICATION:

L2745 - 15'-0"

- MAST ARM LENGTH, IF SHOWN. DO NOT PLACE ON STANDARD OR STRUCTURE
- EQUIPMENT IDENTIFICATION CHARACTERS - PLACE ON STANDARD OR STRUCTURE. EXISTING EQUIPMENT IDENTIFICATION CHARACTERS ARE SHOWN IN PARENTHESIS

## CONDUIT AND CONDUCTOR IDENTIFICATION:

1½"C, 2#10, 15#14, 2 DLC, 12P#18 (PAIR)

- NUMBER AND SIZE OF CONDUCTORS AND CABLES
- SIZE OF CONDUIT IN INCHES

| | |
|---|---|
| ø1, ø2, ø2P, etc. | TRAFFIC PHASE IDENTIFICATION FOR SIGNALS, DETECTORS AND PHASE DIAGRAMS |
| 1 2 3 | LEGEND NUMBERS |
| A B C | EQUIPMENT, SIGNAL POLES, INSTALLATION OR ITEMS |
| 1 2 3 | CONDUIT RUN NUMBERS |

## SIGNAL AND LIGHTING STANDARD (TYPICAL DESIGNATION):

19A - 3 - 100

- WIND VELOCITY = 100 mph
- CASE 3 ARM LOADING
- STANDARD TYPE
- STANDARD PLAN SHEET NUMBER
- DETAIL, NUMBER, SECTION, TYPE OR ELEVATION

# MISCELLANEOUS EQUIPMENT

| NEW | EXISTING | |
|---|---|---|
| CMS | cms | CHANGEABLE MESSAGE SIGN |
| | | CLOSED CIRCUIT TELEVISION CAMERA |
| | | HIGHWAY ADVISORY RADIO POLE AND ANTENNA |
| EMS | ems | LED EXTINGUISHABLE MESSAGE SIGN |
| M V | m v | DETECTION DEVICE<br>M = MICROWAVE SENSOR<br>V = VIDEO IMAGE SENSOR |

# WIRING DIAGRAM LEGEND

- EXTERNAL CONDUCTOR
- CONDUCTOR OR BUS
- TIE POINT
- CONTACTOR COIL
- CONTACTOR, NO CONTACT
- TERMINAL BLOCKS
- CONTACTOR, NC CONTACT
- ENCLOSURE BOND
- GROUNDING ELECTRODE
- CIRCUIT BREAKER
- RECEPTACLE

# PULL BOXES

| NEW | EXISTING | |
|---|---|---|
| | | PULL BOX, No. 5 UNLESS OTHERWISE INDICATED OR NOTED |
| 3 | 9A(21) | PULL BOX, ADDITIONAL DESIGNATIONS OR DESCRIPTIONS |

3 No. 3½ PULL BOX
5 No. 5 PULL BOX
6 No. 6 PULL BOX
7 No. 7 PULL BOX (CEILING)
8 No. 8 PULL BOX
9 No. 9 PULL BOX (STRUCTURE)
9A No. 9A PULL BOX (STRUCTURE)

(C) COMMUNICATIONS PULL BOX
(E) PULL BOX WITH EXTENSION
(S) SPRINKLER CONTROL PULL BOX
(21) ANCHOR BOLTS AND CONDUIT FOR FUTURE INSTALLATION OF TYPE 21 STANDARD
(T) TRAFFIC PULL BOX

# VEHICLE DETECTORS

5 J 9 U

- VEHICLE DETECTOR DESIGNATION
- U = UPPER
  L = LOWER
- SLOT NUMBER IN INPUT FILE
- INPUT FILE (I OR J)
- PHASE

| NEW | EXISTING | |
|---|---|---|
| | | TYPE A LOOP DETECTOR. OUTLINE OF SAW CUT SHOWN |
| | | TYPE B LOOP DETECTOR. OUTLINE OF SAW CUT SHOWN |
| | | TYPE C LOOP DETECTOR. OUTLINE OF SAW CUT SHOWN |
| | | TYPE D LOOP DETECTOR. OUTLINE OF SAW CUT SHOWN |
| | | TYPE E LOOP DETECTOR. OUTLINE OF SAW CUT SHOWN |
| | | TYPE Q LOOP DETECTOR. OUTLINE OF SAW CUT SHOWN |
| DH | dh | DETECTOR HANDHOLE |
| | | MICROWAVE OR VIDEO DETECTION ZONE |

STATE OF CALIFORNIA
DEPARTMENT OF TRANSPORTATION

# ELECTRICAL SYSTEMS (LEGEND AND ABBREVIATIONS)

NO SCALE

RSP ES-1C DATED APRIL 15, 2016 SUPERSEDES RSP ES-1C DATED OCTOBER 30, 2015 AND RSP ES-1C DATED JULY 19, 2013 AND STANDARD PLAN ES-1C DATED MAY 20, 2011 - PAGE 427 OF THE STANDARD PLANS BOOK DATED 2010.

**REVISED STANDARD PLAN RSP ES-1C**

**2010 REVISED STANDARD PLAN RSP ES-1C**

1-22-16

| Dist | COUNTY | ROUTE | POST MILES TOTAL PROJECT | SHEET No. | TOTAL SHEETS |
|---|---|---|---|---|---|
| 06 | Tul | 65 | R9.3/R14.0 | 34 | 57 |

Theresa Gabriel
REGISTERED ELECTRICAL ENGINEER

October 30, 2015
PLANS APPROVAL DATE

REGISTERED PROFESSIONAL ENGINEER
Theresa Aziz Gabriel
No. E15129
Exp. 6-30-16
ELECTRICAL
STATE OF CALIFORNIA

*THE STATE OF CALIFORNIA OR ITS OFFICERS OR AGENTS SHALL NOT BE RESPONSIBLE FOR THE ACCURACY OR COMPLETENESS OF SCANNED COPIES OF THIS PLAN SHEET.*

TO ACCOMPANY PLANS DATED 3-21-16

**2010 REVISED STANDARD PLAN RSP ES-4A**

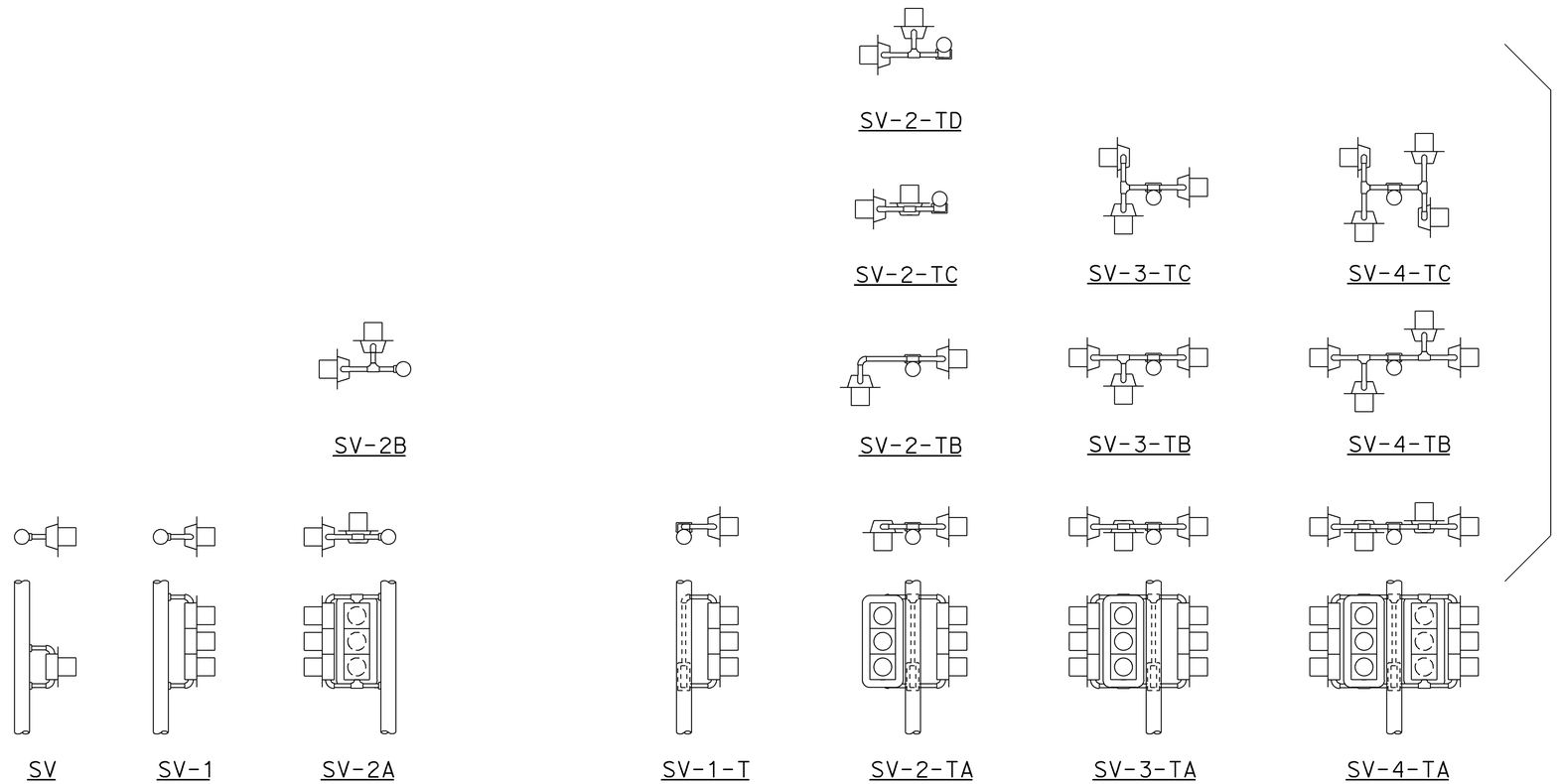


SIDE MOUNTINGS

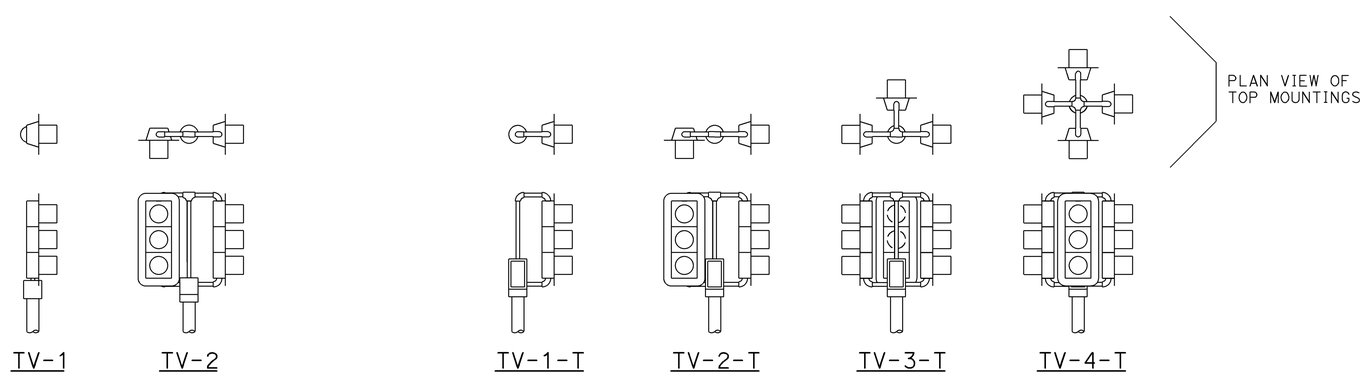


TOP MOUNTINGS

## ABBREVIATIONS:

| | |
|---|---|
| SV | SIDE MOUNTED SIGNAL HEADS |
| T | TERMINAL COMPARTMENT |
| TV | TOP MOUNTED SIGNAL HEADS |
| 1, 2, 3, 4 | NUMBER OF SIGNAL FACES (3 - SECTION, UNLESS OTHERWISE INDICATED) |
| A, B, C, D | CONFIGURATION OF SIGNALS |

## NOTES:

1. Mountings shall be oriented to provide maximum horizontal clearance to adjacent roadway.
2. Bracket arms shall be long enough to permit proper alignment of signals and backplate installation.
3. See Revised Standard Plans RSP ES-4D and RSP ES-4E for attachment fitting details.

STATE OF CALIFORNIA
DEPARTMENT OF TRANSPORTATION

# ELECTRICAL SYSTEMS (SIGNAL HEADS AND MOUNTINGS)

NO SCALE

RSP ES-4A DATED OCTOBER 30, 2015 SUPERSEDES RSP ES-4A DATED JULY 19, 2013 AND STANDARD PLAN ES-4A DATED MAY 20, 2011 - PAGE 443 OF THE STANDARD PLANS BOOK DATED 2010.

**REVISED STANDARD PLAN RSP ES-4A**

| Dist | COUNTY | ROUTE | POST MILES TOTAL PROJECT | SHEET No. | TOTAL SHEETS |
|---|---|---|---|---|---|
| 06 | Tul | 65 | R9.3/R14.0 | 35 | 57 |

Theresa Gabriel
REGISTERED ELECTRICAL ENGINEER

October 30, 2015
PLANS APPROVAL DATE

REGISTERED PROFESSIONAL ENGINEER
Theresa Aziz Gabriel
No. E15129
Exp. 6-30-16
ELECTRICAL
STATE OF CALIFORNIA

*THE STATE OF CALIFORNIA OR ITS OFFICERS OR AGENTS SHALL NOT BE RESPONSIBLE FOR THE ACCURACY OR COMPLETENESS OF SCANNED COPIES OF THIS PLAN SHEET.*

TO ACCOMPANY PLANS DATED 3-21-16

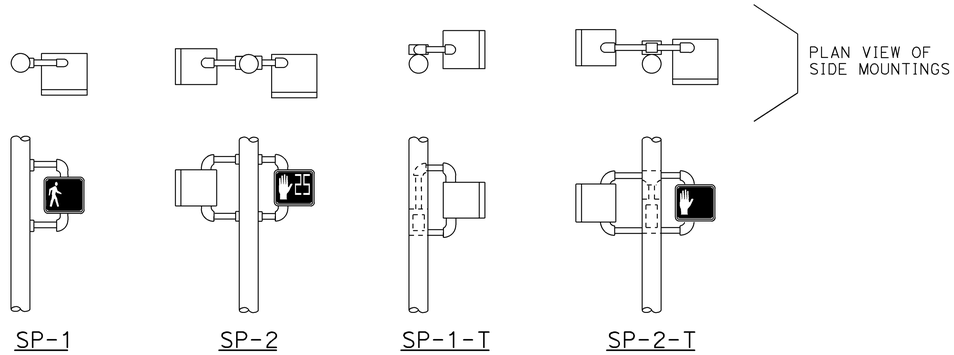


SIDE MOUNTINGS

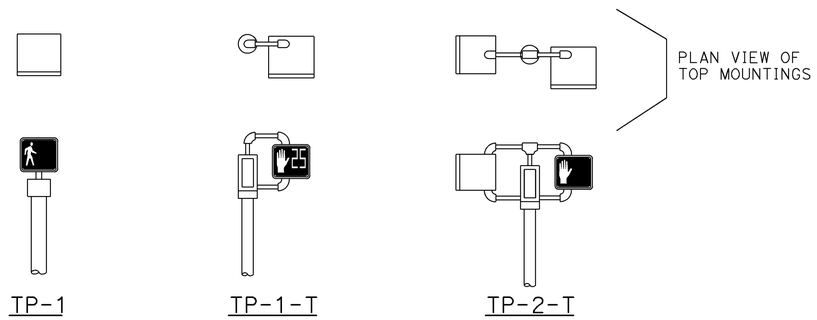


TOP MOUNTINGS

PEDESTRIAN SIGNAL HEAD MOUNTINGS
DETAIL A

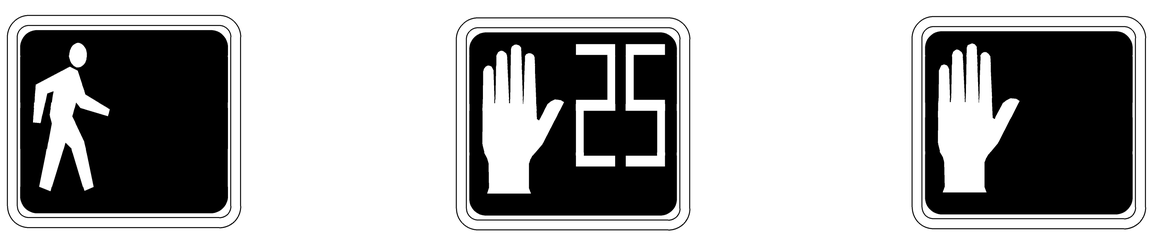

PERSON WALKING INTERVAL FLASHING UPRAISED HAND INTERVAL STEADY UPRAISED HAND INTERVAL

LED COUNTDOWN PEDESTRIAN SIGNAL FACE MODULE
DETAIL B

## NOTES:

1. Mounting shall be oriented to provide maximum horizontal clearance to adjacent roadway.
2. Bracket arms shall be long enough to permit proper alignment of signals.
3. See Revised Standard Plan RSP ES-4D for attachment fittings details.

## ABBREVIATIONS:

| | |
|---|---|
| 1, 2 | NUMBER OF SIGNAL FACES |
| SP | SIDE MOUNTED PEDESTRIAN SIGNAL |
| T | TERMINAL COMPARTMENT |
| TP | TOP MOUNTED PEDESTRIAN SIGNAL |

STATE OF CALIFORNIA
DEPARTMENT OF TRANSPORTATION

# ELECTRICAL SYSTEMS (PEDESTRIAN SIGNAL HEADS)

NO SCALE

RSP ES-4B DATED OCTOBER 30, 2015 SUPERSEDES RSP ES-4B DATED JULY 19, 2013 AND STANDARD PLAN ES-4B DATED MAY 20, 2011 - PAGE 444 OF THE STANDARD PLANS BOOK DATED 2010.

**REVISED STANDARD PLAN RSP ES-4B**

**2010 REVISED STANDARD PLAN RSP ES-4B**

9-1-15

| Dist | COUNTY | ROUTE | POST MILES TOTAL PROJECT | SHEET No. | TOTAL SHEETS |
|---|---|---|---|---|---|
| 06 | Tul | 65 | R9.3/R14.0 | 36 | 57 |

Theresa Gabriel
REGISTERED ELECTRICAL ENGINEER

October 30, 2015
PLANS APPROVAL DATE

REGISTERED PROFESSIONAL ENGINEER Theresa Aziz Gabriel No. E15129 Exp. 6-30-16 ELECTRICAL STATE OF CALIFORNIA

*THE STATE OF CALIFORNIA OR ITS OFFICERS OR AGENTS SHALL NOT BE RESPONSIBLE FOR THE ACCURACY OR COMPLETENESS OF SCANNED COPIES OF THIS PLAN SHEET.*

TO ACCOMPANY PLANS DATED 3-21-16

**2010 REVISED STANDARD PLAN RSP ES-4C**

## VISORS

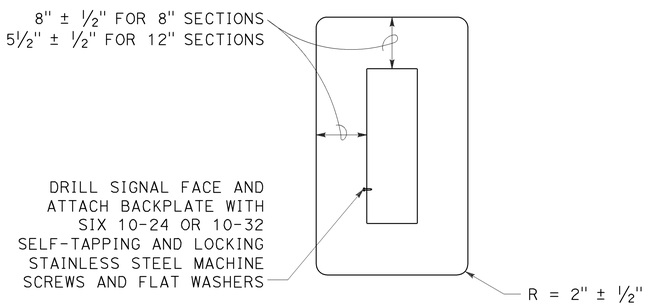


8" AND 12" SECTIONS

## BACKPLATE

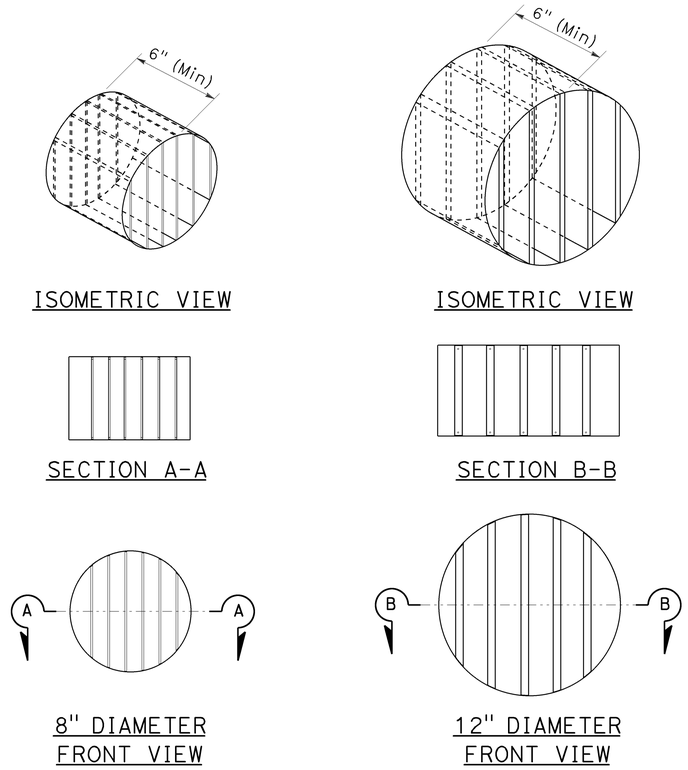


## DIRECTIONAL LOUVER

Directional louvers shall be oriented and secured in place with one plated brass machine screw and nut.

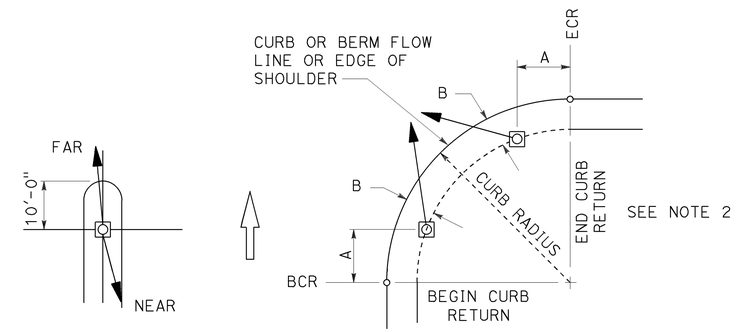


**NOTES:**

1. Typical signal pole placement unless dimensioned on plans.
2. For A and B dimensions, see Pole Schedule.

## SIGNAL STANDARD PLACEMENT DIMENSIONS AND EQUIPMENT LOCATIONS

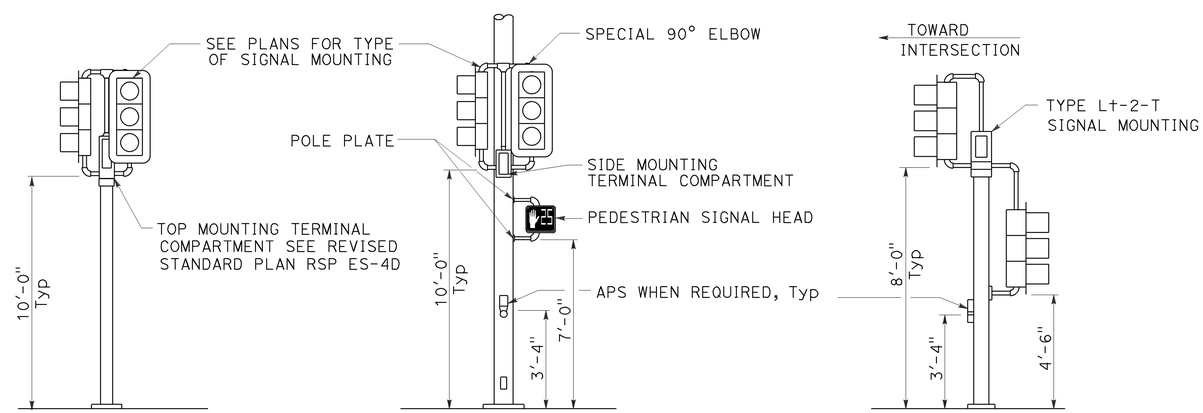


TOP MOUNTED SIGNALS (TV)
Type 1-A, 1-B, 1-C and 1-D standard as indicated on the plans

SIDE MOUNTED SIGNALS (SV AND SP)
Normally used on standards with luminaire or signal mast arm

LEFT TURN LANE SIGNAL
Type 1-A, 1-B, 1-C and 1-D standard as indicated on plans

## TYPICAL SIGNAL HEAD INSTALLATIONS

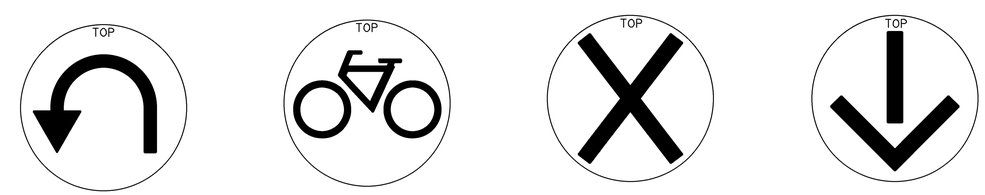


U-TURN | BICYCLE | LANE CONTROL | LANE CONTROL

## SIGNAL FACES

STATE OF CALIFORNIA
DEPARTMENT OF TRANSPORTATION

# ELECTRICAL SYSTEMS (SIGNAL HEADS AND MOUNTINGS)

NO SCALE

RSP ES-4C DATED OCTOBER 30, 2015 SUPERSEDES RSP ES-4C DATED JULY 19, 2013 AND STANDARD PLAN ES-4C DATED MAY 20, 2011 - PAGE 445 OF THE STANDARD PLANS BOOK DATED 2010.

**REVISED STANDARD PLAN RSP ES-4C**

9-28-15

| Dist | COUNTY | ROUTE | POST MILES TOTAL PROJECT | SHEET No. | TOTAL SHEETS |
|---|---|---|---|---|---|
| 06 | Tul | 65 | R9.3/R14.0 | 37 | 57 |

Theresa Gabriel
REGISTERED ELECTRICAL ENGINEER

October 30, 2015
PLANS APPROVAL DATE

REGISTERED PROFESSIONAL ENGINEER Theresa Aziz Gabriel No. E15129 Exp. 6-30-16 ELECTRICAL STATE OF CALIFORNIA

*THE STATE OF CALIFORNIA OR ITS OFFICERS OR AGENTS SHALL NOT BE RESPONSIBLE FOR THE ACCURACY OR COMPLETENESS OF SCANNED COPIES OF THIS PLAN SHEET.*

TO ACCOMPANY PLANS DATED 3-21-16

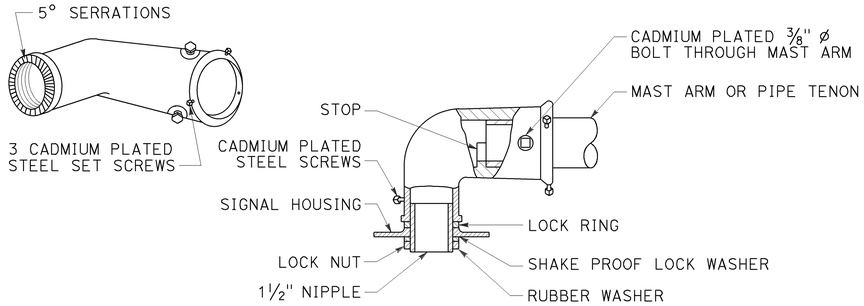


TYPE MAT
MAST ARM MOUNTING
For 2 NPS pipe, see Note 1.

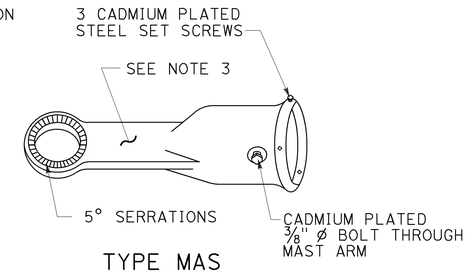


TYPE MAS
MAST ARM MOUNTING
For 2 NPS pipe, see Note 1.

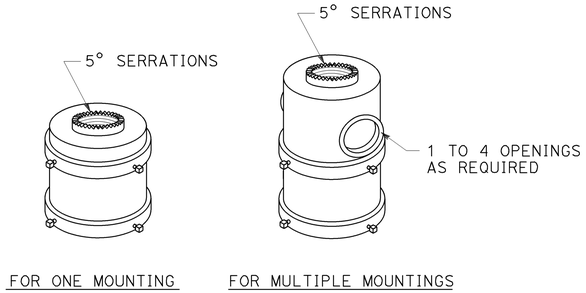


TOP MOUNTINGS
For 4 NPS pipe, see Note 2.

## SIGNAL SLIP FITTERS

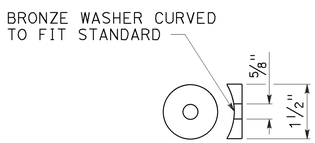


DETAIL C

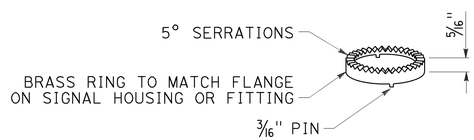


LOCK RING
Use where locking ring is not integral With signal housing or fitting.

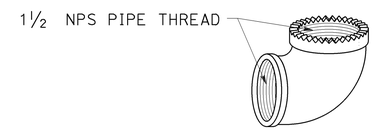


SPECIAL 90° ELBOW
One for each signal head, except those With special slip fitter mounting

## MISCELLANEOUS MOUNTING HARDWARE

## NOTES:

1. After mast arm signal has been plumbed and secured, drill 7/16" hole through mast arm tenon in line with slip fitter hole. Place a cadmium plated 3/8" ø galvanized bolt with washer under bolt head through hole and secure with washer, nut, and locknut. Seal openings between mast arm mountings and mast arm with mastic.
2. (A) Threaded top mounted slip fitter openings shall be 1½ NPS.
   (B) Serrations in fittings shall match those on bottom of signal heads or in lock ring.
   (C) Top opening shall be offset when backplate is used.
3. Wireway shall have a cross section area of 0.95 square inch minimum. Minimum width of ½".

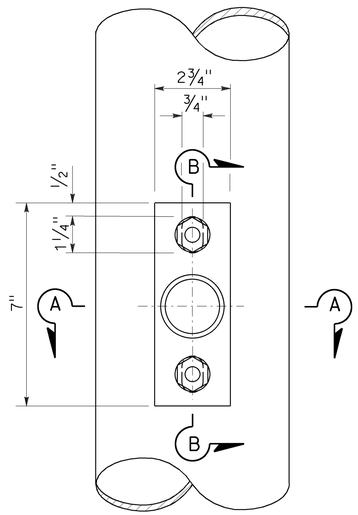


TOP VIEW

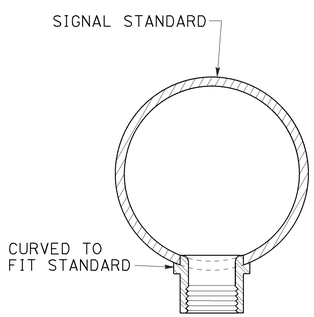


SECTION A-A

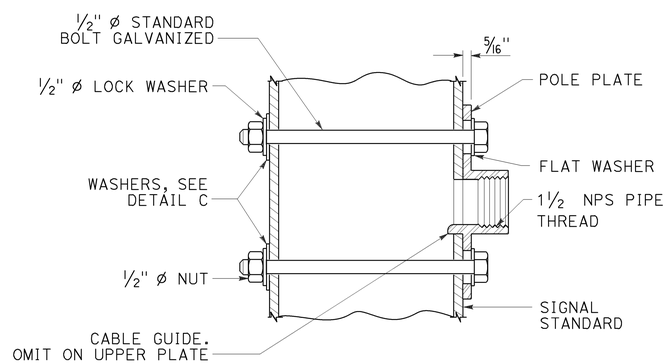


SECTION B-B

POLE PLATE FOR SIDE MOUNTED SIGNAL HEAD
WITHOUT TERMINAL COMPARTMENT

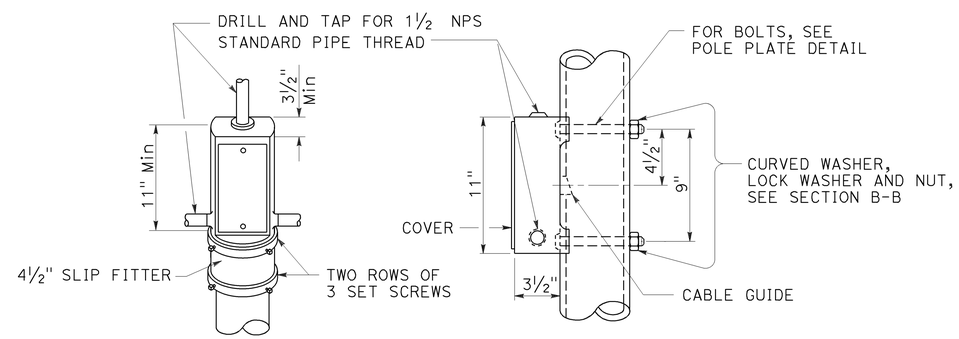


TOP MOUNTING

SIDE MOUNTING

TERMINAL COMPARTMENT

STATE OF CALIFORNIA
DEPARTMENT OF TRANSPORTATION

# ELECTRICAL SYSTEMS (SIGNAL HEAD MOUNTING)

NO SCALE

RSP ES-4D DATED OCTOBER 30, 2015 SUPERSEDES STANDARD PLAN ES-4D DATED MAY 20, 2011 - PAGE 446 OF THE STANDARD PLANS BOOK DATED 2010.

**REVISED STANDARD PLAN RSP ES-4D**

**2010 REVISED STANDARD PLAN RSP ES-4D**

8-20-15

| Dist | COUNTY | ROUTE | POST MILES TOTAL PROJECT | SHEET No. | TOTAL SHEETS |
|---|---|---|---|---|---|
| 06 | Tul | 65 | R9.3/R14.0 | 38 | 57 |

Theresa Gabriel
REGISTERED ELECTRICAL ENGINEER

October 30, 2015
PLANS APPROVAL DATE

REGISTERED PROFESSIONAL ENGINEER
Theresa Aziz Gabriel
No. E15129
Exp. 6-30-16
ELECTRICAL
STATE OF CALIFORNIA

*THE STATE OF CALIFORNIA OR ITS OFFICERS OR AGENTS SHALL NOT BE RESPONSIBLE FOR THE ACCURACY OR COMPLETENESS OF SCANNED COPIES OF THIS PLAN SHEET.*

TO ACCOMPANY PLANS DATED 3-21-16

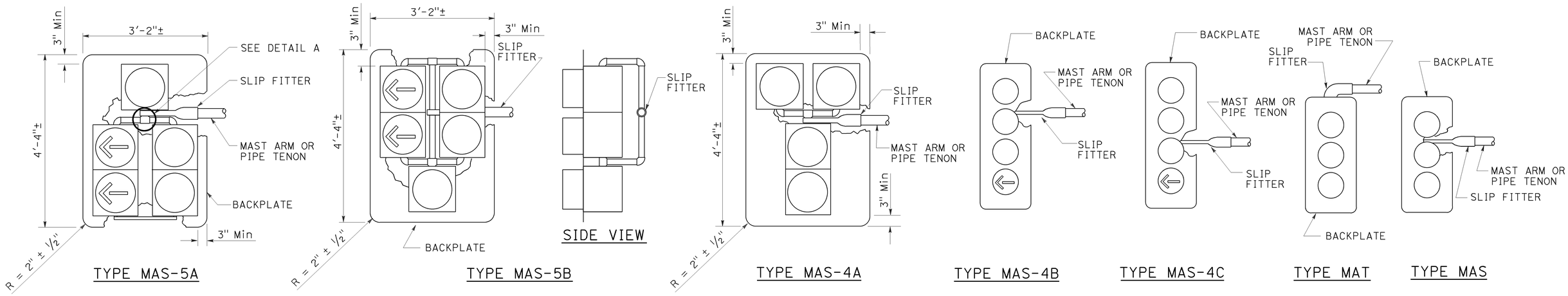


MAST ARM MOUNTINGS

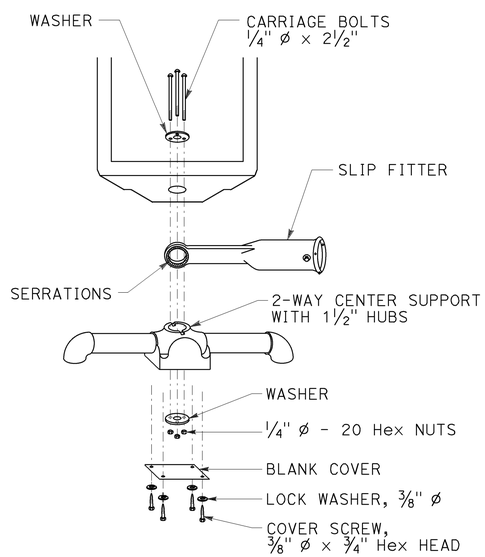


DETAIL A

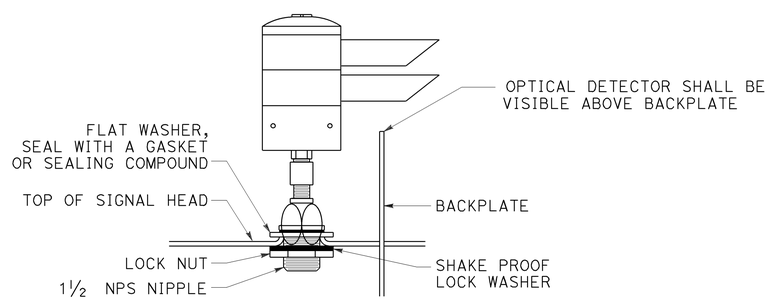


OPTICAL DETECTOR MOUNTING FOR EMERGENCY VEHICLE DETECTION

DETAIL B

STATE OF CALIFORNIA
DEPARTMENT OF TRANSPORTATION

# ELECTRICAL SYSTEMS (SIGNAL HEADS AND OPTICAL DETECTOR MOUNTING)

NO SCALE

RSP ES-4E DATED OCTOBER 30, 2015 SUPERSEDES RSP ES-4E DATED JULY 19, 2013 AND STANDARD PLAN ES-4E DATED MAY 20, 2011 - PAGE 447 OF THE STANDARD PLANS BOOK DATED 2010.

**REVISED STANDARD PLAN RSP ES-4E**

**2010 REVISED STANDARD PLAN RSP ES-4E**

8-19-15

| Dist | COUNTY | ROUTE | POST MILES TOTAL PROJECT | SHEET No. | TOTAL SHEETS |
|---|---|---|---|---|---|
| 06 | Tul | 65 | R9.3/R14.0 | 39 | 57 |

Theresa Gabriel
REGISTERED ELECTRICAL ENGINEER

April 15, 2016
PLANS APPROVAL DATE

REGISTERED PROFESSIONAL ENGINEER
Theresa Aziz Gabriel
No. E15129
Exp. 6-30-16
ELECTRICAL
STATE OF CALIFORNIA

THE STATE OF CALIFORNIA OR ITS OFFICERS OR AGENTS SHALL NOT BE RESPONSIBLE FOR THE ACCURACY OR COMPLETENESS OF SCANNED COPIES OF THIS PLAN SHEET.

TO ACCOMPANY PLANS DATED 3-21-16

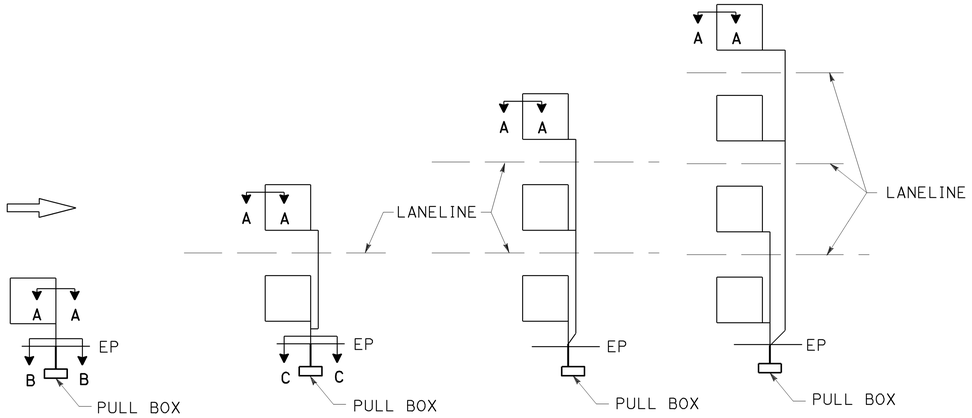


## SAW CUT DETAILS

Type A loop detector configurations illustrated

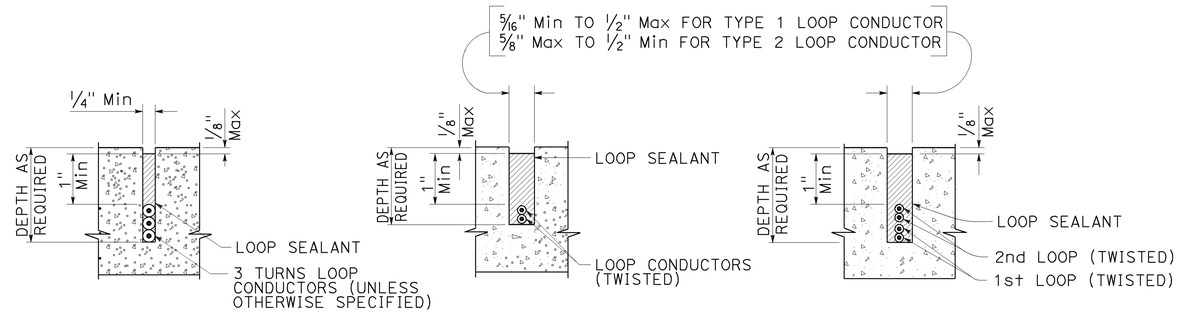


SECTION A-A SECTION B-B SECTION C-C

## SLOT DETAILS - TYPE 1 AND TYPE 2 LOOP CONDUCTOR

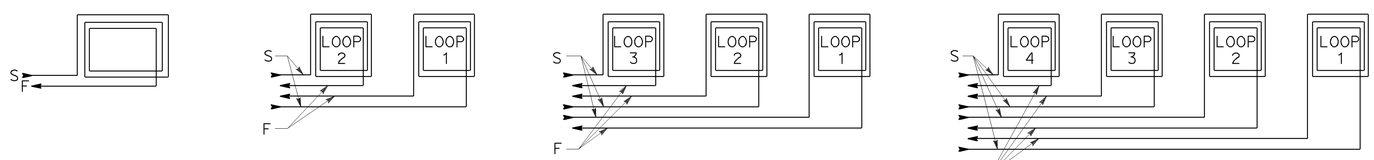


## WINDING DETAILS

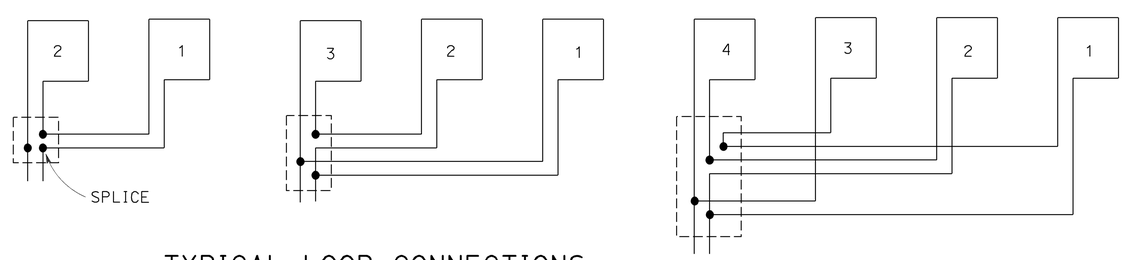


## TYPICAL LOOP CONNECTIONS

Dashed lines represent the pull box

ABBREVIATIONS:

S - START
F - FINISH

STATE OF CALIFORNIA
DEPARTMENT OF TRANSPORTATION

# ELECTRICAL SYSTEMS (LOOP DETECTORS)

NO SCALE

RSP ES-5A DATED APRIL 15, 2016 SUPERSEDES RSP ES-5A DATED OCTOBER 30, 2015 AND STANDARD PLAN ES-5A DATED MAY 20, 2011 - PAGE 448 OF THE STANDARD PLANS BOOK DATED 2010.

**REVISED STANDARD PLAN RSP ES-5A**

2010 REVISED STANDARD PLAN RSP ES-5A

| Dist | COUNTY | ROUTE | POST MILES TOTAL PROJECT | SHEET No. | TOTAL SHEETS |
|---|---|---|---|---|---|
| 06 | Tul | 65 | R9.3/R14.0 | 40 | 57 |

Theresa Gabriel
REGISTERED ELECTRICAL ENGINEER

April 15, 2016
PLANS APPROVAL DATE

REGISTERED PROFESSIONAL ENGINEER
Theresa Aziz Gabriel
No. E15129
Exp. 6-30-16
ELECTRICAL
STATE OF CALIFORNIA

*THE STATE OF CALIFORNIA OR ITS OFFICERS OR AGENTS SHALL NOT BE RESPONSIBLE FOR THE ACCURACY OR COMPLETENESS OF SCANNED COPIES OF THIS PLAN SHEET.*

TO ACCOMPANY PLANS DATED 3-21-16

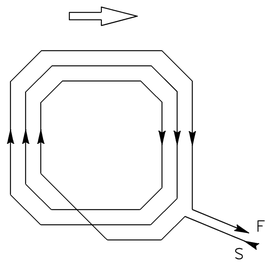


WINDING DETAIL

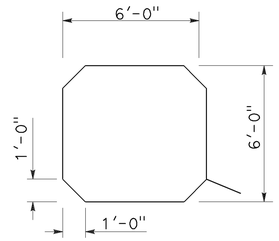


SAW CUT DETAIL

TYPE A LOOP DETECTOR CONFIGURATION

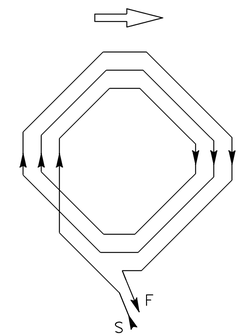


WINDING DETAIL

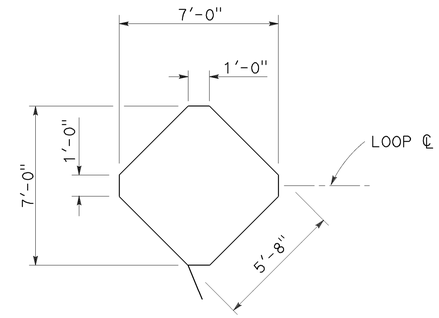


SAW CUT DETAIL

TYPE B LOOP DETECTOR CONFIGURATION

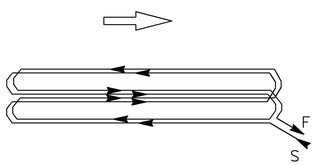


WINDING DETAIL

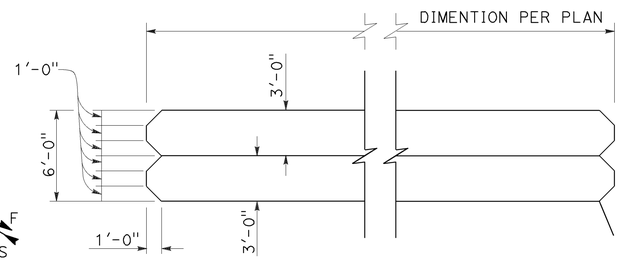


SAW CUT DETAIL

TYPE C LOOP DETECTOR CONFIGURATION

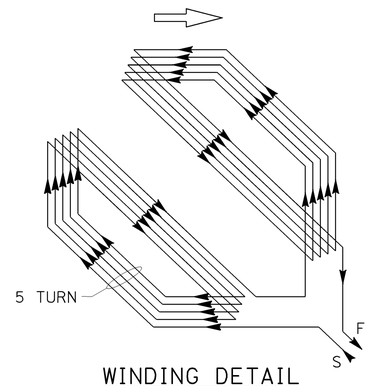


WINDING DETAIL

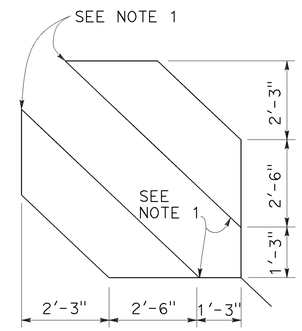


SAW CUT DETAIL

TYPE D LOOP DETECTOR CONFIGURATION

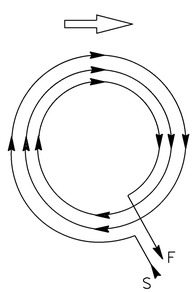


WINDING DETAIL

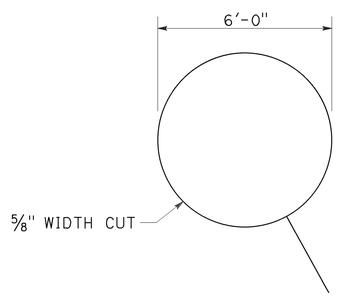


SAW CUT DETAIL

TYPE E LOOP DETECTOR CONFIGURATION

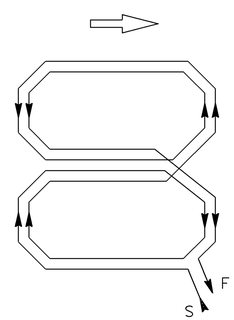


WINDING DETAIL

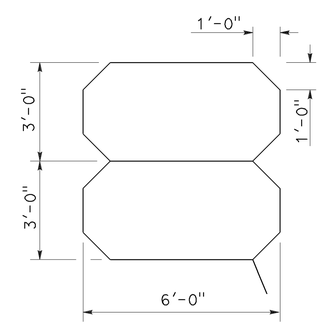


SAW CUT DETAIL

TYPE Q LOOP DETECTOR CONFIGURATION

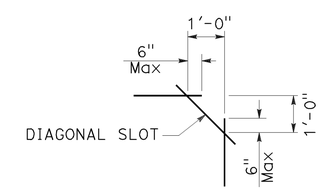


PLAN VIEW OF DIAGONAL SLOT AT CORNERS

NOTES:

1. Round corners of acute angle saw cuts to prevent damage to conductors.
2. Typical distance separating loops from edge to edge is 10' for Type A, B, D and E installation in single lane.
3. Use Type D loops for limit line detection and bicycle lanes.

STATE OF CALIFORNIA
DEPARTMENT OF TRANSPORTATION

# ELECTRICAL SYSTEMS (DETECTORS)

NO SCALE

RSP ES-5B DATED APRIL 15, 2016 SUPERSEDES RSP ES-5B DATED OCTOBER 30, 2015 AND RSP ES-5B DATED JULY 19, 2013 AND STANDARD PLAN ES-5B DATED MAY 20, 2011 - PAGE 449 OF THE STANDARD PLANS BOOK DATED 2010.

**REVISED STANDARD PLAN RSP ES-5B**

**2010 REVISED STANDARD PLAN RSP ES-5B**

| Dist | COUNTY | ROUTE | POST MILES TOTAL PROJECT | SHEET No. | TOTAL SHEETS |
|---|---|---|---|---|---|
| 06 | Tul | 65 | R9.3/R14.0 | 41 | 57 |

Theresa Gabriel
REGISTERED ELECTRICAL ENGINEER

October 30, 2015
PLANS APPROVAL DATE

REGISTERED PROFESSIONAL ENGINEER
Theresa Aziz Gabriel
No. E15129
Exp. 6-30-16
ELECTRICAL
STATE OF CALIFORNIA

THE STATE OF CALIFORNIA OR ITS OFFICERS OR AGENTS SHALL NOT BE RESPONSIBLE FOR THE ACCURACY OR COMPLETENESS OF SCANNED COPIES OF THIS PLAN SHEET.

TO ACCOMPANY PLANS DATED 3-21-16

## NOTES:

1. Back casting shape to fit curvature of pole.
2. Provide cover fitting for top of post, when PBA is mounted on push button assembly post.
3. Install push button on crosswalk side of standard.
4. Use R10 series regulatory signs and plaques for pedestrian and bicycle facilities.

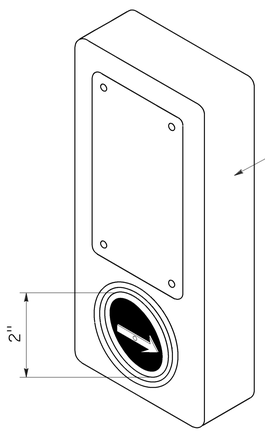


ACCESSIBLE PEDESTRIAN SIGNAL

DETAIL A

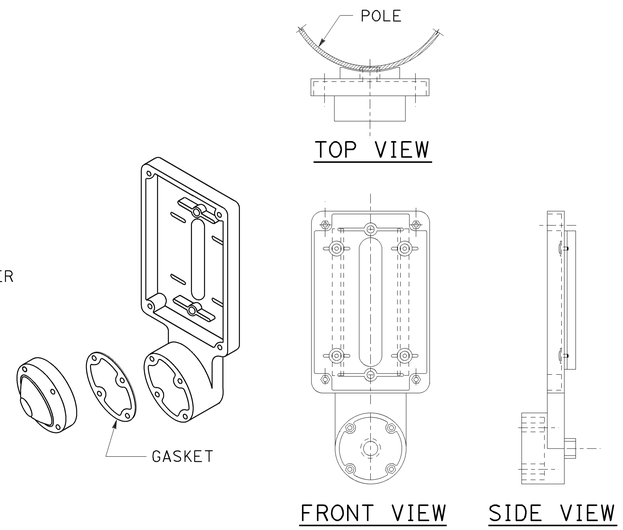


TYPE B PUSH BUTTON ASSEMBLY

DETAIL B

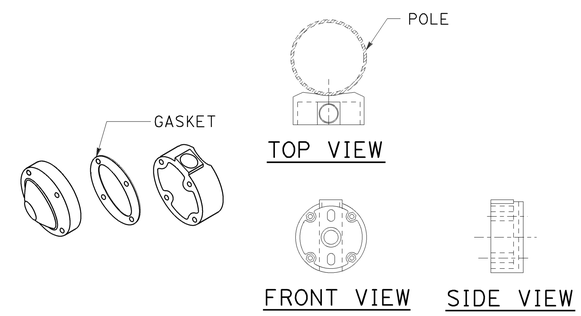


TYPE C PUSH BUTTON ASSEMBLY

DETAIL C

STATE OF CALIFORNIA
DEPARTMENT OF TRANSPORTATION

# ELECTRICAL SYSTEMS (ACCESSIBLE PEDESTRIAN SIGNAL AND PUSH BUTTON ASSEMBLIES)

NO SCALE

RSP ES-5C DATED OCTOBER 30, 2015 SUPERSEDES RSP ES-5C DATED JULY 19, 2013 AND STANDARD PLAN ES-5C DATED MAY 20, 2011 - PAGE 450 OF THE STANDARD PLANS BOOK DATED 2010.

**REVISED STANDARD PLAN RSP ES-5C**

**2010 REVISED STANDARD PLAN RSP ES-5C**

8-24-15

| Dist | COUNTY | ROUTE | POST MILES TOTAL PROJECT | SHEET No. | TOTAL SHEETS |
|---|---|---|---|---|---|
| 06 | Tul | 65 | R9.3/R14.0 | 42 | 57 |

Theresa Gabriel
REGISTERED ELECTRICAL ENGINEER

October 30, 2015
PLANS APPROVAL DATE

REGISTERED PROFESSIONAL ENGINEER Theresa Aziz Gabriel No. E15129 Exp. 6-30-16 ELECTRICAL STATE OF CALIFORNIA

THE STATE OF CALIFORNIA OR ITS OFFICERS OR AGENTS SHALL NOT BE RESPONSIBLE FOR THE ACCURACY OR COMPLETENESS OF SCANNED COPIES OF THIS PLAN SHEET.

TO ACCOMPANY PLANS DATED 3-21-16

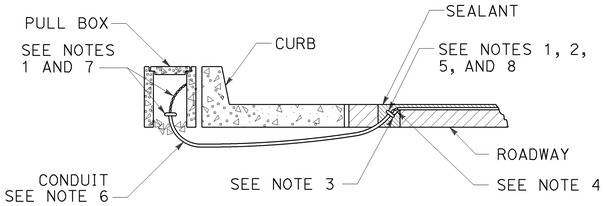


TYPE A
CURB TERMINATION DETAIL

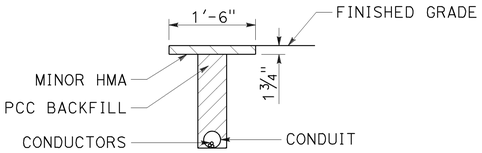


"T" TRENCH
DETAIL T

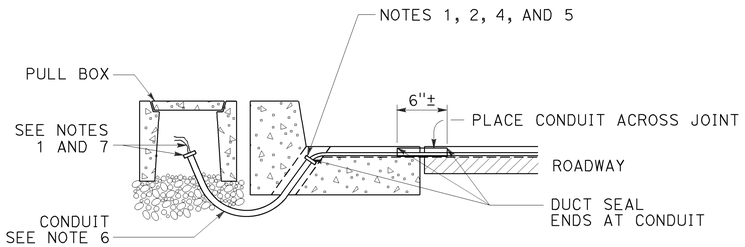


CROSS SECTION

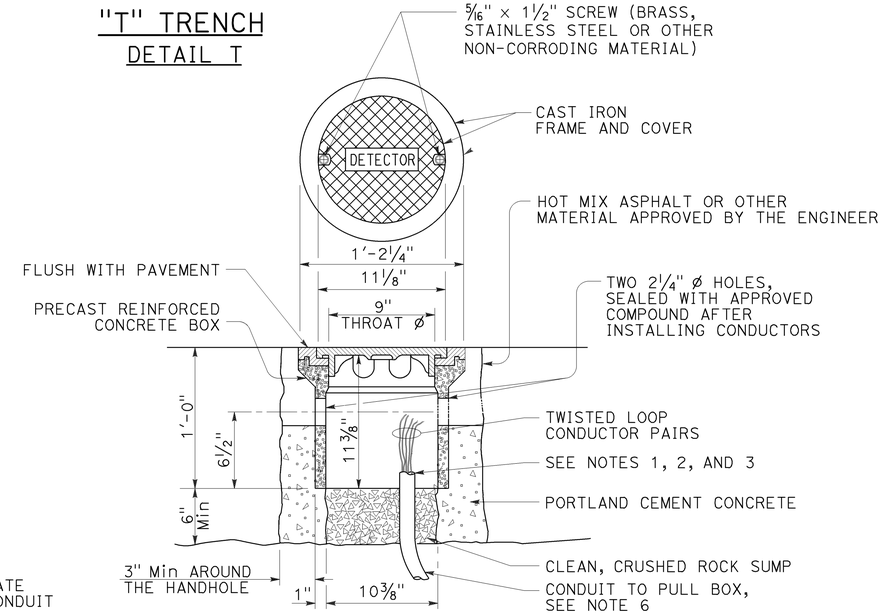


DETECTOR HANDHOLE DETAIL

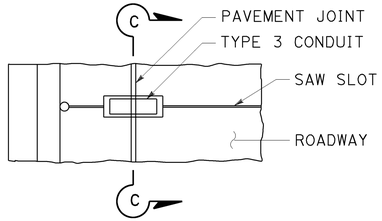


PLAN VIEW

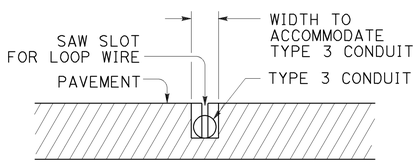


SECTION C-C

TYPE B
CURB TERMINATION DETAIL

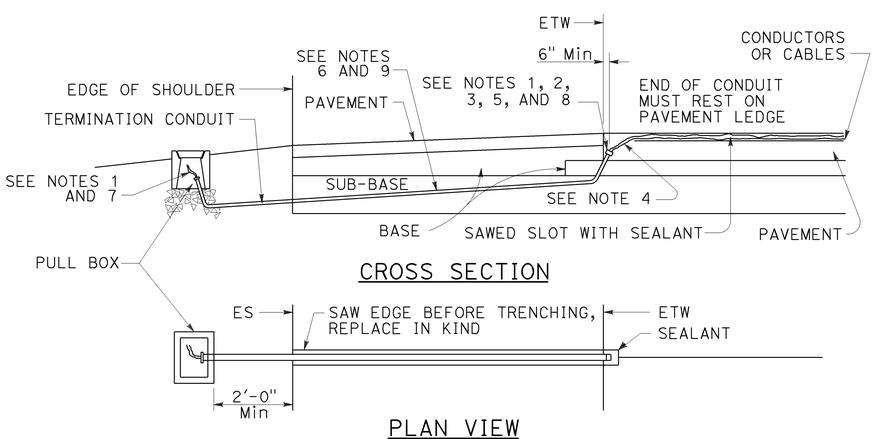


CROSS SECTION

PLAN VIEW

SHOULDER TERMINATION DETAILS

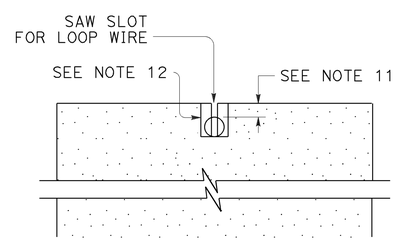


SECTION A-A

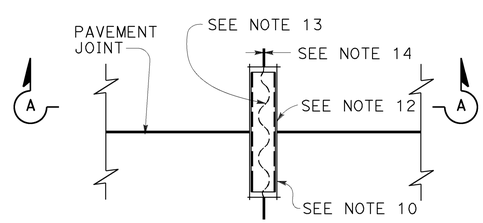


PLAN VIEW

TYPICAL LOOP LEAD-IN DETAIL
AT PAVEMENT JOINT

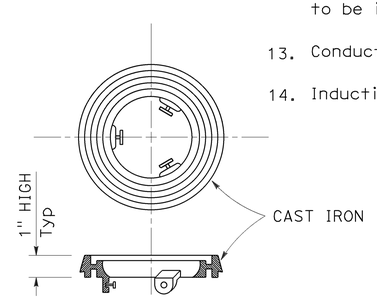


LOCKING GRADE RING

NOTES:

1. Bushing shall be used at end of conduit.
2. Tape detector conductors or cables 3" each side of bushings.
3. Install duct seal compound to each end of termination conduit before installing sealant.
4. Round all sharp edges where detector conductors or cables have to pass.
5. End of conduit shall be 3⅛" below roadway surface.
6. 

| Conduit size | Loop conductors |
|---|---|
| 1"C minimum | 1 to 2 pairs |
| 1½"C minimum | 3 to 4 pairs |
| 2"C minimum | 5 or more pairs |

7. Splice detector conductors or cables to detector lead-in-cable.
8. Location of detector handhole when shown on plans.
9. When the shoulder and traveled way are paved with the same material and there is no joint between them, the conduit shall extend only 2'-0" into the shoulder pavement.
10. ¾"C, Type 3 conduit 6" long minimum, plug both ends with duct compound to keep out sealant.
11. ½" Minimum between top of conduit and pavement surface.
12. Sawcut shall not exceed 1" in width and ⅛" longer than conduit to be installed.
13. Conductors with ½" minimum slack inside conduit.
14. Inductive loop detector saw slot.

STATE OF CALIFORNIA
DEPARTMENT OF TRANSPORTATION

# ELECTRICAL SYSTEMS (CURB AND SHOULDER TERMINATION, TRENCH, AND HANDHOLE DETAILS)

NO SCALE

RSP ES-5D DATED OCTOBER 30, 2015 SUPERSEDES RSP ES-5D DATED JULY 19, 2013 AND STANDARD PLAN ES-5D DATED MAY 20, 2011 - PAGE 451 OF THE STANDARD PLANS BOOK DATED 2010.

**REVISED STANDARD PLAN RSP ES-5D**

2010 REVISED STANDARD PLAN RSP ES-5D

8-19-15

| Dist | COUNTY | ROUTE | POST MILES TOTAL PROJECT | SHEET No. | TOTAL SHEETS |
|---|---|---|---|---|---|
| 06 | Tul | 65 | R9.3/R14.0 | 43 | 57 |

REGISTERED CIVIL ENGINEER

October 30, 2015
PLANS APPROVAL DATE

REGISTERED PROFESSIONAL ENGINEER
Stanley P. Johnson
No. C57793
Exp. 3-31-16
CIVIL
STATE OF CALIFORNIA

*THE STATE OF CALIFORNIA OR ITS OFFICERS OR AGENTS SHALL NOT BE RESPONSIBLE FOR THE ACCURACY OR COMPLETENESS OF SCANNED COPIES OF THIS PLAN SHEET.*

TO ACCOMPANY PLANS DATED 3-21-16

**2010 REVISED STANDARD PLAN RSP ES-6E**

| LUMINAIRE MAST ARM DATA | | | |
|---|---|---|---|
| PROJECTED LENGTH | THICKNESS | MINIMUM OD AT POLE | MOUNTING HEIGHT |
| * 6′-0″ | 0.1196″ | 3¼″ | 36′-9″± |
| * 8′-0″ | | 3½″ | 37′-3″± |
| * 10′-0″ | | 3¾″ | 38′-0″± |
| * 12′-0″ | | | 39′-0″± |
| * 15′-0″ | | 4¼″ | 39′-6″± |
| ** 20′-0″ | 0.1793″ | 5″ | 37′-0″± |

* TYPE 30
** TYPE 31

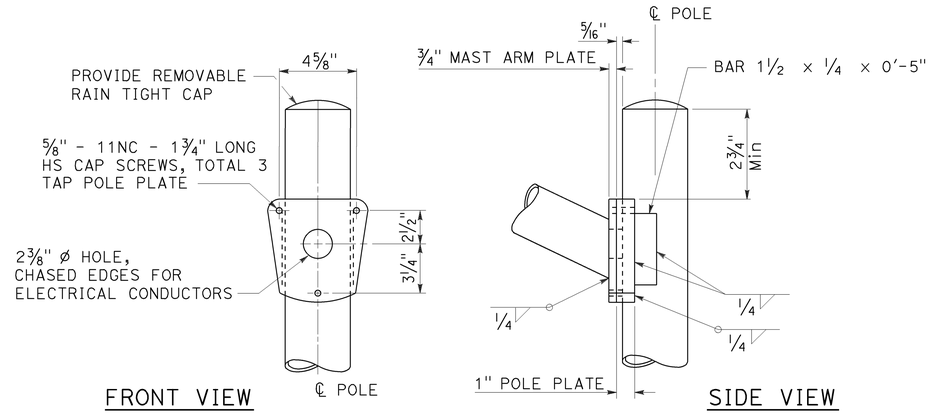


TYPE 30
DETAIL A

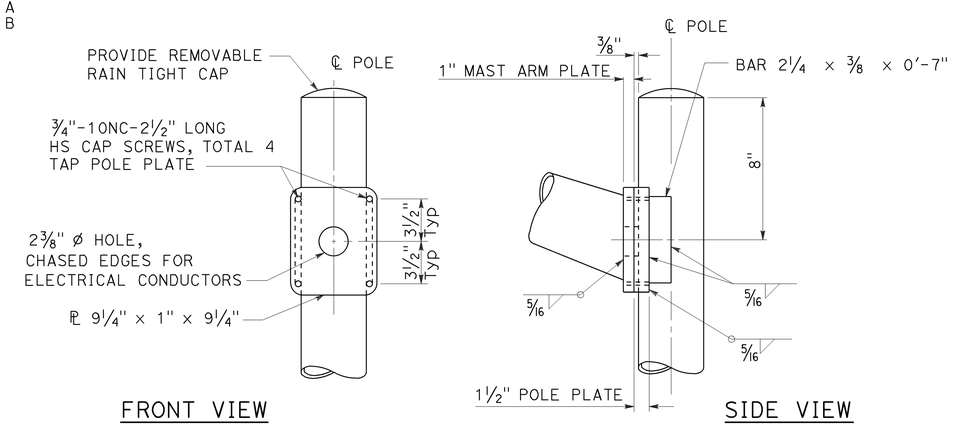


TYPE 31
DETAIL B

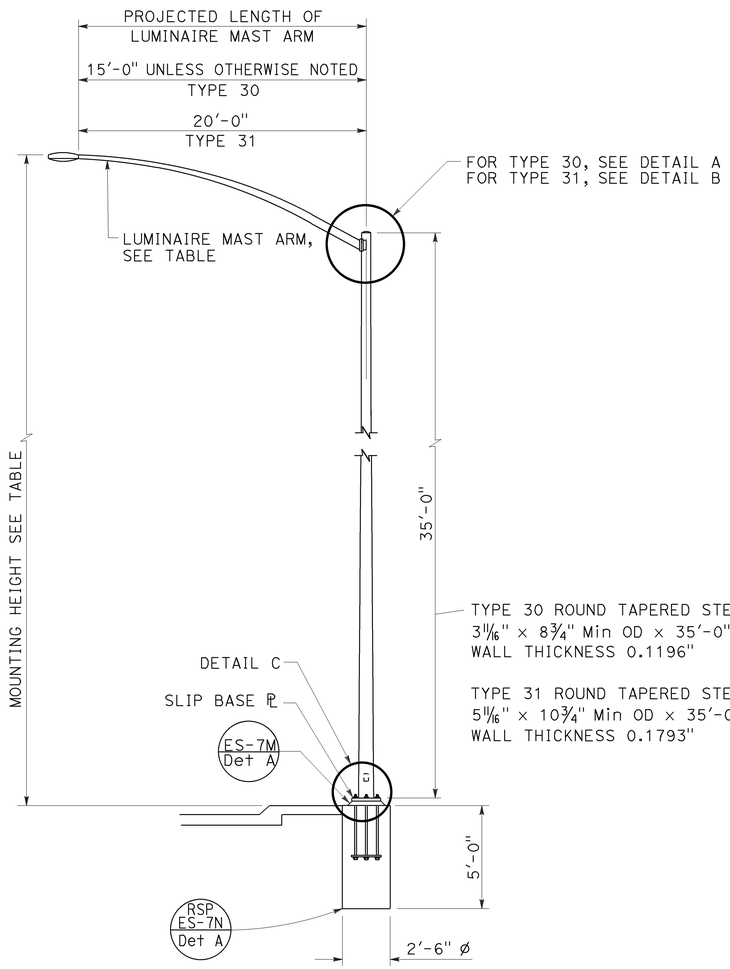


ELEVATION A

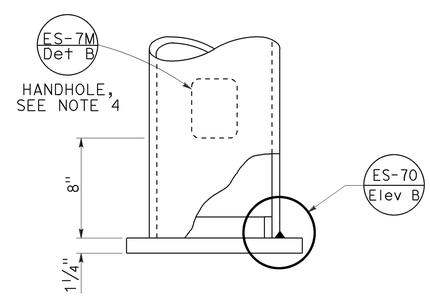


DETAIL C

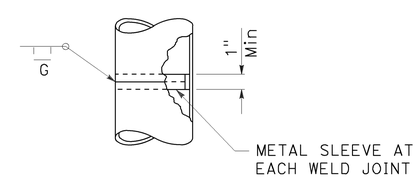


POLE SPLICE

## NOTES:

1. For slip base plate details, see Revised Standard Plan RSP ES-6F.
2. For Type 30 fixed base use Type 15 base plate and foundation shown on Revised Standard Plan RSP ES-6A. Use 1¼″ Dia × 3′-6″ anchor bolts.
3. For Type 31 fixed base use Type 32 base plate, anchor bolts and foundation on Revised Standard Plan RSP ES-6G.
4. Handhole shall be located on the downstream side of traffic.
5. For additional notes and details, see Revised Standard Plans RSP ES-7M and RSP ES-7N.

STATE OF CALIFORNIA
DEPARTMENT OF TRANSPORTATION

# ELECTRICAL SYSTEMS (LIGHTING STANDARD, TYPES 30 AND 31)

NO SCALE

RSP ES-6E DATED OCTOBER 30, 2015 SUPERSEDES STANDARD PLAN ES-6E DATED MAY 20, 2011 - PAGE 456 OF THE STANDARD PLANS BOOK DATED 2010.

**REVISED STANDARD PLAN RSP ES-6E**

8-24-15

| Dist | COUNTY | ROUTE | POST MILES TOTAL PROJECT | SHEET No. | TOTAL SHEETS |
|---|---|---|---|---|---|
| 06 | Tul | 65 | R9.3/R14.0 | 44 | 57 |

REGISTERED CIVIL ENGINEER

October 30, 2015
PLANS APPROVAL DATE

REGISTERED PROFESSIONAL ENGINEER
Stanley P. Johnson
No. C57793
Exp. 3-31-16
CIVIL
STATE OF CALIFORNIA

*THE STATE OF CALIFORNIA OR ITS OFFICERS OR AGENTS SHALL NOT BE RESPONSIBLE FOR THE ACCURACY OR COMPLETENESS OF SCANNED COPIES OF THIS PLAN SHEET.*

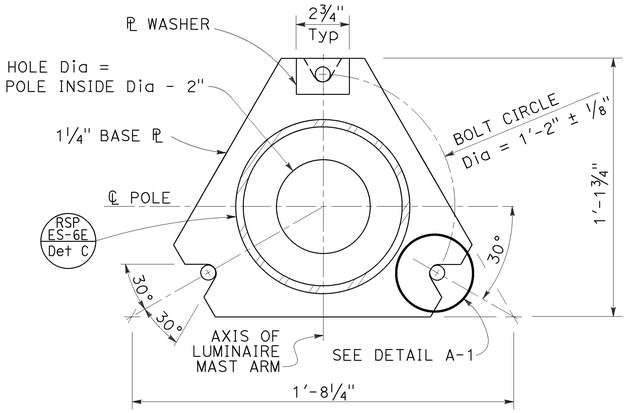


BASE PLATE
DETAIL A

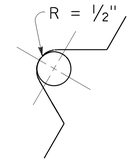


DETAIL A-1

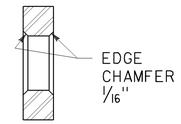


SECTION A-A

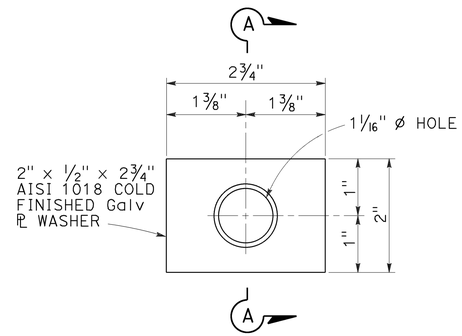


PLATE WASHER
DETAIL D

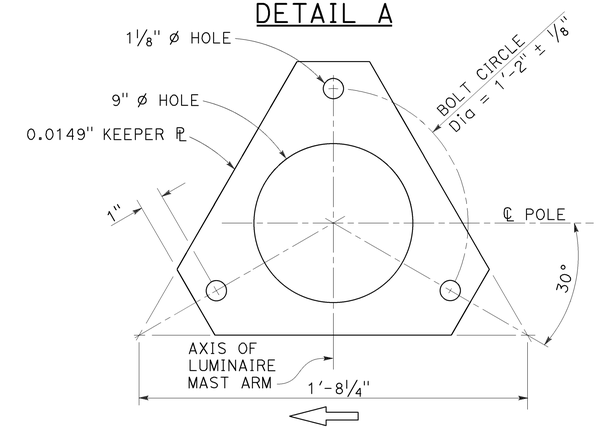


KEEPER PLATE
DETAIL B

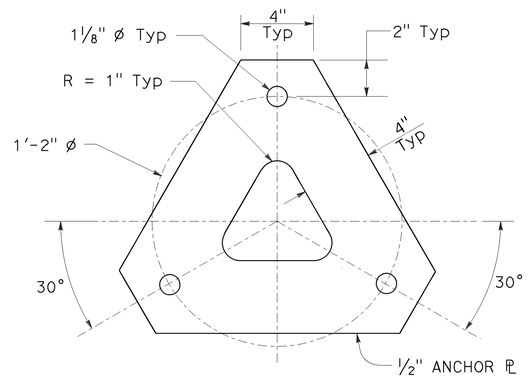


ANCHOR PLATE
DETAIL E

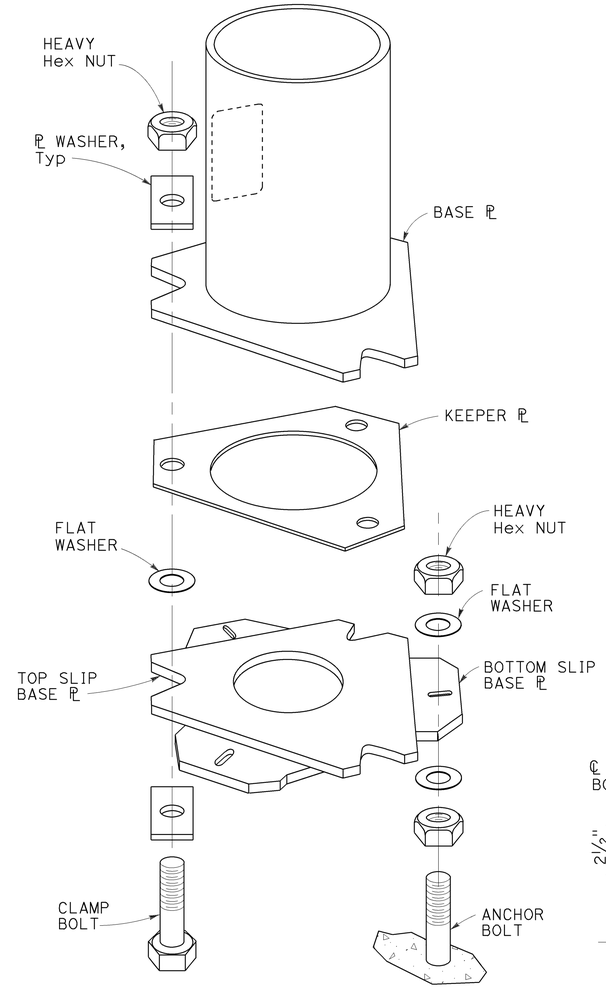


SLIP BASE DETAIL
DETAIL F

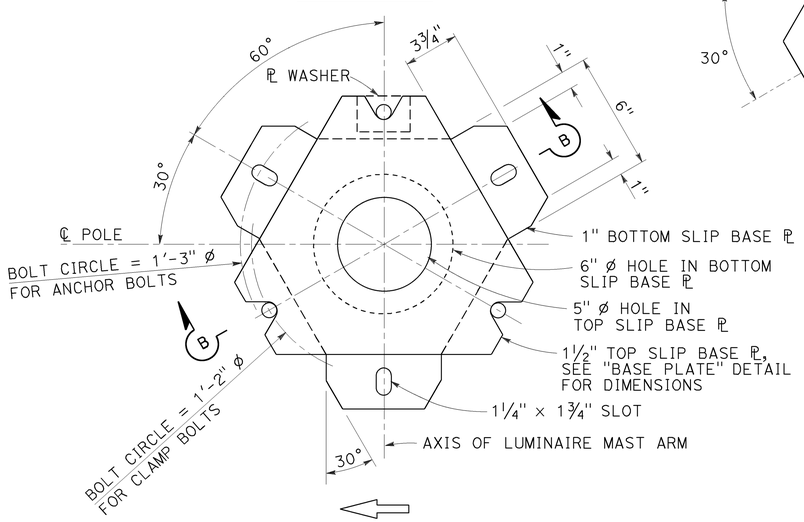


BOTTOM PLATE
DETAIL C

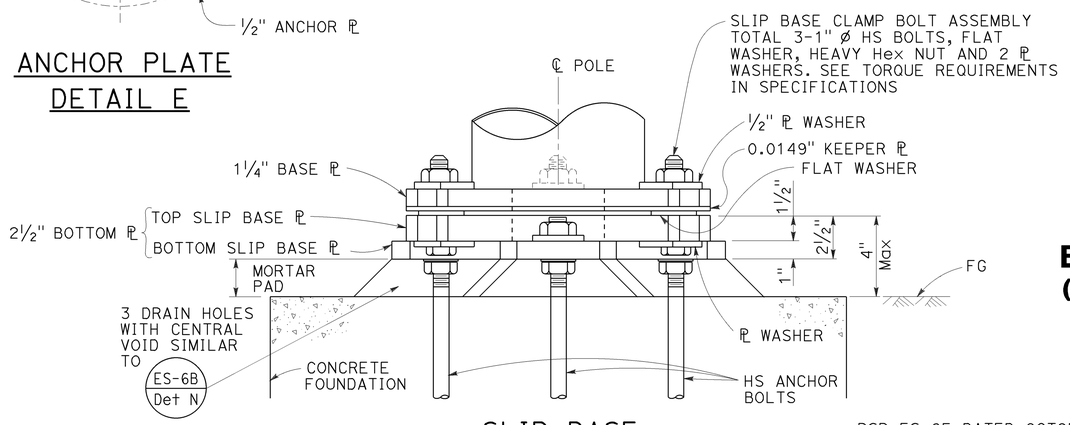


SLIP BASE
ELEVATION A

## NOTES:

TO ACCOMPANY PLANS DATED 3-21-16

1. 1" ø HS anchor bolts. For clamp bolts, see specifications.
2. Conduit shall not protrude more than 2" above top of foundation.
3. Handhole shall be located on the downstream side of traffic.
4. For Type 30 fixed base and for Type 31 fixed base, see Notes 3 and 4 on Revised Standard Plan RSP ES-6E.

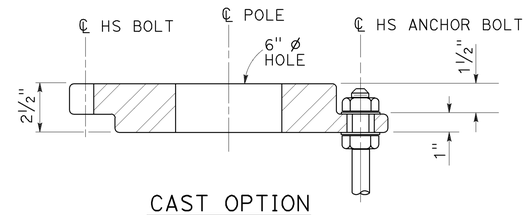


CAST OPTION

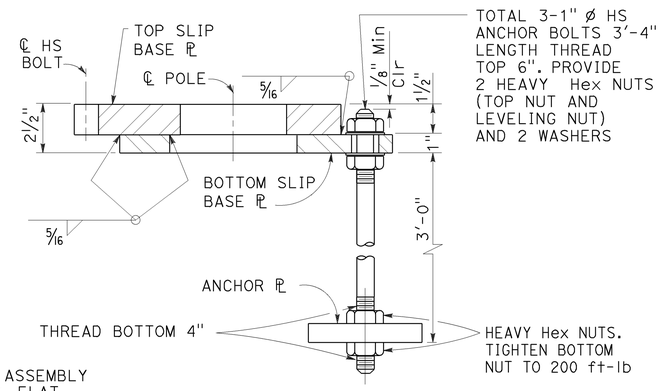


WELDED OPTION

SECTION B-B

STATE OF CALIFORNIA
DEPARTMENT OF TRANSPORTATION

# ELECTRICAL SYSTEMS (LIGHTING STANDARD, SLIP BASE PLATE)

NO SCALE

RSP ES-6F DATED OCTOBER 30, 2015 SUPERSEDES STANDARD PLAN ES-6F DATED MAY 20, 2011 - PAGE 457 OF THE STANDARD PLANS BOOK DATED 2010.

**REVISED STANDARD PLAN RSP ES-6F**

**2010 REVISED STANDARD PLAN RSP ES-6F**

8-20-15

| Dist | COUNTY | ROUTE | POST MILES TOTAL PROJECT | SHEET No. | TOTAL SHEETS |
|---|---|---|---|---|---|
| 06 | Tul | 65 | R9.3/R14.0 | 45 | 57 |

REGISTERED CIVIL ENGINEER

October 30, 2015
PLANS APPROVAL DATE

REGISTERED PROFESSIONAL ENGINEER
Stanley P. Johnson
No. C57793
Exp. 3-31-16
CIVIL
STATE OF CALIFORNIA

*THE STATE OF CALIFORNIA OR ITS OFFICERS OR AGENTS SHALL NOT BE RESPONSIBLE FOR THE ACCURACY OR COMPLETENESS OF SCANNED COPIES OF THIS PLAN SHEET.*

TO ACCOMPANY PLANS DATED 3-21-16

**2010 REVISED STANDARD PLAN RSP ES-7A**

## NOTES:

1. For additional notes, details and data for Type 15TS and Type 21TS Standards, see Revised Standard Plan RSP ES-6A.
2. Handhole shall be located on the downstream side of traffic.

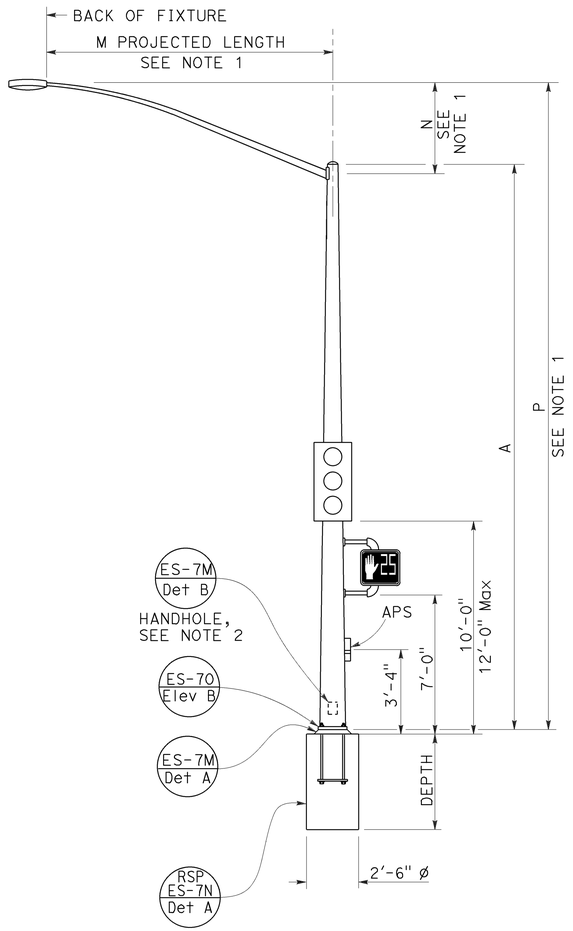


TYPE 15TS AND 21TS STANDARD

ELEVATION A

(See Note 1)

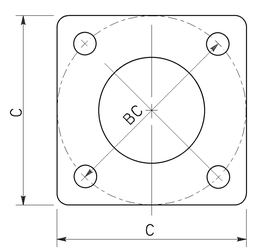


BASE PLATE

TYPE 15TS AND 21TS

DETAIL A

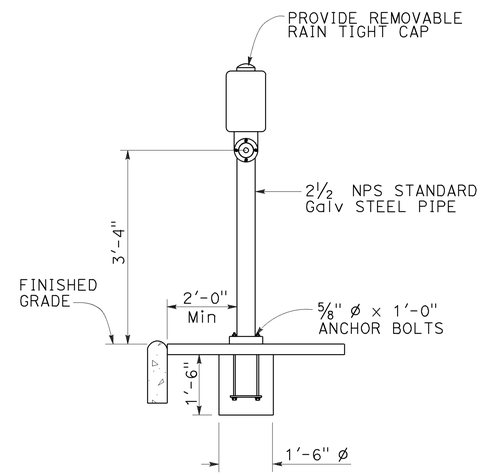


ELEVATION

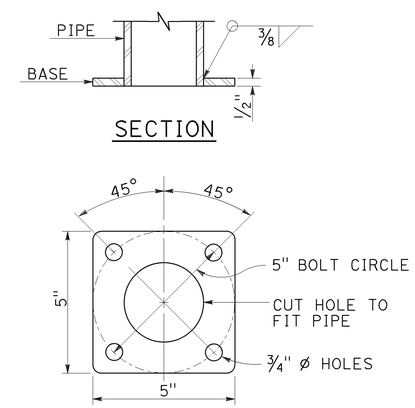


BASE PLATE

PBA POST

PUSH BUTTON ASSEMBLY POST

DETAIL B

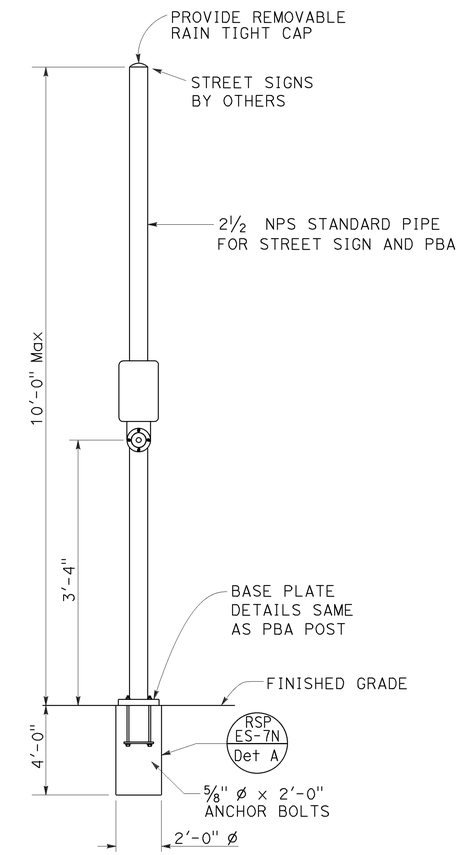


COMBINED STREET SIGN

PUSH BUTTON ASSEMBLY POST

DETAIL C

| POLE TYPE | POLE DATA | | | | BASE PLATE DATA | | | | CIDH |
|---|---|---|---|---|---|---|---|---|---|
| | A HEIGHT | Min OD BASE | Min OD TOP | WALL THICKNESS | C | BC = BOLT CIRCLE | THICKNESS | ANCHOR BOLT SIZE | DEPTH |
| 15TS | 30'-0" | 8" | 3 11/16" | 0.1793" | 1'-1½" | 1'-0" | 2" | 1½" ø x 42" | 7'-6" |
| 21TS | 35'-0" | 9⅜" | 3 9/16" | | 1'-3" | 1'-2" | | | 8'-6" |

STATE OF CALIFORNIA
DEPARTMENT OF TRANSPORTATION

# ELECTRICAL SYSTEMS (SIGNAL AND LIGHTING STANDARD, TYPE TS, AND PUSH BUTTON ASSEMBLY POST)

NO SCALE

RSP ES-7A DATED OCTOBER 30, 2015 SUPERSEDES RSP ES-7A DATED JULY 19, 2013 AND STANDARD PLAN ES-7A DATED MAY 20, 2011 - PAGE 462 OF THE STANDARD PLANS BOOK DATED 2010.

**REVISED STANDARD PLAN RSP ES-7A**

8-24-15

| Dist | COUNTY | ROUTE | POST MILES TOTAL PROJECT | SHEET No. | TOTAL SHEETS |
|---|---|---|---|---|---|
| 06 | Tul | 65 | R9.3/R14.0 | 46 | 57 |

REGISTERED CIVIL ENGINEER

October 30, 2015
PLANS APPROVAL DATE

REGISTERED PROFESSIONAL ENGINEER Stanley P. Johnson No. C57793 Exp. 3-31-16 CIVIL STATE OF CALIFORNIA

*THE STATE OF CALIFORNIA OR ITS OFFICERS OR AGENTS SHALL NOT BE RESPONSIBLE FOR THE ACCURACY OR COMPLETENESS OF SCANNED COPIES OF THIS PLAN SHEET.*

TO ACCOMPANY PLANS DATED 3-21-16

**2010 REVISED STANDARD PLAN RSP ES-7C**

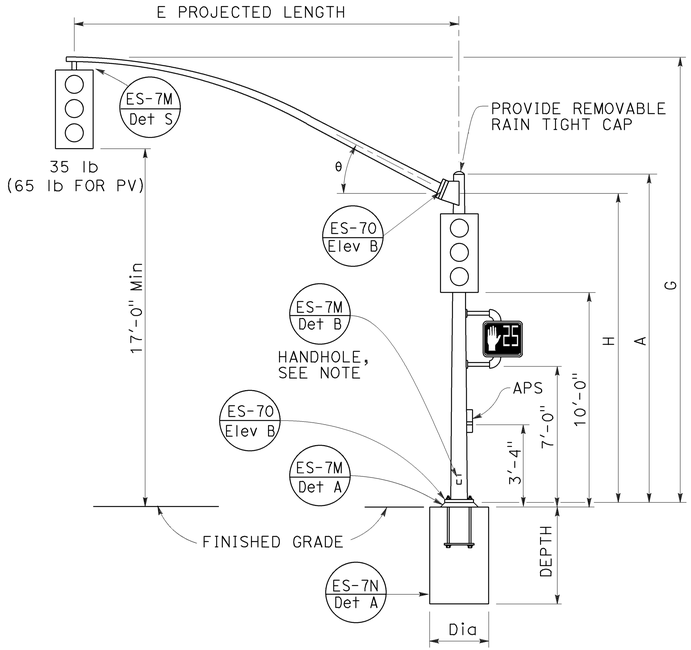


## TYPE 16-1-100, 18-1-100
### ELEVATION A

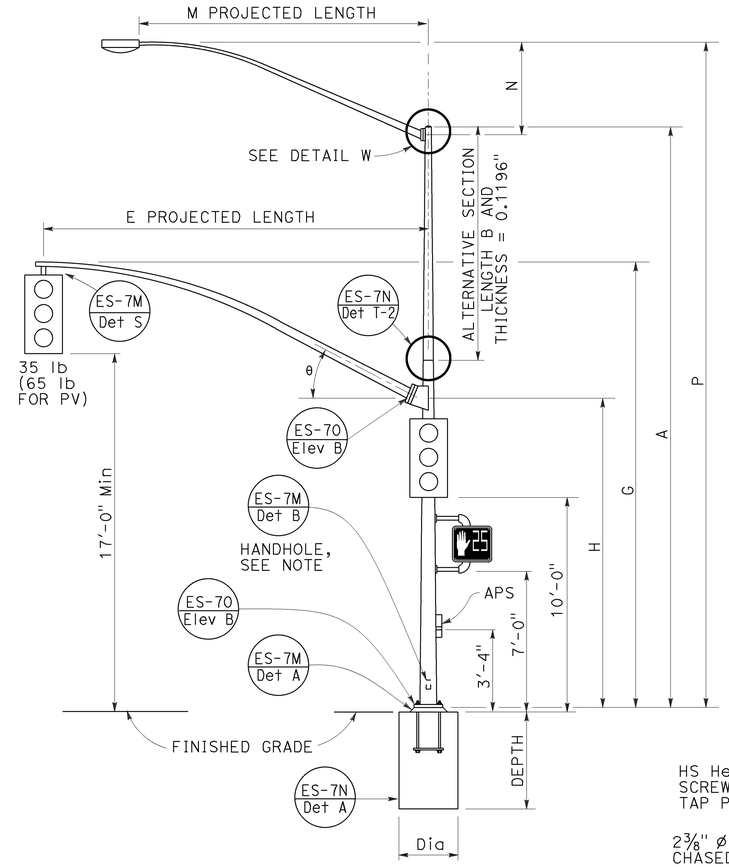


## TYPE 19-1-100, 19A-1-100
### ELEVATION B

Δ = LUMINAIRE MAST ARM SKEW -90° TO +90°
DEFAULT 0°

**NOTE:**

Handhole shall be located on the downstream side of traffic.

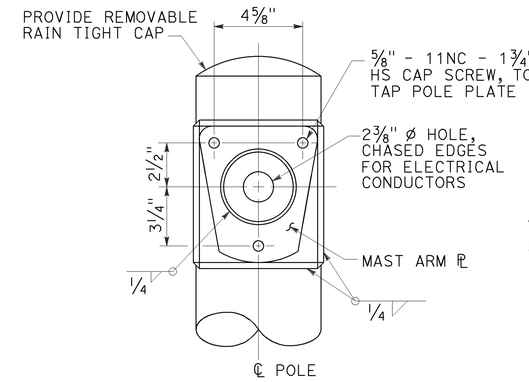


DETAIL W-1

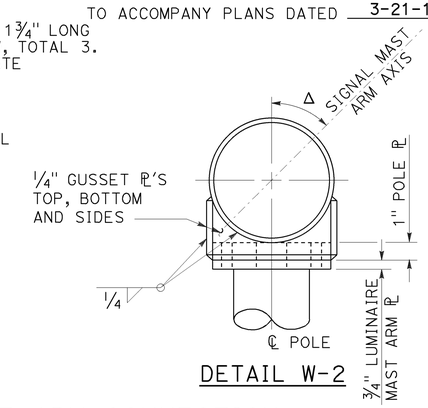


DETAIL W-2

## LUMINAIRE MAST ARM CONNECTION
### DETAIL W

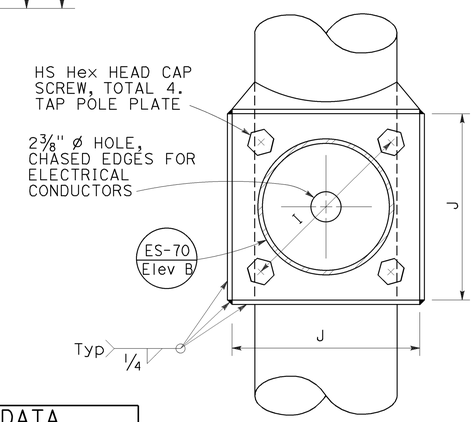


VIEW A-A

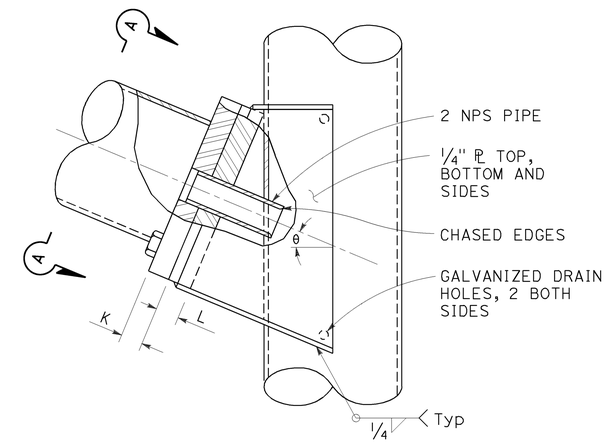


ELEVATION C

## SIGNAL MAST ARM CONNECTION
### DETAIL C

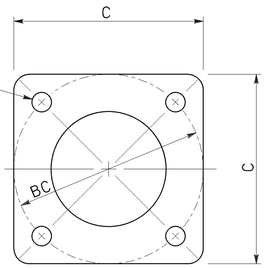


## BASE PLATE
### DETAIL D

**SIGNAL MAST ARM DATA**

| E PROJECTED LENGTH | G MOUNTING HEIGHT | H | Min OD AT POLE | THICKNESS | I BOLT CIRCLE | HS CAP SCREWS | J PLATE SIZE | K MAST ARM ℄ THICKNESS | L POLE ℄ THICKNESS | θ |
|---|---|---|---|---|---|---|---|---|---|---|
| 15'-0" | 21'-8"± | 17'-6" | 7 3/8" | 0.1196" | 12" | 1 1/4"-7NC-3" | 1'-0" | 1 1/4" | 1 1/2" | 23° |
| 20'-0" | | | | | | | | | | |
| 25'-0" | 22'-8"± | 16'-0" | | | | | | | | |
| 30'-0" | 23'-0"± | | 8" | | | | | | | |

**LUMINAIRE MAST ARM DATA**

| M PROJECTED LENGTH | N RISE | Min OD AT POLE | THICKNESS | P MOUNTING HEIGHT 30'-0" POLE | P MOUNTING HEIGHT 35'-0" POLE |
|---|---|---|---|---|---|
| 6'-0" | 2'-0"± | 3 1/4" | 0.1196" | 31'-6"± | 36'-6"± |
| 8'-0" | 2'-6"± | 3 1/2" | | 32'-0"± | 37'-0"± |
| 10'-0" | 3'-3"± | 3 7/8" | | 32'-9"± | 37'-9"± |
| 12'-0" | 4'-3"± | | | 33'-9"± | 38'-9"± |
| 15'-0" | 4'-9"± | 4 1/4" | | 34'-3"± | 39'-3"± |

| POLE TYPE | LOAD CASE | WIND VELOCITY (mph) | POLE DATA: A HEIGHT | Min OD BASE | Min OD TOP | THICKNESS | ALTERNATIVE SECTION B LENGTH | ALTERNATIVE SECTION BOTTOM | ALTERNATIVE SECTION TOP | BASE PLATE DATA: C | BC = BOLT CIRCLE | THICKNESS | ANCHOR BOLT SIZE | LUMINAIRE MAST ARM | SIGNAL MAST ARM | CIDH PILE FOUNDATION: DIAMETER | DEPTH | REINFORCED |
|---|---|---|---|---|---|---|---|---|---|---|---|---|---|---|---|---|---|---|
| 16-1-100 | 1 | 100 | 18'-6" | 10 3/4" | 8 1/16" | 0.1793" | None | | | 1'-5 1/2" | 1'-5 1/2" | 3" | 1 1/2" Ø x 42" | NONE | 15'-0", [20'-0"] | 2'-6" | 9'-0" | YES |
| 18-1-100 | | | 17'-0" | | 8 5/16" | | None | | | | | | | NONE | | | | |
| 19-1-100 | | | 30'-0" | | 6 7/16" | | 10'-0" | 7 7/8" | 6 7/16" | | | | | 6'-15' [12'-0"] | 25'-0", [30'-0"] | | | |
| 19A-1-100 | | | 35'-0" | | 5 11/16" | | 15'-0" | | 5 11/16" | | | | | 6'-15' [15'-0"] | | | | |

[ ] INDICATES MAST ARM LENGTH TO BE USED UNLESS OTHERWISE NOTED ON PLANS.

STATE OF CALIFORNIA
DEPARTMENT OF TRANSPORTATION

# ELECTRICAL SYSTEMS (SIGNAL AND LIGHTING STANDARD, CASE 1 SIGNAL MAST ARM LOADING, WIND VELOCITY = 100 MPH AND SIGNAL MAST ARM LENGTHS 15' TO 30')

NO SCALE

RSP ES-7C DATED OCTOBER 30, 2015 SUPERSEDES RSP ES-7C DATED JULY 19, 2013 AND STANDARD PLAN ES-7C DATED MAY 20, 2011 - PAGE 464 OF THE STANDARD PLANS BOOK DATED 2010.

**REVISED STANDARD PLAN RSP ES-7C**

8-24-15

| Dist | COUNTY | ROUTE | POST MILES TOTAL PROJECT | SHEET No. | TOTAL SHEETS |
|---|---|---|---|---|---|
| 06 | Tul | 65 | R9.3/R14.0 | 47 | 57 |

REGISTERED CIVIL ENGINEER

October 30, 2015
PLANS APPROVAL DATE

REGISTERED PROFESSIONAL ENGINEER
Stanley P. Johnson
No. C57793
Exp. 3-31-16
CIVIL
STATE OF CALIFORNIA

*THE STATE OF CALIFORNIA OR ITS OFFICERS OR AGENTS SHALL NOT BE RESPONSIBLE FOR THE ACCURACY OR COMPLETENESS OF SCANNED COPIES OF THIS PLAN SHEET.*

TO ACCOMPANY PLANS DATED 3-21-16

**NOTE:**
Handhole shall be located on the downstream side of traffic.

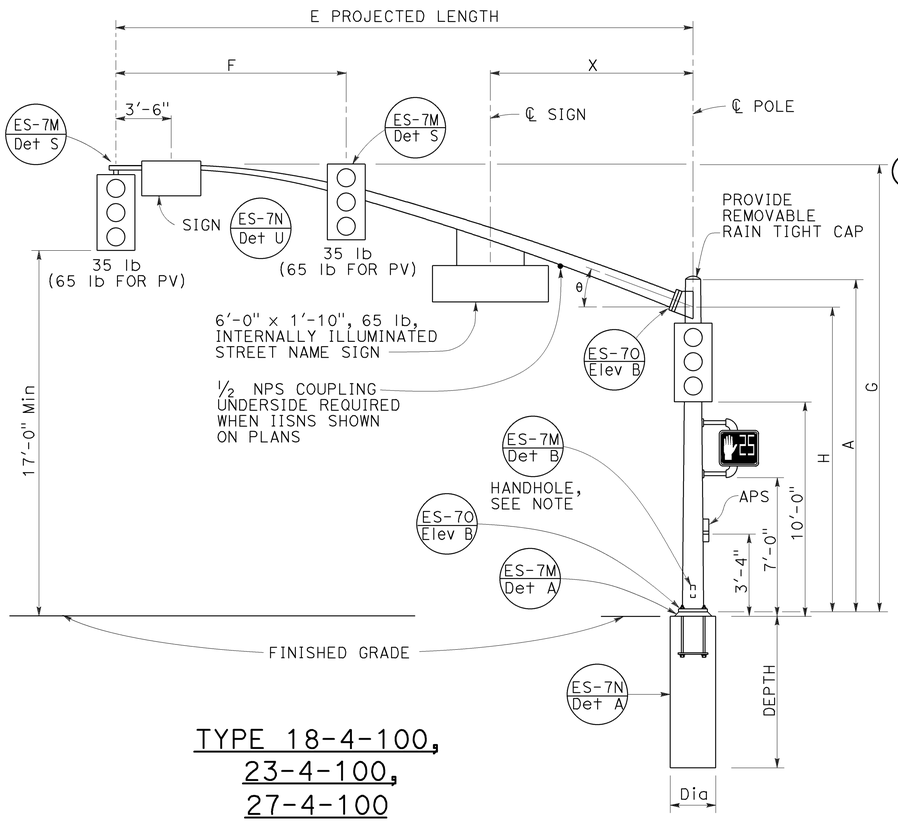


TYPE 18-4-100,
23-4-100,
27-4-100
ELEVATION A

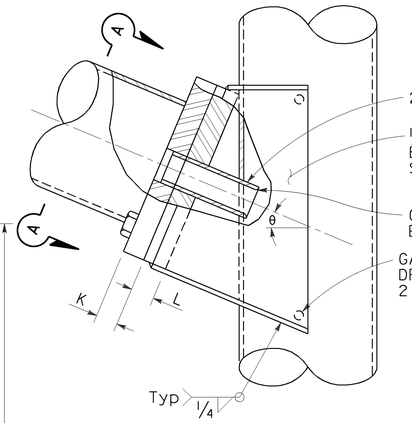


ELEVATION C

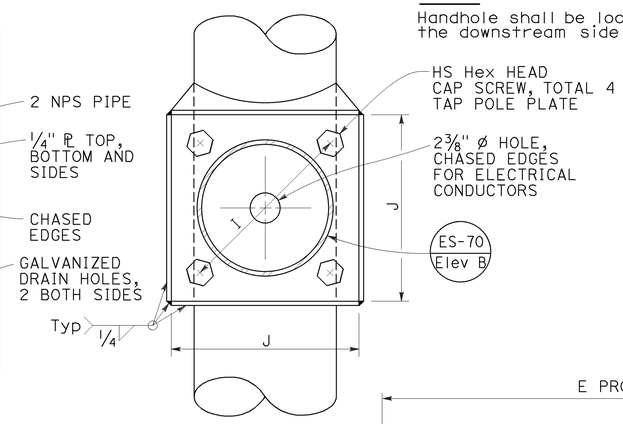


VIEW A-A

SIGNAL MAST ARM CONNECTION
DETAIL A

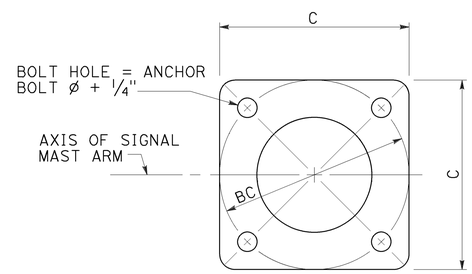


BASE PLATE
DETAIL B

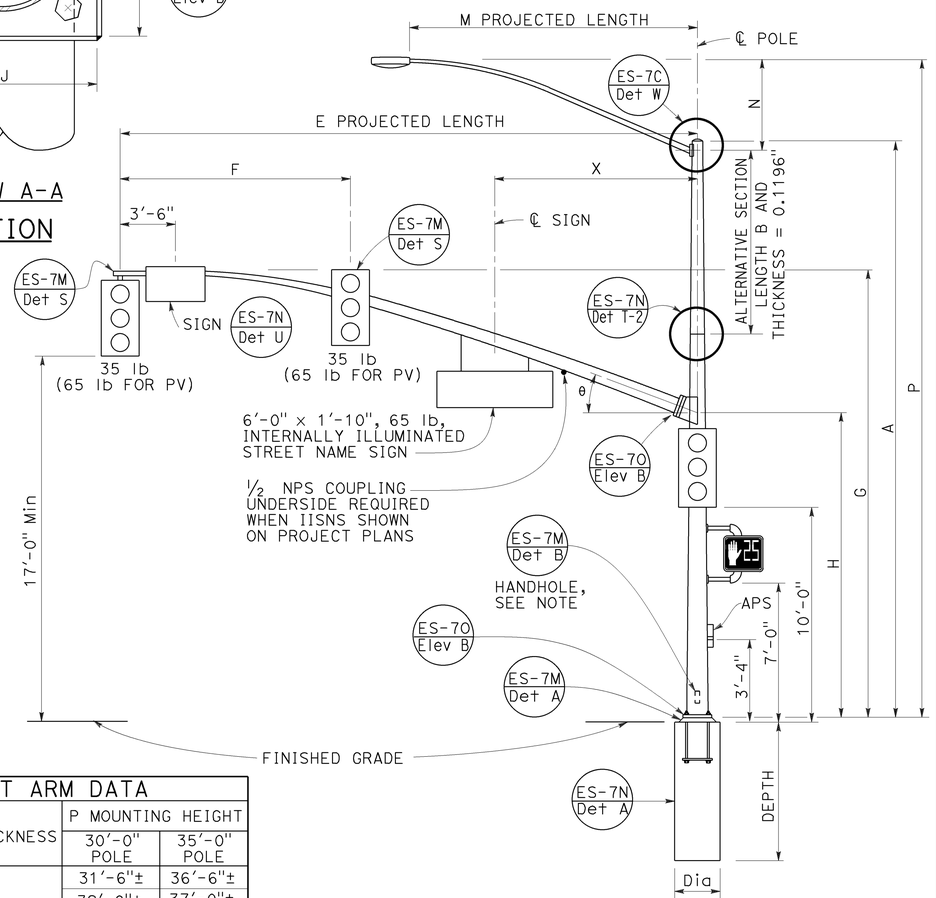


TYPE 19-4-100, 19A-4-100,
24-4-100, 24A-4-100,
26-4-100, 26A-4-100
ELEVATION B

**SIGNAL MAST ARM DATA**

| E PROJECTED LENGTH | F Min SPACING | G MOUNTING HEIGHT | H | Min OD AT POLE | THICKNESS | I BOLT CIRCLE | HS CAP SCREWS | J PLATE SIZE | K MAST ARM PL THICKNESS | L POLE PL THICKNESS | θ | X Max |
|---|---|---|---|---|---|---|---|---|---|---|---|---|
| 25'-0" | 10'-0" | 22'-8"± | 16'-0" | 7⅜" | 0.2391" | 12" | 1¼"-7NC-3" | 1'-0" | 1¼" | 1½" | 23° | 10'-6" |
| 30'-0" | 12'-0" | 23'-0"± | | 8" | | | | | | | | |
| 35'-0" | 14'-0" | | | 8 11/16" | | 13½" | | 1'-1½" | 1½" | 1¾" | 21° | 13'-0" |
| 40'-0" | 15'-0" | | | 9⅜" | | | | | | | 15° | |
| 45'-0" | | 23'-8"± | | 10¼" | | | | | | | | |

**LUMINAIRE MAST ARM DATA**

| M PROJECTED LENGTH | N RISE | Min OD AT POLE | THICKNESS | P MOUNTING HEIGHT 30'-0" POLE | P MOUNTING HEIGHT 35'-0" POLE |
|---|---|---|---|---|---|
| 6'-0" | 2'-0"± | 3¼" | 0.1196" | 31'-6"± | 36'-6"± |
| 8'-0" | 2'-6"± | 3½" | | 32'-0"± | 37'-0"± |
| 10'-0" | 3'-3"± | 3⅞" | | 32'-9"± | 37'-9"± |
| 12'-0" | 4'-3"± | | | 33'-9"± | 38'-9"± |
| 15'-0" | 4'-9"± | 4¼" | | 34'-3"± | 39'-3"± |

**POLE DATA / BASE PLATE DATA / CIDH PILE FOUNDATION**

| POLE TYPE | LOAD CASE | WIND VELOCITY (mph) | A HEIGHT | Min OD BASE | Min OD TOP | THICKNESS | ALTERNATIVE SECTION B LENGTH | ALTERNATIVE SECTION BOTTOM | ALTERNATIVE SECTION TOP | C | BC = BOLT CIRCLE | THICKNESS | ANCHOR BOLT SIZE | LUMINAIRE MAST ARM | SIGNAL MAST ARM | CIDH PILE FOUNDATION Dia | DEPTH | REINFORCED |
|---|---|---|---|---|---|---|---|---|---|---|---|---|---|---|---|---|---|---|
| 18-4-100 | 4 | 100 | 17'-0" | 12⅛" | 9 9/16" | 0.3125" | NONE | | | 1'-7" | 1'-5½" | 3" | 2" Ø x 42" | NONE | 25'-0", [30'-0"] | 3'-0" | 11'-0" | YES |
| 19-4-100 | | | 30'-0" | | 7 11/16" | | 10'-0" | 9⅛" | 7 11/16" | | | | | 6'-15' [12'-0"] | | | | |
| 19A-4-100 | | | 35'-0" | | 6 15/16" | | 15'-0' | | 6 15/16" | | | | | 6'-15' [15'-0"] | | | | |
| 23-4-100 | | | 17'-0" | | 9 9/16" | | NONE | | | | | | | NONE | 35'-0" | | | |
| 24-4-100 | | | 30'-0" | | 7 11/16" | | 10'-0" | 9⅛" | 7 11/16" | | | | | 6'-15' [12'-0"] | | | | |
| 24A-4-100 | | | 35'-0" | | 6 15/16" | | 15'-0" | | 6 15/16" | | | | | 6'-15' [15'-0"] | | | | |
| 26-4-100 | | | 30'-0" | 14" | 8 3/16" | | 10'-0" | 9⅝" | 8 3/16" | 23" | 21" | | 2½" Ø x 42" | 6'-15' [12'-0"] | 40'-0", [45'-0"] | 3'-6" | 12'-0" | |
| 26A-4-100 | | | 35'-0" | | 7 7/16" | | 15'-0" | | 7 7/16" | | | | | 6'-15' [15'-0"] | | | | |
| 27-4-100 | | | 17'-0" | | 10 1/16" | | NONE | | | | | | | NONE | | | | |

[ ] INDICATES MAST ARM LENGTH TO BE USED UNLESS OTHERWISE NOTED ON PLANS.

STATE OF CALIFORNIA
DEPARTMENT OF TRANSPORTATION

# ELECTRICAL SYSTEMS (SIGNAL AND LIGHTING STANDARD, CASE 4 SIGNAL MAST ARM LOADING, WIND VELOCITY=100 MPH AND SIGNAL MAST ARM LENGTHS 25' TO 45')

NO SCALE

RSP ES-7F DATED OCTOBER 30, 2015 SUPERSEDES RSP ES-7F DATED JULY 19, 2013 AND ES-7F DATED MAY 20, 2011 - PAGE 467 OF THE STANDARD PLANS BOOK DATED 2010.

**REVISED STANDARD PLAN RSP ES-7F**

**2010 REVISED STANDARD PLAN RSP ES-7F**

8-24-15

| Dist | COUNTY | ROUTE | POST MILES TOTAL PROJECT | SHEET No. | TOTAL SHEETS |
|---|---|---|---|---|---|
| 06 | Tul | 65 | R9.3/R14.0 | 48 | 57 |

REGISTERED CIVIL ENGINEER

April 15, 2016
PLANS APPROVAL DATE

REGISTERED PROFESSIONAL ENGINEER
Stanley P. Johnson
No. C57793
Exp. 3-31-18
CIVIL
STATE OF CALIFORNIA

*THE STATE OF CALIFORNIA OR ITS OFFICERS OR AGENTS SHALL NOT BE RESPONSIBLE FOR THE ACCURACY OR COMPLETENESS OF SCANNED COPIES OF THIS PLAN SHEET.*

TO ACCOMPANY PLANS DATED 3-21-16

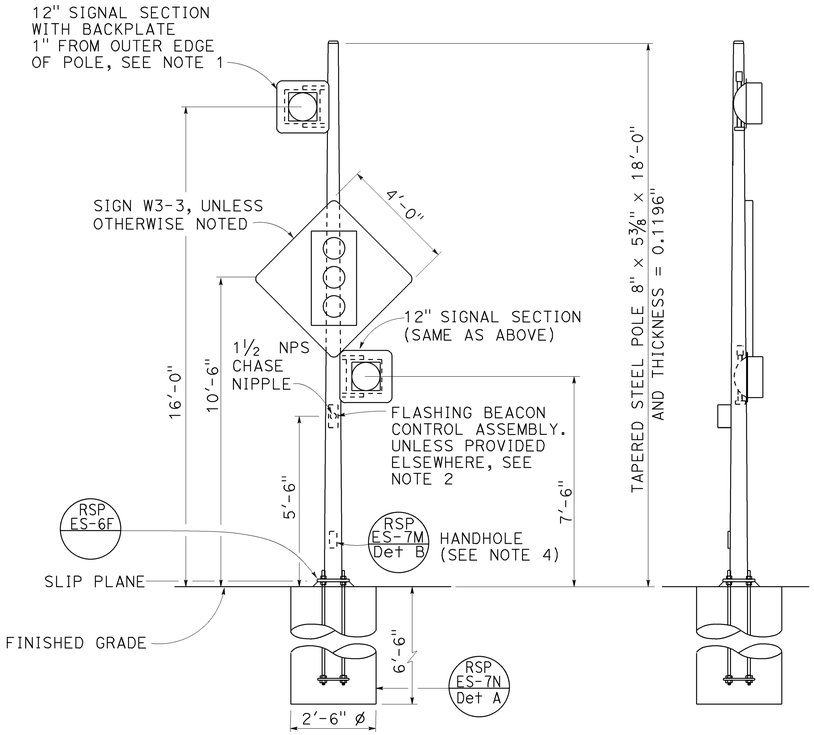


FRONT VIEW

SIDE VIEW

## TYPE 15-FBS
## FLASHING BEACON WITH SLIP BASE INSTALLATION
### DETAIL A

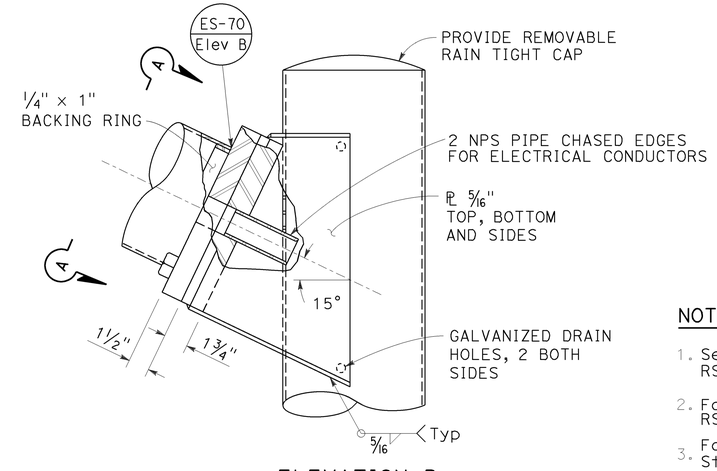


ELEVATION B

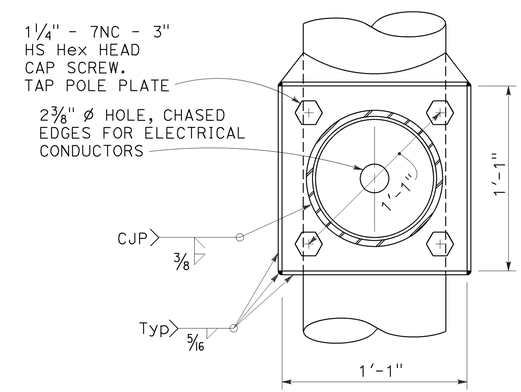


VIEW A-A

## FLASHING BEACON MAST ARM CONNECTION DETAIL
### DETAIL B

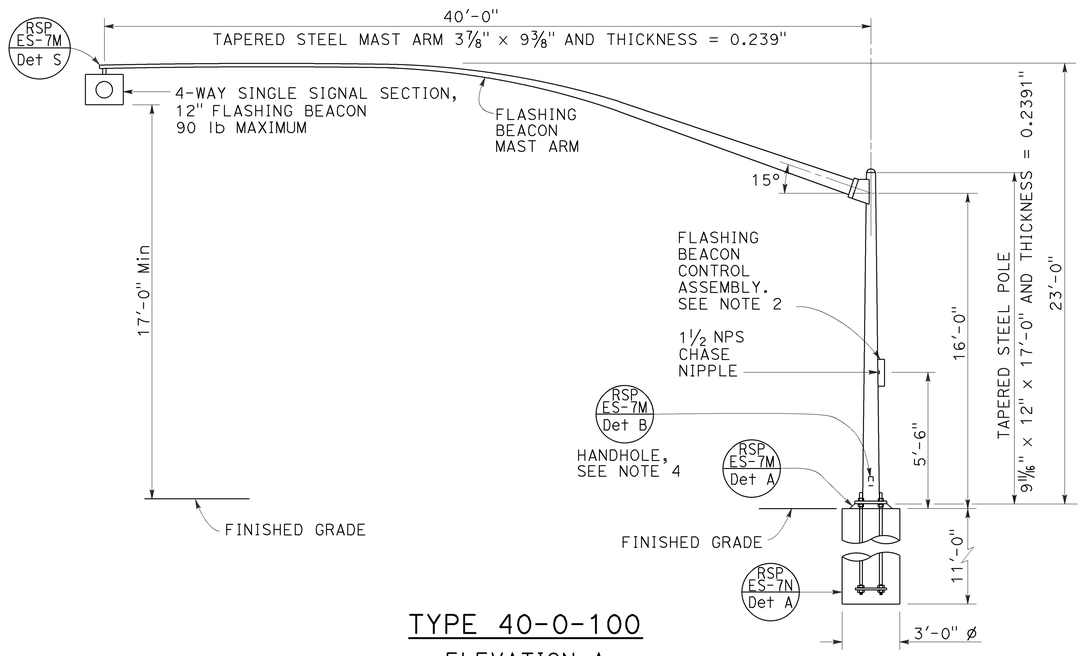


## TYPE 40-0-100
### ELEVATION A

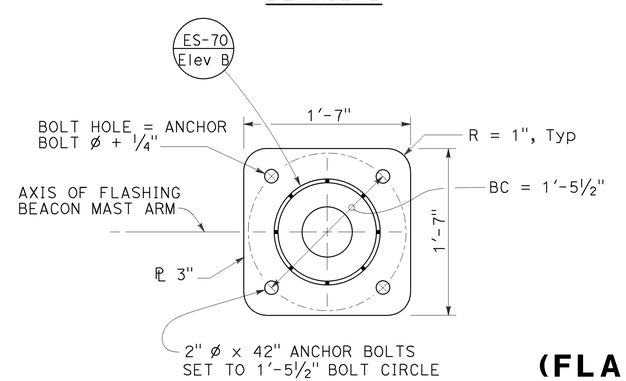


## BASE PLATE
### DETAIL C

## NOTES:

1. See Revised Standard Plans RSP ES-4A and RSP ES-4D for attachment fitting details.
2. For wiring diagram, see Revised Standard Plan RSP ES-14B.
3. For additional notes and details, see Revised Standard Plans RSP ES-7M and RSP ES-7N.
4. Handhole shall be located on the downstream side of traffic.
5. See project plans for type of standard to be installed.

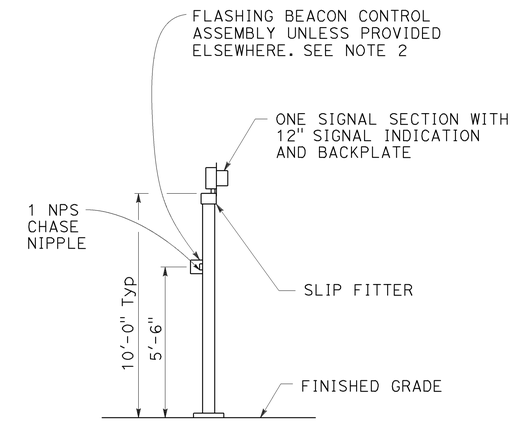


## TYPE 1-A, 1-B, 1-C, AND 1-D
### FLASHING BEACON INSTALLATION
### DETAIL D
See Note 5

STATE OF CALIFORNIA
DEPARTMENT OF TRANSPORTATION

# ELECTRICAL SYSTEMS (FLASHING BEACON ON A TYPE 1, TYPE 15-FBS, AND TYPE 40 STANDARD)

NO SCALE

RSP ES-7J DATED APRIL 15, 2016 SUPERSEDES RSP ES-7J DATED OCTOBER 30, 2015 AND RSP ES-7J DATED JULY 19, 2013 AND STANDARD PLAN ES-7J DATED MAY 20, 2011 - PAGE 471 OF THE STANDARD PLANS BOOK DATED 2010.

**REVISED STANDARD PLAN RSP ES-7J**

**2010 REVISED STANDARD PLAN RSP ES-7J**

1-26-16

| Dist | COUNTY | ROUTE | POST MILES TOTAL PROJECT | SHEET No. | TOTAL SHEETS |
|---|---|---|---|---|---|
| 06 | Tul | 65 | R9.3/R14.0 | 49 | 57 |

REGISTERED CIVIL ENGINEER

October 30, 2015
PLANS APPROVAL DATE

REGISTERED PROFESSIONAL ENGINEER
Stanley P. Johnson
No. C57793
Exp. 3-31-16
CIVIL
STATE OF CALIFORNIA

*THE STATE OF CALIFORNIA OR ITS OFFICERS OR AGENTS SHALL NOT BE RESPONSIBLE FOR THE ACCURACY OR COMPLETENESS OF SCANNED COPIES OF THIS PLAN SHEET.*

TO ACCOMPANY PLANS DATED 3-21-16

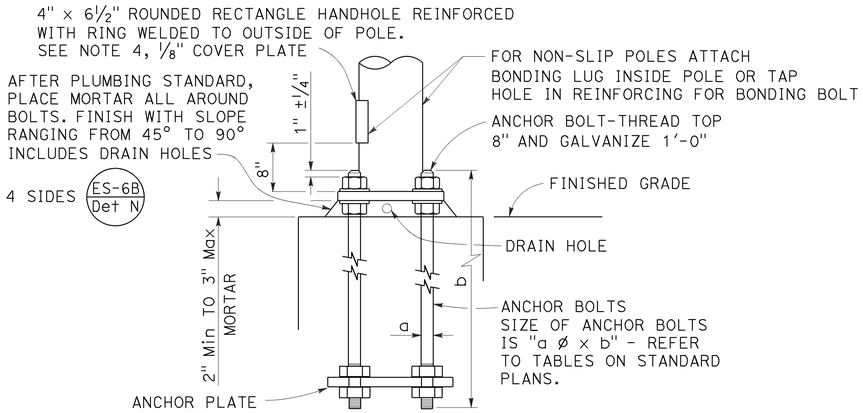


## HANDHOLE AND ANCHORAGE
### DETAIL A

## IDENTIFICATION NUMBER

1. Attach a stamped metal tag with pole's identification number above the handhole. ¼" high number, minimum.
2. Attach a stamped metal tag with mast arm's identification number to the bottom of the signal mast arm near the pole plate. ¼" high number, minimum.

Type — Load case (Use SL for special load case) — Design wind velocity (mph) — Signal mast arm length (ft) {Near handhole: Maximum signal mast arm length for pole type; Near pole plate: Installed signal mast arm length} — Standard plan year — Only for poles or mast arms using Detail F — Only for poles or mast arms using ES-7D

26A - 3 - 100 - 45 - 10 - F or FB

## SAMPLE IDENTIFICATION NUMBER

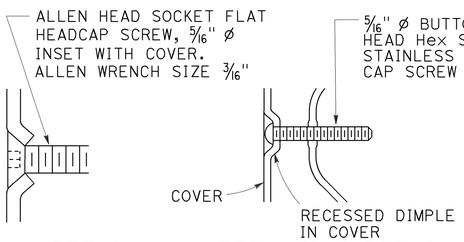


## TYPICAL DETAIL
### DETAIL B-1

## ALTERNATIVE DETAIL
### DETAIL B-2

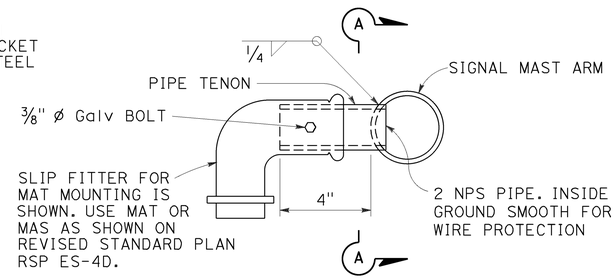


## SIDE TENON
### DETAIL S-1

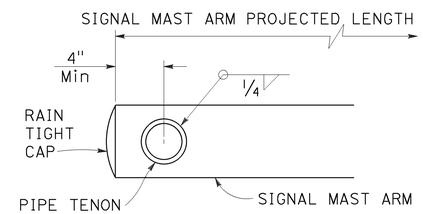


## SECTION A-A

## PIPE TENONS
### DETAIL S

## NOTES:

1. Provide a Hex nut, leveling nut and 2 washers for each bolt.
2. Luminaire mast arms shall be round, tapered steel tubes, taper of 0.1375" to 0.143-inch per foot with an end section 2⅜" OD for mounting hardware. Extensions of 2 NPS Standard pipe and 7" long may be used at the option of the manufacturer. When low pressure sodium luminaires are required, the extension shall be 1'-3".
3. Signal mast arms shall be round, tapered steel tubes, maximum taper 0.143-inch per foot.
4. Handhole reinforcement ring shall be ¼" x 2" for 0.1196" to 0.2391" thick poles, ⅜" x 2" for 0.3125" thick poles.
5. Handholes shall be located on the downstream side of traffic.
6. Detail F, fatigue resistant weld, is required at socket welded signal mast arm plate and pole base plate.
7. Cap screws shall be tightened by the turn-of-nut method ⅓ turn from a snug tight condition. No washer will be required.
8. Outside diameter, wall thickness, and corresponding section properties of poles and mast arms as shown in the Standard Plans are minimums. Unless otherwise specified, alternative sections shall require approval by the Engineer.
9. Wind Loading (3 seconds gust): 100 mph
10. Unit Stresses (Structural steel):
    fy = 55,000 psi (tapered steel tube and anchor bolts)
    fy = 50,000 psi (unless otherwise noted)
11. Unit Stresses (Reinforced concrete):
    f'c = 3,625 psi
    fy = 60,000 psi

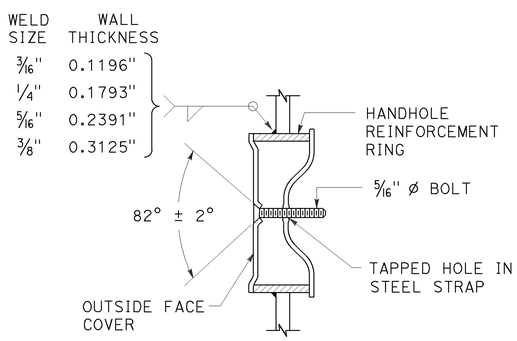


## TAMPER RESISTANT HANDHOLE COVER
### DETAIL B

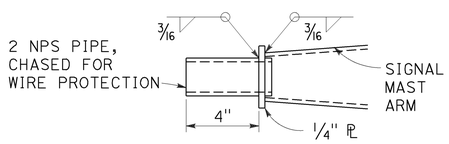


## TIP TENON
### DETAIL TL

This detail supersedes Detail S when so designated

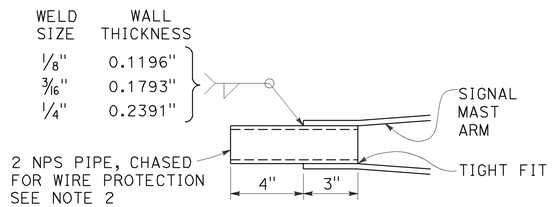


## TIP TENON
### DETAIL TS

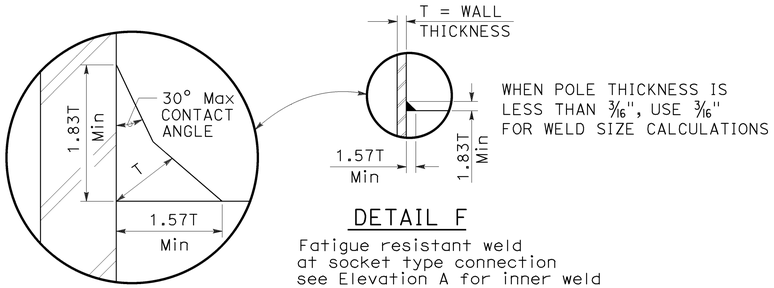


## DETAIL F

Fatigue resistant weld at socket type connection see Elevation A for inner weld

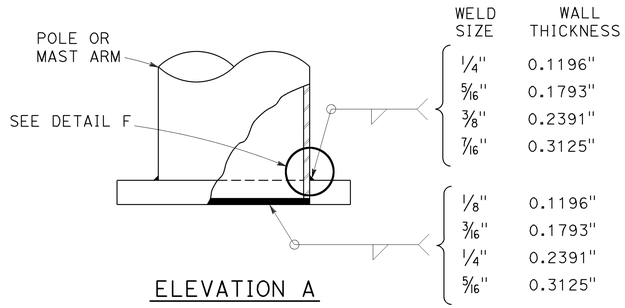


## ELEVATION A

STATE OF CALIFORNIA
DEPARTMENT OF TRANSPORTATION

# ELECTRICAL SYSTEMS (SIGNAL AND LIGHTING STANDARD, DETAIL No. 1)

NO SCALE

RSP ES-7M DATED OCTOBER 30, 2015 SUPERSEDES STANDARD PLAN ES-7M DATED MAY 20, 2011 - PAGE 474 OF THE STANDARD PLANS BOOK DATED 2010.

**REVISED STANDARD PLAN RSP ES-7M**

**2010 REVISED STANDARD PLAN RSP ES-7M**

9-1-15

| Dist | COUNTY | ROUTE | POST MILES TOTAL PROJECT | SHEET No. | TOTAL SHEETS |
|---|---|---|---|---|---|
| 06 | Tul | 65 | R9.3/R14.0 | 50 | 57 |

REGISTERED CIVIL ENGINEER

October 30, 2015
PLANS APPROVAL DATE

REGISTERED PROFESSIONAL ENGINEER
Stanley P. Johnson
No. C57793
Exp. 3-31-16
CIVIL
STATE OF CALIFORNIA

*THE STATE OF CALIFORNIA OR ITS OFFICERS OR AGENTS SHALL NOT BE RESPONSIBLE FOR THE ACCURACY OR COMPLETENESS OF SCANNED COPIES OF THIS PLAN SHEET.*

TO ACCOMPANY PLANS DATED 3-21-16

**2010 REVISED STANDARD PLAN RSP ES-7N**

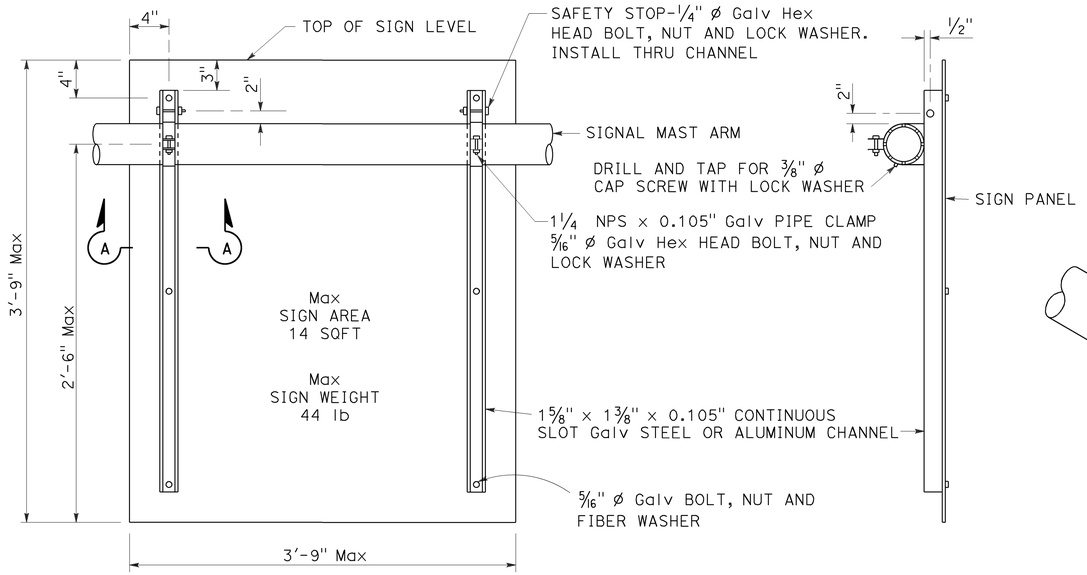


REAR VIEW

SIDE VIEW

## SIGN MOUNTING DETAILS
DETAIL U

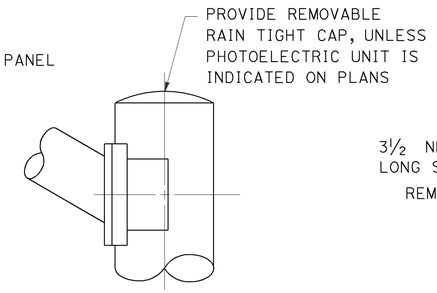


STANDARD TOP
DETAIL B-1

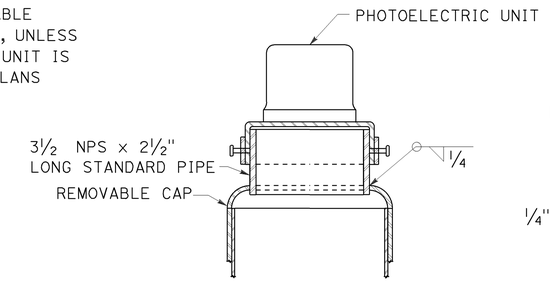


MOUNTING ADAPTER FOR
PHOTOELECTRIC UNIT
DETAIL B-2

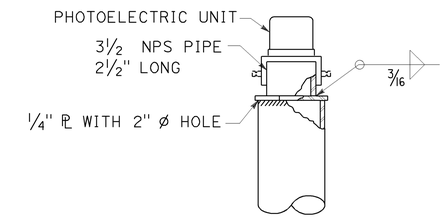


ALTERNATIVE
MOUNTING ADAPTER
DETAIL B-3

## POLE TOP DETAILS
DETAIL B

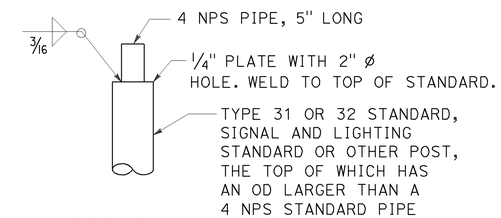


DETAIL C-1

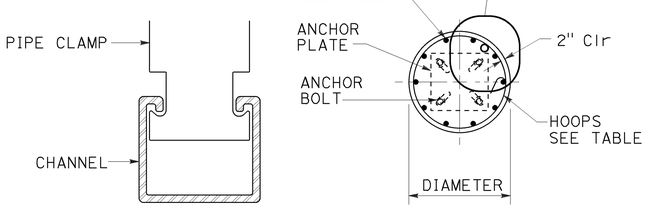


SECTION A-A

SECTION B-B

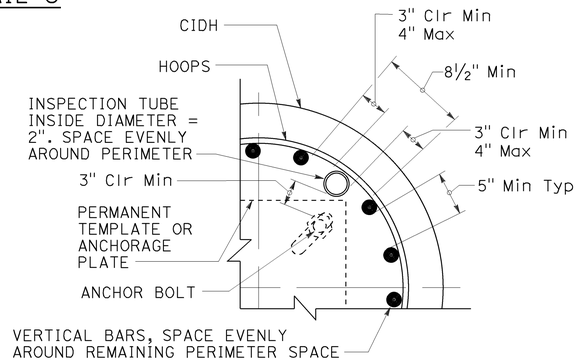


INSPECTION TUBE PLACEMENT
DETAIL I

| CIDH REINFORCING AND INSPECTION TUBE SCHEDULE | | | |
|---|---|---|---|
| CIDH DIAMETER | VERTICAL BARS | HOOPS (WELDED) | INSPECTION TUBE |
| 2 ft | 8-#5 | #4 AT 6 | 2 |
| 2.5 ft | 10-#6 | | 4* |
| 3 ft | 12-#7 | #5 AT 6 | |
| 3.5 ft | 14-#8 | | 4 |
| 4 ft | 18-#9 | 2-#4 AT 7 | 5 |
| 5 ft | 22-#10 | 2-#5 AT 7 | 6 |
| 6 ft | 26-#11 | 2-#6 AT 7 | 7 |

* FOR SLIP BASE VERSIONS WITH 3 ANCHOR BOLTS USE 3 INSPECTION TUBES.

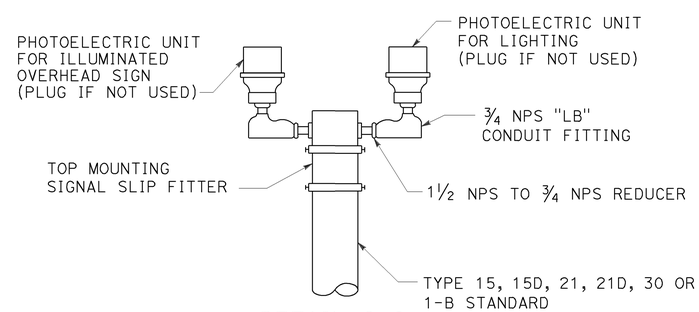


DETAIL C-2

## DUAL PHOTOELECTRIC UNIT MOUNTING DETAIL
DETAIL C

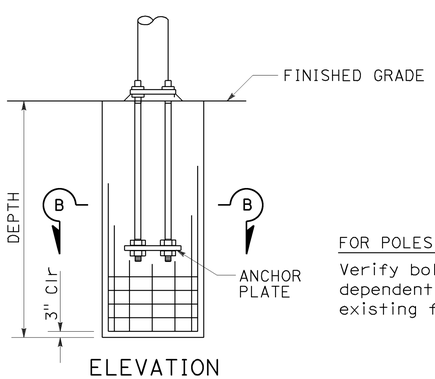


ELEVATION

FOR POLES TO BE INSTALLED ON EXISTING FOUNDATION:
Verify bolt circles, anchor bolt sizes and dependent dimensions for poles to be installed on existing foundations before fabricating the poles.

## CAST-IN-DRILLED-HOLE PILE FOUNDATION, REINFORCED PILE
DETAIL A

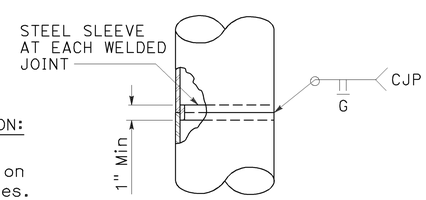


FOR UNIFORM TUBE THICKNESS
DETAIL T-1

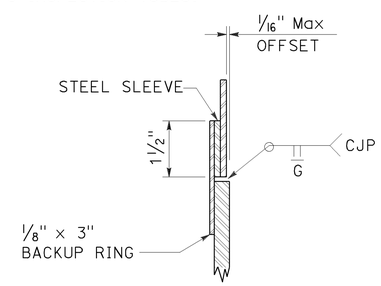


AT TUBE THICKNESS CHANGE
DETAIL T-2

## POLE SPLICES
DETAIL T

STATE OF CALIFORNIA
DEPARTMENT OF TRANSPORTATION

# ELECTRICAL SYSTEMS (SIGNAL AND LIGHTING STANDARD, DETAIL No. 2)

NO SCALE

RSP ES-7N DATED OCTOBER 30, 2015 SUPERSEDES STANDARD PLAN ES-7N DATED MAY 20, 2011 - PAGE 475 OF THE STANDARD PLANS BOOK DATED 2010.

**REVISED STANDARD PLAN RSP ES-7N**

9-1-15

| Dist | COUNTY | ROUTE | POST MILES TOTAL PROJECT | SHEET No. | TOTAL SHEETS |
|---|---|---|---|---|---|
| 06 | Tul | 65 | R9.3/R14.0 | 51 | 57 |

REGISTERED CIVIL ENGINEER

October 30, 2015
PLANS APPROVAL DATE

REGISTERED PROFESSIONAL ENGINEER
Stanley P. Johnson
No. C57793
Exp. 3-31-16
CIVIL
STATE OF CALIFORNIA

*THE STATE OF CALIFORNIA OR ITS OFFICERS OR AGENTS SHALL NOT BE RESPONSIBLE FOR THE ACCURACY OR COMPLETENESS OF SCANNED COPIES OF THIS PLAN SHEET.*

TO ACCOMPANY PLANS DATED 3-21-16

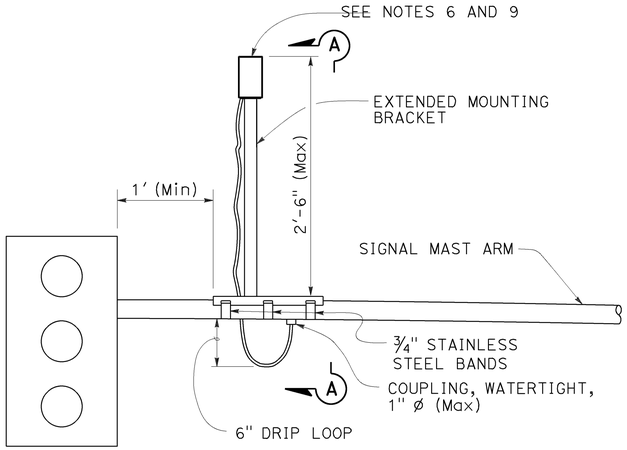


SIGNAL MAST ARM MOUNT

DETAIL A

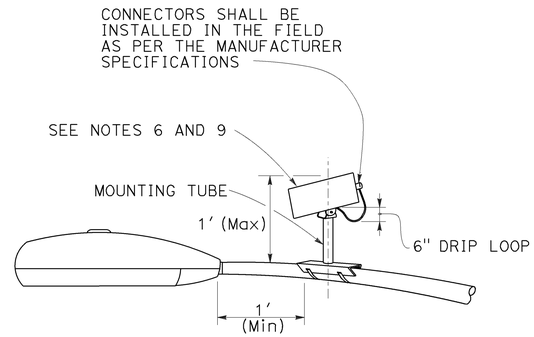


LUMINAIRE MAST ARM MOUNT

DETAIL B

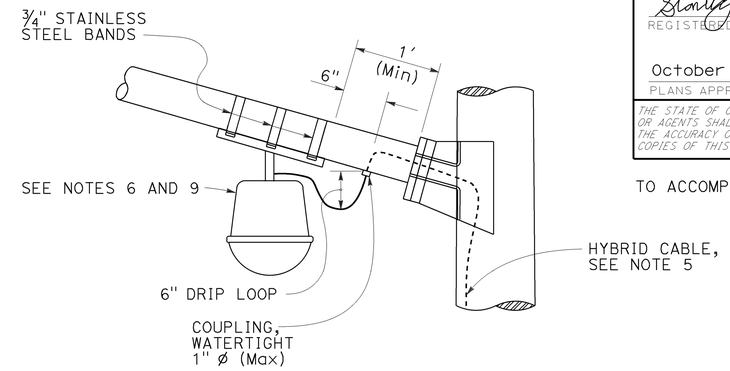


LUMINAIRE MAST ARM MOUNT

DETAIL C

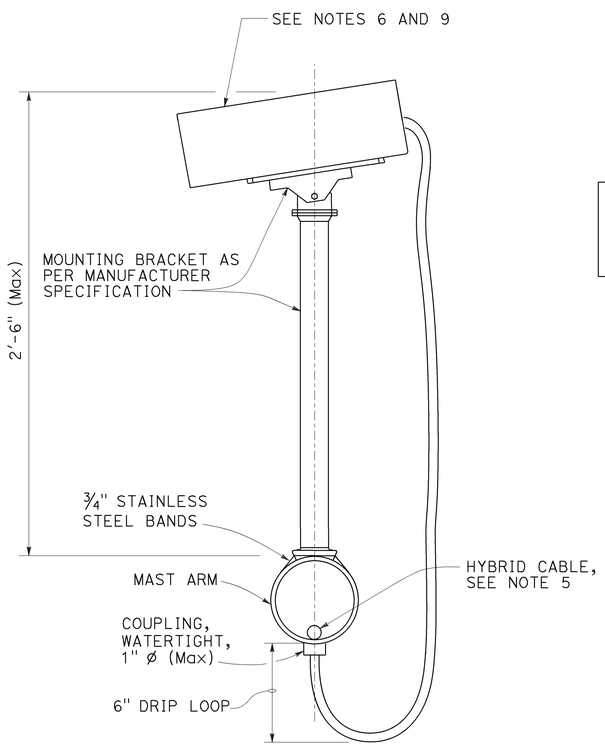


SECTION A-A

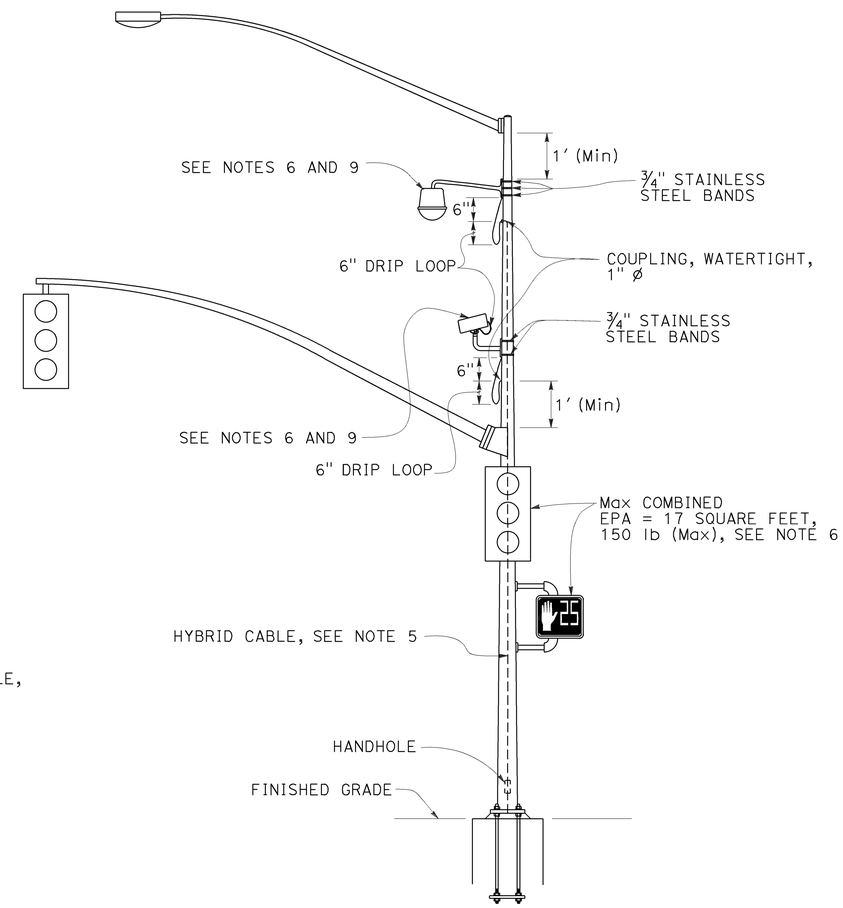


SIGNAL POLE MOUNT

DETAIL D

## NOTES:

1. Exact mounting location of miscellaneous attachment and bracket shall be approved by the Engineer per manufacturer's recommendation.
2. Location of cable entrances on signal pole shall be a minimum of 1′ from any flange or base plate.
3. Hybrid cable entrances on signal pole shall be drilled for weathertight coupling as required.
4. Hybrid cable shall have a drip loop at the entrance into signal pole, luminaire mast arm and signal mast arm.
5. A single hybrid cable shall run continuous and shall not be twisted from the miscellaneous attachment to the controller cabinet. No splices shall be allowed.
6. Use the manufacturer's Effective Projected Area (EPA) for miscellaneous attachment. The maximum EPA for each miscellaneous attachment shall be 1.6 square feet with 10 lb Max.
7. Maximum of two miscellaneous attachments per traffic signal standard.
8. Maximum of one miscellaneous attachment per mast arm.
9. Miscellaneous attachment shall be mounted using clamping devices.

STATE OF CALIFORNIA
DEPARTMENT OF TRANSPORTATION

# ELECTRICAL SYSTEMS (SIGNAL AND LIGHTING, MISCELLANEOUS ATTACHMENT)

NO SCALE

RSP ES-7R DATED OCTOBER 30, 2015 SUPERSEDES RSP ES-7R DATED JULY 19, 2013 AND STANDARD PLAN ES-7R DATED MAY 20, 2011 - PAGE 479 OF THE STANDARD PLANS BOOK DATED 2010.

**REVISED STANDARD PLAN RSP ES-7R**

**2010 REVISED STANDARD PLAN RSP ES-7R**

8-21-15

| DIST | COUNTY | ROUTE | POST MILES TOTAL PROJECT | SHEET NO. | TOTAL SHEETS |
|---|---|---|---|---|---|
| 06 | Tul | 65 | R9.3/R14.0 | 52 | 57 |

Theresa Gabriel
REGISTERED ELECTRICAL ENGINEER

April 15, 2016
PLANS APPROVAL DATE

REGISTERED PROFESSIONAL ENGINEER
Theresa Aziz Gabriel
No. E15129
Exp. 6-30-16
ELECTRICAL
STATE OF CALIFORNIA

*THE STATE OF CALIFORNIA OR ITS OFFICERS OR AGENTS SHALL NOT BE RESPONSIBLE FOR THE ACCURACY OR COMPLETENESS OF SCANNED COPIES OF THIS PLAN SHEET.*

TO ACCOMPANY PLANS DATED 3-21-16

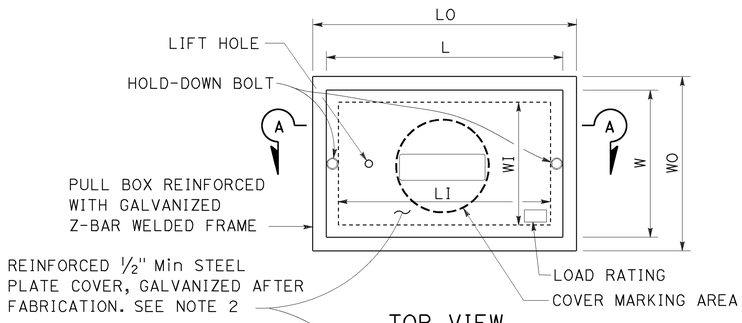


TOP VIEW

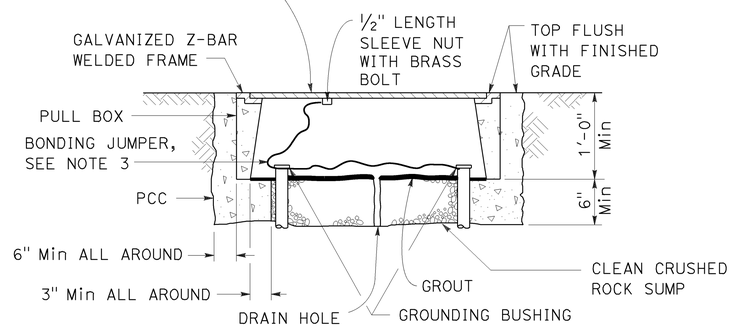


SECTION A-A

## No. 3½(T), No. 5(T) AND No. 6(T) TRAFFIC PULL BOX

## NOTES:

1. Traffic pull box shall be provided with steel cover and special concrete footing. Steel cover shall have embossed non-skid pattern.
2. Steel reinforcing shall be as regularly used in the standard products of the respective manufacturer.
3. Bonding jumper for metal covers shall be 3' long, minimum.
4. The nominal dimensions of the opening in which the cover sets shall be the same as the cover dimensions except the length and width dimensions shall be ⅛" greater.
5. Covers and boxes shall be interchangeable with California standard male and female gages. When interchanged with a standard male or female gage, the top surfaces shall be flush within ⅛".

DIMENSION TABLE

| PULL BOX | PULL BOX | | | | | | COVER | |
|---|---|---|---|---|---|---|---|---|
| | MINIMUM * THICKNESS | MINIMUM DEPTH BOX AND EXTENSION | LO | LI | WO | WI | L ** | W ** |
| No. 3½(T) | 1½" | 1'-0" | 1'-10" - 1'-11" | 1'-5" - 1'-6½" | 1'-3" - 1'-4" | 10" - 1'-0" | 1'-8" -1'-8½" | 1'-1" - 1'-2" |
| No. 5(T) | 1¾" | 1'-0" | 2'-5" - 2'-6" | 2'-0" - 2'-1" | 1'-6" - 1'-7" | 1'-1" - 1'-2" | 2'-3" - 2'-3½" | 1'-4" - 1'-4½" |
| No. 6(T) | 2" | 1'-0" | 2'-11" - 3'-1" | 2'-6" - 2'-7" | 1'-10" - 2'-0" | 1'-5" - 1'-6" | 2'-9" - 2'-9½" | 1'-8" - 1'-8½" |

* EXCLUDING CONDUIT WEB ** TOP DIMENSION

STATE OF CALIFORNIA
DEPARTMENT OF TRANSPORTATION

# ELECTRICAL SYSTEMS (TRAFFIC PULL BOX)

NO SCALE

RSP ES-8B DATED APRIL 15, 2016 SUPERSEDES RSP ES-8B DATED OCTOBER 30, 2015 AND RSP ES-8B DATED JULY 19, 2013 AND RSP ES-8B DATED JANUARY 20, 2012 THAT SUPPLEMENTS THE STANDARD PLANS BOOK DATED 2010.

**REVISED STANDARD PLAN RSP ES-8B**

**2010 REVISED STANDARD PLAN RSP ES-8B**

1-22-16

| Dist | COUNTY | ROUTE | POST MILES TOTAL PROJECT | SHEET No. | TOTAL SHEETS |
|---|---|---|---|---|---|
| 06 | Tul | 65 | R9.3/R14.0 | 53 | 57 |

Theresa Gabriel
REGISTERED ELECTRICAL ENGINEER

October 30, 2015
PLANS APPROVAL DATE

REGISTERED PROFESSIONAL ENGINEER
Theresa Aziz Gabriel
No. E15129
Exp. 6-30-16
ELECTRICAL
STATE OF CALIFORNIA

*THE STATE OF CALIFORNIA OR ITS OFFICERS OR AGENTS SHALL NOT BE RESPONSIBLE FOR THE ACCURACY OR COMPLETENESS OF SCANNED COPIES OF THIS PLAN SHEET.*

TO ACCOMPANY PLANS DATED 3-21-16

**NOTE:**

Curves represent the minimum footcandle (FC).

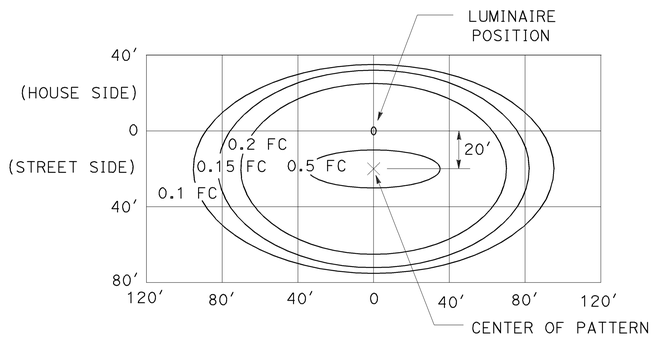


LED LUMINAIRE 165 W
34′ Mounting Height

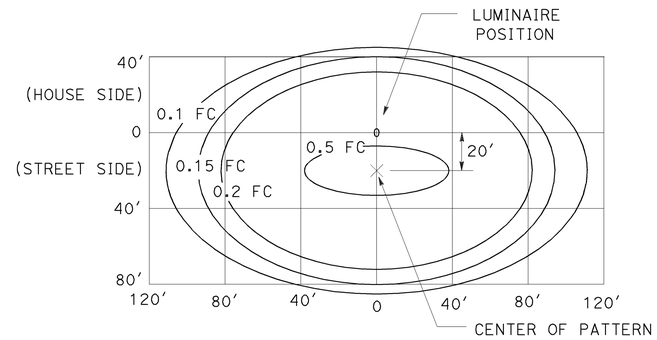


LED LUMINAIRE 235 W
40′ Mounting Height

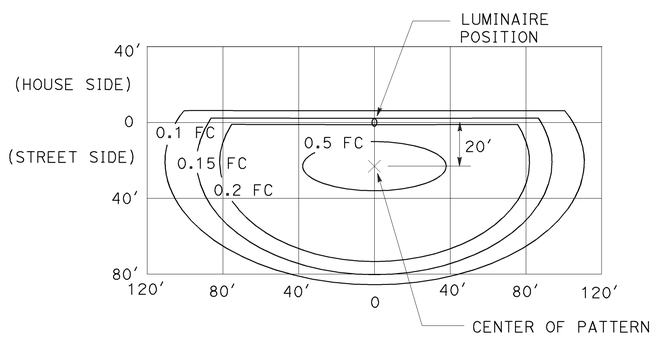


LED LUMINAIRE 235 W
40′ Mounting Height
with back side control

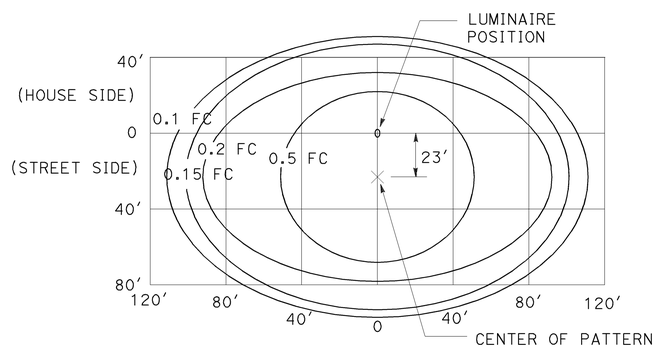


LED LUMINAIRE 300 W
40′ Mounting Height

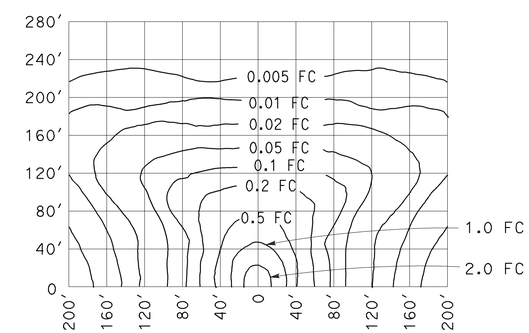


LOW-PRESSURE SODIUM LUMINAIRE 180 W
40′ Mounting Height
Lamp operated at 33,000 lm

STATE OF CALIFORNIA
DEPARTMENT OF TRANSPORTATION

# ELECTRICAL SYSTEMS (ISOFOOTCANDLE CURVES)

NO SCALE

RSP ES-10A DATED OCTOBER 30, 2015 SUPERSEDES RSP ES-10A DATED JULY 19, 2013 THAT SUPPLEMENTS THE STANDARD PLANS BOOK DATED 2010.

**REVISED STANDARD PLAN RSP ES-10A**

**2010 REVISED STANDARD PLAN RSP ES-10A**

9-29-15

| Dist | COUNTY | ROUTE | POST MILES TOTAL PROJECT | SHEET No. | TOTAL SHEETS |
|---|---|---|---|---|---|
| 06 | Tul | 65 | R9.3/R14.0 | 54 | 57 |

REGISTERED CIVIL ENGINEER

July 19, 2013
PLANS APPROVAL DATE

REGISTERED PROFESSIONAL ENGINEER
Stanley P. Johnson
No. C57793
Exp. 3-31-14
CIVIL
STATE OF CALIFORNIA

*THE STATE OF CALIFORNIA OR ITS OFFICERS OR AGENTS SHALL NOT BE RESPONSIBLE FOR THE ACCURACY OR COMPLETENESS OF SCANNED COPIES OF THIS PLAN SHEET.*

TO ACCOMPANY PLANS DATED 3-21-16

| STANDARD TYPE | SETBACK (DIMENSION A) |
|---|---|
| 32 | 30'-0" (Min) |
| 31 | 20'-0" (Min) |
| 15, 15D, 15-SB, 21, 21D, 30 | ARM LENGTH (Min) |

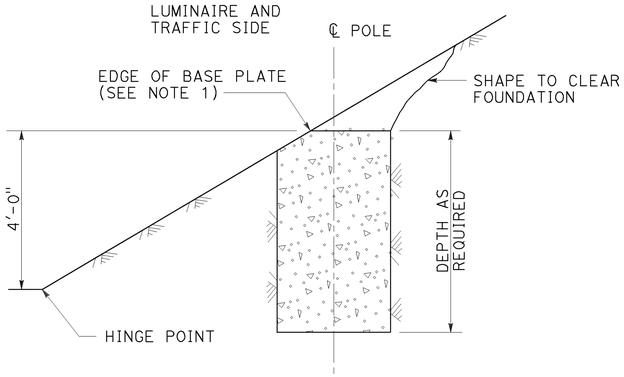


CUT SLOPES
STEEPER THAN 4:1,
LESS THAN 2:1
DETAIL A-1
See Note 2 and 3

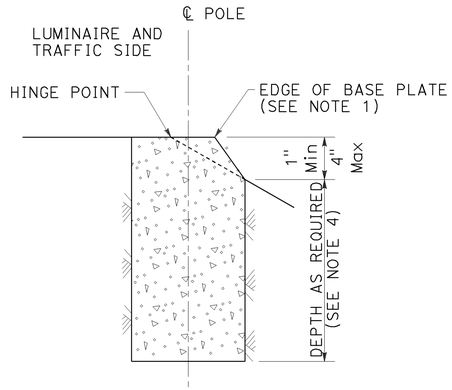


FILL SLOPES
STEEPER THAN 4:1,
LESS THAN 2:1
DETAIL A-2
See Note 2 and 3

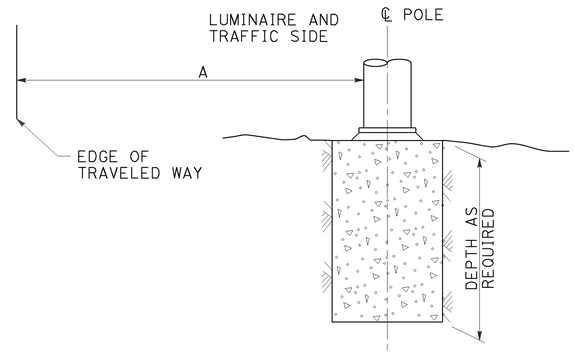


FLAT SECTIONS, CUT OR FILL SLOPES
4:1 OR FLATTER
DETAIL A-3
See Note 2

FOUNDATIONS ADJACENT TO ALL ROADWAYS EXCEPT
IN SIDEWALK, MEDIAN AND ISLAND AREAS
DETAIL A

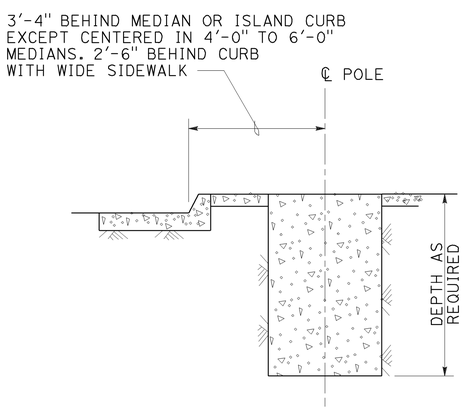


MEDIAN, ISLAND
OR WIDE SIDEWALK
DETAIL B-1
7' Wide and wider

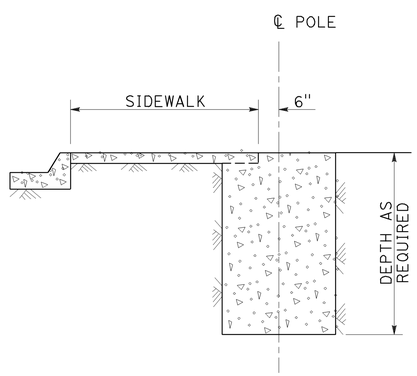


NARROW SIDEWALK
DETAIL B-2
Less than 7' wide

FOUNDATIONS IN SIDEWALK, MEDIAN AND ISLAND AREAS
DETAIL B

NOTES:

1. Where a portion of the foundation is above grade, the top edges shall have a 1" chamfer.
2. Slopes shall be horizontal to vertical ratio (Horizontal : Vertical).
3. Horizontal setbacks on cut and fill slopes steeper than 4:1 shall not exceed the distance shown for flat sections.
4. CIDH embedment depth shall be increased beyond standard depths by the diameter of the CIDH.

STATE OF CALIFORNIA
DEPARTMENT OF TRANSPORTATION

# ELECTRICAL SYSTEMS (FOUNDATION INSTALLATIONS)

NO SCALE

RSP ES-11 DATED JULY 19, 2013 SUPERSEDES STANDARD PLAN ES-11
DATED MAY 20, 2011 - PAGE 488 OF THE STANDARD PLANS BOOK DATED 2010.

**REVISED STANDARD PLAN RSP ES-11**

**2010 REVISED STANDARD PLAN RSP ES-11**

7-9-13

| Dist | COUNTY | ROUTE | POST MILES TOTAL PROJECT | SHEET No. | TOTAL SHEETS |
|---|---|---|---|---|---|
| 06 | Tul | 65 | R9.3/R14.0 | 55 | 57 |

Theresa Gabriel
REGISTERED ELECTRICAL ENGINEER

April 15, 2016
PLANS APPROVAL DATE

REGISTERED PROFESSIONAL ENGINEER
Theresa Aziz Gabriel
No. E15129
Exp. 6-30-16
ELECTRICAL
STATE OF CALIFORNIA

*THE STATE OF CALIFORNIA OR ITS OFFICERS OR AGENTS SHALL NOT BE RESPONSIBLE FOR THE ACCURACY OR COMPLETENESS OF SCANNED COPIES OF THIS PLAN SHEET.*

TO ACCOMPANY PLANS DATED 3-21-16

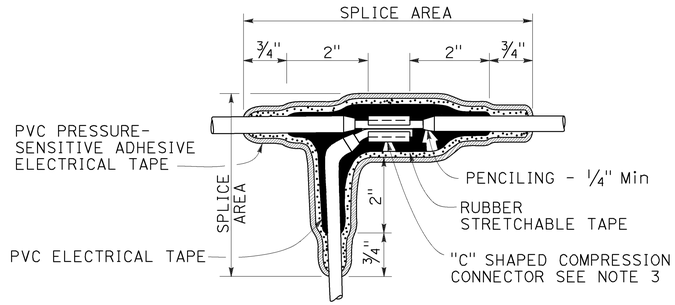


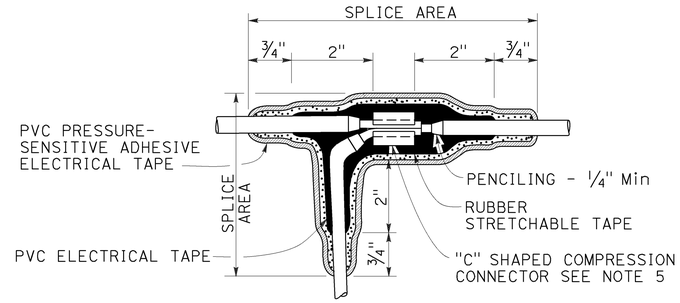


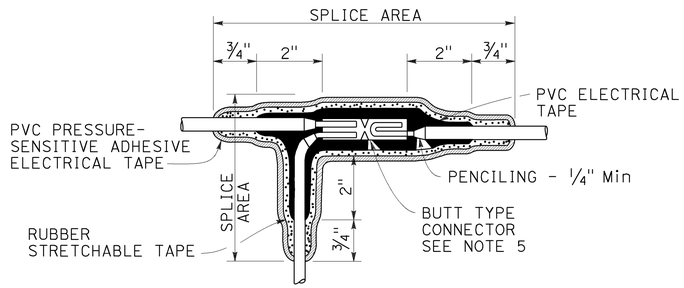


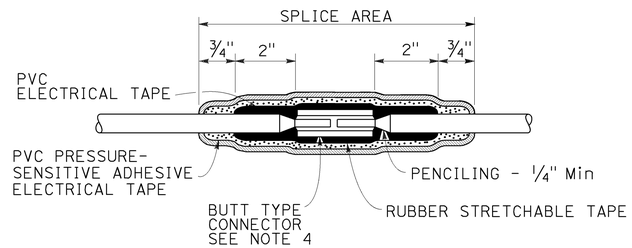


## TYPICAL SPLICE INSULATION METHOD B

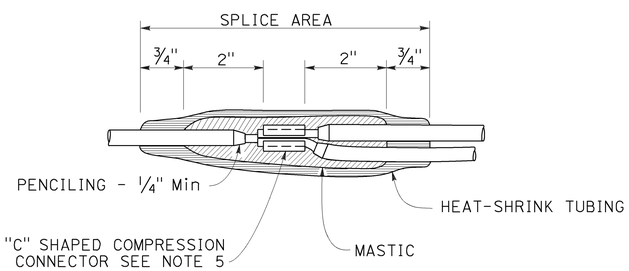


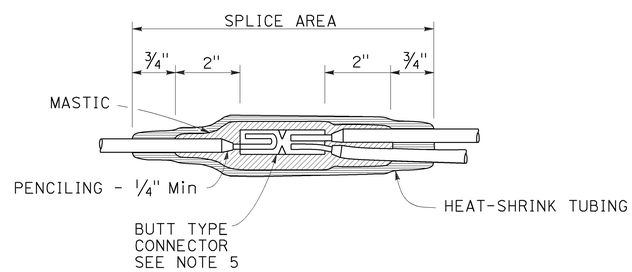


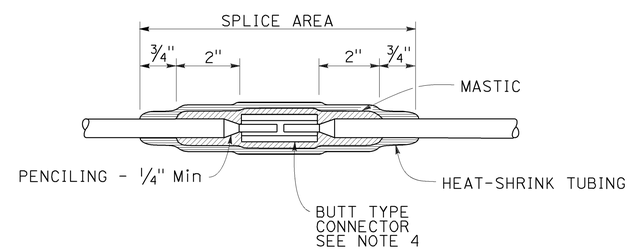


## TYPICAL SPLICE INSULATION HEAT-SHRINK TUBING

## NOTES:

1. Dimensions are minimum.
2. Rubber tapes shall be rolled after application.
3. Between 1 free-end and 1 through conductor.
4. Between 2 free-end conductors.
5. Between 3 free-end conductors.

STATE OF CALIFORNIA
DEPARTMENT OF TRANSPORTATION

# ELECTRICAL SYSTEMS (SPLICE INSULATION METHODS DETAILS)

NO SCALE

RSP ES-13A DATED APRIL 15, 2016 SUPERSEDES RSP ES-13A DATED OCTOBER 30, 2015 AND STANDARD PLAN ES-13A DATED MAY 20, 2011 - PAGE 491 OF THE STANDARD PLANS BOOK DATED 2010.

**REVISED STANDARD PLAN RSP ES-13A**

**2010 REVISED STANDARD PLAN RSP ES-13A**

1-22-16

| Dist | COUNTY | ROUTE | POST MILES TOTAL PROJECT | SHEET No. | TOTAL SHEETS |
|---|---|---|---|---|---|
| 06 | Tul | 65 | R9.3/R14.0 | 56 | 57 |

Theresa Gabriel
REGISTERED ELECTRICAL ENGINEER

April 15, 2016
PLANS APPROVAL DATE

REGISTERED PROFESSIONAL ENGINEER
Theresa Aziz Gabriel
No. E15129
Exp. 6-30-16
ELECTRICAL
STATE OF CALIFORNIA

*THE STATE OF CALIFORNIA OR ITS OFFICERS OR AGENTS SHALL NOT BE RESPONSIBLE FOR THE ACCURACY OR COMPLETENESS OF SCANNED COPIES OF THIS PLAN SHEET.*

TO ACCOMPANY PLANS DATED 3-21-16

| CIRCUIT VOLTAGE | FUSE VOLTAGE RATING | FUSE CURRENT RATING | | | | | | |
|---|---|---|---|---|---|---|---|---|
| | | HPS LAMP BALLAST | | LOW PRESSURE SODIUM BALLAST | INDUCTION SIGN LIGHTING | SINGLE PHASE (TWO WIRE) TRANSFORMERS (PRIMARY SIDE) | | |
| | | 70 W | 100 W | 180 W | 85 W | 1 kVA | 2 kVA | 3 kVA |
| 120 V | 250 V | 5 A | 5 A | 5 A | 5 A | 10 A | 20 A | 30 A |
| 240 V | 250 V | 5 A | 5 A | 5 A | 5 A | 6 A | 10 A | 20 A |
| 480 V | 500-600 V | 5 A | 5 A | 3 A | 1 A (SEE NOTE 2) | 3 A | 6 A | 10 A |

NOTES:

1. Primary lines of multiple ballasts shall be provided with fused connectors. Fuse ratings shall be as noted above.
2. See Revised Standard Plan RSP ES-15D, Type SC3 control.

## FUSE RATINGS FOR FUSED CONNECTORS

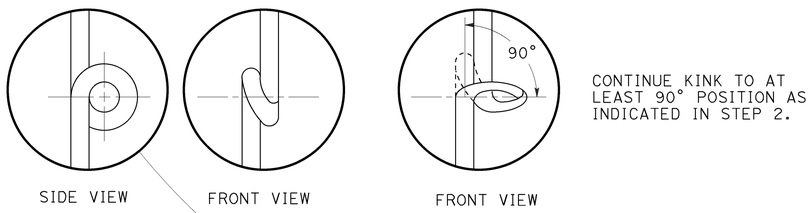


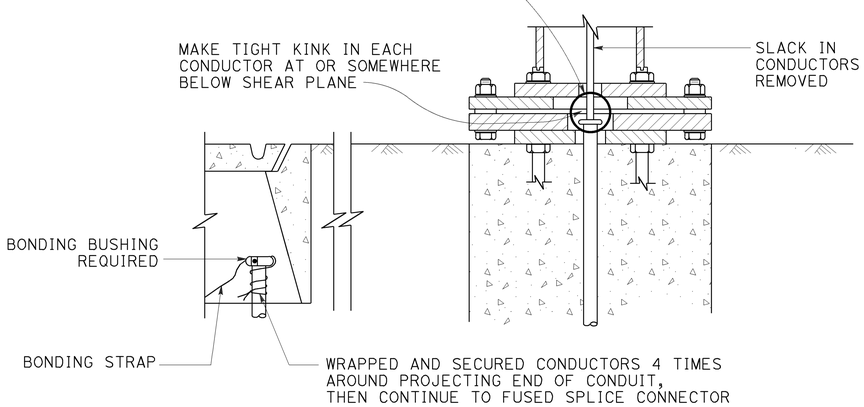


## KINKING DETAIL FOR SLIP BASE STANDARDS

DETAIL A

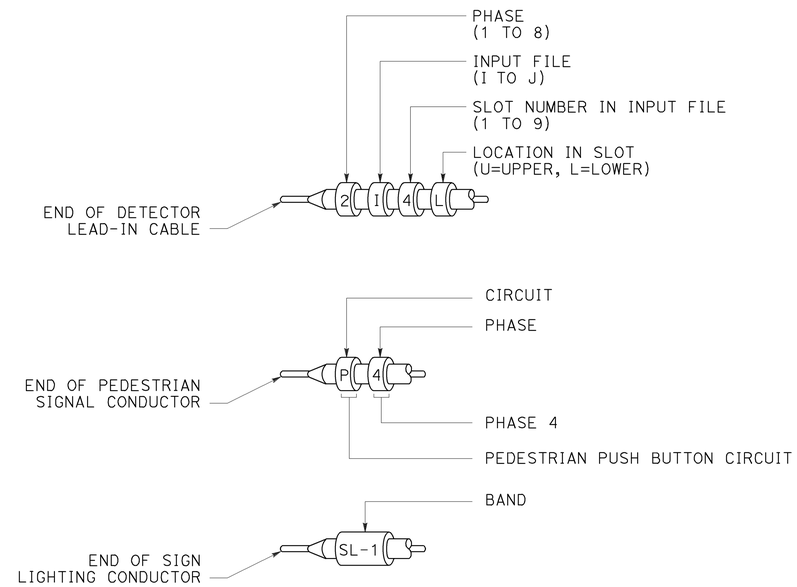


## TYPICAL BANDING DETAILS

DETAIL B

STATE OF CALIFORNIA
DEPARTMENT OF TRANSPORTATION

# ELECTRICAL SYSTEMS (FUSE RATING, KINKING AND BANDING DETAIL)

NO SCALE

RSP ES-13B DATED APRIL 15, 2016 SUPERSEDES STANDARD PLAN ES-13B DATED MAY 20, 2011 - PAGE 492 OF THE STANDARD PLANS BOOK DATED 2010.

**REVISED STANDARD PLAN RSP ES-13B**

**2010 REVISED STANDARD PLAN RSP ES-13B**

1-12-16

| Dist | COUNTY | ROUTE | POST MILES TOTAL PROJECT | SHEET No. | TOTAL SHEETS |
|---|---|---|---|---|---|
| 06 | Tul | 65 | R9.3/R14.0 | 57 | 57 |

Theresa Gabriel
REGISTERED ELECTRICAL ENGINEER

April 15, 2016
PLANS APPROVAL DATE

REGISTERED PROFESSIONAL ENGINEER
Theresa Aziz Gabriel
No. E15129
Exp. 6-30-16
ELECTRICAL
STATE OF CALIFORNIA

THE STATE OF CALIFORNIA OR ITS OFFICERS OR AGENTS SHALL NOT BE RESPONSIBLE FOR THE ACCURACY OR COMPLETENESS OF SCANNED COPIES OF THIS PLAN SHEET.

TO ACCOMPANY PLANS DATED 3-21-16

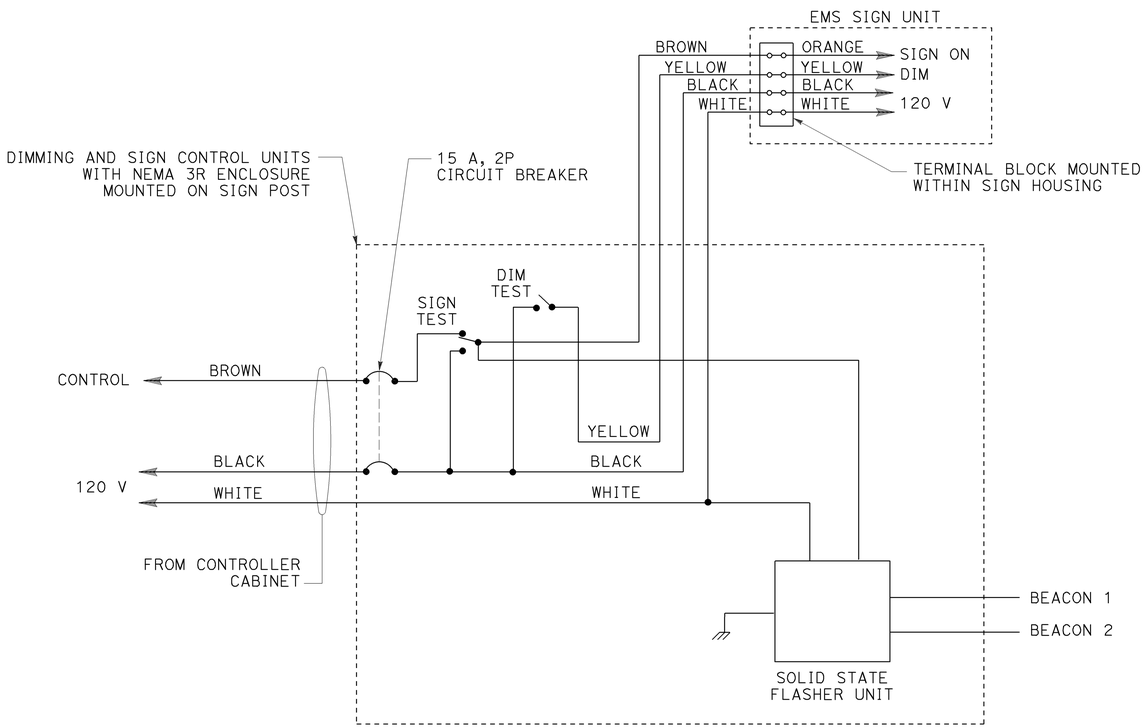


## WIRING DIAGRAM
## LED EXTINGUISHABLE MESSAGE SIGN
### DETAIL A

THE FLASHER SHALL MATE WITH A CINCH-JONES SOCKET S-406-SB OR EQUAL AND CONNECTED AS FOLLOWS:

| PIN | CIRCUIT | PIN | CIRCUIT |
|---|---|---|---|
| 7 | LOAD | 10 | NEUTRAL |
| 8 | LOAD | 11 | LINE |
| 9 | CHASSIS GROUND | 12 | NOT USED |

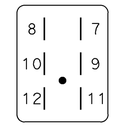


## CONNECTOR SOCKET
## SOLID STATE FLASHER UNIT

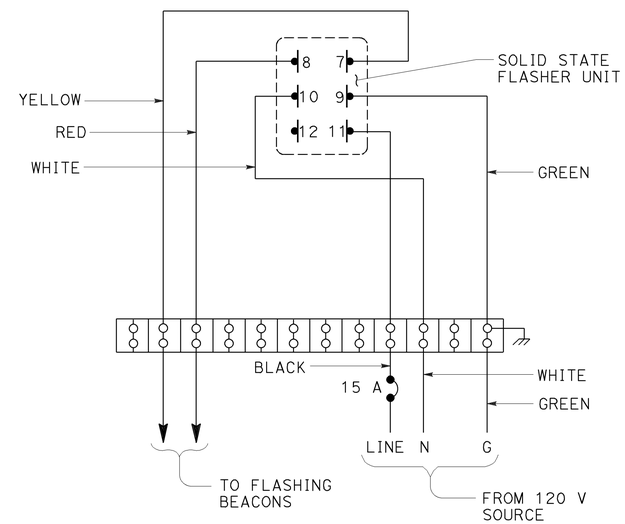


## WIRING DIAGRAM
## FLASHING BEACON CONTROL ASSEMBLY
### DETAIL B

STATE OF CALIFORNIA
DEPARTMENT OF TRANSPORTATION

# ELECTRICAL SYSTEMS (CONTROL ASSEMBLY WIRING DIAGRAMS)

NO SCALE

RSP ES-14B DATED APRIL 15, 2016 SUPERSEDES STANDARD PLAN ES-14B DATED MAY 20, 2011 - PAGE 494 OF THE STANDARD PLANS BOOK DATED 2010.

**REVISED STANDARD PLAN RSP ES-14B**

**2010 REVISED STANDARD PLAN RSP ES-14B**

1-22-16