| Dist | COUNTY | ROUTE | POST MILES TOTAL PROJECT | SHEET No. | TOTAL SHEETS |
|---|---|---|---|---|---|
| 06 | Fre | 245 | Var | 1 | 19 |

INDEX OF PLANS


| SHEET No. | DESCRIPTION |
|---|---|
| 1 | TITLE SHEET AND LOCATION MAP |
| 2-11 | DRAINAGE PROFILES |
| 12 | SUMMARY OF QUANTITIES |
| 13 | CONSTRUCTION AREA SIGNS AND CONSTRUCTION DETAILS |
| 14-19 | REVISED STANDARD PLANS |


THE STANDARD PLANS LIST APPLICABLE TO THIS CONTRACT IS INCLUDED IN THE NOTICE TO BIDDERS AND SPECIAL PROVISIONS BOOK.

STATE OF CALIFORNIA

# DEPARTMENT OF TRANSPORTATION

# PROJECT PLANS FOR CONSTRUCTION ON

# STATE HIGHWAY

## IN FRESNO COUNTY NEAR PINEHURST AT VARIOUS LOCATIONS FROM 0.2 MILE NORTH OF TULARE COUNTY LINE TO 0.1 MILE SOUTH OF HOGBACK ROAD

TO BE SUPPLEMENTED BY STANDARD PLANS DATED 2010

LOCATION MAP

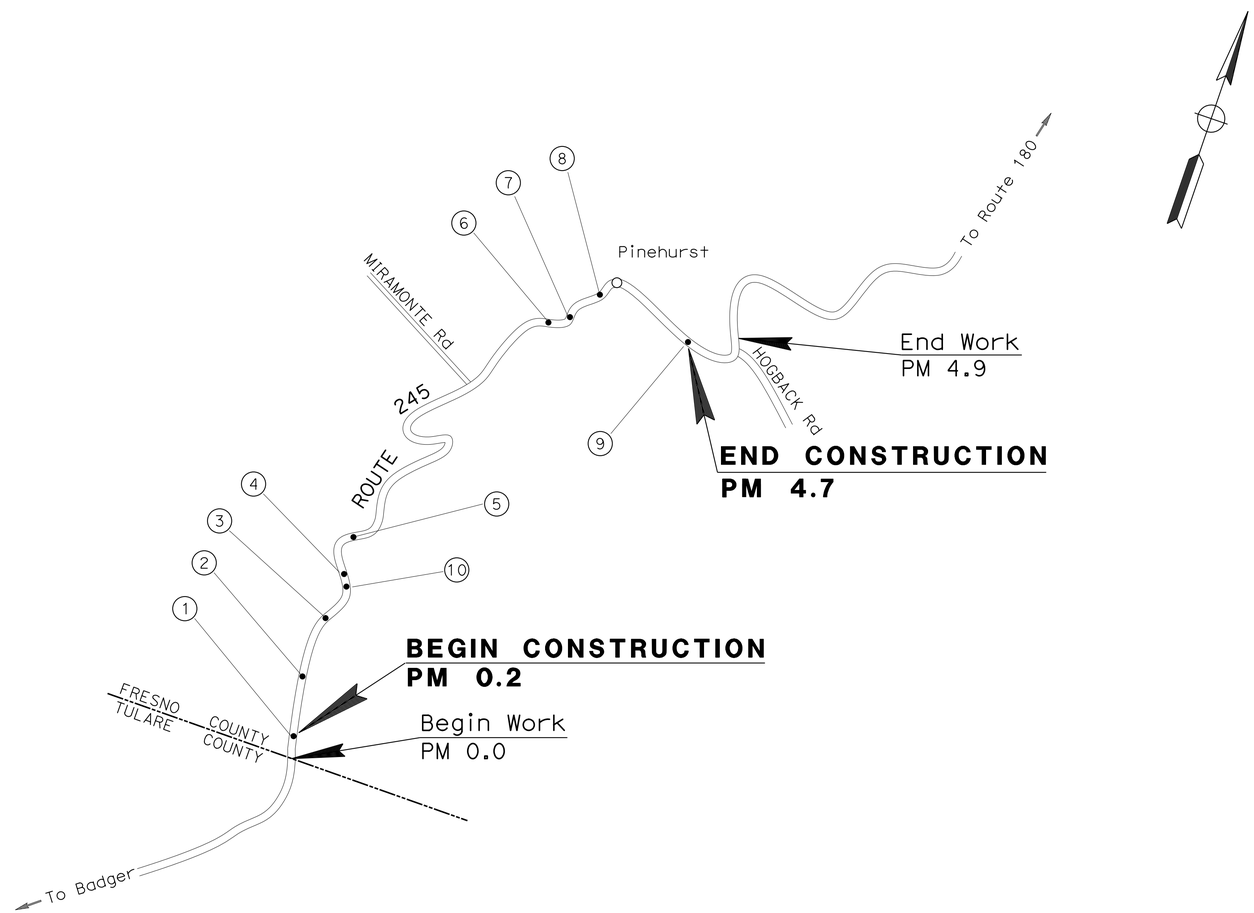


LOCATIONS OF CONSTRUCTION

| LOCATION | PM | DESCRIPTION |
|---|---|---|
| 1 | 0.23 | 0.23 MILE N OF Tul Co LINE |
| 2 | 0.81 | 0.81 mile N of Tul Co line |
| 3 | 0.98 | 0.98 mile N of Tul Co line |
| 4 | 1.13 | 1.13 mile N of Tul Co line |
| 5 | 1.34 | 1.34 mile N of Tul Co line |
| 6 | 3.72 | 1.00 MILE N OF MIRAMONTE Rd |
| 7 | 3.76 | 1.04 MILE N OF MIRAMONTE Rd |
| 8 | 3.92 | 1.20 MILE N OF MIRAMONTE Rd |
| 9 | 4.68 | 0.16 MILE S OF HOGBACK Rd |
| 10 | 1.13 | 1.13 MILE N OF Tul Co LINE |

PROJECT MANAGER BILL MOSES

DESIGN MANAGER FRANK GONZALEZ

02-01-16
PROJECT ENGINEER DATE
REGISTERED CIVIL ENGINEER

February 8, 2016
PLANS APPROVAL DATE

REGISTERED PROFESSIONAL ENGINEER
SHUE XAIXA VUE
No. 63657
Exp. 9-30-16
CIVIL
STATE OF CALIFORNIA

*THE STATE OF CALIFORNIA OR ITS OFFICERS OR AGENTS SHALL NOT BE RESPONSIBLE FOR THE ACCURACY OR COMPLETENESS OF SCANNED COPIES OF THIS PLAN SHEET.*

THE CONTRACTOR SHALL POSSESS THE CLASS (OR CLASSES) OF LICENSE AS SPECIFIED IN THE "NOTICE TO BIDDERS."

NO SCALE

| CONTRACT No. | 06-0S1204 |
|---|---|
| PROJECT ID | 0614000085 |

LAST REVISION 02-04-16 DATE PLOTTED => 22-FEB-2016 TIME PLOTTED => 13:32

| Dist | COUNTY | ROUTE | POST MILES TOTAL PROJECT | SHEET No. | TOTAL SHEETS |
|---|---|---|---|---|---|
| 06 | Fre | 245 | Var | 2 | 19 |

REGISTERED CIVIL ENGINEER 02-01-16 DATE

2-8-16
PLANS APPROVAL DATE

REGISTERED PROFESSIONAL ENGINEER
SHUE X. VUE
No. 63657
Exp. 09-30-16
CIVIL
STATE OF CALIFORNIA

*THE STATE OF CALIFORNIA OR ITS OFFICERS OR AGENTS SHALL NOT BE RESPONSIBLE FOR THE ACCURACY OR COMPLETENESS OF SCANNED COPIES OF THIS PLAN SHEET.*

**NOTE:**

FOR ACCURATE RIGHT OF WAY DATEA, CONTACT RIGHT OF WAY ENGINEERING AT THE DISTRICT OFFICE.

**ABBREVIATION:**

GCP - GRATE CONCRETE PINE

**PAVEMENT CLIMATE REGION:**

INLAND VALLEY

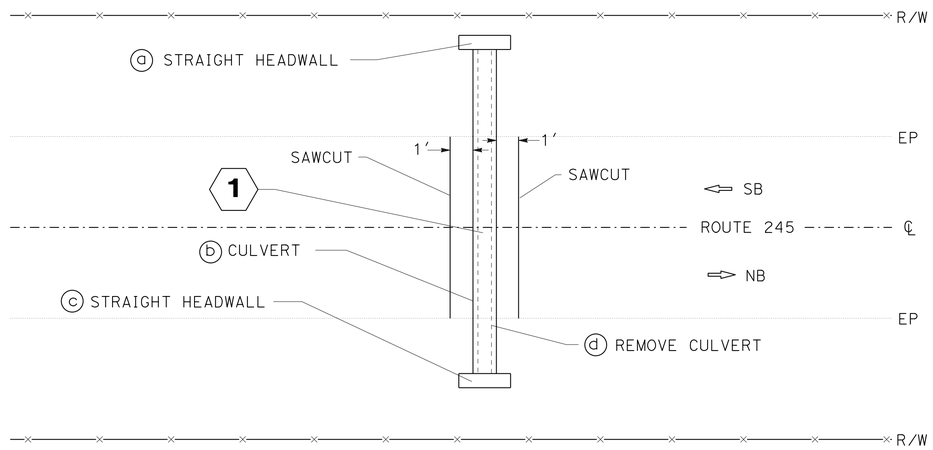


LOCATION No. 1
ROUTE 245
PM 0.23

NO SCALE

**APPROVED FOR DRAINAGE WORK ONLY**

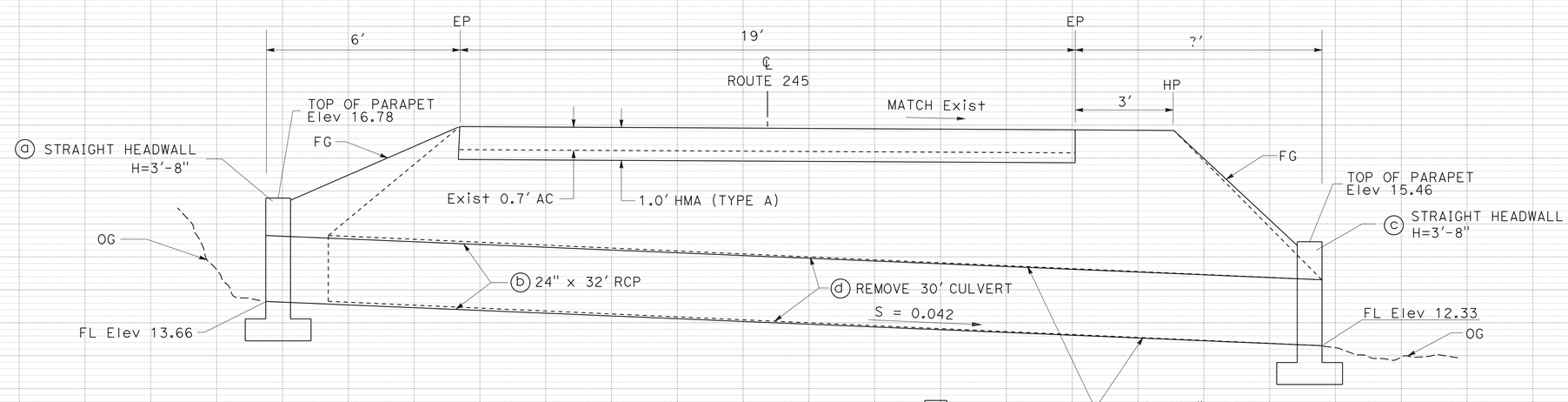


**DRAINAGE SYSTEM No. 1**

# DRAINAGE PLAN AND PROFILES

SCALE: Horiz 1"= 2'
Vert 1"= 2'

**D-1**

STATE OF CALIFORNIA - DEPARTMENT OF TRANSPORTATION
Caltrans® MAINTENANCE DESIGN

FUNCTIONAL SUPERVISOR: FRANK GONZALEZ

CALCULATED-DESIGNED BY: PETE STRATARAS
CHECKED BY: SHUE VUE

REVISED BY | DATE REVISED

LAST REVISION 02-05-16 | DATE PLOTTED => 22-FEB-2016 | TIME PLOTTED => 13:32

| Dist | COUNTY | ROUTE | POST MILES TOTAL PROJECT | SHEET No. | TOTAL SHEETS |
|---|---|---|---|---|---|
| 06 | Fre | 245 | Var | 3 | 19 |

REGISTERED CIVIL ENGINEER 02-01-16 DATE

2-8-16
PLANS APPROVAL DATE

REGISTERED PROFESSIONAL ENGINEER
SHUE X. VUE
No. 63657
Exp. 09-30-16
CIVIL
STATE OF CALIFORNIA

*THE STATE OF CALIFORNIA OR ITS OFFICERS OR AGENTS SHALL NOT BE RESPONSIBLE FOR THE ACCURACY OR COMPLETENESS OF SCANNED COPIES OF THIS PLAN SHEET.*

NOTE:

FOR ACCURATE RIGHT OF WAY DATEA, CONTACT RIGHT OF WAY ENGINEERING AT THE DISTRICT OFFICE.

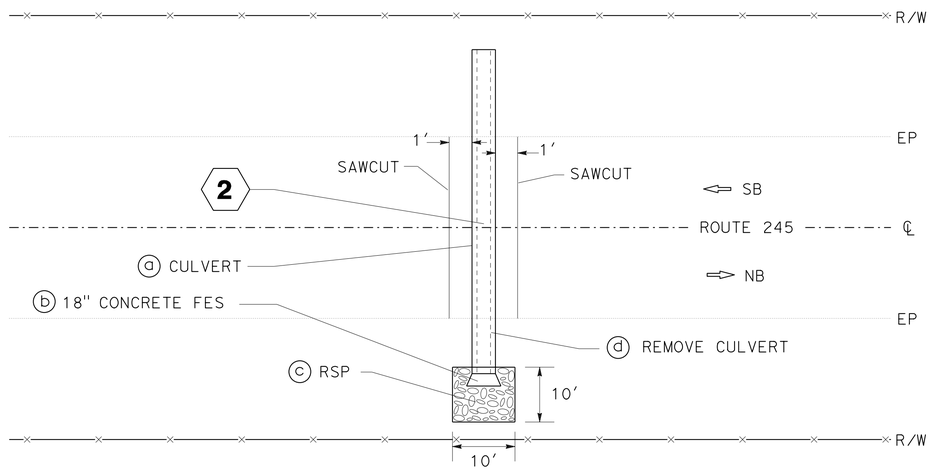


LOCATION No. 2
ROUTE 245
PM 0.81

NO SCALE

**APPROVED FOR DRAINAGE WORK ONLY**

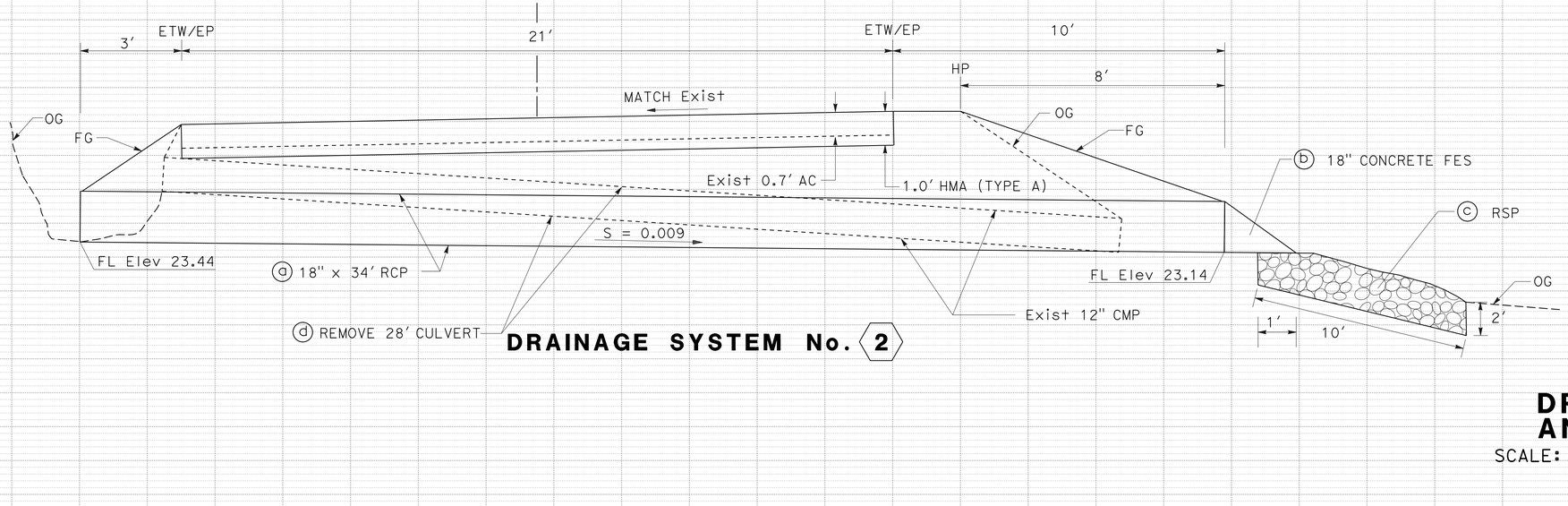


**DRAINAGE SYSTEM No. 2**

# DRAINAGE PLAN AND PROFILES

SCALE: Horiz 1"= 2'
Vert 1"= 2'

**D-2**

STATE OF CALIFORNIA - DEPARTMENT OF TRANSPORTATION
Caltrans® MAINTENANCE DESIGN

FUNCTIONAL SUPERVISOR: FRANK GONZALEZ

CALCULATED-DESIGNED BY: PETE STRATARAS
CHECKED BY: SHUE VUE

REVISED BY
DATE REVISED

LAST REVISION 02-05-16
DATE PLOTTED => 22-FEB-2016
TIME PLOTTED => 13:32

| Dist | COUNTY | ROUTE | POST MILES TOTAL PROJECT | SHEET No. | TOTAL SHEETS |
|---|---|---|---|---|---|
| 06 | Fre | 245 | Var | 4 | 19 |

REGISTERED CIVIL ENGINEER 02-01-06 DATE

2-8-16
PLANS APPROVAL DATE

REGISTERED PROFESSIONAL ENGINEER
SHUE X. VUE
No. 63657
Exp. 09-30-16
CIVIL
STATE OF CALIFORNIA

*THE STATE OF CALIFORNIA OR ITS OFFICERS OR AGENTS SHALL NOT BE RESPONSIBLE FOR THE ACCURACY OR COMPLETENESS OF SCANNED COPIES OF THIS PLAN SHEET.*

NOTE:

FOR ACCURATE RIGHT OF WAY DATEA, CONTACT
RIGHT OF WAY ENGINEERING AT THE DISTRICT OFFICE.

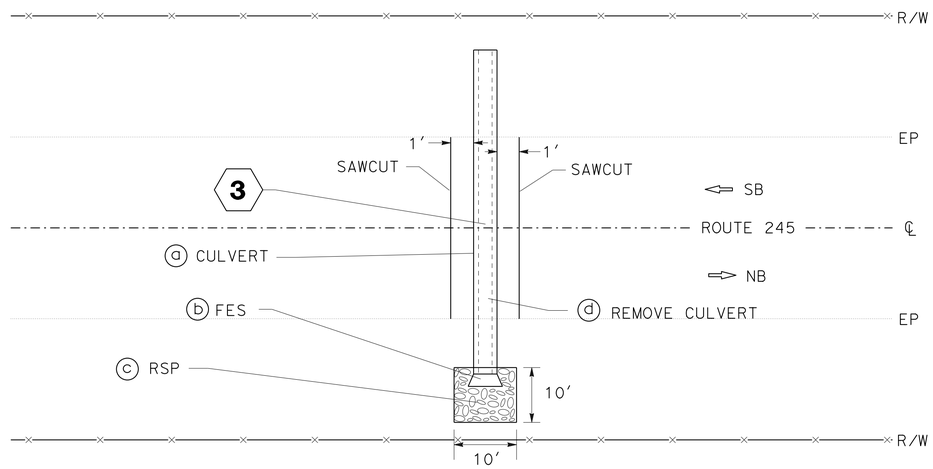


LOCATION No. 3
ROUTE 245
PM 0.98

NO SCALE

**APPROVED FOR DRAINAGE WORK ONLY**

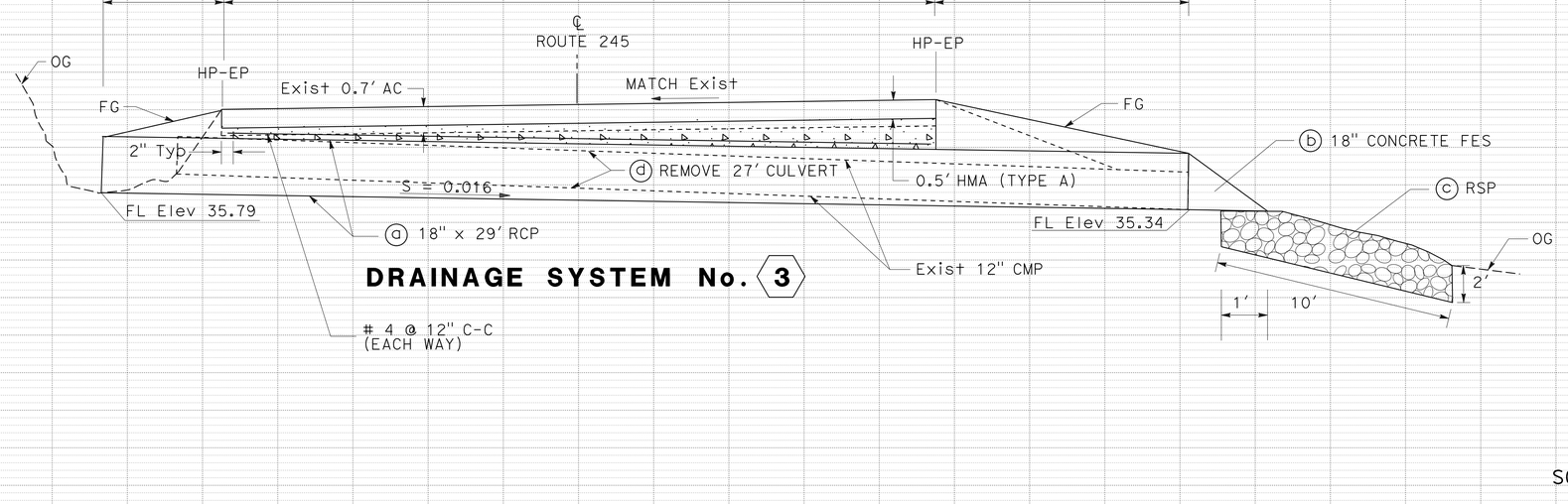


**DRAINAGE SYSTEM No. 3**

## DRAINAGE PLAN AND PROFILES

SCALE: Horiz 1"= 2'
Vert 1"= 2'

**D-3**

STATE OF CALIFORNIA - DEPARTMENT OF TRANSPORTATION
Caltrans® MAINTENANCE DESIGN

FUNCTIONAL SUPERVISOR: FRANK GONZALEZ

CALCULATED-DESIGNED BY: PETE STRATARAS
CHECKED BY: SHUE VUE

REVISED BY | DATE REVISED

LAST REVISION 02-05-16 | DATE PLOTTED => 22-FEB-2016 | TIME PLOTTED => 13:32

| Dist | COUNTY | ROUTE | POST MILES TOTAL PROJECT | SHEET No. | TOTAL SHEETS |
|---|---|---|---|---|---|
| 06 | Fre | 245 | Var | 5 | 19 |

REGISTERED CIVIL ENGINEER 02-01-16 DATE

2-8-16
PLANS APPROVAL DATE

REGISTERED PROFESSIONAL ENGINEER
SHUE X. VUE
No. 63657
Exp. 09-30-16
CIVIL
STATE OF CALIFORNIA

*THE STATE OF CALIFORNIA OR ITS OFFICERS OR AGENTS SHALL NOT BE RESPONSIBLE FOR THE ACCURACY OR COMPLETENESS OF SCANNED COPIES OF THIS PLAN SHEET.*

NOTE:

FOR ACCURATE RIGHT OF WAY DATEA, CONTACT
RIGHT OF WAY ENGINEERING AT THE DISTRICT OFFICE.

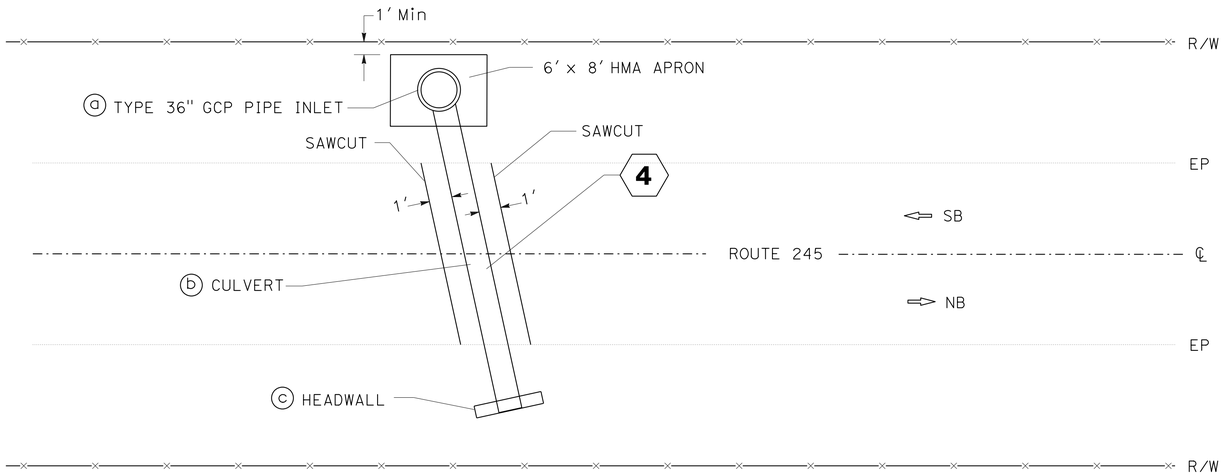


LOCATION No. 4
ROUTE 245
PM 1.13

NO SCALE

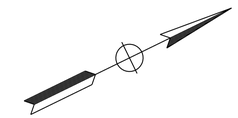

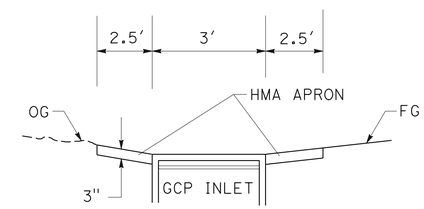


**SECTION A-A**

NO SCALE

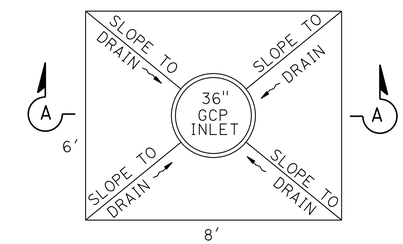


NO SCALE

**APPROVED FOR DRAINAGE WORK ONLY**

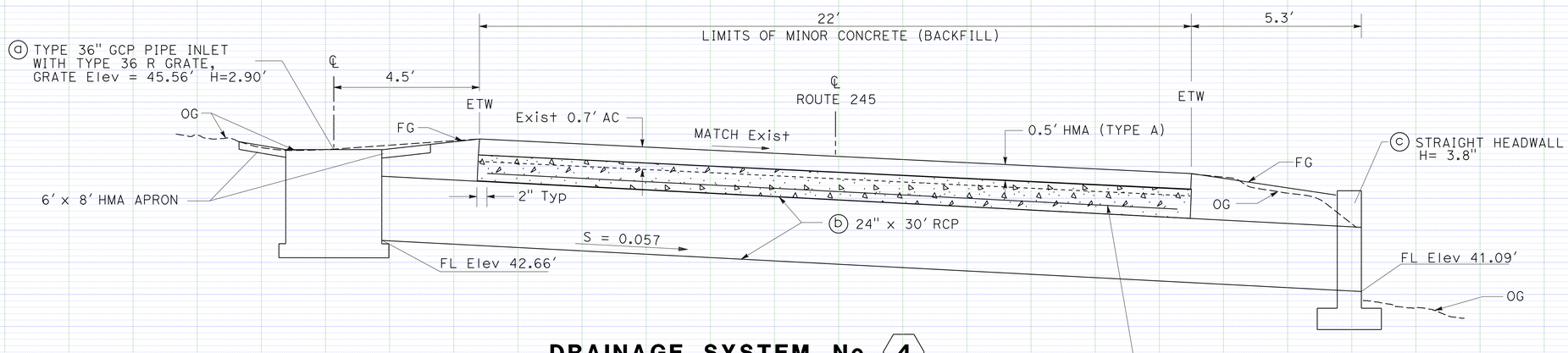


**DRAINAGE SYSTEM No. 4**

# DRAINAGE PLAN AND PROFILES

SCALE: Horiz 1"= 2'
Vert 1"= 2'

**D-4**

STATE OF CALIFORNIA - DEPARTMENT OF TRANSPORTATION
Caltrans® MAINTENANCE DESIGN

FUNCTIONAL SUPERVISOR: FRANK GONZALEZ

CALCULATED-DESIGNED BY: PETE STRATARAS
CHECKED BY: SHUE VUE

REVISED BY | DATE REVISED

LAST REVISION 02-05-16 | DATE PLOTTED => 22-FEB-2016 | TIME PLOTTED => 13:32

| Dist | COUNTY | ROUTE | POST MILES TOTAL PROJECT | SHEET No. | TOTAL SHEETS |
|---|---|---|---|---|---|
| 06 | Fre | 245 | Var | 6 | 19 |

REGISTERED CIVIL ENGINEER 02-01-16 DATE

2-8-16
PLANS APPROVAL DATE

REGISTERED PROFESSIONAL ENGINEER
SHUE X. VUE
No. 63657
Exp. 09-30-16
CIVIL
STATE OF CALIFORNIA

*THE STATE OF CALIFORNIA OR ITS OFFICERS OR AGENTS SHALL NOT BE RESPONSIBLE FOR THE ACCURACY OR COMPLETENESS OF SCANNED COPIES OF THIS PLAN SHEET.*

NOTE:

FOR ACCURATE RIGHT OF WAY DATEA, CONTACT
RIGHT OF WAY ENGINEERING AT THE DISTRICT OFFICE.

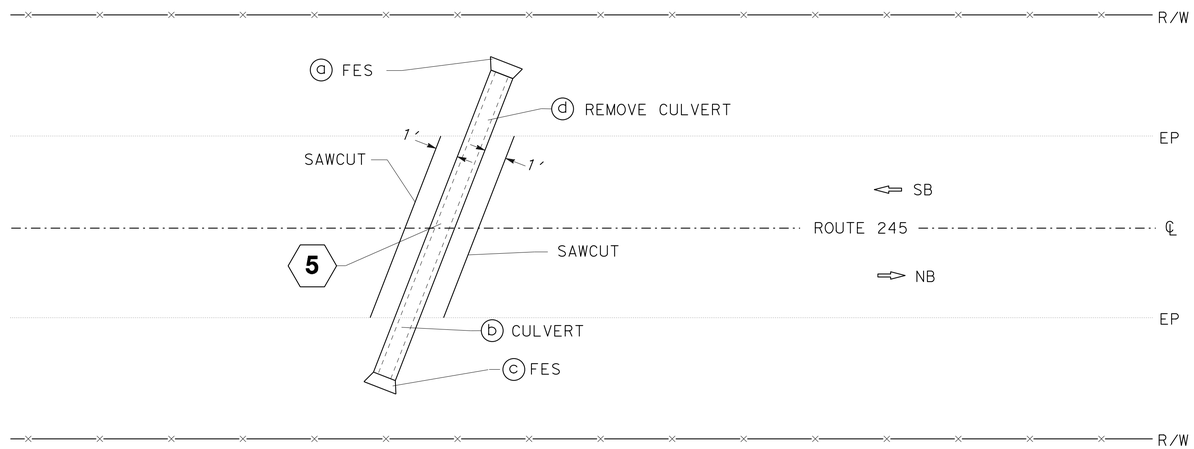


LOCATION No. 5
ROUTE 245
PM 1.34

NO SCALE

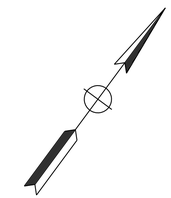

**APPROVED FOR DRAINAGE WORK ONLY**

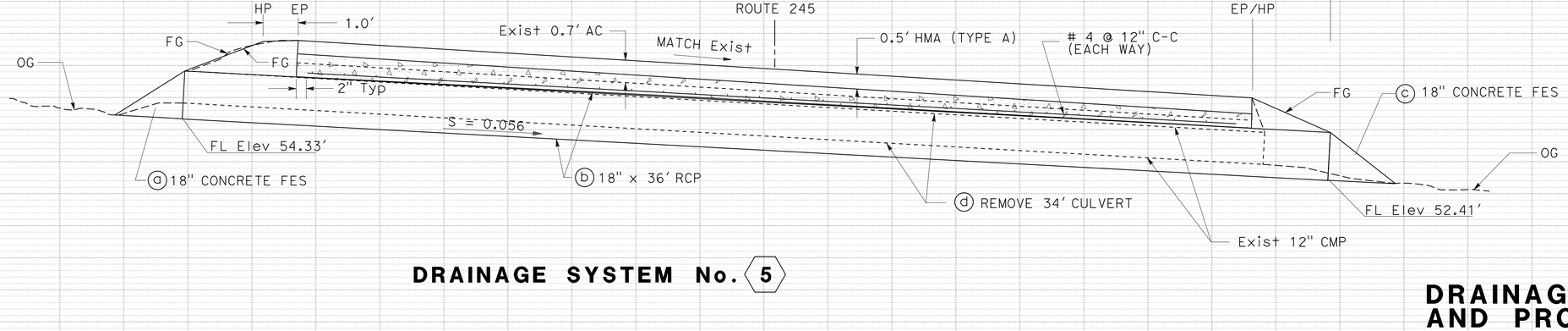


**DRAINAGE SYSTEM No. 5**

# DRAINAGE PLAN AND PROFILES

SCALE: Horiz 1"= 2'
Vert 1"= 2'

**D-5**

STATE OF CALIFORNIA - DEPARTMENT OF TRANSPORTATION
Caltrans® MAINTENANCE DESIGN

FUNCTIONAL SUPERVISOR: FRANK GONZALEZ

CALCULATED-DESIGNED BY: PETE STRATARAS
CHECKED BY: SHUE VUE

REVISED BY | DATE REVISED

LAST REVISION 02-05-16 | DATE PLOTTED => 22-FEB-2016 | TIME PLOTTED => 13:32

| Dist | COUNTY | ROUTE | POST MILES TOTAL PROJECT | SHEET No. | TOTAL SHEETS |
|---|---|---|---|---|---|
| 06 | Fre | 245 | Var | 7 | 19 |

REGISTERED CIVIL ENGINEER 02-01-16 DATE

2-8-16
PLANS APPROVAL DATE

REGISTERED PROFESSIONAL ENGINEER
SHUE X. VUE
No. 63657
Exp. 09-30-16
CIVIL
STATE OF CALIFORNIA

*THE STATE OF CALIFORNIA OR ITS OFFICERS OR AGENTS SHALL NOT BE RESPONSIBLE FOR THE ACCURACY OR COMPLETENESS OF SCANNED COPIES OF THIS PLAN SHEET.*

NOTE:

FOR ACCURATE RIGHT OF WAY DATEA, CONTACT
RIGHT OF WAY ENGINEERING AT THE DISTRICT OFFICE.

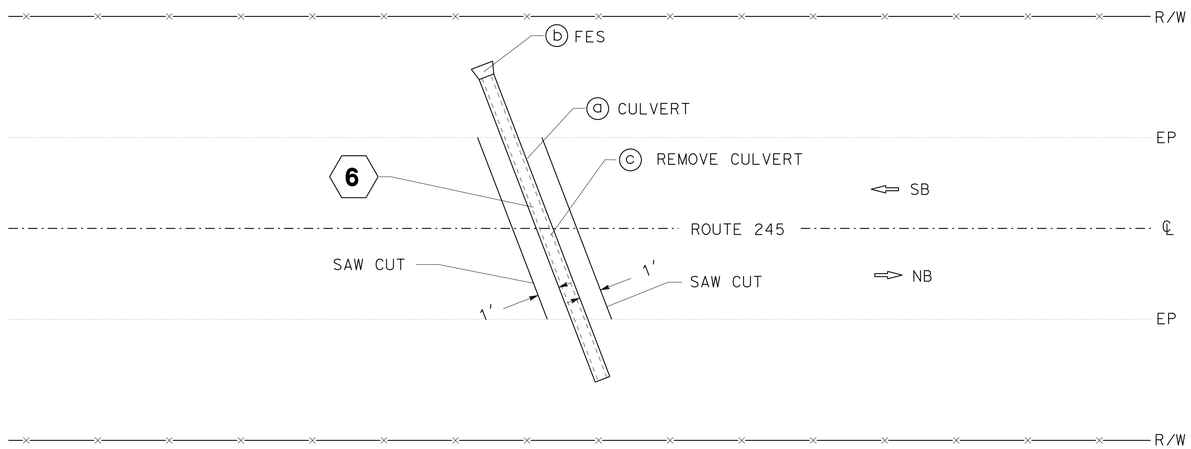


LOCATION No. 6
ROUTE 245
PM 3.72

NO SCALE

**APPROVED FOR DRAINAGE WORK ONLY**

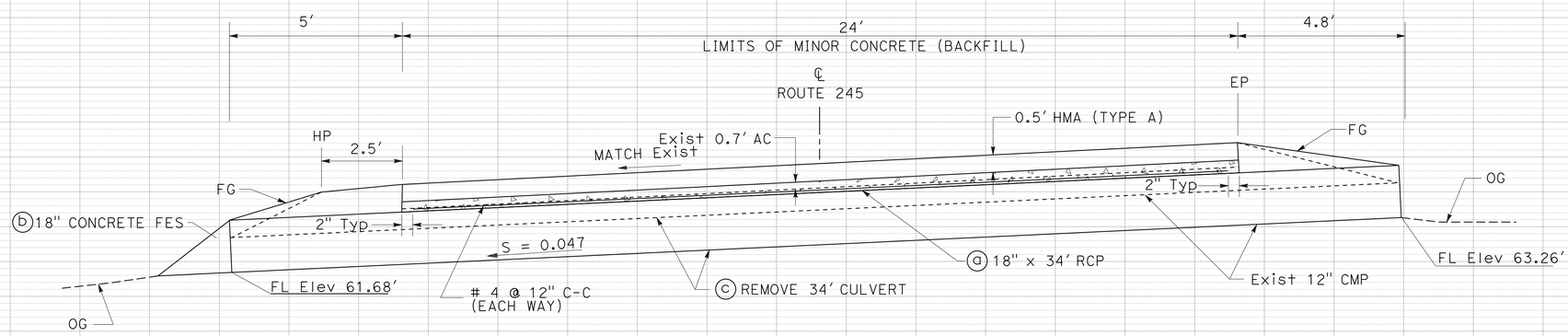


**DRAINAGE SYSTEM No. 6**

# DRAINAGE PLAN AND PROFILES

SCALE: Horiz 1"= 2'
Vert 1"= 2'

**D-6**

REVISED BY | DATE REVISED

PETE STRATARAS | SHUE VUE

CALCULATED-DESIGNED BY | CHECKED BY

FUNCTIONAL SUPERVISOR: FRANK GONZALEZ

STATE OF CALIFORNIA - DEPARTMENT OF TRANSPORTATION
Caltrans® MAINTENANCE DESIGN

LAST REVISION 02-05-16 | DATE PLOTTED => 22-FEB-2016 | TIME PLOTTED => 13:32

| Dist | COUNTY | ROUTE | POST MILES TOTAL PROJECT | SHEET No. | TOTAL SHEETS |
|---|---|---|---|---|---|
| 06 | Fre | 245 | Var | 8 | 19 |

REGISTERED CIVIL ENGINEER 02-01-16 DATE

2-8-16
PLANS APPROVAL DATE

REGISTERED PROFESSIONAL ENGINEER
SHUE X. VUE
No. 63657
Exp. 09-30-16
CIVIL
STATE OF CALIFORNIA

*THE STATE OF CALIFORNIA OR ITS OFFICERS OR AGENTS SHALL NOT BE RESPONSIBLE FOR THE ACCURACY OR COMPLETENESS OF SCANNED COPIES OF THIS PLAN SHEET.*

NOTE:

FOR ACCURATE RIGHT OF WAY DATEA, CONTACT
RIGHT OF WAY ENGINEERING AT THE DISTRICT OFFICE.

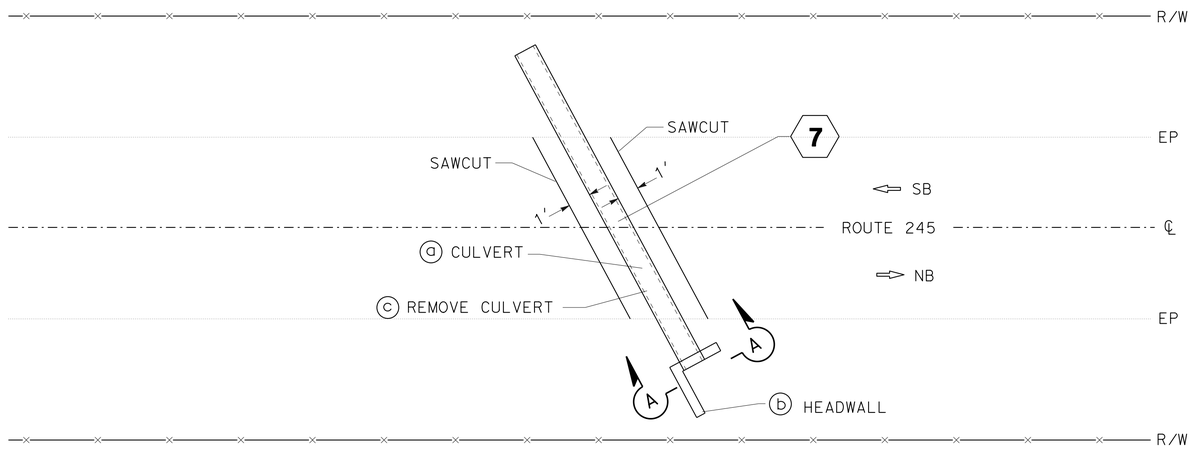


LOCATION No. 7
ROUTE 245
PM 3.76
NO SCALE

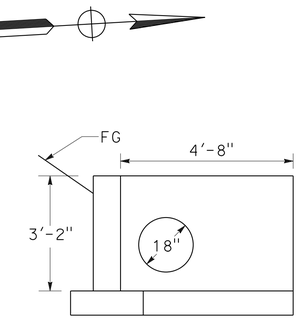


TYPE "L" HEADWALL
**SECTION A-A**
NO SCALE

**APPROVED FOR DRAINAGE WORK ONLY**

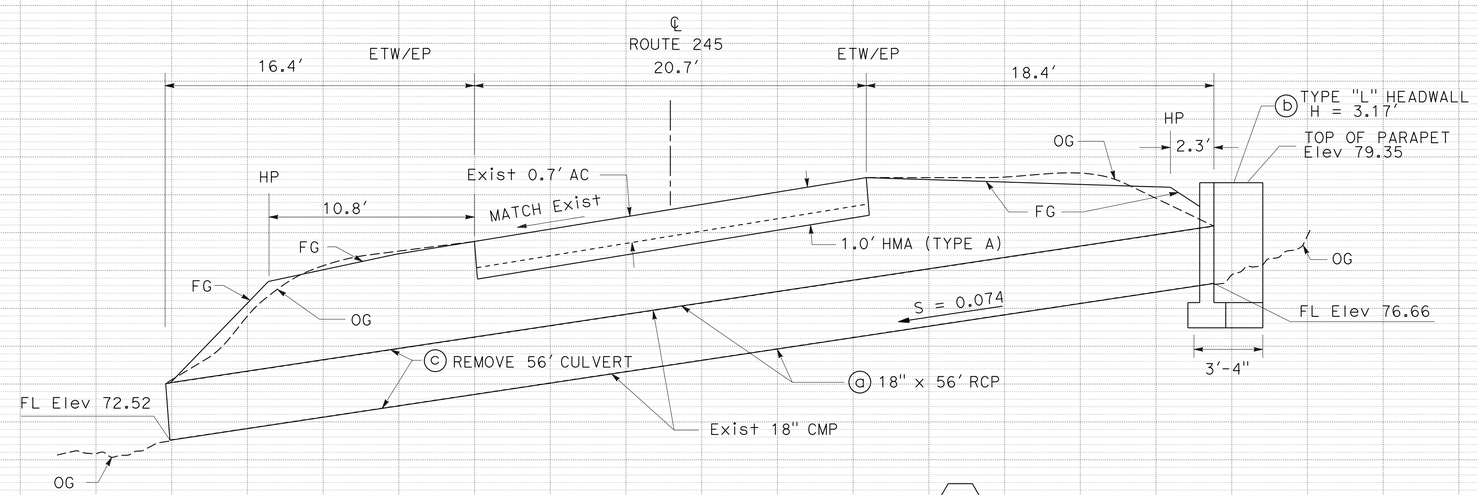


**DRAINAGE SYSTEM No. 7**

**DRAINAGE PLAN AND PROFILES**
SCALE: Horiz 1"= 4'
Vert 1"= 2'
**D-7**

STATE OF CALIFORNIA - DEPARTMENT OF TRANSPORTATION
Caltrans MAINTENANCE DESIGN
FUNCTIONAL SUPERVISOR: FRANK GONZALEZ
CALCULATED-DESIGNED BY: PETE STRATARAS
CHECKED BY: SHUE VUE
REVISED BY
DATE REVISED

LAST REVISION 02-05-16
DATE PLOTTED => 22-FEB-2016
TIME PLOTTED => 13:32

| Dist | COUNTY | ROUTE | POST MILES TOTAL PROJECT | SHEET No. | TOTAL SHEETS |
|---|---|---|---|---|---|
| 06 | Fre | 245 | Var | 9 | 19 |

REGISTERED CIVIL ENGINEER 02-01-16 DATE

2-8-16
PLANS APPROVAL DATE

REGISTERED PROFESSIONAL ENGINEER
SHUE X. VUE
No. 63657
Exp. 09-30-16
CIVIL
STATE OF CALIFORNIA

*THE STATE OF CALIFORNIA OR ITS OFFICERS OR AGENTS SHALL NOT BE RESPONSIBLE FOR THE ACCURACY OR COMPLETENESS OF SCANNED COPIES OF THIS PLAN SHEET.*

NOTE:

FOR ACCURATE RIGHT OF WAY DATEA, CONTACT
RIGHT OF WAY ENGINEERING AT THE DISTRICT OFFICE.

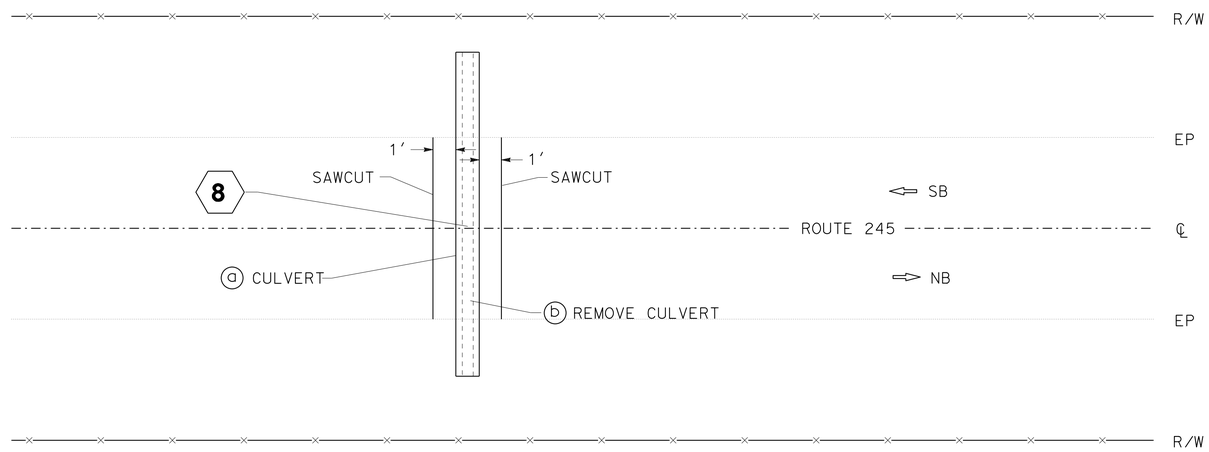


LOCATION No. 8
ROUTE 245
PM 3.92

NO SCALE

**APPROVED FOR DRAINAGE WORK ONLY**

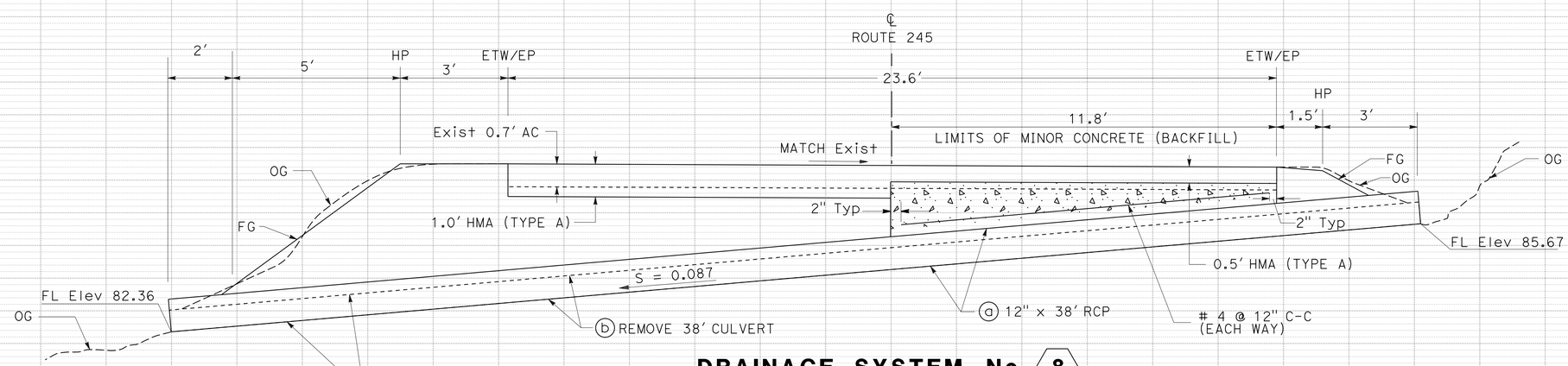


**DRAINAGE SYSTEM No. 8**

# DRAINAGE PLAN AND PROFILES

SCALE: Horiz 1"= 2'
Vert 1"= 2'

**D-8**

STATE OF CALIFORNIA - DEPARTMENT OF TRANSPORTATION
Caltrans® MAINTENANCE DESIGN

FUNCTIONAL SUPERVISOR: FRANK GONZALEZ

CALCULATED-DESIGNED BY: PETE STRATARAS
CHECKED BY: SHUE VUE

REVISED BY | DATE REVISED

LAST REVISION 02-05-16 | DATE PLOTTED => 22-FEB-2016 | TIME PLOTTED => 13:32

| Dist | COUNTY | ROUTE | POST MILES TOTAL PROJECT | SHEET No. | TOTAL SHEETS |
|---|---|---|---|---|---|
| 06 | Fre | 245 | Var | 10 | 19 |

REGISTERED CIVIL ENGINEER 02-01-16 DATE

2-8-16
PLANS APPROVAL DATE

REGISTERED PROFESSIONAL ENGINEER SHUE X. VUE No. 63657 Exp. 09-30-16 CIVIL STATE OF CALIFORNIA

*THE STATE OF CALIFORNIA OR ITS OFFICERS OR AGENTS SHALL NOT BE RESPONSIBLE FOR THE ACCURACY OR COMPLETENESS OF SCANNED COPIES OF THIS PLAN SHEET.*

NOTE:

FOR ACCURATE RIGHT OF WAY DATEA, CONTACT
RIGHT OF WAY ENGINEERING AT THE DISTRICT OFFICE.

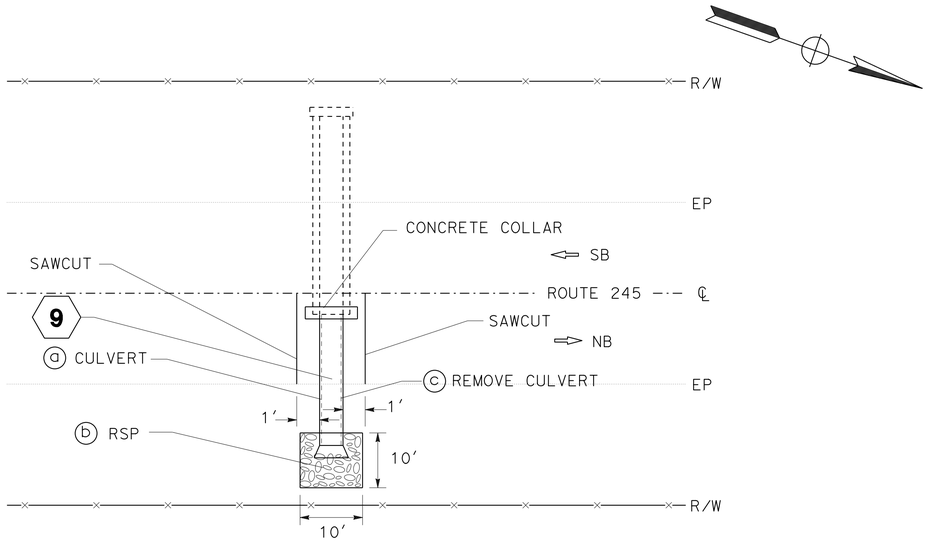


LOCATION No. 9
ROUTE 245
PM 4.68

NO SCALE

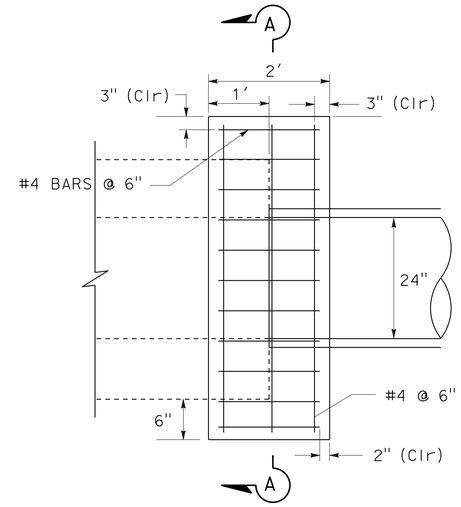


**CONCRETE COLLAR DETAIL**

NO SCALE

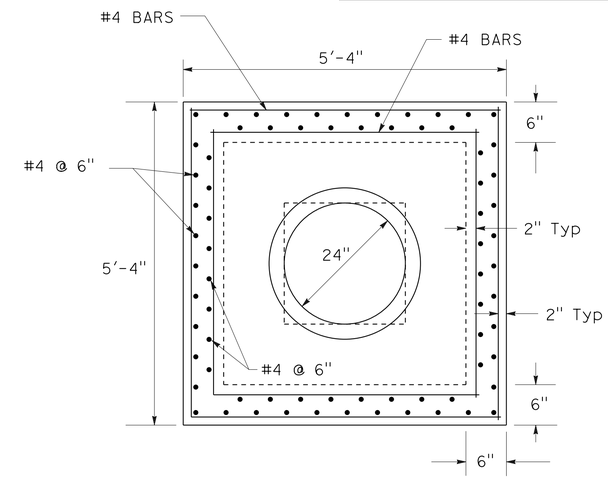


**SECTION A-A**

NO SCALE

**APPROVED FOR DRAINAGE WORK ONLY**

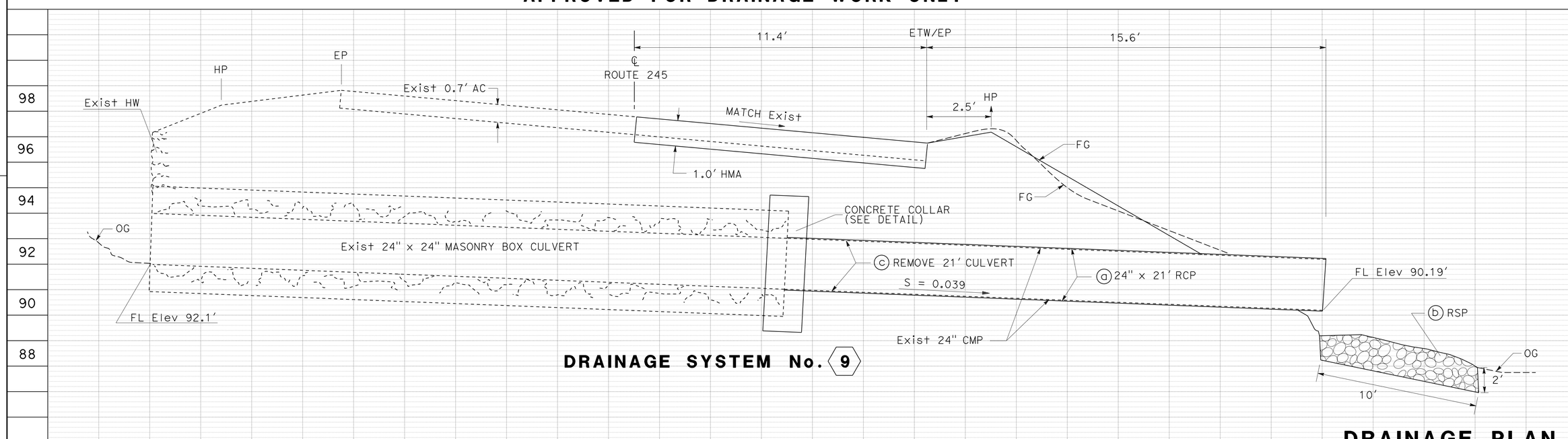


**DRAINAGE SYSTEM No. 9**

**DRAINAGE PLAN AND PROFILES**

SCALE: Horiz 1"= 2′
Vert 1"= 2′

**D-9**

STATE OF CALIFORNIA - DEPARTMENT OF TRANSPORTATION
Caltrans® MAINTENANCE DESIGN

FUNCTIONAL SUPERVISOR: FRANK GONZALEZ

CALCULATED-DESIGNED BY: PETE STRATARAS
CHECKED BY: SHUE VUE

REVISED BY
DATE REVISED

LAST REVISION 02-05-16
DATE PLOTTED => 22-FEB-2016
TIME PLOTTED => 13:32

| Dist | COUNTY | ROUTE | POST MILES TOTAL PROJECT | SHEET No. | TOTAL SHEETS |
|---|---|---|---|---|---|
| 06 | Fre | 245 | Var | 11 | 19 |

REGISTERED CIVIL ENGINEER 02-01-16 DATE

2-8-16
PLANS APPROVAL DATE

REGISTERED PROFESSIONAL ENGINEER
SHUE XAIXA VUE
No. 63657
Exp. 9-30-16
CIVIL
STATE OF CALIFORNIA

*THE STATE OF CALIFORNIA OR ITS OFFICERS OR AGENTS SHALL NOT BE RESPONSIBLE FOR THE ACCURACY OR COMPLETENESS OF SCANNED COPIES OF THIS PLAN SHEET.*

NOTE:

FOR ACCURATE RIGHT OF WAY DATEA, CONTACT
RIGHT OF WAY ENGINEERING AT THE DISTRICT OFFICE.

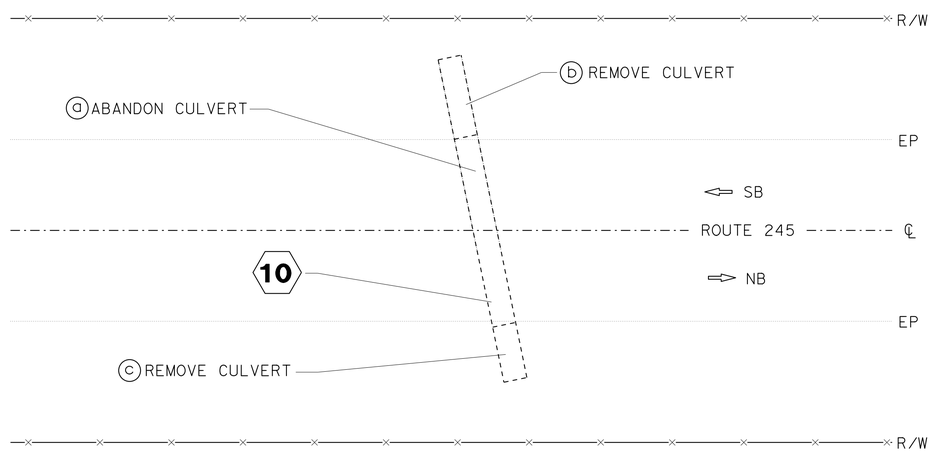


LOCATION No. 10
ROUTE 245
PM 1.13

NO SCALE

**APPROVED FOR DRAINAGE WORK ONLY**

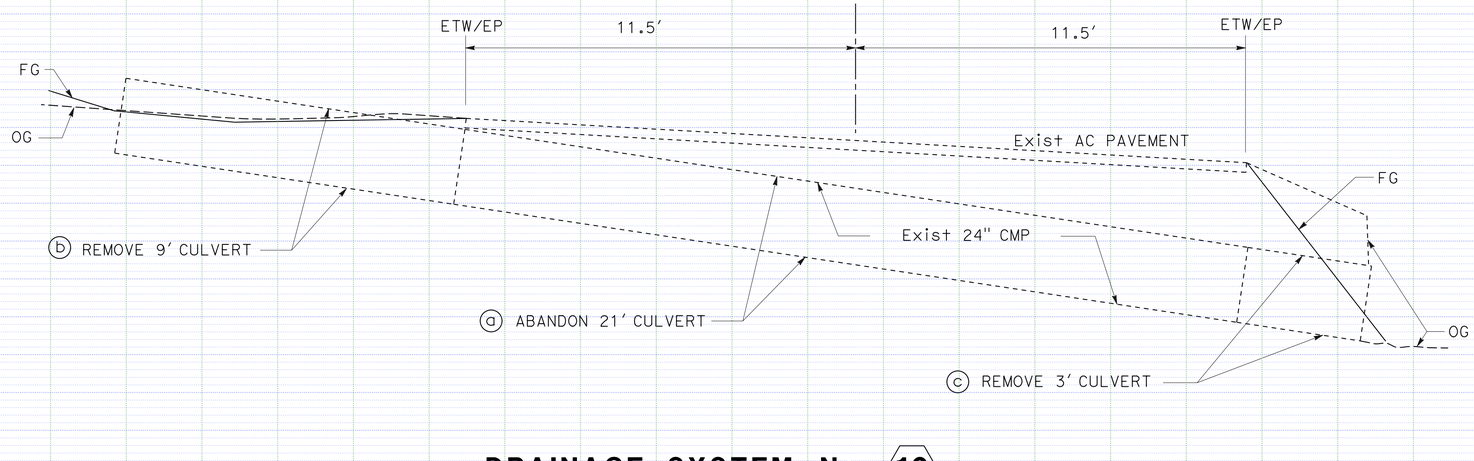


**DRAINAGE SYSTEM No. 10**

# DRAINAGE PLAN AND PROFILES

SCALE: Horiz 1"= 2′
Vert 1"= 2′

**D-10**

STATE OF CALIFORNIA - DEPARTMENT OF TRANSPORTATION
Caltrans® MAINTENANCE DESIGN

FUNCTIONAL SUPERVISOR: FRANK GONZALEZ

CALCULATED-DESIGNED BY: PETE STRATARAS
CHECKED BY: SHUE VUE

REVISED BY | DATE REVISED

LAST REVISION 02-05-16 | DATE PLOTTED => 22-FEB-2016 | TIME PLOTTED => 13:32

| Dist | COUNTY | ROUTE | POST MILES TOTAL PROJECT | SHEET No. | TOTAL SHEETS |
|---|---|---|---|---|---|
| 06 | Fre | 245 | Var | 12 | 19 |

REGISTERED CIVIL ENGINEER 02-01-16 DATE

2-8-16
PLANS APPROVAL DATE

REGISTERED PROFESSIONAL ENGINEER SHUE XAIXA VUE No. 63657 Exp. 9-30-16 CIVIL STATE OF CALIFORNIA

*THE STATE OF CALIFORNIA OR ITS OFFICERS OR AGENTS SHALL NOT BE RESPONSIBLE FOR THE ACCURACY OR COMPLETENESS OF SCANNED COPIES OF THIS PLAN SHEET.*

## DRAINAGE QUANTITIES

| DRAINAGE SYSTEM No. | DRAINAGE UNIT | REMOVE CULVERT | HMA (TYPE A) | TACK COAT | 12" RCP | 18" RCP | 24" RCP | 18" CONCRETE FLARED END SECTION | ABANDON CULVERT | MINOR CONCRETE (MINOR STRUCTURE) | INLET GRATE (TYPE 36R) | 36" PRECAST CONCRETE PIPE INLET | RSP (No. 2 METHOD B) | RSP FABRIC (CLASS 8) | BAR REINFORCING STEEL | CONCRETE BACKFILL (PIPE TRENCH) | DESCRIPTION | DRAINAGE SYSTEM No. | DRAINAGE UNIT |
|---|---|---|---|---|---|---|---|---|---|---|---|---|---|---|---|---|---|---|---|
| | | LF | TON | TON | LF | LF | LF | EA | LF | CY | EA | LF | CY | SQYD | LB | CY | | | |
| 1 | a | | | | | | | | | 1.20 | | | | | | | STRAIGHT HEADWALL | 1 | a |
| | b | | 6.2 | 0.01 | | | 32 | | | | | | | | | | 24" RCP, HMA (TYPE A) | | b |
| | c | | | | | | | | | 1.20 | | | | | | | STRAIGHT HEADWALL | | c |
| | d | 30 | | | | | | | | | | | | | | | REMOVE 24" CMP | | d |
| 2 | a | | 5.3 | 0.01 | | 34 | | | | | | | | | | | PLACE 18" RCP, HMA (TYPE A) | 2 | a |
| | b | | | | | | | 1 | | | | | | | | | PLACE CONCRETE FLARED END SECTION | | b |
| | c | | | | | | | | | | | | 7.5 | 20 | | | RSP | | c |
| | d | 28 | | | | | | | | | | | | | | | REMOVE 12" CMP | | d |
| 3 | a | | 4.8 | 0.01 | | 29 | | | | | | | | | 89 | 4.2 | 18" RCP, HMA (TYPE A), MINOR CONCRETE (BACKFILL) | 3 | a |
| | b | | | | | | | 1 | | | | | | | | | PLACE CONCRETE FLARED END SECTION | | b |
| | c | | | | | | | | | | | | 7.5 | 20 | | | RSP | | c |
| | d | 27 | | | | | | | | | | | | | | | REMOVE 12" CMP | | d |
| 4 | a | | 0.8 | | | | | | | 0.6 | 1 | 3.4 | | | | | HMA APRON, 36" GCP INLET, INLET GRATE (TYPE 36R) | 4 | a |
| | b | | 6.4 | 0.01 | | | 30 | | | | | | | | 106 | 7.3 | 24" RCP, MINOR CONCRETE (BACKFILL), HMA (TYPE A) | | b |
| | c | | | | | | | | | 1.20 | | | | | | | STRAIGHT HEADWALL | | c |
| 5 | a | | | | | | | 1 | | | | | | | | | PLACE CONCRETE FLARED END SECTION | 5 | a |
| | b | | 7.6 | 0.01 | | 36 | | | | | | | | | 141 | 6.8 | 18" RCP, MINOR CONCRETE (BACKFILL), HMA (TYPE A) | | b |
| | c | | | | | | | 1 | | | | | | | | | PLACE CONCRETE FLARED END SECTION | | c |
| | d | 34 | | | | | | | | | | | | | | | REMOVE 12" CMP | | d |
| 6 | a | | 6.0 | 0.01 | | 34 | | | | | | | | | 113 | 4.7 | 18" RCP, MINOR CONCRETE (BACKFILL), HMA (TYPE A) | 6 | a |
| | b | | | | | | | 1 | | | | | | | | | PLACE CONCRETE FLARED END SECTION | | b |
| | c | 34 | | | | | | | | | | | | | | | REMOVE 12" CMP | | c |
| 7 | a | | 8.4 | 0.01 | | 56 | | | | | | | | | | | 18" RCP, HMA (TYPE A) | 7 | a |
| | b | | | | | | | | | 1.04 | | | | | | | "L" HEADWALL | | b |
| | c | 56 | | | | | | | | | | | | | | | REMOVE 18" CMP | | c |
| 8 | a | | 9.6 | 0.01 | 38 | | | | | | | | | | 60 | 3.4 | 12" RCP, MINOR CONCRETE (BACKFILL), HMA (TYPE A) | 8 | a |
| | b | 38 | | | | | | | | | | | | | | | REMOVE 8" CMP | | b |
| 9 | a | | 6.6 | 0.01 | | | 21 | | | 1.9 | | | | | 122 | | 24" RCP, HMA (TYPE A), CONCRETE COLLAR | 9 | a |
| | b | | | | | | | | | | | | 7.5 | 20 | | | RSP | | b |
| | c | 21 | | | | | | | | | | | | | | | REMOVE 24" CMP | | c |
| 10 | a | 9 | | | | | | | | | | | | | | | REMOVE 24"CMP | 10 | a |
| | b | | | | | | | | 21 | | | | | | | | ABANDON 24"CMP | | b |
| | c | 3 | | | | | | | | | | | | | | | REMOVE 24"CMP | | c |
| TOTAL | | 280 | 61.7 | 0.1 | 38 | 189 | 83 | 5 | 21 | 6.34 | 1 | 3.4 | 22.5 | 60 | 631 | 26.4 | | | |

## PAVEMENT DELINEATION QUANTITIES

| ROUTE 245 | DETAIL No. | 4" TWO-COMPONENT PAINT TRFFIC STRIPE (SOLID) |
|---|---|---|
| | | LF |
| Loc 1 - 9 | 22 | 90 |
| | 27B | 180 |
| | TOTAL | 270 |

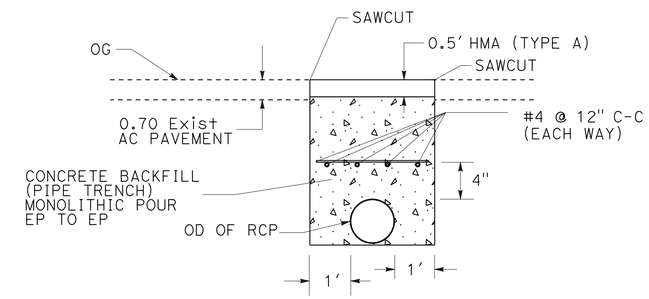


## TYPICAL TRENCH CROSS SECTION
(CONCRETE BACKFILL AND REBAR)

**LOCATIONS 3, 4, 5, 6, 8***

* NB LANE ONLY

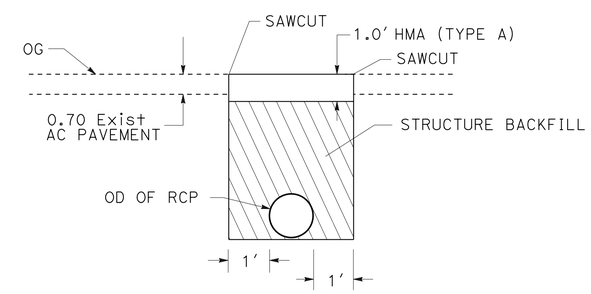


## TYPICAL TRENCH CROSS SECTION
(STRUCTURE BACKFILL)

**LOCATIONS 1, 2 ,7, 8*, 9**

* SB LANE ONLY

# DRAINAGE DETAILS AND SUMMARY OF QUANTITIES

**DD-1**

STATE OF CALIFORNIA - DEPARTMENT OF TRANSPORTATION
Caltrans® MAINTENANCE DESIGN

FUNCTIONAL SUPERVISOR: FRANK GONZALEZ
CALCULATED-DESIGNED BY: PETE STRATARAS
CHECKED BY: SHUE VUE
REVISED BY
DATE REVISED

LAST REVISION 02-05-16 DATE PLOTTED => 22-FEB-2016 TIME PLOTTED => 13:32

| Dist | COUNTY | ROUTE | POST MILES TOTAL PROJECT | SHEET No. | TOTAL SHEETS |
|---|---|---|---|---|---|
| 06 | Fre | 245 | 0.2/4.7 | 13 | 19 |

REGISTERED CIVIL ENGINEER 02-01-16 DATE

2-8-16
PLANS APPROVAL DATE

REGISTERED PROFESSIONAL ENGINEER SHUE XAIXA VUE No. 63657 Exp. 9-30-16 CIVIL STATE OF CALIFORNIA

*THE STATE OF CALIFORNIA OR ITS OFFICERS OR AGENTS SHALL NOT BE RESPONSIBLE FOR THE ACCURACY OR COMPLETENESS OF SCANNED COPIES OF THIS PLAN SHEET.*

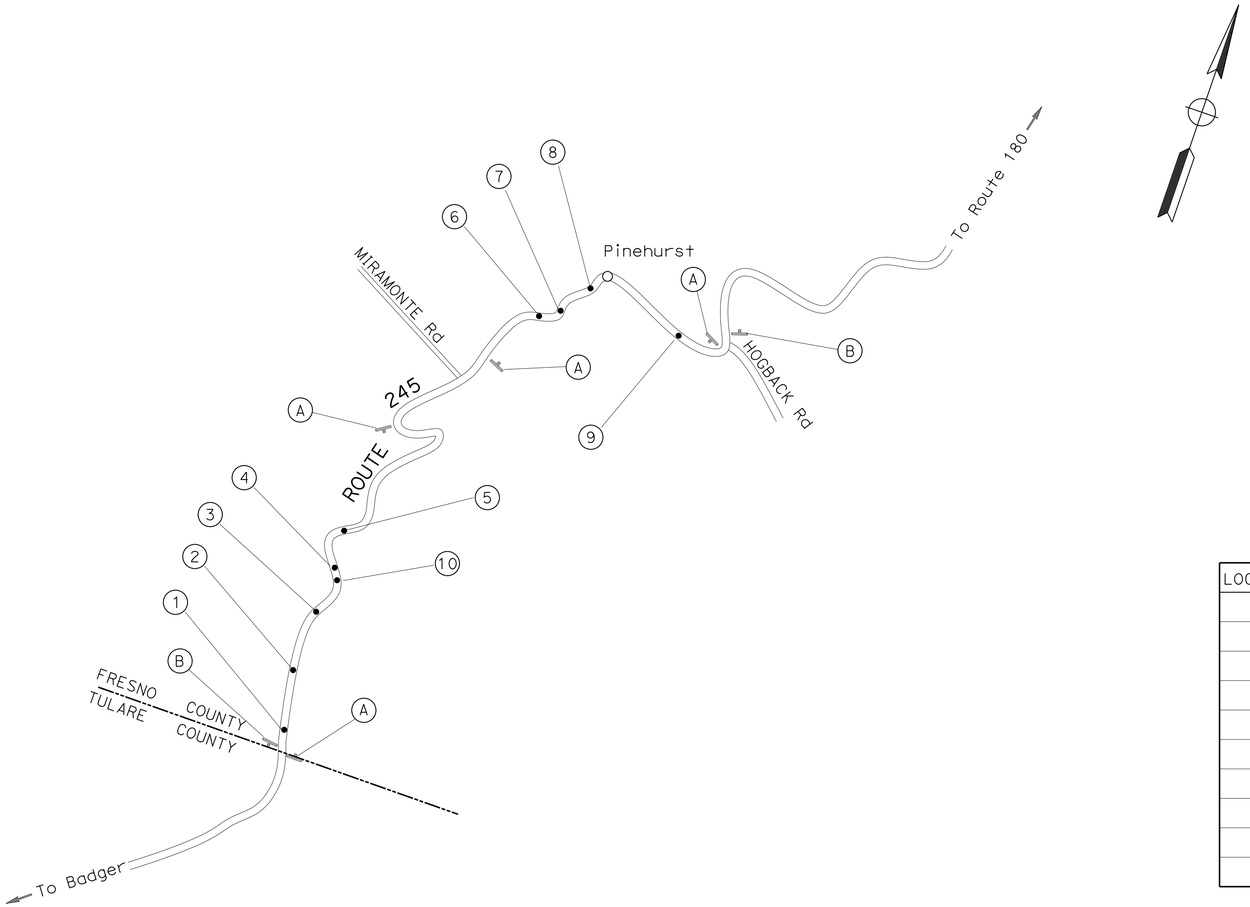


## STATIONARY MOUNTED CONSTRUCTION AREA SIGNS

| SIGN | SIGN CODE | PANEL SIZE | SIGN MESSAGE | No. OF POST AND SIZE | No. SIGNS |
|---|---|---|---|---|---|
| A | W20-1 | 36" x 36" | ROAD WORK AHEAD | 1 - 4" x 4" | 4 |
| B | G20-2 | 36" x 18" | END ROAD WORK | 1 - 4" x 4" | 2 |

NOTE: EXACT LOCATIONS TO BE DETERMINED BY THE ENGINEER.

### LOCATIONS OF CONSTRUCTION

| LOCATION | PM | DESCRIPTION |
|---|---|---|
| 1 | 0.23 | 0.23 MILE N OF Tul Co LINE |
| 2 | 0.81 | 0.81 mile N of Tul Co line |
| 3 | 0.98 | 0.98 mile N of Tul Co line |
| 4 | 1.13 | 1.13 mile N of Tul Co line |
| 5 | 1.34 | 1.34 mile N of Tul Co line |
| 6 | 3.72 | 1.00 MILE N OF MIRAMONTE Rd |
| 7 | 3.76 | 1.04 MILE N OF MIRAMONTE Rd |
| 8 | 3.92 | 1.20 MILE N OF MIRAMONTE Rd |
| 9 | 4.68 | 0.16 MILE S OF HOGBACK Rd |
| 10 | 1.13 | 1.13 MILE N OF Tul Co LINE |

*APPROVED FOR CONSTRUCTION AREA SIGN WORK ONLY*

NO SCALE

## CONSTRUCTION AREA SIGNS

**CS-1**

STATE OF CALIFORNIA - DEPARTMENT OF TRANSPORTATION
Caltrans® MAINTENANCE DESIGN

FUNCTIONAL SUPERVISOR: FRANK GONZALEZ
CALCULATED-DESIGNED BY: PETE STRATARAS
CHECKED BY: SHUE VUE
REVISED BY
DATE REVISED

LAST REVISION 02-05-16 | DATE PLOTTED => 22-FEB-2016 | TIME PLOTTED => 13:32

## M

| | |
|---|---|
| Maint | MAINTENANCE |
| Max | MAXIMUM |
| MB | METAL BEAM |
| MBB | METAL BEAM BARRIER |
| MBGR | METAL BEAM GUARD RAILING |
| Med | MEDIAN |
| MGS | MIDWEST GUARDRAIL SYSTEM |
| MH | MANHOLE |
| Min | MINIMUM |
| Misc | MISCELLANEOUS |
| Misc I & S | MISCELLANEOUS IRON AND STEEL |
| Mkr | MARKER |
| Mod | MODIFIED, |
| | MODIFY |
| Mon | MONUMENT |
| MP | METAL PLATE |
| MPGR | METAL PLATE GUARD RAILING |
| MR | MOVEMENT RATING |
| MSE | MECHANICALLY STABILIZED EMBANKMENT |
| Mt | MOUNTAIN, MOUNT |
| Mtl | MATERIAL |
| MVP | MAINTENANCE VEHICLE PULLOUT |

## N

| | |
|---|---|
| N | NORTH |
| NB | NORTHBOUND |
| No. | NUMBER (MUST HAVE PERIOD) |
| Nos. | NUMBERS (MUST HAVE PERIOD) |
| NPS | NOMINAL PIPE SIZE |
| NS | NEAR SIDE |
| NSP | NEW STANDARD PLAN |
| NTS | NOT TO SCALE |

## O

| | |
|---|---|
| Oblr | OBLITERATE |
| OC | OVERCROSSING |
| OD | OUTSIDE DIAMETER |
| OF | OUTSIDE FACE |
| OG | ORIGINAL GROUND |
| OGAC | OPEN GRADED ASPHALT CONCRETE |
| OGFC | OPEN GRADED FRICTION COURSE |
| OH | OVERHEAD |
| OHWM | ORDINARY HIGH WATER MARK |
| O-O | OUT TO OUT |
| Opp | OPPOSITE |
| OSD | OVERSIDE DRAIN |

## P

| | |
|---|---|
| P | PAGE |
| PAP | PERFORATED ALUMINUM PIPE |
| PB | PULL BOX |
| PC | POINT OF CURVATURE, |
| | PRECAST |
| PCC | POINT OF COMPOUND CURVE, |
| | PORTLAND CEMENT CONCRETE |
| PCMS | PORTABLE CHANGEABLE MESSAGE SIGN |
| PCP | PERFORATED CONCRETE PIPE, |
| | PRESTRESSED CONCRETE PIPE |
| PCVC | POINT OF COMPOUND VERTICAL CURVE |
| PEC | PERMIT TO ENTER AND CONSTRUCT |
| Ped | PEDESTRIAN |
| Ped OC | PEDESTRIAN OVERCROSSING |
| Ped UC | PEDESTRIAN UNDERCROSSING |
| Perm Mtl | PERMEABLE MATERIAL |

## P continued

| | |
|---|---|
| PG | PROFILE GRADE |
| PI | POINT OF INTERSECTION |
| PJP | PARTIAL JOINT PENETRATION |
| Pkwy | PARKWAY |
| ₱,PL | PLATE |
| P/L | PROPERTY LINE |
| PM | POST MILE, |
| | TIME FROM NOON TO MIDNIGHT |
| PN | PAVING NOTCH |
| POC | POINT OF HORIZONTAL CURVE |
| POT | POINT OF TANGENT |
| POVC | POINT OF VERTICAL CURVE |
| PP | PIPE PILE, |
| | PLASTIC PIPE, |
| | POWER POLE |
| PPL | PREFORMED PERMEABLE LINER |
| PPP | PERFORATED PLASTIC PIPE |
| PRC | POINT OF REVERSE CURVE |
| PRF | PAVEMENT REINFORCING FABRIC |
| PRVC | POINT OF REVERSE VERTICAL CURVE |
| PS&E | PLANS, SPECIFICATIONS AND ESTIMATES |
| PS, P/S | PRESTRESSED |
| PSP | PERFORATED STEEL PIPE |
| PT | POINT OF TANGENCY |
| PVC | POLYVINYL CHLORIDE |
| Pvmt | PAVEMENT |

## Q

| | |
|---|---|
| Qty | QUANTITY |

## R

| | |
|---|---|
| R | RADIUS |
| R & D | REMOVE AND DISPOSE |
| R & S | REMOVE AND SALVAGE |
| R/C | RATE OF CHANGE |
| RCA | REINFORCED CONCRETE ARCH |
| RCB | REINFORCED CONCRETE BOX |
| RCP | REINFORCED CONCRETE PIPE |
| RCPA | REINFORCED CONCRETE PIPE ARCH |
| Rd | ROAD |
| Reinf | REINFORCED, |
| | REINFORCEMENT, |
| | REINFORCING |
| Rel | RELOCATE |
| Repl | REPLACEMENT |
| Ret | RETAINING |
| Rev | REVISED, REVISION |
| Rdwy | ROADWAY |
| RHMA | RUBBERIZED HOT MIX ASPHALT |
| Riv | RIVER |
| RM | ROAD-MIXED |
| RP | RADIUS POINT, |
| | REFERENCE POINT |
| RR | RAILROAD |
| RSP | ROCK SLOPE PROTECTION, |
| | REVISED STANDARD PLAN |
| Rt | RIGHT |
| Rte | ROUTE |
| RW | REDWOOD, |
| | RETAINING WALL |
| R/W | RIGHT OF WAY |
| Rwy | RAILWAY |

## S

| | |
|---|---|
| S | SOUTH, |
| | SUPPLEMENT |
| SAE | STRUCTURE APPROACH EMBANKMENT |
| Salv | SALVAGE |
| SAPP | STRUCTURAL ALUMINUM PLATE PIPE |
| SB | SOUTHBOUND |
| SC | SAND CUSHION |
| SCSP | SLOTTED CORRUGATED STEEL PIPE |
| SD | STORM DRAIN |
| Sec | SECOND, |
| | SECTION |
| Sep | SEPARATION |
| SG | SUBGRADE |
| Shld | SHOULDER |
| Sht | SHEET |
| Sim | SIMILAR |
| ₤ | STATION LINE |
| SM | SELECTED MATERIAL |
| Spec | SPECIAL, |
| | SPECIFICATIONS |
| SPP | SLOTTED PLASTIC PIPE |
| SS | SLOPE STAKE |
| SSBM | STRAP AND SADDLE BRACKET METHOD |
| SSD | STRUCTURAL SECTION DRAIN |
| SSPA | STRUCTURAL STEEL PLATE ARCH |
| SSPP | STRUCTURAL STEEL PLATE PIPE |
| SSPPA | STRUCTURAL STEEL PLATE PIPE ARCH |
| SSRP | STEEL SPIRAL RIB PIPE |
| St | STREET |
| Sta | STATION |
| STBB | SINGLE THRIE BEAM BARRIER |
| Std | STANDARD |
| Str | STRUCTURE |
| Surf | SURFACING |
| SW | SIDEWALK, |
| | SOUND WALL |
| Swr | SEWER |
| Sym | SYMMETRICAL |
| S4S | SURFACE 4 SIDES |

## T

| | |
|---|---|
| T | SEMI-TANGENT |
| Tan | TANGENT |
| TBB | THRIE BEAM BARRIER |
| Tbr | TIMBER |
| TC | TOP OF CURB |
| TCB | TRAFFIC CONTROL BOX |
| TCE | TEMPORARY CONSTRUCTION EASEMENT |
| Tel | TELEPHONE |
| Temp | TEMPORARY |
| TG | TOP OF GRADE |
| Tot | TOTAL |
| TP | TELEPHONE POLE |
| TPB | TREATED PERMEABLE BASE |
| TPM | TREATED PERMEABLE MATERIAL |
| Trans | TRANSITION |

## T continued

| | |
|---|---|
| TS | TRANSVERSE, |
| | TRAFFIC SIGNAL, |
| | TUBULAR STEEL |
| Typ | TYPICAL |

## U

| | |
|---|---|
| UC | UNDERCROSSING |
| UD | UNDERDRAIN |
| UG | UNDERGROUND |
| UON | UNLESS OTHERWISE NOTED |
| UP | UNDERPASS |

## V

| | |
|---|---|
| V | VALVE, |
| | DESIGN SPEED |
| Var | VARIABLE, |
| | VARIES |
| VC | VERTICAL CURVE |
| VCP | VITRIFIED CLAY PIPE |
| Vert | VERTICAL |
| Via | VIADUCT |
| Vol | VOLUME |

## W

| | |
|---|---|
| W | WEST, |
| | WIDTH |
| WB | WESTBOUND |
| WH | WEEP HOLE |
| WM | WIRE MESH |
| WS | WATER SURFACE |
| WSP | WELDED STEEL PIPE |
| Wt | WEIGHT |
| WV | WATER VALVE |
| WW | WINGWALL |
| WWLOL | WINGWALL LAYOUT LINE |

## X

| | |
|---|---|
| X Sec | CROSS SECTION |
| Xing | CROSSING |

## Y

| | |
|---|---|
| Yr | YEAR |
| Yrs | YEARS |

| Dist | COUNTY | ROUTE | POST MILES TOTAL PROJECT | SHEET No. | TOTAL SHEETS |
|---|---|---|---|---|---|
| 06 | Fre | 245 | Var | 14 | 19 |

Grace M. Tsushima
REGISTERED CIVIL ENGINEER

July 19, 2013
PLANS APPROVAL DATE

REGISTERED PROFESSIONAL ENGINEER
Grace M. Tsushima
No. C49814
Exp. 9-30-14
CIVIL
STATE OF CALIFORNIA

THE STATE OF CALIFORNIA OR ITS OFFICERS OR AGENTS SHALL NOT BE RESPONSIBLE FOR THE ACCURACY OR COMPLETENESS OF SCANNED COPIES OF THIS PLAN SHEET.

TO ACCOMPANY PLANS DATED 2-8-16

### UNIT OF MEASUREMENT SYMBOLS:

Some of the symbols used in the project plan quantity tables and in the Bid Item List are:

TABLE A

| SYMBOL USED | DEFINITIONS |
|---|---|
| ACRE | ACRE |
| CF | CUBIC FOOT |
| CY | CUBIC YARD |
| EA | EACH |
| GAL | GALLON |
| LB | POUND |
| LF | LINEAR FOOT |
| SQFT | SQUARE FOOT |
| SQYD | SQUARE YARD |
| STA | 100 FEET |
| TAB | TABLET |
| TON | 2,000 POUNDS |

Some of the symbols used in the plans other than in the project plan quantity tables are:

TABLE B

| SYMBOL USED | DEFINITIONS |
|---|---|
| ksi | KIPS PER SQUARE INCH |
| ksf | KIPS PER SQUARE FOOT |
| psi | POUNDS PER SQUARE INCH |
| psf | POUNDS PER SQUARE FOOT |
| $lb/ft^3$, pcf | POUNDS PER CUBIC FOOT |
| tsf | TONS PER SQUARE FOOT |
| mph, MPH * | MILES PER HOUR |
| ø | NOMINAL DIAMETER |
| oz | OUNCE |
| lb | POUND |
| kip | 1,000 POUNDS |
| cal | CALORIE |
| ft | FOOT OR FEET |
| gal | GALLON |

* For use on a sign panel only

STATE OF CALIFORNIA
DEPARTMENT OF TRANSPORTATION

# ABBREVIATIONS (SHEET 2 OF 2)

NO SCALE

RSP A10B DATED JULY 19, 2013 SUPERSEDES STANDARD PLAN A10B DATED MAY 20, 2011 - PAGE 2 OF THE STANDARD PLANS BOOK DATED 2010.

**REVISED STANDARD PLAN RSP A10B**

**2010 REVISED STANDARD PLAN RSP A10B**

6-7-13

| Dist | COUNTY | ROUTE | POST MILES TOTAL PROJECT | SHEET No. | TOTAL SHEETS |
|---|---|---|---|---|---|
| 06 | Fre | 245 | Var | 15 | 19 |

REGISTERED CIVIL ENGINEER

July 18, 2014
PLANS APPROVAL DATE

REGISTERED PROFESSIONAL ENGINEER Carl M. Duan No. C59976 Exp. 6-30-16 CIVIL STATE OF CALIFORNIA

*THE STATE OF CALIFORNIA OR ITS OFFICERS OR AGENTS SHALL NOT BE RESPONSIBLE FOR THE ACCURACY OR COMPLETENESS OF SCANNED COPIES OF THIS PLAN SHEET.*

TO ACCOMPANY PLANS DATED 2-8-16

2010 REVISED STANDARD PLAN RSP A62DA

## DESIGN NOTES:

Design: AASHTO LRFD Bridge Design Specifications, 4th edition with California Amendments. ACPA DESIGN DATA 1, October 2007. INDIRECT DESIGN METHOD

Soil: w Fe = 162 pcf Installation Type 1
w Fe = 168 pcf Installation Types 2 & 3
w = Unit weight of soil (pcf)
Fe = Soil-structure interaction factor

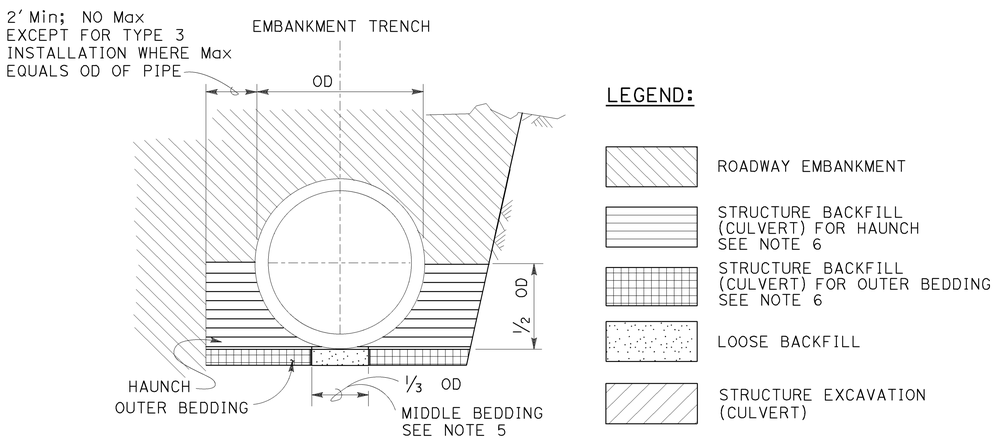


BACKFILL

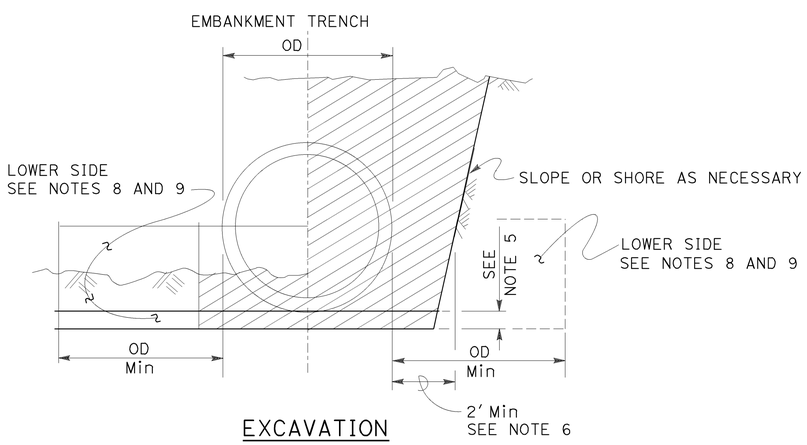


EXCAVATION

## INSTALLATION TYPE 1:

The haunch and outer bedding shall be compacted to a minimum 90 percent relative compaction. In addition, the minimum sand equivalent in these areas shall be 30 and the maximum percentage passing the No. 200 sieve size shall be 12.

## INSTALLATION TYPE 2:

The haunch and outer bedding shall be compacted to a minimum 90 percent relative compaction. In addition, the minimum sand equivalent in these areas shall be 25.

## INSTALLATION TYPE 3:

The haunch and outer bedding shall be compacted to a minimum 85 percent relative compaction. 90 percent relative compaction will be required where the fill over the pipe is less than 4′-0″ or 1/2 OD. In addition, the minimum sand equivalent in these areas shall be 25 and the material shall not contain rocks, broken concrete, or other solid material exceeding 3″ in greatest dimension.

### INSTALLATION TYPE 1

| MINIMUM CLASS AND D-LOAD | COVER | |
|---|---|---|
| | 60″ Dia AND SMALLER | OVER 60″ Dia TO 120″ Dia Max |
| CLASS II 1000D | 14.9′ | 12.9′ |
| CLASS III 1350D | 15.0′ - 21.9′ | 13.0′ - 18.9′ |
| CLASS III SPECIAL 1700D | 22.0′ - 27.9′ | 19.0′ - 24.9′ |
| CLASS IV 2000D | 28.0′ - 32.9′ | 25.0′ - 29.9′ |
| CLASS IV SPECIAL 2500D | 33.0′ - 41.9′ | 30.0′ - 38.9′ |
| CLASS V 3000D | 42.0′ - 49.9′ | 39.0′ - 46.9′ |
| CLASS V SPECIAL 3600D | 50.0′ - 60.0′ | 47.0′ - 58.0′ |

### INSTALLATION TYPE 2

| MINIMUM CLASS AND D-LOAD | COVER | |
|---|---|---|
| | 60″ Dia AND SMALLER | OVER 60″ Dia TO 120″ Dia Max |
| CLASS II 1000D | 11.9′ | 9.9′ |
| CLASS III 1350D | 12.0′ - 15.9′ | 10.0′ - 14.9′ |
| CLASS III SPECIAL 1700D | 16.0′ - 20.9′ | 15.0′ - 19.9′ |
| CLASS IV 2000D | 21.0′ - 24.9′ | 20.0′ - 23.9′ |
| CLASS IV SPECIAL 2500D | 25.0′ - 31.9′ | 24.0′ - 30.9′ |
| CLASS V 3000D | 32.0′ - 37.9′ | 31.0′ - 37.9′ |
| CLASS V SPECIAL 3600D | 38.0′ - 46.0′ | 38.0′ - 46.0′ |

### INSTALLATION TYPE 3

| MINIMUM CLASS AND D-LOAD | COVER | |
|---|---|---|
| | 60″ Dia AND SMALLER | OVER 60″ Dia TO 120″ Dia Max |
| CLASS II 1000D | 8.9′ | 5.9′ |
| CLASS III 1350D | 9.0′ - 11.9′ | 6.0′ - 10.9′ |
| CLASS III SPECIAL 1700D | 12.0′ - 15.9′ | 11.0′ - 13.9′ |
| CLASS IV 2000D | 16.0′ - 18.9′ | 14.0′ - 17.9′ |
| CLASS IV SPECIAL 2500D | 19.0′ - 24.9′ | 18.0′ - 22.9′ |
| CLASS V 3000D | 25.0′ - 29.9′ | 23.0′ - 28.9′ |
| CLASS V SPECIAL 3600D | 30.0′ - 36.0′ | 29.0′ - 35.0′ |

## NOTES:

1. Unless otherwise shown on the plans or specified in the special provision, the Contractor shall have the option of selecting the class of RCP and the type of installation to be used, provided the height of cover does not exceed the value shown for the RCP selected.
   Example: 24″ RCP culvert with maximum cover of 24′-0″ the options are:
   a) Class III Special or stronger with Installation Type 1.
   b) Class IV or stronger with Installation Type 2.
   c) Class IV Special or stronger with Installation Type 3.
   Cover is defined as the maximum vertical distance from top of the pipe to finished grade within the length of any given culvert.
2. The class of RCP and Installation Type selected shall be the same throughout the length of any given culvert.
3. The "length of any culvert" is defined as the culvert between:
   a) Successive drainage structure (inlets, junction boxes, headwalls, etc.).
   b) A drainage structure and the inlet or outlet end of the culvert.
   c) The inlet and outlet end of the culvert when there are no intervening drainage structures.
4. Oval and arch shaped RCP shall not be used.
5. Bedding depth: 1/25 OD Min, not less than 3″.
6. Slurry cement backfill may be substituted for backfill in the outer bedding and haunch areas. If slurry is used, the outer and middle beddings shall be omitted. Prior to installation, the soil under the middle 1/3 of the outside diameter of the pipe shall be softened by scarifying or other means to a minimum depth of 1/25 OD, but not less than 3″. Where slurry cement backfill is used, clear distance to trench wall may be reduced as set forth in the Standard Specifications.
7. Backfill shall be placed full width of excavation except where dimensions are shown for backfill width or thickness. Dimensions shown are minimum.
8. Lower side shall be suitable material as determined by the Engineer. Otherwise it shall be considered unsuitable as set forth in of the Standard Specifications. See Note 9.
9. Where the pipe is placed in a trench, if the trench walls are sloped at 5 vertical to 1 horizontal or steeper for at least 90 percent of the trench height or up to not less than 12″ from the grading plane, the firmness of the soil in the lower side need not be considered.
10. Non-reinforced precast concrete pipe sizes 3′-0″ or smaller may be placed under installation Types 1, 2 or 3.

STATE OF CALIFORNIA
DEPARTMENT OF TRANSPORTATION

# EXCAVATION AND BACKFILL CONCRETE PIPE CULVERTS INDIRECT DESIGN METHOD

NO SCALE

RSP A62DA DATED JULY 18, 2014 SUPERSEDES STANDARD PLAN A62DA DATED MAY 20, 2011 - PAGE 24 OF THE STANDARD PLANS BOOK DATED 2010.

**REVISED STANDARD PLAN RSP A62DA**

| Dist | COUNTY | ROUTE | POST MILES TOTAL PROJECT | SHEET No. | TOTAL SHEETS |
|---|---|---|---|---|---|
| 06 | Fre | 245 | Var | 16 | 19 |

Raymond Don Tsztoo
REGISTERED CIVIL ENGINEER

October 30, 2015
PLANS APPROVAL DATE

REGISTERED PROFESSIONAL ENGINEER
Raymond Don Tsztoo
No. C37332
Exp. 6-30-16
CIVIL
STATE OF CALIFORNIA

*THE STATE OF CALIFORNIA OR ITS OFFICERS OR AGENTS SHALL NOT BE RESPONSIBLE FOR THE ACCURACY OR COMPLETENESS OF SCANNED COPIES OF THIS PLAN SHEET.*

TO ACCOMPANY PLANS DATED 2-8-16

**2010 REVISED STANDARD PLAN RSP D75B**

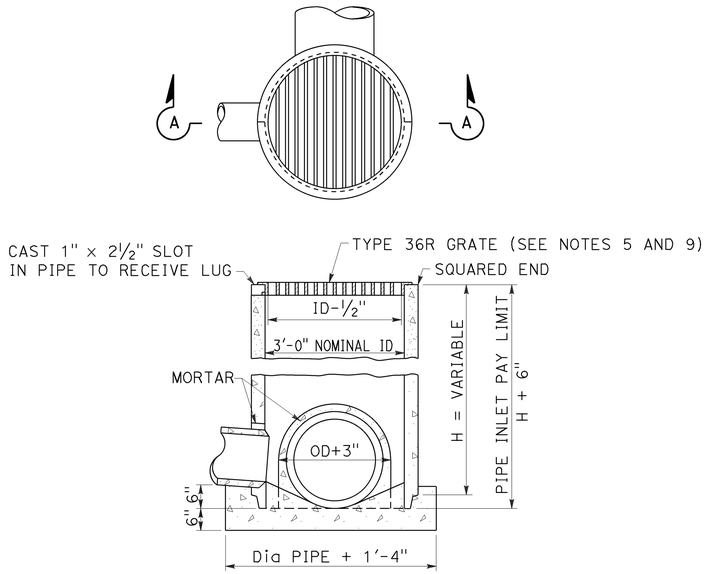


SECTION A-A
TYPE GCP
Concrete pipe inlet with grate

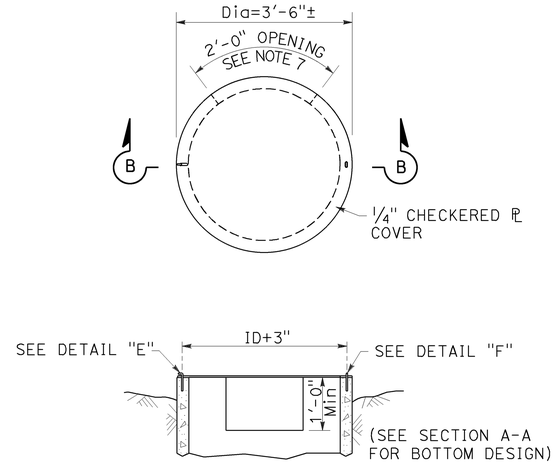


SECTION B-B
TYPE OCP or OCPI
Concrete pipe inlet with steel cover
(See Note 6)

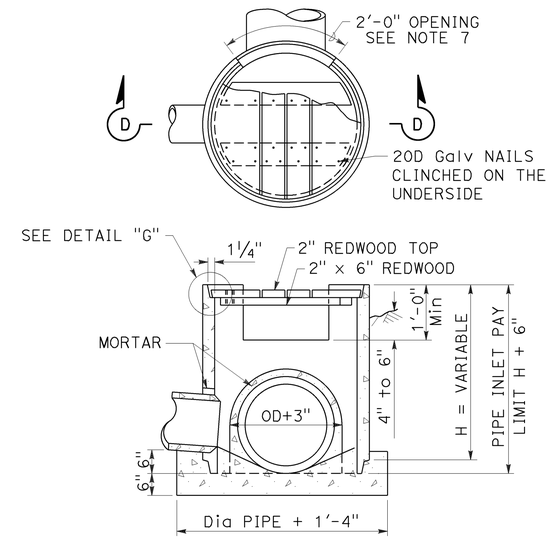


SECTION D-D
TYPE OCP or OCPI
Concrete pipe inlet with redwood cover
(See Notes 6 and 10)

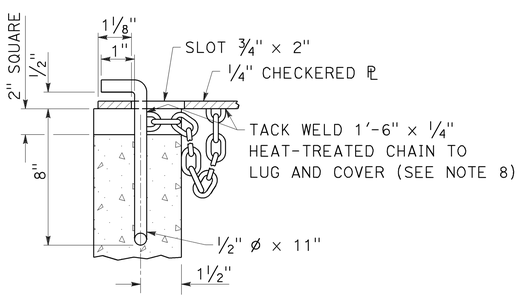


DETAIL "E"

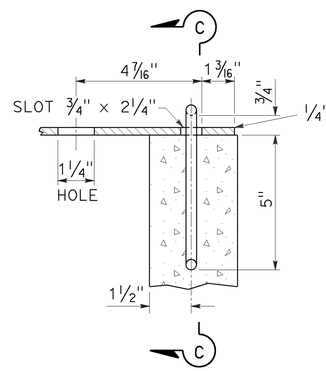


DETAIL "F"

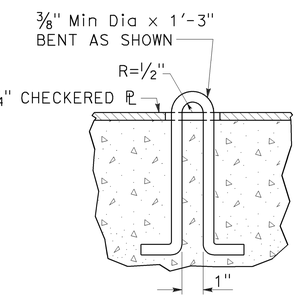


SECTION C-C

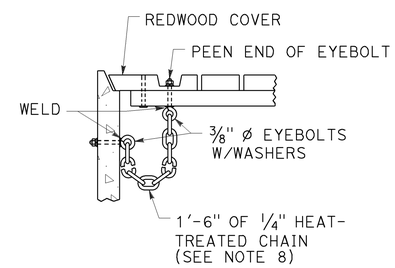


DETAIL "G"

## NOTES:

1. For details of steel pipe inlets, see Standard Plan D75A.
2. For details of ladder and steps and when ladder or steps are required, see Standard Plan D75C.
3. Inlet pipes shall not protrude into basin.
4. Except for inlets used for junction boxes, basin floors shall have minimum slope of 4:1 from all directions toward outlet pipe, and a wood trowel finish.
5. See Revised Standard Plans RSP D77A and RSP D77B for Grate and Frame Details and Weights of Miscellaneous Iron and Steel.
6. Designation of Type OCPI pipe inlets on plans indicates trash racks are to be furnished and installed on all side openings. See Standard Plan D75C for Trash Rack details.
7. More than one side opening may be required. Location and number as ordered by the Engineer. Opening may be cast in pipe.
8. Chain to be provided when specified.
9. Place pipe so bars of grate will be parallel with main surface flow.
10. Redwood covers shall only be placed at locations designated on the plans.

STATE OF CALIFORNIA
DEPARTMENT OF TRANSPORTATION

# CONCRETE PIPE INLETS

NO SCALE

RSP D75B DATED OCTOBER 30, 2015 SUPERSEDES STANDARD PLAN D75B DATED MAY 20, 2011 - PAGE 162 OF THE STANDARD PLANS BOOK DATED 2010.

**REVISED STANDARD PLAN RSP D75B**

9-25-15

| Dist | COUNTY | ROUTE | POST MILES TOTAL PROJECT | SHEET No. | TOTAL SHEETS |
|---|---|---|---|---|---|
| 06 | Fre | 245 | Var | 17 | 19 |

Raymond Don Tsztoo
REGISTERED CIVIL ENGINEER

April 19, 2013
PLANS APPROVAL DATE

REGISTERED PROFESSIONAL ENGINEER Raymond Don Tsztoo No. C37332 Exp. 6-30-14 CIVIL STATE OF CALIFORNIA

*THE STATE OF CALIFORNIA OR ITS OFFICERS OR AGENTS SHALL NOT BE RESPONSIBLE FOR THE ACCURACY OR COMPLETENESS OF SCANNED COPIES OF THIS PLAN SHEET.*

TO ACCOMPANY PLANS DATED 2-8-16

**2010 REVISED STANDARD PLAN RSP D77B**

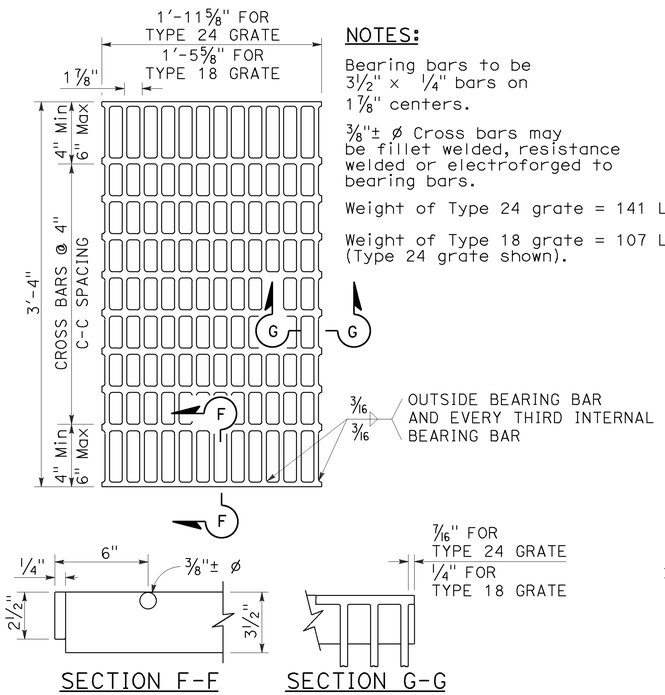


NOTES:

Bearing bars to be 3½" × ¼" bars on 1⅞" centers.

⅜"± ø Cross bars may be fillet welded, resistance welded or electroforged to bearing bars.

Weight of Type 24 grate = 141 LBS.

Weight of Type 18 grate = 107 LBS. (Type 24 grate shown).

## TYPE 18-10 AND 24-13 GRATE

(Welded Steel)

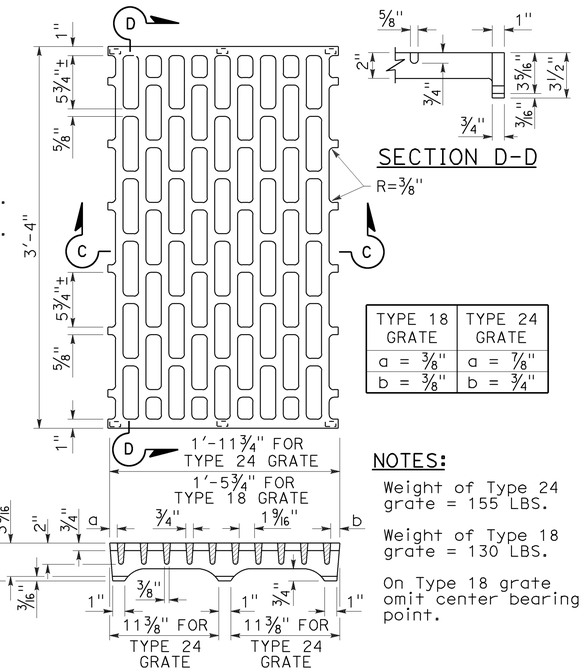


| TYPE 18 GRATE | TYPE 24 GRATE |
|---|---|
| a = ⅜" | a = ⅞" |
| b = ⅜" | b = ¾" |

NOTES:

Weight of Type 24 grate = 155 LBS.

Weight of Type 18 grate = 130 LBS.

On Type 18 grate omit center bearing point.

## TYPE 18-8C AND 24-10C GRATE

(Cast ductile iron)

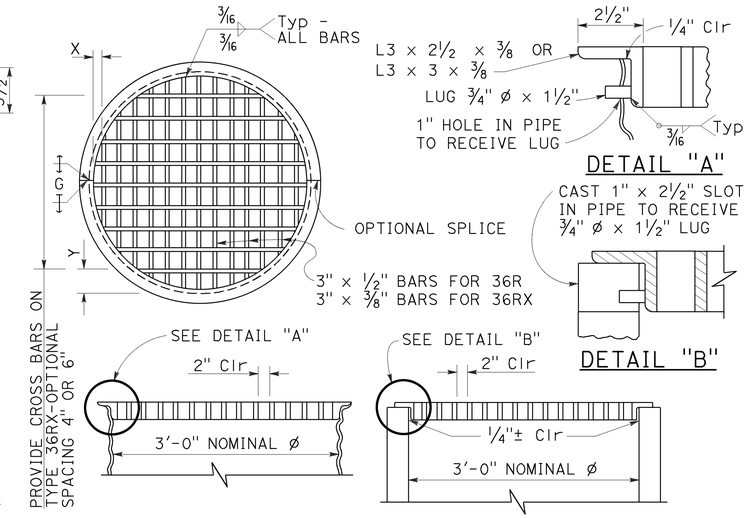


## TYPE 36R AND 36RX GRATE DETAILS

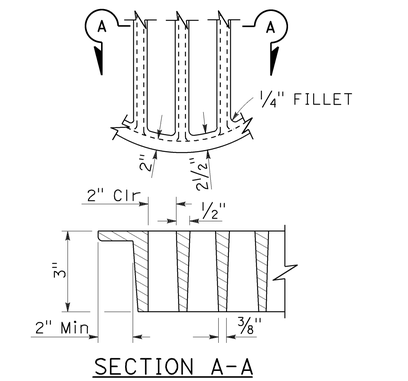


## ALTERNATIVE CAST DUCTILE IRON GRATE OR CAST CARBON STEEL GRATE TYPE 36R AND 36RX

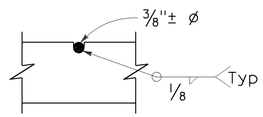


⅜"± ø Cross bars may be fillet welded, resistance welded or electroforged to bearing bars.

## CROSS BAR DETAIL TYPE 36RX GRATE (WELDED STEEL)

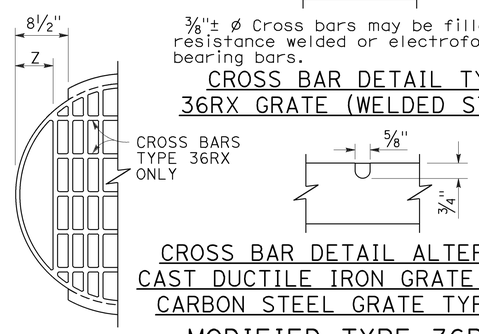


## CROSS BAR DETAIL ALTERNATIVE CAST DUCTILE IRON GRATE OR CAST CARBON STEEL GRATE TYPE 36RX

## MODIFIED TYPE 36R AND 36RX GRATE FOR ODI INLET

NOTES:

1. When alternative grates are allowed - Final pay based on alternative with the lesser weight.
2. Use frame shown on Standard Plan D74A, D74B or RSP D77A as appropriate.
3. When Type 24-10S, 24-12X or 24-13 grates are used with GDO Inlets, a ¼" × 3½" × 3'-4⅞" steel bar shall be welded across the center of inlet frame to separate the individual grates.
4. See Revised Standard Plan RSP D77A for connecting chain to welded grate and frame. When chain is required, do not use cast ductile iron grate.

BASIS FOR Misc IRON AND STEEL FINAL PAY WEIGHTS FOR DRAINAGE INLETS

| INLET TYPE | GRATE TYPE | No. OF GRATES | WEIGHT LB |
|---|---|---|---|
| GDO (SEE NOTE 4) | 24-10C | 2 | 391 |
| | 24-10S | 2 | 456 |
| | 24-12X | 2 | 473 |
| | 24-13 | 2 | 374 |
| G0,G0L,G1,G2, G3,G4 (TYPE 24) | 24-10C | 1 | 202 |
| | 24-10S | 1 | 229 |
| | 24-12X | 1 | 239 |
| | 24-13 | 1 | 188 |
| G4 (TYPE 18) G5,G6 | 18-8S | 1 | 187 |
| | 18-9X | 1 | 187 |
| | 18-10 | 1 | 149 |
| GT1,GT2 | 18-8S | 2 | 374 |
| | 18-9X | 2 | 374 |
| | 18-10 | 2 | 298 |
| GT3,GT4 | 24-10C | 2 | 404 |
| | 24-10S | 2 | 458 |
| | 24-12X | 2 | 478 |
| | 24-13 | 2 | 376 |
| ODI | 36RX (Mod) | 1 | 196 |
| GMP,GCP,GCPI | 36RX | 1 | 215 |
| ODI | 36R (Mod) | 1 | 220 |
| GMP,GCP,GCPI | 36R | 1 | 236 |
| TRASH RACK | | | 22 |
| GRATE CHAIN | | | 3 |

GRATE BAR SPACING TABLE

| TYPE | No. OF BARS | CLEAR BAR SPACING | X | Y 4" SPACING | Y 6" SPACING | Z |
|---|---|---|---|---|---|---|
| 36R | 13 | 2" | 2⅛" | - | - | - |
| 36RX (STEEL) | 15 | 2" | 9/16" | 3¾" | 5¾" | - |
| 36RX (CAST) | 13 | 2" | 2⅛" | 3¾" | 5¾" | - |
| 36R Mod | 12 | 2" | 2⅛" | - | - | 5" |
| 36RX Mod (STEEL) | 13 | 2" | 9/16" | 3¾" | 5¾" | 5 11/16" |
| 36RX Mod (CAST) | 12 | 2" | 2⅛" | 3¾" | 5¾" | 5" |

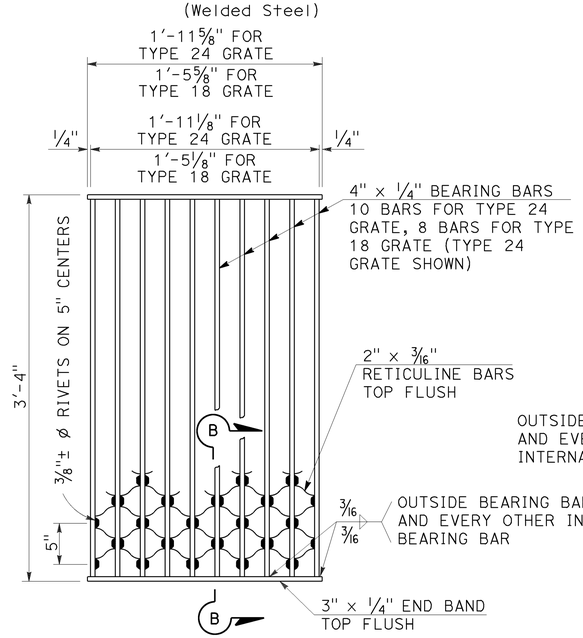


NOTES:

Weight of Type 24 grate = 182 LBS.
Weight of Type 18 grate = 145 LBS.

## TYPE 18-8S AND 24-10S GRATE

(Welded Steel) Reticuline type

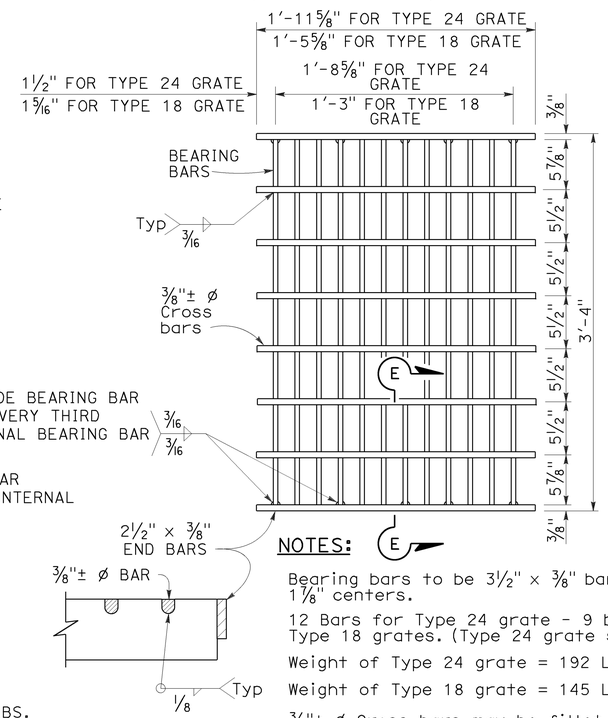


NOTES:

Bearing bars to be 3½" × ⅜" bars on 1⅞" centers.

12 Bars for Type 24 grate - 9 bars for Type 18 grates. (Type 24 grate shown).

Weight of Type 24 grate = 192 LBS.

Weight of Type 18 grate = 145 LBS.

⅜"± ø Cross bars may be fillet welded, resistance welded or electroforged to bearing bars.

## TYPE 18-9X AND 24-12X GRATE

(Welded Steel)

STATE OF CALIFORNIA
DEPARTMENT OF TRANSPORTATION

# GRATE DETAILS No. 2

NO SCALE

RSP D77B DATED APRIL 19, 2013 SUPERSEDES RSP D77B DATED JULY 20, 2012 AND STANDARD PLAN D77B DATED MAY 20, 2011 - PAGE 165 OF THE STANDARD PLANS BOOK DATED 2010.

**REVISED STANDARD PLAN RSP D77B**

4-4-13

| Dist | COUNTY | ROUTE | POST MILES TOTAL PROJECT | SHEET No. | TOTAL SHEETS |
|---|---|---|---|---|---|
| 06 | Fre | 245 | Var | 18 | 19 |

REGISTERED CIVIL ENGINEER

July 19, 2013
PLANS APPROVAL DATE

REGISTERED PROFESSIONAL ENGINEER
Gurinderpal Bhullar
No. C48815
Exp. 9-30-14
CIVIL
STATE OF CALIFORNIA

THE STATE OF CALIFORNIA OR ITS OFFICERS OR AGENTS SHALL NOT BE RESPONSIBLE FOR THE ACCURACY OR COMPLETENESS OF SCANNED COPIES OF THIS PLAN SHEET.

TO ACCOMPANY PLANS DATED 2-8-16

2010 REVISED STANDARD PLAN RSP T9

## TABLE 1

### TAPER LENGTH CRITERIA AND CHANNELIZING DEVICE SPACING

| SPEED (S) | MINIMUM TAPER LENGTH * FOR WIDTH OF OFFSET 12 FEET (W) | | | | MAXIMUM CHANNELIZING DEVICE SPACING | | |
|---|---|---|---|---|---|---|---|
| | | | | | X | Y | Z ** |
| | TANGENT 2L | MERGING L | SHIFTING L/2 | SHOULDER L/3 | TAPER | TANGENT | CONFLICT |
| mph | ft | ft | ft | ft | ft | ft | ft |
| 20 | 160 | 80 | 40 | 27 | 20 | 40 | 10 |
| 25 | 250 | 125 | 63 | 42 | 25 | 50 | 12 |
| 30 | 360 | 180 | 90 | 60 | 30 | 60 | 15 |
| 35 | 490 | 245 | 123 | 82 | 35 | 70 | 17 |
| 40 | 640 | 320 | 160 | 107 | 40 | 80 | 20 |
| 45 | 1080 | 540 | 270 | 180 | 45 | 90 | 22 |
| 50 | 1200 | 600 | 300 | 200 | 50 | 100 | 25 |
| 55 | 1320 | 660 | 330 | 220 | 55 | 110 | 27 |
| 60 | 1440 | 720 | 360 | 240 | 60 | 120 | 30 |
| 65 | 1560 | 780 | 390 | 260 | 65 | 130 | 32 |
| 70 | 1680 | 840 | 420 | 280 | 70 | 140 | 35 |

* - For other offsets, use the following merging taper length formula for L:
For speed of 40 mph or less, $L = WS^2/60$
For speed of 45 mph or more, $L = WS$

Where: L = Taper length in feet
W = Width of offset in feet
S = Posted speed limit, off-peak 85th-percentile speed prior to work starting, or the anticipated operating speed in mph

** - Use for taper and tangent sections where there are no pavement markings or where there is a conflict between existing pavement markings and channelizers (CA).

## TABLE 2

### LONGITUDINAL BUFFER SPACE AND FLAGGER STATION SPACING

| SPEED * | Min D ** | DOWNGRADE Min D *** | | |
|---|---|---|---|---|
| | | -3% | -6% | -9% |
| mph | ft | ft | ft | ft |
| 20 | 115 | 116 | 120 | 126 |
| 25 | 155 | 158 | 165 | 173 |
| 30 | 200 | 205 | 215 | 227 |
| 35 | 250 | 257 | 271 | 287 |
| 40 | 305 | 315 | 333 | 354 |
| 45 | 360 | 378 | 400 | 427 |
| 50 | 425 | 446 | 474 | 507 |
| 55 | 495 | 520 | 553 | 593 |
| 60 | 570 | 598 | 638 | 686 |
| 65 | 645 | 682 | 728 | 785 |
| 70 | 730 | 771 | 825 | 891 |

* - Speed is posted speed limit, off-peak 85th-percentile speed prior to work starting, or the anticipated operating speed in mph

** - Longitudinal buffer space or flagger station spacing

*** - Use on sustained downgrade steeper than -3 percent and longer than 1 mile.

## TABLE 3

### ADVANCE WARNING SIGN SPACING

| ROAD TYPE | DISTANCE BETWEEN SIGNS * | | |
|---|---|---|---|
| | A | B | C |
| | ft | ft | ft |
| URBAN - 25 mph OR LESS | 100 | 100 | 100 |
| URBAN - MORE THAN 25 mph TO 40 mph | 250 | 250 | 250 |
| URBAN - MORE THAN 40 mph | 350 | 350 | 350 |
| RURAL | 500 | 500 | 500 |
| EXPRESSWAY / FREEWAY | 1000 | 1500 | 2640 |

* - The distances are approximate, are intended for guidance purposes only, and should be applied with engineering judgment. These distances should be adjusted by the Engineer for field conditions, if necessary, by increasing or decreasing the recommmended distances.

STATE OF CALIFORNIA
DEPARTMENT OF TRANSPORTATION

# TRAFFIC CONTROL SYSTEM TABLES FOR LANE AND RAMP CLOSURES

NO SCALE

RSP T9 DATED JULY 19, 2013 SUPERSEDES RSP T9 DATED APRIL 19, 2013 THAT SUPPLEMENTS THE STANDARD PLANS BOOK DATED 2010.

**REVISED STANDARD PLAN RSP T9**

| Dist | COUNTY | ROUTE | POST MILES TOTAL PROJECT | SHEET No. | TOTAL SHEETS |
|---|---|---|---|---|---|
| 06 | Fre | 245 | Var | 19 | 19 |

Devinder Singh
REGISTERED CIVIL ENGINEER

October 30, 2015
PLANS APPROVAL DATE

REGISTERED PROFESSIONAL ENGINEER
Devinder Singh
No. C50470
Exp. 6-30-17
CIVIL
STATE OF CALIFORNIA

THE STATE OF CALIFORNIA OR ITS OFFICERS OR AGENTS SHALL NOT BE RESPONSIBLE FOR THE ACCURACY OR COMPLETENESS OF SCANNED COPIES OF THIS PLAN SHEET.

TO ACCOMPANY PLANS DATED 2-8-16

2010 REVISED STANDARD PLAN RSP T13

## NOTES:

See Revised Standard Plan RSP T9 for tables.

Use cone spacing X for taper segment, Y for tangent segment or Z for conflict situations, as approriate, per Table 1, unless X, Y, or Z cone spacing is shown on this sheet.

Unless otherwise specified in the special provisions, all temporary warning signs shall have black legend on fluorescent orange background.

California codes are designated by (CA). Otherwise, Federal (MUTCD) codes are shown.

## TYPICAL LANE CLOSURE WITH REVERSIBLE CONTROL

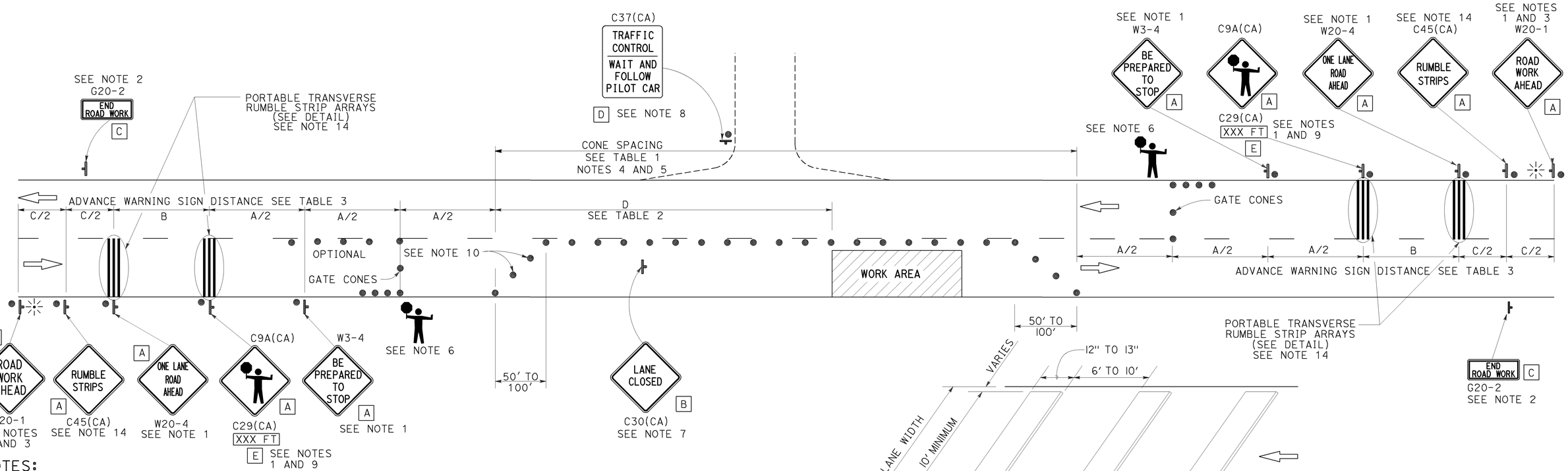


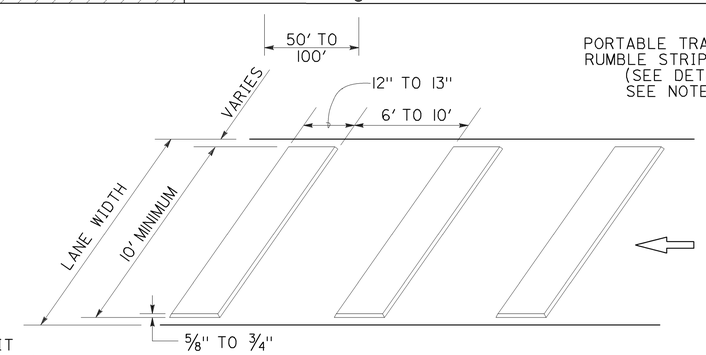


PORTABLE TRANSVERSE RUMBLE STRIP ARRAY DETAIL

## NOTES:

1. Each advance warning sign in each direction of travel shall be equipped with at least two flags for daytime closure. Each flag shall be at least 16" x 16" in size and shall be orange or fluorescent red-orange in color. Flashing beacons shall be placed at the locations indicated for lane closure during hours of darkness.
2. A G20-2 "END ROAD WORK" sign, as appropriate, shall be placed at the end of the lane control unless the end of work area is obvious, or ends within a larger project's limits.
3. If the W20-1 sign would follow within 2000' of a stationary W20-1 or G20-1 "ROAD WORK NEXT _____ MILES", use a W20-4 sign for the first advance warning sign.
4. All cones used for lane closures during the hours of darkness shall be fitted with retroreflective bands (or sleeves) as specified in the specifications.
5. Portable delineators, placed at one-half the spacing indicated for traffic cones, may be used instead of cones for daytime closures only.
6. Additional advance flaggers may be required. Flagger should stand in a conspicuous place, be visible to approaching traffic as well as approaching vehicles after the first vehicle has stopped. During the hours of darkness, the flagging-station and flagger shall be illuminated and clearly visible to approaching traffic. The illumination footprint of the lighting on the ground shall be at least 20' in diameter. Place a minimum of four cones at 50' intervals in advance of flagger station as shown.
7. Place C30(CA) "LANE CLOSED" sign at 500' to 1000' intervals throughout extended work areas. They are optional if the work area is visible from the flagger station.
8. When a pilot car is used, place a C37(CA) "TRAFFIC CONTROL-WAIT AND FOLLOW PILOT CAR" sign with black legend on white background at all intersections, driveways and alleys without a flagger within traffic control area. Signs shall be clean and visible at all times. Where traffic can not be effectively self-regulated, at least one flagger shall be used at each intersection within traffic control area.
9. An optional C29(CA) sign may be placed below the C9A(CA) sign.
10. Either traffic cones or barricades shall be placed on the taper. Barricades shall be Type I, II, or III.
11. The color of the portable transverse rumble strips shall be black or orange. Use 2 arrays, each array shall consist of 3 rumble strips.
12. Portable transverse rumble strips shall not be placed on sharp horizontal or vertical curves nor shall they be placed through pedestrian crossings.
13. If the portable transverse rumble strips become out of alignment (skewed) by more than 6 inches, measured from one end to the other, they shall be readjusted to bring the placement back to the original location.
14. Portable transverse rumble strips are not required if any one of the following conditions is satisfied:
    A. Work duration occupies a location for four hours or less
    B. Posted speed limit is below 45 MPH
    C. Work is of emergency nature
    D. Work zone is in snow or icy weather conditions

## SIGN PANEL SIZE (Min)

| | |
|---|---|
| A | 48" x 48" |
| B | 30" x 30" |
| C | 36" x 18" |
| D | 36" x 42" |
| E | 20" x 7" |

## LEGEND

- TRAFFIC CONE
- TEMPORARY TRAFFIC CONTROL SIGN
- PORTABLE FLASHING BEACON
- FLAGGER

STATE OF CALIFORNIA
DEPARTMENT OF TRANSPORTATION

# TRAFFIC CONTROL SYSTEM FOR LANE CLOSURE ON TWO LANE CONVENTIONAL HIGHWAYS

NO SCALE

RSP T13 DATED OCTOBER 30, 2015 SUPERSEDES RSP T13 DATED OCTOBER 17, 2014, RSP T13 DATED JULY 18, 2014 AND RSP T13 DATED APRIL 19, 2013 AND STANDARD PLAN T13 DATED MAY 20, 2011 - PAGE 241 OF THE STANDARD PLANS BOOK DATED 2010.

**REVISED STANDARD PLAN RSP T13**

10-13-15