Dist	COUNTY	ROUTE	POST MILES TOTAL PROJECT	SHEET No.	TOTAL SHEETS
06	Fre	5	48.8/53.0	2	117

REGISTERED CIVIL ENGINEER 03-03-14 DATE

6-23-14
PLANS APPROVAL DATE

REGISTERED PROFESSIONAL ENGINEER RODRIGO M. CRUZ No. 57918 Exp. 06/30/16 CIVIL STATE OF CALIFORNIA

THE STATE OF CALIFORNIA OR ITS OFFICERS OR AGENTS SHALL NOT BE RESPONSIBLE FOR THE ACCURACY OR COMPLETENESS OF SCANNED COPIES OF THIS PLAN SHEET.

NOTES:

1. DIMENSIONS OF THE PAVEMENT STRUCTURES (STRUCTURAL SECTIONS) ARE SUBJECT TO TOLERANCES IN THE STANDARD SPECIFICATIONS.
2. FOR ACCURATE RIGHT OF WAY DATA SHEET, CONTACT RIGHT OF WAY ENGINEERING AT THE DISTRICT OFFICE.
3. EXACT LOCATIONS AND TYPES OF DIKE ARE SHOWN ON THE LAYOUTS AND IN THE SUMMARY OF QUANTITIES SHEETS.
4. RUMBLE STRIP CONSTRUCTION. SEE SHEETS C-6 AND Q-2.
5. PREVIOUS PANEL REPLACEMENT USING 1.50′ FDAC AT SOME LOCATIONS ONLY.
6. Exist DTBB OCCURS BETWEEN PANOCHE CREEK Br AND RUSSELL Ave OC. Exist SOUTHBOUND DTBB CENTERLINE TO Exist ETW VARIES FROM 5′ TO 42′.
7. RANDOM DISTRESSED PCC PANELS MUST BE REMOVED AND REPLACED WITH HMA (TYPE A) AS SHOWN ON THESE SHEETS. RAPID STRENGTH CONCRETE MUST BE USED IN LIEU OF HMA FOR LOCATIONS WITHOUT K-RAIL. REFER TO SHEET Q-2 FOR LOCATIONS.
8. FOR LOCATION OF SAFETY EDGE, SEE SHEET Q-3.
9. APPLICABLE ONLY WHERE NO PANEL REPLACEMENT IS REQUIRED AND THE LAST LAYER OF HMA IS ABOVE Exist PCC.

DESIGN DESIGNATIONS

DESCRIPTION	2015-2025	2015-2035
2015 ADT	40,500	40,500
2025 ADT	51,500	-
2035 ADT	-	66,000
2025 DHV	6,200	-
2035 DHV	-	7,900
D	65%	65%
T	8%	8%
TI	14.5	16
V	70 MPH	

PAVEMENT CLIMATE REGION

INLAND VALLEY

ABBREVIATIONS:

BWC	BONDED WEARING COARSE
FDAC	FULL DEPTH ASPHALT CONCRETE
GPI	GEOSYNTHETIC PAVEMENT INTERLAYER
ISR	INDIVIDUAL SLAB REPLACEMENT
RAC	RUBBERIZED ASPHALT CONCRETE
RSC	RAPID STRENGTH CONCRETE
SE	SAFETY EDGE

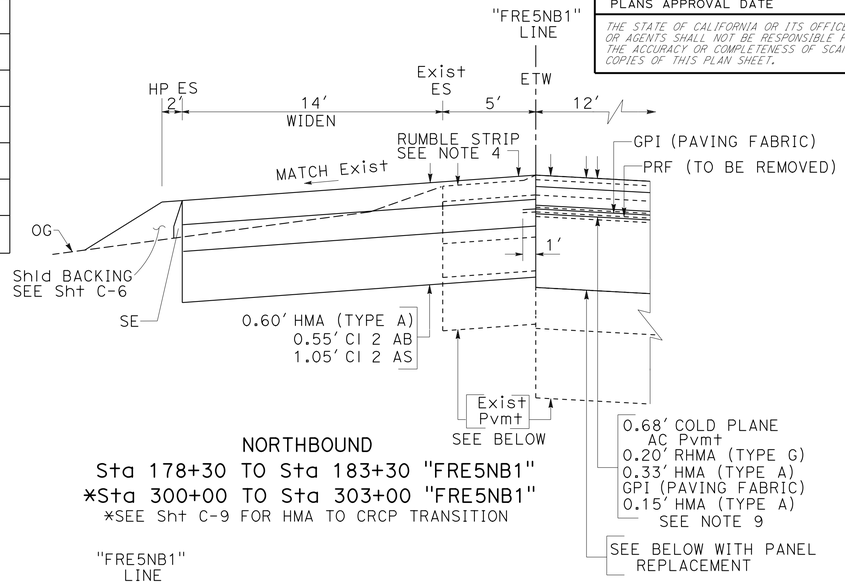

NORTHBOUND
Sta 178+30 TO Sta 183+30 "FRE5NB1"
*Sta 300+00 TO Sta 303+00 "FRE5NB1"
*SEE Sht C-9 FOR HMA TO CRCP TRANSITION

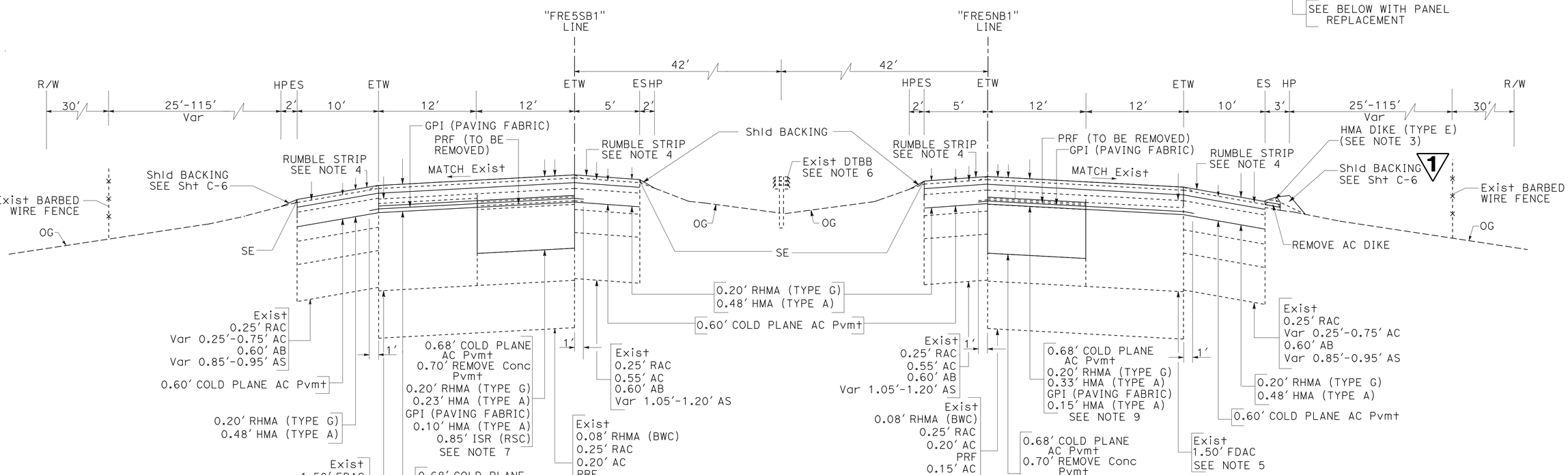

SOUTHBOUND
Sta 1103+00 TO Sta 1170+95 "FRE5SB1"
Sta 1173+30 TO Sta 1328+00 "FRE5SB1"

NORTHBOUND
Sta 103+00 TO Sta 171+56 "FRE5NB1"
Sta 173+91 TO Sta 178+30 "FRE5NB1"
Sta 303+00 TO Sta 328+00 "FRE5NB1"

ROUTE 5

TYPICAL CROSS SECTIONS
NO SCALE

X-1

1 **REPLACED PER ADDENDUM No. 1 DATED 10-24-14**

STATE OF CALIFORNIA - DEPARTMENT OF TRANSPORTATION
Caltrans® **DESIGN**
FUNCTIONAL SUPERVISOR: JUN XU
CALCULATED-DESIGNED BY: ROD CRUZ
CHECKED BY: IRENE LEE
REVISED BY
DATE REVISED

LAST REVISION 10-22-14
DATE PLOTTED => 23-OCT-2014
TIME PLOTTED => 09:06

Dist	COUNTY	ROUTE	POST MILES TOTAL PROJECT	SHEET No.	TOTAL SHEETS
06	Fre	5	48.8/53.0	3	117

REGISTERED CIVIL ENGINEER 03-03-14 DATE

6-23-14
PLANS APPROVAL DATE

REGISTERED PROFESSIONAL ENGINEER RODRIGO M. CRUZ No. 57918 Exp. 06/30/16 CIVIL STATE OF CALIFORNIA

THE STATE OF CALIFORNIA OR ITS OFFICERS OR AGENTS SHALL NOT BE RESPONSIBLE FOR THE ACCURACY OR COMPLETENESS OF SCANNED COPIES OF THIS PLAN SHEET.

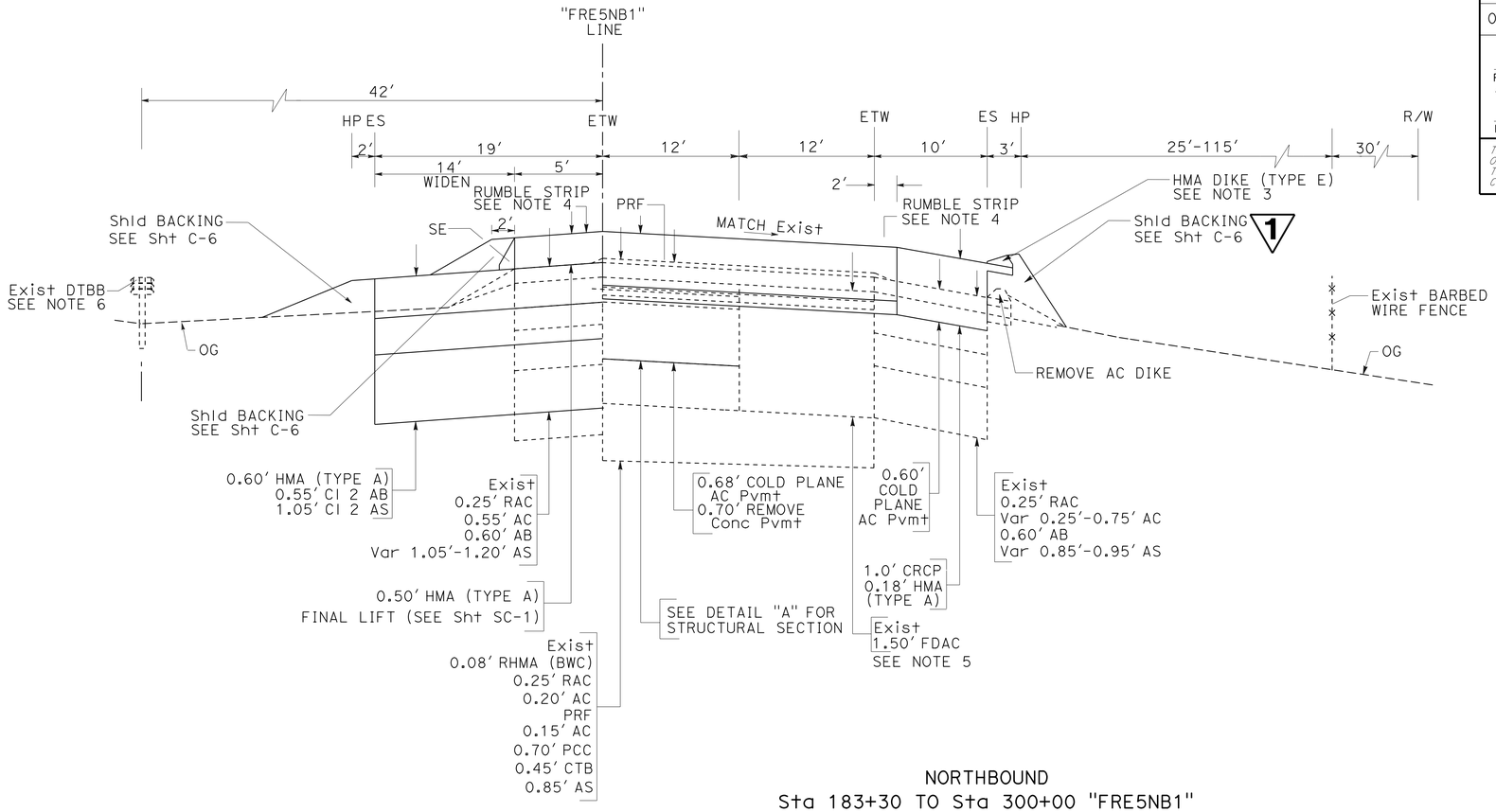

NORTHBOUND
Sta 183+30 TO Sta 300+00 "FRE5NB1"
(CRCP LIMITS, SEE Sht X-1 & LAYOUT SHEETS FOR INSIDE Shld WIDENING LIMITS)

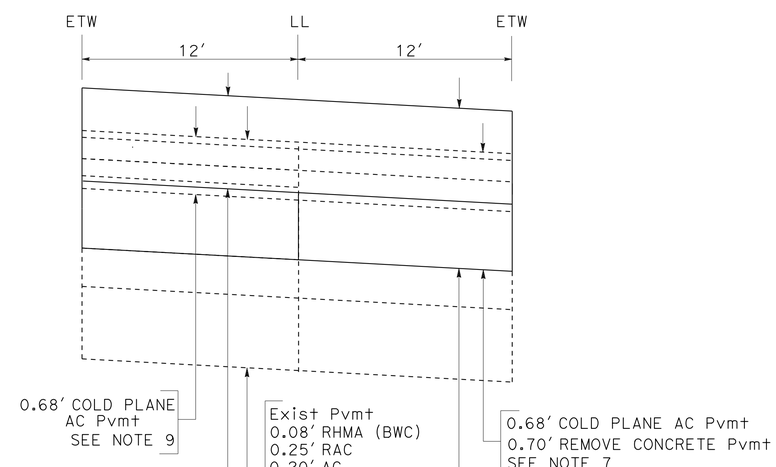

DETAIL "A"

1 **REPLACED PER ADDENDUM No. 1 DATED 10-24-14**

TYPICAL CROSS SECTIONS

NO SCALE

X-2

STATE OF CALIFORNIA - DEPARTMENT OF TRANSPORTATION
Caltrans® DESIGN
FUNCTIONAL SUPERVISOR: JUN XU
CALCULATED-DESIGNED BY: ROD CRUZ
CHECKED BY: IRENE LEE
REVISED BY
DATE REVISED

LAST REVISION 10-22-14 | DATE PLOTTED => 23-OCT-2014 | TIME PLOTTED => 09:07

Dist	COUNTY	ROUTE	POST MILES TOTAL PROJECT	SHEET No.	TOTAL SHEETS
06	Fre	5	48.8/53.0	27	117

REGISTERED CIVIL ENGINEER 03-03-14 DATE

6-23-14
PLANS APPROVAL DATE

REGISTERED PROFESSIONAL ENGINEER RODRIGO M. CRUZ No. 57918 Exp. 06/30/16 CIVIL STATE OF CALIFORNIA

THE STATE OF CALIFORNIA OR ITS OFFICERS OR AGENTS SHALL NOT BE RESPONSIBLE FOR THE ACCURACY OR COMPLETENESS OF SCANNED COPIES OF THIS PLAN SHEET.

NOTES: (THIS SHEET ONLY)

1. THE MINIMUM 6" OFFSET FROM ETW TO THE EDGE OF THE RUMBLE STRIP SHOULD BE USED WHENEVER POSSIBLE TO MINIMIZE ENCROACHMENT INTO THE BICYCLE OUTSIDE SHOULDER AREA.
2. RUMBLE STRIPS AS SHOWN ON THIS PLANSHEET, SHALL NOT BE CONSTRUCTED ON BRIDGE DECKS, BRIDGE APPROACH SLABS OR ACROSS THE FULL WIDTH OF RAMPS AND PUBLIC OR PRIVATE ROAD APPROACHES.
3. PLACE AC DIKE AT VARIOUS LOCATIONS AS SHOWN ON LAYOUTS SHEETS AND SHEET Q-2 FOR DETAILS.
4. INSIDE SHOULDER THAT STARTS AT Sta 176+00 AND ENDS AT Sta 304+00 FOR NORTHBOUND DIRECTION IS 19 FEET WIDE.
5. REFER TO SHEET Q-2 FOR LOCATION OF CONCRETE PAVEMENT RUMBLE STRIP.

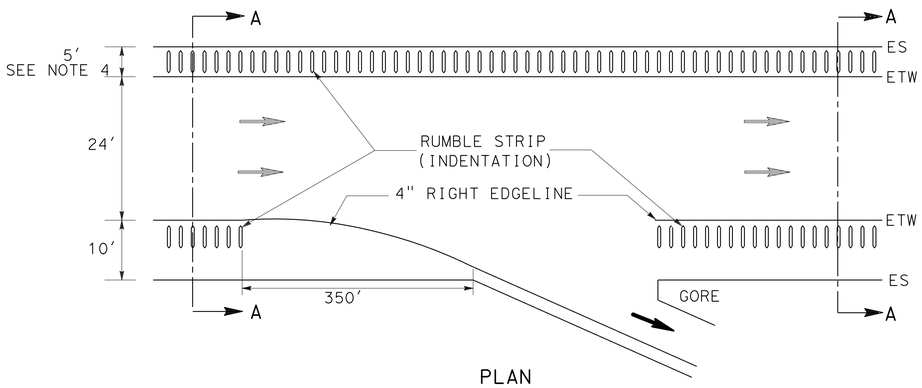

PLAN

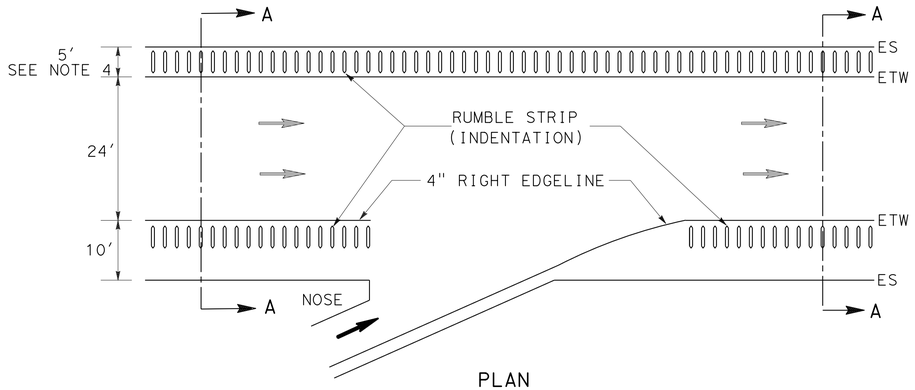

PLAN

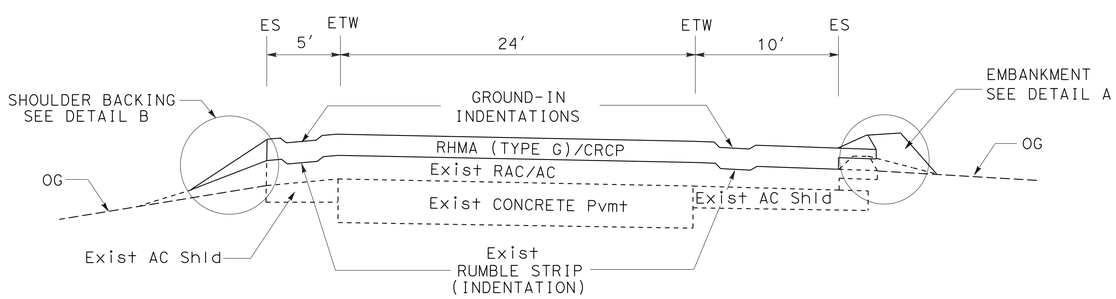

SECTION A-A

RUMBLE STRIP DETAILS

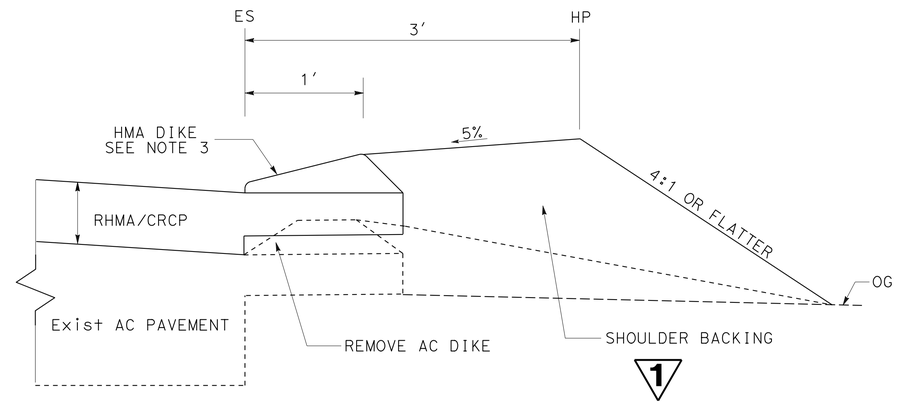

1

SHOULDER BACKING BEHIND BACK OF DIKE

DETAIL A

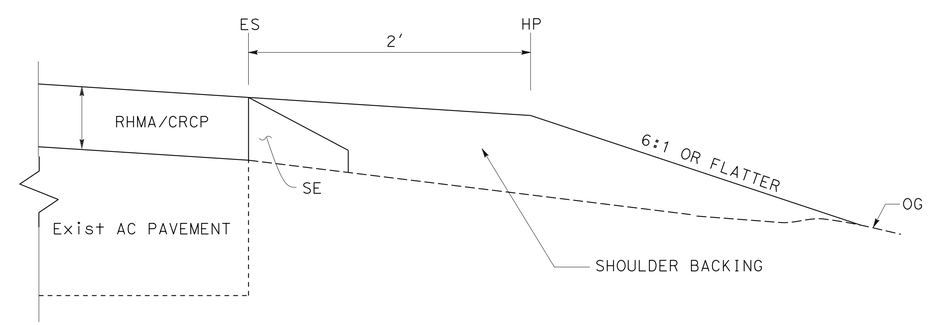

SHOULDER BACKING

DETAIL B

1 REPLACED PER ADDENDUM No. 1 DATED 10-24-14

CONSTRUCTION DETAILS

NO SCALE

C-6

STATE OF CALIFORNIA - DEPARTMENT OF TRANSPORTATION
Caltrans
DESIGN

FUNCTIONAL SUPERVISOR: JUN XU
CALCULATED-DESIGNED BY: ROD CRUZ
CHECKED BY: IRENE LEE
REVISED BY
DATE REVISED

LAST REVISION 10-22-14
DATE PLOTTED => 23-OCT-2014
TIME PLOTTED => 09:07

Dist	COUNTY	ROUTE	POST MILES TOTAL PROJECT	SHEET No.	TOTAL SHEETS
06	Fre	5	48.8/53.0	38	117

REGISTERED CIVIL ENGINEER 03-03-14 DATE

6-23-14
PLANS APPROVAL DATE

REGISTERED PROFESSIONAL ENGINEER RODRIGO M. CRUZ No. 57918 Exp. 06/30/16 CIVIL STATE OF CALIFORNIA

THE STATE OF CALIFORNIA OR ITS OFFICERS OR AGENTS SHALL NOT BE RESPONSIBLE FOR THE ACCURACY OR COMPLETENESS OF SCANNED COPIES OF THIS PLAN SHEET.

NOTE: (THIS SHEET ONLY)

1. SEE X-SECTION SHEETS FOR ROADBED STRUCTURAL SECTION.

STAGE 1 WORK

1. COLD PLANE ONE LANE AT A TIME FOR BOTH LANES AND SHOULDERS USING LANE AND/OR SHOULDER CLOSURE AT NIGHT. RUN TRAFFIC OVER COLD PLANED AREAS. PROVIDE TEMPORARY HMA TAPER AT BEGIN AND END OF THE COLD PLANED SECTION. 1

STAGE 2 WORK

1. REMOVE ISOLATED FAILED PANELS THEN OVERLAY WITH RAPID STRENGTH CONCRETE.

STAGE 3 WORK

1. COLD PLANE REMAINING ASPHALT CONCRETE THEN RESURFACE WITH HMA.

STAGE 4 WORK

1. PLACE GEOSYNTHETIC PAVEMENT INTERLAYER (PAVING FABRIC) THEN RESURFACE WITH HMA. REPEAT SEQUENCE OF WORK UNTIL THE ENTIRE PROJECT LIMITS IS COMPLETED. 1

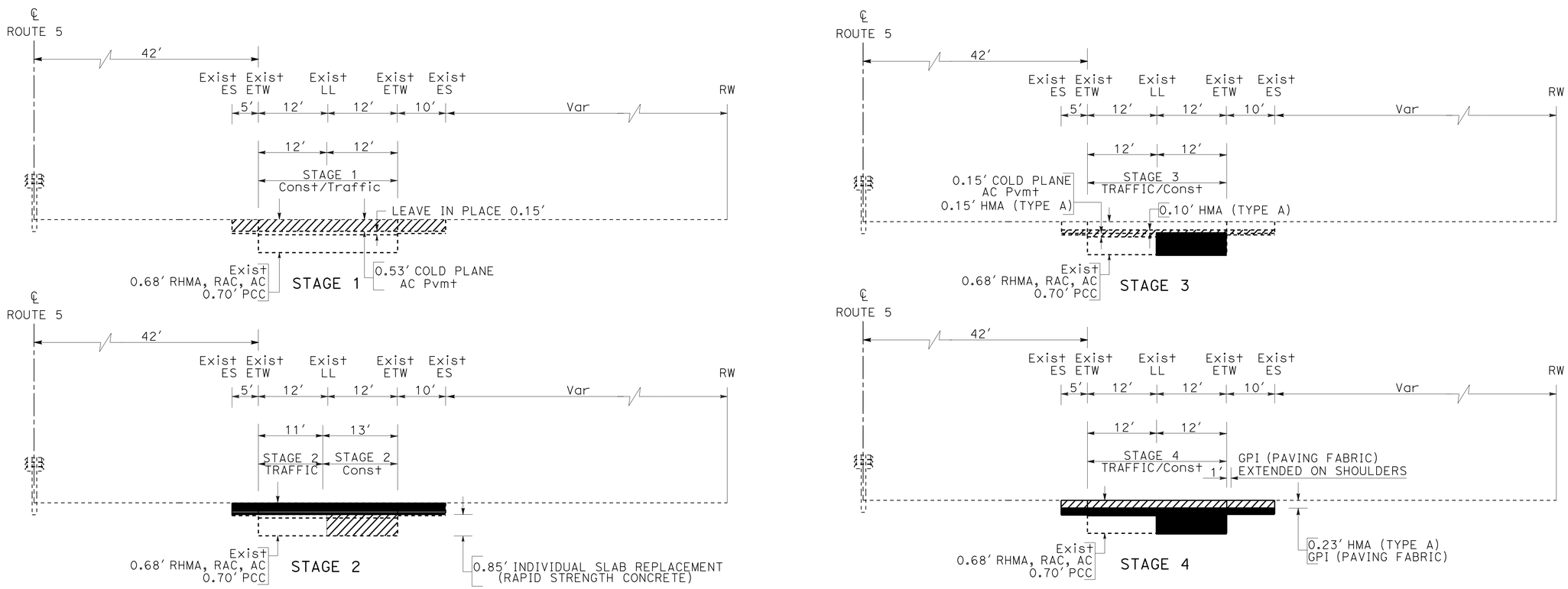

TYPICAL RANDOM INDIVIDUAL SLAB REPLACEMENT STAGE CONSTRUCTION

SOUTHBOUND

Sta 1103+00 TO Sta 1170+95 "FRE5SB1"
Sta 1173+30 TO Sta 1328+00 "FRE5SB1"

NORTHBOUND

Sta 103+00 TO Sta 171+56 "FRE5NB1"
Sta 173+91 TO Sta 183+30 "FRE5NB1"
Sta 300+00 TO Sta 328+00 "FRE5NB1"

1 **REPLACED PER ADDENDUM No. 1 DATED 10-24-14**

APPROVED FOR STAGE CONSTRUCTION WORK ONLY

STAGE CONSTRUCTION

NO SCALE

SC-2

STATE OF CALIFORNIA - DEPARTMENT OF TRANSPORTATION
Caltrans® DESIGN
FUNCTIONAL SUPERVISOR: JUN XU
CALCULATED-DESIGNED BY: ROD CRUZ
CHECKED BY: IRENE LEE
REVISED BY
DATE REVISED

LAST REVISION 10-20-14
DATE PLOTTED => 23-OCT-2014
TIME PLOTTED => 09:07

Dist	COUNTY	ROUTE	POST MILES TOTAL PROJECT	SHEET No.	TOTAL SHEETS
06	Fre	5	48.8/53.0	65	117

REGISTERED CIVIL ENGINEER 03-03-14 DATE

6-23-14
PLANS APPROVAL DATE

REGISTERED PROFESSIONAL ENGINEER RODRIGO M. CRUZ No. 57918 Exp. 06/30/16 CIVIL STATE OF CALIFORNIA

THE STATE OF CALIFORNIA OR ITS OFFICERS OR AGENTS SHALL NOT BE RESPONSIBLE FOR THE ACCURACY OR COMPLETENESS OF SCANNED COPIES OF THIS PLAN SHEET.

ROADWAY ITEMS

LOCATION	HMA (TYPE A)	RHMA (TYPE G)	CLASS 2 AGGREGATE BASE	CLASS 2 AGGREGATE SUBBASE	CRCP	TACK COAT	REMARKS
	TON	TON	CY	CY	CY	TON	
"FRE5NB1" 103+00 TO 171+56	9,679.3	4,010.8				8.7	MAINLINE, INSIDE & OUTSIDE Shld
"FRE5NB1" 104+79 TO 109+08	214.5	107.2				0.2	RAMP "P1" GORE AREA, TW & OUTSIDE Shld
"FRE5NB1" 126+90 TO 135+21	330.1	165.1				0.4	RAMP "P2" GORE AREA, TW & OUTSIDE Shld
"FRE5NB1" 173+91 TO 180+30	1,280.4	373.8				0.8	MAINLINE, INSIDE & OUTSIDE Shld
"FRE5NB1" 178+30 TO 180+30	244.8	102.0				0.2	MAINLINE & OUTSIDE Shld
"FRE5NB1" 178+30 TO 303+00	4,993.9		1,270.1	2,424.7		2.0	INSIDE 5-FOOT Shld
"FRE5NB1" 180+30 TO 183+30	612.0					0.3	HMA to CRCP TRANSITION
"FRE5NB1" 183+30 TO 300+00	2,043.4				14,695.6		CRCP (LANE 1 & 2 & OUTSIDE Shld)
"FRE5NB1" 300+00 TO 303+00	612.0					0.3	HMA to CRCP TRANSITION
"FRE5NB1" 303+00 TO 328+00	4,980.2	1,462.5				3.2	MAINLINE, INSIDE & OUTSIDE Shld
"FRE5NB1" 306+57 TO 310+76	212.5	106.2				0.2	RAMP "R1" GORE AREA, TW & OUTSIDE Shld
"FRE5NB1" 323+68 TO 328+00	253.5	126.8				0.3	RAMP "R2" GORE AREA, TW & OUTSIDE Shld
"FRE5SB1" 1103+00 TO 1170+95	9,682.9	3,975.1				8.6	MAINLINE, INSIDE & OUTSIDE Shld
"FRE5SB1" 1103+00 TO 1110+59	378.3	189.1				0.7	RAMP "P3" GORE AREA, TW & OUTSIDE Shld
"FRE5SB1" 1128+77 TO 1132+55	189.2	94.6				0.2	RAMP "P4" GORE AREA, TW & OUTSIDE Shld
"FRE5SB1" 1173+30 TO 1328+00	21,996.1	9,050.0				19.7	MAINLINE, INSIDE & OUTSIDE Shld
"FRE5SB1" 1305+53 TO 1309+69	208.8	104.4				0.2	RAMP "R3" GORE AREA, TW & OUTSIDE Shld
"FRE5SB1" 1322+40 TO 1326+66	191.6	95.8				0.2	RAMP "R4" GORE AREA, TW & OUTSIDE Shld
STAGE CONSTRUCTION QUANTITIES	8,621.1		3,556.3	6,789.2		7.4	SEE SHEET Q-3
"P1" 12+90 TO 23+11		252.7				0.7	PANOCHE Ave NB OFF RAMP
"P2" 50+17 TO 60+13		328.7				0.7	PANOCHE Ave NB ON RAMP
"P3" 116+49 TO 126+56		249.2				0.7	PANOCHE Ave SB ON RAMP
"P4" 150+26 TO 160+80	782.6	348.8				0.8	PANOCHE Ave SB OFF RAMP
"R1" 32+77 TO 41+36	425.2	283.5				0.6	RUSSELL Ave NB OFF RAMP
"R2" 60+31 TO 64+90		113.6				0.3	RUSSELL Ave NB ON RAMP
"R3" 131+41 TO 136+63	301.5	172.3				0.4	RUSSELL Ave SB ON RAMP
"R4" 160+19 TO 168+18	395.5	263.7				0.6	RUSSELL Ave SB OFF RAMP
HMA DIKE	241.9						SEE SHEET Q-2
HMA Misc AREA	137.1						SEE SHEET Q-3
SAFETY EDGE		150.7			235.1		SEE SHEET Q-3
TOTAL	69,008.3	22,126.6	4,826.4	9,213.9	14,930.7	58.4	
	1	1					

ABBREVIATIONS:

ACC ALTERNATIVE CRASH CUSHION
ISR INDIVIDUAL SLAB REPLACEMENT

EARTHWORK

DESCRIPTION	ROADWAY EXCAVATION	(N) EMBANKMENT	REMARKS
	CY	CY	
"FRE5NB1" 178+30 TO 183+30	609.2	-	INSIDE Shld WIDENING
"FRE5NB1" 183+30 TO 300+00	14,220.1	885.0	INSIDE Shld WIDENING
"FRE5NB1" 300+00 TO 303+00	365.6	-	INSIDE Shld WIDENING
CMS AREA	23.1	-	
WEATHER STATION AREA	41.8	-	
TOTAL	15,259.8		

(N) NOT A SEPARATE PAY ITEM, FOR INFORMATION ONLY.

JOINT SEAL

LOCATION	ISOLATION JOINT SEAL (SILICONE)	(N) LONGITUDINAL CONTRACTION JOINT
	LF	LF
"FRE5NB1" 183+30 TO 300+00	11,670.0	23,340.0

(N) NOT A SEPARATE PAY ITEM, FOR INFORMATION ONLY.

1 **REPLACED PER ADDENDUM No. 1 DATED 10-24-14**

SUMMARY OF QUANTITIES

Q-1

STATE OF CALIFORNIA - DEPARTMENT OF TRANSPORTATION
Caltrans DESIGN
FUNCTIONAL SUPERVISOR JUN XU
CALCULATED-DESIGNED BY ROD CRUZ
CHECKED BY IRENE LEE
REVISED BY
DATE REVISED

LAST REVISION 10-22-14
DATE PLOTTED => 23-OCT-2014
TIME PLOTTED => 09:07

Dist	COUNTY	ROUTE	POST MILES TOTAL PROJECT	SHEET No.	TOTAL SHEETS
06	Fre	5	48.8/53.0	66	117

REGISTERED CIVIL ENGINEER 03-03-14 DATE

6-23-14
PLANS APPROVAL DATE

REGISTERED PROFESSIONAL ENGINEER RODRIGO M. CRUZ No. 57918 Exp. 06/30/16 CIVIL STATE OF CALIFORNIA

THE STATE OF CALIFORNIA OR ITS OFFICERS OR AGENTS SHALL NOT BE RESPONSIBLE FOR THE ACCURACY OR COMPLETENESS OF SCANNED COPIES OF THIS PLAN SHEET.

PANEL REPLACEMENT 1

POST MILE LOCATION***	NB/SB	LANE No. 1	LANE No. 2	No. of PANELS (N)	REMOVE Conc Pvmt** CY	ISR (RAPID STRENGTH Conc) CY	DRILL & BOND (DOWEL BAR) EA
PM 48.974 - PM 49.000	NB	3	9	12	-	68.0	192.0
PM 49.000 - PM 50.000	NB	6	24	30	-	170.0	480.0
PM 50.000 - PM 51.000	NB	4	17	21	98.0	-	-
PM 51.000 - PM 52.000	NB	0	105	105	490.0	-	-
PM 52.000 - PM 53.000	NB	1	90	91	210.0	255.0	720.0
PM 53.000 - PM 53.070	NB	0	5	5	-	28.3	80.0
SUB TOTAL					798.0	521.3	1472.0
PM 53.000 - PM 52.000	SB	0	48	48	-	272.0	768.0
PM 52.000 - PM 51.000	SB	0	14	14	-	79.3	224.0
PM 51.000 - PM 50.000	SB	2	8	10	-	56.7	160.0
PM 50.000 - PM 49.000	SB	0	12	12	-	68.0	192.0
PM 49.000 - PM 48.800	SB	0	10	10	-	56.7	160.0
SUB TOTAL					-	532.7	1504.0
TOTAL					798.0	1054.0	2976.0

***LOCATION OF PANEL SHOWN ARE APPROXIMATE. EXACT LOCATIONS TO BE DETERMINED BY THE ENGINEER.

**PORTION OF EXISTING 0.70' PCC ONLY WHERE NO RAPID STRENGTH CONCRETE, SEE Shts X-2 & C-3.

(N) - NOT A SEPARATE PAY ITEM, FOR INFORMATION ONLY.

DIKE

STATION	REMOVE AC DIKE LF	PLACE HMA DIKE (TYPE A) LF	PLACE HMA DIKE (TYPE E) LF	HMA (TYPE A) TON
103+00 TO 106+16 "FRE5NB1"	316		316	8.3
158+35 TO 169+48 "FRE5NB1"	1113		1113	29.3
224+36 TO 231+98 "FRE5NB1"	762		762	20.1
257+35 TO 269+16 "FRE5NB1"	1181		1181	31.1
1103+00 TO 1110+53 "FRE5SB1"	753		753	19.8
10+00 TO 23+11 "P1" Rt	1311		1311	34.5
22+60 TO 23+11 "P1" Lt	51	51		1.4
50+29 to 54+49 "P2" Rt	420		420	11.1
50+18 TO 50+36 "P2" Lt	18	18		0.5
125+70 TO 126+13 "P3" Rt	43	43		1.2
122+43 TO 126+68 "P3" Lt	425		425	11.2
150+20 TO 150+99 "P4" Rt	79	79		2.2
150+33 TO 154+50 "P4" Lt	417		417	11.0
33+87 TO 41+30 "R1" Rt	743		743	19.6
40+56 TO 41+34 "R1" Lt	78	78		2.1
60+75 TO 64+77 "R2" Rt	402		402	10.6
60+32 TO 61+47 "R2" Lt	115		115	3.0
135+82 TO 136+67 "R3" Rt	85	85		2.3
133+57 TO 135+85 "R3" Lt	228		228	6.0
160+22 TO 166+54 "R4" Lt	632		632	16.6
TOTAL	9172	354	8818	241.9*

* - QUANTITY INCLUDED IN ROADWAY ITEMS TABLE ON Sht Q-1.

SHOULDER RUMBLE STRIP (HMA, GROUND-IN INDENTATIONS)

DIRECTION	STATION	INSIDE SHOULDER Sta	OUTSIDE SHOULDER Sta
NB MAINLINE	103+00 TO 171+00	68.0	-
NB MAINLINE	174+50 TO 328+00	153.5	-
NB MAINLINE	109+06 TO 126+90	-	17.8
NB MAINLINE	131+50 TO 171+00	-	39.5
NB MAINLINE	174+50 TO 176+51	-	2.0
NB MAINLINE	310+76 TO 323+68	-	12.9
SUB TOTAL		221.5	72.2
SB MAINLINE	1103+00 TO 1170+00	67.0	-
SB MAINLINE	1174+00 TO 1328+00	154.0	-
SB MAINLINE	1110+56 TO 1128+77	-	18.2
SB MAINLINE	1133+50 TO 1170+00	-	36.5
SB MAINLINE	1174+00 TO 1304+50	-	130.5
SB MAINLINE	1309+69 TO 1322+83	-	13.1
SUB TOTAL		221.0	198.3
TOTAL		713.0	

MIDWEST GUARDRAIL SYSTEM

STRUCTURE NAME	LOCATION: MEDIAN CL Rte 5	LOCATION: SHOULDER INSIDE NB	LOCATION: SHOULDER INSIDE SB	LOCATION: SHOULDER OUTSIDE NB	LOCATION: SHOULDER OUTSIDE SB	LAYOUT TYPE (N)	REMOVE GUARDRAIL LF	TREATED WOOD WASTE LB	DOUBLE MGS (STEEL POST) LF	MGS (STEEL POST) LF	ALTERNATIVE FLARED TERMINAL SYSTEM EA	END ANCHOR ASSEMBLY (TYPE SFT) EA	RAIL TENSIONING ASSEMBLY EA	ALTERNATIVE CRASH CUSHION SYSTEM EA	REMARKS
PANOCHE ROAD OC	x					14A	200	1485.7	100	106.2		2	2	2	INCLUDES MGS TRANSITION LENGTH TO ACC
CMS OH STRUCTURE (PM 52.06)					x	16B	75	742.9		100	1	1			
FROM SHEET SQ-1								1712.0							TREATED WOOD WASTE FROM ROADSIGN SIGN REMOVAL
TOTAL							275	3940.6	100	206.2	1	3	2	2	

(N) - NOT A SEPARATE PAY ITEM, FOR INFORMATION ONLY.

SHOULDER RUMBLE STRIP (CONCRETE PAVEMENT, GROUND-IN INDENTATIONS)

NB MAINLINE STATION	OUTSIDE SHOULDER Sta
176+51 TO 304+00	127.5

1 REPLACED PER ADDENDUM No. 1 DATED 10-24-14

SUMMARY OF QUANTITIES

Q-2

REVISED BY | DATE REVISED
ROD CRUZ | IRENE LEE
CALCULATED-DESIGNED BY | CHECKED BY
FUNCTIONAL SUPERVISOR: JUN XU
STATE OF CALIFORNIA - DEPARTMENT OF TRANSPORTATION
Caltrans DESIGN

LAST REVISION 10-22-14 | DATE PLOTTED => 23-OCT-2014 | TIME PLOTTED => 09:07

Dist	COUNTY	ROUTE	POST MILES TOTAL PROJECT	SHEET No.	TOTAL SHEETS
06	Fre	5	48.8/53.0	67	117

REGISTERED CIVIL ENGINEER 03-03-14 DATE

6-23-14
PLANS APPROVAL DATE

REGISTERED PROFESSIONAL ENGINEER RODRIGO M. CRUZ No. 57918 Exp. 06/30/16 CIVIL STATE OF CALIFORNIA

THE STATE OF CALIFORNIA OR ITS OFFICERS OR AGENTS SHALL NOT BE RESPONSIBLE FOR THE ACCURACY OR COMPLETENESS OF SCANNED COPIES OF THIS PLAN SHEET.

HMA Misc AREA

LOCATION	PLACE HMA (Misc AREA)	HMA (TYPE A)	REMARKS
	SQYD	TON	
13+13 "P1"	1.1	0.2	OVERSIDE DRAIN
16+00 "P1"	1.6	0.3	OVERSIDE DRAIN
18+24 "P1"	1.7	0.3	OVERSIDE DRAIN
54+49 "P2"	2.3	0.4	OVERSIDE DRAIN
64+70 "R2"	2.2	0.4	OVERSIDE DRAIN
154+50 "P4"	1.0	0.2	OVERSIDE DRAIN
162+39 "FRE5NB1"	2.3	0.4	OVERSIDE DRAIN
165+30 "FRE5NB1"	1.9	0.3	OVERSIDE DRAIN
166+54 "R4"	2.3	0.4	OVERSIDE DRAIN
169+45 "FRE5NB1"	1.4	0.2	OVERSIDE DRAIN
224+41 "FRE5NB1"	2.6	0.4	OVERSIDE DRAIN
257+41 "FRE5NB1"	5.1	0.9	OVERSIDE DRAIN
262+43 "FRE5NB1"	4.9	0.8	OVERSIDE DRAIN
1103+00 "FRE5SB1"	2.3	0.4	OVERSIDE DRAIN
CMS OH SIGN	138.9	46.9	PAVING AROUND AREA
WEATHER STATION	250.7	84.6	PAVING AROUND AREA
TOTAL	422.3	137.1*	

*INCLUDED IN HMA ROADWAY ITEMS TABLE, Sht Q-1.

SHOULDER BACKING

LOCATION	LENGTH (N)	INSIDE SHOULDER	OUTSIDE SHOULDER
	LF	TON	TON
105+60 TO 115+50 "FRE5NB1"	990		6.4
112+00 TO 115+50 "FRE5NB1"	350	2.3	
122+00 TO 124+00 "FRE5NB1"	200		1.3
122+00 TO 168+96 "FRE5NB1"	4,696	30.4	
131+49 TO 169+48 "FRE5NB1"	3,799		51.9
176+51 TO 304+00 "FRE5NB1"	12,749		527.4
176+51 TO 304+00 "FRE5NB1"	12,749	3,679.6	
304+00 TO 314+50 "FRE5NB1"	1,050	6.9	
1105+60 TO 1115+50 "FRE5SB1"	990	6.4	
1122+00 TO 1168+35 "FRE5SB1"	4,635	30.0	
1131+12 TO 1168+35 "FRE5SB1"	3,723		24.2
1175+90 TO 1304+00 "FRE5SB1"	12,810		83.0
1175+90 TO 1313+50 "FRE5SB1"	13,760	89.2	
150+33 TO 163+15 "P4" Lt	1,282	16.7	
150+99 TO 159+54 "P4" Rt	855		11.1
60+32 TO 63+19 "R2" Lt	287	1.5	
60+75 TO 66+59 "R2" Rt	584		3.1
SUB TOTAL		3,863.0	708.4
TOTAL		4,571.4	

(N) - NOT A SEPARATE PAY ITEM, FOR INFORMATION ONLY

DOWNDRAIN

LOCATION	8-INCH CSP (0.064")	8-INCH ENTRANCE TAPER	REMARKS
	LF	EA	
103+99 "FRE5NB1"	10.0	1	NB MAINLINE, OUTSIDE SHOULDER
151+51 "P4"	10.0	1	SB OFF RAMP TO PANOCHE
TOTAL	20.0	2	

SAFETY EDGE

1

LOCATION				LENGTH (N)	RHMA (TYPE G)	Conc
SHEET	STATION	Lt	Rt	LF	TON	CY
L-1 TO L-6	105+60 TO 115+50 "FRE5NB1"	X		990	2.6	
L-2 TO L-6	122+00 TO 168+96 "FRE5NB1"	X		4,696	12.2	
L-1 TO L-2	112+00 TO 115+50 "FRE5NB1"		X	350	0.9	
L-2 TO L-3	122+00 TO 124+00 "FRE5NB1"		X	200	0.5	
L-3 TO L-5	137+00 TO 158+35 "FRE5NB1"		X	2,135	5.5	
L-6 TO L-10	176+51 TO 224+36 "FRE5NB1"		X	4,785		104.1
L-6 TO L-15	176+51 TO 304+00 "FRE5NB1"	X		12,749	33.1	
L-15 TO L-16	304+00 TO 314+50 "FRE5NB1"	X		1,050	2.7	
L-10 TO L-12	231+98 TO 257+35 "FRE5NB1"		X	2,537		55.2
L-13 TO L-15	269+16 TO 304+00 "FRE5NB1"		X	3,484		75.8
L-1 TO L-2	1105+60 TO 1115+50 "FRE5SB1"		X	990	2.6	
L-2 TO L-6	1122+00 TO 1168+35 "FRE5SB1"		X	4,635	12.0	
L-3 TO L-6	1131+12 TO 1168+35 "FRE5SB1"	X		3,723	9.7	
L-6 TO L-15	1175+90 TO 1304+00 "FRE5SB1"	X		12,810	33.2	
L-6 TO L-16	1175+90 TO 1313+50 "FRE5SB1"		X	13,760	35.7	
TOTAL				68,894	150.7*	235.1*

*INCLUDED IN HMA ROADWAY ITEMS TABLE, Sht Q-1.
(N) - NOT A SEPARATE PAY ITEM, FOR INFORMATION ONLY

TEMPORARY FIBER ROLL

LOCATION	LF	DESCRIPTION
CMS OH SIGN PAVED AREA (SEE Sht WPC-1)	238.2	PERIMETER SEDIMENT CONTROL
WEATHER STATION PAVED AREA (SEE Sht WPC-1)	200.0	PERIMETER SEDIMENT CONTROL
PANOCHE CREEK Br (SEE Sht WPC-2)	167.6	PERIMETER SEDIMENT CONTROL
TOTAL	605.8	

STAGE CONSTRUCTION QUANTITIES

LOCATION	STAGE, PHASE	COLD PLANE AC Pvmt	HMA (TYPE A)	CLASS 2 AB	CLASS 2 AS	REMARKS
		SQYD	TON	CY	CY	
"FRE5NB1" 175+50 TO 303+00	*1, 1	5,666.7	765.0			REMOVE Exist RUMBLE STRIP
"FRE5NB1" 178+30 TO 303+00	*1, 2		7,856.1			WIDEN INSIDE Shld to 19 Ft
"FRE5NB1" 178+30 TO 303+00	*1, 2			3556.3		WIDEN INSIDE Shld to 19 Ft
"FRE5NB1" 178+30 TO 303+00	*1, 2				6789.2	WIDEN INSIDE Shld to 19 Ft
TOTAL		5,666.7**	8,621.1***	3,556.3***	6,789.2***	

* REFER TO Sht SC-1 FOR DETAILS
** QUANTITY INCLUDED IN COLD PLANE ASPHALT CONCRETE TABLE
*** QUANTITY INCLUDED IN ROADWAY ITEMS TABLE

1 REPLACED PER ADDENDUM No. 1 DATED 10-24-14

SUMMARY OF QUANTITIES

Q-3

STATE OF CALIFORNIA - DEPARTMENT OF TRANSPORTATION
Caltrans DESIGN
FUNCTIONAL SUPERVISOR JUN XU
CALCULATED-DESIGNED BY IRENE LEE
CHECKED BY ROD CRUZ
REVISED BY
DATE REVISED

LAST REVISION 10-22-14
DATE PLOTTED => 23-OCT-2014
TIME PLOTTED => 09:07