ACNHP-P04(599)E

Dist	COUNTY	ROUTE	POST MILES TOTAL PROJECT	SHEET No.	TOTAL SHEETS
06	Fre, Mad	41U	33.1/33.4, 0.0/0.3	1	113

STATE OF CALIFORNIA
DEPARTMENT OF TRANSPORTATION

PROJECT PLANS FOR CONSTRUCTION ON
STATE HIGHWAY
IN FRESNO AND MADERA COUNTIES
NEAR FRESNO
FROM 0.1 MILE NORTH OF PERRIN ROAD UNDERCROSSING
TO 0.1 MILE SOUTH OF AVENUE 9 UNDERCROSSING

TO BE SUPPLEMENTED BY STANDARD PLANS DATED 2010

INDEX OF PLANS

SHEET No.	DESCRIPTION
1	TITLE AND LOCATION MAP
2-5	LAYOUTS
6	CONSTRUCTION AREA SIGNS
7-10	TRAFFIC HANDLING PLANS
11-13	PAVEMENT DELINEATION PLANS AND QUANTITIES
14	SUMMARY OF QUANTITIES
15-22	LANDSCAPE PLANS
23-42	ELECTRICAL PLANS
43-85	REVISED STANDARD PLANS

STRUCTURE PLANS

86-92	SAN JOAQUIN RIVER OVERFLOW BRIDGE, BR No. 41-0040
93-113	SAN JOAQUIN RIVER BRIDGE, Br No. 42-0112

THE STANDARD PLANS LIST APPLICABLE TO THIS CONTRACT IS INCLUDED IN THE NOTICE TO BIDDERS AND SPECIAL PROVISIONS BOOK.

LOCATION MAP

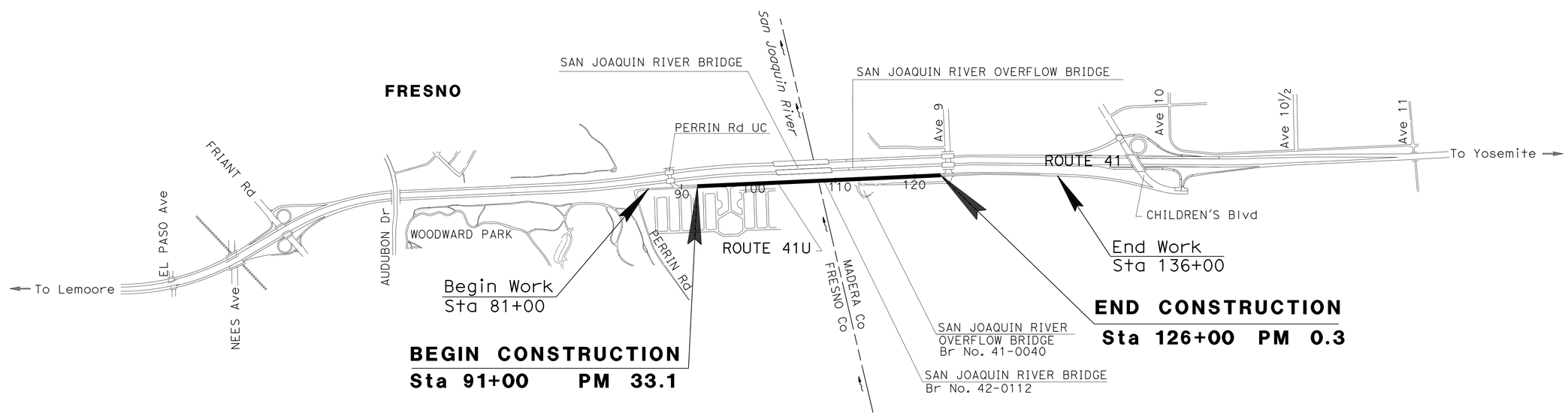

PROJECT ENGINEER
REGISTERED CIVIL ENGINEER

01-28-16
DATE

REGISTERED PROFESSIONAL ENGINEER
THAAR F. JAWHAR
No. 64207
Exp. 6-30-17
CIVIL
STATE OF CALIFORNIA

March 7, 2016
PLANS APPROVAL DATE

THE STATE OF CALIFORNIA OR ITS OFFICERS OR AGENTS SHALL NOT BE RESPONSIBLE FOR THE ACCURACY OR COMPLETENESS OF SCANNED COPIES OF THIS PLAN SHEET.

PROJECT MANAGER ANAND KAPOOR

DESIGN MANAGER GETACHEW ESHETE

THE CONTRACTOR SHALL POSSESS THE CLASS (OR CLASSES) OF LICENSE AS SPECIFIED IN THE "NOTICE TO BIDDERS."

CONTRACT No.	06-0N9904
PROJECT ID	0612000114

LAST REVISION 02-29-16 | DATE PLOTTED => 17-MAY-2016 | TIME PLOTTED => 13:39

Dist	COUNTY	ROUTE	POST MILES TOTAL PROJECT	SHEET No.	TOTAL SHEETS
06	Fre,Mad	41U	33.1/33.4, 0.0/0.3	2	113

REGISTERED CIVIL ENGINEER 01-28-16 DATE

3-7-16
PLANS APPROVAL DATE

REGISTERED PROFESSIONAL ENGINEER THAAR F. JAWHAR No. 64207 Exp. 6-30-17 CIVIL STATE OF CALIFORNIA

THE STATE OF CALIFORNIA OR ITS OFFICERS OR AGENTS SHALL NOT BE RESPONSIBLE FOR THE ACCURACY OR COMPLETENESS OF SCANNED COPIES OF THIS PLAN SHEET.

NOTE:

FOR ACCURATE RIGHT OF WAY DATA, CONTACT RIGHT OF WAY ENGINEERING AT THE DISTRICT OFFICE.

PAVEMENT CLIMATE REGION: INLAND VALLEY

ABBREVIATIONS:

AILTS - ALTERNATIVE IN-LINE TERMINAL SYSTEM
AFTS - ALTERNATIVE FLARED TERMINAL SYSTEM

LEGEND:

COLD PLANE AC Pvmt
HMA (TYPE A)

ACCESS ROAD

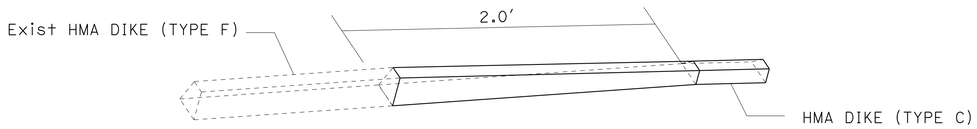

DIKE TRANSITION DETAILS (TYPE F TO TYPE C)

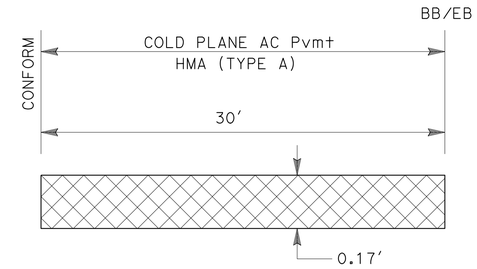

BRIDGE APPROACH OVERLAY DETAIL A

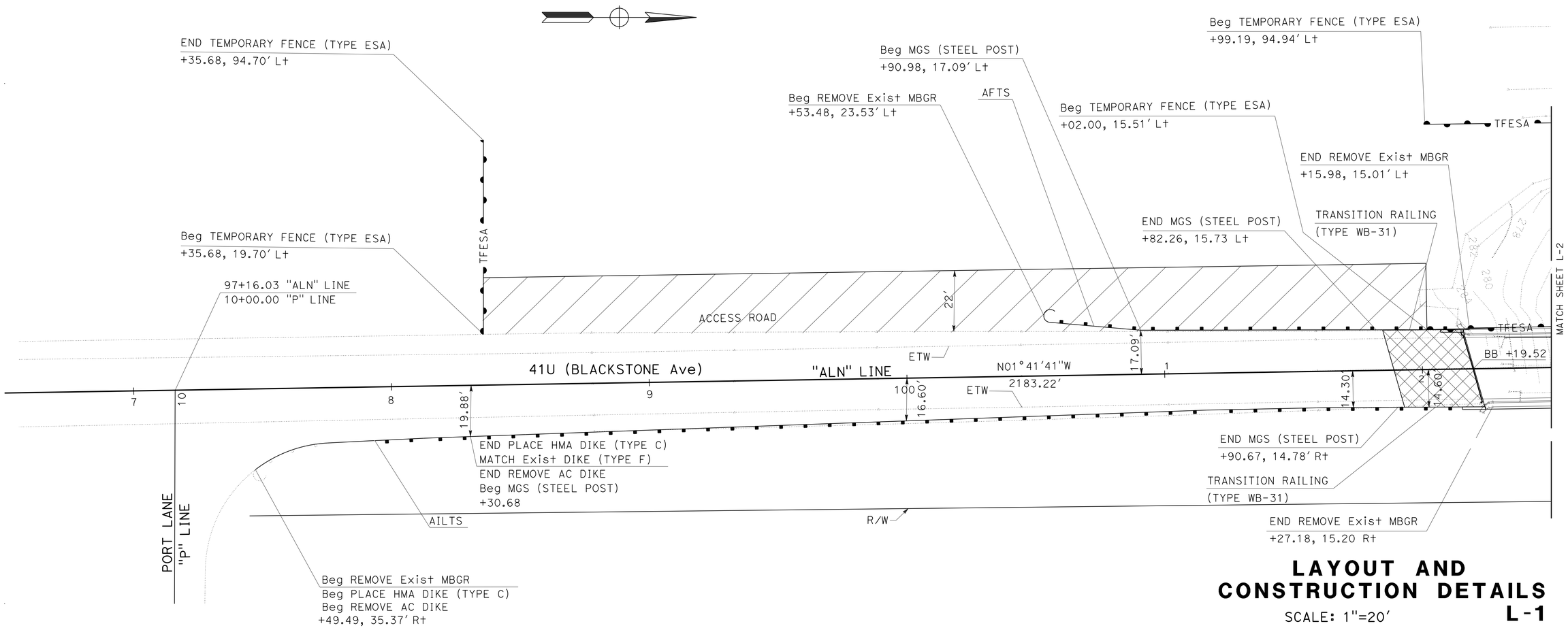

LAYOUT AND CONSTRUCTION DETAILS

SCALE: 1"=20'

L-1

STATE OF CALIFORNIA - DEPARTMENT OF TRANSPORTATION
Caltrans® DESIGN

FUNCTIONAL SUPERVISOR: GETACHEW ESHETE
CALCULATED-DESIGNED BY: HOSS SHOJAI
CHECKED BY: THAER JAWHAR
REVISED BY
DATE REVISED

LAST REVISION 02-29-16
DATE PLOTTED => 17-MAY-2016
TIME PLOTTED => 13:39

Dist	COUNTY	ROUTE	POST MILES TOTAL PROJECT	SHEET No.	TOTAL SHEETS
06	Fre,Mad	41U	33.1/33.4 0.0/0.3	3	113

REGISTERED CIVIL ENGINEER 01-28-16 DATE

3-7-16
PLANS APPROVAL DATE

REGISTERED PROFESSIONAL ENGINEER
THAAR F. JAWHAR
No. 64207
Exp. 6-30-17
CIVIL
STATE OF CALIFORNIA

THE STATE OF CALIFORNIA OR ITS OFFICERS OR AGENTS SHALL NOT BE RESPONSIBLE FOR THE ACCURACY OR COMPLETENESS OF SCANNED COPIES OF THIS PLAN SHEET.

NOTE:

FOR ACCURATE RIGHT OF WAY DATA, CONTACT RIGHT OF WAY ENGINEERING AT THE DISTRICT OFFICE.

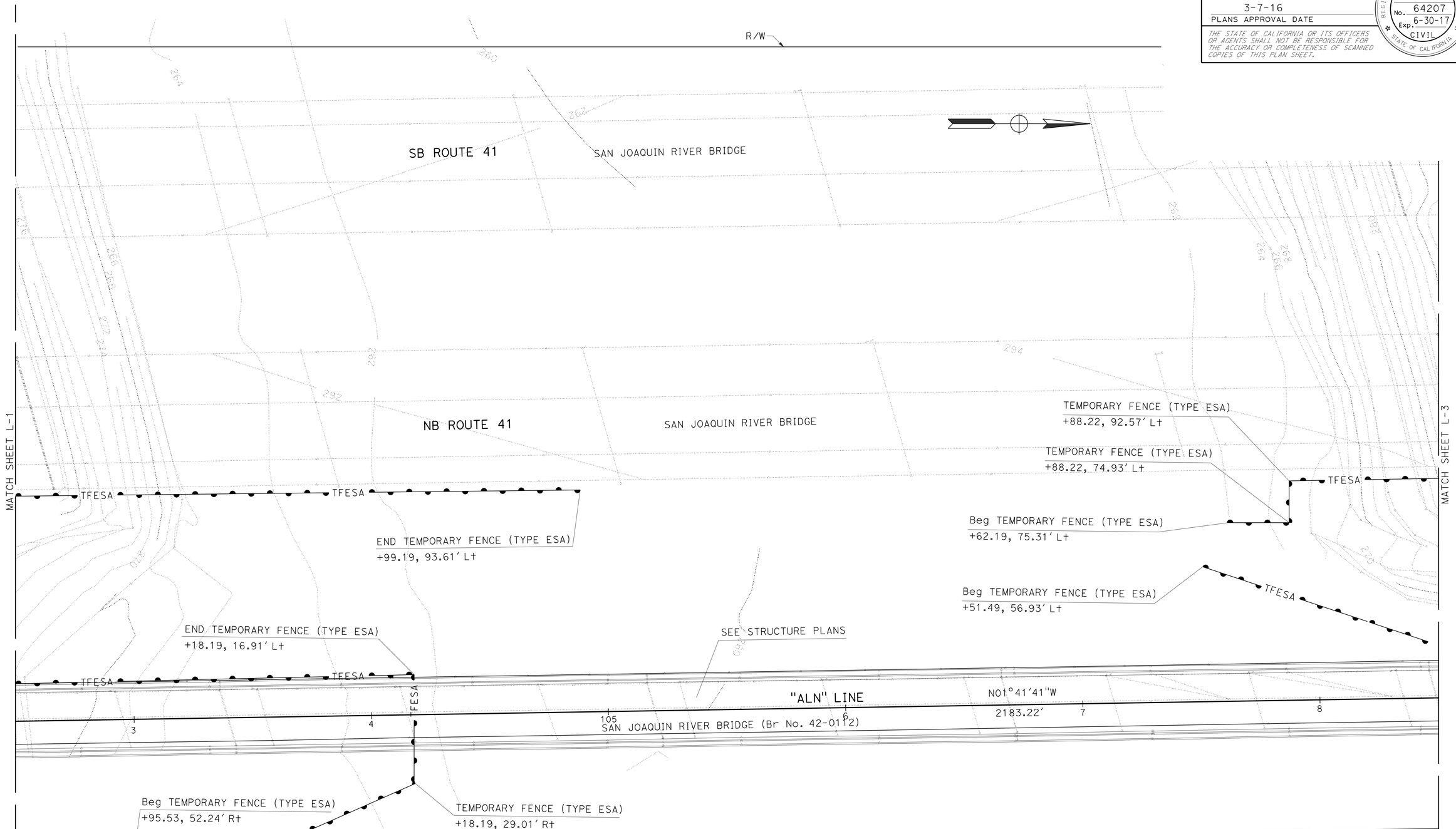

LAYOUT L-2

SCALE: 1"=20'

STATE OF CALIFORNIA - DEPARTMENT OF TRANSPORTATION
Caltrans
DESIGN

FUNCTIONAL SUPERVISOR: GETACHEW ESHETE
CALCULATED-DESIGNED BY: HOSS SHOJAI
CHECKED BY: THAER JAWHAR
REVISED BY
DATE REVISED

LAST REVISION 02-22-16
DATE PLOTTED => 17-MAY-2016
TIME PLOTTED => 13:39

Dist	COUNTY	ROUTE	POST MILES TOTAL PROJECT	SHEET No.	TOTAL SHEETS
06	Fre,Mad	41U	33.1/33.4, 0.0/0.3	4	113

REGISTERED CIVIL ENGINEER 01-28-16 DATE

3-7-16
PLANS APPROVAL DATE

REGISTERED PROFESSIONAL ENGINEER THAAR F. JAWHAR No. 64207 Exp. 6-30-17 CIVIL STATE OF CALIFORNIA

THE STATE OF CALIFORNIA OR ITS OFFICERS OR AGENTS SHALL NOT BE RESPONSIBLE FOR THE ACCURACY OR COMPLETENESS OF SCANNED COPIES OF THIS PLAN SHEET.

NOTE:

FOR ACCURATE RIGHT OF WAY DATA, CONTACT RIGHT OF WAY ENGINEERING AT THE DISTRICT OFFICE.

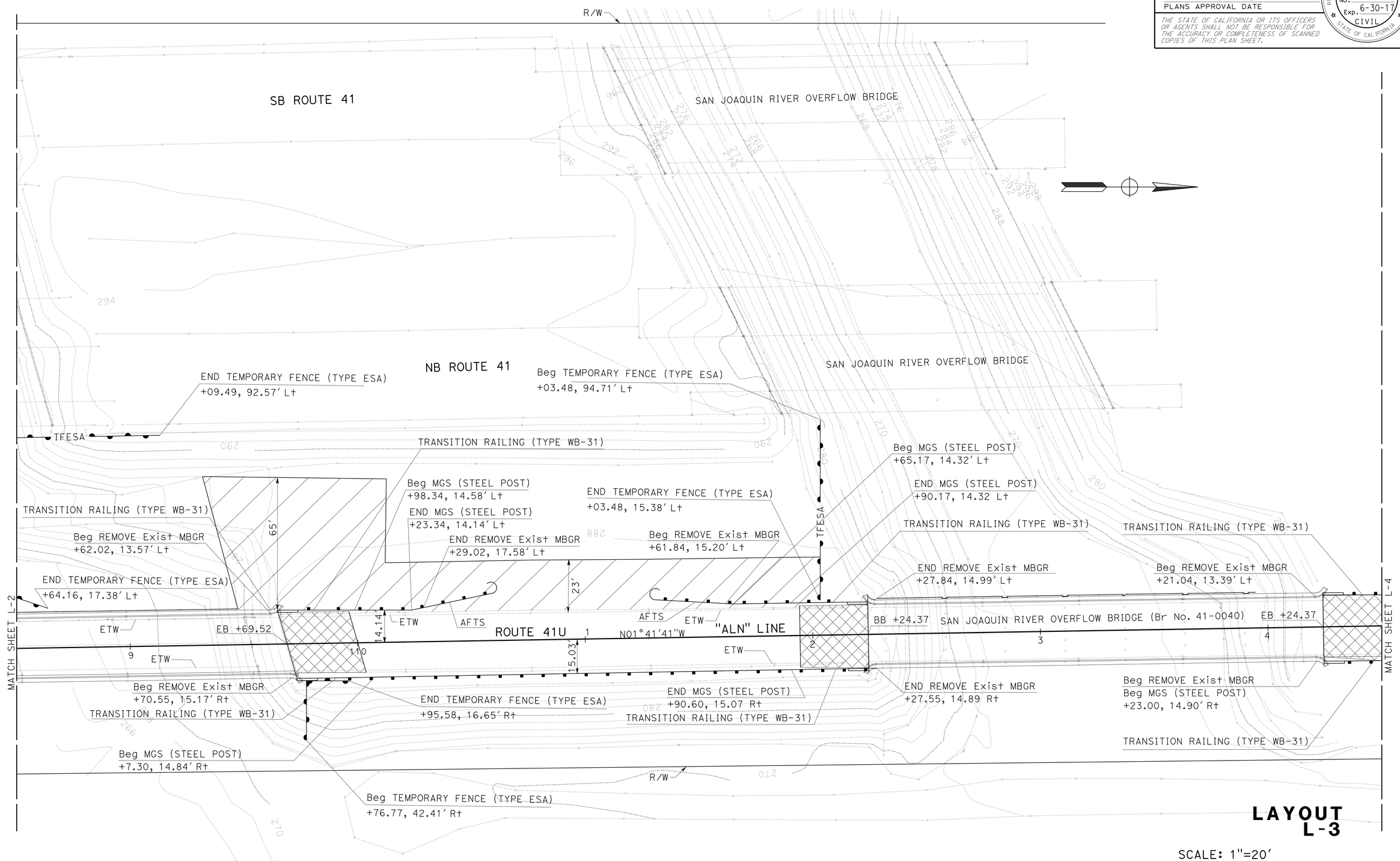

LAYOUT L-3

SCALE: 1"=20′

STATE OF CALIFORNIA - DEPARTMENT OF TRANSPORTATION
Caltrans
DESIGN

FUNCTIONAL SUPERVISOR: GETACHEW ESHETE

CALCULATED-DESIGNED BY: HOSS SHOJAI
CHECKED BY: THAER JAWHAR

REVISED BY
DATE REVISED

LAST REVISION 02-22-16
DATE PLOTTED => 17-MAY-2016
TIME PLOTTED => 13:39

Dist	COUNTY	ROUTE	POST MILES TOTAL PROJECT	SHEET No.	TOTAL SHEETS
06	Fre,Mad	41U	33.1/33.4, 0.0/0.3	5	113

REGISTERED CIVIL ENGINEER 01-28-16 DATE

3-7-16
PLANS APPROVAL DATE

REGISTERED PROFESSIONAL ENGINEER THAAR F. JAWHAR No. 64207 Exp. 6-30-17 CIVIL STATE OF CALIFORNIA

THE STATE OF CALIFORNIA OR ITS OFFICERS OR AGENTS SHALL NOT BE RESPONSIBLE FOR THE ACCURACY OR COMPLETENESS OF SCANNED COPIES OF THIS PLAN SHEET.

NOTE:

FOR ACCURATE RIGHT OF WAY DATA, CONTACT RIGHT OF WAY ENGINEERING AT THE DISTRICT OFFICE.

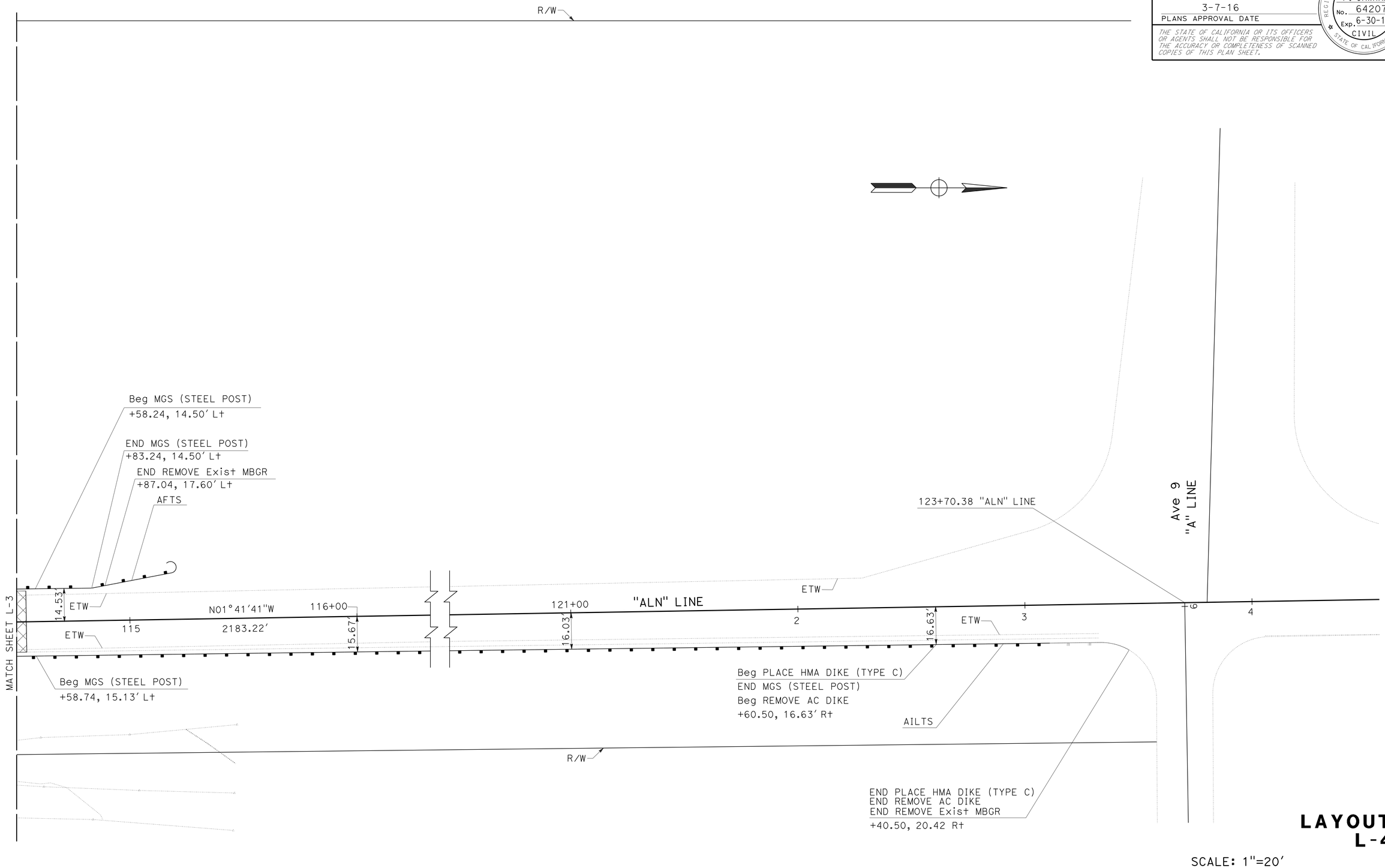

LAYOUT L-4

SCALE: 1"=20'

STATE OF CALIFORNIA - DEPARTMENT OF TRANSPORTATION

Caltrans®

DESIGN

FUNCTIONAL SUPERVISOR: GETACHEW ESHETE

CALCULATED-DESIGNED BY: HOSS SHOJAI

CHECKED BY: THAER JAWHAR

REVISED BY

DATE REVISED

LAST REVISION 02-22-16

DATE PLOTTED => 17-MAY-2016

TIME PLOTTED => 13:39

Dist	COUNTY	ROUTE	POST MILES TOTAL PROJECT	SHEET No.	TOTAL SHEETS
06	Fre,Mad	41U	33.1/33.4, 0.00/0.3	6	113

Hassan Taha 01-27-16
REGISTERED CIVIL ENGINEER DATE

3-7-16
PLANS APPROVAL DATE

REGISTERED PROFESSIONAL ENGINEER HASSAN M. TAHA No. 60130 Exp 6/30/16 CIVIL STATE OF CALIFORNIA

THE STATE OF CALIFORNIA OR ITS OFFICERS OR AGENTS SHALL NOT BE RESPONSIBLE FOR THE ACCURACY OR COMPLETENESS OF SCANNED COPIES OF THIS PLAN SHEET.

STATIONARY MOUNTED CONSTRUCTION AREA SIGNS

SIGN No.	SIGN CODE	PANEL SIZE	SIGN MESSAGE	No. OF POSTS	POST SIZE	No. OF SIGNS
A	W20-1	36" x 36"	ROAD WORK AHEAD	1	4" x 6"	5
B	G20-2	48" x 24"	END ROAD WORK	1	4" x 6"	2

NOTE:

1) EXACT SIGN LOCATIONS TO BE DETERMINED BY THE ENGINEER.

2) FOR ADDITIONAL CONSTRUCTION AREA SIGNS, REFER SHEET TO THQ-1.

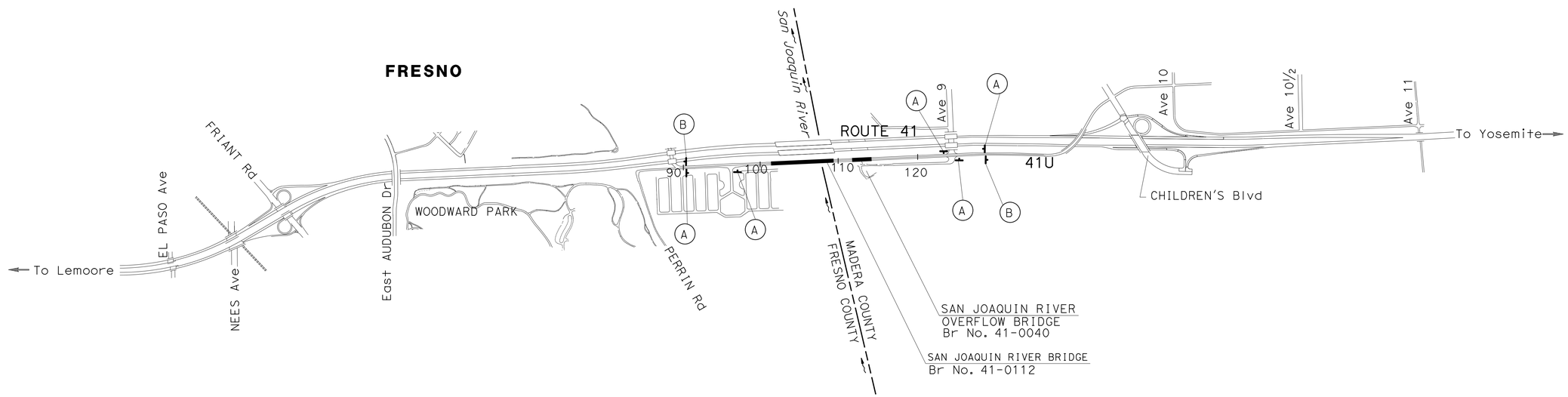

APPROVED FOR CONSTRUCTION AREA SIGN WORK ONLY

CONSTRUCTION AREA SIGN

NO SCALE

CS-1

STATE OF CALIFORNIA - DEPARTMENT OF TRANSPORTATION
Caltrans® TRAFFIC DESIGN

FUNCTIONAL SUPERVISOR: MOHAMMED QATAMI
CALCULATED-DESIGNED BY: SOPHAT YIN
CHECKED BY: HASSAN TAHA
REVISED BY
DATE REVISED

LAST REVISION 02-22-16 | DATE PLOTTED => 17-MAY-2016 | TIME PLOTTED => 13:39

Dist	COUNTY	ROUTE	POST MILES TOTAL PROJECT	SHEET No.	TOTAL SHEETS
06	Fre,Mad	41U	33.1/33.4, 0.00/0.3	7	113

Hassan Taha 01-27-16
REGISTERED CIVIL ENGINEER DATE

3-7-16
PLANS APPROVAL DATE

REGISTERED PROFESSIONAL ENGINEER HASSAN M.TAHA No. 60130 Exp 6/30/16 CIVIL STATE OF CALIFORNIA

THE STATE OF CALIFORNIA OR ITS OFFICERS OR AGENTS SHALL NOT BE RESPONSIBLE FOR THE ACCURACY OR COMPLETENESS OF SCANNED COPIES OF THIS PLAN SHEET.

LEGEND:

- CONSTRUCT THIS STAGE
- Temp RAILING (TYPE K)
- XX — TEMPORARY TRAFFIC STRIPE DETAIL NUMBER
- XX — CONSTRUCTION AREA SIGN NUMBER
- CHANNELIZER (SURFACE MOUNTED)
- TEMPORARY CRASH CUSHION MODULE (ARRAY TS14)
- XX — REMOVE TRAFFIC STRIPE DETAIL NUMBER

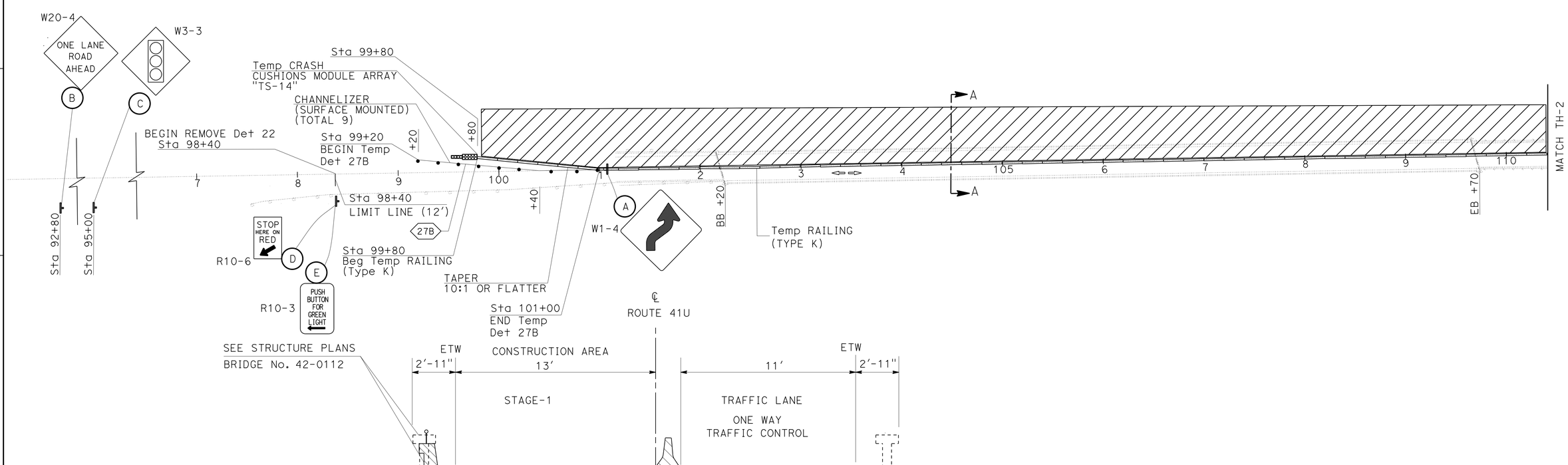

APPROVED FOR TRAFFIC HANDLING WORK ONLY

TRAFFIC HANDLING PLAN
STAGE 1

SCALE:1"=50'

TH-1

STATE OF CALIFORNIA - DEPARTMENT OF TRANSPORTATION
Caltrans® **TRAFFIC DESIGN**

FUNCTIONAL SUPERVISOR: MOHAMMED QATAMI
CALCULATED-DESIGNED BY: SOPHAT YIN
CHECKED BY: HASSAN TAHA
REVISED BY
DATE REVISED

LAST REVISION 03-04-16 | DATE PLOTTED => 17-MAY-2016 | TIME PLOTTED => 13:40

Dist	COUNTY	ROUTE	POST MILES TOTAL PROJECT	SHEET No.	TOTAL SHEETS
06	Fre,Mad	41U	33.1/33.4, 0.00/0.3	8	113

Hassan Taha 01-27-16
REGISTERED CIVIL ENGINEER DATE

3-7-16
PLANS APPROVAL DATE

REGISTERED PROFESSIONAL ENGINEER HASSAN M.TAHA No. 60130 Exp 6/30/16 CIVIL STATE OF CALIFORNIA

THE STATE OF CALIFORNIA OR ITS OFFICERS OR AGENTS SHALL NOT BE RESPONSIBLE FOR THE ACCURACY OR COMPLETENESS OF SCANNED COPIES OF THIS PLAN SHEET.

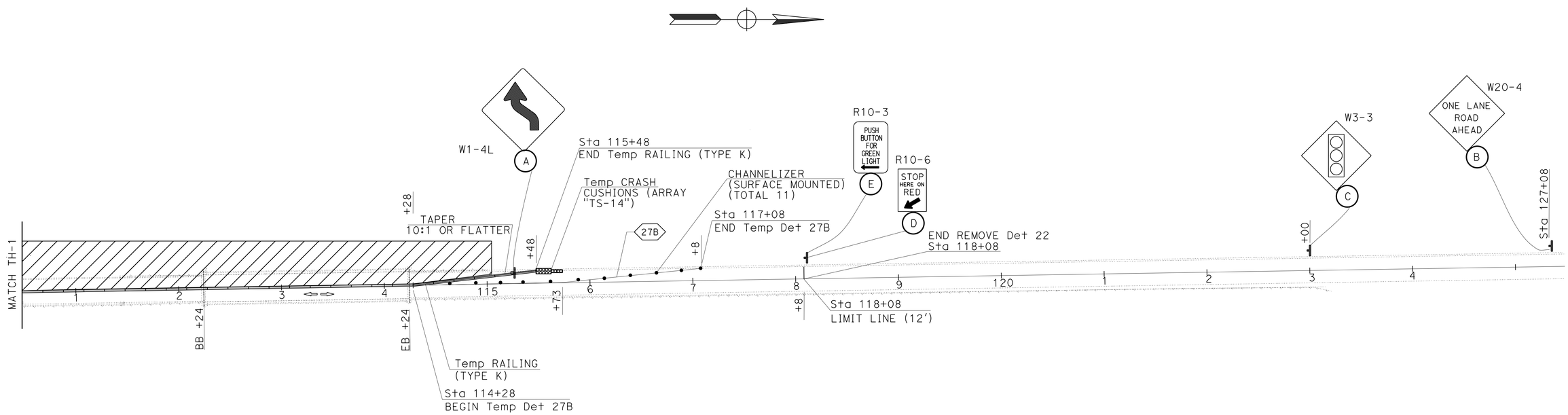

APPROVED FOR TRAFFIC HANDLING WORK ONLY

TRAFFIC HANDLING PLAN
STAGE 1

SCALE:1"=50'

TH-2

STATE OF CALIFORNIA - DEPARTMENT OF TRANSPORTATION
Caltrans
TRAFFIC DESIGN

FUNCTIONAL SUPERVISOR: MOHAMMED QATAMI
CALCULATED-DESIGNED BY: SOPHAT YIN
CHECKED BY: HASSAN TAHA
REVISED BY
DATE REVISED

LAST REVISION 03-04-16
DATE PLOTTED => 17-MAY-2016
TIME PLOTTED => 13:40

Dist	COUNTY	ROUTE	POST MILES TOTAL PROJECT	SHEET No.	TOTAL SHEETS
06	Fre,Mad	41U	33.1/33.4, 0.00/0.3	9	113

Hassan Taha 01-27-16
REGISTERED CIVIL ENGINEER DATE

3-7-16
PLANS APPROVAL DATE

REGISTERED PROFESSIONAL ENGINEER
HASSAN M.TAHA
No. 60130
Exp 6/30/16
CIVIL
STATE OF CALIFORNIA

THE STATE OF CALIFORNIA OR ITS OFFICERS OR AGENTS SHALL NOT BE RESPONSIBLE FOR THE ACCURACY OR COMPLETENESS OF SCANNED COPIES OF THIS PLAN SHEET.

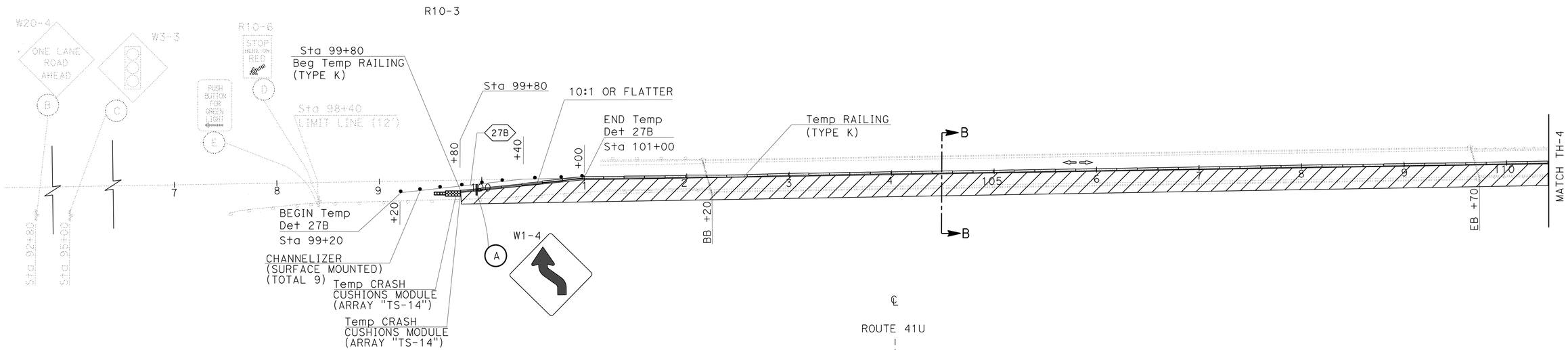

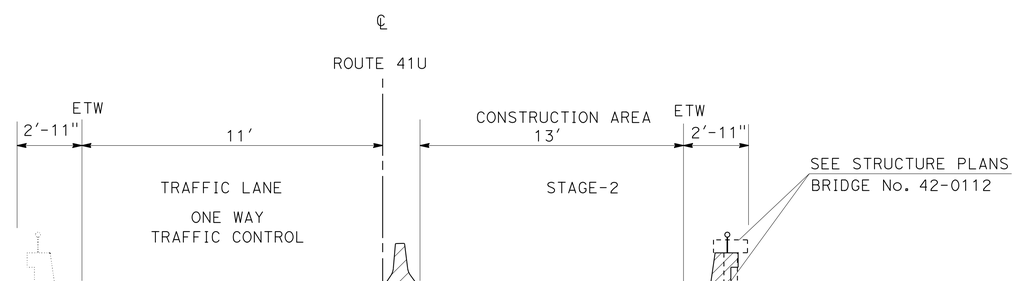

TRAFFIC HANDLING PLAN
STAGE 2

APPROVED FOR TRAFFIC HANDLING WORK ONLY

SCALE:1"=50'

TH-3

STATE OF CALIFORNIA - DEPARTMENT OF TRANSPORTATION
Caltrans®
TRAFFIC DESIGN

FUNCTIONAL SUPERVISOR: MOHAMMED QATAMI
CALCULATED-DESIGNED BY: SOPHAT YIN
CHECKED BY: HASSAN TAHA
REVISED BY
DATE REVISED

LAST REVISION: DATE PLOTTED => 17-MAY-2016
03-04-16 TIME PLOTTED => 13:40

Dist	COUNTY	ROUTE	POST MILES TOTAL PROJECT	SHEET No.	TOTAL SHEETS
06	Fre,Mad	41U	33.1/33.4, 0.00/0.3	10	113

Hassan Taha 01-27-16
REGISTERED CIVIL ENGINEER DATE

3-7-16
PLANS APPROVAL DATE

REGISTERED PROFESSIONAL ENGINEER
HASSAN M.TAHA
No. 60130
Exp 6/30/16
CIVIL
STATE OF CALIFORNIA

THE STATE OF CALIFORNIA OR ITS OFFICERS OR AGENTS SHALL NOT BE RESPONSIBLE FOR THE ACCURACY OR COMPLETENESS OF SCANNED COPIES OF THIS PLAN SHEET.

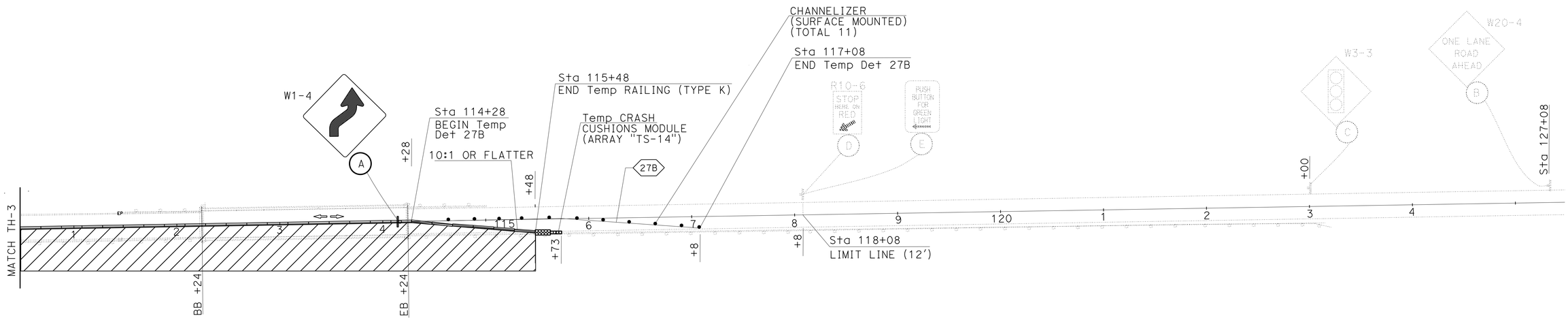

APPROVED FOR TRAFFIC HANDLING WORK ONLY

TRAFFIC HANDLING PLAN
STAGE 2

SCALE:1"=50'

TH-4

CALCULATED-DESIGNED BY	SOPHAT YIN
CHECKED BY	HASSAN TAHA
REVISED BY	
DATE REVISED	
FUNCTIONAL SUPERVISOR	MOHAMMED QATAMI

STATE OF CALIFORNIA - DEPARTMENT OF TRANSPORTATION
Caltrans
TRAFFIC DESIGN

LAST REVISION 02-29-16
DATE PLOTTED => 17-MAY-2016
TIME PLOTTED => 13:40

Dist	COUNTY	ROUTE	POST MILES TOTAL PROJECT	SHEET No.	TOTAL SHEETS
06	Fre,Mad	41U	33.1/33.4, 0.00/0.3	11	113

Hassan Taha 01-27-16
REGISTERED CIVIL ENGINEER DATE

3-7-16
PLANS APPROVAL DATE

REGISTERED PROFESSIONAL ENGINEER HASSAN M.TAHA No. 60130 Exp 6/30/16 CIVIL STATE OF CALIFORNIA

THE STATE OF CALIFORNIA OR ITS OFFICERS OR AGENTS SHALL NOT BE RESPONSIBLE FOR THE ACCURACY OR COMPLETENESS OF SCANNED COPIES OF THIS PLAN SHEET.

STATIONARY MOUNTED CONSTRUCTION AREA SIGNS (TRAFFIC HANDLING)

SIGN No.	SIGN CODE	SIGN MESSAGE	PANEL SIZE	No. OF POST AND SIZE	No. OF SIGNS
A	W1-4	AS SHOWN ON PLAN	30" x 30"	1-4" x 4"	4
B	W20-4	AS SHOWN ON PLAN	36" x 36"	1-4" x 4"	2
C	W3-3	AS SHOWN ON PLAN	36" x 36"	MOUNT ON K-RAIL	2
D	R10-6	AS SHOWN ON PLAN	24" x 36"	1-4" x 6"	2
E	R10-3	AS SHOWN ON PLAN	9" x 12"		2

NOTES:
1. EXACT SIGN LOCATIONS TO BE DETERMINED BY THE ENGINEER.
2. FOR ADDITIONAL CONSTRUCTION AREA SIGNS, REFER TO CONSTRUCTION AREA SIGNS SHEET CS-1.

TEMPORARY CRASH CUSHION MODULE

SHEET No.	EA
TH-1	14
TH-2	14
TH-3	14
TH-4	14
TOTAL	56

CHANNELIZER (SURFACE MOUNTED)

SHEET No.	EA
TH-1	9
TH-2	11
TH-3	9
TH-4	11
TOTAL	40

TEMPORARY RAILING (TYPE K)

SHEET No.	Sta	LF
TH-1	99+80 TO 110+40	1060
TH-2	110+40 TO 115+48	500
TH-3	99+80 TO 110+40	1060
TH-4	110+40 TO 115+48	500
	TOTAL	3120

TEMPORARY PAVEMENT DELINEATION

SHEET No.	LOCATION Sta	DETAIL No.	REMOVE YELLOW THERMOPLASTIC TRAFFIC STRIPE (HAZARDOUS WASTE)	TEMPORARY TRAFFIC STRIPE (TAPE)	TEMPORARY PAVEMENT MARKING (TAPE)	
			LF	LF	DESCRIPTION	SQFT
TH-1	98+40 TO 110+50	22	2420			
	99+20 TO 101+00	27B		180		
TH-2	110+50 TO 118+08	22	1516			
	114+28 TO 117+08	27B		280	2-LIMIT LINES	24
TH-3	99+20 TO 101+00	27B		180		
TH-4	114+28 TO 117+08	27B		280		
		TOTAL	3936	920		

TRAFFIC HANDLING AND QUANTITIES

THQ-1

REVISED BY | DATE REVISED
SOPHAT YIN | HASSAN TAHA
CALCULATED-DESIGNED BY | CHECKED BY
FUNCTIONAL SUPERVISOR: MOHAMMED QATAMI
STATE OF CALIFORNIA - DEPARTMENT OF TRANSPORTATION
Caltrans TRAFFIC DESIGN

LAST REVISION 02-29-16 | DATE PLOTTED => 17-MAY-2016 | TIME PLOTTED => 13:40

Dist	COUNTY	ROUTE	POST MILES TOTAL PROJECT	SHEET No.	TOTAL SHEETS
06	Fre,Mad	41U	33.1/33.4, 0.00/0.3	12	113

Hassan Taha 01-27-16
REGISTERED CIVIL ENGINEER DATE

3-7-16
PLANS APPROVAL DATE

REGISTERED PROFESSIONAL ENGINEER HASSAN M. TAHA No. 60130 Exp 6/30/16 CIVIL STATE OF CALIFORNIA

THE STATE OF CALIFORNIA OR ITS OFFICERS OR AGENTS SHALL NOT BE RESPONSIBLE FOR THE ACCURACY OR COMPLETENESS OF SCANNED COPIES OF THIS PLAN SHEET.

LEGEND:

LIMITS OF DESIGNATED TRAFFIC STRIPING DETAIL

PAVEMENT DELINEATION QUANTITIES

SHEET No.	LOCATION Sta	DETAIL No.	THERMOPLASTIC TRAFFIC STRIPE	
			SOLID YELLOW	SOLID WHITE
			LF	LF
PD-1	98+40 TO 110+50	22	2420	
	99+80 TO 110+50	27B		1070
	99+80 TO 110+50	27B		1070
PD-2	110+50 TO 118+08	22	1516	
	110+50 TO 115+73	27B		523
	110+50 TO 115+73	27B		523
		TOTAL	7122	

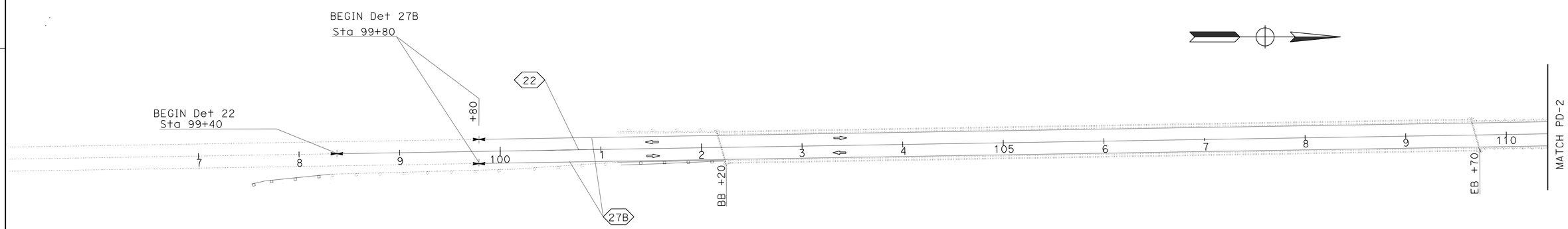

APPROVED FOR PAVEMENT DELINEATION ONLY

PAVEMENT DELINEATION PLAN AND QUANTITIES

SCALE:1"=50'

PD-1

STATE OF CALIFORNIA - DEPARTMENT OF TRANSPORTATION
Caltrans
TRAFFIC DESIGN

FUNCTIONAL SUPERVISOR: MOHAMMED QATAMI
CALCULATED-DESIGNED BY: SOPHAT YIN
CHECKED BY: HASSAN TAHA
REVISED BY
DATE REVISED

LAST REVISION 02-29-16
DATE PLOTTED => 17-MAY-2016
TIME PLOTTED => 13:40

Dist	COUNTY	ROUTE	POST MILES TOTAL PROJECT	SHEET No.	TOTAL SHEETS
06	Fre,Mad	41U	33.1/33.4, 0.00/0.3	13	113

Hassan Taha 01-27-16
REGISTERED CIVIL ENGINEER DATE

3-7-16
PLANS APPROVAL DATE

REGISTERED PROFESSIONAL ENGINEER
HASSAN M.TAHA
No. 60130
Exp 6/30/16
CIVIL
STATE OF CALIFORNIA

THE STATE OF CALIFORNIA OR ITS OFFICERS OR AGENTS SHALL NOT BE RESPONSIBLE FOR THE ACCURACY OR COMPLETENESS OF SCANNED COPIES OF THIS PLAN SHEET.

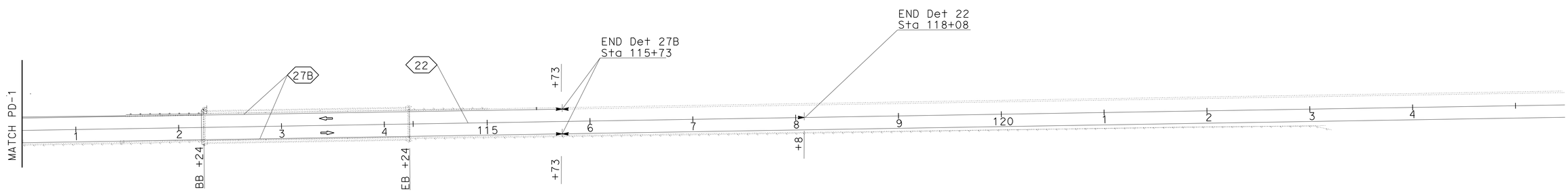

APPROVED FOR PAVEMENT DELINEATION ONLY

PAVEMENT DELINEATION PLAN

PD-2

SCALE:1"=50'

STATE OF CALIFORNIA - DEPARTMENT OF TRANSPORTATION
Caltrans®
TRAFFIC DESIGN

FUNCTIONAL SUPERVISOR: MOHAMMED QATAMI
CALCULATED-DESIGNED BY: SOPHAT YIN
CHECKED BY: HASSAN TAHA
REVISED BY
DATE REVISED

LAST REVISION 03-04-16
DATE PLOTTED => 17-MAY-2016
TIME PLOTTED => 13:40

Dist	COUNTY	ROUTE	POST MILES TOTAL PROJECT	SHEET No.	TOTAL SHEETS
06	Fre,Mad	41U	33.1/33.4, 0.0/0.3	14	113

REGISTERED CIVIL ENGINEER 01-28-16 DATE

3-7-16
PLANS APPROVAL DATE

REGISTERED PROFESSIONAL ENGINEER THAAR F. JAWHAR No. 64207 Exp. 6-30-17 CIVIL STATE OF CALIFORNIA

THE STATE OF CALIFORNIA OR ITS OFFICERS OR AGENTS SHALL NOT BE RESPONSIBLE FOR THE ACCURACY OR COMPLETENESS OF SCANNED COPIES OF THIS PLAN SHEET.

MIDWEST GUARDRAIL SYSTEM

STATION	DIRECTION	LAYOUT TYPE (N)	REMOVE MBGR	TREATED WOOD WASTE	MGS (STEEL POST)	ALTERNATIVE FLARED TERMINAL SYSTEM	ALTERNATIVE IN-LINE TERMINAL SYSTEM	TRANSITION RAILING (TYPE WB-31)
			LF	LB	LF	EA	EA	EA
97+49.49 TO 102+27.18	NB		477.5	3,557				
109+70.55 TO 112+27.55	NB		257.0	1,966				
114+23.00 TO 123+40.50	NB		917.5	6,868				
100+53.48 TO 102+15.98	SB		162.5	1,235				
109+62.02 TO 110+29.02	SB		67.0	502				
111+61.84 TO 112+27.84	SB		66.0	494				
114+21.04 TO 114+87.04	SB		66.0	494				
98+30.68 TO 101+90.67	NB	12A			362.0		1	1
110+07.30 TO 111+90.60	NB	12D			183.0			2
114+58.74 TO 122+82.26	NB	12AA			802.0		1	1
100+90.98 TO 101+82.26	SB	12BB			92.0	1		1
109+98.34 TO 110+23.34	SB	12B			25.0	1		1
111+65.17 TO 111+90.17	SB	12BB			25.0	1		1
114+58.24 TO 114+83.24	SB	12B			25.0	1		1
TOTAL			2013.5	15,116	1514	4	2	8

(N) - NOT A SEPARATE PAY ITEM, FOR INFORMATION ONLY

ROADWAY QUANTITIES

LOCATION	DIRECTION	COLD PLANE AC PAVEMENT	HMA (TYPE A)	PLACE AC DIKE (TYPE C)	REMOVE AC DIKE
		SQYD	TON	LF	LF
BRIDGE APPROACH	NB/SB	379	43		
97+80.68 to 98+30.68	NB		0.3	75	75
122+60.65 to 123+10.65	NB		0.3	75	75
TOTAL		379	43.6	150	150

TEMPORARY STORM WATER POLLUTION CONTROL

STATION	DIRECTION	Temp FIBER ROLL	Temp CONSTRUCTION ENTRANCE	Temp FENCE (TYPE ESA)
		LF	EA	LF
102+25.00 To 102+50.00	SB	320		
109+50.00 TO 109+75.00	SB	200		
102+00.00	SB		1	
109+75.00	SB		1	
98+35.68	SB			75.0
101+99.19 TO 104+99.19	SB			300.0
101+99.19 TO 104+18.19	SB			219.0
102+95.53 TO 104+18.19	NB			167.9
107+51.49 TO 108+64.16	SB			118.5
109+76.77 TO 109+95.58	NB			47.5
107+62.19 TO 109+09.49	SB			173.4
112+03.48	SB			79.3
TOTAL		520	2	1180.6

SUMMARY OF QUANTITIES
Q-1

REVISED BY | DATE REVISED
HOSS SHOJAI | THAER JAWHAR
CALCULATED-DESIGNED BY | CHECKED BY
FUNCTIONAL SUPERVISOR
GETACHEW ESHETE
STATE OF CALIFORNIA - DEPARTMENT OF TRANSPORTATION
Caltrans®
DESIGN

LAST REVISION 02-22-16 | DATE PLOTTED => 17-MAY-2016 | TIME PLOTTED => 13:40

Dist	COUNTY	ROUTE	POST MILES TOTAL PROJECT	SHEET No.	TOTAL SHEETS
06	Fre, Mad	41U	33.1/33.4 0.0/0.3	15	113

LICENSED LANDSCAPE ARCHITECT

3-7-16

PLANS APPROVAL DATE

LICENSED LANDSCAPE ARCHITECT MICHAEL W. MILLS No. 4779 Expiration 11/30/16 Renewal Date 2/22/16 Date STATE OF CALIFORNIA

THE STATE OF CALIFORNIA OR ITS OFFICERS OR AGENTS SHALL NOT BE RESPONSIBLE FOR THE ACCURACY OR COMPLETENESS OF SCANNED COPIES OF THIS PLAN SHEET.

IRRIGATION SPRINKLER SCHEDULE

SYMBOL	DESCRIPTION	SPRAY PATTERN	OPERATING PRESSURE (psi)	PRESSURE COMPENSATING	PLUS/MINUS 5% ② DISCHARGE: GALLONS PER MINUTE (GPM)	DISCHARGE: GALLONS PER HOUR (GPH)	RADIUS (ft)	WIDTH x LENGTH (ft)	FLOW SHUTOFF DEVICE	SPRINKLER ASSEMBLY RISER: TYPE	RISER MATERIAL: PLASTIC	RISER MATERIAL: GALVANIZED	RISER: SIZE (IPS INCH)	RISER: HEIGHT (INCH)	RISER: SWING JOINT (TYPE)	POP-UP: TYPE	POP-UP: INLET CONNECTION (NPT INCH)	POP-UP: SPRINLKER PROTECTOR (TYPE)	TREE WELL: HEIGHT (INCH)	REMARKS
●	RISER SPRINKLER ASSEMBLY	Q	30	X	0.26	—	8	—	X	III	X	—	½	6	II	-	-	-	—	⑦ ⑧

X IN BOX DENOTES REQUIREMENT

APPLICABLE WHEN CIRCLED BELOW:

1 - SEE SPECIAL PROVISIONS.
② - IF A PRESSURE COMPENSATING DEVICE IS SPECIFIED, THE DISCHARGE AND RADII SHOWN REFLECT ITS USE.
3 - VINYL-COATED CAST IRON HOUSING.
4 - SWING JOINTS REQUIRED ADJACENT TO SHOULDERS, CURBS, SIDEWALKS, AND DIKES.
5 - UNLESS OTHERWISE SHOWN ON PLANS.
6 - INTEGRATED CHECK VALVE.
⑦ - MATCHED PRECIPITATION RATE NOZZLES.
⑧ - SPRINKLER REQUIRES DRAIN CHECK VALVE.

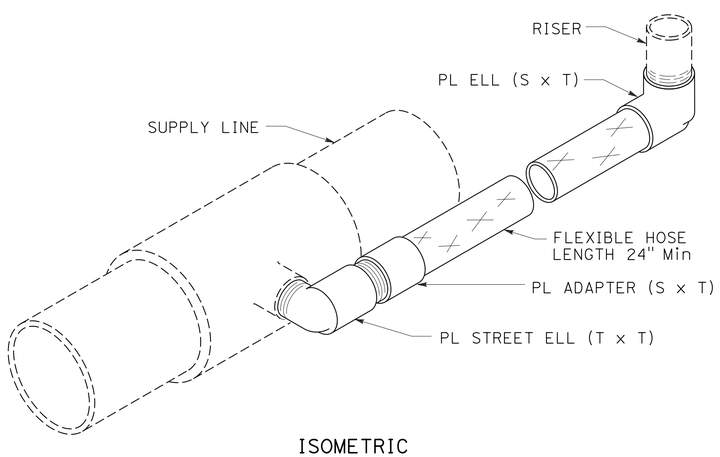

ISOMETRIC

SWING JOINT TYPE II

LATERAL PIPE SIZING CHART

RISER SPRINKLER ASSEMBLY GALLONS PER MINUTE	PIPE SIZE (*)
≤ 8	¾"
≤ 12	1"
≤ 22	1¼"
≤ 30	1½"
≤ 50	2"

(*) UNLESS DESIGNATED OTHERWISE ON PLANS

IRRIGATION SPRINKLER SCHEDULE AND DETAILS ISS-1

STATE OF CALIFORNIA - DEPARTMENT OF TRANSPORTATION
Caltrans® LANDSCAPE ARCHITECTURE
SENIOR LANDSCAPE ARCHITECT: BRAD COLE
CALCULATED-DESIGNED BY: MICHAEL MILLS
CHECKED BY: CHARLES LaRUE
REVISED BY
DATE REVISED

LAST REVISION 02-22-16
DATE PLOTTED => 17-MAY-2016
TIME PLOTTED => 13:40

Dist	COUNTY	ROUTE	POST MILES TOTAL PROJECT	SHEET No.	TOTAL SHEETS
06	Fre, Mad	41U	33.1/33.4 0.0/0.3	16	113

LICENSED LANDSCAPE ARCHITECT

3-7-16

PLANS APPROVAL DATE

LICENSED LANDSCAPE ARCHITECT MICHAEL W. MILLS No. 4179 Signature 11/30/16 Renewal Date 2/22/16 Date STATE OF CALIFORNIA

THE STATE OF CALIFORNIA OR ITS OFFICERS OR AGENTS SHALL NOT BE RESPONSIBLE FOR THE ACCURACY OR COMPLETENESS OF SCANNED COPIES OF THIS PLAN SHEET.

NOTES:

1. FOR ACCURATE RIGHT OF WAY DATA, CONTACT RIGHT OF WAY ENGINEERING AT THE DISTRICT OFFICE.
2. SEE PL-1 FOR PLANTING LEGEND AND HIGHWAY PLANTING QUANTITIES.
3. PROVIDE WATERING FOR PLANTS OUTSIDE OF IRRIGATED AREAS THROUGH PLANT ESTABLISHMENT.

MWELO: I HAVE COMPLIED WITH THE CRITERIA OF THE ORDINCANCE AND APPLIED THEM FOR THE EFFICIENT USE OF WATER IN THE IRRIGATION DESIGN PLAN.

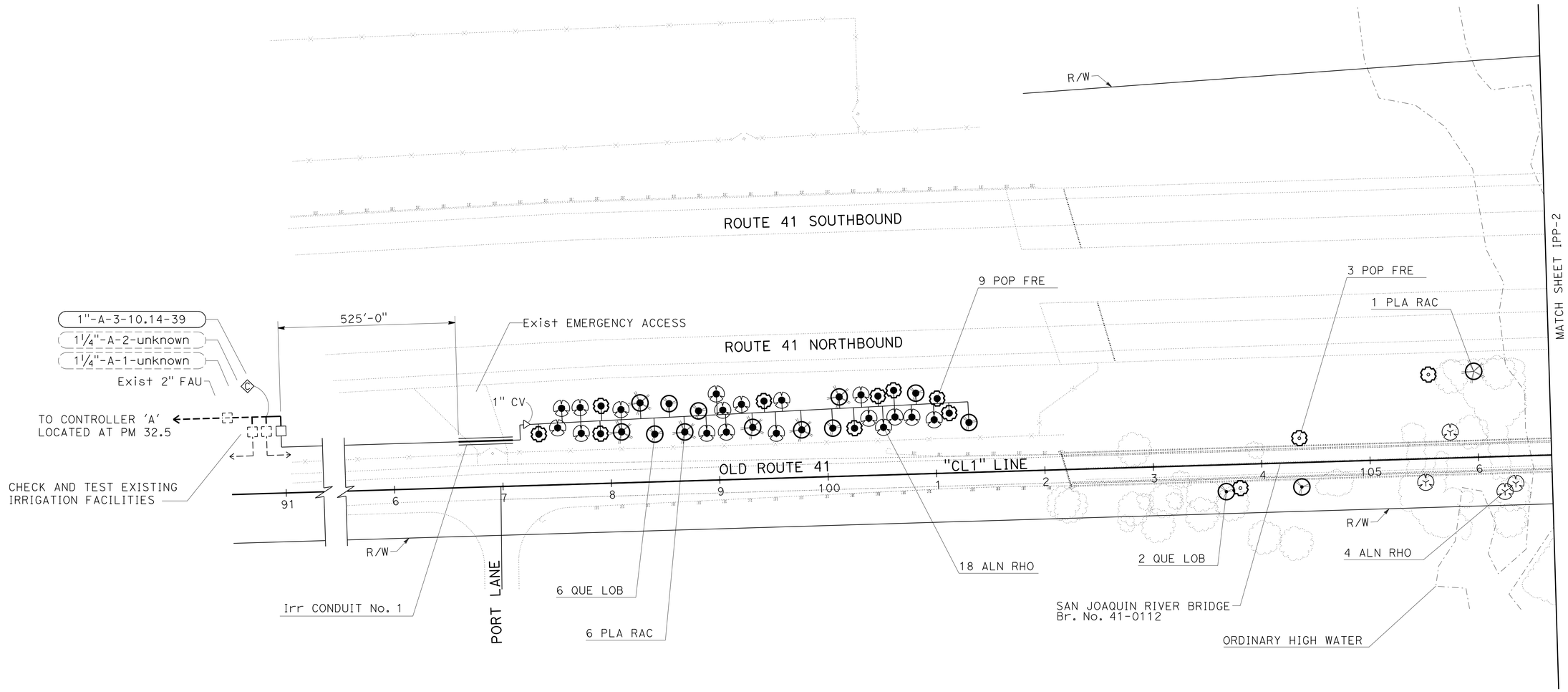

IRRIGATION AND PLANTING PLAN

SCALE: 1"=50'

IPP-1

APPROVED FOR IRRIGATION AND PLANTING WORK ONLY

STATE OF CALIFORNIA - DEPARTMENT OF TRANSPORTATION

Caltrans® LANDSCAPE ARCHITECTURE

SENIOR LANDSCAPE ARCHITECT: BRAD COLE

CALCULATED-DESIGNED BY: MICHAEL MILLS

CHECKED BY: CHARLES LaRUE

REVISED BY

DATE REVISED

LAST REVISION 03-04-16

DATE PLOTTED => 17-MAY-2016

TIME PLOTTED => 13:40

Dist	COUNTY	ROUTE	POST MILES TOTAL PROJECT	SHEET No.	TOTAL SHEETS
06	Fre, Mad	41U	33.1/33.4 0.0/0.3	17	113

LICENSED LANDSCAPE ARCHITECT

3-7-16

PLANS APPROVAL DATE

LICENSED LANDSCAPE ARCHITECT MICHAEL W. MILLS No. 4179 Expiration 11/30/16 Renewal Date 2/22/16 Date STATE OF CALIFORNIA

THE STATE OF CALIFORNIA OR ITS OFFICERS OR AGENTS SHALL NOT BE RESPONSIBLE FOR THE ACCURACY OR COMPLETENESS OF SCANNED COPIES OF THIS PLAN SHEET.

MWELO: I HAVE COMPLIED WITH THE CRITERIA OF THE ORDINCANCE AND APPLIED THEM FOR THE EFFICIENT USE OF WATER IN THE IRRIGATION DESIGN PLAN.

NOTE:

FOR ACCURATE RIGHT OF WAY DATA, CONTACT RIGHT OF WAY ENGINEERING AT THE DISTRICT OFFICE.

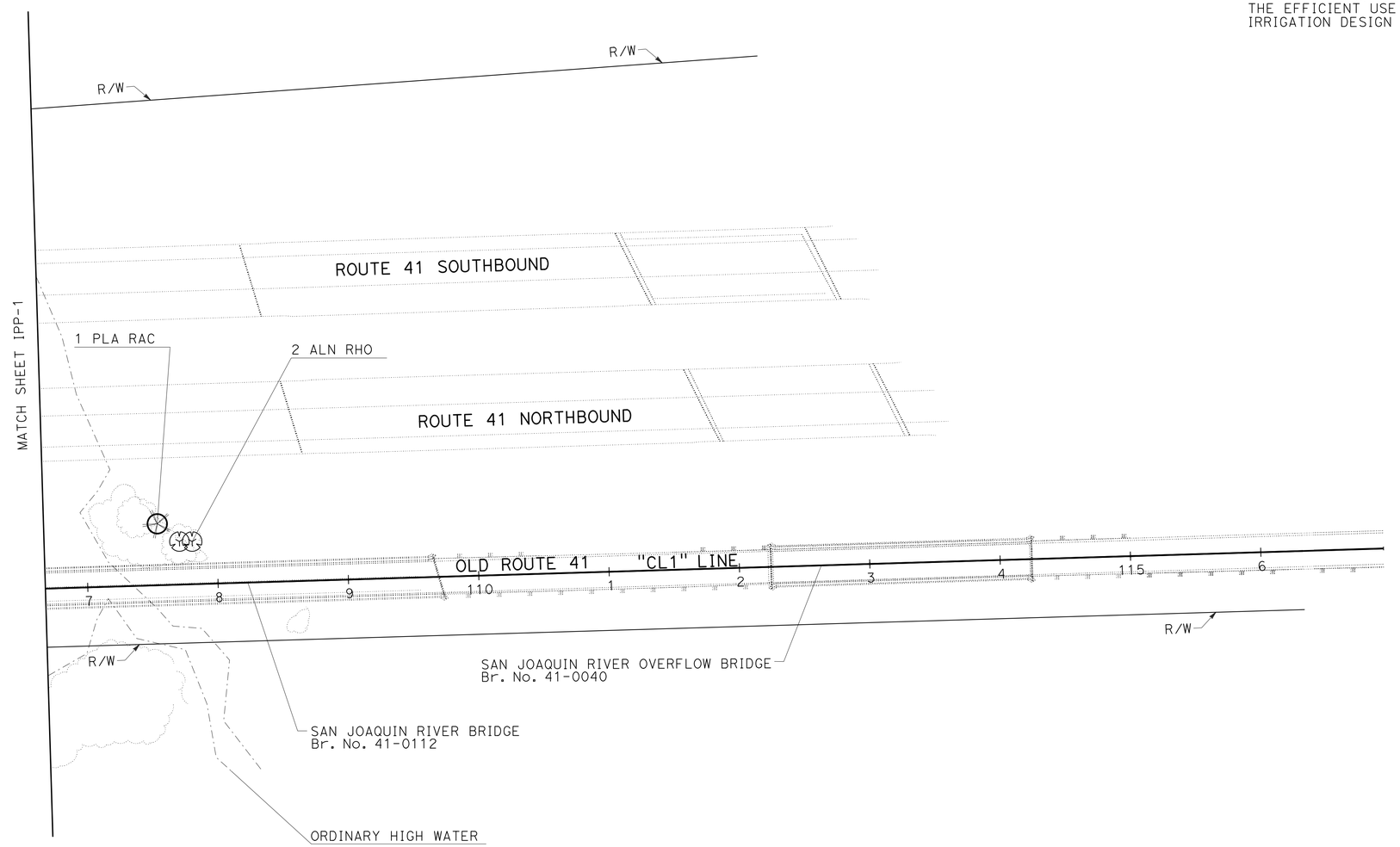

APPROVED FOR IRRIGATION AND PLANTING WORK ONLY

IRRIGATION AND PLANTING PLAN

SCALE: 1"=50'

IPP-2

REVISED BY	DATE REVISED

CALCULATED-DESIGNED BY	MICHAEL MILLS
CHECKED BY	CHARLES LaRUE
SENIOR LANDSCAPE ARCHITECT	BRAD COLE

STATE OF CALIFORNIA - DEPARTMENT OF TRANSPORTATION

Caltrans® LANDSCAPE ARCHITECTURE

LAST REVISION 02-22-16 | DATE PLOTTED => 17-MAY-2016 | TIME PLOTTED => 13:40

Dist	COUNTY	ROUTE	POST MILES TOTAL PROJECT	SHEET No.	TOTAL SHEETS
06	Fre, Mad	41U	33.1/33.4 0.0/0.3	18	113

LICENSED LANDSCAPE ARCHITECT

3-7-16

PLANS APPROVAL DATE

LICENSED LANDSCAPE ARCHITECT MICHAEL W. MILLS No. 4179 Expiration Date 11/30/16 Renewal Date 2/22/16 Date STATE OF CALIFORNIA

THE STATE OF CALIFORNIA OR ITS OFFICERS OR AGENTS SHALL NOT BE RESPONSIBLE FOR THE ACCURACY OR COMPLETENESS OF SCANNED COPIES OF THIS PLAN SHEET.

IRRIGATION QUANTITIES

	CONTROLLER LETTER	VALVE NUMBER	SHEET NUMBER	IRRIGATION CONTROLLER 12 STATION	16 STATION	24 STATION	TWO WIRE	CEC (N) SINGLE	CEC (N) DOUBLE	COPPER PIPE (SUPPLY LINE) 2"	3"	WM 2"	BPA 2"	BPA (N) ENCLOSURE	BPA (N) BLANKET	PRV 2"	RCV 1"	RCV 1½"	DVA 1"	DVA 1½"	FS 1½"	FS 2"	GV 1½"	GV 2"	BV 1"	BV 1½"	WSA 1"	WSA 1½"	CCA 1"	CCA 1½"	PLASTIC PIPE (SCHEDULE 40) (SUPPLY LINE) ¾"	1"	1½"	PLASTIC PIPE (CLASS 315) (SUPPLY LINE) 2"	3"	DRIP IRRIGATION TUBING ¾"	CV 1"	SPRINKLER ASSEMBLY RISER	POP-UP
				EA	EA	EA	EA	EA	EA	LF	LF	EA	EA	EA	EA	EA	EA	EA	EA	EA	EA	EA	EA	EA	EA	EA	EA	EA	EA	EA	LF	LF	LF	LF	LF	LF	EA	EA	EA
SUBTOTALS PER VALVE ON LATERAL SUPPLY SIDE OF CONTROL VALVE	A	1																																					
		2																																					
		3																													800	682					1	39	
		4																																					
		5																																					
		6																																					
		7																																					
		8																																					
		9																																					
		10																																					
		11																																					
		12																																					
SUBTOTALS PER SHEET ON MAIN SUPPLY SIDE OF CONTROL VALVE			IPP-1														1																	10					
TOTAL																	1														800	682		10			1	39	

IRRIGATION CONDUIT

SHEET No.	IRRIGATION CONDUIT No.	LOCATION LINE	LOCATION STATION	SIDE L†	SIDE R†	EXTENSION CONNECTION TYPE CB	EXTENSION CONNECTION TYPE OL	WATER SUPPLY LINE* SIZE (INCH)	WELDED STEEL PIPE 6 LENGTH (LF)
IPP-1	1	CL1	97+00	X				1	38

(N) - NOT A SEPARATE PAY ITEM, FOR INFORMATION ONLY

X - DENOTES REQUIREMENT

*QUANTITY INCLUDED IN IRRIGATION QUANTITIES

ABBREVIATIONS:

CB - COUPLING BAND

OL - OVERLAP

IRRIGATION QUANTITIES

IQ-1

STATE OF CALIFORNIA - DEPARTMENT OF TRANSPORTATION

Caltrans® LANDSCAPE ARCHITECTURE

SENIOR LANDSCAPE ARCHITECT BRAD COLE

CALCULATED-DESIGNED BY MICHAEL MILLS

CHECKED BY CHARLES LaRUE

REVISED BY

DATE REVISED

LAST REVISION 02-25-16

DATE PLOTTED => 17-MAY-2016

TIME PLOTTED => 13:40

Dist	COUNTY	ROUTE	POST MILES TOTAL PROJECT	SHEET No.	TOTAL SHEETS
06	Fre, Mad	41U	33.1/33.4 0.0/0.3	19	113

LICENSED LANDSCAPE ARCHITECT

3-7-16

PLANS APPROVAL DATE

LICENSED LANDSCAPE ARCHITECT MICHAEL W. MILLS No. 4179 Expiration 11/30/16 Renewal Date 2/22/16 Date STATE OF CALIFORNIA

THE STATE OF CALIFORNIA OR ITS OFFICERS OR AGENTS SHALL NOT BE RESPONSIBLE FOR THE ACCURACY OR COMPLETENESS OF SCANNED COPIES OF THIS PLAN SHEET.

PLANTING LEGEND

PLANT GROUP	PLANT No.	SYMBOL	BOTANICAL NAME	COMMON NAME	SIZE	QUANTITY EACH	HOLE SIZE (INCH) Dia	HOLE SIZE (INCH) DEPTH	BASIN TYPE	SOIL AMENDMENT (1) TYPE	SOIL AMENDMENT (1) RATE	IRON SULFATE (1) RATE	COMMERCIAL FERTILIZER (1) PLANTING	COMMERCIAL FERTILIZER (1) PLT ESTB	BASIN MULCH (1) TYPE	BASIN MULCH (1) CY	STAKING	PLANTING LIMITS MINIMUM DISTANCE (ft) FROM ETW	Pvmt	FENCE	WALL	PAVED DITCH	EARTH DITCH	ON CENTER (ft)	REMARKS
A	1		ALNUS RHOMBIFOLIA	WHITE ALDER	No. 1	24	13	3	II	V	0.25 CF	0.25 LB	1 Pkt	8 oz	SB	0.5	4	40	10	10	10	10	5	15	10 14
	2		PLATANUS RACEMOSA	CALIFORNIA SYCAMORE	No. 1	8	13	3	II	V	0.25 CF	0.25 LB	1 Pkt	8 oz	SB	0.5	4	40	10	10	10	10	5	25	10 14
	3		POPULUS FREMONTII	FREMONT COTTONWOOD	No. 1	12	13	3	II	V	0.25 CF	0.25 LB	1 Pkt	8 oz	SB	0.5	4	40	10	10	10	10	5	15	10 14
	4		QUERCUS LOBATA	VALLEY OAK	No. 1	8	13	3	II	V	0.25 CF	0.25 LB	1 Pkt	8 oz	SB	0.5	4	40	10	10	10	10	5	25	10 14

APPLICABLE WHEN CIRCLED:

1 - QUANTITIES SHOWN ARE "PER PLANT" UNLESS SHOWN AS SQFT OR SQYD APPLICATION RATES
2 - BASIN MULCH IS INCLUDED WITH MULCH QUANTITIES SHOWN ON PLANTING PLAN
3 - SUFFICIENT TO RECEIVE ROOT BALL AND AMENDMENTS IF REQUIRED
4 - SEE DETAIL
5 - SEE SPECIAL PROVISIONS
6 - SEE STANDARD SPECIFICATIONS
7 - AS SHOWN ON PLANS
8 - UNLESS OTHERWISE SHOWN ON PLANS
9 - FOLIAGE PROTECTOR REQUIRED
10 - ROOT PROTECTOR REQUIRED
11 - ROOT BARRIER REQUIRED
12 - DEPARTMENT-FURNISHED
13 - TWICE THE DIAMETER OF THE ROOTBALL
14 - 6" THICK BASIN MULCH

ABBREVIATIONS:

S - SPHAGNUM PEAT MOSS
N - NITROLIZED FIR BARK
V - VERMICULITE
P - PERLITE
TB - TREE BARK
WC - WOOD CHIP
SB - SHREDDED BARK
TT - TREE TRIMMING

NOTE:

UNDERLINED PORTIONS OF BOTANICAL NAME INDICATE ABBREVIATIONS USED ON PLANTING PLANS.

HIGHWAY PLANTING QUANTITIES

SHEET	PLANT (GROUP A)	SOIL AMENDMENT	IRON SULFATE	PACKET FERTILIZER	WOOD MULCH BASIN	ROOT PROTECTOR
	EA	CY	LB	EA	CY	EA
IPP-1	52	0.48	13.0	52	26.0	52

PLANT LIST AND HIGHWAY PLANTING QUANTITIES PL-1

REVISED BY | DATE REVISED
MICHAEL MILLS | CHARLES LaRUE
CALCULATED-DESIGNED BY | CHECKED BY
SENIOR LANDSCAPE ARCHITECT | BRAD COLE
STATE OF CALIFORNIA - DEPARTMENT OF TRANSPORTATION
Caltrans LANDSCAPE ARCHITECTURE

LAST REVISION 02-25-16 | DATE PLOTTED => 17-MAY-2016 TIME PLOTTED => 13:40

Dist	COUNTY	ROUTE	POST MILES TOTAL PROJECT	SHEET No.	TOTAL SHEETS
06	Fre, Mad	41U	33.1/33.4 0.0/0.3	20	113

LICENSED LANDSCAPE ARCHITECT

3-7-16

PLANS APPROVAL DATE

LICENSED LANDSCAPE ARCHITECT MICHAEL W. MILLS No. 4779 Registered 11/30/16 Renewal Date 2/22/16 Date STATE OF CALIFORNIA

THE STATE OF CALIFORNIA OR ITS OFFICERS OR AGENTS SHALL NOT BE RESPONSIBLE FOR THE ACCURACY OR COMPLETENESS OF SCANNED COPIES OF THIS PLAN SHEET.

EROSION CONTROL

SEQUENCE	ITEM	MATERIAL DESCRIPTION	MATERIAL TYPE	APPLICATION RATE	REMARKS
STEP 1	COMPOST	COMPOST	MEDIUM	130 CY/ACRE	
STEP 2	INCORPORATE MATERIALS	COMPOST			4" DEPTH
STEP 3	BONDED FIBER MATRIX	SEED	MIX	40 LB/ACRE	
		FIBER		2500 LB/ACRE FOR SLOPES ≤ 4:1 (Horiz:Vert) 3000 LB/ACRE FOR SLOPES > 4:1 and ≤ 3:1 (Horiz:Vert) 3500 LB/ACRE FOR SLOPES > 3:1 and ≤ 2:1 (Horiz:Vert) 4000 LB/ACRE FOR SLOPES > 2:1 and ≤ 1:1 (Horiz:Vert) 4500 LB/ACRE FOR SLOPES > 1:1 (Horiz:Vert)	APPLICATION RATE IS FOR FIBER AND TACKIFIER COMBINED
		TACKIFIER			
STEP 4	BONDED FIBER MATRIX	FIBER		500 LB/ACRE	
		TACKIFIER			

SEED MIX

BOTANICAL NAME (COMMON NAME)	PERCENT GERMINATION (MINIMUM)	POUNDS PURE LIVE SEED PER ACRE (SLOPE MEASUREMENT)
BROMUS CARINATUS (CALIFORNIA BROME)	80	7.2
ELYMUS GLAUCUS (BLUE WILDRYE)	85	6.5
HORDEUM BRACHYANTHERUM (BARLEY)	80	10.0
KOELERIA MACRANTHA (JUNEGRASS)	80	0.2
MELICA IMPERFECTA (MELIC)	60	0.6
NASSELLA PULCHRA (PURPLE NEEDLEGRASS)	80	7.8
VULPIA MICROSTACHYS (SMALL FESCUE)	80	5.8
VULPIA OCTOFLORA (SIX WEEKS FESCUE)	60	1.9

EROSION CONTROL QUANTITIES

SHEET	LOCATION STATION	L†	R†	COMPOST SQFT	INCORPORATE MATERIALS SQFT	BONDED FIBER MATRIX* SQFT	REMARKS
EC-1	OLD SR 41 102+20.00 TO 105+60.00	X		5,300	5,300	5,300	ACCESS ROADS SOUTH SIDE OF SAN JOAQUIN RIVER BRIDGE
EC-2	OLD SR 41 108+00.00 TO 112+00.00	X		5,400	5,400	5,400	ACCESS ROADS NORTH SIDE OF SAN JOAQUIN RIVER BRIDGE
TOTAL				10,700	10,700	10,700	

* INCLUDES STEPS 3 AND 4

EROSION CONTROL LEGEND AND QUANTITIES

ECL-1

REVISED BY | DATE REVISED

MICHAEL MILLS | CHARLES LaRUE

CALCULATED-DESIGNED BY | CHECKED BY

SENIOR LANDSCAPE ARCHITECT | BRAD COLE

STATE OF CALIFORNIA - DEPARTMENT OF TRANSPORTATION

Caltrans® LANDSCAPE ARCHITECTURE

LAST REVISION 02-22-16 | DATE PLOTTED => 17-MAY-2016 | TIME PLOTTED => 13:40

Dist	COUNTY	ROUTE	POST MILES TOTAL PROJECT	SHEET No.	TOTAL SHEETS
06	Fre, Mad	41U	33.1/33.4 0.0/0.3	21	113

LICENSED LANDSCAPE ARCHITECT

3-7-16

PLANS APPROVAL DATE

LICENSED LANDSCAPE ARCHITECT
MICHAEL W. MILLS No. 4179
Signature
11/30/16
Renewal Date
2/22/16
Date
STATE OF CALIFORNIA

THE STATE OF CALIFORNIA OR ITS OFFICERS OR AGENTS SHALL NOT BE RESPONSIBLE FOR THE ACCURACY OR COMPLETENESS OF SCANNED COPIES OF THIS PLAN SHEET.

NOTE:

FOR ACCURATE RIGHT OF WAY DATA, CONTACT RIGHT OF WAY ENGINEERING AT THE DISTRICT OFFICE.

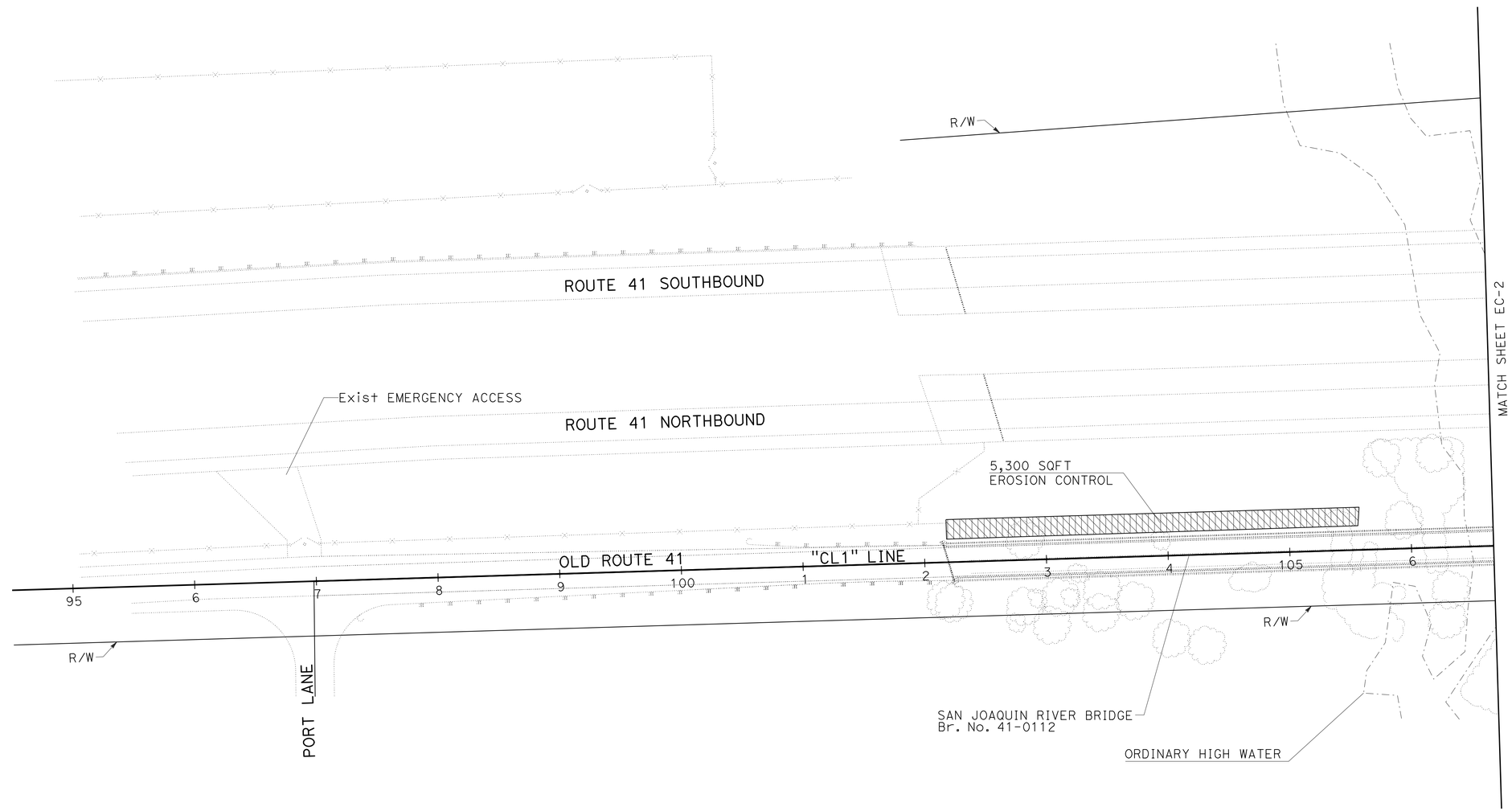

APPROVED FOR EROSION CONTROL WORK ONLY

EROSION CONTROL PLAN

SCALE: 1"=50'

EC-1

REVISED BY	DATE REVISED

MICHAEL MILLS	CALCULATED-DESIGNED BY
CHARLES LaRUE	CHECKED BY
BRAD COLE	SENIOR LANDSCAPE ARCHITECT

STATE OF CALIFORNIA - DEPARTMENT OF TRANSPORTATION
Caltrans® LANDSCAPE ARCHITECTURE

LAST REVISION 02-22-16
DATE PLOTTED => 17-MAY-2016
TIME PLOTTED => 13:40

Dist	COUNTY	ROUTE	POST MILES TOTAL PROJECT	SHEET No.	TOTAL SHEETS
06	Fre, Mad	41U	33.1/33.4 0.0/0.3	22	113

LICENSED LANDSCAPE ARCHITECT

3-7-16

PLANS APPROVAL DATE

LICENSED LANDSCAPE ARCHITECT MICHAEL W. MILLS No. 4179 Expiration 11/30/16 Renewal Date 2/22/16 Date STATE OF CALIFORNIA

THE STATE OF CALIFORNIA OR ITS OFFICERS OR AGENTS SHALL NOT BE RESPONSIBLE FOR THE ACCURACY OR COMPLETENESS OF SCANNED COPIES OF THIS PLAN SHEET.

NOTE:

FOR ACCURATE RIGHT OF WAY DATA, CONTACT RIGHT OF WAY ENGINEERING AT THE DISTRICT OFFICE.

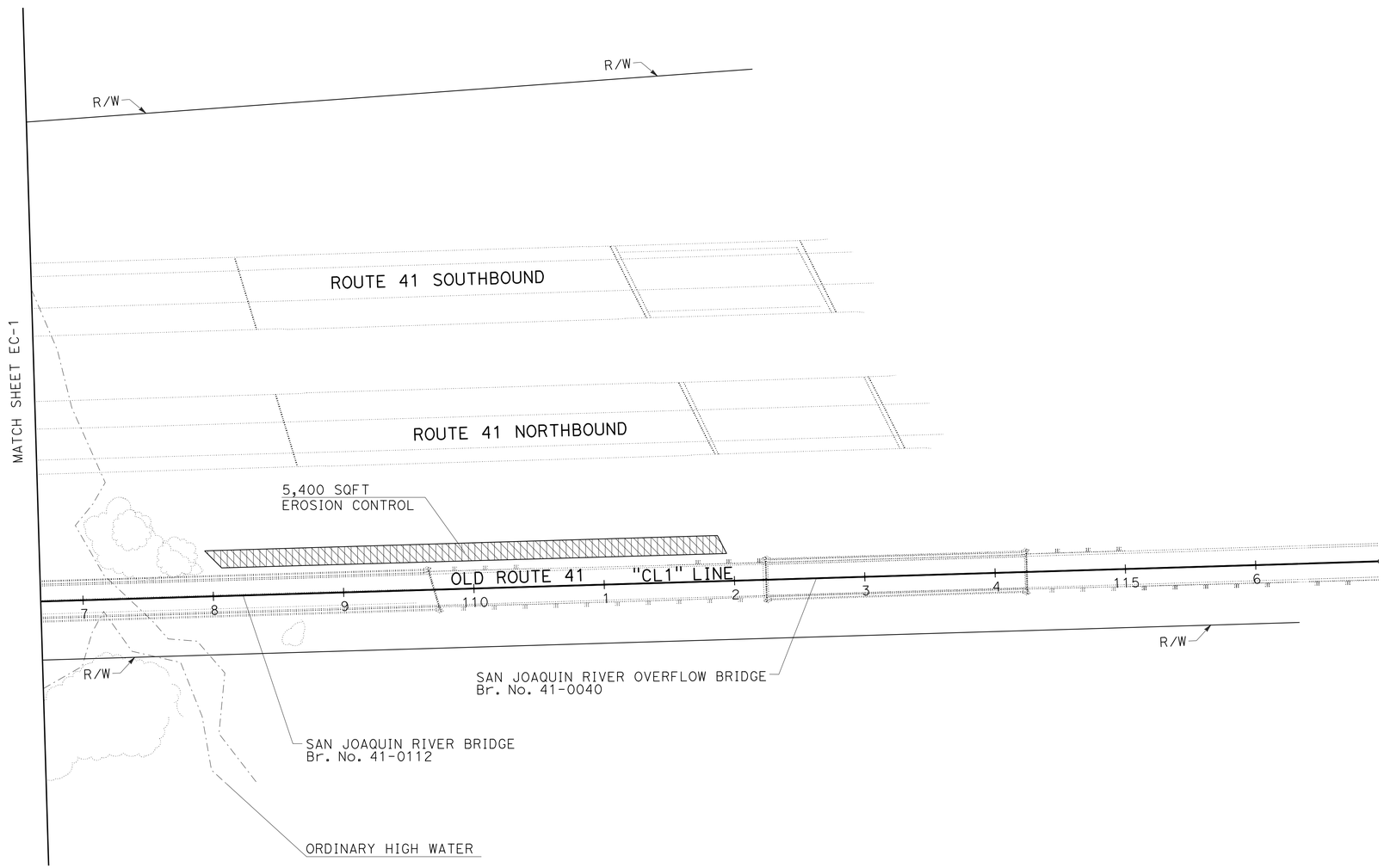

APPROVED FOR EROSION CONTROL WORK ONLY

EROSION CONTROL PLAN

SCALE: 1"=50'

EC-2

REVISED BY | DATE REVISED

MICHAEL MILLS | CHARLES LaRUE

CALCULATED-DESIGNED BY | CHECKED BY

SENIOR LANDSCAPE ARCHITECT

BRAD COLE

STATE OF CALIFORNIA - DEPARTMENT OF TRANSPORTATION

Caltrans® LANDSCAPE ARCHITECTURE

LAST REVISION 02-22-16 | DATE PLOTTED => 17-MAY-2016 | TIME PLOTTED => 13:40

REGISTERED ELECTRICAL ENGINEER 01-18-16 DATE

3-7-16
PLANS APPROVAL DATE

REGISTERED PROFESSIONAL ENGINEER PAUL MATOS No. 18757 Exp. 6/30/17 ELECTRICAL STATE OF CALIFORNIA

THE STATE OF CALIFORNIA OR ITS OFFICERS OR AGENTS SHALL NOT BE RESPONSIBLE FOR THE ACCURACY OR COMPLETENESS OF SCANNED COPIES OF THIS PLAN SHEET.

LEGEND:

1. ADVANCE FLASHING BEACON WITH W3-3 SIGN AND SIGN LIGHTING MOUNTED ON A WOOD POLE, SEE DETAIL A ON SHEET E-7.
2. WOOD POLE, SEE DETAIL B ON SHEET E-7.
3. WOOD POLE, SEE DETAIL H ON SHEET E-9.
4. WOOD POLE, SEE DETAIL C ON SHEET E-7.
5. WOOD POLE SEE DETAIL D ON SHEET E-8.
6. WOOD POLE, SEE DETAIL G ON SHEET E-9.
7. INSTALL DEPARTMENT-FURNISHED MODEL 2070E CONTROLLER ASSEMBLY ON TEMPORARY FOUNDATION PLATFORM, SEE DETAIL I ON SHEET E-9.
8. WOOD POLE, SEE DETAIL E ON SHEET E-8.
9. 120 V, 1Ø, 2-WIRE, TYPE F SERVICE, USED AS SUB-PANEL, ON WOOD POLE WITH THE FOLLOWING CIRCUIT BREAKERS:

AMPERES	VOLTS	POLES	NAMEPLATE	METER	PHOTOELECTRIC CONTROL TYPE
60	120	1	MAIN BREAKER	NO	——
40	120	1	TRAFFIC SIGNAL	NO	——
15	120	1	FLASHING BEACON (NORTH)	NO	——
15	120	1	FLASHING BEACON (SOUTH)	NO	——
20	120	1	HIGHWAY LIGHTING	NO	IV

10. LOOP DETECTORS MUST HAVE 5 TURNS.
11. FOR SIGN DETAIL REFER TO TRAFFIC HANDLING PLANS.
12. Exist 120/240 V, 1Ø, 3-WIRE, TYPE III-AF SERVICE EQUIPMENT ENCLOSURE WITH THE FOLLOWING CIRCUIT BREAKERS:

AMPERES	VOLTS	POLES	NAMEPLATE	METER	PHOTOELECTRIC CONTROL TYPE
100	240	3	MAIN BREAKER	1P-YES 2P-NO	——
70	120	1	CCTV	YES	——
20	120	1	TDC	YES	——
70	120	1	TMS	YES	——
40	240	2	HIGHWAY LIGHTING	NO	FUTURE
*70	120	1	SUB-PANEL	YES	——

*ADD CB AND NAMEPLATE

13. SEE DETAIL F ON SHEET E-8 FOR LOOP DETECTOR SPACING.
14. GENERATOR WITH TEMPORARY CHAIN LINK FENCE (TYPE CL-6) AND 4′ CHAIN LINK GATE (TYPE CL-6) AS SHOWN IN DETAIL J ON SHEET E-9.

NOTES:

1. LOWEST SAG POINT OF MESSENGER WIRE MUST BE 25′ MINIMUM CLEARANCE FROM FINISHED GRADE OR ROADWAY.
2. ALL PULL BOXES MUST BE No. 3½ UNLESS OTHERWISE SPECIFIED.
3. OVERHEAD ENTRANCE CONDUIT FITTING MUST HAVE A DRIP LOOP.

INDEX TO ELECTRICAL PLANS

PLAN No.	TITLE
E-1	INDEX, LEGEND, SYMBOLS, NOTES AND ABBREVIATIONS
E-2 TO E-6	TEMPORARY SIGNAL SYSTEM
E-7 TO E-9	ELECTRICAL DETAILS
E-10	ELECTRICAL QUANTITIES

ABBREVIATIONS:

ATS AUTOMATIC TRANSFER SWITCH

SYMBOLS:

Y
Y — WOOD POLE WITH ADVANCE FLASHING BEACONS

GEN — GENERATOR

WOOD POLES WITH LUMINARE MAST ARM AND SIGNAL HEADS ON SPAN WIRE

WOOD POLE WITH 165 W LED LUMINAIRE (ON MASTARM), SIGNAL HEAD, R10-6 SIGN AND CONDUIT RISER

OH — OVERHEAD ⅜", MESSENGER WIRE WITH CONDUCTORS AS NOTED ON PLANS

TEMPORARY CHAIN LINK FENCE (TYPE CL-6) AND 4′ CHAIN LINK GATE (TYPE CL-6)

F — FUEL LINE

FUEL — FUEL TANK

INDEX, LEGEND, SYMBOLS, NOTES AND ABBREVIATIONS

E-1

NO SCALE

STATE OF CALIFORNIA - DEPARTMENT OF TRANSPORTATION
Caltrans ELECTRICAL DESIGN

FUNCTIONAL SUPERVISOR: ALI BAKHDOUD
CALCULATED-DESIGNED BY: GURVINDERJIT S. BAINS
CHECKED BY: PAUL MATOS
REVISED BY: GSB
DATE REVISED: 01-27-16

LAST REVISION 01-27-16 | DATE PLOTTED => 17-MAY-2016 | TIME PLOTTED => 13:41

Dist	COUNTY	ROUTE	POST MILES TOTAL PROJECT	SHEET No.	TOTAL SHEETS
06	Fre,Mad	41U	33.3/33.4 0.0/0.2	24	113

REGISTERED ELECTRICAL ENGINEER 01-18-16 DATE

3-7-16
PLANS APPROVAL DATE

REGISTERED PROFESSIONAL ENGINEER
PAUL MATOS
No. 18757
Exp. 6/30/17
ELECTRICAL
STATE OF CALIFORNIA

THE STATE OF CALIFORNIA OR ITS OFFICERS OR AGENTS SHALL NOT BE RESPONSIBLE FOR THE ACCURACY OR COMPLETENESS OF SCANNED COPIES OF THIS PLAN SHEET.

NOTE:

FOR ACCURATE RIGHT OF WAY DATA, CONTACT RIGHT OF WAY ENGINEERING AT THE DISTRICT OFFICE.

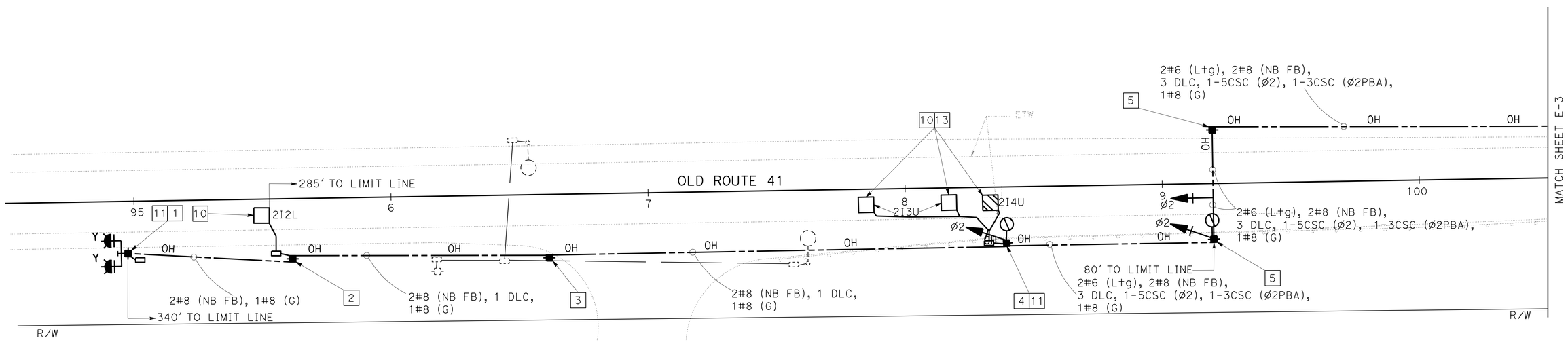

PHASE DIAGRAM
STEADY DEMAND SEQUENCE

TEMPORARY SIGNAL SYSTEM
E-2

APPROVED FOR ELECTRICAL WORK ONLY

SCALE: 1"=20'

STATE OF CALIFORNIA - DEPARTMENT OF TRANSPORTATION
Caltrans®
ELECTRICAL DESIGN

FUNCTIONAL SUPERVISOR: ALI BAKHDOUD
CALCULATED-DESIGNED BY: GURVINDERJIT S. BAINS
CHECKED BY: PAUL MATOS
REVISED BY: GSB
DATE REVISED: 01-27-16

LAST REVISION 01-27-16
DATE PLOTTED => 17-MAY-2016
TIME PLOTTED => 13:41

Dist	COUNTY	ROUTE	POST MILES TOTAL PROJECT	SHEET No.	TOTAL SHEETS
06	Fre,Mad	41U	33.3/33.4 0.0/0.2	25	113

REGISTERED ELECTRICAL ENGINEER 01-18-16 DATE

3-7-16
PLANS APPROVAL DATE

REGISTERED PROFESSIONAL ENGINEER
PAUL MATOS
No. 18757
Exp. 6/30/17
ELECTRICAL
STATE OF CALIFORNIA

THE STATE OF CALIFORNIA OR ITS OFFICERS OR AGENTS SHALL NOT BE RESPONSIBLE FOR THE ACCURACY OR COMPLETENESS OF SCANNED COPIES OF THIS PLAN SHEET.

NOTE:
FOR ACCURATE RIGHT OF WAY DATA, CONTACT RIGHT OF WAY ENGINEERING AT THE DISTRICT OFFICE.

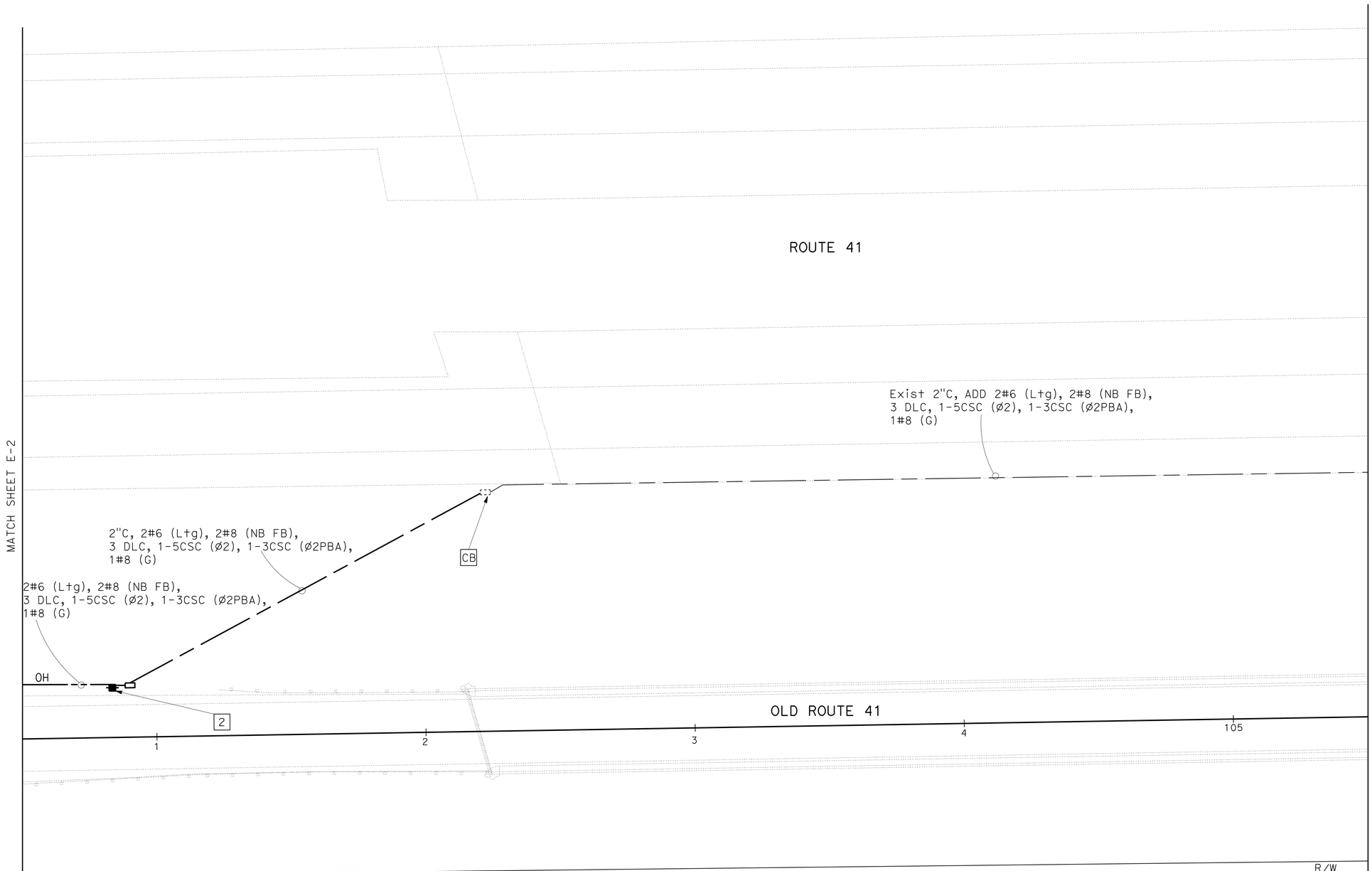

TEMPORARY SIGNAL SYSTEM
E-3

APPROVED FOR ELECTRICAL WORK ONLY

SCALE: 1"=20'

STATE OF CALIFORNIA - DEPARTMENT OF TRANSPORTATION
Caltrans® **ELECTRICAL DESIGN**

FUNCTIONAL SUPERVISOR: ALI BAKHDOUD
CALCULATED-DESIGNED BY: GURVINDERJIT S. BAINS
CHECKED BY: PAUL MATOS
REVISED BY: GSB
DATE REVISED: 01-27-16

LAST REVISION 01-27-16
DATE PLOTTED => 17-MAY-2016
TIME PLOTTED => 13:41

Dist	COUNTY	ROUTE	POST MILES TOTAL PROJECT	SHEET No.	TOTAL SHEETS
06	Fre,Mad	41U	33.3/33.4 0.0/0.2	26	113

Paul Matos 01-18-16
REGISTERED ELECTRICAL ENGINEER DATE

3-7-16
PLANS APPROVAL DATE

REGISTERED PROFESSIONAL ENGINEER
PAUL MATOS
No. 18757
Exp. 6/30/17
ELECTRICAL
STATE OF CALIFORNIA

THE STATE OF CALIFORNIA OR ITS OFFICERS OR AGENTS SHALL NOT BE RESPONSIBLE FOR THE ACCURACY OR COMPLETENESS OF SCANNED COPIES OF THIS PLAN SHEET.

NOTE:

FOR ACCURATE RIGHT OF WAY DATA, CONTACT RIGHT OF WAY ENGINEERING AT THE DISTRICT OFFICE.

APPROVED FOR ELECTRICAL WORK ONLY

TEMPORARY SIGNAL SYSTEM

SCALE: 1"=20'

E-4

STATE OF CALIFORNIA - DEPARTMENT OF TRANSPORTATION
Caltrans® **ELECTRICAL DESIGN**

FUNCTIONAL SUPERVISOR: ALI BAKHDOUD
CALCULATED-DESIGNED BY: GURVINDERJIT S. BAINS
CHECKED BY: PAUL MATOS
REVISED BY: GSB
DATE REVISED: 01-27-16

LAST REVISION 01-27-16
DATE PLOTTED => 17-MAY-2016
TIME PLOTTED => 13:41

Dist	COUNTY	ROUTE	POST MILES TOTAL PROJECT	SHEET No.	TOTAL SHEETS
06	Fre,Mad	41U	33.3/33.4 0.0/0.2	27	113

Paul Matos 01-18-16
REGISTERED ELECTRICAL ENGINEER DATE

3-7-16
PLANS APPROVAL DATE

REGISTERED PROFESSIONAL ENGINEER
PAUL MATOS
No. 18757
Exp. 6/30/17
ELECTRICAL
STATE OF CALIFORNIA

THE STATE OF CALIFORNIA OR ITS OFFICERS OR AGENTS SHALL NOT BE RESPONSIBLE FOR THE ACCURACY OR COMPLETENESS OF SCANNED COPIES OF THIS PLAN SHEET.

NOTE:

FOR ACCURATE RIGHT OF WAY DATA, CONTACT RIGHT OF WAY ENGINEERING AT THE DISTRICT OFFICE.

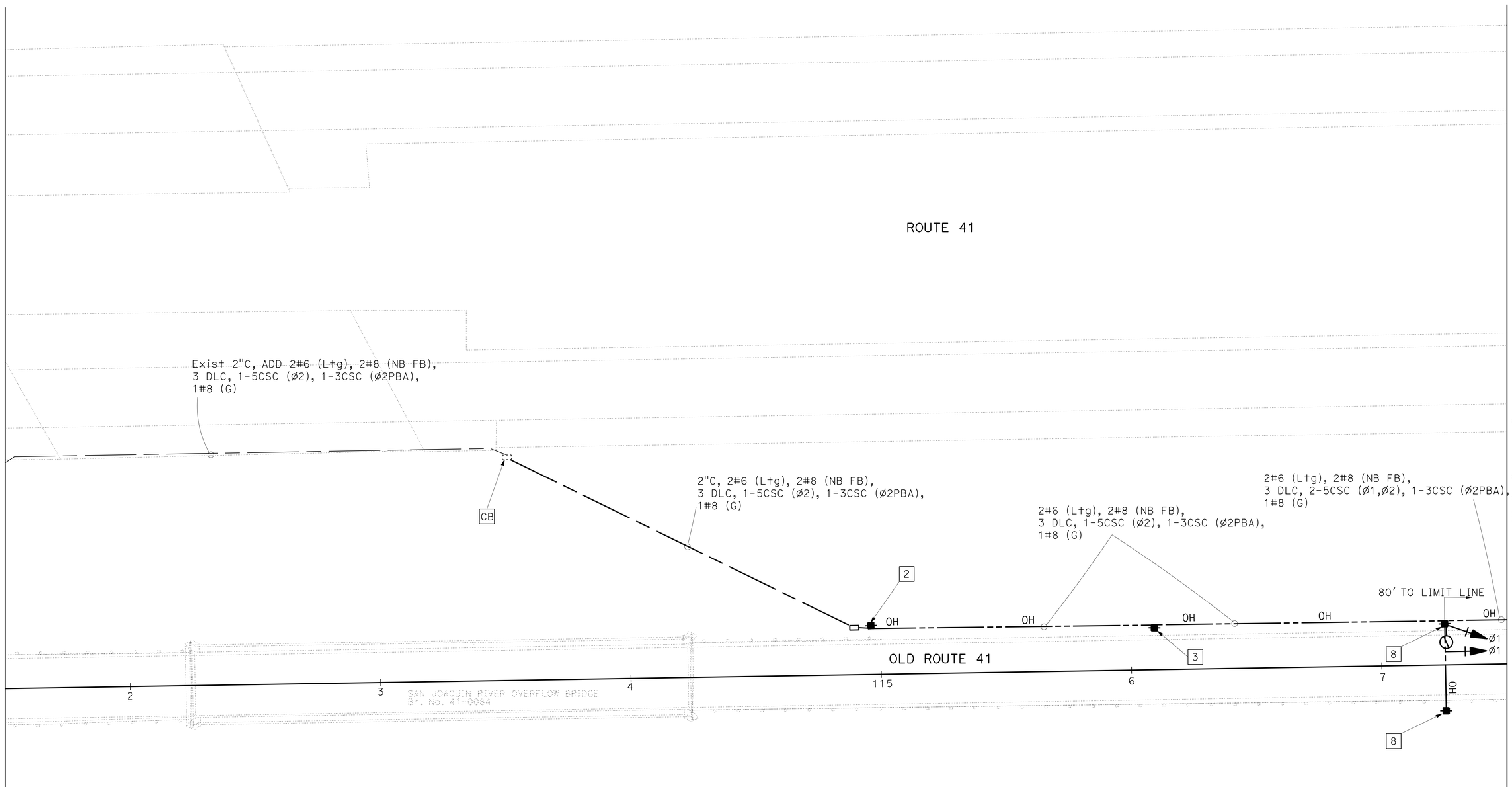

APPROVED FOR ELECTRICAL WORK ONLY

TEMPORARY SIGNAL SYSTEM

SCALE: 1"=20'

E-5

STATE OF CALIFORNIA - DEPARTMENT OF TRANSPORTATION
Caltrans® **ELECTRICAL DESIGN**

FUNCTIONAL SUPERVISOR: ALI BAKHDOUD
CALCULATED-DESIGNED BY: GURVINDERJIT S. BAINS
CHECKED BY: PAUL MATOS
REVISED BY: GSB
DATE REVISED: 01-27-16

LAST REVISION 01-27-16
DATE PLOTTED => 17-MAY-2016
TIME PLOTTED => 13:41

Dist	COUNTY	ROUTE	POST MILES TOTAL PROJECT	SHEET No.	TOTAL SHEETS
06	Fre,Mad	41U	33.3/33.4 0.0/0.2	28	113

REGISTERED ELECTRICAL ENGINEER 01-18-16 DATE

3-7-16
PLANS APPROVAL DATE

REGISTERED PROFESSIONAL ENGINEER PAUL MATOS No. 18757 Exp. 6/30/17 ELECTRICAL STATE OF CALIFORNIA

THE STATE OF CALIFORNIA OR ITS OFFICERS OR AGENTS SHALL NOT BE RESPONSIBLE FOR THE ACCURACY OR COMPLETENESS OF SCANNED COPIES OF THIS PLAN SHEET.

NOTE:

FOR ACCURATE RIGHT OF WAY DATA, CONTACT RIGHT OF WAY ENGINEERING AT THE DISTRICT OFFICE.

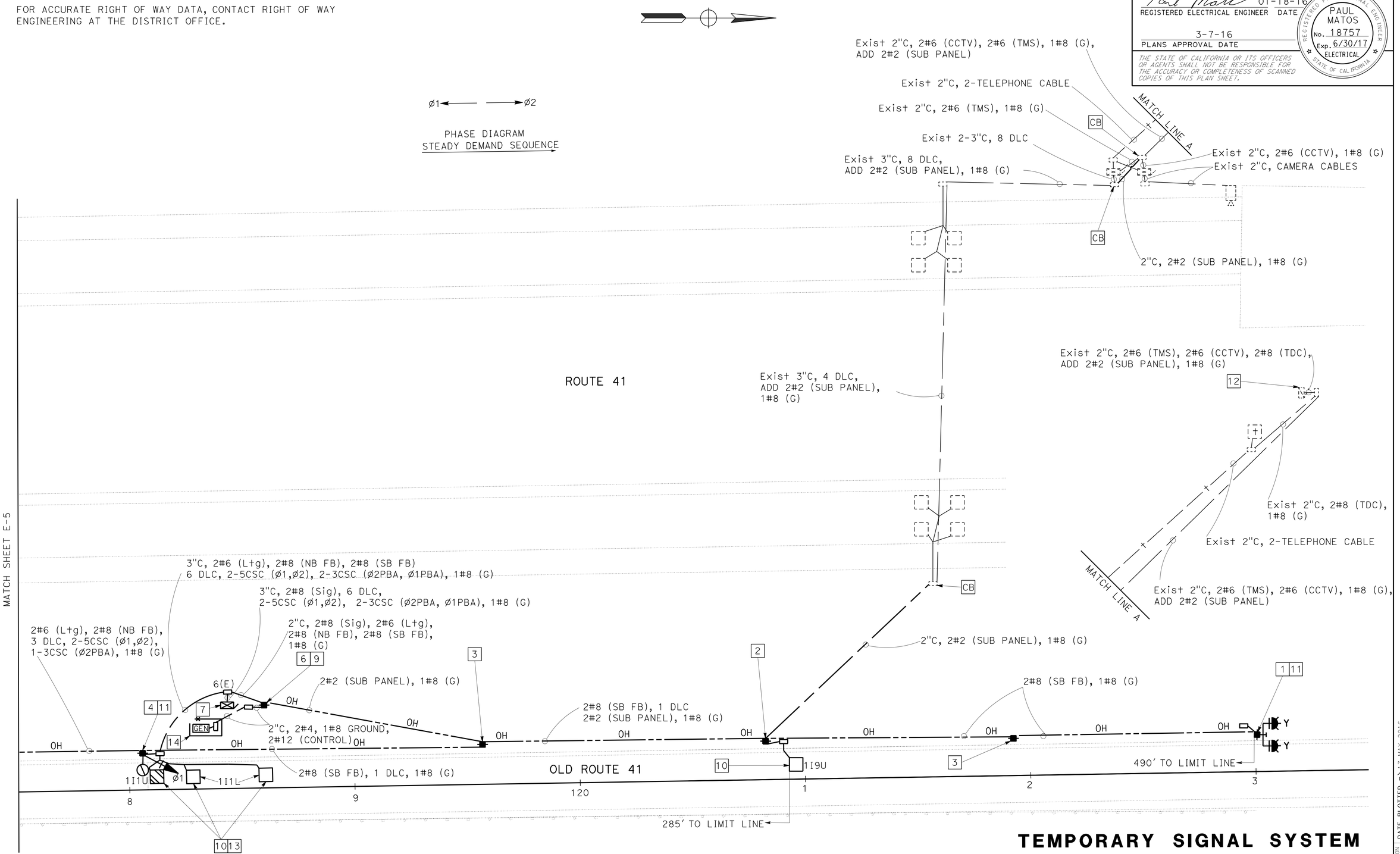

TEMPORARY SIGNAL SYSTEM
E-6

APPROVED FOR ELECTRICAL WORK ONLY

SCALE: 1"=20'

STATE OF CALIFORNIA - DEPARTMENT OF TRANSPORTATION
Caltrans® **ELECTRICAL DESIGN**

FUNCTIONAL SUPERVISOR: ALI BAKHDOUD
CALCULATED-DESIGNED BY: GURVINDERJIT S. BAINS
CHECKED BY: PAUL MATOS
REVISED BY: GSB
DATE REVISED: 01-27-16

LAST REVISION 01-27-16
DATE PLOTTED => 17-MAY-2016
TIME PLOTTED => 13:41

Dist	COUNTY	ROUTE	POST MILES TOTAL PROJECT	SHEET No.	TOTAL SHEETS
06	Fre,Mad	41U	33.3/33.4 0.0/0.2	29	113

REGISTERED ELECTRICAL ENGINEER 01-18-16 DATE

3-7-16
PLANS APPROVAL DATE

REGISTERED PROFESSIONAL ENGINEER PAUL MATOS No. 18757 Exp. 6/30/17 ELECTRICAL STATE OF CALIFORNIA

THE STATE OF CALIFORNIA OR ITS OFFICERS OR AGENTS SHALL NOT BE RESPONSIBLE FOR THE ACCURACY OR COMPLETENESS OF SCANNED COPIES OF THIS PLAN SHEET.

NOTE:

FOR TEMPORARY WOOD POLE DETAILS, SEE "TEMPORARY WOOD POLES" SHEETS.

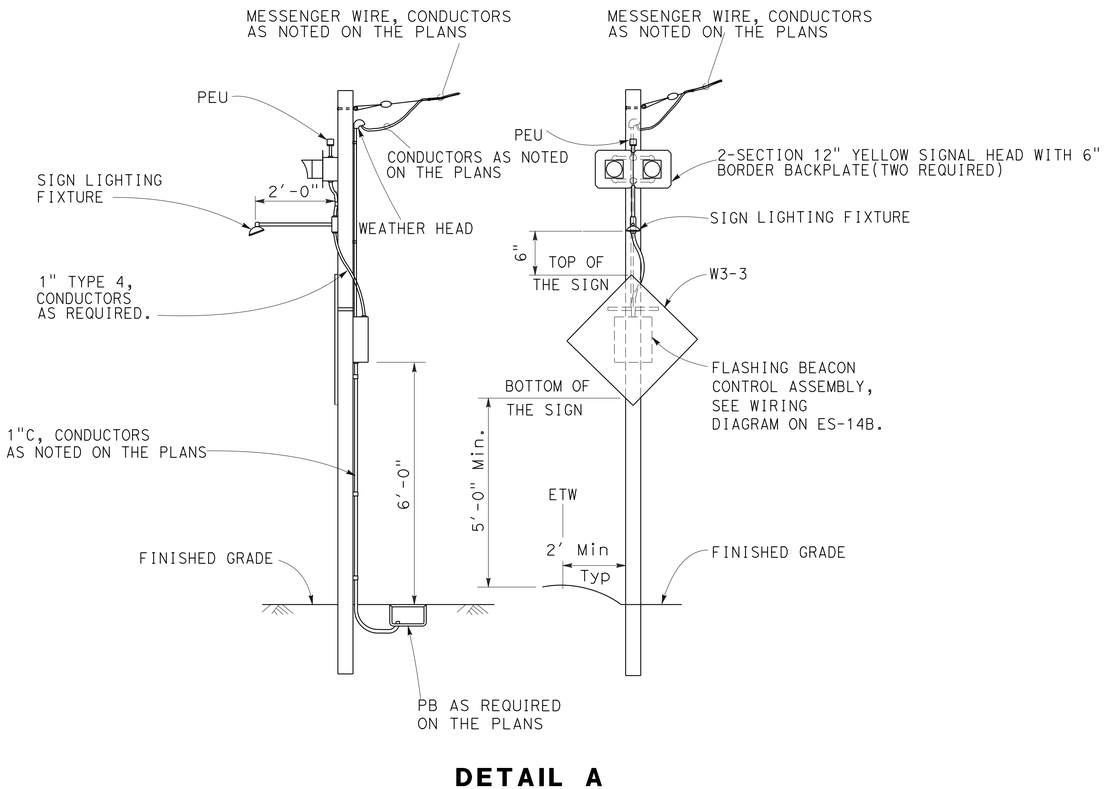

DETAIL A

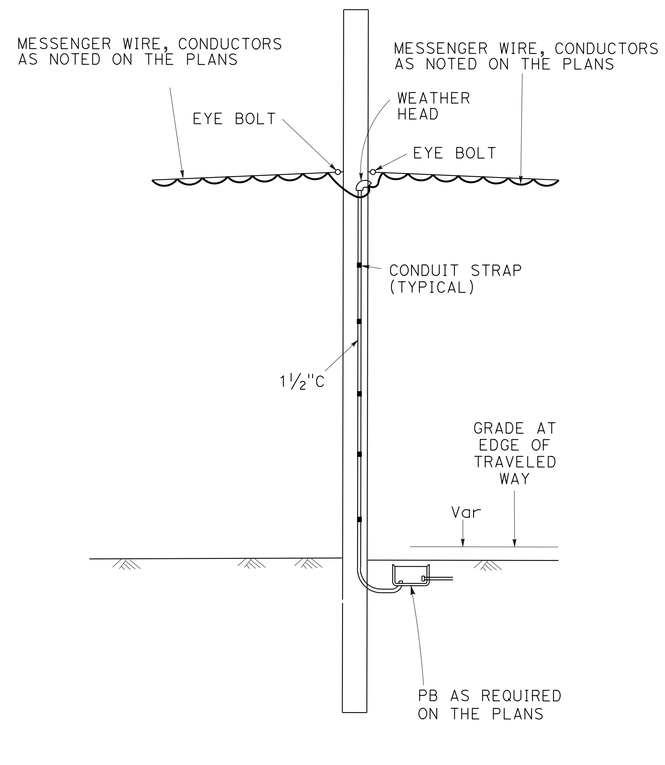

DETAIL B

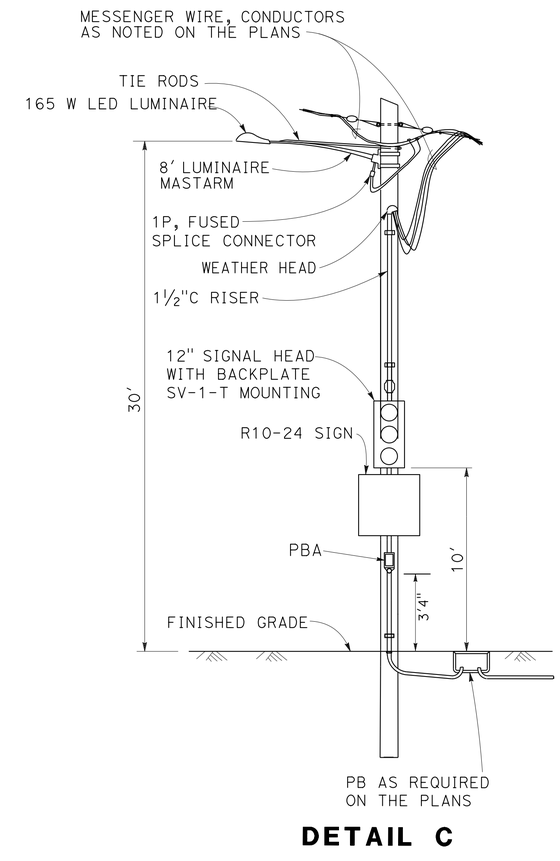

DETAIL C

ELECTRICAL DETAILS
E-7

NO SCALE

STATE OF CALIFORNIA - DEPARTMENT OF TRANSPORTATION
Caltrans® ELECTRICAL DESIGN

FUNCTIONAL SUPERVISOR: ALI BAKHDOUD
CALCULATED-DESIGNED BY: GURVINDERJIT S. BAINS
CHECKED BY: PAUL MATOS
REVISED BY: GSB
DATE REVISED: 01-27-16

LAST REVISION 01-27-16
DATE PLOTTED => 17-MAY-2016
TIME PLOTTED => 13:41

Dist	COUNTY	ROUTE	POST MILES TOTAL PROJECT	SHEET No.	TOTAL SHEETS
06	Fre,Mad	41U	33.3/33.4 0.0/0.2	30	113

REGISTERED ELECTRICAL ENGINEER 01-18-16 DATE

3-7-16
PLANS APPROVAL DATE

REGISTERED PROFESSIONAL ENGINEER PAUL MATOS No. 18757 Exp. 6/30/17 ELECTRICAL STATE OF CALIFORNIA

THE STATE OF CALIFORNIA OR ITS OFFICERS OR AGENTS SHALL NOT BE RESPONSIBLE FOR THE ACCURACY OR COMPLETENESS OF SCANNED COPIES OF THIS PLAN SHEET.

NOTE:

FOR TEMPORARY WOOD POLE DETAILS, SEE "TEMPORARY WOOD POLES" SHEETS.

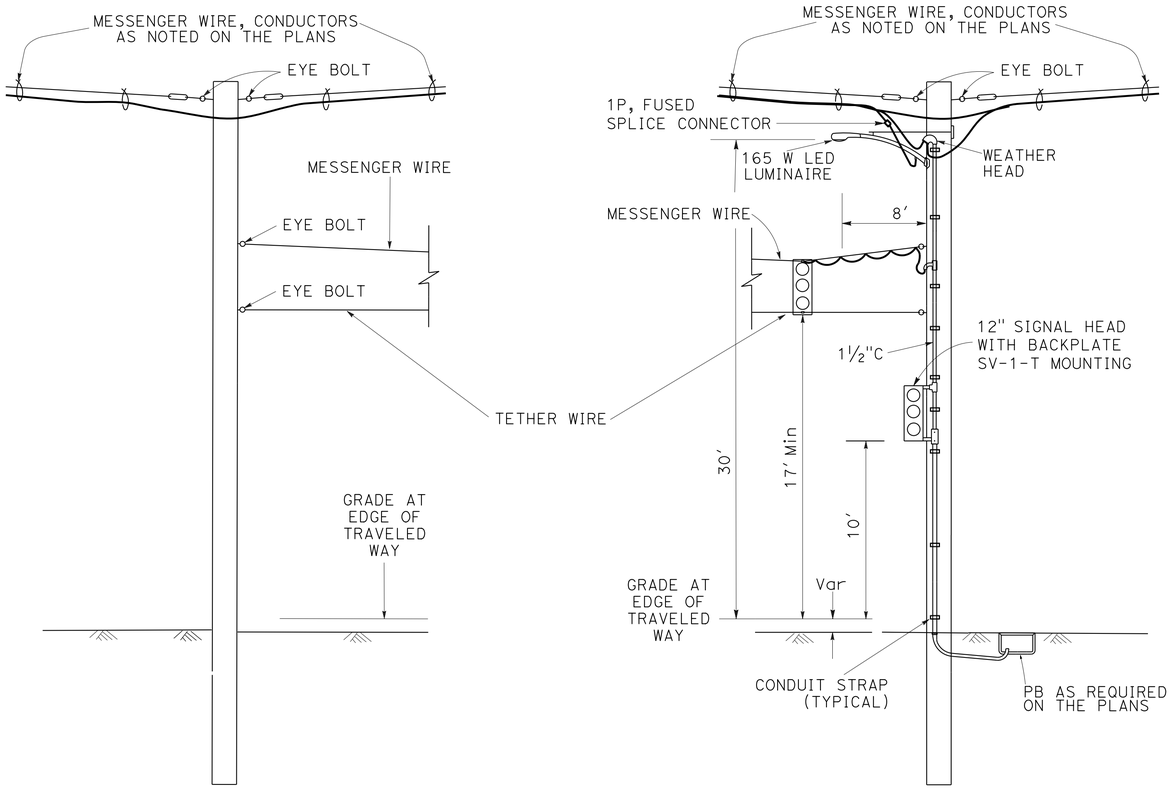

DETAIL D

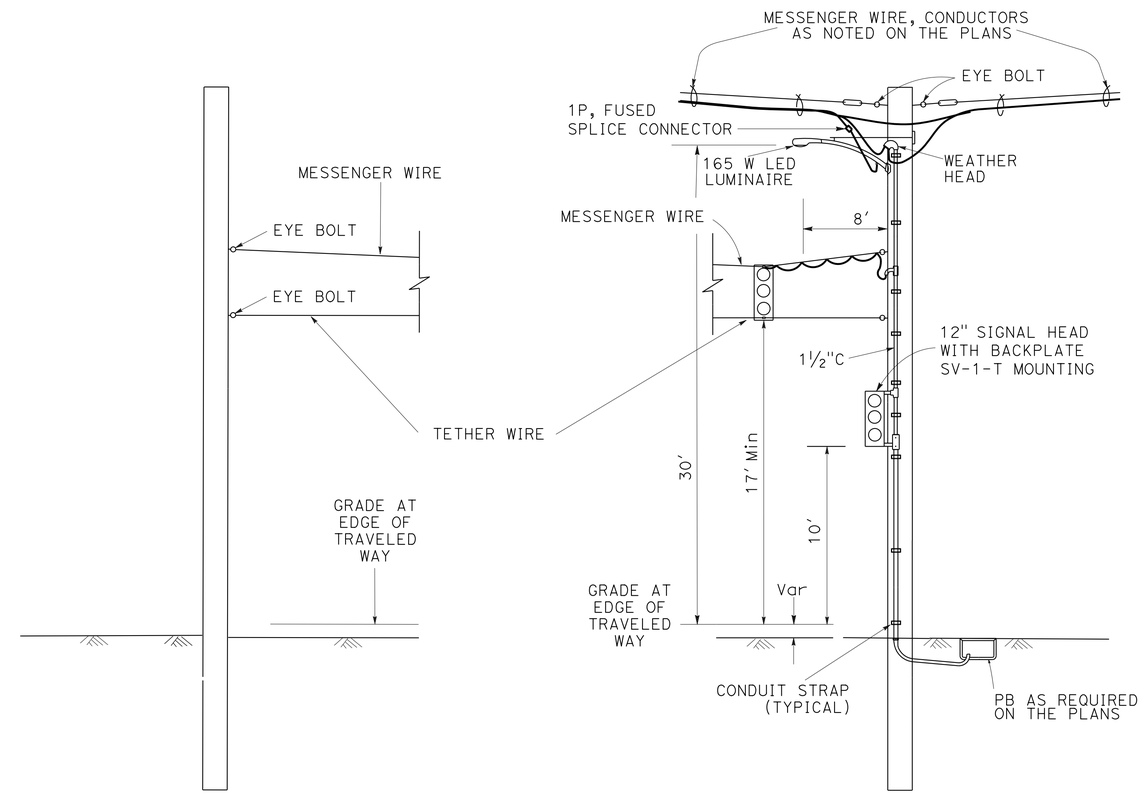

DETAIL E

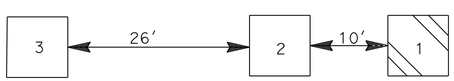

DETAIL F

ELECTRICAL DETAILS E-8

NO SCALE

STATE OF CALIFORNIA - DEPARTMENT OF TRANSPORTATION
Caltrans® ELECTRICAL DESIGN

FUNCTIONAL SUPERVISOR: ALI BAKHDOUD
CALCULATED-DESIGNED BY: GURVINDERJIT S. BAINS
CHECKED BY: PAUL MATOS
REVISED BY: GSB
DATE REVISED: 01-27-16

LAST REVISION 01-27-16 | DATE PLOTTED => 17-MAY-2016 | TIME PLOTTED => 13:41

Dist	COUNTY	ROUTE	POST MILES TOTAL PROJECT	SHEET No.	TOTAL SHEETS
06	Fre,Mad	41U	33.3/33.4 0.0/0.2	31	113

REGISTERED ELECTRICAL ENGINEER 01-18-16 DATE

3-7-16
PLANS APPROVAL DATE

REGISTERED PROFESSIONAL ENGINEER PAUL MATOS No. 18757 Exp. 6/30/17 ELECTRICAL STATE OF CALIFORNIA

THE STATE OF CALIFORNIA OR ITS OFFICERS OR AGENTS SHALL NOT BE RESPONSIBLE FOR THE ACCURACY OR COMPLETENESS OF SCANNED COPIES OF THIS PLAN SHEET.

NOTE:

FOR TEMPORARY WOOD POLE DETAILS, SEE "TEMPORARY WOOD POLES" SHEETS.

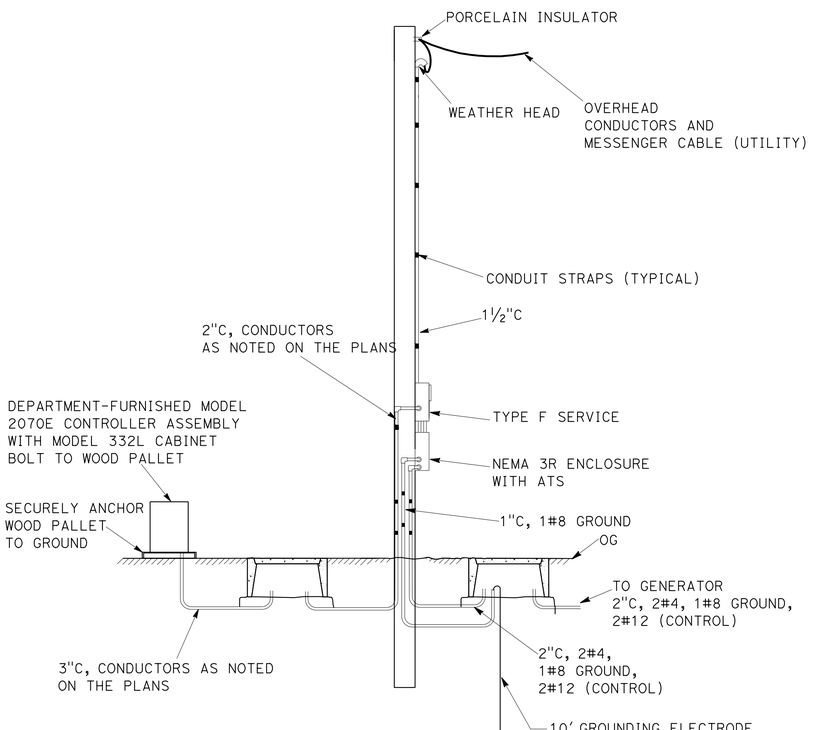

DETAIL G

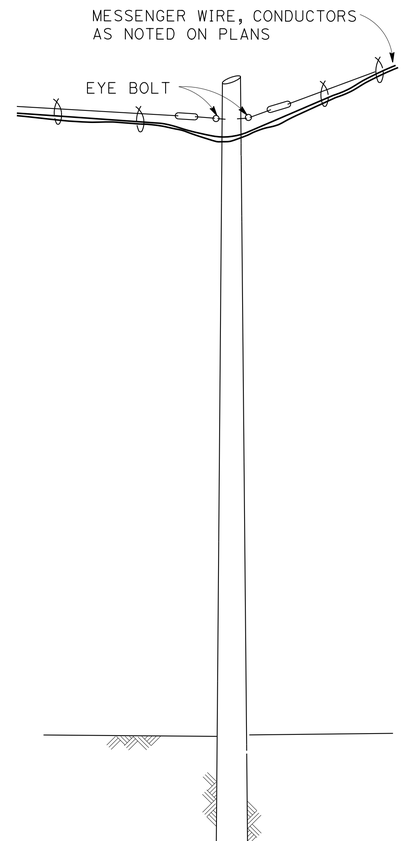

DETAIL H

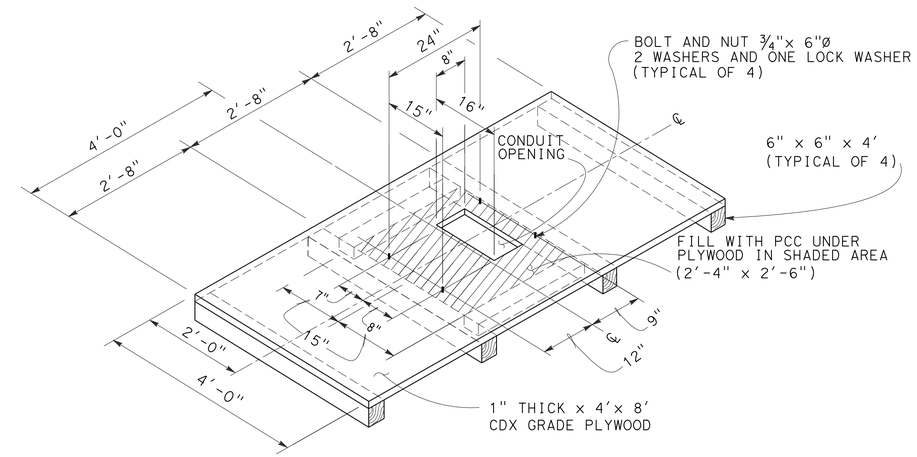

TEMPORARY FOUNDATION PLATFORM DETAIL I

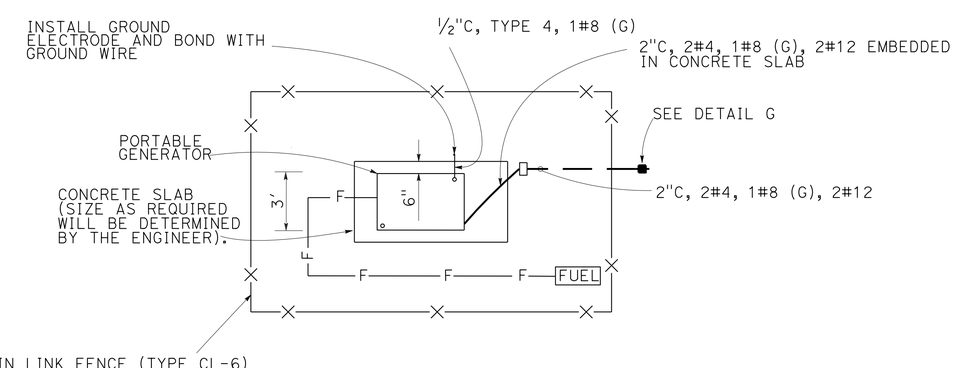

DETAIL J

ELECTRICAL DETAILS
E-9

NO SCALE

STATE OF CALIFORNIA - DEPARTMENT OF TRANSPORTATION
Caltrans® ELECTRICAL DESIGN

CALCULATED-DESIGNED BY	CHECKED BY	FUNCTIONAL SUPERVISOR	REVISED BY	DATE REVISED
GURVINDERJIT S. BAINS	PAUL MATOS	ALI BAKHDOUD	GSB	01-27-16

LAST REVISION 01-27-16 | DATE PLOTTED => 17-MAY-2016 | TIME PLOTTED => 13:41

Dist	COUNTY	ROUTE	POST MILES TOTAL PROJECT	SHEET No.	TOTAL SHEETS
06	Fre,Mad	41U	33.3/33.4 0.0/0.2	32	113

REGISTERED ELECTRICAL ENGINEER 01-18-16 DATE

3-7-16
PLANS APPROVAL DATE

REGISTERED PROFESSIONAL ENGINEER PAUL MATOS No. 18757 Exp. 6/30/17 ELECTRICAL STATE OF CALIFORNIA

THE STATE OF CALIFORNIA OR ITS OFFICERS OR AGENTS SHALL NOT BE RESPONSIBLE FOR THE ACCURACY OR COMPLETENESS OF SCANNED COPIES OF THIS PLAN SHEET.

NOTE:

QUANTITIES SHOWN IN THE TABLE ARE NOT SEPARATE PAY ITEMS, FOR INFORMATION ONLY.

TEMPORARY SIGNAL SYSTEM

SHEET No.	No. 3½ PULL BOX	No. 6(E) PULL BOX	DETECTOR LOOP, TYPE A	DETECTOR LOOP, TYPE D	165 W LED LUMINAIRE	SIGNAL MOUNT SV-1-T	SIGNAL MOUNT ON MESSENGER WIRE	3 SECTION SIGNAL HEAD	PBA	FBCA	2 SECTION SIGNAL HEAD	SIGN LIGHTING FIXTURE	4' CHAIN LINK GATE (TYPE CL-6)	NEMA 3R ENCLOSURE	WOOD POLE WITH EQUIPMENT	8' LMA	MODEL 332L FOUNDATION PLATFORM	TYPE F SERVICE	GENERATOR	FUEL TANK	CHAIN LINK FENCE (TYPE CL-6)	2" CONDUIT (TYPE 3)	No. 2 CONDUCTOR	No. 8 CONDUCTOR (G)	No. 8 CONDUCTOR	No. 6 CONDUCTOR	5 CONDUCTOR SIGNAL CABLE	3 CONDUCTOR SIGNAL CABLE	DLC	TETHER WIRE	MESSENGER WIRE
	EA																				LF										
E-2	3		3	1	2	2	1	3	1	1	1	1			6	2						20		700	1400	650	300	270	1300	100	700
E-3	1														1							150		550	1100	1100	550	550	1650		30
E-4	1																					260		610	1220	1220	610	610	1830		
E-5	1				1	1	1	2							4	1						160		660	1320	1320	685	685	1900	50	260
E-6	5	1	3	1	1	1		1	1	1	1	1	1	1	6	1	1	1	1	1	32	250	2500	1400	1700	1300	300	160	1000		670

ELECTRICAL QUANTITIES
E-10

STATE OF CALIFORNIA - DEPARTMENT OF TRANSPORTATION
Caltrans® ELECTRICAL DESIGN

FUNCTIONAL SUPERVISOR: ALI BAKHDOUD
CALCULATED-DESIGNED BY: GURVINDERJIT S. BAINS
CHECKED BY: PAUL MATOS
REVISED BY: GSB
DATE REVISED: 01-27-16

LAST REVISION 01-27-16
DATE PLOTTED => 17-MAY-2016
TIME PLOTTED => 13:41

DIST	COUNTY	ROUTE	POST MILES TOTAL PROJECT	SHEET No.	TOTAL SHEETS
06	Fre, Mad	41U	33.1/33.4, 0.0/0.3	33	113

REGISTERED CIVIL ENGINEER 01-28-16 DATE

3-7-16
PLANS APPROVAL DATE

REGISTERED PROFESSIONAL ENGINEER THAAR F. JAWHAR No. 64207 Exp. 6-30-17 CIVIL STATE OF CALIFORNIA

The State of California or its officers or agents shall not be responsible for the accuracy or completeness of electronic copies of this plan sheet.

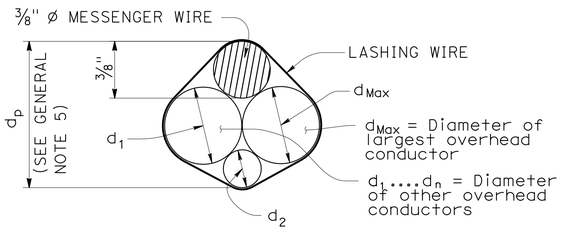

$d_p = 3/8'' + d_{Max} + 0.30 * (d_1 + d_2 + \ldots d_n)$

PROJECTED DEPTH OF OVERHEAD BUNDLE, (d_p)

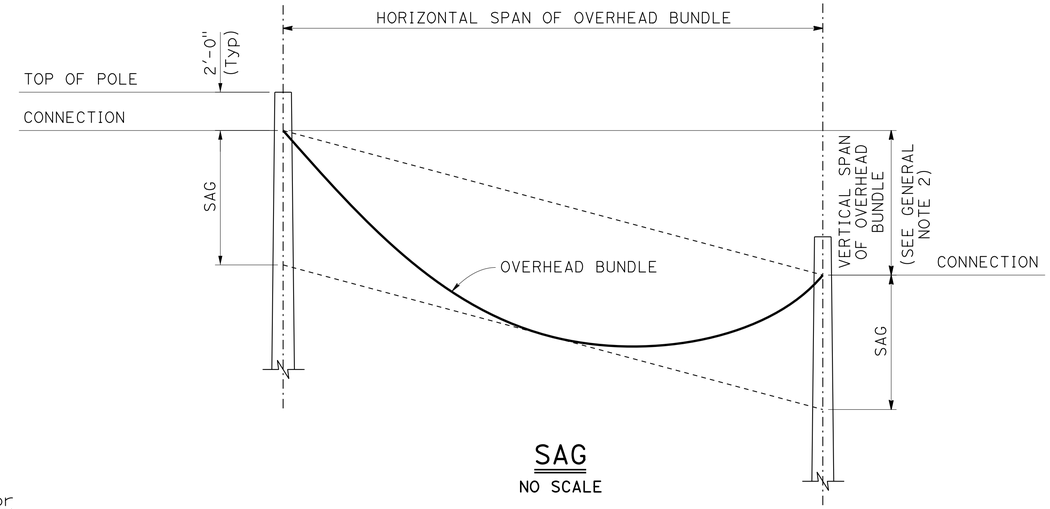

SAG

NO SCALE

Design: AASHTO Standard Specifications for Structural Supports for Highway Signs, Luminaires and Traffic Signals, Fifth Edition (LTS-5).

GROUP LOAD COMBINATIONS:

I Dead Load
II Dead Load + Wind Load
III Dead Load + 0.5 (Wind Load) + Ice Load
IV Fatigue: Not used

LOADING:

Wind Loading: 100 mph (3-second gust)
Wind Recurrence Interval: 10 years
Combined height, exposure, and elevated terrain factor = 1.05
(Exposure C, structure is not located on or over the top half of a ridge, hill, or escarpment)

Ice Loading: 3.0 psf on surfaces, 0.60 in radial thickness of ice at a unit weight of 60 pcf on overhead bundles

BASIC DESIGN VALUES:

Timber Poles: Fb = 1850 psi
Fv = 110 psi
Fcp = 230 psi
Fc = 950 psi
E = 1500 x 10^3 psi

DESIGN WIRE BREAKING STRENGTHS:

ASTM A475, Utilities Grade, 7 strand modified by termination efficiency factor of 0.8

FOUNDATION DESIGN NOTES:

1. Pole embedment depth design is based on Broms' approximate procedure as described in Article 13.6 of AASHTO LTS-5.

2. Embedment depth is calculated based on following soil parameters,
Cohesive Soil:
Shear strength of soil c = 1500 psf.
Cohesionless Soil:
Ø = 30 deg, γ = 120 pcf.
Soil assumed to be unsaturated.

3. An overload factor of 2.0 and an undercapacity factor of 0.7 were used for safety factor of 2.86.

4. Allowable vertical bearing pressure at the end bearing of poles is 3000 psf at 6 feet or more embedment.

5. Guy wire anchor minimum allowable tension capacity, "Qa" = 8,900 lbs.

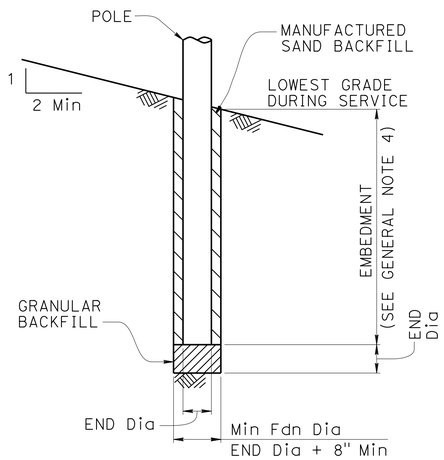

POLE FOUNDATION

GENERAL NOTES:

1. The messenger wire and any combination of overhead conductors must not exceed either a self weight of 3.0 lb/ft or the maximum d in the pole selection tables.

2. The maximum vertical span is 10% of the horizontal span.

3. For poles with adjacent unbalanced horizontal spans, the shortest horizontal span must be at least 50% of the largest horizontal span.

4. Add 2'-0" for slopes above 1V:4H.

5. For a pole supporting multiple spans, calculate d_p for each span and use the largest value.

6. Do not exceed the attachments shown.

DIAMETERS AND SELF WEIGHT OF OVERHEAD CONDUCTORS

CONDUCTOR OR CABLE TYPE	DIAMETER d (in)	WEIGHT w (plf)
3 CONDUCTOR SIGNAL CABLE (3CSC)	0.400	0.0980
5 CONDUCTOR SIGNAL CABLE (5CSC)	0.500	0.1560
9 CONDUCTOR SIGNAL CABLE (9CSC)	0.650	0.2760
12 CONDUCTOR SIGNAL CABLE (12CSC)	0.800	0.3970
28 CONDUCTOR SIGNAL CABLE (28CSC)	0.900	0.6490
1-#14	0.166	0.0235
1-#12	0.185	0.0330
1-#10	0.210	0.0476
1-#8	0.271	0.0774
1-#6	0.310	0.1130
1-#4	0.359	0.1690
1-#3	0.388	0.2080
1-#2	0.420	0.2560
1-#1	0.498	0.3340
6-CONDUCTOR SIGNAL INTERCONNECT CABLE (SIC)	0.350	0.0860
12-CONDUCTOR SIGNAL INTERCONNECT CABLE (SIC)	0.500	0.1440
DETECTOR LEAD-IN CABLE (DLC)	0.310	0.0440
12 to 48-STRAND FIBER OPTIC CABLE (48FOC)	0.424	0.0600
72-STRAND FIBER OPTIC CABLE (72FOC)	0.484	0.0770
96-STRAND FIBER OPTIC CABLE (96FOC)	0.535	0.1050
144-STRAND FIBER OPTIC CABLE (144FOC)	0.670	0.1890
3/8" Ø MESSENGER WIRE	0.375	0.2730

NO SCALE

STANDARD DRAWING
FILE NO. xs18-010
APPROVAL DATE July 2014

STATE OF CALIFORNIA
DEPARTMENT OF TRANSPORTATION

DIVISION OF ENGINEERING SERVICES

BRIDGE NO. 42-0112
POST MILE 33.1/33.3

TEMPORARY WOOD POLES
GENERAL NOTES

DS OSD 2147A (ENGLISH STANDARD DRAWING "XS" BORDER REV. (02-02-11)

ORIGINAL SCALE IN INCHES FOR REDUCED PLANS 0 1 2 3

UNIT: 1475
PROJECT NUMBER & PHASE: 06120001141
CONTRACT NO.: 06-0N9904

DISREGARD PRINTS BEARING EARLIER REVISION DATES

REVISION DATES 6-19-14

SHEET 1 OF 10

FILE => xs18-010.dgn

USERNAME => s113541 DATE PLOTTED => 17-MAY-2016 TIME PLOTTED => 13:41

DIST	COUNTY	ROUTE	POST MILES TOTAL PROJECT	SHEET No.	TOTAL SHEETS
06	Fre, Mad	41U	33.1/33.4, 0.0/0.3	34	113

REGISTERED CIVIL ENGINEER 01-28-16 DATE

3-7-16
PLANS APPROVAL DATE

REGISTERED PROFESSIONAL ENGINEER THAAR F. JAWHAR No. 64207 Exp. 6-30-17 CIVIL STATE OF CALIFORNIA

The State of California or its officers or agents shall not be responsible for the accuracy or completeness of electronic copies of this plan sheet.

LEGEND

- Wood Pole No Attachments
- A Wood Pole with Attachments
- —OH— Overhead Bundle

POLE SELECTION TABLE

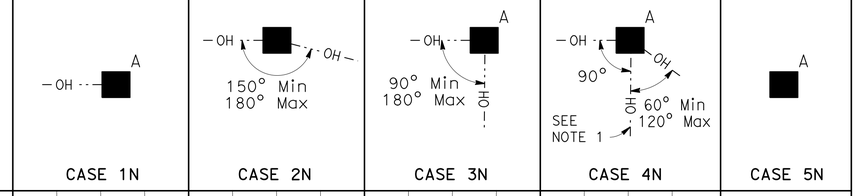

			CASE 1N				CASE 2N				CASE 3N				CASE 4N				CASE 5N
		MAXIMUM d_p	1"	1.5"	2.0"	2.5"	1"	1.5"	2.0"	2.5"	1.0"	1.5"	2.0"	2.5"	1"	1.5"	2.0"	2.5"	N/A
OVERHEAD BUNDLE HORIZONTAL SPAN (Max)	50'	MINIMUM POLE CLASS	H-1	H-2	H-2	H-2	4	3	2	1	H-2	H-2	H-3	H-3	H-4	H-4	H-4	H-5	CLASS 1 E = 10'
		POLE EMBEDMENT (E)	11'				10'				11'				12'				
	100'	MINIMUM POLE CLASS	H-2	H-3	H-4	H-5	1	H-1	H-2	H-3	H-4	H-5	H-5	H-6	H-5	H-5	H-6		
		POLE EMBEDMENT (E)	12'				11'				12'				12'				
	150'	MINIMUM POLE CLASS	H-4	H-5	H-6		H-1	H-2	H-3	H-5	H-6				H-6				
		POLE EMBEDMENT (E)	12'				12'				12'				12'				
	200'	MINIMUM POLE CLASS	H-5	H-6			H-2	H-3	H-5										
		POLE EMBEDMENT (E)	12'				12'												

1. CCTV camera assembly or vehicle detection system
2. Overhead bundle consisting of a 3/8" Ø messenger wire, overhead conductors, and lashing wire
3. Luminaire with mast arm
4. Pedestrian push button assembly or accessible push button assembly
5. Signal face with 3 indications or single sheet sign panel (10 SQFT Max)
6. Riser with weather head as required
7. Pull box as required
8. Grounding as required
9. Single flashing beacon or single sheet sign panel (4 SQFT Max)
10. Single sheet sign panel (4' x 4' Max) or signal face with 3 indications
11. Flashing beacon control assembly
12. NEMA 3R enclosure, 26"(W) x 56"(H) x 12"(D) Max dimensions. Max weight including batteries, 450 lbs
13. 25' SQFT Max total photovoltaic panels mounted as shown as required
14. 2-12" flashing beacons

NOTES:

1. In addition to other restrictions on maximum horizontal span, this horizontal span must not exceed 100'.
2. Cases 1N, 3N and 4N may substitute the attachments shown in Case 5N if the photovoltaic panel is not included.
3. For Case 1N without an overhead bundle (item 2) use minimum pole class H-1 with E=11'.

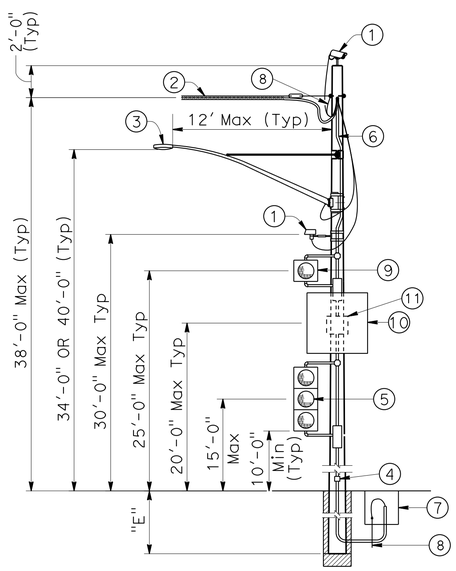

CASE 1N
POLE AT DEAD END WITH ATTACHMENTS
SEE NOTE 2

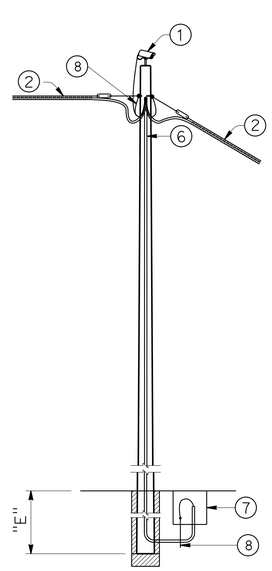

CASE 2N
POLE AT TANGENT WITHOUT ATTACHMENTS

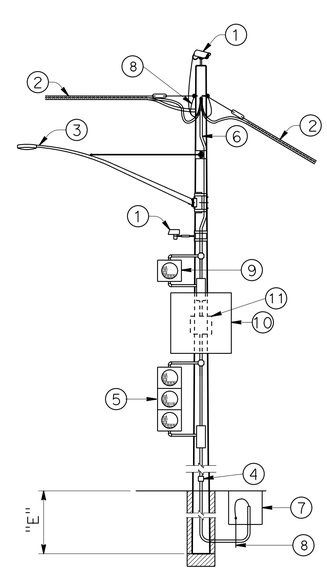

CASE 3N
POLE AT TANGENT OR CORNER WITH ATTACHMENTS
SEE NOTE 2

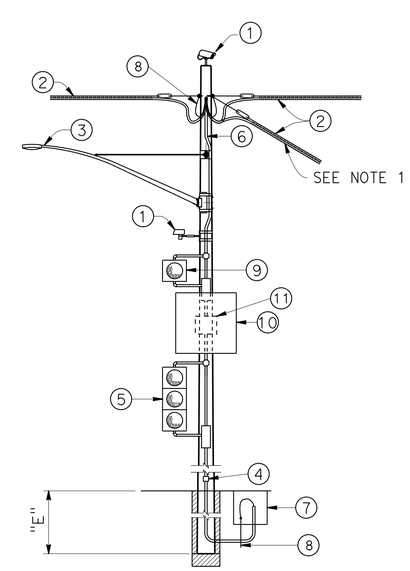

CASE 4N
POLE AT JUNCTION WITH ATTACHMENTS
SEE NOTE 2

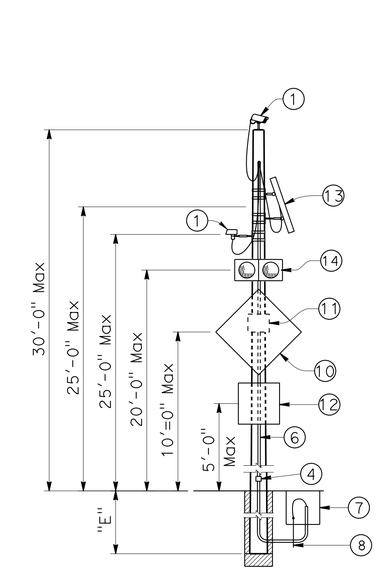

CASE 5N
POLE WITHOUT OVERHEAD BUNDLE WITH ATTACHMENTS

NO SCALE

STANDARD DRAWING

FILE NO. xs18-020

APPROVAL DATE July 2014

STATE OF CALIFORNIA DEPARTMENT OF TRANSPORTATION

DIVISION OF ENGINEERING SERVICES

BRIDGE NO. 42-0112

POST MILE 33.1/33.4

TEMPORARY WOOD POLES
NON-GUYED - NO SIGNALS ON SPANS

DS OSD 2147A (ENGLISH STANDARD DRAWING "XS" BORDER REV. (02-02-11)

ORIGINAL SCALE IN INCHES FOR REDUCED PLANS 0 1 2 3

UNIT: 1475
PROJECT NUMBER & PHASE: 06120001141
CONTRACT NO.: 06-0N9904

DISREGARD PRINTS BEARING EARLIER REVISION DATES

REVISION DATES 6-19-14

SHEET 2 OF 10

FILE => xs18-020.dgn

USERNAME => s113541 DATE PLOTTED => 17-MAY-2016 TIME PLOTTED => 13:41

DIST	COUNTY	ROUTE	POST MILES TOTAL PROJECT	SHEET No.	TOTAL SHEETS
06	Fre, Mad	41U	33.1/33.4, 0.0/0.3	35	113

REGISTERED CIVIL ENGINEER 01-28-16 DATE

3-7-16
PLANS APPROVAL DATE

REGISTERED PROFESSIONAL ENGINEER THAAR F. JAWHAR No. 64207 Exp. 6-30-17 CIVIL STATE OF CALIFORNIA

The State of California or its officers or agents shall not be responsible for the accuracy or completeness of electronic copies of this plan sheet.

LEGEND

- A — Wood Pole with Attachments
- —OH··— Overhead Bundle
- ——→ Guy Anchor

POLE SELECTION TABLE

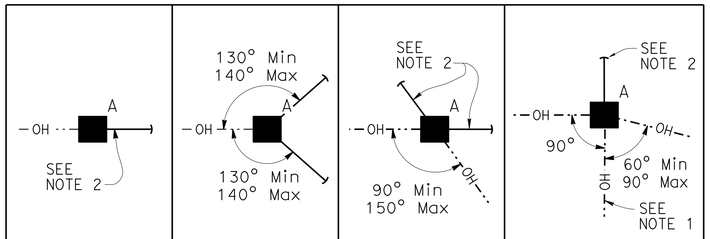

OVERHEAD BUNDLE HORIZONTAL SPAN (Max)		MAXIMUM d_p	1"	1.5"	2.0"	2.5"	1"	1.5"	2.0"	2.5"	1"	1.5"	2.0"	2.5"	1"	1.5"	2.0"	2.5"
	50′	MINIMUM POLE CLASS	H-1	H-1	H-2	H-2	1	1	1	1	1	1	1	H-1	H-2	H-2	H-3	H-3
		POLE EMBEDMENT (E)	10′				9′				9′				11′			
	100′	MINIMUM POLE CLASS	H-2	H-2	H-3	H-4	1	H-1	H-1	H-1	1	H-1	H-2	H-2	H-3	H-3	H-4	H-4
		POLE EMBEDMENT (E)	11′				9′				9′				12′			
	150′	MINIMUM POLE CLASS	H-3	H-3	H-4	H-5	H-1	H-1	H-2	H-2	H-2	H-3	H-3	H-3	H-4	H-5	H-5	H-6
		POLE EMBEDMENT (E)	11′				9′				9′				12′			
	200′	MINIMUM POLE CLASS	H-4	H-4	H-5	H-6	H-1	H-2	H-3	H-3	H-3	H-3	H-4	H-4	H-5	H-6		
		POLE EMBEDMENT (E)	11′				9′				9′				12′			

1. CCTV camera assembly or vehicle detection system
2. Overhead bundle consisting of a 3/8" ø messenger wire, overhead conductors, and lashing wire
3. Luminaire with mast arm
4. Pedestrian push button assembly or accessible push button assembly
5. Signal face with 3 indications or single sheet sign panel (10 SQFT Max)
6. Riser with weather head as required
7. Pull box as required
8. Grounding as required
9. Single flashing beacon or single sheet sign panel (4 SQFT Max)
10. Single sheet sign panel (4′ x 4′ Max) or signal face with 3 indications
11. Flashing beacon control assembly
12. 1/2" ø guy wire with white guy marker and strain insulator (for anchorage see "TEMPORARY WOOD POLES-DETAILS No. 2" sheet)

NOTES:

1. In addition to other restrictions on maximum horizontal span, this horizontal span must not exceed 100′.
2. Guy wire in line with opposing span ± 5°.

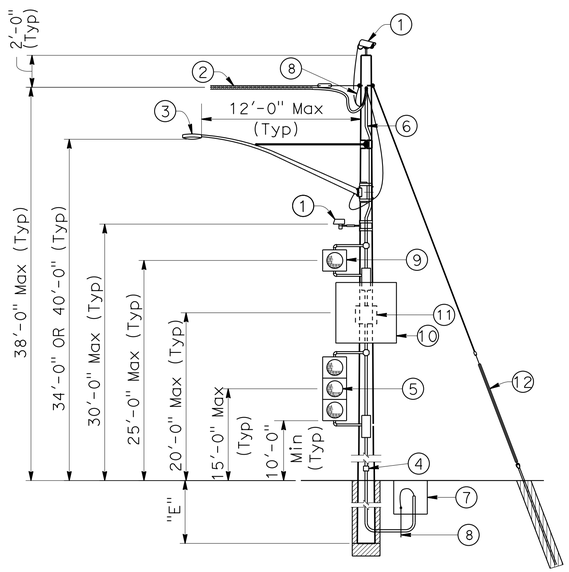

CASE 1G
POLE AT DEAD END
WITH ATTACHMENTS

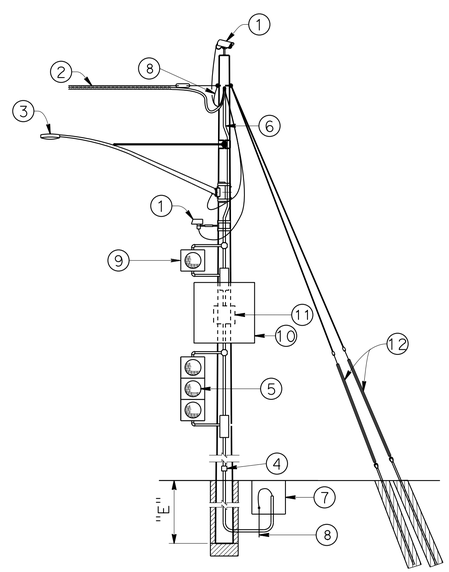

CASE 2G
POLE AT DEAD END
WITH ATTACHMENTS

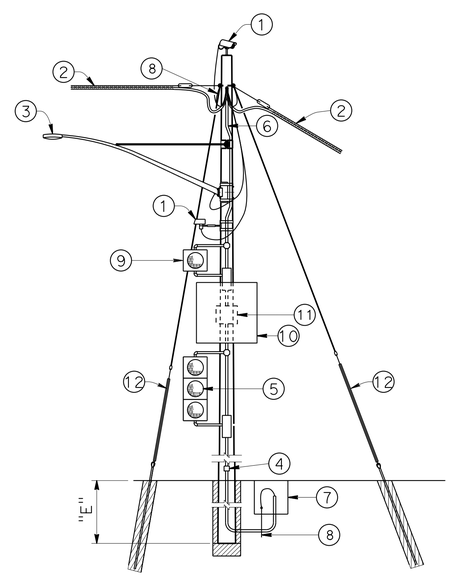

CASE 3G
POLE AT CORNER
WITH ATTACHMENTS

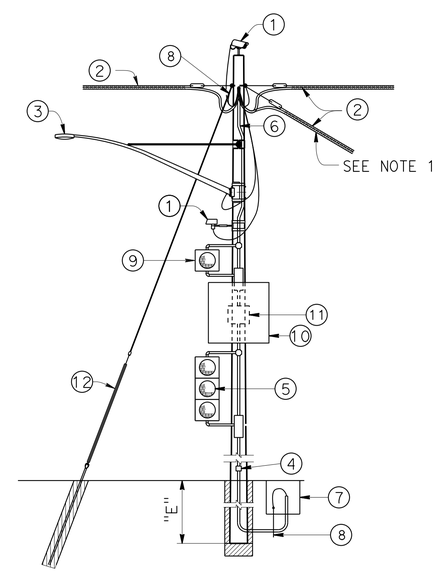

CASE 4G
POLE AT JUNCTION
WITH ATTACHMENTS

NO SCALE

STANDARD DRAWING
FILE NO. xs18-030
APPROVAL DATE July 2014

STATE OF CALIFORNIA
DEPARTMENT OF TRANSPORTATION

DIVISION OF ENGINEERING SERVICES

BRIDGE NO. 42-0112
POST MILE 33.1/33.4

TEMPORARY WOOD POLES
GUYED - NO SIGNALS ON SPANS

DS OSD 2147A (ENGLISH STANDARD DRAWING "XS" BORDER REV. (02-02-11)

ORIGINAL SCALE IN INCHES FOR REDUCED PLANS 0 1 2 3

UNIT: 1475
PROJECT NUMBER & PHASE: 06120001141
CONTRACT NO.: 06-0N9904

DISREGARD PRINTS BEARING EARLIER REVISION DATES

REVISION DATES 6-27-14

SHEET 3 OF 10

FILE => xs18-030.dgn

USERNAME => s113541 DATE PLOTTED => 17-MAY-2016 TIME PLOTTED => 13:41

DIST	COUNTY	ROUTE	POST MILES TOTAL PROJECT	SHEET No.	TOTAL SHEETS
06	Fre, Mad	41U	33.1/33.4, 0.0/0.3	36	113

REGISTERED CIVIL ENGINEER — DATE 01-28-16

3-7-16
PLANS APPROVAL DATE

REGISTERED PROFESSIONAL ENGINEER THAAR F. JAWHAR No. 64207 Exp. 6-30-17 CIVIL STATE OF CALIFORNIA

The State of California or its officers or agents shall not be responsible for the accuracy or completeness of electronic copies of this plan sheet.

LEGEND

- A — Wood Pole with Attachments
- —TS— Overhead Bundle with Signal Faces (See Note 2)
- —OH— Overhead Bundle
- Guy Anchor

POLE SELECTION TABLE

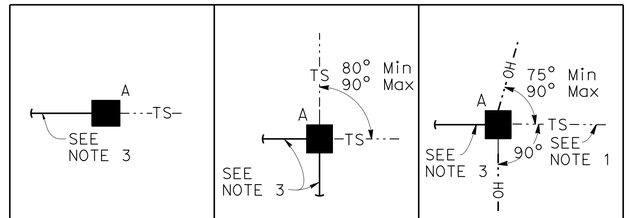

			CASE 1GT			CASE 2GT			CASE 3GT		
		MAXIMUM dp	1"	1.5"	2.0"	1"	1.5"	2.0"	1"	1.5"	2.0"
OVERHEAD BUNDLE HORIZONTAL SPAN Max	50'	MINIMUM POLE CLASS	H-2	H-3	H-3	H-2	H-2	H-2	H-3	H-4	H-4
		POLE EMBEDMENT (E)	10'			10'			11'		
	100'	MINIMUM POLE CLASS	H-3	H-3	H-4	H-2	H-3	H-3	H-4	H-4	H-5
		POLE EMBEDMENT (E)	11'			10'			11'		
	150'	MINIMUM POLE CLASS	H-3	H-4	H-4	H-2	H-3	H-4	H-4	H-5	H-5
		POLE EMBEDMENT (E)	11'			10'			11'		

NOTES:

1. In addition to other restrictions on maximum horizontal span, this horizontal span must not exceed 100'.
2. Maximum of 2 SIGNAL FACES per span within the hatched regions indicated by "LOCATION OF SIGNAL FACES".
3. Guy wire in line with opposing span ± 5°.

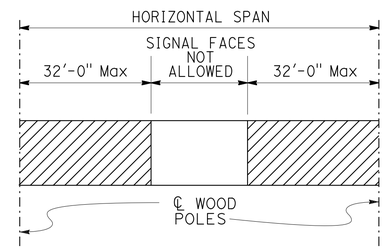

LOCATION OF SIGNAL FACES

1. CCTV camera assembly or vehicle detection system
2. Overhead bundle consisting of 3/8" ø messenger wire and overhead conductors and lashing wire
3. Luminaire with mast arm
4. Pedestrian push button assembly or accessible push button assembly
5. Signal face with 3 indications or single sheet sign panel (10 SQFT Max)
6. Riser with weather head as required
7. Pull box as required
8. Grounding as required
9. 3/8" ø tether wire
10. 1/2" ø guy wire with white guy marker and strain insulator. For anchorage see "TEMPORARY WOOD POLES-DETAILS No. 2" sheet
11. Pedestrian signal head

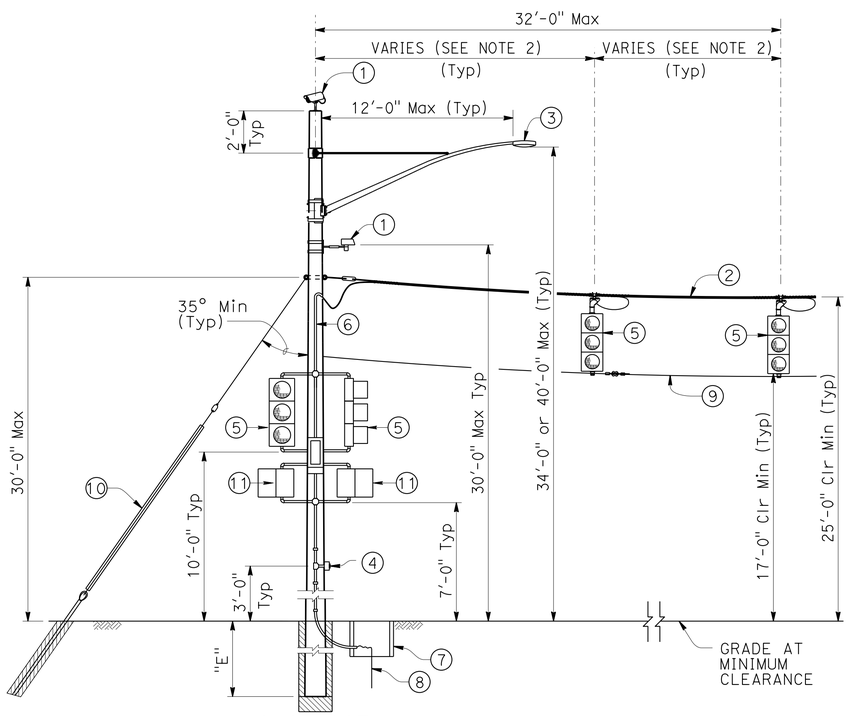

CASE 1GT
POLE AT DEAD END
WITH ATTACHMENTS

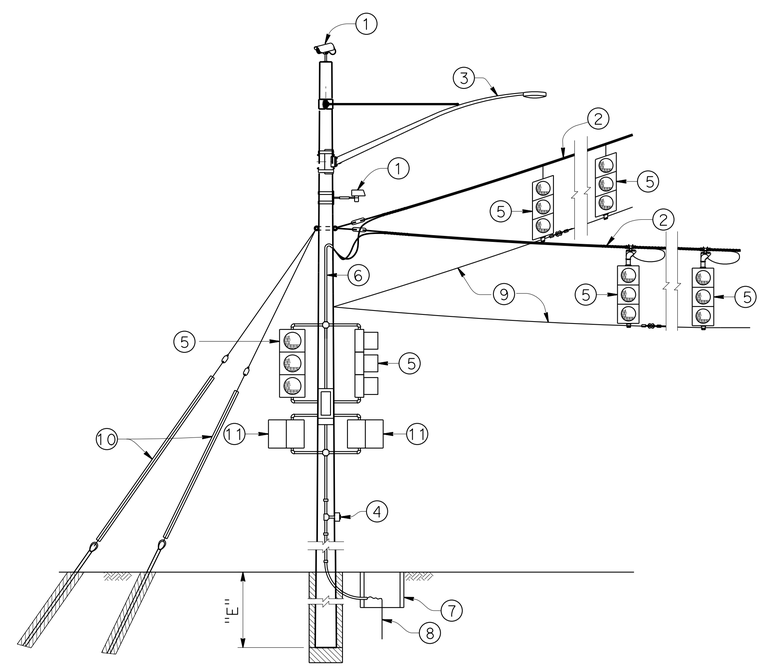

CASE 2GT
POLE AT CORNER
WITH ATTACHMENTS

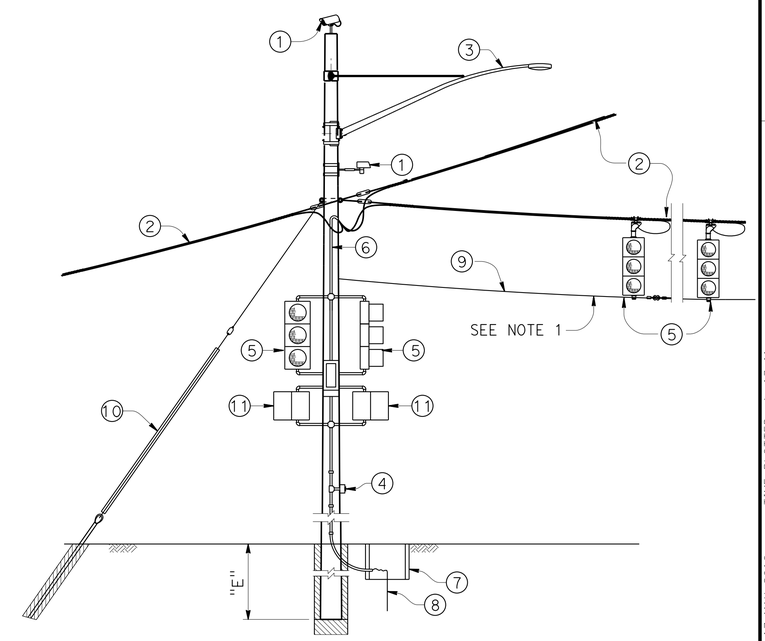

CASE 3GT
POLE AT JUNCTION
WITH ATTACHMENTS

NO SCALE

STANDARD DRAWING		STATE OF CALIFORNIA DEPARTMENT OF TRANSPORTATION	DIVISION OF ENGINEERING SERVICES	BRIDGE NO. 42-0112	TEMPORARY WOOD POLES
FILE NO. xs18-040	APPROVAL DATE July 2014			POST MILE 33.1/33.4	GUYED-WITH SIGNAL FACES ON SPANS

DS OSD 2147A (ENGLISH STANDARD DRAWING "XS" BORDER REV. (02-02-11)

ORIGINAL SCALE IN INCHES FOR REDUCED PLANS 0 1 2 3

UNIT: 1475
PROJECT NUMBER & PHASE: 06120001141 CONTRACT NO.: 06-0N9904

DISREGARD PRINTS BEARING EARLIER REVISION DATES

REVISION DATES 6-27-14 — SHEET 4 OF 10

FILE => xs18-040.dgn

USERNAME => s113541 DATE PLOTTED => 17-MAY-2016 TIME PLOTTED => 13:41

DIST	COUNTY	ROUTE	POST MILES TOTAL PROJECT	SHEET No.	TOTAL SHEETS
06	Fre, Mad	41U	33.1/33.4, 0.0/0.3	37	113

REGISTERED CIVIL ENGINEER 01-28-16 DATE

3-7-16
PLANS APPROVAL DATE

REGISTERED PROFESSIONAL ENGINEER THAAR F. JAWHAR No. 64207 Exp. 6-30-17 CIVIL STATE OF CALIFORNIA

The State of California or its officers or agents shall not be responsible for the accuracy or completeness of electronic copies of this plan sheet.

LEGEND

A — Wood Pole with Attachments

—·· TS —··· — Overhead Bundle with Signal Faces (See Note 1)

POLE SELECTION TABLE

			A —·· TS —··· — CASE 1NT		
OVERHEAD BUNDLE HORIZONTAL SPAN (Max)	75′	MAXIMUM d_p	1"	1.5"	2.0"
		MINIMUM POLE CLASS	H-5	H-6	H-6
		POLE EMBEDMENT (E)	13′		

1. CCTV camera assembly or vehicle detection system
2. Overhead bundle consisting of a ⅜" ø messenger wire and overhead conductors and lashing wire
3. Luminaire with mast arm
4. Pedestrian push button assembly or accessible push button assembly
5. Signal face with 3 indications or single sheet sign panel (10 SQFT Max)
6. Riser with weather head as required
7. Pull box as required
8. Grounding as required
9. ⅜" ø tether wire
10. Pedestrian signal head

NOTE:

1. Maximum of 2 SIGNAL FACES per span within the hatched regions indicated by "LOCATION OF SIGNAL FACES".

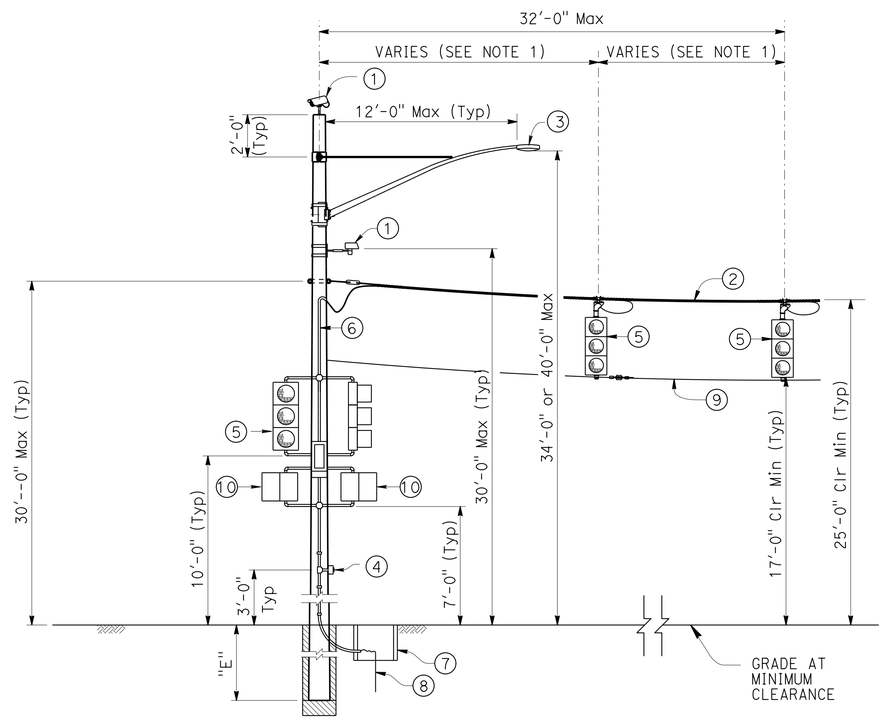

CASE 1NT
POLE AT DEAD END WITH ATTACHMENTS

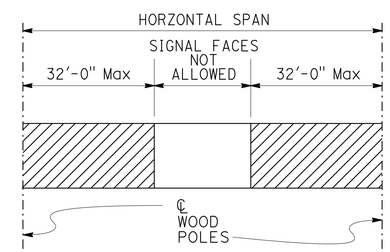

LOCATION OF SIGNAL FACES

NO SCALE

STANDARD DRAWING

FILE NO. xs18-050 APPROVAL DATE July 2014

STATE OF CALIFORNIA DEPARTMENT OF TRANSPORTATION

DIVISION OF ENGINEERING SERVICES

BRIDGE NO. 42-0112 POST MILE 33.1/33.4

TEMPORARY WOOD POLES NON-GUYED-WITH SIGNAL FACES ON SPAN

DS OSD 2147A (ENGLISH STANDARD DRAWING "XS" BORDER REV. (02-02-11)

ORIGINAL SCALE IN INCHES FOR REDUCED PLANS 0 1 2 3

UNIT: 1475
PROJECT NUMBER & PHASE: 06120001141 CONTRACT NO.: 06-0N9904

DISREGARD PRINTS BEARING EARLIER REVISION DATES

REVISION DATES 6-27-14 SHEET 5 OF 10

FILE => xs18-050.dgn

USERNAME => s113541 DATE PLOTTED => 17-MAY-2016 TIME PLOTTED => 13:41

DIST	COUNTY	ROUTE	POST MILES TOTAL PROJECT	SHEET No.	TOTAL SHEETS
06	Fre, Mad	41U	33.1/33.4, 0.0/0.3	38	113

REGISTERED CIVIL ENGINEER 01-28-16 DATE

3-7-16
PLANS APPROVAL DATE

REGISTERED PROFESSIONAL ENGINEER THAAR F. JAWHAR No. 64207 Exp. 6-30-17 CIVIL STATE OF CALIFORNIA

The State of California or its officers or agents shall not be responsible for the accuracy or completeness of electronic copies of this plan sheet.

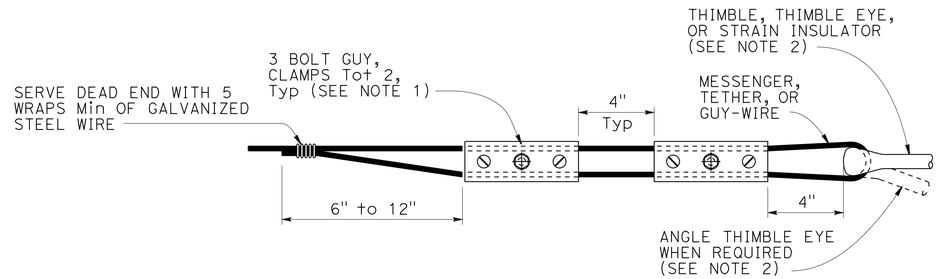

ALTERNATIVE TERMINATION OF MESSENGER WIRES USING GUY CLAMPS

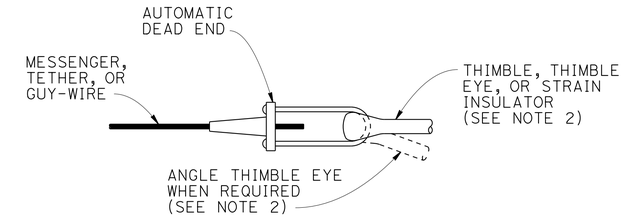

TERMINATION OF WIRES USING AUTOMATIC DEAD END

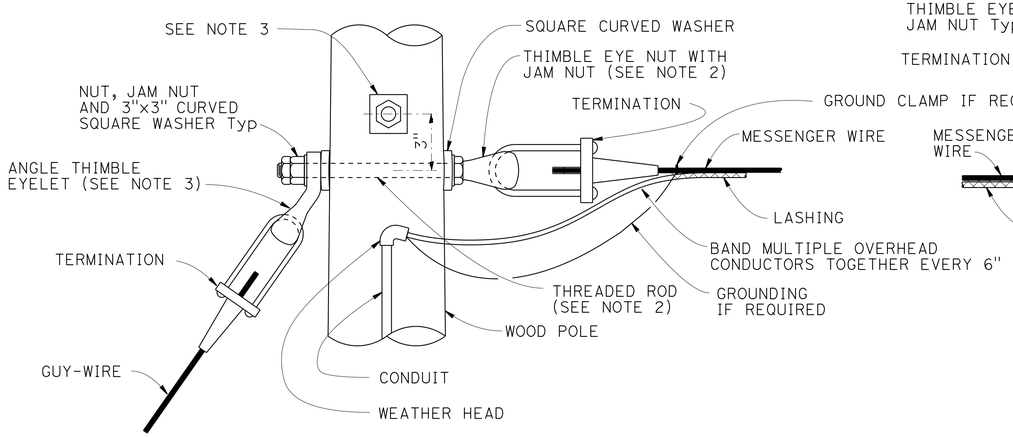

POLE AT DEAD END WITH GUY-WIRE CONNECTION

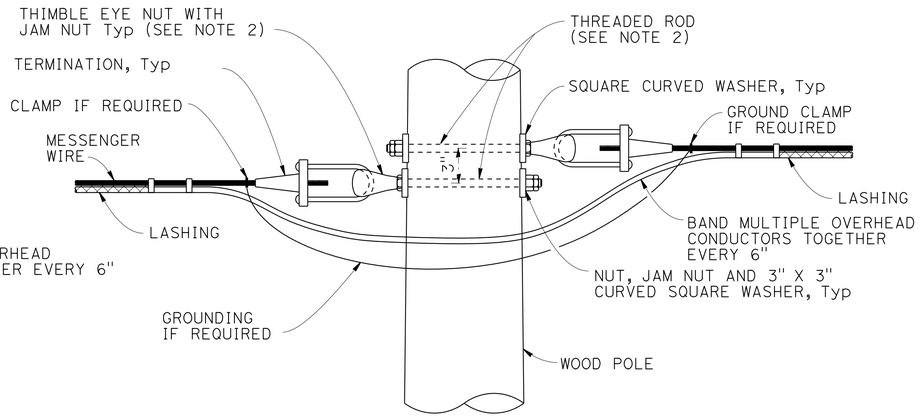

POLE AT TANGENT OR CORNER CONNECTION

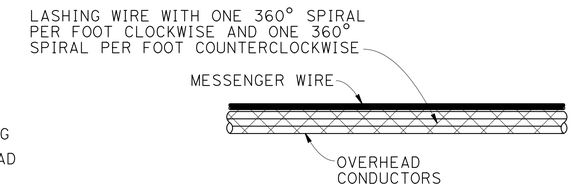

DOUBLE LASHING DETAIL

USE IF d_p IS GREATER THAN 1½"

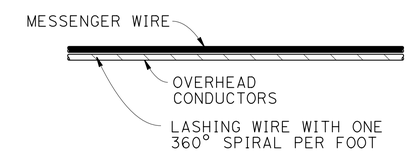

TYPICAL LASHING DETAIL

USE IF d_p IS 1½" OR LESS

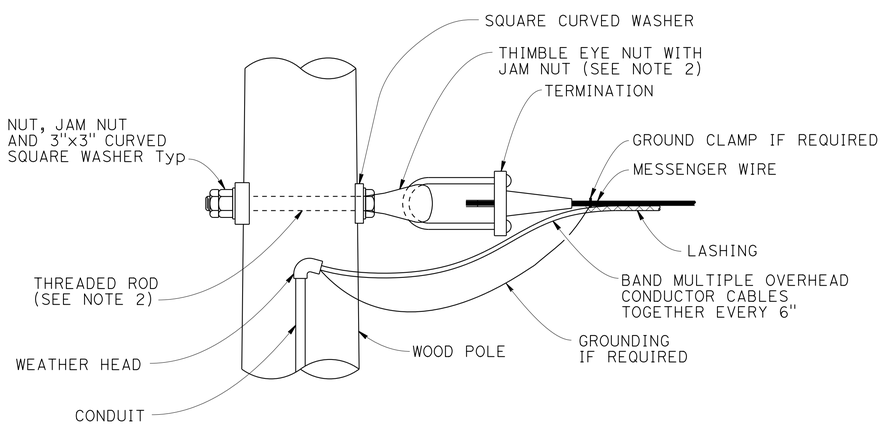

POLE AT DEAD END CONNECTION

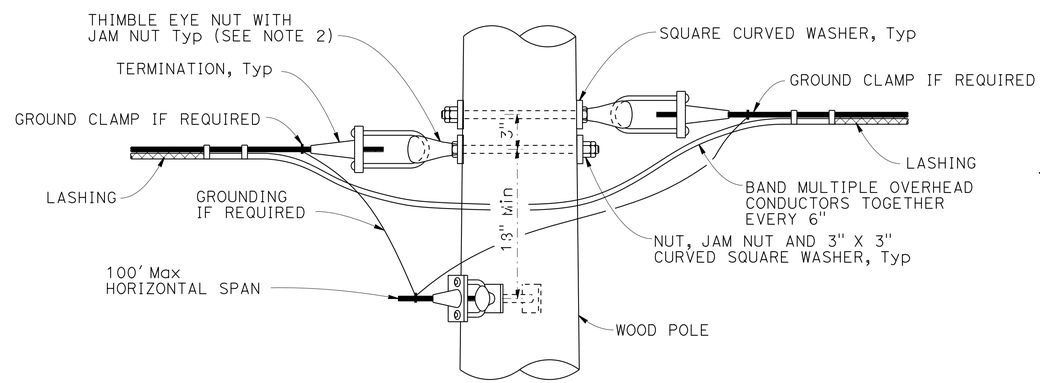

POLE AT JUNCTION CONNECTION

NOTES:

1. For guy wires use 3 clamps.
2. Use ⅝" ø except ¾" ø at guyed wires
3. Install additional angle thimble eyelet at poles with two guy wires.

NO SCALE

STANDARD DRAWING

FILE NO. **xs18-080-1** APPROVAL DATE July 2014

STATE OF **CALIFORNIA** DEPARTMENT OF TRANSPORTATION

DIVISION OF ENGINEERING SERVICES

BRIDGE NO. 42-0112 POST MILE 33.1/33.4

TEMPORARY WOOD POLES DETAILS No. 1

DS OSD 2147A (ENGLISH STANDARD DRAWING "XS" BORDER REV. (02-02-11)

ORIGINAL SCALE IN INCHES FOR REDUCED PLANS 0 1 2 3

UNIT: 1475
PROJECT NUMBER & PHASE: 06120001141 CONTRACT NO.: 06-0N9904

DISREGARD PRINTS BEARING EARLIER REVISION DATES 6-27-14

REVISION DATES | SHEET 6 | OF 10

FILE => xs18-080-1.dgn

USERNAME => s113541 DATE PLOTTED => 17-MAY-2016 TIME PLOTTED => 13:41

DIST	COUNTY	ROUTE	POST MILES TOTAL PROJECT	SHEET No.	TOTAL SHEETS
06	Fre, Mad	41U	33.1/33.4, 0.0/0.3	39	113

REGISTERED CIVIL ENGINEER 01-28-16 DATE

3-7-16
PLANS APPROVAL DATE

REGISTERED PROFESSIONAL ENGINEER THAAR F. JAWHAR No. 64207 Exp. 6-30-17 CIVIL STATE OF CALIFORNIA

The State of California or its officers or agents shall not be responsible for the accuracy or completeness of electronic copies of this plan sheet.

NOTE:

1. For minimum allowable tension capacity of anchors see "Temporary Wood Poles - General Notes" sheet.

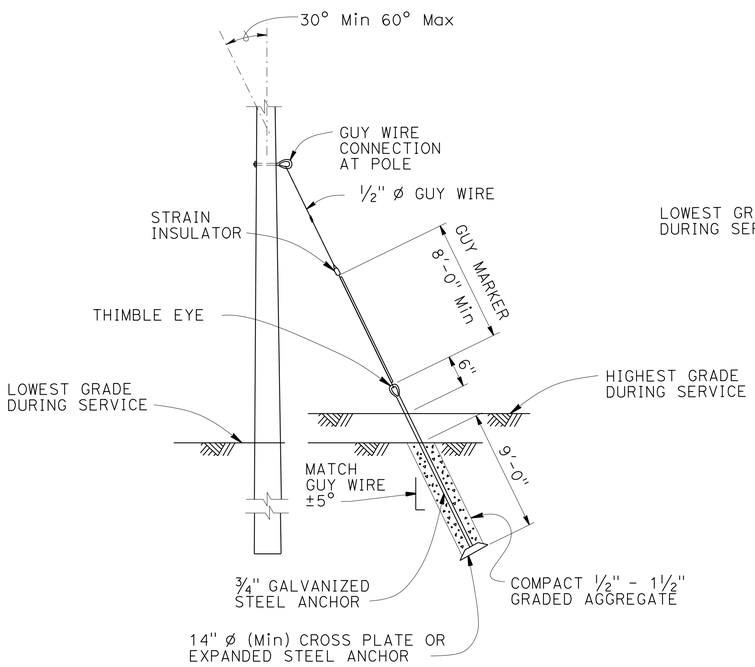

NOTE:

Helical anchor detail may be used in place of expanded steel anchors.

EXPANDED STEEL ANCHOR DETAIL

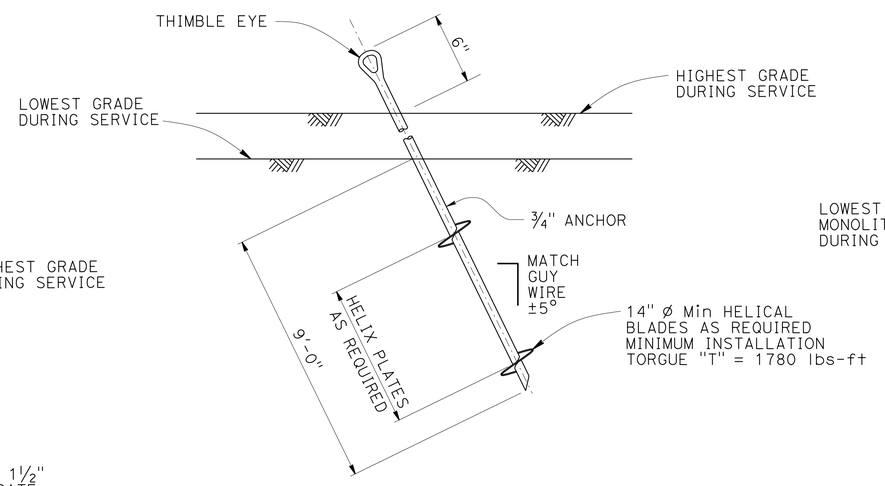

HELICAL ANCHOR DETAIL

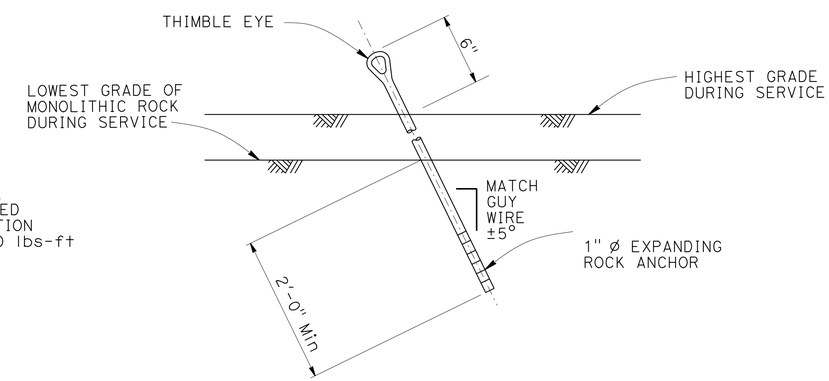

EXPANDING ROCK ANCHOR DETAIL

NO SCALE

STANDARD DRAWING		STATE OF CALIFORNIA DEPARTMENT OF TRANSPORTATION	DIVISION OF ENGINEERING SERVICES	BRIDGE NO. 42-0112 / POST MILE 33.1/33.4	TEMPORARY WOOD POLES DETAILS No. 2
FILE NO. xs18-080-2	APPROVAL DATE July 2014				

DS OSD 2147A (ENGLISH STANDARD DRAWING "XS" BORDER REV. (02-02-11)

ORIGINAL SCALE IN INCHES FOR REDUCED PLANS 0 1 2 3

UNIT: 1475
PROJECT NUMBER & PHASE: 06120001141 CONTRACT NO.: 06-0N9904

DISREGARD PRINTS BEARING EARLIER REVISION DATES → 6-27-14

REVISION DATES | SHEET 7 | OF 10

FILE => xs18-080-2.dgn

USERNAME => s113541 DATE PLOTTED => 17-MAY-2016 TIME PLOTTED => 13:41

DIST	COUNTY	ROUTE	POST MILES TOTAL PROJECT	SHEET No.	TOTAL SHEETS
06	Fre, Mad	41U	33.1/33.4, 0.0/0.3	40	113

REGISTERED CIVIL ENGINEER 01-28-16 DATE

3-7-16
PLANS APPROVAL DATE

REGISTERED PROFESSIONAL ENGINEER THAAR F. JAWHAR No. 64207 Exp. 6-30-17 CIVIL STATE OF CALIFORNIA

The State of California or its officers or agents shall not be responsible for the accuracy or completeness of electronic copies of this plan sheet.

NOTES:

1. Luminaire mast arms must be in compliance with Standard Plan ES-6D with noted modifications.
2. Verify pole dimensions at tie-rod attachment height. Fabricate 8" flat bar with "L" Dimension to maintain an open gap between flanges in finished installation.
3. Not all screw heads and bolt heads are shown for clarity.
4. Mast arm not shown for clarity.

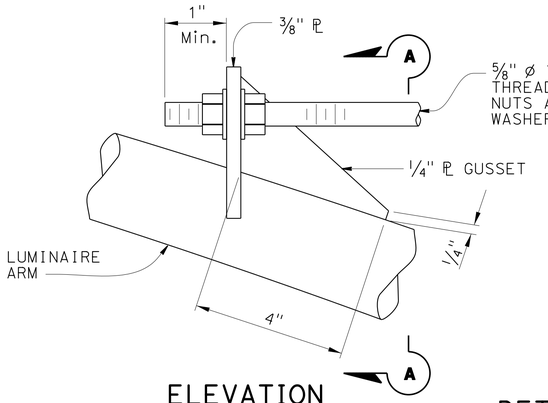

ELEVATION

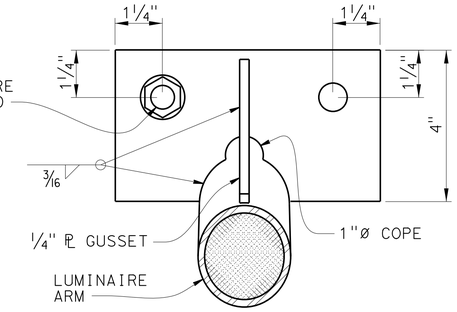

SECTION A-A

DETAIL A
TIE-ROD AT LUMINAIRE ARM
NO SCALE

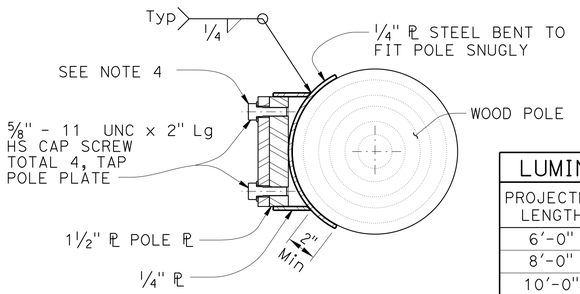

SECTION E-E

LUMINAIRE MAST ARM DATA			
PROJECTED LENGTH	N RISE	Min OD AT POLE	NOMINAL THICKNESS
6'-0"	2'-0"±	3 1/4"	0.1196"
8'-0"	2'-6"±	3 1/2"	
10'-0"	3'-3"±	3 7/8"	
12'-0"	4'-3"±		

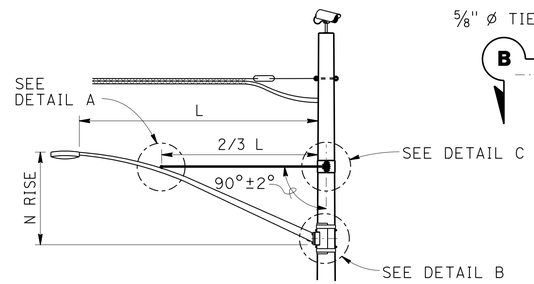

LUMINAIRE MAST ARM

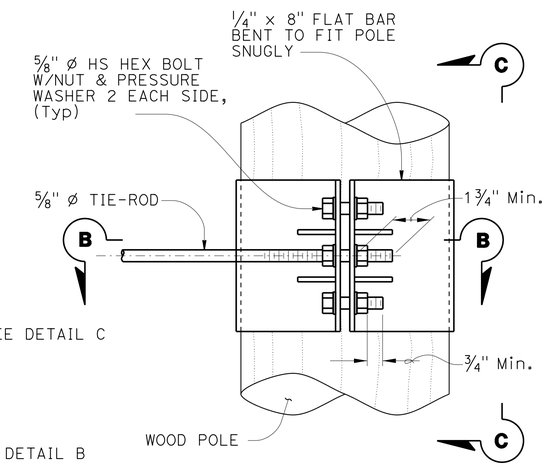

ELEVATION

NOTE:
Not all screw and bolt heads shown for clarity.

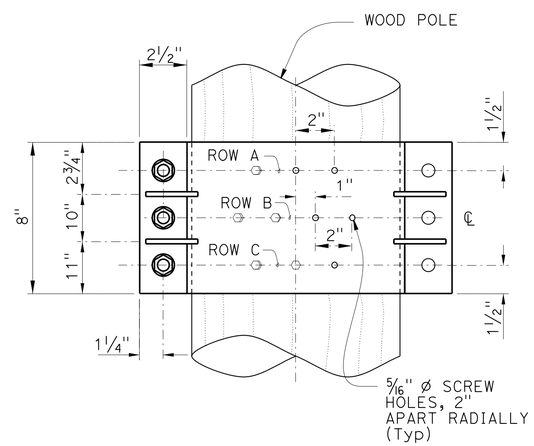

VIEW C-C

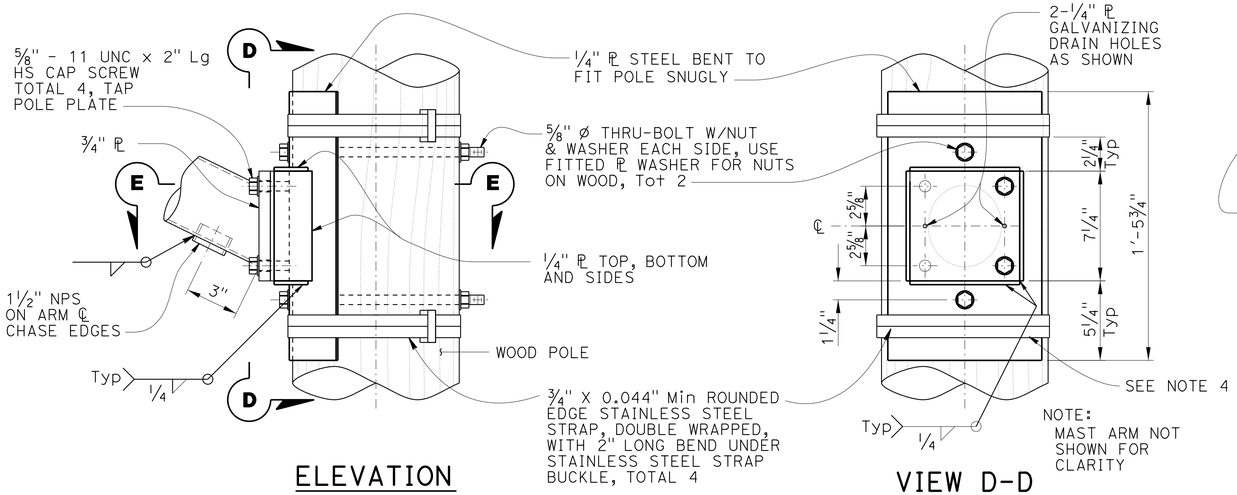

ELEVATION

VIEW D-D

DETAIL B
ARM CONNECTION DETAILS
NO SCALE

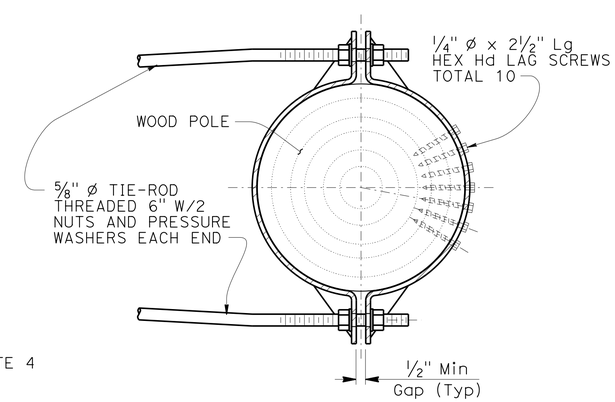

SECTION B-B

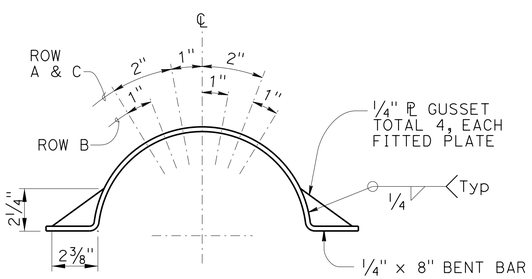

LAG SCREW AND
GUSSET PLATE LAYOUT

DETAIL C
TIE-ROD AT POLE
NO SCALE

STANDARD DRAWING		STATE OF CALIFORNIA DEPARTMENT OF TRANSPORTATION	DIVISION OF ENGINEERING SERVICES	BRIDGE NO. 42-0112	TEMPORARY WOOD POLES
FILE NO. xs18-080-3	APPROVAL DATE July 2014			POST MILE 33.1/33.4	DETAILS No. 3

DS OSD 2147A (ENGLISH STANDARD DRAWING "XS" BORDER REV. (02-02-11)

ORIGINAL SCALE IN INCHES FOR REDUCED PLANS 0 1 2 3

UNIT: 1475
PROJECT NUMBER & PHASE: 06120001141
CONTRACT NO.: 06-0N9904

DISREGARD PRINTS BEARING EARLIER REVISION DATES

REVISION DATES 6-27-14

SHEET 8 OF 10

FILE => xs18-080-3.dgn

USERNAME => s113541 DATE PLOTTED => 17-MAY-2016 TIME PLOTTED => 13:41

DIST	COUNTY	ROUTE	POST MILES TOTAL PROJECT	SHEET No.	TOTAL SHEETS
06	Fre, Mad	41U	33.1/33.4, 0.0/0.3	41	113

REGISTERED CIVIL ENGINEER 01-28-16 DATE

3-7-16
PLANS APPROVAL DATE

REGISTERED PROFESSIONAL ENGINEER THAAR F. JAWHAR No. 64207 Exp. 6-30-17 CIVIL STATE OF CALIFORNIA

The State of California or its officers or agents shall not be responsible for the accuracy or completeness of electronic copies of this plan sheet.

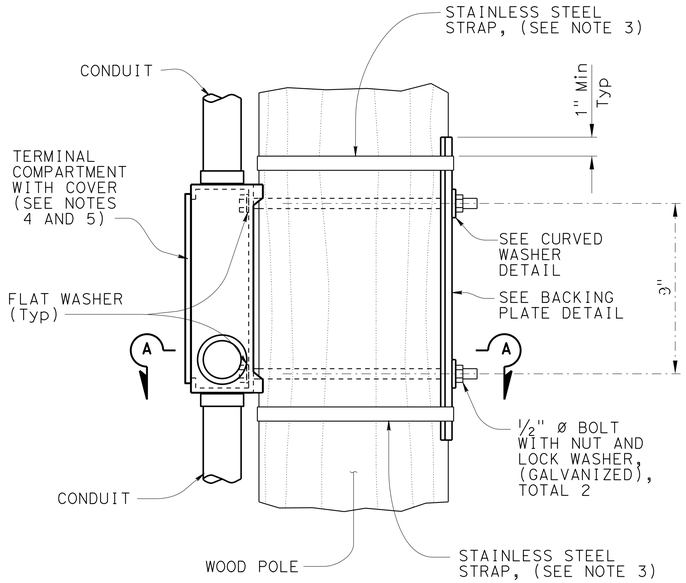

ELEVATION

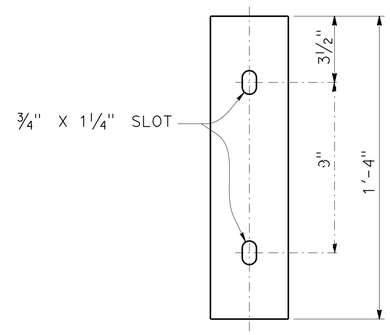

ELEVATION

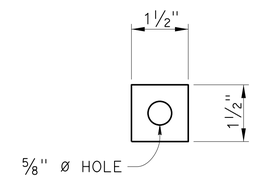

ELEVATION

PLAN

BACKING PLATE DETAIL

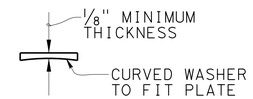

PLAN

CURVED WASHER DETAIL

NOTES:

1. Verify pole dimensions at terminal compartment for fabrication of backing plate and curved washer.
2. Backing plate to be galvanized after fabrication.
3. ¾" x 0.044" minimum, rounded edge stainless steel straps, double wrapped with 2" long bend under stainless steel strap buckle.
4. For miscellaneous details for signal mounting not shown see Standard Plan ES-4D.
5. If the terminal compartment has a cable entry guide on the rear face, remove the cable entry guide to a level that will not interfere with the wood post. Close any unused cable entry locations with raintight cap.

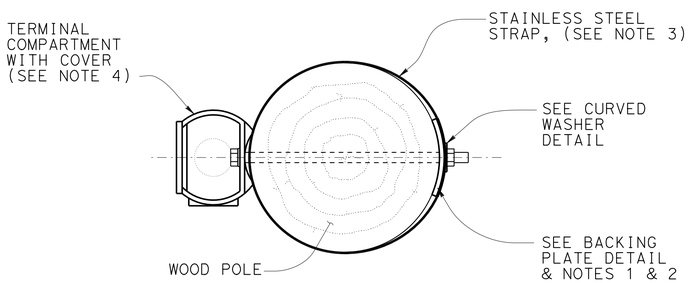

SECTION A-A

SIDE MOUNTING TERMINAL COMPARTMENT

NO SCALE

STANDARD DRAWING

FILE NO. xs18-080-4

APPROVAL DATE July 2014

STATE OF CALIFORNIA DEPARTMENT OF TRANSPORTATION

DIVISION OF ENGINEERING SERVICES

BRIDGE NO. 42-0112

POST MILE 33.1/33.4

TEMPORARY WOOD POLES DETAILS No. 4

DS OSD 2147A (ENGLISH STANDARD DRAWING "XS" BORDER REV. (02-02-11)

ORIGINAL SCALE IN INCHES FOR REDUCED PLANS 0 1 2 3

UNIT: 1475
PROJECT NUMBER & PHASE: 06120001141
CONTRACT NO.: 06-0N9904

DISREGARD PRINTS BEARING EARLIER REVISION DATES

REVISION DATES 6-27-14

SHEET 9 OF 10

FILE => xs18-080-4.dgn

USERNAME => s113541 DATE PLOTTED => 17-MAY-2016 TIME PLOTTED => 13:41

DIST	COUNTY	ROUTE	POST MILES TOTAL PROJECT	SHEET No.	TOTAL SHEETS
06	Fre, Mad	41U	33.1/33.4, 0.0/0.3	42	113

REGISTERED CIVIL ENGINEER 01-28-16 DATE

3-7-16
PLANS APPROVAL DATE

REGISTERED PROFESSIONAL ENGINEER THAAR F. JAWHAR No. 64207 Exp. 6-30-17 CIVIL STATE OF CALIFORNIA

The State of California or its officers or agents shall not be responsible for the accuracy or completeness of electronic copies of this plan sheet.

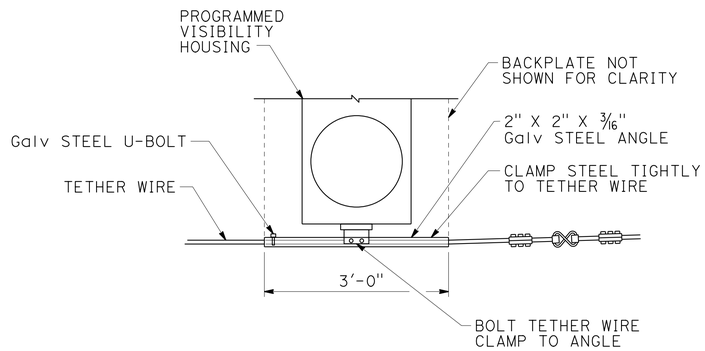

TETHER WIRE ATTACHMENT FOR PROGRAMMED VISIBILITY SIGNAL FACE

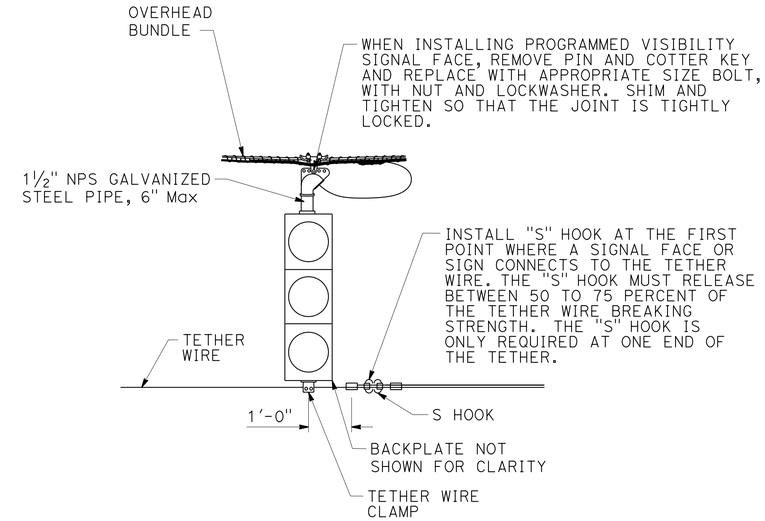

SIGNAL FACE SUPPORT

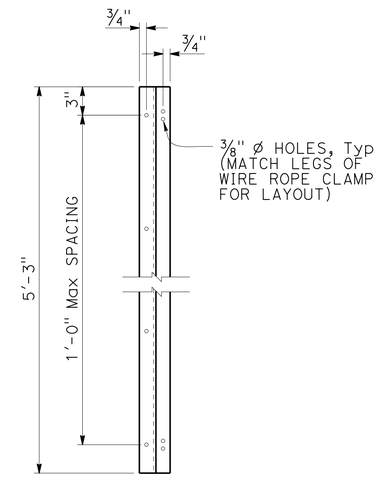

Z-BAR ELEVATION

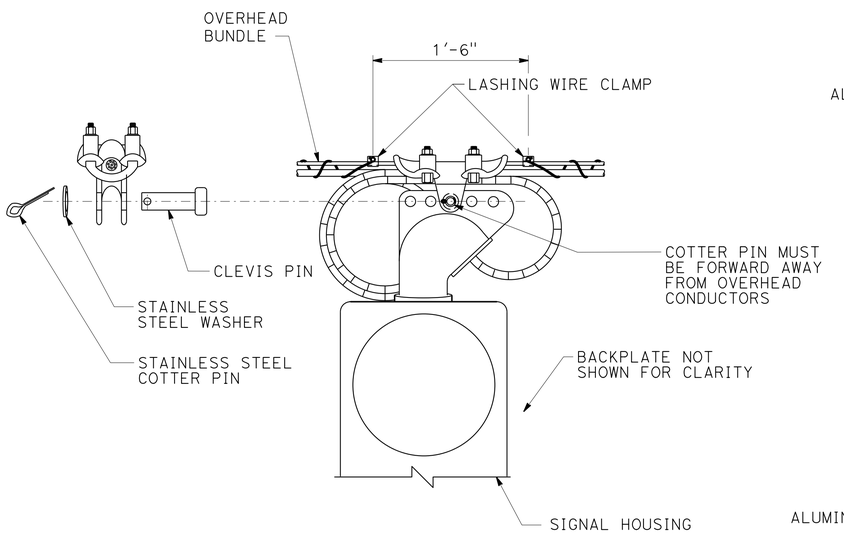

MESSENGER WIRE CLAMP COTTER PIN DETAIL

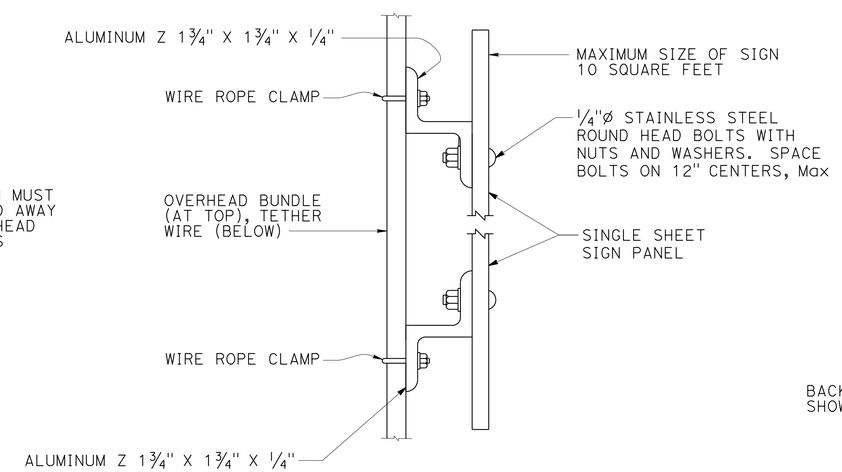

THE OVERLAPPED CONNECTION OF ADJUSTABLE HANGERS MUST USE A MINIMUM OF 2 BOLTS WITH A MINIMUM SPACING BETWEEN BOLTS OF 2"

SIGN MOUNTING DETAIL

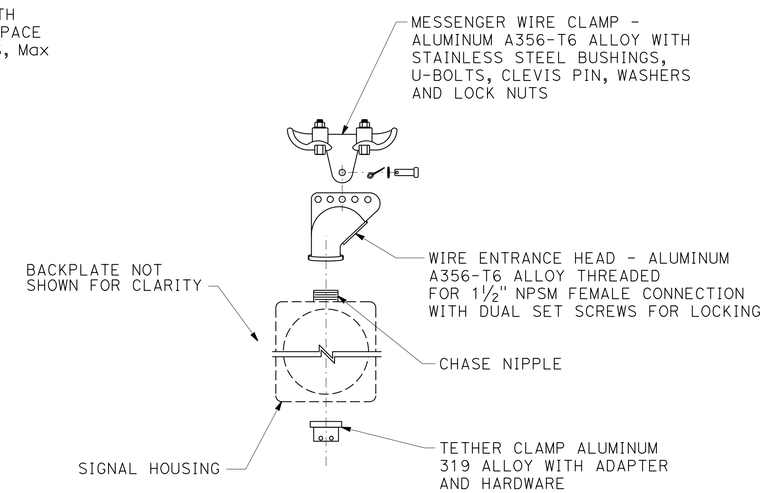

SIGNAL FACE SUPPORT EXPLODED VIEW

NO SCALE

STANDARD DRAWING

FILE NO. xs18-080-5

APPROVAL DATE July 2014

STATE OF CALIFORNIA DEPARTMENT OF TRANSPORTATION

DIVISION OF ENGINEERING SERVICES

BRIDGE NO. 42-0112

POST MILE 33.1/33.4

TEMPORARY WOOD POLES DETAILS No. 5

DS OSD 2147A (ENGLISH STANDARD DRAWING "XS" BORDER REV. (02-02-11)

ORIGINAL SCALE IN INCHES FOR REDUCED PLANS 0 1 2 3

UNIT: 1475
PROJECT NUMBER & PHASE: 06120001141
CONTRACT NO.: 06-0N9904

DISREGARD PRINTS BEARING EARLIER REVISION DATES

REVISION DATES 6-27-14

SHEET 10 OF 10

FILE => xs18-080-5.dgn

USERNAME => s113541 DATE PLOTTED => 17-MAY-2016 TIME PLOTTED => 13:41

M

Maint	MAINTENANCE
Max	MAXIMUM
MB	METAL BEAM
MBB	METAL BEAM BARRIER
MBGR	METAL BEAM GUARD RAILING
Med	MEDIAN
MGS	MIDWEST GUARDRAIL SYSTEM
MH	MANHOLE
Min	MINIMUM
Misc	MISCELLANEOUS
Misc I & S	MISCELLANEOUS IRON AND STEEL
Mkr	MARKER
Mod	MODIFIED,
	MODIFY
Mon	MONUMENT
MP	METAL PLATE
MPGR	METAL PLATE GUARD RAILING
MR	MOVEMENT RATING
MSE	MECHANICALLY STABILIZED EMBANKMENT
Mt	MOUNTAIN, MOUNT
Mtl	MATERIAL
MVP	MAINTENANCE VEHICLE PULLOUT

N

N	NORTH
NB	NORTHBOUND
No.	NUMBER (MUST HAVE PERIOD)
Nos.	NUMBERS (MUST HAVE PERIOD)
NPS	NOMINAL PIPE SIZE
NS	NEAR SIDE
NSP	NEW STANDARD PLAN
NTS	NOT TO SCALE

O

Oblr	OBLITERATE
OC	OVERCROSSING
OD	OUTSIDE DIAMETER
OF	OUTSIDE FACE
OG	ORIGINAL GROUND
OGAC	OPEN GRADED ASPHALT CONCRETE
OGFC	OPEN GRADED FRICTION COURSE
OH	OVERHEAD
OHWM	ORDINARY HIGH WATER MARK
O-O	OUT TO OUT
Opp	OPPOSITE
OSD	OVERSIDE DRAIN

P

P	PAGE
PAP	PERFORATED ALUMINUM PIPE
PB	PULL BOX
PC	POINT OF CURVATURE,
	PRECAST
PCC	POINT OF COMPOUND CURVE,
	PORTLAND CEMENT CONCRETE
PCMS	PORTABLE CHANGEABLE MESSAGE SIGN
PCP	PERFORATED CONCRETE PIPE,
	PRESTRESSED CONCRETE PIPE
PCVC	POINT OF COMPOUND VERTICAL CURVE
PEC	PERMIT TO ENTER AND CONSTRUCT
Ped	PEDESTRIAN
Ped OC	PEDESTRIAN OVERCROSSING
Ped UC	PEDESTRIAN UNDERCROSSING
Perm Mtl	PERMEABLE MATERIAL

P continued

PG	PROFILE GRADE
PI	POINT OF INTERSECTION
PJP	PARTIAL JOINT PENETRATION
Pkwy	PARKWAY
ℙ,PL	PLATE
P/L	PROPERTY LINE
PM	POST MILE,
	TIME FROM NOON TO MIDNIGHT
PN	PAVING NOTCH
POC	POINT OF HORIZONTAL CURVE
POT	POINT OF TANGENT
POVC	POINT OF VERTICAL CURVE
PP	PIPE PILE,
	PLASTIC PIPE,
	POWER POLE
PPL	PREFORMED PERMEABLE LINER
PPP	PERFORATED PLASTIC PIPE
PRC	POINT OF REVERSE CURVE
PRF	PAVEMENT REINFORCING FABRIC
PRVC	POINT OF REVERSE VERTICAL CURVE
PS&E	PLANS, SPECIFICATIONS AND ESTIMATES
PS, P/S	PRESTRESSED
PSP	PERFORATED STEEL PIPE
PT	POINT OF TANGENCY
PVC	POLYVINYL CHLORIDE
Pvmt	PAVEMENT

Q

Qty	QUANTITY

R

R	RADIUS
R & D	REMOVE AND DISPOSE
R & S	REMOVE AND SALVAGE
R/C	RATE OF CHANGE
RCA	REINFORCED CONCRETE ARCH
RCB	REINFORCED CONCRETE BOX
RCP	REINFORCED CONCRETE PIPE
RCPA	REINFORCED CONCRETE PIPE ARCH
Rd	ROAD
Reinf	REINFORCED,
	REINFORCEMENT,
	REINFORCING
Rel	RELOCATE
Repl	REPLACEMENT
Ret	RETAINING
Rev	REVISED, REVISION
Rdwy	ROADWAY
RHMA	RUBBERIZED HOT MIX ASPHALT
Riv	RIVER
RM	ROAD-MIXED
RP	RADIUS POINT,
	REFERENCE POINT
RR	RAILROAD
RSP	ROCK SLOPE PROTECTION,
	REVISED STANDARD PLAN
Rt	RIGHT
Rte	ROUTE
RW	REDWOOD,
	RETAINING WALL
R/W	RIGHT OF WAY
Rwy	RAILWAY

S

S	SOUTH,
	SUPPLEMENT
SAE	STRUCTURE APPROACH EMBANKMENT
Salv	SALVAGE
SAPP	STRUCTURAL ALUMINUM PLATE PIPE
SB	SOUTHBOUND
SC	SAND CUSHION
SCSP	SLOTTED CORRUGATED STEEL PIPE
SD	STORM DRAIN
Sec	SECOND,
	SECTION
Sep	SEPARATION
SG	SUBGRADE
Shld	SHOULDER
Sht	SHEET
Sim	SIMILAR
₤	STATION LINE
SM	SELECTED MATERIAL
Spec	SPECIAL,
	SPECIFICATIONS
SPP	SLOTTED PLASTIC PIPE
SS	SLOPE STAKE
SSBM	STRAP AND SADDLE BRACKET METHOD
SSD	STRUCTURAL SECTION DRAIN
SSPA	STRUCTURAL STEEL PLATE ARCH
SSPP	STRUCTURAL STEEL PLATE PIPE
SSPPA	STRUCTURAL STEEL PLATE PIPE ARCH
SSRP	STEEL SPIRAL RIB PIPE
St	STREET
Sta	STATION
STBB	SINGLE THRIE BEAM BARRIER
Std	STANDARD
Str	STRUCTURE
Surf	SURFACING
SW	SIDEWALK,
	SOUND WALL
Swr	SEWER
Sym	SYMMETRICAL
S4S	SURFACE 4 SIDES

T

T	SEMI-TANGENT
Tan	TANGENT
TBB	THRIE BEAM BARRIER
Tbr	TIMBER
TC	TOP OF CURB
TCB	TRAFFIC CONTROL BOX
TCE	TEMPORARY CONSTRUCTION EASEMENT
Tel	TELEPHONE
Temp	TEMPORARY
TG	TOP OF GRADE
Tot	TOTAL
TP	TELEPHONE POLE
TPB	TREATED PERMEABLE BASE
TPM	TREATED PERMEABLE MATERIAL
Trans	TRANSITION

T continued

TS	TRANSVERSE,
	TRAFFIC SIGNAL,
	TUBULAR STEEL
Typ	TYPICAL

U

UC	UNDERCROSSING
UD	UNDERDRAIN
UG	UNDERGROUND
UON	UNLESS OTHERWISE NOTED
UP	UNDERPASS

V

V	VALVE,
	DESIGN SPEED
Var	VARIABLE,
	VARIES
VC	VERTICAL CURVE
VCP	VITRIFIED CLAY PIPE
Vert	VERTICAL
Via	VIADUCT
Vol	VOLUME

W

W	WEST,
	WIDTH
WB	WESTBOUND
WH	WEEP HOLE
WM	WIRE MESH
WS	WATER SURFACE
WSP	WELDED STEEL PIPE
Wt	WEIGHT
WV	WATER VALVE
WW	WINGWALL
WWLOL	WINGWALL LAYOUT LINE

X

X Sec	CROSS SECTION
Xing	CROSSING

Y

Yr	YEAR
Yrs	YEARS

Dist	COUNTY	ROUTE	POST MILES TOTAL PROJECT	SHEET No.	TOTAL SHEETS
06	Fre, Mad	41U	33.1/33.4 0.0/0.3	43	113

Grace M. Tsushima
REGISTERED CIVIL ENGINEER

July 19, 2013
PLANS APPROVAL DATE

REGISTERED PROFESSIONAL ENGINEER Grace M. Tsushima No. C49814 Exp. 9-30-14 CIVIL STATE OF CALIFORNIA

THE STATE OF CALIFORNIA OR ITS OFFICERS OR AGENTS SHALL NOT BE RESPONSIBLE FOR THE ACCURACY OR COMPLETENESS OF SCANNED COPIES OF THIS PLAN SHEET.

TO ACCOMPANY PLANS DATED 3-7-16

UNIT OF MEASUREMENT SYMBOLS:

Some of the symbols used in the project plan quantity tables and in the Bid Item List are:

TABLE A

SYMBOL USED	DEFINITIONS
ACRE	ACRE
CF	CUBIC FOOT
CY	CUBIC YARD
EA	EACH
GAL	GALLON
LB	POUND
LF	LINEAR FOOT
SQFT	SQUARE FOOT
SQYD	SQUARE YARD
STA	100 FEET
TAB	TABLET
TON	2,000 POUNDS

Some of the symbols used in the plans other than in the project plan quantity tables are:

TABLE B

SYMBOL USED	DEFINITIONS
ksi	KIPS PER SQUARE INCH
ksf	KIPS PER SQUARE FOOT
psi	POUNDS PER SQUARE INCH
psf	POUNDS PER SQUARE FOOT
lb/ft^3, pcf	POUNDS PER CUBIC FOOT
tsf	TONS PER SQUARE FOOT
mph, MPH *	MILES PER HOUR
ø	NOMINAL DIAMETER
oz	OUNCE
lb	POUND
kip	1,000 POUNDS
cal	CALORIE
ft	FOOT OR FEET
gal	GALLON

* For use on a sign panel only

STATE OF CALIFORNIA
DEPARTMENT OF TRANSPORTATION

ABBREVIATIONS (SHEET 2 OF 2)

NO SCALE

RSP A10B DATED JULY 19, 2013 SUPERSEDES STANDARD PLAN A10B DATED MAY 20, 2011 - PAGE 2 OF THE STANDARD PLANS BOOK DATED 2010.

REVISED STANDARD PLAN RSP A10B

2010 REVISED STANDARD PLAN RSP A10B

6-7-13

REFERENCE: CALTRANS SOIL & ROCK LOGGING, CLASSIFICATION, AND PRESENTATION MANUAL (2010)

Dist	COUNTY	ROUTE	POST MILES TOTAL PROJECT	SHEET No.	TOTAL SHEETS
06	Fre, Mad	41U	33.1/33.4 0.0/0.3	44	113

CERTIFIED ENGINEERING GEOLOGIST

October 30, 2015
PLANS APPROVAL DATE

REGISTERED GEOLOGIST
CHRIS A. RISDEN
CERTIFIED ENGINEERING GEOLOGIST
No. 2541
Exp. 9-30-17
STATE OF CALIFORNIA

THE STATE OF CALIFORNIA OR ITS OFFICERS OR AGENTS SHALL NOT BE RESPONSIBLE FOR THE ACCURACY OR COMPLETENESS OF SCANNED COPIES OF THIS PLAN SHEET.

TO ACCOMPANY PLANS DATED 3-7-16

ABBREVIATION:

GWS = Ground Water Surface

CEMENTATION

DESCRIPTION	CRITERIA
WEAK	CRUMBLES OR BREAKS WITH HANDLING OR LITTLE FINGER PRESSURE.
MODERATE	CRUMBLES OR BREAKS WITH CONSIDERABLE FINGER PRESSURE.
STRONG	WILL NOT CRUMBLE OR BREAK WITH FINGER PRESSURE.

BOREHOLE IDENTIFICATION

SYMBOL	HOLE TYPE	DESCRIPTION
Size	A	AUGER BORING (HOLLOW OR SOLID STEM BUCKET)
Size	R	ROTARY DRILLED BORING (CONVENTIONAL)
	RW	ROTARY DRILLED WITH SELF-CASING WIRE-LINE
	RC	ROTARY CORE WITH CONTINUOUSLY-SAMPLED, SELF-CASING WIRE-LINE
	P	ROTARY PERCUSSION BORING (AIR)
Size	R	ROTARY DRILLED DIAMOND CORE
	RC	ROTARY DRILLED DIAMOND CORE, CONTINUOUSLY SAMPLED
Size	HD	HAND DRIVEN (1-INCH SOIL TUBE)
	HA	HAND AUGER
●	D	DYNAMIC CONE PENETRATION BORING
▲	CPT	CONE PENETRATION TEST (ASTM D 5778)
⬚	O	OTHER (NOTE ON LOTB)

Note: Size in inches.

CONSISTENCY OF COHESIVE SOILS

DESCRIPTION	SHEAR STRENGTH (tsf)	POCKET PENETROMETER MEASUREMENT, PP, (tsf)	TORVANE MEASUREMENT, TV, (tsf)	VANE SHEAR MEASUREMENT, VS, (tsf)
VERY SOFT	LESS THAN 0.12	LESS THAN 0.25	LESS THAN 0.12	LESS THAN 0.12
SOFT	0.12 - 0.25	0.25 - 0.5	0.12 - 0.25	0.12 - 0.25
MEDIUM STIFF	0.25 - 0.5	0.5 - 1	0.25 - 0.5	0.25 - 0.5
STIFF	0.5 - 1	1 - 2	0.5 - 1	0.5 - 1
VERY STIFF	1 - 2	2 - 4	1 - 2	1 - 2
HARD	GREATER THAN 2	GREATER THAN 4	GREATER THAN 2	GREATER THAN 2

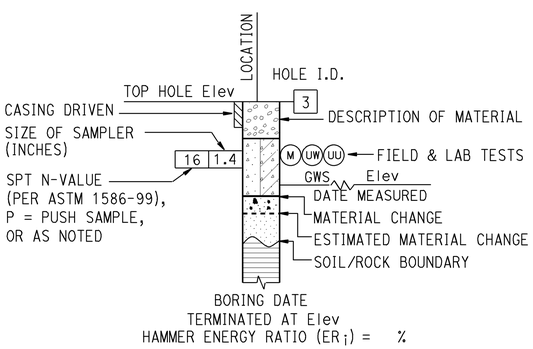

ROTARY BORING

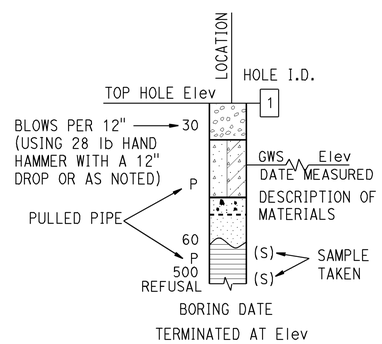

HAND BORING

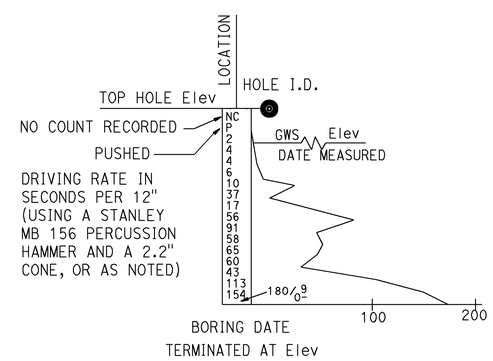

DYNAMIC CONE PENETRATION BORING

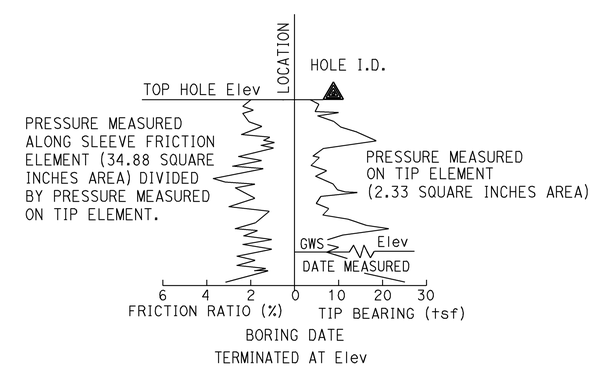

CONE PENETRATION TEST (CPT) BORING

STATE OF CALIFORNIA
DEPARTMENT OF TRANSPORTATION

LEGEND - SOIL (SHEET 1 OF 2)

NO SCALE

RSP A10F DATED OCTOBER 30, 2015 SUPERSEDES STANDARD PLAN A10F DATED MAY 20, 2011 - PAGE 6 OF THE STANDARD PLANS BOOK DATED 2010.

REVISED STANDARD PLAN RSP A10F

2010 REVISED STANDARD PLAN RSP A10F

8-18-15

REFERENCE: CALTRANS SOIL & ROCK LOGGING, CLASSIFICATION, AND PRESENTATION MANUAL (2010)

Dist	COUNTY	ROUTE	POST MILES TOTAL PROJECT	SHEET No.	TOTAL SHEETS
06	Fre, Mad	41U	33.1/33.4 0.0/0.3	45	113

CERTIFIED ENGINEERING GEOLOGIST

October 30, 2015
PLANS APPROVAL DATE

REGISTERED GEOLOGIST
CHRIS A. RISDEN
CERTIFIED ENGINEERING GEOLOGIST
No. 2541
Exp. 9-30-17
STATE OF CALIFORNIA

THE STATE OF CALIFORNIA OR ITS OFFICERS OR AGENTS SHALL NOT BE RESPONSIBLE FOR THE ACCURACY OR COMPLETENESS OF SCANNED COPIES OF THIS PLAN SHEET.

TO ACCOMPANY PLANS DATED 3-7-16

GROUP SYMBOLS AND NAMES

GRAPHIC/SYMBOL	GROUP NAMES	GRAPHIC/SYMBOL	GROUP NAMES
GW	WELL-GRADED GRAVEL WELL-GRADED GRAVEL WITH SAND	CL	LEAN CLAY LEAN CLAY WITH SAND LEAN CLAY WITH GRAVEL SANDY LEAN CLAY SANDY LEAN CLAY WITH GRAVEL GRAVELLY LEAN CLAY GRAVELLY LEAN CLAY WITH SAND
GP	POORLY-GRADED GRAVEL POORLY-GRADED GRAVEL WITH SAND		
GW-GM	WELL-GRADED GRAVEL WITH SILT WELL-GRADED GRAVEL WITH SILT AND SAND	CL-ML	SILTY CLAY SILTY CLAY WITH SAND SILTY CLAY WITH GRAVEL SANDY SILTY CLAY SANDY SILTY CLAY WITH GRAVEL GRAVELLY SILTY CLAY GRAVELLY SILTY CLAY WITH SAND
GW-GC	WELL-GRADED GRAVEL WITH CLAY (OR SILTY CLAY) WELL-GRADED GRAVEL WITH CLAY AND SAND (OR SILTY CLAY AND SAND)		
GP-GM	POORLY-GRADED GRAVEL WITH SILT POORLY-GRADED GRAVEL WITH SILT AND SAND	ML	SILT SILT WITH SAND SILT WITH GRAVEL SANDY SILT SANDY SILT WITH GRAVEL GRAVELLY SILT GRAVELLY SILT WITH SAND
GP-GC	POORLY-GRADED GRAVEL WITH CLAY (OR SILTY CLAY) POORLY-GRADED GRAVEL WITH CLAY AND SAND (OR SILTY CLAY AND SAND)		
GM	SILTY GRAVEL SILTY GRAVEL WITH SAND	OL	ORGANIC LEAN CLAY ORGANIC LEAN CLAY WITH SAND ORGANIC LEAN CLAY WITH GRAVEL SANDY ORGANIC LEAN CLAY SANDY ORGANIC LEAN CLAY WITH GRAVEL GRAVELLY ORGANIC LEAN CLAY GRAVELLY ORGANIC LEAN CLAY WITH SAND
GC	CLAYEY GRAVEL CLAYEY GRAVEL WITH SAND		
GC-GM	SILTY, CLAYEY GRAVEL SILTY, CLAYEY GRAVEL WITH SAND	OL	ORGANIC SILT ORGANIC SILT WITH SAND ORGANIC SILT WITH GRAVEL SANDY ORGANIC SILT SANDY ORGANIC SILT WITH GRAVEL GRAVELLY ORGANIC SILT GRAVELLY ORGANIC SILT WITH SAND
SW	WELL-GRADED SAND WELL-GRADED SAND WITH GRAVEL		
SP	POORLY-GRADED SAND POORLY-GRADED SAND WITH GRAVEL	CH	FAT CLAY FAT CLAY WITH SAND FAT CLAY WITH GRAVEL SANDY FAT CLAY SANDY FAT CLAY WITH GRAVEL GRAVELLY FAT CLAY GRAVELLY FAT CLAY WITH SAND
SW-SM	WELL-GRADED SAND WITH SILT WELL-GRADED SAND WITH SILT AND GRAVEL		
SW-SC	WELL-GRADED SAND WITH CLAY (OR SILTY CLAY) WELL-GRADED SAND WITH CLAY AND GRAVEL (OR SILTY CLAY AND GRAVEL)	MH	ELASTIC SILT ELASTIC SILT WITH SAND ELASTIC SILT WITH GRAVEL SANDY ELASTIC SILT SANDY ELASTIC SILT WITH GRAVEL GRAVELLY ELASTIC SILT GRAVELLY ELASTIC SILT WITH SAND
SP-SM	POORLY-GRADED SAND WITH SILT POORLY-GRADED SAND WITH SILT AND GRAVEL		
SP-SC	POORLY-GRADED SAND WITH CLAY (OR SILTY CLAY) POORLY-GRADED SAND WITH CLAY AND GRAVEL (OR SILTY CLAY AND GRAVEL)	OH	ORGANIC FAT CLAY ORGANIC FAT CLAY WITH SAND ORGANIC FAT CLAY WITH GRAVEL SANDY ORGANIC FAT CLAY SANDY ORGANIC FAT CLAY WITH GRAVEL GRAVELLY ORGANIC FAT CLAY GRAVELLY ORGANIC FAT CLAY WITH SAND
SM	SILTY SAND SILTY SAND WITH GRAVEL		
SC	CLAYEY SAND CLAYEY SAND WITH GRAVEL	OH	ORGANIC ELASTIC SILT ORGANIC ELASTIC SILT WITH SAND ORGANIC ELASTIC SILT WITH GRAVEL SANDY ORGANIC ELASTIC SILT SANDY ORGANIC ELASTIC SILT WITH GRAVEL GRAVELLY ORGANIC ELASTIC SILT GRAVELLY ORGANIC ELASTIC SILT WITH SAND
SC-SM	SILTY, CLAYEY SAND SILTY, CLAYEY SAND WITH GRAVEL		
PT	PEAT	OL/OH	ORGANIC SOIL ORGANIC SOIL WITH SAND ORGANIC SOIL WITH GRAVEL SANDY ORGANIC SOIL SANDY ORGANIC SOIL WITH GRAVEL GRAVELLY ORGANIC SOIL GRAVELLY ORGANIC SOIL WITH SAND
	COBBLES COBBLES AND BOULDERS BOULDERS		

FIELD AND LABORATORY TESTING

- (C) CONSOLIDATION (ASTM D2435)
- (CL) COLLAPSE POTENTIAL (ASTM D4546)
- (CP) COMPACTION CURVE (CTM 216)
- (CR) CORROSIVITY TESTING (CTM 643, CTM 422, CTM 417)
- (CU) CONSOLIDATED UNDRAINED TRIAXIAL (ASTM D4767)
- (DS) DIRECT SHEAR (ASTM D3080)
- (EI) EXPANSION INDEX (ASTM D4829)
- (M) MOISTURE CONTENT (ASTM D2216)
- (OC) ORGANIC CONTENT-% (ASTM D2974)
- (P) PERMEABILITY (CTM 220)
- (PA) PARTICLE SIZE ANALYSIS (ASTM D422)
- (PI) PLASTICITY INDEX (AASHTO T 90) LIQUID LIMIT (AASHTO T 89)
- (PL) POINT LOAD INDEX (ASTM D5731)
- (PM) PRESSURE METER
- (R) R-VALUE (CTM 301)
- (SE) SAND EQUIVALENT (CTM 217)
- (SG) SPECIFIC GRAVITY (AASHTO T 100)
- (SL) SHRINKAGE LIMIT (ASTM D4943)
- (SW) SWELL POTENTIAL (ASTM D4546)
- (UC) UNCONFINED COMPRESSION-SOIL (ASTM D2166) UNCONFINED COMPRESSION-ROCK (ASTM D7012 - METHOD C)
- (UU) UNCONSOLIDATED UNDRAINED TRIAXIAL (ASTM D2850)
- (UW) UNIT WEIGHT (ASTM D7263 - METHOD B)

APPARENT DENSITY OF COHESIONLESS SOILS

DESCRIPTION	SPT N_{60} (BLOWS / 12 INCHES)
VERY LOOSE	0 - 5
LOOSE	5 - 10
MEDIUM DENSE	10 - 30
DENSE	30 - 50
VERY DENSE	GREATER THAN 50

MOISTURE

DESCRIPTION	CRITERIA
DRY	NO DISCERNABLE MOISTURE
MOIST	MOISTURE PRESENT, BUT NO FREE WATER
WET	VISIBLE FREE WATER

PERCENT OR PROPORTION OF SOILS

DESCRIPTION	CRITERIA
TRACE	PARTICLES ARE PRESENT BUT ESTIMATED TO BE LESS THAN 5%
FEW	5% - 10%
LITTLE	15% - 25%
SOME	30% - 45%
MOSTLY	50% - 100%

PARTICLE SIZE

DESCRIPTION		SIZE
BOULDER		GREATER THAN 12"
COBBLE		3" - 12"
GRAVEL	COARSE	3/4" - 3"
	FINE	1/5" - 3/4"
SAND	COARSE	1/16" - 1/5"
	MEDIUM	1/64" - 1/16"
	FINE	1/300" - 1/64"
SILT AND CLAY		LESS THAN 1/300"

STATE OF CALIFORNIA
DEPARTMENT OF TRANSPORTATION

LEGEND - SOIL (SHEET 2 OF 2)

NO SCALE

RSP A10G DATED OCTOBER 30, 2015 SUPERSEDES STANDARD PLAN A10G DATED MAY 20, 2011 - PAGE 7 OF THE STANDARD PLANS BOOK DATED 2010.

REVISED STANDARD PLAN RSP A10G

2010 REVISED STANDARD PLAN RSP A10G

9-22-15

Dist	COUNTY	ROUTE	POST MILES TOTAL PROJECT	SHEET No.	TOTAL SHEETS
06	Fre, Mad	41U	33.1/33.4 0.0/0.3	46	113

REGISTERED CIVIL ENGINEER

July 20, 2012
PLANS APPROVAL DATE

REGISTERED PROFESSIONAL ENGINEER
Roberta L. McLaughlin
No. C40375
Exp. 3-31-13
CIVIL
STATE OF CALIFORNIA

THE STATE OF CALIFORNIA OR ITS OFFICERS OR AGENTS SHALL NOT BE RESPONSIBLE FOR THE ACCURACY OR COMPLETENESS OF SCANNED COPIES OF THIS PLAN SHEET.

TO ACCOMPANY PLANS DATED 3-7-16

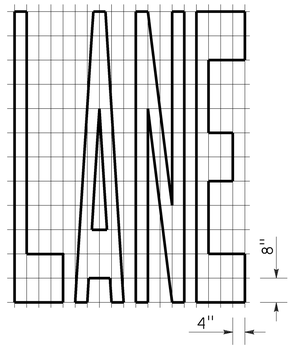

A=24 ft²

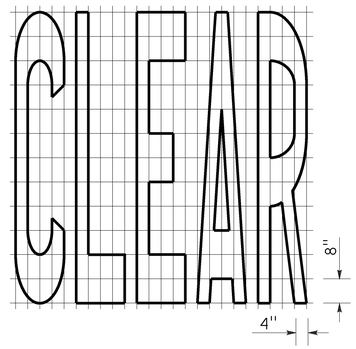

A=27 ft²

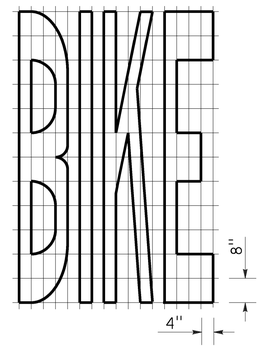

A=21 ft²

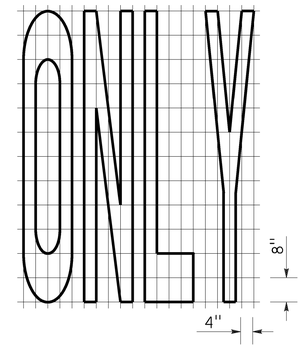

A=22 ft²

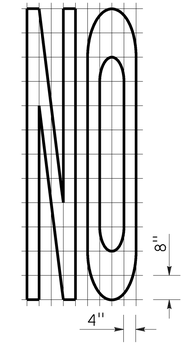

A=14 ft²

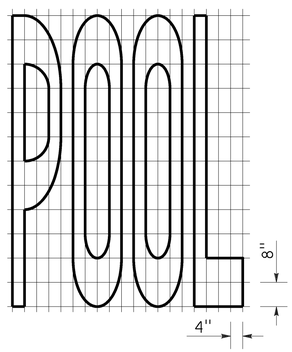

A=23 ft²

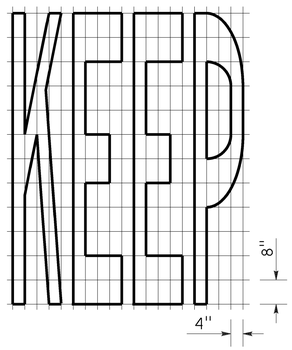

A=24 ft²

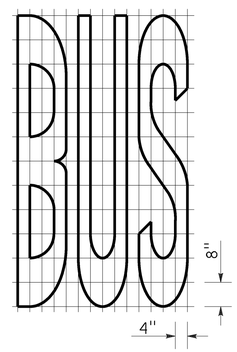

A=20 ft²

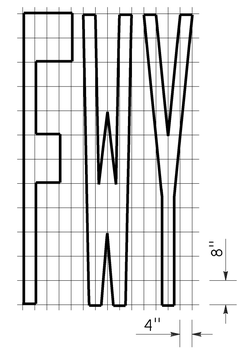

A=16 ft²

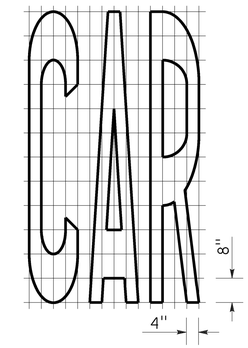

A=17 ft²

WORD MARKINGS			
ITEM	ft²	ITEM	ft²
LANE	24	NO	14
POOL	23	BIKE	21
CAR	17	BUS	20
CLEAR	27	ONLY	22
KEEP	24	FWY	16

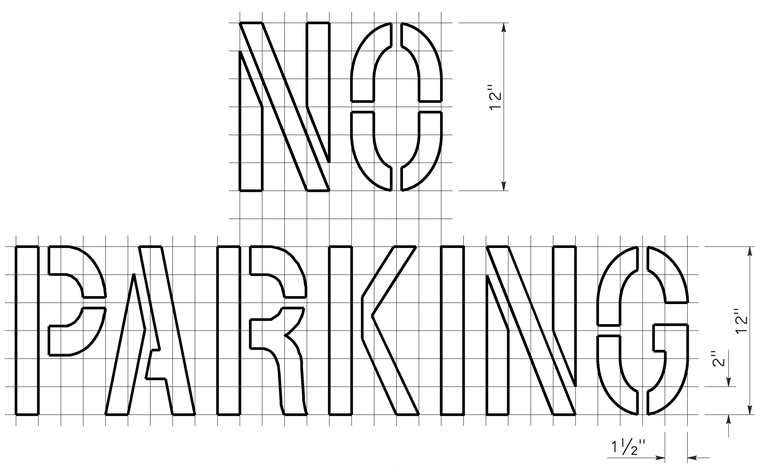

A=2 ft²
See Notes 6 and 7

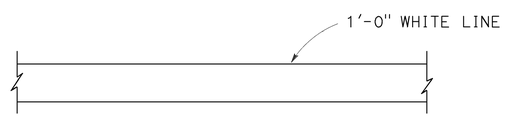

LIMIT LINE (STOP LINE)

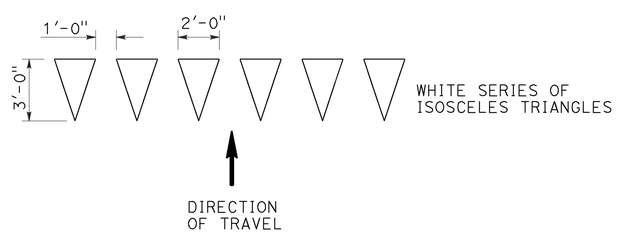

YIELD LINE

NOTES:

1. If a message consists of more than one word, it should read "UP", i.e., the first word should be nearest the driver.
2. The space between words should be at least four times the height of the characters for low speed roads, but not more than ten times the height of the characters. The space may be reduced appropriately where there is limited space because of local conditions.
3. Minor variations in dimensions may be accepted by the Engineer.
4. Portions of a letter, number or symbol may be separated by connecting segments not to exceed 2" in width.
5. The words "NO PARKING" pavement marking is to be used for parking facilities. For typical locations of markings, see Standard Plans A90A and A90B.
6. The words "NO PARKING", shall be painted in white letters no less than 1'-0" high on a contrasting background and located so that it is visible to traffic enforcement officials.

STATE OF CALIFORNIA
DEPARTMENT OF TRANSPORTATION

PAVEMENT MARKINGS WORDS, LIMIT AND YIELD LINES

NO SCALE

RSP A24E DATED JULY 20, 2012 SUPERSEDES STANDARD PLAN A24E
DATED MAY 20, 2011 - PAGE 17 OF THE STANDARD PLANS BOOK DATED 2010.

REVISED STANDARD PLAN RSP A24E

2010 REVISED STANDARD PLAN RSP A24E

6-12-12

Dist	COUNTY	ROUTE	POST MILES TOTAL PROJECT	SHEET No.	TOTAL SHEETS
06	Fre, Mad	41U	33.1/33.4 0.0/0.3	47	113

Randell D. Hiatt
REGISTERED CIVIL ENGINEER

July 19, 2013
PLANS APPROVAL DATE

REGISTERED PROFESSIONAL ENGINEER Randell D. Hiatt No. C50200 Exp. 6-30-15 CIVIL STATE OF CALIFORNIA

THE STATE OF CALIFORNIA OR ITS OFFICERS OR AGENTS SHALL NOT BE RESPONSIBLE FOR THE ACCURACY OR COMPLETENESS OF SCANNED COPIES OF THIS PLAN SHEET.

TO ACCOMPANY PLANS DATED 3-7-16

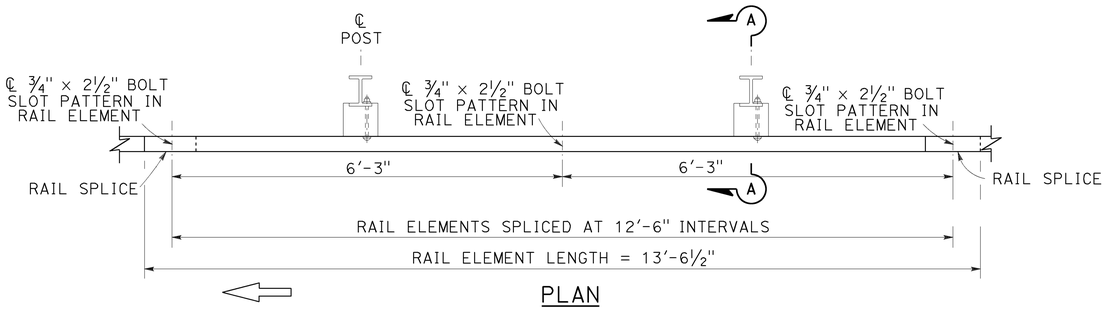

PLAN

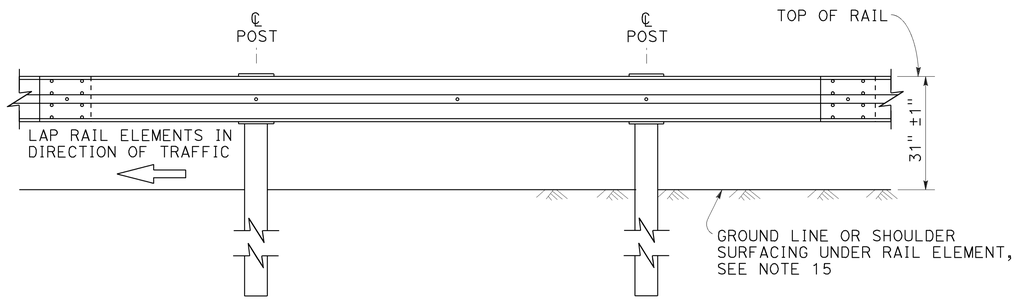

ELEVATION

MIDWEST GUARDRAIL SYSTEM WITH STEEL POSTS AND NOTCHED WOOD OR NOTCHED RECYCLED PLASTIC BLOCKS

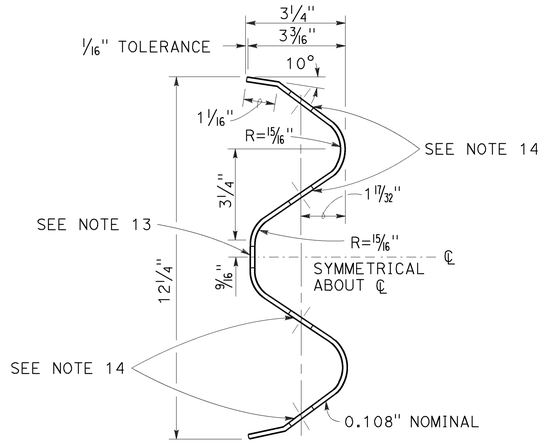

SECTION THRU RAIL ELEMENT

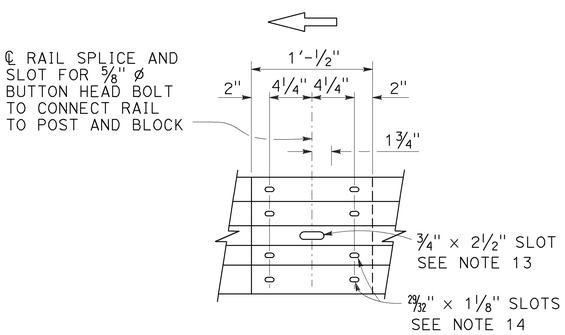

ELEVATION

RAIL ELEMENT SPLICE DETAIL

a) Connect the over lapped end of the rail elements with ⅝" ø × 1⅜" button head oval shoulder splice bolts inserted into the 29⁄32" × 1⅛" slots and bolted together with ⅝" ø recessed hex nuts. Recess of hex nut points toward rail element. A total of 8 bolts and nuts are to be used at each rail splice connection.

b) The ends of the rail elements are to be overlapped in the direction of traffic (see details).

c) Where end cap is to be attached to the end of a rail element, a total of 4 of the above described splice bolts and nuts are to be used.

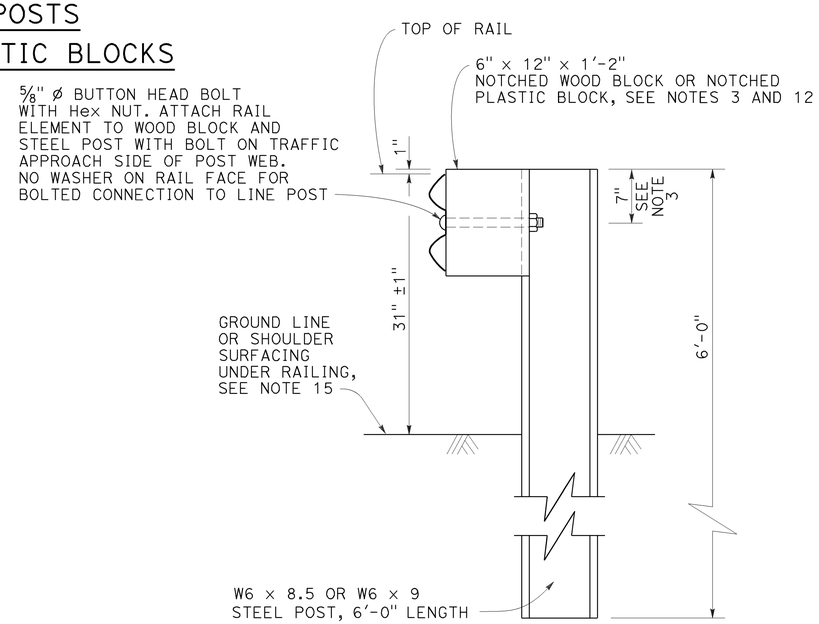

SECTION A-A

TYPICAL STEEL LINE POST INSTALLATION

See Note 4

NOTES:

1. For details of wood post installations, see Revised Standard Plan RSP A77L1.
2. For details of standard hardware used to construct MGS, see Revised Standard Plan RSP A77M1.
3. For details of steel posts and notched wood blocks used to construct MGS, see Revised Standard Plan RSP A77N2.
4. For additional installation details, see Revised Standard Plan RSP A77N3.
5. MGS post spacing to be 6'-3" center to center, except as otherwise noted.
6. For MGS typical layouts, see the A77P, A77Q and A77R Series of Standard Plans.
7. If railing is connected to terminal system end treatment, use 31" height terminal system end treatment.
8. For MGS end anchor details, see Revised Standard Plans RSP A77S1 and RSP A77T2.
9. For details of MGS transition to bridge railing, see Revised Standard Plan RSP A77U4.
10. For additional details of MGS connection to bridge railings, see Revised Standard Plans RSP A77U1, RSP A77U2 and RSP A77V1.
11. For dike positioning and MGS delineation details, see Revised Standard Plan RSP A77N4.
12. Notched face of block faces steel post.
13. Slotted hole for bolted connection of rail element to block and post. See "Section Thru Rail Element".
14. Slotted holes for splice bolts to overlap ends of rail element. See "Section Thru Rail Element".
15. Install posts in soil.

STATE OF CALIFORNIA
DEPARTMENT OF TRANSPORTATION

MIDWEST GUARDRAIL SYSTEM STANDARD RAILING SECTION (STEEL POST WITH NOTCHED WOOD OR NOTCHED RECYCLED PLASTIC BLOCK)

NO SCALE

RSP A77L2 DATED JULY 19, 2013 SUPPLEMENTS THE STANDARD PLANS BOOK DATED 2010.

REVISED STANDARD PLAN RSP A77L2

2010 REVISED STANDARD PLAN RSP A77L2

7-3-13

Dist	COUNTY	ROUTE	POST MILES TOTAL PROJECT	SHEET No.	TOTAL SHEETS
06	Fre, Mad	41U	33.1/33.4 0.0/0.3	48	113

Randell D. Hiatt
REGISTERED CIVIL ENGINEER

July 19, 2013
PLANS APPROVAL DATE

REGISTERED PROFESSIONAL ENGINEER
Randell D. Hiatt
No. C50200
Exp. 6-30-15
CIVIL
STATE OF CALIFORNIA

THE STATE OF CALIFORNIA OR ITS OFFICERS OR AGENTS SHALL NOT BE RESPONSIBLE FOR THE ACCURACY OR COMPLETENESS OF SCANNED COPIES OF THIS PLAN SHEET.

TO ACCOMPANY PLANS DATED 3-7-16

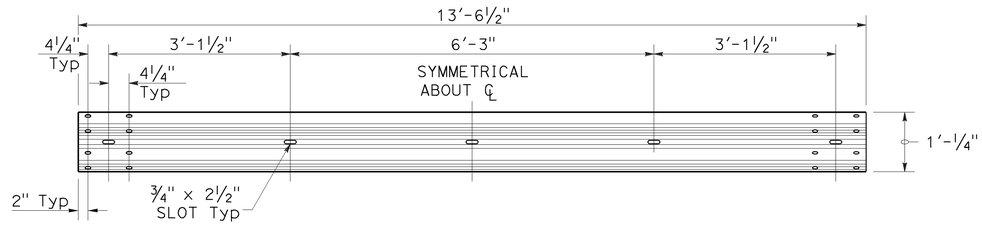

TYPICAL RAIL ELEMENT

NOTE:

1. Slotted holes for splice bolts to overlap ends of rail element.

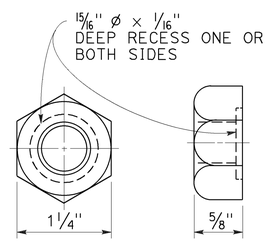

⅝" ø RECESS NUT

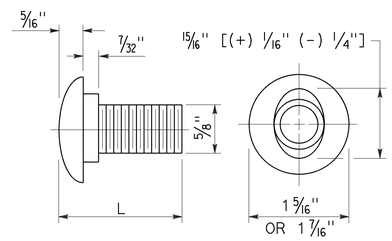

⅝" ø BUTTON HEAD BOLT

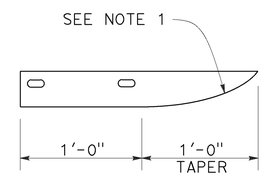

PLAN

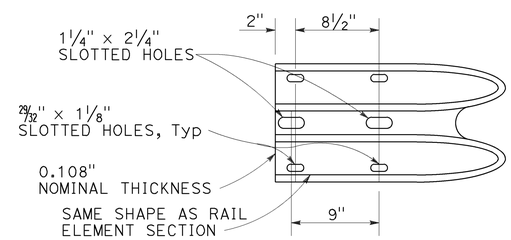

ELEVATION

END CAP
(TYPE A)

BUTTON HEAD BOLT

L	THREAD LENGTH
1⅜"	FULL THREAD LENGTH
2"	FULL THREAD LENGTH
10"	4" Min THREAD LENGTH
18"	4" Min THREAD LENGTH
20"	4" Min THREAD LENGTH
22"	4" Min THREAD LENGTH
26"	4" Min THREAD LENGTH
36"	4" Min THREAD LENGTH
** 2¾"	2" Min THREAD LENGTH
** 19"	4" Min THREAD LENGTH

** For nested rail applications.

STATE OF CALIFORNIA
DEPARTMENT OF TRANSPORTATION

MIDWEST GUARDRAIL SYSTEM STANDARD HARDWARE

NO SCALE

RSP A77M1 DATED JULY 19, 2013 SUPPLEMENTS THE STANDARD PLANS BOOK DATED 2010.

REVISED STANDARD PLAN RSP A77M1

2010 REVISED STANDARD PLAN RSP A77M1

7-3-13

Dist	COUNTY	ROUTE	POST MILES TOTAL PROJECT	SHEET No.	TOTAL SHEETS
06	Fre, Mad	41U	33.1/33.4 0.0/0.3	49	113

Randell D. Hiatt
REGISTERED CIVIL ENGINEER

November 15, 2013
PLANS APPROVAL DATE

REGISTERED PROFESSIONAL ENGINEER
Randell D. Hiatt
No. C50200
Exp. 6-30-15
CIVIL
STATE OF CALIFORNIA

THE STATE OF CALIFORNIA OR ITS OFFICERS OR AGENTS SHALL NOT BE RESPONSIBLE FOR THE ACCURACY OR COMPLETENESS OF SCANNED COPIES OF THIS PLAN SHEET.

TO ACCOMPANY PLANS DATED 3-7-16

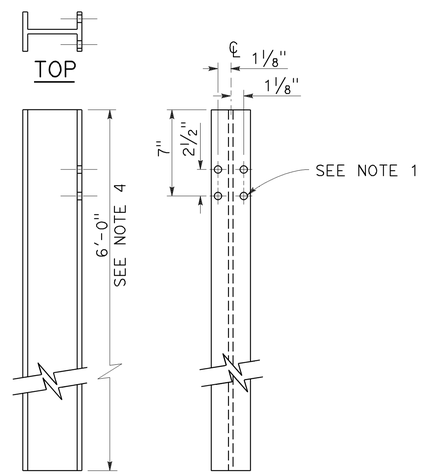

SIDE FRONT

W6 x 9 OR W6 x 8.5
STEEL POST
See Note 4

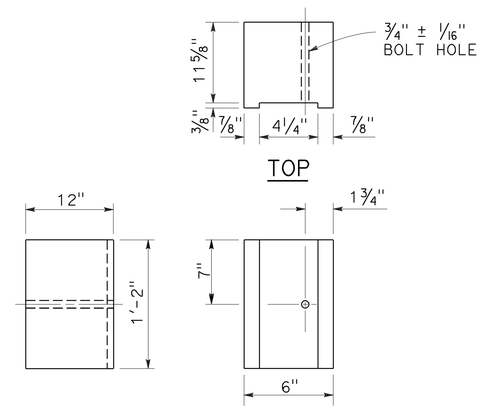

SIDE FRONT

6" x 12"
NOTCHED WOOD BLOCK
See Notes 2 and 3

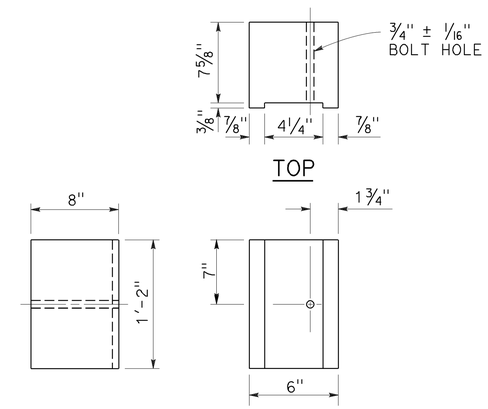

SIDE FRONT

6" x 8"
NOTCHED WOOD BLOCK
Only for use with metal beam guard railing. See Note 5

NOTES:

1. All holes in steel post shall be 13/16" Dia maximum.
2. Dimensions shown for wood block are nominal.
3. Notched face of block faces steel post.
4. 6'-0" length posts to be used for typical roadway installation. See Revised Standard Plan RSP A77N3.
5. See Revised Standard Plan RSP A77L3 for use of 6" x 8" and 8" x 8" notched wood blocks.
6. This post and 8" x 12" block combination to be used for line post sections of MGS on narrow roadways and where strengthened line post sections of MGS are warranted to shield fixed objects.

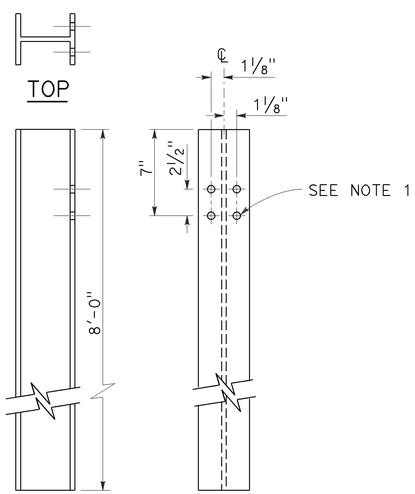

SIDE FRONT

W6 x 15
STEEL POST
See Note 6

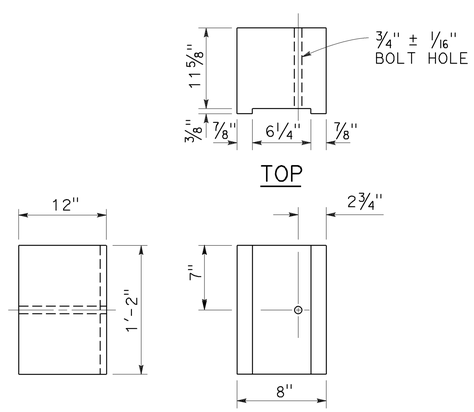

SIDE FRONT

8" x 12"
NOTCHED WOOD BLOCK
See Notes 2 and 3

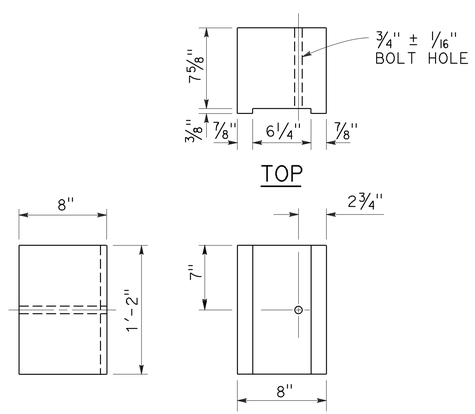

SIDE FRONT

8" x 8"
NOTCHED WOOD BLOCK
Only for use with metal beam guard railing. See Note 5

STATE OF CALIFORNIA
DEPARTMENT OF TRANSPORTATION

MIDWEST GUARDRAIL SYSTEM STEEL POST AND NOTCHED WOOD BLOCK DETAILS

NO SCALE

RSP A77N2 DATED NOVEMBER 15, 2013 SUPERSEDES RSP A77N2
DATED JULY 19, 2013 THAT SUPPLEMENTS THE STANDARD PLANS BOOK DATED 2010.

REVISED STANDARD PLAN RSP A77N2

2010 REVISED STANDARD PLAN RSP A77N2

10-29-13

Dist	COUNTY	ROUTE	POST MILES TOTAL PROJECT	SHEET No.	TOTAL SHEETS
06	Fre, Mad	41U	33.1/33.4 0.0/0.3	50	113

Randell D. Hiatt
REGISTERED CIVIL ENGINEER

July 19, 2013
PLANS APPROVAL DATE

REGISTERED PROFESSIONAL ENGINEER
Randell D. Hiatt
No. C50200
Exp. 6-30-15
CIVIL
STATE OF CALIFORNIA

THE STATE OF CALIFORNIA OR ITS OFFICERS OR AGENTS SHALL NOT BE RESPONSIBLE FOR THE ACCURACY OR COMPLETENESS OF SCANNED COPIES OF THIS PLAN SHEET.

TO ACCOMPANY PLANS DATED 3-7-16

NOTES:

1. When necessary to place dike more than 7" in front of face of MGS, only Type C dike may be used. For dike details, see Revised Standard Plan RSP A87B.
2. For standard railing post embedment, see Revised Standard Plan RSP A77N3.
3. MGS delineation to be used where shown on the Project Plans.
4. When dike or curb is placed under MGS, the maximum height of the dike or curb shall be 6". Mountable dike should not be used. For dike and curb details, see Revised Standard Plans RSP A87A and RSP A87B.
5. For details of typical distance between the face of rail and hinge point, see Revised Standard Plan RSP A77N3.
6. For steel line posts, use 1/4 - 20 self-tapping screws in 0.22" diameter holes or 1/4" bolts in 9/32" diameter holes.

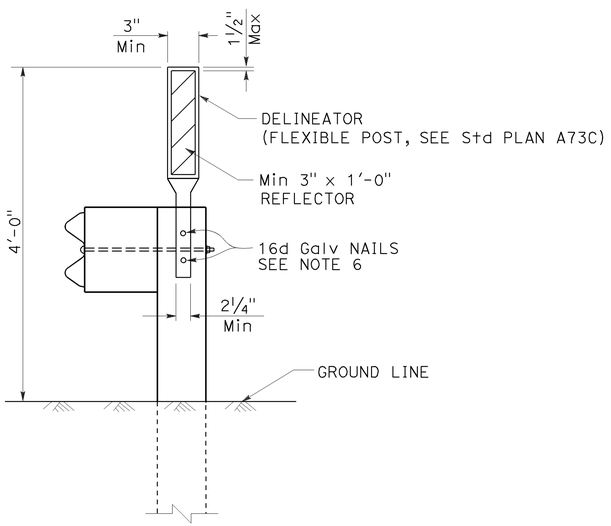

MGS DELINEATION

See Note 3

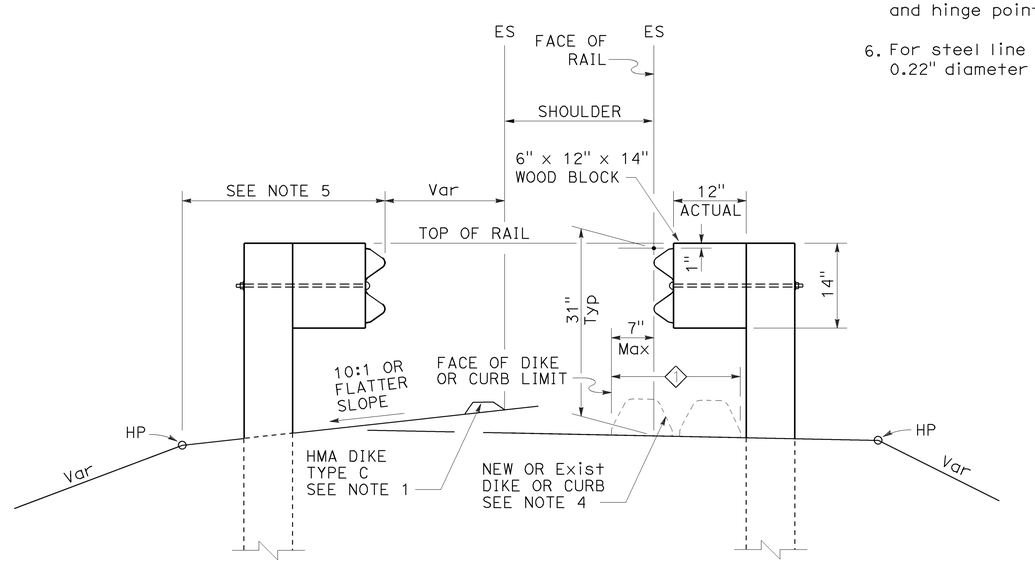

DIKE POSITIONING

See Note 1

1 PERMISSIBLE DIKE OR CURB PLACEMENT AREA

STATE OF CALIFORNIA
DEPARTMENT OF TRANSPORTATION

MIDWEST GUARDRAIL SYSTEM TYPICAL RAILING DELINEATION AND DIKE POSITIONING DETAILS

NO SCALE

RSP A77N4 DATED JULY 19, 2013 SUPPLEMENTS THE STANDARD PLANS BOOK DATED 2010.

REVISED STANDARD PLAN RSP A77N4

2010 REVISED STANDARD PLAN RSP A77N4

7-10-13

Dist	COUNTY	ROUTE	POST MILES TOTAL PROJECT	SHEET No.	TOTAL SHEETS
06	Fre, Mad	41U	33.1/33.4 0.0/0.3	51	113

Randell D. Hiatt
REGISTERED CIVIL ENGINEER

August 14, 2015
PLANS APPROVAL DATE

REGISTERED PROFESSIONAL ENGINEER
Randell D. Hiatt
No. C50200
Exp. 6-30-17
CIVIL
STATE OF CALIFORNIA

THE STATE OF CALIFORNIA OR ITS OFFICERS OR AGENTS SHALL NOT BE RESPONSIBLE FOR THE ACCURACY OR COMPLETENESS OF SCANNED COPIES OF THIS PLAN SHEET.

TO ACCOMPANY PLANS DATED 3-7-16

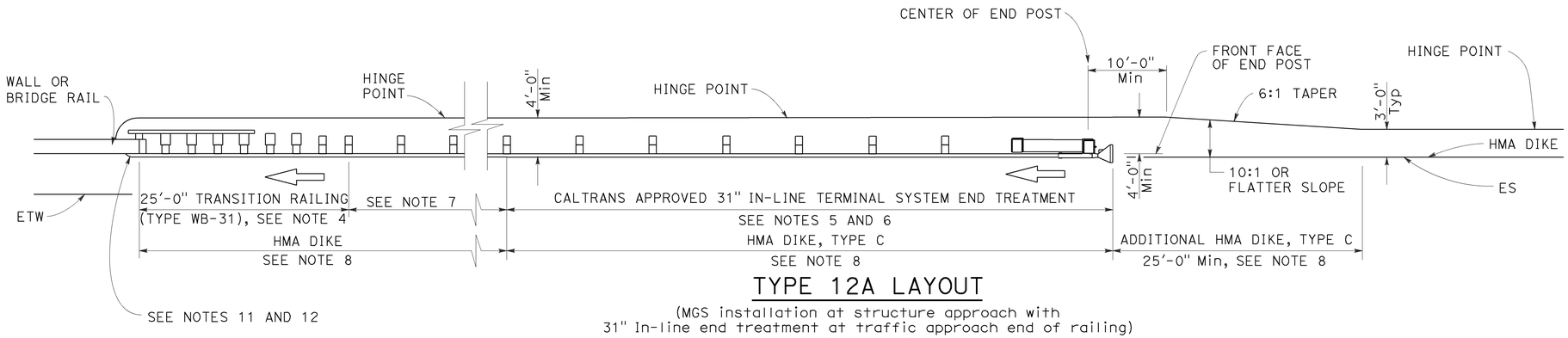

TYPE 12A LAYOUT

(MGS installation at structure approach with
31" In-line end treatment at traffic approach end of railing)
See Note 9

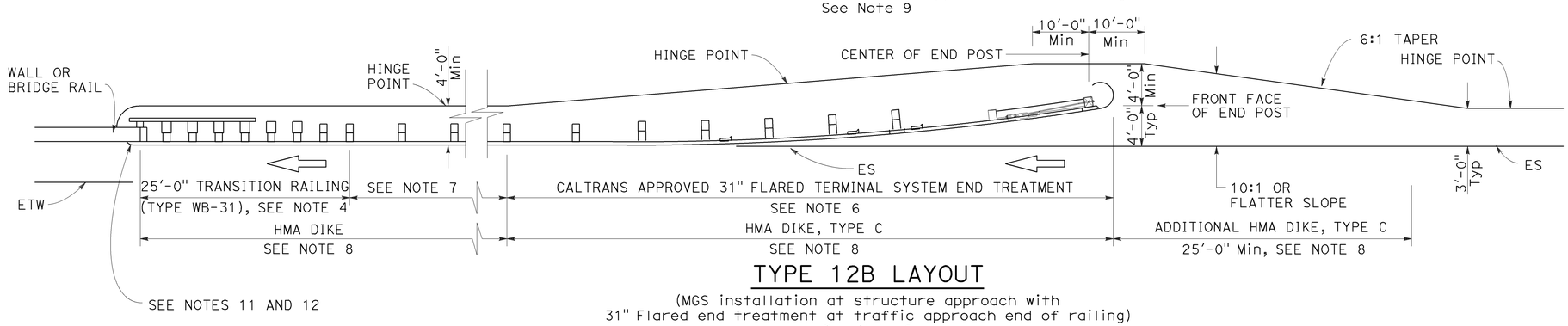

TYPE 12B LAYOUT

(MGS installation at structure approach with
31" Flared end treatment at traffic approach end of railing)
See Note 9

NOTES:

1. Line post, blocks and hardware to be used are shown on Revised Standard Plans RSP A77L1, RSP A77L2, RSP A77M1, RSP A77N1 and RSP A77N2.
2. MGS post spacing to be 6'-3" center to center, except as otherwise noted.
3. Except as noted, line posts are 6" x 8" x 6'-0" wood with 6" x 12" x 1'-2" wood blocks. W6 x 8.5 or W6 x 9 steel posts, 6'-0" in length, with 6" x 12" x 1'-2" notched wood blocks or plastic blocks may be used for 6" x 8" x 6'-0" wood posts with 6" x 12" x 1'-2" wood blocks where applicable and when specified.
4. For Transition Railing (Type WB-31) details for Types 12A and 12B Layouts, see Revised Standard Plan RSP A77U4.
5. 31" in-line terminal system end treatments are used where site conditions will not accommodate a 31" flared end treatment.
6. The type of 31" terminal system end treatment to be used will be shown on the Project Plans.
7. Dependent on site conditions (embankment height, side slopes, or other fixed objects), it may be advisable to construct additional guard railing (a length equal to multiples of 12'-6" with 6'-3" post spacing) between the transition railing and end treatment. A 12.5 degree angle of departure can be drawn on the Project Plans from the edge of traveled way through the outer most point of the fixed object to determine the additional length of railing needed.
8. Where placement of dike is required with guard railing installations, see Revised Standard Plan RSP A77N4 for dike positioning details.
9. Type 12A or Type 12B Layouts are typically used:
   a. To the right of approaching traffic, at the end of a structure, on two-lane conventional highway where the roadbed width across the structure is less than 40 feet.
   b. To the left of approaching traffic, at the end of a structure, on two-lane conventional highway where the roadbed width across the structure is less than 40 feet.
   c. To the right of approaching traffic at the end of each structure on multilane freeways or expressways with separate adjacent or parallel bridges.
   d. To the right of approaching traffic at the end of the structure on multilane freeways or expressways with decked median on the bridge.
10. See Revised Standard Plan RSP A77Q3 for typical layout used left of approaching traffic at the ends of each structure on multilane freeways or expressways with separate adjacent or parallel bridges.
11. For additional details of typical connections to bridge rail, see Connection Detail AA on Revised Standard Plans RSP A77U1 and RSP A77U2 and Connection Detail FF on Revised Standard Plans RSP A77V1 and RSP A77V2.
12. For additional details of a typical connection to walls or abutments, see Revised Standard Plan RSP A77U3.

STATE OF CALIFORNIA
DEPARTMENT OF TRANSPORTATION

MIDWEST GUARDRAIL SYSTEM TYPICAL LAYOUTS FOR STRUCTURE APPROACH

NO SCALE

RSP A77Q1 DATED AUGUST 14, 2015 SUPERSEDES RSP A77Q1 DATED JULY 19, 2013 THAT SUPPLEMENTS THE STANDARD PLANS BOOK DATED 2010.

REVISED STANDARD PLAN RSP A77Q1

2010 REVISED STANDARD PLAN RSP A77Q1

8-12-15

Dist	COUNTY	ROUTE	POST MILES TOTAL PROJECT	SHEET No.	TOTAL SHEETS
06	Fre, Mad	41U	33.1/33.4 0.0/0.3	52	113

Randell D. Hiatt
REGISTERED CIVIL ENGINEER

August 14, 2015
PLANS APPROVAL DATE

REGISTERED PROFESSIONAL ENGINEER
Randell D. Hiatt
No. C50200
Exp. 6-30-17
CIVIL
STATE OF CALIFORNIA

THE STATE OF CALIFORNIA OR ITS OFFICERS OR AGENTS SHALL NOT BE RESPONSIBLE FOR THE ACCURACY OR COMPLETENESS OF SCANNED COPIES OF THIS PLAN SHEET.

TO ACCOMPANY PLANS DATED 3-7-16

2010 REVISED STANDARD PLAN RSP A77Q2

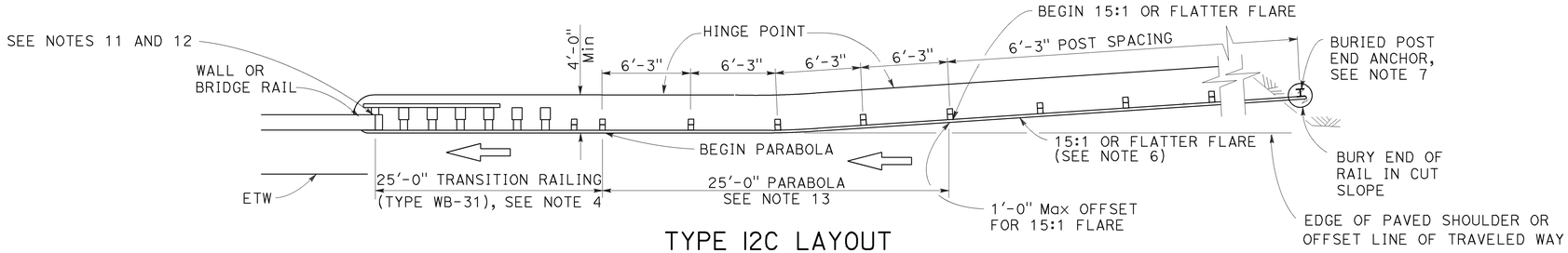

TYPE 12C LAYOUT

(MGS installation at structure approach with a Buried end anchor treatment at traffic approach end of railing)
See Notes 8 and 9

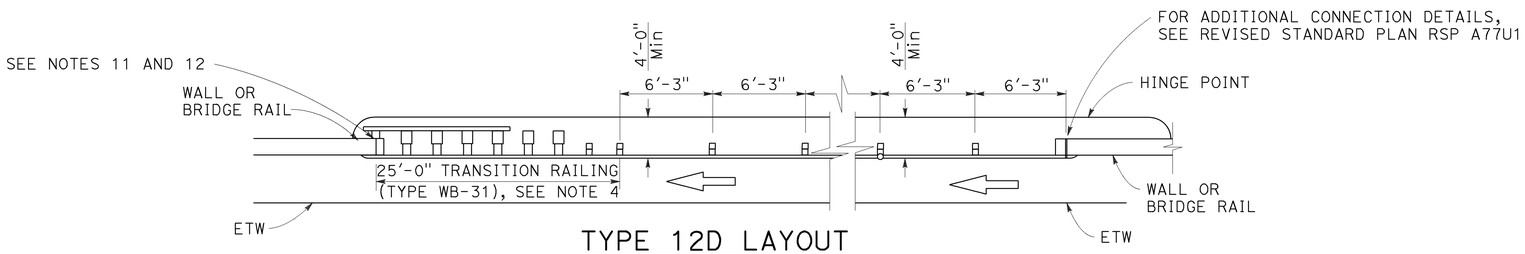

TYPE 12D LAYOUT

(Continuous MGS installation between structures)
See Notes 5 and 9

BASE LINE (EDGE OF PAVED SHOULDER OR OFFSET LINE OF EDGE OF TRAVELED WAY)

$$Y = \frac{WX^2}{L^2}$$

Y = OFFSET FROM BASE LINE
W = MAXIMUM OFFSET
X = DISTANCE ALONG BASE LINE
L = LENGTH OF FLARE

PARABOLIC FLARE OFFSETS

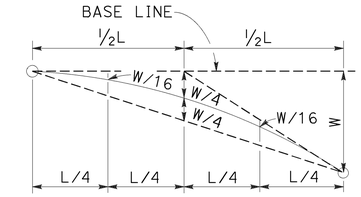

TYPICAL PARABOLIC LAYOUT

NOTES:

1. Line post, blocks and hardware to be used are shown on Revised Standard Plans RSP A77L1, RSP A77L2, RSP A77M1, RSP A77N1 and RSP A77N2.
2. MGS post spacing to be 6'-3" center to center, except as otherwise noted.
3. Except as noted, line posts are 6" x 8" x 6'-0" m wood with 6" x 12" x 1'-2" wood blocks. W6 x 8.5 or W6 x 9 steel posts, 6'-0" in length, with 6" x 12" x 1'-2" notched wood blocks or plastic blocks may be used for 6" x 8" x 6'-0" wood posts with 6" x 12" x 1'-2" wood blocks where applicable and when specified.
4. For Transition Railing (Type WB-31) details for Types 12C and 12D Layouts, see Revised Standard Plan RSP A77U4.
5. Type 12D layout is typically used where continous MGS is recommended between structures.
6. The 15:1 or flatter flare for Type 12C Layout is based on the edge of the paved shoulder or offset line of edge of the traveled way. The length of MGS with the 15:1 or flatter flare is based on site conditions and should be a length equal to multiples of 12'-6".
7. For details of the buried post end anchor used with Type 12C Layout, see Revised Standard Plan RSP A77T2.
8. Where placement of dike is required with MGS installations, see Revised Standard Plan RSP A77N4 for dike positioning details.
9. Type 12C Layout is typically used:
   a. To the right of approaching traffic, at the end of the structure, on two-lane conventional highway where the roadbed width across the structure is less than 40 feet.
   b. To the left of approaching traffic, at each of a structure, on two-lane conventional highway where the roadbed width across the structure is less than 40 feet.
   c. To the right of approaching traffic at the end of each structure on multilane freeways or expressways with separate adjacent or parallel bridges.
   d. To the right of approaching traffic at the end of the structure on multilane freeways or expressways with decked median on the bridge.
10. See Revised Standard Plan RSP A77Q3 for typical layout used left of approaching traffic at the ends of each structure on multilane freeways or expressways with separate adjacent or parallel bridges.
11. For additional details of typical connections to bridge rail, see Connection Detail AA on Revised Standard Plans RSP A77U1 and RSP A77U2 and Connection Detail FF on Revised Standard Plans RSP A77V1 and RSP A77V2.
12. For additional details of a typical connection to walls or abutments, see Revised Standard Plan RSP A77U3.
13. For typical flare offsets for 25'-0" length parabola with maximum offset of 1'-0", see Revised Standard Plan RSP A77P1.

STATE OF CALIFORNIA
DEPARTMENT OF TRANSPORTATION

MIDWEST GUARDRAIL SYSTEM TYPICAL LAYOUTS FOR STRUCTURE APPROACH AND BETWEEN STRUCTURES

NO SCALE

RSP A77Q2 DATED AUGUST 14, 2015 SUPERSEDES RSP A77Q2 DATED JULY 19, 2013 THAT SUPPLEMENTS THE STANDARD PLANS BOOK DATED 2010.

REVISED STANDARD PLAN RSP A77Q2

Dist	COUNTY	ROUTE	POST MILES TOTAL PROJECT	SHEET No.	TOTAL SHEETS
06	Fre, Mad	41U	33.1/33.4 0.0/0.3	53	113

Randell D. Hiatt
REGISTERED CIVIL ENGINEER

August 14, 2015
PLANS APPROVAL DATE

REGISTERED PROFESSIONAL ENGINEER
Randell D. Hiatt
No. C50200
Exp. 6-30-17
CIVIL
STATE OF CALIFORNIA

THE STATE OF CALIFORNIA OR ITS OFFICERS OR AGENTS SHALL NOT BE RESPONSIBLE FOR THE ACCURACY OR COMPLETENESS OF SCANNED COPIES OF THIS PLAN SHEET.

TO ACCOMPANY PLANS DATED 3-7-16

2010 REVISED STANDARD PLAN RSP A77Q4

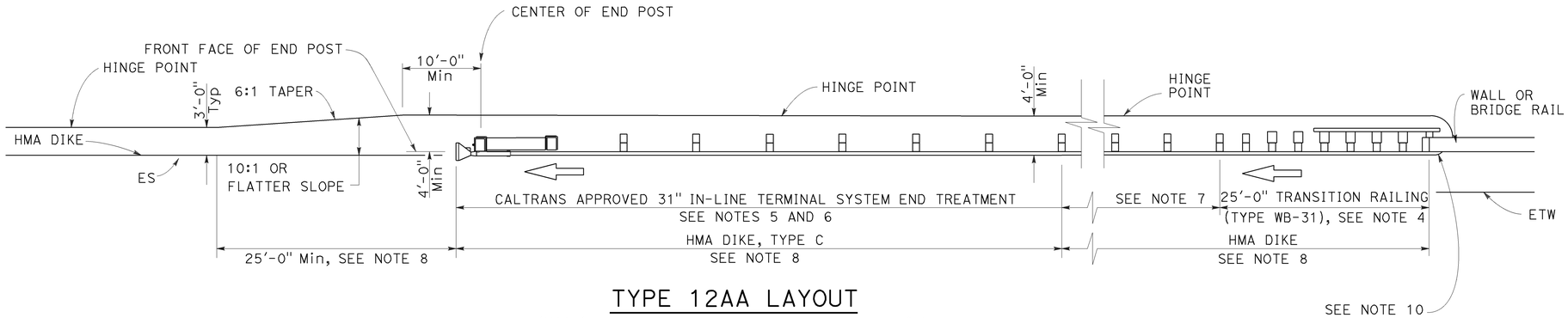

TYPE 12AA LAYOUT

(MGS installation at structure departure with
31" in-line end treatment at trailing end of railing)
See Notes 8 and 9

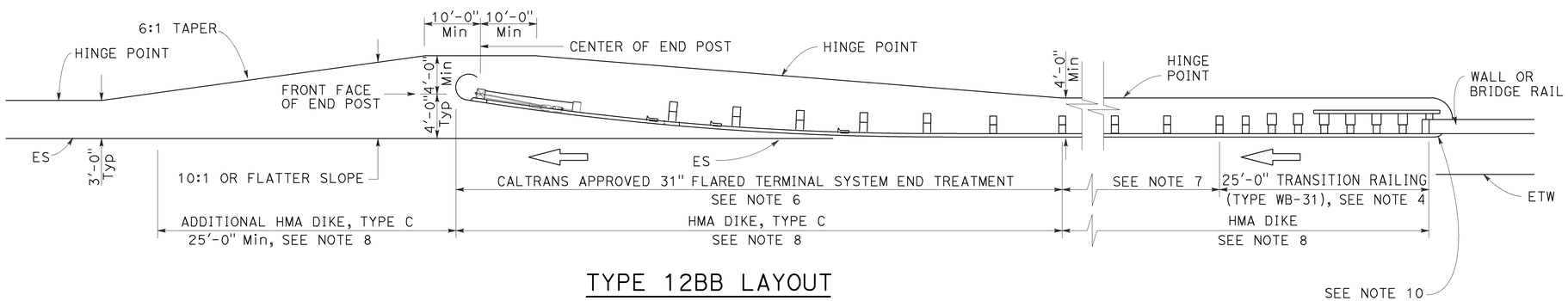

TYPE 12BB LAYOUT

(MGS installation at structure departure with
31" flared end treatment at trailing end of railing)
See Notes 8 and 9

NOTES:

1. Line post, blocks and hardware to be used are shown on Revised Standard Plans RSP A77L1, RSP A77L2, RSP A77M1, RSP A77N1 and RSP A77N2.
2. MGS post spacing to be 6'-3" center to center, except as otherwise noted.
3. Except as noted, line posts are 6" x 8" x 6'-0" wood with 6" x 12" x 1'-2" wood blocks. W6 x 8.5 or W6 x 9 steel posts, 6'-0" in length, with 6" x 12" x 1-2" notched wood blocks or notched recycled plastic blocks may be used for 6" x 8" x 6'-0" wood posts with 6" x 12" x 1'-2" wood blocks where applicable and when specified.
4. For Transition Railing (Type WB-31) details for Types 12AA and 12BB Layouts, see Revised Standard Plan RSP A77U4.
5. 31" in-line terminal system treatments are used where site conditions will not accommodate a 31" flared end treatment.
6. The type of 31" terminal system to be used will be shown on the Project Plans.
7. Dependent on site conditions (embankment height, side slopes, other fixed objects), it may be advisable to construct additional MGS (a length equal to multiples of 12'-6" with 6'-3" post spacing) between the transition railing and 31" end treatments.
8. Where placement of dike is required with MGS installations, see Revised Standard Plan RSP A77N4 for dike positioning details.
9. Type 12AA or Type 12BB Layouts are typically used to the right of traffic departing a structure on two-way conventional highways where the roadbed width across the structure is less than 40 feet.
10. For additional details of typical connections to bridge rail, see Connection Detail CC on Revised Standard Plan RSP A77U2 and Connection Detail HH on Revised Standard Plan RSP A77V2.

STATE OF CALIFORNIA
DEPARTMENT OF TRANSPORTATION

MIDWEST GUARDRAIL SYSTEM TYPICAL LAYOUTS FOR STRUCTURE DEPARTURE

NO SCALE

RSP A77Q4 DATED AUGUST 14, 2015 SUPERSEDES RSP A77Q4 DATED JULY 19, 2013 THAT SUPPLEMENTS THE STANDARD PLANS BOOK DATED 2010.

REVISED STANDARD PLAN RSP A77Q4

8-12-15

Dist	COUNTY	ROUTE	POST MILES TOTAL PROJECT	SHEET No.	TOTAL SHEETS
06	Fre, Mad	41U	33.1/33.4 0.0/0.3	54	113

Randell D. Hiatt
REGISTERED CIVIL ENGINEER

July 19, 2013
PLANS APPROVAL DATE

REGISTERED PROFESSIONAL ENGINEER
Randell D. Hiatt
No. C50200
Exp. 6-30-15
CIVIL
STATE OF CALIFORNIA

THE STATE OF CALIFORNIA OR ITS OFFICERS OR AGENTS SHALL NOT BE RESPONSIBLE FOR THE ACCURACY OR COMPLETENESS OF SCANNED COPIES OF THIS PLAN SHEET.

TO ACCOMPANY PLANS DATED 3-7-16

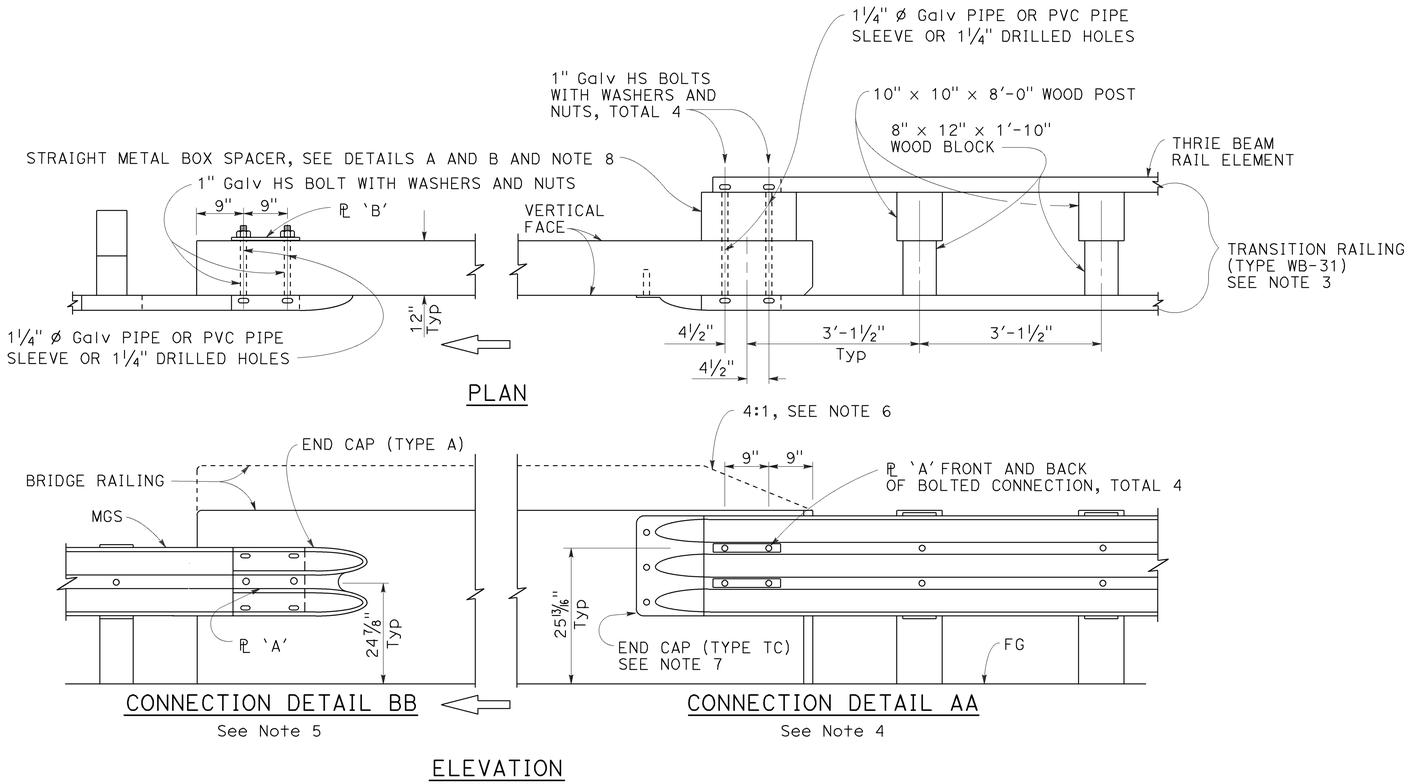

MIDWEST GUARDRAIL SYSTEM CONNECTION TO BRIDGE RAILING WITHOUT SIDEWALK

NOTES:

1. See Revised Standard Plan RSP A77U2 for additional connection details to bridges without sidewalks.
2. Additional details of posts, blocks and hardware are shown on Revised Standard Plans RSP A77M1, RSP A77N1 and RSP A77N2.
3. For additional details of Transition Railing (Type WB-31), see Revised Standard Plan RSP A77U4. Transition Railing (Type WB-31) transitions the 12 gauge MGS railing section to a heavier gage nested thrie beam railing section which is connected to the concrete bridge railing.
4. For typical use of Connection Detail AA, see Layout Types 12A and 12B on Revised Standard Plan RSP A77Q1, Layout Types 12C and 12D on Revised Standard Plan RSP A77Q2, and Layout Type 12E on Revised Standard Plan RSP A77Q3.
5. For typical use of Connection Detail BB, see Layout Type 12D (structure departure railing connection) on Revised Standard Plan RSP A77Q2 and Layout Type 12DD on Revised Standard Plan RSP A77Q5.
6. Where the height of the bridge railing exceeds the height of the thrie beam railing by more than 1" at Connection Detail AA, taper the top of the end of the bridge railing at 4:1 to match the top elevation of the thrie beam rail.
7. For details of End Cap (Type TC), see Revised Standard Plan RSP A77U4.
8. See Revised Standard Plan RSP A77U4 for additional details regarding depth dimension for straight metal box spacer.

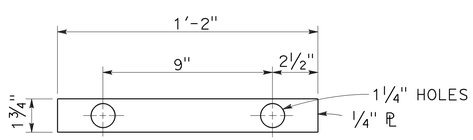

PLATE 'A'

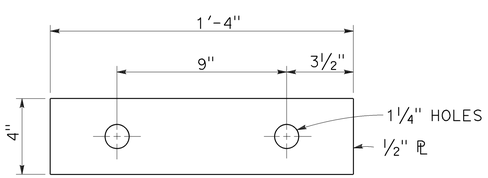

PLATE 'B'
(For backside of connection BB)

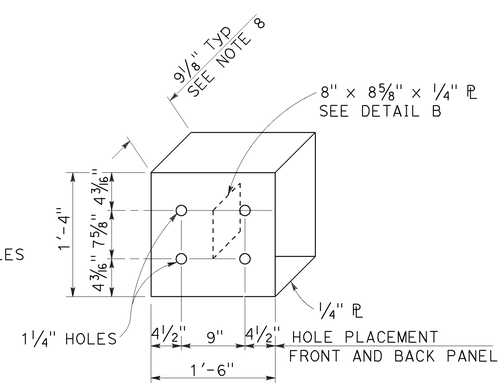

DETAIL A

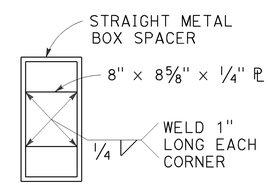

DETAIL B

STRAIGHT METAL BOX SPACER

STATE OF CALIFORNIA
DEPARTMENT OF TRANSPORTATION

MIDWEST GUARDRAIL SYSTEM CONNECTIONS TO BRIDGE RAILINGS WITHOUT SIDEWALKS DETAILS No. 1

NO SCALE

RSP A77U1 DATED JULY 19, 2013 SUPPLEMENTS THE STANDARD PLANS BOOK DATED 2010.

REVISED STANDARD PLAN RSP A77U1

2010 REVISED STANDARD PLAN RSP A77U1

7-8-13

Dist	COUNTY	ROUTE	POST MILES TOTAL PROJECT	SHEET No.	TOTAL SHEETS
06	Fre, Mad	41U	33.1/33.4 0.0/0.3	55	113

Randell D. Hiatt
REGISTERED CIVIL ENGINEER

July 19, 2013
PLANS APPROVAL DATE

REGISTERED PROFESSIONAL ENGINEER Randell D. Hiatt No. C50200 Exp. 6-30-15 CIVIL STATE OF CALIFORNIA

THE STATE OF CALIFORNIA OR ITS OFFICERS OR AGENTS SHALL NOT BE RESPONSIBLE FOR THE ACCURACY OR COMPLETENESS OF SCANNED COPIES OF THIS PLAN SHEET.

TO ACCOMPANY PLANS DATED 3-7-16

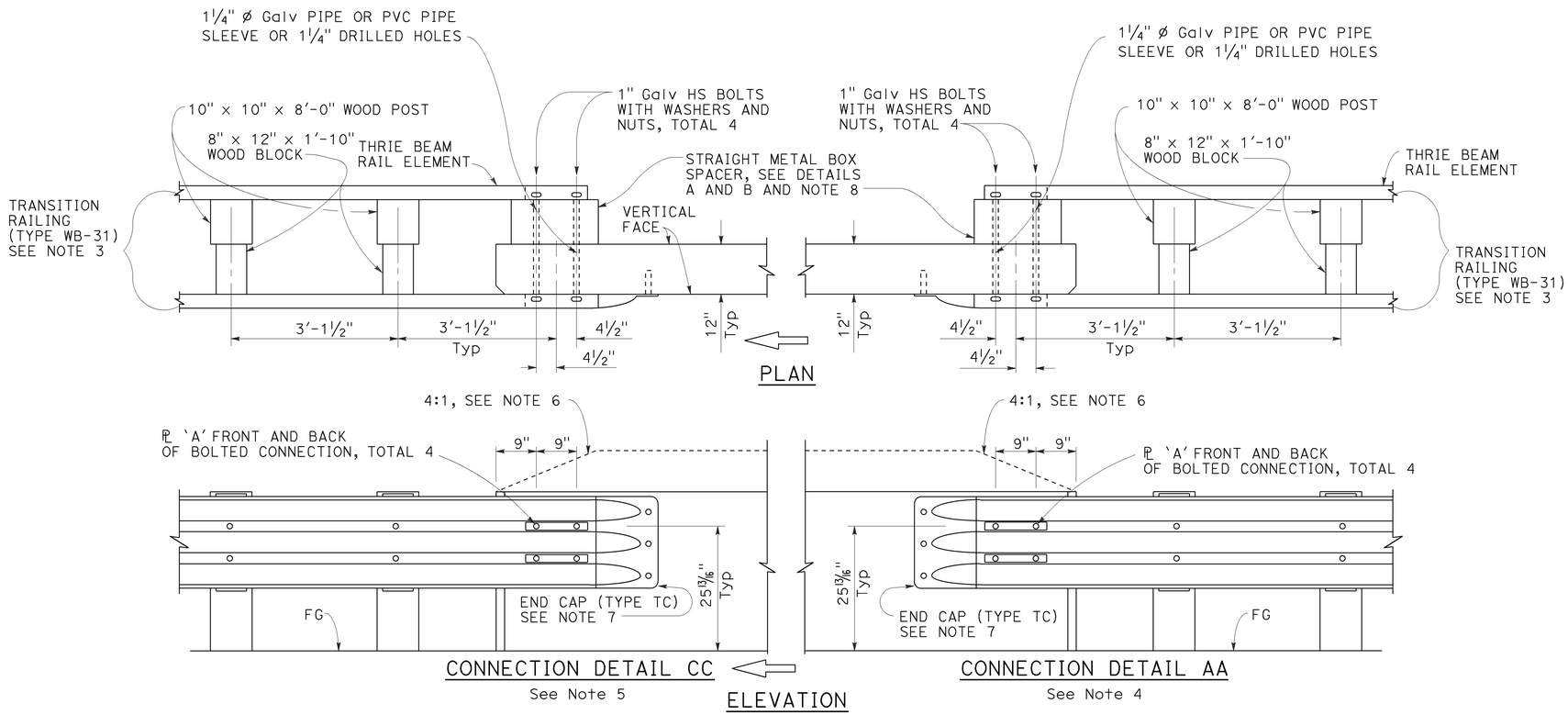

MIDWEST GUARDRAIL SYSTEM CONNECTION TO BRIDGE RAILING WITHOUT SIDEWALK

NOTES:

1. See Revised Standard Plan RSP A77U1 for additional connection details to bridges without sidewalks.
2. Additional details of posts, blocks and hardware are shown on Revised Standard Plans RSP A77M1, RSP A77N1 and RSP A77N2.
3. For additional details of Transition Railing (Type WB-31), see Revised Standard Plan RSP A77U4. Transition Railing (Type WB-31) transitions the 12 gauge MGS railing section to a heavier gage nested thrie beam railing section which is connected to the concrete bridge railing.
4. For typical use of Connection Detail AA, see Layout Types 12A and 12B on Revised Standard Plan RSP A77Q1, Layout Types 12C and 12D on Revised Standard Plan RSP A77Q2, and Layout Type 12E on Revised Standard Plan RSP A77Q3.
5. For typical use of Connection Detail CC, see Layout Types 12AA and 12BB on Revised Standard Plan RSP A77Q4 and Layout Type 12CC on Revised Standard Plan RSP A77Q5.
6. Where the height of the bridge railing exceeds the height of the thrie beam railing by more than 1" at Connection Detail AA and connection Detail CC, taper the top of the end of the bridge railing at 4:1 to match the top elevation of the thrie beam railing.
7. For details of End Cap (Type TC), see Revised Standard Plan RSP A77U4.
8. See Revised Standard Plan RSP A77U4 for additional details regarding depth dimension for straight metal box spacer.

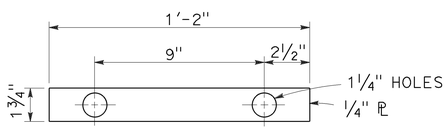

PLATE 'A'

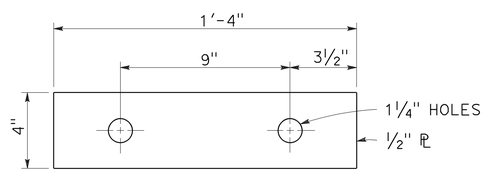

PLATE 'B'
(For backside of connection BB)

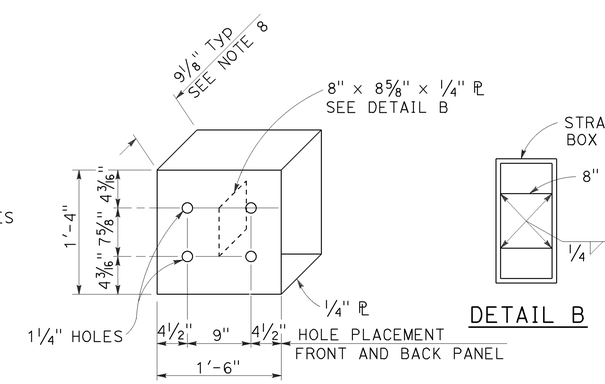

DETAIL A

DETAIL B

STRAIGHT METAL BOX SPACER

STATE OF CALIFORNIA
DEPARTMENT OF TRANSPORTATION

MIDWEST GUARDRAIL SYSTEM CONNECTIONS TO BRIDGE RAILINGS WITHOUT SIDEWALKS DETAILS No. 2

NO SCALE

RSP A77U2 DATED JULY 19, 2013 SUPPLEMENTS THE STANDARD PLANS BOOK DATED 2010.

REVISED STANDARD PLAN RSP A77U2

2010 REVISED STANDARD PLAN RSP A77U2

6-20-13

Dist	COUNTY	ROUTE	POST MILES TOTAL PROJECT	SHEET No.	TOTAL SHEETS
06	Fre, Mad	41U	33.1/33.4 0.0/0.3	56	113

Randell D. Hiatt
REGISTERED CIVIL ENGINEER

July 19, 2013
PLANS APPROVAL DATE

REGISTERED PROFESSIONAL ENGINEER Randell D. Hiatt No. C50200 Exp. 6-30-15 CIVIL STATE OF CALIFORNIA

THE STATE OF CALIFORNIA OR ITS OFFICERS OR AGENTS SHALL NOT BE RESPONSIBLE FOR THE ACCURACY OR COMPLETENESS OF SCANNED COPIES OF THIS PLAN SHEET.

TO ACCOMPANY PLANS DATED 3-7-16

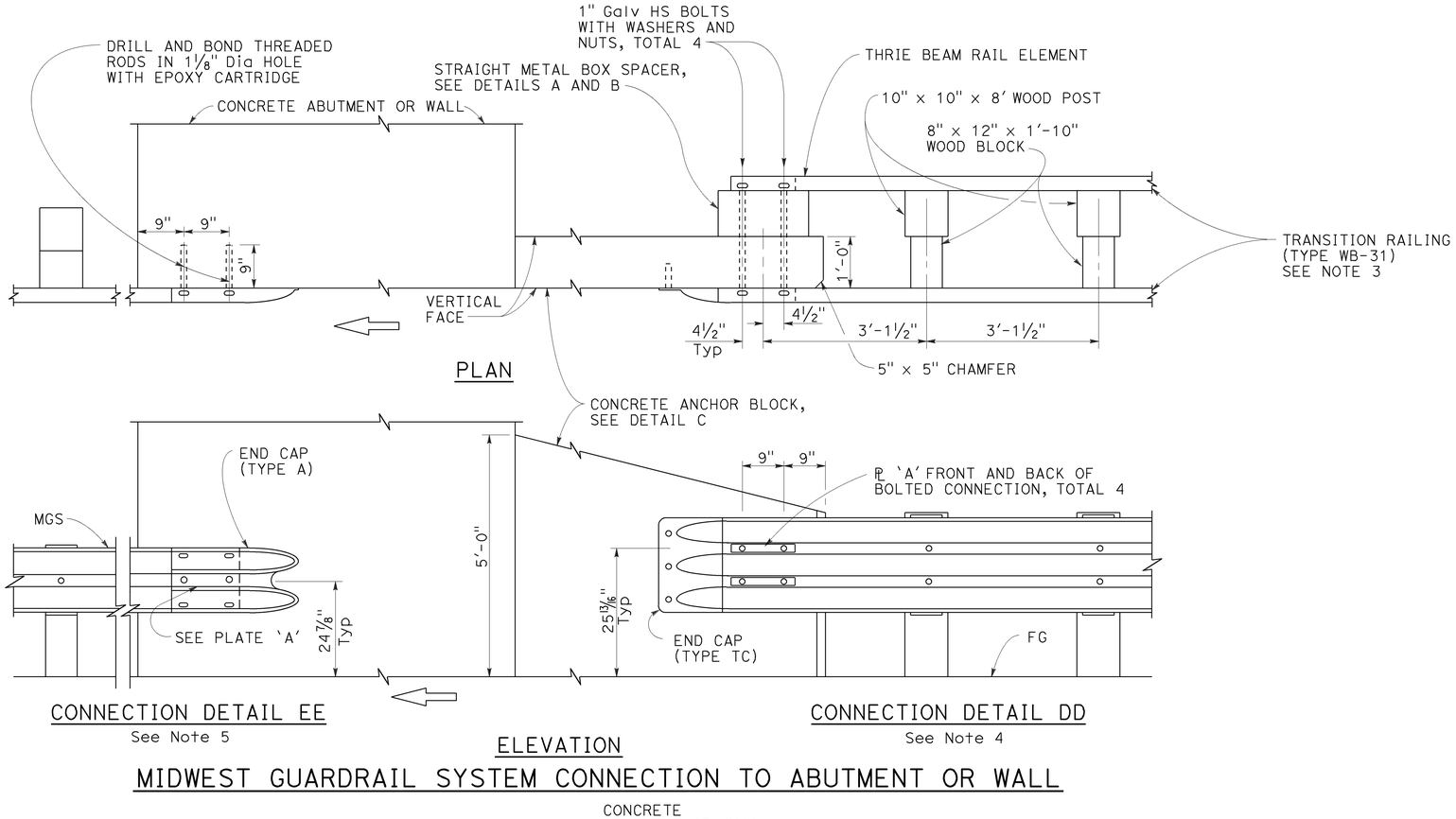

MIDWEST GUARDRAIL SYSTEM CONNECTION TO ABUTMENT OR WALL

NOTES:

1. These connection details apply to abutments and walls.
2. Additional details of posts, blocks and hardware are shown on Revised Standard Plans RSP A77M1, RSP A77N1 and RSP A77N2.
3. For additional details of Transition Railing (Type WB-31), see Revised Standard Plan RSP A77U4. Transition Railing (Type WB-31) transitions the 12 gauge MGS railing section to a heavier gage nested thrie beam railingsection which is connected to the concrete anchor block.
4. For typical use of Connection Details DD, see Layout Types 12A and 12B on Revised Standard Plan RSP A77Q1 and Layout Types 12C and 12D on Revised Standard Plan RSP A77Q2.
5. For typical use of Connection Detail EE, see Layout Type 12D on Revised Standard Plan RSP A77Q2 and Layout Type 12DD on Revised Standard Plan RSP A77Q5.

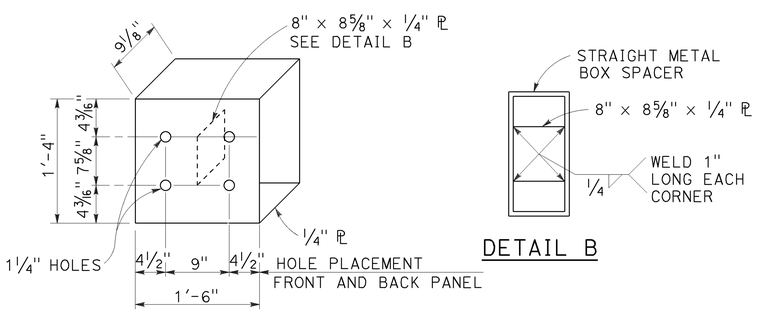

STRAIGHT METAL BOX SPACER

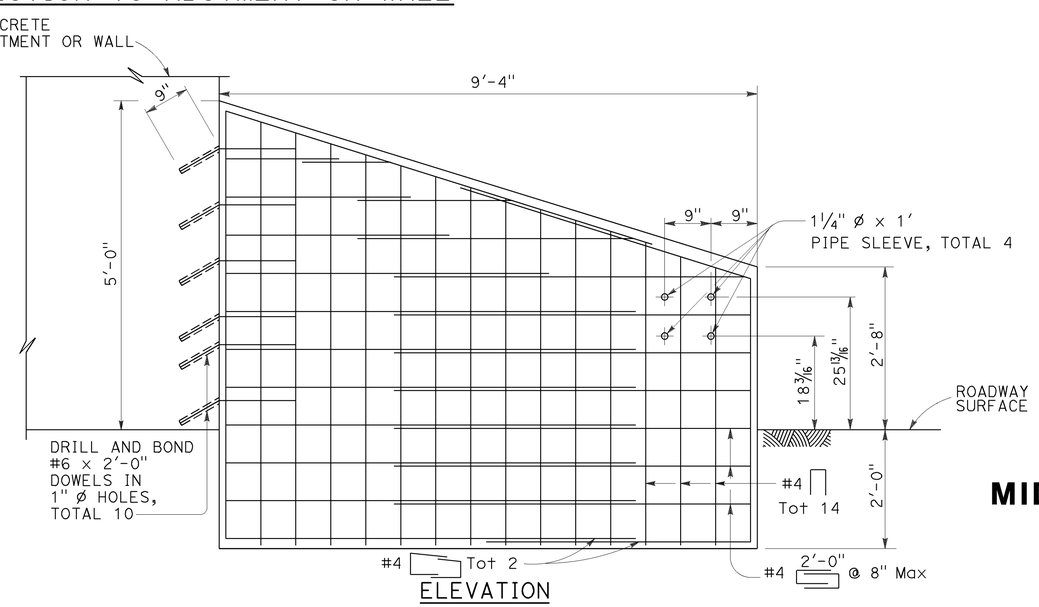

ELEVATION

ANCHOR BLOCK FOR TRANSITION RAILING CONNECTION

DETAIL C

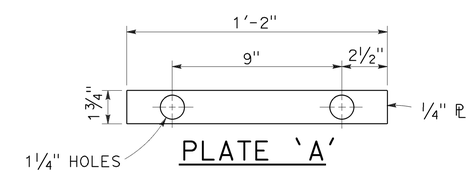

STATE OF CALIFORNIA
DEPARTMENT OF TRANSPORTATION

MIDWEST GUARDRAIL SYSTEM CONNECTIONS TO ABUTMENTS AND WALLS

NO SCALE

RSP A77U3 DATED JULY 19, 2013 SUPPLEMENTS THE STANDARD PLANS BOOK DATED 2010.

REVISED STANDARD PLAN RSP A77U3

2010 REVISED STANDARD PLAN RSP A77U3

7-8-13

Dist	COUNTY	ROUTE	POST MILES TOTAL PROJECT	SHEET No.	TOTAL SHEETS
06	Fre, Mad	41U	33.1/33.4 0.0/0.3	57	113

Randell D. Hiatt
REGISTERED CIVIL ENGINEER

January 23, 2015
PLANS APPROVAL DATE

REGISTERED PROFESSIONAL ENGINEER Randell D. Hiatt No. C50200 Exp. 6-30-15 CIVIL STATE OF CALIFORNIA

THE STATE OF CALIFORNIA OR ITS OFFICERS OR AGENTS SHALL NOT BE RESPONSIBLE FOR THE ACCURACY OR COMPLETENESS OF SCANNED COPIES OF THIS PLAN SHEET.

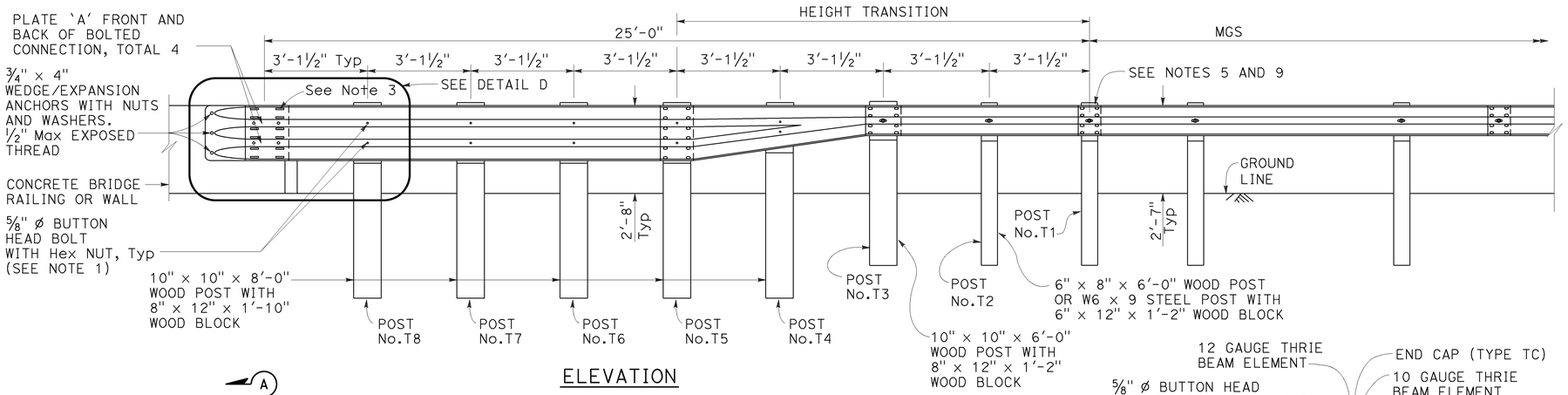

ELEVATION

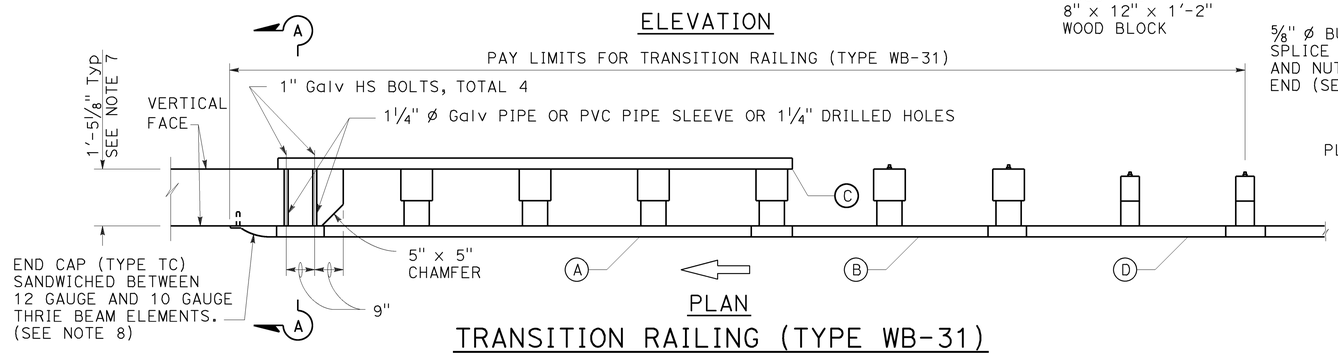

PLAN

TRANSITION RAILING (TYPE WB-31)

(No Blockout Attachment)

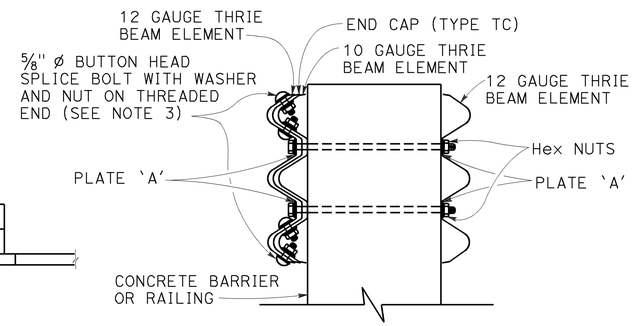

SECTION A-A

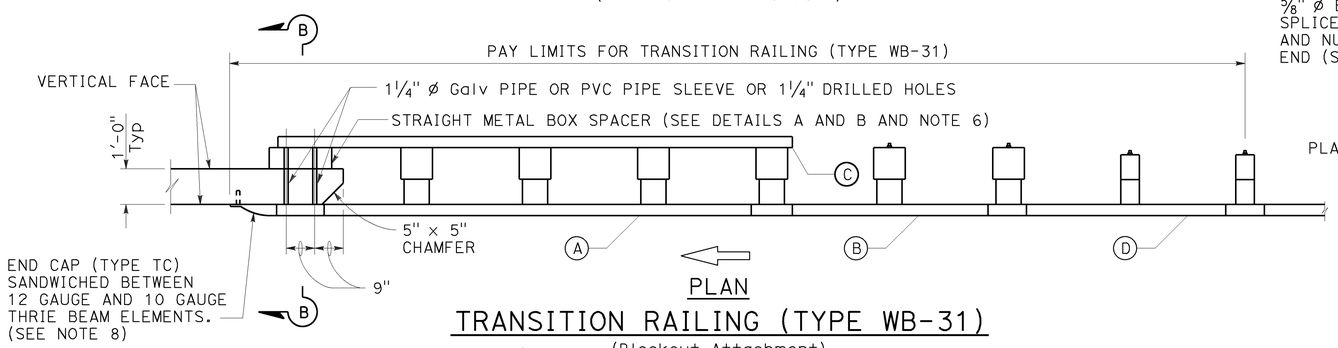

PLAN

TRANSITION RAILING (TYPE WB-31)

(Blockout Attachment)

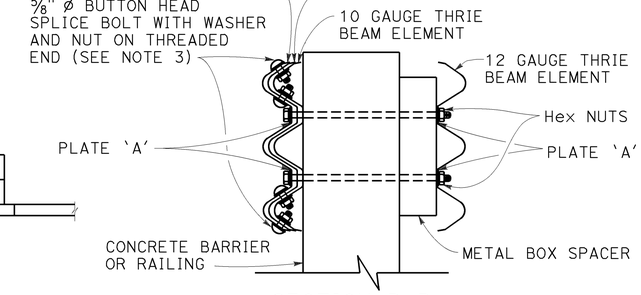

SECTION B-B

LEGEND:

- (A) NESTED THRIE BEAM ELEMENTS (ONE 12 GAUGE ELEMENT NESTED OVER ONE 10 GAUGE ELEMENT).
- (B) ONE ASYMMETRICAL 10 GAUGE "W" BEAM TO THRIE BEAM ELEMENT.
- (C) ONE 12 GAUGE THRIE BEAM ELEMENT.
- (D) ONE 10 GAUGE "W" BEAM RAIL ELEMENT (7'-3 1/2"LENGTH)

10 GAUGE = 0.138" THICK
12 GAUGE = 0.108" THICK

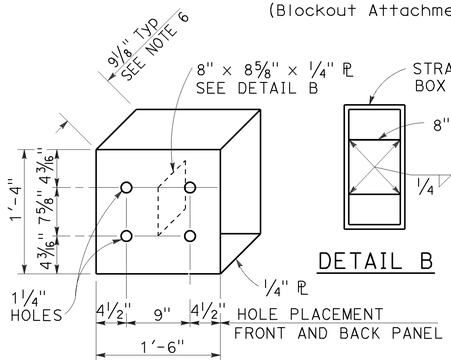

DETAIL A

STRAIGHT METAL BOX SPACER

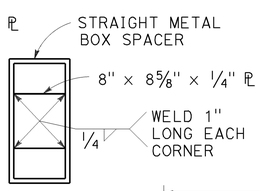

DETAIL B

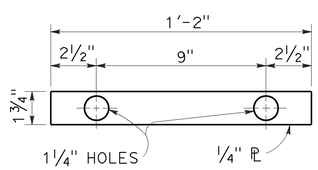

DETAIL C

PLATE 'A'

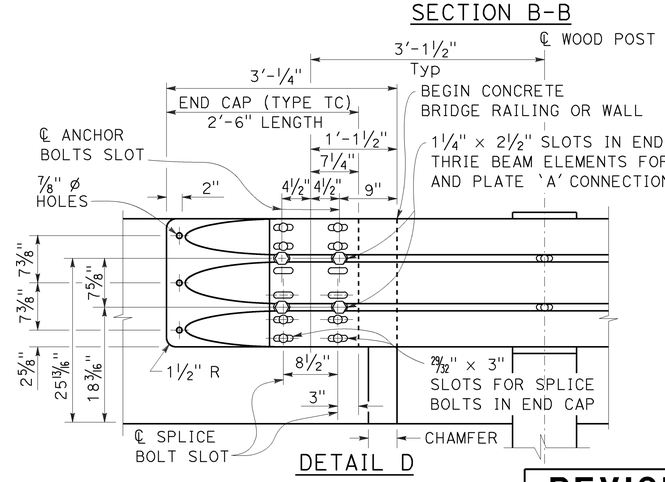

DETAIL D

NOTES:

TO ACCOMPANY PLANS DATED 3-7-16

1. Use 5/8" ø Button head bolts and hex nuts for connections to posts. No washer on rail face for bolted connections to post.
2. The nested rail elements, end cap, and 'W' beam to thrie beam element may be spliced together prior to bolting the elements to the wood post and concrete barrier or railing.
3. Exterior splice bolt holes for rail element splices at Post No. T5 and the connection to the concrete barrier or railing shall be the standard 29/32" x 1 1/8" slot size. Interior splice bolt holes at these locations may be increased up to 1 1/4" ø. Only the top 4 and the bottom 4 splice bolts with washers and nuts are required for rail splices at Post No. T5 and the connection to the concrete barrier or railing.
4. The top elevation of Posts No. T2 through No. T7 shall not project more than 1" above the top elevation of the rail element.
5. Typically, the railing connected to Transition Railing (Type WB-31) will be either standard railing section of MGS with height transition ratio of 150:1 or a Caltrans approved 31" end treatment attached to Post No. T1.
6. The depth of the metal box spacer varies from the 9 1/8" to 1 1/2" and is dependent on the width of the concrete railing or wall. The combined dimension for the depth of the metal box spacer plus the width of railing or wall is typically 21 1/8". Where the space between the backside of the concrete railing or wall and the rear thrie beam element is less than 1 1/2", metal plates similar to Plate 'A' are to be used as spacers.
7. Where the width of the concrete railing or wall is greater than 17 1/8", wood blocks are to be used to fill the space created between the backside of Posts No. T5 through No. T8 and the rear thrie beam element. These wood blocks shall be 8" in width and 1'-2" in length. The dimension between the front thrie beam element and the rear thrie beam element is to match the width of the concrete railing or wall.
8. End cap may be installed over 12 gauge and 10 gauge thrie beam elements where transition railing is installed on the departure end of bridge railing.
9. Conform standard railing section height to 31" at Post No. T1 using height transition ratio of 150:1.

STATE OF CALIFORNIA
DEPARTMENT OF TRANSPORTATION

MIDWEST GUARDRAIL SYSTEM TRANSITION RAILING (TYPE WB-31)

NO SCALE

RSP A77U4 DATED JANUARY 23, 2015 SUPERSEDES RSP A77U4 DATED NOVEMBER 15, 2013 AND RSP A77U4 DATED JULY 19, 2013 THAT SUPPLEMENTS THE STANDARD PLANS BOOK DATED 2010.

REVISED STANDARD PLAN RSP A77U4

2010 REVISED STANDARD PLAN RSP A77U4

1-8-15

Dist	COUNTY	ROUTE	POST MILES TOTAL PROJECT	SHEET No.	TOTAL SHEETS
06	Fre, Mad	41U	33.1/33.4 0.0/0.3	58	113

Randell D. Hiatt
REGISTERED CIVIL ENGINEER

July 19, 2013
PLANS APPROVAL DATE

REGISTERED PROFESSIONAL ENGINEER
Randell D. Hiatt
No. C50200
Exp. 6-30-15
CIVIL
STATE OF CALIFORNIA

THE STATE OF CALIFORNIA OR ITS OFFICERS OR AGENTS SHALL NOT BE RESPONSIBLE FOR THE ACCURACY OR COMPLETENESS OF SCANNED COPIES OF THIS PLAN SHEET.

TO ACCOMPANY PLANS DATED 3-7-16

NOTES:

1. Refer to Revised Standard Plans RSP A77L1 and RSP A77L2 for component details for MGS not shown on this plan.
2. All posts for any standard barrier run shall be of the same type: Wood or Steel.
3. Install posts in soil.

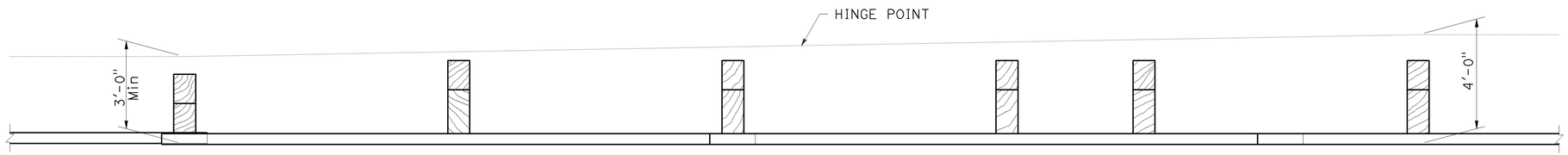

PLAN

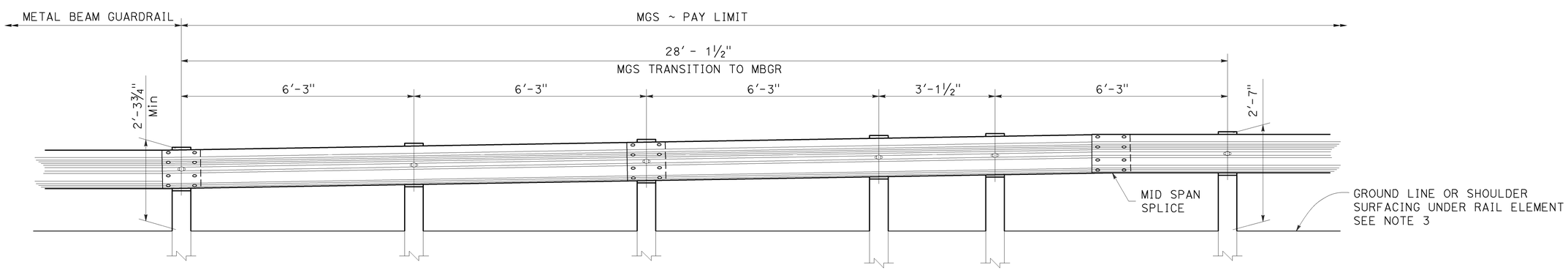

ELEVATION

STATE OF CALIFORNIA
DEPARTMENT OF TRANSPORTATION

MIDWEST GUARDRAIL SYSTEM TRANSITION TO METAL BEAM GUARDRAIL

NO SCALE

RSP A77U5 DATED JULY 19, 2013 SUPPLEMENTS THE STANDARD PLANS BOOK DATED 2010.

REVISED STANDARD PLAN RSP A77U5

2010 REVISED STANDARD PLAN RSP A77U5

6-20-13

Dist	COUNTY	ROUTE	POST MILES TOTAL PROJECT	SHEET No.	TOTAL SHEETS
06	Fre, Mad	41U	33.1/33.4 0.0/0.3	59	113

REGISTERED CIVIL ENGINEER

July 18, 2014
PLANS APPROVAL DATE

Glenn DeCou No. C34547 Exp. 9-30-15 CIVIL — REGISTERED PROFESSIONAL ENGINEER — STATE OF CALIFORNIA

THE STATE OF CALIFORNIA OR ITS OFFICERS OR AGENTS SHALL NOT BE RESPONSIBLE FOR THE ACCURACY OR COMPLETENESS OF SCANNED COPIES OF THIS PLAN SHEET.

TO ACCOMPANY PLANS DATED 3-7-16

2010 REVISED STANDARD PLAN RSP A85

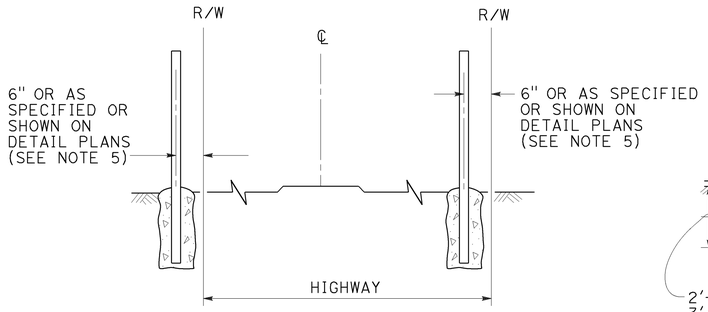

FENCE LOCATION

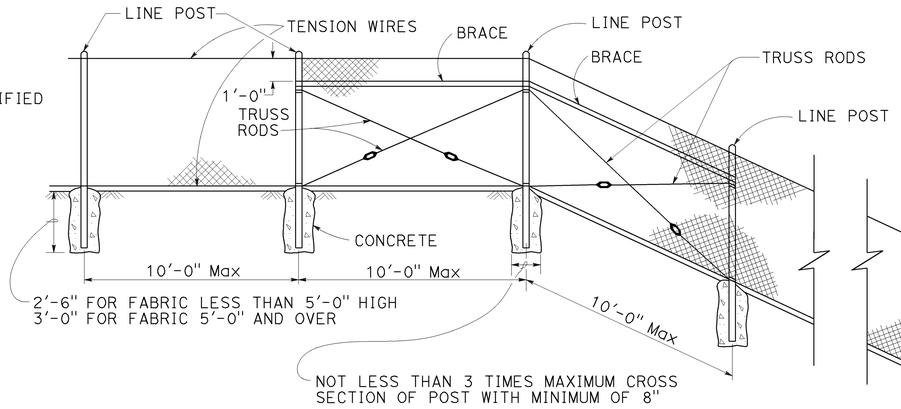

CHAIN LINK FENCE ON SHARP BREAK IN GRADE

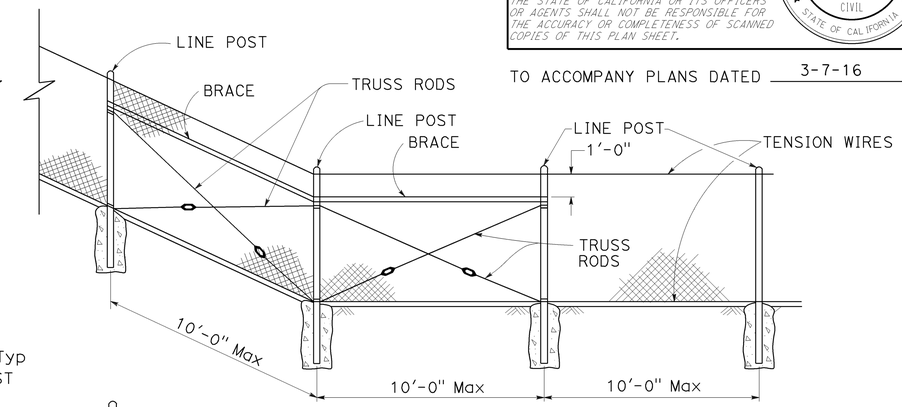

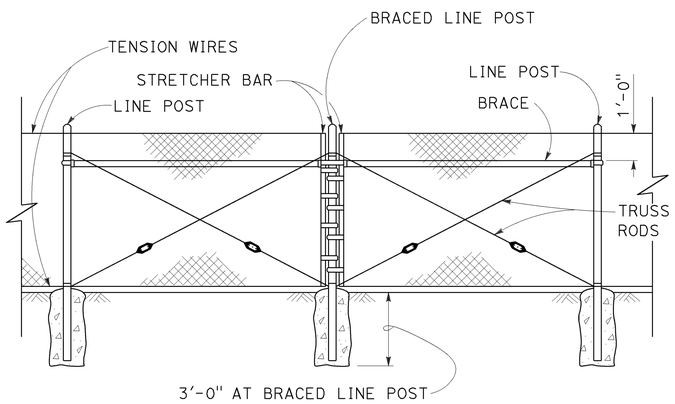

BRACED LINE POST INSTALLATION

Braced line post at intervals not exceeding 1000'

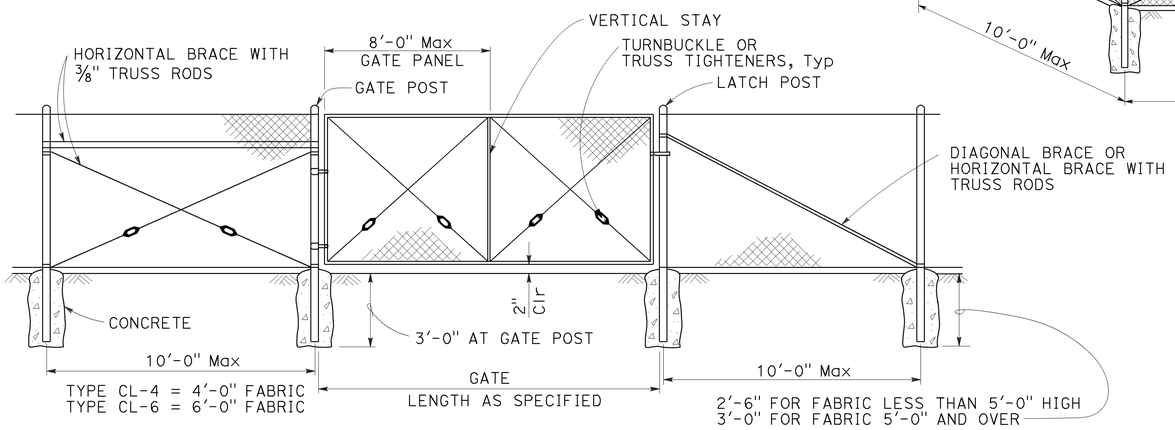

CHAIN LINK GATE INSTALLATION

GATE POST			
FENCE HEIGHT	GATE WIDTHS	ROUND OD PIPE	WEIGHT (lb/ft)
6'-0" AND LESS	UP THRU 6'-0"	2.875"	5.80
	OVER 6'-0" THRU 12'-0"	4.500"	10.80
	OVER 12'-0" THRU 18'-0"	5.563"	14.63
	OVER 18'-0" TO 24'-0" Max	6.625"	18.99
OVER 6'-0" TO 8'-0" Max	UP THRU 6'-0"	3.500"	7.58
	OVER 6'-0" THRU 12'-0"	5.563"	14.63
	OVER 12'-0" THRU 18'-0"	6.625"	18.99
	OVER 18'-0" TO 24'-0" Max	8.625"	28.58

Above post dimensions and weights are minimums. Larger sizes may be used upon approval.

NOTES:

1. The table below shows minimum sized posts and braces complying with the specifications. Larger or heavier post and brace sizes may be used upon approval.
2. Sections shown in the tables must also comply with the strength requirements and other provisions of the Specifications.
3. Other sections which comply with the strength requirements and other provisions of the Specifications may be used upon approval.
4. Options exercised shall be uniform on any one project.
5. Offset to be 2'-0" at monument locations, measured at right angles to R/W lines. Taper to achieve offset to be at least 20'-0" long.
6. See Revised Standard Plan RSP A85B for Brace, Stretcher Bar, and Truss Tightener Details.

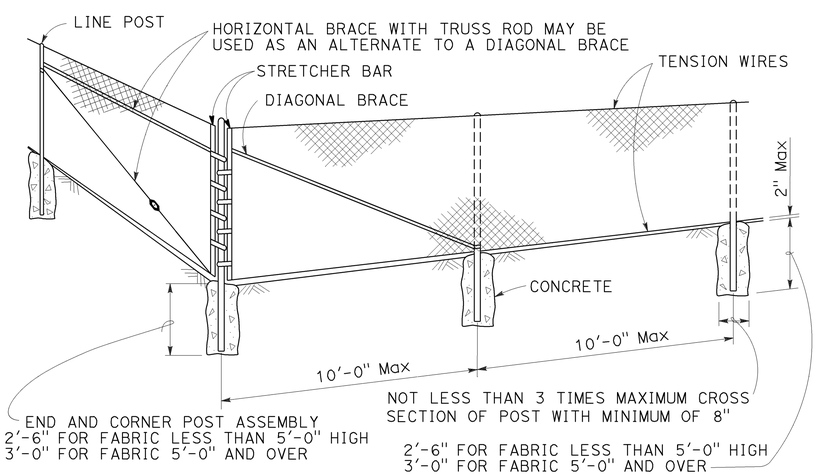

CORNER POST

TYPICAL MEMBER DIMENSIONS (See Notes)										
FENCE HEIGHT	LINE POSTS				END, LATCH AND CORNER POSTS		BRACES			
	ROUND OD PIPE	WEIGHT (lb/ft)	ROLL FORMED		ROUND OD PIPE	WEIGHT (lb/ft)	ROUND OD PIPE	WEIGHT (lb/ft)	ROLL FORMED	
			SECTION	WEIGHT (lb/ft)					SECTION	WEIGHT (lb/ft)
6'-0" AND LESS	1.900"	2.72	1.875" x 1.625"	1.85	2.375"	3.65	1.66"	2.27	1.625" x 1.25"	1.35
OVER 6'-0" TO 8'-0" Max	2.375"	3.65	2.25" x 1.70"	2.78	2.875"	5.80	1.66"	2.27	1.625" x 1.25"	1.35

STATE OF CALIFORNIA
DEPARTMENT OF TRANSPORTATION

CHAIN LINK FENCE

NO SCALE

RSP A85 DATED JULY 18, 2014 SUPERSEDES STANDARD PLAN A85 DATED MAY 20, 2011 - PAGE 112 OF THE STANDARD PLANS BOOK DATED 2010.

REVISED STANDARD PLAN RSP A85

7-1-14

Dist	COUNTY	ROUTE	POST MILES TOTAL PROJECT	SHEET No.	TOTAL SHEETS
06	Fre, Mad	41U	33.1/33.4 0.0/0.3	60	113

REGISTERED CIVIL ENGINEER

October 19, 2012
PLANS APPROVAL DATE

REGISTERED PROFESSIONAL ENGINEER Glenn DeCou No. C34547 Exp. 9-30-13 CIVIL STATE OF CALIFORNIA

THE STATE OF CALIFORNIA OR ITS OFFICERS OR AGENTS SHALL NOT BE RESPONSIBLE FOR THE ACCURACY OR COMPLETENESS OF SCANNED COPIES OF THIS PLAN SHEET.

TO ACCOMPANY PLANS DATED 3-7-16

2010 REVISED STANDARD PLAN RSP A85B

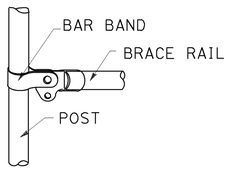

BRACE RAIL

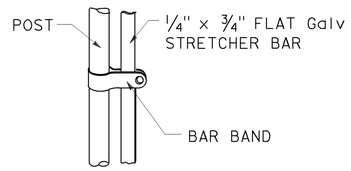

STRETCHER BAR

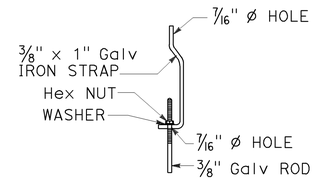

TRUSS TIGHTENER

NOTES:

1. All material for abutment connection to be galvanized.
2. The chain link fabric shall be replaced by barbed wire strands at 12" maximum centers between the double posts.
3. When the width of the culvert makes it necessary to anchor a post to the top of the culvert, a cast iron shoe or other device approved by the Engineer shall be used.
4. Fencing over stream and around headwall may also use Barbed Wire or Wire Mesh fencing with either wood post or steel post installation.
5. See Standard Plan A85 for Chain Link fence dimensions. See Standard Plan A86 for Barbed Wire and Wire Mesh fence dimensions and for wood post and steel post installation.

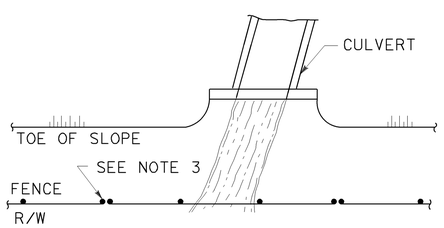

PLAN

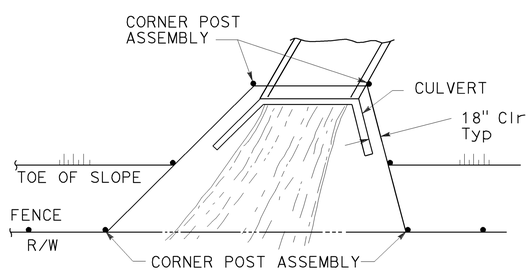

PLAN

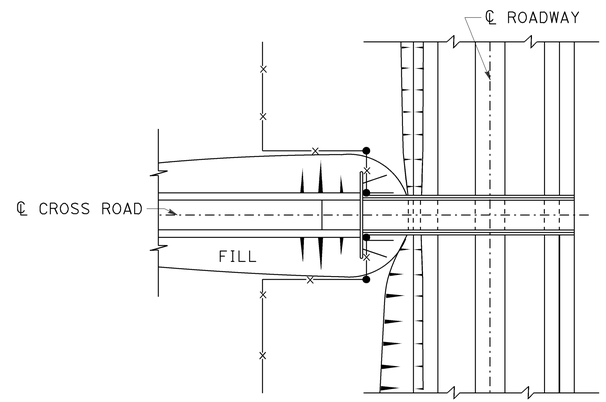

PLAN OF ROADWAY - OVERCROSSING

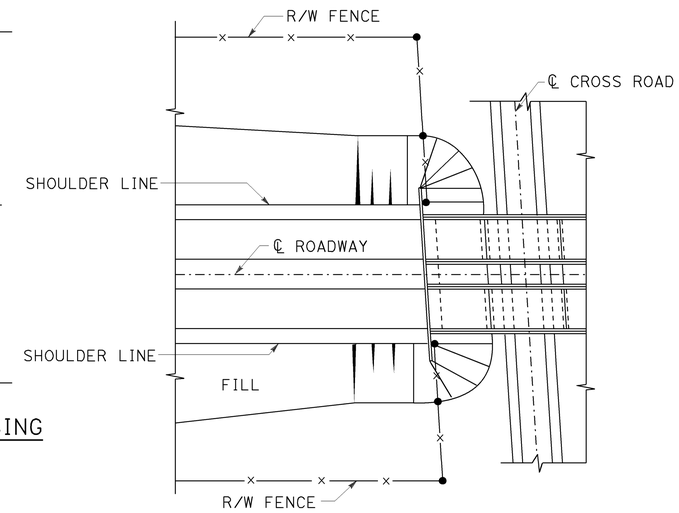

PLAN OF ROADWAY - UNDERCROSSING

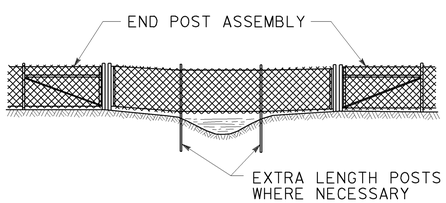

ELEVATION

INSTALLATION OVER STREAM

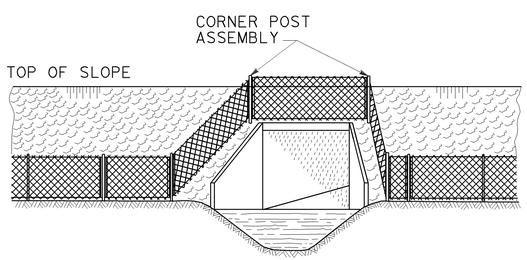

ELEVATION

INSTALLATION AROUND HEADWALL

See Note 4

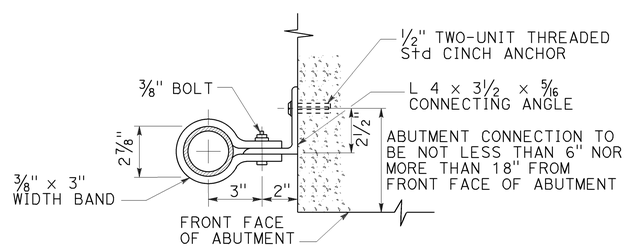

ABUTMENT CONNECTION

TYPICAL INSTALLATION AT BRIDGES

STATE OF CALIFORNIA
DEPARTMENT OF TRANSPORTATION

CHAIN LINK FENCE DETAILS

NO SCALE

RSP A85B DATED OCTOBER 19, 2012 SUPERSEDES STANDARD PLAN A85B DATED MAY 20, 2011 - PAGE 114 OF THE STANDARD PLANS BOOK DATED 2010.

REVISED STANDARD PLAN RSP A85B

7-19-12

Dist	COUNTY	ROUTE	POST MILES TOTAL PROJECT	SHEET No.	TOTAL SHEETS
06	Fre, Mad	41U	33.1/33.4 0.0/0.3	61	113

REGISTERED CIVIL ENGINEER

January 15, 2016
PLANS APPROVAL DATE

REGISTERED PROFESSIONAL ENGINEER
Michael Janzen
No. 44788
Exp. 3-31-16
CIVIL
STATE OF CALIFORNIA

THE STATE OF CALIFORNIA OR ITS OFFICERS OR AGENTS SHALL NOT BE RESPONSIBLE FOR THE ACCURACY OR COMPLETENESS OF SCANNED COPIES OF THIS PLAN SHEET.

TO ACCOMPANY PLANS DATED 3-7-16

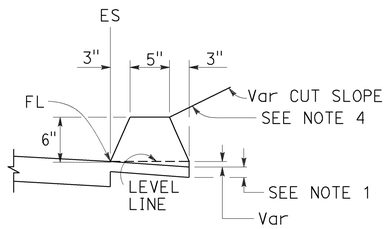

TYPE A
See Notes 3 and 5

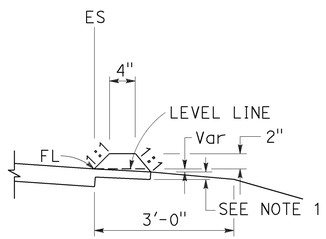

TYPE C

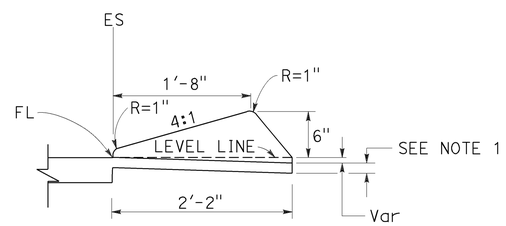

TYPE D

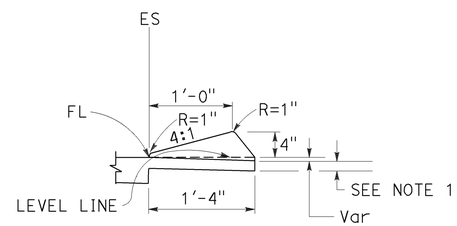

TYPE E

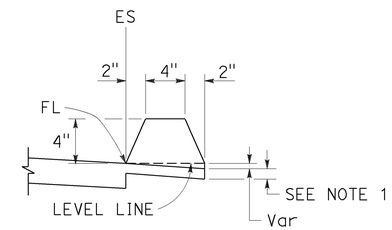

TYPE F
See Note 5

DIKES

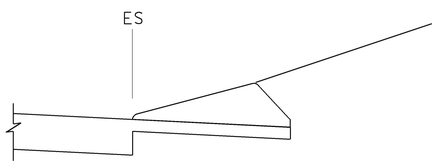

CASE C-1
Cut Slope

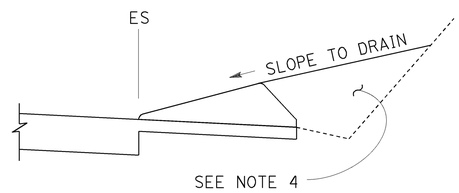

CASE C-2
Cut Slope

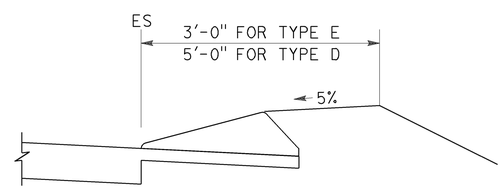

CASE F

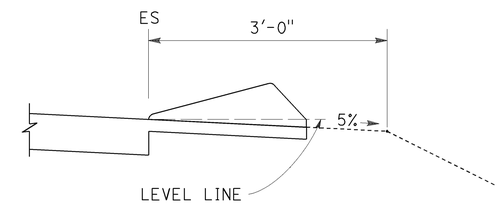

CASE R
See Note 2

TYPE D AND E BACKFILL DETAILS

NOTES:

1. For HMA shoulders only, extend top layer of HMA placed on the shoulder under dike with no joint at the ES. For projects with OGFC shoulders, do not extend OGFC under dike. See project plans for modified dike detail.
2. Case R applies to retrofit only projects where restrictive conditions do not provide enough width for Case F backfill.
3. Type A dike only to be used where restrictive slope conditions do not provide enough width to use Type D or Type E dike.
4. Fill and compact with excavated material to top of dike.
5. Use Type A or F dike, where dike is required with guardrail installations. See Standard Plan A77N4 for dike positioning details. See Standard Plan A77N3 for hinge point offsets with guardrail.

DIKE QUANTITIES

TYPE	CUBIC YARDS PER LINEAR FOOT
A	0.0135
C	0.0038
D	0.0293
E	0.0130
F	0.0066

Quantities based on 5% cross slope.

STATE OF CALIFORNIA
DEPARTMENT OF TRANSPORTATION

HOT MIX ASPHALT DIKES

NO SCALE

RSP A87B DATED JANUARY 15, 2016 SUPERSEDES STANDARD PLAN A87B DATED OCTOBER 30, 2015 - PAGE 126 OF THE STANDARD PLANS BOOK DATED 2015.

REVISED STANDARD PLAN RSP A87B

2015 REVISED STANDARD PLAN RSP A87B

11-17-15

Dist	COUNTY	ROUTE	POST MILES TOTAL PROJECT	SHEET No.	TOTAL SHEETS
06	Fre, Mad	41U	33.1/33.4 0.0/0.3	62	113

Gregory A. Balzer
LICENSED LANDSCAPE ARCHITECT

July 19, 2013
PLANS APPROVAL DATE

LICENSED LANDSCAPE ARCHITECT Gregory A. Balzer 2516 STATE OF CALIFORNIA
Gregory A. Balzer
Original Date 2-28-15
Renewal Date 7-19-13
Date

THE STATE OF CALIFORNIA OR ITS OFFICERS OR AGENTS SHALL NOT BE RESPONSIBLE FOR THE ACCURACY OR COMPLETENESS OF SCANNED COPIES OF THIS PLAN SHEET.

TO ACCOMPANY PLANS DATED 3-7-16

A

AB	AGGREGATE BASE
ABS	ACRYLONITRILE-BUTADIENE-STYRENE
AC	ASPHALT CONCRETE
ACC	ARMOR-CLAD CONDUCTORS
Adj	ADJACENT/ADJUSTABLE
AIC	AUXILIARY IRRIGATION CONTROLLER
Alt	ALTERNATIVE
AMEND	AMENDMENT
ARV	AIR RELEASE VALVE
AUTO	AUTOMATIC
AUX	AUXILIARY
AVB	ATMOSPHERIC VACUUM BREAKER

B

B&B	BALLED AND BURLAPPED
B/B	BRASS/BRONZE
B/B/PL	BRASS/BRONZE/PLASTIC
B/PL	BRASS/PLASTIC
BFM	BONDED FIBER MATRIX
Bit Ctd	BITUMINOUS COATED
BP	BOOSTER PUMP
BPA	BACKFLOW PREVENTER ASSEMBLY
BPE	BACKFLOW PREVENTER ENCLOSURE
BV	BALL VALVE

C

C	CONDUIT
CAP	CORRUGATED ALUMINUM PIPE
CARV	COMBINATION AIR RELEASE VALVE
CB	COUPLING BAND
CCA	CAM COUPLER ASSEMBLY
CEC	CONTROLLER ENCLOSURE CABINET
CHDPE	CORRUGATED HIGH DENSITY POLYETHYLENE
CL	CHAIN LINK
CNC	CONTROL AND NEUTRAL CONDUCTORS
Conc	CONCRETE
CP	COPPER PIPE
CS	COMPOST SOCK
CSP	CORRUGATED STEEL PIPE
CST	CENTER STRIP
CV	CHECK VALVE

D

Dia	DIAMETER
DIP	DUCTILE IRON PIPE
DIT	DRIP IRRIGATION TUBING
DG	DECOMPOSED GRANITE
DN	DIAMETER NOMINAL
DVA	DRIP VALVE ASSEMBLY

E

EC	EROSION CONTROL
ECTC	EROSION CONTROL TECHNOLOGY COUNCIL
Elect	ELECTRIC/ELECTRICAL
Elev	ELEVATION
ELL	ELBOW
ENCL	ENCLOSURE
EP	EDGE OF PAVEMENT
ES	EDGE OF SHOULDER
EST	END STRIP
ESTB	ESTABLISHMENT
ETW	EDGE OF TRAVELED WAY

F

F	FULL CIRCLE
F/P	FULL/PART CIRCLE
FCV	FLOW CONTROL VALVE
FERT	FERTILIZER
FG	FINISHED GRADE
FH	FLEXIBLE HOSE
FIPT	FEMALE IRON PIPE THREAD
FIS	FERTILIZER INJECTOR SYSTEM
FL	FLOW LINE
FR	FIBER ROLL
FS	FLOW SENSOR
FSC	FLOW SENSOR CABLE
FV	FLUSH VALVE

G

Galv	GALVANIZED
GARV	GARDEN VALVE
GARVA	GARDEN VALVE ASSEMBLY
GM	GRAVEL MULCH
GPH	GALLONS PER HOUR
GPM	GALLONS PER MINUTE
GSP	GALVANIZED STEEL PIPE
GV	GATE VALVE

H

H	HALF CIRCLE
HDPE	HIGH DENSITY POLYETHYLENE
HP	HORSEPOWER/HINGE POINT
HPL	HIGH PRESSURE LINE
Hwy	HIGHWAY

I

IC	IRRIGATION CONTROLLER
ICC	IRRIGATION CONTROLLER(S) IN CONTROLLER ENCLOSURE CABINET
ID	INSIDE DIAMETER
IFS	IRRIGATION FILTRATION SYSTEM
IPS	IRON PIPE SIZE
IPT	IRON PIPE THREAD
Irr	IRRIGATION

L

L	LENGTH

M

Max	MAXIMUM
MBGR	METAL BEAM GUARD RAILING
MCV	MANUAL CONTROL VALVE
MIC	MASTER IRRIGATION CONTROLLER
Min	MINIMUM
MIPT	MALE IRON PIPE THREAD
Misc	MISCELLANEOUS
Mtl	MATERIAL
MVP	MAINTENANCE VEHICLE PULLOUT

N

NCN	NO COMMON NAME
NL	NOZZLE LINE
No.	NUMBER
NPT	NATIONAL PIPE THREAD

O

O/C	ON CENTER
OD	OUTSIDE DIAMETER
OL	OVERLAP

P

P	PART CIRCLE
PB	PULL BOX
PCC	PORTLAND CEMENT CONCRETE
PE	POLYETHYLENE
Pkt	PACKET
PL	PLASTIC
PLS	PURE LIVE SEED
PLT	PLANT/PLANTING
PLT ESTB	PLANT ESTABLISHMENT
PM	POST MILE
PR	PRESSURE RATED
PRLV	PRESSURE RELIEF VALVE
PRV	PRESSURE REGULATING VALVE
PVC	POLYVINYL CHLORIDE
Pvmt	PAVEMENT

Q

Q	QUARTER CIRCLE
QCV	QUICK COUPLING VALVE

NOTE:

For additional abbreviations, see Standard Plans A10A and A10B.

R

R	RADIUS
RCP	REINFORCED CONCRETE PIPE
RCV	REMOTE CONTROL VALVE
RCVM	REMOTE CONTROL VALVE (MASTER)
RCVMF	REMOTE CONTROL VALVE (MASTER) W/FLOW SENSOR
RCVP	REMOTE CONTROL VALVE W/PRESSURE REGULATOR
RCW	RECYCLED WATER
RECP	ROLLED EROSION CONTROL PRODUCT
REQ	REQUIRED
RICS	REMOTE IRRIGATION CONTROL SYSTEM
R/W	RIGHT OF WAY

S

S	SLIP
SCH	SCHEDULE
SF	STATE-FURNISHED
Shld	SHOULDER
Sq	SQUARE
SST	SIDE STRIP
Sta	STATION
Std	STANDARD
SW	SIDEWALK/SOUND WALL

T

T	THIRD CIRCLE/THREAD
TLS	TRUCK LOADING STANDPIPE
TQ	THREE QUARTER CIRCLE
TRM	TURF REINFORCEMENT MAT
TT	TWO-THIRDS CIRCLE
TWSA	TREE WELL SPRINKLER ASSEMBLY
Typ	TYPICAL

U

UG	UNDERGROUND

W

W	WIDTH
W/	WITH
WM	WATER METER
WS	WYE STRAINER
WSA	WYE STRAINER ASSEMBLY
WSP	WELDED STEEL PIPE
WWM	WELDED WIRE MESH

STATE OF CALIFORNIA
DEPARTMENT OF TRANSPORTATION

LANDSCAPE AND EROSION CONTROL ABBREVIATIONS

NO SCALE

RSP H1 DATED JULY 19, 2013 SUPERSEDES STANDARD PLAN H1 DATED MAY 20, 2011 - PAGE 218 OF THE STANDARD PLANS BOOK DATED 2010.

REVISED STANDARD PLAN RSP H1

2010 REVISED STANDARD PLAN RSP H1

6-28-13

Dist	COUNTY	ROUTE	POST MILES TOTAL PROJECT	SHEET No.	TOTAL SHEETS
06	Fre, Mad	41U	33.1/33.4 0.0/0.3	63	113

LICENSED LANDSCAPE ARCHITECT

November 15, 2013
PLANS APPROVAL DATE

LICENSED LANDSCAPE ARCHITECT — Gregory A. Belzer 2516 — 02-28-15 Renewal Date — 11-15-13 Date — STATE OF CALIFORNIA

THE STATE OF CALIFORNIA OR ITS OFFICERS OR AGENTS SHALL NOT BE RESPONSIBLE FOR THE ACCURACY OR COMPLETENESS OF SCANNED COPIES OF THIS PLAN SHEET.

TO ACCOMPANY PLANS DATED 3-7-16

2010 REVISED STANDARD PLAN RSP H2

EXISTING	NEW	ITEM DESCRIPTION
		WATER METER (WM)
		BACKFLOW PREVENTER ASSEMBLY (BPA)
		BACKFLOW PREVENTER ENCLOSURE (BPE)
		BOOSTER PUMP (BP)
		TRUCK LOADING STANDPIPE (TLS)
	FS	FLOW SENSOR (FS)
		MASTER IRRIGATION CONTROLLER (MIC)
		AUXILIARY IRRIGATION CONTROLLER (AIC)
		IRRIGATION CONTROLLER (IC) IRRIGATION CONTROLLER (IC) (BATTERY) IRRIGATION CONTROLLER (IC) (SOLAR) IRRIGATION CONTROLLER (IC) (TWO WIRE) IRRIGATION CONTROLLER(S) IN CONTROLLER ENCLOSURE CABINET (ICC)
acc	ACC	ARMOR-CLAD CONDUCTORS (ACC)
cnc	CNC	CONTROL AND NEUTRAL CONDUCTORS (CNC)
		IRRIGATION CONDUIT
		EXTEND IRRIGATION CONDUIT
dip	DIP	DUCTILE IRON PIPE (SUPPLY LINE) (MAIN) (DIP)
		GALVANIZED STEEL PIPE (SUPPLY LINE) (MAIN) (GSP)
		GALVANIZED STEEL PIPE (SUPPLY LINE) (LATERAL) (GSP)
		PLASTIC PIPE (SUPPLY LINE) (MAIN)
		PLASTIC PIPE (SUPPLY LINE) (LATERAL)
cp	CP	COPPER PIPE (SUPPLY LINE)
dit	DIT	DRIP IRRIGATION TUBING
		REMOTE CONTROL VALVE (RCV) REMOTE CONTROL VALVE (MASTER) (RCVM) REMOTE CONTROL VALVE (MASTER) W/FLOW METER (RCVMF)
P	P	REMOTE CONTROL VALVE W/PRESSURE REGULATOR (RCVP)
		EXISTING MANUAL CONTROL VALVE (MCV)
	V	DRIP VALVE ASSEMBLY (DVA)
	Y	WYE STRAINER ASSEMBLY (WSA)

EXISTING	NEW	ITEM DESCRIPTION
		GATE VALVE (GV)
		BALL VALVE (BV)
		QUICK COUPLING VALVE (QCV)
		CAM COUPLER ASSEMBLY (CCA)
		GARDEN VALVE ASSEMBLY (GARVA)
		PRESSURE REGULATING VALVE (PRV)
		PRESSURE RELIEF VALVE (PRLV)
		FLOW CONTROL VALVE (FCV)
		COMBINATION AIR RELEASE VALVE (CARV)
		CHECK VALVE (CV)
		FLUSH VALVE (FV)
		EXISTING NOZZLE LINE W/TURNING UNION
		EXISTING IRRIGATION SYSTEM
		EXISTING IRRIGATION SYSTEM TO BE REMOVED
		CHAIN LINK GATE
		QUICK COUPLING VALVE W/SPRINKLER PROTECTOR
3	3	SPRINKLER W/SPRINKLER PROTECTOR
	C	CONNECT TO EXISTING SYSTEM
		CAP
		CAP EXISTING
	\\\FR\\\	FIBER ROLL
	\\\CS\\\	COMPOST SOCK

- RCV SIZE
- IRRIGATION CONTROLLER
- CONTROLLER STATION
- VALVE IN PARALLEL (IF APPLICABLE)
- GPM
- QUANTITY OF SPRINKLERS (WHEN SHOWN)

* 2½"-A-2b-40-60

VALVE CODE

* VALVE CODES FOR EXISTING VALVES ARE SHOWN IN A DASHED ENCLOSURE.

STATE OF CALIFORNIA
DEPARTMENT OF TRANSPORTATION

LANDSCAPE AND EROSION CONTROL SYMBOLS

NO SCALE

RSP H2 DATED NOVEMBER 15, 2013 SUPERSEDES RSP H2 DATED JULY 19, 2013 AND STANDARD PLAN H2 DATED MAY 20, 2011 - PAGE 219 OF THE STANDARD PLANS BOOK DATED 2010.

REVISED STANDARD PLAN RSP H2

10-9-13

Dist	COUNTY	ROUTE	POST MILES TOTAL PROJECT	SHEET No.	TOTAL SHEETS
06	Fre, Mad	41U	33.1/33.4 0.0/0.3	64	113

LICENSED LANDSCAPE ARCHITECT

July 19, 2013
PLANS APPROVAL DATE

THE STATE OF CALIFORNIA OR ITS OFFICERS OR AGENTS SHALL NOT BE RESPONSIBLE FOR THE ACCURACY OR COMPLETENESS OF SCANNED COPIES OF THIS PLAN SHEET.

LICENSED LANDSCAPE ARCHITECT
Gregory A. Belzer 2516
Renewal Date 2-28-15
Renewal Date 7-19-13
Date
STATE OF CALIFORNIA

TO ACCOMPANY PLANS DATED 3-7-16

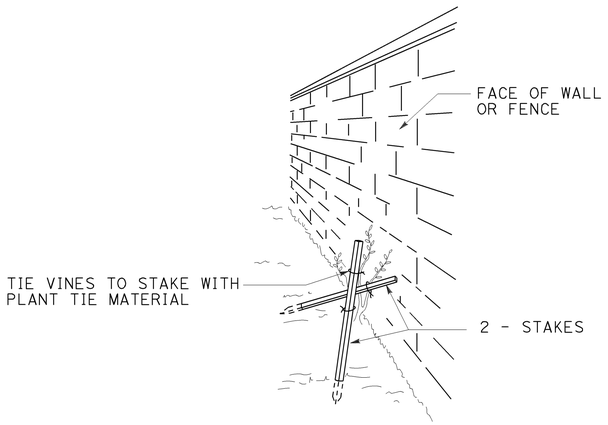

PERSPECTIVE
VINE STAKING

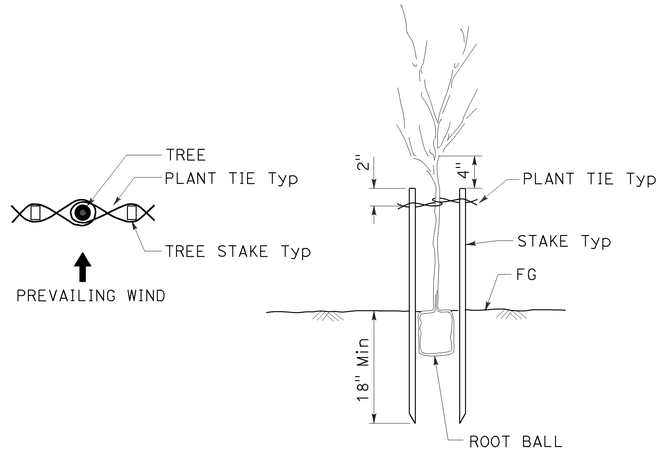

TREE STAKING

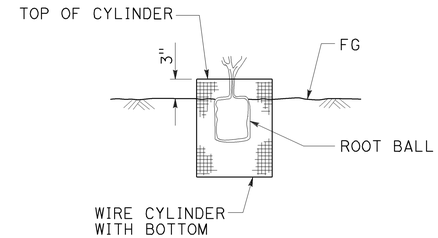

SECTION
ROOT PROTECTOR

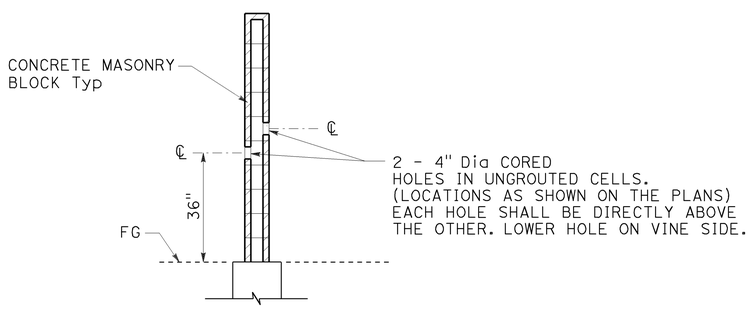

SECTION
CORE HOLE (VINE)

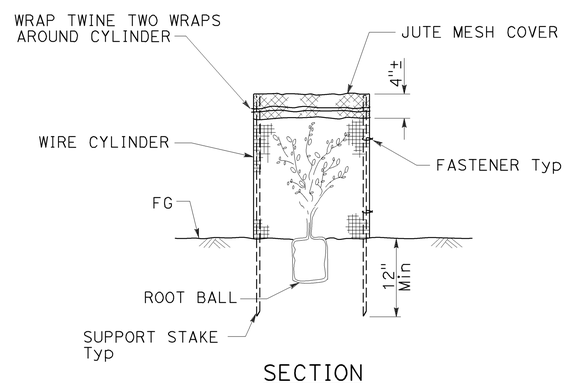

SECTION
FOLIAGE PROTECTOR

STATE OF CALIFORNIA
DEPARTMENT OF TRANSPORTATION

LANDSCAPE DETAILS

NO SCALE

RSP H4 DATED JULY 19, 2013 SUPERSEDES STANDARD PLAN H4
DATED MAY 20, 2011 - PAGE 221 OF THE STANDARD PLANS BOOK DATED 2010.

REVISED STANDARD PLAN RSP H4

2010 REVISED STANDARD PLAN RSP H4

6-28-13

Dist	COUNTY	ROUTE	POST MILES TOTAL PROJECT	SHEET No.	TOTAL SHEETS
06	Fre, Mad	41U	33.1/33.4 0.0/0.3	65	113

Gregory A. Belzer
LICENSED LANDSCAPE ARCHITECT

July 19, 2013
PLANS APPROVAL DATE

LICENSED LANDSCAPE ARCHITECT Gregory A. Belzer 2576 STATE OF CALIFORNIA
Gregory A. Belzer
02-28-15
Renewal Date
7-19-13
Date

THE STATE OF CALIFORNIA OR ITS OFFICERS OR AGENTS SHALL NOT BE RESPONSIBLE FOR THE ACCURACY OR COMPLETENESS OF SCANNED COPIES OF THIS PLAN SHEET.

TO ACCOMPANY PLANS DATED 3-7-16

2010 REVISED STANDARD PLAN RSP H5

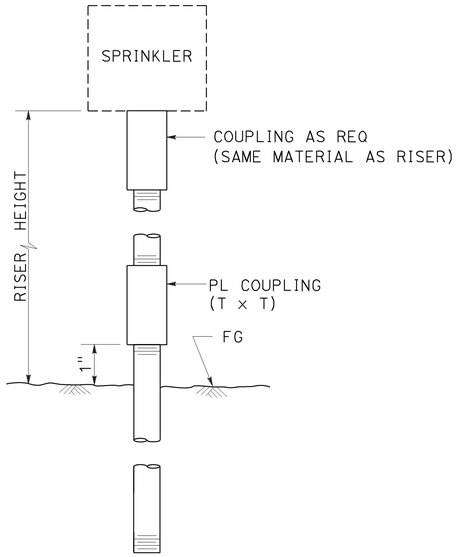

ELEVATION

RISER SPRINKLER ASSEMBLY TYPE I

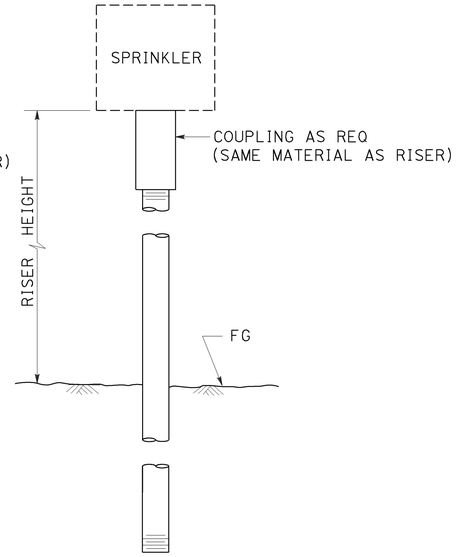

ELEVATION

RISER SPRINKLER ASSEMBLY TYPE II

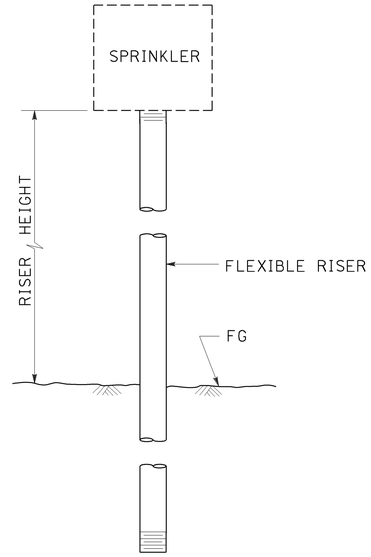

ELEVATION

RISER SPRINKLER ASSEMBLY TYPE III

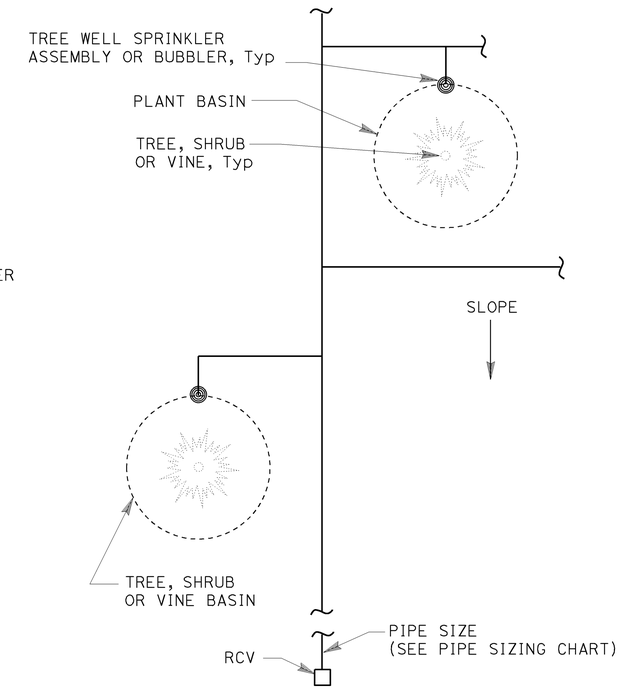

PLAN

NOTES:

1. Install tree well sprinkler assembly on up-hill side of plant when on slope.
2. Install bubbler within basin.

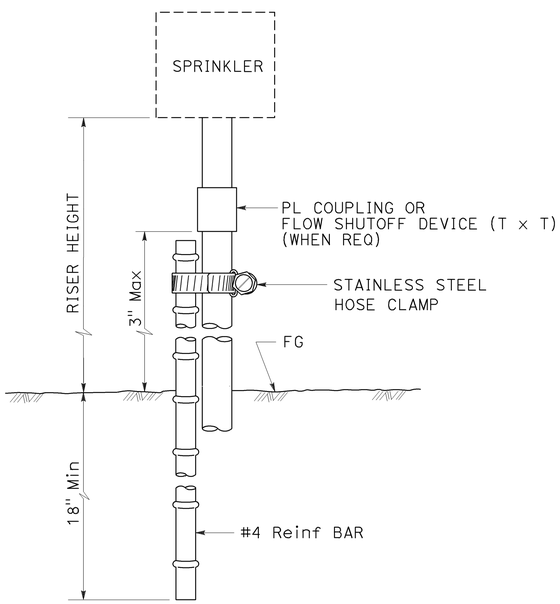

ELEVATION

RISER SPRINKLER ASSEMBLY TYPE IV

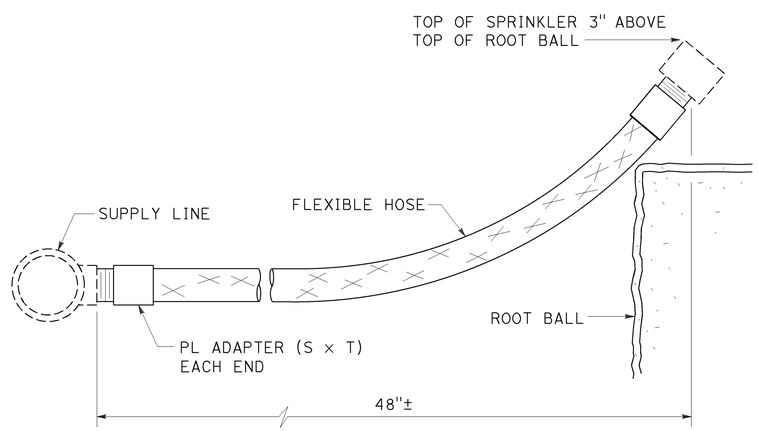

ELEVATION

RISER SPRINKLER ASSEMBLY TYPE V

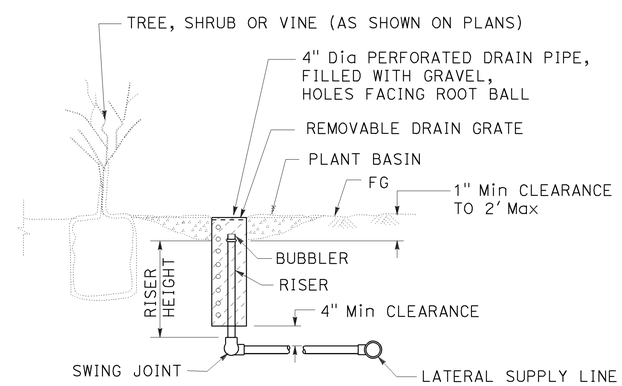

SECTION

TREE WELL SPRINKLER ASSEMBLY

STATE OF CALIFORNIA
DEPARTMENT OF TRANSPORTATION

LANDSCAPE DETAILS

NO SCALE

RSP H5 DATED JULY 19, 2013 SUPERSEDES STANDARD PLAN H5
DATED MAY 20, 2011 - PAGE 222 OF THE STANDARD PLANS BOOK DATED 2010.

REVISED STANDARD PLAN RSP H5

6-28-13

Dist	COUNTY	ROUTE	POST MILES TOTAL PROJECT	SHEET No.	TOTAL SHEETS
06	Fre, Mad	41U	33.1/33.4 0.0/0.3	66	113

LICENSED LANDSCAPE ARCHITECT

July 19, 2013
PLANS APPROVAL DATE

LICENSED LANDSCAPE ARCHITECT Gregory A. Balzer 2516 STATE OF CALIFORNIA
Gregory A. Balzer
02-28-15
Renewal Date
7-19-13
Date

THE STATE OF CALIFORNIA OR ITS OFFICERS OR AGENTS SHALL NOT BE RESPONSIBLE FOR THE ACCURACY OR COMPLETENESS OF SCANNED COPIES OF THIS PLAN SHEET.

TO ACCOMPANY PLANS DATED 3-7-16

2010 REVISED STANDARD PLAN RSP H7

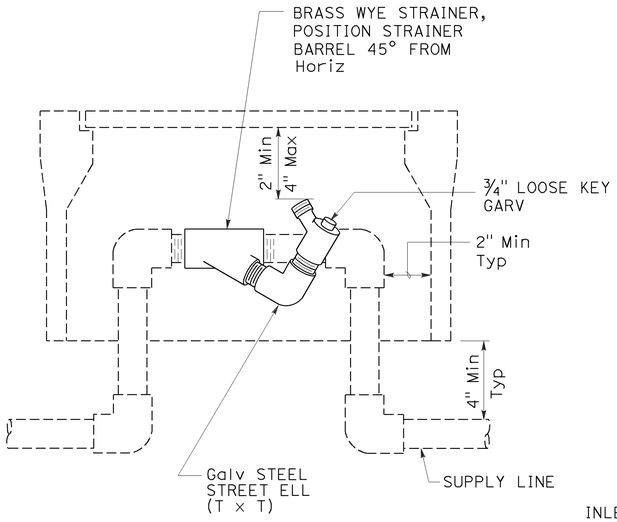

ELEVATION
WYE STRAINER ASSEMBLY

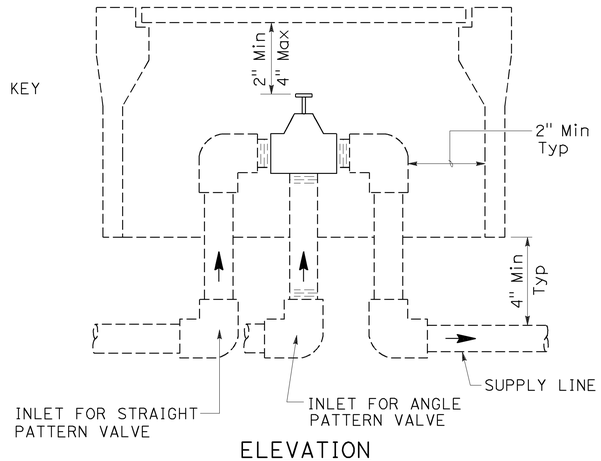

ELEVATION
VALVE

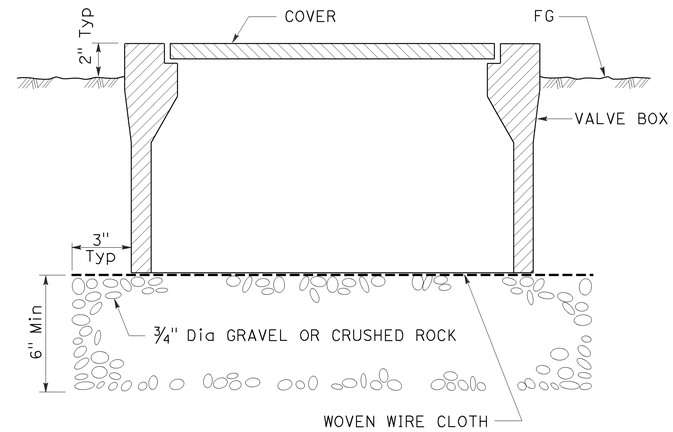

SECTION
VALVE BOX

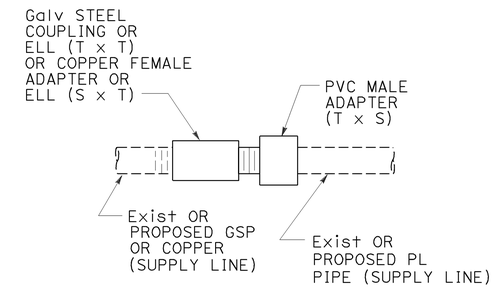

GALVANIZED OR COPPER PIPE CONNECTION TO PLASTIC PIPE

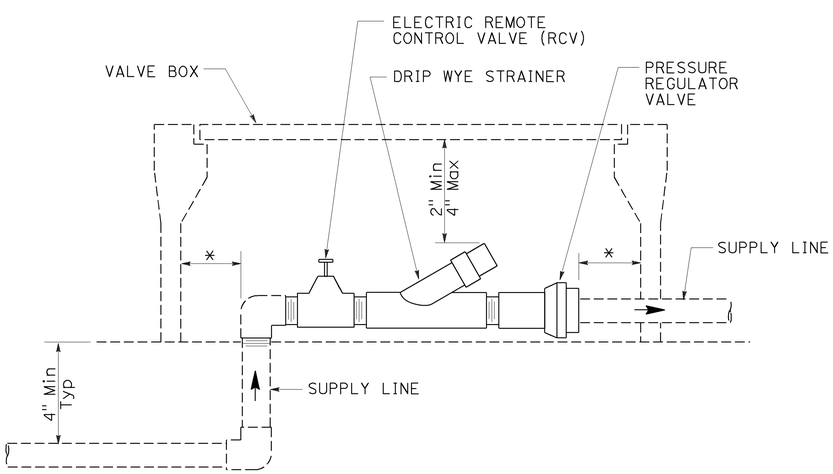

* 2" CLEARANCE ON ALL SIDES

ELEVATION
DRIP VALVE ASSEMBLY

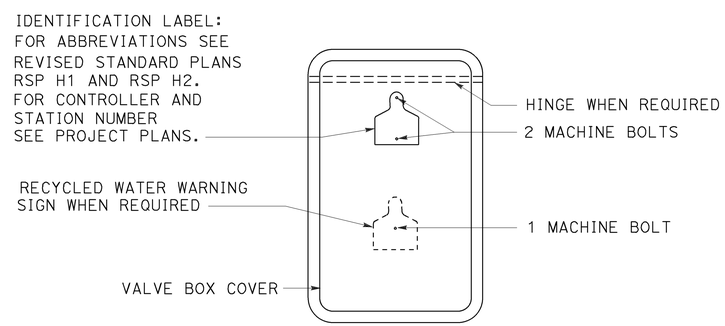

PLAN

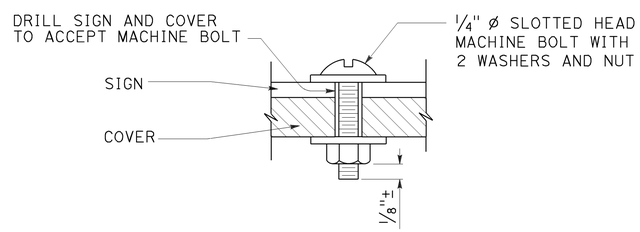

SECTION
VALVE BOX IDENTIFICATION

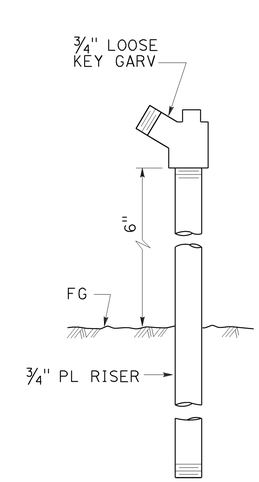

ELEVATION
GARDEN VALVE ASSEMBLY

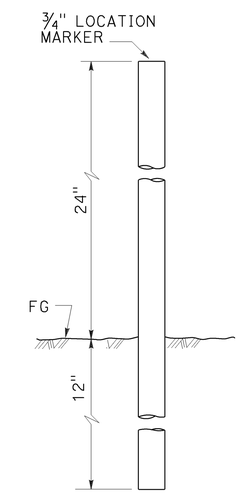

ELEVATION
LOCATION MARKER

GARDEN VALVE ASSEMBLY

STATE OF CALIFORNIA
DEPARTMENT OF TRANSPORTATION

LANDSCAPE DETAILS

NO SCALE

RSP H7 DATED JULY 19, 2013 SUPERSEDES STANDARD PLAN H7
DATED MAY 20, 2011 - PAGE 224 OF THE STANDARD PLANS BOOK DATED 2010.

REVISED STANDARD PLAN RSP H7

6-20-13

Dist	COUNTY	ROUTE	POST MILES TOTAL PROJECT	SHEET No.	TOTAL SHEETS
06	Fre, Mad	41U	33.1/33.4 0.0/0.3	67	113

Gregory A. Balzer
LICENSED LANDSCAPE ARCHITECT

July 19, 2013
PLANS APPROVAL DATE

LICENSED LANDSCAPE ARCHITECT Gregory A. Balzer 2516 STATE OF CALIFORNIA
Gregory A. Balzer
Original Date
2-28-15
Renewal Date
7-19-13
Date

THE STATE OF CALIFORNIA OR ITS OFFICERS OR AGENTS SHALL NOT BE RESPONSIBLE FOR THE ACCURACY OR COMPLETENESS OF SCANNED COPIES OF THIS PLAN SHEET.

TO ACCOMPANY PLANS DATED 3-7-16

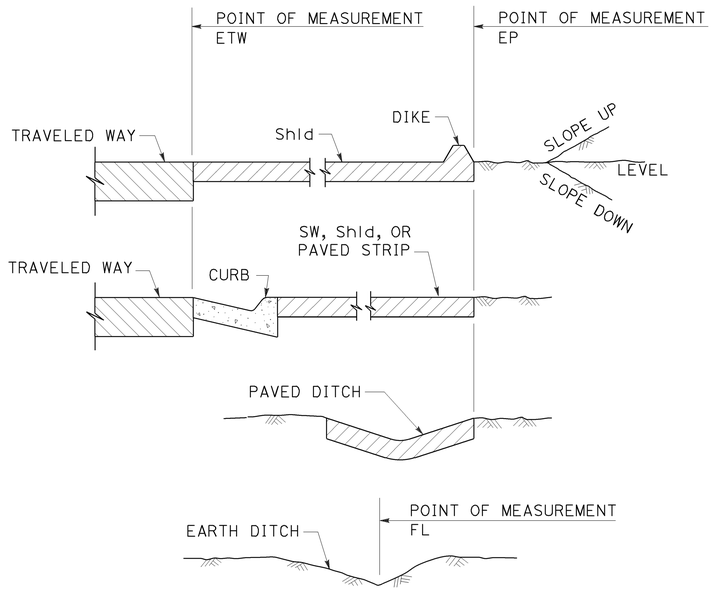

SECTION
POINTS OF MEASUREMENT

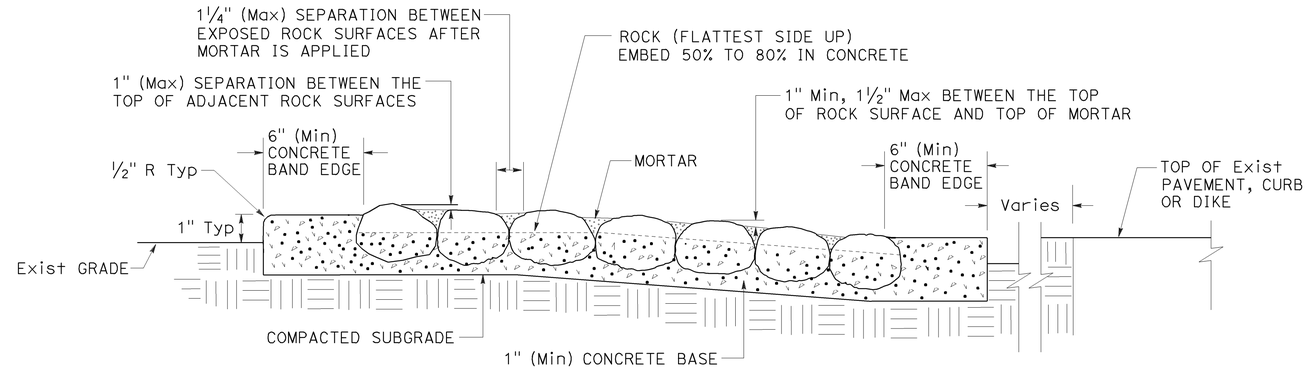

SECTION
ROCK BLANKET

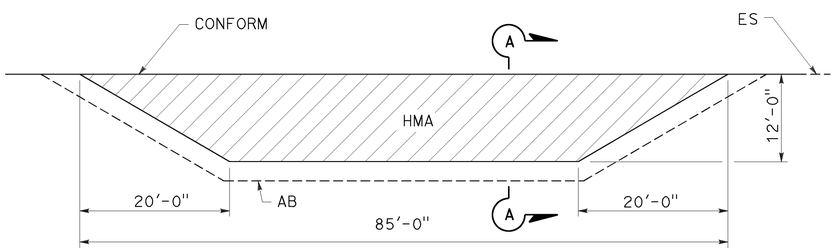

PLAN

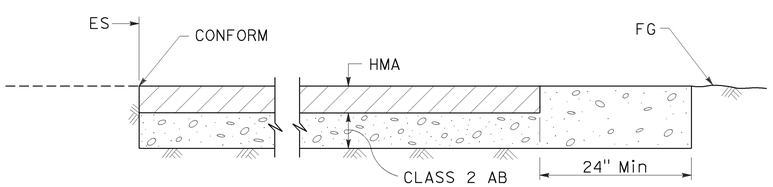

SECTION A-A
MAINTENANCE VEHICLE PULLOUT

STATE OF CALIFORNIA
DEPARTMENT OF TRANSPORTATION

LANDSCAPE DETAILS

NO SCALE

RSP H9A DATED JULY 19, 2013 SUPPLEMENTS THE STANDARD PLANS BOOK DATED 2010.

REVISED STANDARD PLAN RSP H9A

2010 REVISED STANDARD PLAN RSP H9A

6-21-13

Dist	COUNTY	ROUTE	POST MILES TOTAL PROJECT	SHEET No.	TOTAL SHEETS
06	Fre, Mad	41U	33.1/33.4 0.0/0.3	68	113

REGISTERED CIVIL ENGINEER

July 19, 2013
PLANS APPROVAL DATE

REGISTERED PROFESSIONAL ENGINEER Gurinderpal Bhullar No. C48815 Exp. 9-30-14 CIVIL STATE OF CALIFORNIA

THE STATE OF CALIFORNIA OR ITS OFFICERS OR AGENTS SHALL NOT BE RESPONSIBLE FOR THE ACCURACY OR COMPLETENESS OF SCANNED COPIES OF THIS PLAN SHEET.

TO ACCOMPANY PLANS DATED 3-7-16

2010 REVISED STANDARD PLAN RSP T9

TABLE 1

TAPER LENGTH CRITERIA AND CHANNELIZING DEVICE SPACING

SPEED (S)	MINIMUM TAPER LENGTH * FOR WIDTH OF OFFSET 12 FEET (W)				MAXIMUM CHANNELIZING DEVICE SPACING		
					X	Y	Z **
	TANGENT 2L	MERGING L	SHIFTING L/2	SHOULDER L/3	TAPER	TANGENT	CONFLICT
mph	ft	ft	ft	ft	ft	ft	ft
20	160	80	40	27	20	40	10
25	250	125	63	42	25	50	12
30	360	180	90	60	30	60	15
35	490	245	123	82	35	70	17
40	640	320	160	107	40	80	20
45	1080	540	270	180	45	90	22
50	1200	600	300	200	50	100	25
55	1320	660	330	220	55	110	27
60	1440	720	360	240	60	120	30
65	1560	780	390	260	65	130	32
70	1680	840	420	280	70	140	35

* - For other offsets, use the following merging taper length formula for L:
For speed of 40 mph or less, $L = WS^2/60$
For speed of 45 mph or more, $L = WS$

Where: L = Taper length in feet
W = Width of offset in feet
S = Posted speed limit, off-peak 85th-percentile speed prior to work starting, or the anticipated operating speed in mph

** - Use for taper and tangent sections where there are no pavement markings or where there is a conflict between existing pavement markings and channelizers (CA).

TABLE 2

LONGITUDINAL BUFFER SPACE AND FLAGGER STATION SPACING

SPEED *	Min D **	DOWNGRADE Min D ***		
		-3%	-6%	-9%
mph	ft	ft	ft	ft
20	115	116	120	126
25	155	158	165	173
30	200	205	215	227
35	250	257	271	287
40	305	315	333	354
45	360	378	400	427
50	425	446	474	507
55	495	520	553	593
60	570	598	638	686
65	645	682	728	785
70	730	771	825	891

* - Speed is posted speed limit, off-peak 85th-percentile speed prior to work starting, or the anticipated operating speed in mph

** - Longitudinal buffer space or flagger station spacing

*** - Use on sustained downgrade steeper than -3 percent and longer than 1 mile.

TABLE 3

ADVANCE WARNING SIGN SPACING

ROAD TYPE	DISTANCE BETWEEN SIGNS *		
	A	B	C
	ft	ft	ft
URBAN - 25 mph OR LESS	100	100	100
URBAN - MORE THAN 25 mph TO 40 mph	250	250	250
URBAN - MORE THAN 40 mph	350	350	350
RURAL	500	500	500
EXPRESSWAY / FREEWAY	1000	1500	2640

* - The distances are approximate, are intended for guidance purposes only, and should be applied with engineering judgment. These distances should be adjusted by the Engineer for field conditions, if necessary, by increasing or decreasing the recommmended distances.

STATE OF CALIFORNIA
DEPARTMENT OF TRANSPORTATION

TRAFFIC CONTROL SYSTEM TABLES FOR LANE AND RAMP CLOSURES

NO SCALE

RSP T9 DATED JULY 19, 2013 SUPERSEDES RSP T9 DATED APRIL 19, 2013 THAT SUPPLEMENTS THE STANDARD PLANS BOOK DATED 2010.

REVISED STANDARD PLAN RSP T9

4-30-13

Dist	COUNTY	ROUTE	POST MILES TOTAL PROJECT	SHEET No.	TOTAL SHEETS
06	Fre, Mad	41U	33.1/33.4 0.0/0.3	69	113

Devinder Singh
REGISTERED CIVIL ENGINEER

October 30, 2015
PLANS APPROVAL DATE

REGISTERED PROFESSIONAL ENGINEER
Devinder Singh
No. C50470
Exp. 6-30-17
CIVIL
STATE OF CALIFORNIA

THE STATE OF CALIFORNIA OR ITS OFFICERS OR AGENTS SHALL NOT BE RESPONSIBLE FOR THE ACCURACY OR COMPLETENESS OF SCANNED COPIES OF THIS PLAN SHEET.

TO ACCOMPANY PLANS DATED 3-7-16

NOTES:

See Revised Standard Plan RSP T9 for tables.

Use cone spacing X for taper segment, Y for tangent segment or Z for conflict situations, as approriate, per Table 1, unless X, Y, or Z cone spacing is shown on this sheet.

Unless otherwise specified in the special provisions, all temporary warning signs shall have black legend on fluorescent orange background.

California codes are designated by (CA). Otherwise, Federal (MUTCD) codes are shown.

TYPICAL LANE CLOSURE WITH REVERSIBLE CONTROL

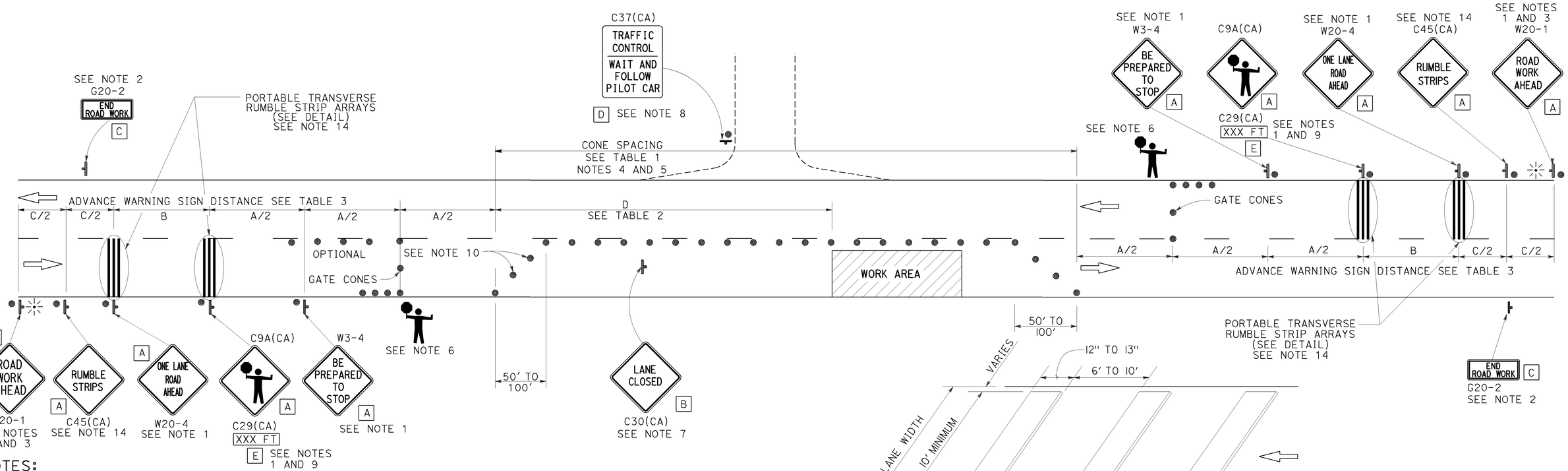

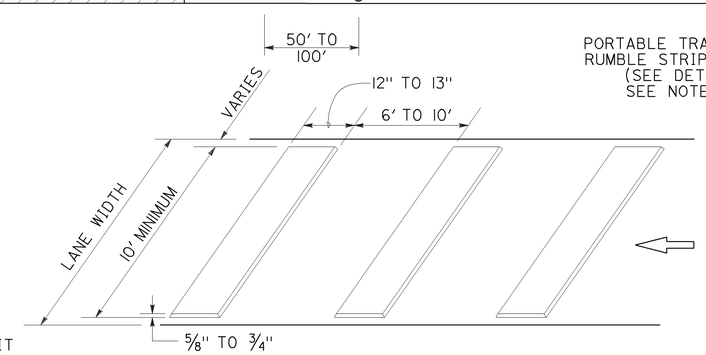

PORTABLE TRANSVERSE RUMBLE STRIP ARRAY DETAIL

NOTES:

1. Each advance warning sign in each direction of travel shall be equipped with at least two flags for daytime closure. Each flag shall be at least 16" x 16" in size and shall be orange or fluorescent red-orange in color. Flashing beacons shall be placed at the locations indicated for lane closure during hours of darkness.
2. A G20-2 "END ROAD WORK" sign, as appropriate, shall be placed at the end of the lane control unless the end of work area is obvious, or ends within a larger project's limits.
3. If the W20-1 sign would follow within 2000' of a stationary W20-1 or G20-1 "ROAD WORK NEXT _____ MILES", use a W20-4 sign for the first advance warning sign.
4. All cones used for lane closures during the hours of darkness shall be fitted with retroreflective bands (or sleeves) as specified in the specifications.
5. Portable delineators, placed at one-half the spacing indicated for traffic cones, may be used instead of cones for daytime closures only.
6. Additional advance flaggers may be required. Flagger should stand in a conspicuous place, be visible to approaching traffic as well as approaching vehicles after the first vehicle has stopped. During the hours of darkness, the flagging-station and flagger shall be illuminated and clearly visible to approaching traffic. The illumination footprint of the lighting on the ground shall be at least 20' in diameter. Place a minimum of four cones at 50' intervals in advance of flagger station as shown.
7. Place C30(CA) "LANE CLOSED" sign at 500' to 1000' intervals throughout extended work areas. They are optional if the work area is visible from the flagger station.
8. When a pilot car is used, place a C37(CA) "TRAFFIC CONTROL-WAIT AND FOLLOW PILOT CAR" sign with black legend on white background at all intersections, driveways and alleys without a flagger within traffic control area. Signs shall be clean and visible at all times. Where traffic can not be effectively self-regulated, at least one flagger shall be used at each intersection within traffic control area.
9. An optional C29(CA) sign may be placed below the C9A(CA) sign.
10. Either traffic cones or barricades shall be placed on the taper. Barricades shall be Type I, II, or III.
11. The color of the portable transverse rumble strips shall be black or orange. Use 2 arrays, each array shall consist of 3 rumble strips.
12. Portable transverse rumble strips shall not be placed on sharp horizontal or vertical curves nor shall they be placed through pedestrian crossings.
13. If the portable transverse rumble strips become out of alignment (skewed) by more than 6 inches, measured from one end to the other, they shall be readjusted to bring the placement back to the original location.
14. Portable transverse rumble strips are not required if any one of the following conditions is satisfied:
    A. Work duration occupies a location for four hours or less
    B. Posted speed limit is below 45 MPH
    C. Work is of emergency nature
    D. Work zone is in snow or icy weather conditions

SIGN PANEL SIZE (Min)

A	48" x 48"
B	30" x 30"
C	36" x 18"
D	36" x 42"
E	20" x 7"

LEGEND

- TRAFFIC CONE
- TEMPORARY TRAFFIC CONTROL SIGN
- PORTABLE FLASHING BEACON
- FLAGGER

STATE OF CALIFORNIA
DEPARTMENT OF TRANSPORTATION

TRAFFIC CONTROL SYSTEM FOR LANE CLOSURE ON TWO LANE CONVENTIONAL HIGHWAYS

NO SCALE

RSP T13 DATED OCTOBER 30, 2015 SUPERSEDES RSP T13 DATED OCTOBER 17, 2014, RSP T13 DATED JULY 18, 2014 AND RSP T13 DATED APRIL 19, 2013 AND STANDARD PLAN T13 DATED MAY 20, 2011 - PAGE 241 OF THE STANDARD PLANS BOOK DATED 2010.

REVISED STANDARD PLAN RSP T13

2010 REVISED STANDARD PLAN RSP T13

10-13-15

Dist	COUNTY	ROUTE	POST MILES TOTAL PROJECT	SHEET No.	TOTAL SHEETS
06	Fre, Mad	41U	33.1/33.4 0.0/0.3	70	113

REGISTERED CIVIL ENGINEER

October 30, 2015
PLANS APPROVAL DATE

REGISTERED PROFESSIONAL ENGINEER Efthymios Delis No. C51434 Exp. 6-30-17 CIVIL STATE OF CALIFORNIA

THE STATE OF CALIFORNIA OR ITS OFFICERS OR AGENTS SHALL NOT BE RESPONSIBLE FOR THE ACCURACY OR COMPLETENESS OF SCANNED COPIES OF THIS PLAN SHEET.

TO ACCOMPANY PLANS DATED 3-7-16

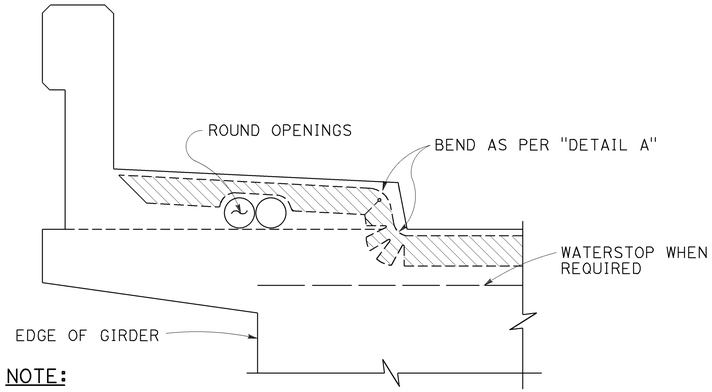

NOTE:
Type "B" seal shown. Type "A" seals to comform to the general path of seal shown, cuts for bending not required. Bend type "A" seals 3" up into curb or barrier rail on only the low end of the seal.

CONCRETE BARRIER AND SIDEWALK

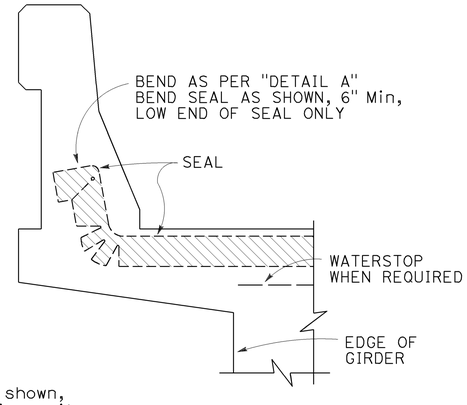

CONCRETE BARRIER

JOINT SEALS DETAILS

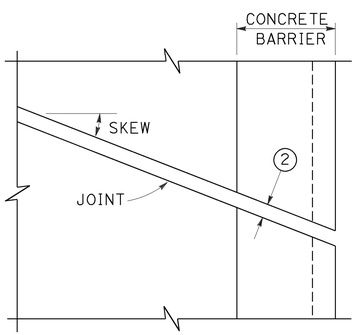

PLAN OF JOINT (SKEW ≤ 20°)

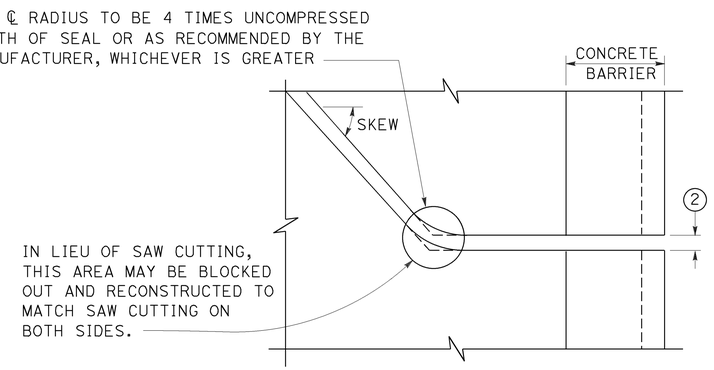

PLAN OF JOINT (SKEW > 20°)

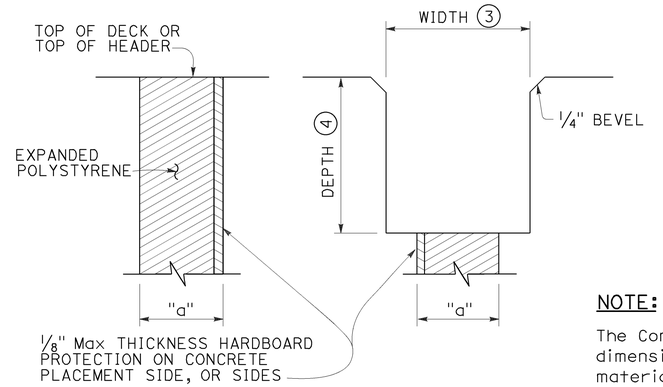

FORMING DETAIL SAWCUT DETAIL

NOTE:
The Contractor shall verify all controlling field dimensions before ordering or fabricatiing any material.

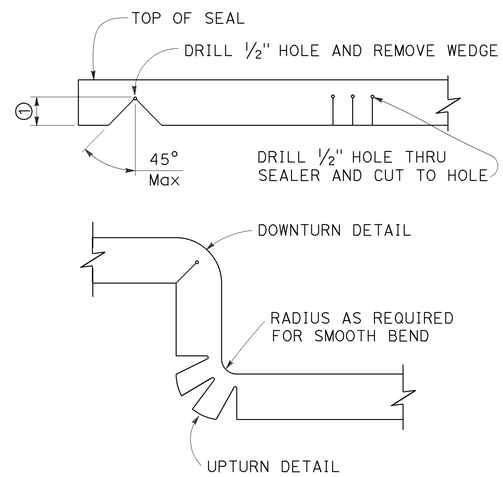

DETAIL A

NOTES:

1. Make smooth cuts from the bottom of seal to 1½" clear of top leaving at least one complete cell between the top of the cut and top of the seal. When necessary cut back of seal to clear conduit and round openings.
2. Opening in barrier to match width of sawn deck joint.
3. Sawcut groove widths shall be as ordered by the Engineer.
4. Depth of sawcut: Type A - Depth to be 2" minimum.
   Type B - Depth to be equal to or greater than the depth of seal measured along the contact surface, when compressed to minimum width position (W_2) plus dimensions shown.
5. MR (movement rating) as shown on other plan sheets.
6. Other depths must be approved by the Engineer.
7. A sidewalk joint shall be covered by an expansion joint armor.

DIMENSIONS "a" OF JOINT REQUIRED

MOVEMENT RATING (MR) 5	BRIDGE TYPE	"a" DIMENSION DECK CONCRETE PLACED		
		WINTER	FALL-SPRING	SUMMER
2"	ALL EXCEPT CIP/PS	1½"	1¼"	¾"
	CIP/PS	1¼"	1"	½"
1½"	ALL EXCEPT CIP/PS	1¼"	1"	½"
	CIP/PS	1"	¾"	½"
1"	ALL EXCEPT CIP/PS	1"	¾"	½"
	CIP/PS	¾"	½"	½"
½"	ALL EXCEPT CIP/PS	¾"	¾"	½"
	CIP/PS	½"	½"	½"

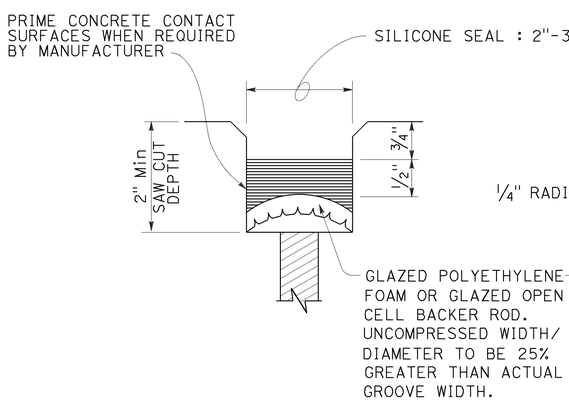

TYPE A SEAL
Movement rating : Silicone = 1" Max

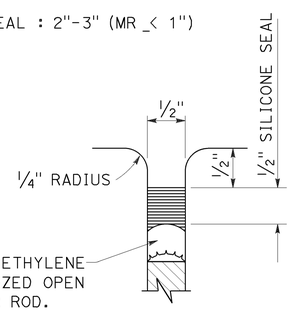

TYPE AL SEAL
Longitudinal joints only

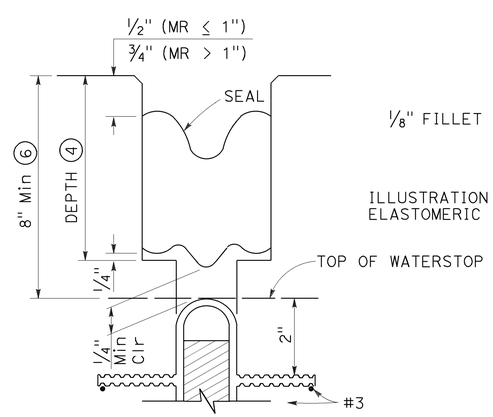

TYPE B JOINT SEAL
IN MINIMUM WIDTH POSITION (W_2)

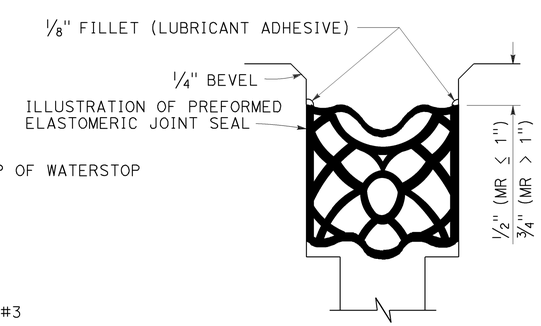

TYPE B SEAL
Movement Rating ≤ 2"

STATE OF CALIFORNIA
DEPARTMENT OF TRANSPORTATION

JOINT SEALS (MAXIMUM MOVEMENT RATING = 2")

NO SCALE

RSP B6-21 DATED OCTOBER 30, 2015 SUPERSEDES STANDARD PLAN B6-21 DATED MAY 20, 2011 - PAGE 283 OF THE STANDARD PLANS BOOK DATED 2010.

REVISED STANDARD PLAN RSP B6-21

2010 REVISED STANDARD PLAN RSP B6-21

8-18-15

Dist	COUNTY	ROUTE	POST MILES TOTAL PROJECT	SHEET No.	TOTAL SHEETS
06	Fre, Mad	41U	33.1/33.4 0.0/0.3	71	113

REGISTERED CIVIL ENGINEER

November 15, 2013
PLANS APPROVAL DATE

REGISTERED PROFESSIONAL ENGINEER
Tillat Satter
No. C42892
Exp. 3-31-14
CIVIL
STATE OF CALIFORNIA

THE STATE OF CALIFORNIA OR ITS OFFICERS OR AGENTS SHALL NOT BE RESPONSIBLE FOR THE ACCURACY OR COMPLETENESS OF SCANNED COPIES OF THIS PLAN SHEET.

TO ACCOMPANY PLANS DATED 3-7-16

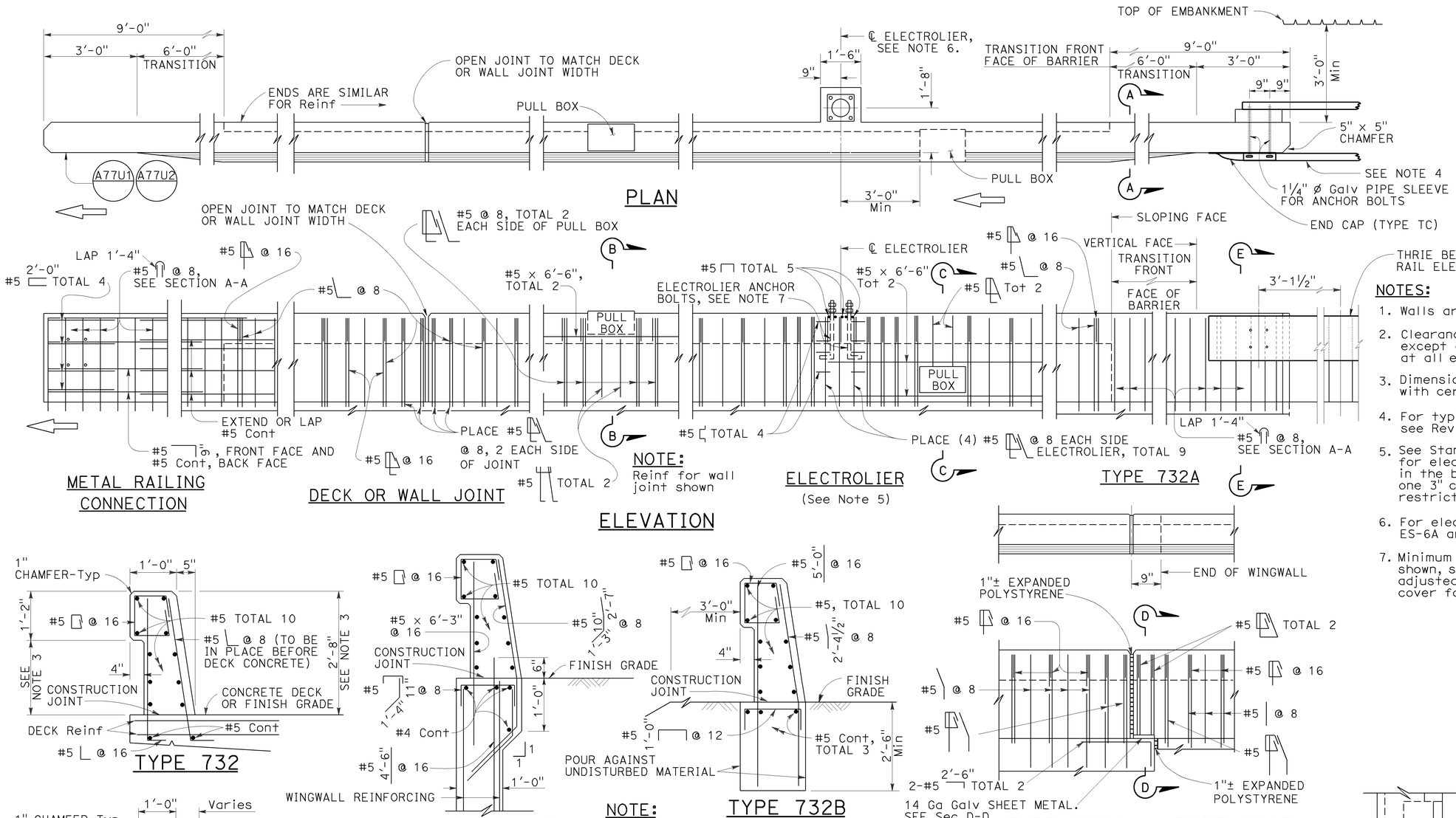

NOTES:

1. Walls are to be backfilled before barrier is placed.
2. Clearance to reinforcing steel in barrier to be 1", except as noted. Longitudinal reinforcement to stop at all expansion joints.
3. Dimensions may vary with roadway cross slope and with certain thickness of surfacing. See Project Plans.
4. For typical metal railing connection details not shown, see Revised Standard Plans RSP A77U1 and RSP A77U2.
5. See Standard Plans ES-9A, ES-9B, ES-9C, ES-9D and ES-9E for electrical details. The maximum number of conduits in the barrier is limited to two 2" conduits along with one 3" conduit. When a 3" conduit is used, it is restricted to the base of the barrier.
6. For electrolier mounting details, See Standard Plans ES-6A and ES-6B.
7. Minimum concrete edge distance, to the reinforcing shown, shall be maintained. Edge distance may be adjusted to accommodate increase in concrete cover for architectual treatment.

NOTE: Types 732A and 732B are similar to Type 732 except as noted.

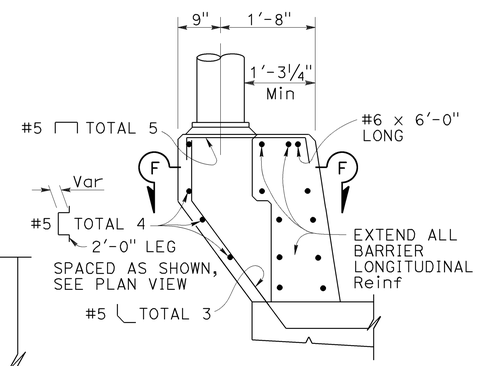

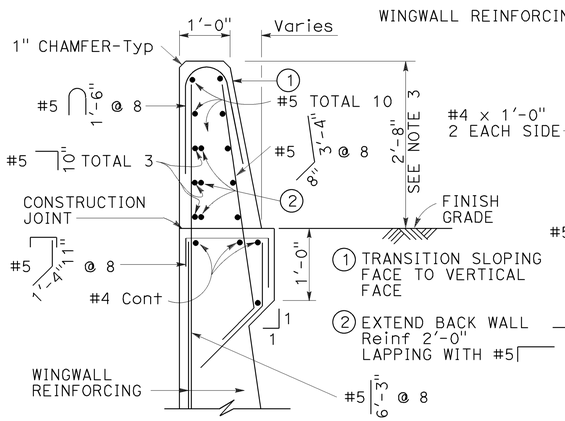

Details shown for barrier anchorage to Type 732A. Anchorage for barrier Types 732 and 732A are similar to their respective details.

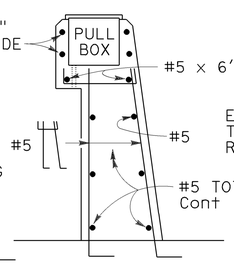

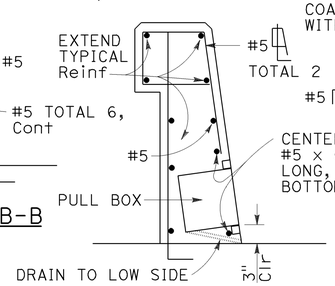

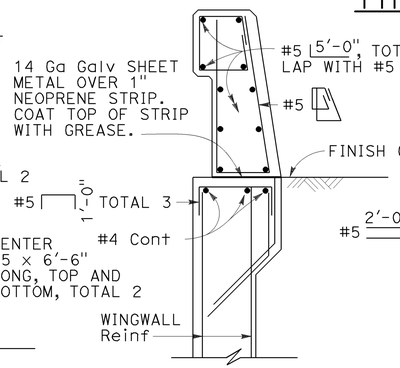

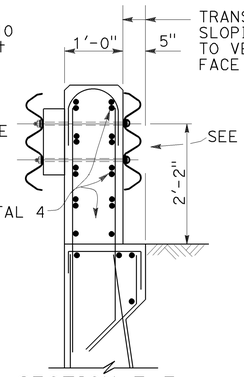

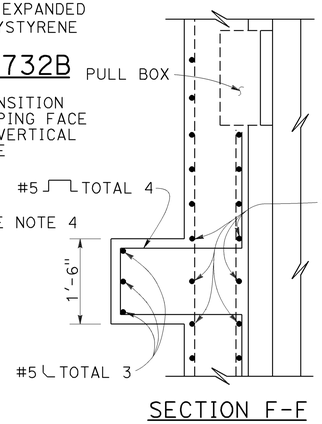

STATE OF CALIFORNIA
DEPARTMENT OF TRANSPORTATION

CONCRETE BARRIER TYPE 732

NO SCALE

RSP B11-55 DATED NOVEMBER 15, 2013 SUPERSEDES
RSP B11-55 DATED JULY 19, 2013 AND STANDARD PLAN B11-55
DATED MAY 20, 2011 - PAGE 297 OF THE STANDARD PLANS BOOK DATED 2010.

REVISED STANDARD PLAN RSP B11-55

2010 REVISED STANDARD PLAN RSP B11-55

10-4-13

Dist	COUNTY	ROUTE	POST MILES TOTAL PROJECT	SHEET No.	TOTAL SHEETS
06	Fre, Mad	41U	33.1/33.4 0.0/0.3	72	113

Theresa Gabriel
REGISTERED ELECTRICAL ENGINEER

October 30, 2015
PLANS APPROVAL DATE

REGISTERED PROFESSIONAL ENGINEER Theresa Aziz Gabriel No. E15129 Exp. 6-30-16 ELECTRICAL STATE OF CALIFORNIA

THE STATE OF CALIFORNIA OR ITS OFFICERS OR AGENTS SHALL NOT BE RESPONSIBLE FOR THE ACCURACY OR COMPLETENESS OF SCANNED COPIES OF THIS PLAN SHEET.

TO ACCOMPANY PLANS DATED 3-7-16

LEGEND:

AB	ABANDON. IF APPLIED TO CONDUIT, REMOVE CONDUCTORS
BC	INSTALL PULL BOX IN EXISTING CONDUIT RUN
BP	PEDESTRIAN BARRICADE, TYPE AS INDICATED ON PLAN
CB	INSTALL CONDUIT INTO EXISTING PULL BOX
CC	CONNECT NEW AND EXISTING CONDUIT. REMOVE EXISTING CONDUCTORS AND INSTALL CONDUCTORS AS INDICATED
CF	CONDUIT TO REMAIN FOR FUTURE USE. REMOVE CONDUCTORS. INSTALL PULL TAPE
DH	DETECTOR HANDHOLE
FA	FOUNDATION TO BE ABANDONED
IS	INSTALL SIGN ON SIGNAL MAST ARM
NS	NO SLIP BASE ON STANDARD
PEC	PHOTOELECTRIC CONTROL
PEU	PHOTOELECTRIC UNIT
RC	EQUIPMENT OR MATERIAL TO BE REMOVED AND BECOME THE PROPERTY OF THE CONTRACTOR
RE	REMOVE ELECTROLIER, FUSES AND BALLAST. TAPE ENDS OF CONDUCTORS
RL	RELOCATE EQUIPMENT
RR	REMOVE AND REUSE EQUIPMENT
RS	REMOVE AND SALVAGE EQUIPMENT
SC	SPLICE NEW TO EXISTING CONDUCTORS
SD	SERVICE DISCONNECT
TSP	TELEPHONE SERVICE POINT

ABBREVIATIONS

AC+	UNDERGROUNDED CONDUCTOR
APS	ACCESSIBLE PEDESTRIAN SIGNAL
Batt	BATTERY
BBS	BATTERY BACKUP SYSTEM
BC	BOLT CIRCLE
Blk	BLACK
BP	BYPASS
BPB	BICYCLE PUSH BUTTON
C	CONDUIT
CB	CIRCUIT BREAKER
CCTV	CLOSED CIRCUIT TELEVISION
Ckt	CIRCUIT
CMS	CHANGEABLE MESSAGE SIGN
Ctid	CALTRANS IDENTIFICATION
Comm	COMMUNICATION
Cntl	CONTROL
DF	DEPARTMENT-FURNISHED
DLC	LOOP DETECTOR LEAD-IN CABLE
EMS	EXTINGUISHABLE MESSAGE SIGN
EVUC	EMERGENCY VEHICLE UNIT CABLE
EVUD	EMERGENCY VEHICLE UNIT DETECTOR
FB	FLASHING BEACON
FBCA	FLASHING BEACON CONTROL ASSEMBLY
FBS	FLASHING BEACON WITH SLIP BASE
FO	FIBER OPTIC
G	EQUIPMENT GROUNDING CONDUCTOR
GB	GROUND BUS
GFCI	GROUND FAULT CIRCUIT INTERRUPTER
Grn	GREEN
HAR	HIGHWAY ADVISORY RADIO
Hex	HEXAGONAL
HPS	HIGH PRESSURE SODIUM
IISNS	INTERNALLY ILLUMINATED STREET NAME SIGN
ISL	INDUCTION SIGN LIGHTING
LED	LIGHT EMITTING DIODE
LMA	LUMINAIRE MAST ARM
LPS	LOW PRESSURE SODIUM
Ltg	LIGHTING
Lum	LUMINAIRE
M	METERED
MAT	MAST ARM MOUNTING TOP ATTACHMENT
MAS	MAST ARM MOUNTING SIDE ATTACHMENT
MBPS	MANUAL BYPASS SWITCH
M/M	MULTIPLE TO MULTIPLE TRANSFORMER
Mtg	MOUNTING
MV	MERCURY VAPOR LIGHTING FIXTURE
MVDS	MICROWAVE VEHICLE DETECTION SYSTEM
N	NEUTRAL (GROUNDED CONDUCTOR)
NB	NEUTRAL BUS
NC	NORMALLY CLOSE
NO	NORMALLY OPEN
P	CIRCUIT BREAKER'S POLE
PB	PULL BOX
PBA	PUSH BUTTON ASSEMBLY
PEC	PHOTOELECTRIC CONTROL
Ped	PEDESTRIAN
PEU	PHOTOELECTRIC UNIT
PT	CONDUIT WITH PULL TAPE
PTR	POWER TRANSFER RELAY
RE	RELOCATED EQUIPMENT
RM	RAMP METERING
RWIS	ROADSIDE WEATHER INFORMATION SYSTEM
SB	SLIP BASE
SIC	SIGNAL INTERCONNECT CABLE
Sig	SIGNAL
SMA	SIGNAL MAST ARM
SNS	STREET NAME SIGN
SP	SERVICE POINT
TB	TERMINAL BOARD
TDC	TELEPHONE DEMARCATION CABINET
Temp	TEMPERATURE
TMS	TRAFFIC MONITORING STATION
TOS	TRAFFIC OPERATIONS SYSTEM
UPS	UNINTERRUPTABLE POWER SUPPLY
UPSC	UNINTERRUPTABLE POWER SUPPLY CONTROLLER
Veh	VEHICLE
VIVDS	VIDEO IMAGE VEHICLE DETECTION SYSTEM
Wht	WHITE
WIM	WEIGH-IN-MOTION
Xfmr	TRANSFORMER

SOFFIT AND WALL-MOUNTED LUMINAIRES

PENDANT SOFFIT LUMINAIRE, 70 W HPS UNLESS OTHERWISE SPECIFIED

FLUSH-MOUNTED SOFFIT LUMINAIRE, 70 W HPS UNLESS OTHERWISE SPECIFIED

WALL-MOUNTED LUMINAIRE, 70 W HPS UNLESS OTHERWISE SPECIFIED

EXISTING SOFFIT OR WALL-MOUNTED LUMINAIRE TO REMAIN UNMODIFIED

EXISTING SOFFIT OR WALL-MOUNTED LUMINAIRE TO BE MODIFIED AS SPECIFIED

NOTE:
Arrow indicates "street side" of luminaire.

COMMONLY USED SYMBOLS FOR UNITED STATES CUSTOMARY UNITS OF MEASUREMENT:

SYMBOL	DEFINITIONS
Ω	OHMS
min	MINUTE
s	SECOND
bps	BITS PER SECOND
Bps	BYTES PER SECOND
A	AMPERE
V	VOLT
$V_{(dc)}$	VOLT (DIRECT CURRENT)
$V_{(ac)}$	VOLT (ALTERNATING CURRENT)
FC	FOOT - CANDLE
W	WATTS
VA	VOLT-AMPERE
M	MEGA
k	KILO
m	MILLI
μ	MICRO
P	PICO
Hz	HERTZ

MISCELLANEOUS ELECTROLIERS

NEW	EXISTING	
		LUMINAIRE ON WOOD POLE
		NON-STANDARD ELECTROLIER (SEE PROJECT LEGEND)
		CITY ELECTROLIER
		ELECTROLIER FOUNDATION (FUTURE INSTALLATION)

NOTES:

1. LED luminaires shall be 235 W when installed on Type 21, 21D, 30, 31 and 32 Standards, unless otherwise specified. LED luminaires shall be 165 W when installed on other type standards or poles, unless otherwise specified.
2. Luminaires shall be the cutoff type, ANSI Type III medium cutoff lighting distribution, unless otherwise specified.

STANDARD ELECTROLIER

NEW	EXISTING	STANDARD TYPE
		15
		15D
		15 STRUCTURE
		15D STRUCTURE
		21
		21D
		21 STRUCTURE
		21D STRUCTURE
		30
		31
		32

STATE OF CALIFORNIA
DEPARTMENT OF TRANSPORTATION

ELECTRICAL SYSTEMS (LEGEND AND ABBREVIATIONS)

NO SCALE

RSP ES-1A DATED OCTOBER 30, 2015 SUPERSEDES RSP ES-1A DATED JULY 19, 2013 AND STANDARD PLAN ES-1A DATED MAY 20, 2011 - PAGE 425 OF THE STANDARD PLANS BOOK DATED 2010.

REVISED STANDARD PLAN RSP ES-1A

2010 REVISED STANDARD PLAN RSP ES-1A

9-29-15

Dist	COUNTY	ROUTE	POST MILES TOTAL PROJECT	SHEET No.	TOTAL SHEETS
06	Fre, Mad	41U	33.1/33.4 0.0/0.3	73	113

Theresa Gabriel
REGISTERED ELECTRICAL ENGINEER

October 30, 2015
PLANS APPROVAL DATE

REGISTERED PROFESSIONAL ENGINEER Theresa Aziz Gabriel No. E15129 Exp. 6-30-16 ELECTRICAL STATE OF CALIFORNIA

THE STATE OF CALIFORNIA OR ITS OFFICERS OR AGENTS SHALL NOT BE RESPONSIBLE FOR THE ACCURACY OR COMPLETENESS OF SCANNED COPIES OF THIS PLAN SHEET.

TO ACCOMPANY PLANS DATED 3-7-16

CONDUIT

NEW	EXISTING	
		LIGHTING CONDUIT, UNLESS OTHERWISE INDICATED OR NOTED
		TRAFFIC SIGNAL CONDUIT
C	c	COMMUNICATION CONDUIT
T	t	TELEPHONE CONDUIT
F	f	FIRE ALARM CONDUIT
FO	fo	FIBER OPTIC CONDUIT
		CONDUIT TERMINATION
R	r	CONDUIT RISER ATTACHED TO THE STRUCTURE OR SERVICE POLE

SERVICE EQUIPMENT

NEW	EXISTING	
OH	oh	OVERHEAD LINES
U	U	WOOD POLE, "U" INDICATES UTILITY OWNED
		POLE GUY WITH ANCHOR
		UTILITY TRANSFORMER - GROUND MOUNTED
III	III	SERVICE EQUIPMENT ENCLOSURE TYPE. DOOR INDICATES FRONT OF ENCLOSURE
T	t	TELEPHONE DEMARCATION CABINET

POLE-MOUNTED SERVICE DESIGNATION

TYPE H SERVICE, 28'-10" — TYPE OF INSTALLATION AND POLE HEIGHT ABOVE GRADE

FLASHING BEACON

NEW	EXISTING	
R	R	FLASHING BEACON (ONE VEHICLE SIGNAL HEAD WITH BACKPLATE AND VISOR) "R" INDICATES RED INDICATION, "Y" INDICATES YELLOW INDICATION
Y Y	Y Y	FLASHING BEACON WITH TYPE 15-FBS STANDARD AND A SIGN.
R R	R R	FLASHING BEACON WITH TYPES 9, 9A OR 9B SIGN UNLESS OTHERWISE SPECIFIED OR INDICATED

SIGNAL EQUIPMENT

NEW	EXISTING	
		PEDESTRIAN SIGNAL HEAD
		PUSH BUTTON ASSEMBLY POST
		PEDESTRIAN BARRICADE
		VEHICLE SIGNAL HEAD (WITH BACKPLATE AND 3-SECTIONS: RED, YELLOW AND GREEN)
		VEHICLE SIGNAL HEAD WITH ANGLE VISOR
PV	PV	MODIFICATIONS OF BASIC SYMBOL: "L" INDICATES ALL NON-ARROW SECTIONS LOUVERED "LG" INDICATES LOUVERED GREEN SECTION ONLY "PV" INDICATES ALL 12" SECTIONS PROGRAMMED VISIBILITY "8" INDICATES ALL 8" SECTIONS (ONLY WHEN SPECIFIED)
		VEHICLE SIGNAL HEAD CONSISTING OF RED, YELLOW AND GREEN LEFT ARROW SECTIONS
		VEHICLE SIGNAL HEAD CONSISTING OF RED AND YELLOW SECTIONS WITH AN UP GREEN ARROW SECTION
		VEHICLE SIGNAL HEAD (5 SECTION) CONSISTING OF RED, YELLOW AND GREEN SECTIONS WITH YELLOW AND GREEN RIGHT ARROW SECTIONS
		TYPE 15TS STANDARD WITH VEHICLE SIGNAL HEAD AND LUMINAIRE
		TYPE 21TS STANDARD WITH VEHICLE SIGNAL HEAD AND LUMINAIRE
		STANDARD WITH LUMINAIRE AND SIGNAL MAST ARMS AND ATTACHED VEHICLE SIGNAL HEADS
		TYPE 1 STANDARD WITH ATTACHED VEHICLE SIGNAL HEADS
		STANDARD WITH A SIGNAL MAST ARM, ATTACHED VEHICLE SIGNAL HEADS AND INTERNALLY ILLUMINATED STREET NAME SIGN
		CONTROLLER ASSEMBLY. DOOR INDICATES FRONT OF CABINET

SIGNAL EQUIPMENT Cont

NEW	EXISTING	
		GUARD POST
		TYPE 1 STANDARD WITH RAMP METERING SIGN
		OPTICAL DETECTOR FOR THE EMERGENCY VEHICLE DETECTION

NOTES:

1. All signal sections shall be 12" unless shown otherwise.
2. Signal heads shall be provided with backplates unless shown otherwise.

ILLUMINATED OVERHEAD SIGN

NEW	EXISTING	
		SINGLE POST, SINGLE ILLUMINATED SIGN, BALANCED BUTTERFLY
		SINGLE POST, DOUBLE ILLUMINATED SIGN, BALANCED BUTTERFLY
		SINGLE POST, SINGLE ILLUMINATED SIGN, FULL CANTILEVER
		DOUBLE POST, SINGLE ILLUMINATED SIGN
		SINGLE ILLUMINATED SIGN MOUNTED ON STRUCTURE
		DOUBLE POST, SINGLE ILLUMINATED SIGN WITH ELECTROLIER

STATE OF CALIFORNIA
DEPARTMENT OF TRANSPORTATION

ELECTRICAL SYSTEMS (LEGEND AND ABBREVIATIONS)

NO SCALE

RSP ES-1B DATED OCTOBER 30, 2015 SUPERSEDES RSP ES-1B DATED JULY 19, 2013 AND STANDARD PLAN ES-1B DATED MAY 20, 2011 - PAGE 426 OF THE STANDARD PLANS BOOK DATED 2010.

REVISED STANDARD PLAN RSP ES-1B

2010 REVISED STANDARD PLAN RSP ES-1B

8-19-15

Dist	COUNTY	ROUTE	POST MILES TOTAL PROJECT	SHEET No.	TOTAL SHEETS
06	Fre, Mad	41U	33.1/33.4 0.0/0.3	74	113

Theresa Gabriel
REGISTERED ELECTRICAL ENGINEER

October 30, 2015
PLANS APPROVAL DATE

REGISTERED PROFESSIONAL ENGINEER Theresa Aziz Gabriel No. E15129 Exp. 6-30-16 ELECTRICAL STATE OF CALIFORNIA

THE STATE OF CALIFORNIA OR ITS OFFICERS OR AGENTS SHALL NOT BE RESPONSIBLE FOR THE ACCURACY OR COMPLETENESS OF SCANNED COPIES OF THIS PLAN SHEET.

TO ACCOMPANY PLANS DATED 3-7-16

EQUIPMENT IDENTIFICATION

ILLUMINATED SIGN IDENTIFICATION NUMBER:

SIGN No. 12345

10 ISL SCI 1.0

- SIGN NUMBER - PLACE ON POST OR STRUCTURE
- TRANSFORMER RATING (kVA)
- LIGHTING CONTROL TYPE
- NUMBER AND TYPE OF FIXTURES

} DO NOT PLACE ON STANDARD OR STRUCTURE

ELECTROLIER OR EQUIPMENT IDENTIFICATION NUMBER:

12345 - 15'-0"

- MAST ARM LENGTH, IF SHOWN. DO NOT PLACE ON STANDARD OR STRUCTURE
- EQUIPMENT NUMBER - PLACE ON STANDARD OR STRUCTURE. EXISTING EQUIPMENT NUMBERS ARE SHOWN IN PARENTHESIS

CONDUIT AND CONDUCTOR IDENTIFICATION:

1½"C, 2#10, 15#14, 2 DLC, 12P#18

- PAIR
- NUMBER AND SIZE OF CONDUCTORS AND CABLES
- SIZE OF CONDUIT IN INCHES

ø1, ø2, ø2P, etc.	TRAFFIC PHASE IDENTIFICATION FOR SIGNALS, DETECTORS AND PHASE DIAGRAMS
1 2 3	LEGEND NUMBERS
A B C	EQUIPMENT, SIGNAL POLES, INSTALLATION OR ITEMS
1 2 3	CONDUIT RUN NUMBERS

SIGNAL AND LIGHTING STANDARD (TYPICAL DESIGNATION):

19A - 3 - 100

- WIND VELOCITY = 100 mph
- CASE 3 ARM LOADING
- STANDARD TYPE
- STANDARD PLAN SHEET NUMBER
- DETAIL, NUMBER, SECTION, TYPE OR ELEVATION

MISCELLANEOUS EQUIPMENT

NEW	EXISTING	
CMS	cms	CHANGEABLE MESSAGE SIGN
		CLOSED CIRCUIT TELEVISION CAMERA
		HIGHWAY ADVISORY RADIO POLE AND ANTENNA
EMS	ems	LED EXTINGUISHABLE MESSAGE SIGN
M V	m v	DETECTION DEVICE M = MICROWAVE SENSOR V = VIDEO IMAGE SENSOR

WIRING DIAGRAM LEGEND

----	EXTERNAL CONDUCTOR
	CONDUCTOR OR BUS
	TIE POINT
	CONTACTOR COIL
	CONTACTOR, NO CONTACT
	TERMINAL BLOCKS
	CONTACTOR, NC CONTACT
	ENCLOSURE BOND
	GROUNDING ELECTRODE
	CIRCUIT BREAKER
	RECEPTACLE

PULL BOXES

NEW	EXISTING	
		PULL BOX, No. 5 UNLESS OTHERWISE INDICATED OR NOTED
3	9A(21)	PULL BOX, ADDITIONAL DESIGNATIONS OR DESCRIPTIONS

3 No. 3½ PULL BOX
5 No. 5 PULL BOX
6 No. 6 PULL BOX
7 No. 7 (CEILING PULL BOX)
8 No. 8 (PENDANT SOFFIT PULL BOX)
9 No. 9 PULL BOX
9A No. 9A PULL BOX

(C) COMMUNICATIONS PULL BOX
(E) PULL BOX WITH EXTENSION
(S) SPRINKLER CONTROL PULL BOX
(21) ANCHOR BOLTS AND CONDUIT FOR FUTURE INSTALLATION OF TYPE 21 STANDARD
(T) TRAFFIC PULL BOX

VEHICLE DETECTORS

5 J 9 U

- VEHICLE DETECTOR DESIGNATION
- U = UPPER
  L = LOWER
- SLOT NUMBER IN INPUT FILE
- INPUT FILE (I OR J)
- PHASE

NEW	EXISTING	
		TYPE A LOOP DETECTOR. OUTLINE OF SAWCUT SHOWN
		TYPE B LOOP DETECTOR. OUTLINE OF SAWCUT SHOWN
		TYPE C LOOP DETECTOR. OUTLINE OF SAWCUT SHOWN
		TYPE D LOOP DETECTOR. OUTLINE OF SAWCUT SHOWN
		TYPE E LOOP DETECTOR. OUTLINE OF SAWCUT SHOWN
		TYPE Q LOOP DETECTOR. OUTLINE OF SAWCUT SHOWN
DH	dh	DETECTOR HANDHOLE
		MICROWAVE OR VIDEO DETECTION ZONE

STATE OF CALIFORNIA
DEPARTMENT OF TRANSPORTATION

ELECTRICAL SYSTEMS (LEGEND AND ABBREVIATIONS)

NO SCALE

RSP ES-1C DATED OCTOBER 30, 2015 SUPERSEDES RSP ES-1C DATED JULY 19, 2013 AND STANDARD PLAN ES-1C DATED MAY 20, 2011 - PAGE 427 OF THE STANDARD PLANS BOOK DATED 2010.

REVISED STANDARD PLAN RSP ES-1C

2010 REVISED STANDARD PLAN RSP ES-1C

8-19-15

Dist	COUNTY	ROUTE	POST MILES TOTAL PROJECT	SHEET No.	TOTAL SHEETS
06	Fre, Mad	41U	33.1/33.4 0.0/0.3	75	113

Theresa Gabriel
REGISTERED ELECTRICAL ENGINEER

October 30, 2015
PLANS APPROVAL DATE

REGISTERED PROFESSIONAL ENGINEER Theresa Aziz Gabriel No. E15129 Exp. 6-30-16 ELECTRICAL STATE OF CALIFORNIA

THE STATE OF CALIFORNIA OR ITS OFFICERS OR AGENTS SHALL NOT BE RESPONSIBLE FOR THE ACCURACY OR COMPLETENESS OF SCANNED COPIES OF THIS PLAN SHEET.

TO ACCOMPANY PLANS DATED 3-7-16

2010 REVISED STANDARD PLAN RSP ES-2A

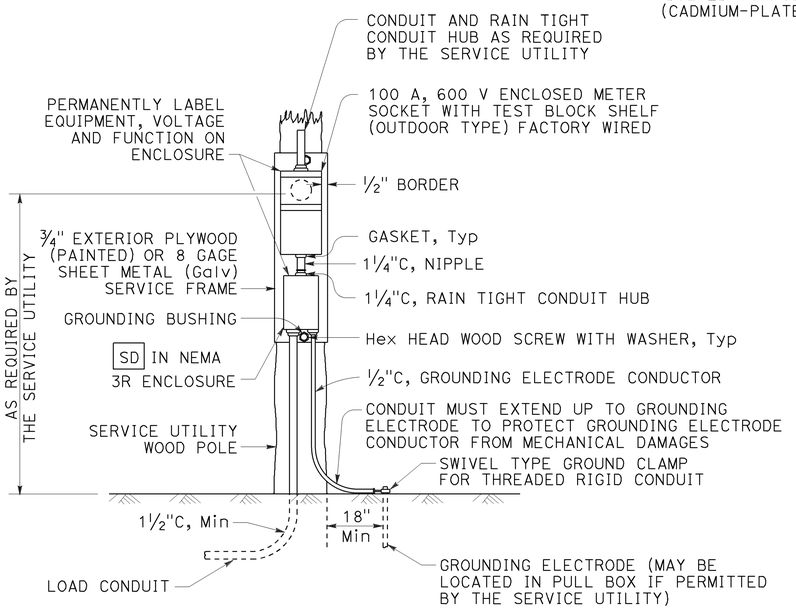

TYPE SCE-1
DETAIL A

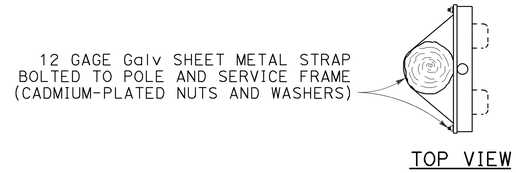

TOP VIEW

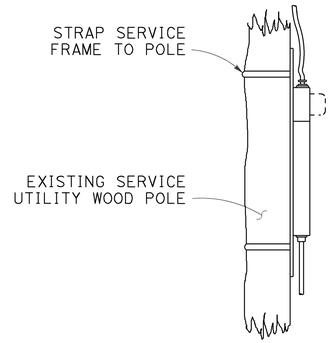

SIDE VIEW

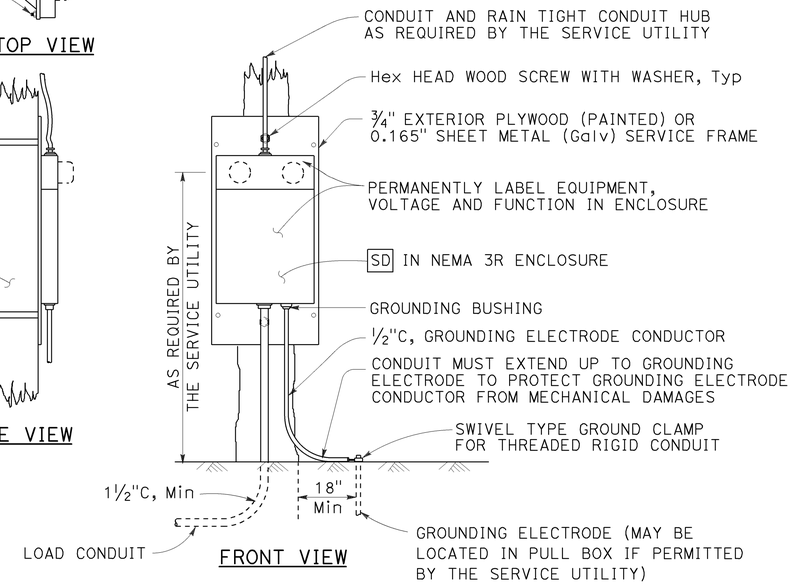

FRONT VIEW

TYPE SCE-2
DETAIL B

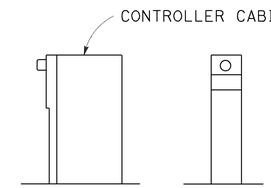

TYPE II TYPE III

TYPE OF SERVICE (TYPICAL)
DETAIL C

See Notes 1 and 2

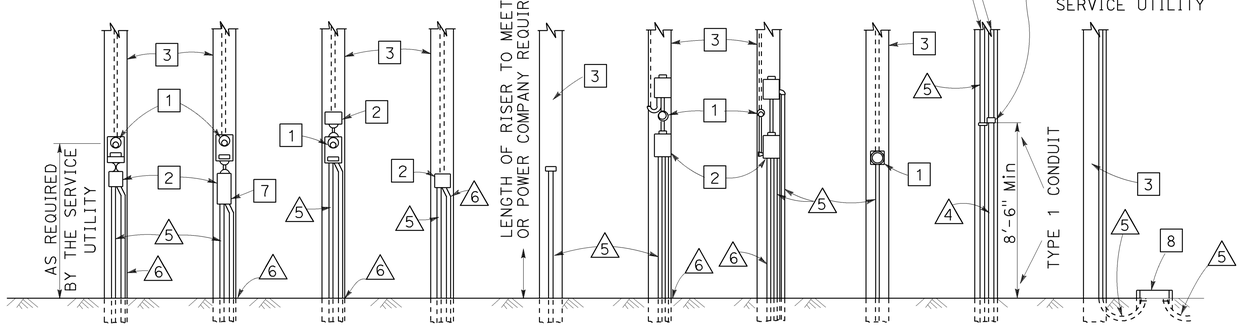

POLE MOUNTED SERVICE INSTALLATIONS
DETAIL D

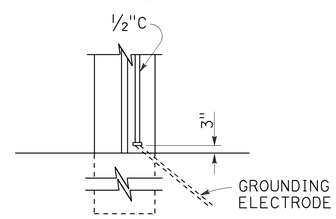

TYPE A
See Note 3

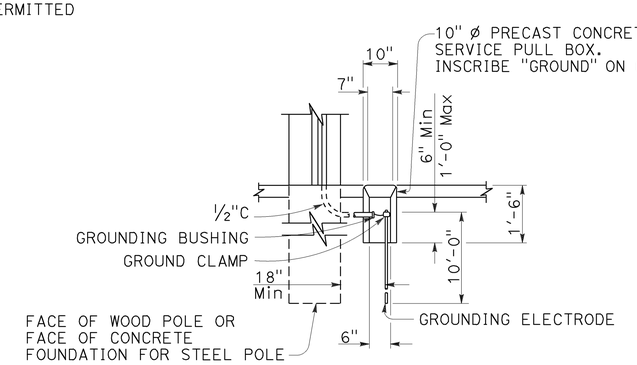

TYPE B
See Note 4

SERVICE GROUNDING
DETAIL E

LEGEND:

1. METER SOCKET.
2. SERVICE ENCLOSURE WITH A MINIMUM 60 A RATED MAIN CIRCUIT BREAKER, UNLESS OTHERWISE SHOWN.
3. A. UTILITY OWNED POLE. THE SERVICE UTILITY WILL FURNISH AND INSTALL REQUIRED SERVICE RISER, PEU WITH CONDUCTORS AND OTHER EQUIPMENT AS NEEDED.
   B. STATE OWNED POLE. THE CONTRACTOR SHALL FURNISH AND INSTALL REQUIRED SERVICE RISER AND EQUIPMENT.
4. 2"C, SERVICE CONDUIT MUST HAVE A GROUNDED TYPE BUSHING INSTALLED AT UPPER END OF THE METALLIC POLE RISER CONDUIT. A GROUNDING CONDUCTOR MUST BE ATTACHED TO THE BUSHING, CARRIED THROUGH THE CONDUIT RUN AND ATTACHED TO THE SERVICE EQUIPMENT ENCLOSURE'S GROUNDING ELECTRODE.
5. CONDUIT, LENGTH AND SIZE AS REQUIRED.
6. ½"C, 1#6. SEE DETAIL E.
7. FLASHING BEACON CONTROL ASSEMBLY.
8. SERVICE PULL BOX, No. 5 UNLESS OTHERWISE NOTED, FURNISHED AND INSTALLED BY THE CONTRACTOR. SERVICE UTILITY SHALL DETERMINE THE EXACT LOCATION.

NOTES:

1. Type II service equipment enclosure mounted on the side of a controller cabinet.
2. Type III complete free-standing service equipment enclosure.
3. Ground clamp and required fittings must be accessible. Conduit must extend to protect grounding electrode conductor from mechanical damage.
4. Use where service utility requires 18" clearance between grounding electrode and the pole or service equipment enclosure. Installation shown is for sidewalk or paved areas. In unpaved areas, omit special service pull box and locate ground clamp above ground or locate ground clamp in nearest pull box.

STATE OF CALIFORNIA
DEPARTMENT OF TRANSPORTATION

ELECTRICAL SYSTEMS (SERVICE EQUIPMENT)

NO SCALE

RSP ES-2A DATED OCTOBER 30, 2015 SUPERSEDES STANDARD PLAN ES-2A DATED MAY 20, 2011 - PAGE 428 OF THE STANDARD PLANS BOOK DATED 2010.

REVISED STANDARD PLAN RSP ES-2A

8-20-15

Dist	COUNTY	ROUTE	POST MILES TOTAL PROJECT	SHEET No.	TOTAL SHEETS
06	Fre, Mad	41U	33.1/33.4 0.0/0.3	76	113

Theresa Gabriel
REGISTERED ELECTRICAL ENGINEER

October 30, 2015
PLANS APPROVAL DATE

REGISTERED PROFESSIONAL ENGINEER Theresa Aziz Gabriel No. E15129 Exp. 6-30-16 ELECTRICAL STATE OF CALIFORNIA

THE STATE OF CALIFORNIA OR ITS OFFICERS OR AGENTS SHALL NOT BE RESPONSIBLE FOR THE ACCURACY OR COMPLETENESS OF SCANNED COPIES OF THIS PLAN SHEET.

TO ACCOMPANY PLANS DATED 3-7-16

2010 REVISED STANDARD PLAN RSP ES-4C

VISORS

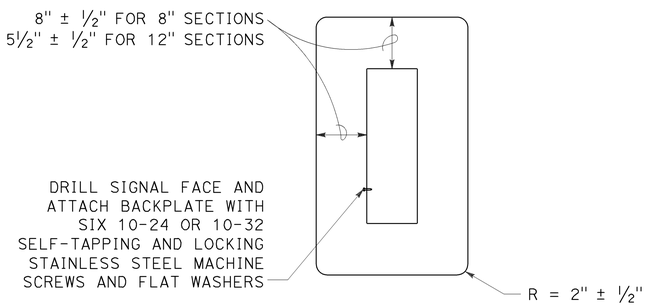

8" AND 12" SECTIONS

BACKPLATE

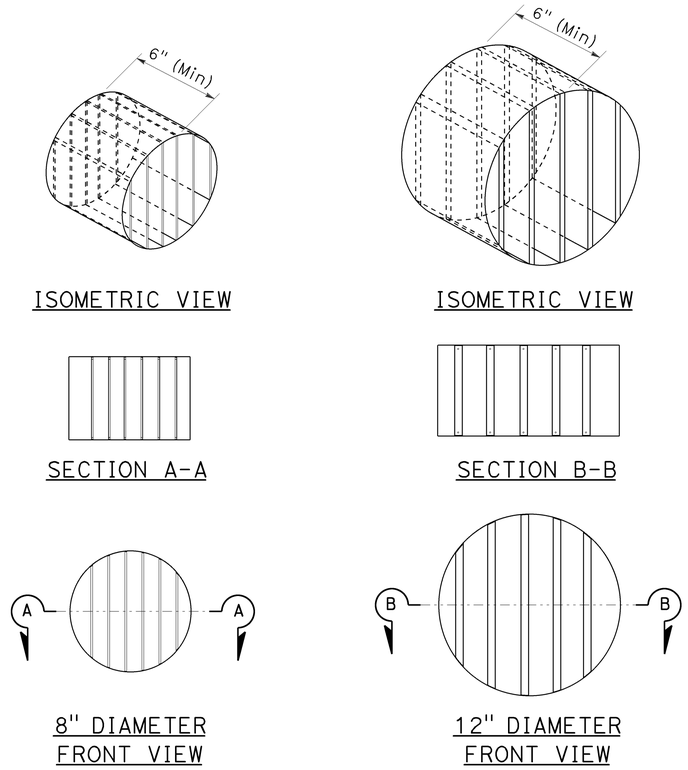

DIRECTIONAL LOUVER

Directional louvers shall be oriented and secured in place with one plated brass machine screw and nut.

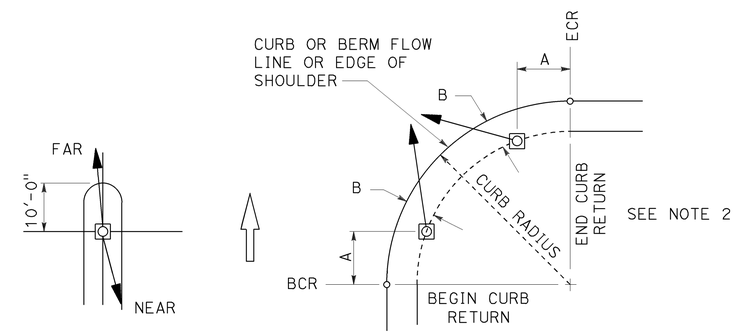

NOTES:

1. Typical signal pole placement unless dimensioned on plans.
2. For A and B dimensions, see Pole Schedule.

SIGNAL STANDARD PLACEMENT DIMENSIONS AND EQUIPMENT LOCATIONS

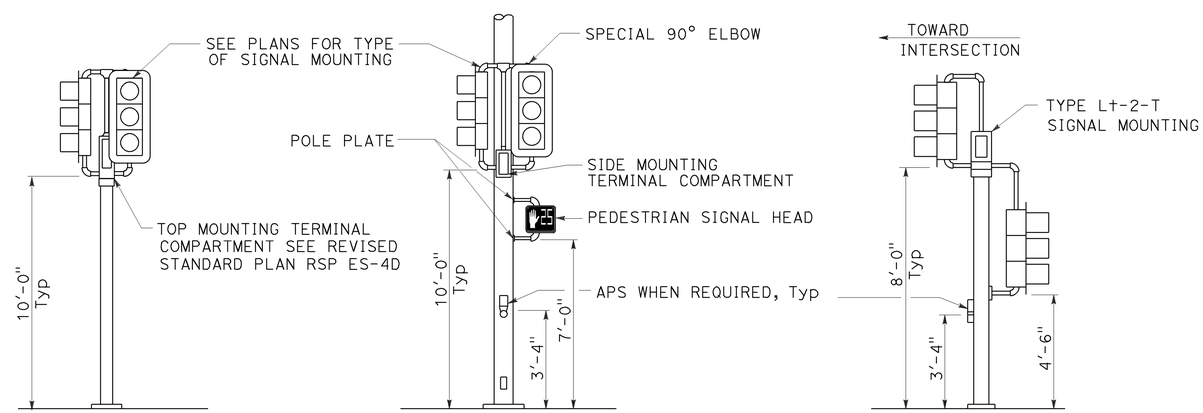

TOP MOUNTED SIGNALS (TV)
Type 1-A, 1-B, 1-C and 1-D standard as indicated on the plans

SIDE MOUNTED SIGNALS (SV AND SP)
Normally used on standards with luminaire or signal mast arm

LEFT TURN LANE SIGNAL
Type 1-A, 1-B, 1-C and 1-D standard as indicated on plans

TYPICAL SIGNAL HEAD INSTALLATIONS

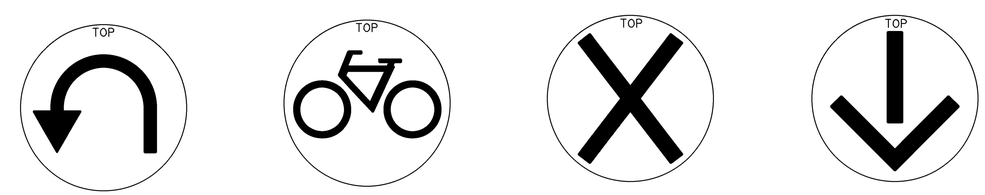

U-TURN | BICYCLE | LANE CONTROL | LANE CONTROL

SIGNAL FACES

STATE OF CALIFORNIA
DEPARTMENT OF TRANSPORTATION

ELECTRICAL SYSTEMS (SIGNAL HEADS AND MOUNTINGS)

NO SCALE

RSP ES-4C DATED OCTOBER 30, 2015 SUPERSEDES RSP ES-4C DATED JULY 19, 2013 AND STANDARD PLAN ES-4C DATED MAY 20, 2011 - PAGE 445 OF THE STANDARD PLANS BOOK DATED 2010.

REVISED STANDARD PLAN RSP ES-4C

9-28-15

Dist	COUNTY	ROUTE	POST MILES TOTAL PROJECT	SHEET No.	TOTAL SHEETS
06	Fre, Mad	41U	33.1/33.4 0.0/0.3	77	113

Theresa Gabriel
REGISTERED ELECTRICAL ENGINEER

October 30, 2015
PLANS APPROVAL DATE

REGISTERED PROFESSIONAL ENGINEER Theresa Aziz Gabriel No. E15129 Exp. 6-30-16 ELECTRICAL STATE OF CALIFORNIA

THE STATE OF CALIFORNIA OR ITS OFFICERS OR AGENTS SHALL NOT BE RESPONSIBLE FOR THE ACCURACY OR COMPLETENESS OF SCANNED COPIES OF THIS PLAN SHEET.

TO ACCOMPANY PLANS DATED 3-7-16

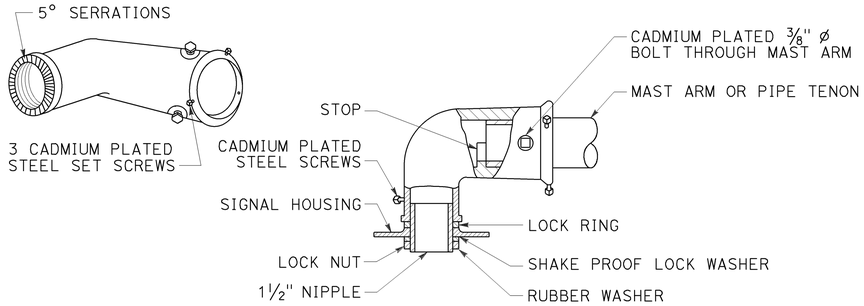

TYPE MAT
MAST ARM MOUNTING
For 2 NPS pipe, see Note 1.

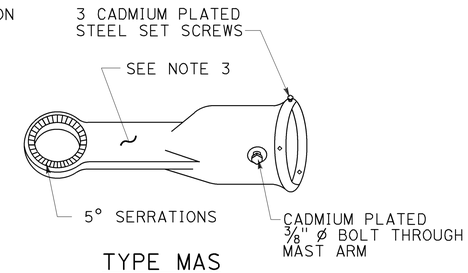

TYPE MAS
MAST ARM MOUNTING
For 2 NPS pipe, see Note 1.

SIGNAL SLIP FITTERS

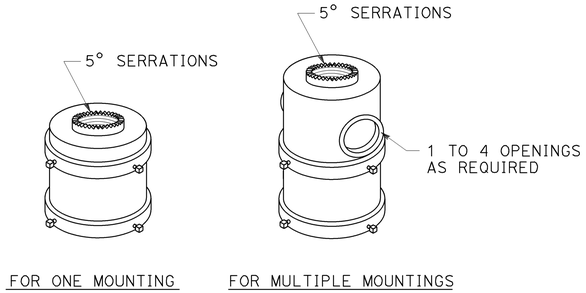

TOP MOUNTINGS
For 4 NPS pipe, see Note 2.

NOTES:

1. After mast arm signal has been plumbed and secured, drill 7/16" hole through mast arm tenon in line with slip fitter hole. Place a cadmium plated 3/8" ø galvanized bolt with washer under bolt head through hole and secure with washer, nut, and locknut. Seal openings between mast arm mountings and mast arm with mastic.
2. (A) Threaded top mounted slip fitter openings shall be 1½ NPS.
   (B) Serrations in fittings shall match those on bottom of signal heads or in lock ring.
   (C) Top opening shall be offset when backplate is used.
3. Wireway shall have a cross section area of 0.95 square inch minimum. Minimum width of ½".

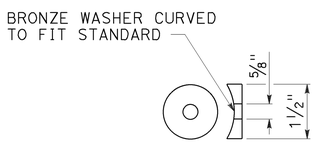

DETAIL C

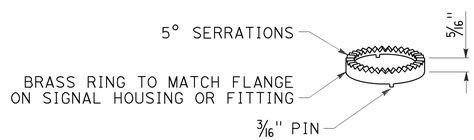

LOCK RING
Use where locking ring is not integral With signal housing or fitting.

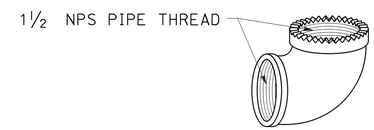

SPECIAL 90° ELBOW
One for each signal head, except those With special slip fitter mounting

MISCELLANEOUS MOUNTING HARDWARE

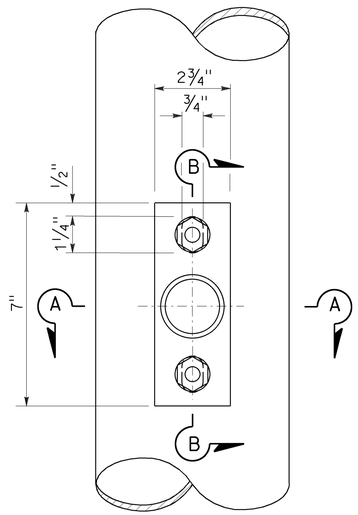

TOP VIEW

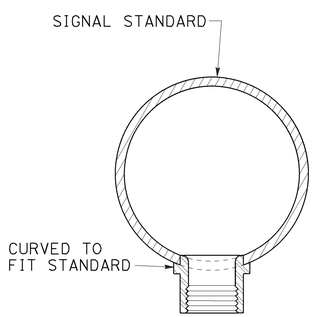

SECTION A-A

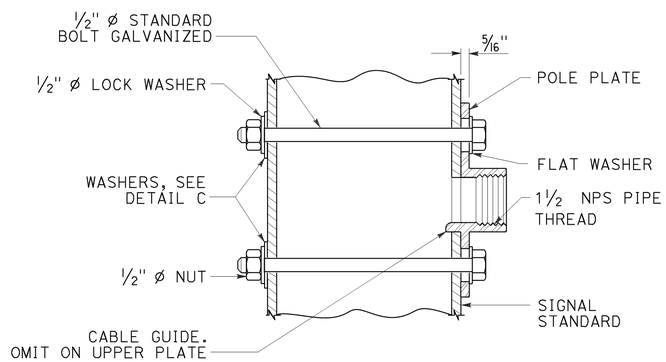

SECTION B-B

POLE PLATE FOR SIDE MOUNTED SIGNAL HEAD
WITHOUT TERMINAL COMPARTMENT

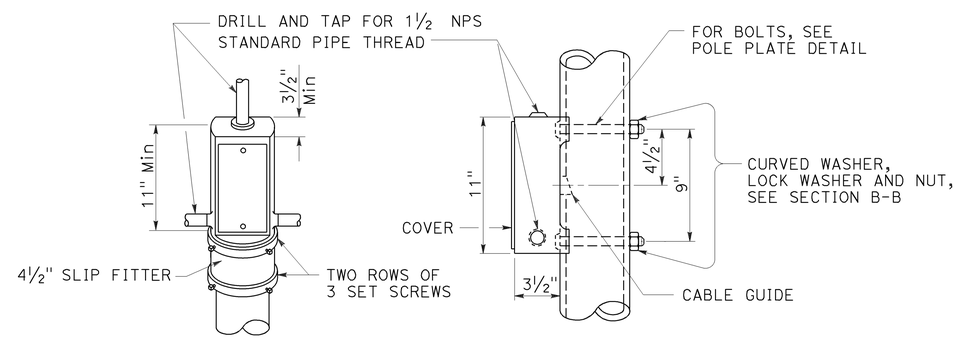

TOP MOUNTING

SIDE MOUNTING

TERMINAL COMPARTMENT

STATE OF CALIFORNIA
DEPARTMENT OF TRANSPORTATION

ELECTRICAL SYSTEMS (SIGNAL HEAD MOUNTING)

NO SCALE

RSP ES-4D DATED OCTOBER 30, 2015 SUPERSEDES STANDARD PLAN ES-4D DATED MAY 20, 2011 - PAGE 446 OF THE STANDARD PLANS BOOK DATED 2010.

REVISED STANDARD PLAN RSP ES-4D

2010 REVISED STANDARD PLAN RSP ES-4D

8-20-15

Dist	COUNTY	ROUTE	POST MILES TOTAL PROJECT	SHEET No.	TOTAL SHEETS
06	Fre, Mad	41U	33.1/33.4 0.0/0.3	78	113

Theresa Gabriel
REGISTERED ELECTRICAL ENGINEER

October 30, 2015
PLANS APPROVAL DATE

REGISTERED PROFESSIONAL ENGINEER Theresa Aziz Gabriel No. E15129 Exp. 6-30-16 ELECTRICAL STATE OF CALIFORNIA

THE STATE OF CALIFORNIA OR ITS OFFICERS OR AGENTS SHALL NOT BE RESPONSIBLE FOR THE ACCURACY OR COMPLETENESS OF SCANNED COPIES OF THIS PLAN SHEET.

TO ACCOMPANY PLANS DATED 3-7-16

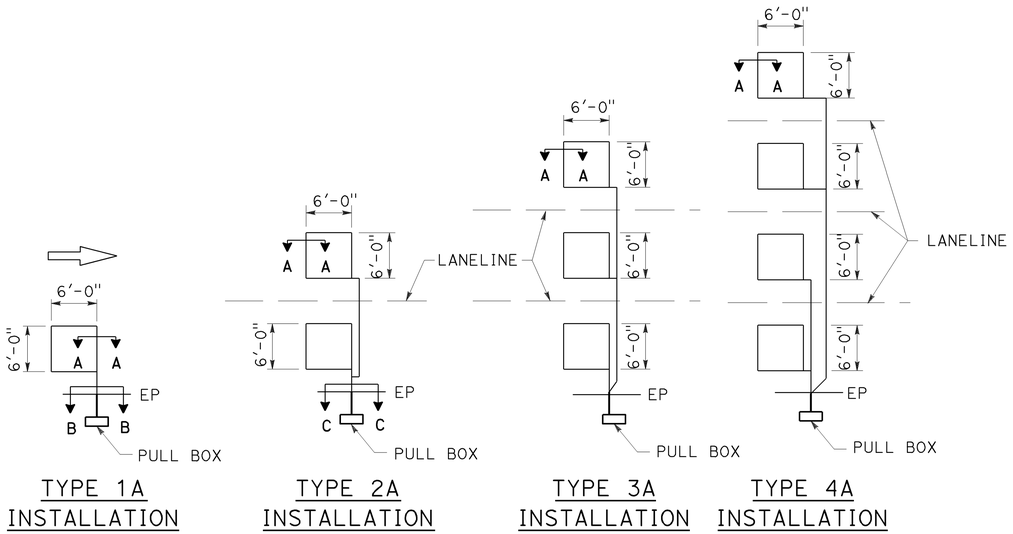

SAWCUT DETAILS

Type A loop detector configurations illustrated

1. 1A thru 4A = 1 Type A loop configuration in each lane.
2. 1B thru 4B = 1 Type B loop configuration in each lane.
3. 1C = 1 Type C loop configuration entering lanes as required.
4. 1D thru 4D = 1 Type D loop configuration in each lane.
5. 1E thru 4E = 1 Type E loop configuration in each lane.
6. 1Q thru 4Q = 1 Type Q loop configuration in each lane.
   Use Type A, B, C, D, E or Q loop detector configurations only when specified or shown on plans.

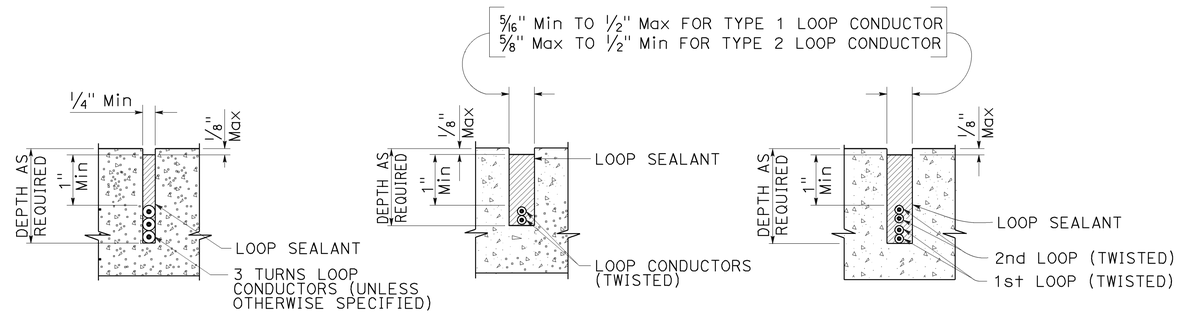

SLOT DETAILS - TYPE 1 AND TYPE 2 LOOP CONDUCTOR

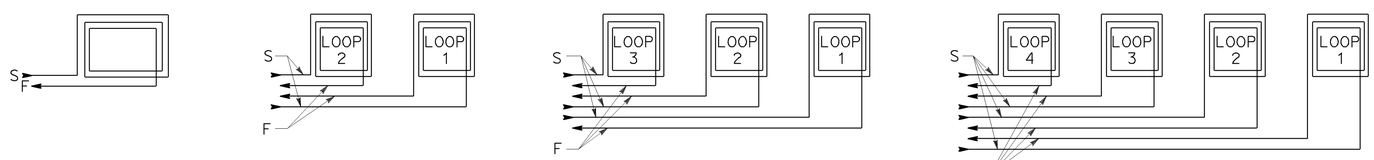

WINDING DETAILS

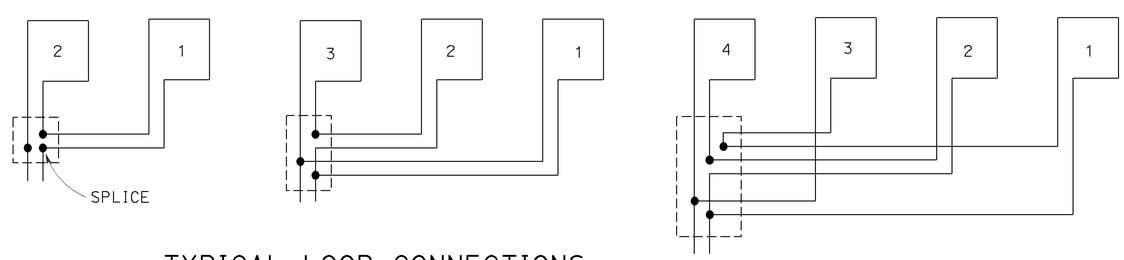

TYPICAL LOOP CONNECTIONS

Dashed lines represent the pull box

ABBREVIATIONS:

S - START
F - FINISH

STATE OF CALIFORNIA
DEPARTMENT OF TRANSPORTATION

ELECTRICAL SYSTEMS (LOOP DETECTORS)

NO SCALE

RSP ES-5A DATED OCTOBER 30, 2015 SUPERSEDES STANDARD PLAN ES-5A DATED MAY 20, 2011 - PAGE 448 OF THE STANDARD PLANS BOOK DATED 2010.

REVISED STANDARD PLAN RSP ES-5A

2010 REVISED STANDARD PLAN RSP ES-5A

8-24-15

Dist	COUNTY	ROUTE	POST MILES TOTAL PROJECT	SHEET No.	TOTAL SHEETS
06	Fre, Mad	41U	33.1/33.4 0.0/0.3	79	113

Theresa Gabriel
REGISTERED ELECTRICAL ENGINEER

October 30, 2015
PLANS APPROVAL DATE

REGISTERED PROFESSIONAL ENGINEER Theresa Aziz Gabriel No. E15129 Exp. 6-30-16 ELECTRICAL STATE OF CALIFORNIA

THE STATE OF CALIFORNIA OR ITS OFFICERS OR AGENTS SHALL NOT BE RESPONSIBLE FOR THE ACCURACY OR COMPLETENESS OF SCANNED COPIES OF THIS PLAN SHEET.

TO ACCOMPANY PLANS DATED 3-7-16

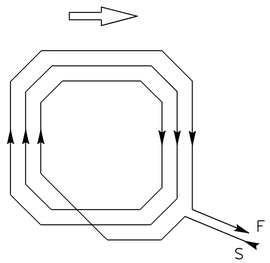

WINDING DETAIL

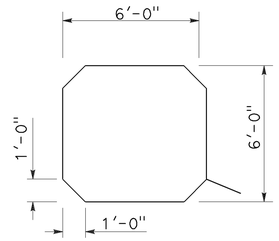

SAWCUT DETAIL

TYPE A LOOP DETECTOR CONFIGURATION

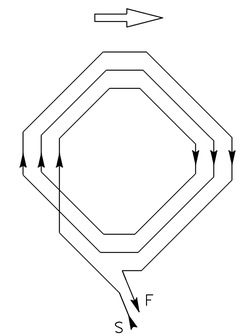

WINDING DETAIL

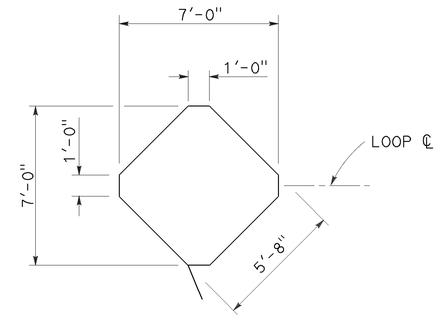

SAWCUT DETAIL

TYPE B LOOP DETECTOR CONFIGURATION

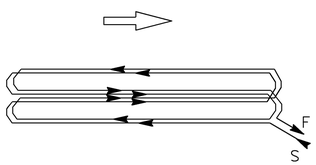

WINDING DETAIL

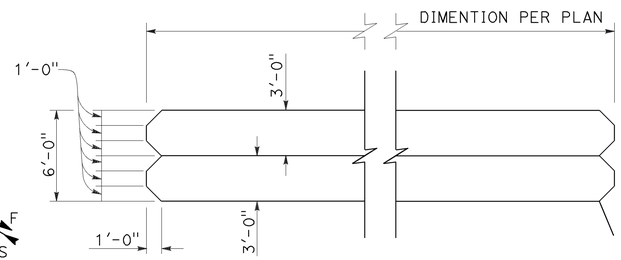

SAWCUT DETAIL

TYPE C LOOP DETECTOR CONFIGURATION

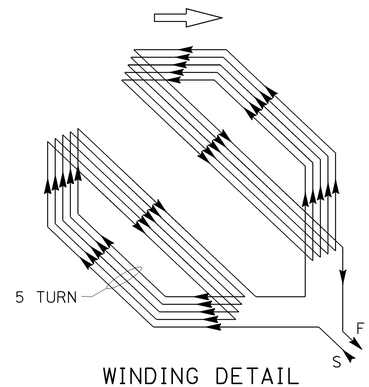

WINDING DETAIL

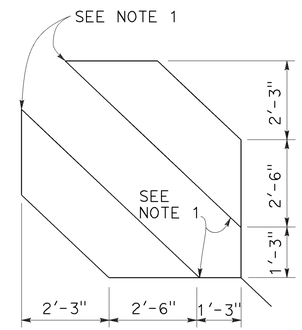

SAWCUT DETAIL

TYPE D LOOP DETECTOR CONFIGURATION

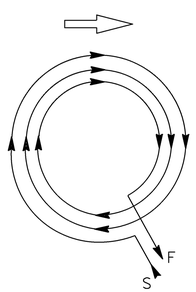

WINDING DETAIL

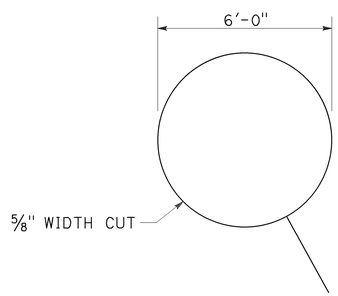

SAWCUT DETAIL

TYPE E LOOP DETECTOR CONFIGURATION

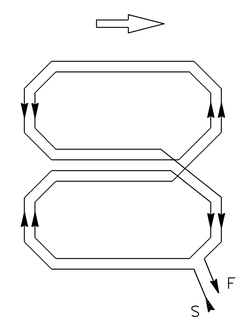

WINDING DETAIL

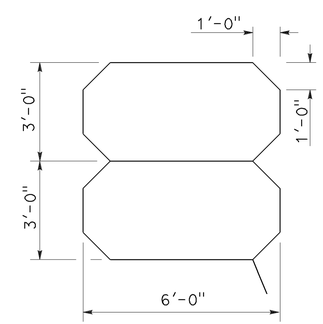

SAWCUT DETAIL

TYPE Q LOOP DETECTOR CONFIGURATION

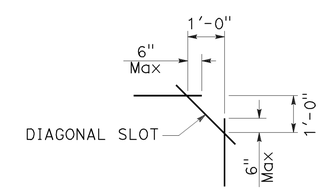

PLAN VIEW OF DIAGONAL SLOT AT CORNERS

NOTES:

1. Round corners of acute angle sawcuts to prevent damage to conductors.
2. Typical distance separating loops from edge to edge is 10' for Type A, B, D and E installation in single lane.
3. Use Type D loops for limit line detector installations in left turn and bicycle lanes.

STATE OF CALIFORNIA
DEPARTMENT OF TRANSPORTATION

ELECTRICAL SYSTEMS (DETECTORS)

NO SCALE

RSP ES-5B DATED OCTOBER 30, 2015 SUPERSEDES RSP ES-5B DATED JULY 19, 2013 AND STANDARD PLAN ES-5B DATED MAY 20, 2011 - PAGE 449 OF THE STANDARD PLANS BOOK DATED 2010.

REVISED STANDARD PLAN RSP ES-5B

2010 REVISED STANDARD PLAN RSP ES-5B

9-25-15

Dist	COUNTY	ROUTE	POST MILES TOTAL PROJECT	SHEET No.	TOTAL SHEETS
06	Fre, Mad	41U	33.1/33.4 0.0/0.3	80	113

Theresa Gabriel
REGISTERED ELECTRICAL ENGINEER

October 30, 2015
PLANS APPROVAL DATE

REGISTERED PROFESSIONAL ENGINEER
Theresa Aziz Gabriel
No. E15129
Exp. 6-30-16
ELECTRICAL
STATE OF CALIFORNIA

THE STATE OF CALIFORNIA OR ITS OFFICERS OR AGENTS SHALL NOT BE RESPONSIBLE FOR THE ACCURACY OR COMPLETENESS OF SCANNED COPIES OF THIS PLAN SHEET.

TO ACCOMPANY PLANS DATED 3-7-16

2010 REVISED STANDARD PLAN RSP ES-5C

NOTES:

1. Back casting shape to fit curvature of pole.
2. Provide cover fitting for top of post, when PBA is mounted on push button assembly post.
3. Install push button on crosswalk side of standard.
4. Use R10 series regulatory signs and plaques for pedestrian and bicycle facilities.

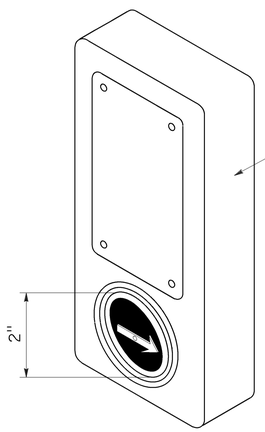

ACCESSIBLE PEDESTRIAN SIGNAL

DETAIL A

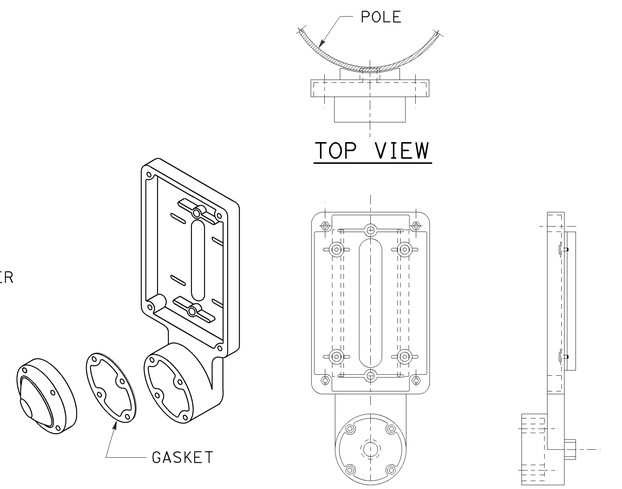

TYPE B PUSH BUTTON ASSEMBLY

DETAIL B

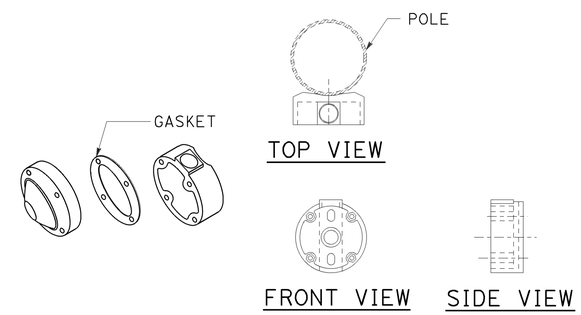

TYPE C PUSH BUTTON ASSEMBLY

DETAIL C

STATE OF CALIFORNIA
DEPARTMENT OF TRANSPORTATION

ELECTRICAL SYSTEMS (ACCESSIBLE PEDESTRIAN SIGNAL AND PUSH BUTTON ASSEMBLIES)

NO SCALE

RSP ES-5C DATED OCTOBER 30, 2015 SUPERSEDES RSP ES-5C DATED JULY 19, 2013 AND STANDARD PLAN ES-5C DATED MAY 20, 2011 - PAGE 450 OF THE STANDARD PLANS BOOK DATED 2010.

REVISED STANDARD PLAN RSP ES-5C

Dist	COUNTY	ROUTE	POST MILES TOTAL PROJECT	SHEET No.	TOTAL SHEETS
06	Fre, Mad	41U	33.1/33.4 0.0/0.3	81	113

Theresa Gabriel
REGISTERED ELECTRICAL ENGINEER

October 30, 2015
PLANS APPROVAL DATE

REGISTERED PROFESSIONAL ENGINEER Theresa Aziz Gabriel No. E15129 Exp. 6-30-16 ELECTRICAL STATE OF CALIFORNIA

THE STATE OF CALIFORNIA OR ITS OFFICERS OR AGENTS SHALL NOT BE RESPONSIBLE FOR THE ACCURACY OR COMPLETENESS OF SCANNED COPIES OF THIS PLAN SHEET.

TO ACCOMPANY PLANS DATED 3-7-16

2010 REVISED STANDARD PLAN RSP ES-5D

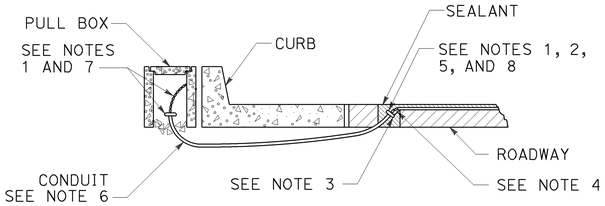

TYPE A
CURB TERMINATION DETAIL

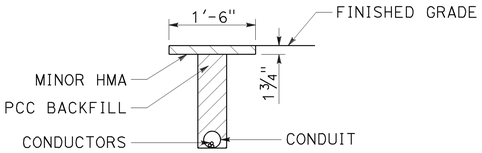

"T" TRENCH
DETAIL T

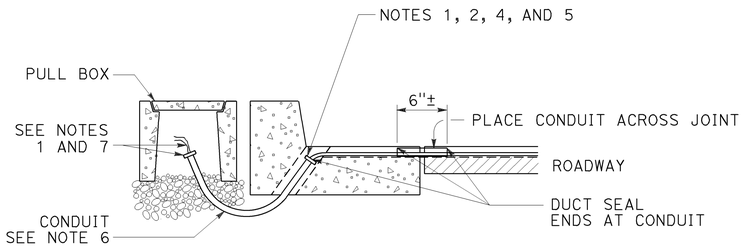

CROSS SECTION

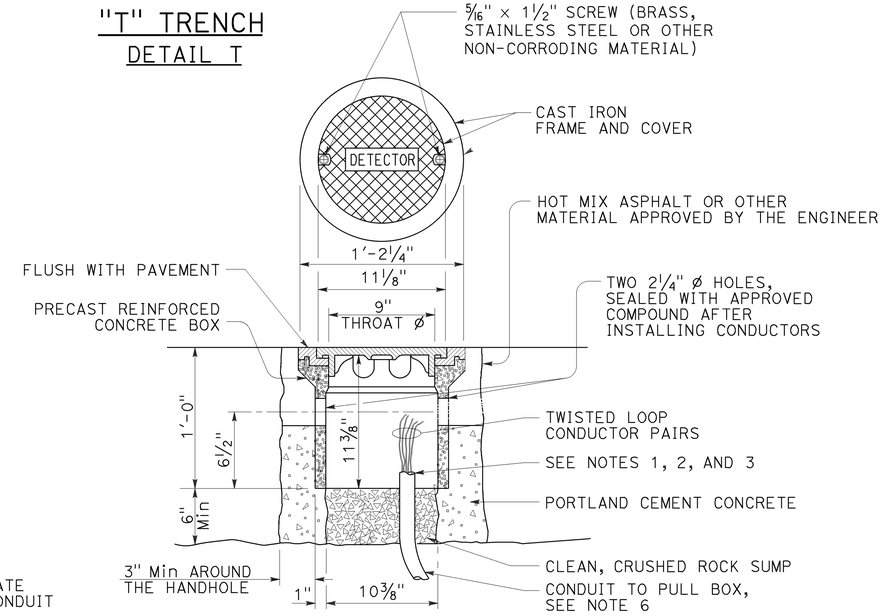

DETECTOR HANDHOLE DETAIL

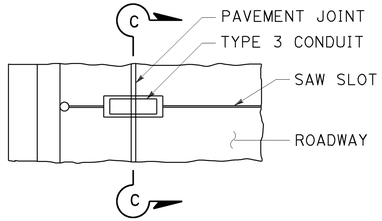

PLAN VIEW

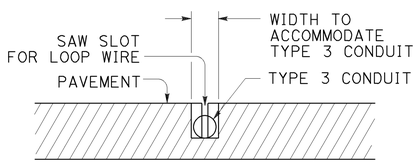

SECTION C-C

TYPE B
CURB TERMINATION DETAIL

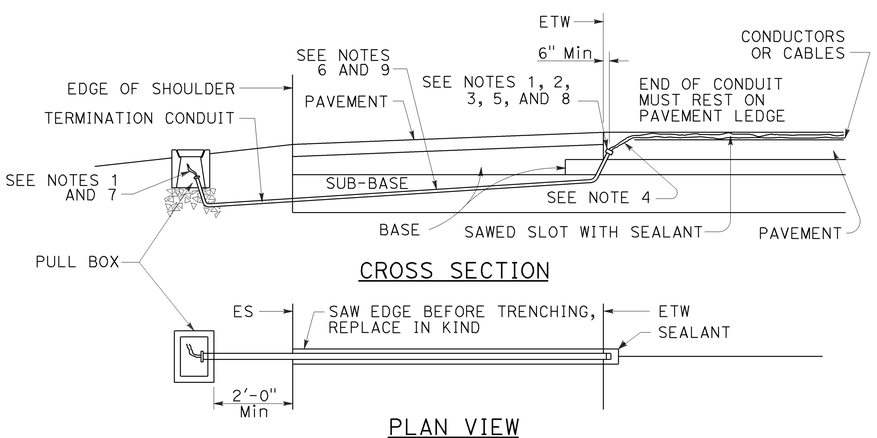

CROSS SECTION

PLAN VIEW

SHOULDER TERMINATION DETAILS

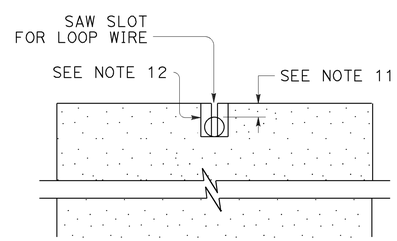

SECTION A-A

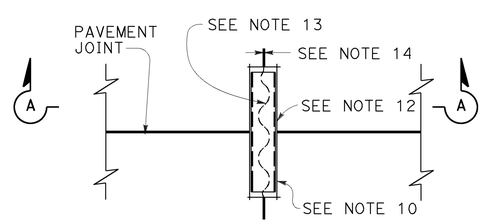

PLAN VIEW

TYPICAL LOOP LEAD-IN DETAIL
AT PAVEMENT JOINT

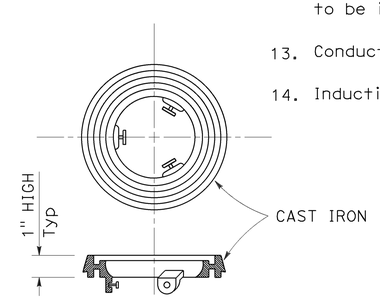

LOCKING GRADE RING

NOTES:

1. Bushing shall be used at end of conduit.
2. Tape detector conductors or cables 3" each side of bushings.
3. Install duct seal compound to each end of termination conduit before installing sealant.
4. Round all sharp edges where detector conductors or cables have to pass.
5. End of conduit shall be 3⅛" below roadway surface.
6.

Conduit size	Loop conductors
1"C minimum	1 to 2 pairs
1½"C minimum	3 to 4 pairs
2"C minimum	5 or more pairs

7. Splice detector conductors or cables to detector lead-in-cable.
8. Location of detector handhole when shown on plans.
9. When the shoulder and traveled way are paved with the same material and there is no joint between them, the conduit shall extend only 2'-0" into the shoulder pavement.
10. ¾"C, Type 3 conduit 6" long minimum, plug both ends with duct compound to keep out sealant.
11. ½" Minimum between top of conduit and pavement surface.
12. Sawcut shall not exceed 1" in width and ⅛" longer than conduit to be installed.
13. Conductors with ½" minimum slack inside conduit.
14. Inductive loop detector saw slot.

STATE OF CALIFORNIA
DEPARTMENT OF TRANSPORTATION

ELECTRICAL SYSTEMS (CURB AND SHOULDER TERMINATION, TRENCH, AND HANDHOLE DETAILS)

NO SCALE

RSP ES-5D DATED OCTOBER 30, 2015 SUPERSEDES RSP ES-5D DATED JULY 19, 2013 AND STANDARD PLAN ES-5D DATED MAY 20, 2011 - PAGE 451 OF THE STANDARD PLANS BOOK DATED 2010.

REVISED STANDARD PLAN RSP ES-5D

8-19-15

DIST	COUNTY	ROUTE	POST MILES TOTAL PROJECT	SHEET NO.	TOTAL SHEETS
06	Fre, Mad	41U	33.1/33.4 0.0/0.3	82	113

Theresa Gabriel
REGISTERED ELECTRICAL ENGINEER

October 30, 2015
PLANS APPROVAL DATE

REGISTERED PROFESSIONAL ENGINEER Theresa Aziz Gabriel No. E15129 Exp. 6-30-16 ELECTRICAL STATE OF CALIFORNIA

THE STATE OF CALIFORNIA OR ITS OFFICERS OR AGENTS SHALL NOT BE RESPONSIBLE FOR THE ACCURACY OR COMPLETENESS OF SCANNED COPIES OF THIS PLAN SHEET.

TO ACCOMPANY PLANS DATED 3-7-16

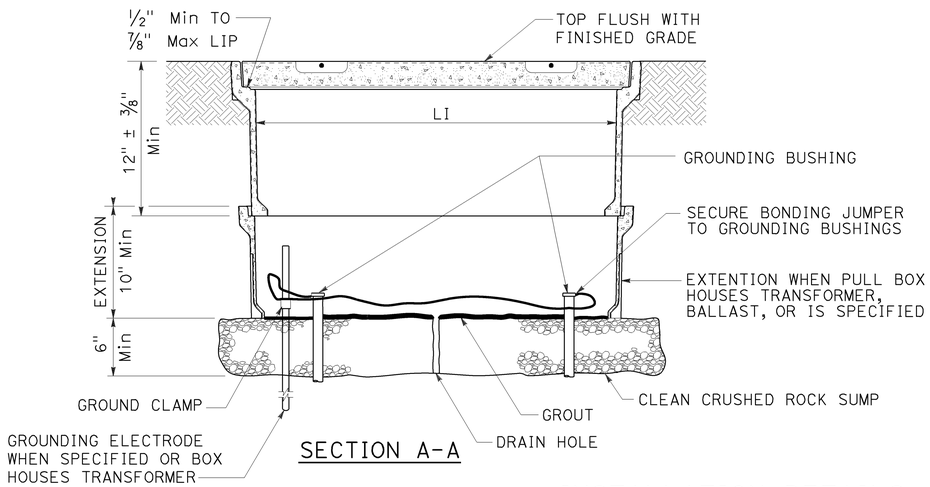

SECTION A-A

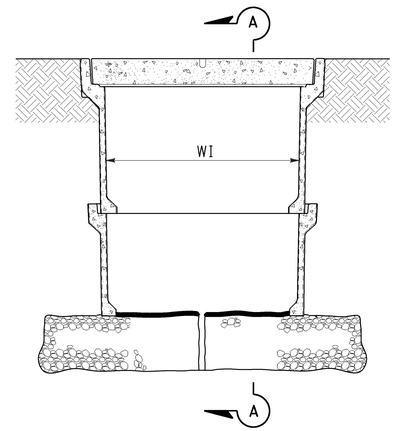

SIDE VIEW

INSTALLATION DETAILS

DETAIL A

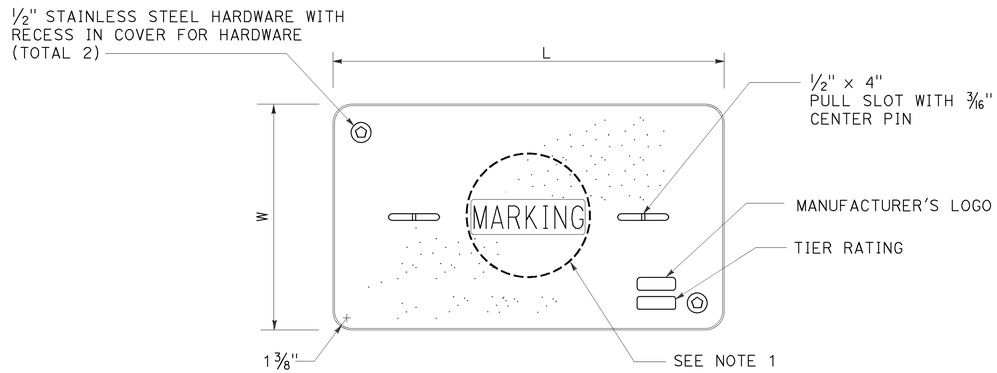

COVER TOP VIEW

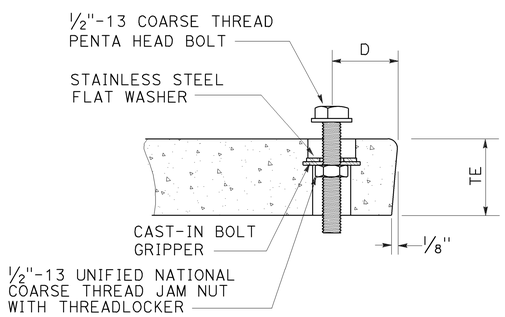

TYPICAL COVER CAPTIVE BOLT

OR SIMILAR

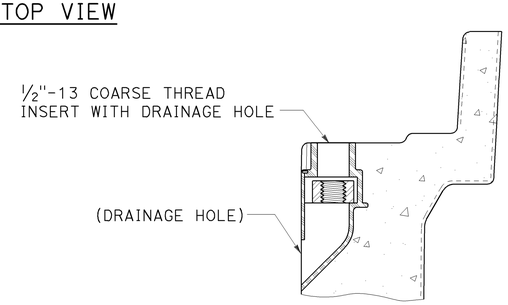

TYPICAL THREADED INSERT

OR SIMILAR

NOTES:

1. Pull box covers shall be marked as follows: "SERVICE" Service circuits between service point and service disconnect; "SPRINKLER-CONTROL" sprinkler control circuits, 50 V or less; "CALTRANS" on all pull boxes, except pull boxes marked "SPRINKLER-CONTROL"; and "TELEPHONE" Telephone service;
   - A) No. 3½ pull box.
     - 1) "SIGNAL" - Traffic signal circuits with or without lighting or sign lighting circuits.
     - 2) "LIGHTING" - Lighting or sign lighting circuits where voltage is under 600 V.
   - B) No. 5, 6, 9 or 9A pull box.
     - 1) "TRAFFIC SIGNAL" - Traffic signal circuits with or without lighting or sign lighting circuits.
     - 2) "LIGHTING" - Lighting or sign lighting circuits where voltage is under 600 V.
     - 3) "LIGHTING-HIGH VOLTAGE" - Lighting or sign lighting circuits where voltage is above 600 V.
     - 4) "IRRIGATION" - Circuits to irrigation controller 120 V or more.
     - 5) "RAMP METER" - Ramp meter circuits.
     - 6) "COUNT STATION" - Count or speed monitor circuits.
     - 7) "COMMUNICATIONS" - Communication circuits.
     - 8) "TOS COMMUNICATIONS" - TOS communication line.
     - 9) "TOS POWER" - TOS power.
     - 10) "TDC POWER" - Telephone demarcation cabinet power.
     - 11) "CCTV" - Closed circuit television circuits.
     - 12) "TMS" - Traffic monitoring station circuits.
     - 13) "CMS" - Changeable message sign circuits.
     - 14) "HAR" - Highway advisory radio circuits.
     - 15) "BOOSTER PUMP" - Booster pump circuit.
2. The nominal dimensions of the opening in which the cover sets shall be the same as the cover dimensions except the length and width dimensions shall be 1/8" greater.
3. Covers and boxes shall be interchangeable with California standard male and female gages. When interchanged with a standard male or female gage, the top surfaces shall be flush within 1/8". Top outside radius of covers and pull boxes shall have a 1/8" radius.
4. Pull box extension may be another pull box as long as the bottom edge of the pull box can fit into the cover opening.
5. Dimensions for the cover for non-traffic pull box are nominal values.

DIMENSION TABLE

PULL BOX	PULL BOX					COVER				
	MINIMUM DEPTH BOX	MINIMUM DEPTH EXTENSION	MINIMUM WEIGHT	LI Min	WI Min	TE	D	L	W	MINIMUM WEIGHT
No. 3½	12"	N/A	40 lb	1' - 3"	9"	1¾"	1¾"	1'-3¼" - 1'-3⅜"	10" - 10⅛"	30 lb
No. 5	12"	10"	55 lb	1' - 8"	11"	2"	1¾"	1'-11¼"	1'-1¾"	60 lb
No. 6	12"	10"	70 lb	2' - 4¼"	1' - 3¼"	2"	2"	2'-6½"	1'-5½"	85 lb

STATE OF CALIFORNIA
DEPARTMENT OF TRANSPORTATION

ELECTRICAL SYSTEMS (NON-TRAFFIC PULL BOX)

NO SCALE

RSP ES-8A DATED OCTOBER 30, 2015 SUPERSEDES RSP ES-8A DATED JULY 19, 2013 AND RSP ES-8A DATED JANUARY 20, 2012 THAT SUPPLEMENTS THE STANDARD PLANS BOOK DATED 2010.

REVISED STANDARD PLAN RSP ES-8A

2010 REVISED STANDARD PLAN RSP ES-8A

8-25-15

Dist	COUNTY	ROUTE	POST MILES TOTAL PROJECT	SHEET No.	TOTAL SHEETS
06	Fre, Mad	41U	33.1/33.4 0.0/0.3	83	113

Theresa Gabriel
REGISTERED ELECTRICAL ENGINEER

October 30, 2015
PLANS APPROVAL DATE

REGISTERED PROFESSIONAL ENGINEER
Theresa Aziz Gabriel
No. E15129
Exp. 6-30-16
ELECTRICAL
STATE OF CALIFORNIA

THE STATE OF CALIFORNIA OR ITS OFFICERS OR AGENTS SHALL NOT BE RESPONSIBLE FOR THE ACCURACY OR COMPLETENESS OF SCANNED COPIES OF THIS PLAN SHEET.

TO ACCOMPANY PLANS DATED 3-7-16

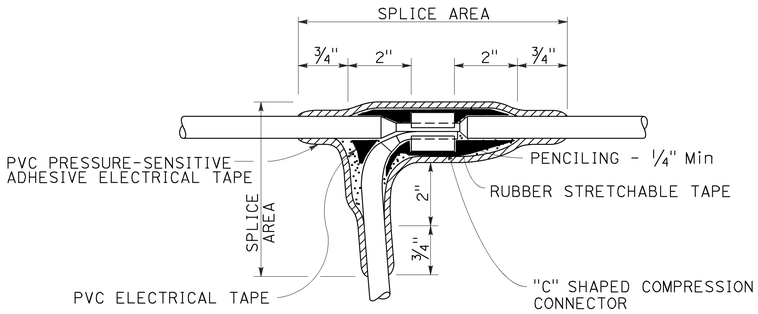

TYPE C SPLICE

See Note 3

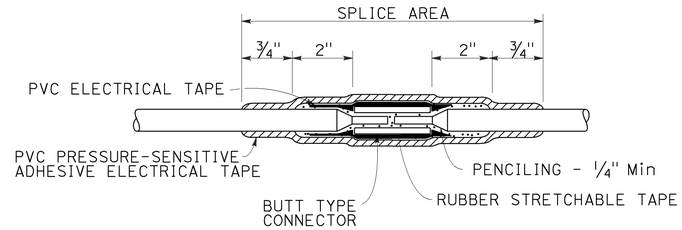

TYPE S SPLICE

See Note 4

NOTES:

1. Dimensions are minimum.
2. Rubber tapes shall be rolled after application.
3. Between 1 free-end and 1 through conductor.
4. Between 2 free-end conductors.
5. Between 3 free-end conductors.

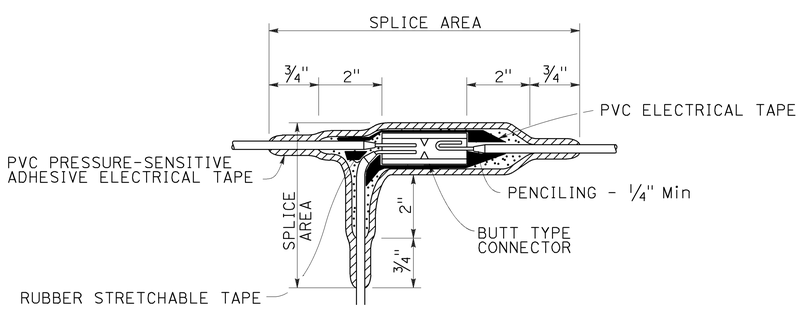

TYPE ST SPLICE

See Note 5

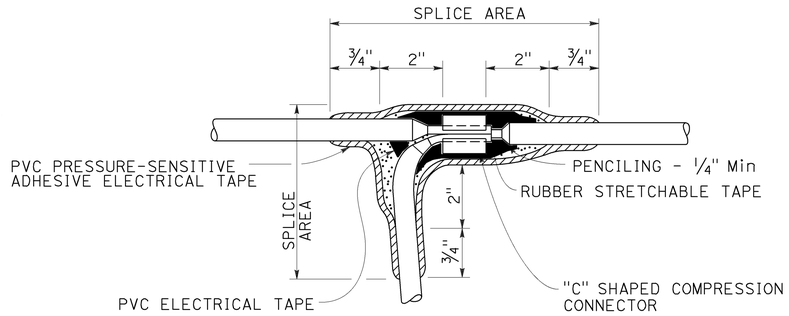

TYPE T SPLICE

See Note 5

STATE OF CALIFORNIA
DEPARTMENT OF TRANSPORTATION

ELECTRICAL SYSTEMS (SPLICING DETAILS)

NO SCALE

RSP ES-13A DATED OCTOBER 30, 2015 SUPERSEDES STANDARD PLAN ES-13A DATED MAY 20, 2011 - PAGE 491 OF THE STANDARD PLANS BOOK DATED 2010.

REVISED STANDARD PLAN RSP ES-13A

2010 REVISED STANDARD PLAN RSP ES-13A

9-28-15

Dist	COUNTY	ROUTE	POST MILES TOTAL PROJECT	SHEET No.	TOTAL SHEETS
06	Fre, Mad	41U	33.1/33.4, 0.0/0.3	84	113

Theresa Gabriel
REGISTERED ELECTRICAL ENGINEER

April 15, 2016
PLANS APPROVAL DATE

REGISTERED PROFESSIONAL ENGINEER
Theresa Aziz Gabriel
No. E15129
Exp. 6-30-16
ELECTRICAL
STATE OF CALIFORNIA

THE STATE OF CALIFORNIA OR ITS OFFICERS OR AGENTS SHALL NOT BE RESPONSIBLE FOR THE ACCURACY OR COMPLETENESS OF SCANNED COPIES OF THIS PLAN SHEET.

TO ACCOMPANY PLANS DATED 3-7-16

CIRCUIT VOLTAGE	FUSE VOLTAGE RATING	FUSE CURRENT RATING						
		HPS LAMP BALLAST		LOW PRESSURE SODIUM BALLAST	INDUCTION SIGN LIGHTING	SINGLE PHASE (TWO WIRE) TRANSFORMERS (PRIMARY SIDE)		
		70 W	100 W	180 W	85 W	1 kVA	2 kVA	3 kVA
120 V	250 V	5 A	5 A	5 A	5 A	10 A	20 A	30 A
240 V	250 V	5 A	5 A	5 A	5 A	6 A	10 A	20 A
480 V	500-600 V	5 A	5 A	3 A	1 A (SEE NOTE 2)	3 A	6 A	10 A

NOTES:

1. Primary lines of multiple ballasts shall be provided with fused connectors. Fuse ratings shall be as noted above.
2. See Revised Standard Plan RSP ES-15D, Type SC3 control.

FUSE RATINGS FOR FUSED CONNECTORS

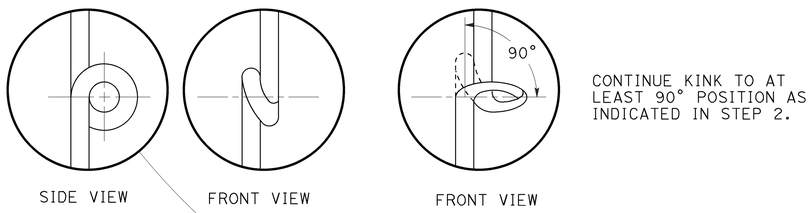

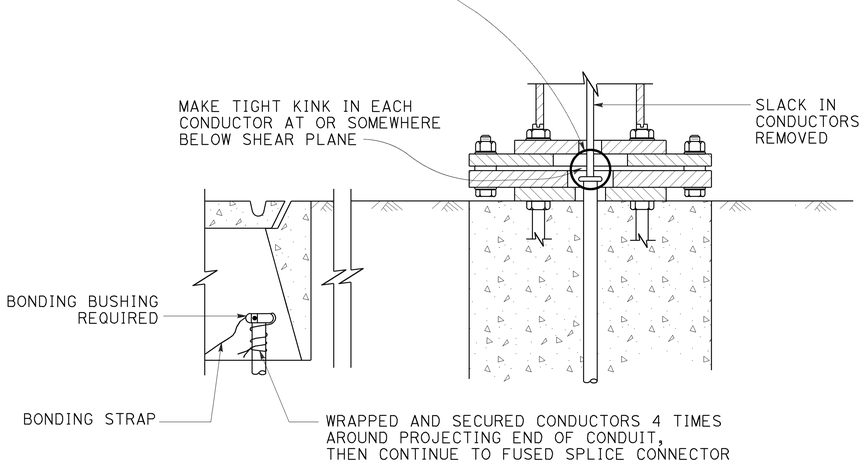

KINKING DETAIL FOR SLIP BASE STANDARDS

DETAIL A

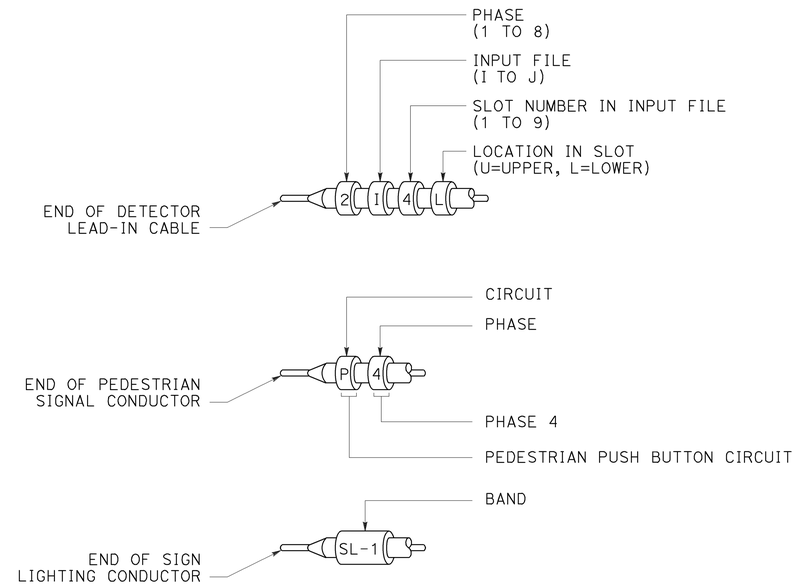

TYPICAL BANDING DETAILS

DETAIL B

STATE OF CALIFORNIA
DEPARTMENT OF TRANSPORTATION

ELECTRICAL SYSTEMS (FUSE RATING, KINKING AND BANDING DETAIL)

NO SCALE

RSP ES-13B DATED APRIL 15, 2016 SUPERSEDES STANDARD PLAN ES-13B DATED MAY 20, 2011 - PAGE 492 OF THE STANDARD PLANS BOOK DATED 2010.

REVISED STANDARD PLAN RSP ES-13B

2010 REVISED STANDARD PLAN RSP ES-13B

1-12-16

Dist	COUNTY	ROUTE	POST MILES TOTAL PROJECT	SHEET No.	TOTAL SHEETS
06	Fre, Mad	41U	33.1/33.4, 0.0/0.3	85	113

Theresa Gabriel
REGISTERED ELECTRICAL ENGINEER

April 15, 2016
PLANS APPROVAL DATE

REGISTERED PROFESSIONAL ENGINEER
Theresa Aziz Gabriel
No. E15129
Exp. 6-30-16
ELECTRICAL
STATE OF CALIFORNIA

THE STATE OF CALIFORNIA OR ITS OFFICERS OR AGENTS SHALL NOT BE RESPONSIBLE FOR THE ACCURACY OR COMPLETENESS OF SCANNED COPIES OF THIS PLAN SHEET.

TO ACCOMPANY PLANS DATED 3-7-16

2010 REVISED STANDARD PLAN RSP ES-14B

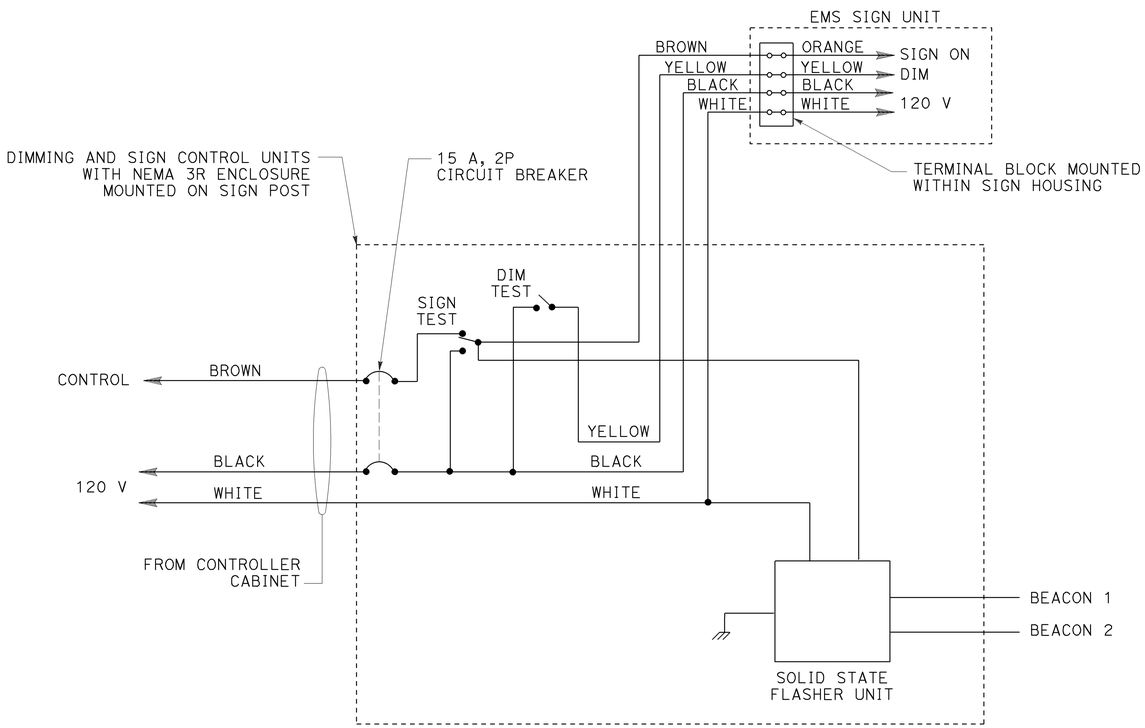

WIRING DIAGRAM
LED EXTINGUISHABLE MESSAGE SIGN
DETAIL A

THE FLASHER SHALL MATE WITH A CINCH-JONES SOCKET S-406-SB OR EQUAL AND CONNECTED AS FOLLOWS:

PIN	CIRCUIT	PIN	CIRCUIT
7	LOAD	10	NEUTRAL
8	LOAD	11	LINE
9	CHASSIS GROUND	12	NOT USED

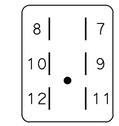

CONNECTOR SOCKET
SOLID STATE FLASHER UNIT

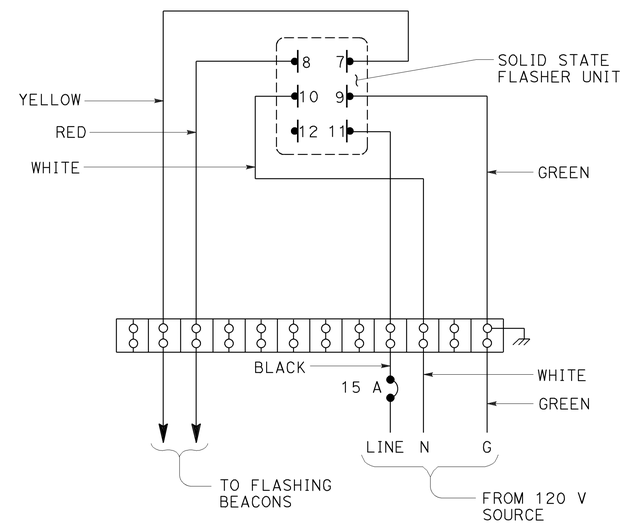

WIRING DIAGRAM
FLASHING BEACON CONTROL ASSEMBLY
DETAIL B

STATE OF CALIFORNIA
DEPARTMENT OF TRANSPORTATION

ELECTRICAL SYSTEMS (CONTROL ASSEMBLY WIRING DIAGRAMS)

NO SCALE

RSP ES-14B DATED APRIL 15, 2016 SUPERSEDES STANDARD PLAN ES-14B DATED MAY 20, 2011 - PAGE 494 OF THE STANDARD PLANS BOOK DATED 2010.

REVISED STANDARD PLAN RSP ES-14B

1-22-16

DIST	COUNTY	ROUTE	POST MILES TOTAL PROJECT	SHEET No.	TOTAL SHEETS
06	Fre,Mad	41U	33.1/33.4, 0.0/0.3	86	113

Evan M. Franciliso 2-26-16
REGISTERED CIVIL ENGINEER DATE

3-7-16
PLANS APPROVAL DATE

REGISTERED PROFESSIONAL ENGINEER
EVAN FRANCILISO
No. C66343
Exp. 6-30-2016
CIVIL
STATE OF CALIFORNIA

The State of California or its officers or agents shall not be responsible for the accuracy or completeness of scanned copies of this plan sheet.

LEGEND:

- Limits of bridge removal (Portion)
- Indicates Existing structure
- Indicates new structure

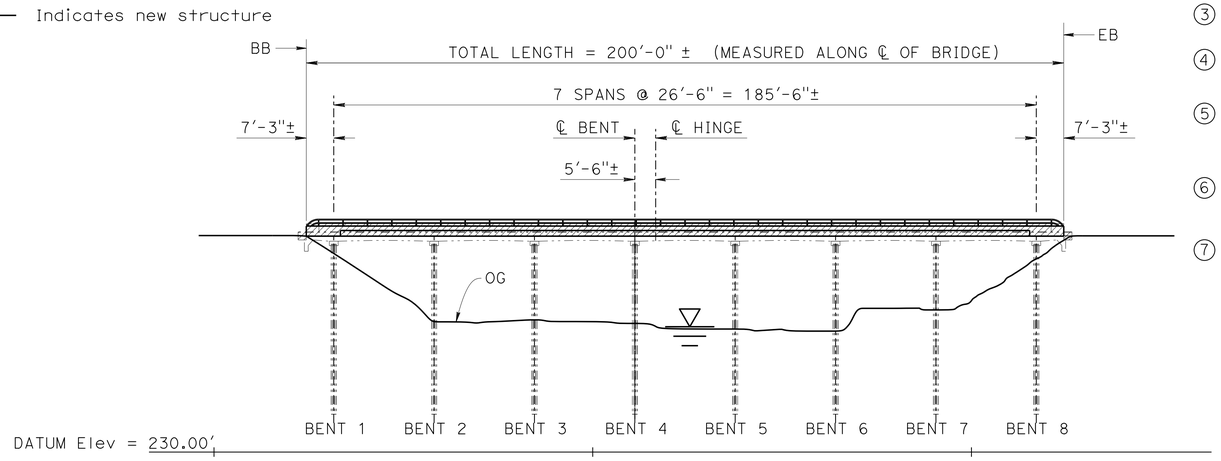

ELEVATION
1" = 20'

NOTES:

1. CARBON FIBER REINFORCED POLYMER STRIPS
2. TEMPORARY RAILING (TYPE K), SEE "ROADWAY PLANS"
3. REMOVE EXISTING BRIDGE RAILING AND CURB
4. CONCRETE BARRIER (TYPE 732 MODIFIED) WITH TUBULAR BICYCLE RAILING
5. PREPARE CONCRETE BRIDGE DECK SURFACE, FURNISH AND PLACE ¾" POLYESTER CONCRETE OVERLAY
6. CLEAN EXPANSION JOINTS AND PLACE NEW JOINT SEALS (MR = 2")
7. REFINISH BRIDGE DECK

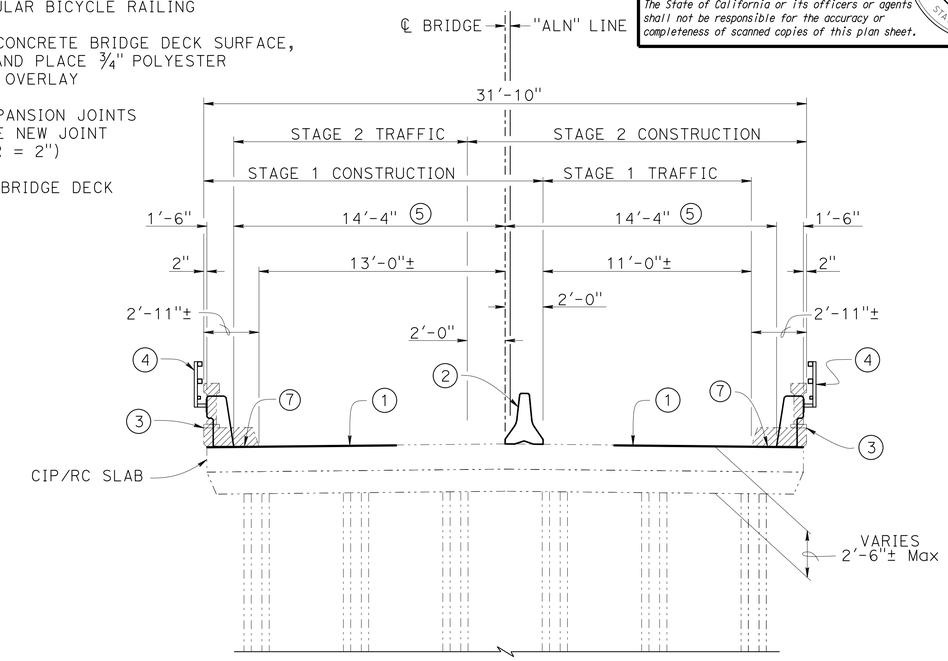

TYPICAL SECTION AT BENT
¼" = 1'-0"

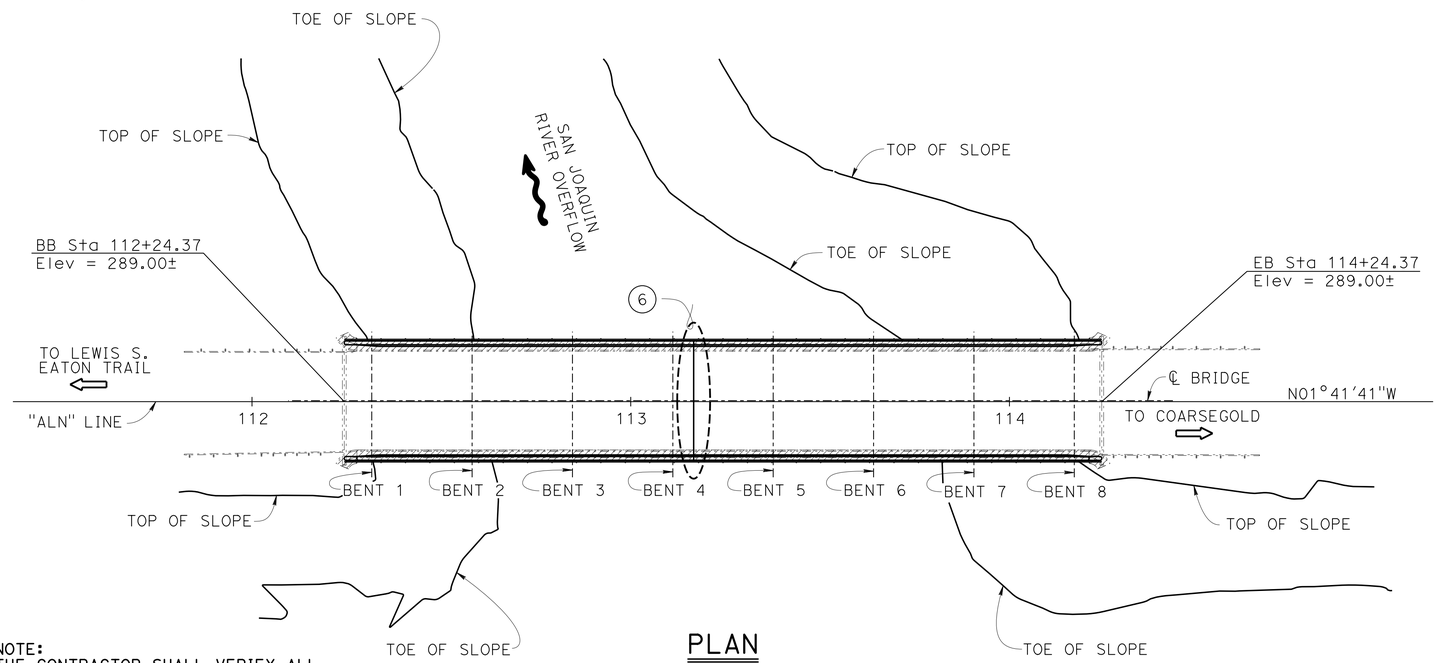

PLAN
1" = 20'

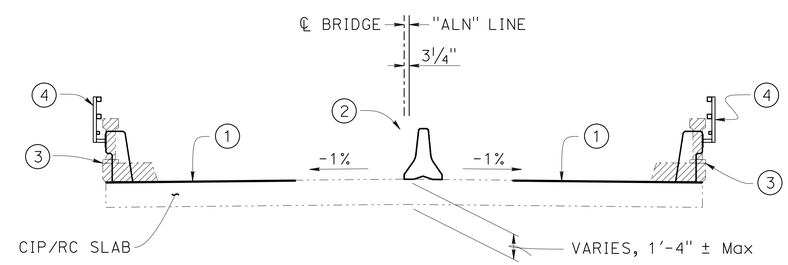

TYPICAL SECTION AT SPAN
¼" = 1'-0"

NOTES:

1. For dimension, see "TYPICAL SECTION AT BENT" sheet.
2. Move temporary railing (Type K) 2 feet to the left for stage 2.

NOTE:
THE CONTRACTOR SHALL VERIFY ALL CONTROLLING FIELD DIMENSIONS BEFORE ORDERING OR FABRICATING ANY MATERIAL.

SAN JOAQUIN RIVER OVERFLOW
BARRIER REPLACEMENT
GENERAL PLAN

RICHARD MELKO
DESIGN ENGINEER

	BY	CHECKED
DESIGN	EVAN FRANCILISO	AUSTIN QUIROZ
DETAILS	DAVID ELLIOTT	EVAN FRANCILISO
QUANTITIES	EVAN FRANCILISO	AUSTIN QUIROZ

LOAD FACTOR DESIGN — LIVE LOADING: H20 OR M18 AND PERMIT DESIGN LOAD

	BY	CHECKED
LAYOUT	EVAN FRANCILISO	AUSTIN QUIROZ
SPECIFICATIONS	MICHAEL KETELTAS	PLANS AND SPECS COMPARED JIM CORRADO

STATE OF CALIFORNIA
DEPARTMENT OF TRANSPORTATION

DIVISION OF ENGINEERING SERVICES
STRUCTURE DESIGN
DESIGN BRANCH 9

BRIDGE NO. 41-0040
POST MILE 0.08

ORIGINAL SCALE IN INCHES FOR REDUCED PLANS 0 1 2 3

UNIT: 3594
PROJECT NUMBER & PHASE: 0612000114-1
CONTRACT NO.: 06-0N9904

DISREGARD PRINTS BEARING EARLIER REVISION DATES

REVISION DATES: 2-10-16 10-8-15 11-6-15 11-20-15

SHEET 1 OF 7

FILE => 41-0040-a-gp.dgn

STRUCTURES DESIGN GENERAL PLAN SHEET (ENGLISH) (REV.09-01-10)

USERNAME => s113541 DATE PLOTTED => 18-MAY-2016 TIME PLOTTED => 11:31

DIST	COUNTY	ROUTE	POST MILES TOTAL PROJECT	SHEET No.	TOTAL SHEETS
06	Fre,Mad	41U	33.1/33.4, 0.0/0.3	87	113

Evan M. Franciliso 2-26-16
REGISTERED CIVIL ENGINEER DATE

3-7-16
PLANS APPROVAL DATE

REGISTERED PROFESSIONAL ENGINEER
EVAN FRANCILISO
No. C66343
Exp. 6-30-2016
CIVIL
STATE OF CALIFORNIA

The State of California or its officers or agents shall not be responsible for the accuracy or completeness of scanned copies of this plan sheet.

STANDARD PLANS DATED MAY 2010

	A10A	ABBREVIATIONS (SHEET 1 OF 2)
RSP -	A10B	ABBREVIATIONS (SHEET 2 OF 2)
	A10C	LINES AND SYMBOLS (SHEET 1 OF 3)
	A10D	LINES AND SYMBOLS (SHEET 2 OF 3)
	A10E	LINES AND SYMBOLS (SHEET 3 OF 3)
RSP -	A10F	LEGEND - SOIL (SHEET 1 OF 2)
RSP -	A10G	LEGEND - SOIL (SHEET 1 OF 2)
	A10H	LEGEND - ROCK
RSP -	A77U1	MIDWEST GUARDRAIL SYSTEM - CONNECTIONS TO BRIDGE RAILING WITHOUT SIDEWALK DETAILS NO. 1
RSP -	A77U2	MIDWEST GUARDRAIL SYSTEM - CONNECTIONS TO BRIDGE RAILING WITHOUT SIDEWALK DETAILS NO. 2
RSP -	A77U4	MIDWEST GUARDRAIL SYSTEM - TRANSITION RAILING (TYPE WB-31)
RSP -	B6-21	JOINT SEALS (MAXIMUM MOVEMENT RATING 2")
RSP -	B11-55	CONCRETE BARRIER TYPE 732

INDEX TO PLANS

SHEET NO.	TITLE
1	GENERAL PLAN
2	INDEX TO PLANS
3	FOUNDATION PLAN
4	REMOVAL DETAILS
5	BARRIER DETAILS
6	CARBON FIBER REINFORCED POLYMER
7	TUBULAR BICYCLE RAILING DETAILS

QUANTITIES

PUBLIC SAFETY PLAN	LUMP	SUM
PREPARE CONCRETE BRIDGE DECK SURFACE	5,733	SQFT
REFINISH BRIDGE DECK	500	SQFT
FURNISH POLYESTER CONCRETE OVERLAY	358	CF
PLACE POLYESTER CONCRETE OVERLAY	5,733	SQFT
CARBON FIBER REINFORCED POLYMER STRIP	2,240	LF
BRIDGE REMOVAL (PORTION), LOCATION B	LUMP	SUM
CLEAN EXPANSION JOINT	32	LF
JOINT SEAL (MR 2")	30	LF
TUBULAR BICYCLE RAILING	400	LF
CONCRETE BARRIER (TYPE 732 MODIFIED)	400	LF

GENERAL NOTES
LOAD FACTOR DESIGN

DESIGN:
Bridge Design Specifications
('96 AASHTO w/Revisions by Caltrans)

SEISMIC DESIGN:
Caltrans Seismic Design Criteria (SDC), Version 1.7 dated APRIL 2013

LIVE LOADING:
HS20-44 and alternative and permit design load.

SEISMIC LOADING:
V_{s30} = 300 m/sec
M_{max} = 7.9
PGA = 0.21 g
See "Site Specific ARS Curve"

CONCRETE:
fy = 60 ksi
f'c = 3.6 ksi
n = 8

CARBON FIBER REINFORCED POLYMER:
Minimum Tensile Strength = 285 ksi
Minimum Modulus of Elasticity = 18,000 ksi
Effective Cross Sectional Area = 0.11 in²

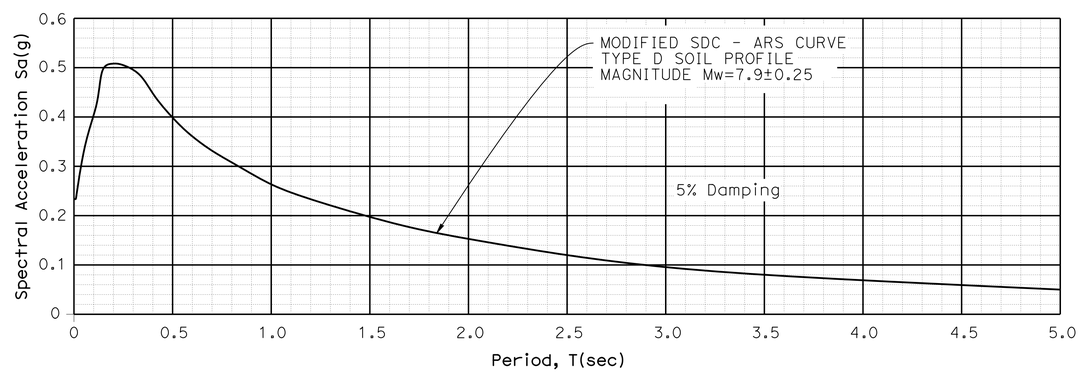

SITE SPECIFIC ACCELERATION
RESPONSE SPECTRA CURVE

No Scale

NOTE:
THE CONTRACTOR SHALL VERIFY ALL CONTROLLING FIELD DIMENSIONS BEFORE ORDERING OR FABRICATING ANY MATERIAL.

DESIGN	BY EVAN FRANCILISO	CHECKED AUSTIN QUIROZ	
DETAILS	BY DAVID ELLIOTT	CHECKED EVAN FRANCILISO	
QUANTITIES	BY EVAN FRANCILISO	CHECKED AUSTIN QUIROZ	

STATE OF CALIFORNIA
DEPARTMENT OF TRANSPORTATION

DIVISION OF ENGINEERING SERVICES
STRUCTURE DESIGN
DESIGN BRANCH 9

BRIDGE NO. 41-0040
POST MILE 0.08

SAN JOAQUIN RIVER OVERFLOW
BARRIER REPLACEMENT
INDEX TO PLANS

STRUCTURES DESIGN DETAIL SHEET (ENGLISH) (REV. 09-01-10)

ORIGINAL SCALE IN INCHES FOR REDUCED PLANS 0 1 2 3

UNIT: 3594
PROJECT NUMBER & PHASE: 0612000114-1
CONTRACT NO.: 06-0N9904

DISREGARD PRINTS BEARING EARLIER REVISION DATES

REVISION DATES: 11-6-15 2-10-16 3-15-15 10-1-15

SHEET 2 OF 7

FILE => 41-0040-a-itp.dgn

USERNAME => s113541 DATE PLOTTED => 18-MAY-2016 TIME PLOTTED => 11:32

DIST	COUNTY	ROUTE	POST MILES TOTAL PROJECT	SHEET No.	TOTAL SHEETS
06	Fre,Mad	41U	33.1/33.4, 0.0/0.3	88	113

Evan M. Francliso 2-26-16
REGISTERED CIVIL ENGINEER DATE

3-7-16
PLANS APPROVAL DATE

REGISTERED PROFESSIONAL ENGINEER
EVAN FRANCILISO
No. C66343
Exp. 6-30-2016
CIVIL
STATE OF CALIFORNIA

The State of California or its officers or agents shall not be responsible for the accuracy or completeness of electronic copies of this plan sheet.

NOTE:

1. Hydrologic summary data per bridge No. 42-0112.

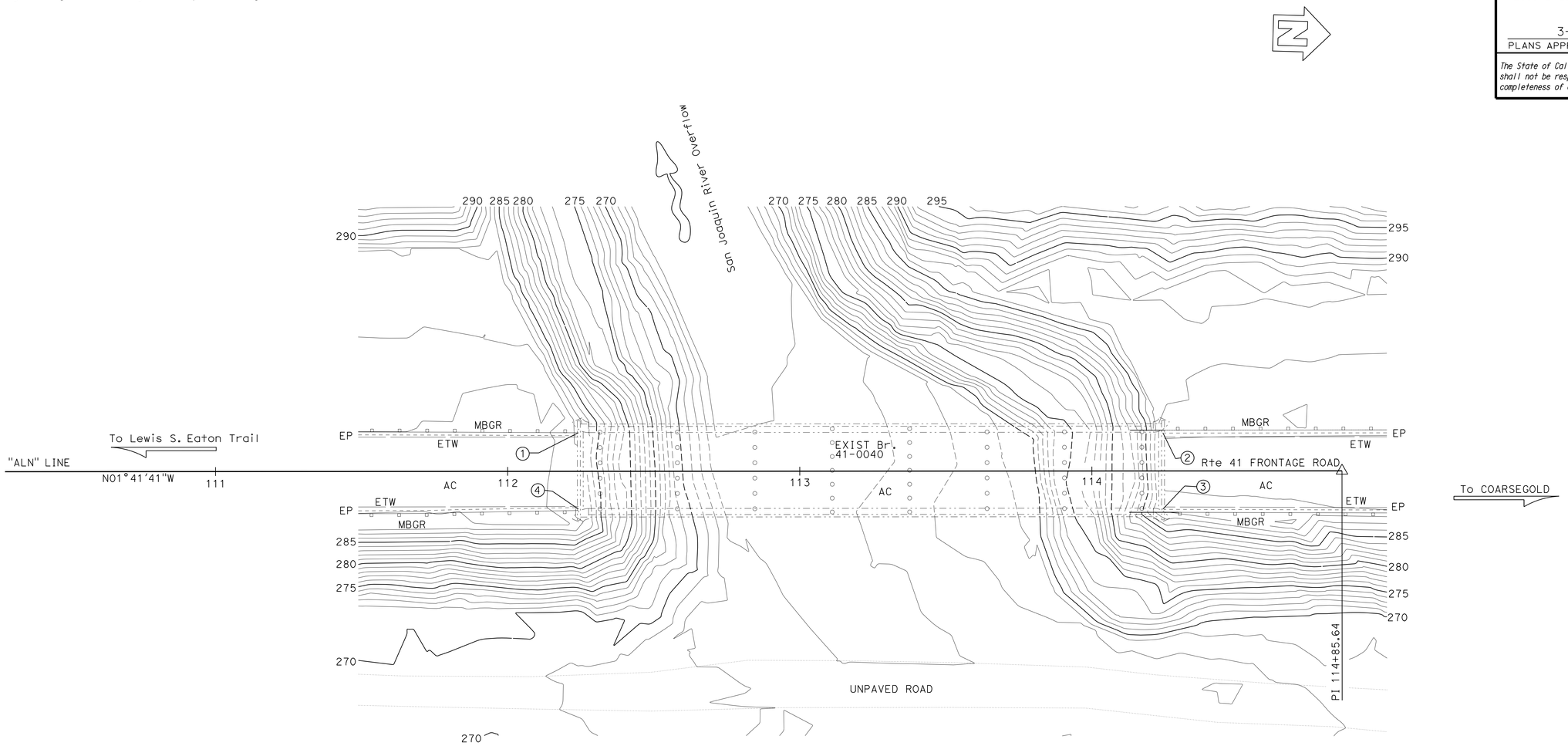

SURVEY CONTROL

MRW0087 (NOT SHOWN)
Fnd 1" IP W/RCTP
21.00 FT Lt. "ALN" LINE
Sta 102+00.24
N 2 202 590.09
E 6 330 001.20
Elev=288.13

MRW0090 (NOT SHOWN)
Fnd 1" IP W/RCTP
61.87 FT Lt. "ALN" LINE
Sta 108+93.07
N 2 203 281.41
E 6 329 939.86
Elev=279.99

Bridge Location (PN Points Br. 41-0040)

① 13.20 FT Lt. ALN LINE Sta 112+24.19 Elev=288.87
② 13.05 FT Lt. ALN LINE Sta 114+24.32 Elev=288.85
③ 13.12 FT Rt. ALN LINE Sta 114+24.26 Elev=288.86
④ 12.92 FT Rt. ALN LINE Sta 114+24.22 Elev=288.89

NOTE:
THE CONTRACTOR SHALL VERIFY ALL CONTROLLING FIELD DIMENSIONS BEFORE ORDERING OR FABRICATING ANY MATERIAL.

SCOUR DATA TABLE

SUPPORT NO.	LONG TERM (DEGRADATION AND CONTRACTION) SCOUR ELEVATION (FT)	SHORT TERM (LOCAL) SCOUR DEPTH (FT)
BENT 1	N/A	N/A
BENT 2	N/A	N/A
BENT 3	N/A	N/A
BENT 4	N/A	N/A
BENT 5	N/A	N/A
BENT 6	N/A	N/A
BENT 7	N/A	N/A
BENT 8	N/A	N/A

HYDROLOGIC SUMMARY

DRAINAGE AREA: 1700 SQUARE MILES

	MAX DAILY RELEASE	ALLOWED BASE FLOOD	ORDINARY HIGHWATER ESTIMATE
FREQUENCY (YEARS)	50	100	x
EXISTING WATER SURFACE ELEV. (FEET)	272.1	277.1	x
DISCHARGE (CUBIC FEET PER SECOND)	33,000	70,000	x

FLOOD PLAIN DATA ARE BASED UPON INFORMATION AVAILABLE WHEN THE PLANS WERE PREPARED AND ARE SHOWN TO MEET FEDERAL REQUIREMENTS. THE ACCURACY OF SAID INFORMATION IS NOT WARRANTED BY THE STATE AND INTERESTED OR AFFECTED PARTIES SHOULD MAKE THEIR OWN INVESTIGATIONS.

SAN JOAQUIN RIVER OVERFLOW
BARRIER REPLACEMENT
FOUNDATION PLAN

PRELIMINARY INVESTIGATION SECTION

SCALE 1"=20'	VERT.DATUM NAVD88 (2010.16)	PHOTOGRAMMETRY AS OF: X			
	HORZ.DATUM NAD83	SURVEYED	BY DISTROCT 11/2014	CHECKED	BY C. FASSETT 02/2015
ALIGNMENT TIES Dist TRAVERSE SHEET		DRAFTED	BY S. ZHENG 02/2015	CHECKED	BY S. SOU 02/2015

DESIGN	BY EVAN FRANCILISO	CHECKED	AUSTIN QUIROZ
DETAILS	BY DAVID ELLIOTT	CHECKED	EVAN FRANCILISO
QUANTITIES	BY EVAN FRANCILISO	CHECKED	AUSTIN QUIROZ

STATE OF CALIFORNIA
DEPARTMENT OF TRANSPORTATION

DIVISION OF ENGINEERING SERVICES
STRUCTURE DESIGN
DESIGN BRANCH 9

BRIDGE NO. 41-0040
POST MILE 0.08

STRUCTURES FOUNDATION PLAN SHEET (ENGLISH) (REV. 09-01-10)

ORIGINAL SCALE IN INCHES FOR REDUCED PLANS 0 1 2 3

UNIT: 3646
PROJECT NUMBER & PHASE: 06-1200-0114-1 CONTRACT NO.: 06-0N9904

SUBMITTAL DATE	REVISION DATES			SHEET	OF
2/5/2015	11-16-15	2-10-16	11-8-15 11-18-15	3	7

FILE => 41-0040-e-fpl01.dgn

USERNAME => s113541 DATE PLOTTED => 18-MAY-2016 TIME PLOTTED => 11:32

DIST	COUNTY	ROUTE	POST MILES TOTAL PROJECT	SHEET No.	TOTAL SHEETS
06	Fre,Mad	41U	33.1/33.4, 0.0/0.3	89	113

Evan M. Franciliso 2-26-16
REGISTERED CIVIL ENGINEER DATE

3-7-16
PLANS APPROVAL DATE

REGISTERED PROFESSIONAL ENGINEER
EVAN FRANCILISO
No. C66343
Exp. 6-30-2016
CIVIL
STATE OF CALIFORNIA

The State of California or its officers or agents shall not be responsible for the accuracy or completeness of scanned copies of this plan sheet.

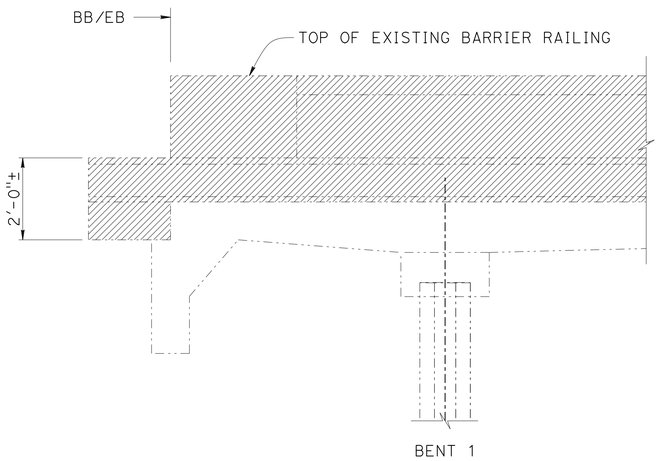

PART ELEVATION - REMOVAL

½" = 1'-0"

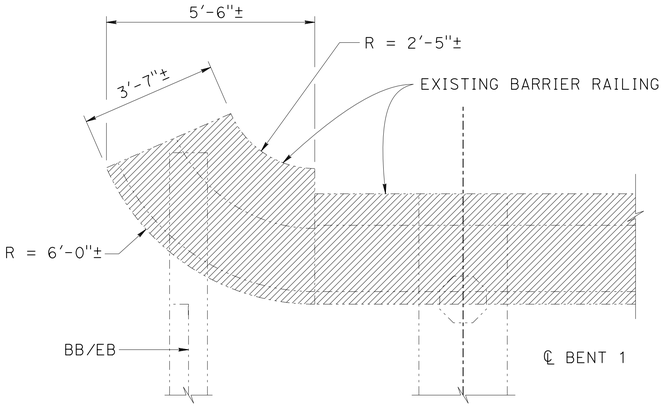

PART PLAN - REMOVAL

½" = 1'-0"

NOTE: Left side existing barrier railing shown, similar on right side of existing barrier railing.

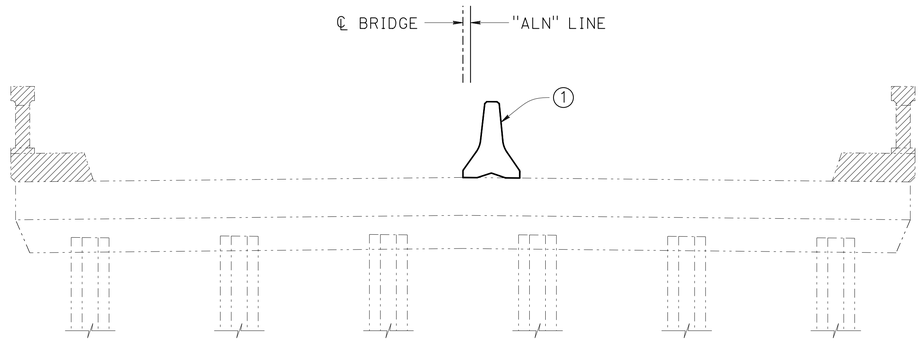

TYPICAL SECTION AT BENTS

⅜" = 1'-0"

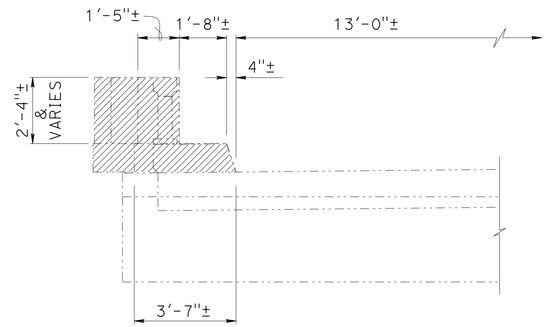

SECTION AT BEGINNING/END OF BRIDGE

⅜" = 1'-0"

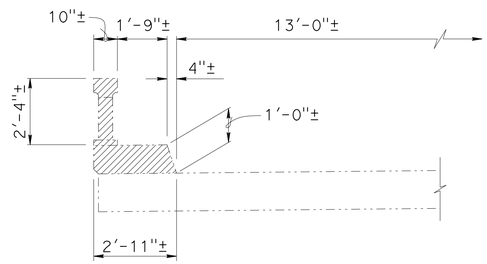

SECTION AT SPAN

⅜" = 1'-0"

LEGEND:

- Indicates existing structure
- Indicates new structure
- Bridge removal (Portion)
- (1) Temporary railing (Type K), see "ROADWAY PLANS"

NOTE:
THE CONTRACTOR SHALL VERIFY ALL CONTROLLING FIELD DIMENSIONS BEFORE ORDERING OR FABRICATING ANY MATERIAL.

DESIGN	BY EVAN FRANCILISO	CHECKED AUSTIN QUIROZ	
DETAILS	BY DAVID ELLIOTT	CHECKED EVAN FRANCILISO	
QUANTITIES	BY EVAN FRANCILISO	CHECKED AUSTIN QUIROZ	

STATE OF CALIFORNIA
DEPARTMENT OF TRANSPORTATION

DIVISION OF ENGINEERING SERVICES
STRUCTURE DESIGN
DESIGN BRANCH 9

BRIDGE NO. 41-0040
POST MILE 0.08

SAN JOAQUIN RIVER OVERFLOW
BARRIER REPLACEMENT
REMOVAL DETAILS

STRUCTURES DESIGN DETAIL SHEET (ENGLISH) (REV. 09-01-10)

ORIGINAL SCALE IN INCHES FOR REDUCED PLANS 0 1 2 3

UNIT: 3594
PROJECT NUMBER & PHASE: 0612000114
CONTRACT NO.: 06-0N9904

DISREGARD PRINTS BEARING EARLIER REVISION DATES

REVISION DATES: 11-6-15 11-20-15 2-10-16 10-1-15

SHEET 4 OF 7

FILE => 41-0040-m-removal detail.dgn

USERNAME => s113541 DATE PLOTTED => 18-MAY-2016 TIME PLOTTED => 11:32

DIST	COUNTY	ROUTE	POST MILES TOTAL PROJECT	SHEET No.	TOTAL SHEETS
06	Fre,Mad	41U	33.1/33.4, 0.0/0.3	90	113

Evan M. Franciliso 2-26-16
REGISTERED CIVIL ENGINEER DATE

3-7-16
PLANS APPROVAL DATE

REGISTERED PROFESSIONAL ENGINEER EVAN FRANCILISO No. C66343 Exp. 6-30-2016 CIVIL STATE OF CALIFORNIA

The State of California or its officers or agents shall not be responsible for the accuracy or completeness of scanned copies of this plan sheet.

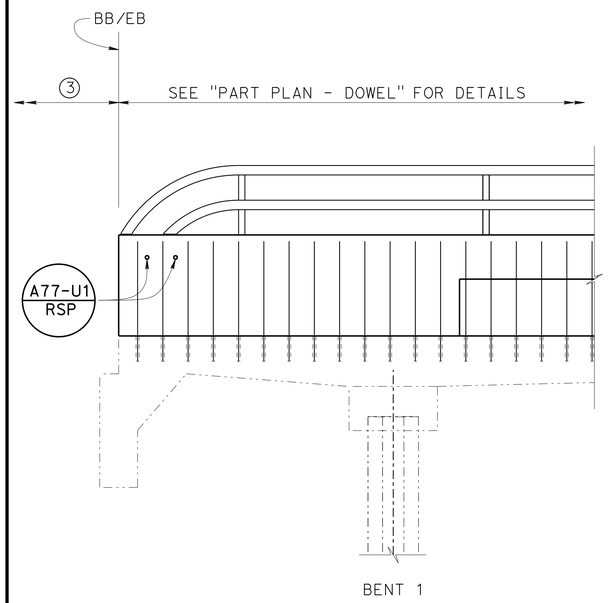

PART ELEVATION - DOWELS

½" = 1'-0"

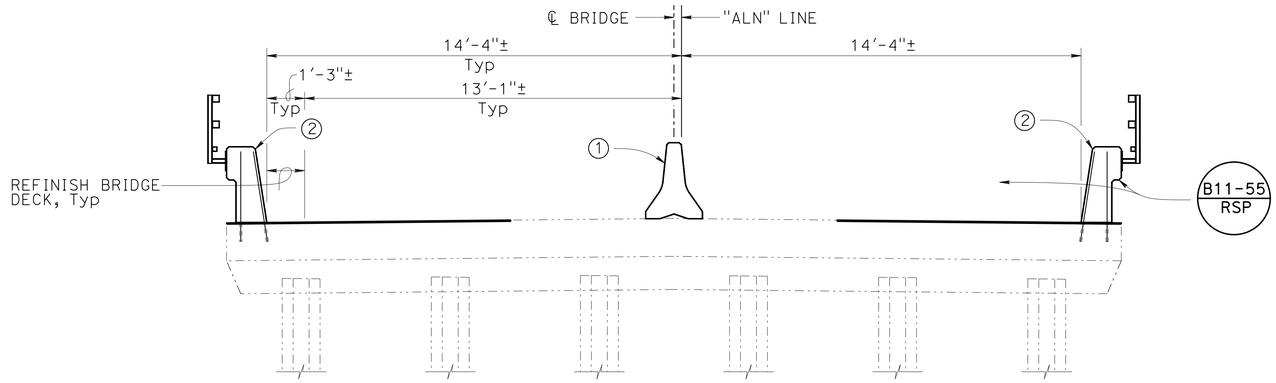

TYPICAL SECTION AT BENTS

⅜" = 1'-0"

LEGEND:

Indicates existing structure

Indicates new structure

NOTE:

① Temporary railing (Type K), see "ROADWAY PLANS"

② Concrete barrier (Type 732 Modified) with tubular bicycle railing, Typ

③ Midwest guardrail system, see "Roadway Plans"

④ Scupper maximum spacing = 60'-0"

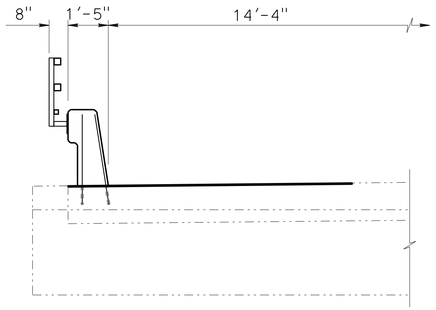

SECTION AT BEGINNING/END OF BRIDGE

⅜" = 1'-0"

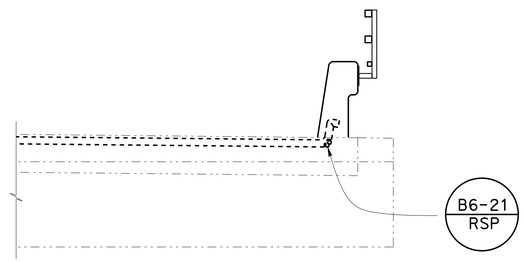

NOTES: Bend joint seal 6" up into rail.

JOINT SEAL AT LOW SIDE OF DECK

⅜" = 1'-0"

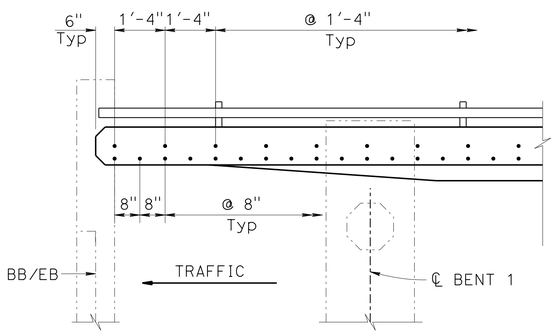

PART PLAN - DOWELS

½" = 1'-0"

NOTE: See "SCUPPER DETAILS"

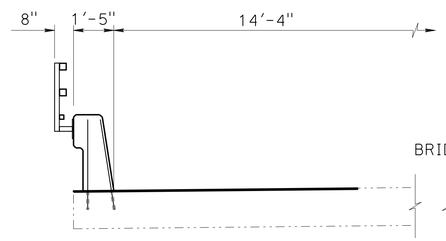

SECTION AT SPAN

⅜" = 1'-0"

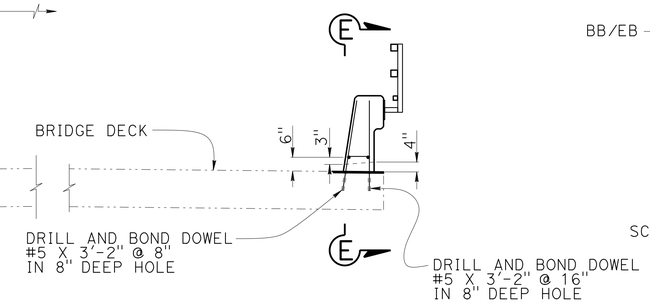

SCUPPER DETAILS

⅜" = 1'-0"

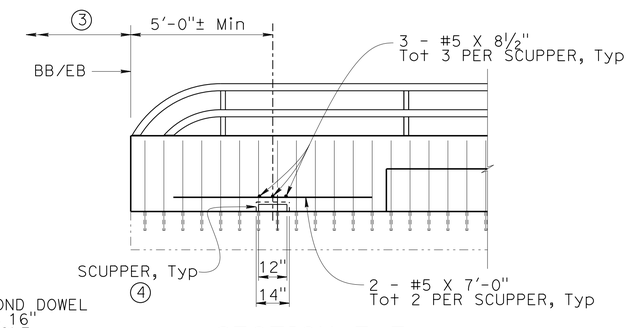

SECTION E-E

⅜" = 1'-0"

NOTE:
THE CONTRACTOR SHALL VERIFY ALL CONTROLLING FIELD DIMENSIONS BEFORE ORDERING OR FABRICATING ANY MATERIAL.

	BY	CHECKED
DESIGN	EVAN FRANCILISO	AUSTIN QUIROZ
DETAILS	DAVID ELLIOTT	EVAN FRANCILISO
QUANTITIES	EVAN FRANCILISO	AUSTIN QUIROZ

STATE OF CALIFORNIA
DEPARTMENT OF TRANSPORTATION

DIVISION OF ENGINEERING SERVICES
STRUCTURE DESIGN
DESIGN BRANCH 9

BRIDGE NO. 41-0040
POST MILE 0.08

SAN JOAQUIN RIVER OVERFLOW
BARRIER REPLACEMENT
BARRIER DETAILS

STRUCTURES DESIGN DETAIL SHEET (ENGLISH) (REV. 09-01-10)

ORIGINAL SCALE IN INCHES FOR REDUCED PLANS 0 1 2 3

UNIT: 3594
PROJECT NUMBER & PHASE: 0612000114
CONTRACT NO.: 06-0N9904

DISREGARD PRINTS BEARING EARLIER REVISION DATES

REVISION DATES: 2-10-16 9-18-15 10-1-15 11-18-15

SHEET 5 OF 7

FILE => 41-0040-t-barrier detail.dgn

USERNAME => s113541 DATE PLOTTED => 18-MAY-2016 TIME PLOTTED => 11:32

DIST	COUNTY	ROUTE	POST MILES TOTAL PROJECT	SHEET No.	TOTAL SHEETS
06	Fre,Mad	41U	33.1/33.4, 0.0/0.3	91	113

Evan M. Franciliso 2-26-16
REGISTERED CIVIL ENGINEER DATE

3-7-16
PLANS APPROVAL DATE

REGISTERED PROFESSIONAL ENGINEER EVAN FRANCILISO No. C66343 Exp. 6-30-2016 CIVIL STATE OF CALIFORNIA

The State of California or its officers or agents shall not be responsible for the accuracy or completeness of scanned copies of this plan sheet.

LEGEND:

- - - - - Indicates existing structure

——— Indicates new structure

(1) Indicates limits of sawcut grooves in existing concrete deck, place new CFRP flexural strengthening in each groove

CFRP - Carbon Fiber Reinforced Polymer

NOTES:

1. Adjust CFRP groove spacing to avoid conflict with barrier reinforcement.
2. Sawcut CFRP grooves after concrete cures per special provisions.

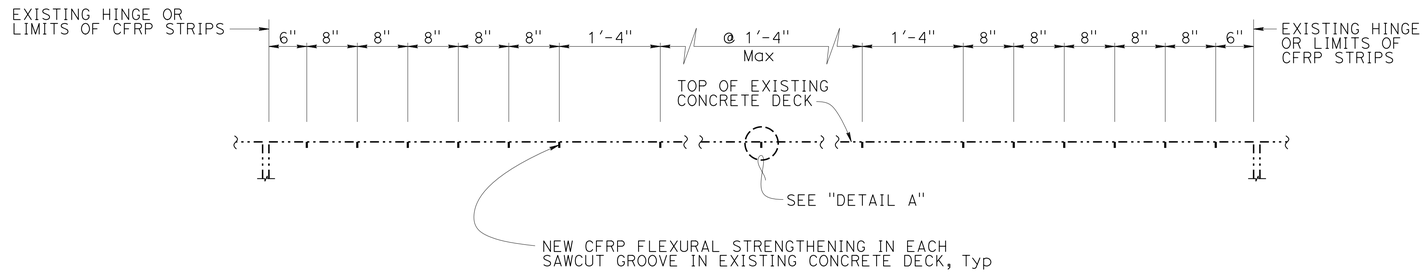

SECTION D-D

NO SCALE

NOTE: Space sawcuts along CFRP layout.

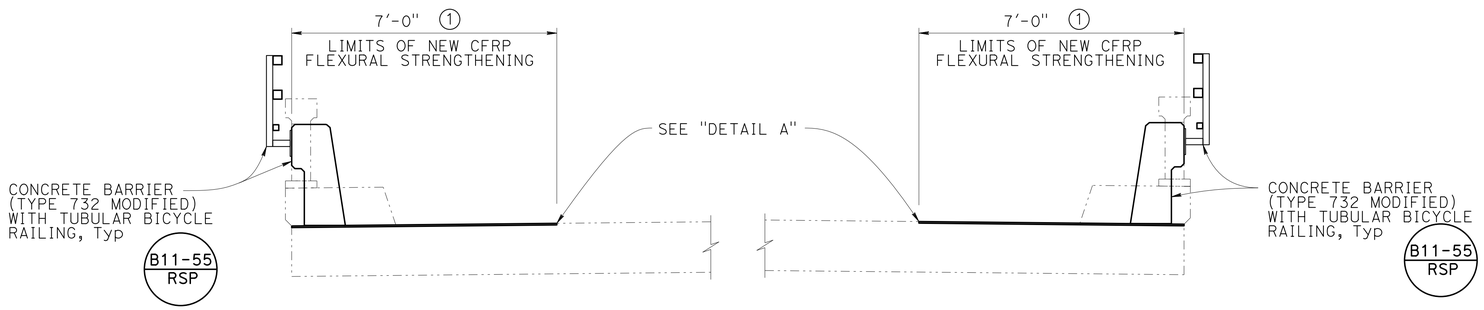

TYPICAL CFRP AT DECK OVERHANG

½" = 1'-0"

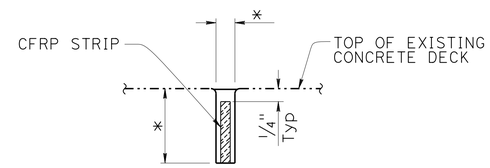

DETAIL A

NO SCALE

NOTE:

* SAWCUT WIDTH TO BE DETERMINED BY THE CFRP MANUFACTURER AND THE ENGINEER. 1" MAXIMUM DEPTH.

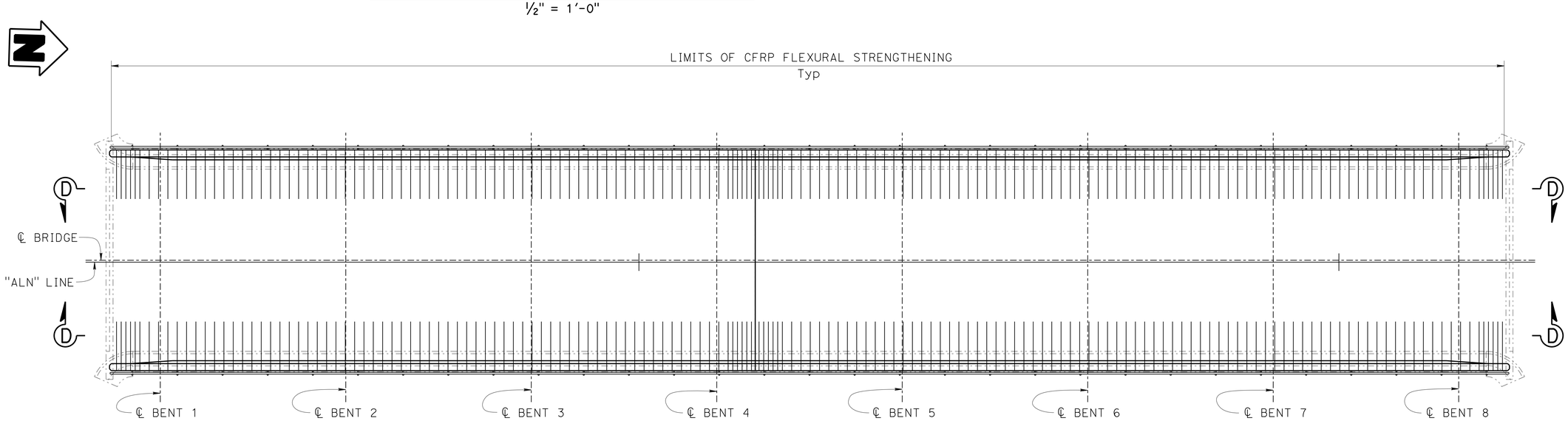

PLAN - CFRP LAYOUT

⅛" = 1'-0"

NOTE:
THE CONTRACTOR SHALL VERIFY ALL CONTROLLING FIELD DIMENSIONS BEFORE ORDERING OR FABRICATING ANY MATERIAL.

SAN JOAQUIN RIVER OVERFLOW BARRIER REPLACEMENT

CARBON FIBER REINFORCED POLYMER

	BY	CHECKED
DESIGN	EVAN FRANCILISO	AUSTIN QUIROZ
DETAILS	DAVID ELLIOTT	EVAN FRANCILISO
QUANTITIES	EVAN FRANCILISO	AUSTIN QUIROZ

STATE OF CALIFORNIA
DEPARTMENT OF TRANSPORTATION

DIVISION OF ENGINEERING SERVICES
STRUCTURE DESIGN
DESIGN BRANCH 9

BRIDGE NO. 41-0040
POST MILE 0.08

STRUCTURES DESIGN DETAIL SHEET (ENGLISH) (REV. 09-01-10)

ORIGINAL SCALE IN INCHES FOR REDUCED PLANS 0 1 2 3

UNIT: 3594
PROJECT NUMBER & PHASE: 0612000114
CONTRACT NO.: 06-0N9904

DISREGARD PRINTS BEARING EARLIER REVISION DATES

REVISION DATES 11-13-15 11-24-15 2-10-16 10-1-15

SHEET 6 OF 7

FILE => 41-0040-u-cfrp details.dgn

USERNAME => s113541 DATE PLOTTED => 18-MAY-2016 TIME PLOTTED => 11:32

DIST	COUNTY	ROUTE	POST MILES TOTAL PROJECT	SHEET No.	TOTAL SHEETS
06	Fre,Mad	41U	33.1/33.4, 0.0/0.3	92	113

Evan M. Francilico 2-26-16
REGISTERED CIVIL ENGINEER DATE

3-7-16
PLANS APPROVAL DATE

REGISTERED PROFESSIONAL ENGINEER
EVAN FRANCILISO
No. C66343
Exp. 6-30-2016
CIVIL
STATE OF CALIFORNIA

The State of California or its officers or agents shall not be responsible for the accuracy or completeness of electronic copies of this plan sheet.

The components of this Bridge Standard Drawing have been prepared under the responsible charge of the Technical Owner, a registered civil engineer in the State of California. Refer to: http://www.dot.ca.gov/hq/esc/techpubs/manual/bridgemanuals/bridge-standard-detail-sheet/index.html.
The selection and proper application of the component design and any modifications shown have been prepared under the responsible charge of the registered civil engineer for the project.

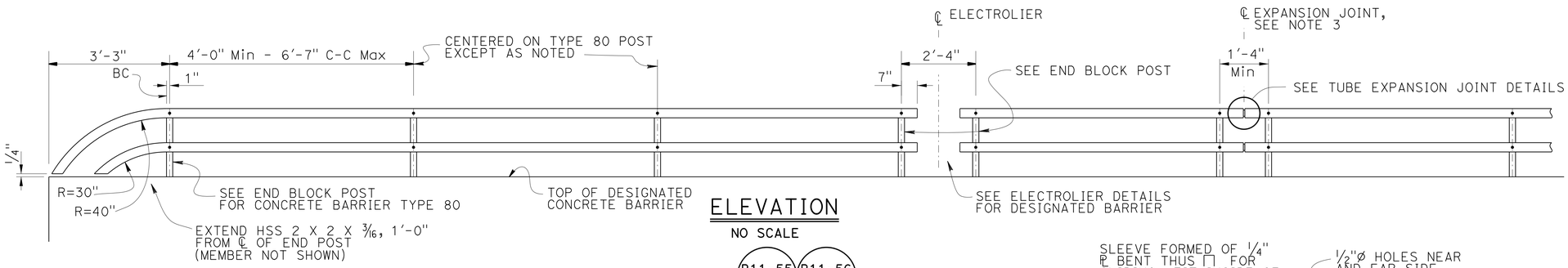

ELEVATION
NO SCALE

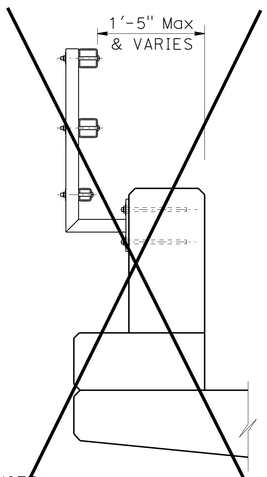

NOTE:
For details not shown, see "TYPE 732 OR 736"

TYPE 80 END BLOCK POST
1" = 1'-0"
1

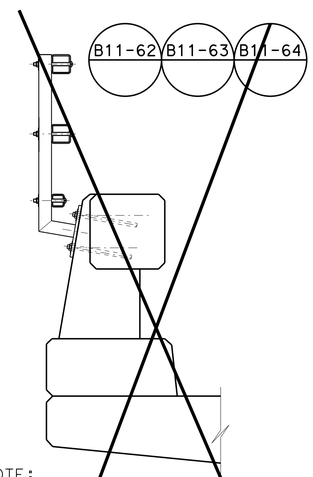

NOTE:
For details not shown, see "TYPE 732 OR 736"

TYPE 80
1" = 1'-0"
1

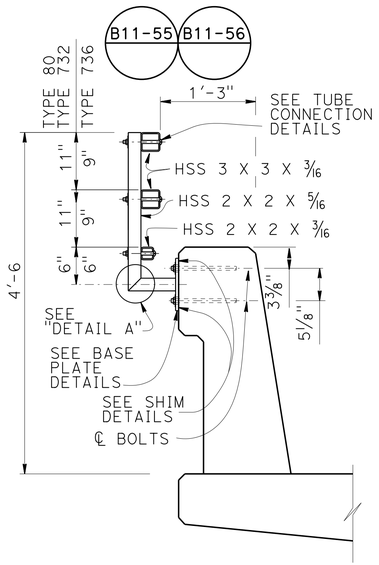

TYPE 732 OR 736
1" = 1'-0"

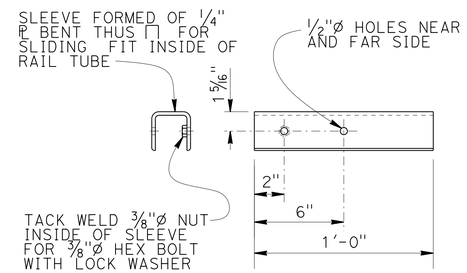

SLEEVE DETAIL
NO SCALE

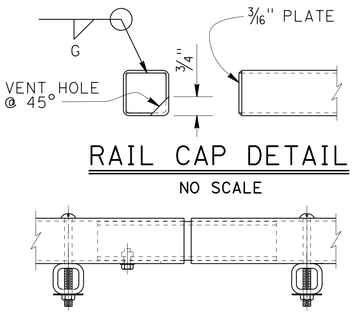

RAIL CAP DETAIL
NO SCALE

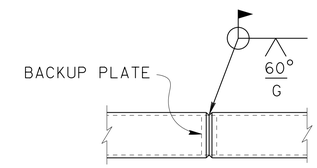

WELDED SPLICE DETAIL
NO SCALE

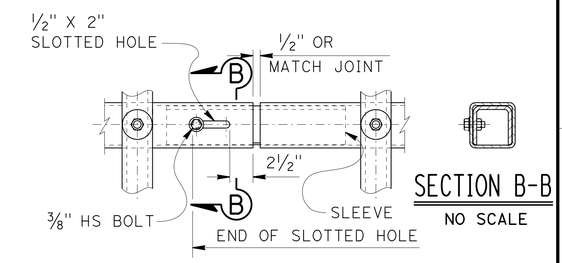

TUBE EXPANSION JOINT DETAILS
NO SCALE

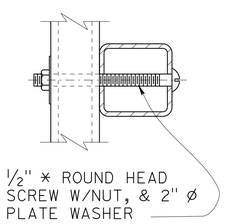

TUBE CONNECTION DETAIL
NO SCALE

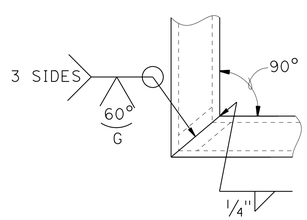

DETAIL A
NO SCALE
2

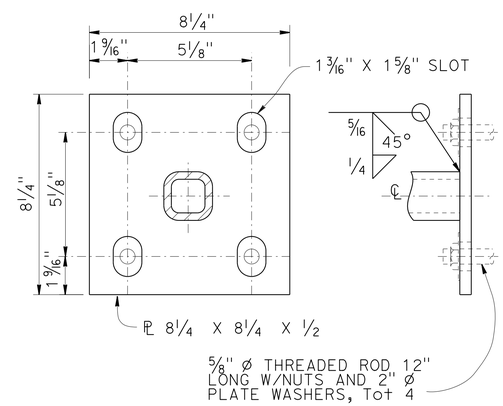

BASE PLATE DETAIL
NO SCALE

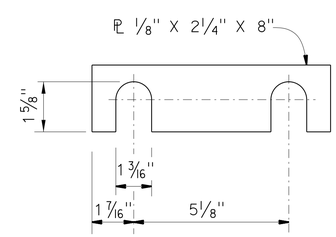

SHIM DETAILS
NO SCALE

NOTES:

1. Post must be normal to railing.
2. Rail tubes must be shop bent or fabricated to fit horizontal curve when radius is less than 950'.
3. Tube expansion joints must be located in the tubes spanning deck or wall joints. Increase joint width in tubes to match expansion joint width and increase sleeve length correspondingly.
4. Top rail tube must be continuous over not less than two posts except a short post spacing is permitted near deck or wall joints, electroliers, or other rail discontinuities as noted.
5. See Project Plans for limits of tubular bicycle railing.

NOTE:
THE CONTRACTOR SHALL VERIFY ALL CONTROLLING FIELD DIMENSIONS BEFORE ORDERING OR FABRICATING ANY MATERIAL.

MODIFIED
STANDARD DRAWING
FILE NO. xs16-035
APPROVAL DATE October 2014

1 DELETED DETAIL
2 MODIFIED DETAIL

STATE OF CALIFORNIA
DEPARTMENT OF TRANSPORTATION

DIVISION OF ENGINEERING SERVICES

BRIDGE NO. 41-0040
POST MILE 0.08

SPECIAL DETAILS
SAN JOAQUIN RIVER OVERFLOW
CONCRETE BARRIER TYPE 80, 732 & 736
TUBULAR BICYCLE RAILING DETAILS

DS OSD 2147A (ENGLISH STANDARD DRAWING "XS" BORDER REV. (02-02-11)

ORIGINAL SCALE IN INCHES FOR REDUCED PLANS 0 1 2 3

UNIT: 3594
PROJECT NUMBER & PHASE: 06-1200-0114-1 CONTRACT NO.: 06-0N9904

DISREGARD PRINTS BEARING EARLIER REVISION DATES

REVISION DATES: 2-10-16 10-14-14 5-21-15 9-15-15
SHEET 7 OF 7

FILE => 41-0040xs16-035[1].dgn

USERNAME => s113541 DATE PLOTTED => 18-MAY-2016 TIME PLOTTED => 11:32

NOTES:

1. SCOUR MITIGATION
2. HINGE RETROFIT
3. CLEAN EXPANSION JOINTS AND PLACE NEW JOINT SEALS (MR 2")
4. REMOVE UNSOUND CONCRETE AND REPAIR WITH RAPID SETTING CONCRETE (PATCH)
5. REMOVE CHIP SEAL

LEGEND:

- Limits of bridge removal (Portion)
- Limits of remove chip seal
- Indicates existing structure
- Indicates new structure
- Low water elevation

DIST	COUNTY	ROUTE	POST MILES TOTAL PROJECT	SHEET No.	TOTAL SHEETS
06	Fre,Mad	41U	33.1/33.4, 0.0/0.3	93	113

Evan M. Franciliso 2-26-16
REGISTERED CIVIL ENGINEER DATE

3-7-16
PLANS APPROVAL DATE

REGISTERED PROFESSIONAL ENGINEER
EVAN FRANCILISO
No. C66343
Exp. 6-30-2016
CIVIL
STATE OF CALIFORNIA

The State of California or its officers or agents shall not be responsible for the accuracy or completeness of scanned copies of this plan sheet.

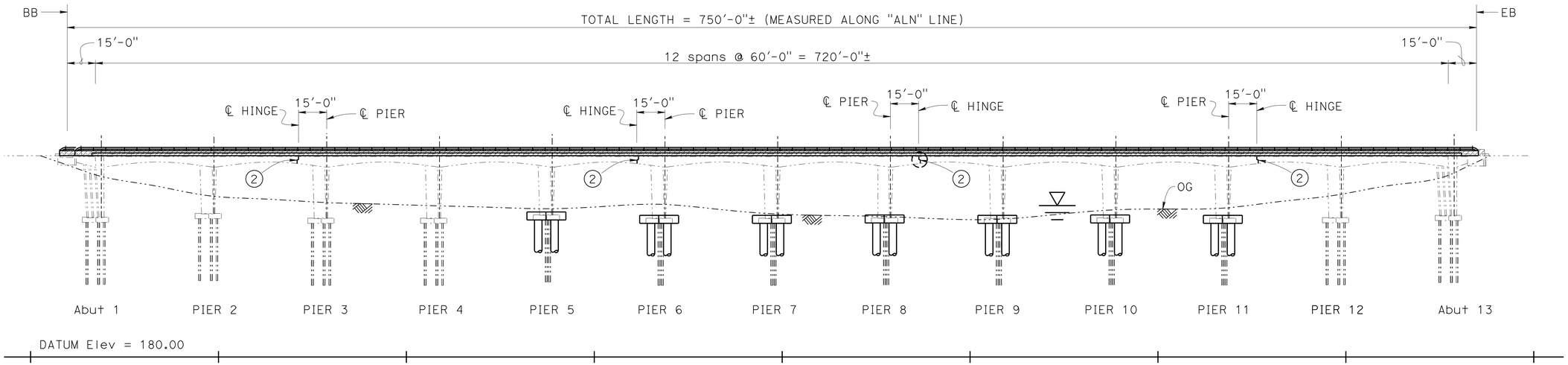

ELEVATION

1" = 30'

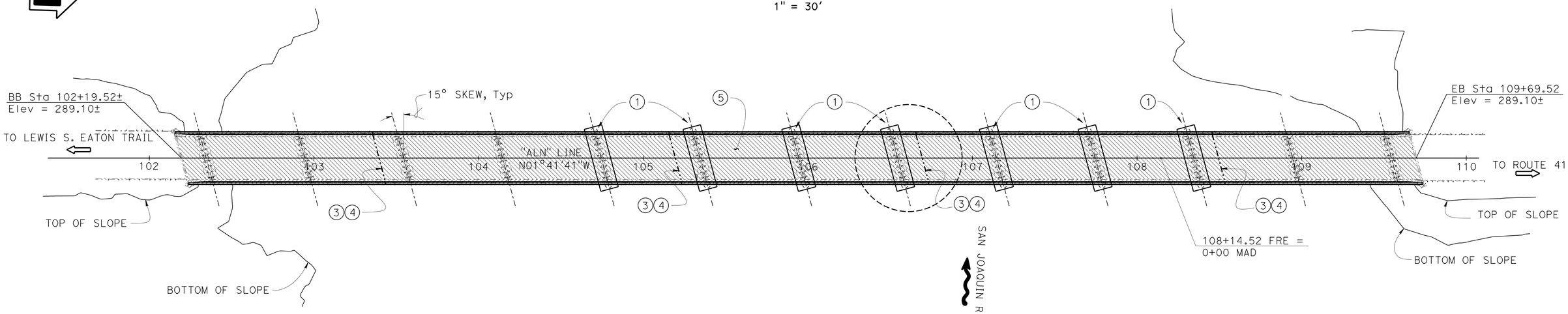

PLAN

1" = 30'

NOTE:
THE CONTRACTOR SHALL VERIFY ALL CONTROLLING FIELD DIMENSIONS BEFORE ORDERING OR FABRICATING ANY MATERIAL.

SAN JOAQUIN RIVER BRIDGE

SEISMIC RETROFIT AND SCOUR COUNTERMEASURE

GENERAL PLAN NO. 1

RICHARD MELKO
DESIGN ENGINEER

	BY	CHECKED
DESIGN	EVAN FRANCILISO	KIM MORI
DETAILS	DAVID ELLIOTT	EVAN FRANCILISO
QUANTITIES	EVAN FRANCILISO	KIM MORI

LOAD FACTOR DESIGN — LIVE LOADING: H20 OR M18 AND PERMIT DESIGN LOAD

	BY	CHECKED
LAYOUT	EVAN FRANCILISO	KIM MORI
SPECIFICATIONS	MICHAEL KETELTAS	PLANS AND SPECS COMPARED JIM CORRADO

ORIGINAL SCALE IN INCHES FOR REDUCED PLANS 0 1 2 3

STATE OF CALIFORNIA
DEPARTMENT OF TRANSPORTATION

DIVISION OF ENGINEERING SERVICES
STRUCTURE ~~DESIGN~~
DESIGN BRANCH 9

BRIDGE NO. 42-0112
POST MILE 33.34

UNIT: 3594
PROJECT NUMBER & PHASE: 0612000114-1
CONTRACT NO.: 06-0N9904

DISREGARD PRINTS BEARING EARLIER REVISION DATES

REVISION DATES: 11-4-15 11-14-15 11-20-15 2-10-16

SHEET 1 OF 21

USERNAME => s113541 DATE PLOTTED => 18-MAY-2016 TIME PLOTTED => 11:32

STRUCTURES DESIGN GENERAL PLAN SHEET (ENGLISH) (REV.09-01-10)

FILE => 42-0112-a-gp1.dgn

DIST	COUNTY	ROUTE	POST MILES TOTAL PROJECT	SHEET No.	TOTAL SHEETS
06	Fre,Mad	41U	33.1/33.4, 0.0/0.3	94	113

Evan M. Franciliso 2-26-16
REGISTERED CIVIL ENGINEER DATE

3-7-16
PLANS APPROVAL DATE

REGISTERED PROFESSIONAL ENGINEER EVAN FRANCILISO No. C66343 Exp. 6-30-2016 CIVIL STATE OF CALIFORNIA

The State of California or its officers or agents shall not be responsible for the accuracy or completeness of scanned copies of this plan sheet.

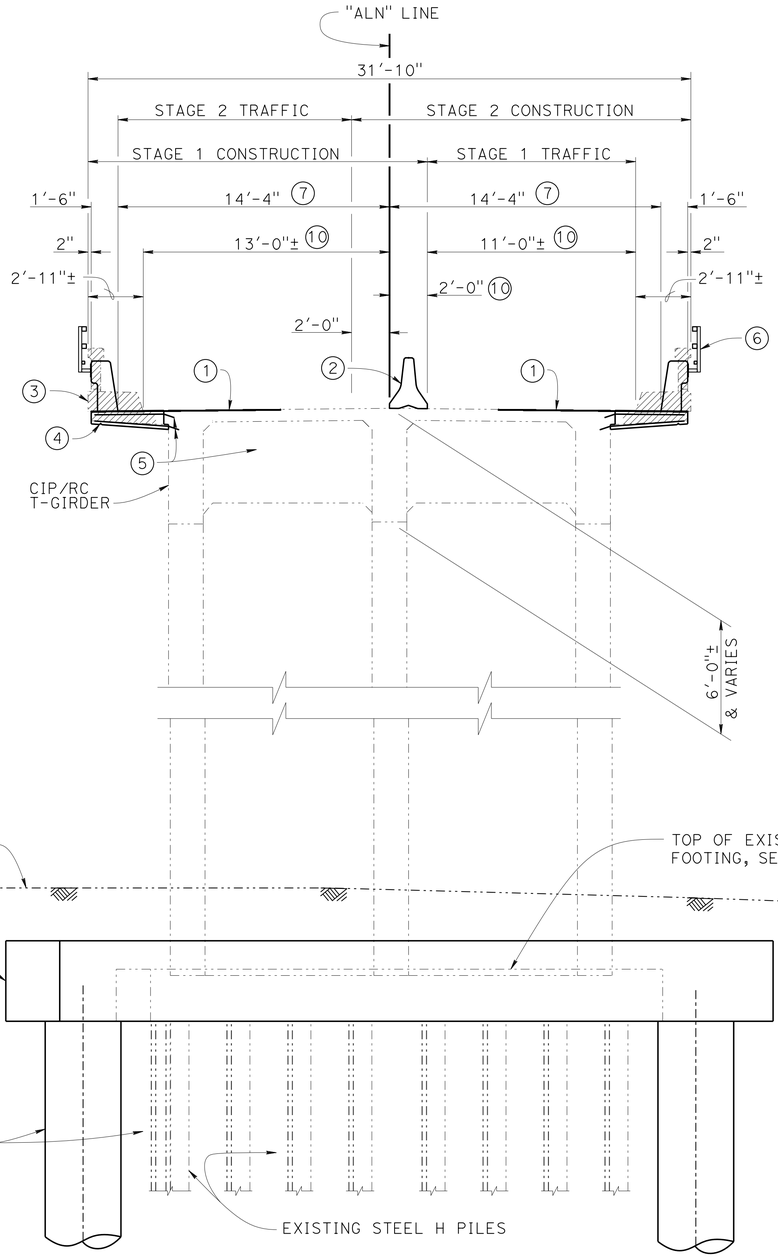

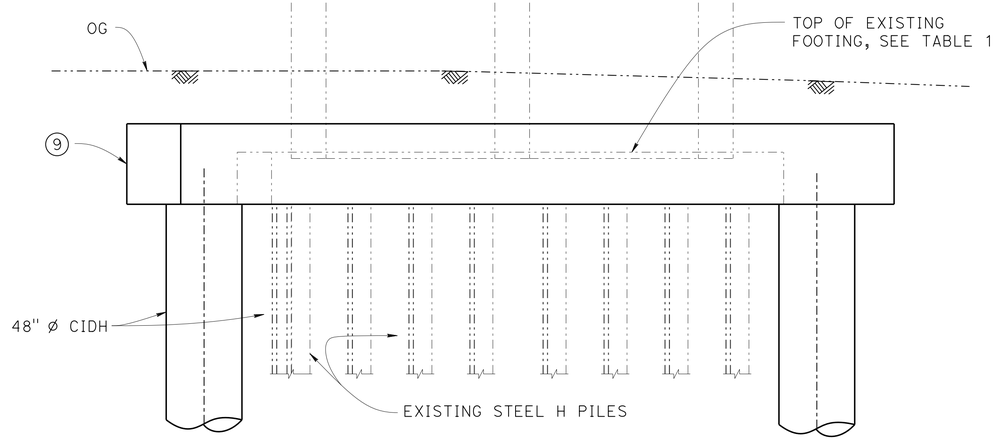

TABLE 1

LOCATION	APPROXIMATE TOP OF EXISTING FOOTING ELEVATION (Ft) (NAVD88)
ABUT 1	256.4±
PIER 2	258.4±
PIER 3	255.9±
PIER 4	255.9±
PIER 5	257.7±
PIER 6	255.9±
PIER 7	255.9±
PIER 8	256.1±
PIER 9	255.9±
PIER 10	256.1±
PIER 11	255.9±
PIER 12	256.2±
ABUT 13	257.4±

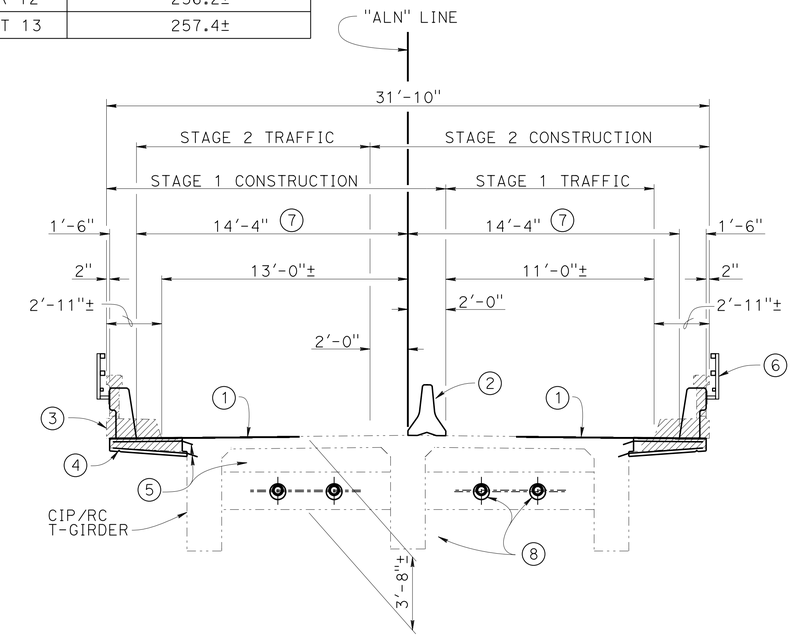

TYPICAL SECTION @ HINGE

1/4" = 1'-0"

NOTE: Move Temporary Railing (Type K) 2 feet to the left for Stage 2 Construction.

LEGEND:

- Limits of bridge removal (Portion)
- Indicates existing structure
- Indicates new structure

NOTES:

1. Carbon fiber reinforced polymer strip
2. Temporary railing (Type K), see "ROADWAY PLANS"
3. Remove existing bridge railing, curb and overhang
4. Concrete overhang
5. Drill and bond dowel
6. Concrete barrier (Type 732 Modified) With Tubular Bicycle Railing
7. Prepare concrete bridge deck surface, furnish and place 3/4" polyester concrete overlay
8. Hinge retrofit, pipe seat extender with concrete bolsters
9. Scour mitigation
10. Remove chip seal

TYPICAL SECTION @ PIERS

1/4" = 1'-0"

NOTE: Move Temporary Railing (Type K) 2 feet to the left for Stage 2 Construction.

NOTE:
THE CONTRACTOR SHALL VERIFY ALL CONTROLLING FIELD DIMENSIONS BEFORE ORDERING OR FABRICATING ANY MATERIAL.

RICHARD MELKO
DESIGN ENGINEER

	BY	CHECKED
DESIGN	EVAN FRANCILISO	KIM MORI
DETAILS	DAVID ELLIOTT	EVAN FRANCILISO
QUANTITIES	EVAN FRANCILISO	KIM MORI

LOAD FACTOR DESIGN — LIVE LOADING: H20 OR M18 AND PERMIT DESIGN LOAD

	BY	CHECKED
LAYOUT	EVAN FRANCILISO	KIM MORI
SPECIFICATIONS	MICHAEL KETELTAS	PLANS AND SPECS COMPARED X

ORIGINAL SCALE IN INCHES FOR REDUCED PLANS 0 1 2 3

STATE OF CALIFORNIA
DEPARTMENT OF TRANSPORTATION

DIVISION OF ENGINEERING SERVICES
STRUCTURE ~~DESIGN~~
DESIGN BRANCH 9

BRIDGE NO. 42-0112
POST MILE 33.34

SAN JOAQUIN RIVER BRIDGE

SEISMIC RETROFIT AND SCOUR COUNTERMEASURE

GENERAL PLAN NO. 2

UNIT: 3594
PROJECT NUMBER & PHASE: 0612000114-1
CONTRACT NO.: 06-0N9904

DISREGARD PRINTS BEARING EARLIER REVISION DATES

REVISION DATES: 2-10-16 9-28-15 9-28-15 11-4-15

SHEET 2 OF 21

USERNAME => s113541 DATE PLOTTED => 18-MAY-2016 TIME PLOTTED => 11:32

STRUCTURES DESIGN GENERAL PLAN SHEET (ENGLISH) (REV.09-01-10)

FILE => 42-0112-a-gp2.dgn

DIST	COUNTY	ROUTE	POST MILES TOTAL PROJECT	SHEET No.	TOTAL SHEETS
06	Fre,Mad	41U	33.1/33.4, 0.0/0.3	95	113

Evan M. Franciliso 2-26-16
REGISTERED CIVIL ENGINEER DATE

3-7-16
PLANS APPROVAL DATE

REGISTERED PROFESSIONAL ENGINEER EVAN FRANCILISO No. C66343 Exp. 6-30-2016 CIVIL STATE OF CALIFORNIA

The State of California or its officers or agents shall not be responsible for the accuracy or completeness of scanned copies of this plan sheet.

STANDARD PLANS DATED MAY 2010

STANDARD PLAN SHEET NUMBER
DETAIL NUMBER

	A10A	ABBREVIATIONS (SHEET 1 OF 2)
RSP -	A10B	ABBREVIATIONS (SHEET 2 OF 2)
	A10C	LINES AND SYMBOLS (SHEET 1 OF 3)
	A10D	LINES AND SYMBOLS (SHEET 2 OF 3)
	A10E	LINES AND SYMBOLS (SHEET 3 OF 3)
RSP -	A10F	LEGEND - SOIL (SHEET 1 OF 2)
RSP -	A10G	LEGEND - SOIL (SHEET 1 OF 2)
	A10H	LEGEND - ROCK
	A62C	LIMITS OF PAYMENT FOR EXCAVATION AND BACKFILL BRIDGE
RSP -	A77U1	MIDWEST GUARDRAIL SYSTEM - CONNECTIONS TO BRIDGE RAILING WITHOUT SIDEWALK DETAILS NO. 1
RSP -	A77U2	MIDWEST GUARDRAIL SYSTEM - CONNECTIONS TO BRIDGE RAILING WITHOUT SIDEWALK DETAILS NO. 2
RSP -	A77U4	MIDWEST GUARDRAIL SYSTEM - TRANSITIONS RAILING (TYPE WB-31)
RSP -	B6-21	JOINT SEALS (MAXIMUM MOVEMENT RATING = 2")
RSP -	B11-55	CONCRETE BARRIER TYPE 732

INDEX TO PLANS

1 GENERAL PLAN NO. 1
2 GENERAL PLAN NO. 2
3 INDEX TO PLANS
4 FOUNDATION PLAN NO. 1
5 FOUNDATION PLAN NO. 2
6 REMOVAL DETAILS
7 EXCAVATION AND BACKFILL DETAILS NO. 1
8 EXCAVATION AND BACKFILL DETAILS NO. 2
9 PIER FOOTING LAYOUT
10 PIER FOOTING DETAILS
11 CIDH PILE DETAILS
12 HINGE RETROFIT DETAILS NO. 1
13 HINGE RETROFIT DETAILS NO. 2
14 OVERHANG AND BARRIER DETAILS NO. 1
15 OVERHANG AND BARRIER DETAILS NO. 2
16 CARBON FIBER REINFORCED POLYMER
17 PIPE EXTENDER/ SHEAR KEY DETAILS (RETROFIT)
18 TUBULAR BYCYCLE RAILING DETAILS
19 LOG OF TEST BORINGS 1 OF 3
20 LOG OF TEST BORINGS 2 OF 3
21 LOG OF TEST BORINGS 3 OF 3

QUANTITIES

PUBLIC SAFETY PLAN	LUMP SUM	
RAPID SETTING CONCRETE (PATCH)	7	CF
REMOVE UNSOUND CONCRETE	7	CF
PREPARE CONCRETE BRIDGE DECK SURFACE	21,500	SQFT
FURNISH POLYESTER CONCRETE OVERLAY	1,344	CF
PLACE POLYESTER CONCRETE OVERLAY	21,500	SQFT
REMOVE CHIP SEAL	18,625	SQFT
CARBON FIBER REINFORCED POLYMER STRIP	8,288	LF
CORE CONCRETE (10")	48	LF
BRIDGE REMOVAL (PORTION), LOCATION A	LUMP SUM	
STRUCTURE EXCAVATION (BRIDGE)	624	CY
STRUCTURE EXCAVATION (TYPE D)	89	CY
48" CAST-IN-DRILLED-HOLE CONCRETE PILING	730	LF
STRUCTURAL CONCRETE, BRIDGE FOOTING	325	CY
STRUCTURAL CONCRETE, BRIDGE	178	CY
DIAPHRAGM BOLSTER	16	EA
DRILL AND BOND DOWEL	2,326	LF
CLEAN EXPANSION JOINT	132	LF
JOINT SEAL (MR 2")	132	LF
BAR REINFORCING STEEL (BRIDGE)	202,578	LB
MISCELLANEIOUS METAL (PIPE EXTENDER)	10,368	LB
TUBULAR BICYCLE RAILING	1,500	LF
CONCRETE BARRIER (TYPE 732 MODIFIED)	1,500	LF

NOTE:
THE CONTRACTOR SHALL VERIFY ALL CONTROLLING FIELD DIMENSIONS BEFORE ORDERING OR FABRICATING ANY MATERIAL.

GENERAL NOTES
LOAD FACTOR DESIGN

DESIGN:
Bridge Design Specifications
('96 AASHTO w/Revisions by Caltrans)

SEISMIC DESIGN:
Caltrans Seismic Design Criteria (SDC), Version 1.7 dated APRIL 2013

LIVE LOADING:
HS20-44 and alternative and permit design load.

SEISMIC LOADING:
V_{s30} = 300 m/sec
M_{max} = 7.9
PGA = 0.21 g
See "Site Specific ARS Curve"

CONCRETE:
fy = 60 ksi
f'c = 3.6 ksi
n = 8

MISCELLANEOUS METAL:
Steel Pipe:
fy = 35 ksi

CARBON FIBER REINFORCED POLYMER:
Minimum Tensile Strength = 285 ksi
Minimum Modulus of Elasticity = 18,000 ksi
Effective Cross Sectional Area = 0.11 in²

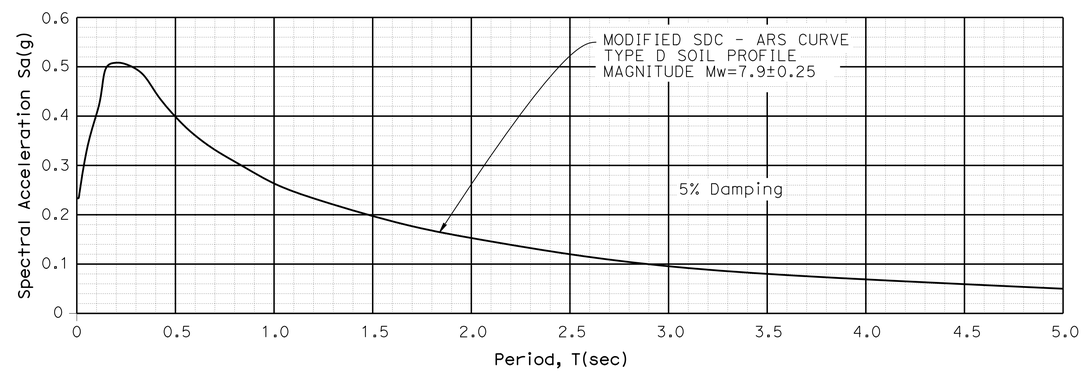

SITE SPECIFIC ACCELERATION RESPONSE SPECTRA CURVE

No Scale

LEGEND:
Limits of bridge removal (Portion)
Indicates existing structure
Indicates new structure

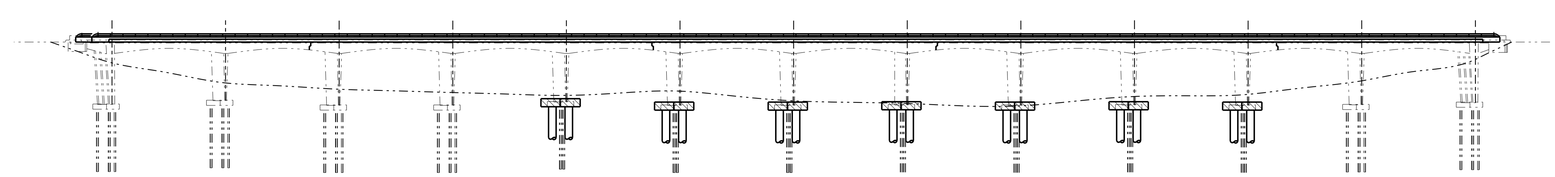

Structural Concrete, Bridge (4.0 ksi @ 28 DAYS)
Structural Concrete, Bridge Footing (3.6 ksi @ 28 DAYS)

CONCRETE STRENGTH AND TYPE LIMITS

No Scale

SAN JOAQUIN RIVER BRIDGE

SEISMIC RETROFIT AND SCOUR COUNTERMEASURE

INDEX TO PLANS

	BY	CHECKED
DESIGN	EVAN FRANCILISO	KIM MORI
DETAILS	DAVID ELLIOTT	EVAN FRANCILISO
QUANTITIES	EVAN FRANCILISO	KIM MORI

STATE OF CALIFORNIA
DEPARTMENT OF TRANSPORTATION

DIVISION OF ENGINEERING SERVICES
STRUCTURE DESIGN
DESIGN BRANCH 9

BRIDGE NO. 42-0112
POST MILE 33.34

STRUCTURES DESIGN DETAIL SHEET (ENGLISH) (REV. 09-01-10)

ORIGINAL SCALE IN INCHES FOR REDUCED PLANS 0 1 2 3

UNIT: 3594
PROJECT NUMBER & PHASE: 0612000114-1
CONTRACT NO.: 06-0N9904

DISREGARD PRINTS BEARING EARLIER REVISION DATES

REVISION DATES 7-28-15 9-22-15 9-28-15 2-10-16

SHEET 3 OF 21

FILE => 42-0112-a-itp.dgn

USERNAME => s173541 DATE PLOTTED => 18-MAY-2016 TIME PLOTTED => 11:32

NOTE:
THE CONTRACTOR SHALL VERIFY ALL CONTROLLING FIELD DIMENSIONS BEFORE ORDERING OR FABRICATING ANY MATERIAL.

DIST	COUNTY	ROUTE	POST MILES TOTAL PROJECT	SHEET No.	TOTAL SHEETS
06	Fre,Mad	41U	33.1/33.4, 0.0/0.3	96	113

Evan M. Franciliso 2-26-16
REGISTERED CIVIL ENGINEER DATE

3-7-16
PLANS APPROVAL DATE

REGISTERED PROFESSIONAL ENGINEER
EVAN FRANCILISO
No. C66343
Exp. 6-30-2016
CIVIL
STATE OF CALIFORNIA

The State of California or its officers or agents shall not be responsible for the accuracy or completeness of electronic copies of this plan sheet.

SOFFIT ELEVATIONS (FOUNDATION PLAN No 1)

1	288.39	11	285.16	21	284.90	31	283.03	41	285.63	51	282.90
2	282.93	12	285.62	22	288.35	32	284.78	42	284.61	52	282.96
3	288.38	13	288.37	23	283.00	33	288.42	43	288.39	53	283.01
4	285.16	14	284.95	24	282.94	34	285.63	44	282.99	54	282.96
5	285.61	15	283.02	25	285.02	35	284.99	45	283.02		
6	288.38	16	288.34	26	288.38	36	288.37	46	283.11		
7	284.91	17	282.95	27	285.61	37	282.99	47	283.04		
8	283.05	18	285.06	28	284.92	38	283.08	48	283.10		
9	282.98	19	285.61	29	288.38	39	284.85	49	282.91		
10	288.34	20	288.35	30	283.03	40	288.37	50	282.93		

NOTE:
1. All bent locations are approximate (±).

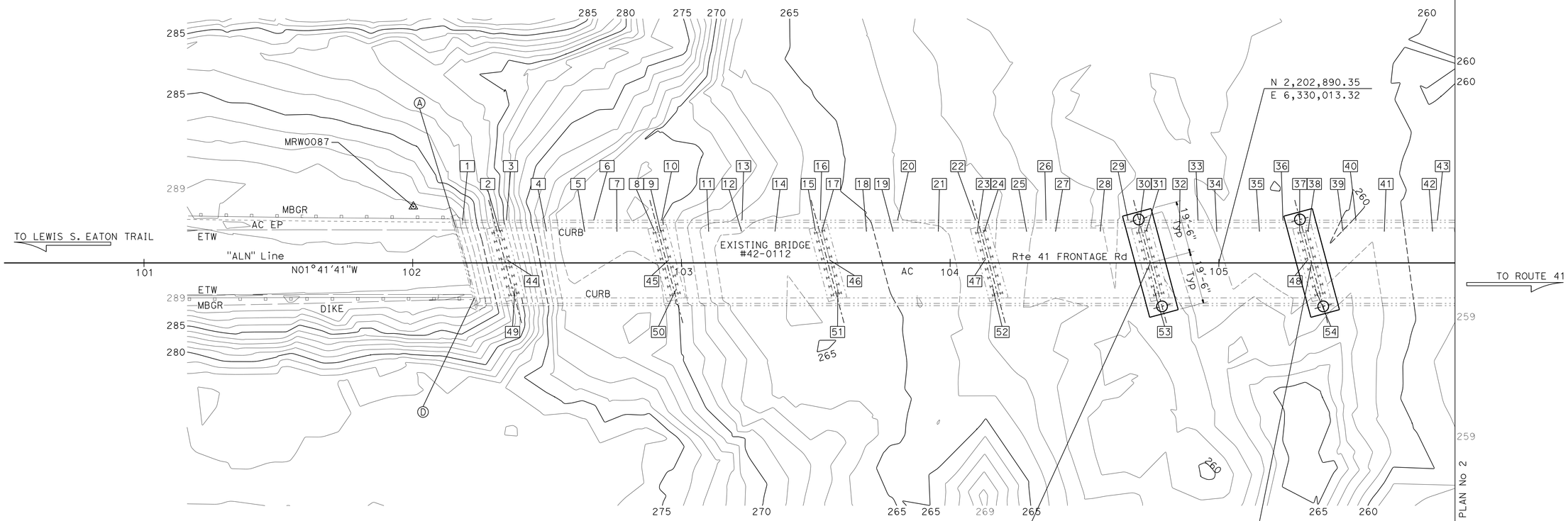

PILE DATA TABLE

Support No.	Pile Type	Nominal Resistance (kips)		Cutoff Elevation (Ft)	Design Tip Elevations (Ft)	Specified Tip Elevation (Ft)
		Compression	Tension			
Piers 5-11	48" CIDH	1340	0	253.8-255.6	202.0 (a) 216.0 (c) 223.5 (d)	202.0

NOTES: 1) Design tip elevations are controlled by:
(a) Compression (Strenght Limit)
(c) Settlement
(d) Lateral

2) The CIDH specified tip elevations shall not be raised.

SURVEY CONTROL

MRW0087
Fnd 1" IP w/RCTP
21.00 Ft Lt "ALN" LINE
Sta 102+00.24
N 2,202,590.09
E 6,330,001.20
Elev = 288.13

MRW0090 (Shown on Foundation Plan No 2)
Fnd 1" IP w/RCTP
61.86 Ft Lt "ALN" LINE
Sta 108+93.07
N 2,203,281.41
E 6,329,939.86
Elev = 279.99

Bridge Location # 42-0112
Ⓐ - 13.12 Lt "ALN" LINE, Sta 102+16.03, Elev=288.93 ±
Ⓑ - 13.03 Lt "ALN" LINE, Sta 109+66.15, Elev=288.91 ±
Ⓒ - 13.07 Rt "ALN" LINE, Sta 109+73.04, Elev=288.95 ±
Ⓓ - 12.94 Rt "ALN" LINE, Sta 102+23.01, Elev=288.92 ±

SAN JOAQUIN RIVER BRIDGE
SEISMIC RETROFIT AND SCOUR COUNTERMEASURE
FOUNDATION PLAN NO 1

PRELIMINARY INVESTIGATION SECTION

SCALE	VERT.DATUM NAVD88	PHOTOGRAMMETRY AS OF: X			
1"=20'	HORZ.DATUM NAD83 (2010.16)	SURVEYED	BY DISTRICT	CHECKED	BY C. FASSETT 02/2015
ALIGNMENT TIES Dist TRAVERSE SHEET		DRAFTED	BY L. YOUNG 02/2015	CHECKED	BY S. SOU 02/2015

DESIGN	BY EVAN FRANCILISO	CHECKED KIM MORI
DETAILS	BY DAVID ELLIOTT	CHECKED EVAN FRANCILISO
QUANTITIES	BY EVAN FRANCILISO	CHECKED KIM MORI

STATE OF CALIFORNIA
DEPARTMENT OF TRANSPORTATION

DIVISION OF ENGINEERING SERVICES
STRUCTURE DESIGN
DESIGN BRANCH 9

BRIDGE NO. 42-0112
POST MILE 33.4

STRUCTURES FOUNDATION PLAN SHEET (ENGLISH) (REV. 09-01-10)

ORIGINAL SCALE IN INCHES FOR REDUCED PLANS 0 1 2 3

UNIT: 3646
PROJECT NUMBER & PHASE: 0612000114-1
CONTRACT NO.: 06-0N9904

SUBMITTAL DATE	REVISION DATES				SHEET	OF
2/9/2015	11-20-15	2-10-16	9-23-15	10-1-15	4	21

FILE => 42-0112-e-fp1.dgn

USERNAME => s113541 DATE PLOTTED => 18-MAY-2016 TIME PLOTTED => 11:32

DIST	COUNTY	ROUTE	POST MILES TOTAL PROJECT	SHEET No.	TOTAL SHEETS
06	Fre,Mad	41U	33.1/33.4, 0.0/0.3	97	113

Evan M. Franciliso 2-26-16
REGISTERED CIVIL ENGINEER DATE

3-7-16
PLANS APPROVAL DATE

REGISTERED PROFESSIONAL ENGINEER EVAN FRANCILISO No. C66343 Exp. 6-30-2016 CIVIL STATE OF CALIFORNIA

The State of California or its officers or agents shall not be responsible for the accuracy or completeness of electronic copies of this plan sheet.

NOTES:

1. For "PILE DATA TABLE", see "FOUNDATION PLAN NO. 1" sheet.
2. All bent locations are approximate (±).

SOFFIT ELEVATIONS (FOUNDATION PLAN No 2)

55 - 283.07	65 - 284.95	75 - 282.95	85 - 284.76	95 - 283.14	105 - 282.96
56 - 283.21	66 - 285.65	76 - 284.89	86 - 283.04	96 - 283.09	106 - 282.99
57 - 288.42	67 - 288.38	77 - 285.60	87 - 288.36	97 - 283.02	
58 - 285.12	68 - 284.74	78 - 284.93	88 - 282.98	98 - 285.10	
59 - 285.62	69 - 282.96	79 - 282.92	89 - 285.03	99 - 283.03	
60 - 284.63	70 - 288.37	80 - 282.94	90 - 285.59	100 - 285.12	
61 - 288.38	71 - 285.20	81 - 288.38	91 - 288.40	101 - 283.03	
62 - 283.01	72 - 285.59	82 - 285.27	92 - 285.02	102 - 283.14	
63 - 283.23	73 - 288.36	83 - 285.57	93 - 288.40	103 - 282.97	
64 - 288.38	74 - 284.78	84 - 288.37	94 - 283.02	104 - 282.92	

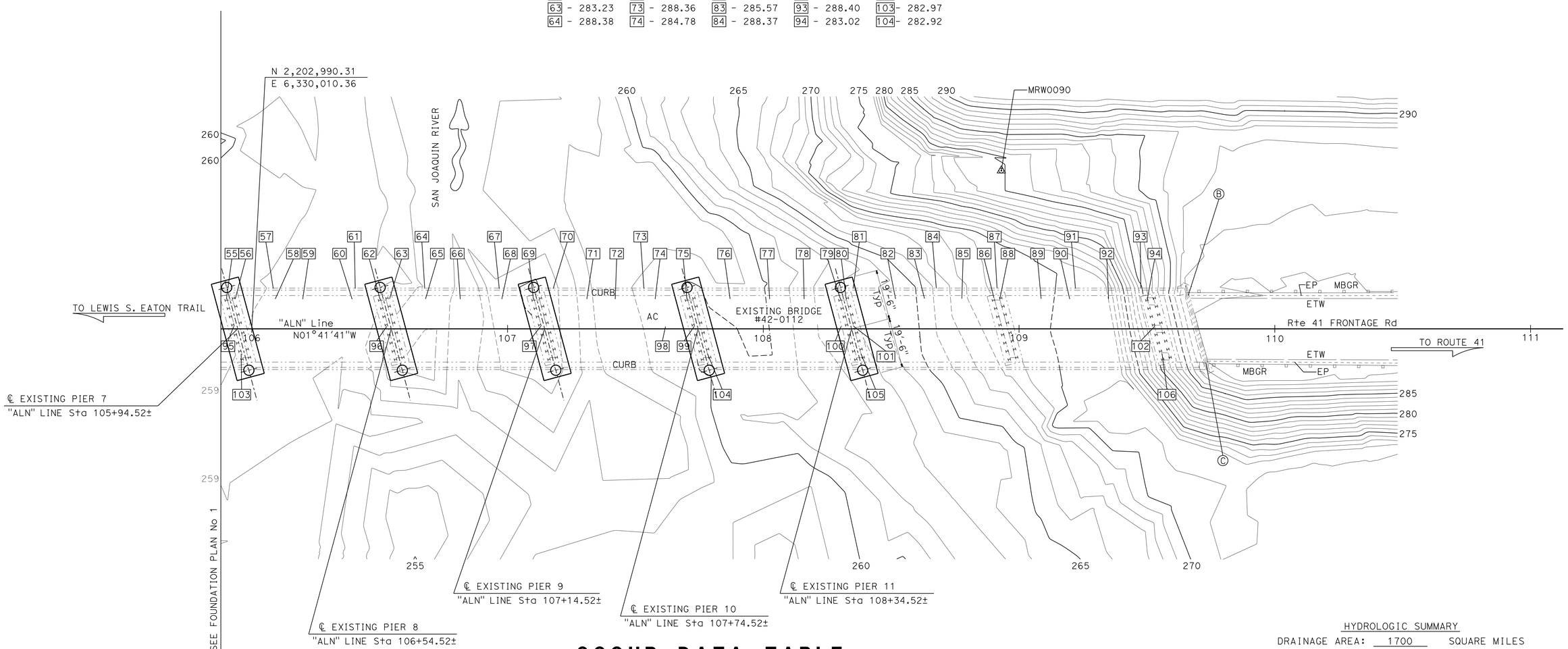

SCOUR DATA TABLE

SUPPORT NO.	LONG TERM (DEGRADATION AND CONTRACTION) SCOUR ELEVATION (FT)	SHORT TERM (LOCAL) SCOUR DEPTH (FT)
ABUTMENT 1	N/A	N/A
PIER 2	262.2	4.3
PIER 3	255.4	5.4
PIER 4	253.5	5.9
PIER 5	251.9	8.0
PIER 6	253.9	8.0
PIER 7	249.9	8.0

SUPPORT NO.	LONG TERM (DEGRADATION AND CONTRACTION) SCOUR ELEVATION (FT)	SHORT TERM (LOCAL) SCOUR DEPTH (FT)
PIER 8	246.6	8.0
PIER 9	245.9	8.0
PIER 10	250.6	12.5
PIER 11	252.4	10.0
PIER 12	258.0	9.5
ABUTMENT 13	N/A	N/A

HYDROLOGIC SUMMARY

DRAINAGE AREA: 1700 SQUARE MILES

	MAX DAILY RELEASE	ALLOWED BASE FLOOD	ORDINARY HIGHWATER ESTIMATE
FREQUENCY (YEARS)	50	100	x
EXISTING WATER SURFACE ELEV. (FEET)	272.0	277.1	x
DISCHARGE (CUBIC FEET PER SECOND)	33,000	70,000	x

FLOOD PLAIN DATA ARE BASED UPON INFORMATION AVAILABLE WHEN THE PLANS WERE PREPARED AND ARE SHOWN TO MEET FEDERAL REQUIREMENTS. THE ACCURACY OF SAID INFORMATION IS NOT WARRANTED BY THE STATE AND INTERESTED OR AFFECTED PARTIES SHOULD MAKE THEIR OWN INVESTIGATIONS.

NOTE:
THE CONTRACTOR SHALL VERIFY ALL CONTROLLING FIELD DIMENSIONS BEFORE ORDERING OR FABRICATING ANY MATERIAL.

SAN JOAQUIN RIVER BRIDGE

SEISMIC RETROFIT AND SCOUR COUNTERMEASURE

FOUNDATION PLAN NO 2

PRELIMINARY INVESTIGATION SECTION

SCALE 1"=20'	VERT.DATUM NAVD88	PHOTOGRAMMETRY AS OF: X		
HORZ.DATUM NAD83 (2010.16)	SURVEYED	BY DISTRICT	CHECKED	BY C. FASSETT 02/2015
ALIGNMENT TIES Dist TRAVERSE SHEET	DRAFTED	BY L. YOUNG 02/2015	CHECKED	BY S. SOU 02/2015

DESIGN	BY EVAN FRANCILISO	CHECKED KIM MORI
DETAILS	BY DAVID ELLIOTT	CHECKED EVAN FRANCILISO
QUANTITIES	BY EVAN FRANCILISO	CHECKED KIM MORI

STATE OF CALIFORNIA
DEPARTMENT OF TRANSPORTATION

DIVISION OF ENGINEERING SERVICES
STRUCTURE DESIGN
DESIGN BRANCH 9

BRIDGE NO. 42-0112
POST MILE 33.4

STRUCTURES FOUNDATION PLAN SHEET (ENGLISH) (REV. 09-01-10)

ORIGINAL SCALE IN INCHES FOR REDUCED PLANS 0 1 2 3

UNIT: 3646
PROJECT NUMBER & PHASE: 0612000114-1
CONTRACT NO.: 06-0N9904

SUBMITTAL DATE	REVISION DATES				SHEET	OF
2/9/2015	11-4-15	2-10-16	9-23-15	10-1-15	5	21

FILE => 42-0112-e-fp2.dgn

USERNAME => S113541 DATE PLOTTED => 18-MAY-2016 TIME PLOTTED => 11:33

DIST	COUNTY	ROUTE	POST MILES TOTAL PROJECT	SHEET No.	TOTAL SHEETS
06	Fre,Mad	41U	33.1/33.4, 0.0/0.3	98	113

Evan M. Franciliso 2-26-16
REGISTERED CIVIL ENGINEER DATE

3-7-16
PLANS APPROVAL DATE

REGISTERED PROFESSIONAL ENGINEER
EVAN FRANCILISO
No. C66343
Exp. 6-30-2016
CIVIL
STATE OF CALIFORNIA

The State of California or its officers or agents shall not be responsible for the accuracy or completeness of scanned copies of this plan sheet.

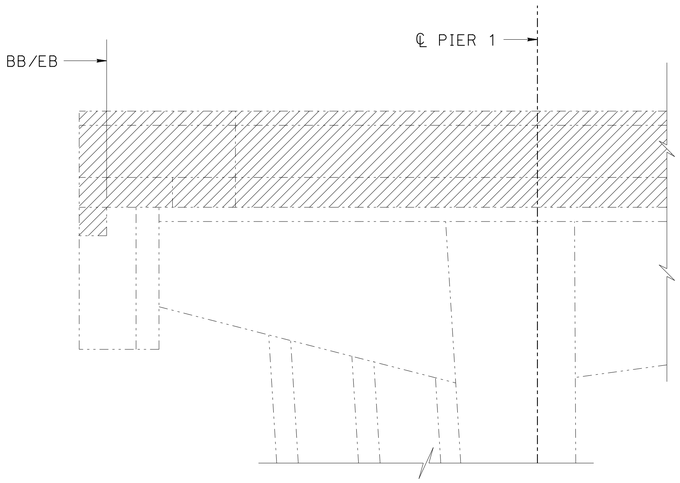

PART ELEVATION - REMOVAL

½" = 1'-0"

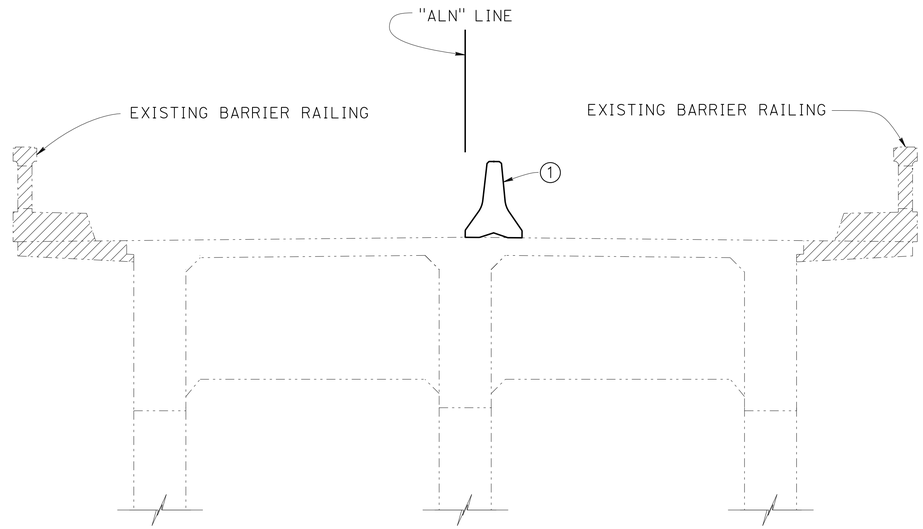

TYPICAL SECTION AT BENTS

½" = 1'-0"

NOTE:

1. Existing transverse reinforcement to remain undamaged.

LEGEND:

- Indicates existing structure
- Indicates new structure
- Bridge removal (Portion)
- (1) Temporary railing (Type K), see "ROADWAY PLANS"

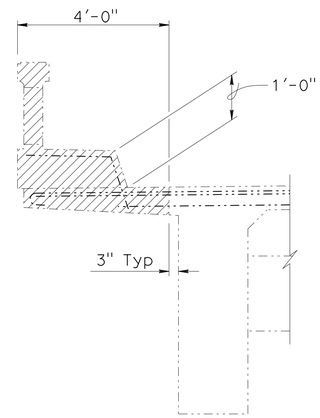

SECTION AT SPAN

½" = 1'-0"

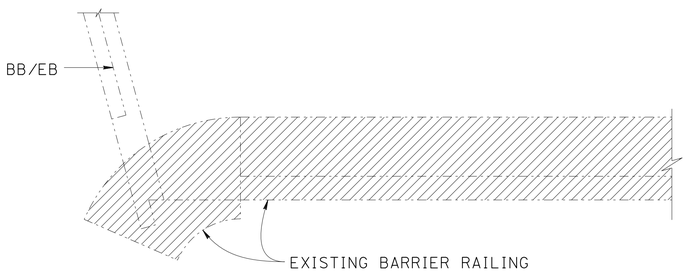

PART PLAN - REMOVAL

½" = 1'-0"

NOTE: Right side existing barrier railing removed, similar on left side of existing barrier railing.

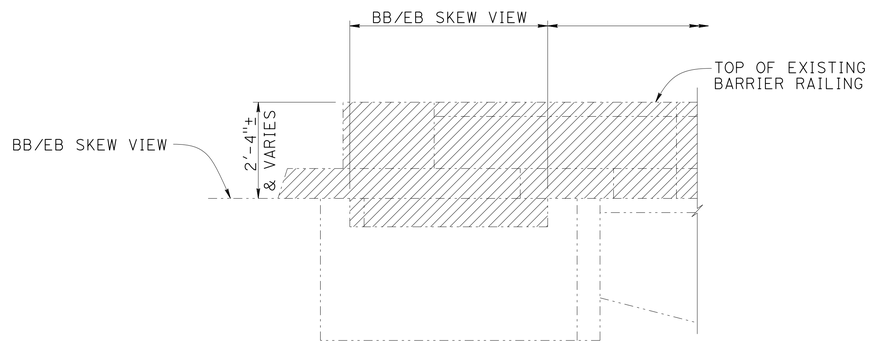

SECTION AT BEGINNING/END OF BRIDGE

½" = 1'-0"

NOTE:
THE CONTRACTOR SHALL VERIFY ALL CONTROLLING FIELD DIMENSIONS BEFORE ORDERING OR FABRICATING ANY MATERIAL.

SAN JOAQUIN RIVER BRIDGE

SEISMIC RETROFIT AND SCOUR COUNTERMEASURE

REMOVAL DETAILS

	BY	CHECKED
DESIGN	EVAN FRANCILISO	KIM MORI
DETAILS	DAVID ELLIOTT	EVAN FRANCILISO
QUANTITIES	EVAN FRANCILISO	KIM MORI

STATE OF CALIFORNIA
DEPARTMENT OF TRANSPORTATION

DIVISION OF ENGINEERING SERVICES
STRUCTURE DESIGN
DESIGN BRANCH 9

BRIDGE NO. 42-0112
POST MILE 33.34

STRUCTURES DESIGN DETAIL SHEET (ENGLISH) (REV. 09-01-10)

ORIGINAL SCALE IN INCHES FOR REDUCED PLANS 0 1 2 3

UNIT: 3594
PROJECT NUMBER & PHASE: 0612000114-1
CONTRACT NO.: 06-0N9904

DISREGARD PRINTS BEARING EARLIER REVISION DATES

REVISION DATES: 11-20-15 2-10-16 9-29-15 11-4-15

SHEET 16 OF 21

FILE => 42-0112-f-removal details.dgn

USERNAME => s113541 DATE PLOTTED => 18-MAY-2016 TIME PLOTTED => 11:33

DIST	COUNTY	ROUTE	POST MILES TOTAL PROJECT	SHEET No.	TOTAL SHEETS
06	Fre,Mad	41U	33.1/33.4, 0.0/0.3	99	113

Evan M. Franciliso 2-26-16
REGISTERED CIVIL ENGINEER DATE

3-7-16
PLANS APPROVAL DATE

REGISTERED PROFESSIONAL ENGINEER
EVAN FRANCILISO
No. C66343
Exp. 6-30-2016
CIVIL
STATE OF CALIFORNIA

The State of California or its officers or agents shall not be responsible for the accuracy or completeness of scanned copies of this plan sheet.

LEGEND:

- Denotes structure excavation
- Denotes structure backfill
- Indicates existing structure
- Indicates new structure

NOTE:
1. Structure excavation (Type D) at pier 8 AND pier 9.

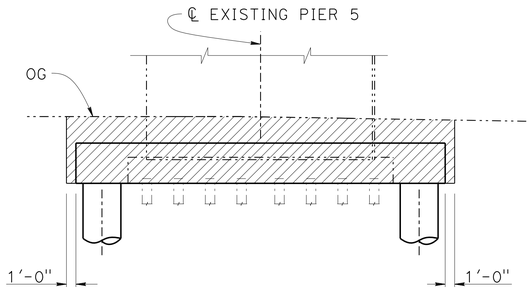

ELEVATION PIER 5 - EXCAVATION
1/8" = 1'-0"

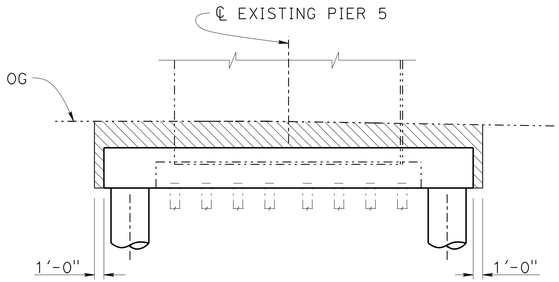

ELEVATION PIER 5 - BACKFILL
1/8" = 1'-0"

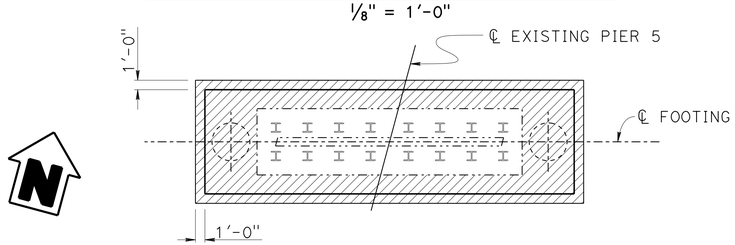

PLAN PIER 5 - EXCAVATION
1/8" = 1'-0"
NOTE: Pier 5 shown, similar Pier 6, 7, 8, 9, 10, and 11.

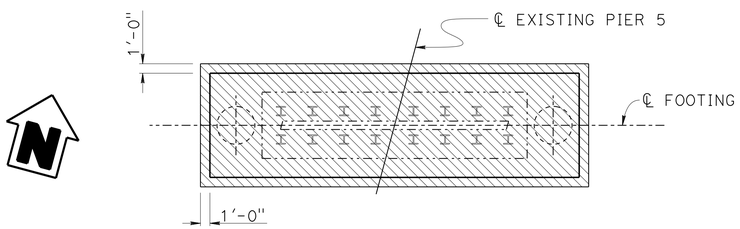

PLAN PIER 5 - BACKFILL
1/8" = 1'-0"
NOTE: Pier 5 shown, similar Pier 6, 7, 8, 9, 10, and 11.

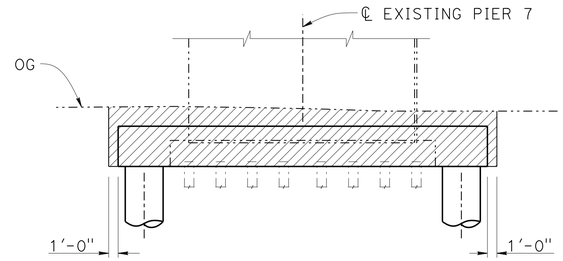

ELEVATION PIER 7 - EXCAVATION
1/8" = 1'-0"

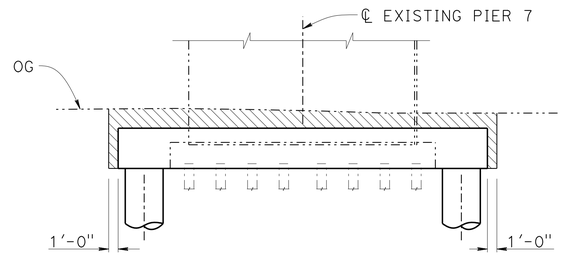

ELEVATION PIER 7 - BACKFILL
1/8" = 1'-0"

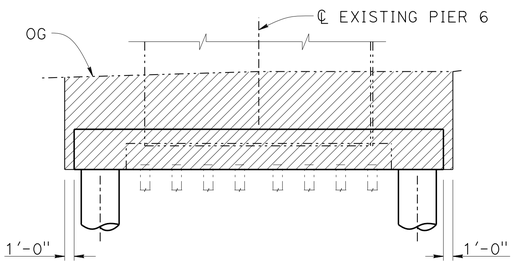

ELEVATION PIER 6 - EXCAVATION
1/8" = 1'-0"

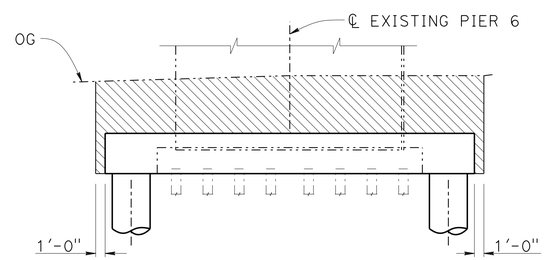

ELEVATION PIER 6 - BACKFILL
1/8" = 1'-0"

LIMITS OF EXCAVTION AND BACKFILL

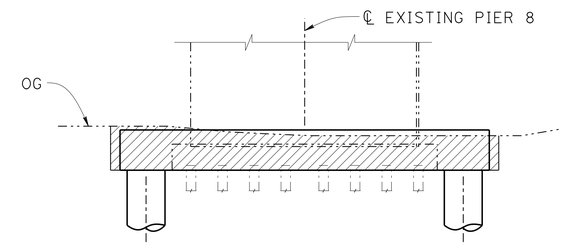

ELEVATION PIER 8 - EXCAVATION
1/8" = 1'-0"

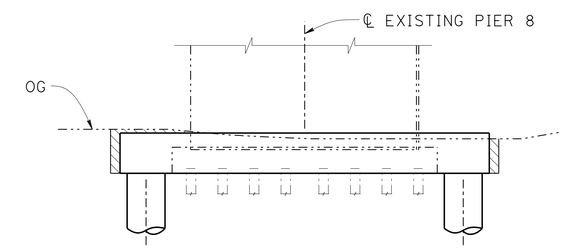

ELEVATION PIER 8 - BACKFILL
1/8" = 1'-0"

NOTE:
THE CONTRACTOR SHALL VERIFY ALL CONTROLLING FIELD DIMENSIONS BEFORE ORDERING OR FABRICATING ANY MATERIAL.

	BY	CHECKED
DESIGN	EVAN FRANCILISO	KIM MORI
DETAILS	DAVID ELLIOTT	EVAN FRANCILISO
QUANTITIES	EVAN FRANCILISO	KIM MORI

STATE OF CALIFORNIA
DEPARTMENT OF TRANSPORTATION

DIVISION OF ENGINEERING SERVICES
STRUCTURE DESIGN
DESIGN BRANCH 9

BRIDGE NO. 42-0112
POST MILE 33.34

SAN JOAQUIN RIVER BRIDGE
SEISMIC RETROFIT AND SCOUR COUNTERMEASURE
EXCAVATION AND BACKFILL DETAIL NO. 1

STRUCTURES DESIGN DETAIL SHEET (ENGLISH) (REV. 09-01-10)

ORIGINAL SCALE IN INCHES FOR REDUCED PLANS 0 1 2 3

UNIT: 3594
PROJECT NUMBER & PHASE: 0612000114-1 CONTRACT NO.: 06-0N9904

DISREGARD PRINTS BEARING EARLIER REVISION DATES

REVISION DATES: 9-29-15 11-4-15 2-10-16 9-29-15

SHEET 7 OF 21

USERNAME => s113541 DATE PLOTTED => 18-MAY-2016 TIME PLOTTED => 11:33

FILE => 42-0112-g-excav_bkfill detail no. 1.dgn

DIST	COUNTY	ROUTE	POST MILES TOTAL PROJECT	SHEET No.	TOTAL SHEETS
06	Fre,Mad	41U	33.1/33.4, 0.0/0.3	100	113

Evan M. Franciliso 2-26-16
REGISTERED CIVIL ENGINEER DATE

3-7-16
PLANS APPROVAL DATE

REGISTERED PROFESSIONAL ENGINEER
EVAN FRANCILISO
No. C66343
Exp. 6-30-2016
CIVIL
STATE OF CALIFORNIA

The State of California or its officers or agents shall not be responsible for the accuracy or completeness of scanned copies of this plan sheet.

NOTE:

1. Structure excavation (Type D) at pier 8 AND pier 9.

LEGEND:

- Denotes structure excavation
- Denotes structure backfill
- Indicates existing structure
- Indicates new structure

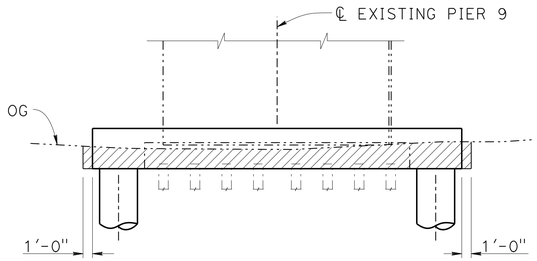

ELEVATION PIER 9 - EXCAVATION

1/8" = 1'-0"

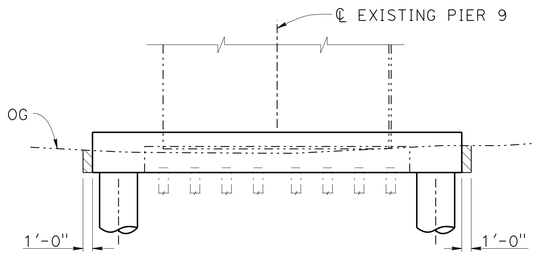

ELEVATION PIER 9 - BACKFILL

1/8" = 1'-0"

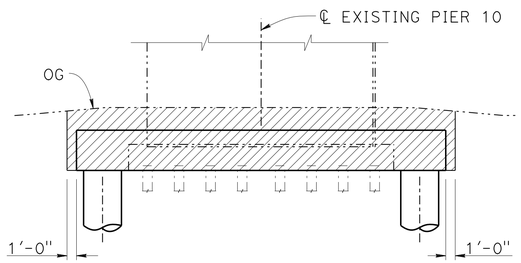

ELEVATION PIER 10 - EXCAVATION

1/8" = 1'-0"

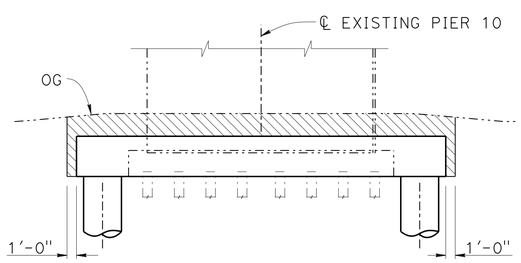

ELEVATION PIER 10 - BACKFILL

1/8" = 1'-0"

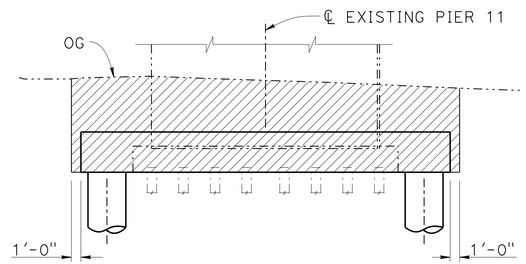

ELEVATION PIER 11 - EXCAVATION

1/8" = 1'-0"

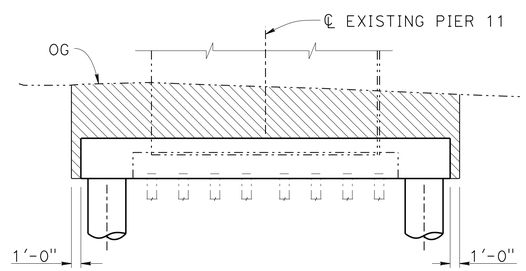

ELEVATION PIER 11 - BACKFILL

1/8" = 1'-0"

LOCATION	APPROXIMATE OG ELEVATION (Ft) (NAVD88)
PIER 5	261.9±
PIER 6	261.8±
PIER 7	259.3±
PIER 8	257.4±
PIER 9	255.5±
PIER 10	259.9±
PIER 11	262.8±

LIMITS OF EXCAVTION AND BACKFILL

NOTE:
THE CONTRACTOR SHALL VERIFY ALL CONTROLLING FIELD DIMENSIONS BEFORE ORDERING OR FABRICATING ANY MATERIAL.

SAN JOAQUIN RIVER BRIDGE

SEISMIC RETROFIT AND SCOUR COUNTERMEASURE

EXCAVATION AND BACKFILL DETAIL NO. 2

	BY	CHECKED
DESIGN	EVAN FRANCILISO	KIM MORI
DETAILS	DAVID ELLIOTT	EVAN FRANCILISO
QUANTITIES	EVAN FRANCILISO	KIM MORI

STATE OF CALIFORNIA
DEPARTMENT OF TRANSPORTATION

DIVISION OF ENGINEERING SERVICES
STRUCTURE DESIGN
DESIGN BRANCH 9

BRIDGE NO. 42-0112
POST MILE 33.34

STRUCTURES DESIGN DETAIL SHEET (ENGLISH) (REV. 09-01-10)

ORIGINAL SCALE IN INCHES FOR REDUCED PLANS 0 1 2 3

UNIT: 3594
PROJECT NUMBER & PHASE: 0612000114-1
CONTRACT NO.: 06-0N9904

DISREGARD PRINTS BEARING EARLIER REVISION DATES

REVISION DATES: 9-22-15 9-29-15 2-10-16 7-30-15

SHEET 8 OF 21

FILE => 42-0112-g-excav_bkfill detail no. 2.dgn

USERNAME => s113541 DATE PLOTTED => 18-MAY-2016 TIME PLOTTED => 11:33

DIST	COUNTY	ROUTE	POST MILES TOTAL PROJECT	SHEET No.	TOTAL SHEETS
06	Fre,Mad	41U	33.1/33.4, 0.0/0.3	101	113

Evan M. Franciliso 2-26-16
REGISTERED CIVIL ENGINEER DATE

3-7-16
PLANS APPROVAL DATE

REGISTERED PROFESSIONAL ENGINEER EVAN FRANCILISO No. C66343 Exp. 6-30-2016 CIVIL STATE OF CALIFORNIA

The State of California or its officers or agents shall not be responsible for the accuracy or completeness of scanned copies of this plan sheet.

LEGEND:

- Limits of bridge removal (Portion)
- Indicates existing structure
- Indicates new structure

NOTES:

1. Existing reinforcement to remain undamaged.
2. For "Detail A", see "PIER FOOTING DETAILS" sheet.

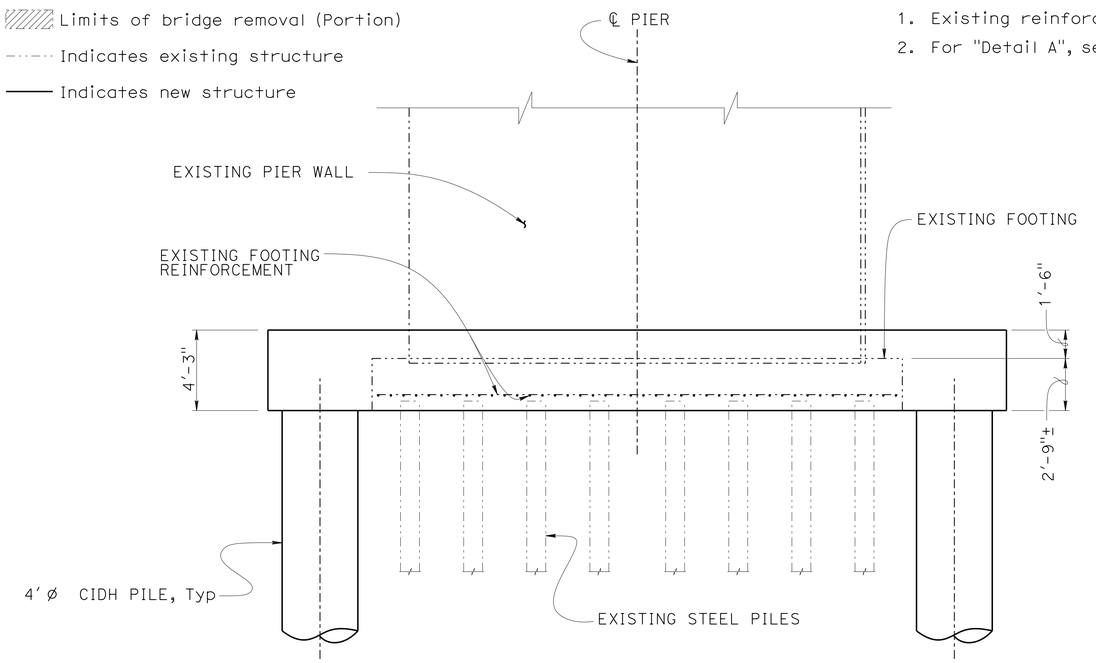

PART PIER FOOTING ELEVATION

1/4" = 1'-0"

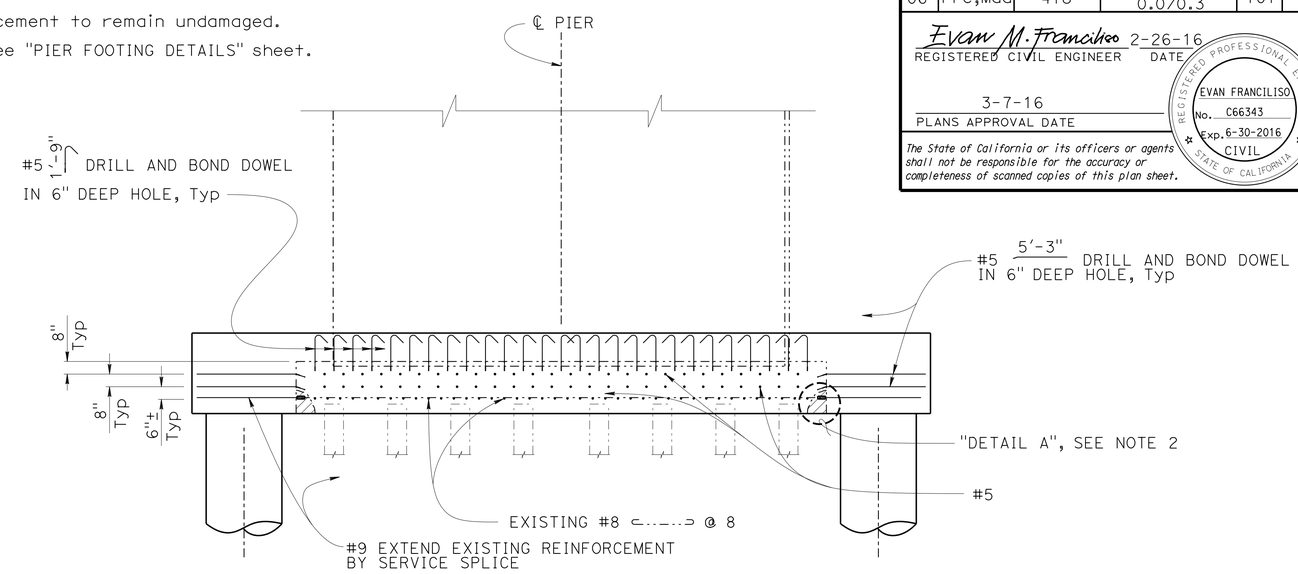

FOOTING DOWELS ELEVATION

1/4" = 1'-0"

NOTE: For location of Section A-A, see "PIER FOOTING DETAILS NO. 1" sheet.

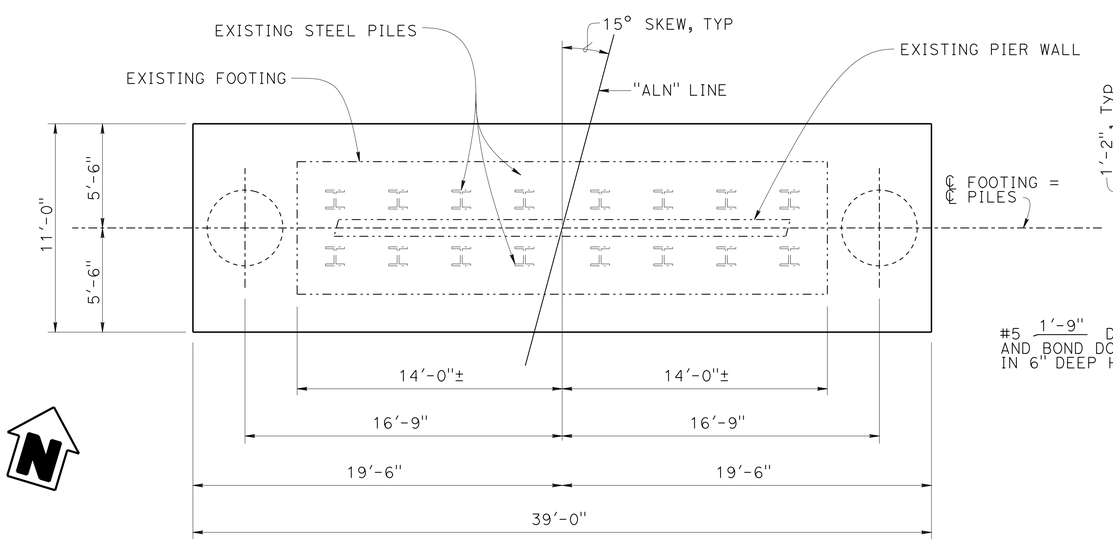

PART PIER FOOTING PLAN

1/4" = 1'-0"

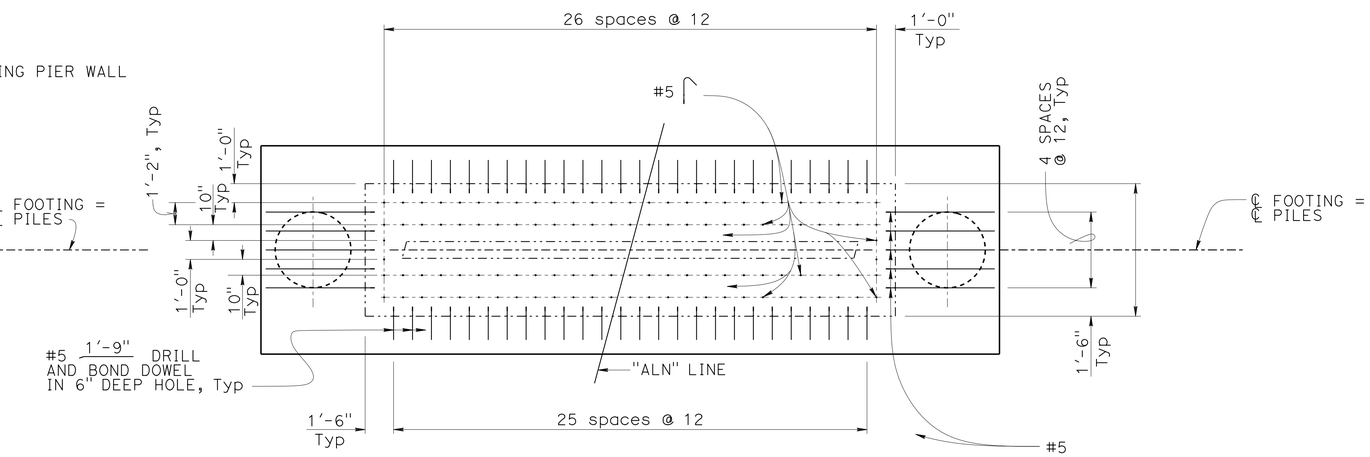

FOOTING DOWELS PLAN

1/4" = 1'-0"

NOTE:
THE CONTRACTOR SHALL VERIFY ALL CONTROLLING FIELD DIMENSIONS BEFORE ORDERING OR FABRICATING ANY MATERIAL.

SAN JOAQUIN RIVER BRIDGE

SEISMIC RETROFIT AND SCOUR COUNTERMEASURE

PIER FOOTING LAYOUT

	BY	CHECKED
DESIGN	EVAN FRANCILISO	KIM MORI
DETAILS	DAVID ELLIOTT	EVAN FRANCILISO
QUANTITIES	EVAN FRANCILISO	KIM MORI

STATE OF CALIFORNIA
DEPARTMENT OF TRANSPORTATION

DIVISION OF ENGINEERING SERVICES
STRUCTURE DESIGN
DESIGN BRANCH 9

BRIDGE NO. 42-0112
POST MILE 33.34

STRUCTURES DESIGN DETAIL SHEET (ENGLISH) (REV. 09-01-10)

ORIGINAL SCALE IN INCHES FOR REDUCED PLANS 0 1 2 3

UNIT: 3594
PROJECT NUMBER & PHASE: 0612000114-1
CONTRACT NO.: 06-0N9904

DISREGARD PRINTS BEARING EARLIER REVISION DATES

REVISION DATES: 11-4-15 2-10-16 9-22-15 9-29-15

SHEET 9 OF 21

FILE => 42-0112-h-pier ftg layout.dgn

USERNAME => s113541 DATE PLOTTED => 18-MAY-2016 TIME PLOTTED => 11:33

DIST	COUNTY	ROUTE	POST MILES TOTAL PROJECT	SHEET No.	TOTAL SHEETS
06	Fre,Mad	41U	33.1/33.4, 0.0/0.3	102	113

Evan M. Franciliso 2-26-16
REGISTERED CIVIL ENGINEER DATE

3-7-16
PLANS APPROVAL DATE

REGISTERED PROFESSIONAL ENGINEER EVAN FRANCILISO No. C66343 Exp. 6-30-2016 CIVIL STATE OF CALIFORNIA

The State of California or its officers or agents shall not be responsible for the accuracy or completeness of scanned copies of this plan sheet.

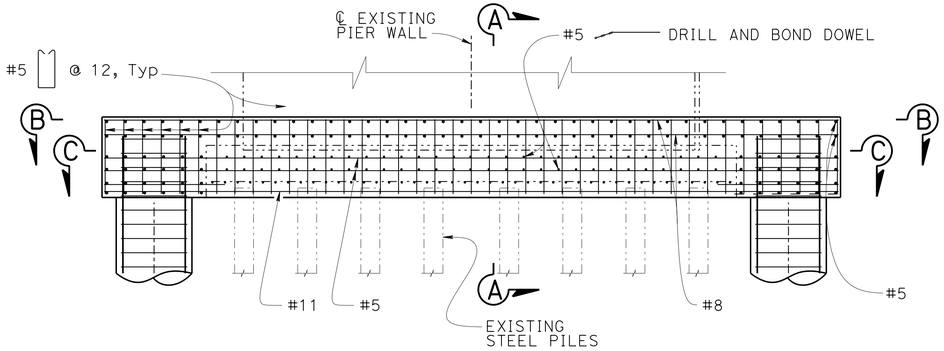

PART PIER FOOTING ELEVATION

¼" = 1'-0"

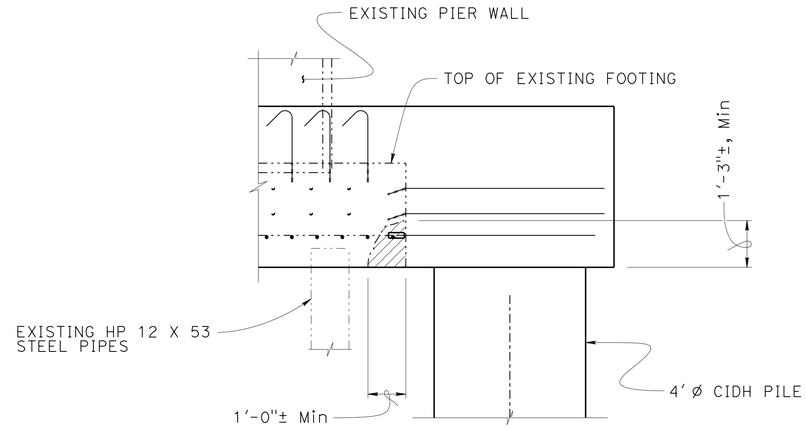

DETAIL A

½" = 1'-0"

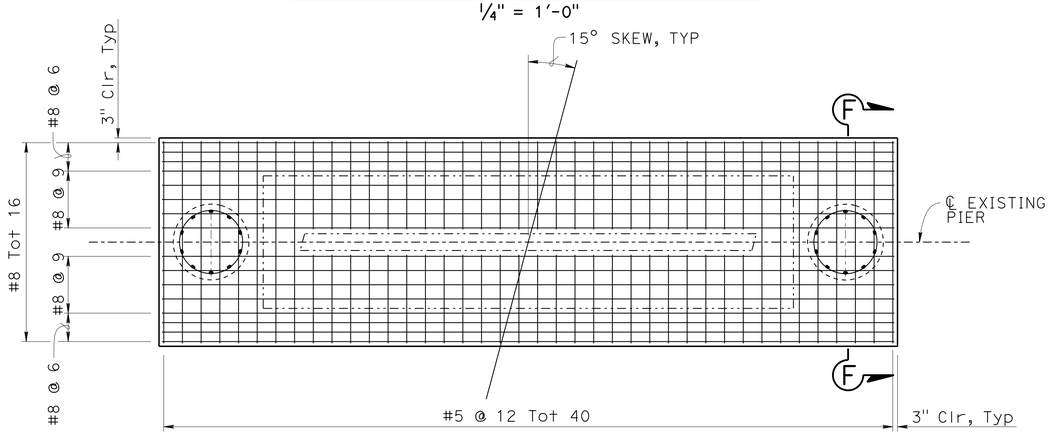

SECTION B-B (TOP MAT REINFORCEMENT)

¼" = 1'-0"

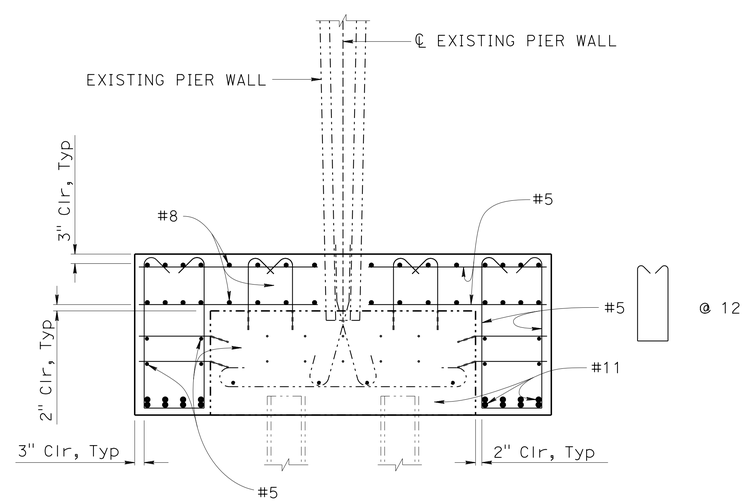

SECTION A-A

½" = 1'-0"

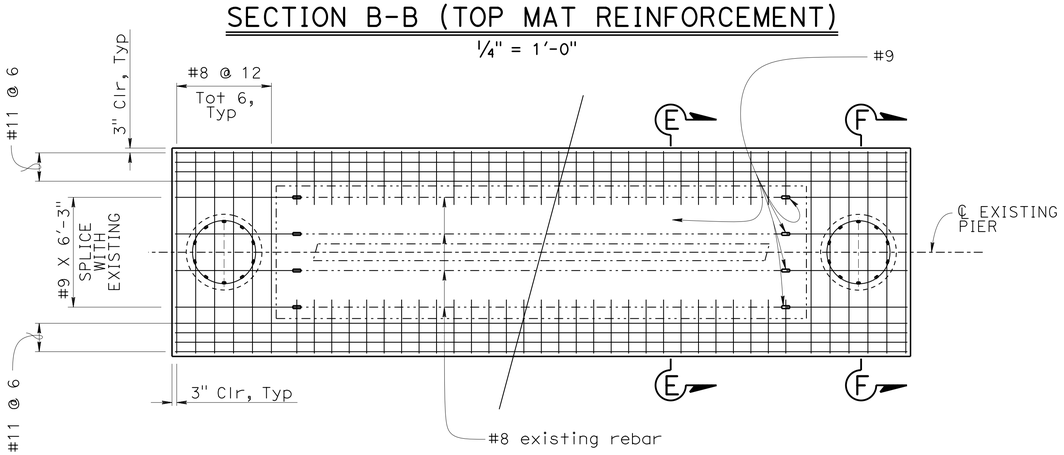

SECTION C-C (BOTTOM MAT REINFORCEMENT)

¼" = 1'-0"

NOTES:

1. For Section F-F, see "CIDH PILE DETAILS" sheet.
2. For location of SECTION A-A, see "PIER FOOTING LAYOUT" sheet.
3. For location of "Detail A", see "PIER FOOTING LAYOUT" sheet.

LEGEND:

- Indicates existing structure
- Indicates new structure
- Bridge removal (Portion)

NOTE:
THE CONTRACTOR SHALL VERIFY ALL CONTROLLING FIELD DIMENSIONS BEFORE ORDERING OR FABRICATING ANY MATERIAL.

	BY	CHECKED
DESIGN	EVAN FRANCILISO	KIM MORI
DETAILS	DAVID ELLIOTT	EVAN FRANCILISO
QUANTITIES	EVAN FRANCILISO	KIM MORI

STATE OF CALIFORNIA
DEPARTMENT OF TRANSPORTATION

DIVISION OF ENGINEERING SERVICES
STRUCTURE DESIGN
DESIGN BRANCH 9

BRIDGE NO. 42-0112
POST MILE 33.34

SAN JOAQUIN RIVER BRIDGE

SEISMIC RETROFIT AND SCOUR COUNTERMEASURE

PIER FOOTING DETAILS

STRUCTURES DESIGN DETAIL SHEET (ENGLISH) (REV. 09-01-10)

ORIGINAL SCALE IN INCHES FOR REDUCED PLANS 0 1 2 3

UNIT: 3594
PROJECT NUMBER & PHASE: 0612000114-1
CONTRACT NO.: 06-0N9904

DISREGARD PRINTS BEARING EARLIER REVISION DATES

REVISION DATES: 11-4-15 2-10-16 9-22-15 9-29-15

SHEET 10 OF 21

FILE => 42-0112-1-pier ftg details.dgn

USERNAME => s173541 DATE PLOTTED => 18-MAY-2016 TIME PLOTTED => 11:33

DIST	COUNTY	ROUTE	POST MILES TOTAL PROJECT	SHEET No.	TOTAL SHEETS
06	Fre,Mad	41U	33.1/33.4, 0.0/0.3	103	113

Evan M. Franciliso 2-26-16
REGISTERED CIVIL ENGINEER DATE

3-7-16
PLANS APPROVAL DATE

REGISTERED PROFESSIONAL ENGINEER EVAN FRANCILISO No. C66343 Exp. 6-30-2016 CIVIL STATE OF CALIFORNIA

The State of California or its officers or agents shall not be responsible for the accuracy or completeness of scanned copies of this plan sheet.

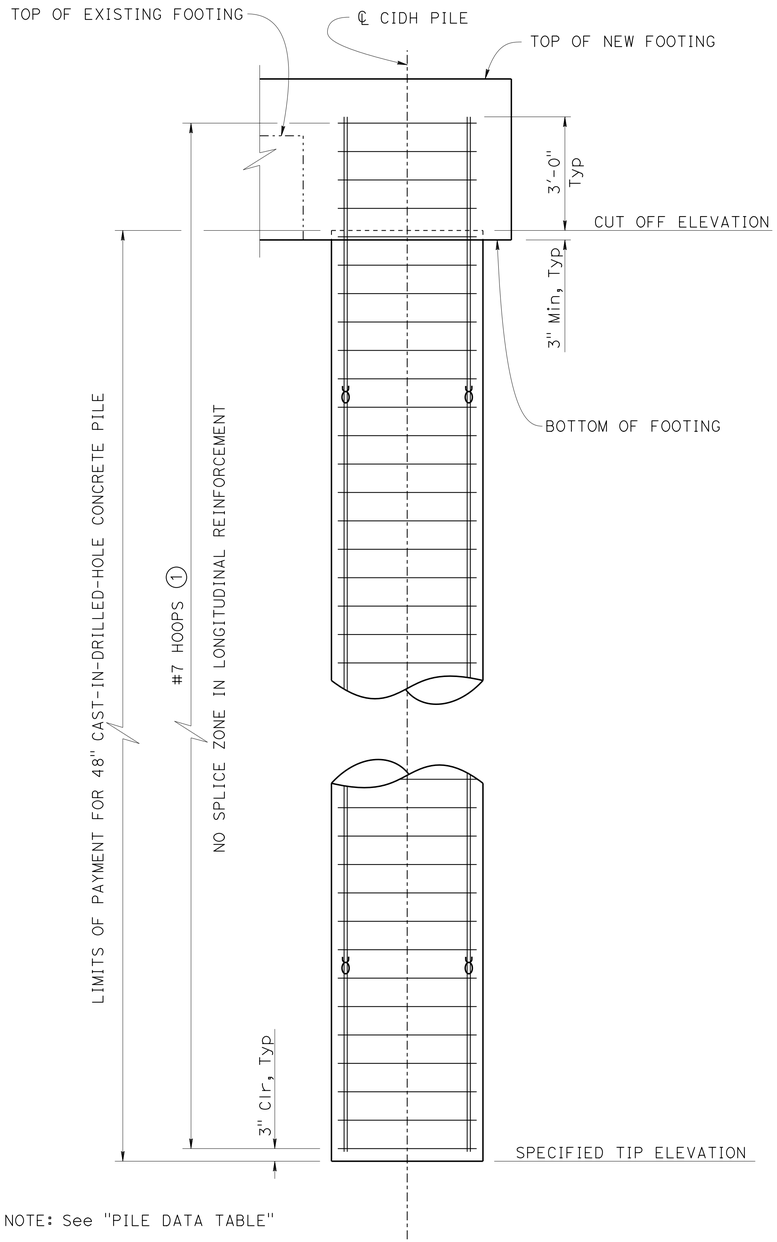

NOTE: See "PILE DATA TABLE"

CIDH PILE ELEVATION

½" = 1'-0"

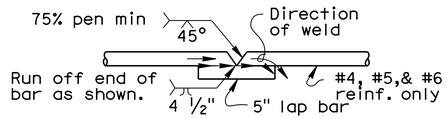

1. Butt weld to be made first.
2. Butt weld to be made in flat or horizontal position.
3. Lap bar to be centered on splice.
4. Flare weld to be made in direction shown.
5. Lap bar equal size to hoop bar.

VEE GROOVE WELDED SPLICE

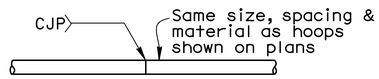

Individual hoops, made continuous with 100% penetration welds hoops.

BUTT WELDED CONTINUOUS HOOP

HOOP DETAIL

LEGEND:

-·-·-·- Indicates existing structure

——— Indicates new structure

ȣ Indicates bundle bars

NOTES:

(1) All hoops must be ultimate butt splice

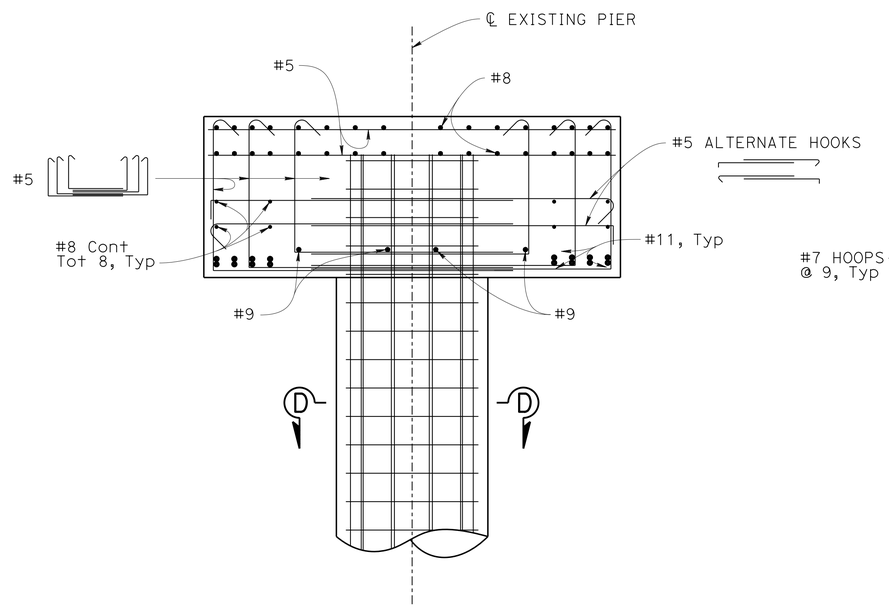

SECTION F-F

½" = 1'-0"

NOTE:

For location of Section F-F, see "PIER FOOTING DETAILS" sheet.

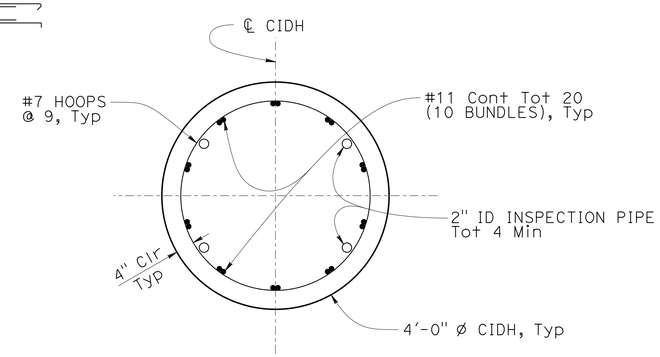

SECTION D-D

¾" = 1'-0"

NOTE:
THE CONTRACTOR SHALL VERIFY ALL CONTROLLING FIELD DIMENSIONS BEFORE ORDERING OR FABRICATING ANY MATERIAL.

SAN JOAQUIN RIVER BRIDGE

SEISMIC RETROFIT AND SCOUR COUNTERMEASURE

CIDH PILE DETAILS

	BY	CHECKED
DESIGN	EVAN FRANCILISO	KIM MORI
DETAILS	DAVID ELLIOTT	EVAN FRANCILISO
QUANTITIES	EVAN FRANCILISO	KIM MORI

STATE OF CALIFORNIA
DEPARTMENT OF TRANSPORTATION

DIVISION OF ENGINEERING SERVICES
STRUCTURE DESIGN
DESIGN BRANCH 9

BRIDGE NO. 42-0112
POST MILE 33.34

STRUCTURES DESIGN DETAIL SHEET (ENGLISH) (REV. 09-01-10)

ORIGINAL SCALE IN INCHES FOR REDUCED PLANS 0 1 2 3

UNIT: 3594
PROJECT NUMBER & PHASE: 0612000114-1
CONTRACT NO.: 06-0N9904

DISREGARD PRINTS BEARING EARLIER REVISION DATES

REVISION DATES: 2-10-16 7-30-15 9-22-15 9-30-15

SHEET 11 OF 21

FILE => 42-0112-j-cidh pile details.dgn

USERNAME => s113541 DATE PLOTTED => 18-MAY-2016 TIME PLOTTED => 11:33

DIST	COUNTY	ROUTE	POST MILES TOTAL PROJECT	SHEET No.	TOTAL SHEETS
06	Fre,Mad	41U	33.1/33.4, 0.0/0.3	104	113

Evan M. Franciliso 2-26-16
REGISTERED CIVIL ENGINEER DATE

3-7-16
PLANS APPROVAL DATE

REGISTERED PROFESSIONAL ENGINEER
EVAN FRANCILISO
No. C66343
Exp. 6-30-2016
CIVIL
STATE OF CALIFORNIA

The State of California or its officers or agents shall not be responsible for the accuracy or completeness of scanned copies of this plan sheet.

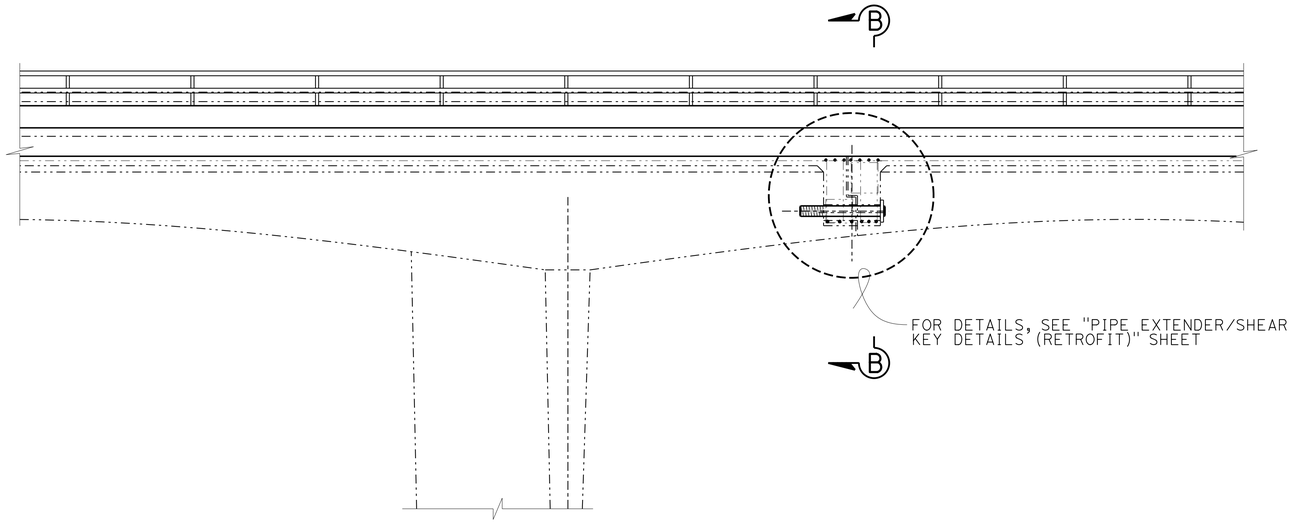

PART ELEVATION

1/4" = 1'-0"

LEGEND:

Indicates existing structure

Indicates new structure

NOTE:

1. For location of "DETAIL B", see "HINGE RETROFIT DETAILS NO. 2" sheet.

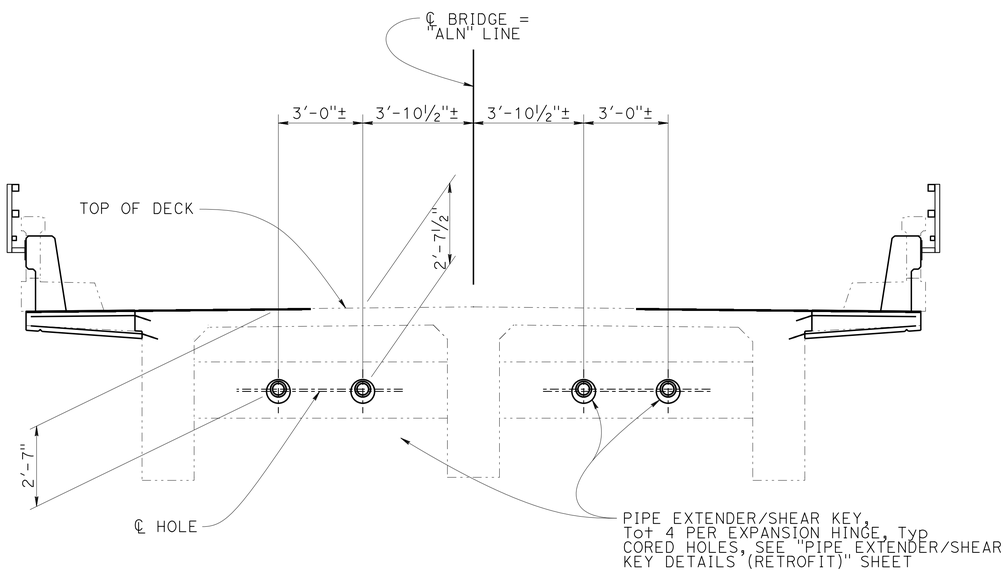

SECTION B-B

3/8" = 1'-0"

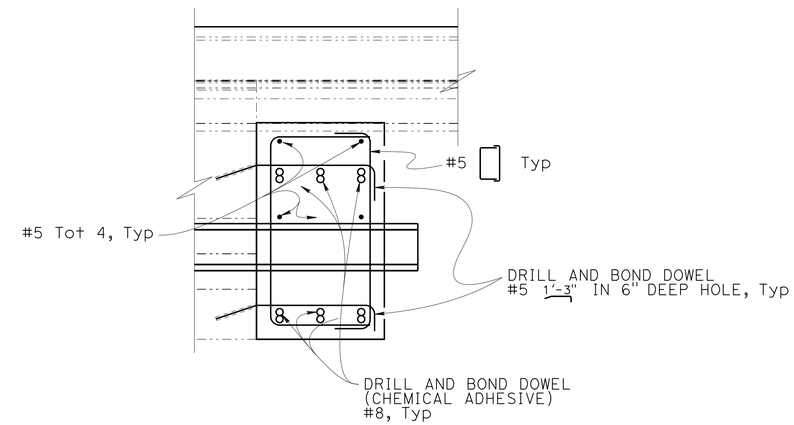

DETAIL B

3/4" = 1'-0"

NOTE:
THE CONTRACTOR SHALL VERIFY ALL CONTROLLING FIELD DIMENSIONS BEFORE ORDERING OR FABRICATING ANY MATERIAL.

SAN JOAQUIN RIVER BRIDGE

SEISMIC RETROFIT AND SCOUR COUNTERMEASURE

HINGE RETROFIT DETAILS NO. 1

	BY	CHECKED
DESIGN	EVAN FRANCILISO	KIM MORI
DETAILS	DAVID ELLIOTT	EVAN FRANCILISO
QUANTITIES	EVAN FRANCILISO	KIM MORI

STATE OF CALIFORNIA
DEPARTMENT OF TRANSPORTATION

DIVISION OF ENGINEERING SERVICES
STRUCTURE DESIGN
DESIGN BRANCH 9

BRIDGE NO. 42-0112
POST MILE 33.34

STRUCTURES DESIGN DETAIL SHEET (ENGLISH) (REV. 09-01-10)

ORIGINAL SCALE IN INCHES FOR REDUCED PLANS 0 1 2 3

UNIT: 3594
PROJECT NUMBER & PHASE: 0612000114-1
CONTRACT NO.: 06-0N9904

DISREGARD PRINTS BEARING EARLIER REVISION DATES

REVISION DATES: 7-28-15 9-30-15 11-4-15 2-10-16

SHEET 12 OF 21

USERNAME => s113541 DATE PLOTTED => 18-MAY-2016 TIME PLOTTED => 11:33

FILE => 42-0112-n-hinge det01.dgn

DIST	COUNTY	ROUTE	POST MILES TOTAL PROJECT	SHEET No.	TOTAL SHEETS
06	Fre,Mad	41U	33.1/33.4, 0.0/0.3	105	113

Evan M. Franciliso 2-26-16
REGISTERED CIVIL ENGINEER DATE

3-7-16
PLANS APPROVAL DATE

REGISTERED PROFESSIONAL ENGINEER
EVAN FRANCILISO
No. C66343
Exp. 6-30-2016
CIVIL
STATE OF CALIFORNIA

The State of California or its officers or agents shall not be responsible for the accuracy or completeness of scanned copies of this plan sheet.

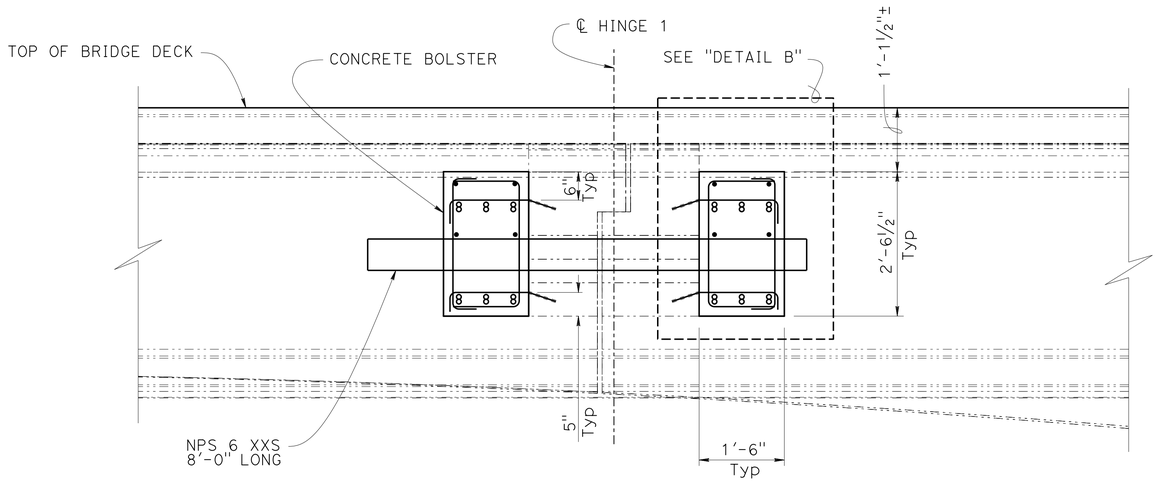

SECTION R-R

¾" = 1'-0"

LEGEND:

-·-·-·- Indicates existing structure

——— Indicates new structure

NOTE:

1. For "DETAIL B", see "HINGE RETROFIT DETAILS NO. 1" sheet.

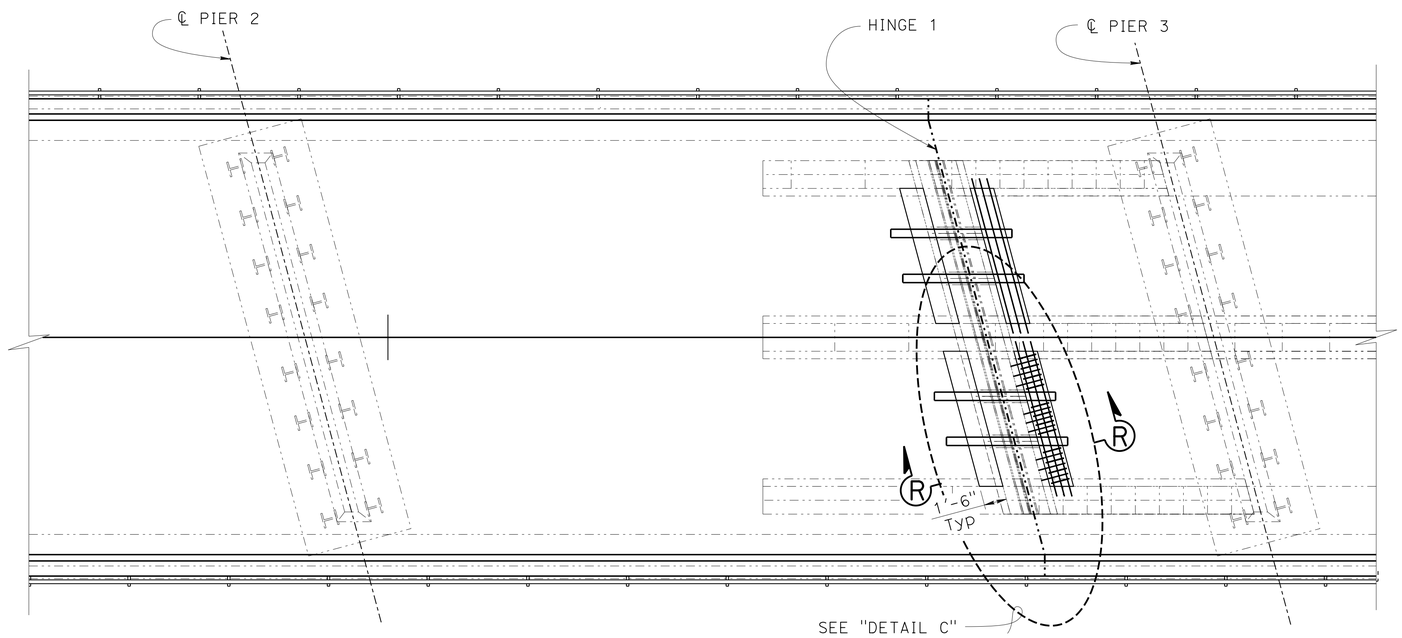

PART PLAN - HINGE 1

1" = 5'

NOTE: Hinge 1 shown, Hinge 2, 3, and 4 similar.

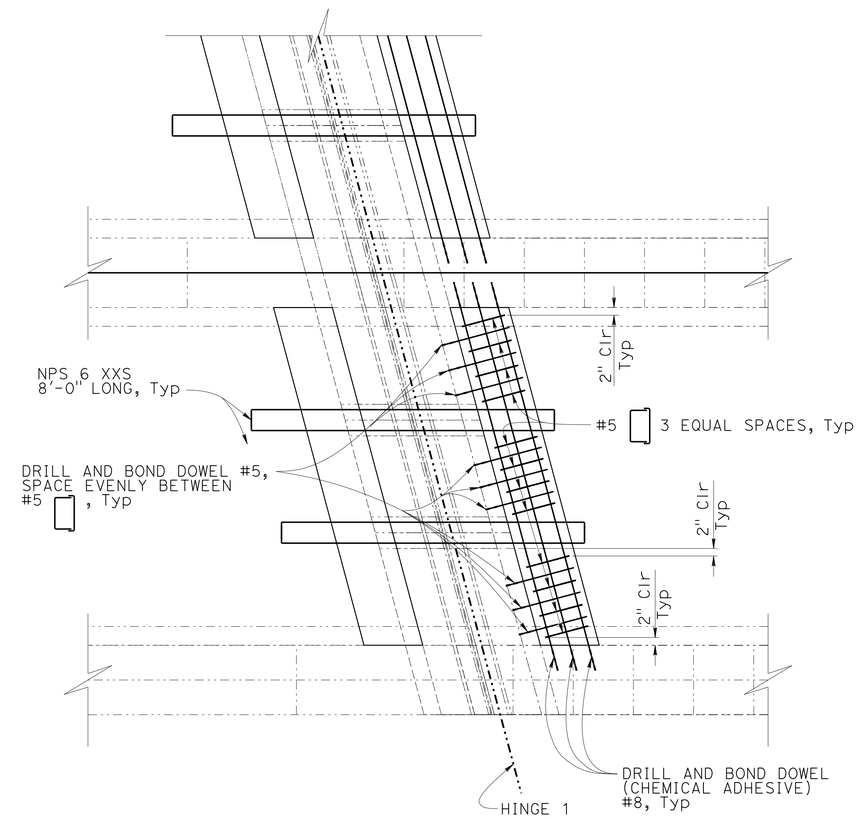

DETAIL C

½" = 1'-0"

NOTE:
THE CONTRACTOR SHALL VERIFY ALL CONTROLLING FIELD DIMENSIONS BEFORE ORDERING OR FABRICATING ANY MATERIAL.

	BY	CHECKED
DESIGN	EVAN FRANCILISO	KIM MORI
DETAILS	DAVID ELLIOTT	EVAN FRANCILISO
QUANTITIES	EVAN FRANCILISO	KIM MORI

STATE OF CALIFORNIA
DEPARTMENT OF TRANSPORTATION

DIVISION OF ENGINEERING SERVICES
STRUCTURE DESIGN
DESIGN BRANCH 9

BRIDGE NO. 42-0112
POST MILE 33.34

SAN JOAQUIN RIVER BRIDGE

SEISMIC RETROFIT AND SCOUR COUNTERMEASURE

HINGE RETROFIT DETAILS NO. 2

STRUCTURES DESIGN DETAIL SHEET (ENGLISH) (REV. 09-01-10)

ORIGINAL SCALE IN INCHES FOR REDUCED PLANS 0 1 2 3

UNIT: 3594
PROJECT NUMBER & PHASE: 0612000114-1
CONTRACT NO.: 06-0N9904

DISREGARD PRINTS BEARING EARLIER REVISION DATES

REVISION DATES: 7-22-15 9-22-15 10-1-15 2-10-16

SHEET 113 OF 121

FILE => 42-0112-n-hinge det02.dgn

USERNAME => s113541 DATE PLOTTED => 18-MAY-2016 TIME PLOTTED => 11:33

DIST	COUNTY	ROUTE	POST MILES TOTAL PROJECT	SHEET No.	TOTAL SHEETS
06	Fre,Mad	41U	33.1/33.4, 0.0/0.3	106	113

Evan M. Franciliso 2-26-16
REGISTERED CIVIL ENGINEER DATE

3-7-16
PLANS APPROVAL DATE

REGISTERED PROFESSIONAL ENGINEER EVAN FRANCILISO No. C66343 Exp. 6-30-2016 CIVIL STATE OF CALIFORNIA

The State of California or its officers or agents shall not be responsible for the accuracy or completeness of scanned copies of this plan sheet.

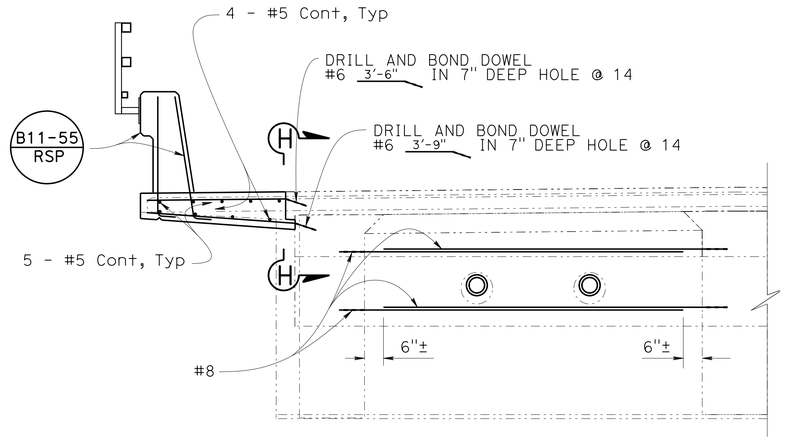

OVERHANG DETAILS AT HINGE

½" = 1'-0"

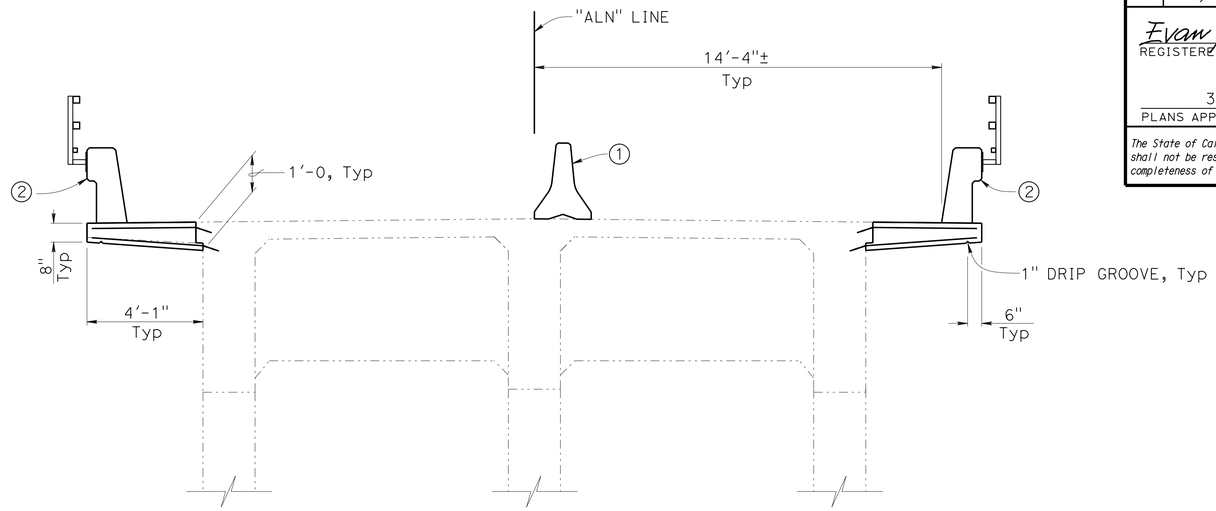

TYPICAL SECTION AT BENTS

⅜" = 1'-0"

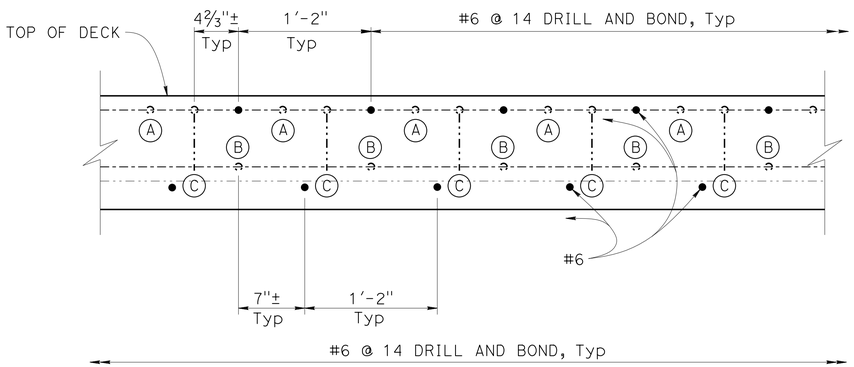

SECTION H-H

1½" = 1'-0"

LEGEND:

- (A) EXISTING #6 @ 14 33'-8"
- (B) EXISTING #6 @ 14 24'6"
- (C) EXISTING #6 @ 14 31'-8"
- Indicates existing structure
- Indicates new structure
- (1) Temporary railing (Type K), see "ROADWAY PLANS"
- (2) Concrete barrier (Type 732 Modified) with tubular bicycle railing, Typ

NOTE:
THE CONTRACTOR SHALL VERIFY ALL CONTROLLING FIELD DIMENSIONS BEFORE ORDERING OR FABRICATING ANY MATERIAL.

SAN JOAQUIN RIVER BRIDGE

SEISMIC RETROFIT AND SCOUR COUNTERMEASURE

OVERHANG AND BARRIER DETAILS NO. 1

	BY	CHECKED
DESIGN	EVAN FRANCILISO	KIM MORI
DETAILS	DAVID ELLIOTT	EVAN FRANCILISO
QUANTITIES	EVAN FRANCILISO	KIM MORI

STATE OF CALIFORNIA
DEPARTMENT OF TRANSPORTATION

DIVISION OF ENGINEERING SERVICES
STRUCTURE DESIGN
DESIGN BRANCH 9

BRIDGE NO. 42-0112
POST MILE 33.34

STRUCTURES DESIGN DETAIL SHEET (ENGLISH) (REV. 09-01-10)

ORIGINAL SCALE IN INCHES FOR REDUCED PLANS 0 1 2 3

UNIT: 3594
PROJECT NUMBER & PHASE: 0612000114-1
CONTRACT NO.: 06-0N9904

DISREGARD PRINTS BEARING EARLIER REVISION DATES

REVISION DATES: 11-4-15 11-20-15 2-10-16 10-4-15

SHEET 14 OF 21

FILE => 42-0112-o-overhang det1.dgn

USERNAME => s113541 DATE PLOTTED => 18-MAY-2016 TIME PLOTTED => 11:33

DIST	COUNTY	ROUTE	POST MILES TOTAL PROJECT	SHEET No.	TOTAL SHEETS
06	Fre,Mad	41U	33.1/33.4, 0.0/0.3	107	113

Evan M. Franciliso 2-26-16
REGISTERED CIVIL ENGINEER DATE

3-7-16
PLANS APPROVAL DATE

REGISTERED PROFESSIONAL ENGINEER EVAN FRANCILISO No. C66343 Exp. 6-30-2016 CIVIL STATE OF CALIFORNIA

The State of California or its officers or agents shall not be responsible for the accuracy or completeness of scanned copies of this plan sheet.

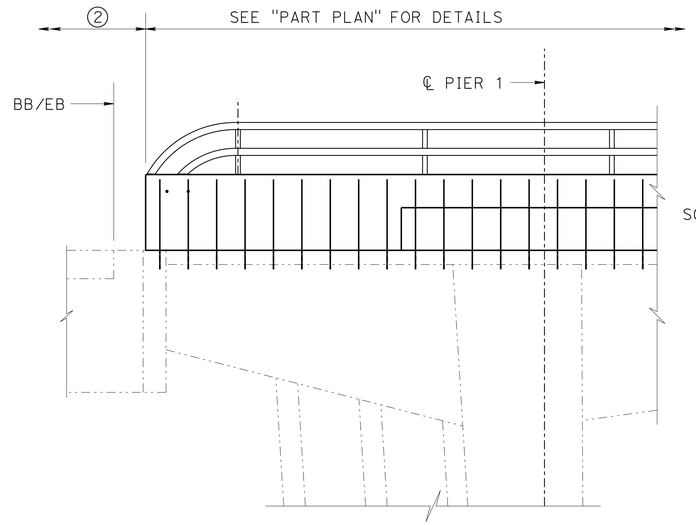

PART ELEVATION

3/8" = 1'-0"

A77U1 A77U2 A77U3 A77U4 A77U5

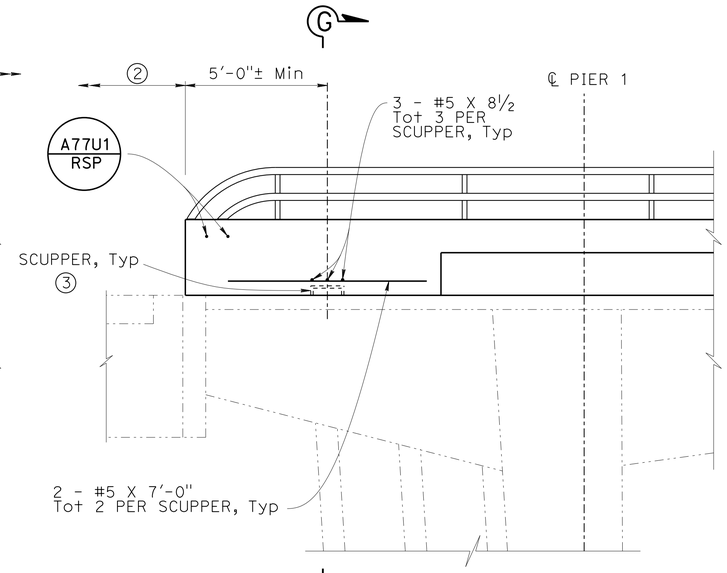

PART ELEVATION - SCUPPER

3/8" = 1'-0"

A77U1 A77U2 A77U3 A77U4 A77U5

LEGEND:

- Indicates existing structure
- Indicates new structure
- ① Concrete barrier (Type 732 Modified) with tubular bicycle railing, Typ
- ② Midwest guardrail system, see "Roadway Plans"
- ③ Scupper maximum spacing = 60'-0"

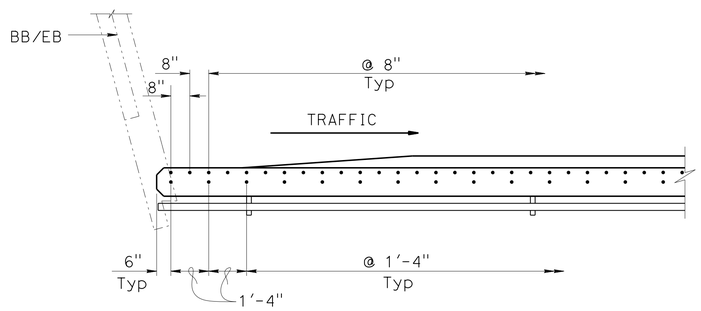

PART PLAN

3/8" = 1'-0"

NOTE: Right side existing barrier railing shown, similar on left side of existing barrier railing.

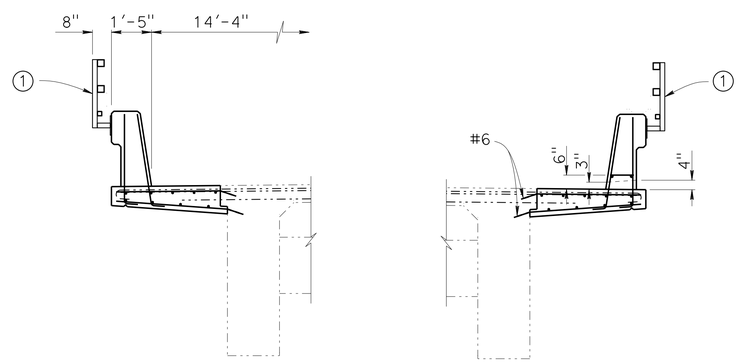

NOTE: For details, see "OVERHANG DETAILS AT HINGE" on "OVERHANG AND BARRIER DETAILS NO. 1" sheet.

SECTION AT SPAN

½" = 1'-0"

SECTION G-G

½" = 1'-0"

NOTE:
THE CONTRACTOR SHALL VERIFY ALL CONTROLLING FIELD DIMENSIONS BEFORE ORDERING OR FABRICATING ANY MATERIAL.

SAN JOAQUIN RIVER BRIDGE

SEISMIC RETROFIT AND SCOUR COUNTERMEASURE

OVERHANG AND BARRIER DETAILS NO. 2

	BY	CHECKED
DESIGN	EVAN FRANCILISO	KIM MORI
DETAILS	DAVID ELLIOTT	EVAN FRANCILISO
QUANTITIES	EVAN FRANCILISO	KIM MORI

STATE OF CALIFORNIA
DEPARTMENT OF TRANSPORTATION

DIVISION OF ENGINEERING SERVICES
STRUCTURE DESIGN
DESIGN BRANCH 9

BRIDGE NO. 42-0112
POST MILE 33.34

STRUCTURES DESIGN DETAIL SHEET (ENGLISH) (REV. 09-01-10)

ORIGINAL SCALE IN INCHES FOR REDUCED PLANS 0 1 2 3

UNIT: 3594
PROJECT NUMBER & PHASE: 0612000114-1
CONTRACT NO.: 06-0N9904

DISREGARD PRINTS BEARING EARLIER REVISION DATES

REVISION DATES 11-4-15 11-16-15 11-18-15 2-10-16

SHEET 15 OF 21

FILE => 42-0112-o-overhang det2.dgn

USERNAME => s173541 DATE PLOTTED => 18-MAY-2016 TIME PLOTTED => 11:33

DIST	COUNTY	ROUTE	POST MILES TOTAL PROJECT	SHEET No.	TOTAL SHEETS
06	Fre,Mad	41U	33.1/33.4, 0.0/0.3	108	113

Evan M. Franciliso 2-26-16
REGISTERED CIVIL ENGINEER DATE

3-7-16
PLANS APPROVAL DATE

REGISTERED PROFESSIONAL ENGINEER EVAN FRANCILISO No. C66343 Exp. 6-30-2016 CIVIL STATE OF CALIFORNIA

The State of California or its officers or agents shall not be responsible for the accuracy or completeness of scanned copies of this plan sheet.

LEGEND:

CFRP = CARBON FIBER REINFORCED POLYMER

Indicates existing structure

Indicates new structure

(1) Indicates limits of sawcut grooves in existing concrete deck, place new carbon fiber reinforced polymer (CFRP) flexural strengthening in each groove

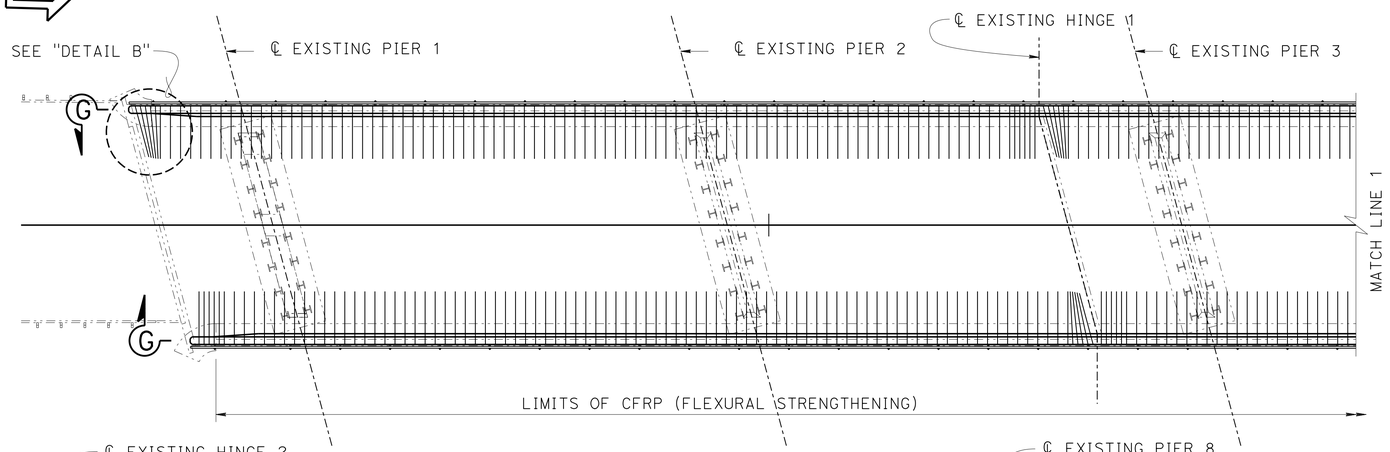

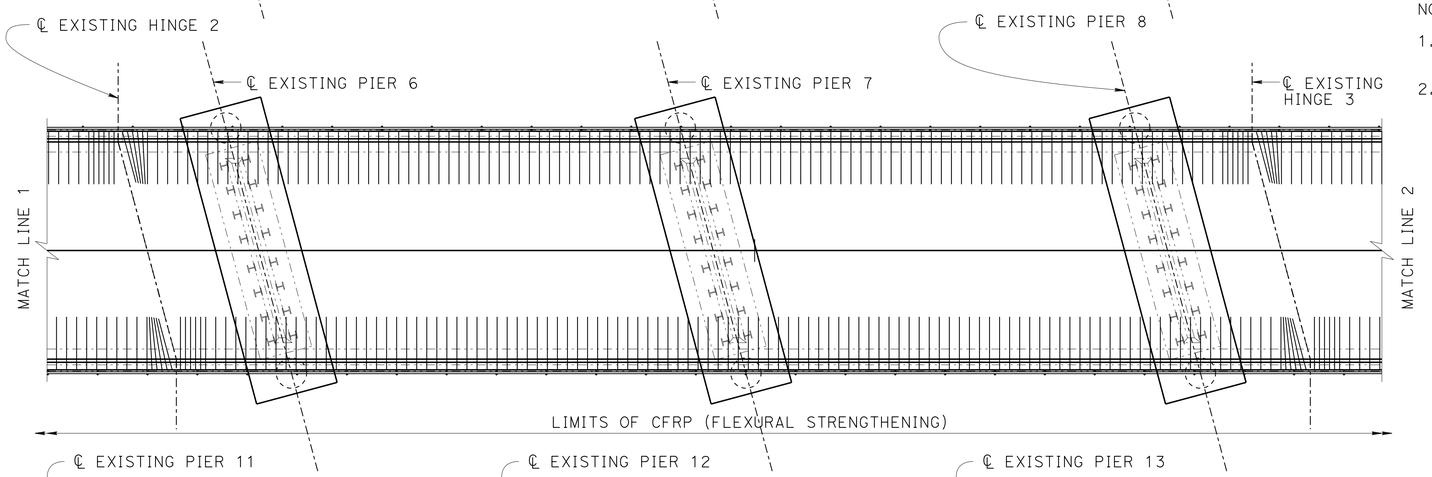

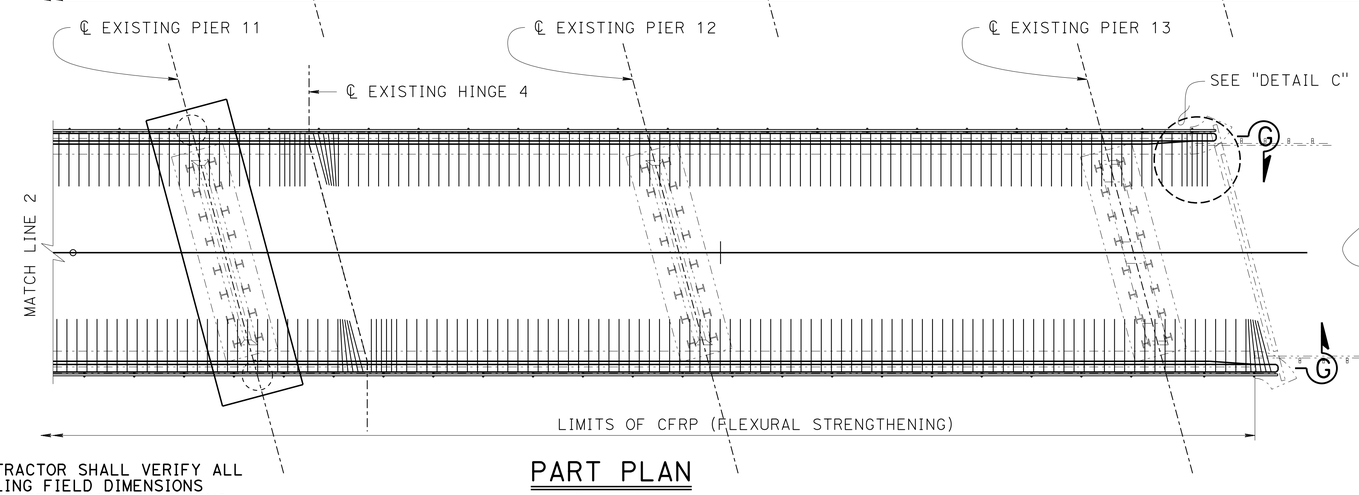

PART PLAN

1" = 10'

NOTE:
THE CONTRACTOR SHALL VERIFY ALL CONTROLLING FIELD DIMENSIONS BEFORE ORDERING OR FABRICATING ANY MATERIAL.

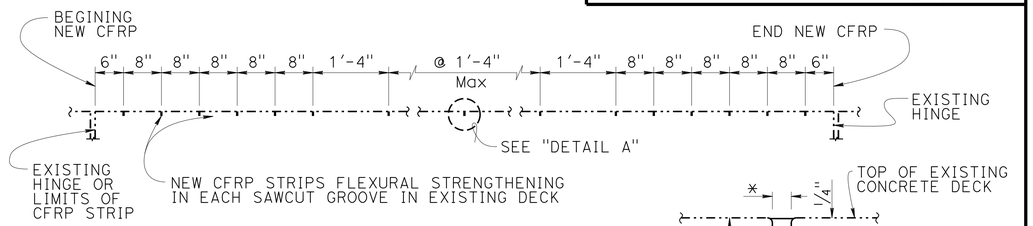

SECTION G-G

NO SCALE

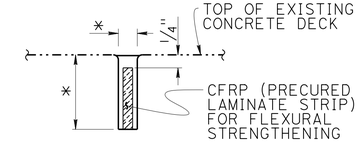

DETAIL A

NO SCALE

* SAWCUT WIDTH TO BE DETERMINED BY THE CFRP MANUFACTURER AND THE ENGINEER. 1" MAXIMUM DEPTH.

NOTES:

1. Adjust CFRP groove spacing to avoid conflict with barrier reinforcement.
2. Sawcut CFRP grooves after concrete cures per special provisions.

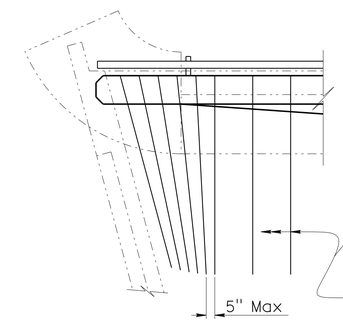

DETAIL B

NO SCALE

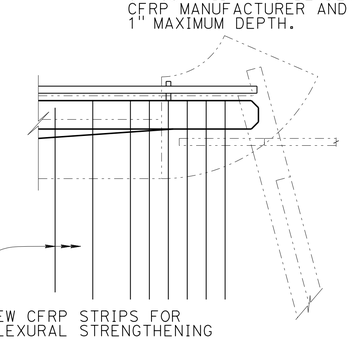

DETAIL C

NO SCALE

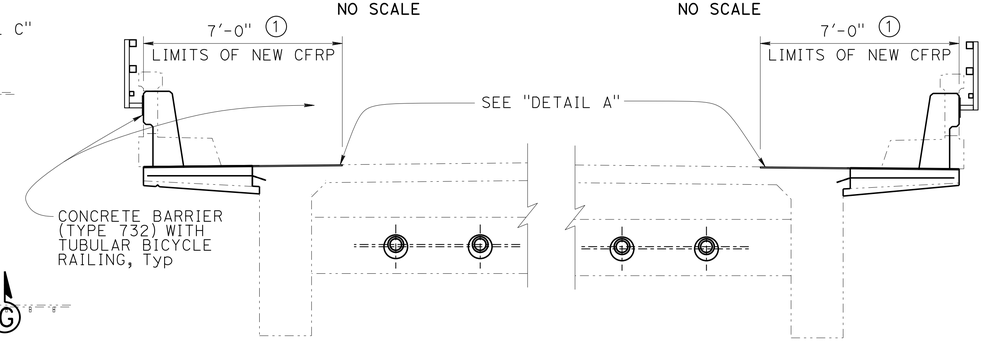

TYPICAL CFRP AT DECK OVERHANG

3/8" = 1'-0"

SAN JOAQUIN RIVER BRIDGE

SEISMIC RETROFIT AND SCOUR COUNTERMEASURE

CARBON FIBER REINFORCED POLYMER

	BY	CHECKED
DESIGN	EVAN FRANCILISO	KIM MORI
DETAILS	DAVID ELLIOTT	EVAN FRANCILISO
QUANTITIES	EVAN FRANCILISO	KIM MORI

STATE OF CALIFORNIA
DEPARTMENT OF TRANSPORTATION

DIVISION OF ENGINEERING SERVICES
STRUCTURE DESIGN
DESIGN BRANCH 9

BRIDGE NO. 42-0112
POST MILE 33.34

STRUCTURES DESIGN DETAIL SHEET (ENGLISH) (REV. 09-01-10)

ORIGINAL SCALE IN INCHES FOR REDUCED PLANS 0 1 2 3

UNIT: 3594
PROJECT NUMBER & PHASE: 0612000114-1
CONTRACT NO.: 06-0N9904

DISREGARD PRINTS BEARING EARLIER REVISION DATES

REVISION DATES: 2-10-16 7-30-15 9-23-15 11-16-15

SHEET 16 OF 21

FILE => 42-0112-r-cfrp_01.dgn

USERNAME => DATE PLOTTED => 18-MAY-2016 TIME PLOTTED => 11:33

DIST	COUNTY	ROUTE	POST MILES TOTAL PROJECT	SHEET No.	TOTAL SHEETS
06	Fre,Mad	41U	33.1/33.4, 0.0/0.3	109	113

Evan M. Franciliso 2-26-16
REGISTERED CIVIL ENGINEER DATE

3-7-16
PLANS APPROVAL DATE

REGISTERED PROFESSIONAL ENGINEER EVAN FRANCILISO No. C66343 Exp. 6-30-2016 CIVIL STATE OF CALIFORNIA

The State of California or its officers or agents shall not be responsible for the accuracy or completeness of scanned copies of this plan sheet.

NOTE:
THE CONTRACTOR MUST VERIFY ALL CONTROLLING FIELD DIMENSIONS BEFORE ORDERING OR FABRICATING ANY MATERIAL.

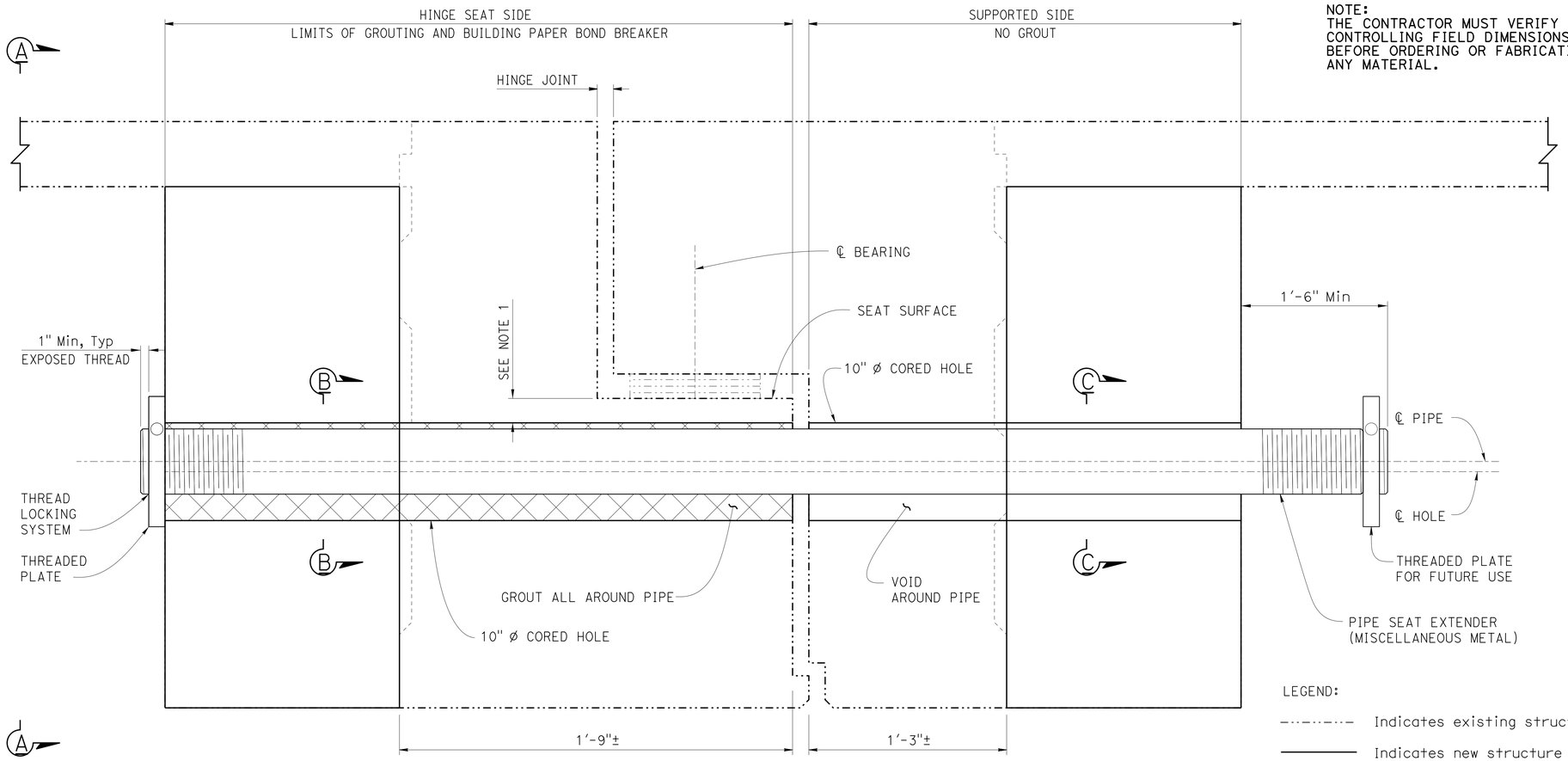

PIPE EXTENDER ELEVATION

NO SCALE

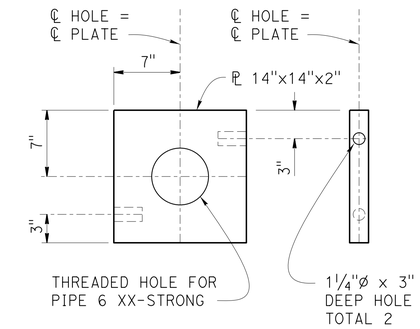

FOR 6"ø PIPE SEAT EXTENDER

The bearing surface for the Threaded Plate must be perpendicular to the hole.

2 Threaded Plates per Pipe Seat Extender.
Only install Plate on Hinge Seat Side.
On the Supported Side place Threaded Plate on Pipe Extender for future use.

The 3" deep holes in plate are to receive a 1" ø rod for removal of the threaded plate (by others).

THREADED PLATE DETAILS

1½" = 1'-0"

LEGEND:

-·-·-·- Indicates existing structure

——— Indicates new structure

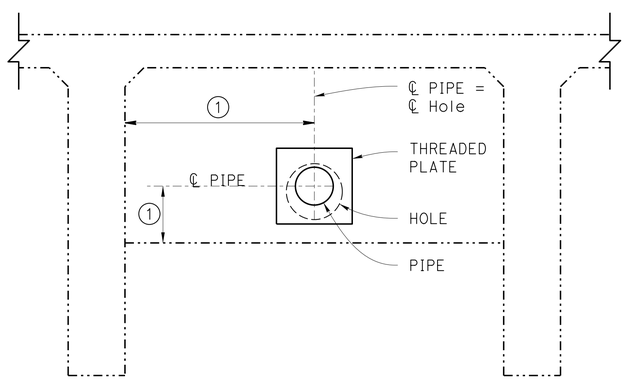

VIEW A-A

¾" = 1'-0"

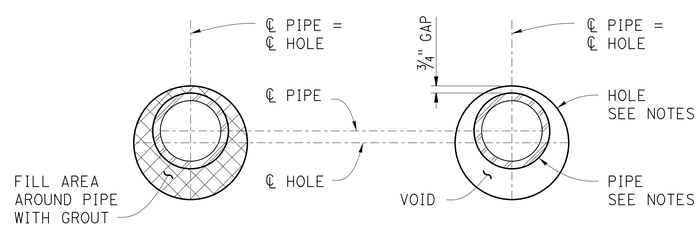

HINGE SEAT SIDE

SECTION B-B

1½" = 1'-0"

SUPPORTED SIDE

SECTION C-C

1½" = 1'-0"

NOTES:

1. The Hole must be aligned to form a straight line the entire length of the Pipe Extender. The hole must be cored with the top of hole 2" below the seat's top main reinforcement. During construction hole ends must be capped to prevent debris intrusion.
2. Pipe 6 XX-Strong galvanized pipe and 10" diameter hole.
3. Set pipe parallel to top of hole. Maintain a ¾" gap between pipe and top of hole.
4. Tightly wrap fixed side of pipe with 2 layers of 15 lbs building paper. Paper is to remain in place as a bond breaker.
5. Thread Pipe and Plate: 8 threads per inch per ASME B 1.20.1. Thread pipe 12" on both ends.
6. Apply Thread Locking System after grouting and tighten Threaded Plate snug against concrete surface, Hinge Seat Side only.
7. Existing reinforcement not shown.
8. Remove existing cable restrainers.

(1) For Location of pipe, see "HINGE RETROFIT DETAILS NO. 1" sheet.

SAN JOAQUIN RIVER BRIDGE

SEISMIC RETROFIT AND SCOUR COUNTERMEASURE

PIPE EXTENDER/SHEAR KEY DETAILS (RETROFIT)

	BY	CHECKED
DESIGN	EVAN FRANCILISO	KIM MORI
DETAILS	DAVID ELLIOTT	EVAN FRANCILISO
QUANTITIES	EVAN FRANCILISO	KIM MORI

STATE OF CALIFORNIA
DEPARTMENT OF TRANSPORTATION

DIVISION OF ENGINEERING SERVICES
STRUCTURE DESIGN
DESIGN BRANCH 9

BRIDGE NO. 42-0112
POST MILE 33.34

STRUCTURES DESIGN DETAIL SHEET (ENGLISH) (REV. 09-01-10)

ORIGINAL SCALE IN INCHES FOR REDUCED PLANS 0 1 2 3

UNIT: 3594
PROJECT NUMBER & PHASE: 0612000114-1
CONTRACT NO.: 06-0N9904

DISREGARD PRINTS BEARING EARLIER REVISION DATES

REVISION DATES 8-22-15 10-7-15 11-9-15 2-10-16

SHEET 17 OF 21

FILE => 42-0112-u-pipe ext_shear key.dgn

USERNAME => s113541 DATE PLOTTED => 18-MAY-2016 TIME PLOTTED => 11:33

DIST	COUNTY	ROUTE	POST MILES TOTAL PROJECT	SHEET No.	TOTAL SHEETS
06	Fre,Mad	41U	33.1/33.4, 0.0/0.3	110	113

Evan M. Francilico 2-26-16
REGISTERED CIVIL ENGINEER DATE

3-7-16
PLANS APPROVAL DATE

REGISTERED PROFESSIONAL ENGINEER
EVAN FRANCILISO
No. C66343
Exp. 6-30-2016
CIVIL
STATE OF CALIFORNIA

The State of California or its officers or agents shall not be responsible for the accuracy or completeness of electronic copies of this plan sheet.

The components of this Bridge Standard Drawing have been prepared under the responsible charge of the Technical Owner, a registered civil engineer in the State of California. Refer to: http://www.dot.ca.gov/hq/esc/techpubs/manual/bridgemanuals/bridge-standard-detail-sheet/index.html.
The selection and proper application of the component design and any modifications shown have been prepared under the responsible charge of the registered civil engineer for the project.

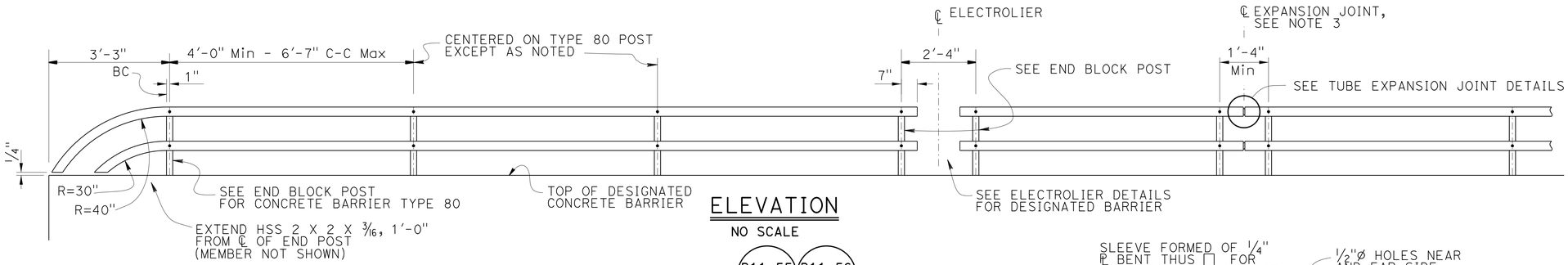

ELEVATION
NO SCALE

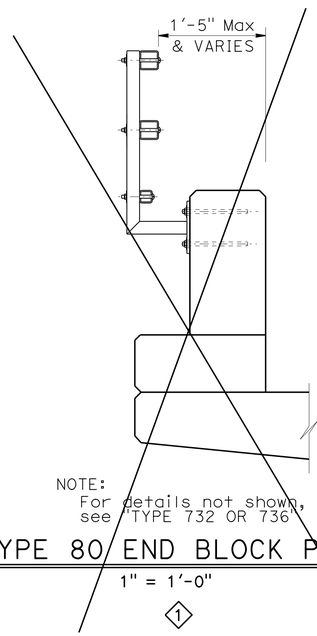

NOTE:
For details not shown, see "TYPE 732 OR 736"

TYPE 80 END BLOCK POST
1" = 1'-0"
1

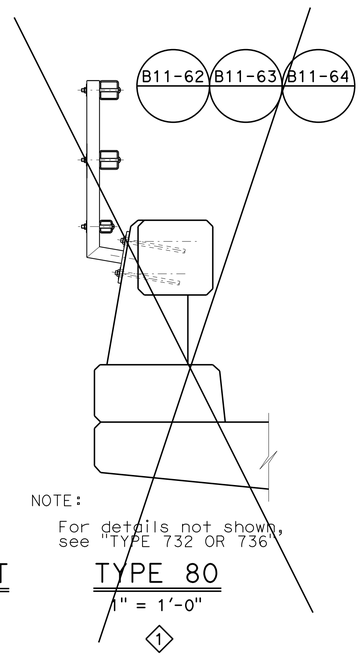

NOTE:
For details not shown, see "TYPE 732 OR 736"

TYPE 80
1" = 1'-0"
1

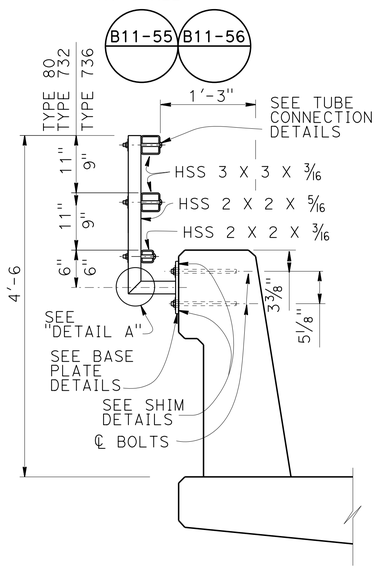

TYPE 732 OR 736
1" = 1'-0"

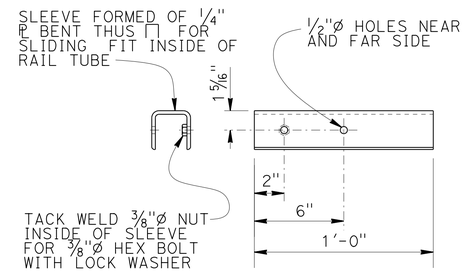

SLEEVE DETAIL
NO SCALE

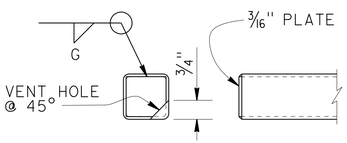

RAIL CAP DETAIL
NO SCALE

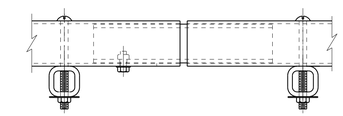

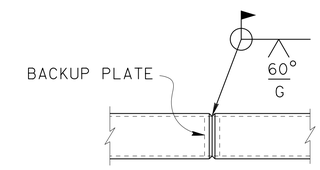

WELDED SPLICE DETAIL
NO SCALE

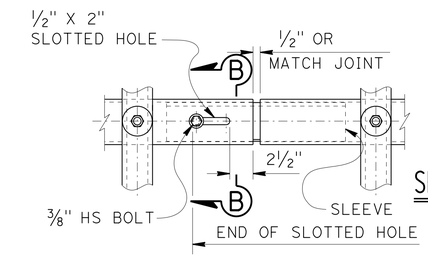

SECTION B-B
NO SCALE

TUBE EXPANSION JOINT DETAILS
NO SCALE

NOTES:

1. Post must be normal to railing.
2. Rail tubes must be shop bent or fabricated to fit horizontal curve when radius is less than 950'.
3. Tube expansion joints must be located in the tubes spanning deck or wall joints. Increase joint width in tubes to match expansion joint width and increase sleeve length correspondingly.
4. Top rail tube must be continuous over not less than two posts except a short post spacing is permitted near deck or wall joints, electroliers, or other rail discontinuities as noted.
5. See Project Plans for limits of tubular bicycle railing.

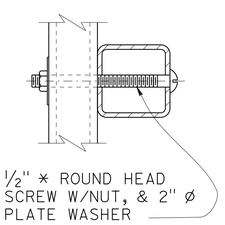

TUBE CONNECTION DETAIL
NO SCALE

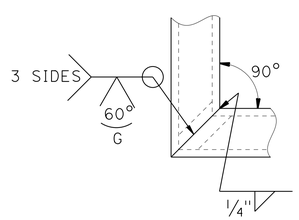

DETAIL A
NO SCALE
2

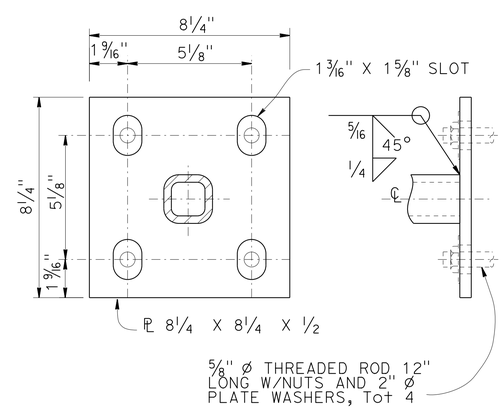

BASE PLATE DETAIL
NO SCALE

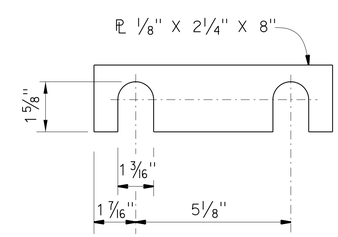

SHIM DETAILS
NO SCALE

NOTE:
THE CONTRACTOR SHALL VERIFY ALL CONTROLLING FIELD DIMENSIONS BEFORE ORDERING OR FABRICATING ANY MATERIAL.

MODIFIED
STANDARD DRAWING
FILE NO. xs16-035
APPROVAL DATE October 2014

1 DELETED DETAILS
2 MODIFIED DETAILS

STATE OF CALIFORNIA
DEPARTMENT OF TRANSPORTATION

DIVISION OF ENGINEERING SERVICES

BRIDGE NO. 42-0112
POST MILE 33.34

SPECIAL DETAILS
SAN JOAQUIN RIVER BRIDGE
SEISMIC RETROFIT AND SCOUR COUNTERMEASURE
CONCRETE BARRIER TYPE 80, 732 & 736
TUBULAR BICYCLE RAILING DETAILS

DS OSD 2147A (ENGLISH STANDARD DRAWING "XS" BORDER REV. (02-02-11)

ORIGINAL SCALE IN INCHES FOR REDUCED PLANS 0 1 2 3

UNIT: 3594
PROJECT NUMBER & PHASE: 0612000114-1
CONTRACT NO.: 06-0N9904

DISREGARD PRINTS BEARING EARLIER REVISION DATES
REVISION DATES 10-14-15 2-10-16 5-23-15 9-29-15
SHEET 18 OF 21

FILE => 42-0112-xs16-035[1].dgn

USERNAME => s113541 DATE PLOTTED => 18-MAY-2016 TIME PLOTTED => 11:34

DIST.	COUNTY	ROUTE	POST MILES TOTAL PROJECT	SHEET NO.	TOTAL SHEETS
06	Fre,Mad	41	R31.7/R33.5 R0.0/R3.2	526	528

CERTIFIED ENGINEERING GEOLOGIST

REGISTERED GEOLOGIST R.W. FOX No. 78 Exp. 6-30-95 CERTIFIED ENGINEERING GEOLOGIST STATE OF CALIFORNIA

9-23-96
PLANS APPROVAL DATE

BENCH MARK

BM BR RP NO. T-35 ELEV. 286.20
1" IP SW QUAD SAN JOAQUIN BR. 160.26'
RT OF STA 1759+09.30 POT C/L RTE 41.

BM BR RP NO. T-39 ELEV. 267.83
1" IP 3'E FENCE 500'N 200'W 66.40' RT OF
STA 3+31.81 POT C/L RTE 41.

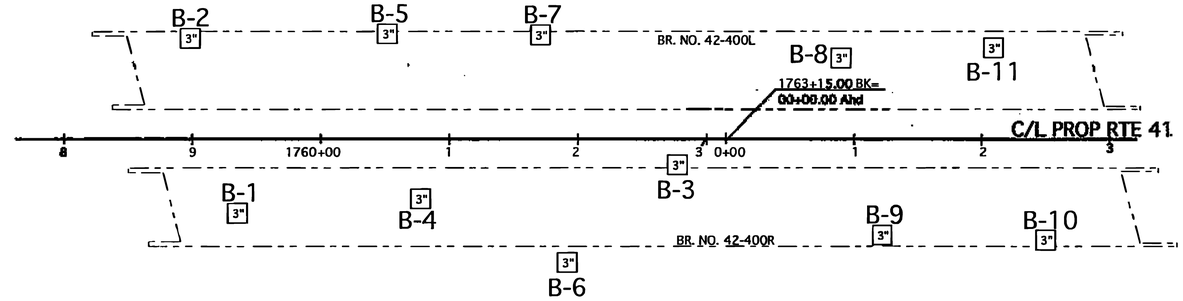

PLAN
1" = 60'

DIVISION OF ENGINEERING SERVICES - GEOTECHNICAL SERVICES

As-Built Log of Test Borings sheet is considered an informational document only. As such, the State of California registration seal with signature, license number and registration certificate expiration date confirm that this is a true and accurate copy of the original document. This drawing is available and presented only for the convenience of any bidder, contractor or other interested party.

DIST.	COUNTY	ROUTE	POST MILES-TOTAL PROJECT	Sheet No.	Total Sheets
06	Fre/Mad	41U	33.1/33.4,0.0/0.3	111	113

REGISTERED CIVIL ENGINEER — DATE 12-2-2015

TO ACCOMPANY PLANS DATED 3-7-16

REGISTERED PROFESSIONAL ENGINEER ZHAOHUI YANG No. 71801 Exp. 12-31-17 CIVIL STATE OF CALIFORNIA

LOG OF TEST BORINGS

NOTE: A COPY OF THIS LOG OF TEST BORINGS IS AVAILABLE AT OFFICE OF STRUCTURE MAINTENANCE AND INVESTIGATIONS, SACRAMENTO, CALIFORNIA

UNIT: 3594
PROJECT NUMBER & PHASE: 06120001141

BRIDGE No.	Sheet	of
42-0112	19	21

NOTE:
E = BLOW COUNT FOR ONE FOOT PENETRATION EXTRAPOLATED FROM BLOW COUNT FOR LESS THAN ONE FOOT (DUE TO CHANGE IN MATERIAL OR HARD DRIVING).

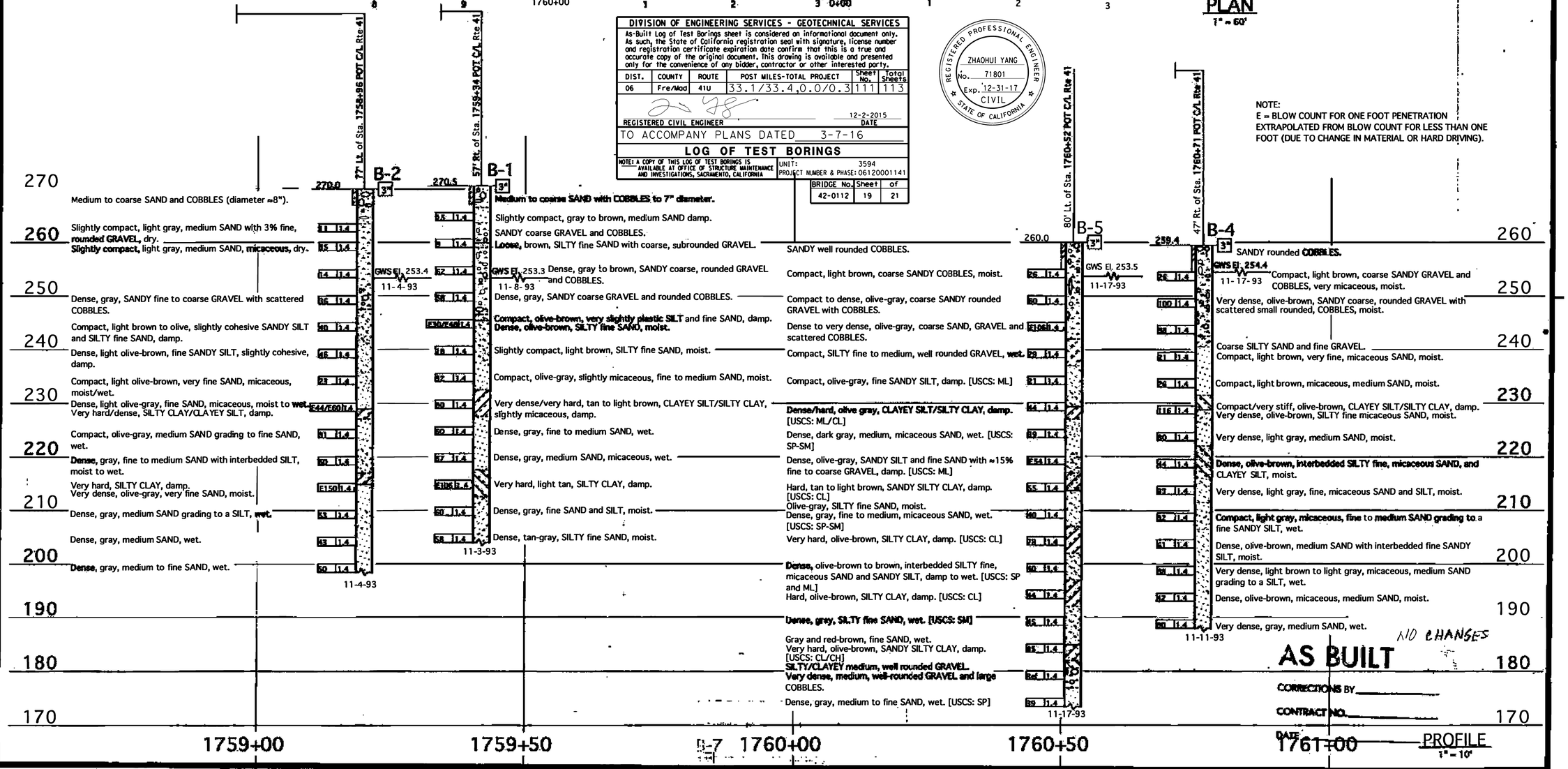

NO CHANGES

AS BUILT

CORRECTIONS BY _____

CONTRACT NO. _____

DATE _____

LEGEND OF BORING OPERATIONS

LEGEND OF EARTH MATERIALS

CONSISTENCY CLASSIFICATION FOR SOILS

According to the Standard Penetration Test

Penetration Index (Blows / ft)	Granular	Cohesive
0-4	Very loose	Very soft
5-9	Loose	Soft
10-19	Slightly compact	Stiff
20-34	Compact	Very stiff
35-69	Dense	Hard
>70	Very dense	Very hard

NOTE: Classification of earth material as shown on this sheet is based upon field inspection and is not to be construed to imply mechanical analysis.

DIVISION OF NEW TECHNOLOGY, MATERIALS AND RESEARCH	OFFICE OF ENGINEERING GEOLOGY
DRAWN BY Ken Wahl 3/94	
CHECKED BY	

FIELD INVESTIGATION BY: D. THOMAS

State of CALIFORNIA DEPARTMENT OF TRANSPORTATION

DIVISION OF STRUCTURES STRUCTURE DESIGN 13

BRIDGE NO. 42-0400R/L
POST MILE 33.13

SAN JOAQUIN RIVER BRIDGE ALT. 2

LOG OF TEST BORINGS 1 OF 3

ORIGINAL SCALE IN INCHES FOR REDUCED PLANS 0 1 2 3

CU 06
EA 305501

DISREGARD PRINTS BEARING EARLIER REVISION DATES

REVISION DATES (PRELIMINARY STAGE ONLY)

SHEET 23 OF 25

TL 6051 REV. 2/92

DIST.	COUNTY	ROUTE	POST MILES TOTAL PROJECT	SHEET NO.	TOTAL SHEETS
06	Fre,Mad	41	R31.7/R33.5, R0.0/R3.2	502	528

CERTIFIED ENGINEERING GEOLOGIST

REGISTERED GEOLOGIST — R.W. FOX — No. 70 — Exp. 8-31-95 — CERTIFIED ENGINEERING GEOLOGIST — STATE OF CALIFORNIA

9-23-96
PLANS APPROVAL DATE

The State of California or its officers or agents shall not be responsible for the accuracy or completeness of electronic copies of this plan sheet.

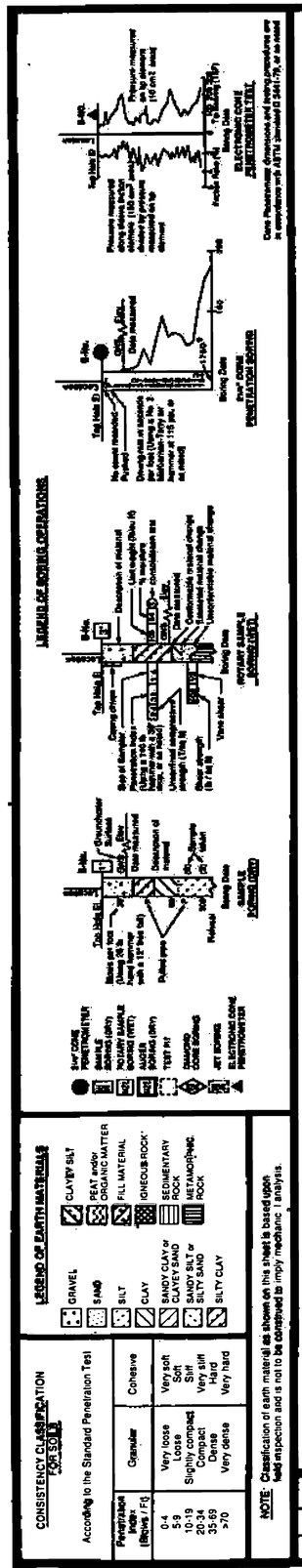

DIVISION OF ENGINEERING SERVICES - GEOTECHNICAL SERVICES					
As-Built Log of Test Borings sheet is considered an informational document only. As such, the State of California registration seal with signature, license number and registration certificate expiration date confirm that this is a true and accurate copy of the original document. This drawing is available and presented only for the convenience of any bidder, contractor or other interested party.					
DIST.	COUNTY	ROUTE	POST MILES-TOTAL PROJECT	Sheet No.	Total Sheets
06	Fre/Mad	41U	33.1/33.4,0.0/0.3	112	113
REGISTERED CIVIL ENGINEER			12-2-2015 DATE		
TO ACCOMPANY PLANS DATED 3-7-16					
LOG OF TEST BORINGS					
NOTE: A COPY OF THIS LOG OF TEST BORINGS IS AVAILABLE AT OFFICE OF STRUCTURE MAINTENANCE AND INVESTIGATIONS, SACRAMENTO, CALIFORNIA			UNIT: 3594 PROJECT NUMBER & PHASE: 0612000114 1		
BRIDGE No.	Sheet	of			
42-0112	20	21			

REGISTERED PROFESSIONAL ENGINEER — ZHAOHUI YANG — No. 71801 — Exp. 12-31-17 — CIVIL — STATE OF CALIFORNIA

FOR PLAN VIEW, SEE "LOG OF TEST BORINGS", SHEET 1 OF 3.

NOTE:
E = BLOW COUNT FOR ONE FOOT PENETRATION EXTRAPOLATED FROM BLOW COUNT FOR LESS THAN ONE FOOT (DUE TO CHANGE IN MATERIAL OR HARD DRIVING).

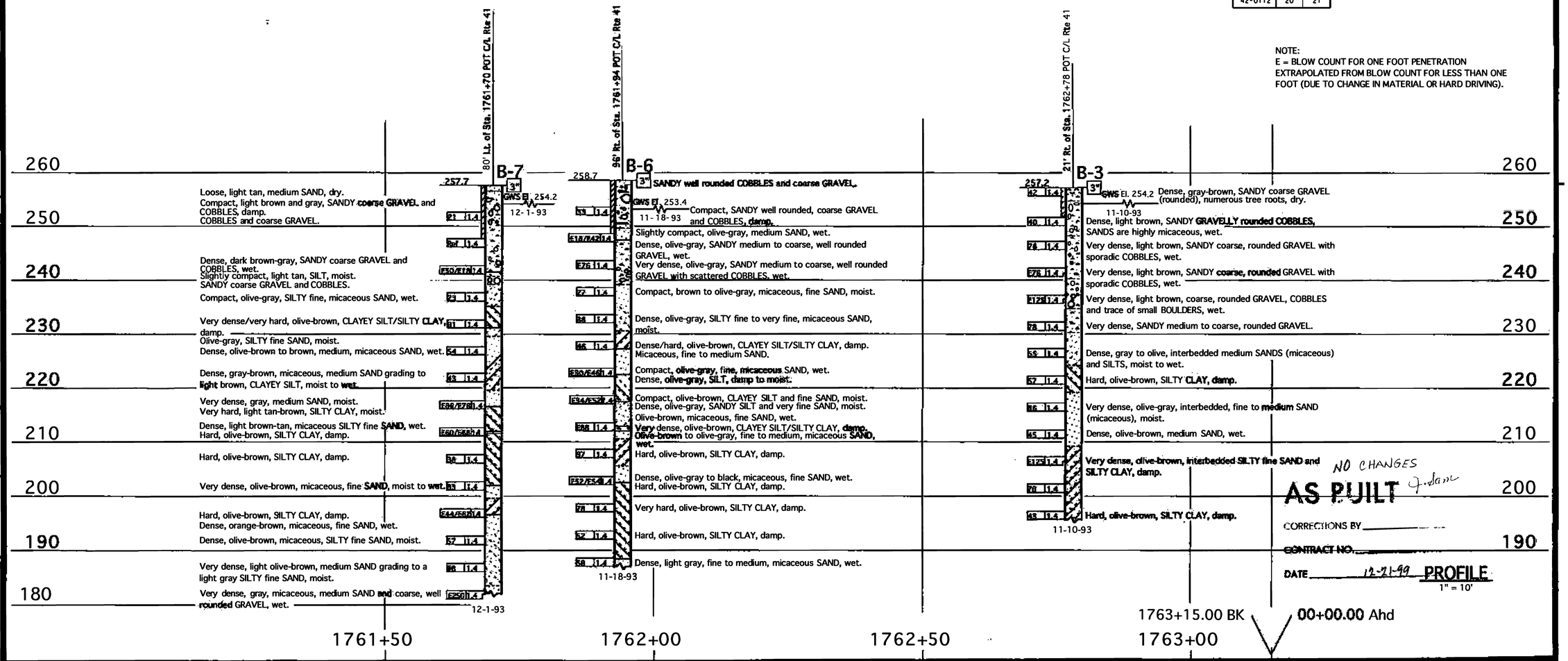

NO CHANGES
AS BUILT J. Jane
CORRECTIONS BY
CONTRACT NO.
DATE 12-21-99
PROFILE
1" = 10'

DIVISION OF NEW TECHNOLOGY, MATERIAL AND RESEARCH	OFFICE OF ENGINEERING GEOLOGY	FIELD INVESTIGATION BY:	State of CALIFORNIA DEPARTMENT OF TRANSPORTATION	DIVISION OF STRUCTURES STRUCTURE DESIGN 13	BRIDGE NO. 42-0400R/L	SAN JOAQUIN RIVER BRIDGE ALT. I
DRAWN BY Ken Wahl 3/94		D. THOMAS			POST MILE 33.13	LOG OF TEST BORINGS 2 OF 3
CHECKED BY						

ORIGINAL SCALE IN INCHES FOR REDUCED PLANS 0 1 2 3

CU 06
EA 305501

DISREGARD PRINTS BEARING EARLIER REVISION DATES

REVISION DATES (PRELIMINARY STAGE ONLY)

SHEET 23 OF 24

DIST.	COUNTY	ROUTE	POST MILES TOTAL PROJECT	SHEET NO.	TOTAL SHEETS
06	Fre,Mad	41	R31.7/R33.5, R0.0/R3.2	503	528

CERTIFIED ENGINEERING GEOLOGIST

REGISTERED GEOLOGIST T.W. FOX No. 78 Exp. 8-31-96 CERTIFIED ENGINEERING GEOLOGIST STATE OF CALIFORNIA

9-23-96
PLANS APPROVAL DATE

The State of California or its officers or agents shall not be responsible for the accuracy or completeness of electronic copies of this plan sheet.

REGISTERED PROFESSIONAL ENGINEER ZHAOHUI YANG No. 71801 Exp. 12-31-17 CIVIL STATE OF CALIFORNIA

FOR PLAN VIEW, SEE "LOG OF TEST BORINGS", SHEET 1 OF 3.

DIVISION OF ENGINEERING SERVICES - GEOTECHNICAL SERVICES

As-Built Log of Test Borings sheet is considered an informational document only. As such, the State of California registration seal with signature, license number and registration certificate expiration date confirm that this is a true and accurate copy of the original document. This drawing is available and presented only for the convenience of any bidder, contractor or other interested party.

DIST.	COUNTY	ROUTE	POST MILES-TOTAL PROJECT	Sheet No.	Total Sheets
06	Fre/Mad	41U	33.1/33.4,0.0/0.3	113	113

REGISTERED CIVIL ENGINEER — DATE 12-2-2015

TO ACCOMPANY PLANS DATED 3-7-16

LOG OF TEST BORINGS

NOTE: A COPY OF THIS LOG OF TEST BORINGS IS AVAILABLE AT OFFICE OF STRUCTURE MAINTENANCE AND INVESTIGATIONS, SACRAMENTO, CALIFORNIA

UNIT: 3594
PROJECT NUMBER & PHASE: 06120001141

BRIDGE No.	Sheet	of
42-0112	21	21

NOTE:
E = BLOW COUNT OR ONE FOOT PENETRATION EXTRAPOLATED FROM BLOW COUNT OR LESS THAN ONE FOOT (DUE TO CHANGE IN MATERIAL OR ARD DRIVING).

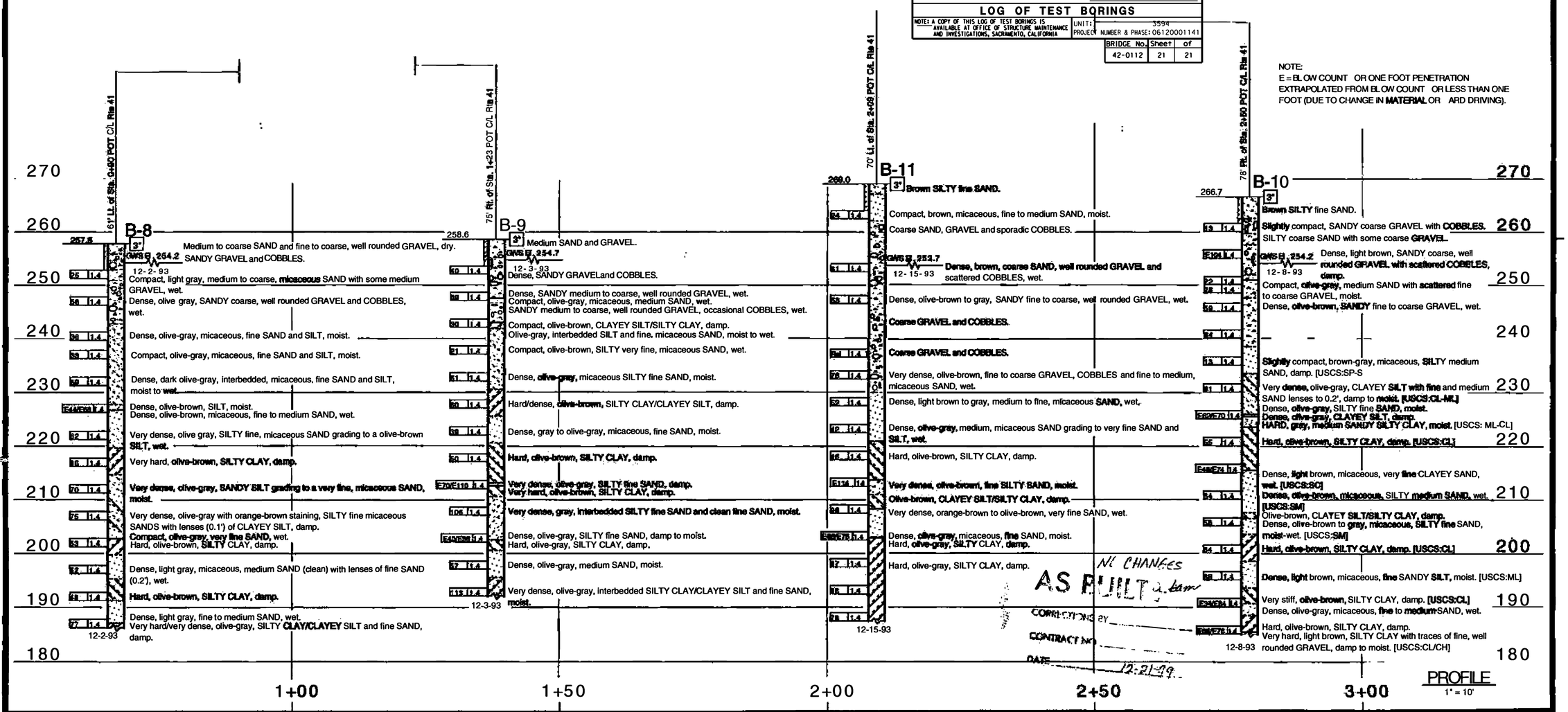

NC CHANGES
AS BUILT
CORRECTIONS BY
CONTRACT NO.
DATE 12-21-99

LEGEND OF BORING OPERATIONS

LEGEND OF EARTH MATERIALS: GRAVEL, SAND, SILT, CLAY, CLAYEY SILT, SANDY CLAY or CLAYEY SAND, SANDY SILT or SILTY SAND, SILTY CLAY, PEAT and/or ORGANIC MATTER, FILL MATERIAL, IGNEOUS ROCK, SEDIMENTARY ROCK, METAMORPHIC ROCK

CONSISTENCY CLASSIFICATION FOR SOILS
According to the Standard Penetration Test

Penetration Index (Blows / Ft)	Granular	Cohesive
0-4	Very loose	Very soft
5-9	Loose	Soft
10-19	Slightly compact	Stiff
20-34	Compact	Very stiff
35-69	Dense	Hard
>70	Very dense	Very hard

NOTE: Classification of earth material as shown on this sheet is based upon field inspection and is not to be construed to imply mechanical analysis.

DIVISION OF NEW TECHNOLOGY, MATERIALS AND RESEARCH	OFFICE OF ENGINEERING GEOLOGY
DRAWN BY Kim Wall 3/94	
CHECKED BY	

FIELD INVESTIGATION BY: D. THOMAS

State of CALIFORNIA DEPARTMENT OF TRANSPORTATION

DIVISION OF STRUCTURES STRUCTURE DESIGN 13

BRIDGE NO. 42-0400R/L
POST MILE 33.18

SAN JOAQUIN RIVER BRIDGE ALT. I
LOG OF TEST BORINGS 3 OF 3

ORIGINAL SCALE IN INCHES FOR REDUCED PLANS 0 1 2 3

CU 06
EA 305501

DISREGARD PRINTS BEARING EARLIER REVISION DATES

REVISION DATES (PRELIMINARY STAGE ONLY)

SHEET 24 OF 24

TL 6051 REV. 2/92