Dist	COUNTY	ROUTE	POST MILES TOTAL PROJECT	SHEET No.	TOTAL SHEETS
06	Ker	99	19.5	1	55

STATE OF CALIFORNIA

DEPARTMENT OF TRANSPORTATION

PROJECT PLANS FOR CONSTRUCTION ON

STATE HIGHWAY

IN KERN COUNTY
IN BAKERSFIELD
AT PANAMA LANE OVERCROSSING

TO BE SUPPLEMENTED BY STANDARD PLANS DATED 2010

INDEX OF PLANS

SHEET No.	DESCRIPTION
1	TITLE AND LOCATION MAP
2-4	TYPICAL CROSS SECTIONS
5	LAYOUT
6	PROFILE
7	PROFILE AND SUPERELEVATION DIAGRAM
8-11	CONSTRUCTION DETAILS
12	TEMPORARY WATER POLLUTION CONTROL PLAN
13-17	DRAINAGE PLANS, PROFILES, DETAILS, AND QUANTITIES
18	MOTORIST INFORMATION PLAN
19-20	STAGE CONSTRUCTION PLANS, DETAILS AND QUANTITIES
21-23	PAVEMENT DELINEATION PLANS AND QUANTITIES
24-27	SIGN DETAILS AND QUANTITIES
28-29	SUMMARY OF QUANTITIES
30	IRRIGATION PLAN
31-32	EROSION CONTROL LEGEND, QUANTITIES AND PLAN
33-39	ELECTRICAL PLANS
40	TRAFFIC CONTROL SYSTEM
41-52	REVISED STANDARD PLANS

STRUCTURE PLANS

53-55	BARRIER DETAILS

THE STANDARD PLANS LIST APPLICABLE TO THIS CONTRACT IS INCLUDED IN THE NOTICE TO BIDDERS AND SPECIAL PROVISIONS BOOK.

LOCATION MAP

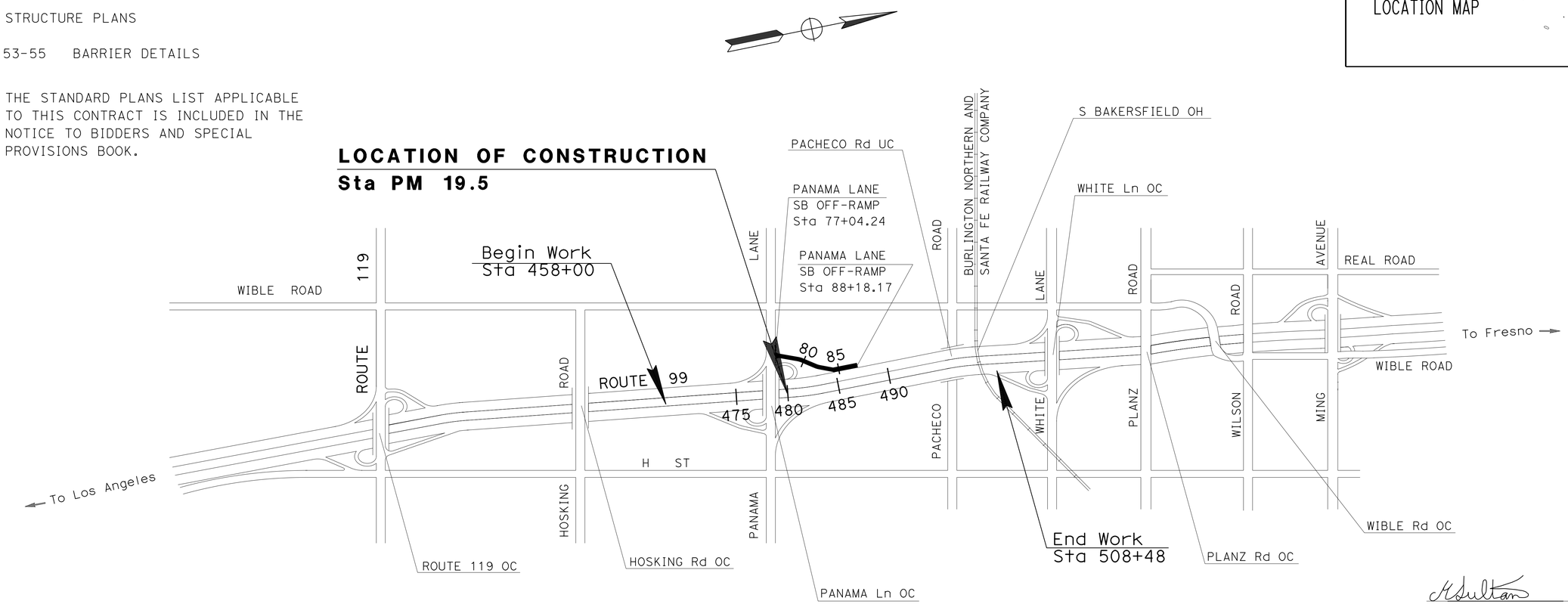

NO SCALE

THE CONTRACTOR SHALL POSSESS THE CLASS (OR CLASSES) OF LICENSE AS SPECIFIED IN THE "NOTICE TO BIDDERS."

PROJECT MANAGER: PAUL PINEDA

DESIGN ENGINEER: DAVID SANGHA

PROJECT ENGINEER / REGISTERED CIVIL ENGINEER — DATE: 02-01-13

MAHMOOD A SULTAN, No. 76344, Exp. 12-31-14, CIVIL — REGISTERED PROFESSIONAL ENGINEER — STATE OF CALIFORNIA

February 4, 2013
PLANS APPROVAL DATE

THE STATE OF CALIFORNIA OR ITS OFFICERS OR AGENTS SHALL NOT BE RESPONSIBLE FOR THE ACCURACY OR COMPLETENESS OF SCANNED COPIES OF THIS PLAN SHEET.

CONTRACT No.	06-0N6904
PROJECT ID	0600020643

LAST REVISION 02-04-13 — DATE PLOTTED => 21-FEB-2013 — TIME PLOTTED => 15:44

Dist	COUNTY	ROUTE	POST MILES TOTAL PROJECT	SHEET No.	TOTAL SHEETS
06	Ker	99	19.5	2	55

REGISTERED CIVIL ENGINEER 2-01-13 DATE

2-04-13
PLANS APPROVAL DATE

REGISTERED PROFESSIONAL ENGINEER MAHMOOD A SULTAN No. 76344 Exp. 12-31-14 CIVIL STATE OF CALIFORNIA

THE STATE OF CALIFORNIA OR ITS OFFICERS OR AGENTS SHALL NOT BE RESPONSIBLE FOR THE ACCURACY OR COMPLETENESS OF SCANNED COPIES OF THIS PLAN SHEET.

NOTES:

1. DIMENSIONS OF PAVEMENT STRUCTURES (STRUCTURAL SECTIONS) ARE SUBJECT TO TOLERANCES SPECIFIED IN THE STANDARD SPECIFICATIONS.
2. SUPERELEVATIONS ARE SHOWN ON THE SUPERELEVATION DIAGRAMS.
3. FOR LIMITS OF Conc CURB AND CONCRETE BARRIERS SEE LAYOUT SHEET.
4. REFER TO STRUCTURE PLANS FOR CONCRETE BARRIER DETAILS.
5. FOR LIMITS OF HMA AREA BETWEEN SOUNDWALL AND Conc BARRIER, SEE LAYOUT SHEET AND QUANTITY SHEET Q-1.

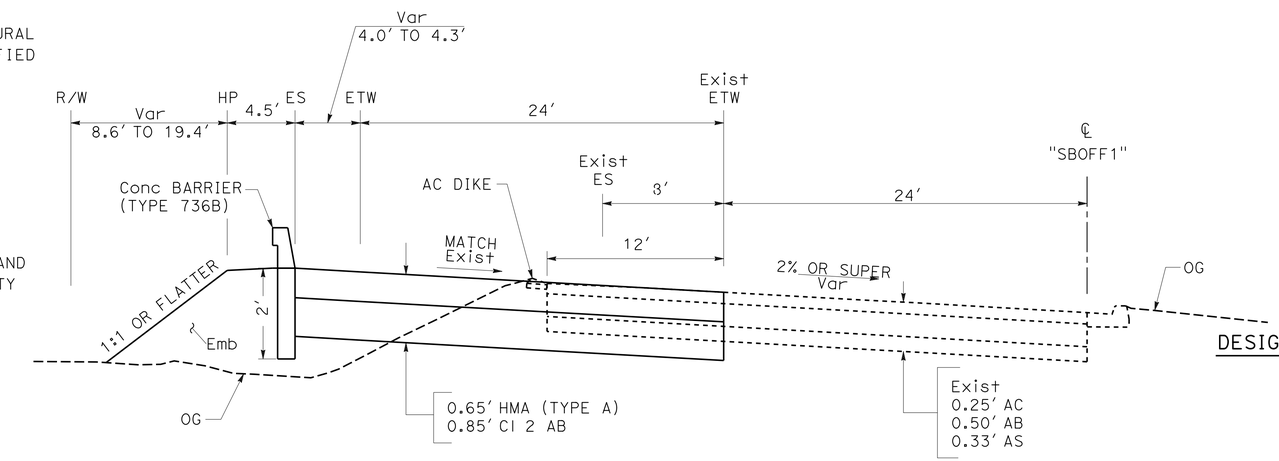

"SBOFF1" 78+88.62 TO "SBOFF1" 79+84.05

DESIGN DESIGNATION (PANAMA LANE SB OFF RAMP)

2013 ADT	17,200
2023 ADT	19,500
2033 ADT	22,000
D	75%
T	10%
TI	11.0
V	35 MPH

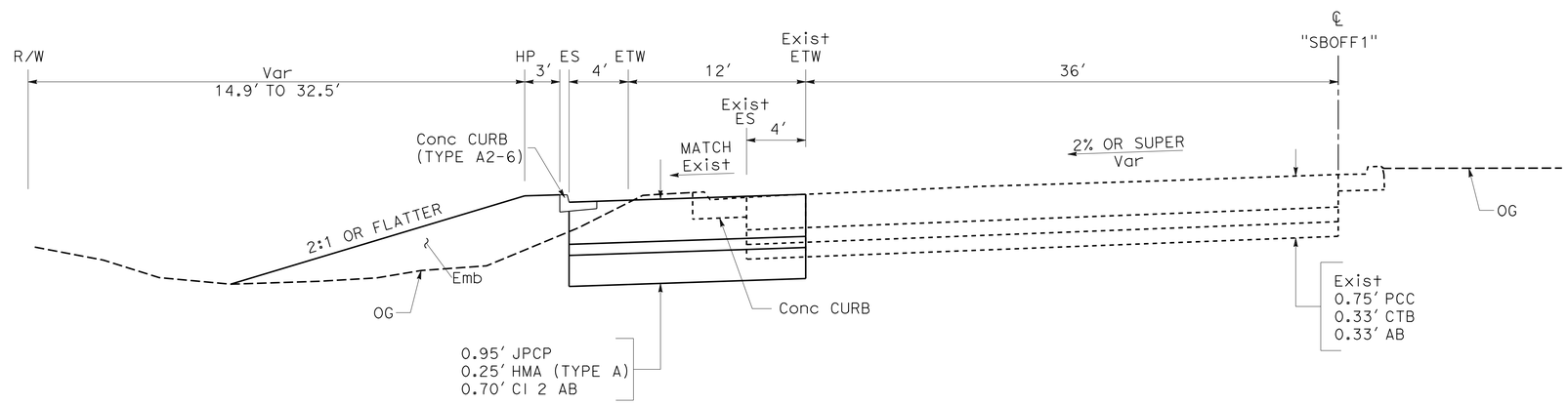

"SBOFF1" 77+42.84 TO "SBOFF1" 78+88.62

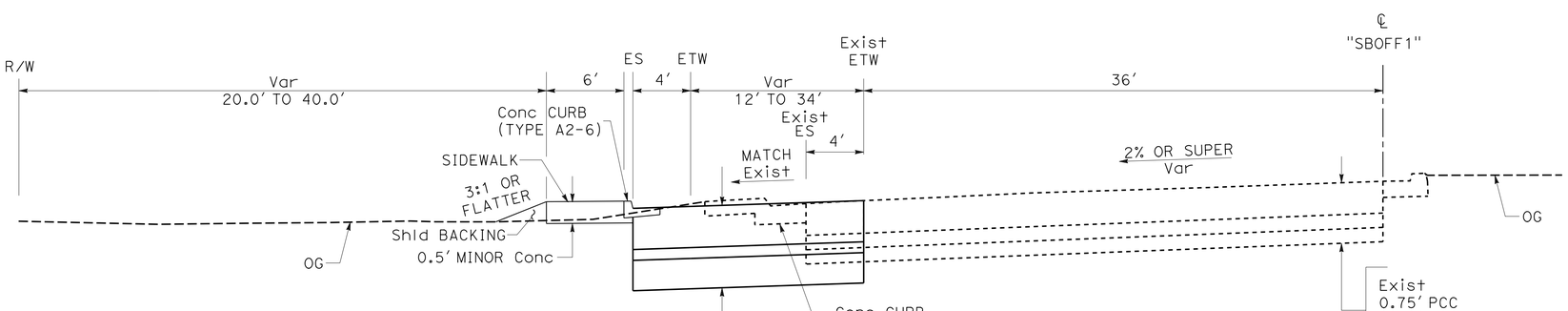

"SBOFF1" 77+04.24 TO "SBOFF1" 77+42.84

ROUTE 99

TYPICAL CROSS SECTIONS

NO SCALE

X-1

REVISED BY | DATE REVISED

DAVID LOCKLING | MAHMOOD SULTAN

CALCULATED-DESIGNED BY | CHECKED BY

FUNCTIONAL SUPERVISOR: DAVID SANGHA

STATE OF CALIFORNIA - DEPARTMENT OF TRANSPORTATION

Caltrans® DESIGN

LAST REVISION 02-14-13 | DATE PLOTTED => 21-FEB-2013 | TIME PLOTTED => 15:44

Dist	COUNTY	ROUTE	POST MILES TOTAL PROJECT	SHEET No.	TOTAL SHEETS
06	Ker	99	19.5	3	55

REGISTERED CIVIL ENGINEER 2-01-13 DATE

2-04-13
PLANS APPROVAL DATE

REGISTERED PROFESSIONAL ENGINEER MAHMOOD A SULTAN No. 76344 Exp. 12-31-14 CIVIL STATE OF CALIFORNIA

THE STATE OF CALIFORNIA OR ITS OFFICERS OR AGENTS SHALL NOT BE RESPONSIBLE FOR THE ACCURACY OR COMPLETENESS OF SCANNED COPIES OF THIS PLAN SHEET.

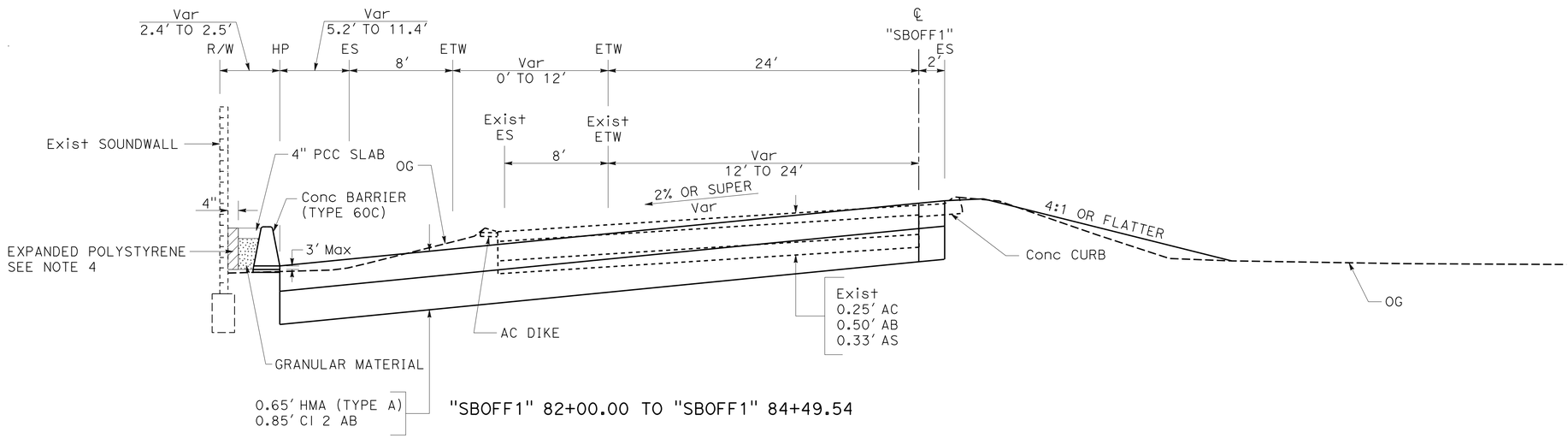

"SBOFF1" 82+00.00 TO "SBOFF1" 84+49.54

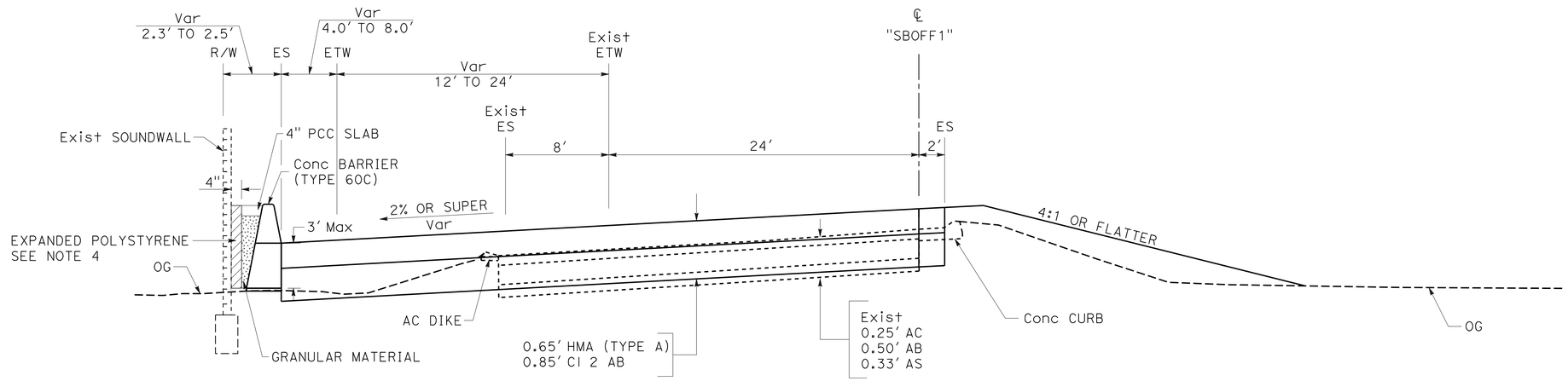

"SBOFF1" 81+00.00 TO "SBOFF1" 82+00.00

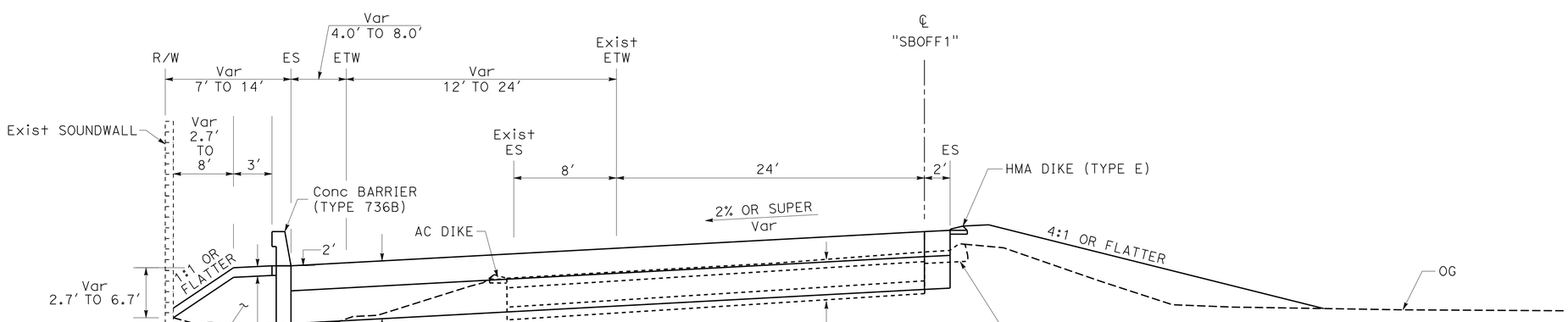

"SBOFF1" 79+84.06 TO "SBOFF1" 81+00.00

ROUTE 99

TYPICAL CROSS SECTIONS

NO SCALE

X-2

STATE OF CALIFORNIA - DEPARTMENT OF TRANSPORTATION

DESIGN

FUNCTIONAL SUPERVISOR: DAVID SANGHA

CALCULATED-DESIGNED BY: DAVID LOCKLING

CHECKED BY: MAHMOOD SULTAN

REVISED BY / DATE REVISED

LAST REVISION 02-08-13 DATE PLOTTED => 21-FEB-2013 TIME PLOTTED => 15:44

Dist	COUNTY	ROUTE	POST MILES TOTAL PROJECT	SHEET No.	TOTAL SHEETS
06	Ker	99	19.5	4	55

REGISTERED CIVIL ENGINEER 02-01-13 DATE

2-04-13
PLANS APPROVAL DATE

REGISTERED PROFESSIONAL ENGINEER MAHMOOD A SULTAN No. 76344 Exp. 12-31-14 CIVIL STATE OF CALIFORNIA

THE STATE OF CALIFORNIA OR ITS OFFICERS OR AGENTS SHALL NOT BE RESPONSIBLE FOR THE ACCURACY OR COMPLETENESS OF SCANNED COPIES OF THIS PLAN SHEET.

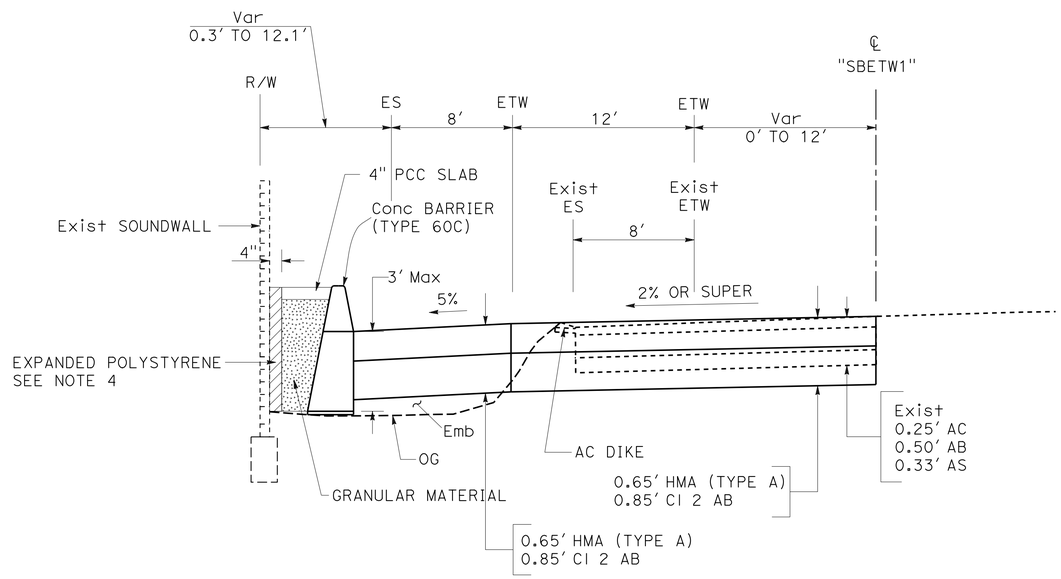

"SBETW1" 488+48.88 TO "SBETW1" 490+75.17

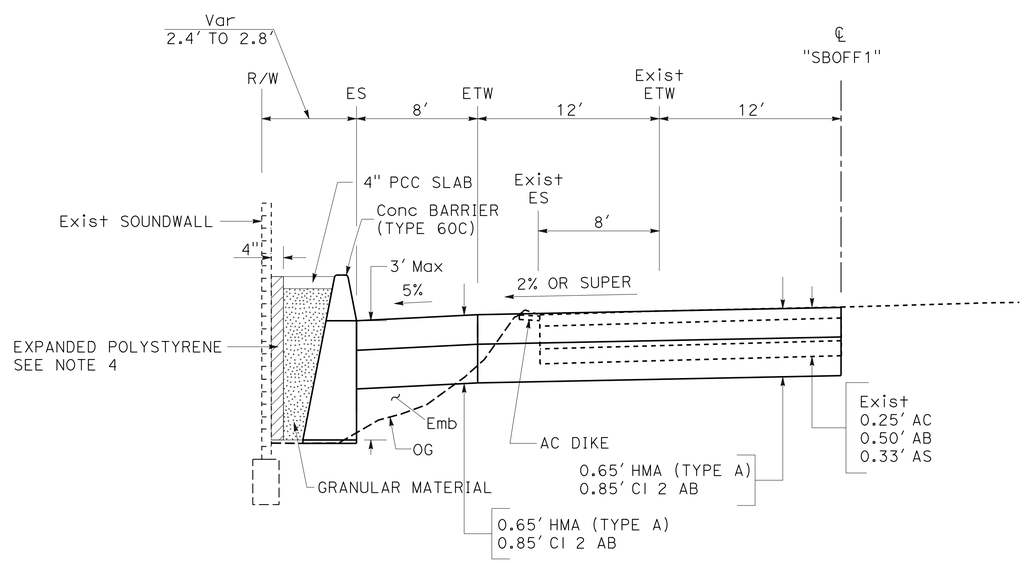

"SBOFF1" 84+49.54 TO "SBOFF1" 88+18.17

ROUTE 99

TYPICAL CROSS SECTIONS

NO SCALE **X-3**

STATE OF CALIFORNIA - DEPARTMENT OF TRANSPORTATION
Caltrans® **DESIGN**

FUNCTIONAL SUPERVISOR: DAVID SANGHA
CALCULATED-DESIGNED BY: DAVID LOCKLING
CHECKED BY: MAHMOOD SULTAN
REVISED BY / DATE REVISED

LAST REVISION 02-05-13
DATE PLOTTED => 21-FEB-2013
TIME PLOTTED => 15:44

Dist	COUNTY	ROUTE	POST MILES TOTAL PROJECT	SHEET No.	TOTAL SHEETS
06	Ker	99	19.5	5	55

REGISTERED CIVIL ENGINEER 2-01-13 DATE

2-04-13
PLANS APPROVAL DATE

REGISTERED PROFESSIONAL ENGINEER MAHMOOD A SULTAN No. 76344 Exp. 12-31-14 CIVIL STATE OF CALIFORNIA

THE STATE OF CALIFORNIA OR ITS OFFICERS OR AGENTS SHALL NOT BE RESPONSIBLE FOR THE ACCURACY OR COMPLETENESS OF SCANNED COPIES OF THIS PLAN SHEET.

LEGEND

- MINOR CONCRETE (TEXTURED PAVING)
- 6" COLD PLANE AC Pvmt
  6" PLACE HMA
- CONCRETE BARRIER

NOTES:

1. FOR ACCURATE RIGHT OF WAY DATA, CONTACT RIGHT OF WAY ENGINEERING AT THE DISTRICT OFFICE.
2. LOCATIONS OF UTILITY FACILITIES SHOWN ON THESE PLANS ARE APPROXIMATE AND SHALL BE VERIFIED BY THE CONTRACTOR PRIOR TO CONSTRUCTION.
3. SEE STANDARD PLANS FOR CURB RAMP DETAILS.
4. UTILITY OWNERSHIP ON THIS PROJECT:
   ELECTRIC - PACIFIC GAS AND ELECTRIC (PG&E)
   CABLE TV - BRIGHT HOUSE NETWORK (BHN)
   SEWER - CITY OF BAKERSFIELD
   OIL - KERN OIL AND REFINING COMPANY (KERN OIL)
5. SEE EXTEND IRRIGATION CROSSOVERS TABLE ON SUMMARY OF QUANTITIES SHEET FOR WSP QUANTITY AND IRRIGATION PLAN.
6. FOR LOCATIONS OF COLD PLANE AC PAVEMENT, SEE CONSTRUCTION DETAIL PLAN SHEET C-2 AND ELECTRICAL PLAN SHEET E-3.

ABBREVIATIONS:

AFTS - ALTERNATIVE FLARED TERMINAL SYSTEM
EAA - END ANCHOR ASSEMBLY

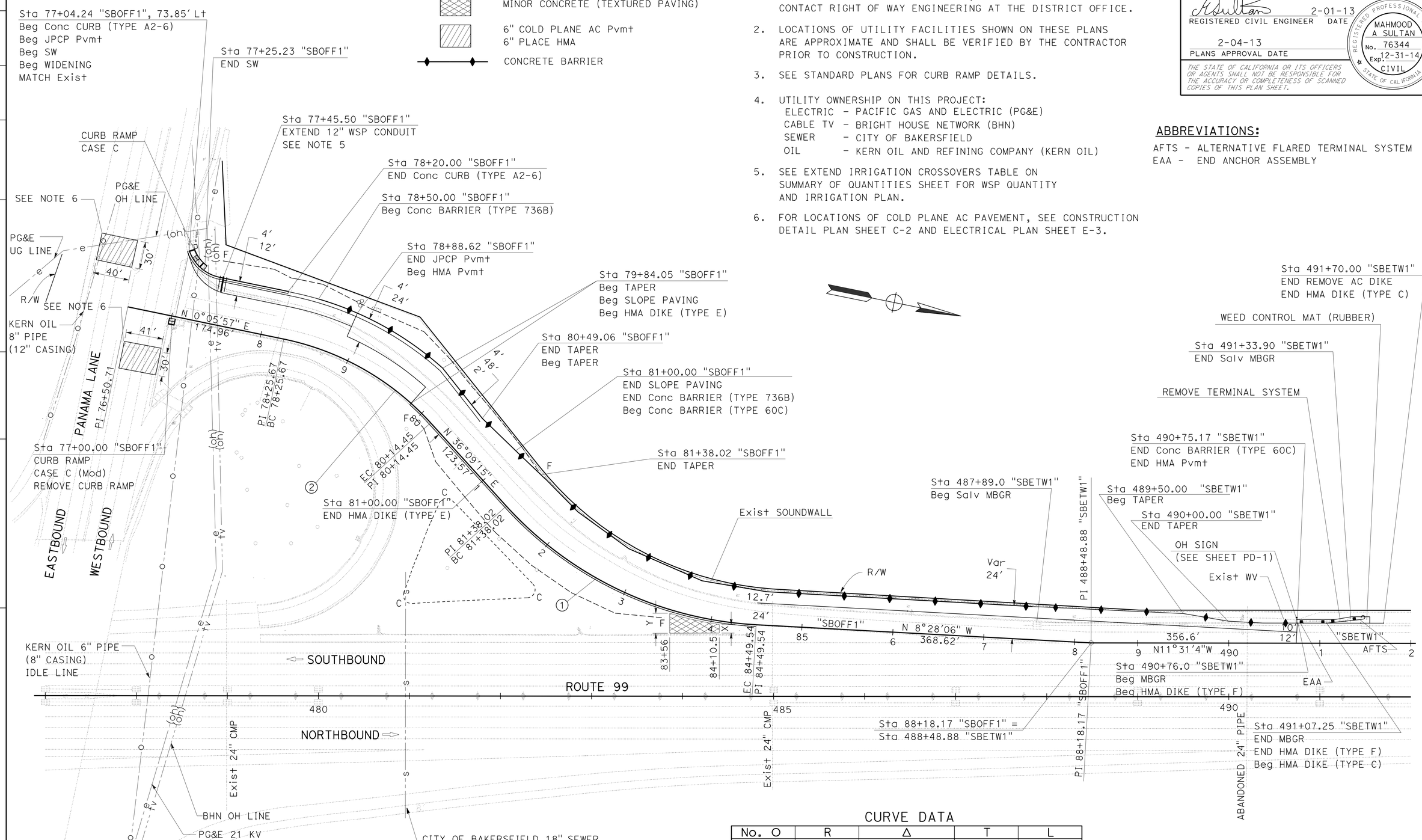

CURVE DATA

No. O	R	Δ	T	L
1	400.00'	44°37'22"	164.14'	311.52'
2	300.00'	36°3'18"	97.64'	188.78'

LAYOUT L-1

SCALE: 1"=50'

STATE OF CALIFORNIA - DEPARTMENT OF TRANSPORTATION
DESIGN
FUNCTIONAL SUPERVISOR: DAVID SANGHA
CALCULATED-DESIGNED BY: MAHMOOD SULTAN
CHECKED BY: CARMELITA BELLE
REVISED BY
DATE REVISED

LAST REVISION 02-05-13
DATE PLOTTED => 21-FEB-2013
TIME PLOTTED => 15:44

Dist	COUNTY	ROUTE	POST MILES TOTAL PROJECT	SHEET No.	TOTAL SHEETS
06	Ker	99	19.5	6	55

REGISTERED CIVIL ENGINEER 2-01-13 DATE

2-04-13
PLANS APPROVAL DATE

REGISTERED PROFESSIONAL ENGINEER MAHMOOD A SULTAN No. 76344 Exp. 12-31-14 CIVIL STATE OF CALIFORNIA

THE STATE OF CALIFORNIA OR ITS OFFICERS OR AGENTS SHALL NOT BE RESPONSIBLE FOR THE ACCURACY OR COMPLETENESS OF SCANNED COPIES OF THIS PLAN SHEET.

ABBREVIATION:

VPI - VERTICAL POINT OF INTERSECTION

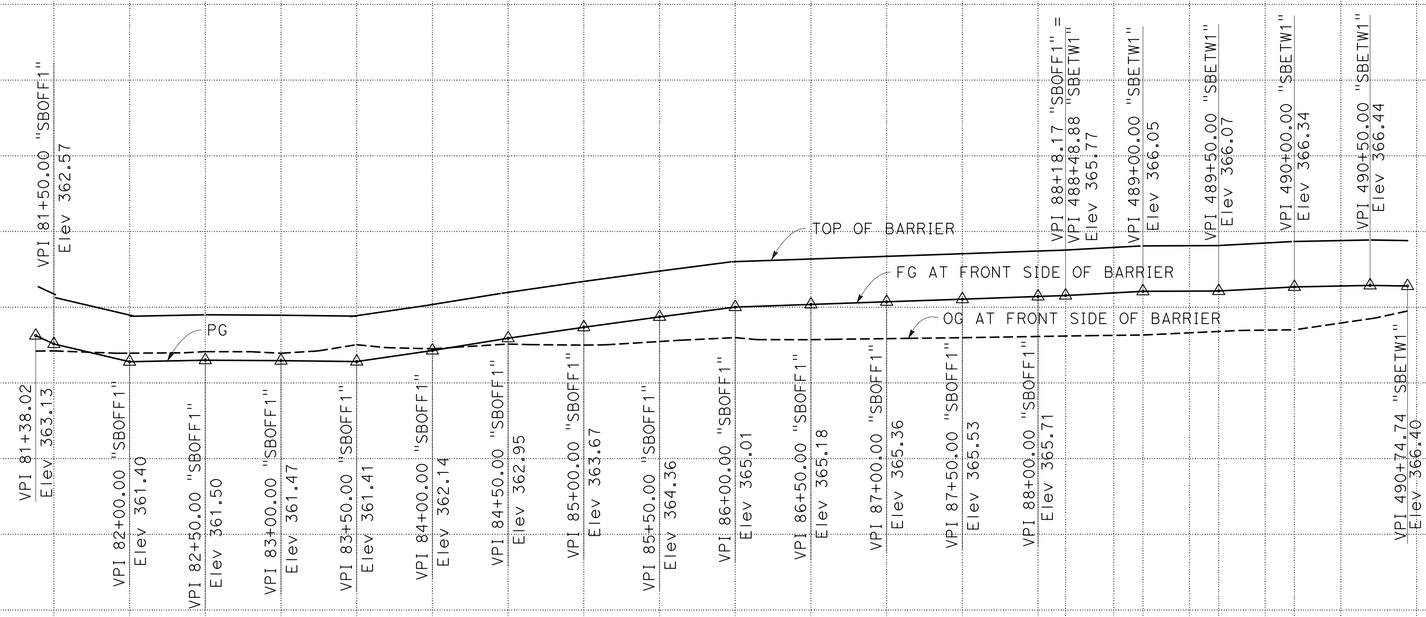

CONCRETE BARRIER (TYPE 60C) PROFILE

ROUTE 99 SOUTHBOUND OFF-RAMP
AT PANAMA LANE ("SBOFF1" AND "SBETW1")

SCALE: Horiz 1"=50'
Vert 1"=5'

PROFILE

P-1

STATE OF CALIFORNIA - DEPARTMENT OF TRANSPORTATION
Caltrans® **DESIGN**

FUNCTIONAL SUPERVISOR: DAVID SANGHA

CALCULATED-DESIGNED BY: HARJINDER DHILLON
CHECKED BY: MAHMOOD SULTAN

REVISED BY
DATE REVISED

LAST REVISION 02-07-13
DATE PLOTTED => 21-FEB-2013
TIME PLOTTED => 15:44

Dist	COUNTY	ROUTE	POST MILES TOTAL PROJECT	SHEET No.	TOTAL SHEETS
06	Ker	99	19.5	7	55

REGISTERED CIVIL ENGINEER 02-01-13 DATE

02-04-13
PLANS APPROVAL DATE

REGISTERED PROFESSIONAL ENGINEER MAHMOOD A SULTAN No. 76344 Exp. 12-31-14 CIVIL STATE OF CALIFORNIA

THE STATE OF CALIFORNIA OR ITS OFFICERS OR AGENTS SHALL NOT BE RESPONSIBLE FOR THE ACCURACY OR COMPLETENESS OF SCANNED COPIES OF THIS PLAN SHEET.

ABBREVIATIONS:

K - DISTANCE IN FEET REQUIRED TO ACHIEVE A 1% CHANGE IN GRADE
VPI - VERTICAL POINT OF INTERSECTION
VPOT - VERTICAL POINT OF TANGENT
P+ - POINT

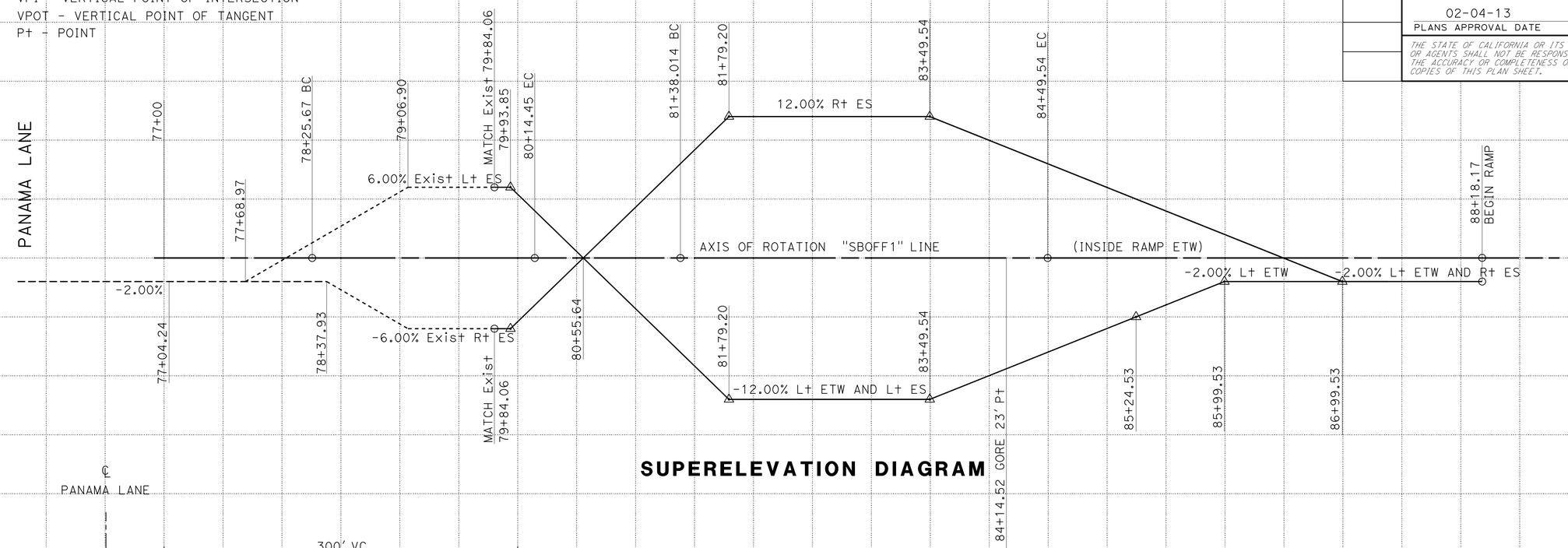

SUPERELEVATION DIAGRAM

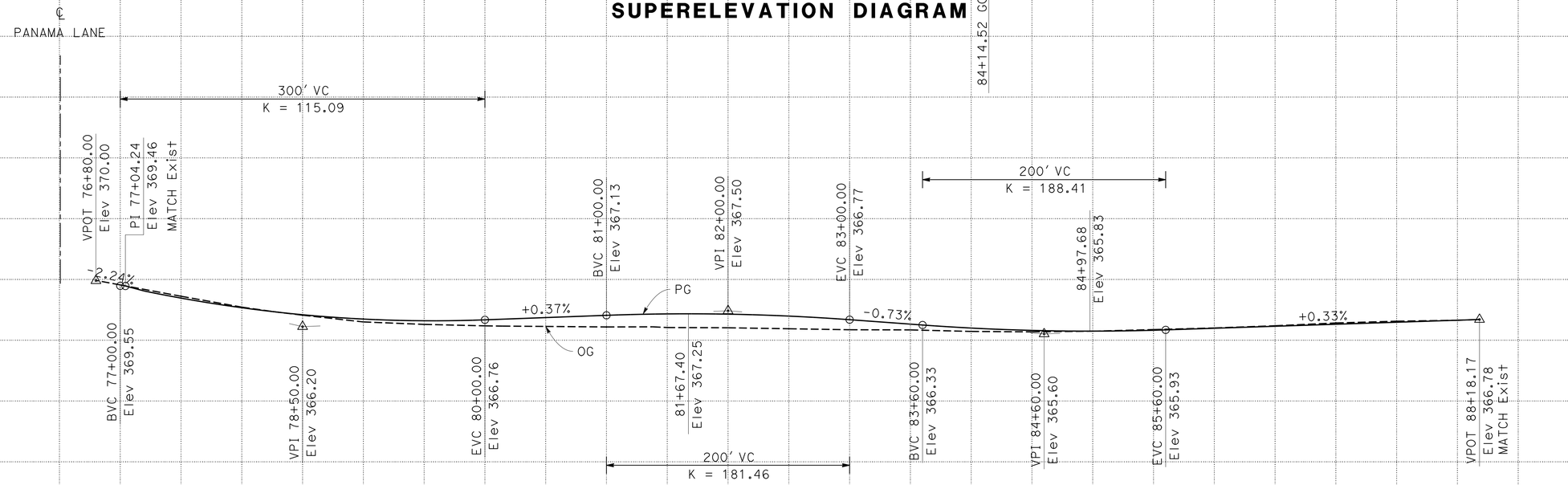

PROFILE

ROUTE 99 SOUTHBOUND OFF-RAMP
AT PANAMA LANE ("SBOFF1")

PROFILE AND SUPERELEVATION DIAGRAM

SCALE: Horiz 1"=50'
Vert 1"=5'

PS-1

STATION		76	77	78	79	80	81	82	83	84	85	86	87	88	89	TOTAL
CY	Exc						1679									1679
	Emb						1532									1532

STATE OF CALIFORNIA - DEPARTMENT OF TRANSPORTATION
Caltrans DESIGN

FUNCTIONAL SUPERVISOR: DAVID SANGHA
CALCULATED-DESIGNED BY: HARJINDER DHILLON
CHECKED BY: MAHMOOD SULTAN
REVISED BY / DATE REVISED

LAST REVISION 02-14-13
DATE PLOTTED => 21-FEB-2013
TIME PLOTTED => 15:44

Dist	COUNTY	ROUTE	POST MILES TOTAL PROJECT	SHEET No.	TOTAL SHEETS
06	Ker	99	19.5	8	55

REGISTERED CIVIL ENGINEER 02-01-13 DATE

02-04-13
PLANS APPROVAL DATE

REGISTERED PROFESSIONAL ENGINEER MAHMOOD A SULTAN No. 76344 Exp. 12-31-14 CIVIL STATE OF CALIFORNIA

THE STATE OF CALIFORNIA OR ITS OFFICERS OR AGENTS SHALL NOT BE RESPONSIBLE FOR THE ACCURACY OR COMPLETENESS OF SCANNED COPIES OF THIS PLAN SHEET.

NOTE:

FOR CURB RAMP DETAILS NOT SHOWN, SEE STANDARD PLANS.

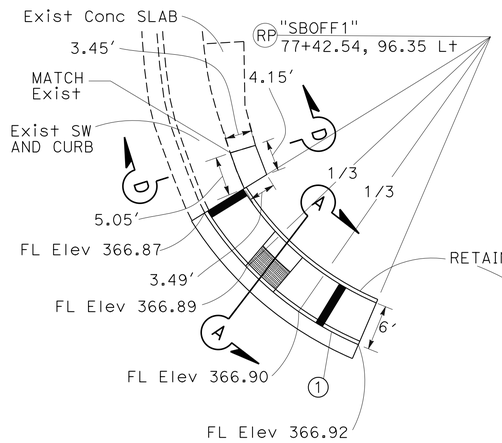

CASE C
NORTHWEST CORNER

CURVE DATA

No. O	R	Δ	T	L
1	45.00'	34°35'01"	14.01'	27.16'

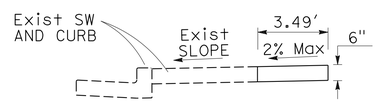

SECTION D-D

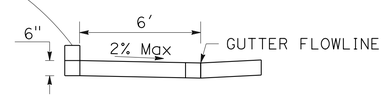

SECTION A-A

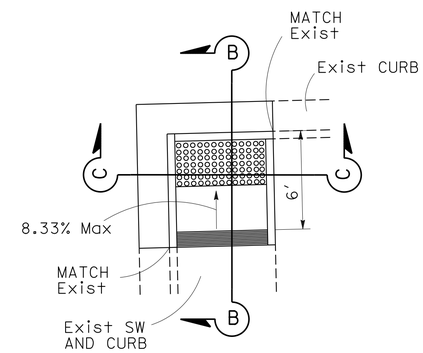

CASE C MODIFIED
NORTHEAST CORNER

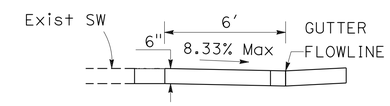

SECTION B-B

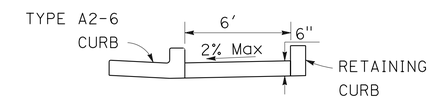

SECTION C-C

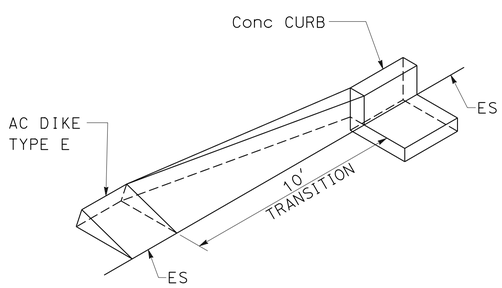

TRANSITION FROM
CONCRETE CURB
TO HMA DIKE TYPE E

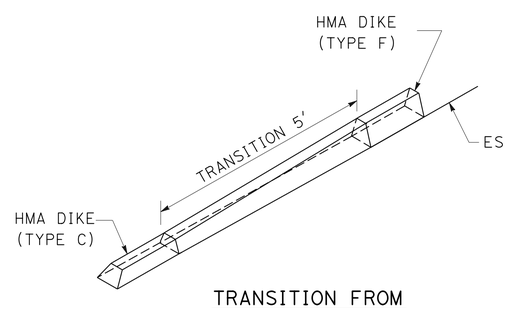

TRANSITION FROM
HMA DIKE TYPE C
TO TYPE F

CONSTRUCTION DETAILS

C-1

NO SCALE

STATE OF CALIFORNIA - DEPARTMENT OF TRANSPORTATION
Caltrans® DESIGN

FUNCTIONAL SUPERVISOR: DAVID SANGHA
CALCULATED-DESIGNED BY: HARJINDER DHILLON
CHECKED BY: MAHMOOD SULTAN
REVISED BY
DATE REVISED

LAST REVISION 02-05-13
DATE PLOTTED => 21-FEB-2013
TIME PLOTTED => 15:44

Dist	COUNTY	ROUTE	POST MILES TOTAL PROJECT	SHEET No.	TOTAL SHEETS
06	Ker	99	19.5	9	55

REGISTERED CIVIL ENGINEER 02-01-13 DATE

2-04-13
PLANS APPROVAL DATE

REGISTERED PROFESSIONAL ENGINEER MAHMOOD A SULTAN No. 76344 Exp. 12-31-14 CIVIL STATE OF CALIFORNIA

THE STATE OF CALIFORNIA OR ITS OFFICERS OR AGENTS SHALL NOT BE RESPONSIBLE FOR THE ACCURACY OR COMPLETENESS OF SCANNED COPIES OF THIS PLAN SHEET.

NOTE:
6" x 6" - W1.4 x 1.4 (STEEL MESH)

LEGEND

⇨ DIRECTION OF TRAFFIC

6" COLD PLANE AC Pvmt
6" PLACE HMA

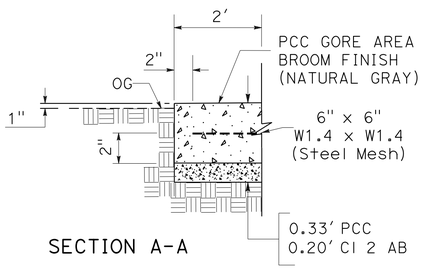

SECTION A-A

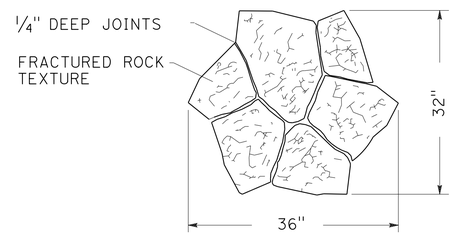

PLAN
STAMPED STONE PATTERN

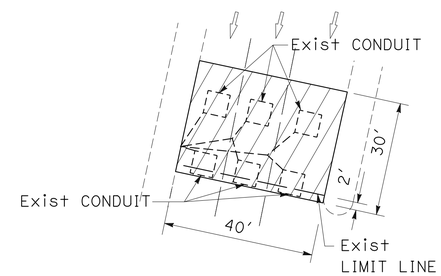

PANAMA LANE
EASTBOUND

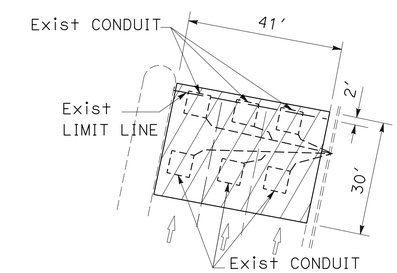

PANAMA LANE
WESTBOUND

COLD PLANE AC PAVMENT

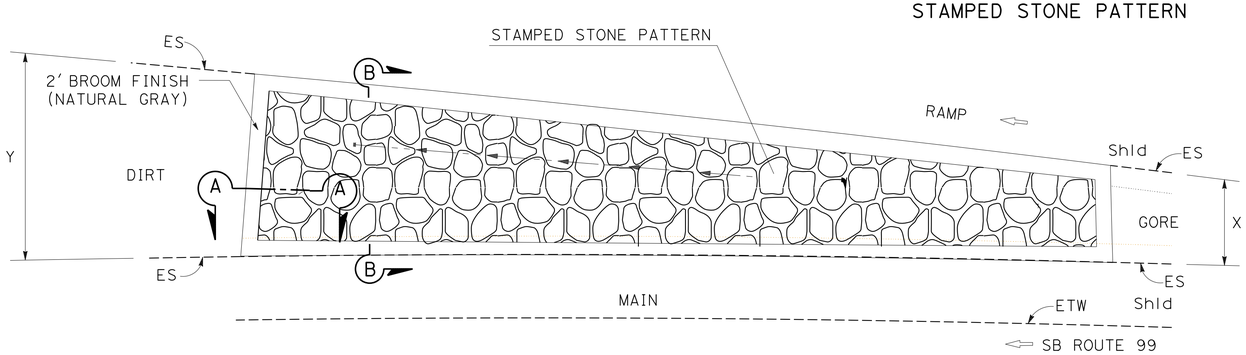

PLAN

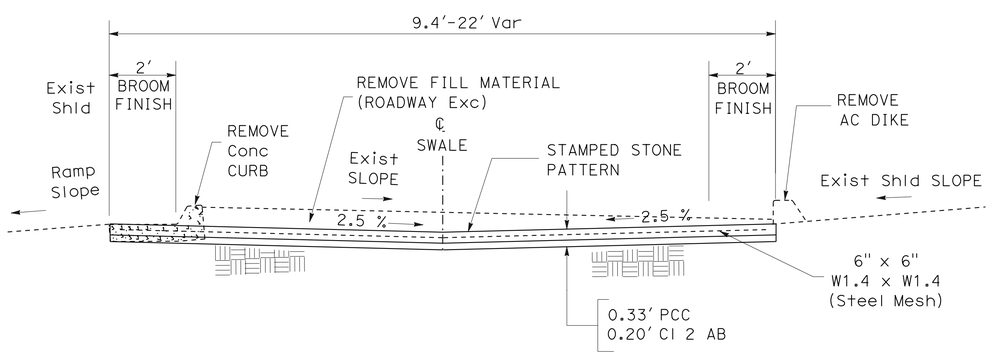

SECTION B-B

MINOR CONCRETE (TEXTURED PAVING) DIMENSIONS

SHEET No.	ALIGNMENT	LOCATION		"X"	"Y"
		STA	STA	FT	FT
L-1	"SBOFF1"	83+56.00	84+10.50	9.4	22

MINOR CONCRETE (TEXTURED PAVING)

ALL DIMENSIONS ARE IN FEET UNLESS OTHERWISE SHOWN

CONSTRUCTION DETAILS

C-2

NO SCALE

STATE OF CALIFORNIA - DEPARTMENT OF TRANSPORTATION
Caltrans®
DESIGN
FUNCTIONAL SUPERVISOR DAVID SANGHA
CALCULATED-DESIGNED BY HARJINDER DHILLON
CHECKED BY MAHMOOD SULTAN
REVISED BY
DATE REVISED

LAST REVISION 02-05-13 | DATE PLOTTED => 21-FEB-2013 | TIME PLOTTED => 15:44

Dist	COUNTY	ROUTE	POST MILES TOTAL PROJECT	SHEET No.	TOTAL SHEETS
06	Ker	99	19.5	10	55

REGISTERED CIVIL ENGINEER 02-01-13 DATE

02-04-13
PLANS APPROVAL DATE

REGISTERED PROFESSIONAL ENGINEER MAHMOOD A SULTAN No. 76344 Exp. 12-31-14 CIVIL STATE OF CALIFORNIA

THE STATE OF CALIFORNIA OR ITS OFFICERS OR AGENTS SHALL NOT BE RESPONSIBLE FOR THE ACCURACY OR COMPLETENESS OF SCANNED COPIES OF THIS PLAN SHEET.

NOTES:

1. WEED CONTROL MAT (RUBBER) MUST BE 48" WIDE INDIVIDUAL MATS OR 48" WIDE CONTINUOUS ROLL PRODUCT. INDIVIDUAL MATS ARE SHOWN.
2. EDGES OF MAT TO ABUT EDGES OF POST.
3. WHERE EDGE OF PAVED SHOULDER IS MORE THAN 24" FROM BACK OF POST, EDGE OF WEED CONTROL MAT MUST BE 24" FROM BACK OF POST. WHERE PAVED SHOULDER IS CONSTRUCTED 24" OR LESS FROM BACK OF POST, ABUT EDGE OF WEED CONTROL MAT AGAINST EDGE OF PAVED SHOULDER. WHERE DIKE IS CONSTRUCTED UNDER RAILING, ABUT EDGE OF WEED CONTROL MAT AGAINST BACK OF DIKE.
4. LAP WEED CONTROL MAT IN DIRECTION OF WATER FLOW.
5. FOR CONTINUOUS ROLL PRODUCT LOCATE OVERLAP JOINT AT OR BETWEEN POSTS AS SHOWN.
6. DIRECTION OF ADJACENT TRAFFIC INDICATED BY ⇦ .

LEGEND

WEED CONTROL MAT (RUBBER)

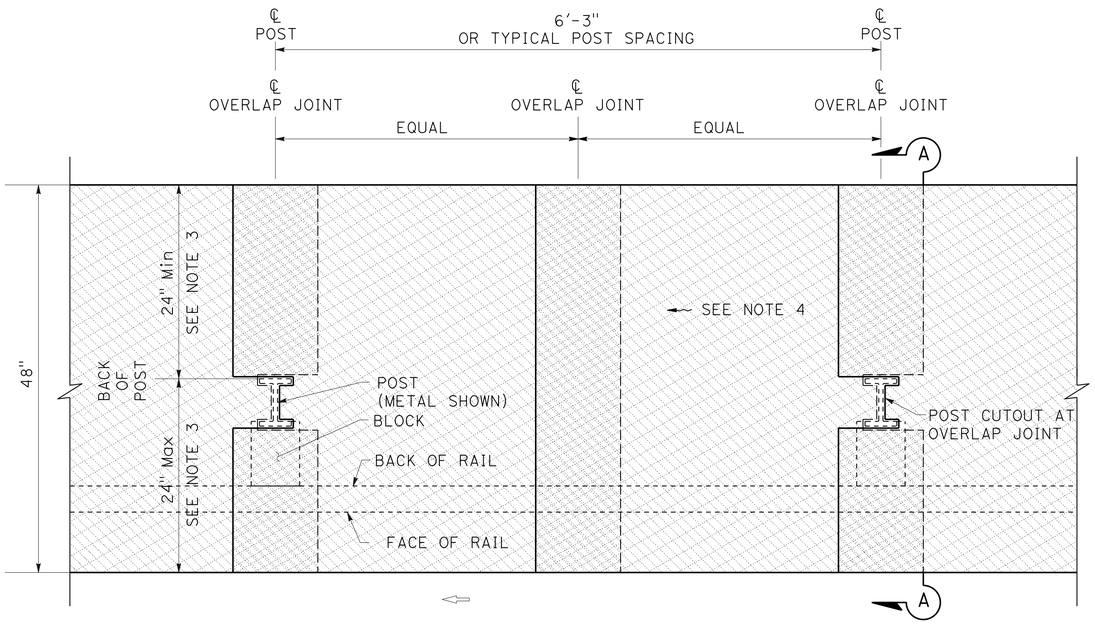

PLAN

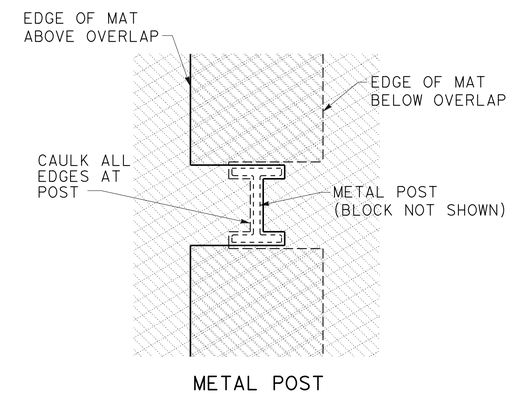

PLAN

POST CUTOUT AT OVERLAP JOINT

(SEE NOTE 2)

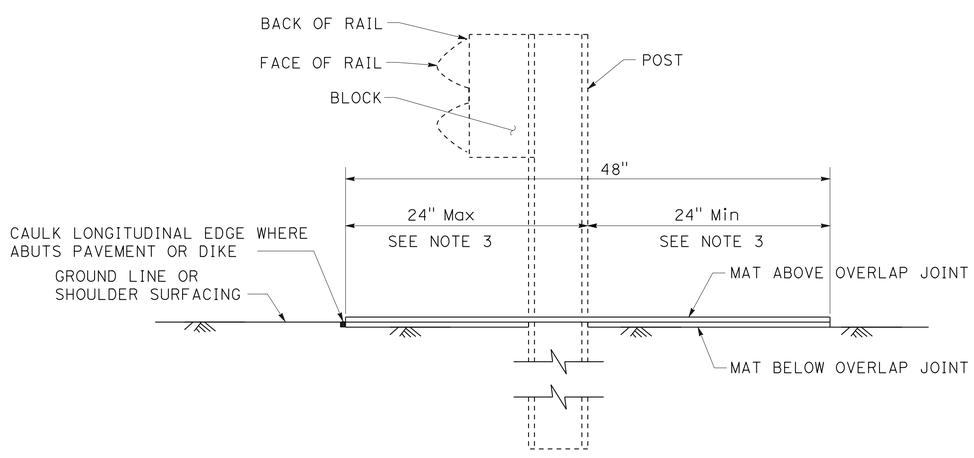

SECTION A-A

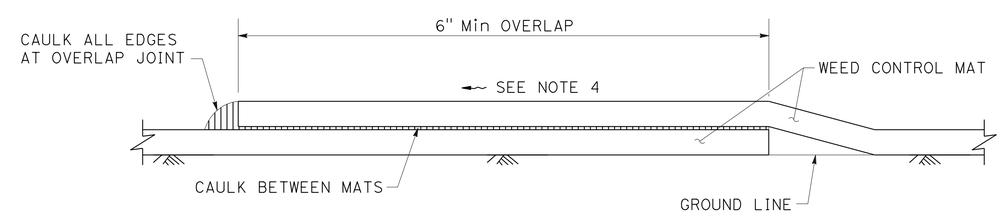

SECTION

OVERLAP JOINT

WEED CONTROL MAT (RUBBER) UNDER METAL BEAM GUARD RAILING

(SEE NOTE 1)

CONSTRUCTION DETAILS

NO SCALE

C-3

STATE OF CALIFORNIA - DEPARTMENT OF TRANSPORTATION
Caltrans® DESIGN

FUNCTIONAL SUPERVISOR: DAVID SANGHA
CALCULATED-DESIGNED BY: MAHMOOD SULTAN
CHECKED BY: CARMELITA BELLE
REVISED BY
DATE REVISED

LAST REVISION 02-04-13 | DATE PLOTTED => 21-FEB-2013 | TIME PLOTTED => 15:44

Dist	COUNTY	ROUTE	POST MILES TOTAL PROJECT	SHEET No.	TOTAL SHEETS
06	Ker	99	19.5	11	55

REGISTERED CIVIL ENGINEER 02-01-13 DATE

02-04-13
PLANS APPROVAL DATE

REGISTERED PROFESSIONAL ENGINEER MAHMOOD A SULTAN No. 76344 Exp. 12-31-14 CIVIL STATE OF CALIFORNIA

THE STATE OF CALIFORNIA OR ITS OFFICERS OR AGENTS SHALL NOT BE RESPONSIBLE FOR THE ACCURACY OR COMPLETENESS OF SCANNED COPIES OF THIS PLAN SHEET.

NOTES:

1. WEED CONTROL MAT (RUBBER) MUST BE 48" WIDE INDIVIDUAL MATS OR 48" WIDE CONTINUOUS ROLL PRODUCT. INDIVIDUAL MATS AND CONTINUOUS ROLL PRODUCT SHOWN.
2. SEE WEED CONTROL MAT (RUBBER) UNDER METAL BEAM GUARD RAILING FOR ADDITIONAL POST CUTOUT AND OVERLAP JOINT DETAILS.
3. WHERE EDGE OF PAVED SHOULDER IS MORE THAN 24" FROM BACK OF POST, EDGE OF WEED CONTROL MAT MUST BE 24" FROM BACK OF POST. WHERE PAVED SHOULDER IS CONSTRUCTED 24" OR LESS FROM BACK OF POST, ABUT EDGE OF WEED CONTROL MAT AGAINST EDGE OF PAVED SHOULDER. WHERE DIKE IS CONSTRUCTED UNDER RAILING, ABUT EDGE OF WEED CONTROL MAT AGAINST BACK OF DIKE.
4. CONTINUE ALIGNMENT OF MAT EDGE AT OFFSET FROM BACK OF POST.
5. LAP WEED CONTROL MAT IN DIRECTION OF WATER FLOW.
6. DIRECTION OF ADJACENT TRAFFIC INDICATED BY ⇦ .

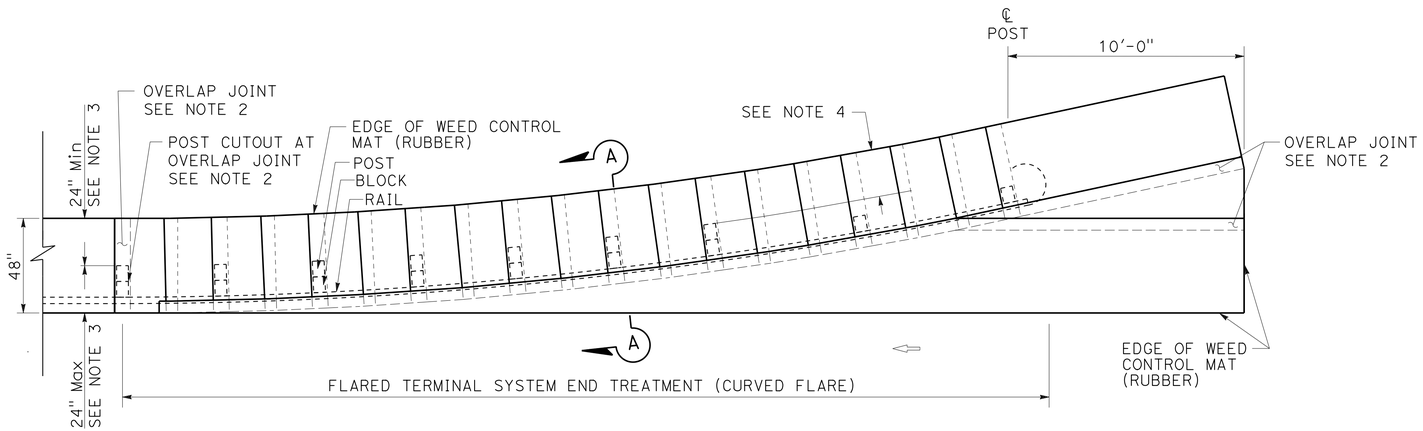

PLAN

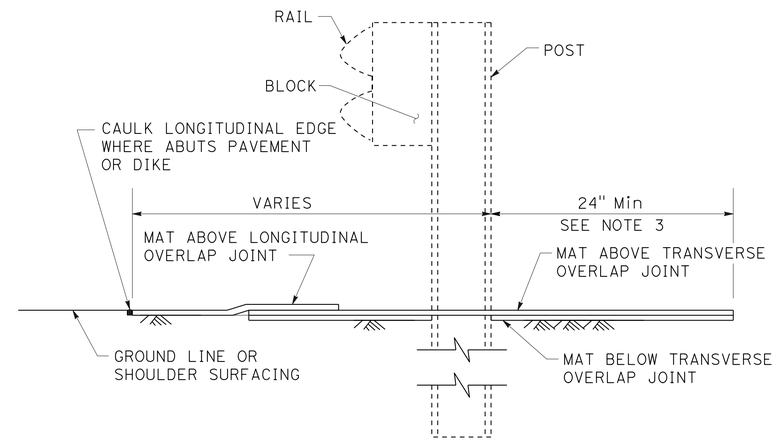

SECTION A-A

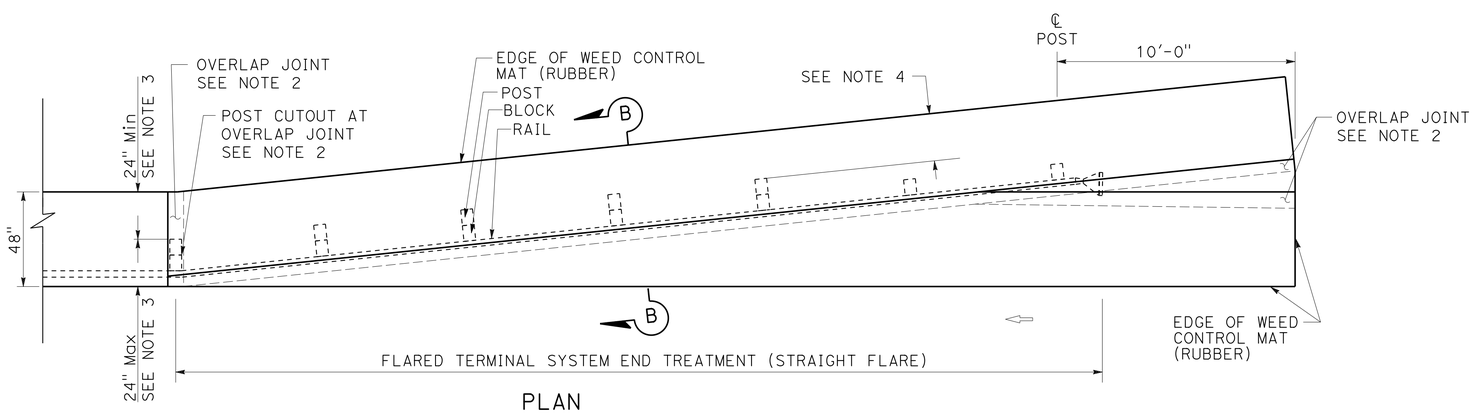

PLAN

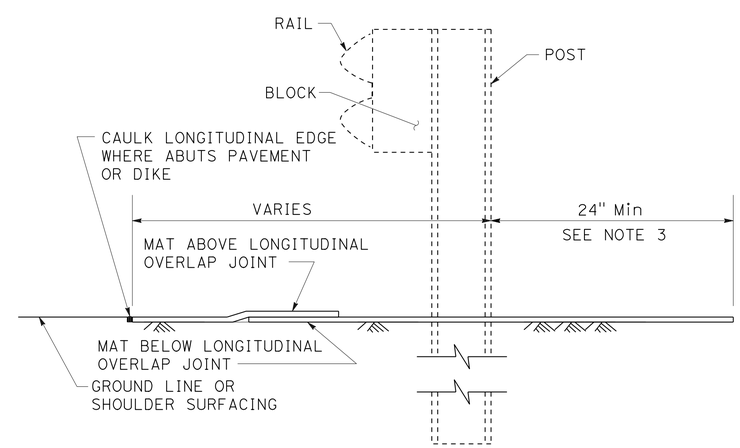

SECTION B-B

WEED CONTROL MAT (RUBBER) UNDER TERMINAL SYSTEM END TREATMENTS

SEE NOTE 1

CONSTRUCTION DETAILS

NO SCALE

C-4

STATE OF CALIFORNIA - DEPARTMENT OF TRANSPORTATION
Caltrans® DESIGN
FUNCTIONAL SUPERVISOR: DAVID SANGHA
CALCULATED-DESIGNED BY: MAHMOOD SULTAN
CHECKED BY: CARMELITA BELLE
REVISED BY
DATE REVISED

LAST REVISION 01-30-13 | DATE PLOTTED => 21-FEB-2013 | TIME PLOTTED => 15:44

Dist	COUNTY	ROUTE	POST MILES TOTAL PROJECT	SHEET No.	TOTAL SHEETS
06	Ker	99	19.5	12	55

REGISTERED CIVIL ENGINEER 02-01-13 DATE

02-04-13
PLANS APPROVAL DATE

REGISTERED PROFESSIONAL ENGINEER MAHMOOD A SULTAN No. 76344 Exp. 12-31-14 CIVIL STATE OF CALIFORNIA

THE STATE OF CALIFORNIA OR ITS OFFICERS OR AGENTS SHALL NOT BE RESPONSIBLE FOR THE ACCURACY OR COMPLETENESS OF SCANNED COPIES OF THIS PLAN SHEET.

NOTES:

1. FOR ACCURATE RIGHT OF WAY DATA, CONTACT RIGHT OF WAY ENGINEERING AT THE DISTRICT OFFICE.
2. LOCATION FOR DRAINAGE SYSTEM SEE DRAINAGE PLAN.

LEGEND

- DIRECTION OF FLOW
- Exist DRAINAGE FLOW
- TFESA — TEMPORARY FENCE (TYPE ESA)
- TEMPORARY DRAINAGE INLET PROTECTION

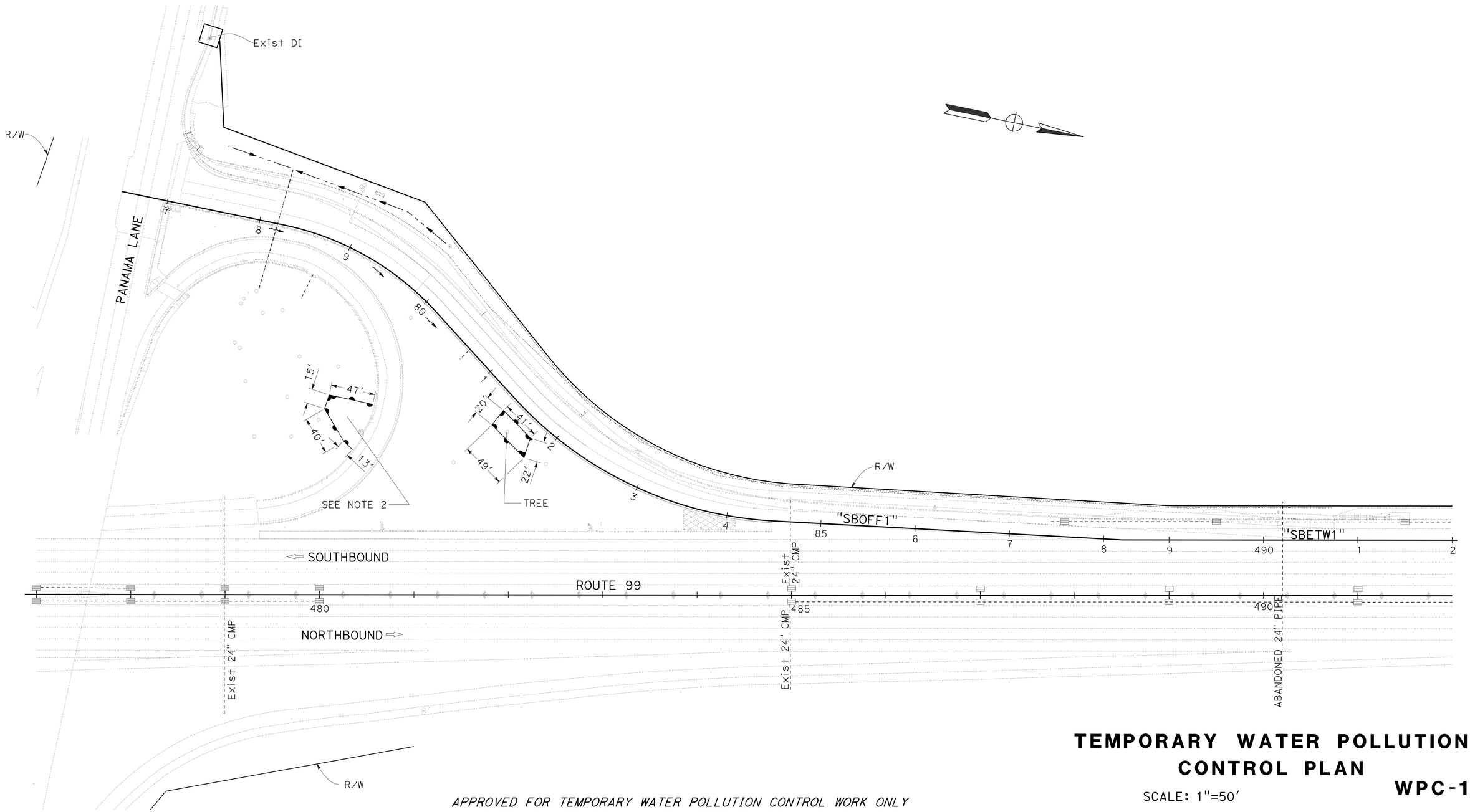

APPROVED FOR TEMPORARY WATER POLLUTION CONTROL WORK ONLY

TEMPORARY WATER POLLUTION CONTROL PLAN

SCALE: 1"=50'

WPC-1

STATE OF CALIFORNIA - DEPARTMENT OF TRANSPORTATION
Caltrans® DESIGN

FUNCTIONAL SUPERVISOR: DAVID SANGHA
CALCULATED-DESIGNED BY: MAHMOOD SULTAN
CHECKED BY: CARMELITA BELLE
REVISED BY
DATE REVISED

LAST REVISION 02-04-13
DATE PLOTTED => 21-FEB-2013
TIME PLOTTED => 15:44

Dist	COUNTY	ROUTE	POST MILES TOTAL PROJECT	SHEET No.	TOTAL SHEETS
06	Ker	99	19.5	13	55

REGISTERED CIVIL ENGINEER 02-01-13 DATE

02-04-13
PLANS APPROVAL DATE

REGISTERED PROFESSIONAL ENGINEER MAHMOOD A SULTAN No. 76344 Exp. 12-31-14 CIVIL STATE OF CALIFORNIA

THE STATE OF CALIFORNIA OR ITS OFFICERS OR AGENTS SHALL NOT BE RESPONSIBLE FOR THE ACCURACY OR COMPLETENESS OF SCANNED COPIES OF THIS PLAN SHEET.

NOTE:

FOR ACCURATE RIGHT OF WAY DATA, CONTACT RIGHT OF WAY ENGINEERING AT THE DISTRICT OFFICE.

LEGEND

- (xx) DRAINAGE UNIT
- No. DRAINAGE SYSTEM No.
- FLARED END SECTION WITH ROCK SLOPE PROTECTION
- DRAINAGE CULVERT
- AC OVERSIDE DRAIN
- RSP (BACKING No.2, METHOD B)
- DRAINAGE FLOW

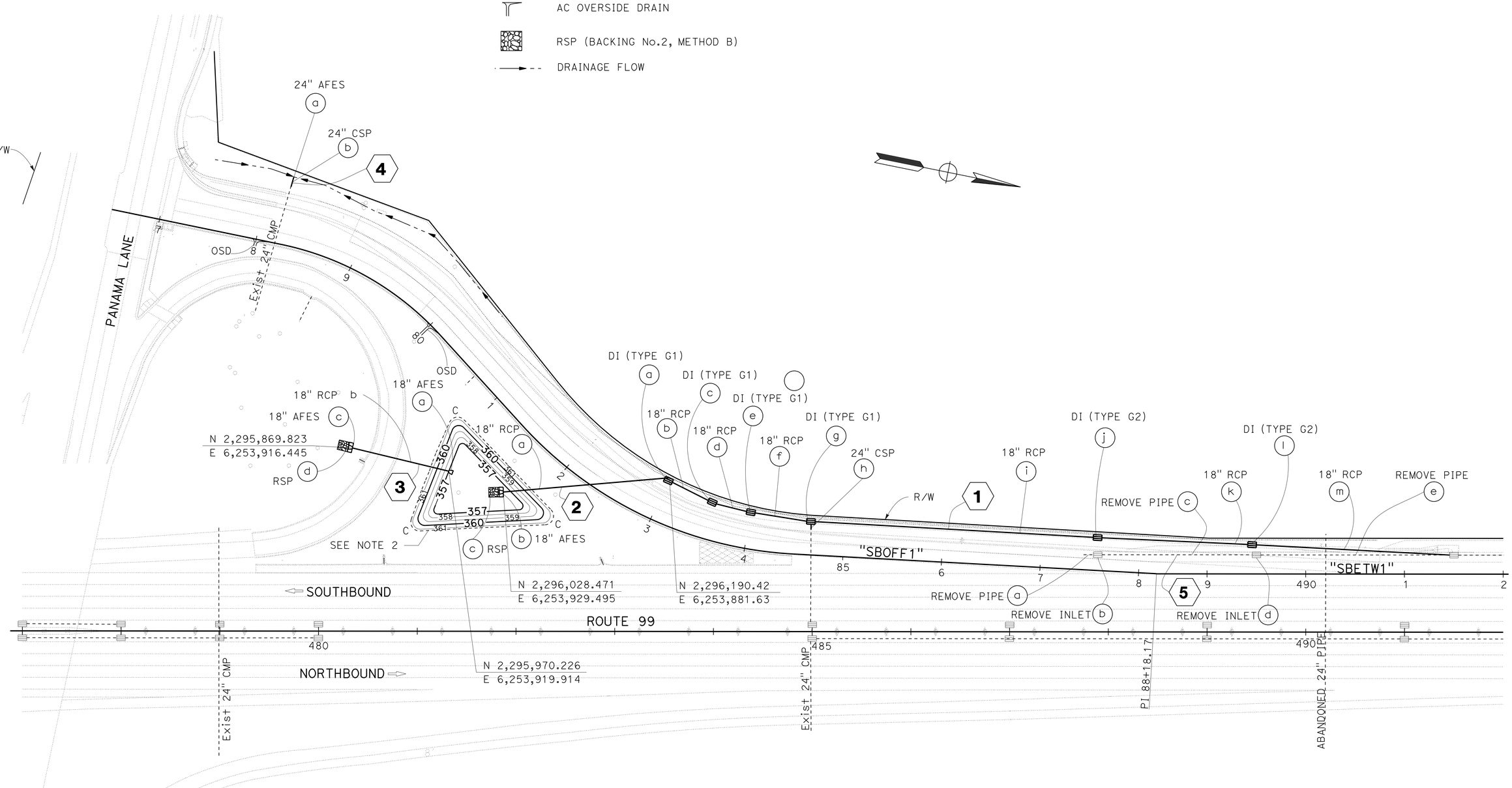

DRAINAGE PLAN

D-1

APPROVED FOR DRAINAGE AND CONTOUR GRADING WORK ONLY

SCALE: 1"=50'

STATE OF CALIFORNIA - DEPARTMENT OF TRANSPORTATION
Caltrans DESIGN

FUNCTIONAL SUPERVISOR: DAVID SANGHA
CALCULATED-DESIGNED BY: MAHMOOD SULTAN
CHECKED BY: CARMELITA BELLE
REVISED BY / DATE REVISED

LAST REVISION 02-04-13 | DATE PLOTTED => 21-FEB-2013 | TIME PLOTTED => 15:44

Dist	COUNTY	ROUTE	POST MILES TOTAL PROJECT	SHEET No.	TOTAL SHEETS
06	Ker	99	19.5	14	55

REGISTERED CIVIL ENGINEER 02-01-13 DATE

02-04-13
PLANS APPROVAL DATE

REGISTERED PROFESSIONAL ENGINEER MAHMOOD A SULTAN No. 76344 Exp. 12-31-14 CIVIL STATE OF CALIFORNIA

THE STATE OF CALIFORNIA OR ITS OFFICERS OR AGENTS SHALL NOT BE RESPONSIBLE FOR THE ACCURACY OR COMPLETENESS OF SCANNED COPIES OF THIS PLAN SHEET.

ABBREVIATION:

"DS# 2" DRAINAGE SYSTEM No. 2

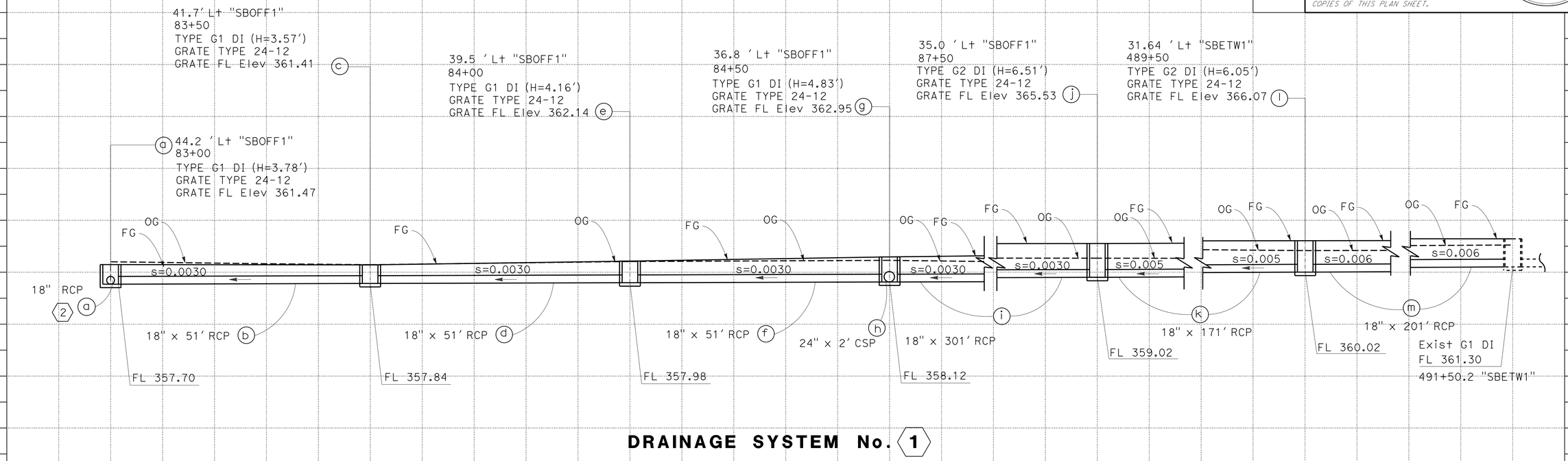

DRAINAGE SYSTEM No. 1

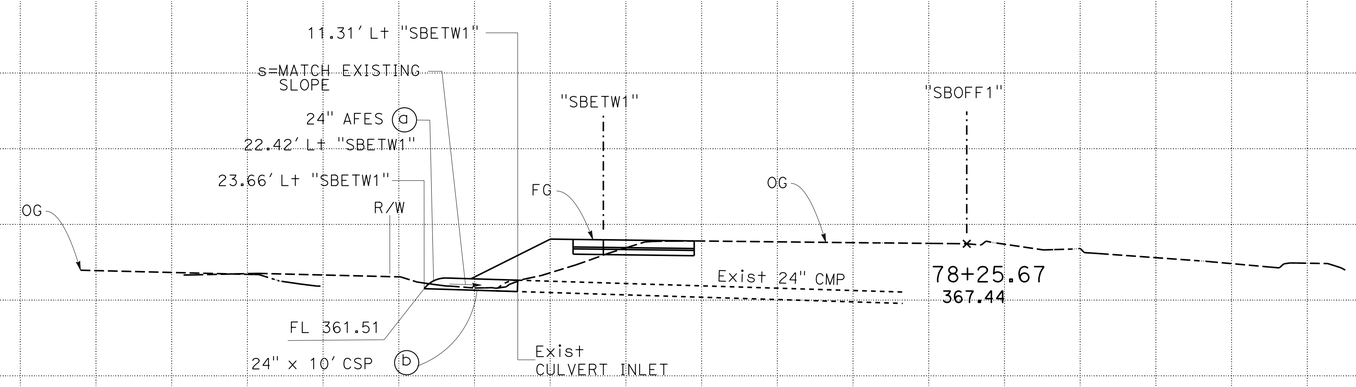

DRAINAGE SYSTEM No. 4

78+25.67

DRAINAGE PROFILE

SCALE: Horiz 1"= 10'
Vert 1"= 10'

DP-1

STATE OF CALIFORNIA - DEPARTMENT OF TRANSPORTATION
Caltrans
DESIGN
FUNCTIONAL SUPERVISOR: DAVID SANGHA
CALCULATED-DESIGNED BY: MAGDI MOHAMED
CHECKED BY: MAHMOOD SULTAN
REVISED BY
DATE REVISED

LAST REVISION 01-31-13 | DATE PLOTTED => 21-FEB-2013 | TIME PLOTTED => 15:44

Dist	COUNTY	ROUTE	POST MILES TOTAL PROJECT	SHEET No.	TOTAL SHEETS
06	Ker	99	19.5	15	55

REGISTERED CIVIL ENGINEER 02-01-13 DATE

02-04-13
PLANS APPROVAL DATE

REGISTERED PROFESSIONAL ENGINEER MAHMOOD A SULTAN No. 76344 Exp. 12-31-14 CIVIL STATE OF CALIFORNIA

THE STATE OF CALIFORNIA OR ITS OFFICERS OR AGENTS SHALL NOT BE RESPONSIBLE FOR THE ACCURACY OR COMPLETENESS OF SCANNED COPIES OF THIS PLAN SHEET.

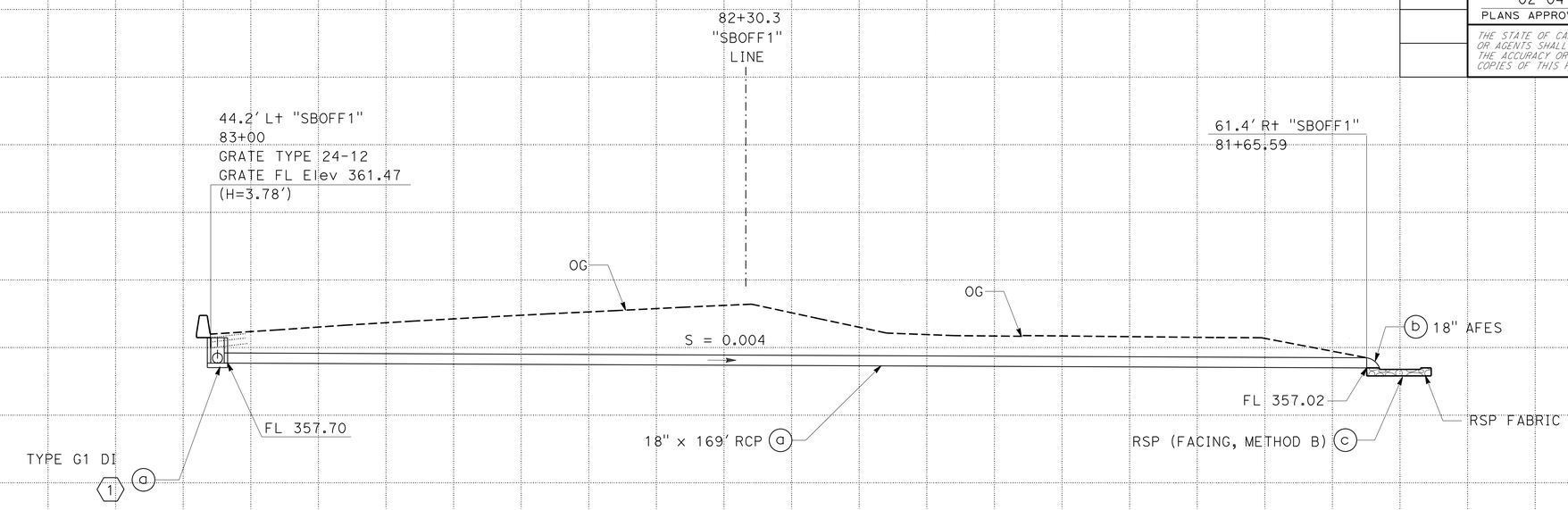

DRAINAGE SYSTEM No. 2

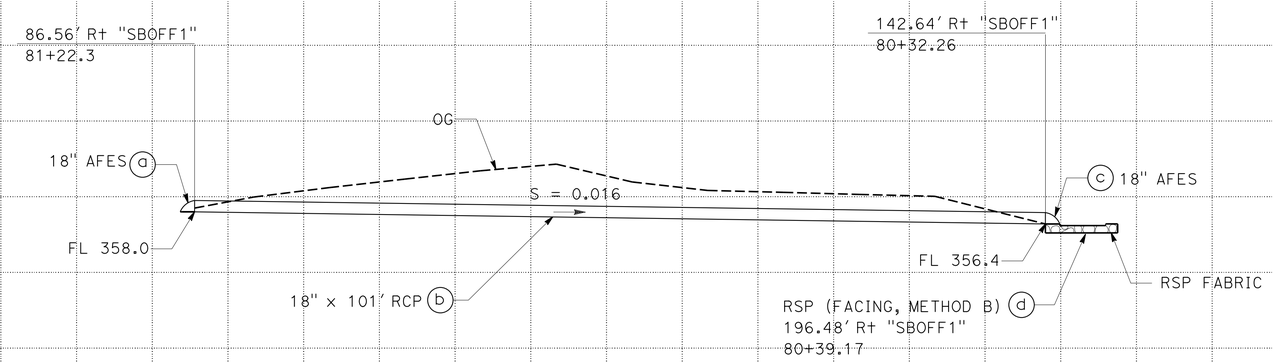

DRAINAGE SYSTEM No. 3

DRAINAGE PROFILE

SCALE: Horiz 1"= 10'
Vert 1"= 10'

DP-2

MAHMOOD SULTAN — REVISED BY — DATE REVISED
MAGDI MOHAMED — CALCULATED-DESIGNED BY — CHECKED BY
FUNCTIONAL SUPERVISOR: DAVID SANGHA
STATE OF CALIFORNIA - DEPARTMENT OF TRANSPORTATION — Caltrans — DESIGN

LAST REVISION 01-31-13 | DATE PLOTTED => 21-FEB-2013 | TIME PLOTTED => 15:44

Dist	COUNTY	ROUTE	POST MILES TOTAL PROJECT	SHEET No.	TOTAL SHEETS
06	Ker	99	19.5	16	55

REGISTERED CIVIL ENGINEER 02-01-13 DATE

02-04-13
PLANS APPROVAL DATE

REGISTERED PROFESSIONAL ENGINEER MAHMOOD A SULTAN No. 76344 Exp. 12-31-14 CIVIL STATE OF CALIFORNIA

THE STATE OF CALIFORNIA OR ITS OFFICERS OR AGENTS SHALL NOT BE RESPONSIBLE FOR THE ACCURACY OR COMPLETENESS OF SCANNED COPIES OF THIS PLAN SHEET.

NOTES:

"d" REPRESENTS THE INSIDE DIAMETER OF THE PIPE CONNECTED TO THE FLARED END SECTION.

ABBREVIATIONS:

d = DIAMETER OF PIPE
w = WIDTH OF THE FLARED END SECTION OPENING

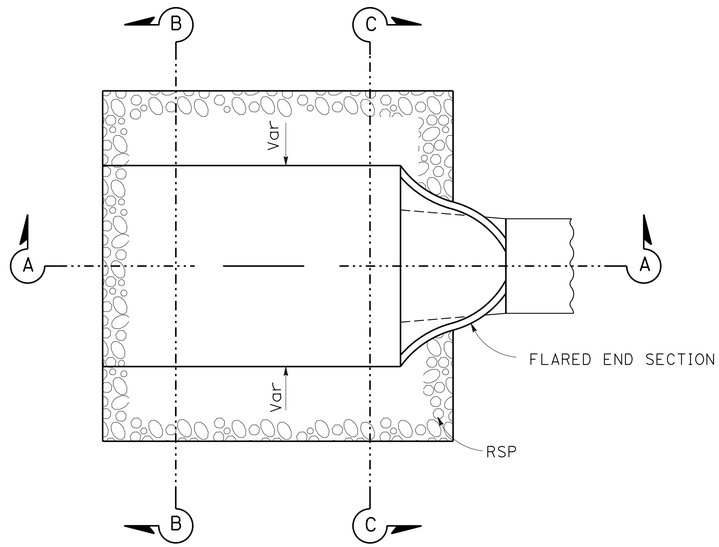

PLAN

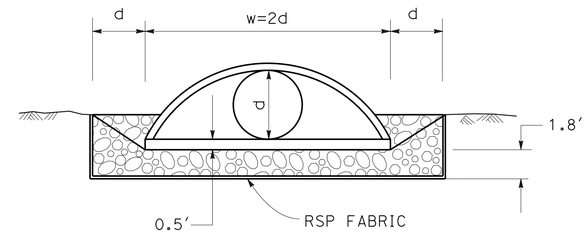

SECTION C-C

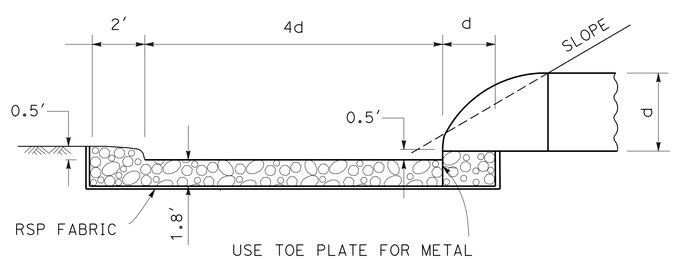

USE TOE PLATE FOR METAL FLARED END SECTIONS
(USE PCC CUTOFF WALL WITH PRECAST CONCRETE FLARED END SECTION)

SECTION A-A

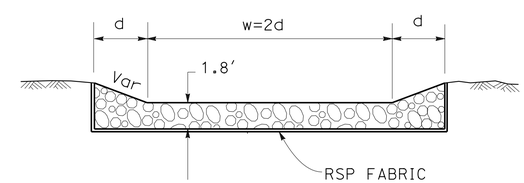

SECTION B-B

ROCK SLOPE PROTECTION

DRAINAGE DETAILS DD-1

NO SCALE

STATE OF CALIFORNIA - DEPARTMENT OF TRANSPORTATION
Caltrans® DESIGN

FUNCTIONAL SUPERVISOR: DAVID SANGHA

CALCULATED-DESIGNED BY: MAGDI MOHAMED
CHECKED BY: MAHMOOD SULTAN

REVISED BY | DATE REVISED

LAST REVISION 01-31-13 | DATE PLOTTED => 21-FEB-2013 TIME PLOTTED => 15:44

Dist	COUNTY	ROUTE	POST MILES TOTAL PROJECT	SHEET No.	TOTAL SHEETS
06	Ker	99	19.5	17	55

REGISTERED CIVIL ENGINEER 02-01-13 DATE

02-04-13
PLANS APPROVAL DATE

REGISTERED PROFESSIONAL ENGINEER MAHMOOD A SULTAN No. 76344 Exp. 12-31-14 CIVIL STATE OF CALIFORNIA

THE STATE OF CALIFORNIA OR ITS OFFICERS OR AGENTS SHALL NOT BE RESPONSIBLE FOR THE ACCURACY OR COMPLETENESS OF SCANNED COPIES OF THIS PLAN SHEET.

NOTE:

(N) - NOT A SEPARATE PAY ITEM, FOR INFORMATION ONLY.

ALTERNATIVE FLARED END SECTION

ALLOWABLE MATERIAL
STEEL
CONCRETE

DRAINAGE QUANTITIES

DRAINAGE PLAN SHEET No.	DRAINAGE SYSTEM No.	DRAINAGE UNIT	REMOVE INLET (EA)	REMOVE PIPE (LF)	24" CSP (0.109" THICK) (LF)	18" RCP (LF)	24" AFES (EA)	18" AFES (EA)	RSP (FACING, METHOD B) (CY)	RSP FABRIC (SQYD)	DRAINAGE INLET: MINOR CONCRETE (MINOR STRUCTURE) (CY)	DRAINAGE INLET: Misc IRON AND STEEL (LB)	DRAINAGE INLET: (N) HEIGHT OF INLET (LF)	DESCRIPTION	STATION	DRAINAGE UNIT	DRAINAGE SYSTEM No.
D-1	1	a									1.12	326	3.78	DI TYPE G1, GRATE TYPE 24-12	44.3′ Lt "SBOFF1", 83+00	a	1
		b				51								18" RCP		b	
		c									1.08	326	3.57	DI TYPE G1, GRATE TYPE 24-12	41.62′ Lt "SBOFF1", 83+50	c	
		d				51								18" RCP		d	
		e									1.21	326	4.16	DI TYPE G1, GRATE TYPE 24-12	37.0′ Lt "SBOFF1", 84+00	e	
		f				51								18" RCP		f	
		g									1.35	326	4.83	DI TYPE G1, GRATE TYPE 24-12	32.0′ Lt "SBOFF1", 84+50	g	
		h			2									24" CSP		h	
		i				301								18" RCP		i	
		j									2.21	326	6.51	DI TYPE G2, GRATE TYPE 24-12	32.0′ Lt "SBOFF1", 87+50	j	
		k				171								18" RCP		k	
		l									2.09	326	6.05	DI TYPE G2, GRATE TYPE 24-12	22.0′ Lt "SBETW1", 489+50	l	
		m				201								18" RCP		m	
	2	a				169								18" RCP		a	2
		b						1						18" AFES		b	
		c							4.9	28.5				RSP (FACING, METHOD B), RSP FABRIC	61.4′ Rt "SBOFF1", 81+65.59	c	
	3	a						1						18" AFES		a	3
		b				101								18" RCP		b	
		c						1						18" AFES		c	
		d							4.9	28.5				RSP (FACING, METHOD B), RSP FABRIC	196.48′ Rt "SBOFF1", 80+39.17	d	
	4	a					1							24" AFES	82.3′ Rt "SBOFF1", 78+25.67	a	4
		b			10									24" CMP CULVERT		b	
	5	a		10										REMOVE 18" RCP	"SBOFF1", 87+43.34	a	5
		b	1											REMOVE DI	"SBOFF1", 87+57.76	b	
		c		161										REMOVE 18" RCP		c	
		d	1											REMOVE DI	"SBETW1", 489+50	d	
		e		200										REMOVE 18" RCP		e	
SHEET TOTAL			2	371	12	1096	1	3	9.8	57.0	9.06	1956					

DRAINAGE QUANTITIES

NO SCALE

DQ-1

STATE OF CALIFORNIA - DEPARTMENT OF TRANSPORTATION
Caltrans DESIGN

FUNCTIONAL SUPERVISOR: DAVID SANGHA
CALCULATED-DESIGNED BY: MAGDI MOHAMED
CHECKED BY: MAHMOOD SULTAN
REVISED BY
DATE REVISED

LAST REVISION 01-31-13
DATE PLOTTED => 21-FEB-2013
TIME PLOTTED => 15:44

Dist	COUNTY	ROUTE	POST MILES TOTAL PROJECT	SHEET No.	TOTAL SHEETS
06	Ker	99	19.5	18	55

REGISTERED CIVIL ENGINEER 02-01-13 DATE

02-04-13
PLANS APPROVAL DATE

REGISTERED PROFESSIONAL ENGINEER KEVIN H. MURAI No. C 59586 Exp 12/31/13 CIVIL STATE OF CALIFORNIA

THE STATE OF CALIFORNIA OR ITS OFFICERS OR AGENTS SHALL NOT BE RESPONSIBLE FOR THE ACCURACY OR COMPLETENESS OF SCANNED COPIES OF THIS PLAN SHEET.

LEGEND

- DIRECTION OF DETOUR
- ONE POST SIGN
- TWO POST SIGN
- (X-X) SIGN NUMBER
- CONSTRUCTION AREA

(1-1) Panama Lane — G7-1(CA); DETOUR — M4-10(L)

(1-2) Panama Lane — G7-1(CA); DETOUR — M4-10(R)

(1-3) DETOUR — SC9(CA)

(1-4) PANAMA LANE EXIT - RAMP CLOSED — SC8(CA)

(1-5) RAMP CLOSED USE RAMP AT ROUTE 119 AFT — SC7(CA)

(1-6) ROAD WORK AHEAD — W20-1

(1-7) END ROAD WORK — G20-2

G7-1(CA)

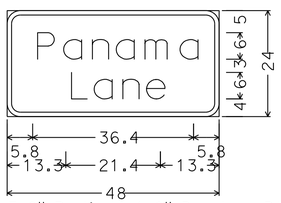

3.0" Radius, 1.0" Border, Black on Orange;
[Panama] E; [Lane] E;
Table of letter and object lefts.

P	a	n	a	m	a
5.8	12.0	18.2	23.9	30.1	38.4

L	a	n	e
13.3	18.9	25.1	30.8

NOTES:

1. LOCATIONS OF CONSTRUCTION AREA SIGNS SHOWN ARE APPROXIMATE. EXACT SIGN LOCATIONS TO BE DETERMINED BY THE ENGINEER.
2. FOR MORE CONSTRUCTION AREA SIGNS, SEE TRAFFIC HANDLING SHEET.
3. FOR RAMP CLOSURE, SEE TRAFFIC HANDLING SHEET.
4. IN ADVANCE OF RAMP CLOSURE, USE PORTABLE CHANGEABLE MESSAGE SIGN (PCMS) TO INFORM MOTORIST OF FUTURE RAMP CLOSURE.

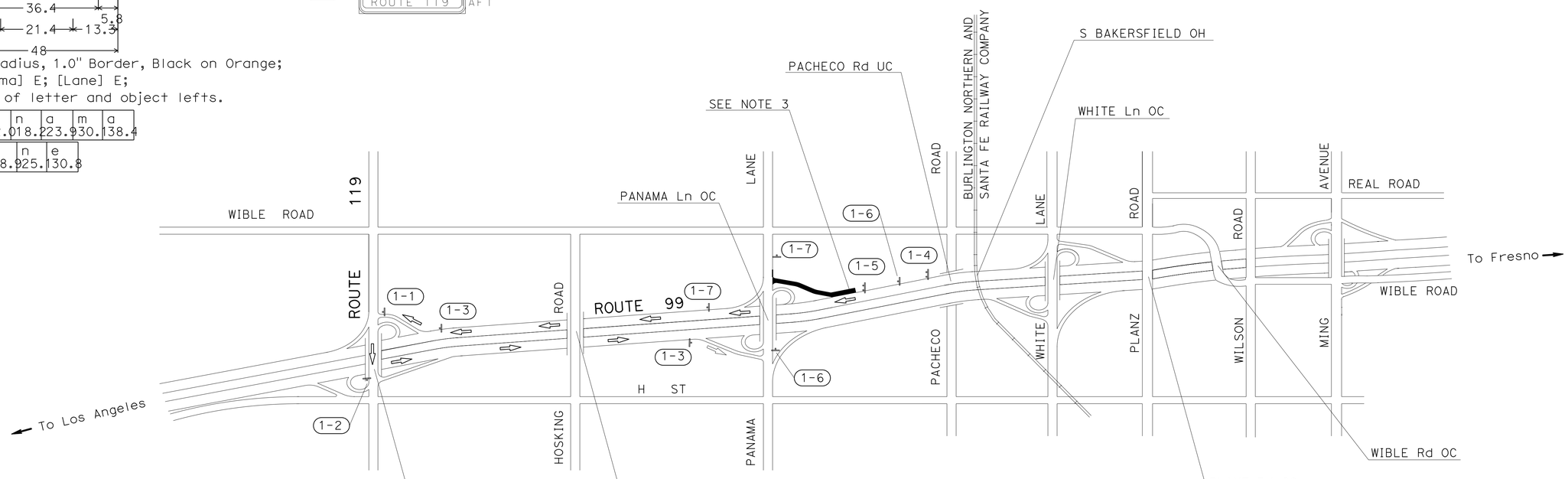

STATIONARY MOUNTED CONSTRUCTION AREA SIGNS

SIGN No.	SIGN CODE	No. OF SIGNS	PANEL SIZE	No. OF POST AND SIZE	SIGN MESSAGE
(1-1)	G7-1(CA)	1	48" x 24"	1- 4" x 6"	PANAMA LANE
	M4-10(L)	1	48" x 18"		DETOUR ARROW LEFT
(1-2)	G7-1(CA)	1	48" x 24"	1- 4" x 6"	PANAMA LANE
	M4-10(R)	1	48" x 18"		DETOUR ARROW RIGHT
(1-3)	SC9(CA)	2	48" x 48"	1- 4" x 6"	DETOUR W/ARROW
(1-4)	SC8(CA)	1	84" x 42"	2- 4" x 6"	EXIT RAMP CLOSED
(1-5)	SC7(CA)	1	84" x 42"	2- 4" x 6"	RAMP CLOSED USE RAMP AT
(1-6)	W20-1	2	48" x 48"	1- 4" x 6"	ROAD WORK AHEAD
(1-7)	G20-2	2	36" x 18"	1- 4" x 6"	END ROAD WORK

BAKERSFIELD

MOTORIST INFORMATION PLAN

NO SCALE

MI-1

STATE OF CALIFORNIA - DEPARTMENT OF TRANSPORTATION
Caltrans
TRAFFIC DESIGN

FUNCTIONAL SUPERVISOR: MOHAMMED QATAMI
CALCULATED-DESIGNED BY: KEVIN MURAI
CHECKED BY: HASSAN TAHA
REVISED BY
DATE REVISED

LAST REVISION 01-30-13
DATE PLOTTED => 21-FEB-2013
TIME PLOTTED => 15:44

Dist	COUNTY	ROUTE	POST MILES TOTAL PROJECT	SHEET No.	TOTAL SHEETS
06	Ker	99	19.5	19	55

REGISTERED CIVIL ENGINEER 02-01-13 DATE

02-04-13
PLANS APPROVAL DATE

REGISTERED PROFESSIONAL ENGINEER KEVIN H. MURAI No. C 59586 Exp 12/31/13 CIVIL STATE OF CALIFORNIA

THE STATE OF CALIFORNIA OR ITS OFFICERS OR AGENTS SHALL NOT BE RESPONSIBLE FOR THE ACCURACY OR COMPLETENESS OF SCANNED COPIES OF THIS PLAN SHEET.

LEGEND

- DIRECTION OF TRAFFIC
- TEMPORARY RAILING (TYPE K)
- TEMPORARY CRASH CUSHION ARRAY TS14
- ONE POST SIGN
- CHANNELIZER
- TRAFFIC PLASTIC DRUM
- TYPE III BARRICADE
- CONSTRUCTION AREA

ABBREVIATIONS:

TRK TEMPORARY RAILING (TYPE K)

NOTES:

1. STATION/OFFSET CALLOUTS FOR TRK REFER TO THE TRAFFIC SIDE OF THE RAILING.
2. TRK TAPERS SHALL BE 10:1 UNLESS OTHERWISE INDICATED.
3. PORTION OF WORK IN CONFLICT WITH TRK TO BE COMPLETED LATER WITH A NIGHT TIME LANE CLOSURE.
4. FOR ADDITIONAL CONSTRUCTION AREA SIGNS, SEE MOTORIST INFORMATION PLAN.

CHANNELIZER (SURFACE MOUNTED)

	EA
TOTAL	14

TEMPORARY CRASH CUSHION MODULE

	EA
TOTAL	14

TEMPORARY RAILING (TYPE K)

LOCATION	LF
STA 484+63 TO STA 492+63 RTE 99	800
TOTAL	800

STATIONARY MOUNTED CONSTRUCTION AREA SIGNS

SIGN No.	SIGN CODE	No. OF SIGNS	PANEL SIZE	No. OF POST AND SIZE	SIGN MESSAGE
1-1	C30A(CA)	1	48" x 48"	1- 4" x 6"	SHOULDER CLOSED
1-2	W21-5b	1	48" x 48"	1- 4" x 6"	RIGHT SHOULDER CLOSED AHEAD
1-3	W21-5	1	48" x 48"	1- 4" x 6"	SHOULDER WORK

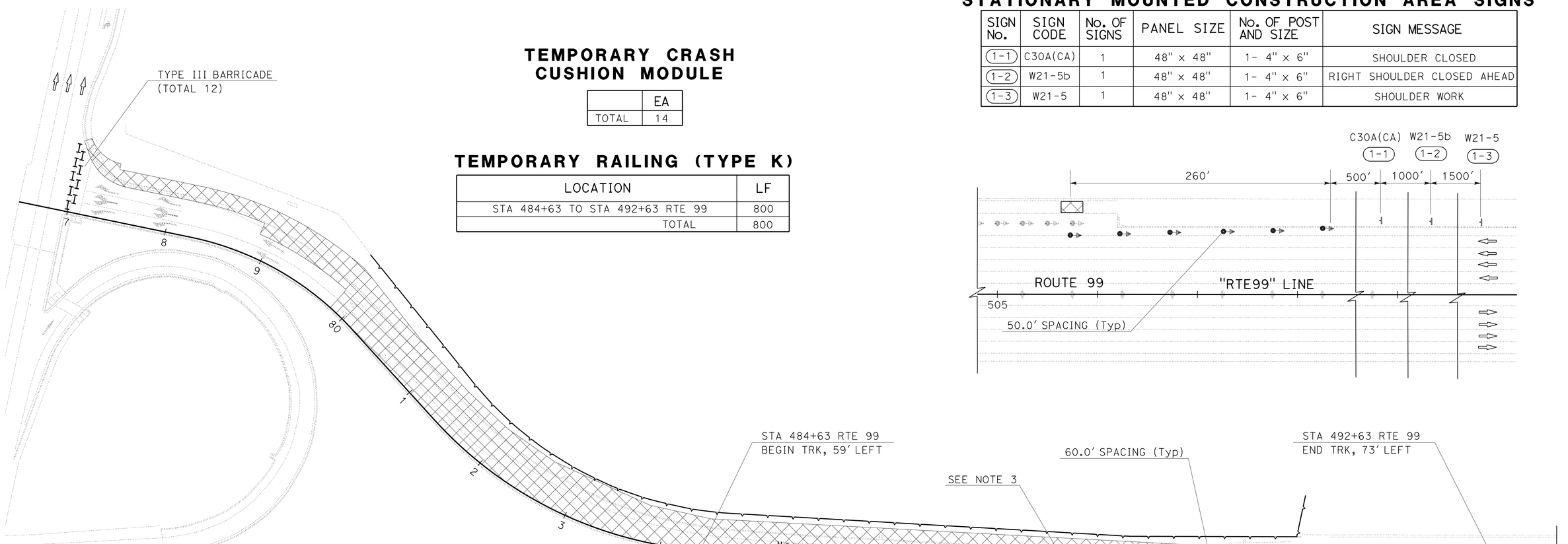

STAGE CONSTRUCTION TRAFFIC HANDLING PLAN AND QUANTITIES (STAGE 1A)

SCALE: 1"=50'

TH-1

STATE OF CALIFORNIA - DEPARTMENT OF TRANSPORTATION
Caltrans
TRAFFIC DESIGN

FUNCTIONAL SUPERVISOR: MOHAMMED QATAMI
CALCULATED-DESIGNED BY: KEVIN MURAI
CHECKED BY: HASSAN TAHA
REVISED BY
DATE REVISED

LAST REVISION 01-30-13
DATE PLOTTED => 21-FEB-2013
TIME PLOTTED => 15:44

Dist	COUNTY	ROUTE	POST MILES TOTAL PROJECT	SHEET No.	TOTAL SHEETS
06	Ker	99	19.5	20	55

REGISTERED CIVIL ENGINEER 02-01-13 DATE

02-04-13
PLANS APPROVAL DATE

REGISTERED PROFESSIONAL ENGINEER KEVIN H. MURAI No. C 59586 Exp. 12/31/13 CIVIL STATE OF CALIFORNIA

THE STATE OF CALIFORNIA OR ITS OFFICERS OR AGENTS SHALL NOT BE RESPONSIBLE FOR THE ACCURACY OR COMPLETENESS OF SCANNED COPIES OF THIS PLAN SHEET.

NOTE:

FOR ADDITIONAL CONSTRUCTION AREA SIGNS, SEE MOTORIST INFORMATION PLAN.

CONSTRUCTION AREA SIGNS

SIGN No.	SIGN CODE	No. OF SIGNS	PANEL SIZE	SIGN MESSAGE	COMMENT
2-1	SC11(CA)	2	42" x 30"	LANE CLOSED	MOUNT ON BARRICADE

TYPE III BARRICADE

SHEET	EA
TH-1	12
TH-2	6
TOTAL	18

TRAFFIC PLASTIC DRUM

	EA
TOTAL	18

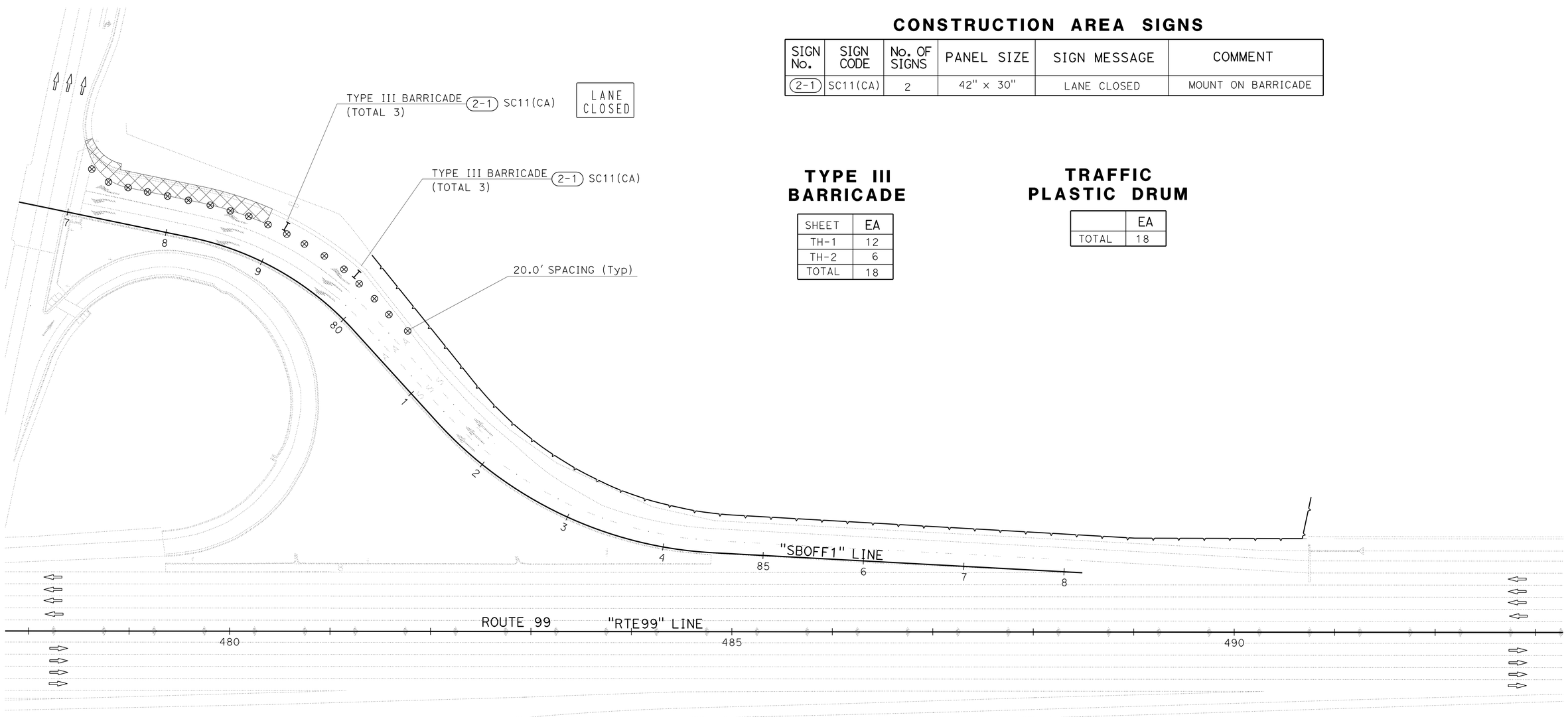

STAGE CONSTRUCTION TRAFFIC HANDLING PLAN AND QUANTITIES

(STAGE 1B)

SCALE: 1"=50'

TH-2

STATE OF CALIFORNIA - DEPARTMENT OF TRANSPORTATION
Caltrans
TRAFFIC DESIGN

FUNCTIONAL SUPERVISOR: MOHAMMED QATAMI
CALCULATED-DESIGNED BY: KEVIN MURAI
CHECKED BY: HASSAN TAHA
REVISED BY
DATE REVISED

LAST REVISION 01-30-13
DATE PLOTTED => 21-FEB-2013
TIME PLOTTED => 15:44

Dist	COUNTY	ROUTE	POST MILES TOTAL PROJECT	SHEET No.	TOTAL SHEETS
06	Ker	99	19.5	21	55

REGISTERED CIVIL ENGINEER 02-01-13 DATE

02-04-13
PLANS APPROVAL DATE

REGISTERED PROFESSIONAL ENGINEER KEVIN H. MURAI No. C 59586 Exp. 12/31/13 CIVIL STATE OF CALIFORNIA

THE STATE OF CALIFORNIA OR ITS OFFICERS OR AGENTS SHALL NOT BE RESPONSIBLE FOR THE ACCURACY OR COMPLETENESS OF SCANNED COPIES OF THIS PLAN SHEET.

LEGEND:

- XX — TRAFFIC STRIPE DETAIL No.
- XX — REMOVE TRAFFIC STRIPE DETAIL No.
- DIRECTION OF TRAFFIC
- TYPE III ARROW (24')
- TYPE V ARROW (24')
- CHANGE OF STRIPE DETAIL
- PAVEMENT MARKING
- REMOVE PAVEMENT MARKING
- X-X — ROADSIDE SIGN NUMBER
- ROADSIDE SIGN - ONE POST
- ROADSIDE SIGN - TWO POST
- SIGN MOUNTED ON MAST ARM
- RELOCATE ROADSIDE SIGN (STRAP SADDLE BRACKET METHOD - SSBM) FROM TO
- REMOVE ROADSIDE SIGN
- RELOCATE ROADSIDE SIGN FROM TO
- * REMOVE SIGN STRUCTURE
- F, G DELINEATOR (CLASS 1)

NOTE: FOR LIMITS OF TRAFFIC STRIPE AND PAVEMENT MARKING, SEE PAVEMENT DELINEATION QUANTITIES.

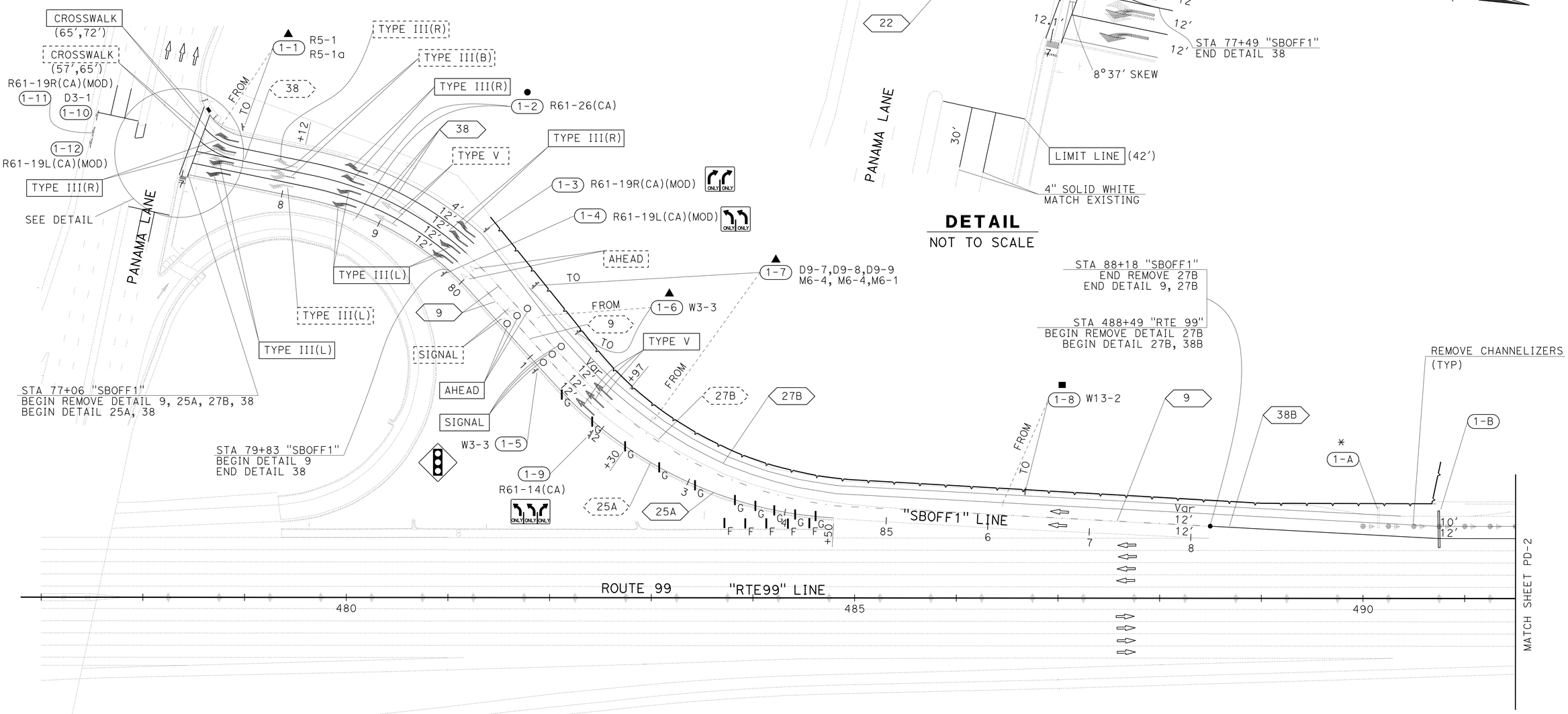

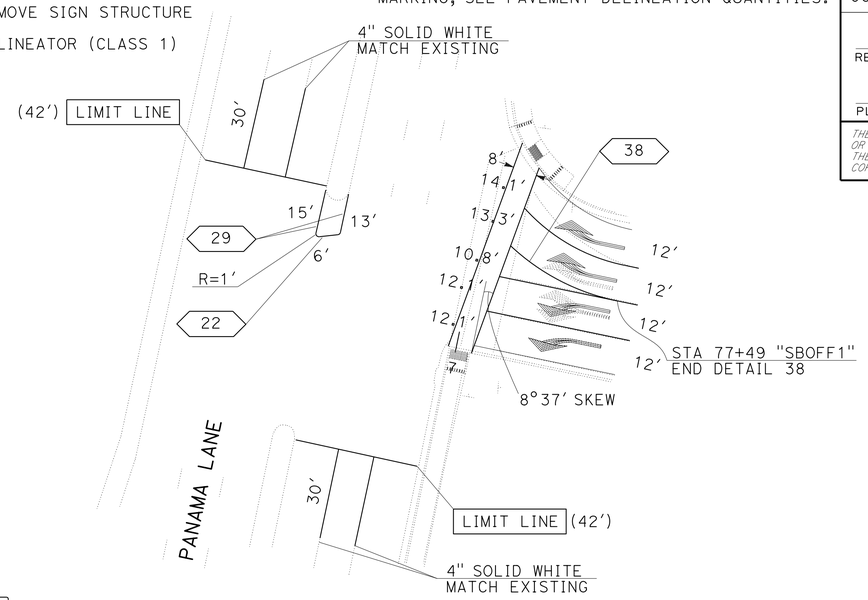

DETAIL
NOT TO SCALE

PAVEMENT DELINEATION AND SIGN PLAN

SCALE: 1"=50'

PD-1

STATE OF CALIFORNIA - DEPARTMENT OF TRANSPORTATION
Caltrans
TRAFFIC DESIGN

FUNCTIONAL SUPERVISOR: MOHAMMED QATAMI
CALCULATED-DESIGNED BY: KEVIN MURAI
CHECKED BY: HASSAN TAHA
REVISED BY / DATE REVISED

LAST REVISION 01-30-13
DATE PLOTTED => 21-FEB-2013
TIME PLOTTED => 15:44

Dist	COUNTY	ROUTE	POST MILES TOTAL PROJECT	SHEET No.	TOTAL SHEETS
06	Ker	99	19.5	22	55

REGISTERED CIVIL ENGINEER 02-01-13 DATE

02-04-13
PLANS APPROVAL DATE

REGISTERED PROFESSIONAL ENGINEER
KEVIN H. MURAI
No. C 59586
Exp. 12/31/13
CIVIL
STATE OF CALIFORNIA

THE STATE OF CALIFORNIA OR ITS OFFICERS OR AGENTS SHALL NOT BE RESPONSIBLE FOR THE ACCURACY OR COMPLETENESS OF SCANNED COPIES OF THIS PLAN SHEET.

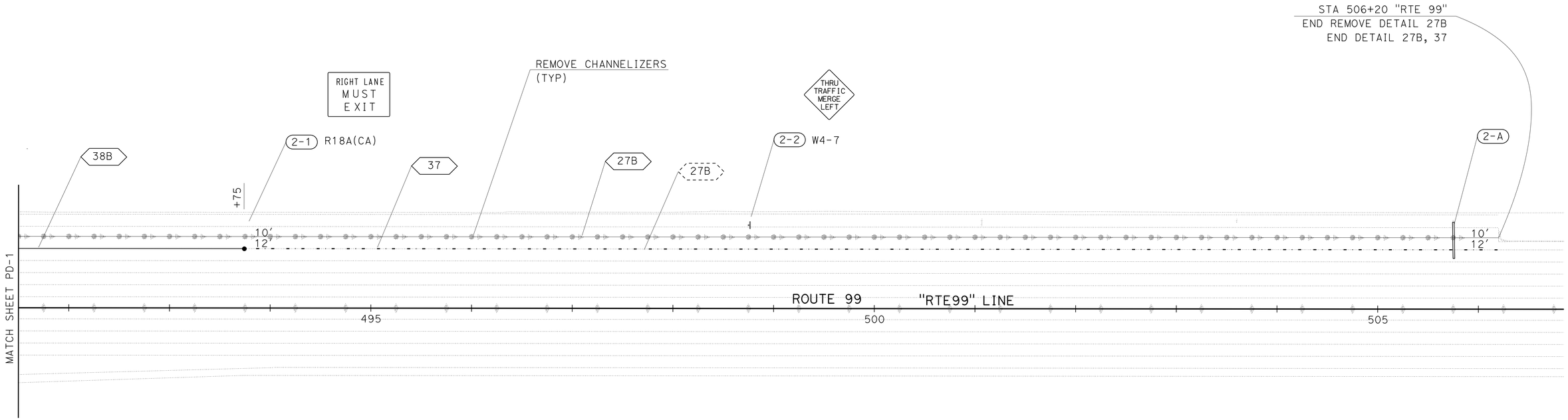

PAVEMENT DELINEATION AND SIGN PLAN

SCALE: 1"=50'

PD-2

STATE OF CALIFORNIA - DEPARTMENT OF TRANSPORTATION
Caltrans
TRAFFIC DESIGN

FUNCTIONAL SUPERVISOR: MOHAMMED QATAMI

CALCULATED-DESIGNED BY: KEVIN MURAI
CHECKED BY: HASSAN TAHA

REVISED BY
DATE REVISED

LAST REVISION 01-30-13
DATE PLOTTED => 21-FEB-2013
TIME PLOTTED => 15:44

Dist	COUNTY	ROUTE	POST MILES TOTAL PROJECT	SHEET No.	TOTAL SHEETS
06	Ker	99	19.5	23	55

REGISTERED CIVIL ENGINEER 02-01-13 DATE

02-04-13
PLANS APPROVAL DATE

REGISTERED PROFESSIONAL ENGINEER KEVIN H. MURAI No. C 59586 Exp. 12/31/13 CIVIL STATE OF CALIFORNIA

THE STATE OF CALIFORNIA OR ITS OFFICERS OR AGENTS SHALL NOT BE RESPONSIBLE FOR THE ACCURACY OR COMPLETENESS OF SCANNED COPIES OF THIS PLAN SHEET.

ABBREVIATIONS:

I : INSTALL/PLACE PAVEMENT DELINEATION
R: REMOVE PAVEMENT DELINEATION
EA: EACH
SQFT: SQUARE FEET
LF: LINEAR FOOT

DELINEATOR (CLASS 1)

SHEET No.	DELINEATORS (CLASS 1)	
	TYPE F	TYPE G
	EA	EA
PD-1	5	10
SUBTOTAL	5	10
TOTAL	15	

PAVEMENT DELINEATION QUANTITIES

SHEET No.	ROUTE	LOCATION		DETAIL No.	INSTALL/REMOVE	PAVEMENT MARKERS (RETRO-REFLECTIVE)				THERMOPLASTIC TRAFFIC STRIPE					THERMOPLASTIC PAVEMENT MARKING		REMOVE PAVEMENT MARKER	REMOVE THERMOPLASTIC TRAFFIC STRIPE		REMOVE THERMOPLASTIC PAVEMENT MARKING		REMOVE CHANNELIZERS
		FROM	TO			TYPE C	TYPE D	TYPE G	TYPE H	SOLID YELLOW 4"	SOLID WHITE 4"	SOLID WHITE 8"	(BROKEN 12-3) 8"	(BROKEN 17-7) 4"	DESCRIPTION	SQFT		WHITE	YELLOW (HAZARDOUS)	DESCRIPTION	SQFT	
						EA	EA	EA	EA	LF	LF	LF	LF	LF				LF	LF			
PD-1	SBOFF1	77+06	78+12	38	R										12 TYPE III	504	5	212		2 TYPE III (B)	146	6
	SBOFF1	77+06	82+30	9	R										3 SIGNAL	96	12	153		2 TYPE III	84	
	SBOFF1	77+06	88+18	27B	R										3 AHEAD	93		1112		2 TYPE V	66	
	SBOFF1	77+06	84+50	25A	R										3 TYPE V	99	32		744	2 SIGNAL	64	
	SBOFF1	77+06	84+50	25A	I				32	744					1 CROSSWALK	137				2 AHEAD	62	
	SBOFF1	77+06	79+83	38	I			13				277								1 CROSSWALK	122	
	SBOFF1	77+06	79+83	38	I			13				277										
	SBOFF1	77+06	79+83	38	I			13				277										
	SBOFF1	77+06	77+49	38	I			3				43										
	SBOFF1	77+06	88+18	27B	I						1112											
	SBOFF1	79+83	81+97	9	I			5						214								
	SBOFF1	79+83	88+18	9	I			18						835								
	RTE99	488+49	491+50	27B	R													301				
	RTE99	488+49	491+50	27B	I						301											
	RTE99	488+49	491+50	38B	I			28				301										74
	PANAMA	0+00	0+30	29	I		6			120												
	PANAMA	0+00	0+06	22	I		4			12												
	PANAMA	0+00	0+30	27B	I						30											
	PANAMA	0+00	0+30	27B	I						30				1 LIMIT LINE	42						
	PANAMA	0+00	0+30	27B	I						30											
	PANAMA	0+00	0+30	27B	I						30				1 LIMIT LINE	42						
PD-2	RTE99	491+50	506+20	27B	R													1470				
	RTE99	491+50	506+20	27B	I						1470											
	RTE99	491+50	493+75	38B	I			22				225										
	RTE99	493+75	506+20	37	I	8		78					1245									
SUBTOTAL						8	10	193	32	876	3003	1400	1245	1049		1013	49	3248	744		544	80
TOTAL						243				3879		1400	1245	1049		1013	49	3248	744		544	80

PAVEMENT DELINEATION QUANTITIES

PDQ-1

STATE OF CALIFORNIA - DEPARTMENT OF TRANSPORTATION
Caltrans® TRAFFIC DESIGN

FUNCTIONAL SUPERVISOR: MOHAMMED QATAMI
CALCULATED-DESIGNED BY: KEVIN MURAI
CHECKED BY: HASSAN TAHA
REVISED BY
DATE REVISED

LAST REVISION 01-30-13
DATE PLOTTED => 21-FEB-2013
TIME PLOTTED => 15:44

Dist	COUNTY	ROUTE	POST MILES TOTAL PROJECT	SHEET No.	TOTAL SHEETS
06	Ker	99	19.5	24	55

REGISTERED CIVIL ENGINEER 02-01-13 DATE

2-4-13
PLANS APPROVAL DATE

REGISTERED PROFESSIONAL ENGINEER KEVIN H. MURAI No. C 59586 Exp. 12/31/13 CIVIL STATE OF CALIFORNIA

THE STATE OF CALIFORNIA OR ITS OFFICERS OR AGENTS SHALL NOT BE RESPONSIBLE FOR THE ACCURACY OR COMPLETENESS OF SCANNED COPIES OF THIS PLAN SHEET.

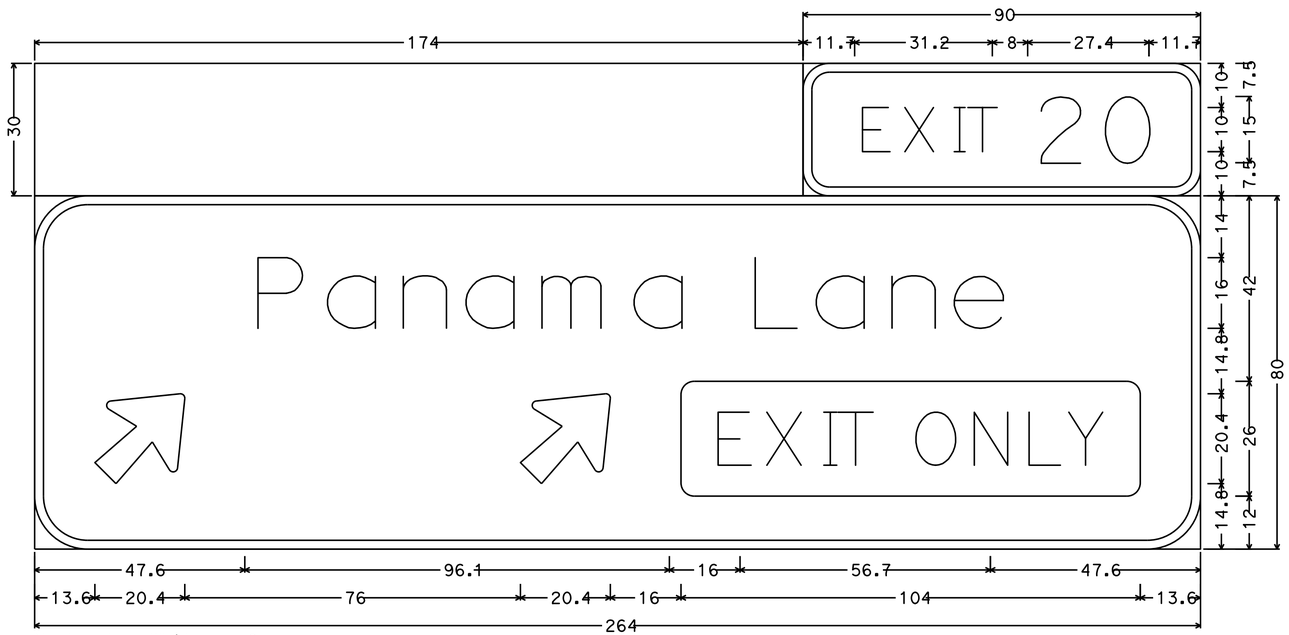

No border, White on Green;
6.0" Radius, 2.0" Border, White on Green;
[EXIT] E; [20] E;
12.0" Radius, 2.0" Border, White on Green;
[Panama Lane] E Mod; Arrow 16CAP-1L - 25.0" 45{; Arrow 16CAP-1L - 25.0" 45{; Rounded Rectangle 3.0" Radius Yellow;
Table of letter and object lefts.

E	X	I	T	2	0
11.7	21.1	31.7	35.5	50.9	65.9

P	a	n	a	m	a	L	a	n	e
47.6	64.2	80.4	95.5	111.8	133.6	159.7	174.8	191.1	206.2

13.6	110.0	146.4

SIGN 1-B DETAIL

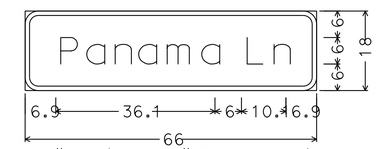

3.0" Radius, 1.0" Border, White on Green;
[Panama Ln] E Mod;
Table of letter and object lefts.

P	a	n	a	m	a
6.9	13.2	19.3	24.9	31.0	39.2

L	n
49.0	55.2

SIGN 1-10 DETAIL

SIGN DETAILS

NO SCALE **SD-1**

STATE OF CALIFORNIA - DEPARTMENT OF TRANSPORTATION
Caltrans®
TRAFFIC DESIGN

FUNCTIONAL SUPERVISOR: MOHAMMED QATAMI
CALCULATED-DESIGNED BY: KEVIN MURAI
CHECKED BY: HASSAN TAHA
REVISED BY
DATE REVISED

LAST REVISION 01-30-13
DATE PLOTTED => 21-FEB-2013
TIME PLOTTED => 15:44

Dist	COUNTY	ROUTE	POST MILES TOTAL PROJECT	SHEET No.	TOTAL SHEETS
06	Ker	99	19.5	25	55

REGISTERED CIVIL ENGINEER 02-01-13 DATE

02-04-13
PLANS APPROVAL DATE

REGISTERED PROFESSIONAL ENGINEER KEVIN H. MURAI No. C 59586 Exp. 12/31/13 CIVIL STATE OF CALIFORNIA

THE STATE OF CALIFORNIA OR ITS OFFICERS OR AGENTS SHALL NOT BE RESPONSIBLE FOR THE ACCURACY OR COMPLETENESS OF SCANNED COPIES OF THIS PLAN SHEET.

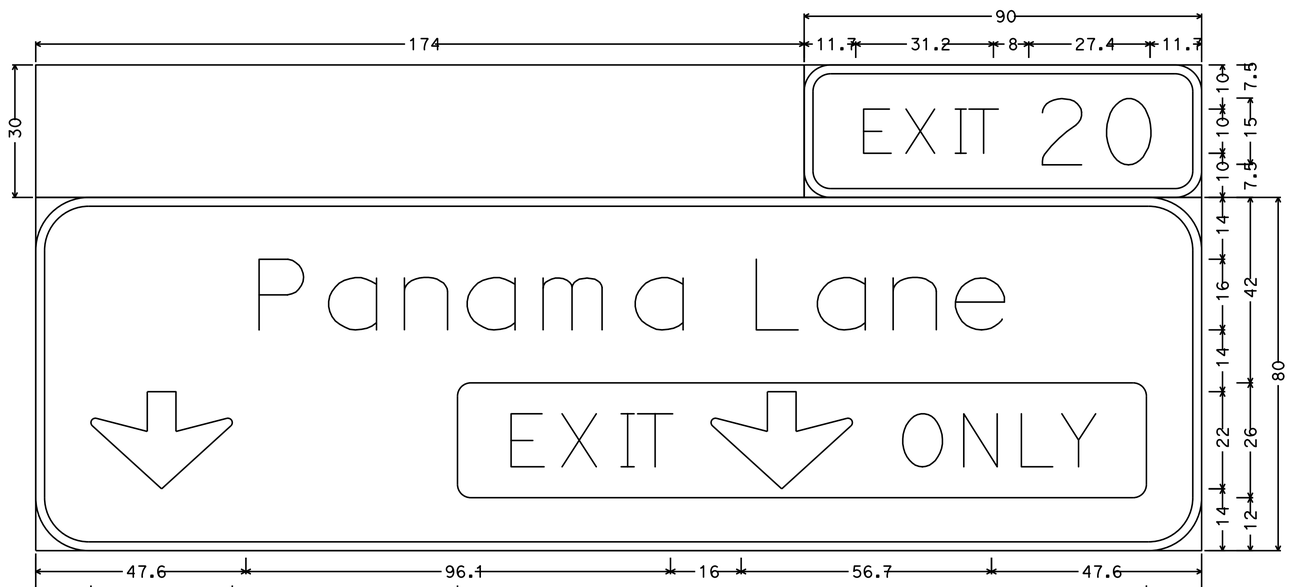

No border, White on Green;
6.0" Radius, 2.0" Border, White on Green;
[EXIT] E; [20] E;
12.0" Radius, 2.0" Border, White on Green;
[Panama Lane] E Mod; Down Arrow 22.0" 270{; Rounded Rectangle 3.0" Radius Yellow;
Table of letter and object lefts.

E	X	I	T	2	0
11.721.	131.7	35.5	50.9	65.9	

P	a	n	a	m	a	L	a	n	e	
47.6	64.2	80.4	95.5	111.8	133.6	159.7	174.8	191.1	206.2	

⇩	═
12.5	95.5

SIGN 2-A DETAIL

SIGN DETAILS

NO SCALE **SD-2**

STATE OF CALIFORNIA - DEPARTMENT OF TRANSPORTATION
Caltrans® **TRAFFIC DESIGN**

FUNCTIONAL SUPERVISOR: MOHAMMED QATAMI
CALCULATED-DESIGNED BY: KEVIN MURAI
CHECKED BY: HASSAN TAHA
REVISED BY / DATE REVISED

LAST REVISION 01-30-13
DATE PLOTTED => 21-FEB-2013
TIME PLOTTED => 15:44

Dist	COUNTY	ROUTE	POST MILES TOTAL PROJECT	SHEET No.	TOTAL SHEETS
06	Ker	99	19.5	26	55

REGISTERED CIVIL ENGINEER 02-01-13 DATE

02-04-13
PLANS APPROVAL DATE

REGISTERED PROFESSIONAL ENGINEER KEVIN H. MURAI No. C 59586 Exp 12/31/13 CIVIL STATE OF CALIFORNIA

THE STATE OF CALIFORNIA OR ITS OFFICERS OR AGENTS SHALL NOT BE RESPONSIBLE FOR THE ACCURACY OR COMPLETENESS OF SCANNED COPIES OF THIS PLAN SHEET.

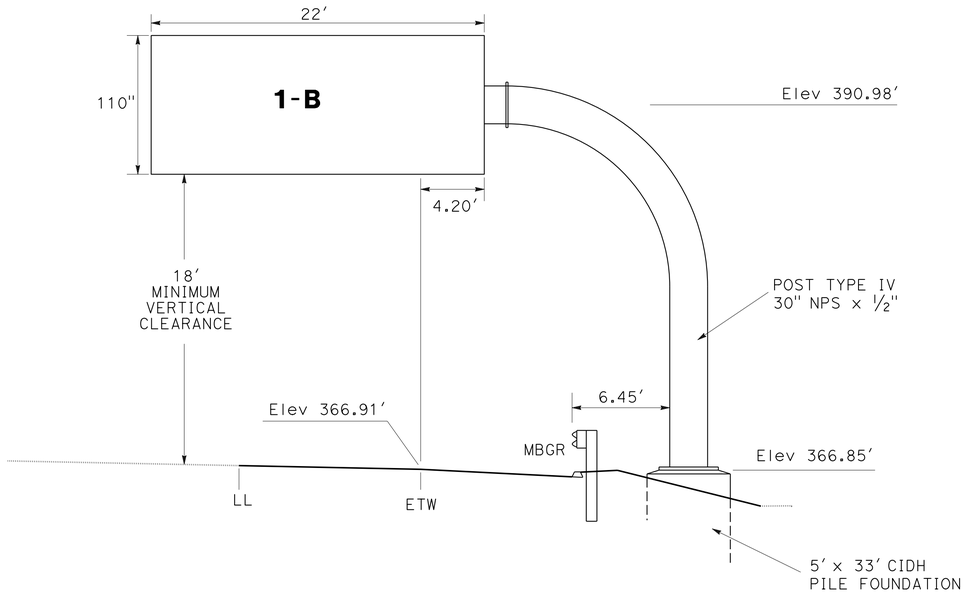

OVERHEAD SIGN TUBULAR
"RTE 99" STA 490+75

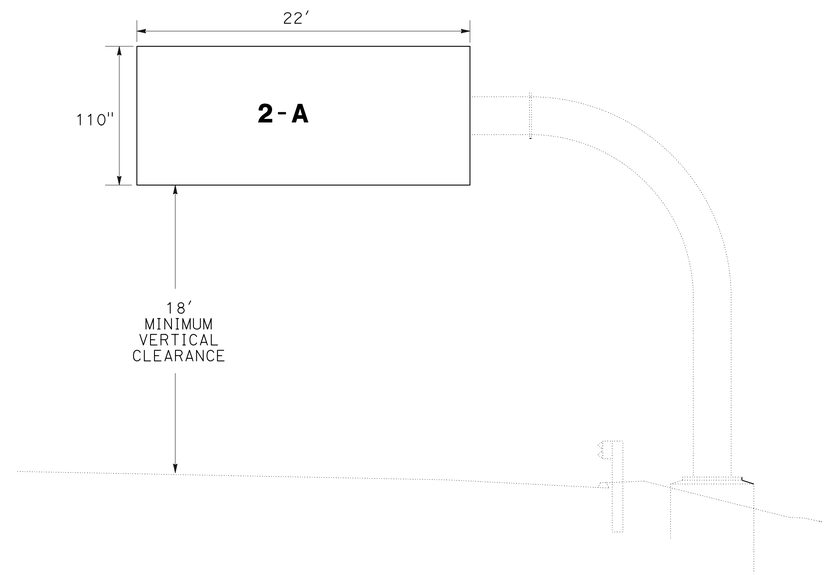

REPLACE SIGN PANEL
"RTE 99" STA 505+75

SIGN DETAILS

NO SCALE **SD-3**

REVISED BY	DATE REVISED
KEVIN MURAI	HASSAN TAHA
CALCULATED-DESIGNED BY	CHECKED BY
FUNCTIONAL SUPERVISOR	MOHAMMED QATAMI

STATE OF CALIFORNIA - DEPARTMENT OF TRANSPORTATION
Caltrans
TRAFFIC DESIGN

LAST REVISION 01-30-13 | DATE PLOTTED => 21-FEB-2013 | TIME PLOTTED => 15:44

Dist	COUNTY	ROUTE	POST MILES TOTAL PROJECT	SHEET No.	TOTAL SHEETS
06	Ker	99	19.5	27	55

REGISTERED CIVIL ENGINEER 02-01-13 DATE

02-04-13
PLANS APPROVAL DATE

REGISTERED PROFESSIONAL ENGINEER KEVIN H. MURAI No. C 59586 Exp. 12/31/13 CIVIL STATE OF CALIFORNIA

THE STATE OF CALIFORNIA OR ITS OFFICERS OR AGENTS SHALL NOT BE RESPONSIBLE FOR THE ACCURACY OR COMPLETENESS OF SCANNED COPIES OF THIS PLAN SHEET.

ABBREVIATIONS:

EA: EACH
SQFT: SQUARE FEET
LB: POUND
SSBM: STRAP AND SADDLE BRACKET METHOD
CIDH: CAST-IN-DRILLED-HOLE

ROADSIDE SIGN

SHEET No.	SIGN No.	SIGN CODE	SIGN MESSAGE	PANEL SIZE (LxD)	No. OF POST AND SIZE	BACKGROUND		LEGEND		GRAFFITI FLOW		FURNISH SINGLE SHEET ALUMINUM SIGN			ROADSIDE SIGN ONE POST	ROADSIDE SIGN TWO POST	RELOCATE ROADSIDE SIGN SIGN ON MAST ARM/POLE*	RELOCATE ROADSIDE SIGN (SSBM)	REMOVE ROADSIDE SIGN	TREATED WOOD WASTE
						SHEETING COLOR	RETROREFLECTIVITY ASTM TYPE	SHEETING COLOR	RETROREFLECTIVITY ASTM TYPE	STANDARD	PREMIUM	0.063"- UNFRAMED	0.080"- UNFRAMED	0.063"- FRAMED						
				INCH x INCH	INCH x INCH							SQFT			EA					LB
PD-1	S1-1	R5-1, R5-1a														1				
	S1-2	R61-26 (CA)																	2	100
	S1-3	R61-19R (CA) (MOD)	RIGHT ONLY / RIGHT ONLY	48 x 36	1 - 4 x 6	WHITE	III	BLACK		X			12.00		1					
	S1-4	R61-19L (CA) (MOD)	LEFT ONLY / LEFT ONLY	48 x 36	1 - 4 x 6	WHITE	III	BLACK		X			12.00		1					
	S1-5	W3-3	SIGNAL AHEAD SYMBOL	48 x 48	1 - 6 x 6	YELLOW	VII	B/R	VII		X		16.00		1					
	S1-6	W3-3														1				
	S1-7	D9-7, D9-8, D9-9, M6-4, M6-4, M6-1														1				
	S1-8	W13-2																1		
	S1-9	R61-14 (CA)	LEFT ONLY / LEFT ONLY / RIGHT ONLY	72 x 45	2 - 4 x 6	WHITE	III	BLACK		X				22.50		1				
	S1-10	D3-1	PANAMA LN	66 x 18		GREEN	VII	WHITE	VII		X			8.25				1		
	S1-11	R61-19R (CA) (MOD)	RIGHT ONLY / RIGHT ONLY	36 x 30		WHITE	III	BLACK		X		7.50						1		
	S1-12	R61-19L (CA) (MOD)	LEFT ONLY / LEFT ONLY	36 x 30		WHITE	III	BLACK		X		7.50						1		
PD-2	S2-1	R18AR (CA)	RIGHT LANE MUST EXIT	66 x 48	2 - 4 x 6	WHITE	III	BLACK		X				22.00		1				
	S2-2	W4-7L	THRU TRAFFIC MERGE LEFT	48 x 48	1 - 6 x 6	YELLOW	III	BLACK			X		16.00		1					
											TOTAL	15.00	56.00	52.75	4	2	3	3	1	2	100

* INCLUDED IN ELECTRICAL FOR INSTALLATION

OVERHEAD SIGN STRUCTURE QUANTITIES

SHEET No.	SIGN No.	LOCATION	SIGN MESSAGE	OVERHEAD SIGN PANEL														
				SINGLE FACED	DOUBLE FACED	BACKGROUND		LEGEND		GRAFFITI FLOW		FURNISH LAMINATED PANEL SIGN (1" - TYPE A)	PANEL SIZE	FURNISH SIGN STRUCTURE (TUBULAR)	INSTALL SIGN STRUCTURE (TUBULAR)	REMOVE SIGN STRUCTURE	INSTALL SIGN PANEL ON EXISTING FRAME	CIDH CONCRETE PILE (SIGN FOUNDATION)
						SHEETING COLOR	Retroreflectivity ASTM TYPE	SHEETING COLOR	Retroreflectivity ASTM TYPE	STANDARD	PREMIUM							60"
												SQFT	INCH x INCH	LB	LB	EA	SQFT	LF
PD-1	1-A	Sta 490+15 ROUTE 99	EXIT 20 Panama Lane ↗													1		
	1-B	Sta 490+75 ROUTE 99	EXIT 20 Panama Lane ↗ ↗ EXIT ONLY	X		GREEN	IV	WHITE	IV		IV	202	264 x 110	14,300	14,300			33.0
PD-2	2-A	Sta 505+75 ROUTE 99	EXIT 20 Panama Lane ↓ EXIT ↓ ONLY	X		GREEN	IV	WHITE	IV		IV	202	264 x 110				202	
											TOTAL	404		14,300	14,300	1	202	33.0

SIGN QUANTITIES

SQ-1

STATE OF CALIFORNIA - DEPARTMENT OF TRANSPORTATION
TRAFFIC DESIGN
Caltrans
FUNCTIONAL SUPERVISOR: MOHAMMED QATAMI
CALCULATED-DESIGNED BY: KEVIN MURAI
CHECKED BY: HASSAN TAHA
REVISED BY
DATE REVISED

LAST REVISION 01-30-13
DATE PLOTTED => 21-FEB-2013
TIME PLOTTED => 15:44

Dist	COUNTY	ROUTE	POST MILES TOTAL PROJECT	SHEET No.	TOTAL SHEETS
06	Ker	99	19.5	28	55

REGISTERED CIVIL ENGINEER 02-01-13 DATE

02-04-13
PLANS APPROVAL DATE

REGISTERED PROFESSIONAL ENGINEER MAHMOOD A SULTAN No. 76344 Exp. 12-31-14 CIVIL STATE OF CALIFORNIA

THE STATE OF CALIFORNIA OR ITS OFFICERS OR AGENTS SHALL NOT BE RESPONSIBLE FOR THE ACCURACY OR COMPLETENESS OF SCANNED COPIES OF THIS PLAN SHEET.

PLACE HMA (Misc AREA)

SHEET No.	LOCATION	HMA OVERSIDE DRAIN					SLOPE PAVING		
		THICKNESS	WIDTH	LENGTH	AREA	HMA *	THICKNESS	AREA	HMA *
		INCH	LF	LF	SQYD	TON	LF	SQYD	TON
D-1	"SBOFF1" Sta 78+00	3	2.75	10	3.0	0.5			
D-1	"SBOFF1" Sta 80+00	3	2.75	10	3.0	0.5			
L-1	"SBOFF1" Sta 79+84.05 TO "SBOFF1" Sta 81+00.00						0.25	100	17
L-1	"SBOFF1" Sta 81+00.00 TO "SBOFF1" Sta 81+38.02								
	SUB-TOTAL				6	1		100	17
	TOTAL							106	18

* REFER TO ROADWAY QUANTITIES TABLE FOR TOTAL HMA (TYPE A) QUANTITIES.

ROADWAY QUANTITIES

SHEET No.	LOCATION/DESCRIPTION	HMA (TYPE A)	CLASS 2 AGGREGATE BASE	TACK COAT	JOINTED PLAIN CONCRETE PAVEMENT	ROADWAY EXCAVATION	SHOULDER BACKING	EMBANKMENT (N)	CONCRETE BARRIER (TYPE 736B)	CONCRETE BARRIER (TYPE 60C)	COLD PLANE ASPHALT CONCRETE PAVEMENT	MINOR CONCRETE (TEXTURED PAVING)
		TON	CY	TON	CY	CY	TON	CY	LF	LF	SQYD	SQFT
L-1	"SBOFF1" Sta 77+04.24 TO "SBOFF1" Sta 78+88.62	60	78		115	133	11.7	441				
L-1	"SBOFF1" Sta 78+88.62 TO "SBETW1" Sta 490+75.17	2167	1417	2.1		1789		1345				
L-1	"SBOFF1" Sta 78+50.00 TO "SBOFF1" Sta 81+00.00								250			
L-1	"SBOFF1" Sta 81+00.00 TO "SBETW1" Sta 490+75.17									945		
L-1	PANAMA LANE (WESTBOUND)	46									137	
L-1	PANAMA LANE (EASTBOUND)	45									134	
L-1	"SBOFF1" Sta 83+56.00 TO "SBOFF1" Sta 84+10.50											815
D-1	BASINS					1096						
Q-2	MINOR CONCRETE (Misc CONSTRUCTION)					15		10				
Q-2	HMA DIKE QUANTITIES	3.8										
Q-1	PLACE HMA (Misc AREA)	18										
	TOTAL	2339.8	1495	2.1	115	3033	11.7		250	945	271	815

(N) NOT A SEPARATE PAY ITEM, FOR INFORMATION ONLY

TEMPORARY WATER POLLUTION CONTROL QUANTITIES

SHEET No.	LOCATION/ DESCRIPTION	TEMPORARY DRAINAGE INLET PROTECTION	TEMPORARY FENCE (TYPE ESA)
		EA	LF
WPC-1	"SBOFF1" Sta 77+08.9, Lt 178'	1	
WPC-1	REFER TO SHEET WPC-1		15
			40
			13
			47
			20
			49
			22
			41
	TOTAL	1	247

SUMMARY OF QUANTITIES
Q-1

REVISED BY	DATE REVISED
DAVID LOCKLING	MAHMOOD SULTAN
CALCULATED-DESIGNED BY	CHECKED BY
FUNCTIONAL SUPERVISOR	DAVID SANGHA

STATE OF CALIFORNIA - DEPARTMENT OF TRANSPORTATION
Caltrans DESIGN

LAST REVISION 02-15-13 DATE PLOTTED => 21-FEB-2013 TIME PLOTTED => 15:44

Dist	COUNTY	ROUTE	POST MILES TOTAL PROJECT	SHEET No.	TOTAL SHEETS
06	Ker	99	19.5	29	55

REGISTERED CIVIL ENGINEER 2-1-13 DATE

02-04-13
PLANS APPROVAL DATE

REGISTERED PROFESSIONAL ENGINEER MAHMOOD A SULTAN No. 76344 Exp. 12-31-14 CIVIL STATE OF CALIFORNIA

THE STATE OF CALIFORNIA OR ITS OFFICERS OR AGENTS SHALL NOT BE RESPONSIBLE FOR THE ACCURACY OR COMPLETENESS OF SCANNED COPIES OF THIS PLAN SHEET.

MINOR CONCRETE (Misc CONSTRUCTION)

SHEET No.	LOCATION/DESCRIPTION	SIDE	SIDEWALK	Conc CURB (TYPE A2-6)	CURB RAMP
			CY	CY	CY
L-1	"SBOFF1" Sta 77+00.00	R+		1	2
L-1	"SBOFF1" Sta 77+04.24	R+	0.3		
L-1	"SBOFF1" Sta 77+04.24 TO "SBOFF1" Sta 77+25.23	L+	3		
L-1	"SBOFF1" Sta 77+04.24 TO "SBOFF1" Sta 78+20.00	L+		8	
SUB-TOTAL			3.3	9	2
TOTAL			14.3		

REMOVAL CONCRETE

SHEET No.	LOCATION/DESCRIPTION	SIDE	CURB	CURB RAMP
			CY	CY
L-1	"SBOFF1" Sta 77+00.00	R+	1	1
	SUB-TOTAL		1	1
	TOTAL		2	

HMA DIKE QUANTITIES

SHEET No.	LOCATION	SIDE	PLACE HMA DIKE (TYPE C)	PLACE HMA DIKE (TYPE E)	PLACE HMA DIKE (TYPE F)	HMA (TYPE A) *
			LF	LF	LF	TON
L-1	"SBOFF1" Sta 79+84.05 TO "SBOFF1" Sta 81+00.00	R+		116		3.0
L-1	"SBETW1" Sta 490+76.00 TO "SBETW1" Sta 491+07.25	L+			32	0.4
L-1	"SBETW1" Sta 491+07.25 TO "SBETW1" Sta 491+45.00	L+	38			0.4
TOTAL			38	116	32	3.8

* REFER TO ROADWAY QUANTITIES TABLE FOR TOTAL HMA (TYPE A) QUANTITIES.

EXTEND IRRIGATION CROSSOVERS

LOCATION		SIDE		WELDED STEEL PIPE CONDUIT	CB	OL	(N) WATER LINE CROSSOVER SIZE (INCH)	(N) SPRINKLER CONTROL CROSSOVER SIZE (INCH)
LINE	STATION	L+	R+	SIZE (INCH) 12 LENGTH (LF)				
"SBOFF1"	77+45.5	X		10.0	X	X	3"	2"
TOTAL				10.0				

(N) - NOT A SEPARATE PAY ITEM FOR INFORMATION ONLY
X - DENOTES REQUIREMENT
CB - COUPLING BAND
OL - OVERLAP

METAL BEAM GUARD RAILING

LOCATION	SIDE	LAYOUT TYPE	MBGR (STEEL POST)	ALTERNATIVE FLARED TERMINAL SYSTEM	END ANCHOR ASSEMBLY (TYPE SFT)	WEED CONTROL MAT (RUBBER)	SALVAGE MBGR	REMOVE TERMINAL (N) SYSTEM
			LF	EA	EA	SQYD	LF	EA
"SBETW1" Sta 490+76.00 TO "SBETW1" Sta 491+07.25	L+	16B	25	1	1			
"SBETW1" Sta 487+89.00 TO "SBETW1" Sta 491+33.90	L+						345	1
"SBETW1" Sta 490+74.00 TO "SBETW1" Sta 491+55.00	L+					46		
TOTAL			25	1	1	46	345	

(N) NOT A SEPARATE PAY ITEM, FOR INFORMATION ONLY

SUMMARY OF QUANTITIES
Q-2

STATE OF CALIFORNIA - DEPARTMENT OF TRANSPORTATION
Caltrans® DESIGN
FUNCTIONAL SUPERVISOR: DAVID SANGHA
CALCULATED-DESIGNED BY: DAVID LOCKLING
CHECKED BY: MAHMOOD SULTAN
REVISED BY / DATE REVISED

LAST REVISION 02-05-13
DATE PLOTTED => 21-FEB-2013
TIME PLOTTED => 15:52

Dist	COUNTY	ROUTE	POST MILES TOTAL PROJECT	SHEET No.	TOTAL SHEETS
06	Ker	99	19.5	30	55

LICENSED LANDSCAPE ARCHITECT

02-04-13
PLANS APPROVAL DATE

LICENSED LANDSCAPE ARCHITECT
KEVIN GALLO No. 2555
Expiration Date
12/31/13
Renewal Date
02-01-13
Date
STATE OF CALIFORNIA

THE STATE OF CALIFORNIA OR ITS OFFICERS OR AGENTS SHALL NOT BE RESPONSIBLE FOR THE ACCURACY OR COMPLETENESS OF SCANNED COPIES OF THIS PLAN SHEET.

NOTES:

1. FOR ACCURATE RIGHT OF WAY DATA, CONTACT RIGHT OF WAY ENGINEERING AT THE DISTRICT OFFICE.
2. RELOCATE Exist IRRIGATION FACILITIES OUTSIDE Emb AREAS.
3. INSTALL NEW VAVE BOXES FOR ALL RELOCATED IRRIGATION FACILITIES.
4. RECONNECT ALL RELOCATED IRRIGATION FACILITIES AS SHOWN.

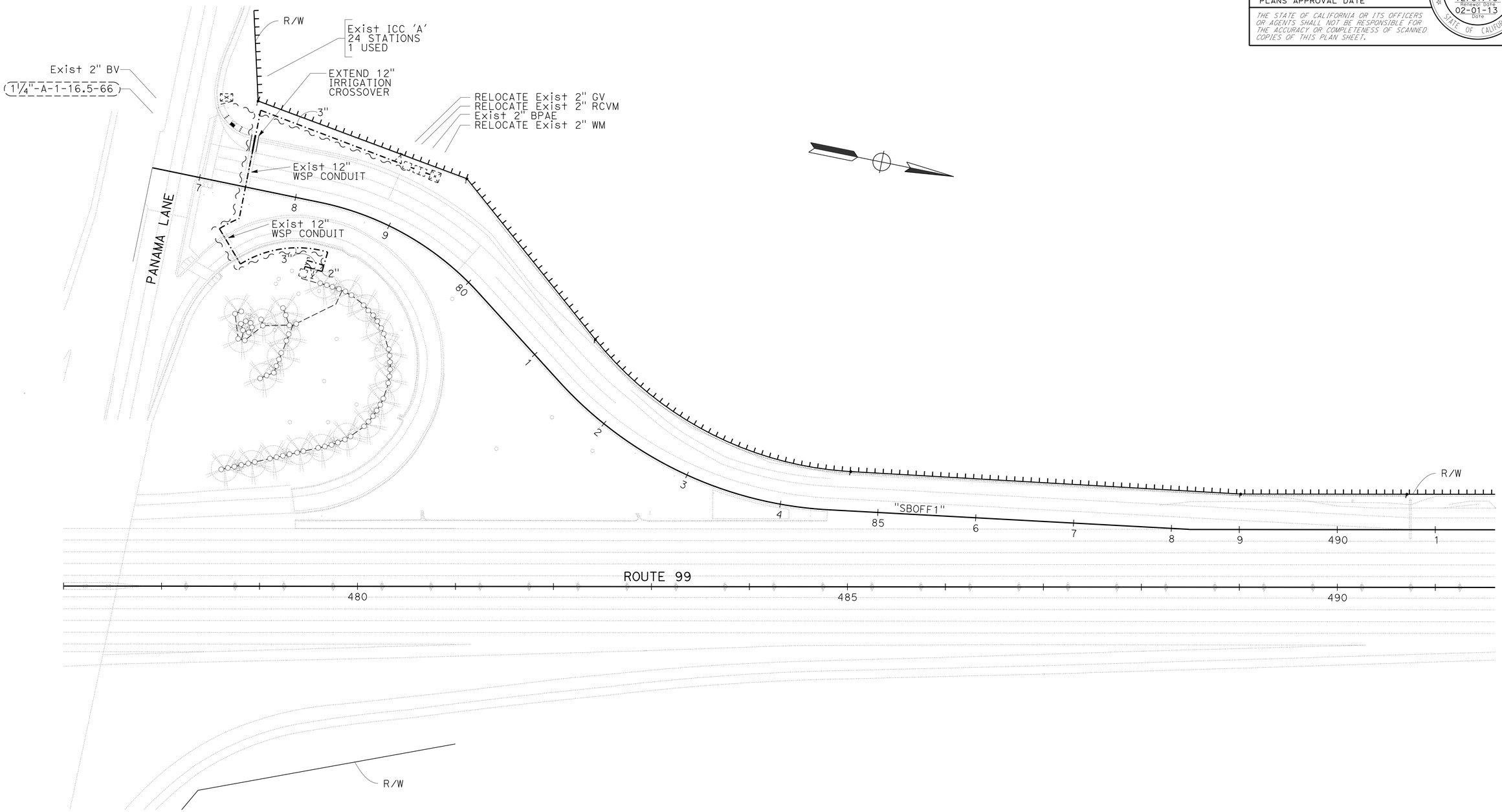

APPROVED FOR IRRIGATION WORK ONLY

IRRIGATION PLAN
IP-1

SCALE: 1"=50'

STATE OF CALIFORNIA - DEPARTMENT OF TRANSPORTATION
Caltrans® LANDSCAPE ARCHITECTURE

SENIOR LANDSCAPE ARCHITECT: BRAD COLE
CALCULATED-DESIGNED BY: KEVIN GALLO
CHECKED BY: GLORIA RAMIREZ
REVISED BY
DATE REVISED

LAST REVISION 01-30-13
DATE PLOTTED => 21-FEB-2013
TIME PLOTTED => 15:45

Dist	COUNTY	ROUTE	POST MILES TOTAL PROJECT	SHEET No.	TOTAL SHEETS
06	Ker	99	19.5	31	55

LICENSED LANDSCAPE ARCHITECT

02-04-13
PLANS APPROVAL DATE

LICENSED LANDSCAPE ARCHITECT
KEVIN GALLO No. 2556
Renewal Date 12/31/13
Renewal Date 02-01-13
Date
STATE OF CALIFORNIA

THE STATE OF CALIFORNIA OR ITS OFFICERS OR AGENTS SHALL NOT BE RESPONSIBLE FOR THE ACCURACY OR COMPLETENESS OF SCANNED COPIES OF THIS PLAN SHEET.

SEED MIX

BOTANICAL NAME (COMMON NAME)	PERCENT GERMINATION (MINIMUM)	POUNDS PURE LIVE SEED PER ACRE (SLOPE MEASUREMENT)
ESCHSCHOLZIA CALIFORNICA CALIFORNIA POPPY	60	2.00
FESTUCA IDAHOENSIS 'MT. TAM' BLUE BUNCH GRASS	40	6.00
LASTHENIA CALIFORNICA (DWARF GOLDFIELDS)	50	0.50
LAYIA PLATYGLOSSA (TIDY TIPS)	65	0.50
LINARIA MAROCCANA (MOROCCAN TOADFLAX)	70	1.00
LOTUS PURSHIANUS (PURSHINGS LOTUS)	40	3.00
LUPINUS BICOLOR (PIGMY-LEAVED LUPINE)	70	3.00
NASELLA CERNUA (DEAWNED) (NODDING STIPA)	40	6.00
POA SECUNDA SECUNDA (PINE BLUEGRASS)	50	3.00

SEED PRODUCED IN CALIFORNIA ONLY.

HYDROSEED

ITEM	MATERIAL		APPLICATION RATE
	DESCRIPTION	TYPE	
HYDROSEED	SEED	MIX	25.00 LB/ACRE
	FIBER	WOOD	1000 LB/ACRE
	TACKIFIER	PSYLLIUM	150 LB/ACRE

EROSION CONTROL QUANTITIES

SHEET	LOCATION	HYDROSEED SQFT
NOT SHOWN ON PLANS	LOCATION 1	6,054
	LOCATION 2	1,285
	LOCATION 3	4,897
	LOCATION 4	22,645
	LOCATION 5	1,461
	TOTAL:	36,342

APPROVED FOR EROSION CONTROL WORK ONLY

EROSION CONTROL LEGEND AND QUANTITIES
ECL-1

STATE OF CALIFORNIA - DEPARTMENT OF TRANSPORTATION
Caltrans® LANDSCAPE ARCHITECTURE

SENIOR LANDSCAPE ARCHITECT: BRAD COLE
CALCULATED-DESIGNED BY: KEVIN GALLO
CHECKED BY: GLORIA RAMIREZ
REVISED BY
DATE REVISED

LAST REVISION 01-30-13
DATE PLOTTED => 21-FEB-2013
TIME PLOTTED => 15:45

Dist	COUNTY	ROUTE	POST MILES TOTAL PROJECT	SHEET No.	TOTAL SHEETS
06	Ker	99	19.5	32	55

LICENSED LANDSCAPE ARCHITECT

02-04-13
PLANS APPROVAL DATE

LICENSED LANDSCAPE ARCHITECT
KEVIN GALLO No. 2525
Expires
12/31/13
Renewal Date
02-01-13
Date
STATE OF CALIFORNIA

THE STATE OF CALIFORNIA OR ITS OFFICERS OR AGENTS SHALL NOT BE RESPONSIBLE FOR THE ACCURACY OR COMPLETENESS OF SCANNED COPIES OF THIS PLAN SHEET.

LEGEND:

HYDROSEED

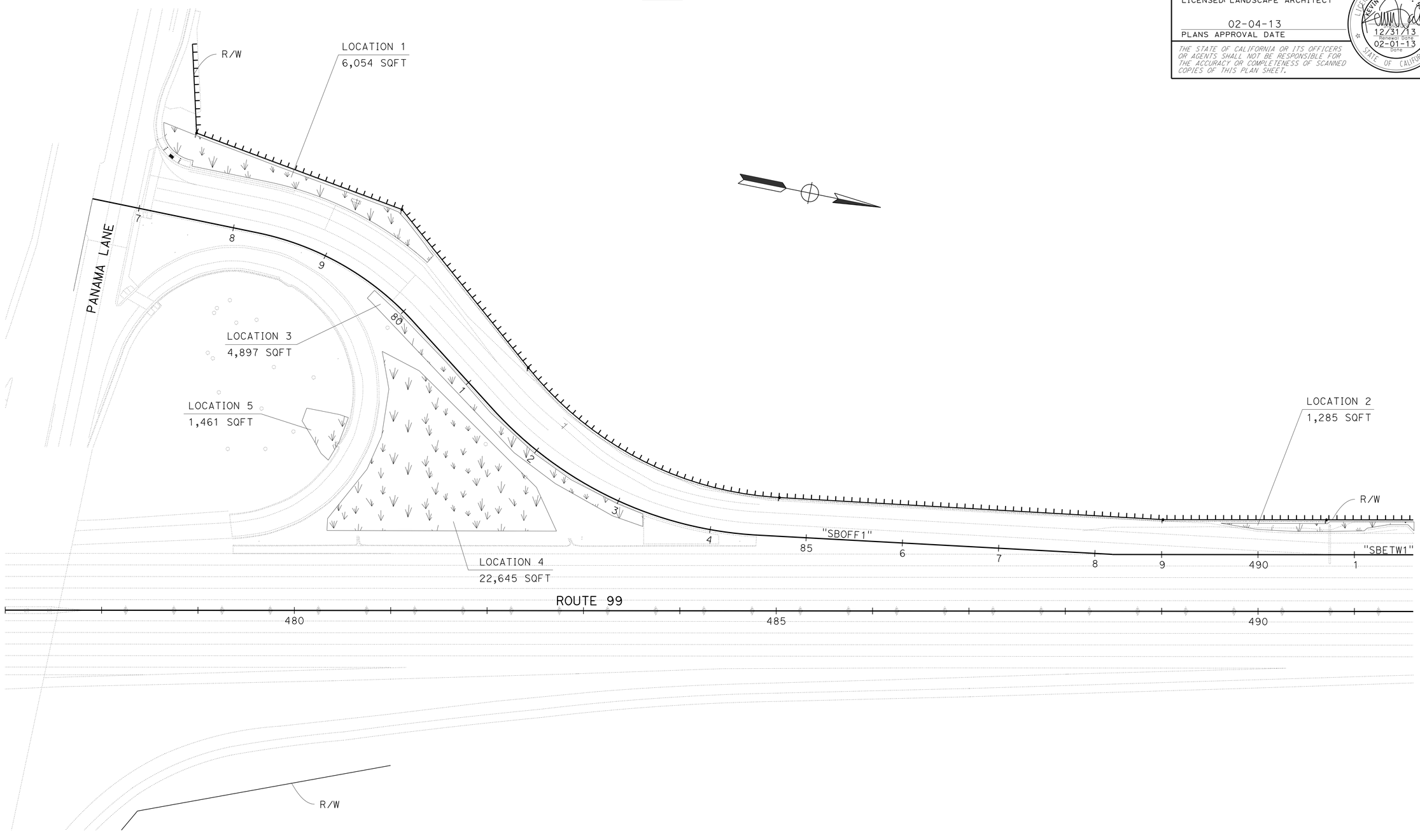

EROSION CONTROL PLAN
EC-1

SCALE: 1"=50'

REVISED BY | DATE REVISED
KEVIN GALLO | GLORIA RAMIREZ
CALCULATED-DESIGNED BY | CHECKED BY
SENIOR LANDSCAPE ARCHITECT | BRAD COLE
STATE OF CALIFORNIA - DEPARTMENT OF TRANSPORTATION
Caltrans® LANDSCAPE ARCHITECTURE

LAST REVISION 01-30-13 | DATE PLOTTED => 21-FEB-2013 | TIME PLOTTED => 15:45

Dist	COUNTY	ROUTE	POST MILES TOTAL PROJECT	SHEET No.	TOTAL SHEETS
06	Ker	99	19.5	33	55

REGISTERED ELECTRICAL ENGINEER 02/01/13 DATE

02-04-13
PLANS APPROVAL DATE

REGISTERED PROFESSIONAL ENGINEER RAJPREET SINGH No. 17496 Exp. 6/30/13 ELECTRICAL STATE OF CALIFORNIA

THE STATE OF CALIFORNIA OR ITS OFFICERS OR AGENTS SHALL NOT BE RESPONSIBLE FOR THE ACCURACY OR COMPLETENESS OF SCANNED COPIES OF THIS PLAN SHEET.

LEGEND:

1 RS Exist 120/240 V, 1Ø, 3-WIRE, TYPE III-AF SERVICE EQUIPMENT ENCLOSURE WITH THE FOLLOWING CTID No. 06500990019530G.

2 120/240 V, 1Ø, 3-WIRE, TYPE III-CF SERVICE EQUIPMENT ENCLOSURE WITH THE FOLLOWING CIRCUIT BREAKERS:

CTID No. 06500990019530T

AMPERES	VOLTS	POLES	NAMEPLATE	METER	PHOTOELECTRIC CONTROL TYPE
100	240	2	MAIN BREAKER	YES	———
50	120	1	TRAFFIC SIGNAL	YES	———
30	120	1	SPARE	YES	———
——	——	6	SPACE	——	———

CTID No. 06500990019530G

AMPERES	VOLTS	POLES	NAMEPLATE	METER	PHOTOELECTRIC CONTROL TYPE
100	240	2	MAIN BREAKER	YES	———
30	240	2	LIGHTING	YES	IV
30	240	2	SIGN LIGHTING	YES	LC3 *
20	120	1	ICC A	YES	———
30	240	2	SPARE	YES	———
——	——	6	SPACE	——	———

* FUTURE USE

3 Exist 120/240 V, 1Ø, 3-WIRE, TYPE III-CF SERVICE EQUIPMENT ENCLOSURE WITH THE FOLLOWING CIRCUIT BREAKERS:

CTID No. 06500990019540T

AMPERES	VOLTS	POLES	NAMEPLATE	METER	PHOTOELECTRIC CONTROL TYPE
100	240	2	MAIN BREAKER	YES	———
40	120	1	334-CCTV CABINET	YES	———
20	120	1	TDC	YES	———
20	120	1	MVDS	YES	———
20	120	1	SPARE	YES	———
——	——	5	SPACE	——	———

CTID No. 06500990019540L

AMPERES	VOLTS	POLES	NAMEPLATE	METER	PHOTOELECTRIC CONTROL TYPE
100	240	2	MAIN BREAKER	YES	———
40	240	2	HIGHWAY LIGHTING	YES	V
20	120	1	LIGHTING CONTROL	YES	———
40	240	2	SIGN ILLUMINATION	YES	V
20	120	1	SIGN CONTROL	YES	———
——	——	3	SPACE	——	———

4 COORDINATE WITH THE CITY OF BAKERSFIELD TO DISCONNECT AND RECONNECT THE Exist sic CABLE IN Exist sig CONTROLLER CABINET, LOCATED AT THE SOUTH WEST CORNER OF PANAMA LANE AND WIBLE ROAD.

5 Exist icc "A".

6 Exist MODEL 2070 CONTROLLER ASSEMBLY WITH BBS.

7 RS EXISTING hps LUMINAIRE AND INSTALL 165 W LED LUMINAIRE ON EXISTING SIGNAL POLE.

8 FOR TYPE 21 MOUNTED ON TYPE 60 C CONCRETE BARRIER, SEE SHEET SES-2.

9 RS Exist VDS POLE AND RELOCATE Exist MVDS EQUIPMENT ON TYPE 30 VDS POLE. FOR MVDS INSTALLATION, REFER TO ELECTRICAL DETAIL ON SHEET E-6.

CONDUIT AND CONDUCTOR SCHEDULE

CONDUCTOR DESIGNATION			CONDUIT RUN NUMBER AND SIZE									
CABLE TYPE	POLE	PHASE	* 1	2	3	4	5	* 6	* 7	8	9
			2-3"	2"	2"	3"	3"	2"	2"	2"	3"
VEH-PED / 12CSC	ⓐ	6,6P	1	1							
	Ⓑ	4 / 6	1 / 1	1 / 1	1 / 1						
	Ⓒ	4,6,6P / 6	1 / 1	1 / 1	1 / 1		1 / 1				
	ⓓ	2,4	1						1	1	1
	Ⓔ	4	1							1	1
PPB 3CSC	Ⓕ	2,4	1							1	1
	TOTAL		6 / 2	3 / 2	2 / 2		1 / 1		1	3	3
AWG	CIRCUIT										
#6	signal		2								
#8	LIGHTING			2	2		2	2	2	2	2
	** sic		2	1	1	1					
DLC	PHASE										
	Ø2		4							4	4
	Ø2 ADV		1								
	Ø4		5	5	5						
	Ø4 ADV		2	2	2						
	Ø6		4	4	4		4	4			
	Ø6 ADV		1	1	1	1					
	TOTAL		17	12	12	1	4	4		4	4

* Exist CONDUIT
** Exist CONDUCTORS

POLE AND EQUIPMENT SCHEDULE

No.	STANDARD TYPE	SMA	LMA	VEH SIG MTG MAST ARM	VEH SIG MTG POLE	PED SIG MTG	PPB Ø	PPB ARROW	LED LUM	SPECIAL REQUIREMENTS
ⓐ	26-4-100	40′	12′	MAS MAS	SV-1-T	SP-1-T			165 W	Exist POLE AND EQUIPMENT, RC Exist PPB, RC Exist CONDUCTORS, AND SEAL PPB HOLE. 7
Ⓑ	1-A				TV-1-T		6	←		
Ⓒ	15TS		12′		SV-2-T	SP-1-T	6	←	165 W	
ⓓ	24-4-100	35′	12′	MAS MAS	SV-2-T				165 W	7 *
Ⓔ	18-2-100	25′		MAS	SV-1-T					INSTALL R61-19R(CA)(MOD), R61-19L(CA)(MOD), AND D3-1 SIGN ON SMA.
Ⓕ	15TS		12′		SV-1-T SV-1-T				165 W	MOUNT Ø4 SIGNAL HEAD AT MAXIMUM HEIGHT OF 12′.

* Exist POLE AND EQUIPMENT, UNLESS OTHERWISE NOTED.

ABBREVIATIONS:

PG&E PACIFIC GAS AND ELECTRIC COMPANY
PV PHOTOVOLTAIC

APPROVED FOR ELECTRICAL WORK ONLY

LEGEND, ABBREVIATIONS, AND SCHEDULES

NO SCALE

E-1

REVISED BY | DATE REVISED
YOHANNES CHALLA | RAJPREET SINGH
CALCULATED-DESIGNED BY | CHECKED BY
FUNCTIONAL SUPERVISOR: ALI BAKHDOUD
STATE OF CALIFORNIA - DEPARTMENT OF TRANSPORTATION
Caltrans® ELECTRICAL DESIGN

LAST REVISION 02-01-13 | DATE PLOTTED => 21-FEB-2013 | TIME PLOTTED => 15:45

Dist	COUNTY	ROUTE	POST MILES TOTAL PROJECT	SHEET No.	TOTAL SHEETS
06	Ker	99	19.5	34	55

REGISTERED ELECTRICAL ENGINEER 02/01/13 DATE

PLANS APPROVAL DATE 02-04-13

REGISTERED PROFESSIONAL ENGINEER RAJPREET SINGH No. 17496 Exp. 6/30/13 ELECTRICAL STATE OF CALIFORNIA

THE STATE OF CALIFORNIA OR ITS OFFICERS OR AGENTS SHALL NOT BE RESPONSIBLE FOR THE ACCURACY OR COMPLETENESS OF SCANNED COPIES OF THIS PLAN SHEET.

NOTE:

1. FOR ACCURATE RIGHT OF WAY DATA, CONTACT RIGHT OF WAY ENGINEERING AT THE DISTRICT OFFICE.

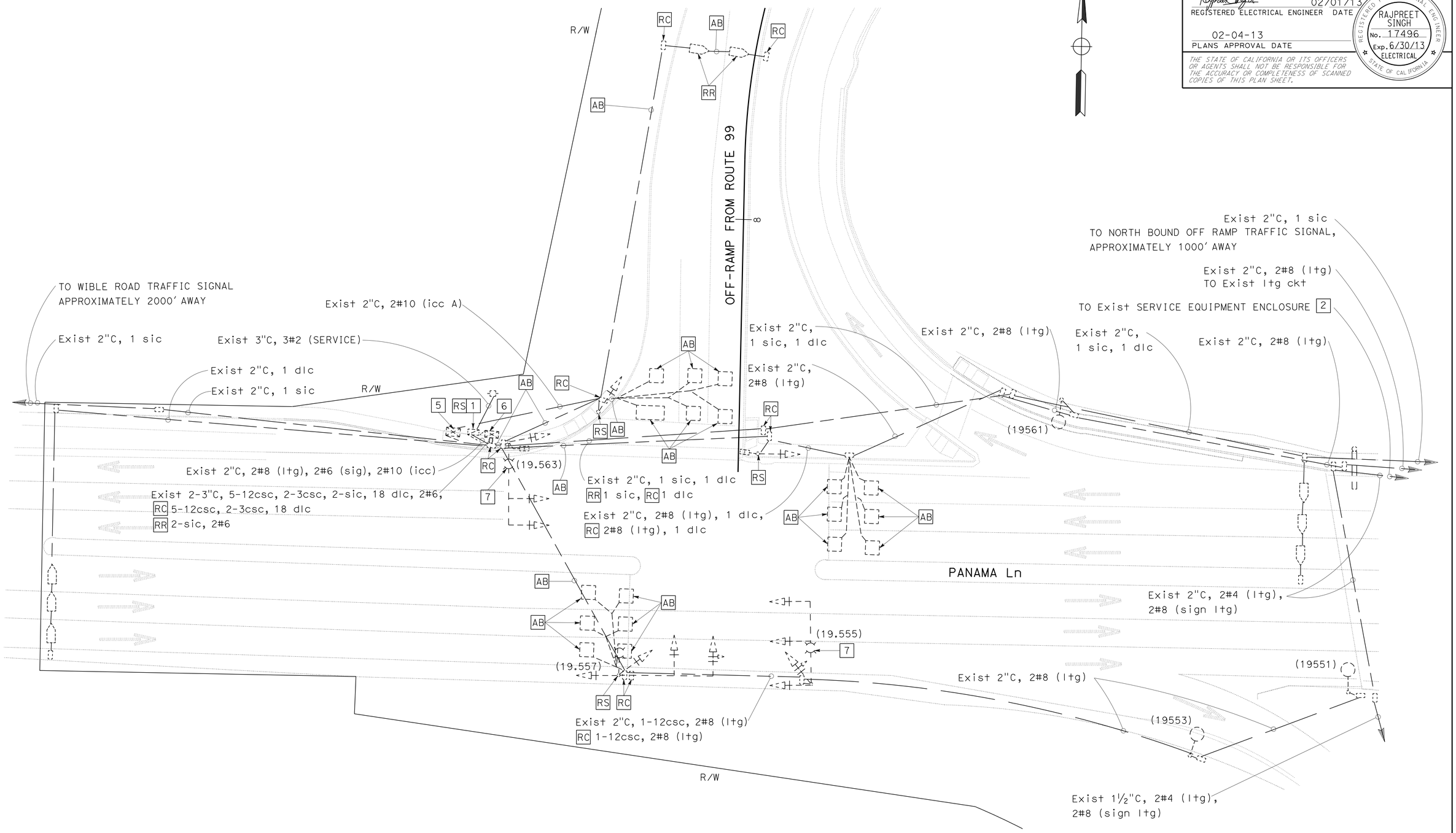

MODIFY SIGNAL AND LIGHTING

SCALE: 1"=20'

E-2

APPROVED FOR ELECTRICAL WORK ONLY

STATE OF CALIFORNIA - DEPARTMENT OF TRANSPORTATION

Caltrans® **ELECTRICAL DESIGN**

FUNCTIONAL SUPERVISOR: ALI BAKHDOUD

CALCULATED-DESIGNED BY: YOHANNES CHALLA

CHECKED BY: RAJPREET SINGH

REVISED BY

DATE REVISED

LAST REVISION DATE PLOTTED => 21-FEB-2013 TIME PLOTTED => 15:45

02-01-13

Dist	COUNTY	ROUTE	POST MILES TOTAL PROJECT	SHEET No.	TOTAL SHEETS
06	Ker	99	19.5	35	55

REGISTERED ELECTRICAL ENGINEER 02/01/13 DATE

PLANS APPROVAL DATE 02-04-13

REGISTERED PROFESSIONAL ENGINEER RAJPREET SINGH No. 17496 Exp. 6/30/13 ELECTRICAL STATE OF CALIFORNIA

THE STATE OF CALIFORNIA OR ITS OFFICERS OR AGENTS SHALL NOT BE RESPONSIBLE FOR THE ACCURACY OR COMPLETENESS OF SCANNED COPIES OF THIS PLAN SHEET.

NOTES:

1. FOR ACCURATE RIGHT OF WAY DATA, CONTACT RIGHT OF WAY ENGINEERING AT THE DISTRICT OFFICE.
2. ALL PULL BOXES MUST BE No. 5 WITH EXTENSION UNLESS OTHERWISE NOTED.

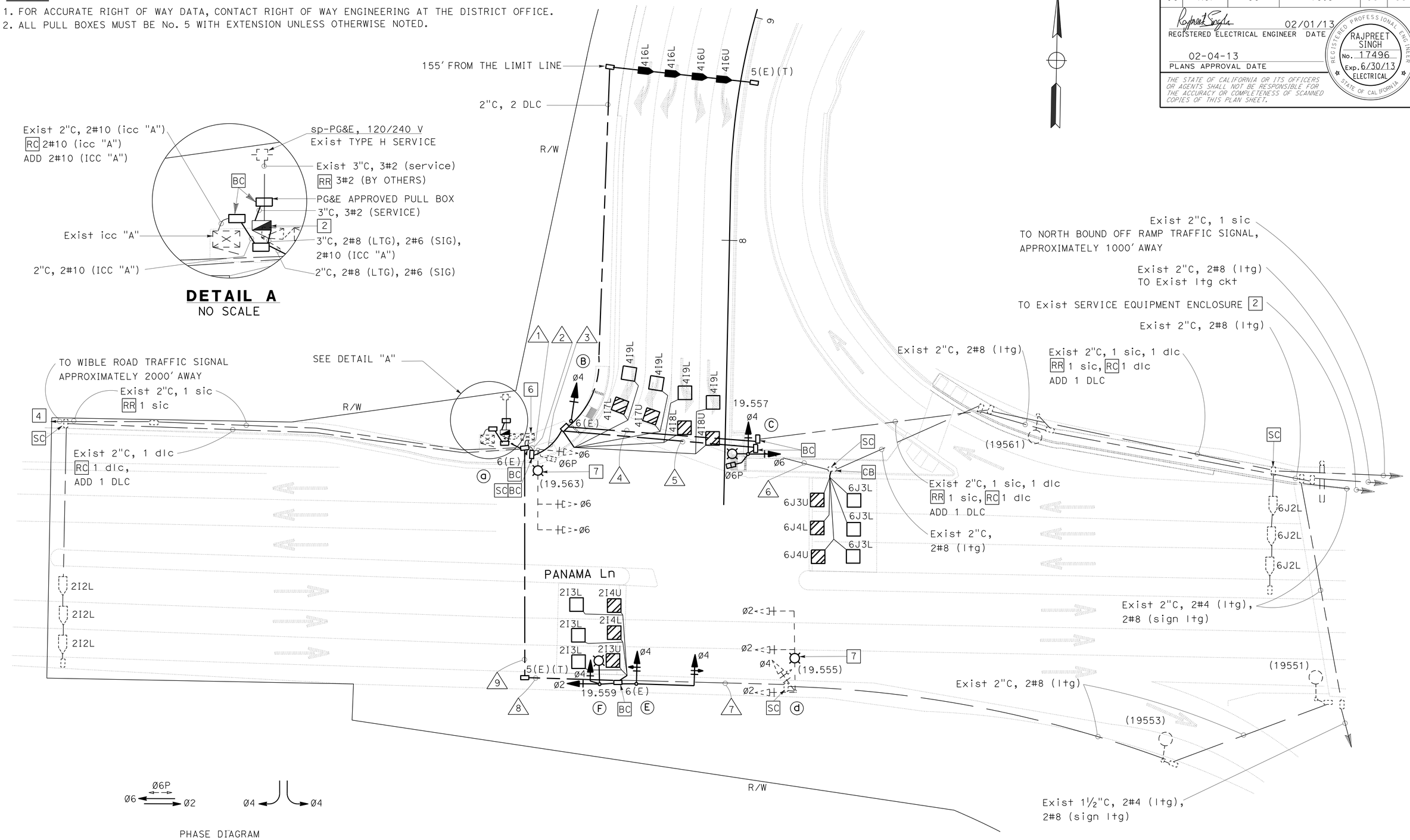

APPROVED FOR ELECTRICAL WORK ONLY

MODIFY SIGNAL AND LIGHTING

SCALE: 1"=20'

E-3

STATE OF CALIFORNIA - DEPARTMENT OF TRANSPORTATION

Caltrans® **ELECTRICAL DESIGN**

FUNCTIONAL SUPERVISOR: ALI BAKHDOUD

CALCULATED-DESIGNED BY: YOHANNES CHALLA

CHECKED BY: RAJPREET SINGH

REVISED BY / DATE REVISED

LAST REVISION 02-01-13 | DATE PLOTTED => 21-FEB-2013 | TIME PLOTTED => 15:45

Dist	COUNTY	ROUTE	POST MILES TOTAL PROJECT	SHEET No.	TOTAL SHEETS
06	Ker	99	19.5	36	55

REGISTERED ELECTRICAL ENGINEER 02/01/13 DATE

PLANS APPROVAL DATE 02-04-13

REGISTERED PROFESSIONAL ENGINEER RAJPREET SINGH No. 17496 Exp. 6/30/13 ELECTRICAL STATE OF CALIFORNIA

THE STATE OF CALIFORNIA OR ITS OFFICERS OR AGENTS SHALL NOT BE RESPONSIBLE FOR THE ACCURACY OR COMPLETENESS OF SCANNED COPIES OF THIS PLAN SHEET.

NOTES:

1. FOR ACCURATE RIGHT OF WAY DATA, CONTACT RIGHT OF WAY ENGINEERING AT THE DISTRICT OFFICE.
2. ALL PULL BOXES MUST BE No. 5 WITH EXTENSION UNLESS OTHERWISE NOTED.

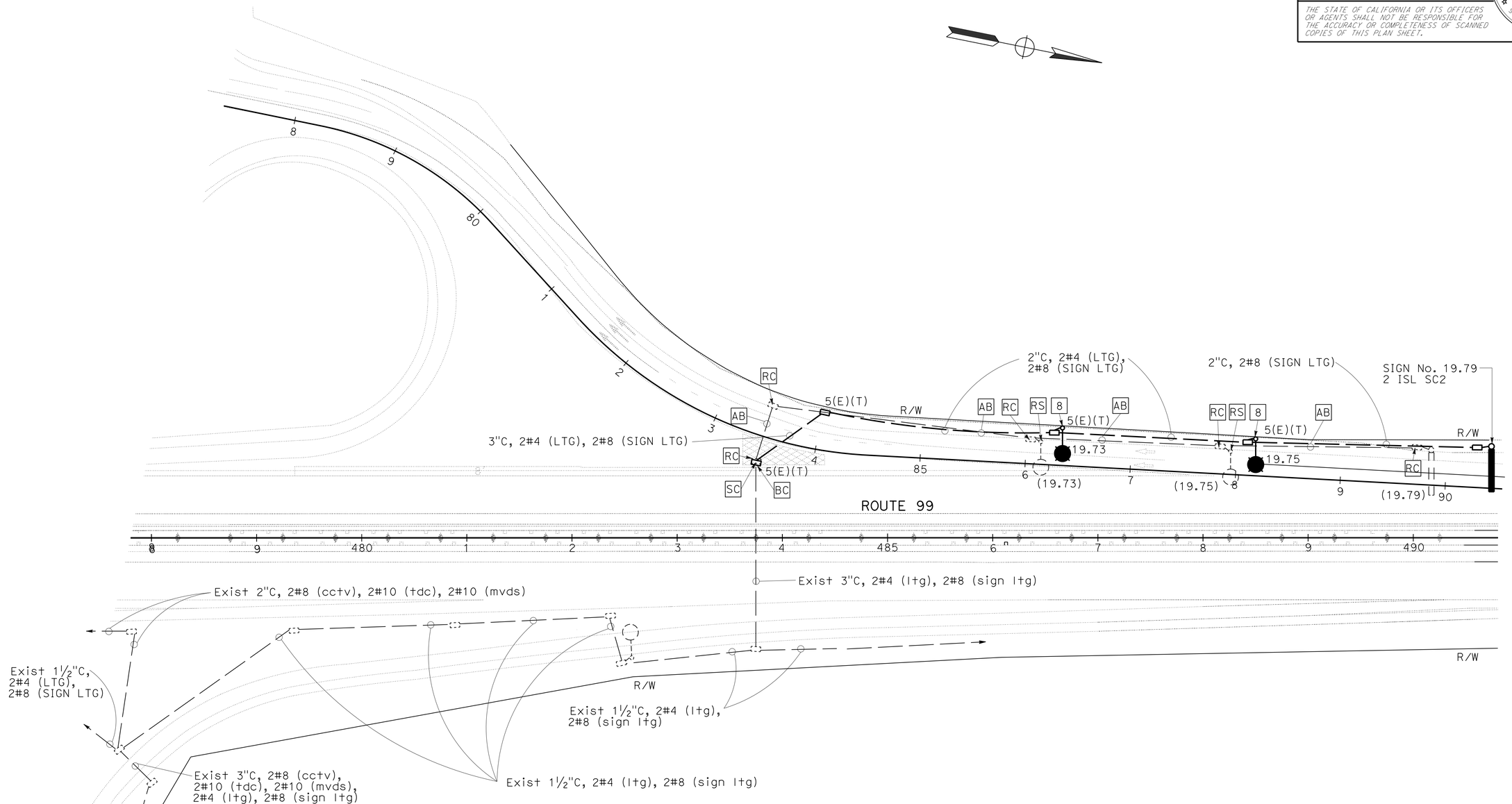

MODIFY LIGHTING AND SIGN ILLUMINATION

APPROVED FOR ELECTRICAL WORK ONLY

SCALE: 1"=50'

E-4

STATE OF CALIFORNIA - DEPARTMENT OF TRANSPORTATION
Caltrans® ELECTRICAL DESIGN

FUNCTIONAL SUPERVISOR: ALI BAKHDOUD

CALCULATED-DESIGNED BY: YOHANNES CHALLA
CHECKED BY: RAJPREET SINGH

REVISED BY
DATE REVISED

LAST REVISION 02-01-13 | DATE PLOTTED => 21-FEB-2013 | TIME PLOTTED => 15:45

BORDER LAST REVISED 7/2/2010 | USERNAME => s115755 | DGN FILE => 0600020643ua004.dgn | RELATIVE BORDER SCALE IS IN INCHES 0 1 2 3 | UNIT 1515 | PROJECT NUMBER & PHASE 06000206431

Dist	COUNTY	ROUTE	POST MILES TOTAL PROJECT	SHEET No.	TOTAL SHEETS
06	Ker	99	19.5	37	55

REGISTERED ELECTRICAL ENGINEER 02/01/13 DATE

PLANS APPROVAL DATE 02-04-13

REGISTERED PROFESSIONAL ENGINEER RAJPREET SINGH No. 17496 Exp. 6/30/13 ELECTRICAL STATE OF CALIFORNIA

THE STATE OF CALIFORNIA OR ITS OFFICERS OR AGENTS SHALL NOT BE RESPONSIBLE FOR THE ACCURACY OR COMPLETENESS OF SCANNED COPIES OF THIS PLAN SHEET.

NOTES:

1. FOR ACCURATE RIGHT OF WAY DATA, CONTACT RIGHT OF WAY ENGINEERING AT THE DISTRICT OFFICE.
2. ALL PULL BOXES MUST BE No. 5 WITH EXTENSION UNLESS OTHERWISE NOTED.

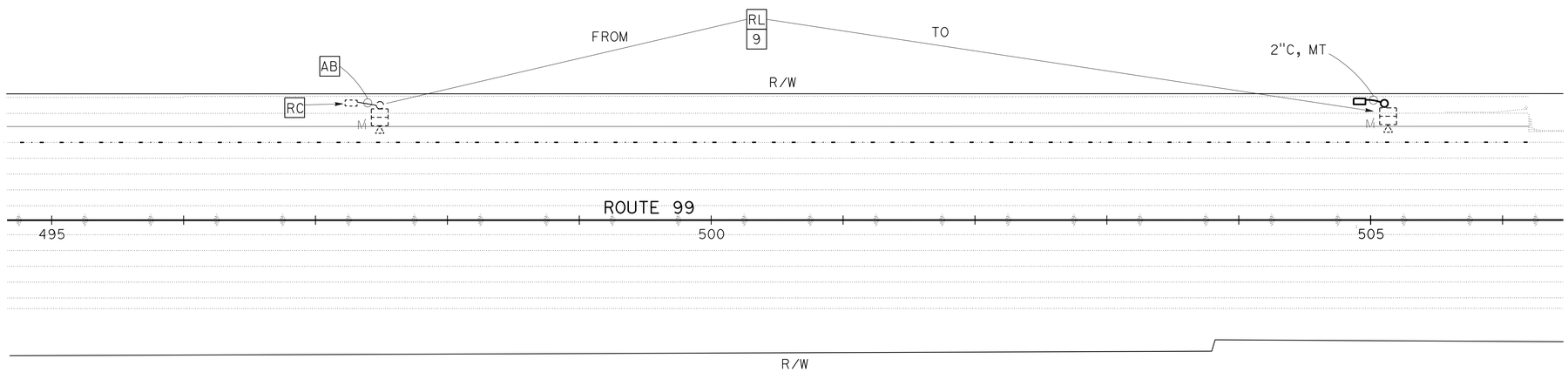

MODIFY MICROWAVE VEHICLE DETECTION SYSTEM

SCALE: 1"=50'

E-5

APPROVED FOR ELECTRICAL WORK ONLY

STATE OF CALIFORNIA - DEPARTMENT OF TRANSPORTATION

Caltrans® ELECTRICAL DESIGN

FUNCTIONAL SUPERVISOR: ALI BAKHDOUD

CALCULATED-DESIGNED BY: YOHANNES CHALLA

CHECKED BY: RAJPREET SINGH

REVISED BY

DATE REVISED

LAST REVISION 02-01-13

DATE PLOTTED => 21-FEB-2013
TIME PLOTTED => 15:45

Dist	COUNTY	ROUTE	POST MILES TOTAL PROJECT	SHEET No.	TOTAL SHEETS
06	Ker	99	19.5	38	55

REGISTERED ELECTRICAL ENGINEER 02/01/13 DATE

02-04-13
PLANS APPROVAL DATE

REGISTERED PROFESSIONAL ENGINEER RAJPREET SINGH No. 17496 Exp. 6/30/13 ELECTRICAL STATE OF CALIFORNIA

THE STATE OF CALIFORNIA OR ITS OFFICERS OR AGENTS SHALL NOT BE RESPONSIBLE FOR THE ACCURACY OR COMPLETENESS OF SCANNED COPIES OF THIS PLAN SHEET.

NOTE:

ALL EQUIPMENT IS EXISTING AND MUST BE RELOCATED FROM Exist VDS POLE TO NEW VDS 30 POLE.

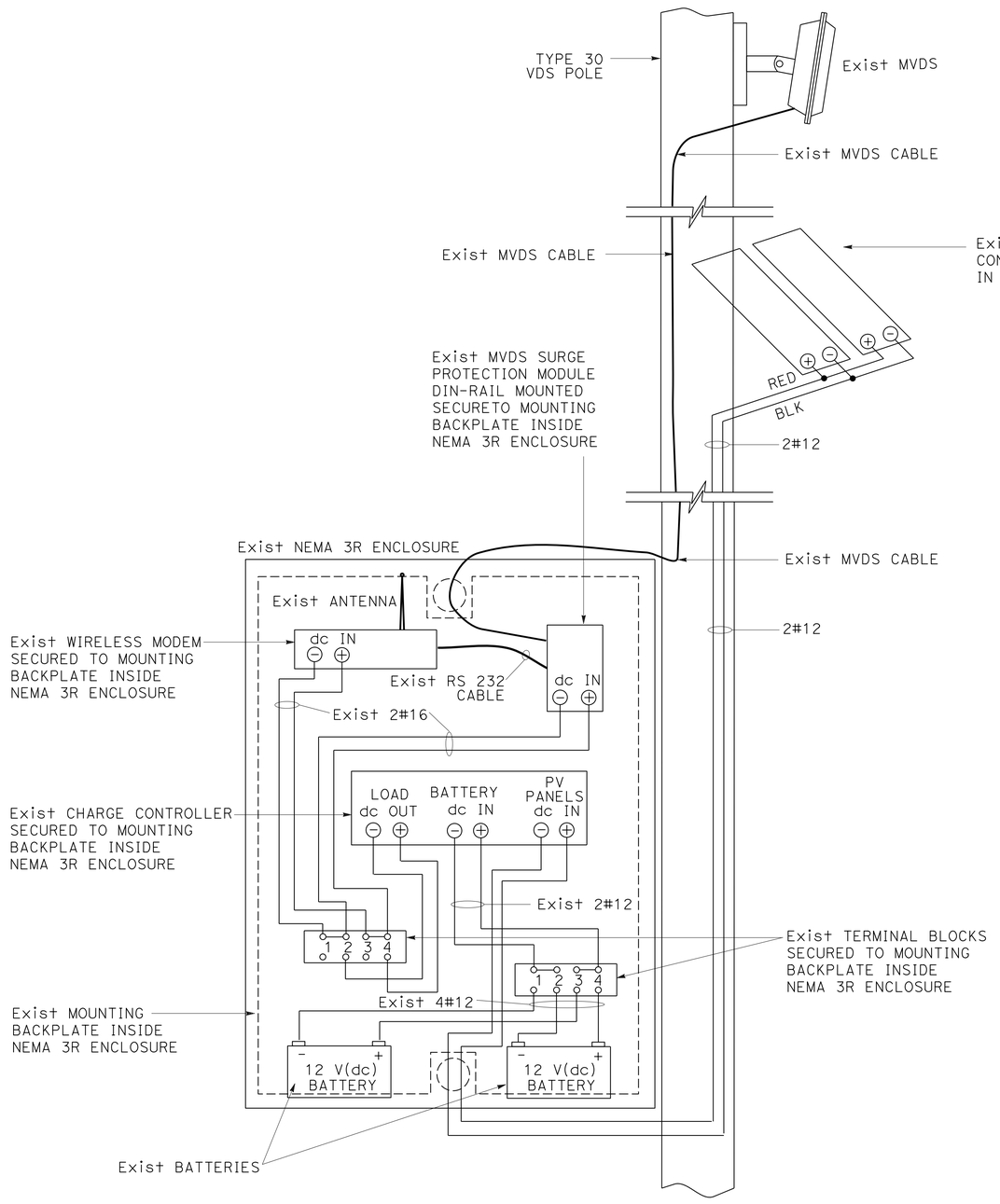

VDS STANDARD WITH MVDS AND PV POWER

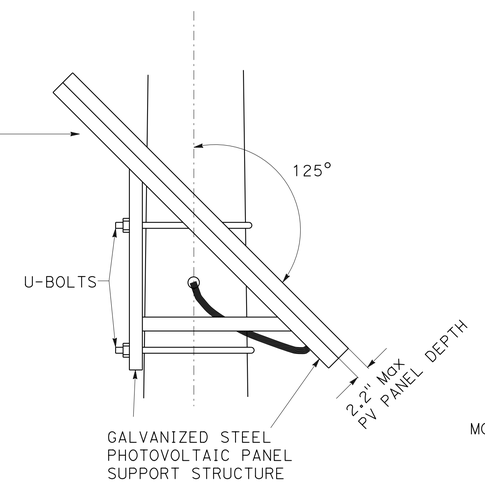

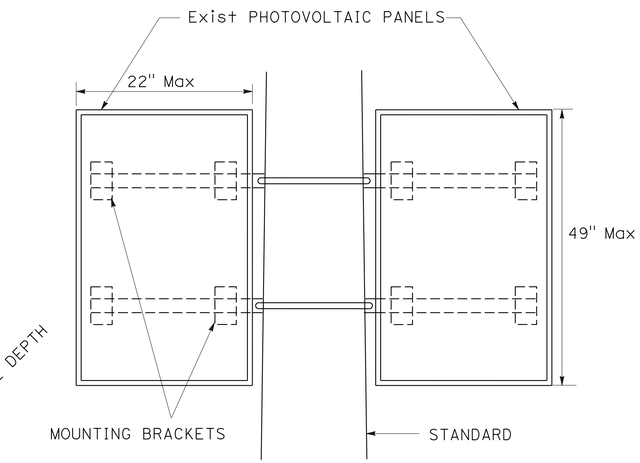

PHOTOVOLTAIC PANEL SUPPORT STRUCTURE

APPROVED FOR ELECTRICAL WORK ONLY

ELECTRICAL DETAILS
NO SCALE

E-6

STATE OF CALIFORNIA - DEPARTMENT OF TRANSPORTATION
Caltrans® ELECTRICAL DESIGN

FUNCTIONAL SUPERVISOR: ALI BAKHDOUD
CALCULATED-DESIGNED BY: YOHANNES CHALLA
CHECKED BY: RAJPREET SINGH
REVISED BY
DATE REVISED

LAST REVISION 02-01-13 | DATE PLOTTED => 21-FEB-2013 | TIME PLOTTED => 15:45

Dist	COUNTY	ROUTE	POST MILES TOTAL PROJECT	SHEET No.	TOTAL SHEETS
06	Ker	99	19.5	39	55

REGISTERED ELECTRICAL ENGINEER 02/01/13 DATE

02-04-13
PLANS APPROVAL DATE

REGISTERED PROFESSIONAL ENGINEER RAJPREET SINGH No. 17496 Exp. 6/30/13 ELECTRICAL STATE OF CALIFORNIA

THE STATE OF CALIFORNIA OR ITS OFFICERS OR AGENTS SHALL NOT BE RESPONSIBLE FOR THE ACCURACY OR COMPLETENESS OF SCANNED COPIES OF THIS PLAN SHEET.

NOTE:
THE QUANTITIES ON THIS SHEET ARE FOR INFORMATION ONLY AND ARE NOT SEPARATE PAY ITEMS.

MODIFY SIGNAL AND LIGHTING

SHEET No.	No. 5 (E) PB EA	No. 5 (E)(T) PB EA	No. 6 (E) PB EA	PG&E APPROVED PB EA	2"C TYPE 1 LF	2"C TYPE 3 LF	3"C TYPE 3 LF	No. 6 CONDUCTOR LF	No. 8 CONDUCTOR LF	DLC LF	12CSC LF	3CSC LF	TYPE A DETECTOR LOOP EA	TYPE D DETECTOR LOOP EA	TYPE 1-A SIGNAL STANDARD EA	TYPE 1-A FOUNDATION EA
E-3	6	2	3	1	40	230	320	30	1110	2300	660	150	10	10	1	1

MODIFY SIGNAL AND LIGHTING

SHEET No.	TYPE 15TS SIGNAL STANDARD EA	TYPE 15TS CIDH PILE EA	POLE TYPE 18-2-100 WITH 25' SMA EA	POLE TYPE 18-2-100 CIDH PILE EA	165 W LED LUMINAIRE EA	TYPE III-CF ENCLOSURE EA	TYPE III-CF FOUNDATION EA
E-3	2	2	1	1	2	1	1

MODIFY LIGHTING AND SIGN ILLUMINATION

SHEET No.	No. 5(E) PB EA	No. 5(E)(T) PB EA	2"C TYPE 1 LF	2"C TYPE 3 LF	3"C TYPE 3 LF	No. 4 CONDUCTOR LF	No. 8 CONDUCTOR LF	TYPE 21 ELECTROLIER EA	85 W ISL EA
E-4	1	4	30	630	80	980	2160	2	2

MODIFY MICROWAVE VEHICLE DETECTION SYSTEM

SHEET No.	No. 5(E) PB EA	2"C TYPE 1 LF	TYPE 30 VDS POLE EA	TYPE 30 VDS POLE CIDH PILE EA
E-5	1	10	1	1

ELECTRICAL QUANTITIES
E-7

STATE OF CALIFORNIA - DEPARTMENT OF TRANSPORTATION
Caltrans® ELECTRICAL DESIGN

FUNCTIONAL SUPERVISOR: ALI BAKHDOUD
CALCULATED-DESIGNED BY: YOHANNES CHALLA
CHECKED BY: RAJPREET SINGH
REVISED BY
DATE REVISED

LAST REVISION 02-01-13
DATE PLOTTED => 21-FEB-2013
TIME PLOTTED => 15:45

Dist	COUNTY	ROUTE	POST MILES TOTAL PROJECT	SHEET No.	TOTAL SHEETS
06	Ker	99	19.5	40	55

REGISTERED CIVIL ENGINEER 12-7-12 DATE

2-4-13
PLANS APPROVAL DATE

REGISTERED PROFESSIONAL ENGINEER Gurinderpal Bhullar No. C48815 Exp. 9-30-14 CIVIL STATE OF CALIFORNIA

THE STATE OF CALIFORNIA OR ITS OFFICERS OR AGENTS SHALL NOT BE RESPONSIBLE FOR THE ACCURACY OR COMPLETENESS OF SCANNED COPIES OF THIS PLAN SHEET.

TYPICAL RAMP CLOSURES

SIGN PANEL SIZE (Min)

- A 48" x 48"
- B 48" x 30"
- C 30" x 30"
- D 48" x 48" - SPEED OF 50 mph OR MORE
  36" x 36" - SPEED LESS THAN 50 mph
- E 48" x 36"

LEGEND

- TRAFFIC CONE
- TEMPORARY SIGN
- BARRICADES

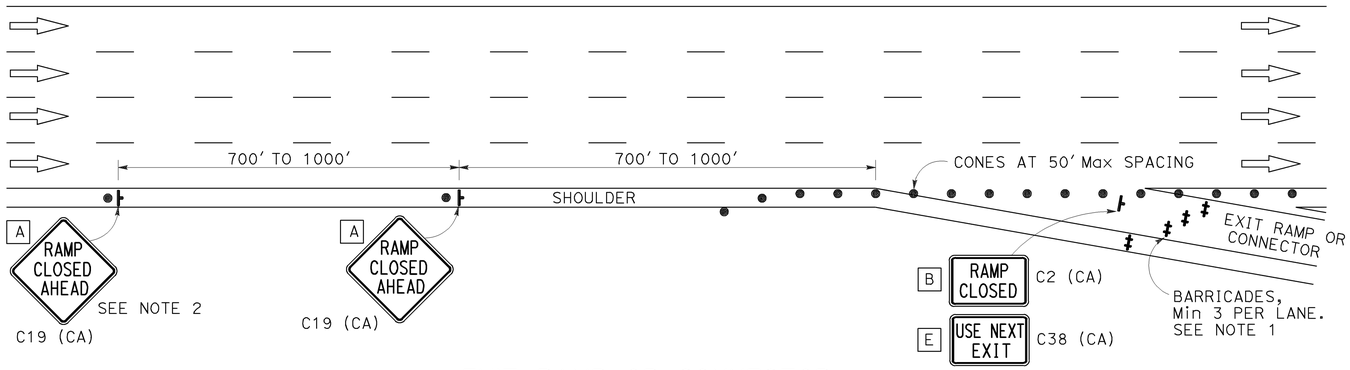

EXIT RAMP OR CONNECTOR

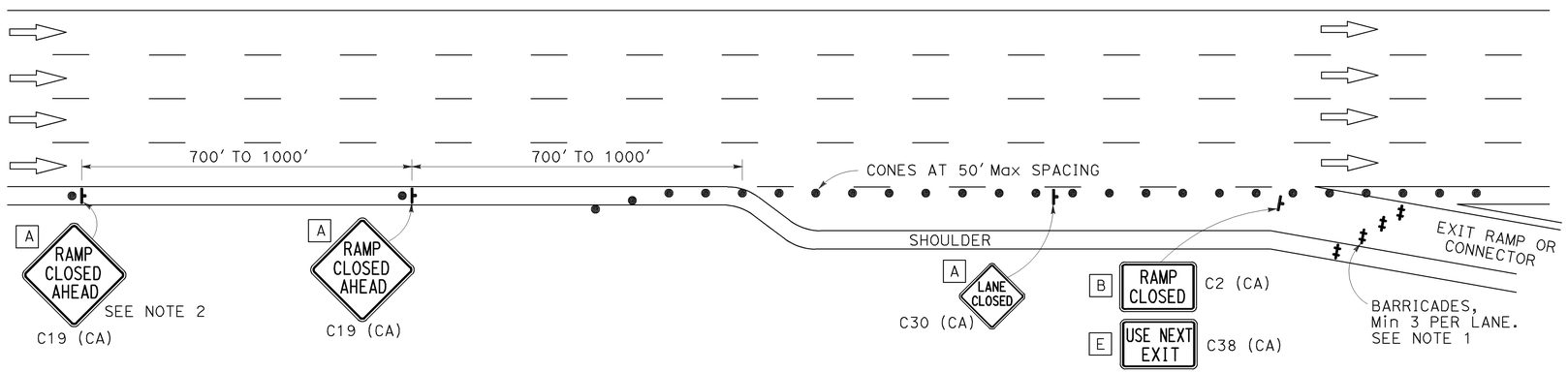

EXIT RAMP OR CONNECTOR WITH ADDITIONAL LANE

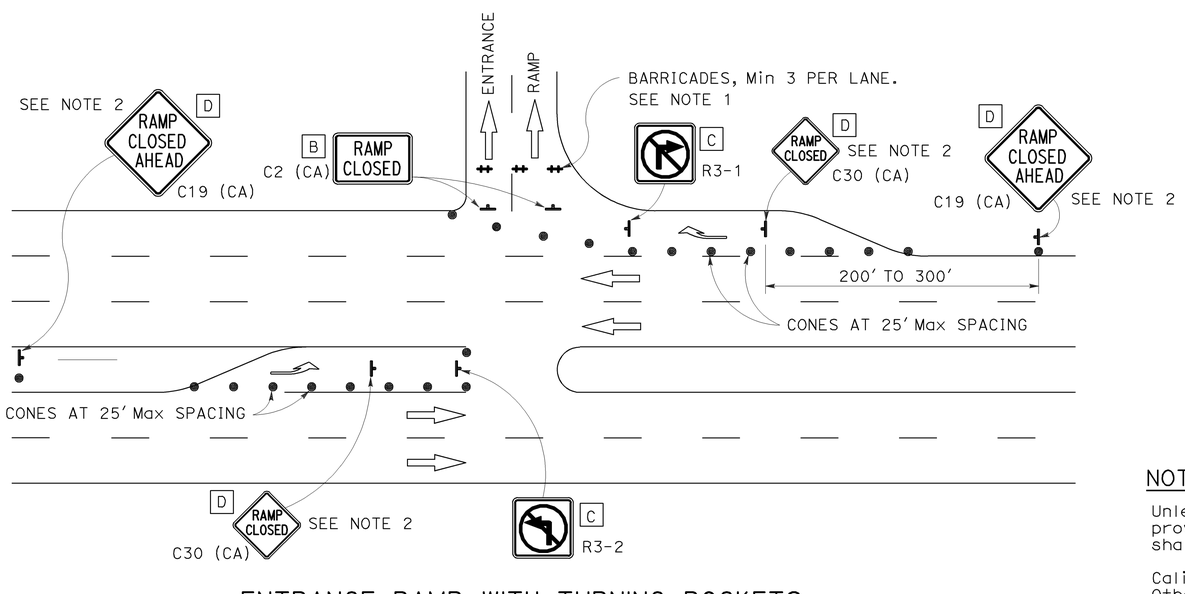

ENTRANCE RAMP WITH TURNING POCKETS

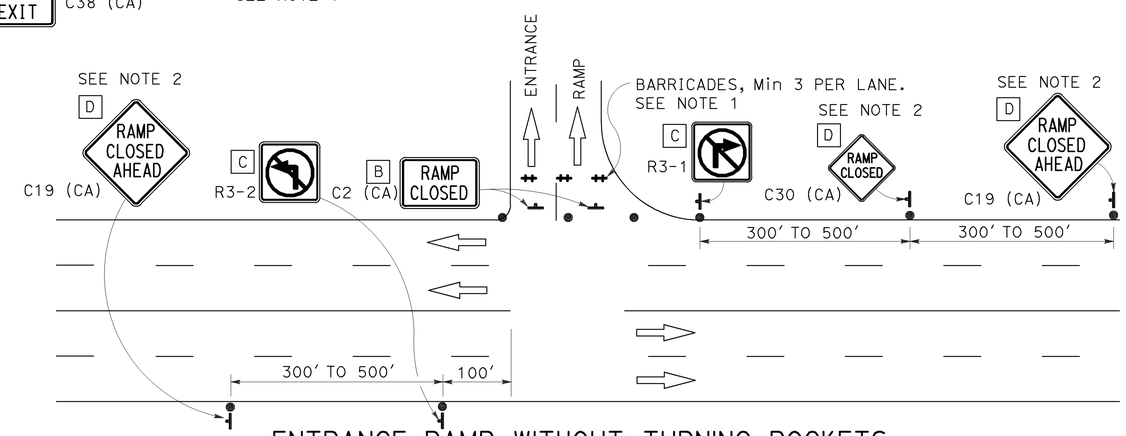

ENTRANCE RAMP WITHOUT TURNING POCKETS

NOTES:

1. Barricades shall be Type I, II, or III for closures lasting one week or less and Type III for closures lasting longer than one week.
2. In addition to placing the C19 (CA) "RAMP CLOSED AHEAD" and C30 (CA) "RAMP CLOSED" signs, black on orange overlay plates with the word "CLOSED" may be mounted, as directed by the Engineer, on all guide signs that refer to the closed ramp. The letter size on the overlay shall be the same as the guide sign.
3. Each advance C19 (CA) "RAMP CLOSED AHEAD" sign shall be equipped with at least two flags for daytime closure. Each flag shall be at least 16" x 16" in size and shall be orange or fluorescent red-orange in color.
4. All cones used for ramp closures during the hours of darkness shall be fitted with retroreflective bands (or sleeves) as specified in the specifications.
5. Portable delineators, placed at one-half the spacing indicated for traffic cones, may be used instead of cones for daytime ramp closures only.
6. At least one person shall be assigned to provide full time maintenance of traffic control devices, unless otherwise directed by the Engineer.
7. The existing "EXIT" sign in the gore area shall be covered during ramp closures.

NOTES:

Unless otherwise specified in the special provisions, all temporary warning signs shall have black legend on orange background.

California code are designated by (CA). Otherwise, Federal (MUTCD) codes are shown.

STATE OF CALIFORNIA
DEPARTMENT OF TRANSPORTATION

TRAFFIC CONTROL SYSTEM FOR RAMP CLOSURE

NO SCALE

TCS-1

STATE OF CALIFORNIA - DEPARTMENT OF TRANSPORTATION
Caltrans

FUNCTIONAL SUPERVISOR | CALCULATED-DESIGNED BY | CHECKED BY | REVISED BY | DATE REVISED

LAST REVISION 00-00-00 | DATE PLOTTED => 10-DEC-2012 | TIME PLOTTED => 09:45

Dist	COUNTY	ROUTE	POST MILES TOTAL PROJECT	SHEET No.	TOTAL SHEETS
06	Ker	99	19.5	41	55

REGISTERED CIVIL ENGINEER

April 20, 2012
PLANS APPROVAL DATE

REGISTERED PROFESSIONAL ENGINEER
Roberta L. McLaughlin
No. C40375
Exp. 3-31-13
CIVIL
STATE OF CALIFORNIA

THE STATE OF CALIFORNIA OR ITS OFFICERS OR AGENTS SHALL NOT BE RESPONSIBLE FOR THE ACCURACY OR COMPLETENESS OF SCANNED COPIES OF THIS PLAN SHEET.

TO ACCOMPANY PLANS DATED 2-4-13

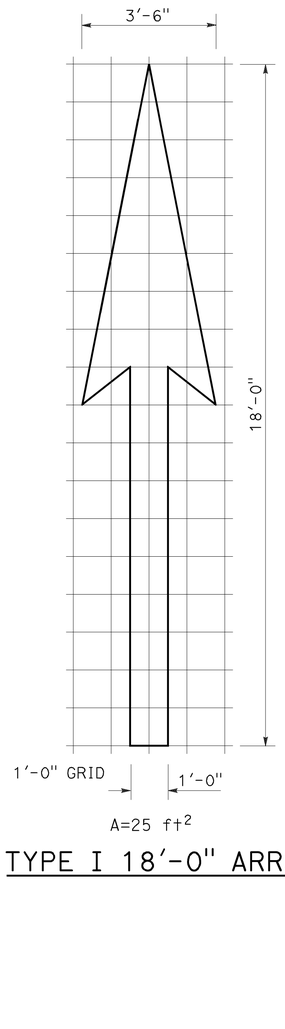

A=25 ft^2

TYPE I 18'-0" ARROW

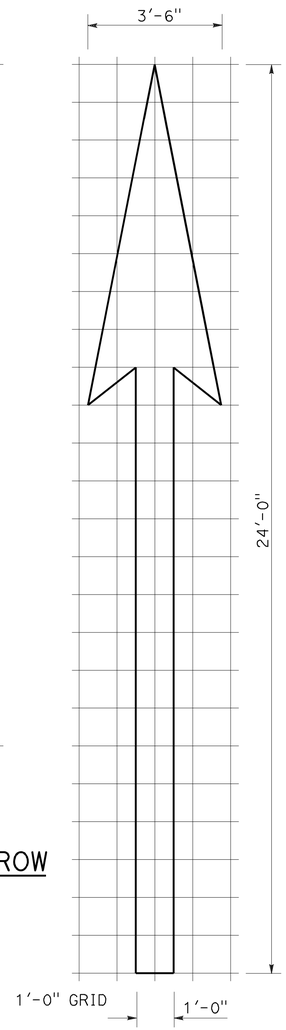

A=31 ft^2

TYPE I 24'-0" ARROW

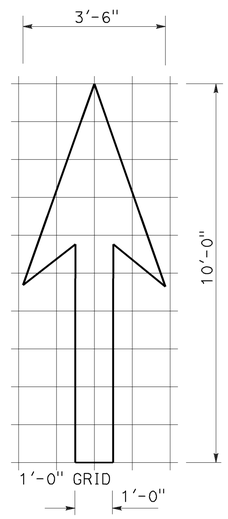

A=14 ft^2

TYPE I 10'-0" ARROW

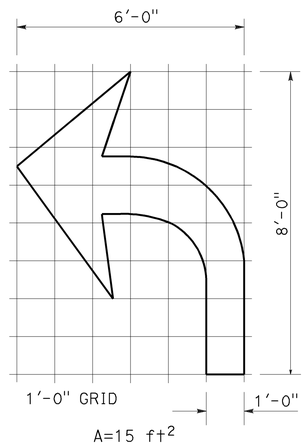

A=15 ft^2

TYPE IV (L) ARROW

(For Type IV (R) arrow, use mirror image)

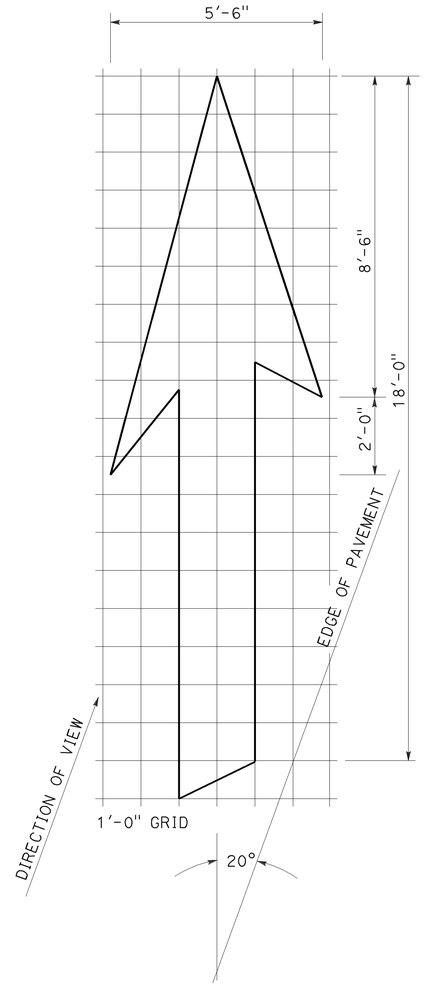

A=42 ft^2

TYPE VI ARROW

Right lane drop arrow
(For left lane, use mirror image)

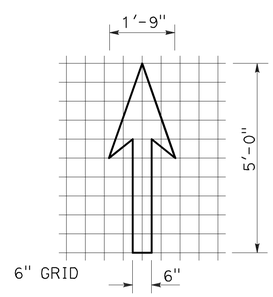

A=3.5 ft^2

BIKE LANE ARROW

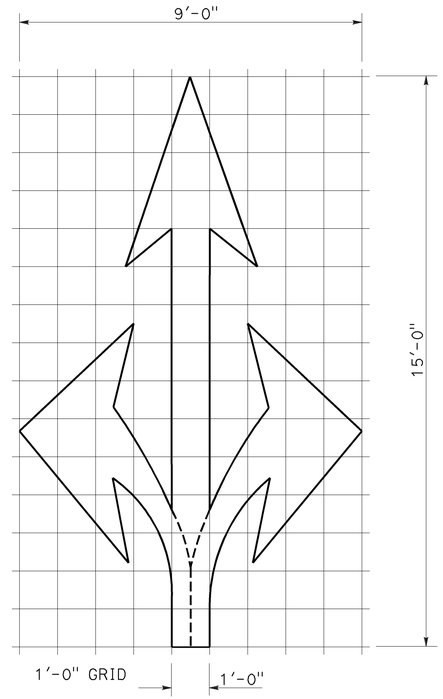

A=36 ft^2

TYPE VIII ARROW

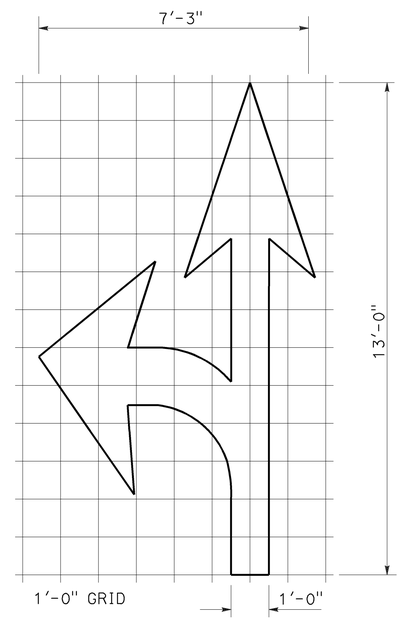

A=27 ft^2

TYPE VII (L) ARROW

(For Type VII (R) arrow, use mirror image)

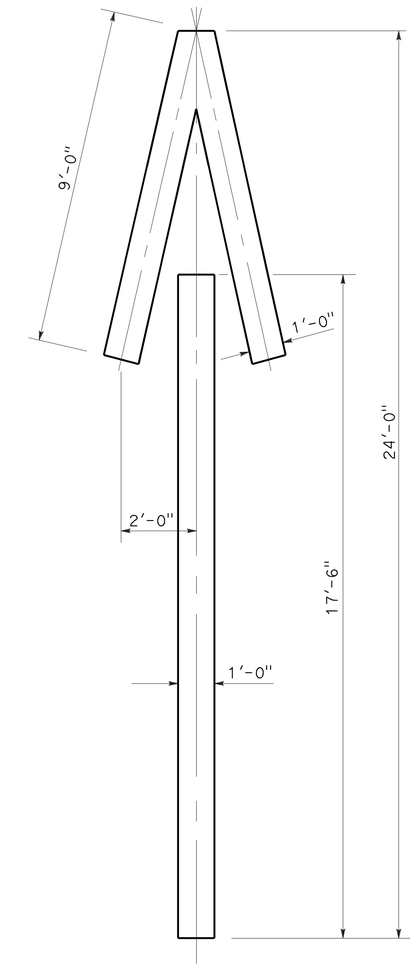

A=33 ft^2

TYPE V ARROW

NOTE:
Minor variations in dimensions may be accepted by the Engineer.

STATE OF CALIFORNIA
DEPARTMENT OF TRANSPORTATION

PAVEMENT MARKINGS ARROWS

NO SCALE

RSP A24A DATED APRIL 20, 2012 SUPERSEDES STANDARD PLAN A24A DATED MAY 20, 2011 - PAGE 13 OF THE STANDARD PLANS BOOK DATED 2010.

REVISED STANDARD PLAN RSP A24A

2010 REVISED STANDARD PLAN RSP A24A

3-14-12

Dist	COUNTY	ROUTE	POST MILES TOTAL PROJECT	SHEET No.	TOTAL SHEETS
06	Ker	99	19.5	42	55

REGISTERED CIVIL ENGINEER

July 20, 2012
PLANS APPROVAL DATE

REGISTERED PROFESSIONAL ENGINEER
Roberta L. McLaughlin
No. C40375
Exp. 3-31-13
CIVIL
STATE OF CALIFORNIA

THE STATE OF CALIFORNIA OR ITS OFFICERS OR AGENTS SHALL NOT BE RESPONSIBLE FOR THE ACCURACY OR COMPLETENESS OF SCANNED COPIES OF THIS PLAN SHEET.

TO ACCOMPANY PLANS DATED 2-4-13

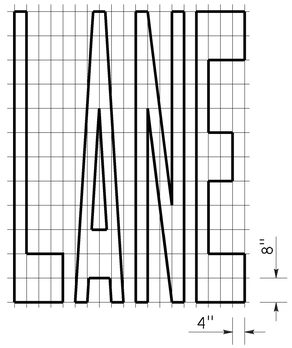

A=24 ft²

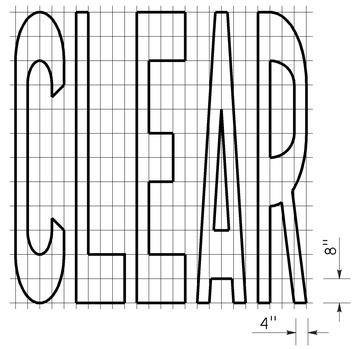

A=27 ft²

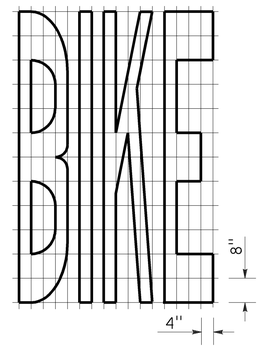

A=21 ft²

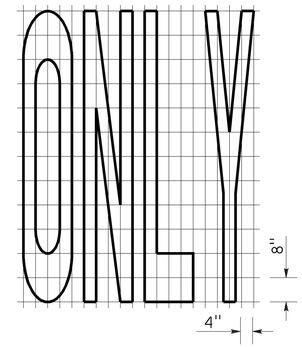

A=22 ft²

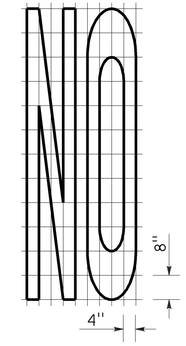

A=14 ft²

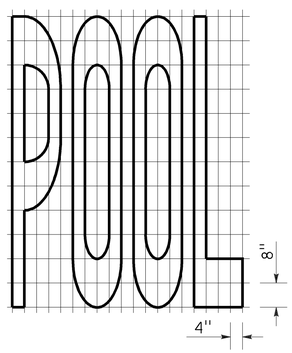

A=23 ft²

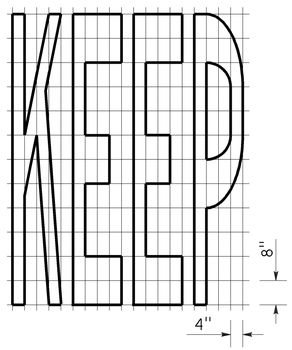

A=24 ft²

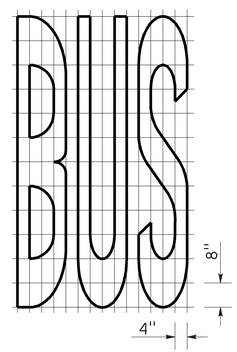

A=20 ft²

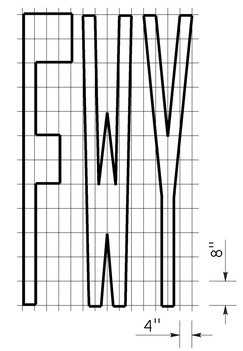

A=16 ft²

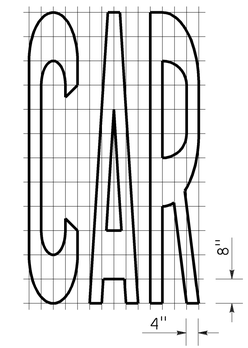

A=17 ft²

WORD MARKINGS			
ITEM	ft²	ITEM	ft²
LANE	24	NO	14
POOL	23	BIKE	21
CAR	17	BUS	20
CLEAR	27	ONLY	22
KEEP	24	FWY	16

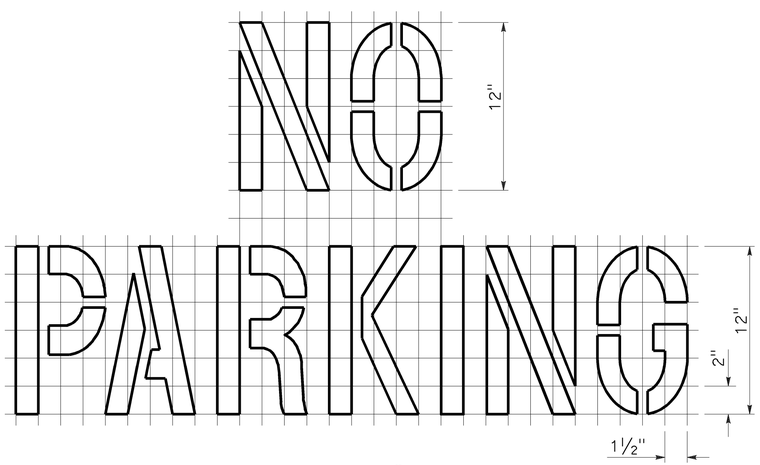

A=2 ft²
See Notes 6 and 7

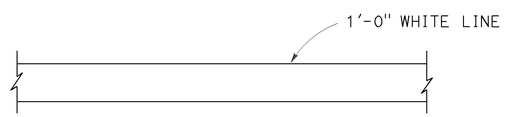

LIMIT LINE (STOP LINE)

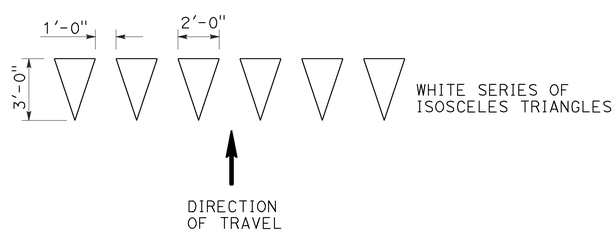

YIELD LINE

NOTES:

1. If a message consists of more than one word, it should read "UP", i.e., the first word should be nearest the driver.
2. The space between words should be at least four times the height of the characters for low speed roads, but not more than ten times the height of the characters. The space may be reduced appropriately where there is limited space because of local conditions.
3. Minor variations in dimensions may be accepted by the Engineer.
4. Portions of a letter, number or symbol may be separated by connecting segments not to exceed 2" in width.
5. The words "NO PARKING" pavement marking is to be used for parking facilities. For typical locations of markings, see Standard Plans A90A and A90B.
6. The words "NO PARKING", shall be painted in white letters no less than 1'-0" high on a contrasting background and located so that it is visible to traffic enforcement officials.

STATE OF CALIFORNIA
DEPARTMENT OF TRANSPORTATION

PAVEMENT MARKINGS WORDS, LIMIT AND YIELD LINES

NO SCALE

RSP A24E DATED JULY 20, 2012 SUPERSEDES STANDARD PLAN A24E
DATED MAY 20, 2011 - PAGE 17 OF THE STANDARD PLANS BOOK DATED 2010.

REVISED STANDARD PLAN RSP A24E

2010 REVISED STANDARD PLAN RSP A24E

6-12-12

Dist	COUNTY	ROUTE	POST MILES TOTAL PROJECT	SHEET No.	TOTAL SHEETS
06	Ker	99	19.5	43	55

REGISTERED CIVIL ENGINEER

July 20, 2012
PLANS APPROVAL DATE

REGISTERED PROFESSIONAL ENGINEER
Roberta L. McLaughlin
No. C40375
Exp. 3-31-13
CIVIL
STATE OF CALIFORNIA

THE STATE OF CALIFORNIA OR ITS OFFICERS OR AGENTS SHALL NOT BE RESPONSIBLE FOR THE ACCURACY OR COMPLETENESS OF SCANNED COPIES OF THIS PLAN SHEET.

TO ACCOMPANY PLANS DATED 2-4-13

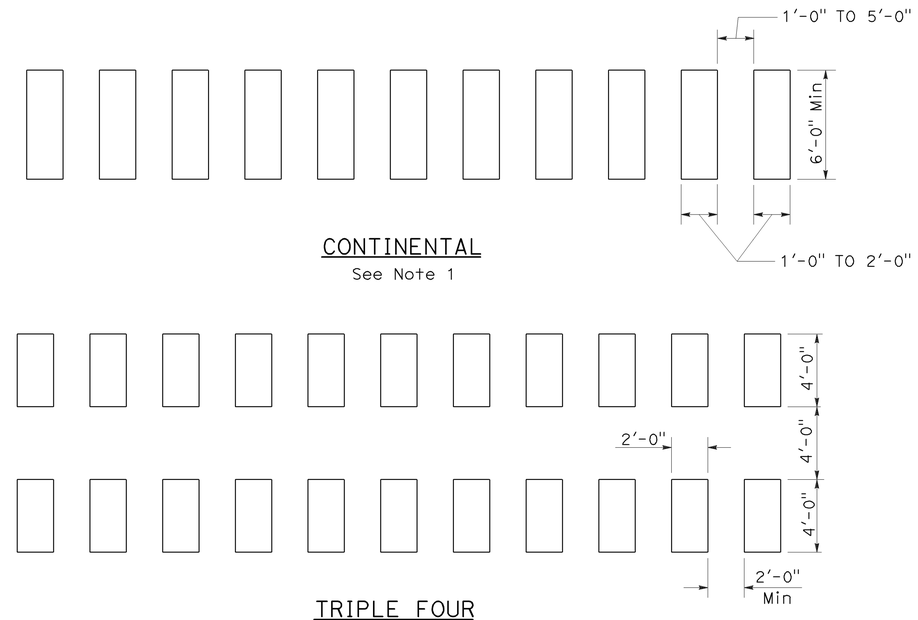

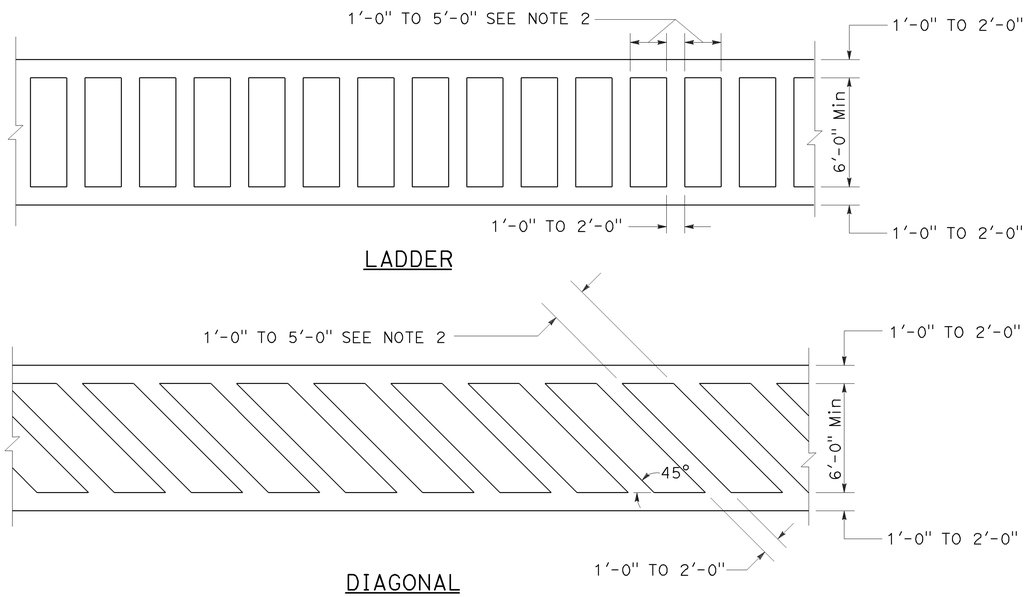

HIGHER VISIBILITY CROSSWALKS

NOTES:

1. Spaces between markings should be placed in wheel tracks of each lane.
2. Spacings not to exceed 2.5 times width of longitudinal line.
3. All crosswalk markings must be white except for those near schools must be yellow.

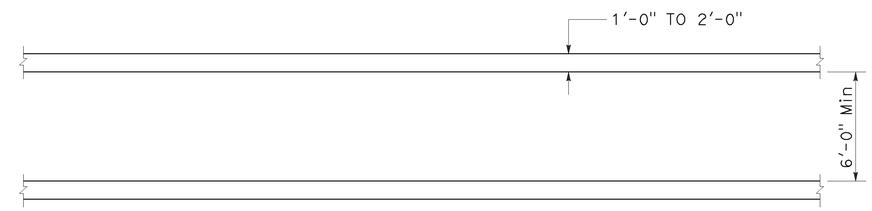

BASIC

STATE OF CALIFORNIA
DEPARTMENT OF TRANSPORTATION

PAVEMENT MARKINGS CROSSWALKS

NO SCALE

RSP A24F DATED JULY 20, 2012 SUPPLEMENTS THE STANDARD PLANS BOOK DATED 2010.

REVISED STANDARD PLAN RSP A24F

2010 REVISED STANDARD PLAN RSP A24F

6-28-12

DIST	COUNTY	ROUTE	POST MILES TOTAL PROJECT	SHEET No.	TOTAL SHEETS
06	Ker	99	19.5	44	55

REGISTERED CIVIL ENGINEER

January 20, 2012
PLANS APPROVAL DATE

REGISTERED PROFESSIONAL ENGINEER
Cornelis M. Hakim
No. C55610
Exp. 12-31-12
CIVIL
STATE OF CALIFORNIA

THE STATE OF CALIFORNIA OR ITS OFFICERS OR AGENTS SHALL NOT BE RESPONSIBLE FOR THE ACCURACY OR COMPLETENESS OF SCANNED COPIES OF THIS PLAN SHEET.

TO ACCOMPANY PLANS DATED 2-4-13

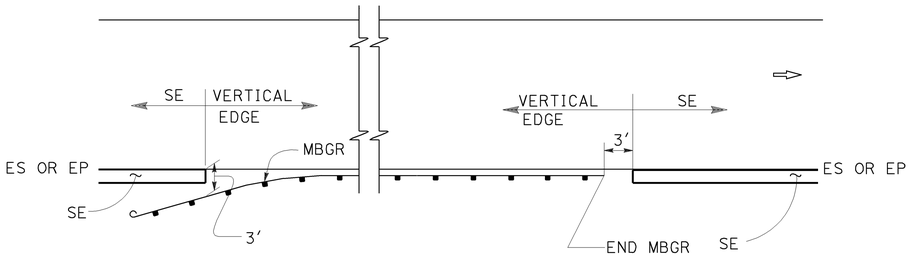

MBGR

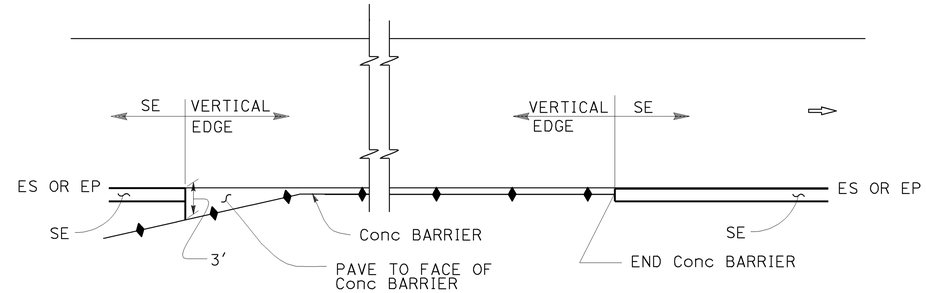

CONCRETE BARRIER

ABBREVIATIONS:

SE SAFETY EDGE

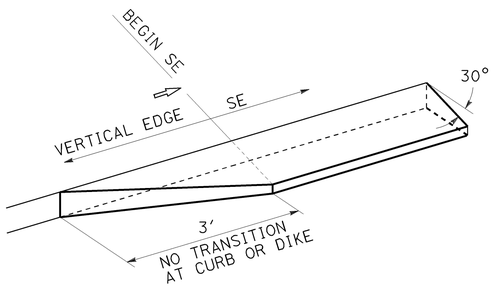

TRANSITION DETAIL
FOR CONCRETE ONLY

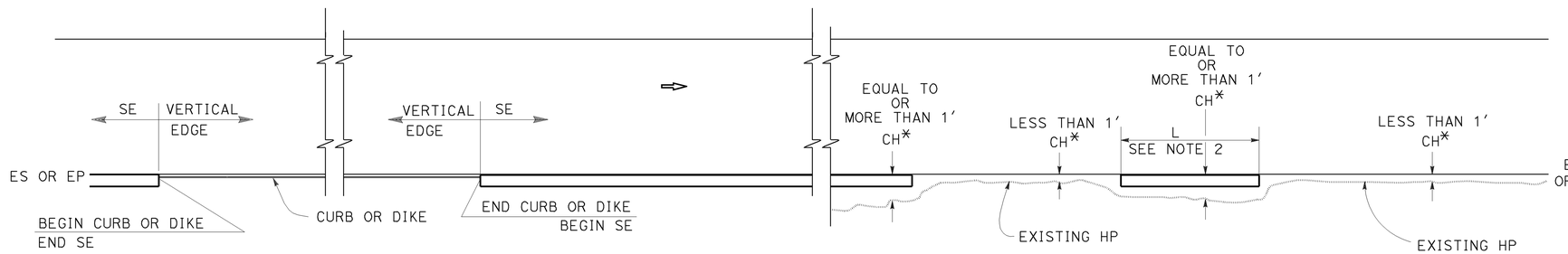

CURB OR DIKE

NARROW SIDE SLOPE

* CH = Distance from ES or EP to existing HP.

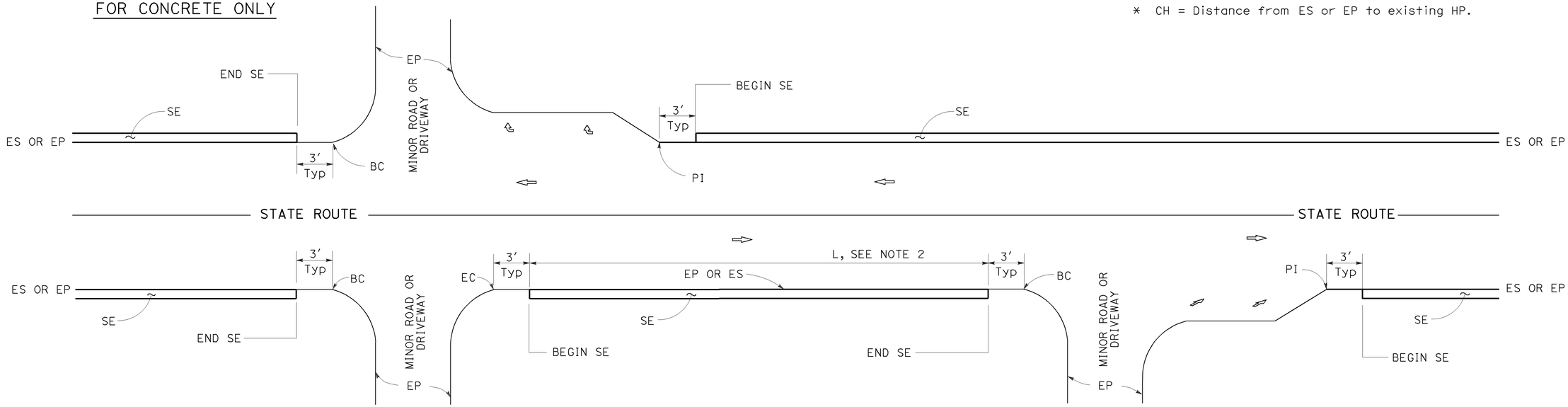

INTERSECTION

MINOR ROADWAY OR DRIVEWAY

DRIVEWAY AND INTERSECTION

NOTES:

1. For details not shown, see Revised Standard Plans RSP P75 and RSP P76.
2. Safety edge is optional when L is less than 30′.

STATE OF CALIFORNIA
DEPARTMENT OF TRANSPORTATION

PAVEMENT EDGE TREATMENTS

NO SCALE

RSP P74 DATED JANUARY 20, 2012 SUPPLEMENTS THE STANDARD PLANS BOOK DATED 2010.

REVISED STANDARD PLAN RSP P74

2010 REVISED STANDARD PLAN RSP P74

01-05-12

DIST	COUNTY	ROUTE	POST MILES TOTAL PROJECT	SHEET No.	TOTAL SHEETS
06	Ker	99	19.5	45	55

REGISTERED CIVIL ENGINEER

January 20, 2012
PLANS APPROVAL DATE

REGISTERED PROFESSIONAL ENGINEER Cornelis M. Hakim No. C55610 Exp. 12-31-12 CIVIL STATE OF CALIFORNIA

THE STATE OF CALIFORNIA OR ITS OFFICERS OR AGENTS SHALL NOT BE RESPONSIBLE FOR THE ACCURACY OR COMPLETENESS OF SCANNED COPIES OF THIS PLAN SHEET.

TO ACCOMPANY PLANS DATED 2-4-13

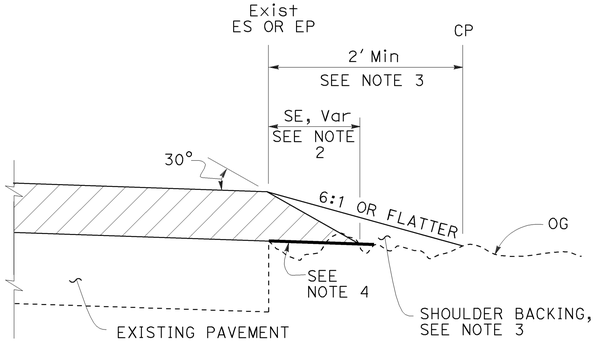

CASE A
Safety Edge

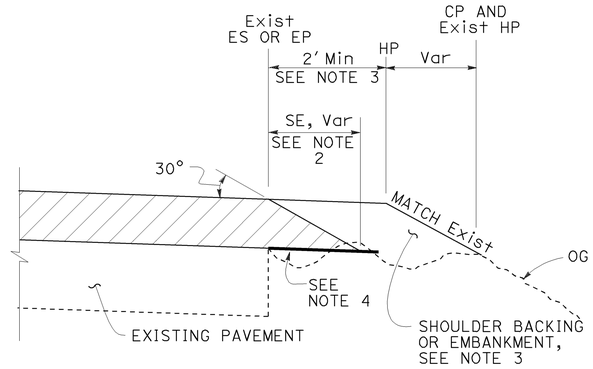

CASE B
Safety Edge

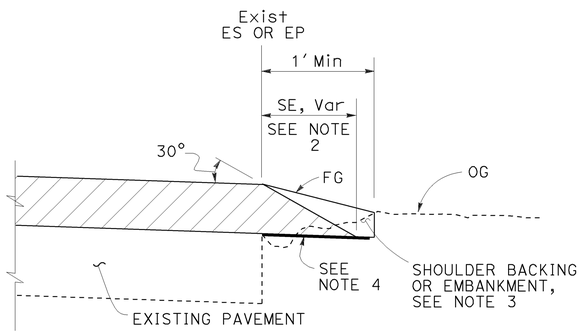

CASE C
Safety Edge

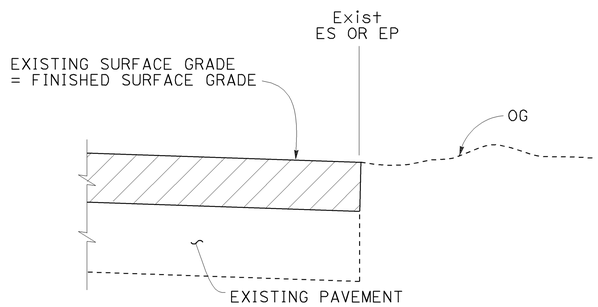

CASE D
Vertical Edge

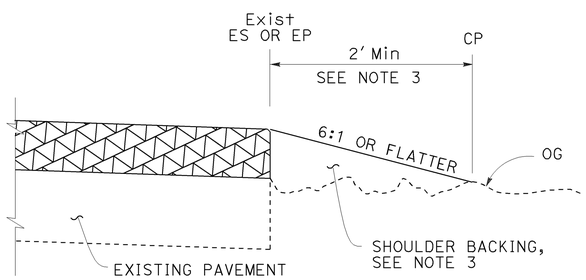

CASE E
Vertical Edge

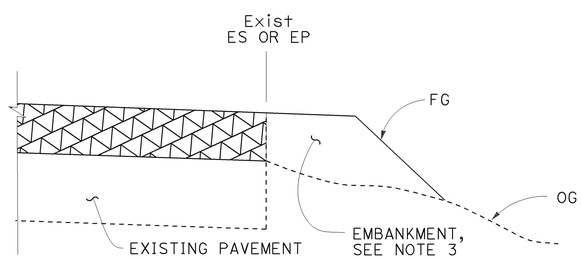

CASE F
Vertical Edge
* See Table A and Revised Std Plan RSP P74

LEGEND:

- HMA OVERLAY
- HMA OR CONCRETE OVERLAY
- CONCRETE OVERLAY

ABBREVIATIONS:

SE SAFETY EDGE
TT TOTAL THICKNESS OF SE

TABLE A
EDGE TREATMENT FOR VARIOUS OVERLAY THICKNESS AND CONDITIONS

	OVERLAY THICKNESS	
FIELD CONDITION	LESS THAN 0.15'	0.15' OR MORE
Exist SLOPE 6:1 OR FLATTER	CASE E	CASE A
Exist SLOPE 3:1 TO 6:1	CASE E	CASE B
Exist SLOPE STEEPER THAN 3:1	CASE F	CASE F
CUT SECTION (REPLACE, COLD PLANE, MILL PAVEMENT)	CASE D	CASE C

ADDITIONAL HMA OR CONCRETE QUANTITIES FOR SE/SIDE/MILE

TYPICAL CROSS SECTION	TT	TOTAL ADDITIONAL MATERIAL FOR SE/SIDE/MILE		
		HMA (TON)	CONCRETE (CY)*	CONCRETE (CY)**
TT	0.15'	NA	NA	NA
	0.20'	13.7	NA	NA
	0.30'	30.9	NA	NA
	0.40'	54.9	NA	NA
	0.45'	69.4	NA	NA
TT 0.43'	0.50'	84.2	NA	NA
	0.60'	113.9	NA	NA
	0.70'	143.6	70.9	94.2
	0.80'	173.3	85.6	112.2
	0.90'	203.0	100.3	130.2
	1.00'	232.7	114.9	148.2
	1.10'	262.4	129.6	166.2
	1.20'	292.1	144.3	184.2

* For Detail "A"
** For Optional Detail "A"

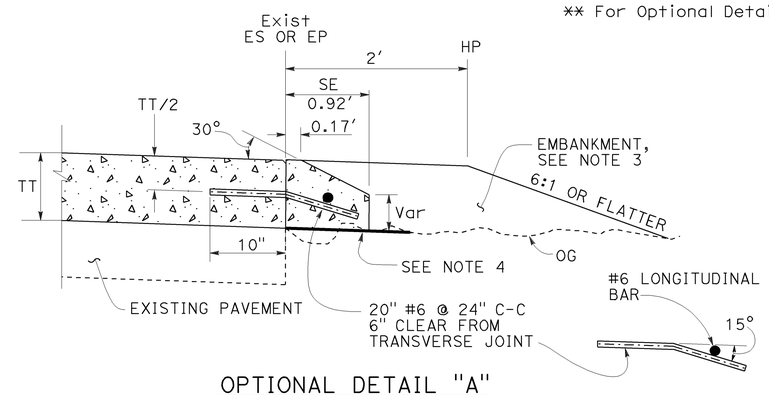

OPTIONAL DETAIL "A"
For concrete overlay
See Note 5

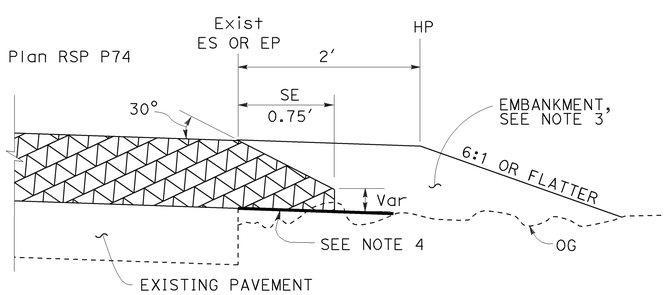

DETAIL "A"
For HMA overlay thickness more than 0.43' or concrete overlay

NOTES:

1. For limits of safety edge and vertical edge treatments, see Revised Standard Plan RSP P74.
2. Details shown for HMA overlay thickness less than 0.43'. See Detail "A" for HMA overlay thickness more than 0.43' or concrete overlay.
3. For locations and limits of shoulder backing or embankment see project plans.
4. Grade existing ground to place safety edge. 1' minimum width
5. Safety edge transverse joint must match overlay transverse joint. End of #6 longitudinal bar must be 2" ±½" clear from transverse joint.
6. Safety edge is not needed in the area of MBGR, barrier, right turn lane and acceleration lane. See Revised Standard Plan RSP P74.

STATE OF CALIFORNIA
DEPARTMENT OF TRANSPORTATION

PAVEMENT EDGE TREATMENTS-OVERLAYS

NO SCALE

RSP P75 DATED JANUARY 20, 2012 SUPPLEMENTS THE STANDARD PLANS BOOK DATED 2010.

REVISED STANDARD PLAN RSP P75

2010 REVISED STANDARD PLAN RSP P75

01-09-12

DIST	COUNTY	ROUTE	POST MILES TOTAL PROJECT	SHEET No.	TOTAL SHEETS
06	Ker	99	19.5	46	55

REGISTERED CIVIL ENGINEER

January 20, 2012
PLANS APPROVAL DATE

REGISTERED PROFESSIONAL ENGINEER
Cornelis M. Hakim
No. C55610
Exp. 12-31-12
CIVIL
STATE OF CALIFORNIA

THE STATE OF CALIFORNIA OR ITS OFFICERS OR AGENTS SHALL NOT BE RESPONSIBLE FOR THE ACCURACY OR COMPLETENESS OF SCANNED COPIES OF THIS PLAN SHEET.

TO ACCOMPANY PLANS DATED 2-4-13

LEGEND:

- HMA PAVEMENT
- HMA OR CONCRETE PAVEMENT
- CONCRETE PAVEMENT

ABBREVIATIONS:

SE SAFETY EDGE
TT TOTAL THICKNESS OF SE
HW HINGE WIDTH, DISTANCE FROM ES OR EP TO HP

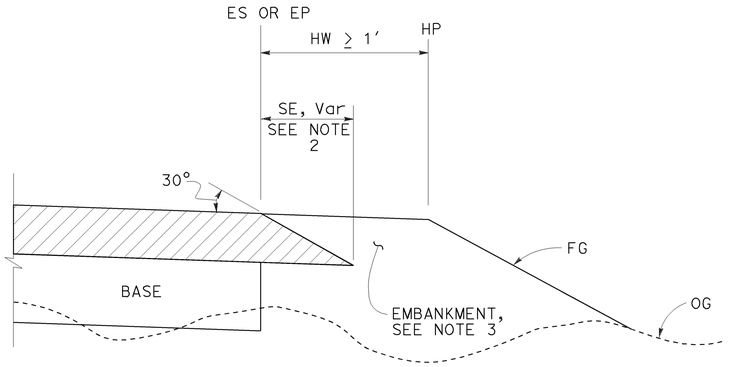

CASE K
Safety Edge - Fill Section, HW ≥ 1′

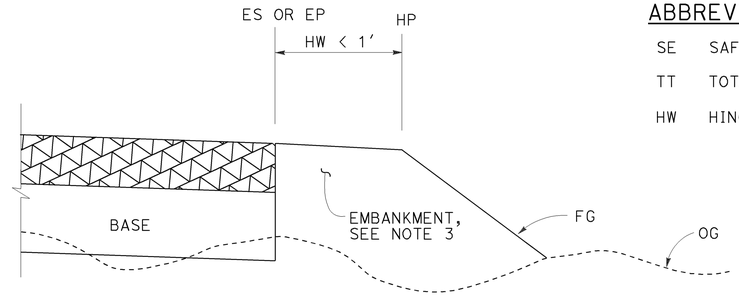

CASE L
Vertical Edge - Fill Section, HW < 1′

FILL SECTION

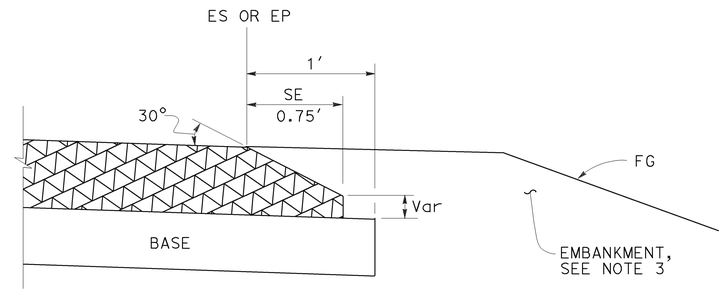

DETAIL "B"
For HMA pavement thickness more than 0.43′ or concrete pavement

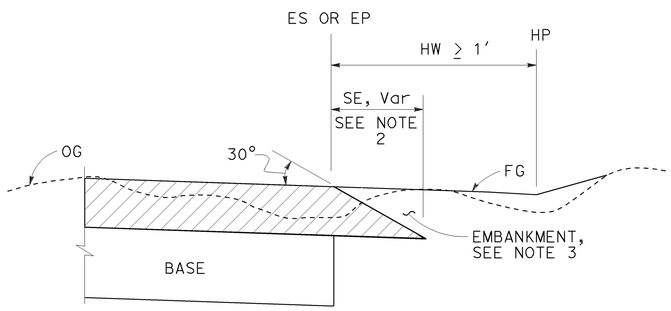

CASE M
Safety Edge - Cut Section, HW ≥ 1′

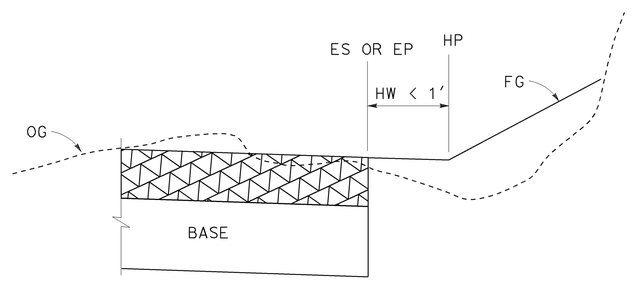

CASE N
Vertical Edge - Cut Section, HW < 1′

CUT SECTION

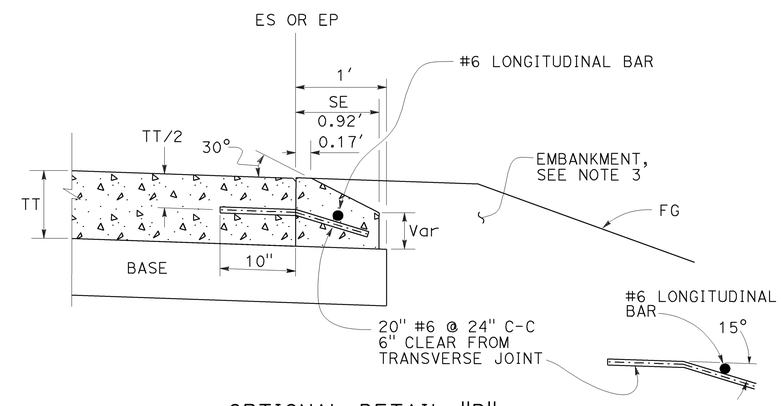

OPTIONAL DETAIL "B"
For concrete pavement
See Note 4

NOTES:

1. For limits of safety edge and vertical edge treatments, see Revised Standard Plan RSP P74
2. Details shown for HMA pavement thickness less than 0.43′. See Detail "B" for HMA pavement thickness more than 0.43′ or concrete pavement.
3. For locations and limits of embankment see project plans.
4. Safety edge transverse joint must match pavement transverse joint. End of #6 longitudinal bar must be 2" ±½" clear from transverse joint.
5. Safety edge is not needed in the area of MBGR, barrier, right turn lane and acceleration lane. See Revised Standard Plan RSP P74.

STATE OF CALIFORNIA
DEPARTMENT OF TRANSPORTATION

PAVEMENT EDGE TREATMENTS-NEW CONSTRUCTION

NO SCALE

RSP P76 DATED JANUARY 20, 2012 SUPPLEMENTS THE STANDARD PLANS BOOK DATED 2010.

REVISED STANDARD PLAN RSP P76

2010 REVISED STANDARD PLAN RSP P76

01-09-12

TO ACCOMPANY PLANS DATED 2-4-13

Dist	COUNTY	ROUTE	POST MILES TOTAL PROJECT	SHEET No.	TOTAL SHEETS
06	Ker	99	19.5	47	55

REGISTERED CIVIL ENGINEER

October 19, 2012
PLANS APPROVAL DATE

REGISTERED PROFESSIONAL ENGINEER Glenn DeCou No. C34547 Exp. 9-30-13 CIVIL STATE OF CALIFORNIA

THE STATE OF CALIFORNIA OR ITS OFFICERS OR AGENTS SHALL NOT BE RESPONSIBLE FOR THE ACCURACY OR COMPLETENESS OF SCANNED COPIES OF THIS PLAN SHEET.

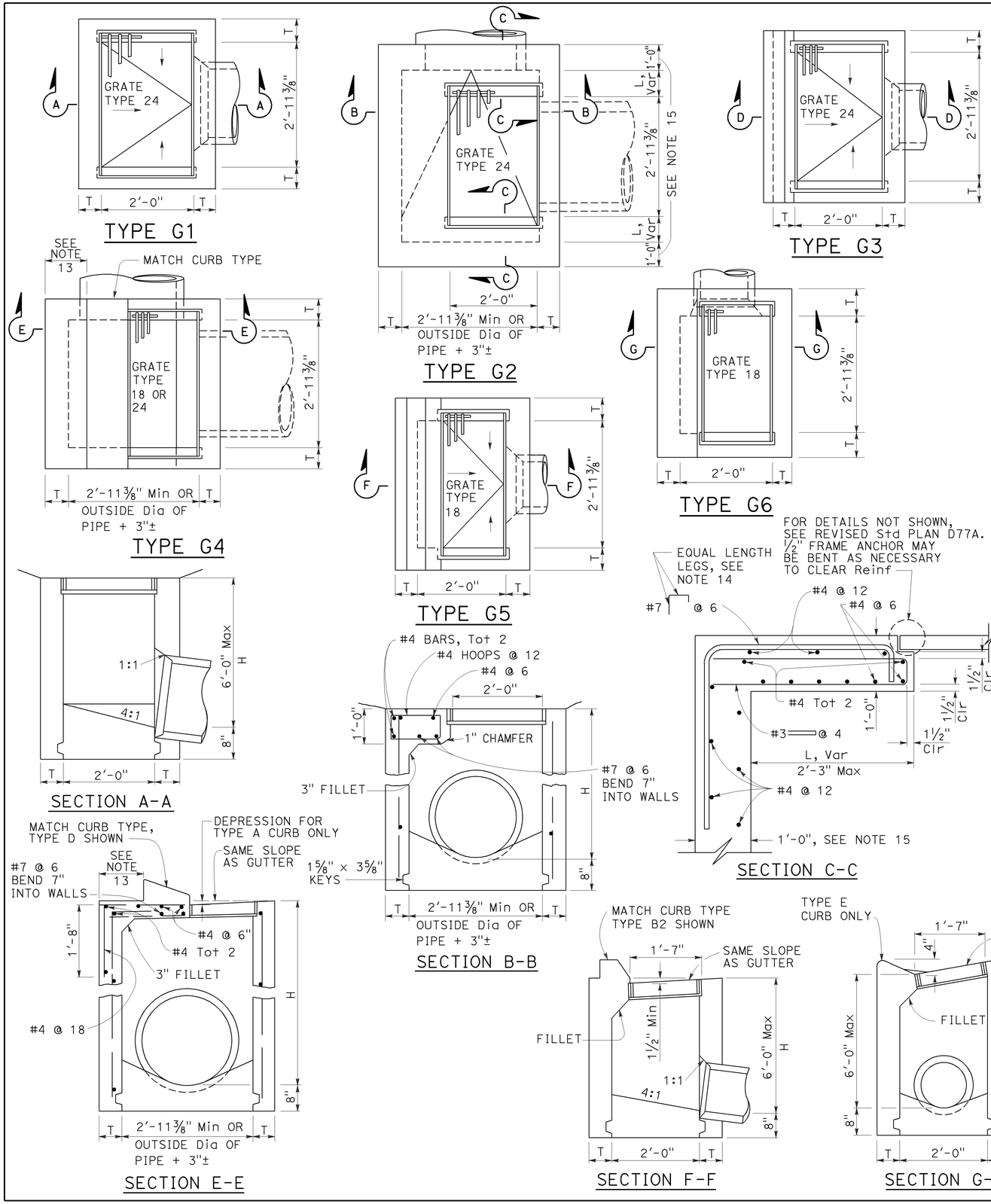

NOTES:

1. "H" is the difference in elevation between the outlet pipe flow line and the normal gutter grade line undepressed.
2. For "T" wall thickness, see Table A below.
3. Wall reinforcing not required when "H" is 8'-0" or less and the unsupported width or length is 7'-0" or less. Walls exceeding these limits shall be reinforced with #4 bars @ 1'-6" ± centers placed 1½" clear to inside of box unless otherwise shown.
4. Inlet bottom reinforcing not required. See Standard Plan D74C for alternative reinforced bottom and alternative half round bottom.
5. Steps-None required where "H" is less than 2'-6". Where "H" is 2'-6" or more, install steps with lowest rung 1'-0" above the floor and highest rung not more than 6" below top of inlet. The distance between steps shall not exceed 1'-0" and shall be uniform throughout the length of the wall. Place steps in the wall without an opening. Steps inserts may be substituted for the bar steps. Step inserts shall comply with State Industrial Safety requirements. See Standard Plan D74C for step details.
6. Details shown apply to both metal and concrete pipe.
7. Pipe(s) can be placed in any wall.
8. Curb section shall match adjacent curb.
9. Basin floors shall have wood trowel finish and a minimum slope of 12:3 from all directions toward outlet pipe.
10. Set inlet so that grate bars are parallel to direction of principal surface flow.
11. See Revised Standard Plans D77A and D77B for grate and frame details and weights of miscellaneous iron and steel.
12. See Standard Plan D78A for gutter depression details.
13. This dimenison will vary with different grates, curbs types, box width and wall thickness.
14. Bar may be rotated as necessary to clear opening. Where "L" is 6" or less, bar may be omitted.
15. Where "L" is 6" or less, wall thickness shall be as shown in Table A.
16. Cast-in-place inlets to be formed around all pipes/stubs intersecting the inlet, and concrete poured in one continuous operation. Precast inlets shall have mortared connections conforming to details for Type GCP Inlet shown on Standard Plan D75B. See Standard Specifications for mortar composition.

TABLE A

CONCRETE QUANTITIES				
TYPE	H=3'-0" TO 8'-0" (T=6")		H=8'-1" TO 20'-0" (T=8")	
	H=3'-0" (CY)	ADDITIONAL PCC PER FOOT (CY)	H=8'-1" (CY)	ADDITIONAL PCC PER FOOT (CY)
G-1	0.95	0.220	See Note A	SEE NOTE A
G-2*	1.31	0.255	3.50	0.357
G-3	1.03	0.220	See Note A	SEE NOTE A
G-4* (TYPE 24)	1.27	0.255	3.48	0.357
G-4* (TYPE 18)	1.30	0.255	3.50	0.357
G-5	1.02	0.220	SEE NOTE A	SEE NOTE A
G-6	1.04	0.220	SEE NOTE A	SEE NOTE A

TABLE BASED ON 8" FLOOR SLAB. NO DEDUCTIONS ARE TO BE MADE TO THESE QUANTITIES BECAUSE OF PIPE OPENINGS, DIFFERENT FLOOR ALTERNATIVES OR DIFFERENT CURB TYPES. * QUANTITIES FOR TYPE G-2 AND G-4 INLETS BASED ON THE MINIMUM INTERIOR DIMENSIONS.

NOTE A:

Maximum allowable height 6'-0".

STATE OF CALIFORNIA
DEPARTMENT OF TRANSPORTATION

DRAINAGE INLETS

NO SCALE

RSP D73 DATED OCTOBER 19, 2012 SUPERSEDES STANDARD PLAN D73 DATED MAY 20, 2011 - PAGE 156 OF THE STANDARD PLANS BOOK DATED 2010.

REVISED STANDARD PLAN RSP D73

2010 REVISED STANDARD PLAN RSP D73

7-19-12

Dist	COUNTY	ROUTE	POST MILES TOTAL PROJECT	SHEET No.	TOTAL SHEETS
06	Ker	99	19.5	48	55

Raymond Don Tsztoo
REGISTERED CIVIL ENGINEER

July 20, 2012
PLANS APPROVAL DATE

REGISTERED PROFESSIONAL ENGINEER Raymond Don Tsztoo No. C37332 Exp. 6-30-14 CIVIL STATE OF CALIFORNIA

THE STATE OF CALIFORNIA OR ITS OFFICERS OR AGENTS SHALL NOT BE RESPONSIBLE FOR THE ACCURACY OR COMPLETENESS OF SCANNED COPIES OF THIS PLAN SHEET.

TO ACCOMPANY PLANS DATED 2-4-13

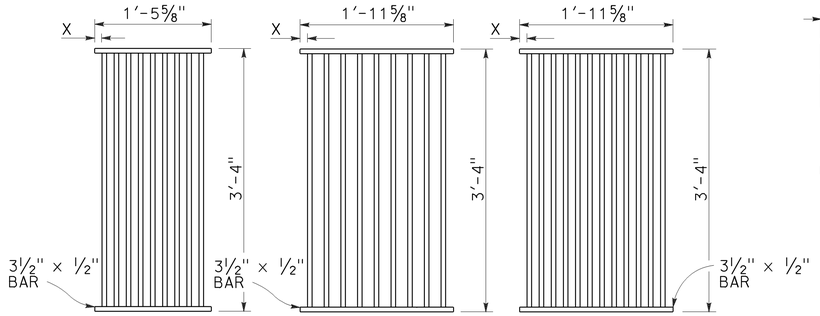

TYPE 18-9

1⅜" Clear spacing. Use within the roadbed on highways where bicycles and pedestrians are excluded.

TYPE 24-9

2" Clear spacing. Use in locations off the roadbed on all types of highways.

TYPE 24-12

1⅜" Clear spacing. Use within the roadbed on highways where bicycles and pedestrians are excluded.

RECTANGULAR GRATE DETAILS

(See table below)

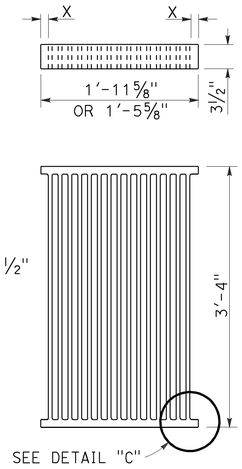

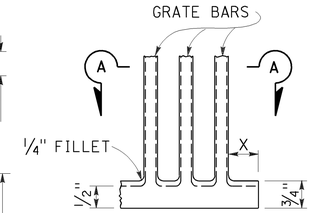

DETAIL "C"

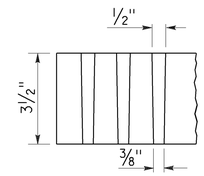

SECTION A-A

ALTERNATIVE CAST DUCTILE IRON GRATE OR CAST CARBON STEEL GRATE

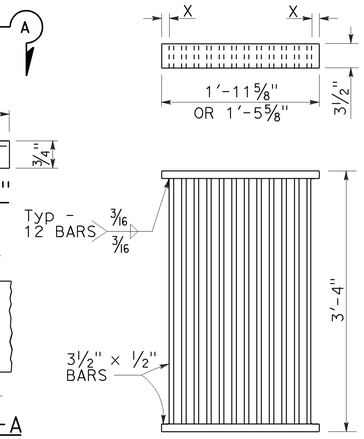

ALTERNATIVE WELDED GRATE

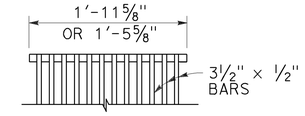

CAST END BLOCK

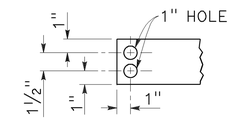

END OF BAR

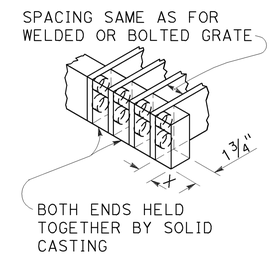

ALTERNATIVE CAST DUCTILE IRON OR CAST CARBON STEEL END BLOCK GRATE

NOTES:

1. Grate type numbers refer to approximate width of grate in inches and number of bars, respectively.
2. Contractor has the option of using cast ductile iron, cast carbon steel, welded, bolted, or cast end block grate.
3. Rounded top of bars optional on all grates.
4. Pipe inlets with a grate shall be placed so that bars parallel direction of principle surface flow.
5. Complete joint penetration butt welds may be substituted for the fillet welds on all anchors.
6. Standard square, hexagon, round or equivalent headed anchors may be substituted for the right angle hooks on the anchors shown on this plan.
7. Grate and frame weights are based on welded grates (weights of face angles, steps, protection bars, etc. are not included).
8. Connect chain to grate and frame only at locations shown on the plans. When chain is required, do not use cast ductile iron grates.

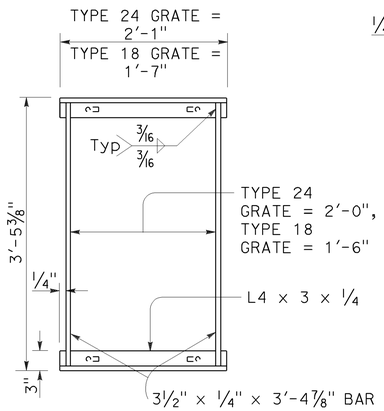

TYPICAL FRAME

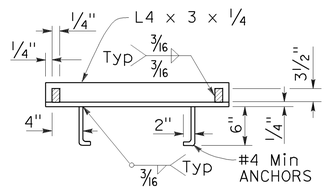

CROSS SECTION

(Thru frame)

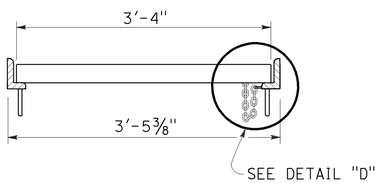

LONGITUDINAL SECTION

(Thru frame and grate)

RECTANGULAR FRAME DETAILS

(For all rectangular grates)

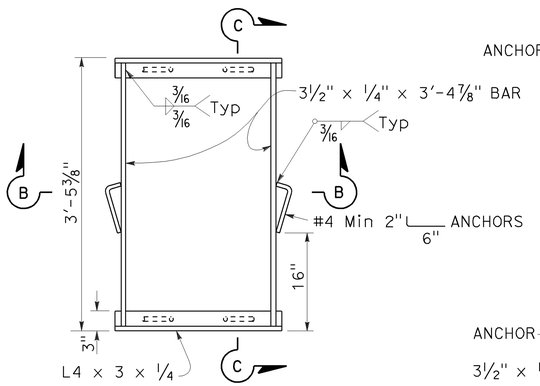

TYPICAL FRAME

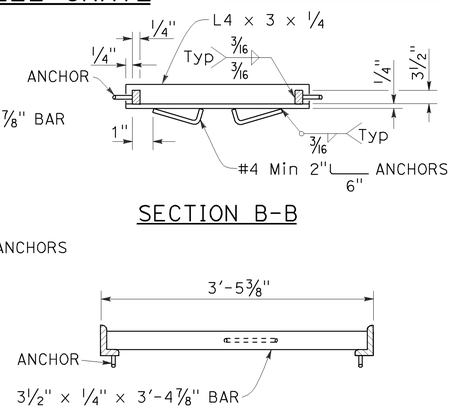

SECTION B-B

SECTION C-C

ALTERNATIVE ANCHOR FOR RECTANGULAR FRAME

(For details not shown, See Rectangular Frame Details)

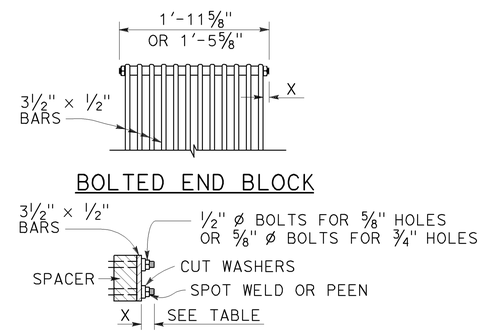

ALTERNATIVE BOLTED GRATE

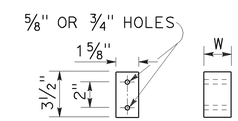

BAR SPACER

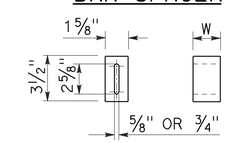

ALTERNATIVE SPACER

W = 1⅜" or 2"

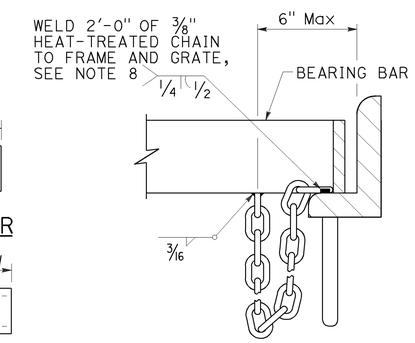

DETAIL "D"

(Steel grates only)

GRATE BAR SPACING TABLE

TYPE	No. OF BARS	CLEAR BAR SPACING	X
18-9	9	1⅜"	1 1/16"
24-9	9	2"	1 9/16"
24-12	12	1⅜"	1¼"

INLET TYPE	COVER TYPE	WEIGHT LB
OS	PLATE	174
OL-7	PLATE	170
OL-10	PLATE	170
OL-14	PLATE	170
OL-21	PLATE	170
OCP	PLATE	112
OCPI	PLATE	112
OCPI	REDWOOD	42
OMP	PLATE	177
OMPI	PLATE	177

INLET TYPE	GRATE TYPE	No. OF GRATES	WEIGHT LB
GDO	24-12	2	634
GOL-7	24-12	1	326
GOL-10	24-12	1	326
GO,G1,G2,G3,G4 (TYPE 24)	24-9	1	263
	24-12	1	326
G4 (TYPE 18),G5,G6	18-9	1	249
GT1	18-9	2	498
GT2	18-9	2	498
GT3	24-12	2	652
GT4	24-12	2	652
TRASH RACK			22
GRATE CHAIN			3

BASIS FOR Misc IRON & STEEL FINAL PAY WEIGHTS FOR DRAINAGE INLETS

(See Note 7)

STATE OF CALIFORNIA
DEPARTMENT OF TRANSPORTATION

GRATE DETAILS

NO SCALE

RSP D77A DATED JULY 20, 2012 SUPERSEDES STANDARD PLAN D77A DATED MAY 20, 2011 - PAGE 164 OF THE STANDARD PLANS BOOK DATED 2010.

REVISED STANDARD PLAN RSP D77A

2010 REVISED STANDARD PLAN RSP D77A

6-13-12

DIST	COUNTY	ROUTE	POST MILES TOTAL PROJECT	SHEET NO.	TOTAL SHEETS
06	Ker	99	19.5	49	55

REGISTERED ELECTRICAL ENGINEER

January 20, 2012
PLANS APPROVAL DATE

REGISTERED PROFESSIONAL ENGINEER Jeffery G. McRae No. E14512 Exp. 6-30-12 ELECTRICAL STATE OF CALIFORNIA

THE STATE OF CALIFORNIA OR ITS OFFICERS OR AGENTS SHALL NOT BE RESPONSIBLE FOR THE ACCURACY OR COMPLETENESS OF SCANNED COPIES OF THIS PLAN SHEET.

TO ACCOMPANY PLANS DATED 2-4-13

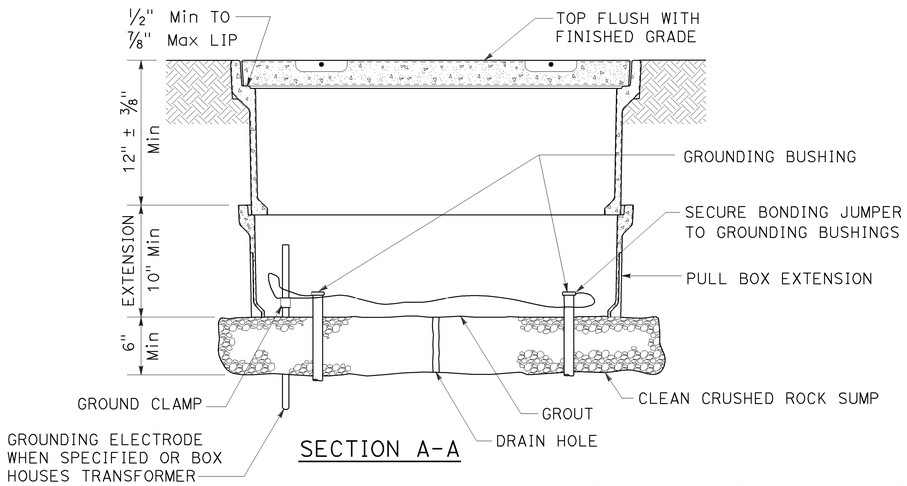

SECTION A-A

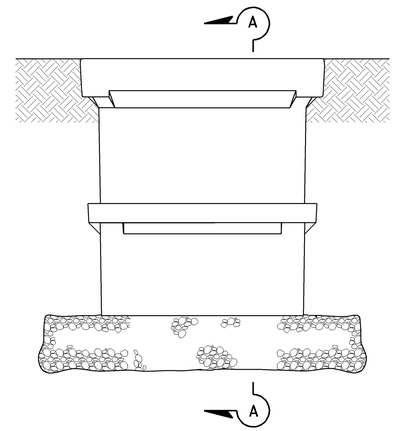

SIDE VIEW

INSTALLATION DETAILS

DETAIL A

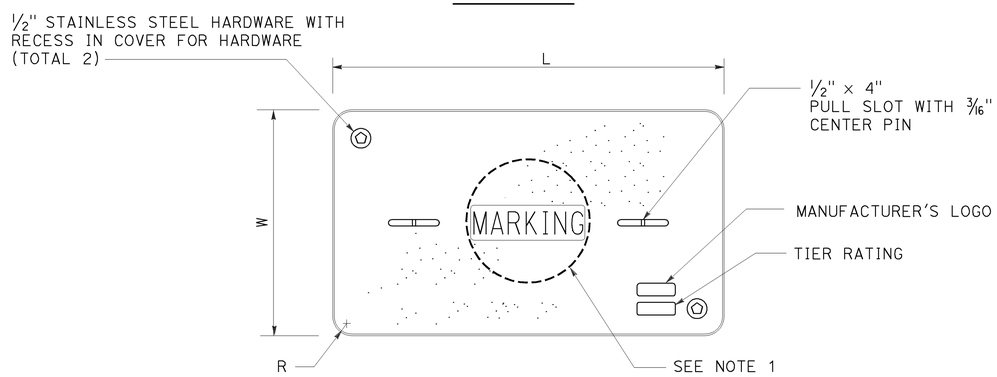

COVER TOP VIEW

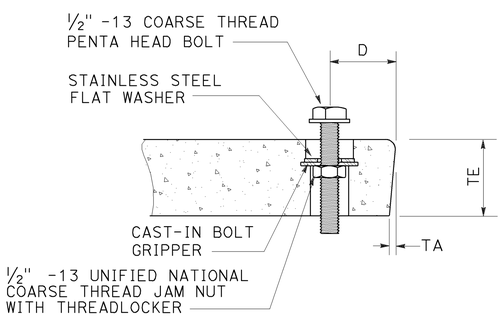

TYPICAL COVER CAPTIVE BOLT

OR SIMILAR

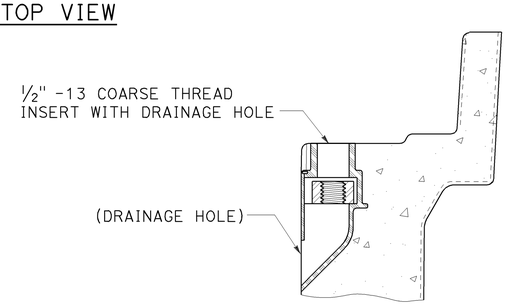

TYPICAL THREADED INSERT

OR SIMILAR

DIMENSION TABLE										
PULL BOX	PULL BOX			COVER						
	MINIMUM DEPTH BOX	MINIMUM DEPTH EXTENSION	MAXIMUM WEIGHT	L	W	R	TE	TA	D	MAXIMUM WEIGHT
No. 3 1/2	12"	N/A	40 lb	1' - 3 3/8"	10 1/8"	1 3/8"	2"	1/8"	1 3/4"	30 lb
No. 5	12"	10"	55 lb	1' - 11 1/4"	1' - 1 3/4"	1 3/8"	2"	1/8"	1 3/4"	60 lb
No. 6	12"	10"	70 lb	2' - 6 1/2"	1' - 5 1/2"	1 3/8"	2"	1/8"	2"	85 lb

NOTES ON PULL BOXES:

1. Pull box covers must be marked as follows: "SERVICE" Service circuits between service point and service disconnect; "SPRINKLER-CONTROL" sprinkler control circuits, 50 V or less; "CALTRANS" on all pull boxes, except pull boxes marked "SPRINKLER-CONTROL"; and "TELEPHONE" Telephone service;

   A) No. 3 1/2 pull box.
      1) "SIGNAL" - Traffic signal circuits with or without street or sign lighting circuits.
      2) "ST LIGHTING" - Street or sign lighting circuits where voltage is under 600 V.

   B) No. 5, 6, 9 or 9A pull box.
      1) "TRAFFIC SIGNAL" - Traffic signal circuits with or without street or sign lighting circuits.
      2) "STREET LIGHTING" - Street or sign lighting circuits where voltage is under 600 V.
      3) "STREET LIGHTING-HIGH VOLTAGE" - Street or sign lighting circuits where voltage is above 600 V.
      4) "IRRIGATION" - Circuits to irrigation controller 120 V or more.
      5) "RAMP METER" - Ramp meter circuits.
      6) "COUNT STATION" - Count or speed monitor circuits.
      7) "COMMUNICATIONS" - Communication circuits.
      8) "TOS COMMUNICATIONS" - TOS communication line.
      9) "TOS POWER" - TOS power.
      10) "TDC POWER" - Telephone demarcation cabinet power.
      11) "CCTV" - Closed circuit television circuits.
      12) "TMS" - Traffic monitoring station circuits.
      13) "CMS" - Changeable message sign circuits.
      14) "HAR" - Highway advisory radio circuits.

2. The nominal dimensions of the opening in which the cover sets must be the same as the cover dimensions (L and W) plus 1/8" or greater.
3. Covers and boxes must be interchangeable with California Standard. When interchanged with a standard, the top surfaces must be flush within 1/8". Top outside radius of covers and pull boxes must have a 1/8" radius.
4. Pull box extension may be another pull box as long as the bottom edge of the pull box can fit into the cover opening.

STATE OF CALIFORNIA
DEPARTMENT OF TRANSPORTATION

ELECTRICAL SYSTEMS (PULL BOX)

NO SCALE

RSP ES-8A DATED JANUARY 20, 2012 SUPPLEMENTS THE STANDARD PLANS BOOK DATED 2010.

REVISED STANDARD PLAN RSP ES-8A

2010 REVISED STANDARD PLAN RSP ES-8A

01-09-12

DIST	COUNTY	ROUTE	POST MILES TOTAL PROJECT	SHEET NO.	TOTAL SHEETS
06	Ker	99	19.5	50	55

REGISTERED ELECTRICAL ENGINEER

January 20, 2012
PLANS APPROVAL DATE

REGISTERED PROFESSIONAL ENGINEER Jeffery G. McRae No. E14512 Exp. 6-30-12 ELECTRICAL STATE OF CALIFORNIA

THE STATE OF CALIFORNIA OR ITS OFFICERS OR AGENTS SHALL NOT BE RESPONSIBLE FOR THE ACCURACY OR COMPLETENESS OF SCANNED COPIES OF THIS PLAN SHEET.

TO ACCOMPANY PLANS DATED 2-4-13

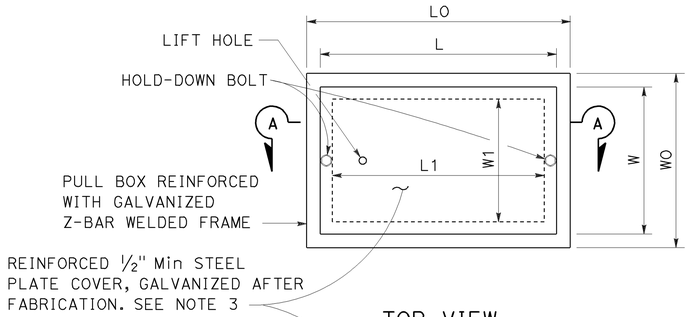

TOP VIEW

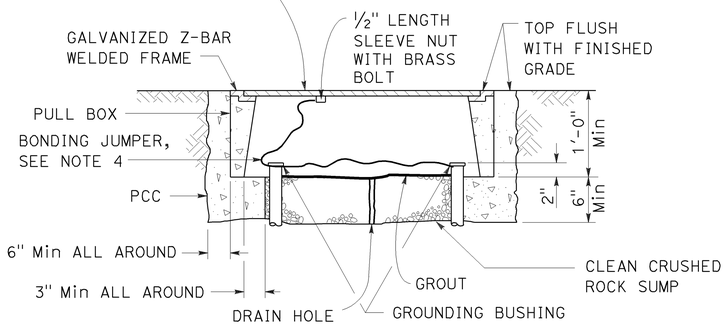

SECTION A-A

No. 3½(T), No. 5(T) AND No. 6(T) TRAFFIC PULL BOX

NOTES ON PULL BOXES:

1. Traffic pull box shall be provided with steel cover and special concrete footing. Steel cover shall have embossed non-skid pattern.
2. Steel reinforcing shall be as regularly used in the standard products of the respective manufacturer.
3. Pull box covers must be marked as follows: "SERVICE" Service circuits between service point and service disconnect; "SPRINKLER-CONTROL" Sprinkler control circuits, 50 V or less; "CALTRANS" On all pull boxes, except pull boxes marked "SPRINKLER-CONTROL"; and "TELEPHONE" Telephone service.
   A) No. 3½(T) pull box.
      1) "SIGNAL" - Traffic signal circuits with or without street or sign lighting circuits.
      2) "ST LIGHTING" - Street or sign lighting circuits where voltage is under 600 V.
   B) No. 5(T) or 6(T) pull box.
      1) "TRAFFIC SIGNAL" - Traffic signal circuits with or without street or sign lighting circuits.
      2) "STREET LIGHTING" - Street or sign lighting circuits where voltage is under 600 V.
      3) "STREET LIGHTING-HIGH VOLTAGE" - Street or sign lighting circuits where voltage is above 600 V.
      4) "IRRIGATION" - Circuits to irrigation controller 120 V or more.
      5) "RAMP METER" - Ramp meter circuits.
      6) "COUNT STATION" - Count or speed monitor circuits.
      7) "COMMUNICATION" - Communication circuits.
      8) "TOS COMMUNICATIONS" - TOS communications line.
      9) "TOS POWER" - TOS power.
      10) "TDC POWER" - Telephone demarcation cabinet power.
      11) "CCTV" - Closed circuit television circuits.
      12) "TMS" - Traffic monitoring station circuits.
      13) "CMS" - Changeable message sign circuits.
      14) "HAR" - Highway advisory radio circuits.
4. Bonding jumper for metal covers shall be 3' long, minimum.
5. The nominal dimensions of the opening in which the cover sets must be the same as the cover dimensions except the length and width dimensions shall be ⅛" greater.
6. Covers and boxes must be interchangeable with California standard male and female gages. When interchanged with a standard male or female gage, the top surfaces must be flush within ⅛".

DIMENSION TABLE

PULL BOX	BOX						COVER				
	MINIMUM * THICKNESS	MINIMUM DEPTH BOX AND EXTENSION	WO	LO	L1	W1	L **	W **	R	EDGE THICKNESS	EDGE TAPER
No. 3½(T)	1½"	1'-0"	1'-5"± 1"	1'-8⅞"±	1'-2½"±	10⅝"± 1"	1'-8"±	1'-1¾"±	0"	½"	NONE
No. 5(T)	1¾"	1'-0"	1'-11½"± 1"	2'-5½"±	1'-7"±	1'-1"± 1"	2'-3"±	1'-4"±	0"	½"	NONE
No. 6(T)	2"	1'-0"	2'-6"± 1"	2'-11½"±	1'-11½"±	1'-5"± 1"	2'-9"±	1'-8"±	0"	½"	NONE

* EXCLUDING CONDUIT WEB ** TOP DIMENSION

STATE OF CALIFORNIA
DEPARTMENT OF TRANSPORTATION

ELECTRICAL SYSTEMS (TRAFFIC RATED PULL BOX)

NO SCALE

RSP ES-8B DATED JANUARY 20, 2012 SUPPLEMENTS THE STANDARD PLANS BOOK DATED 2010.

REVISED STANDARD PLAN RSP ES-8B

2010 REVISED STANDARD PLAN RSP ES-8B

Dist	COUNTY	ROUTE	POST MILES TOTAL PROJECT	SHEET No.	TOTAL SHEETS
06	Ker	99	19.5	51	55

REGISTERED ELECTRICAL ENGINEER

July 20, 2012
PLANS APPROVAL DATE

REGISTERED PROFESSIONAL ENGINEER
Jeffery G. McRae
No. E14512
Exp. 6-30-14
ELECTRICAL
STATE OF CALIFORNIA

THE STATE OF CALIFORNIA OR ITS OFFICERS OR AGENTS SHALL NOT BE RESPONSIBLE FOR THE ACCURACY OR COMPLETENESS OF SCANNED COPIES OF THIS PLAN SHEET.

TO ACCOMPANY PLANS DATED 2-4-13

ISOFOOTCANDLE CURVE - MINIMUM

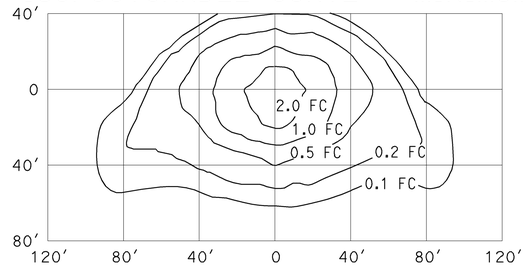

TYPE III MEDIUM CUTOFF

Cutoff Luminaire
34′ Mounting Height
Lamp operated at 22,000 lm
200-W high pressure sodium lamp
ANSI Designation S66

ISOFOOTCANDLE CURVE - MINIMUM

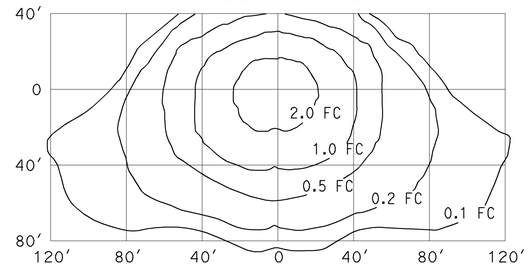

TYPE III MEDIUM CUTOFF

Cutoff Luminaire
40′ Mounting Height
Lamp operated at 37,000 lm
310-W high pressure sodium lamp
ANSI Designation S67

ISOFOOTCANDLE CURVE - MINIMUM

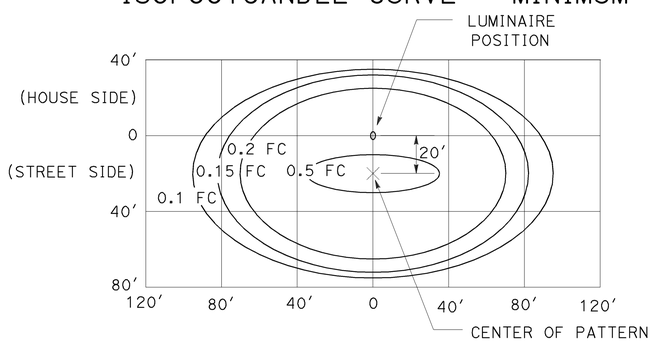

LED LUMINAIRE ROADWAY 1

200-W HPS Equivalent at 34′ Mounting Height

ISOFOOTCANDLE CURVE - MINIMUM

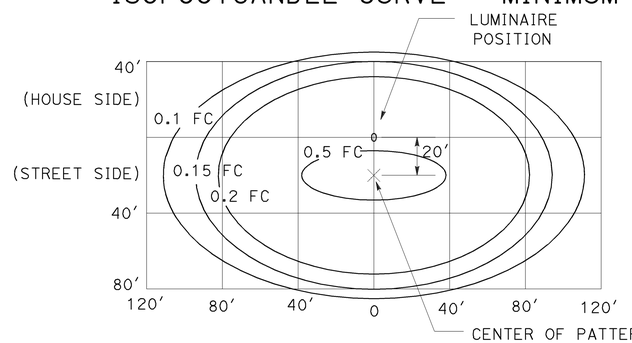

LED LUMINAIRE ROADWAY 2

310-W HPS Equivalent at 40′ Mounting Height

ISOFOOTCANDLE CURVE - MINIMUM

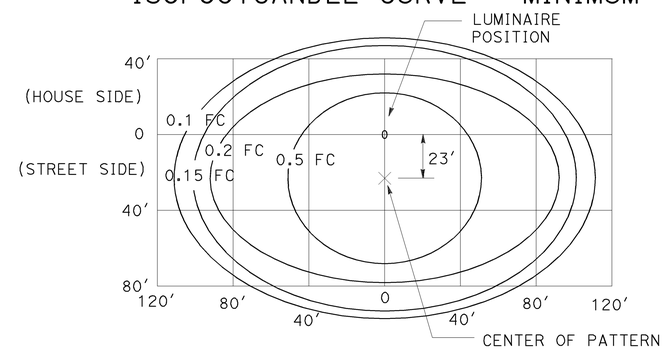

LED LUMINAIRE ROADWAY 4

400-W HPS Equivalent at 40′ Mounting Height

ISOFOOTCANDLE CURVE - MINIMUM

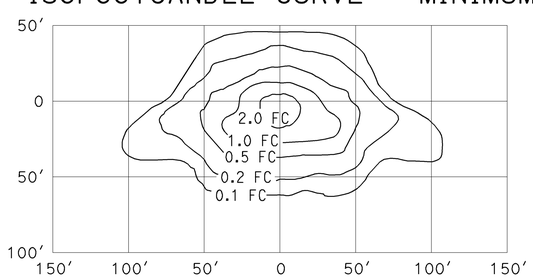

TYPE III MEDIUM CUTOFF

Cutoff Luminaire
30′ Mounting Height
Lamp operated at 16,000 lm
150-W high pressure sodium lamp
ANSI Designation S55

ISOFOOTCANDLE CURVE - MINIMUM

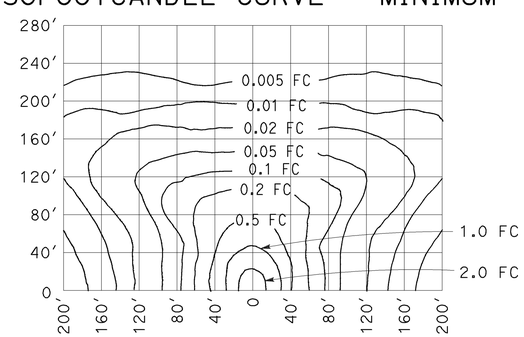

LOW PRESSURE SODIUM LUMINAIRE

40′ Mounting Height
Lamp operated at 33,000 lm
180-W low pressure sodium lamp

STATE OF CALIFORNIA
DEPARTMENT OF TRANSPORTATION

ELECTRICAL SYSTEMS (ISOFOOTCANDLE DIAGRAMS)

NO SCALE

RSP ES-10A DATED JULY 20, 2012 SUPPLEMENTS THE STANDARD PLANS BOOK DATED 2010.

REVISED STANDARD PLAN RSP ES-10A

2010 REVISED STANDARD PLAN RSP ES-10A

2-16-12

Dist	COUNTY	ROUTE	POST MILES TOTAL PROJECT	SHEET No.	TOTAL SHEETS
06	Ker	99	19.5	52	55

Jeffery G. McRae
REGISTERED ELECTRICAL ENGINEER

July 20, 2012
PLANS APPROVAL DATE

REGISTERED PROFESSIONAL ENGINEER
Jeffery G. McRae
No. E14512
Exp. 6-30-14
ELECTRICAL
STATE OF CALIFORNIA

THE STATE OF CALIFORNIA OR ITS OFFICERS OR AGENTS SHALL NOT BE RESPONSIBLE FOR THE ACCURACY OR COMPLETENESS OF SCANNED COPIES OF THIS PLAN SHEET.

TO ACCOMPANY PLANS DATED 2-4-13

ISOFOOTCANDLE CURVE - MINIMUM

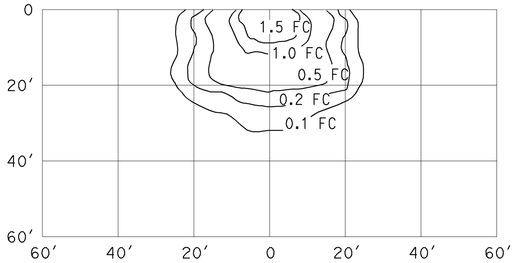

WALL LUMINAIRE
15′ Mounting Height
Lamp operated at 5,800 lm
70-W high pressure sodium lamp
ANSI Designation S62

ISOFOOTCANDLE CURVE - MINIMUM

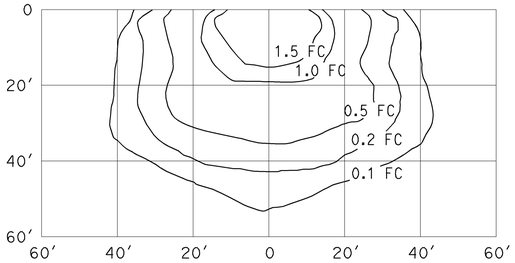

WALL LUMINAIRE
15′ Mounting Height
Lamp operated at 9,500 lm
100-W high pressure sodium lamp
ANSI Designation S54

ISOFOOTCANDLE CURVE - MINIMUM

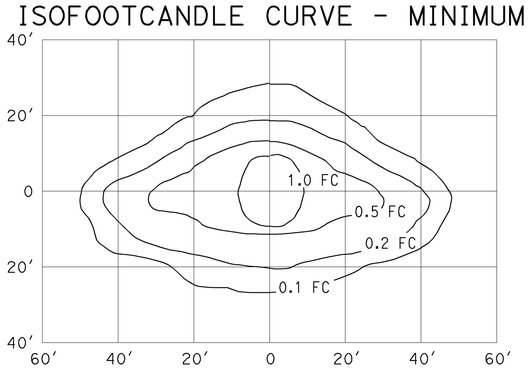

PENDANT SOFFIT LUMINAIRE
TYPE III SHORT
17′ Mounting Height
Lamp operated at 5,800 lm
70-W high pressure sodium lamp
ANSI Designation S62

ISOFOOTCANDLE CURVE - MINIMUM

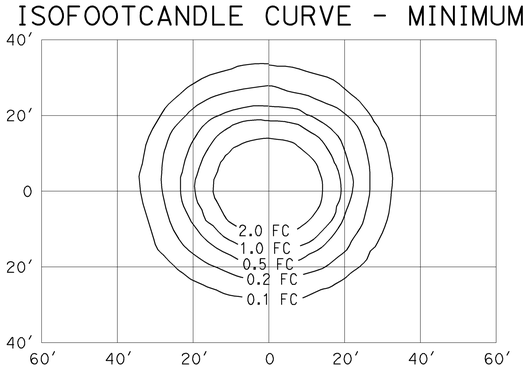

PENDANT SOFFIT LUMINAIRE
17′ Mounting Height
Lamp operated at 5,800 lm
70-W high pressure sodium lamp
ANSI Designation S62

ISOFOOTCANDLE CURVE - MINIMUM

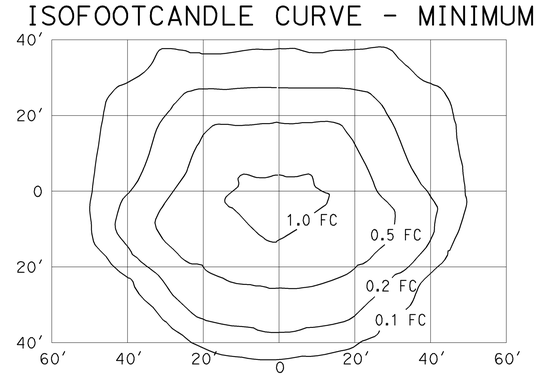

FLUSH SOFFIT LUMINAIRE
17′ Mounting Height
Lamp operated at 5,800 lm
70-W high pressure sodium lamp
ANSI Designation S62

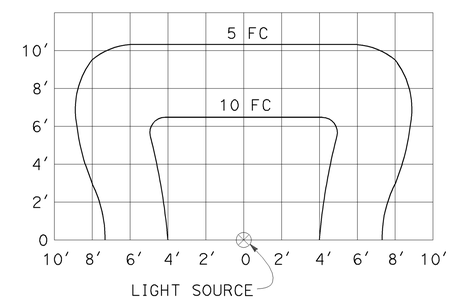

SIGN LIGHTING FIXTURE
ISOFOOTCANDLE DIAGRAM

NOTES:

1. Curves represent the minimum footcandle (FC) of initial illumination on a 10′-0" x 20′-0" panel.
2. The FC shown are with the fixture attached to the light fixture mounting channel which places the center of the source 4′-8" in front of panel and 1′-0" below the bottom edge.
3. Applicable lamp: 85-W fluorescent phosphor coated induction lamp.

STATE OF CALIFORNIA
DEPARTMENT OF TRANSPORTATION

ELECTRICAL SYSTEMS (ISOFOOTCANDLE DIAGRAMS)

NO SCALE

RSP ES-10B DATED JULY 20, 2012 SUPPLEMENTS THE STANDARD PLANS BOOK DATED 2010.

REVISED STANDARD PLAN RSP ES-10B

2010 REVISED STANDARD PLAN RSP ES-10B

DIST	COUNTY	ROUTE	POST MILES TOTAL PROJECT	SHEET No.	TOTAL SHEETS
06	Ker	99	19.5	53	55

REGISTERED CIVIL ENGINEER 2-6-2013 DATE

2-4-13
PLANS APPROVAL DATE

REGISTERED PROFESSIONAL ENGINEER TILLAT SATTER No. C42892 Exp. 3-31-14 CIVIL STATE OF CALIFORNIA

The State of California or its officers or agents shall not be responsible for the accuracy or completeness of scanned copies of this plan sheet.

LEGEND

- EXISTING
- NEW
- PCC
- POLYSTYRENE

NOTES:

1. For location of barriers see ROADWAY PLANS.
2. Start 4" PCC slope at hinge point where width between SW and back of barrier at FG narrows to 2'-6".
3. Pave 4" HMA layer to drain per ROADWAY PLANS.
4. Ensure no damage to existing soundwall or soundwall foundation during construction.

STANDARD PLANS DATED MAY 2010

A10A	ACRONYMS AND ABBREVIATIONS (A-L)
A10B	ACRONYMS AND ABBREVIATIONS (M-Z)
A76A	CONCRETE BARRIER TYPE 60
B11-56	CONCRETE BARRIER TYPE 736
ES-6A	ELECTRICAL SYSTEMS (LIGHTING STANDARD, TYPES 15 AND 21)
ES-7N	ELECTRICAL SYSTEMS (SIGNAL AND LIGHTING STANDARD, DETAILS No. 2)

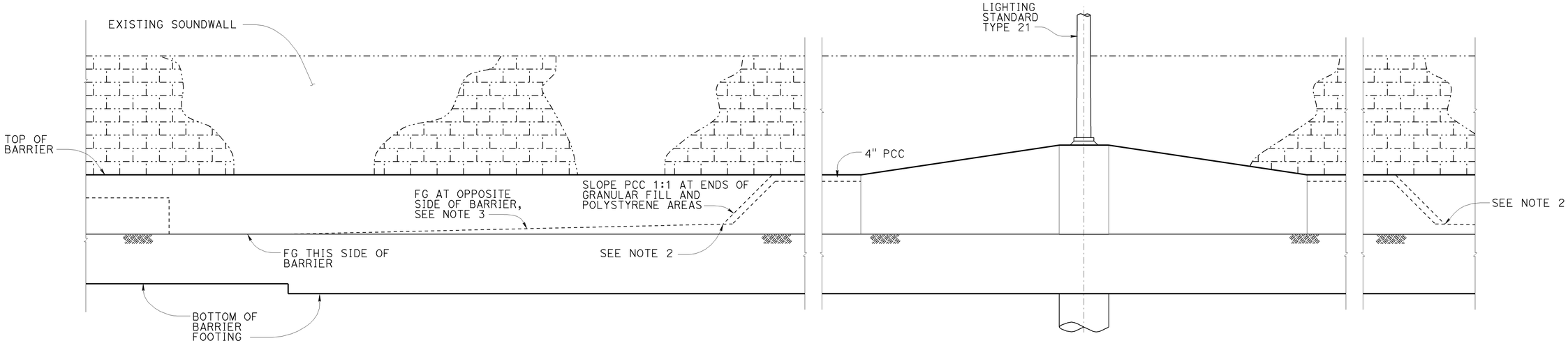

ELEVATION

NO SCALE

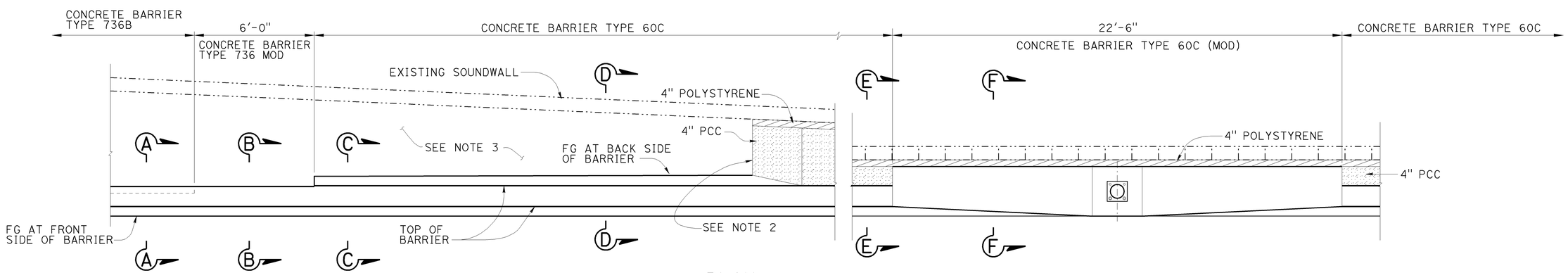

PLAN

NO SCALE

THE CONTRACTOR SHALL VERIFY ALL CONTROLLING FIELD DIMENSIONS BEFORE ORDERING OR FABRICATING ANY MATERIAL.

	BY	CHECKED
DESIGN	TILLAT SATTER	JOEL MAGANA
DETAILS	P C WELLS	JOEL MAGANA
QUANTITIES	X	X

STATE OF CALIFORNIA
DEPARTMENT OF TRANSPORTATION

DIVISION OF ENGINEERING SERVICES
STRUCTURE DESIGN
SPECIAL DESIGN BRANCH

BRIDGE NO. NXA
POST MILE 19.5

BARRIER DETAILS 1
PLAN, ELEVATION

STRUCTURES DESIGN SPECIAL DESIGN SHEET (ENGLISH) (REV. 09-01-10)

ORIGINAL SCALE IN INCHES FOR REDUCED PLANS 0 1 2 3

UNIT: 3619
PROJECT NUMBER & PHASE: 06000206431
CONTRACT NO.: 06-0N690

DISREGARD PRINTS BEARING EARLIER REVISION DATES

REVISION DATES 2-7-13

SHEET 1 OF 3

FILE => 06-0n690-kba01.dgn

USERNAME => s124393 DATE PLOTTED => 07-FEB-2013 TIME PLOTTED => 07:37

DIST	COUNTY	ROUTE	POST MILES TOTAL PROJECT	SHEET No.	TOTAL SHEETS
06	Ker	99	19.5	54	55

REGISTERED CIVIL ENGINEER — DATE 2-6-2013

2-4-13
PLANS APPROVAL DATE

REGISTERED PROFESSIONAL ENGINEER — TILLAT SATTER — No. C42892 — Exp. 3-31-14 — CIVIL — STATE OF CALIFORNIA

The State of California or its officers or agents shall not be responsible for the accuracy or completeness of scanned copies of this plan sheet.

LEGEND

- EXISTING
- NEW
- PCC
- POLYSTYRENE

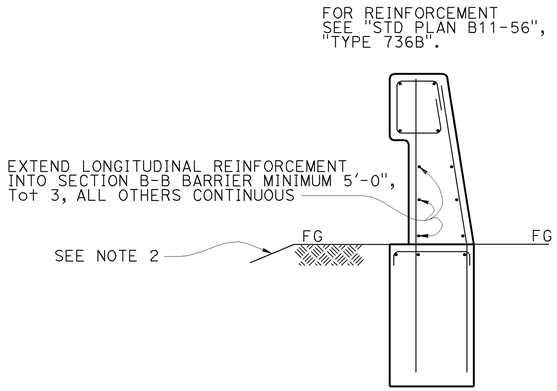

SECTION A-A
NO SCALE

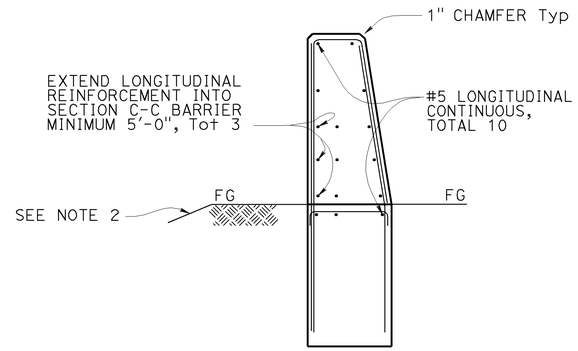

SECTION B-B
NO SCALE

NOTES:

1. If dimension is less than 2'-6" "SECTION E-E" applies.
2. Pave 4" HMA layer to drain per ROADWAY PLANS.
3. Slope 1:1 at ends, see BARRIER DETAILS 1.
4. Ensure no damage to existing soundwall or soundwall foundation during construction.
5. Place filter fabric over CTPB before placement of 4" PCC.

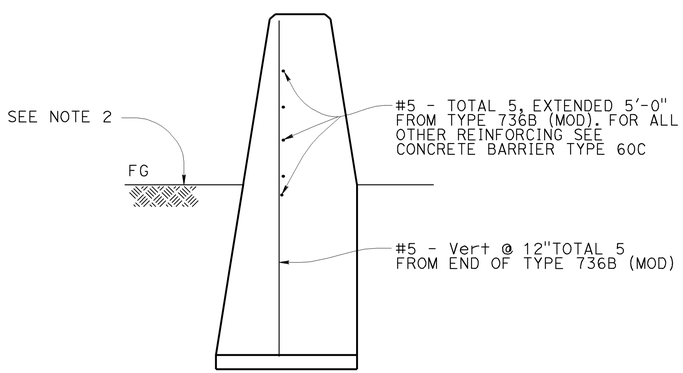

SECTION C-C
NO SCALE

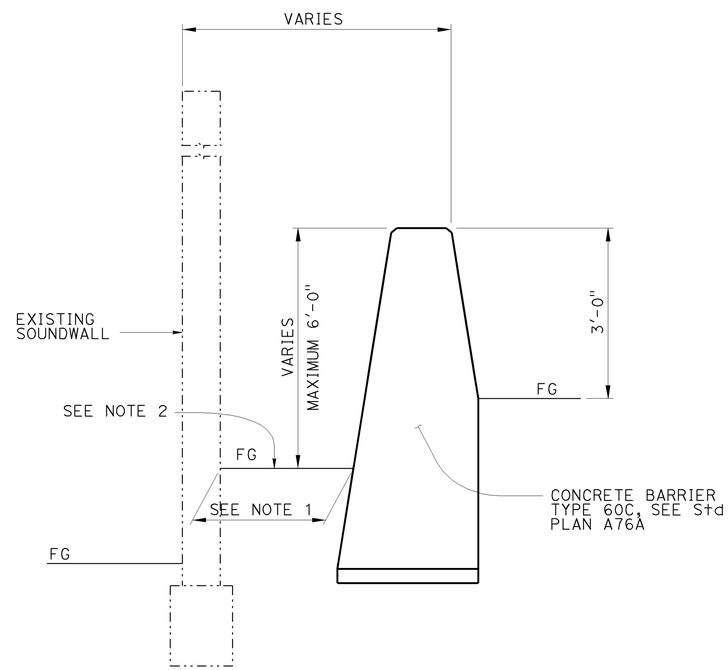

SECTION D-D
NO SCALE

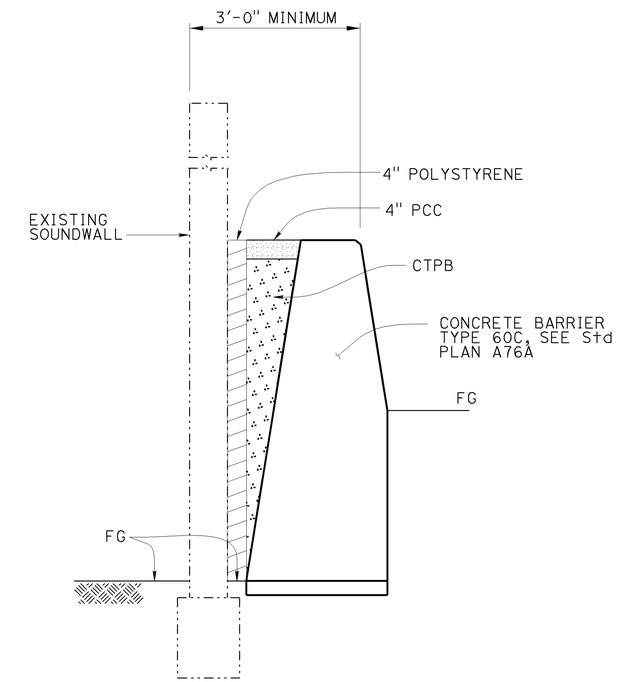

SECTION E-E
NO SCALE

THE CONTRACTOR SHALL VERIFY ALL CONTROLLING FIELD DIMENSIONS BEFORE ORDERING OR FABRICATING ANY MATERIAL.

	BY	CHECKED
DESIGN	TILLAT SATTER	JOEL MAGANA
DETAILS	P C WELLS	JOEL MAGANA
QUANTITIES	X	X

STATE OF CALIFORNIA
DEPARTMENT OF TRANSPORTATION

DIVISION OF ENGINEERING SERVICES
STRUCTURE DESIGN
SPECIAL DESIGN BRANCH

BRIDGE NO. N/A
POST MILE 19.5

BARRIER DETAILS 2
BARRIER SECTIONS

STRUCTURES DESIGN SPECIAL DESIGN SHEET (ENGLISH) (REV. 09-01-10)

ORIGINAL SCALE IN INCHES FOR REDUCED PLANS 0 1 2 3

UNIT: 3619
PROJECT NUMBER & PHASE: 06000206431
CONTRACT NO.: 06-0N690

DISREGARD PRINTS BEARING EARLIER REVISION DATES

REVISION DATES: 2-7-13

SHEET 2 OF 3

FILE => 06-0n690-kbar02.dgn

USERNAME => s124393 DATE PLOTTED => 07-FEB-2013 TIME PLOTTED => 09:31

DIST	COUNTY	ROUTE	POST MILES TOTAL PROJECT	SHEET No.	TOTAL SHEETS
06	Ker	99	19.5	55	55

REGISTERED CIVIL ENGINEER — DATE 2-6-2013

2-4-13
PLANS APPROVAL DATE

REGISTERED PROFESSIONAL ENGINEER — TILLAT SATTER — No. C42892 — Exp. 3-31-14 — CIVIL — STATE OF CALIFORNIA

The State of California or its officers or agents shall not be responsible for the accuracy or completeness of scanned copies of this plan sheet.

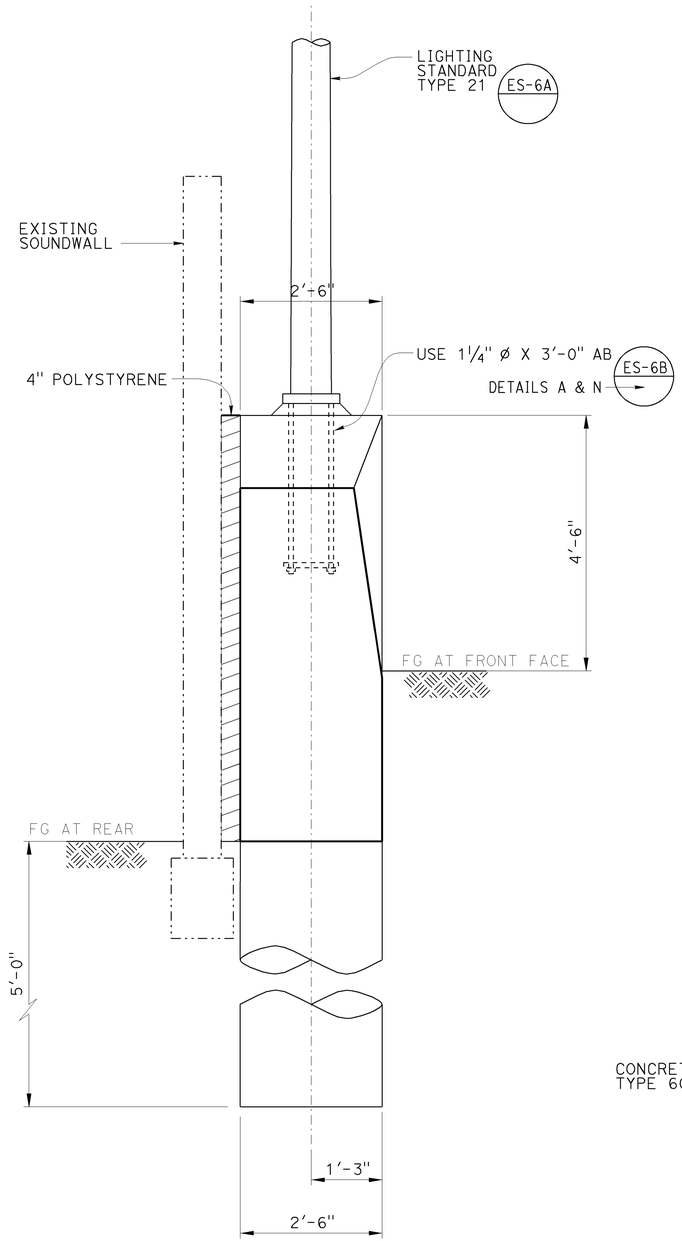

SECTION F-F

NO SCALE

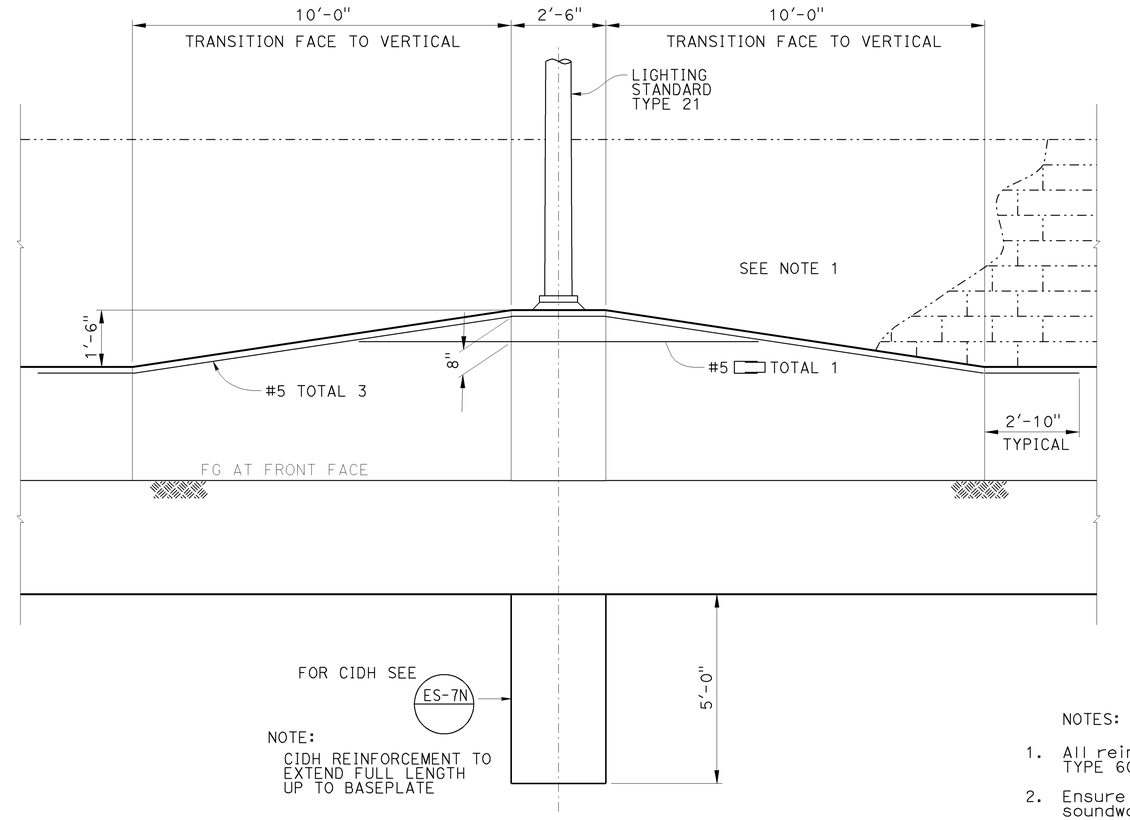

ELEVATION

NO SCALE

LEGEND

- EXISTING
- NEW
- PCC
- POLYSTYRENE

NOTES:

1. All reinforcement shown is in addition to TYPE 60C reinforcement.
2. Ensure no damage to existing soundwall or soundwall foundation during construction.

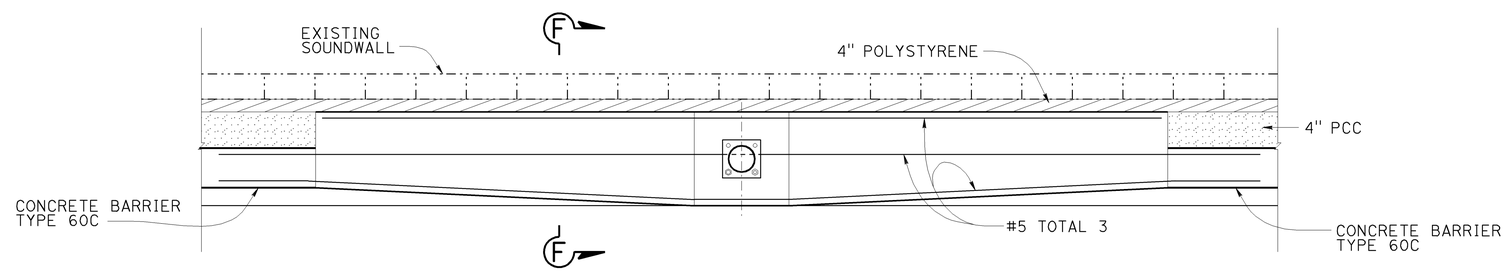

PLAN

NO SCALE

THE CONTRACTOR SHALL VERIFY ALL CONTROLLING FIELD DIMENSIONS BEFORE ORDERING OR FABRICATING ANY MATERIAL.

	BY	CHECKED
DESIGN	TILLAT SATTER	JOEL MAGANA
DETAILS	P C WELLS	JOEL MAGANA
QUANTITIES	X	X

STATE OF CALIFORNIA
DEPARTMENT OF TRANSPORTATION

DIVISION OF ENGINEERING SERVICES
STRUCTURE DESIGN
SPECIAL DESIGN BRANCH

BRIDGE NO. N/A
POST MILE 19.5

BARRIER DETAILS 3
BARRIER MOUNTED LIGHTING DETAILS

STRUCTURES DESIGN SPECIAL DESIGN SHEET (ENGLISH) (REV. 09-01-10)

ORIGINAL SCALE IN INCHES FOR REDUCED PLANS 0 1 2 3

UNIT: 3619
PROJECT NUMBER & PHASE: 06000206431
CONTRACT NO.: 06-0N690

DISREGARD PRINTS BEARING EARLIER REVISION DATES

REVISION DATES: 2-7-13

SHEET 3 OF 3

FILE => 06-0n690-kbar03.dgn

USERNAME => s124393 DATE PLOTTED => 07-FEB-2013 TIME PLOTTED => 07:38