Dist	COUNTY	ROUTE	POST MILES TOTAL PROJECT	SHEET No.	TOTAL SHEETS
06	Tul	99	23.5	1	16

STATE OF CALIFORNIA

DEPARTMENT OF TRANSPORTATION

PROJECT PLANS FOR CONSTRUCTION ON

STATE HIGHWAY

IN TULARE COUNTY
NEAR TULARE
AT AVENUE 184 OVERCROSSING

TO BE SUPPLEMENTED BY STANDARD PLANS DATED MAY 2010

INDEX OF PLANS

SHEET No.	DESCRIPTION
1	TITLE AND LOCATION MAP
2	TYPICAL CROSS SECTIONS
3	LAYOUT
4	CONSTRUCTION DETAILS
5	DRAINAGE PROFILES
6	CONSTRUCTION AREA SIGNS
7	PAVEMENT DELINEATION AND SIGN PLAN
8	SIGN QUANTITIES
9	SUMMARY OF QUANTITIES
10-11	TRAFFIC MONITORING STATION
12-16	REVISED STANDARD PLANS

THE STANDARD PLANS LIST APPLICABLE TO THIS CONTRACT IS INCLUDED IN THE NOTICE TO BIDDERS AND SPECIAL PROVISIONS BOOK.

LOCATION MAP

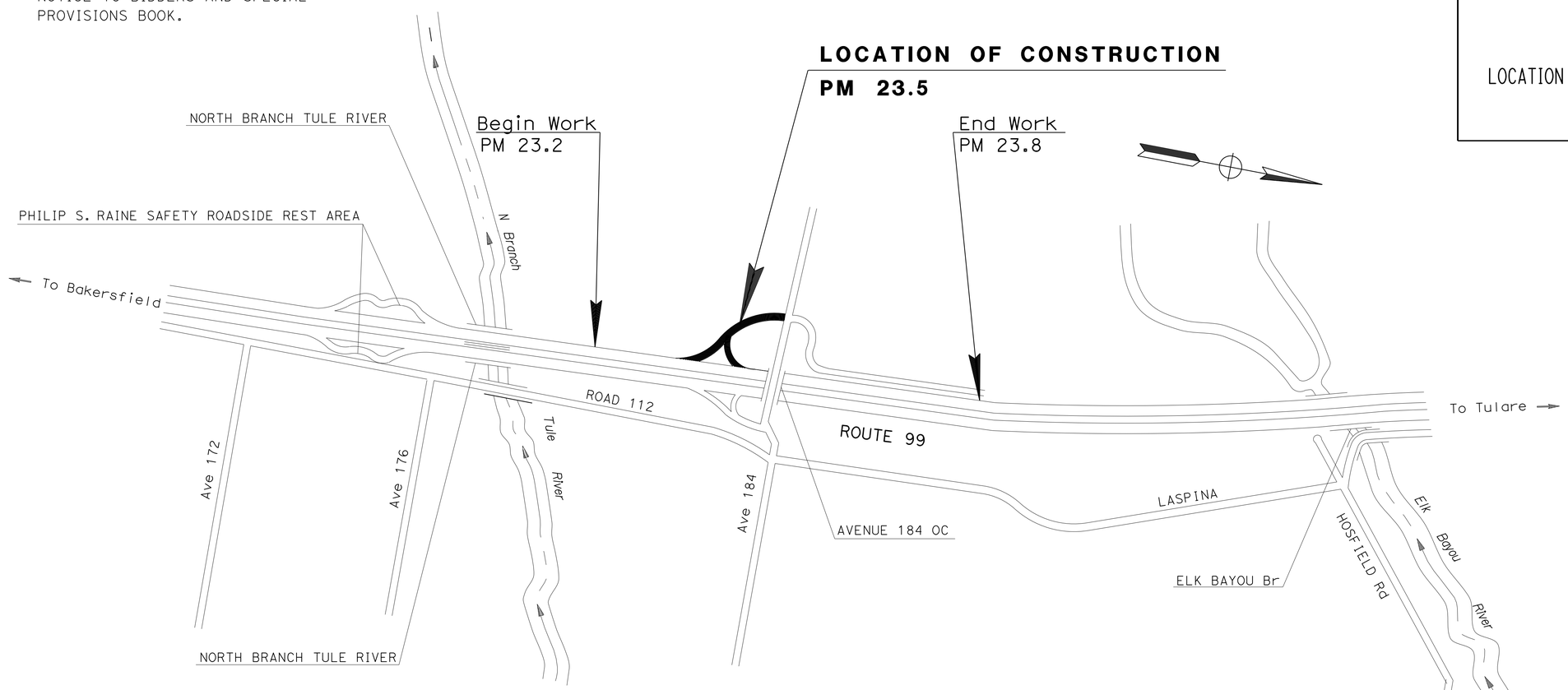

NO SCALE

THE CONTRACTOR SHALL POSSESS THE CLASS (OR CLASSES) OF LICENSE AS SPECIFIED IN THE "NOTICE TO BIDDERS."

Steve M Lee 06/01/12
PROJECT ENGINEER DATE
REGISTERED CIVIL ENGINEER

August 27, 2012
PLANS APPROVAL DATE

REGISTERED PROFESSIONAL ENGINEER STEVE M. LEE No. 62613 Exp. 6-30-14 CIVIL STATE OF CALIFORNIA

THE STATE OF CALIFORNIA OR ITS OFFICERS OR AGENTS SHALL NOT BE RESPONSIBLE FOR THE ACCURACY OR COMPLETENESS OF SCANNED COPIES OF THIS PLAN SHEET.

PROJECT MANAGER JUDY AGUILAR

DESIGN ENGINEER THANH NGUYEN

CONTRACT No.	06-0N5404
PROJECT ID	0600020471

LAST REVISION 04-18-12

DATE PLOTTED => 20-SEP-2012
TIME PLOTTED => 17:58

Dist	COUNTY	ROUTE	POST MILES TOTAL PROJECT	SHEET No.	TOTAL SHEETS
06	Tul	99	23.5	2	16

Steve M Lee 06/01/12
REGISTERED CIVIL ENGINEER DATE

08-27-12
PLANS APPROVAL DATE

REGISTERED PROFESSIONAL ENGINEER STEVE M. LEE No. 62613 Exp 6-30-14 CIVIL STATE OF CALIFORNIA

THE STATE OF CALIFORNIA OR ITS OFFICERS OR AGENTS SHALL NOT BE RESPONSIBLE FOR THE ACCURACY OR COMPLETENESS OF SCANNED COPIES OF THIS PLAN SHEET.

NOTES:

1. DIMENSIONS OF THE PAVEMENT STRUCTURES (STRUCTURAL SECTIONS) ARE SUBJECT TO TOLERANCES SPECIFIED IN THE STANDARD SPECIFICATIONS.
2. FOR ACCURATE RIGHT OF WAY DATA, CONTACT RIGHT OF WAY ENGINEERING AT THE DISTRICT OFFICE.

ABBREVIATION:

PG-TR PERFORMANCE GRADE- TIRE RUBBER

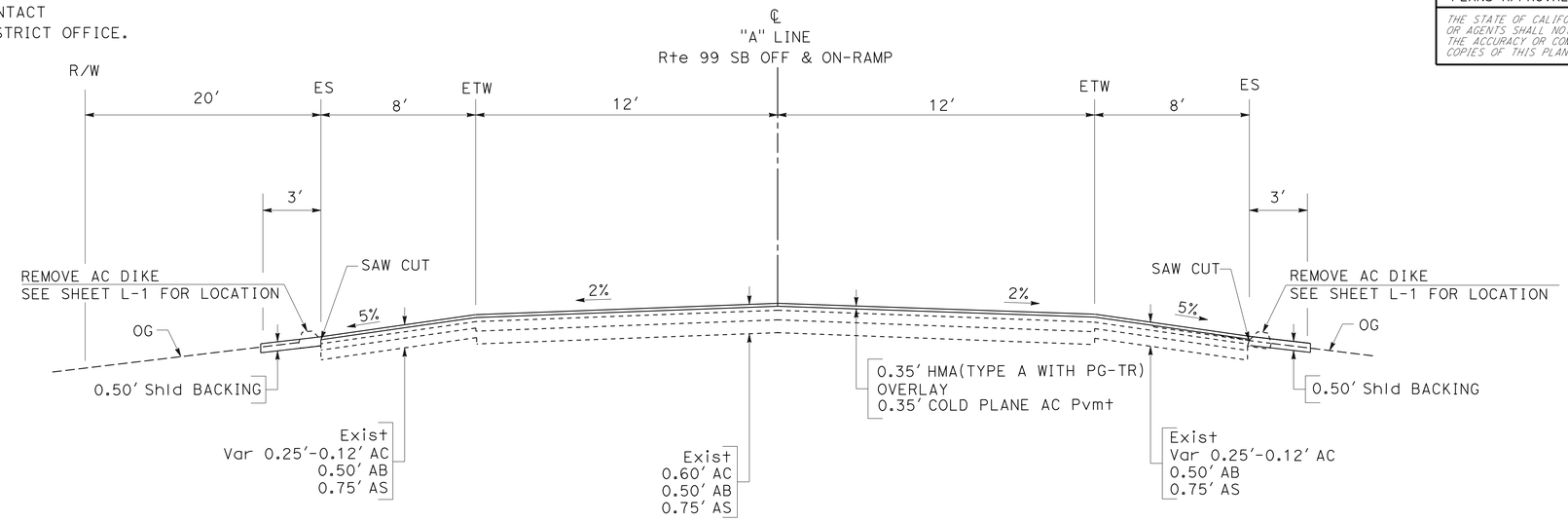

"A" LINE

Sta 125+49 TO Sta 130+60

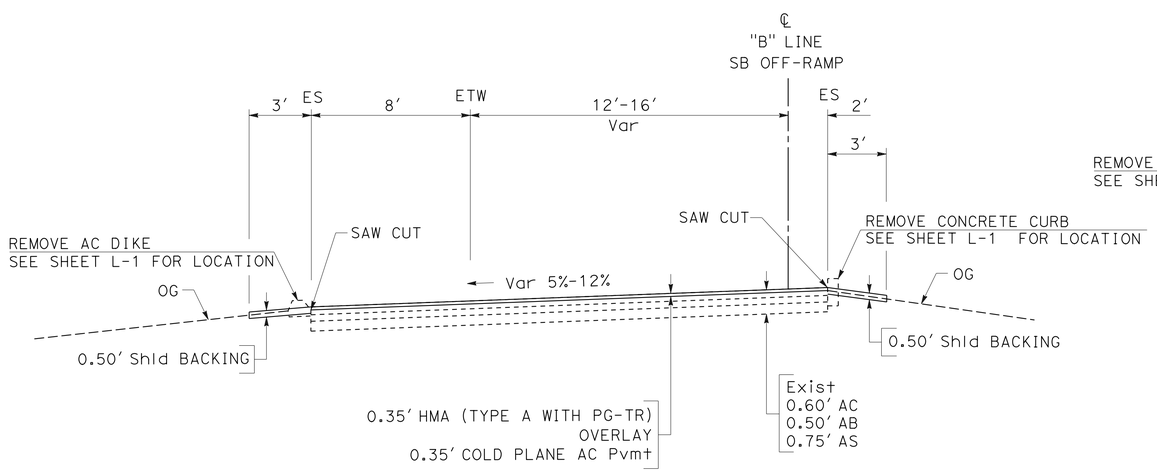

"B" LINE

Sta 325+49 TO Sta 329+37

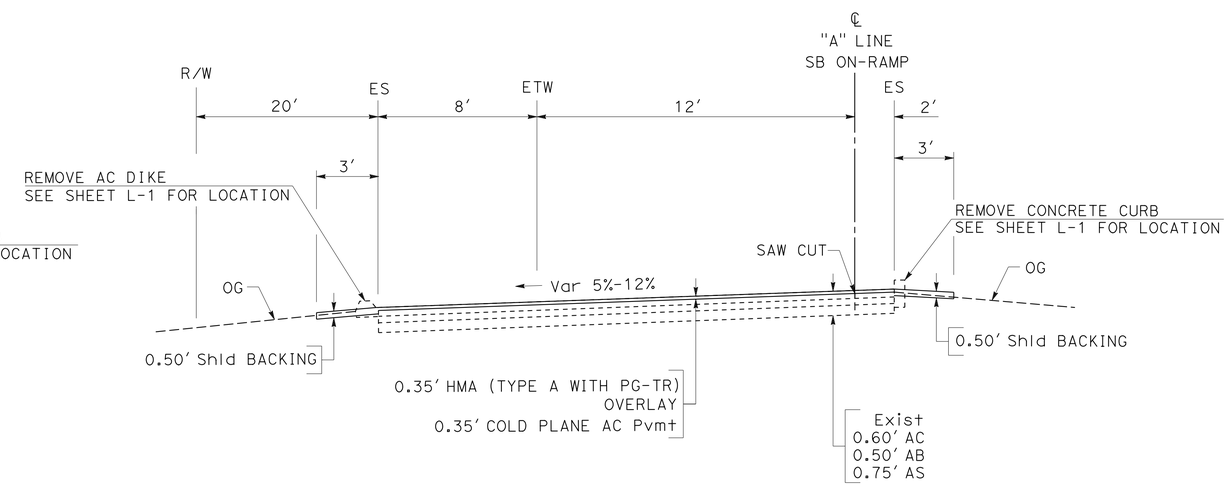

"A" LINE

Sta 119+75 TO Sta 125+49

TYPICAL CROSS SECTIONS
X-1

NO SCALE

STATE OF CALIFORNIA - DEPARTMENT OF TRANSPORTATION
Caltrans DESIGN
FUNCTIONAL SUPERVISOR THANH NGUYEN
CALCULATED-DESIGNED BY HECTOR TRUJILLO
CHECKED BY STEVE M LEE
REVISED BY
DATE REVISED

LAST REVISION 04-19-12 DATE PLOTTED => 20-SEP-2012 TIME PLOTTED => 17:58

Dist	COUNTY	ROUTE	POST MILES TOTAL PROJECT	SHEET No.	TOTAL SHEETS
06	Tul	99	23.5	3	16

Steve M Lee 06/01/12
REGISTERED CIVIL ENGINEER DATE

08-27-12
PLANS APPROVAL DATE

REGISTERED PROFESSIONAL ENGINEER STEVE M. LEE No. 62613 Exp 6-30-14 CIVIL STATE OF CALIFORNIA

THE STATE OF CALIFORNIA OR ITS OFFICERS OR AGENTS SHALL NOT BE RESPONSIBLE FOR THE ACCURACY OR COMPLETENESS OF SCANNED COPIES OF THIS PLAN SHEET.

NOTE:

FOR ACCURATE RIGHT OF WAY DATA, CONTACT RIGHT OF WAY ENGINEERING AT THE DISTRICT OFFICE.

LEGEND:

- DRAINAGE SYSTEM No.
- DRAINAGE UNIT
- MINOR Conc (STAMPED Conc)
- HMA (TYPE A WITH PG-TR)

CURVE DATA

No. (#)	R	Δ	T	L
1	400′	50°38′20"	189.25′	353.53′
2	300′	57°06′35"	163.26′	299.03′
3	150′	124°23′05"	284.41′	325.64′

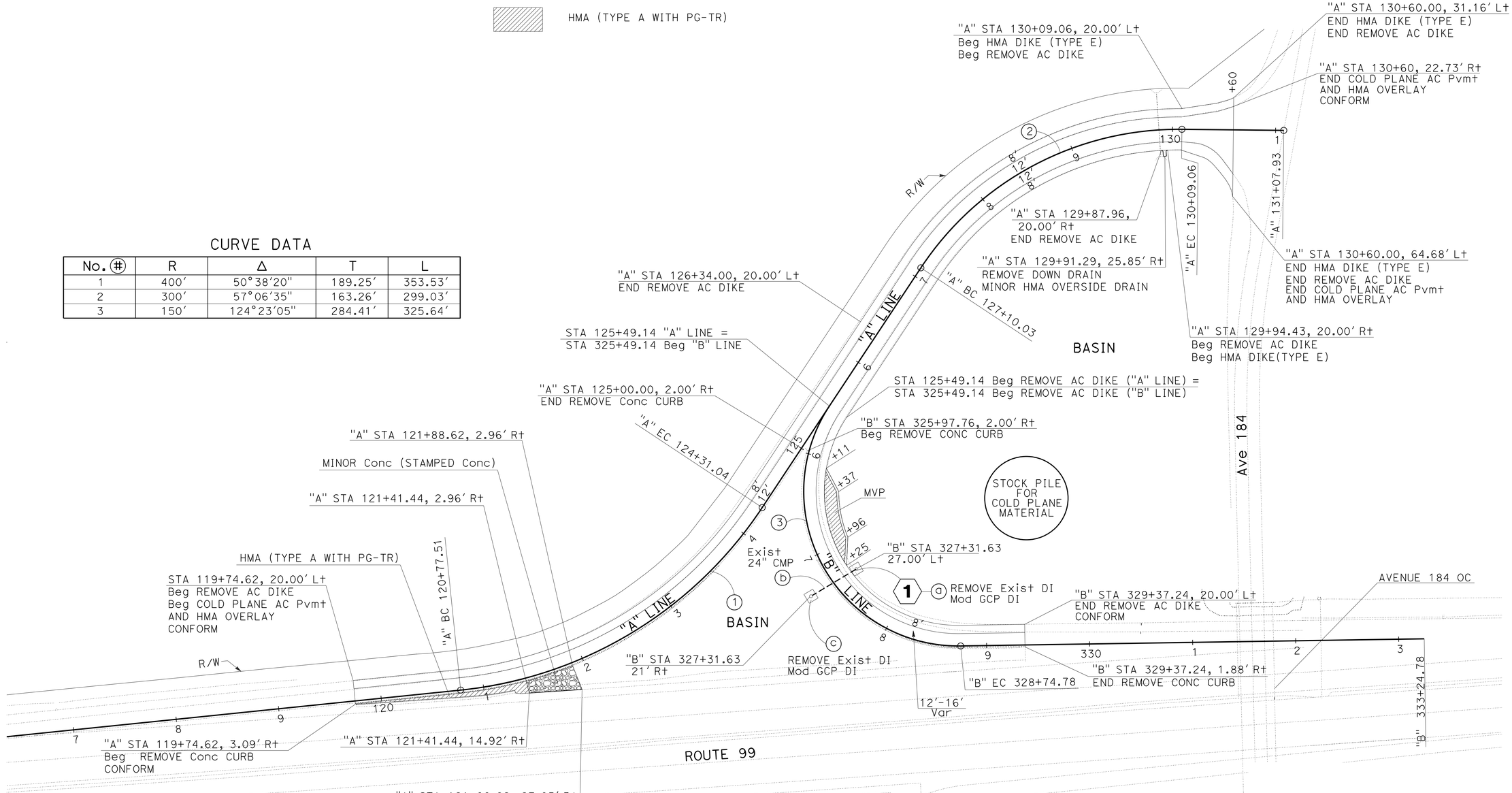

SCALE: 1"=50′

LAYOUT L-1

STATE OF CALIFORNIA - DEPARTMENT OF TRANSPORTATION
Caltrans DESIGN

FUNCTIONAL SUPERVISOR: THANH NGUYEN
CALCULATED-DESIGNED BY: SHAKILA HANIF
CHECKED BY: STEVE M LEE
REVISED BY / DATE REVISED

LAST REVISION 05-02-12
DATE PLOTTED => 20-SEP-2012
TIME PLOTTED => 17:58

Dist	COUNTY	ROUTE	POST MILES TOTAL PROJECT	SHEET No.	TOTAL SHEETS
06	Tul	99	23.5	4	16

REGISTERED CIVIL ENGINEER 06/01/12 DATE

08-27-12
PLANS APPROVAL DATE

REGISTERED PROFESSIONAL ENGINEER STEVE M. LEE No. 62613 Exp 6-30-14 CIVIL STATE OF CALIFORNIA

THE STATE OF CALIFORNIA OR ITS OFFICERS OR AGENTS SHALL NOT BE RESPONSIBLE FOR THE ACCURACY OR COMPLETENESS OF SCANNED COPIES OF THIS PLAN SHEET.

ABBREVIATION:

PG-TR PERFORMANCE GRADE-TIRE RUBBER

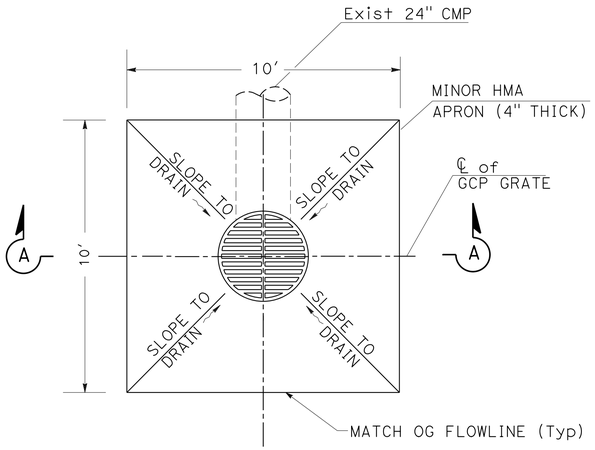

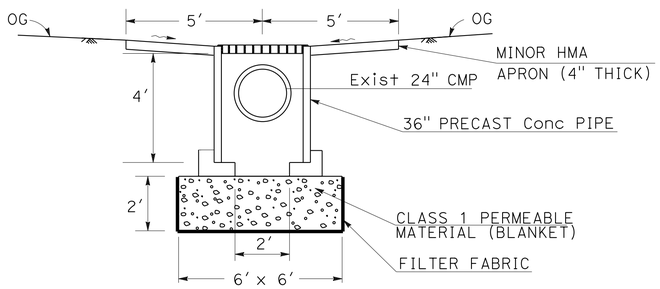

TYPE GCP MODIFIED OPEN BOTTOM INLET WITH GRATE AND HMA APRON

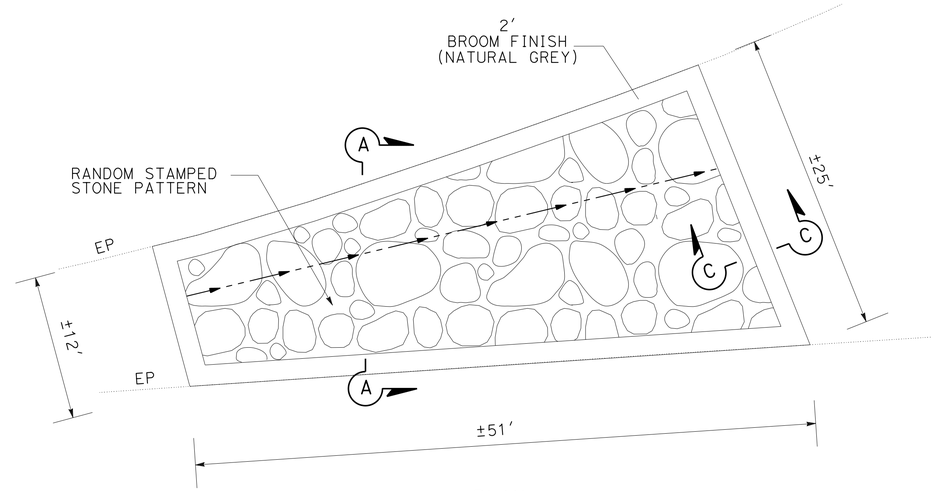

PLAN

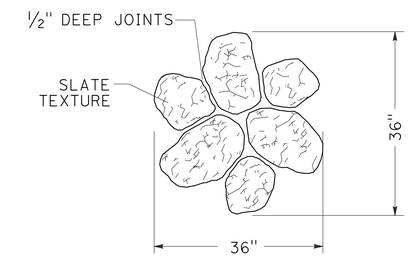

PLAN
RANDOM STONE PATTERN
(ALL LOCATIONS)

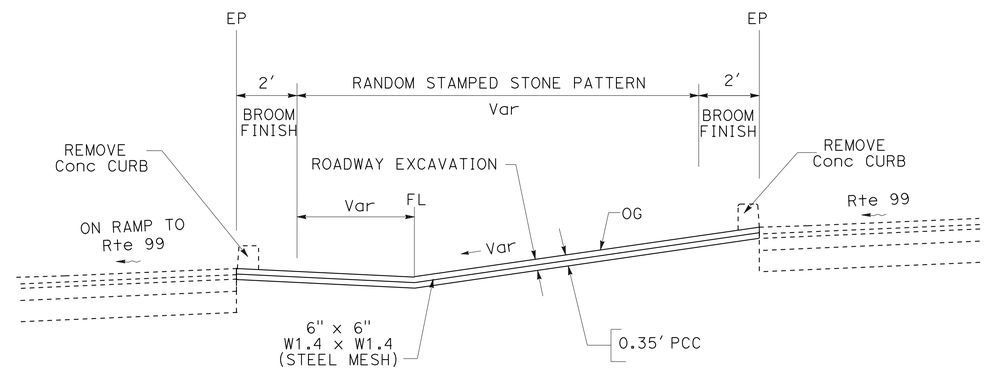

SECTION A-A

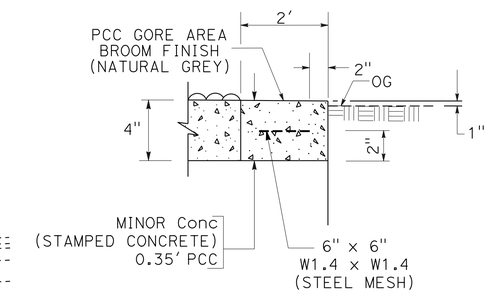

SECTION C-C

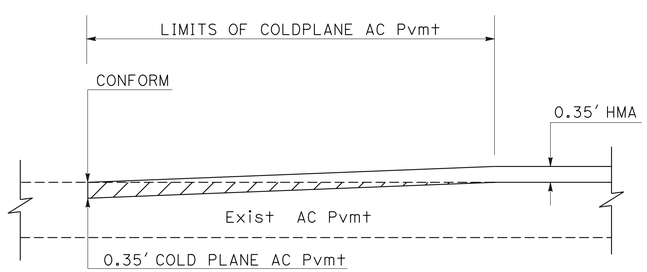

TYPICAL PAVEMENT TRANSITION

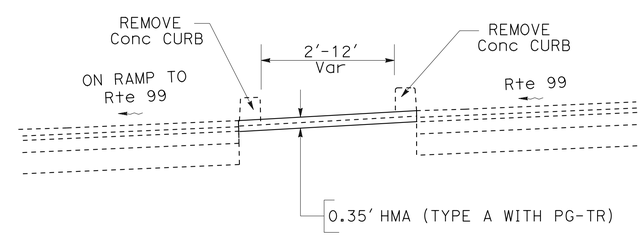

HMA CAP DETAIL
STA 119+75 TO 121+41

CONSTRUCTION DETAILS

NO SCALE

C-1

STATE OF CALIFORNIA - DEPARTMENT OF TRANSPORTATION
Caltrans DESIGN
FUNCTIONAL SUPERVISOR THANH NGUYEN
CALCULATED-DESIGNED BY STEVE M LEE
CHECKED BY ANDREW UN
REVISED BY
DATE REVISED

LAST REVISION 05-02-12 DATE PLOTTED => 20-SEP-2012 TIME PLOTTED => 17:58

Dist	COUNTY	ROUTE	POST MILES TOTAL PROJECT	SHEET No.	TOTAL SHEETS
06	Tul	99	23.5	5	16

Steve M Lee 06/01/12
REGISTERED CIVIL ENGINEER DATE

08-27-12
PLANS APPROVAL DATE

REGISTERED PROFESSIONAL ENGINEER STEVE M. LEE No. 62613 Exp 6-30-14 CIVIL STATE OF CALIFORNIA

THE STATE OF CALIFORNIA OR ITS OFFICERS OR AGENTS SHALL NOT BE RESPONSIBLE FOR THE ACCURACY OR COMPLETENESS OF SCANNED COPIES OF THIS PLAN SHEET.

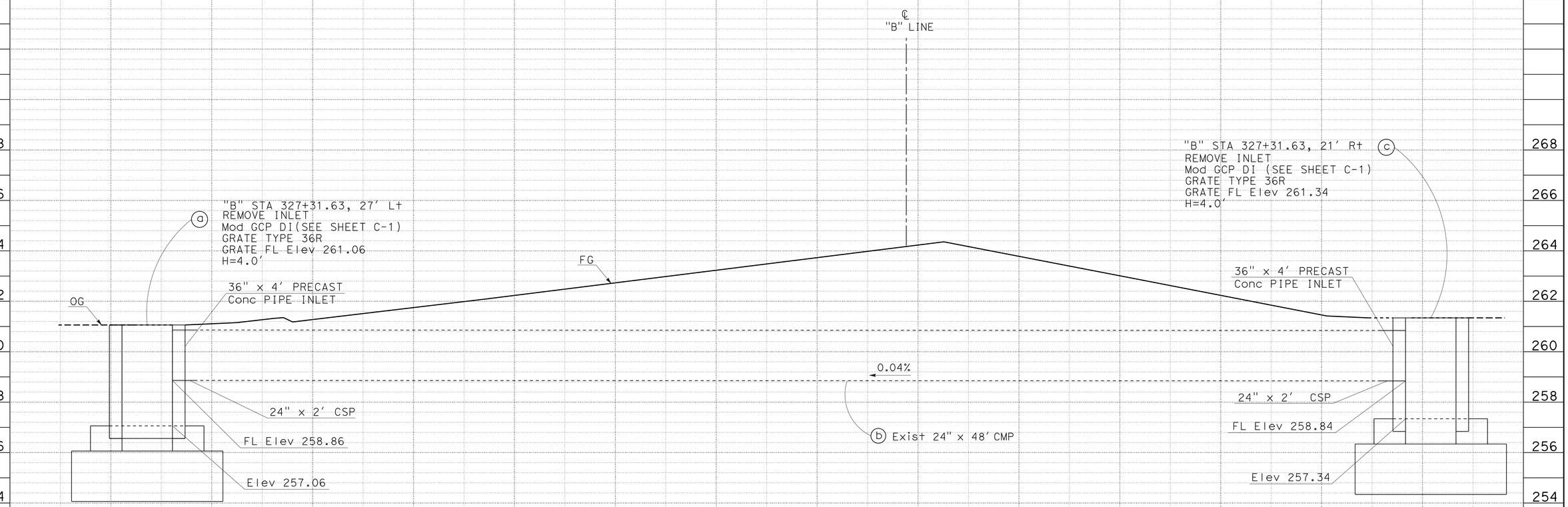

DRAINAGE SYSTEM No. 1

DRAINAGE PROFILES
DP-1

STATION		TOTAL
CY	Exc	
	Emb	

STATE OF CALIFORNIA - DEPARTMENT OF TRANSPORTATION
Caltrans DESIGN

FUNCTIONAL SUPERVISOR: THANH NGUYEN
CALCULATED-DESIGNED BY: HECTOR TRUJILLO
CHECKED BY: STEVE M LEE
REVISED BY: DDF
DATE REVISED: 02-27-12

LAST REVISION DATE PLOTTED => 20-SEP-2012
TIME PLOTTED => 17:58
04-23-12

Dist	COUNTY	ROUTE	POST MILES TOTAL PROJECT	SHEET No.	TOTAL SHEETS
06	Tul	99	23.5	6	16

Sandy L Le 08-27-12
REGISTERED CIVIL ENGINEER DATE

08-27-12
PLANS APPROVAL DATE

REGISTERED PROFESSIONAL ENGINEER
SANDY L. LE
No. 67065
Exp. 9/30/14
CIVIL
STATE OF CALIFORNIA

THE STATE OF CALIFORNIA OR ITS OFFICERS OR AGENTS SHALL NOT BE RESPONSIBLE FOR THE ACCURACY OR COMPLETENESS OF SCANNED COPIES OF THIS PLAN SHEET.

STATIONARY MOUNTED CONSTRUCTION AREA SIGNS

SIGN	SIGN CODE	PANEL SIZE	SIGN MESSAGE	No. OF POSTS	POST SIZE	No. OF SIGNS
A	W20-1	60" x 60"	ROAD WORK AHEAD	2	4" x 6"	1
B	W20-1	36" x 36"	ROAD WORK AHEAD	1	4" x 6"	2
C	C14(CA)	48" x 24"	END ROAD WORK	1	4" x 6"	3

NOTES:

1. ALL TEMPORARY WARNING SIGNS SHALL HAVE BLACK LEGEND ON ORANGE BACKGROUND
2. EXACT SIGN LOCATIONS TO BE DETERMINED BY THE ENGINEER
3. CALIFORNIA CODE ARE DESIGNATED BY (CA). OTHERWISE, FEDERAL (MUTCD) CODES ARE SHOWN

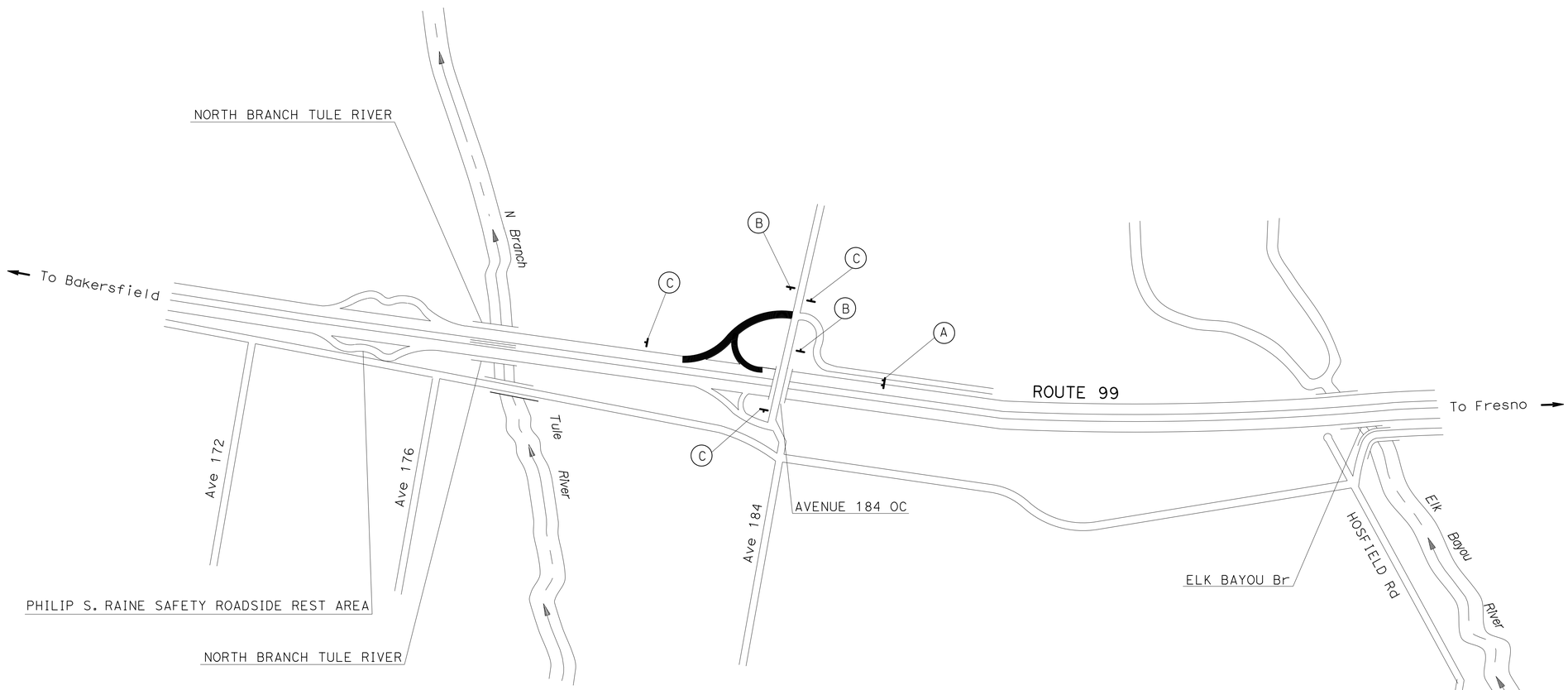

APPROVED FOR CONSTRUCTION AREA SIGN WORK ONLY

CONSTRUCTION AREA SIGNS

NO SCALE

CS-1

STATE OF CALIFORNIA - DEPARTMENT OF TRANSPORTATION
Caltrans
TRAFFIC DESIGN

FUNCTIONAL SUPERVISOR: MOHAMMED QATAMI
CALCULATED-DESIGNED BY: HASSAN TAHA
CHECKED BY: SANDY LE
REVISED BY
DATE REVISED

LAST REVISION 08-27-12
DATE PLOTTED => 20-SEP-2012
TIME PLOTTED => 17:59

Dist	COUNTY	ROUTE	POST MILES TOTAL PROJECT	SHEET No.	TOTAL SHEETS
06	Tul	99	23.5	7	16

Sandy L Le 08-27-12
REGISTERED CIVIL ENGINEER DATE

08-27-12
PLANS APPROVAL DATE

REGISTERED PROFESSIONAL ENGINEER SANDY L. LE No. 67065 Exp. 9/30/14 CIVIL STATE OF CALIFORNIA

THE STATE OF CALIFORNIA OR ITS OFFICERS OR AGENTS SHALL NOT BE RESPONSIBLE FOR THE ACCURACY OR COMPLETENESS OF SCANNED COPIES OF THIS PLAN SHEET.

LEGEND

- XX — TRAFFIC STRIPE PAVEMENT DELINEATION DETAIL NUMBER
- XX — ROADSIDE SIGN No.
- ROADSIDE SIGN - ONE POST
- ROADSIDE SIGN - TWO POST
- STOP/AHEAD — PAVEMENT MARKING (STOP, AHEAD)
- PAVEMENT MARKING (TYPE V ARROW)
- PAVEMENT MARKING (TYPE I 24' ARROW)
- LIMITS OF DESIGNATED TRAFFIC STRIPING DETAIL
- REMOVE ROADSIDE SIGN
- INSTALL SIGN (SSBM)

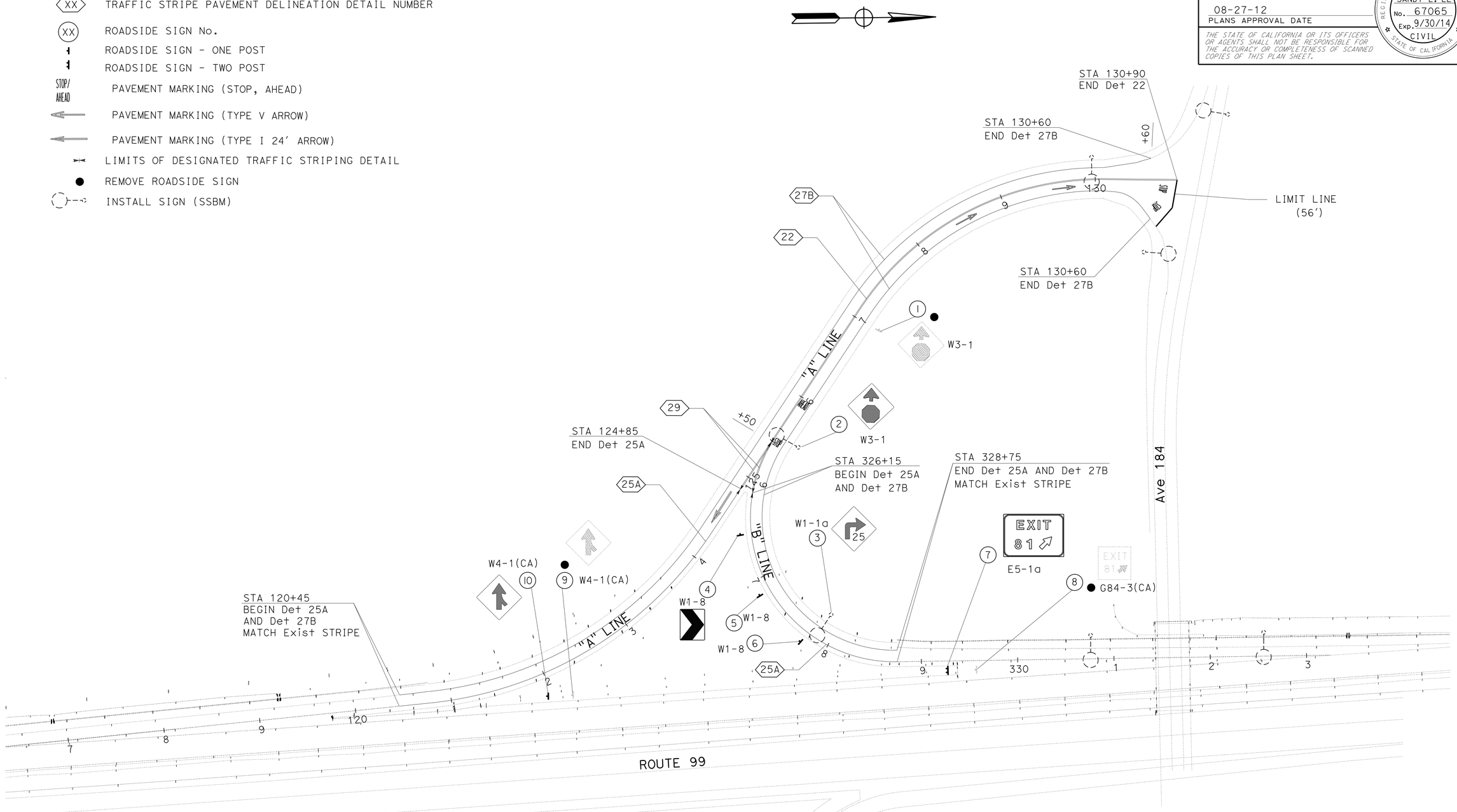

PAVEMENT DELINEATION AND SIGN PLAN

SCALE:1"=50'

PD-1

APPROVED FOR PAVEMENT DELINEATION AND SIGN WORK ONLY

REVISED BY	DATE REVISED
SANDY LE	HASSAN TAHA
CALCULATED-DESIGNED BY	CHECKED BY
FUNCTIONAL SUPERVISOR	MOHAMMED QATAMI

STATE OF CALIFORNIA - DEPARTMENT OF TRANSPORTATION
Caltrans
TRAFFIC DESIGN

LAST REVISION 08-27-12 | DATE PLOTTED => 20-SEP-2012 | TIME PLOTTED => 17:59

Dist	COUNTY	ROUTE	POST MILES TOTAL PROJECT	SHEET No.	TOTAL SHEETS
06	Tul	99	23.5	8	16

REGISTERED CIVIL ENGINEER Sandy L Le 08-27-12 DATE

PLANS APPROVAL DATE 08-27-12

REGISTERED PROFESSIONAL ENGINEER SANDY L. LE No. 67065 Exp. 9/30/14 CIVIL STATE OF CALIFORNIA

THE STATE OF CALIFORNIA OR ITS OFFICERS OR AGENTS SHALL NOT BE RESPONSIBLE FOR THE ACCURACY OR COMPLETENESS OF SCANNED COPIES OF THIS PLAN SHEET.

PAVEMENT DELINEATION

LOCATION	DETAIL No.	4" THERMOPLASTIC TRAFFIC STRIPE		PAVEMENT MARKERS (RETRO-REFLECTIVE)		THERMOPLASTIC PAVEMENT MARKING	DESCRIPTION
		YELLOW	WHITE	TYPE D	TYPE H		
		LF	LF	EA	EA	SQFT	
STA 'A" 120+45 TO 124+85	25A	440			19	56	1-LIMIT LINE
STA "A" 120+45 TO 130+60	27B		1015			66	3-"STOP"
STA "A" 124+85 TO 125+50	29	260		8		31	1-"AHEAD"
STA "A" 125+50 TO 130+90	22	1080		48		66	2-TYPE V ARROWS
STA 'B" 326+15 TO 328+75	25A	260			12	31	1-TYPE I ARROW
STA "B" 326+15 TO 328+75	27B		260				
STA 'A" 124+85 TO 130+60	27B		575				
	TOTAL	3890		87		250	

SIGN QUANTITIES

SHEET No.	SIGN No.	SIGN CODE	SIGN MESSAGE	No. OF POST AND SIZE	PANEL SIZE	BACKGROUND		LEGEND		STANDARD GRAFFITI FILM	PREMIUM GRAFFITI FILM	FURNISH SINGLE SHEET ALUMINUM SIGN (0.063-UNFRAMED)	FURNISH SINGLE SHEET ALUMINUM SIGN (0.080"-UNFRAMED)	ROADSIDE SIGN-ONE POST	ROADSIDE SIGN-TWO POST	INSTALL SIGN (SSBM)	REMOVE ROADSIDE SIGN
						SHEETING COLOR	RETROREFLECTIVITY ASTM TYPE	SHEETING COLOR	RETROREFLECTIVITY ASTM TYPE								
				EACH-INCHES	INCHES							SQFT	SQFT	EA	EA	EA	EA
PD-1	1	W3-1	STOP AHEAD														1
	2	W3-1	STOP AHEAD	1 - 6 x 6	48 x 48	YELLOW	VII	B/W	VII		X		16			1	
	3	W1-1a	COMBINATION TURN/ADVISORY SPEED	1 - 6 x 6	48 x 48	YELLOW	III	BLACK			X		16			1	
	4	W1-8	CHERVON ALIGNMENT	1 - 4 x 6	36 x 48	YELLOW	III	BLACK			X	12		1			
	5	W1-8	CHERVON ALIGNMENT	1 - 4 x 6	36 x 48	YELLOW	III	BLACK			X	12		1			
	6	W1-8	CHERVON ALIGNMENT	1 - 4 x 6	36 x 48	YELLOW	III	BLACK			X	12		1			
	7	E5-1a	EXIT 81 WITH ARROW	2 - 6 X 6	72 x 60	GREEN	VII	WHITE	VII		X		30		1		
	8	G84-3 (CA)	EXIT 81 WITH ARROW														1
	9	W4-1 (CA)	COMBINATION REVERSE TURN														1
	10	W4-1 (CA)	COMBINATION REVERSE TURN	1 - 6 x 6	48 x 48	YELLOW	III	BLACK		X			16	1			
									TOTAL			36	78	4	1	2	3

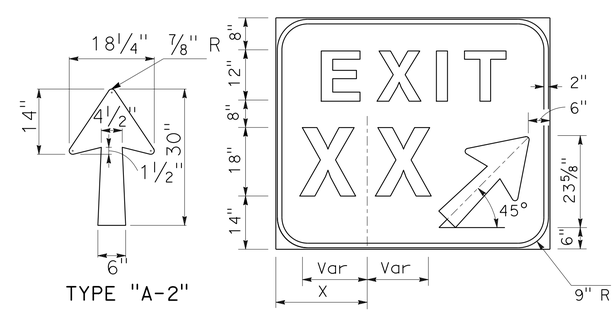

E5-1 SIGN DETAILS

SIGN SPECIFICATIONS						
SIGN NUMBER	BOARD SIZE	No. OF DIGITS	X	ARROW		
				WIDTH	LENGTH	TYPE
E5-1a	72"x60"	1 or 2	24"	18¼"	30"	A-2

PAVEMENT DELINEATION AND SIGN QUANTITIES

PDQ-1

STATE OF CALIFORNIA - DEPARTMENT OF TRANSPORTATION

Caltrans® TRAFFIC DESIGN

FUNCTIONAL SUPERVISOR MOHAMMED QATAMI

CALCULATED-DESIGNED BY SANDY LE

CHECKED BY HASSAN TAHA

REVISED BY

DATE REVISED

LAST REVISION 08-27-12

DATE PLOTTED => 20-SEP-2012

TIME PLOTTED => 17:59

Dist	COUNTY	ROUTE	POST MILES TOTAL PROJECT	SHEET No.	TOTAL SHEETS
06	Tul	99	23.5	9	16

Steve M Lee 06/01/12
REGISTERED CIVIL ENGINEER DATE

08-27-12
PLANS APPROVAL DATE

REGISTERED PROFESSIONAL ENGINEER STEVE M. LEE No. 62613 Exp 6-30-14 CIVIL STATE OF CALIFORNIA

THE STATE OF CALIFORNIA OR ITS OFFICERS OR AGENTS SHALL NOT BE RESPONSIBLE FOR THE ACCURACY OR COMPLETENESS OF SCANNED COPIES OF THIS PLAN SHEET.

ROADWAY QUANTITIES

LOCATION		REMOVE AC DIKE	PLACE HMA DIKE (TYPE E)	REMOVE CONCRETE CURB (LF)	COLD PLANE ASPHALT CONCRETE PAVEMENT	HMA (TYPE A WITH PG-TR)	MINOR HMA	TACK COAT	PLACE HMA (Misc AREA)	Shld BACKING	CLASS 2 AGGREGATE BASE	MINOR CONCRETE (STAMPED CONCRETE)	ROADWAY EXCAVATION
FROM STATION	TO STATION	LF	LF	LF	SQYD	TON	TON	TON	SQYD	TON	CY	SQFT	
"A" 119+74	"A" 130+60				3720	888	5	4.4	4	207		873	11.3
"A" 119+74	"A" 126+34	659											
"A" 130+09	"A" 130+60	51	51										
"A" 125+49	"A" 129+88	439											
"A" 129+94	"A" 130+60	66	66										
"A" 119+74	"A" 125+00			526									
"B" 325+49	"B" 329+37	388			815	192				64	20		
"B" 325+97	"B" 329+37			339									
DRAINAGE TOTAL							5		24				
TOTAL		1603	117	865	4535	1080	10	4.4	28	271	20	873	11.3

TEMPORARY DRAINAGE INLET PROTECTION

LOCATION	EA
"B" 327+31.63, 27′ Lt	1
"B" 327+31.63, 21′ Rt	1
TOTAL	2

DRAINAGE QUANTITIES

DRAINAGE SYSTEM No. ⬡	DRAINAGE UNIT No. ○	DRAINAGE INLET: MINOR CONCRETE (MINOR STRUCTURE)	DRAINAGE INLET: Misc IRON & STEEL	DRAINAGE INLET: DESIGN HEIGHT (H)	REMOVE INLET (*)	24" CSP (.109" THICK)	36" PRECAST Conc PIPE INLET	MINOR HMA	PLACE HMA (Misc AREA)	CLASS 1 PERMEABLE MATERIAL (BLANKET)	24" CMP (**)	DESCRIPTION
		CY	LB	LF	EA	LF	LF	TON	SQYD	CY	LF	
1	a	0.7	236	2.2		2	4	2.5	12	3		Mod GCP DI, GRATE (TYPE 36R), APRON
	b										48	Exist 24" X 48′ CMP
1	c	0.7	236	2.5	1	2	4	2.5	12	3		Mod GCP DI, GRATE (TYPE 36R), APRON
TOTAL		1.4	472		1	4	8	5	24	6	48	

(*)- COST IS INCLUDED WITH NEW INLET
(**)- Exist CMP REMAINS IN PLACE

SUMMARY OF QUANTITIES
Q-1

STATE OF CALIFORNIA - DEPARTMENT OF TRANSPORTATION
Caltrans® DESIGN
FUNCTIONAL SUPERVISOR: THANH NGUYEN
CALCULATED-DESIGNED BY: SHAKILA HANIF
CHECKED BY: STEVE M LEE
REVISED BY / DATE REVISED

LAST REVISION 07-13-12
DATE PLOTTED => 20-SEP-2012
TIME PLOTTED => 17:59

Dist	COUNTY	ROUTE	POST MILES TOTAL PROJECT	SHEET No.	TOTAL SHEETS
06	Tul	99	23.5	10	16

REGISTERED ELECTRICAL ENGINEER 08-27-12 DATE

08-27-12
PLANS APPROVAL DATE

REGISTERED PROFESSIONAL ENGINEER DANIEL THANH VO No. 17408 Exp. 9/30/14 ELECTRICAL STATE OF CALIFORNIA

THE STATE OF CALIFORNIA OR ITS OFFICERS OR AGENTS SHALL NOT BE RESPONSIBLE FOR THE ACCURACY OR COMPLETENESS OF SCANNED COPIES OF THIS PLAN SHEET.

LEGEND:

1. Exist 120/240 V, 1ø, 3-WIRE, TYPE III-BF SERVICE EQUIPMENT ENCLOSURE.
2. TO EXISTING HIGHWAY LIGHTING NOT SHOWN.
3. MODIFIED TYPE B TDC WITH PATC. SEE SHEET E-2 FOR DETAILS.

NOTES:

1. FOR ACCURATE RIGHT OF WAY DATA, CONTACT RIGHT OF WAY ENGINEERING AT THE DISTRICT OFFICE.
2. NOT ALL EXISTING ELECTRICAL SYSTEM IS SHOWN ON THE PLAN.
3. LOCATION OF EXISTING EQUIPMENT AS SHOWN IS APPROXIMATE. VERIFY EXACT LOCATION IN FIELD.
4. ALL PULL BOXES SHALL BE No. 5(E) UNLESS OTHERWISE NOTED.

ABBREVIATIONS:

PATC = PORTABLE AUTOMATED TRAFFIC COUNTER

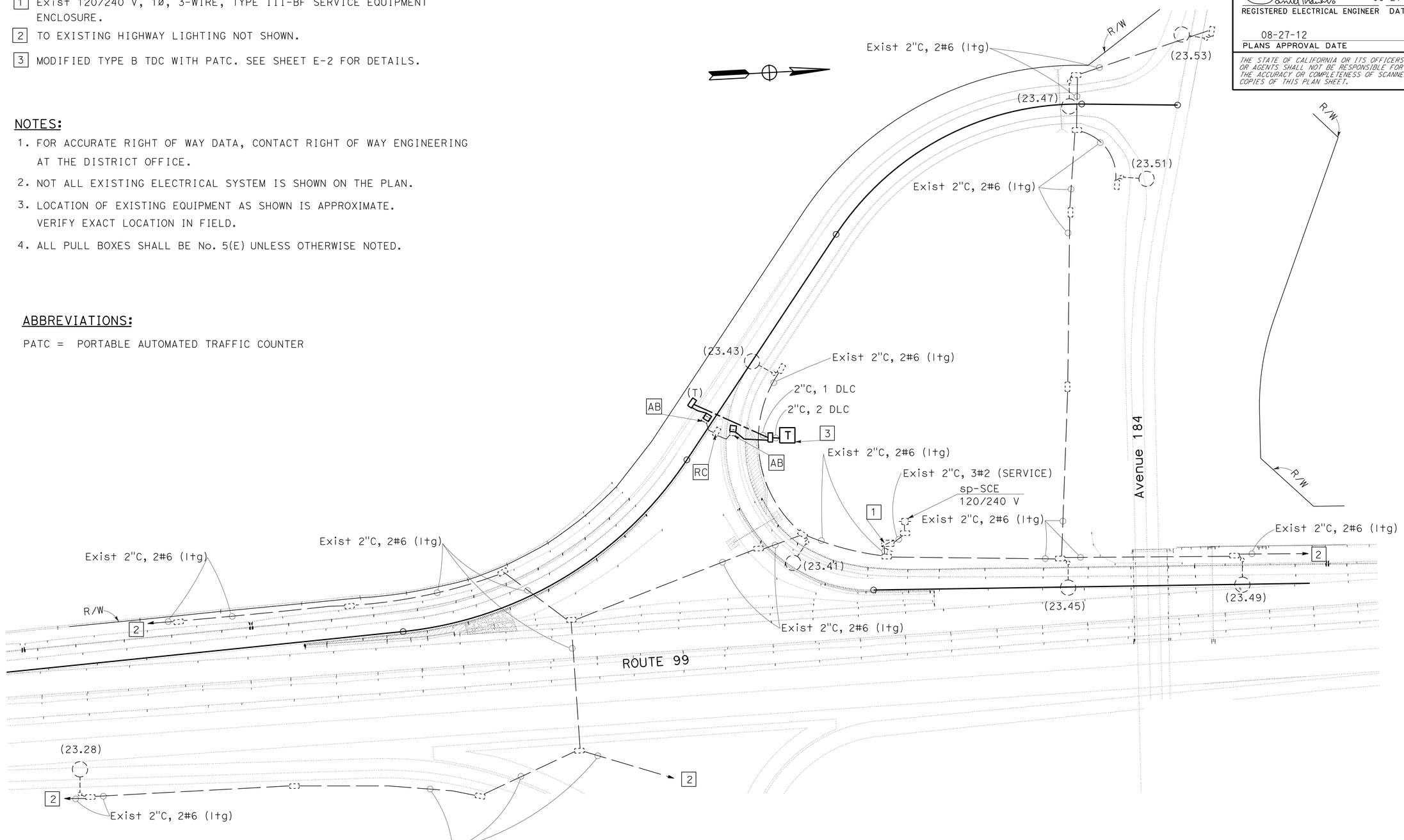

APPROVED FOR ELECTRICAL WORK ONLY

TRAFFIC COUNT STATION E-1

SCALE: 1"=50'

STATE OF CALIFORNIA - DEPARTMENT OF TRANSPORTATION
Caltrans® ELECTRICAL DESIGN

FUNCTIONAL SUPERVISOR: ALI BAKHDOUD
CALCULATED-DESIGNED BY: KARIM ABDOLLAHIAN
CHECKED BY: DANIEL VO
REVISED BY
DATE REVISED

LAST REVISION 08-27-12
DATE PLOTTED => 20-SEP-2012
TIME PLOTTED => 17:59

Dist	COUNTY	ROUTE	POST MILES TOTAL PROJECT	SHEET No.	TOTAL SHEETS
06	Tul	99	23.5	11	16

REGISTERED ELECTRICAL ENGINEER — DATE 08-27-12

PLANS APPROVAL DATE 08-27-12

REGISTERED PROFESSIONAL ENGINEER — DANIEL THANH VO No. 17408 Exp. 9/30/14 ELECTRICAL — STATE OF CALIFORNIA

THE STATE OF CALIFORNIA OR ITS OFFICERS OR AGENTS SHALL NOT BE RESPONSIBLE FOR THE ACCURACY OR COMPLETENESS OF SCANNED COPIES OF THIS PLAN SHEET.

NOTES:

1. MODIFIED TDC MUST BE FURNISHED WITH A TERMINAL BLOCK, SHELF AND PATC. DIMENSIONS ARE NOMINAL.
2. AN APPROVED MASTIC OR CAULKING COMPOUND MUST BE PLACED ON THE FOUNDATION PRIOR TO PLACING THE CABINET TO SEAL OPENINGS BETWEEN THE BOTTOM OF THE CABINET AND THE FOUNDATION.
3. IA RAISED PCC PAD MUST BE PLACED IN FRONT OF THE TDC. PAD MUST BE 24" x 22" x 4" AND 2" ABOVE FINISHED GRADE.
4. CONDUIT MUST BE BONDED TO THE ENCLOSURE.
5. TDC:
   - A. MATERIAL MUST BE ANODIZED ALUMINUM (1/8" THICK).
   - B. THE EXTERIOR DOOR MUST BE SIDE HUNG AND SECURED WITH A DRAW LATCH, LOCKABLE WITH A PADLOCK. THE PADLOCK HOLE MUST HAVE A MINIMUM DIAMETER OF 7/16" TO RECEIVE A PADLOCK.
   - C. VENTILATION LOUVERS MUST BE LOCATED ON THE DOOR.
   - D. FASTEN FIXED MOUNTING PANELS WITH NUTS, LOCK AND FLAT WASHERS TO 3/16" Ø x 1" STUDS WELDED TO ENCLOSURE.
   - E. PATC STEEL SHELF MUST BE ONE PIECE. SECURE TO PLYWOOD PANEL WITH SCREWS. DIMENSIONS AS SHOWN ON DETAIL A.

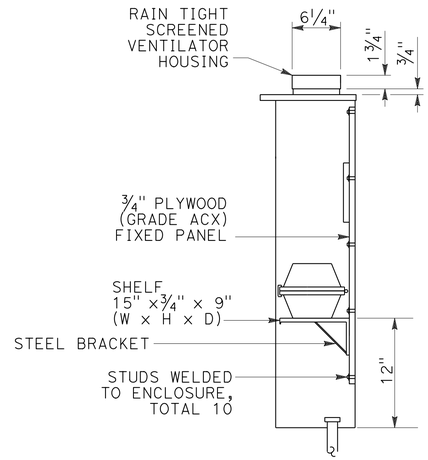

SECTION A-A

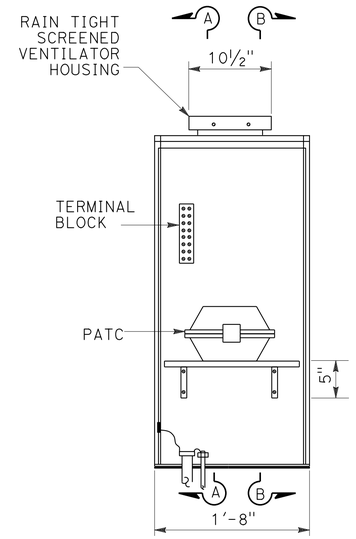

FRONT VIEW

INTERIOR DETAIL A

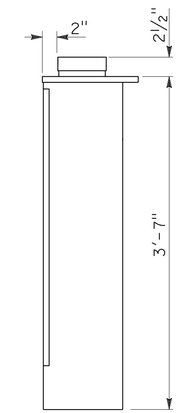

SECTION B-B

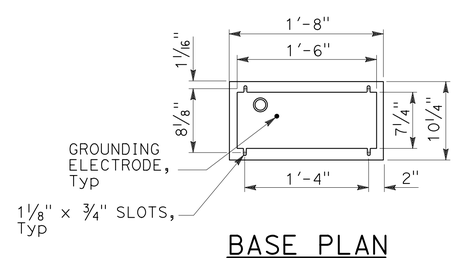

BASE PLAN

DETAIL C

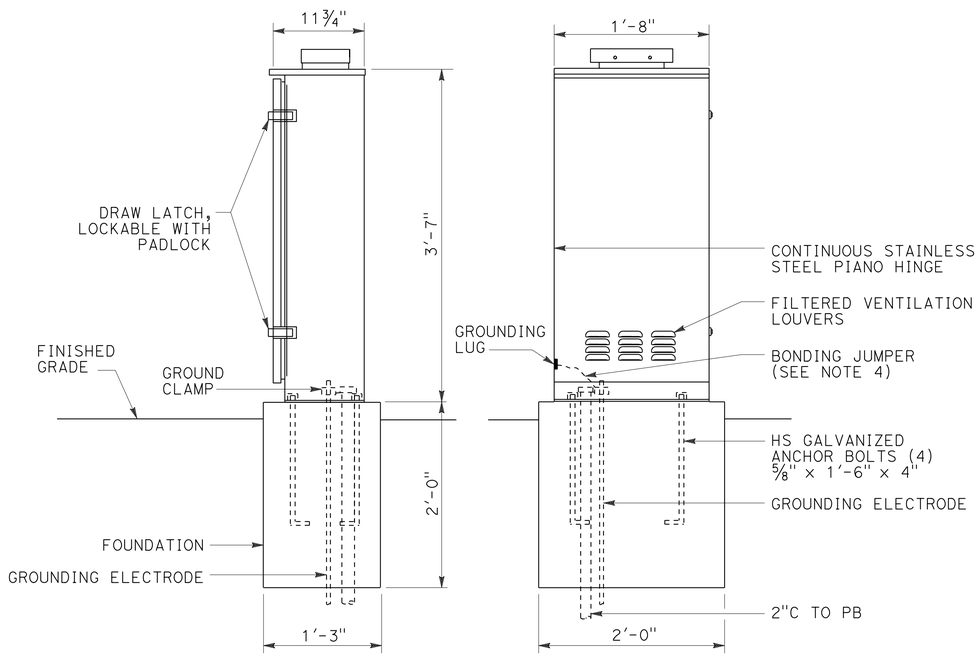

SIDE VIEW — FRONT VIEW

EXTERIOR DETAIL B

TRAFFIC COUNT STATION

SHEET No.	DLC	2"C, TYPE 1	2"C, TYPE 3	No. 5 (T) PB	No. 5 (E) PB	RC PB	TYPE A DETECTOR LOOP	MODIFIED TYPE B TDC CABINET	MODIFIED TYPE B TDC CABINET FOUNDATION	PATC
	LF	LF	LF	EA	EA	EA	EA	EA	EA	EA
E-1	120	10	90	1	1	1	2	1	1	1

ELECTRICAL DETAILS AND QUANTITIES

NO SCALE

E-2

STATE OF CALIFORNIA - DEPARTMENT OF TRANSPORTATION — Caltrans® ELECTRICAL DESIGN

FUNCTIONAL SUPERVISOR: ALI BAKHDOUD

CALCULATED-DESIGNED BY: KARIM ABDOLLAHIAN — CHECKED BY: DANIEL VO

REVISED BY — DATE REVISED

LAST REVISION 08-27-12 — DATE PLOTTED => 20-SEP-2012 — TIME PLOTTED => 17:59

Dist	COUNTY	ROUTE	POST MILES TOTAL PROJECT	SHEET No.	TOTAL SHEETS
06	Tul	99	23.5	12	16

REGISTERED CIVIL ENGINEER

April 20, 2012
PLANS APPROVAL DATE

REGISTERED PROFESSIONAL ENGINEER
Roberta L. McLaughlin
No. C40375
Exp. 3-31-13
CIVIL
STATE OF CALIFORNIA

THE STATE OF CALIFORNIA OR ITS OFFICERS OR AGENTS SHALL NOT BE RESPONSIBLE FOR THE ACCURACY OR COMPLETENESS OF SCANNED COPIES OF THIS PLAN SHEET.

TO ACCOMPANY PLANS DATED 8-27-12

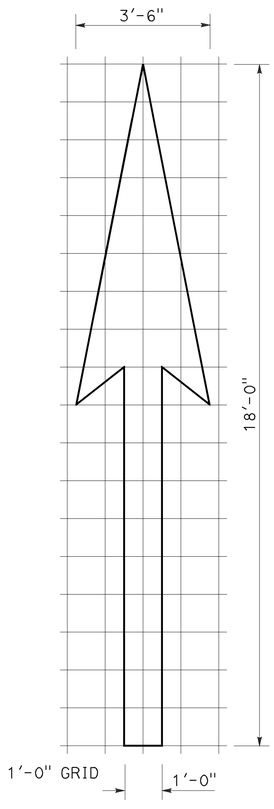

A=25 ft^2

TYPE I 18'-0" ARROW

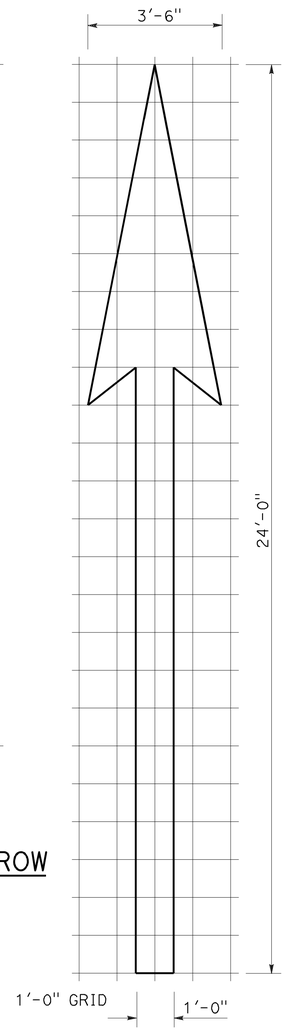

A=31 ft^2

TYPE I 24'-0" ARROW

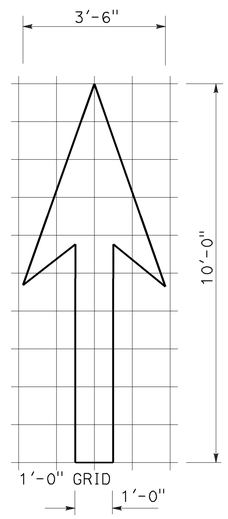

A=14 ft^2

TYPE I 10'-0" ARROW

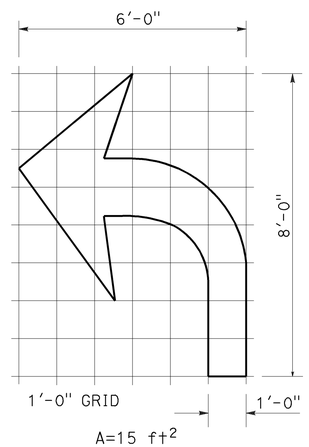

A=15 ft^2

TYPE IV (L) ARROW

(For Type IV (R) arrow, use mirror image)

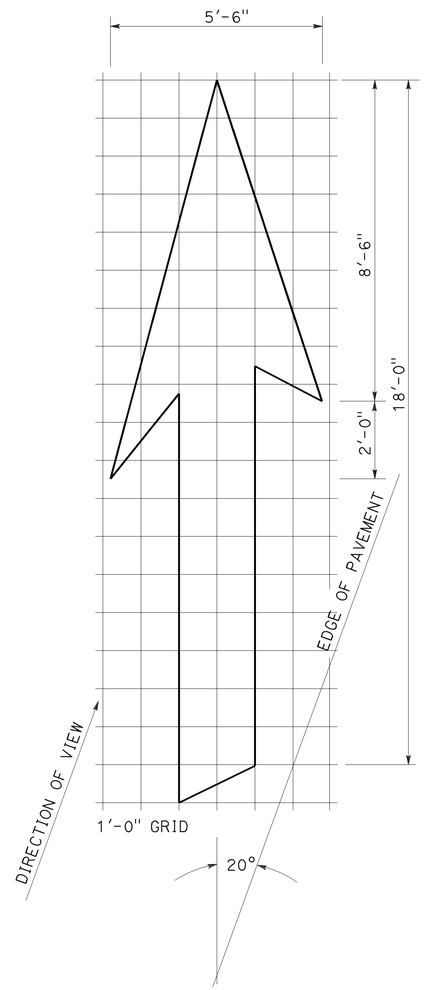

A=42 ft^2

TYPE VI ARROW

Right lane drop arrow
(For left lane, use mirror image)

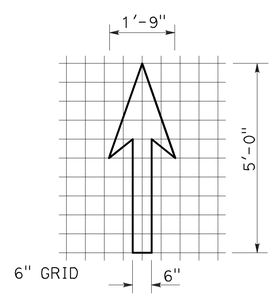

A=3.5 ft^2

BIKE LANE ARROW

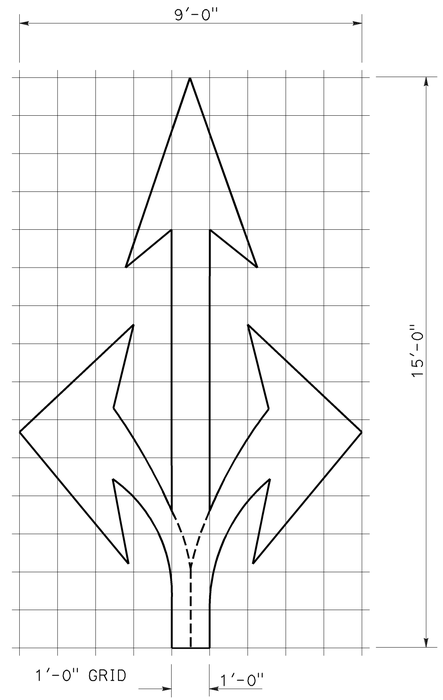

A=36 ft^2

TYPE VIII ARROW

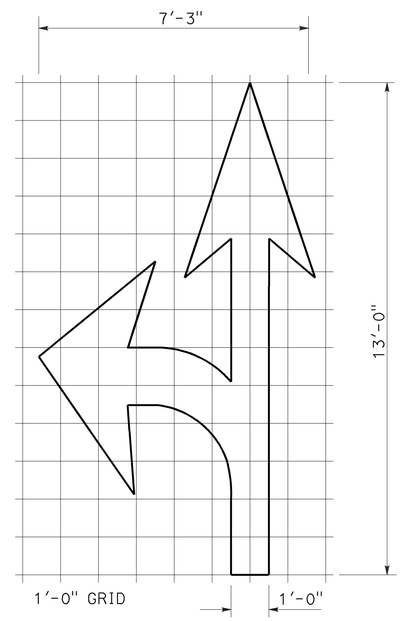

A=27 ft^2

TYPE VII (L) ARROW

(For Type VII (R) arrow, use mirror image)

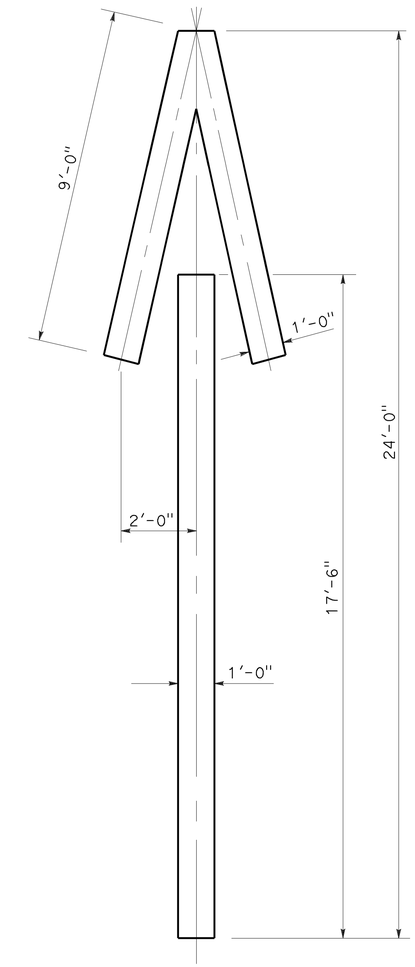

A=33 ft^2

TYPE V ARROW

NOTE:
Minor variations in dimensions may be accepted by the Engineer.

STATE OF CALIFORNIA
DEPARTMENT OF TRANSPORTATION

PAVEMENT MARKINGS ARROWS

NO SCALE

RSP A24A DATED APRIL 20, 2012 SUPERSEDES STANDARD PLAN A24A DATED MAY 20, 2011 - PAGE 13 OF THE STANDARD PLANS BOOK DATED 2010.

REVISED STANDARD PLAN RSP A24A

2010 REVISED STANDARD PLAN RSP A24A

3-14-12

Dist	COUNTY	ROUTE	POST MILES TOTAL PROJECT	SHEET No.	TOTAL SHEETS
06	Tul	99	23.5	13	16

REGISTERED CIVIL ENGINEER

July 20, 2012
PLANS APPROVAL DATE

REGISTERED PROFESSIONAL ENGINEER
Roberta L. McLaughlin
No. C40375
Exp. 3-31-13
CIVIL
STATE OF CALIFORNIA

THE STATE OF CALIFORNIA OR ITS OFFICERS OR AGENTS SHALL NOT BE RESPONSIBLE FOR THE ACCURACY OR COMPLETENESS OF SCANNED COPIES OF THIS PLAN SHEET.

TO ACCOMPANY PLANS DATED 8-27-12

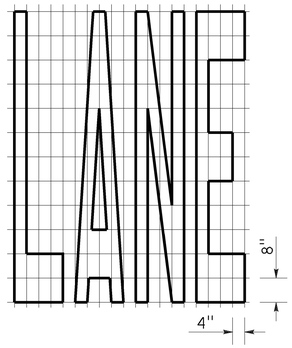

A=24 ft²

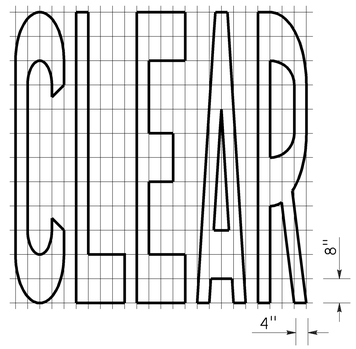

A=27 ft²

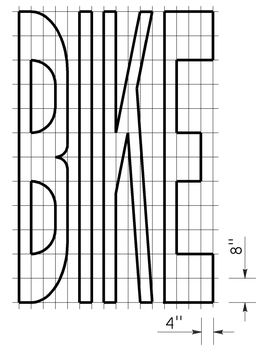

A=21 ft²

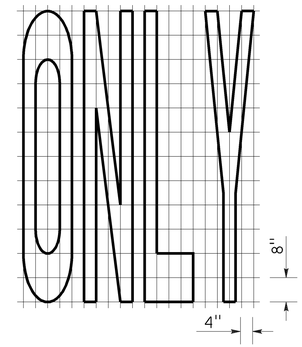

A=22 ft²

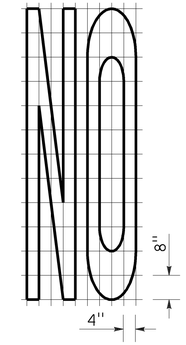

A=14 ft²

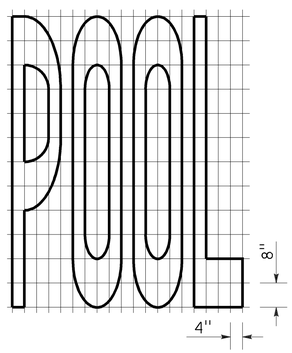

A=23 ft²

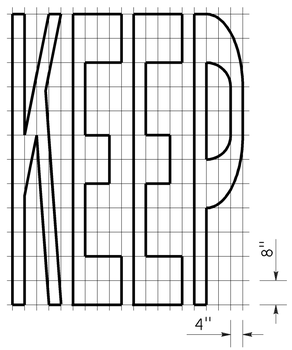

A=24 ft²

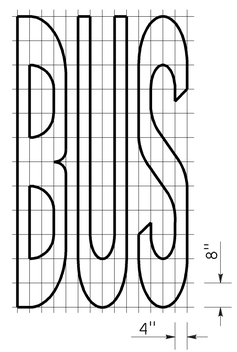

A=20 ft²

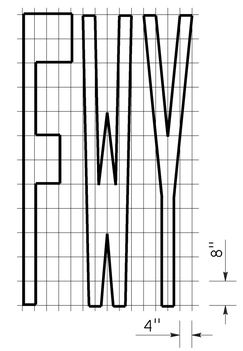

A=16 ft²

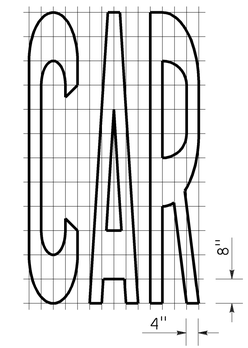

A=17 ft²

WORD MARKINGS			
ITEM	ft²	ITEM	ft²
LANE	24	NO	14
POOL	23	BIKE	21
CAR	17	BUS	20
CLEAR	27	ONLY	22
KEEP	24	FWY	16

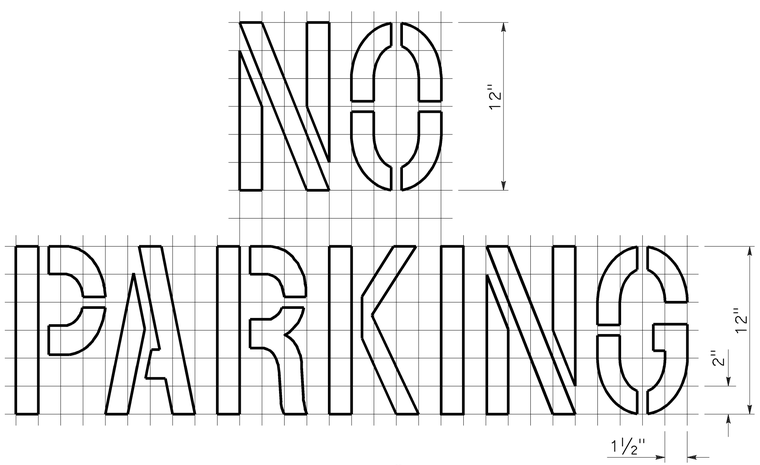

A=2 ft²
See Notes 6 and 7

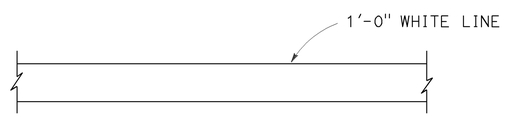

LIMIT LINE (STOP LINE)

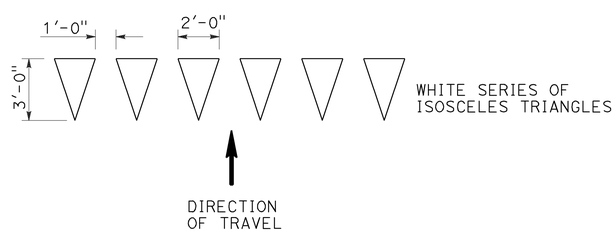

YIELD LINE

NOTES:

1. If a message consists of more than one word, it should read "UP", i.e., the first word should be nearest the driver.
2. The space between words should be at least four times the height of the characters for low speed roads, but not more than ten times the height of the characters. The space may be reduced appropriately where there is limited space because of local conditions.
3. Minor variations in dimensions may be accepted by the Engineer.
4. Portions of a letter, number or symbol may be separated by connecting segments not to exceed 2" in width.
5. The words "NO PARKING" pavement marking is to be used for parking facilities. For typical locations of markings, see Standard Plans A90A and A90B.
6. The words "NO PARKING", shall be painted in white letters no less than 1'-0" high on a contrasting background and located so that it is visible to traffic enforcement officials.

STATE OF CALIFORNIA
DEPARTMENT OF TRANSPORTATION

PAVEMENT MARKINGS WORDS, LIMIT AND YIELD LINES

NO SCALE

RSP A24E DATED JULY 20, 2012 SUPERSEDES STANDARD PLAN A24E
DATED MAY 20, 2011 - PAGE 17 OF THE STANDARD PLANS BOOK DATED 2010.

REVISED STANDARD PLAN RSP A24E

2010 REVISED STANDARD PLAN RSP A24E

6-12-12

Dist	COUNTY	ROUTE	POST MILES TOTAL PROJECT	SHEET No.	TOTAL SHEETS
06	Tul	99	23.5	14	16

REGISTERED CIVIL ENGINEER

July 20, 2012
PLANS APPROVAL DATE

Raymond Don Tsztoo
No. C37332
Exp. 6-30-14
CIVIL
STATE OF CALIFORNIA
REGISTERED PROFESSIONAL ENGINEER

THE STATE OF CALIFORNIA OR ITS OFFICERS OR AGENTS SHALL NOT BE RESPONSIBLE FOR THE ACCURACY OR COMPLETENESS OF SCANNED COPIES OF THIS PLAN SHEET.

TO ACCOMPANY PLANS DATED 8-27-12

2010 REVISED STANDARD PLAN RSP D77B

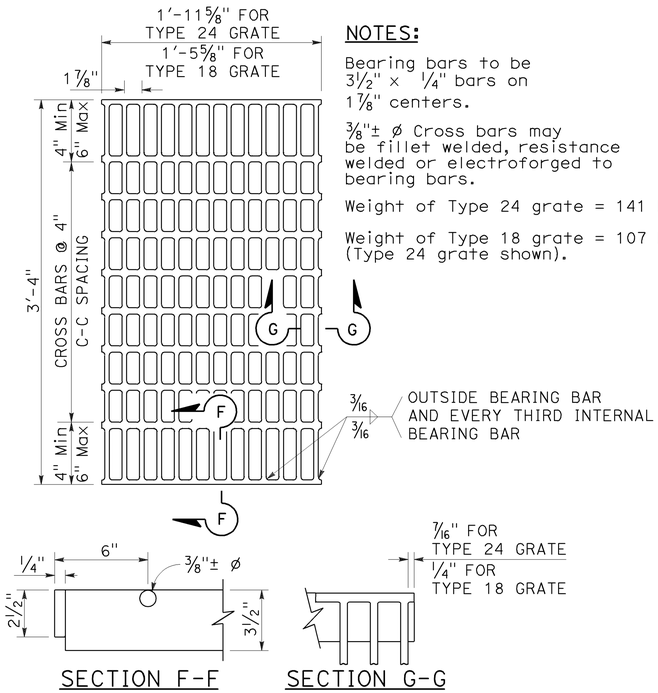

SECTION F-F SECTION G-G

TYPE 18-10 AND 24-13 GRATE

(Welded Steel)

NOTES:

Bearing bars to be 3½" × ¼" bars on 1⅞" centers.

⅜"± ø Cross bars may be fillet welded, resistance welded or electroforged to bearing bars.

Weight of Type 24 grate = 141 LBS.

Weight of Type 18 grate = 107 LBS. (Type 24 grate shown).

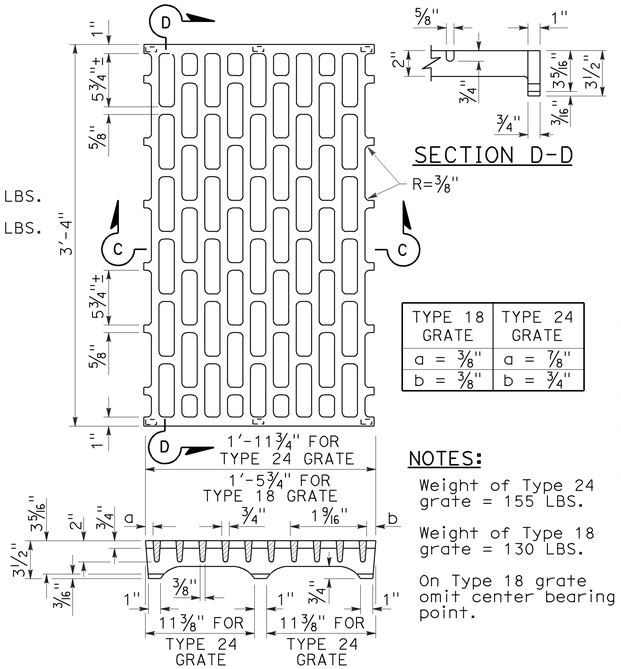

SECTION D-D

TYPE 18 GRATE	TYPE 24 GRATE
a = ⅜"	a = ⅞"
b = ⅜"	b = ¾"

NOTES:

Weight of Type 24 grate = 155 LBS.

Weight of Type 18 grate = 130 LBS.

On Type 18 grate omit center bearing point.

SECTION C-C

TYPE 18-8C AND 24-10C GRATE

(Cast ductile iron)

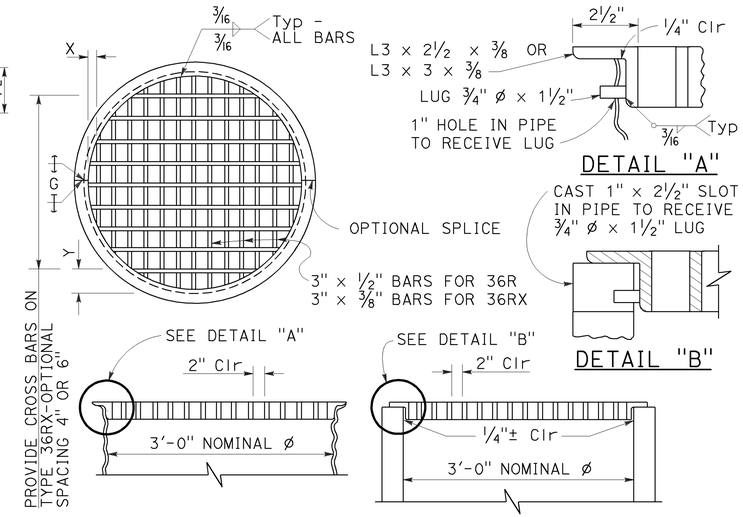

TYPE 36R AND 36RX GRATE DETAILS

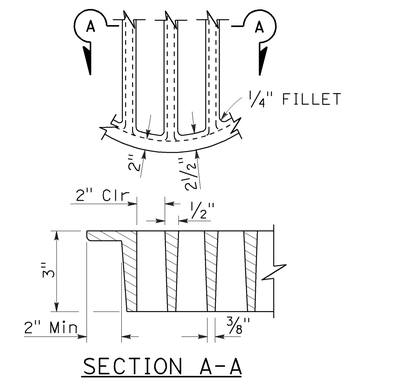

SECTION A-A

ALTERNATIVE CAST DUCTILE IRON GRATE OR CAST CARBON STEEL GRATE TYPE 36R AND 36RX

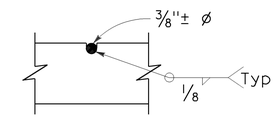

⅜"± ø Cross bars may be fillet welded, resistance welded or electroforged to bearing bars.

CROSS BAR DETAIL TYPE 36RX GRATE (WELDED STEEL)

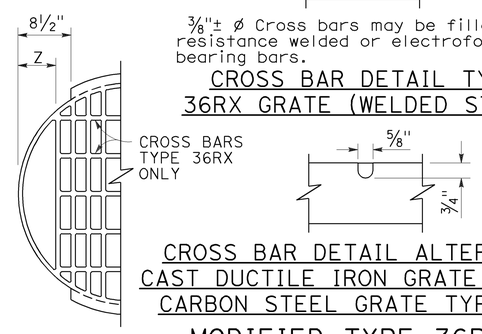

CROSS BAR DETAIL ALTERNATIVE CAST DUCTILE IRON GRATE OR CAST CARBON STEEL GRATE TYPE 36RX

MODIFIED TYPE 36R AND 36RX GRATE FOR ODI INLET

NOTES:

1. When alternative grates are allowed - Final pay based on alternative with the lesser weight.
2. Use frame shown on Standard Plan D74A, D74B or RSP D77A as appropriate.
3. When Type 24-10S, 24-12X or 24-13 grates are used with GDO Inlets, a ¼" × 3½" × 3'-4⅞" steel bar shall be welded across the center of inlet frame to separate the individual grates.
4. See Revised Standard Plan RSP D77A for connecting chain to welded grate and frame. When chain is required, do not use cast ductile iron grate.

BASIS FOR Misc IRON AND STEEL FINAL PAY WEIGHTS FOR DRAINAGE INLETS

INLET TYPE	GRATE TYPE	No. OF GRATES	WEIGHT LB
GDO (SEE NOTE 4)	24-10C	2	391
	24-10S	2	456
	24-12X	2	473
	24-13	2	374
GO,GOL,G1,G2, G3,G4 (TYPE 24)	24-10C	1	202
	24-10S	1	229
	24-12X	1	239
	24-13	1	188
G4 (TYPE 18) G5,G6	18-8S	1	187
	18-9X	1	187
	18-10	1	149
GT1,GT2	18-8S	2	374
	18-9X	2	374
	18-10	2	298
GT3,GT4	24-10C	2	404
	24-10S	2	458
	24-12X	2	478
	24-13	2	376
ODI	36RX (Mod)	1	196
GMP,GCP,GCPI	36RX	1	215
ODI	36R (Mod)	1	220
GMP,GCP,GCPI	36R	1	236
TRASH RACK			22
GRATE CHAIN			3

GRATE BAR SPACING TABLE

TYPE	No. OF BARS	CLEAR BAR SPACING	X	Y 4" SPACING	Y 6" SPACING	Z
36R	13	2"	2⅛"	-	-	-
36RX (STEEL)	15	2"	9/16"	3¾"	5¾"	-
36RX (CAST)	13	2"	2⅛"	3¾"	5¾"	-
36R Mod	12	2"	2⅛"	-	-	5"
36RX Mod (STEEL)	13	2"	9/16"	3¾"	5¾"	5 11/16"
36RX Mod (CAST)	12	2"	2⅛"	3¾"	5¾"	5"

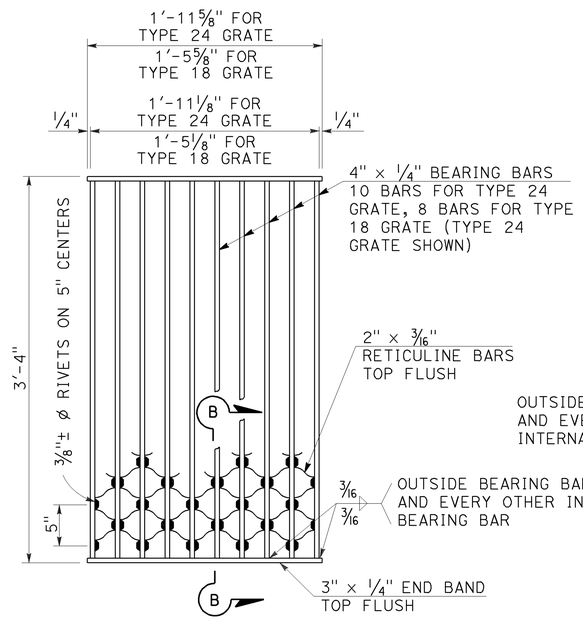

SECTION B-B

NOTES:

Weight of Type 24 grate = 182 LBS.
Weight of Type 18 grate = 145 LBS.

TYPE 18-8S AND 24-10S GRATE

(Welded Steel) Reticuline type

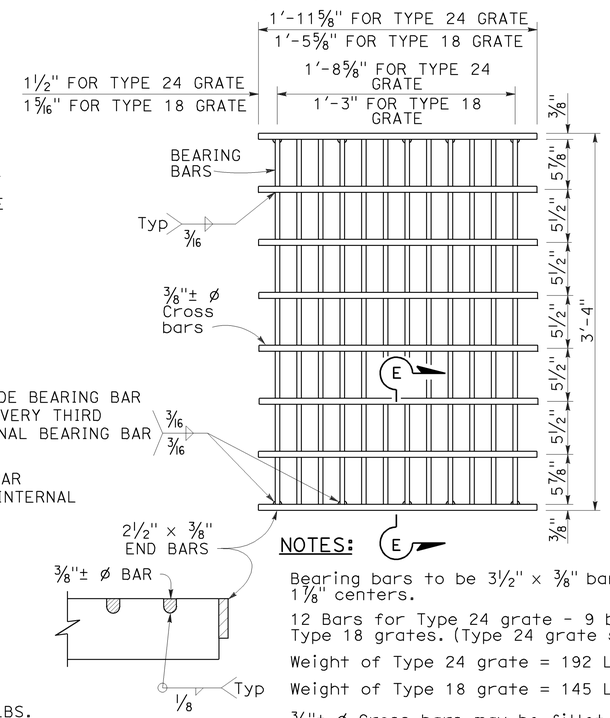

SECTION E-E

NOTES:

Bearing bars to be 3½" × ⅜" bars on 1⅞" centers.

12 Bars for Type 24 grate - 9 bars for Type 18 grates. (Type 24 grate shown).

Weight of Type 24 grate = 192 LBS.

Weight of Type 18 grate = 145 LBS.

⅜"± ø Cross bars may be fillet welded, resistance welded or electroforged to bearing bars.

TYPE 18-9X AND 24-12X GRATE

(Welded Steel)

STATE OF CALIFORNIA
DEPARTMENT OF TRANSPORTATION

BICYCLE TRAVERSABLE GRATE DETAILS

NO SCALE

RSP D77B DATED JULY 20, 2012 SUPERSEDES STANDARD PLAN D77B DATED MAY 20, 2011 - PAGE 165 OF THE STANDARD PLANS BOOK DATED 2010.

REVISED STANDARD PLAN RSP D77B

4-17-12

DIST	COUNTY	ROUTE	POST MILES TOTAL PROJECT	SHEET NO.	TOTAL SHEETS
06	Tul	99	23.5	15	16

REGISTERED ELECTRICAL ENGINEER

January 20, 2012
PLANS APPROVAL DATE

REGISTERED PROFESSIONAL ENGINEER Jeffery G. McRae No. E14512 Exp. 6-30-12 ELECTRICAL STATE OF CALIFORNIA

THE STATE OF CALIFORNIA OR ITS OFFICERS OR AGENTS SHALL NOT BE RESPONSIBLE FOR THE ACCURACY OR COMPLETENESS OF SCANNED COPIES OF THIS PLAN SHEET.

TO ACCOMPANY PLANS DATED 8-27-12

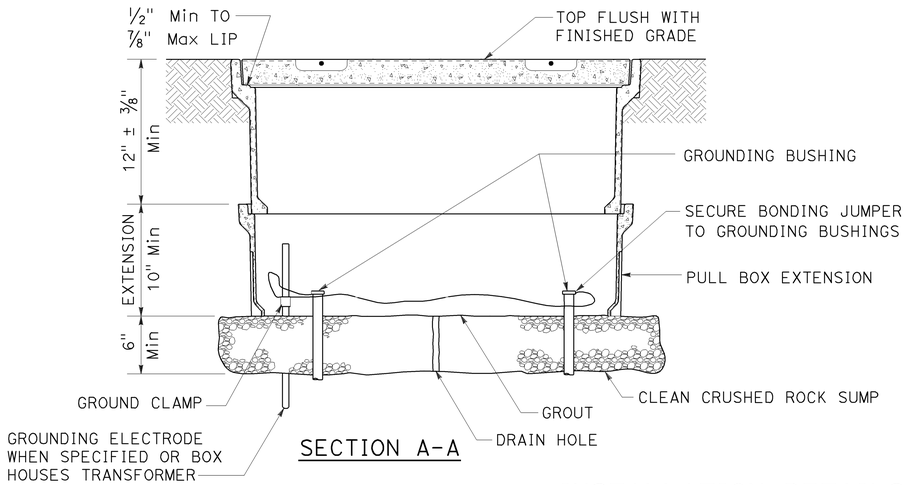

SECTION A-A

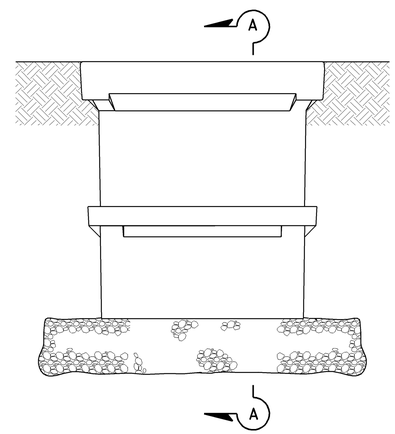

SIDE VIEW

INSTALLATION DETAILS

DETAIL A

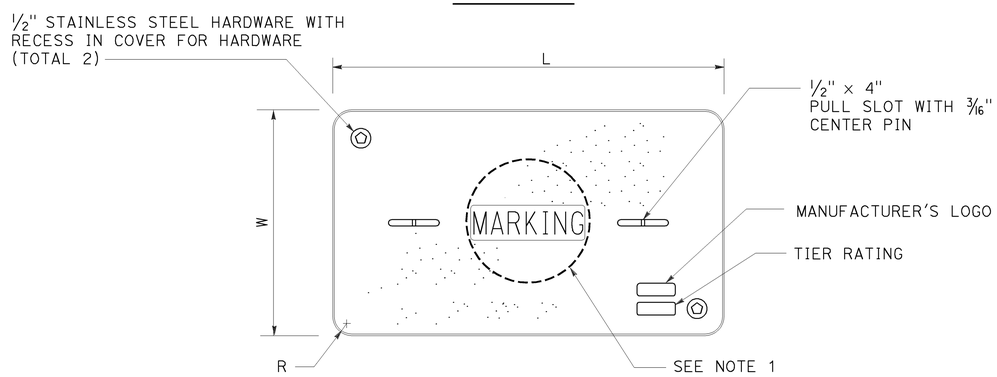

COVER TOP VIEW

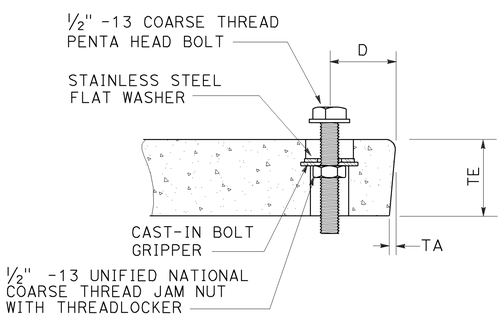

TYPICAL COVER CAPTIVE BOLT

OR SIMILAR

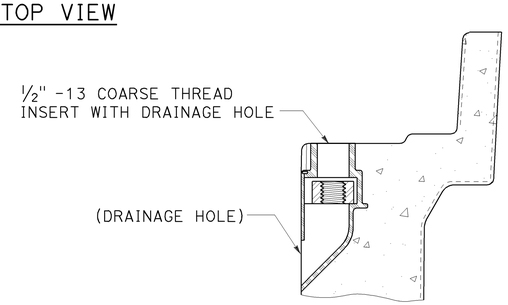

TYPICAL THREADED INSERT

OR SIMILAR

DIMENSION TABLE										
PULL BOX	PULL BOX			COVER						
	MINIMUM DEPTH BOX	MINIMUM DEPTH EXTENSION	MAXIMUM WEIGHT	L	W	R	TE	TA	D	MAXIMUM WEIGHT
No. 3 1/2	12"	N/A	40 lb	1' - 3 3/8"	10 1/8"	1 3/8"	2"	1/8"	1 3/4"	30 lb
No. 5	12"	10"	55 lb	1' - 11 1/4"	1' - 1 3/4"	1 3/8"	2"	1/8"	1 3/4"	60 lb
No. 6	12"	10"	70 lb	2' - 6 1/2"	1' - 5 1/2"	1 3/8"	2"	1/8"	2"	85 lb

NOTES ON PULL BOXES:

1. Pull box covers must be marked as follows: "SERVICE" Service circuits between service point and service disconnect; "SPRINKLER-CONTROL" sprinkler control circuits, 50 V or less; "CALTRANS" on all pull boxes, except pull boxes marked "SPRINKLER-CONTROL"; and "TELEPHONE" Telephone service;

   A) No. 3 1/2 pull box.
      1) "SIGNAL" - Traffic signal circuits with or without street or sign lighting circuits.
      2) "ST LIGHTING" - Street or sign lighting circuits where voltage is under 600 V.

   B) No. 5, 6, 9 or 9A pull box.
      1) "TRAFFIC SIGNAL" - Traffic signal circuits with or without street or sign lighting circuits.
      2) "STREET LIGHTING" - Street or sign lighting circuits where voltage is under 600 V.
      3) "STREET LIGHTING-HIGH VOLTAGE" - Street or sign lighting circuits where voltage is above 600 V.
      4) "IRRIGATION" - Circuits to irrigation controller 120 V or more.
      5) "RAMP METER" - Ramp meter circuits.
      6) "COUNT STATION" - Count or speed monitor circuits.
      7) "COMMUNICATIONS" - Communication circuits.
      8) "TOS COMMUNICATIONS" - TOS communication line.
      9) "TOS POWER" - TOS power.
      10) "TDC POWER" - Telephone demarcation cabinet power.
      11) "CCTV" - Closed circuit television circuits.
      12) "TMS" - Traffic monitoring station circuits.
      13) "CMS" - Changeable message sign circuits.
      14) "HAR" - Highway advisory radio circuits.

2. The nominal dimensions of the opening in which the cover sets must be the same as the cover dimensions (L and W) plus 1/8" or greater.
3. Covers and boxes must be interchangeable with California Standard. When interchanged with a standard, the top surfaces must be flush within 1/8". Top outside radius of covers and pull boxes must have a 1/8" radius.
4. Pull box extension may be another pull box as long as the bottom edge of the pull box can fit into the cover opening.

STATE OF CALIFORNIA
DEPARTMENT OF TRANSPORTATION

ELECTRICAL SYSTEMS (PULL BOX)

NO SCALE

RSP ES-8A DATED JANUARY 20, 2012 SUPPLEMENTS THE STANDARD PLANS BOOK DATED 2010.

REVISED STANDARD PLAN RSP ES-8A

2010 REVISED STANDARD PLAN RSP ES-8A

01-09-12

DIST	COUNTY	ROUTE	POST MILES TOTAL PROJECT	SHEET NO.	TOTAL SHEETS
06	Tul	99	23.5	16	16

REGISTERED ELECTRICAL ENGINEER

January 20, 2012
PLANS APPROVAL DATE

REGISTERED PROFESSIONAL ENGINEER Jeffery G. McRae No. E14512 Exp. 6-30-12 ELECTRICAL STATE OF CALIFORNIA

THE STATE OF CALIFORNIA OR ITS OFFICERS OR AGENTS SHALL NOT BE RESPONSIBLE FOR THE ACCURACY OR COMPLETENESS OF SCANNED COPIES OF THIS PLAN SHEET.

TO ACCOMPANY PLANS DATED 8-27-12

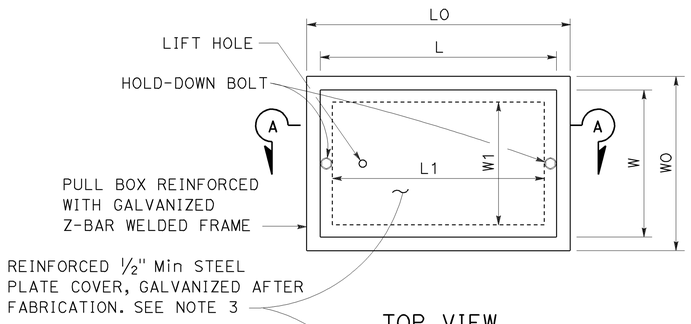

TOP VIEW

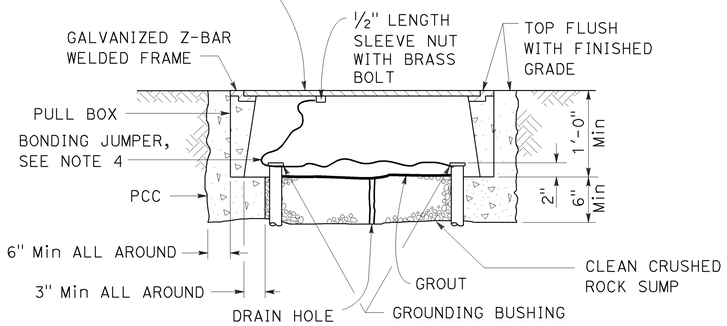

SECTION A-A

No. 3½(T), No. 5(T) AND No. 6(T) TRAFFIC PULL BOX

NOTES ON PULL BOXES:

1. Traffic pull box shall be provided with steel cover and special concrete footing. Steel cover shall have embossed non-skid pattern.
2. Steel reinforcing shall be as regularly used in the standard products of the respective manufacturer.
3. Pull box covers must be marked as follows: "SERVICE" Service circuits between service point and service disconnect; "SPRINKLER-CONTROL" Sprinkler control circuits, 50 V or less; "CALTRANS" On all pull boxes, except pull boxes marked "SPRINKLER-CONTROL"; and "TELEPHONE" Telephone service.
   A) No. 3½(T) pull box.
      1) "SIGNAL" - Traffic signal circuits with or without street or sign lighting circuits.
      2) "ST LIGHTING" - Street or sign lighting circuits where voltage is under 600 V.
   B) No. 5(T) or 6(T) pull box.
      1) "TRAFFIC SIGNAL" - Traffic signal circuits with or without street or sign lighting circuits.
      2) "STREET LIGHTING" - Street or sign lighting circuits where voltage is under 600 V.
      3) "STREET LIGHTING-HIGH VOLTAGE" - Street or sign lighting circuits where voltage is above 600 V.
      4) "IRRIGATION" - Circuits to irrigation controller 120 V or more.
      5) "RAMP METER" - Ramp meter circuits.
      6) "COUNT STATION" - Count or speed monitor circuits.
      7) "COMMUNICATION" - Communication circuits.
      8) "TOS COMMUNICATIONS" - TOS communications line.
      9) "TOS POWER" - TOS power.
      10) "TDC POWER" - Telephone demarcation cabinet power.
      11) "CCTV" - Closed circuit television circuits.
      12) "TMS" - Traffic monitoring station circuits.
      13) "CMS" - Changeable message sign circuits.
      14) "HAR" - Highway advisory radio circuits.
4. Bonding jumper for metal covers shall be 3' long, minimum.
5. The nominal dimensions of the opening in which the cover sets must be the same as the cover dimensions except the length and width dimensions shall be ⅛" greater.
6. Covers and boxes must be interchangeable with California standard male and female gages. When interchanged with a standard male or female gage, the top surfaces must be flush within ⅛".

DIMENSION TABLE

PULL BOX	BOX						COVER				
	MINIMUM * THICKNESS	MINIMUM DEPTH BOX AND EXTENSION	WO	LO	L1	W1	L **	W **	R	EDGE THICKNESS	EDGE TAPER
No. 3½(T)	1½"	1'-0"	1'-5"± 1"	1'-8⅞"±	1'-2½"±	10⅝"± 1"	1'-8"±	1'-1¾"±	0"	½"	NONE
No. 5(T)	1¾"	1'-0"	1'-11½"± 1"	2'-5½"±	1'-7"±	1'-1"± 1"	2'-3"±	1'-4"±	0"	½"	NONE
No. 6(T)	2"	1'-0"	2'-6"± 1"	2'-11½"±	1'-11½"±	1'-5"± 1"	2'-9"±	1'-8"±	0"	½"	NONE

* EXCLUDING CONDUIT WEB ** TOP DIMENSION

STATE OF CALIFORNIA
DEPARTMENT OF TRANSPORTATION

ELECTRICAL SYSTEMS (TRAFFIC RATED PULL BOX)

NO SCALE

RSP ES-8B DATED JANUARY 20, 2012 SUPPLEMENTS THE STANDARD PLANS BOOK DATED 2010.

REVISED STANDARD PLAN RSP ES-8B

2010 REVISED STANDARD PLAN RSP ES-8B