Dist	COUNTY	ROUTE	POST MILES TOTAL PROJECT	SHEET No.	TOTAL SHEETS
06	Ker	5	10.2	1	15

STATE OF CALIFORNIA

DEPARTMENT OF TRANSPORTATION

PROJECT PLANS FOR CONSTRUCTION ON

STATE HIGHWAY

IN KERN COUNTY NEAR GRAPEVINE AT GRAPEVINE UNDERCROSSING

TO BE SUPPLEMENTED BY STANDARD PLANS DATED 2010

INDEX OF PLANS

SHEET No.	DESCRIPTION
1	TITLE AND LOCATION MAP
2-6	CONSTRUCTION DETAILS
7	CONSTRUCTION AREA SIGNS
8	SUMMARY OF QUANTITIES
9-10	TRAFFIC CONTROL SYSTEM
11	REVISED STANDARD PLAN

STRUCTURE PLANS

12	GENERAL PLAN
13	DETAILS
14	STRUCTURE APPROACH TYPE R(30D)
15	THRIE BEAM CONNECTION (TYPE 27)

THE STANDARD PLANS LIST APPLICABLE TO THIS CONTRACT IS INCLUDED IN THE NOTICE TO BIDDERS AND SPECIAL PROVISIONS BOOK.

LOCATION OF CONSTRUCTION

Br No. 50-0194R/L PM 10.2

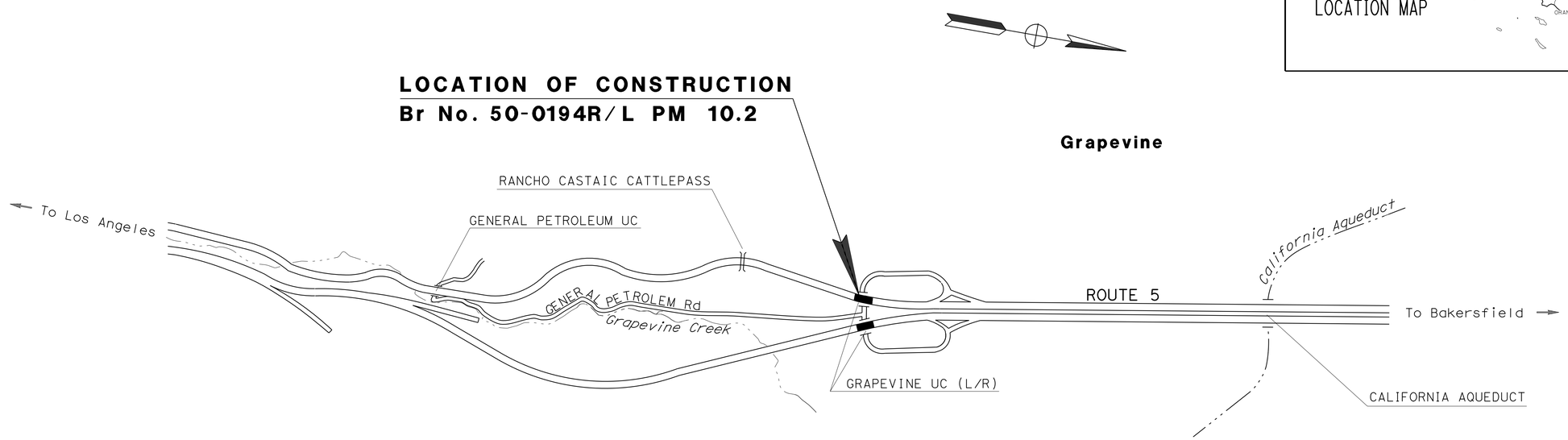

NO SCALE

THE CONTRACTOR SHALL POSSESS THE CLASS (OR CLASSES) OF LICENSE AS SPECIFIED IN THE "NOTICE TO BIDDERS."

PROJECT MANAGER: BILL MOSES

DESIGN ENGINEER: FRANK GONZALEZ

10-10-12
PROJECT ENGINEER REGISTERED CIVIL ENGINEER — DATE

November 26, 2012
PLANS APPROVAL DATE

REGISTERED PROFESSIONAL ENGINEER — SHUE XAIXA VUE — No. 63657 — Exp. 9-30-14 — CIVIL — STATE OF CALIFORNIA

THE STATE OF CALIFORNIA OR ITS OFFICERS OR AGENTS SHALL NOT BE RESPONSIBLE FOR THE ACCURACY OR COMPLETENESS OF SCANNED COPIES OF THIS PLAN SHEET.

CONTRACT No.	06-0M2004
PROJECT ID	0600020113

LAST REVISION 10-10-12 — DATE PLOTTED => 07-DEC-2012 — TIME PLOTTED => 13:13

Dist	COUNTY	ROUTE	POST MILES TOTAL PROJECT	SHEET No.	TOTAL SHEETS
06	Ker	5	10.2	2	15

REGISTERED CIVIL ENGINEER 10/10/12 DATE

11-26-12
PLANS APPROVAL DATE

REGISTERED PROFESSIONAL ENGINEER SHUE X. VUE No. 63657 Exp. 09/30/14 CIVIL STATE OF CALIFORNIA

THE STATE OF CALIFORNIA OR ITS OFFICERS OR AGENTS SHALL NOT BE RESPONSIBLE FOR THE ACCURACY OR COMPLETENESS OF SCANNED COPIES OF THIS PLAN SHEET.

NOTES:

1. FOR CONCRETE BARRIER (TYPE 27 MODIFIED), SEE STRUCTURAL STANDARD PLANS.
2. FOR DETAIL SECTION A-A AND SECTION B-B SEE SHEET C-3.
3. FOR DETAIL SECTION C-C SEE SHEET C-5.
4. FOR COLD PLANE AC PAVEMENT DEPTH, SEE SHEET C-5.

LEGEND:

COLD PLANE AC PAVEMENT

HMA (TYPE A)

SHOULDER RUMBLE STRIP (GROUND-IN INDENTATION)

ABBREVIATIONS:

PBM - PERVIOUS BASE MATERIAL

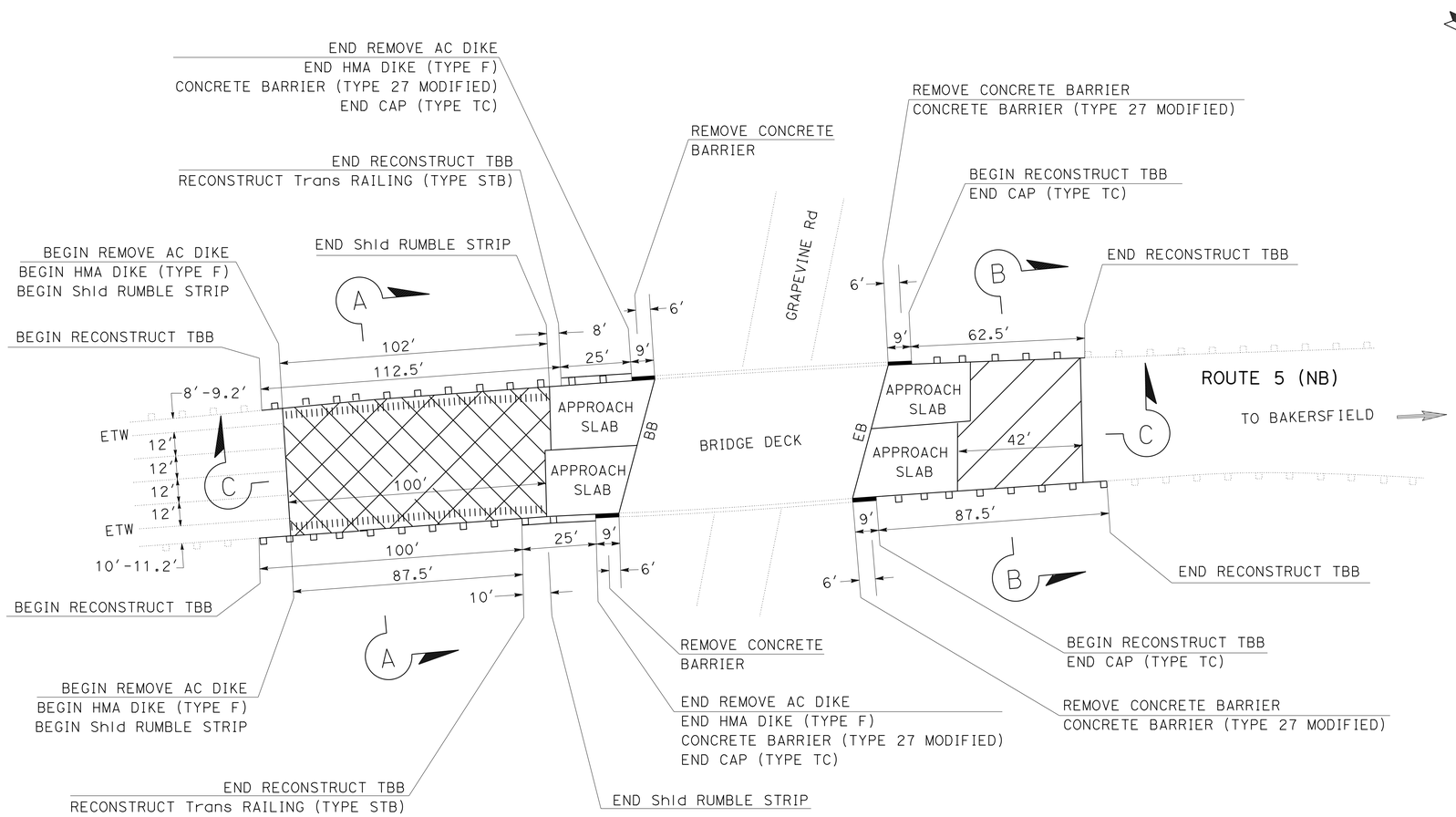

RIGHT BRIDGE

(NORTHBOUND)

EXISTING UTILITY FACILITIES HAVE NOT BEEN PLOTTED ON THESE PLANS

CONSTRUCTION DETAILS

NO SCALE

C-1

STATE OF CALIFORNIA - DEPARTMENT OF TRANSPORTATION
Caltrans® MAINTENANCE DESIGN

FUNCTIONAL SUPERVISOR: FRANK GONZALEZ

CALCULATED-DESIGNED BY: TONY VAZQUEZ
CHECKED BY: SHUE VUE

REVISED BY
DATE REVISED

LAST REVISION 10-10-12
DATE PLOTTED => 07-DEC-2012
TIME PLOTTED => 13:13

Dist	COUNTY	ROUTE	POST MILES TOTAL PROJECT	SHEET No.	TOTAL SHEETS
06	Ker	5	10.2	3	15

REGISTERED CIVIL ENGINEER 10/10/12 DATE

11-26-12
PLANS APPROVAL DATE

REGISTERED PROFESSIONAL ENGINEER
SHUE X. VUE
No. 63657
Exp. 09/30/14
CIVIL
STATE OF CALIFORNIA

THE STATE OF CALIFORNIA OR ITS OFFICERS OR AGENTS SHALL NOT BE RESPONSIBLE FOR THE ACCURACY OR COMPLETENESS OF SCANNED COPIES OF THIS PLAN SHEET.

NOTES:

1. FOR CONCRETE BARRIER (TYPE 27 MODIFIED), SEE STRUCTURAL STANDARD PLANS.
2. FOR DETAIL SECTION D-D SEE SHEET C-4.
3. FOR DETAIL SECTION E-E SEE SHEET C-5.

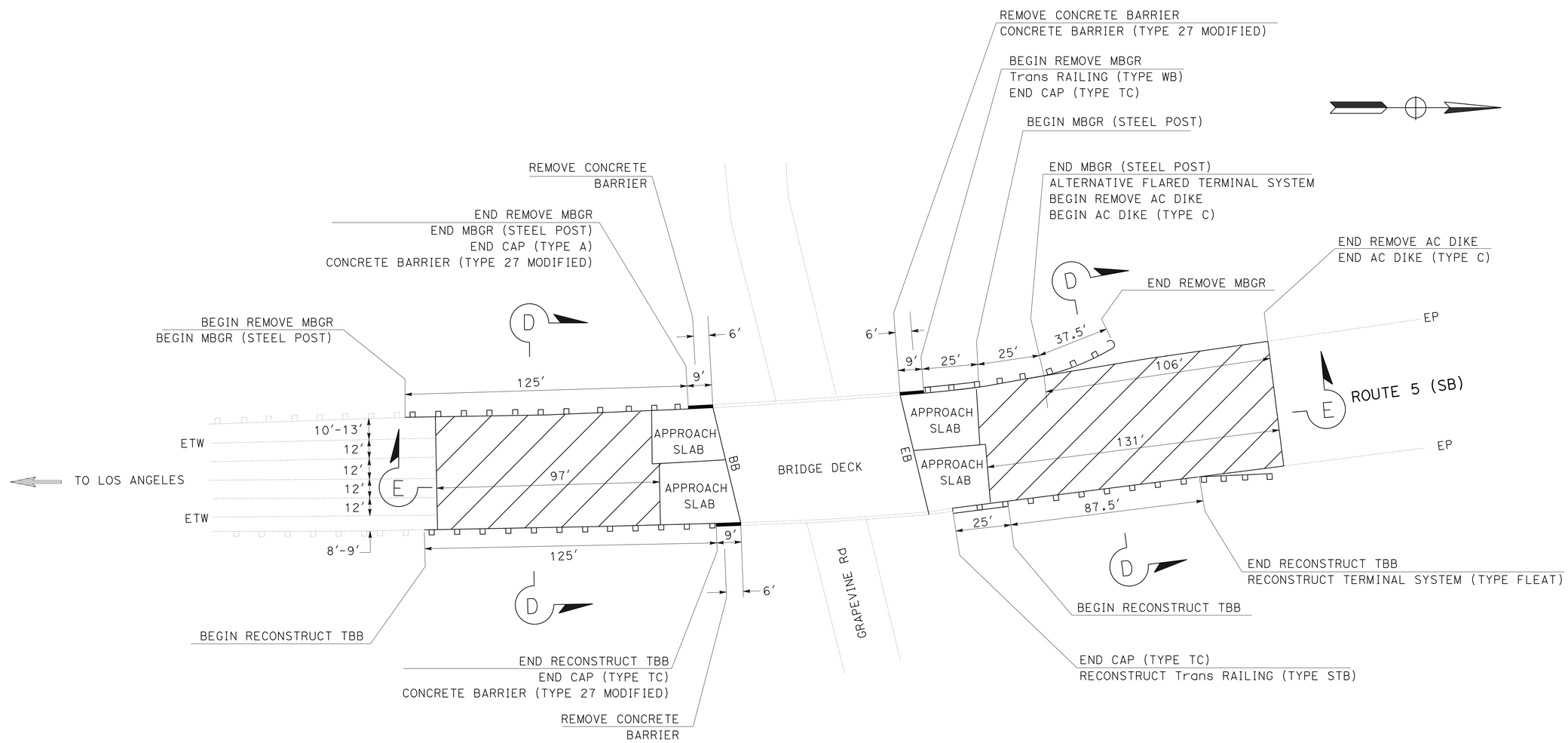

LEFT BRIDGE
(SOUTHBOUND)

EXISTING UTILITY FACILITIES HAVE NOT BEEN PLOTTED ON THESE PLANS

CONSTRUCTION DETAILS

NO SCALE

C-2

STATE OF CALIFORNIA - DEPARTMENT OF TRANSPORTATION
Caltrans MAINTENANCE DESIGN

FUNCTIONAL SUPERVISOR: FRANK GONZALEZ
CALCULATED-DESIGNED BY: TONY VAZQUEZ
CHECKED BY: SHUE VUE
REVISED BY
DATE REVISED

LAST REVISION 10-10-12
DATE PLOTTED => 07-DEC-2012
TIME PLOTTED => 13:13

Dist	COUNTY	ROUTE	POST MILES TOTAL PROJECT	SHEET No.	TOTAL SHEETS
06	Ker	5	10.2	4	15

REGISTERED CIVIL ENGINEER 10/10/12 DATE

11-26-12
PLANS APPROVAL DATE

REGISTERED PROFESSIONAL ENGINEER SHUE XAIXA VUE No. 63657 Exp. 9-30-14 CIVIL STATE OF CALIFORNIA

THE STATE OF CALIFORNIA OR ITS OFFICERS OR AGENTS SHALL NOT BE RESPONSIBLE FOR THE ACCURACY OR COMPLETENESS OF SCANNED COPIES OF THIS PLAN SHEET.

NOTES:

1. DIMENSIONS OF THE PAVEMENT STRUCTURES (STRUCTURAL SECTIONS) ARE SUBJECT TO TOLERANCES SPECIFIED IN THE STANDARD SPECIFICATIONS.
2. FOR ACCURATE RIGHT OF WAY DATA, CONTACT RIGHT OF WAY ENGINEERING AT THE DISTRICT OFFICE.
3. FOR COLD PLANE AC PAVEMENT DEPTH, SEE SHEET C-5.

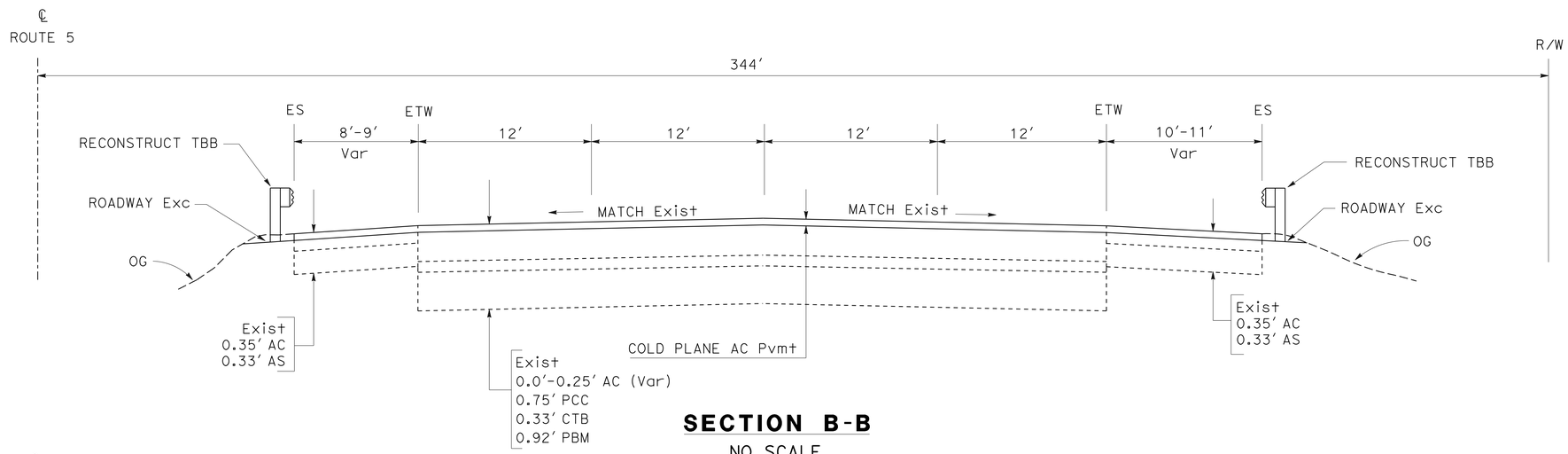

SECTION B-B
NO SCALE

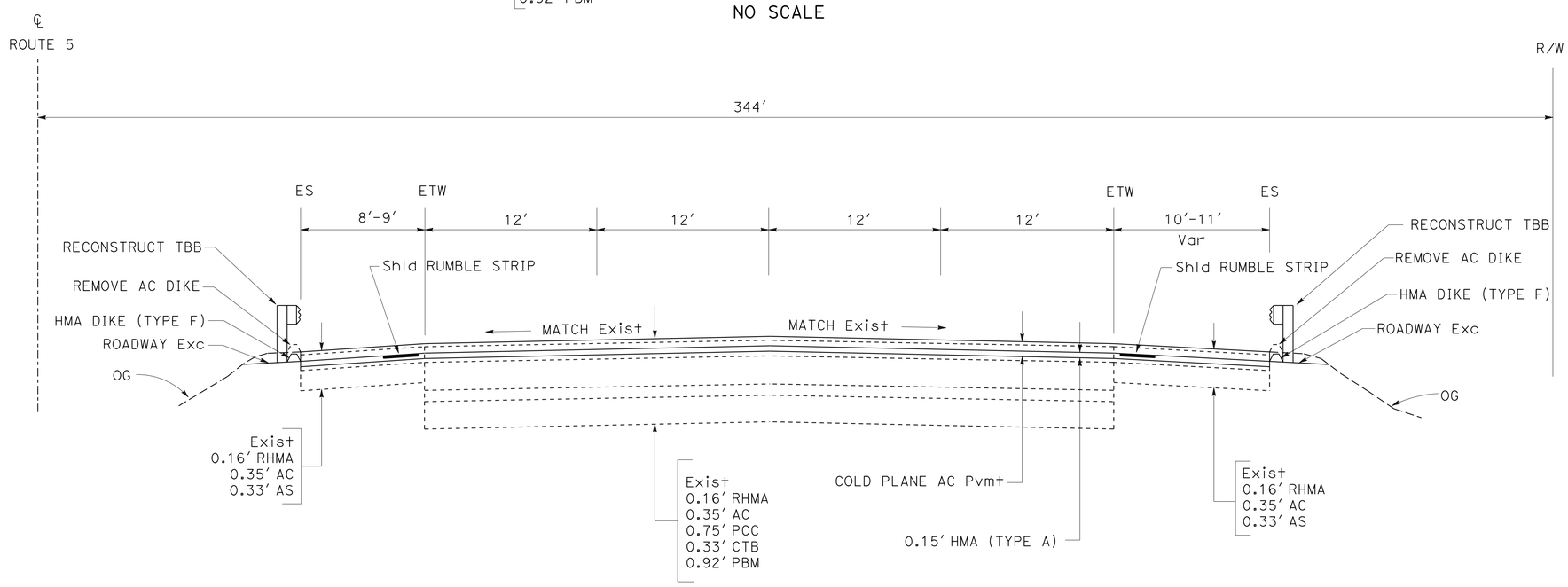

SECTION A-A
NO SCALE

EXISTING UTILITY FACILITIES HAVE NOT BEEN PLOTTED ON THESE PLANS

CONSTRUCTION DETAILS
C-3

STATE OF CALIFORNIA - DEPARTMENT OF TRANSPORTATION
Caltrans® MAINTENANCE DESIGN
FUNCTIONAL SUPERVISOR: FRANK GONZALEZ
CALCULATED-DESIGNED BY: TONY VAZQUEZ
CHECKED BY: SHUE VUE
REVISED BY
DATE REVISED

LAST REVISION 10-10-12
DATE PLOTTED => 07-DEC-2012
TIME PLOTTED => 13:13

Dist	COUNTY	ROUTE	POST MILES TOTAL PROJECT	SHEET No.	TOTAL SHEETS
06	Ker	5	10.2	5	15

REGISTERED CIVIL ENGINEER 10/10/12 DATE

11-26-12
PLANS APPROVAL DATE

REGISTERED PROFESSIONAL ENGINEER SHUE XAIXA VUE No. 63657 Exp. 9-30-14 CIVIL STATE OF CALIFORNIA

THE STATE OF CALIFORNIA OR ITS OFFICERS OR AGENTS SHALL NOT BE RESPONSIBLE FOR THE ACCURACY OR COMPLETENESS OF SCANNED COPIES OF THIS PLAN SHEET.

NOTES:

1. DIMENSIONS OF THE PAVEMENT STRUCTURES (STRUCTURAL SECTIONS) ARE SUBJECT TO TOLERANCES SPECIFIED IN THE STANDARD SPECIFICATIONS.
2. FOR ACCURATE RIGHT OF WAY DATA, CONTACT RIGHT OF WAY ENGINEERING AT THE DISTRICT OFFICE.
3. FOR COLD PLANE AC PAVEMENT DEPTH, SEE SHEET C-5.

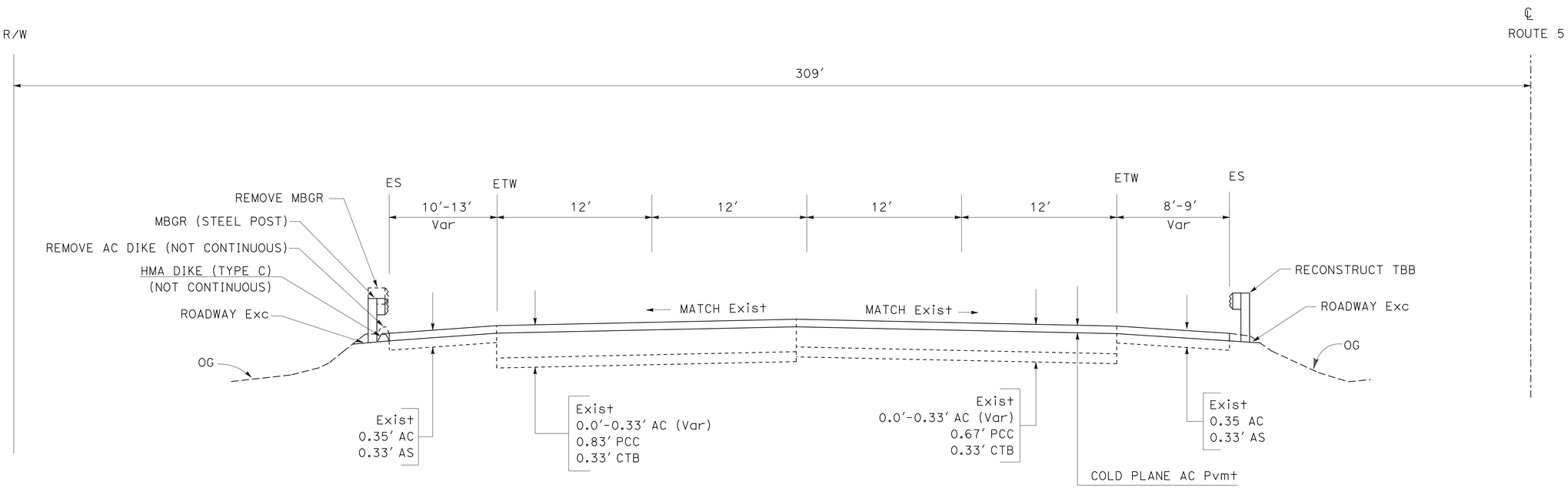

SECTION D-D
NO SCALE

EXISTING UTILITY FACILITIES HAVE NOT BEEN PLOTTED ON THESE PLANS

CONSTRUCTION DETAILS
C-4

STATE OF CALIFORNIA - DEPARTMENT OF TRANSPORTATION
Caltrans® MAINTENANCE DESIGN
FUNCTIONAL SUPERVISOR: FRANK GONZALEZ
CALCULATED-DESIGNED BY: TONY VAZQUEZ
CHECKED BY: SHUE VUE
REVISED BY
DATE REVISED

LAST REVISION 10-10-12 DATE PLOTTED => 07-DEC-2012 TIME PLOTTED => 13:13

Dist	COUNTY	ROUTE	POST MILES TOTAL PROJECT	SHEET No.	TOTAL SHEETS
06	Ker	5	10.2	6	15

REGISTERED CIVIL ENGINEER 10/10/12 DATE

11-26-12
PLANS APPROVAL DATE

REGISTERED PROFESSIONAL ENGINEER SHUE XAIXA VUE No. 63657 Exp. 9-30-14 CIVIL STATE OF CALIFORNIA

THE STATE OF CALIFORNIA OR ITS OFFICERS OR AGENTS SHALL NOT BE RESPONSIBLE FOR THE ACCURACY OR COMPLETENESS OF SCANNED COPIES OF THIS PLAN SHEET.

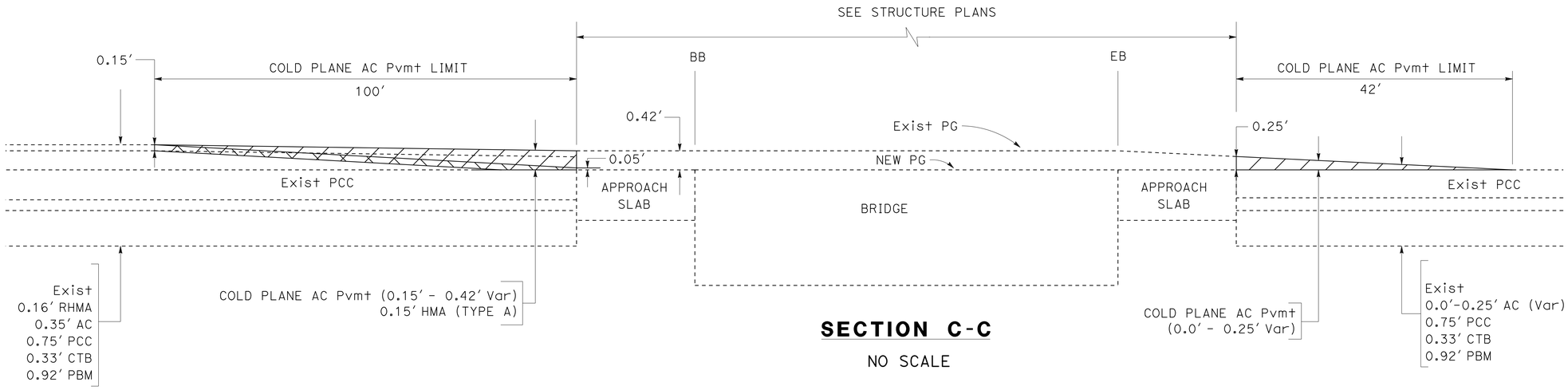

SECTION C-C

NO SCALE

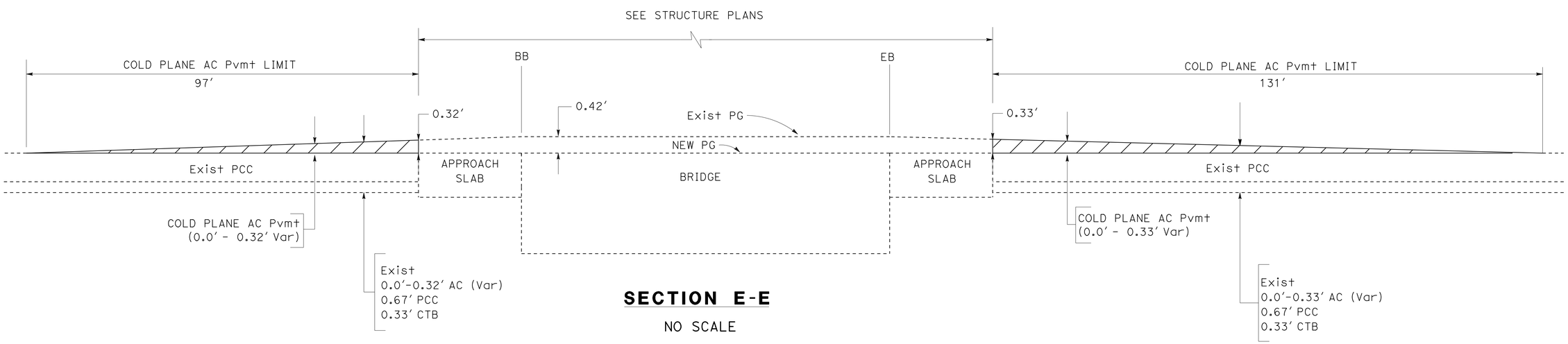

SECTION E-E

NO SCALE

EXISTING UTILITY FACILITIES HAVE NOT BEEN PLOTTED ON THESE PLANS

CONSTRUCTION DETAILS

C-5

STATE OF CALIFORNIA - DEPARTMENT OF TRANSPORTATION
Caltrans® MAINTENANCE DESIGN

FUNCTIONAL SUPERVISOR: FRANK GONZALEZ

CALCULATED-DESIGNED BY: TONY VAZQUEZ
CHECKED BY: SHUE VUE

REVISED BY
DATE REVISED

LAST REVISION 10-10-12
DATE PLOTTED => 07-DEC-2012
TIME PLOTTED => 13:13

Dist	COUNTY	ROUTE	POST MILES TOTAL PROJECT	SHEET No.	TOTAL SHEETS
06	Ker	5	10.2	7	15

REGISTERED CIVIL ENGINEER 10/10/12 DATE

11-26-12
PLANS APPROVAL DATE

REGISTERED PROFESSIONAL ENGINEER
SHUE XAIXA VUE
No. 63657
Exp. 9-30-14
CIVIL
STATE OF CALIFORNIA

THE STATE OF CALIFORNIA OR ITS OFFICERS OR AGENTS SHALL NOT BE RESPONSIBLE FOR THE ACCURACY OR COMPLETENESS OF SCANNED COPIES OF THIS PLAN SHEET.

STATIONARY MOUNTED CONSTRUCTION AREA SIGNS

	SIGN CODE	PANEL SIZE	SIGN MESSAGE	No. OF POST AND SIZE	No. OF SIGNS
(A)	W20-1	48" x 48"	ROAD WORK AHEAD	1- 4" x 6"	4
(B)	G20-2	36" x 18"	END ROAD WORK	1- 4" x 4"	6
(C)	W20-1	36" x 18"	ROAD WORK AHEAD	1- 4" x 4"	1
(D)	C40	72" x 36"	TRAFFIC FINES DOUBLED IN CONSTRUCTION ZONES	2- 4" x 4"	2

NOTE: EXACT SIGN LOCATIONS TO BE DETERMINED BY THE ENGINEER.

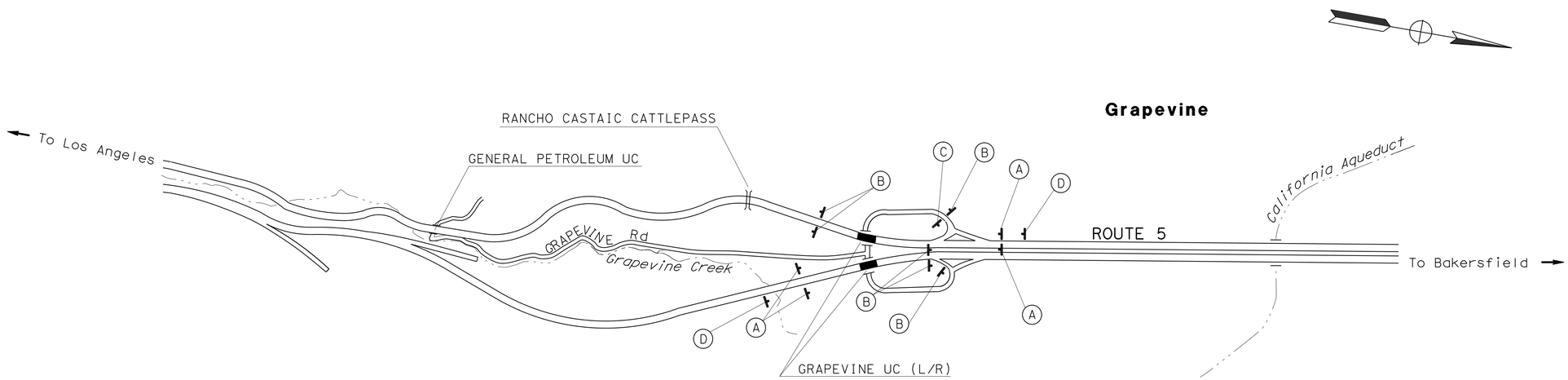

EXISTING UTILITIES FACILITIES HAVE NOT BEEN PLOTTED ON THESE PLANS.

APPROVED FOR CONSTRUCTION AREA SIGN WORK ONLY

CONSTRUCTION AREA SIGNS

NO SCALE

CS-1

STATE OF CALIFORNIA - DEPARTMENT OF TRANSPORTATION
Caltrans MAINTENANCE DESIGN

FUNCTIONAL SUPERVISOR: FRANK GONZALEZ
CALCULATED-DESIGNED BY: TONY VAZQUEZ
CHECKED BY: SHUE VUE
REVISED BY
DATE REVISED

LAST REVISION 10-10-12 | DATE PLOTTED => 07-DEC-2012 | TIME PLOTTED => 13:13

Dist	COUNTY	ROUTE	POST MILES TOTAL PROJECT	SHEET No.	TOTAL SHEETS
06	Ker	5	10.2	8	15

REGISTERED CIVIL ENGINEER 10-10-12 DATE

11-26-12
PLANS APPROVAL DATE

REGISTERED PROFESSIONAL ENGINEER SHUE XAIXA VUE No. 63657 Exp. 9-30-14 CIVIL STATE OF CALIFORNIA

THE STATE OF CALIFORNIA OR ITS OFFICERS OR AGENTS SHALL NOT BE RESPONSIBLE FOR THE ACCURACY OR COMPLETENESS OF SCANNED COPIES OF THIS PLAN SHEET.

ROADWAY QUANTITIES

BRIDGE	COLD PLANE AC PAVEMENT	TACK COAT	HOT MIX ASPHALT (TYPE A)	PLACE HMA DIKE (TYPE F)	PLACE HMA DIKE (TYPE C)	REMOVE AC DIKE	SHOULDER RUMBLE STRIP (HMA, GROUND-IN INDENTATION)	ROADWAY EXCAVATION
	SQYD	TON	TON	LF	LF	LF	STA	CY
RIGHT BRIDGE	1,149	0.2	85.0	248		248	2	5
LEFT BRIDGE	1,962	0.1	0.3		106	106		7
TOTAL	3,111	0.3	85.3	248	106	354	2	12

METAL BEAM GUARD RAIL AND SINGLE THRIE BEAM BARRIER QUANTITIES

BRIDGE	REMOVE MBGR	MBGR (STEEL POST)	TRANSITION RAILING (TYPE WB)	RECONSTRUCT THRIE BEAM BARRIER	END CAP (TYPE A)	* END CAP (TYPE TC)	RECONSTRUCT TRANSITION RAILING (TYPE STB)	ALTERNATIVE FLARED TERMINAL SYSTEM	LAYOUT TYPE	RECONSTRUCT TERMINAL SYSTEM (TYPE FLEAT)	TREATED WOOD WASTE
	LF	LF	EA	LF	EA	EA	EA	EA		EA	LB
RIGHT BRIDGE				362.5		4	2			1	
LEFT BRIDGE	213	150	1	212.5	1	3	1	1	12B		2,775
TOTAL	213	150	1	575.0	1	7	3	1		1	2,775

* NOTE: CONTRACTOR MAY RE-USE EXIST END CAP (TYPE TC)

PAVEMENT DELINEATION QUANTITIES

BRIDGE	DETAIL No.	THERMOPLASTIC TRAFFIC STRIPE			PAVEMENT MARKER (RETROREFLECTIVE)
		4" (BROKEN 36-12)	4"	8"	TYPE G
		LF	LF	LF	EA
RIGHT BRIDGE	11	630			
	24		315		
	27B		315		
	38B			315	29
LEFT BRIDGE	11	802			
	24		401		
	27B		401		
	38B			401	36
TOTAL		1,432	1,432	716	65

THRIE BEAM CONNECTION (TYPE 27)

BRIDGE	REMOVE CONCRETE BARRIER	CONCRETE BARRIER (TYPE 27 MODIFIED)
	LF	LF
RIGHT BRIDGE	24	36
LEFT BRIDGE	18	27
TOTAL	42	63

SUMMARY OF QUANTITIES
Q-1

REVISED BY | DATE REVISED
TONY VAZQUEZ | SHUE VUE
CALCULATED-DESIGNED BY | CHECKED BY
FUNCTIONAL SUPERVISOR | FRANK GONZALEZ
STATE OF CALIFORNIA - DEPARTMENT OF TRANSPORTATION
Caltrans® MAINTENANCE DESIGN

LAST REVISION 10-09-12 | DATE PLOTTED => 07-DEC-2012 TIME PLOTTED => 17:17

Dist	COUNTY	ROUTE	POST MILES TOTAL PROJECT	SHEET No.	TOTAL SHEETS
06	Ker	5	10.2	9	15

REGISTERED CIVIL ENGINEER 10-10-12 DATE

11-26-12
PLANS APPROVAL DATE

REGISTERED PROFESSIONAL ENGINEER SHUE XAIXA VUE No. 63657 Exp. 9-30-14 CIVIL STATE OF CALIFORNIA

THE STATE OF CALIFORNIA OR ITS OFFICERS OR AGENTS SHALL NOT BE RESPONSIBLE FOR THE ACCURACY OR COMPLETENESS OF SCANNED COPIES OF THIS PLAN SHEET.

NOTES:

Unless otherwise specified in the special provisions, all temporary warning signs shall have black legend on orange background.

California code are designated by (CA). Otherwise, Federal (MUTCD) codes are shown.

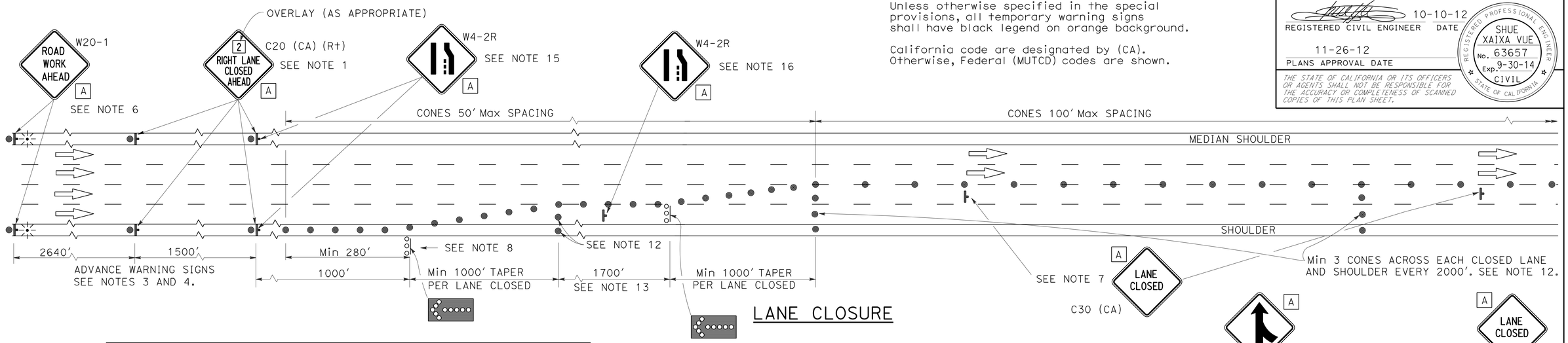

LANE CLOSURE

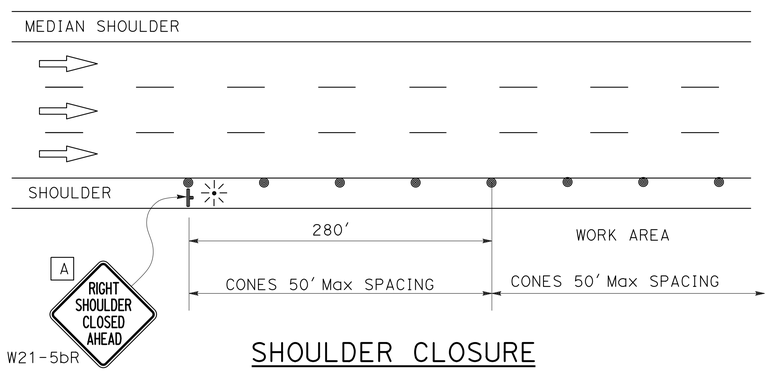

SHOULDER CLOSURE

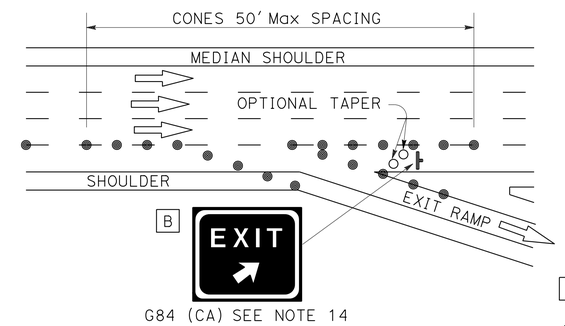

LANE CLOSURE AT EXIT RAMP

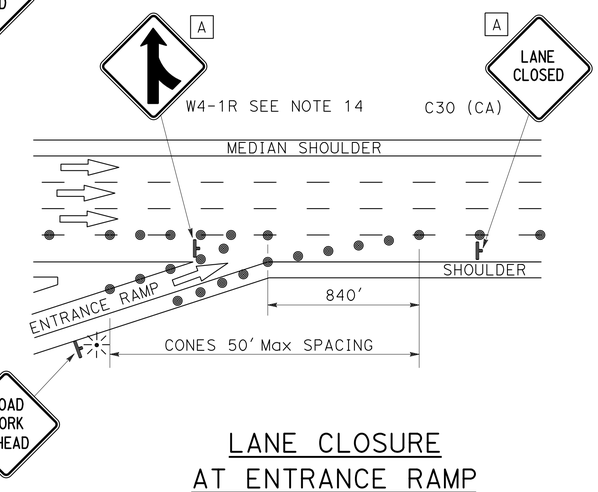

LANE CLOSURE AT ENTRANCE RAMP

NOTES:

1. Median lane closures shall conform to the details for outside lane closures except that C20 (CA) (Lt) signs shall be used.
2. At least one person shall be assigned to provide full time maintenance of traffic control devices for lane closures.
3. Duplicate sign installations are not required:
   a) On opposite shoulder if at least one-half of the available lanes remain open to traffic.
   b) In the median if the width of the median shoulder is less than 8' and the outside lanes are to be closed.
4. Each advance warning sign on each side of the roadway shall be equipped with at least two flags for daytime closure. Each flag shall be at least 16" x 16" in size and shall be orange or fluorescent red-orange in color. Flashing beacons shall be placed at the locations indicated for lane closure during hours of darkness.
5. A C14 (CA) "END ROAD WORK" sign, as appropriate, shall be placed at the end of the lane closure unless the end of work area is obvious or ends within a larger project's limits.
6. If the W20-1 sign would follow within 2000' of a stationary W20-1 or C11 (CA) "ROAD WORK NEXT _____ MILES", use a C20 (CA) sign for the first advance warning sign.
7. Place a C30 (CA) sign every 2000' throughout length of lane closure.
8. One flashing arrow sign for each lane closed. The first flashing arrow sign shall be Type I. All others may be either Type I or Type II.
9. A minimum 1500' of sight distance shall be provided where possible for vehicles approaching the first flashing arrow sign. Lane closures shall not begin at top of crest vertical curve or on a horizontal curve.
10. All cones used for lane closures during the hours of darkness shall be fitted with retroreflective bands (or sleeves) as specified in the specifications.
11. Portable delineators, placed at one-half the spacing indicated for traffic cones may be used instead of cones for daytime closures only.
12. Unless otherwise specified in the special provisions, a minimum of 3 cones shall be placed transversely across each closed lane and shoulder at each location where a taper across a traffic lane ends and every 2000' as shown on the "Lane Closure" detail. Two Type II barricades may be used instead of the 3 cones. The transverse alignment of the cones or barricades on the closed shoulder may be shifted from the transverse alignment to provide access to the work.
13. Unless otherwise specified in the special provisions, the 1700' tangent shown along lane lines shall be used between the 1000' tapers required for each closed traffic lane.
14. Unless otherwise specified in the special provisions, the G84 (CA) and W4-1 signs shall be used as shown.
15. When specified in the special provisions, a W4-2 "LANE ENDS" symbol sign is to be used in place of the C20 (CA) "RIGHT LANE CLOSED AHEAD" sign.
16. The W4-2 "LANE ENDS" symbol sign shown at this location is to be used where the W4-2 sign is used as advance warning as described in Note 15.

SIGN PANEL SIZE (Min)

A	48" x 48"
B	54" x 48"

LEGEND

- TRAFFIC CONE
- TRAFFIC CONE (OPTIONAL TAPER)
- TEMPORARY SIGN
- FLASHING ARROW SIGN (FAS)
- FAS SUPPORT OR TRAILER
- PORTABLE FLASHING BEACON

STATE OF CALIFORNIA
DEPARTMENT OF TRANSPORTATION

TRAFFIC CONTROL SYSTEM (FOR LANE CLOSURE ON FREEWAYS AND EXPRESSWAYS)

NO SCALE

TCS-1

STATE OF CALIFORNIA - DEPARTMENT OF TRANSPORTATION
Caltrans MAINTENANCE DESIGN

FUNCTIONAL SUPERVISOR: FRANK GONZALEZ
CALCULATED-DESIGNED BY: TONY VAZQUEZ
CHECKED BY: SHUE VUE
REVISED BY
DATE REVISED

LAST REVISION 00-00-00 | DATE PLOTTED => 07-DEC-2012 | TIME PLOTTED => 16:36

Dist	COUNTY	ROUTE	POST MILES TOTAL PROJECT	SHEET No.	TOTAL SHEETS
06	Ker	5	10.2	10	15

REGISTERED CIVIL ENGINEER 10-10-12 DATE

11-26-12
PLANS APPROVAL DATE

REGISTERED PROFESSIONAL ENGINEER SHUE XAIXA VUE No. 63657 Exp. 9-30-14 CIVIL STATE OF CALIFORNIA

THE STATE OF CALIFORNIA OR ITS OFFICERS OR AGENTS SHALL NOT BE RESPONSIBLE FOR THE ACCURACY OR COMPLETENESS OF SCANNED COPIES OF THIS PLAN SHEET.

TYPICAL RAMP CLOSURES

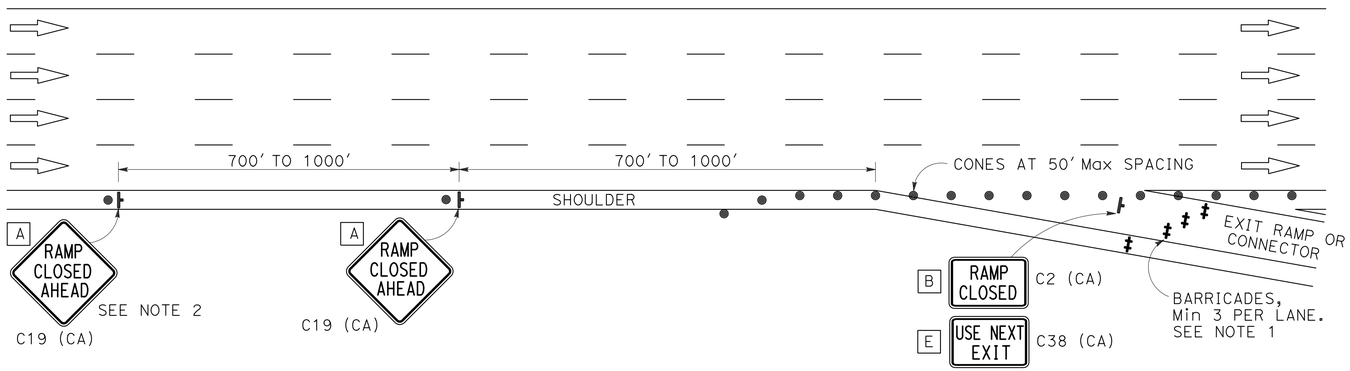

EXIT RAMP OR CONNECTOR

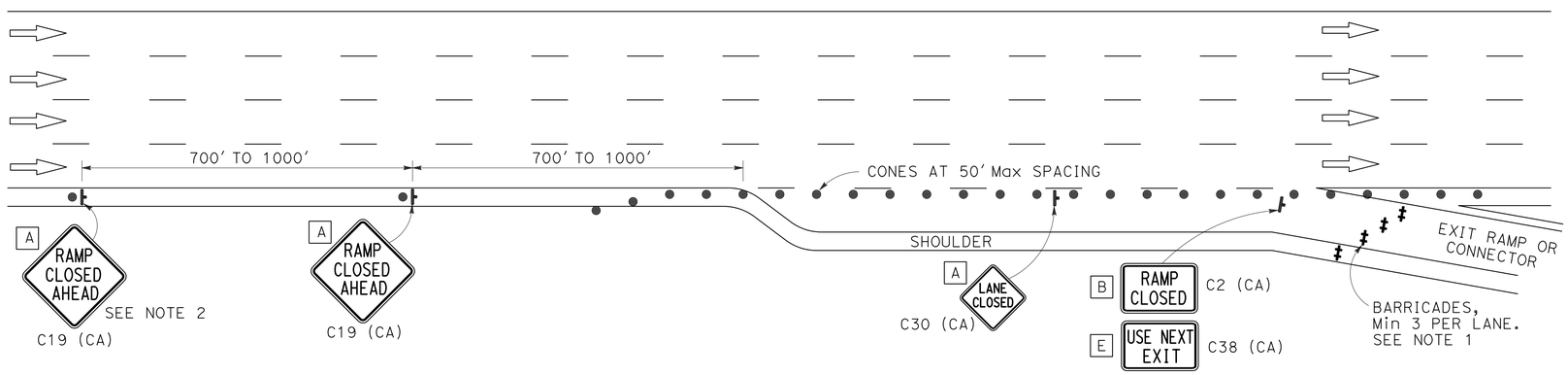

EXIT RAMP OR CONNECTOR WITH ADDITIONAL LANE

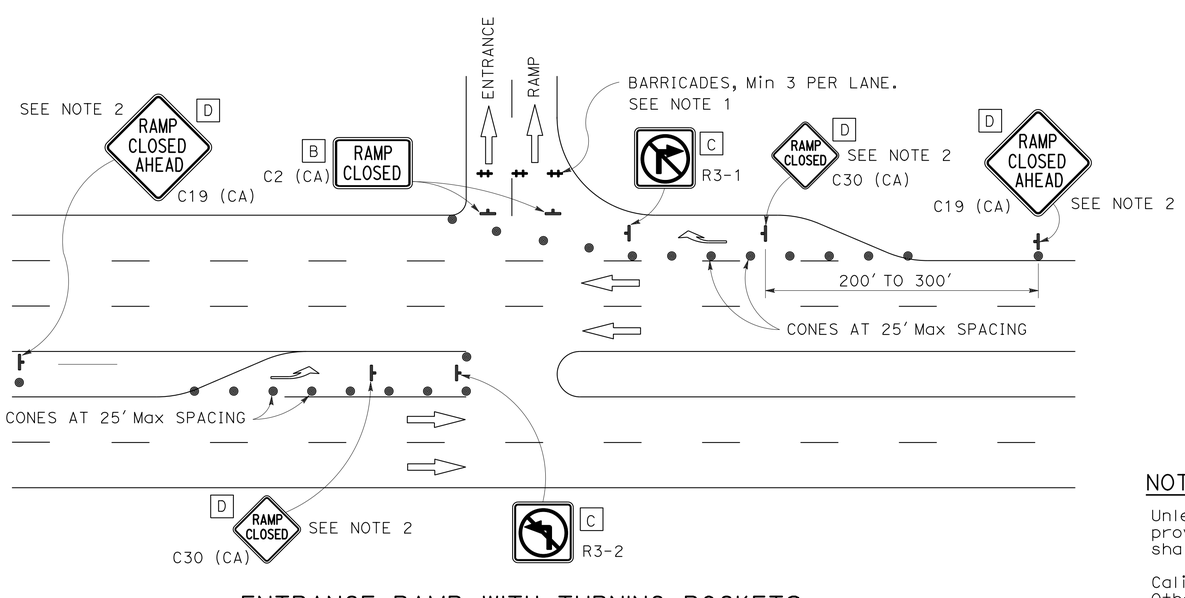

ENTRANCE RAMP WITH TURNING POCKETS

SIGN PANEL SIZE (Min)

- A 48" x 48"
- B 48" x 30"
- C 30" x 30"
- D 48" x 48" - SPEED OF 50 mph OR MORE
  36" x 36" - SPEED LESS THAN 50 mph
- E 48" x 36"

LEGEND

- TRAFFIC CONE
- TEMPORARY SIGN
- BARRICADES

NOTES:

1. Barricades shall be Type I, II, or III for closures lasting one week or less and Type III for closures lasting longer than one week.
2. In addition to placing the C19 (CA) "RAMP CLOSED AHEAD" and C30 (CA) "RAMP CLOSED" signs, black on orange overlay plates with the word "CLOSED" may be mounted, as directed by the Engineer, on all guide signs that refer to the closed ramp. The letter size on the overlay shall be the same as the guide sign.
3. Each advance C19 (CA) "RAMP CLOSED AHEAD" sign shall be equipped with at least two flags for daytime closure. Each flag shall be at least 16" x 16" in size and shall be orange or fluorescent red-orange in color.
4. All cones used for ramp closures during the hours of darkness shall be fitted with retroreflective bands (or sleeves) as specified in the specifications.
5. Portable delineators, placed at one-half the spacing indicated for traffic cones, may be used instead of cones for daytime ramp closures only.
6. At least one person shall be assigned to provide full time maintenance of traffic control devices, unless otherwise directed by the Engineer.
7. The existing "EXIT" sign in the gore area shall be covered during ramp closures.

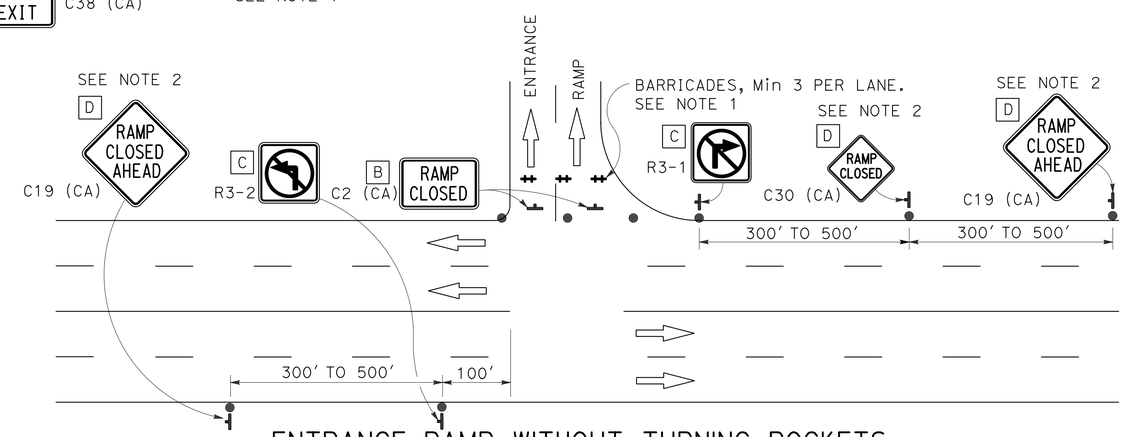

ENTRANCE RAMP WITHOUT TURNING POCKETS

NOTES:

Unless otherwise specified in the special provisions, all temporary warning signs shall have black legend on orange background.

California code are designated by (CA). Otherwise, Federal (MUTCD) codes are shown.

STATE OF CALIFORNIA
DEPARTMENT OF TRANSPORTATION

TRAFFIC CONTROL SYSTEM (FOR RAMP CLOSURE)

NO SCALE

TCS-2

STATE OF CALIFORNIA - DEPARTMENT OF TRANSPORTATION
Caltrans MAINTENANCE DESIGN

FUNCTIONAL SUPERVISOR: FRANK GONZALEZ
CALCULATED-DESIGNED BY: TONY VAZQUEZ
CHECKED BY: SHUE VUE
REVISED BY
DATE REVISED

LAST REVISION 00-00-00
DATE PLOTTED => 07-DEC-2012
TIME PLOTTED => 13:13

Dist	COUNTY	ROUTE	POST MILES TOTAL PROJECT	SHEET No.	TOTAL SHEETS
06	Ker	5	10.2	11	15

REGISTERED CIVIL ENGINEER

April 20, 2012
PLANS APPROVAL DATE

REGISTERED PROFESSIONAL ENGINEER — William K. Farnbach — No. C49042 — Exp. 9-30-12 — CIVIL — STATE OF CALIFORNIA

THE STATE OF CALIFORNIA OR ITS OFFICERS OR AGENTS SHALL NOT BE RESPONSIBLE FOR THE ACCURACY OR COMPLETENESS OF SCANNED COPIES OF THIS PLAN SHEET.

TO ACCOMPANY PLANS DATED 11-26-12

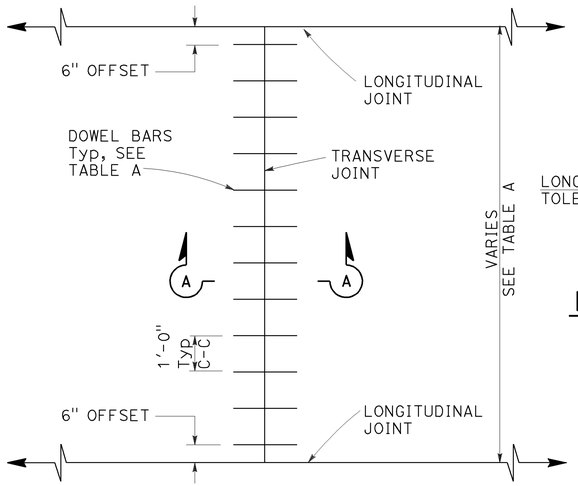

TRANSVERSE JOINT DOWEL BAR LAYOUT

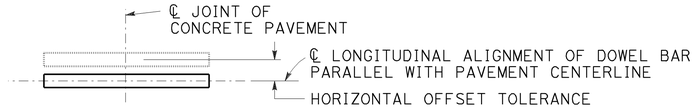

PLAN

HORIZONTAL OFFSET TOLERANCE

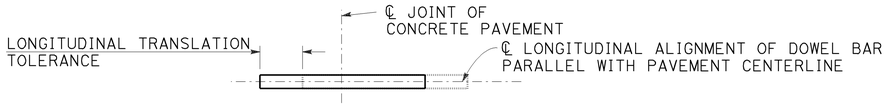

PLAN

LONGITUDINAL TRANSLATION TOLERANCE

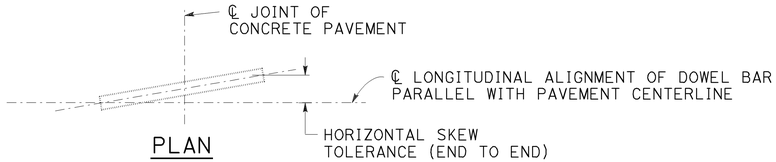

PLAN

HORIZONTAL SKEW TOLERANCE

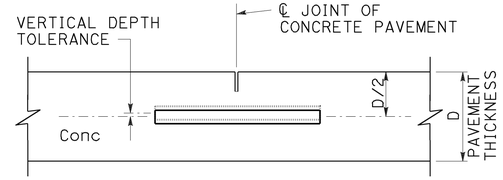

ELEVATION

VERTICAL DEPTH TOLERANCE

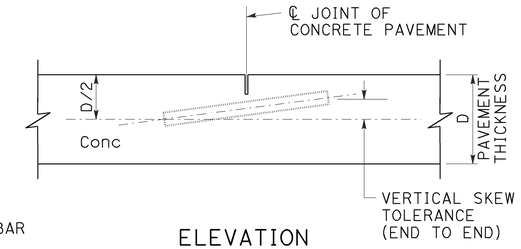

ELEVATION

VERTICAL SKEW TOLERANCE

NOTES:

1. See Standard Plan P1 for typical dowel bar placement and locations.
2. 1½" Dia dowel bars are to be used with a pavement thickness, D, equal to or greater than 0.70 feet. For pavement thickness, D, less than 0.70 feet, use 1¼" Dia dowel bars.
3. For widths not shown, see Project Plans.
4. If fresh concrete pavement is placed adjacent to existing concrete pavement, the top corner of the existing concrete pavement does not need to be rounded to the ¼" radius, as shown.
5. May also use ¾" Dia dowel bars 2'-4" ± ¼" in length. Center the length of dowel bars at the centerline of longitudinal joint.

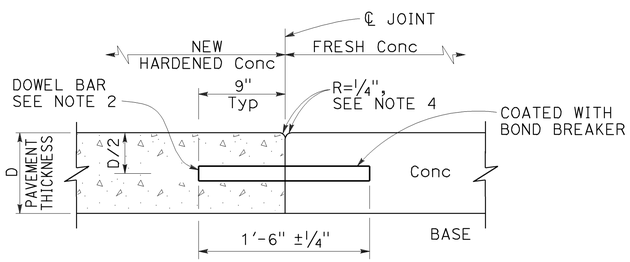

SECTION A-A

TRANSVERSE CONSTRUCTION JOINT DETAIL

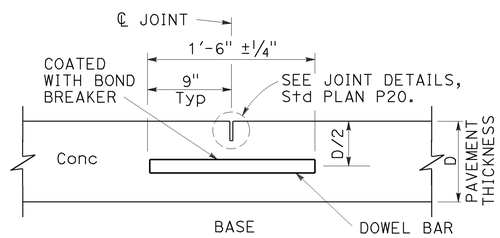

TRANSVERSE CONTRACTION JOINT

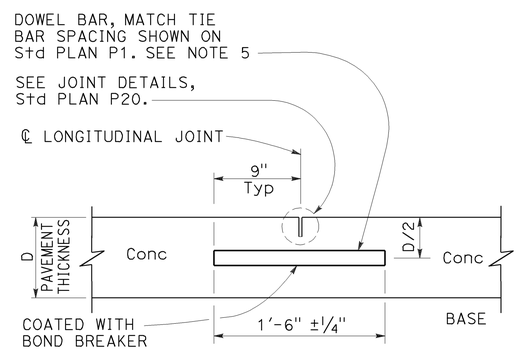

LONGITUDINAL CONTRACTION JOINT WITH DOWEL BARS

See Revised Std Plan RSP P18

TABLE A (See Note 3)

DOWEL BAR TRANSVERSE SPACING TABLE	
WIDTH BETWEEN LONGITUDINAL JOINTS	NUMBER OF DOWELS BETWEEN LONGITUDINAL JOINTS
14'-0"	14
13'-0"	13
12'-0"	12
11'-0"	11
10'-0"	10
8'-0"	8
5'-0"	5
4'-0"	4

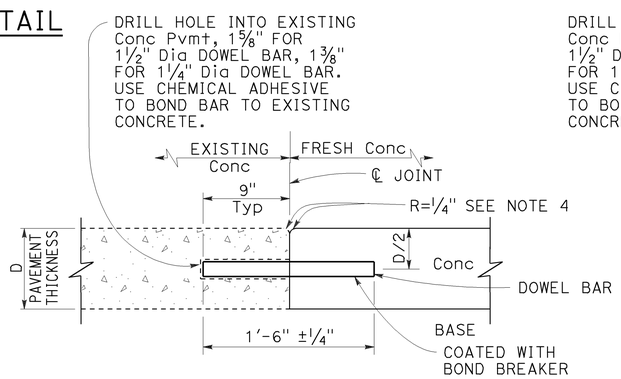

TRANSVERSE CONSTRUCTION JOINT FOR EXISTING CONCRETE PAVEMENT

Drill and bond locations

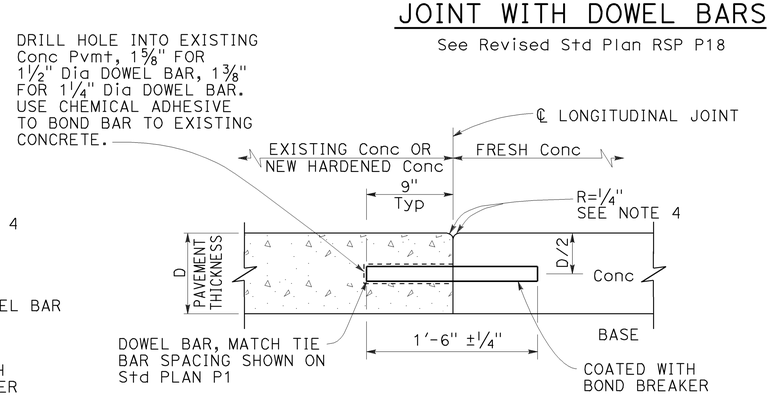

LONGITUDINAL CONSTRUCTION JOINT WITH DOWEL BARS

See Revised Std Plan RSP P18

STATE OF CALIFORNIA
DEPARTMENT OF TRANSPORTATION

CONCRETE PAVEMENT-DOWEL BAR DETAILS

NO SCALE

RSP P10 DATED APRIL 20, 2012 SUPERSEDES STANDARD PLAN P10 DATED MAY 20, 2011 - PAGE 131 OF THE STANDARD PLANS BOOK DATED 2010.

REVISED STANDARD PLAN RSP P10

2010 REVISED STANDARD PLAN RSP P10

2-22-12

DIST	COUNTY	ROUTE	POST MILES TOTAL PROJECT	SHEET No.	TOTAL SHEETS
06	Ker	5	10.2	12	15

REGISTERED CIVIL ENGINEER 9-19-12 DATE

11-26-12
PLANS APPROVAL DATE

REGISTERED PROFESSIONAL ENGINEER THOMAS J. BOLLA No. C 43811 Exp. 6-30-13 CIVIL STATE OF CALIFORNIA

The State of California or its officers or agents shall not be responsible for the accuracy or completeness of electronic copies of this plan sheet.

NOTES: (APPLY TO ALL SHEETS)

---·---·-- Indicates existing.

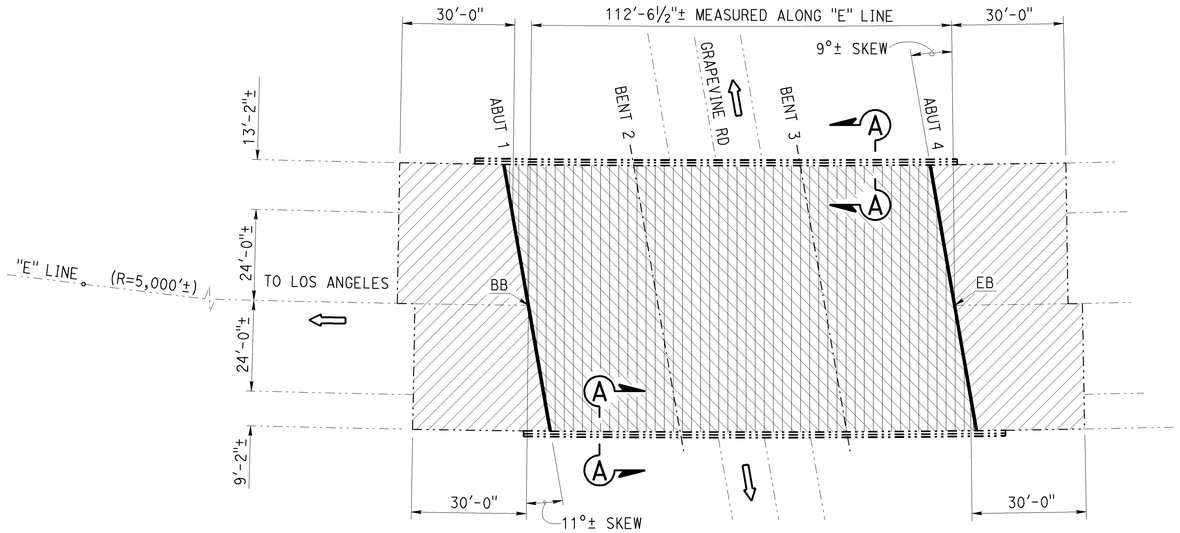

PLAN (LEFT BRIDGE)

1" = 20'

GRAPEVINE UNDERCROSSING 50-0194L

QUANTITIES

RAPID SETTING CONCRETE (PATCH)	20	CF
REMOVE ASPHALT CONCRETE SURFACING	7,915	SQFT
REMOVE UNSOUND CONCRETE	20	CF
PREPARE CONCRETE BRIDGE DECK SURFACE	7,915	SQFT
FURNISH POLYESTER CONCRETE OVERLAY	594	CF
PLACE POLYESTER CONCRETE OVERLAY	7,915	SQFT
AGGREGATE BASE (APPROACH SLAB)	17	CY
STRUCTURAL CONCRETE, APPROACH SLAB (TYPE R)	167	CY
PAVING NOTCH EXTENSION	106	CF
JOINT SEAL (MR 1/2")	144	LF

NOTES: (APPLY TO THIS SHEET ONLY)

Indicates limits of remove existing 5"± depth AC overlay and membrane seal.

Indicates limits of prepare concrete bridge deck surface, furnish and place new ¾" minimum depth polyester concrete overlay. Prior to placing new polyester concrete overlay, remove unsound concrete and patch with rapid setting concrete as shown on the "Deck Repair Detail - Overlay" on "DETAILS" sheet.

Indicates limits of remove existing approach and place new Structure Approach Type R(30D). For details, see "STRUCTURE APPROACH TYPE R(30D)" sheet.

Indicates limits of existing joint seal removal and placement of new joint seal. Place paving notch extension.

For "Section A-A", see "DETAILS" sheet.

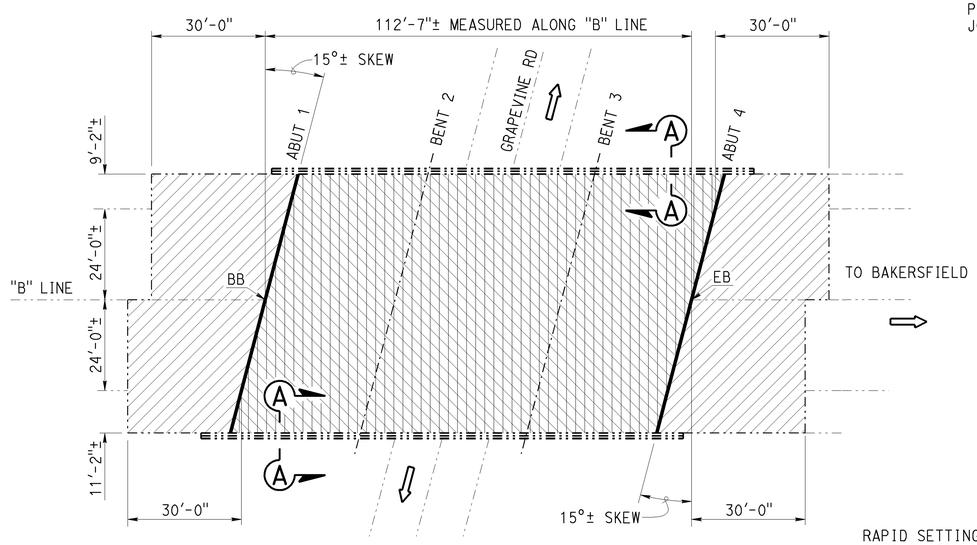

PLAN (RIGHT BRIDGE)

1" = 20'

GRAPEVINE UNDERCROSSING 50-0194R

QUANTITIES

RAPID SETTING CONCRETE (PATCH)	20	CF
REMOVE ASPHALT CONCRETE SURFACING	7,690	SQFT
REMOVE UNSOUND CONCRETE	20	CF
PREPARE CONCRETE BRIDGE DECK SURFACE	7,690	SQFT
FURNISH POLYESTER CONCRETE OVERLAY	577	CF
PLACE POLYESTER CONCRETE OVERLAY	7,690	SQFT
AGGREGATE BASE (APPROACH SLAB)	17	CY
STRUCTURAL CONCRETE, APPROACH SLAB (TYPE R)	168	CY
PAVING NOTCH EXTENSION	106	CF
JOINT SEAL (MR 1/2")	142	LF

INDEX TO PLANS

SHEET NO.	TITLE
1	GENERAL PLAN
2	DETAILS
3	STRUCTURE APPROACH TYPE R(30D)

STANDARD PLANS 2010

SHEET NO.	TITLE
A10A	ABBREVIATIONS (SHEET 1 OF 2)
A10B	ABBREVIATIONS (SHEET 2 OF 2)
B6-21	JOINT SEALS (MAXIMUM MOVEMENT RATING = 2")
RSP P10	CONCRETE PAVEMENT-DOWEL BAR DETAILS

STANDARD PLAN SHEET No.

DETAIL No.

NOTE:
THE CONTRACTOR SHALL VERIFY ALL CONTROLLING FIELD DIMENSIONS BEFORE ORDERING OR FABRICATING ANY MATERIAL.

8-6-12
DESIGN ENGINEER

	BY	CHECKED		BY	CHECKED
DESIGN	T. Bolla	Ali Nojoumi	LAYOUT	Dale Kubochi	Ali Nojoumi
DETAILS	Dale Kubochi	Ali Nojoumi	SPECIFICATIONS	Dave Klein	PLANS AND SPECS COMPARED Dave Klein
QUANTITIES	T. Bolla	Ali Nojoumi			

STATE OF CALIFORNIA
DEPARTMENT OF TRANSPORTATION

DIVISION OF MAINTENANCE
STRUCTURE MAINTENANCE DESIGN

BRIDGE NO. 50-0194L/R
POST MILE 10.16

GRAPEVINE UNDERCROSSING
GENERAL PLAN

STRUCTURES MAINTENANCE GENERAL PLAN SHEET (ENGLISH) (REV. 09-01-10)

ORIGINAL SCALE IN INCHES FOR REDUCED PLANS 0 1 2 3

UNIT: 3488
PROJECT NUMBER & PHASE: 0600020113 1 CONTRACT NO.: 06-0M2001

DISREGARD PRINTS BEARING EARLIER REVISION DATES

REVISION DATES 8-22-12 11-19-12 11-26-12

SHEET 1 OF 3

FILE => 06-0m2001-a-gp01.dgn

USERNAME => s124228 DATE PLOTTED => 28-NOV-2012 TIME PLOTTED => 12:42

DIST	COUNTY	ROUTE	POST MILES TOTAL PROJECT	SHEET No.	TOTAL SHEETS
06	Ker	5	10.2	13	15

Thomas J. Bolla 9-19-12
REGISTERED CIVIL ENGINEER DATE

11-26-12
PLANS APPROVAL DATE

REGISTERED PROFESSIONAL ENGINEER
THOMAS J. BOLLA
No. C 43811
Exp. 6-30-13
CIVIL
STATE OF CALIFORNIA

The State of California or its officers or agents shall not be responsible for the accuracy or completeness of electronic copies of this plan sheet.

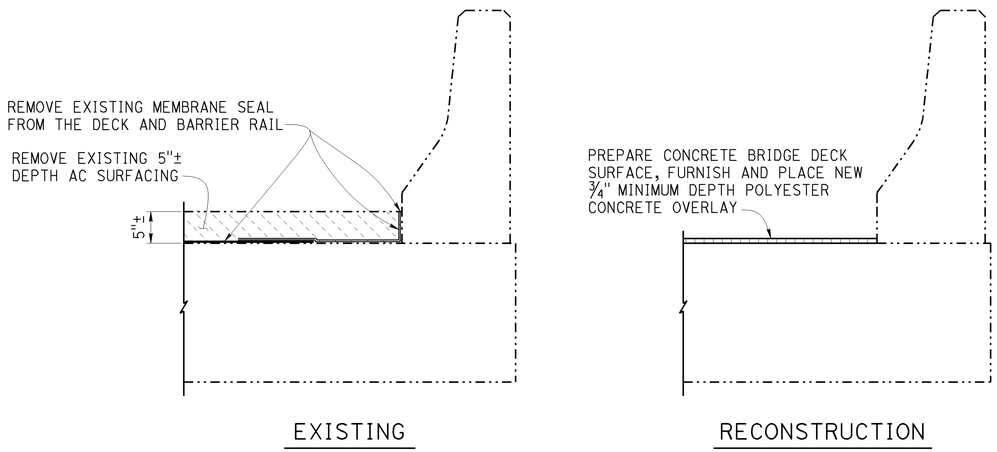

SECTION A-A

1" = 1'-0"

DECK REPAIR TABLE
REMOVE UNSOUND CONCRETE AND RAPID SETTING CONCRETE (PATCH)

BRIDGE NAME	BRIDGE NUMBER	APPROXIMATE AREA DAMAGED (PERCENT)	APPROXIMATE DEPTH (INCHES)
GRAPEVINE UNDERCROSSING	50-0194L	1	3
	50-0194R	1	3

Locations to be determined by the Engineer. For details see "DECK REPAIR DETAIL - OVERLAY".

JOINT SEAL TABLE

BRIDGE NAME	BRIDGE NUMBER	LOCATION		MINIMUM "MR" (INCHES)	APPROXIMATE LENGTH (FEET)	EXISTING WATERSTOP	APPROX DEPTH TO CLEAN EXP JOINT (INCHES)
GRAPEVINE UNDERCROSSING	50-0194L	Abut 1	BB	0.5	72	NO	-
		Abut 4	EB	0.5	72	NO	-
	50-0194R	Abut 1	BB	0.5	71	NO	-
		Abut 4	EB	0.5	71	NO	-

LEGEND:

BB - Paving Notch at beginning of bridge
EB - Paving Notch at end of bridge

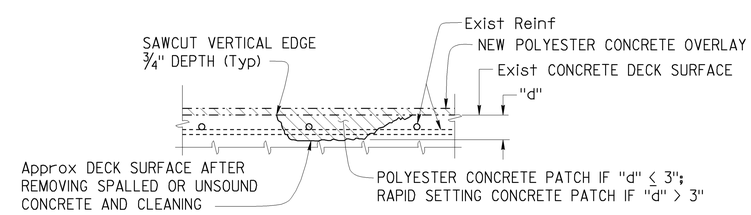

DECK REPAIR DETAIL - OVERLAY

Note: Locations to be determined by the Engineer. Reinforcement may be encountered during deck concrete removal.

NO SCALE

NOTE:
THE CONTRACTOR SHALL VERIFY ALL CONTROLLING FIELD DIMENSIONS BEFORE ORDERING OR FABRICATING ANY MATERIAL.

DESIGN	BY T. Bolla	CHECKED Ali Nojoumi	
DETAILS	BY Dale Kubochi	CHECKED Ali Nojoumi	
QUANTITIES	BY T. Bolla	CHECKED Ali Nojoumi	

STATE OF CALIFORNIA
DEPARTMENT OF TRANSPORTATION

DIVISION OF MAINTENANCE
STRUCTURE MAINTENANCE DESIGN

BRIDGE NO. 50-0194L/R
POST MILE 10.16

GRAPEVINE UNDERCROSSING
DETAILS

STRUCTURES MAINTENANCE DETAIL SHEET (ENGLISH) (REV. 09-01-10)

ORIGINAL SCALE IN INCHES FOR REDUCED PLANS 0 1 2 3

UNIT: 3488
PROJECT NUMBER & PHASE: 0600020113 1 CONTRACT NO.: 06-0M2001

DISREGARD PRINTS BEARING EARLIER REVISION DATES

REVISION DATES 3-26-12 3-28-12 11-19-12

SHEET 2 OF 3

FILE => 06-0m2001-d-det.dgn

USERNAME => s124428 DATE PLOTTED => 28-NOV-2012 TIME PLOTTED => 12:42

DIST	COUNTY	ROUTE	POST MILES TOTAL PROJECT	SHEET No.	TOTAL SHEETS
06	Ker	5	10.2	14	15

REGISTERED CIVIL ENGINEER Thomas J. Bolla DATE 9-19-12

11-26-12
PLANS APPROVAL DATE

REGISTERED PROFESSIONAL ENGINEER THOMAS J. BOLLA No. C 43811 Exp. 6-30-13 CIVIL STATE OF CALIFORNIA

The State of California or its officers or agents shall not be responsible for the accuracy or completeness of electronic copies of this plan sheet.

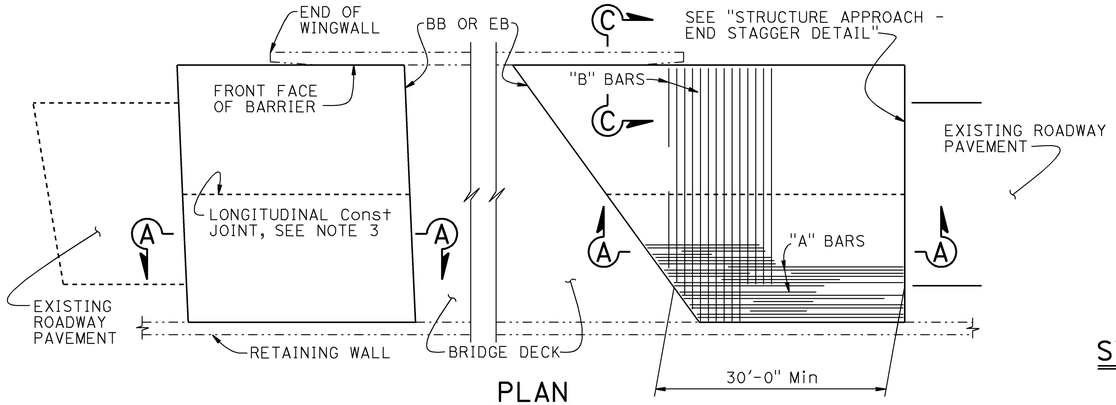

PLAN
1" = 10'

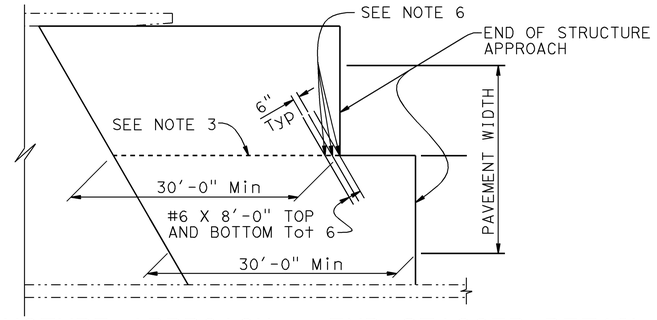

STRUCTURE APPROACH - END STAGGER DETAIL
NO SCALE

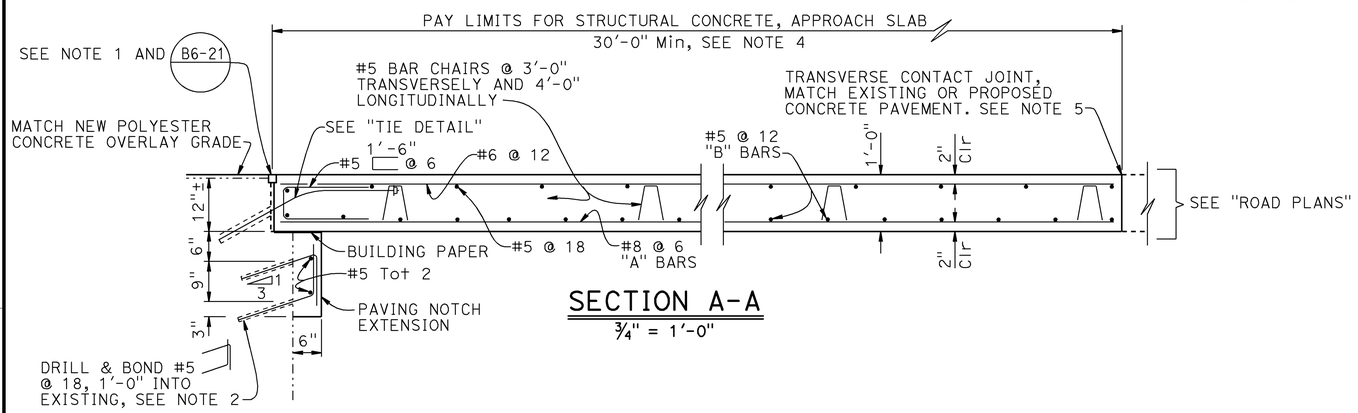

SECTION A-A
¾" = 1'-0"

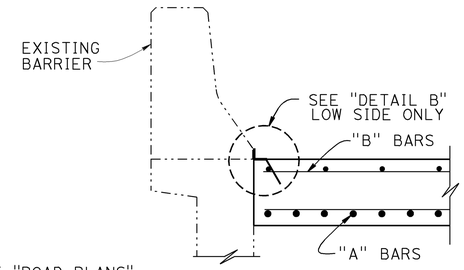

SECTION C-C
¾" = 1'-0"

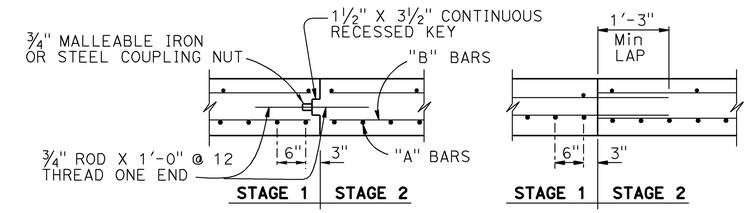

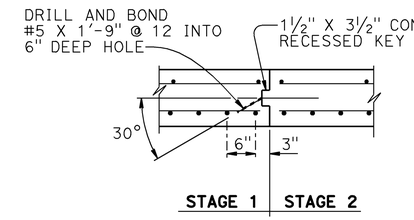

LONGITUDINAL CONSTRUCTION JOINT ALTERNATIVES
¾" = 1'-0"

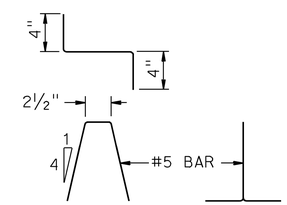

BAR CHAIR DETAIL
1½" = 1'-0"

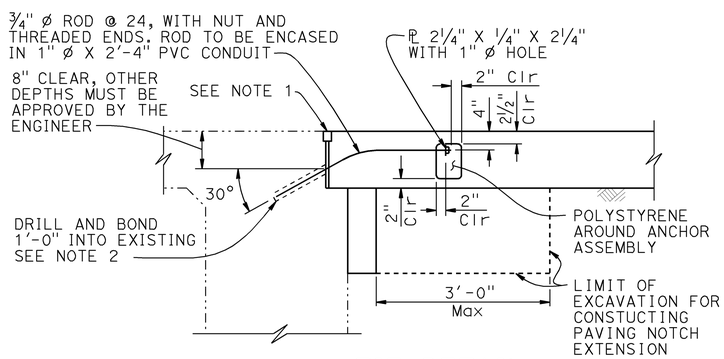

TIE DETAIL
¾" = 1'-0"

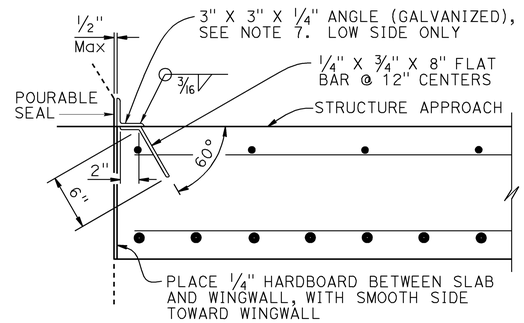

DETAIL B
1½" = 1'-0"

NOTES:
1. For details not shown or noted, see General Plan. Adjust bar reinforcement to clear a sawcut for sealed joint, when required
2. Space to avoid existing prestress anchorages and main reinforcement
3. Longitudinal construction joints, when permitted by the Engineer, shall be located on lane lines
4. Transverse contact joint shall be a minimum of 5'-0" from an existing or constructed weakened plane joint
5. For transverse contact joint with new PCC paving, refer to Standard Plan P10
6. Couplers are required for stage construction
7. End angle at beginning of barrier transition, end of wingwall or end of structure approach as applicable

NOTE:
THE CONTRACTOR SHALL VERIFY ALL CONTROLLING FIELD DIMENSIONS BEFORE ORDERING OR FABRICATING ANY MATERIAL.

	BY	CHECKED
DESIGN	T. Bolla	Ali Nojoumi
DETAILS	Dale Kubochi	Ali Nojoumi
QUANTITIES	T. Bolla	Ali Nojoumi

STATE OF CALIFORNIA
DEPARTMENT OF TRANSPORTATION

DIVISION OF MAINTENANCE
STRUCTURE MAINTENANCE DESIGN

BRIDGE NO. 50-0194L/R
POST MILE 10.16

GRAPEVINE UNDERCROSSING
STRUCTURE APPROACH TYPE R(30D)

STRUCTURES MAINTENANCE DETAIL SHEET (ENGLISH) (REV. 09-01-10)

ORIGINAL SCALE IN INCHES FOR REDUCED PLANS 0 1 2 3

UNIT: 3488
PROJECT NUMBER & PHASE: 0600020113 1 CONTRACT NO.: 06-0M2001

DISREGARD PRINTS BEARING EARLIER REVISION DATES

REVISION DATES 1-25-12 3-30-12 11-19-12

SHEET 3 OF 3

FILE => 06-0m2001-s-str-app.dgn

USERNAME => s124428 DATE PLOTTED => 28-NOV-2012 TIME PLOTTED => 12:43

DIST	COUNTY	ROUTE	POST MILES TOTAL PROJECT	SHEET No.	TOTAL SHEETS
06	Ker	5	10.2	15	15

REGISTERED CIVIL ENGINEER 9/25/12 DATE

11-26-12
PLANS APPROVAL DATE

REGISTERED PROFESSIONAL ENGINEER TILLAT SATTER No. C42892 Exp. 3-31-14 CIVIL STATE OF CALIFORNIA

The State of California or its officers or agents shall not be responsible for the accuracy or completeness of electronic copies of this plan sheet.

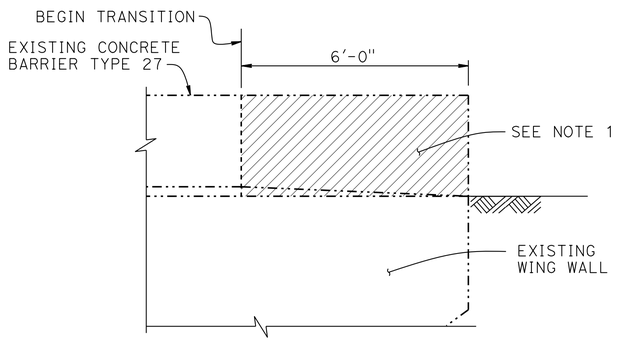

CONCRETE REMOVAL
1/2" = 1'-0"

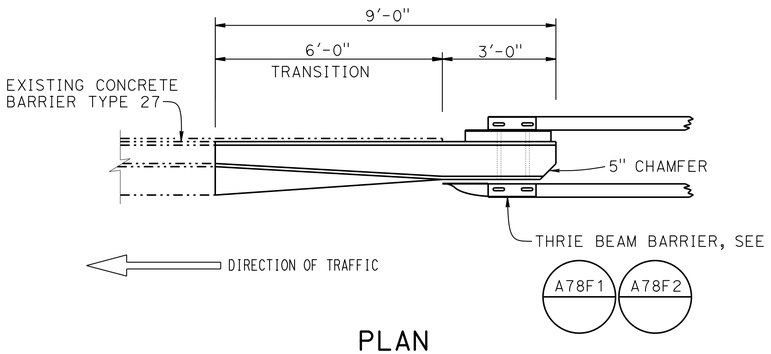

PLAN
1/2" = 1'-0"

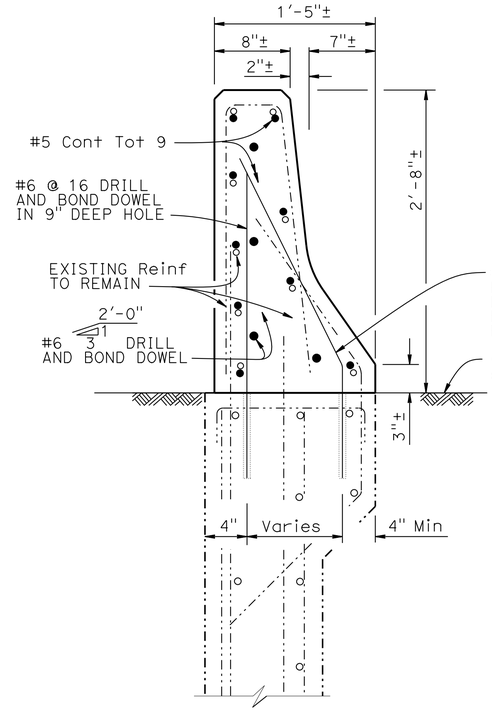

SECTION B-B
1 1/2" = 1'-0"

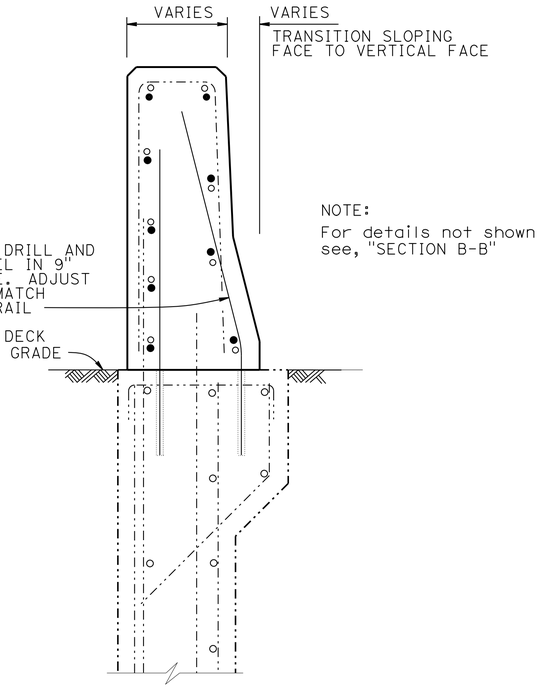

NOTE:
For details not shown see, "SECTION B-B"

SECTION C-C
1 1/2" = 1'-0"

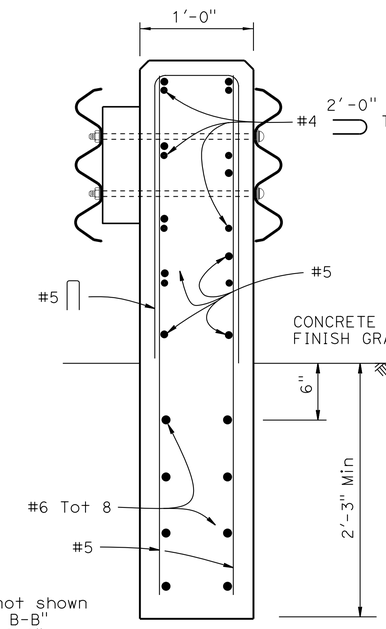

NOTE:
For details not shown see, "SECTION B-B" and "SECTION C-C"

SECTION D-D
1 1/2" = 1'-0"

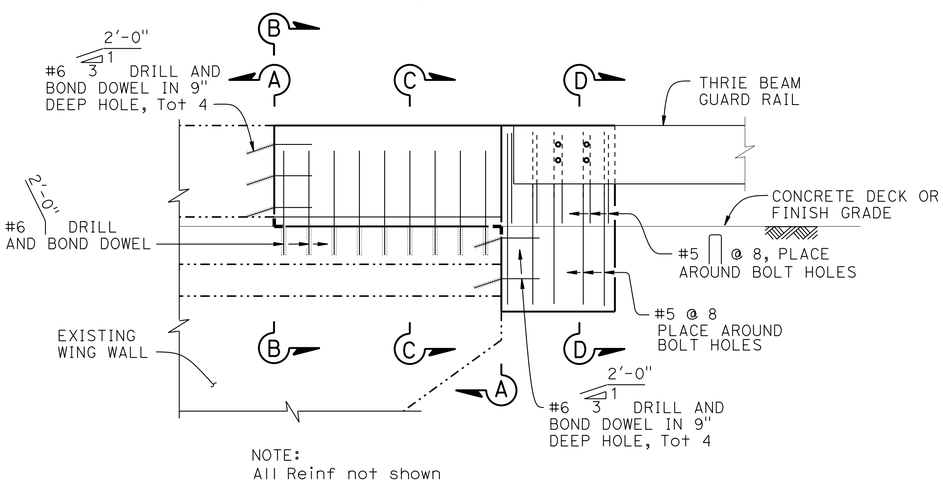

NOTE:
All Reinf not shown

ELEVATION
1/2" = 1'-0"

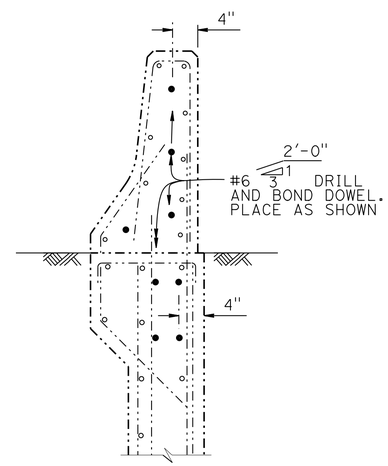

SECTION A-A
1" = 1'-0"

NOTES:
1. Cut and remove the portion of Concrete Barrier Type 27 as required. Existing reinforcement to remain
2. Wingwall reinforcement to remain

LEGEND:
- Indicates existing structure
- Indicates new construction
- Concrete removal
- Indicates Existing Reinforcement

NOTE:
THE CONTRACTOR SHALL VERIFY ALL CONTROLLING FIELD DIMENSIONS BEFORE ORDERING OR FABRICATING ANY MATERIAL.

STANDARD DRAWING
FILE NO. xs16-020
APPROVAL DATE July 2011

STATE OF CALIFORNIA
DEPARTMENT OF TRANSPORTATION

DIVISION OF ENGINEERING SERVICES

BRIDGE NO. 05-0194R/L
POST MILE 10.2

XS16-020
THRIE BEAM CONNECTION-TYPE 27

DS OSD 2147A (ENGLISH STANDARD DRAWING "XS" BORDER REV. (02-02-11)

ORIGINAL SCALE IN INCHES FOR REDUCED PLANS 0 1 2 3

UNIT: 1594
PROJECT NUMBER & PHASE: 0600020113-1
CONTRACT NO.: 06-0M2001

DISREGARD PRINTS BEARING EARLIER REVISION DATES

REVISION DATES | SHEET | OF

FILE => 06-0m2001-z-thrieb-brdt.dgn

USERNAME => s115755 DATE PLOTTED => 07-DEC-2012 TIME PLOTTED => 13:22