Dist	COUNTY	ROUTE	POST MILES TOTAL PROJECT	SHEET No.	TOTAL SHEETS
06	Tul	65,99,137, 190,198,216	Var	1	59

INDEX OF PLANS

SHEET No.	DESCRIPTION
1	TITLE SHEET AND LOCATION MAP
2-7	LAYOUTS
8-24	CONSTRUCTION DETAILS
25	CONSTRUCTION AREA SIGNS
26-29	PAVEMENT DELINEATION AND SIGN PLAN
30	PAVEMENT DELINEATION AND SIGN QUANTITIES
31	SUMMARY OF QUANTITIES
32-39	ELECTRICAL PLANS
40-59	REVISED AND NEW STANDARD PLANS

THE STANDARD PLANS LIST APPLICABLE TO THIS CONTRACT IS INCLUDED IN THE NOTICE TO BIDDERS AND SPECIAL PROVISIONS BOOK.

STATE OF CALIFORNIA

DEPARTMENT OF TRANSPORTATION

PROJECT PLANS FOR CONSTRUCTION ON

STATE HIGHWAY

IN TULARE COUNTY AT VARIOUS LOCATIONS

TO BE SUPPLEMENTED BY STANDARD PLANS DATED MAY 2006

LOCATION MAP

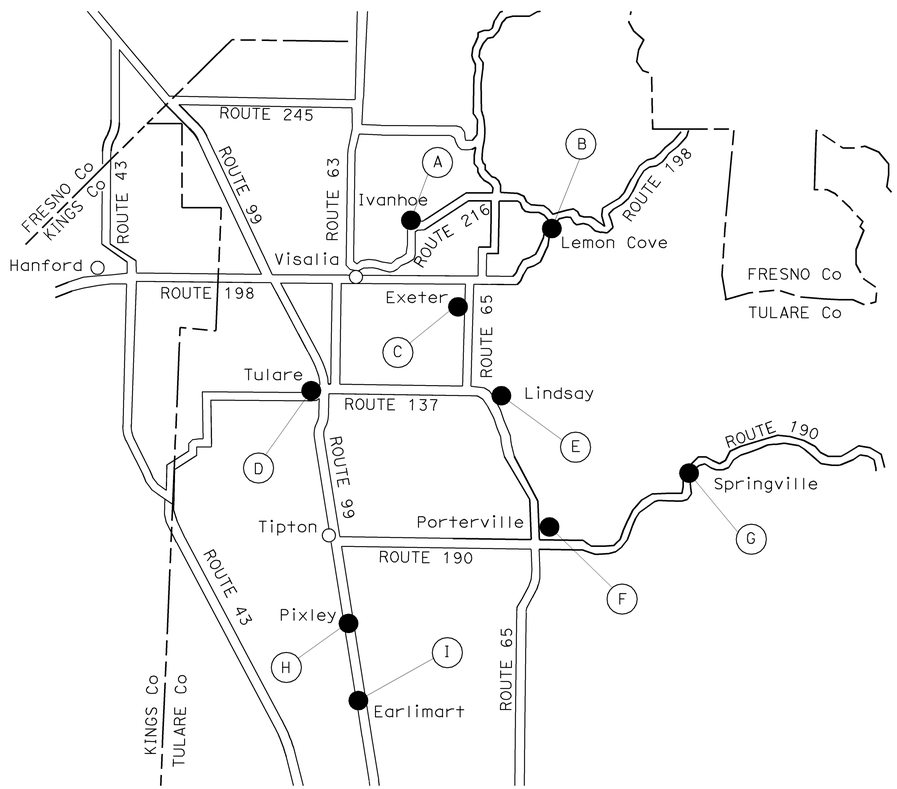

NO SCALE

LOCATIONS OF CONSTRUCTION

No.	ROUTE	CITY	PM	LOCATION
A	216	IVANHOE	7.0	1
B	198	LEMON COVE	27.0	2-3
C	65	EXETER	37.1	4
D	99 137	TULARE TULARE	30.6 14.3/17.5	5 6-24
E	65	LINDSAY	29.9	25
F	190	PORTERVILLE	16.4/16.9	26-32
G	190	SPRINGVILLE	31.5/32.3	33-38
H	99	PIXLEY	12.3/12.8	39-42
I	99	EARLIMART	6.2/7.2	43-46

Steve M Lee 03-10-10
PROJECT ENGINEER DATE
REGISTERED CIVIL ENGINEER

March 22, 2010
PLANS APPROVAL DATE

REGISTERED PROFESSIONAL ENGINEER STEVE M. LEE No. 62613 Exp. 6-30-10 CIVIL STATE OF CALIFORNIA

THE STATE OF CALIFORNIA OR ITS OFFICERS OR AGENTS SHALL NOT BE RESPONSIBLE FOR THE ACCURACY OR COMPLETENESS OF SCANNED COPIES OF THIS PLAN SHEET.

PROJECT MANAGER DALLIA FOSTER

DESIGN ENGINEER THANH NGUYEN

THE CONTRACTOR SHALL POSSESS THE CLASS (OR CLASSES) OF LICENSE AS SPECIFIED IN THE "NOTICE TO BIDDERS."

LAST REVISION 03-10-10

DATE PLOTTED => 22-APR-2010
TIME PLOTTED => 12:56

CONTRACT No. **06-0G9304**

Dist	COUNTY	ROUTE	POST MILES TOTAL PROJECT	SHEET No.	TOTAL SHEETS
06	Tul	65,99,137, 190,198,216	Var	2	59

Steve M Lee 8/28/09
REGISTERED CIVIL ENGINEER DATE

3-22-10
PLANS APPROVAL DATE

REGISTERED PROFESSIONAL ENGINEER STEVE M. LEE No. 62613 Exp 6-30-10 CIVIL STATE OF CALIFORNIA

THE STATE OF CALIFORNIA OR ITS OFFICERS OR AGENTS SHALL NOT BE RESPONSIBLE FOR THE ACCURACY OR COMPLETENESS OF SCANNED COPIES OF THIS PLAN SHEET.

NOTE:

1. FOR ACCURATE RIGHT OF WAY AND ACCESS DATA, CONTACT RIGHT OF WAY ENGINEERING AT THE DISTRICT OFFICE.

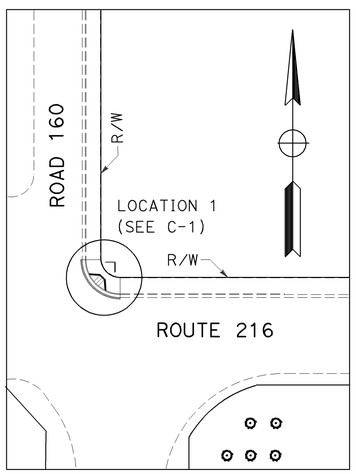

LOCATION 1
ROUTE 216/ROAD 160
(IVANHOE)
PM 7.0

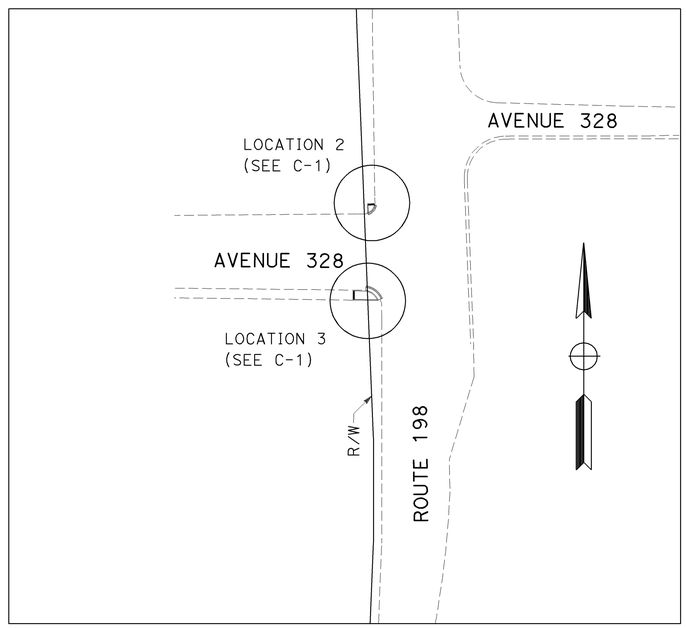

LOCATIONS 2-3
ROUTE 198/AVENUE 328
(LEMONCOVE)
PM 27.0

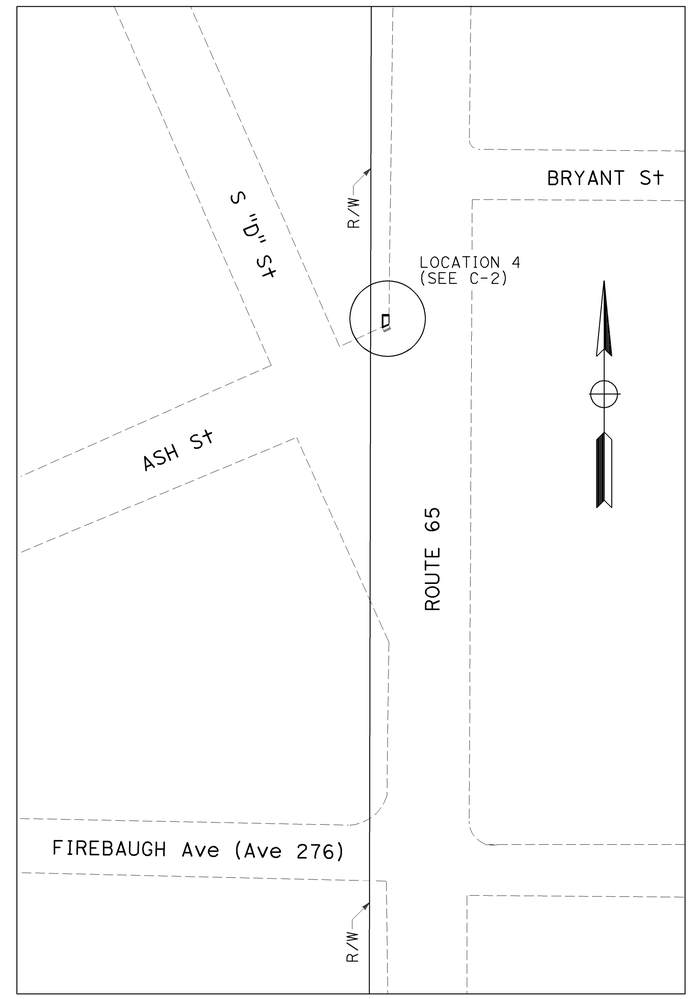

LOCATION 4
ROUTE 65/ASH STREET
(EXETER)
PM 37.1

SCALE: 1" = 50'

LAYOUTS
L-1

REVISED BY	DATE REVISED

CALCULATED-DESIGNED BY: DEBRA FRANCO
CHECKED BY: STEVE M. LEE
FUNCTIONAL SUPERVISOR: THANH NGUYEN

STATE OF CALIFORNIA - DEPARTMENT OF TRANSPORTATION
Caltrans
DESIGN

LAST REVISION 03-10-10
DATE PLOTTED => 20-APR-2010
TIME PLOTTED => 15:55

Dist	COUNTY	ROUTE	POST MILES TOTAL PROJECT	SHEET No.	TOTAL SHEETS
06	Tul	65,99,137, 190,198,216	Var	3	59

REGISTERED CIVIL ENGINEER 8/28/09 DATE

3-22-10
PLANS APPROVAL DATE

REGISTERED PROFESSIONAL ENGINEER STEVE M. LEE No. 62613 Exp 6-30-10 CIVIL STATE OF CALIFORNIA

THE STATE OF CALIFORNIA OR ITS OFFICERS OR AGENTS SHALL NOT BE RESPONSIBLE FOR THE ACCURACY OR COMPLETENESS OF SCANNED COPIES OF THIS PLAN SHEET.

NOTE:

1. FOR ACCURATE RIGHT OF WAY AND ACCESS DATA, CONTACT RIGHT OF WAY ENGINEERING AT THE DISTRICT OFFICE.

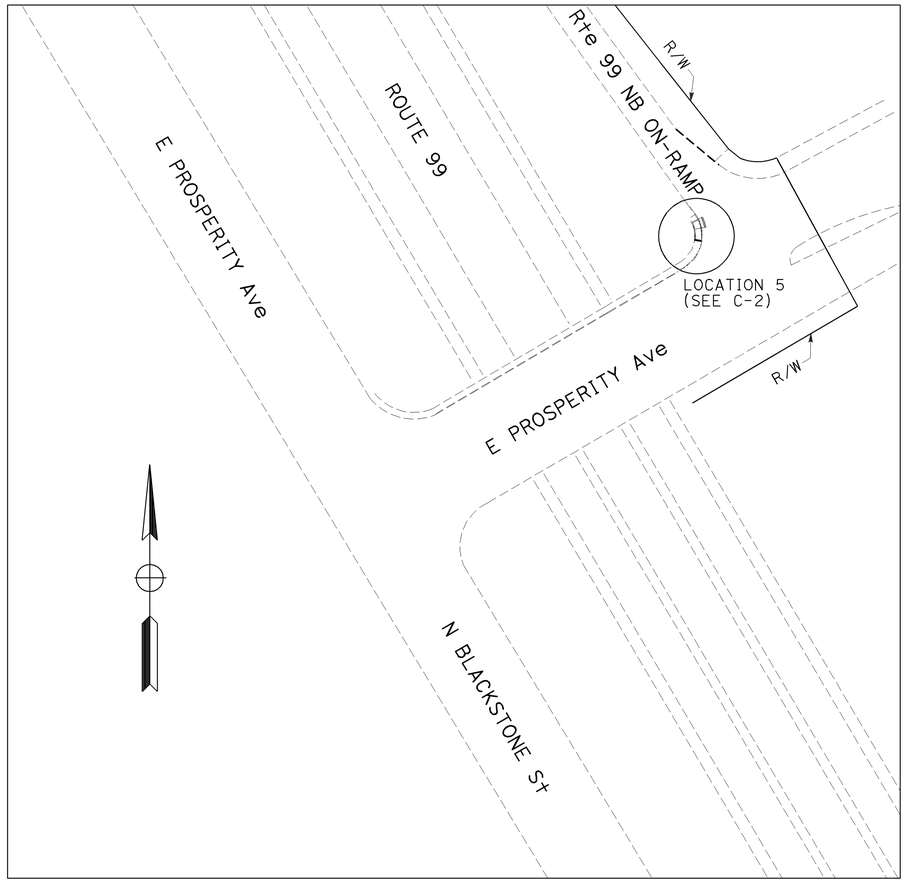

LOCATION 5
ROUTE 99 NB ON-RAMP/E PROSPERITY AVENUE
(TULARE)
PM 30.6

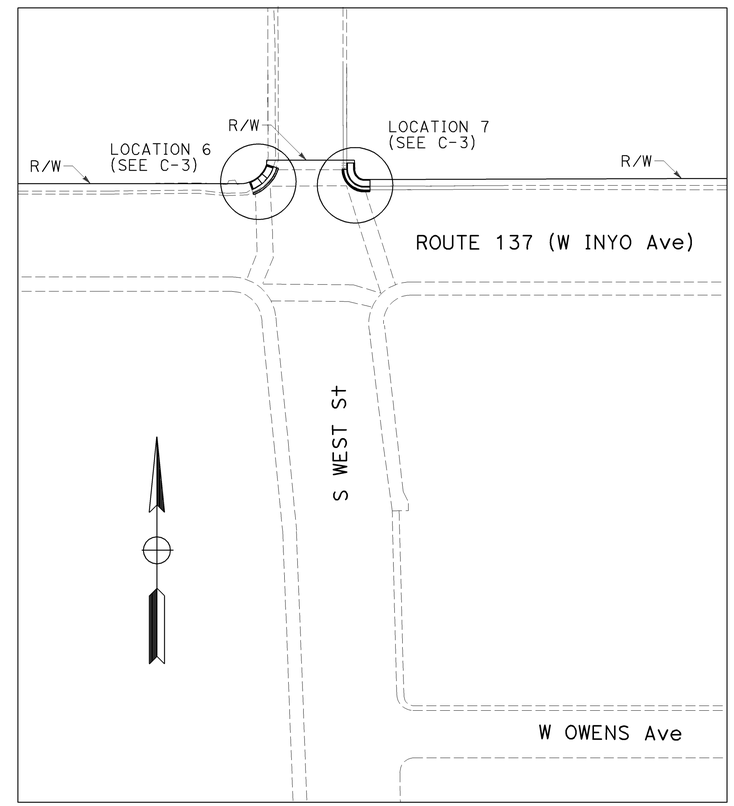

LOCATIONS 6-7
ROUTE 137/S WEST STREET
(TULARE)
PM 14.3

SCALE: 1" = 50'

LAYOUTS
L-2

STATE OF CALIFORNIA - DEPARTMENT OF TRANSPORTATION
Caltrans
DESIGN

FUNCTIONAL SUPERVISOR: THANH NGUYEN
CALCULATED-DESIGNED BY: DEBRA FRANCO
CHECKED BY: STEVE M. LEE
REVISED BY
DATE REVISED

LAST REVISION 03-10-10 | DATE PLOTTED => 20-APR-2010 | TIME PLOTTED => 15:55

Dist	COUNTY	ROUTE	POST MILES TOTAL PROJECT	SHEET No.	TOTAL SHEETS
06	Tul	65,99,137, 190,198,216	Var	4	59

REGISTERED CIVIL ENGINEER 8/28/09 DATE

3-22-10
PLANS APPROVAL DATE

REGISTERED PROFESSIONAL ENGINEER STEVE M. LEE No. 62613 Exp 6-30-10 CIVIL STATE OF CALIFORNIA

THE STATE OF CALIFORNIA OR ITS OFFICERS OR AGENTS SHALL NOT BE RESPONSIBLE FOR THE ACCURACY OR COMPLETENESS OF SCANNED COPIES OF THIS PLAN SHEET.

NOTE:

1. FOR ACCURATE RIGHT OF WAY AND ACCESS DATA, CONTACT RIGHT OF WAY ENGINEERING AT THE DISTRICT OFFICE.

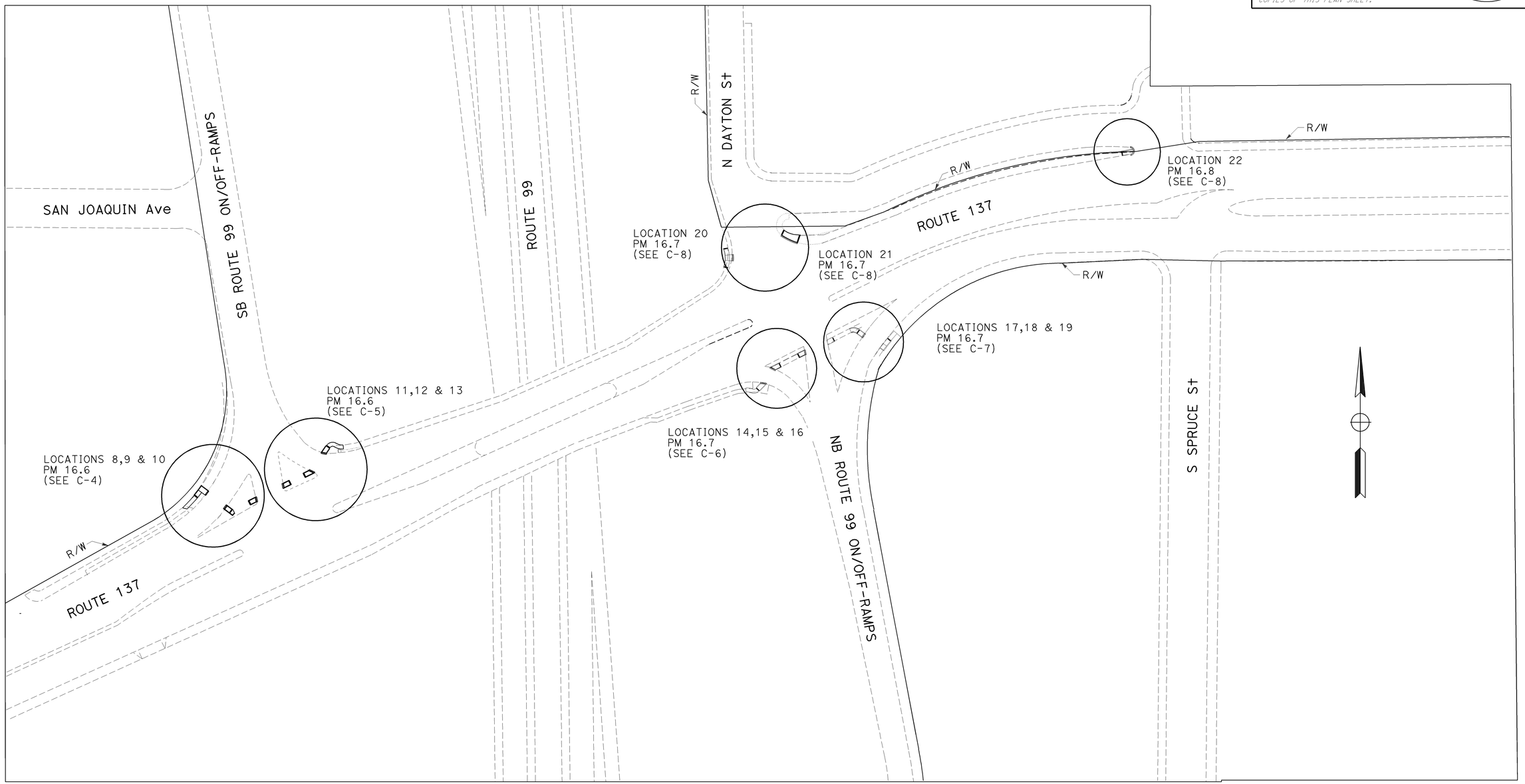

LOCATIONS 8-22
ROUTE 137/ROUTE 99 NB & SB ON/OFF RAMPS
(TULARE)
PM 16.6/16.8

SCALE: 1" = 50'

LAYOUTS
L-3

STATE OF CALIFORNIA - DEPARTMENT OF TRANSPORTATION
DESIGN

FUNCTIONAL SUPERVISOR: THANH NGUYEN
CALCULATED-DESIGNED BY: DEBRA FRANCO
CHECKED BY: STEVE M. LEE
REVISED BY
DATE REVISED

LAST REVISION 03-10-10 | DATE PLOTTED => 20-APR-2010 | TIME PLOTTED => 15:55

Dist	COUNTY	ROUTE	POST MILES TOTAL PROJECT	SHEET No.	TOTAL SHEETS
06	Tul	65,99,137, 190,198,216	Var	5	59

Steve M Lee 8/28/09
REGISTERED CIVIL ENGINEER DATE

3-22-10
PLANS APPROVAL DATE

REGISTERED PROFESSIONAL ENGINEER STEVE M. LEE No. 62613 Exp 6-30-10 CIVIL STATE OF CALIFORNIA

THE STATE OF CALIFORNIA OR ITS OFFICERS OR AGENTS SHALL NOT BE RESPONSIBLE FOR THE ACCURACY OR COMPLETENESS OF SCANNED COPIES OF THIS PLAN SHEET.

NOTE:

1. FOR ACCURATE RIGHT OF WAY AND ACCESS DATA, CONTACT RIGHT OF WAY ENGINEERING AT THE DISTRICT OFFICE.

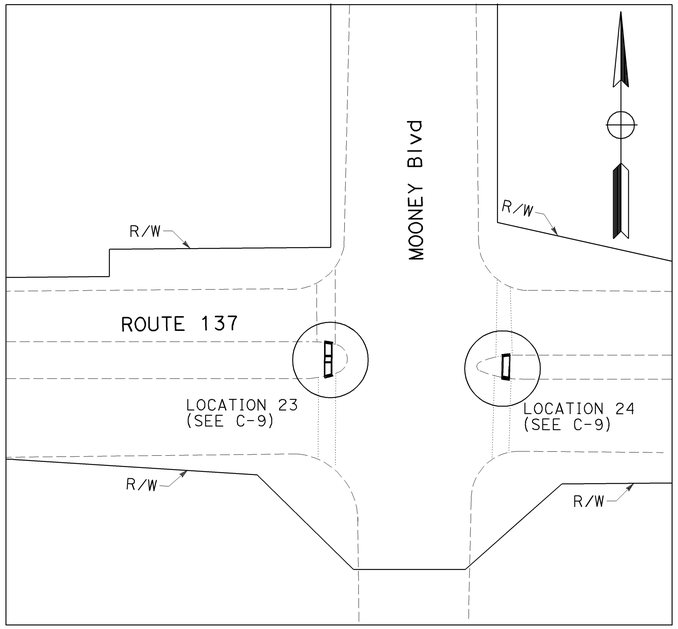

LOCATIONS 23-24
ROUTE 137/MOONEY BOULAVARD
(TULARE)
PM 17.5

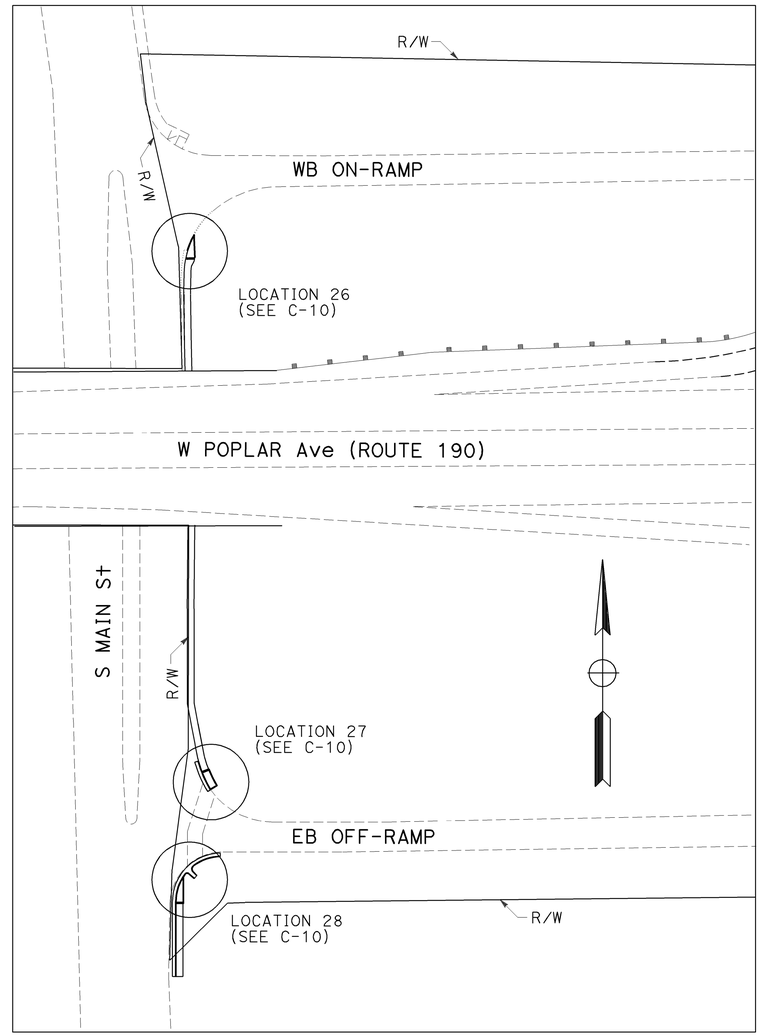

LOCATIONS 26-28
ROUTE 190 ON & OFF-RAMPS /MAIN STREET
(PORTERVILLE)
PM 16.4

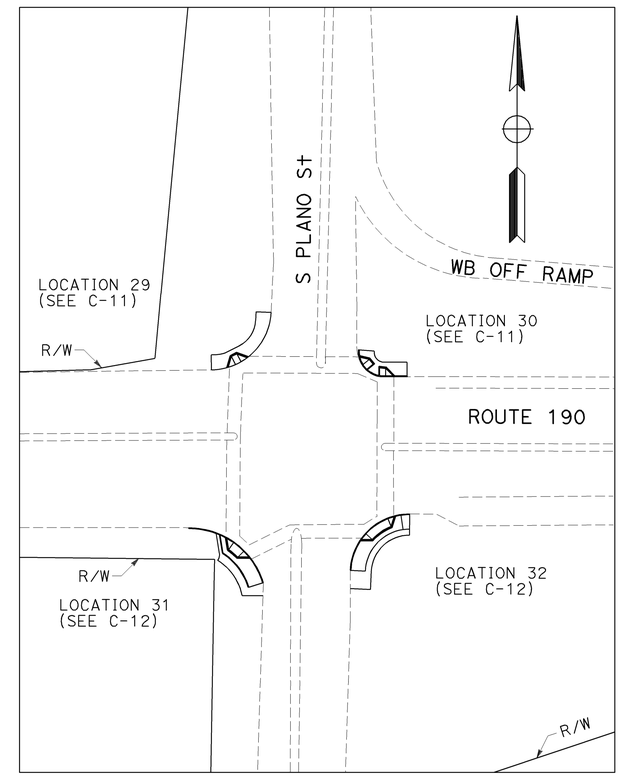

LOCATIONS 29-32
ROUTE 190/PLANO STREET
(PORTERVILLE)
PM 16.9

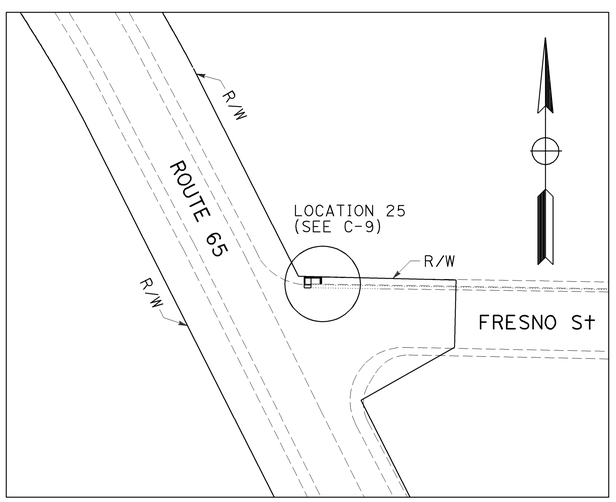

LOCATION 25
ROUTE 65/FRESNO STREET
(LINDSAY)
PM 29.9

SCALE: 1" = 50'

LAYOUTS
L-4

STATE OF CALIFORNIA - DEPARTMENT OF TRANSPORTATION
Caltrans
DESIGN

FUNCTIONAL SUPERVISOR: THANH NGUYEN
CALCULATED-DESIGNED BY: DEBRA FRANCO
CHECKED BY: STEVE M. LEE
REVISED BY
DATE REVISED

LAST REVISION 03-10-10
DATE PLOTTED => 20-APR-2010
TIME PLOTTED => 15:55

Dist	COUNTY	ROUTE	POST MILES TOTAL PROJECT	SHEET No.	TOTAL SHEETS
06	Tul	65,99,137, 190,198,216	Var	6	59

REGISTERED CIVIL ENGINEER 8/28/09 DATE

3-22-10
PLANS APPROVAL DATE

REGISTERED PROFESSIONAL ENGINEER STEVE M. LEE No. 62613 Exp 6-30-10 CIVIL STATE OF CALIFORNIA

THE STATE OF CALIFORNIA OR ITS OFFICERS OR AGENTS SHALL NOT BE RESPONSIBLE FOR THE ACCURACY OR COMPLETENESS OF SCANNED COPIES OF THIS PLAN SHEET.

NOTE:

1. FOR ACCURATE RIGHT OF WAY AND ACCESS DATA, CONTACT RIGHT OF WAY ENGINEERING AT THE DISTRICT OFFICE.

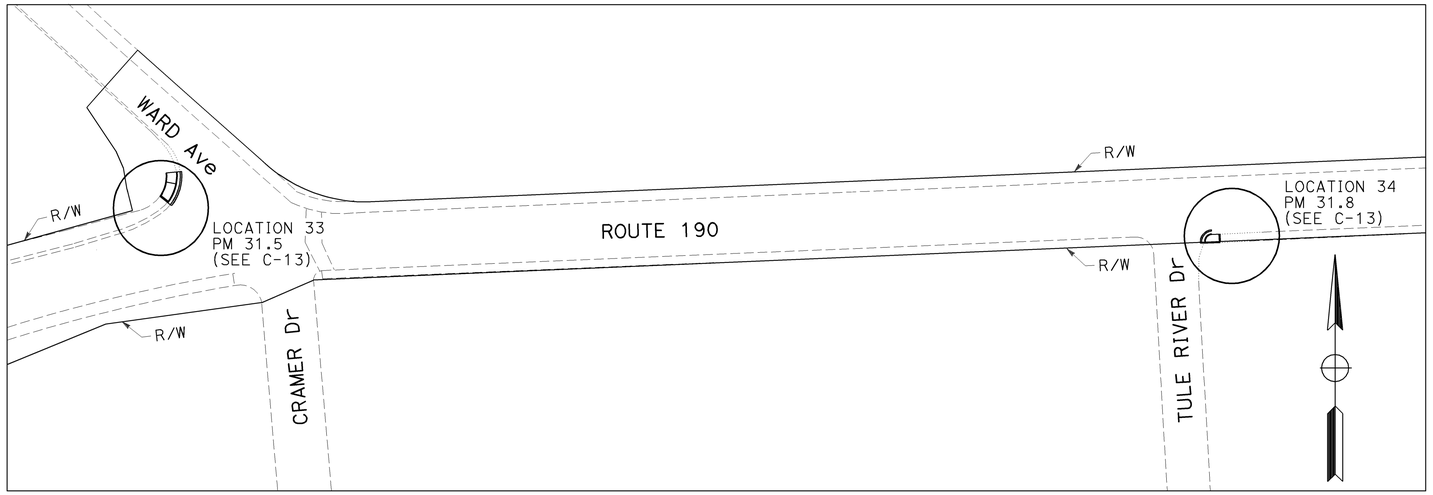

LOCATIONS 33-34
ROUTE 190/WARD Ave
ROUTE 190/TULE RIVER Dr
(SPRINGVILLE)
PM 31.5/31.8

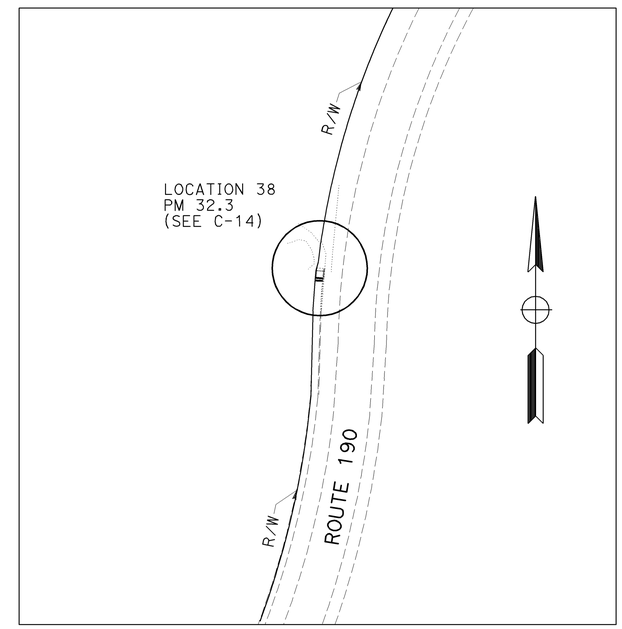

LOCATION 38
ROUTE 190
(SPRINGVILLE)
PM 32.3

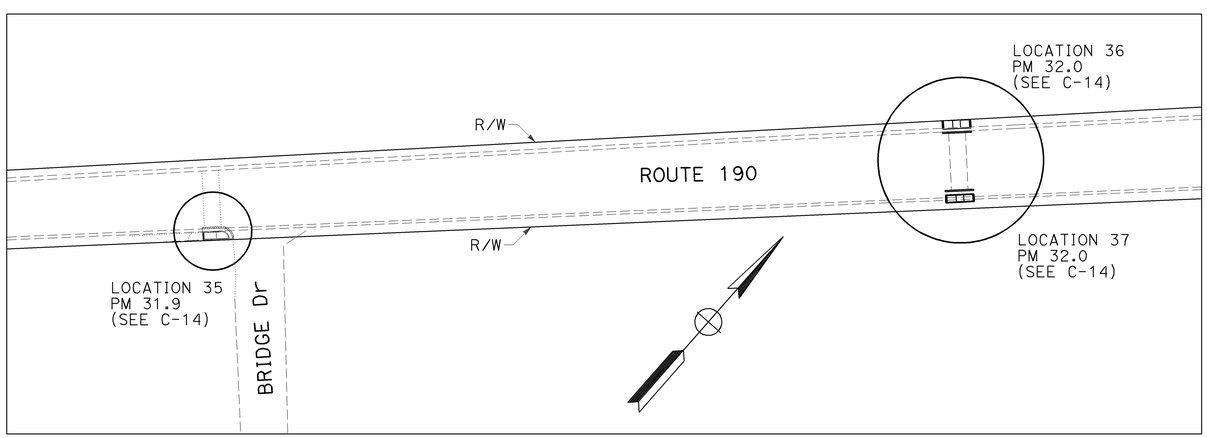

LOCATIONS 35-37
ROUTE 190/BRIDGE Dr
(SPRINGVILLE)
PM 31.9/32.0

SCALE: 1" = 50'

LAYOUTS
L-5

REVISED BY | DATE REVISED
DEBRA FRANCO | STEVE M. LEE
CALCULATED-DESIGNED BY | CHECKED BY
FUNCTIONAL SUPERVISOR
THANH NGUYEN

STATE OF CALIFORNIA - DEPARTMENT OF TRANSPORTATION
Caltrans
DESIGN

LAST REVISION 03-10-10 | DATE PLOTTED => 20-APR-2010 | TIME PLOTTED => 15:55

Dist	COUNTY	ROUTE	POST MILES TOTAL PROJECT	SHEET No.	TOTAL SHEETS
06	Tul	65,99,137, 190,198,216	Var	7	59

REGISTERED CIVIL ENGINEER 8/28/09 DATE

3-22-10
PLANS APPROVAL DATE

REGISTERED PROFESSIONAL ENGINEER STEVE M. LEE No. 62613 Exp 6-30-10 CIVIL STATE OF CALIFORNIA

THE STATE OF CALIFORNIA OR ITS OFFICERS OR AGENTS SHALL NOT BE RESPONSIBLE FOR THE ACCURACY OR COMPLETENESS OF SCANNED COPIES OF THIS PLAN SHEET.

NOTE:

1. FOR ACCURATE RIGHT OF WAY AND ACCESS DATA, CONTACT RIGHT OF WAY ENGINEERING AT THE DISTRICT OFFICE.

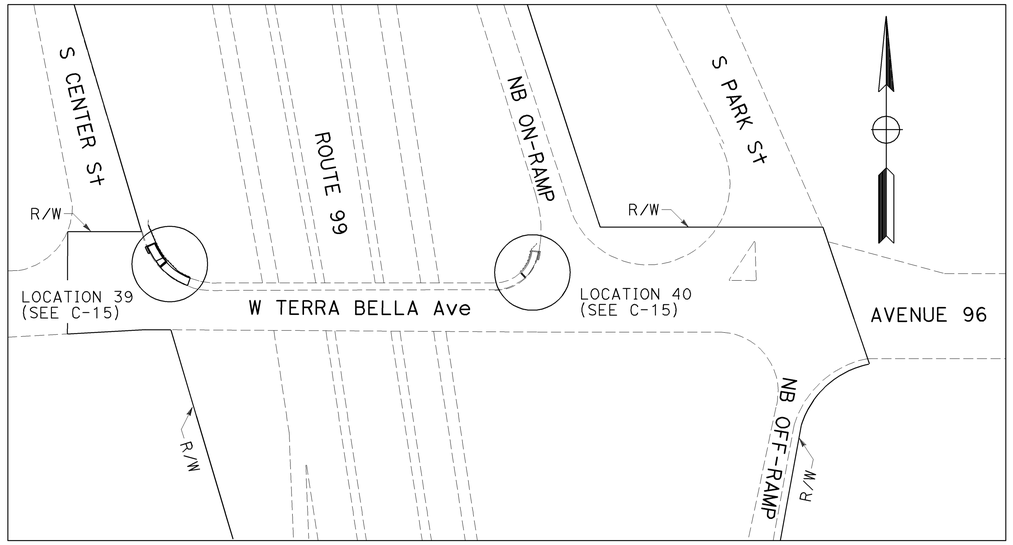

LOCATIONS 39-40
ROUTE 99/W TERRA BELLA Ave
(PIXLEY)
PM 12.3

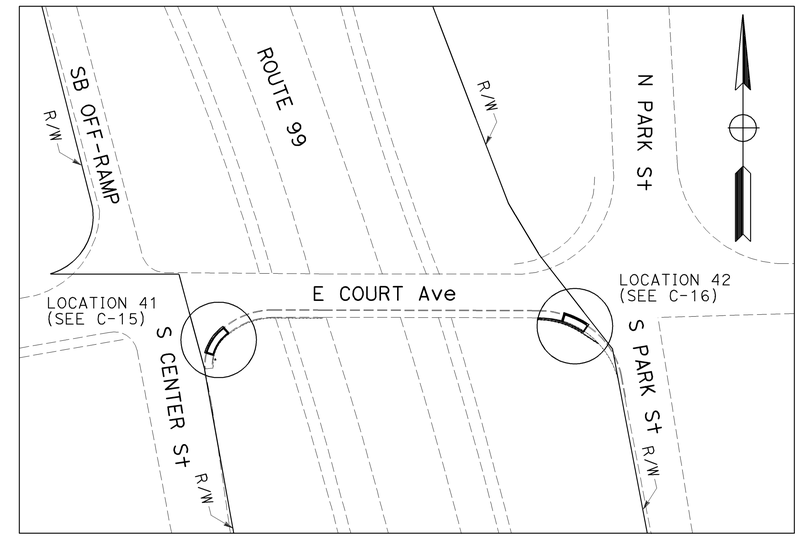

LOCATIONS 41-42
ROUTE 99/ E COURT AVENUE
(PIXLEY)
PM 12.8

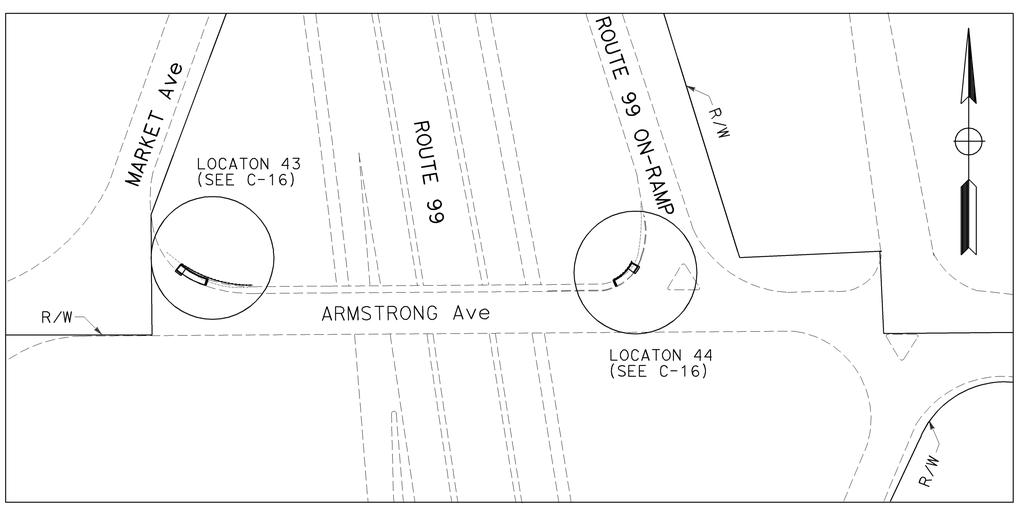

LOCATIONS 43-44
ROUTE 99/ARMSTRONG AVENUE
(EARLIMART)
PM 6.2

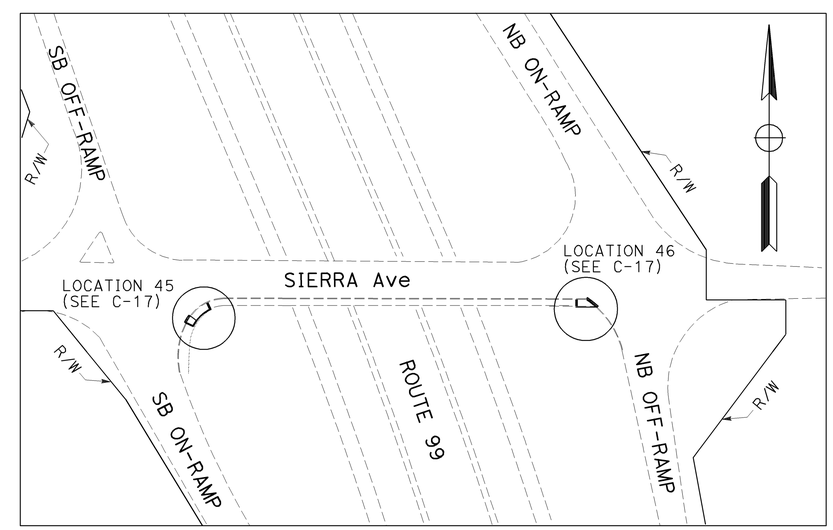

LOCATIONS 45-46
ROUTE 99/SIERRA AVENUE
(EARLIMART)
PM 7.2

SCALE: 1" = 50'

LAYOUTS
L-6

STATE OF CALIFORNIA - DEPARTMENT OF TRANSPORTATION
Caltrans
DESIGN

FUNCTIONAL SUPERVISOR: THANH NGUYEN
CALCULATED-DESIGNED BY: DEBRA FRANCO
CHECKED BY: STEVE M. LEE
REVISED BY
DATE REVISED

LAST REVISION 03-10-10
DATE PLOTTED => 20-APR-2010
TIME PLOTTED => 15:55

Dist	COUNTY	ROUTE	POST MILES TOTAL PROJECT	SHEET No.	TOTAL SHEETS
06	Tul	65,99,137, 190,198,216	Var	8	59

REGISTERED CIVIL ENGINEER 8/28/09 DATE

3-22-10
PLANS APPROVAL DATE

REGISTERED PROFESSIONAL ENGINEER STEVE M. LEE No. 62613 Exp 6-30-10 CIVIL STATE OF CALIFORNIA

THE STATE OF CALIFORNIA OR ITS OFFICERS OR AGENTS SHALL NOT BE RESPONSIBLE FOR THE ACCURACY OR COMPLETENESS OF SCANNED COPIES OF THIS PLAN SHEET.

LEGEND

- REPLACE AC SURFACING 12" (W) x 6" (D)
- (A) MATCH Exist SW
- (B) REMOVE CURB AND PLACE CURB (TYPE A2-6)
- (C) MATCH Exist Pvmt
- (D) MATCH Exist FL
- (E) REMOVE CURB AND PLACE CURB (TYPE A1-6)
- (F) REMOVE Conc SW
- (G) Conc CURB (TYPE A1-6)
- (H) DEPRESSED CURB
- (I) RETAINING CURB
- (J) Conc CURB (TYPE A2-6)
- (K) REMOVE AC Pvmt (Rdwy Exc)
- PCC Pvmt
- REMOVE MEDIAN ISLAND/ AC Pvmt & PLACE HMA (Rdwy Exc)

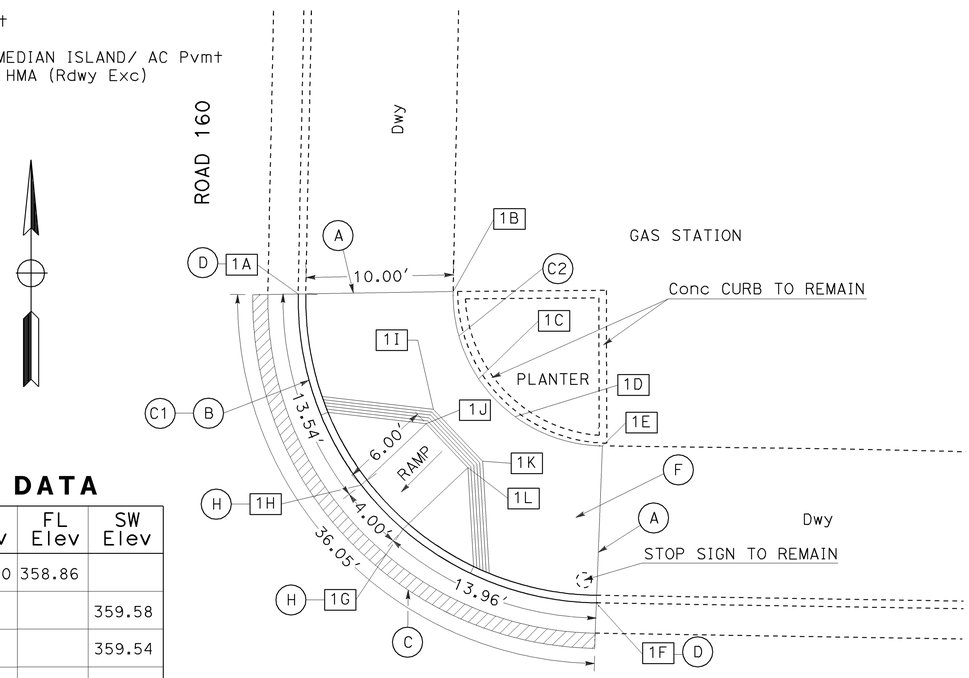

ELEVATION DATA

LOCATION	POINT No.	TC Elev	FL Elev	SW Elev
1	1A	359.30	358.86	
	1B			359.58
	1C			359.54
	1D			359.55
	1E			359.69
	1F	359.50	358.99	
	1G	358.93	358.93	
	1H	358.92	358.92	
	1I			359.47
	1J			359.45
	1K			359.48
	1L			359.46

LOCATION 1
ROUTE 216/ROAD 160
(PM 7.0, CASE A CURB RAMP)

ROUTE 216

CURVE DATA

No.	R	Δ	L
C1	20.00'	90°14'24"	31.50'
C2	10.00'	90°17'05"	15.76'

LOCATION 2
ROUTE 198/AVENUE 328
(PM 27.0, CASE F CURB RAMP)

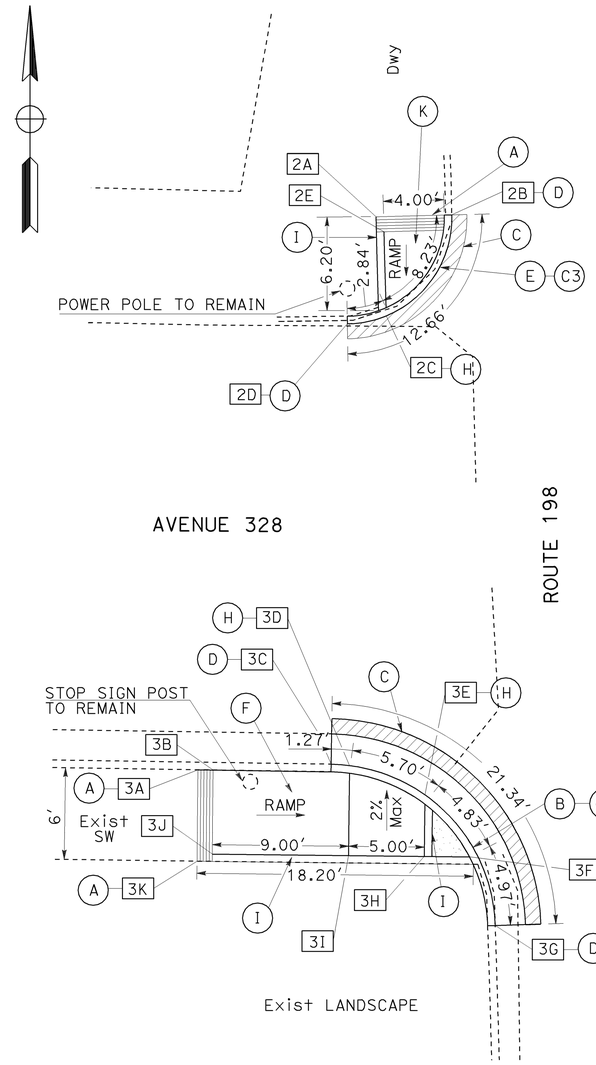

CURVE DATA

No.	R	Δ	L
C3	7.00'	90°38'00"	11.07'
C4	11.00'	87°20'48"	16.77'

ELEVATION DATA

LOCATION	POINT No.	TC Elev	FL Elev	SW Elev
2	2A	518.22		518.22
	2B	518.48	518.15	
	2C	518.18	518.18	
	2D	518.59	518.30	
	2E	518.20		518.20
3	3A			518.73
	3B			518.71
	3C	518.69	518.19	
	3D	518.20	518.20	
	3E	518.22	518.22	
	3F	518.79		518.79
	3G	518.87	518.37	
	3H	518.80		518.30
	3I	518.82		518.32
	3J			518.76
	3K			518.78

LOCATION 3
ROUTE 198/AVENUE 328
(PM 27.0, CASE F CURB RAMP)

CONSTRUCTION DETAILS
C-1

NO SCALE

STATE OF CALIFORNIA - DEPARTMENT OF TRANSPORTATION
DESIGN
FUNCTIONAL SUPERVISOR: THANH NGUYEN
CALCULATED-DESIGNED BY: DEBRA FRANCO
CHECKED BY: STEVE M. LEE
REVISED BY
DATE REVISED

LAST REVISION 03-10-10 | DATE PLOTTED => 20-APR-2010 | TIME PLOTTED => 15:56

Dist	COUNTY	ROUTE	POST MILES TOTAL PROJECT	SHEET No.	TOTAL SHEETS
06	Tul	65,99,137, 190,198,216	Var	9	59

Steve M Lee 8/28/09
REGISTERED CIVIL ENGINEER DATE

3-22-10
PLANS APPROVAL DATE

REGISTERED PROFESSIONAL ENGINEER STEVE M. LEE No. 62613 Exp 6-30-10 CIVIL STATE OF CALIFORNIA

THE STATE OF CALIFORNIA OR ITS OFFICERS OR AGENTS SHALL NOT BE RESPONSIBLE FOR THE ACCURACY OR COMPLETENESS OF SCANNED COPIES OF THIS PLAN SHEET.

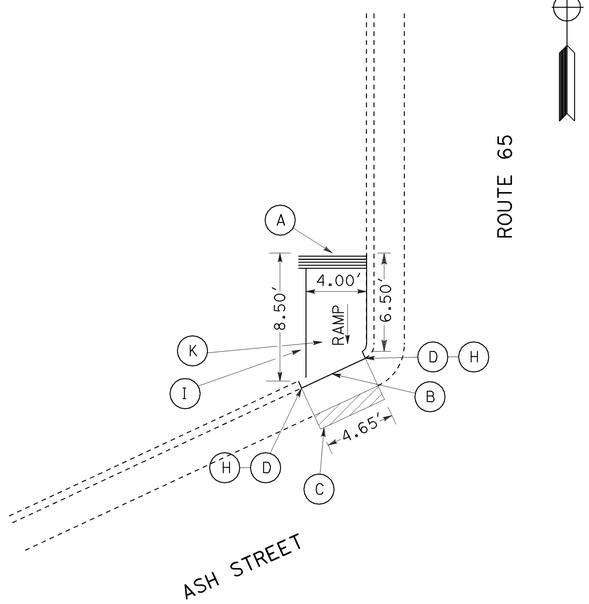

LOCATION 4
ROUTE 65/ASH STREET
(PM 37.1, CASE F CURB RAMP)

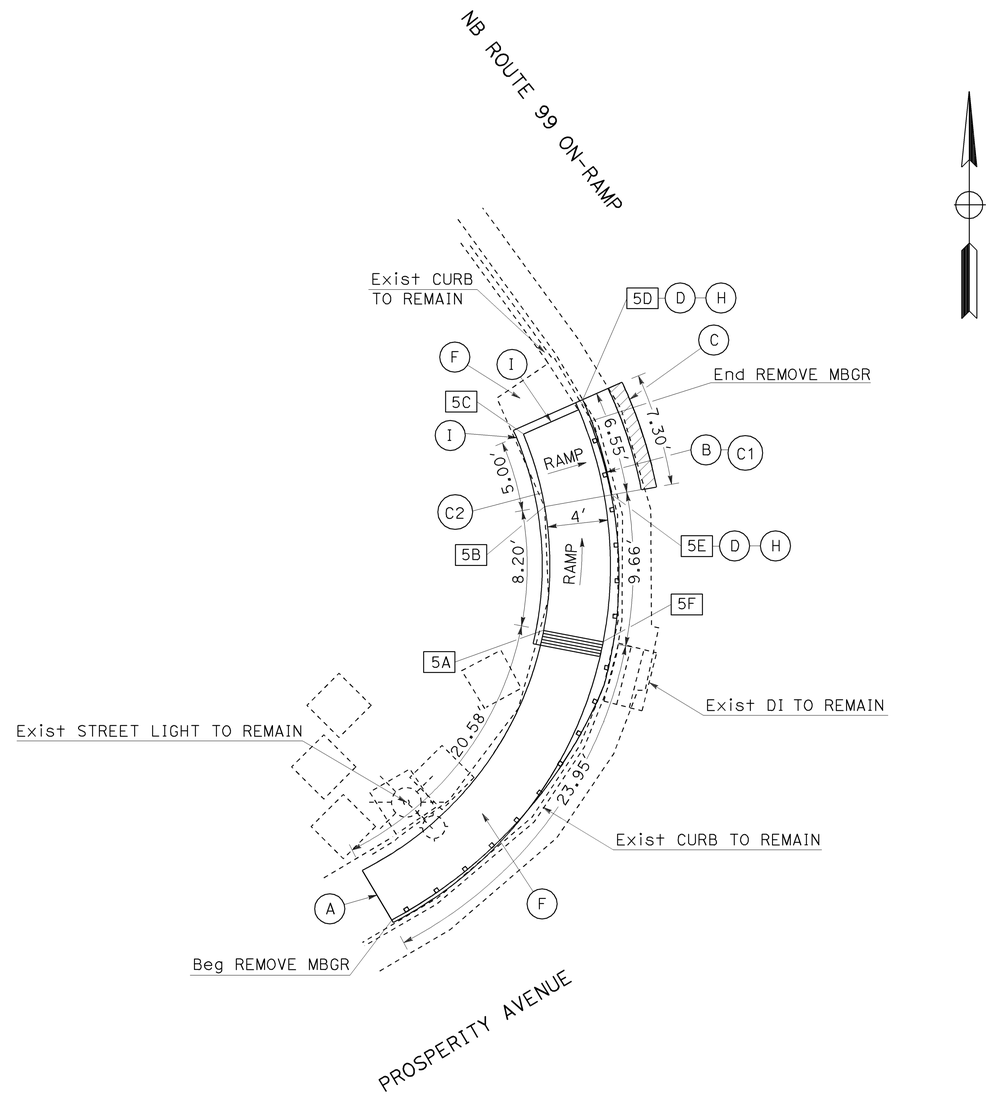

LOCATION 5
ROUTE 99 NB ON-RAMP/ E PROSPERITY AVENUE
(PM 30.6, CASE C CURB RAMP)

CURVE DATA

No.	R	Δ	L
C1	27.00'	13°53'26"	6.55'
C2	22.50'	86°0'51"	33.78'

ELEVATION DATA

LOCATION	POINT No.	TC Elev	FL Elev	SW Elev
5	5A	292.81		292.81
	5B	292.72		292.22
	5C	292.79		292.29
	5D	292.20	292.20	
	5E	292.13	292.13	
	5F			292.65

CONSTRUCTION DETAILS
NO SCALE
C-2

STATE OF CALIFORNIA - DEPARTMENT OF TRANSPORTATION
Caltrans® DESIGN
FUNCTIONAL SUPERVISOR THANH NGUYEN
CALCULATED-DESIGNED BY DEBRA FRANCO
CHECKED BY STEVE M. LEE
REVISED BY
DATE REVISED

LAST REVISION 03-10-10 DATE PLOTTED => 20-APR-2010 TIME PLOTTED => 15:56

Dist	COUNTY	ROUTE	POST MILES TOTAL PROJECT	SHEET No.	TOTAL SHEETS
06	Tul	65,99,137, 190,198,216	Var	10	59

REGISTERED CIVIL ENGINEER 8/28/09 DATE

3-22-10
PLANS APPROVAL DATE

REGISTERED PROFESSIONAL ENGINEER STEVE M. LEE No. 62613 Exp 6-30-10 CIVIL STATE OF CALIFORNIA

THE STATE OF CALIFORNIA OR ITS OFFICERS OR AGENTS SHALL NOT BE RESPONSIBLE FOR THE ACCURACY OR COMPLETENESS OF SCANNED COPIES OF THIS PLAN SHEET.

ELEVATION DATA

LOCATION	POINT No.	TC Elev	FL Elev	SW Elev
6	6A	273.15	272.65	
	6B			273.13
	6C	273.09		273.09
	6D			273.07
	6E	272.42	272.42	
	6F	273.01		272.51
	6G	272.30	272.30	
	6H	272.89		272.39
	6I	272.37	271.87	
	6J			272.35
	6K	272.50		272.50
	6L			272.48

CURVE DATA

No.	R	Δ	L
C1	25.00′	54°43′01″	23.87′
C2	20.50′	54°43′01″	19.56′
C3	12.00′	90°22′07″	18.93′
C4	7.50′	90°22′07″	11.83′

ELEVATION DATA

LOCATION	POINT No.	TC Elev	FL Elev	SW Elev
7	7A			272.20
	7B			272.11
	7C	272.00	271.50	
	7D	271.56	271.56	
	7E	272.15		271.65
	7F	271.75		217.75
	7G	272.34		271.84
	7H	272.45	271.95	
	7I	272.42		272.42
	7J	272.44		272.44
	7K	272.13		272.13

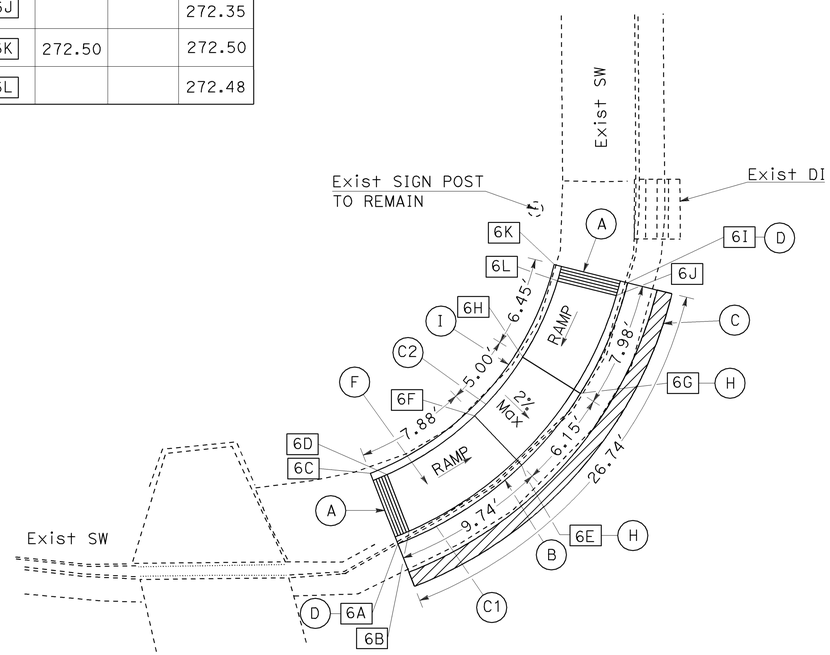

ROUTE 137

LOCATION 6
ROUTE 137/S WEST STREET
(PM 14.3, CASE C CURB RAMP)

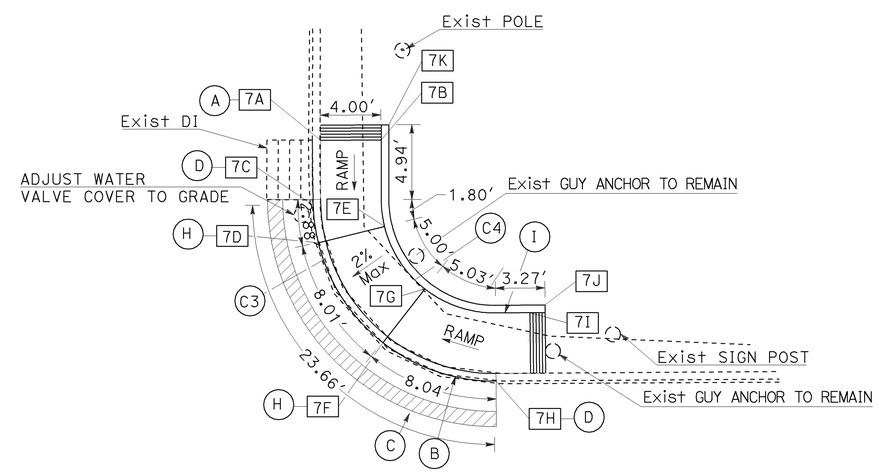

LOCATION 7
ROUTE 137/S WEST STREET
(PM 14.3, CASE C CURB RAMP)

CONSTRUCTION DETAILS
C-3

NO SCALE

STATE OF CALIFORNIA - DEPARTMENT OF TRANSPORTATION
Caltrans DESIGN
FUNCTIONAL SUPERVISOR: THANH NGUYEN
CALCULATED-DESIGNED BY: DEBRA FRANCO
CHECKED BY: STEVE M. LEE
REVISED BY
DATE REVISED

LAST REVISION 03-10-10
DATE PLOTTED => 20-APR-2010
TIME PLOTTED => 15:56

Dist	COUNTY	ROUTE	POST MILES TOTAL PROJECT	SHEET No.	TOTAL SHEETS
06	Tul	65,99,137, 190,198,216	Var	11	59

REGISTERED CIVIL ENGINEER 8/28/09 DATE

3-22-10
PLANS APPROVAL DATE

REGISTERED PROFESSIONAL ENGINEER STEVE M. LEE No. 62613 Exp 6-30-10 CIVIL STATE OF CALIFORNIA

THE STATE OF CALIFORNIA OR ITS OFFICERS OR AGENTS SHALL NOT BE RESPONSIBLE FOR THE ACCURACY OR COMPLETENESS OF SCANNED COPIES OF THIS PLAN SHEET.

ELEVATION DATA

LOCATION	POINT No.	TC Elev	FL Elev	SW Elev
8	8A	284.14		283.64
	8B	284.08		283.58
	8C	284.09		284.09
	8D			284.07
	8E			284.18
	8F			284.22
	8G			284.01
	8H	283.99		283.99
	8I	284.00		283.50
	8J	283.42	283.42	
	8K	283.48	283.48	

CURVE DATA

No.	R	Δ	L
C1	147.50′	11°14′35"	28.59′
C2	155.50′	1°50′33"	5.00′
C3	204.50′	1°23′42"	5.00′

ELEVATION DATA

LOCATION	POINT No.	TC Elev	FL Elev	SW Elev
9	9A	285.73		285.73
	9B			285.60
	9C	285.58		285.58
	9D	285.08	285.08	
	9E	285.05	285.05	
	9F	286.53		285.53
	9G	285.55		285.64
	9H	285.76		285.76
10	10A	285.32	285.32	
	10B	285.79	285.79	
	10C			285.81
	10D			285.83
	10E	285.81		285.81
	10F	285.33	285.33	

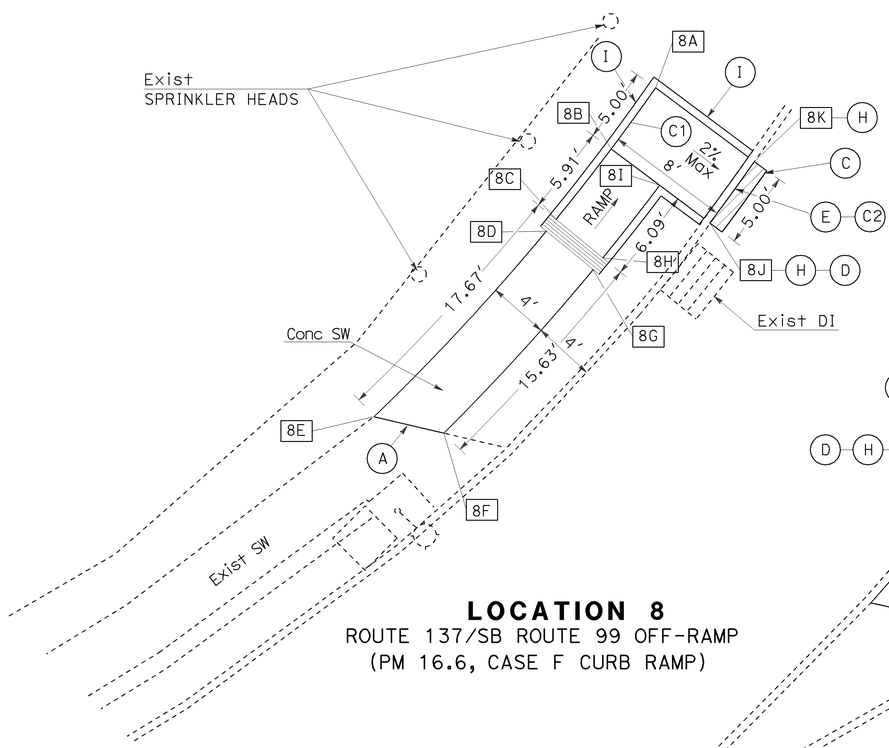

LOCATION 8
ROUTE 137/SB ROUTE 99 OFF-RAMP
(PM 16.6, CASE F CURB RAMP)

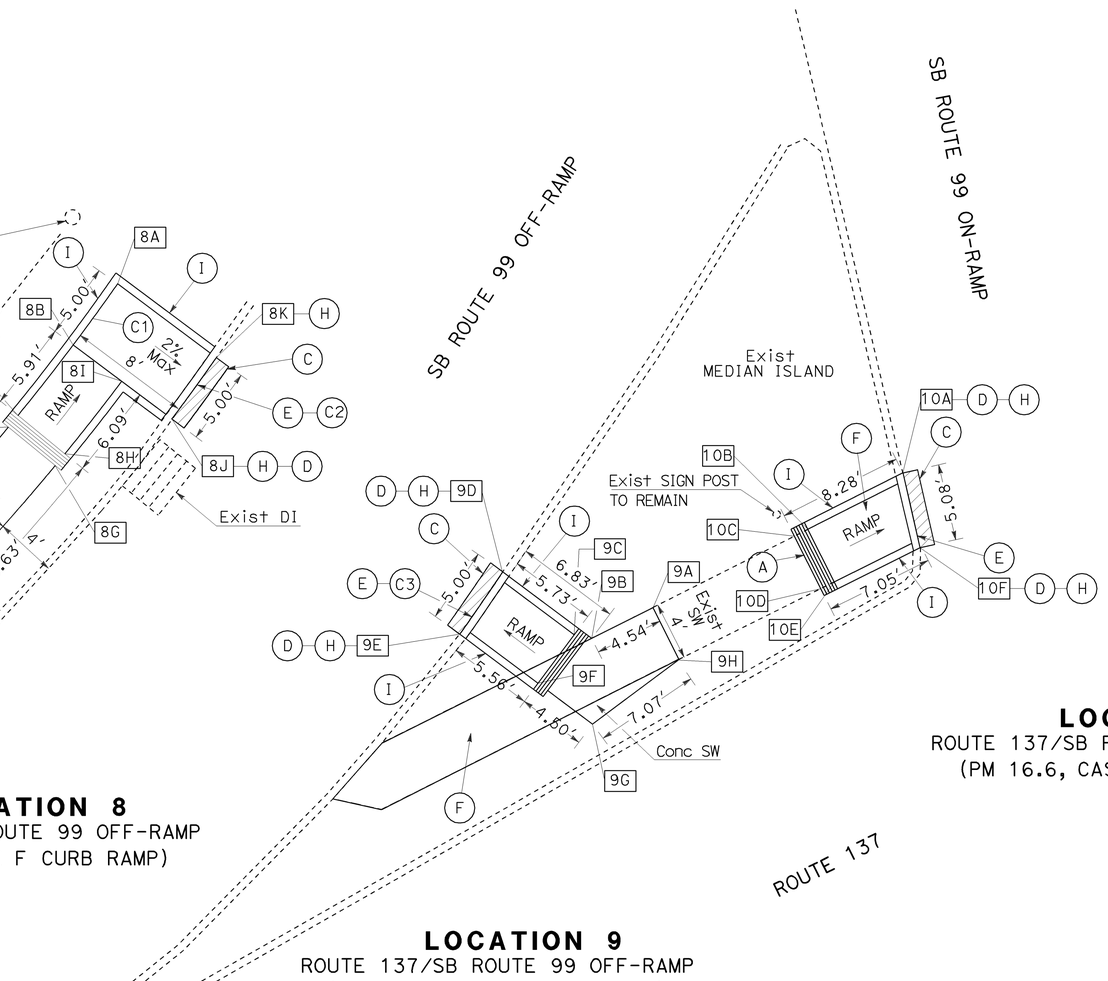

LOCATION 10
ROUTE 137/SB ROUTE 99 OFF-RAMP
(PM 16.6, CASE F CURB RAMP)

LOCATION 9
ROUTE 137/SB ROUTE 99 OFF-RAMP
(PM 16.6, CASE F CURB RAMP)

CONSTRUCTION DETAILS
NO SCALE

C-4

STATE OF CALIFORNIA - DEPARTMENT OF TRANSPORTATION
Caltrans DESIGN
FUNCTIONAL SUPERVISOR THANH NGUYEN
CALCULATED-DESIGNED BY DEBRA FRANCO
CHECKED BY STEVE M. LEE
REVISED BY
DATE REVISED

LAST REVISION DATE PLOTTED => 20-APR-2010
03-10-10 TIME PLOTTED => 15:56

Dist	COUNTY	ROUTE	POST MILES TOTAL PROJECT	SHEET No.	TOTAL SHEETS
06	Tul	65,99,137, 190,198,216	Var	12	59

REGISTERED CIVIL ENGINEER 8/28/09 DATE

3-22-10
PLANS APPROVAL DATE

REGISTERED PROFESSIONAL ENGINEER STEVE M. LEE No. 62613 Exp 6-30-10 CIVIL STATE OF CALIFORNIA

THE STATE OF CALIFORNIA OR ITS OFFICERS OR AGENTS SHALL NOT BE RESPONSIBLE FOR THE ACCURACY OR COMPLETENESS OF SCANNED COPIES OF THIS PLAN SHEET.

CURVE DATA

No.	R	Δ	L
C1	10.00′	39°24′48″	6.88′
C2	7.00′	89°43′26″	10.96′
C3	29.00′	10°32′10″	5.33′
C4	3.00′	89°43′26″	4.70′
C5	14.00′	39°28′28″	9.65′

ELEVATION DATA

LOCATION	POINT No.	TC Elev	FL Elev	SW Elev
11	11A			285.75
	11B	285.33	285.33	
	11C	285.36	285.36	
	11D			285.80
	11E	285.73		
	11F	285.78		
12	12A	285.11	285.11	
	12B			285.58
	12C			285.66
	12D	285.20	285.20	
	12E	285.56		
	12F	285.64		
13	13A			285.21
	13B			285.14
	13C	285.05		285.05
	13D	284.26	284.26	
	13E	284.30	284.30	
	13F	284.94		284.94
	13G			285.01
	13H			285.20

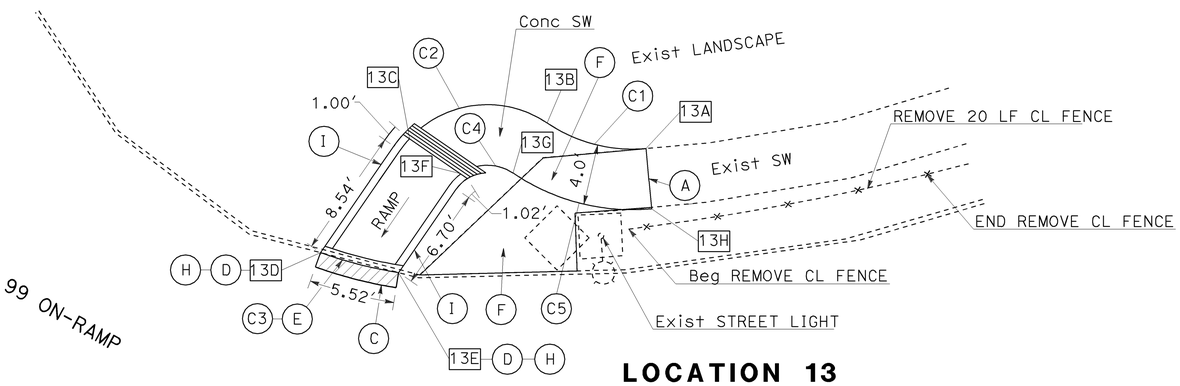

LOCATION 13
ROUTE 137/SB ROUTE 99 ON-RAMP
(PM 16.6, CASE F CURB RAMP)

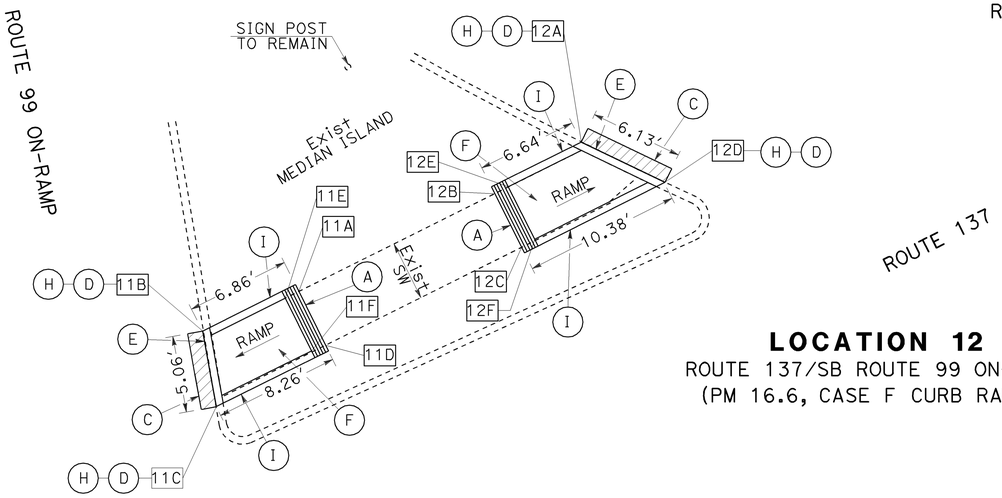

LOCATION 11
ROUTE 137/SN ROUTE 99 ON-RAMP
(PM 16.6, CASE F CURB RAMP)

LOCATION 12
ROUTE 137/SB ROUTE 99 ON-RAMP
(PM 16.6, CASE F CURB RAMP)

CONSTRUCTION DETAILS
C-5

NO SCALE

STATE OF CALIFORNIA - DEPARTMENT OF TRANSPORTATION
DESIGN
Caltrans

FUNCTIONAL SUPERVISOR: THANH NGUYEN
CALCULATED-DESIGNED BY: STEVE M. LEE
CHECKED BY: DEBRA FRANCO
REVISED BY
DATE REVISED

LAST REVISION 03-10-10
DATE PLOTTED => 20-APR-2010
TIME PLOTTED => 15:56

Dist	COUNTY	ROUTE	POST MILES TOTAL PROJECT	SHEET No.	TOTAL SHEETS
06	Tul	65,99,137, 190,198,216	Var	13	59

REGISTERED CIVIL ENGINEER 8/28/09 DATE

3-22-10
PLANS APPROVAL DATE

REGISTERED PROFESSIONAL ENGINEER STEVE M. LEE No. 62613 Exp 6-30-10 CIVIL STATE OF CALIFORNIA

THE STATE OF CALIFORNIA OR ITS OFFICERS OR AGENTS SHALL NOT BE RESPONSIBLE FOR THE ACCURACY OR COMPLETENESS OF SCANNED COPIES OF THIS PLAN SHEET.

CURVE DATA

No.	R	Δ	L
C1	10.00′	28°30′11"	4.98′
C2	14.00′	28°08′28"	6.88′
C3	7.00′	70°29′13"	8.61′
C4	3.00′	71°23′11"	3.64′
C5	28.59′	12°40′11"	6.32′

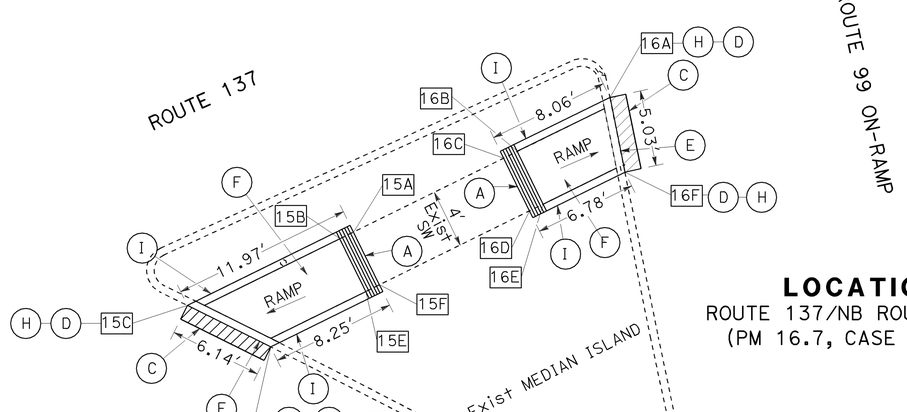

LOCATION 16
ROUTE 137/NB ROUTE 99 ON-RAMP
(PM 16.7, CASE F CURB RAMP)

LOCATION 15
ROUTE 137/NB ROUTE 99 ON-RAMP
(PM 16.7, CASE F CURB RAMP)

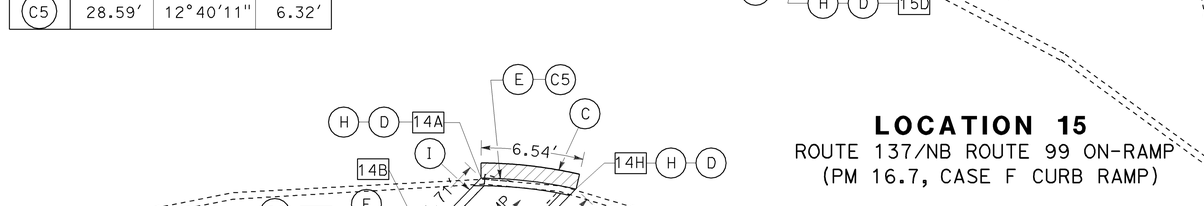

LOCATION 14
ROUTE 137/NB ROUTE 99 ON-RAMP
(PM 16.7, CASE F CURB RAMP)

ELEVATION DATA

LOCATION	POINT No.	TC Elev	FL Elev	SW Elev
14	14A	285.99	285.99	
	14B	286.46		286.46
	14C			286.58
	14D			286.72
	14E			286.67
	14F			286.57
	14G	286.46		286.46
	14H	285.93	285.93	
15	15A			287.25
	15B	287.23		287.23
	15C	286.69	286.69	
	15D	286.65	286.65	
	15E	287.20		287.20
	15F			287.22
16	16A	286.81	286.81	
	16B	287.23		287.23
	16C			287.25
	16D			287.24
	16E	287.22		287.22
	16F	286.77	286.77	

CONSTRUCTION DETAILS
C-6

NO SCALE

REVISED BY | DATE REVISED
DEBRA FRANCO | STEVE M. LEE
CALCULATED-DESIGNED BY | CHECKED BY
FUNCTIONAL SUPERVISOR
THANH NGUYEN

STATE OF CALIFORNIA - DEPARTMENT OF TRANSPORTATION
Caltrans
DESIGN

LAST REVISION 03-10-10 | DATE PLOTTED => 20-APR-2010 | TIME PLOTTED => 15:56

Dist	COUNTY	ROUTE	POST MILES TOTAL PROJECT	SHEET No.	TOTAL SHEETS
06	Tul	65,99,137, 190,198,216	Var	14	59

REGISTERED CIVIL ENGINEER 8/28/09 DATE

3-22-10
PLANS APPROVAL DATE

REGISTERED PROFESSIONAL ENGINEER STEVE M. LEE No. 62613 Exp 6-30-10 CIVIL STATE OF CALIFORNIA

THE STATE OF CALIFORNIA OR ITS OFFICERS OR AGENTS SHALL NOT BE RESPONSIBLE FOR THE ACCURACY OR COMPLETENESS OF SCANNED COPIES OF THIS PLAN SHEET.

CURVE DATA

No.	R	Δ	L
C1	145.00′	2°14′37″	5.68′
C2	140.50′	11°35′09″	28.41′
C3	292.00′	0°58′56″	5.01′
C4	8.00′	63°13′16″	8.83′
C5	4.00′	63°04′13″	4.40′

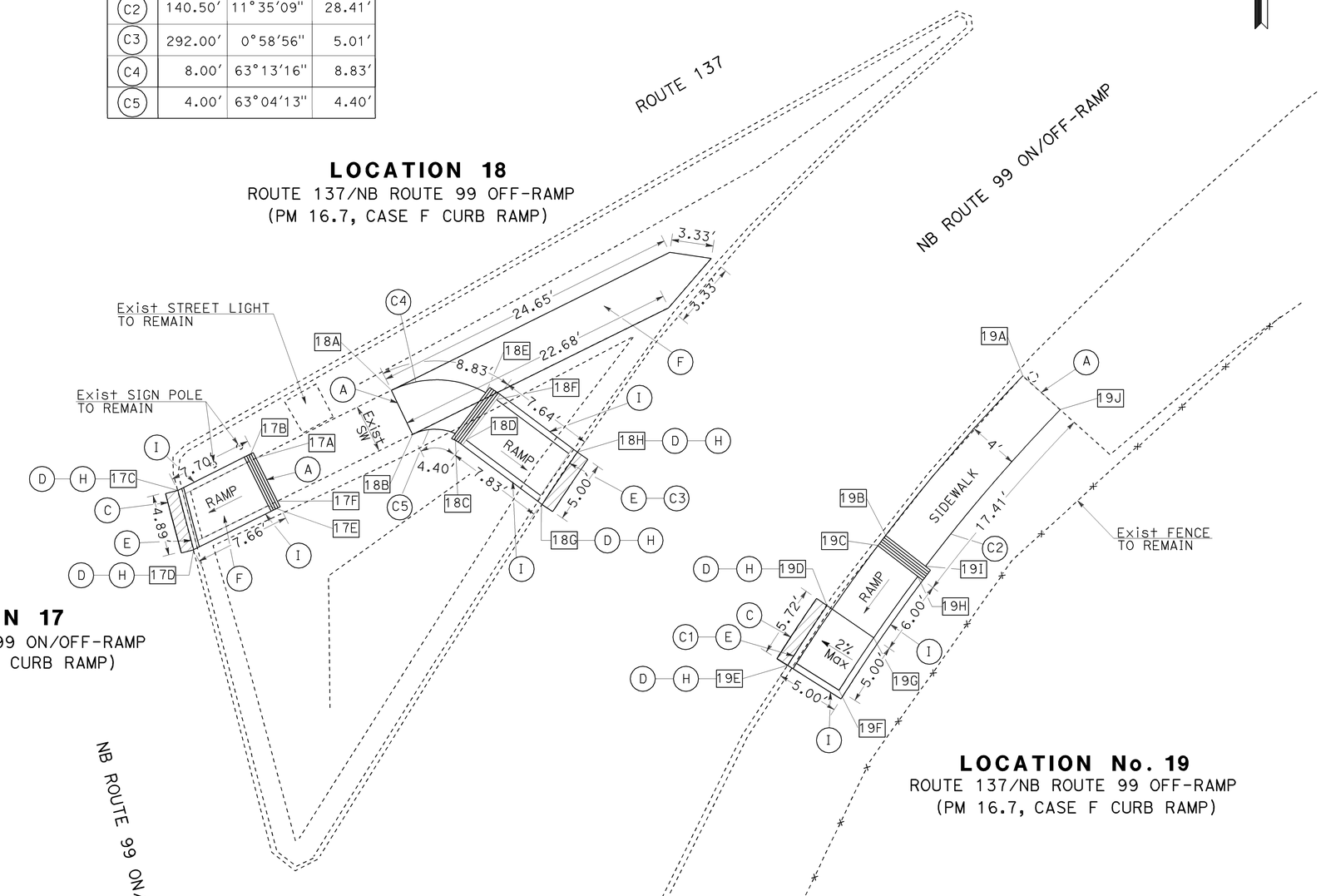

ELEVATION DATA

LOCATION	POINT No.	TC Elev	FL Elev	SW Elev
17	17A			287.28
	17B	287.26		287.26
	17C	286.82	286.82	
	17D	286.80	286.80	
	17E	287.24		287.24
	17F			287.26
18	18A			287.22
	18B			287.18
	18C	287.11		287.11
	18D	287.09		287.09
	18E	287.07		287.07
	18F	287.05		287.05
	18G	286.45	286.45	
	18H	286.46	286.46	
19	19A			286.19
	19B			285.90
	19C			285.88
	19D	285.38	285.38	
	19E	285.36	285.36	
	19F	285.96		285.46
	19G	285.98		285.48
	19H	285.97		285.97
	19I	285.99		285.99
	19J			286.20

CONSTRUCTION DETAILS
C-7

NO SCALE

STATE OF CALIFORNIA - DEPARTMENT OF TRANSPORTATION
Caltrans® DESIGN

FUNCTIONAL SUPERVISOR: THANH NGUYEN
CALCULATED-DESIGNED BY: DEBRA FRANCO
CHECKED BY: STEVE M. LEE
REVISED BY
DATE REVISED

LAST REVISION 03-10-10
DATE PLOTTED => 20-APR-2010
TIME PLOTTED => 15:56

Dist	COUNTY	ROUTE	POST MILES TOTAL PROJECT	SHEET No.	TOTAL SHEETS
06	Tul	65,99,137, 190,198,216	Var	15	59

REGISTERED CIVIL ENGINEER 8/28/09 DATE

3-22-10
PLANS APPROVAL DATE

REGISTERED PROFESSIONAL ENGINEER STEVE M. LEE No. 62613 Exp 6-30-10 CIVIL STATE OF CALIFORNIA

THE STATE OF CALIFORNIA OR ITS OFFICERS OR AGENTS SHALL NOT BE RESPONSIBLE FOR THE ACCURACY OR COMPLETENESS OF SCANNED COPIES OF THIS PLAN SHEET.

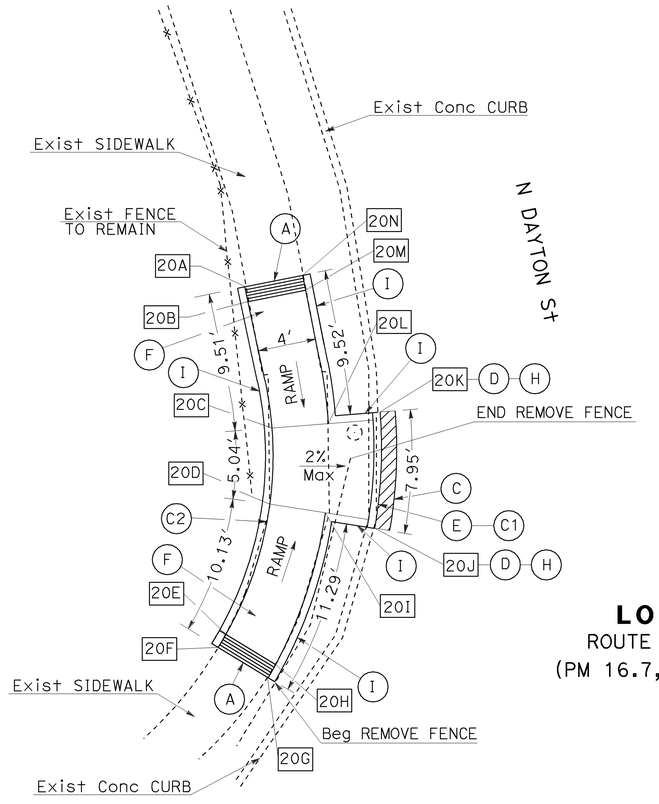

LOCATION 20
ROUTE 137/N DAYTON St
(PM 16.7, CASE C CURB RAMP)

ELEVATION DATA

LOCATION	POINT No.	TC Elev	FL Elev	SW Elev
20	20A	286.40		286.40
	20B			286.38
	20C	286.36		285.86
	20D	286.46		285.96
	20E			286.68
	20F	285.70		286.70
	20G			286.77
	20H			286.75
	20I	286.40		285.90
	20J	285.83	285.83	
	20K	285.72	285.72	
	20L	288.28		285.78
	20M			286.46
	20N			286.48

CURVE DATA

No.	R	Δ	L
C1	30.53'	14°26'41"	7.70'
C2	23.81'	41°46'40"	17.36'
C3	55.00'	5°45'35"	5.53'
C4	28.90'	42°53'24"	21.64'
C5	3.65'	103°31'21"	6.59'

ELEVATION DATA

LOCATION	POINT No.	TC Elev	FL Elev	SW Elev
22	22A			286.73
	22B			286.71
	22C		286.12	
	22D	286.03	286.03	
	22E	286.72		286.72
	22F	286.74		286.74
	22G			286.91

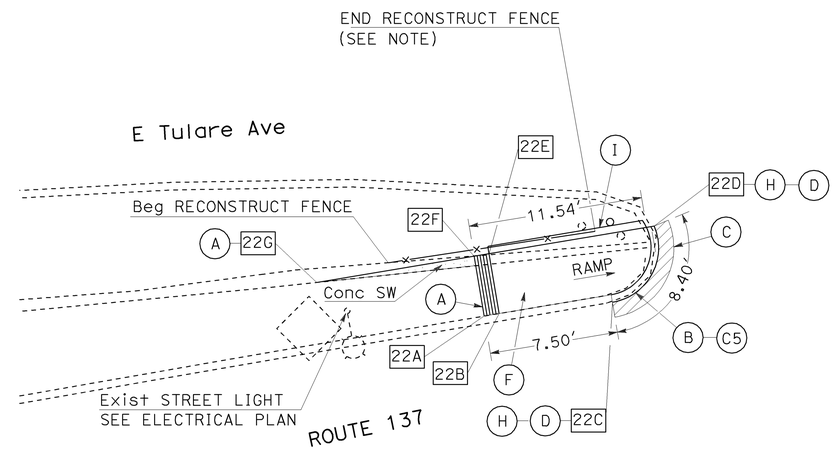

LOCATION 22
ROUTE 137/SPRUCE STREET
(PM 16.8, CASE F CURB RAMP)

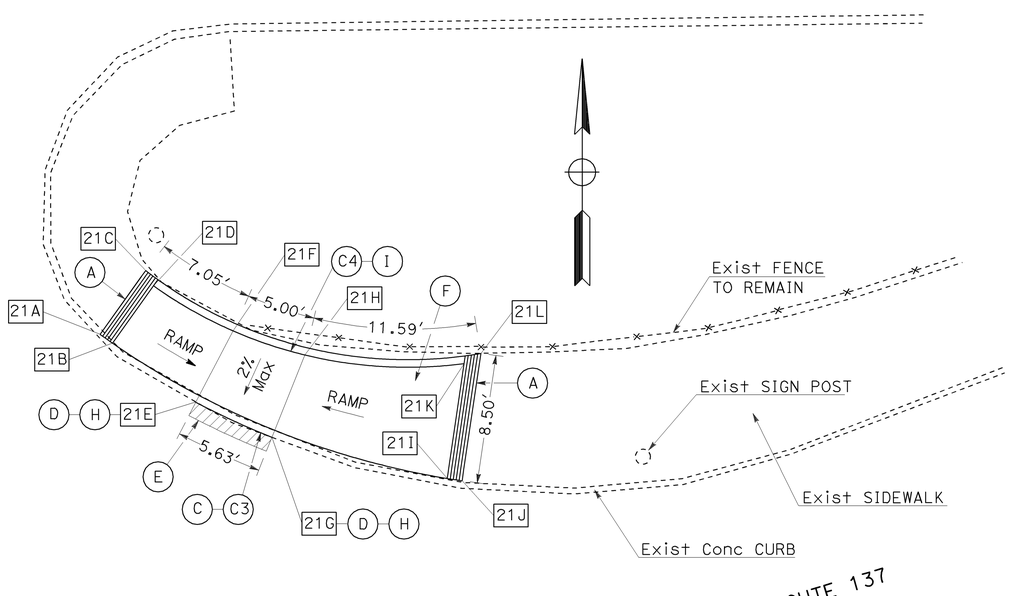

LOCATION 21
ROUTE 137/N DAYTON St
(PM 16.7, CASE C CURB RAMP)

ELEVATION DATA

LOCATION	POINT No.	TC Elev	FL Elev	SW Elev
21	21A			286.80
	21B			286.78
	21C			286.95
	21D	286.93		286.93
	21E	286.36	286.36	
	21F	286.97		286.47
	21G	286.39	286.39	
	21H	287.01		286.51
	21I			286.98
	21J	286.96		
	21K			287.25
	21L			287.27

CONSTRUCTION DETAILS
NO SCALE

C-8

STATE OF CALIFORNIA - DEPARTMENT OF TRANSPORTATION
Caltrans DESIGN

FUNCTIONAL SUPERVISOR: THANH NGUYEN
CALCULATED-DESIGNED BY: DEBRA FRANCO
CHECKED BY: STEVE M. LEE
REVISED BY / DATE REVISED

LAST REVISION 03-10-10 | DATE PLOTTED => 20-APR-2010 | TIME PLOTTED => 15:56

Dist	COUNTY	ROUTE	POST MILES TOTAL PROJECT	SHEET No.	TOTAL SHEETS
06	Tul	65,99,137, 190,198,216	Var	16	59

REGISTERED CIVIL ENGINEER 8/28/09 DATE

3-22-10
PLANS APPROVAL DATE

REGISTERED PROFESSIONAL ENGINEER STEVE M. LEE No. 62613 Exp 6-30-10 CIVIL STATE OF CALIFORNIA

THE STATE OF CALIFORNIA OR ITS OFFICERS OR AGENTS SHALL NOT BE RESPONSIBLE FOR THE ACCURACY OR COMPLETENESS OF SCANNED COPIES OF THIS PLAN SHEET.

ELEVATION DATA

LOCATION	POINT No.	TC Elev	FL Elev	SW Elev
23	23A	290.86	290.86	
	23B			291.51
	23C			291.61
	23D	291.07	291.07	
	23E	291.05	291.05	
	23F			291.59
	23G			291.49
	23H	290.88	290.88	
24	24A	290.02	290.02	
	24B	290.71		290.21
	24C	290.06	290.06	
	24D	289.99	289.99	
	24E	290.65		290.15
	24F	289.95	289.95	

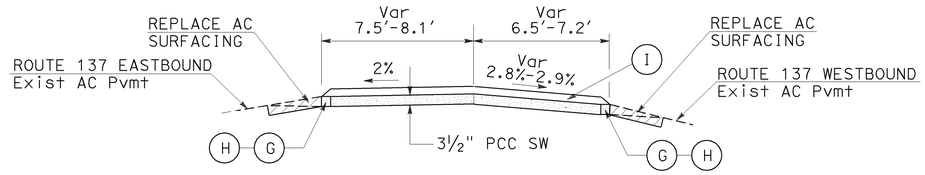

SECTION B-B
NO SCALE

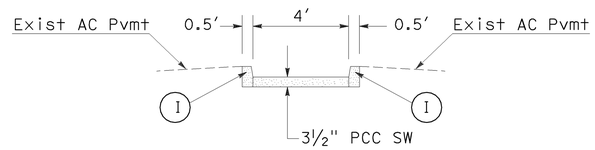

SECTION A-A
NO SCALE

CURVE DATA

No.	R	Δ	L
C1	83.50'	3°33'50"	5.19'
C2	82.00'	3°31'44"	5.05'
C3	107.00'	2°45'06"	5.14'
C4	55.11'	5°14'03"	5.03'

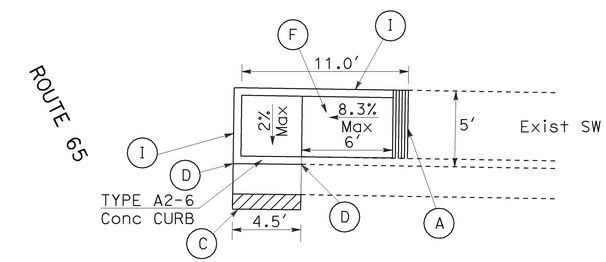

FRESNO STREET

LOCATION 25
ROUTE 65/FRESNO STREET
(PM 29.9, CASE F CURB RAMP)

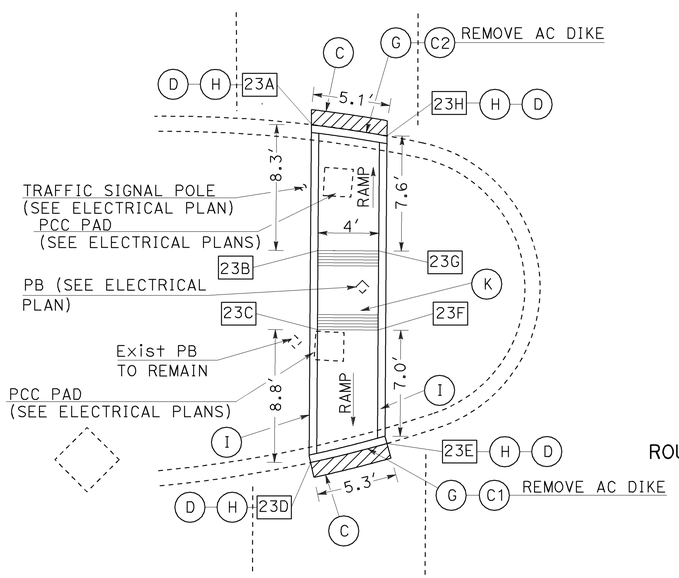

LOCATION 23
ROUTE 137/MOONEY Blvd
(PM 17.5, CASE F CURB RAMP)

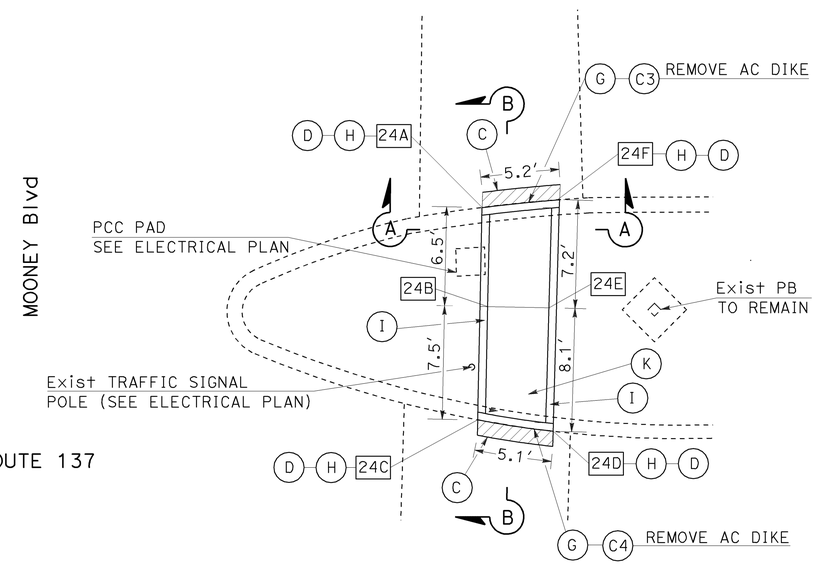

LOCATION 24
ROUTE 137/MOONEY Blvd
(PM 17.5, CONCRETE CURB OPENING)

CONSTRUCTION DETAILS

NO SCALE

C-9

REVISED BY | DATE REVISED
DEBRA FRANCO | STEVE M. LEE
CALCULATED-DESIGNED BY | CHECKED BY
FUNCTIONAL SUPERVISOR: THANH NGUYEN

STATE OF CALIFORNIA - DEPARTMENT OF TRANSPORTATION
Caltrans
DESIGN

LAST REVISION 03-10-10 | DATE PLOTTED => 20-APR-2010 | TIME PLOTTED => 15:56

Dist	COUNTY	ROUTE	POST MILES TOTAL PROJECT	SHEET No.	TOTAL SHEETS
06	Tul	65,99,137, 190,198,216	Var	17	59

REGISTERED CIVIL ENGINEER 8/28/09 DATE

3-22-10
PLANS APPROVAL DATE

REGISTERED PROFESSIONAL ENGINEER STEVE M. LEE No. 62613 Exp 6-30-10 CIVIL STATE OF CALIFORNIA

THE STATE OF CALIFORNIA OR ITS OFFICERS OR AGENTS SHALL NOT BE RESPONSIBLE FOR THE ACCURACY OR COMPLETENESS OF SCANNED COPIES OF THIS PLAN SHEET.

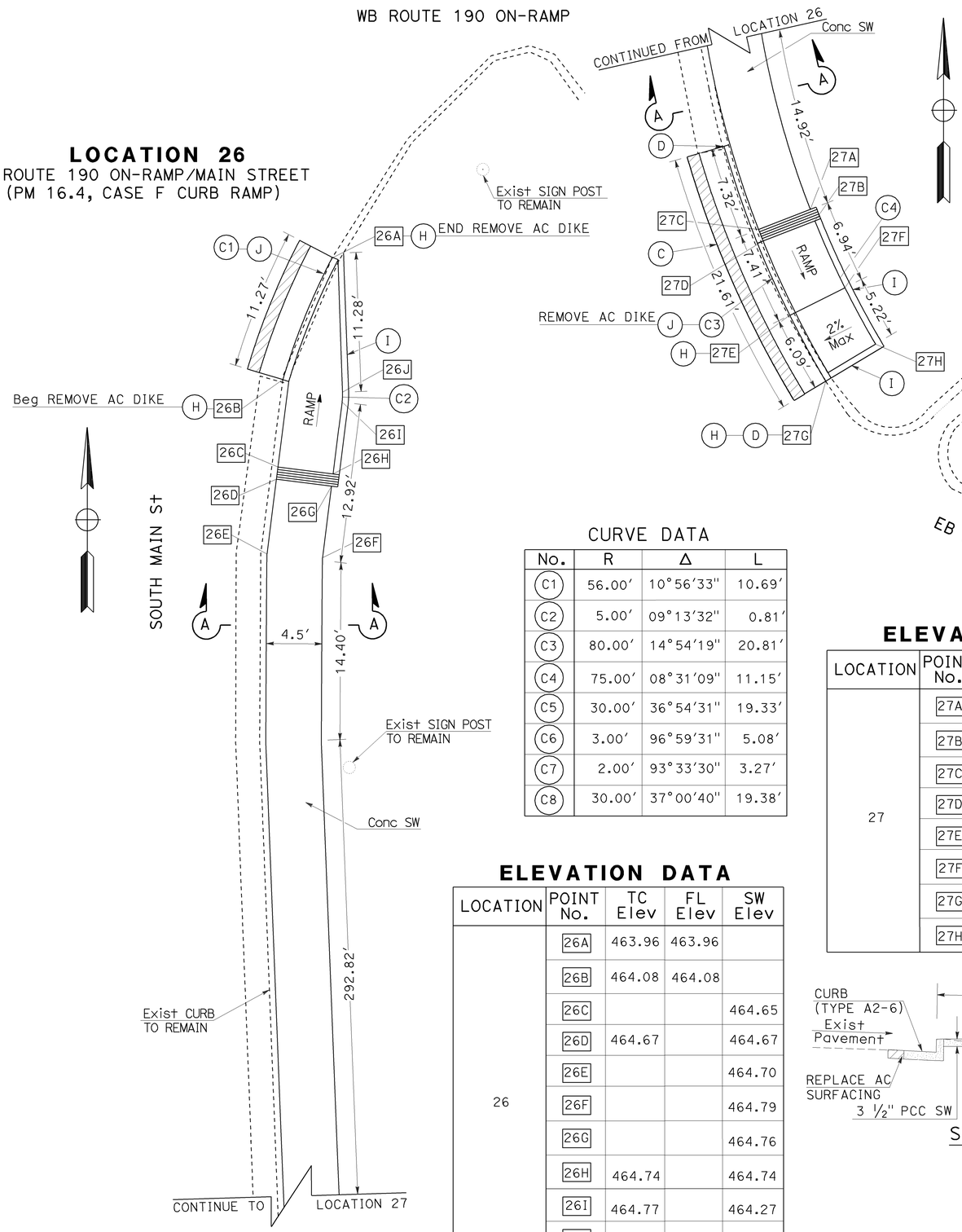

CURVE DATA

No.	R	Δ	L
C1	56.00′	10°56′33"	10.69′
C2	5.00′	09°13′32"	0.81′
C3	80.00′	14°54′19"	20.81′
C4	75.00′	08°31′09"	11.15′
C5	30.00′	36°54′31"	19.33′
C6	3.00′	96°59′31"	5.08′
C7	2.00′	93°33′30"	3.27′
C8	30.00′	37°00′40"	19.38′

ELEVATION DATA

LOCATION	POINT No.	TC Elev	FL Elev	SW Elev
26	26A	463.96	463.96	
	26B	464.08	464.08	
	26C			464.65
	26D	464.67		464.67
	26E			464.70
	26F			464.79
	26G			464.76
	26H	464.74		464.74
	26I	464.77		464.27
	26J	464.71		464.21

ELEVATION DATA

LOCATION	POINT No.	TC Elev	FL Elev	SW Elev
27	27A			464.08
	27B	464.06		464.06
	27C	464.05		464.05
	27D	464.03		464.03
	27E	463.49	463.49	
	27F	464.02		463.52
	27G	463.43	463.43	
	27H	464.46		463.96

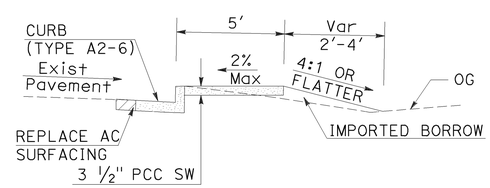

SECTION A-A
NO SCALE

ELEVATION DATA

LOCATION	POINT No.	TC Elev	FL Elev	SW Elev
28	28A			464.51
	28B	464.42	463.92	
	28C	464.54		464.54
	28D			464.63
	28E	464.52		464.52
	28F			464.61
	28G	464.55	464.05	
	28H	463.95	463.95	
	28I	463.83	463.83	
	28J		463.65	
	28K	464.30	463.80	
	28L		463.75	
	28M		463.70	
	28N		463.75	
	28O		463.80	
	28P		463.05	

CONSTRUCTION DETAILS

NO SCALE

C-10

REVISED BY	DATE REVISED

CALCULATED-DESIGNED BY	CHECKED BY
DEBRA FRANCO	STEVE M. LEE

FUNCTIONAL SUPERVISOR: THANH NGUYEN

STATE OF CALIFORNIA - DEPARTMENT OF TRANSPORTATION
Caltrans
DESIGN

LAST REVISION 03-10-10
DATE PLOTTED => 20-APR-2010
TIME PLOTTED => 15:56

Dist	COUNTY	ROUTE	POST MILES TOTAL PROJECT	SHEET No.	TOTAL SHEETS
06	Tul	65,99,137, 190,198,216	Var	18	59

REGISTERED CIVIL ENGINEER 8/28/09 DATE

3-22-10
PLANS APPROVAL DATE

REGISTERED PROFESSIONAL ENGINEER STEVE M. LEE No. 62613 Exp 6-30-10 CIVIL STATE OF CALIFORNIA

THE STATE OF CALIFORNIA OR ITS OFFICERS OR AGENTS SHALL NOT BE RESPONSIBLE FOR THE ACCURACY OR COMPLETENESS OF SCANNED COPIES OF THIS PLAN SHEET.

ELEVATION DATA

LOCATION	POINT No.	TC Elev	FL Elev	SW Elev
29	29A	462.81	462.48	
	29B			463.01
	29C	462.70	462.37	
	29D	462.32	462.32	
	29E			462.65
	29F			462.73
	29G	462.28	462.28	
	29H			462.61
	29I			462.69
	29J	462.55	462.22	
	29K	462.22	461.89	
	29L			462.42

CURVE DATA

No.	R	Δ	L
C1	39.00′	85°55′53″	59.06′
C2	16.00′	93°53′55″	26.22′
C3	6.50′	93°53′55″	10.65′

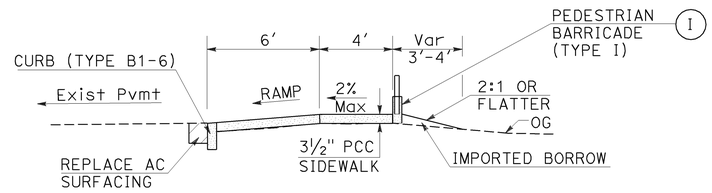

SECTION A-A
NO SCALE

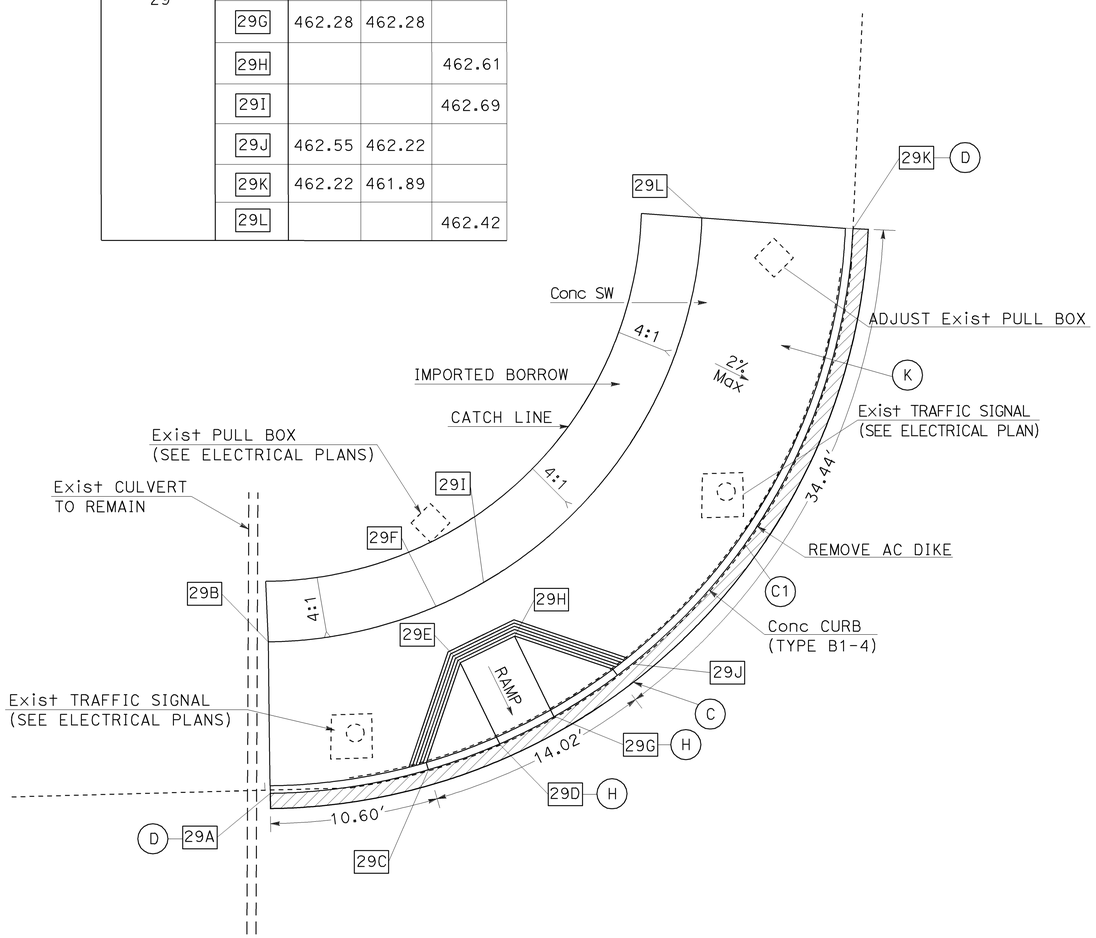

ROUTE 190

LOCATION 29
ROUTE 190/PLANO STREET
(PM 16.9, CASE A CURB RAMP)

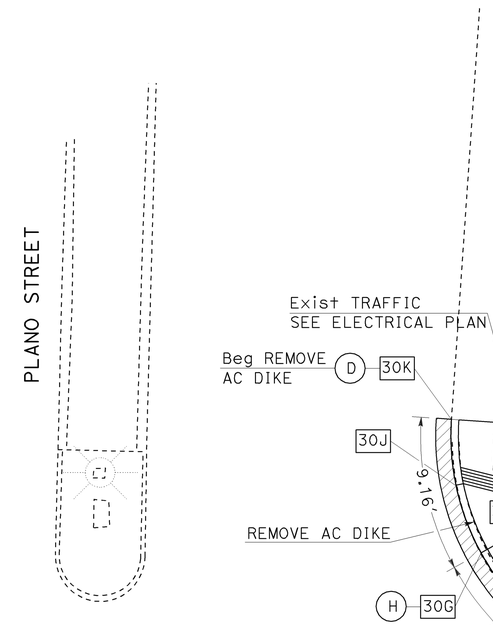

ELEVATION DATA

LOCATION	POINT No.	TC Elev	FL Elev	SW Elev
30	30A	463.57		463.27
	30B	463.07	462.74	
	30C	463.09	462.76	
	30D	462.77	462.77	
	30E			463.21
	30F	463.79		463.29
	30G	462.54	462.54	
	30H			462.87
	30I	463.45		462.95
	30J	462.80	462.47	
	30K	462.75	462.42	
	30L	463.45		462.95

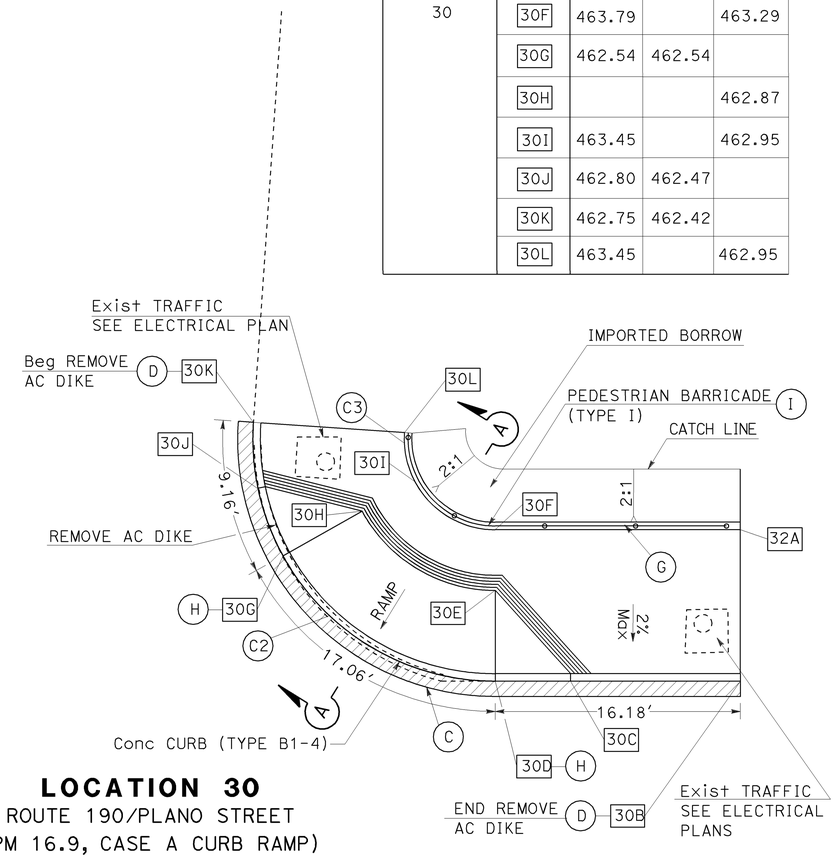

LOCATION 30
ROUTE 190/PLANO STREET
(PM 16.9, CASE A CURB RAMP)

CONSTRUCTION DETAILS
NO SCALE

C-11

STATE OF CALIFORNIA - DEPARTMENT OF TRANSPORTATION
Caltrans DESIGN
FUNCTIONAL SUPERVISOR THANH NGUYEN
CALCULATED-DESIGNED BY DEBRA FRANCO
CHECKED BY STEVE M. LEE
REVISED BY
DATE REVISED

LAST REVISION 03-10-10 | DATE PLOTTED => 20-APR-2010 | TIME PLOTTED => 15:56

Dist	COUNTY	ROUTE	POST MILES TOTAL PROJECT	SHEET No.	TOTAL SHEETS
06	Tul	65,99,137, 190,198,216	Var	19	59

REGISTERED CIVIL ENGINEER 8/28/09 DATE

3-22-10
PLANS APPROVAL DATE

REGISTERED PROFESSIONAL ENGINEER STEVE M. LEE No. 62613 Exp 6-30-10 CIVIL STATE OF CALIFORNIA

THE STATE OF CALIFORNIA OR ITS OFFICERS OR AGENTS SHALL NOT BE RESPONSIBLE FOR THE ACCURACY OR COMPLETENESS OF SCANNED COPIES OF THIS PLAN SHEET.

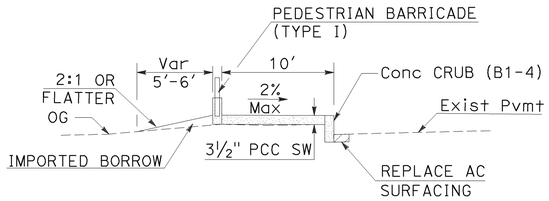

SECTION A-A
NO SCALE

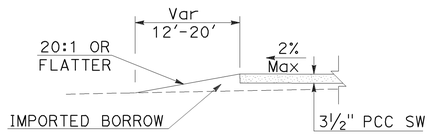

SECTION B-B
NO SCALE

ELEVATION DATA

LOCATION	POINT No.	TC Elev	FL Elev	SW Elev
31	31A	462.38	462.05	
	31B			462.13
	31C	462.71		462.21
	31D	462.64		462.14
	31E	462.56		462.06
	31F	461.86	461.53	
	31G	462.01	461.68	
	31H	461.73	461.73	
	31I	461.80	461.80	
	31J	462.17	461.84	
	31K	462.21	461.88	
	31L			462.06

ELEVATION DATA

LOCATION	POINT No.	TC Elev	FL Elev	SW Elev
32	32A	462.98	462.65	
	32B	462.86	462.53	
	32C	462.77	462.44	
	32D	462.33	462.33	
	32E	461.75	461.75	
	32F	462.18	461.85	
	32G	461.71	461.38	
	32H			461.91
	32I			462.36
	32J			462.74
	32K			463.06
	32L			462.66
	32M			462.28

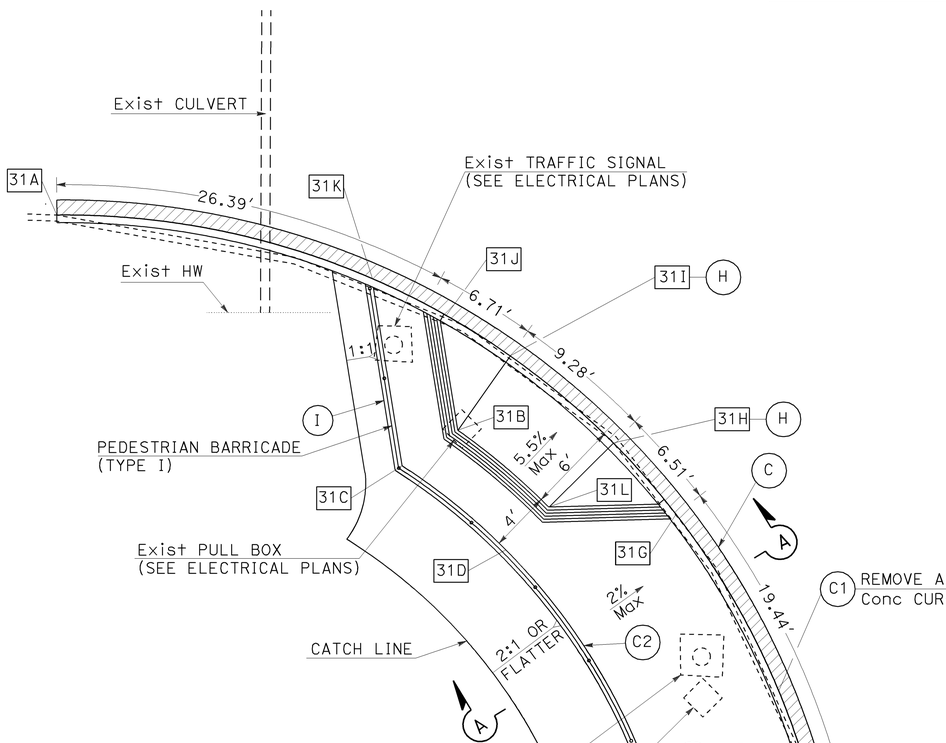

LOCATION 31
ROUTE 190/PLANO STREET
(PM 16.9, CASE A CURB RAMP)

ROUTE 190

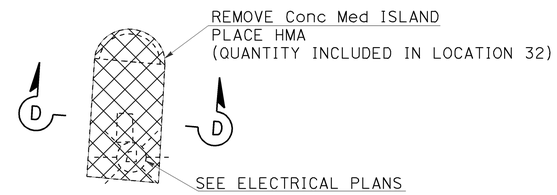

PLANO STREET

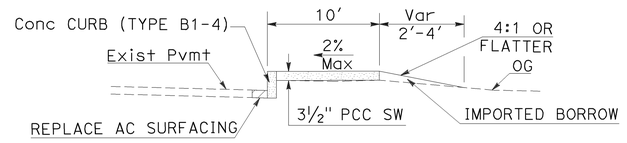

SECTION C-C
NO SCALE

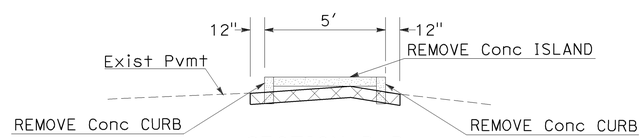

SECTION D-D
NO SCALE

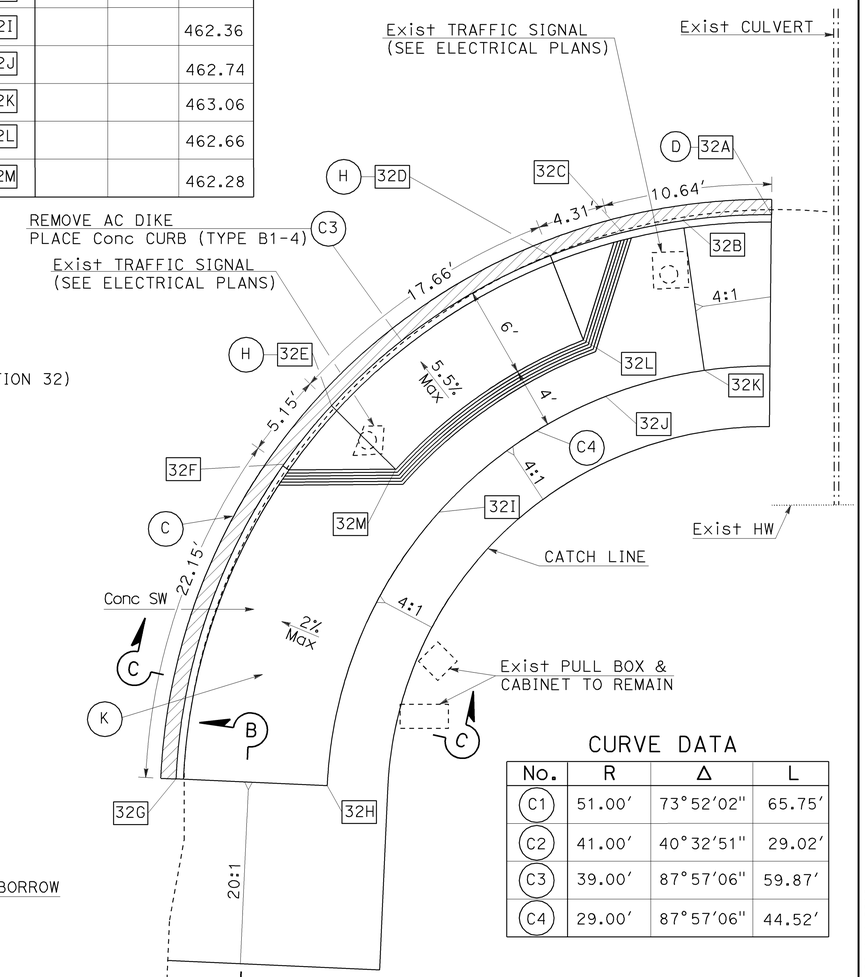

CURVE DATA

No.	R	Δ	L
C1	51.00'	73°52'02"	65.75'
C2	41.00'	40°32'51"	29.02'
C3	39.00'	87°57'06"	59.87'
C4	29.00'	87°57'06"	44.52'

LOCATION 32
ROUTE 190/PLANO STREET
(PM 16.9, CASE A CURB RAMP)

CONSTRUCTION DETAILS
NO SCALE

C-12

REVISED BY | DATE REVISED
DEBRA FRANCO | STEVE M. LEE
CALCULATED-DESIGNED BY | CHECKED BY
FUNCTIONAL SUPERVISOR
THANH NGUYEN
STATE OF CALIFORNIA - DEPARTMENT OF TRANSPORTATION
Caltrans DESIGN

LAST REVISION 03-10-10 | DATE PLOTTED => 20-APR-2010 | TIME PLOTTED => 15:56

Dist	COUNTY	ROUTE	POST MILES TOTAL PROJECT	SHEET No.	TOTAL SHEETS
06	Tul	65,99,137, 190,198,216	Var	20	59

REGISTERED CIVIL ENGINEER 8/28/09 DATE

3-22-10
PLANS APPROVAL DATE

REGISTERED PROFESSIONAL ENGINEER STEVE M. LEE No. 62613 Exp 6-30-10 CIVIL STATE OF CALIFORNIA

THE STATE OF CALIFORNIA OR ITS OFFICERS OR AGENTS SHALL NOT BE RESPONSIBLE FOR THE ACCURACY OR COMPLETENESS OF SCANNED COPIES OF THIS PLAN SHEET.

ELEVATION DATA

LOCATION	POINT No.	TC Elev	FL Elev	SW Elev
33	33A	1025.08		1025.08
	33B	1024.90	1024.40	
	33C	1024.76	1024.26	
	33D	1024.60		1024.60
	33E		1024.43	
	33F	1024.13	1024.13	
	33G	1024.28	1024.28	
	33H	1024.96		1024.96
	33I	1024.98	1024.48	
	33J	1025.10		
	33K			1024.62
	33L	1024.45	1023.95	

CURVE DATA

No.	R	Δ	L
C1	29.00′	42°57′52″	21.75′
C2	22.18′	42°57′52″	16.63′
C3	5.00′	86°31′57″	7.55′

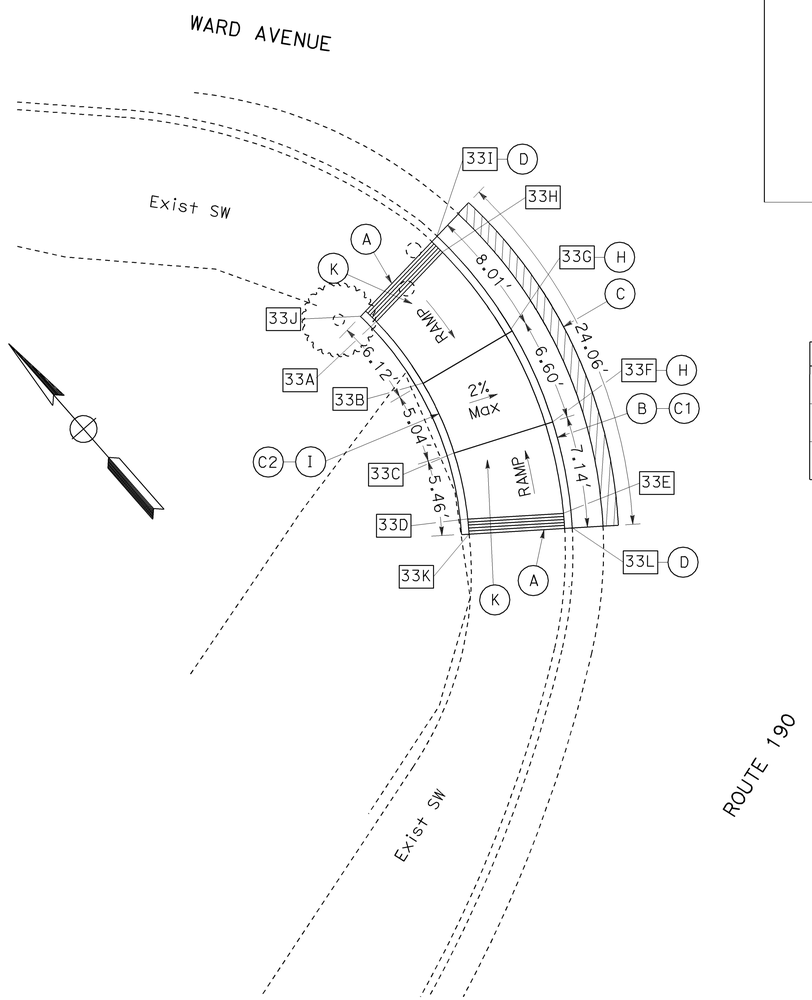

LOCATION 33

ROUTE 190/WARD AVENUE
(PM 31.5, CASE C CURB RAMP)

ELEVATION DATA

LOCATION	POINT No.	TC Elev	FL Elev	SW Elev
34	34A	1028.01	1027.54	
	34B	1027.88	1027.38	
	34C			1028.23
	34D			1028.11
	34E	1028.09		1028.09
	34F	1028.21		1028.21

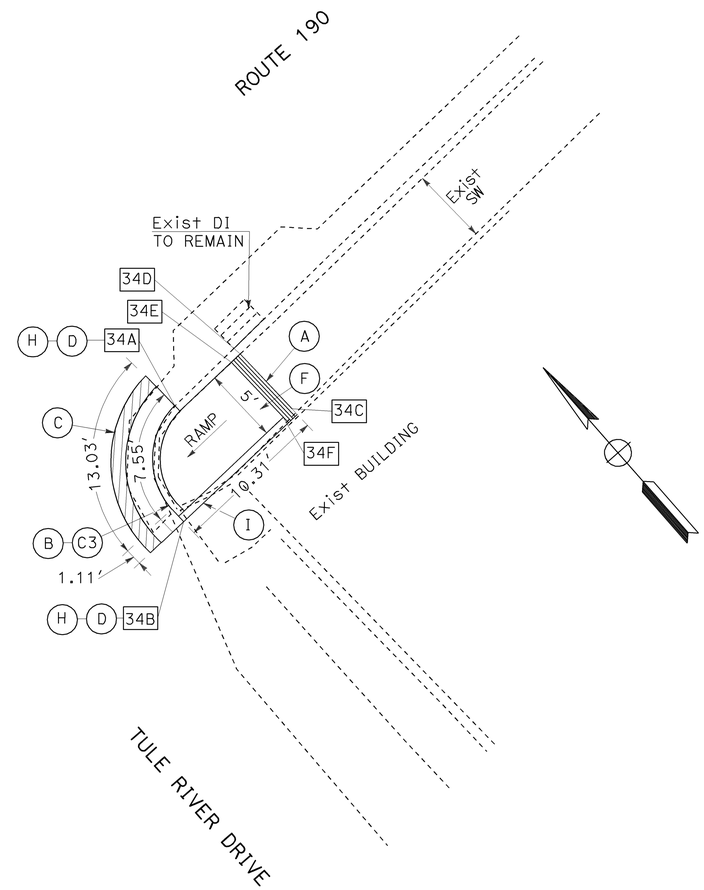

LOCATION 34

ROUTE 190/TULE RIVER DRIVE
(PM 31.8, CASE F CURB RAMP)

CONSTRUCTION DETAILS
C-13

NO SCALE

STATE OF CALIFORNIA - DEPARTMENT OF TRANSPORTATION
Caltrans® DESIGN
FUNCTIONAL SUPERVISOR: THANH NGUYEN
CALCULATED-DESIGNED BY: STEVE M. LEE
CHECKED BY: DEBRA FRANCO
REVISED BY
DATE REVISED

LAST REVISION 03-10-10
DATE PLOTTED => 20-APR-2010
TIME PLOTTED => 15:56

Dist	COUNTY	ROUTE	POST MILES TOTAL PROJECT	SHEET No.	TOTAL SHEETS
06	Tul	65,99,137, 190,198,216	Var	21	59

REGISTERED CIVIL ENGINEER 8/28/09 DATE

3-22-10
PLANS APPROVAL DATE

REGISTERED PROFESSIONAL ENGINEER STEVE M. LEE No. 62613 Exp 6-30-10 CIVIL STATE OF CALIFORNIA

THE STATE OF CALIFORNIA OR ITS OFFICERS OR AGENTS SHALL NOT BE RESPONSIBLE FOR THE ACCURACY OR COMPLETENESS OF SCANNED COPIES OF THIS PLAN SHEET.

ELEVATION TABLE

LOCATION	POINT No.	TC Elev	FL Elev	SW Elev
36	36A			1047.70
	36B	1047.64		1047.14
	36C	1047.58		1047.08
	36D			1047.46
	36E	1047.39	1046.89	
	36F	1046.98	1046.98	
	36G	1047.54	1047.04	
	36H	1047.59	1047.09	
37	37A	1047.23		1047.23
	37B	1046.66	1046.66	
	37C	1046.58	1046.58	
	37D	1046.95		1046.95
	37E			1047.02
	37F	1047.00		1047.00
	37G	1047.18		1046.68
	37H	1046.74		1046.24
	37I	1047.34		1047.34
	37J			1047.36
	37K	1047.25	1046.75	
	37L	1046.97	1046.47	

ELEVATION TABLE

LOCATION	POINT No.	TC Elev	FL Elev	SW Elev
38	38A	1048.98	1048.48	1048.48
	38B			1048.86
	38C			1048.81
	38D	1048.87	1048.42	1048.42

LOCATION 36
ROUTE 190/490 FEET EAST OF BRIDGE DRIVE
(PM 32.0, CASE C CURB RAMP)

ELEVATION TABLE

LOCATION	POINT No.	TC Elev	FL Elev	SW Elev
35	35A	1033.40	1032.90	
	35B	1033.38		1033.38
	35C	1033.57		1033.57
	35D			1033.55
	35E	1032.91	1032.91	
	35F	1033.37		1032.87
	35G	1032.69	1032.69	

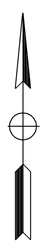

CURVE TABLE

No.	R	Δ	L
C1	5.00′	90°0′0″	7.85′

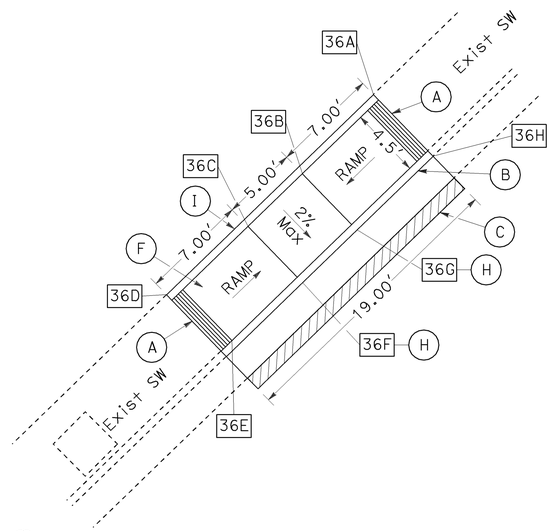

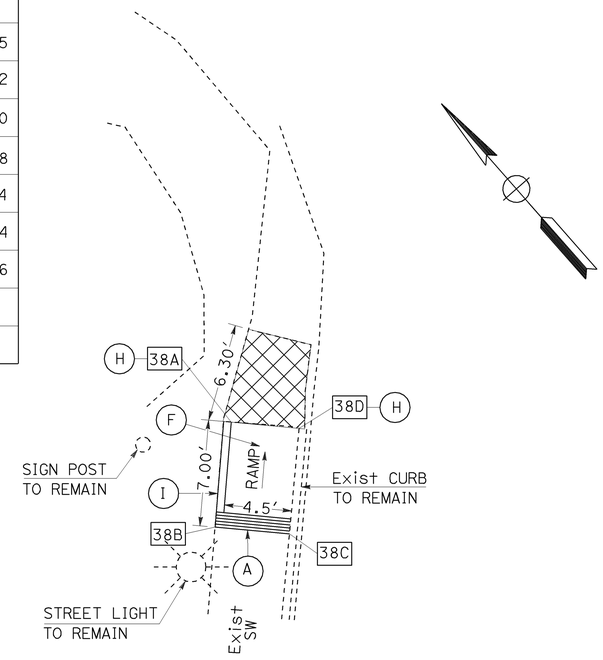

LOCATION 38
ROUTE 190
(PM 32.3, CASE F CURB RAMP)

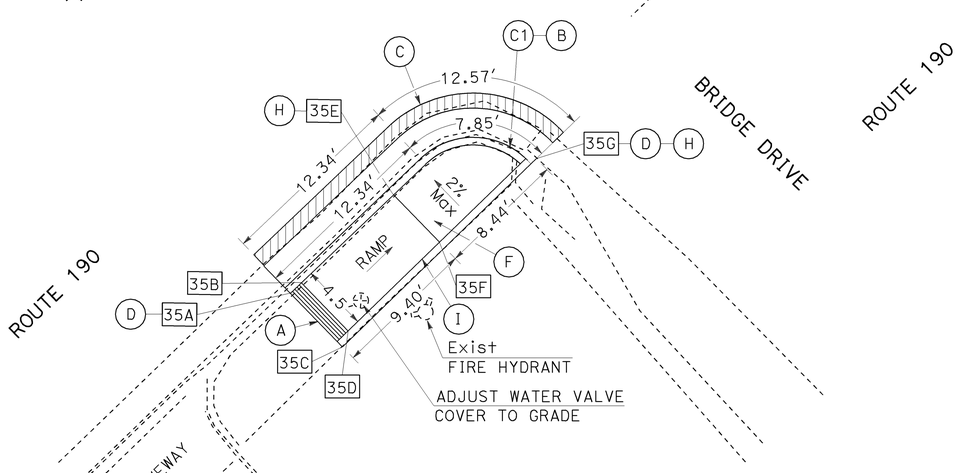

LOCATION 35
ROUTE 190/BRIDGE DRIVE
(PM 31.9, CASE F CURB RAMP)

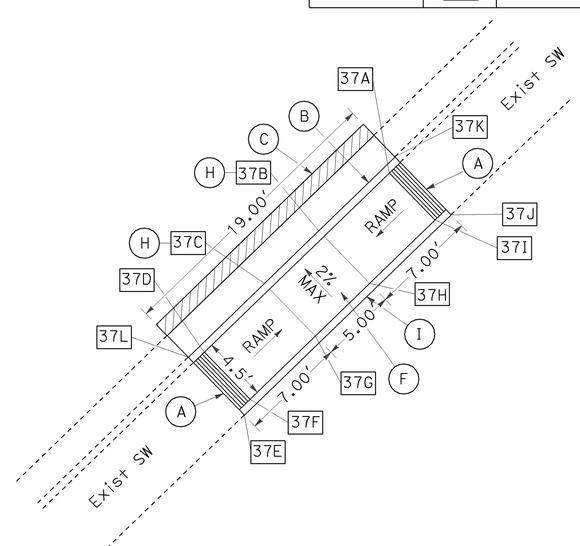

LOCATION 37
ROUTE 190/490 FEET EAST OF BRIDGE DRIVE
(PM 32.0, CASE C CURB RAMP)

NO SCALE

CONSTRUCTION DETAILS
C-14

STATE OF CALIFORNIA - DEPARTMENT OF TRANSPORTATION
Caltrans DESIGN

FUNCTIONAL SUPERVISOR: THANH NGUYEN
CALCULATED-DESIGNED BY: DEBRA FRANCO
CHECKED BY: STEVE M. LEE
REVISED BY
DATE REVISED

LAST REVISION 03-10-10
DATE PLOTTED => 20-APR-2010
TIME PLOTTED => 15:56

Dist	COUNTY	ROUTE	POST MILES TOTAL PROJECT	SHEET No.	TOTAL SHEETS
06	Tul	65,99,137, 190,198,216	Var	22	59

REGISTERED CIVIL ENGINEER 8/28/09 DATE

3-22-10
PLANS APPROVAL DATE

REGISTERED PROFESSIONAL ENGINEER STEVE M. LEE No. 62613 Exp 6-30-10 CIVIL STATE OF CALIFORNIA

THE STATE OF CALIFORNIA OR ITS OFFICERS OR AGENTS SHALL NOT BE RESPONSIBLE FOR THE ACCURACY OR COMPLETENESS OF SCANNED COPIES OF THIS PLAN SHEET.

ELEVATION DATA

LOCATION	POINT No.	TC Elev	FL Elev	SW Elev
39	39A			264.99
	39B	264.79		264.79
	39C	264.43		263.93
	39D	264.32		263.82
	39E	263.70	263.70	
	39F	263.82	263.82	
	39G	263.84		263.84
	39H			264.86

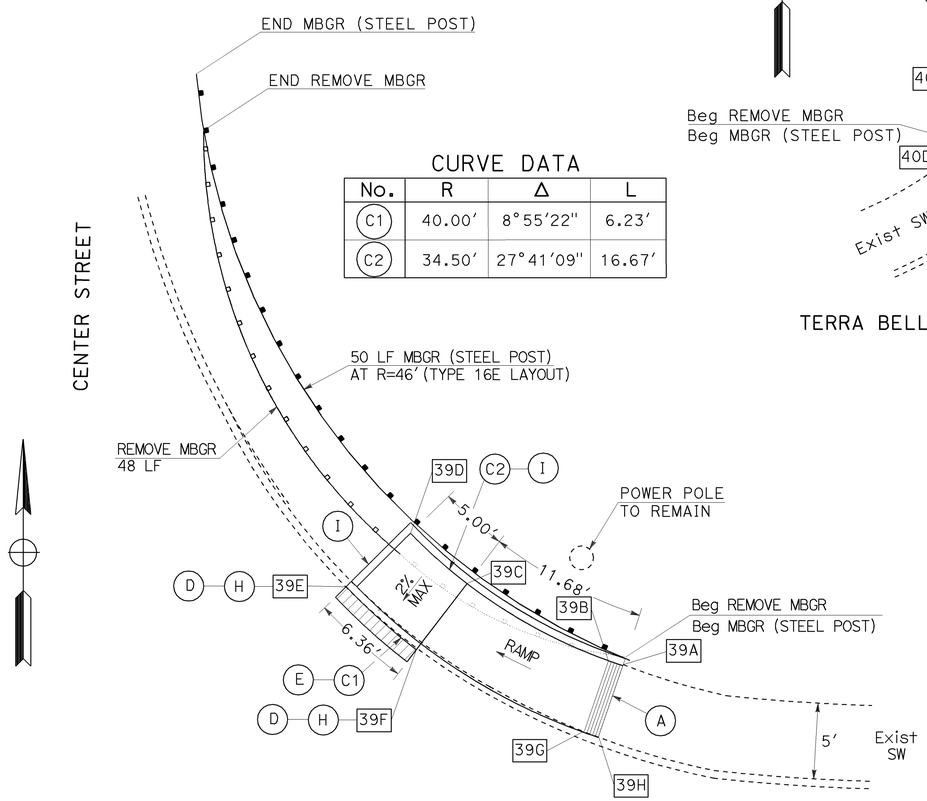

LOCATION 39
ROUTE 99/W TERRA BELLA AVENUE
(PM 12.3, CASE C CURB RAMP)

CURVE DATA

No.	R	Δ	L
C1	40.00'	8°55'22"	6.23'
C2	34.50'	27°41'09"	16.67'

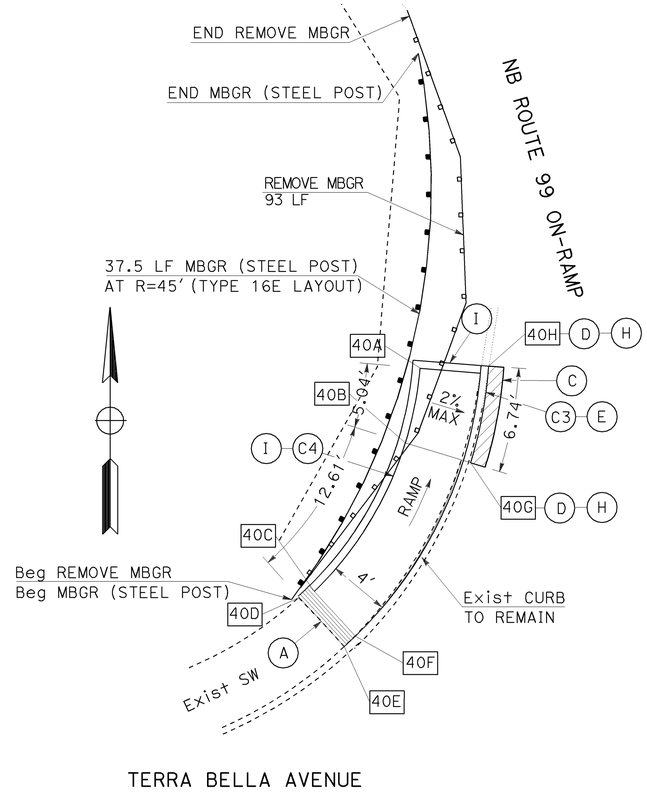

ELEVATION DATA

LOCATION	POINT No.	TC Elev	FL Elev	SW Elev
40	40A	263.94		263.44
	40B	264.02		263.52
	40C	264.44		264.44
	40D			264.46
	40E			264.38
	40F	264.36		264.36
	40G	263.43	263.43	
	40H	263.35	263.35	

CURVE DATA

No.	R	Δ	L
C3	28.00'	13°18'16"	6.50'
C4	23.50'	44°10'22"	18.12'

LOCATION 40
ROUTE 99/TERRA BELLA AVENUE
(PM 12.3, CASE C CURB RAMP)

CURVE DATA

No.	R	Δ	L
C5	30.10'	43°42'04"	22.96'
C6	25.60'	45°06'46"	20.16'

ELEVATION DATA

LOCATION	POINT No.	TC Elev	FL Elev	SW Elev
41	41A	263.01	262.26	
	41B	262.07	262.07	
	41C	261.98	261.98	
	41D	262.63	261.86	
	41E			262.76
	41F	262.47		262.47
	41G	262.57		262.07
	41H	262.67		262.17
	41I	263.10		263.10
	41J			263.12

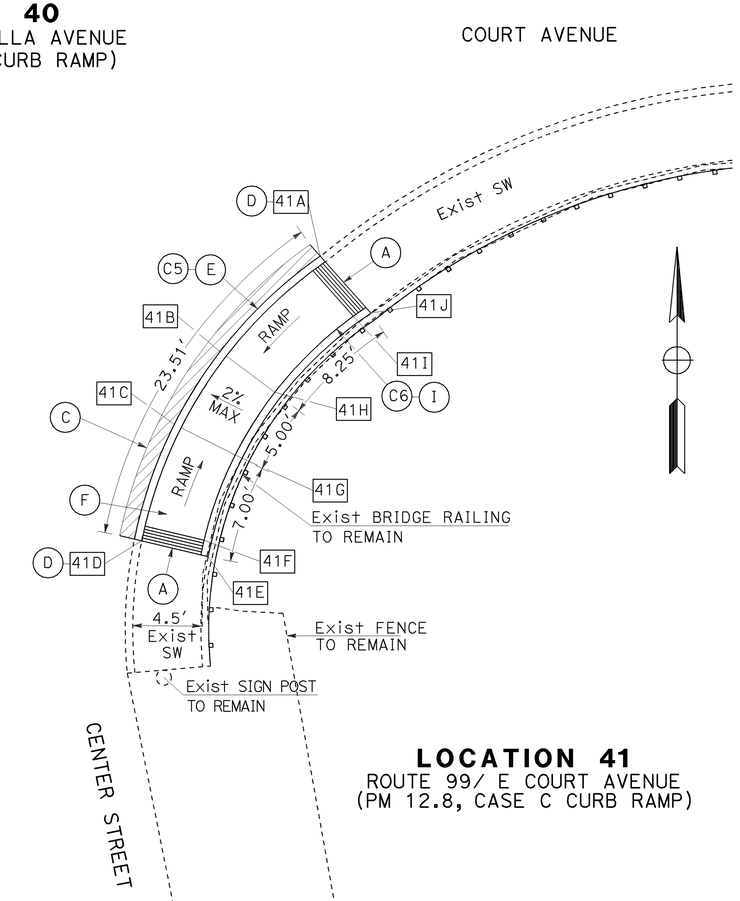

LOCATION 41
ROUTE 99/ E COURT AVENUE
(PM 12.8, CASE C CURB RAMP)

CONSTRUCTION DETAILS
NO SCALE

C-15

STATE OF CALIFORNIA - DEPARTMENT OF TRANSPORTATION
Caltrans DESIGN

FUNCTIONAL SUPERVISOR: THANH NGUYEN
CALCULATED-DESIGNED BY: DEBRA FRANCO
CHECKED BY: STEVE M. LEE
REVISED BY
DATE REVISED

LAST REVISION DATE PLOTTED => 20-APR-2010
TIME PLOTTED => 15:56
03-10-10

Dist	COUNTY	ROUTE	POST MILES TOTAL PROJECT	SHEET No.	TOTAL SHEETS
06	Tul	65,99,137, 190,198,216	Var	23	59

REGISTERED CIVIL ENGINEER 8/28/09 DATE

3-22-10
PLANS APPROVAL DATE

REGISTERED PROFESSIONAL ENGINEER STEVE M. LEE No. 62613 Exp 6-30-10 CIVIL STATE OF CALIFORNIA

THE STATE OF CALIFORNIA OR ITS OFFICERS OR AGENTS SHALL NOT BE RESPONSIBLE FOR THE ACCURACY OR COMPLETENESS OF SCANNED COPIES OF THIS PLAN SHEET.

CURVE DATA

No.	R	Δ	L
C1	60.00′	5°38′03″	5.90′
C2	55.00′	16°57′23″	16.28′

ELEVATION DATA

LOCATION	POINT No.	TC Elev	FL Elev	SW Elev
42	42A	262.24	262.24	
	42B	263.32	263.32	
	42C			264.24
	42D			264.66
	42E			264.78
	42F			264.60
	42G	263.92		263.42
	42H	263.82		263.32

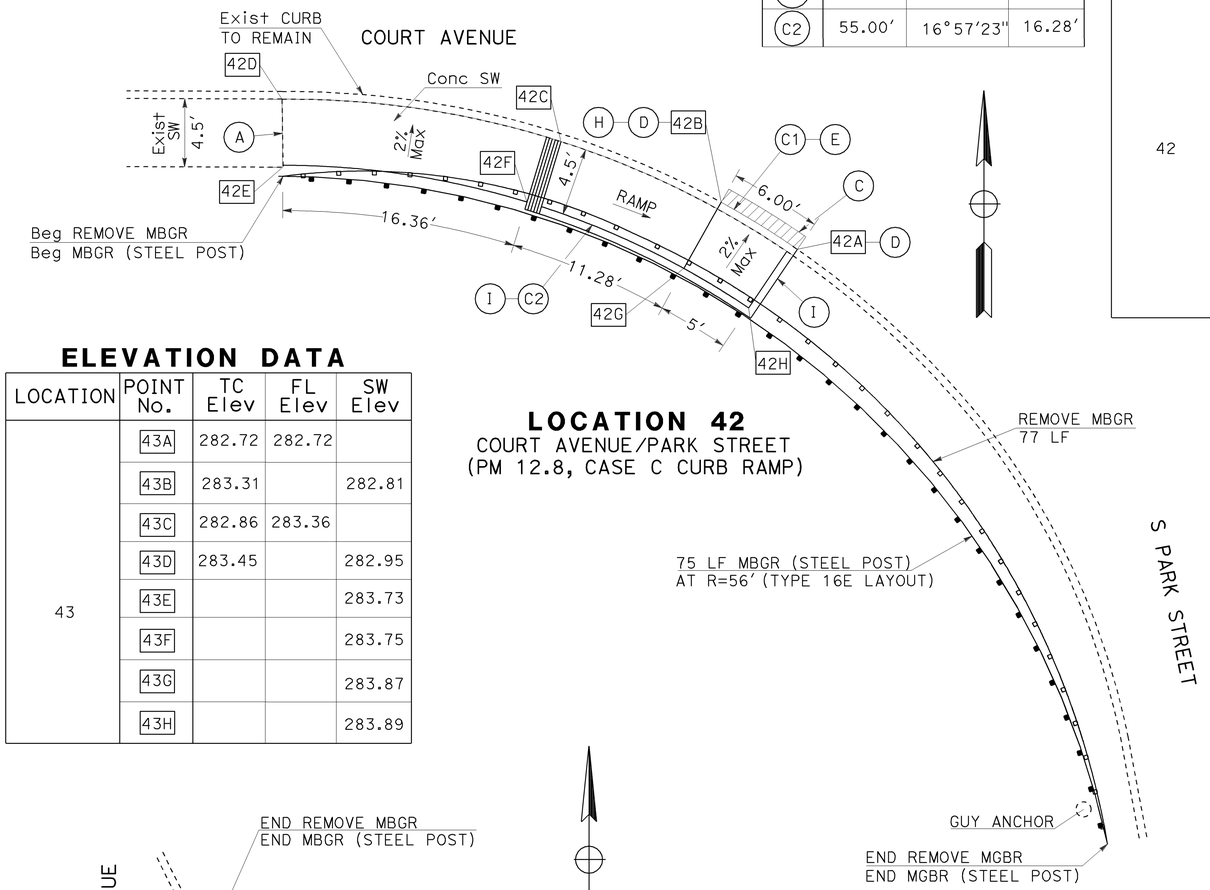

LOCATION 42
COURT AVENUE/PARK STREET
(PM 12.8, CASE C CURB RAMP)

ELEVATION DATA

LOCATION	POINT No.	TC Elev	FL Elev	SW Elev
43	43A	282.72	282.72	
	43B	283.31		282.81
	43C	282.86	283.36	
	43D	283.45		282.95
	43E			283.73
	43F			283.75
	43G			283.87
	43H			283.89

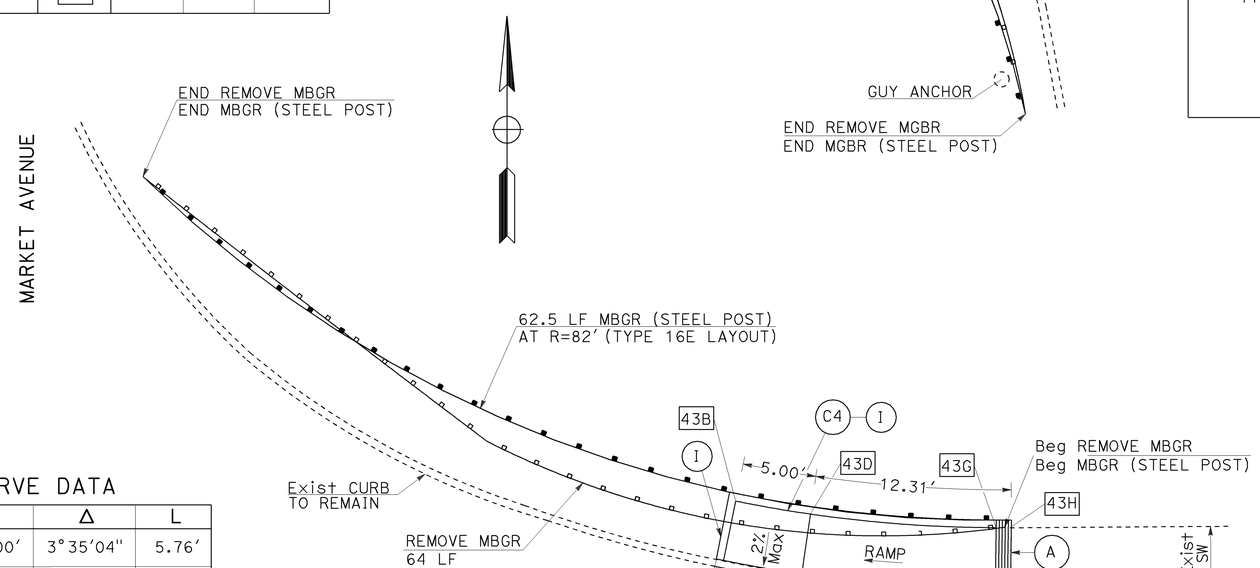

CURVE DATA

No.	R	Δ	L
C3	92.00′	3°35′04″	5.76′
C4	87.50′	11°20′02″	17.31′

LOCATION 43
ARMSTRONG AVENUE/MARKET AVENUE
(PM 6.2, CASE F CURB RAMP)

CURVE DATA

No.	R	Δ	L
C5	30.00′	10°11′43″	5.34′
C6	25.00′	39°52′35″	17.40′

ELEVATION DATA

LOCATION	POINT No.	TC Elev	FL Elev	SW Elev
44	44A	282.99		282.49
	44B	283.10		282.60
	44C			283.68
	44D			283.63
	44E	282.52	282.52	
	44F	282.40	282.40	

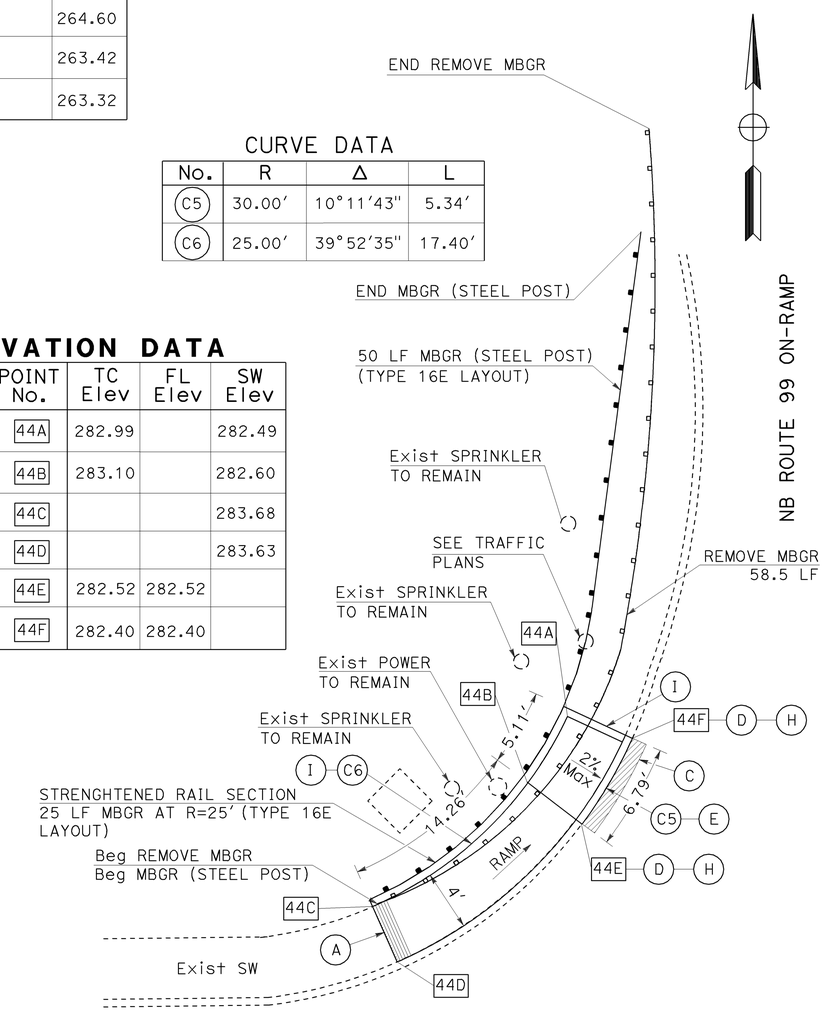

LOCATION 44
NB ROUTE 99 ON-RAMP/ARMSTRONG AVENUE
(PM 6.2, CASE C CURB RAMP)

CONSTRUCTION DETAILS
C-16

NO SCALE

REVISED BY	DATE REVISED
DEBRA FRANCO	STEVE M. LEE
CALCULATED-DESIGNED BY	CHECKED BY
FUNCTIONAL SUPERVISOR	THANH NGUYEN

STATE OF CALIFORNIA - DEPARTMENT OF TRANSPORTATION
Caltrans DESIGN

LAST REVISION 03-10-10 DATE PLOTTED => 20-APR-2010 TIME PLOTTED => 15:56

Dist	COUNTY	ROUTE	POST MILES TOTAL PROJECT	SHEET No.	TOTAL SHEETS
06	Tul	65,99,137, 190,198,216	Var	24	59

REGISTERED CIVIL ENGINEER 8/28/09 DATE

3-22-10
PLANS APPROVAL DATE

REGISTERED PROFESSIONAL ENGINEER STEVE M. LEE No. 62613 Exp 6-30-10 CIVIL STATE OF CALIFORNIA

THE STATE OF CALIFORNIA OR ITS OFFICERS OR AGENTS SHALL NOT BE RESPONSIBLE FOR THE ACCURACY OR COMPLETENESS OF SCANNED COPIES OF THIS PLAN SHEET.

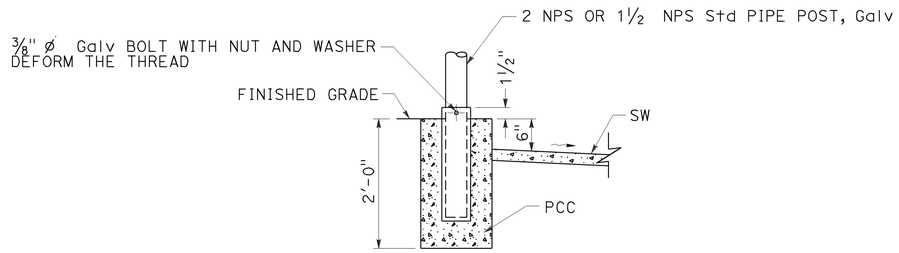

PEDESTRIAN BARRICADE SLEEVE POST DETAIL

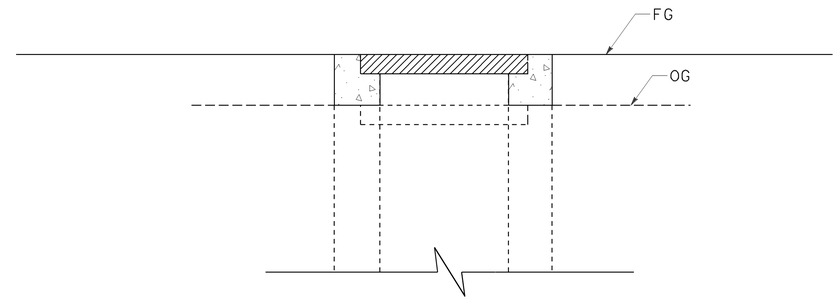

ADJUST WATER VALVE COVER TO GRADE

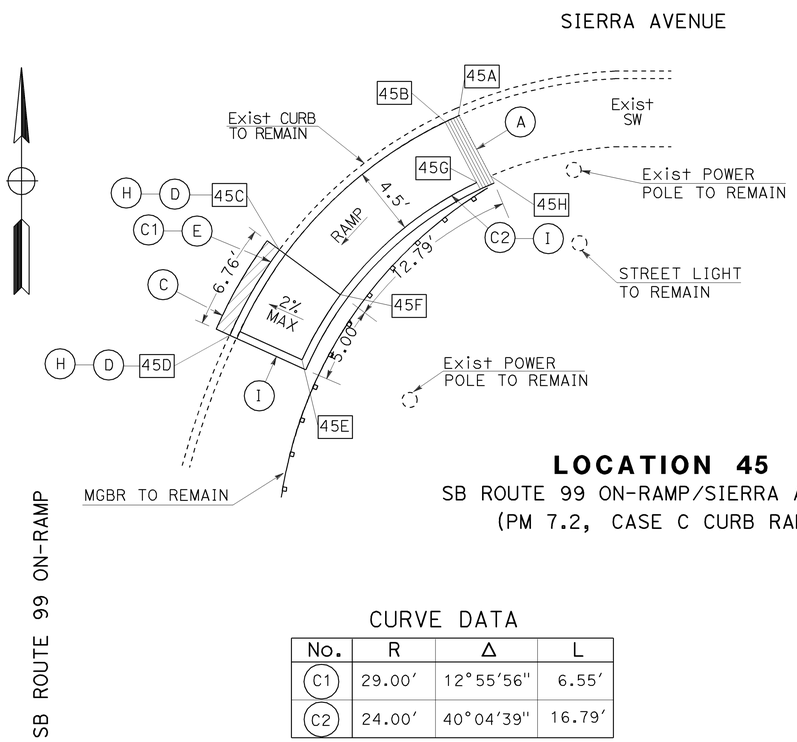

LOCATION 45

SB ROUTE 99 ON-RAMP/SIERRA AVENUE
(PM 7.2, CASE C CURB RAMP)

CURVE DATA

No.	R	Δ	L
C1	29.00′	12°55′56″	6.55′
C2	24.00′	40°04′39″	16.79′

ELEVATION DATA

LOCATION	POINT No.	TC Elev	FL Elev	SW Elev
45	45A			276.79
	45B			276.77
	45C	275.90	275.90	
	45D	275.85	275.85	
	45E	276.45		275.95
	45F	276.53		276.03
	45G			276.88
	45H			276.90

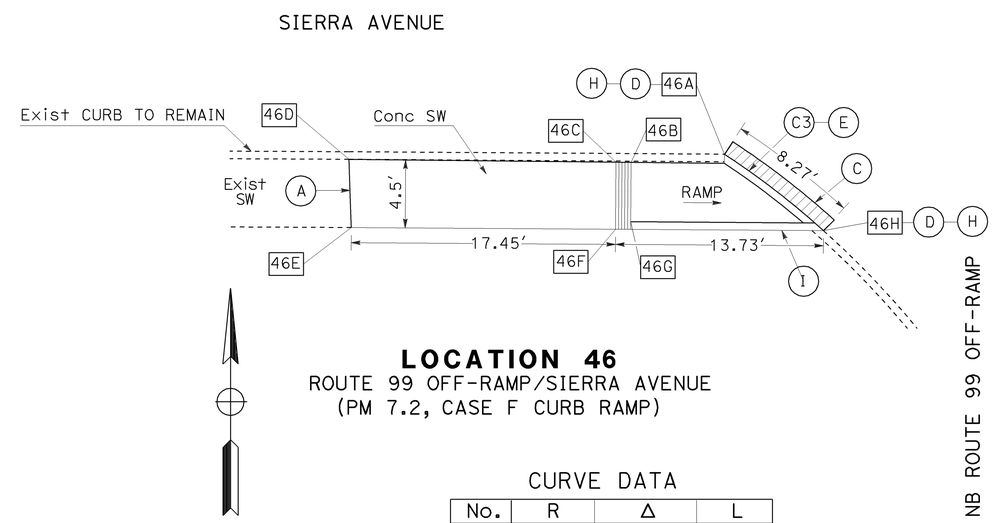

LOCATION 46

ROUTE 99 OFF-RAMP/SIERRA AVENUE
(PM 7.2, CASE F CURB RAMP)

CURVE DATA

No.	R	Δ	L
C3	53.00′	8°56′22″	8.27′

ELEVATION DATA

LOCATION	POINT No.	TC Elev	FL Elev	SW Elev
46	46A	275.81	275.81	
	46B			276.36
	46C			276.38
	46D			276.58
	46E			276.72
	46F			276.40
	46G	276.38		276.38
	46H	275.82	275.82	

CONSTRUCTION DETAILS

NO SCALE

C-17

STATE OF CALIFORNIA - DEPARTMENT OF TRANSPORTATION
Caltrans
DESIGN

FUNCTIONAL SUPERVISOR: THANH NGUYEN
CALCULATED-DESIGNED BY: DEBRA FRANCO
CHECKED BY: STEVE M. LEE
REVISED BY
DATE REVISED

LAST REVISION 03-10-10
DATE PLOTTED => 20-APR-2010
TIME PLOTTED => 15:56

Dist	COUNTY	ROUTE	POST MILES TOTAL PROJECT	SHEET No.	TOTAL SHEETS
06	Tul	65,99,137, 190,198,216	Var	25	59

REGISTERED CIVIL ENGINEER 3-5-10 DATE

3-22-10
PLANS APPROVAL DATE

REGISTERED PROFESSIONAL ENGINEER MAZIN H. AL-ALI No. 65523 Exp. 9/30/11 CIVIL STATE OF CALIFORNIA

THE STATE OF CALIFORNIA OR ITS OFFICERS OR AGENTS SHALL NOT BE RESPONSIBLE FOR THE ACCURACY OR COMPLETENESS OF SCANNED COPIES OF THIS PLAN SHEET.

STATIONARY MOUNTED CONSTRUCTION AREA SIGNS

SIGN No.	SIGN CODE	PANEL SIZE	SIGN MESSAGE	No. OF POST AND SIZE	EACH
A	W20-1	36" x 36"	ROAD WORK AHEAD	1-4" x 6"	19
B	G20-2	36" x 18"	END ROAD WORK	1-4" x 6"	17

NOTE:

1. LOCATIONS OF CONSTRUCTION AREA SIGNS SHOWN ARE APPROXIMATE, EXACT LOCATIONS WILL BE DETERMINED BY THE ENGINEER.

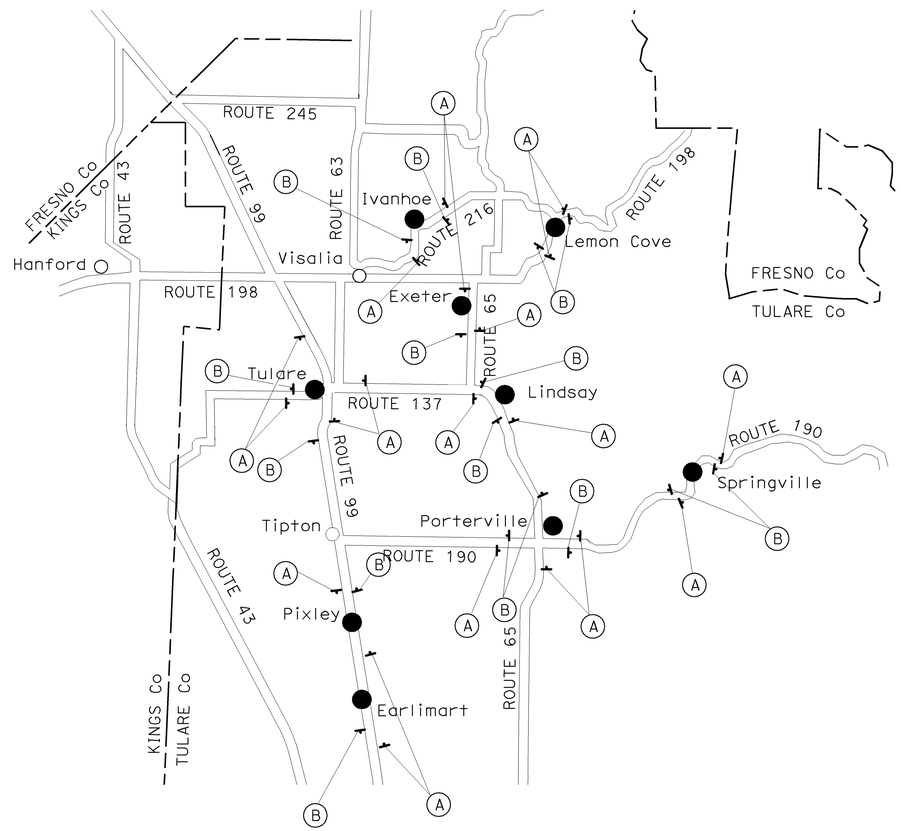

THIS PLAN ACCURATE FOR CONSTRUCTION AREA SIGN WORK ONLY

CONSTRUCTION AREA SIGNS

CS-1

NO SCALE

STATE OF CALIFORNIA - DEPARTMENT OF TRANSPORTATION
Caltrans
TRAFFIC DESIGN

FUNCTIONAL SUPERVISOR: MOHAMMED QATAMI
CALCULATED-DESIGNED BY: HASEEB YOUSAF
CHECKED BY: MAZIN AL-ALI
REVISED BY
DATE REVISED

LAST REVISION 03-10-10
DATE PLOTTED => 22-APR-2010
TIME PLOTTED => 13:27

Dist	COUNTY	ROUTE	POST MILES TOTAL PROJECT	SHEET No.	TOTAL SHEETS
06	Tul	65,99,137, 190,198,216	Var	26	59

REGISTERED CIVIL ENGINEER 3-5-10 DATE

3-22-10
PLANS APPROVAL DATE

REGISTERED PROFESSIONAL ENGINEER MAZIN H. AL-ALI No. 65523 Exp. 9/30/11 CIVIL STATE OF CALIFORNIA

THE STATE OF CALIFORNIA OR ITS OFFICERS OR AGENTS SHALL NOT BE RESPONSIBLE FOR THE ACCURACY OR COMPLETENESS OF SCANNED COPIES OF THIS PLAN SHEET.

LEGEND

- (XX) ROADSIDE SIGN (WITH NUMBER)
- ROADSIDE SIGN (ONE POST)
- RESET ROADSIDE SIGN
- RELOCATE ROADSIDE SIGN FROM / TO
- STRAP AND SADDLE BRACKET METHOD

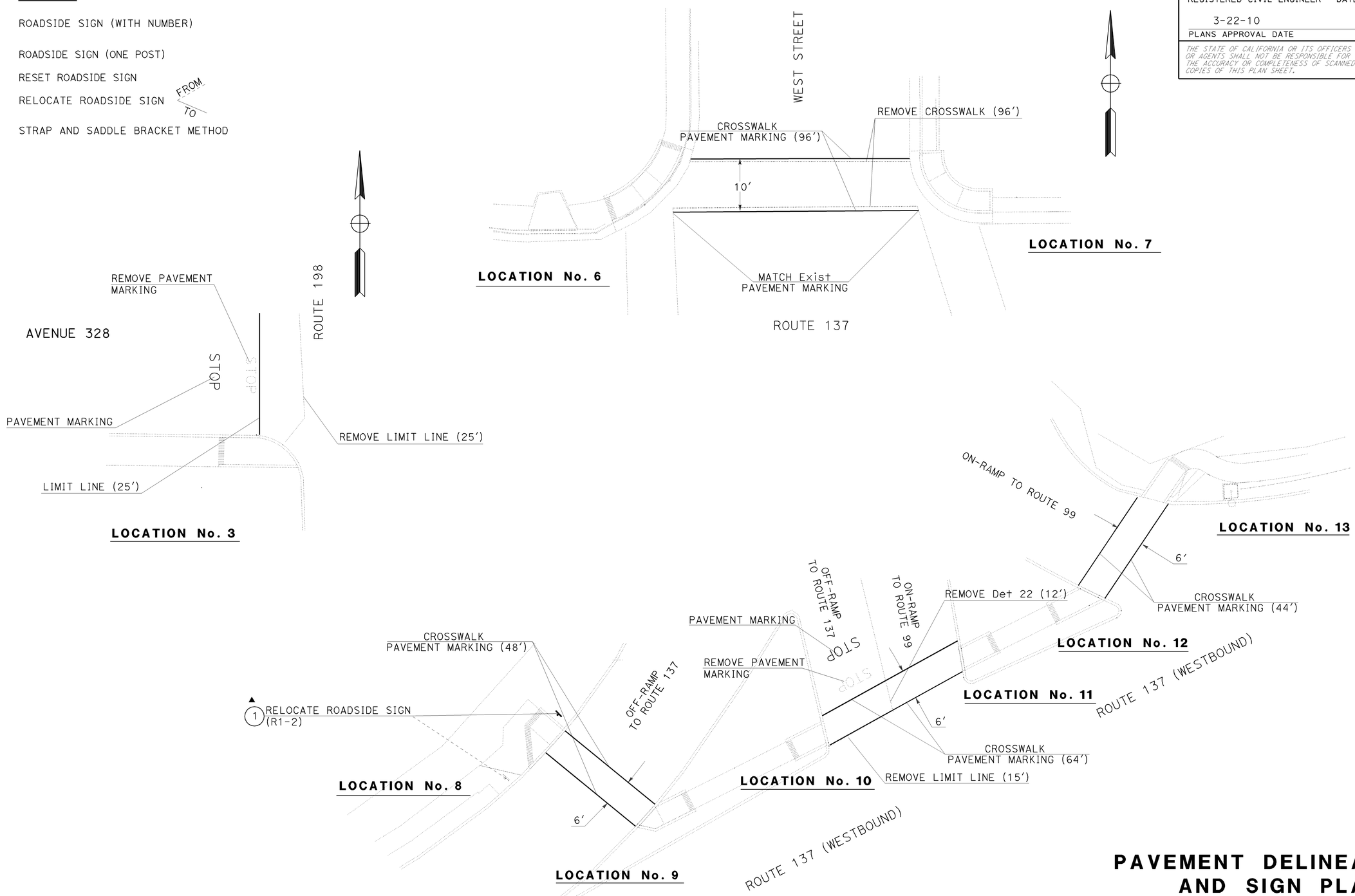

THIS PLAN ACCURATE FOR PAVEMENT DELINEATION AND SIGNS ONLY.

PAVEMENT DELINEATION AND SIGN PLAN

NO SCALE

PD-1

STATE OF CALIFORNIA - DEPARTMENT OF TRANSPORTATION
Caltrans
TRAFFIC DESIGN

FUNCTIONAL SUPERVISOR: MOHAMMED QATAMI
CALCULATED-DESIGNED BY: HASEEB YOUSAF
CHECKED BY: MAZIN AL-ALI
REVISED BY / DATE REVISED

LAST REVISION 03-10-10 | DATE PLOTTED => 22-APR-2010 | TIME PLOTTED => 13:27

Dist	COUNTY	ROUTE	POST MILES TOTAL PROJECT	SHEET No.	TOTAL SHEETS
06	Tul	65,99,137, 190,198,216	Var	27	59

REGISTERED CIVIL ENGINEER 3-5-10 DATE

3-22-10
PLANS APPROVAL DATE

REGISTERED PROFESSIONAL ENGINEER MAZIN H. AL-ALI No. 65523 Exp. 9/30/11 CIVIL STATE OF CALIFORNIA

THE STATE OF CALIFORNIA OR ITS OFFICERS OR AGENTS SHALL NOT BE RESPONSIBLE FOR THE ACCURACY OR COMPLETENESS OF SCANNED COPIES OF THIS PLAN SHEET.

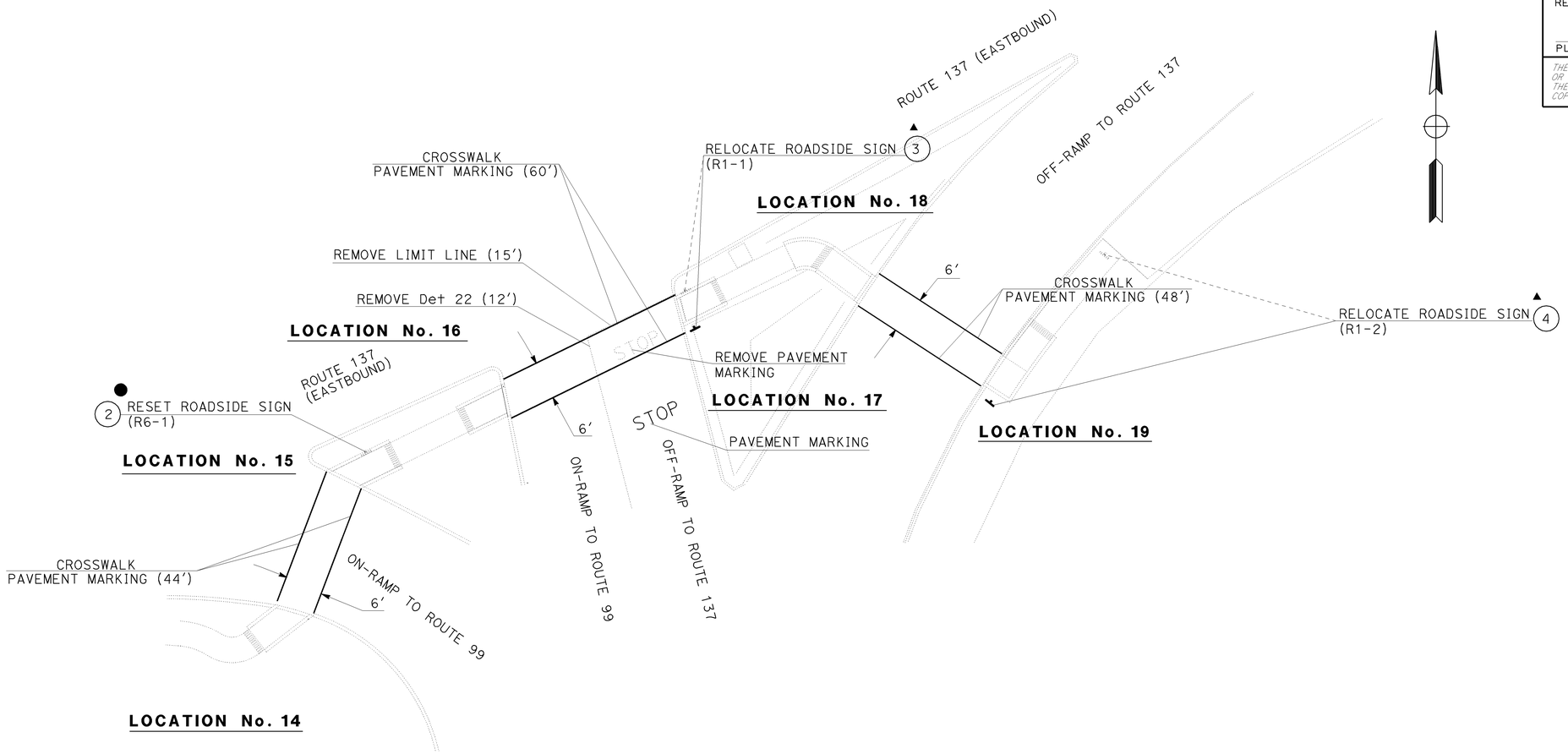

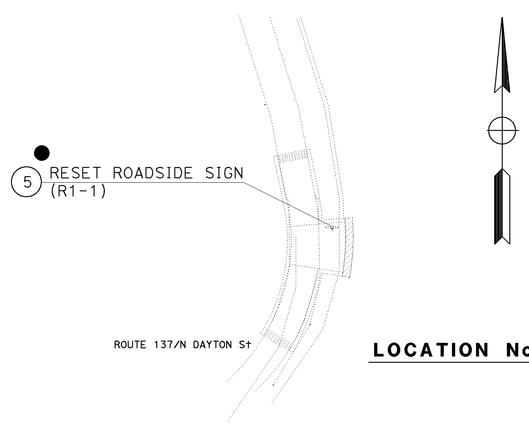

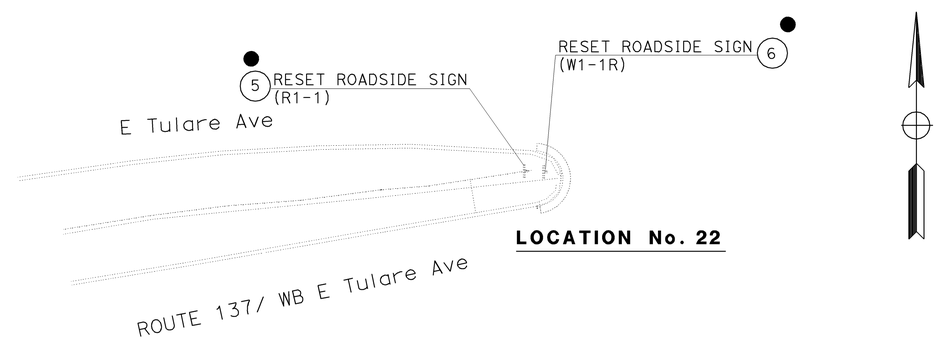

THIS PLAN ACCURATE FOR PAVEMENT DELINEATION AND SIGNS ONLY.

PAVEMENT DELINEATION AND SIGN PLAN

NO SCALE

PD-2

STATE OF CALIFORNIA - DEPARTMENT OF TRANSPORTATION
Caltrans
TRAFFIC DESIGN

FUNCTIONAL SUPERVISOR: MOHAMMED QATAMI
CALCULATED-DESIGNED BY: HASEEB YOUSAF
CHECKED BY: MAZIN AL-ALI
REVISED BY
DATE REVISED

LAST REVISION 03-10-10
DATE PLOTTED => 22-APR-2010
TIME PLOTTED => 13:27

Dist	COUNTY	ROUTE	POST MILES TOTAL PROJECT	SHEET No.	TOTAL SHEETS
06	Tul	65,99,137, 190,198,216	Var	28	59

REGISTERED CIVIL ENGINEER 3-5-10 DATE

3-22-10
PLANS APPROVAL DATE

REGISTERED PROFESSIONAL ENGINEER MAZIN H. AL-ALI No. 65523 Exp. 9/30/11 CIVIL STATE OF CALIFORNIA

THE STATE OF CALIFORNIA OR ITS OFFICERS OR AGENTS SHALL NOT BE RESPONSIBLE FOR THE ACCURACY OR COMPLETENESS OF SCANNED COPIES OF THIS PLAN SHEET.

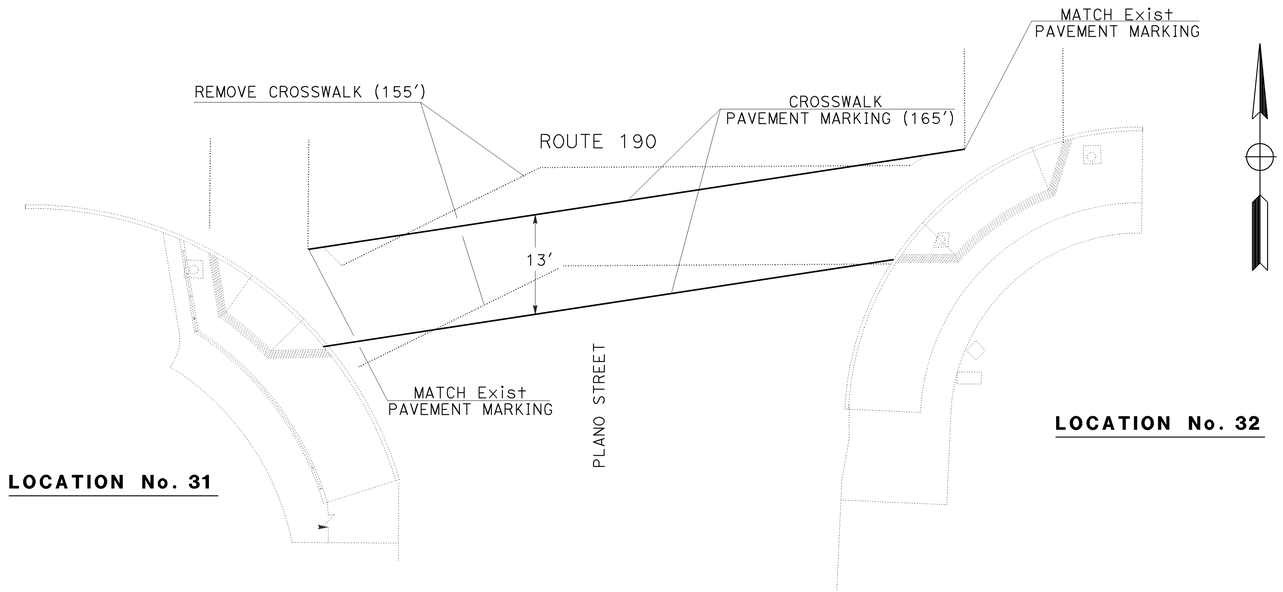

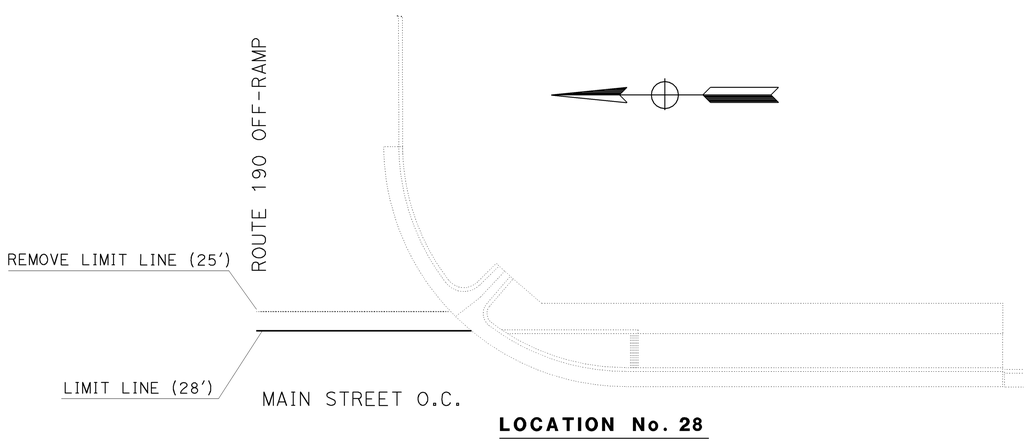

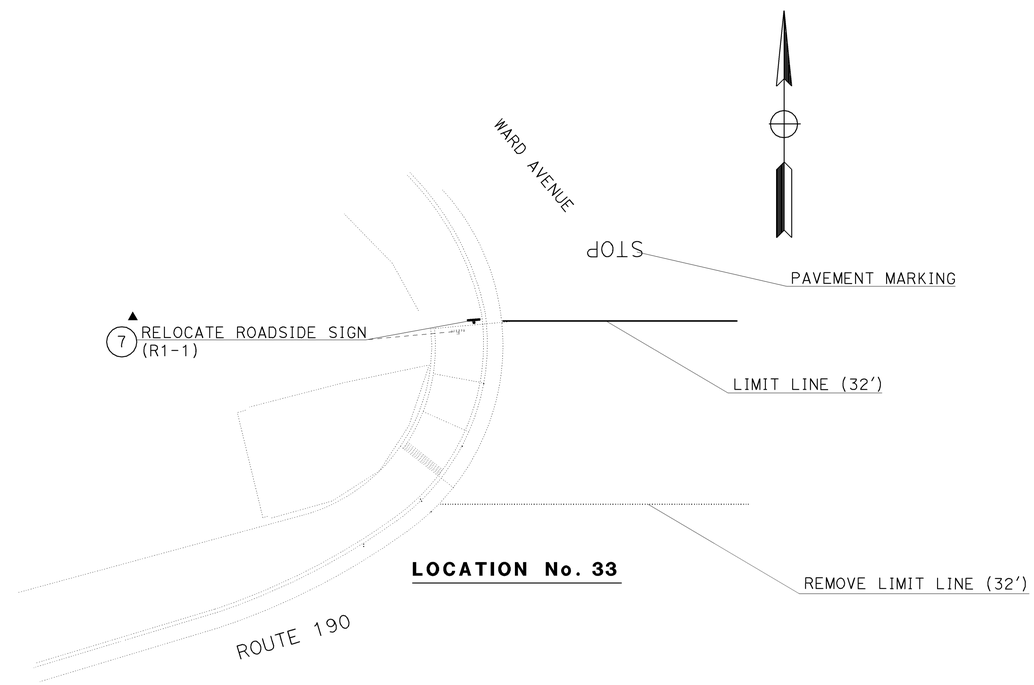

THIS PLAN ACCURATE FOR PAVEMENT DELINEATION AND SIGNS ONLY.

PAVEMENT DELINEATION AND SIGN PLAN

NO SCALE

PD-3

STATE OF CALIFORNIA - DEPARTMENT OF TRANSPORTATION
Caltrans
TRAFFIC DESIGN

FUNCTIONAL SUPERVISOR: MOHAMMED QATAMI
CALCULATED-DESIGNED BY: HASEEB YOUSAF
CHECKED BY: MAZIN AL-ALI
REVISED BY
DATE REVISED

LAST REVISION 03-10-10
DATE PLOTTED => 22-APR-2010
TIME PLOTTED => 13:27

Dist	COUNTY	ROUTE	POST MILES TOTAL PROJECT	SHEET No.	TOTAL SHEETS
06	Tul	65,99,137, 190,198,216	Var	29	59

REGISTERED CIVIL ENGINEER 3-5-10 DATE

3-22-10
PLANS APPROVAL DATE

REGISTERED PROFESSIONAL ENGINEER MAZIN H. AL-ALI No. 65523 Exp. 9/30/11 CIVIL STATE OF CALIFORNIA

THE STATE OF CALIFORNIA OR ITS OFFICERS OR AGENTS SHALL NOT BE RESPONSIBLE FOR THE ACCURACY OR COMPLETENESS OF SCANNED COPIES OF THIS PLAN SHEET.

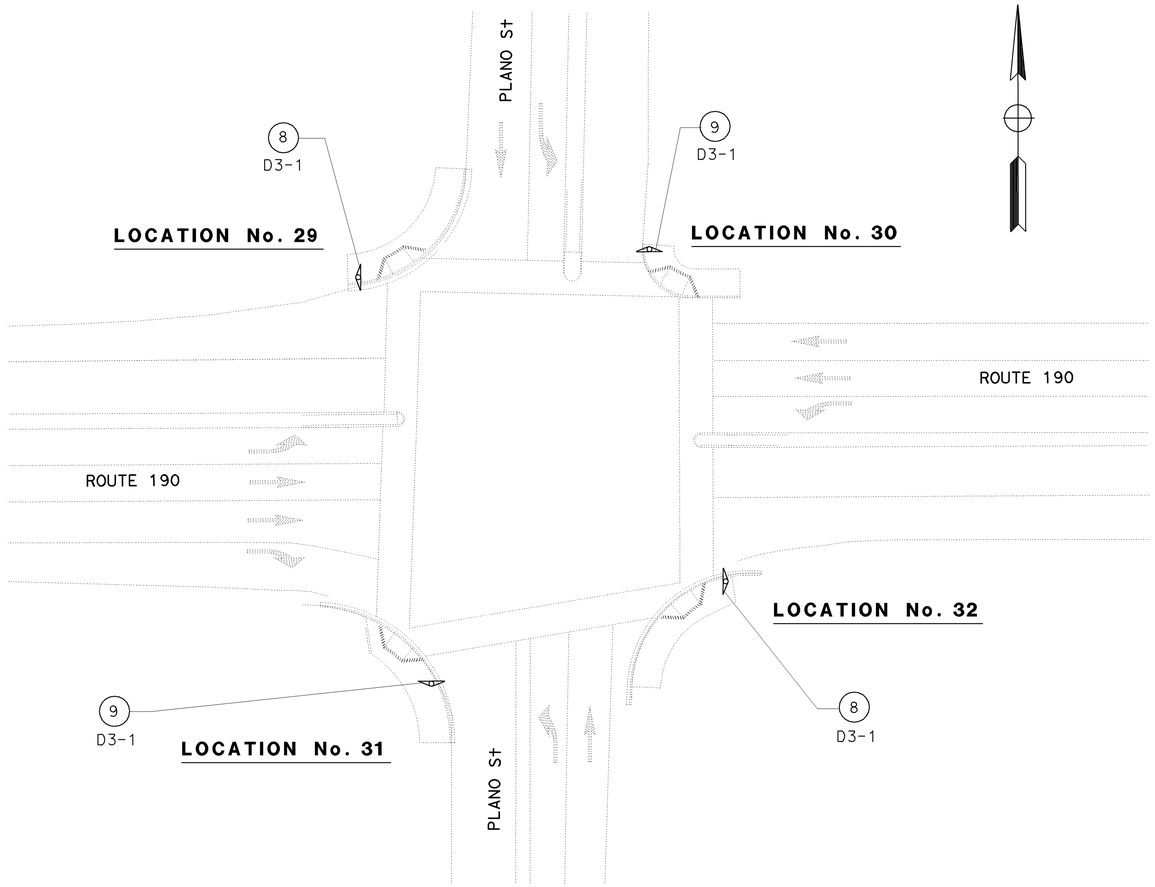

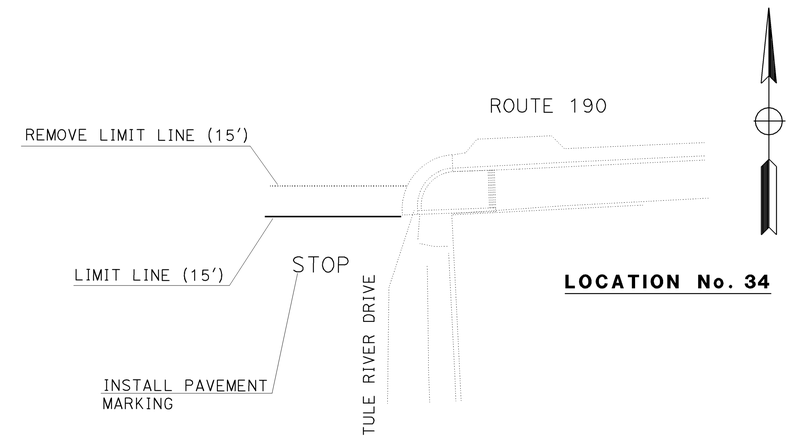

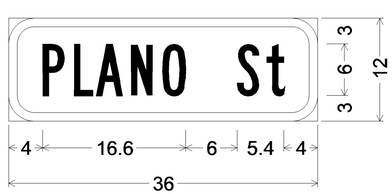

3.0" Radius, 1.0" Border, White on Green;
[PLANO St] B;

8
D3-1

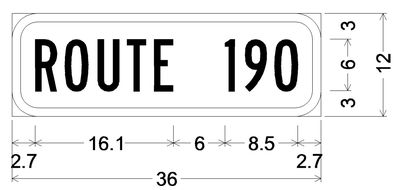

3.0" Radius, 1.0" Border, White on Green;
[ROUTE 190] B;

9
D3-1

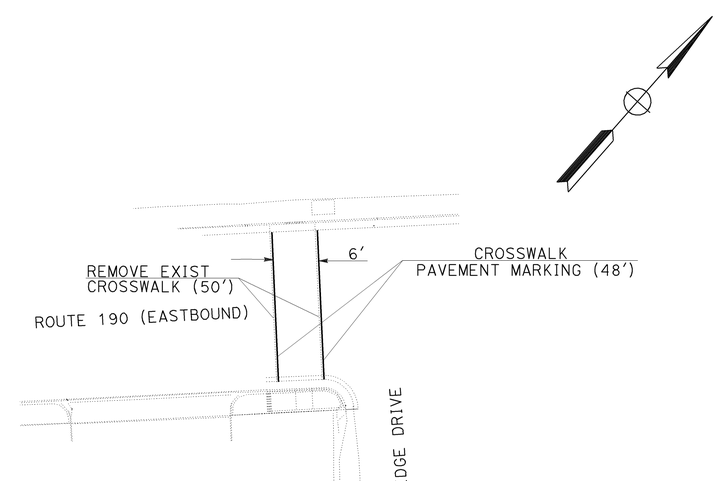

LOCATION No. 35

PAVEMENT DELINEATION AND SIGN PLAN

NO SCALE

PD-4

THIS PLAN ACCURATE FOR PAVEMENT DELINEATION AND SIGNS ONLY.

ALL DIMENSIONS ARE IN INCHES UNLESS OTHERWISE SHOWN

STATE OF CALIFORNIA - DEPARTMENT OF TRANSPORTATION
Caltrans
TRAFFIC DESIGN

FUNCTIONAL SUPERVISOR: MOHAMMED QATAMI
CALCULATED-DESIGNED BY: HASEEB YOUSAF
CHECKED BY: MAZIN AL-ALI
REVISED BY
DATE REVISED

LAST REVISION 03-10-10
DATE PLOTTED => 22-APR-2010
TIME PLOTTED => 13:27

Dist	COUNTY	ROUTE	POST MILES TOTAL PROJECT	SHEET No.	TOTAL SHEETS
06	Tul	65,99,137, 190,198,216	Var	30	59

REGISTERED CIVIL ENGINEER 3-5-10 DATE

3-22-10
PLANS APPROVAL DATE

REGISTERED PROFESSIONAL ENGINEER MAZIN H. AL-ALI No. 65523 Exp. 9/30/11 CIVIL STATE OF CALIFORNIA

THE STATE OF CALIFORNIA OR ITS OFFICERS OR AGENTS SHALL NOT BE RESPONSIBLE FOR THE ACCURACY OR COMPLETENESS OF SCANNED COPIES OF THIS PLAN SHEET.

PAVEMENT DELINEATION QUANTITIES

SHEET No.	LOCATION	DETAIL No.	(N) REMOVE PAVEMENT MARKER	REMOVE THERMOPLASTIC TRAFFIC STRIPE	THERMOPLASTIC PAVEMENT MARKING		REMOVE THERMOPLASTIC PAVEMENT MARKING
			EA	LF	DESCRIPTION	SQFT	SQFT
PD-1	LOCATION No. 3 Route 198/328 Avenue				1-"STOP"	22.00	
					1-"STOP"		22.00
					1-LIMIT LINE	25.00	
					1-LIMIT LINE		25.00
	LOCATION No. 6 AND 7 Route 137/ WEST STREET				CROSSWALK	96.00	
					CROSSWALK		96.00
	LOCATION No. 8 AND 9 OFF-RAMP TO ROUTE 137				CROSSWALK	48.00	
	LOCATION No. 10 AND 11 OFF-RAMP/ON RAMP TO ROUTE 99	22	3	12	1-LIMIT LINE		15.00
					1-"STOP"	22.00	
					1-"STOP"		22.00
					CROSSWALK	64.00	
	LOCATION No. 12 AND 13 ON RAMP TO ROUTE 99				CROSSWALK	44.00	
PD-2	LOCATION No. 14 AND 15 ON RAMP TO ROUTE 99				CROSSWALK	44.00	
	LOCATION No. 16 AND 17 OFF-RAMP/ON RAMP TO ROUTE 99	22	3	12	1-LIMIT LINE		15.00
					1-"STOP"	22.00	
					1-"STOP"		22.00
					CROSSWALK	60.00	
	LOCATION No. 18 AND 19 OFF-RAMP TO ROUTE 137				CROSSWALK	48.00	
PD-3	LOCATION No. 28 ROUTE 190 OFF-RAMP /MAIN STREET O.C.				1-LIMIT LINE	28.00	25.00
	LOCATION No. 31 AND 32 ROUTE 190/PLANO St				CROSSWALK	165.00	
					CROSSWALK		155.00
	LOCATION No. 33 ROUTE 190/WARD Ave				1-LIMIT LINE		32.00
					1-LIMIT LINE	32.00	
					1-"STOP"	22.00	
PD-4	LOCATION No. 34 ROUTE 190/TULE RIVER Dr				1-LIMIT LINE		15.00
					1-LIMIT LINE	15.00	
					1-"STOP"	22.00	
	LOCATION No. 35 ROUTE 190/BRIDGE DRIVE				CROSSWALK	48.00	
					CROSSWALK		50.00
	Subtotal		6	24		827.00	494.00

(N) NOT A SEPARATE PAY ITEM, FOR INFORMATION ONLY.

ROADSIDE SIGN QUANTITIES

SHEET No.	SIGN (No.)	SIGN CODE	PANEL SIZE	SINGLE FACED	BACKGROUND: SHEETING COLOR	BACKGROUND: Retroreflectivity ASTM TYPE	LEGEND: SHEETING COLOR	LEGEND: Retroreflectivity ASTM TYPE	GRAFFITI FLOW: PREMIUM	FURNISH SINGLE SHEET ALUMINUM SIGN UNFRAMED 0.063"	(N) INSTALL SIGN	RELOCATE ROADSIDE SIGN	RESET ROADSIDE SIGN
										SQFT	EA	EA	EA
PD-1	1	R1-2										1	
PD-2	2	R6-1											1
	3	R1-1										1	
	4	R1-2										1	
	5	R1-1											2
	6	W1-1R											1
PD-3	7	R1-1										1	
PD-4	8	D3-1	36" x 12"	×	GREEN		WHITE	III	×	6	2		
	9	D3-1	36" x 12"	×	GREEN		WHITE	III	×	6	2		
			Subtotal							12	4	4	4

(N) SEE ELECTRICAL PLANS FOR INSTALLATION
NOT A SEPARATE PAY ITEM, FOR INFORMATION ONLY.

PAVEMENT DELINEATION AND SIGN QUANTITIES

PDQ-1

STATE OF CALIFORNIA - DEPARTMENT OF TRANSPORTATION
Caltrans® TRAFFIC DESIGN

FUNCTIONAL SUPERVISOR: MOHAMMED QATAMI
CALCULATED-DESIGNED BY: HASEEB YOUSAF
CHECKED BY: MAZIN AL-ALI
REVISED BY
DATE REVISED

LAST REVISION 03-10-10
DATE PLOTTED => 22-APR-2010
TIME PLOTTED => 13:27

Dist	COUNTY	ROUTE	POST MILES TOTAL PROJECT	SHEET No.	TOTAL SHEETS
06	Tul	65,99,137, 190,198,216	Var	31	59

REGISTERED CIVIL ENGINEER 8/28/09 DATE

3-22-10
PLANS APPROVAL DATE

REGISTERED PROFESSIONAL ENGINEER STEVE M. LEE No. 62613 Exp 6-30-10 CIVIL STATE OF CALIFORNIA

THE STATE OF CALIFORNIA OR ITS OFFICERS OR AGENTS SHALL NOT BE RESPONSIBLE FOR THE ACCURACY OR COMPLETENESS OF SCANNED COPIES OF THIS PLAN SHEET.

SUMMARY OF QUANTITIES

LOCATION	SHEET No.	ROUTE	PM	REMOVE CONCRETE CURB CY	REMOVE CONCRETE SIDEWALK CY	REMOVE CONCRETE Med ISLAND CY	REPLACE AC SURFACING CY	REMOVE AC DIKE LF	PLACE HMA DIKE (TYPE E) LF	MINOR CONCRETE (Misc CONSTRUCTION) CURB RAMP/ SIDEWALK CY	MINOR CONCRETE (Misc CONSTRUCTION) RETAINING CURB CY	MINOR CONCRETE (Misc CONSTRUCTION) CURB CY	MBGR (STEEL POST) LF	REMOVE MBGR LF	REMOVE CL FENCE LF	RECONSTRUCT CL FENCE LF	PEDESTRIAN BARRICADE EA	TEMPORARY DI PROTECTION EA	ADJUST WV COVER TO GRADE EA	PLACE HMA (Misc AREA) SQYD	IMPORTED BORROW CY	MINOR HMA TON	ROADWAY EXCAVATION CY
1	C-1	216	7.0	1.85	2.48		0.65			2.48		1.85											
2	C-1	198	27.0	0.29			0.22			0.15		0.29											
3	C-1	198	27.0	0.15	0.92		0.39			0.92	0.56	0.15											0.38
4	C-2	65	37.1	0.27			0.09			0.32	0.19												0.62
5	C-2	99	30.6	0.38	1.73		0.13			1.59	0.44	0.38		40.0				1					
6	C-3	137	14.3	1.41	1.04		1.20			1.04	0.32	1.41						1					
7	C-3	137	14.3	1.12			0.42			1.01	0.47	1.12						1	1				
8	C-4	137	16.6	0.13			0.09			1.40	0.48	0.13						1					
9	C-4	137	16.6	0.13	0.95		0.09			0.65	0.29	0.13											
10	C-4	137	16.6	0.13	0.31		0.09			0.31	0.32	0.13											
11	C-5	137	16.6	0.13	0.29		0.09			0.29	0.31	0.13											
12	C-5	137	16.6	0.16	0.33		0.11			0.34	0.36	0.16											
13	C-5	137	16.6	0.14	0.27		0.10			1.02	0.42	0.14			20.0								
14	C-6	137	16.7	0.16	0.81		0.12			0.88	0.36	0.16											
15	C-6	137	16.7	0.16	0.38		0.11			0.38	0.44	0.16											
16	C-6	137	16.7	0.13	0.29		0.09			0.29	0.31	0.13											
17	C-7	137	16.7	0.13	0.27		0.09			0.27	0.31	0.13											
18	C-7	137	16.7	0.13	1.07		0.09			0.61	0.38	0.13											
19	C-7	137	16.7	0.15			0.11			1.24	0.39	0.15											
20	C-8	137	16.7	0.20	1.07		0.15			1.26	1.24	0.20			20.0								
21	C-8	137	16.7	0.14	1.52		0.10			1.52	0.56	0.14											
22	C-8	137	16.8	0.17	0.48		0.16			0.52	0.27	0.17				14.0							
23	C-9	137	17.5				0.19	10.24		0.88	1.06	0.26											1.89
24	C-9	137	17.5				0.19	10.17		0.60	0.71	0.26											1.28
25	C-9	65	29.9		0.34		0.08			0.48	0.36	0.27											
26	C-10	190	16.4				0.21	10.69		15.22	0.45	0.63									21.7		
27	C-10	190	16.4				0.40	20.81		1.33	0.29	1.23									4.7		
28	C-10	190	16.4				1.32	62.85	20	2.93	0.42	4.08							2	4.0	20.3	1.0	8.14
29	C-11	190	16.9				1.11	59.06		5.26		1.29									20.0		9.02
30	C-11	190	16.9				0.80	42.40		3.47	0.67	0.93					4				9.7		
31	C-12	190	16.9				1.23	65.75		3.74	1.06	1.44					6			5.0	32.9	1.6	
32	C-12	190	16.9			8.25	1.12	59.87		4.80		1.55									22.9		
33	C-13	190	31.5	1.28	1.31		0.45			1.31	0.38	1.28											
34	C-13	190	31.8	0.51	0.48		0.26			0.48	0.25	0.51						1					
35	C-14	190	31.9	1.19	0.75		0.46			0.75	0.42	1.19							1				
36	C-14	190	32.0	1.12	0.92		0.35			0.92	0.49	1.12											
37	C-14	190	32.0	1.12	0.92		0.35			0.92	0.49	1.12											
38	C-14	190	32.3		0.38		0.52			0.38	0.16												0.52
39	C-15	99	12.3	0.16			0.12			0.96	0.41	0.16	50.0	48.0									
40	C-15	99	12.3	0.17			0.12			0.83	0.43	0.17	37.5	43.0									
41	C-15	99	12.8	0.59	0.92		0.43			0.92	0.47	0.59											
42	C-16	99	12.8	0.15			0.11			1.64	0.51	0.15	75.0	77.0									
43	C-16	99	6.2	0.15			0.11			0.81	0.55	0.15	62.5	64.0									
44	C-16	99	6.2	0.14			0.13			0.86	0.58	0.17	50.0	58.5									
45	C-17	99	7.2	0.17			0.13			0.94	0.43	0.17											
46	C-17	99	7.2	0.29			0.16			1.27	0.31	0.22											
SUBTOTAL				14.70	20.23	8.25				70.19	19.32	26.37											
TOTAL					43.18		15.04	341.84	20		115.88		275.0	330.5	40.0	14.0	10	5	4	9.0	132.2	2.6	21.85

SUMMARY OF QUANTITIES
Q-1

HECTOR TRUJILLO — CALCULATED-DESIGNED BY
STEVE M. LEE — CHECKED BY
REVISED BY
DATE REVISED
FUNCTIONAL SUPERVISOR
THANH NGUYEN
STATE OF CALIFORNIA - DEPARTMENT OF TRANSPORTATION
Caltrans
DESIGN

LAST REVISION 03-10-10
DATE PLOTTED => 20-APR-2010
TIME PLOTTED => 15:57

Dist	COUNTY	ROUTE	POST MILES TOTAL PROJECT	SHEET No.	TOTAL SHEETS
06	Tul	65,99,137, 190,198,216	Var	32	59

Omar Mendoza 3-5-10
REGISTERED ELECTRICAL ENGINEER

3-22-10
PLANS APPROVAL DATE

REGISTERED PROFESSIONAL ENGINEER
OMAR MENDOZA
No. 17982
Exp. 12/31/10
ELECTRICAL
STATE OF CALIFORNIA

THE STATE OF CALIFORNIA OR ITS OFFICERS OR AGENTS SHALL NOT BE RESPONSIBLE FOR THE ACCURACY OR COMPLETENESS OF SCANNED COPIES OF THIS PLAN SHEET.

NOTES: (FOR THIS SHEET ONLY)

1. Exist 240/480, 1ø, 3-WIRE, TYPE A SERVICE WITH TYPE V PEC.
2. RL Exist SIGNS.
3. ALL PULL BOXES SHALL BE No. 5 (E) UNLESS OTHERWISE NOTED.
4. FOR ACCURATE RIGHT OF WAY AND ACCESS DATA, CONTACT RIGHT OF WAY ENGINEERING AT THE DISTRICT OFFICE.

ABBREVIATIONS:

SCE - SOUTHERN CALIFORNIA EDISON
CTID - CALTRANS IDENTIFICATION

LEGEND:

1 - Exist CONDUIT RUN
a - Exist SIGNAL STANDARD

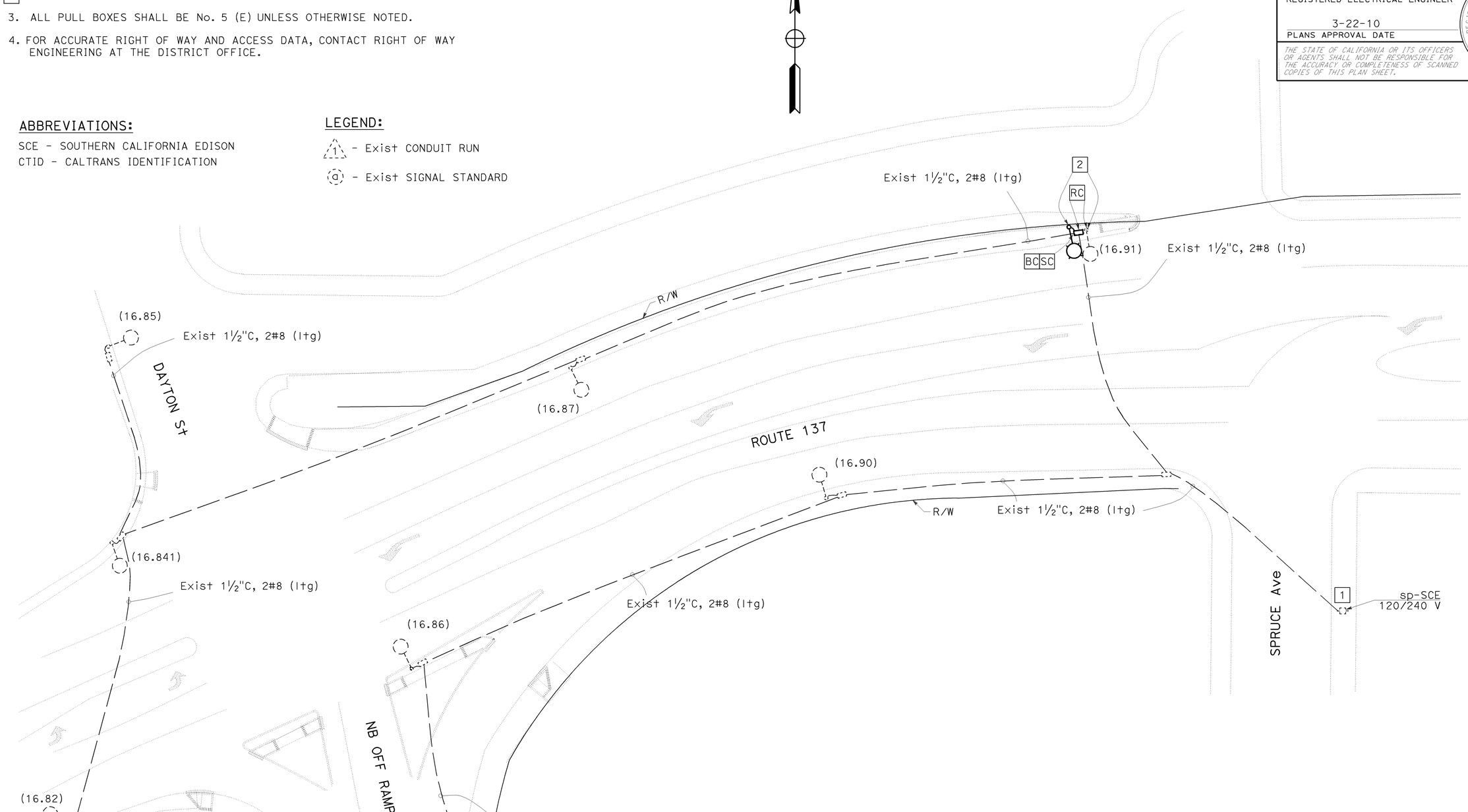

THIS PLAN IS ACCURATE FOR ELECTRICAL WORK ONLY.

SCALE: 1"=20'

MODIFY LIGHTING
E-1

STATE OF CALIFORNIA - DEPARTMENT OF TRANSPORTATION
Caltrans
ELECTRICAL DESIGN

FUNCTIONAL SUPERVISOR: ALI BAKHDOUD
CALCULATED-DESIGNED BY: OMAR MENDOZA
CHECKED BY: RAJPREET SINGH
REVISED BY

LAST REVISION 02-24-10
DATE PLOTTED => 20-APR-2010
TIME PLOTTED => 15:57

Dist	COUNTY	ROUTE	POST MILES TOTAL PROJECT	SHEET No.	TOTAL SHEETS
06	Tul	65,99,137, 190,198,216	Var	33	59

Omar Mendoza 3-5-10
REGISTERED ELECTRICAL ENGINEER

3-22-10
PLANS APPROVAL DATE

REGISTERED PROFESSIONAL ENGINEER
OMAR MENDOZA
No. 17982
Exp. 12/31/10
ELECTRICAL
STATE OF CALIFORNIA

THE STATE OF CALIFORNIA OR ITS OFFICERS OR AGENTS SHALL NOT BE RESPONSIBLE FOR THE ACCURACY OR COMPLETENESS OF SCANNED COPIES OF THIS PLAN SHEET.

NOTES: (FOR SHEETS E-2 AND E-3)

1 Exist 120/240 V, 1ø, 3-WIRE SERVICE EQUIPMENT ENCLOSURE WITH THE FOLLOWING CIRCUIT BREAKERS:

CTID No. 06461900016920T

AMPERES	VOLTS	POLES	NAME PLATE	METER	PHOTOELECTRIC CONTROL TYPE
100	240	2	MAIN	YES	——
50	120	1	SIGNAL	YES	——
40	240	2	LIGHTING	YES	V
15	120	1	LIGHTING CONTROL	YES	——
30	120	1	SPARE	YES	——

2 Exist MODEL 170 CONTROLLER ASSEMBLY AND bbs. FURNISH AND INSTALL WIRELESS MODEM.

3 RC Exist ppb, INSTALL NEW PPB.

4. ALL PULL BOXES SHALL BE No. 5 (E) UNLESS OTHERWISE NOTED.

POLE AND EQUIPMENT SCHEDULE

STANDARD				VEH SIG MTG		PED SIG MTG	PPB		HPS LUM	SPECIAL REQUIREMENTS
No.	TYPE	SMA	LMA	MAST ARM	POLE		ø	ARROW		
a	17-1-80	20′	15′	mas	SV-1-T	SP-1-T	8	←	200 W	3
b	1-A				TV-2-T	SP-1-T	2	→		3
c	24-3-80	35′	15′	mat mas	SV-1-T	SP-1-T	2	←	200 W	3
d	1-A				TV-2-T	SP-1-T	4	→		3
e	1-A				TV-1-T		4	↔		3
f	17-1-80	20′	15′	mas	SV-1-T	SP-1-T	4	←	200 W	RC Exist ppb
g	1-A				TV-2-T	SP-1-T	6	→		RC Exist ppb
h	24-3-80	45′	15′	mat mas	SV-1-T	SP-1-T	6	←	200 W	3
i	1-A				TV-2-T	SP-1-T	8	→		3
j	1-A				TV-1-T		8	↔		3
K	PPB POST						6 4	← →		

CONDUIT AND CONDUCTOR SCHEDULE

CONDUCTOR DESIGNATION			CONDUIT RUN NUMBER AND SIZE								
CABLE TYPE	POLE	PHASE	1	2		3	4	5	6	7	8
			3"	3"		3"	3"	3"	2½"	2"	2½"
				*	**						
VEH-PED 12CSC	a	2,2P / 8		1 / 1		1 / 1	1 / 1	1 / 1	1 / 1		
	b	7,8,8P / 2		1 / 1		1 / 1	1 / 1	1 / 1	1 / 1	1 / 1	
	c	4,4P,7	1 / 1								1 / 1
	d	1,2,2P / 4	1 / 1								1 / 1
	e	1 / 4	1 / 1								
	f	6,6P / 4									
	g	3,4,4P / 6		1 / 1							
	h	3,8,8P / 6		1 / 1		1 / 1					
	i	5,6,6P / 8		1 / 1		1 / 1	1 / 1				
	j	1 / 8		1 / 1		1 / 1	1 / 1	1 / 1			
PPB 3CSC	K	4,6			2						
		TOTAL	3 / 3	6 / 6	2	5 / 5	4 / 4	3 / 3	2 / 2	1 / 1	2 / 2
AWG		CIRCUIT									
#6		SIGNAL		2							
#8		LIGHTING	2	2		2	2	2	2		2
		DETECTORS - DLC									
dlc		PHASE									
		ø1		1		1	1	1			
		ø2	1								1
		ø2 ADV	1								
		ø3		1		1	1	1	1	1	
		ø4		2							
		ø4 ADV		1							
		ø5	1								
		ø6		1		1	1	1			
		ø6 ADV		1		1	1	1			
		ø7		1							
		ø8		2		2	2	2	2	2	
		ø8 ADV	1								1
		TOTAL	4	10		6	6	6	3	3	2

* Exist CONDUCTORS TO REMAIN AS INDICATED IN THE TABLE.
** INSTALL CONDUCTORS IN EXISTING CONDUIT RUN AS INDICATED IN THE TABLE.

THIS PLAN IS ACCURATE FOR ELECTRICAL WORK ONLY.

NO SCALE

MODIFY SIGNAL
E-2

STATE OF CALIFORNIA - DEPARTMENT OF TRANSPORTATION
Caltrans® ELECTRICAL DESIGN

FUNCTIONAL SUPERVISOR: ALI BAKHDOUD
CALCULATED-DESIGNED BY: OMAR MENDOZA
CHECKED BY: RAJPREET SINGH
REVISED BY / DATE REVISED

LAST REVISION 02-24-10 | DATE PLOTTED => 20-APR-2010 | TIME PLOTTED => 15:57

Dist	COUNTY	ROUTE	POST MILES TOTAL PROJECT	SHEET No.	TOTAL SHEETS
06	Tul	65,99,137, 190,198,216	Var	34	59

Omar Mendoza 3-5-10
REGISTERED ELECTRICAL ENGINEER

3-22-10
PLANS APPROVAL DATE

REGISTERED PROFESSIONAL ENGINEER OMAR MENDOZA No. 17982 Exp. 12/31/10 ELECTICAL STATE OF CALIFORNIA

THE STATE OF CALIFORNIA OR ITS OFFICERS OR AGENTS SHALL NOT BE RESPONSIBLE FOR THE ACCURACY OR COMPLETENESS OF SCANNED COPIES OF THIS PLAN SHEET.

NOTES:

1. FOR NOTES AND SCHEDULES, SEE SHEET E-2.
2. FOR ACCURATE RIGHT OF WAY AND ACCESS DATA, CONTACT RIGHT OF WAY ENGINEERING AT THE DISTRICT OFFICE.

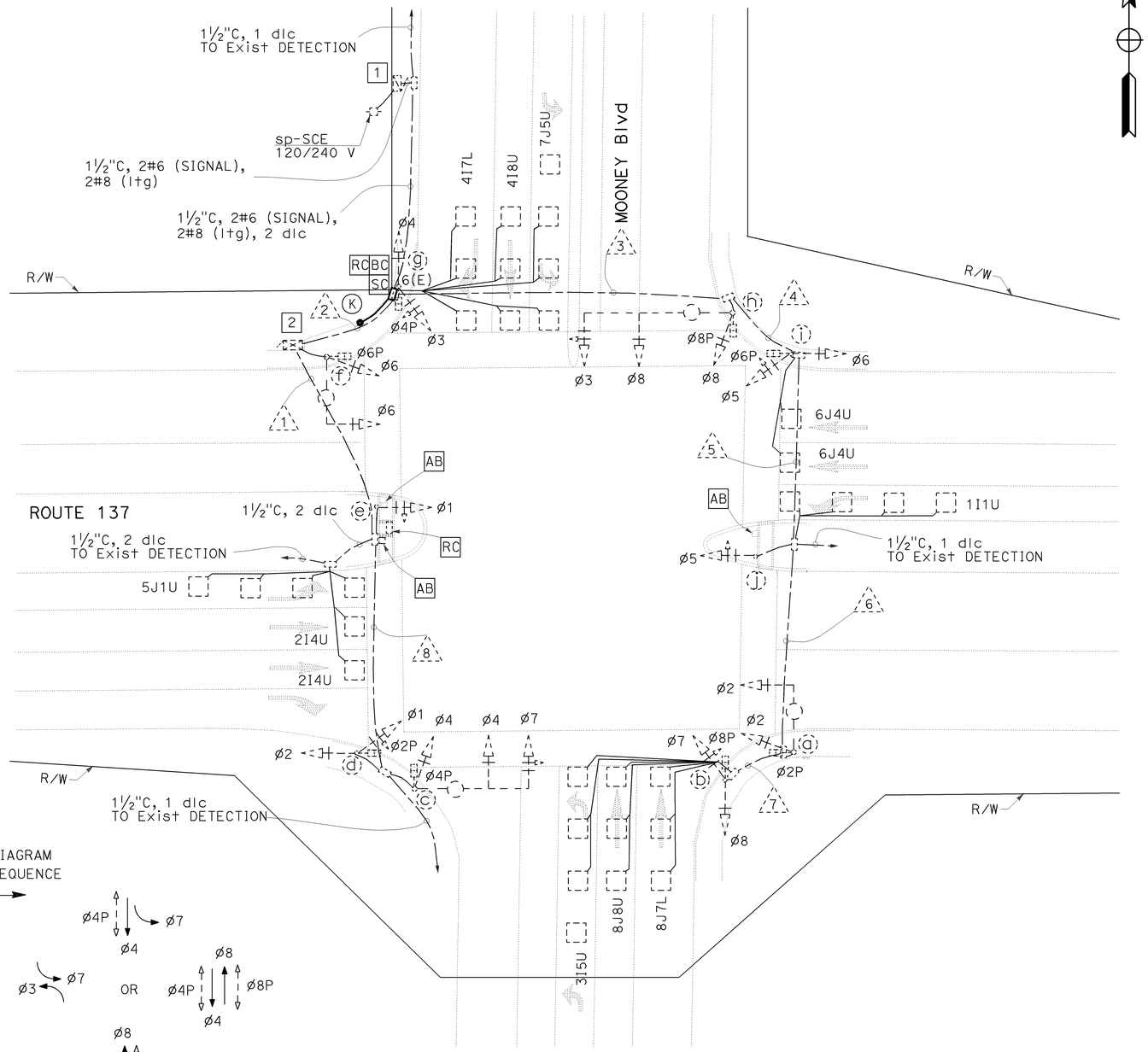

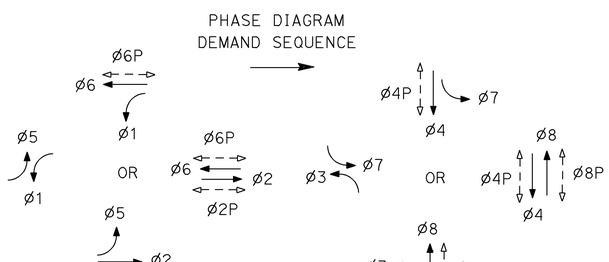

THIS PLAN IS ACCURATE FOR ELECTRICAL WORK ONLY.

SCALE: 1"=20'

MODIFY SIGNAL
E-3

STATE OF CALIFORNIA - DEPARTMENT OF TRANSPORTATION
Caltrans® ELECTRICAL DESIGN

FUNCTIONAL SUPERVISOR: ALI BAKHDOUD
CALCULATED-DESIGNED BY: OMAR MENDOZA
CHECKED BY: RAJPREET SINGH
REVISED BY
DATE REVISED

LAST REVISION 02-24-10
DATE PLOTTED => 20-APR-2010
TIME PLOTTED => 15:57

Dist	COUNTY	ROUTE	POST MILES TOTAL PROJECT	SHEET No.	TOTAL SHEETS
06	Tul	65,99,137, 190,198,216	Var	35	59

Omar Mendoza 3-5-10
REGISTERED ELECTRICAL ENGINEER

3-22-10
PLANS APPROVAL DATE

REGISTERED PROFESSIONAL ENGINEER OMAR MENDOZA No. 17982 Exp. 12/31/10 ELECTRICAL STATE OF CALIFORNIA

THE STATE OF CALIFORNIA OR ITS OFFICERS OR AGENTS SHALL NOT BE RESPONSIBLE FOR THE ACCURACY OR COMPLETENESS OF SCANNED COPIES OF THIS PLAN SHEET.

NOTES: (FOR SHEETS E-4 THROUGH E-8)

1 120/240 V, 1ø, 3-WIRE TYPE III-BF SERVICE EQUIPMENT ENCLOSURE WITH THE FOLLOWING CIRCUIT BREAKERS:

CTID No. 06461900016920T

AMPERES	VOLTS	POLES	NAME PLATE	METER	PHOTOELECTRIC CONTROL TYPE
100	240	2	MAIN	YES	——
50	120	1	SIGNAL	YES	——
15	120	1	FLASHING BEACONS W	YES	——
15	120	1	FLASHING BEACONS E	YES	——
30	240	2	LIGHTING	YES	V
15	120	1	LIGHTING CONTROL	YES	——
——	——	6	SPACE	YES	——

2 STATE-FURNISHED MODEL 2070 CONTROLLER ASSEMBLY AND BBS. FURNISH AND INSTALL WIRELESS MODEM.

3 SEE SIGN PLANS FOR SIGN DETAILS.

4. ALL PULL BOXES SHALL BE No. 5 (E) UNLESS OTHERWISE NOTED.

POLE AND EQUIPMENT SCHEDULE

STANDARD				VEH SIG MTG		PED SIG MTG	PPB		HPS LUM	SPECIAL REQUIREMENTS
No.	TYPE	SMA	LMA	MAST ARM	POLE		ø	ARROW		
A	1-A				TV-2-T	SP-1-T	2	→		INSTALL Exist SIGN FROM POLE (I)
B	24-4-100	35′	12′	MAS MAS	SV-1-T	SP-1-T	2	←	200 W	3 INSTALL D3-1 SIGN ON SIGNAL POLE, F=14′
C	15TS		12′		SV-2-T	SP-1-T	4	→	200 W	INSTALL Exist SIGN FROM POLE (c)
D	29-5-100	50′	12′	MAS MAS MAS	SV-1-T	SP-1-T	4	←	200 W	3 INSTALL D3-1 SIGN ON SIGNAL POLE, F=15′
E	1-A				TV-2-T	SP-1-T	6	→		INSTALL Exist SIGN FROM POLE (g)
F	19-4-100	30′	12′	MAS MAS	SV-1-T	SP-1-T	6	←	200 W	3 INSTALL D3-1 SIGN ON SIGNAL POLE, F=12′
G	15TS		12′		SV-2-T	SP-1-T	8	→	200 W	INSTALL Exist SIGN FROM POLE (i)
H	29-5-100	50′	12′	MAS MAS MAS	SV-1-T	SP-1-T	8	←	200 W	3 INSTALL D3-1 SIGN ON SIGNAL POLE, F=15′

CONDUIT AND CONDUCTOR SCHEDULE

CONDUCTOR DESIGNATION			CONDUIT RUN NUMBER AND SIZE									
CABLE TYPE	POLE	PHASE	1	2	3	4	5	6	7	8	9	10
			2-4"	4"	3"	3"	3"	3"	3"	3"	3"	4"
VEH-PED 12CSC	A	7,8,8P / 2	1/1									
	B	4,4P,7 / 2	1/1	1/1	1/1							
	C	1,2,2P / 4	1/1	1/1	1/1	1/1						
	D	1,6,6P / 4	1/1	1/1	1/1	1/1	1/1					
	E	3,4,4P / 6	1/1						1/1	1/1	1/1	1/1
	F	3,8,8P / 6	1/1							1/1	1/1	1/1
	G	5,6,6P / 8	1/1								1/1	1/1
	H	2,2P,5 / 8	1/1									1/1
PPB 3CSC		TOTAL	8/8	3/3	3/3	2/2	1/1		1/1	2/2	3/3	4/4
AWG		CIRCUIT										
#6		SIGNAL	2	2								
#8		LIGHTING		2	2	2		2	2	2	2	2
#10		FLASHING BEACONS E		2							2	2
#10		FLASHING BEACONS W			2	2						
		DETECTORS - DLC										
DLC		PHASE										
		ø1	2								2	2
		ø2	3	3	3	3						
		ø2 MID	1	1	1	1						
		ø2 FAR	1	1	1	1						
		ø3	2	2								
		ø4	2						2	2	2	2
		ø4 ADV	1						1	1	1	1
		ø5	2	2	2	2						
		ø6	2								2	2
		ø6 MID	1								1	1
		ø6 FAR	1								1	1
		ø7	2						2	2	2	2
		ø8	2	2								
		ø8 ADV	1	1								
		TOTAL	23	12	7	7			5	5	11	11

THIS PLAN IS ACCURATE FOR ELECTRICAL WORK ONLY.

MODIFY SIGNAL AND LIGHTING

NO SCALE

E-4

REVISED BY | DATE REVISED
OMAR MENDOZA | RAJPREET SINGH
CALCULATED-DESIGNED BY | CHECKED BY
FUNCTIONAL SUPERVISOR: ALI BAKHDOUD
STATE OF CALIFORNIA - DEPARTMENT OF TRANSPORTATION
Caltrans® ELECTRICAL DESIGN

LAST REVISION 02-24-10 | DATE PLOTTED => 20-APR-2010 | TIME PLOTTED => 15:57

Dist	COUNTY	ROUTE	POST MILES TOTAL PROJECT	SHEET No.	TOTAL SHEETS
06	Tul	65,99,137 190,198,216	Var	36	59

Omar Mendoza 3-5-10
REGISTERED ELECTRICAL ENGINEER

3-22-10
PLANS APPROVAL DATE

REGISTERED PROFESSIONAL ENGINEER OMAR MENDOZA No. 17982 Exp. 12/31/10 ELECTRICAL STATE OF CALIFORNIA

THE STATE OF CALIFORNIA OR ITS OFFICERS OR AGENTS SHALL NOT BE RESPONSIBLE FOR THE ACCURACY OR COMPLETENESS OF SCANNED COPIES OF THIS PLAN SHEET.

NOTES:

1. FOR NOTES AND SCHEDULES, SEE SHEET E-4.
2. FOR ACCURATE RIGHT OF WAY AND ACCESS DATA, CONTACT RIGHT OF WAY ENGINEERING AT THE DISTRICT OFFICE.

Exist POLE AND EQUIPMENT SCHEDULE

STANDARD				VEH SIG MTG		PED SIG MTG	PPB		HPS LUM	SPECIAL REQUIREMENTS
No.	TYPE	SMA	LMA	MAST ARM	POLE		ø	ARROW		
a	1-A				TV-2-T		2	↔		RC
b	17-1-80	15′	12′	mas	SV-1-T	SP-1-T	2	←	200 W	RC
c	15TS		15′		SV-1-T	SP-1-T	4	→	200 W	RC RR Exist SIGN TO POLE C
d	16-1-80	15′		mas	SV-2-T		4	↔		RC
e	17-1-80	20′	15′	mas	SV-1-T	SP-1-T	4	←	200 W	RC
f	1-A				TV-1-T	SP-1-T	6	→		RC
g	1-A				TV-2-T		6	↔		RC RR Exist SIGN TO POLE E
h	17-1-80	15′	12′	mas	SV-1-T	SP-1-T	6	←	200 W	RC
i	15TS		15′		SV-1-T	SP-1-T	8	→	200 W	RC RR Exist SIGN TO POLE G
j	16-1-80	15′		mas	SV-2-T		8	↔		RC
k	17-1-80	20′	15′	mas	SV-1-T	SP-1-T	8	←	200 W	RC
l	1-A				TV-1-T	SP-1-T	2	→		RC RR Exist SIGN TO POLE A

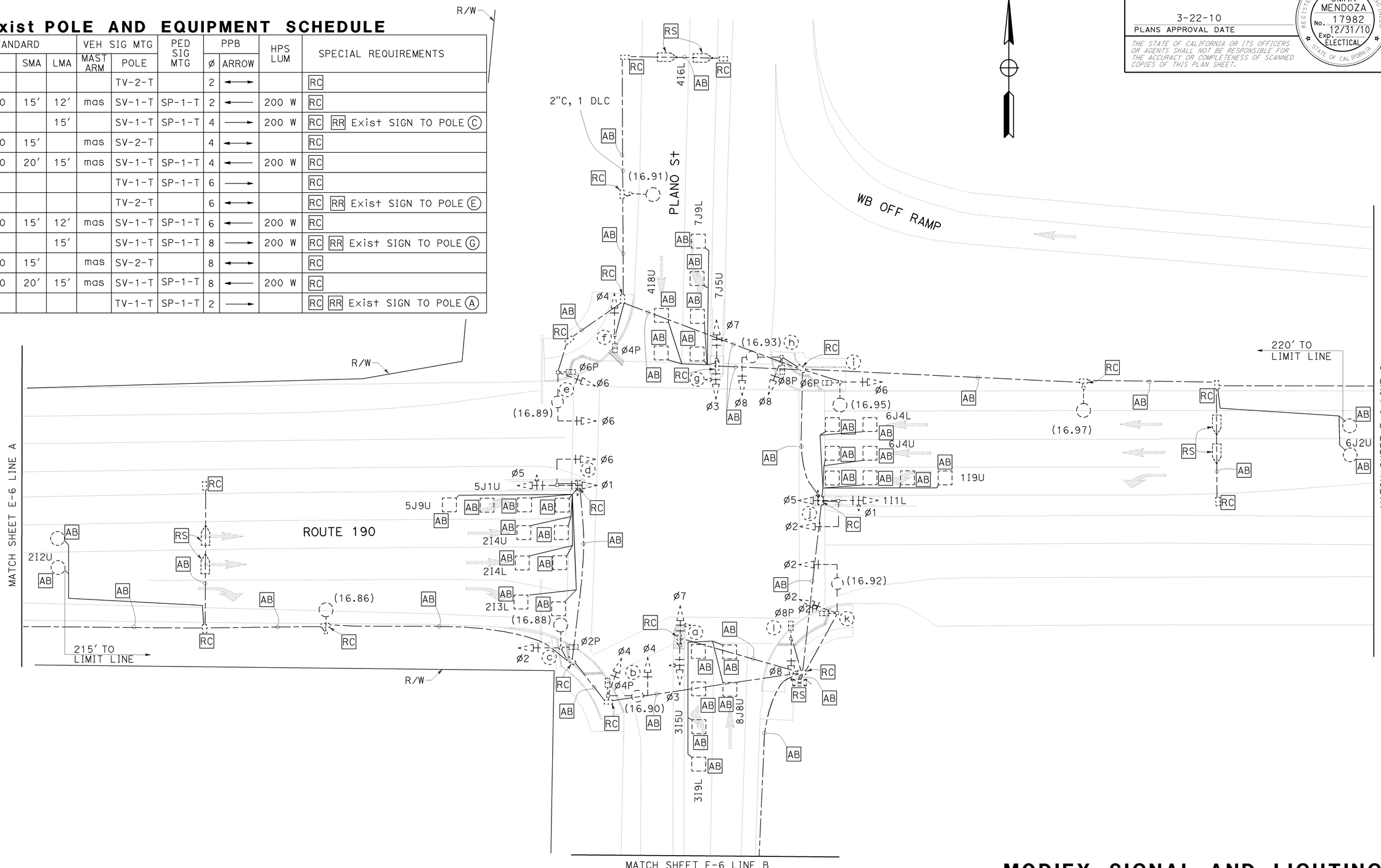

THIS PLAN IS ACCURATE FOR ELECTRICAL WORK ONLY.

MODIFY SIGNAL AND LIGHTING

SCALE: 1"=20′

E-5

STATE OF CALIFORNIA - DEPARTMENT OF TRANSPORTATION
Caltrans
ELECTRICAL DESIGN

FUNCTIONAL SUPERVISOR: ALI BAKHDOUD
CALCULATED-DESIGNED BY: OMAR MENDOZA
CHECKED BY: RAJPREET SINGH
REVISED BY
DATE REVISED

LAST REVISION 02-24-10
DATE PLOTTED => 20-APR-2010
TIME PLOTTED => 15:57

Dist	COUNTY	ROUTE	POST MILES TOTAL PROJECT	SHEET No.	TOTAL SHEETS
06	Tul	65,99,137, 190,198,216	Var	37	59

Omar Mendoza 3-5-10
REGISTERED ELECTRICAL ENGINEER

3-22-10
PLANS APPROVAL DATE

REGISTERED PROFESSIONAL ENGINEER OMAR MENDOZA No. 17982 Exp. 12/31/10 ELECTRICAL STATE OF CALIFORNIA

THE STATE OF CALIFORNIA OR ITS OFFICERS OR AGENTS SHALL NOT BE RESPONSIBLE FOR THE ACCURACY OR COMPLETENESS OF SCANNED COPIES OF THIS PLAN SHEET.

NOTES:

1. FOR ACCURATE RIGHT OF WAY AND ACCESS DATA, CONTACT RIGHT OF WAY ENGINEERING AT THE DISTRICT OFFICE.
2. FOR NOTES AND SCHEDULES, SEE SHEET E-4.
3. RIGHT OF WAY LIMITS ARE INDETERMINATE, AND ARE NOT SHOWN. THE CONTRACTOR MUST CONTACT RIGHT OF WAY ENGINEERING AT THE DISTRICT OFFICE FOR CONDITIONS OF USE PRIOR TO COMMENCING WORK.

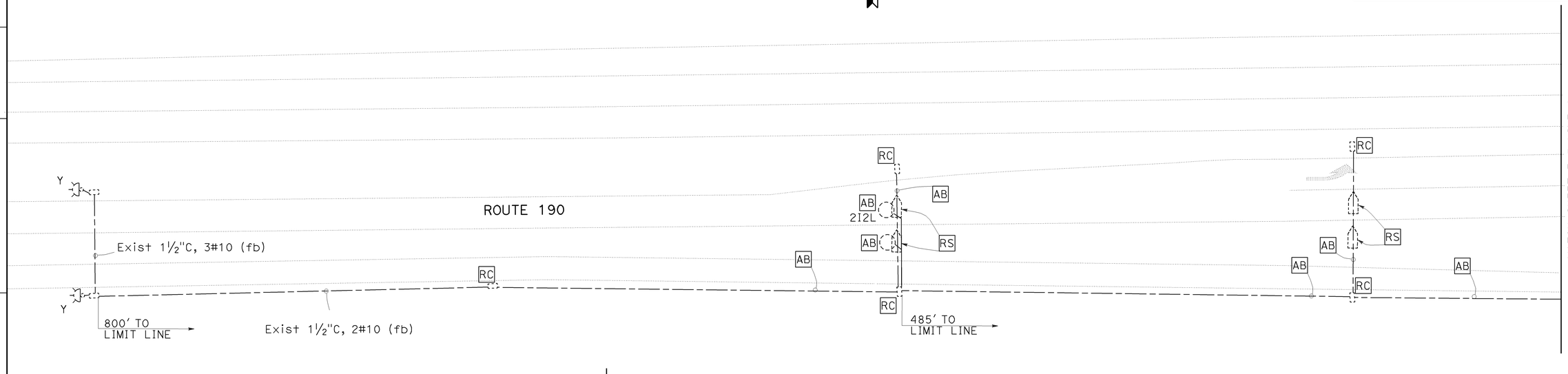

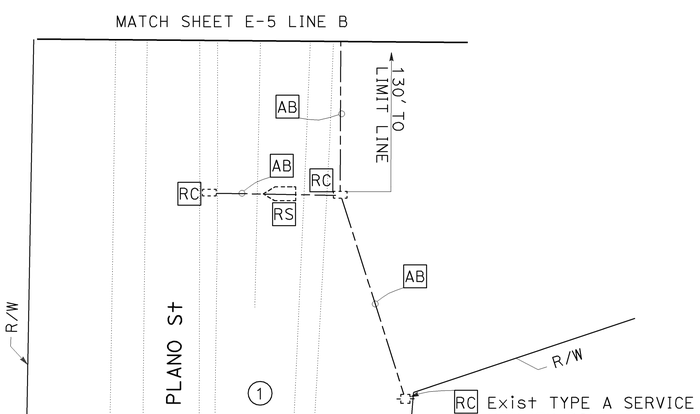

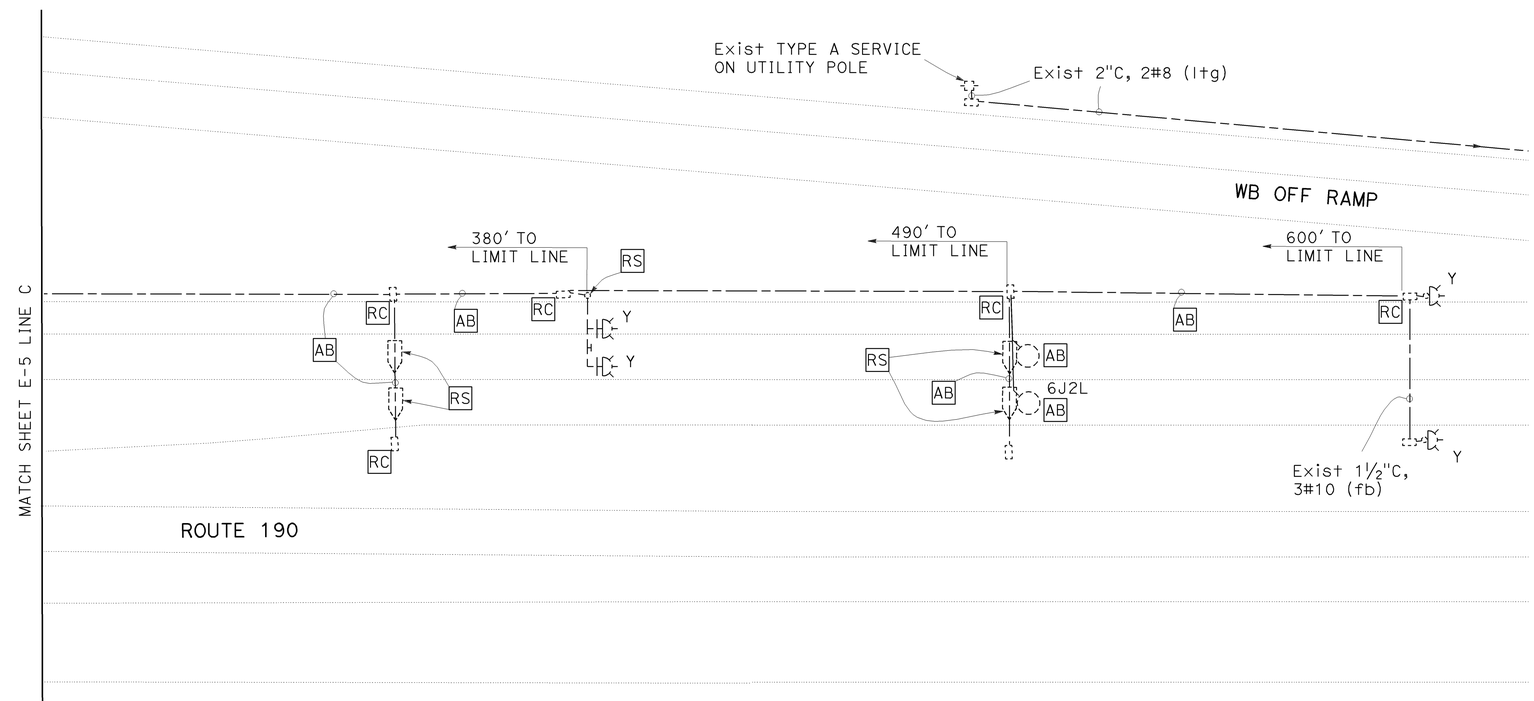

THIS PLAN IS ACCURATE FOR ELECTRICAL WORK ONLY.

MODIFY SIGNAL AND LIGHTING

SCALE: 1"=20'

E-6

STATE OF CALIFORNIA - DEPARTMENT OF TRANSPORTATION
Caltrans ELECTRICAL DESIGN

FUNCTIONAL SUPERVISOR: ALI BAKHDOUD
CALCULATED-DESIGNED BY: OMAR MENDOZA
CHECKED BY: RAJPREET SINGH
REVISED BY
DATE REVISED

LAST REVISION 02-24-10
DATE PLOTTED => 20-APR-2010
TIME PLOTTED => 15:57

Dist	COUNTY	ROUTE	POST MILES TOTAL PROJECT	SHEET No.	TOTAL SHEETS
06	Tul	65,99,137, 190,198,216	Var	38	59

Omar Mendoza 3-5-10
REGISTERED ELECTRICAL ENGINEER

3-22-10
PLANS APPROVAL DATE

REGISTERED PROFESSIONAL ENGINEER OMAR MENDOZA No. 17982 Exp. 12/31/10 ELECTICAL STATE OF CALIFORNIA

THE STATE OF CALIFORNIA OR ITS OFFICERS OR AGENTS SHALL NOT BE RESPONSIBLE FOR THE ACCURACY OR COMPLETENESS OF SCANNED COPIES OF THIS PLAN SHEET.

NOTES:

1. FOR NOTES AND SCHEDULES, SEE SHEET E-4.
2. FOR ACCURATE RIGHT OF WAY AND ACCESS DATA, CONTACT RIGHT OF WAY ENGINEERING AT THE DISTRICT OFFICE.

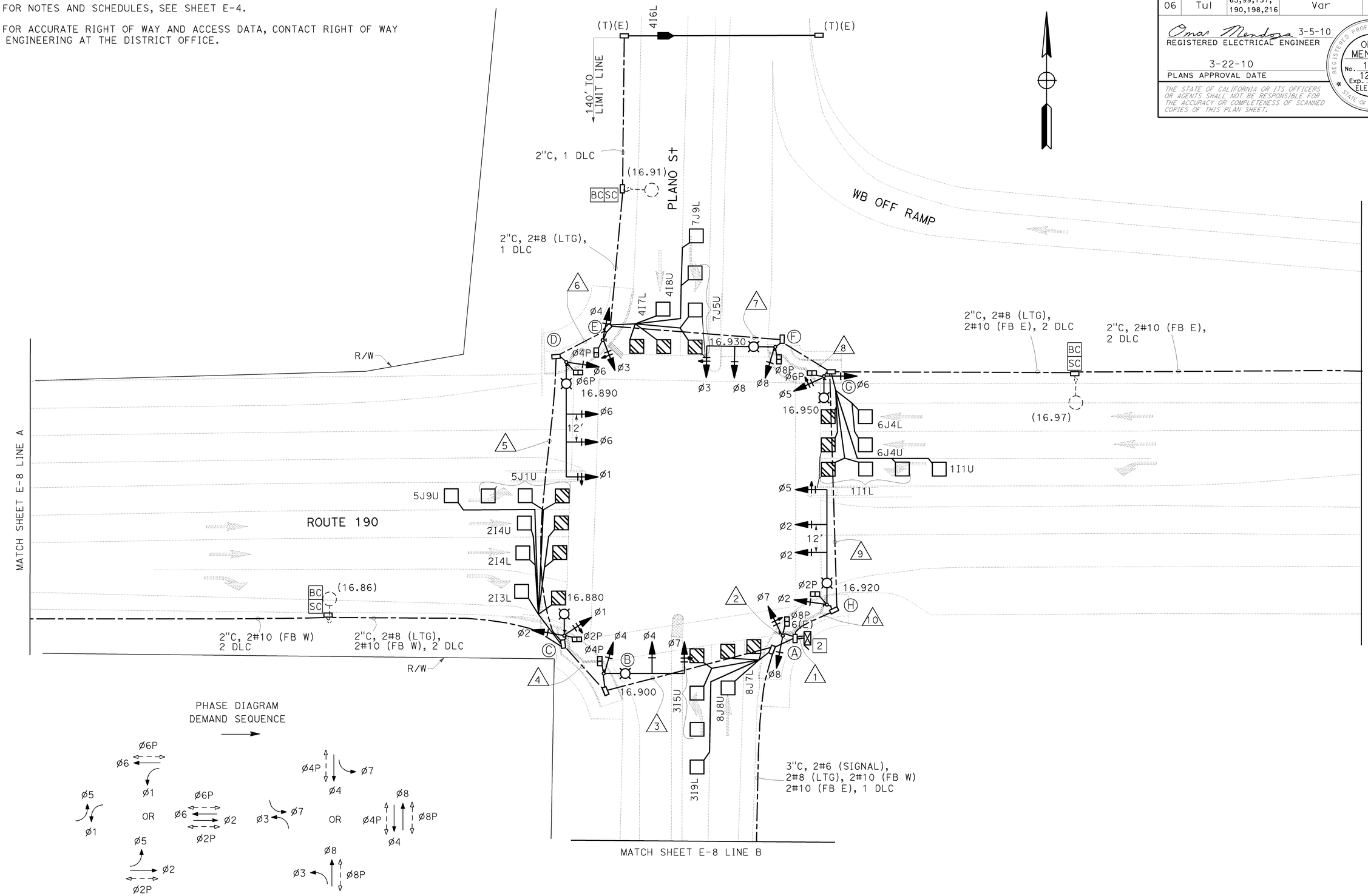

THIS PLAN IS ACCURATE FOR ELECTRICAL WORK ONLY.

MODIFY SIGNAL AND LIGHTING

SCALE: 1"=20'

E-7

STATE OF CALIFORNIA - DEPARTMENT OF TRANSPORTATION
Caltrans® ELECTRICAL DESIGN

FUNCTIONAL SUPERVISOR: ALI BAKHDOUD
CALCULATED-DESIGNED BY: OMAR MENDOZA
CHECKED BY: RAJPREET SINGH
REVISED BY
DATE REVISED

LAST REVISION DATE PLOTTED => 20-APR-2010
02-24-10 TIME PLOTTED => 15:57

Dist	COUNTY	ROUTE	POST MILES TOTAL PROJECT	SHEET No.	TOTAL SHEETS
06	Tul	65,99,137, 190,198,216	Var	39	59

Omar Mendoza 3-5-10
REGISTERED ELECTRICAL ENGINEER

3-22-10
PLANS APPROVAL DATE

REGISTERED PROFESSIONAL ENGINEER
OMAR MENDOZA
No. 17982
Exp. 12/31/10
ELECTICAL
STATE OF CALIFORNIA

THE STATE OF CALIFORNIA OR ITS OFFICERS OR AGENTS SHALL NOT BE RESPONSIBLE FOR THE ACCURACY OR COMPLETENESS OF SCANNED COPIES OF THIS PLAN SHEET.

NOTES:

1. FOR ACCURATE RIGHT OF WAY AND ACCESS DATA, CONTACT RIGHT OF WAY ENGINEERING AT THE DISTRICT OFFICE.
2. FOR NOTES AND SCHEDULES, SEE SHEET E-4.
3. RIGHT OF WAY LIMITS ARE INDETERMINATE, AND ARE NOT SHOWN. THE CONTRACTOR MUST CONTACT RIGHT OF WAY ENGINEERING AT THE DISTRICT OFFICE FOR CONDITIONS OF USE PRIOR TO COMMENCING WORK.

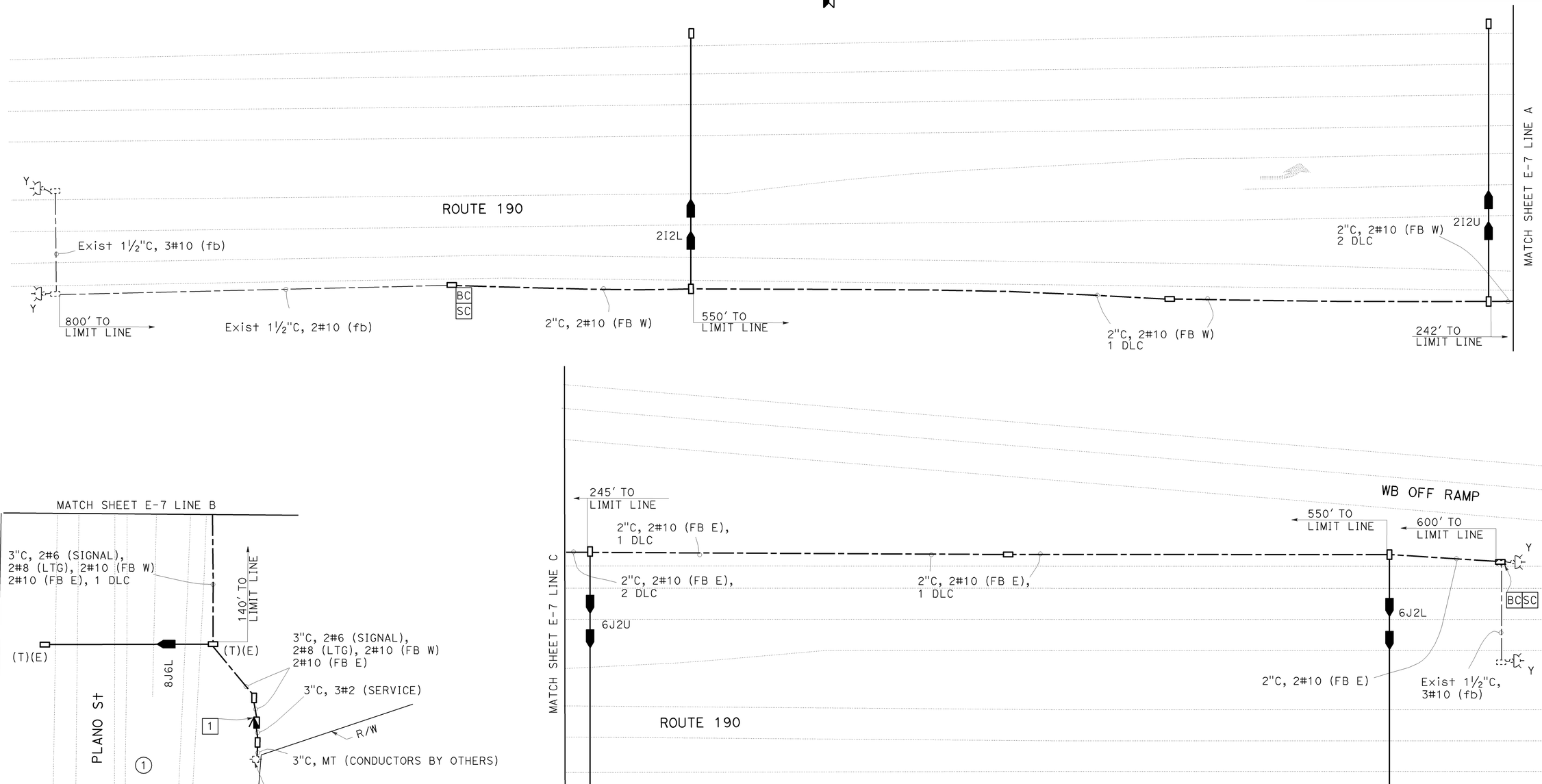

THIS PLAN IS ACCURATE FOR ELECTRICAL WORK ONLY.

MODIFY SIGNAL AND LIGHTING

SCALE: 1"=20'

E-8

STATE OF CALIFORNIA - DEPARTMENT OF TRANSPORTATION
Caltrans® ELECTRICAL DESIGN

FUNCTIONAL SUPERVISOR: ALI BAKHDOUD
CALCULATED-DESIGNED BY: OMAR MENDOZA
CHECKED BY: RAJPREET SINGH
REVISED BY
DATE REVISED

LAST REVISION 02-24-10
DATE PLOTTED => 20-APR-2010
TIME PLOTTED => 15:57

DIST	COUNTY	ROUTE	POST MILES TOTAL PROJECT	SHEET NO.	TOTAL SHEETS
06	Tul	65,99,137, 190,198,216	Var	40	59

REGISTERED CIVIL ENGINEER

June 5, 2009
PLANS APPROVAL DATE

Glenn DeCou No. C34547 Exp. 9-30-09 CIVIL — REGISTERED PROFESSIONAL ENGINEER — STATE OF CALIFORNIA

The State of California or its officers or agents shall not be responsible for the accuracy or completeness of electronic copies of this plan sheet.

To accompany plans dated 3-22-10

2006 REVISED STANDARD PLAN RSP A85

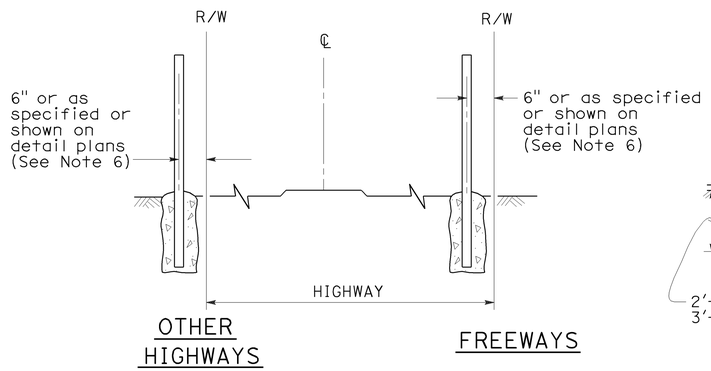

FENCE LOCATION

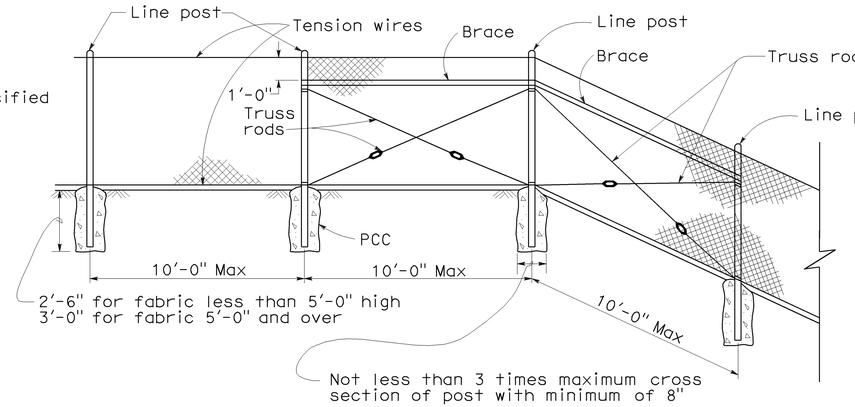

CHAIN LINK FENCE ON SHARP BREAK IN GRADE

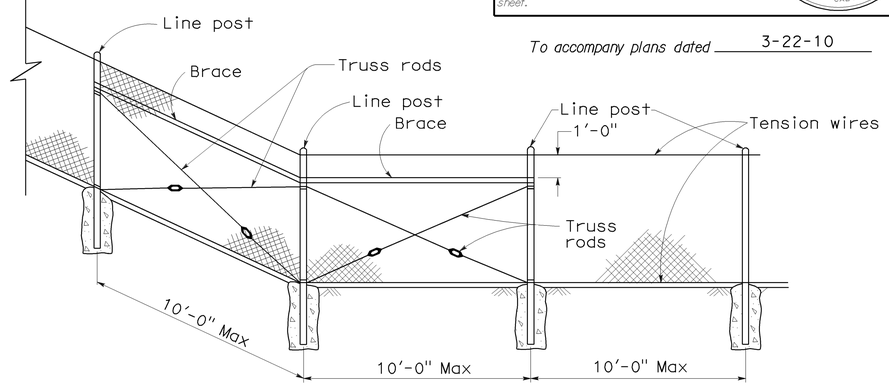

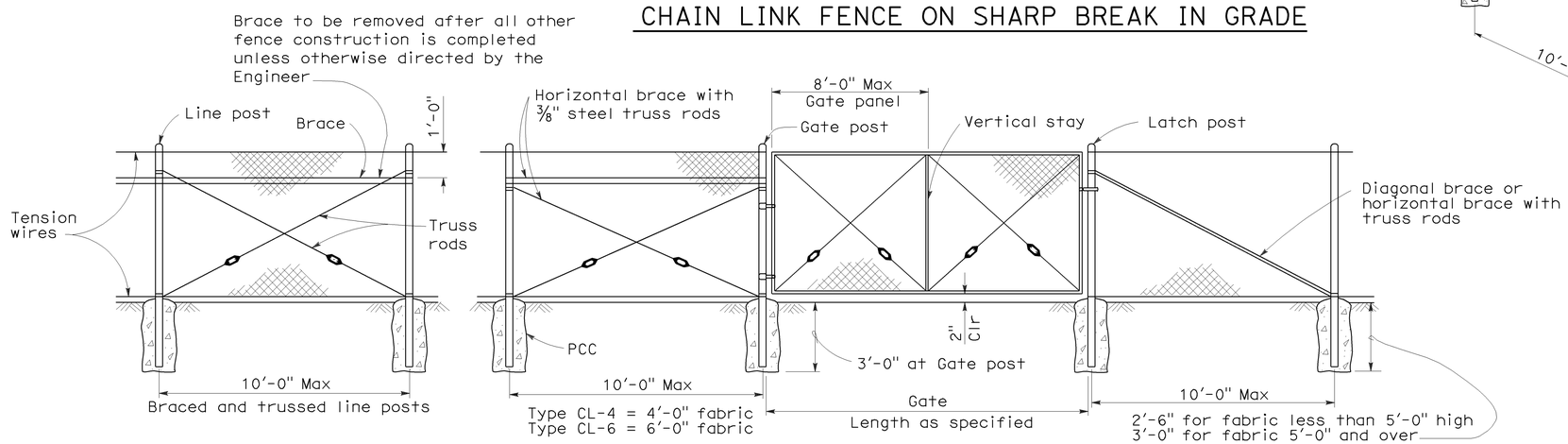

CHAIN LINK GATE INSTALLATION

GATE POST			
FENCE HEIGHT	GATE WIDTHS	NOMINAL ID	WEIGHT PER FOOT
6'-0" and Less	Up thru 6'-0"	2½"	4.95 LB
	Over 6'-0" thru 12'-0"	4"	10.79 LB
	Over 12'-0" thru 18'-0"	5"	14.62 LB
	Over 18'-0" to 24'-0" Max	6"	18.97 LB
Over 6'-0"	Up thru 6'-0"	3"	7.58 LB
	Over 6'-0" thru 12'-0"	5"	14.62 LB
	Over 12'-0" thru 18'-0"	6"	18.97 LB
	Over 18'-0" to 24'-0" Max	8"	28.55 LB

Above post dimensions and weights are minimums. Larger sizes may be used on approval of the Engineer.

NOTES:

1. The below table shows examples of post and brace sections which may comply with the Specifications.
2. Sections shown in the tables must also comply with the strength requirements and other provisions of the Specifications.
3. Other sections which comply with the strength requirements and other provisions of the Specifications may be used on approval of the Engineer.
4. Options exercised shall be uniform on any one project.
5. Dimensions shown are nominal.
6. Offset to be 2'-0" at monument locations, measured at right angles to R/W lines. Taper to achieve offset to be at least 20'-0" long.

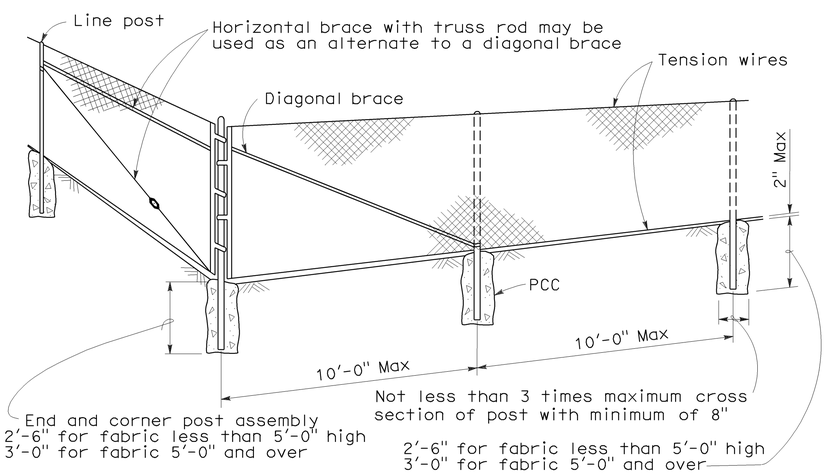

CORNER POST

TYPICAL MEMBER DIMENSIONS (See Notes)											
FENCE HEIGHT	LINE POSTS			END, LATCH & CORNER POSTS				BRACES			
	ROUND ID	H	ROLL FORMED	ROUND ID	ROLL FORMED			ROUND ID	H	ROLL FORMED	
6' & less	1½"	1⅞" × 1⅝"	1⅞" × 1⅝"	2"	3½" × 3½"	2" × 1¾"		1¼"	1½" × 1 5/16"	1⅝" × 1¼"	1¾" × 1¼"
Over 6'	2"	2¼" × 2"	2" × 1¾"	2½"	3½" × 3½"	2½" × 2½"		1¼"	1½" × 1 5/16"	1⅝" × 1¼"	1¾" × 1¼"

STATE OF CALIFORNIA
DEPARTMENT OF TRANSPORTATION

CHAIN LINK FENCE

NO SCALE

RSP A85 DATED JUNE 5, 2009 SUPERSEDES STANDARD PLAN A85 DATED MAY 1, 2006 - PAGE 111 OF THE STANDARD PLANS BOOK DATED MAY 2006.

REVISED STANDARD PLAN RSP A85

5-7-09

DIST	COUNTY	ROUTE	POST MILES TOTAL PROJECT	SHEET NO.	TOTAL SHEETS
06	Tul	65,99,137, 190,198,216	Var	41	59

REGISTERED CIVIL ENGINEER

November 17, 2006
PLANS APPROVAL DATE

REGISTERED PROFESSIONAL ENGINEER Michael Janzen No. 44788 Exp. 03-31-08 CIVIL STATE OF CALIFORNIA

The State of California or its officers or agents shall not be responsible for the accuracy or completeness of electronic copies of this plan sheet.

To accompany plans dated 3-22-10

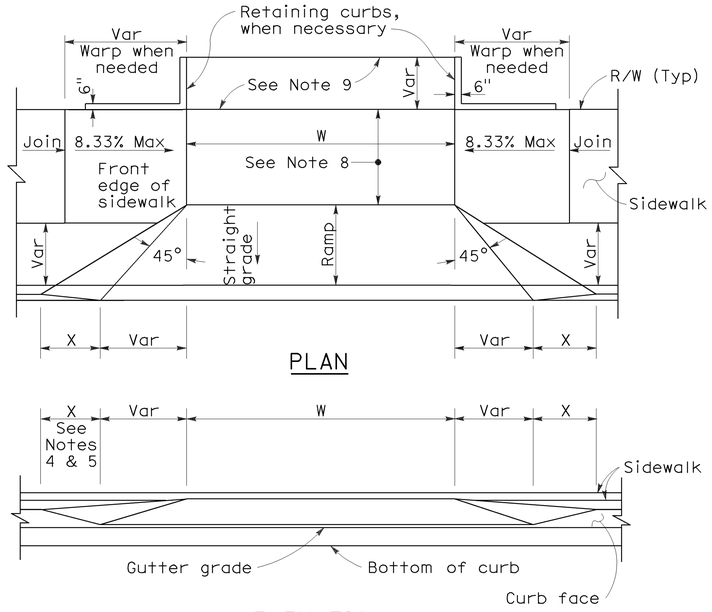

PLAN

ELEVATION

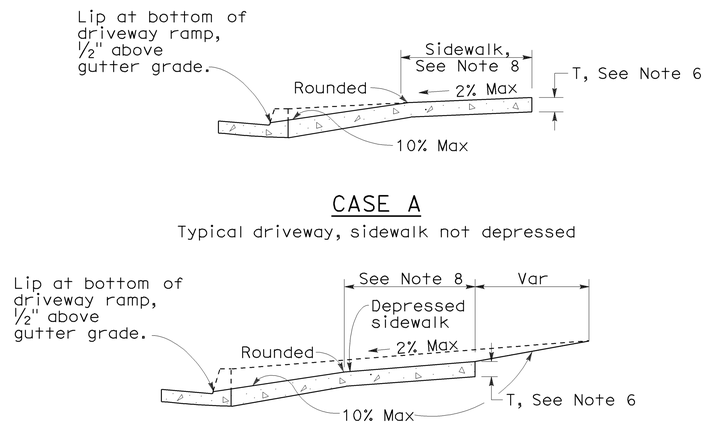

CASE A

Typical driveway, sidewalk not depressed

CASE B

Driveway with depressed sidewalk

SECTIONS

CURB QUANTITIES

TYPE	CUBIC YARDS PER LINEAR FOOT
A1-6	0.02585
A1-8	0.03084
A2-6	0.05903
A2-8	0.06379
A3-6	0.01036
A3-8	0.01435
B1-4	0.02185
B1-6	0.02930
B2-4	0.05515
B2-6	0.06171
B3-4	0.00641
B3-6	0.01074
B4	0.05709
D-4	0.04083
D-6	0.06804
E	0.06661

TABLE A

CURB TYPE	DIMENSIONS "H1"	"H2"	"W1"	"W2"
A1-6	1'-2"	6"	7½"	1½"
A1-8	1'-4"	8"	8"	2"
A2-6	1'-0"	6"	2'-7½"	1½"
A2-8	1'-2"	8"	2'-8"	2"
A3-6	6"	5"	7¼"	1¼"
A3-8	8"	7"	7¾"	1¾"
B1-4	1'-0"	4"	7½"	2½"
B1-6	1'-2"	6"	9"	4"
B2-4	10"	4"	2'-7½"	2½"
B2-6	1'-0"	6"	2'-9"	4"
B3-4	4"	3"	7"	2"
B3-6	6"	5"	8½"	3½"
D-4	10"	4"	1'-6"	1'-1"
D-6	1'-0"	6"	2'-2"	1'-8"

DRIVEWAYS

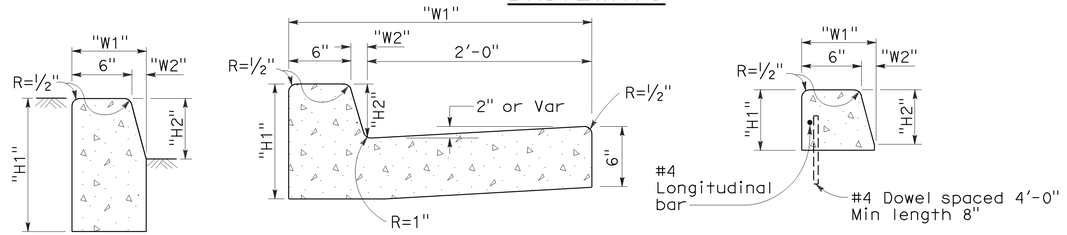

TYPE A1 CURBS
See Table A

TYPE A2 CURBS
See Table A

TYPE A3 CURBS
Superimposed on existing pavement
See Table A

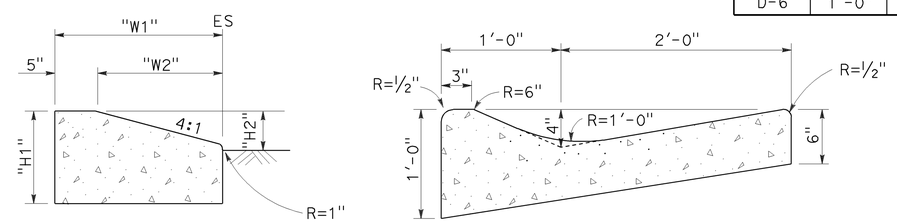

TYPE D CURBS
See Table A

TYPE E CURB

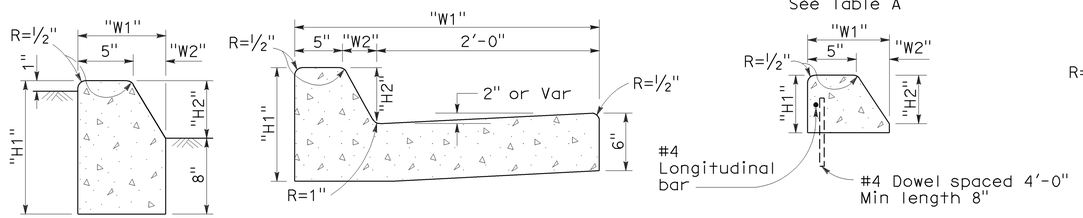

TYPE B1 CURBS
See Table A

TYPE B2 CURBS
See Table A

TYPE B3 CURBS
Superimposed on existing pavement
See Table A

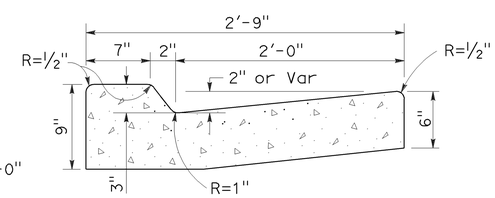

TYPE B4 CURBS

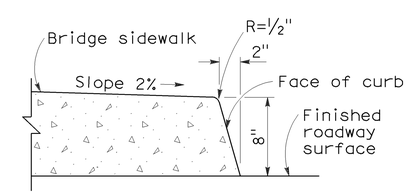

TYPE H CURB
On Bridges

CURBS

NOTES:

1. Case A driveway section typically applies.
2. Use Case B driveway section when ramp slopes would exceed 10% in Case A.
3. Use Case B driveway section when sidewalk cross slope would exceed 2% in Case A.
4. X=3'-0" except for curb heights over 10" where 4:1 slopes shall be used on curb slope.
5. X is a variable when sidewalk is located where wheelchairs may traverse the surface. Slopes shall not exceed 8.33%.
6. Sidewalk and ramp thickness "T" at driveway shall be 4" for residental and 6" for commercial.
7. Difference in slope of the driveway ramp and the slope of a line between the gutter and a point on the roadway 5'-0" from gutter line shall not exceed 15%. Reduce driveway ramp slope, not gutter slope, where required.
8. Minimum width of clear passageway for sidewalk shall be 4'-0".
9. Retaining curbs and acquisition of construction easement may be necessary for narrow sidewalks or curb heights in excess of 6".
10. Across the pedestrian route at curb ramp locations, the gutter pan slope shall not exceed 1" of depth for each 2'-0" of width.

STATE OF CALIFORNIA
DEPARTMENT OF TRANSPORTATION

CURBS AND DRIVEWAYS

NO SCALE

RSP A87A DATED NOVEMBER 17, 2006 SUPERSEDES STANDARD PLAN A87A DATED MAY 1, 2006 - PAGE 113 OF THE STANDARD PLANS BOOK DATED MAY 2006.

REVISED STANDARD PLAN RSP A87A

2006 REVISED STANDARD PLAN RSP A87A

10-25-06

DIST	COUNTY	ROUTE	POST MILES TOTAL PROJECT	SHEET NO.	TOTAL SHEETS
06	Tul	65,99,137, 190,198,216	Var	42	59

REGISTERED CIVIL ENGINEER

September 1, 2006
PLANS APPROVAL DATE

Hector David Cordova No. C41957 Exp. 3-31-08 CIVIL — REGISTERED PROFESSIONAL ENGINEER — STATE OF CALIFORNIA

The State of California or its officers or agents shall not be responsible for the accuracy or completeness of electronic copies of this plan sheet.

To accompany plans dated 3-22-10

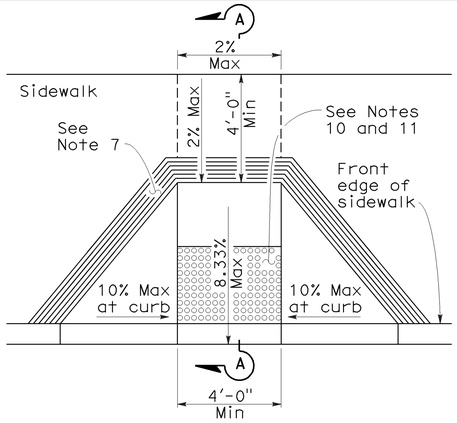

CASE A

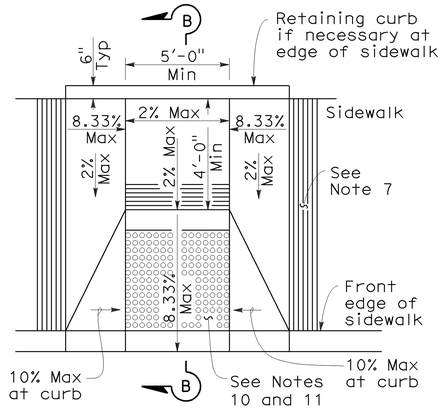

CASE B

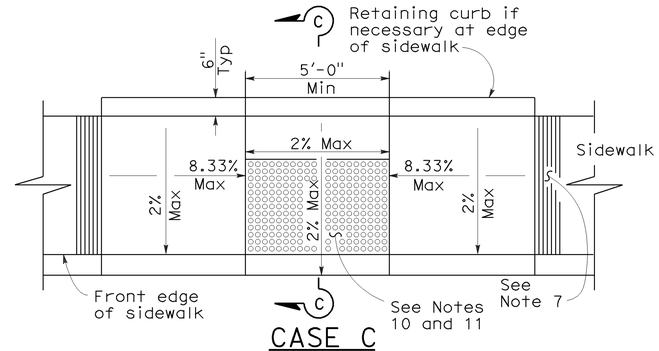

CASE C

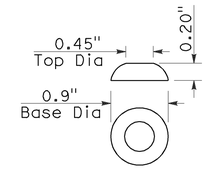

RAISED TRUNCATED DOME

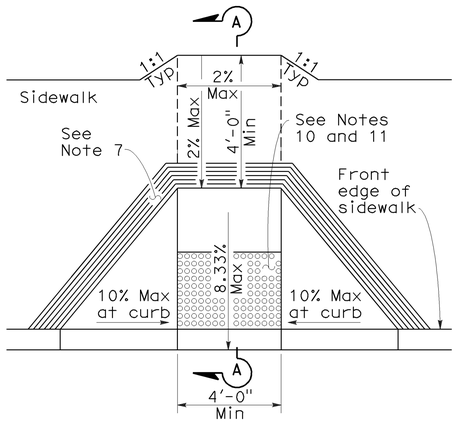

CASE D

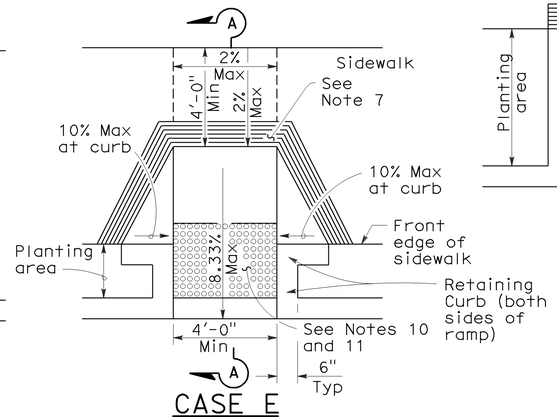

CASE E

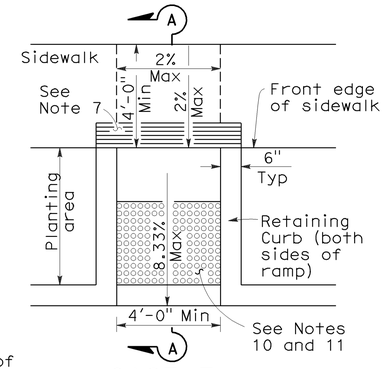

CASE F

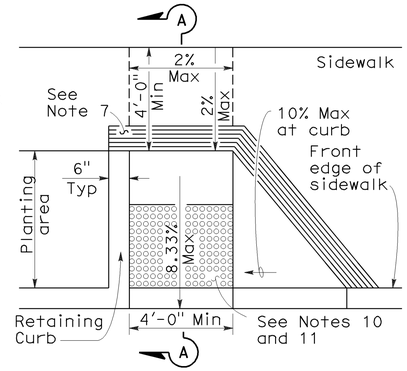

CASE G
See Note 4

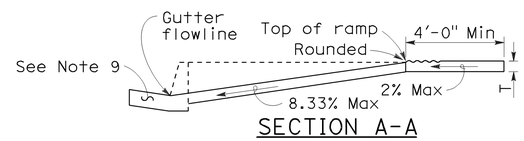

SECTION A-A

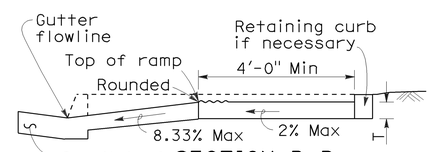

SECTION B-B
Depress entire sidewalk as required

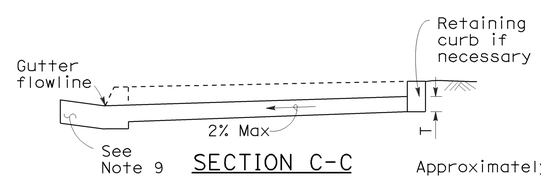

SECTION C-C

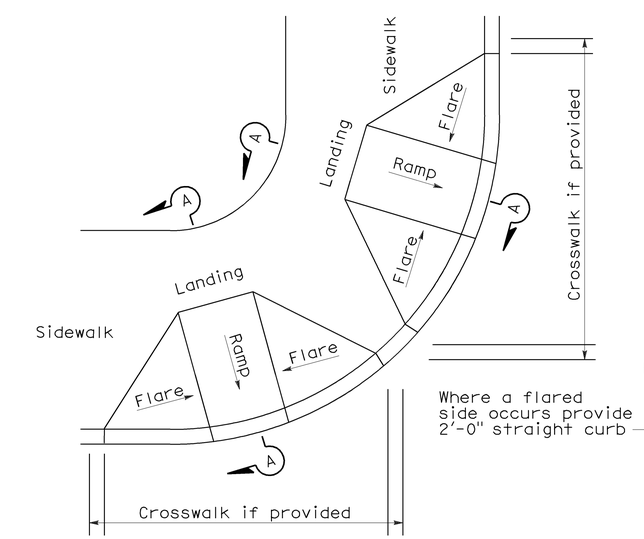

DETAIL A

TYPICAL TWO-RAMP CORNER INSTALLATION

See Note 1

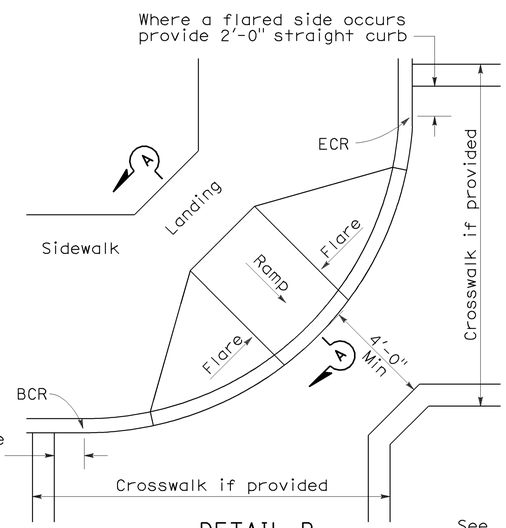

DETAIL B

TYPICAL ONE-RAMP CORNER INSTALLATION

See Notes 1 and 3

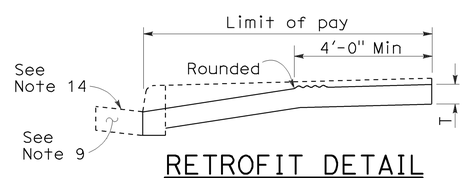

RETROFIT DETAIL

Existing curb and sidewalk

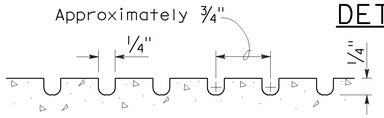

GROOVING DETAIL

NOTES:

1. As site conditions dictate, Case A through Case G curb ramps may be used for corner installations similar to those shown in Detail A and Detail B. The case of curb ramps used in Detail A do not have to be the same. Case A through Case G curb ramps also may be used at mid block locations, as site conditions dictate.
2. If distance from curb to back of sidewalk is too short to accommodate ramp and 4'-0" platform (landing) as shown in Case A, the sidewalk may be depressed longitudinally as in Case B, or C or may be widened as in Case D.
3. When ramp is located in center of curb return, crosswalk configuration must be similar to that shown for Detail B.
4. As site conditions dictate, the retaining curb side and the flared side of the Case G ramp shall be constructed in reversed position.
5. If located on a curve, the sides of the ramp need not be parallel, but the minimum width of the ramp shall be 4'-0".
6. Side slope of ramp flares vary uniformly from a maximum of 10% at curb to conform with longitudinal sidewalk slope adjacent to top of the ramp, except in Case C and Case F.
7. The curb ramp shall be outlined, as shown, with a 1'-0" wide border with 1/4" grooves approximately 3/4" on center. See grooving detail.
8. Transitions from ramps and landing to walks, gutters or streets shall be flush and free of abrupt changes.
9. Maximum slopes of adjoining gutters, the road surface immediately adjacent to the curb ramp or accessible route shall not exceed 5 percent within 4'-0" of the top and bottom of the curb ramp.
10. Curb ramps shall have a detectable warning surface that extends the full width and 3'-0" depth of the ramp. Detectable Warning Surfaces shall conform to the details on this plan and the requirements in the Special Provisions.
11. The edge of the detectable warning surface nearest the street shall be between 6" and 8" from the gutter flowline.
12. Sidewalk and ramp thickness, "T", shall be 3 1/2" minimum.
13. Utility pull boxes, manholes, vaults and all other utility facilities within the boundaries of the curb ramp will be relocated or adjusted to grade by the owner prior to, or in conjunction with, curb ramp construction.
14. For retrofit conditions, removal and replacement of curb apron will be at the Contractor's option, unless otherwise shown on project plans.

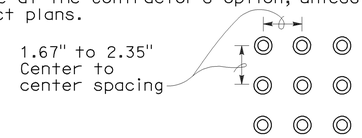

RAISED TRUNCATED DOME PATTERN (IN-LINE)

DETECTABLE WARNING SURFACE

See Note 10

STATE OF CALIFORNIA
DEPARTMENT OF TRANSPORTATION

CURB RAMP DETAILS

NO SCALE

RSP A88A DATED SEPTEMBER 1, 2006 SUPERSEDES STANDARD PLAN A88A DATED MAY 1, 2006 - PAGE 115 OF THE STANDARD PLANS BOOK DATED MAY 2006.

REVISED STANDARD PLAN RSP A88A

2006 REVISED STANDARD PLAN RSP A88A

8-3-06

DIST	COUNTY	ROUTE	POST MILES TOTAL PROJECT	SHEET NO.	TOTAL SHEETS
06	Tul	65,99,137, 190,198,216	Var	43	59

Randell D. Hiatt
REGISTERED CIVIL ENGINEER

June 6, 2008
PLANS APPROVAL DATE

REGISTERED PROFESSIONAL ENGINEER
Randell D. Hiatt
No. C50200
Exp. 6-30-09
CIVIL
STATE OF CALIFORNIA

The State of California or its officers or agents shall not be responsible for the accuracy or completeness of electronic copies of this plan sheet.

To accompany plans dated 3-22-10

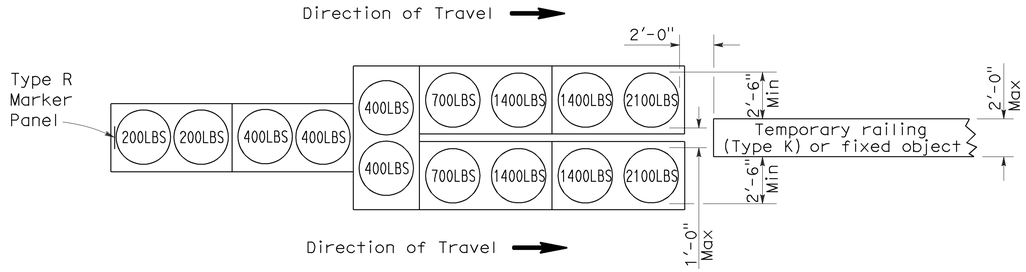

ARRAY 'TU14'

Approach speed 45 mph or more

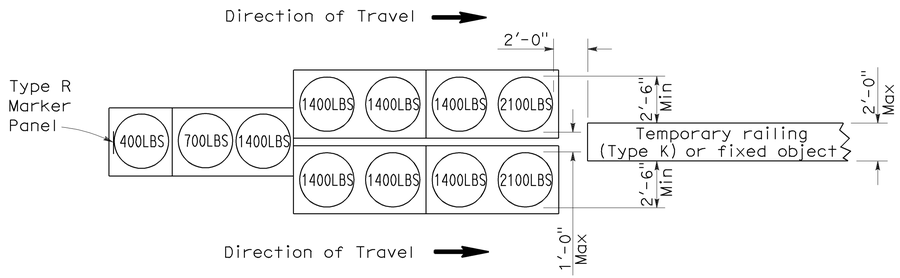

ARRAY 'TU11'

Approach speed less than 45 mph

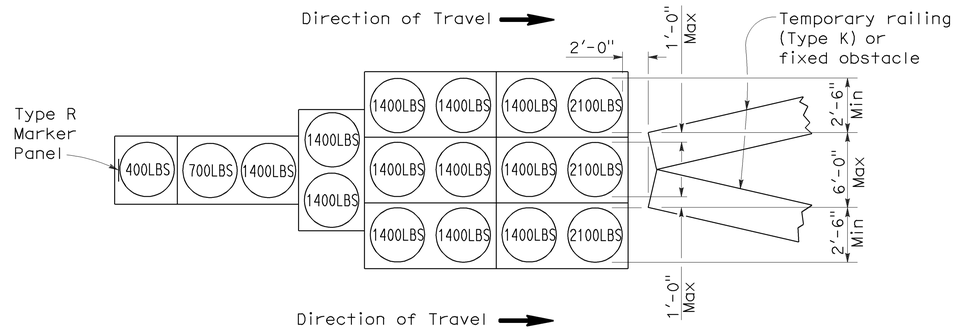

ARRAY 'TU17'

Approach speed less than 45 mph

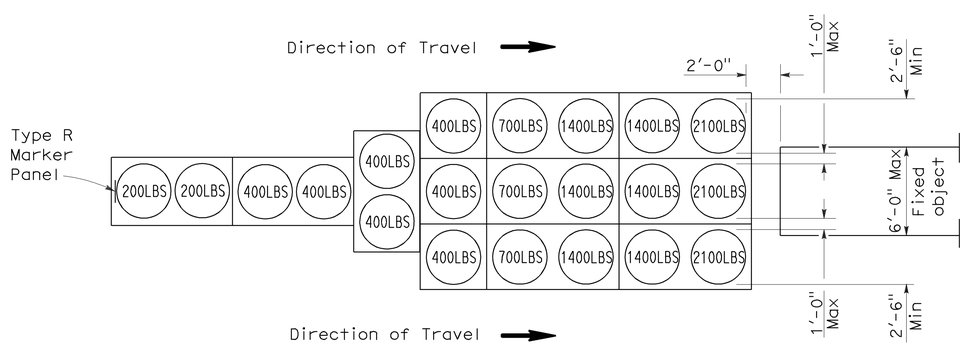

ARRAY 'TU21'

Approach speed 45 mph or more

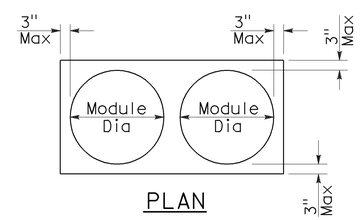

PLAN

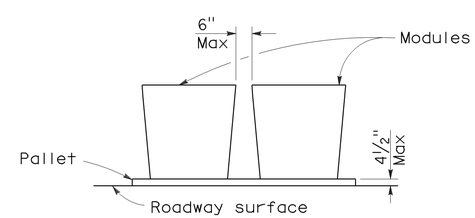

ELEVATION

CRASH CUSHION PALLET DETAIL

See Note 7

NOTES:

1. (XXX) Indicates sand filled module location and weight of sand in pounds for each module. Module spacing is based on the greater diameter of the module.
2. All sand weights are nominal.
3. Temporary crash cushion arrays shall not encroach on the traveled way.
4. Place the top of Type R marker panel 1" below the module lid.
5. Refer to Standard Plan A73B for marker details.
6. Approach speeds indicated conform to NCHRP 350 Report criteria.
7. Use of pallets is optional.

STATE OF CALIFORNIA
DEPARTMENT OF TRANSPORTATION

TEMPORARY CRASH CUSHION, SAND FILLED (UNIDIRECTIONAL)

NO SCALE

RSP T1A DATED JUNE 6, 2008 SUPERSEDES STANDARD PLAN T1A
DATED MAY 1, 2006 - PAGE 211 OF THE STANDARD PLANS BOOK DATED MAY 2006.

REVISED STANDARD PLAN RSP T1A

2006 REVISED STANDARD PLAN RSP T1A

5-15-08

DIST	COUNTY	ROUTE	POST MILES TOTAL PROJECT	SHEET NO.	TOTAL SHEETS
06	Tul	65,99,137, 190,198,216	Var	44	59

Randell D. Hiatt
REGISTERED CIVIL ENGINEER

June 6, 2008
PLANS APPROVAL DATE

REGISTERED PROFESSIONAL ENGINEER
Randell D. Hiatt
No. C50200
Exp. 6-30-09
CIVIL
STATE OF CALIFORNIA

The State of California or its officers or agents shall not be responsible for the accuracy or completeness of electronic copies of this plan sheet.

To accompany plans dated 3-22-10

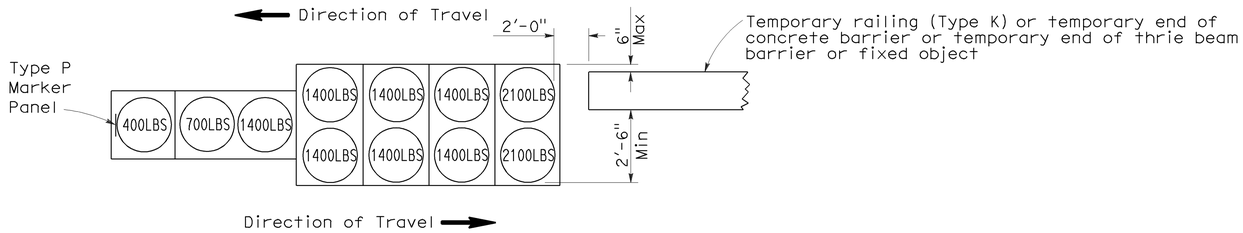

ARRAY 'TB11'

Approach speed less than 45 mph

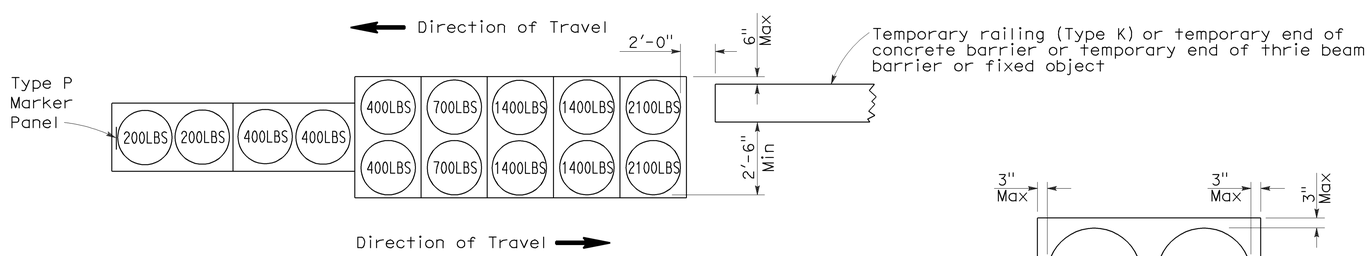

ARRAY 'TB14'

Approach speed 45 mph or more

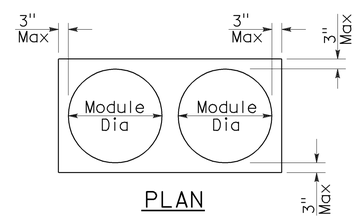

PLAN

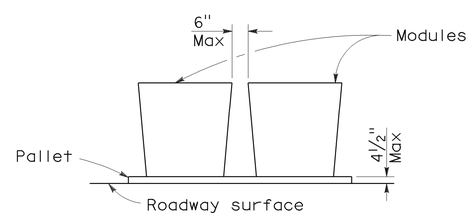

ELEVATION

CRASH CUSHION PALLET DETAIL

See Note 7

NOTES:

1. (XXX) Indicates sand filled module location and weight of sand in pounds for each module. Module spacing is based on the greater diameter of the module.
2. All sand weights are nominal.
3. Temporary crash cushion arrays shall not encroach on the traveled way.
4. Place the Type P marker panel so that the bottom of the panel rests upon the pallet.
5. Refer to Standard Plan A73B for marker details.
6. Approach speeds indicated conform to NCHRP 350 Report criteria.
7. Use of pallets is optional.

STATE OF CALIFORNIA
DEPARTMENT OF TRANSPORTATION

TEMPORARY CRASH CUSHION, SAND FILLED (BIDIRECTIONAL)

NO SCALE

RSP T1B DATED JUNE 6, 2008 SUPERSEDES STANDARD PLAN T1B
DATED MAY 1, 2006 - PAGE 212 OF THE STANDARD PLANS BOOK DATED MAY 2006.

REVISED STANDARD PLAN RSP T1B

2006 REVISED STANDARD PLAN RSP T1B

5-15-08

DIST	COUNTY	ROUTE	POST MILES TOTAL PROJECT	SHEET NO.	TOTAL SHEETS
06	Tul	65,99,137, 190,198,216	Var	45	59

Randell D. Hiatt
REGISTERED CIVIL ENGINEER

June 6, 2008
PLANS APPROVAL DATE

REGISTERED PROFESSIONAL ENGINEER
Randell D. Hiatt
No. C50200
Exp. 6-30-09
CIVIL
STATE OF CALIFORNIA

The State of California or its officers or agents shall not be responsible for the accuracy or completeness of electronic copies of this plan sheet.

To accompany plans dated 3-22-10

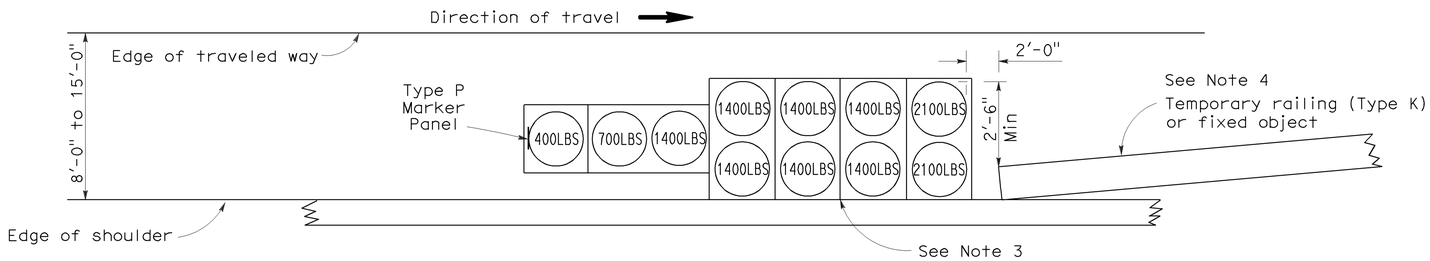

ARRAY 'TS11'

Approach speed less than 45 mph
See Note 9

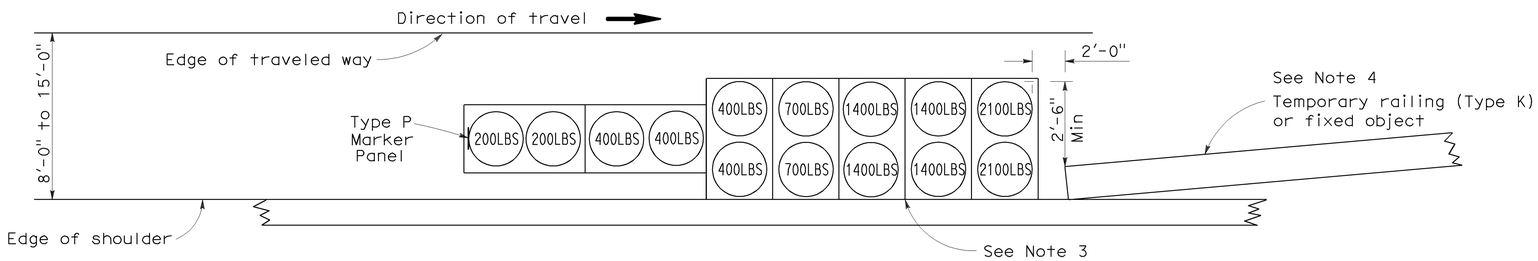

ARRAY 'TS14'

Approach speed 45 mph or more
See Note 9

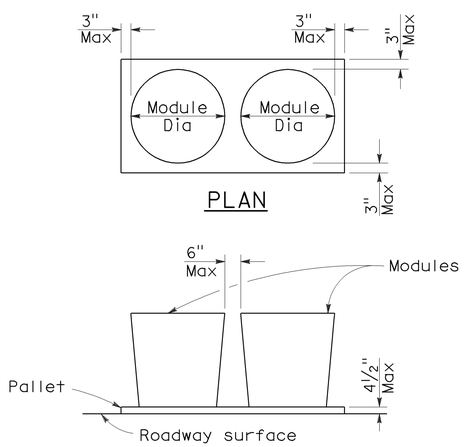

CRASH CUSHION PALLET DETAIL

See Note 11

NOTES:

1. (XXX) Indicates sand filled module location and weight of sand in pounds for each module. Module spacing is based on the greater diameter of the module.
2. All sand weights are nominal.
3. The temporary crash cushion arrays shown on this plan shall be used only in locations where there will be traffic on one side of the temporary crash cushion array.
4. If the fixed object or approach end of the temporary railing is less than 15'-0" from the edge of traveled way, a temporary crash cushion is required in a construction or work zone.
5. Temporary crash cushion arrays shall not encroach on the traveled way.
6. Arrays for median shoulders shall conform to details shown on this plan for outside shoulders.
7. Place the Type P marker panel so that the bottom of the panel rests upon the pallet and faces traffic.
8. Refer to Standard Plan A73B for marker details.
9. For shoulder widths less than 8'-0", appropriate approved crash cushion protection, other than sand filled modules, shall be provided at fixed objects and at approach ends of temporary railing. The specific type of crash cushion shall be as shown on the project plans or as specified in the Special Provisions, or if not shown on the project plans or specified in the Special Provisions, shall be as approved by the Engineer.
10. Approach speeds indicated conform to NCHRP 350 Report criteria.
11. Use of pallets is optional.

STATE OF CALIFORNIA
DEPARTMENT OF TRANSPORTATION

TEMPORARY CRASH CUSHION, SAND FILLED (SHOULDER INSTALLATIONS)

NO SCALE

RSP T2 DATED JUNE 6, 2008 SUPERSEDES STANDARD PLAN T2
DATED MAY 1, 2006 - PAGE 213 OF THE STANDARD PLANS BOOK DATED MAY 2006.

REVISED STANDARD PLAN RSP T2

2006 REVISED STANDARD PLAN RSP T2

5-15-08

DIST	COUNTY	ROUTE	POST MILES TOTAL PROJECT	SHEET NO.	TOTAL SHEETS
06	Tul	65,99,137, 190,198,216	Var	46	59

LICENSED LANDSCAPE ARCHITECT

August 15, 2008
PLANS APPROVAL DATE

The State of California or its officers or agents shall not be responsible for the accuracy or completeness of electronic copies of this plan sheet.

LICENSED LANDSCAPE ARCHITECT — Robert B. Schott — Signature — 11-04-08 Renewal Date — 08-11-08 Date — STATE OF CALIFORNIA

To accompany plans dated 3-22-10

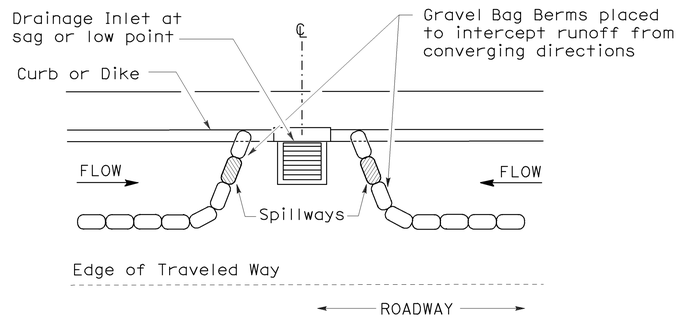

PLAN

CONFIGURATION FOR SAG POINT INLET (GRAVEL BAG BERM)

GRAVEL BAG BERM (TYPE 3A) SPACING TABLE

SLOPE OF ROADWAY (PERCENT)	1 to 3.9	4 to 5.9	6 to 7.9	8 to 10	10+
INTERVAL BETWEEN BERM	100′	75′	50′	25′	12′

For slope of less than 1%, install barriers only if erosion/sediment is prevalent

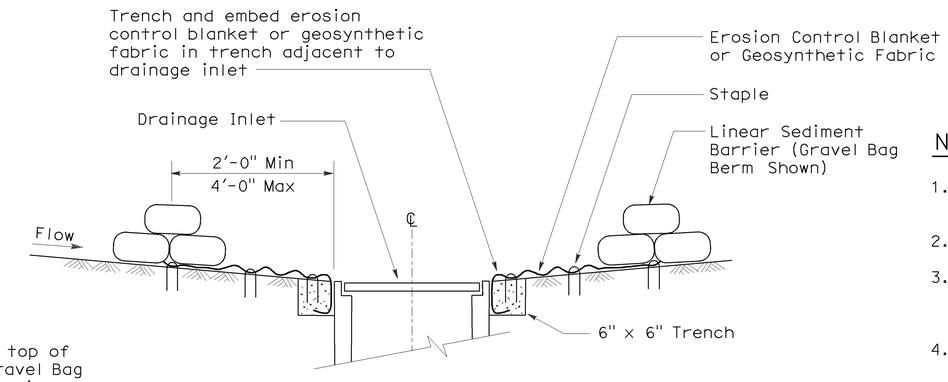

SECTION A-A

NOTES:

1. Place safety cones adjacent to drainage inlet protection.
2. Dimensions may vary to fit field conditions.
3. Install a minimum of 3 gravel bag berms upstream of each drainage inlet to be protected.
4. Position erosion control blanket or geosynthetic fabric at edge of concrete apron and secure in trench.
5. Erosion control blanket or geosynthetic fabric is not required if the area adjacent to the drainage inlet is vegetated or paved.

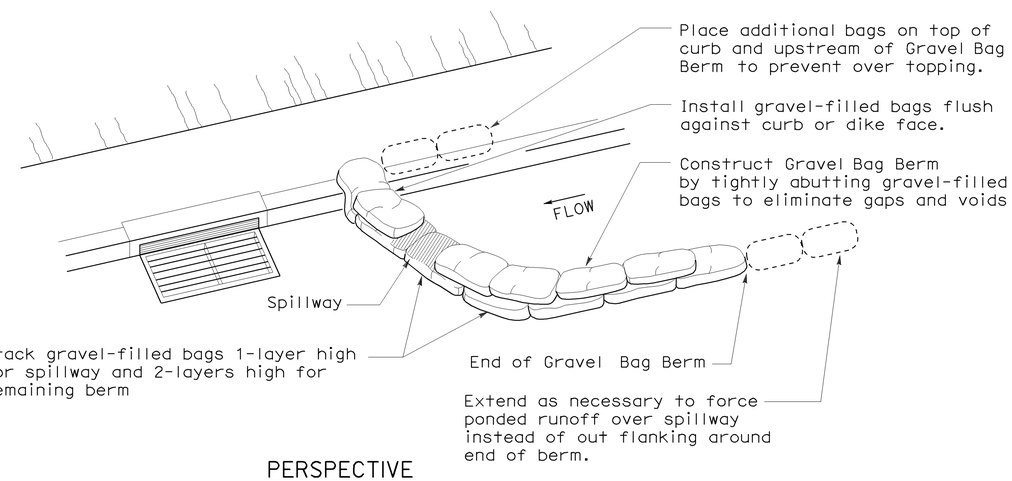

PERSPECTIVE

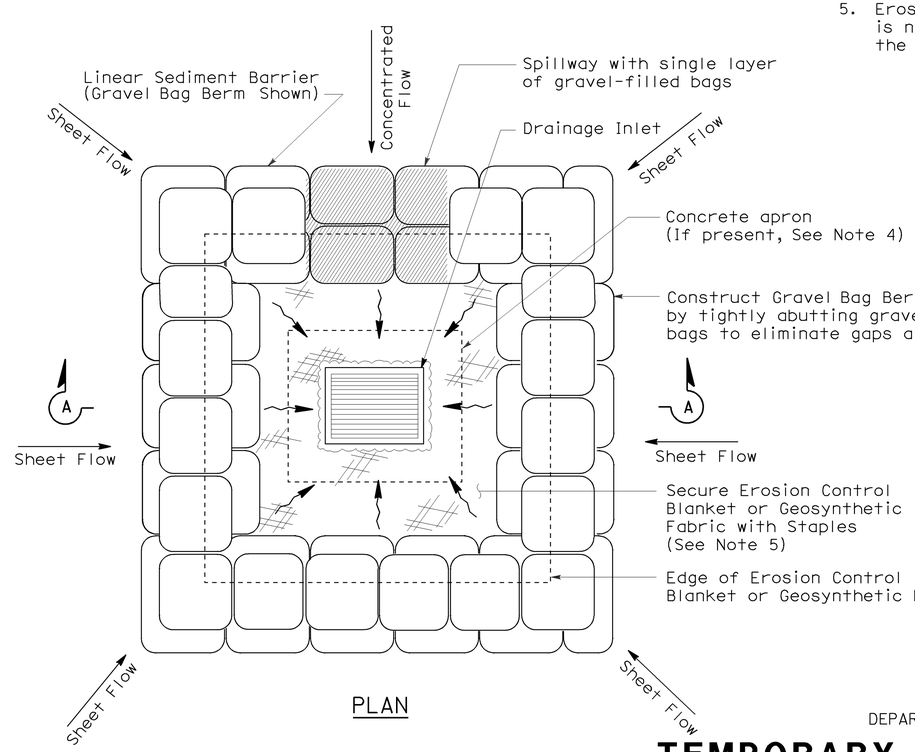

PLAN

TEMPORARY DRAINAGE INLET PROTECTION (TYPE 3B)

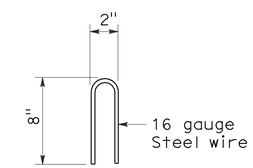

STAPLE DETAIL

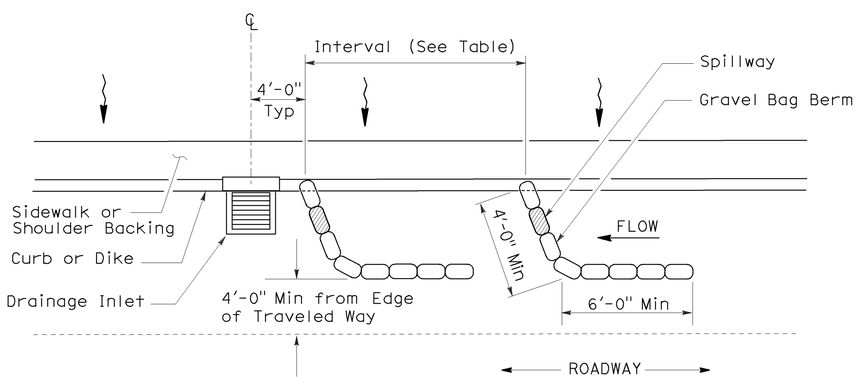

PLAN

TEMPORARY DRAINAGE INLET PROTECTION (TYPE 3A) (GRAVEL BAG BERM)

STATE OF CALIFORNIA
DEPARTMENT OF TRANSPORTATION

TEMPORARY WATER POLLUTION CONTROL DETAILS (TEMPORARY DRAINAGE INLET PROTECTION)

NO SCALE

NSP T62 DATED AUGUST 15, 2008 SUPPLEMENTS THE STANDARD PLANS BOOK DATED MAY 2006.

NEW STANDARD PLAN NSP T62

2006 NEW STANDARD PLAN NSP T62

7-11-08

DIST	COUNTY	ROUTE	POST MILES TOTAL PROJECT	SHEET NO.	TOTAL SHEETS
06	Tul	65,99,137, 190,198,216	Var	47	59

REGISTERED ELECTRICAL ENGINEER

October 5, 2007
PLANS APPROVAL DATE

REGISTERED PROFESSIONAL ENGINEER Jeffery G. McRae No. E14512 Exp. 6-30-08 ELECTRICAL STATE OF CALIFORNIA

The State of California or its officers or agents shall not be responsible for the accuracy or completeness of electronic copies of this plan sheet.

To accompany plans dated 3-22-10

ELECTROLIERS

STANDARD TYPES
15, 15D
15 STRUCTURE
21, 21D STRUCTURE
30
31
32
35
36-20A

High mast light pole

Double Arm lighting standard

Existing electrolier

Electrolier foundation (Future installation)

NOTES:

1. Luminaires shall be 310 W HPS when installed on Type 21, 21D, 30, 31, 32, 35 and 36-20A Standards, unless otherwise specified. Luminaires shall be 200 W HPS when installed on other type standards or poles, unless otherwise specified.
2. Luminaires shall be the cutoff type, ANSI Type Ⅲ medium cutoff lighting distribution, unless otherwise specified.
3. Variations noted adjacent to symbol on project plans.

Electrolier (see project notes or project plans)

Luminaire on wood pole

STANDARD NOTES:

- AB Abandon. If applied to conduit, remove conductors.
- BC Install pull box in existing conduit run.
- BP Pedestrian barricade, type as indicated on plan.
- CB Install conduit into existing pull box.
- CC Connect new and existing conduit. Remove existing conductors and install conductors as indicated.
- CF Conduit to remain for future use. Remove conductors. Install pull wire or rope.
- DH Detector handhole.
- FA Foundation to be abandoned.
- IS Install sign on signal mast arm.
- NS No slip base on standard.
- PEC Photoelectric control.
- PEU Photoelectric unit.
- RC Equipment or material to be removed and become the property of the Contractor.
- RE Remove electrolier, fuses and ballast. Tape ends of conductors.
- RL Relocate equipment.
- RR Remove and reuse equipment.
- RS Remove and salvage equipment.
- SC Splice new to existing conductors.
- SD Service disconnect.
- SF Standard to remain for future use. Remove luminaire, pole conductors, fuses and ballast.
- TSP Telephone service point.

ABBREVIATIONS AND EQUIPMENT DESIGNATIONS

PROPOSED	EXISTING	
BBS	bbs	Battery backup system
BC	bc	Bolt circle
C	C	Conduit
CCTV	cctv	Closed circuit television
CKT	ckt	Circuit
CMS	cms	Changeable message sign
DLC	dlc	Loop detector lead-in cable
EMS	ems	Extinguishable message sign
EVC	evc	Emergency vehicle cable
EVD	evd	Emergency vehicle detector
FB	fb	Flashing beacon
FBCA	fbca	Flashing beacon control assembly
FBS	fbs	Flashing beacon with slip base
FO	fo	Fiber optic
G	G	Ground (Equipment Grounding Conductor)
GFCI	GFCI	Ground fault circuit interrupt
HAR	har	Highway advisory radio
HEX	hex	Hexagonal
HPS	hps	High pressure sodium
IISNS	iisns	Internally illuminated street name sign
ISL	isl	Induction sign lighting
LED	led	Light emitting diode
LMA	lma	Luminaire mast arm
LPS	lps	Low pressure sodium
LTG	ltg	Lighting
LUM	lum	Luminaire
MAT	mat	Mast arm mounting vehicle signal faces, top attachment
MAS	mas	Mast arm mounting vehicle signal faces, side attachment
MAS-4A	mas-4A	Mast arm mounting vehicle signal faces, side attachment - 4 signal section
MAS-4B	mas-4B	
MAS-4C	mas-4C	
MAS-5A	mas-5A	Mast arm mounting vehicle signal faces, side attachment - 5 signal section
MAS-5B	mas-5B	
MC	mc	Mercury contactor
M/M	m/m	Multiple to multiple transformer
MT	mt	Conduit with pull wire or rope only
MTG	mtg	Mounting
	mv	Mercury vapor lighting fixture
N	N	Neutral (Grounded Conductor)
NC	NC	Normally closed
NO	NO	Normally open
PB	pb	Pull box
PEC	pec	Photoelectric control (Type Ⅰ, Ⅱ, Ⅲ, Ⅳ or Ⅴ as shown)
PED	ped	Pedestrian
PEU	peu	Photoelectric unit
PPB	ppb	Pedestrian push button
RL		Relocated equipment
RM	rm	Ramp metering
SB	sb	Slip base
SIC	sic	Signal interconnect cable
SIG	sig	Signal
SMA	sma	Signal mast arm
SNS	sns	Street name sign
SP	sp	Service point
TDC	tdc	Telephone demarcation cabinet
TMS	tms	Traffic monitoring station
TOS	tos	Traffic Operations System
VEH	veh	Vehicle
XFMR	xfmr	Transformer
COMM	comm	Communication
RWIS	rwis	Roadway weather information system

SOFFIT AND WALL MOUNTED LUMINAIRES

Pendant, 70 W HPS unless otherwise specified.

Flush, 70 W HPS unless otherwise specified.

Wall surface, 70 W HPS unless otherwise specified.

Existing soffit or wall luminaire to remain unmodified.

Existing soffit or wall luminaire to be modified as specified.

NOTE:

Arrow indicates "street side" of luminaire.

STATE OF CALIFORNIA
DEPARTMENT OF TRANSPORTATION

ELECTRICAL SYSTEMS (SYMBOLS AND ABBREVIATIONS)

NO SCALE

RSP ES-1A DATED OCTOBER 5, 2007 SUPERSEDES STANDARD PLAN ES-1A
DATED MAY 1, 2006 - PAGE 400 OF THE STANDARD PLANS BOOK DATED MAY 2006.

REVISED STANDARD PLAN RSP ES-1A

2006 REVISED STANDARD PLAN RSP ES-1A

DIST	COUNTY	ROUTE	POST MILES TOTAL PROJECT	SHEET NO.	TOTAL SHEETS
06	Tul	65,99,137, 190,198,216	Var	48	59

REGISTERED ELECTRICAL ENGINEER

October 5, 2007
PLANS APPROVAL DATE

REGISTERED PROFESSIONAL ENGINEER Jeffery G. McRae No. E14512 Exp. 6-30-08 ELECTRICAL STATE OF CALIFORNIA

The State of California or its officers or agents shall not be responsible for the accuracy or completeness of electronic copies of this plan sheet.

To accompany plans dated 3-22-10

CONDUIT

PROPOSED	EXISTING	
		Lighting Conduit, unless otherwise indicated or noted
		Traffic signal conduit
C	c	Communication conduit
T	t	Telephone conduit
F	f	Fire alarm conduit
FO	fo	Fiber optic conduit
		Conduit termination (RSP ES-9A C)
R	r	Conduit riser in/on structure or service pole

SERVICE EQUIPMENT

PROPOSED	EXISTING	
OH	oh	Overhead lines
U	U	Wood pole "U" indicates utility owned
		Pole guy with anchor
		Utility transformer - ground mounted
III		Service equipment enclosure type
		Service equipment enclosure door indicates front of enclosure
T	t	Telephone demarcation cabinet

POLE-MOUNTED SERVICE DESIGNATION

Type of installation

TYPE H SERVICE - 28'-10" ← Pole height above grade

ILLUMINATED OVERHEAD SIGN

PROPOSED	EXISTING	
		Overhead sign - Single post
		Overhead sign - Two post
		Overhead sign - Mounted on structure
		Overhead sign with electrolier

SIGNAL EQUIPMENT

PROPOSED	EXISTING	
		Pedestrian signal face
		Pedestrian push button post
		Pedestrian barricade
		Vehicle signal face (with backplate, 3-Section: red, yellow and green)
		Vehicle signal face with angle visors
PV	PV	Modifications of basic symbols: "L" indicates all non-arrow sections louvered "LG" indicates louvered green section only "PV" indicates 12" programmed visibility sections "8" indicates all 8" sections (only when specified)
		Type 15TS and Vehicle signal face
		Vehicle signal face with red, yellow and green left arrow sections
		Vehicle signal face with red and yellow sections and up green arrow
		Vehicle signal face (5 Section) with red, yellow and green sections and yellow and green right arrows
		Type 1 Standard and attached vehicle signal faces
		Standard with signal mast arm only and attached vehicle signal faces and internally illuminated street name sign
		Type 33 Standard, Left-turn vehicle signal face and sign
		Standard with luminaire and signal mast arms and attached vehicle signal faces
		Cantilever flashing beacon Type 9 Frame, with a sign unless otherwise specified or indicated
		Type 15-FBS Standard with two vehicle signal face sections with lens, backplate and visor with a sign
R	Y	Flashing beacon. One vehicle signal face section with lens, backplate and visor. "R" indicates red indication, "Y" indicates yellow indication
		Controller assembly. Door indicates front of cabinet

SIGNAL EQUIPMENT Cont

PROPOSED	EXISTING	
		Guard post
		Type 1 Standard with "Meter On" sign
		Emergency Vehicle detector

NOTES:

1. All signal sections shall be 12" unless shown otherwise.
2. Signal heads shall be provided with backplates unless shown otherwise.
3. Signal indication shall be LED.

STATE OF CALIFORNIA
DEPARTMENT OF TRANSPORTATION

ELECTRICAL SYSTEMS (SYMBOLS AND ABBREVIATIONS)

NO SCALE

RSP ES-1B DATED OCTOBER 5, 2007 SUPERCEDES STANDARD PLAN ES-1B DATED MAY 1, 2006 - PAGE 401 OF THE STANDARD PLANS BOOK DATED MAY 2006.

REVISED STANDARD PLAN RSP ES-1B

2006 REVISED STANDARD PLAN RSP ES-1B

7-10-07

DIST	COUNTY	ROUTE	POST MILES TOTAL PROJECT	SHEET NO.	TOTAL SHEETS
06	Tul	65,99,137, 190,198,216	Var	49	59

Jeffery G. McRae
REGISTERED ELECTRICAL ENGINEER

October 5, 2007
PLANS APPROVAL DATE

REGISTERED PROFESSIONAL ENGINEER
Jeffery G. McRae
No. E14512
Exp. 6-30-08
ELECTRICAL
STATE OF CALIFORNIA

The State of California or its officers or agents shall not be responsible for the accuracy or completeness of electronic copies of this plan sheet.

To accompany plans dated 3-22-10

EQUIPMENT IDENTIFICATION

ILLUMINATED SIGN IDENTIFICATION NUMBER:

Sign No. 12345 — Sign number - Place on post or structure

10 ISL SCI 1.0
- 1.0 — Transformer rating (kVA)
- SCI — Lighting control type
- ISL — Number and type of fixtures

Do NOT place on standard or structure

ELECTROLIER OR EQUIPMENT IDENTIFICATION NUMBER:

12345 - 15'-0"
- 15'-0" — Mast arm length, if shown. Do not place on standard or structure.
- 12345 — Equipment number - Place on standard or structure. Existing equipment numbers are shown in parenthesis

CONDUIT AND CONDUCTOR IDENTIFICATION:

1½"C, 2#10, 15#14, 2 DLC
- 2#10, 15#14, 2 DLC — Number and size of conductors and cables
- 1½"C — Size of conduit in inches

Ø1, Ø2, Ø2P, etc.	Traffic phase identification for signal faces, detectors and phase diagrams
1 2 3	Project note numbers
A B C	Equipment description, installation or item numbers
1 2 3	Conduit run numbers

SIGNAL AND LIGHTING STANDARD (TYPICAL DESIGNATION):

19A - 3 - 100
- 100 — Wind velocity = 100 mph
- 3 — Case 3 arm loading
- 19A — Standard type

Standard Plan sheet number
Detail number or letter

MISCELLANEOUS EQUIPMENT

PROPOSED	EXISTING	
CMS	cms	Changeable message sign
		Closed circuit television camera
		Highway advisory radio pole and antenna
EMS	ems	Extinguishable message sign
M V	m v	Detection device M = Microwave sensor V = Video image sensor

WIRING DIAGRAM LEGEND

P	Pole
CB	Circuit breaker
A	Ampere
V	Volt
M	Metered
UM	Unmetered
NB	Neutral bus
GB	Ground bus
G	Equipment grounding conductor
N	Grounded conductor (Neutral)

External conductor
Conductor or bus
Tie point
Contactor coil
Contactor, Contact NO
Terminal blocks
Contactor, Contact NC
Enclosure bond
Grounding electrode
Circuit breaker
Receptacle

PULL BOXES

PROPOSED EXISTING

Pull box-No. 5 unless otherwise indicated or noted.

3 — 9A(21)

Pull box-Additional designations or descriptions

3 = No. 3½ pull box
5 = No. 5 pull box
6 = No. 6 pull box
7 = No. 7 (Ceiling pull box)
8 = No. 8 (Pendant soffit pull box)
9 = No. 9 pull box
9A = No. 9A pull box

(C) = Communications pull box
(E) = Pull box with extension
(S) = Sprinkler control pull box
(21) = Anchor bolts and conduit for future installation of Type 21 Standard
(T) = Traffic pull box

VEHICLE DETECTORS

5 J 9 U
- U = Upper
- L = Lower
- Slot number in input file
- Input file (I or J)
- Phase

Vehicle detector designation

PROPOSED	EXISTING	
		Type A detector loop. Outline of sawcut shown.
		Type B detector loop. Outline of sawcut shown.
		Type C detector loop. Outline of sawcut shown.
		Type D detector loop. Outline of sawcut shown.
		Type E detector loop. Outline of sawcut shown.
		Type Q detector loop. Outline of sawcut shown.
		Magnetic detector
DH	dh	Detector handhole
		Microwave or video detection zone

STATE OF CALIFORNIA
DEPARTMENT OF TRANSPORTATION

ELECTRICAL SYSTEMS (SYMBOLS AND ABBREVIATIONS)

NO SCALE

RSP ES-1C DATED OCTOBER 5, 2007 SUPERCEDES STANDARD PLAN ES-1C DATED MAY 1, 2006 - PAGE 402 OF THE STANDARD PLANS BOOK DATED MAY 2006.

REVISED STANDARD PLAN RSP ES-1C

2006 REVISED STANDARD PLAN RSP ES-1C

7-10-07

DIST	COUNTY	ROUTE	POST MILES TOTAL PROJECT	SHEET NO.	TOTAL SHEETS
06	Tul	65,99,137, 190,198,216	Var	50	59

REGISTERED ELECTRICAL ENGINEER

October 5, 2007
PLANS APPROVAL DATE

REGISTERED PROFESSIONAL ENGINEER
Jeffery G. McRae
No. E14512
Exp. 6-30-08
ELECTRICAL
STATE OF CALIFORNIA

The State of California or its officers or agents shall not be responsible for the accuracy or completeness of electronic copies of this plan sheet.

To accompany plans dated 3-22-10

2006 REVISED STANDARD PLAN RSP ES-2C

NOTES-TYPE III SERVICE EQUIPMENT ENCLOSURES:

1. Service equipment enclosure and metering equipment shall meet the requirements of the service utility. The meter area shall have a sealable, lockable, weathertight cover that can be removed without the use of tools.

2. Service equipment enclosures shall be factory wired and conform to NEMA standards.

3. Dimensions of service equipment enclosures shall meet the requirements of the service utility.

4. The dead front panels on Type III service equipment enclosures shall have a continuous stainless steel or aluminum piano hinge. The panel in front of the breakers shall be secured with a latch or captive screws. No live parts shall be mounted on the dead front panel.

5. The exterior door shall have provisions for padlocking. The padlock hole shall be a minimum diameter of 7/16".

6. Enclosures housing transformers of more than one kVA shall have effective screened ventilation louver of not less than 50 square inches. Screen shall be stainless steel No. 304, with a No. 10 size mesh. Framed screen shall be secured with at least four bolts.

7. Fasteners on the exterior of the enclosure shall be vandal-resistant and shall not be removable from the exterior. Exterior screws, nuts, bolts and washers shall be stainless steel.

8. Landing lugs for incoming service conductors shall be compatible with either copper or aluminum conductors sized to suit the conductors shown on the plan. Landing lugs shall be copper or tin-plated aluminum. Neutral bus shall be rated for 125 A and be suitable for copper or aluminum conductors unless otherwise specified. The terminal shall include but not be limited to:

   a) Incoming terminals (landing lugs)
   b) Neutral lugs
   c) Solid neutral terminal strip

9. At least 6 standard single pole circuit breaker spaces, 3/4" nominal, shall be provided for branch circuits. Circuit breaker interiors shall be copper. Interiors of enclosure shall accept plug-in or cable-in/cable-out circuit breakers.

10. Control wiring shall be 600 V, 14 stranded machine tool wire. Where subject to flexing, 19 strand wire shall be used.

11. Main bus shall be rated for 125 A and shall be tin-plated copper.

12. A plastic laminated wiring diagram shall be provided with brass mounting eyelets and attached to the inside of the enclosure and the wiring diagram shall be affixed to the interior with a UL or ETL approved method.

13. An engraved phenolic nameplate on the dead front panel indicating the function of each circuit or device shall be installed with stainless steel rivets or stainless steel screws:

    a) Adjacent to the breaker or device with character size a minimum of 1/8".

    b) At the top of the exterior door panel indicating State system number, voltage level and number of phases with character size a minimum of 3/16".

14. The plan shows the approximate location of devices within the enclosure. Components may be rearranged, however, the "working" clearances within the service equipment enclosure shall be maintained.

15. In unpaved areas a raised portland cement concrete pad 2'-0" x 4" x width of foundation shall be constructed in front of new service equipment enclosure installation. Pad shall be set to elevation of foundation.

16. Foundation shall extend 2" minimum beyond edge of service equipment enclosure.

17. Internal bus, where shown, is typical only. Alternative design of proposed service equipment enclosure shall be submitted to the Engineer for approval.

18. Plug-in circuit breakers may be mounted in the vertical or horizontal position. Cable-in/cable-out circuit breakers shall be mounted in the vertical position.

19. Type III-AF and Type III-BF service equipment enclosures shall have the meter viewing windows located on the front side of the service equipment enclosures.

20. Type III-AR and Type III-BR service equipment enclosures shall be similarly constructed as Type III-AF and Type III-BF respectively, except the meter viewing windows shall be located on the back side of the service equipment enclosures.

21. Minimum clearance shall be required for front and back of service equipment enclosure per National Electrical Code, Article 110.26, "Spaces About Electric Equipment (600 Volts, Nominal, or Less)."

STATE OF CALIFORNIA
DEPARTMENT OF TRANSPORTATION

ELECTRICAL SYSTEMS (SERVICE EQUIPMENT NOTES TYPE III SERIES)

NO SCALE

RSP ES-2C DATED OCTOBER 5, 2007 SUPERCEDES STANDARD PLAN ES-2C
DATED MAY 1, 2006 - PAGE 405 OF THE STANDARD PLANS BOOK DATED MAY 2006.

REVISED STANDARD PLAN RSP ES-2C

DIST	COUNTY	ROUTE	POST MILES TOTAL PROJECT	SHEET NO.	TOTAL SHEETS
06	Tul	65,99,137, 190,198,216	Var	51	59

REGISTERED ELECTRICAL ENGINEER

October 5, 2007
PLANS APPROVAL DATE

The State of California or its officers or agents shall not be responsible for the accuracy or completeness of electronic copies of this plan sheet.

REGISTERED PROFESSIONAL ENGINEER Jeffery G. McRae No. E14512 Exp. 6-30-08 ELECTRICAL STATE OF CALIFORNIA

To accompany plans dated 3-22-10

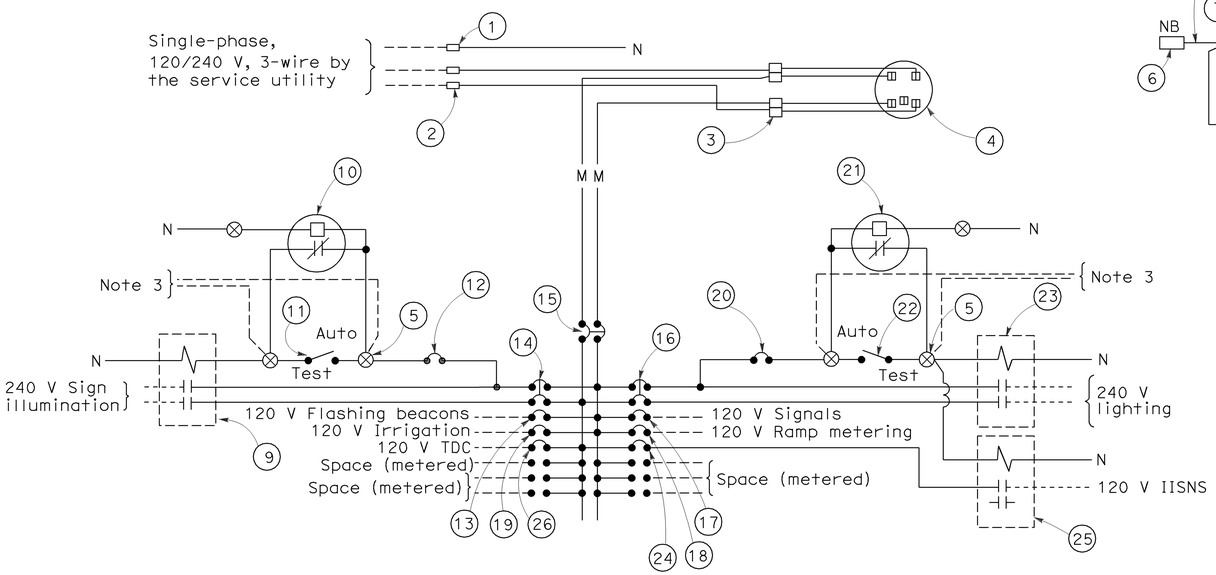

120/240 V SERVICE WIRING DIAGRAM (TYPICAL)

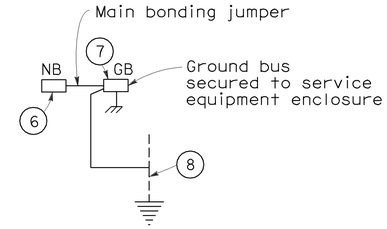

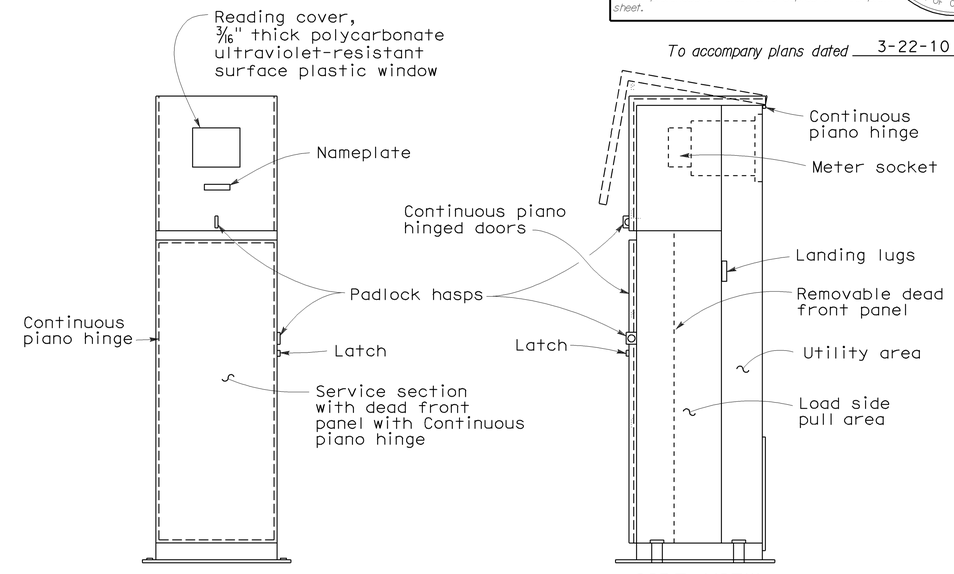

FRONT VIEW

SIDE VIEW

TYPE III-BF SERVICE EQUIPMENT ENCLOSURE WITH PROVISIONS FOR ONE 100 A METER (TYPICAL)

TYPE III-B SERVICE (120/240 V) EQUIPMENT LEGEND		
ITEM No.	COMPONENT	NAME PLATE DESCRIPTION
1	Neutral lug	
2	Landing lug (Note 6)	
3	Test bypass facility	
4	Meter socket and support	
5	Terminal blocks	
6	Neutral bus	
7	Ground bus	
8	Grounding electrode	
9	30 A, 2PNO Contactor	Sign Illumination
10	Photoelectric unit (Note 7)	
11	15 A, 1P, Test switch	Sign Illumination Test Switch
12	15 A, 120 V, 1P, CB	Sign Illumination Control
13	15 A, 120 V, 1P, CB	Flashing Beacon
14	30 A, 240 V, 2P, CB	Sign Illumination
15	100 A, 240 V, 2P, CB	Main Breaker
16	30 A, 240 V, 2P, CB	Lighting
17	50 A, 120 V, 1P, CB	Signals
18	30 A, 120 V, 1P, CB	Ramp Metering
19	20 A, 120 V, 1P, CB	Irrigation
20	15 A, 120 V, 1P, CB	Lighting Control
21	Photoelectric unit (Note 7)	
22	15 A, 1P, Test switch	Lighting Test Switch
23	60 A, 2PNO Contactor	Lighting
24	15 A, 120 V, 1P, CB	IISNS
25	30 A, 2PNO Contactor	IISNS
26	20 A, 120 V, IP, CB	Telephone Demarcation Cabinet

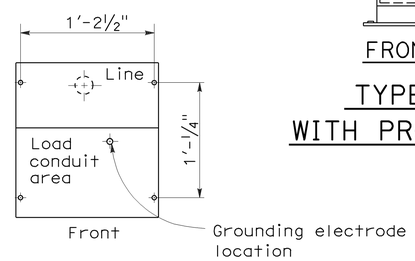

BASE FOR TYPE III-B SERVICE EQUIPMENT ENCLOSURE

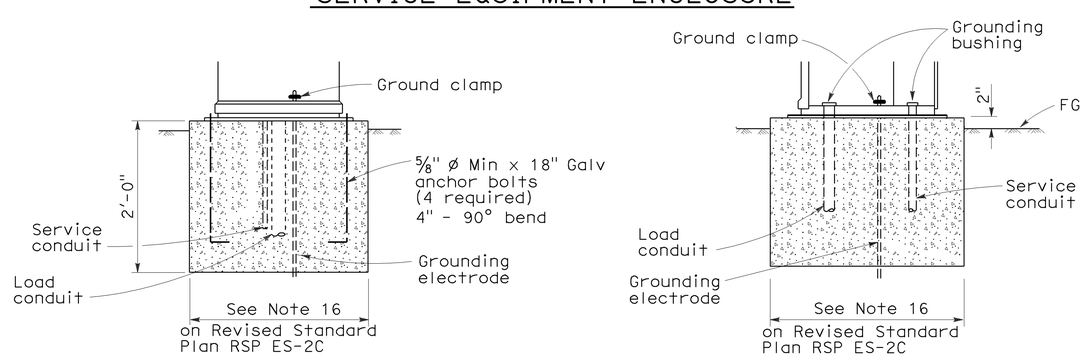

FRONT VIEW

SIDE VIEW

TYPE III-B SERVICE EQUIPMENT ENCLOSURE FOUNDATION DETAILS

NOTES: (FOR SERVICE EQUIPMENT ENCLOSURE)

1. Voltage ratings of service equipment shall conform to the service voltages indicated on the plans.
2. Unless otherwise indicated on the plans, service equipment items shall be provided for each service equipment enclosure as shown.
3. Connect to remote test switch mounted on lighting standards, sign post or structure when required.
4. Items No. 1 and 6 shall be isolated from the service equipment enclosure.
5. Meter sockets shall be 5 clip type.
6. The landing lug shall be suitable for multiple conductors.
7. Type V photoelectric control shall be used unless otherwise indicated on the plans.

STATE OF CALIFORNIA
DEPARTMENT OF TRANSPORTATION

ELECTRICAL SYSTEMS (SERVICE EQUIPMENT AND TYPICAL WIRING DIAGRAM, TYPE III-B SERIES)

NO SCALE

RSP ES-2E DATED OCTOBER 5, 2007 SUPERCEDES STANDARD PLAN ES-2E DATED MAY 1, 2006 - PAGE 407 OF THE STANDARD PLANS BOOK DATED MAY 2006.

REVISED STANDARD PLAN RSP ES-2E

2006 REVISED STANDARD PLAN RSP ES-2E

7-10-07

DIST	COUNTY	ROUTE	POST MILES TOTAL PROJECT	SHEET NO.	TOTAL SHEETS
06	Tul	65,99,137, 190,198,216	Var	52	59

REGISTERED ELECTRICAL ENGINEER

June 6, 2008
PLANS APPROVAL DATE

REGISTERED PROFESSIONAL ENGINEER
Jeffery G. McRae
No. E14512
Exp. 6-30-10
ELECTRICAL
STATE OF CALIFORNIA

The State of California or its officers or agents shall not be responsible for the accuracy or completeness of electronic copies of this plan sheet.

To accompany plans dated 3-22-10

VISORS

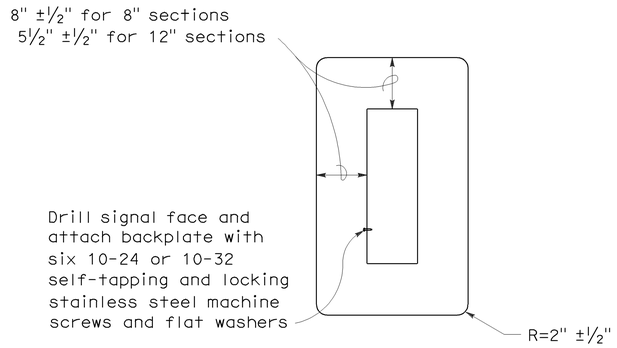

8" AND 12" SECTIONS

BACKPLATE

1/16" minimum thickness
3001-14 aluminum, or plastic when specified

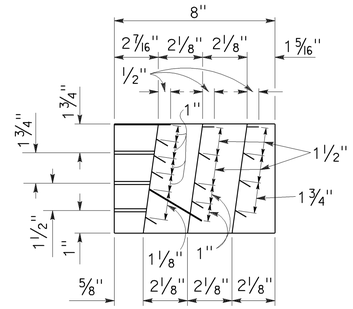

SECTION A-A

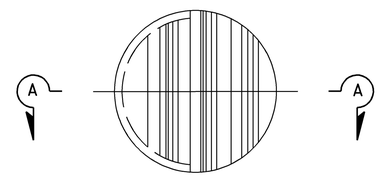

FRONT VIEW

DIRECTIONAL LOUVER

Directional louvers shall be oriented as directed by the Engineer and secured in place with one plated brass machine screw and nut.

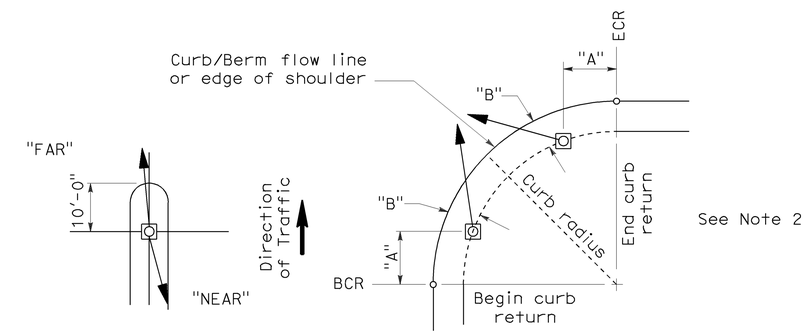

NOTES:

1. Typical signal pole placement unless dimensioned on plans.
2. For "A" and "B" dimensions, see Pole Schedule, or as directed by the Engineer.

SIGNAL STANDARD PLACEMENT DIMENSIONS AND EQUIPMENT LOCATIONS

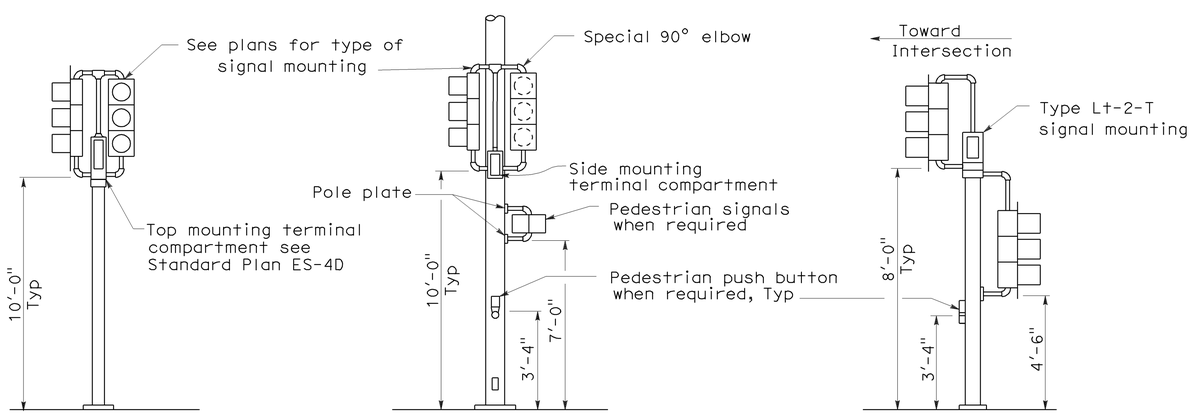

TOP MOUNTED SIGNALS (TV)

Type 1-A, 1-B, 1-C and 1-D standard as indicated on the plans

SIDE MOUNTED SIGNALS (SV AND SP)

Normally used on standards with luminaire or signal mast arm

LEFT TURN LANE SIGNAL

Type 1-A, 1-B, 1-C and 1-D standard as indicated on plans

TYPICAL SIGNAL INSTALLATIONS

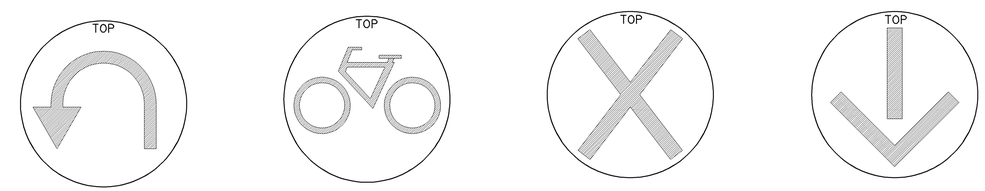

U-TURN SIGNAL FACE | BICYCLE SIGNAL FACE | LANE CONTROL SIGNAL FACE | LANE CONTROL SIGNAL FACE

STATE OF CALIFORNIA
DEPARTMENT OF TRANSPORTATION

ELECTRICAL SYSTEMS (SIGNAL HEADS AND MOUNTINGS)

NO SCALE

RSP ES-4C DATED JUNE 6, 2008 SUPERSEDES STANDARD PLAN ES-4C DATED MAY 1, 2006 - PAGE 420 OF THE STANDARD PLANS BOOK DATED MAY 2006.

REVISED STANDARD PLAN RSP ES-4C

2006 REVISED STANDARD PLAN RSP ES-4C

5-19-08

DIST	COUNTY	ROUTE	POST MILES TOTAL PROJECT	SHEET NO.	TOTAL SHEETS
06	Tul	65,99,137, 190,198,216	Var	53	59

REGISTERED ELECTRICAL ENGINEER

June 6, 2008
PLANS APPROVAL DATE

REGISTERED PROFESSIONAL ENGINEER Jeffery G. McRae No. E14512 Exp. 6-30-10 ELECTRICAL STATE OF CALIFORNIA

The State of California or its officers or agents shall not be responsible for the accuracy or completeness of electronic copies of this plan sheet.

To accompany plans dated 3-22-10

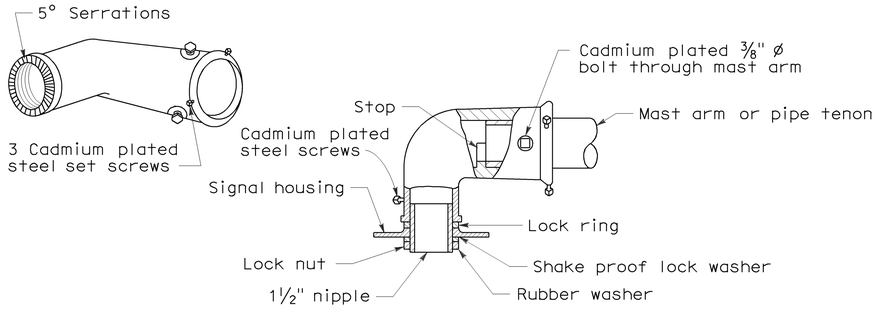

MAST ARM MOUNTING - TYPE "MAT"

For 2 NPS pipe, see Note 1.

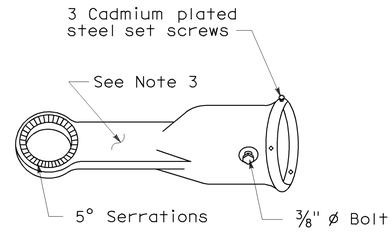

MAST ARM MOUNTING - TYPE "MAS"

For 2 NPS pipe. See Note 1.

SIGNAL SLIP FITTERS

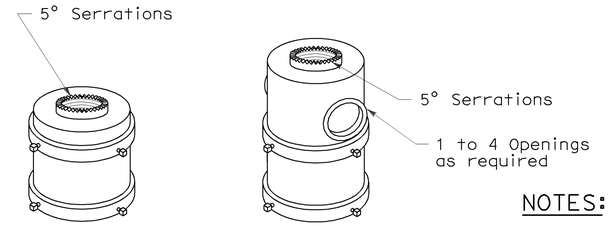

For one mounting For mulitiple mountings

TOP MOUNTINGS

For 4 NPS pipe, see Note 2.

NOTES:

1. After mast arm signal has been plumbed and secured, drill 7/16" hole through mast arm tenon in line with slip fitter hole. Place a cadmium plated 3/8" ø galvanized bolt with washer under bolt head through hole and secure with washer, nut, and locknut. Seal openings between mast arm mountings and mast arm with mastic.
2. (a) Threaded top mounted slip fitter openings shall be 1½ NPS.
   (b) Serrations in fittings shall match those on bottom of signal heads or in lock ring.
   (c) Top opening shall be offset when backplate is used.
3. Wireway shall have a cross section area of 0.95 square inch minimum. Minimum width of ½".

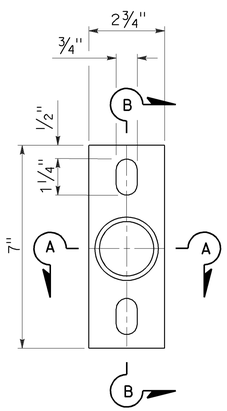

POLE PLATE

For side mountings

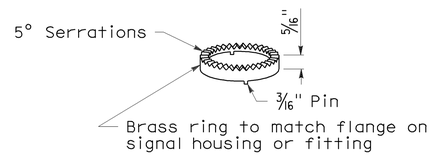

LOCK RING

Use where locking ring is not integral with signal housing or fitting.

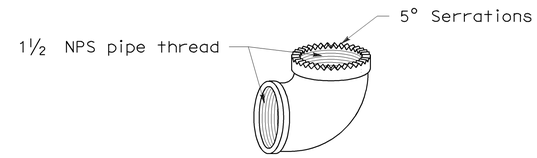

SPECIAL 90° ELBOW

One for each signal head, except those with special slip fitter mounting

MISCELLANEOUS MOUNTING HARDWARE

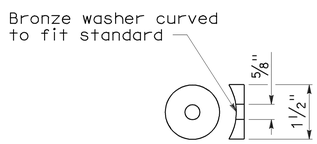

DETAIL "C"

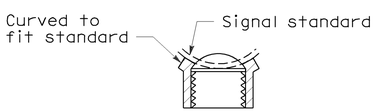

SECTION A-A

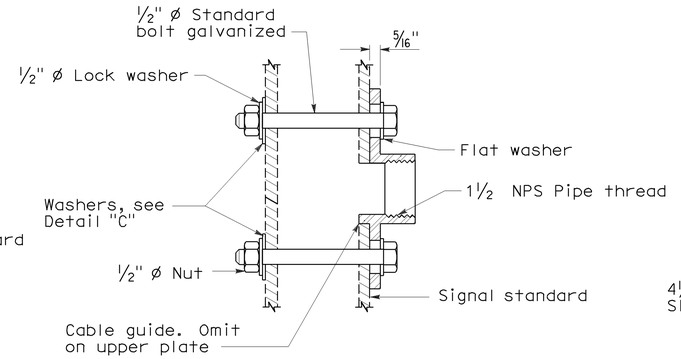

SECTION B-B

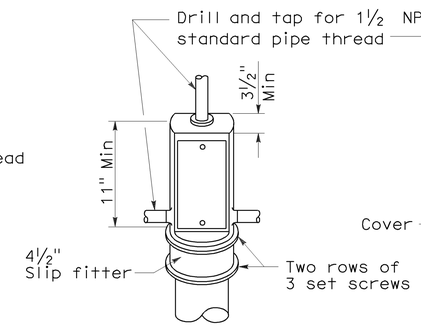

TOP MOUNTING

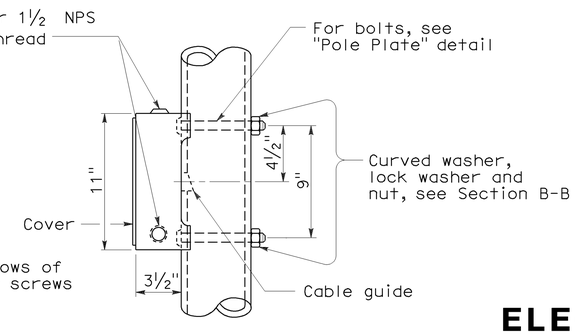

SIDE MOUNTING

TERMINAL COMPARTMENTS

STATE OF CALIFORNIA
DEPARTMENT OF TRANSPORTATION

ELECTRICAL SYSTEMS (SIGNAL HEADS AND MOUNTINGS)

NO SCALE

RSP ES-4D DATED June 6, 2008 SUPERSEDES STANDARD PLAN ES-4D
DATED MAY 1, 2006 - PAGE 421 OF THE STANDARD PLANS BOOK DATED MAY 2006.

REVISED STANDARD PLAN RSP ES-4D

2006 REVISED STANDARD PLAN RSP ES-4D

5-19-08

DIST	COUNTY	ROUTE	POST MILES TOTAL PROJECT	SHEET NO.	TOTAL SHEETS
06	Tul	65,99,137, 190,198,216	Var	54	59

REGISTERED ELECTRICAL ENGINEER

October 5, 2007
PLANS APPROVAL DATE

REGISTERED PROFESSIONAL ENGINEER Jeffery G. McRae No. E14512 Exp. 6-30-08 ELECTRICAL STATE OF CALIFORNIA

The State of California or its officers or agents shall not be responsible for the accuracy or completeness of electronic copies of this plan sheet.

To accompany plans dated 3-22-10

LOOP INSTALLATION PROCEDURE

1. Loops shall be centered in lanes.
2. Saw slots in pavement for loop conductors as shown in details.
3. Distance between side of loop and a lead-in saw cut from adjacent detectors shall be 2'-0" minimum. Distance between lead-in saw cuts shall be 6" minimum.
4. Bottom of saw slot shall be smooth with no sharp edges.
5. Slots shall be washed until clean, blown out and thoroughly dried before installing loop conductors.
6. Adjacent loops on the same sensor unit channel shall be wound in opposite directions.
7. Identify and tag loop circuit pairs in the pull box with loop number, start (S) and finish (F) of conductor. Identify and tag lead-in-cable with sensor number and phase.
8. Install loop conductor in slot using a 3/16" to 1/4" thick wood paddle. Hold loop conductors with wood paddles (at the bottom of the sawed slot) during sealant placement.
9. No more than 2 twisted pairs shall be installed in one sawed slot.
10. Allow additional 5'-0" of slack length of conductor for the lead-in run to pull box.
11. The additional length of each conductor for each loop shall be twisted together into a pair (6 turns per 3'-4" minimum) before being placed in the slot and conduit leading to pull box.
12. Test each loop circuit for continuity, circuit resistance and insulation resistance at the pull box before filling slots.
13. Fill slots as shown in details.
14. Splice loop conductors to lead-in-cable. Splices shall be soldered.
15. End of lead-in-cable and Type 2 loop conductor shall be waterproofed prior to installing in conduit to prevent moisture from entering the cable.
16. Lead-in-cable shall not be spliced between the pull box and the controller cabinet terminals.
17. Test each loop circuit for continuity, circuit resistance and insulation resistance at the controller cabinet location.
18. Where loop conductors are not to be spliced to a lead-in-cable, the ends of the conductors shall be taped and waterproofed with electrical insulating coating.

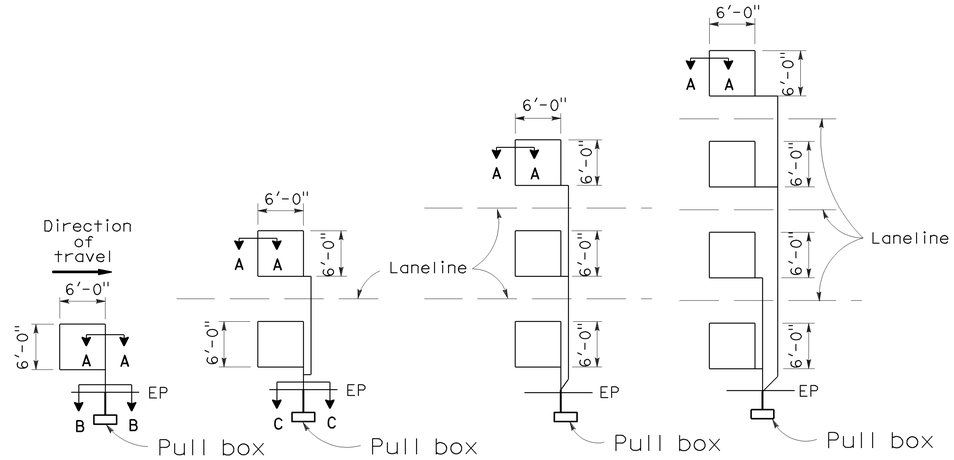

TYPE 1A INSTALLATION | TYPE 2A INSTALLATION | TYPE 3A INSTALLATION | TYPE 4A INSTALLATION

SAWCUT DETAILS

(Type A loop detector configurations illustrated)

1. 1A thru 4A = 1 Type A loop configuration in each lane.
2. 1B thru 4B = 1 Type B loop configuration in each lane.
3. 1C = 1 Type C loop configuration entering lanes as required.
4. 1D thru 4D = 1 Type D loop configuration in each lane.
5. 1E thru 4E = 1 Type E loop configuration in each lane.
6. 1Q thru 4Q = 1 Type Q loop configuration in each lane. (Use Type A, B, C, D, E or Q loop detector configurations only when specified or shown on plans)

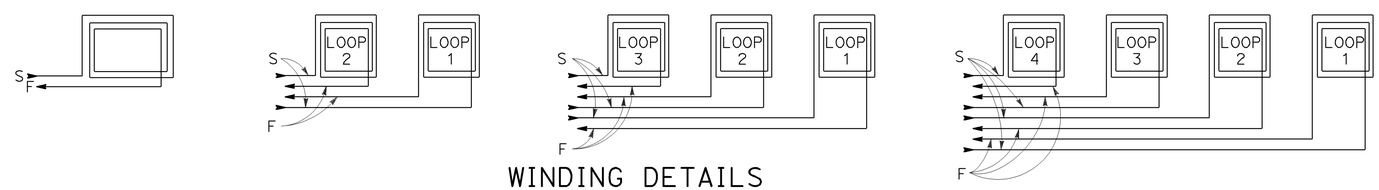

WINDING DETAILS

See Notes 6 and 7

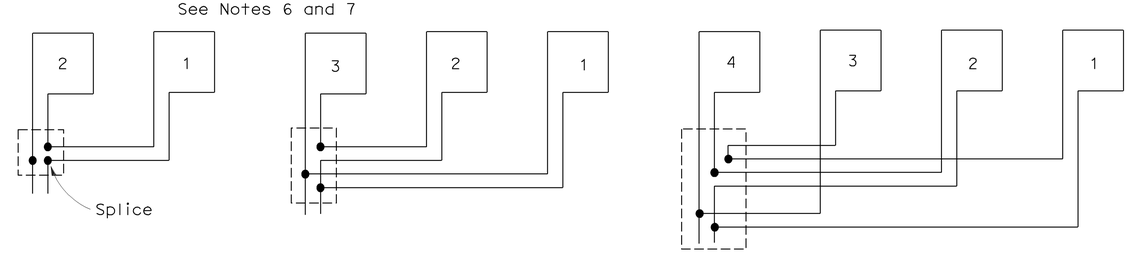

TYPICAL LOOP CONNECTIONS

(Dashed lines represent the pull box)

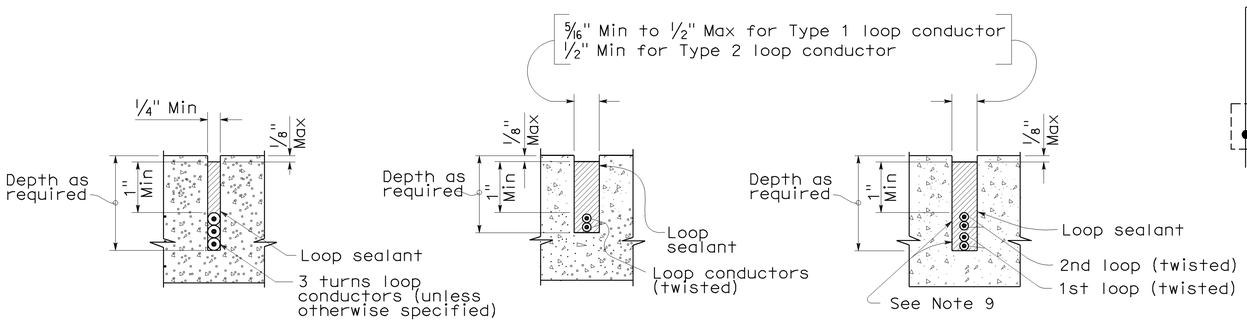

SECTION A-A | SECTION B-B | SECTION C-C

SLOT DETAILS - TYPE 1 AND TYPE 2 LOOP CONDUCTOR

STATE OF CALIFORNIA
DEPARTMENT OF TRANSPORTATION

ELECTRICAL SYSTEMS (DETECTORS)

NO SCALE

RSP ES-5A DATED OCTOBER 5, 2007 SUPERCEDES STANDARD PLAN ES-5A DATED MAY 1, 2006 - PAGE 423 OF THE STANDARD PLANS BOOK DATED MAY 2006.

REVISED STANDARD PLAN RSP ES-5A

2006 REVISED STANDARD PLAN RSP ES-5A

8-17-07

DIST	COUNTY	ROUTE	POST MILES TOTAL PROJECT	SHEET NO.	TOTAL SHEETS
06	Tul	65,99,137, 190,198,216	Var	55	59

REGISTERED CIVIL ENGINEER

October 5, 2007
PLANS APPROVAL DATE

REGISTERED PROFESSIONAL ENGINEER
Stanley P. Johnson
No. C57793
Exp. 3-31-08
CIVIL
STATE OF CALIFORNIA

The State of California or its officers or agents shall not be responsible for the accuracy or completeness of electronic copies of this plan sheet.

To accompany plans dated 3-22-10

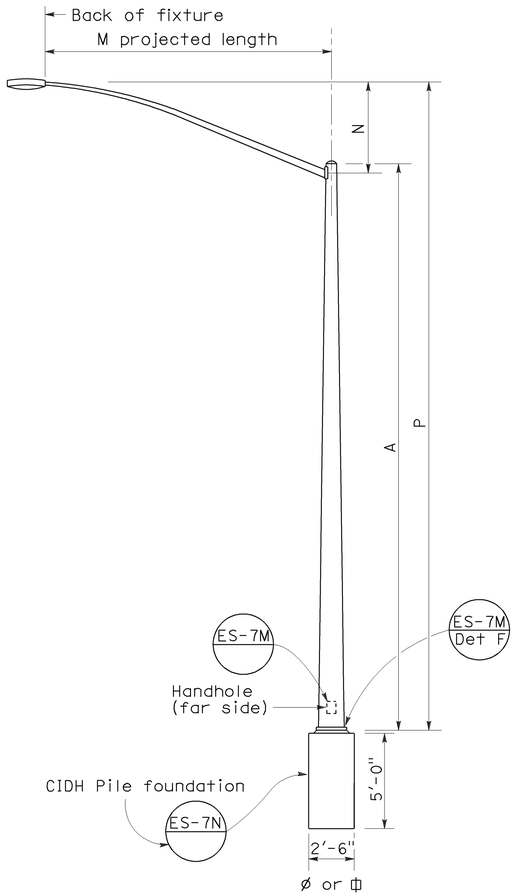

ELEVATION
TYPE 15 AND TYPE 21

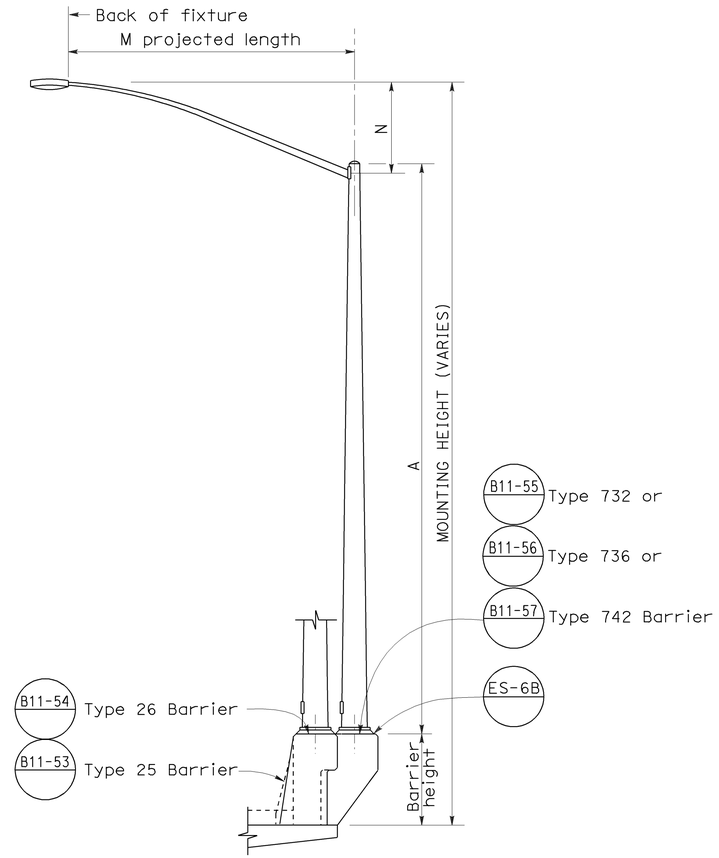

ELEVATION
TYPE 15 AND TYPE 21 BARRIER RAIL MOUNTED

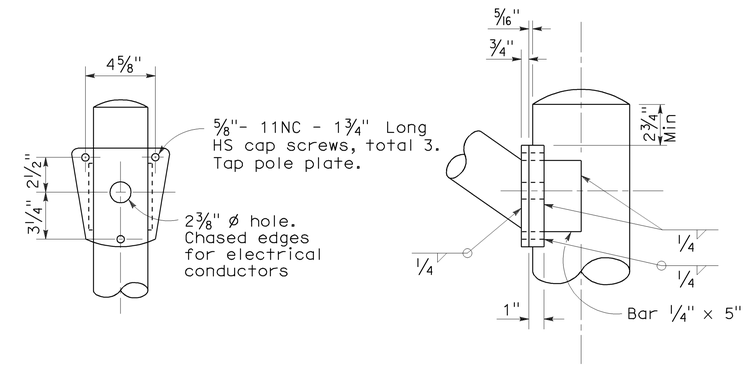

DETAIL R
LUMINAIRE ARM CONNECTION

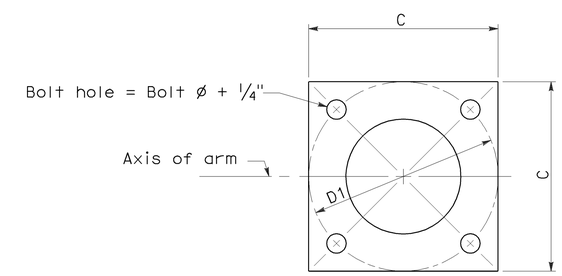

BASE PLATE

POLE TYPE	POLE DATA				BASE PLATE DATA				LUMINAIRE ARM
	A Height	Min OD Base	Min OD Top	Wall Thickness	C	D1 Bolt Circle	Thick-ness	Anchor Bolts Size	
15	30′	8"	3 7/8"	0.1196"	1′-0"	1′-0"	1"	1" ø x 3′-0" x 4"*	6′ - 15′ [12′]
21	35′	8 5/8"	3 7/8"	0.1196"	1′-0"	1′-0"	1"	1 1/4"ø x 3′-0" x 4"*	6′ - 15′ [12′]

* For barrier rail bolts, see Standard Plan ES-6B.

LUMINAIRE ARM DATA					
M Projected Length	N Rise	Min OD At Pole	Nominal Thickness	P Type 15	P Type 21
6′-0"	2′-0"±	3 1/4"	0.1196"	31′-6"±	36′-6"±
8′-0"	2′-6"±	3 1/2"	0.1196"	32′-0"±	37′-0"±
10′-0"	3′-3"±	3 7/8"	0.1196"	32′-9"±	37′-9"±
12′-0"	4′-3"±	3 7/8"	0.1196"	33′-9"±	38′-9"±
15′-0"	4′-9"±	4 1/4"	0.1196"	34′-3"±	39′-3"±

NOTES:

1. ☐ Indicates arm length to be used unless otherwise noted on the plans.
2. For Type 15-SB, use Type 15 standard with Type 30 slip base plate details, see Standard Plan ES-6F.
3. For additional notes, see Standard Plan ES-7M and ES-7N.

STATE OF CALIFORNIA
DEPARTMENT OF TRANSPORTATION

ELECTRICAL SYSTEMS (LIGHTING STANDARD TYPES 15 AND 21)

NO SCALE

RSP ES-6A DATED OCTOBER 5, 2007 SUPERCEDES STANDARD PLAN ES-6A
DATED MAY 1, 2006 - PAGE 427 OF THE STANDARD PLANS BOOK DATED MAY 2006.

REVISED STANDARD PLAN RSP ES-6A

2006 REVISED STANDARD PLAN RSP ES-6A

DIST	COUNTY	ROUTE	POST MILES TOTAL PROJECT	SHEET NO.	TOTAL SHEETS
06	Tul	65,99,137, 190,198,216	Var	56	59

REGISTERED CIVIL ENGINEER

October 5, 2007
PLANS APPROVAL DATE

REGISTERED PROFESSIONAL ENGINEER
Stanley P. Johnson
No. C57793
Exp. 3-31-08
CIVIL
STATE OF CALIFORNIA

The State of California or its officers or agents shall not be responsible for the accuracy or completeness of electronic copies of this plan sheet.

To accompany plans dated 3-22-10

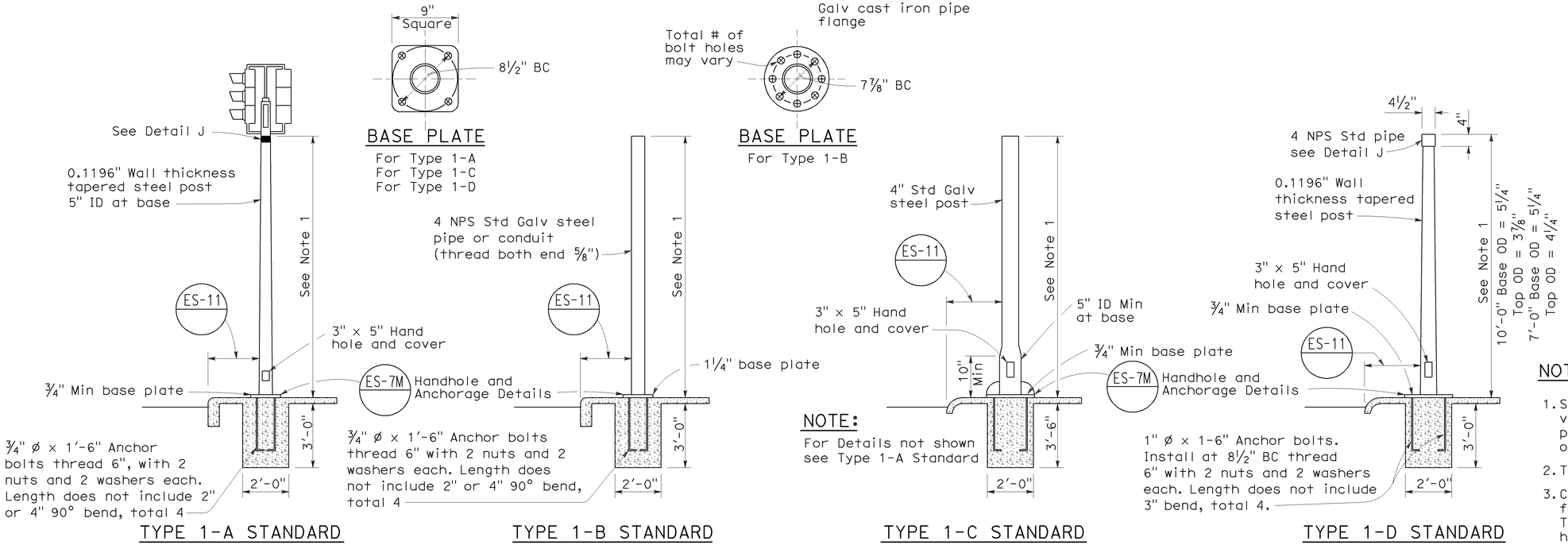

TYPE 1 SIGNAL STANDARDS

NOTES:

1. Standards shall be 10'-0" ± 2" for vehicle signals and 7'-0" ± 2" for pedestrian signals unless otherwise noted on plans.
2. Top of standards shall be 4½" OD.
3. Conduits shall extend 2" maximum above finished surface of foundation and for Types 1-A, 1-C and 1-D shall be sloped toward handhole.
4. Anchor bolts shall be bonded to conduit or grounding conductor.
5. Conduit between standard and adjacent pull box shall be 2" minimum.
6. Paint numbers on roadway side facing traffic when electrolier or post is left of direction of traffic.

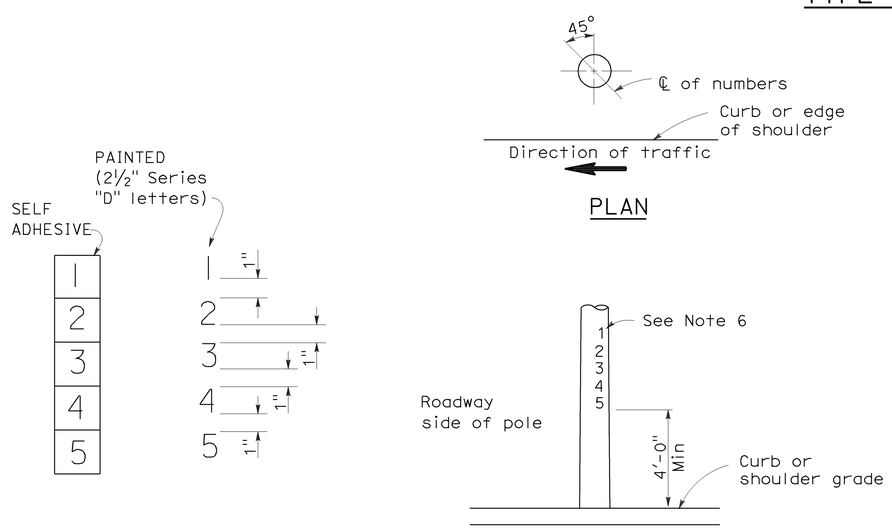

NUMBER DETAIL

TYPICAL NUMBER FORMAT

LOCATION OF EQUIPMENT NUMBERS ON STANDARDS AND POSTS

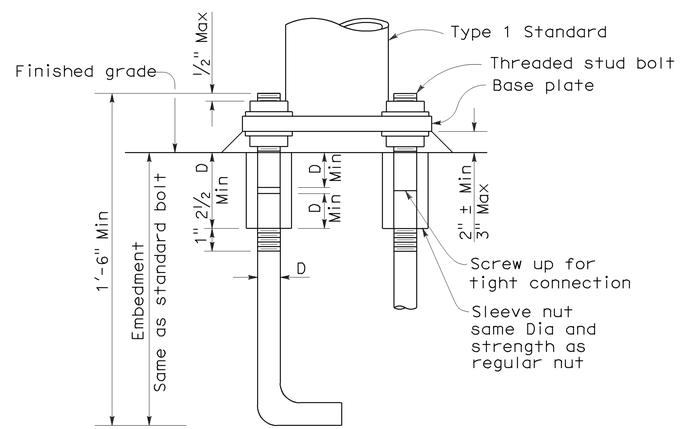

ANCHOR BOLTS WITH SLEEVE NUTS

Sleeve nuts to be used only when shown or specified on Project Plans

D = Diameter of anchor bolt

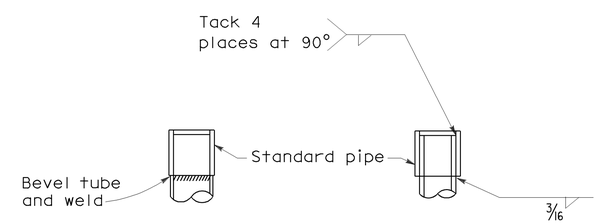

DETAIL J

Tube may be inserted into pipe or butted as required

STATE OF CALIFORNIA
DEPARTMENT OF TRANSPORTATION

ELECTRICAL SYSTEMS (SIGNAL AND LIGHTING STANDARD TYPE 1 STANDARD AND EQUIPMENT NUMBERING)

NO SCALE

RSP ES-7B DATED OCTOBER 5, 2007 SUPERCEDES STANDARD PLAN ES-7B DATED MAY 1, 2006 - PAGE 438 OF THE STANDARD PLANS BOOK DATED MAY 2006.

REVISED STANDARD PLAN RSP ES-7B

2006 REVISED STANDARD PLAN RSP ES-7B

7-10-07

DIST	COUNTY	ROUTE	POST MILES TOTAL PROJECT	SHEET NO.	TOTAL SHEETS
06	Tul	65,99,137, 190,198,216	Var	57	59

REGISTERED CIVIL ENGINEER

June 15, 2007
PLANS APPROVAL DATE

REGISTERED PROFESSIONAL ENGINEER Stanley P. Johnson No. C57793 Exp. 3-31-08 CIVIL STATE OF CALIFORNIA

The State of California or its officers or agents shall not be responsible for the accuracy or completeness of electronic copies of this plan sheet.

To accompany plans dated 3-22-10

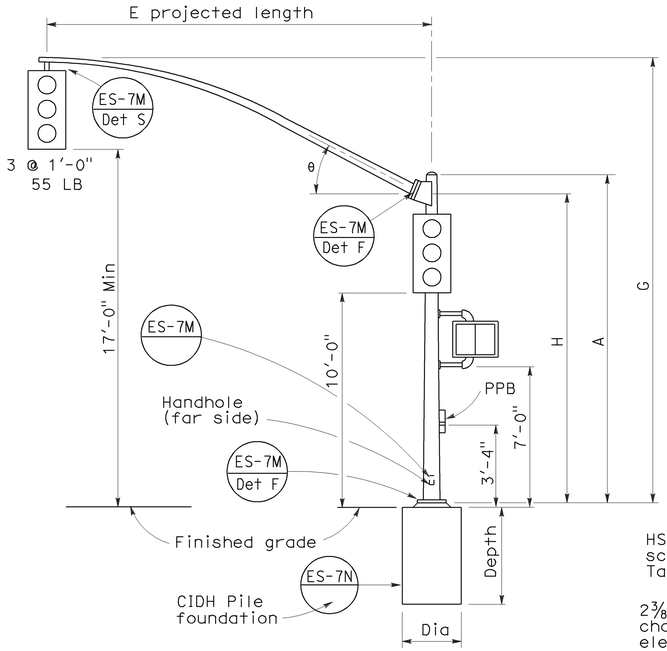

ELEVATION

TYPE 16-1-100, 18-1-100

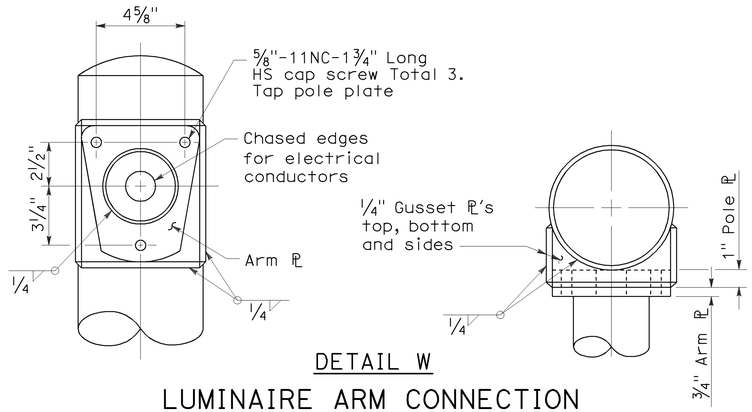

DETAIL W

LUMINAIRE ARM CONNECTION

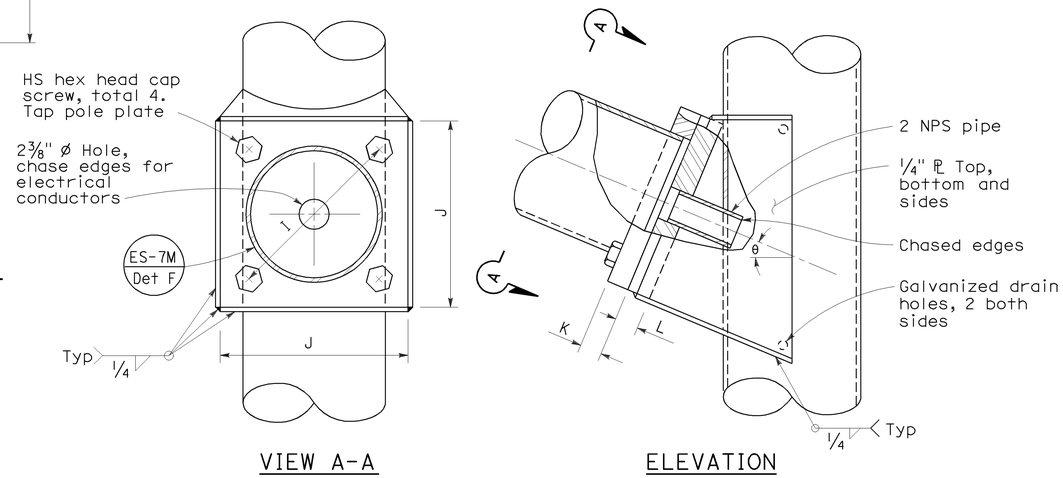

VIEW A-A

ELEVATION

SIGNAL ARM CONNECTION DETAILS

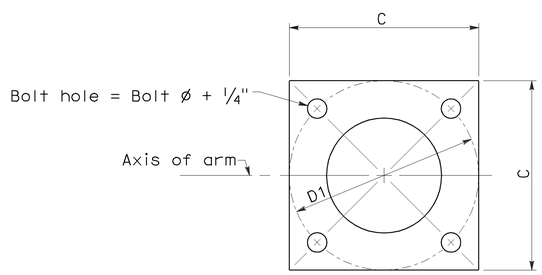

BASE PLATE

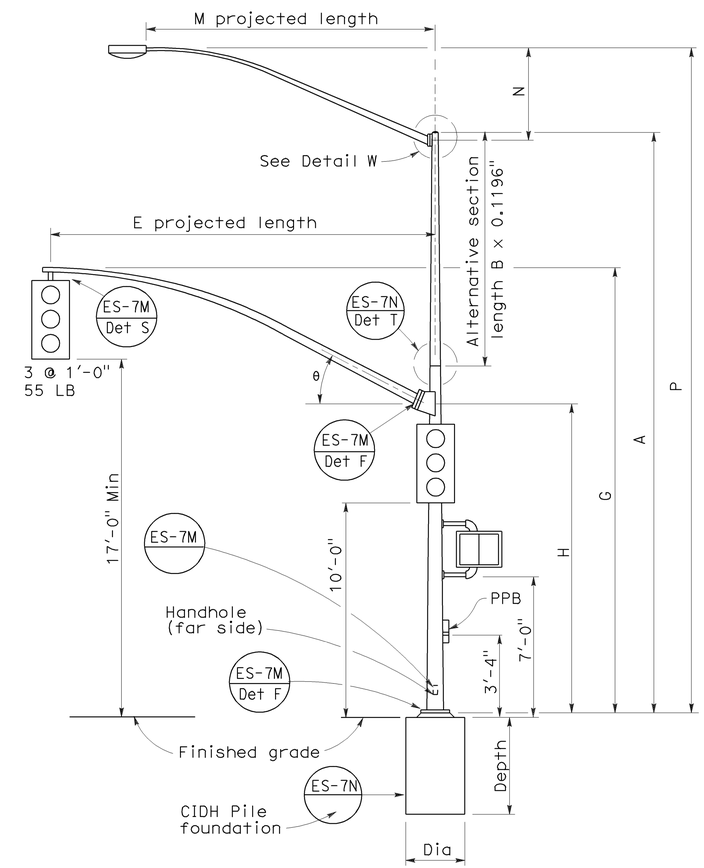

ELEVATION

TYPE 19-1-100, 19A-1-100

SIGNAL ARM DATA										
E Projected Length	G Mounting Height	H	Min OD At Pole	Thickness	I Bolt Circle	HS Cap Screws	J Plate size	K Arm ℙ Thickness	L Pole ℙ Thickness	θ
15'-0"	21'-8"±	17'-6"	7"	0.1196"	12"	1¼"-7NC-3"	1'-0"	1¼"	1½"	23°
20'-0"	21'-8"±		7⅛"							
25'-0"	22'-8"±	16'-0"	7 5/16"							
30'-0"	23'-0"±		8"							

LUMINAIRE ARM DATA					
M Projected Length	N Rise	Min OD at Pole	Thickness	P Mounting Height 30'-0" Pole	P Mounting Height 35'-0" Pole
6'-0"	2'-0"±	3¼"	0.1196"	31'-6"±	36'-6"±
8'-0"	2'-6"±	3½"		32'-0"±	37'-0"±
10'-0"	3'-3"±	3⅞"		32'-9"±	37'-9"±
12'-0"	4'-3"±			33'-9"±	38'-9"±
15'-0"	4'-9"±	4¼"		34'-3"±	39'-3"±

Pole Type	Load Case	Wind Velocity mph	POLE DATA A Height	Min OD Base	Min OD Top	Thickness	Alternative Section B Length	Alternative Section Bottom	Alternative Section Top	BASE PLATE DATA C	D1 Bolt Circle	Thickness	Anchor Bolts Size	Luminaire Arm	Signal Arm	CIDH PILE FOUNDATION Diameter	Depth	Reinforced
16-1-100	1	100	18'-6"	10¾"	8¼"	0.1793"	None			1'-6"	1'-5½"	1¼"	1½" Ø × 42" × 6"	None	15'-0", 20'-0"	2'-6"	7'-2"	Yes
18-1-100			17'-0"		8 7/16"		None							None				
19-1-100			30'-0"		6⅝"		10'-0"	8"	6⅝"					6'-15' [12'-0"]	25'-0", 30'-0"			
19A-1-100			35'-0"		5 15/16"		15'-0"		5 15/16"					6'-15' [15'-0"]				

☐ Indicates arm length to be used unless otherwise noted on plans.

STATE OF CALIFORNIA
DEPARTMENT OF TRANSPORTATION

ELECTRICAL SYSTEMS (SIGNAL AND LIGHTING STANDARD CASE 1 ARM LOADING WIND VELOCITY = 100 MPH ARM LENGTHS 15' TO 30')

NO SCALE

RSP ES-7C DATED JUNE 15, 2007 SUPERSEDES STANDARD PLAN ES-7C DATED MAY 1, 2006 - PAGE 439 OF THE STANDARD PLANS BOOK DATED MAY 2006.

REVISED STANDARD PLAN RSP ES-7C

2006 REVISED STANDARD PLAN RSP ES-7C

1-26-07

DIST	COUNTY	ROUTE	POST MILES TOTAL PROJECT	SHEET NO.	TOTAL SHEETS
06	Tul	65,99,137, 190,198,216	Var	58	59

REGISTERED CIVIL ENGINEER

October 5, 2007
PLANS APPROVAL DATE

REGISTERED PROFESSIONAL ENGINEER Stanley P. Johnson No. C57793 Exp. 3-31-08 CIVIL STATE OF CALIFORNIA

The State of California or its officers or agents shall not be responsible for the accuracy or completeness of electronic copies of this plan sheet.

To accompany plans dated 3-22-10

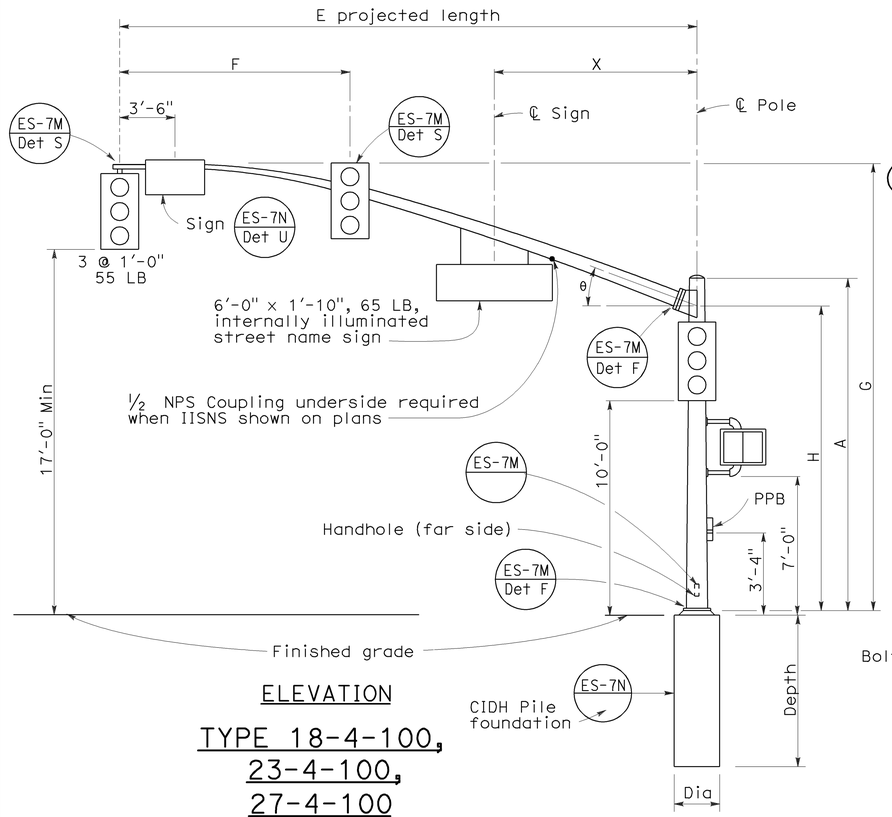

ELEVATION

TYPE 18-4-100, 23-4-100, 27-4-100

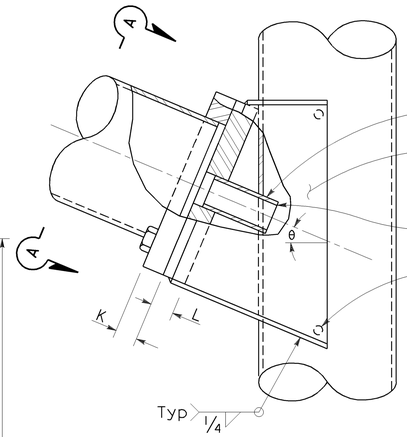

ELEVATION

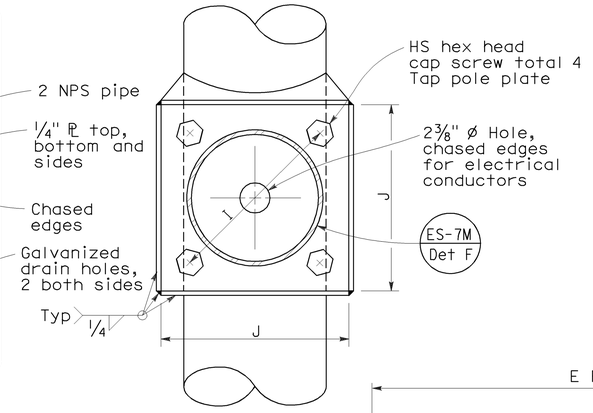

VIEW A-A

SIGNAL ARM CONNECTION DETAILS

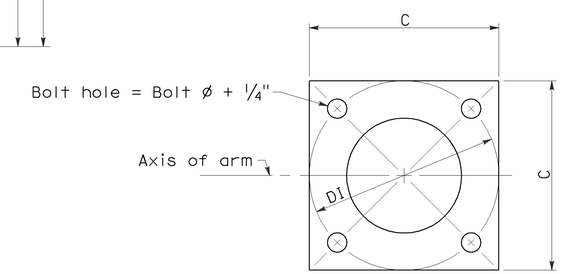

BASE PLATE

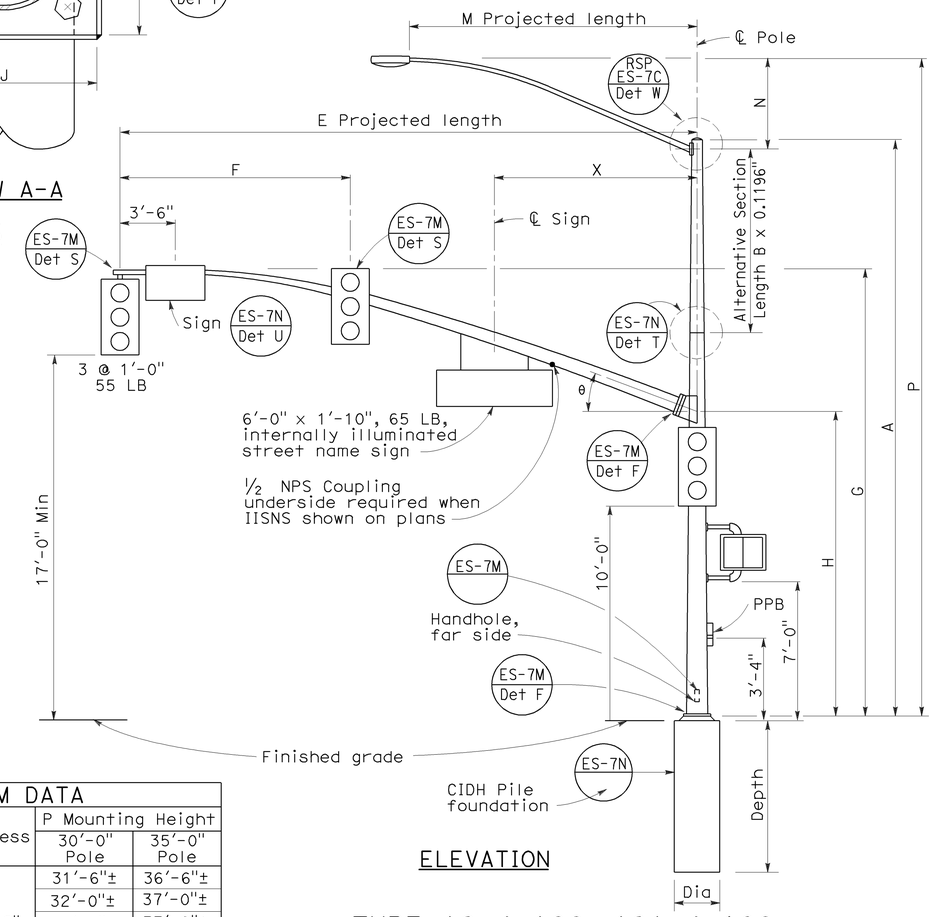

ELEVATION

TYPE 19-4-100, 19A-4-100, 24-4-100, 24A-4-100, 26-4-100, 26A-4-100

SIGNAL ARM DATA												
E Projected Length	F Min Spacing	G Mounting Height	H	Min OD at Pole	Thickness	I Bolt Circle	HS Cap Screws	J Plate Size	K Arm PL Thickness	L Pole PL Thickness	θ	X Max
25'-0"	10'-0"	22'-8"±	16'-0"	7 5/16"	0.2391"	12"	1¼"-7NC-3"	1'-0"	1¼"	1½"	23°	10'-6"
30'-0"	12'-0"	23'-0"±		8"								
35'-0"	14'-0"			8 11/16"		13½"		1'-1½"	1½"	1¾"	21°	
40'-0"	15'-0"			9⅜"							15°	13'-0"
45'-0"		23'-8"±		10¼"								

LUMINAIRE ARM DATA					
M Projected Length	N Rise	Min OD at Pole	Thickness	P Mounting Height 30'-0" Pole	P Mounting Height 35'-0" Pole
6'-0"	2'-0"±	3¼"	0.1196"	31'-6"±	36'-6"±
8'-0"	2'-6"±	3½"		32'-0"±	37'-0"±
10'-0"	3'-3"±	3⅞"		32'-9"±	37'-9"±
12'-0"	4'-3"±			33'-9"±	38'-9"±
15'-0"	4'-9"±	4¼"		34'-3"±	39'-3"±

POLE DATA									BASE PLATE DATA							CIDH PILE FOUNDATION		
Pole Type	Load Case	Wind Velocity mph	A Height	Min OD Base	Min OD Top	Thickness	Alternative Section B Length	Alternative Section Bottom	Alternative Section Top	C	DI Bolt Circle	Thickness	Anchor Bolts Size	Luminaire Arm	Signal Arm	Dia	Depth	Reinforced
18-4-100	4	100	17'-0"	12"	9"	0.2391"	None			1'-6"	1'-6"	1½"	2" Ø x 42" x 6"	None	25'-0", 30'-0"	3'-0"	9'-0"	Yes
19-4-100			30'-0"		8"		10'-0"	9⅜"	8"					6'-15' 12'-0"				
19A-4-100			35'-0"		7 5/16"		15'-0'		7 5/16"					6'-15' 15'-0"				
23-4-100			17'-0"		9"		None							None	35'-0"			
24-4-100			30'-0"		8"		10'-0"	9⅜"	8"					6'-15' 12'-0"				
24A-4-100			35'-0"		7 5/16"		15'-0"		7 5/16"					6'-15' 15'-0"				
26-4-100			30'-0"	12½"	8"	0.3125"	10'-0"	9¾"	8⅜"					6'-15' 12'-0"	40'-0", 45'-0"			
26A-4-100			35'-0"		7 5/16"		15'-0"		7 11/16"					6'-15' 15'-0"				
27-4-100			17'-0"		9¾"		None							None				

☐ Indicates arm length to be used unless otherwise noted on plans.

STATE OF CALIFORNIA
DEPARTMENT OF TRANSPORTATION

ELECTRICAL SYSTEMS (SIGNAL AND LIGHTING STANDARD CASE 4 ARM LOADING WIND VELOCITY=100 MPH ARM LENGTHS 25' TO 45')

NO SCALE

RSP ES-7F DATED OCTOBER 5, 2007 SUPERCEDES RSP ES-7F DATED NOVEMBER 17, 2006 AND STANDARD PLAN ES-7F DATED MAY 1, 2006 - PAGE 442 OF THE STANDARD PLANS BOOK DATED MAY 2006.

REVISED STANDARD PLAN RSP ES-7F

2006 REVISED STANDARD PLAN RSP ES-7F

7-10-07

DIST	COUNTY	ROUTE	POST MILES TOTAL PROJECT	SHEET NO.	TOTAL SHEETS
06	Tul	65,99,137, 190,198,216	Var	59	59

REGISTERED CIVIL ENGINEER

November 17, 2006
PLANS APPROVAL DATE

REGISTERED PROFESSIONAL ENGINEER Stanley P. Johnson No. C57793 Exp. 03-31-08 CIVIL STATE OF CALIFORNIA

The State of California or its officers or agents shall not be responsible for the accuracy or completeness of electronic copies of this plan sheet.

To accompany plans dated 3-22-10

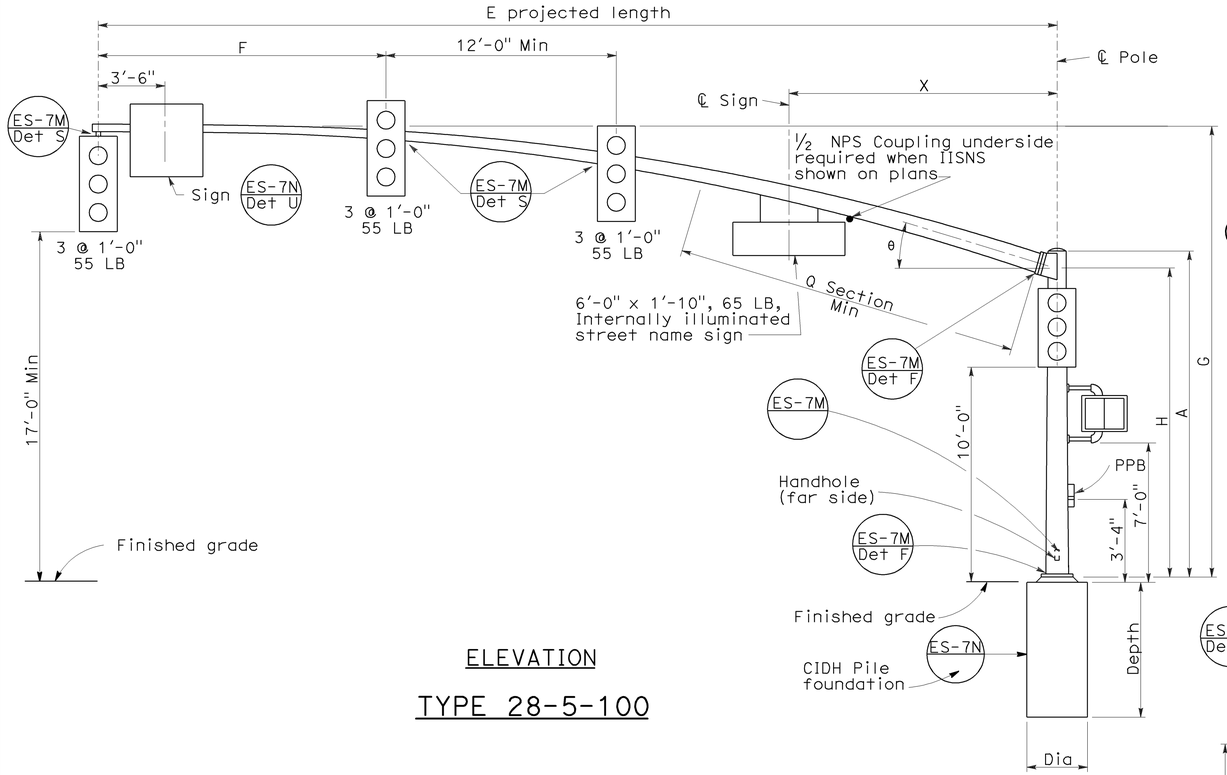

ELEVATION

TYPE 28-5-100

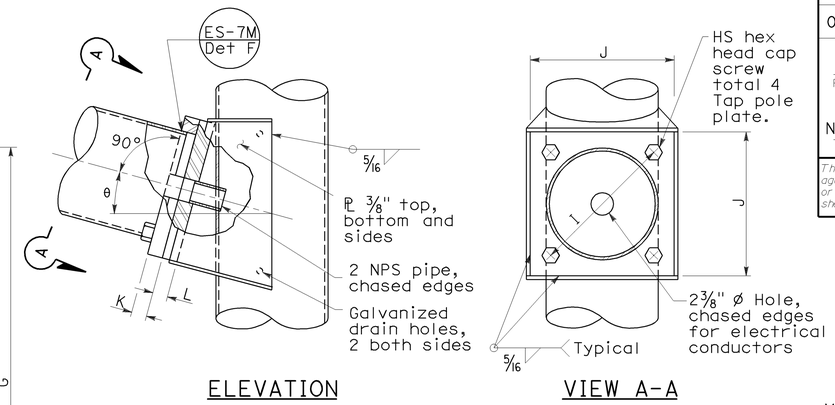

ELEVATION

VIEW A-A

SIGNAL ARM CONNECTION DETAILS

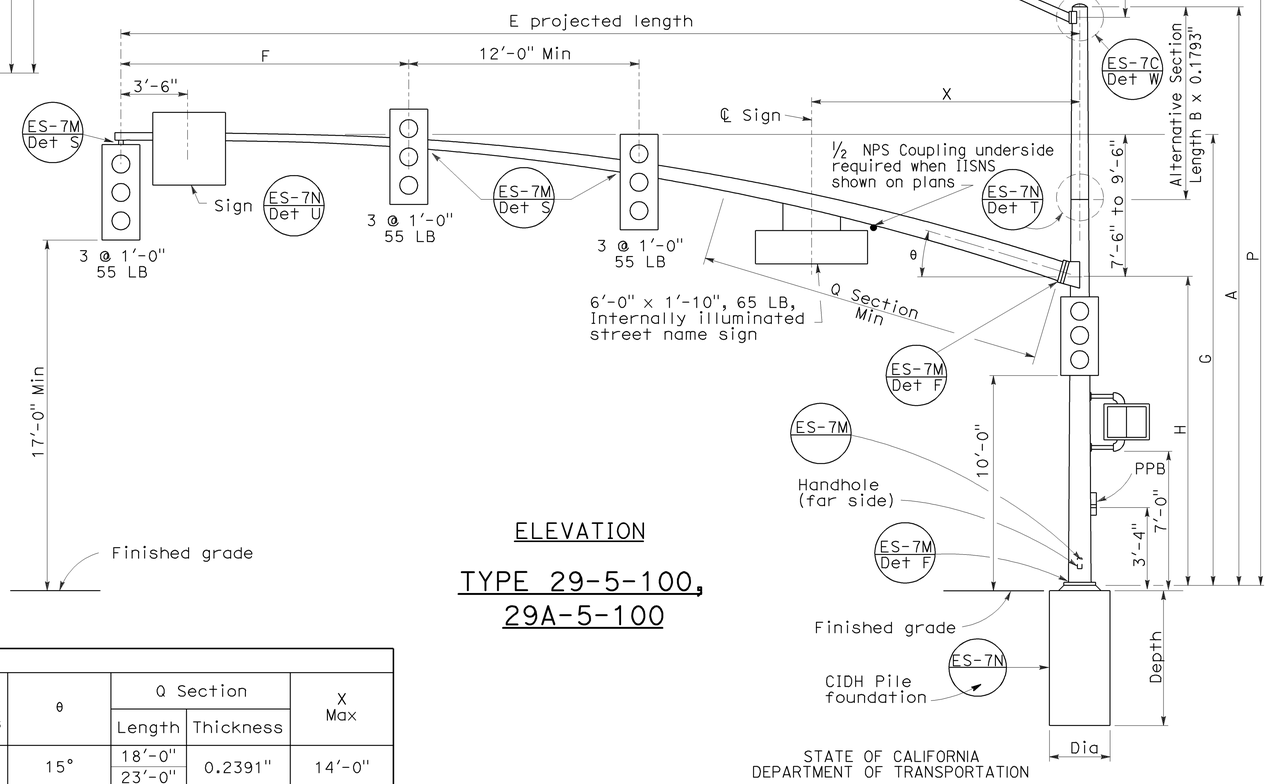

ELEVATION

TYPE 29-5-100, 29A-5-100

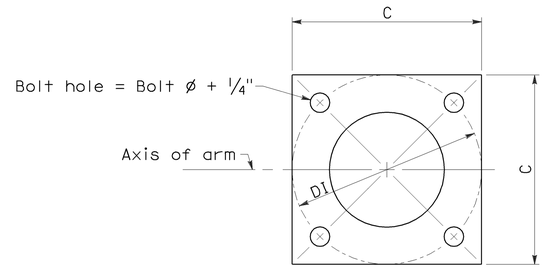

BASE PLATE

LUMINAIRE ARM DATA					
M Projected Length	N Rise	Min OD at Pole	Thickness	P Mounting Height 30'-0" Pole	P Mounting Height 35'-0" Pole
6'-0"	2'-0"±	3 1/4"	0.1196"	31'-6"±	36'-6"±
8'-0"	2'-6"±	3 1/2"		32'-0"±	37'-0"±
10'-0"	3'-3"±	3 7/8"		32'-9"±	37'-9"±
12'-0"	4'-3"±			33'-9"±	38'-9"±
15'-0"	4'-9"±	4 1/4"		34'-3"±	39'-3"±

SIGNAL ARM DATA														
E Projected Length	F Min Spacing	G Mounting Height	H	Min OD at Pole	Thickness	I Bolt Circle	HS Cap Screws	J Plate Size	K Arm ℄ Thickness	L Pole ℄ Thickness	θ	Q Section Length	Q Section Thickness	X Max
50'-0"	15'-0"	23'-7"± to 25'-7"±	16'-0"	11 7/16"	0.1793"	16"	1 1/2"-6NC-3 1/4"	1'-4"	1 3/4"	1 3/4"	15°	18'-0"	0.2391"	14'-0"
55'-0"				1'-1/4"								23'-0"		

POLE DATA									BASE PLATE DATA						CIDH PILE FOUNDATION		
Pole Type	Load Case	Wind Velocity mph	A Height	Min OD Base	Min OD Top	Thickness	Alternative Section B Length	Alternative Section Bottom	Alternative Section Top	C	DI Bolt Circle	Thickness	Anchor Bolts Size	Luminaire Arm	Signal Arm	Dia	Depth	Reinforced
28-5-100	5	100	17'-0"	14"	11 11/16"	0.3125"	None	11 1/4"	9 7/8"	21"	21"	1 3/4"	2" ø x 42" x 6"	None	50'-0", 55'-0"	3'-0"	9'-2"	Yes
29-5-100			30'-0"		9 7/8"		10'-0"							6'-15' [15'-0"]				
29A-5-100			35'-0"		9 3/16"		15'-0"		9 3/16"	23"	23"							

[ ] Indicates arm length to be used unless otherwise noted on plans.

STATE OF CALIFORNIA
DEPARTMENT OF TRANSPORTATION

ELECTRICAL SYSTEMS (SIGNAL AND LIGHTING STANDARD CASE 5 ARM LOADING WIND VELOCITY=100 MPH ARM LENGTHS 50' TO 55')

NO SCALE

RSP ES-7G DATED NOVEMBER 17, 2006 SUPERSEDES STANDARD PLAN ES-7G DATED MAY 1, 2006 - PAGE 443 OF THE STANDARD PLANS BOOK DATED MAY 2006.

REVISED STANDARD PLAN RSP ES-7G

2006 REVISED STANDARD PLAN RSP ES-7G

5-15-06