Dist	COUNTY	ROUTE	POST MILES TOTAL PROJECT	SHEET No.	TOTAL SHEETS
06	Mad	41	11.7/13.4	1	94

STATE OF CALIFORNIA
DEPARTMENT OF TRANSPORTATION

ACNHP-P041(128)E

PROJECT PLANS FOR CONSTRUCTION ON
STATE HIGHWAY

IN MADERA COUNTY
NEAR COARSEGOLD FROM 0.3 MILE NORTH OF ROAD 208 TO 2.0 MILES NORTH OF ROAD 208

TO BE SUPPLEMENTED BY STANDARD PLANS DATED 2010

INDEX OF PLANS

SHEET No.	DESCRIPTION
1	TITLE AND LOCATION MAP
2-9	TYPICAL CROSS SECTIONS
10-16	LAYOUTS
17-23	PROFILES AND SUPERELEVATION DIAGRAMS
24-26	CONSTRUCTION DETAILS
27-46	DRAINAGE PLANS, PROFILES, DETAILS AND QUANTITIES
47	CONSTRUCTION AREA SIGNS
48-55	STAGE CONSTRUCTION PLANS
56-63	TRAFFIC HANDLING PLANS AND QUANTITIES
64-71	PAVEMENT DELINEATION PLANS AND QUANTITIES
72-73	SUMMARY OF QUANTITIES
74-81	EROSION CONTROL LEGEND, PLANS AND QUANTITIES
82-94	REVISED STANDARD PLANS

THE STANDARD PLANS LIST APPLICABLE TO THIS CONTRACT IS INCLUDED IN THE NOTICE TO BIDDERS AND SPECIAL PROVISIONS BOOK.

LOCATION MAP

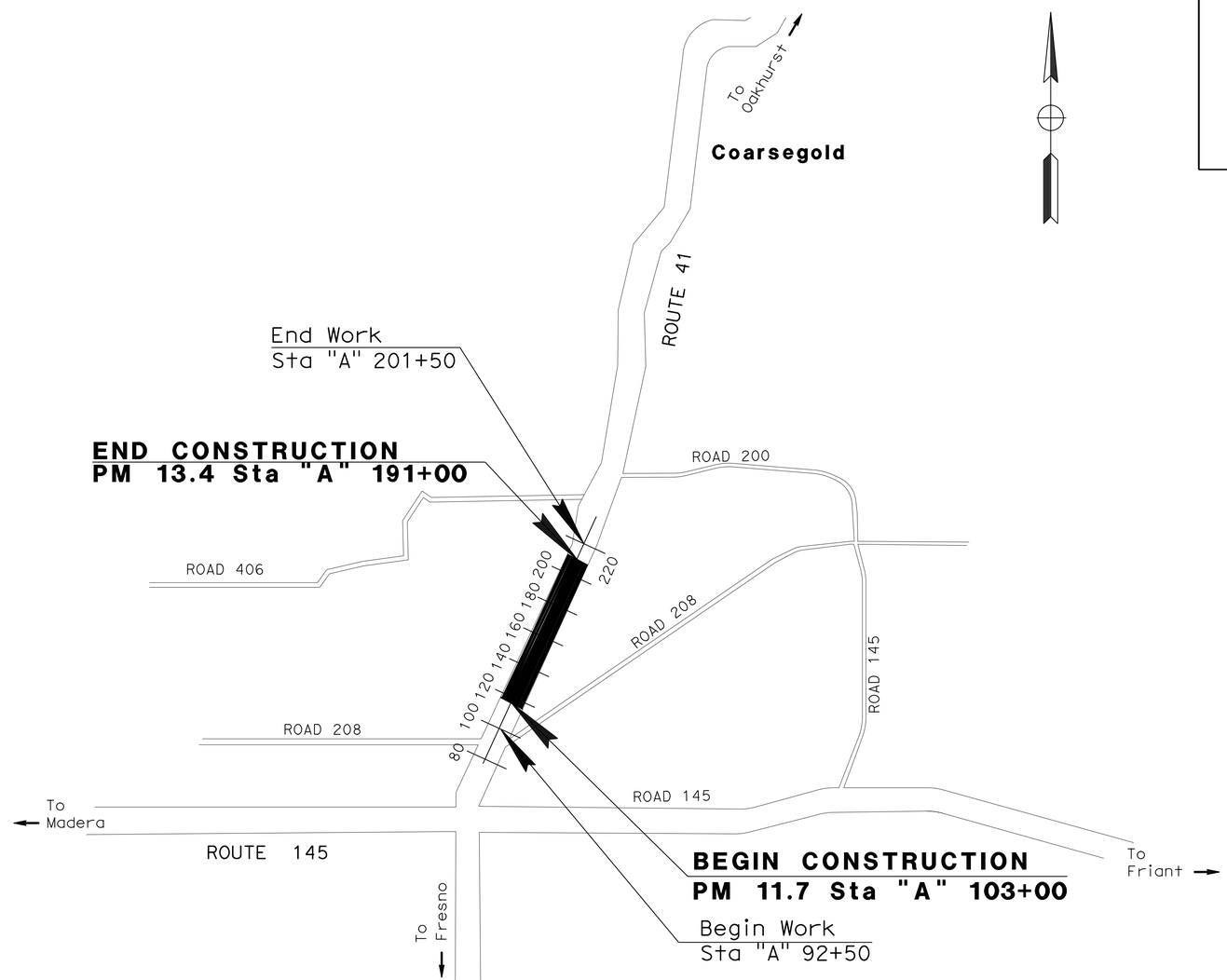

NO SCALE

THE CONTRACTOR SHALL POSSESS THE CLASS (OR CLASSES) OF LICENSE AS SPECIFIED IN THE "NOTICE TO BIDDERS."

PROJECT ENGINEER
REGISTERED CIVIL ENGINEER

1/26/15
DATE

January 26, 2015
PLANS APPROVAL DATE

REGISTERED PROFESSIONAL ENGINEER
MAJID MONFAREDIAN
No. 65517
Exp. 9/30/15
CIVIL
STATE OF CALIFORNIA

THE STATE OF CALIFORNIA OR ITS OFFICERS OR AGENTS SHALL NOT BE RESPONSIBLE FOR THE ACCURACY OR COMPLETENESS OF SCANNED COPIES OF THIS PLAN SHEET.

CONTRACT No.	06-0G9004
PROJECT ID	0600000112

PROJECT MANAGER: ANAND KAPOOR
DESIGN ENGINEER: MICHAEL K. LIM

LAST REVISION 01-26-15
DATE PLOTTED => 09-APR-2015
TIME PLOTTED => 13:08

Dist	COUNTY	ROUTE	POST MILES TOTAL PROJECT	SHEET No.	TOTAL SHEETS
06	Mad	41	11.7/13.4	2	94

REGISTERED CIVIL ENGINEER 1/26/15 DATE

01/26/15
PLANS APPROVAL DATE

REGISTERED PROFESSIONAL ENGINEER MAJID MONFAREDIAN No. 65517 Exp. 9/30/15 CIVIL STATE OF CALIFORNIA

THE STATE OF CALIFORNIA OR ITS OFFICERS OR AGENTS SHALL NOT BE RESPONSIBLE FOR THE ACCURACY OR COMPLETENESS OF SCANNED COPIES OF THIS PLAN SHEET.

NOTES:

1. DIMENSIONS OF THE PAVEMENT STRUCTURES (STRUCTURAL SECTIONS) ARE SUBJECT TO TOLERANCES SPECIFIED IN THE STANDARD SPECIFICATIONS.
2. SUPERELEVATION AS SHOWN OR AS DIRECTED BY THE ENGINEER.
3. LOCATIONS AND TYPES OF RUMBLE STRIPS ARE SHOWN ON THE LAYOUTS, CONSTRUCTION DETAILS AND IN SUMMARY OF QUANTITIES SHEETS.
4. FOR ACCURATE RIGHT OF WAY DATA, CONTACT RIGHT OF WAY ENGINEERING AT THE DISTRICT OFFICE.

ROUTE 41
DESIGN DESIGNATION

2034 ADT	42,000 (ROUTE 41)
DHV	4,500
D	60%
T	10%
V	55 MPH

PAVEMENT CLIMATE REGION

INLAND VALLEY

ABBREVIATION:

RHMA (TYPE G): RUBBERIZED HOT MIX ASPHALT (GAP GRADED)

TYPICAL PAVEMENT STRUCTURAL SECTIONS

1. Exist
   0.60′ AC
   1.55′ AB
2. 0.40′ HMA (TYPE A)
   1.55′ CLASS 2 AB
3. 0.20′ RHMA
   (TYPE G)
4. Var
   0-0.55′ HMA
   (TYPE A)
5. 0.20′ COLD PLANE AC Pvmt
   0.20′ RHMA (TYPE G)
6. Var
   0-0.50′ HMA
   (TYPE A)

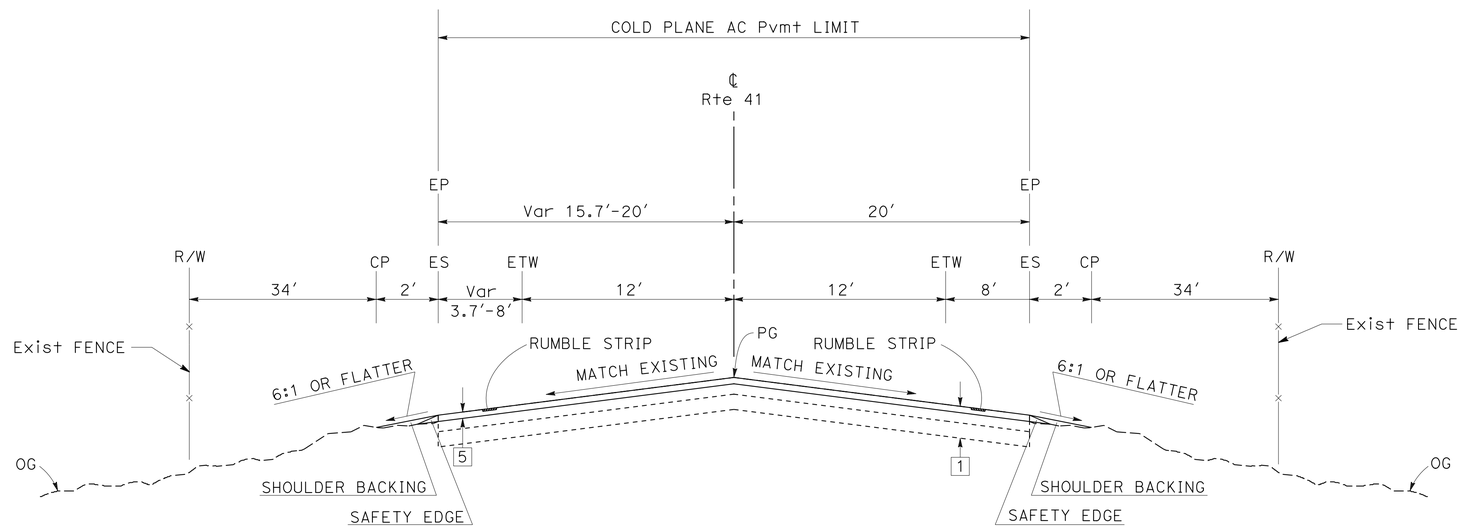

ROUTE 41

Sta 103+00 TO Sta 105+00

TYPICAL CROSS SECTIONS

NO SCALE

X-1

STATE OF CALIFORNIA - DEPARTMENT OF TRANSPORTATION
Caltrans® DESIGN

FUNCTIONAL SUPERVISOR: MICHAEL K. LIM
CALCULATED-DESIGNED BY: MAJID MONFAREDIAN
CHECKED BY: MICHAEL K. LIM
REVISED BY
DATE REVISED

LAST REVISION 01-26-15
DATE PLOTTED => 07-APR-2015
TIME PLOTTED => 13:09

Dist	COUNTY	ROUTE	POST MILES TOTAL PROJECT	SHEET No.	TOTAL SHEETS
06	Mad	41	11.7/13.4	3	94

REGISTERED CIVIL ENGINEER 1/26/15 DATE

01/26/15
PLANS APPROVAL DATE

REGISTERED PROFESSIONAL ENGINEER MAJID MONFAREDIAN No. 65517 Exp. 9/30/15 CIVIL STATE OF CALIFORNIA

THE STATE OF CALIFORNIA OR ITS OFFICERS OR AGENTS SHALL NOT BE RESPONSIBLE FOR THE ACCURACY OR COMPLETENESS OF SCANNED COPIES OF THIS PLAN SHEET.

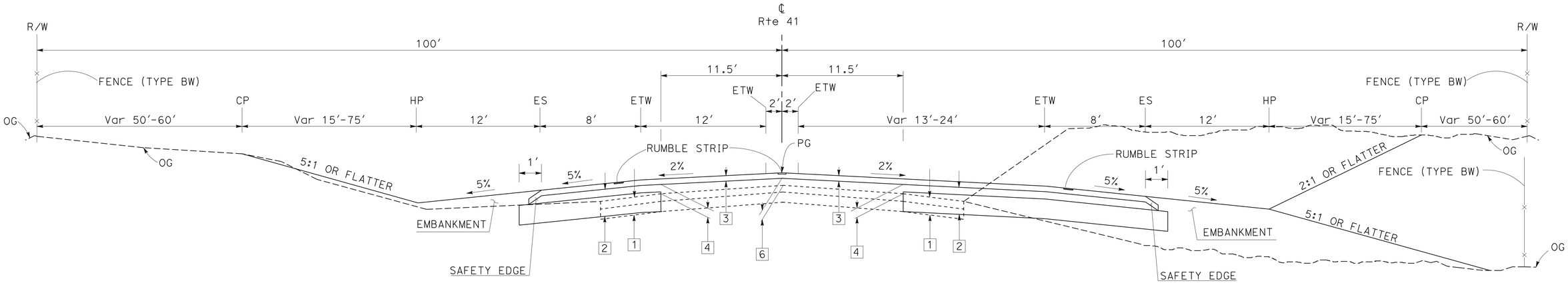

ROUTE 41

Sta 106+43 TO Sta 108+70

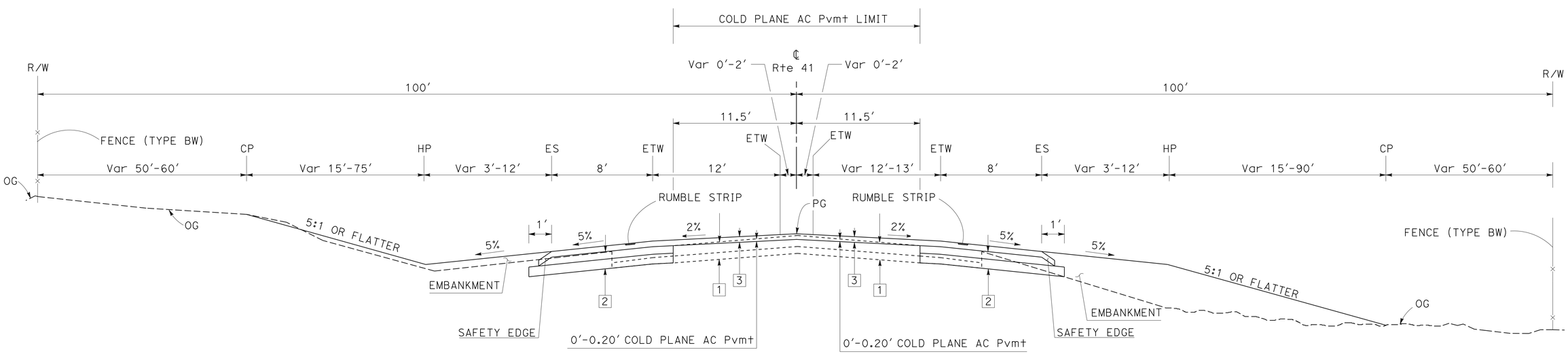

ROUTE 41

Sta 105+00 TO Sta 106+43

TYPICAL CROSS SECTIONS

NO SCALE

X-2

REVISED BY | DATE REVISED

MAJID MONFAREDIAN | MICHAEL K. LIM

CALCULATED-DESIGNED BY | CHECKED BY

FUNCTIONAL SUPERVISOR: MICHAEL K. LIM

STATE OF CALIFORNIA - DEPARTMENT OF TRANSPORTATION

Caltrans®

DESIGN

LAST REVISION 01-26-15 | DATE PLOTTED => 07-APR-2015 | TIME PLOTTED => 13:09

Dist	COUNTY	ROUTE	POST MILES TOTAL PROJECT	SHEET No.	TOTAL SHEETS
06	Mad	41	11.7/13.4	4	94

REGISTERED CIVIL ENGINEER DATE 1/26/15

01/26/15
PLANS APPROVAL DATE

REGISTERED PROFESSIONAL ENGINEER MAJID MONFAREDIAN No. 65517 Exp. 9/30/15 CIVIL STATE OF CALIFORNIA

THE STATE OF CALIFORNIA OR ITS OFFICERS OR AGENTS SHALL NOT BE RESPONSIBLE FOR THE ACCURACY OR COMPLETENESS OF SCANNED COPIES OF THIS PLAN SHEET.

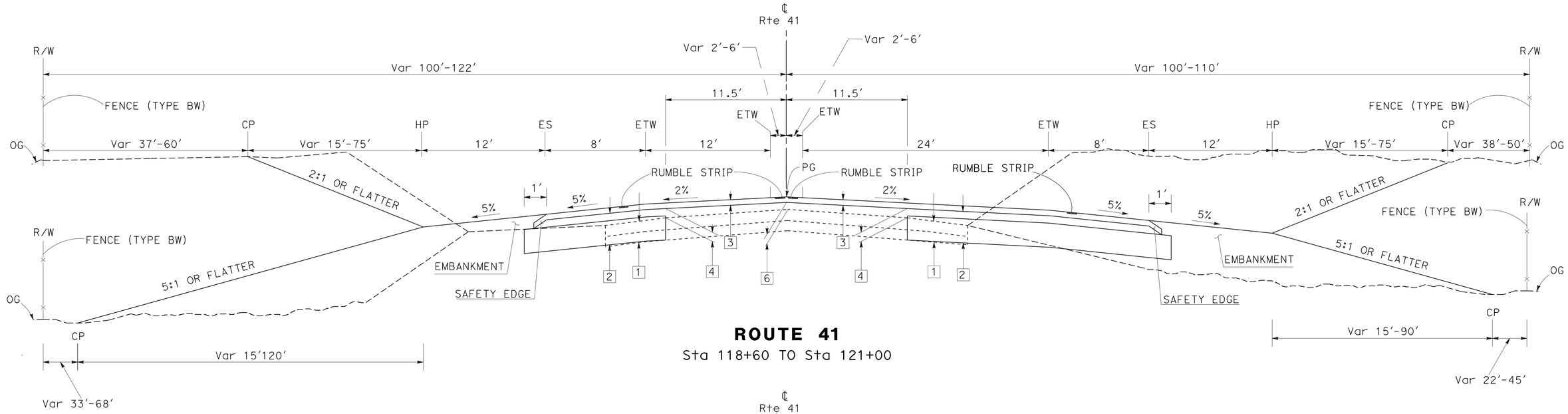

ROUTE 41

Sta 118+60 TO Sta 121+00

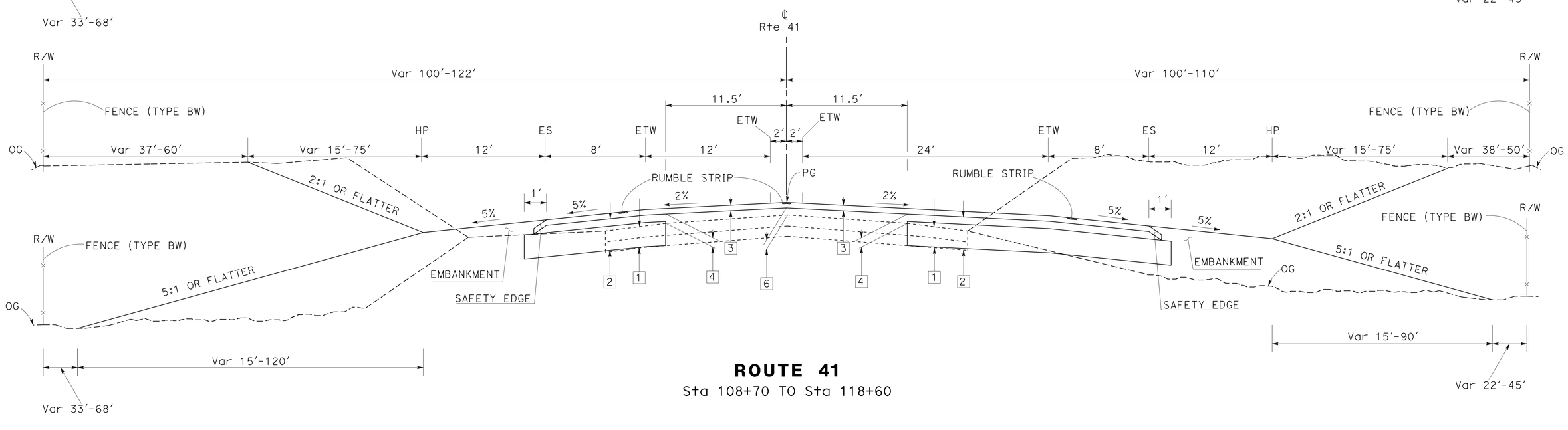

ROUTE 41

Sta 108+70 TO Sta 118+60

TYPICAL CROSS SECTIONS

NO SCALE

X-3

STATE OF CALIFORNIA - DEPARTMENT OF TRANSPORTATION

Caltrans® **DESIGN**

FUNCTIONAL SUPERVISOR: MICHAEL K. LIM

CALCULATED-DESIGNED BY: MAJID MONFAREDIAN

CHECKED BY: MICHAEL K. LIM

REVISED BY

DATE REVISED

LAST REVISION 01-26-15

DATE PLOTTED => 07-APR-2015
TIME PLOTTED => 13:09

Dist	COUNTY	ROUTE	POST MILES TOTAL PROJECT	SHEET No.	TOTAL SHEETS
06	Mad	41	11.7/13.4	5	94

REGISTERED CIVIL ENGINEER 1/26/15 DATE

01/26/15
PLANS APPROVAL DATE

REGISTERED PROFESSIONAL ENGINEER MAJID MONFAREDIAN No. 65517 Exp. 9/30/15 CIVIL STATE OF CALIFORNIA

THE STATE OF CALIFORNIA OR ITS OFFICERS OR AGENTS SHALL NOT BE RESPONSIBLE FOR THE ACCURACY OR COMPLETENESS OF SCANNED COPIES OF THIS PLAN SHEET.

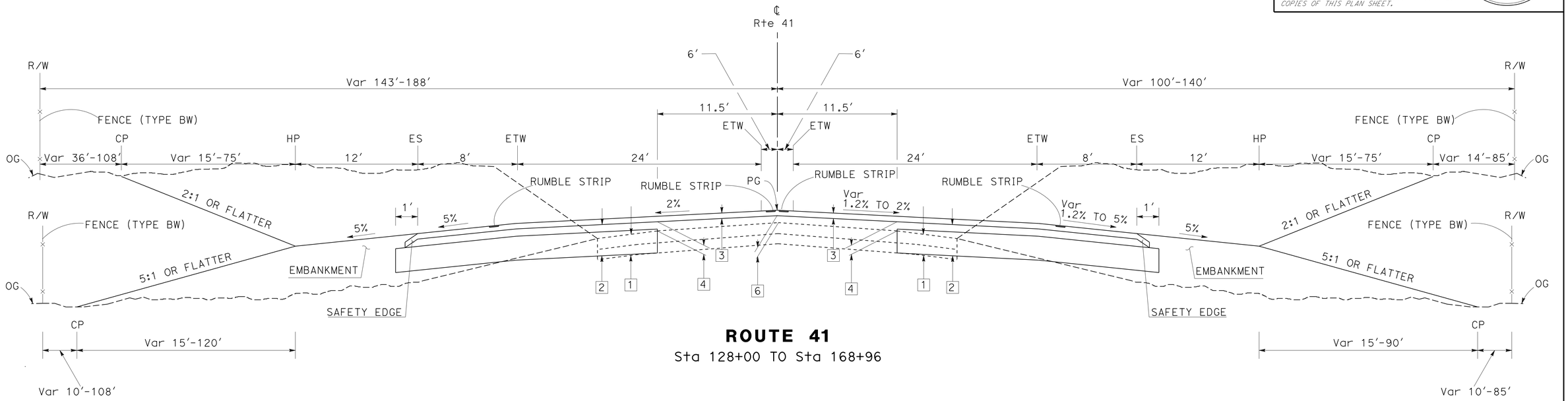

ROUTE 41

Sta 128+00 TO Sta 168+96

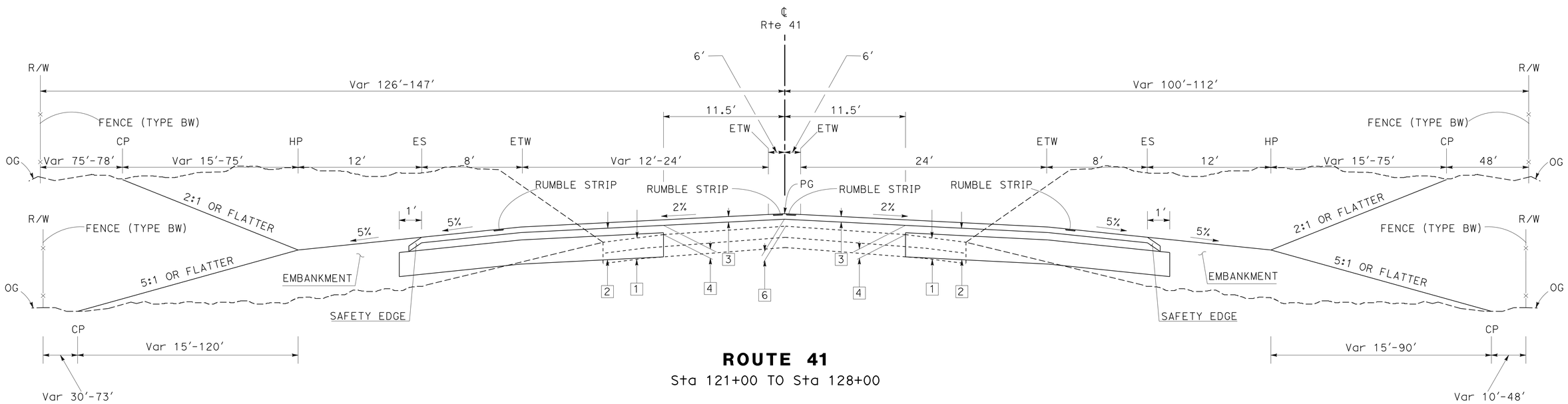

ROUTE 41

Sta 121+00 TO Sta 128+00

TYPICAL CROSS SECTIONS

NO SCALE

X-4

STATE OF CALIFORNIA - DEPARTMENT OF TRANSPORTATION

DESIGN

FUNCTIONAL SUPERVISOR: MICHAEL K. LIM

CALCULATED-DESIGNED BY: MAJID MONFAREDIAN

CHECKED BY: MICHAEL K. LIM

REVISED BY / DATE REVISED

LAST REVISION 01-26-15

DATE PLOTTED => 07-APR-2015
TIME PLOTTED => 13:09

Dist	COUNTY	ROUTE	POST MILES TOTAL PROJECT	SHEET No.	TOTAL SHEETS
06	Mad	41	11.7/13.4	6	94

REGISTERED CIVIL ENGINEER DATE 1/26/15

01/26/15
PLANS APPROVAL DATE

REGISTERED PROFESSIONAL ENGINEER MAJID MONFAREDIAN No. 65517 Exp. 9/30/15 CIVIL STATE OF CALIFORNIA

THE STATE OF CALIFORNIA OR ITS OFFICERS OR AGENTS SHALL NOT BE RESPONSIBLE FOR THE ACCURACY OR COMPLETENESS OF SCANNED COPIES OF THIS PLAN SHEET.

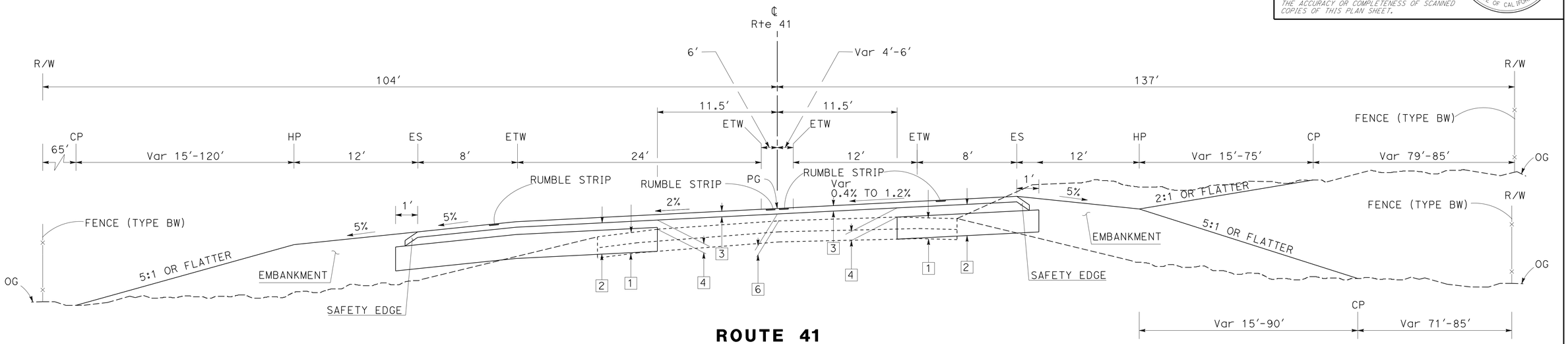

ROUTE 41

Sta 175+79.44 TO Sta 177+00.00

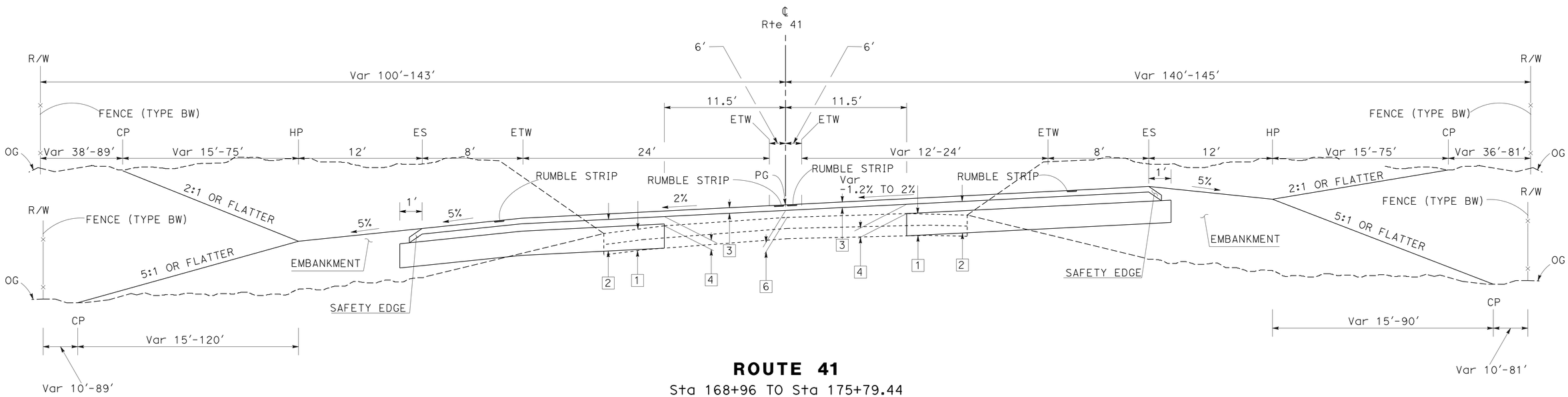

ROUTE 41

Sta 168+96 TO Sta 175+79.44

TYPICAL CROSS SECTIONS

NO SCALE

X-5

STATE OF CALIFORNIA - DEPARTMENT OF TRANSPORTATION
Caltrans®
DESIGN

FUNCTIONAL SUPERVISOR: MICHAEL K. LIM

MAJID MONFAREDIAN — MICHAEL K. LIM

CALCULATED-DESIGNED BY | CHECKED BY

REVISED BY | DATE REVISED

LAST REVISION 01-26-15 | DATE PLOTTED => 07-APR-2015 | TIME PLOTTED => 13:09

Dist	COUNTY	ROUTE	POST MILES TOTAL PROJECT	SHEET No.	TOTAL SHEETS
06	Mad	41	11.7/13.4	7	94

REGISTERED CIVIL ENGINEER 1/26/15 DATE

01/26/15
PLANS APPROVAL DATE

REGISTERED PROFESSIONAL ENGINEER MAJID MONFAREDIAN No. 65517 Exp. 9/30/15 CIVIL STATE OF CALIFORNIA

THE STATE OF CALIFORNIA OR ITS OFFICERS OR AGENTS SHALL NOT BE RESPONSIBLE FOR THE ACCURACY OR COMPLETENESS OF SCANNED COPIES OF THIS PLAN SHEET.

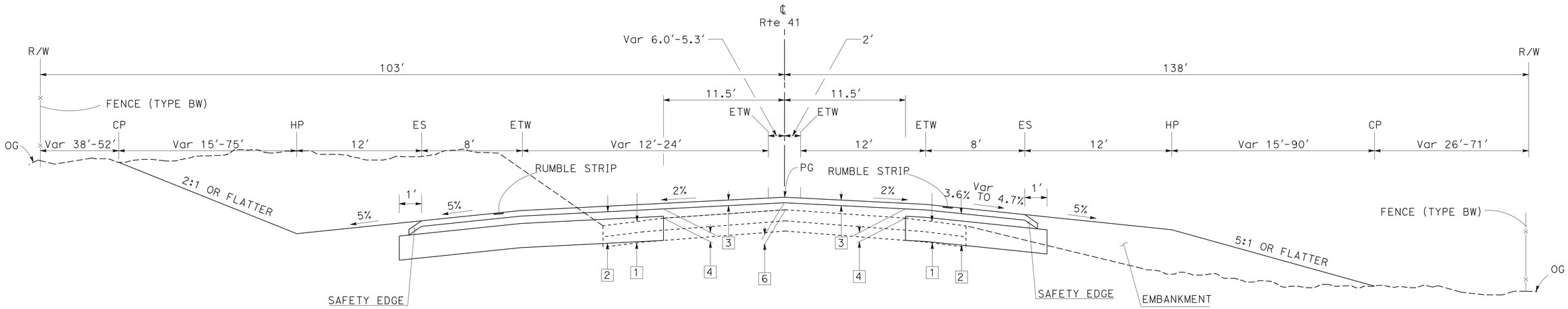

ROUTE 41

Sta 179+50 TO Sta 179+90

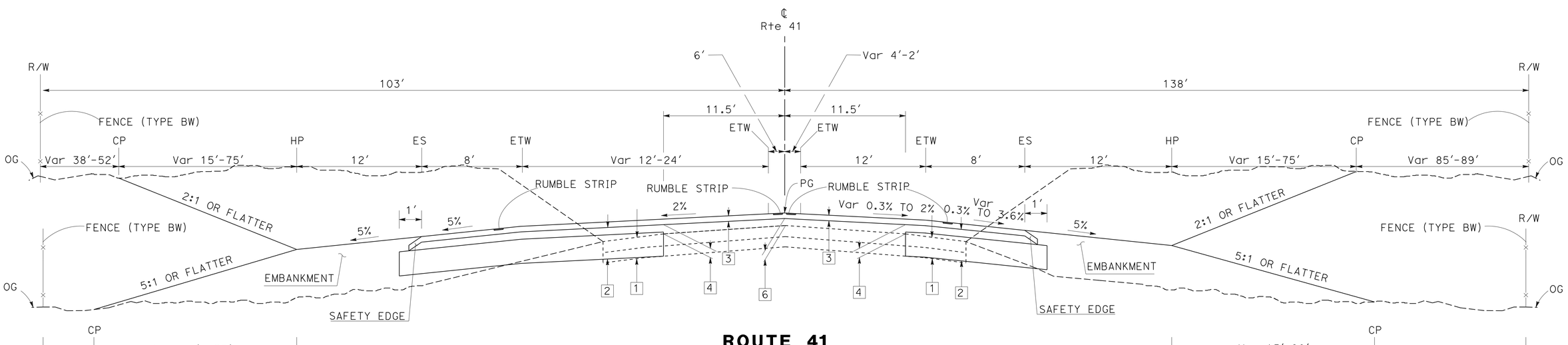

ROUTE 41

Sta 177+00 TO Sta 179+50

TYPICAL CROSS SECTIONS

NO SCALE

X-6

REVISED BY	DATE REVISED
MAJID MONFAREDIAN	MICHAEL K. LIM
CALCULATED-DESIGNED BY	CHECKED BY
FUNCTIONAL SUPERVISOR	MICHAEL K. LIM

STATE OF CALIFORNIA - DEPARTMENT OF TRANSPORTATION

Caltrans

DESIGN

LAST REVISION 01-26-15 | DATE PLOTTED => 07-APR-2015 | TIME PLOTTED => 13:09

Dist	COUNTY	ROUTE	POST MILES TOTAL PROJECT	SHEET No.	TOTAL SHEETS
06	Mad	41	11.7/13.4	8	94

REGISTERED CIVIL ENGINEER 1/26/15 DATE

01/26/15
PLANS APPROVAL DATE

REGISTERED PROFESSIONAL ENGINEER MAJID MONFAREDIAN No. 65517 Exp. 9/30/15 CIVIL STATE OF CALIFORNIA

THE STATE OF CALIFORNIA OR ITS OFFICERS OR AGENTS SHALL NOT BE RESPONSIBLE FOR THE ACCURACY OR COMPLETENESS OF SCANNED COPIES OF THIS PLAN SHEET.

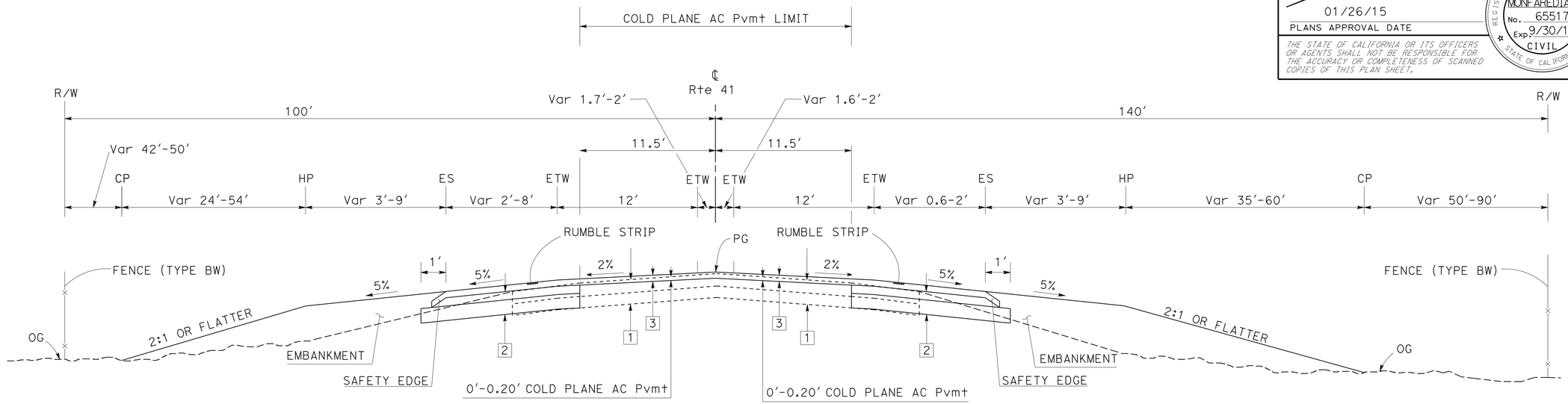

ROUTE 41

Sta 182+00 TO Sta 183+00

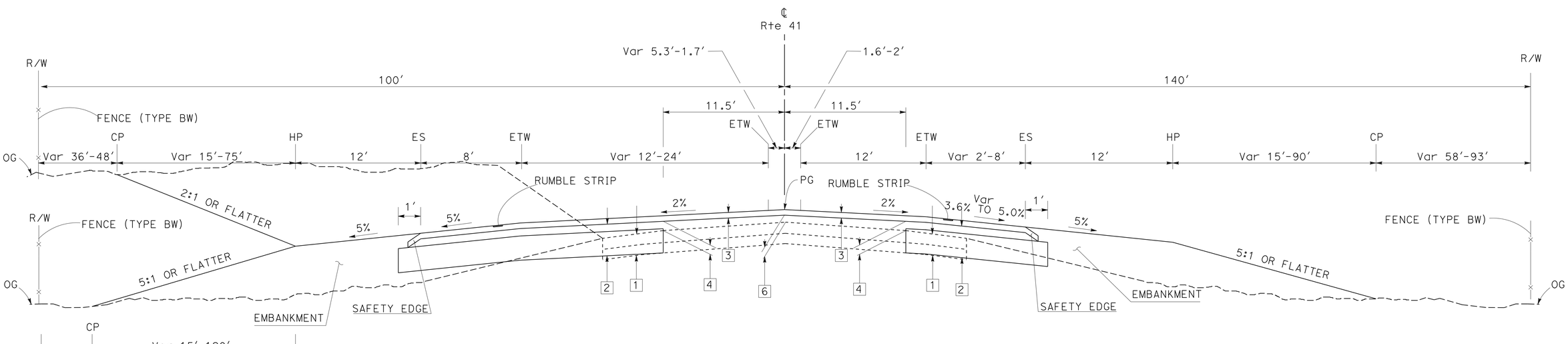

ROUTE 41

Sta 179+90 TO Sta 182+00

TYPICAL CROSS SECTIONS

NO SCALE

X-7

REVISED BY | DATE REVISED

MAJID MONFAREDIAN | MICHAEL K. LIM

CALCULATED-DESIGNED BY | CHECKED BY

FUNCTIONAL SUPERVISOR: MICHAEL K. LIM

STATE OF CALIFORNIA - DEPARTMENT OF TRANSPORTATION

DESIGN

Caltrans

LAST REVISION 01-26-15 | DATE PLOTTED => 07-APR-2015 | TIME PLOTTED => 13:09

Dist	COUNTY	ROUTE	POST MILES TOTAL PROJECT	SHEET No.	TOTAL SHEETS
06	Mad	41	11.7/13.4	9	94

REGISTERED CIVIL ENGINEER DATE 1/26/15

01/26/15
PLANS APPROVAL DATE

REGISTERED PROFESSIONAL ENGINEER MAJID MONFAREDIAN No. 65517 Exp. 9/30/15 CIVIL STATE OF CALIFORNIA

THE STATE OF CALIFORNIA OR ITS OFFICERS OR AGENTS SHALL NOT BE RESPONSIBLE FOR THE ACCURACY OR COMPLETENESS OF SCANNED COPIES OF THIS PLAN SHEET.

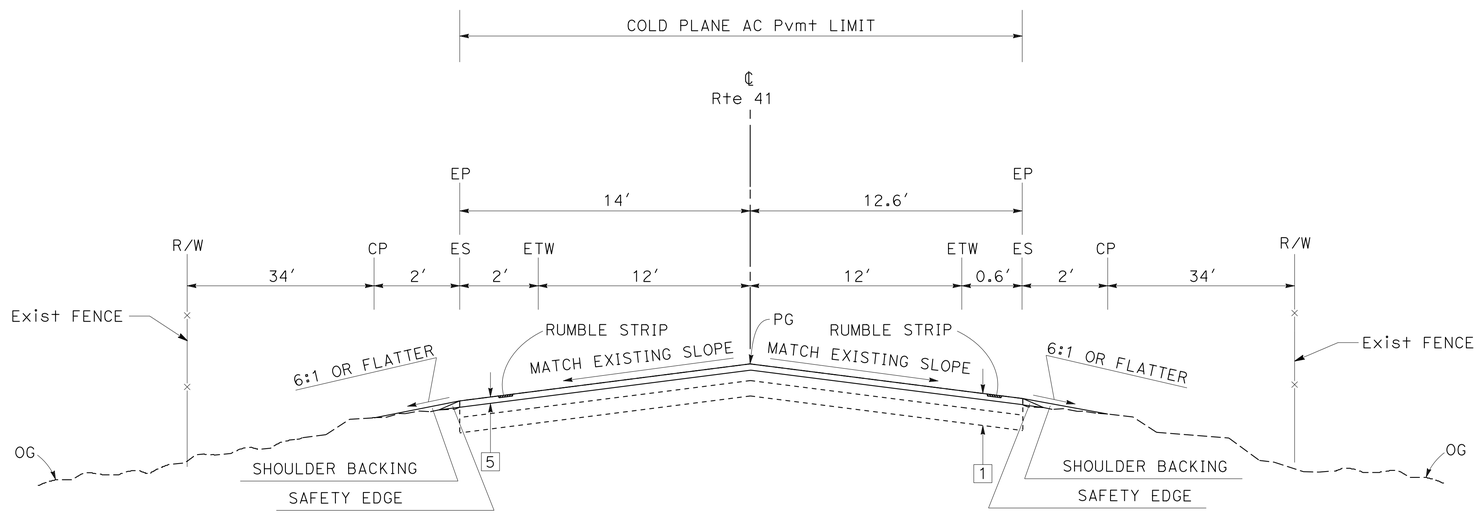

ROUTE 41

Sta 183+00 TO Sta 191+00

TYPICAL CROSS SECTIONS

NO SCALE

X-8

STATE OF CALIFORNIA - DEPARTMENT OF TRANSPORTATION
Caltrans
DESIGN

FUNCTIONAL SUPERVISOR: MICHAEL K. LIM
CALCULATED-DESIGNED BY: MAJID MONFAREDIAN
CHECKED BY: MICHAEL K. LIM
REVISED BY
DATE REVISED

LAST REVISION 01-26-15
DATE PLOTTED => 07-APR-2015
TIME PLOTTED => 13:09

Dist	COUNTY	ROUTE	POST MILES TOTAL PROJECT	SHEET No.	TOTAL SHEETS
06	Mad	41	11.7/13.4	10	94

REGISTERED CIVIL ENGINEER 1/26/15 DATE

01/26/15
PLANS APPROVAL DATE

REGISTERED PROFESSIONAL ENGINEER
MAJID MONFAREDIAN
No. 65517
Exp. 9/30/15
CIVIL
STATE OF CALIFORNIA

THE STATE OF CALIFORNIA OR ITS OFFICERS OR AGENTS SHALL NOT BE RESPONSIBLE FOR THE ACCURACY OR COMPLETENESS OF SCANNED COPIES OF THIS PLAN SHEET.

NOTES:

1. FOR ACCURATE RIGHT OF WAY DATA, CONTACT RIGHT OF WAY ENGINEERING AT THE DISTRICT OFFICE.
2. LAYOUT LINES AND STATIONS ARE FOR CONSTRUCTION PURPOSES ONLY.
3. LOCATIONS OF TEMPORARY SILT FENCES AND TEMPORARY FIBER ROLLS MUST BE AS ORDERED BY THE ENGINEER.

LEGEND:

COLD PLANE AC Pvmt

REMOVE FENCE

REMOVE TREE

ABBREVIATIONS:

BWF-BARBED WIRE FENCE (TYPE BW, 5 STRAND, METAL POST)
RFBW-REMOVE FENCE (TYPE BW)

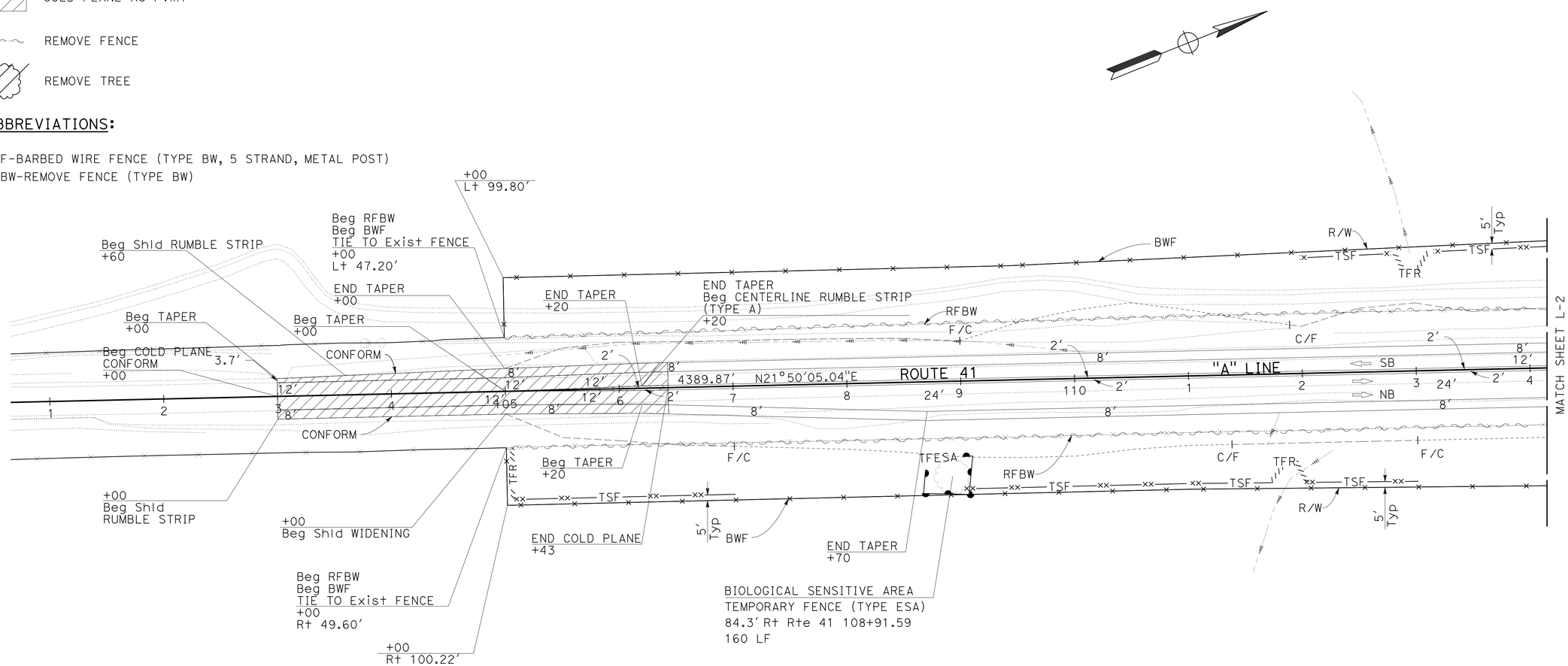

LAYOUT

SCALE:1"=50' **L-1**

STATE OF CALIFORNIA - DEPARTMENT OF TRANSPORTATION
Caltrans
DESIGN

FUNCTIONAL SUPERVISOR: MICHAEL K. LIM
CALCULATED-DESIGNED BY: MAJID MONFAREDIAN
CHECKED BY: MICHAEL K. LIM
REVISED BY
DATE REVISED

LAST REVISION 01-26-15
DATE PLOTTED => 07-APR-2015
TIME PLOTTED => 13:09

Dist	COUNTY	ROUTE	POST MILES TOTAL PROJECT	SHEET No.	TOTAL SHEETS
06	Mad	41	11.7/13.4	11	94

REGISTERED CIVIL ENGINEER 1/26/15 DATE

01/26/15
PLANS APPROVAL DATE

REGISTERED PROFESSIONAL ENGINEER MAJID MONFAREDIAN No. 65517 Exp. 9/30/15 CIVIL STATE OF CALIFORNIA

THE STATE OF CALIFORNIA OR ITS OFFICERS OR AGENTS SHALL NOT BE RESPONSIBLE FOR THE ACCURACY OR COMPLETENESS OF SCANNED COPIES OF THIS PLAN SHEET.

NOTE:

FOR ACCURATE RIGHT OF WAY DATA, CONTACT RIGHT OF WAY ENGINEERING AT THE DISTRICT OFFICE.

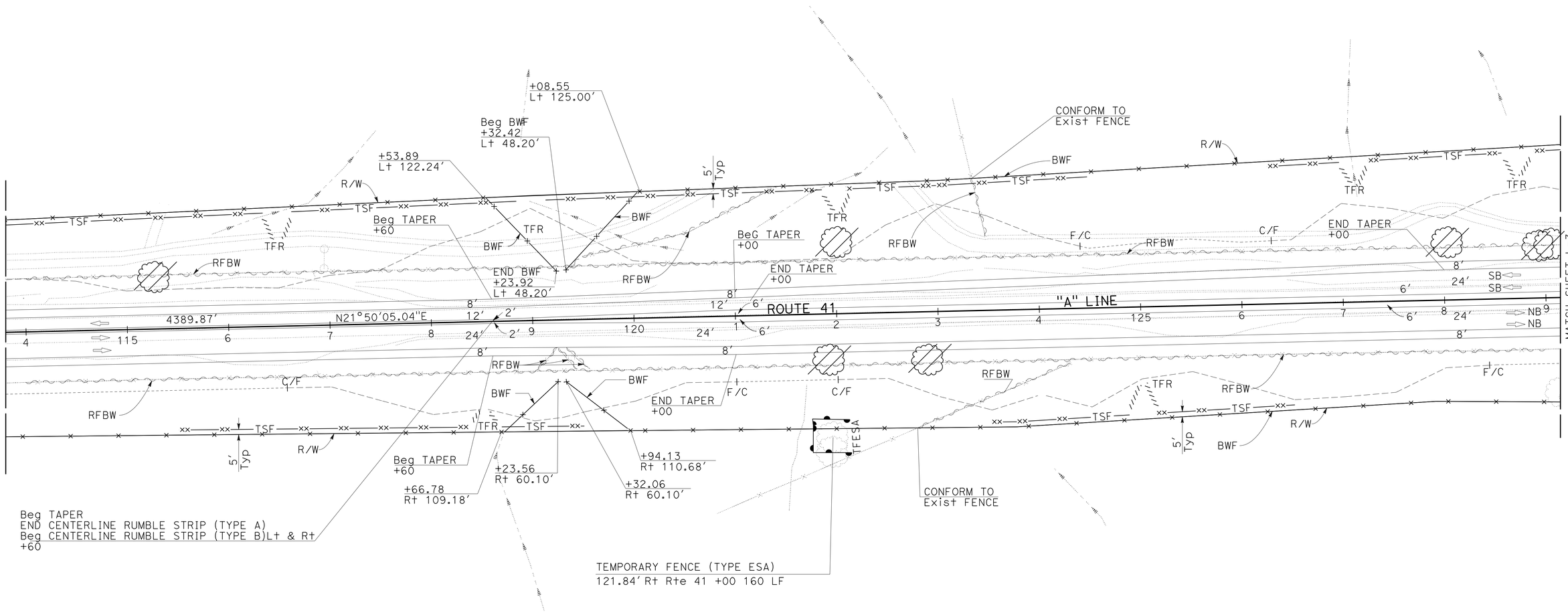

LAYOUT

SCALE:1"=50' **L-2**

STATE OF CALIFORNIA - DEPARTMENT OF TRANSPORTATION

Caltrans DESIGN

FUNCTIONAL SUPERVISOR: MICHAEL K. LIM

CALCULATED-DESIGNED BY: MAJID MONFAREDIAN

CHECKED BY: MICHAEL K. LIM

REVISED BY

DATE REVISED

LAST REVISION 01-26-15

DATE PLOTTED => 07-APR-2015
TIME PLOTTED => 13:09

Dist	COUNTY	ROUTE	POST MILES TOTAL PROJECT	SHEET No.	TOTAL SHEETS
06	Mad	41	11.7/13.4	12	94

REGISTERED CIVIL ENGINEER DATE 1/26/15

01/26/15
PLANS APPROVAL DATE

REGISTERED PROFESSIONAL ENGINEER MAJID MONFAREDIAN No. 65517 Exp. 9/30/15 CIVIL STATE OF CALIFORNIA

THE STATE OF CALIFORNIA OR ITS OFFICERS OR AGENTS SHALL NOT BE RESPONSIBLE FOR THE ACCURACY OR COMPLETENESS OF SCANNED COPIES OF THIS PLAN SHEET.

NOTE:

FOR ACCURATE RIGHT OF WAY DATA, CONTACT RIGHT OF WAY ENGINEERING AT THE DISTRICT OFFICE.

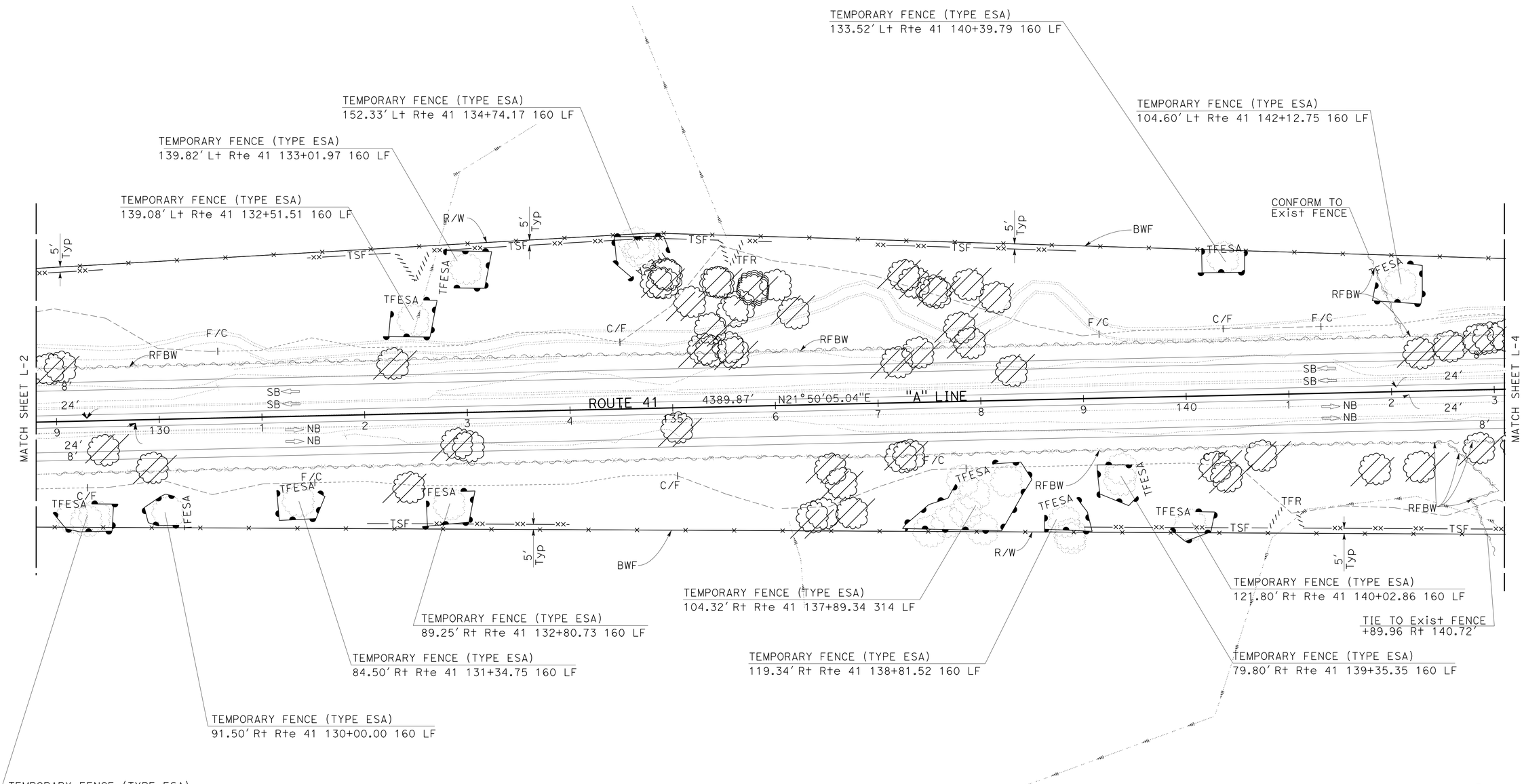

LAYOUT

SCALE:1"=50' **L-3**

STATE OF CALIFORNIA - DEPARTMENT OF TRANSPORTATION
DESIGN
Caltrans®

FUNCTIONAL SUPERVISOR: MICHAEL K. LIM
CALCULATED-DESIGNED BY: MAJID MONFAREDIAN
CHECKED BY: MICHAEL K. LIM
REVISED BY
DATE REVISED

LAST REVISION 01-26-15
DATE PLOTTED => 07-APR-2015
TIME PLOTTED => 13:09

Dist	COUNTY	ROUTE	POST MILES TOTAL PROJECT	SHEET No.	TOTAL SHEETS
06	Mad	41	11.7/13.4	13	94

REGISTERED CIVIL ENGINEER 1/26/15 DATE

01/26/15
PLANS APPROVAL DATE

REGISTERED PROFESSIONAL ENGINEER MAJID MONFAREDIAN No. 65517 Exp. 9/30/15 CIVIL STATE OF CALIFORNIA

THE STATE OF CALIFORNIA OR ITS OFFICERS OR AGENTS SHALL NOT BE RESPONSIBLE FOR THE ACCURACY OR COMPLETENESS OF SCANNED COPIES OF THIS PLAN SHEET.

NOTE:

FOR ACCURATE RIGHT OF WAY DATA, CONTACT RIGHT OF WAY ENGINEERING AT THE DISTRICT OFFICE.

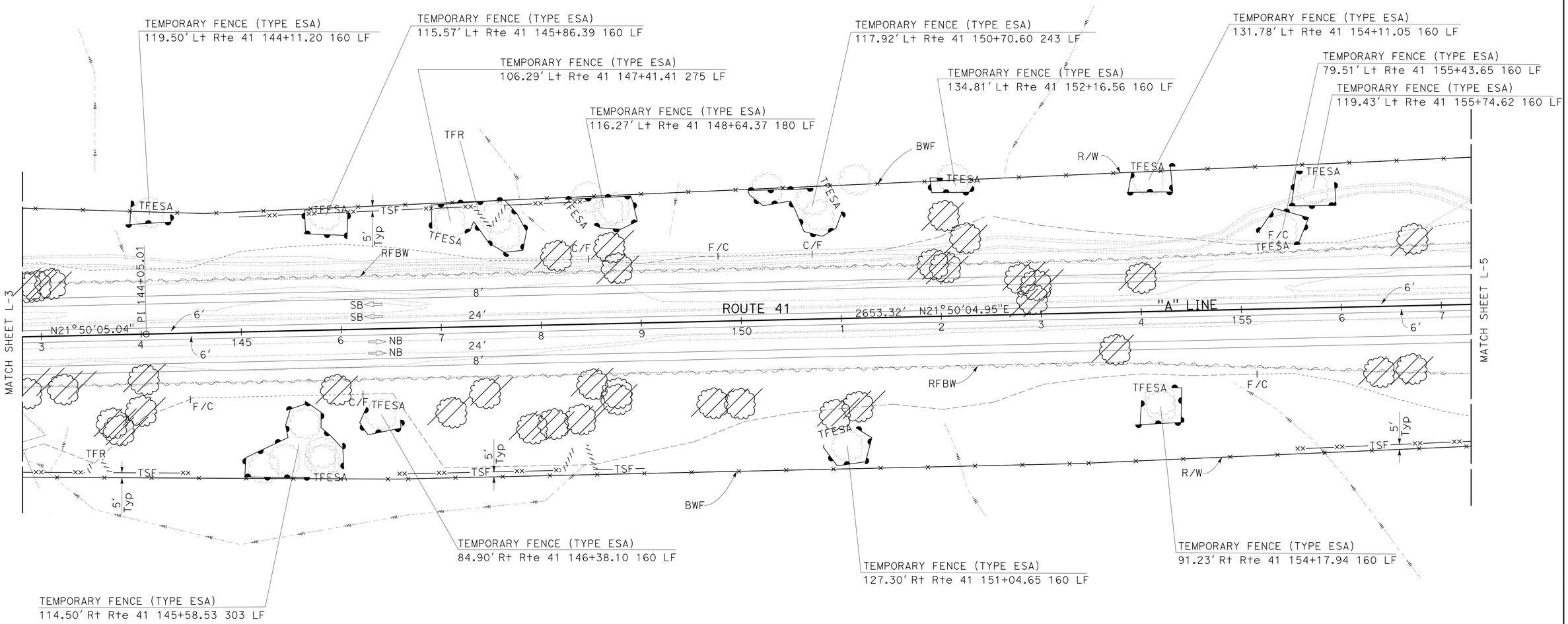

LAYOUT

SCALE:1"=50' **L-4**

STATE OF CALIFORNIA - DEPARTMENT OF TRANSPORTATION

Caltrans

DESIGN

FUNCTIONAL SUPERVISOR: MICHAEL K. LIM

CALCULATED-DESIGNED BY: MAJID MONFAREDIAN

CHECKED BY: MICHAEL K. LIM

REVISED BY

DATE REVISED

LAST REVISION 01-26-15

DATE PLOTTED => 07-APR-2015
TIME PLOTTED => 13:09

Dist	COUNTY	ROUTE	POST MILES TOTAL PROJECT	SHEET No.	TOTAL SHEETS
06	Mad	41	11.7/13.4	14	94

REGISTERED CIVIL ENGINEER DATE 1/26/15

01/26/15
PLANS APPROVAL DATE

REGISTERED PROFESSIONAL ENGINEER MAJID MONFAREDIAN No. 65517 Exp. 9/30/15 CIVIL STATE OF CALIFORNIA

THE STATE OF CALIFORNIA OR ITS OFFICERS OR AGENTS SHALL NOT BE RESPONSIBLE FOR THE ACCURACY OR COMPLETENESS OF SCANNED COPIES OF THIS PLAN SHEET.

NOTE:

FOR ACCURATE RIGHT OF WAY DATA, CONTACT RIGHT OF WAY ENGINEERING AT THE DISTRICT OFFICE.

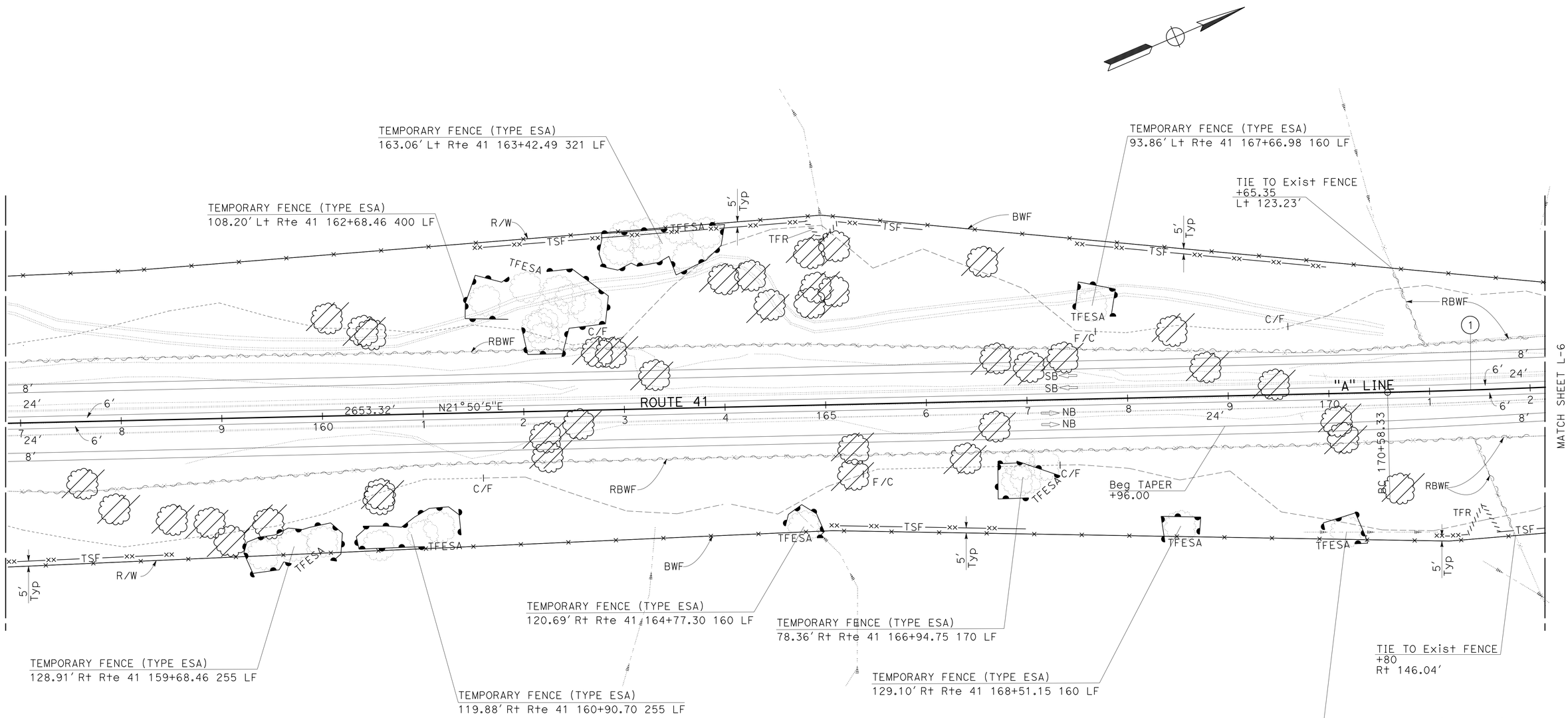

CURVE DATA

No. (X)	R	Δ	T	L
1	8133'	3°40'16"	260.64'	521.11'

LAYOUT

SCALE:1"=50' **L-5**

STATE OF CALIFORNIA - DEPARTMENT OF TRANSPORTATION
Caltrans
DESIGN

FUNCTIONAL SUPERVISOR: MICHAEL K. LIM
MAJID MONFAREDIAN
MICHAEL K. LIM
CALCULATED-DESIGNED BY
CHECKED BY
REVISED BY
DATE REVISED

LAST REVISION 01-26-15
DATE PLOTTED => 07-APR-2015
TIME PLOTTED => 13:10

Dist	COUNTY	ROUTE	POST MILES TOTAL PROJECT	SHEET No.	TOTAL SHEETS
06	Mad	41	11.7/13.4	15	94

REGISTERED CIVIL ENGINEER DATE 1/26/15

01/26/15
PLANS APPROVAL DATE

REGISTERED PROFESSIONAL ENGINEER MAJID MONFAREDIAN No. 65517 Exp. 9/30/15 CIVIL STATE OF CALIFORNIA

THE STATE OF CALIFORNIA OR ITS OFFICERS OR AGENTS SHALL NOT BE RESPONSIBLE FOR THE ACCURACY OR COMPLETENESS OF SCANNED COPIES OF THIS PLAN SHEET.

NOTE:

FOR ACCURATE RIGHT OF WAY DATA, CONTACT RIGHT OF WAY ENGINEERING AT THE DISTRICT OFFICE.

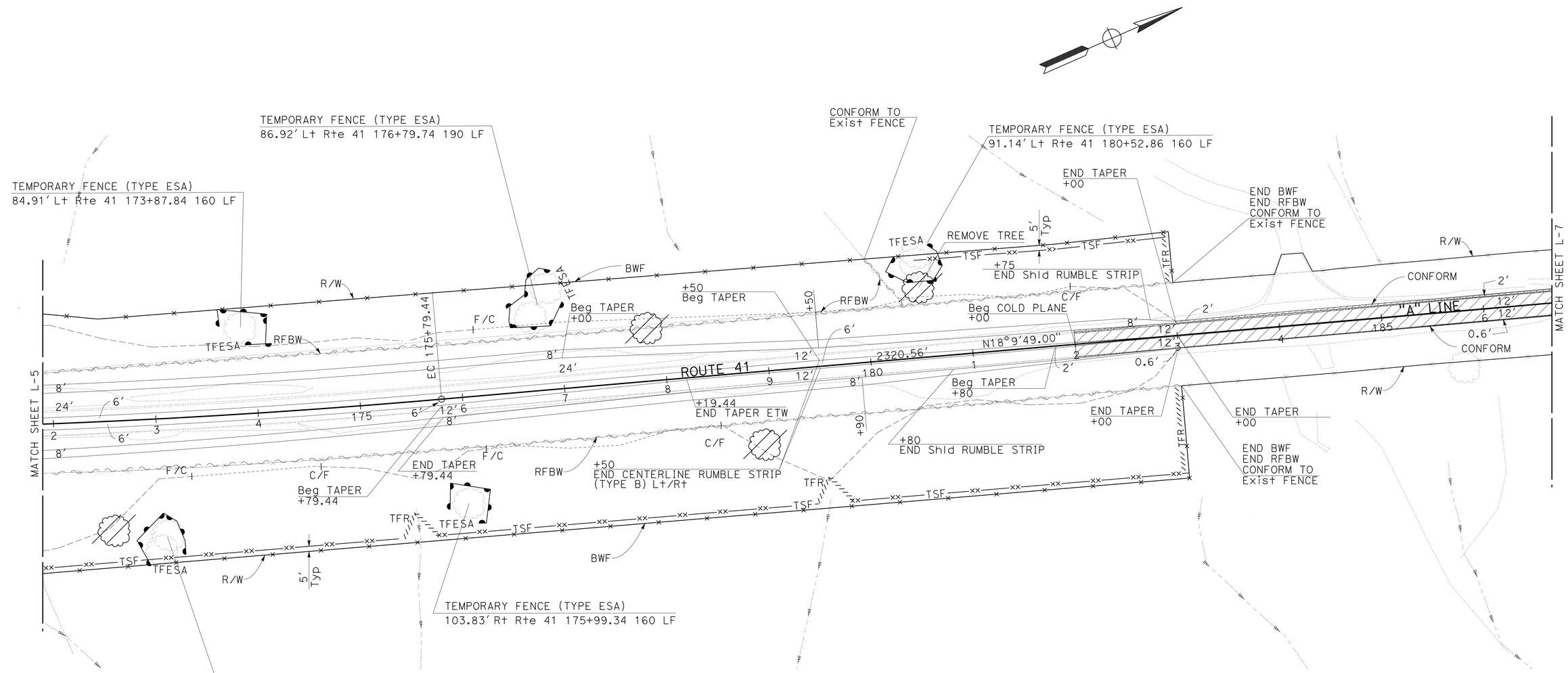

LAYOUT

SCALE:1"=50' **L-6**

STATE OF CALIFORNIA - DEPARTMENT OF TRANSPORTATION
Caltrans
DESIGN

FUNCTIONAL SUPERVISOR: MICHAEL K. LIM
CALCULATED-DESIGNED BY: MAJID MONFAREDIAN
CHECKED BY: MICHAEL K. LIM
REVISED BY
DATE REVISED

LAST REVISION 01-26-15
DATE PLOTTED => 07-APR-2015
TIME PLOTTED => 13:10

Dist	COUNTY	ROUTE	POST MILES TOTAL PROJECT	SHEET No.	TOTAL SHEETS
06	Mad	41	11.7/13.4	16	94

REGISTERED CIVIL ENGINEER 1/26/15 DATE

01/26/15
PLANS APPROVAL DATE

REGISTERED PROFESSIONAL ENGINEER
MAJID MONFAREDIAN
No. 65517
Exp. 9/30/15
CIVIL
STATE OF CALIFORNIA

THE STATE OF CALIFORNIA OR ITS OFFICERS OR AGENTS SHALL NOT BE RESPONSIBLE FOR THE ACCURACY OR COMPLETENESS OF SCANNED COPIES OF THIS PLAN SHEET.

NOTE:

FOR ACCURATE RIGHT OF WAY DATA, CONTACT
RIGHT OF WAY ENGINEERING AT THE DISTRICT OFFICE.

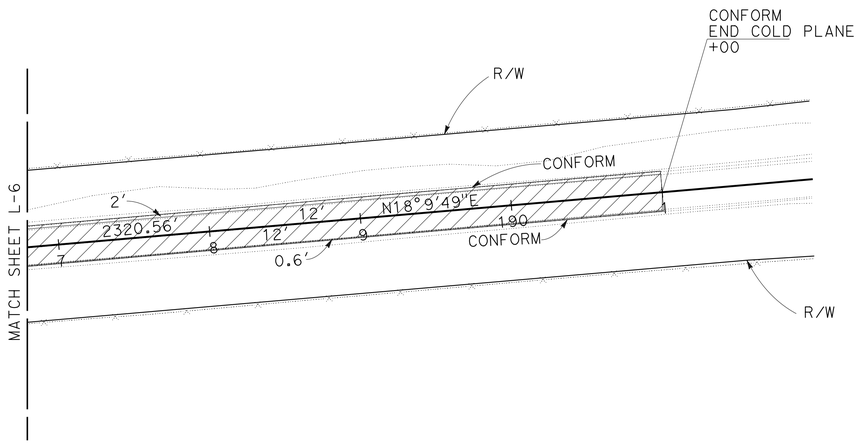

LAYOUT

SCALE:1"=50' **L-7**

REVISED BY	
DATE REVISED	
CALCULATED-DESIGNED BY	MAJID MONFAREDIAN
CHECKED BY	MICHAEL K. LIM
FUNCTIONAL SUPERVISOR	MICHAEL K. LIM

STATE OF CALIFORNIA - DEPARTMENT OF TRANSPORTATION
Caltrans
DESIGN

LAST REVISION 01-26-15
DATE PLOTTED => 07-APR-2015
TIME PLOTTED => 13:10

Dist	COUNTY	ROUTE	POST MILES TOTAL PROJECT	SHEET No.	TOTAL SHEETS
06	Mad	41	11.7/13.4	17	94

REGISTERED CIVIL ENGINEER DATE 1/26/15

01/26/15
PLANS APPROVAL DATE

REGISTERED PROFESSIONAL ENGINEER MAJID MONFAREDIAN No. 65517 Exp. 9/30/15 CIVIL STATE OF CALIFORNIA

THE STATE OF CALIFORNIA OR ITS OFFICERS OR AGENTS SHALL NOT BE RESPONSIBLE FOR THE ACCURACY OR COMPLETENESS OF SCANNED COPIES OF THIS PLAN SHEET.

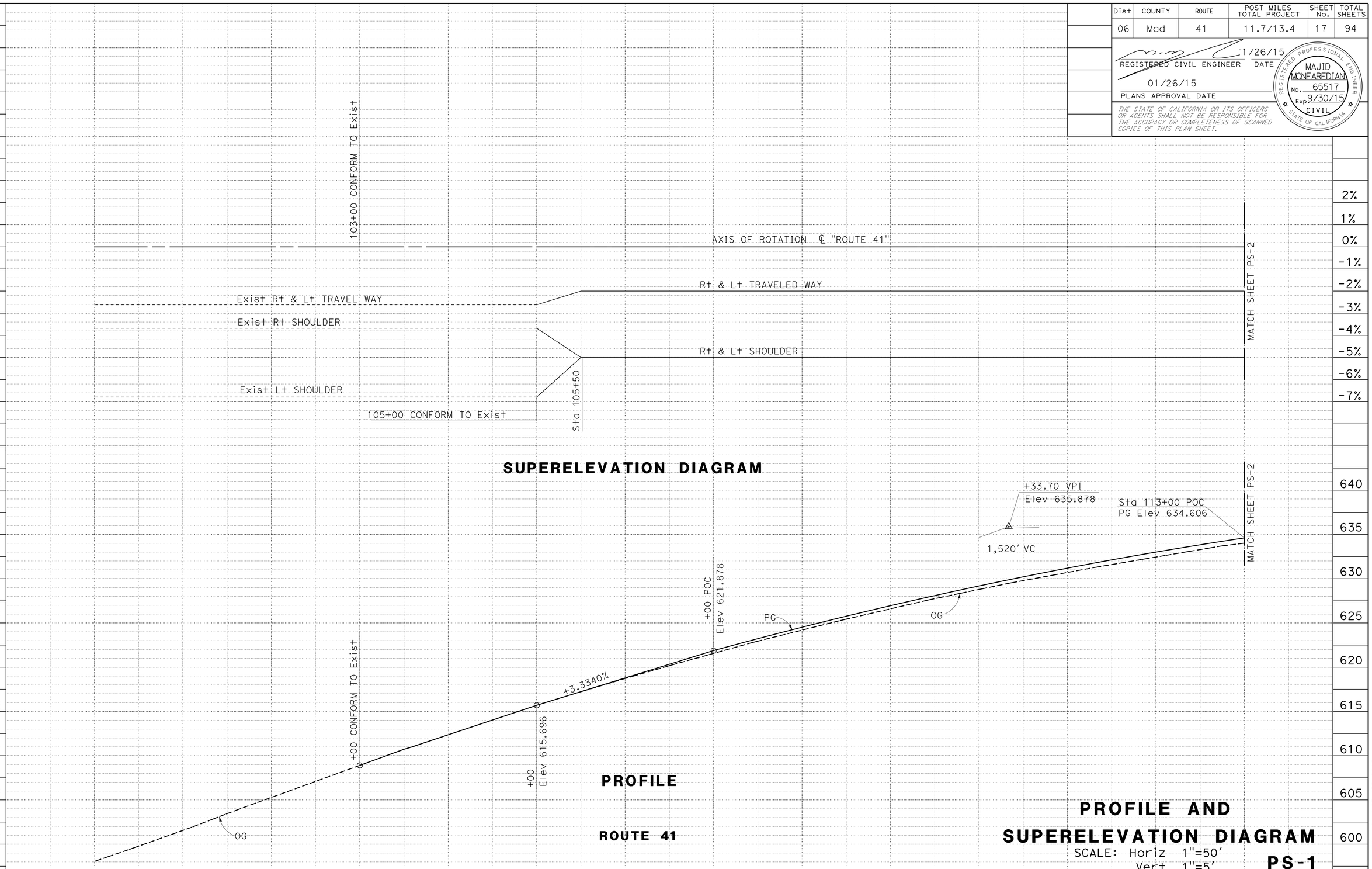

ROUTE 41

PROFILE AND SUPERELEVATION DIAGRAM

SCALE: Horiz 1"=50'
Vert 1"=5'

PS-1

STATE OF CALIFORNIA - DEPARTMENT OF TRANSPORTATION
Caltrans
DESIGN

FUNCTIONAL SUPERVISOR: MICHAEL K. LIM
CALCULATED-DESIGNED BY: MAJID MONFAREDIAN
CHECKED BY: MICHAEL K. LIM
REVISED BY
DATE REVISED

LAST REVISION 01-26-15
DATE PLOTTED => 07-APR-2015
TIME PLOTTED => 13:10

Dist	COUNTY	ROUTE	POST MILES TOTAL PROJECT	SHEET No.	TOTAL SHEETS
06	Mad	41	11.7/13.4	18	94

REGISTERED CIVIL ENGINEER 1/26/15 DATE

01/26/15
PLANS APPROVAL DATE

REGISTERED PROFESSIONAL ENGINEER MAJID MONFAREDIAN No. 65517 Exp. 9/30/15 CIVIL STATE OF CALIFORNIA

THE STATE OF CALIFORNIA OR ITS OFFICERS OR AGENTS SHALL NOT BE RESPONSIBLE FOR THE ACCURACY OR COMPLETENESS OF SCANNED COPIES OF THIS PLAN SHEET.

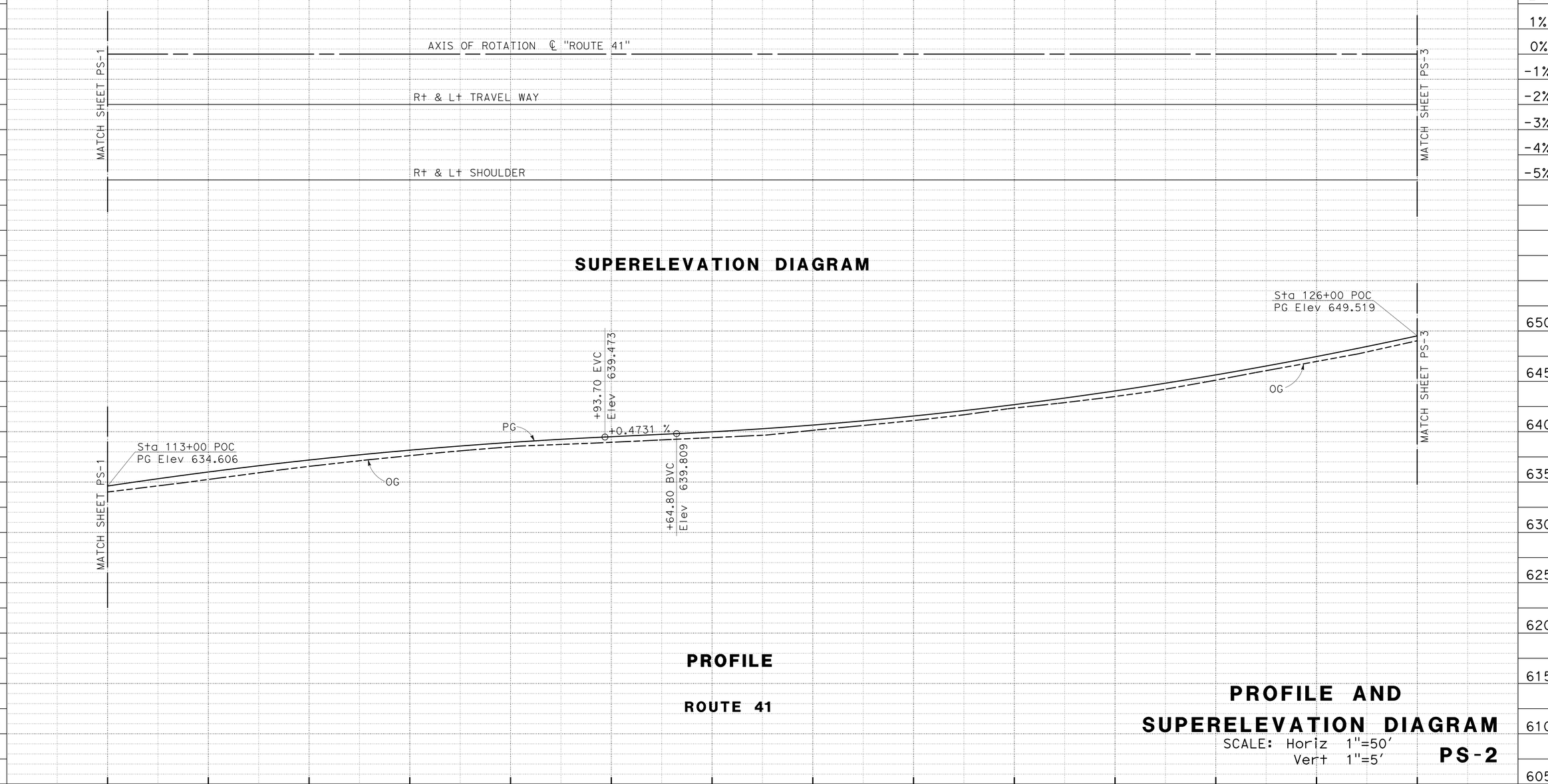

PROFILE AND SUPERELEVATION DIAGRAM

SCALE: Horiz 1"=50'
Vert 1"=5'

PS-2

REVISED BY | DATE REVISED

MAJID MONFAREDIAN | MICHAEL K. LIM

CALCULATED-DESIGNED BY | CHECKED BY

FUNCTIONAL SUPERVISOR: MICHAEL K. LIM

STATE OF CALIFORNIA - DEPARTMENT OF TRANSPORTATION

Caltrans® DESIGN

DATE PLOTTED => 07-APR-2015
TIME PLOTTED => 13:10

LAST REVISION 01-26-15

Dist	COUNTY	ROUTE	POST MILES TOTAL PROJECT	SHEET No.	TOTAL SHEETS
06	Mad	41	11.7/13.4	19	94

REGISTERED CIVIL ENGINEER 1/26/15 DATE

01/26/15
PLANS APPROVAL DATE

REGISTERED PROFESSIONAL ENGINEER MAJID MONFAREDIAN No. 65517 Exp. 9/30/15 CIVIL STATE OF CALIFORNIA

THE STATE OF CALIFORNIA OR ITS OFFICERS OR AGENTS SHALL NOT BE RESPONSIBLE FOR THE ACCURACY OR COMPLETENESS OF SCANNED COPIES OF THIS PLAN SHEET.

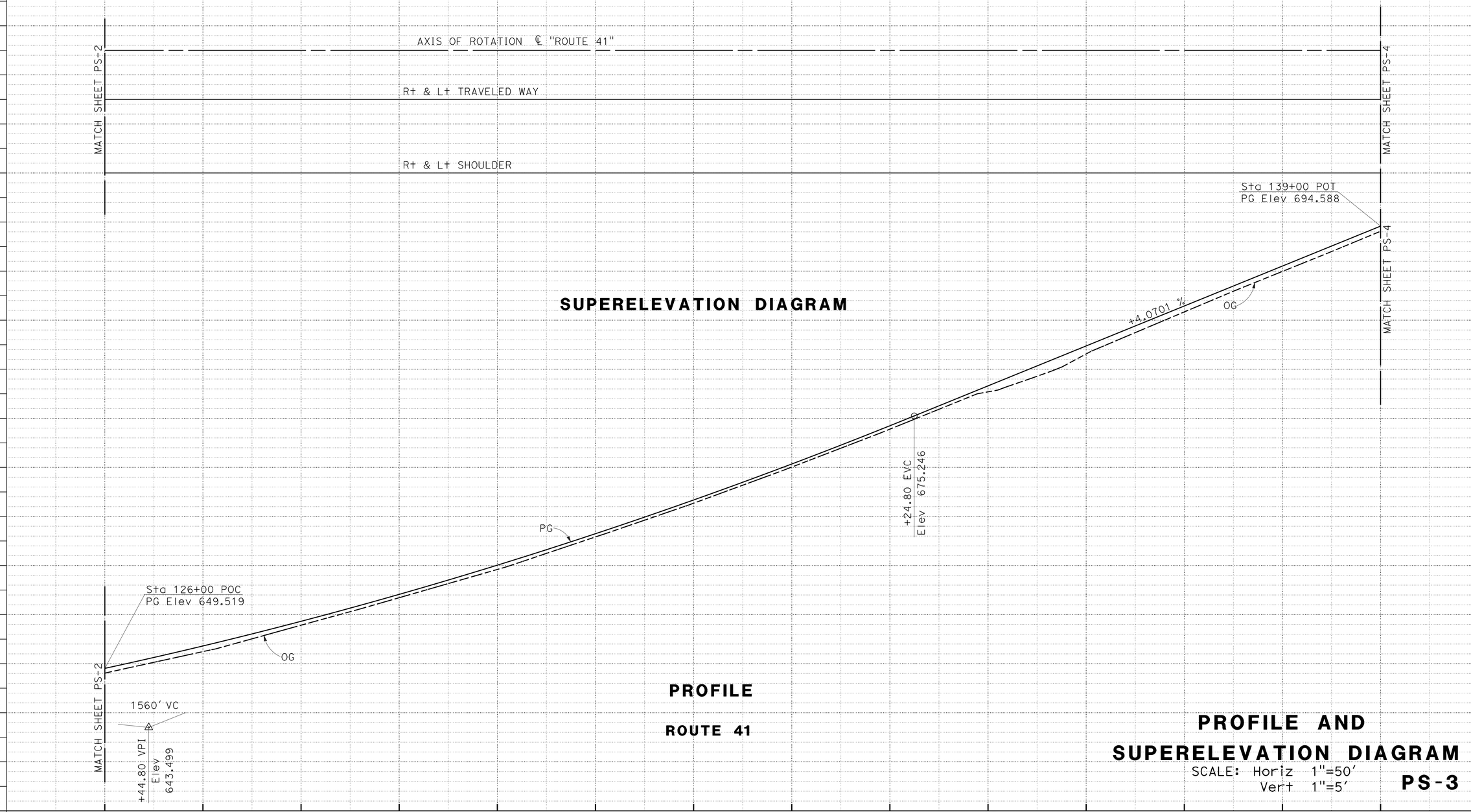

PROFILE AND SUPERELEVATION DIAGRAM

SCALE: Horiz 1"=50'
Vert 1"=5'

PS-3

STATE OF CALIFORNIA - DEPARTMENT OF TRANSPORTATION

DESIGN

Caltrans

FUNCTIONAL SUPERVISOR: MICHAEL K. LIM

CALCULATED-DESIGNED BY: MAJID MONFAREDIAN

CHECKED BY: MICHAEL K. LIM

REVISED BY

DATE REVISED

LAST REVISION 01-26-15

DATE PLOTTED => 07-APR-2015
TIME PLOTTED => 13:10

Dist	COUNTY	ROUTE	POST MILES TOTAL PROJECT	SHEET No.	TOTAL SHEETS
06	Mad	41	11.7/13.4	20	94

REGISTERED CIVIL ENGINEER DATE 1/26/15

01/26/15
PLANS APPROVAL DATE

REGISTERED PROFESSIONAL ENGINEER MAJID MONFAREDIAN No. 65517 Exp. 9/30/15 CIVIL STATE OF CALIFORNIA

THE STATE OF CALIFORNIA OR ITS OFFICERS OR AGENTS SHALL NOT BE RESPONSIBLE FOR THE ACCURACY OR COMPLETENESS OF SCANNED COPIES OF THIS PLAN SHEET.

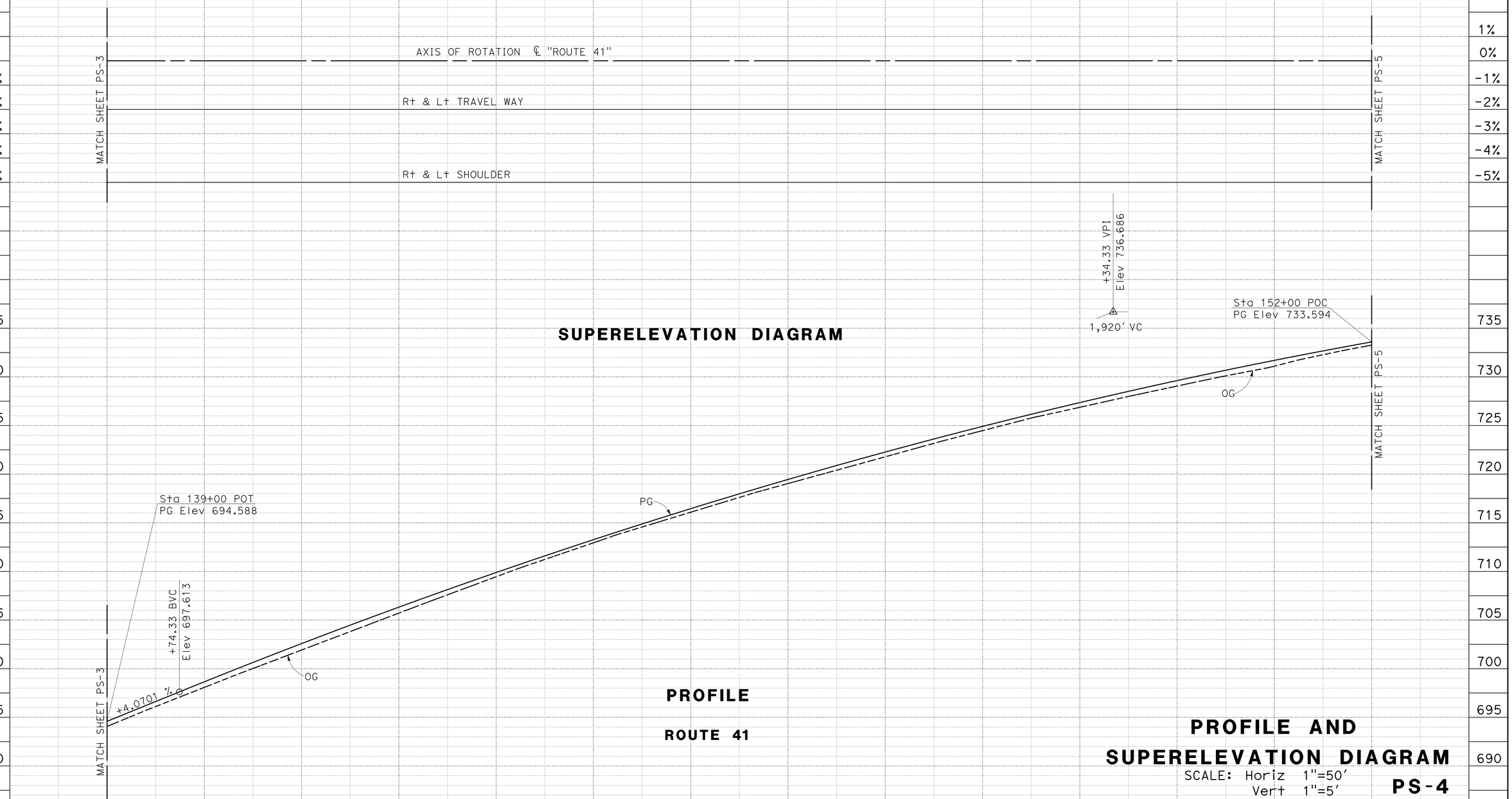

SUPERELEVATION DIAGRAM

PROFILE

ROUTE 41

PROFILE AND SUPERELEVATION DIAGRAM

SCALE: Horiz 1"=50'
Vert 1"=5'

PS-4

STATE OF CALIFORNIA - DEPARTMENT OF TRANSPORTATION
Caltrans
DESIGN

FUNCTIONAL SUPERVISOR: MICHAEL K. LIM

CALCULATED-DESIGNED BY: MAJID MONFAREDIAN
CHECKED BY: MICHAEL K. LIM

REVISED BY
DATE REVISED

LAST REVISION DATE PLOTTED => 07-APR-2015
TIME PLOTTED => 13:10
01-26-15

Dist	COUNTY	ROUTE	POST MILES TOTAL PROJECT	SHEET No.	TOTAL SHEETS
06	Mad	41	11.7/13.4	21	94

REGISTERED CIVIL ENGINEER 1/26/15 DATE

01/26/15
PLANS APPROVAL DATE

REGISTERED PROFESSIONAL ENGINEER MAJID MONFAREDIAN No. 65517 Exp. 9/30/15 CIVIL STATE OF CALIFORNIA

THE STATE OF CALIFORNIA OR ITS OFFICERS OR AGENTS SHALL NOT BE RESPONSIBLE FOR THE ACCURACY OR COMPLETENESS OF SCANNED COPIES OF THIS PLAN SHEET.

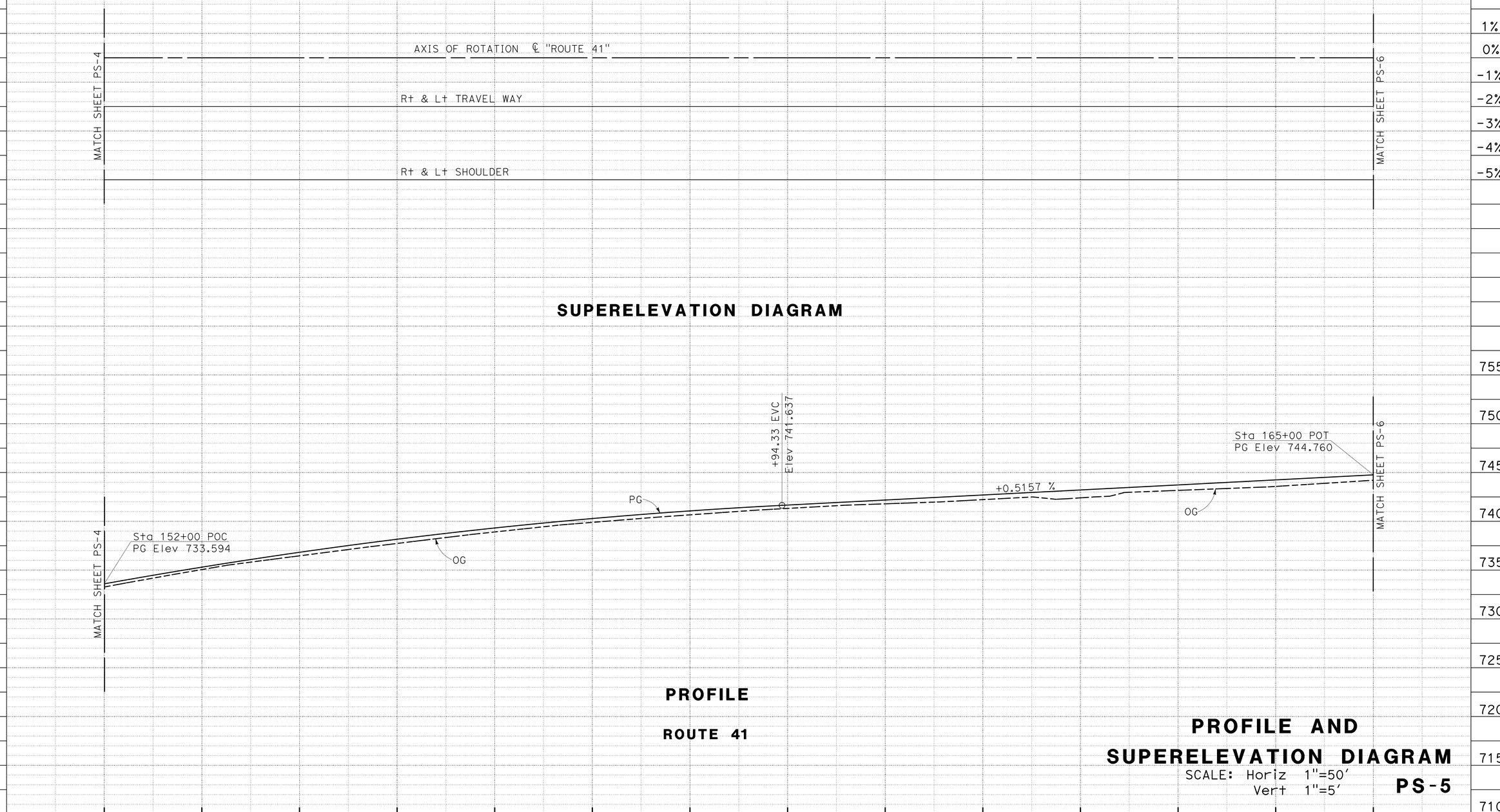

STATE OF CALIFORNIA - DEPARTMENT OF TRANSPORTATION
Caltrans
DESIGN

FUNCTIONAL SUPERVISOR: MICHAEL K. LIM

CALCULATED-DESIGNED BY: MAJID MONFAREDIAN
CHECKED BY: MICHAEL K. LIM

REVISED BY
DATE REVISED

LAST REVISION 01-26-15
DATE PLOTTED => 07-APR-2015
TIME PLOTTED => 13:10

Dist	COUNTY	ROUTE	POST MILES TOTAL PROJECT	SHEET No.	TOTAL SHEETS
06	Mad	41	11.7/13.4	22	94

REGISTERED CIVIL ENGINEER 1/26/15 DATE

01/26/15
PLANS APPROVAL DATE

REGISTERED PROFESSIONAL ENGINEER MAJID MONFAREDIAN No. 65517 Exp. 9/30/15 CIVIL STATE OF CALIFORNIA

THE STATE OF CALIFORNIA OR ITS OFFICERS OR AGENTS SHALL NOT BE RESPONSIBLE FOR THE ACCURACY OR COMPLETENESS OF SCANNED COPIES OF THIS PLAN SHEET.

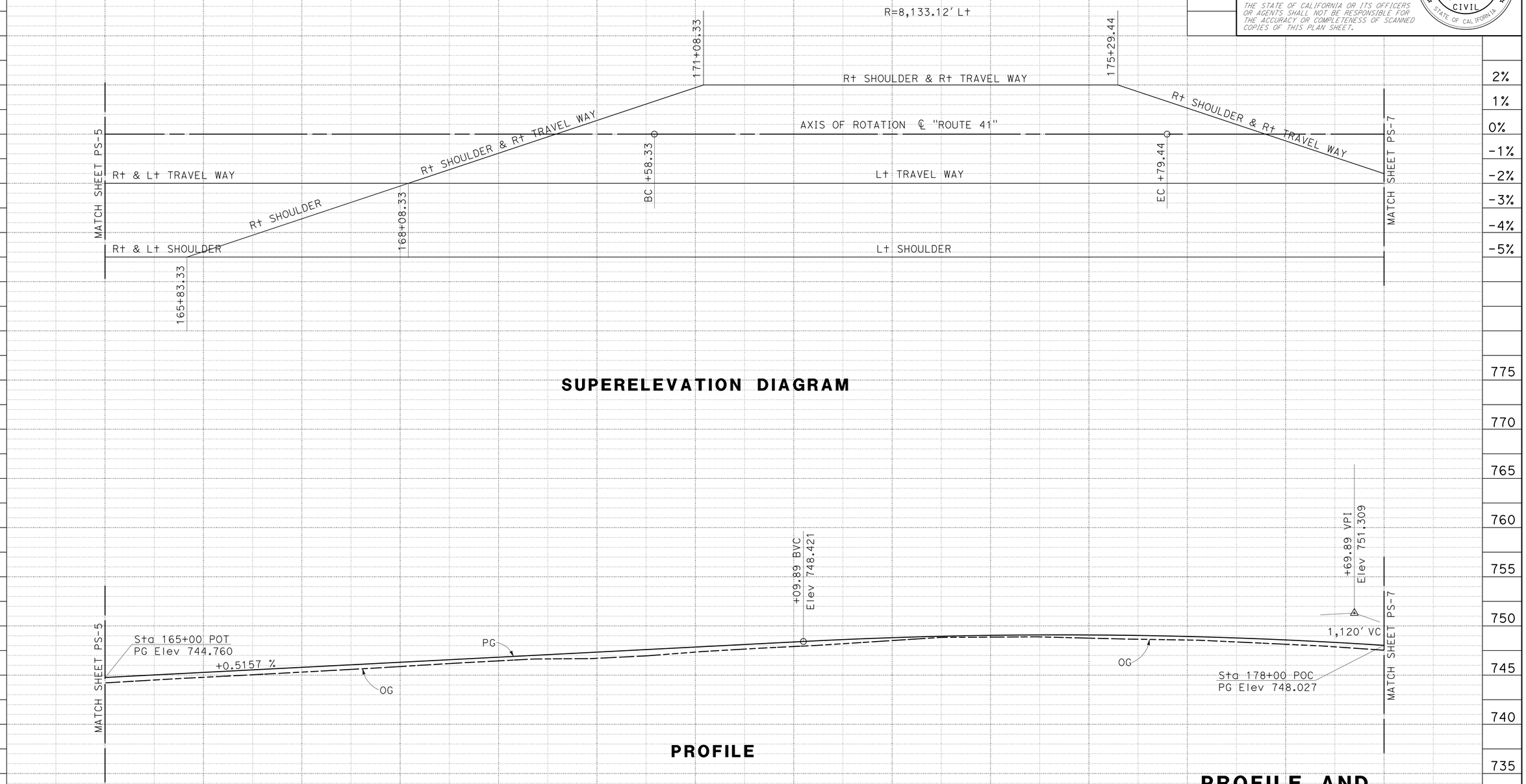

SUPERELEVATION DIAGRAM

PROFILE

ROUTE 41

PROFILE AND SUPERELEVATION DIAGRAM

SCALE: Horiz 1"=50'
Vert 1"=5'

PS-6

REVISED BY | DATE REVISED

MAJID MONFAREDIAN | MICHAEL K. LIM

CALCULATED-DESIGNED BY | CHECKED BY

FUNCTIONAL SUPERVISOR: MICHAEL K. LIM

STATE OF CALIFORNIA - DEPARTMENT OF TRANSPORTATION

DESIGN

Caltrans

LAST REVISION 01-26-15 | DATE PLOTTED => 07-APR-2015 | TIME PLOTTED => 13:10

Dist	COUNTY	ROUTE	POST MILES TOTAL PROJECT	SHEET No.	TOTAL SHEETS
06	Mad	41	11.7/13.4	23	94

REGISTERED CIVIL ENGINEER 1/26/15 DATE

01/26/15
PLANS APPROVAL DATE

REGISTERED PROFESSIONAL ENGINEER MAJID MONFAREDIAN No. 65517 Exp. 9/30/15 CIVIL STATE OF CALIFORNIA

THE STATE OF CALIFORNIA OR ITS OFFICERS OR AGENTS SHALL NOT BE RESPONSIBLE FOR THE ACCURACY OR COMPLETENESS OF SCANNED COPIES OF THIS PLAN SHEET.

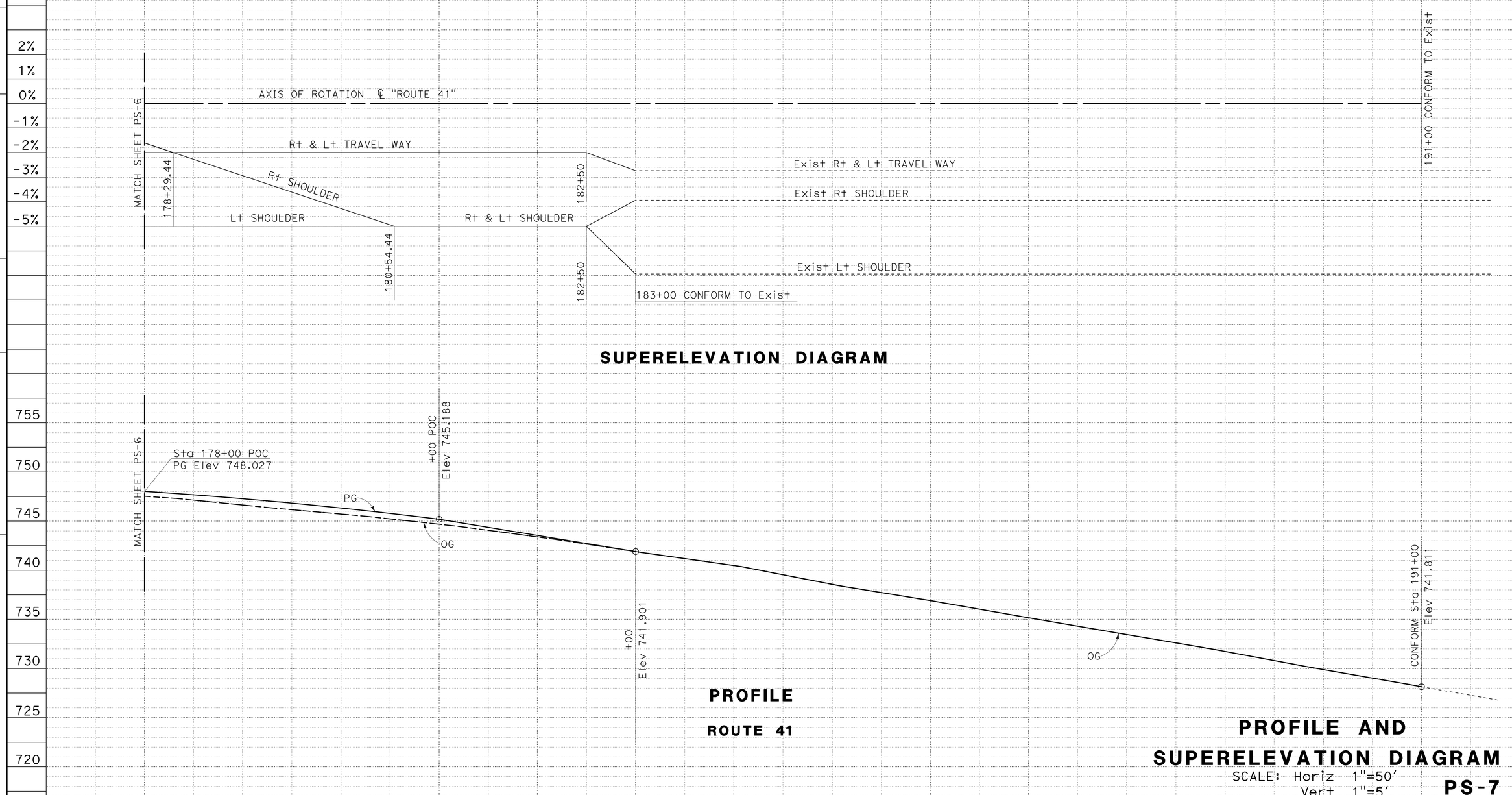

STATE OF CALIFORNIA - DEPARTMENT OF TRANSPORTATION
DESIGN
Caltrans

FUNCTIONAL SUPERVISOR: MICHAEL K. LIM
CALCULATED-DESIGNED BY: MAJID MONFAREDIAN
CHECKED BY: MICHAEL K. LIM
REVISED BY
DATE REVISED

LAST REVISION 01-26-15
DATE PLOTTED => 07-APR-2015
TIME PLOTTED => 13:10

Dist	COUNTY	ROUTE	POST MILES TOTAL PROJECT	SHEET No.	TOTAL SHEETS
06	Mad	41	11.7/13.4	24	94

REGISTERED CIVIL ENGINEER 1/26/15 DATE

01/26/15
PLANS APPROVAL DATE

REGISTERED PROFESSIONAL ENGINEER
MAJID MONFAREDIAN
No. 65517
Exp. 9/30/15
CIVIL
STATE OF CALIFORNIA

THE STATE OF CALIFORNIA OR ITS OFFICERS OR AGENTS SHALL NOT BE RESPONSIBLE FOR THE ACCURACY OR COMPLETENESS OF SCANNED COPIES OF THIS PLAN SHEET.

LEGEND:

0.20' COLD PLANE AC Pvmt

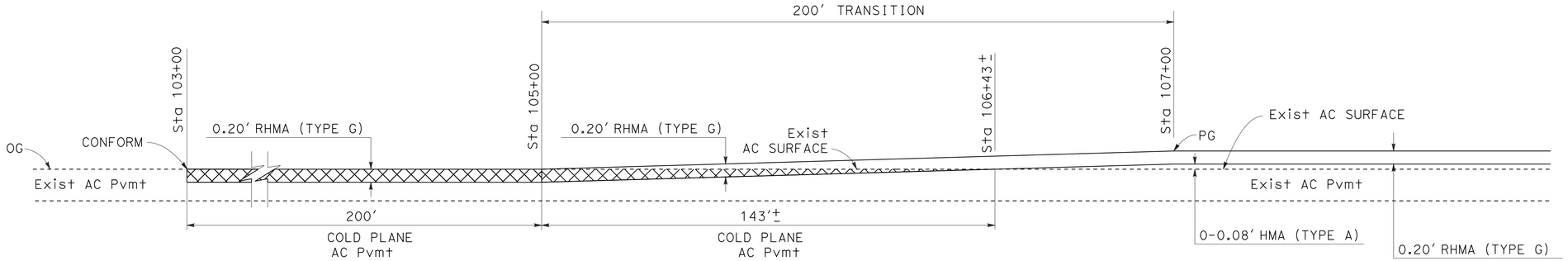

COLD PLANE AND LONGITUDINAL TRANSITION

Sta 103+00 TO Sta 106+43

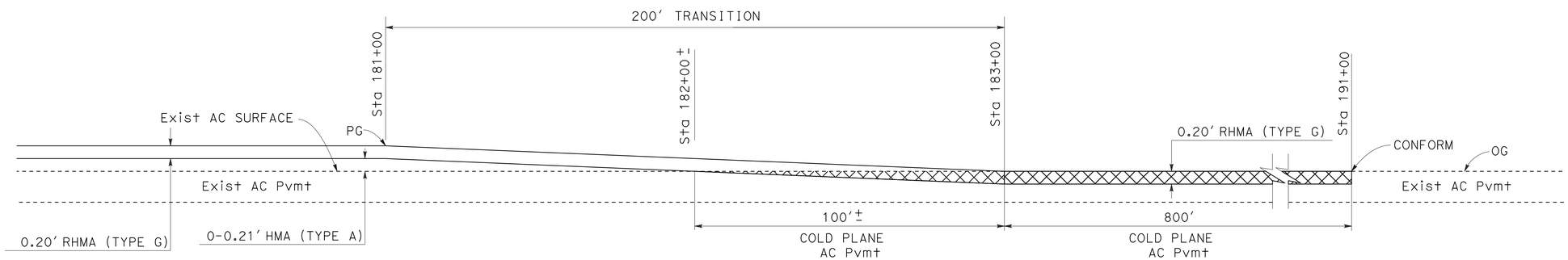

COLD PLANE AND LONGITUDINAL TRANSITION

Sta 181+00 TO Sta 191+00

ROUTE 41

CONSTRUCTION DETAILS

NO SCALE

C-1

REVISED BY	DATE REVISED

CALCULATED-DESIGNED BY	CHECKED BY
MAJID MONFAREDIAN	MICHAEL K. LIM

FUNCTIONAL SUPERVISOR: MICHAEL K. LIM

STATE OF CALIFORNIA - DEPARTMENT OF TRANSPORTATION

Caltrans®

DESIGN

LAST REVISION 01-26-15 | DATE PLOTTED => 07-APR-2015 | TIME PLOTTED => 13:10

Dist	COUNTY	ROUTE	POST MILES TOTAL PROJECT	SHEET No.	TOTAL SHEETS
06	Mad	41	11.7/13.4	25	94

REGISTERED CIVIL ENGINEER 1/26/15 DATE

01/26/15
PLANS APPROVAL DATE

REGISTERED PROFESSIONAL ENGINEER MAJID MONFAREDIAN No. 65517 Exp. 9/30/15 CIVIL STATE OF CALIFORNIA

THE STATE OF CALIFORNIA OR ITS OFFICERS OR AGENTS SHALL NOT BE RESPONSIBLE FOR THE ACCURACY OR COMPLETENESS OF SCANNED COPIES OF THIS PLAN SHEET.

NOTE:

Temp FENCE LOCATIONS, PLCAEMENT, AND QUANTITIES MUST BE AS ORDERED BY THE THE ENGINEER.

MULTIPLE TREES MAY BE FENCED IN A SINGLE FENCE.

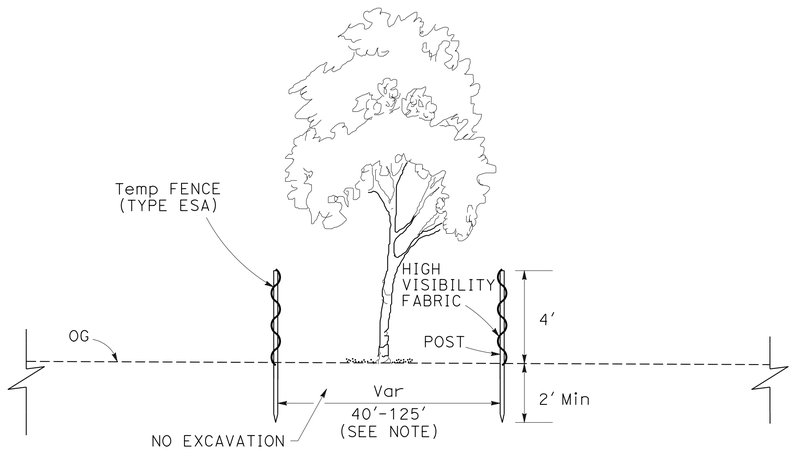

SECTION A-A

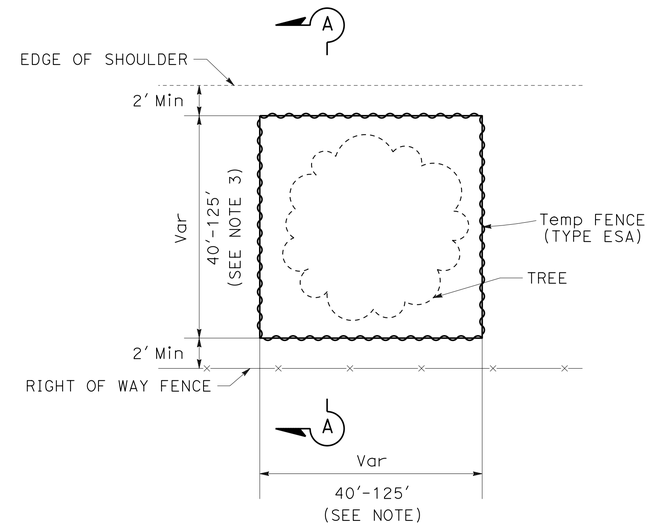

PLAN

TYPICAL
Temp FENCE (TYPE ESA)

CONSTRUCTION DETAILS

NO SCALE **C-2**

STATE OF CALIFORNIA - DEPARTMENT OF TRANSPORTATION
Caltrans
DESIGN

FUNCTIONAL SUPERVISOR: MICHAEL K. LIM
CALCULATED-DESIGNED BY: MAJID MONFAREDIAN
CHECKED BY: MICHAEL K. LIM
REVISED BY
DATE REVISED

LAST REVISION 01-26-15
DATE PLOTTED => 07-APR-2015
TIME PLOTTED => 13:10

Dist	COUNTY	ROUTE	POST MILES TOTAL PROJECT	SHEET No.	TOTAL SHEETS
06	Mad	41	11.7/13.4	26	94

REGISTERED CIVIL ENGINEER DATE 1/26/15

01/26/15
PLANS APPROVAL DATE

REGISTERED PROFESSIONAL ENGINEER MAJID MONFAREDIAN No. 65517 Exp. 9/30/15 CIVIL STATE OF CALIFORNIA

THE STATE OF CALIFORNIA OR ITS OFFICERS OR AGENTS SHALL NOT BE RESPONSIBLE FOR THE ACCURACY OR COMPLETENESS OF SCANNED COPIES OF THIS PLAN SHEET.

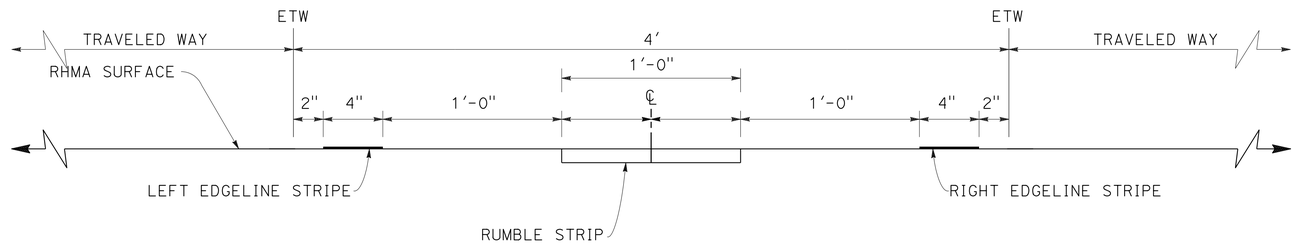

RUMBLE STRIP PLACEMENT
CENTER LINE (TYPE A)

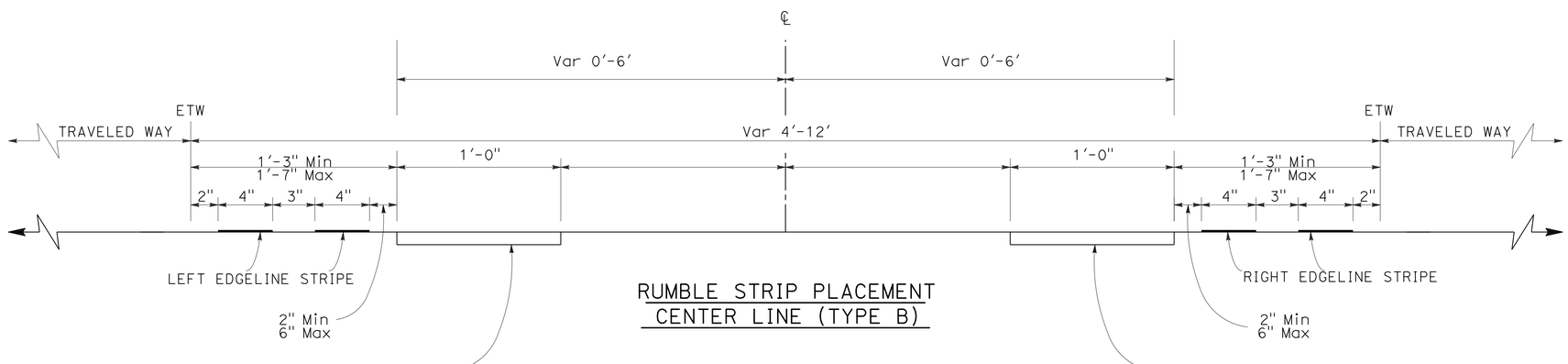

RUMBLE STRIP PLACEMENT
CENTER LINE (TYPE B)

TYPICAL GROUND-IN RUMBLE STRIP
CENTER LINE PLACEMENT

CONSTRUCTION DETAILS

NO SCALE

C-3

REVISED BY	DATE REVISED
MAJID MONFAREDIAN	MICHAEL K. LIM

CALCULATED-DESIGNED BY	CHECKED BY

FUNCTIONAL SUPERVISOR: MICHAEL K. LIM

STATE OF CALIFORNIA - DEPARTMENT OF TRANSPORTATION

Caltrans®

DESIGN

LAST REVISION 01-26-15 | DATE PLOTTED => 07-APR-2015 | TIME PLOTTED => 13:10

Dist	COUNTY	ROUTE	POST MILES TOTAL PROJECT	SHEET No.	TOTAL SHEETS
06	Mad	41	11.7/13.4	27	94

REGISTERED CIVIL ENGINEER 01/26/15 DATE

01/26/15
PLANS APPROVAL DATE

REGISTERED PROFESSIONAL ENGINEER
MAJID MONFAREDIAN
No. 65517
Exp. 9/30/15
CIVIL
STATE OF CALIFORNIA

THE STATE OF CALIFORNIA OR ITS OFFICERS OR AGENTS SHALL NOT BE RESPONSIBLE FOR THE ACCURACY OR COMPLETENESS OF SCANNED COPIES OF THIS PLAN SHEET.

NOTE:

FOR ACCURATE RIGHT OF WAY DATA, CONTACT
RIGHT OF WAY ENGINEERING AT THE DISTRICT OFFICE.

LEGEND:

- HOT MIX ASPHALT OVERSIDE DRAIN AND HMA PAVED GUTTER
- 12" CORROGATED METAL PIPE DOWNDRAIN WITH ENTRANCE TAPER (TYPE 2) AND HMA PAVED GUTTER
- X — HMA OVERSIDE DRAIN/PIPE DOWNDRAIN NUMBER
- ROCK SLOPE PROTECTION
- STEEL FLARED END SECTION
- X — BIOSWALE/DRAINAGE SWALE NUMBER
- BIOSWALE
- DRAINAGE SWALE

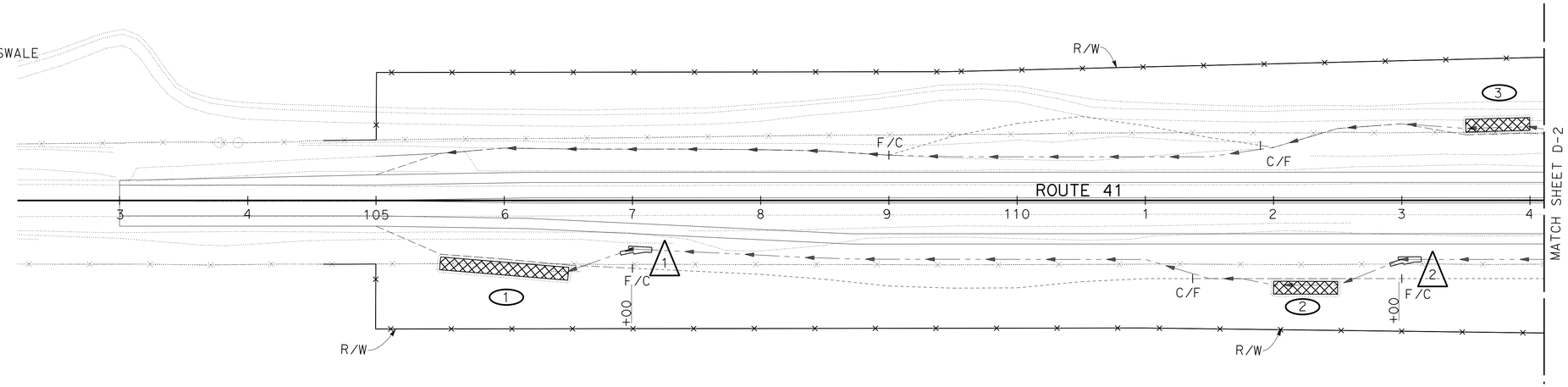

THIS PLAN ACCURATE FOR DRAINAGE WORK ONLY

DRAINAGE PLAN

SCALE:1"=50'

D-1

REVISED BY	DATE REVISED

CALCULATED-DESIGNED BY	CHECKED BY
MAJID MONFAREDIAN	MICHAEL K. LIM

FUNCTIONAL SUPERVISOR: MICHAEL K. LIM

STATE OF CALIFORNIA - DEPARTMENT OF TRANSPORTATION
Caltrans
DESIGN

LAST REVISION 01-26-15
DATE PLOTTED => 07-APR-2015
TIME PLOTTED => 13:10

Dist	COUNTY	ROUTE	POST MILES TOTAL PROJECT	SHEET No.	TOTAL SHEETS
06	Mad	41	11.7/13.4	28	94

REGISTERED CIVIL ENGINEER 1/26/15 DATE

01/26/15
PLANS APPROVAL DATE

REGISTERED PROFESSIONAL ENGINEER
MAJID MONFAREDIAN
No. 65517
Exp. 9/30/15
CIVIL
STATE OF CALIFORNIA

THE STATE OF CALIFORNIA OR ITS OFFICERS OR AGENTS SHALL NOT BE RESPONSIBLE FOR THE ACCURACY OR COMPLETENESS OF SCANNED COPIES OF THIS PLAN SHEET.

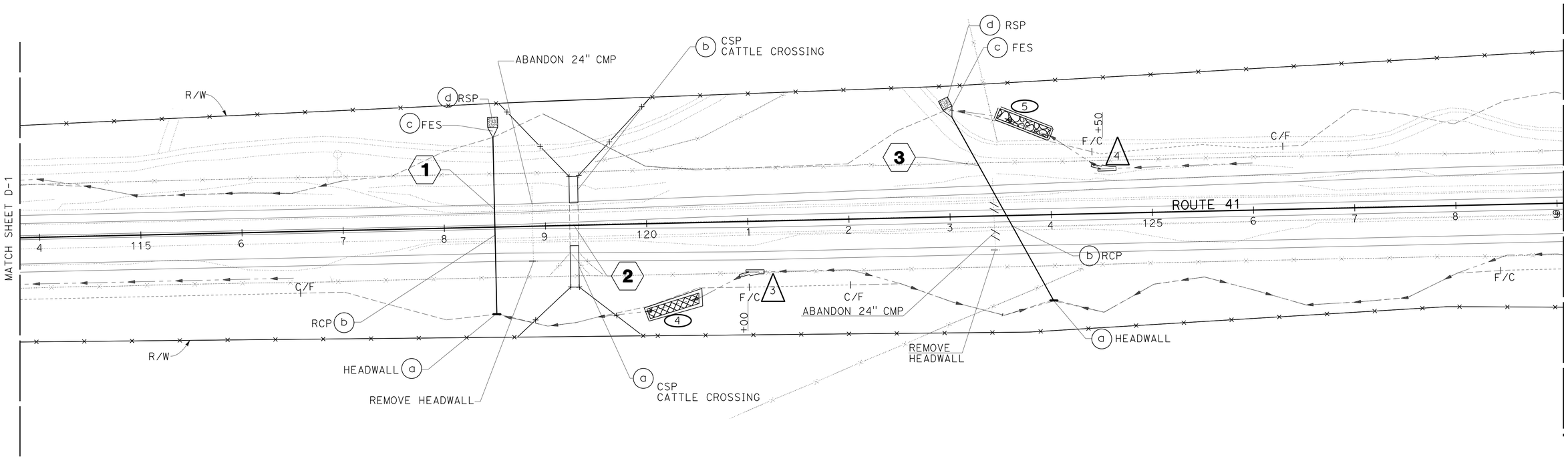

THIS PLAN ACCURATE FOR DRAINAGE WORK ONLY

DRAINAGE PLAN

SCALE:1"=50'

D-2

REVISED BY	DATE REVISED

CALCULATED-DESIGNED BY: MAJID MONFAREDIAN
CHECKED BY: MICHAEL K. LIM
FUNCTIONAL SUPERVISOR: MICHAEL K. LIM

STATE OF CALIFORNIA - DEPARTMENT OF TRANSPORTATION
Caltrans
DESIGN

LAST REVISION 01-26-15
DATE PLOTTED => 07-APR-2015
TIME PLOTTED => 13:10

Dist	COUNTY	ROUTE	POST MILES TOTAL PROJECT	SHEET No.	TOTAL SHEETS
06	Mad	41	11.7/13.4	29	94

REGISTERED CIVIL ENGINEER 1/26/15 DATE

01/26/15
PLANS APPROVAL DATE

REGISTERED PROFESSIONAL ENGINEER MAJID MONFAREDIAN No. 65517 Exp. 9/30/15 CIVIL STATE OF CALIFORNIA

THE STATE OF CALIFORNIA OR ITS OFFICERS OR AGENTS SHALL NOT BE RESPONSIBLE FOR THE ACCURACY OR COMPLETENESS OF SCANNED COPIES OF THIS PLAN SHEET.

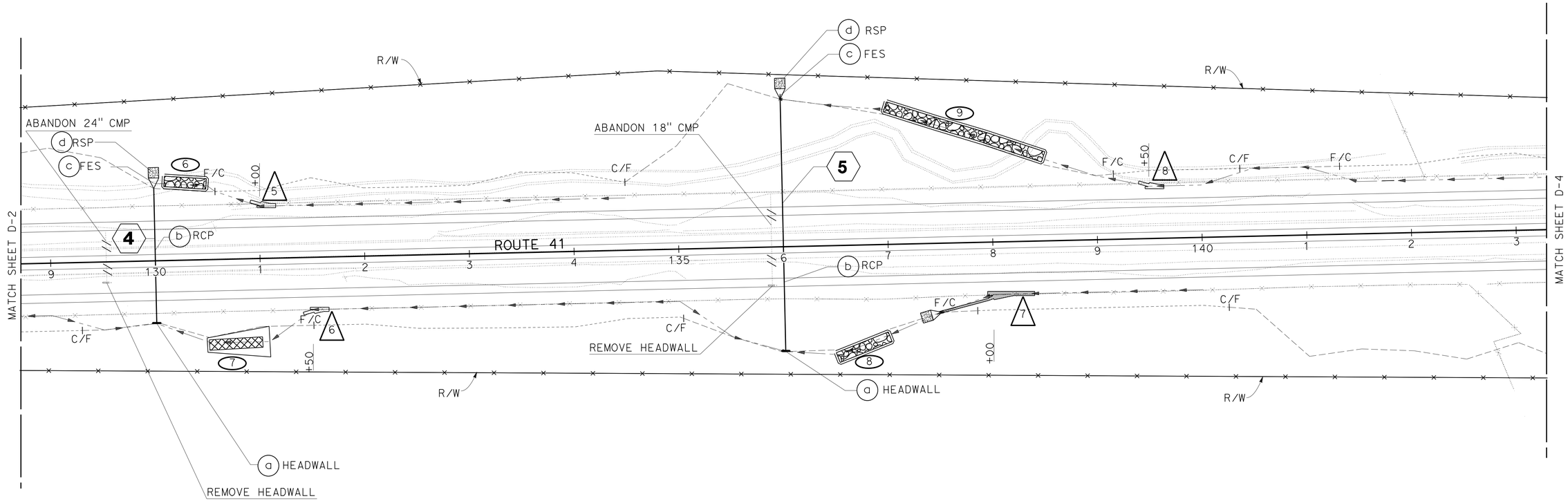

DRAINAGE PLAN

SCALE:1"=50′ **D-3**

THIS PLAN ACCURATE FOR DRAINAGE WORK ONLY

STATE OF CALIFORNIA - DEPARTMENT OF TRANSPORTATION
Caltrans
DESIGN

FUNCTIONAL SUPERVISOR: MICHAEL K. LIM
CALCULATED-DESIGNED BY: MAJID MONFAREDIAN
CHECKED BY: MICHAEL K. LIM
REVISED BY
DATE REVISED

LAST REVISION 01-26-15
DATE PLOTTED => 07-APR-2015
TIME PLOTTED => 13:10

Dist	COUNTY	ROUTE	POST MILES TOTAL PROJECT	SHEET No.	TOTAL SHEETS
06	Mad	41	11.7/13.4	30	94

REGISTERED CIVIL ENGINEER 1/26/15 DATE

01/26/15
PLANS APPROVAL DATE

REGISTERED PROFESSIONAL ENGINEER
MAJID MONFAREDIAN
No. 65517
Exp. 9/30/15
CIVIL
STATE OF CALIFORNIA

THE STATE OF CALIFORNIA OR ITS OFFICERS OR AGENTS SHALL NOT BE RESPONSIBLE FOR THE ACCURACY OR COMPLETENESS OF SCANNED COPIES OF THIS PLAN SHEET.

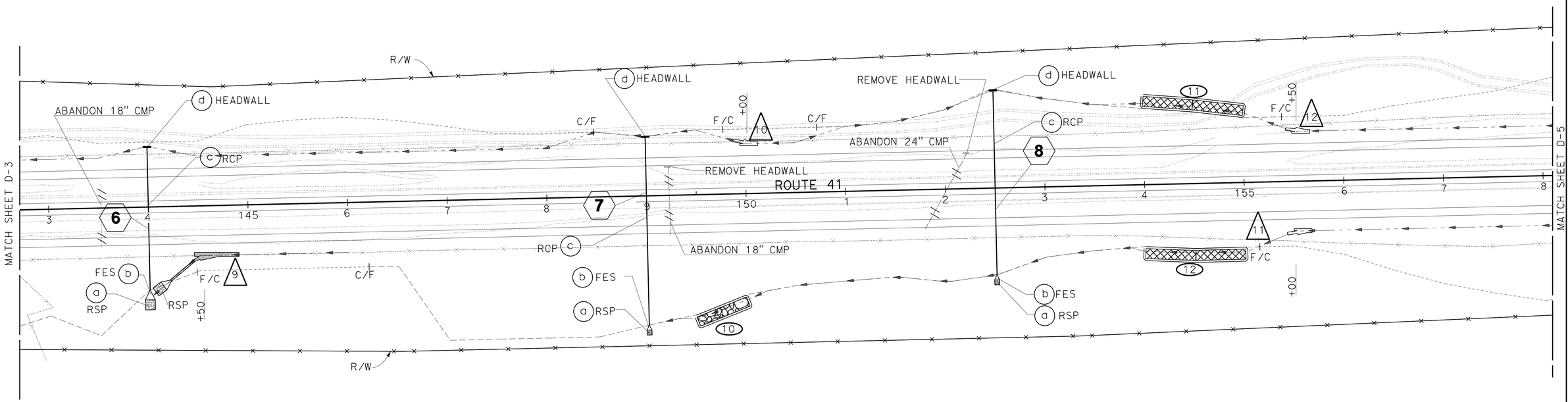

THIS PLAN ACCURATE FOR DRAINAGE WORK ONLY

DRAINAGE PLAN

SCALE:1"=50'

D-4

STATE OF CALIFORNIA - DEPARTMENT OF TRANSPORTATION
Caltrans
DESIGN

FUNCTIONAL SUPERVISOR: MICHAEL K. LIM
CALCULATED-DESIGNED BY: MAJID MONFAREDIAN
CHECKED BY: MICHAEL K. LIM
REVISED BY
DATE REVISED

LAST REVISION 01-26-15
DATE PLOTTED => 07-APR-2015
TIME PLOTTED => 13:10

Dist	COUNTY	ROUTE	POST MILES TOTAL PROJECT	SHEET No.	TOTAL SHEETS
06	Mad	41	11.7/13.4	31	94

REGISTERED CIVIL ENGINEER DATE 1/26/15

01/26/15
PLANS APPROVAL DATE

REGISTERED PROFESSIONAL ENGINEER MAJID MONFAREDIAN No. 65517 Exp. 9/30/15 CIVIL STATE OF CALIFORNIA

THE STATE OF CALIFORNIA OR ITS OFFICERS OR AGENTS SHALL NOT BE RESPONSIBLE FOR THE ACCURACY OR COMPLETENESS OF SCANNED COPIES OF THIS PLAN SHEET.

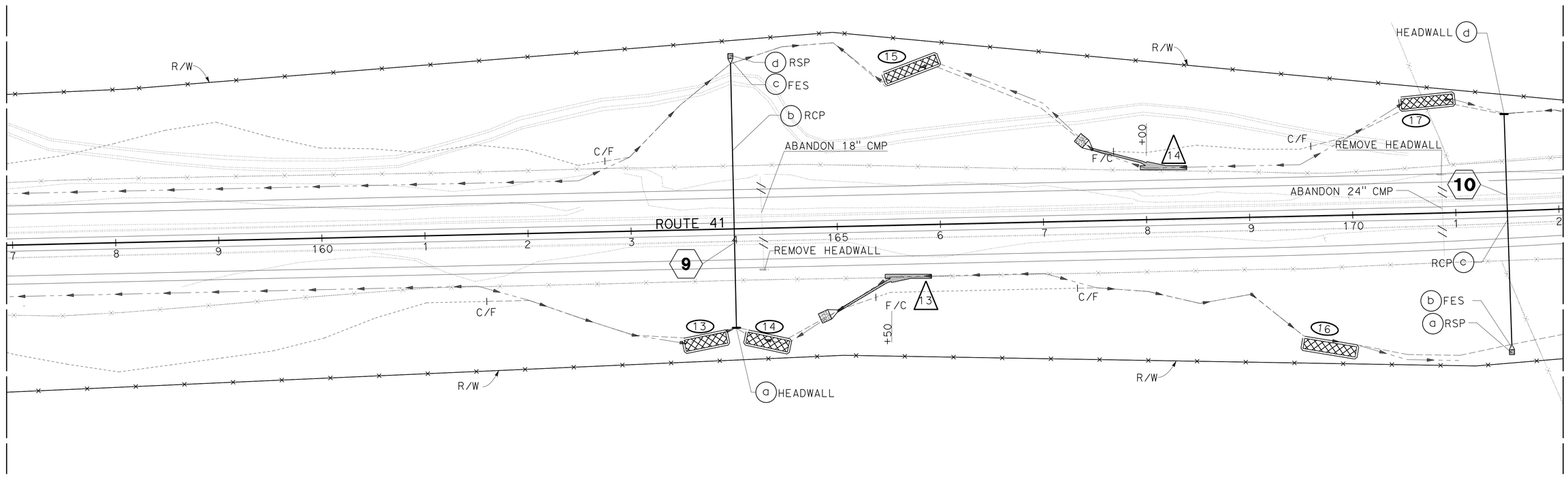

THIS PLAN ACCURATE FOR DRAINAGE WORK ONLY

DRAINAGE PLAN

SCALE:1"=50'

D-5

STATE OF CALIFORNIA - DEPARTMENT OF TRANSPORTATION

DESIGN

Caltrans

FUNCTIONAL SUPERVISOR: MICHAEL K. LIM

CALCULATED-DESIGNED BY: MAJID MONFAREDIAN

CHECKED BY: MICHAEL K. LIM

REVISED BY

DATE REVISED

LAST REVISION 01-26-15

DATE PLOTTED => 07-APR-2015
TIME PLOTTED => 13:10

Dist	COUNTY	ROUTE	POST MILES TOTAL PROJECT	SHEET No.	TOTAL SHEETS
06	Mad	41	11.7/13.4	32	94

REGISTERED CIVIL ENGINEER DATE 1/26/15

01/26/15
PLANS APPROVAL DATE

REGISTERED PROFESSIONAL ENGINEER
MAJID MONFAREDIAN
No. 65517
Exp. 9/30/15
CIVIL
STATE OF CALIFORNIA

THE STATE OF CALIFORNIA OR ITS OFFICERS OR AGENTS SHALL NOT BE RESPONSIBLE FOR THE ACCURACY OR COMPLETENESS OF SCANNED COPIES OF THIS PLAN SHEET.

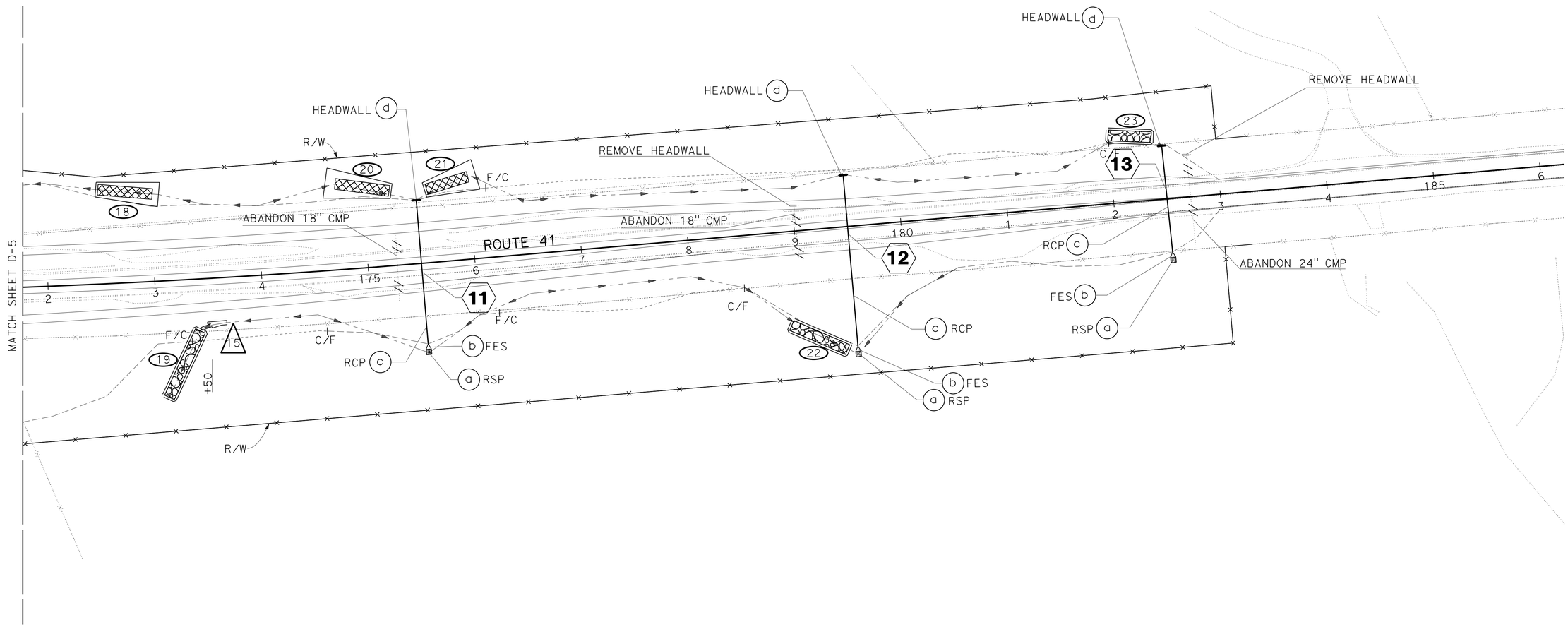

THIS PLAN ACCURATE FOR DRAINAGE WORK ONLY

DRAINAGE PLAN

SCALE:1"=50'

D-6

STATE OF CALIFORNIA - DEPARTMENT OF TRANSPORTATION
Caltrans
DESIGN

FUNCTIONAL SUPERVISOR: MICHAEL K. LIM
CALCULATED-DESIGNED BY: MAJID MONFAREDIAN
CHECKED BY: MICHAEL K. LIM
REVISED BY
DATE REVISED

LAST REVISION 01-26-15
DATE PLOTTED => 07-APR-2015
TIME PLOTTED => 13:10

Dist	COUNTY	ROUTE	POST MILES TOTAL PROJECT	SHEET No.	TOTAL SHEETS
06	Mad	41	11.7/13.4	33	94

REGISTERED CIVIL ENGINEER DATE 1/26/15

01/26/15
PLANS APPROVAL DATE

REGISTERED PROFESSIONAL ENGINEER MAJID MONFAREDIAN No. 65517 Exp. 9/30/15 CIVIL STATE OF CALIFORNIA

THE STATE OF CALIFORNIA OR ITS OFFICERS OR AGENTS SHALL NOT BE RESPONSIBLE FOR THE ACCURACY OR COMPLETENESS OF SCANNED COPIES OF THIS PLAN SHEET.

NOTE:

ALL JOINTS ARE STANDARD UNLESS MENTIONED OTHERWISE.

ABBREVIATION:

SFES: STEEL FLARED END SECTION

LEGEND:

RSP

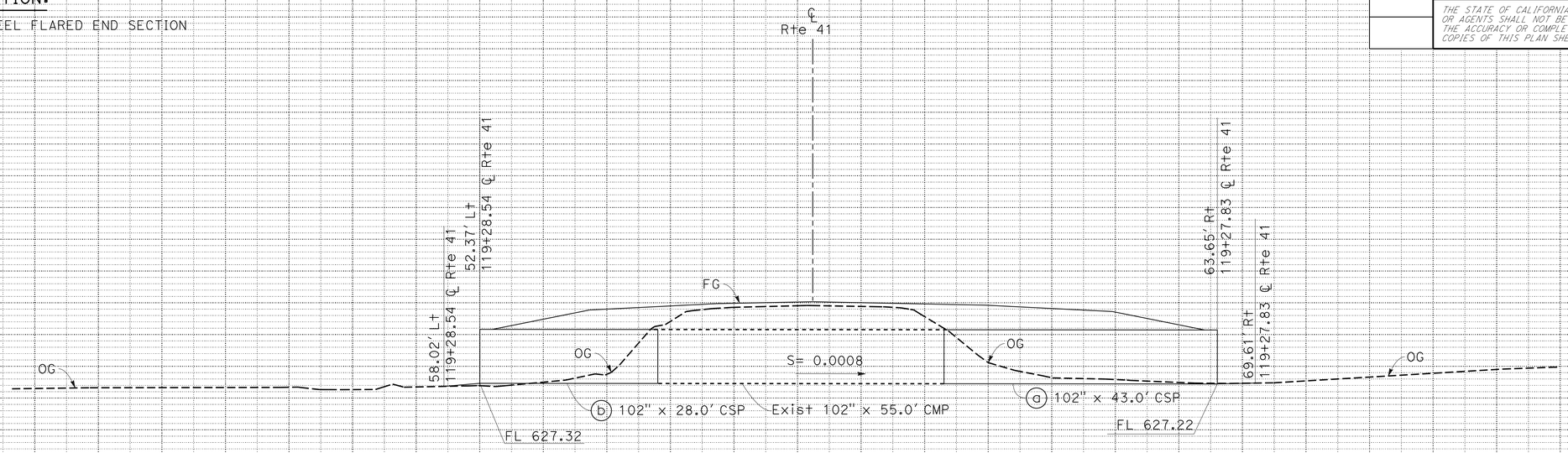

DRAINAGE SYSTEM No. 2

Sta 119+28.23

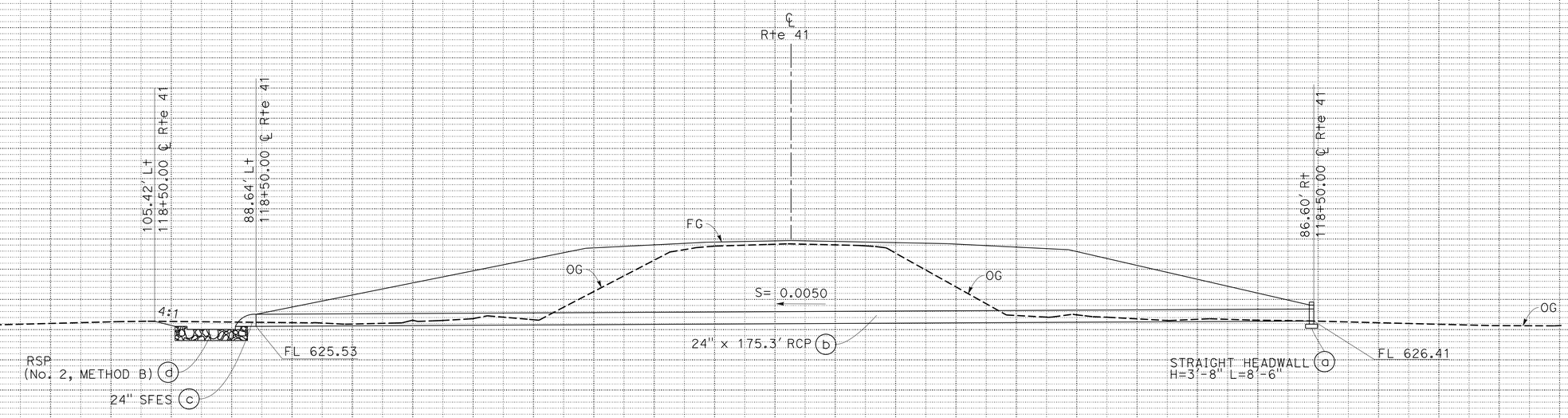

DRAINAGE SYSTEM No. 1

Sta 118+50.00

DRAINAGE PROFILES
DP-1

SCALE : Horiz 1" = 10'
Vert 1" = 10'

REVISED BY | DATE REVISED
MAJID MONFAREDIAN | MICHAEL K. LIM
CALCULATED-DESIGNED BY | CHECKED BY
FUNCTIONAL SUPERVISOR: MICHAEL K. LIM

STATE OF CALIFORNIA - DEPARTMENT OF TRANSPORTATION
Caltrans
DESIGN

LAST REVISION 01-26-15 | DATE PLOTTED => 07-APR-2015 | TIME PLOTTED => 13:10

Dist	COUNTY	ROUTE	POST MILES TOTAL PROJECT	SHEET No.	TOTAL SHEETS
06	Mad	41	11.7/13.4	34	94

REGISTERED CIVIL ENGINEER DATE 1/26/15

01/26/15
PLANS APPROVAL DATE

REGISTERED PROFESSIONAL ENGINEER MAJID MONFAREDIAN No. 65517 Exp. 9/30/15 CIVIL STATE OF CALIFORNIA

THE STATE OF CALIFORNIA OR ITS OFFICERS OR AGENTS SHALL NOT BE RESPONSIBLE FOR THE ACCURACY OR COMPLETENESS OF SCANNED COPIES OF THIS PLAN SHEET.

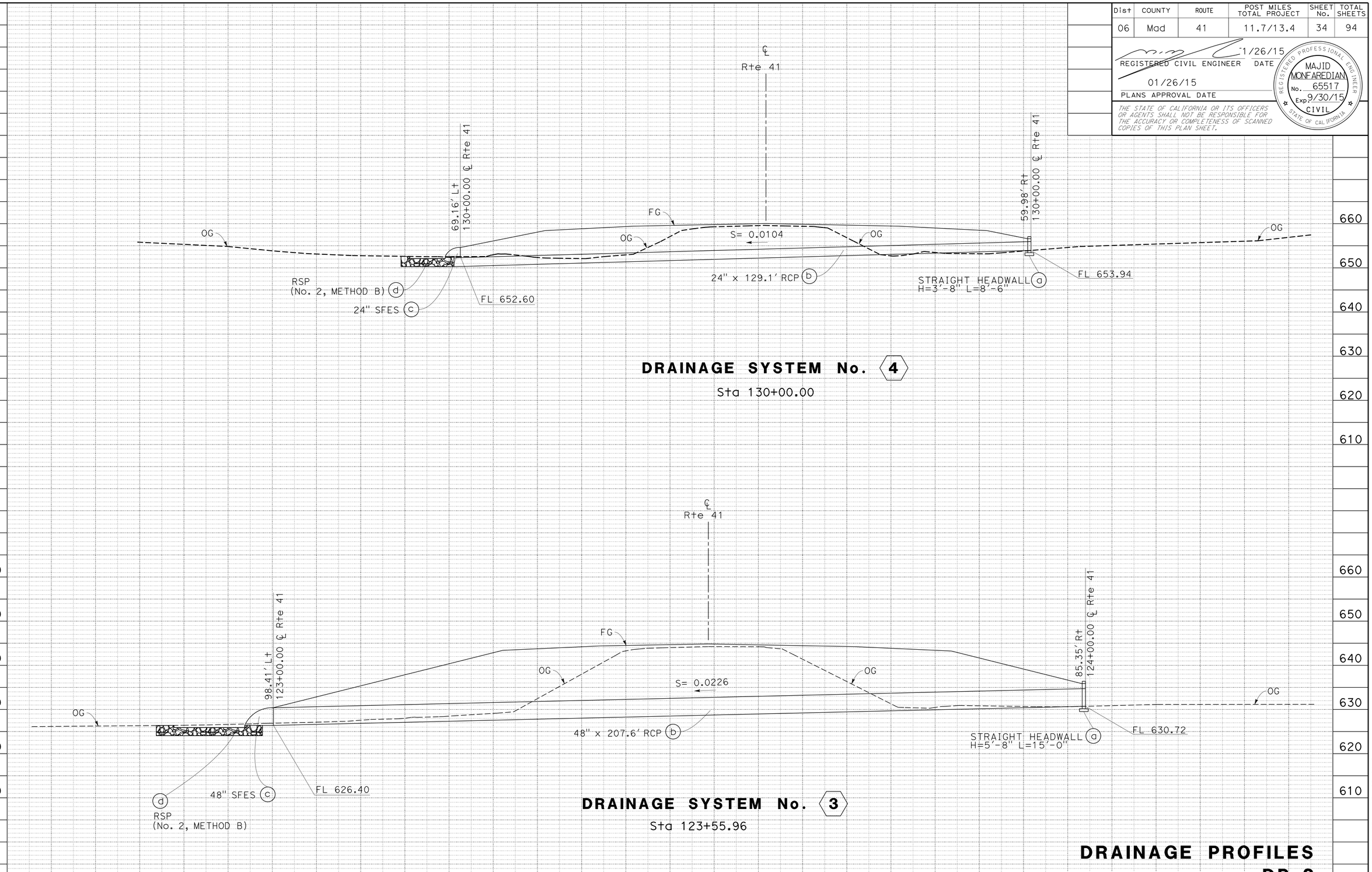

DRAINAGE PROFILES
DP-2

SCALE : Horiz 1" = 10'
Vert 1" = 10'

REVISED BY | DATE REVISED
MAJID MONFAREDIAN | MICHAEL K. LIM
CALCULATED-DESIGNED BY | CHECKED BY
FUNCTIONAL SUPERVISOR: MICHAEL K. LIM

STATE OF CALIFORNIA - DEPARTMENT OF TRANSPORTATION
Caltrans
DESIGN

LAST REVISION 01-26-15 | DATE PLOTTED => 07-APR-2015 | TIME PLOTTED => 13:10

Dist	COUNTY	ROUTE	POST MILES TOTAL PROJECT	SHEET No.	TOTAL SHEETS
06	Mad	41	11.7/13.4	35	94

REGISTERED CIVIL ENGINEER 1/26/15 DATE

01/26/15
PLANS APPROVAL DATE

REGISTERED PROFESSIONAL ENGINEER MAJID MONFAREDIAN No. 65517 Exp. 9/30/15 CIVIL STATE OF CALIFORNIA

THE STATE OF CALIFORNIA OR ITS OFFICERS OR AGENTS SHALL NOT BE RESPONSIBLE FOR THE ACCURACY OR COMPLETENESS OF SCANNED COPIES OF THIS PLAN SHEET.

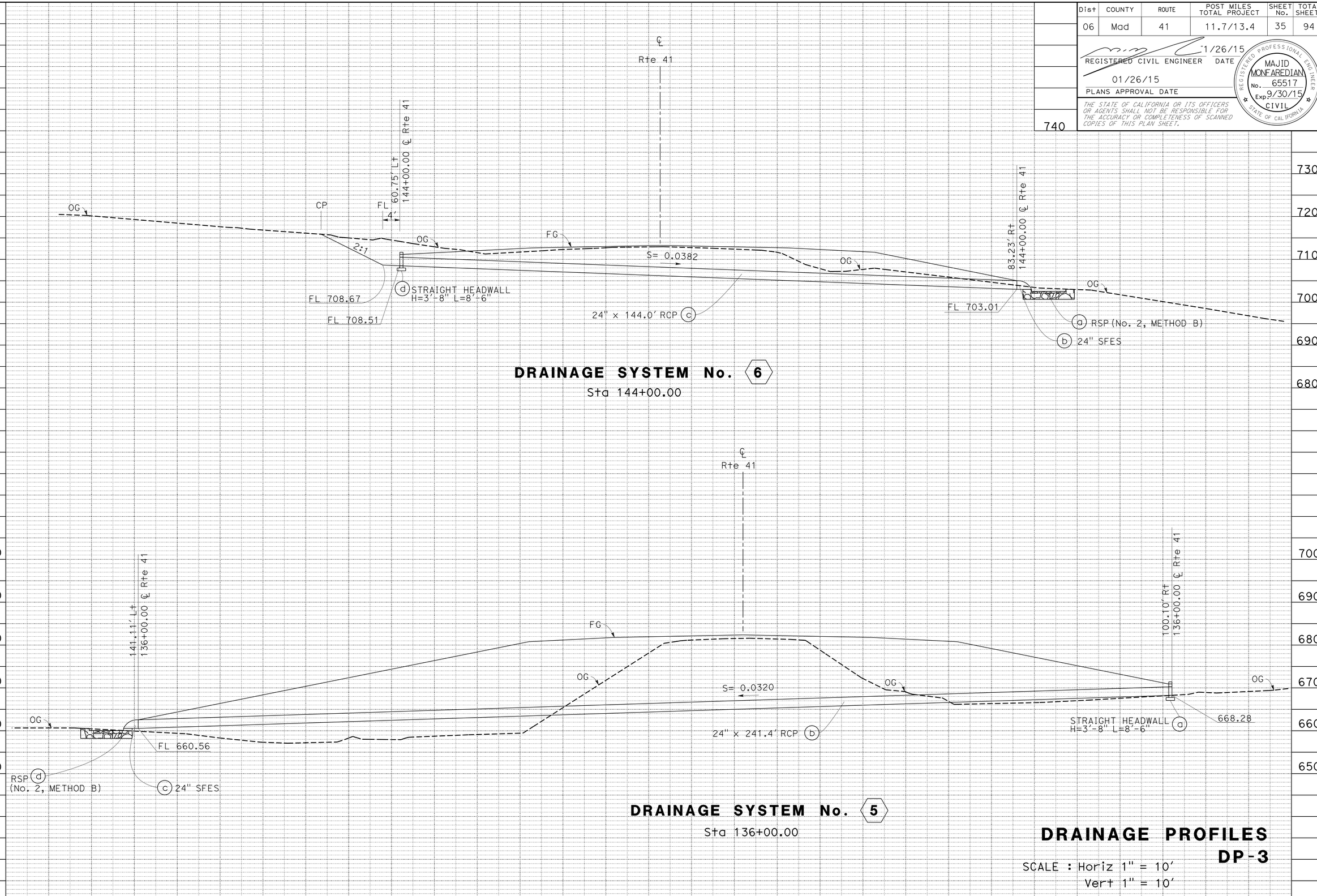

DRAINAGE PROFILES
DP-3

SCALE : Horiz 1" = 10'
Vert 1" = 10'

STATE OF CALIFORNIA - DEPARTMENT OF TRANSPORTATION
Caltrans®
DESIGN

FUNCTIONAL SUPERVISOR: MICHAEL K. LIM
CALCULATED-DESIGNED BY: MAJID MONFAREDIAN
CHECKED BY: MICHAEL K. LIM
REVISED BY
DATE REVISED

LAST REVISION 01-26-15
DATE PLOTTED => 07-APR-2015
TIME PLOTTED => 13:10

Dist	COUNTY	ROUTE	POST MILES TOTAL PROJECT	SHEET No.	TOTAL SHEETS
06	Mad	41	11.7/13.4	36	94

REGISTERED CIVIL ENGINEER 1/26/15 DATE

01/26/15
PLANS APPROVAL DATE

REGISTERED PROFESSIONAL ENGINEER MAJID MONFAREDIAN No. 65517 Exp. 9/30/15 CIVIL STATE OF CALIFORNIA

THE STATE OF CALIFORNIA OR ITS OFFICERS OR AGENTS SHALL NOT BE RESPONSIBLE FOR THE ACCURACY OR COMPLETENESS OF SCANNED COPIES OF THIS PLAN SHEET.

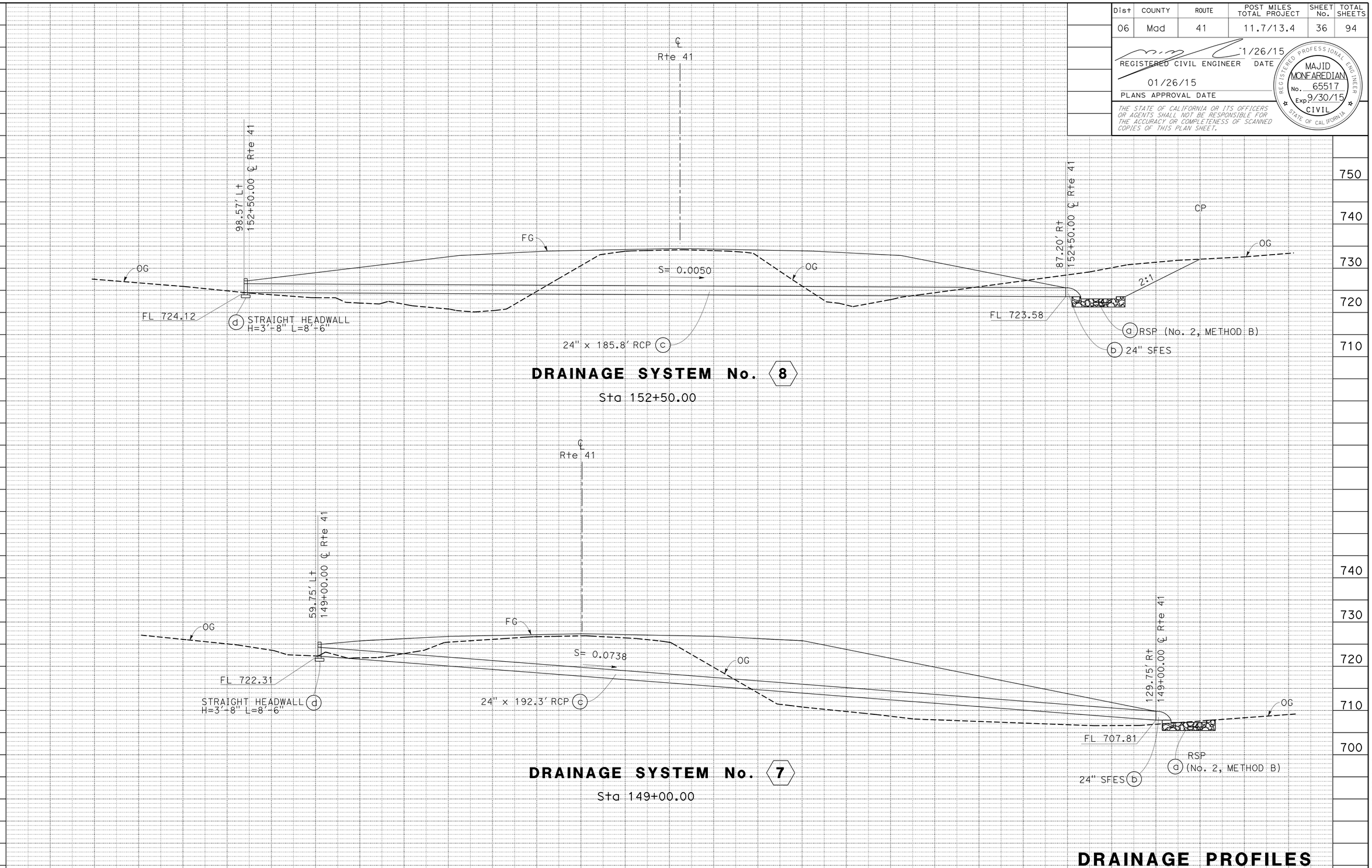

DRAINAGE PROFILES

DP-4

SCALE : Horiz 1" = 10'
Vert 1" = 10'

STATE OF CALIFORNIA - DEPARTMENT OF TRANSPORTATION
Caltrans
DESIGN

FUNCTIONAL SUPERVISOR: MICHAEL K. LIM

CALCULATED-DESIGNED BY: MAJID MONFAREDIAN
CHECKED BY: MICHAEL K. LIM

REVISED BY | DATE REVISED

LAST REVISION 01-26-15 | DATE PLOTTED => 07-APR-2015 | TIME PLOTTED => 13:10

Dist	COUNTY	ROUTE	POST MILES TOTAL PROJECT	SHEET No.	TOTAL SHEETS
06	Mad	41	11.7/13.4	37	94

REGISTERED CIVIL ENGINEER DATE 1/26/15

01/26/15
PLANS APPROVAL DATE

REGISTERED PROFESSIONAL ENGINEER MAJID MONFAREDIAN No. 65517 Exp. 9/30/15 CIVIL STATE OF CALIFORNIA

THE STATE OF CALIFORNIA OR ITS OFFICERS OR AGENTS SHALL NOT BE RESPONSIBLE FOR THE ACCURACY OR COMPLETENESS OF SCANNED COPIES OF THIS PLAN SHEET.

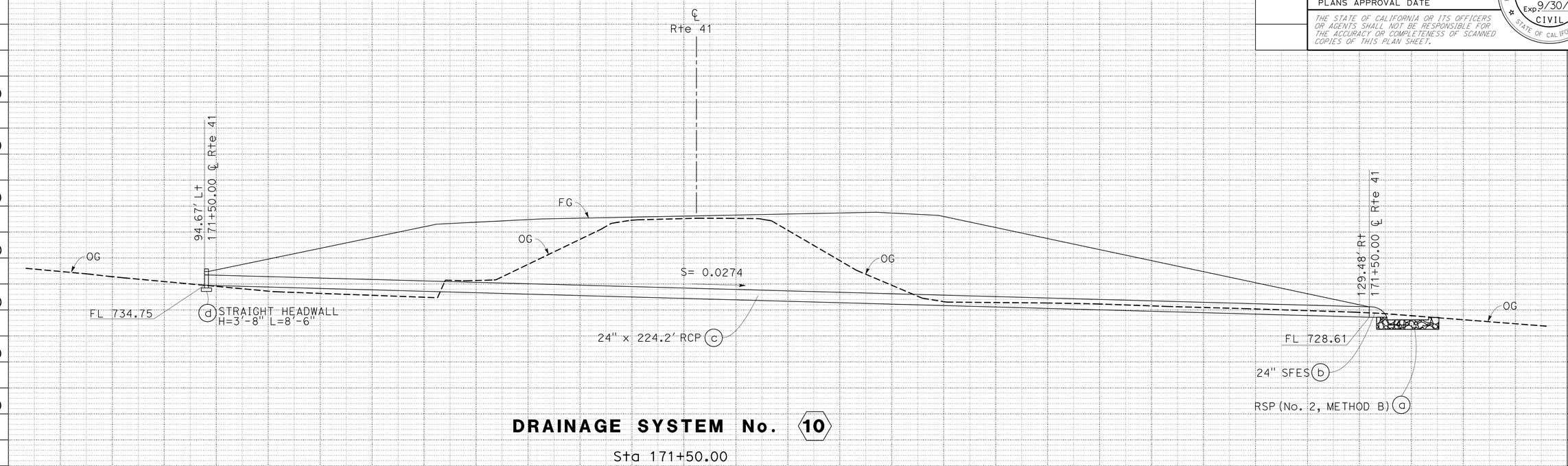

DRAINAGE SYSTEM No. 10

Sta 171+50.00

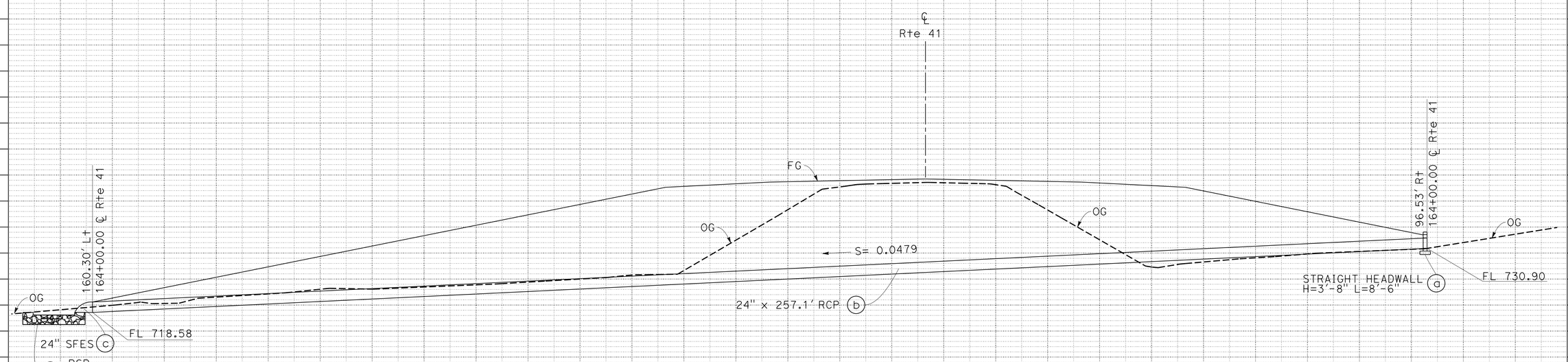

DRAINAGE SYSTEM No. 9

Sta 164+00.00

DRAINAGE PROFILES
DP-5

SCALE : Horiz 1" = 10'
Vert 1" = 10'

REVISED BY | DATE REVISED
MAJID MONFAREDIAN | MICHAEL K. LIM
CALCULATED-DESIGNED BY | CHECKED BY
FUNCTIONAL SUPERVISOR: MICHAEL K. LIM

STATE OF CALIFORNIA - DEPARTMENT OF TRANSPORTATION
Caltrans
DESIGN

LAST REVISION 01-26-15 | DATE PLOTTED => 07-APR-2015 | TIME PLOTTED => 13:10

Dist	COUNTY	ROUTE	POST MILES TOTAL PROJECT	SHEET No.	TOTAL SHEETS
06	Mad	41	11.7/13.4	38	94

REGISTERED CIVIL ENGINEER 1/26/15 DATE

01/26/15
PLANS APPROVAL DATE

REGISTERED PROFESSIONAL ENGINEER MAJID MONFAREDIAN No. 65517 Exp. 9/30/15 CIVIL STATE OF CALIFORNIA

THE STATE OF CALIFORNIA OR ITS OFFICERS OR AGENTS SHALL NOT BE RESPONSIBLE FOR THE ACCURACY OR COMPLETENESS OF SCANNED COPIES OF THIS PLAN SHEET.

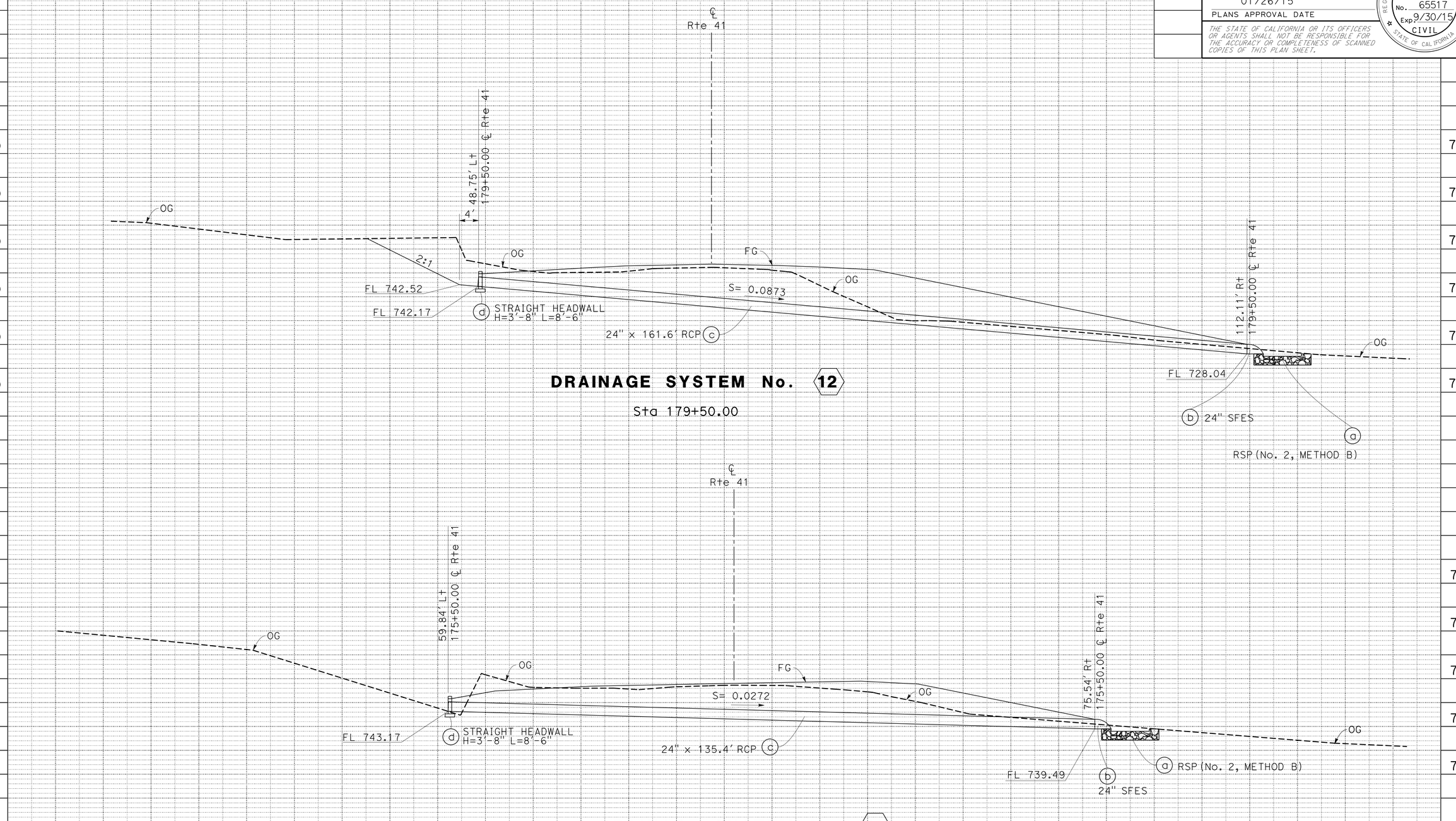

DRAINAGE PROFILES
DP-6

SCALE : Horiz 1" = 10'
Vert 1" = 10'

REVISED BY | DATE REVISED
MAJID MONFAREDIAN | MICHAEL K. LIM
CALCULATED-DESIGNED BY | CHECKED BY
FUNCTIONAL SUPERVISOR: MICHAEL K. LIM

STATE OF CALIFORNIA - DEPARTMENT OF TRANSPORTATION
Caltrans
DESIGN

LAST REVISION 01-26-15 | DATE PLOTTED => 07-APR-2015 | TIME PLOTTED => 13:10

Dist	COUNTY	ROUTE	POST MILES TOTAL PROJECT	SHEET No.	TOTAL SHEETS
06	Mad	41	11.7/13.4	39	94

REGISTERED CIVIL ENGINEER 1/26/15 DATE

01/26/15
PLANS APPROVAL DATE

REGISTERED PROFESSIONAL ENGINEER MAJID MONFAREDIAN No. 65517 Exp. 9/30/15 CIVIL STATE OF CALIFORNIA

THE STATE OF CALIFORNIA OR ITS OFFICERS OR AGENTS SHALL NOT BE RESPONSIBLE FOR THE ACCURACY OR COMPLETENESS OF SCANNED COPIES OF THIS PLAN SHEET.

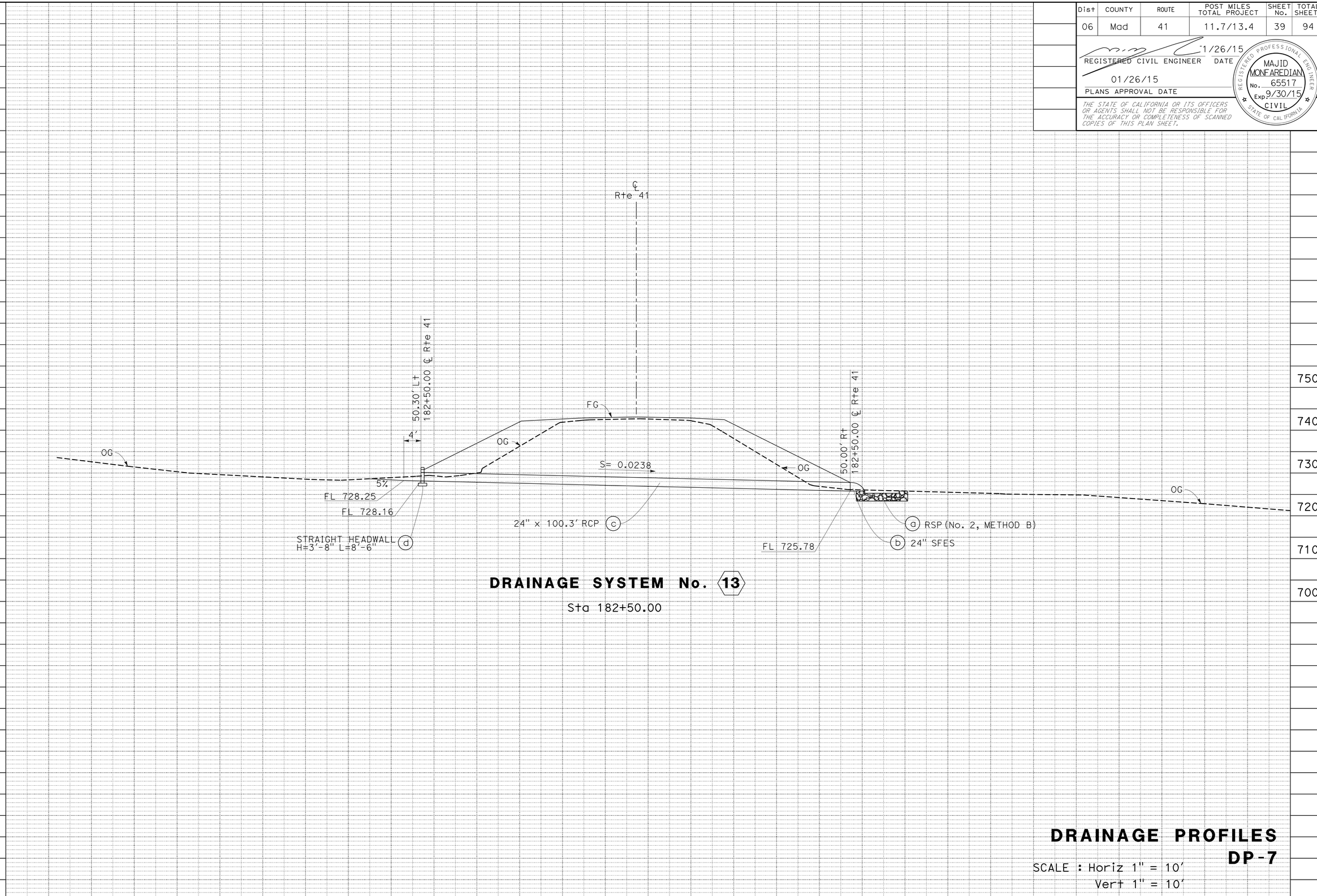

DRAINAGE SYSTEM No. 13

Sta 182+50.00

DRAINAGE PROFILES

DP-7

SCALE : Horiz 1" = 10'
Vert 1" = 10'

REVISED BY | DATE REVISED

MAJID MONFAREDIAN | MICHAEL K. LIM

CALCULATED-DESIGNED BY | CHECKED BY

FUNCTIONAL SUPERVISOR: MICHAEL K. LIM

STATE OF CALIFORNIA - DEPARTMENT OF TRANSPORTATION

Caltrans® DESIGN

LAST REVISION 01-26-15 | DATE PLOTTED => 07-APR-2015 | TIME PLOTTED => 13:10

Dist	COUNTY	ROUTE	POST MILES TOTAL PROJECT	SHEET No.	TOTAL SHEETS
06	Mad	41	11.7/13.4	40	94

REGISTERED CIVIL ENGINEER DATE 1/26/15

01/26/15
PLANS APPROVAL DATE

REGISTERED PROFESSIONAL ENGINEER MAJID MONFAREDIAN No. 65517 Exp. 9/30/15 CIVIL STATE OF CALIFORNIA

THE STATE OF CALIFORNIA OR ITS OFFICERS OR AGENTS SHALL NOT BE RESPONSIBLE FOR THE ACCURACY OR COMPLETENESS OF SCANNED COPIES OF THIS PLAN SHEET.

NOTES (THIS SHEET ONLY):

1 PIPE DOWNDRAINS SHALL BE TRENCH INSTALLED.

2 CROSS SECTION OF SLOPE DITCH MAY BE SEMICIRCULAR, VEE OR TRAPEZOIDAL.

3 OUTLET OFFSET AND ELEVATION OF HMA OVERSIDE DRAIN VARIES AND DEPENDS ON THE SIDE SLOPE.

4 EXACT LOCATIONS OF DOWNDRAINS AND OVERSIDE DRAINS MUST BE AS ORDERED BY THE ENGINEER.

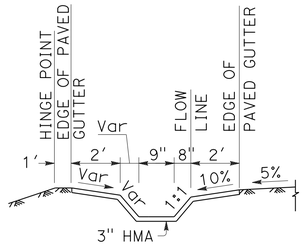

SECTION B-B

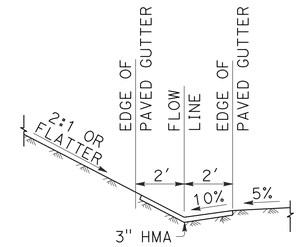

SECTION A-A

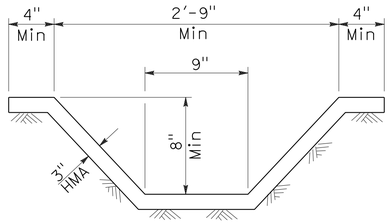

SECTION C-C
SEE NOTE 2

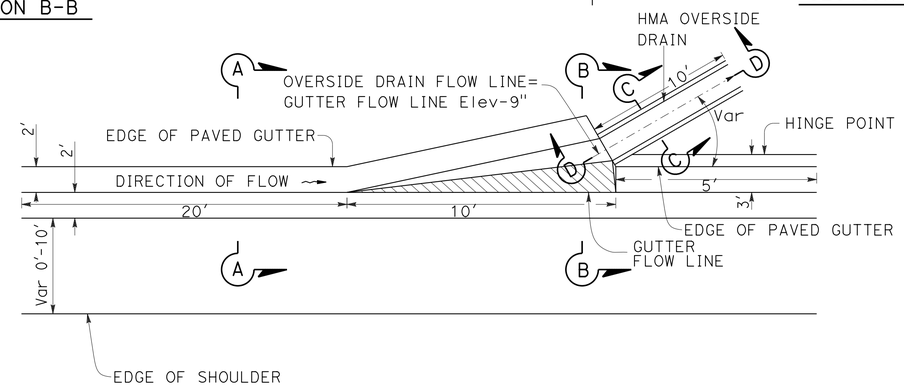

PLAN

PAVED HMA GUTTER AND HMA OVERSIDE DRAIN

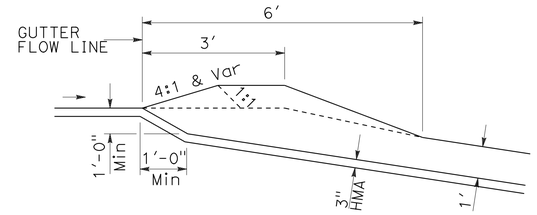

SECTION D-D

HMA OVERSIDE DRAINS

X No.	STA	DIRECTION	ENTRANCE OFFSET FT	ENTRANCE ELEVATION FT
1	107+00	NB	37.84	620.521
2	113+00	NB	46.00	633.087
3	121+00	NB	50.00	639.960
4	124+50	SB	44.00	645.046
5	131+00	SB	50.00	661.643
6	131+50	NB	50.00	663.332
8	139+50	SB	50.00	695.023
10	150+00	SB	50.00	728.021
11	155+50	NB	50.00	737.164
12	155+50	SB	50.00	737.164
15	173+50	NB	42.55	748.960

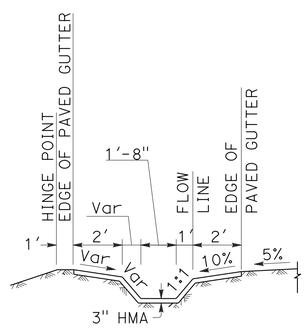

SECTION F-F

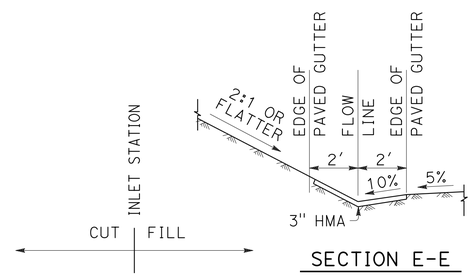

SECTION E-E

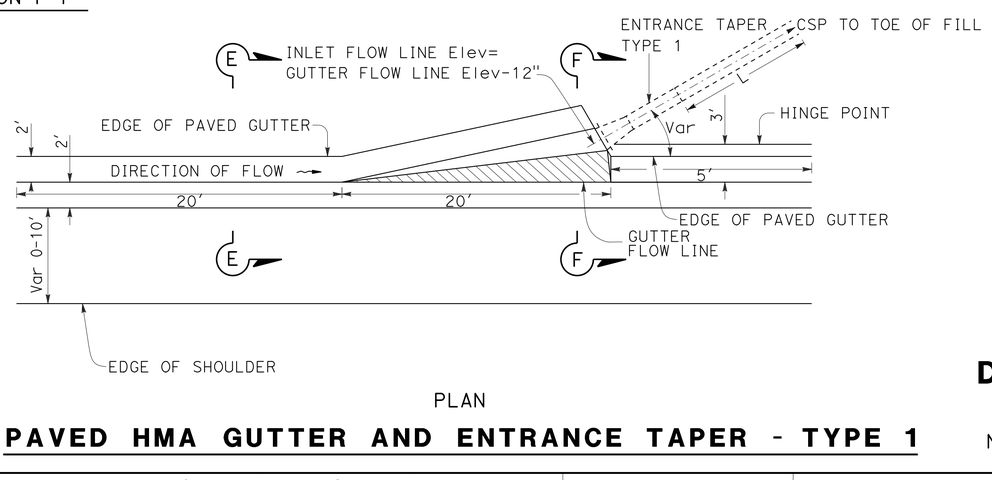

PLAN

PAVED HMA GUTTER AND ENTRANCE TAPER - TYPE 1

NO SCALE

CORRUGATED STEEL PIPE DOWNDRAINS

X No.	STA	DIRECTION	LENGTH (L) FT	ENTRANCE OFFSET FT	ENTRANCE ELEVATION FT	OUTLET OFFSET FT	OUTLET ELEVATION FT
7	138+00	NB	52.7	50.00	688.917	65.89	683.704
9	144+50	NB	33.8	50.00	713.279	65.00	709.418
13	165+50	NB	59.2	50.00	743.418	80.96	736.696
14	168+00	SB	53.3	50.00	744.707	68.16	740.817

DRAINAGE DETAILS
DD-1

REVISED BY | DATE REVISED
MAJID MONFAREDIAN | MICHAEL K. LIM
CALCULATED-DESIGNED BY | CHECKED BY
FUNCTIONAL SUPERVISOR: MICHAEL K. LIM
STATE OF CALIFORNIA - DEPARTMENT OF TRANSPORTATION
DESIGN
Caltrans

LAST REVISION 01-26-15 | DATE PLOTTED => 07-APR-2015 | TIME PLOTTED => 13:10

Dist	COUNTY	ROUTE	POST MILES TOTAL PROJECT	SHEET No.	TOTAL SHEETS
06	Mad	41	11.7/13.4	41	94

REGISTERED CIVIL ENGINEER 1/26/15 DATE

01/26/15
PLANS APPROVAL DATE

REGISTERED PROFESSIONAL ENGINEER MAJID MONFAREDIAN No. 65517 Exp. 9/30/15 CIVIL STATE OF CALIFORNIA

THE STATE OF CALIFORNIA OR ITS OFFICERS OR AGENTS SHALL NOT BE RESPONSIBLE FOR THE ACCURACY OR COMPLETENESS OF SCANNED COPIES OF THIS PLAN SHEET.

NOTES (THIS SHEET ONLY):

1. THE ROCK MATERIAL AND PLACEMENT METHOD SHALL CONFORM TO THE GRADING "NO. 2" FOR METHOD "B" PLACEMENTS.
2. INCORPORATE 4" OF COMPOST IN 18" OF SOIL.
3. FOR DIMENSIONS W, L, D, AND H REFER TO SHEET DQ-4.

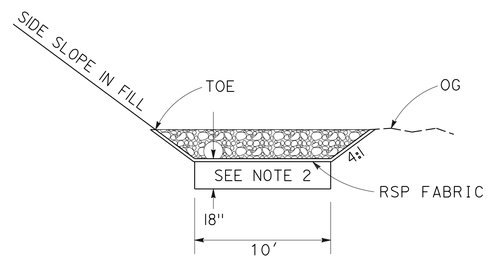

SECTION B-B

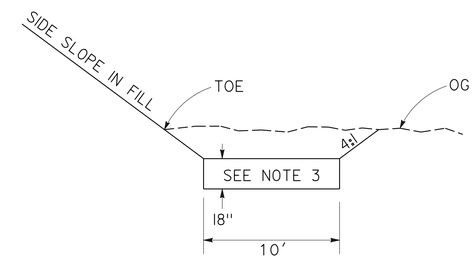

SECTION B-B

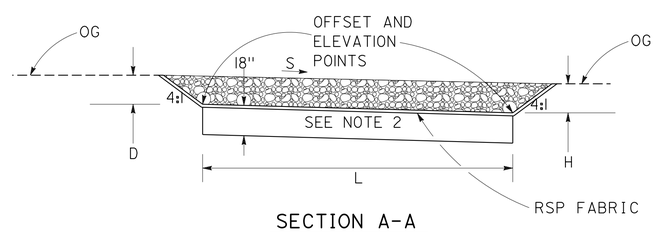

SECTION A-A

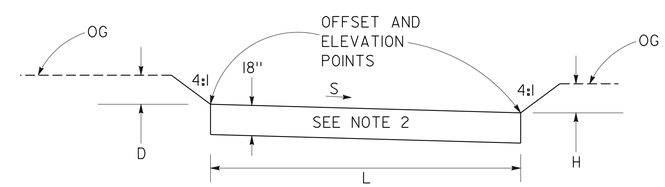

SECTION A-A

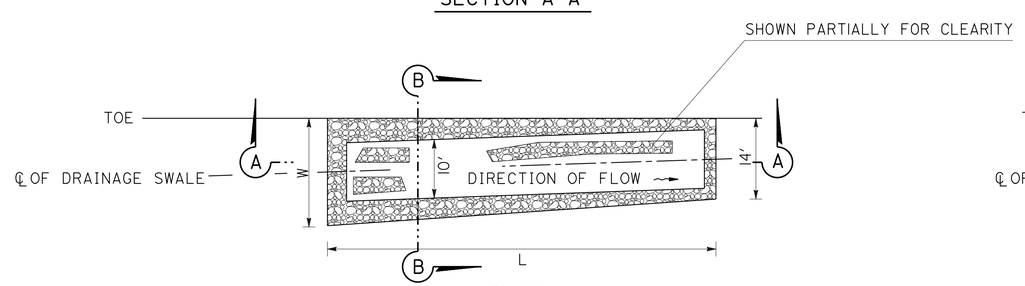

PLAN

TYPICAL DRAINAGE SWALE

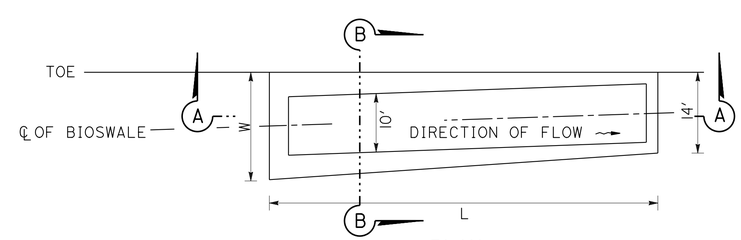

PLAN

TYPICAL BIOSWALE

DRAINAGE DETAILS

NO SCALE

DD-2

STATE OF CALIFORNIA - DEPARTMENT OF TRANSPORTATION
Caltrans®
DESIGN
FUNCTIONAL SUPERVISOR: MICHAEL K. LIM
CALCULATED-DESIGNED BY: MAJID MONFAREDIAN
CHECKED BY: MICHAEL K. LIM
REVISED BY
DATE REVISED

LAST REVISION 01-26-15
DATE PLOTTED => 07-APR-2015
TIME PLOTTED => 13:10

Dist	COUNTY	ROUTE	POST MILES TOTAL PROJECT	SHEET No.	TOTAL SHEETS
06	Mad	41	11.7/13.4	42	94

REGISTERED CIVIL ENGINEER 1/26/15 DATE

01/26/15
PLANS APPROVAL DATE

REGISTERED PROFESSIONAL ENGINEER MAJID MONFAREDIAN No. 65517 Exp. 9/30/15 CIVIL STATE OF CALIFORNIA

THE STATE OF CALIFORNIA OR ITS OFFICERS OR AGENTS SHALL NOT BE RESPONSIBLE FOR THE ACCURACY OR COMPLETENESS OF SCANNED COPIES OF THIS PLAN SHEET.

NOTES (THIS SHEET ONLY):

1. "D" REPRESENTS THE OUTSIDE DIAMETER OF THE PIPE CONNECTED TO THE FLARED-END SECTION.
2. THE ROCK MATERIAL AND PLACEMENT METHOD SHALL CONFORM TO THE GRADING "NO. 2" FOR METHOD "B" PLACEMENTS.

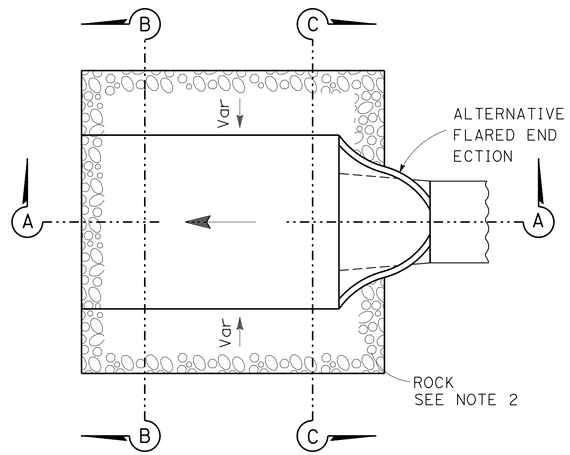

PLAN

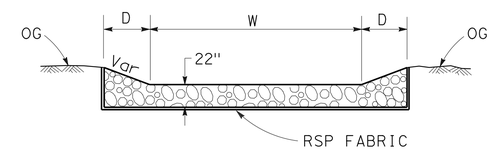

SECTION B-B

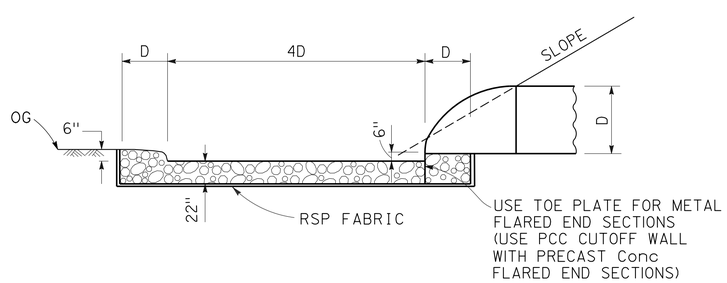

SECTION A-A

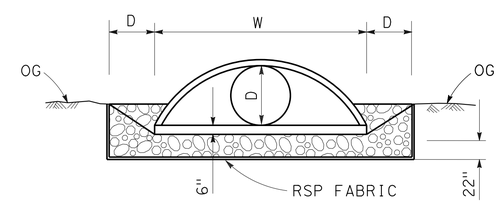

SECTION C-C

ROCK SLOPE PROTECTION

DRAINAGE DETAILS

NO SCALE

DD-3

STATE OF CALIFORNIA - DEPARTMENT OF TRANSPORTATION
Caltrans® DESIGN

FUNCTIONAL SUPERVISOR: MICHAEL K. LIM
CALCULATED-DESIGNED BY: MAJID MONFAREDIAN
CHECKED BY: MICHAEL K. LIM
REVISED BY
DATE REVISED

LAST REVISION 01-26-15
DATE PLOTTED => 07-APR-2015
TIME PLOTTED => 13:10

Dist	COUNTY	ROUTE	POST MILES TOTAL PROJECT	SHEET No.	TOTAL SHEETS
06	Mad	41	11.7/13.4	43	94

REGISTERED CIVIL ENGINEER 1/26/15 DATE

01/26/15
PLANS APPROVAL DATE

REGISTERED PROFESSIONAL ENGINEER MAJID MONFAREDIAN No. 65517 Exp. 9/30/15 CIVIL STATE OF CALIFORNIA

THE STATE OF CALIFORNIA OR ITS OFFICERS OR AGENTS SHALL NOT BE RESPONSIBLE FOR THE ACCURACY OR COMPLETENESS OF SCANNED COPIES OF THIS PLAN SHEET.

DRAINAGE QUANTITIES

DRAINAGE PLAN SHEET No.	DRAINAGE SYSTEM No. ⬡	DRAINAGE UNIT ◯	24" RCP LF	48" RCP LF	102" CSP (0.168" THICK) LF	24" STEEL FLARED END SECTION EA	48" STEEL FLARED END SECTION EA	RSP FABRIC (CALSS 8) SQYD	RSP (No. 2, METHOD B) CY	MINOR CONCRETE (MINOR STRUCTURE) CY	MAXIMUM COVER (N) FT	DESCRIPTION	STATION	DRAINAGE SYSTEM No. ⬡	DRAINAGE UNIT ◯	DRAINAGE SHEET No.
D-2	1	a								1.2		STRAIGHT HEADWALL H=3'-8", L=8'-6"	Rte 41 118+50.00	1	a	D-2
		b	175.3								11.8	24" RCP			b	
		c				1						STEEL FLARED END SECTION			c	
		d						23.5	7.7			RSP (No. 2, METHOD B)			d	
D-2	2	a			43.0						4.0	102" CSP EXTENTION	Rte 41 118+50.00	2	a	D-2
		b			28.0							102" CSP EXTENTION			b	
D-2	3	a								2.8		STRAIGHT HEADWALL H=5'-8", L=15'-0"	Rte 41 123+55.96	3	a	D-2
		b		207.6							12.0	48" RCP			b	
		c					1					STEEL FLARED END SECTION			c	
		d						64.2	30.0			RSP (No. 2, METHOD B)			d	
D-3	4	a								1.2		STRAIGHT HEADWALL H=3'-8", L=8'-6"	Rte 41 130+00.00	4	a	D-3
		b	129.1								6.0	24" RCP			b	
		c				1						STEEL FLARED END SECTION			c	
		d						23.5	7.7			RSP (No. 2, METHOD B)			d	
D-3	5	a								1.2		STRAIGHT HEADWALL H=3'-8", L=8'-6"	Rte 41 136+00.00	5	a	D-3
		b	241.4								15.6	24" RCP			b	
		c				1						STEEL FLARED END SECTION			c	
		d						23.5	7.7			RSP (No. 2, METHOD B)			d	
SHEET TOTAL			545.8	207.6	71.0	3	1	134.7	53.1	6.4						

(N) - NOT A SEPARATE PAY ITEM. FOR INFORMATION ONLY

ABANDON CULVERT

DRAINAGE PLAN SHEET No.	ABANDON CULVERT LF	SAND BACKFILL CY	REMOVE HEADWALL EA	DESCRIPTION	STATION
D-2	74.0	17.2	1	24" CMP CULVERT	118+87.30 "Rte 41"
D-2	70.3	16.4	1	24" CMP CULVERT	123+43.00 "
D-3	48.3	11.2	1	24" CMP CULVERT	129+53.15 "
D-3	87.0	15.2	1	18" CMP CULVERT	135+88.74 "
D-4	63.0	11.0		18" CMP CULVERT	143+52.70 "
D-4	68.4	11.9	1	18" CMP CULVERT	149+23.00 "
D-4	86.6	20.2	1	24" CMP CULVERT	152+01.92 "
D-5	90.1	15.7	1	18" CMP CULVERT	164+27.07 "
D-5	80.0	18.6	1	24" CMP CULVERT	170+87.27 "
D-6	61.6	10.8		18" CMP CULVERT	175+27.30 "
D-6	48.3	8.4	1	18" CMP CULVERT	179+02.00 "
D-6	84.8	19.7	1	24" CMP CULVERT	182+71.47 "
TOTAL	862.4	176.3	10		

REVISED BY | DATE REVISED
MAJID MONFAREDIAN | MICHAEL K. LIM
CALCULATED-DESIGNED BY | CHECKED BY
FUNCTIONAL SUPERVISOR: MICHAEL K. LIM

STATE OF CALIFORNIA - DEPARTMENT OF TRANSPORTATION
Caltrans®
DESIGN

DRAINAGE QUANTITIES
DQ-1

LAST REVISION 01-26-15 | DATE PLOTTED => 07-APR-2015 | TIME PLOTTED => 13:10

Dist	COUNTY	ROUTE	POST MILES TOTAL PROJECT	SHEET No.	TOTAL SHEETS
06	Mad	41	11.7/13.4	44	94

REGISTERED CIVIL ENGINEER DATE 1/26/15

01/26/15
PLANS APPROVAL DATE

REGISTERED PROFESSIONAL ENGINEER MAJID MONFAREDIAN No. 65517 Exp. 9/30/15 CIVIL STATE OF CALIFORNIA

THE STATE OF CALIFORNIA OR ITS OFFICERS OR AGENTS SHALL NOT BE RESPONSIBLE FOR THE ACCURACY OR COMPLETENESS OF SCANNED COPIES OF THIS PLAN SHEET.

DRAINAGE QUANTITIES

DRAINAGE PLAN SHEET No.	DRAINAGE SYSTEM No. ⬡	DRAINAGE UNIT ◯	24" RCP LF	48" RCP LF	102" CMP (0.168" THICK) LF	24" STEEL FLARED END SECTION EA	48" STEEL FLARED END SECTION	RSP FABRIC (CALSS 8) SQYD	RSP (No. 2, METHOD B) CY	MINOR CONCRETE (MINOR STRUCTURE) CY	MAXIMUM COVER (N) FT	DESCRIPTION	STATION	DRAINAGE SYSTEM No. ⬡	DRAINAGE UNIT ◯	DRAINAGE SHEET No.
D-4	6	a						23.5	7.7			RSP (No. 2, METHOD B)	Rte 41 144+00.00	6	a	D-4
		b				1						STEEL FLARED END SECTION			b	
		c	144.0								5.6	24" RCP			c	
		d								1.2		STRAIGHT HEADWALL H=3'-8", L=8'-6"			d	
D-4	7	a						23.5	7.7			RSP (No. 2, METHOD B)	Rte 41 149+00.00	7	a	D-4
		b				1						STEEL FLARED END SECTION			b	
		c	189.5								9.8	24" RCP			c	
		d								1.2		STRAIGHT HEADWALL H=3'-8", L=8'-6"			d	
D-4	8	a						23.5	7.7			RSP (No. 2, METHOD B)	Rte 41 152+50.00	8	a	D-4
		b				1						STEEL FLARED END SECTION			b	
		c	185.8								8.5	24" RCP			c	
		d								1.2		STRAIGHT HEADWALL H=3'-8", L=8'-6"			d	
D-5	9	a						23.5	7.7			STRAIGHT HEADWALL H=3'-8", L=8'-6"	Rte 41 164+00.00	9	a	D-4
		b				1					16.8	24" RCP			b	
		c	257.1									STEEL FLARED END SECTION			c	
		d								1.2		RSP (No. 2, METHOD B)			d	
SHEET TOTAL			776.4			4		94.0	30.8	4.8						

DRAINAGE QUANTITIES
DQ-2

STATE OF CALIFORNIA - DEPARTMENT OF TRANSPORTATION
Caltrans® DESIGN

FUNCTIONAL SUPERVISOR: MICHAEL K. LIM
CALCULATED-DESIGNED BY: MAJID MONFAREDIAN
CHECKED BY: MICHAEL K. LIM
REVISED BY
DATE REVISED

LAST REVISION 01-26-15
DATE PLOTTED => 07-APR-2015
TIME PLOTTED => 13:10

Dist	COUNTY	ROUTE	POST MILES TOTAL PROJECT	SHEET No.	TOTAL SHEETS
06	Mad	41	11.7/13.4	45	94

REGISTERED CIVIL ENGINEER 1/26/15 DATE

01/26/15
PLANS APPROVAL DATE

REGISTERED PROFESSIONAL ENGINEER MAJID MONFAREDIAN No. 65517 Exp. 9/30/15 CIVIL STATE OF CALIFORNIA

THE STATE OF CALIFORNIA OR ITS OFFICERS OR AGENTS SHALL NOT BE RESPONSIBLE FOR THE ACCURACY OR COMPLETENESS OF SCANNED COPIES OF THIS PLAN SHEET.

DRAINAGE QUANTITIES

DRAINAGE PLAN SHEET No.	DRAINAGE SYSTEM No. ⬡	DRAINAGE UNIT ◯	24" RCP LF	48" RCP LF	102" CMP (0.168" THICK) LF	24" STEEL FLARED END SECTION EA	48" STEEL FLARED END SECTION EA	RSP FABRIC (CALSS 8) SQYD	RSP (No. 2, METHOD B) CY	MINOR CONCRETE (MINOR STRUCTURE) CY	MAXIMUM COVER (N) FT	DESCRIPTION	STATION	DRAINAGE SYSTEM No. ⬡	DRAINAGE UNIT ◯	DRAINAGE SHEET No.
D-5	10	a						23.5	7.7			RSP (No. 2, METHOD B)	Rte 41 171+50.00	10	a	D-5
		b				1						STEEL FLARED END SECTION			b	
		c	224.2								15.6	24" RCP			c	
		d								1.2		STRAIGHT HEADWALL H=3'-8", L=8'-6"			d	
D-6	11	a						23.5	7.7			RSP (No. 2, METHOD B)	Rte 41 175+50.00	11	a	D-6
		b				1						STEEL FLARED END SECTION			b	
		c	135.4								6.7	24" RCP			c	
		d								1.2		STRAIGHT HEADWALL H=3'-8", L=8'-6"			d	
D-6	12	a						23.5	7.7			RSP (No. 2, METHOD B)	Rte 41 179+50.00	12	a	D-6
		b				1						STEEL FLARED END SECTION			b	
		c	160.9								8.7	24" RCP			c	
		d								1.2		STRAIGHT HEADWALL H=3'-8", L=8'-6"			d	
D-7	13	a						23.5	7.7			RSP (No. 2, METHOD B)	Rte 41 182+50.00	13	a	D-7
		b				1						STEEL FLARED END SECTION			b	
		c	100.3								14.2	24" RCP			c	
		d								1.2		STRAIGHT HEADWALL H=3'-8", L=8'-6"			d	
SHEET TOTAL			620.8			4		94.0	30.8	4.8						
DRAINAGE SWALES								817.6	113.8							
DOWNDRAINS								40.0	12.0							
SHEET DQ-1 TOTAL			545.8	207.6	71.0	3	1	134.7	53.1	6.4						
SHEET DQ-2 TOTAL			776.4			4		94.0	30.8	4.8						
TOTAL			1,943.0	207.6	71.0	11	1	1180.3	240.5	16.0						

PAVED HMA GUTTER AND HMA OVERSIDE DRAINS

△ No.	STA	DIRECTION	* PLACE HMA (Misc AREA) SQYD	* HMA (TYPE A) TON
1	107+00	NB	23.7	4.0
2	113+00	NB	23.7	4.0
3	121+00	NB	23.7	4.0
4	124+50	SB	23.7	4.0
5	131+00	SB	23.7	4.0
6	131+50	NB	23.7	4.0
8	139+50	SB	23.7	4.0
10	150+00	SB	23.7	4.0
11	155+50	NB	23.7	4.0
12	155+50	SB	23.7	4.0
15	173+50	NB	23.7	4.0
TOTAL			260.7	44.0

* QUANTITY INCLUDED ON ROADWAY QUANTITIES TABLE ON SHEET Q-1

DOWNDRAINS

△ No.	STA	DIRECTION	12" CSP DOWNDRAINS FT	12" ENTRANCE TAPER EA	12" STEEL FLARED END SECTION EA	RSP FABRIC (CLASS 8) ** SQYD	RSP (No. 2, METHOD B) ** CY	PLACE HMA (Misc AREA)* SQYD	HMA (TYPE A)* TON
7	138+00	NB	52.7	1	1	10	3	24.5	4.1
9	144+50	NB	33.8	1	1	10	3	24.5	4.1
13	165+50	NB	59.2	1	1	10	3	24.5	4.1
14	168+00	SB	53.3	1	1	10	3	24.5	4.1
		TOTAL	199.0	4	4	40	12	98.0	16.4

* QUANTITY INCLUDED ON ROADWAY QUANTITIES TABLE ON SHEET Q-1

** QUANTITY INCLUDED IN DRAINAGE QUANTITIES

DRAINAGE QUANTITIES
DQ-3

STATE OF CALIFORNIA - DEPARTMENT OF TRANSPORTATION
DESIGN
Caltrans®

MAJID MONFAREDIAN — MICHAEL K. LIM — REVISED BY — DATE REVISED
CALCULATED-DESIGNED BY — CHECKED BY
FUNCTIONAL SUPERVISOR — MICHAEL K. LIM

LAST REVISION 01-26-15 — DATE PLOTTED => 07-APR-2015 — TIME PLOTTED => 13:11

Dist	COUNTY	ROUTE	POST MILES TOTAL PROJECT	SHEET No.	TOTAL SHEETS
06	Mad	41	11.7/13.4	46	94

REGISTERED CIVIL ENGINEER 01/26/15 DATE

01/26/15
PLANS APPROVAL DATE

REGISTERED PROFESSIONAL ENGINEER MAJID MONFAREDIAN No. 65517 Exp. 9/30/15 CIVIL STATE OF CALIFORNIA

THE STATE OF CALIFORNIA OR ITS OFFICERS OR AGENTS SHALL NOT BE RESPONSIBLE FOR THE ACCURACY OR COMPLETENESS OF SCANNED COPIES OF THIS PLAN SHEET.

NOTES (This sheet only):

1. THE ROCK MATERIAL AND PLACEMENT METHOD SHALL CONFORM TO THE GRADING FOR METHOD "B" PLACEMENTS.
2. OFFSETS AND ELEVATIONS OF BIOSWALES AND DRAINAGE SWALES ARE AT THE CENTER LINE OF SWALE AT THE FLOW LINE.
3. FOR MORE INFORMATION FOR DRAINAGE AND BIOSWALES SEE EROSION CONTROL QUANTITIES SHEET.

BIOSWALES AND DRAINAGE SWALES

X No.	DIRECTION	BEGIN STA	BEGIN OFFSET (FT)	BEGIN Elev (FT)	END STA	END OFFSET (FT)	END Elev (FT)	W (FT)	L (FT)	D (FT)	H (FT)	S %	* ROADWAY EXCAVATION (CY)	** RSP FABRIC (CLASS 8) (SQYD)	** RSP (No. 2, METHOD B) (CY)	DESCRIPTION
1	NB	105+50	49.04	612.602	106+50	57.20	616.580	14.0	100.2	0.5	0.5	4.0	22.3			BIOSWALE
2	NB	112+00	68.04	627.990	112+50	68.20	630.730	14.0	50.0	0.5	0.5	5.5	11.1			BIOSWALE
3	SB	113+50	58.27	629.150	114+00	59.58	630.148	14.0	50.0	0.5	0.5	2.0	11.1			BIOSWALE
4	NB	120+00	89.17	632.181	120+50	74.85	635.296	19.4	52.8	1.1	0.5	5.9	20.9			BIOSWALE
5	SB	123+50	101.21	630.235	124+00	80.34	638.483	14.0	54.2	0.5	0.5	15.2	12.1	84.3	11.6	DRAINAGE SWALE
6	SB	130+10	75.68	652.978	130+50	72.35	658.939	14.0	40.1	0.5	0.5	14.9	8.9	62.4	8.5	DRAINAGE SWALE
7	NB	130+50	81.61	654.983	131+00	79.88	658.046	29.3	50.9	2.2	0.5	6.0	40.3			BIOSWALE
8	NB	136+50	107.05	672.354	137+00	88.31	677.795	14.0	53.4	0.5	0.5	10.2	11.9	83.1	11.5	DRAINAGE SWALE
9	SB	137+00	131.47	670.302	138+50	80.32	686.296	14.0	158.6	0.5	0.5	10.1	35.2	246.7	34.9	DRAINAGE SWALE
10	NB	149+50	127.34	712.735	150+50	108.43	718.761	14.0	53.5	0.5	0.5	11.3	11.9	83.2	11.5	DRAINAGE SWALE
11	SB	154+00	83.58	730.073	155+00	72.17	734.150	14.0	100.8	0.5	0.5	4.0	22.4			BIOSWALE
12	NB	154+00	69.20	735.650	155+00	71.79	734.247	14.0	100.3	0.5	0.5	1.4	22.3			BIOSWALE
13	NB	163+50	112.43	731.607	163+90	105.22	731.731	14.0	40.8	0.5	0.5	0.3	9.1			BIOSWALE
14	NB	164+10	105.74	731.937	164+50	115.18	731.594	14.0	41.2	0.5	0.5	0.8	9.2			BIOSWALE
15	SB	166+50	142.27	720.951	166+00	160.19	723.369	14.0	53.2	0.5	0.5	4.5	11.8			BIOSWALE
16	NB	169+50	123.50	732.486	170+00	132.90	730.382	14.0	51.1	0.5	0.5	4.1	11.4			BIOSWALE
17	SB	170+50	106.45	736.185	171+00	110.29	735.425	14.0	50.1	0.5	0.5	1.5	11.1			BIOSWALE
18	SB	172+50	88.28	741.683	173+00	81.73	744.950	22.7	51.1	1.5	0.5	6.0	26.4			BIOSWALE
19	NB	173+08	109.05	739.749	173+40	48.55	750.642	14.0	68.6	0.5	0.5	15.9	15.2	106.7	14.9	DRAINAGE SWALE
20	SB	174+75	80.48	748.050	175+25	70.00	745.015	29.2	50.3	2.2	0.5	6.0	39.7			BIOSWALE
21	SB	175+60	68.33	745.684	176+00	79.40	748.100	26.6	40.4	1.9	0.5	6.0	27.2			BIOSWALE
22	NB	178+90	87.76	735.960	179+40	114.70	729.176	14.0	56.8	0.5	0.5	11.9	12.6	88.4	12.3	DRAINAGE SWALE
23	SB	182+00	63.80	736.599	182+40	58.69	729.510	14.0	40.4	0.5	0.5	17.6	9.0	62.8	8.6	DRAINAGE SWALE
TOTAL													413.0	817.6	113.8	

* QUANTITIES ARE INCLUDED ON SHEET Q-1.

** RSP (No. 2, METHOD B) AND RSP FABRIC (CLASS 8) QUANTITIES ARE INCLUDED ON SHEET DQ-3.

DRAINAGE QUANTITIES
DQ-4

STATE OF CALIFORNIA - DEPARTMENT OF TRANSPORTATION
Caltrans
DESIGN

FUNCTIONAL SUPERVISOR: MICHAEL K. LIM
CALCULATED-DESIGNED BY: MAJID MONFAREDIAN
CHECKED BY: MICHAEL K. LIM
REVISED BY
DATE REVISED

LAST REVISION 01-26-15
DATE PLOTTED => 07-APR-2015
TIME PLOTTED => 13:11

Dist	COUNTY	ROUTE	POST MILES TOTAL PROJECT	SHEET No.	TOTAL SHEETS
06	Mad	41	11.7/13.4	47	94

REGISTERED CIVIL ENGINEER 1/26/15 DATE

01/26/15
PLANS APPROVAL DATE

REGISTERED PROFESSIONAL ENGINEER HUE NGUYEN No. 74484 Exp. 12/31/15 CIVIL STATE OF CALIFORNIA

THE STATE OF CALIFORNIA OR ITS OFFICERS OR AGENTS SHALL NOT BE RESPONSIBLE FOR THE ACCURACY OR COMPLETENESS OF SCANNED COPIES OF THIS PLAN SHEET.

STATIONARY MOUNTED CONSTRUCTION AREA SIGNS

SIGN	SIGN CODE FEDERAL	SIGN CODE CALIFORNIA	SIGN MESSAGE	No. OF SIGNS	PANEL SIZE	No. OF POST AND SIZE
A	W20-1		ROAD WORK AHEAD	2	48" x 48"	1- 6" x 6"
B	G20-2		END ROAD WORK	2	36" x 18"	1- 4" x 4"
C	W20-1		ROAD WORK AHEAD	4	36" x 36"	1- 4" x 6"

NOTES:

1. EXACT LOCATIONS OF CONSTRUCTION AREA SIGNS TO BE AS ORDERED BY THE ENGINEER.
2. FOR ADDITIONAL CONSTRUCTION AREA SIGNS SEE THQ-1.

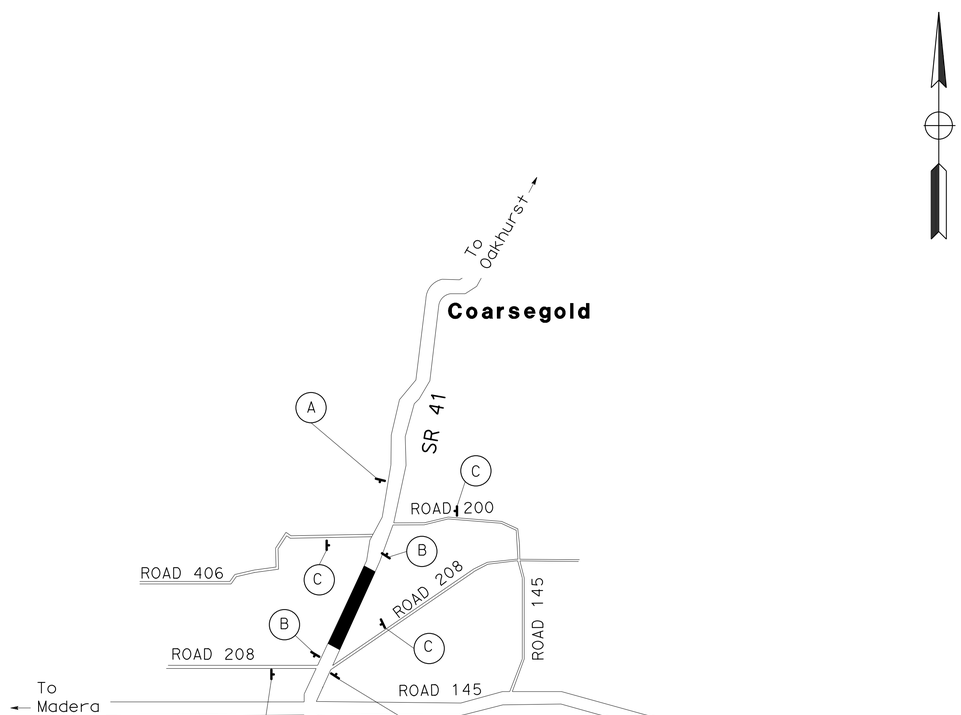

APPROVED FOR CONSTRUCTION AREA SIGN WORK ONLY

CONSTRUCTION AREA SIGNS
CS-1

NO SCALE

STATE OF CALIFORNIA - DEPARTMENT OF TRANSPORTATION
Caltrans® TRAFFIC DESIGN

FUNCTIONAL SUPERVISOR: MOHAMMED QATAMI
CALCULATED-DESIGNED BY: CECILE NGUYEN
CHECKED BY: HUE NGUYEN
REVISED BY
DATE REVISED

LAST REVISION 01-26-15
DATE PLOTTED => 07-APR-2015
TIME PLOTTED => 13:11

Dist	COUNTY	ROUTE	POST MILES TOTAL PROJECT	SHEET No.	TOTAL SHEETS
06	Mad	41	11.7/13.4	48	94

REGISTERED CIVIL ENGINEER DATE 1/26/15

01/26/15
PLANS APPROVAL DATE

REGISTERED PROFESSIONAL ENGINEER MAJID MONFAREDIAN No. 65517 Exp. 9/30/15 CIVIL STATE OF CALIFORNIA

THE STATE OF CALIFORNIA OR ITS OFFICERS OR AGENTS SHALL NOT BE RESPONSIBLE FOR THE ACCURACY OR COMPLETENESS OF SCANNED COPIES OF THIS PLAN SHEET.

STAGE 1 CONSTRUCTION NOTES:

1. CONSTRUCT FENCE ON NORTHBOUND AND SOUTHBOUND.
2. REMOVE EXISTING FENCE, CLEAR AND GRUB WITHIN RIGHT-OF-WAY AND REMOVE TREES.
3. CONSTRUCT DRAINAGE SWALES AND BIOSWALES ON NORTHBOUND.
4. CONSTRUCT NORTHBOUND EMBANKMENT AND DRAINAGE SYSTEMS.
5. CONSTRUCT TEMPORARY Pvmt ON NORTHBOUND.
6. APPLY TEMPORARY EROSION CONTROL (NORTHBOUND ONLY).

LEGEND:

CONSTRUCT THIS STAGE

CONSTRUCTED PREVIOUS STAGES

TEMPORARY RAILING (TYPE K)

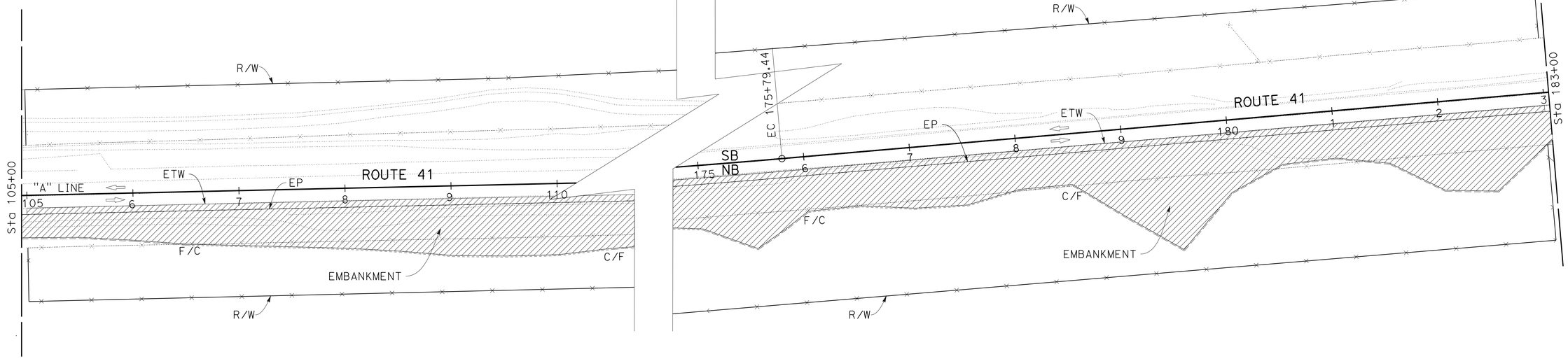

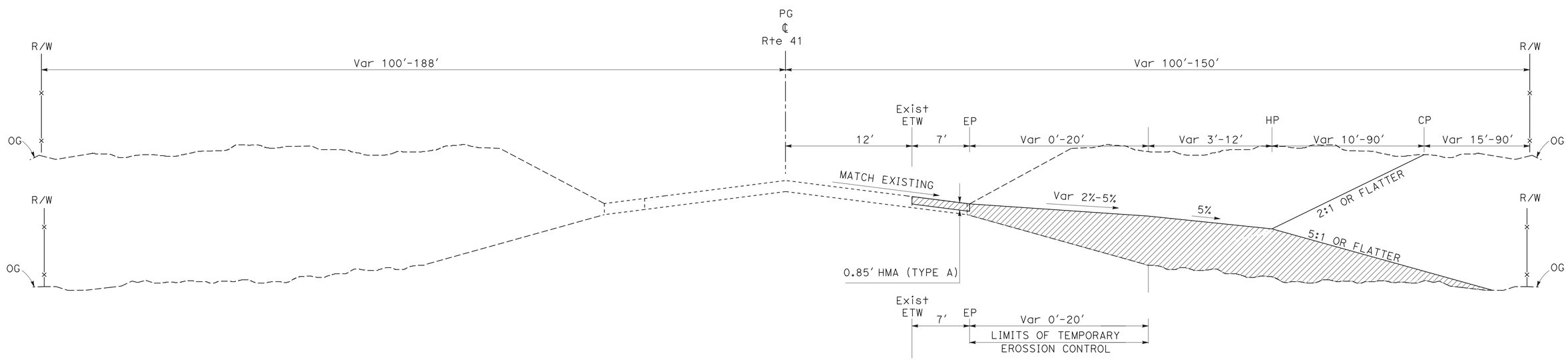

ROUTE 41

Sta 105+00 TO Sta 183+00

APPROVED FOR STAGE CONSTRUCTION WORK ONLY

STAGE CONSTRUCTION PLAN

(STAGE 1)

NO SCALE

SC-1

STATE OF CALIFORNIA - DEPARTMENT OF TRANSPORTATION

Caltrans®

DESIGN

FUNCTIONAL SUPERVISOR: MICHAEL K. LIM

MAJID MONFAREDIAN — MICHAEL K. LIM

CALCULATED-DESIGNED BY / CHECKED BY

REVISED BY / DATE REVISED

LAST REVISION 01-26-15

DATE PLOTTED => 07-APR-2015
TIME PLOTTED => 13:11

Dist	COUNTY	ROUTE	POST MILES TOTAL PROJECT	SHEET No.	TOTAL SHEETS
06	Mad	41	11.7/13.4	49	94

REGISTERED CIVIL ENGINEER DATE 1/26/15

01/26/15
PLANS APPROVAL DATE

REGISTERED PROFESSIONAL ENGINEER MAJID MONFAREDIAN No. 65517 Exp. 9/30/15 CIVIL STATE OF CALIFORNIA

THE STATE OF CALIFORNIA OR ITS OFFICERS OR AGENTS SHALL NOT BE RESPONSIBLE FOR THE ACCURACY OR COMPLETENESS OF SCANNED COPIES OF THIS PLAN SHEET.

STAGE 2 CONSTRUCTION NOTES:

1. CROSS SLOPE CORRECTION ON NORTHBOUND AND SOUTHBOUND.
2. NIGHT WORK, ONE WAY TRAFFIC CONTROL.
3. PLACE TEMPORARY TRAFFIC STRIPE (SEE TRAFFIC HANDLING PLANS).
4. Temp RAILING (TYPE K) SHALL BE PLACED PRIOR TO OPENING THE SOUTHBOUND LANES TO TRAFFIC.

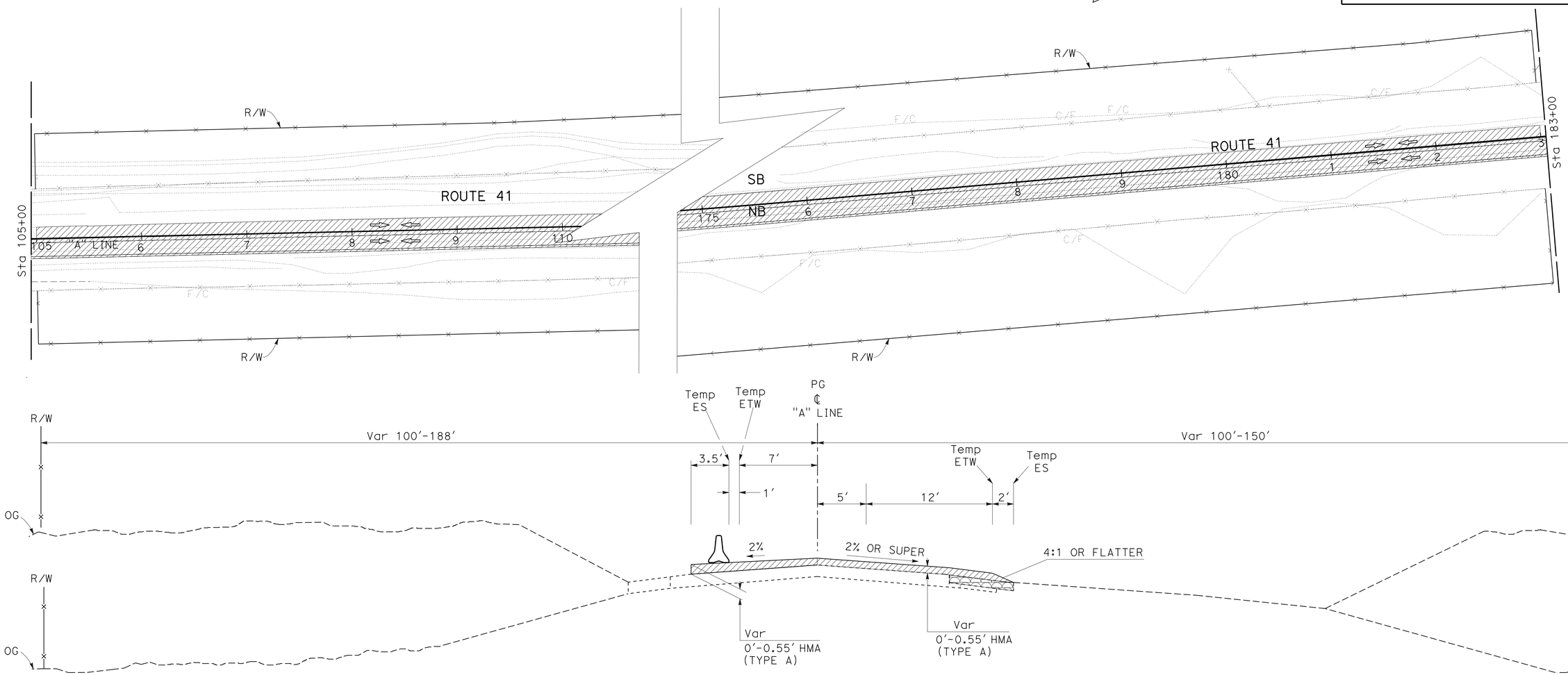

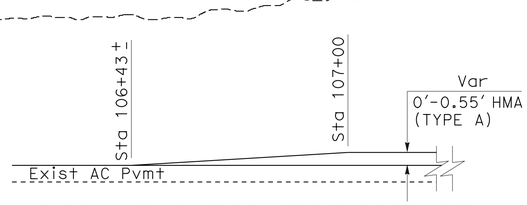

LONGITUDINAL TRANSITION

Sta 106+43± TO Sta 107+00

ROUTE 41

Sta 107+00 TO Sta 181+00

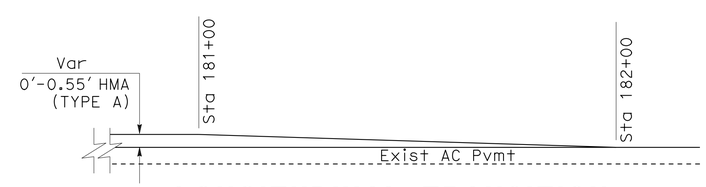

LONGITUDINAL TRANSITION

Sta 181+00 TO Sta 183+00

APPROVED FOR STAGE CONSTRUCTION WORK ONLY

STAGE CONSTRUCTION PLAN

(STAGE 2)

NO SCALE

SC-2

STATE OF CALIFORNIA - DEPARTMENT OF TRANSPORTATION

Caltrans®

DESIGN

FUNCTIONAL SUPERVISOR: MICHAEL K. LIM

CALCULATED-DESIGNED BY: MAJID MONFAREDIAN

CHECKED BY: MICHAEL K. LIM

REVISED BY

DATE REVISED

LAST REVISION 01-26-15

DATE PLOTTED => 07-APR-2015

TIME PLOTTED => 13:11

Dist	COUNTY	ROUTE	POST MILES TOTAL PROJECT	SHEET No.	TOTAL SHEETS
06	Mad	41	11.7/13.4	50	94

REGISTERED CIVIL ENGINEER 1/26/15 DATE

01/26/15
PLANS APPROVAL DATE

REGISTERED PROFESSIONAL ENGINEER MAJID MONFAREDIAN No. 65517 Exp. 9/30/15 CIVIL STATE OF CALIFORNIA

THE STATE OF CALIFORNIA OR ITS OFFICERS OR AGENTS SHALL NOT BE RESPONSIBLE FOR THE ACCURACY OR COMPLETENESS OF SCANNED COPIES OF THIS PLAN SHEET.

STAGE 3 CONSTRUCTION NOTES:

1. CONSTRUCT SOUTHBOUND DRAINAGE SYSTEMS.
2. CONSTRUCT DRAINAGE SWALES AND BIO SWALES ON NORTHBOUND.
3. CONSTRUCT ROADWAY WIDENING ON SOUTHBOUND.

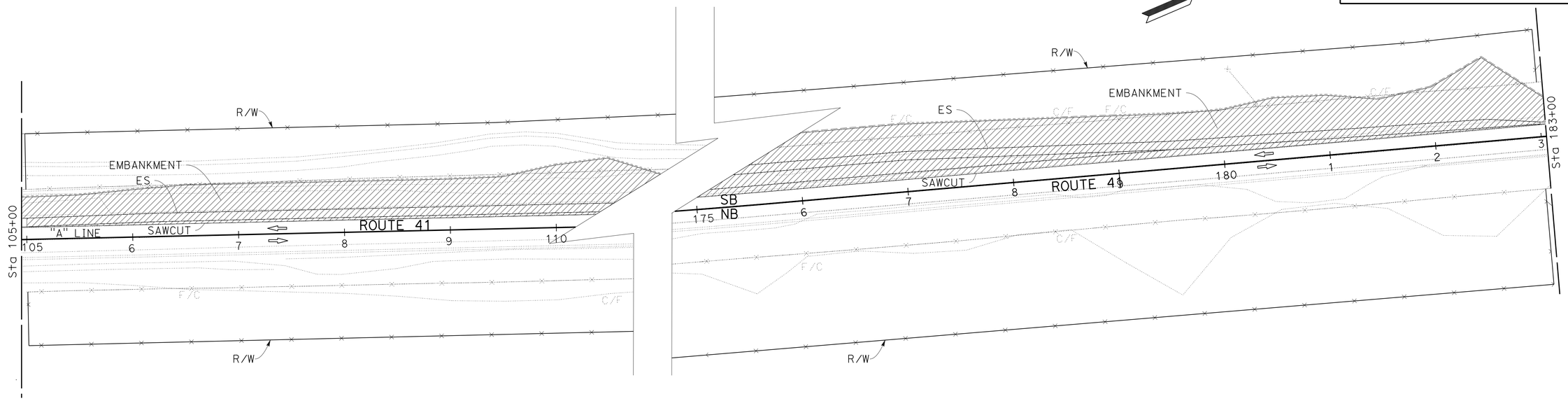

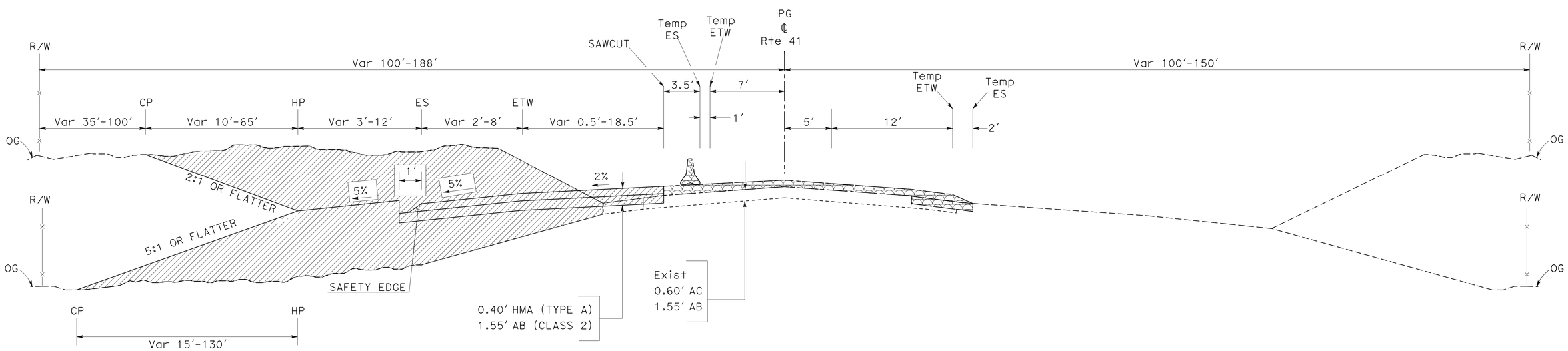

ROUTE 41

Sta 105+00 TO Sta 183+00

APPROVED FOR STAGE CONSTRUCTION WORK ONLY

STAGE CONSTRUCTION PLAN

(STAGE 3) **SC-3**

NO SCALE

REVISED BY | DATE REVISED
MAJID MONFAREDIAN | MICHAEL K. LIM
CALCULATED-DESIGNED BY | CHECKED BY
FUNCTIONAL SUPERVISOR: MICHAEL K. LIM

STATE OF CALIFORNIA - DEPARTMENT OF TRANSPORTATION
Caltrans
DESIGN

LAST REVISION 01-26-15 | DATE PLOTTED => 07-APR-2015 | TIME PLOTTED => 13:11

Dist	COUNTY	ROUTE	POST MILES TOTAL PROJECT	SHEET No.	TOTAL SHEETS
06	Mad	41	11.7/13.4	51	94

REGISTERED CIVIL ENGINEER DATE 1/26/15

01/26/15
PLANS APPROVAL DATE

REGISTERED PROFESSIONAL ENGINEER
MAJID MONFAREDIAN
No. 65517
Exp. 9/30/15
CIVIL
STATE OF CALIFORNIA

THE STATE OF CALIFORNIA OR ITS OFFICERS OR AGENTS SHALL NOT BE RESPONSIBLE FOR THE ACCURACY OR COMPLETENESS OF SCANNED COPIES OF THIS PLAN SHEET.

STAGE 4 CONSTRUCTION NOTES:

1. CONSTRUCT ROADWAY WIDENING ON NORTHBOUND.
2. REMOVE Temp TRAFFIC STRIPE FROM STAGE 3.
3. PLACE TEMPORARY TRAFFIC STRIPE (SEE TRAFFIC HANDLING PLANS).
4. NIGHT WORK, ONE WAY TRAFFIC CONTROL.
5. Temp RAILING (TYPE K) SHALL BE PLACED PRIOR TO OPENING THE NORTHBOUND LANES TO TRAFFIC.

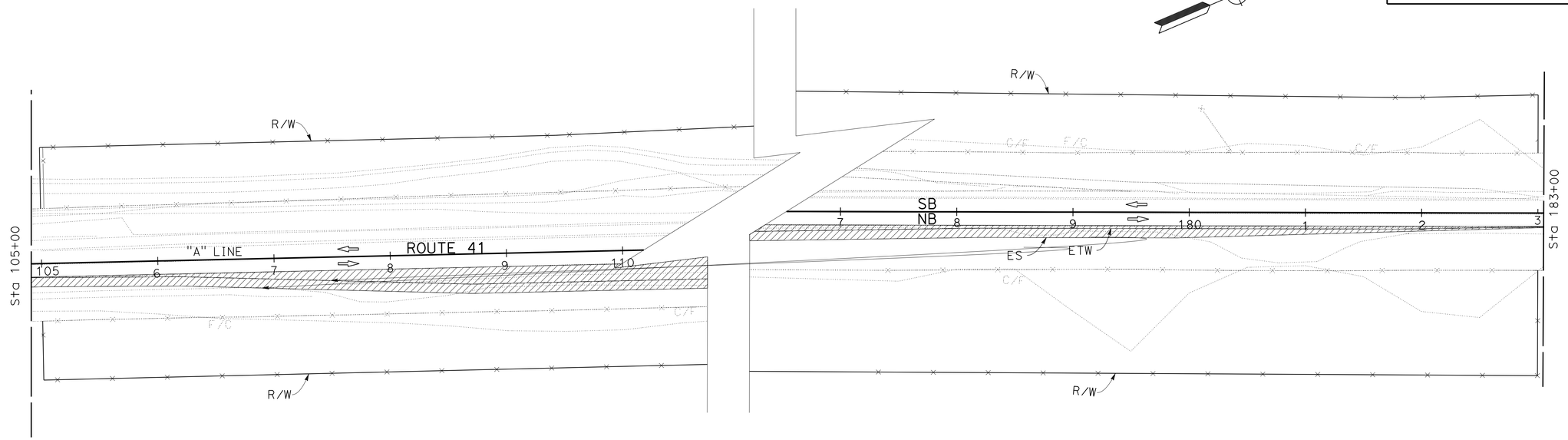

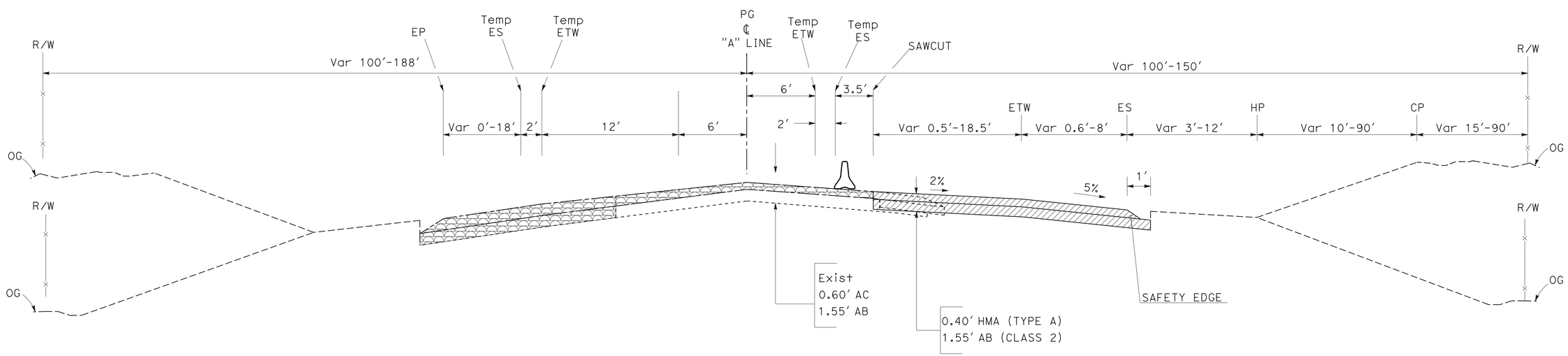

ROUTE 41

Sta 105+00 TO Sta 128+00

Sta 177+00 TO Sta 183+00

APPROVED FOR STAGE CONSTRUCTION WORK ONLY

STAGE CONSTRUCTION PLAN

(STAGE 4) **SC-4**

NO SCALE

STATE OF CALIFORNIA - DEPARTMENT OF TRANSPORTATION

Caltrans® **DESIGN**

FUNCTIONAL SUPERVISOR: MICHAEL K. LIM

CALCULATED-DESIGNED BY: MAJID MONFAREDIAN

CHECKED BY: MICHAEL K. LIM

REVISED BY

DATE REVISED

LAST REVISION 01-26-15

DATE PLOTTED => 07-APR-2015
TIME PLOTTED => 13:11

Dist	COUNTY	ROUTE	POST MILES TOTAL PROJECT	SHEET No.	TOTAL SHEETS
06	Mad	41	11.7/13.4	52	94

REGISTERED CIVIL ENGINEER DATE 1/26/15

01/26/15
PLANS APPROVAL DATE

REGISTERED PROFESSIONAL ENGINEER MAJID MONFAREDIAN No. 65517 Exp. 9/30/15 CIVIL STATE OF CALIFORNIA

THE STATE OF CALIFORNIA OR ITS OFFICERS OR AGENTS SHALL NOT BE RESPONSIBLE FOR THE ACCURACY OR COMPLETENESS OF SCANNED COPIES OF THIS PLAN SHEET.

STAGE 5 CONSTRUCTION NOTES:

CONSTRUCT ROADWAY WIDENING ON NORTHBOUND.

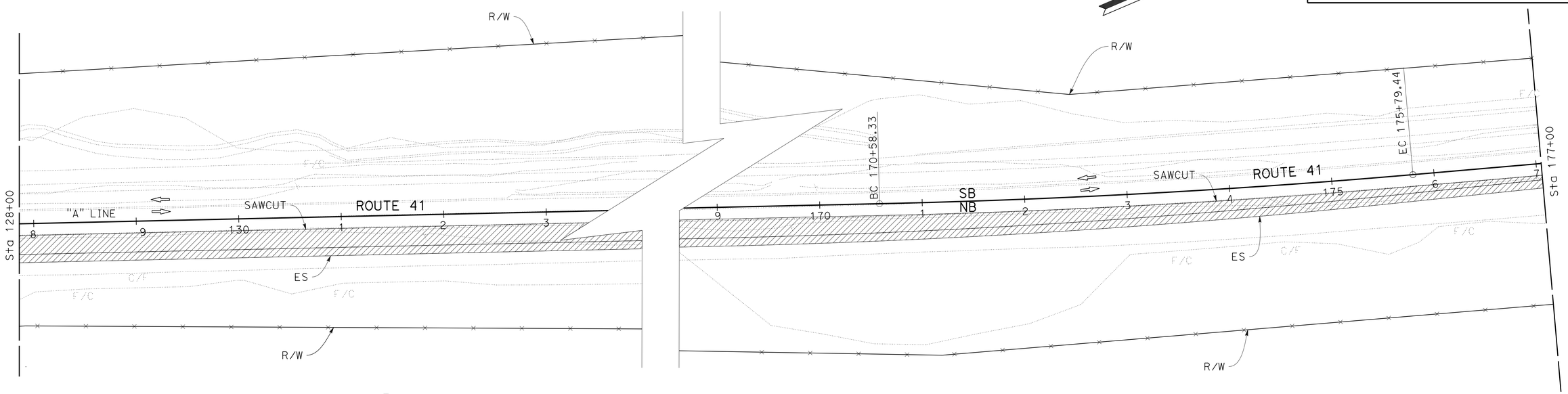

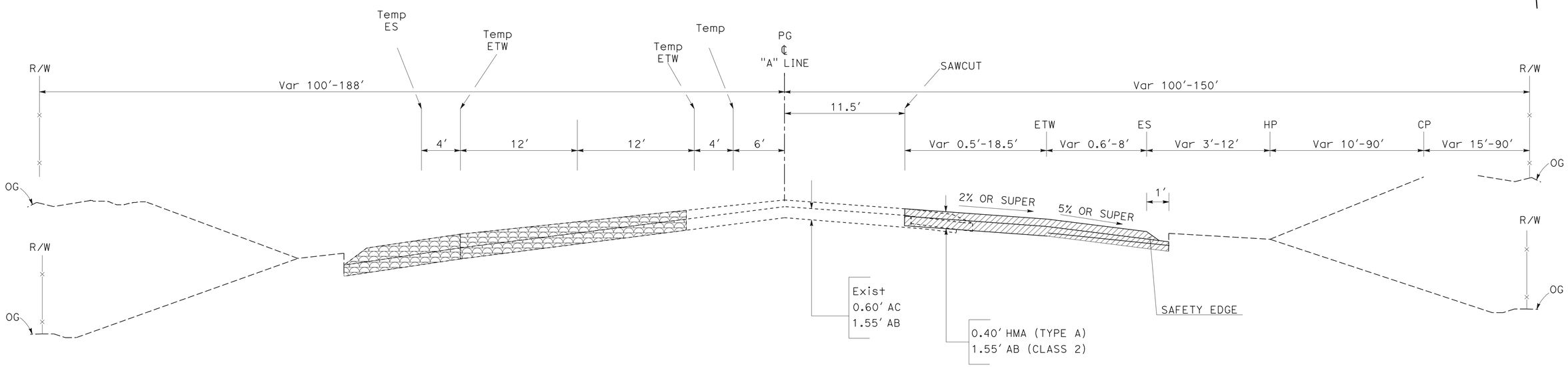

ROUTE 41

Sta 128+00 TO Sta 177+00

APPROVED FOR STAGE CONSTRUCTION WORK ONLY

STAGE CONSTRUCTION PLAN

(STAGE 5) **SC-5**

NO SCALE

REVISED BY	DATE REVISED
MAJID MONFAREDIAN	MICHAEL K. LIM
CALCULATED-DESIGNED BY	CHECKED BY
FUNCTIONAL SUPERVISOR	MICHAEL K. LIM

STATE OF CALIFORNIA - DEPARTMENT OF TRANSPORTATION

Caltrans DESIGN

LAST REVISION 01-26-15 | DATE PLOTTED => 07-APR-2015 | TIME PLOTTED => 13:11

Dist	COUNTY	ROUTE	POST MILES TOTAL PROJECT	SHEET No.	TOTAL SHEETS
06	Mad	41	11.7/13.4	53	94

REGISTERED CIVIL ENGINEER 1/26/15 DATE

01/26/15
PLANS APPROVAL DATE

REGISTERED PROFESSIONAL ENGINEER MAJID MONFAREDIAN No. 65517 Exp. 9/30/15 CIVIL STATE OF CALIFORNIA

THE STATE OF CALIFORNIA OR ITS OFFICERS OR AGENTS SHALL NOT BE RESPONSIBLE FOR THE ACCURACY OR COMPLETENESS OF SCANNED COPIES OF THIS PLAN SHEET.

STAGE 6 CONSTRUCTION NOTES:

1. PLACE 0.20' RHMA (TYPE-G).
2. PLACE SHOULDER BACKING.
3. CONSTRUCT RUMBLE STRIPS ON SHOULDERS AND CENTER LINE.
4. NIGHT WORK, ONE WAY TRAFFIC CONTROL.

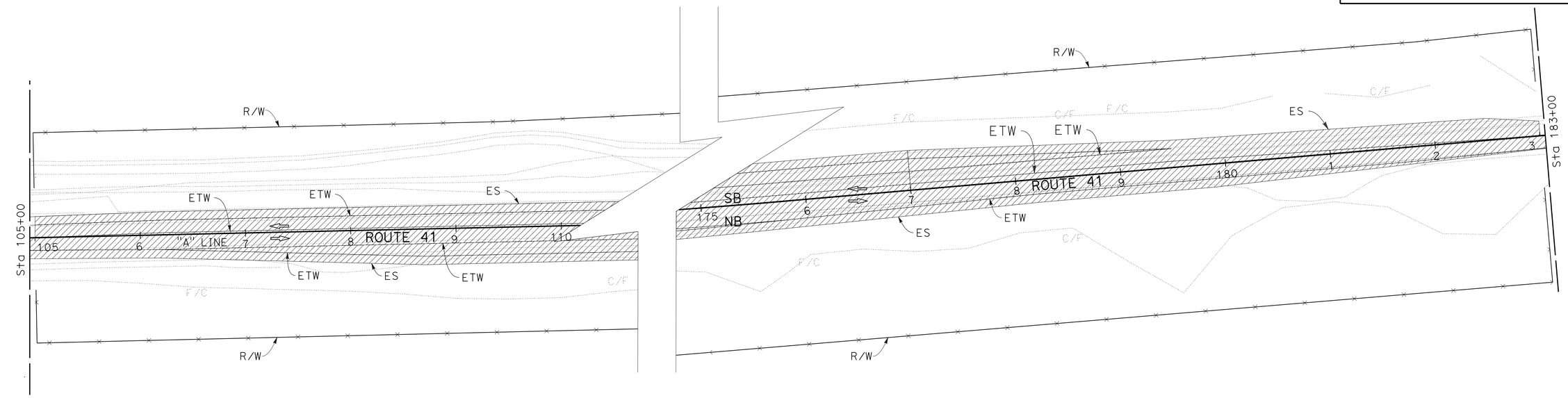

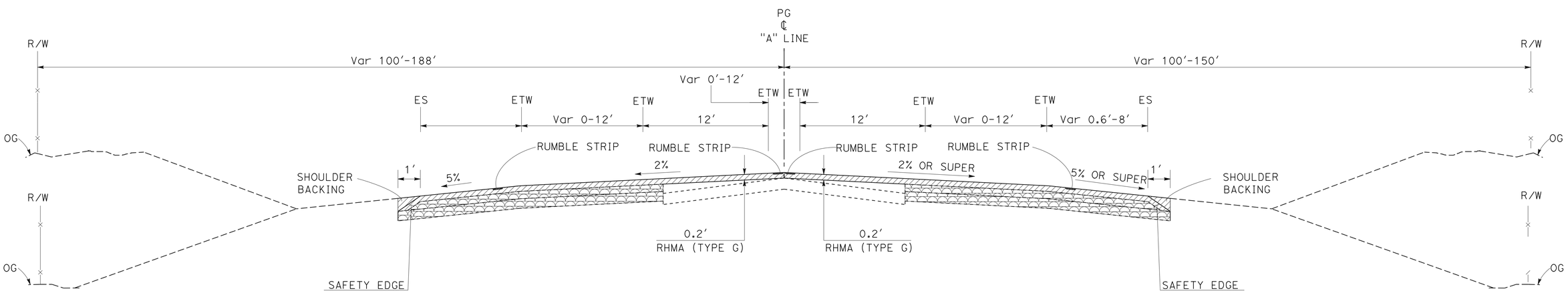

ROUTE 41

Sta 106+43 TO Sta 182+00

APPROVED FOR STAGE CONSTRUCTION WORK ONLY

STAGE CONSTRUCTION PLAN

(STAGE 6)

NO SCALE

SC-6

REVISED BY | DATE REVISED

MAJID MONFAREDIAN | MICHAEL K. LIM

CALCULATED-DESIGNED BY | CHECKED BY

FUNCTIONAL SUPERVISOR: MICHAEL K. LIM

STATE OF CALIFORNIA - DEPARTMENT OF TRANSPORTATION

Caltrans® DESIGN

LAST REVISION 01-26-15 | DATE PLOTTED => 07-APR-2015 | TIME PLOTTED => 13:11

Dist	COUNTY	ROUTE	POST MILES TOTAL PROJECT	SHEET No.	TOTAL SHEETS
06	Mad	41	11.7/13.4	54	94

REGISTERED CIVIL ENGINEER DATE 1/26/15

01/26/15
PLANS APPROVAL DATE

REGISTERED PROFESSIONAL ENGINEER MAJID MONFAREDIAN No. 65517 Exp. 9/30/15 CIVIL STATE OF CALIFORNIA

THE STATE OF CALIFORNIA OR ITS OFFICERS OR AGENTS SHALL NOT BE RESPONSIBLE FOR THE ACCURACY OR COMPLETENESS OF SCANNED COPIES OF THIS PLAN SHEET.

STAGE 7 CONSTRUCTION NOTES:

1. COLD PLANE AND OVERLAY WITH 0.20' RHMA (TYPE-G) ON NORTHBOUND.
2. PLACE SHOULDER BACKING ON NORTHBOUND.
3. CONSTRUCT RUMBLE STRIPS ON SHOULDER AND CENTER LINE.
4. NIGHT WORK, ONE WAY TRAFFIC CONTROL.

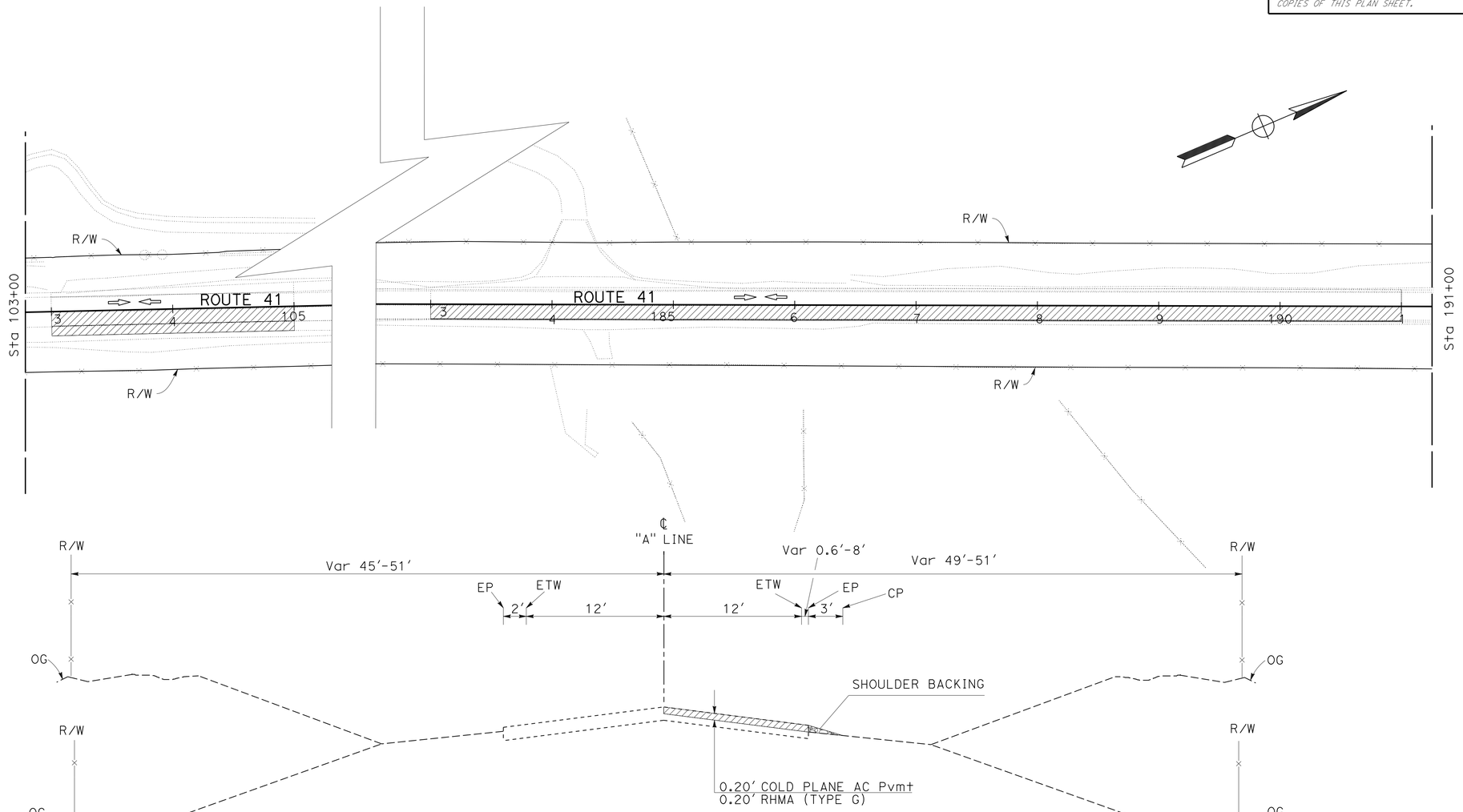

ROUTE 41

Sta 103+00 TO Sta 106+43

APPROVED FOR STAGE CONSTRUCTION WORK ONLY

STAGE CONSTRUCTION PLAN

(STAGE 7) **SC-7**

NO SCALE

STATE OF CALIFORNIA - DEPARTMENT OF TRANSPORTATION

Caltrans®

DESIGN

FUNCTIONAL SUPERVISOR: MICHAEL K. LIM

CALCULATED-DESIGNED BY: MAJID MONFAREDIAN

CHECKED BY: MICHAEL K. LIM

REVISED BY

DATE REVISED

LAST REVISION 01-26-15

DATE PLOTTED => 07-APR-2015
TIME PLOTTED => 13:11

Dist	COUNTY	ROUTE	POST MILES TOTAL PROJECT	SHEET No.	TOTAL SHEETS
06	Mad	41	11.7/13.4	55	94

REGISTERED CIVIL ENGINEER DATE 1/26/15

01/26/15
PLANS APPROVAL DATE

REGISTERED PROFESSIONAL ENGINEER MAJID MONFAREDIAN No. 65517 Exp. 9/30/15 CIVIL STATE OF CALIFORNIA

THE STATE OF CALIFORNIA OR ITS OFFICERS OR AGENTS SHALL NOT BE RESPONSIBLE FOR THE ACCURACY OR COMPLETENESS OF SCANNED COPIES OF THIS PLAN SHEET.

STAGE 8 CONSTRUCTION NOTES:

1. COLD PLANE AND OVERLAY WITH 0.20' RHMA (TYPE-G) ON SOUTHBOUND.
2. PLACE SHOULDER BACKING ON SOUTHBOUND.
3. CONSTRUCT RUMBLE STRIPS ON SHOULDER AND CENTER LINE.
4. NIGHT WORK, ONE WAY TRAFFIC CONTROL.

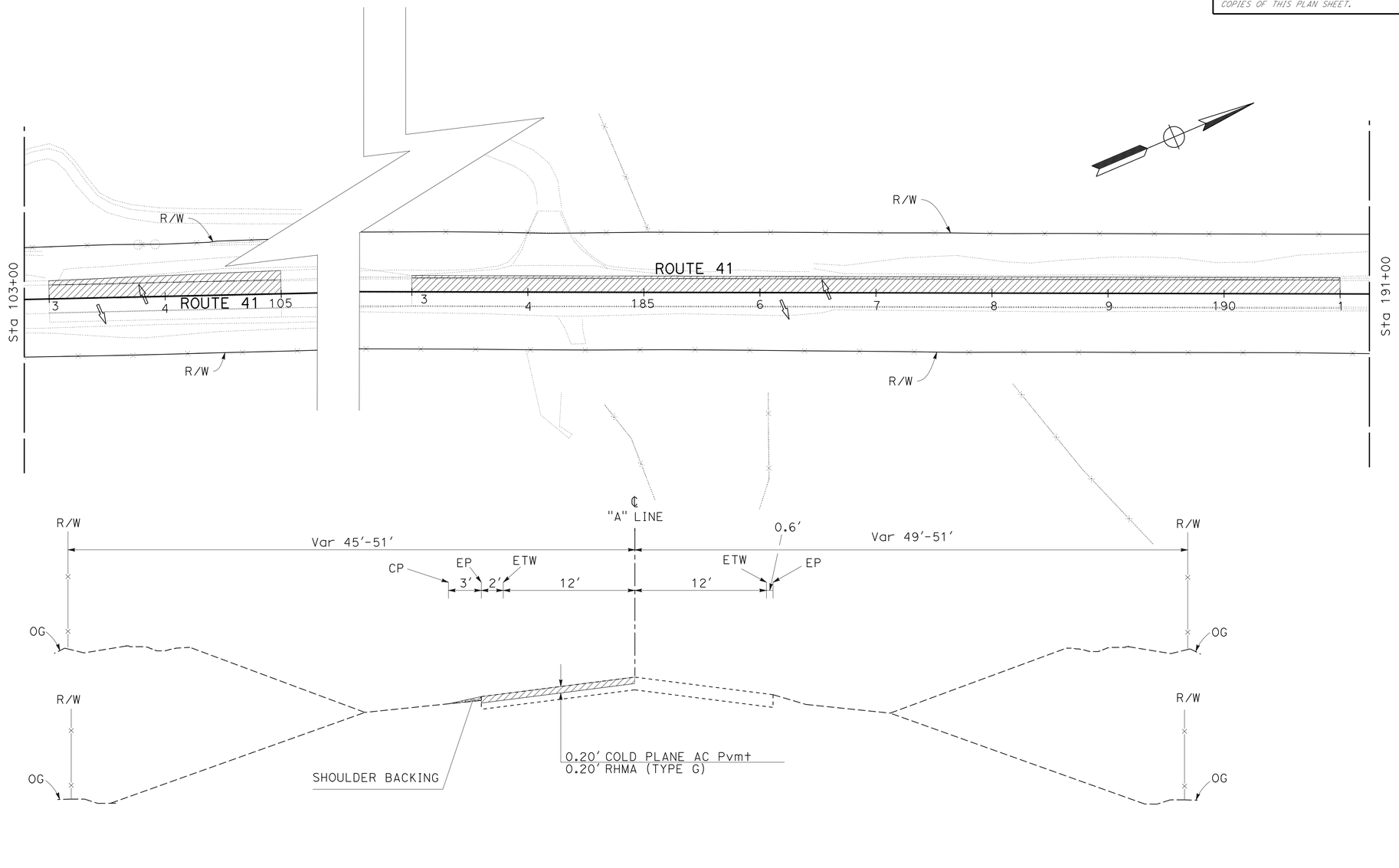

ROUTE 41

Sta 103+00 TO Sta 106+43
Sta 182+00 TO Sta 191+00

APPROVED FOR STAGE CONSTRUCTION WORK ONLY

STAGE CONSTRUCTION PLAN
(STAGE 8)

NO SCALE

SC-8

STATE OF CALIFORNIA - DEPARTMENT OF TRANSPORTATION
Caltrans®
DESIGN

FUNCTIONAL SUPERVISOR: MICHAEL K. LIM
CALCULATED-DESIGNED BY: MAJID MONFAREDIAN
CHECKED BY: MICHAEL K. LIM
REVISED BY
DATE REVISED

LAST REVISION 01-26-15
DATE PLOTTED => 07-APR-2015
TIME PLOTTED => 13:11

Dist	COUNTY	ROUTE	POST MILES TOTAL PROJECT	SHEET No.	TOTAL SHEETS
06	Mad	41	11.7/13.4	56	94

REGISTERED CIVIL ENGINEER 1/26/15 DATE

01/26/15
PLANS APPROVAL DATE

REGISTERED PROFESSIONAL ENGINEER HUE NGUYEN No. 74484 Exp. 12/31/15 CIVIL STATE OF CALIFORNIA

THE STATE OF CALIFORNIA OR ITS OFFICERS OR AGENTS SHALL NOT BE RESPONSIBLE FOR THE ACCURACY OR COMPLETENESS OF SCANNED COPIES OF THIS PLAN SHEET.

LEGEND:

- Temp CRASH CUSHION ARRAY "TS14"
- (XX) REMOVE THERMOPLASTIC TRAFFIC STRIPE
- (XX) SIGN No.
- TEMPORARY TRAFFIC STRIPE (PAINT) DETAIL No.
- CHANNELIZER
- CONSTRUCTION AREA SIGN
- OBJECT MARKER (TYPE P)

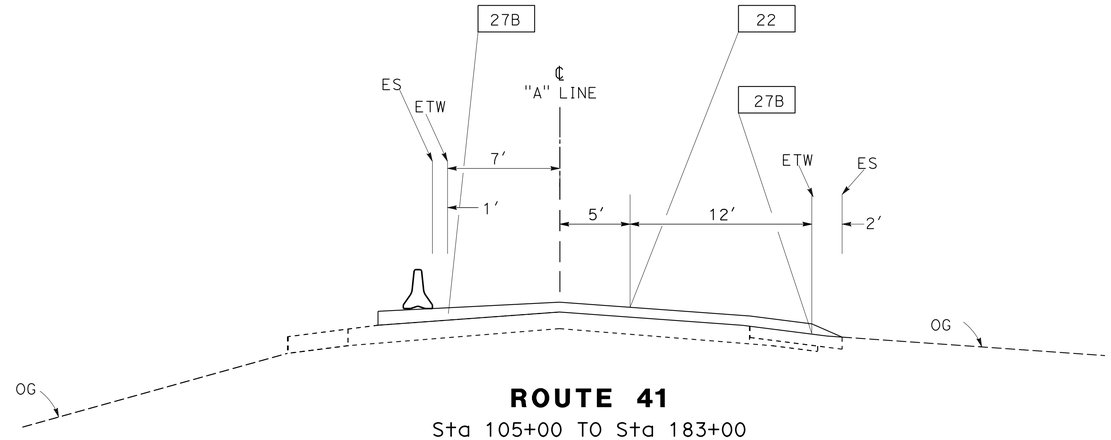

ROUTE 41

Sta 105+00 TO Sta 183+00

SECTION A-A

(STAGE 3)

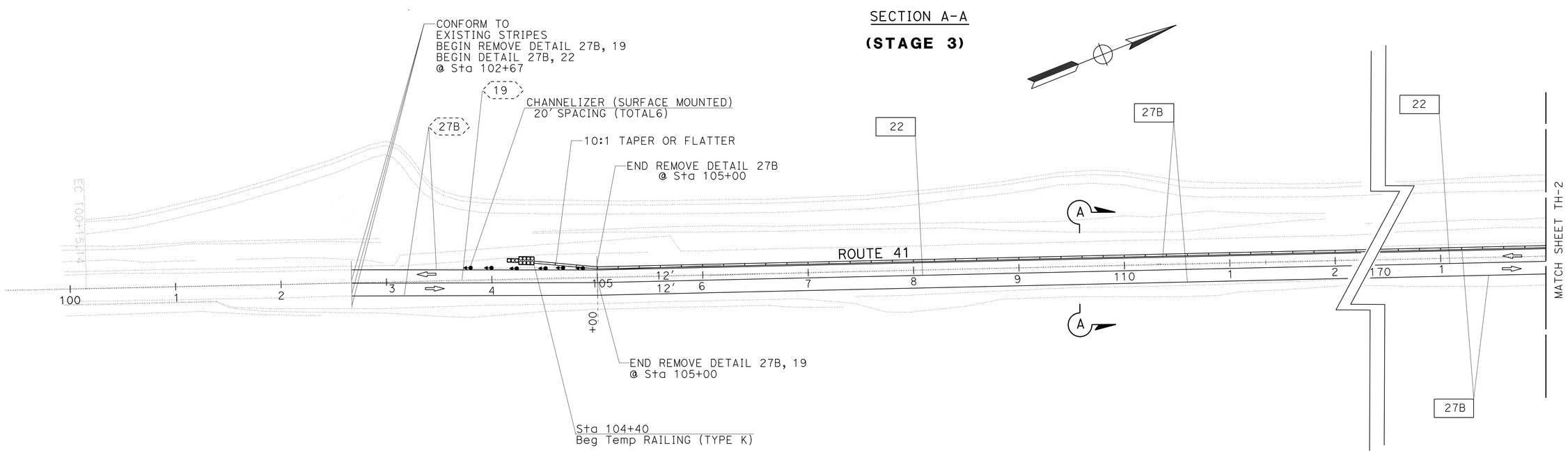

TRAFFIC HANDLING PLAN

(STAGE 3)

SCALE:1"=50′

TH-1

APPROVED FOR TRAFFIC HANDLING WORK ONLY

REVISED BY	DATE REVISED
CN	07/12/13

CALCULATED-DESIGNED BY: CECILE NGUYEN
CHECKED BY: HUE NGUYEN
FUNCTIONAL SUPERVISOR: MOHAMMED QATAMI

STATE OF CALIFORNIA - DEPARTMENT OF TRANSPORTATION
Caltrans
TRAFFIC DESIGN

LAST REVISION 01-26-15
DATE PLOTTED => 07-APR-2015
TIME PLOTTED => 13:11

Dist	COUNTY	ROUTE	POST MILES TOTAL PROJECT	SHEET No.	TOTAL SHEETS
06	Mad	41	11.7/13.4	57	94

REGISTERED CIVIL ENGINEER 1/26/15 DATE

01/26/15
PLANS APPROVAL DATE

REGISTERED PROFESSIONAL ENGINEER
HUE NGUYEN
No. 74484
Exp. 12/31/15
CIVIL
STATE OF CALIFORNIA

THE STATE OF CALIFORNIA OR ITS OFFICERS OR AGENTS SHALL NOT BE RESPONSIBLE FOR THE ACCURACY OR COMPLETENESS OF SCANNED COPIES OF THIS PLAN SHEET.

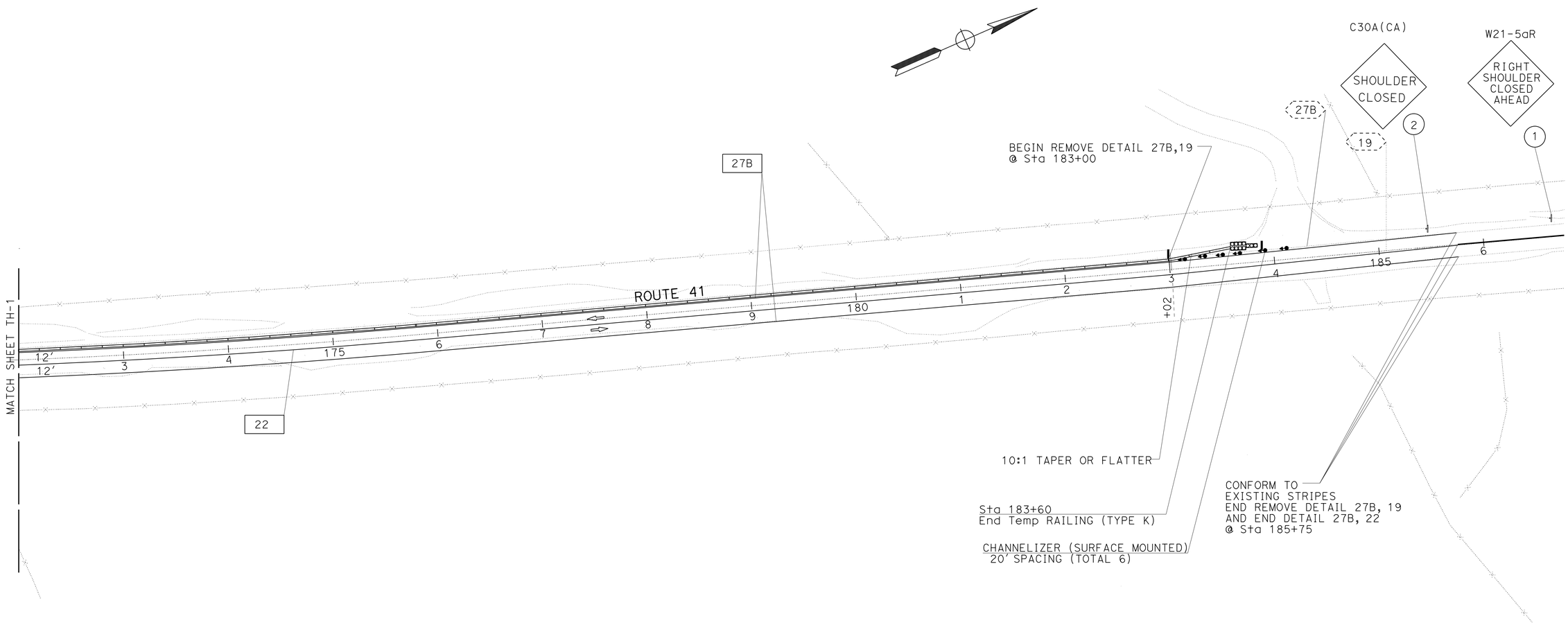

TRAFFIC HANDLING PLAN

(STAGE 3)

SCALE:1"=50'

TH-2

APPROVED FOR TRAFFIC HANDLING WORK ONLY

STATE OF CALIFORNIA - DEPARTMENT OF TRANSPORTATION

Caltrans®

TRAFFIC DESIGN

FUNCTIONAL SUPERVISOR: MOHAMMED QATAMI

CALCULATED-DESIGNED BY: CECILE NGUYEN

CHECKED BY: HUE NGUYEN

REVISED BY: GN

DATE REVISED: 07/02/13

LAST REVISION 01-26-15

DATE PLOTTED => 07-APR-2015
TIME PLOTTED => 13:11

Dist	COUNTY	ROUTE	POST MILES TOTAL PROJECT	SHEET No.	TOTAL SHEETS
06	Mad	41	11.7/13.4	58	94

REGISTERED CIVIL ENGINEER 1/26/15 DATE

01/26/15
PLANS APPROVAL DATE

REGISTERED PROFESSIONAL ENGINEER HUE NGUYEN No. 74484 Exp. 12/31/15 CIVIL STATE OF CALIFORNIA

THE STATE OF CALIFORNIA OR ITS OFFICERS OR AGENTS SHALL NOT BE RESPONSIBLE FOR THE ACCURACY OR COMPLETENESS OF SCANNED COPIES OF THIS PLAN SHEET.

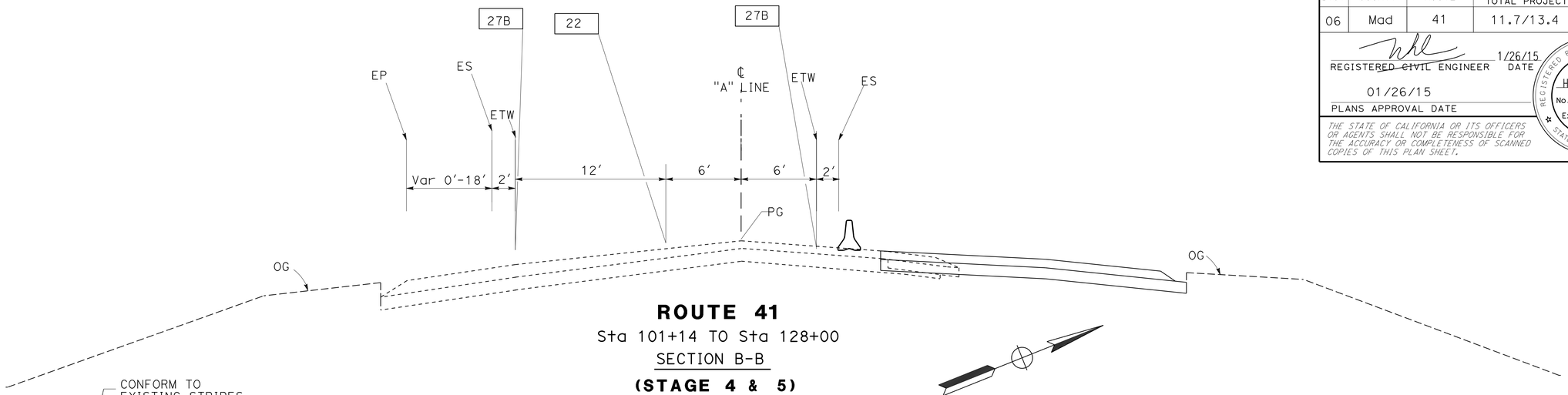

ROUTE 41

Sta 101+14 TO Sta 128+00

SECTION B-B

(STAGE 4 & 5)

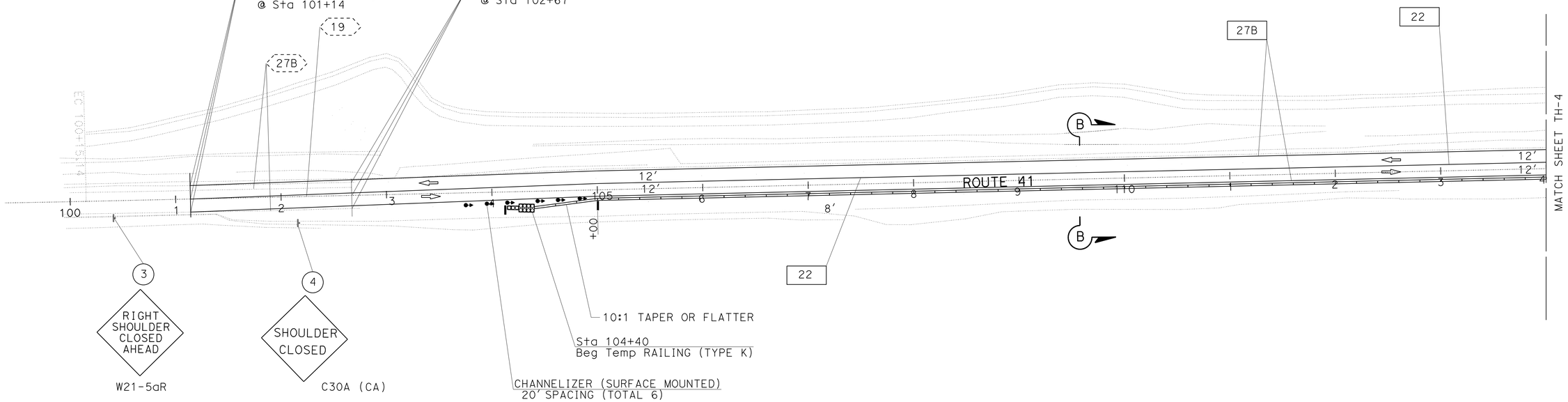

APPROVED FOR TRAFFIC HANDLING WORK ONLY

TRAFFIC HANDLING PLAN

(STAGE 4)

SCALE:1"=50'

TH-3

STATE OF CALIFORNIA - DEPARTMENT OF TRANSPORTATION

Caltrans® **TRAFFIC DESIGN**

FUNCTIONAL SUPERVISOR: MOHAMMED QATAMI

CALCULATED-DESIGNED BY: CECILE NGUYEN

CHECKED BY: HUE NGUYEN

REVISED BY: CN

DATE REVISED: 07/02/13

LAST REVISION 01-26-15

DATE PLOTTED => 07-APR-2015
TIME PLOTTED => 13:11

Dist	COUNTY	ROUTE	POST MILES TOTAL PROJECT	SHEET No.	TOTAL SHEETS
06	Mad	41	11.7/13.4	59	94

REGISTERED CIVIL ENGINEER 1/26/15 DATE

01/26/15
PLANS APPROVAL DATE

REGISTERED PROFESSIONAL ENGINEER
HUE NGUYEN
No. 74484
Exp. 12/31/15
CIVIL
STATE OF CALIFORNIA

THE STATE OF CALIFORNIA OR ITS OFFICERS OR AGENTS SHALL NOT BE RESPONSIBLE FOR THE ACCURACY OR COMPLETENESS OF SCANNED COPIES OF THIS PLAN SHEET.

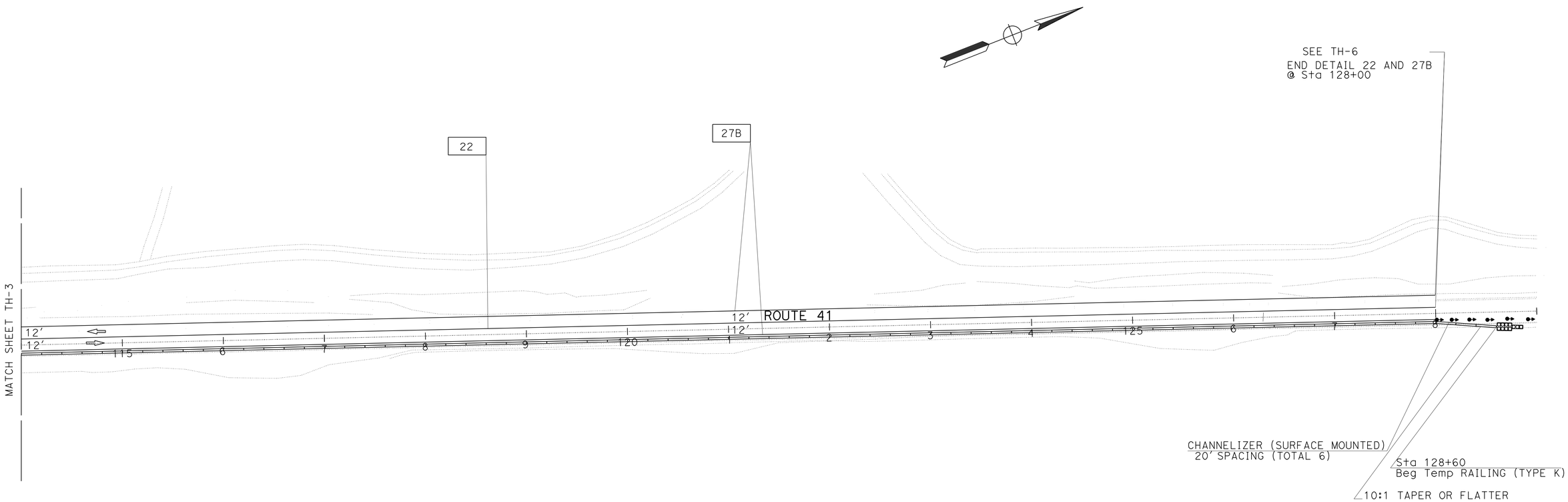

TRAFFIC HANDLING PLAN

(STAGE 4)

SCALE:1"=50'

TH-4

APPROVED FOR TRAFFIC HANDLING WORK ONLY

STATE OF CALIFORNIA - DEPARTMENT OF TRANSPORTATION
Caltrans
TRAFFIC DESIGN

FUNCTIONAL SUPERVISOR: MOHAMMED QATAMI

CALCULATED-DESIGNED BY: CECILE NGUYEN
CHECKED BY: HUE NGUYEN

REVISED BY: CN
DATE REVISED: 07/02/13

LAST REVISION 01-26-15
DATE PLOTTED => 07-APR-2015
TIME PLOTTED => 13:11

Dist	COUNTY	ROUTE	POST MILES TOTAL PROJECT	SHEET No.	TOTAL SHEETS
06	Mad	41	11.7/13.4	60	94

REGISTERED CIVIL ENGINEER 1/26/15 DATE

01/26/15
PLANS APPROVAL DATE

REGISTERED PROFESSIONAL ENGINEER HUE NGUYEN No. 74484 Exp. 12/31/15 CIVIL STATE OF CALIFORNIA

THE STATE OF CALIFORNIA OR ITS OFFICERS OR AGENTS SHALL NOT BE RESPONSIBLE FOR THE ACCURACY OR COMPLETENESS OF SCANNED COPIES OF THIS PLAN SHEET.

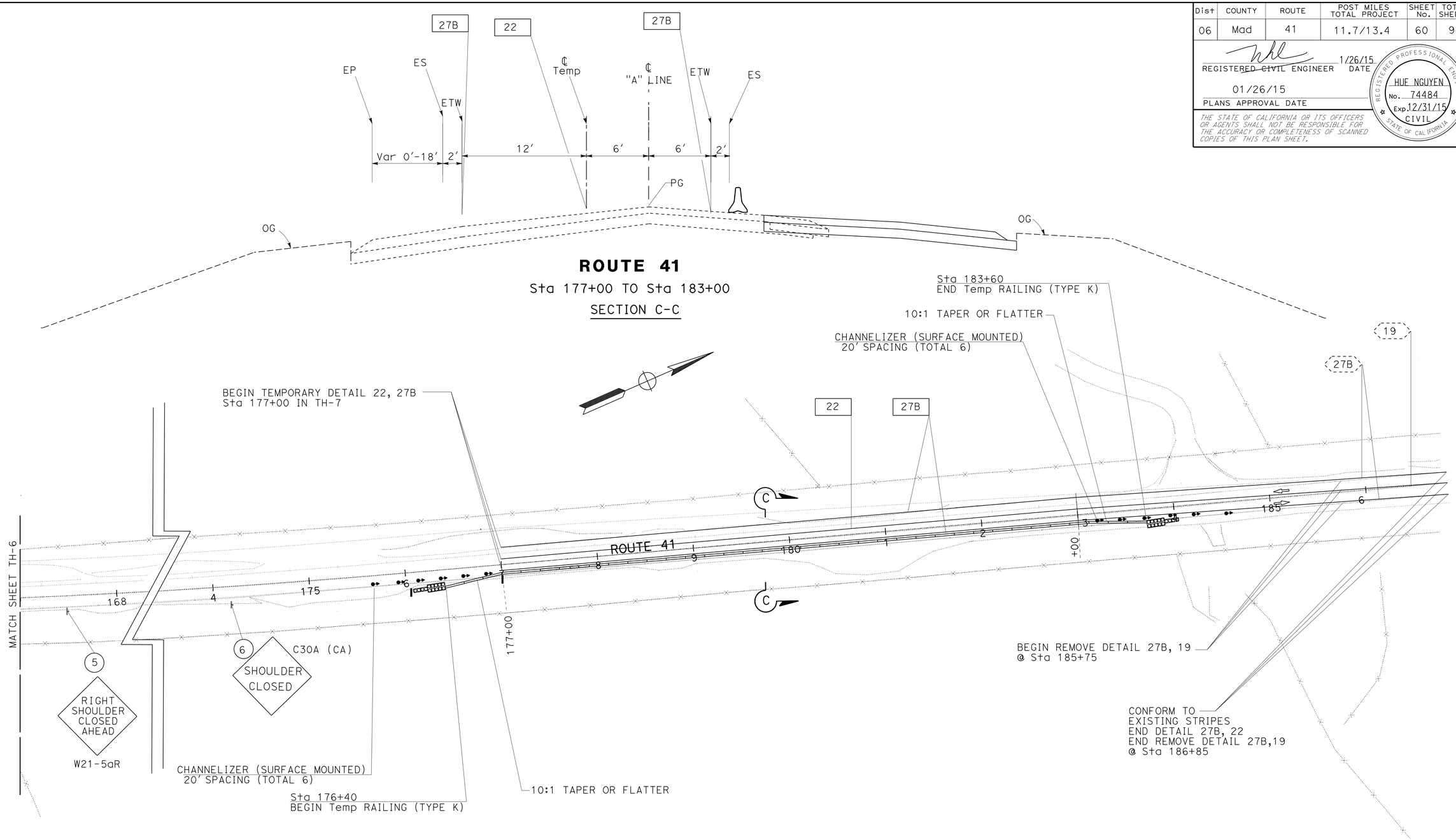

TRAFFIC HANDLING PLAN

(STAGE 4)

SCALE:1"=50'

TH-5

APPROVED FOR TRAFFIC HANDLING WORK ONLY

REVISED BY	DATE REVISED
CN	07/02/13

CALCULATED-DESIGNED BY: CECILE NGUYEN
CHECKED BY: HUE NGUYEN
FUNCTIONAL SUPERVISOR: MOHAMMED QATAMI

STATE OF CALIFORNIA - DEPARTMENT OF TRANSPORTATION
Caltrans
TRAFFIC DESIGN

LAST REVISION 01-26-15
DATE PLOTTED => 07-APR-2015
TIME PLOTTED => 13:11

Dist	COUNTY	ROUTE	POST MILES TOTAL PROJECT	SHEET No.	TOTAL SHEETS
06	Mad	41	11.7/13.4	61	94

REGISTERED CIVIL ENGINEER 1/26/15 DATE

01/26/15
PLANS APPROVAL DATE

REGISTERED PROFESSIONAL ENGINEER HUE NGUYEN No. 74484 Exp.12/31/15 CIVIL STATE OF CALIFORNIA

THE STATE OF CALIFORNIA OR ITS OFFICERS OR AGENTS SHALL NOT BE RESPONSIBLE FOR THE ACCURACY OR COMPLETENESS OF SCANNED COPIES OF THIS PLAN SHEET.

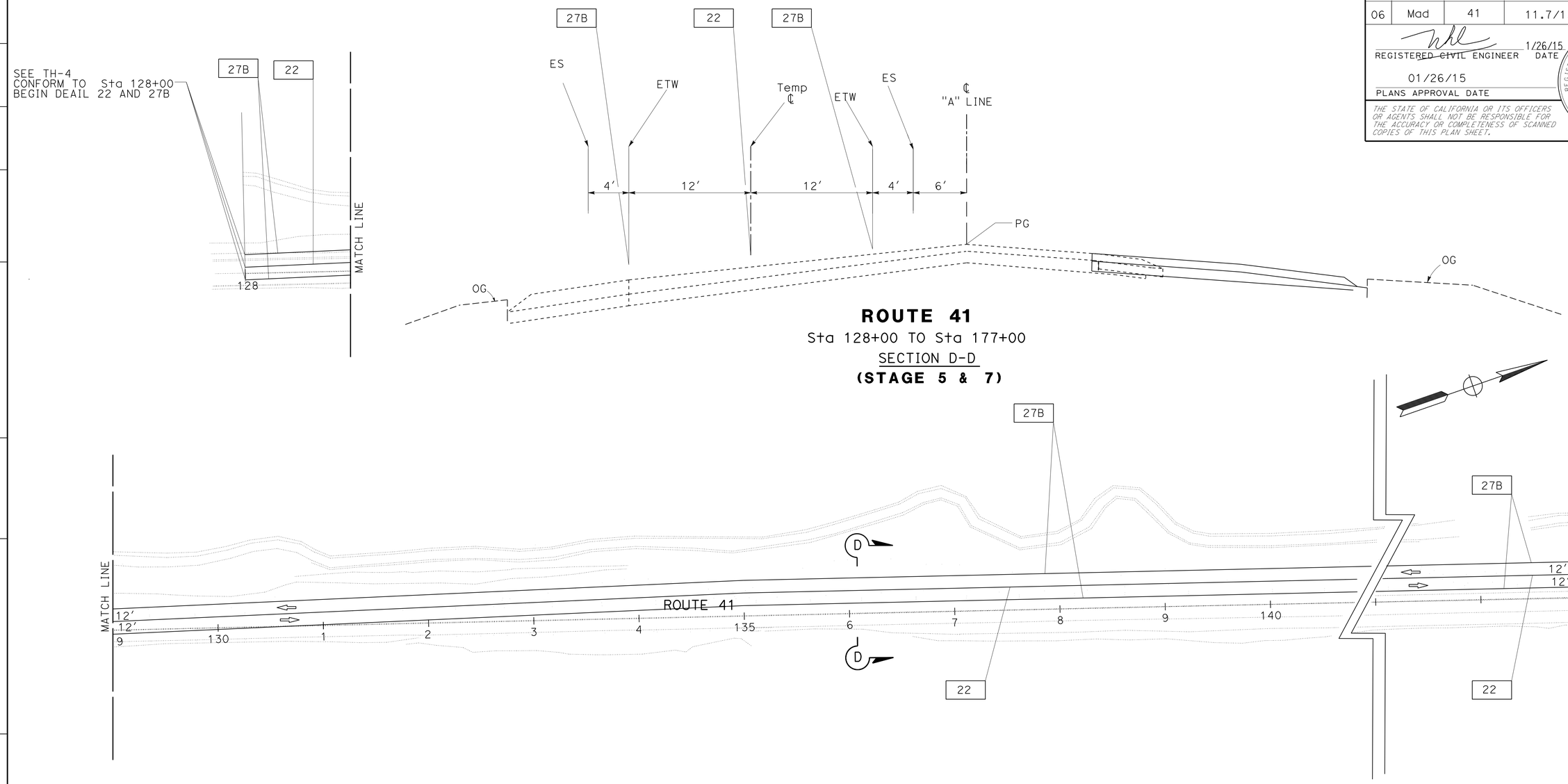

TRAFFIC HANDLING PLAN

(STAGE 5)

SCALE:1"=50′

TH-6

APPROVED FOR TRAFFIC HANDLING WORK ONLY

STATE OF CALIFORNIA - DEPARTMENT OF TRANSPORTATION

Caltrans

TRAFFIC DESIGN

FUNCTIONAL SUPERVISOR: MOHAMMED QATAMI

CALCULATED-DESIGNED BY: CECILE NGUYEN

CHECKED BY: HUE NGUYEN

REVISED BY: CN

DATE REVISED: 07/02/13

LAST REVISION 01-26-15

DATE PLOTTED => 07-APR-2015

TIME PLOTTED => 13:11

Dist	COUNTY	ROUTE	POST MILES TOTAL PROJECT	SHEET No.	TOTAL SHEETS
06	Mad	41	11.7/13.4	62	94

REGISTERED CIVIL ENGINEER 1/26/15 DATE

01/26/15
PLANS APPROVAL DATE

REGISTERED PROFESSIONAL ENGINEER
HUE NGUYEN
No. 74484
Exp. 12/31/15
CIVIL
STATE OF CALIFORNIA

THE STATE OF CALIFORNIA OR ITS OFFICERS OR AGENTS SHALL NOT BE RESPONSIBLE FOR THE ACCURACY OR COMPLETENESS OF SCANNED COPIES OF THIS PLAN SHEET.

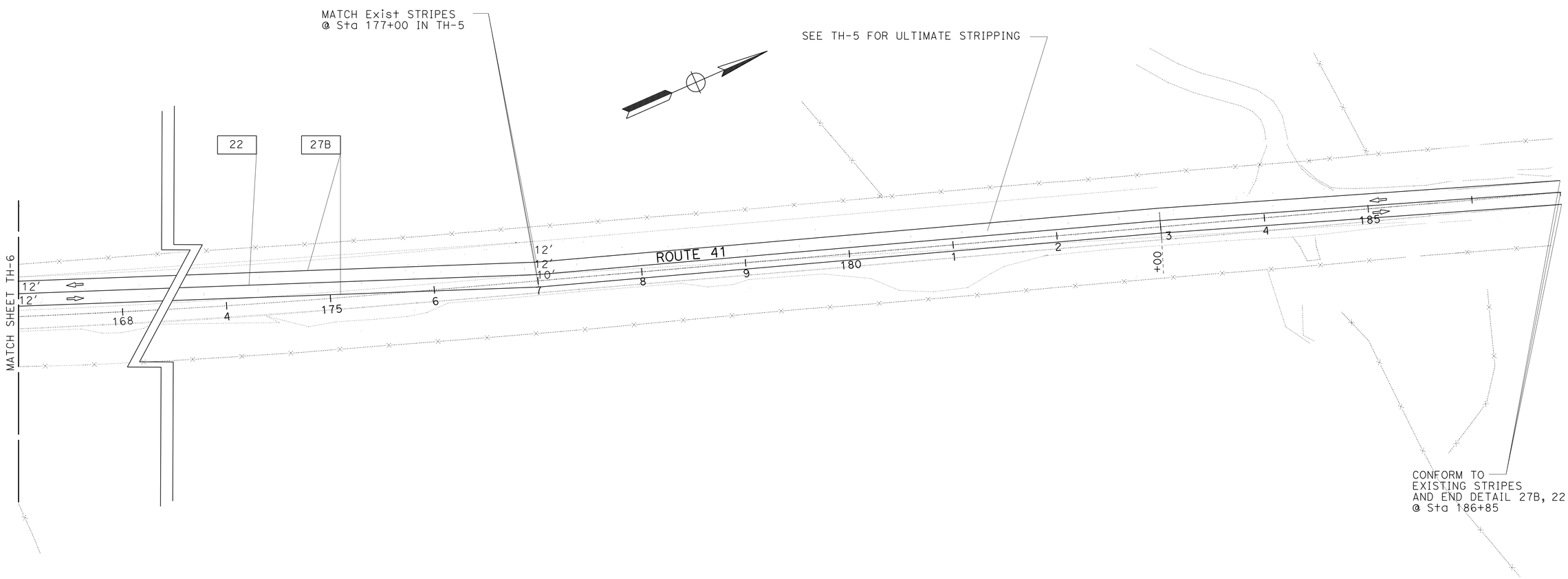

TRAFFIC HANDLING PLAN

(STAGE 5)

SCALE:1"=50'

TH-7

APPROVED FOR TRAFFIC HANDLING WORK ONLY

STATE OF CALIFORNIA - DEPARTMENT OF TRANSPORTATION
Caltrans
TRAFFIC DESIGN

FUNCTIONAL SUPERVISOR: MOHAMMED QATAMI

CALCULATED-DESIGNED BY: CECILE NGUYEN
CHECKED BY: HUE NGUYEN

REVISED BY: CN
DATE REVISED: 07/02/13

LAST REVISION 01-26-15 | DATE PLOTTED => 07-APR-2015 | TIME PLOTTED => 13:11

Dist	COUNTY	ROUTE	POST MILES TOTAL PROJECT	SHEET No.	TOTAL SHEETS
06	Mad	41	11.7/13.4	63	94

REGISTERED CIVIL ENGINEER 1/26/15 DATE

01/26/15
PLANS APPROVAL DATE

REGISTERED PROFESSIONAL ENGINEER HUE NGUYEN No. 74484 Exp. 12/31/15 CIVIL STATE OF CALIFORNIA

THE STATE OF CALIFORNIA OR ITS OFFICERS OR AGENTS SHALL NOT BE RESPONSIBLE FOR THE ACCURACY OR COMPLETENESS OF SCANNED COPIES OF THIS PLAN SHEET.

TEMPORARY PAVEMENT DELINEATION

STAGE	SHEET	STATION	DETAIL	TEMPORARY PAVEMENT MARKER RETROREFLECTIVE TYPE D	TEMPORARY TRAFFIC STRIPE (PAINT)	REMOVE THERMOPLASTIC TRAFFIC STRIPE	REMOVE YELLOW THERMOPLASTIC TRAFFIC STRIPE (HAZARDOUS WASTE)	REMOVE PAVEMENT MARKER
				EA	LF	LF	LF	EA
	TH-1	102+67 TO 105+00	27B,19			466	292	56
	TH-2	183+00 TO 185+75	27B,19			550	344	
	TH-3	101+14 TO 102+67	27B,19			306	191	
	TH-5	185+75 TO 186+85	27B,19			220	138	
3	TH-1/TH-2	102+67 TO 185+75	22	694	8,308			
		102+67 TO 185+75	27B		16,616			
4	TH-3/TH-4	101+14 TO 128+00	27B		5,372			
		101+14 TO 128+00	22	226	2,686			
	TH-5	177+00 TO 186+85	27B		1,970			
		177+00 TO 186+85	22	84	985			
5	TH-6/TH-7	128+00 TO 177+00	27B		9,800			
		128+00 TO 177+00	22	410	4,900			
SUBTOTAL				1414	50,637	1,542	965	
TOTAL				1,414	50,637	1,542	965	56

TEMPORARY RAILING (TYPE K)

SHEET No.	DIRECTION	LOCATION STA	TO STA	TEMPORARY RAILING (TYPE K)	OBJECT MARKER (TYPE P) (N)
				LF	EA
TH-1 TO TH-2	SB	104+40	183+60	7,920	2
TH-3 TO TH-4	NB	104+40	128+60	2,420	2
TH-5	NB	176+40	183+60	720	2
TOTAL				11,060	

(N) - NOT A SEPERATE PAY ITEM, FOR INFORMATION ONLY.

STATIONARY MOUNTED CONSTRUCTION AREA SIGNS

SHEET	SIGN No.	SIGN CODE	SIGN MESSAGE	PANEL SIZE	No. OF POST AND SIZE	No. OF SIGNS
				INCHES	EA-INCHES	EA
TH-2	1	W21-5aR	RIGHT SHOULDER CLOSED AHEAD	48 x 48	1 -6 x 6	1
	2	C30A (CA)	SHOULDER CLOSED	48 x 48	1 -6 x 6	1
TH-3	3	W21-5aR	RIGHT SHOULDER CLOSED AHEAD	48 x 48	1 -6 x 6	1
	4	C30A (CA)	SHOULDER CLOSED	48 x 48	1 -6 x 6	1
TH-5	5	W21-5aR	RIGHT SHOULDER CLOSED AHEAD	48 x 48	1 -6 x 6	1
	6	C30A (CA)	SHOULDER CLOSED	48 x 48	1 -6 x 6	1

FOR ADDITIONAL CONSTRUCTION AREA SIGNS REFER TO SHEET CS-1.

CHANNELIZER (SURFACE MOUNTED)

STAGE	SHEET No.	EA
3	TH-1	6
	TH-2	6
4	TH-3/TH-4	12
	TH-5	12
TOTAL		36

TEMPORARY CRASH CUSHION MODULE

SHEET No.	"TS14"
	EA
TH-1	14
TH-2	14
TH-3/TH-4	28
TH-5	28
TOTAL	84

TRAFFIC HANDLING QUANTITIES

THQ-1

REVISED BY	DATE REVISED
CN	07/02/13

CECILE NGUYEN — HUE NGUYEN — CALCULATED-DESIGNED BY — CHECKED BY

FUNCTIONAL SUPERVISOR: MOHAMMED QATAMI

STATE OF CALIFORNIA - DEPARTMENT OF TRANSPORTATION — Caltrans® — TRAFFIC DESIGN

LAST REVISION 01-26-15 — DATE PLOTTED => 07-APR-2015 — TIME PLOTTED => 13:11

Dist	COUNTY	ROUTE	POST MILES TOTAL PROJECT	SHEET No.	TOTAL SHEETS
06	Mad	41	11.7/13.4	64	94

REGISTERED CIVIL ENGINEER 1/26/15 DATE

01/26/15
PLANS APPROVAL DATE

REGISTERED PROFESSIONAL ENGINEER HUE NGUYEN No. 74484 Exp. 12/31/15 CIVIL STATE OF CALIFORNIA

THE STATE OF CALIFORNIA OR ITS OFFICERS OR AGENTS SHALL NOT BE RESPONSIBLE FOR THE ACCURACY OR COMPLETENESS OF SCANNED COPIES OF THIS PLAN SHEET.

LEGEND:

FI DELINEATOR (CLASS 1) TYPE F

RELOCATE ROADSIDE SIGN — FROM / TO

SIGN No.

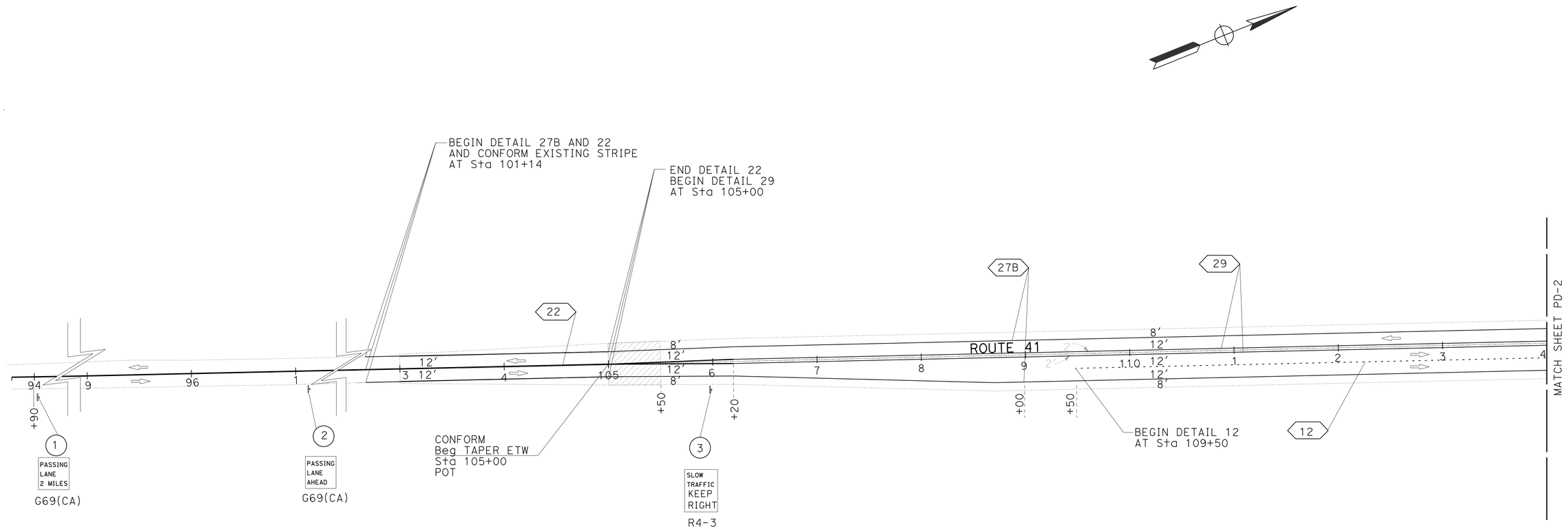

PAVEMENT DELINEATION PLAN

SCALE:1"=50'

PD-1

APPROVED FOR PAVEMENT DELINEATION WORK ONLY

STATE OF CALIFORNIA - DEPARTMENT OF TRANSPORTATION
Caltrans®
TRAFFIC DESIGN

FUNCTIONAL SUPERVISOR: MOHAMMED QATAMI
CALCULATED-DESIGNED BY: CECILE NGUYEN
CHECKED BY: HUE NGUYEN
REVISED BY
DATE REVISED

LAST REVISION 01-26-15
DATE PLOTTED => 07-APR-2015
TIME PLOTTED => 13:11

Dist	COUNTY	ROUTE	POST MILES TOTAL PROJECT	SHEET No.	TOTAL SHEETS
06	Mad	41	11.7/13.4	65	94

REGISTERED CIVIL ENGINEER 1/26/15 DATE

01/26/15
PLANS APPROVAL DATE

REGISTERED PROFESSIONAL ENGINEER
HUE NGUYEN
No. 74484
Exp. 12/31/15
CIVIL
STATE OF CALIFORNIA

THE STATE OF CALIFORNIA OR ITS OFFICERS OR AGENTS SHALL NOT BE RESPONSIBLE FOR THE ACCURACY OR COMPLETENESS OF SCANNED COPIES OF THIS PLAN SHEET.

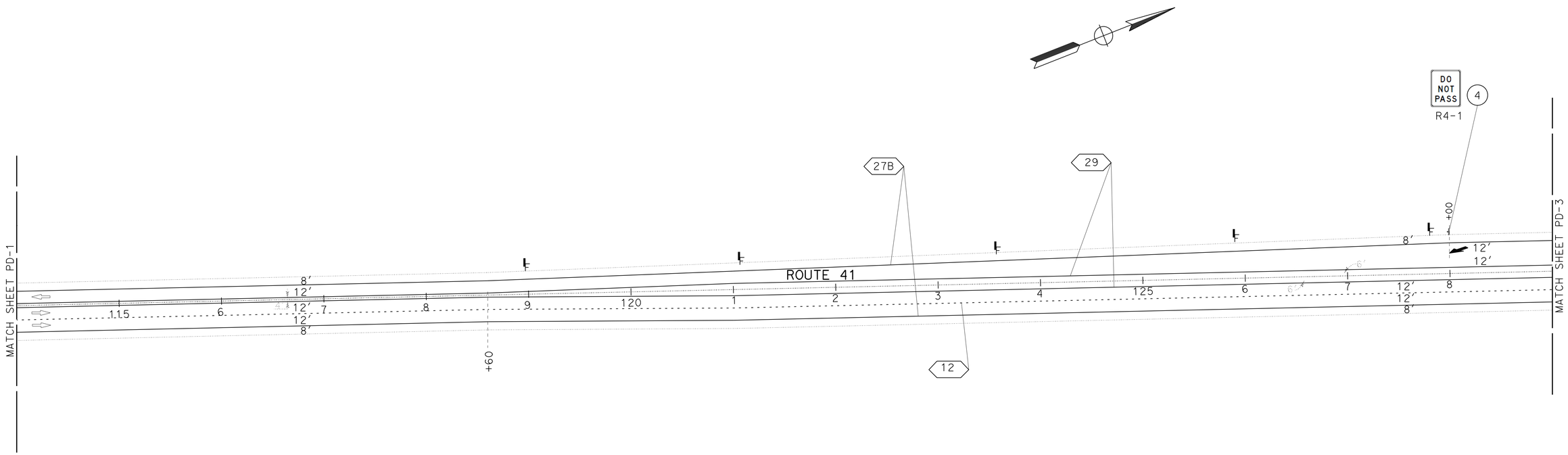

PAVEMENT DELINEATION PLAN

PD-2

SCALE:1"=50′

APPROVED FOR PAVEMENT DELINEATION WORK ONLY

STATE OF CALIFORNIA - DEPARTMENT OF TRANSPORTATION
Caltrans®
TRAFFIC DESIGN

FUNCTIONAL SUPERVISOR: MOHAMMED QATAMI
CALCULATED-DESIGNED BY: CECILE NGUYEN
CHECKED BY: HUE NGUYEN
REVISED BY
DATE REVISED

LAST REVISION 01-26-15
DATE PLOTTED => 07-APR-2015
TIME PLOTTED => 13:11

Dist	COUNTY	ROUTE	POST MILES TOTAL PROJECT	SHEET No.	TOTAL SHEETS
06	Mad	41	11.7/13.4	66	94

REGISTERED CIVIL ENGINEER 1/26/15 DATE

01/26/15
PLANS APPROVAL DATE

REGISTERED PROFESSIONAL ENGINEER
HUE NGUYEN
No. 74484
Exp. 12/31/15
CIVIL
STATE OF CALIFORNIA

THE STATE OF CALIFORNIA OR ITS OFFICERS OR AGENTS SHALL NOT BE RESPONSIBLE FOR THE ACCURACY OR COMPLETENESS OF SCANNED COPIES OF THIS PLAN SHEET.

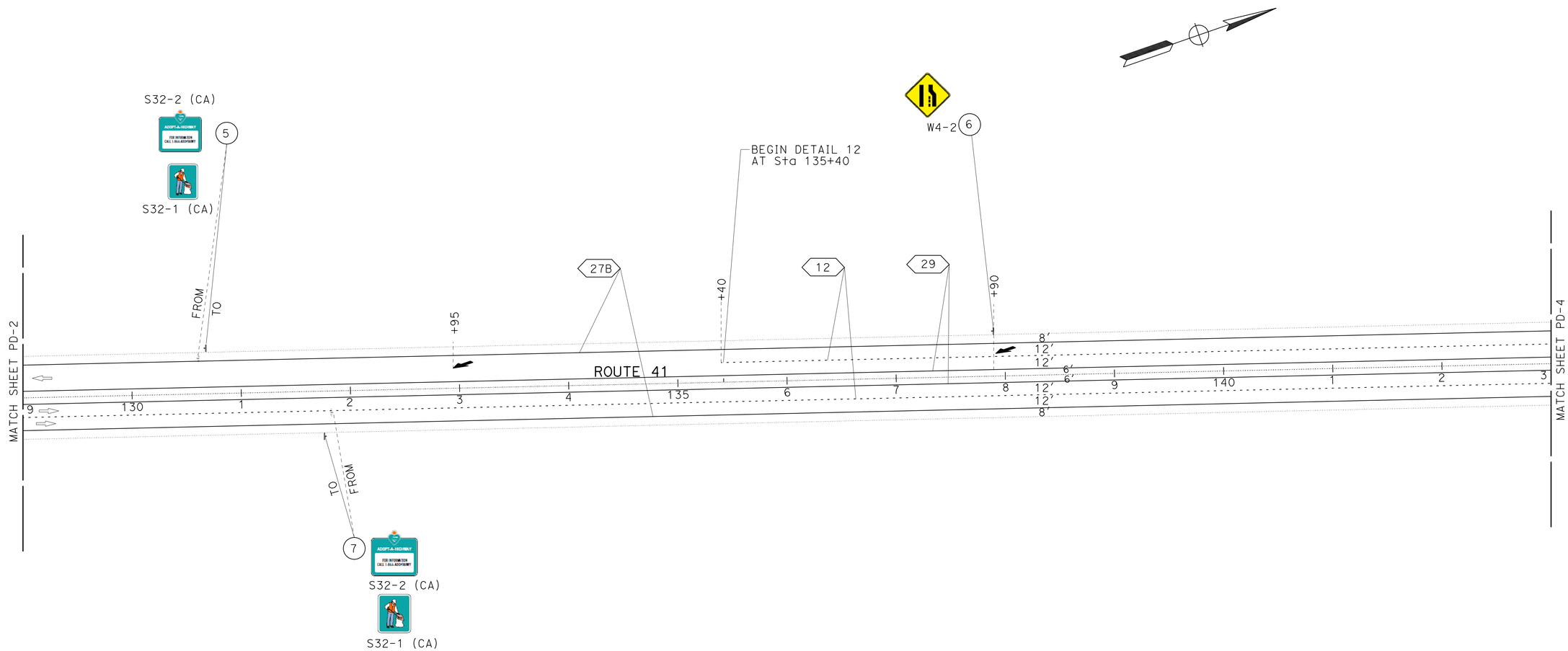

PAVEMENT DELINEATION PLAN
PD-3

APPROVED FOR PAVEMENT DELINEATION WORK ONLY

SCALE:1"=50'

STATE OF CALIFORNIA - DEPARTMENT OF TRANSPORTATION
Caltrans®
TRAFFIC DESIGN

FUNCTIONAL SUPERVISOR: MOHAMMED QATAMI
CALCULATED-DESIGNED BY: CECILE NGUYEN
CHECKED BY: HUE NGUYEN
REVISED BY
DATE REVISED

LAST REVISION 01-26-15
DATE PLOTTED => 07-APR-2015
TIME PLOTTED => 13:11

Dist	COUNTY	ROUTE	POST MILES TOTAL PROJECT	SHEET No.	TOTAL SHEETS
06	Mad	41	11.7/13.4	67	94

REGISTERED CIVIL ENGINEER 1/26/15 DATE

01/26/15
PLANS APPROVAL DATE

REGISTERED PROFESSIONAL ENGINEER
HUE NGUYEN
No. 74484
Exp. 12/31/15
CIVIL
STATE OF CALIFORNIA

THE STATE OF CALIFORNIA OR ITS OFFICERS OR AGENTS SHALL NOT BE RESPONSIBLE FOR THE ACCURACY OR COMPLETENESS OF SCANNED COPIES OF THIS PLAN SHEET.

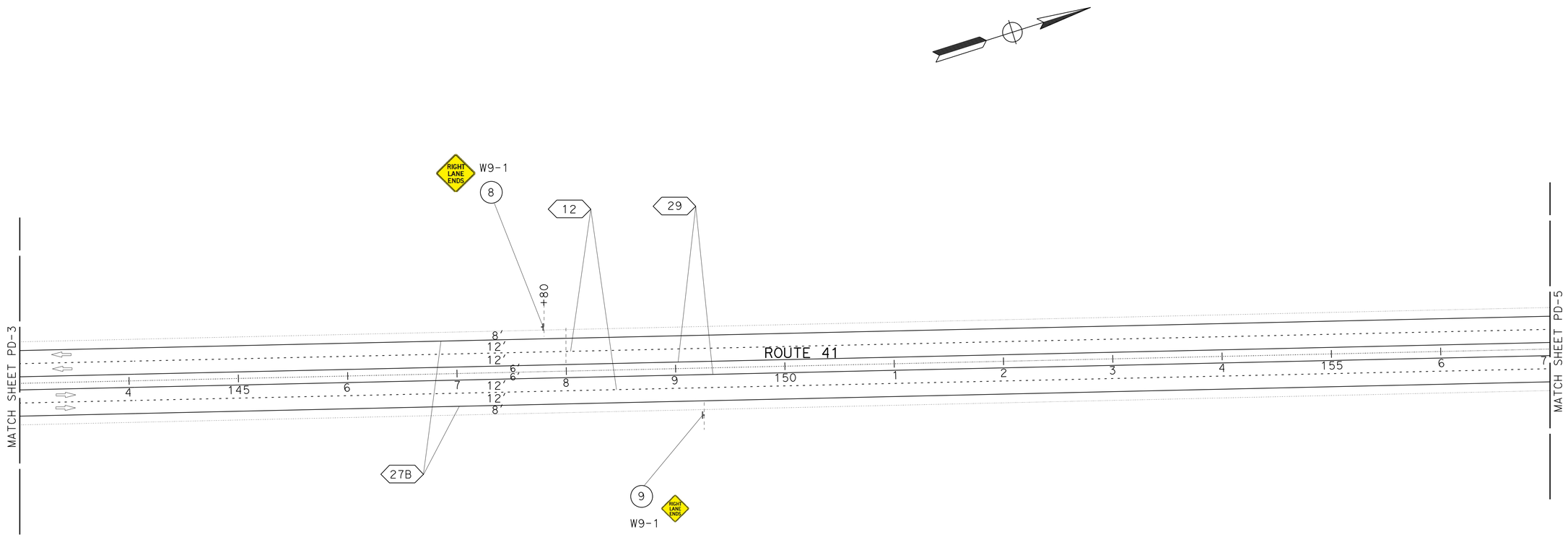

PAVEMENT DELINEATION PLAN

PD-4

APPROVED FOR PAVEMENT DELINEATION WORK ONLY

SCALE:1"=50'

STATE OF CALIFORNIA - DEPARTMENT OF TRANSPORTATION
Caltrans
TRAFFIC DESIGN

FUNCTIONAL SUPERVISOR: MOHAMMED QATAMI

CALCULATED-DESIGNED BY: CECILE NGUYEN
CHECKED BY: HUE NGUYEN

REVISED BY
DATE REVISED

LAST REVISION 01-26-15
DATE PLOTTED => 07-APR-2015
TIME PLOTTED => 13:12

Dist	COUNTY	ROUTE	POST MILES TOTAL PROJECT	SHEET No.	TOTAL SHEETS
06	Mad	41	11.7/13.4	68	94

REGISTERED CIVIL ENGINEER 1/26/15 DATE

01/26/15
PLANS APPROVAL DATE

REGISTERED PROFESSIONAL ENGINEER
HUE NGUYEN
No. 74484
Exp. 12/31/15
CIVIL
STATE OF CALIFORNIA

THE STATE OF CALIFORNIA OR ITS OFFICERS OR AGENTS SHALL NOT BE RESPONSIBLE FOR THE ACCURACY OR COMPLETENESS OF SCANNED COPIES OF THIS PLAN SHEET.

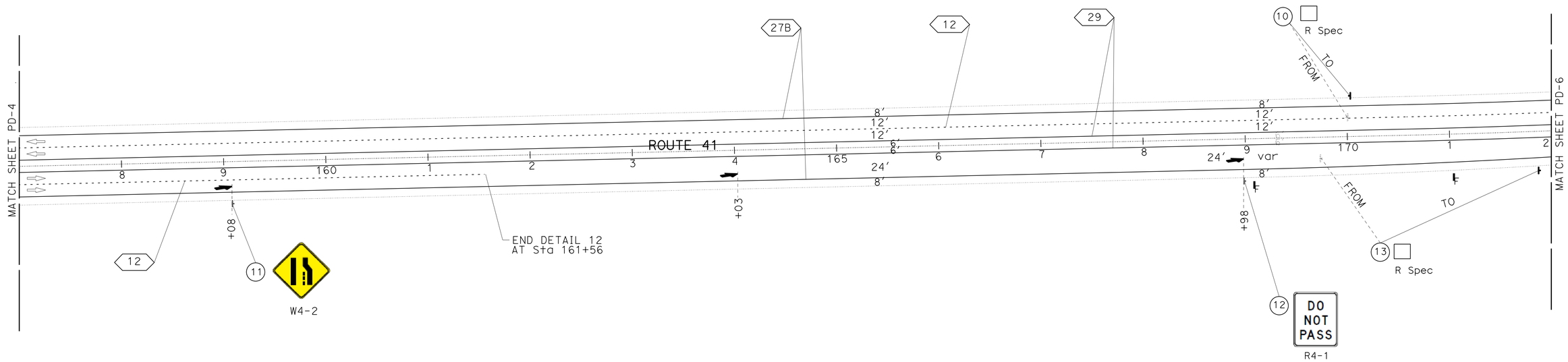

PAVEMENT DELINEATION PLAN

PD-5

APPROVED FOR PAVEMENT DELINEATION WORK ONLY

SCALE:1"=50'

STATE OF CALIFORNIA - DEPARTMENT OF TRANSPORTATION
Caltrans®
TRAFFIC DESIGN

FUNCTIONAL SUPERVISOR: MOHAMMED QATAMI

CALCULATED-DESIGNED BY: CECILE NGUYEN
CHECKED BY: HUE NGUYEN

REVISED BY
DATE REVISED

LAST REVISION 01-26-15
DATE PLOTTED => 07-APR-2015
TIME PLOTTED => 13:12

Dist	COUNTY	ROUTE	POST MILES TOTAL PROJECT	SHEET No.	TOTAL SHEETS
06	Mad	41	11.7/13.4	69	94

REGISTERED CIVIL ENGINEER 1/26/15 DATE

01/26/15
PLANS APPROVAL DATE

REGISTERED PROFESSIONAL ENGINEER
HUE NGUYEN
No. 74484
Exp. 12/31/15
CIVIL
STATE OF CALIFORNIA

THE STATE OF CALIFORNIA OR ITS OFFICERS OR AGENTS SHALL NOT BE RESPONSIBLE FOR THE ACCURACY OR COMPLETENESS OF SCANNED COPIES OF THIS PLAN SHEET.

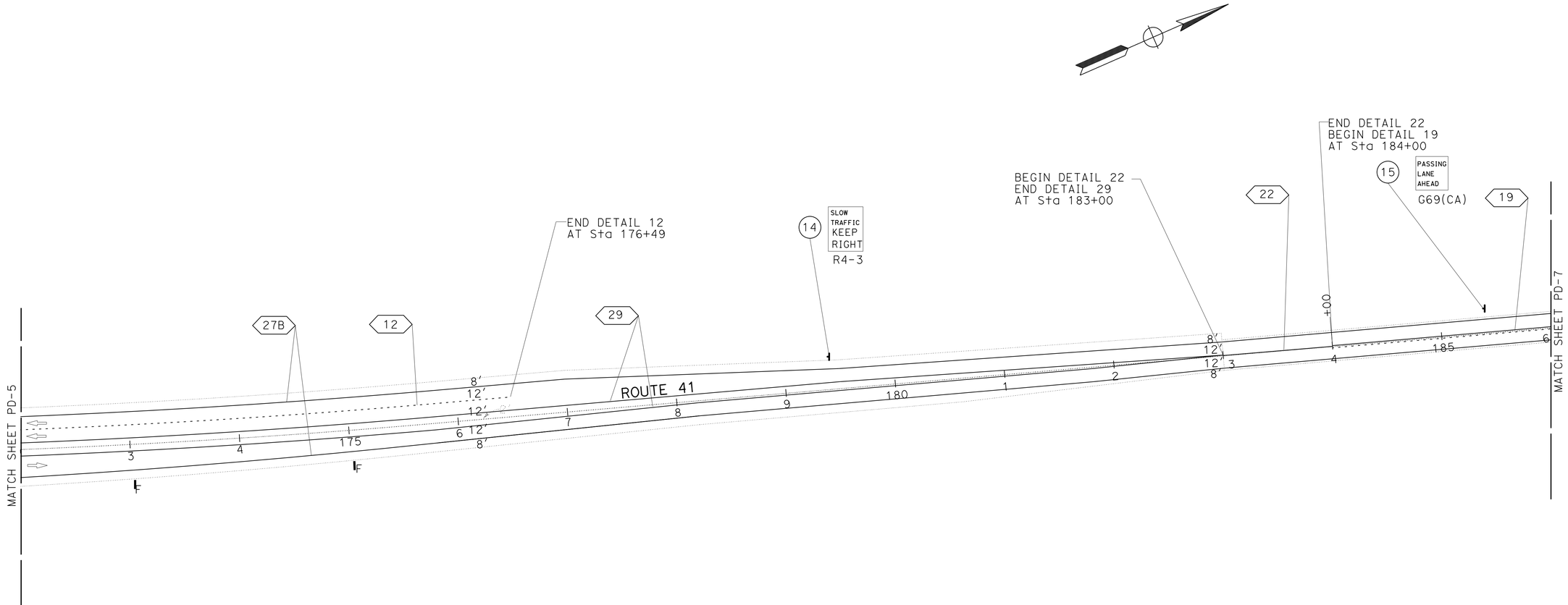

PAVEMENT DELINEATION PLAN

PD-6

APPROVED FOR PAVEMENT DELINEATION WORK ONLY

SCALE:1"=50'

REVISED BY	DATE REVISED

CALCULATED-DESIGNED BY: CECILE NGUYEN
CHECKED BY: HUE NGUYEN

FUNCTIONAL SUPERVISOR: MOHAMMED QATAMI

STATE OF CALIFORNIA - DEPARTMENT OF TRANSPORTATION
Caltrans
TRAFFIC DESIGN

LAST REVISION 01-26-15
DATE PLOTTED => 07-APR-2015
TIME PLOTTED => 13:12

Dist	COUNTY	LOCATION CODE	POST MILES TOTAL PROJECT	SHEET No.	TOTAL SHEETS
06	Mad	41	11.7/13.4	70	94

REGISTERED CIVIL ENGINEER 1/26/15 DATE

01/26/15
PLANS APPROVAL DATE

REGISTERED PROFESSIONAL ENGINEER
HUE NGUYEN
No. 74484
Exp. 12/31/15
CIVIL
STATE OF CALIFORNIA

THE STATE OF CALIFORNIA OR ITS OFFICERS OR AGENTS SHALL NOT BE RESPONSIBLE FOR THE ACCURACY OR COMPLETENESS OF SCANNED COPIES OF THIS PLAN SHEET.

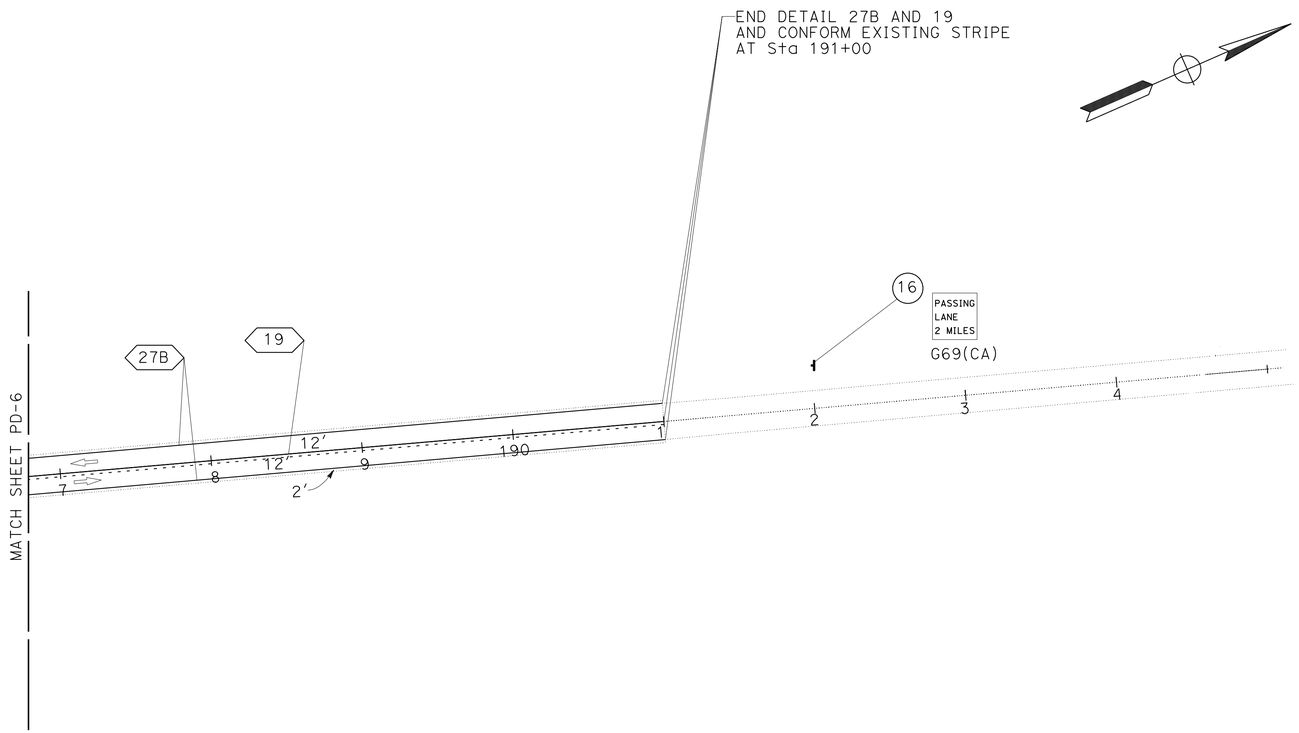

PAVEMENT DELINEATION PLAN

PD-7

APPROVED FOR PAVEMENT DELINEATION WORK ONLY

SCALE:1"=50'

STATE OF CALIFORNIA - DEPARTMENT OF TRANSPORTATION
Caltrans®
TRAFFIC DESIGN

FUNCTIONAL SUPERVISOR: MOHAMMED QATAMI
CALCULATED-DESIGNED BY: CECILE NGUYEN
CHECKED BY: HUE NGUYEN
REVISED BY
DATE REVISED

LAST REVISION 01-26-15
DATE PLOTTED => 07-APR-2015
TIME PLOTTED => 13:12

Dist	COUNTY	ROUTE	POST MILES TOTAL PROJECT	SHEET No.	TOTAL SHEETS
06	Mad	41	11.7/13.4	71	94

REGISTERED CIVIL ENGINEER 1/26/15 DATE

01/26/15
PLANS APPROVAL DATE

REGISTERED PROFESSIONAL ENGINEER HUE NGUYEN No. 74484 Exp. 12/31/15 CIVIL STATE OF CALIFORNIA

THE STATE OF CALIFORNIA OR ITS OFFICERS OR AGENTS SHALL NOT BE RESPONSIBLE FOR THE ACCURACY OR COMPLETENESS OF SCANNED COPIES OF THIS PLAN SHEET.

NOTE: EXACT SIGN LOCATIONS MUST BE ORDERED BY THE ENGINEER.

ROADSIDE SIGN QUANTITIES

SIGN No.	SIGN CODE FEDERAL	SIGN CODE CALIFORNIA	SIGN MESSAGE	PANEL SIZE (L x D) IN x IN	POST SIZE IN x IN	RELOCATE ROADSIDE SIGN EA	ROADSIDE SIGN (ONE POST) EA	SIGN MATERIALS: FURNISH SINGLE SHEET ALUMINUM SIGN UNFRAMED 0.063" SQFT	0.080" SQFT	SINGLE FACED	BACKGROUND SHEETING COLOR	BACKGROUND RETROFLECTIVE ASTM TYPE	LEGEND SHEETING COLOR	LEGEND RETROFLECTIVE ASTM TYPE	GRAFFITI FILM STANDARD	GRAFFITI FILM PREMIUM
1		G69(CA)	PASSING LANE 2 MILES	48 x 36	4 x 6		1		12	×	GREEN	IV	WHITE	IV		×
2		G69(CA)	PASSING LANE AHEAD	48 x 36	4 x 6		1		12	×	GREEN	IV	WHITE	IV		×
3	R4-3		SLOWER TRAFFIC KEEP RIGHT	36 x 48	4 x 6		1	12		×	WHITE	III	BLACK			×
4	R4-1		DO NOT PASS	36 x 48	4 x 6		1	12		×	WHITE	III	BLACK			×
5		S32(CA) S32-1(CA)	ADOPT-A-HIGHWAY LITTER REMOVAL			1										
6	W4-2		LANE ENDS	48 x 48	6 x 6		1	16		×	YELLOW	III	BLACK			×
7		S32(CA) S32-1(CA)	ADOPT-A-HIGHWAY LITTER REMOVAL			1										
8	W9-1		RIGHT LANE ENDS	48 x 48	6 x 6		1	16		×	YELLOW	III	BLACK			×
9	W9-1		RIGHT LANE ENDS	48 x 48	6 x 6		1	16		×	YELLOW	III	BLACK			×
10	R Spec		CLICK IT OR TICKET			1										
11	W4-2		LANE ENDS	48 x 48	6 x 6		1	16		×	YELLOW	III	BLACK			×
12	R4-1		DO NOT PASS	36 x 48	4 x 6		1	12		×	YELLOW	III	BLACK			×
13	R Spec		CLICK IT OR TICKET			1										
14	R4-3		SLOWER TRAFFIC KEEP RIGHT	36 x 48	4 x 6		1	12		×	WHITE	III	BLACK			×
15		G69(CA)	PASSING LANE AHEAD	48 x 36	4 x 6		1		12	×	YELLOW	III	BLACK			×
16		G69(CA)	PASSING LANE 2 MILES	48 x 36	4 x 6		1		12	×	YELLOW	III	BLACK			×
TOTAL						4	12	112	48							

PAVEMENT DELINEATION

STATION	THERMOPLASTIC TRAFFIC STRIPE: DETAIL 19 4" SOLID 4" BROKEN 36-12 YELLOW	DETAIL 12 4" BROKEN 36-12 WHITE	DETAIL 22 4" DOUBLE YELLOW	DETAIL 27B 4" SOLID WHITE	DETAIL 29 4" DOUBLE YELLOW	PAVEMENT MARKER RETROREFLECTIVE: TYPE D	TYPE H	TYPE G	DELINEATOR (CLASS 1) TYPE F	THERMOPLASTIC PAVEMENT MARKING TYPE VI ARROW
	LF	LF	LF	LF	LF	EA	EA	EA	EA	SQFT
101+14 To 105+00			772			34				
105+00 To 183+00					31,200	652				42
109+50 To 161+56		5,206						110	5	84
135+40 To 176+49		4,109						88		
101+14 To 191+00				17,972						126
183+00 To 184+00			200			11				
184+00 To 191+00	1,400					16	30		4	
SUBTOTAL	1,400	9,315	972	17,972	31,200	713	30	198	9	252
TOTAL	10,715		50,144			941			9	252

PAVEMENT DELINEATION AND SIGN QUANTITIES
PDQ-1

REVISED BY HN	DATE REVISED 09-30-14		
CECILE NGUYEN	HUE NGUYEN		
CALCULATED-DESIGNED BY	CHECKED BY		
FUNCTIONAL SUPERVISOR	MOHAMMED QATAMI		
STATE OF CALIFORNIA - DEPARTMENT OF TRANSPORTATION	Caltrans® TRAFFIC DESIGN		

LAST REVISION 01-26-15 | DATE PLOTTED => 07-APR-2015 TIME PLOTTED => 13:12

Dist	COUNTY	ROUTE	POST MILES TOTAL PROJECT	SHEET No.	TOTAL SHEETS
06	Mad	41	11.7/13.4	72	94

REGISTERED CIVIL ENGINEER 01/26/15 DATE

01/26/15
PLANS APPROVAL DATE

REGISTERED PROFESSIONAL ENGINEER MAJID MONFAREDIAN No. 65517 Exp. 9/30/15 CIVIL STATE OF CALIFORNIA

THE STATE OF CALIFORNIA OR ITS OFFICERS OR AGENTS SHALL NOT BE RESPONSIBLE FOR THE ACCURACY OR COMPLETENESS OF SCANNED COPIES OF THIS PLAN SHEET.

ROADWAY QUANTITIES

STATION	DIRECTION	COLD PLANE ASPHALT CONCRETE PAVEMENT	RUBBERIZED HOT MIX ASPHALT (GAP GRADED)	HOT MIX ASPHALT (TYPE A)	CLASS 2 AGGREGATE BASE (CY)	PLACE HMA (Misc AREA)	SHOULDER BACKING	TACK COAT	ROADWAY EXCAVATION	ROCK EXCAVATION (CONTROLLED BLASTING)	EMBANKMENT (N)	IMPORTED BORROW (CY) *
		SQYD	TON	TON	CY	SQYD	TON	TON	CY	CY	CY	CY
103+00.00 TO 106+43.00	NB/SB	1,540	216	155.0	169		20	0.8	226		54	
106+43.00 TO 108+70.00	NB/SB		192	380.0	406		6	0.7	833		123	
108+70.00 TO 121+00.00	NB/SB		1,023	2,471.0	2,329		27	4.3	4,882		7,609	
121+00.00 TO 168+96.00	NB/SB		5,409	12,063.0	14,363		108	22.8	11,877	55,060	77,356	
168+96.00 TO 177+00.00	NB/SB		834	1,857.0	2,135		18	3.6	3,946	1,530	15,374	
177+00.00 TO 179+90.00	NB/SB		240	606.0	522		7	0.8	1,911	1,140	1,778	
179+90.00 TO 182+00.00	NB/SB		126	285.0	219		5	0.8	1,248		535	
182+00.00 TO 191+00.00	NB/SB	2,650	369	76.0	60		51	1.2	77		1,568	
OVERSIDE DRAINS (SEE SHEET DQ-3)				44.0		260.7						
PIPE DOWNDRAINS (SEE SHEET DQ-3)				16.4		98.0						
SWALES (SEE SHEET DD-3)									413.0			
TOTAL		4,190	8,409	17,953.4	20,203	358.7	242	35.0	25,413.0	57,730	104,397	24,430

(N) - NOT A SEPARATE PAY ITEM. FOR INFORMATION ONLY

* GRADING FACTOR OF 0.87 IS USED.

RUMBLE STRIP

STATION	DIRECTION	SHOULDER RUMBLE STRIP (RHMA,GROUND-INDENTATIONS)	CENTERLINE RUMBLE STRIP (RHMA,GROUND-INDENTATIONS)
		STA	STA
103+60 TO 182+75	OUTSIDE Shld SB	79.2	
103+00 TO 180+80	OUTSIDE Shld NB	77.8	
106+20 TO 118+60	CENTERLINE (TYPE A)		12.4
118+60 TO 179+50 L†	CENTERLINE SB (TYPE B)		60.9
118+60 TO 179+50 R†	CENTERLINE NB (TYPE B)		60.9
TOTAL		157.0	134.2

TEMPORARY WATER POLLUTION CONTROL

SHEET No.	TEMPORARY SILT FENCE		TEMPORARY FIBER ROLL		TEMPORARY FENCE (TYPE ESA)		TEMPORARY CONSTRUCTION ENTRANCE
	LF		LF		LF		EA
	NB	SB	NB	SB	NB	SB	
L-1	600	200	90	40	160		
L-2	700	1,320	80	200	160		
L-3	650	700	40	80	1,434	640	
L-4	550	350	80	40	783	1,498	
L-5	450	700	40	40	1,160	881	
L-6	1,100	100	250	50	320	510	
SUBTOTAL	4,050	3,370	580	450	4,017	3,529	4
TOTAL	7,420		1,030		7,546		4

FENCE (TYPE BW)

SHEET No.	DIRECTION	FENCE (TYPE BW, 5-STRAND, METAL POST)	REMOVE FENCE (TYPE BW)	TREATED WOOD WASTE
		LF	LF	LB
L-1	NB/SB	1,902	1,800	5,650
L-2	NB/SB	3,002	3,433	10,100
L-3	NB/SB	2,800	2,916	9,200
L-4	NB/SB	2,800	2,801	9,900
L-5	NB/SB	3,005	3,188	10,000
L-6	NB/SB	2,345	2,259	7,200
TOTAL		15,854	16,397	52,050

TEMPORARY EROSION CONTROL

STATION		DIRECTION	TEMPORARY HYDRAULIC MULCH
FROM	TO		SQYD
105+00	114+00	NB	1,905
114+00	129+00	NB	4,076
129+00	143+00	NB	4,045
143+00	157+00	NB	4,045
157+00	172+00	NB	4,277
172+00	183+00	NB	1,443
TOTAL			19,791

SUMMARY OF QUANTITIES

Q-1

REVISED BY	DATE REVISED
MAJID MONFAREDIAN	MICHAEL K. LIM
CALCULATED-DESIGNED BY	CHECKED BY
FUNCTIONAL SUPERVISOR	MICHAEL K. LIM

STATE OF CALIFORNIA - DEPARTMENT OF TRANSPORTATION

Caltrans® DESIGN

LAST REVISION 01-26-15 | DATE PLOTTED => 07-APR-2015 TIME PLOTTED => 13:12

Dist	COUNTY	ROUTE	POST MILES TOTAL PROJECT	SHEET No.	TOTAL SHEETS
06	Mad	41	11.7/13.4	73	94

REGISTERED CIVIL ENGINEER 1/26/15 DATE

01/26/15
PLANS APPROVAL DATE

REGISTERED PROFESSIONAL ENGINEER MAJID MONFAREDIAN No. 65517 Exp. 9/30/15 CIVIL STATE OF CALIFORNIA

THE STATE OF CALIFORNIA OR ITS OFFICERS OR AGENTS SHALL NOT BE RESPONSIBLE FOR THE ACCURACY OR COMPLETENESS OF SCANNED COPIES OF THIS PLAN SHEET.

REMOVE EXISTING TREES

SHEET No.	TREE No.	STATION	OFFSET	SIDE	REMOVE TREE (N)
		STA	FEET	L+/R+	EA
L-2	1	115+28	51.3	L+	1
L-2	2	121+92	45.3	R+	1
L-2	3	122+02	70.6	L+	1
L-2	4	122+89	47.4	R+	1
L-2	5	128+04	56.9	L+	1
L-2	6	128+94	51.6	L+	1
L-3	7	129+46	28.8	R+	1
L-3	8	129+93	47.0	R+	1
L-3	9	129+04	53.3	L+	1
L-3	10	132+42	71.8	R+	1
L-3	11	132+89	30.1	R+	1
L-3	12	133+01	33.1	R+	1
L-3	13	132+29	48.5	L+	1
L-3	14	135+04	19.2	R+	1
L-3	15	136+34	109.2	R+	1
L-3	16	136+44	106.2	R+	1
L-3	17	136+53	62.9	R+	1
L-3	18	136+63	77.2	R+	1
L-3	19	136+73	106.3	R+	1
L-3	20	137+21	52.9	R+	1
L-3	21	137+29	51.0	R+	1
L-3	22	134+87	122.0	L+	1
L-3	23	134+93	121.7	L+	1
L-3	24	134+96	130.6	L+	1
L-3	25	134+98	129.3	L+	1
L-3	26	135+20	102.7	L+	1
L-3	27	135+32	56.7	L+	1
L-3	28	135+39	54.4	L+	1
L-3	29	135+39	76.5	L+	1
L-3	30	135+45	121.5	L+	1
L-3	31	135+48	121.3	L+	1
L-3	32	135+56	57.7	L+	1
L-3	33	135+60	52.4	L+	1
L-3	34	135+61	92.5	L+	1
L-3	35	135+67	98.0	L+	1
L-3	36	135+81	112.7	L+	1
L-3	37	135+81	114.7	L+	1
L-3	38	135+81	116.7	L+	1
L-3	39	136+03	117.2	L+	1
L-3	40	136+20	89.4	L+	1
L-3	41	137+20	39.5	L+	1
L-3	42	137+28	124.0	L+	1
L-3	43	137+38	116.8	L+	1
L-3	44	137+40	48.4	L+	1
L-3	45	137+56	108.4	L+	1
L-3	46	137+59	106.4	L+	1
SUBTOTAL					46

(N) - NOT A SEPARATE PAY ITEM.
FOR INFORMATION ONLY.

REMOVE EXISTING TREES

SHEET No.	TREE No.	STATION	OFFSET	SIDE	REMOVE TREE (N)
		STA	FEET	L+/R+	EA
L-3	47	137+81	71.7	L+	1
L-3	48	137+90	11.4	L+	1
L-3	49	137+91	56.5	L+	1
L-3	50	138+17	100.4	L+	1
L-3	51	138+31	28.5	L+	1
L-3	52	140+27	69.4	R+	1
L-3	53	140+38	78.9	R+	1
L-3	54	140+72	59.4	R+	1
L-3	55	141+83	74.9	R+	1
L-3	56	142+26	73.8	R+	1
L-3	57	142+84	56.7	R+	1
L-3	58	142+28	36.7	L+	1
L-3	59	142+57	42.9	L+	1
L-3	60	142+86	49.3	L+	1
L-3	61	142+96	50.5	L+	1
L-4	62	143+11	52.3	L+	1
L-4	63	143+21	53.6	R+	1
L-4	64	143+69	88.6	R+	1
L-4	65	143+76	95.8	R+	1
L-4	66	143+99	76.9	R+	1
L-4	67	144+02	45.7	R+	1
L-4	68	145+94	60.0	R+	1
L-4	69	147+09	85.4	R+	1
L-4	70	147+43	66.9	R+	1
L-4	71	147+89	103.3	R+	1
L-4	72	148+10	99.1	R+	1
L-4	73	148+37	95.3	R+	1
L-4	74	148+50	60.3	R+	1
L-4	75	148+74	76.0	R+	1
L-4	76	148+75	69.8	R+	1
L-4	77	149+70	81.9	R+	1
L-4	78	149+97	83.0	R+	1
L-4	79	148+17	68.9	L+	1
L-4	80	148+70	76.0	L+	1
L-4	81	148+77	55.2	L+	1
L-4	82	150+92	96.1	R+	1
L-4	83	151+15	88.7	R+	1
L-4	84	151+93	52.0	L+	1
L-4	85	152+05	100.3	L+	1
L-4	86	152+06	48.6	L+	1
L-4	87	152+26	77.3	L+	1
L-4	88	152+80	35.5	L+	1
L-4	89	152+92	14.8	L+	1
L-4	90	152+96	28.7	L+	1
L-4	91	153+74	37.5	R+	1
L-4	92	154+00	33.6	L+	1
SUBTOTAL					46

(N) - NOT A SEPARATE PAY ITEM.
FOR INFORMATION ONLY.

REMOVE EXISTING TREES

SHEET No.	TREE No.	STATION	OFFSET	SIDE	REMOVE TREE (N)
		STA	FEET	L+/R+	EA
L-4	93	156+37	65.9	R+	1
L-4	94	156+69	63.4	R+	1
L-4	95	156+73	66.7	R+	1
L-5	96	157+61	61.9	R+	1
L-5	97	157+92	87.9	R+	1
L-5	98	158+49	99.8	R+	1
L-5	99	158+86	103.6	R+	1
L-5	100	159+06	121.9	R+	1
L-5	101	159+45	105.5	R+	1
L-5	102	160+55	83.9	R+	1
L-5	103	160+56	78.8	R+	1
L-5	104	160+07	96.8	L+	1
L-5	105	160+42	83.8	L+	1
L-5	106	160+50	79.6	L+	1
L-5	107	162+22	26.2	R+	1
L-5	108	162+23	45.7	R+	1
L-5	109	162+55	13.6	R+	1
L-5	110	162+75	57.6	L+	1
L-5	111	162+89	56.5	L+	1
L-5	112	163+31	33.4	L+	1
L-5	113	164+02	127.0	L+	1
L-5	114	164+29	130.0	L+	1
L-5	115	164+47	100.5	L+	1
L-5	116	164+87	101.6	L+	1
L-5	117	164+88	150.8	L+	1
L-5	118	164+94	116.6	L+	1
L-5	119	165+11	112.6	L+	1
L-5	120	165+13	157.3	L+	1
L-5	121	165+27	70.0	R+	1
L-5	122	165+27	44.6	R+	1
L-5	123	166+39	56.3	R+	1
L-5	124	166+68	25.3	R+	1
L-5	125	166+59	138.6	L+	1
L-5	126	166+70	42.4	L+	1
L-5	127	167+03	33.0	L+	1
L-5	128	167+37	41.8	L+	1
L-5	129	168+46	65.6	L+	1
L-5	130	168+79	28.8	L+	1
L-5	131	169+46	10.2	L+	1
L-5	132	170+08	28.0	R+	1
L-5	133	170+14	44.3	R+	1
L-5	134	170+68	96.0	R+	1
L-6	135	172+55	107.1	R+	1
L-6	136	177+85	51.7	L+	1
L-6	137	178+90	71.6	R+	1
L-6	138	180+53	68.5	L+	1
SUBTOTAL					46
GRAND TOTAL					138

(N) - NOT A SEPARATE PAY ITEM.
FOR INFORMATION ONLY.

SUMMARY OF QUANTITIES

Q-2

STATE OF CALIFORNIA - DEPARTMENT OF TRANSPORTATION
Caltrans
DESIGN

FUNCTIONAL SUPERVISOR: MICHAEL K. LIM
CALCULATED-DESIGNED BY: MAJID MONFAREDIAN
CHECKED BY: MICHAEL K. LIM
REVISED BY
DATE REVISED

LAST REVISION 01-26-15
DATE PLOTTED => 07-APR-2015
TIME PLOTTED => 13:12

Dist	COUNTY	ROUTE	POST MILES TOTAL PROJECT	SHEET No.	TOTAL SHEETS
06	Mad	41	11.7/13.6	74	94

Sherry D. Alexander
LICENSED LANDSCAPE ARCHITECT
01/26/15
PLANS APPROVAL DATE

LICENSED LANDSCAPE ARCHITECT Sherry D. Alexander No. 4978 Sherry D. Alexander Expiration 09/30/15 Renewal Date 01/26/15 Date STATE OF CALIFORNIA

THE STATE OF CALIFORNIA OR ITS OFFICERS OR AGENTS SHALL NOT BE RESPONSIBLE FOR THE ACCURACY OR COMPLETENESS OF SCANNED COPIES OF THIS PLAN SHEET.

EROSION CONTROL

SEQUENCE	ITEM	MATERIAL DESCRIPTION	MATERIAL TYPE	APPLICATION RATE	REMARKS
STEP 1	COMPOST	COMPOST	FINE	405 CY/ACRE	
STEP 2	INCORPORATE MATERIALS	COMPOST			6" DEEP
STEP 3	ROLLED EROSION CONTROL PRODUCT (NETTING)	NETTING	TYPE A		
STEP 4	FIBER ROLLS	FIBER ROLLS	8" TO 10" Dia		TYPE 2 INSTALLATION, PLACE AT 10' APART
STEP 5	BONDED FIBER MATRIX	FIBER		3,200 LB/ACRE FOR ALL SLOPES	APPLICATION RATE IS FOR FIBER AND TACKIFIER COMBINED
		TACKIFIER			
		SEED	MIX	91.6 LB/ACRE	

SEED MIX

BOTANICAL NAME (COMMON NAME)	PERCENT GERMINATION (MINIMUM)	POUNDS PURE LIVE SEED PER ACRE (SLOPE MEASUREMENT)
ACHILLEA MILLEFOLIUM[1] (WESTERN YARROW)	70	0.8
BROMUS MARGINATUS[1] (MOUNTAIN BROME)	80	20.9
CAREX PRAEGRACILIS (CLUSTERED FIELD SEDGE)	80	3.2
ELYMUS GLAUCUS (BLUE WILDRYE)	85	20.0
HORDEUM BRACHYANTHERUM (MEADOW BARLEY)	80	22.2
LEYMUS TRITICOIDES (BEARDLESS WILDRYE)	80	12.8
LOTUS PURSHIANUS (SPANISH LOTUS)	70	7.5
VULPIA MICROSTACHYS (SMALL FESCUE)	80	4.2

[1] SEED PRODUCED IN CALIFORNIA ONLY.

EROSION CONTROL LEGEND

ECL-1

REVISED BY | DATE REVISED
SHERRY ALEXANDER | MICHAEL MILLS
CALCULATED-DESIGNED BY | CHECKED BY
SENIOR LANDSCAPE ARCHITECT | BRAD COLE
STATE OF CALIFORNIA - DEPARTMENT OF TRANSPORTATION
Caltrans® LANDSCAPE ARCHITECTURE

LAST REVISION 01-26-15 | DATE PLOTTED => 07-APR-2015 | TIME PLOTTED => 13:12

Dist	COUNTY	ROUTE	POST MILES TOTAL PROJECT	SHEET No.	TOTAL SHEETS
06	Mad	41	11.7/13.6	75	94

LICENSED LANDSCAPE ARCHITECT

01/26/15

PLANS APPROVAL DATE

LICENSED LANDSCAPE ARCHITECT — Sherry D. Alexander No. 4978 — Expiration Date 09/30/15 — Renewal Date 01/26/15 — Date — STATE OF CALIFORNIA

THE STATE OF CALIFORNIA OR ITS OFFICERS OR AGENTS SHALL NOT BE RESPONSIBLE FOR THE ACCURACY OR COMPLETENESS OF SCANNED COPIES OF THIS PLAN SHEET.

NOTES:

1. FOR ACCURATE RIGHT OF WAY DATA, CONTACT RIGHT OF WAY ENGINEERING AT THE DISTRICT OFFICE.
2. FOR MORE INFORMATION FOR DRAINAGE AND BIOSWALES SEE DRAINAGE PLANS, DRAINAGE DETAILS AND DRAINAGE QUANTITIES SHEETS.

LEGEND:

EROSION CONTROL

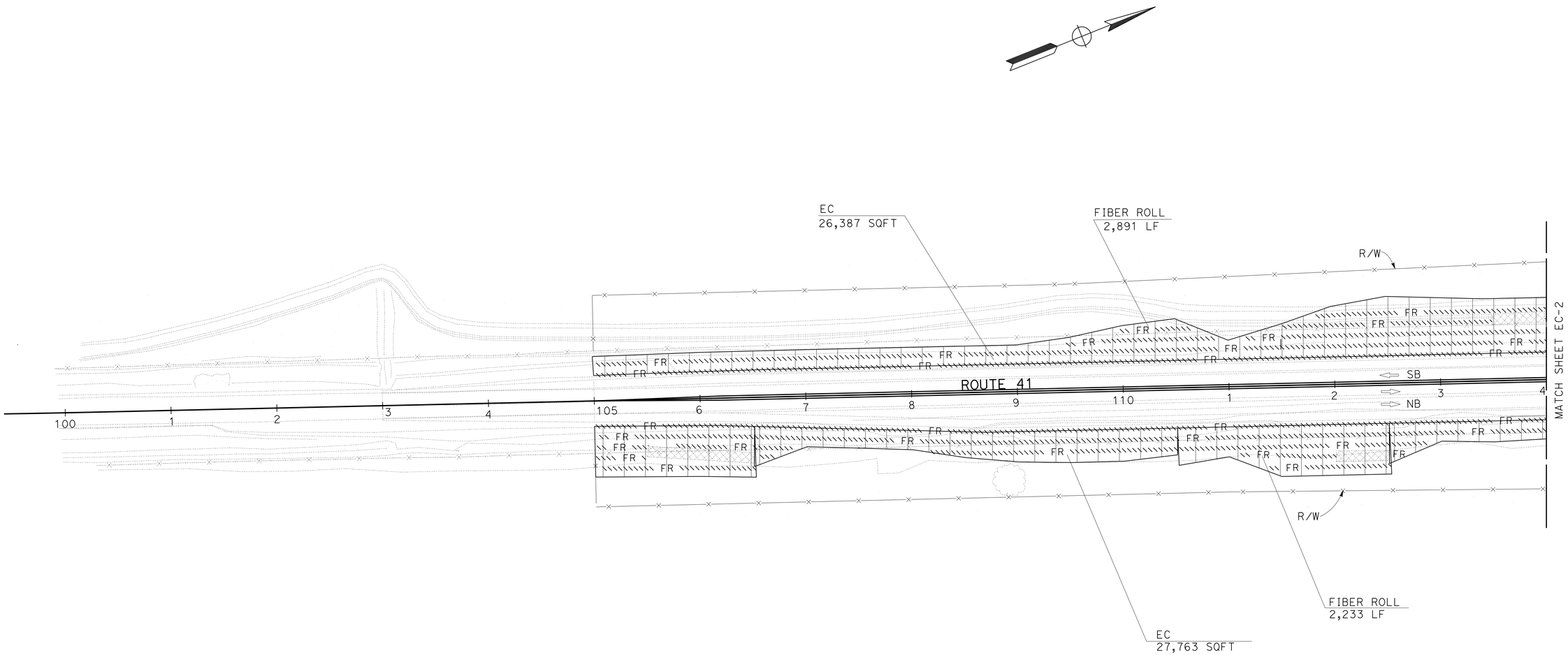

APPROVED FOR EROSION CONTROL WORK ONLY

EROSION CONTROL PLAN

SCALE:1"=50'

EC-1

STATE OF CALIFORNIA - DEPARTMENT OF TRANSPORTATION

Caltrans® LANDSCAPE ARCHITECTURE

SENIOR LANDSCAPE ARCHITECT: BRAD COLE

CALCULATED-DESIGNED BY: CHARLES LaRUE

CHECKED BY: MICHAEL MILLS

REVISED BY

DATE REVISED

LAST REVISION 01-26-15

DATE PLOTTED => 07-APR-2015

TIME PLOTTED => 13:12

Dist	COUNTY	ROUTE	POST MILES TOTAL PROJECT	SHEET No.	TOTAL SHEETS
06	Mad	41	11.7/13.6	76	94

LICENSED LANDSCAPE ARCHITECT

01/26/15

PLANS APPROVAL DATE

LICENSED LANDSCAPE ARCHITECT — Sherry D. Alexander No. 4939 — Expiration Date 09/30/15 — Renewal Date 01/26/15 — Date — STATE OF CALIFORNIA

THE STATE OF CALIFORNIA OR ITS OFFICERS OR AGENTS SHALL NOT BE RESPONSIBLE FOR THE ACCURACY OR COMPLETENESS OF SCANNED COPIES OF THIS PLAN SHEET.

NOTE:

FOR ACCURATE RIGHT OF WAY DATA, CONTACT RIGHT OF WAY ENGINEERING AT THE DISTRICT OFFICE.

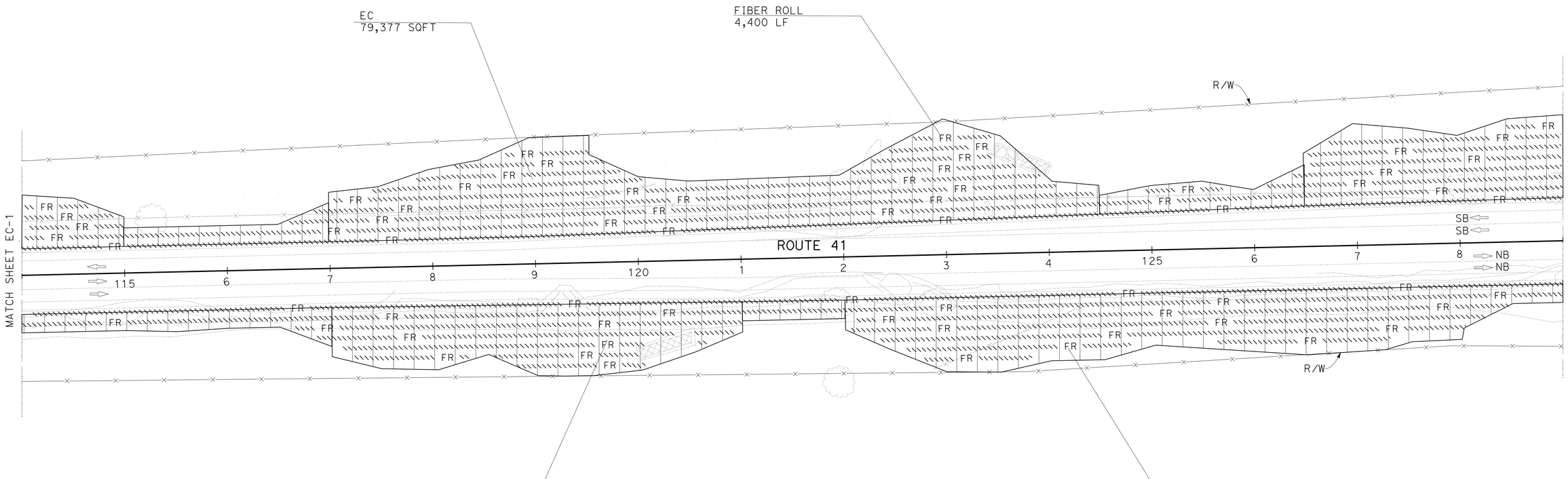

APPROVED FOR EROSION CONTROL WORK ONLY

EROSION CONTROL PLAN

SCALE:1"=50'

EC-2

REVISED BY | DATE REVISED

CHARLES LaRUE | MICHAEL MILLS

CALCULATED-DESIGNED BY | CHECKED BY

SENIOR LANDSCAPE ARCHITECT

BRAD COLE

STATE OF CALIFORNIA - DEPARTMENT OF TRANSPORTATION

Caltrans® LANDSCAPE ARCHITECTURE

LAST REVISION 01-26-15 | DATE PLOTTED => 07-APR-2015 | TIME PLOTTED => 13:12

Dist	COUNTY	ROUTE	POST MILES TOTAL PROJECT	SHEET No.	TOTAL SHEETS
06	Mad	41	11.7/13.6	77	94

Sherry D. Alexander
LICENSED LANDSCAPE ARCHITECT

01/26/15
PLANS APPROVAL DATE

LICENSED LANDSCAPE ARCHITECT
Sherry D. Alexander No. 4978
Sherry D. Alexander
Expiration Date
09/30/15
Renewal Date
01/26/15
Date
STATE OF CALIFORNIA

THE STATE OF CALIFORNIA OR ITS OFFICERS OR AGENTS SHALL NOT BE RESPONSIBLE FOR THE ACCURACY OR COMPLETENESS OF SCANNED COPIES OF THIS PLAN SHEET.

NOTE:

FOR ACCURATE RIGHT OF WAY DATA, CONTACT RIGHT OF WAY ENGINEERING AT THE DISTRICT OFFICE.

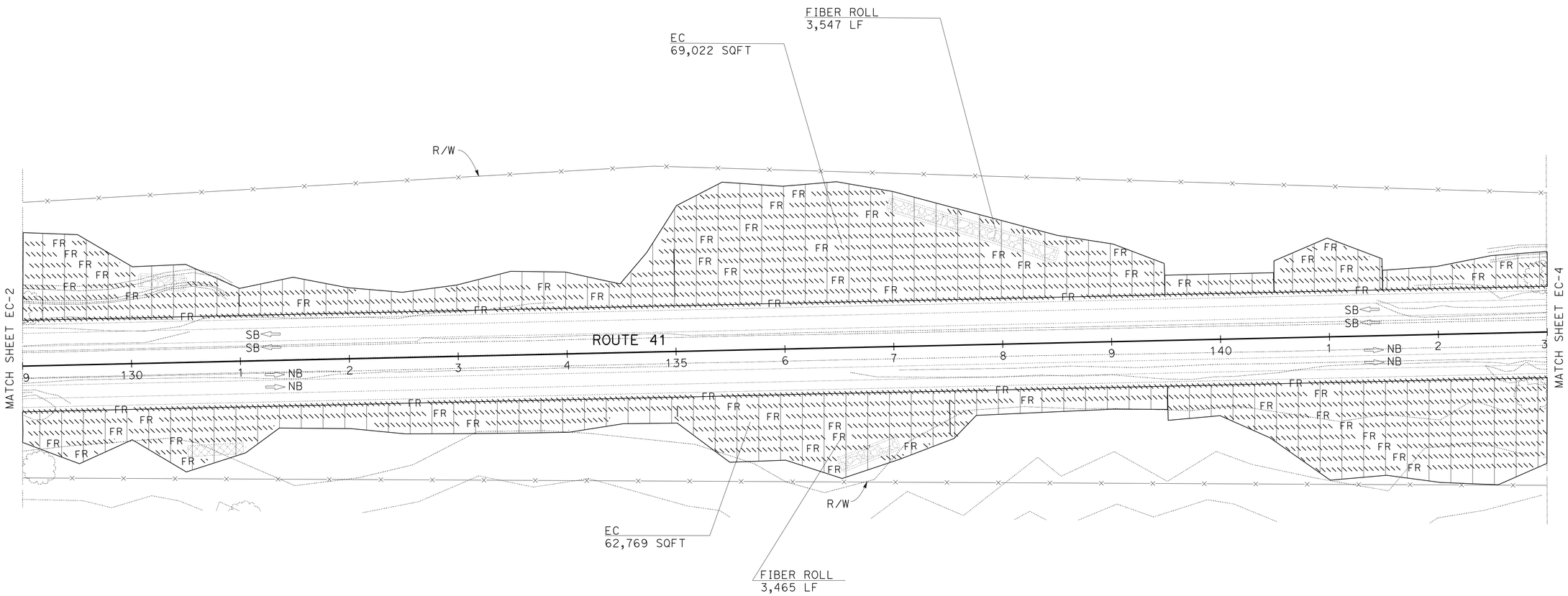

APPROVED FOR EROSION CONTROL WORK ONLY

EROSION CONTROL PLAN

SCALE:1"=50'

EC-3

REVISED BY | DATE REVISED
CHARLES LaRUE | MICHAEL MILLS
CALCULATED-DESIGNED BY | CHECKED BY
SENIOR LANDSCAPE ARCHITECT
BRAD COLE

STATE OF CALIFORNIA - DEPARTMENT OF TRANSPORTATION
Caltrans® LANDSCAPE ARCHITECTURE

LAST REVISION 01-26-15 | DATE PLOTTED => 07-APR-2015 | TIME PLOTTED => 13:12

Dist	COUNTY	ROUTE	POST MILES TOTAL PROJECT	SHEET No.	TOTAL SHEETS
06	Mad	41	11.7/13.6	78	94

Sherry D. Alexander
LICENSED LANDSCAPE ARCHITECT

01/26/15
PLANS APPROVAL DATE

LICENSED LANDSCAPE ARCHITECT
Sherry D. Alexander No. 4978
Sherry D. Alexander
Renewal Date
09/30/15
Renewal Date
01/26/15
Date
STATE OF CALIFORNIA

THE STATE OF CALIFORNIA OR ITS OFFICERS OR AGENTS SHALL NOT BE RESPONSIBLE FOR THE ACCURACY OR COMPLETENESS OF SCANNED COPIES OF THIS PLAN SHEET.

NOTE:

FOR ACCURATE RIGHT OF WAY DATA, CONTACT RIGHT OF WAY ENGINEERING AT THE DISTRICT OFFICE.

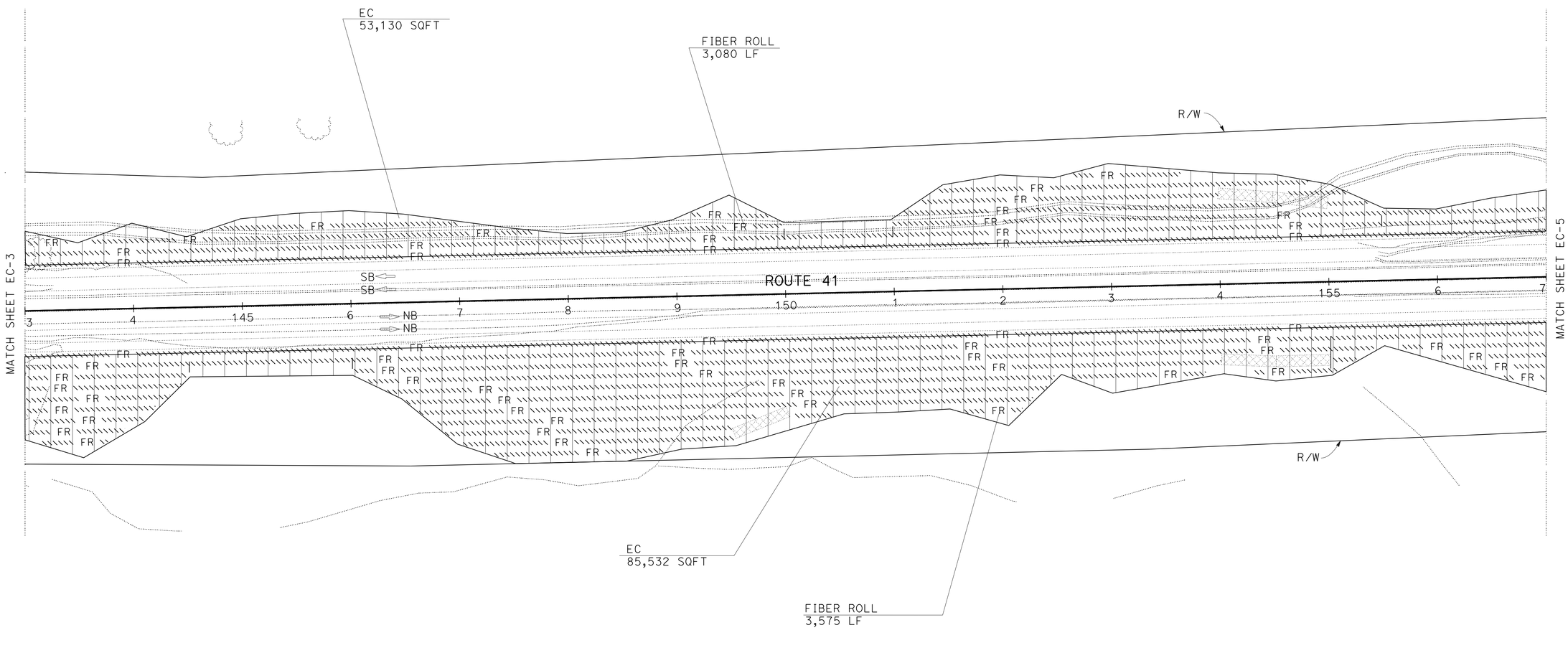

APPROVED FOR EROSION CONTROL WORK ONLY

EROSION CONTROL PLAN

SCALE:1"=50'

EC-4

STATE OF CALIFORNIA - DEPARTMENT OF TRANSPORTATION
Caltrans® LANDSCAPE ARCHITECTURE

SENIOR LANDSCAPE ARCHITECT: BRAD COLE

CALCULATED-DESIGNED BY: CHARLES LaRUE
CHECKED BY: MICHAEL MILLS

REVISED BY
DATE REVISED

LAST REVISION 01-26-15
DATE PLOTTED => 07-APR-2015
TIME PLOTTED => 13:12

Dist	COUNTY	ROUTE	POST MILES TOTAL PROJECT	SHEET No.	TOTAL SHEETS
06	Mad	41	11.7/13.6	79	94

Sherry D. Alexander
LICENSED LANDSCAPE ARCHITECT

01/26/15
PLANS APPROVAL DATE

LICENSED LANDSCAPE ARCHITECT
Sherry D. Alexander No. 4938
Sherry D. Alexander
Expiration Date
09/30/15
Renewal Date
01/26/15
Date
STATE OF CALIFORNIA

THE STATE OF CALIFORNIA OR ITS OFFICERS OR AGENTS SHALL NOT BE RESPONSIBLE FOR THE ACCURACY OR COMPLETENESS OF SCANNED COPIES OF THIS PLAN SHEET.

NOTE:

FOR ACCURATE RIGHT OF WAY DATA, CONTACT RIGHT OF WAY ENGINEERING AT THE DISTRICT OFFICE.

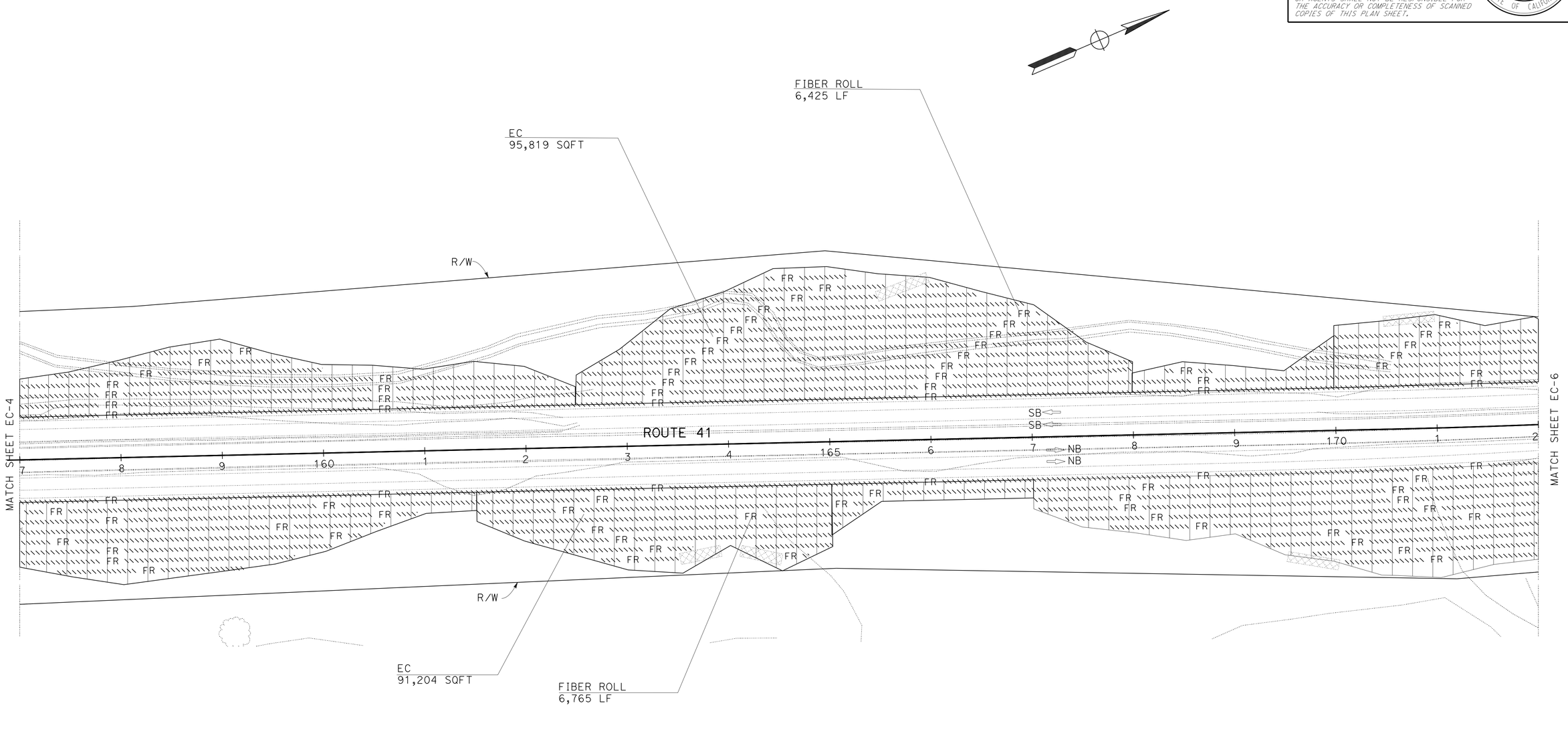

APPROVED FOR EROSION CONTROL WORK ONLY

EROSION CONTROL PLAN

SCALE:1"=50'

EC-5

REVISED BY | DATE REVISED

CHARLES LaRUE | MICHAEL MILLS

CALCULATED-DESIGNED BY | CHECKED BY

SENIOR LANDSCAPE ARCHITECT | BRAD COLE

STATE OF CALIFORNIA - DEPARTMENT OF TRANSPORTATION

Caltrans® LANDSCAPE ARCHITECTURE

LAST REVISION 01-26-15 | DATE PLOTTED => 07-APR-2015 | TIME PLOTTED => 13:12

Dist	COUNTY	ROUTE	POST MILES TOTAL PROJECT	SHEET No.	TOTAL SHEETS
06	Mad	41	11.7/13.6	80	94

Sherry D. Alexander
LICENSED LANDSCAPE ARCHITECT

01/26/15
PLANS APPROVAL DATE

LICENSED LANDSCAPE ARCHITECT
Sherry D. Alexander No. 4978
Sherry D. Alexander
Expiration Date
09/30/15
Renewal Date
01/26/15
Date
STATE OF CALIFORNIA

THE STATE OF CALIFORNIA OR ITS OFFICERS OR AGENTS SHALL NOT BE RESPONSIBLE FOR THE ACCURACY OR COMPLETENESS OF SCANNED COPIES OF THIS PLAN SHEET.

NOTE:

FOR ACCURATE RIGHT OF WAY DATA, CONTACT
RIGHT OF WAY ENGINEERING AT THE DISTRICT OFFICE.

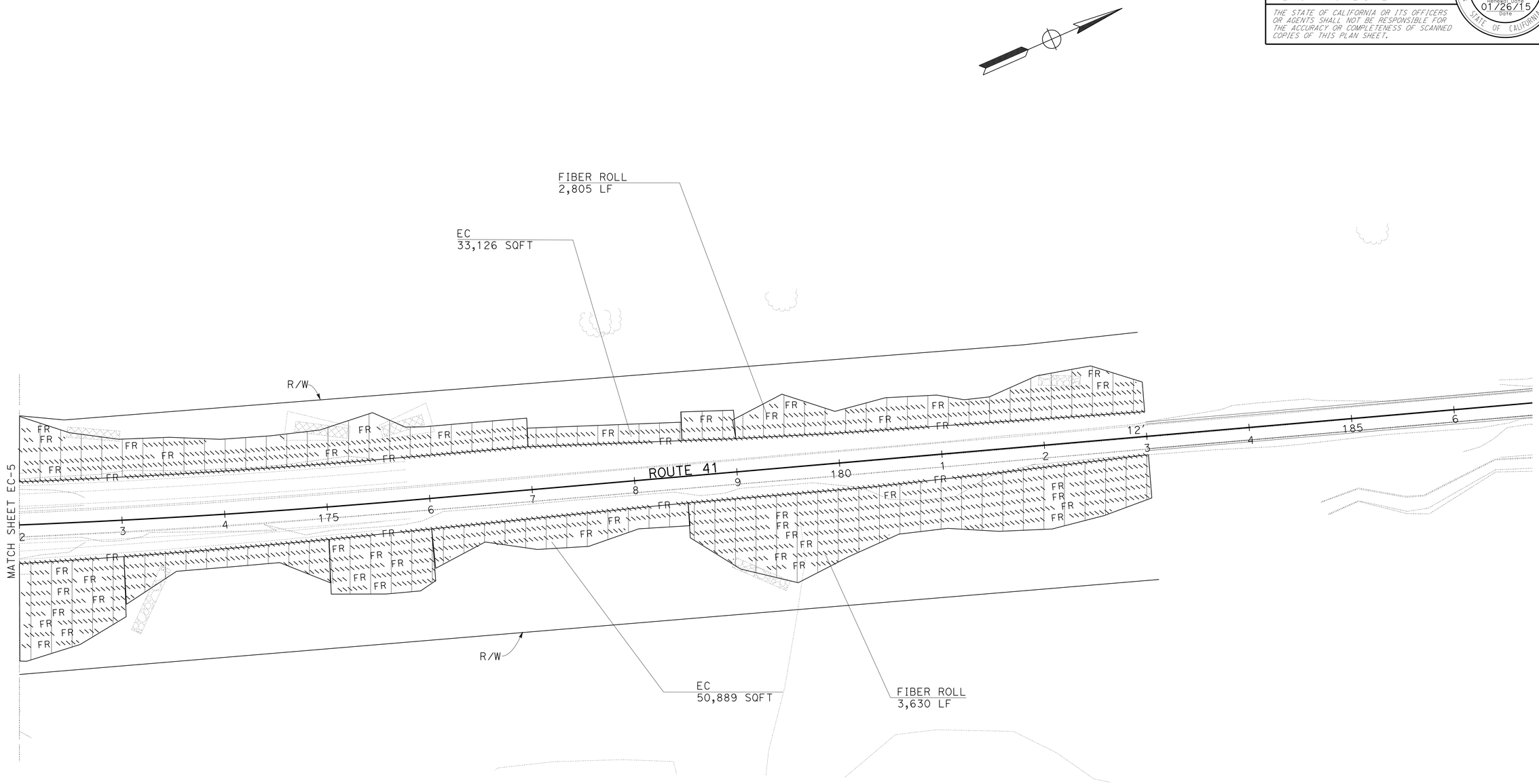

APPROVED FOR EROSION CONTROL WORK ONLY

EROSION CONTROL PLAN

SCALE:1"=50'

EC-6

STATE OF CALIFORNIA - DEPARTMENT OF TRANSPORTATION
Caltrans® LANDSCAPE ARCHITECTURE

SENIOR LANDSCAPE ARCHITECT: BRAD COLE

CALCULATED-DESIGNED BY: CHARLES LaRUE
CHECKED BY: MICHAEL MILLS

REVISED BY
DATE REVISED

LAST REVISION 01-26-15
DATE PLOTTED => 07-APR-2015
TIME PLOTTED => 13:12

Dist	COUNTY	ROUTE	POST MILES TOTAL PROJECT	SHEET No.	TOTAL SHEETS
06	Mad	41	11.7/13.6	81	94

Sherry D. Alexander
LICENSED LANDSCAPE ARCHITECT
01/26/15
PLANS APPROVAL DATE

LICENSED LANDSCAPE ARCHITECT
Sherry D. Alexander No. 4978
Sherry D. Alexander
Expiration Date
09/30/15
Renewal Date
01/26/15
Date
STATE OF CALIFORNIA

THE STATE OF CALIFORNIA OR ITS OFFICERS OR AGENTS SHALL NOT BE RESPONSIBLE FOR THE ACCURACY OR COMPLETENESS OF SCANNED COPIES OF THIS PLAN SHEET.

EROSION CONTROL QUANTITIES

SHEET		BIOSWALES AND DRAIANGE SWALES	COMPOST	INCORPORATE MATERIALS	ROLLED EROSION CONTROL PRODUCT (NETTING)	EROSION CONTROL (BONDED FIBER MATRIX)	FIBER ROLLS
	No.	DESCRIPTION	SQFT	SQFT	SQFT	SQFT	LF
EC-1			54,150	54,150	54,150	54,150	5,124
EC-2			151,273	151,273	151,273	151,273	8,800
EC-3			131,791	131,791	131,791	131,791	7,012
EC-4			138,662	138,662	138,662	138,662	6,655
EC-5			187,023	187,023	187,023	187,023	13,190
EC-6			84,015	84,015	84,015	84,015	6,435
D-1	1	BIOSWALE	1,003	1,003	1,003	1,003	
	2	BIOSWALE	500	500	500	500	
	3	BIOSWALE	500	500	500	500	
D-2	4	BIOSWALE	528	528	528	528	
	5	DRAINAGE SWALE	543	543	543		
D-3	6	DRAINAGE SWALE	401	401	401		
	7	BIOSWALE	509	509	509	509	
	8	DRAINAGE SWALE	534	534	534		
	9	DRAINAGE SWALE	1,586	1,586	1,586		
D-4	10	DRAINAGE SWALE	535	535	535		
	11	BIOSWALE	1,008	1,008	1,008	1,008	
	12	BIOSWALE	1,003	1,003	1,003	1,003	
D-5	13	BIOSWALE	409	409	409	409	
	14	BIOSWALE	412	412	412	412	
	15	BIOSWALE	532	532	532	532	
	16	BIOSWALE	511	511	511	511	
	17	BIOSWALE	501	501	501	501	
D-6	18	BIOSWALE	511	511	511	511	
	19	DRAINAGE SWALE	686	686	686		
	20	BIOSWALE	503	503	503	503	
	21	BIOSWALE	404	404	404	404	
	22	DRAINAGE SWALE	569	569	569		
	23	DRAINAGE SWALE	404	404	404		
	TOTAL		761,006	761,006	761,006	755,748	47,216

EROSION CONTROL QUANTITIES
ECQ-1

REVISED BY | DATE REVISED
CHARLES LaRUE | MICHAEL MILLS
CALCULATED-DESIGNED BY | CHECKED BY
SENIOR LANDSCAPE ARCHITECT | BRAD COLE
STATE OF CALIFORNIA - DEPARTMENT OF TRANSPORTATION
Caltrans® LANDSCAPE ARCHITECTURE

LAST REVISION 01-26-15 | DATE PLOTTED => 07-APR-2015 | TIME PLOTTED => 13:12

M

Maint	MAINTENANCE
Max	MAXIMUM
MB	METAL BEAM
MBB	METAL BEAM BARRIER
MBGR	METAL BEAM GUARD RAILING
Med	MEDIAN
MGS	MIDWEST GUARDRAIL SYSTEM
MH	MANHOLE
Min	MINIMUM
Misc	MISCELLANEOUS
Misc I & S	MISCELLANEOUS IRON AND STEEL
Mkr	MARKER
Mod	MODIFIED,
	MODIFY
Mon	MONUMENT
MP	METAL PLATE
MPGR	METAL PLATE GUARD RAILING
MR	MOVEMENT RATING
MSE	MECHANICALLY STABILIZED EMBANKMENT
Mt	MOUNTAIN, MOUNT
Mtl	MATERIAL
MVP	MAINTENANCE VEHICLE PULLOUT

N

N	NORTH
NB	NORTHBOUND
No.	NUMBER (MUST HAVE PERIOD)
Nos.	NUMBERS (MUST HAVE PERIOD)
NPS	NOMINAL PIPE SIZE
NS	NEAR SIDE
NSP	NEW STANDARD PLAN
NTS	NOT TO SCALE

O

Oblr	OBLITERATE
OC	OVERCROSSING
OD	OUTSIDE DIAMETER
OF	OUTSIDE FACE
OG	ORIGINAL GROUND
OGAC	OPEN GRADED ASPHALT CONCRETE
OGFC	OPEN GRADED FRICTION COURSE
OH	OVERHEAD
OHWM	ORDINARY HIGH WATER MARK
O-O	OUT TO OUT
Opp	OPPOSITE
OSD	OVERSIDE DRAIN

P

P	PAGE
PAP	PERFORATED ALUMINUM PIPE
PB	PULL BOX
PC	POINT OF CURVATURE,
	PRECAST
PCC	POINT OF COMPOUND CURVE,
	PORTLAND CEMENT CONCRETE
PCMS	PORTABLE CHANGEABLE MESSAGE SIGN
PCP	PERFORATED CONCRETE PIPE,
	PRESTRESSED CONCRETE PIPE
PCVC	POINT OF COMPOUND VERTICAL CURVE
PEC	PERMIT TO ENTER AND CONSTRUCT
Ped	PEDESTRIAN
Ped OC	PEDESTRIAN OVERCROSSING
Ped UC	PEDESTRIAN UNDERCROSSING
Perm Mtl	PERMEABLE MATERIAL

P continued

PG	PROFILE GRADE
PI	POINT OF INTERSECTION
PJP	PARTIAL JOINT PENETRATION
Pkwy	PARKWAY
ℙ,PL	PLATE
P/L	PROPERTY LINE
PM	POST MILE,
	TIME FROM NOON TO MIDNIGHT
PN	PAVING NOTCH
POC	POINT OF HORIZONTAL CURVE
POT	POINT OF TANGENT
POVC	POINT OF VERTICAL CURVE
PP	PIPE PILE,
	PLASTIC PIPE,
	POWER POLE
PPL	PREFORMED PERMEABLE LINER
PPP	PERFORATED PLASTIC PIPE
PRC	POINT OF REVERSE CURVE
PRF	PAVEMENT REINFORCING FABRIC
PRVC	POINT OF REVERSE VERTICAL CURVE
PS&E	PLANS, SPECIFICATIONS AND ESTIMATES
PS, P/S	PRESTRESSED
PSP	PERFORATED STEEL PIPE
PT	POINT OF TANGENCY
PVC	POLYVINYL CHLORIDE
Pvmt	PAVEMENT

Q

Qty	QUANTITY

R

R	RADIUS
R & D	REMOVE AND DISPOSE
R & S	REMOVE AND SALVAGE
R/C	RATE OF CHANGE
RCA	REINFORCED CONCRETE ARCH
RCB	REINFORCED CONCRETE BOX
RCP	REINFORCED CONCRETE PIPE
RCPA	REINFORCED CONCRETE PIPE ARCH
Rd	ROAD
Reinf	REINFORCED,
	REINFORCEMENT,
	REINFORCING
Rel	RELOCATE
Repl	REPLACEMENT
Ret	RETAINING
Rev	REVISED, REVISION
Rdwy	ROADWAY
RHMA	RUBBERIZED HOT MIX ASPHALT
Riv	RIVER
RM	ROAD-MIXED
RP	RADIUS POINT,
	REFERENCE POINT
RR	RAILROAD
RSP	ROCK SLOPE PROTECTION,
	REVISED STANDARD PLAN
Rt	RIGHT
Rte	ROUTE
RW	REDWOOD,
	RETAINING WALL
R/W	RIGHT OF WAY
Rwy	RAILWAY

S

S	SOUTH,
	SUPPLEMENT
SAE	STRUCTURE APPROACH EMBANKMENT
Salv	SALVAGE
SAPP	STRUCTURAL ALUMINUM PLATE PIPE
SB	SOUTHBOUND
SC	SAND CUSHION
SCSP	SLOTTED CORRUGATED STEEL PIPE
SD	STORM DRAIN
Sec	SECOND,
	SECTION
Sep	SEPARATION
SG	SUBGRADE
Shld	SHOULDER
Sht	SHEET
Sim	SIMILAR
℄	STATION LINE
SM	SELECTED MATERIAL
Spec	SPECIAL,
	SPECIFICATIONS
SPP	SLOTTED PLASTIC PIPE
SS	SLOPE STAKE
SSBM	STRAP AND SADDLE BRACKET METHOD
SSD	STRUCTURAL SECTION DRAIN
SSPA	STRUCTURAL STEEL PLATE ARCH
SSPP	STRUCTURAL STEEL PLATE PIPE
SSPPA	STRUCTURAL STEEL PLATE PIPE ARCH
SSRP	STEEL SPIRAL RIB PIPE
St	STREET
Sta	STATION
STBB	SINGLE THRIE BEAM BARRIER
Std	STANDARD
Str	STRUCTURE
Surf	SURFACING
SW	SIDEWALK,
	SOUND WALL
Swr	SEWER
Sym	SYMMETRICAL
S4S	SURFACE 4 SIDES

T

T	SEMI-TANGENT
Tan	TANGENT
TBB	THRIE BEAM BARRIER
Tbr	TIMBER
TC	TOP OF CURB
TCB	TRAFFIC CONTROL BOX
TCE	TEMPORARY CONSTRUCTION EASEMENT
Tel	TELEPHONE
Temp	TEMPORARY
TG	TOP OF GRADE
Tot	TOTAL
TP	TELEPHONE POLE
TPB	TREATED PERMEABLE BASE
TPM	TREATED PERMEABLE MATERIAL
Trans	TRANSITION

T continued

TS	TRANSVERSE,
	TRAFFIC SIGNAL,
	TUBULAR STEEL
Typ	TYPICAL

U

UC	UNDERCROSSING
UD	UNDERDRAIN
UG	UNDERGROUND
UON	UNLESS OTHERWISE NOTED
UP	UNDERPASS

V

V	VALVE,
	DESIGN SPEED
Var	VARIABLE,
	VARIES
VC	VERTICAL CURVE
VCP	VITRIFIED CLAY PIPE
Vert	VERTICAL
Via	VIADUCT
Vol	VOLUME

W

W	WEST,
	WIDTH
WB	WESTBOUND
WH	WEEP HOLE
WM	WIRE MESH
WS	WATER SURFACE
WSP	WELDED STEEL PIPE
Wt	WEIGHT
WV	WATER VALVE
WW	WINGWALL
WWLOL	WINGWALL LAYOUT LINE

X

X Sec	CROSS SECTION
Xing	CROSSING

Y

Yr	YEAR
Yrs	YEARS

Dist	COUNTY	ROUTE	POST MILES TOTAL PROJECT	SHEET No.	TOTAL SHEETS
06	Mad	41	11.7/13.4	82	94

Grace M. Tsushima
REGISTERED CIVIL ENGINEER

July 19, 2013
PLANS APPROVAL DATE

REGISTERED PROFESSIONAL ENGINEER Grace M. Tsushima No. C49814 Exp. 9-30-14 CIVIL STATE OF CALIFORNIA

THE STATE OF CALIFORNIA OR ITS OFFICERS OR AGENTS SHALL NOT BE RESPONSIBLE FOR THE ACCURACY OR COMPLETENESS OF SCANNED COPIES OF THIS PLAN SHEET.

TO ACCOMPANY PLANS DATED 1-26-15

2010 REVISED STANDARD PLAN RSP A10B

UNIT OF MEASUREMENT SYMBOLS:

Some of the symbols used in the project plan quantity tables and in the Bid Item List are:

TABLE A

SYMBOL USED	DEFINITIONS
ACRE	ACRE
CF	CUBIC FOOT
CY	CUBIC YARD
EA	EACH
GAL	GALLON
LB	POUND
LF	LINEAR FOOT
SQFT	SQUARE FOOT
SQYD	SQUARE YARD
STA	100 FEET
TAB	TABLET
TON	2,000 POUNDS

Some of the symbols used in the plans other than in the project plan quantity tables are:

TABLE B

SYMBOL USED	DEFINITIONS
ksi	KIPS PER SQUARE INCH
ksf	KIPS PER SQUARE FOOT
psi	POUNDS PER SQUARE INCH
psf	POUNDS PER SQUARE FOOT
lb/ft^3, pcf	POUNDS PER CUBIC FOOT
tsf	TONS PER SQUARE FOOT
mph, MPH *	MILES PER HOUR
ø	NOMINAL DIAMETER
oz	OUNCE
lb	POUND
kip	1,000 POUNDS
cal	CALORIE
ft	FOOT OR FEET
gal	GALLON

* For use on a sign panel only

STATE OF CALIFORNIA
DEPARTMENT OF TRANSPORTATION

ABBREVIATIONS (SHEET 2 OF 2)

NO SCALE

RSP A10B DATED JULY 19, 2013 SUPERSEDES STANDARD PLAN A10B DATED MAY 20, 2011 - PAGE 2 OF THE STANDARD PLANS BOOK DATED 2010.

REVISED STANDARD PLAN RSP A10B

6-7-13

Dist	COUNTY	ROUTE	POST MILES TOTAL PROJECT	SHEET No.	TOTAL SHEETS
06	Mad	41	11.7/13.4	83	94

REGISTERED CIVIL ENGINEER

July 19, 2013
PLANS APPROVAL DATE

REGISTERED PROFESSIONAL ENGINEER Roberta L. McLaughlin No. C40375 Exp. 3-31-15 CIVIL STATE OF CALIFORNIA

THE STATE OF CALIFORNIA OR ITS OFFICERS OR AGENTS SHALL NOT BE RESPONSIBLE FOR THE ACCURACY OR COMPLETENESS OF SCANNED COPIES OF THIS PLAN SHEET.

TO ACCOMPANY PLANS DATED 1-26-15

EXIT RAMP NEUTRAL AREA (GORE) TREATMENT

DETAIL 36

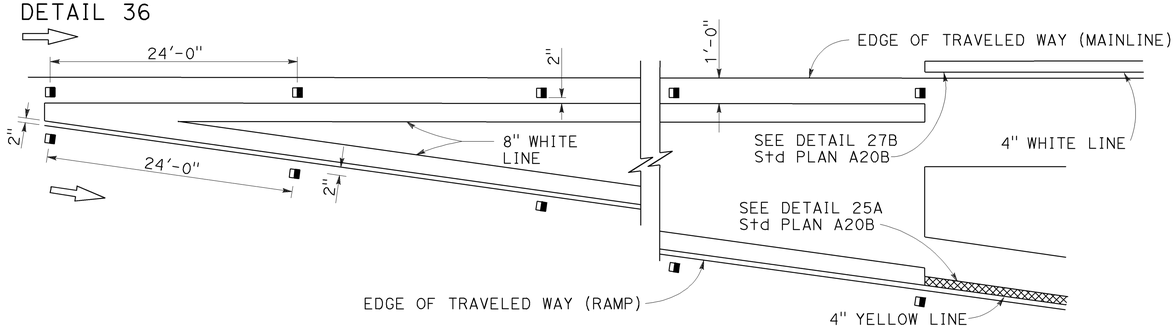

ENTRANCE RAMP NEUTRAL AREA (MERGE) TREATMENT

DETAIL 36A

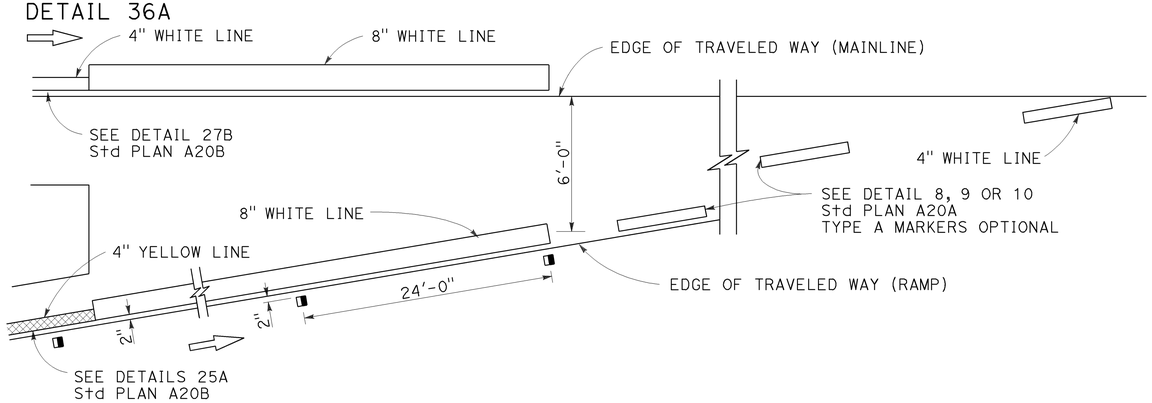

ENTRANCE RAMP NEUTRAL AREA (ACCELERATION LANE) TREATMENT

DETAIL 36B

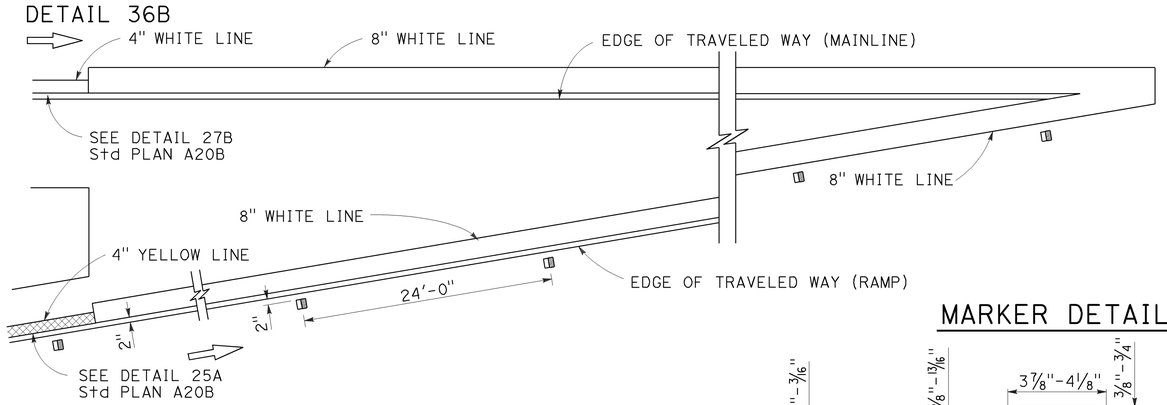

LANE DROP AT EXIT RAMPS

DETAIL 37

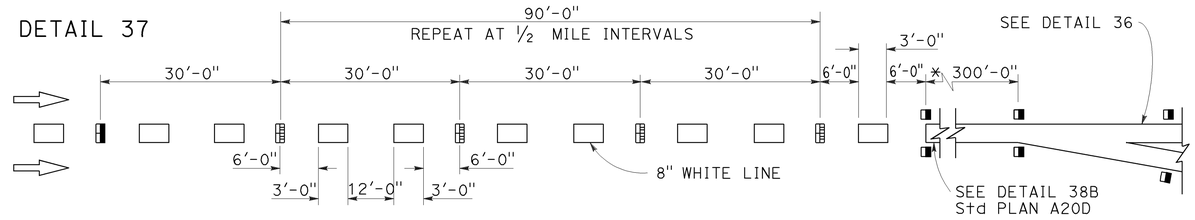

DETAIL 37A

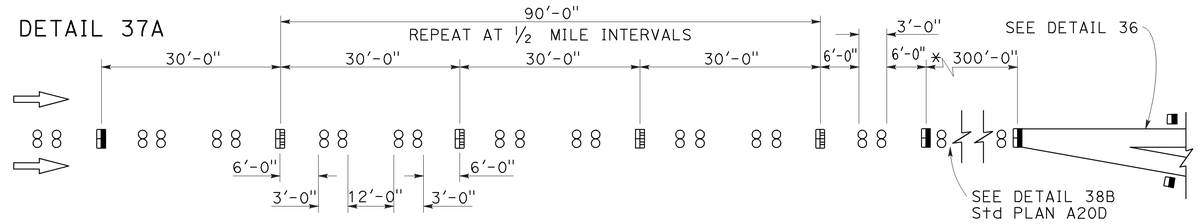

* The solid channelizing line shown may be omitted on short auxiliary lanes where weaving length is critical.

LANE DROP AT INTERSECTIONS

DETAIL 37B

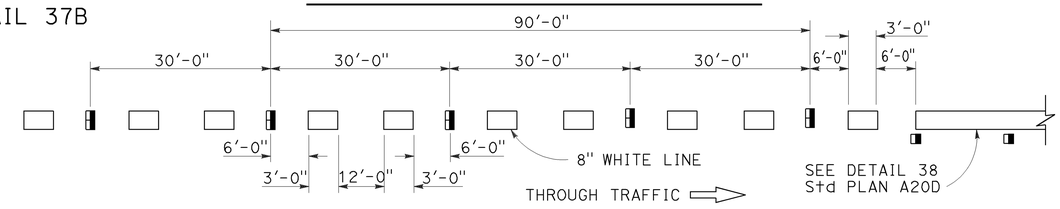

DETAIL 37C

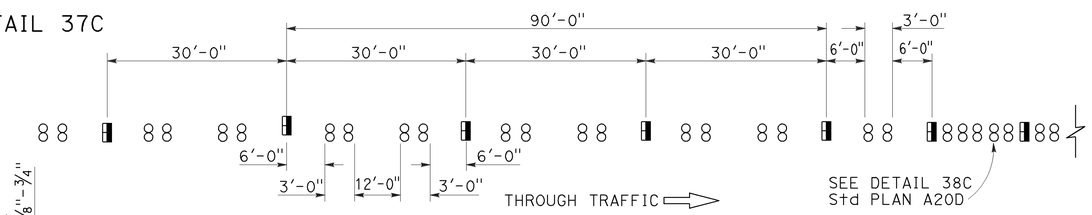

MARKER DETAILS

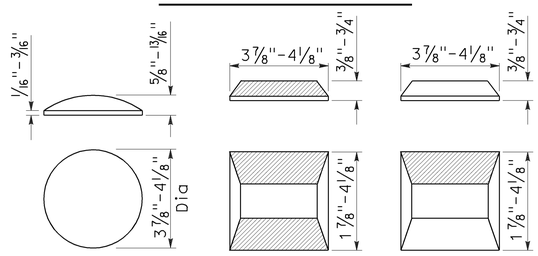

LEGEND:

MARKERS

- ○ TYPE A WHITE NON-REFLECTIVE
- ⊞ TYPE C RED-CLEAR RETROREFLECTIVE
- ◨ TYPE G ONE-WAY CLEAR RETROREFLECTIVE

STATE OF CALIFORNIA
DEPARTMENT OF TRANSPORTATION

PAVEMENT MARKERS AND TRAFFIC LINE TYPICAL DETAILS

NO SCALE

RSP A20C DATED JULY 19, 2013 SUPERSEDES STANDARD PLAN A20C DATED MAY 20, 2011 - PAGE 11 OF THE STANDARD PLANS BOOK DATED 2010.

REVISED STANDARD PLAN RSP A20C

2010 REVISED STANDARD PLAN RSP A20C

4-29-13

Dist	COUNTY	ROUTE	POST MILES TOTAL PROJECT	SHEET No.	TOTAL SHEETS
06	Mad	41	11.7/13.4	84	94

REGISTERED CIVIL ENGINEER

April 20, 2012
PLANS APPROVAL DATE

REGISTERED PROFESSIONAL ENGINEER
Roberta L. McLaughlin
No. C40375
Exp. 3-31-13
CIVIL
STATE OF CALIFORNIA

THE STATE OF CALIFORNIA OR ITS OFFICERS OR AGENTS SHALL NOT BE RESPONSIBLE FOR THE ACCURACY OR COMPLETENESS OF SCANNED COPIES OF THIS PLAN SHEET.

TO ACCOMPANY PLANS DATED 1-26-15

2010 REVISED STANDARD PLAN RSP A24A

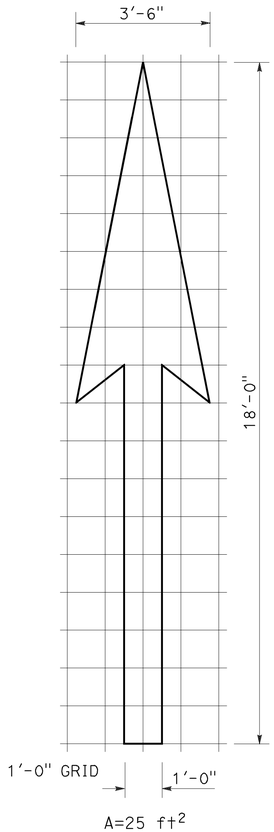

A=25 ft^2

TYPE I 18'-0" ARROW

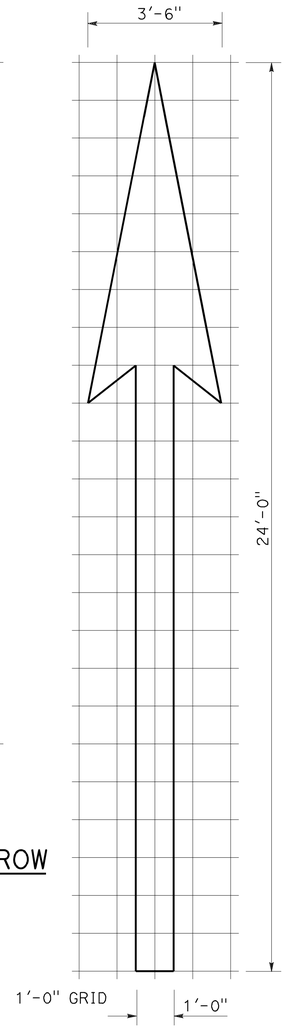

A=31 ft^2

TYPE I 24'-0" ARROW

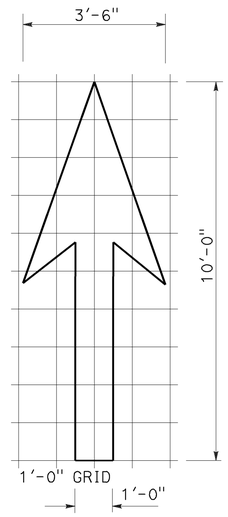

A=14 ft^2

TYPE I 10'-0" ARROW

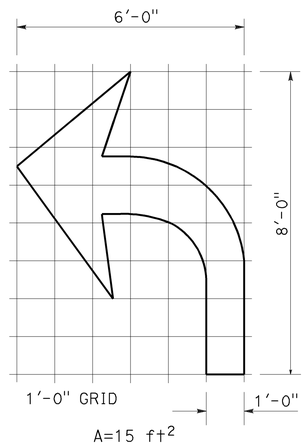

A=15 ft^2

TYPE IV (L) ARROW

(For Type IV (R) arrow, use mirror image)

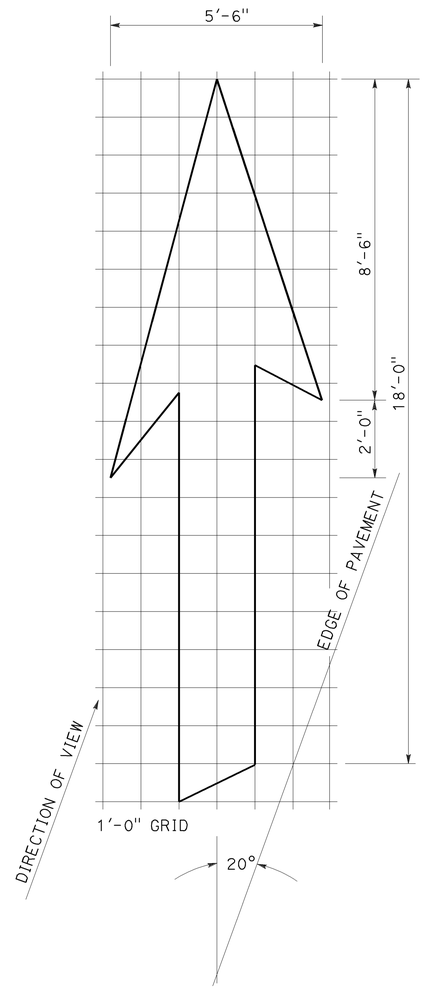

A=42 ft^2

TYPE VI ARROW

Right lane drop arrow
(For left lane, use mirror image)

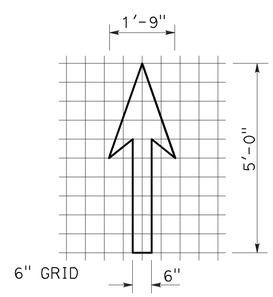

A=3.5 ft^2

BIKE LANE ARROW

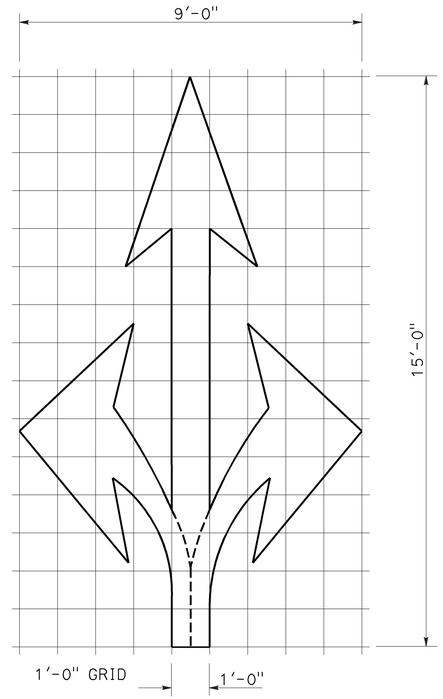

A=36 ft^2

TYPE VIII ARROW

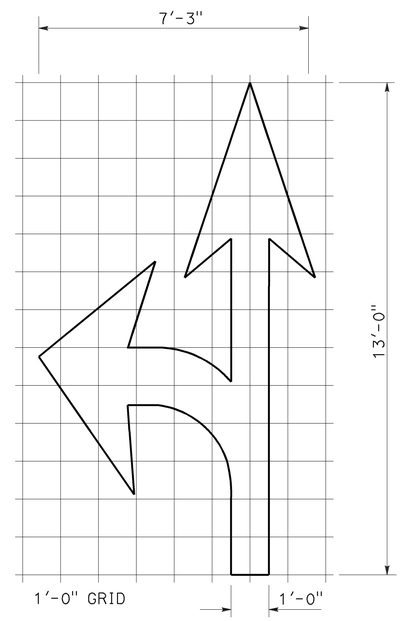

A=27 ft^2

TYPE VII (L) ARROW

(For Type VII (R) arrow, use mirror image)

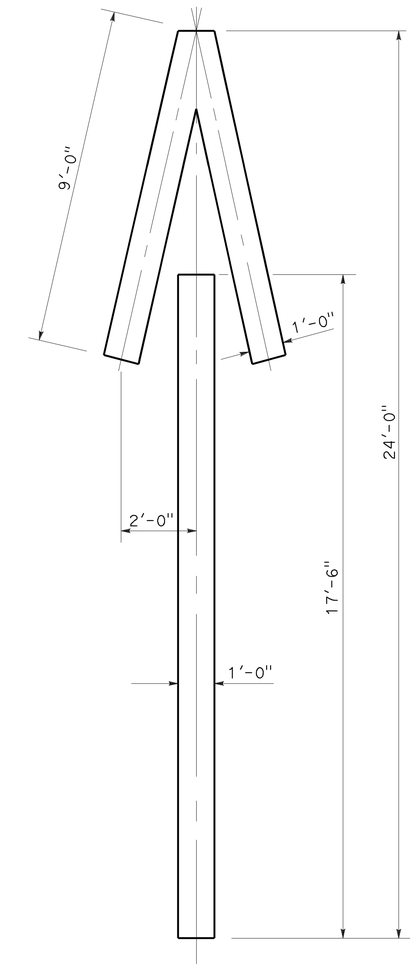

A=33 ft^2

TYPE V ARROW

NOTE:
Minor variations in dimensions may be accepted by the Engineer.

STATE OF CALIFORNIA
DEPARTMENT OF TRANSPORTATION

PAVEMENT MARKINGS ARROWS

NO SCALE

RSP A24A DATED APRIL 20, 2012 SUPERSEDES STANDARD PLAN A24A DATED MAY 20, 2011 - PAGE 13 OF THE STANDARD PLANS BOOK DATED 2010.

REVISED STANDARD PLAN RSP A24A

3-14-12

Dist	COUNTY	ROUTE	POST MILES TOTAL PROJECT	SHEET No.	TOTAL SHEETS
06	Mad	41	11.7/13.4	85	94

REGISTERED CIVIL ENGINEER

July 18, 2014
PLANS APPROVAL DATE

REGISTERED PROFESSIONAL ENGINEER
Carl M. Duan
No. C59976
Exp. 6-30-16
CIVIL
STATE OF CALIFORNIA

THE STATE OF CALIFORNIA OR ITS OFFICERS OR AGENTS SHALL NOT BE RESPONSIBLE FOR THE ACCURACY OR COMPLETENESS OF SCANNED COPIES OF THIS PLAN SHEET.

TO ACCOMPANY PLANS DATED 1-26-15

DESIGN NOTES:

Design: AASHTO LRFD Bridge Design Specifications, 4th edition with California Amendments. ACPA DESIGN DATA 1, October 2007. INDIRECT DESIGN METHOD

Soil: w Fe = 162 pcf Installation Type 1
w Fe = 168 pcf Installation Types 2 & 3
w = Unit weight of soil (pcf)
Fe = Soil-structure interaction factor

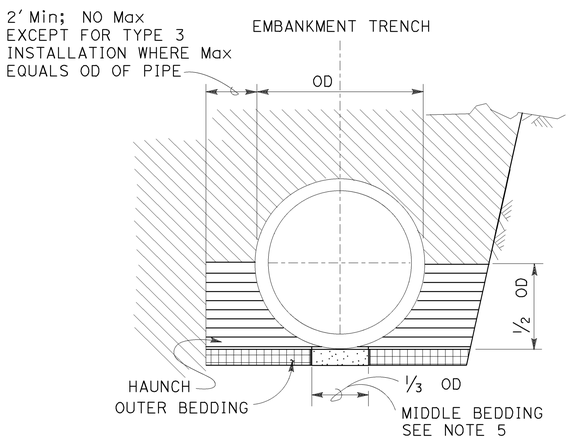

BACKFILL

LEGEND:

- ROADWAY EMBANKMENT
- STRUCTURE BACKFILL (CULVERT) FOR HAUNCH SEE NOTE 6
- STRUCTURE BACKFILL (CULVERT) FOR OUTER BEDDING SEE NOTE 6
- LOOSE BACKFILL
- STRUCTURE EXCAVATION (CULVERT)

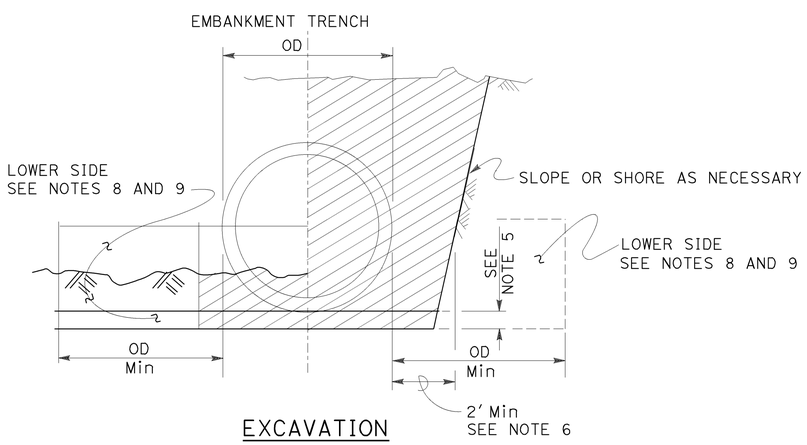

EXCAVATION

INSTALLATION TYPE 1:

The haunch and outer bedding shall be compacted to a minimum 90 percent relative compaction. In addition, the minimum sand equivalent in these areas shall be 30 and the maximum percentage passing the No. 200 sieve size shall be 12.

INSTALLATION TYPE 2:

The haunch and outer bedding shall be compacted to a minimum 90 percent relative compaction. In addition, the minimum sand equivalent in these areas shall be 25.

INSTALLATION TYPE 3:

The haunch and outer bedding shall be compacted to a minimum 85 percent relative compaction. 90 percent relative compaction will be required where the fill over the pipe is less than 4′-0″ or 1/2 OD. In addition, the minimum sand equivalent in these areas shall be 25 and the material shall not contain rocks, broken concrete, or other solid material exceeding 3″ in greatest dimension.

INSTALLATION TYPE 1

MINIMUM CLASS AND D-LOAD	COVER	
	60″ Dia AND SMALLER	OVER 60″ Dia TO 120″ Dia Max
CLASS II 1000D	14.9′	12.9′
CLASS III 1350D	15.0′ - 21.9′	13.0′ - 18.9′
CLASS III SPECIAL 1700D	22.0′ - 27.9′	19.0′ - 24.9′
CLASS IV 2000D	28.0′ - 32.9′	25.0′ - 29.9′
CLASS IV SPECIAL 2500D	33.0′ - 41.9′	30.0′ - 38.9′
CLASS V 3000D	42.0′ - 49.9′	39.0′ - 46.9′
CLASS V SPECIAL 3600D	50.0′ - 60.0′	47.0′ - 58.0′

INSTALLATION TYPE 2

MINIMUM CLASS AND D-LOAD	COVER	
	60″ Dia AND SMALLER	OVER 60″ Dia TO 120″ Dia Max
CLASS II 1000D	11.9′	9.9′
CLASS III 1350D	12.0′ - 15.9′	10.0′ - 14.9′
CLASS III SPECIAL 1700D	16.0′ - 20.9′	15.0′ - 19.9′
CLASS IV 2000D	21.0′ - 24.9′	20.0′ - 23.9′
CLASS IV SPECIAL 2500D	25.0′ - 31.9′	24.0′ - 30.9′
CLASS V 3000D	32.0′ - 37.9′	31.0′ - 37.9′
CLASS V SPECIAL 3600D	38.0′ - 46.0′	38.0′ - 46.0′

INSTALLATION TYPE 3

MINIMUM CLASS AND D-LOAD	COVER	
	60″ Dia AND SMALLER	OVER 60″ Dia TO 120″ Dia Max
CLASS II 1000D	8.9′	5.9′
CLASS III 1350D	9.0′ - 11.9′	6.0′ - 10.9′
CLASS III SPECIAL 1700D	12.0′ - 15.9′	11.0′ - 13.9′
CLASS IV 2000D	16.0′ - 18.9′	14.0′ - 17.9′
CLASS IV SPECIAL 2500D	19.0′ - 24.9′	18.0′ - 22.9′
CLASS V 3000D	25.0′ - 29.9′	23.0′ - 28.9′
CLASS V SPECIAL 3600D	30.0′ - 36.0′	29.0′ - 35.0′

NOTES:

1. Unless otherwise shown on the plans or specified in the special provision, the Contractor shall have the option of selecting the class of RCP and the type of installation to be used, provided the height of cover does not exceed the value shown for the RCP selected.
   Example: 24″ RCP culvert with maximum cover of 24′-0″ the options are:
   a) Class III Special or stronger with Installation Type 1.
   b) Class IV or stronger with Installation Type 2.
   c) Class IV Special or stronger with Installation Type 3.
   Cover is defined as the maximum vertical distance from top of the pipe to finished grade within the length of any given culvert.
2. The class of RCP and Installation Type selected shall be the same throughout the length of any given culvert.
3. The "length of any culvert" is defined as the culvert between:
   a) Successive drainage structure (inlets, junction boxes, headwalls, etc.).
   b) A drainage structure and the inlet or outlet end of the culvert.
   c) The inlet and outlet end of the culvert when there are no intervening drainage structures.
4. Oval and arch shaped RCP shall not be used.
5. Bedding depth: 1/25 OD Min, not less than 3″.
6. Slurry cement backfill may be substituted for backfill in the outer bedding and haunch areas. If slurry is used, the outer and middle beddings shall be omitted. Prior to installation, the soil under the middle 1/3 of the outside diameter of the pipe shall be softened by scarifying or other means to a minimum depth of 1/25 OD, but not less than 3″. Where slurry cement backfill is used, clear distance to trench wall may be reduced as set forth in the Standard Specifications.
7. Backfill shall be placed full width of excavation except where dimensions are shown for backfill width or thickness. Dimensions shown are minimum.
8. Lower side shall be suitable material as determined by the Engineer. Otherwise it shall be considered unsuitable as set forth in of the Standard Specifications. See Note 9.
9. Where the pipe is placed in a trench, if the trench walls are sloped at 5 vertical to 1 horizontal or steeper for at least 90 percent of the trench height or up to not less than 12″ from the grading plane, the firmness of the soil in the lower side need not be considered.
10. Non-reinforced precast concrete pipe sizes 3′-0″ or smaller may be placed under installation Types 1, 2 or 3.

STATE OF CALIFORNIA
DEPARTMENT OF TRANSPORTATION

EXCAVATION AND BACKFILL CONCRETE PIPE CULVERTS INDIRECT DESIGN METHOD

NO SCALE

RSP A62DA DATED JULY 18, 2014 SUPERSEDES STANDARD PLAN A62DA DATED MAY 20, 2011 - PAGE 24 OF THE STANDARD PLANS BOOK DATED 2010.

REVISED STANDARD PLAN RSP A62DA

2010 REVISED STANDARD PLAN RSP A62DA

Dist	COUNTY	ROUTE	POST MILES TOTAL PROJECT	SHEET No.	TOTAL SHEETS
06	Mad	41	11.7/13.4	86	94

Raymond Don Tsztoo
REGISTERED CIVIL ENGINEER

October 19, 2012
PLANS APPROVAL DATE

REGISTERED PROFESSIONAL ENGINEER
Raymond Don Tsztoo
No. C37332
Exp. 6-30-14
CIVIL
STATE OF CALIFORNIA

THE STATE OF CALIFORNIA OR ITS OFFICERS OR AGENTS SHALL NOT BE RESPONSIBLE FOR THE ACCURACY OR COMPLETENESS OF SCANNED COPIES OF THIS PLAN SHEET.

TO ACCOMPANY PLANS DATED 1-26-15

2010 REVISED STANDARD PLAN RSP A86D

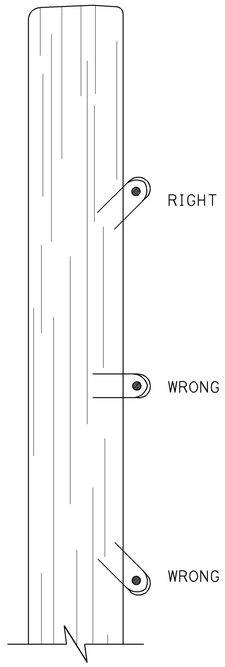

DRIVE STAPLES AT ANGLE

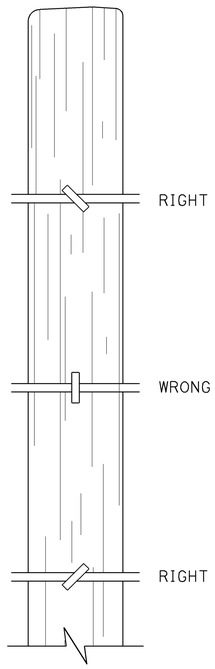

DO NOT DRIVE STAPLES PARALLEL TO SIDE OF POST

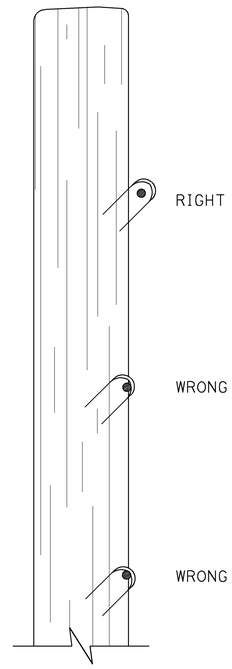

LEAVE WIRE LOOSE IN STAPLE

LINE POST STAPLING DETAILS

(Apply to rectangular/square and round posts)
Do not staple vertical wire in wire mesh.

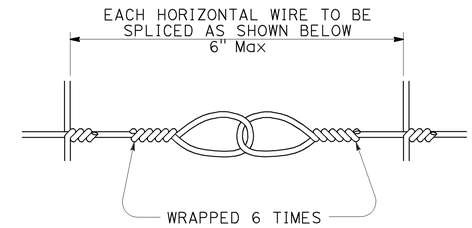

SPLICE DETAIL FOR BARBED WIRE/WIRE MESH FENCE

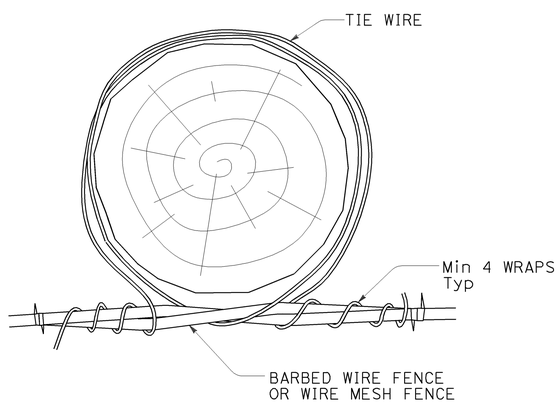

OPTION A

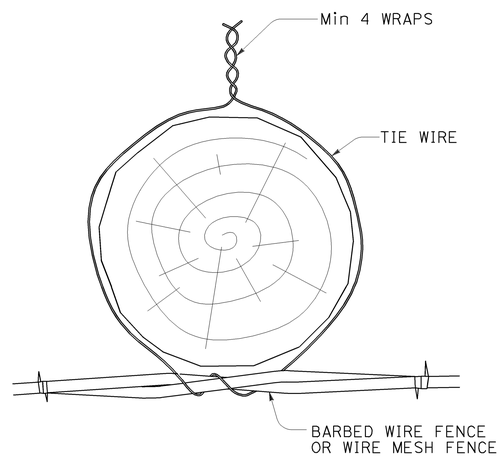

OPTION B

LINE POST WIRE TIE OPTION DETAILS

(Option details also apply to rectangular/square posts)

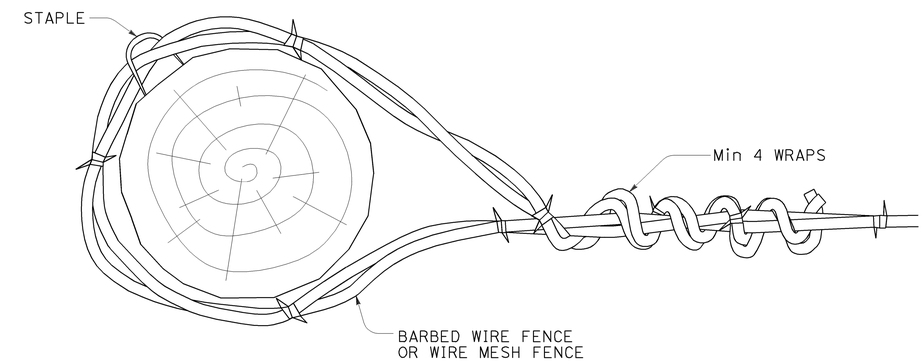

END, LATCH, PULL, AND CORNER POST DETAIL

(Also applies to rectangular/square posts)

STATE OF CALIFORNIA
DEPARTMENT OF TRANSPORTATION

BARBED WIRE AND WIRE MESH FENCE - MISCELLANEOUS DETAILS

NO SCALE

RSP A86D DATED OCTOBER 19, 2012 SUPPLEMENTS THE STANDARD PLANS BOOK DATED 2010.

REVISED STANDARD PLAN RSP A86D

10-9-12

Dist	COUNTY	ROUTE	POST MILES TOTAL PROJECT	SHEET No.	TOTAL SHEETS
06	Mad	41	11.7/13.4	90	94

Gregory A. Balzer
LICENSED LANDSCAPE ARCHITECT

July 19, 2013
PLANS APPROVAL DATE

LICENSED LANDSCAPE ARCHITECT Gregory A. Balzer 2516 STATE OF CALIFORNIA
Gregory A. Balzer
10 Expiration Date 2-28-15
Renewal Date 7-19-13
Date

THE STATE OF CALIFORNIA OR ITS OFFICERS OR AGENTS SHALL NOT BE RESPONSIBLE FOR THE ACCURACY OR COMPLETENESS OF SCANNED COPIES OF THIS PLAN SHEET.

TO ACCOMPANY PLANS DATED 1-26-15

2010 REVISED STANDARD PLAN RSP H1

A

AB	AGGREGATE BASE
ABS	ACRYLONITRILE-BUTADIENE-STYRENE
AC	ASPHALT CONCRETE
ACC	ARMOR-CLAD CONDUCTORS
Adj	ADJACENT/ADJUSTABLE
AIC	AUXILIARY IRRIGATION CONTROLLER
Alt	ALTERNATIVE
AMEND	AMENDMENT
ARV	AIR RELEASE VALVE
AUTO	AUTOMATIC
AUX	AUXILIARY
AVB	ATMOSPHERIC VACUUM BREAKER

B

B&B	BALLED AND BURLAPPED
B/B	BRASS/BRONZE
B/B/PL	BRASS/BRONZE/PLASTIC
B/PL	BRASS/PLASTIC
BFM	BONDED FIBER MATRIX
Bit Ctd	BITUMINOUS COATED
BP	BOOSTER PUMP
BPA	BACKFLOW PREVENTER ASSEMBLY
BPE	BACKFLOW PREVENTER ENCLOSURE
BV	BALL VALVE

C

C	CONDUIT
CAP	CORRUGATED ALUMINUM PIPE
CARV	COMBINATION AIR RELEASE VALVE
CB	COUPLING BAND
CCA	CAM COUPLER ASSEMBLY
CEC	CONTROLLER ENCLOSURE CABINET
CHDPE	CORRUGATED HIGH DENSITY POLYETHYLENE
CL	CHAIN LINK
CNC	CONTROL AND NEUTRAL CONDUCTORS
Conc	CONCRETE
CP	COPPER PIPE
CS	COMPOST SOCK
CSP	CORRUGATED STEEL PIPE
CST	CENTER STRIP
CV	CHECK VALVE

D

Dia	DIAMETER
DIP	DUCTILE IRON PIPE
DIT	DRIP IRRIGATION TUBING
DG	DECOMPOSED GRANITE
DN	DIAMETER NOMINAL
DVA	DRIP VALVE ASSEMBLY

E

EC	EROSION CONTROL
ECTC	EROSION CONTROL TECHNOLOGY COUNCIL
Elect	ELECTRIC/ELECTRICAL
Elev	ELEVATION
ELL	ELBOW
ENCL	ENCLOSURE
EP	EDGE OF PAVEMENT
ES	EDGE OF SHOULDER
EST	END STRIP
ESTB	ESTABLISHMENT
ETW	EDGE OF TRAVELED WAY

F

F	FULL CIRCLE
F/P	FULL/PART CIRCLE
FCV	FLOW CONTROL VALVE
FERT	FERTILIZER
FG	FINISHED GRADE
FH	FLEXIBLE HOSE
FIPT	FEMALE IRON PIPE THREAD
FIS	FERTILIZER INJECTOR SYSTEM
FL	FLOW LINE
FR	FIBER ROLL
FS	FLOW SENSOR
FSC	FLOW SENSOR CABLE
FV	FLUSH VALVE

G

Galv	GALVANIZED
GARV	GARDEN VALVE
GARVA	GARDEN VALVE ASSEMBLY
GM	GRAVEL MULCH
GPH	GALLONS PER HOUR
GPM	GALLONS PER MINUTE
GSP	GALVANIZED STEEL PIPE
GV	GATE VALVE

H

H	HALF CIRCLE
HDPE	HIGH DENSITY POLYETHYLENE
HP	HORSEPOWER/HINGE POINT
HPL	HIGH PRESSURE LINE
Hwy	HIGHWAY

I

IC	IRRIGATION CONTROLLER
ICC	IRRIGATION CONTROLLER(S) IN CONTROLLER ENCLOSURE CABINET
ID	INSIDE DIAMETER
IFS	IRRIGATION FILTRATION SYSTEM
IPS	IRON PIPE SIZE
IPT	IRON PIPE THREAD
Irr	IRRIGATION

L

L	LENGTH

M

Max	MAXIMUM
MBGR	METAL BEAM GUARD RAILING
MCV	MANUAL CONTROL VALVE
MIC	MASTER IRRIGATION CONTROLLER
Min	MINIMUM
MIPT	MALE IRON PIPE THREAD
Misc	MISCELLANEOUS
Mtl	MATERIAL
MVP	MAINTENANCE VEHICLE PULLOUT

N

NCN	NO COMMON NAME
NL	NOZZLE LINE
No.	NUMBER
NPT	NATIONAL PIPE THREAD

O

O/C	ON CENTER
OD	OUTSIDE DIAMETER
OL	OVERLAP

P

P	PART CIRCLE
PB	PULL BOX
PCC	PORTLAND CEMENT CONCRETE
PE	POLYETHYLENE
Pkt	PACKET
PL	PLASTIC
PLS	PURE LIVE SEED
PLT	PLANT/PLANTING
PLT ESTB	PLANT ESTABLISHMENT
PM	POST MILE
PR	PRESSURE RATED
PRLV	PRESSURE RELIEF VALVE
PRV	PRESSURE REGULATING VALVE
PVC	POLYVINYL CHLORIDE
Pvmt	PAVEMENT

Q

Q	QUARTER CIRCLE
QCV	QUICK COUPLING VALVE

R

R	RADIUS
RCP	REINFORCED CONCRETE PIPE
RCV	REMOTE CONTROL VALVE
RCVM	REMOTE CONTROL VALVE (MASTER)
RCVMF	REMOTE CONTROL VALVE (MASTER) W/FLOW SENSOR
RCVP	REMOTE CONTROL VALVE W/PRESSURE REGULATOR
RCW	RECYCLED WATER
RECP	ROLLED EROSION CONTROL PRODUCT
REQ	REQUIRED
RICS	REMOTE IRRIGATION CONTROL SYSTEM
R/W	RIGHT OF WAY

S

S	SLIP
SCH	SCHEDULE
SF	STATE-FURNISHED
Shld	SHOULDER
Sq	SQUARE
SST	SIDE STRIP
Sta	STATION
Std	STANDARD
SW	SIDEWALK/SOUND WALL

T

T	THIRD CIRCLE/THREAD
TLS	TRUCK LOADING STANDPIPE
TQ	THREE QUARTER CIRCLE
TRM	TURF REINFORCEMENT MAT
TT	TWO-THIRDS CIRCLE
TWSA	TREE WELL SPRINKLER ASSEMBLY
Typ	TYPICAL

U

UG	UNDERGROUND

W

W	WIDTH
W/	WITH
WM	WATER METER
WS	WYE STRAINER
WSA	WYE STRAINER ASSEMBLY
WSP	WELDED STEEL PIPE
WWM	WELDED WIRE MESH

NOTE:

For additional abbreviations, see Standard Plans A10A and A10B.

STATE OF CALIFORNIA
DEPARTMENT OF TRANSPORTATION

LANDSCAPE AND EROSION CONTROL ABBREVIATIONS

NO SCALE

RSP H1 DATED JULY 19, 2013 SUPERSEDES STANDARD PLAN H1 DATED MAY 20, 2011 - PAGE 218 OF THE STANDARD PLANS BOOK DATED 2010.

REVISED STANDARD PLAN RSP H1

6-28-13

Dist	COUNTY	ROUTE	POST MILES TOTAL PROJECT	SHEET No.	TOTAL SHEETS
06	Mad	41	11.7/13.4	91	94

LICENSED LANDSCAPE ARCHITECT

November 15, 2013
PLANS APPROVAL DATE

LICENSED LANDSCAPE ARCHITECT
Gregory A. Balzer 2516
Expiration Date
2-28-15
Renewal Date
11-15-13
Date
STATE OF CALIFORNIA

THE STATE OF CALIFORNIA OR ITS OFFICERS OR AGENTS SHALL NOT BE RESPONSIBLE FOR THE ACCURACY OR COMPLETENESS OF SCANNED COPIES OF THIS PLAN SHEET.

TO ACCOMPANY PLANS DATED 1-26-15

2010 REVISED STANDARD PLAN RSP H2

EXISTING	NEW	ITEM DESCRIPTION
		WATER METER (WM)
		BACKFLOW PREVENTER ASSEMBLY (BPA)
		BACKFLOW PREVENTER ENCLOSURE (BPE)
		BOOSTER PUMP (BP)
		TRUCK LOADING STANDPIPE (TLS)
	FS	FLOW SENSOR (FS)
		MASTER IRRIGATION CONTROLLER (MIC)
		AUXILIARY IRRIGATION CONTROLLER (AIC)
		IRRIGATION CONTROLLER (IC) IRRIGATION CONTROLLER (IC) (BATTERY) IRRIGATION CONTROLLER (IC) (SOLAR) IRRIGATION CONTROLLER (IC) (TWO WIRE) IRRIGATION CONTROLLER(S) IN CONTROLLER ENCLOSURE CABINET (ICC)
acc	ACC	ARMOR-CLAD CONDUCTORS (ACC)
cnc	CNC	CONTROL AND NEUTRAL CONDUCTORS (CNC)
		IRRIGATION CONDUIT
		EXTEND IRRIGATION CONDUIT
dip	DIP	DUCTILE IRON PIPE (SUPPLY LINE) (MAIN) (DIP)
		GALVANIZED STEEL PIPE (SUPPLY LINE) (MAIN) (GSP)
		GALVANIZED STEEL PIPE (SUPPLY LINE) (LATERAL) (GSP)
		PLASTIC PIPE (SUPPLY LINE) (MAIN)
		PLASTIC PIPE (SUPPLY LINE) (LATERAL)
cp	CP	COPPER PIPE (SUPPLY LINE)
dit	DIT	DRIP IRRIGATION TUBING
		REMOTE CONTROL VALVE (RCV) REMOTE CONTROL VALVE (MASTER) (RCVM) REMOTE CONTROL VALVE (MASTER) W/FLOW METER (RCVMF)
P	P	REMOTE CONTROL VALVE W/PRESSURE REGULATOR (RCVP)
		EXISTING MANUAL CONTROL VALVE (MCV)
	V	DRIP VALVE ASSEMBLY (DVA)
	Y	WYE STRAINER ASSEMBLY (WSA)

EXISTING	NEW	ITEM DESCRIPTION
		GATE VALVE (GV)
		BALL VALVE (BV)
		QUICK COUPLING VALVE (QCV)
		CAM COUPLER ASSEMBLY (CCA)
		GARDEN VALVE ASSEMBLY (GARVA)
		PRESSURE REGULATING VALVE (PRV)
		PRESSURE RELIEF VALVE (PRLV)
		FLOW CONTROL VALVE (FCV)
		COMBINATION AIR RELEASE VALVE (CARV)
		CHECK VALVE (CV)
		FLUSH VALVE (FV)
		EXISTING NOZZLE LINE W/TURNING UNION
		EXISTING IRRIGATION SYSTEM
		EXISTING IRRIGATION SYSTEM TO BE REMOVED
		CHAIN LINK GATE
		QUICK COUPLING VALVE W/SPRINKLER PROTECTOR
3	3	SPRINKLER W/SPRINKLER PROTECTOR
	C	CONNECT TO EXISTING SYSTEM
		CAP
		CAP EXISTING
	FR	FIBER ROLL
	CS	COMPOST SOCK

- RCV SIZE
- IRRIGATION CONTROLLER
- CONTROLLER STATION
- VALVE IN PARALLEL (IF APPLICABLE)
- GPM
- QUANTITY OF SPRINKLERS (WHEN SHOWN)

* 2½"-A-2b-40-60

VALVE CODE

* VALVE CODES FOR EXISTING VALVES ARE SHOWN IN A DASHED ENCLOSURE.

STATE OF CALIFORNIA
DEPARTMENT OF TRANSPORTATION

LANDSCAPE AND EROSION CONTROL SYMBOLS

NO SCALE

RSP H2 DATED NOVEMBER 15, 2013 SUPERSEDES RSP H2 DATED JULY 19, 2013 AND STANDARD PLAN H2 DATED MAY 20, 2011 - PAGE 219 OF THE STANDARD PLANS BOOK DATED 2010.

REVISED STANDARD PLAN RSP H2

10-9-13

DIST	COUNTY	ROUTE	POST MILES TOTAL PROJECT	SHEET No.	TOTAL SHEETS
06	Mad	41	11.7/13.4	87	94

REGISTERED CIVIL ENGINEER

November 15, 2013
PLANS APPROVAL DATE

REGISTERED PROFESSIONAL ENGINEER
Cornelis M. Hakim
No. C55610
Exp. 12-31-14
CIVIL
STATE OF CALIFORNIA

THE STATE OF CALIFORNIA OR ITS OFFICERS OR AGENTS SHALL NOT BE RESPONSIBLE FOR THE ACCURACY OR COMPLETENESS OF SCANNED COPIES OF THIS PLAN SHEET.

TO ACCOMPANY PLANS DATED 1-26-15

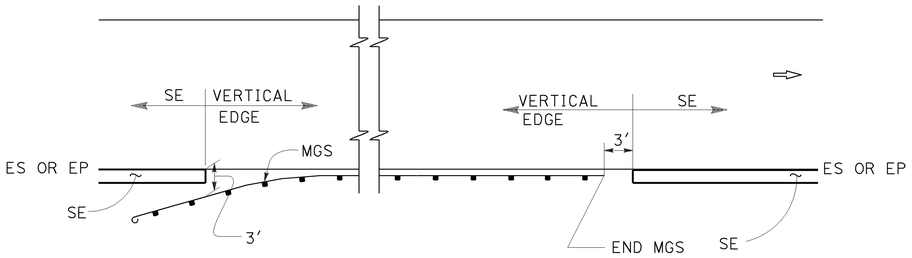

MGS

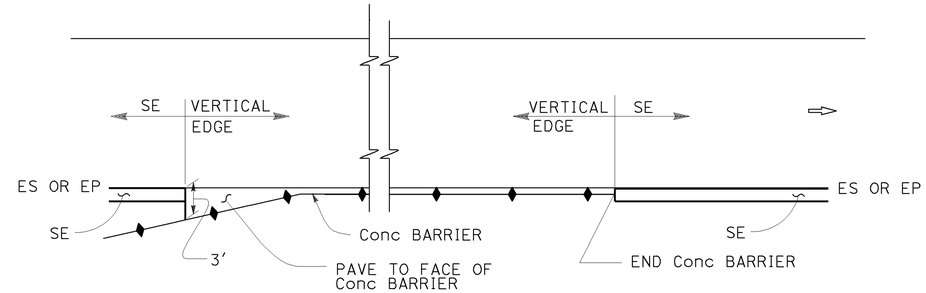

CONCRETE BARRIER

ABBREVIATIONS:

SE SAFETY EDGE

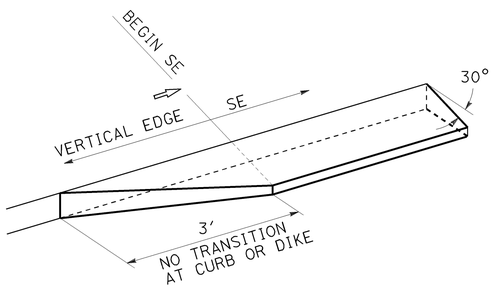

TRANSITION DETAIL
FOR CONCRETE ONLY

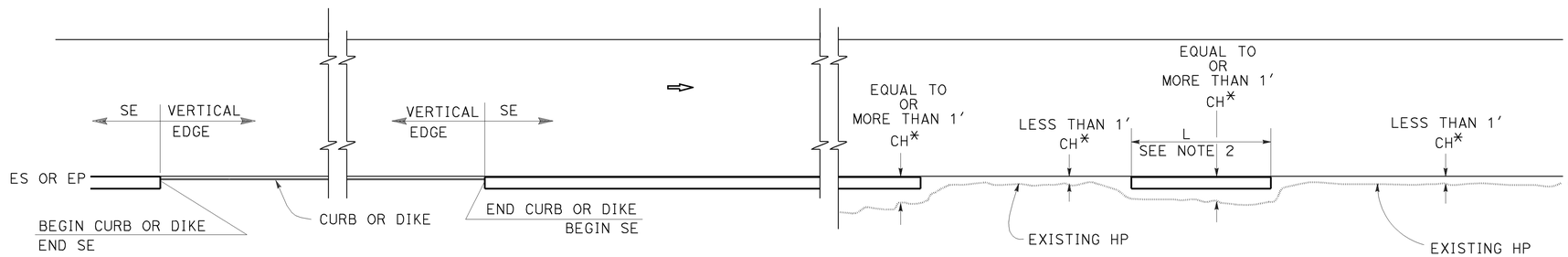

CURB OR DIKE

NARROW SIDE SLOPE

* CH = Distance from ES or EP to existing HP.

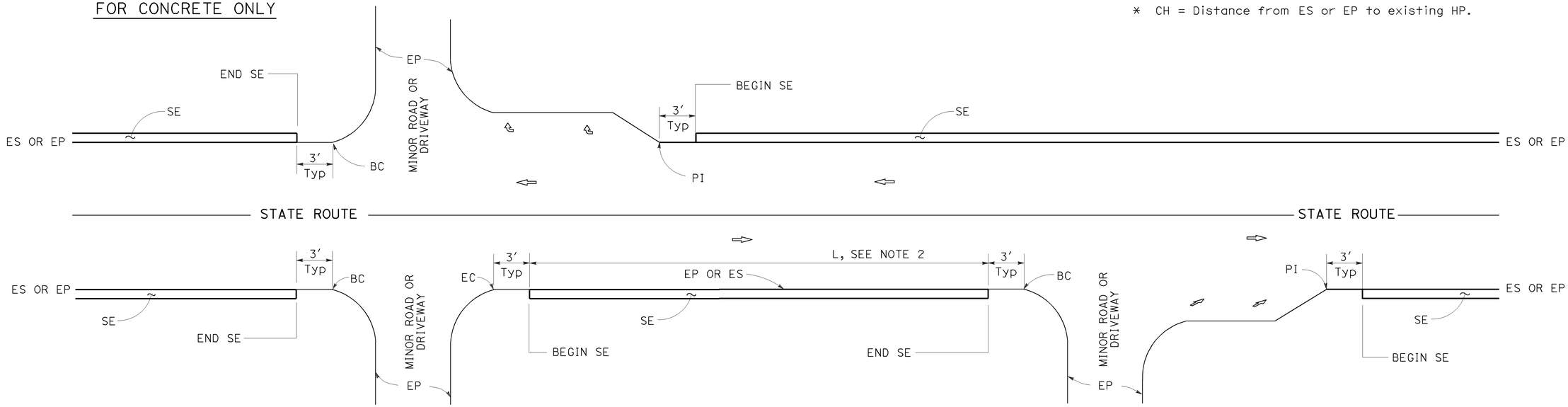

INTERSECTION

MINOR ROADWAY OR DRIVEWAY

DRIVEWAY AND INTERSECTION

NOTES:

1. For details not shown, see Revised Standard Plans RSP P75 and RSP P76.
2. Safety edge is optional when L is less than 30′.

STATE OF CALIFORNIA
DEPARTMENT OF TRANSPORTATION

PAVEMENT EDGE TREATMENTS

NO SCALE

RSP P74 DATED NOVEMBER 15, 2013 SUPERSEDES RSP P74 DATED JANUARY 20, 2012 THAT SUPPLEMENTS THE STANDARD PLANS BOOK DATED 2010.

REVISED STANDARD PLAN RSP P74

2010 REVISED STANDARD PLAN RSP P74

10-11-13

DIST	COUNTY	ROUTE	POST MILES TOTAL PROJECT	SHEET No.	TOTAL SHEETS
06	Mad	41	11.7/13.4	88	94

REGISTERED CIVIL ENGINEER

November 15, 2013
PLANS APPROVAL DATE

REGISTERED PROFESSIONAL ENGINEER
Cornelis M. Hakim
No. C55610
Exp. 12-31-14
CIVIL
STATE OF CALIFORNIA

THE STATE OF CALIFORNIA OR ITS OFFICERS OR AGENTS SHALL NOT BE RESPONSIBLE FOR THE ACCURACY OR COMPLETENESS OF SCANNED COPIES OF THIS PLAN SHEET.

TO ACCOMPANY PLANS DATED 1-26-15

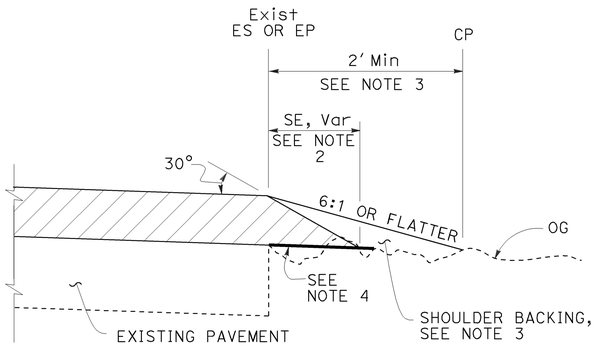

CASE A
Safety Edge

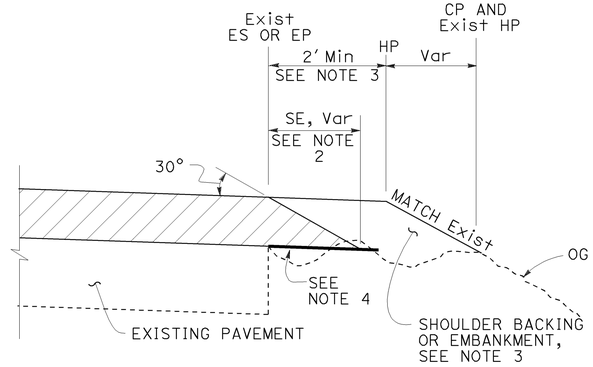

CASE B
Safety Edge

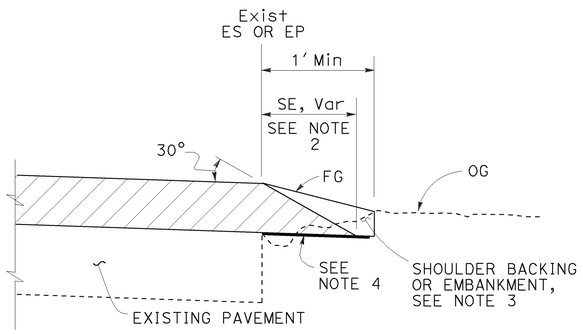

CASE C
Safety Edge

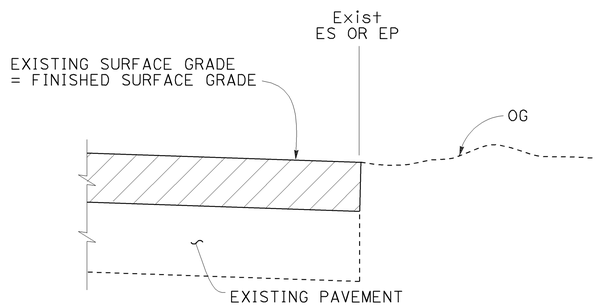

CASE D
Vertical Edge

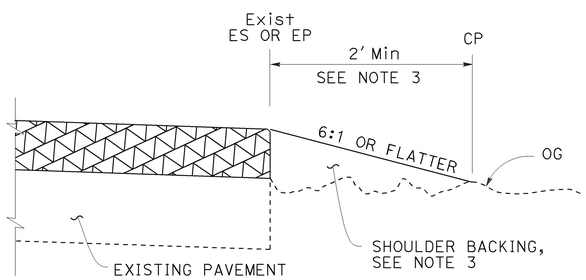

CASE E
Vertical Edge

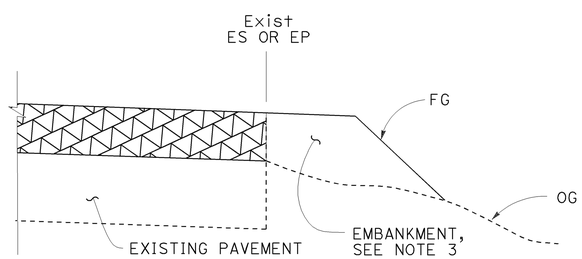

CASE F
Vertical Edge
* See Table A and Revised Std Plan RSP P74

LEGEND:

- HMA OVERLAY
- HMA OR CONCRETE OVERLAY
- CONCRETE OVERLAY

ABBREVIATIONS:

SE SAFETY EDGE
TT TOTAL THICKNESS OF SE

TABLE A
EDGE TREATMENT FOR VARIOUS OVERLAY THICKNESS AND CONDITIONS

	OVERLAY THICKNESS	
FIELD CONDITION	LESS THAN 0.15′	0.15′ OR MORE
Exist SLOPE 6:1 OR FLATTER	CASE E	CASE A
Exist SLOPE 3:1 TO 6:1	CASE E	CASE B
Exist SLOPE STEEPER THAN 3:1	CASE F	CASE F
CUT SECTION (REPLACE, COLD PLANE, MILL PAVEMENT)	CASE D	CASE C

ADDITIONAL HMA OR CONCRETE QUANTITIES FOR SE/SIDE/MILE

TYPICAL CROSS SECTION	TT	TOTAL ADDITIONAL MATERIAL FOR SE/SIDE/MILE		
		HMA (TON)	CONCRETE (CY)*	CONCRETE (CY)**
TT	0.15′	NA	NA	NA
	0.20′	13.7	NA	NA
	0.30′	30.9	NA	NA
	0.40′	54.9	NA	NA
	0.45′	69.4	NA	NA
TT 0.43′	0.50′	84.2	NA	NA
	0.60′	113.9	NA	NA
	0.70′	143.6	70.9	94.2
	0.80′	173.3	85.6	112.2
	0.90′	203.0	100.3	130.2
	1.00′	232.7	114.9	148.2
	1.10′	262.4	129.6	166.2
	1.20′	292.1	144.3	184.2

* For Detail "A"
** For Optional Detail "A"

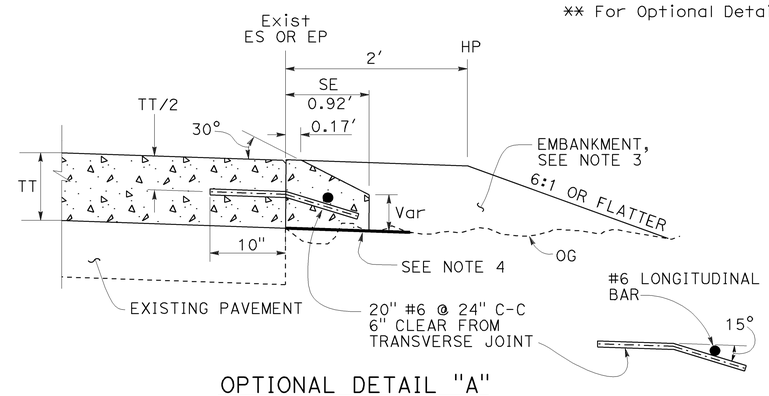

OPTIONAL DETAIL "A"
For concrete overlay
See Note 5

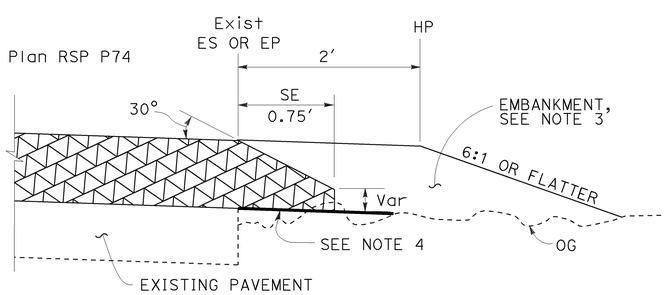

DETAIL "A"
For HMA overlay thickness more than 0.43′ or concrete overlay

NOTES:

1. For limits of safety edge and vertical edge treatments, see Revised Standard Plan RSP P74.
2. Details shown for HMA overlay thickness less than 0.43′. See Detail "A" for HMA overlay thickness more than 0.43′ or concrete overlay.
3. For locations and limits of shoulder backing or embankment see project plans.
4. Grade existing ground to place safety edge. 1′ minimum width
5. Safety edge transverse joint must match overlay transverse joint. End of #6 longitudinal bar must be 2" ±½" clear from transverse joint.
6. Safety edge is not needed in the area of MGS, barrier, right turn lane and acceleration lane. See Revised Standard Plan RSP P74.

STATE OF CALIFORNIA
DEPARTMENT OF TRANSPORTATION

PAVEMENT EDGE TREATMENTS-OVERLAYS

NO SCALE

RSP P75 DATED NOVEMBER 15, 2013 SUPERSEDES RSP P75 DATED JANUARY 20, 2012 THAT SUPPLEMENTS THE STANDARD PLANS BOOK DATED 2010.

REVISED STANDARD PLAN RSP P75

2010 REVISED STANDARD PLAN RSP P75

10-4-13

DIST	COUNTY	ROUTE	POST MILES TOTAL PROJECT	SHEET No.	TOTAL SHEETS
06	Mad	41	11.7/13.4	89	94

REGISTERED CIVIL ENGINEER

November 15, 2013
PLANS APPROVAL DATE

REGISTERED PROFESSIONAL ENGINEER
Cornelis M. Hakim
No. C55610
Exp. 12-31-14
CIVIL
STATE OF CALIFORNIA

THE STATE OF CALIFORNIA OR ITS OFFICERS OR AGENTS SHALL NOT BE RESPONSIBLE FOR THE ACCURACY OR COMPLETENESS OF SCANNED COPIES OF THIS PLAN SHEET.

TO ACCOMPANY PLANS DATED 1-26-15

LEGEND:

- HMA PAVEMENT
- HMA OR CONCRETE PAVEMENT
- CONCRETE PAVEMENT

ABBREVIATIONS:

SE SAFETY EDGE
TT TOTAL THICKNESS OF SE
HW HINGE WIDTH, DISTANCE FROM ES OR EP TO HP

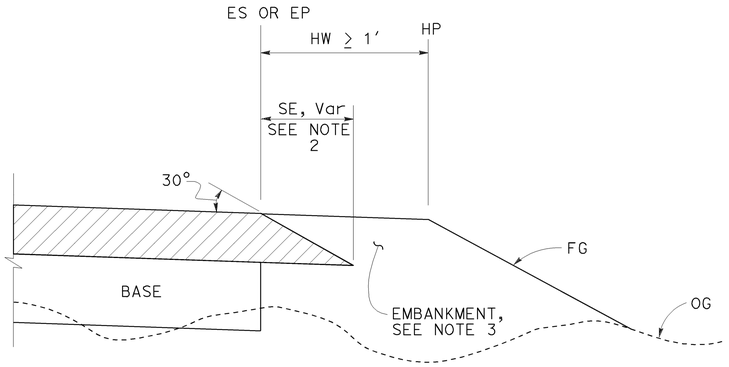

CASE K
Safety Edge - Fill Section, HW ≥ 1′

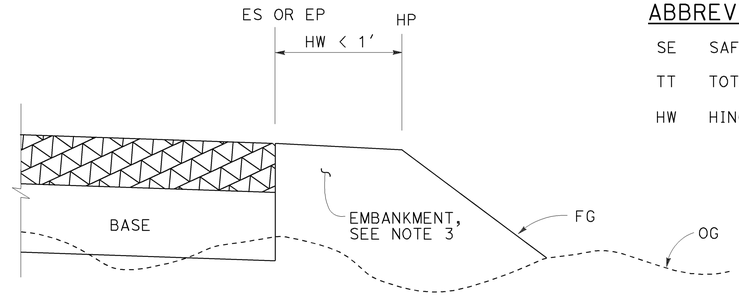

CASE L
Vertical Edge - Fill Section, HW < 1′

FILL SECTION

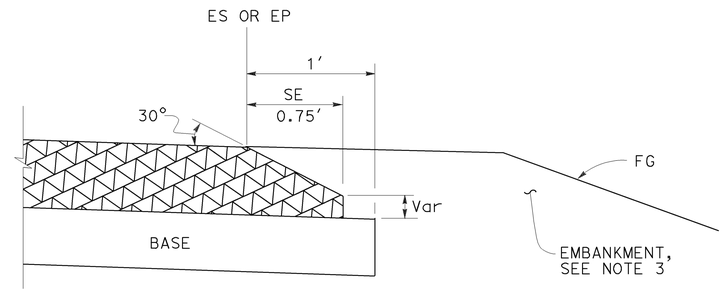

DETAIL "B"
For HMA pavement thickness more than 0.43′ or concrete pavement

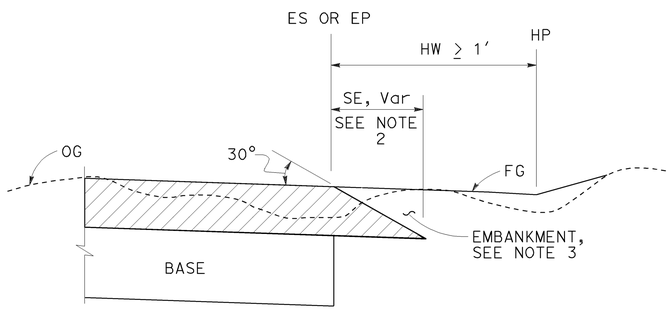

CASE M
Safety Edge - Cut Section, HW ≥ 1′

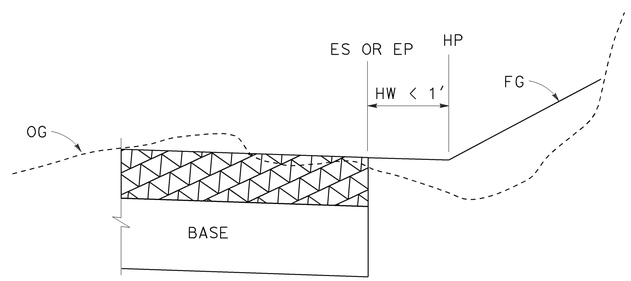

CASE N
Vertical Edge - Cut Section, HW < 1′

CUT SECTION

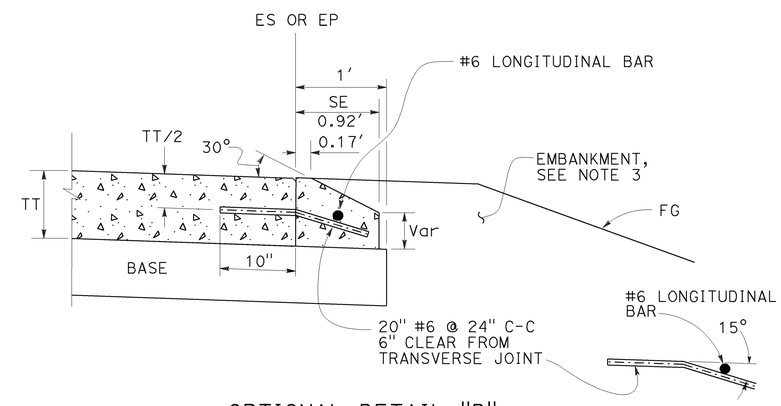

OPTIONAL DETAIL "B"
For concrete pavement
See Note 4

NOTES:

1. For limits of safety edge and vertical edge treatments, see Revised Standard Plan RSP P74
2. Details shown for HMA pavement thickness less than 0.43′. See Detail "B" for HMA pavement thickness more than 0.43′ or concrete pavement.
3. For locations and limits of embankment see project plans.
4. Safety edge transverse joint must match pavement transverse joint. End of #6 longitudinal bar must be 2" ±½" clear from transverse joint.
5. Safety edge is not needed in the area of MGS, barrier, right turn lane and acceleration lane. See Revised Standard Plan RSP P74.

STATE OF CALIFORNIA
DEPARTMENT OF TRANSPORTATION

PAVEMENT EDGE TREATMENTS-NEW CONSTRUCTION

NO SCALE

RSP P76 DATED NOVEMBER 15, 2013 SUPERSEDES RSP P76 DATED JANUARY 20, 2012 THAT SUPPLEMENTS THE STANDARD PLANS BOOK DATED 2010.

REVISED STANDARD PLAN RSP P76

2010 REVISED STANDARD PLAN RSP P76

10-4-13

Dist	COUNTY	ROUTE	POST MILES TOTAL PROJECT	SHEET No.	TOTAL SHEETS
06	Mad	41	11.7/13.4	92	94

REGISTERED CIVIL ENGINEER

July 19, 2013
PLANS APPROVAL DATE

REGISTERED PROFESSIONAL ENGINEER
Gurinderpal Bhullar
No. C48815
Exp. 9-30-14
CIVIL
STATE OF CALIFORNIA

THE STATE OF CALIFORNIA OR ITS OFFICERS OR AGENTS SHALL NOT BE RESPONSIBLE FOR THE ACCURACY OR COMPLETENESS OF SCANNED COPIES OF THIS PLAN SHEET.

TO ACCOMPANY PLANS DATED 1-26-15

2010 REVISED STANDARD PLAN RSP T9

TABLE 1

TAPER LENGTH CRITERIA AND CHANNELIZING DEVICE SPACING

SPEED (S)	MINIMUM TAPER LENGTH * FOR WIDTH OF OFFSET 12 FEET (W)				MAXIMUM CHANNELIZING DEVICE SPACING		
					X	Y	Z **
	TANGENT 2L	MERGING L	SHIFTING L/2	SHOULDER L/3	TAPER	TANGENT	CONFLICT
mph	ft	ft	ft	ft	ft	ft	ft
20	160	80	40	27	20	40	10
25	250	125	63	42	25	50	12
30	360	180	90	60	30	60	15
35	490	245	123	82	35	70	17
40	640	320	160	107	40	80	20
45	1080	540	270	180	45	90	22
50	1200	600	300	200	50	100	25
55	1320	660	330	220	55	110	27
60	1440	720	360	240	60	120	30
65	1560	780	390	260	65	130	32
70	1680	840	420	280	70	140	35

* - For other offsets, use the following merging taper length formula for L:
For speed of 40 mph or less, $L = WS^2/60$
For speed of 45 mph or more, $L = WS$

Where: L = Taper length in feet
W = Width of offset in feet
S = Posted speed limit, off-peak 85th-percentile speed prior to work starting, or the anticipated operating speed in mph

** - Use for taper and tangent sections where there are no pavement markings or where there is a conflict between existing pavement markings and channelizers (CA).

TABLE 2

LONGITUDINAL BUFFER SPACE AND FLAGGER STATION SPACING

SPEED *	Min D **	DOWNGRADE Min D ***		
		-3%	-6%	-9%
mph	ft	ft	ft	ft
20	115	116	120	126
25	155	158	165	173
30	200	205	215	227
35	250	257	271	287
40	305	315	333	354
45	360	378	400	427
50	425	446	474	507
55	495	520	553	593
60	570	598	638	686
65	645	682	728	785
70	730	771	825	891

* - Speed is posted speed limit, off-peak 85th-percentile speed prior to work starting, or the anticipated operating speed in mph

** - Longitudinal buffer space or flagger station spacing

*** - Use on sustained downgrade steeper than -3 percent and longer than 1 mile.

TABLE 3

ADVANCE WARNING SIGN SPACING

ROAD TYPE	DISTANCE BETWEEN SIGNS *		
	A	B	C
	ft	ft	ft
URBAN - 25 mph OR LESS	100	100	100
URBAN - MORE THAN 25 mph TO 40 mph	250	250	250
URBAN - MORE THAN 40 mph	350	350	350
RURAL	500	500	500
EXPRESSWAY / FREEWAY	1000	1500	2640

* - The distances are approximate, are intended for guidance purposes only, and should be applied with engineering judgment. These distances should be adjusted by the Engineer for field conditions, if necessary, by increasing or decreasing the recommmended distances.

STATE OF CALIFORNIA
DEPARTMENT OF TRANSPORTATION

TRAFFIC CONTROL SYSTEM TABLES FOR LANE AND RAMP CLOSURES

NO SCALE

RSP T9 DATED JULY 19, 2013 SUPERSEDES RSP T9 DATED APRIL 19, 2013 THAT SUPPLEMENTS THE STANDARD PLANS BOOK DATED 2010.

REVISED STANDARD PLAN RSP T9

4-30-13

Dist	COUNTY	ROUTE	POST MILES TOTAL PROJECT	SHEET No.	TOTAL SHEETS
06	Mad	41	11.7/13.4	93	94

Devinder Singh
REGISTERED CIVIL ENGINEER

October 17, 2014
PLANS APPROVAL DATE

REGISTERED PROFESSIONAL ENGINEER
Devinder Singh
No. C50470
Exp. 6-30-15
CIVIL
STATE OF CALIFORNIA

THE STATE OF CALIFORNIA OR ITS OFFICERS OR AGENTS SHALL NOT BE RESPONSIBLE FOR THE ACCURACY OR COMPLETENESS OF SCANNED COPIES OF THIS PLAN SHEET.

TO ACCOMPANY PLANS DATED 1-26-15

2010 REVISED STANDARD PLAN RSP T13

NOTES:

See Revised Standard Plan RSP T9 for tables.

Use cone spacing X for taper segment, Y for tangent segment or Z for conflict situations, as approriate, per Table 1, unless X, Y, or Z cone spacing is shown on this sheet.

Unless otherwise specified in the special provisions, all temporary warning signs shall have black legend on fluorescent orange background.

California codes are designated by (CA). Otherwise, Federal (MUTCD) codes are shown.

TYPICAL LANE CLOSURE WITH REVERSIBLE CONTROL

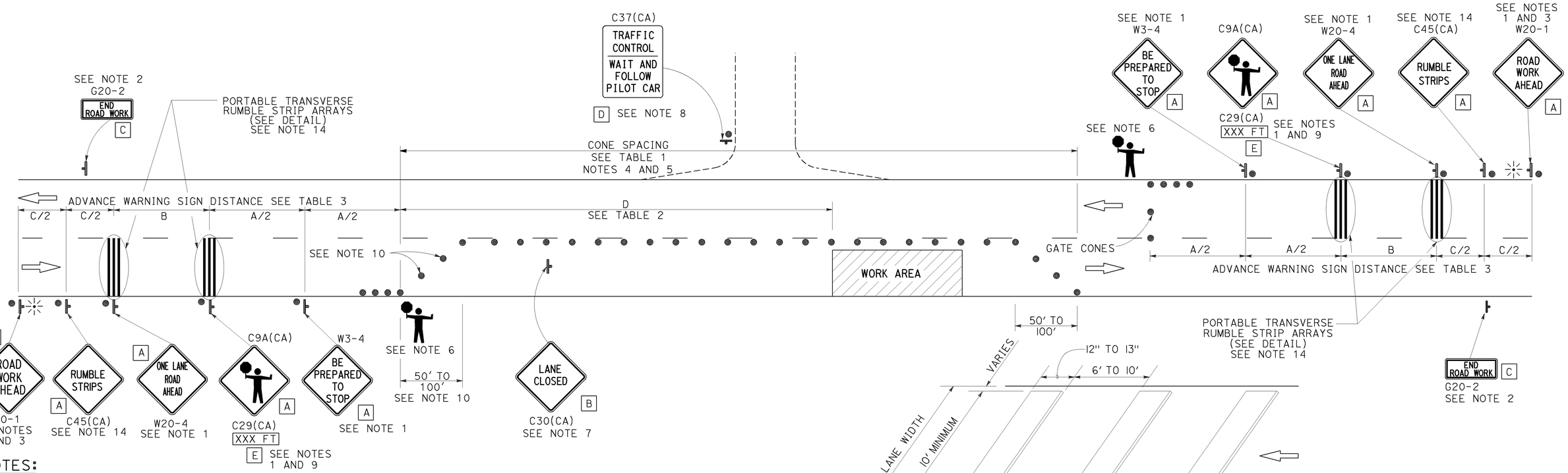

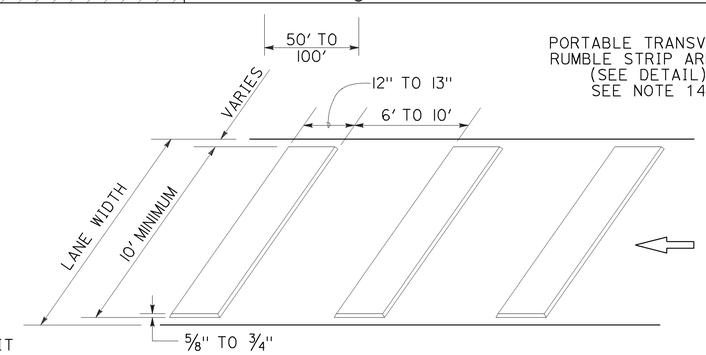

PORTABLE TRANSVERSE RUMBLE STRIP ARRAY DETAIL

NOTES:

1. Each advance warning sign in each direction of travel shall be equipped with at least two flags for daytime closure. Each flag shall be at least 16" x 16" in size and shall be orange or fluorescent red-orange in color. Flashing beacons shall be placed at the locations indicated for lane closure during hours of darkness.
2. A G20-2 "END ROAD WORK" sign, as appropriate, shall be placed at the end of the lane control unless the end of work area is obvious, or ends within a larger project's limits.
3. If the W20-1 sign would follow within 2000' of a stationary W20-1 or G20-1 "ROAD WORK NEXT _____ MILES", use a W20-4 sign for the first advance warning sign.
4. All cones used for lane closures during the hours of darkness shall be fitted with retroreflective bands (or sleeves) as specified in the specifications.
5. Portable delineators, placed at one-half the spacing indicated for traffic cones, may be used instead of cones for daytime closures only.
6. Additional advance flaggers may be required. Flagger should stand in a conspicuous place, be visible to approaching traffic as well as approaching vehicles after the first vehicle has stopped. During the hours of darkness, the flagging-station and flagger shall be illuminated and clearly visible to approaching traffic. The illumination footprint of the lighting on the ground shall be at least 20' in diameter. Place a minimum of four cones at 50' intervals in advance of flagger station as shown.
7. Place C30(CA) "LANE CLOSED" sign at 500' to 1000' intervals throughout extended work areas. They are optional if the work area is visible from the flagger station.
8. When a pilot car is used, place a C37(CA) "TRAFFIC CONTROL-WAIT AND FOLLOW PILOT CAR" sign with black legend on white background at all intersections, driveways and alleys without a flagger within traffic control area. Signs shall be clean and visible at all times. Where traffic can not be effectively self-regulated, at least one flagger shall be used at each intersection within traffic control area.
9. An optional C29(CA) sign may be placed below the C9A(CA) sign.
10. Either traffic cones or barricades shall be placed on the taper. Barricades shall be Type I, II, or III.
11. The color of the portable transverse rumble strips shall be black or orange. Use 2 arrays, each array shall consist of 3 rumble strips.
12. Portable transverse rumble strips shall not be placed on sharp horizontal or vertical curves nor shall they be placed through pedestrian crossings.
13. If the portable transverse rumble strips become out of alignment (skewed) by more than 6 inches, measured from one end to the other, they shall be readjusted to bring the placement back to the original location.
14. Portable transverse rumble strips are not required if any one of the following conditions is satisfied:
    A. Work duration occupies a location for four hours or less
    B. Posted speed limit is below 45 MPH
    C. Work is of emergency nature
    D. Work zone is in snow or icy weather conditions

LEGEND

- TRAFFIC CONE
- TEMPORARY TRAFFIC CONTROL SIGN
- PORTABLE FLASHING BEACON
- FLAGGER

SIGN PANEL SIZE (Min)

A	48" x 48"
B	30" x 30"
C	36" x 18"
D	36" x 42"
E	20" x 7"

STATE OF CALIFORNIA
DEPARTMENT OF TRANSPORTATION

TRAFFIC CONTROL SYSTEM FOR LANE CLOSURE ON TWO LANE CONVENTIONAL HIGHWAYS

NO SCALE

RSP T13 DATED OCTOBER 17, 2014 SUPERSEDES RSP T13 DATED JULY 18, 2014 AND RSP T13 DATED APRIL 19, 2013 AND STANDARD PLAN T13 DATED MAY 20, 2011 - PAGE 241 OF THE STANDARD PLANS BOOK DATED 2010.

REVISED STANDARD PLAN RSP T13

9-26-14

Dist	COUNTY	ROUTE	POST MILES TOTAL PROJECT	SHEET No.	TOTAL SHEETS
06	Mad	41	11.7/13.4	94	94

REGISTERED CIVIL ENGINEER

April 19, 2013
PLANS APPROVAL DATE

REGISTERED PROFESSIONAL ENGINEER Gurinderpal Bhullar No. C48815 Exp. 9-30-14 CIVIL STATE OF CALIFORNIA

THE STATE OF CALIFORNIA OR ITS OFFICERS OR AGENTS SHALL NOT BE RESPONSIBLE FOR THE ACCURACY OR COMPLETENESS OF SCANNED COPIES OF THIS PLAN SHEET.

TO ACCOMPANY PLANS DATED 1-26-15

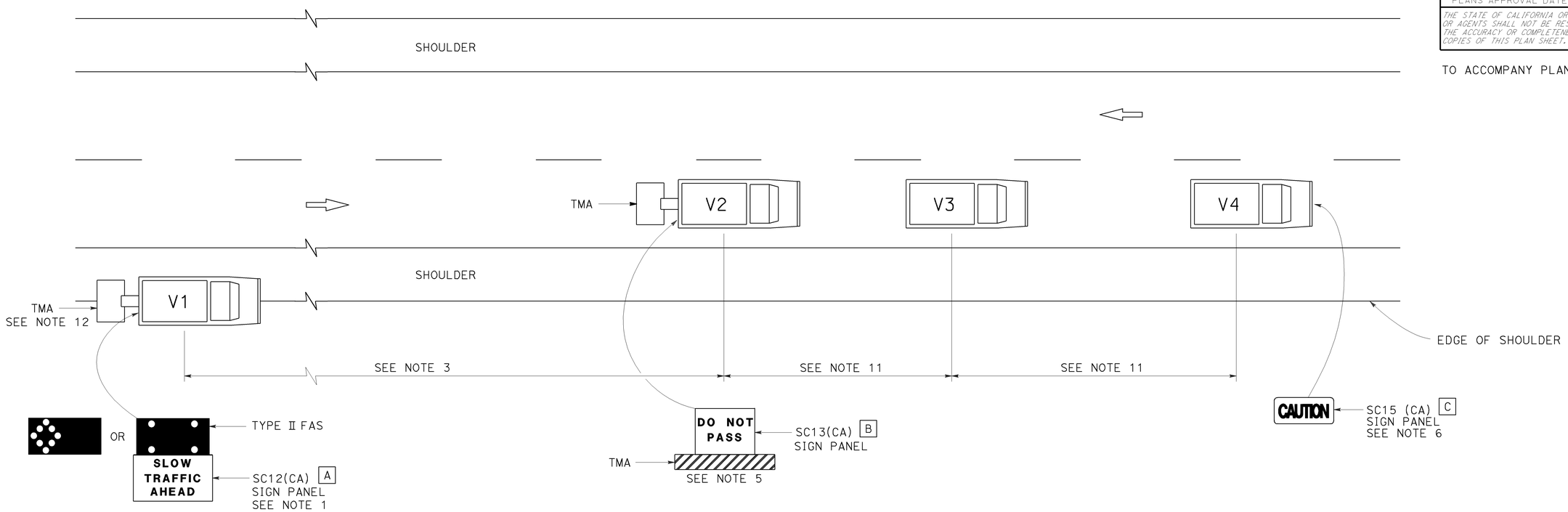

LEGEND

V1	SIGN VEHICLE
V2	SHADOW VEHICLE
V3	WORK/APPLICATION VEHICLE
V4	SIGN VEHICLE
TMA	TRUCK-MOUNTED ATTENUATOR
	FLASHING ARROW SIGN (FAS) IN FLASHING CAUTION MODE
	FLASHING ARROW SIGN (FAS) IN ALTERNATING DIAMOND CAUTION

SIGN PANEL SIZE (Min)

A	72" x 42"
B	54" x 42"
C	54" x 24"

NOTES:

1. Either a changeable message sign or a SC12(CA) "SLOW TRAFFIC AHEAD" sign shall be mounted on the rear of sign vehicle V1. The changeable message sign shall be sequenced to show the "CAUTION" message first, follow by the "SLOW TRAFFIC AHEAD" message. A Type II flashing arrow sign may be used with the SC12(CA) sign panel.
2. Sign vehicle V1 should be positioned where highly visible when shoulders are not available.
3. If traffic queues develop, sign vehicle V1 should be positioned upstream from the end of queue.
4. Vehicle-mounted sign panels shall have Type III or above retroreflective sheeting, black on white, or black on fluorescent orange, with 6" minimum series D letters per Caltrans sign specifications.
5. Shadow vehicle shall be equipped with a truck-mounted attenuator. The sign panel shown shall be mounted on the rear of shadow vehicle V2. The message "LANE CLOSED" may be used in place of the "DO NOT PASS" message.
6. The sign panel shown shall be mounted on the front of sign vehicle V4, facing opposing traffic.
7. All vehicles shall be equipped with flashing or rotating amber lights.
8. Sign vehicle V4 will not be required when the work and vehicles V2 and V3 are 2′ or more from the centerline of the highway during the work or application operations.
9. All vehicles used for lane closures shall be equipped with two-way radios and the vehicle operators shall maintain communication during the work or application operation.
10. This plan shall not be used where workers would be on foot in the work area. Use a stationary type lane closure (Revised Standard Plan T13) for this condition.
11. Minimize spacing between vehicles V2 and V3 and vehicles V3 and V4 to deter road users from driving in between them.
12. If sign vehicle V1 encroaches into the traffic lane due to insufficient shoulder width, sign vehicle V1 shall be equipped with a truck-mounted attenuator. Sign vehicle V1 shall stay as close to the edge of shoulder as practicable.

STATE OF CALIFORNIA
DEPARTMENT OF TRANSPORTATION

TRAFFIC CONTROL SYSTEM FOR MOVING LANE CLOSURE ON TWO LANE HIGHWAYS

NO SCALE

RSP T17 DATED APRIL 19, 2013 SUPERSEDES STANDARD PLAN T17
DATED MAY 20, 2011 - PAGE 245 OF THE STANDARD PLANS BOOK DATED 2010.

REVISED STANDARD PLAN RSP T17

2010 REVISED STANDARD PLAN RSP T17

12-18-12