Dist	COUNTY	ROUTE	POST MILES TOTAL PROJECT	SHEET No.	TOTAL SHEETS
05	SLO	46	40.7/46.3	401	541

REGISTERED CIVIL ENGINEER DATE 11-07-11

2-13-12
PLANS APPROVAL DATE

REGISTERED PROFESSIONAL ENGINEER KEVIN H. MURAI No. C 59586 Exp 12/31/13 CIVIL STATE OF CALIFORNIA

THE STATE OF CALIFORNIA OR ITS OFFICERS OR AGENTS SHALL NOT BE RESPONSIBLE FOR THE ACCURACY OR COMPLETENESS OF SCANNED COPIES OF THIS PLAN SHEET.

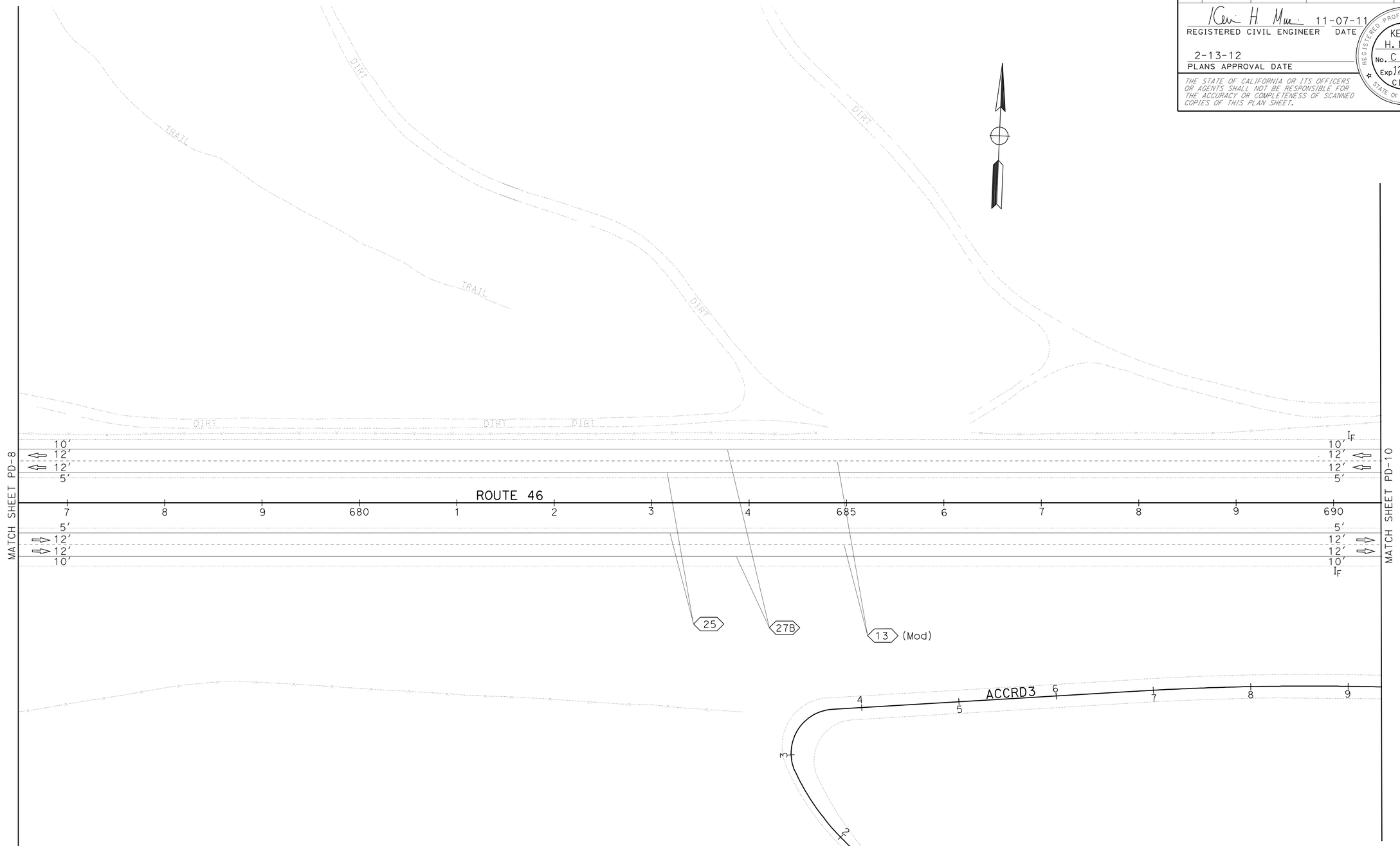

PAVEMENT DELINEATION AND SIGN PLAN

SCALE: 1" = 50′

PD-9

APPROVED FOR PAVEMENT DELINEATION AND SIGN WORK ONLY

STATE OF CALIFORNIA - DEPARTMENT OF TRANSPORTATION
Caltrans
TRAFFIC DESIGN

FUNCTIONAL SUPERVISOR: MOHAMMED QATAMI
CALCULATED-DESIGNED BY: KEVIN MURAI
CHECKED BY: HASSAN TAHA
REVISED BY
DATE REVISED

LAST REVISION 11-07-11
DATE PLOTTED => 16-FEB-2012
TIME PLOTTED => 13:44

Dist	COUNTY	ROUTE	POST MILES TOTAL PROJECT	SHEET No.	TOTAL SHEETS
05	SLO	46	40.7/46.3	402	541

REGISTERED CIVIL ENGINEER 11-07-11 DATE

2-13-12
PLANS APPROVAL DATE

REGISTERED PROFESSIONAL ENGINEER KEVIN H. MURAI No. C 59586 Exp 12/31/13 CIVIL STATE OF CALIFORNIA

THE STATE OF CALIFORNIA OR ITS OFFICERS OR AGENTS SHALL NOT BE RESPONSIBLE FOR THE ACCURACY OR COMPLETENESS OF SCANNED COPIES OF THIS PLAN SHEET.

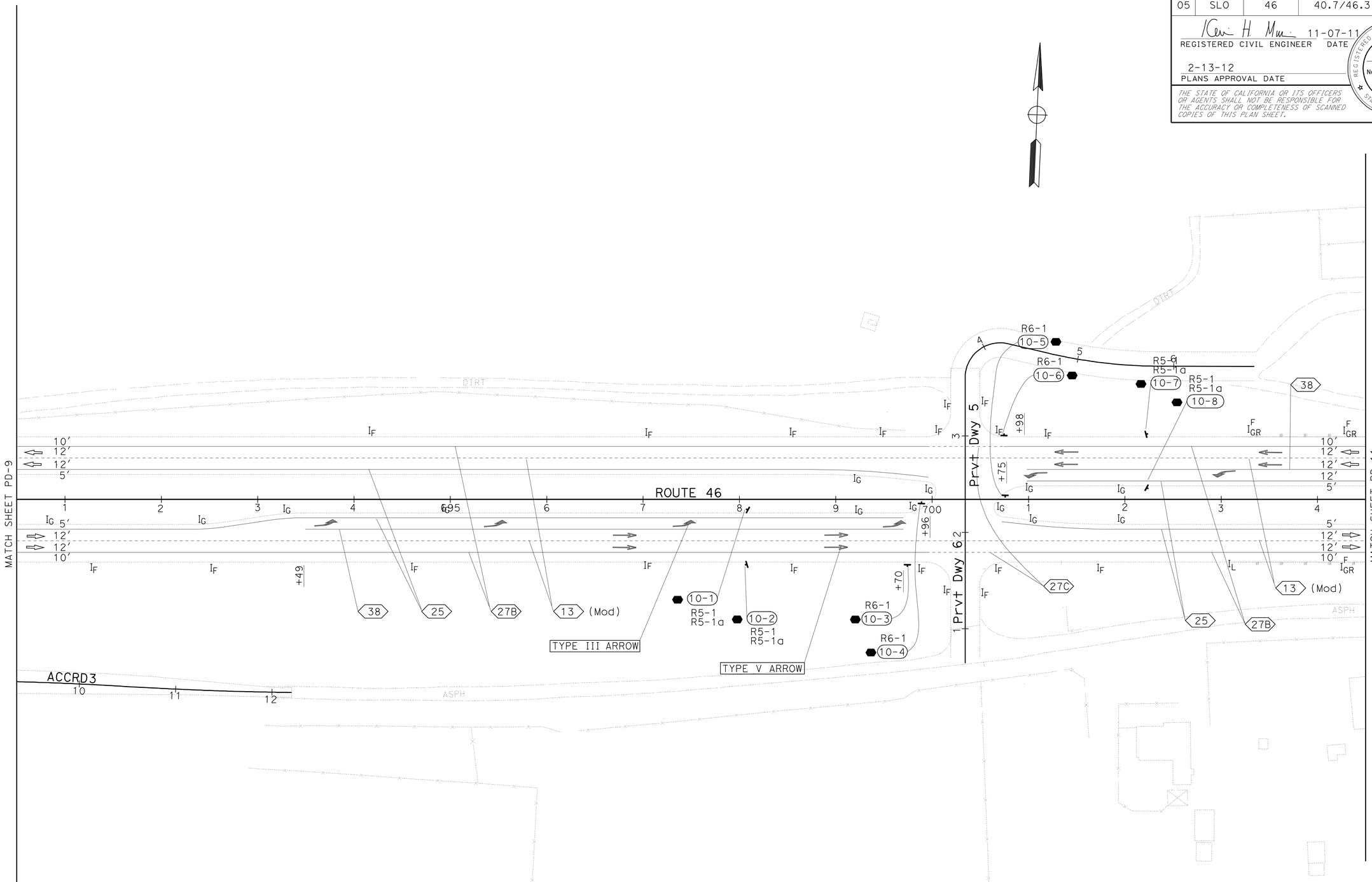

PAVEMENT DELINEATION AND SIGN PLAN

SCALE: 1" = 50'

PD-10

APPROVED FOR PAVEMENT DELINEATION AND SIGN WORK ONLY

STATE OF CALIFORNIA - DEPARTMENT OF TRANSPORTATION
Caltrans
TRAFFIC DESIGN

FUNCTIONAL SUPERVISOR: MOHAMMED QATAMI
CALCULATED-DESIGNED BY: KEVIN MURAI
CHECKED BY: HASSAN TAHA
REVISED BY
DATE REVISED

LAST REVISION 11-07-11
DATE PLOTTED => 16-FEB-2012
TIME PLOTTED => 13:44

Dist	COUNTY	ROUTE	POST MILES TOTAL PROJECT	SHEET No.	TOTAL SHEETS
05	SLO	46	40.7/46.3	403	541

REGISTERED CIVIL ENGINEER 11-07-11 DATE

2-13-12
PLANS APPROVAL DATE

REGISTERED PROFESSIONAL ENGINEER KEVIN H. MURAI No. C 59586 Exp 12/31/13 CIVIL STATE OF CALIFORNIA

THE STATE OF CALIFORNIA OR ITS OFFICERS OR AGENTS SHALL NOT BE RESPONSIBLE FOR THE ACCURACY OR COMPLETENESS OF SCANNED COPIES OF THIS PLAN SHEET.

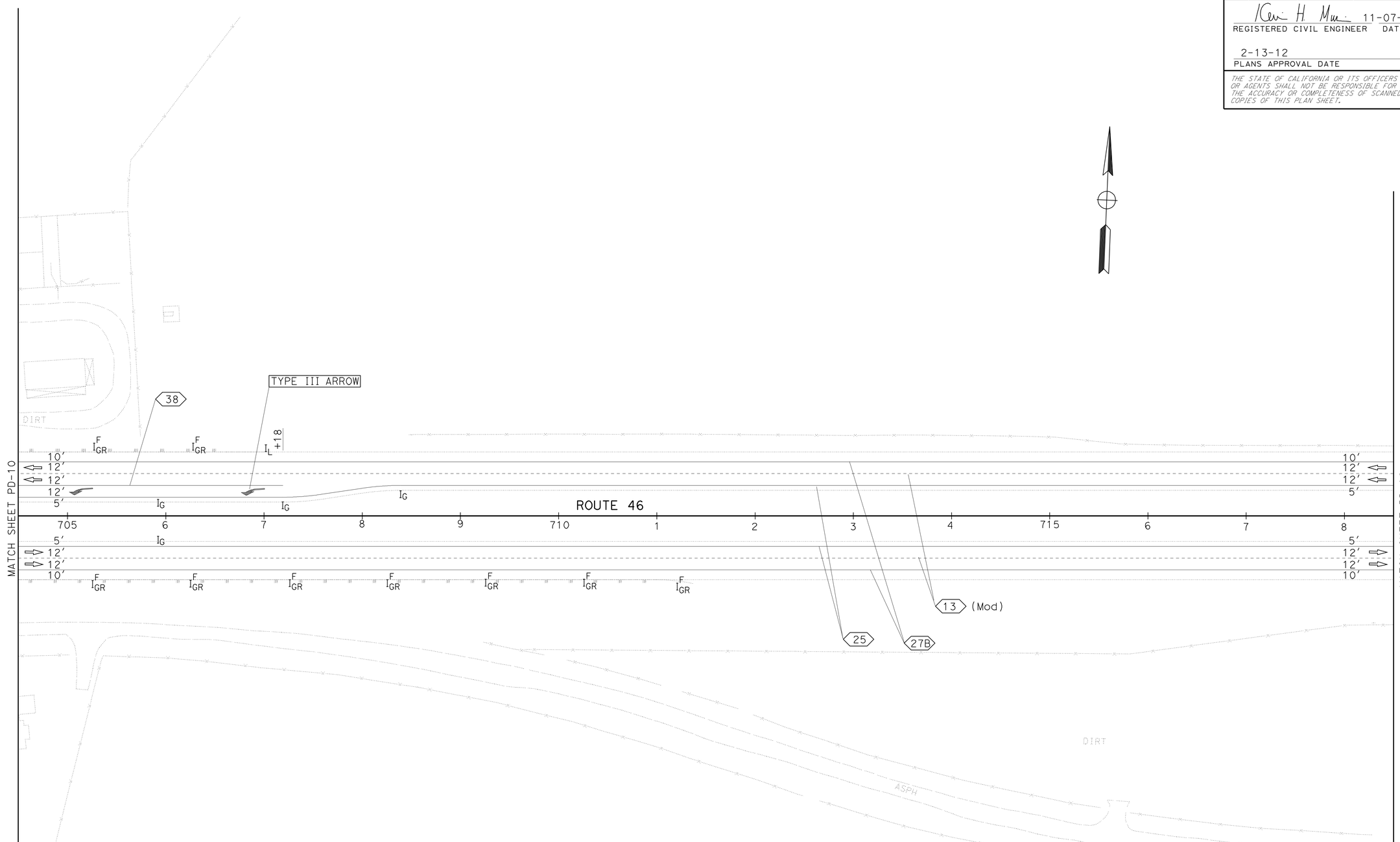

PAVEMENT DELINEATION AND SIGN PLAN

SCALE: 1" = 50'

PD-11

APPROVED FOR PAVEMENT DELINEATION AND SIGN WORK ONLY

REVISED BY	DATE REVISED

CALCULATED-DESIGNED BY: KEVIN MURAI
CHECKED BY: HASSAN TAHA
FUNCTIONAL SUPERVISOR: MOHAMMED QATAMI

STATE OF CALIFORNIA - DEPARTMENT OF TRANSPORTATION
Caltrans
TRAFFIC DESIGN

LAST REVISION 11-07-11
DATE PLOTTED => 16-FEB-2012
TIME PLOTTED => 13:44

Dist	COUNTY	ROUTE	POST MILES TOTAL PROJECT	SHEET No.	TOTAL SHEETS
05	SLO	46	40.7/46.3	404	541

REGISTERED CIVIL ENGINEER 11-07-11 DATE

2-13-12
PLANS APPROVAL DATE

REGISTERED PROFESSIONAL ENGINEER KEVIN H. MURAI No. C 59586 Exp 12/31/13 CIVIL STATE OF CALIFORNIA

THE STATE OF CALIFORNIA OR ITS OFFICERS OR AGENTS SHALL NOT BE RESPONSIBLE FOR THE ACCURACY OR COMPLETENESS OF SCANNED COPIES OF THIS PLAN SHEET.

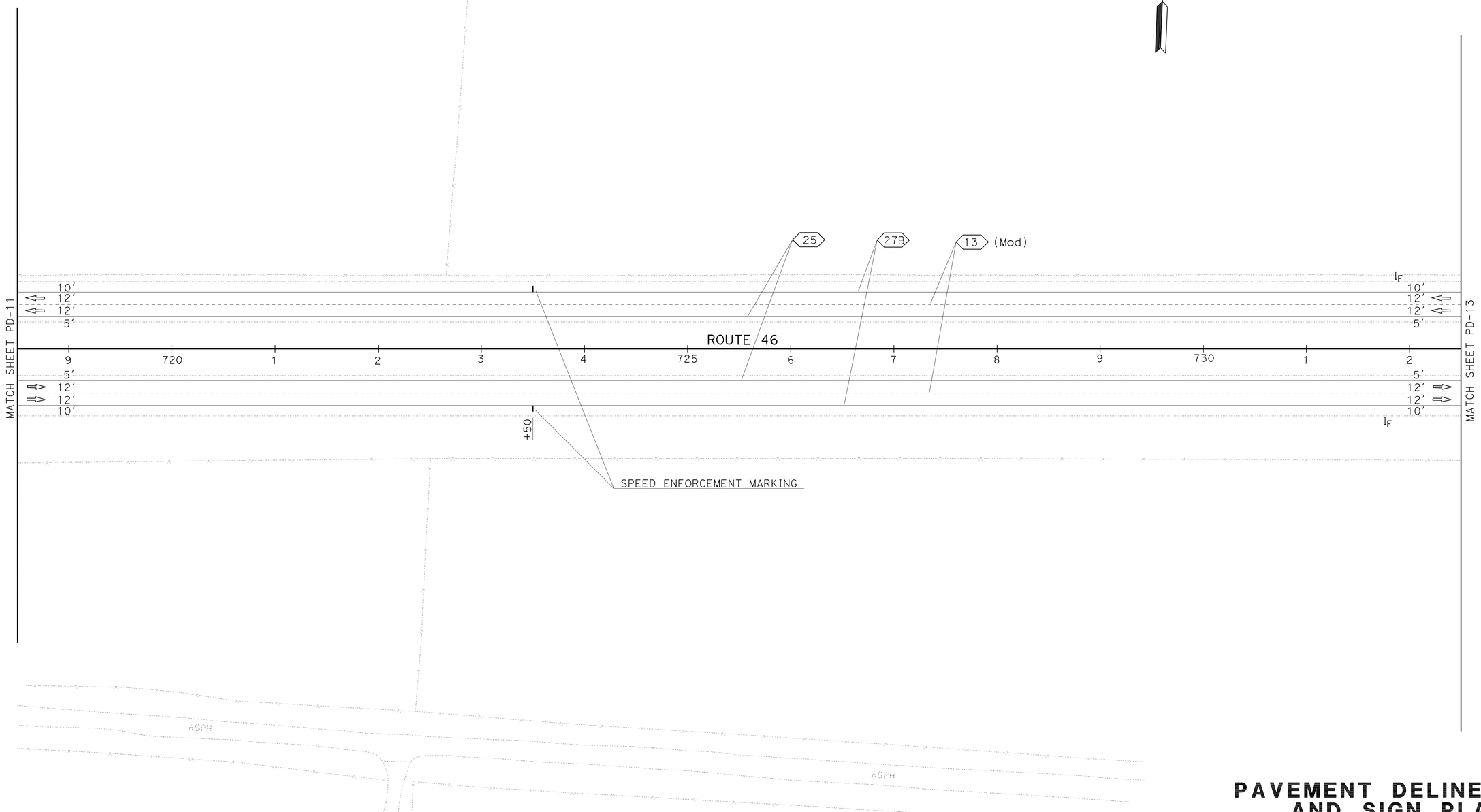

PAVEMENT DELINEATION AND SIGN PLAN

SCALE: 1" = 50′

APPROVED FOR PAVEMENT DELINEATION AND SIGN WORK ONLY

PD-12

STATE OF CALIFORNIA - DEPARTMENT OF TRANSPORTATION
Caltrans
TRAFFIC DESIGN

FUNCTIONAL SUPERVISOR: MOHAMMED QATAMI
CALCULATED-DESIGNED BY: KEVIN MURAI
CHECKED BY: HASSAN TAHA
REVISED BY
DATE REVISED

LAST REVISION 11-07-11
DATE PLOTTED => 16-FEB-2012
TIME PLOTTED => 13:44

Dist	COUNTY	ROUTE	POST MILES TOTAL PROJECT	SHEET No.	TOTAL SHEETS
05	SLO	46	40.7/46.3	405	541

REGISTERED CIVIL ENGINEER 11-07-11 DATE

2-13-12
PLANS APPROVAL DATE

REGISTERED PROFESSIONAL ENGINEER KEVIN H. MURAI No. C 59586 Exp 12/31/13 CIVIL STATE OF CALIFORNIA

THE STATE OF CALIFORNIA OR ITS OFFICERS OR AGENTS SHALL NOT BE RESPONSIBLE FOR THE ACCURACY OR COMPLETENESS OF SCANNED COPIES OF THIS PLAN SHEET.

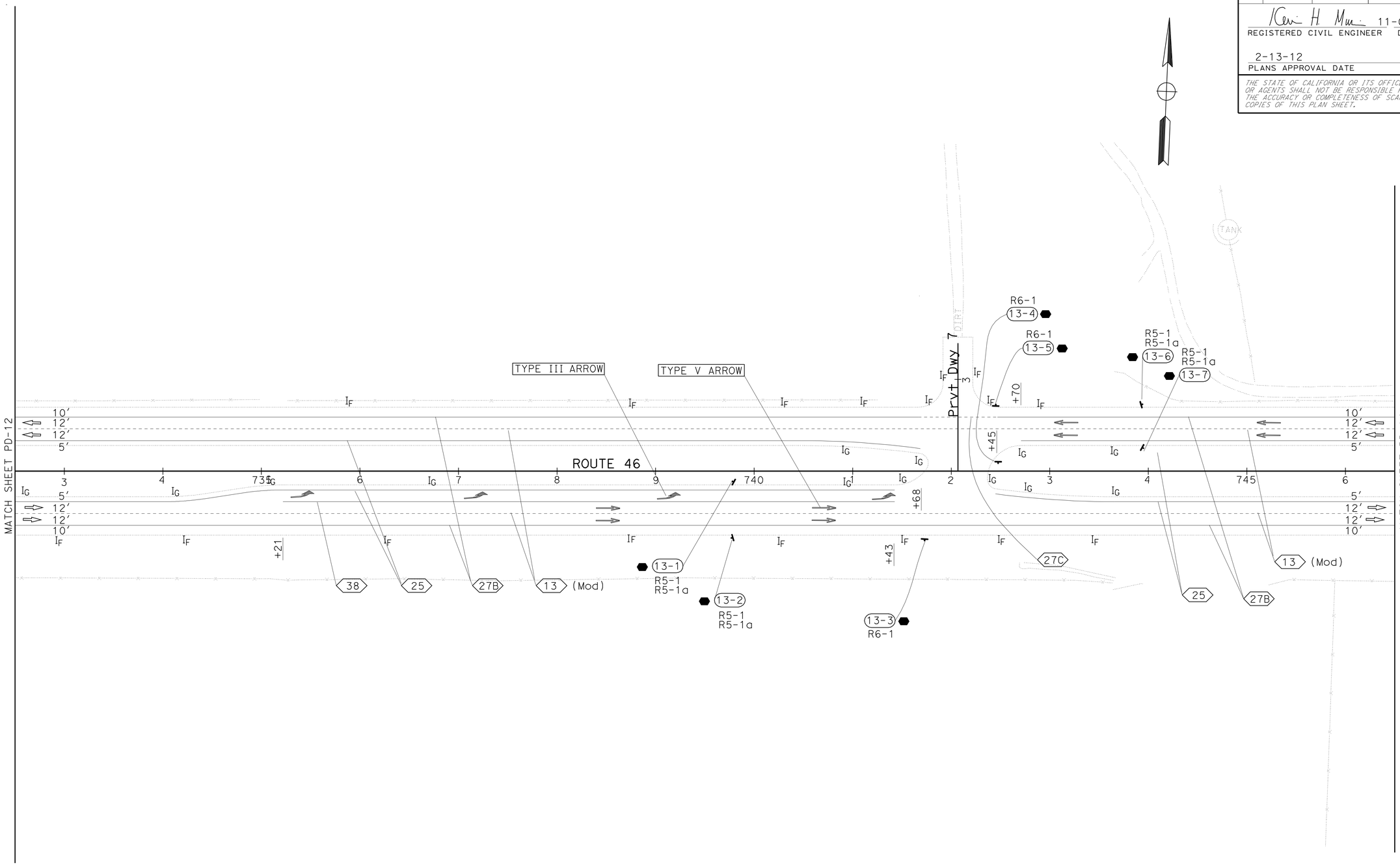

PAVEMENT DELINEATION AND SIGN PLAN

SCALE: 1" = 50′

PD-13

APPROVED FOR PAVEMENT DELINEATION AND SIGN WORK ONLY

STATE OF CALIFORNIA - DEPARTMENT OF TRANSPORTATION

Caltrans

TRAFFIC DESIGN

FUNCTIONAL SUPERVISOR: MOHAMMED QATAMI

CALCULATED-DESIGNED BY: KEVIN MURAI

CHECKED BY: HASSAN TAHA

REVISED BY

DATE REVISED

LAST REVISION 11-07-11

DATE PLOTTED => 16-FEB-2012
TIME PLOTTED => 13:46

Dist	COUNTY	ROUTE	POST MILES TOTAL PROJECT	SHEET No.	TOTAL SHEETS
05	SLO	46	40.7/46.3	406	541

REGISTERED CIVIL ENGINEER 11-07-11 DATE

2-13-12
PLANS APPROVAL DATE

REGISTERED PROFESSIONAL ENGINEER KEVIN H. MURAI No. C 59586 Exp 12/31/13 CIVIL STATE OF CALIFORNIA

THE STATE OF CALIFORNIA OR ITS OFFICERS OR AGENTS SHALL NOT BE RESPONSIBLE FOR THE ACCURACY OR COMPLETENESS OF SCANNED COPIES OF THIS PLAN SHEET.

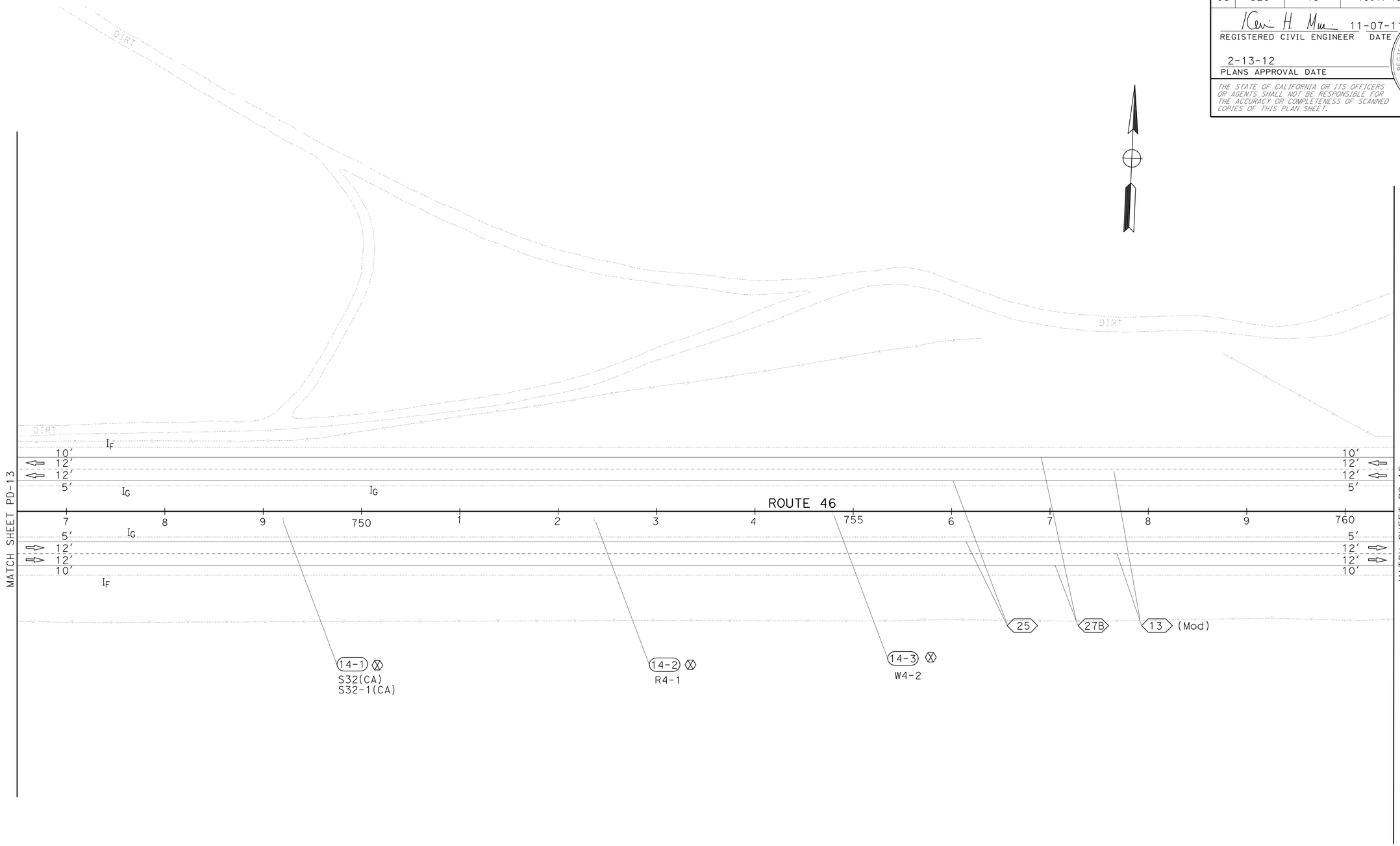

PAVEMENT DELINEATION AND SIGN PLAN

SCALE: 1" = 50′

PD-14

APPROVED FOR PAVEMENT DELINEATION AND SIGN WORK ONLY

STATE OF CALIFORNIA - DEPARTMENT OF TRANSPORTATION
Caltrans
TRAFFIC DESIGN

FUNCTIONAL SUPERVISOR: MOHAMMED QATAMI
CALCULATED-DESIGNED BY: KEVIN MURAI
CHECKED BY: HASSAN TAHA
REVISED BY
DATE REVISED

LAST REVISION 11-07-11
DATE PLOTTED => 16-FEB-2012
TIME PLOTTED => 13:46

Dist	COUNTY	ROUTE	POST MILES TOTAL PROJECT	SHEET No.	TOTAL SHEETS
05	SLO	46	40.7/46.3	407	541

REGISTERED CIVIL ENGINEER 11-07-11 DATE

2-13-12
PLANS APPROVAL DATE

REGISTERED PROFESSIONAL ENGINEER
KEVIN H. MURAI
No. C 59586
Exp. 12/31/13
CIVIL
STATE OF CALIFORNIA

THE STATE OF CALIFORNIA OR ITS OFFICERS OR AGENTS SHALL NOT BE RESPONSIBLE FOR THE ACCURACY OR COMPLETENESS OF SCANNED COPIES OF THIS PLAN SHEET.

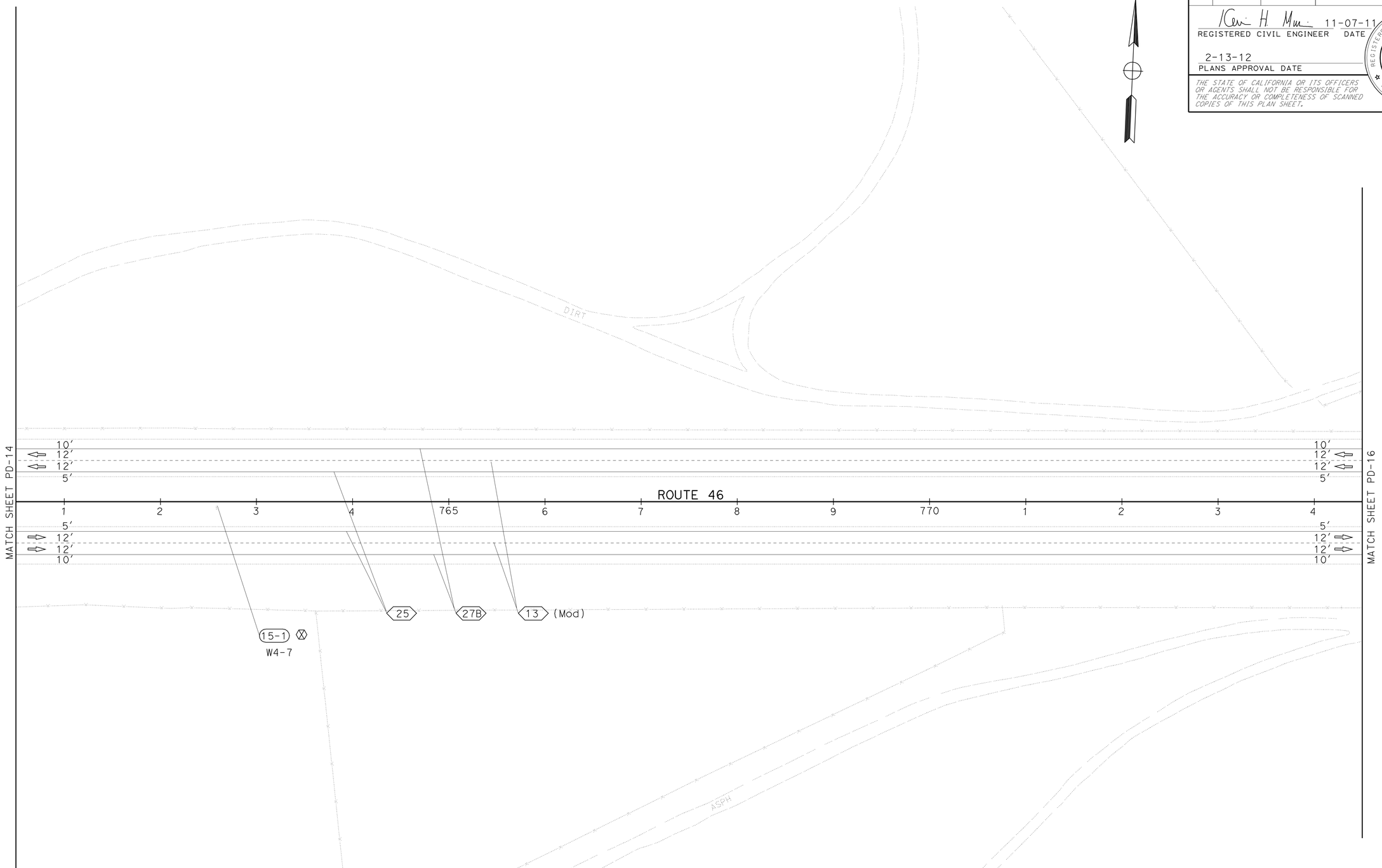

PAVEMENT DELINEATION AND SIGN PLAN

SCALE: 1" = 50′

PD-15

APPROVED FOR PAVEMENT DELINEATION AND SIGN WORK ONLY

REVISED BY	DATE REVISED

CALCULATED-DESIGNED BY: KEVIN MURAI
CHECKED BY: HASSAN TAHA
FUNCTIONAL SUPERVISOR: MOHAMMED QATAMI

STATE OF CALIFORNIA - DEPARTMENT OF TRANSPORTATION
Caltrans
TRAFFIC DESIGN

LAST REVISION 11-07-11
DATE PLOTTED => 16-FEB-2012
TIME PLOTTED => 13:46

Dist	COUNTY	ROUTE	POST MILES TOTAL PROJECT	SHEET No.	TOTAL SHEETS
05	SLO	46	40.7/46.3	408	541

REGISTERED CIVIL ENGINEER 11-07-11 DATE

2-13-12
PLANS APPROVAL DATE

REGISTERED PROFESSIONAL ENGINEER KEVIN H. MURAI No. C 59586 Exp 12/31/13 CIVIL STATE OF CALIFORNIA

THE STATE OF CALIFORNIA OR ITS OFFICERS OR AGENTS SHALL NOT BE RESPONSIBLE FOR THE ACCURACY OR COMPLETENESS OF SCANNED COPIES OF THIS PLAN SHEET.

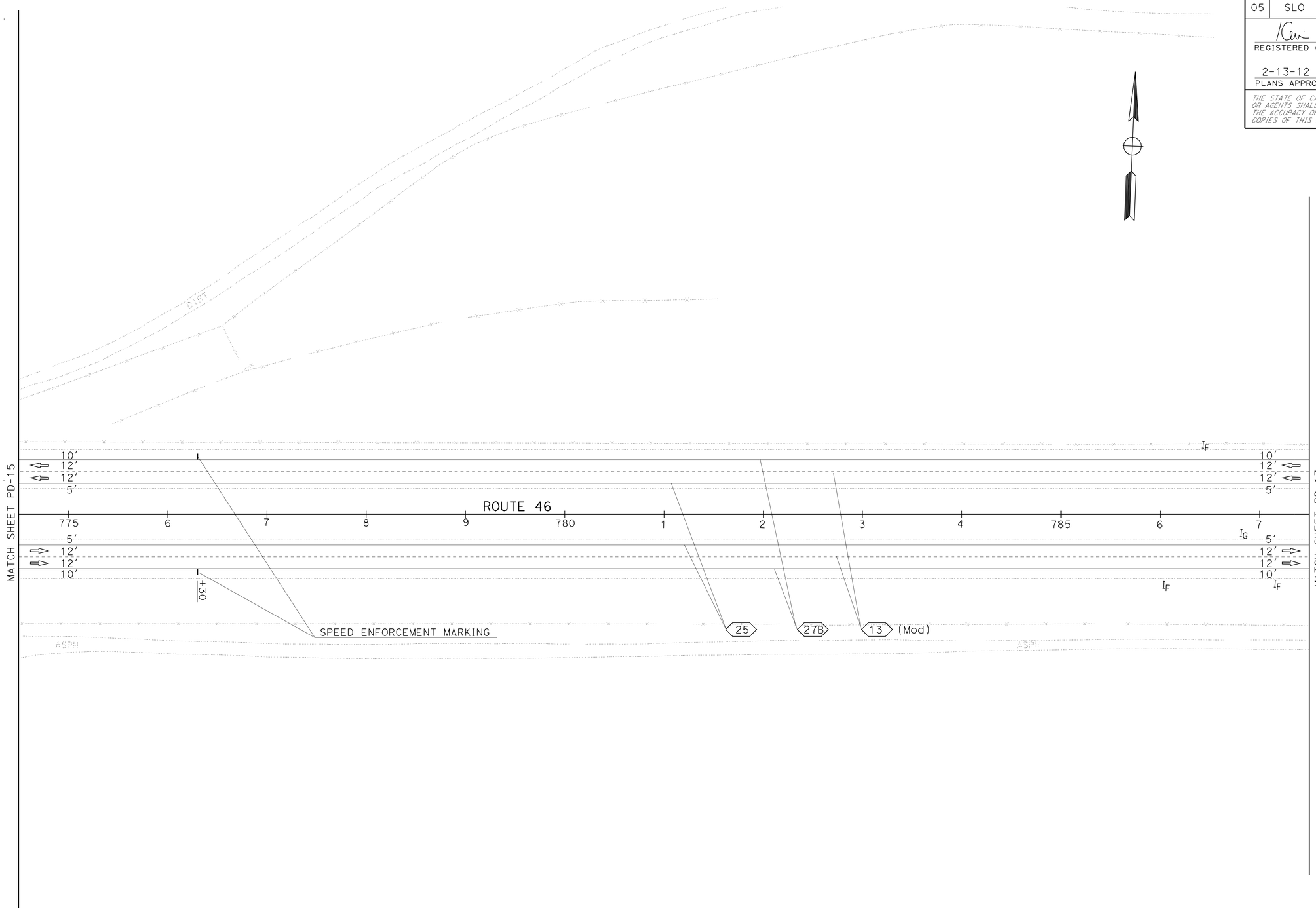

PAVEMENT DELINEATION AND SIGN PLAN

SCALE: 1" = 50′

PD-16

APPROVED FOR PAVEMENT DELINEATION AND SIGN WORK ONLY

STATE OF CALIFORNIA - DEPARTMENT OF TRANSPORTATION
Caltrans
TRAFFIC DESIGN

FUNCTIONAL SUPERVISOR: MOHAMMED QATAMI
CALCULATED-DESIGNED BY: KEVIN MURAI
CHECKED BY: HASSAN TAHA
REVISED BY
DATE REVISED

LAST REVISION 11-07-11
DATE PLOTTED => 16-FEB-2012
TIME PLOTTED => 13:46

Dist	COUNTY	ROUTE	POST MILES TOTAL PROJECT	SHEET No.	TOTAL SHEETS
05	SLO	46	40.7/46.3	409	541

REGISTERED CIVIL ENGINEER 11-07-11 DATE

2-13-12
PLANS APPROVAL DATE

REGISTERED PROFESSIONAL ENGINEER KEVIN H. MURAI No. C 59586 Exp 12/31/13 CIVIL STATE OF CALIFORNIA

THE STATE OF CALIFORNIA OR ITS OFFICERS OR AGENTS SHALL NOT BE RESPONSIBLE FOR THE ACCURACY OR COMPLETENESS OF SCANNED COPIES OF THIS PLAN SHEET.

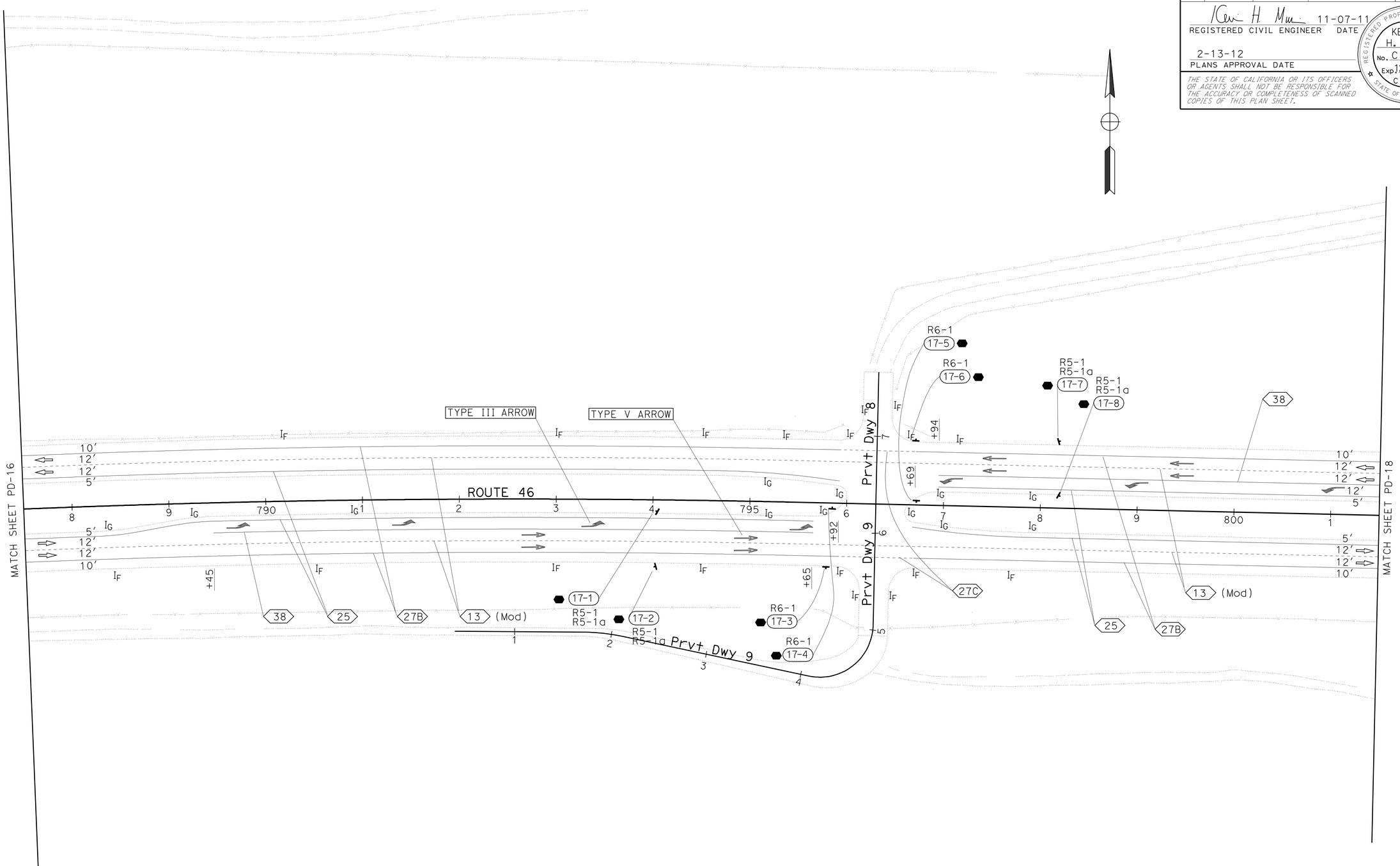

PAVEMENT DELINEATION AND SIGN PLAN

SCALE: 1" = 50′

PD-17

APPROVED FOR PAVEMENT DELINEATION AND SIGN WORK ONLY

STATE OF CALIFORNIA - DEPARTMENT OF TRANSPORTATION
Caltrans
TRAFFIC DESIGN

FUNCTIONAL SUPERVISOR: MOHAMMED QATAMI
CALCULATED-DESIGNED BY: KEVIN MURAI
CHECKED BY: HASSAN TAHA
REVISED BY
DATE REVISED

LAST REVISION 11-07-11
DATE PLOTTED => 16-FEB-2012
TIME PLOTTED => 13:46

Dist	COUNTY	ROUTE	POST MILES TOTAL PROJECT	SHEET No.	TOTAL SHEETS
05	SLO	46	40.7/46.3	410	541

REGISTERED CIVIL ENGINEER 11-07-11 DATE

2-13-12
PLANS APPROVAL DATE

REGISTERED PROFESSIONAL ENGINEER KEVIN H. MURAI No. C 59586 Exp 12/31/13 CIVIL STATE OF CALIFORNIA

THE STATE OF CALIFORNIA OR ITS OFFICERS OR AGENTS SHALL NOT BE RESPONSIBLE FOR THE ACCURACY OR COMPLETENESS OF SCANNED COPIES OF THIS PLAN SHEET.

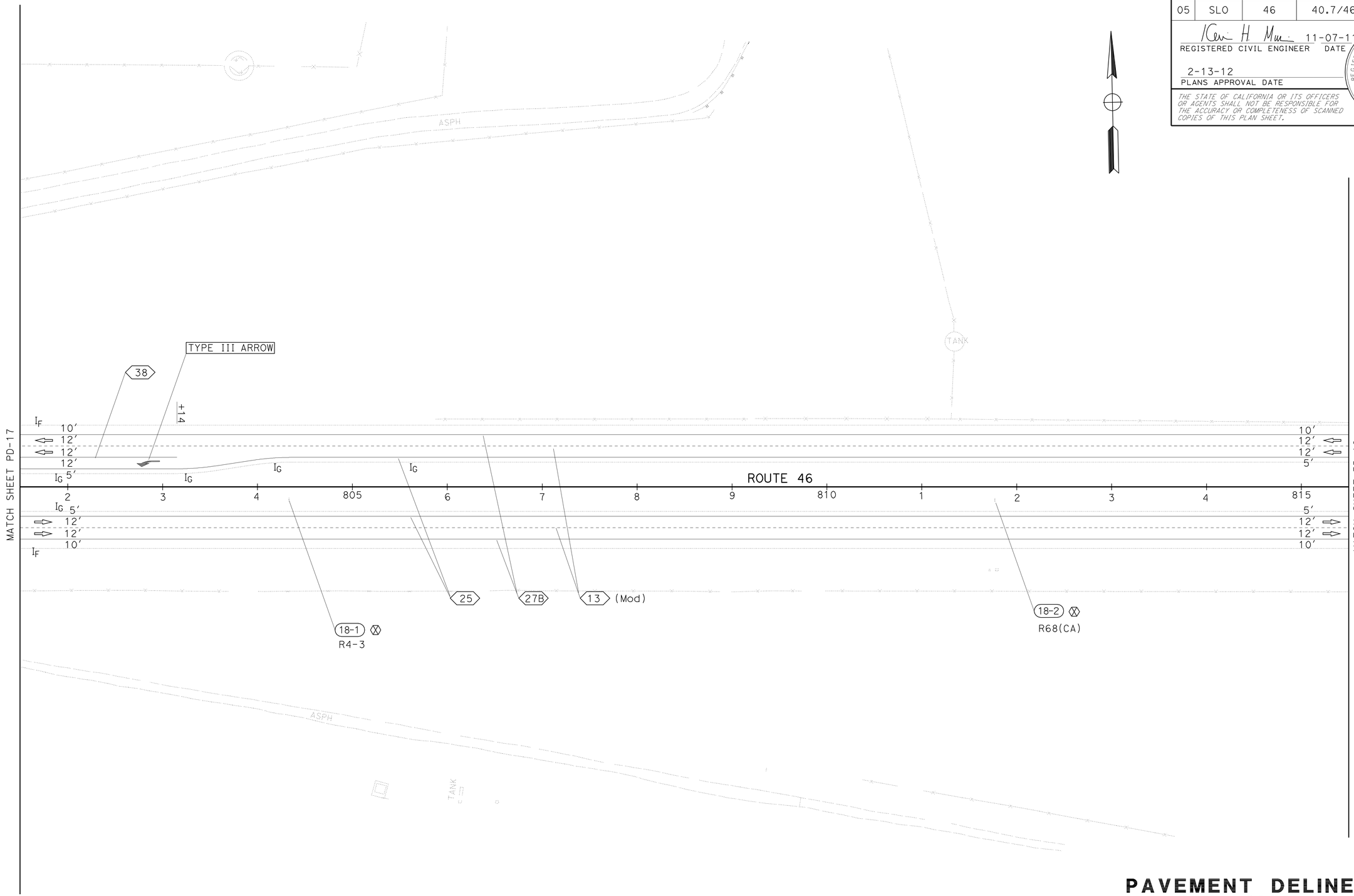

PAVEMENT DELINEATION AND SIGN PLAN

SCALE: 1" = 50′

PD-18

APPROVED FOR PAVEMENT DELINEATION AND SIGN WORK ONLY

STATE OF CALIFORNIA - DEPARTMENT OF TRANSPORTATION
Caltrans
TRAFFIC DESIGN

FUNCTIONAL SUPERVISOR: MOHAMMED QATAMI
CALCULATED-DESIGNED BY: KEVIN MURAI
CHECKED BY: HASSAN TAHA
REVISED BY
DATE REVISED

LAST REVISION 11-07-11
DATE PLOTTED => 16-FEB-2012
TIME PLOTTED => 13:46

Dist	COUNTY	ROUTE	POST MILES TOTAL PROJECT	SHEET No.	TOTAL SHEETS
05	SLO	46	40.7/46.3	411	541

REGISTERED CIVIL ENGINEER 11-07-11 DATE

2-13-12
PLANS APPROVAL DATE

REGISTERED PROFESSIONAL ENGINEER
KEVIN H. MURAI
No. C 59586
Exp 12/31/13
CIVIL
STATE OF CALIFORNIA

THE STATE OF CALIFORNIA OR ITS OFFICERS OR AGENTS SHALL NOT BE RESPONSIBLE FOR THE ACCURACY OR COMPLETENESS OF SCANNED COPIES OF THIS PLAN SHEET.

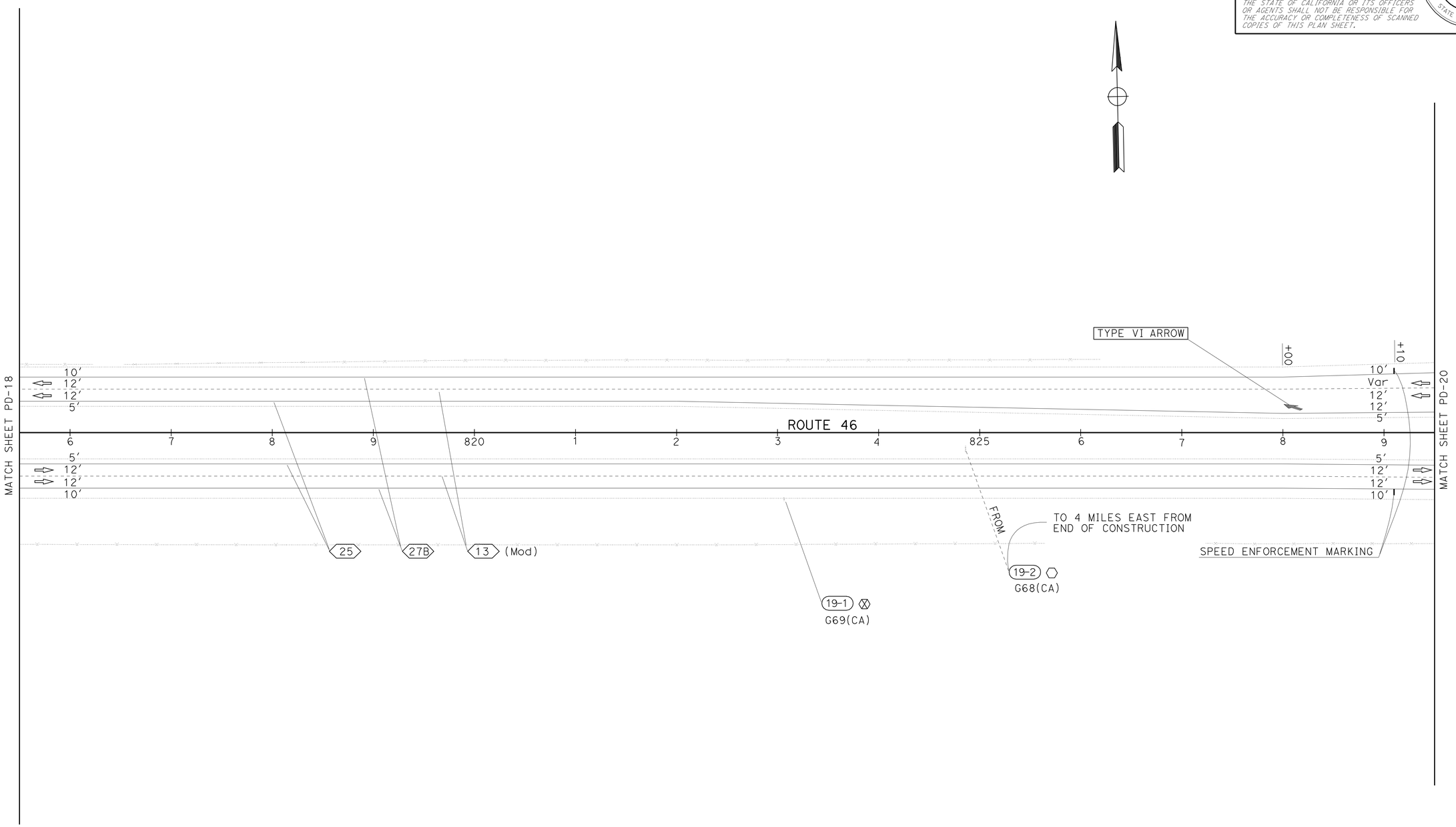

PAVEMENT DELINEATION AND SIGN PLAN

SCALE: 1" = 50′

PD-19

APPROVED FOR PAVEMENT DELINEATION AND SIGN WORK ONLY

STATE OF CALIFORNIA - DEPARTMENT OF TRANSPORTATION
Caltrans
TRAFFIC DESIGN

FUNCTIONAL SUPERVISOR: MOHAMMED QATAMI
CALCULATED-DESIGNED BY: KEVIN MURAI
CHECKED BY: HASSAN TAHA
REVISED BY
DATE REVISED

LAST REVISION 11-07-11
DATE PLOTTED => 16-FEB-2012
TIME PLOTTED => 13:46

Dist	COUNTY	ROUTE	POST MILES TOTAL PROJECT	SHEET No.	TOTAL SHEETS
05	SLO	46	40.7/46.3	412	541

REGISTERED CIVIL ENGINEER 11-07-11 DATE

2-13-12
PLANS APPROVAL DATE

REGISTERED PROFESSIONAL ENGINEER KEVIN H. MURAI No. C 59586 Exp 12/31/13 CIVIL STATE OF CALIFORNIA

THE STATE OF CALIFORNIA OR ITS OFFICERS OR AGENTS SHALL NOT BE RESPONSIBLE FOR THE ACCURACY OR COMPLETENESS OF SCANNED COPIES OF THIS PLAN SHEET.

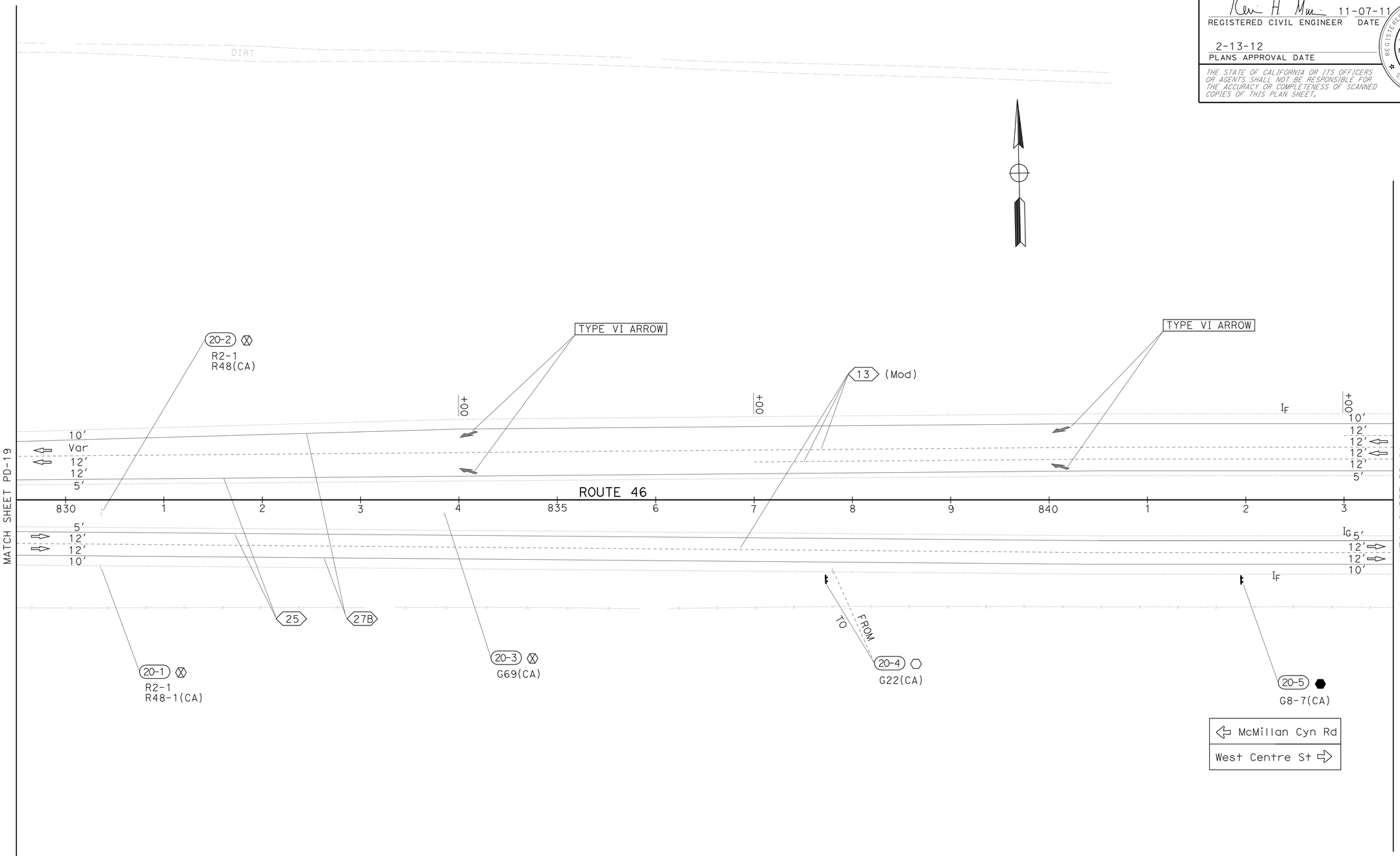

PAVEMENT DELINEATION AND SIGN PLAN

SCALE: 1" = 50′

APPROVED FOR PAVEMENT DELINEATION AND SIGN WORK ONLY

PD-20

LAST REVISION 11-07-11 | DATE PLOTTED => 16-FEB-2012 | TIME PLOTTED => 13:46

STATE OF CALIFORNIA - DEPARTMENT OF TRANSPORTATION
Caltrans
TRAFFIC DESIGN

FUNCTIONAL SUPERVISOR: MOHAMMED QATAMI

CALCULATED-DESIGNED BY: KEVIN MURAI
CHECKED BY: HASSAN TAHA

REVISED BY | DATE REVISED

Dist	COUNTY	ROUTE	POST MILES TOTAL PROJECT	SHEET No.	TOTAL SHEETS
05	SLO	46	40.7/46.3	413	541

REGISTERED CIVIL ENGINEER 11-07-11 DATE

2-13-12
PLANS APPROVAL DATE

REGISTERED PROFESSIONAL ENGINEER KEVIN H. MURAI No. C 59586 Exp 12/31/13 CIVIL STATE OF CALIFORNIA

THE STATE OF CALIFORNIA OR ITS OFFICERS OR AGENTS SHALL NOT BE RESPONSIBLE FOR THE ACCURACY OR COMPLETENESS OF SCANNED COPIES OF THIS PLAN SHEET.

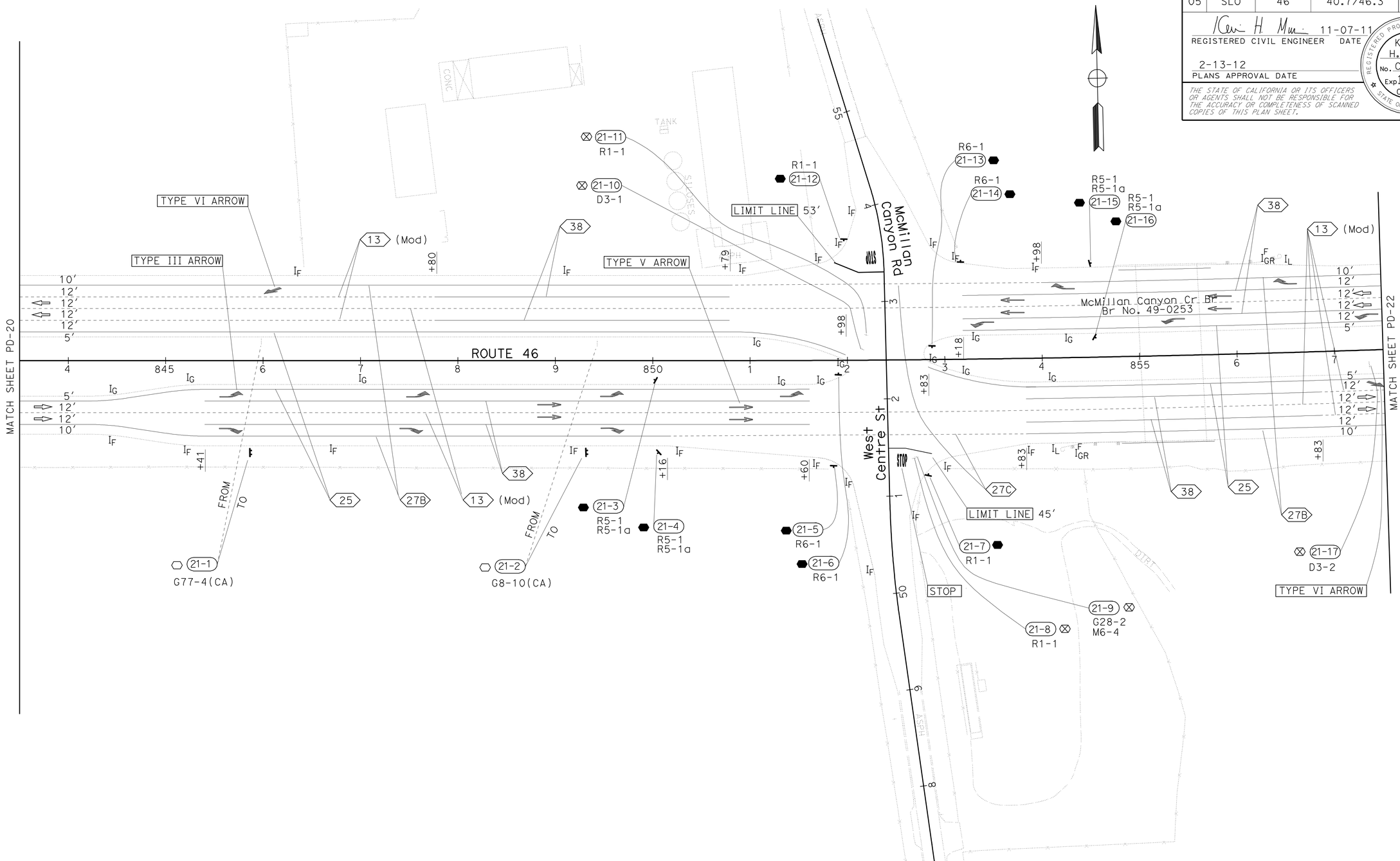

PAVEMENT DELINEATION AND SIGN PLAN

SCALE: 1" = 50'

PD-21

APPROVED FOR PAVEMENT DELINEATION AND SIGN WORK ONLY

STATE OF CALIFORNIA - DEPARTMENT OF TRANSPORTATION
Caltrans® TRAFFIC DESIGN

FUNCTIONAL SUPERVISOR: MOHAMMED QATAMI
CALCULATED-DESIGNED BY: KEVIN MURAI
CHECKED BY: HASSAN TAHA
REVISED BY
DATE REVISED

LAST REVISION 11-07-11 DATE PLOTTED => 16-FEB-2012 TIME PLOTTED => 13:46

BORDER LAST REVISED 4/11/2008
RELATIVE BORDER SCALE IS IN INCHES 0 1 2 3
USERNAME => s114937
DGN FILE => 533077na021.dgn
CU 06386
EA 330771

Dist	COUNTY	ROUTE	POST MILES TOTAL PROJECT	SHEET No.	TOTAL SHEETS
05	SLO	46	40.7/46.3	414	541

REGISTERED CIVIL ENGINEER 11-07-11 DATE

2-13-12
PLANS APPROVAL DATE

REGISTERED PROFESSIONAL ENGINEER KEVIN H. MURAI No. C 59586 Exp 12/31/13 CIVIL STATE OF CALIFORNIA

THE STATE OF CALIFORNIA OR ITS OFFICERS OR AGENTS SHALL NOT BE RESPONSIBLE FOR THE ACCURACY OR COMPLETENESS OF SCANNED COPIES OF THIS PLAN SHEET.

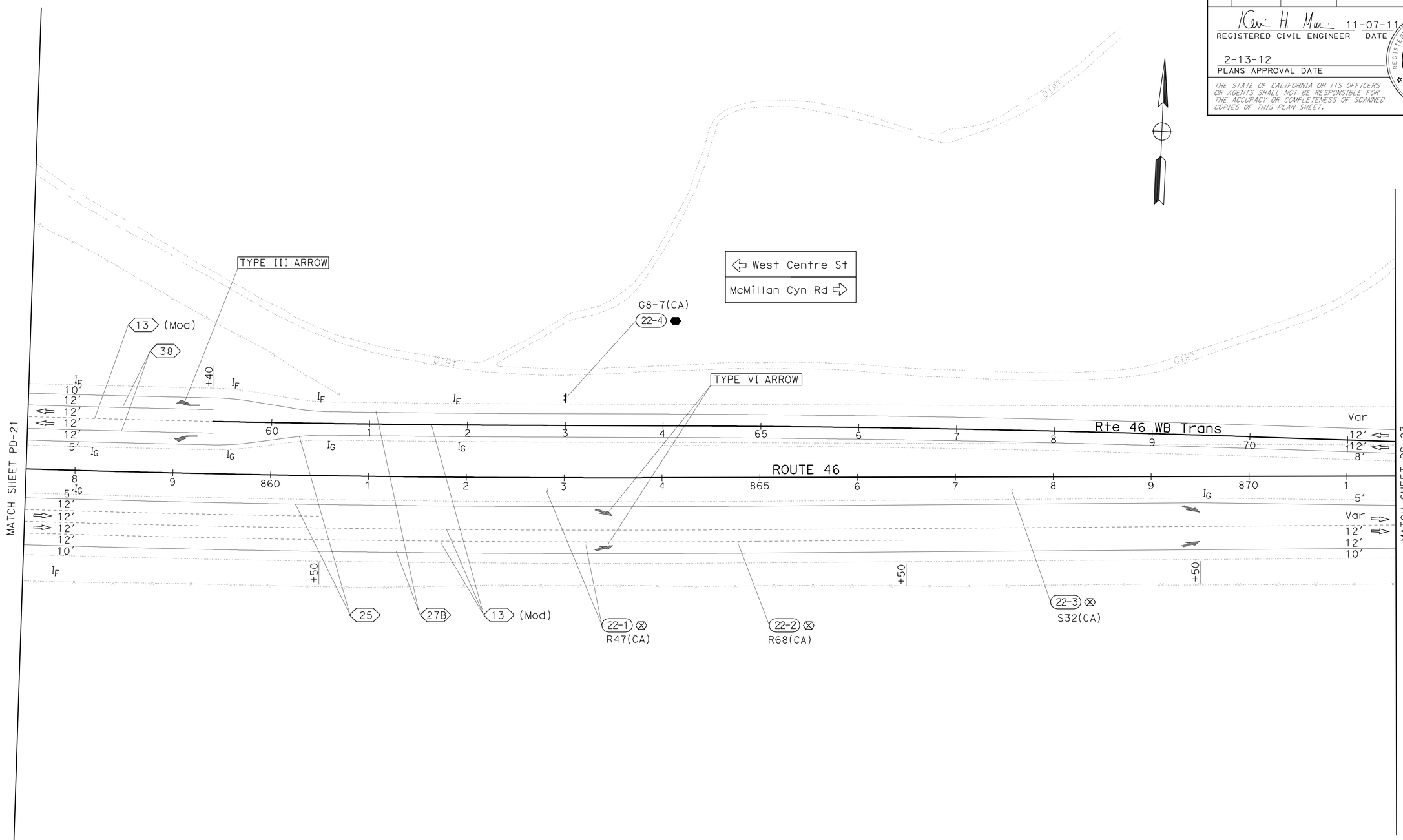

PAVEMENT DELINEATION AND SIGN PLAN

SCALE: 1" = 50'

PD-22

APPROVED FOR PAVEMENT DELINEATION AND SIGN WORK ONLY

STATE OF CALIFORNIA - DEPARTMENT OF TRANSPORTATION
Caltrans®
TRAFFIC DESIGN

FUNCTIONAL SUPERVISOR: MOHAMMED QATAMI
CALCULATED-DESIGNED BY: KEVIN MURAI
CHECKED BY: HASSAN TAHA
REVISED BY
DATE REVISED

LAST REVISION 11-07-11
DATE PLOTTED => 16-FEB-2012
TIME PLOTTED => 13:46

Dist	COUNTY	ROUTE	POST MILES TOTAL PROJECT	SHEET No.	TOTAL SHEETS
05	SLO	46	40.7/46.3	415	541

REGISTERED CIVIL ENGINEER 11-07-11 DATE

2-13-12
PLANS APPROVAL DATE

REGISTERED PROFESSIONAL ENGINEER KEVIN H. MURAI No. C 59586 Exp 12/31/13 CIVIL STATE OF CALIFORNIA

THE STATE OF CALIFORNIA OR ITS OFFICERS OR AGENTS SHALL NOT BE RESPONSIBLE FOR THE ACCURACY OR COMPLETENESS OF SCANNED COPIES OF THIS PLAN SHEET.

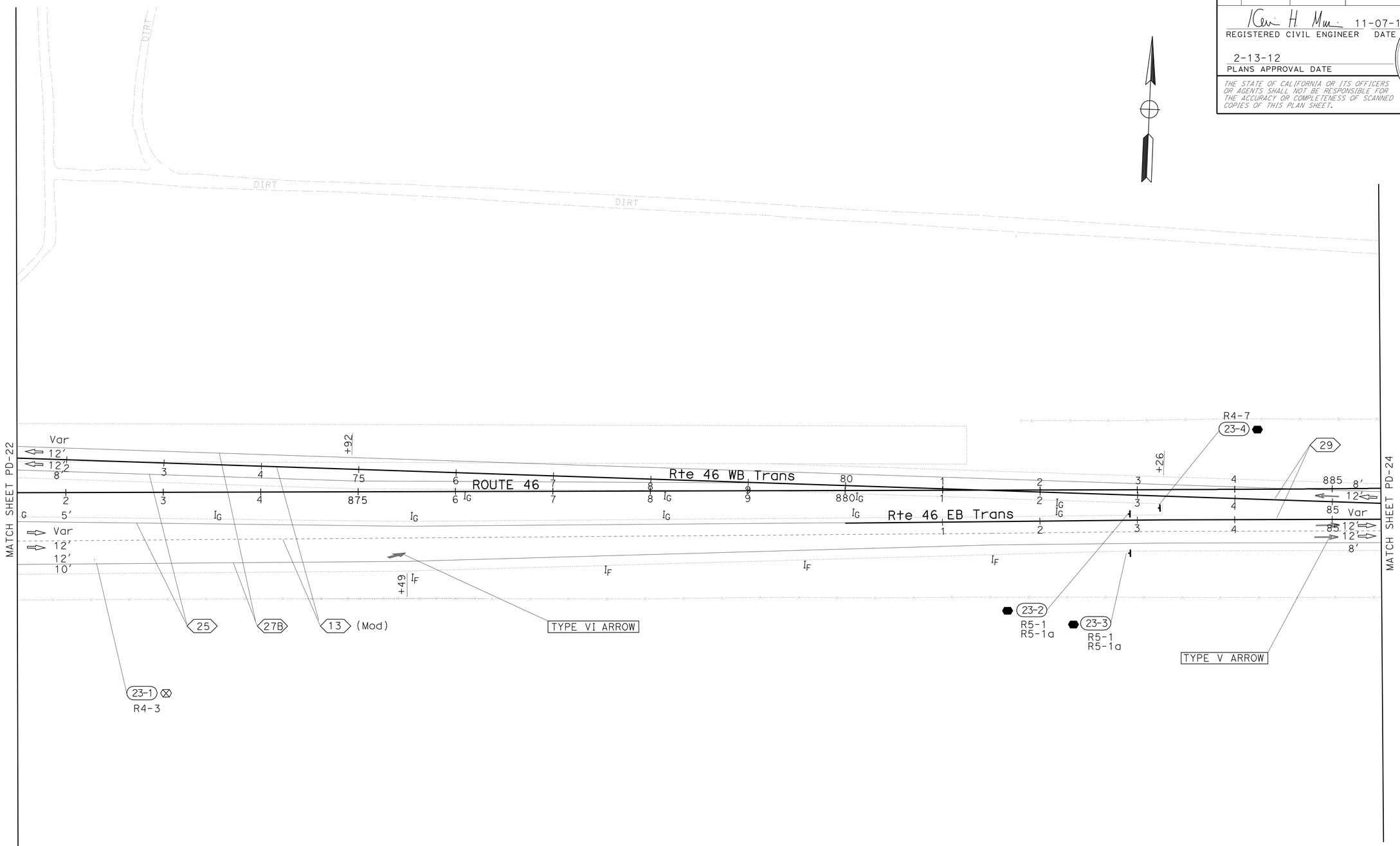

PAVEMENT DELINEATION AND SIGN PLAN

SCALE: 1" = 50'

PD-23

APPROVED FOR PAVEMENT DELINEATION AND SIGN WORK ONLY

STATE OF CALIFORNIA - DEPARTMENT OF TRANSPORTATION
Caltrans®
TRAFFIC DESIGN

FUNCTIONAL SUPERVISOR: MOHAMMED QATAMI

CALCULATED-DESIGNED BY: KEVIN MURAI
CHECKED BY: HASSAN TAHA

REVISED BY
DATE REVISED

LAST REVISION 11-07-11
DATE PLOTTED => 16-FEB-2012
TIME PLOTTED => 13:47

Dist	COUNTY	ROUTE	POST MILES TOTAL PROJECT	SHEET No.	TOTAL SHEETS
05	SLO	46	40.7/46.3	416	541

REGISTERED CIVIL ENGINEER 11-07-11 DATE

2-13-12
PLANS APPROVAL DATE

REGISTERED PROFESSIONAL ENGINEER KEVIN H. MURAI No. C 59586 Exp 12/31/13 CIVIL STATE OF CALIFORNIA

THE STATE OF CALIFORNIA OR ITS OFFICERS OR AGENTS SHALL NOT BE RESPONSIBLE FOR THE ACCURACY OR COMPLETENESS OF SCANNED COPIES OF THIS PLAN SHEET.

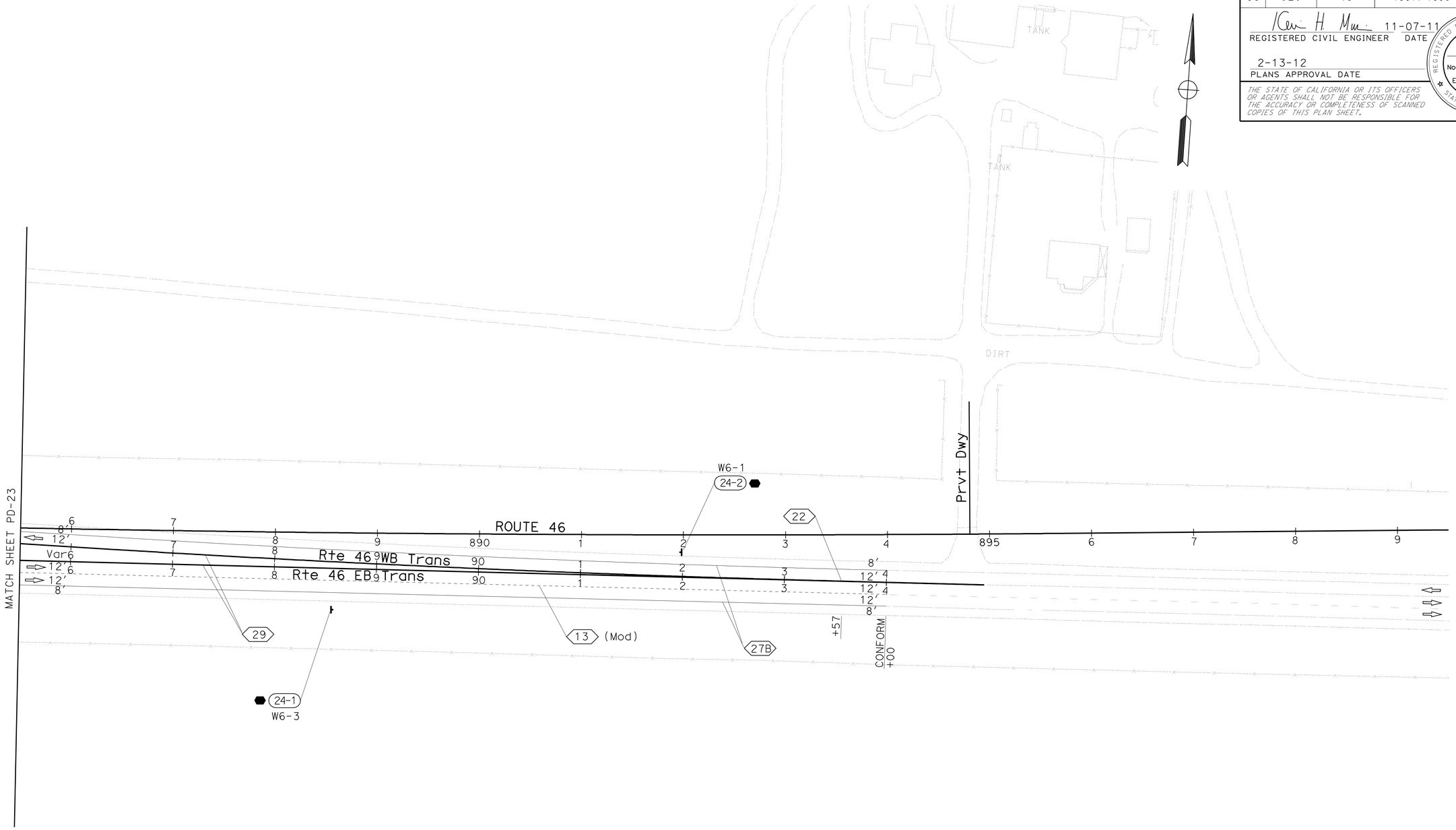

PAVEMENT DELINEATION AND SIGN PLAN

SCALE: 1" = 50'

PD-24

APPROVED FOR PAVEMENT DELINEATION AND SIGN WORK ONLY

STATE OF CALIFORNIA - DEPARTMENT OF TRANSPORTATION
Caltrans
TRAFFIC DESIGN

FUNCTIONAL SUPERVISOR: MOHAMMED QATAMI
CALCULATED-DESIGNED BY: KEVIN MURAI
CHECKED BY: HASSAN TAHA
REVISED BY
DATE REVISED

LAST REVISION 11-07-11
DATE PLOTTED => 16-FEB-2012
TIME PLOTTED => 13:47

Dist	COUNTY	ROUTE	POST MILES TOTAL PROJECT	SHEET No.	TOTAL SHEETS
05	SLO	46	40.7/46.3	417	541

REGISTERED CIVIL ENGINEER 11-07-11 DATE

2-13-12
PLANS APPROVAL DATE

REGISTERED PROFESSIONAL ENGINEER KEVIN H. MURAI No. C 59586 Exp. 12/31/13 CIVIL STATE OF CALIFORNIA

THE STATE OF CALIFORNIA OR ITS OFFICERS OR AGENTS SHALL NOT BE RESPONSIBLE FOR THE ACCURACY OR COMPLETENESS OF SCANNED COPIES OF THIS PLAN SHEET.

PAVEMENT DELINEATION QUANTITIES

SHEET No.	ROUTE	LOCATION FROM	LOCATION TO	DIRECTION	DETAIL No.	INSTALL/REMOVE	PAVEMENT MARKERS (RETRO-REFLECTIVE) TYPE D EA	TYPE G EA	TYPE H EA	NON REFLECTIVE TYPE A EA	THERMOPLASTIC TRAFFIC STRIPE SOLID YELLOW 4" LF	SOLID WHITE 4" LF	SOLID WHITE 8" LF	(BROKEN 12-3) 4" LF	(BROKEN 36-12) 4" LF	THERMOPLASTIC PAVEMENT MARKING DESCRIPTION	SQFT
PD-1	ROUTE 46	572+76	578+50	EB	13M	I		13		48					574		
PD-2	ROUTE 46	578+50	590+50	EB	13M	I		26		100					1,200		
PD-3	ROUTE 46	590+50	597+05	EB	13M	I		15		56					655	2 TYPE V	66
	ROUTE 46	598+51	603+50	EB	13M	I		11		42					499	2 TYPE VI	84
	ROUTE 46	601+80	603+50	EB	13M	I		5		16					170		
PD-4	ROUTE 46	603+50	607+04	EB	13M	I		8		30					354		
	ROUTE 46	603+50	618+50	EB	13M	I		32		126					1,500	4 TYPE VI	168
	ROUTE 46	607+04	618+50	EB	25	I			25		1,146						
	ROUTE 46	605+24	618+50	EB	27B	I						1,326				1 SPEED ENFORCEMENT	6
	ROUTE 46	618+00	618+50	WB	25	I			2		50					1 SPEED ENFORCEMENT	6
	ROUTE 46	618+00	618+50	WB	13M	I		2		6					50		
	ROUTE 46	618+00	618+50	WB	27B	I						50					
PD-5	ROUTE 46	618+50	628+10	EB	25	I			21		960						
	ROUTE 46	618+50	628+32	EB	27B	I						982				4 TYPE V	132
	ROUTE 46	618+50	633+50	EB	13M	I		32		126					1,500	4 TYPE III	168
	ROUTE 46	622+00	628+10	EB	38	I		26					610				
	ROUTE 46	628+32	629+13	EB	27C	I								81			
	ROUTE 46	629+13	633+50	EB	25	I			10		437						
	ROUTE 46	629+13	633+50	EB	27B	I						437					
	ROUTE 46	618+50	628+32	WB	25	I			21		982						
	ROUTE 46	618+50	628+32	WB	27B	I						982				4 TYPE V	132
	ROUTE 46	618+50	633+50	WB	13M	I		32		126					1,500		
	ROUTE 46	628+32	629+13	WB	27C	I								81			
	ROUTE 46	629+13	633+50	WB	27B	I						437					
	ROUTE 46	629+38	633+50	WB	25	I			10		412						
	ROUTE 46	629+38	633+50	WB	38	I		18					412			2 TYPE III	84
PD-6	ROUTE 46	633+50	648+50	EB	13M	I		32		126					1,500		
	ROUTE 46	633+50	648+50	EB	25	I			32		1,500						
	ROUTE 46	633+50	648+50	EB	27B	I						1,500					
	ROUTE 46	633+50	635+38	WB	38	I		9					188			2 TYPE III	84
	ROUTE 46	633+50	648+50	WB	13M	I		32		126					1,500		
	ROUTE 46	633+50	648+50	WB	25	I			32		1,500						
	ROUTE 46	633+50	648+50	WB	27B	I						1,500					
PD-7	ROUTE 46	648+50	655+69	EB	25	I			16		719						
	ROUTE 46	648+50	656+00	EB	27B	I						750				4 TYPE V	132
	ROUTE 46	648+50	662+50	EB	13M	I		30		118					1,400	4 TYPE III	168
	ROUTE 46	649+48	655+69	EB	38	I		27					621				
	ROUTE 46	656+00	656+78	EB	27C	I								78			
	ROUTE 46	656+78	662+50	EB	25	I			13		572						
	ROUTE 46	656+78	662+50	EB	27B	I						572					
	ROUTE 46	648+50	656+00	WB	25	I			17		750						
	ROUTE 46	648+50	656+00	WB	27B	I						750				4 TYPE V	132
	ROUTE 46	648+50	662+50	WB	13M	I		30		118					1,400	1 STOP	22
	ROUTE 46	656+00	656+78	WB	27C	I								78		1 XWALK&LL	60
																1 XWALK&LL	60
SHEET TOTAL							0	382	199	1,164	9,028	9,286	1,831	318	13,802		1,504

STATE OF CALIFORNIA - DEPARTMENT OF TRANSPORTATION
Caltrans® TRAFFIC DESIGN

FUNCTIONAL SUPERVISOR: MOHAMMED QATAMI
CALCULATED-DESIGNED BY: KEVIN MURAI
CHECKED BY: MICHAEL DENNISON
REVISED BY
DATE REVISED

PAVEMENT DELINEATION QUANTITIES

PDQ-1

LAST REVISION 11-07-11
DATE PLOTTED => 16-FEB-2012
TIME PLOTTED => 13:48

Dist	COUNTY	ROUTE	POST MILES TOTAL PROJECT	SHEET No.	TOTAL SHEETS
05	SLO	46	40.7/46.3	418	541

REGISTERED CIVIL ENGINEER 11-07-11 DATE

2-13-12
PLANS APPROVAL DATE

REGISTERED PROFESSIONAL ENGINEER KEVIN H. MURAI No. C 59586 Exp. 12/31/13 CIVIL STATE OF CALIFORNIA

THE STATE OF CALIFORNIA OR ITS OFFICERS OR AGENTS SHALL NOT BE RESPONSIBLE FOR THE ACCURACY OR COMPLETENESS OF SCANNED COPIES OF THIS PLAN SHEET.

PAVEMENT DELINEATION QUANTITIES

SHEET No.	ROUTE	LOCATION FROM	LOCATION TO	DIRECTION	DETAIL No.	INSTALL/REMOVE	PAVEMENT MARKERS (RETRO-REFLECTIVE) TYPE D EA	TYPE G EA	TYPE H EA	NON REFLECTIVE TYPE A EA	THERMOPLASTIC TRAFFIC STRIPE SOLID YELLOW 4" LF	SOLID WHITE 4" LF	SOLID WHITE 8" LF	(BROKEN 12-3) 4" LF	(BROKEN 36-12) 4" LF	THERMOPLASTIC PAVEMENT MARKING DESCRIPTION	SQFT
PD-7	ROUTE 46	656+78	662+50	WB	27B	I						572					
	ROUTE 46	656+97	662+50	WB	25	I			13		553						
	ROUTE 46	656+97	662+50	WB	38	I		24					553			3 TYPE III	126
PD-8	ROUTE 46	662+50	676+50	EB	13M	I		30		118					1,400		
	ROUTE 46	662+50	676+50	EB	25	I			30		1,400						
	ROUTE 46	662+50	676+50	EB	27B	I						1,400				1 SPEED ENFORCEMENT	6
	ROUTE 46	662+50	663+17	WB	38	I		4					67			1 TYPE III	42
	ROUTE 46	662+50	676+50	WB	13M	I		30		118					1,400		
	ROUTE 46	662+50	676+50	WB	25	I			30		1,400						
	ROUTE 46	662+50	676+50	WB	27B	I						1,400				1 SPEED ENFORCEMENT	6
PD-9	ROUTE 46	676+50	690+50	EB	13M	I		30		118					1,400		
	ROUTE 46	676+50	690+50	EB	25	I			30		1,400						
	ROUTE 46	676+50	690+50	EB	27B	I						1,400					
	ROUTE 46	676+50	690+50	WB	13M	I		30		118					1,400		
	ROUTE 46	676+50	690+50	WB	25	I			30		1,400						
	ROUTE 46	676+50	690+50	WB	27B	I						1,400					
PD-10	ROUTE 46	690+50	699+70	EB	25	I			20		920						
	ROUTE 46	690+50	699+96	EB	27B	I						946				4 TYPE V	132
	ROUTE 46	690+50	704+50	EB	13M	I		30		118					1,400	4 TYPE III	168
	ROUTE 46	693+49	699+70	EB	38	I		27					621				
	ROUTE 46	699+96	700+75	EB	27C	I								79			
	ROUTE 46	700+75	704+50	EB	25	I			9		375						
	ROUTE 46	700+75	704+50	EB	27B	I						375					
	ROUTE 46	699+50	699+96	WB	25	I			2		46						
	ROUTE 46	699+50	699+96	WB	27B	I						46					
	ROUTE 46	699+50	704+50	WB	13M	I		11		42					500		
	ROUTE 46	699+96	700+75	WB	27C	I								79		4 TYPE V	132
	ROUTE 46	700+75	704+50	WB	27B	I						375					
	ROUTE 46	700+98	704+50	WB	25	I			8		352						
	ROUTE 46	700+98	704+50	WB	38	I		16					352			2 TYPE III	84
PD-11	ROUTE 46	704+50	718+50	EB	13M	I		30		118					1,400		
	ROUTE 46	704+50	718+50	EB	25	I			30		1,400						
	ROUTE 46	704+50	718+50	EB	27B	I						1,400					
	ROUTE 46	704+50	707+18	WB	38	I		12					268			2 TYPE III	84
	ROUTE 46	704+50	718+50	WB	13M	I		30		118					1,400		
	ROUTE 46	704+50	718+50	WB	25	I			30		1,400						
	ROUTE 46	704+50	718+50	WB	27B	I						1,400					
PD-12	ROUTE 46	718+50	732+50	EB	13M	I		30		118					1,400		
	ROUTE 46	718+50	732+50	EB	25	I			30		1,400						
	ROUTE 46	718+50	732+50	EB	27B	I						1,400				1 SPEED ENFORCEMENT	6
	ROUTE 46	718+50	732+50	WB	13M	I		30		118					1,400		
	ROUTE 46	718+50	732+50	WB	25	I			30		1,400						
	ROUTE 46	718+50	732+50	WB	27B	I						1,400				1 SPEED ENFORCEMENT	6
PD-13	ROUTE 46	732+50	741+43	EB	25	I			20		893						
	ROUTE 46	732+50	746+50	EB	13M	I		30		118					1,400		
SHEET TOTAL							0	396	313	1,222	14,339	13,514	1,861	158	14,500		792

PAVEMENT DELINEATION QUANTITIES

PDQ-2

STATE OF CALIFORNIA - DEPARTMENT OF TRANSPORTATION
Caltrans® TRAFFIC DESIGN

FUNCTIONAL SUPERVISOR: MOHAMMED QATAMI
CALCULATED-DESIGNED BY: MICHAEL DENNISON
CHECKED BY: KEVIN MURAI
REVISED BY
DATE REVISED

LAST REVISION 11-07-11
DATE PLOTTED => 16-FEB-2012
TIME PLOTTED => 13:49

Dist	COUNTY	ROUTE	POST MILES TOTAL PROJECT	SHEET No.	TOTAL SHEETS
05	SLO	46	40.7/46.3	419	541

REGISTERED CIVIL ENGINEER 11-07-11 DATE

2-13-12
PLANS APPROVAL DATE

REGISTERED PROFESSIONAL ENGINEER KEVIN H. MURAI No. C 59586 Exp. 12/31/13 CIVIL STATE OF CALIFORNIA

THE STATE OF CALIFORNIA OR ITS OFFICERS OR AGENTS SHALL NOT BE RESPONSIBLE FOR THE ACCURACY OR COMPLETENESS OF SCANNED COPIES OF THIS PLAN SHEET.

PAVEMENT DELINEATION QUANTITIES

SHEET No.	ROUTE	LOCATION FROM	LOCATION TO	DIRECTION	DETAIL No.	INSTALL/REMOVE	PAVEMENT MARKERS (RETRO-REFLECTIVE) TYPE D EA	TYPE G EA	TYPE H EA	NON REFLECTIVE TYPE A EA	THERMOPLASTIC TRAFFIC STRIPE SOLID YELLOW 4" LF	SOLID WHITE 4" LF	SOLID WHITE 8" LF	(BROKEN 12-3) 4" LF	(BROKEN 36-12) 4" LF	THERMOPLASTIC PAVEMENT MARKING DESCRIPTION	SQFT
PD-13	ROUTE 46	732+50	746+50	EB	27B	I						1,400				4 TYPE V	132
	ROUTE 46	735+21	741+43	EB	38	I		27					622			4 TYPE III	168
	ROUTE 46	742+45	746+50	EB	25	I			9		405						
	ROUTE 46	732+50	741+68	WB	25	I			20		918					4 TYPE V	132
	ROUTE 46	732+50	741+68	WB	27B	I						918					
	ROUTE 46	732+50	746+50	WB	13M	I		30		118					1,400		
	ROUTE 46	741+68	742+45	WB	27C	I								77			
	ROUTE 46	742+45	746+50	WB	27B	I						405					
	ROUTE 46	742+70	746+50	WB	25	I			9		380						
PD-14	ROUTE 46	746+50	760+50	EB	13M	I		30		118					1,400		
	ROUTE 46	746+50	760+50	EB	25	I			30		1,400						
	ROUTE 46	746+50	760+50	EB	27B	I						1,400					
	ROUTE 46	746+50	760+50	WB	13M	I		30		118					1,400		
	ROUTE 46	746+50	760+50	WB	25	I			30		1,400						
	ROUTE 46	746+50	760+50	WB	27B	I						1,400					
PD-15	ROUTE 46	760+50	774+50	EB	13M	I		30		118					1,400		
	ROUTE 46	760+50	774+50	EB	25	I			30		1,400						
	ROUTE 46	760+50	774+50	EB	27B	I						1,400					
	ROUTE 46	760+50	774+50	WB	13M	I		30		118					1,400		
	ROUTE 46	760+50	774+50	WB	25	I			30		1,400						
	ROUTE 46	760+50	774+50	WB	27B	I						1,400					
PD-16	ROUTE 46	774+50	787+50	EB	13M	I		28		110					1,300		
	ROUTE 46	774+50	787+50	EB	25	I			28		1,300						
	ROUTE 46	774+50	787+50	EB	27B	I						1,300				1 SPEED ENFORCEMENT	6
	ROUTE 46	774+50	787+50	WB	13M	I		28		110					1,300		
	ROUTE 46	774+50	787+50	WB	25	I			28		1,300						
	ROUTE 46	774+50	787+50	WB	27B	I						1,300				1 SPEED ENFORCEMENT	6
PD-17	ROUTE 46	787+50	795+65	EB	25	I			18		815						
	ROUTE 46	787+50	795+92	EB	27B	I						842				4 TYPE V	132
	ROUTE 46	787+50	801+50	EB	13M	I		30		118					1,400	4 TYPE III	168
	ROUTE 46	789+45	795+65	EB	38	I		27					620				
	ROUTE 46	795+92	796+69	EB	27C	I								77			
	ROUTE 46	796+69	801+50	EB	25	I			11		481						
	ROUTE 46	796+69	801+50	EB	27B	I						481					
	ROUTE 46	787+50	795+92	WB	25	I			19		842						
	ROUTE 46	787+50	795+92	WB	27B	I						842					
	ROUTE 46	787+50	801+50	WB	13M	I		30		118					1,400		
	ROUTE 46	795+92	796+69	WB	27C	I								77			
	ROUTE 46	796+69	801+50	WB	27B	I						481				4 TYPE V	132
	ROUTE 46	796+94	801+50	WB	25	I			11		456						
	ROUTE 46	796+94	801+50	WB	38	I		20					456			3 TYPE III	126
PD-18	ROUTE 46	801+50	815+50	EB	13M	I		30		118					1,400		
	ROUTE 46	801+50	815+50	EB	25	I			30		1,400						
	ROUTE 46	801+50	815+50	EB	27B	I						1,400					
	ROUTE 46	801+50	803+14	WB	38	I		8					164			1 TYPE III	42
SHEET TOTAL							0	379	304	1,164	13,897	14,969	1,862	231	13,800		1,044

PAVEMENT DELINEATION QUANTITIES

PDQ-3

STATE OF CALIFORNIA - DEPARTMENT OF TRANSPORTATION
Caltrans® TRAFFIC DESIGN

FUNCTIONAL SUPERVISOR: MOHAMMED QATAMI
CALCULATED-DESIGNED BY: MICHAEL DENNISON
CHECKED BY: KEVIN MURAI
REVISED BY
DATE REVISED

LAST REVISION 11-07-11
DATE PLOTTED => 16-FEB-2012
TIME PLOTTED => 13:49

Dist	COUNTY	ROUTE	POST MILES TOTAL PROJECT	SHEET No.	TOTAL SHEETS
05	SLO	46	40.7/46.3	420	541

REGISTERED CIVIL ENGINEER 11-07-11 DATE

2-13-12
PLANS APPROVAL DATE

REGISTERED PROFESSIONAL ENGINEER KEVIN H. MURAI No. C 59586 Exp. 12/31/13 CIVIL STATE OF CALIFORNIA

THE STATE OF CALIFORNIA OR ITS OFFICERS OR AGENTS SHALL NOT BE RESPONSIBLE FOR THE ACCURACY OR COMPLETENESS OF SCANNED COPIES OF THIS PLAN SHEET.

PAVEMENT DELINEATION QUANTITIES

SHEET No.	ROUTE	LOCATION FROM	LOCATION TO	DIRECTION	DETAIL No.	INSTALL/REMOVE	PAVEMENT MARKERS (RETRO-REFLECTIVE) TYPE D EA	TYPE G EA	TYPE H EA	NON REFLECTIVE TYPE A EA	THERMOPLASTIC TRAFFIC STRIPE SOLID YELLOW 4" LF	SOLID WHITE 4" LF	SOLID WHITE 8" LF	(BROKEN 12-3) 4" LF	(BROKEN 36-12) 4" LF	THERMOPLASTIC PAVEMENT MARKING DESCRIPTION	SQFT
	ROUTE 46	801+50	815+50	WB	13M	I		30		118					1,400		
	ROUTE 46	801+50	815+50	WB	25	I			30		1,400						
	ROUTE 46	801+50	815+50	WB	27B	I						1,400					
PD-19	ROUTE 46	815+50	829+50	EB	13M	I		30		118					1,400		
	ROUTE 46	815+50	829+50	EB	25	I			30		1,400						
	ROUTE 46	815+50	829+50	EB	27B	I						1,400				1 SPEED ENFORCEMENT	6
	ROUTE 46	815+50	829+50	WB	13M	I		30		118					1,400	1 TYPE VI	42
	ROUTE 46	815+50	829+50	WB	25	I			30		1,400						
	ROUTE 46	815+50	829+50	WB	27B	I						1,400				1 SPEED ENFORCEMENT	6
PD-20	ROUTE 46	829+50	843+50	EB	13M	I		30		118					1,400		
	ROUTE 46	829+50	843+50	EB	25	I			30		1,400					4 TYPE VI	168
	ROUTE 46	829+50	843+50	EB	27B	I						1,400					
	ROUTE 46	829+50	843+50	WB	13M	I		30		118					1,400		
	ROUTE 46	843+00	843+50	WB	13M	I		2		6					50		
	ROUTE 46	829+50	843+50	WB	25	I			30		1,400						
	ROUTE 46	829+50	843+50	WB	27B	I						1,400					
	ROUTE 46	837+00	843+50	WB	13M	I		15		56					650		
PD-21	ROUTE 46	843+50	850+16	EB	27B	I						666				4 TYPE V	132
	ROUTE 46	842+50	851+60	EB	25	I			20		910					2 TYPE VI	84
	ROUTE 46	842+50	857+50	EB	13M	I		32		126					1,500	1 STOP	22
	ROUTE 46	845+41	851+60	EB	38	I		27					619			3 TYPE III	126
	ROUTE 46	845+41	851+60	EB	38	I		27					619			4 TYPE III	168
	ROUTE 46	850+16	853+83	EB	27C	I								367		1 XWALK&LL	45
	ROUTE 46	852+83	857+50	EB	25	I			11		467						
	ROUTE 46	853+83	857+50	EB	27B	I						367					
	ROUTE 46	853+83	856+83	EB	38	I		14					300				
	ROUTE 46	853+83	856+83	EB	38	I		14					300				
	ROUTE 46	856+83	857+50	EB	13M	I		2		6					67		
	ROUTE 46	856+83	857+50	EB	13M	I		2		6					67		
	ROUTE 46	843+50	847+80	WB	13M	I		10		36					430		
	ROUTE 46	843+50	847+80	WB	13M	I		10		36					430		
	ROUTE 46	843+50	850+79	WB	27B	I						729					
	ROUTE 46	843+50	851+98	WB	25	I			19		848						
	ROUTE 46	843+50	857+50	WB	13M	I		30		118					1,400	1 STOP	22
	ROUTE 46	847+80	850+79	WB	38	I		13					299				
	ROUTE 46	847+80	850+79	WB	38	I		13					299				
	ROUTE 46	850+79	853+98	WB	27C	I								319		1 XWALK&LL	53
	ROUTE 46	853+18	857+50	WB	25	I			10		432					4 TYPE V	132
	ROUTE 46	853+18	857+50	WB	38	I		19					432			3 TYPE III	126
	ROUTE 46	853+18	857+50	WB	38	I		19					432			2 TYPE III	84
PD-22	ROUTE 46	853+98	857+50	WB	27B	I						352					
	ROUTE 46	857+50	860+50	EB	13M	I		7		26					300		
	ROUTE 46	857+50	871+50	EB	13M	I		30		118					1,400	4 TYPE VI	168
	ROUTE 46	857+50	866+50	EB	13M	I		20		76					900		
SHEET TOTAL							0	457	210	1,200	9,657	9,114	3,300	686	14,194		1,384

STATE OF CALIFORNIA - DEPARTMENT OF TRANSPORTATION
Caltrans® TRAFFIC DESIGN

FUNCTIONAL SUPERVISOR: MOHAMMED QATAMI
CALCULATED-DESIGNED BY: MICHAEL DENNISON
CHECKED BY: KEVIN MURAI
REVISED BY
DATE REVISED

PAVEMENT DELINEATION QUANTITIES

PDQ-4

LAST REVISION 11-07-11
DATE PLOTTED => 16-FEB-2012
TIME PLOTTED => 13:49

Dist	COUNTY	ROUTE	POST MILES TOTAL PROJECT	SHEET No.	TOTAL SHEETS
05	SLO	46	40.7/46.3	421	541

REGISTERED CIVIL ENGINEER 11-07-11 DATE

2-13-12
PLANS APPROVAL DATE

REGISTERED PROFESSIONAL ENGINEER KEVIN H. MURAI No. C 59586 Exp. 12/31/13 CIVIL STATE OF CALIFORNIA

THE STATE OF CALIFORNIA OR ITS OFFICERS OR AGENTS SHALL NOT BE RESPONSIBLE FOR THE ACCURACY OR COMPLETENESS OF SCANNED COPIES OF THIS PLAN SHEET.

PAVEMENT DELINEATION QUANTITIES

SHEET No.	ROUTE	LOCATION FROM	LOCATION TO	DIRECTION	DETAIL No.	INSTALL/REMOVE	PAVEMENT MARKERS (RETRO-REFLECTIVE) TYPE D EA	TYPE G EA	TYPE H EA	NON REFLECTIVE TYPE A EA	THERMOPLASTIC TRAFFIC STRIPE SOLID YELLOW 4" LF	SOLID WHITE 4" LF	SOLID WHITE 8" LF	(BROKEN 12-3) 4" LF	(BROKEN 36-12) 4" LF	THERMOPLASTIC PAVEMENT MARKING DESCRIPTION	SQFT
PD-22	ROUTE 46	857+50	871+50	EB	25	I			30		1,400						
	ROUTE 46	857+50	871+50	EB	27B	I						1,400					
	ROUTE 46	857+50	871+50	WB	13M	I		30		118					1,400		
	ROUTE 46	857+50	859+40	WB	38	I		9					190			1 TYPE III	42
	ROUTE 46	857+50	859+40	WB	38	I		9					190			1 TYPE III	42
	ROUTE 46	857+50	871+50	WB	25	I			30		1,400						
	ROUTE 46	857+50	871+50	WB	27B	I						1,400					
PD-23	ROUTE 46	871+50	875+49	EB	13M	I		9		34					399		
	ROUTE 46	871+50	885+50	EB	13M	I		30		118					1,400	1 TYPE VI	42
	ROUTE 46	871+50	883+26	EB	25	I			26		1,176						
	ROUTE 46	871+50	885+50	EB	27B	I						1,400				2 TYPE V	66
	ROUTE 46	883+26	885+50	EB	29	I	22				896						
	ROUTE 46	871+50	874+92	WB	13M	I		8		30					342		
	ROUTE 46	871+50	883+26	WB	25	I			26		1,176						
	ROUTE 46	871+50	885+50	WB	27B	I						1,400				1 TYPE V	33
	ROUTE 46	883+26	885+50	WB	29	I	22				896						
PD-24	ROUTE 46	885+50	893+57	EB	29	I	70				3,228						
	ROUTE 46	885+50	894+00	EB	13M	I		19		72					850		
	ROUTE 46	885+50	894+00	EB	27B	I						850					
	ROUTE 46	893+57	894+00	EB	22	I	6				86						
	ROUTE 46	885+50	893+57	WB	29	I	70				3,228						
	ROUTE 46	885+50	894+00	WB	27B	I						850					
THIS SHEET SUBTOTAL							190	114	111	372	13,486	7,300	380	0	4,391		225
SHEET PDQ-1 SUBTOTAL							0	382	199	1,164	9,028	9,286	1,831	318	13,802		1,504
SHEET PDQ-2 SUBTOTAL							0	396	313	1,222	14,339	13,514	1,861	158	14,500		792
SHEET PDQ-3 SUBTOTAL							0	379	304	1,164	13,897	14,969	1,862	231	13,800		1,044
SHEET PDQ-4 SUBTOTAL							0	457	210	1,200	9,657	9,114	3,300	686	14,194		1,384
SHEET THQ-8 TOTAL							5,150	289	240	350	0	0	0	0	0		0
SHEET THQ-9 TOTAL							0	53	27	202	1,227	382	0	0	2,378		66
SUBTOTAL							5,340	2,070	1,404	5,674	61,634	54,565	9,234	1,393	63,065		5,015
TOTAL							8,814			5,674	116,199		9,234	1,393	63,065		5,015

PAVEMENT DELINEATION QUANTITIES

PDQ-5

STATE OF CALIFORNIA - DEPARTMENT OF TRANSPORTATION
Caltrans TRAFFIC DESIGN

FUNCTIONAL SUPERVISOR: MOHAMMED QATAMI
CALCULATED-DESIGNED BY: MICHAEL DENNISON
CHECKED BY: KEVIN MURAI
REVISED BY
DATE REVISED

LAST REVISION 11-07-11
DATE PLOTTED => 16-FEB-2012
TIME PLOTTED => 13:49

Dist	COUNTY	ROUTE	POST MILES TOTAL PROJECT	SHEET No.	TOTAL SHEETS
05	SLO	46	40.7/46.3	422	541

REGISTERED CIVIL ENGINEER 11-07-11 DATE

2-13-12
PLANS APPROVAL DATE

REGISTERED PROFESSIONAL ENGINEER KEVIN H. MURAI No. C 59586 Exp. 12/31/13 CIVIL STATE OF CALIFORNIA

THE STATE OF CALIFORNIA OR ITS OFFICERS OR AGENTS SHALL NOT BE RESPONSIBLE FOR THE ACCURACY OR COMPLETENESS OF SCANNED COPIES OF THIS PLAN SHEET.

DELINEATOR (CLASS 1)

SHEET No.	DELINEATORS (CLASS 1)	
	TYPE F	TYPE G
	EA	EA
PD-5	19	14
PD-6	6	6
PD-7	20	13
PD-8		2
PD-9	2	
PD-10	22	12
PD-11	9	4
PD-12	2	
PD-13	13	17
PD-14	2	3
PD-16	3	1
PD-17	18	12
PD-18	2	5
PD-20	2	1
PD-21	22	12
PD-22	5	6
PD-23	4	9
SUBTOTAL	151	117
TOTAL	268	

MILEPOST MARKER

MILEPOST MARKER		
LOCATION	EASTBOUND EACH	WESTBOUND EACH
POSTMILE 41.0	1	1
POSTMILE 42.0	1	1
POSTMILE 43.0	1	1
POSTMILE 44.0	1	1
POSTMILE 45.0	1	1
POSTMILE 46.0	1	1
SUBTOTAL	6	6
TOTAL	12	

OBJECT MARKERS

SHEET No.	OBJECT MARKERS
	TYPE L
	EACH
PD-10	1
PD-11	1
PD-21	2
TOTAL	4

PAVEMENT DELINEATION QUANTITIES

PDQ-6

STATE OF CALIFORNIA - DEPARTMENT OF TRANSPORTATION
Caltrans TRAFFIC DESIGN

FUNCTIONAL SUPERVISOR: MOHAMMED QATAMI
CALCULATED-DESIGNED BY: MICHAEL DENNISON
CHECKED BY: KEVIN MURAI
REVISED BY
DATE REVISED

LAST REVISION 11-07-11 | DATE PLOTTED => 16-FEB-2012 | TIME PLOTTED => 13:49

Dist	COUNTY	ROUTE	POST MILES TOTAL PROJECT	SHEET No.	TOTAL SHEETS
05	SLO	46	40.7/46.3	423	541

REGISTERED CIVIL ENGINEER 11-07-11 DATE

2-13-12
PLANS APPROVAL DATE

REGISTERED PROFESSIONAL ENGINEER KEVIN H. MURAI No. C 59586 Exp. 12/31/13 CIVIL STATE OF CALIFORNIA

THE STATE OF CALIFORNIA OR ITS OFFICERS OR AGENTS SHALL NOT BE RESPONSIBLE FOR THE ACCURACY OR COMPLETENESS OF SCANNED COPIES OF THIS PLAN SHEET.

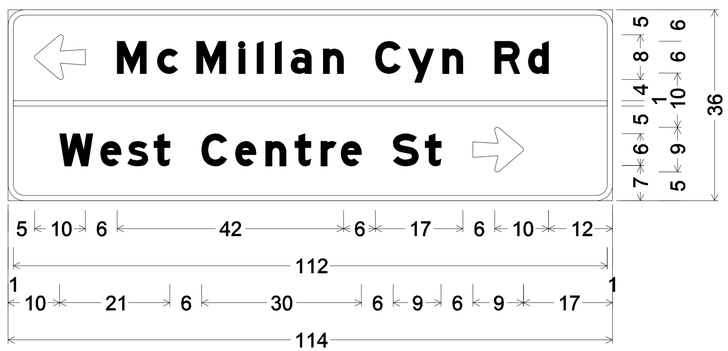

3" Radius, 1" Border, White on Green;
Arrow 6UC-1L - 10" 180°; [McMillan Cyn Rd] E Mod;
[West Centre St] E Mod; Arrow 6UC-1L - 10" 0°;

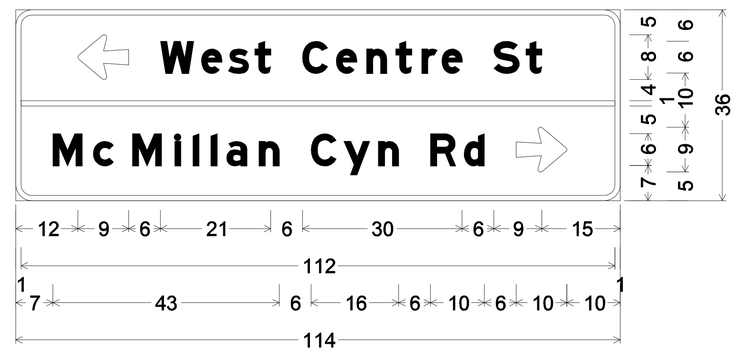

3" Radius, 1" Border, White on Green;
Arrow 6UC-1L - 10" 180°; [West Centre St] E Mod;
[McMillan Cyn Rd] E Mod; Arrow 6UC-1L - 10" 0°;

SIGN DETAILS
SD-1

REVISED BY	DATE REVISED

CALCULATED-DESIGNED BY	CHECKED BY
MICHAEL DENNISON	KEVIN MURAI

FUNCTIONAL SUPERVISOR: MOHAMMED QATAMI

STATE OF CALIFORNIA - DEPARTMENT OF TRANSPORTATION
Caltrans
TRAFFIC DESIGN

LAST REVISION 11-07-11 | DATE PLOTTED => 16-FEB-2012 | TIME PLOTTED => 14:34

Dist	COUNTY	ROUTE	POST MILES TOTAL PROJECT	SHEET No.	TOTAL SHEETS
05	SLO	46	40.7/46.3	424	541

REGISTERED CIVIL ENGINEER 11-07-11 DATE

2-13-12
PLANS APPROVAL DATE

REGISTERED PROFESSIONAL ENGINEER KEVIN H. MURAI No. C 59586 Exp. 12/31/13 CIVIL STATE OF CALIFORNIA

THE STATE OF CALIFORNIA OR ITS OFFICERS OR AGENTS SHALL NOT BE RESPONSIBLE FOR THE ACCURACY OR COMPLETENESS OF SCANNED COPIES OF THIS PLAN SHEET.

ROADSIDE SIGN

SHEET No.	SIGN No.	SIGN CODE	SIGN MESSAGE	PANEL SIZE (LxD)	No. OF POST AND SIZE	BACKGROUND SHEETING COLOR	BACKGROUND RETROREFLECTIVITY ASTM TYPE	LEGEND SHEETING COLOR	LEGEND RETROREFLECTIVITY ASTM TYPE	GRAFFITI FLOW STANDARD	GRAFFITI FLOW PREMIUM	FURNISH SINGLE SHEET ALUMINUM SIGN 0.063"-FRAMED	0.080"-FRAMED	0.063"-UNFRAMED	0.080"-UNFRAMED	ROADSIDE SIGN-ONE POST	ROADSIDE SIGN-TWO POST	REMOVE ROADSIDE SIGN	RELOCATE ROADSIDE SIGN
				INCHES	INCHES							SQFT				EA			
PD-3	3 - 1	W9-1R	RIGHT LANE ENDS	36 x 36	1 - 4 x 6	YELLOW	III	BLACK			X			9.00		1			
	3 - 2	W4-2R	LANE ENDS	48 x 48	1 - 6 x 6	YELLOW	III	BLACK			X				16.00	1			
PD-5	5 - 1	R5-1	DO NOT ENTER															1	
	1	R5-1a	WRONG WAY																
	5 - 2	R4-7	KEEP RIGHT SYMBOL															1	
	5 - 3	R5-1	DO NOT ENTER															1	
	3	R5-1a	WRONG WAY																
	5 - 4	W6-3	TWO-WAY TRAFFIC															1	
	5 - 5	W6-1	DIVIDED HIGHWAY (ROAD)															1	
	5 - 6	R5-1	DO NOT ENTER	36 x 36	1 - 4 x 6	RED	VII	WHITE	VII		X			9.00		1			
	6	R5-1a	WRONG WAY	36 x 24		RED	VII	WHITE	VII		X			6.00					
	5 - 7	R5-1	DO NOT ENTER	36 x 36	1 - 4 x 6	RED	VII	WHITE	VII		X			9.00		1			
	7	R5-1a	WRONG WAY	36 x 24		RED	VII	WHITE	VII		X			6.00					
	5 - 8	R6-1L	ONE WAY	54 x 18	1 - 4 x 6	BLACK		WHITE	III	X					6.75	1			
	5 - 9	R6-1R	ONE WAY	54 x 18	1 - 4 x 6	BLACK		WHITE	III	X					6.75	1			
	5 - 10	R6-1R	ONE WAY	54 x 18	1 - 4 x 6	BLACK		WHITE	III	X					6.75	1			
	5 - 11	R6-1L	ONE WAY	54 x 18	1 - 4 x 6	BLACK		WHITE	III	X					6.75	1			
	5 - 12	R5-1	DO NOT ENTER	36 x 36	1 - 4 x 6	RED	VII	WHITE	VII		X			9.00		1			
	12	R5-1a	WRONG WAY	36 x 24		RED	VII	WHITE	VII		X			6.00					
	5 - 13	R5-1	DO NOT ENTER	36 x 36	1 - 4 x 6	RED	VII	WHITE	VII		X			9.00		1			
	13	R5-1a	WRONG WAY	36 x 24		RED	VII	WHITE	VII		X			6.00					
PD-6	6 - 1	G69 (CA)	PASSING LANE 2 MILES															2	
PD-7	7 - 1	W9-1R	RIGHT LANE ENDS															1	
	7 - 2	W4-2R	LANE ENDS															1	
	7 - 3	R3-2	NO LEFT TURN															1	
	7 - 4	R1-1	STOP	36 x 36	1 - 4 x 6	RED	VII	WHITE	VII		X			9.00		1			
	7 - 5	R5-1	DO NOT ENTER	36 x 36	1 - 4 x 6	RED	VII	WHITE	VII		X			9.00		1			
	5	R5-1a	WRONG WAY	36 x 24		RED	VII	WHITE	VII		X			6.00					
	7 - 6	R5-1	DO NOT ENTER	36 x 36	1 - 4 x 6	RED	VII	WHITE	VII		X			9.00		1			
	6	R5-1a	WRONG WAY	36 x 24		RED	VII	WHITE	VII		X			6.00					
	7 - 7	R6-1L	ONE WAY	54 x 18	1 - 4 x 6	BLACK		WHITE	III	X					6.75	1			
	7 - 8	R6-1R	ONE WAY	54 x 18	1 - 4 x 6	BLACK		WHITE	III	X					6.75	1			
	7 - 9	R3-2	NO LEFT TURN															1	
	7 - 10	R3-2	NO LEFT TURN															1	
	7 - 11	R3-2	NO LEFT TURN															1	
	7 - 12	R6-1R	ONE WAY	54 x 18	1 - 4 x 6	BLACK		WHITE	III	X					6.75	1			
	7 - 13	R6-1L	ONE WAY	54 x 18	1 - 4 x 6	BLACK		WHITE	III	X					6.75	1			
									SHEET TOTAL			0	0	108.00	70.00	17	0	13	0

SIGN QUANTITIES
SQ-1

STATE OF CALIFORNIA - DEPARTMENT OF TRANSPORTATION
Caltrans® TRAFFIC DESIGN

FUNCTIONAL SUPERVISOR: MOHAMMED QATAMI
CALCULATED-DESIGNED BY: MICHAEL DENNISON
CHECKED BY: KEVIN MURAI
REVISED BY
DATE REVISED

LAST REVISION 11-07-11
DATE PLOTTED => 16-FEB-2012
TIME PLOTTED => 14:34

Dist	COUNTY	ROUTE	POST MILES TOTAL PROJECT	SHEET No.	TOTAL SHEETS
05	SLO	46	40.7/46.3	425	541

REGISTERED CIVIL ENGINEER 11-07-11 DATE

2-13-12
PLANS APPROVAL DATE

REGISTERED PROFESSIONAL ENGINEER KEVIN H. MURAI No. C 59586 Exp. 12/31/13 CIVIL STATE OF CALIFORNIA

THE STATE OF CALIFORNIA OR ITS OFFICERS OR AGENTS SHALL NOT BE RESPONSIBLE FOR THE ACCURACY OR COMPLETENESS OF SCANNED COPIES OF THIS PLAN SHEET.

ROADSIDE SIGN

SHEET No.	SIGN No.	SIGN CODE	SIGN MESSAGE	PANEL SIZE (LxD) INCHES	No. OF POST AND SIZE INCHES	BACKGROUND SHEETING COLOR	BACKGROUND RETROREFLECTIVITY ASTM TYPE	LEGEND SHEETING COLOR	LEGEND RETROREFLECTIVITY ASTM TYPE	GRAFFITI FLOW STANDARD	GRAFFITI FLOW PREMIUM	FURNISH SINGLE SHEET ALUMINUM SIGN 0.063"-FRAMED (SQFT)	0.080"-FRAMED (SQFT)	0.063"-UNFRAMED (SQFT)	0.080"-UNFRAMED (SQFT)	ROADSIDE SIGN-ONE POST (EA)	ROADSIDE SIGN-TWO POST (EA)	REMOVE ROADSIDE SIGN (EA)	RELOCATE ROADSIDE SIGN (EA)
PD-7	7 -14	R5-1	DO NOT ENTER	36 x 36	1 - 4 x 6	RED	VII	WHITE	VII		X			9.00		1			
	14	R5-1a	WRONG WAY	36 x 24		RED	VII	WHITE	VII		X			6.00					
	7 -15	R5-1	DO NOT ENTER	36 x 36	1 - 4 x 6	RED	VII	WHITE	VII		X			9.00		1			
	15	R5-1a	WRONG WAY	36 x 24		RED	VII	WHITE	VII		X			6.00					
	7 -16	S32 (CA)	ADOPT-A-HIGHWAY																1
	16	S32-1 (CA)	LITTER REMOVAL																
	7 -17	R4-1	DO NOT PASS															1	
	7 -18	S32 (CA)	ADOPT-A-HIGHWAY																1
	18	S32-1 (CA)	LITTER REMOVAL																
PD-10	10- 1	R5-1	DO NOT ENTER	36 x 36	1 - 4 x 6	RED	VII	WHITE	VII		X			9.00		1			
	1	R5-1a	WRONG WAY	36 x 24		RED	VII	WHITE	VII		X			6.00					
	10 - 2	R5-1	DO NOT ENTER	36 x 36	1 - 4 x 6	RED	VII	WHITE	VII		X			9.00		1			
	2	R5-1a	WRONG WAY	36 x 24		RED	VII	WHITE	VII		X			6.00					
	10- 3	R6-1L	ONE WAY	54 x 18	1 - 4 x 6	BLACK		WHITE	III	X					6.75	1			
	10 - 4	R6-1R	ONE WAY	54 x 18	1 - 4 x 6	BLACK		WHITE	III	X					6.75	1			
	10- 5	R6-1R	ONE WAY	54 x 18	1 - 4 x 6	BLACK		WHITE	III	X					6.75	1			
	10 -6	R6-1R	ONE WAY	54 x 18	1 - 4 x 6	BLACK		WHITE	III	X					6.75	1			
	10- 7	R5-1	DO NOT ENTER	36 x 36	1 - 4 x 6	RED	VII	WHITE	VII		X			9.00		1			
	7	R5-1a	WRONG WAY	36 x 24		RED	VII	WHITE	VII		X			6.00					
	10 - 8	R5-1	DO NOT ENTER	36 x 36	1 - 4 x 6	RED	VII	WHITE	VII		X			9.00		1			
	8	R5-1a	WRONG WAY	36 x 24		RED	VII	WHITE	VII		X			6.00					
PD-13	13 - 1	R5-1	DO NOT ENTER	36 x 36	1 - 4 x 6	RED	VII	WHITE	VII		X			9.00		1			
	1	R5-1a	WRONG WAY	36 x 24		RED	VII	WHITE	VII		X			6.00					
	13 - 2	R5-1	DO NOT ENTER	36 x 36	1 - 4 x 6	RED	VII	WHITE	VII		X			9.00		1			
	2	R5-1a	WRONG WAY	36 x 24		RED	VII	WHITE	VII		X			6.00					
	13 - 3	R6-1L	ONE WAY	54 x 18	1 - 4 x 6	BLACK		WHITE	III	X					6.75	1			
	13 - 4	R6-1R	ONE WAY	54 x 18	1 - 4 x 6	BLACK		WHITE	III	X					6.75	1			
	13 - 5	R6-1L	ONE WAY	54 x 18	1 - 4 x 6	BLACK		WHITE	III	X					6.75	1			
	13 - 6	R5-1	DO NOT ENTER	36 x 36	1 - 4 x 6	RED	VII	WHITE	VII		X			9.00		1			
	6	R5-1a	WRONG WAY	36 x 24		RED	VII	WHITE	VII		X			6.00					
	13 - 7	R5-1	DO NOT ENTER	36 x 36	1 - 4 x 6	RED	VII	WHITE	VII		X			9.00		1			
	- 7	R5-1a	WRONG WAY	36 x 24		RED	VII	WHITE	VII		X			6.00					
PD-14	14 - 1	S32 (CA)	ADOPT-A-HIGHWAY															1	
	1	S32-1 (CA)	LITTER REMOVAL																
	14 - 2	R4-1	DO NOT PASS															1	
	14 - 3	W4-2R	LANE ENDS															1	
PD-15	15 - 1	W4-7L	THRU TRAFFIC MERGE LEFT															1	
											SHEET TOTAL	0	0	150.00	47.25	17	0	5	2

SIGN QUANTITIES

SQ-2

STATE OF CALIFORNIA - DEPARTMENT OF TRANSPORTATION
Caltrans® TRAFFIC DESIGN

FUNCTIONAL SUPERVISOR: MOHAMMED QATAMI
CALCULATED-DESIGNED BY: MICHAEL DENNISON
CHECKED BY: KEVIN MURAI
REVISED BY
DATE REVISED

LAST REVISION 11-07-11
DATE PLOTTED => 16-FEB-2012
TIME PLOTTED => 14:34

Dist	COUNTY	ROUTE	POST MILES TOTAL PROJECT	SHEET No.	TOTAL SHEETS
05	SLO	46	40.7/46.3	426	541

REGISTERED CIVIL ENGINEER 11-07-11 DATE

2-13-12
PLANS APPROVAL DATE

REGISTERED PROFESSIONAL ENGINEER KEVIN H. MURAI No. C 59586 Exp. 12/31/13 CIVIL STATE OF CALIFORNIA

THE STATE OF CALIFORNIA OR ITS OFFICERS OR AGENTS SHALL NOT BE RESPONSIBLE FOR THE ACCURACY OR COMPLETENESS OF SCANNED COPIES OF THIS PLAN SHEET.

ROADSIDE SIGN

SHEET No.	SIGN No.	SIGN CODE	SIGN MESSAGE	PANEL SIZE (LxD) INCHES	No. OF POST AND SIZE INCHES	BACKGROUND SHEETING COLOR	BACKGROUND RETROREFLECTIVITY ASTM TYPE	LEGEND SHEETING COLOR	LEGEND RETROREFLECTIVITY ASTM TYPE	GRAFFITI FLOW STANDARD	GRAFFITI FLOW PREMIUM	FURNISH SINGLE SHEET ALUMINUM SIGN 0.063"-FRAMED (SQFT)	0.080"-FRAMED (SQFT)	0.063"-UNFRAMED (SQFT)	0.080"-UNFRAMED (SQFT)	ROADSIDE SIGN-ONE POST (EA)	ROADSIDE SIGN-TWO POST (EA)	REMOVE ROADSIDE SIGN (EA)	RELOCATE ROADSIDE SIGN (EA)
PD-17	17- 1	R5-1	DO NOT ENTER	36 X 36	1 - 4 X 6	RED	VII	WHITE	VII		X			9.00		1			
	1	R5-1a	WRONG WAY	36 X 24		RED	VII	WHITE	VII		X			6.00					
	17- 2	R5-1	DO NOT ENTER	36 X 36	1 - 4 X 6	RED	VII	WHITE	VII		X			9.00		1			
	2	R5-1a	WRONG WAY	36 X 24		RED	VII	WHITE	VII		X			6.00					
	17- 3	R6-1L	ONE WAY	54 X 18	1 - 4 X 6	BLACK		WHITE	III	X					6.75	1			
	17- 4	R6-1R	ONE WAY	54 X 18	1 - 4 X 6	BLACK		WHITE	III	X					6.75	1			
	17- 5	R6-1R	ONE WAY	54 X 18	1 - 4 X 6	BLACK		WHITE	III	X					6.75	1			
	17- 6	R6-1L	ONE WAY	54 X 18	1 - 4 X 6	BLACK		WHITE	III	X					6.75	1			
	17- 7	R5-1	DO NOT ENTER	36 X 36	1 - 4 X 6	RED	VII	WHITE	VII		X			9.00		1			
	7	R5-1a	WRONG WAY	36 X 24		RED	VII	WHITE	VII		X			6.00					
	17- 8	R5-1	DO NOT ENTER	36 X 36	1 - 4 X 6	RED	VII	WHITE	VII		X			9.00		1			
	8	R5-1a	WRONG WAY	36 X 24		RED	VII	WHITE	VII		X			6.00					
PD-18	18- 1	R4-3	SLOWER TRAFFIC KEEP RIGHT															1	
	18- 2	R68 (CA)	PASSING LANE AHEAD															1	
PD-19	19- 1	G69 (CA)	PASSING LANE 2 MILES															1	
	19- 2	G68 (CA)	DIVIDED ROAD 2 MILES AHEAD																1
PD-20	20- 1	R2-1	SPEED LIMIT															1	
	1	R48-1 (CA)	RADAR ENFORCED																
	20- 2	R2-1	SPEED LIMIT															1	
	2	R48 (CA)	SPEED ENFORCED BY RADAR																
	20- 3	G69 (CA)	PASSING LANE 2 MILES															1	
	20- 4	G22 (CA)	SHANDON TURN-OFF 1/4 MILE																1
	20- 5	G8-7 (CA)	McMILLAN Cyn ROAD/WEST CENTRE St	114 x 36	2 - 4 X 6	GREEN	VII	WHITE	VII		X		28.50				1		
PD-21	21- 1	G77-4 (CA)	EAST 46, WEST 41																1
	21- 2	G8-10 (CA)	SHANDON, CRESTON																1
	21- 3	R5-1	DO NOT ENTER	36 x 36	1 - 4 x 6	RED	VII	WHITE	VII		X			9.00		1			
	3	R5-1a	WRONG WAY	36 x 24		RED	VII	WHITE	VII		X			6.00					
	21- 4	R5-1	DO NOT ENTER	36 x 36	1 - 4 x 6	RED	VII	WHITE	VII		X			9.00		1			
	4	R5-1a	WRONG WAY	36 x 24		RED	VII	WHITE	VII		X			6.00					
	21- 5	R6-1L	ONE WAY	54 x 18	1 - 4 x 6	BLACK		WHITE	III	X					6.75	1			
	21- 6	R6-1R	ONE WAY	54 x 18	1 - 4 x 6	BLACK		WHITE	III	X					6.75	1			
	21- 7	R1-1	STOP	36 x 36	1 - 4 x 6	RED	VII	WHITE	VII		X			9.00		1			
	21- 8	R1-1	STOP															1	
	21- 9	G28-2 (CA)	ROUTE 46 SHIELD															1	
	9	M6-4	DIRECTIONAL ARROW AUXILIARY																
	21-10	D3-1	MCMILLAN Cyn ROAD															1	
									SHEET TOTAL			0	28.50	99.00	40.50	13	1	9	4

SIGN QUANTITIES

SQ-3

STATE OF CALIFORNIA - DEPARTMENT OF TRANSPORTATION
Caltrans® TRAFFIC DESIGN

FUNCTIONAL SUPERVISOR: MOHAMMED QATAMI
CALCULATED-DESIGNED BY: MICHAEL DENNISON
CHECKED BY: KEVIN MURAI
REVISED BY
DATE REVISED

LAST REVISION 11-07-11
DATE PLOTTED => 16-FEB-2012
TIME PLOTTED => 14:34

Dist	COUNTY	ROUTE	POST MILES TOTAL PROJECT	SHEET No.	TOTAL SHEETS
05	SLO	46	40.7/46.3	427	541

REGISTERED CIVIL ENGINEER 11-07-11 DATE

2-13-12
PLANS APPROVAL DATE

REGISTERED PROFESSIONAL ENGINEER KEVIN H. MURAI No. C 59586 Exp. 12/31/13 CIVIL STATE OF CALIFORNIA

THE STATE OF CALIFORNIA OR ITS OFFICERS OR AGENTS SHALL NOT BE RESPONSIBLE FOR THE ACCURACY OR COMPLETENESS OF SCANNED COPIES OF THIS PLAN SHEET.

ROADSIDE SIGN

SHEET No.	SIGN No.	SIGN CODE	SIGN MESSAGE	PANEL SIZE (LxD) INCHES	No. OF POST AND SIZE INCHES	BACKGROUND SHEETING COLOR	BACKGROUND RETROREFLECTIVITY ASTM TYPE	LEGEND SHEETING COLOR	LEGEND RETROREFLECTIVITY ASTM TYPE	GRAFFITI FLOW STANDARD	GRAFFITI FLOW PREMIUM	FURNISH SINGLE SHEET ALUMINUM SIGN 0.063"-FRAMED (SQFT)	0.080"-FRAMED (SQFT)	0.063"-UNFRAMED (SQFT)	0.080"-UNFRAMED (SQFT)	ROADSIDE SIGN-ONE POST (EA)	ROADSIDE SIGN-TWO POST (EA)	REMOVE ROADSIDE SIGN (EA)	RELOCATE ROADSIDE SIGN (EA)
PD-21	21-11	R1-1	STOP															1	
	21-12	R1-1	STOP	36 x 36	1 - 4 x 6	RED	VII	WHITE	VII		X			9.00		1			
	21-13	R6-1R	ONE WAY	54 x 18	1 - 4 x 6	BLACK		WHITE	III	X					6.75	1			
	21-14	R6-1L	ONE WAY	54 x 18	1 - 4 x 6	BLACK		WHITE	III	X					6.75	1			
	21-15	R5-1	DO NOT ENTER	36 x 36	1 - 4 x 6	RED	VII	WHITE	VII		X			9.00		1			
	15	R5-1a	WRONG WAY	36 x 24		RED	VII	WHITE	VII		X			6.00					
	21-16	R5-1	DO NOT ENTER	36 x 36	1 - 4 x 6	RED	VII	WHITE	VII		X			9.00		1			
	16	R5-1a	WRONG WAY	36 x 24		RED	VII	WHITE	VII		X			6.00					
	21-17	D3-2	ADVANCE STREET NAME															1	
PD-22	22- 1	R47 (CA)	$1000 FINE FOR LITTERING															1	
	22- 2	R68 (CA)	PASSING LANE AHEAD															1	
	22- 3	S32 (CA)	ADOPT-A-HIGHWAY															1	
	22- 4	G8-7 (CA)	McMILLAN Cyn ROAD/WEST CENTRE St	114 x 36	2 - 4 X 6	GREEN	VII	WHITE	VII		X		28.50				1		
PD-23	23- 1	R4-3	SLOWER TRAFFIC KEEP RIGHT															1	
	23- 2	R5-1	DO NOT ENTER	36 x 36	1 - 4 x 6	RED	VII	WHITE	VII		X			9.00		1			
	2	R5-1a	WRONG WAY	36 x 24		RED	VII	WHITE	VII		X			6.00					
	23- 3	R5-1	DO NOT ENTER	36 x 36	1 - 4 x 6	RED	VII	WHITE	VII		X			9.00		1			
	3	R5-1a	WRONG WAY	36 x 24		RED	VII	WHITE	VII		X			6.00					
	23- 4	R4-7	KEEP RIGHT SYMBOL	36 x 48	1 - 4 x 6	WHITE	III	BLACK		X				12.00		1			
PD-24	24- 1	W6-3	TWO-WAY TRAFFIC	48 x 48	1 - 6 x 6	YELLOW	III	BLACK			X				16.00	1			
	24- 2	W6-1	DIVIDED HIGHWAY (ROAD)	48 x 48	1 - 6 x 6	YELLOW	III	BLACK			X				16.00	1			
SHEET SUBTOTAL												0	28.50	81.00	45.50	10	1	6	0
SHEET SQ-1 SUBTOTAL												0		108.00	70.00	17	0	13	0
SHEET SQ-2 SUBTOTAL												0		150.00	47.25	17	0	5	2
SHEET SQ-3 SUBTOTAL												0	28.50	99.00	40.50	13	1	9	4
SHEET THQ-10 SUBTOTAL												0		0	0	0	0	5	4
TOTAL												0	57.00	438.00	203.25	57	2	38	10

SIGN QUANTITIES
SQ-4

REVISED BY | DATE REVISED

MICHAEL DENNISON | KEVIN MURAI

CALCULATED-DESIGNED BY | CHECKED BY

FUNCTIONAL SUPERVISOR: MOHAMMED QATAMI

STATE OF CALIFORNIA - DEPARTMENT OF TRANSPORTATION
Caltrans® TRAFFIC DESIGN

LAST REVISION 11-07-11 | DATE PLOTTED => 16-FEB-2012 | TIME PLOTTED => 14:34

Dist	COUNTY	ROUTE	POST MILES TOTAL PROJECT	SHEET No.	TOTAL SHEETS
05	SLO	46	40.7/46.3	428	541

REGISTERED CIVIL ENGINEER DATE 11-10-11

2-13-12
PLANS APPROVAL DATE

REGISTERED PROFESSIONAL ENGINEER JOSE M. ARGUELLO No. 51321 Exp. 06-30-12 CIVIL STATE OF CALIFORNIA

THE STATE OF CALIFORNIA OR ITS OFFICERS OR AGENTS SHALL NOT BE RESPONSIBLE FOR THE ACCURACY OR COMPLETENESS OF SCANNED COPIES OF THIS PLAN SHEET.

ABBREVIATIONS:

(N) NOT A SEPARATE PAY ITEM, FOR INFORMATION ONLY.

S	STAGE	Aux	AUXILARY
P	PHASE	Prvt	PRIVATE
TOC	TOP OF CUT	X-Over	CROSSOVER
TOF	TOE OF FILL	Ovrly / Lvl	OVERLAY / LEVELING
IS	INSIDE Shld	OSD	OVERSIDE DRAIN
OS	OUTSIDE Shld	PP	PLASTIC PIPE
TW	TRAVELED WAY	SM	SELECT MATERIAL
IA	INSIDE Aux Ln		
OA	OUTSIDE Aux Ln		
MX	Med CROSSOVER		

TEMPORARY FIBER ROLL

LOCATION	DESCRIPTION	Temp FIBER ROLL LF
Rte 46 ℄ Sta 607+00 to Sta 894+00	EASTBOUND SLOPES	50,600
Rte 46 ℄ Sta 607+00 to Sta 894+00	WESTBOUND SLOPES	64,500
Rte 46 ℄ Sta 621+75 to Sta 624+00	TOP OF CUT SLOPE ON LEFT	225
Rte 46 ℄ Sta 654+91 to Sta 656+11	TOP OF CUT SLOPE ON LEFT	235
Rte 46 ℄ Sta 658+35 to Sta 662+00	TOP OF CUT SLOPE ON LEFT	360
Rte 46 ℄ Sta 665+30 to Sta 666+30	TOP OF CUT SLOPE ON RIGHT	100
Rte 46 ℄ Sta 676+08 to Sta 679+14	TOP OF CUT SLOPE ON LEFT	310
Rte 46 ℄ Sta 689+50 to Sta 692+52	TOP OF CUT SLOPE ON LEFT	115
Rte 46 ℄ Sta 691+60 to Sta 694+60	TOP OF CUT SLOPE ON RIGHT	305
Rte 46 ℄ Sta 700+35 to Sta 701+45	TOP OF CUT SLOPE ON LEFT	130
Rte 46 ℄ Sta 724+00 to Sta 728+45	TOP OF CUT SLOPE ON LEFT	450
Rte 46 ℄ Sta 732+45 to Sta 739+90	TOP OF CUT SLOPE ON LEFT	750
Rte 46 ℄ Sta 751+00 to Sta 753+25	TOP OF CUT SLOPE ON RIGHT	230
Rte 46 ℄ Sta 759+15 to Sta 760+25	TOP OF CUT SLOPE ON LEFT	135
Rte 46 ℄ Sta 762+80 to Sta 766+15	TOP OF CUT SLOPE ON LEFT	335
Rte 46 ℄ Sta 770+85 to Sta 772+75	TOP OF CUT SLOPE ON LEFT	195
Rte 46 ℄ Sta 800+25 to Sta 807+00	TOP OF CUT SLOPE ON LEFT	675
Rte 46 ℄ Sta 845+60 to ℄ McMILLAN CANYON Rd Sta 55+45	TOP OF CUT SLOPE ON LEFT	815
Rte 46 ℄ Sta 858+00 to Sta 859+40	TOP OF CUT SLOPE ON LEFT	130
Rte 46 ℄ Sta 860+40 to Sta 863+00	TOP OF CUT SLOPE ON LEFT	270
	TOTAL	120,865

TEMPORARY SILT FENCE

LOCATION	DESCRIPTION	Temp SILT FENCE LF
Rte 46 ℄ Sta 607+00 to Sta 894+00	EASTBOUND AND WESTBOUND SLOPE PERIMETER	57,400
McMILLAN CANYON Rd ℄ Sta 46+70 to Sta 55+40	RIGHT AND LEFT SLOPE PERIMETER	1,750
	TOTAL	59,150

TEMPORARY CHECK DAM

LOCATION	DESCRIPTION	Temp CHECK DAM LF
Rte 46 ℄ Sta 607+00 to Sta 883+00	MEDIAN	63,380
Rte 46 ℄ Sta 633+75 to Sta 636+75	SWALE ON Rt	240
Rte 46 ℄ Sta 673+00 to Sta 675+75	SWALE ON Lt	210
Rte 46 ℄ Sta 679+25 to Sta 683+75	SWALE ON Lt	445
Rte 46 ℄ Sta 680+75 to Sta 684+00	SWALE ON Rt	220
Rte 46 ℄ Sta 719+00 to Sta 723+75	SWALE ON Lt	300
Rte 46 ℄ Sta 743+80 to Sta 744+75	SWALE ON Lt	75
Rte 46 ℄ Sta 760+00 to Sta 763+50	SWALE ON Rt	270
Rte 46 ℄ Sta 772+50 to Sta 776+25	SWALE ON Rt	285
Rte 46 ℄ Sta 775+75 to Sta 777+15	SWALE ON Lt	105
Rte 46 ℄ Sta 798+75 to Sta 800+00	SWALE ON Lt	90
Rte 46 ℄ Sta 810+25 to Sta 819+50	SWALE ON Lt	690
Rte 46 ℄ Sta 834+75 to Sta 845+50	SWALE ON Lt	540
Rte 46 ℄ Sta 853+25 to Sta 854+75	SWALE ON Rt	220
	TOTAL	67,070

TEMPORARY HYDRAULIC MULCH (BONDED FIBER MATRIX)

LOCATION	DESCRIPTION	Temp HYDRAULIC MULCH (BONDED FIBER MATRIX) SQYD
Rte 46 ℄ Sta 607+00 to Sta 894+00	EASTBOUND SLOPES	78,900
Rte 46 ℄ Sta 607+00 to Sta 894+00	WESTBOUND SLOPES	106,200
	TOTAL	185,100

SUMMARY OF QUANTITIES
Q-1

STATE OF CALIFORNIA - DEPARTMENT OF TRANSPORTATION
06-DESIGN
Caltrans

FUNCTIONAL SUPERVISOR: JACK WALKER
CALCULATED-DESIGNED BY: JOSE ARGUELLO
CHECKED BY: SUMANGALI HOODE
REVISED BY
DATE REVISED

LAST REVISION 09-06-11
DATE PLOTTED => 16-FEB-2012
TIME PLOTTED => 14:34

Dist	COUNTY	ROUTE	POST MILES TOTAL PROJECT	SHEET No.	TOTAL SHEETS
05	SLO	46	40.7/46.3	429	541

REGISTERED CIVIL ENGINEER DATE 11-10-11

2-13-12
PLANS APPROVAL DATE

REGISTERED PROFESSIONAL ENGINEER JOSE M. ARGUELLO No. 51321 Exp. 06-30-12 CIVIL STATE OF CALIFORNIA

THE STATE OF CALIFORNIA OR ITS OFFICERS OR AGENTS SHALL NOT BE RESPONSIBLE FOR THE ACCURACY OR COMPLETENESS OF SCANNED COPIES OF THIS PLAN SHEET.

TEMPORARY DRAINAGE INLET PROTECTION

DRAINAGE SYSTEM No. (#)	DRAINAGE UNIT No. (×)	PLAN SHEET No.	LOCATION	TYPE 3A EA	TYPE 4A EA
2	a	D-2	Rte 46 ℄ 629+38.00		1
2	c	D-2	Rte 46 ℄ 629+78.00		1
5	f	D-3	Rte 46 ℄ 642+27.86		1
5	n	D-3	Rte 46 ℄ 644+03.69		1
7	d	D-4	Rte 46 ℄ 652+25.00	1	
7	f	D-4	Rte 46 ℄ 652+45.12	1	
7	h	D-4	Rte 46 ℄ 654+89.50	1	
7	j	D-4	Rte 46 ℄ 655+88.57	1	
8	c	D-5	Rte 46 ℄ 665+92.00	1	
8	e	D-5	Rte 46 ℄ 668+13.00	1	
8	g	D-5	Rte 46 ℄ 670+34.00	1	
8	i	D-5	Rte 46 ℄ 672+55.00	1	
8	k	D-5	Rte 46 ℄ 672+75.00	1	
9	g	D-5	Rte 46 ℄ 675+08.59		1
11	b	D-6	Rte 46 ℄ 688+80.00		1
11	d	D-7	Rte 46 ℄ 691+86.00		1
11	f	D-7	Rte 46 ℄ 692+39.00		1
11	h	D-7	Rte 46 ℄ 692+69.00		1
11	j	D-7	Rte 46 ℄ 693+13.00		1
11	k	D-7	Rte 46 ℄ 692+83.00	1	
11	m	D-7	Rte 46 ℄ 693+13.00	1	
11	o	D-7	Rte 46 ℄ 693+43.00	1	
11	p	D-7	Rte 46 ℄ 692+83.00	1	
11	r	D-7	Rte 46 ℄ 693+13.00	1	
11	t	D-7	Rte 46 ℄ 693+43.00	1	
13	l	D-7	Rte 46 ℄ 699+67.44	1	
13	x	D-7	Rte 46 ℄ 699+54.37		1
13	z	D-7	Rte 46 ℄ 701+00.00		1
13	ab	D-7	Rte 46 ℄ 701+40.00		1
13	ag	D-7	Rte 46 ℄ 699+50.00	1	
13	aj	D-7	Rte 46 ℄ 701+40.00	1	
19	f	D-10	Rte 46 ℄ 742+70.78		1
19	h	D-10	Rte 46 ℄ 743+10.78		1
22	g	D-11	Rte 46 ℄ 755+72.44	1	
22	i	D-11	Rte 46 ℄ 760+00.00	1	
22	k	D-12	Rte 46 ℄ 763+10.00	1	
22	m	D-12	Rte 46 ℄ 766+25.00	1	
22	q	D-12	Rte 46 ℄ 769+80.00	1	
22	w	D-12	Rte 46 ℄ 772+50.00	1	
22	y	D-13	Rte 46 ℄ 775+05.00	1	
22	aa	D-13	Rte 46 ℄ 775+25.00	1	
22	ai	D-11	Rte 46 ℄ 753+42.00	1	
22	ar	D-11	Rte 46 ℄ 757+85.00	1	
24	j	D-13	Rte 46 ℄ 777+20.00		1
25	c	D-13	Rte 46 ℄ 782+28.11		1
26	a	D-13	Rte 46 ℄ 783+30.00		1
26	c	D-13	Rte 46 ℄ 782+90.00		1
27	n	D-14	Rte 46 ℄ 797+70.00		1
27	o	D-14	Rte 46 ℄ 798+22.00		1
27	p	D-14	Rte 46 ℄ 798+62.00		1
28	k	D-16	Rte 46 ℄ 819+04.00		1
			COLUMN - SUBTOTAL	28	23
			CONTINUED		

TEMPORARY DRAINAGE INLET PROTECTION (CONTINUED)

DRAINAGE SYSTEM No. (#)	DRAINAGE UNIT No. (×)	PLAN SHEET No.	LOCATION	TYPE 3A EA	TYPE 4A EA
			COLUMN - CARRYOVER	28	23
31	a	D-18	Rte 46 ℄ 851+97.08	1	
31	c	D-18	Rte 46 ℄ 853+13.68	1	
31	e	D-18	Rte 46 ℄ 853+25.00		1
31	g	D-18	Rte 46 ℄ 853+65.00		1
34	g	D-19	Rte 46 ℄ 863+63.00		1
36	f	D-19	Rte 46 ℄ 878+28.00		1
37	a	D-19	Rte 46 ℄ 881+00.00		1
38	a	D-19	Rte 46 ℄ 881+90.00		1
			SUBTOTAL	30	29
			TOTAL	59	

SUMMARY OF QUANTITIES
Q-2

STATE OF CALIFORNIA - DEPARTMENT OF TRANSPORTATION
Caltrans 06-DESIGN

FUNCTIONAL SUPERVISOR: JACK WALKER
CALCULATED-DESIGNED BY: SUMANGALI HOODE
CHECKED BY: JOSE ARGUELLO
REVISED BY / DATE REVISED

LAST REVISION 10-25-11 | DATE PLOTTED => 16-FEB-2012 | TIME PLOTTED => 14:34

Dist	COUNTY	ROUTE	POST MILES TOTAL PROJECT	SHEET No.	TOTAL SHEETS
05	SLO	46	40.7/46.3	430	541

REGISTERED CIVIL ENGINEER 11-10-11 DATE

2-13-12
PLANS APPROVAL DATE

REGISTERED PROFESSIONAL ENGINEER JOSE M. ARGUELLO No. 51321 Exp. 06-30-12 CIVIL STATE OF CALIFORNIA

THE STATE OF CALIFORNIA OR ITS OFFICERS OR AGENTS SHALL NOT BE RESPONSIBLE FOR THE ACCURACY OR COMPLETENESS OF SCANNED COPIES OF THIS PLAN SHEET.

REMOVE FENCE

LAYOUT PLAN L SHEET No.	LOCATION FROM	LOCATION TO	REMOVE FENCE LF
2-3	Rte 46 ℄ Sta 630+00 121′ Lt	Rte 46 ℄ Sta 634+00 126′ Lt	418
3	Rte 46 ℄ Sta 637+95 177′ Lt	Rte 46 ℄ Sta 640+18 179′ Lt	223
3-4	Rte 46 ℄ Sta 643+06 122′ Lt	Rte 46 ℄ Sta 655+93 52′ Lt	1,283
4	Prvt Dwt 3A ℄ Sta 6+85 41′ Lt	Prvt Dwt 3A ℄ Sta 8+22 9′ Lt	144
4	Prvt Dwt 3A ℄ Sta 8+13 12′ Rt	Prvt Dwt 3A ℄ Sta 9+02 18′ Rt	89
4-14	Rte 46 ℄ Sta 656+72 92′ Lt	Rte 46 ℄ Sta 796+22 92′ Lt	14,143
7	Rte 46 ℄ Sta 702+91 154′ Lt	Rte 46 ℄ Sta 702+95 81′ Lt	73
8	Rte 46 ℄ Sta 705+72 120′ Lt	Rte 46 ℄ Sta 705+74 81′ Lt	39
9	Rte 46 ℄ Sta 722+66 71′ Lt	Rte 46 ℄ Sta 722+69 116′ Lt	44
10	Rte 46 ℄ Sta 745+03 122′ Lt	Rte 46 ℄ Sta 745+11 71′ Lt	51
12	Rte 46 ℄ Sta 773+67 128′ Lt	Rte 46 ℄ Sta 773+77 119′ Lt	14
12-13	Rte 46 ℄ Sta 774+02 108′ Lt	Rte 46 ℄ Sta 774+75 124′ Lt	81
13	Rte 46 ℄ Sta 774+99 73′ Lt	Rte 46 ℄ Sta 776+22 123′ Lt	132
14	Prvt Dwy 8 ℄ Sta 7+18 19′ Lt	Prvt Dwy 8 ℄ Sta 7+66 12′ Lt	49
14	Prvt Dwy 8 ℄ Sta 7+20 12′ Rt	Prvt Dwy 8 ℄ Sta 7+66 24′ Rt	48
14-18	Rte 46 ℄ Sta 796+39 107′ Lt	Rte 46 ℄ Sta 851+73 71′ Lt	5,555
15	Rte 46 ℄ Sta 811+31 71′ Lt	Rte 46 ℄ Sta 811+34 166′ Lt	94
18	Rte 46 ℄ Sta 846+40 116′ Lt	Rte 46 ℄ Sta 846+44 71′ Lt	44
18	McMillan Canyon Rd ℄ Sta 53+12 65′ Lt	McMillan Canyon Rd ℄ Sta 54+75 57′ Lt	144
18	McMillan Canyon Rd ℄ Sta 53+09 91′ Rt	McMillan Canyon Rd ℄ Sta 54+72 58′ Rt	186
18	Rte 46 ℄ Sta 853+30 70′ Lt	Rte 46 ℄ Sta 855+32 17′ Lt	222
18-21	Rte 46 ℄ Sta 856+09 61′ Lt	Rte 46 ℄ Sta 894+53 54′ Lt	3,844
19	Rte 46 ℄ Sta 859+30 160′ Lt	Rte 46 ℄ Sta 860+95 69′ Lt	187
21	Prvt Dwy 10 ℄ Sta 5+34 28′ Lt	Prvt Dwy 10 ℄ Sta 6+01 25′ Lt	66
		Lt SUBTOTAL	27,173
2	Rte 46 ℄ Sta 628+40 116′ Rt	Rte 46 ℄ Sta 628+59 146′ Rt	36
2-4	Rte 46 ℄ Sta 628+89 145′ Rt	Rte 46 ℄ Sta 655+78 111′ Rt	2,763
3	Rte 46 ℄ Sta 639+64 122′ Rt	Rte 46 ℄ Sta 639+69 80′ Rt	42
4-6	Rte 46 ℄ Sta 656+54 122′ Rt	Rte 46 ℄ Sta 685+47 97′ Rt	2,911
5	Rte 46 ℄ Sta 674+59 120′ Rt	Rte 46 ℄ Sta 676+22 212′ Rt	186
6	Rte 46 ℄ Sta 676+74 211′ Rt	Rte 46 ℄ Sta 682+05 202′ Rt	534
6	Rte 46 ℄ Sta 684+44 243′ Rt	Rte 46 ℄ Sta 685+80 228′ Rt	155
6	Rte 46 ℄ Sta 685+35 128′ Rt	Rte 46 ℄ Sta 685+54 225′ Rt	99
6	Rte 46 ℄ Sta 686+08 143′ Rt	Rte 46 ℄ Sta 689+89 210′ Rt	390
6-7	Rte 46 ℄ Sta 686+18 107′ Rt	Rte 46 ℄ Sta 698+28 120′ Rt	1,220
6-7	Rte 46 ℄ Sta 687+04 113′ Rt	Rte 46 ℄ Sta 690+86 164′ Rt	386
7-13	Rte 46 ℄ Sta 701+39 109′ Rt	Rte 46 ℄ Sta 781+68 111′ Rt	8,037
8	Rte 46 ℄ Sta 709+59 136′ Rt	Rte 46 ℄ Sta 711+99 203′ Rt	250
10	Rte 46 ℄ Sta 745+89 124′ Rt	Rte 46 ℄ Sta 745+89 111′ Rt	13
12	Rte 46 ℄ Sta 763+62 114′ Rt	Rte 46 ℄ Sta 763+63 130′ Rt	16
12	Rte 46 ℄ Sta 770+76 110′ Rt	Rte 46 ℄ Sta 770+78 132′ Rt	22
14	Rte 46 ℄ Sta 795+68 110′ Rt	Rte 46 ℄ Sta 796+69 127′ Rt	110
17	Rte 46 ℄ Sta 837+60 109′ Rt	Rte 46 ℄ Sta 842+60 109′ Rt	500
18	W Centre St ℄ Sta 49+06 31′ Rt	W Centre St ℄ Sta 51+17 33′ Rt	210
18-20	Rte 46 ℄ Sta 852+75 122′ Rt	Rte 46 ℄ Sta 877+67 111′ Rt	2,499
18	Rte 46 ℄ Sta 854+41 115′ Rt	Rte 46 ℄ Sta 854+56 181′ Rt	69
		Rt SUBTOTAL	20,448
		Lt SUBTOTAL	27,173
		Rt SUBTOTAL	20,448
		TOTAL	47,621

TEMPORARY FENCE (TYPE ESA)

PLAN SHEET No.	LOCATION	Temp FENCE (TYPE ESA) LF
L-5	Rte 46 ℄ Sta 672+72 TO Sta 673+47 Rt	136
L-5	Rte 46 ℄ Sta 670+50 TO Sta 675+75 Rt	1038
L-5	Rte 46 ℄ Sta 674+50 TO Sta 675+25 Lt	221
L-18	Rte 46 ℄ Sta 850+51 TO Sta 851+17 Rt	81
	TOTAL	1476

REMOVE CONCRETE PAVEMENT

LOCATION	THICKNESS (N) FT	REMOVE Conc Pvmt SQYD
Rte 46 ℄ Sta 811+30.59 TO Sta 812+04.26 Exist EASTBOUND No.1	1.50	98
Rte 46 ℄ Sta 811+54.46 TO Sta 812+30.24 Exist WESTBOUND No.1	1.50	101
TOTAL		199

(N) NOT A SEPARATE PAY ITEM, FOR INFORMATION ONLY.

SUMMARY OF QUANTITIES
Q-3

STATE OF CALIFORNIA - DEPARTMENT OF TRANSPORTATION
06-DESIGN
FUNCTIONAL SUPERVISOR: JACK WALKER
CALCULATED-DESIGNED BY: JOHN CLARKE
CHECKED BY: JOSE ARGUELLO
REVISED BY / DATE REVISED

LAST REVISION 11-09-11
DATE PLOTTED => 16-FEB-2012
TIME PLOTTED => 14:34

Dist	COUNTY	ROUTE	POST MILES TOTAL PROJECT	SHEET No.	TOTAL SHEETS
05	SLO	46	40.7/46.3	431	541

REGISTERED CIVIL ENGINEER 11-10-11 DATE

2-13-12
PLANS APPROVAL DATE

REGISTERED PROFESSIONAL ENGINEER JOSE M. ARGUELLO No. 51321 Exp. 06-30-12 CIVIL STATE OF CALIFORNIA

THE STATE OF CALIFORNIA OR ITS OFFICERS OR AGENTS SHALL NOT BE RESPONSIBLE FOR THE ACCURACY OR COMPLETENESS OF SCANNED COPIES OF THIS PLAN SHEET.

COLD PLANE AC PAVEMENT

STAGE - PHASE	LOCATION	COLD PLANE AC Pvmt (0.35' Max)	COLD PLANE AC Pvmt (0.15' Max)
		SQYD	SQYD
S1 P1	ACCRD1 ℄ Sta 864+31.98 TO Sta 864+51.98		25
S1 P1	McMillan Canyon Rd ℄ Sta 55+60.00 TO Sta 56+00.00		131
S1 P1	Prvt Dwy 8 ℄ Sta 7+66.30 TO Sta 8+05.78		72
S1 P2	Detour 1 ℄ Sta 5+73.18 TO Sta 16+59.38 OS		539
S1 P2	Detour 1 ℄ Sta 21+42.39 TO Sta 24+14.26 OS		181
S1 P2	Detour 2 ℄ Sta 61+42.90 TO Sta 78+56.50 OS		381
S2 P1	Prvt Dwy 3B ℄ Sta 10+80.00 TO Sta 11+20.00		80
S2 P1	Prvt Dwy 3C ℄ Sta 9+76.50 TO Sta 9+86.50		14
S2 P1	Rte 46 ℄ Sta 618+00.00 TO Sta 619+42.76 Lt IS TW OS		619
S2 P1	Rte 46 ℄ Sta 619+42.76 TO Sta 620+48.90 Lt TW OS		295
S2 P2	Detour 5 ℄ Sta 113+51.76 TO Sta 123+49.09		182
S3	Rte 46 ℄ Sta 605+73.18 TO Sta 616+59.38 Lt IS	539	
S4	Rte 46 EB Trans ℄ Sta 93+00.00 TO Sta 94+00.00 TW OS		356
S4	W Centre St ℄ Sta 48+50.00 TO Sta 49+00.00		133
S5	Rte 46 ℄ Sta 643+75.00 TO Sta 644+75.00 Lt IS TW OS		433
S5	Rte 46 ℄ Sta 644+75.00 TO Sta 810+10.49 Lt OS		18,373
S5	Rte 46 ℄ Sta 705+99.63 TO Sta 712+16.60 Lt IS		343
S5	Rte 46 ℄ Sta 810+10.49 TO Sta 811+10.49 Lt IS TW OS		433
S5	Rte 46 ℄ Sta 813+60.49 TO Sta 814+60.49 Lt IS TW OS		433
S5	Rte 46 ℄ Sta 814+60.49 TO Sta 853+88.66 Lt OS		4,365
S5	Rte 46 ℄ Sta 853+88.66 TO Sta 854+88.66 Lt IS IA TW OA OS		756
S5	Rte 46 ℄ Sta 855+71.95 TO Sta 856+71.95 Lt IS IA TW OA OS		756
S5	Rte 46 ℄ Sta 856+71.95 TO Sta 883+25.46 Lt OS		2,948
S5	Rte 46 ℄ Sta 607+03.76 TO Sta 615+25.00 Rt IS	456	
S5	Rte 46 ℄ Sta 615+25.00 TO Sta 616+25.00 Rt IS TW OA OS		567
S5	Rte 46 ℄ Sta 616+25.00 TO Sta 618+00.00 Rt IS TW		404
S5	Rte 46 ℄ Sta 616+25.00 TO Sta 644+00.00 Rt OS		3,083
S5	Rte 46 ℄ Sta 630+00.00 TO Sta 638+11.27 Rt IS		451
S5	Rte 46 WB Trans ℄ Sta 93+00.00 TO Sta 94+00.00 TW OS		222
	SUBTOTAL	995	36,575
	TOTAL	37,570	

OBLITERATE SURFACING

LAYOUT PLAN L SHEET No.	LOCATION	DESCRIPTION	OBLITERATE SURFACING
			SQYD
6	Rte 46 ℄ Sta 684+25 TO Sta 684+40 174'-241' Rt	REALIGNMENT OF ACCRD3	75
6	Rte 46 ℄ Sta 687+13 TO Sta 690+35 141'-176' Rt	REALIGNMENT OF ACCRD3	327
7-8	Rte 46 ℄ Sta 703+85 TO Sta 709+99 108'-163' Rt	REMOVE WITHIN R/W	590
14	Rte 46 ℄ Sta 793+43 TO Sta 795+99 83'-161'Rt	REALIGNMENT OF Prvt Dwy 9	359
18	W Centre St ℄ Sta 49+13 TO Sta 50+34 24'-36' Lt	REMOVE WITHIN R/W	25
		TOTAL	1376

WEIGH-IN-MOTION CONCRETE PAVEMENT

LOCATION	SEAL Pvmt Jt		JOINTED PLAIN Conc Pvmt
	TS	Longit	
	LF	LF	CY
Rte 46 ℄ Sta 810+60.22 TO Sta 813+10.22 Rt (EASTBOUND)	702	500	542
Rte 46 ℄ Sta 811+10.49 TO Sta 813+60.49 Lt (WESTBOUND)	702	500	542
SUBTOTAL	1404	1000	1084
TOTAL	2404		1084

CRACK TREATMENT

STAGE - PHASE	LOCATION	Dist (N)	LANES (N)	CRACK TREATMENT
		LF	No.	LNMI
S2 P1	Rte 46 ℄ Sta 618+00.00 TO Sta 620+48.90 Lt	248.90	2	0.09
S3	Rte 46 ℄ Sta 694+00.00 TO Sta 710+00.00 Rt	1600.00	2	0.61
S4	Rte 46 ℄ Sta 710+00.00 TO Sta 742+45.51 Rt	3245.51	2	1.23
S4	Rte 46 ℄ Sta 745+25.00 TO Sta 788+25.05 Rt	4300.05	2	1.63
S4	Rte 46 ℄ Sta 788+25.05 TO Sta 795+66.08 Rt	741.03	3	0.42
S4	Rte 46 ℄ Sta 795+66.08 TO Sta 810+60.22 Rt	1494.14	2	0.57
S4	Rte 46 ℄ Sta 813+10.22 TO Sta 828+00.00 Rt	1489.78	2	0.56
S4	Rte 46 EB Trans ℄ Sta 81+50.12 TO Sta 83+25.31 Rt	175.19	2	0.07
S4	Rte 46 EB Trans ℄ Sta 83+25.31 TO Sta 94+00.00 Rt	1074.69	3	0.61
			TOTAL	5.79

(N) NOT A SEPARATE PAY ITEM, FOR INFORMATION ONLY.

METAL BEAM GUARD RAILING

LAYOUT PLAN L SHEET No.	LOCATION	LAYOUT TYPE (N)	MBGR (STEEL POST)	Alt FLARED TERMINAL SYSTEM	END ANCHOR ASSEMBLY (SFT)	TRANSITION RAILING (WB)	END CAP (TC) (N)
			LF	EA	EA	EA	EA
7-8	Rte 46 ℄ Sta 702+75.00 TO Sta 707+00.00 Lt	11E	350.0	2			
7-8	Rte 46 ℄ Sta 702+75.00 TO Sta 711+00.00 Rt	11B	787.5	1	1		
18	Rte 46 ℄ Sta 854+28.64 TO Sta 854+90.86 Rt	12B	25.0	1		1	1
18	Rte 46 ℄ Sta 855+74.36 TO Sta 856+37.14 Lt	12B	25.0	1		1	1
6	ACCRD3 ℄ Sta 4+26.00 TO Sta 5+26.00 Rt	11E	25.0	2			
		TOTAL	1212.5	7	1	2	2

(N) NOT A SEPARATE PAY ITEM, FOR INFORMATION ONLY.

SUMMARY OF QUANTITIES
Q-4

STATE OF CALIFORNIA - DEPARTMENT OF TRANSPORTATION
06-DESIGN
Caltrans

FUNCTIONAL SUPERVISOR: JACK WALKER
CALCULATED-DESIGNED BY: JOHN CLARKE
CHECKED BY: JOSE ARGUELLO
REVISED BY
DATE REVISED

LAST REVISION 12-22-11
DATE PLOTTED => 16-FEB-2012
TIME PLOTTED => 14:34

Dist	COUNTY	ROUTE	POST MILES TOTAL PROJECT	SHEET No.	TOTAL SHEETS
05	SLO	46	40.7/46.3	432	541

REGISTERED CIVIL ENGINEER 11-10-11 DATE

2-13-12
PLANS APPROVAL DATE

REGISTERED PROFESSIONAL ENGINEER JOSE M. ARGUELLO No. 51321 Exp. 06-30-12 CIVIL STATE OF CALIFORNIA

THE STATE OF CALIFORNIA OR ITS OFFICERS OR AGENTS SHALL NOT BE RESPONSIBLE FOR THE ACCURACY OR COMPLETENESS OF SCANNED COPIES OF THIS PLAN SHEET.

ABANDON AND REMOVE DRAINAGE FACILITY

REMOVE FES (EA)	REMOVE HW/EW (EA)	REMOVE INLET (EA)	REMOVE JS (EA)	REMOVE WW (EA)	REMOVE Culv (LF)	REMOVE SCSP (LF)	LENGTH (N) (LF)	Abn Culv (EA)	SAND Bkf (CY)	Abn JS (EA)	DESCRIPTION	STATION	PLAN SHEET No.	DRAINAGE SYSTEM No. (#)	DRAINAGE UNIT No. (×)
						20.2					Remove SCSP	630+10	D-2	1X	a
					24.3						Remove 8" CMP	630+10	D-2	1X	b
					26.5						Remvoe 12" CMP	630+78	D-2	2X	a
						19.6					Remove SCSP	633+88	D-3	3X	a
					34.2						Remove 8" CMP	633+88	D-3	3X	b
	1										Remove HW	655+97	D-4	4X	a
					105.1						Remove 24" RCP	655+97	D-4	4X	b
1											Remove FES	655+97	D-4	4X	c
						19.6					Remove SCSP	665+11	D-5	5X	a
		1									Remove DI	665+37	D-5	6X	a
					89.4						Remove 24" CMP	665+37	D-5	6X	b
	1										Remove HW	665+37	D-5	6X	c
						19.8					Remove SCSP	675+10	D-5	7X	a
					26.4						Remove 8" CMP	675+10	D-5	7X	b
						39.6					Remove SCSP	686+36	D-6	8X	a
					26.7						Remove 8" CMP	686+36	D-6	8X	b
						39.8					Remove SCSP	686+75	D-6	9X	a
					28.0						Remove 8" CMP	686+75	D-6	9X	b
						19.9					Remove SCSP	703+79	D-7	10X	a
					31.3						Remove 18" CMP	703+79	D-7	10X	b
						20.3					Remove SCSP	704+27	D-7	11X	a
					35.3						Remove 8" CMP	704+27	D-7	11X	b
						19.7					Remove SCSP	706+45	D-8	12X	a
					46.2						Remove 8" CMP	706+45	D-8	12X	b
						19.9					Remove SCSP	708+30	D-8	13X	a
					42.5						Remove 8" CMP	708+30	D-8	13X	b
						19.9					Remove SCSP	709+30	D-8	14X	a
					59.9						Remove 8" CMP	709+30	D-8	14X	b
						20.0					Remove SCSP	713+28	D-8	15X	a
					17.2						Remove 8" CMP	713+28	D-8	15X	b
						19.8					Remove SCSP	714+29	D-8	16X	a
					62.5						Remove 8" CMP	714+29	D-8	16X	b
						20.0					Remove SCSP	718+22	D-8	17X	a
					26.7						Remove 8" CMP	718+22	D-8	17X	b
	1										Remove HW	737+98	D-10	18X	a
							64.5	1	7.5		Abn 24" RCP	737+98	D-10	18X	b
	1										Remove EW	737+98	D-10	18X	c
1	4	1	0	0	682.2	318.1	64.5	1	7.5	0	COLUMN - SUBTOTAL				

CONTINUED

(N) NOT A SEPARATE PAY ITEM, FOR INFORMATION ONLY.

ABANDON AND REMOVE DRAINAGE FACILITY (CONTINUED)

REMOVE FES (EA)	REMOVE HW/EW (EA)	REMOVE INLET (EA)	REMOVE JS (EA)	REMOVE WW (EA)	REMOVE Culv (LF)	REMOVE SCSP (LF)	LENGTH (N) (LF)	Abn Culv (EA)	SAND Bkf (CY)	Abn JS (EA)	DESCRIPTION	STATION	PLAN SHEET No.	DRAINAGE SYSTEM No. (#)	DRAINAGE UNIT No. (×)
1	4	1	0	0	682.2	318.1	64.5	1	7.5	0	COLUMN - CARRYOVER				
1											Remove FES	764+20	D-12	19X	a
							83.5	1	9.7		Abn 24" RCP	764+20	D-12	19X	b
	1										Remove EW	764+20	D-12	19X	c
						20.2					Remove SCSP	775+80	D-13	20X	a
					20.0						Remove 8" CMP	775+80	D-13	20X	b
1											Remove FES	776+60	D-13	21X	a
							123.5	1	14.4		Abn 24" RCP	776+60	D-13	21X	b
	1										Remove EW	776+60	D-13	21X	c
1											Remove FES	788+04	D-14	22X	a
							78.6	1	9.1		Abn 24" RCP	788+04	D-14	22X	b
	1										Remove EW	788+04	D-14	22X	c
1											Remove FES	792+31	D-14	23X	a
							81.1	1	9.4		Abn 24" RCP	792+31	D-14	23X	b
	1										Remove EW	792+31	D-14	23X	c
						19.1					Remove SCSP	815+30	D-15	24X	a
					13.0						Remove 8" CMP	815+30	D-15	24X	b
						20.1					Remove SCSP	818+29	D-16	25X	a
					20.6						Remove 8" CMP	818+29	D-16	25X	b
1											Remove FES	819+00	D-16	26X	a
							69.9	1	203.2		Abn 60" CMP	819+00	D-16	26X	b
1											Remove FES	819+00	D-16	26X	c
1											Remove FES	819+25	D-16	27X	a
					13.4						Abn 18" CMP	819+25	D-16	27X	b
1											Remove FES	819+25	D-16	27X	c
						19.9					Remove SCSP	821+28	D-16	28X	a
					25.8						Remove 8" CMP	821+28	D-16	28X	b
						19.9					Remove SCSP	821+31	D-16	29X	a
					25.1						Remove 8" CMP	821+31	D-16	29X	b
						20.0					Remove SCSP	824+30	D-16	30X	a
					25.9						Remove 8" CMP	824+30	D-16	30X	b
9	8	1	0	0	826.0	437.3	501.1	6	253.3	0	TOTAL THIS Sht				

(N) NOT A SEPARATE PAY ITEM, FOR INFORMATION ONLY.

SUMMARY OF QUANTITIES

Q-5

STATE OF CALIFORNIA - DEPARTMENT OF TRANSPORTATION
Caltrans® 06-DESIGN

FUNCTIONAL SUPERVISOR: JACK WALKER
CALCULATED-DESIGNED BY: TOM LIU
CHECKED BY: SUMANGALI HOODE
REVISED BY / DATE REVISED

LAST REVISION 11-02-11 DATE PLOTTED => 16-FEB-2012 TIME PLOTTED => 14:34

Dist	COUNTY	ROUTE	POST MILES TOTAL PROJECT	SHEET No.	TOTAL SHEETS
05	SLO	46	40.7/46.3	433	541

REGISTERED CIVIL ENGINEER 11-10-11 DATE

2-13-12
PLANS APPROVAL DATE

REGISTERED PROFESSIONAL ENGINEER JOSE M. ARGUELLO No. 51321 Exp. 06-30-12 CIVIL STATE OF CALIFORNIA

THE STATE OF CALIFORNIA OR ITS OFFICERS OR AGENTS SHALL NOT BE RESPONSIBLE FOR THE ACCURACY OR COMPLETENESS OF SCANNED COPIES OF THIS PLAN SHEET.

ABANDON AND REMOVE DRAINAGE FACILITY (CONTINUED)

REMOVE							LENGTH (N)	Abn Culv	SAND Bkf	Abn JS	DESCRIPTION	STATION	PLAN SHEET No.	DRAINAGE SYSTEM No. (#)	DRAINAGE UNIT No. (×)
FES	HW/EW	INLET	JS	WW	Culv	SCSP									
EA	EA	EA	EA	EA	LF	LF	LF	EA	CY	EA					
						19.9					Remove SCSP	824+31	D-16	31X	a
					25.7						Remove 8" CMP	824+31	D-16	31X	b
	1										Remove HW	826+82	D-16	32X	a
							76.4	1	8.9		Abn 24" RCP	826+82	D-16	32X	b
	1										Remove EW	826+82	D-16	32X	a
						20.0					Remove SCSP	827+31	D-16	33X	a
					25.0						Remove 8" CMP	827+31	D-16	33X	b
					22.4						Remove 8" CMP	830+31	D-17	34X	a
	1										Remove HW	834+77	D-17	35X	a
					67.8						Remove 24" RCP	834+77	D-17	35X	b
	1										Remove EW	834+77	D-17	35X	c
					20.0						Remove 8" CMP	839+29	D-17	36X	a
	1										Remove HW	841+04	D-17	37X	a
					72.5						Remove 24" RCP	841+04	D-17	37X	b
	1										Remove EW	841+04	D-17	37X	c
	1										Remove HW	852+70	D-18	38X	a
					53.9						Remove 24" RCP	852+70	D-18	38X	b
	1										Remove EW	852+70	D-18	38X	c
						20.0					Remove SCSP	870+27	D-19	40X	a
					24.8						Remove 8" CMP	870+27	D-19	40X	b
						20.0					Remove SCSP	870+31	D-19	41X	a
					27.4						Remove 8" CMP	870+31	D-19	41X	b
						19.5					Remove SCSP	873+29	D-20	43X	a
					27.9						Remove 8" CMP	873+29	D-20	43X	b
						19.7					Remove SCSP	873+30	D-20	44X	a
					27.1						Remove 8" CMP	873+30	D-20	44X	b
						19.8					Remove SCSP	879+29	D-20	45X	a
					26.7						Remove 8" CMP	879+29	D-20	45X	b
					SEE Sht Q-16						Remove 12'x10' RCB	855+65	d-18	46X	a
9	8	1	0	0	826.0	437.3	501.1	6	253.3	0	Sht Q-6 TOTAL				
7	24	8	6	2	1736.5	0	746.3	10	255.6	3	DRAINAGE QUANTITIES SUMMARY (Sht DQ-13)				
16	32	9	6	2	2562.5	437.3	1247.4	16	508.9	3	TOTAL				

(N) NOT A SEPARATE PAY ITEM, FOR INFORMATION ONLY.

SUMMARY OF QUANTITIES
Q-6

STATE OF CALIFORNIA - DEPARTMENT OF TRANSPORTATION
06-DESIGN
Caltrans

FUNCTIONAL SUPERVISOR: JACK WALKER
CALCULATED-DESIGNED BY: SUMANGALI HOODE
CHECKED BY: TOM LIU
REVISED BY
DATE REVISED

LAST REVISION 11-03-11
DATE PLOTTED => 16-FEB-2012
TIME PLOTTED => 14:34

Dist	COUNTY	ROUTE	POST MILES TOTAL PROJECT	SHEET No.	TOTAL SHEETS
05	SLO	46	40.7/46.3	434	541

REGISTERED CIVIL ENGINEER 11-10-11 DATE

2-13-12
PLANS APPROVAL DATE

REGISTERED PROFESSIONAL ENGINEER JOSE M. ARGUELLO No. 51321 Exp. 06-30-12 CIVIL STATE OF CALIFORNIA

THE STATE OF CALIFORNIA OR ITS OFFICERS OR AGENTS SHALL NOT BE RESPONSIBLE FOR THE ACCURACY OR COMPLETENESS OF SCANNED COPIES OF THIS PLAN SHEET.

RUMBLE STRIP

FINAL Surf	LOCATION	HMA INSIDE Shld Sta	HMA OUTSIDE Shld Sta	HMA CENTER LINE Sta
NO	Detour 1 ℄ Sta 5+73.18 TO Sta 26+25.57 WB	20.52		
NO	Detour 1 ℄ Sta 16+59.38 TO Sta 26+25.03 WB		9.66	
NO	Detour 1 ℄ Sta 31+25.78 TO Sta 35+01.86			3.76
NO	Detour 1 ℄ Sta 31+25.78 TO Sta 35+01.86 EB		3.76	
NO	Detour 1 ℄ Sta 31+25.78 TO Sta 35+01.86 WB		3.76	
NO	Detour 2 ℄ Sta 44+00.00 TO Sta 52+00.00			8.00
NO	Detour 2 ℄ Sta 44+00.00 TO Sta 52+00.00 EB		8.00	
NO	Detour 2 ℄ Sta 44+00.00 TO Sta 52+00.00 WB		8.00	
NO	Detour 2 ℄ Sta 52+00.00 TO Sta 61+42.90			9.43
NO	Detour 2 ℄ Sta 52+00.00 TO Sta 61+42.90 EB		9.43	
NO	Detour 2 ℄ Sta 52+00.00 TO Sta 69+03.30 WB		17.03	
NO	Detour 2 ℄ Sta 74+03.30 TO Sta 78+56.50 WB		4.53	
NO	Rte 46 ℄ Sta 615+25.00 TO Sta 626+23.94 EB		10.99	
NO	Rte 46 ℄ Sta 618+00.00 TO Sta 626+23.94 EB	8.24		
NO	Rte 46 ℄ Sta 635+00.00 TO Sta 644+00.00			9.00
NO	Rte 46 ℄ Sta 635+00.00 TO Sta 644+00.00 EB		9.00	
NO	Rte 46 ℄ Sta 635+00.00 TO Sta 644+00.00 WB		9.00	
	STAGE 2 TRAFFIC SUBTOTAL	28.76	93.16	30.19
NO	Detour 3 ℄ Sta 32+41.09 TO Sta 42+25.00 EB		9.84	
NO	Detour 3 ℄ Sta 32+41.09 TO Sta 42+25.00 EB	9.84		
NO	Detour 3 ℄ Sta 42+25.00 TO Sta 43+76.48 EB	1.51		
NO	Detour 3 ℄ Sta 42+25.00 TO Sta 54+72.66 EB		12.48	
NO	Detour 3 ℄ Sta 43+76.48 TO Sta 54+72.60			10.96
NO	Detour 3 ℄ Sta 58+82.18 TO Sta 60+00.00			1.18
NO	Detour 3 ℄ Sta 58+82.18 TO Sta 60+00.00 EB		1.18	
NO	Detour 3 ℄ Sta 60+00.00 TO Sta 63+98.35			3.98
NO	Detour 3 ℄ Sta 60+00.00 TO Sta 63+98.35 EB		3.98	
NO	Detour 5 ℄ Sta 102+84.24 TO Sta 126+01.83			23.18
NO	Detour 5 ℄ Sta 102+84.24 TO Sta 126+01.83 EB		23.18	
NO	Detour 5 ℄ Sta 102+84.24 TO Sta 126+01.83 WB		23.18	
YES	Rte 46 ℄ Sta 618+00.00 TO Sta 626+23.94 WB	8.24	8.24	
YES	Rte 46 ℄ Sta 629+38.00 TO Sta 643+75.00 WB	14.37		
YES	Rte 46 ℄ Sta 631+23.94 TO Sta 643+75.00 WB		12.51	
NO	Rte 46 ℄ Sta 643+75.00 TO Sta 655+66.71 WB		11.92	
NO	Rte 46 ℄ Sta 656+93.87 TO Sta 660+00.00 WB		3.06	
NO	Rte 46 ℄ Sta 660+00.00 TO Sta 697+84.24 WB		37.84	
NO	Rte 46 ℄ Sta 664+00.00 TO Sta 697+84.24			33.84
NO	Rte 46 ℄ Sta 664+00.00 TO Sta 697+84.24 EB		33.84	
	STAGE 3 TRAFFIC SUBTOTAL	33.96	181.25	73.14
NO	Detour 4 ℄ Sta 63+92.63 TO Sta 91+61.40			27.69
NO	Detour 4 ℄ Sta 63+92.63 TO Sta 91+61.40 EB		27.69	
NO	Detour 4 ℄ Sta 63+92.63 TO Sta 91+61.40 WB		27.69	
NO	Rte 46 ℄ Sta 702+84.24 TO Sta 739+56.78			36.73
NO	Rte 46 ℄ Sta 702+84.24 TO Sta 739+56.78 EB		36.73	
NO	Rte 46 ℄ Sta 702+84.24 TO Sta 739+56.78 WB		36.73	
NO	Rte 46 ℄ Sta 744+56.78 TO Sta 793+80.14			49.23
NO	Rte 46 ℄ Sta 744+56.78 TO Sta 793+80.14 EB		49.23	
NO	Rte 46 ℄ Sta 744+56.78 TO Sta 793+80.14 WB		49.23	
NO	Rte 46 ℄ Sta 798+80.14 TO Sta 811+10.49 WB		12.30	12.30
NO	Rte 46 ℄ Sta 798+80.14 TO Sta 811+10.49 EB		12.30	
NO	Rte 46 ℄ Sta 813+60.49 TO Sta 850+84.35 EB		37.24	37.24
NO	Rte 46 ℄ Sta 813+60.49 TO Sta 851+71.09 WB		38.11	
NO	Rte 46 ℄ Sta 853+12.33 TO Sta 854+88.00 WB		1.76	
NO	Rte 46 ℄ Sta 853+18.71 TO Sta 854+88.00			1.69
NO	Rte 46 ℄ Sta 853+18.71 TO Sta 854+88.00 EB		1.69	
NO	Rte 46 ℄ Sta 855+73.00 TO Sta 863+92.63			8.20
NO	Rte 46 ℄ Sta 855+73.00 TO Sta 863+92.63 EB		8.20	
NO	Rte 46 ℄ Sta 855+73.00 TO Sta 863+92.63 WB		8.20	
	STAGE 4 TRAFFIC SUBTOTAL	0.00	347.10	173.08

CONTINUED

RUMBLE STRIP (CONTINUED)

FINAL Surf	LOCATION	HMA INSIDE Shld Sta	HMA OUTSIDE Shld Sta	HMA CENTER LINE Sta
YES	Rte 46 ℄ Sta 605+73.15 TO Sta 616+58.75 WB	10.86		
YES	Rte 46 ℄ Sta 607+03.76 TO Sta 628+09.88 EB	21.06		
YES	Rte 46 ℄ Sta 615+25.00 TO Sta 626+23.94 EB		10.99	
YES	Rte 46 ℄ Sta 631+23.94 TO Sta 644+00.00 EB	12.76	12.76	
YES	Rte 46 ℄ Sta 643+75.00 TO Sta 654+74.28 WB	10.99		
YES	Rte 46 ℄ Sta 643+75.00 TO Sta 655+66.71 WB		11.92	
YES	Rte 46 ℄ Sta 644+00.00 TO Sta 653+83.00 EB		9.83	
YES	Rte 46 ℄ Sta 644+00.00 TO Sta 655+68.95 EB	11.69		
YES	Rte 46 ℄ Sta 656+93.87 TO Sta 697+84.24 WB		40.90	
YES	Rte 46 ℄ Sta 657+04.89 TO Sta 697+84.24 WB	40.79		
YES	Rte 46 ℄ Sta 657+77.35 TO Sta 699+70.18 EB	41.93		
YES	Rte 46 ℄ Sta 658+83.00 TO Sta 697+84.24 EB		39.01	
YES	Rte 46 ℄ Sta 700+98.30 TO Sta 739+56.78 WB	38.58		
YES	Rte 46 ℄ Sta 702+84.24 TO Sta 739+56.78 WB		36.73	
YES	Rte 46 ℄ Sta 702+84.24 TO Sta 741+42.72 EB	38.58		
YES	Rte 46 ℄ Sta 702+84.24 TO Sta 793+80.14 EB		90.96	
YES	Rte 46 ℄ Sta 744+56.78 TO Sta 793+80.14 WB	49.23	49.23	
YES	Rte 46 ℄ Sta 744+56.78 TO Sta 795+66.08 EB	51.09		
YES	Rte 46 ℄ Sta 796+94.20 TO Sta 811+10.49 WB	14.16		
YES	Rte 46 ℄ Sta 813+60.49 TO Sta 850+84.35 WB	37.24		
YES	Rte 46 ℄ Sta 798+80.14 TO Sta 810+60.22 EB	11.80		
YES	Rte 46 ℄ Sta 813+10.22 TO Sta 851+60.98 EB	38.51		
YES	Rte 46 ℄ Sta 798+80.14 TO Sta 811+10.49 WB		12.30	
YES	Rte 46 ℄ Sta 813+60.49 TO Sta 851+71.09 WB		38.11	
YES	Rte 46 ℄ Sta 798+80.14 TO Sta 810+60.22 EB		11.80	
YES	Rte 46 ℄ Sta 813+10.22 TO Sta 851+71.33 EB		38.61	
YES	Rte 46 ℄ Sta 853+08.05 TO Sta 854+92.00 EB		1.84	
YES	Rte 46 ℄ Sta 853+12.33 TO Sta 854+88.00 WB		1.76	
YES	Rte 46 ℄ Sta 853+18.71 TO Sta 854+88.00 WB	1.69		
YES	Rte 46 ℄ Sta 853+93.08 TO Sta 854+92.00 EB	0.99		
YES	Rte 46 ℄ Sta 855+73.00 TO Sta 863+92.63 WB	8.20		
YES	Rte 46 ℄ Sta 855+73.00 TO Sta 883+25.46 WB		27.52	
YES	Rte 46 ℄ Sta 855+77.00 TO Sta 881+50.00 EB	25.73	25.73	
YES	Rte 46 ℄ Sta 879+24.29 TO Sta 883+25.46 WB	4.01		
YES	Rte 46 EB Trans ℄ Sta 81+50.00 TO Sta 94+00.00 EB		12.50	12.50
YES	Rte 46 WB Trans ℄ Sta 63+92.63 TO Sta 81+50.00 WB	17.57		
YES	Rte 46 WB Trans ℄ Sta 79+23.10 TO Sta 94+00.00 WB		14.77	
	STAGE 5 TRAFFIC SUBTOTAL	487.46	487.27	12.50
	STAGE 2 TRAFFIC SUBTOTAL	28.76	93.16	30.19
	STAGE 3 TRAFFIC SUBTOTAL	33.96	181.25	73.14
	STAGE 4 TRAFFIC SUBTOTAL	0.00	347.10	173.08
	STAGE 5 TRAFFIC SUBTOTAL	487.46	487.27	12.50
	SUBTOTAL	550.18	1108.78	288.91
	TOTAL	1947.87		

SUMMARY OF QUANTITIES
Q-7

STATE OF CALIFORNIA - DEPARTMENT OF TRANSPORTATION
Caltrans® 06-DESIGN

FUNCTIONAL SUPERVISOR: JACK WALKER
CALCULATED-DESIGNED BY: JOHN CLARKE
CHECKED BY: JOSE ARGUELLO
REVISED BY
DATE REVISED

LAST REVISION 12-22-11
DATE PLOTTED => 16-FEB-2012
TIME PLOTTED => 14:34

Dist	COUNTY	ROUTE	POST MILES TOTAL PROJECT	SHEET No.	TOTAL SHEETS
05	SLO	46	40.7/46.3	435	541

REGISTERED CIVIL ENGINEER 11-10-11 DATE

2-13-12
PLANS APPROVAL DATE

REGISTERED PROFESSIONAL ENGINEER JOSE M. ARGUELLO No. 51321 Exp. 06-30-12 CIVIL STATE OF CALIFORNIA

THE STATE OF CALIFORNIA OR ITS OFFICERS OR AGENTS SHALL NOT BE RESPONSIBLE FOR THE ACCURACY OR COMPLETENESS OF SCANNED COPIES OF THIS PLAN SHEET.

SURVEY MONUMENT

LOCATION	DESCRIPTION	TYPE A EA
Rte 46 ℄ Sta 607+03.76 0′ Rt	New Survey Mon, BC	1
Rte 46 ℄ Sta 619+00.44 0′ Rt	New Survey Mon, EC	1
Rte 46 ℄ Sta 630+00.00 0′ Rt	New Survey Mon	1
Rte 46 ℄ Sta 646+22.42 0′ Rt	New Survey Mon, BC	1
Rte 46 ℄ Sta 654+26.22 0′ Rt	New Survey Mon, EC	1
Rte 46 ℄ Sta 660+00.00 0′ Rt	New Survey Mon	1
Rte 46 ℄ Sta 670+00.00 0′ Rt	New Survey Mon	1
Rte 46 ℄ Sta 680+00.00 0′ Rt	New Survey Mon	1
Rte 46 ℄ Sta 690+00.00 0′ Rt	New Survey Mon	1
Rte 46 ℄ Sta 699+00.00 0′ Rt	New Survey Mon	1
Rte 46 ℄ Sta 710+00.00 0′ Rt	New Survey Mon	1
Rte 46 ℄ Sta 720+00.00 0′ Rt	New Survey Mon	1
Rte 46 ℄ Sta 730+00.00 0′ Rt	New Survey Mon	1
Rte 46 ℄ Sta 740+00.00 0′ Rt	New Survey Mon	1
Rte 46 ℄ Sta 750+00.00 0′ Rt	New Survey Mon	1
Rte 46 ℄ Sta 760+00.00 0′ Rt	New Survey Mon	1
Rte 46 ℄ Sta 770+00.00 0′ Rt	New Survey Mon	1
Rte 46 ℄ Sta 780+00.00 0′ Rt	New Survey Mon	1
Rte 46 ℄ Sta 787+35.18 0′ Rt	New Survey Mon, BC	1
Rte 46 ℄ Sta 790+00.00 0′ Rt	New Survey Mon, POC	1
Rte 46 ℄ Sta 795+40.78 0′ Rt	New Survey Mon, EC	1
Rte 46 ℄ Sta 810+00.00 0′ Rt	New Survey Mon	1
Rte 46 ℄ Sta 820+00.00 0′ Rt	New Survey Mon	1
Rte 46 ℄ Sta 830+00.00 0′ Rt	New Survey Mon	1
Rte 46 ℄ Sta 840+00.00 0′ Rt	New Survey Mon	1
Rte 46 ℄ Sta 850+00.00 0′ Rt	New Survey Mon	1
Rte 46 ℄ Sta 858+00.00 0′ Rt	New Survey Mon, POC	1
Rte 46 ℄ Sta 863+92.63 0′ Rt	New Survey Mon, EC	1
Rte 46 ℄ Sta 870+00.00 0′ Rt	New Survey Mon	1
	TOTAL	29

CABLE RAILING

DRAINAGE SYSTEM AND UNIT No.	DRAINAGE PLAN D Sht No.	LOCATION	CABLE RAILING LF
5 o	3	Rte 46 ℄ Sta 642+39.11 104.69′ Lt	9.8
10 h	6	Rte 46 ℄ Sta 685+70.52 160.39′ Lt	31.7
10 i,j	6	Rte 46 ℄ Sta 685+92.96 224.41′ Rt	64.5
13 h	7	Rte 46 ℄ Sta 699+96.61 206.29′ Lt	20.3
13 r,s	7	Rte 46 ℄ Sta 699+22.23 154.98′ Rt	30.5
13 u,v	7	Rte 46 ℄ Sta 699+13.94 194.46′ Rt	20.3
21 f (RW1-2)	10	Rte 46 ℄ Sta 743+40.36 113.13′ Lt	65.5
21 f (RW3-4)	10	Rte 46 ℄ Sta 743+85.04 127.61′ Rt	60.9
		TOTAL	303.5

SUMMARY OF QUANTITIES
Q-8

STATE OF CALIFORNIA - DEPARTMENT OF TRANSPORTATION
Caltrans® 06-DESIGN

FUNCTIONAL SUPERVISOR: JACK WALKER
CALCULATED-DESIGNED BY: JOSE ARGUELLO
CHECKED BY: JOHN CLARKE
REVISED BY / DATE REVISED

LAST REVISION 10-25-11
DATE PLOTTED => 16-FEB-2012
TIME PLOTTED => 14:34

Dist	COUNTY	ROUTE	POST MILES TOTAL PROJECT	SHEET No.	TOTAL SHEETS
05	SLO	46	40.7/46.3	436	541

REGISTERED CIVIL ENGINEER 11-10-11 DATE

2-13-12
PLANS APPROVAL DATE

REGISTERED PROFESSIONAL ENGINEER JOSE M. ARGUELLO No. 51321 Exp 06-30-12 CIVIL STATE OF CALIFORNIA

THE STATE OF CALIFORNIA OR ITS OFFICERS OR AGENTS SHALL NOT BE RESPONSIBLE FOR THE ACCURACY OR COMPLETENESS OF SCANNED COPIES OF THIS PLAN SHEET.

* ADDITIONAL ROADWAY EXCAVATION FOR REMOVE AC PAVEMENT.
** FOR INFORMATION ONLY. SELECT MATERIAL MUST BE USED FOR CI 5 AS. SEE SHEET C-17 AND C-18 FOR LOCATIONS OF SELECT MATERIAL.
*** FOR INFORMATION ONLY. QUANTITIES ARE PART OF ROADWAY EXCAVATION QUANTITIES.

EARTHWORK

LOCATION	Rdwy Exc	Emb (N)	SELECT MATERIAL ** ***	REMOVE AC Pvmt ***
	CY	CY	CY	CY
● STAGE 1 PHASE 1				
Rte 46 EB Lanes, Sta 615+25.00 TO Sta 644+00.00	1,311	106,655		
Rte 46 WB Lanes, Sta 657+00.00 TO Sta 883+25.46	596,557	231,877	24,947	
DETOUR 2, Sta 44+00.00 TO Sta 52+00.00	0	37,679		
Temp Prvt Dwy 1, Sta 1+29.08 TO Sta 6+61.15	4,682	194		
Prvt Dwy 2	9	2,496		
Prvt Dwy 5	3,891	212		
DETOUR 5, Sta 106+00.32 TO Sta 112+25	0	176		
Prvt Dwy 7	170	1		
Prvt Dwy 8	422	1		66
McMILLAN CANYON Rd	1,851	1		368
ACCRD1	3,527	476		
ACCRD2 - INCLUDED IN Rte 46 WB Lanes	0	0		
ACCRD4	6,883	1		
ACCRD5	29,028	5		
Temp Berm & Embankment, Sta 667+25 TO Sta 684+25	917	92,473		
STAGE 1 PHASE 1 SUBTOTAL	649,248	472,247	24,947	434
● STAGE 1 PHASE 2				
DETOUR 1, Sta 5+73.18 TO Sta 38+13.14	4,437	514		602
DETOUR 2, Sta 52+00.00 TO Sta 78+56.50	6,068	5,949		1,388
Temp Prvt Dwy 1, Sta 0+78.52 TO Sta 1+29.08	104	59		
STAGE 1 PHASE 2 SUBTOTAL	10,609	6,522	0	1,990
● STAGE 2 PHASE 1				
* Rte 46 WB Lanes, Sta 618+00.00 TO Sta 660+00.00	6,721	6,721		6,721
Rte 46 WB Lanes, Sta 618+00.00 TO Sta 660+00.00	35,103	48,959		8,526
DETOUR 3, Sta 42+25.00 TO Sta 55+99.41	2,425	426		
Prvt Dwy 1	83	141		
Prvt Dwy 3A	5,357	6		110
Prvt Dwy 3B	2,706	25		128
Prvt Dwy 3C	77	0		23
STAGE 2 PHASE 1 SUBTOTAL	52,472	56,278	0	15,507
● STAGE 2 PHASE 2				
DETOUR 3, Sta 32+41.09 TO Sta 42+25.00	1,428	453		
DETOUR 5, Sta 112+25.00 TO Sta 123+49.09	2,508	201		
STAGE 2 PHASE 2 SUBTOTAL	3,936	654	0	0

CONTINUED

(N) NOT A SEPARATE PAY ITEM, FOR INFORMATION ONLY.

EARTHWORK (CONTINUED)

LOCATION	Rdwy Exc	Emb (N)	SELECT MATERIAL ** ***	REMOVE AC Pvmt ***
	CY	CY	CY	CY
● STAGE 3				
* Rte 46 EB Trans, Sta 607+03.76 TO Sta 628+41.86	4,228	4,228		4,228
* Rte 46 EB Lanes, Sta 644+00.00 TO Sta 710+00.00	6,001	6,001		6,001
* Detour 1	2,662	2,662		2,662
* Detour 2	1,140	1,140		1,140
* Temp Dwy 1	1,080	1,080		1,080
Rte 46 EB Lanes, Sta 621+50.00 TO Sta 629+00.00	2795	725		
Rte 46 EB Lanes, Sta 644+00.00 TO Sta 710+00.00	113,377	70,428	22,958	18,648
Prvt Dwy 4	4,134	0		
Prvt Dwy 6	77	95		
McMILLAN CANYON Cr Br, RIGHT PORTION	-	-		
ACCRD3	1,239	567		
DETOUR 4	6,716	113		
STAGE 3 SUBTOTAL	143,449	87,039	22,958	33,759
● STAGE 4				
* Rte 46 EB Lanes, Sta 710+00.00 TO Sta 881+50.00	12,666	12,666		12,666
* Remove Detour 5	4,246	4,246		4,246
* Exist W Centre St Sta 49+00.00 TO Sta 51+68.00	161	161		161
Rte 46 EB Lanes, Sta 710+00.00 TO Sta 881+50.00	47,377	52,620		24,192
Rte 46 EB Trans, Sta 81+50.12 TO Sta 94+00.00	33	178		
Prvt Dwy 9	65	172		
W CENTRE St	502	45		199
STAGE 4 SUBTOTAL	65,050	70,088	0	41,464
● STAGE 5				
* Remove Detour 3	926	926		926
* Remove Detour 4	156	156		156
Rte 46 WB Trans, Sta 66+00 TO Sta 91+61.44	242	112		
Temp BERM TO FG, Rte 46 Sta 670+25 TO Sta 684+25 Rt	16,959			
STAGE 5 SUBTOTAL	18,283	1,194	0	1,082
STAGE 1 PHASE 1 SUBTOTAL	649,248	472,247	24,947	434
STAGE 1 PHASE 2 SUBTOTAL	10,609	6,522	0	1,990
STAGE 2 PHASE 1 SUBTOTAL	52,472	56,278	0	15,507
STAGE 2 PHASE 2 SUBTOTAL	3,936	654	0	0
STAGE 3 SUBTOTAL	143,449	87,039	22,958	33,759
STAGE 4 SUBTOTAL	65,050	70,088	0	41,464
STAGE 5 SUBTOTAL	18,283	1,194	0	1,082
TOTAL	943,047	694,021	47,905	94,236

(N) NOT A SEPARATE PAY ITEM, FOR INFORMATION ONLY.

SUMMARY OF QUANTITIES
Q-9

STATE OF CALIFORNIA - DEPARTMENT OF TRANSPORTATION
Caltrans 06-DESIGN
FUNCTIONAL SUPERVISOR JACK WALKER
CALCULATED-DESIGNED BY JOSE BAUTISTA
CHECKED BY JOSE ARGUELLO
REVISED BY
DATE REVISED

LAST REVISION 11-10-11 DATE PLOTTED => 16-FEB-2012 TIME PLOTTED => 14:34

Dist	COUNTY	ROUTE	POST MILES TOTAL PROJECT	SHEET No.	TOTAL SHEETS
05	SLO	46	40.7/46.3	437	541

REGISTERED CIVIL ENGINEER 11-10-11 DATE

2-13-12
PLANS APPROVAL DATE

REGISTERED PROFESSIONAL ENGINEER JOSE M. ARGUELLO No. 51321 Exp. 06-30-12 CIVIL STATE OF CALIFORNIA

THE STATE OF CALIFORNIA OR ITS OFFICERS OR AGENTS SHALL NOT BE RESPONSIBLE FOR THE ACCURACY OR COMPLETENESS OF SCANNED COPIES OF THIS PLAN SHEET.

ROADWAY QUANTITIES

STAGE - PHASE	LOCATION	RHMA (GAP GRADED) TON	HMA (TYPE A) TON	LCB CY	CL 2 AB CY	CL 1 AS CY	CL 5 AS CY	TACK COAT TON
S1 P1	EB Rte 46 ℄ Sta 620+80.00 TO Sta 621+50.00 IA		6		3		11	0.00
S1 P1	EB Rte 46 ℄ Sta 618+00.00 TO Sta 621+50.00 IS		68		32		125	0.04
S1 P1	EB Rte 46 ℄ Sta 638+11.27 TO Sta 644+00.00 IS		101		48		188	0.05
S1 P1	EB Rte 46 ℄ Sta 699+25.00 TO Sta 701+75.00 IS		103					0.06
S1 P1	EB Rte 46 ℄ Sta 795+40.78 TO Sta 797+25.00 IS		20					0.00
S1 P1	EB Rte 46 ℄ Sta 851+60.98 TO Sta 853+50.00 IS		170					0.17
S1 P1	EB Rte 46 ℄ Sta 699+25.00 TO Sta 700+80.78 MX		31		98			0.00
S1 P1	EB Rte 46 ℄ Sta 795+83.92 TO Sta 796+63.80 MX		12		38			0.00
S1 P1	EB Rte 46 ℄ Sta 615+25.00 TO Sta 616+25.00 OA		53		22		87	0.05
S1 P1	EB Rte 46 ℄ Sta 616+25.00 TO Sta 621+77.75 OA		133		62		243	0.17
S1 P1	EB Rte 46 ℄ Sta 615+25.00 TO Sta 616+25.00 OS		51		20		79	0.05
S1 P1	EB Rte 46 ℄ Sta 616+25.00 TO Sta 644+00.00 OS		1,247		520		2,034	2.01
S1 P1	EB Rte 46 ℄ Sta 615+25.00 TO Sta 616+25.00 TW		28	12		47		0.03
S1 P1	EB Rte 46 ℄ Sta 616+25.00 TO Sta 644+00.00 TW		2,999	1409		5,509		3.84
	EB MAINLINE S1 P1 SUBTOTAL	0	5,022	1421	843	5,556	2,767	6.47
S1 P1	WB Rte 46 ℄ Sta 660+00.00 TO Sta 664+38.00 IA		181		85		332	0.10
S1 P1	WB Rte 46 ℄ Sta 700+98.30 TO Sta 708+39.24 IA		322		152		593	0.17
S1 P1	WB Rte 46 ℄ Sta 796+94.20 TO Sta 797+00.00 IA		2		1		5	0.00
S1 P1	WB Rte 46 ℄ Sta 850+00.00 TO Sta 850+84.35 IA		41		19		74	0.02
S1 P1	WB Rte 46 ℄ Sta 853+18.71 TO Sta 853+89.95 IA		33		16		62	0.02
S1 P1	WB Rte 46 ℄ Sta 853+89.95 TO Sta 854+89.95 IA		53		22		87	0.05
S1 P1	WB Rte 46 ℄ Sta 855+71.95 TO Sta 856+71.95 IA		53		22		87	0.05
S1 P1	WB Rte 46 ℄ Sta 856+71.95 TO Sta 857+00.00 IA		14		6		25	0.01
S1 P1	WB Rte 46 ℄ Sta 660+00.00 TO Sta 698+75.51 IS		697		327		1,279	0.37
S1 P1	WB Rte 46 ℄ Sta 700+98.30 TO Sta 715+00.00 IS		283		133		521	0.15
S1 P1	WB Rte 46 ℄ Sta 740+00.00 TO Sta 740+48.05 IS		8		4		15	0.00
S1 P1	WB Rte 46 ℄ Sta 742+70.78 TO Sta 745+00.00 IS		39		19		73	0.02
S1 P1	WB Rte 46 ℄ Sta 796+94.20 TO Sta 797+00.00 IS		2		1		2	0.00
S1 P1	WB Rte 46 ℄ Sta 811+10.49 TO Sta 813+60.49 IS					90		
S1 P1	WB Rte 46 ℄ Sta 850+00.00 TO Sta 850+84.35 IS		18		9		34	0.01
S1 P1	WB Rte 46 ℄ Sta 853+18.71 TO Sta 853+89.95 IS		16		7		28	0.01
S1 P1	WB Rte 46 ℄ Sta 853+89.95 TO Sta 854+89.95 IS		24		10		40	0.02
S1 P1	WB Rte 46 ℄ Sta 855+71.95 TO Sta 856+71.95 IS		24		10		39	0.02
S1 P1	WB Rte 46 ℄ Sta 856+71.95 TO Sta 857+00.00 IS		6		3		11	0.00
S1 P1	WB Rte 46 ℄ Sta 698+75.51 TO Sta 700+98.30 MX		150		71		276	0.08
S1 P1	WB Rte 46 ℄ Sta 740+48.05 TO Sta 742+70.78 MX		135		64		248	0.07
S1 P1	WB Rte 46 ℄ Sta 795+00.00 TO Sta 796+94.20 MX		144		68		267	0.08
S1 P1	WB Rte 46 ℄ Sta 850+84.35 TO Sta 853+18.71 MX		295		138		541	0.16
S1 P1	WB Rte 46 ℄ Sta 850+00.00 TO Sta 853+89.95 OA		300		141		552	0.16
S1 P1	WB Rte 46 ℄ Sta 853+89.95 TO Sta 854+89.95 OA		53		22		86	0.05
S1 P1	WB Rte 46 ℄ Sta 855+71.95 TO Sta 856+71.95 OA		53		22		87	0.05
S1 P1	WB Rte 46 ℄ Sta 856+71.95 TO Sta 857+00.00 OA		14		6		24	0.01
S1 P1	WB Rte 46 ℄ Sta 660+00.00 TO Sta 715+00.00 OS		2,414		1008		3,942	2.29
S1 P1	WB Rte 46 ℄ Sta 740+00.00 TO Sta 745+00.00 OS		219		92		358	0.21
S1 P1	WB Rte 46 ℄ Sta 795+00.00 TO Sta 797+00.00 OS		88		37		143	0.08
S1 P1	WB Rte 46 ℄ Sta 811+10.49 TO Sta 813+60.49 OS					181		
S1 P1	WB Rte 46 ℄ Sta 850+00.00 TO Sta 853+89.95 OS		193		80		314	0.18
S1 P1	WB Rte 46 ℄ Sta 853+89.95 TO Sta 854+89.95 OS		74		30		116	0.07
S1 P1	WB Rte 46 ℄ Sta 855+71.95 TO Sta 856+71.95 OS		71		28		110	0.06
S1 P1	WB Rte 46 ℄ Sta 856+71.95 TO Sta 857+00.00 OS		16		6		24	0.01
S1 P1	WB Rte 46 ℄ Sta 660+00.00 TO Sta 715+00.00 TW		6,200	2913		11,387		3.31
S1 P1	WB Rte 46 ℄ Sta 740+00.00 TO Sta 745+00.00 TW		564	265		1,035		0.30
S1 P1	WB Rte 46 ℄ Sta 795+00.00 TO Sta 797+00.00 TW		226	106		414		0.12
S1 P1	WB Rte 46 ℄ Sta 811+10.49 TO Sta 813+60.49 TW					433		
S1 P1	WB Rte 46 ℄ Sta 850+00.00 TO Sta 853+89.95 TW		439	206		806		0.23
S1 P1	WB Rte 46 ℄ Sta 853+89.95 TO Sta 854+89.95 TW		125	52		205		0.12
S1 P1	WB Rte 46 ℄ Sta 855+71.95 TO Sta 856+71.95 TW		125	53		206		0.12
S1 P1	WB Rte 46 ℄ Sta 856+71.95 TO Sta 857+00.00 TW		31	15		58		0.02
	WB MAINLINE S1 P1 SUBTOTAL	0	13,745	3610	2659	14,815	10,395	8.80

CONTINUED

ROADWAY QUANTITIES (CONTINUED)

STAGE - PHASE	LOCATION	RHMA (GAP GRADED) TON	HMA (TYPE A) TON	LCB CY	CL 2 AB CY	CL 1 AS CY	CL 5 AS CY	TACK COAT TON
S1 P1	ACCRD1 ℄ Sta 859+57.74 TO Sta 864+31.98		166		513			0.30
S1 P1	ACCRD1 ℄ Sta 864+31.98 TO Sta 864+51.98		2					0.01
S1 P1	ACCRD2 ℄ Sta 859+57.74 TO Sta 860+87.96		33		105			0.00
S1 P1	McMillan Canyon Rd ℄ Sta 53+39.35 TO Sta 55+60.00		482		227		886	0.62
S1 P1	McMillan Canyon Rd ℄ Sta 55+60.00 TO Sta 56+00.00		14					0.06
S1 P1	Prvt Dwy 2 ℄ Sta 7+27.94 TO Sta 8+08.94		49		150			0.00
S1 P1	Prvt Dwy 5 ℄ Sta 2+99.24 TO Sta 3+70.51		43		133			0.00
S1 P1	Prvt Dwy 7 ℄ Sta 2+71.78 TO Sta 3+42.94		43		133			0.00
S1 P1	Prvt Dwy 8 ℄ Sta 6+95.14 TO Sta 7+66.30		43		133			0.08
S1 P1	Prvt Dwy 8 ℄ Sta 7+66.30 TO Sta 8+05.78		8					0.03
	MINOR Rd S1 P1 SUBTOTAL	0	883	0	1394	0	886	1.10
S1 P1	Detour 2 ℄ Sta 44+00.00 TO Sta 52+00.00		1,387		652		2,548	1.78
S1 P1	Detour 5 ℄ Sta 106+00.32 TO Sta 112+25.00		21					0.00
S1 P1	Detour 5 ℄ Sta 106+00.32 TO Sta 112+25.00		574		270	1,054		0.31
S1 P1	Temp Prvt Dwy 1 ℄ Sta 1+62.09 TO Sta 6+61.45		238		734			0.00
S1 P1	Temp Prvt Dwy 2 ℄ Sta 10+61.82 TO Sta 10+71.09		16					0.05
S1 P1	Temp Prvt Dwy 2 ℄ Sta 10+71.09 TO Sta 11+45.21		45					0.00
	DETOUR S1 P1 SUBTOTAL	0	2,281	0	1656	1,054	2,548	2.14
	EB MAINLINE S1 P1 SUBTOTAL	0	5,022	1421	843	5,556	2,767	6.47
	WB MAINLINE S1 P1 SUBTOTAL	0	13,745	3610	2659	14,815	10,395	8.80
	MINOR RD S1 P1 SUBTOTAL	0	883	0	1394	0	886	1.10
	DETOUR S1 P1 SUBTOTAL	0	2,281	0	1656	1,054	2,548	2.14
	S1 P1 TOTAL	0	21,931	5031	6552	21,425	16,596	18.51
S1 P2	EB Rte 46 ℄ Sta 741+00.00 TO Sta 743+00.00 IS		87					0.13
S1 P2	EB Rte 46 ℄ Sta 741+42.72 TO Sta 742+53.32 MX		27		85			0.00
	EB MAINLINE S1 P2 SUBTOTAL	0	114	0	85	0	0	0.13
S1 P2	Detour 1 ℄ Sta 5+73.18 TO Sta 19+44.19		808		379		1,483	0.43
S1 P2	Detour 1 ℄ Sta 21+52.06 TO Sta 38+13.14		983		462		1,807	0.53
S1 P2	Detour 1 ℄ Sta 21+42.39 TO Sta 25+48.12 GORE		66					0.00
S1 P2	Detour 1 ℄ Sta 5+73.18 TO Sta 16+59.38 OS		88					0.25
S1 P2	Detour 1 ℄ Sta 21+42.39 TO Sta 24+14.26 OS		29					0.08
S1 P2	Detour 2 ℄ Sta 52+00.00 TO Sta 60+19.72		1,063		499		1,952	0.57
S1 P2	Detour 2 ℄ Sta 61+42.90 TO Sta 78+56.50 OS		1,073		504		1,972	0.57
S1 P2	Detour 2 ℄ Sta 61+42.90 TO Sta 78+56.50 OS		37					0.17
S1 P2	Temp Prvt Dwy 1 ℄ Sta 0+85.11 TO Sta 1+22.49		62		192			0.00
	DETOUR S1 P2 SUBTOTAL	0	4,209	0	2036	0	7,214	2.60
	EB MAINLINE S1 P2 SUBTOTAL	0	114	0	85	0	0	0.13
	DETOUR S1 P2 SUBTOTAL	0	4,209	0	2036	0	7,214	2.60
	S1 P2 TOTAL	0	4,323	0	2121	0	7,214	2.73
	S1 P1 TOTAL	0	21,931	5031	6552	21,425	16,596	18.51
	S1 P2 TOTAL	0	4,323	0	2121	0	7,214	2.73
	TOTAL THIS Sht	0	26,254	5031	8673	21,425	23,810	21.24

SUMMARY OF QUANTITIES
Q-10

STATE OF CALIFORNIA - DEPARTMENT OF TRANSPORTATION
Caltrans®
06-DESIGN

FUNCTIONAL SUPERVISOR: JACK WALKER
CALCULATED-DESIGNED BY: JOHN CLARKE
CHECKED BY: JOSE ARGUELLO
REVISED BY
DATE REVISED

LAST REVISION 12-06-11
DATE PLOTTED => 16-FEB-2012
TIME PLOTTED => 14:34

Dist	COUNTY	ROUTE	POST MILES TOTAL PROJECT	SHEET No.	TOTAL SHEETS
05	SLO	46	40.7/46.3	438	541

REGISTERED CIVIL ENGINEER DATE 11-10-11

2-13-12
PLANS APPROVAL DATE

REGISTERED PROFESSIONAL ENGINEER JOSE M. ARGUELLO No. 51321 Exp. 06-30-12 CIVIL STATE OF CALIFORNIA

THE STATE OF CALIFORNIA OR ITS OFFICERS OR AGENTS SHALL NOT BE RESPONSIBLE FOR THE ACCURACY OR COMPLETENESS OF ELECTRONIC COPIES OF THIS PLAN SHEET.

ROADWAY QUANTITIES (CONTINUED)

STAGE - PHASE	LOCATION	RHMA (GAP GRADED) TON	HMA (TYPE A) TON	LCB CY	CI 2 AB CY	CI 1 AS CY	CI 5 AS CY	TACK COAT TON
S2 P1	WB Rte 46 ℄ Sta 629+38.00 TO Sta 636+65.00 IA	106	213		150	585		0.34
S2 P1	WB Rte 46 ℄ Sta 657+04.89 TO Sta 660+00.00 IA		139		65	253		0.07
S2 P1	WB Rte 46 ℄ Sta 618+00.00 TO Sta 619+42.76 IS	8	8					0.05
S2 P1	WB Rte 46 ℄ Sta 619+42.76 TO Sta 620+48.90 IS	6	19					0.05
S2 P1	WB Rte 46 ℄ Sta 620+48.90 TO Sta 627+15.21 IS	38	76		54	212		0.12
S2 P1	WB Rte 46 ℄ Sta 629+38.00 TO Sta 643+75.00 IS	98	195		137	537		0.31
S2 P1	WB Rte 46 ℄ Sta 643+75.00 TO Sta 644+75.00 IS		20		8	32		0.03
S2 P1	WB Rte 46 ℄ Sta 644+75.00 TO Sta 654+74.28 IS		174		81	318		0.09
S2 P1	WB Rte 46 ℄ Sta 657+04.89 TO Sta 660+00.00 IS		66		32	123		0.04
S2 P1	WB Rte 46 ℄ Sta 627+15.21 TO Sta 629+38.00 MX	50	100		71	276		0.16
S2 P1	WB Rte 46 ℄ Sta 654+74.28 TO Sta 657+04.89 MX		111		52	203		0.14
S2 P1	WB Rte 46 ℄ Sta 654+91.71 TO Sta 660+00.00 OA		144		67	264		0.08
S2 P1	WB Rte 46 ℄ Sta 618+00.00 TO Sta 619+42.76 OS	15						0.07
S2 P1	WB Rte 46 ℄ Sta 619+42.76 TO Sta 620+48.90 OS	14						0.05
S2 P1	WB Rte 46 ℄ Sta 620+48.90 TO Sta 643+75.00 OS	303	605		426	1,667		0.97
S2 P1	WB Rte 46 ℄ Sta 643+75.00 TO Sta 644+75.00 OS		46		18	72		0.07
S2 P1	WB Rte 46 ℄ Sta 644+75.00 TO Sta 660+00.00 OS		692		289	1,130		0.66
S2 P1	WB Rte 46 ℄ Sta 618+00.00 TO Sta 619+42.76 TW	37	13					0.25
S2 P1	WB Rte 46 ℄ Sta 619+42.76 TO Sta 620+48.90 TW	28	33					0.19
S2 P1	WB Rte 46 ℄ Sta 620+48.90 TO Sta 643+75.00 TW	874	1748	1232		4,816		2.80
S2 P1	WB Rte 46 ℄ Sta 643+75.00 TO Sta 644+75.00 TW		127	53		207		0.12
S2 P1	WB Rte 46 ℄ Sta 644+75.00 TO Sta 660+00.00 TW		1715	806		3,150		2.20
	WB MAINLINE S2 P1 SUBTOTAL	1577	6244	2091	1450	13,845	0	8.86
S2 P1	Prvt Dwy 1 ℄ Sta 9+38.94 TO Sta 10+03.94		41		123			0.00
S2 P1	Prvt Dwy 3A ℄ Sta 7+10.06 TO Sta 8+87.39		115		354			0.00
S2 P1	Prvt Dwy 3B ℄ Sta 7+62.50 TO Sta 10+80.00		140		433			0.00
S2 P1	Prvt Dwy 3B ℄ Sta 10+80.00 TO Sta 11+20.00		8					0.04
S2 P1	Prvt Dwy 3C ℄ Sta 9+42.03 TO Sta 9+76.50		10		27			0.00
S2 P1	Prvt Dwy 3C ℄ Sta 9+76.50 TO Sta 9+86.50		2					0.01
	MINOR Rd S2 P1 SUBTOTAL	0	316	0	937	0	0	0.05
S2 P1	Detour 3 ℄ Sta 42+25.00 TO Sta 55+99.41		1095		514	2,010		0.58
	DETOUR S2 P1 SUBTOTAL	0	1095	0	514	2,010	0	0.58
	WB MAINLINE S2 P1 SUBTOTAL	1577	6244	2091	1450	13,845	0	8.86
	MINOR Rd S2 P1 SUBTOTAL	0	316	0	937	0	0	0.05
	DETOUR S2 P1 SUBTOTAL	0	1095	0	514	2,010	0	0.58
	S2 P1 TOTAL	1577	7655	2091	2901	15,855	0	9.49
S2 P2	Detour 3 ℄ Sta 32+41.09 TO Sta 42+25.00		712		335	1,308		0.38
S2 P2	Detour 5 ℄ Sta 112+25.00 TO Sta 122+67.64		935		439	1,716		0.50
S2 P2	Detour 5 ℄ Sta 113+51.76 TO Sta 123+49.09		137					0.43
	DETOUR S2 P2 SUBTOTAL	0	1784	0	774	3,024	0	1.31
	DETOUR S2 P2 SUBTOTAL	0	1784	0	774	3,024	0	1.31
	S2 P2 TOTAL	0	1784	0	774	3,024	0	1.31
S3	EB Rte 46 ℄ Sta 648+28.00 TO Sta 655+68.95 IA	108	217		152		594	0.35
S3	EB Rte 46 ℄ Sta 657+77.35 TO Sta 685+00.00 IA	381	763		537		2100	1.22
S3	EB Rte 46 ℄ Sta 692+29.24 TO Sta 694+00.00 IA	18	35		25		98	0.10
S3	EB Rte 46 ℄ Sta 694+00.00 TO Sta 699+70.18 IA	93	185		131	511		0.30
S3	EB Rte 46 ℄ Sta 644+00.00 TO Sta 655+68.95 IS	78	156		110		431	0.25
S3	EB Rte 46 ℄ Sta 657+77.35 TO Sta 694+00.00 IS	255	509		359		1404	0.82
S3	EB Rte 46 ℄ Sta 694+00.00 TO Sta 699+70.18 IS	41	82		58	227		0.13
S3	EB Rte 46 ℄ Sta 701+92.97 TO Sta 710+00.00 IS	58	253					0.41
S3	EB Rte 46 ℄ Sta 655+68.95 TO Sta 657+77.35 MX	71	142		101		393	0.23
S3	EB Rte 46 ℄ Sta 699+70.18 TO Sta 701+92.97 MX	50	101		71	277		0.16
S3	EB Rte 46 ℄ Sta 644+00.00 TO Sta 694+00.00 OS	651	1301		918		3587	2.09
S3	EB Rte 46 ℄ Sta 694+00.00 TO Sta 710+00.00 OS	257	513		362	1,416		0.82
S3	EB Rte 46 ℄ Sta 644+00.00 TO Sta 694+00.00 TW	1880	3760	2650		10,359		6.02
S3	EB Rte 46 ℄ Sta 694+00.00 TO Sta 699+94.24 TW	206	666					0.99
S3	EB Rte 46 ℄ Sta 699+94.24 TO Sta 700+74.24 TW	28	86					0.19
S3	EB Rte 46 ℄ Sta 700+74.24 TO Sta 710+00.00 TW	304	959					2.14
.	EB MAINLINE S3 SUBTOTAL	4479	9728	2650	2824	12,790	8607	16.22

CONTINUED

ROADWAY QUANTITIES (CONTINUED)

STAGE - PHASE	LOCATION	RHMA (GAP GRADED) TON	HMA (TYPE A) TON	LCB CY	CI 2 AB CY	CI 1 AS CY	CI 5 AS CY	TACK COAT TON
S3	WB Rte 46 ℄ Sta 797+00.00 TO Sta 804+35.14 IA		320		150		588	0.17
S3	WB Rte 46 ℄ Sta 822+00.00 TO Sta 850+00.00 IA		1,180		555	2,168		0.63
S3	WB Rte 46 ℄ Sta 857+00.00 TO Sta 860+60.13 IA		140		66	258		0.08
S3	WB Rte 46 ℄ Sta 605+73.18 TO Sta 616+59.38 IS	53						0.00
S3	WB Rte 46 ℄ Sta 715+00.00 TO Sta 740+00.00 IS		433		204		796	0.23
S3	WB Rte 46 ℄ Sta 745+00.00 TO Sta 794+67.99 IS		862		405		1,583	0.46
S3	WB Rte 46 ℄ Sta 797+00.00 TO Sta 810+10.49 IS		259		122		475	0.14
S3	WB Rte 46 ℄ Sta 810+10.49 TO Sta 811+10.49 IS		20		8		32	0.02
S3	WB Rte 46 ℄ Sta 813+60.49 TO Sta 814+60.49 IS		20		8	32		0.02
S3	WB Rte 46 ℄ Sta 814+60.49 TO Sta 850+00.00 IS		734		345	1,348		0.39
S3	WB Rte 46 ℄ Sta 857+00.00 TO Sta 866+00.35 IS		172		80	314		0.09
S3	WB Rte 46 ℄ Sta 866+00.35 TO Sta 876+92.60 IS		236	111		435		0.13
S3	WB Rte 46 ℄ Sta 876+92.60 TO Sta 883+25.46 IS		109		52	202		0.06
S3	WB Rte 46 ℄ Sta 655+99.34 TO Sta 657+04.89 MX	17	33		23		92	0.05
S3	WB Rte 46 ℄ Sta 794+67.99 TO Sta 795+00.00 MX		6		3		11	0.00
S3	WB Rte 46 ℄ Sta 828+00.00 TO Sta 850+00.00 OA		894		420	1,642		0.48
S3	WB Rte 46 ℄ Sta 857+00.00 TO Sta 860+60.20 OA		140		66	259		0.08
S3	WB Rte 46 ℄ Sta 715+00.00 TO Sta 740+00.00 OS		1,098		458		1,792	1.04
S3	WB Rte 46 ℄ Sta 745+00.00 TO Sta 795+00.00 OS		2,197		917		3,586	2.08
S3	WB Rte 46 ℄ Sta 797+00.00 TO Sta 810+10.49 OS		575		240		939	0.55
S3	WB Rte 46 ℄ Sta 810+10.49 TO Sta 811+10.49 OS		46		18		72	0.04
S3	WB Rte 46 ℄ Sta 813+60.49 TO Sta 814+60.49 OS		46		18	72		0.04
S3	WB Rte 46 ℄ Sta 814+60.49 TO Sta 850+00.00 OS		1,659		693	2,710		1.58
S3	WB Rte 46 ℄ Sta 857+00.00 TO Sta 883+25.46 OS		1,168		488	1,907		1.11
S3	WB Rte 46 ℄ Sta 715+00.00 TO Sta 740+00.00 TW		2,817	1,324		5,176		3.61
S3	WB Rte 46 ℄ Sta 745+00.00 TO Sta 795+00.00 TW		5,638	2,650		10,357		3.01
S3	WB Rte 46 ℄ Sta 797+00.00 TO Sta 810+10.49 TW		1,477	694		2,713		0.79
S3	WB Rte 46 ℄ Sta 810+10.49 TO Sta 811+10.49 TW		127	53		207		0.12
S3	WB Rte 46 ℄ Sta 813+60.49 TO Sta 814+60.49 TW		127	53		207		0.12
S3	WB Rte 46 ℄ Sta 814+60.49 TO Sta 850+00.00 TW		3,990	1,875		7,328		2.13
S3	WB Rte 46 ℄ Sta 857+00.00 TO Sta 883+25.46 TW		2,911	1,367		5,345		1.55
	WB MAINLINE S3 SUBTOTAL	70	29,434	8,127	5,339	42,680	9,966	20.80
S3	ACCRD3 ℄ Sta 1+00.00 TO Sta 4+63.40				145			
S3	ACCRD3 ℄ Sta 4+86.58 TO Sta 12+20.37				294			
S3	Prvt Dwy 4 ℄ Sta 4+72.29 TO Sta 5+67.88		57		174			0.00
S3	Prvt Dwy 6 ℄ Sta 0+63.30 TO Sta 1+01.55				38			
S3	Prvt Dwy 6 ℄ Sta 1+01.55 TO Sta 1+69.24		41		128			0.00
	MINOR Rd S3 SUBTOTAL	0	98	0	779	0	0	0
	S2 P1 TOTAL	1577	7,655	2,091	2,901	15,855	0	9.49
	S2 P2 TOTAL	0	1,784	0	774	3,024	0	1.31
	EB MAINLINE S3 SUBTOTAL	4479	9,728	2,650	2,824	12,790	8,607	16.22
	WB MAINLINE S3 SUBTOTAL	70	29,434	8,127	5,339	42,680	9,966	20.80
	MINOR Rd S3 SUBTOTAL	0	98	0	779	0	0	0
	TOTAL THIS Sht	6126	48,699	12,868	12,617	74,349	18,573	47.82

SUMMARY OF QUANTITIES
Q-11

STATE OF CALIFORNIA - DEPARTMENT OF TRANSPORTATION
Caltrans 06-DESIGN

FUNCTIONAL SUPERVISOR: JACK WALKER
CALCULATED-DESIGNED BY: JOHN CLARKE
CHECKED BY: JOSE ARGUELLO
REVISED BY
DATE REVISED

LAST REVISION 12-06-11
DATE PLOTTED => 16-FEB-2012
TIME PLOTTED => 14:34

Dist	COUNTY	ROUTE	POST MILES TOTAL PROJECT	SHEET No.	TOTAL SHEETS
05	SLO	46	40.7/46.3	439	541

REGISTERED CIVIL ENGINEER DATE 11-10-11

2-13-12
PLANS APPROVAL DATE

REGISTERED PROFESSIONAL ENGINEER JOSE M. ARGUELLO No. 51321 Exp. 06-30-12 CIVIL STATE OF CALIFORNIA

THE STATE OF CALIFORNIA OR ITS OFFICERS OR AGENTS SHALL NOT BE RESPONSIBLE FOR THE ACCURACY OR COMPLETENESS OF SCANNED COPIES OF THIS PLAN SHEET.

ROADWAY QUANTITIES (CONTINUED)

STAGE - PHASE	LOCATION	RHMA (GAP GRADED) TON	HMA (TYPE A) TON	LCB CY	CI 2 AB CY	CI 1 AS CY	CI 5 AS CY	TACK COAT TON
S3	EB Detour 4 ℄ Sta 79+23.09 TO Sta 79+52.89 GORE		2					0.00
S3	EB Detour 4 ℄ Sta 65+99.39 TO Sta 74+92.67 OS		234		110	429		0.12
S3	EB Detour 4 ℄ Sta 74+92.67 TO Sta 85+85.51 OS & TW		613		288	1,125		0.33
S3	WB Detour 4 ℄ Sta 76+91.50 TO Sta 91+61.40 OS		412		194	758		0.22
S3	Detour 4 ℄ Sta 67+96.72 TO Sta 90+79.69 TW		1,176	552		2,159		0.63
	DETOUR S3 SUBTOTAL	0	2,437	552	592	4,471	0	1.30
	EB MAINLINE S3 SUBTOTAL (Sht Q-11)	4,479	9,728	2,650	2824	12,790	8,607	16.22
	WB MAINLINE S3 SUBTOTAL (Sht Q-11)	70	29,434	8,127	5339	42,680	9,966	20.80
	MINOR Rd S3 SUBTOTAL (Sht Q-11)	0	98	0	779	0	0	0
	DETOUR S3 SUBTOTAL	0	2,437	552	592	4,471	0	1.30
	S3 TOTAL	4,549	41,697	11,329	9534	59,941	18,573	38.32
S4	EB Rte 46 ℄ Sta 734+01.78 TO Sta 741+42.72 IA	113	226		160	625		0.36
S4	EB Rte 46 ℄ Sta 788+25.05 TO Sta 795+66.08 IA	118	243					0.38
S4	EB Rte 46 ℄ Sta 844+20.00 TO Sta 851+60.98 IA	108	215		152	593		0.59
S4	EB Rte 46 ℄ Sta 853+93.08 TO Sta 854+94.08 IA	16	31		22	87		0.09
S4	EB Rte 46 ℄ Sta 855+74.77 TO Sta 875+50.00 IA	263	525		370	1,446		1.43
S4	EB Rte 46 ℄ Sta 710+00.00 TO Sta 734+01.78 IS	174	503					0.56
S4	EB Rte 46 ℄ Sta 734+01.78 TO Sta 741+42.72 IS	53	107		75	295		0.17
S4	EB Rte 46 ℄ Sta 743+65.51 TO Sta 745+25.00 IS	9	18		13	51		0.05
S4	EB Rte 46 ℄ Sta 745+25.00 TO Sta 788+25.05 IS	311	504					1.00
S4	EB Rte 46 ℄ Sta 788+25.05 TO Sta 795+66.08 IS	53	130					0.17
S4	EB Rte 46 ℄ Sta 797+88.87 TO Sta 804+30.00 IS	46	85					0.15
S4	EB Rte 46 ℄ Sta 804+30.00 TO Sta 810+60.22 IS	45	147					0.22
S4	EB Rte 46 ℄ Sta 813+10.22 TO Sta 828+00.00 IS	108	357					0.52
S4	EB Rte 46 ℄ Sta 828+00.00 TO Sta 851+60.98 IS	148	297		209	818		0.48
S4	EB Rte 46 ℄ Sta 853+93.08 TO Sta 854+94.08 IS	7	14		10	39		0.04
S4	EB Rte 46 ℄ Sta 855+74.77 TO Sta 881+50.00 IS	177	355		250	976		0.96
S4	EB Rte 46 ℄ Sta 741+42.72 TO Sta 742+45.51 MX	40	80		56	220		0.13
S4	EB Rte 46 ℄ Sta 742+45.51 TO Sta 743+65.51 MX	12	23		16	64		0.06
S4	EB Rte 46 ℄ Sta 795+66.08 TO Sta 796+76.68 MX	22	45		31	122		0.07
S4	EB Rte 46 ℄ Sta 795+66.08 TO Sta 797+88.87 MX	31	51					0.10
S4	EB Rte 46 ℄ Sta 851+60.98 TO Sta 853+93.08 MX	97	193		136	534		0.53
S4	EB Rte 46 ℄ Sta 844+20.00 TO Sta 854+94.08 OA	205	410		289	1,131		1.12
S4	EB Rte 46 ℄ Sta 855+74.77 TO Sta 881+50.00 OA	362	724		510	1,994		1.97
S4	EB Rte 46 ℄ Sta 710+00.00 TO Sta 742+45.51 OS	512	1,024		722	2,823		2.79
S4	EB Rte 46 ℄ Sta 742+45.51 TO Sta 745+25.00 OS	36	72		51	200		0.20
S4	EB Rte 46 ℄ Sta 745+25.00 TO Sta 810+60.22 OS	1,058	2,115		1491	5,828		5.76
S4	EB Rte 46 ℄ Sta 810+60.22 TO Sta 813+10.22 OS					181		
S4	EB Rte 46 ℄ Sta 813+10.22 TO Sta 828+00.00 OS	238	476		335	1,311		0.76
S4	EB Rte 46 ℄ Sta 828+00.00 TO Sta 854+94.08 OS	312	624		440	1,719		1.00
S4	EB Rte 46 ℄ Sta 844+80.00 TO Sta 851+71.33 OS				74			
S4	EB Rte 46 ℄ Sta 855+74.77 TO Sta 881+50.00 OS	368	736		519	2,028		1.18
S4	EB Rte 46 ℄ Sta 710+00.00 TO Sta 734+01.78 TW	799	1,393					2.56
S4	EB Rte 46 ℄ Sta 734+01.78 TO Sta 741+42.72 TW	253	472					1.38
S4	EB Rte 46 ℄ Sta 741+42.72 TO Sta 742+45.51 TW	35	87					0.11
S4	EB Rte 46 ℄ Sta 742+45.51 TO Sta 745+25.00 TW	105	211	148		579		0.57
S4	EB Rte 46 ℄ Sta 745+25.00 TO Sta 788+25.05 TW	1,422	2,794					4.56
S4	EB Rte 46 ℄ Sta 788+25.05 TO Sta 795+90.14 TW	242	502					0.78
S4	EB Rte 46 ℄ Sta 795+90.14 TO Sta 796+70.14 TW	27	42					0.14
S4	EB Rte 46 ℄ Sta 796+70.14 TO Sta 804+30.00 TW	252	425					0.81
S4	EB Rte 46 ℄ Sta 804+30.00 TO Sta 810+60.22 TW	209	420					0.67
S4	EB Rte 46 ℄ Sta 813+10.22 TO Sta 828+00.00 TW	494	1,050					1.58
S4	EB Rte 46 ℄ Sta 828+00.00 TO Sta 854+94.08 TW	1,012	2,025	1427		5,577		5.51
S4	EB Rte 46 ℄ Sta 855+74.77 TO Sta 881+50.00 TW	968	1,935	1365		5,334		3.10
	EB MAINLINE S4 SUBTOTAL	10,860	21,686	2940	5931	34,575	0	44.61

CONTINUED

ROADWAY QUANTITIES (CONTINUED)

STAGE - PHASE	LOCATION	RHMA (GAP GRADED) TON	HMA (TYPE A) TON	LCB CY	CI 2 AB CY	CI 1 AS CY	CI 5 AS CY	TACK COAT TON
S4	Prvt Dwy 9 ℄ Sta 1+63.15 TO Sta 4+93.99				108			
S4	Prvt Dwy 9 ℄ Sta 4+93.99 TO Sta 5+65.14		43		133			0.00
S4	W Centre St ℄ Sta 48+50.00 TO Sta 49+00.00		14					0.06
S4	W Centre St ℄ Sta 49+00.00 TO Sta 51+40.29		499		235		918	0.27
	MINOR Rd S4 SUBTOTAL	0	556	0	476	0	918	0.33
S4	EB Trans ℄ Sta 81+50.12 TO Sta 83+25.43 IS	10	31					0.07
S4	EB Trans ℄ Sta 81+50.12 TO Sta 83+25.43 OS	17	57					0.12
S4	EB Trans ℄ Sta 83+25.43 TO Sta 86+00.00 OS	24	24					0.12
S4	EB Trans ℄ Sta 86+00.00 TO Sta 93+00.00 OS	61						0.18
S4	EB Trans ℄ Sta 93+00.00 TO Sta 94+00.00 OS	9						0.04
S4	EB Trans ℄ Sta 81+50.12 TO Sta 83+25.43 TW	46	141					0.33
S4	EB Trans ℄ Sta 83+25.43 TO Sta 86+00.00 TW	71	104					0.37
S4	EB Trans ℄ Sta 86+00.00 TO Sta 93+00.00 TW	182						0.54
S4	EB Trans ℄ Sta 93+00.00 TO Sta 94+00.00 TW	26						0.12
	EB TRANSITION S4 SUBTOTAL	446	357	0	0	0	0	1.89
	EB MAINLINE S4 SUBTOTAL	10,860	21,686	2940	5931	34,575	0	44.61
	MINOR Rd S4 SUBTOTAL	0	556	0	476	0	918	0.33
	EB TRANSITION S4 SUBTOTAL	446	357	0	0	0	0	1.89
	S4 TOTAL	11,306	22,599	2940	6407	34,575	918	46.83
S5	EB Rte 46 ℄ Sta 620+80.00 TO Sta 621+50.00 IA	2						0.00
S5	EB Rte 46 ℄ Sta 621+50.00 TO Sta 627+00.00 IA	86	172		122	476		0.28
S5	EB Rte 46 ℄ Sta 627+00.00 TO Sta 628+09.88 IA	13						0.00
S5	EB Rte 46 ℄ Sta 607+03.76 TO Sta 615+25.00 IS	44						0.21
S5	EB Rte 46 ℄ Sta 615+25.00 TO Sta 618+00.00 IS	15	22					0.10
S5	EB Rte 46 ℄ Sta 618+00.00 TO Sta 621+50.00 IS	17						0.05
S5	EB Rte 46 ℄ Sta 621+50.00 TO Sta 627+00.00 IS	41	82		58	227		0.13
S5	EB Rte 46 ℄ Sta 627+00.00 TO Sta 628+09.88 IS	6						0.00
S5	EB Rte 46 ℄ Sta 630+32.67 TO Sta 638+11.27 IS	34						0.16
S5	EB Rte 46 ℄ Sta 638+11.27 TO Sta 644+00.00 IS	26						0.12
S5	EB Rte 46 ℄ Sta 628+09.88 TO Sta 630+32.67 MX	28						0.00
S5	EB Rte 46 ℄ Sta 628+23.66 TO Sta 629+06.01 MX	13	27		19	74		0.07
S5	EB Rte 46 ℄ Sta 615+25.00 TO Sta 616+25.00 OA	12						0.06
S5	EB Rte 46 ℄ Sta 616+25.00 TO Sta 621+77.75 OA	33						0.16
S5	EB Rte 46 ℄ Sta 615+25.00 TO Sta 616+25.00 OS	11						0.05
S5	EB Rte 46 ℄ Sta 616+25.00 TO Sta 644+00.00 OS	277						1.30
S5	EB Rte 46 ℄ Sta 615+25.00 TO Sta 618+00.00 TW	51	74					0.35
S5	EB Rte 46 ℄ Sta 615+25.00 TO Sta 616+25.00 TW	6						0.03
S5	EB Rte 46 ℄ Sta 616+25.00 TO Sta 644+00.00 TW	750						2.24
	EB MAINLINE S5 SUBTOTAL	1,465	377	0	199	777	0	5.31
	DETOUR S3 SUBTOTAL	0	2,437	552	592	4,471	0	1.30
	S4 TOTAL	11,306	22,599	2940	6407	34,575	918	46.83
	EB MAINLINE S5 SUBTOTAL	1,465	377	0	199	777	0	5.31
	TOTAL THIS Sht	12,771	25,413	3492	7198	39,823	918	53.44

SUMMARY OF QUANTITIES
Q-12

STATE OF CALIFORNIA - DEPARTMENT OF TRANSPORTATION
06-DESIGN
Caltrans®

CALCULATED-DESIGNED BY JOHN CLARKE
CHECKED BY JOSE ARGUELLO
FUNCTIONAL SUPERVISOR JACK WALKER
REVISED BY
DATE REVISED

LAST REVISION 12-06-11
DATE PLOTTED => 16-FEB-2012
TIME PLOTTED => 14:34

Dist	COUNTY	ROUTE	POST MILES TOTAL PROJECT	SHEET No.	TOTAL SHEETS
05	SLO	46	40.7/46.3	440	541

REGISTERED CIVIL ENGINEER 11-10-11 DATE

2-13-12
PLANS APPROVAL DATE

REGISTERED PROFESSIONAL ENGINEER JOSE M. ARGUELLO No. 51321 Exp. 06-30-12 CIVIL STATE OF CALIFORNIA

THE STATE OF CALIFORNIA OR ITS OFFICERS OR AGENTS SHALL NOT BE RESPONSIBLE FOR THE ACCURACY OR COMPLETENESS OF SCANNED COPIES OF THIS PLAN SHEET.

ROADWAY QUANTITIES (CONTINUED)

STAGE - PHASE	LOCATION	RHMA (GAP GRADED) TON	HMA (TYPE A) TON	LCB CY	CI 2 AB CY	CI 1 AS CY	CI 5 AS CY	TACK COAT TON
S5	WB Rte 46 ℄ Sta 657+04.89 TO Sta 660+00.00 IA	34						0.10
S5	WB Rte 46 ℄ Sta 660+00.00 TO Sta 664+38.00 IA	45						0.14
S5	WB Rte 46 ℄ Sta 700+98.30 TO Sta 708+39.24 IA	81						0.24
S5	WB Rte 46 ℄ Sta 796+94.20 TO Sta 797+00.00 IA	1						0.00
S5	WB Rte 46 ℄ Sta 797+00.00 TO Sta 804+35.14 IA	80						0.24
S5	WB Rte 46 ℄ Sta 822+00.00 TO Sta 850+00.00 IA	295						0.88
S5	WB Rte 46 ℄ Sta 850+00.00 TO Sta 850+84.35 IA	10						0.03
S5	WB Rte 46 ℄ Sta 853+18.71 TO Sta 853+89.95 IA	8						0.03
S5	WB Rte 46 ℄ Sta 853+89.95 TO Sta 854+89.95 IA	12						0.06
S5	WB Rte 46 ℄ Sta 855+71.95 TO Sta 856+71.95 IA	12						0.06
S5	WB Rte 46 ℄ Sta 856+71.95 TO Sta 857+00.00 IA	3						0.01
S5	WB Rte 46 ℄ Sta 857+00.00 TO Sta 860+60.13 IA	35						0.11
S5	WB Rte 46 ℄ Sta 643+75.00 TO Sta 644+75.00 IS	4						0.02
S5	WB Rte 46 ℄ Sta 644+75.00 TO Sta 654+74.28 IS	43						0.13
S5	WB Rte 46 ℄ Sta 657+04.89 TO Sta 660+00.00 IS	17						0.05
S5	WB Rte 46 ℄ Sta 660+00.00 TO Sta 698+75.51 IS	174						0.52
S5	WB Rte 46 ℄ Sta 700+98.30 TO Sta 705+99.63 IS	27						0.08
S5	WB Rte 46 ℄ Sta 705+99.63 TO Sta 712+16.80 IS	32						0.15
S5	WB Rte 46 ℄ Sta 712+16.80 TO Sta 715+00.00 IS	12						0.04
S5	WB Rte 46 ℄ Sta 715+00.00 TO Sta 740+00.00 IS	108						0.32
S5	WB Rte 46 ℄ Sta 740+00.00 TO Sta 740+48.05 IS	2						0.01
S5	WB Rte 46 ℄ Sta 742+70.78 TO Sta 745+00.00 IS	10						0.03
S5	WB Rte 46 ℄ Sta 745+00.00 TO Sta 794+67.99 IS	215						0.64
S5	WB Rte 46 ℄ Sta 796+94.20 TO Sta 797+00.00 IS	0						0.00
S5	WB Rte 46 ℄ Sta 797+00.00 TO Sta 810+10.49 IS	65						0.19
S5	WB Rte 46 ℄ Sta 810+10.49 TO Sta 811+10.49 IS	4						0.02
S5	WB Rte 46 ℄ Sta 813+60.49 TO Sta 814+60.49 IS	4						0.02
S5	WB Rte 46 ℄ Sta 814+60.49 TO Sta 850+00.00 IS	184						0.55
S5	WB Rte 46 ℄ Sta 850+00.00 TO Sta 850+84.35 IS	4						0.01
S5	WB Rte 46 ℄ Sta 853+18.71 TO Sta 853+89.95 IS	4						0.01
S5	WB Rte 46 ℄ Sta 853+89.95 TO Sta 854+89.95 IS	5						0.03
S5	WB Rte 46 ℄ Sta 855+71.95 TO Sta 856+71.95 IS	5						0.03
S5	WB Rte 46 ℄ Sta 856+71.95 TO Sta 857+00.00 IS	2						0.00
S5	WB Rte 46 ℄ Sta 857+00.00 TO Sta 866+00.35 IS	43						0.13
S5	WB Rte 46 ℄ Sta 866+00.35 TO Sta 876+92.60 IS	59						0.18
S5	WB Rte 46 ℄ Sta 876+92.60 TO Sta 883+25.46 IS	28						0.08
S5	WB Rte 46 ℄ Sta 654+74.28 TO Sta 657+04.89 MX	28						0.08
S5	WB Rte 46 ℄ Sta 698+75.51 TO Sta 700+98.30 MX	37						0.11
S5	WB Rte 46 ℄ Sta 740+48.05 TO Sta 742+70.78 MX	34						0.10
S5	WB Rte 46 ℄ Sta 794+67.99 TO Sta 795+00.00 MX	1						0.00
S5	WB Rte 46 ℄ Sta 795+00.00 TO Sta 796+94.20 MX	36						0.11
S5	WB Rte 46 ℄ Sta 850+84.35 TO Sta 853+18.71 MX	74						0.22
S5	WB Rte 46 ℄ Sta 654+91.71 TO Sta 660+00.00 OA	36						0.11
S5	WB Rte 46 ℄ Sta 828+00.00 TO Sta 850+00.00 OA	224						0.67
S5	WB Rte 46 ℄ Sta 850+00.00 TO Sta 853+89.95 OA	75						0.22
S5	WB Rte 46 ℄ Sta 853+89.95 TO Sta 854+89.95 OA	12						0.06
S5	WB Rte 46 ℄ Sta 855+71.95 TO Sta 856+71.95 OA	12						0.06
S5	WB Rte 46 ℄ Sta 856+71.95 TO Sta 857+00.00 OA	3						0.01
S5	WB Rte 46 ℄ Sta 857+00.00 TO Sta 860+60.20 OA	35						0.11
S5	WB Rte 46 ℄ Sta 643+75.00 TO Sta 644+75.00 OS	10						0.05
S5	WB Rte 46 ℄ Sta 644+75.00 TO Sta 660+00.00 OS	154						0.72
S5	WB Rte 46 ℄ Sta 660+00.00 TO Sta 715+00.00 OS	537						2.52
S5	WB Rte 46 ℄ Sta 715+00.00 TO Sta 740+00.00 OS	244						1.15
S5	WB Rte 46 ℄ Sta 740+00.00 TO Sta 745+00.00 OS	49						0.23
S5	WB Rte 46 ℄ Sta 745+00.00 TO Sta 795+00.00 OS	488						2.29
S5	WB Rte 46 ℄ Sta 795+00.00 TO Sta 797+00.00 OS	20						0.09
S5	WB Rte 46 ℄ Sta 797+00.00 TO Sta 810+10.49 OS	128						0.60
S5	WB Rte 46 ℄ Sta 810+10.49 TO Sta 811+10.49 OS	10						0.05
S5	WB Rte 46 ℄ Sta 813+60.49 TO Sta 814+60.49 OS	10						0.05
S5	WB Rte 46 ℄ Sta 814+60.49 TO Sta 850+00.00 OS	369						1.73
S5	WB Rte 46 ℄ Sta 850+00.00 TO Sta 853+89.95 OS	43						0.20
	WB MAINLINE S5 - COLUMN - SUBTOTAL	4336	0	0	0	0	0	16.68

CONTINUED

ROADWAY QUANTITIES (CONTINUED)

STAGE - PHASE	LOCATION	RHMA (GAP GRADED) TON	HMA (TYPE A) TON	LCB CY	CI 2 AB CY	CI 1 AS CY	CI 5 AS CY	TACK COAT TON
	WB MAINLINE S5 - COLUMN - CARRYOVER	4,336	0	0	0	0	0	16.68
S5	WB Rte 46 ℄ Sta 853+89.95 TO Sta 854+89.95 OS	16						0.07
S5	WB Rte 46 ℄ Sta 855+71.95 TO Sta 856+71.95 OS	15						0.07
S5	WB Rte 46 ℄ Sta 856+71.95 TO Sta 857+00.00 OS	3						0.02
S5	WB Rte 46 ℄ Sta 857+00.00 TO Sta 883+25.46 OS	260						1.22
S5	WB Rte 46 ℄ Sta 643+75.00 TO Sta 644+75.00 TW	28						0.13
S5	WB Rte 46 ℄ Sta 644+75.00 TO Sta 660+00.00 TW	429						1.28
S5	WB Rte 46 ℄ Sta 660+00.00 TO Sta 715+00.00 TW	1,550						4.63
S5	WB Rte 46 ℄ Sta 715+00.00 TO Sta 740+00.00 TW	705						2.11
S5	WB Rte 46 ℄ Sta 740+00.00 TO Sta 745+00.00 TW	141						0.42
S5	WB Rte 46 ℄ Sta 745+00.00 TO Sta 795+00.00 TW	1,410						4.22
S5	WB Rte 46 ℄ Sta 795+00.00 TO Sta 797+00.00 TW	56						0.17
S5	WB Rte 46 ℄ Sta 797+00.00 TO Sta 810+10.49 TW	369						1.10
S5	WB Rte 46 ℄ Sta 810+10.49 TO Sta 811+10.49 TW	28						0.13
S5	WB Rte 46 ℄ Sta 813+60.49 TO Sta 814+60.49 TW	28						0.13
S5	WB Rte 46 ℄ Sta 814+60.49 TO Sta 850+00.00 TW	998						2.98
S5	WB Rte 46 ℄ Sta 850+00.00 TO Sta 853+89.95 TW	110						0.33
S5	WB Rte 46 ℄ Sta 853+89.95 TO Sta 854+89.95 TW	28						0.13
S5	WB Rte 46 ℄ Sta 855+71.95 TO Sta 856+71.95 TW	28						0.13
S5	WB Rte 46 ℄ Sta 856+71.95 TO Sta 857+00.00 TW	8						0.02
S5	WB Rte 46 ℄ Sta 857+00.00 TO Sta 883+25.46 TW	728						2.18
	WB MAINLINE S5 SUBTOTAL	11,274	0	0	0	0	0	38.15
S5	WB Trans ℄ Sta 79+23.10 TO Sta 83+25.00 GORE		45					0.08
S5	WB Trans ℄ Sta 65+99.39 TO Sta 86+12.25 IS	155						0.46
S5	WB Trans ℄ Sta 76+58.42 TO Sta 91+61.44 OS	118						0.35
S5	WB Trans ℄ Sta 91+61.44 TO Sta 93+00.00 OS	12						0.04
S5	WB Trans ℄ Sta 93+00.00 TO Sta 94+00.00 OS	9						0.04
S5	WB Trans ℄ Sta 68+43.94 TO Sta 90+82.00 TW	260						0.78
S5	WB Trans ℄ Sta 83+25.77 TO Sta 86+12.25 TW	43	23					0.22
S5	WB Trans ℄ Sta 86+12.25 TO Sta 91+61.44 TW	83						0.00
S5	WB Trans ℄ Sta 91+61.44 TO Sta 93+00.00 TW	19						0.06
S5	WB Trans ℄ Sta 93+00.00 TO Sta 94+00.00 TW	13						0.06
	WB TRANSITION S5 SUBTOTAL	712	68	0	0	0	0	2.09
	EB MAINLINE S5 SUBTOTAL (Sht Q-12)	1,465	377	0	199	777	0	5.31
	WB MAINLINE S5 SUBTOTAL	11,274	0	0	0	0	0	38.15
	WB TRANSITION S5 SUBTOTAL	712	68	0	0	0	0	2.09
	S5 TOTAL	13,451	445	0	199	777	0	45.55
	WB MAINLINE S5 SUBTOTAL	11,274	0	0	0	0	0	38.15
	WB TRANSITION S5 SUBTOTAL	712	68	0	0	0	0	2.09
	TOTAL THIS Sht	11,986	68	0	0	0	0	40.24

SUMMARY OF QUANTITIES
Q-13

STATE OF CALIFORNIA - DEPARTMENT OF TRANSPORTATION
Caltrans 06-DESIGN

FUNCTIONAL SUPERVISOR: JACK WALKER
CALCULATED-DESIGNED BY: JOHN CLARKE
CHECKED BY: JOSE ARGUELLO
REVISED BY / DATE REVISED

LAST REVISION 12-06-11 | DATE PLOTTED => 16-FEB-2012 | TIME PLOTTED => 14:34

Dist	COUNTY	ROUTE	POST MILES TOTAL PROJECT	SHEET No.	TOTAL SHEETS
05	SLO	46	40.7/46.3	441	541

REGISTERED CIVIL ENGINEER 11-10-11 DATE

2-13-12
PLANS APPROVAL DATE

REGISTERED PROFESSIONAL ENGINEER JOSE M. ARGUELLO No. 51321 Exp. 06-30-12 CIVIL STATE OF CALIFORNIA

THE STATE OF CALIFORNIA OR ITS OFFICERS OR AGENTS SHALL NOT BE RESPONSIBLE FOR THE ACCURACY OR COMPLETENESS OF SCANNED COPIES OF THIS PLAN SHEET.

ROADWAY QUANTITIES SUMMARY

DESCRIPTION	RHMA (GAP GRADED)	HMA (TYPE A)	LCB	CI 2 AB	CI 1 AS	CI 5 AS	TACK COAT
	TON	TON	CY	CY	CY	CY	TON
Sht Q-10 TOTAL	0	26,254	5,031	8,673	21,425	23,810	21.24
Sht Q-11 TOTAL	6,126	48,699	12,868	12,617	74,349	18,573	47.82
Sht Q-12 TOTAL	12,771	25,413	3,492	7,198	39,823	918	53.44
Sht Q-13 TOTAL	11,986	68	0	0	0	0	40.24
SUBTOTAL	30,883	100,434	21,391	28,488	135,597	43,301	162.74
SUBTOTAL	30,883	100,434	21,391	28,488	135,597	43,301	162.74
CI 2 AB AT RCB (Sht Q-16)	0	0	0	708	0	0	0
PLACE HMA (Misc AREA) (Sht Q-15)	0	66	0	0	0	0	0
HIGH SIDE SUPER DITCH (HSSD) (Sht Q-15)	0	279	0	0	0	0	0
PLACE HOT MIXED ASPHALT DIKE (Sht Q-15)	0	1,397	0	0	0	0	0
TOTAL	30,883	102,176	21,391	29,196	135,597	43,301	162.74

SUMMARY OF QUANTITIES
Q-14

STATE OF CALIFORNIA DEPARTMENT OF TRANSPORTATION
Caltrans®
06-DESIGN

FUNCTIONAL SUPERVISOR: JACK WALKER
CALCULATED-DESIGNED BY: JOHN CLARKE
CHECKED BY: JOSE ARGUELLO
REVISED BY
DATE REVISED

LAST REVISION 12-07-11
DATE PLOTTED => 16-FEB-2012
TIME PLOTTED => 14:34

Dist	COUNTY	ROUTE	POST MILES TOTAL PROJECT	SHEET No.	TOTAL SHEETS
05	SLO	46	40.7/46.3	442	541

REGISTERED CIVIL ENGINEER 11-10-11 DATE

2-13-12
PLANS APPROVAL DATE

REGISTERED PROFESSIONAL ENGINEER JOSE M. ARGUELLO No. 51321 Exp. 06-30-12 CIVIL STATE OF CALIFORNIA

THE STATE OF CALIFORNIA OR ITS OFFICERS OR AGENTS SHALL NOT BE RESPONSIBLE FOR THE ACCURACY OR COMPLETENESS OF SCANNED COPIES OF THIS PLAN SHEET.

PLACE HOT MIXED ASPHALT DIKE

STAGE - PHASE	LOCATION	PAD (N) THICK-NESS	TYPE C	TYPE E	TYPE F	HMA * (TYPE A)
		FT	LF	LF	LF	TON
S1 P1	ACCRD1 ℄ Sta 859+57.74 TO Sta 864+31.98 Lt	0.25		462		22.82
S1 P1	ACCRD1 ℄ Sta 864+70.00 TO Sta 864+20.00 Rt	0.25		53		2.62
S1 P1	DETOUR 2 ℄ Sta 44+00.00 TO Sta 49+00.00 Lt	0.15		500		19.90
S1 P1	DETOUR 2 ℄ Sta 50+25.00 TO Sta 52+00.00 Rt	0.15		175		6.97
S1 P1	McMillan Canyon Rd ℄ Sta 53+43.29 TO Sta 55+60.00 Lt	0.25		232		11.46
S1 P1	McMillan Canyon Rd ℄ Sta 53+36.61 TO Sta 55+30.00 Rt	0.25		223		11.02
S1 P1	Prvt Dwy 5 ℄ Sta 2+99.24 TO Sta 3+67.37 Lt	0.25		85		4.20
S1 P1	Prvt Dwy 5 ℄ Sta 2+99.24 TO Sta 3+60.47 Rt	0.25		75		3.71
S1 P1	Prvt Dwy 8 ℄ Sta 6+98.14 TO Sta 7+04.46 Rt	0.25		21		1.04
S1 P1	Rte 46 ℄ Sta 660+00.00 TO Sta 671+52.64 Lt	0.30		1,153		62.49
S1 P1	Rte 46 ℄ Sta 671+90.17 TO Sta 672+75.00 Lt	0.30		85		4.61
S1 P1	Rte 46 ℄ Sta 674+75.00 TO Sta 679+00.00 Lt	0.30		425		23.04
S1 P1	Rte 46 ℄ Sta 688+75.00 TO Sta 699+94.24 Lt	0.30		1,119		60.65
S1 P1	Rte 46 ℄ Sta 700+74.24 TO Sta 701+50.00 Lt	0.30		76		4.12
S1 P1	Rte 46 ℄ Sta 702+50.00 TO Sta 703+12.50 Lt	0.30	63			1.38
S1 P1	Rte 46 ℄ Sta 703+12.50 TO Sta 706+62.50 Lt	0.30			350	9.56
S1 P1	Rte 46 ℄ Sta 706+62.50 TO Sta 707+25.00 Lt	0.30	63			1.38
S1 P1	Rte 46 ℄ Sta 740+00.00 TO Sta 741+66.78 Lt	0.30		167		9.05
S1 P1	Rte 46 ℄ Sta 796+70.14 TO Sta 797+00.00 Lt	0.30		30		1.63
S1 P1	Rte 46 ℄ Sta 850+00.00 TO Sta 851+69.52 Lt	0.30		170		9.21
S1 P1	Rte 46 ℄ Sta 853+13.68 TO Sta 854+84.44 Lt	0.30		171		9.27
S1 P1	Rte 46 ℄ Sta 615+25.00 TO Sta 624+50.00 Rt	0.30		925		50.14
S1 P1	Rte 46 ℄ Sta 630+00.00 TO Sta 635+00.00 Rt	0.30		500		27.10
S1 P1	Rte 46 ℄ Sta 636+75.00 TO Sta 642+20.00 Rt	0.30		545		29.54
S2 P1	Rte 46 ℄ Sta 656+01.06 TO Sta 660+00.00 Lt-INSIDE	0.15		399		15.88
S1 P1	Rte 46 ℄ Sta 660+00.00 TO Sta 664+38.00 Lt-INSIDE	0.15		438		17.43
S1 P1	Temp Prvt Dwy 1 ℄ Sta 4+70.00 TO Sta 5+45.30 Rt	0.15		334		13.29
S1 P2	DETOUR 2 ℄ Sta 61+42.90 TO Sta 70+25.00 Lt	0.15		882		35.10
S1 P2	DETOUR 2 ℄ Sta 72+31.94 TO Sta 78+56.50 Lt	0.15		625		24.88
S1 P2	DETOUR 2 ℄ Sta 52+00.00 TO Sta 54+50.00 Rt	0.15		250		9.95
S1 P2	DETOUR 2 ℄ Sta 59+25.00 TO Sta 60+19.72 Rt	0.15		95		3.78
S1 P2	Temp Prvt Dwy 1 ℄ Sta 0+97.17 TO Sta 1+03.27 Rt	0.15		14		0.56
S2 P1	DETOUR 3 ℄ Sta 49+25.00 TO Sta 55+99.41 Rt	0.15		674		26.83
S2 P1	Prvt Dwy 3A ℄ Sta 7+10.46 TO Sta 8+88.31 Lt	0.25		202		9.98
S2 P1	Prvt Dwy 3A ℄ Sta 7+09.99 TO Sta 7+62.83 Rt	0.25		74		3.66
S2 P1	Prvt Dwy 3A ℄ Sta 8+42.50 TO Sta 8+86.71 Rt	0.25		48		2.37
S2 P1	Prvt Dwy 3B ℄ Sta 8+32.54 TO Sta 8+70.00 Lt	0.25		50		2.47
S2 P1	Prvt Dwy 3B ℄ Sta 7+62.83 TO Sta 9+06.10 Rt	0.25		103		5.09
S2 P1	Rte 46 ℄ Sta 618+00.00 TO Sta 628+33.94 Lt	0.25		1,034		51.08
S2 P1	Rte 46 ℄ Sta 632+00.00 TO Sta 635+65.00 Lt	0.25		365		18.03
S2 P1	Rte 46 ℄ Sta 652+25.00 TO Sta 655+68.76 Lt	0.30		342		18.54
S2 P1	Rte 46 ℄ Sta 656+94.26 TO Sta 660+00.00 Lt	0.30		306		16.59
S3	Prvt Dwy 4 ℄ Sta 4+71.77 TO Sta 5+62.33 Lt	0.25		106		5.24
S3	Prvt Dwy 4 ℄ Sta 4+72.82 TO Sta 5+67.25 Rt	0.25		106		5.24
S3	Rte 46 ℄ Sta 671+52.64 TO Sta 671+90.17 Lt	0.30		38		2.06
S3	Rte 46 ℄ Sta 723+57.00 TO Sta 740+00.00 Lt	0.30		1,643		89.05
S3	Rte 46 ℄ Sta 745+00.00 TO Sta 775+25.00 Lt	0.30		3,025		163.96
S3	Rte 46 ℄ Sta 797+00.00 TO Sta 797+75.00 Lt	0.30		75		4.07
S3	Rte 46 ℄ Sta 800+00.00 TO Sta 811+10.49 Lt	0.30		1,110		60.16
S3	Rte 46 ℄ Sta 813+60.49 TO Sta 820+50.00 Lt	0.30		690		37.40
S3	Rte 46 ℄ Sta 845+60.00 TO Sta 850+00.00 Lt	0.30		440		23.85
S3	Rte 46 ℄ Sta 857+25.00 TO Sta 870+50.00 Lt	0.30		1,325		71.82
S3	Rte 46 ℄ Sta 882+00.00 TO Sta 883+25.46 Lt	0.30		125		6.78
S3	Rte 46 ℄ Sta 649+75.00 TO Sta 655+88.22 Rt	0.25		616		30.43
S3	Rte 46 ℄ Sta 656+68.37 TO Sta 676+50.00 Rt	0.25		1,982		97.91
S3	Rte 46 ℄ Sta 691+50.00 TO Sta 699+94.24 Rt	0.25		844		41.69
S3	Rte 46 ℄ Sta 703+12.50 TO Sta 710+00.00 Rt	0.25			688	17.20
S4	Rte 46 ℄ Sta 710+00.00 TO Sta 711+00.00 Rt	0.25			100	2.50
S4	Rte 46 ℄ Sta 711+00.00 TO Sta 713+00.00 Rt	0.25		200		9.88
S4	Rte 46 ℄ Sta 749+75.00 TO Sta 760+00.00 Rt	0.25		1,025		50.64
S4	Rte 46 ℄ Sta 818+50.00 TO Sta 821+50.00 Rt	0.25		300		14.82
		TOTAL	126	27,077	1138	1397.12

(N) NOT A SEPARATE PAY ITEM, FOR INFORMATION ONLY.
* INCLUDED IN ROADWAY QUANTITIES SUMMARY TABLE (SHEET Q-14)

PLACE HMA (Misc AREA)

LOCATION	PLACE HMA (Misc AREA)	HMA * (TYPE A)
	SQYD	TON
DRAINAGE QUANTITIES SUMMARY (SHEET DQ-13)	379	38
HMA OVERSIDE DRAINS (SHEET Q-16)	156	25
PIPE DOWNDRAINS (SHEET Q-16)	15	3
TOTAL	550	66

* INCLUDED IN ROADWAY QUANTITIES SUMMARY TABLE (SHEET Q-14)

HIGH SIDE SUPER DITCH (HSSD)

STAGE - PHASE	LOCATION	THICKNESS (N)	LENGTH (N)	HMA * (TYPE A)
		FT	LF	TON
S1 P1	ACCRD1 ℄ Sta 864+70.00 TO Sta 864+20.00 Rt	0.25	53	2.87
S1 P1	Prvt Dwy 8 ℄ Sta 6+98.14 TO Sta 7+04.46 Rt	0.25	21	1.14
S2 P1	Rte 46 ℄ Sta 656+01.06 TO Sta 660+00.00 Lt-INSIDE	0.15	399	13.01
S1 P1	Rte 46 ℄ Sta 660+00.00 TO Sta 664+38.00 Lt-INSIDE	0.15	438	14.28
S1 P1	Rte 46 ℄ Sta 796+70.14 TO Sta 797+00.00 Lt	0.30	30	1.95
S1 P1	Rte 46 ℄ Sta 850+00.00 TO Sta 850+15.73 Lt	0.30	16	1.04
S1 P2	Temp Prvt Dwy 1 ℄ Sta 4+70.00 TO Sta 5+45.30 Rt	0.15	334	10.89
S2 P1	DETOUR 3 ℄ Sta 49+25.00 TO Sta 55+99.41 Rt	0.15	674	21.97
S2 P1	Prvt Dwy 3A ℄ Sta 8+42.50 TO Sta 8+86.71 Rt	0.25	48	2.60
S2 P1	Prvt Dwy 3B ℄ Sta 8+32.54 TO Sta 8+70.00 Lt	0.25	50	2.71
S3	Prvt Dwy 4 ℄ Sta 5+45.30 TO Sta 5+67.25 Rt	0.25	34	1.84
S3	Prvt Dwy 4 ℄ Sta 5+48.29 TO Sta 5+62.33 Lt	0.25	28	1.52
S3	Rte 46 ℄ Sta 649+75.00 TO Sta 655+88.22 Rt	0.25	616	33.39
S3	Rte 46 ℄ Sta 656+68.37 TO Sta 676+50.00 Rt	0.25	1982	107.42
S3	Rte 46 ℄ Sta 797+00.00 TO Sta 797+75.00 Lt	0.30	75	4.88
S3	Rte 46 ℄ Sta 800+00.00 TO Sta 803+15.14 Lt	0.30	315	20.48
S3	Rte 46 ℄ Sta 845+60.00 TO Sta 850+00.00 Lt	0.30	440	28.60
S3	Rte 46 ℄ Sta 882+00.00 TO Sta 883+25.46 Lt	0.30	125	8.13
			TOTAL	278.72

(N) NOT A SEPARATE PAY ITEM, FOR INFORMATION ONLY.
* INCLUDED IN ROADWAY QUANTITIES SUMMARY TABLE (SHEET Q-14)

SUMMARY OF QUANTITIES
Q-15

STATE OF CALIFORNIA - DEPARTMENT OF TRANSPORTATION
Caltrans® 06-DESIGN
FUNCTIONAL SUPERVISOR: JACK WALKER
CALCULATED-DESIGNED BY: JOSE ARGUELLO
CHECKED BY: JOHN CLARKE
REVISED BY / DATE REVISED

LAST REVISION 12-07-11
DATE PLOTTED => 16-FEB-2012
TIME PLOTTED => 14:34

Dist	COUNTY	ROUTE	POST MILES TOTAL PROJECT	SHEET No.	TOTAL SHEETS
05	SLO	46	40.7/46.3	443	541

REGISTERED CIVIL ENGINEER DATE 11-10-11

2-13-12
PLANS APPROVAL DATE

REGISTERED PROFESSIONAL ENGINEER JOSE M. ARGUELLO No. 51321 Exp. 06-30-12 CIVIL STATE OF CALIFORNIA

THE STATE OF CALIFORNIA OR ITS OFFICERS OR AGENTS SHALL NOT BE RESPONSIBLE FOR THE ACCURACY OR COMPLETENESS OF SCANNED COPIES OF THIS PLAN SHEET.

RETAINING WALL

RW No.	LOCATION	RW TYPE	Str Conc (RW)	BAR Reinf STEEL (RW)	Str Exc (RW)	Str Bkf (RW) Str Bkf (RW)	Str Bkf (RW) PERVIOUS Bkf MATERIAL (RW)	WATER STOP (N)
			CY	LB	CY	CY	CY	EA
1	Rte 46 ℄ Sta 743+21.28 128.49 Lt TO Sta 743+34.29 113.31 Lt	1	29.0	3,480	88.12	94.00	3.0	21
2	Rte 46 ℄ Sta 743+48.07 113.73 Lt TO Sta 774+80.06 114.72 Lt	1	45.7	4,786	159.93	146.59	4.4	21
3	Rte 46 ℄ Sta 743+57.25 127.17 Rt TO Sta 743+77.24 127.75 Rt	1	32.6	3,695	116.87	119.46	2.8	21
4	Rte 46 ℄ Sta 743+92.84 128.20 Rt TO Sta 744+18.22 128.96 Rt	1	38.7	4,294	120.71	125.91	4.1	21
	SUBTOTAL					485.96	14.3	
	TOTAL		146.0	16,253	485.63	500.26		

(N) NOT A SEPARATE PAY ITEM, FOR INFORMATION ONLY.

PIPE DOWNDRAINS

LENGTH L' (N)	PLACE HMA * Misc AREA	PLACE HMA * HMA (TYPE A)	DOWNDRAIN 15" CSP (0.079" THICK)	DOWNDRAIN 15" Anch Assy	DOWNDRAIN 15" Ent TAPER	DOWNDRAIN 15" SLIP Jt	ROCK SLOPE PROTECTION** BACKING No. 1, METHOD B	ROCK SLOPE PROTECTION** FABRIC	DESCRIPTION	STATION	PLAN SHEET No.
LF	SQYD	TON	LF	EA	EA	EA	CY	SQYD			
38.5	3	0.6	26.7	1	1	1	1	5	DD CSP 15" Anchored Lt	632+03	D-2
67.5	3	0.6	55.7	1	1	1	1	5	DD CSP 15" Anchored Rt	630+03	D-2
84.5	3	0.6	72.7	1	1	1	1	5	DD CSP 15" Anchored Lt	636+78	D-3
29.0	3	0.6	17.2	1	1	1	1	5	DD CSP 15" Anchored Lt	703+12.5	D-7
29.0	3	0.6	17.2	1	1	1	1	5	DD CSP 15" Anchored Lt	703+15.5	D-7
248.5	15	3.0	189.5	5	5	5	5	25	TOTAL		

(N) NOT A SEPARATE PAY ITEM, FOR INFORMATION ONLY.
* INCLUDED IN PLACE HMA (Misc AREA) TABLE (Sht Q-15)
** INCLUDED IN ROCK SLOPE PROTECTION TABLE (Sht Q-17)

HMA OVERSIDE DRAINS

LENGTH L' (N)	PLACE HMA * Misc AREA	PLACE HMA * HMA (TYPE A)	ROCK SLOPE PROTECTION** BACKING No. 1, METHOD B	ROCK SLOPE PROTECTION** FABRIC	DESCRIPTION	STATION	PLAN SHEET No.
LF	SQYD	TON	CY	SQYD			
59.0	22	3.7	0.5	3	OSD HMA Rt	649+75	D-4
33.0	15	2.5	0.5	3	OSD HMA Lt	678+97	D-6
16.2	9	1.4	0.5	3	OSD HMA Lt	723+60	D-9
22.0	10	1.6	0.5	3	OSD HMA Lt	745+03	D-10
52.1	20	3.3	0.5	3	OSD HMA Rt	759+97	D-11
34.0	14	2.2	0.5	3	OSD HMA Lt	818+53	D-16
77.0	29	4.8	0.5	3	OSD HMA Lt	870+47	D-19
100.8	37	5.8	0.5	3	OSD HMA Lt	882+00	D-20
-	156	25.3	4.0	24	TOTAL		

(N) NOT A SEPARATE PAY ITEM, FOR INFORMATION ONLY.
* INCLUDED IN PLACE HMA (Misc AREA) TABLE (Sht Q-15)
** INCLUDED IN ROCK SLOPE PROTECTION TABLE (Sht Q-17)

MINOR CONCRETE (GUTTER)

RW No.	LOCATION	LENGTH (N)	MINOR Conc (GUTTER)
		LF	CY
1 & 2	Rte 46 ℄ Sta 743+21.28 128.49 Lt TO Sta 774+80.06 114.72 Lt	55	1.67
3 & 4	Rte 46 ℄ Sta 743+57.25 127.17 Rt TO Sta 744+18.22 128.96 Rt	62	1.93
	TOTAL	117	3.60

(N) NOT A SEPARATE PAY ITEM, FOR INFORMATION ONLY.

MINOR CONCRETE (CURB)

LOCATION	TYPE	LENGTH (N)	MINOR Conc (CURB)
		LF	CY
Rte 46 ℄ Sta 811+10.49 TO Sta 813+60.49 Lt	D-4	250	10.21
	TOTAL	250	10.21

(N) NOT A SEPARATE PAY ITEM, FOR INFORMATION ONLY.

REMOVE CONCRETE (STRUCTURE)

DESCRIPTION	STATION	PLAN SHEET No.	DRAINAGE SYSTEM No. ⬡	DRAINAGE UNIT No. ○	REMOVE Conc (STRUCTURE)
					CY
Remove 12'x10' RCB (+)	685+86	D-6	10	a	213.6
Remove 12'x12' RCB (+)	743+50	D-10	21	a	366.6
Remove 12'x10' RCB (+)	855+65	D-18	46X	a	126.6
				TOTAL	706.8

(+) INCLUDES REMOVE ALL WW AND APRONS

CI 2 AB AT RCB

STATION	PLAN SHEET No.	DRAINAGE SYSTEM No. ⬡	DRAINAGE UNIT No. ○	CI 2 AB ***
				CY
685+86	D-6	10	q	489.4
743+50	D-10	21	o	218.4
			TOTAL	707.8

*** INCLUDED IN ROADWAY QUANTITIES SUMMARY TABLE (Sht Q-14)

SUMMARY OF QUANTITIES
Q-16

STATE OF CALIFORNIA - DEPARTMENT OF TRANSPORTATION
Caltrans 06-DESIGN
FUNCTIONAL SUPERVISOR JACK WALKER
CALCULATED-DESIGNED BY TOM LIU
CHECKED BY SUMANGALI HOODE
REVISED BY
DATE REVISED

LAST REVISION 12-07-11
DATE PLOTTED => 16-FEB-2012
TIME PLOTTED => 14:34

Dist	COUNTY	ROUTE	POST MILES TOTAL PROJECT	SHEET No.	TOTAL SHEETS
05	SLO	46	40.7/46.3	444	541

REGISTERED CIVIL ENGINEER 11-10-11 DATE

2-13-12
PLANS APPROVAL DATE

REGISTERED PROFESSIONAL ENGINEER JOSE M. ARGUELLO No. 51321 Exp. 06-30-12 CIVIL STATE OF CALIFORNIA

THE STATE OF CALIFORNIA OR ITS OFFICERS OR AGENTS SHALL NOT BE RESPONSIBLE FOR THE ACCURACY OR COMPLETENESS OF SCANNED COPIES OF THIS PLAN SHEET.

CONCRETE STAINING

PLAN SHEET No.	DRAINAGE SYSTEM No. ⬡	DRAINAGE UNIT No. ○	DESCRIPTION		Conc STAINING SQYD
D-2	2	a	G2 DI 24-9 GRATE	Median	27.6
D-2	2	c	G2 DI 24-9 GRATE	Median	27.6
D-5	9	g	G2 DI 24-9 GRATE (DD6)	Median	27.6
D-6	11	b	G2 DI 24-9 GRATE (DD6) (MOD)	Median	27.6
D-6	11	d	G2 DI 24-9 GRATE (DD6) (MOD)	Median	27.6
D-6	11	f	G2 DI 24-9 GRATE (DD6) (MOD)	Median	27.6
D-6	11	h	G2 DI 24-9 GRATE (DD6) (MOD)	Median	27.6
D-6	11	j	G2 DI 24-9 GRATE (DD6) (MOD)	Median	27.6
D-7	13	x	G2 Mod DI 24-9 GRATE (DD6)	Median	54.0
D-7	13	z	G2 DI 24-9 GRATE (DD6)	Median	27.6
D-7	13	ab	G2 DI 24-9 GRATE (DD6)	Median	27.6
D-10	19	f	G2 DI 24-9 GRATE (DD6)	Median	27.6
D-10	19	h	G2 DI 24-9 GRATE (DD6)	Median	27.6
D-11	20	b	PCC Xing		22.2
D-11	22	at	PCC Xing		22.2
D-11	22	av	PCC Xing		22.2
D-13	24	j	G2 DI 24-9 GRATE (DD6)	Median	27.6
D-13	25	c	G2 DI 24-9 GRATE (DD6) (MOD)	Median Sag	27.6
D-13	26	a	G1 DI 24-9 GRATE (DD6)	Median	27.6
D-13	26	c	G2 DI 24-9 GRATE (DD6)	Median	27.6
D-14	27	n	G1 DI 24-9 GRATE (DD6)	Median	27.6
D-14	27	o	G2 DI 24-9 GRATE (DD6)	Median	27.6
D-14	27	p	G2 DI 24-9 GRATE (DD6)	Median	27.6
D-16	28	k	G2 DI 24-9 GRATE (DD6)	Median	27.6
D-18	31	e	G2 DI 24-9 GRATE (DD6)	Median	27.6
D-18	31	g	G2 DI 24-9 GRATE (DD6)	Median	27.6
D-20	36	c	G2 DI 24-12X GRATE	Median	27.6
				DRAINAGE SYSTEMS STAINING SUBTOTAL	755.4
				DRAINAGE SYSTEMS STAINING SUBTOTAL	755.4
				DITCH LINING (Sht Q-17)	2817.6
				VEGETATION CONTROL (Sht Q-19)	761.9
				TOTAL	4334.9

ROCK SLOPE PROTECTION

PLAN SHEET No.	LOCATION	(1 TON, METHOD A) CY	(1/4 TON, METHOD B) CY	(LIGHT, METHOD B) CY	(No. 1, METHOD B) CY	RSP FABRIC SQYD
DD-30	McMILLAN CANYON CREEK	4619			1851	3,965
	DRAINAGE QUANTITIES SUMMARY (Sht DQ-13)	29	735	611	1024	3,112
	HMA OVERSIDE DRAINS (Sht Q-16)				4	24
	PIPE DOWNDRAINS (Sht Q-16)				5	25
	DITCH LINING (Sht Q-17)				1547	5,251
	TOTAL	4648	735	611	4431	12,377

DITCH LINING

LOCATION	TYPE (N)	LENGTH (N) LF	CUTOFF WALL (N) EA	Conc (DITCH LINING) CY	RSP (No.1, METHOD B) ** CY	RSP FABRIC ** SQYD	Conc * STAINING SQYD
Rte 46 ℄ Sta 629+09.26 TO Sta 631+87.78 Lt	4.0' TOF	279.44			62.1	216.5	
Rte 46 ℄ Sta 637+08.00 TO Sta 642+11.41 Lt	8.0' TOF	509.44			226.4	647.8	
Rte 46 ℄ Sta 642+44.36 TO Sta 650+00.00 Lt	4.0' TOF	753.11			167.3	583.4	
Rte 46 ℄ Sta 664+81.38 TO Sta 667+32.97 Lt	4.0' TOC	251.84	4	10.3			122.7
Rte 46 ℄ Sta 667+54.19 TO Sta 672+75.00 Lt	4.0' TOC	522.80	7	21.4			254.7
Rte 46 ℄ Sta 672+75.00 TO Sta 673+00.00 Lt	4.0' TOF	25.11			5.6	19.5	
Rte 46 ℄ Sta 685+64.61 TO Sta 688+25.00 Lt	4.0' TOF	274.35			61.0	212.5	
Rte 46 ℄ Sta 689+00.00 TO Sta 699+94.24 Lt	4.0' TOC	1095.07	12	44.5			533.4
Rte 46 ℄ Sta 691+50.00 TO Sta 699+52.00 Lt	4.0' TOC	825.88	10	33.6			402.3
Rte 46 ℄ Sta 702+10.12 TO Sta 706+23.98 Lt	4.0' TOF	415.47			92.3	321.9	
Rte 46 ℄ Sta 706+34.79 TO Sta 716+75.00 Lt	4.0' TOF	1050.33			233.4	813.7	
Rte 46 ℄ Sta 745+00.00 TO Sta 746+00.00 Lt	4.0' TOF	100.00			22.2	77.5	
Rte 46 ℄ Sta 746+00.00 TO Sta 749+75.00 Lt	4.0' TOC	375.00	5	15.3			182.7
Rte 46 ℄ Sta 766+40.00 TO Sta 768+00.00 Lt	4.0' TOC	160.02	3	6.6			77.9
Rte 46 ℄ Sta 788+25.00 TO Sta 796+07.82 Lt	4.0' TOF	795.59			176.8	616.3	
Rte 46 ℄ Sta 856+45.00 TO Sta 856+75.00 Lt	4.0' TOF	29.84	1	1.3			14.5
Rte 46 ℄ Sta 856+75.00 TO Sta 860+00.00 Lt	4.0' TOC	328.93	4	13.4			160.2
Rte 46 ℄ Sta 860+00.00 TO Sta 865+00.00 Lt	6.0' TOC	497.68	6	29.7			366.1
Rte 46 ℄ Sta 865+00.00 TO Sta 871+49.98 Lt	4.0' TOC	654.30	7	26.6			318.7
Rte 46 ℄ Sta 630+00.00 TO Sta 630+79.20 Rt	4.0' TOF	79.20			17.6	61.4	
Rte 46 ℄ Sta 646+65.00 TO Sta 649+25.00 Rt	4.0' TOF	262.76			58.4	203.6	
Rte 46 ℄ Sta 667+25.00 TO Sta 671+50.00 Rt	4.0' TOC	425.01	6	17.4			207.0
Rte 46 ℄ Sta 671+50.00 TO Sta 674+50.00 Rt	4.0' TOF	313.35			69.6	242.8	
Rte 46 ℄ Sta 716+67.92 TO Sta 726+75.00 Rt	4.0' TOF	1035.10			230.0	801.9	
Rte 46 ℄ Sta 766+75.00 TO Sta 772+25.00 Rt	4.0' TOF	558.11			124.0	432.4	
ACCRD5 ℄ Sta 1+16.00 TO Sta 2+33.00 Rt	4.0' TOC	119.36	3	5.0			58.1
ACCRD4 ℄ Sta 3+25.00 TO Sta 5+68.00 Rt	4.0' TOC	244.88	4	10.1			119.3
			TOTAL	235.2	1546.7	5251.2	2817.6

(N) NOT A SEPARATE PAY ITEM, FOR INFORMATION ONLY.
* QUANTITY INCLUDED IN CONCRETE STAINING TABLE (Sht Q-17)
** QUANTITY INCLUDED IN ROCK SLOPE PROTECTION TABLE (Sht Q-17)

SUMMARY OF QUANTITIES
Q-17

STATE OF CALIFORNIA - DEPARTMENT OF TRANSPORTATION
Caltrans 06-DESIGN

FUNCTIONAL SUPERVISOR: JACK WALKER
CALCULATED-DESIGNED BY: JOHN CLARKE
CHECKED BY: JOSE ARGUELLO
REVISED BY / DATE REVISED

LAST REVISION 11-08-11
DATE PLOTTED => 23-FEB-2012
TIME PLOTTED => 13:58

Dist	COUNTY	ROUTE	POST MILES TOTAL PROJECT	SHEET No.	TOTAL SHEETS
05	SLO	46	40.7/46.3	445	541

REGISTERED CIVIL ENGINEER 11-10-11 DATE

2-13-12
PLANS APPROVAL DATE

REGISTERED PROFESSIONAL ENGINEER JOSE M. ARGUELLO No. 51321 Exp 06-30-12 CIVIL STATE OF CALIFORNIA

THE STATE OF CALIFORNIA OR ITS OFFICERS OR AGENTS SHALL NOT BE RESPONSIBLE FOR THE ACCURACY OR COMPLETENESS OF SCANNED COPIES OF THIS PLAN SHEET.

CHAIN LINK FENCE (TYPE CL-7, Mod)

LAYOUT PLAN L SHEET No.	LOCATION	CHAIN LINK FENCE (TYPE CL-7, Mod) LF
6	Rte 46 ℄ Sta 683+43.00 TO Sta 683+83.00 Lt	41
6	Rte 46 ℄ Sta 683+83.00 TO Sta 687+44.00 Lt	379
10	Rte 46 ℄ Sta 742+22.28 TO Sta 742+40.09 Lt	20
10	Rte 46 ℄ Sta 742+46.40 TO Sta 744+74.86 Lt	241
10	Rte 46 ℄ Sta 744+83.00 TO Sta 745+41.00 Lt	61
18	Rte 46 ℄ Sta 852+62.50 TO Sta 854+16.00 Lt	221
18	Rte 46 ℄ Sta 854+16.00 TO Sta 854+97.10 Lt	88
18	Rte 46 ℄ Sta 855+60.57 TO Sta 856+25.00 Lt	76
18-19	Rte 46 ℄ Sta 856+25.00 TO Sta 859+29.28 Lt	302
	Lt SUBTOTAL	1429
6	Rte 46 ℄ Sta 683+93.00 TO Sta 684+13.00 Rt	20
6	Rte 46 ℄ Sta 684+29.32 TO Sta 687+93.00 Rt	364
10	Rte 46 ℄ Sta 741+85.00 TO Sta 745+85.00 Rt	407
18	Rte 46 ℄ Sta 852+90.09 TO Sta 854+80.00 Rt	335
18	Rte 46 ℄ Sta 854+78.42 TO Sta 855+03.94 Rt	78
18	Rte 46 ℄ Sta 855+67.00 TO Sta 856+73.65 Rt	121
18-19	Rte 46 ℄ Sta 856+75.00 TO Sta 859+00.00 Rt	228
	Rt SUBTOTAL	1553
	Lt SUBTOTAL	1429
	Rt SUBTOTAL	1553
	TOTAL	2982

8' CHAIN LINK GATE (TYPE CL-7, Mod)

LAYOUT PLAN L SHEET No.	LOCATION	8' CL GATE (TYPE CL-7, Mod) EA
6	Rte 46 ℄ Sta 683+83.00 190.26' Lt	2
6	Rte 46 ℄ Sta 687+44.00 122.85' Lt	2
10	Rte 46 ℄ Sta 742+43.25 135.75' Lt	2
10	Rte 46 ℄ Sta 744+78.93 89.88' Lt	2
18	Rte 46 ℄ Sta 854+16.00 135.73' Lt	2
18	Rte 46 ℄ Sta 856+25.00 143.54' Lt	2
	Lt SUBTOTAL	12
6	Rte 46 ℄ Sta 684+21.16 198.18' Rt	2
10	Rte 46 ℄ Sta 741+85.00 100.36' Rt	2
10	Rte 46 ℄ Sta 745+85.00 115.73' Rt	2
18	Rte 46 ℄ Sta 854+79.21 170.23' Rt	2
18	Rte 46 ℄ Sta 856+74.30 151.89' Rt	2
	Rt SUBTOTAL	10
	Lt SUBTOTAL	12
	Rt SUBTOTAL	10
	TOTAL	22

FENCE (TYPE BW, 5 STRAND, METAL POST)

LAYOUT PLAN L SHEET No.	LOCATION	FENCE (TYPE BW, 5 STRAND, METAL POST) LF
3	Rte 46 ℄ Sta 638+72.00 TO Sta 645+00.00 Lt	635
4	Rte 46 ℄ Sta 649+00.00 TO Sta 656+19.34 Lt	821
4	Prvt Dwy 3A ℄ Sta 8+84.39 TO Sta 9+01.74 Rt	18
4	Rte 46 ℄ Sta 656+49.32 TO Sta 657+40.78 Lt	116
4-5	Rte 46 ℄ Sta 657+24.42 TO Sta 673+30.00 Lt	1,638
6	Rte 46 ℄ Sta 677+30.00 TO Sta 683+43.00 Lt	622
6-7	Rte 46 ℄ Sta 687+44.00 TO Sta 700+18.74 Lt	1,304
7	Rte 46 ℄ Sta 700+49.74 TO Sta 704+32.00 Lt	396
9	Rte 46 ℄ Sta 720+47.00 TO Sta 727+64.00 Lt	717
9-10	Rte 46 ℄ Sta 731+64.00 TO Sta 741+91.28 Lt	1,047
10	Rte 46 ℄ Sta 745+03.19 TO Sta 745+08.45 Lt	34
10-13	Rte 46 ℄ Sta 745+41.00 TO Sta 775+40.00 Lt	3,005
13-14	Rte 46 ℄ Sta 784+28.00 TO Sta 796+00.14 Lt	1,197
14-16	Rte 46 ℄ Sta 800+50.00 TO Sta 817+02.00 Lt	1,676
16-18	Rte 46 ℄ Sta 823+23.00 TO Sta 851+54.06 Lt	2,955
19	Rte 46 ℄ Sta 859+29.28 TO Sta 870+10.00 Lt	1,093
20	Rte 46 ℄ Sta 874+10.00 TO Sta 876+28.00 Lt	219
20-21	Rte 46 ℄ Sta 880+28.00 TO Sta 894+65.00 Lt	1,452
	Lt SUBTOTAL	18,945
2	Rte 46 ℄ Sta 628+39.61 TO Sta 628+58.44 Rt	32
3	Rte 46 ℄ Sta 634+73.00 TO Sta 645+00.00 Rt	1,030
4	Rte 46 ℄ Sta 649+38.00 TO Sta 656+08.86 Rt	710
4-5	Rte 46 ℄ Sta 656+39.89 TO Sta 672+54.00 Rt	1,642
6	Rte 46 ℄ Sta 676+61.00 TO Sta 683+93.00 Rt	732
6-7	Rte 46 ℄ Sta 687+93.00 TO Sta 700+18.74 Rt	1,281
7-8	Rte 46 ℄ Sta 700+49.74 TO Sta 707+09.00 Rt	671
9	Rte 46 ℄ Sta 718+83.00 TO Sta 727+22.00 Rt	843
9-10	Rte 46 ℄ Sta 731+22.00 TO Sta 741+85.00 Rt	1,063
10-13	Rte 46 ℄ Sta 745+85.00 TO Sta 775+40.00 Rt	2,955
13-14	Rte 46 ℄ Sta 784+28.00 TO Sta 796+00.14 Rt	1,170
14-16	Rte 46 ℄ Sta 799+52.00 TO Sta 817+30.00 Rt	1,778
16-18	Rte 46 ℄ Sta 822+64.00 TO Sta 852+31.92 Rt	3,141
19	Rte 46 ℄ Sta 859+00.00 TO Sta 869+50.00 Rt	1,054
20	Rte 46 ℄ Sta 873+50.00 TO Sta 876+28.00 Rt	278
20	Rte 46 ℄ Sta 880+28.00 TO Sta 880+47.92 Rt	20
	Rt SUBTOTAL	18,400
	Lt SUBTOTAL	18,945
	Rt SUBTOTAL	18,400
	TOTAL	37,345

FENCE (TYPE WM, MODIFIED)

LAYOUT PLAN L SHEET No.	LOCATION	FENCE (TYPE WM, Mod) LF
2-3	Rte 46 ℄ Sta 629+85.00 TO Sta 638+72.00 Lt	947
3-4	Rte 46 ℄ Sta 645+00.00 TO Sta 649+00.00 Lt	433
5-6	Rte 46 ℄ Sta 673+30.00 TO Sta 677+30.00 Lt	440
7-9	Rte 46 ℄ Sta 704+32.00 TO Sta 720+47.00 Lt	1,711
9	Rte 46 ℄ Sta 727+64.00 TO Sta 731+64.00 Lt	429
13	Rte 46 ℄ Sta 775+40.00 TO Sta 784+28.00 Lt	942
14	Rte 46 ℄ Sta 796+60.14 TO Sta 800+50.00 Lt	444
16	Rte 46 ℄ Sta 817+02.00 TO Sta 823+23.00 Lt	668
19-20	Rte 46 ℄ Sta 870+10.00 TO Sta 874+10.00 Lt	440
20	Rte 46 ℄ Sta 876+28.00 TO Sta 880+28.00 Lt	429
	Lt SUBTOTAL	6,883
2-3	Rte 46 ℄ Sta 628+89.44 TO Sta 634+73.00 Rt	613
3-4	Rte 46 ℄ Sta 645+00.00 TO Sta 649+38.00 Rt	471
5-6	Rte 46 ℄ Sta 672+54.00 TO Sta 676+61.00 Rt	454
8-9	Rte 46 ℄ Sta 707+09.00 TO Sta 718+83.00 Rt	1,281
9	Rte 46 ℄ Sta 727+22.00 TO Sta 731+22.00 Rt	429
13	Rte 46 ℄ Sta 775+40.00 TO Sta 784+28.00 Rt	919
14	Rte 46 ℄ Sta 796+60.14 TO Sta 799+52.00 Rt	332
16	Rte 46 ℄ Sta 817+30.00 TO Sta 822+64.00 Rt	563
19-20	Rte 46 ℄ Sta 869+50.00 TO Sta 873+50.00 Rt	430
20	Rte 46 ℄ Sta 876+28.00 TO Sta 880+28.00 Rt	429
	Rt SUBTOTAL	5,921
	Lt SUBTOTAL	6,883
	Rt SUBTOTAL	5,921
	TOTAL	12,804

SUMMARY OF QUANTITIES
Q-18

STATE OF CALIFORNIA - DEPARTMENT OF TRANSPORTATION
Caltrans 06-DESIGN

FUNCTIONAL SUPERVISOR: JACK WALKER
CALCULATED-DESIGNED BY: JOHN CLARKE
CHECKED BY: JOSE ARGUELLO
REVISED BY
DATE REVISED

LAST REVISION 11-2-11
DATE PLOTTED => 16-FEB-2012
TIME PLOTTED => 14:35

Dist	COUNTY	ROUTE	POST MILES TOTAL PROJECT	SHEET No.	TOTAL SHEETS
05	SLO	46	40.7/46.3	446	541

REGISTERED CIVIL ENGINEER 11-10-11 DATE

2-13-12
PLANS APPROVAL DATE

REGISTERED PROFESSIONAL ENGINEER JOSE M. ARGUELLO No. 51321 Exp. 06-30-12 CIVIL STATE OF CALIFORNIA

THE STATE OF CALIFORNIA OR ITS OFFICERS OR AGENTS SHALL NOT BE RESPONSIBLE FOR THE ACCURACY OR COMPLETENESS OF SCANNED COPIES OF THIS PLAN SHEET.

VEGETATION CONTROL (MINOR CONCRETE)

PLAN SHEET No.	DESCRIPTION	ROADSIDE SIGN ONE POST EA	ROADSIDE SIGN TWO POST EA	MINOR Conc SQYD	Conc STAINING ** SQYD
PD-3	W9-1	1		2.3	2.3
	W4-2	1		2.3	2.3
PD-5	R1-1	2		4.6	4.6
	R6-1	4		9.2	9.2
	R5-1, R5-1a	4		9.2	9.2
PD-7	R1-1	2		4.6	4.6
	R6-1	4		9.2	9.2
	R5-1, R5-1a	4		9.2	9.2
	S32(CA), S32-1(CA)	2		4.6	4.6
PD-10	R1-1	2		4.6	4.6
	R6-1	4		9.2	9.2
	R5-1, R5-1a	4		9.2	9.2
PD-13	R1-1	1		2.3	2.3
	R6-1	3		6.9	6.9
	R5-1, R5-1a	4		9.2	9.2
PD-17	R1-1	2		4.6	4.6
	R6-1	4		9.2	9.2
	R5-1, R5-1a	4		9.2	9.2
PD-19	G68(CA) *		1	5.2	5.2
PD-20	G22(CA)		1	5.2	5.2
	G8-7(CA)		1	5.2	5.2
PD-21	G77-4(CA)		1	5.2	5.2
	G8-10(CA)		1	5.2	5.2
	R1-1	2		4.6	4.6
	R6-1	4		9.2	9.2
	R5-1, R5-1a	4		9.2	9.2
PD-22	G8-7(CA)		1	5.2	5.2
PD-23	R5-1, R5-1a	2		4.6	4.6
	R4-7	1		2.3	2.3
PD-24	W6-3	1		2.3	2.3
	W6-1	1		2.3	2.3
	SIGN POST SUBTOTAL			185.3	185.3
L-7,8	Rte 46 ℄ Sta 702+57.25 TO Sta 707+17.60 Lt			178.7	178.7
L-18	Rte 46 ℄ Sta 855+72.35 TO Sta 856+57.63 Lt			55.1	55.1
L-7,8	Rte 46 ℄ Sta 702+57.25 TO Sta 711+10.00 Rt			295.2	295.2
L-18	Rte 46 ℄ Sta 854+10.75 TO Sta 854+92.85 Rt			47.6	47.6
	MBGR SUBTOTAL			576.6	576.6
	SIGN POST SUBTOTAL			185.3	185.3
	MBGR SUBTOTAL			576.6	576.6
	TOTAL			761.9	761.9

* OUTSIDE PROJECT LIMITS
** INCLUDED IN CONCRETE STAINING SUMMARY TABLE (SEE Sht Q-17)

WELDED STEEL PIPE

PLAN SHEET No.	LOCATION FROM	LOCATION TO	4" WSP (0.105" THICK) LF
C-16	Rte 46 ℄ Sta 700+00 109.68' Lt	Rte 46 ℄ Sta 700+00 111.39' Rt	221.1
C-16	Rte 46 ℄ Sta 700+00 109.68' Lt	Rte 46 ℄ Sta 700+00 111.39' Rt	221.1
		TOTAL	442.2

SUMMARY OF QUANTITIES
Q-19

STATE OF CALIFORNIA - DEPARTMENT OF TRANSPORTATION
Caltrans
06-DESIGN
FUNCTIONAL SUPERVISOR: JACK WALKER
CALCULATED-DESIGNED BY: JOHN CLARKE
CHECKED BY: JOSE ARGUELLO
REVISED BY
DATE REVISED

LAST REVISION 10-31-11
DATE PLOTTED => 16-FEB-2012
TIME PLOTTED => 14:35

Dist	COUNTY	ROUTE	POST MILES TOTAL PROJECT	SHEET No.	TOTAL SHEETS
05	SLO	46	40.7/46.3	447	541

Tom W. Liu 11-10-11
REGISTERED CIVIL ENGINEER DATE

2-13-12
PLANS APPROVAL DATE

REGISTERED PROFESSIONAL ENGINEER TOM W. LIU No. 77212 Exp. 6-30-13 CIVIL STATE OF CALIFORNIA

THE STATE OF CALIFORNIA OR ITS OFFICERS OR AGENTS SHALL NOT BE RESPONSIBLE FOR THE ACCURACY OR COMPLETENESS OF SCANNED COPIES OF THIS PLAN SHEET.

NOTES:

1. FOR RSP LIMITS, SEE DRAINAGE PLANS.
2. SEE STANDARD PLAN D84 FOR CONNECTION OF RCB TO RETAINING WALLS.
3. FOR DETAILS NOT SHOWN, SEE STANDARD PLANS.

LEGEND

XXXX STANDARD PLAN No.

RSP

DRAINAGE SYSTEM No.

ABBREVIATION:

RW RETAINING WALL

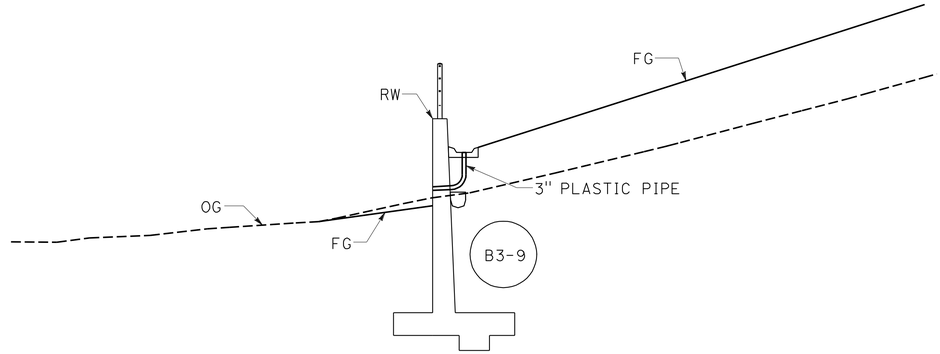

Sta 1+54

GUTTER OUTLET DETAIL
NO SCALE

RW FLARE ANGLE

ANGLE	DEGREE
ø1	30°07'57"
ø2	98°43'15"

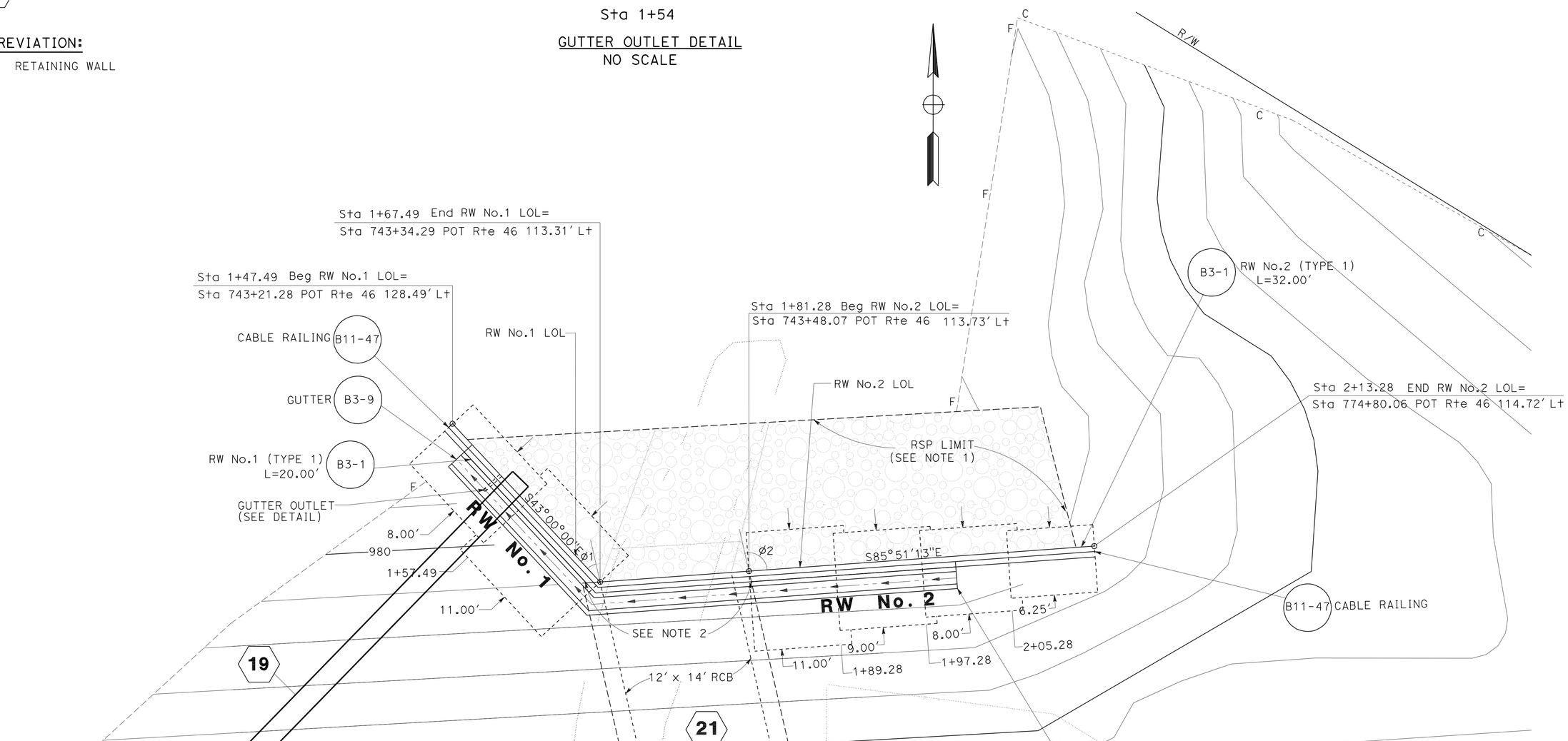

PLAN
SCALE: 1" = 5'

APPROVED FOR RETAINING WALL WORK ONLY

RETAINING WALL PLAN
(RETAINING WALLS No. 1 & 2)

SCALE AS SHOWN

R-1

STATE OF CALIFORNIA - DEPARTMENT OF TRANSPORTATION
Caltrans
06-DESIGN

FUNCTIONAL SUPERVISOR: JACK WALKER
CALCULATED-DESIGNED BY: TOM LIU
CHECKED BY: SUMANGALI HOODE
REVISED BY
DATE REVISED

LAST REVISION 09-09-11
DATE PLOTTED => 16-FEB-2012
TIME PLOTTED => 13:56

Dist	COUNTY	ROUTE	POST MILES TOTAL PROJECT	SHEET No.	TOTAL SHEETS
05	SLO	46	40.7/46.3	448	541

Tom W. Liu 11-10-11
REGISTERED CIVIL ENGINEER DATE

2-13-12
PLANS APPROVAL DATE

REGISTERED PROFESSIONAL ENGINEER TOM W. LIU No. 77212 Exp. 6-30-13 CIVIL STATE OF CALIFORNIA

THE STATE OF CALIFORNIA OR ITS OFFICERS OR AGENTS SHALL NOT BE RESPONSIBLE FOR THE ACCURACY OR COMPLETENESS OF SCANNED COPIES OF THIS PLAN SHEET.

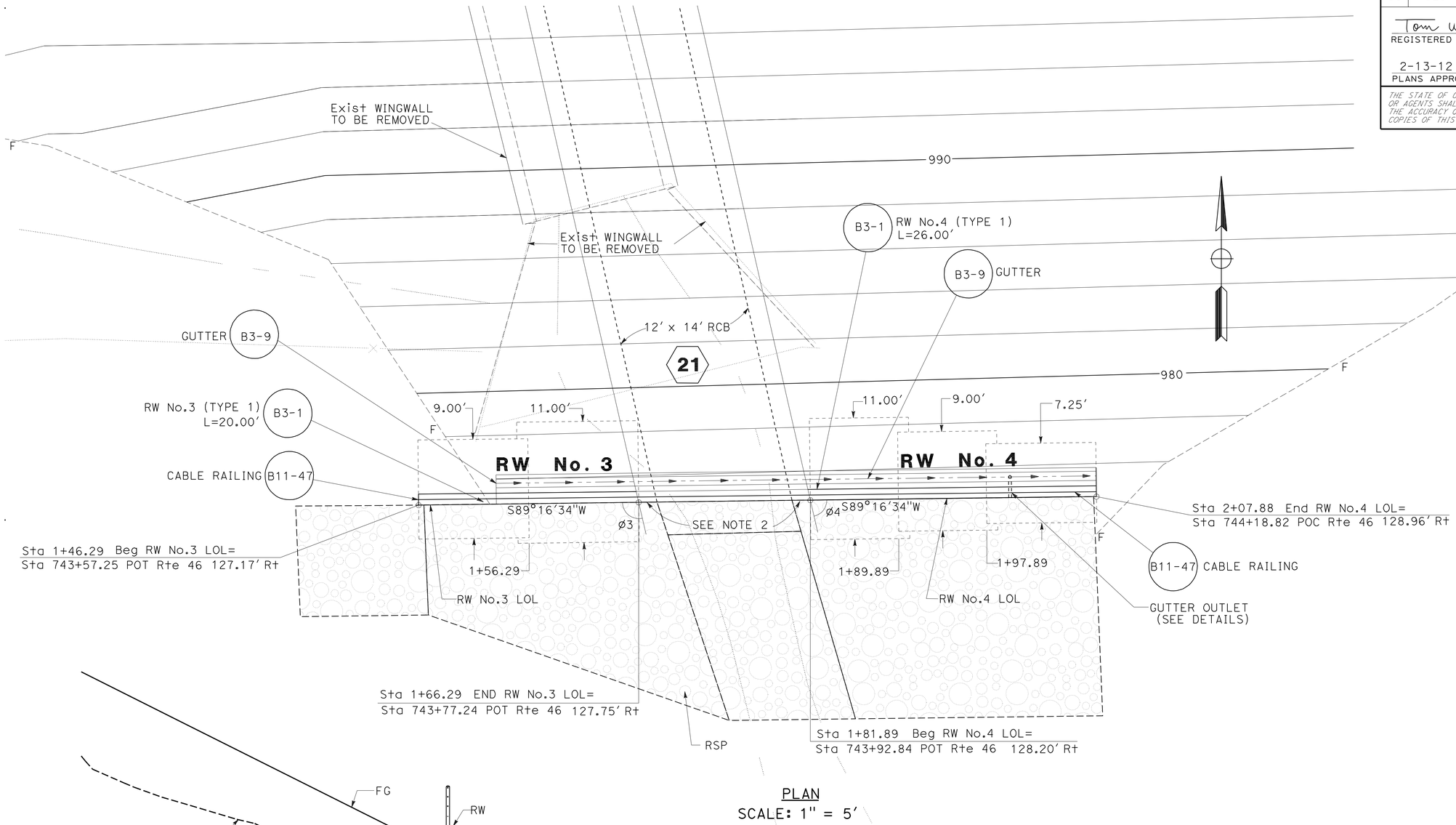

PLAN
SCALE: 1" = 5'

RW FLARE ANGLE

ANGLE	DEGREE
Ø3	102°08'37"
Ø4	77°51'24"

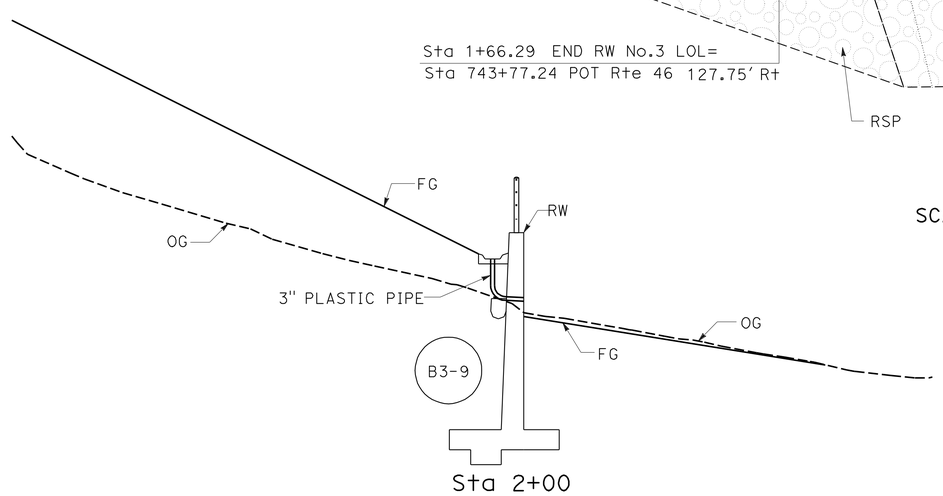

Sta 2+00
GUTTER OUTLET DETAIL
NO SCALE

APPROVED FOR RETAINING WALL WORK ONLY

RETAINING WALL PLAN
(RETAINING WALLS No. 3 & 4)
SCALE AS SHOWN **R-2**

REVISED BY | DATE REVISED
TOM LIU | SUMANGALI HOODE
CALCULATED-DESIGNED BY | CHECKED BY
FUNCTIONAL SUPERVISOR | JACK WALKER
STATE OF CALIFORNIA - DEPARTMENT OF TRANSPORTATION
Caltrans
06-DESIGN

LAST REVISION 09-09-11 | DATE PLOTTED => 16-FEB-2012 | TIME PLOTTED => 13:56

BORDER LAST REVISED 4/11/2008 | RELATIVE BORDER SCALE IS IN INCHES 0 1 2 3 | USERNAME => s123631 | DGN FILE => 533077qa002.dgn | CU 06220 | EA 330771

Dist	COUNTY	ROUTE	POST MILES TOTAL PROJECT	SHEET No.	TOTAL SHEETS
05	SLO	46	40.7/46.3	449	541

Tom W. Liu 11-10-11
REGISTERED CIVIL ENGINEER DATE

2-13-12
PLANS APPROVAL DATE

REGISTERED PROFESSIONAL ENGINEER TOM W. LIU No. 77212 Exp. 6-30-13 CIVIL STATE OF CALIFORNIA

THE STATE OF CALIFORNIA OR ITS OFFICERS OR AGENTS SHALL NOT BE RESPONSIBLE FOR THE ACCURACY OR COMPLETENESS OF SCANNED COPIES OF THIS PLAN SHEET.

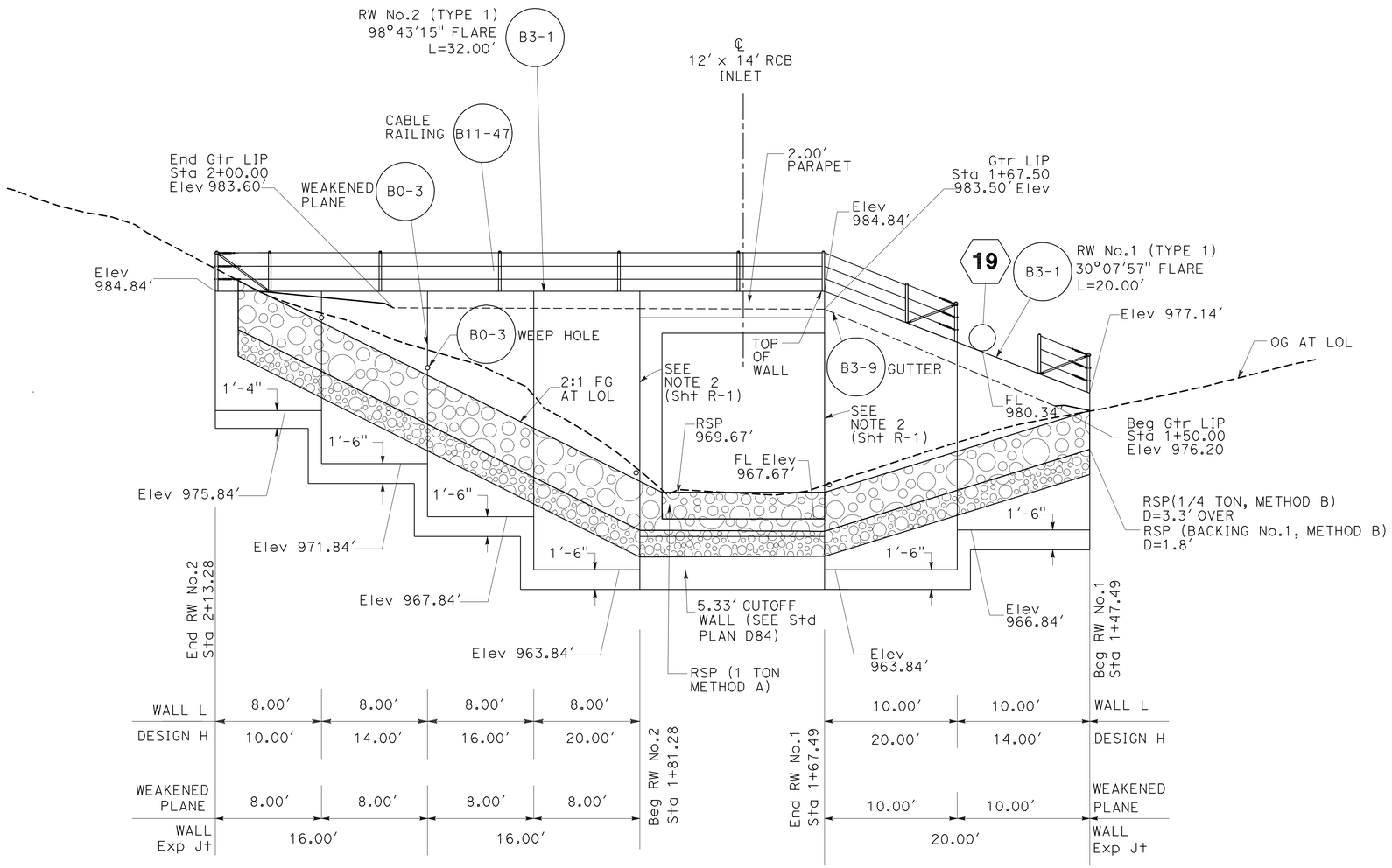

ELEVATION

SCALE: 1" = 5'

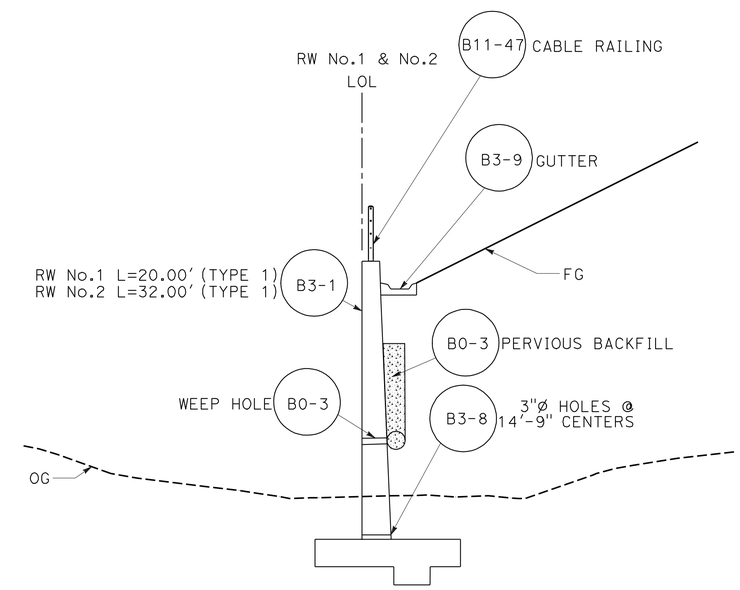

RW No.1 & No.2 TYPICAL SECTION

NO SCALE

APPROVED FOR RETAINING WALL WORK ONLY

RETAINING WALL DETAILS
(RETAINING WALLS No.1 & No.2)

SCALE AS SHOWN **R-3**

REVISED BY | DATE REVISED
TOM LIU | SUMANGALI HOODE
CALCULATED-DESIGNED BY | CHECKED BY
FUNCTIONAL SUPERVISOR | JACK WALKER
STATE OF CALIFORNIA - DEPARTMENT OF TRANSPORTATION
Caltrans | 06-DESIGN

LAST REVISION 08-01-11 | DATE PLOTTED => 16-FEB-2012 | TIME PLOTTED => 13:56

Dist	COUNTY	ROUTE	POST MILES TOTAL PROJECT	SHEET No.	TOTAL SHEETS
05	SLO	46	40.7/46.3	450	541

Tom W. Liu 11-10-11
REGISTERED CIVIL ENGINEER DATE

2-13-12
PLANS APPROVAL DATE

REGISTERED PROFESSIONAL ENGINEER TOM W. LIU No. 77212 Exp. 6-30-13 CIVIL STATE OF CALIFORNIA

THE STATE OF CALIFORNIA OR ITS OFFICERS OR AGENTS SHALL NOT BE RESPONSIBLE FOR THE ACCURACY OR COMPLETENESS OF SCANNED COPIES OF THIS PLAN SHEET.

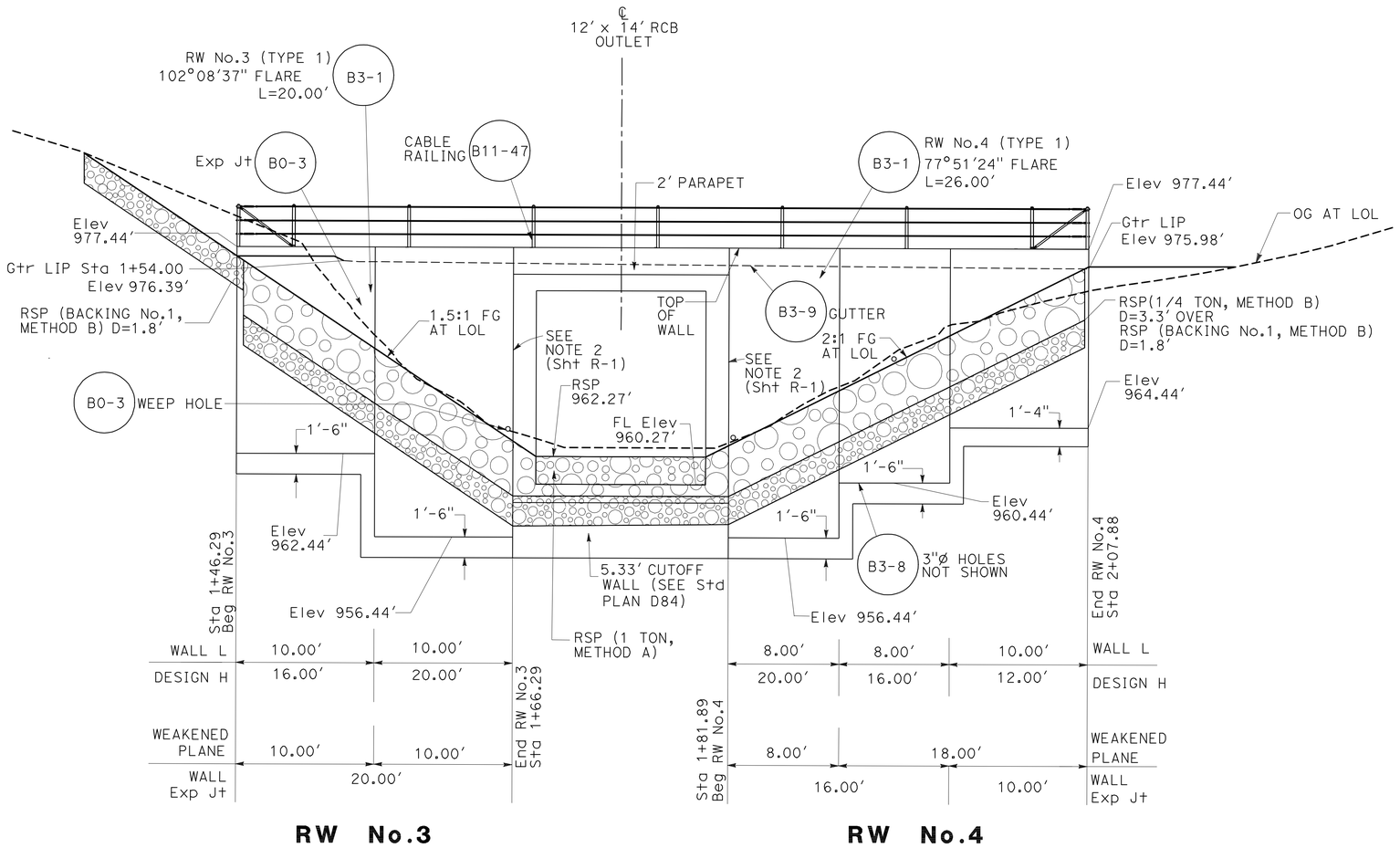

ELEVATION

SCALE: 1″ = 5′

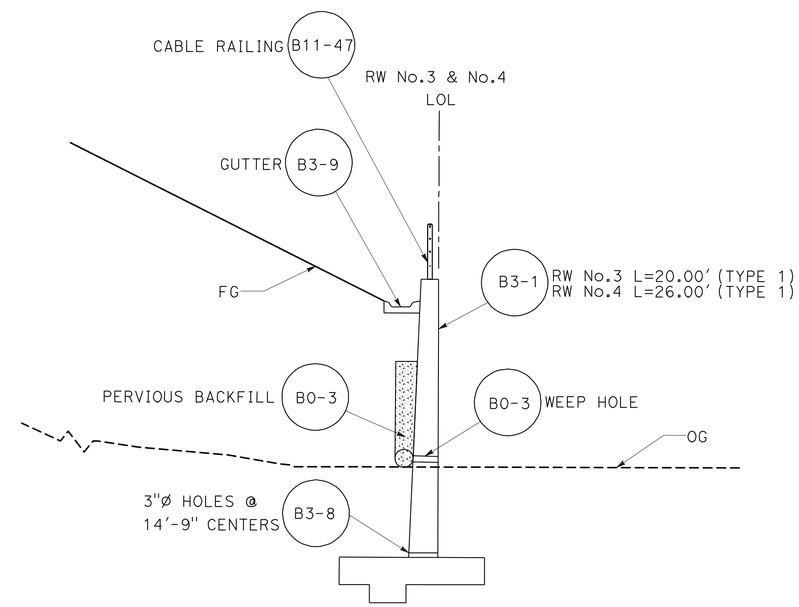

RW No.3 & No.4 TYPICAL SECTION

NO SCALE

APPROVED FOR RETAINING WALL WORK ONLY

RETAINING WALL DETAILS
(RETAINING WALLS No.3 & No.4)

SCALE AS SHOWN

R-4

STATE OF CALIFORNIA - DEPARTMENT OF TRANSPORTATION
Caltrans®
06-DESIGN

FUNCTIONAL SUPERVISOR: JACK WALKER

CALCULATED-DESIGNED BY: TOM LIU
CHECKED BY: SUMANGALI HOODE

REVISED BY
DATE REVISED

LAST REVISION 08-01-11
DATE PLOTTED => 16-FEB-2012
TIME PLOTTED => 13:56

DIST	COUNTY	ROUTE	POST MILES TOTAL PROJECT	SHEET No	TOTAL SHEETS
05	SLO	46	40.7/46.3	451	541

REGISTERED CIVIL ENGINEER 6-10-11

2-13-12
PLANS APPROVAL DATE

The State of California or its officers or agents shall not be responsible for the accuracy or completeness of electronic copies of this plan sheet.

REGISTERED PROFESSIONAL ENGINEER Dan Appelbaum No. C50001 Exp. 6-30-13 CIVIL STATE OF CALIFORNIA

This LOTB sheet was prepared in accordance with the Caltrans Soil & Rock Logging, Classification, & Presentation Manual (2010 Edition).

BENCH MARK

SLO 46 PM 43.32

Fnd 3/4" ip w/plug & nail
16.27' Rt "RTE46" Line ℄ Rte 46
Sta 739+27.96
N 2,435,611.02
E 5,833,242.78
Elev = 995.89 (NGVD29)

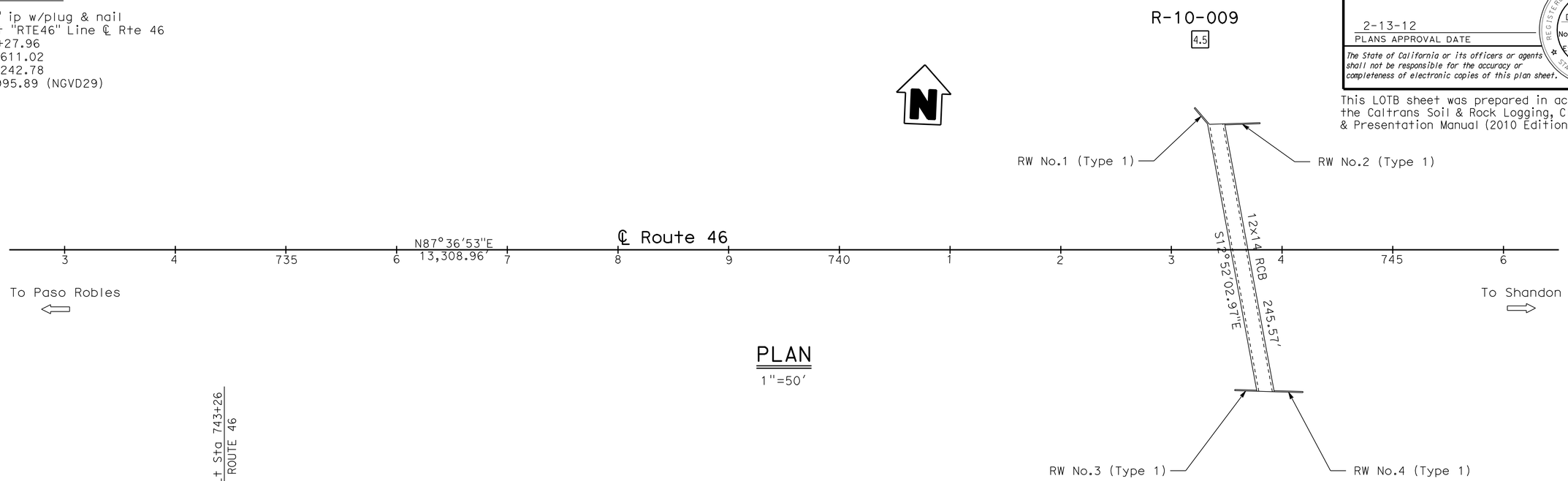

PLAN

1"=50'

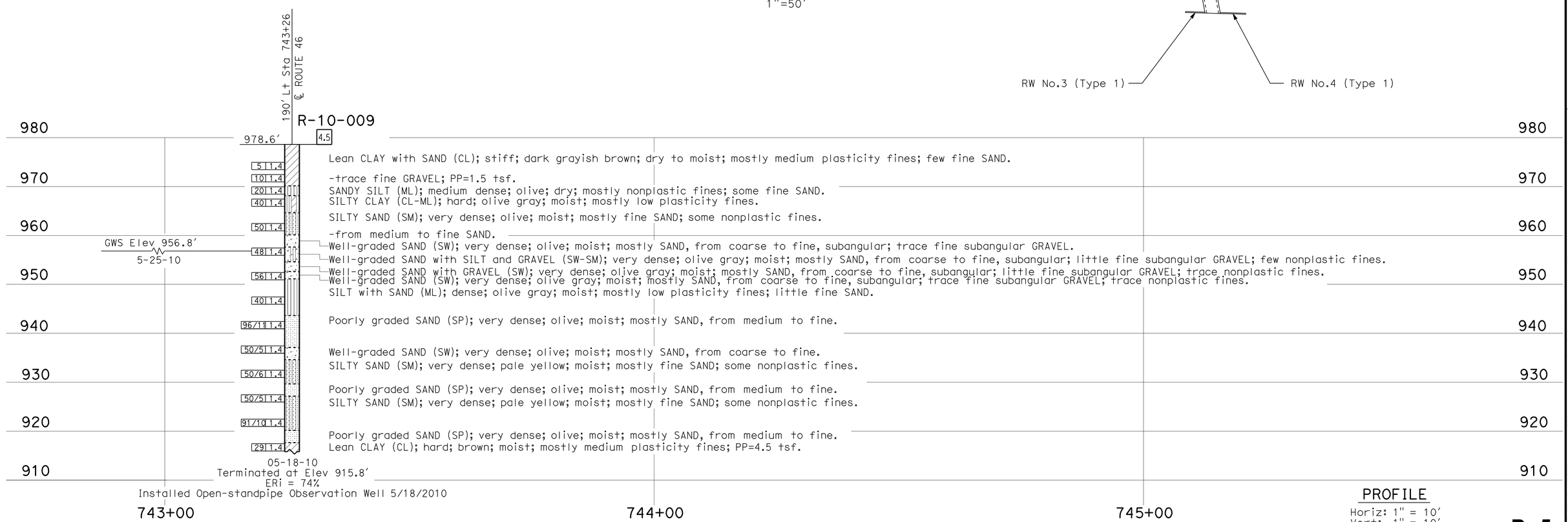

PROFILE

Horiz: 1" = 10'
Vert: 1" = 10'

R-5

ENGINEERING SERVICES	GEOTECHNICAL SERVICES	STATE OF CALIFORNIA DEPARTMENT OF TRANSPORTATION	DIVISION OF ENGINEERING SERVICES STRUCTURE DESIGN DESIGN BRANCH X	BRIDGE NO. / POST MILE 43.38	RETAINING WALLS No. 1, 2, 3, & 4 LOG OF TEST BORINGS 1 OF 3
FUNCTIONAL SUPERVISOR NAME: M. Finegan	DRAWN BY: D. Appelbaum, 9/10 CHECKED BY: M. Jurasius	FIELD INVESTIGATION BY: S. Heredia			

OGS CIVIL LOG OF TEST BORINGS SHEET

ORIGINAL SCALE IN INCHES FOR REDUCED PLANS 0 1 2 3

UNIT: 3643
PROJECT NUMBER & PHASE: 05000200491 CONTRACT NO.: 05-330771

DISREGARD PRINTS BEARING EARLIER REVISION DATES 06-10-11

REVISION DATES | SHEET X | OF X

FILE => 533077qa005.dgn

USERNAME => s123631 DATE PLOTTED => 16-FEB-2012 TIME PLOTTED => 13:57

REFERENCE: CALTRANS SOIL & ROCK LOGGING, CLASSIFICATION, AND PRESENTATION MANUAL (2010)

DIST	COUNTY	ROUTE	POST MILES TOTAL PROJECT	SHEET No	TOTAL SHEETS
05	SLO	46	40.7/46.3	452	541

REGISTERED CIVIL ENGINEER 6-10-11

2-13-12
PLANS APPROVAL DATE

REGISTERED PROFESSIONAL ENGINEER
Dan Appelbaum
No. C50001
Exp. 6-30-13
CIVIL
STATE OF CALIFORNIA

The State of California or its officers or agents shall not be responsible for the accuracy or completeness of electronic copies of this plan sheet.

CEMENTATION

Description	Criteria
Weak	Crumbles or breaks with handling or little finger pressure.
Moderate	Crumbles or breaks with considerable finger pressure.
Strong	Will not crumble or break with finger pressure.

BOREHOLE IDENTIFICATION

Symbol	Hole Type	Description
Size	A	Auger Boring (hollow or solid stem bucket)
Size	R RW RC P	Rotary drilled boring (conventional) Rotary drilled with self-casing wire-line Rotary core with continuously-sampled, self-casing wire-line Rotary percussion boring (air)
Size	R	Rotary drilled diamond core
Size	HD HA	Hand driven (1-inch soil tube) Hand Auger
●	D	Dynamic Cone Penetration Boring
▲	CPT	Cone Penetration Test (ASTM D 5778)
⬚	O	Other (note on LOTB)

Note: Size in inches.

CONSISTENCY OF COHESIVE SOILS

Description	Shear Strength (tsf)	Pocket Penetrometer Measurement, PP, (tsf)	Torvane Measurement, TV, (tsf)	Vane Shear Measurement, VS, (tsf)
Very Soft	Less than 0.12	Less than 0.25	Less than 0.12	Less than 0.12
Soft	0.12 - 0.25	0.25 - 0.5	0.12 - 0.25	0.12 - 0.25
Medium Stiff	0.25 - 0.5	0.5 - 1	0.25 - 0.5	0.25 - 0.5
Stiff	0.5 - 1	1 - 2	0.5 - 1	0.5 - 1
Very Stiff	1 - 2	2 - 4	1 - 2	1 - 2
Hard	Greater than 2	Greater than 4	Greater than 2	Greater than 2

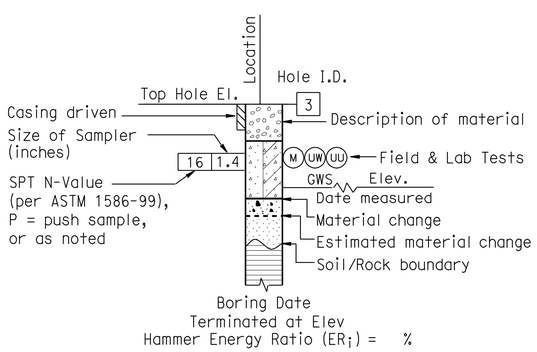

ROTARY BORING

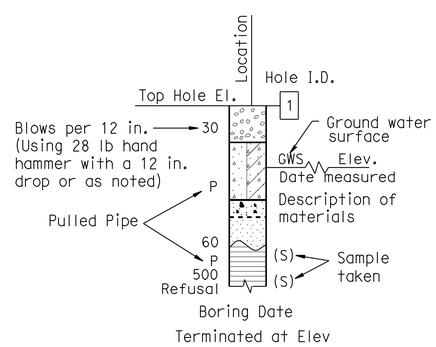

HAND BORING

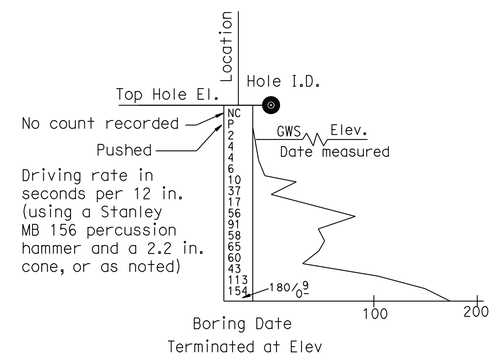

DYNAMIC CONE PENETRATION BORING

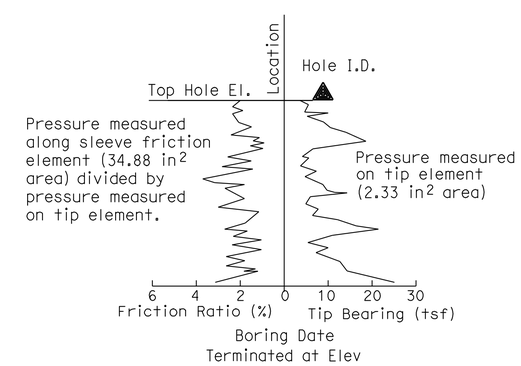

CONE PENETRATION TEST (CPT) BORING

R-6

ENGINEERING SERVICES	GEOTECHNICAL SERVICES	STATE OF CALIFORNIA DEPARTMENT OF TRANSPORTATION	DIVISION OF ENGINEERING SERVICES STRUCTURE DESIGN DESIGN BRANCH X	BRIDGE NO. / POST MILE 43.38	RETAINING WALLS No. 1, 2, 3, & 4 LOG OF TEST BORINGS 2 OF 3
	PREPARED BY: I.G-Remmen				

GS LOTB SOIL LEGEND

ORIGINAL SCALE IN INCHES FOR REDUCED PLANS 0 1 2 3

UNIT: 3643
PROJECT NUMBER & PHASE: 05000200491 CONTRACT NO.: 05-330771

DISREGARD PRINTS BEARING EARLIER REVISION DATES 12-20-10

REVISION DATES				SHEET	OF
				X	X

FILE => 533077qa006.dgn

USERNAME => s123631 DATE PLOTTED => 16-FEB-2012 TIME PLOTTED => 13:57

REFERENCE: CALTRANS SOIL & ROCK LOGGING, CLASSIFICATION, AND PRESENTATION MANUAL (2010)

DIST	COUNTY	ROUTE	POST MILES TOTAL PROJECT	SHEET No	TOTAL SHEETS
05	SLO	46	40.7/46.3	453	541

Dan Appelbaum 6-10-11
REGISTERED CIVIL ENGINEER

2-13-12
PLANS APPROVAL DATE

The State of California or its officers or agents shall not be responsible for the accuracy or completeness of electronic copies of this plan sheet.

REGISTERED PROFESSIONAL ENGINEER
Dan Appelbaum
No. C50001
Exp. 6-30-13
CIVIL
STATE OF CALIFORNIA

GROUP SYMBOLS AND NAMES

Graphic/Symbol	Group Names
GW	Well-graded GRAVEL Well-graded GRAVEL with SAND
GP	Poorly-graded GRAVEL Poorly-graded GRAVEL with SAND
GW-GM	Well-graded GRAVEL with SILT Well-graded GRAVEL with SILT and SAND
GW-GC	Well-graded GRAVEL with CLAY (or SILTY CLAY) Well-graded GRAVEL with CLAY and SAND (or SILTY CLAY and SAND)
GP-GM	Poorly-graded GRAVEL with SILT Poorly-graded GRAVEL with SILT and SAND
GP-GC	Poorly-graded GRAVEL with CLAY (or SILTY CLAY) Poorly-graded GRAVEL with CLAY and SAND (or SILTY CLAY and SAND)
GM	SILTY GRAVEL SILTY GRAVEL with SAND
GC	CLAYEY GRAVEL CLAYEY GRAVEL with SAND
GC-GM	SILTY, CLAYEY GRAVEL SILTY, CLAYEY GRAVEL with SAND
SW	Well-graded SAND Well-graded SAND with GRAVEL
SP	Poorly-graded SAND Poorly-graded SAND with GRAVEL
SW-SM	Well-graded SAND with SILT Well-graded SAND with SILT and GRAVEL
SW-SC	Well-graded SAND with CLAY (or SILTY CLAY) Well-graded SAND with CLAY and GRAVEL (or SILTY CLAY and GRAVEL)
SP-SM	Poorly-graded SAND with SILT Poorly-graded SAND with SILT and GRAVEL
SP-SC	Poorly-graded SAND with CLAY (or SILTY CLAY) Poorly-graded SAND with CLAY and GRAVEL (or SILTY CLAY and GRAVEL)
SM	SILTY SAND SILTY SAND with GRAVEL
SC	CLAYEY SAND CLAYEY SAND with GRAVEL
SC-SM	SILTY, CLAYEY SAND SILTY, CLAYEY SAND with GRAVEL
PT	PEAT
	COBBLES COBBLES and BOULDERS BOULDERS

Graphic/Symbol	Group Names
CL	Lean CLAY Lean CLAY with SAND Lean CLAY with GRAVEL SANDY lean CLAY SANDY lean CLAY with GRAVEL GRAVELLY lean CLAY GRAVELLY lean CLAY with SAND
CL-ML	SILTY CLAY SILTY CLAY with SAND SILTY CLAY with GRAVEL SANDY SILTY CLAY SANDY SILTY CLAY with GRAVEL GRAVELLY SILTY CLAY GRAVELLY SILTY CLAY with SAND
ML	SILT SILT with SAND SILT with GRAVEL SANDY SILT SANDY SILT with GRAVEL GRAVELLY SILT GRAVELLY SILT with SAND
OL	ORGANIC lean CLAY ORGANIC lean CLAY with SAND ORGANIC lean CLAY with GRAVEL SANDY ORGANIC lean CLAY SANDY ORGANIC lean CLAY with GRAVEL GRAVELLY ORGANIC lean CLAY GRAVELLY ORGANIC lean CLAY with SAND
OL	ORGANIC SILT ORGANIC SILT with SAND ORGANIC SILT with GRAVEL SANDY ORGANIC SILT SANDY ORGANIC SILT with GRAVEL GRAVELLY ORGANIC SILT GRAVELLY ORGANIC SILT with SAND
CH	Fat CLAY Fat CLAY with SAND Fat CLAY with GRAVEL SANDY fat CLAY SANDY fat CLAY with GRAVEL GRAVELLY fat CLAY GRAVELLY fat CLAY with SAND
MH	Elastic SILT Elastic SILT with SAND Elastic SILT with GRAVEL SANDY elastic SILT SANDY elastic SILT with GRAVEL GRAVELLY elastic SILT GRAVELLY elastic SILT with SAND
OH	ORGANIC fat CLAY ORGANIC fat CLAY with SAND ORGANIC fat CLAY with GRAVEL SANDY ORGANIC fat CLAY SANDY ORGANIC fat CLAY with GRAVEL GRAVELLY ORGANIC fat CLAY GRAVELLY ORGANIC fat CLAY with SAND
OH	ORGANIC elastic SILT ORGANIC elastic SILT with SAND ORGANIC elastic SILT with GRAVEL SANDY ORGANIC elastic SILT SANDY ORGANIC elastic SILT with GRAVEL GRAVELLY ORGANIC elastic SILT GRAVELLY ORGANIC elastic SILT with SAND
OL/OH	ORGANIC SOIL ORGANIC SOIL with SAND ORGANIC SOIL with GRAVEL SANDY ORGANIC SOIL SANDY ORGANIC SOIL with GRAVEL GRAVELLY ORGANIC SOIL GRAVELLY ORGANIC SOIL with SAND

FIELD AND LABORATORY TESTING

- (C) Consolidation (ASTM D 2435)
- (CL) Collapse Potential (ASTM D 5333)
- (CP) Compaction Curve (CTM 216)
- (CR) Corrosivity Testing (CTM 643, CTM 422, CTM 417)
- (CU) Consolidated Undrained Triaxial (ASTM D 4767)
- (DS) Direct Shear (ASTM D 3080)
- (EI) Expansion Index (ASTM D 4829)
- (M) Moisture Content (ASTM D 2216)
- (OC) Organic Content-% (ASTM D 2974)
- (P) Permeability (CTM 220)
- (PA) Particle Size Analysis (ASTM D 422)
- (PI) Plasticity Index (AASHTO T 90) Liquid Limit (AASHTO T 89)
- (PL) Point Load Index (ASTM D 5731)
- (PM) Pressure Meter
- (R) R-Value (CTM 301)
- (SE) Sand Equivalent (CTM 217)
- (SG) Specific Gravity (AASHTO T 100)
- (SL) Shrinkage Limit (ASTM D 427)
- (SW) Swell Potential (ASTM D 4546)
- (UC) Unconfined Compression-Soil (ASTM D 2166) Unconfined Compression-Rock (ASTM D 2938)
- (UU) Unconsolidated Undrained Triaxial (ASTM D 2850)
- (UW) Unit Weight (ASTM D 4767)

APPARENT DENSITY OF COHESIONLESS SOILS

Description	SPT N_{60} (Blows / 12 in.)
Very Loose	0 - 5
Loose	5 - 10
Medium Dense	10 - 30
Dense	30 - 50
Very Dense	Greater than 50

MOISTURE

Description	Criteria
Dry	No discernable moisture
Moist	Moisture present, but no free water
Wet	Visible free water

PERCENT OR PROPORTION OF SOILS

Description	Criteria
Trace	Particles are present but estimated to be less than 5%
Few	5% - 10%
Little	15% - 25%
Some	30% - 45%
Mostly	50% - 100%

PARTICLE SIZE

Description		Size (in.)
Boulder		Greater than 12
Cobble		3 - 12
Gravel	Coarse	3/4 - 3
	Fine	1/5 - 3/4
Sand	Coarse	1/16 - 1/5
	Medium	1/64 - 1/16
	Fine	1/300 - 1/64
Silt and Clay		Less than 1/300

R-7

ENGINEERING SERVICES

GEOTECHNICAL SERVICES
PREPARED BY: I.G-Remmen

STATE OF CALIFORNIA
DEPARTMENT OF TRANSPORTATION

DIVISION OF ENGINEERING SERVICES
STRUCTURE DESIGN
DESIGN BRANCH X

BRIDGE NO.
POST MILE 43.38

RETAINING WALLS No. 1, 2, 3, & 4
LOG OF TEST BORINGS 3 OF 3

GS LOTB SOIL LEGEND

ORIGINAL SCALE IN INCHES FOR REDUCED PLANS 0 1 2 3

UNIT: 3643
PROJECT NUMBER & PHASE: 05000200491
CONTRACT NO.: 05-330771

DISREGARD PRINTS BEARING EARLIER REVISION DATES

REVISION DATES | SHEET X | OF X

FILE => 533077qa007.dgn

USERNAME => s123631 DATE PLOTTED => 16-FEB-2012 TIME PLOTTED => 13:57

Dist	COUNTY	ROUTE	POST MILES TOTAL PROJECT	SHEET No.	TOTAL SHEETS
05	SLO	46	40.7/46.3	454	541

Xavier Alfaro 10-26-11
REGISTERED ELECTRICAL ENGINEER DATE

2-13-12
PLANS APPROVAL DATE

REGISTERED PROFESSIONAL ENGINEER XAVIER I. ALFARO No. E17488 Exp. 6-30-13 ELECTRICAL STATE OF CALIFORNIA

THE STATE OF CALIFORNIA OR ITS OFFICERS OR AGENTS SHALL NOT BE RESPONSIBLE FOR THE ACCURACY OR COMPLETENESS OF SCANNED COPIES OF THIS PLAN SHEET.

NOTES (FOR THIS SHEET ONLY):

1. WIM SCALE FRAME, SEE DETAILS ON SHEET E-2 AND E-3.
2. 2" PVC DRAIN, SEE DETAILS ON SHEET E-2 AND E-3.
3. RS Exist wim CENTRAL UNIT, ADD NEW CENTRAL UNIT WITH MODEM.
4. AB Exist LOOP DETECTORS, CONDUIT AND CONDUCTORS.
   RC Exist PB AND ASSOCIATED wim EQUIPMENT.

NOTES (FOR SHEET E-1 THRU E-3):

1. FOR ACCURATE RIGHT OF WAY DATA, CONTACT RIGHT OF WAY ENGINEERING AT THE DISTRICT OFFICE.
2. EXACT LOCATION OF WIM SCALES WILL BE DETERMINED BY THE ENGINEER. THE ENGINEER WILL VERIFY FINAL LOCATION OF THE WIM SCALES PRIOR TO THE CONTRACTOR PERFORMING ANY WORK ON THE ROADWAY.
3. EXACT CONFIGURATION AND INSTALLATION PROCEDURES OF SCALE FRAME, AND LOOP DETECTORS SHALL CONFORM TO THE REQUIREMENTS OF THE WIM MANUFACTURER.
4. PVC DRAIN SHALL CONFORM TO TYPE C OUTLET WITH COVER AS SHOWN ON STANDARD PLAN D99B, EXCEPT THAT PIPE SHALL BE 2".
5. WIM SCALE SHALL MATCH ROADWAY PROFILE AND CROSS-SLOPE.
6. NON-METALLIC BUSHING SHALL BE USED AT ROADWAY END OF THE CONDUIT.
7. INSTALL DUCT SEAL COMPOUND TO EACH END OF ROADWAY CONDUIT BEFORE INSTALLING EPOXY, OR OTHER APPROVED MATERIALS.
8. END OF 3"C AND 2" PVC PIPE RESTS ON BOTTOM OF PAVEMENT NOTCH, 3"C BOTTOM MUST BE ABOVE 2" PVC PIPE.

ABBREVIATIONS:

PROPOSED	Exist	
WIM	wim	WEIGH-IN-MOTION
SLC	slc	SCALE LEAD IN CABLE
PG&E		PACIFIC GAS AND ELECTRIC COMPANY
CTID		CALTRANS IDENTIFICATION

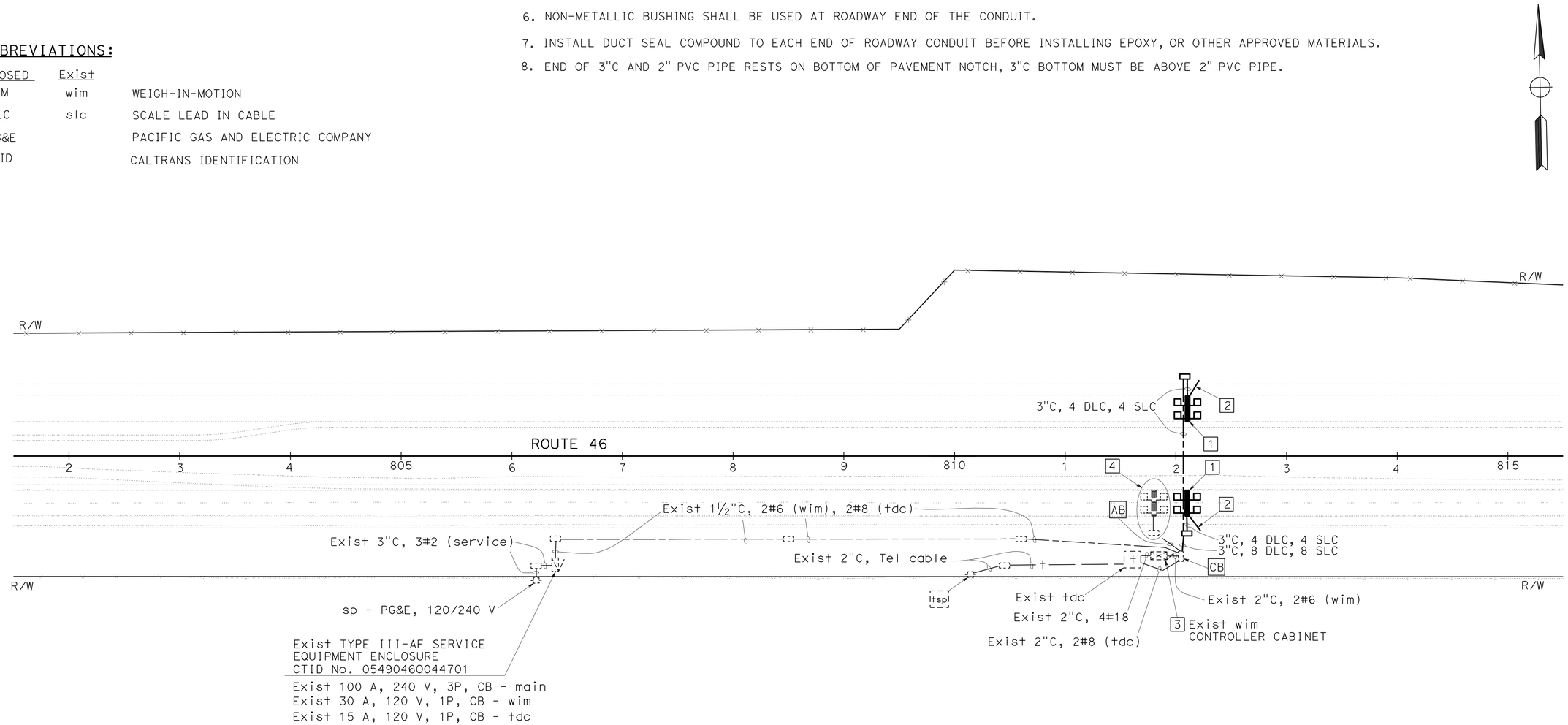

HIGH SPEED WEIGH-IN-MOTION

SCALE: 1" = 50'

E-1

APPROVED FOR ELECTRICAL WORK ONLY

STATE OF CALIFORNIA - DEPARTMENT OF TRANSPORTATION
Caltrans® **ELECTRICAL DESIGN**

FUNCTIONAL SUPERVISOR: ALI BAKHDOUD
CALCULATED-DESIGNED BY: XAVIER ALFARO
CHECKED BY: RAJPREET SINGH
REVISED BY
DATE REVISED

LAST REVISION 10-26-11
DATE PLOTTED => 16-FEB-2012
TIME PLOTTED => 14:34

Dist	COUNTY	ROUTE	POST MILES TOTAL PROJECT	SHEET No.	TOTAL SHEETS
05	SLO	46	40.7/46.3	455	541

Xavier Alfaro 10-26-11
REGISTERED ELECTRICAL ENGINEER DATE

2-13-12
PLANS APPROVAL DATE

REGISTERED PROFESSIONAL ENGINEER XAVIER I. ALFARO No. E17488 Exp. 6-30-13 ELECTRICAL STATE OF CALIFORNIA

THE STATE OF CALIFORNIA OR ITS OFFICERS OR AGENTS SHALL NOT BE RESPONSIBLE FOR THE ACCURACY OR COMPLETENESS OF SCANNED COPIES OF THIS PLAN SHEET.

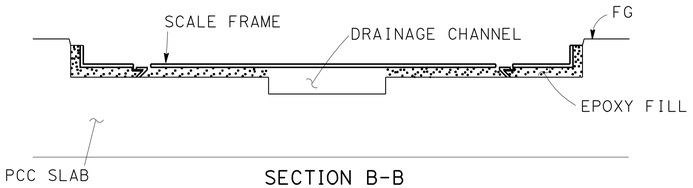

SECTION B-B

(SEE SCALE FRAME INSTALLATION DETAIL ON SHEET E-3)

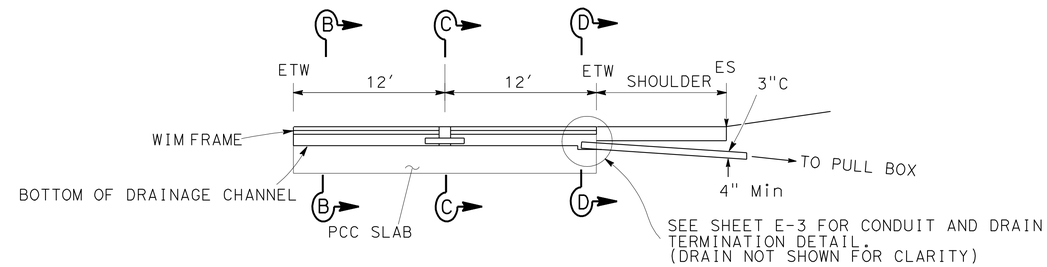

SECTION A-A

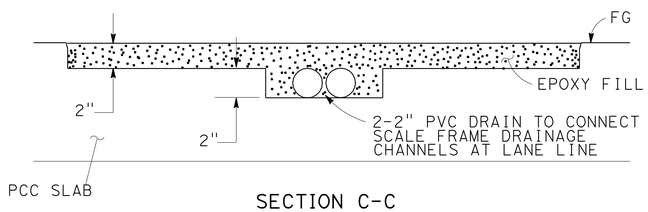

SECTION C-C

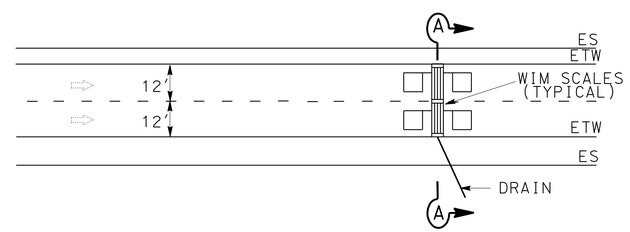

TYPICAL WIM INSTALLATION DETAIL

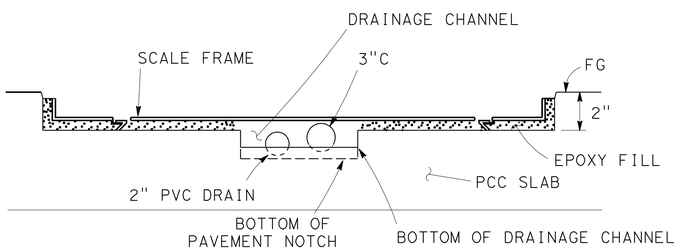

SECTION D-D

(SEE SCALE FRAME INSTALLATION DETAIL ON SHEET E-3)

HIGH SPEED WEIGH-IN-MOTION
(DETAILS)

NO SCALE

E-2

APPROVED FOR ELECTRICAL WORK ONLY

STATE OF CALIFORNIA - DEPARTMENT OF TRANSPORTATION
Caltrans
ELECTRICAL DESIGN

FUNCTIONAL SUPERVISOR: ALI BAKHDOUD
CALCULATED-DESIGNED BY: XAVIER ALFARO
CHECKED BY: RAJPREET SINGH
REVISED BY
DATE REVISED

LAST REVISION 10-26-11
DATE PLOTTED => 16-FEB-2012
TIME PLOTTED => 14:35

Dist	COUNTY	ROUTE	POST MILES TOTAL PROJECT	SHEET No.	TOTAL SHEETS
05	SLO	46	40.7/46.3	456	541

Xavier Alfaro 10-26-11
REGISTERED ELECTRICAL ENGINEER DATE

2-13-12
PLANS APPROVAL DATE

REGISTERED PROFESSIONAL ENGINEER XAVIER I. ALFARO No. E17488 Exp. 6-30-13 ELECTRICAL STATE OF CALIFORNIA

THE STATE OF CALIFORNIA OR ITS OFFICERS OR AGENTS SHALL NOT BE RESPONSIBLE FOR THE ACCURACY OR COMPLETENESS OF SCANNED COPIES OF THIS PLAN SHEET.

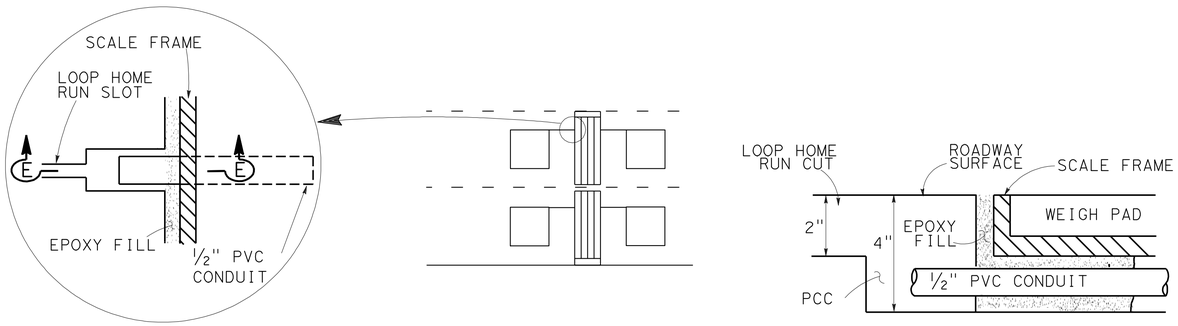

PLAN VIEW

LOOP HOME RUN DETAIL

SECTION E-E

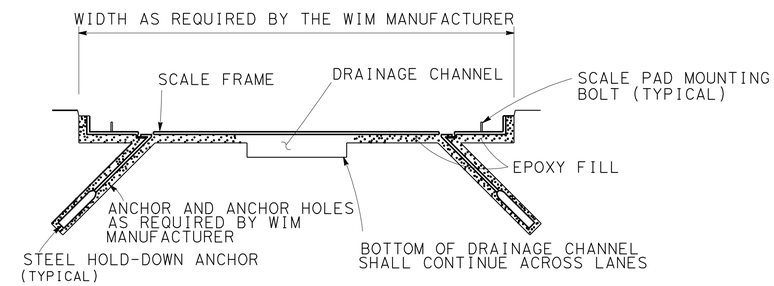

SCALE FRAME INSTALLATION

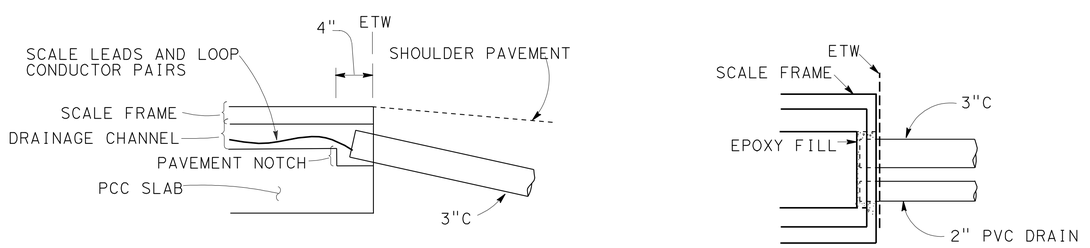

ELEVATION VIEW

PLAN VIEW

CONDUIT AND PVC DRAIN TERMINATION DETAILS

HIGH SPEED WEIGH-IN-MOTION
(DETAILS)

SCALE: 1" = 50'

E-3

APPROVED FOR ELECTRICAL WORK ONLY

STATE OF CALIFORNIA - DEPARTMENT OF TRANSPORTATION
Caltrans® **ELECTRICAL DESIGN**

FUNCTIONAL SUPERVISOR: ALI BAKHDOUD
CALCULATED-DESIGNED BY: XAVIER ALFARO
CHECKED BY: RAJPREET SINGH
REVISED BY
DATE REVISED

LAST REVISION 10-26-11
DATE PLOTTED => 16-FEB-2012
TIME PLOTTED => 14:35

Dist	COUNTY	ROUTE	POST MILES TOTAL PROJECT	SHEET No.	TOTAL SHEETS
05	SLO	46	40.7/46.3	457	541

Xavier Alfaro 10-26-11
REGISTERED ELECTRICAL ENGINEER DATE

2-13-12
PLANS APPROVAL DATE

REGISTERED PROFESSIONAL ENGINEER XAVIER I. ALFARO No. E17488 Exp. 6-30-13 ELECTRICAL STATE OF CALIFORNIA

THE STATE OF CALIFORNIA OR ITS OFFICERS OR AGENTS SHALL NOT BE RESPONSIBLE FOR THE ACCURACY OR COMPLETENESS OF SCANNED COPIES OF THIS PLAN SHEET.

NOTE:

1. FOR ACCURATE RIGHT OF WAY DATA, CONTACT RIGHT OF WAY ENGINEERING AT THE DISTRICT OFFICE.

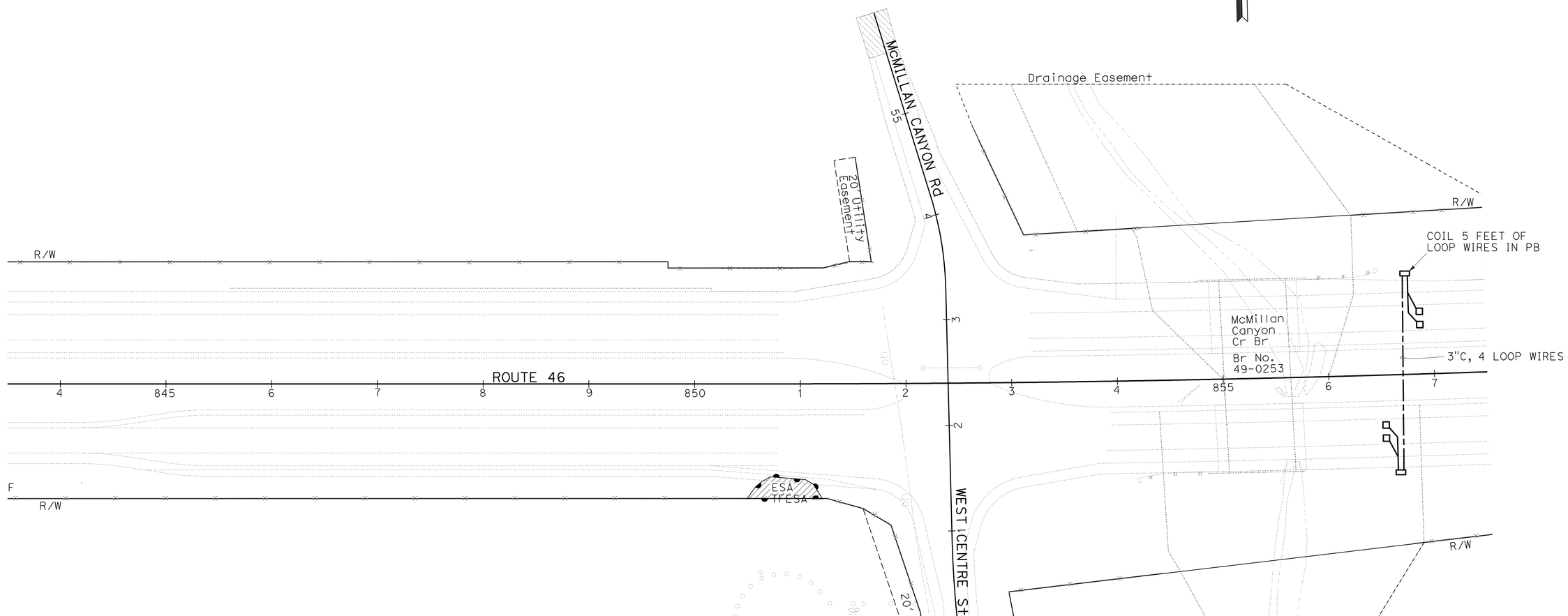

INDUCTIVE LOOP DETECTOR

SCALE: 1" = 50'

E-4

APPROVED FOR ELECTRICAL WORK ONLY

STATE OF CALIFORNIA - DEPARTMENT OF TRANSPORTATION
Caltrans® **ELECTRICAL DESIGN**

FUNCTIONAL SUPERVISOR: ALI BAKHDOUD
CALCULATED-DESIGNED BY: XAVIER ALFARO
CHECKED BY: RAJPREET SINGH
REVISED BY
DATE REVISED

LAST REVISION 10-26-11
DATE PLOTTED => 16-FEB-2012
TIME PLOTTED => 14:35

DIST	COUNTY	ROUTE	POST MILES TOTAL PROJECT	SHEET NO.	TOTAL SHEETS
05	SLO	46	40.7/46.3	458	541

REGISTERED CIVIL ENGINEER

June 6, 2008
PLANS APPROVAL DATE

REGISTERED PROFESSIONAL ENGINEER
Donald E. Howe
No. C46402
Exp. 3-31-09
CIVIL
STATE OF CALIFORNIA

The State of California or its officers or agents shall not be responsible for the accuracy or completeness of electronic copies of this plan sheet.

To accompany plans dated 2-13-12

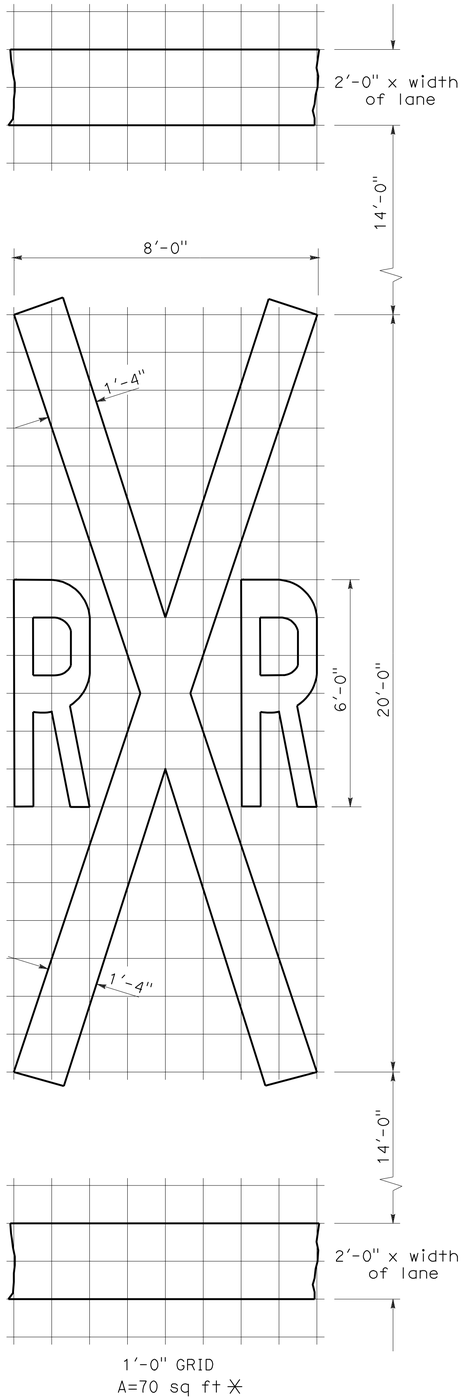

RAILROAD CROSSING SYMBOL

✳70 sq ft DOES NOT INCLUDE THE 2'-0" x VARIABLE WIDTH TRANSVERSE LINES.

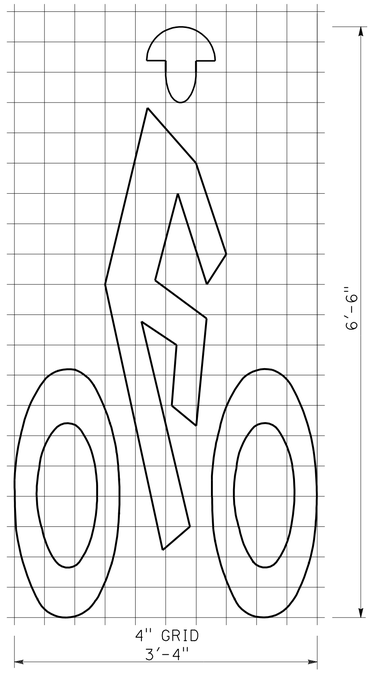

BIKE LANE SYMBOL

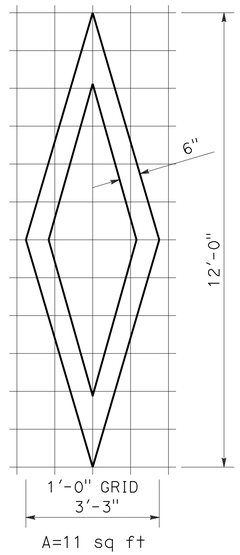

DIAMOND SYMBOL

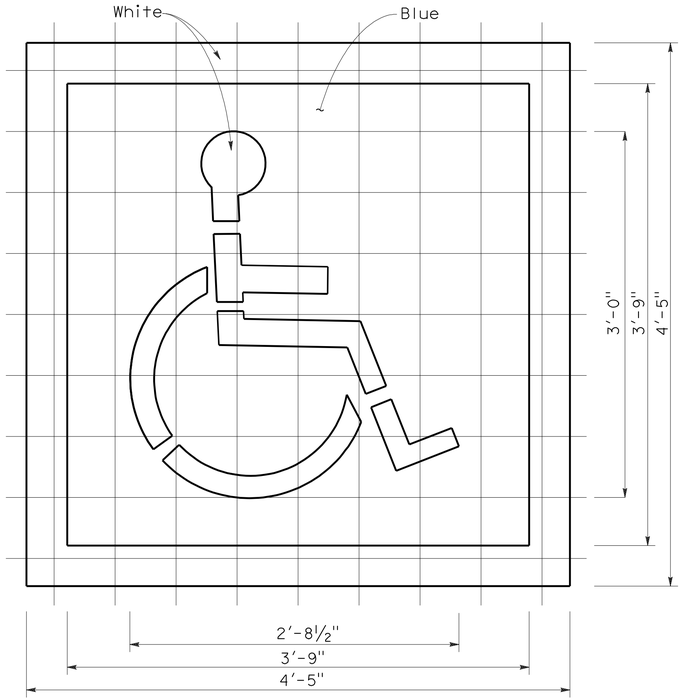

INTERNATIONAL SYMBOL OF ACCESSIBILITY MARKING

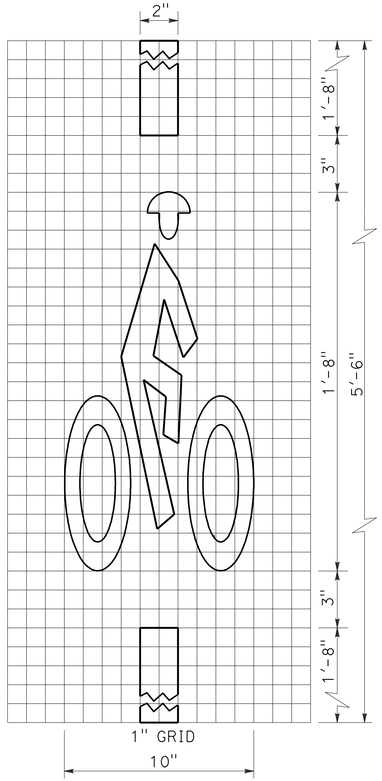

BICYCLE LOOP DETECTOR SYMBOL

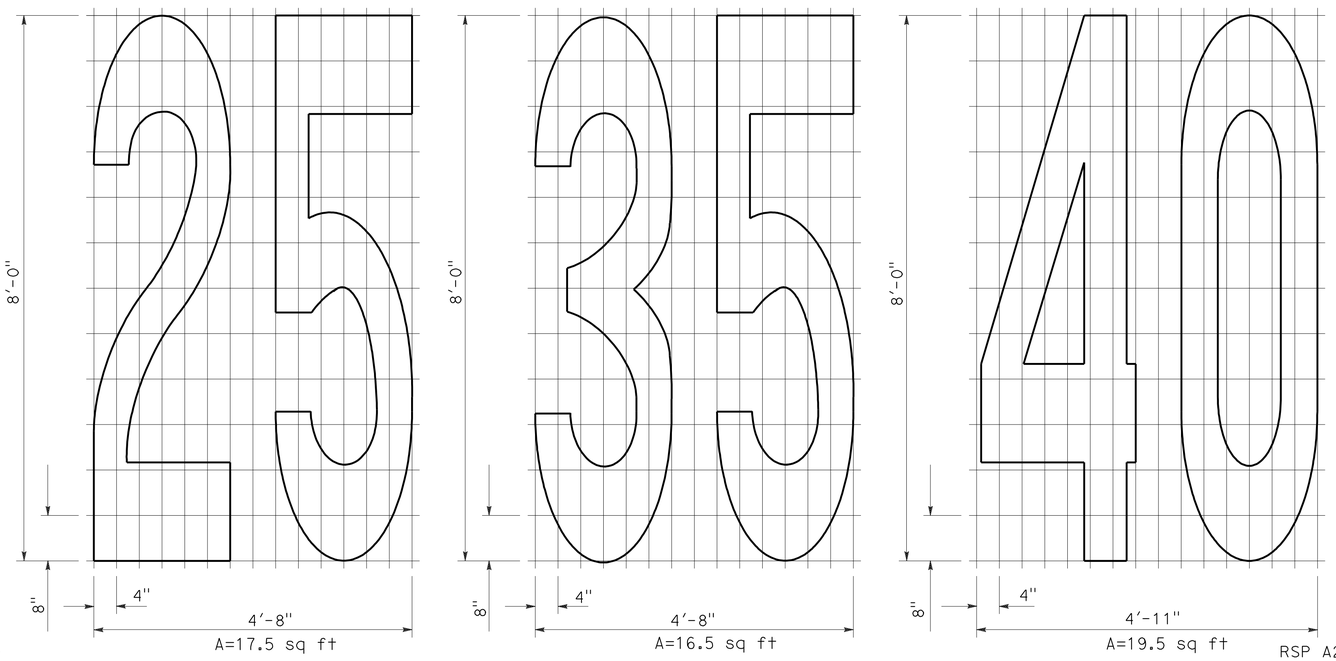

NUMERALS

NOTE:

1. Minor variations in dimensions may be accepted by the Engineer.

STATE OF CALIFORNIA
DEPARTMENT OF TRANSPORTATION

PAVEMENT MARKINGS SYMBOLS AND NUMERALS

NO SCALE

RSP A24C DATED JUNE 6, 2008 SUPERSEDES STANDARD PLAN A24C DATED MAY 1, 2006 - PAGE 11 OF THE STANDARD PLANS BOOK DATED MAY 2006.

REVISED STANDARD PLAN RSP A24C

2006 REVISED STANDARD PLAN RSP A24C

5-27-08

DIST	COUNTY	ROUTE	POST MILES TOTAL PROJECT	SHEET NO.	TOTAL SHEETS
05	SLO	46	40.7/46.3	459	541

REGISTERED CIVIL ENGINEER

November 17, 2006
PLANS APPROVAL DATE

REGISTERED PROFESSIONAL ENGINEER Dallas Forester No. C37765 Exp. 12-31-06 CIVIL STATE OF CALIFORNIA

The State of California or its officers or agents shall not be responsible for the accuracy or completeness of electronic copies of this plan sheet.

To accompany plans dated 2-13-12

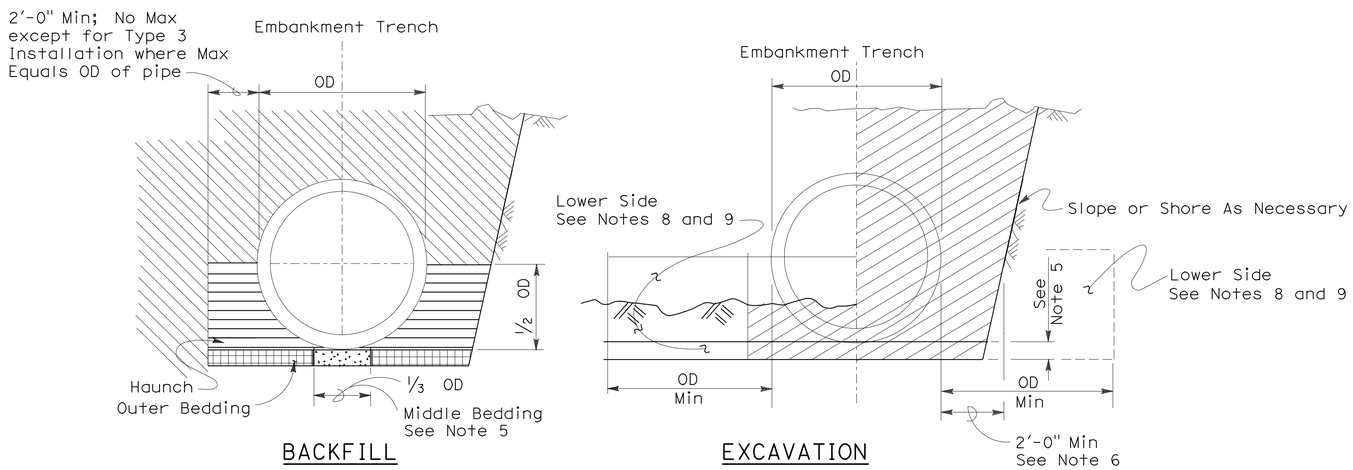

Roadway Embankment

Structure Backfill (Culvert) See Note 6

Structure Backfill (Culvert) See Note 6

Loose Backfill

Excavation Structure (Culvert)

TYPE 1 INSTALLATION:

The haunch and outer bedding shall be compacted to a minimum 90 percent relative compaction. In addition, the minimum sand equivalent in these areas shall be 30 and the maximum percentage passing the 75 μm sieve size shall be 12.

TYPE 2 INSTALLATION:

The haunch and outer bedding shall be compacted to a minimum 90 percent relative compaction. In addition, the minimum sand equivalent in these areas shall be 25.

TYPE 3 INSTALLATION:

The haunch and outer bedding shall be compacted to a minimum 85 percent relative compaction. 90 percent relative compaction will be required where the fill over the pipe is less than 4'-0" or 1/2 OD.

INSTALLATION TYPE 1

MINIMUM CLASS AND D-LOAD	COVER	
	108" Dia AND SMALLER	OVER 108" Dia
Class II 1000D	14.9'	12.9'
Class III 1350D	15.0' - 20.9'	13.0' - 18.9'
Class III Special 1700D	21.0' - 26.9'	19.0' - 24.9'
Class IV 2000D	27.0' - 31.9'	25.0' - 29.9'
Class IV Special 2500D	32.0' - 40.9'	30.0' - 38.9'
Class V 3000D	41.0' - 49.9'	39.0' - 46.9'
Class V Special 3600D	50.0' - 59.0'	47.0' - 58.0'

INSTALLATION TYPE 2

MINIMUM CLASS AND D-LOAD	COVER
Class II 1000D	9.9'
Class III 1350D	10.0'- 14.9'
Class III Special 1700D	15.0' - 19.9'
Class IV 2000D	20.0' - 24.9'
Class IV Special 2500D	25.0' - 31.9'
Class V 3000D	32.0' - 38.9'
Class V Special 3600D	39.0' - 47.0'

INSTALLATION TYPE 3

MINIMUM CLASS AND D-LOAD	COVER	
	48" Dia AND SMALLER	OVER 48" Dia
Class II 1000D	7.9'	5.9'
Class III 1350D	8.0' - 10.9'	6.0' - 8.9'
Class III Special 1700D	11.0' - 14.9'	9.0' - 12.9'
Class IV 2000D	15.0' - 17.9'	13.0' - 15.9'
Class IV Special 2500D	18.0' - 21.9'	16.0' - 19.9'
Class V 3000D	22.0' - 26.9'	20.0' - 24.9'
Class V Special 3600D	30.0' - 33.0'	25.0' - 31.0'

NOTES:

1. Unless otherwise shown on the plans or specified in the special provision, the Contractor shall have the option of selecting the class of RCP and the type of installation to be used, provided the height of cover does not exceed the value shown for the RCP selected.
   Example: 24" RCP culvert with maximum cover of 19'-0" the options are:
   a) Class III or stronger with Installation Type 1.
   b) Class III Special or stronger with Installation Type 2.
   c) Class IV Special or stronger with Installation Type 3.
   Cover is defined as the maximum vertical distance from top of the pipe to finished grade within the length of any given culvert.
2. The class of RCP and Installation Type selected shall be the same throughout the length of any given culvert.
3. The "length of any culvert" is defined as the culvert between:
   a) Successive drainage structure (inlets, junction boxes, headwalls, etc.).
   b) A drainage structure and the inlet or outlet end of the culvert.
   c) The inlet and outlet end of the culvert when there are no intervening drainage structures.
4. Oval and arch shaped RCP shall not be used.
5. 1/25 OD Min, not less than 3".
6. Slurry cement backfill may be substituted for backfill in the outer bedding and haunch areas. If slurry is used the outer and middle beddings shall be omitted. Prior to installation the soil under the middle 1/3 of the outside diameter of the pipe shall be softened by scarifying or other means to a minimum depth of 1/25 OD, but not less than 3". Where slurry cement backfill is used clear distance to trench wall may be reduced as set forth in Section 19-3.062 of the Standard Specifications.
7. Backfill shall be placed full width of excavation except where dimensions are shown for backfill width or thickness. Dimensions shown are minimums.
8. Lower side shall be suitable material as determined by the Engineer. Otherwise it shall be considered unsuitable as set forth in Section 19-2.02 of the Standard Specifications. See Note 9.
9. Where the pipe is placed in a trench, if the trench walls are sloped at 5 vertical to 1 horizontal or steeper for at least 90 percent of the trench height or up to not less than 12" from the grading plane, the firmness of the soil in the lower side need not be considered.
10. Non-reinforced precast concrete pipe sizes 3'-0" or smaller may be placed under installation Types 1, 2 or 3.

STATE OF CALIFORNIA
DEPARTMENT OF TRANSPORTATION

EXCAVATION AND BACKFILL CONCRETE PIPE CULVERTS

NO SCALE

RSP A62DA DATED NOVEMBER 17, 2006 SUPERSEDES STANDARD PLAN A62DA DATED MAY 1, 2006 - PAGE 20 OF THE STANDARD PLANS BOOK DATED MAY 2006.

REVISED STANDARD PLAN RSP A62DA

2006 REVISED STANDARD PLAN RSP A62DA

10-26-06

DIST	COUNTY	ROUTE	POST MILES TOTAL PROJECT	SHEET NO.	TOTAL SHEETS
05	SLO	46	40.7/46.3	460	541

Mark S. Turner
PROFESSIONAL LAND SURVEYOR

June 30, 2006
PLANS APPROVAL DATE

LICENSED LAND SURVEYOR
Mark S. Turner
No. 6228
Exp. 3-31-08
STATE OF CALIFORNIA

The State of California or its officers or agents shall not be responsible for the accuracy or completeness of electronic copies of this plan sheet.

To accompany plans dated 2-13-12

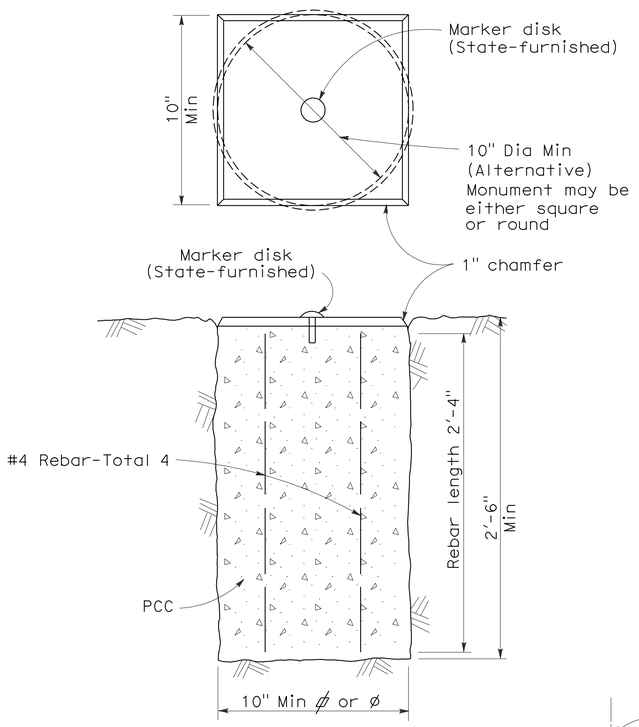

TYPE A

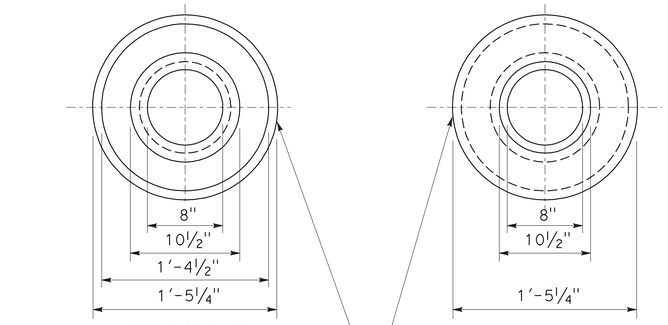

TOP VIEW OF
MONUMENT OF WELL RING

BOTTOM VIEW OF
MONUMENT OF WELL RING

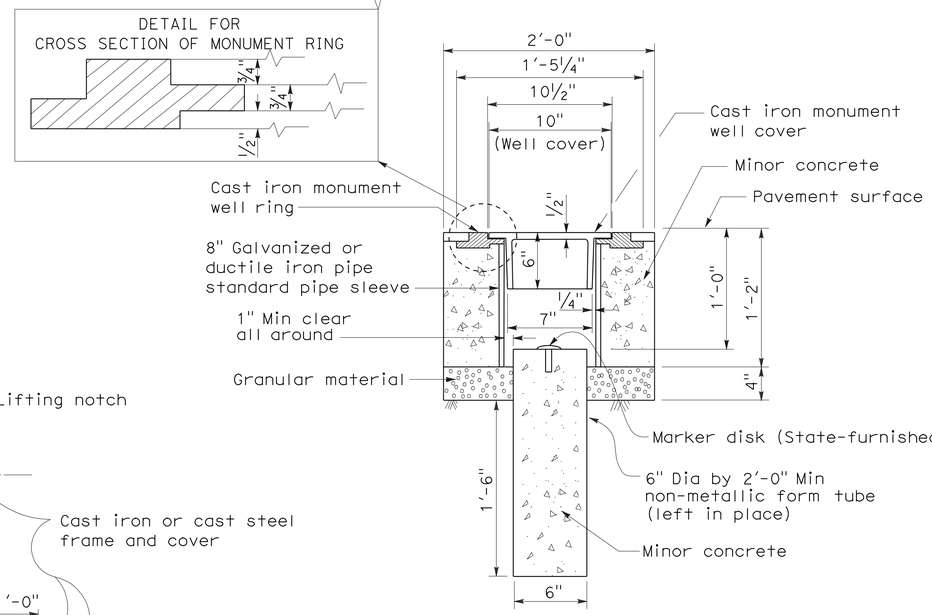

TYPE B

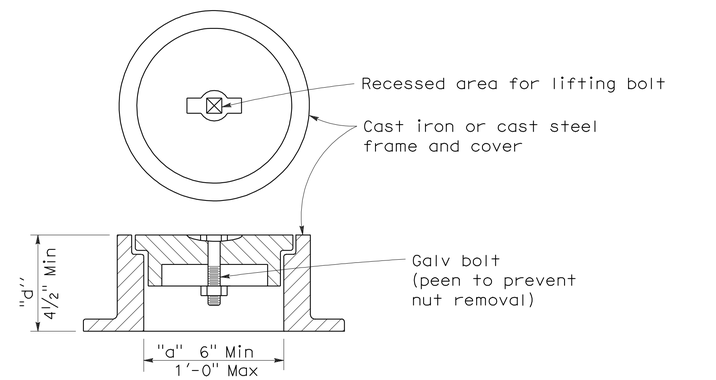

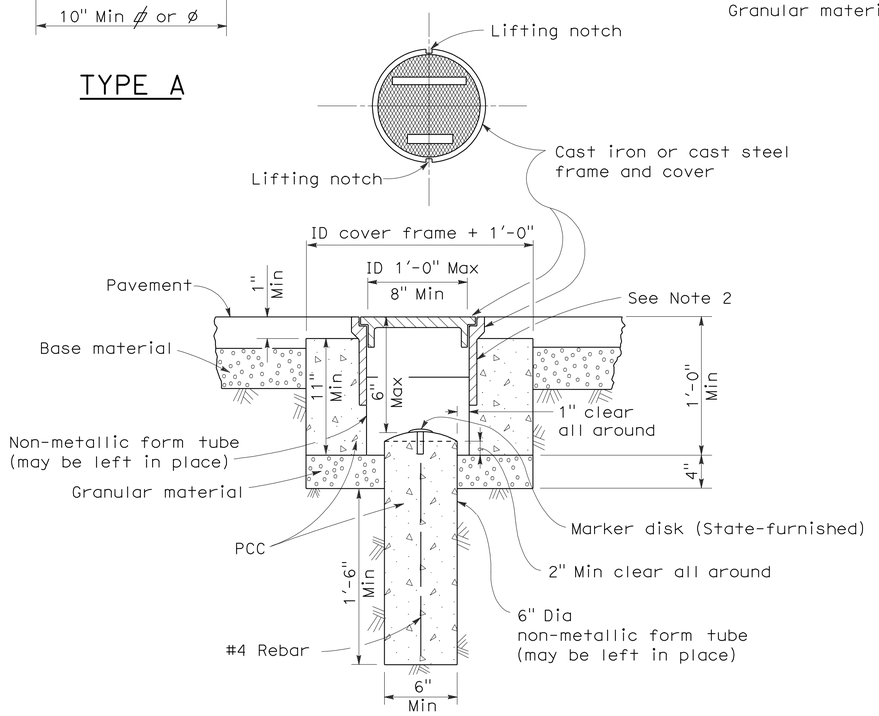

TYPE D
Alternative No. 1

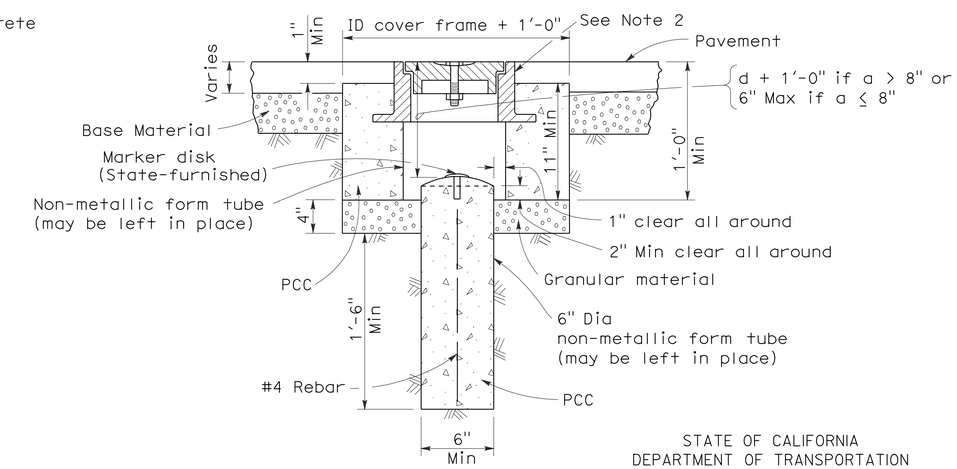

TYPE D
Alternative No. 2

NOTES:

1. The configuration of the cast iron or cast steel frame and cover may vary from that shown.
2. Frame shall be embedded in the concrete a minimum of 3".
3. Type D monument shall be either Alternative No. 1 or Alternative No. 2 at the contractor's option.
4. All portland cement concrete shall be Class 2 or minor concrete with 1" maximum aggregate.

STATE OF CALIFORNIA
DEPARTMENT OF TRANSPORTATION

SURVEY MONUMENTS

NO SCALE

RSP A74 DATED JUNE 30, 2006 SUPERSEDES STANDARD PLAN DATED MAY 1, 2006 - PAGE 28 OF THE STANDARD PLANS BOOK DATED MAY 2006.

REVISED STANDARD PLAN RSP A74

2006 REVISED STANDARD PLAN RSP A74

5-24-06

Dist	COUNTY	ROUTE	POST MILES TOTAL PROJECT	SHEET No.	TOTAL SHEETS
05	SLO	46	40.7/46.3	461	541

Randell D. Hiatt
REGISTERED CIVIL ENGINEER

May 20, 2011
PLANS APPROVAL DATE

REGISTERED PROFESSIONAL ENGINEER
Randell D. Hiatt
No. C50200
Exp. 6-30-11
CIVIL
STATE OF CALIFORNIA

The State of California or its officers or agents shall not be responsible for the accuracy or completeness of electronic copies of this plan sheet.

To accompany plans dated 2-13-12

NOTES:

1. When necessary to place dike in front of face of guard railing, only Type C dike may be used. For dike details, see Standard Plan A87B.
2. For standard railing post embedment, see Standard Plans A77C3.
3. Guard railing delineation to be used where shown on the Project Plans.
4. When dike or curb is placed under guard railing, the maximum height of the dike or curb shall be 4". Mountable dike should not be used. For dike and curb details, see Standard Plans A87A and A87B.
5. For details of typical distance between the face of rail and hinge point, see Standard Plan A77C3.
6. For steel line posts, use ¼ - 20 self-tapping screws in 0.22" diameter holes or ¼" bolts in 9/32" diameter holes.

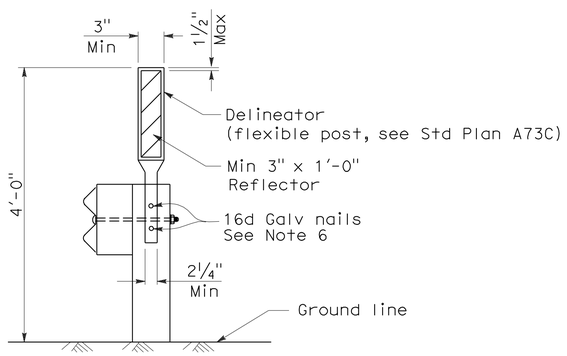

GUARD RAILING DELINEATION

See Note 3

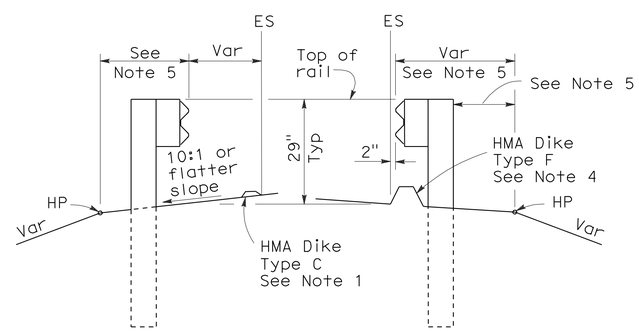

DIKE POSITIONING

See Note 1

STATE OF CALIFORNIA
DEPARTMENT OF TRANSPORTATION

METAL BEAM GUARD RAILING TYPICAL RAILING DELINEATION AND DIKE POSITIONING DETAILS

NO SCALE

RSP A77C4 DATED MAY 20, 2011 SUPERSEDES RSP A77C4 DATED JUNE 6, 2008 AND STANDARD PLAN A77C4 DATED MAY 1, 2006 - PAGE 47 OF THE STANDARD PLANS BOOK DATED MAY 2006.

REVISED STANDARD PLAN RSP A77C4

2006 REVISED STANDARD PLAN RSP A77C4

3-10-11

DIST	COUNTY	ROUTE	POST MILES TOTAL PROJECT	SHEET NO.	TOTAL SHEETS
05	SLO	46	40.7/46.3	462	541

Randell D. Hiatt
REGISTERED CIVIL ENGINEER

October 20, 2006
PLANS APPROVAL DATE

REGISTERED PROFESSIONAL ENGINEER
Randell D. Hiatt
No. C50200
Exp. 6-30-07
CIVIL
STATE OF CALIFORNIA

The State of California or its officers or agents shall not be responsible for the accuracy or completeness of electronic copies of this plan sheet.

To accompany plans dated 2-13-12

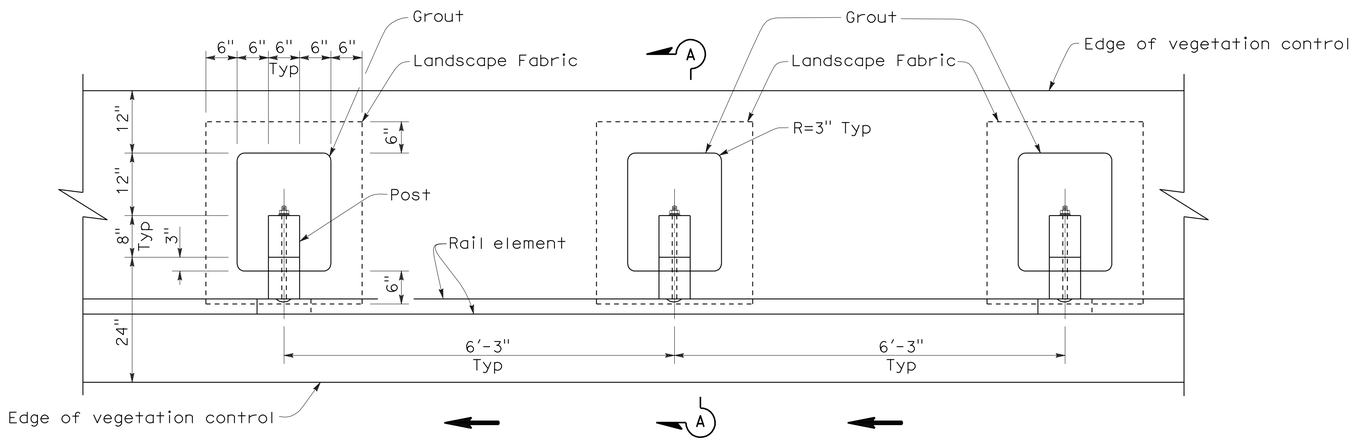

PLAN

NOTES:

1. Where the distance between back of post and hinge point is less than 24", vegetation control to be constructed flush with the back edge of the post.
2. Where dike is constructed under railing, construct vegetation control to back edge of dike. Where paved shoulder is constructed within 24" in front of the post, construct vegetation control to the edge of paved shoulder.
3. Direction of adjacent traffic indicated by ← .

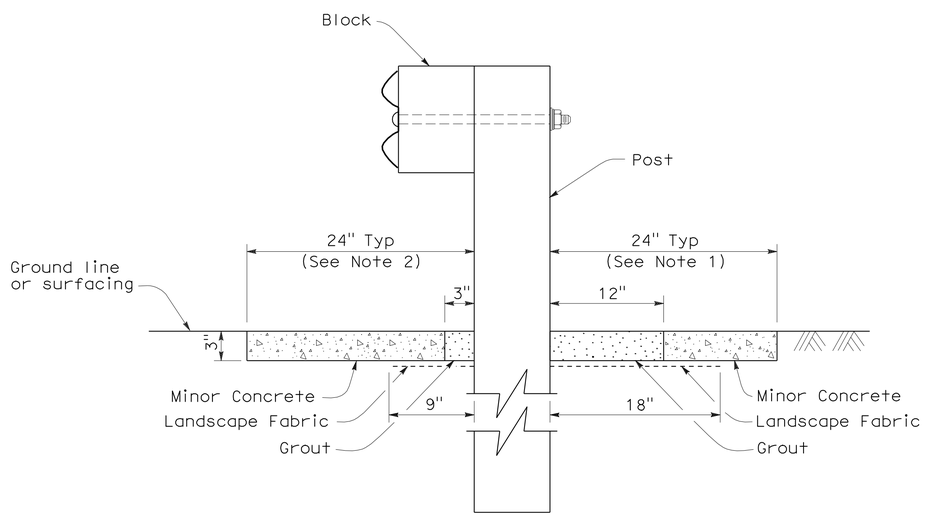

SECTION A-A

STATE OF CALIFORNIA
DEPARTMENT OF TRANSPORTATION

METAL BEAM GUARD RAILING TYPICAL VEGETATION CONTROL STANDARD RAILING SECTION

NO SCALE

NSP A77C5 DATED OCTOBER 20, 2006 SUPPLEMENTS THE STANDARD PLANS BOOK DATED MAY 2006.

NEW STANDARD PLAN NSP A77C5

2006 NEW STANDARD PLAN NSP A77C5

7-17-06

DIST	COUNTY	ROUTE	POST MILES TOTAL PROJECT	SHEET NO.	TOTAL SHEETS
05	SLO	46	40.7/46.3	463	541

Randell D. Hiatt
REGISTERED CIVIL ENGINEER

October 20, 2006
PLANS APPROVAL DATE

REGISTERED PROFESSIONAL ENGINEER
Randell D. Hiatt
No. C50200
Exp. 6-30-07
CIVIL
STATE OF CALIFORNIA

The State of California or its officers or agents shall not be responsible for the accuracy or completeness of electronic copies of this plan sheet.

To accompany plans dated 2-13-12

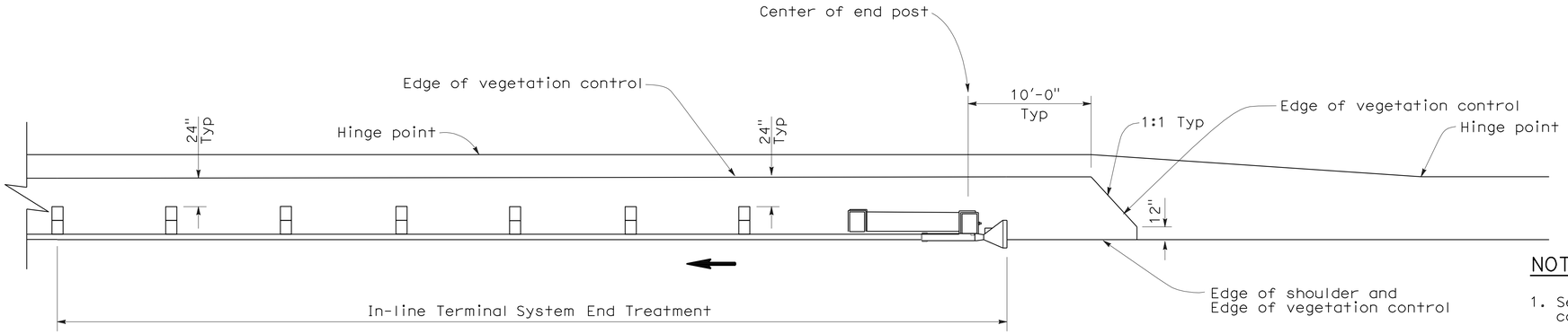

PLAN

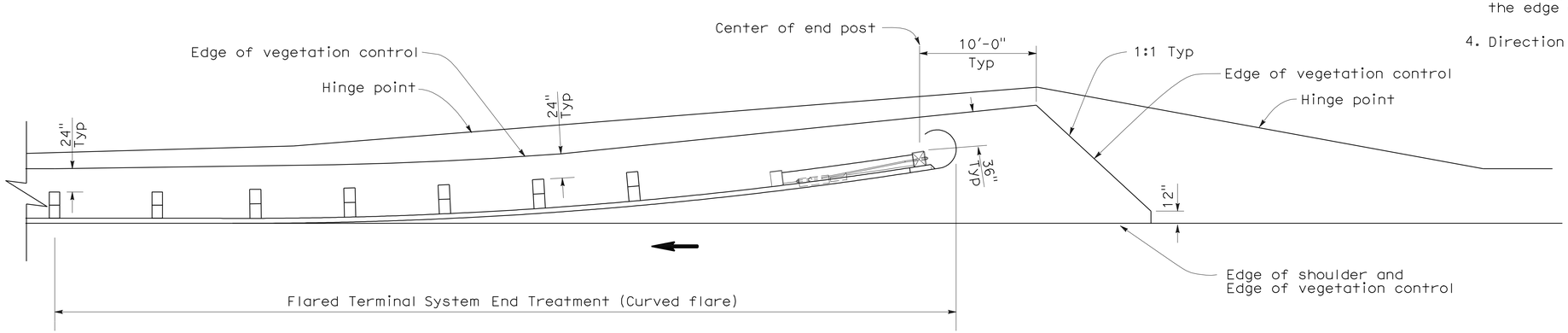

PLAN

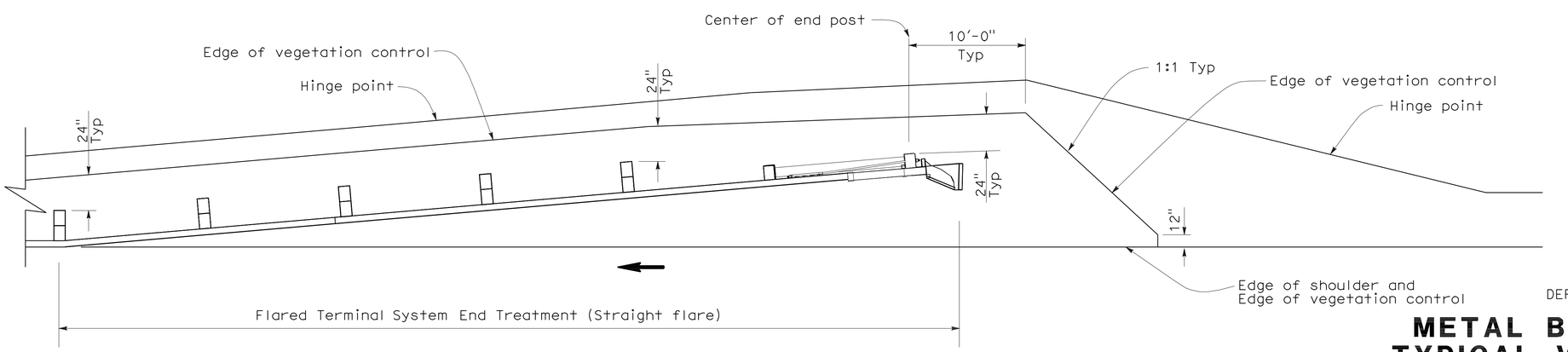

PLAN

NOTES:

1. See New Standard Plan NSP A77C5 for additional vegetation control details.
2. Where the distance between back of post and hinge point is less than 24", vegetation control to be constructed flush with the back edge of the post.
3. Where dike is constructed under railing, construct vegetation control to back edge of dike. Where paved shoulder is constructed within 24" in front of the post, construct vegetation control to the edge of paved shoulder.
4. Direction of adjacent traffic indicated by ←.

STATE OF CALIFORNIA
DEPARTMENT OF TRANSPORTATION

METAL BEAM GUARD RAILING TYPICAL VEGETATION CONTROL FOR TERMINAL SYSTEM END TREATMENTS

NO SCALE

NSP A77C6 DATED OCTOBER 20, 2006 SUPPLEMENTS THE STANDARD PLANS BOOK DATED MAY 2006.

NEW STANDARD PLAN NSP A77C6

2006 NEW STANDARD PLAN NSP A77C6

7-17-06

DIST	COUNTY	ROUTE	POST MILES TOTAL PROJECT	SHEET NO.	TOTAL SHEETS
05	SLO	46	40.7/46.3	464	541

Randell D. Hiatt
REGISTERED CIVIL ENGINEER

October 20, 2006
PLANS APPROVAL DATE

REGISTERED PROFESSIONAL ENGINEER
Randell D. Hiatt
No. C50200
Exp. 6-30-07
CIVIL
STATE OF CALIFORNIA

The State of California or its officers or agents shall not be responsible for the accuracy or completeness of electronic copies of this plan sheet.

To accompany plans dated 2-13-12

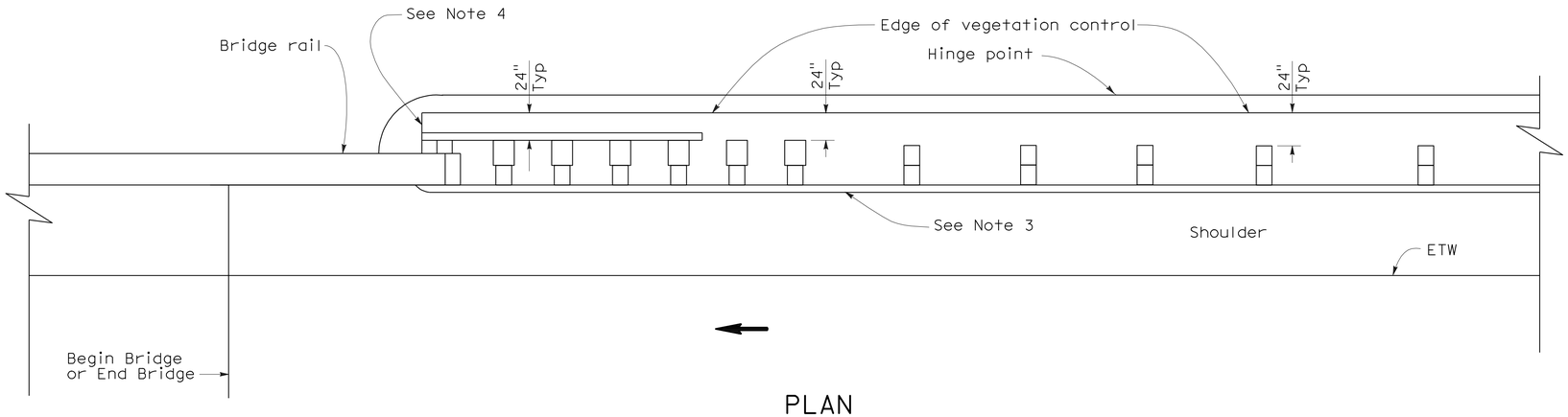

PLAN

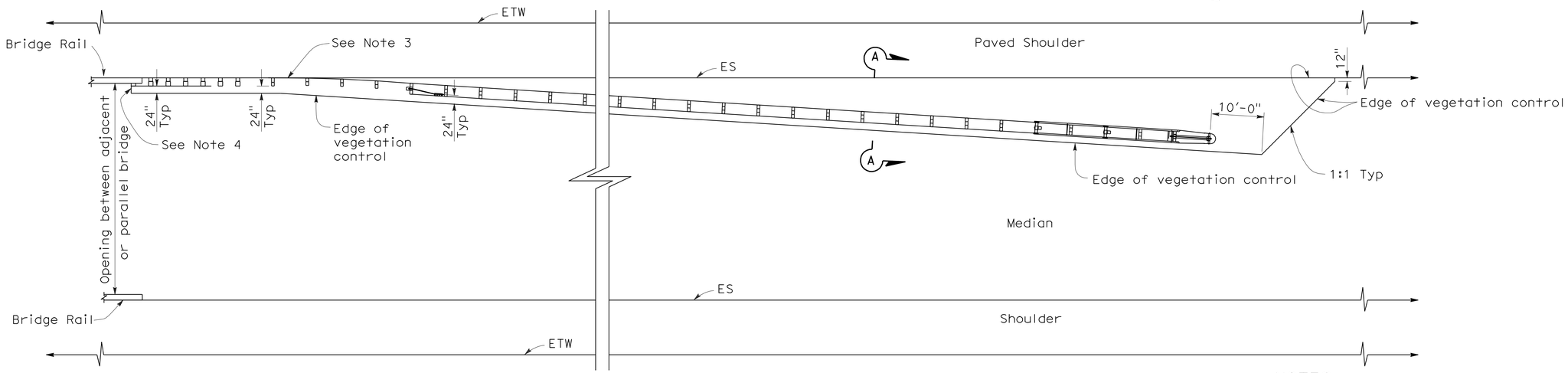

PLAN

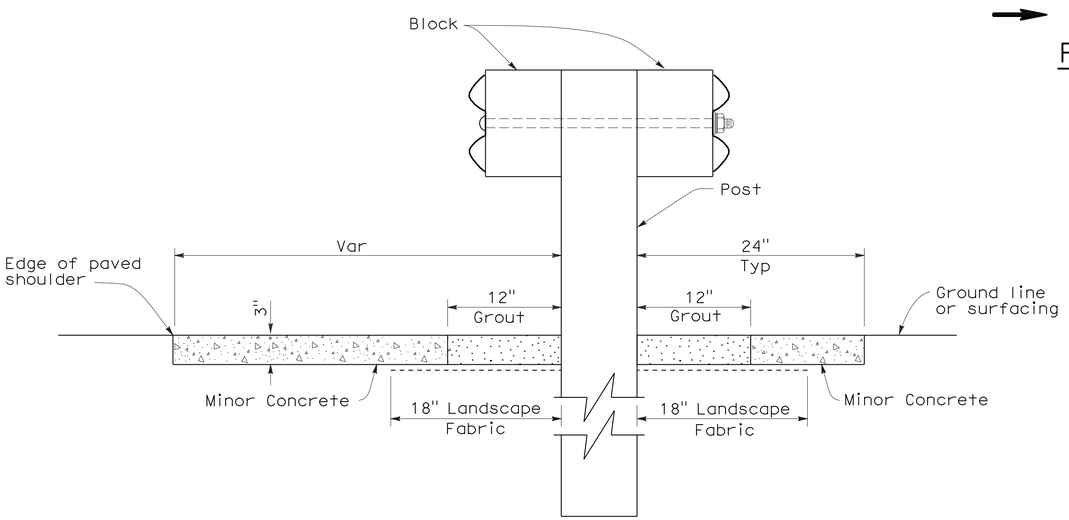

SECTION A-A

NOTES:

1. See New Standard Plan NSP A77C5 for additional vegetation control details.
2. Where the distance between back of post and hinge point is less than 24", vegetation control to be constructed flush with the back edge of the post.
3. Where dike is constructed under railing, construct vegetation control to back edge of dike. Where paved shoulder is constructed within 24" in front of the post, construct vegetation control to the edge of paved shoulder.
4. End vegetation control at end of backside rail element.
5. Direction of adjacent traffic indicated by ←.

STATE OF CALIFORNIA
DEPARTMENT OF TRANSPORTATION

METAL BEAM GUARD RAILING TYPICAL VEGETATION CONTROL AT STRUCTURE APPROACH AND DEPARTURE

NO SCALE

NSP A77C7 DATED OCTOBER 20, 2006 SUPPLEMENTS THE STANDARD PLANS BOOK DATED MAY 2006.

NEW STANDARD PLAN NSP A77C7

2006 NEW STANDARD PLAN NSP A77C7

7-17-06

DIST	COUNTY	ROUTE	POST MILES TOTAL PROJECT	SHEET NO.	TOTAL SHEETS
05	SLO	46	40.7/46.3	465	541

Randell D. Hiatt
REGISTERED CIVIL ENGINEER

October 20, 2006
PLANS APPROVAL DATE

REGISTERED PROFESSIONAL ENGINEER
Randell D. Hiatt
No. C50200
Exp. 6-30-07
CIVIL
STATE OF CALIFORNIA

The State of California or its officers or agents shall not be responsible for the accuracy or completeness of electronic copies of this plan sheet.

To accompany plans dated 2-13-12

NOTES:

1. See New Standard Plan NSP A77C5 for additional vegetation control details.
2. Where the distance between back of post and hinge point is less than 24", vegetation control to be constructed flush with the back edge of the post.
3. Where dike is constructed under railing, construct vegetation control to back edge of dike. Where paved shoulder is constructed within 24" in front of the post, construct vegetation control to the edge of paved shoulder.
4. Direction of adjacent traffic indicated by ←.

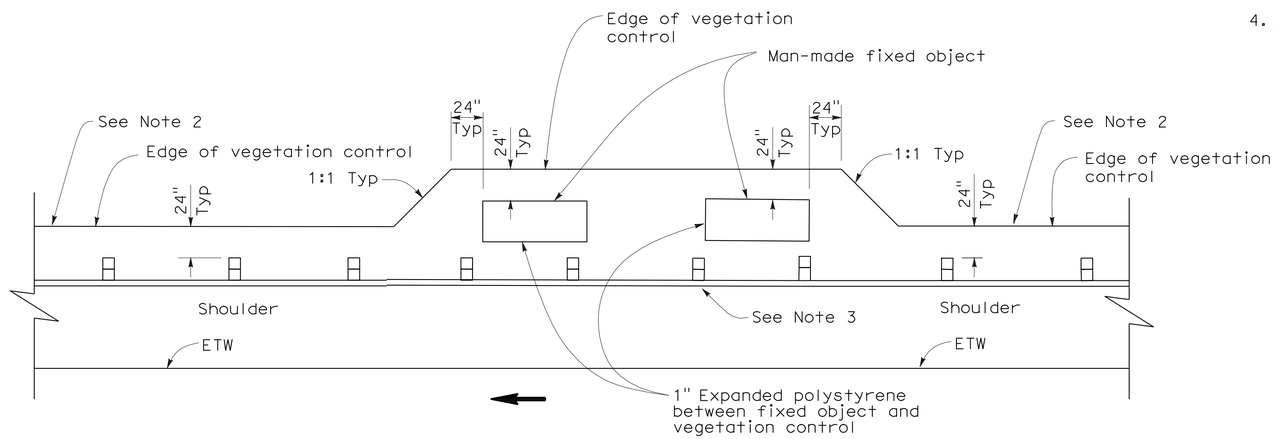

PLAN

FIXED OBJECT(S) ON SHOULDER

STATE OF CALIFORNIA
DEPARTMENT OF TRANSPORTATION

METAL BEAM GUARD RAILING TYPICAL VEGETATION CONTROL AT FIXED OBJECT

NO SCALE

NSP A77C8 DATED OCTOBER 20, 2006 SUPPLEMENTS THE STANDARD PLANS BOOK DATED MAY 2006.

NEW STANDARD PLAN NSP A77C8

2006 NEW STANDARD PLAN NSP A77C8

7-17-06

DIST	COUNTY	ROUTE	POST MILES TOTAL PROJECT	SHEET NO.	TOTAL SHEETS
05	SLO	46	40.7/46.3	466	541

Randell D. Hiatt
REGISTERED CIVIL ENGINEER

October 20, 2006
PLANS APPROVAL DATE

REGISTERED PROFESSIONAL ENGINEER
Randell D. Hiatt
No. C50200
Exp. 6-30-07
CIVIL
STATE OF CALIFORNIA

The State of California or its officers or agents shall not be responsible for the accuracy or completeness of electronic copies of this plan sheet.

To accompany plans dated 2-13-12

NOTES:

1. See New Standard Plan NSP A77C5 for additional vegetation control details.
2. Where dike is constructed under railing, construct vegetation control to back edge of dike. Where paved shoulder is constructed within 24" in front of the post, construct vegetation control to the edge of paved shoulder.
3. Direction of adjacent traffic indicated by ← .

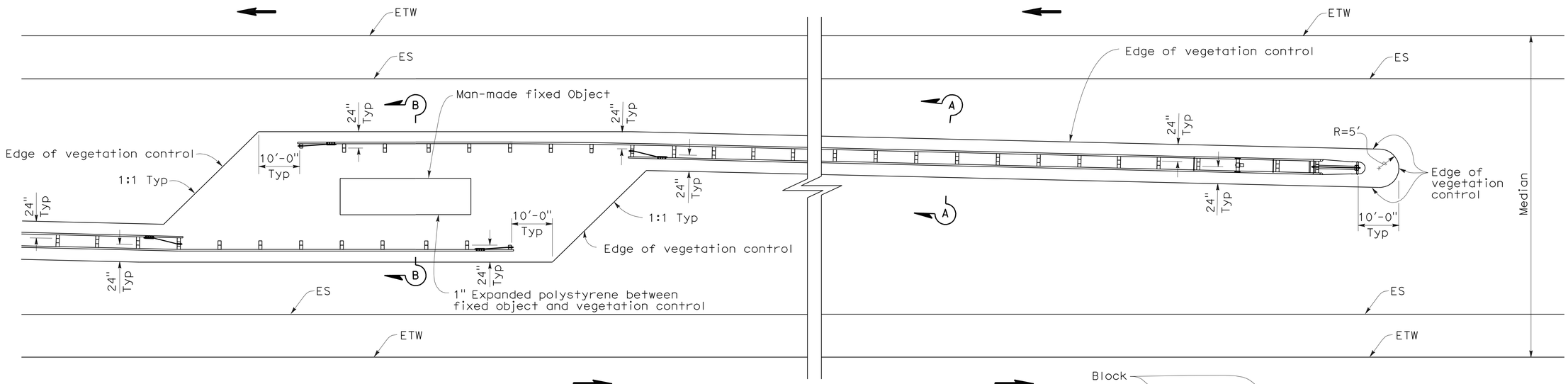

PLAN

FIXED OBJECT(S) IN MEDIAN

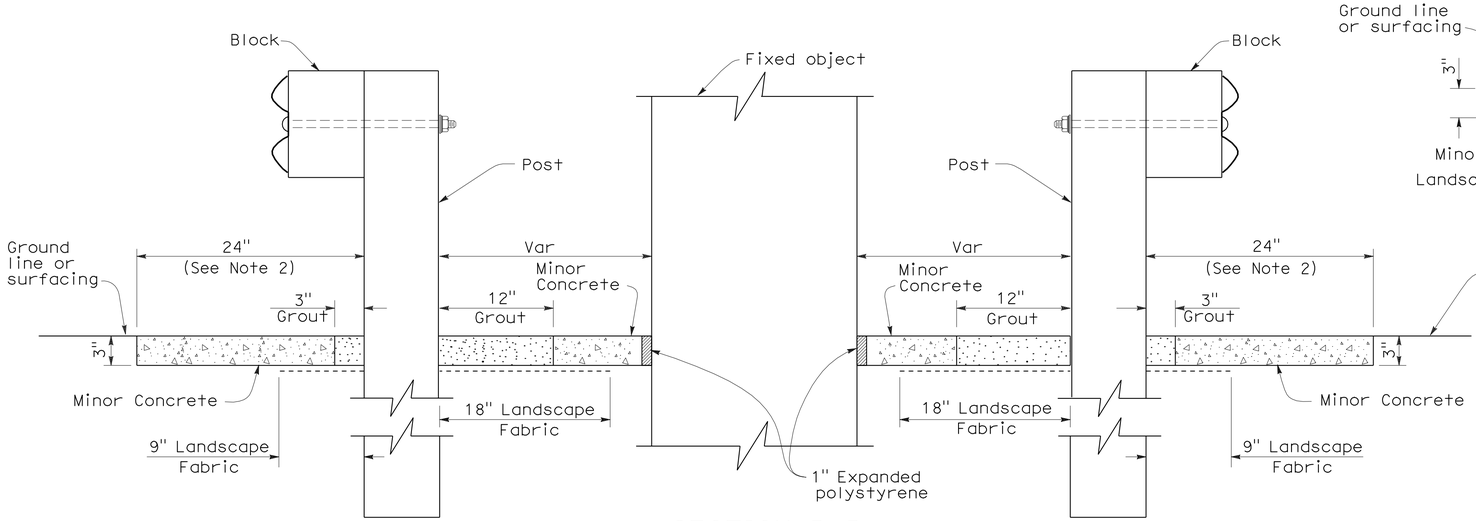

SECTION B-B

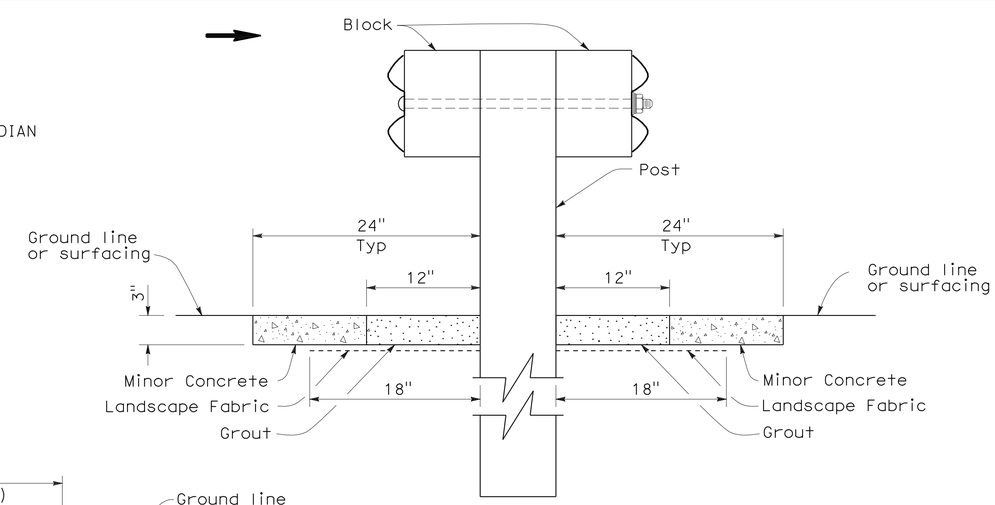

SECTION A-A

STATE OF CALIFORNIA
DEPARTMENT OF TRANSPORTATION

METAL BEAM GUARD RAILING TYPICAL VEGETATION CONTROL AT FIXED OBJECT

NO SCALE

NSP A77C9 DATED OCTOBER 20, 2006 SUPPLEMENTS THE STANDARD PLANS BOOK DATED MAY 2006.

NEW STANDARD PLAN NSP A77C9

2006 NEW STANDARD PLAN NSP A77C9

7-17-06

DIST	COUNTY	ROUTE	POST MILES TOTAL PROJECT	SHEET NO.	TOTAL SHEETS
05	SLO	46	40.7/46.3	467	541

Randell D. Hiatt
REGISTERED CIVIL ENGINEER

October 20, 2006
PLANS APPROVAL DATE

REGISTERED PROFESSIONAL ENGINEER
Randell D. Hiatt
No. C50200
Exp. 6-30-07
CIVIL
STATE OF CALIFORNIA

The State of California or its officers or agents shall not be responsible for the accuracy or completeness of electronic copies of this plan sheet.

To accompany plans dated 2-13-12

NOTES:

1. See New Standard Plan NSP A77C5 for additional vegetation control details.
2. Where dike is constructed under railing, construct vegetation control to back edge of dike. Where paved shoulder is constructed within 24" in front of the post, construct vegetation control to the edge of paved shoulder.
3. Direction of adjacent traffic indicated by ←.

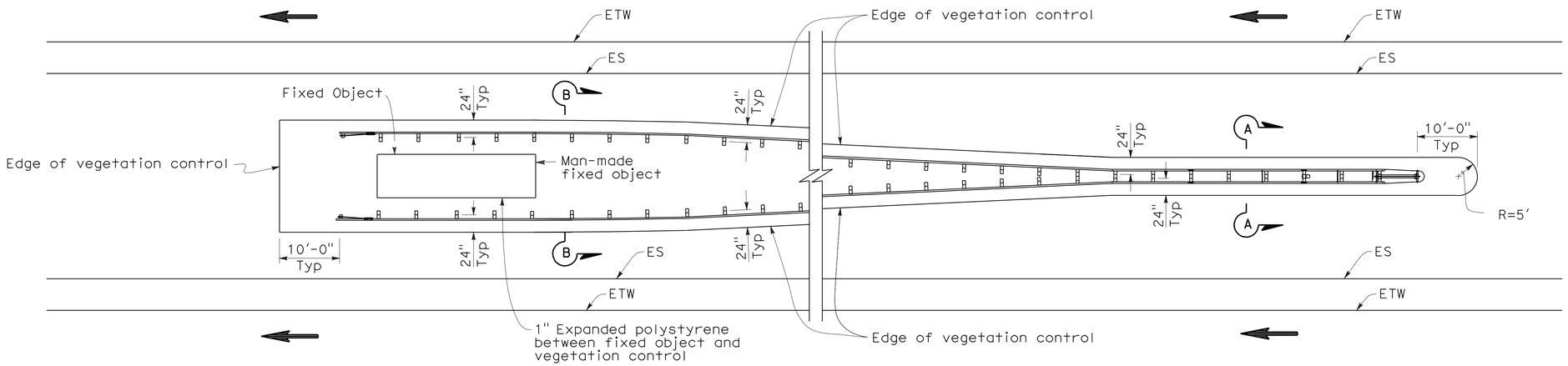

PLAN

FIXED OBJECT(S) BETWEEN SEPARATE ROADBEDS
(ONE-WAY TRAFFIC)

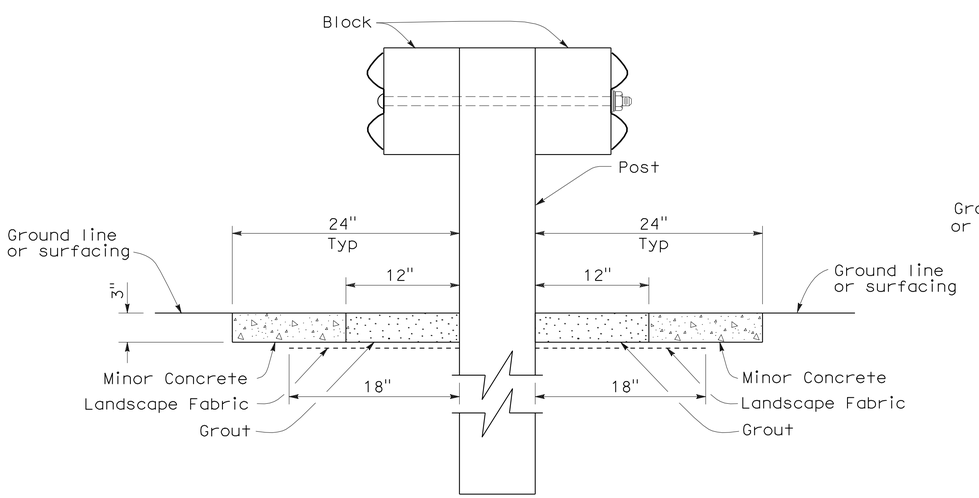

SECTION A-A

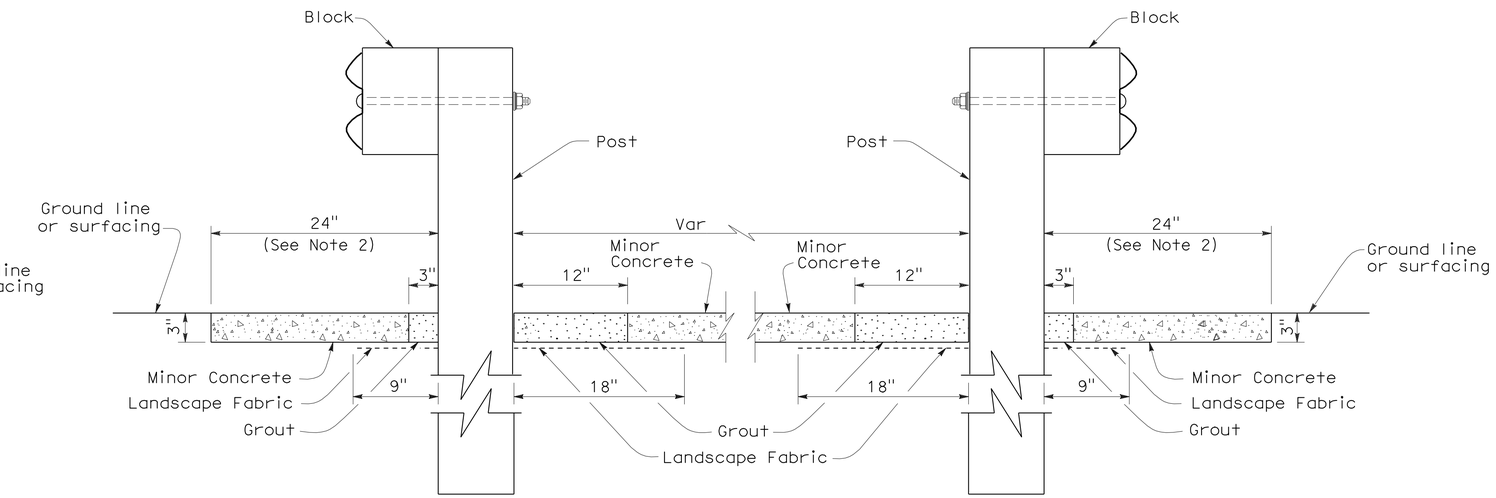

SECTION B-B

STATE OF CALIFORNIA
DEPARTMENT OF TRANSPORTATION

METAL BEAM GUARD RAILING TYPICAL VEGETATION CONTROL AT FIXED OBJECT

NO SCALE

NSP A77C10 DATED OCTOBER 20, 2006 SUPPLEMENTS THE STANDARD PLANS BOOK DATED MAY 2006.

NEW STANDARD PLAN NSP A77C10

2006 NEW STANDARD PLAN NSP A77C10

7-17-06

DIST	COUNTY	ROUTE	POST MILES TOTAL PROJECT	SHEET NO.	TOTAL SHEETS
05	SLO	46	40.7/46.3	468	541

Randell D. Hiatt
REGISTERED CIVIL ENGINEER

June 6, 2008
PLANS APPROVAL DATE

REGISTERED PROFESSIONAL ENGINEER
Randell D. Hiatt
No. C50200
Exp. 6-30-09
CIVIL
STATE OF CALIFORNIA

The State of California or its officers or agents shall not be responsible for the accuracy or completeness of electronic copies of this plan sheet.

To accompany plans dated 2-13-12

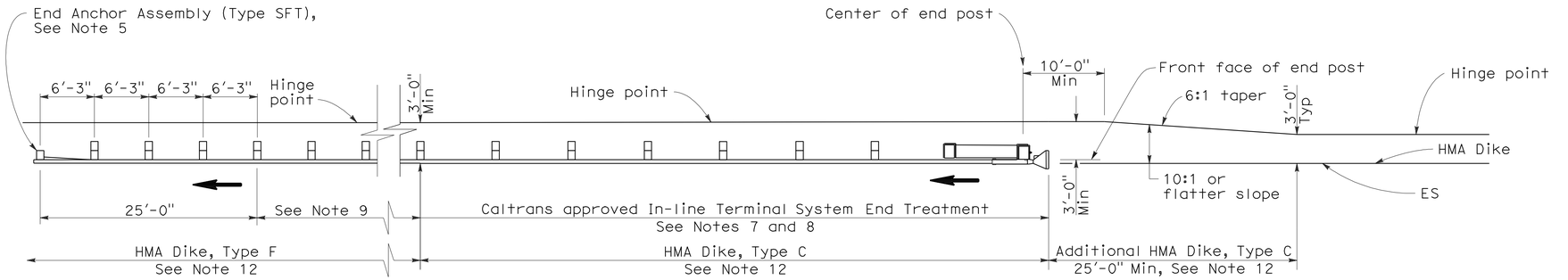

TYPE 11A LAYOUT

(EMBANKMENT GUARD INSTALLATION WITH IN-LINE END TREATMENT AT TRAFFIC APPROACH END OF RAILING)
See Note 6

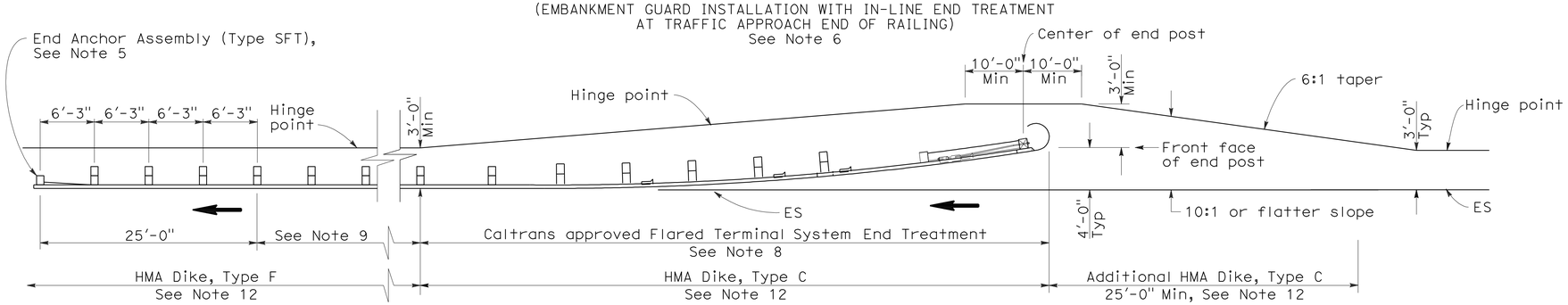

TYPE 11B LAYOUT

(EMBANKMENT GUARD RAILING INSTALLATION WITH FLARED END TREATMENT AT TRAFFIC APPROACH END OF RAILING)
See Note 6

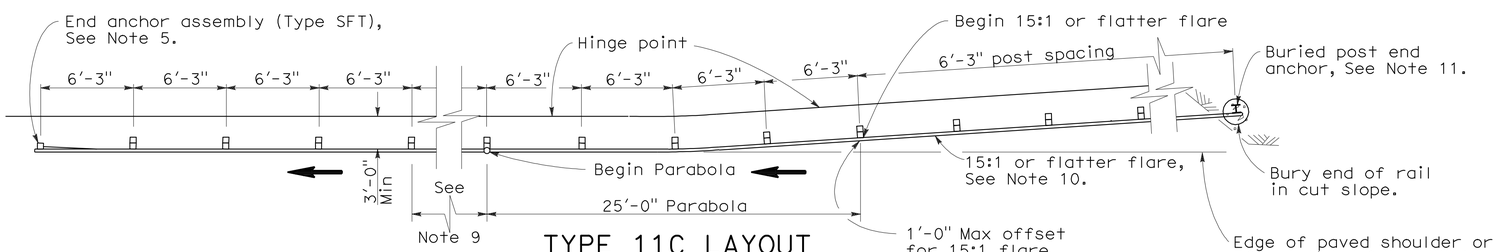

TYPE 11C LAYOUT

(EMBANKMENT GUARD RAILING INSTALLATION WITH BURIED END ANCHOR TREATMENT AT TRAFFIC APPROACH END OF RAILING)
See Notes 6 and 12

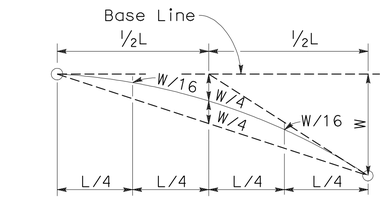

TYPICAL PARABOLIC LAYOUT

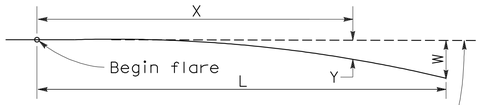

Base Line (Edge of paved shoulder or offset line of edge of traveled way)

$$Y = \frac{WX^2}{L^2}$$

Y = Offset from base line
W = Maximum offset
X = Distance along base line
L = Length of flare

PARABOLIC FLARE OFFSETS

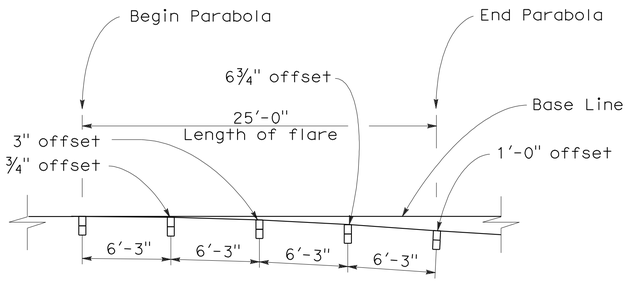

TYPICAL FLARE OFFSETS FOR 1 FOOT MAX END OFFSET

NOTES:

1. Line post, blocks and hardware to be used are shown on Standard Plans A77A1, A77A2, A77B1, A77C1, and A77C2.
2. Guard rail post spacing to be 6'-3" center to center, except as otherwise noted.
3. Except as noted, line posts are 6" x 8" x 6'-0" wood with 6" x 8" x 1'-2" wood blocks. W6 x 9 steel posts, 6'-0" in length, with 6" x 8" x 1'-2" notched wood blocks or recycled plastic blocks may be used for 6" x 8" x 6'-0" wood post with 6" x 8" x 1'-2" wood blocks where applicable and when specified.
4. Direction of adjacent traffic indicated by ⟶.
5. For End Anchor Assembly (Type SFT) details, see Standard Plan A77H1.
6. Layout Types 11A, 11B or 11C are typically used where guard railing is recommended to shield embankment slopes and a crashworthy end treatment is required for only one direction of traffic.
7. In-line Terminal System End Treatments are used where site conditions will not accommodate a flared end treatment.
8. The type of terminal system end treatment to be used will be shown on the Project Plans.
9. Dependent on site conditions (embankment height and side slope), construction of additional guard railing (length equal to multiples of 12'-6" with 6'-3" post spacing) may be advisable.
10. The 15:1 or flatter flare used with buried end anchors is based on the edge of the paved shoulder or offset line of edge of the traveled way. The length of guard railing within the 15:1 or flatter flare is based on site conditions and should be a length equal to multiples of 12'-6".
11. For details of the buried post end anchor used with Type 11C Layout, see Standard Plan A77I2.
12. Where placement of dike is required with guard railing installations, see Revised Standard Plan RSP A77C4 for dike positioning details.

STATE OF CALIFORNIA
DEPARTMENT OF TRANSPORTATION

METAL BEAM GUARD RAILING TYPICAL LAYOUTS FOR EMBANKMENTS

NO SCALE

RSP A77E1 DATED JUNE 6, 2008 SUPERSEDES STANDARD PLAN A77E1
DATED MAY 1, 2006 - PAGE 48 OF THE STANDARD PLANS BOOK DATED MAY 2006.

REVISED STANDARD PLAN RSP A77E1

2006 REVISED STANDARD PLAN RSP A77E1

12-10-07

DIST	COUNTY	ROUTE	POST MILES TOTAL PROJECT	SHEET NO.	TOTAL SHEETS
05	SLO	46	40.7/46.3	469	541

Randell D. Hiatt
REGISTERED CIVIL ENGINEER

June 6, 2008
PLANS APPROVAL DATE

REGISTERED PROFESSIONAL ENGINEER
Randell D. Hiatt
No. C50200
Exp. 6-30-09
CIVIL
STATE OF CALIFORNIA

The State of California or its officers or agents shall not be responsible for the accuracy or completeness of electronic copies of this plan sheet.

To accompany plans dated 2-13-12

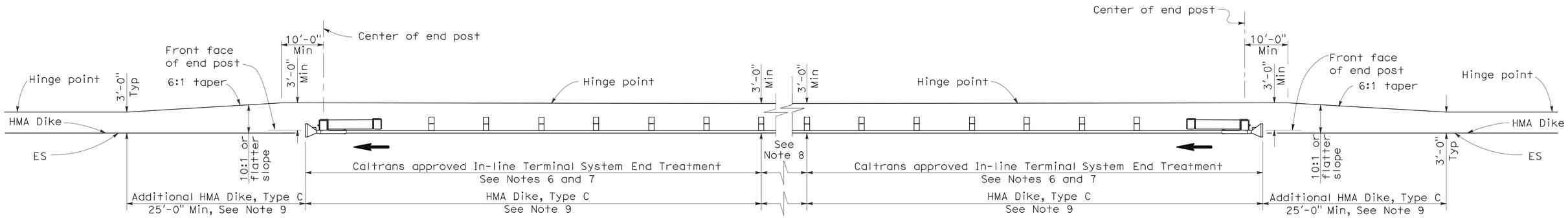

TYPE 11D LAYOUT

(EMBANKMENT GUARD RAILING INSTALLATION WITH IN-LINE END TREATMENT AT EACH END OF RAILING)
See Note 5

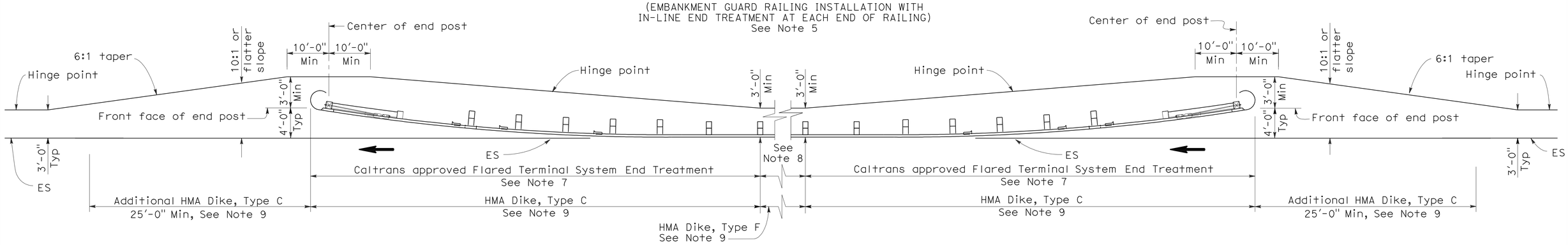

TYPE 11E LAYOUT

(EMBANKMENT GUARD RAILING INSTALLATION WITH FLARED END TREATMENT AT EACH END OF RAILING)
See Note 5

NOTES:

1. Line post, blocks and hardware to be used are shown on Standard Plans A77A1, A77A2, A77B1, A77C1 and A77C2.
2. Guard rail post spacing to be 6'-3" center to center, except as otherwise noted.
3. Except as noted, line posts are 6" x 8" x 6'-0" wood with 6" x 8" x 1'-2" wood blocks. W6 x 9 steel posts, 6'-0" in length, with 6" x 8" x 1'-2" notched wood blocks or plastic blocks may be used for 6" x 8" x 6'-0" wood post with 6" x 8" x 1'-2" wood blocks where applicable and when specified.
4. Direction of adjacent traffic indicated by ➡.
5. Layout Types 11D through 11L, shown on the A77E Series of Revised Standard Plans, are typically used where guard railing is recommended to shield embankment slopes and a crashworthy end treatment is required for both directions of traffic.
6. In-line Terminal System End Treatments are used where site conditions will not accommodate a flared end treatment.
7. The type of terminal system end treatment to be used will be shown on the Project Plans.
8. Dependent on site conditions (embankment height and side slope), construction of additional guard railing (length equal to multiples of 12'-6" with 6'-3" post spacing) may be advisable.
9. Where placement of dike is required with guard railing installations, see Revised Standard Plan RSP A77C4 for dike positioning details.

STATE OF CALIFORNIA
DEPARTMENT OF TRANSPORTATION

METAL BEAM GUARD RAILING TYPICAL LAYOUTS FOR EMBANKMENTS

NO SCALE

RSP A77E2 DATED JUNE 6, 2008 SUPERSEDES STANDARD PLAN A77E2
DATED MAY 1, 2006 - PAGE 49 OF THE STANDARD PLANS BOOK DATED MAY 2006.

REVISED STANDARD PLAN RSP A77E2

2006 REVISED STANDARD PLAN RSP A77E2

12-10-07

DIST	COUNTY	ROUTE	POST MILES TOTAL PROJECT	SHEET NO.	TOTAL SHEETS
05	SLO	46	40.7/46.3	470	541

Randell D. Hiatt
REGISTERED CIVIL ENGINEER

June 6, 2008
PLANS APPROVAL DATE

REGISTERED PROFESSIONAL ENGINEER
Randell D. Hiatt
No. C50200
Exp. 6-30-09
CIVIL
STATE OF CALIFORNIA

The State of California or its officers or agents shall not be responsible for the accuracy or completeness of electronic copies of this plan sheet.

To accompany plans dated 2-13-12

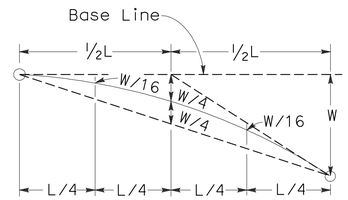

TYPICAL PARABOLIC LAYOUT

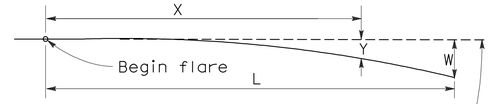

Base Line (Edge of paved shoulder or offset line of edge of traveled way)

$$Y = \frac{WX^2}{L^2}$$

Y = Offset from base line
W = Maximum offset
X = Distance along base line
L = Length of flare

PARABOLIC FLARE OFFSETS

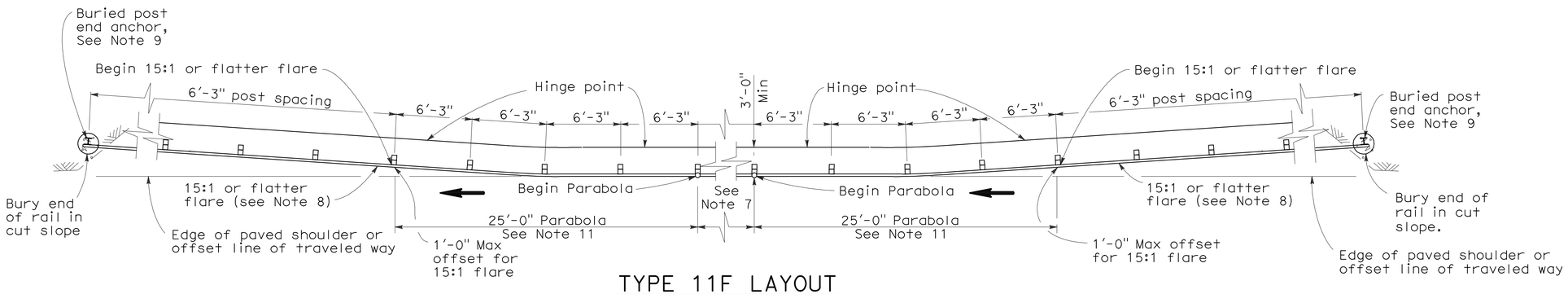

TYPE 11F LAYOUT

(EMBANKMENT GUARD RAILING INSTALLATION WITH A BURIED END ANCHOR TREATMENT AT EACH END OF RAILING)
See Notes 5 and 10

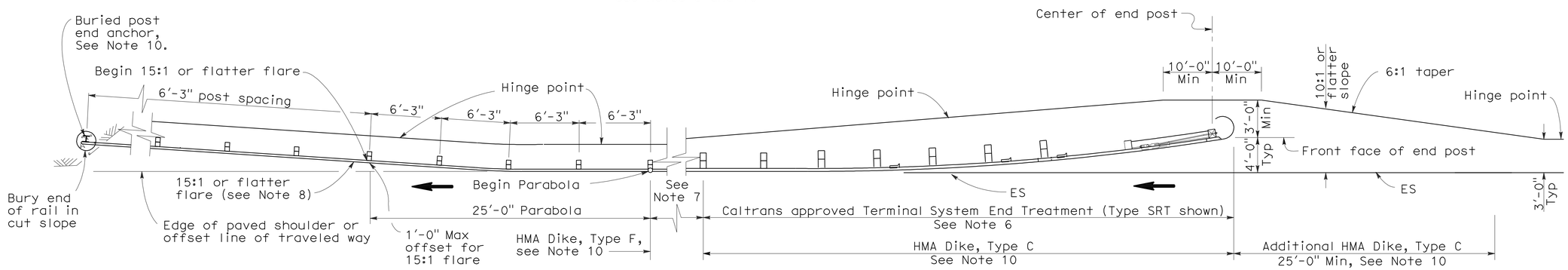

TYPE 11G LAYOUT

(EMBANKMENT GUARD RAILING INSTALLATION WITH FLARED END TREATMENT AND A BURIED END ANCHOR TREATMENT AT THE ENDS OF RAILING)
See Notes 5 and 10

NOTES:

1. Line post, blocks and hardware to be used are shown on Standard Plans A77A1, A77A2, A77B1, A77C1 and A77C2.
2. Guard rail post spacing to be 6'-3" center to center, except as otherwise noted.
3. Except as noted, line posts are 6" x 8" x 6'-0" wood with 6" x 8" x 1'-2" wood blocks. W6 x 9 steel posts, 6'-0" in length, with 6" x 8" x 1'-2" notched wood blocks or plastic blocks may be used for 6" x 8" x 6'-0" wood post with 6" x 8" x 1'-2" wood blocks where applicable and when specified.
4. Direction of adjacent traffic indicated by ⟶.
5. Layout Types 11D through 11L, shown on the A77E Series of Revised Standard Plans, are typically used where guard railing is recommended to shield embankment slopes and a crashworthy end treatment is required for both directions of traffic.
6. The type of terminal system end treatment to be used will be shown on the Project Plans.
7. Dependent on site conditions (embankment height and side slope), construction of additional guard railing (length equal to multiples of 12'-6" with 6'-3" post spacing) may be advisable.
8. The 15:1 or flatter flare used with buried end anchors is based on the edge of the paved shoulder or offset line of edge of the traveled way. The length of guard railing within the 15:1 or flatter flare is based on site conditions and should be a length equal to multiples of 12'-6".
9. For details of the buried post end anchor used with Type 11F and 11G Layouts, see Standard Plan A77I2.
10. Where placement of dike is required with guard railing installations, see Revised Standard Plan RSP A77C4 for dike positioning details.
11. For typical flare offsets for 25'-0" length parabola with maximum offset of 1'-0", see Revised Standard Plan RSP A77E1.

STATE OF CALIFORNIA
DEPARTMENT OF TRANSPORTATION

METAL BEAM GUARD RAILING TYPICAL LAYOUTS FOR EMBANKMENTS

NO SCALE

RSP A77E3 DATED JUNE 6, 2008 SUPERSEDES STANDARD PLAN A77E3 DATED MAY 1, 2006 - PAGE 50 OF THE STANDARD PLANS BOOK DATED MAY 2006.

REVISED STANDARD PLAN RSP A77E3

2006 REVISED STANDARD PLAN RSP A77E3

12-10-07

DIST	COUNTY	ROUTE	POST MILES TOTAL PROJECT	SHEET NO.	TOTAL SHEETS
05	SLO	46	40.7/46.3	471	541

Randell D. Hiatt
REGISTERED CIVIL ENGINEER

June 6, 2008
PLANS APPROVAL DATE

REGISTERED PROFESSIONAL ENGINEER
Randell D. Hiatt
No. C50200
Exp. 6-30-09
CIVIL
STATE OF CALIFORNIA

The State of California or its officers or agents shall not be responsible for the accuracy or completeness of electronic copies of this plan sheet.

To accompany plans dated 2-13-12

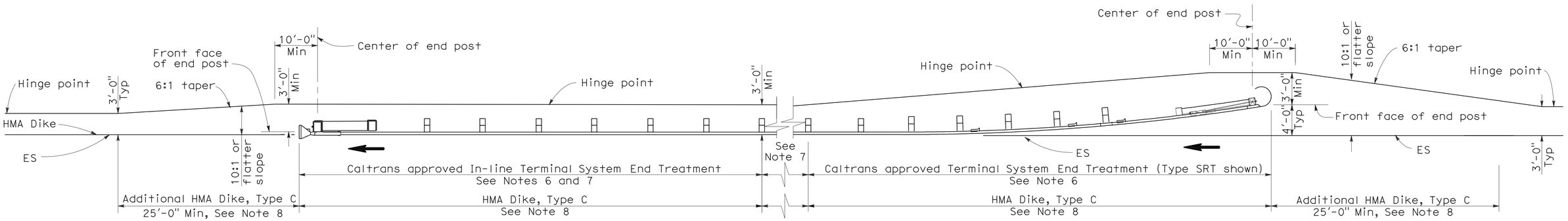

TYPE 11H LAYOUT

(EMBANKMENT GUARD RAILING INSTALLATION WITH FLARED END TREATMENT
AND AN IN-LINE TREATMENT AT THE ENDS OF RAILING)
See Notes 5 and 8

NOTES:

1. Line post, blocks and hardware to be used are shown on Standard Plans A77A1, A77A2, A77B1, A77C1 and A77C2.
2. Guard rail post spacing to be 6'-3" center to center, except as otherwise noted.
3. Except as noted, line posts are 6" x 8" x 6'-0" wood with 6" x 8" x 1'-2" wood blocks. W6 x 9 steel posts, 6'-0" in length, with 6" x 8" x 1'-2" notched wood blocks or plastic blocks may be used for 6" x 8" x 6'-0" wood post with 6" x 8" x 1'-2" wood blocks where applicable and when specified.
4. Direction of adjacent traffic indicated by ⟶.
5. Layout Types 11D through 11L, shown on the A77E Series of Revised Standard Plans, are typically used where guard railing is recommended to shield embankment slopes and a crashworthy end treatment is required for both directions of traffic.
6. The type of terminal system end treatment to be used will be shown on the Project Plans.
7. Dependent on site conditions (embankment height and side slope), construction of additional guard railing (length equal to multiples of 12'-6" with 6'-3" post spacing) may be advisable.
8. Where placement of dike is required with guard railing installations, see Revised Standard Plan RSP A77C4 for dike positioning details.

STATE OF CALIFORNIA
DEPARTMENT OF TRANSPORTATION

METAL BEAM GUARD RAILING TYPICAL LAYOUTS FOR EMBANKMENTS

NO SCALE

RSP A77E4 DATED JUNE 6, 2008 SUPERSEDES STANDARD PLAN A77E4
DATED MAY 1, 2006 - PAGE 51 OF THE STANDARD PLANS BOOK DATED MAY 2006.

REVISED STANDARD PLAN RSP A77E4

2006 REVISED STANDARD PLAN RSP A77E4

12-10-07

DIST	COUNTY	ROUTE	POST MILES TOTAL PROJECT	SHEET NO.	TOTAL SHEETS
05	SLO	46	40.7/46.3	472	541

Randell D. Hiatt
REGISTERED CIVIL ENGINEER

June 6, 2008
PLANS APPROVAL DATE

REGISTERED PROFESSIONAL ENGINEER
Randell D. Hiatt
No. C50200
Exp. 6-30-09
CIVIL
STATE OF CALIFORNIA

The State of California or its officers or agents shall not be responsible for the accuracy or completeness of electronic copies of this plan sheet.

To accompany plans dated 2-13-12

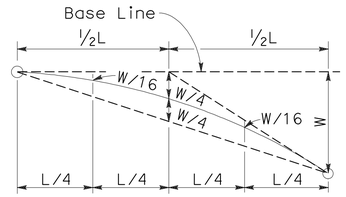

TYPICAL PARABOLIC LAYOUT

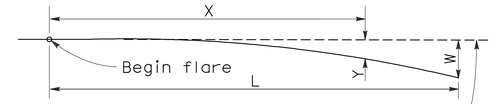

Base Line (Edge of paved shoulder or offset line of edge of traveled way)

$$Y = \frac{WX^2}{L^2}$$

Y = Offset from base line
W = Maximum offset
X = Distance along base line
L = Length of flare

PARABOLIC FLARE OFFSETS

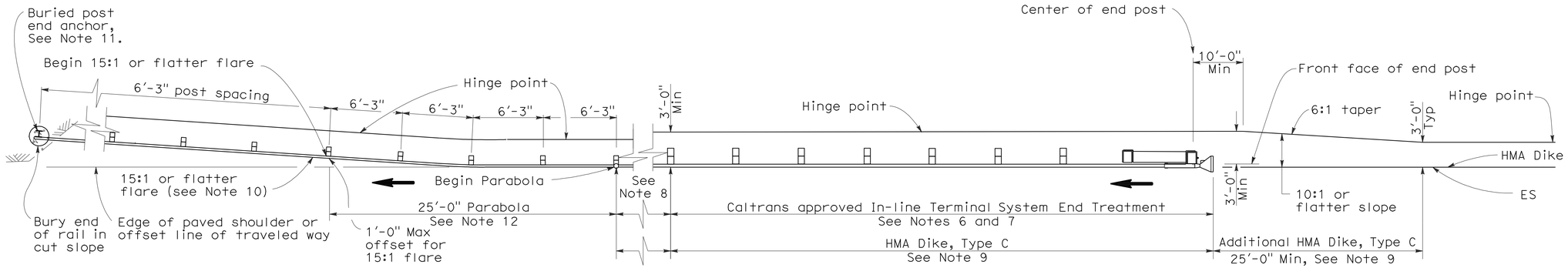

TYPE 11I LAYOUT

(EMBANKMENT GUARD RAILING INSTALLATION WITH IN-LINE END TREATMENT AND A BURIED END ANCHOR TREATMENT AT THE ENDS OF RAILING)
See Note 5

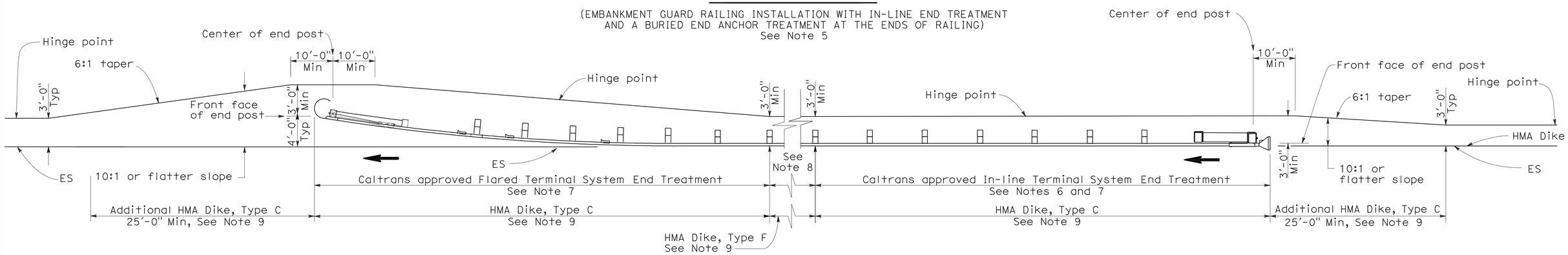

TYPE 11J LAYOUT

(EMBANKMENT GUARD RAILING INSTALLATION WITH IN-LINE END TREATMENT AND FLARED END TREATMENT AT THE ENDS OF RAILING)
See Note 5

NOTES:

1. Line post, blocks and hardware to be used are shown on Standard Plans A77A1, A77A2, A77B1, A77C1 and A77C2.
2. Guard rail post spacing to be 6'-3" center to center, except as otherwise noted.
3. Except as noted, line posts are 6" x 8" x 6'-0" wood with 6" x 8" x 1'-2" wood blocks. W6 x 9 steel posts, 6'-0" in length, with 6" x 8" x 1'-2" notched wood blocks or plastic blocks may be used for 6" x 8" x 6'-0" wood post with 6" x 8" x 1'-2" wood blocks where applicable and when specified.
4. Direction of adjacent traffic indicated by ⟶.
5. Layout Types 11D through 11L, shown on the A77E Series of Revised Standard Plans, are typically used where guard railing is recommended to shield embamkment slopes and a crashworthy end treatment is required for both directions of traffic.
6. In-line Terminal System End Treatments are used where site conditions will not accommodate a flared end treatment.
7. The type of terminal system end treatment to be used will be shown on the Project Plans.
8. Dependent on site conditions (embankment height and side slope), construction of additional guard railing (length equal to multiples of 12'-6" with 6'-3" post spacing) may be advisable.
9. Where placement of dike is required with guard railing installations, see Revised Standard Plan RSP A77C4 for dike positioning details.
10. The 15:1 or flatter flare used with buried end anchors is based on the edge of the paved shoulder or offset line of edge of the traveled way. The length of guard railing within the 15:1 or flatter flare is based on site conditions and should be a length equal to multiples of 12'-6".
11. For details of the buried post end anchor used with Type 11I Layout, see Standard Plan A77I2.
12. For typical flare offsets for 25'-0" length parabola with maximum offset of 1'-0", see Revised Standard Plan RSP A77E1.

STATE OF CALIFORNIA
DEPARTMENT OF TRANSPORTATION

METAL BEAM GUARD RAILING TYPICAL LAYOUTS FOR EMBANKMENTS

NO SCALE

RSP A77E5 DATED JUNE 6, 2008 SUPERSEDES STANDARD PLAN A77E5 DATED MAY 1, 2006 - PAGE 52 OF THE STANDARD PLANS BOOK DATED MAY 2006.

REVISED STANDARD PLAN RSP A77E5

2006 REVISED STANDARD PLAN RSP A77E5

12-10-07

DIST	COUNTY	ROUTE	POST MILES TOTAL PROJECT	SHEET NO.	TOTAL SHEETS
05	SLO	46	40.7/46.3	473	541

Randell D. Hiatt
REGISTERED CIVIL ENGINEER

June 6, 2008
PLANS APPROVAL DATE

REGISTERED PROFESSIONAL ENGINEER
Randell D. Hiatt
No. C50200
Exp. 6-30-09
CIVIL
STATE OF CALIFORNIA

The State of California or its officers or agents shall not be responsible for the accuracy or completeness of electronic copies of this plan sheet.

To accompany plans dated 2-13-12

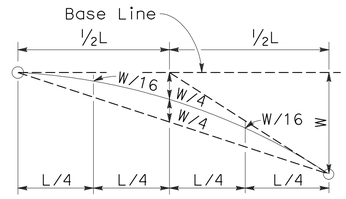

TYPICAL PARABOLIC LAYOUT

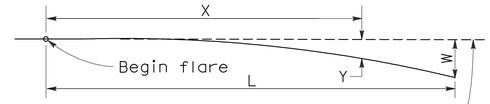

Base Line (Edge of paved shoulder or offset line of edge of traveled way)

$$Y = \frac{WX^2}{L^2}$$

Y = Offset from base line
W = Maximum offset
X = Distance along base line
L = Length of flare

PARABOLIC FLARE OFFSETS

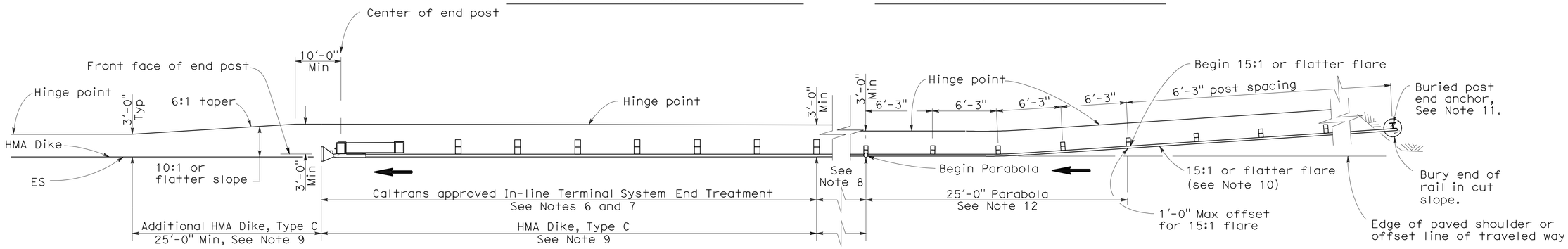

TYPE 11K LAYOUT

(EMBANKMENT GUARD RAILING INSTALLATION WITH A BURIED END ANCHOR TREATMENT AND AN IN-LINE END TREATMENT AT THE ENDS OF RAILING)
See Note 5

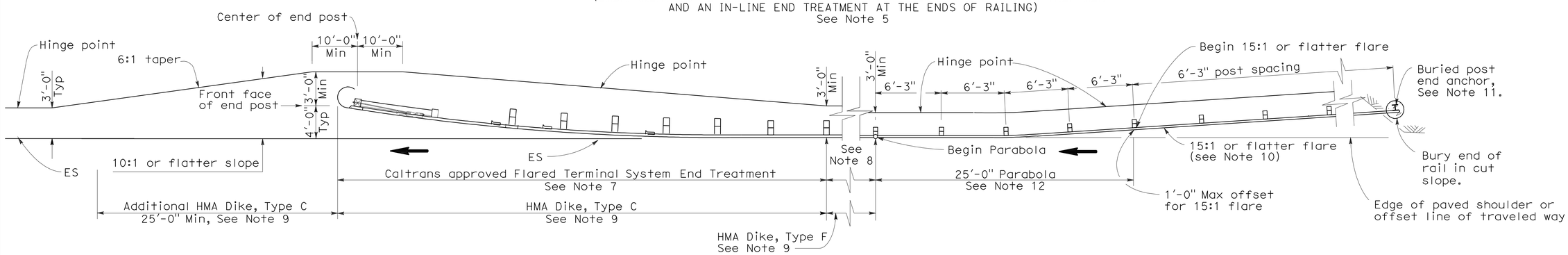

TYPE 11L LAYOUT

(EMBANKMENT GUARD RAILING INSTALLATION WITH A BURIED END ANCHOR TREATMENT AND A FLARED END TREATMENT AT THE ENDS OF RAILING)
See Note 5

NOTES:

1. Line post, blocks and hardware to be used are shown on Standard Plans A77A1, A77A2, A77B1, A77C1 and A77C2.
2. Guard rail post spacing to be 6'-3" center to center, except as otherwise noted.
3. Except as noted, line posts are 6" x 8" x 6'-0" wood with 6" x 8" x 1'-2" wood blocks. W6 x 9 steel posts, 6'-0" in length, with 6" x 8" x 1'-2" notched wood blocks or plastic blocks may be used for 6" x 8" x 6'-0" wood post with 6" x 8" x 1'-2" wood blocks where applicable and when specified.
4. Direction of adjacent traffic indicated by ⟶.
5. Layout Types 11D through 11L, shown on the A77E Series of Revised Standard Plans, are typically used where guard railing is recommended to shield embamkment slopes and a crashworthy end treatment is required for both directions of traffic.
6. In-line Terminal System End Treatments are used where site conditions will not accommodate a flared end treatment.
7. The type of terminal system end treatment to be used will be shown on the Project Plans.
8. Dependent on site conditions (embankment height and side slope), construction of additional guard railing (length equal to multiples of 12'-6" with 6'-3" post spacing) may be advisable.
9. Where placement of dike is required with guard railing installations, see Revised Standard Plan RSP A77C4 for dike positioning details.
10. The 15:1 or flatter flare used with buried end anchors is based on the edge of the paved shoulder or offset line of edge of the traveled way. The length of guard railing within the 15:1 or flatter flare is based on site conditions and should be a length equal to multiples of 12'-6".
11. For details of the buried post end anchor used with Type 11K and 11L Layouts, see Standard Plan A77I2.
12. For typical flare offsets for 25'-0" length parabola with maximum offset of 1'-0", see Revised Standard Plan RSP A77E1.

STATE OF CALIFORNIA
DEPARTMENT OF TRANSPORTATION

METAL BEAM GUARD RAILING TYPICAL LAYOUTS FOR EMBANKMENTS

NO SCALE

RSP A77E6 DATED JUNE 6, 2008 SUPERSEDES STANDARD PLAN A77E6
DATED MAY 1, 2006 - PAGE 53 OF THE STANDARD PLANS BOOK DATED MAY 2006.

REVISED STANDARD PLAN RSP A77E6

2006 REVISED STANDARD PLAN RSP A77E6

12-10-07

DIST	COUNTY	ROUTE	POST MILES TOTAL PROJECT	SHEET NO.	TOTAL SHEETS
05	SLO	46	40.7/46.3	474	541

Randell D. Hiatt
REGISTERED CIVIL ENGINEER

June 6, 2008
PLANS APPROVAL DATE

REGISTERED PROFESSIONAL ENGINEER
Randell D. Hiatt
No. C50200
Exp. 6-30-09
CIVIL
STATE OF CALIFORNIA

The State of California or its officers or agents shall not be responsible for the accuracy or completeness of electronic copies of this plan sheet.

To accompany plans dated 2-13-12

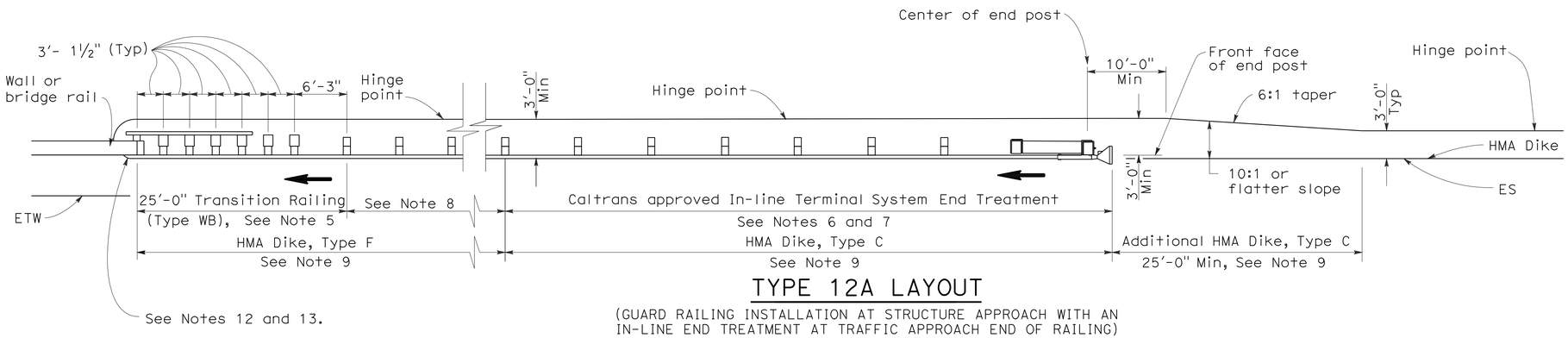

TYPE 12A LAYOUT

(GUARD RAILING INSTALLATION AT STRUCTURE APPROACH WITH AN IN-LINE END TREATMENT AT TRAFFIC APPROACH END OF RAILING)
See Notes 10

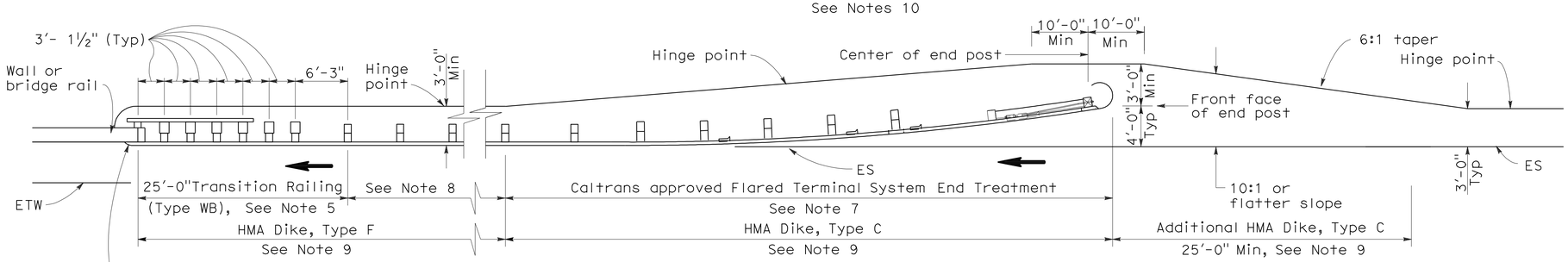

TYPE 12B LAYOUT

(GUARD RAILING INSTALLATION AT STRUCTURE APPROACH WITH A FLARED END TREATMENT AT TRAFFIC APPROACH END OF RAILING)
See Notes 10

NOTES:

1. Line post, blocks and hardware to be used are shown on Standard Plans A77A1, A77A2, A77B1, A77C1 and A77C2.
2. Guard rail post spacing to be 6'-3" center to center, except as otherwise noted.
3. Except as noted, line posts are 6" x 8" x 6'-0" wood with 6" x 8" x 1'-2" wood blocks. W6 x 9 steel posts, 6'-0" in length, with 6" x 8" x 1'-2" notched wood blocks or plastic blocks may be used for 6" x 8" x 6'-0" wood posts with 6" x 8" x 1'-2" wood blocks where applicable and when specified.
4. Direction of adjacent traffic indicated by ➡.
5. For Transition Railing (Type WB) details for Types 12A and 12B Layouts, see Standard Plan A77J4.
6. In-line Terminal System End Treatments are used where site conditions will not accommodate a flared end treatment.
7. The type of terminal system end treatment to be used will be shown on the Project Plans.
8. Dependent on site conditions (embankment height, side slopes, or other fixed objects), it may be advisable to construct additional guard railing (a length equal to multiples of 12'-6" with 6'-3" post spacing) between the transition railing and end treatment.
9. Where placement of dike is required with guard railing installations, see Revised Standard Plan RSP A77C4 for dike positioning details.
10. Type 12A or Type 12B Layouts are typically used:
    a. To the right of approaching traffic, at the end of a structure, on two-lane conventional highway where the roadbed width across the structure is less than 40 feet.
    b. To the left of approaching traffic, at the end of a structure, on two-lane conventional highway where the roadbed width across the structure is less than 40 feet.
    c. To the right of approaching traffic at the end of each structure on multilane freeways or expressways with separate adjacent or parallel bridges.
    d. To the right of approaching traffic at the end of the structure on multilane freeways or expressways with decked median on the bridge.
11. See Revised Standard Plan RSP A77F3 for typical layout used left of approaching traffic at the ends of each structure on multilane freeways or expressways with separate adjacent or parallel bridges.
12. For additional details of typical connections to bridge rail, see Connection Detail AA on Revised Standard Plans RSP A77J1 and RSP A77J2 and Connection Detail FF on Standard Plans A77K1 and A77K2.
13. For additional details of a typical connection to walls or abutments, see Standard Plan A77J3.

STATE OF CALIFORNIA
DEPARTMENT OF TRANSPORTATION

METAL BEAM GUARD RAILING TYPICAL LAYOUTS FOR STRUCTURE APPROACH

NO SCALE

RSP A77F1 DATED JUNE 6, 2008 SUPERSEDES STANDARD PLAN A77F1
DATED MAY 1, 2006 - PAGE 54 OF THE STANDARD PLANS BOOK DATED MAY 2006.

REVISED STANDARD PLAN RSP A77F1

2006 REVISED STANDARD PLAN RSP A77F1

12-10-07

DIST	COUNTY	ROUTE	POST MILES TOTAL PROJECT	SHEET NO.	TOTAL SHEETS
05	SLO	46	40.7/46.3	475	541

Randell D. Hiatt
REGISTERED CIVIL ENGINEER

June 6, 2008
PLANS APPROVAL DATE

REGISTERED PROFESSIONAL ENGINEER
Randell D. Hiatt
No. C50200
Exp. 6-30-09
CIVIL
STATE OF CALIFORNIA

The State of California or its officers or agents shall not be responsible for the accuracy or completeness of electronic copies of this plan sheet.

To accompany plans dated 2-13-12

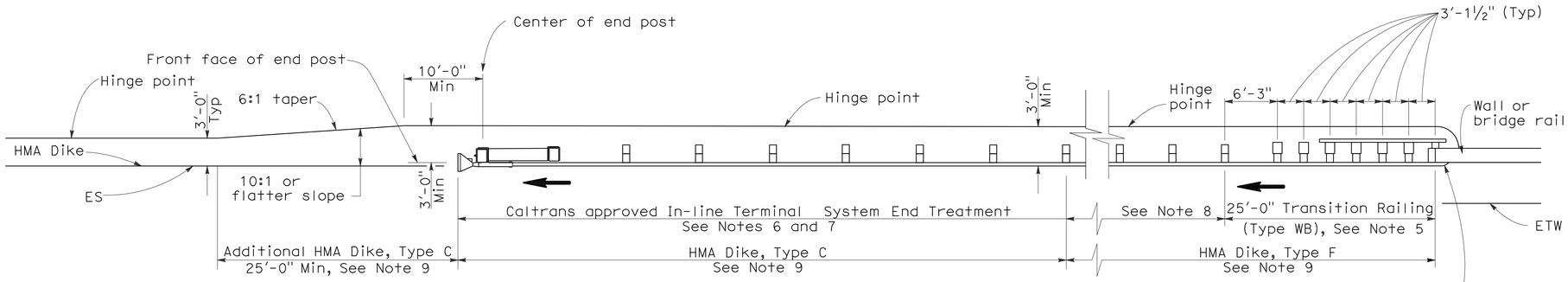

TYPE 12AA LAYOUT

(GUARD RAILING INSTALLATION AT STRUCTURE DEPARTURE WITH AN IN-LINE END TREATMENT AT TRAILING END OF RAILING)
See Notes 9 and 10

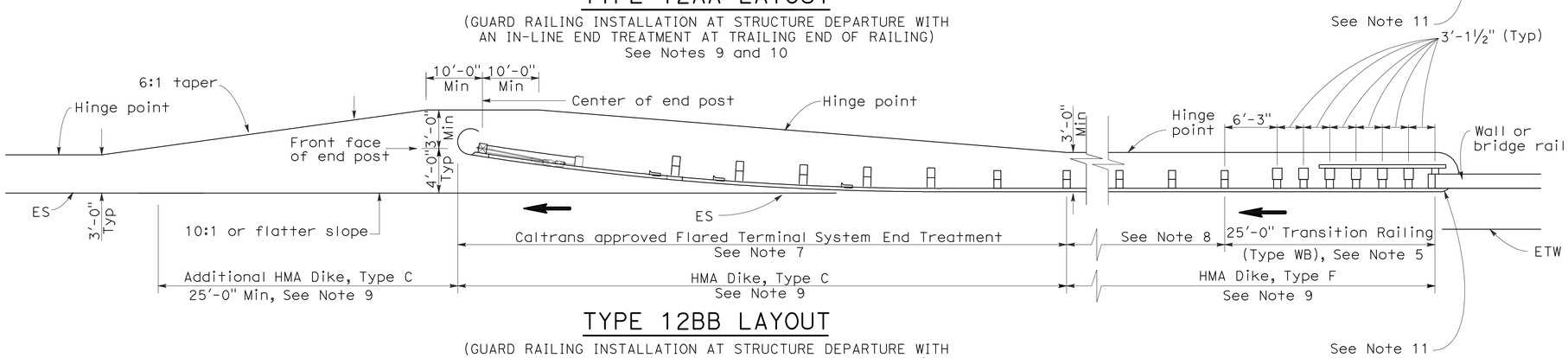

TYPE 12BB LAYOUT

(GUARD RAILING INSTALLATION AT STRUCTURE DEPARTURE WITH A FLARED END TREATMENT AT TRAILING END OF RAILING)
See Notes 9 and 10

NOTES:

1. Line post, blocks and hardware to be used are shown on Standard Plans A77A1, A77A2, A77B1, A77C1 and A77C2.
2. Guard rail post spacing to be 6'-3" center to center, except as otherwise noted.
3. Except as noted, line posts are 6" x 8" x 6'-0" wood with 6" x 8" x 1'-2" wood blocks. W6 x 9 steel posts, 6'-0" in length, with 6" x 8" x 1-2" notched wood blocks or notched recycled plastic blocks may be used for 6" x 8" x 6'-0" wood posts with 6" x 8" x 1'-2" wood blocks where applicable and when specified.
4. Direction of adjacent traffic indicated by ⟶.
5. For Transition Railing (Type WB) details for Types 12AA and 12BB Layouts, see Standard Plan A77J4.
6. In-line Terminal System Treatments are used where site conditions will not accommodate a flared end treatment.
7. The type of terminal system to be used will be shown on the Project Plans.
8. Dependent on site conditions (embankment height, side slopes, other fixed objects), it may be advisable to construct additional guard railing (a length equal to multiples of 12'-6" with 6'-3" post spacing) between the transition railing and end treatments.
9. Where placement of dike is required with guard railing installations, see Revised Standard Plan RSP A77C4 for dike positioning details.
10. Type 12AA or Type 12BB Layouts are typically used to the right of traffic departing a structure on two-way conventional highways where the roadbed width across the structure is less than 40 feet.
11. For additional details of typical connections to bridge rail, see Connection Detail CC on Revised Standard Plan RSP A77J2 and Connection Detail HH on Standard Plans A77k2.

STATE OF CALIFORNIA
DEPARTMENT OF TRANSPORTATION

METAL BEAM GUARD RAILING TYPICAL LAYOUTS FOR STRUCTURE DEPARTURE

NO SCALE

RSP A77F4 DATED JUNE 6, 2008 SUPERSEDES STANDARD PLAN A77F4
DATED MAY 1, 2006 - PAGE 57 OF THE STANDARD PLANS BOOK DATED MAY 2006.

REVISED STANDARD PLAN RSP A77F4

2006 REVISED STANDARD PLAN RSP A77F4

12-10-07

DIST	COUNTY	ROUTE	POST MILES TOTAL PROJECT	SHEET NO.	TOTAL SHEETS
05	SLO	46	40.7/46.3	476	541

Randell D. Hiatt
REGISTERED CIVIL ENGINEER

June 6, 2008
PLANS APPROVAL DATE

REGISTERED PROFESSIONAL ENGINEER
Randell D. Hiatt
No. C50200
Exp. 6-30-09
CIVIL
STATE OF CALIFORNIA

The State of California or its officers or agents shall not be responsible for the accuracy or completeness of electronic copies of this plan sheet.

To accompany plans dated 2-13-12

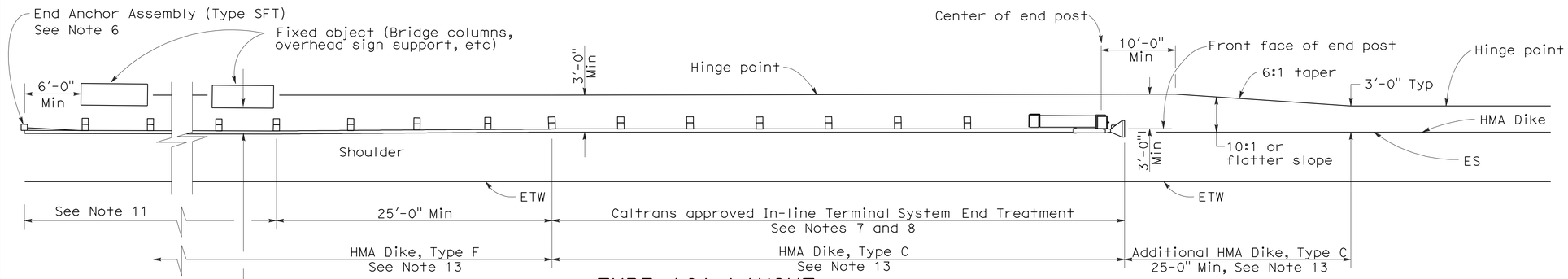

TYPE 16A LAYOUT

(GUARD RAILING INSTALLATION AT ROADSIDE FIXED OBJECT OR OBJECTS WITH AN IN-LINE END TREATMENT AT TRAFFIC APPROACH END OF RAILING)
See Notes 12 and 13

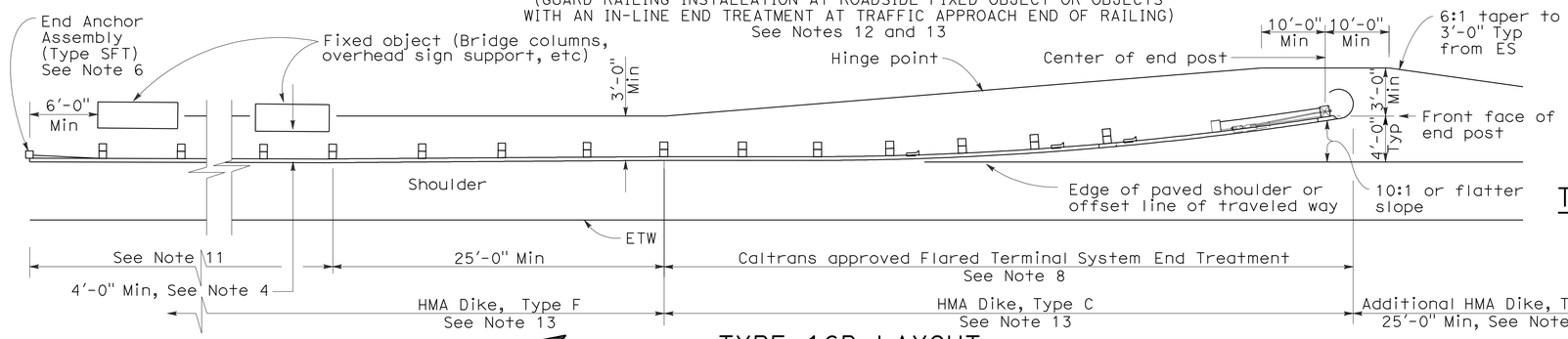

TYPE 16B LAYOUT

(GUARD RAILING INSTALLATION AT ROADSIDE FIXED OBJECT OR OBJECTS WITH A FLARED END TREATMENT AT TRAFFIC APPROACH END OF RAILING)
See Notes 12 and 13

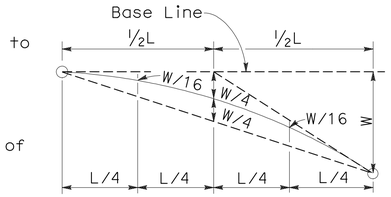

TYPICAL PARABOLIC LAYOUT

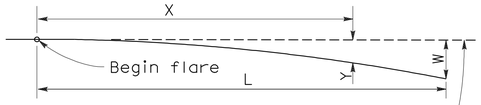

Base Line (Edge of paved shoulder or offset line of edge of traveled way)

$$Y = \frac{WX^2}{L^2}$$

Y = Offset from base line
W = Maximum offset
X = Distance along base line
L = Length of flare

PARABOLIC FLARE OFFSETS

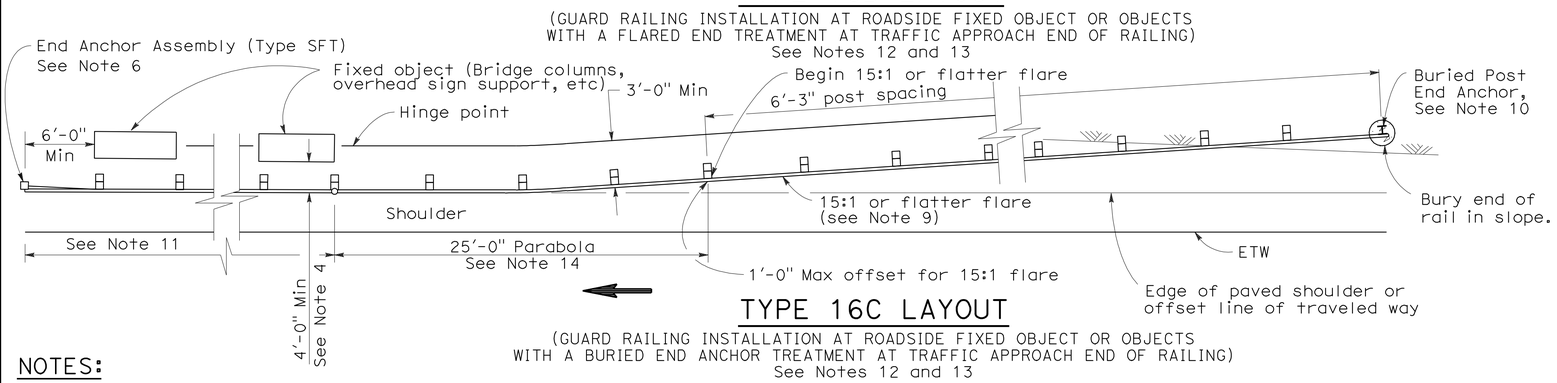

TYPE 16C LAYOUT

(GUARD RAILING INSTALLATION AT ROADSIDE FIXED OBJECT OR OBJECTS WITH A BURIED END ANCHOR TREATMENT AT TRAFFIC APPROACH END OF RAILING)
See Notes 12 and 13

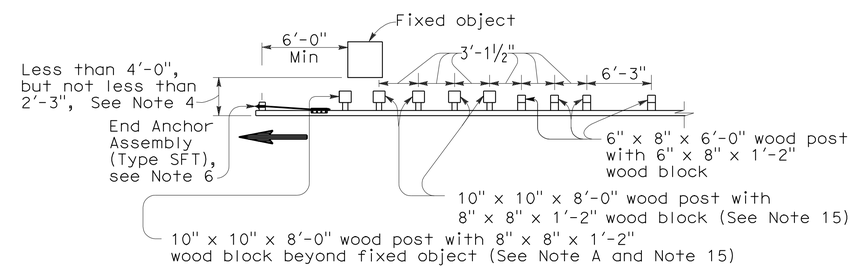

NOTE A: For a series of fixed objects (bridge columns, overhead sign supports, etc.) additional 10" x 10" x 8'-0" wood post with 8" x 8" x 1'-2" wood blocks at 3'-1½" center to center spacing are to be used between fixed objects.

STRENGTHENED RAILING SECTIONS FOR FIXED OBJECT

Use strengthened railing sections with Types 16A, 16B or 16C Layouts where minimum clearance between the face of the guard railing and fixed object(s) is less than 4'-0", but not less than 2'-3". See Note 4

NOTES:

1. Line post, blocks and hardware to be used are shown on Revised Standard Plans A77A1, A77A2, A77B1, A77C1 and A77C2.
2. Guard railing post spacing to be 6'-3" center to center, except as otherwise noted.
3. Except as noted, line posts are 6" x 8" x 6'-0" wood with 6" x 8" x 1'-2" wood blocks. W6 x 9 steel posts, 6'-0" in length, with 6" x 8" x 1'-2" notched wood blocks or notched recycled plastic blocks may be used for 6" x 8" x 6'-0" wood line posts with 6" x 8" x 1'-2" wood blocks where applicable and when specified.
4. A 4'-0" minimum clearance is required between the face of the railing and the face of a fixed object located directly behind standard guard railing sections with post spacing of 6'-3". Construct guard railing as shown in the detail "Strengthened Railing Sections for Fixed Objects" on this plan, where the clearance between the face of the railing and the face of a fixed object is less than 4'-0", but not less than 2'-3". Where the clearance is less than 2'-3", a concrete wall or barrier should be constructed to shield the fixed object(s).
5. Direction of adjacent traffic indicated by ⟶.
6. For End Anchor Assembly (Type SFT) details, see Standard Plan A77H1.
7. In-line Terminal System End Treatments are used where site conditions will not accommodate a flared end treatment.
8. The type of terminal system to be used will be shown on the Project Plans.
9. The 15:1 or flatter flare used with Type 16C Layout is based on the edge of the paved shoulder or offset line of edge of the traveled way. The length of guard railing within the 15:1 or flatter flare is based on site conditions and should be a length equal to multiples of 12'-6".
10. For details of the Buried Post End Anchor used with Type 16C Layout, see Standard Plan A77I2.
11. As site conditions dictate, construct additional guard railing to shield fixed object(s). Additional guard railing length equal to multiples of 12'-6". Post spacing at 6'-3" except as specified in Note 4.
12. Layout Types 16A, 16B or 16C are typically used where guard railing is recommended to shield roadside fixed object(s) and a crashworthy end treatment is required for only one direction of traffic.
13. Where placement of dike is required with guard railing, see Revised Standard Plan RSP A77C4 for dike positioning details.
14. For typical flare offsets for 25'-0" length parabola with maximum offset of 1'-0", see Revised Standard Plan RSP A77E1.
15. W6 x 15 steel post, 8'-0" in length, with 8" x 8" x 1'-2" notched wood block or notched recycled plastic blocks may be used in place of the 10" x 10" x 8'-0" wood post with 8" x 8" x 1'-2" wood block shown in the "Strengthened Railing Sections Detail".

STATE OF CALIFORNIA
DEPARTMENT OF TRANSPORTATION

METAL BEAM GUARD RAILING TYPICAL LAYOUTS FOR ROADSIDE FIXED OBJECTS

NO SCALE

RSP A77G3 DATED JUNE 6, 2008 SUPERSEDES STANDARD PLAN A77G3 DATED MAY 1, 2006 - PAGE 61 OF THE STANDARD PLANS BOOK DATED MAY 2006.

REVISED STANDARD PLAN RSP A77G3

2006 REVISED STANDARD PLAN RSP A77G3

12-10-07

DIST	COUNTY	ROUTE	POST MILES TOTAL PROJECT	SHEET NO.	TOTAL SHEETS
05	SLO	46	40.7/46.3	477	541

Randell D. Hiatt
REGISTERED CIVIL ENGINEER

June 6, 2008
PLANS APPROVAL DATE

REGISTERED PROFESSIONAL ENGINEER
Randell D. Hiatt
No. C50200
Exp. 6-30-09
CIVIL
STATE OF CALIFORNIA

The State of California or its officers or agents shall not be responsible for the accuracy or completeness of electronic copies of this plan sheet.

To accompany plans dated 2-13-12

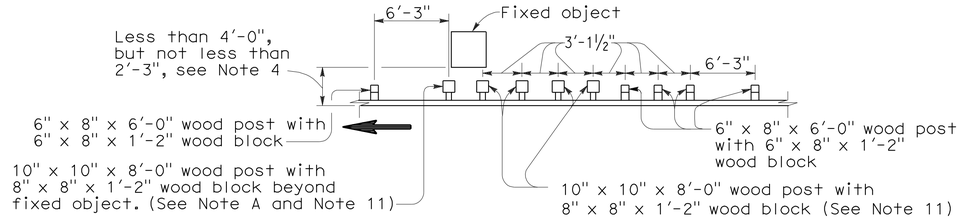

NOTE A: For a series of fixed objects (bridge columns, overhead sign supports, etc.) additional 10" x 10" x 8'-0" wood post with 8" x 8" x 1'-2" wood blocks at 3'-1½" center to center spacing are to be used between fixed object(s).

STRENGTHENED RAILING SECTIONS FOR FIXED OBJECT

Use strengthened railing sections with Layout Types 16D or 16E where minimum clearance between the guard railing and fixed object(s) is less than 4'-0", but not less than 2'-3". See Note 4.

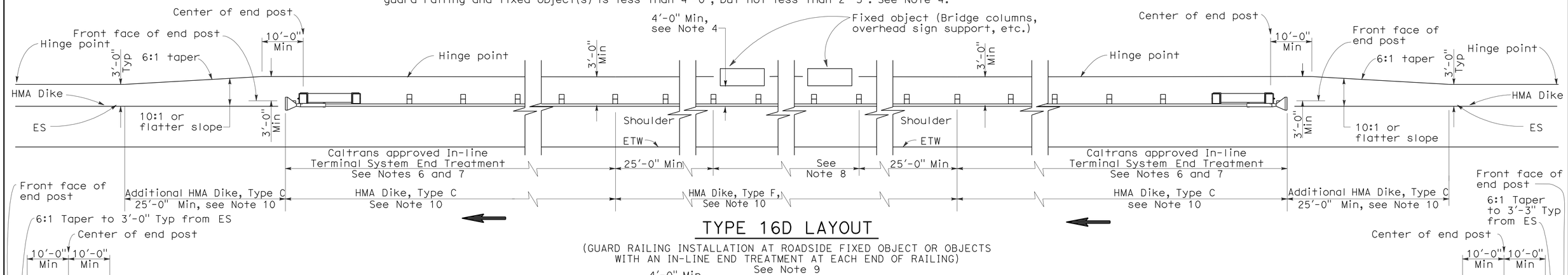

TYPE 16D LAYOUT

(GUARD RAILING INSTALLATION AT ROADSIDE FIXED OBJECT OR OBJECTS WITH AN IN-LINE END TREATMENT AT EACH END OF RAILING)
See Note 9

TYPE 16E LAYOUT

(GUARD RAILING INSTALLATION AT ROADSIDE FIXED OBJECT OR OBJECTS WITH A FLARED END TREATMENT AT EACH END OF RAILING)
See Note 9

NOTES:

1. Line post, blocks and hardware to be used are shown on Standard Plans A77A1, A77A2, A77B1, A77C1 and A77C2.
2. Guard railing post spacing to be 6'-3" center to center, except as otherwise noted.
3. Except as noted, line posts are 6" x 8" x 6'-0" wood with 6" x 8" x 1'-2" wood blocks. W6 x 9 steel posts, 6'-0" in length, with 6" x 8" x 1'-2" notched wood blocks or notched recycled plastic blocks may be used for 6" x 8" x 6'-0" wood line posts with 6" x 8" x 1'-2" wood blocks where applicable and when specified.
4. A 4'-0" minimum clearance is required between the face of the railing and the face of a fixed object located directly behind standard guard railing sections with post spacing at 6'-3". Construct guard railing as shown in the detail "Strengthened Railing Sections for Fixed Objects" on this plan, where the clearance between the face of the railing and the face of a fixed object is less than 4'-0", but not less than 2'-3". Where the clearance is less than 2'-3", a concrete wall or barrier should be constructed to shield the fixed object(s).
5. Direction of adjacent traffic indicated by ⟶ .
6. In-line Terminal System End Treatments are used where site conditions will not accommodate a flared end treatment.
7. The type of terminal system to be used will be shown on the Project Plans.
8. As site conditions dictate, construct additional guard railing to shield fixed object(s). Additional guard railing length equal to multiples of 12'-6". Post spacing at 6'-3", except as specified in Note 4.
9. Layout Types 16D through 16L, shown on the A77G Series of Revised Standard Plans, are typically used where guard railing is recommended to shield roadside fixed object(s) and a crashworthy end treatment is required for both directions of traffic.
10. Where placement of dike is required with guard railing, see Revised Standard Plan RSP A77C4 for dike positioning details.
11. W6 x 15 steel post, 8'-0" in length, with 8" x 8" x 1'-2" notched wood block or notched recycled plastic block may be used in place of the 10" x 10" x 8'-0" wood post with 8" x 8" x 1'-2" wood block shown in the "Strengthened Railing Sections Detail."

STATE OF CALIFORNIA
DEPARTMENT OF TRANSPORTATION

METAL BEAM GUARD RAILING TYPICAL LAYOUTS FOR ROADSIDE FIXED OBJECTS

NO SCALE

RSP A77G4 DATED JUNE 6, 2008 SUPERSEDES STANDARD PLAN A77G4
DATED MAY 1, 2006 - PAGE 62 OF THE STANDARD PLANS BOOK DATED MAY 2006.

REVISED STANDARD PLAN RSP A77G4

2006 REVISED STANDARD PLAN RSP A77G4

12-10-07

DIST	COUNTY	ROUTE	POST MILES TOTAL PROJECT	SHEET NO.	TOTAL SHEETS
05	SLO	46	40.7/46.3	478	541

Randell D. Hiatt
REGISTERED CIVIL ENGINEER

June 6, 2008
PLANS APPROVAL DATE

REGISTERED PROFESSIONAL ENGINEER
Randell D. Hiatt
No. C50200
Exp. 6-30-09
CIVIL
STATE OF CALIFORNIA

The State of California or its officers or agents shall not be responsible for the accuracy or completeness of electronic copies of this plan sheet.

To accompany plans dated 2-13-12

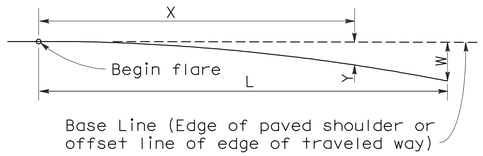

$$Y = \frac{WX^2}{L^2}$$

Y = Offset from base line
W = Maximum offset
X = Distance along base line
L = Length of flare

PARABOLIC FLARE OFFSETS

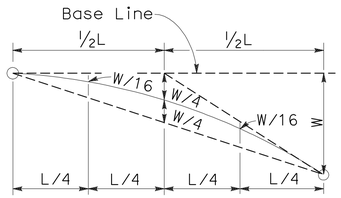

TYPICAL PARABOLIC LAYOUT

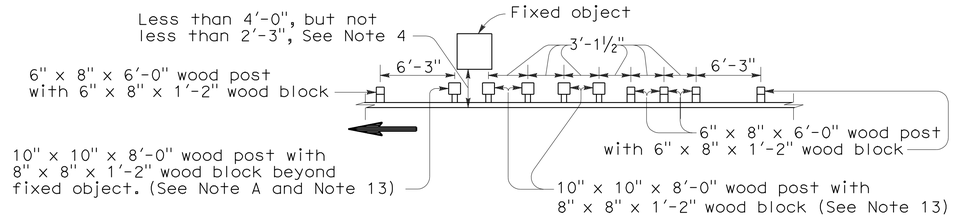

NOTE A: For a series of fixed objects (bridge columns, overhead sign supports, etc.) additional 10" x 10" x 8'-0" wood post with 8" x 8" x 1'-2" wood blocks at 3'-1½" center to center spacing are to be used between fixed object(s).

STRENGTHENED RAILING SECTIONS FOR FIXED OBJECT

Use strengthened railing sections with Layout Types 16F or 16G where minimum clearance between the face of the guard railing and fixed object(s) is less than 4'-0", but not less than 2'-3". See Note 4.

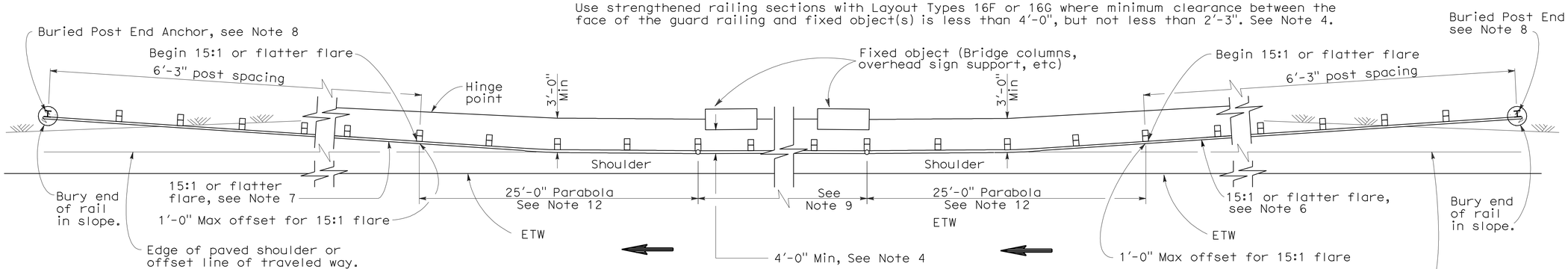

TYPE 16F LAYOUT

(GUARD RAILING INSTALLATION AT ROADSIDE FIXED OBJECT OR OBJECTS WITH A BURIED END ANCHOR TREATMENT AT EACH END OF RAILING)
See Notes 10 and 11

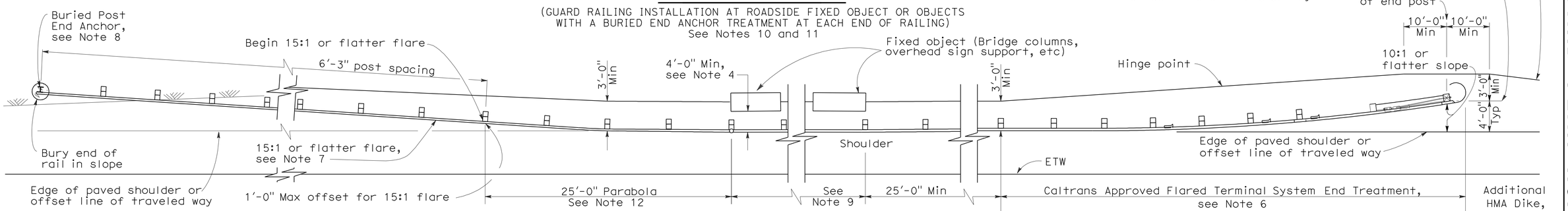

TYPE 16G LAYOUT

(GUARD RAILING INSTALLATION AT ROADSIDE FIXED OBJECT OR OBJECTS WITH A FLARED END TREATMENT AND A BURIED END ANCHOR TREATMENT AT THE ENDS OF RAILING)
See Notes 10 and 11

NOTES:

1. Line post, blocks and hardware to be used are shown on Standard Plans A77A1, A77A2, A77B1, A77C1 and A77C2.
2. Guard railing post spacing to be 6'-3" center to center, except as otherwise noted.
3. Except as noted, line posts are 6" x 8" x 6'-0" wood with 6" x 8" x 1'-2" wood blocks. W6 x 9 steel posts, 6'-0" in length, with 8" x 8" x 1'-2" notched wood blocks or notched recycled plastic blocks may be used for 6" x 8" x 6'-0" wood posts with 6" x 8" x 1'-2" wood blocks where applicable and when specified.
4. A 4'-0" minimum clearance is required between the face of the railing and the face of a fixed object located directly behind standard guard railing sections with post spacing at 6'-3". Construct guard railing as shown in the detail "Strengthened Railing Sections for Fixed Objects" on this plan, where the clearance between the face of the railing and the face of a fixed object is less than 4'-0", but not less than 2'-3". Where the clearance is less than 2'-3", a concrete wall or barrier should be constructed to shield the fixed object(s).
5. Direction of adjacent traffic indicated by ⟶.
6. The type of terminal system to be used will be shown on the Project Plans.
7. The 15:1 or flatter flare for the buried post anchor is based on the edge of the paved shoulder or offset line of edge of the traveled way. The length of guard railing within the 15:1 or flatter flare is based on site conditions and should be a length equal to multiples of 12'-6".
8. For details of the Buried Post End Anchor details, see Standard Plan A77I2.
9. As site conditions dictate, construct additional guard railing to shield fixed object(s). Additional guard railing length equal to multiples of 12'-6". Post spacing at 6'-3", except as specified in Note 4.
10. Layout Types 16D through 16L, shown on the A77G Series of Revised Standard Plans, are typically used on highways where guard railing is recommended to shield roadside fixed object(s) and a crashworthy end treatment is required for both directions of traffic.
11. Where placement of dike is required with guard railing, see Revised Standard Plan RSP A77C4 for dike positioning details.
12. For typical flare offsets for 25'-0" length parabola with maximum offset of 1'-0", see Revised Standard Plan RSP A77E1.
13. W6 x 15 steel post, 8'-0" in length, with 8" x 8" x 1'-2" notched wood block or notched recycled plastic blocks may be used in place of the 10" x 10" x 8'-0" wood post with 8" x 8" x 1'-2" wood block shown in the "Strengthened Railing Sections Detail".

STATE OF CALIFORNIA
DEPARTMENT OF TRANSPORTATION

METAL BEAM GUARD RAILING TYPICAL LAYOUTS FOR ROADSIDE FIXED OBJECTS

NO SCALE

RSP A77G5 DATED JUNE 6, 2008 SUPERSEDES STANDARD PLAN A77G5 DATED MAY 1, 2006 - PAGE 63 OF THE STANDARD PLANS BOOK DATED MAY 2006.

REVISED STANDARD PLAN RSP A77G5

2006 REVISED STANDARD PLAN RSP A77G5

12-10-07

DIST	COUNTY	ROUTE	POST MILES TOTAL PROJECT	SHEET NO.	TOTAL SHEETS
05	SLO	46	40.7/46.3	479	541

Randell D. Hiatt
REGISTERED CIVIL ENGINEER

June 6, 2008
PLANS APPROVAL DATE

REGISTERED PROFESSIONAL ENGINEER
Randell D. Hiatt
No. C50200
Exp. 6-30-09
CIVIL
STATE OF CALIFORNIA

The State of California or its officers or agents shall not be responsible for the accuracy or completeness of electronic copies of this plan sheet.

To accompany plans dated 2-13-12

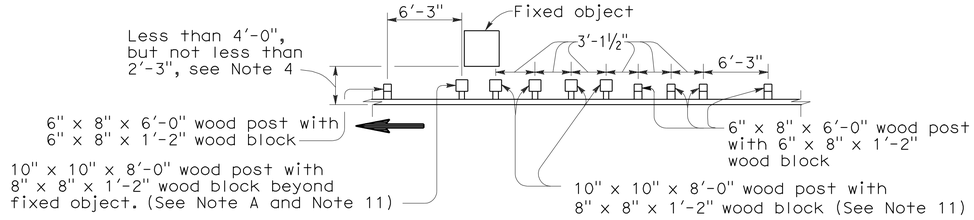

Note A. For a series of fixed objects (bridge columns, overhead sign supports, etc.) additional 10" x 10" x 8'-0" wood post with 8" x 8" x 1'-2" wood blocks at 3'-1½" center to center spacing are to be used between fixed object(s).

STRENGTHENED RAILING SECTIONS FOR FIXED OBJECT

Use strengthened railing sections with Layout Type 16H where minimum clearance between the face of the guard railing and fixed object(s) is less than 4'-0", but not less than 2'-3". See Note 4.

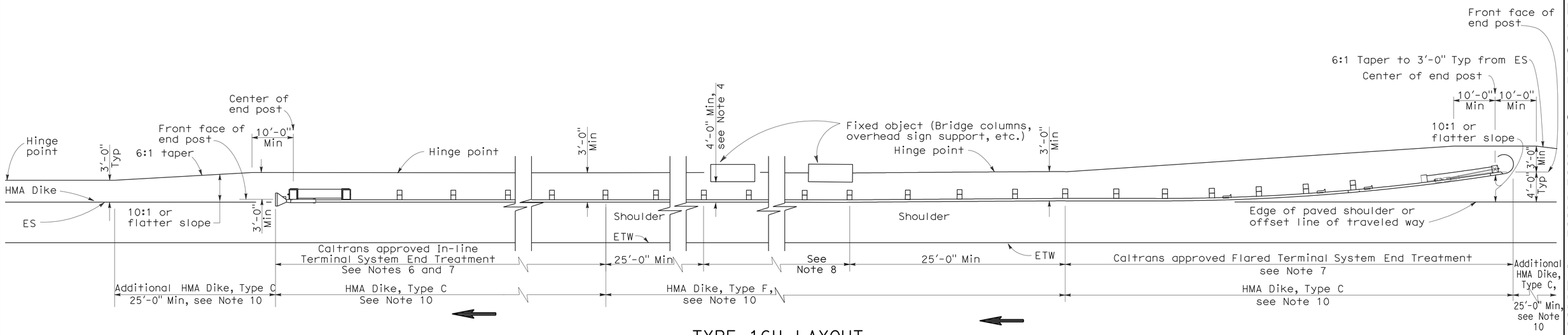

TYPE 16H LAYOUT

(GUARD RAILING INSTALLATION AT ROADSIDE FIXED OBJECT OR OBJECTS WITH A FLARED END TREATMENT AND AN IN-LINE TREATMENT AT THE ENDS OF RAILING)
See Note 9

NOTES:

1. Line post, blocks and hardware to be used are shown on Standard Plans A77A1, A77A2, A77B1, A77C1 and A77C2.
2. Guard railing post spacing to be 6'-3" center to center, except as otherwise noted.
3. Except as noted, line posts are 6" x 8" x 6'-0" wood with 6" x 8" x 1'-2" wood blocks. W6 x 9 steel posts, 6'-0" in length, with 6" x 8" x 1'-2" notched wood blocks or notched recycled plastic blocks may be used for 6" x 8" x 6'-0" wood posts with 6" x 8" x 1'-2" wood blocks where applicable and when specified.
4. A 4'-0" minimum clearance is required between the face of the railing and the face of a fixed object located directly behind standard guard railing sections with post spacing at 6'-3". Construct guard railing as shown in the detail "Strengthened Railing Sections for Fixed Objects" on this plan, where the clearance between the face of the railing and the face of a fixed object is less than 4'-0", but not less than 2'-3". Where the clearance is less than 2'-3", a concrete wall or barrier should be constructed to shield the fixed object(s).
5. Direction of adjacent traffic indicated by ⟶ .
6. In-line Terminal System End Treatments are used where site conditions will not accommodate a flared end treatment.
7. The type of terminal system to be used will be shown on the Project Plans.
8. As site conditions dictate, construct additional guard railing to shield fixed object(s). Additional guard railing length equal to multiples of 12'-6". Post spacing at 6'-3", except as specified in Note 4.
9. Layout Types 16D through 16L, shown on the A77G Series of Revised Standard PLans, typically used where guard railing is recommended to shield roadside fixed object(s) and a crashworthy end treatment is required for both directions of traffic.
10. Where placement of dike is required with guard railing, see Revised Standard Plan RSP A77C4 for dike positioning details.
11. W6 x 15 steel post, 8'-0" in length, with 8" x 8" x 1'-2" notched wood block or notched recycled plastic blocks may be used in place of the 10" x 10" x 8'-0" wood post with 8" x 8" x 1'-2" wood block shown in the "Strengthened Railing Sections Detail".

STATE OF CALIFORNIA
DEPARTMENT OF TRANSPORTATION

METAL BEAM GUARD RAILING TYPICAL LAYOUTS FOR ROADSIDE FIXED OBJECTS

NO SCALE

RSP A77G6 DATED JUNE 6, 2008 SUPERSEDES STANDARD PLAN A77G6 DATED MAY 1, 2006 - PAGE 64 OF THE STANDARD PLANS BOOK DATED MAY 2006.

REVISED STANDARD PLAN RSP A77G6

2006 REVISED STANDARD PLAN RSP A77G6

12-10-07

DIST	COUNTY	ROUTE	POST MILES TOTAL PROJECT	SHEET NO.	TOTAL SHEETS
05	SLO	46	40.7/46.3	480	541

Randell D. Hiatt
REGISTERED CIVIL ENGINEER

June 6, 2008
PLANS APPROVAL DATE

REGISTERED PROFESSIONAL ENGINEER Randell D. Hiatt No. C50200 Exp. 6-30-09 CIVIL STATE OF CALIFORNIA

The State of California or its officers or agents shall not be responsible for the accuracy or completeness of electronic copies of this plan sheet.

To accompany plans dated 2-13-12

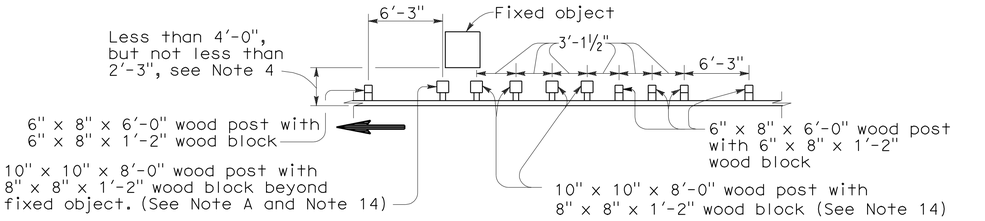

Note A. For a series of fixed objects (bridge columns, overhead sign supports, etc.) additional 10" x 10" x 8'-0" wood post with 8" x 8" x 1'-2" wood blocks at 3'-1½" center to center spacing are to be used between fixed object(s).

STRENGTHENED RAILING SECTIONS FOR FIXED OBJECT

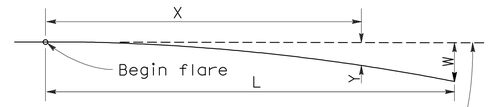

Base Line (Edge of paved shoulder or offset line of edge of traveled way)

$$Y = \frac{WX^2}{L^2}$$

Y = Offset from base line
W = Maximum offset
X = Distance along base line
L = Length of flare

PARABOLIC FLARE OFFSETS

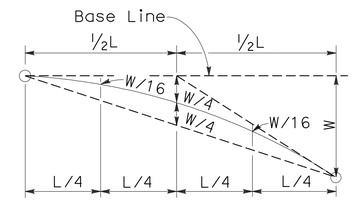

TYPICAL PARABOLIC LAYOUT

Use strengthened railing sections with Layout Types 16I or 16J Layouts where minimum clearance between the face of the guard railing and fixed object(s) is less than 4'-0", but not less than 2'-3". See Note 4.

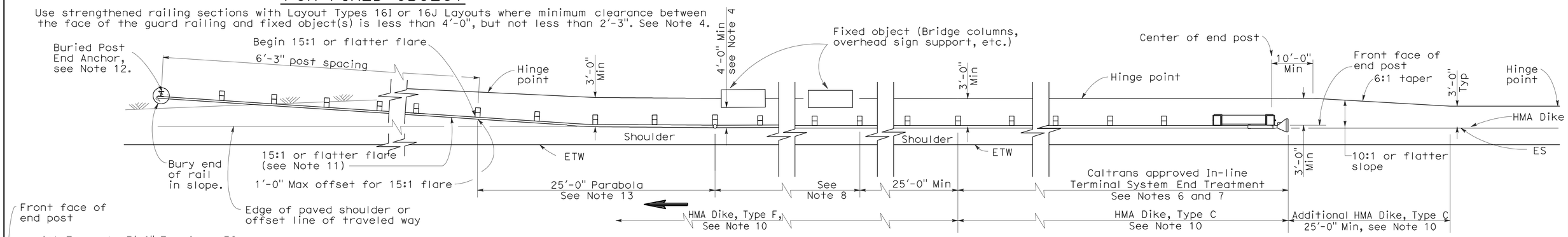

TYPE 16I LAYOUT

(GUARD RAILING INSTALLATION AT ROADSIDE FIXED OBJECT OR OBJECTS WITH AN IN-LINE END TREATMENT AND A BURIED END ANCHOR TREATMENT AT THE ENDS OF RAILING) See Note 9

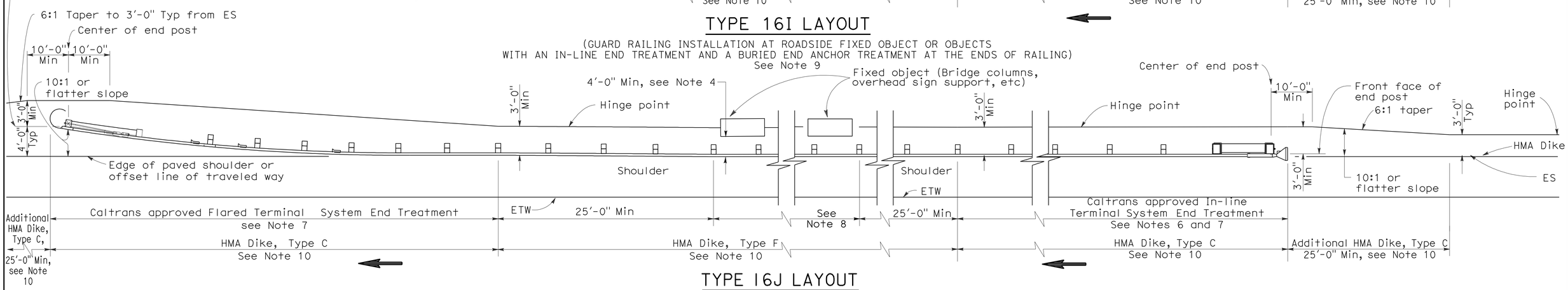

TYPE 16J LAYOUT

(GUARD RAILING INSTALLATION AT ROADSIDE FIXED OBJECT OR OBJECTS WITH AN IN-LINE END TREATMENT AND A FLARED END TREATMENT AT THE ENDS OF RAILING) See Note 9

NOTES:

1. Line post, blocks and hardware to be used are shown on Standard Plans A77A1, A77A2, A77B1, A77C1 and A77C2.
2. Guard railing post spacing to be 6'-3" center to center, except as otherwise noted.
3. Except as noted, line posts are 6" x 8" x 6'-0" wood with 6" x 8" x 1'-2" wood blocks. W6 x 9 steel posts, 6'-0" in length, with 6" x 8" x 1'-2" notched wood blocks or notched recycled plastic blocks may be used for 6" x 8" x 6'-0" wood posts with 6" x 8" x 1'-2" wood blocks where applicable and when specified.
4. A 4'-0" minimum clearance is required between the face of the railing and the face of a fixed object located directly behind standard guard railing sections with post spacing at 6'-3". Construct guard railing as shown in the detail "Strengthened Railing Sections for Fixed Objects" on this plan, where the clearance between the face of the railing and the face of a fixed object is less than 4'-0", but not less than 2'-3". Where the clearance is less than 2'-3", a concrete wall or barrier should be constructed to shield the fixed object(s).
5. Direction of adjacent traffic indicated by ➡.
6. In-line Terminal System End Treatments are used where site conditions will not accommodate a flared end treatment.
7. The type of terminal system to be used will be shown on the Project Plans.
8. As site conditions dictate, construct additional guard railing to shield fixed object(s). Additional guard railing length equal to multiples of 12'-6". Post spacing at 6'-3", except as specified in Note 4.
9. Layout Types 16D through 16L, shown on the A77G Series of Revised Standard Plans, are typically used where guard railing is recommended to shield roadside fixed object(s) and a crashworthy end treatment is required for both directions of traffic.
10. Where placement of dike is required with guard railing, see Revised Standard Plan RSP A77C4 for dike positioning details.
11. The 15:1 or flatter flare for the buried post anchor is based on the edge of the paved shoulder or offset line of edge of the traveled way. The length of guard railing within the 15:1 or flatter flare is based on site conditions and should be a length equal to multiples of 12'-6".
12. For details of Buried Post End Anchor details, see Standard Plan A77I2.
13. For typical flare offsets for 25'-0" length parabola with maximum offset of 1'-0", see Revised Standard RSP Plan A77E1.
14. W6 x 15 steel post, 8'-0" in length, with 8" x 8" x 1'-2" notched wood block or notched recycled plastic blocks may be used in place of the 10" x 10" x 8'-0" wood post with 8" x 8" x 1'-2" wood block shown in the "Strengthened Railing Sections Detail".

STATE OF CALIFORNIA
DEPARTMENT OF TRANSPORTATION

METAL BEAM GUARD RAILING TYPICAL LAYOUTS FOR ROADSIDE FIXED OBJECTS

NO SCALE

RSP A77G7 DATED JUNE 6, 2008 SUPERSEDES STANDARD PLAN A77G7 DATED MAY 1, 2006 - PAGE 65 OF THE STANDARD PLANS BOOK DATED MAY 2006.

REVISED STANDARD PLAN RSP A77G7

2006 REVISED STANDARD PLAN RSP A77G7

12-10-07

DIST	COUNTY	ROUTE	POST MILES TOTAL PROJECT	SHEET NO.	TOTAL SHEETS
05	SLO	46	40.7/46.3	481	541

Randell D. Hiatt
REGISTERED CIVIL ENGINEER

June 6, 2008
PLANS APPROVAL DATE

REGISTERED PROFESSIONAL ENGINEER
Randell D. Hiatt
No. C50200
Exp. 6-30-09
CIVIL
STATE OF CALIFORNIA

The State of California or its officers or agents shall not be responsible for the accuracy or completeness of electronic copies of this plan sheet.

To accompany plans dated 2-13-12

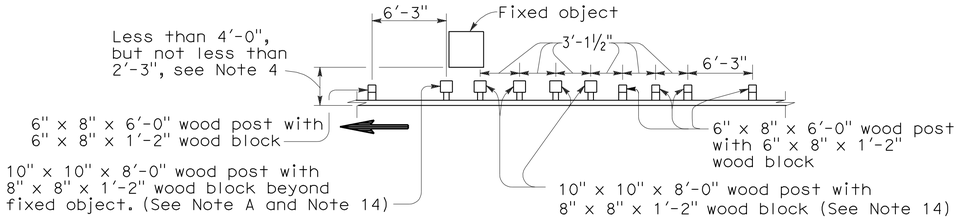

Note A. For a series of fixed objects (bridge columns, overhead sign supports, etc.) additional 10" x 10" x 8'-0" wood post with 8" x 8" x 1'-2" wood blocks at 3'-1½" center to center spacing are to be used between fixed object(s).

STRENGTHENED RAILING SECTIONS FOR FIXED OBJECT

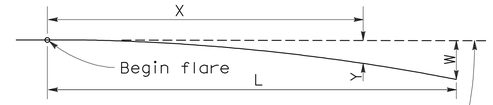

Base Line (Edge of paved shoulder or offset line of edge of traveled way)

$$Y = \frac{WX^2}{L^2}$$

Y = Offset from base line
W = Maximum offset
X = Distance along base line
L = Length of flare

PARABOLIC FLARE OFFSETS

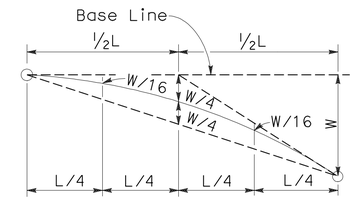

TYPICAL PARABOLIC LAYOUT

Use strengthened railing sections with Layout Types 16K or 16L Layouts where minimum clearance between the face of the guard railing and fixed object(s) is less than 4'-0", but not less than 2'-3". See Note 4.

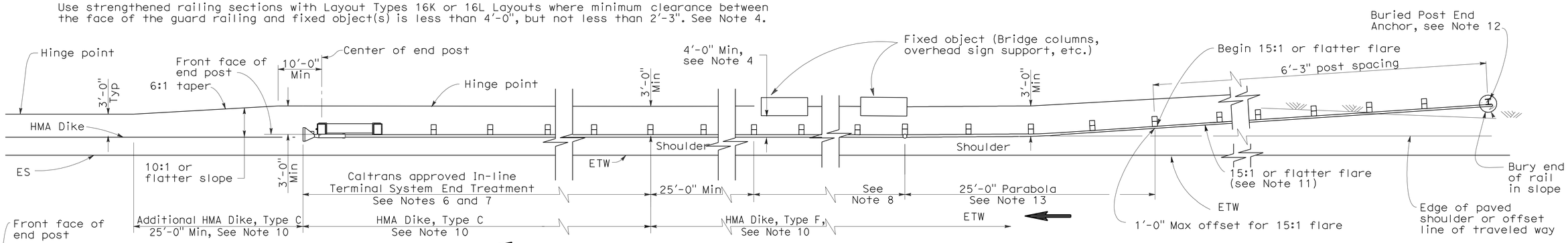

TYPE 16K LAYOUT

(GUARD RAILING INSTALLATION AT ROADSIDE FIXED OBJECT OR OBJECTS WITH A BURIED END ANCHOR TREATMENT AND AN IN-LINE END TREATMENT AT THE ENDS OF RAILING)
See Note 9

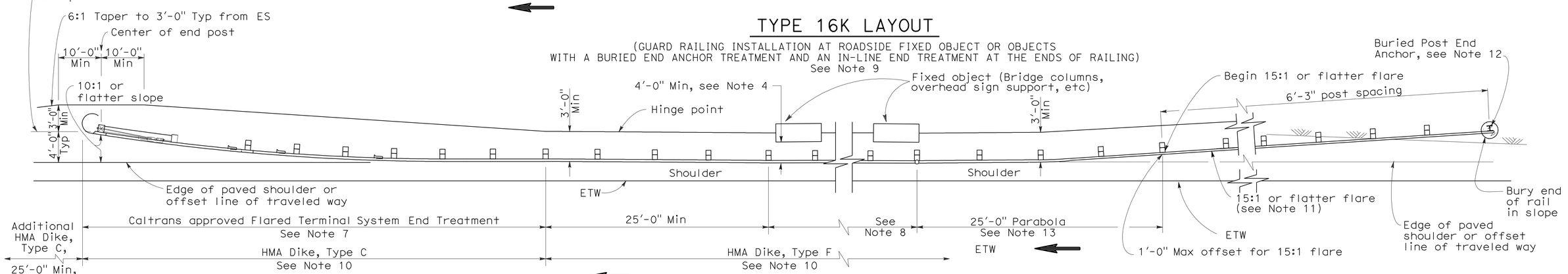

TYPE 16L LAYOUT

(GUARD RAILING INSTALLATION AT ROADSIDE FIXED OBJECT OR OBJECTS WITH A BURIED END ANCHOR TREATMENT AND A FLARED END TREATMENT AT THE ENDS OF RAILING)
See Note 9

NOTES:

1. Line post, blocks and hardware to be used are shown on Standard Plans A77A1, A77A2, A77B1, A77C1 and A77C2.
2. Guard railing post spacing to be 6'-3" center to center, except as otherwise noted.
3. Except as noted, line posts are 6" x 8" x 6'-0" wood with 6" x 8" x 1'-2" wood blocks. W6 x 9 steel posts, 6'-0" in length, with 6" x 8" x 1'-2" notched wood blocks or notched recycled plastic blocks may be used for 6" x 8" x 6'-0" wood posts with 6" x 8" x 1'-2" wood blocks where applicable and when specified.
4. A 4'-0" minimum clearance is required between the face of the railing and the face of a fixed object located directly behind standard guard railing sections with post spacing at 6'-3". Construct guard railing as shown in the detail "Strengthened Railing Sections for Fixed Objects" on this plan, where the clearance between the face of the railing and the face of a fixed object is less than 4'-0", but not less than 2'-3". Where the clearance is less than 2'-3", a concrete wall or barrier should be constructed to shield the fixed object(s).
5. Direction of adjacent traffic indicated by ⟶.
6. In-line Terminal System End Treatments are used where site conditions will not accommodate a flared end treatment.
7. The type of terminal system to be used will be shown on the Project Plans.
8. As site conditions dictate, construct additional guard railing to shield fixed object(s). Additional guard railing length equal to multiples of 12'-6". Post spacing at 6'-3", except as specified in Note 4.
9. Layout Types 16D through 16L, shown on the A77G Series of Revised Standard Plans are typically used where guard railing is recommended to shield roadside fixed object(s) and a crashworthy end treatment is required for both directions of traffic.
10. Where placement of dike is required with guard railing, see Revised Standard Plan RSP A77C4 for dike positioning details.
11. The 15:1 or flatter flare for the buried post anchor is based on the edge of the paved shoulder or offset line of edge of the traveled way. The length of guard railing within the 15:1 or flatter flare is based on site conditions and should be a length equal to multiples of 12'-6".
12. For details of Buried Post End Anchor details, see Standard Plan A77I2.
13. For typical flare offsets for 25'-0" length parabola with maximum offset of 1'-0", see Revised Standard RSP Plan A77E1.
14. W6 x 15 steel post, 8'-0" in length, with 8" x 8" x 1'-2" notched wood block or notched recycled plastic blocks may be used in place of the 10" x 10" x 8'-0" wood post with 8" x 8" x 1'-2" wood block shown in the "Strengthened Railing Sections Detail".

STATE OF CALIFORNIA
DEPARTMENT OF TRANSPORTATION

METAL BEAM GUARD RAILING TYPICAL LAYOUTS FOR ROADSIDE FIXED OBJECTS

NO SCALE

RSP A77G8 DATED JUNE 6, 2008 SUPERSEDES STANDARD PLAN A77G8 DATED MAY 1, 2006 - PAGE 66 OF THE STANDARD PLANS BOOK DATED MAY 2006.

REVISED STANDARD PLAN RSP A77G8

2006 REVISED STANDARD PLAN RSP A77G8

12-10-07

Dist	COUNTY	ROUTE	POST MILES TOTAL PROJECT	SHEET No.	TOTAL SHEETS
05	SLO	46	40.7/46.3	482	541

Randell D. Hiatt
REGISTERED CIVIL ENGINEER

May 20, 2011
PLANS APPROVAL DATE

REGISTERED PROFESSIONAL ENGINEER
Randell D. Hiatt
No. C50200
Exp. 6-30-11
CIVIL
STATE OF CALIFORNIA

The State of California or its officers or agents shall not be responsible for the accuracy or completeness of electronic copies of this plan sheet.

To accompany plans dated 2-13-12

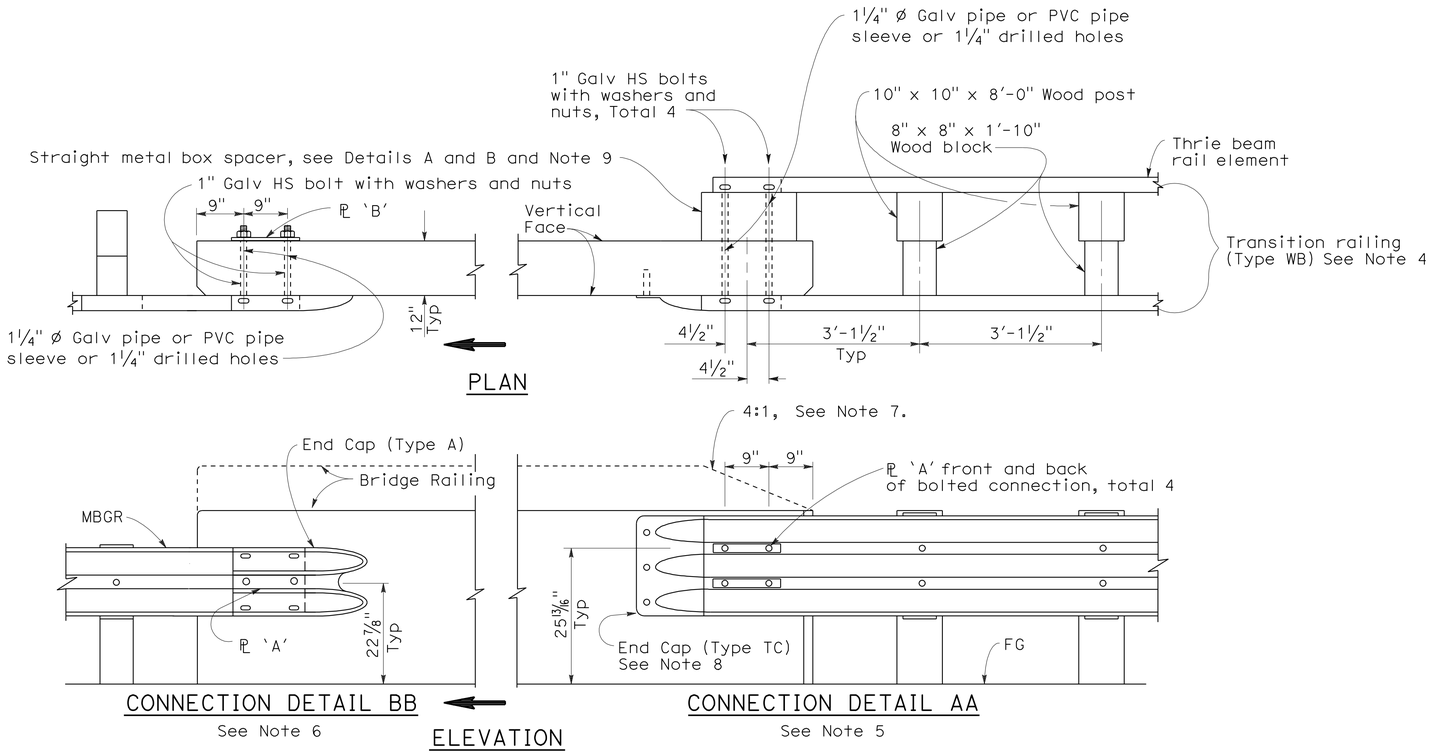

GUARD RAILING CONNECTION TO BRIDGE RAILING WITHOUT SIDEWALK

NOTES:

1. See Revised Standard Plan RSP A77J2 for additional connection details to bridges without sidewalks.
2. Additional details of posts, blocks and hardware are shown on Standard Plan A77B1, A77C1 and A77C2.
3. Direction of adjacent traffic indicated by ➡.
4. For additional details of Transition Railing (Type WB), see Standard Plan A77J4. Transition Railing (Type WB) transitions the 12 gage w-beam standard railing section of guard railing to a heavier gage nested thrie beam railing section which is connected to the concrete bridge railing.
5. For typical use of Connection Detail AA, see Layout Types 12A and 12B on Revised Standard Plan RSP A77F1, Layout Types 12C and 12D on Standard Plan A77F2, and Layout Type 12E on Revised Standard Plan RSP A77F3.
6. For typical use of Connection Detail BB, see Layout Type 12D (structure departure railing connection) on Standard Plan A77F2 and Layout Type 12DD on Standard Plan A77F5.
7. Where the height of the bridge railing exceeds the height of the thrie beam railing by more than 1" at Connection Detail AA, taper the top of the end of the bridge railing at 4:1 to match the top elevation of the thrie beam rail.
8. For details of End Cap (Type TC), see Standard Plan A77J4.
9. See Standard Plan A77J4 for additional details regarding depth dimension for straight metal box spacer.

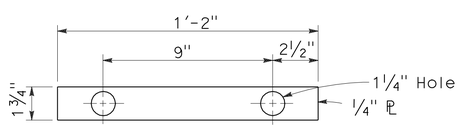

PLATE 'A'

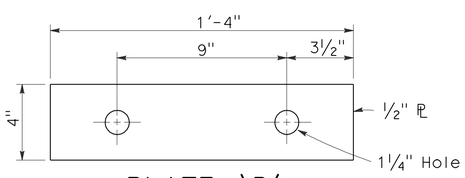

PLATE 'B'
(For backside of connection BB)

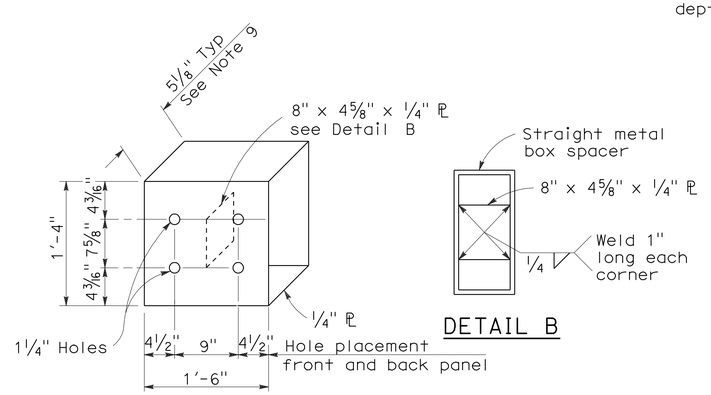

DETAIL A

DETAIL B

STRAIGHT METAL BOX SPACER

STATE OF CALIFORNIA
DEPARTMENT OF TRANSPORTATION

METAL BEAM GUARD RAILING CONNECTIONS TO BRIDGE RAILINGS WITHOUT SIDEWALKS DETAILS No.1

NO SCALE

RSP A77J1 DATED MAY 20, 2011 SUPERSEDES RSP A77J1 DATED JUNE 6, 2008 AND STANDARD PLAN A77J1 DATED MAY 1, 2006 - PAGE 72 OF THE STANDARD PLANS BOOK DATED MAY 2006.

REVISED STANDARD PLAN RSP A77J1

2006 REVISED STANDARD PLAN RSP A77J1

3-10-11

DIST	COUNTY	ROUTE	POST MILES TOTAL PROJECT	SHEET NO.	TOTAL SHEETS
05	SLO	46	40.7/46.3	483	541

Randell D. Hiatt
REGISTERED CIVIL ENGINEER

June 6, 2008
PLANS APPROVAL DATE

REGISTERED PROFESSIONAL ENGINEER
Randell D. Hiatt
No. C50200
Exp. 6-30-09
CIVIL
STATE OF CALIFORNIA

The State of California or its officers or agents shall not be responsible for the accuracy or completeness of electronic copies of this plan sheet.

To accompany plans dated 2-13-12

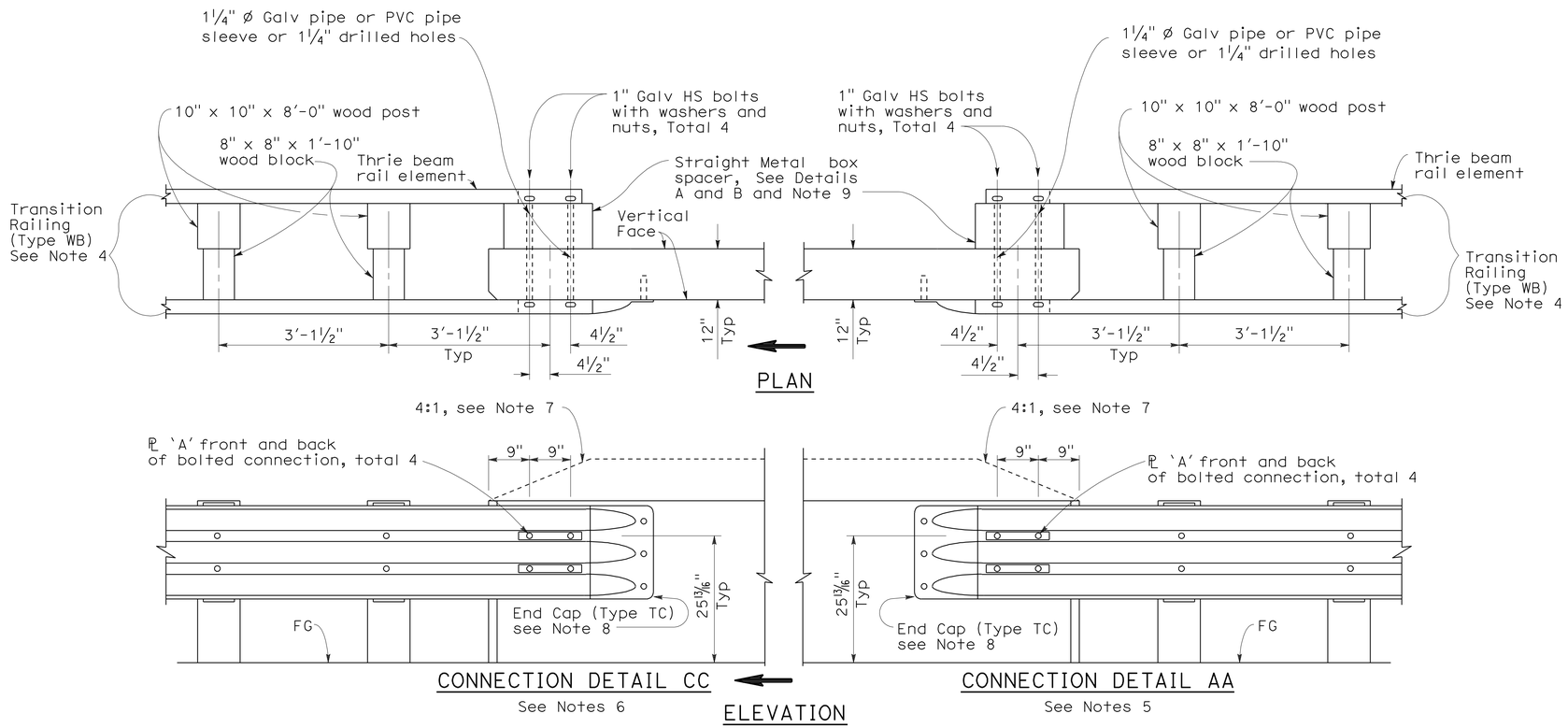

GUARD RAILING CONNECTION TO BRIDGE RAILING WITHOUT SIDEWALK

NOTES:

1. See Revised Standard Plan RSP A77J1 for additional connection details to bridges without sidewalks.
2. Additional details of posts, blocks and hardware are shown on Standard Plan A77B1, A77C1 and A77C2.
3. Direction of adjacent traffic indicated by ⟹.
4. For additional details of Transition Railing (Type WB), see Standard Plan A77J4. Transition Railing (Type WB) transitions the 12 gage w-beam standard railing section of guard railing to a heavier gage nested thrie beam railing section which is connected to the concrete bridge railing.
5. For typical use of Connection Detail AA, see Layout Types 12A and 12B on Revised Standard Plan RSP A77F1, Layout Types 12C and 12D on Standard Plan A77F2, and Layout Type 12E on Revised Standard Plan RSP A77F3.
6. For typical use of Connection Detail CC, see Layout Types 12AA and 12BB on Standard Plan A77F4 and Layout Type 12CC on Standard Plan A77F5.
7. Where the height of the bridge railing exceeds the height of the thrie beam railing by more than 1" at Connection Detail AA and connection Detail CC, taper the top of the end of the bridge railing at 4:1 to match the top elevation of the thrie beam railing.
8. For details of End Cap (Type TC), see Standard Plans A77J4.
9. See Standard Plans A77J4 for additional details regarding depth dimension for straight metal box spacer.

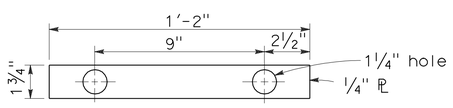

PLATE 'A'

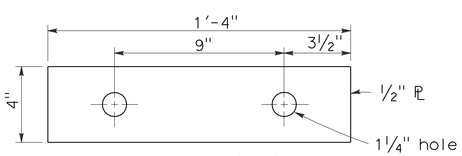

PLATE 'B'
(For backside of connection BB)

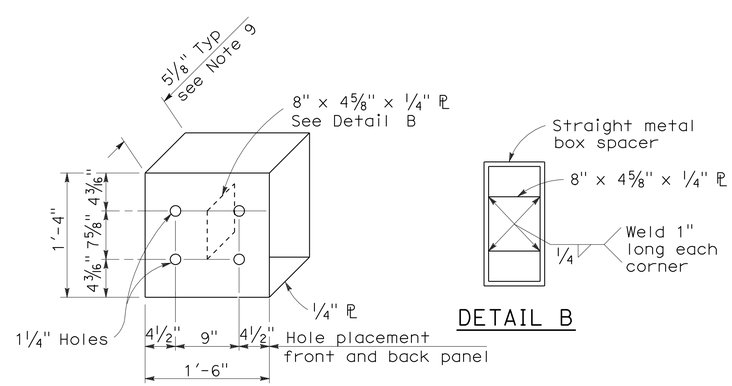

DETAIL A

DETAIL B

STRAIGHT METAL BOX SPACER

STATE OF CALIFORNIA
DEPARTMENT OF TRANSPORTATION

METAL BEAM GUARD RAILING CONNECTIONS TO BRIDGE RAILINGS WITHOUT SIDEWALKS DETAILS No.2

NO SCALE

RSP A77J2 DATED JUNE 6, 2008 SUPERSEDES STANDARD PLAN A77J2 DATED MAY 1, 2006 - PAGE 73 OF THE STANDARD PLANS BOOK DATED MAY 2006.

REVISED STANDARD PLAN RSP A77J2

2006 REVISED STANDARD PLAN RSP A77J2

12-10-07

Dist	COUNTY	ROUTE	POST MILES TOTAL PROJECT	SHEET No.	TOTAL SHEETS
05	SLO	46	40.7/46.3	484	541

Randell D. Hiatt
REGISTERED CIVIL ENGINEER

May 20, 2011
PLANS APPROVAL DATE

REGISTERED PROFESSIONAL ENGINEER Randell D. Hiatt No. C50200 Exp. 6-30-11 CIVIL STATE OF CALIFORNIA

To accompany plans dated 2-13-12

The State of California or its officers or agents shall not be responsible for the accuracy or completeness of electronic copies of this plan sheet.

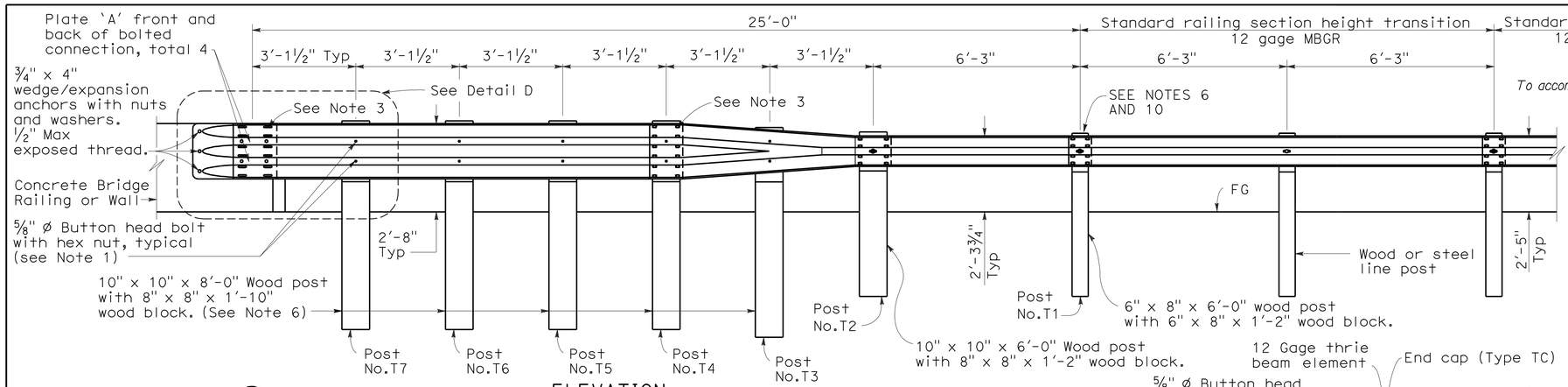

ELEVATION

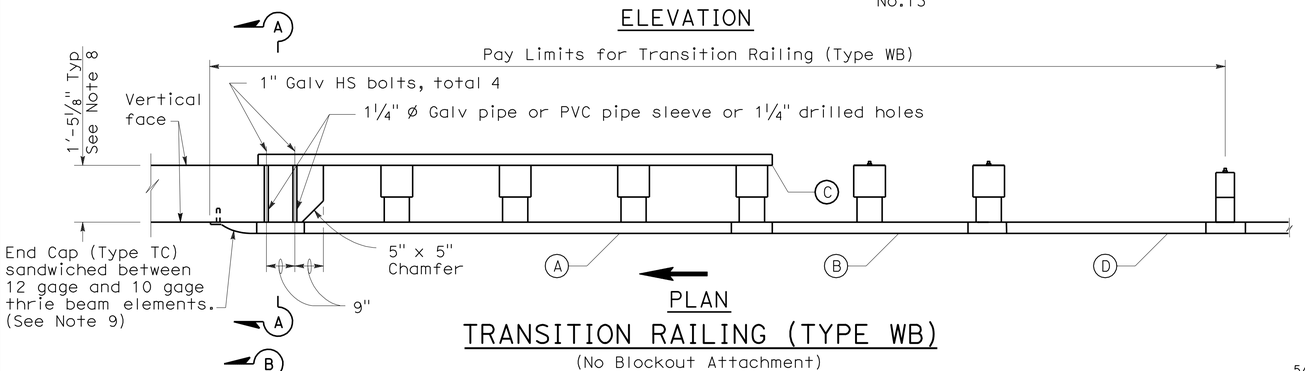

PLAN

TRANSITION RAILING (TYPE WB)

(No Blockout Attachment)

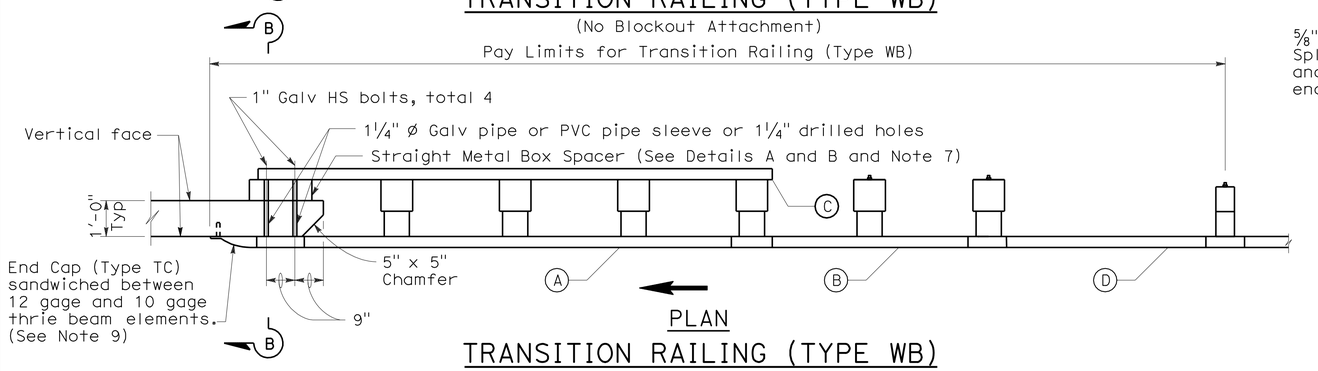

PLAN

TRANSITION RAILING (TYPE WB)

(Blockout Attachment)

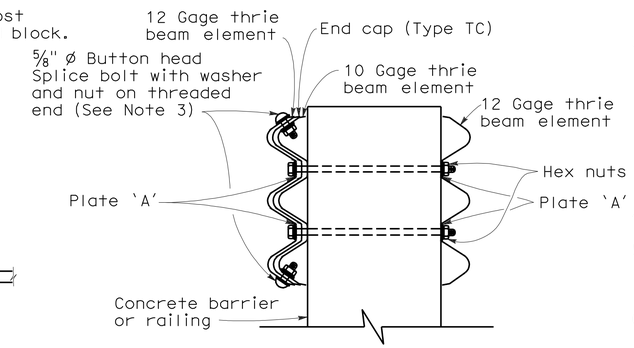

SECTION A-A

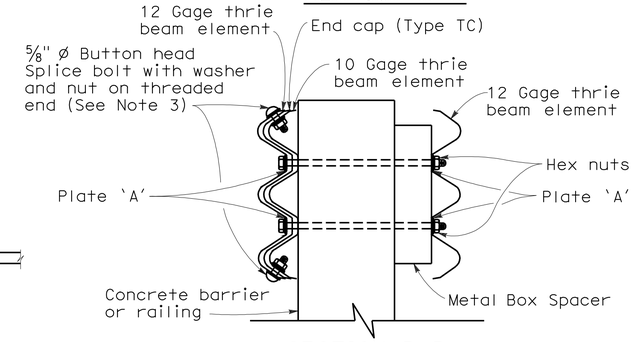

SECTION B-B

NOTES:

1. Use ⅝" ø Button head bolts and hex nuts for connections to posts. No washer on rail face for bolted connections to post.
2. The nested rail elements, end cap, and 'W' beam to thrie beam element may be spliced together prior to bolting the elements to the wood post and concrete barrier or railing.
3. Exterior splice bolt holes for rail element splices at Post No. T4 and the connection to the concrete barrier or railing shall be the standard 29/32" x 1⅛" slot size. Interior splice bolt holes at these locations may be increased up to 1¼" ø. Only the top 2 and the bottom 2 splice bolts with washers and nuts are required for rail splices at Post No. T4 and the connection to the concrete barrier or railing.
4. Direction of adjacent traffic indicated by →.
5. The top elevation of Posts No. T2 through No. T7 shall not project more than 1" above the top elevation of the rail element.
6. Typically, the railing connected to Transition Railing (Type WB) will be either standard railing section of metal beam guard railing with height transition ratio of 120:1 or an approved Caltrans end treatment attached to Post No. T1.
7. The depth of the metal box spacer varies from the 5⅛" to 1½" and is dependent on the width of the concrete railing or wall. The combined dimension for the depth of the metal box spacer plus the width of railing or wall is typically 17⅛". Where the space between the backside of the concrete railing or wall and the rear thrie beam element is less than 1½", metal plates similar to Plate 'A' are to be used as spacers.
8. Where the width of the concrete railing or wall is greater than 17⅛", wood blocks are to be used to fill the space created between the backside of Posts No. T4 through No. T7 and the rear thrie beam element. These wood blocks shall be 8" in width and 1'-2" in length. The dimension between the front thrie beam element and the rear thrie beam element is to match the width of the concrete railing or wall.
9. End cap may be installed over 12 gage and 10 gage thrie beam elements where transition railing is installed on the departure end of bridge railing.
10. Conform standard railing section height to 2'-3¾" at Post No. T1 using height transition ratio of 120:1.

LEGEND

(A) Nested thrie beam elements (one 12 gage element nested over one 10 gage element).

(B) One 10 gage "W" beam to thrie beam element.

(C) One 12 gage thrie beam element.

(D) One 10 gage "W" beam rail element (7'-3½" length)

10 gage = 0.135" thick

12 gage = 0.108" thick

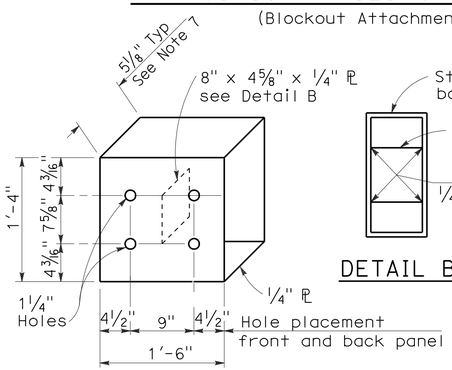

DETAIL A

STRAIGHT METAL BOX SPACER

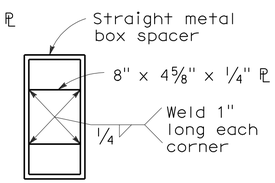

DETAIL B

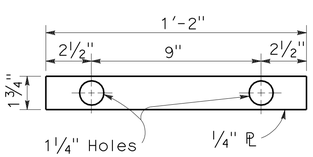

DETAIL C

PLATE 'A'

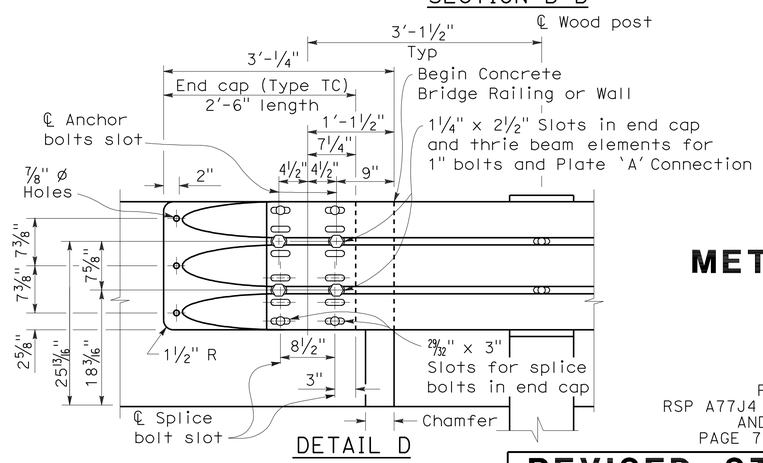

DETAIL D

STATE OF CALIFORNIA
DEPARTMENT OF TRANSPORTATION

METAL BEAM GUARD RAILING TRANSITION RAILING (TYPE WB)

NO SCALE

RSP A77J4 DATED MAY 20, 2011 SUPERSEDES
RSP A77J4 DATED JUNE 5, 2009, RSP A77J4 DATED JUNE 6, 2008
AND STANDARD PLAN A77J4 DATED MAY 1, 2006 -
PAGE 75 OF THE STANDARD PLANS BOOK DATED MAY 2006.

REVISED STANDARD PLAN RSP A77J4

2006 REVISED STANDARD PLAN RSP A77J4

5-14-09

DIST	COUNTY	ROUTE	POST MILES TOTAL PROJECT	SHEET NO.	TOTAL SHEETS
05	SLO	46	40.7/46.3	485	541

Glenn DeCou
REGISTERED CIVIL ENGINEER

June 5, 2009
PLANS APPROVAL DATE

REGISTERED PROFESSIONAL ENGINEER Glenn DeCou No. C34547 Exp. 9-30-09 CIVIL STATE OF CALIFORNIA

The State of California or its officers or agents shall not be responsible for the accuracy or completeness of electronic copies of this plan sheet.

To accompany plans dated 2-13-12

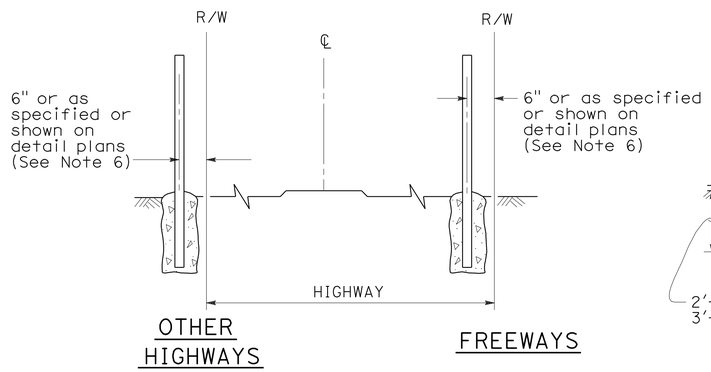

FENCE LOCATION

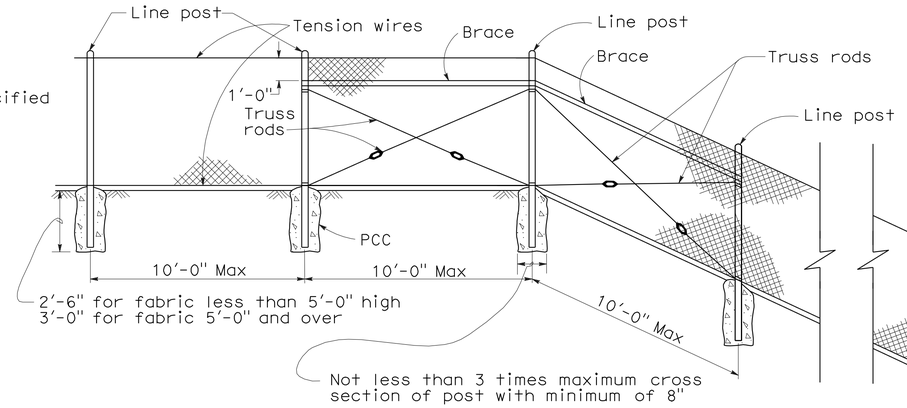

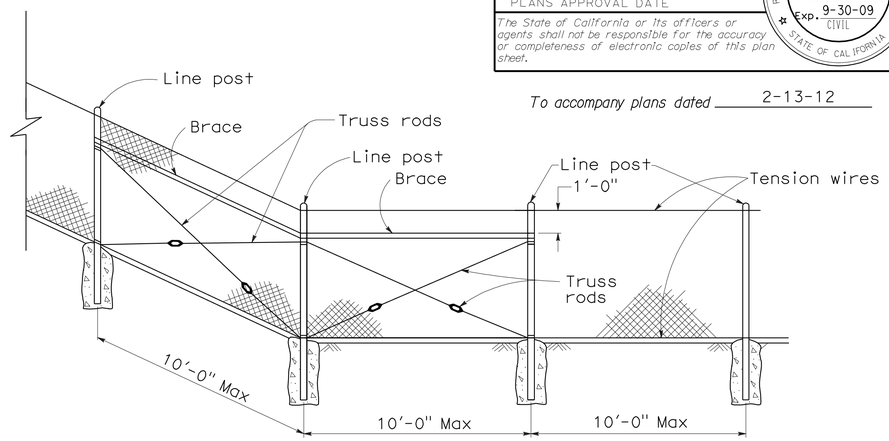

CHAIN LINK FENCE ON SHARP BREAK IN GRADE

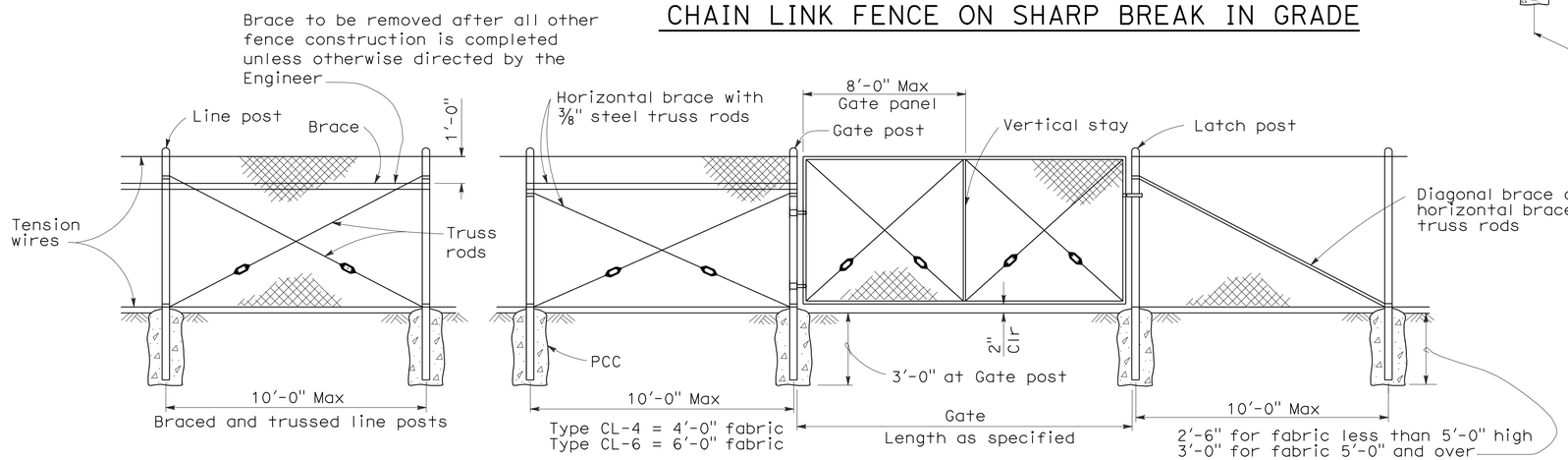

CHAIN LINK GATE INSTALLATION

GATE POST			
FENCE HEIGHT	GATE WIDTHS	NOMINAL ID	WEIGHT PER FOOT
6'-0" and Less	Up thru 6'-0"	2½"	4.95 LB
	Over 6'-0" thru 12'-0"	4"	10.79 LB
	Over 12'-0" thru 18'-0"	5"	14.62 LB
	Over 18'-0" to 24'-0" Max	6"	18.97 LB
Over 6'-0"	Up thru 6'-0"	3"	7.58 LB
	Over 6'-0" thru 12'-0"	5"	14.62 LB
	Over 12'-0" thru 18'-0"	6"	18.97 LB
	Over 18'-0" to 24'-0" Max	8"	28.55 LB

Above post dimensions and weights are minimums. Larger sizes may be used on approval of the Engineer.

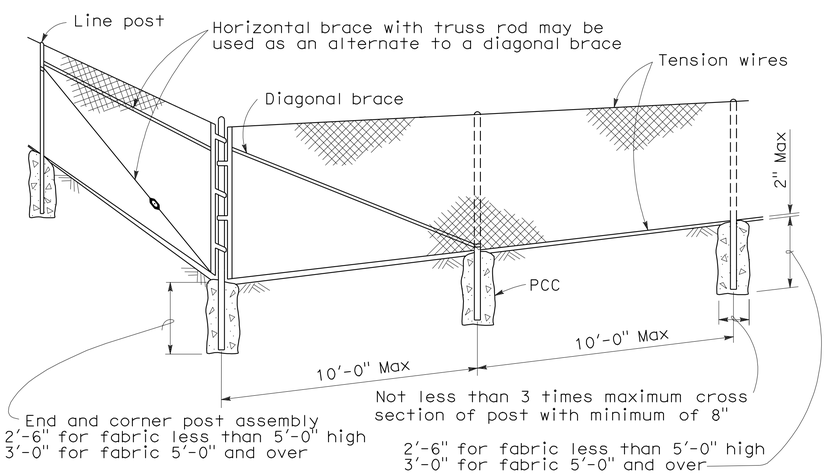

CORNER POST

NOTES:

1. The below table shows examples of post and brace sections which may comply with the Specifications.
2. Sections shown in the tables must also comply with the strength requirements and other provisions of the Specifications.
3. Other sections which comply with the strength requirements and other provisions of the Specifications may be used on approval of the Engineer.
4. Options exercised shall be uniform on any one project.
5. Dimensions shown are nominal.
6. Offset to be 2'-0" at monument locations, measured at right angles to R/W lines. Taper to achieve offset to be at least 20'-0" long.

TYPICAL MEMBER DIMENSIONS (See Notes)											
FENCE HEIGHT	LINE POSTS			END, LATCH & CORNER POSTS				BRACES			
	ROUND ID	H	ROLL FORMED	ROUND ID	ROLL FORMED			ROUND ID	H	ROLL FORMED	
6' & less	1½"	1⅞" × 1⅝"	1⅞" × 1⅝"	2"	3½" × 3½"	2" × 1¾"		1¼"	1½" × 1 5/16"	1⅝" × 1¼"	1¾" × 1¼"
Over 6'	2"	2¼" × 2"	2" × 1¾"	2½"	3½" × 3½"	2½" × 2½"		1¼"	1½" × 1 5/16"	1⅝" × 1¼"	1¾" × 1¼"

STATE OF CALIFORNIA
DEPARTMENT OF TRANSPORTATION

CHAIN LINK FENCE

NO SCALE

RSP A85 DATED JUNE 5, 2009 SUPERSEDES STANDARD PLAN A85
DATED MAY 1, 2006 - PAGE 111 OF THE STANDARD PLANS BOOK DATED MAY 2006.

REVISED STANDARD PLAN RSP A85

2006 REVISED STANDARD PLAN RSP A85

5-7-09

DIST	COUNTY	ROUTE	POST MILES TOTAL PROJECT	SHEET NO.	TOTAL SHEETS
05	SLO	46	40.7/46.3	486	541

REGISTERED CIVIL ENGINEER

June 5, 2009
PLANS APPROVAL DATE

REGISTERED PROFESSIONAL ENGINEER Glenn DeCou No. C34547 Exp. 9-30-09 CIVIL STATE OF CALIFORNIA

The State of California or its officers or agents shall not be responsible for the accuracy or completeness of electronic copies of this plan sheet.

To accompany plans dated 2-13-12

NOTES:

1. H is 2'-6" for fabric less than 5'-0" high.
   H is 3'-0" for fabric 5'-0" and over.
2. T is not less than 3 times maximum cross section of post with minimum of 8".
3. Arms with barbed wire to be used where shown on plans.
4. See Revised Standard Plan RSP A85 for Chain Link Fencing dimensions.
5. Reinforcing must comply with ASTM A 706.
6. See Detail A on New Standard Plan NSP A86B for connection at headwall.

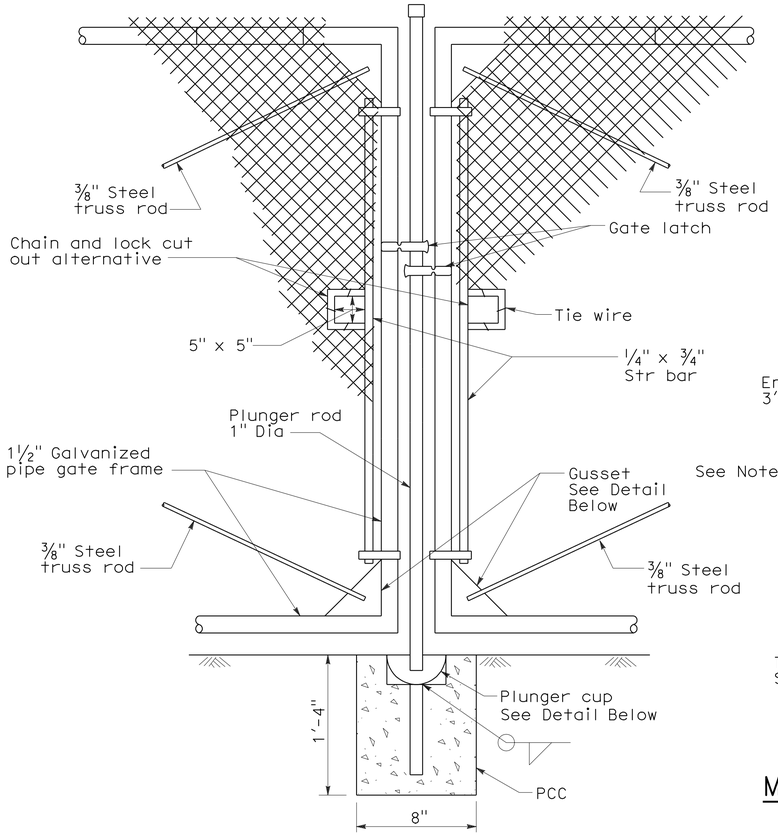

TYPICAL DOUBLE GATE REMOVABLE CENTER POST

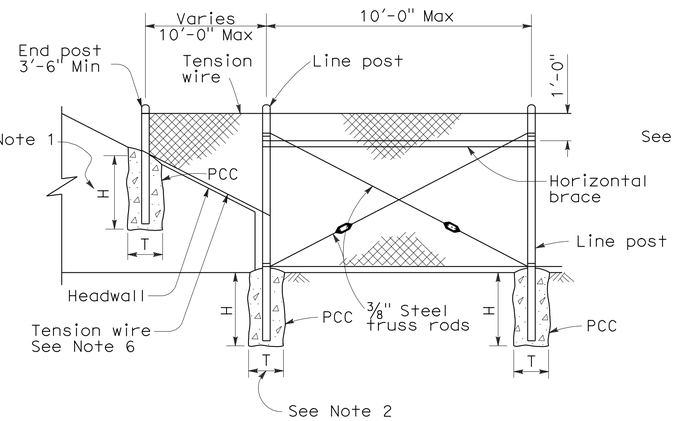

METHOD OF TYING FENCE TO HEADWALL

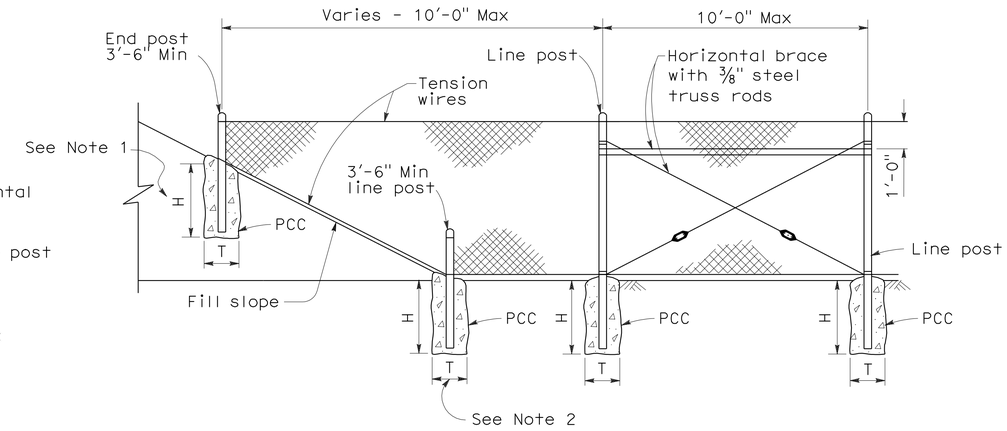

METHOD OF ERECTING FENCE FOR FILL SLOPE

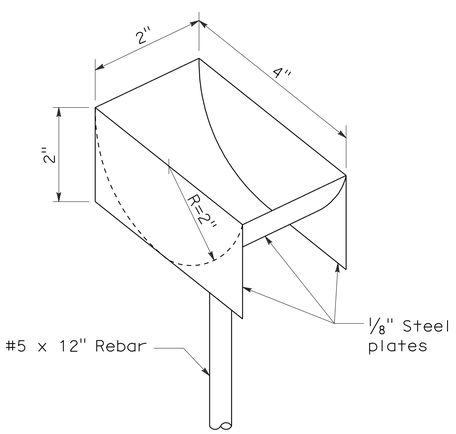

PLUNGER CUP DETAIL

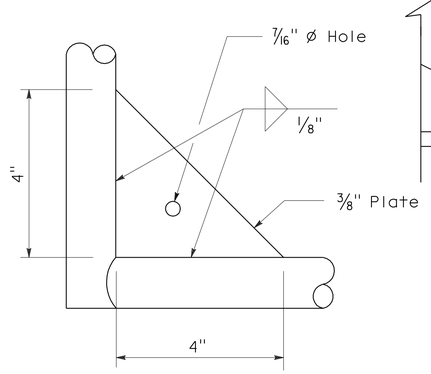

GUSSET DETAIL

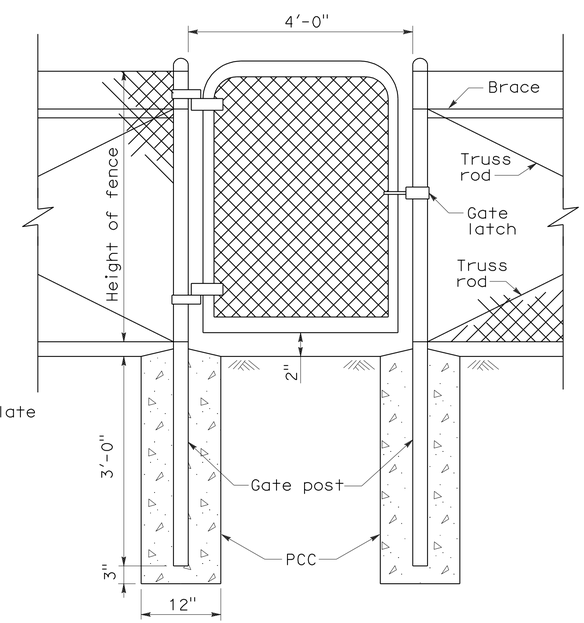

WALK GATE

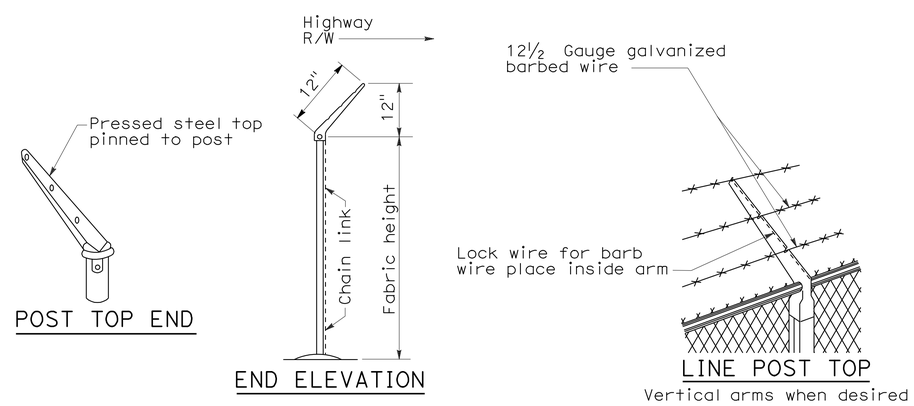

POST TOP END

END ELEVATION

LINE POST TOP
Vertical arms when desired

BARBED WIRE POST TOP
See Note 3

STATE OF CALIFORNIA
DEPARTMENT OF TRANSPORTATION

CHAIN LINK FENCE DETAILS

NO SCALE

NSP A85A DATED JUNE 5, 2009 SUPPLEMENTS THE STANDARD PLANS BOOK DATED MAY 2006.

NEW STANDARD PLAN NSP A85A

2006 NEW STANDARD PLAN NSP A85A

5-7-09

DIST	COUNTY	ROUTE	POST MILES TOTAL PROJECT	SHEET NO.	TOTAL SHEETS
05	SLO	46	40.7/46.3	487	541

REGISTERED CIVIL ENGINEER

June 5, 2009
PLANS APPROVAL DATE

REGISTERED PROFESSIONAL ENGINEER Glenn DeCou No. C34547 Exp. 9-30-09 CIVIL STATE OF CALIFORNIA

The State of California or its officers or agents shall not be responsible for the accuracy or completeness of electronic copies of this plan sheet.

To accompany plans dated 2-13-12

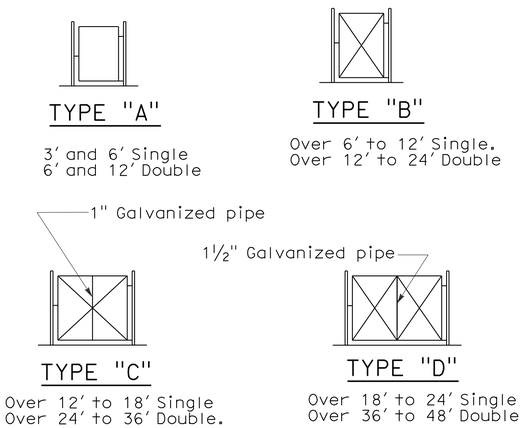

TYPICAL FRAMEWORK SHOWING NUMBER OF BAYS IN GATE

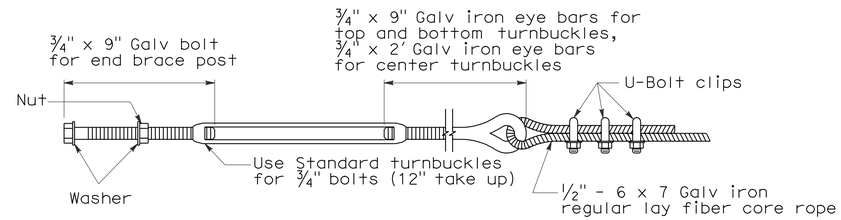

TURNBUCKLE A

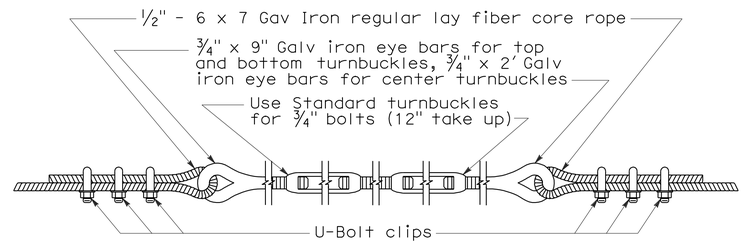

TURNBUCKLE B

NOTES:

1. All material for abutment connection to be galvanized.
2. The chain link fabric shall be replaced by barbed wire strands at 12" maximum centers between the double posts.
3. When the width of the culvert makes it necessary to anchor a post to the top of the culvert, a cast iron shoe or other device approved by the Engineer shall be used.
4. Fencing over stream and around headwall may also use Barbed Wire or Wire Mesh fencing with either wood post or steel post installation.
5. See Revised Standard Plan RSP A85 for Chain Link fence dimensions. See Standard Plan A86 for Barbed Wire and Wire Mesh fence dimensions and for wood post and steel post installation.

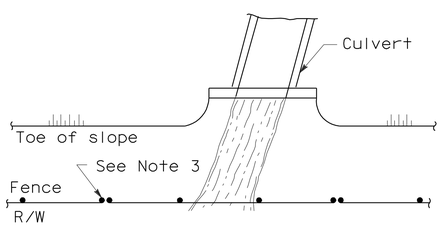

PLAN

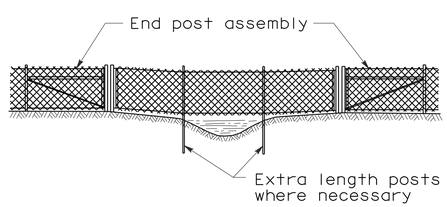

ELEVATION

INSTALLATION OVER STREAM

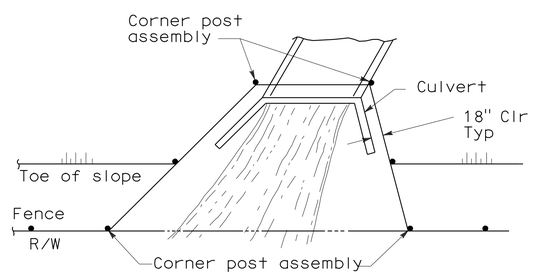

PLAN

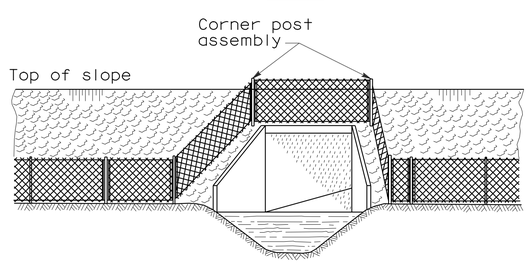

ELEVATION

INSTALLATION AROUND HEADWALL

See Note 4

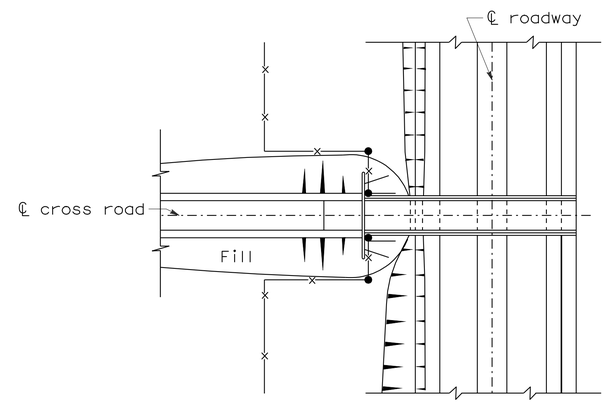

PLAN OF ROADWAY - UNDERPASS

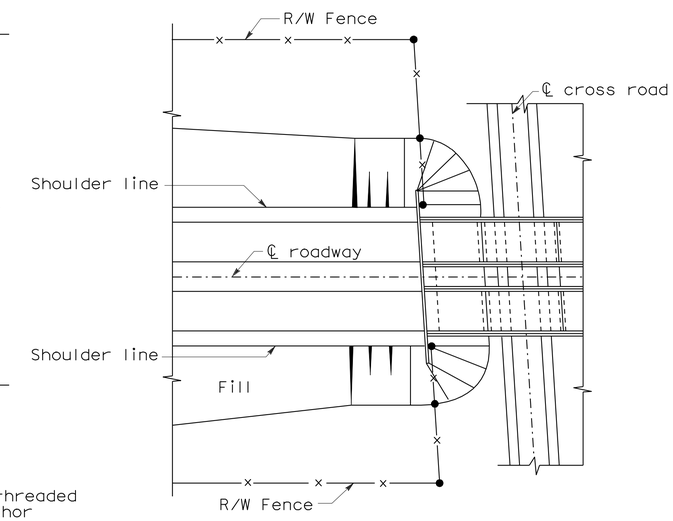

PLAN OF ROADWAY - OVERPASS

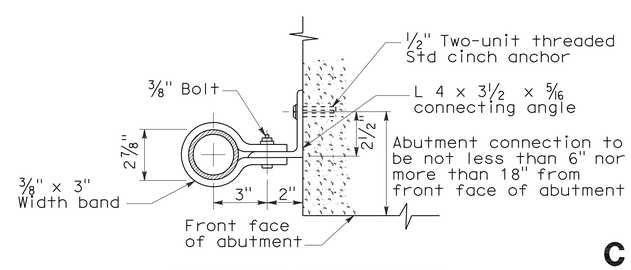

ABUTMENT CONNECTION

TYPICAL INSTALLATION AT BRIDGES

STATE OF CALIFORNIA
DEPARTMENT OF TRANSPORTATION

CHAIN LINK FENCE DETAILS

NO SCALE

NSP A85B DATED JUNE 5, 2009 SUPPLEMENTS THE STANDARD PLANS BOOK DATED MAY 2006.

NEW STANDARD PLAN NSP A85B

2006 NEW STANDARD PLAN NSP A85B

5-12-09

DIST	COUNTY	ROUTE	POST MILES TOTAL PROJECT	SHEET NO.	TOTAL SHEETS
05	SLO	46	40.7/46.3	488	541

REGISTERED CIVIL ENGINEER

June 5, 2009
PLANS APPROVAL DATE

REGISTERED PROFESSIONAL ENGINEER Glenn DeCou No. C34547 Exp. 9-30-09 CIVIL STATE OF CALIFORNIA

The State of California or its officers or agents shall not be responsible for the accuracy or completeness of electronic copies of this plan sheet.

To accompany plans dated 2-13-12

NOTES:

1. Offset to be 2'-0" at monument locations, measured at right angles to R/W lines. Taper to achieve offset to be at least 20'-0" long.
2. Line post spacing for wood post equals 12'-0" maximum. Line post spacing for metal post equals 10'-0" maximum.
3. See Standard Plan A86 for Barbed Wire and Wire Mesh dimensions and for steel post and wood post dimensions and weight.
4. Use wood posts when specified in the Special Provisions or shown on the Project Plans.

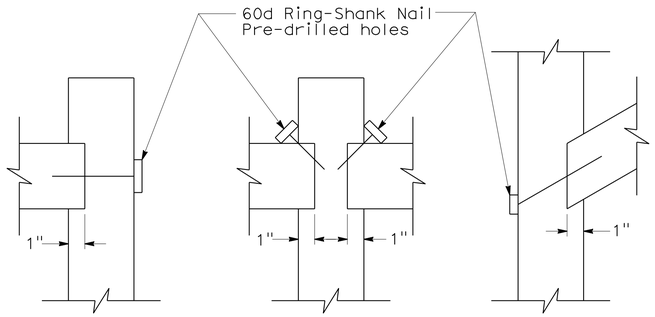

WOOD MORTISE DETAIL

See Note 4

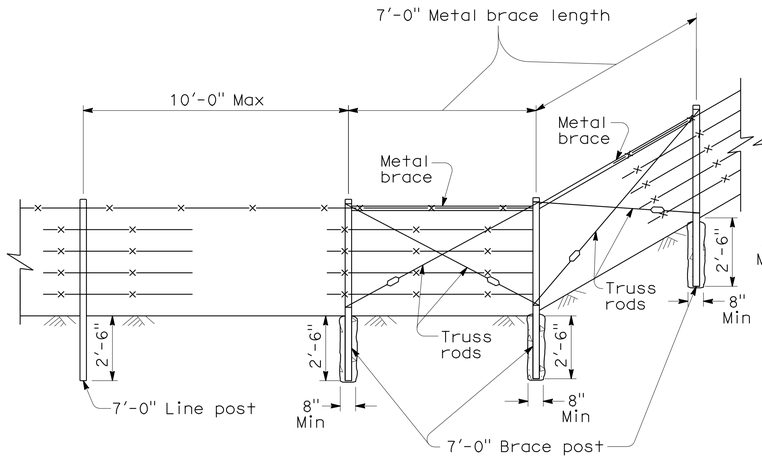

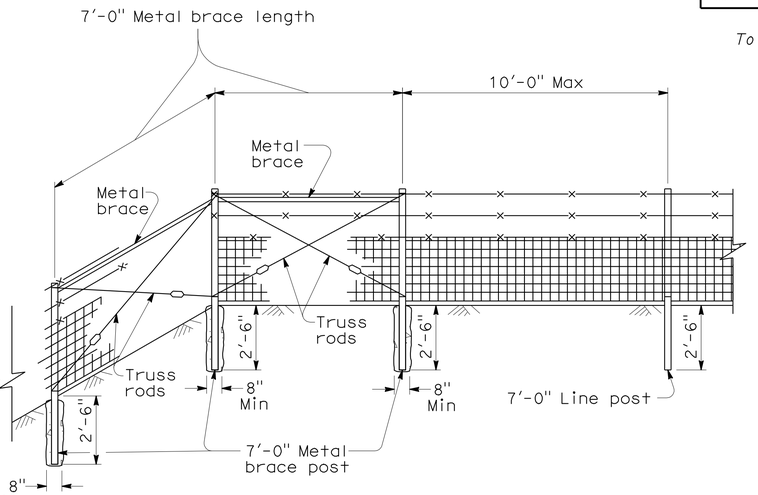

METAL POST

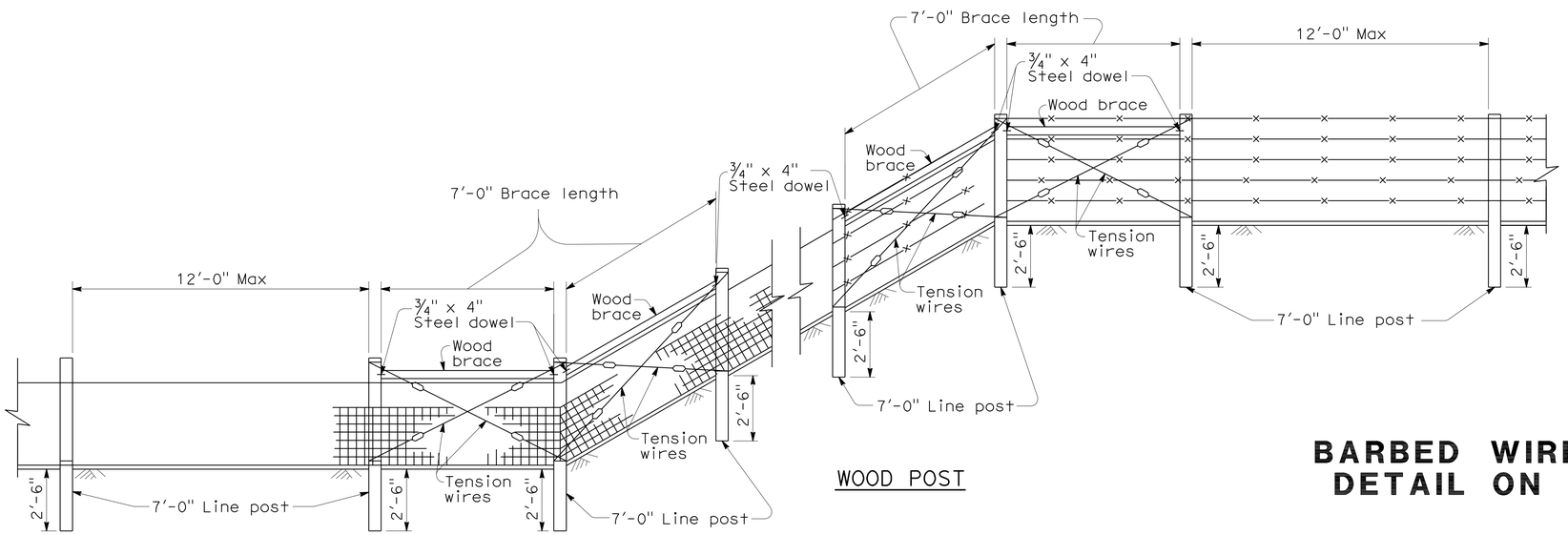

WOOD POST

FENCE ON SHARP BREAK IN GRADE

LEGEND

Wire Mesh fencing

Barbed Wire fencing

STATE OF CALIFORNIA
DEPARTMENT OF TRANSPORTATION

BARBED WIRE AND WIRE MESH FENCE DETAIL ON SHARP BREAK IN GRADE

NO SCALE

NSP A86A DATED JUNE 5, 2009 SUPPLEMENTS THE STANDARD PLANS BOOK DATED MAY 2006.

NEW STANDARD PLAN NSP A86A

2006 NEW STANDARD PLAN NSP A86A

5-12-09

DIST	COUNTY	ROUTE	POST MILES TOTAL PROJECT	SHEET NO.	TOTAL SHEETS
05	SLO	46	40.7/46.3	489	541

REGISTERED CIVIL ENGINEER

June 5, 2009
PLANS APPROVAL DATE

REGISTERED PROFESSIONAL ENGINEER
Glenn DeCou
No. C34547
Exp. 9-30-09
CIVIL
STATE OF CALIFORNIA

The State of California or its officers or agents shall not be responsible for the accuracy or completeness of electronic copies of this plan sheet.

To accompany plans dated 2-13-12

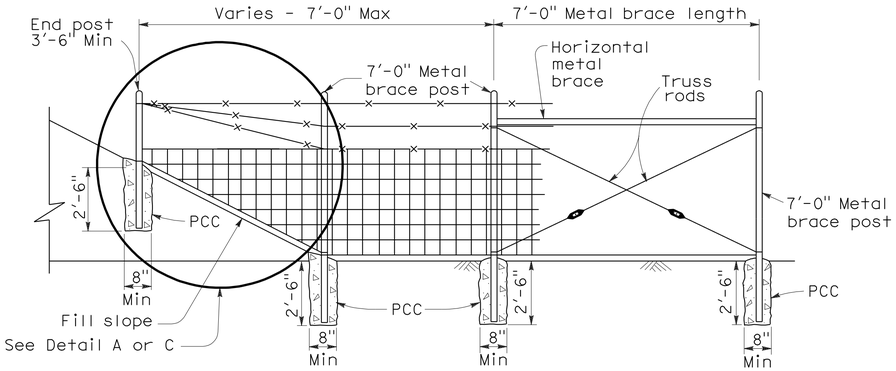

METAL POST

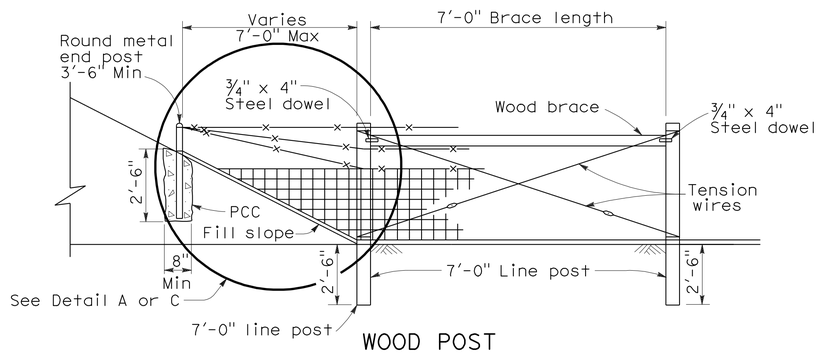

WOOD POST

METHOD OF ERECTING FENCE FOR FILL SLOPE

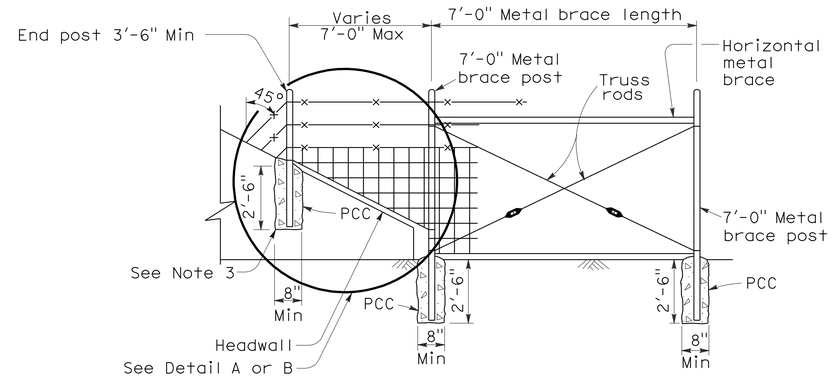

METAL POST

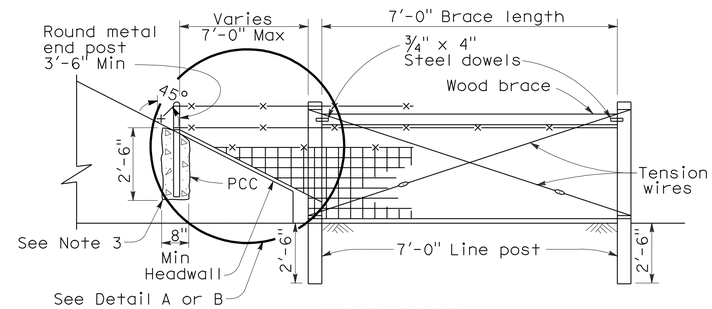

WOOD POST

METHOD OF TYING FENCE TO HEADWALL

NOTES:

1. Wire Mesh fencing shown, can also use Barbed Wire fencing.
2. See Standard Plan A86 for Wire Mesh and Barbed Wire fence dimensions.
3. See Standard Plan B11-7 Alternative Anchorage Detail for connection at headwall. Round metal post to be used for all fence types.

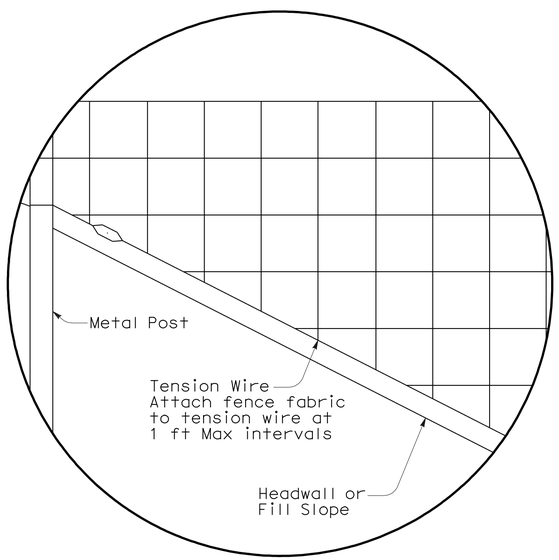

DETAIL A

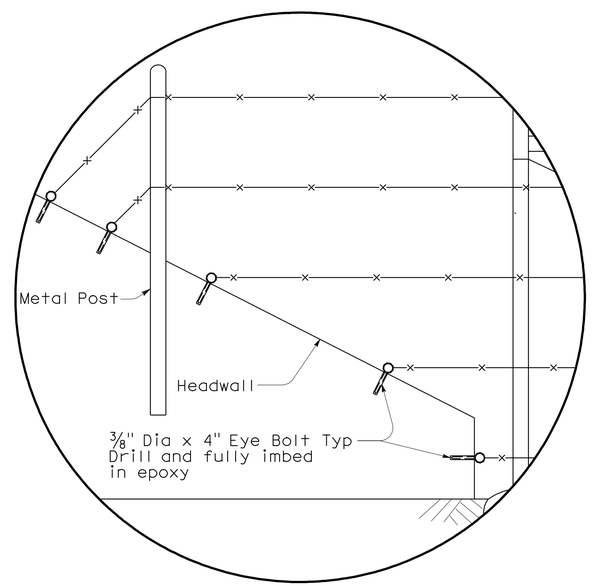

DETAIL B

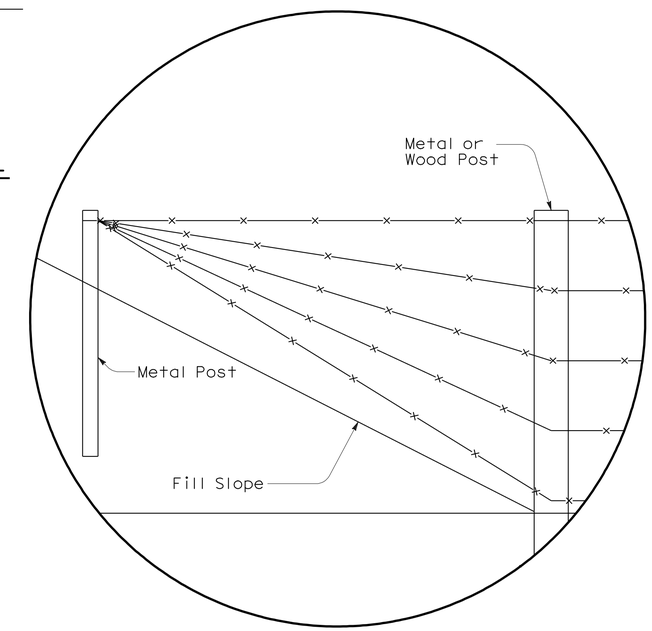

DETAIL C

STATE OF CALIFORNIA
DEPARTMENT OF TRANSPORTATION

BARBED WIRE AND WIRE MESH FENCE DETAILS

NSP A86B DATED JUNE 5, 2009 SUPPLEMENTS THE STANDARD PLANS BOOK DATED MAY 2006.

NEW STANDARD PLAN NSP A86B

2006 NEW STANDARD PLAN NSP A86B

5-12-09

DIST	COUNTY	ROUTE	POST MILES TOTAL PROJECT	SHEET NO.	TOTAL SHEETS
05	SLO	46	40.7/46.3	490	541

REGISTERED CIVIL ENGINEER

June 5, 2009
PLANS APPROVAL DATE

REGISTERED PROFESSIONAL ENGINEER Glenn DeCou No. C34547 Exp. 9-30-09 CIVIL STATE OF CALIFORNIA

The State of California or its officers or agents shall not be responsible for the accuracy or completeness of electronic copies of this plan sheet.

To accompany plans dated 2-13-12

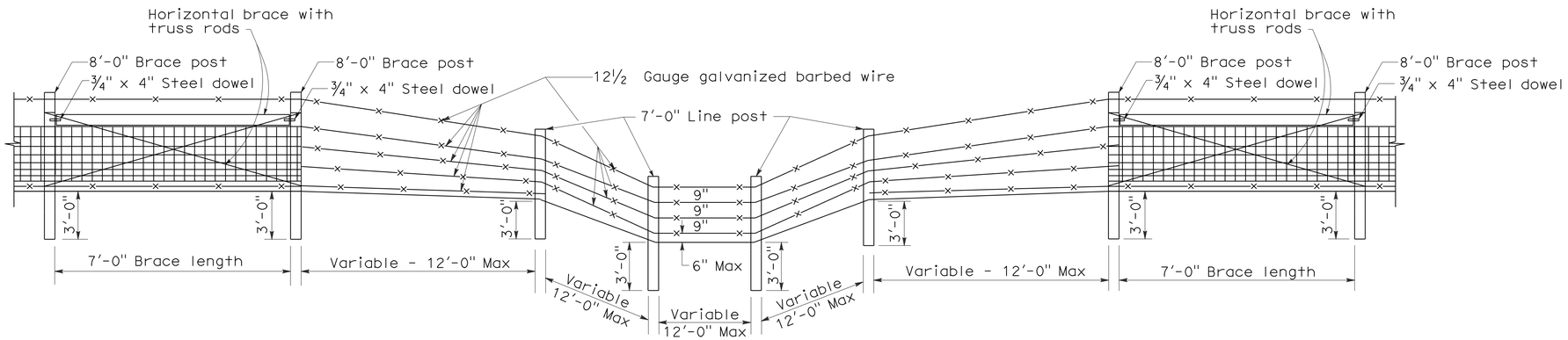

TYPE I

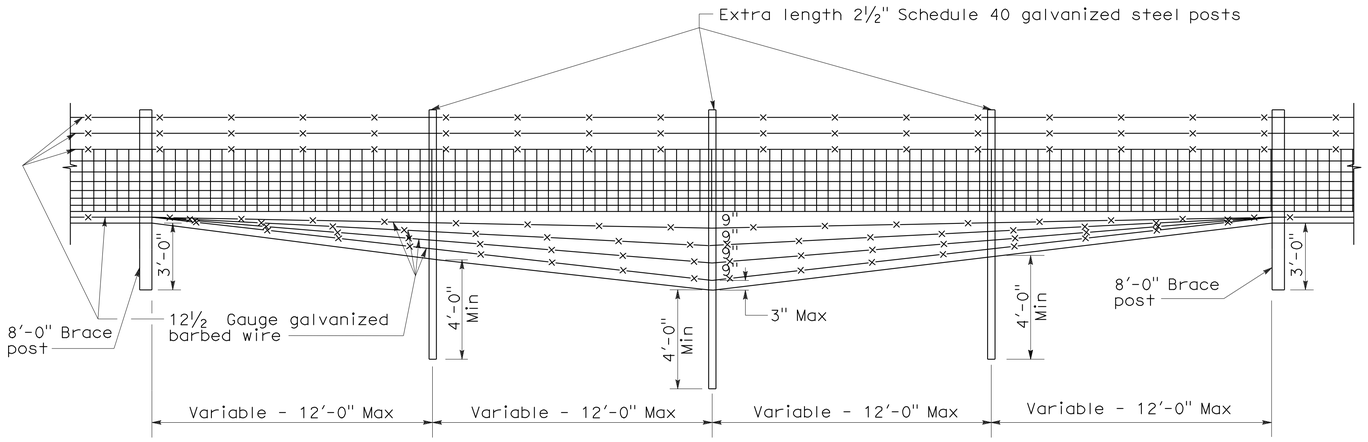

TYPE II

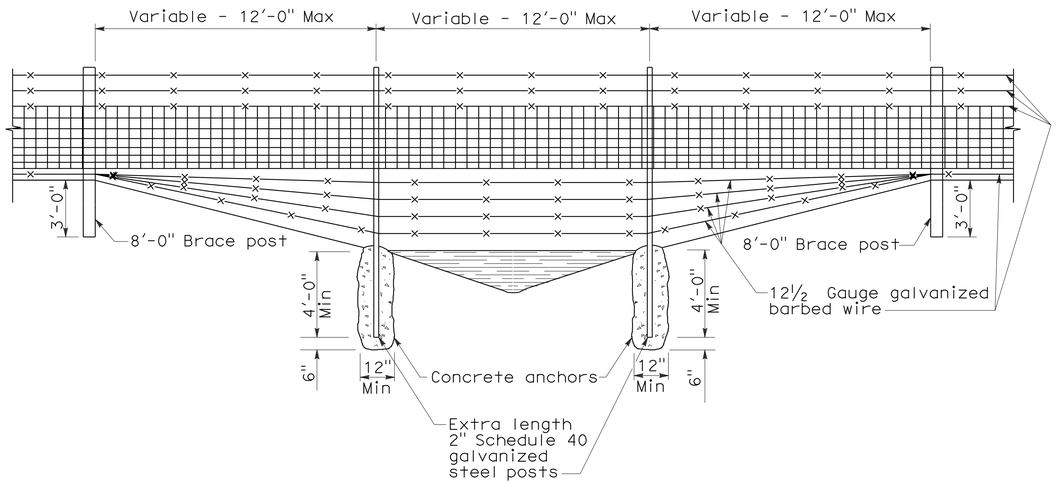

TYPE III

DITCH CROSSINGS

NOTES:

1. Type I Ditch Crossing shows wood posts. Steel posts may be used in place of wood.
2. Ditch crossing show Wire Mesh fencing. Barbed Wire fencing may be used in place of Wire Mesh.
3. See Standard Plan A86 for Wire Mesh and Barbed Wire fence dimensions.
4. See Standard Plan A86 for steel post installation.

STATE OF CALIFORNIA
DEPARTMENT OF TRANSPORTATION

BARBED WIRE AND WIRE MESH FENCE DETAILS AT DITCH CROSSING

NO SCALE

NSP A86C DATED JUNE 5, 2009 SUPPLEMENTS THE STANDARD PLANS BOOK DATED MAY 2006.

NEW STANDARD PLAN NSP A86C

2006 NEW STANDARD PLAN NSP A86C

5-12-09

DIST	COUNTY	ROUTE	POST MILES TOTAL PROJECT	SHEET NO.	TOTAL SHEETS
05	SLO	46	40.7/46.3	491	541

REGISTERED CIVIL ENGINEER

November 17, 2006
PLANS APPROVAL DATE

REGISTERED PROFESSIONAL ENGINEER Michael Janzen No. 44788 Exp. 03-31-08 CIVIL STATE OF CALIFORNIA

The State of California or its officers or agents shall not be responsible for the accuracy or completeness of electronic copies of this plan sheet.

To accompany plans dated 2-13-12

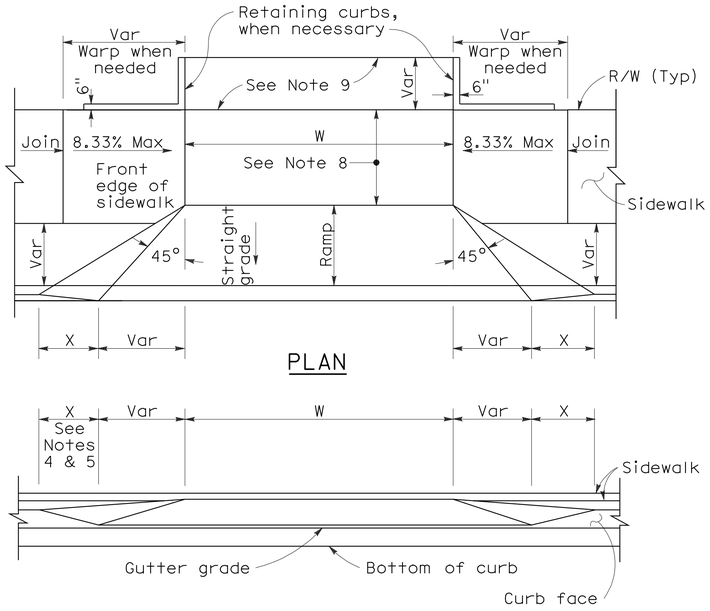

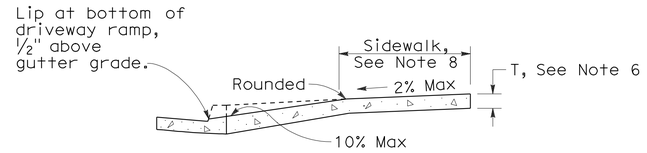

CASE A

Typical driveway, sidewalk not depressed

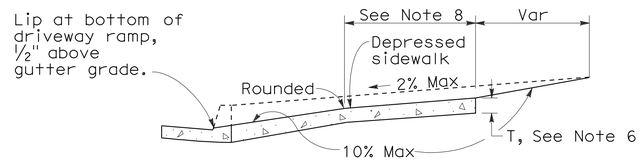

CASE B

Driveway with depressed sidewalk

SECTIONS

CURB QUANTITIES

TYPE	CUBIC YARDS PER LINEAR FOOT
A1-6	0.02585
A1-8	0.03084
A2-6	0.05903
A2-8	0.06379
A3-6	0.01036
A3-8	0.01435
B1-4	0.02185
B1-6	0.02930
B2-4	0.05515
B2-6	0.06171
B3-4	0.00641
B3-6	0.01074
B4	0.05709
D-4	0.04083
D-6	0.06804
E	0.06661

TABLE A

CURB TYPE	DIMENSIONS "H1"	"H2"	"W1"	"W2"
A1-6	1'-2"	6"	7½"	1½"
A1-8	1'-4"	8"	8"	2"
A2-6	1'-0"	6"	2'-7½"	1½"
A2-8	1'-2"	8"	2'-8"	2"
A3-6	6"	5"	7¼"	1¼"
A3-8	8"	7"	7¾"	1¾"
B1-4	1'-0"	4"	7½"	2½"
B1-6	1'-2"	6"	9"	4"
B2-4	10"	4"	2'-7½"	2½"
B2-6	1'-0"	6"	2'-9"	4"
B3-4	4"	3"	7"	2"
B3-6	6"	5"	8½"	3½"
D-4	10"	4"	1'-6"	1'-1"
D-6	1'-0"	6"	2'-2"	1'-8"

DRIVEWAYS

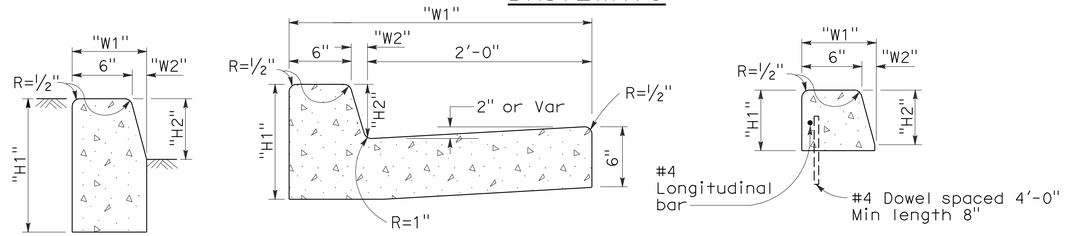

TYPE A1 CURBS
See Table A

TYPE A2 CURBS
See Table A

TYPE A3 CURBS
Superimposed on existing pavement
See Table A

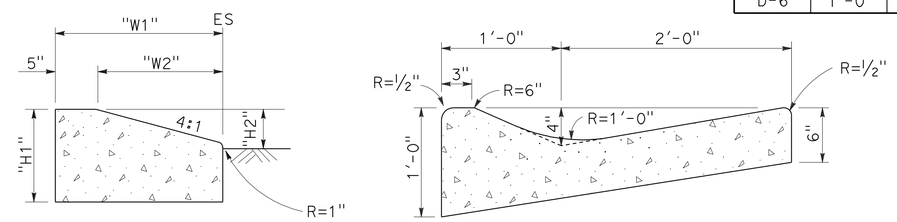

TYPE D CURBS
See Table A

TYPE E CURB

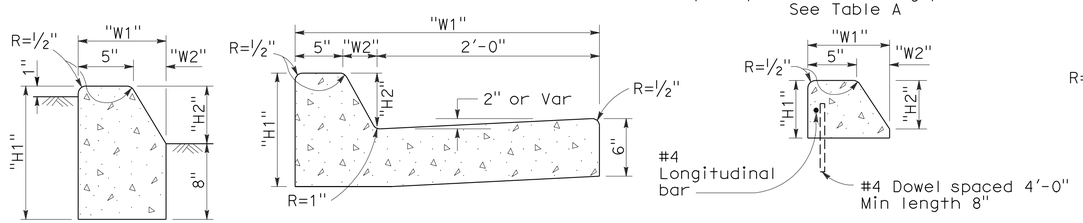

TYPE B1 CURBS
See Table A

TYPE B2 CURBS
See Table A

TYPE B3 CURBS
Superimposed on existing pavement
See Table A

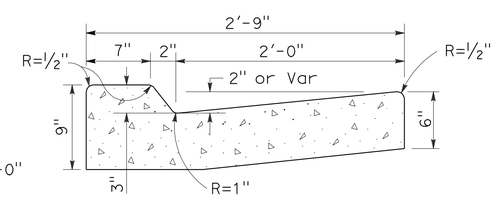

TYPE B4 CURBS

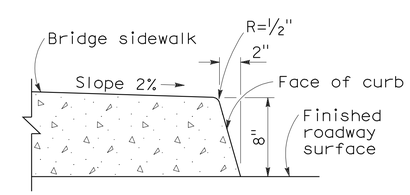

TYPE H CURB
On Bridges

CURBS

NOTES:

1. Case A driveway section typically applies.
2. Use Case B driveway section when ramp slopes would exceed 10% in Case A.
3. Use Case B driveway section when sidewalk cross slope would exceed 2% in Case A.
4. X=3'-0" except for curb heights over 10" where 4:1 slopes shall be used on curb slope.
5. X is a variable when sidewalk is located where wheelchairs may traverse the surface. Slopes shall not exceed 8.33%.
6. Sidewalk and ramp thickness "T" at driveway shall be 4" for residental and 6" for commercial.
7. Difference in slope of the driveway ramp and the slope of a line between the gutter and a point on the roadway 5'-0" from gutter line shall not exceed 15%. Reduce driveway ramp slope, not gutter slope, where required.
8. Minimum width of clear passageway for sidewalk shall be 4'-0".
9. Retaining curbs and acquisition of construction easement may be necessary for narrow sidewalks or curb heights in excess of 6".
10. Across the pedestrian route at curb ramp locations, the gutter pan slope shall not exceed 1" of depth for each 2'-0" of width.

STATE OF CALIFORNIA
DEPARTMENT OF TRANSPORTATION

CURBS AND DRIVEWAYS

NO SCALE

RSP A87A DATED NOVEMBER 17, 2006 SUPERSEDES STANDARD PLAN A87A DATED MAY 1, 2006 - PAGE 113 OF THE STANDARD PLANS BOOK DATED MAY 2006.

REVISED STANDARD PLAN RSP A87A

2006 REVISED STANDARD PLAN RSP A87A

10-25-06

DIST	COUNTY	ROUTE	POST MILES TOTAL PROJECT	SHEET NO.	TOTAL SHEETS
05	SLO	46	40.7/46.3	492	541

William K. Farnbach
REGISTERED CIVIL ENGINEER

May 15, 2009
PLANS APPROVAL DATE

REGISTERED PROFESSIONAL ENGINEER
William K. Farnbach
No. C49042
Exp. 9-30-10
CIVIL
STATE OF CALIFORNIA

The State of California or its officers or agents shall not be responsible for the accuracy or completeness of electronic copies of this plan sheet.

To accompany plans dated 2-13-12

2006 REVISED STANDARD PLAN RSP P1

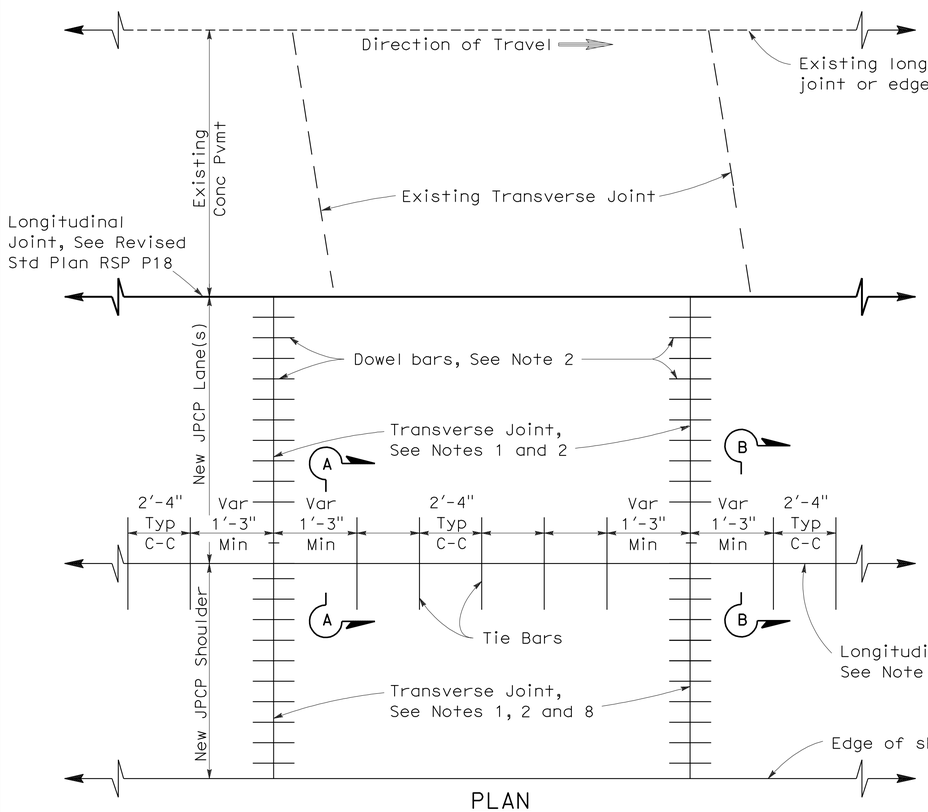

PLAN

LANE/SHOULDER ADDITION OR RECONSTRUCTION

See Notes 6 and 7

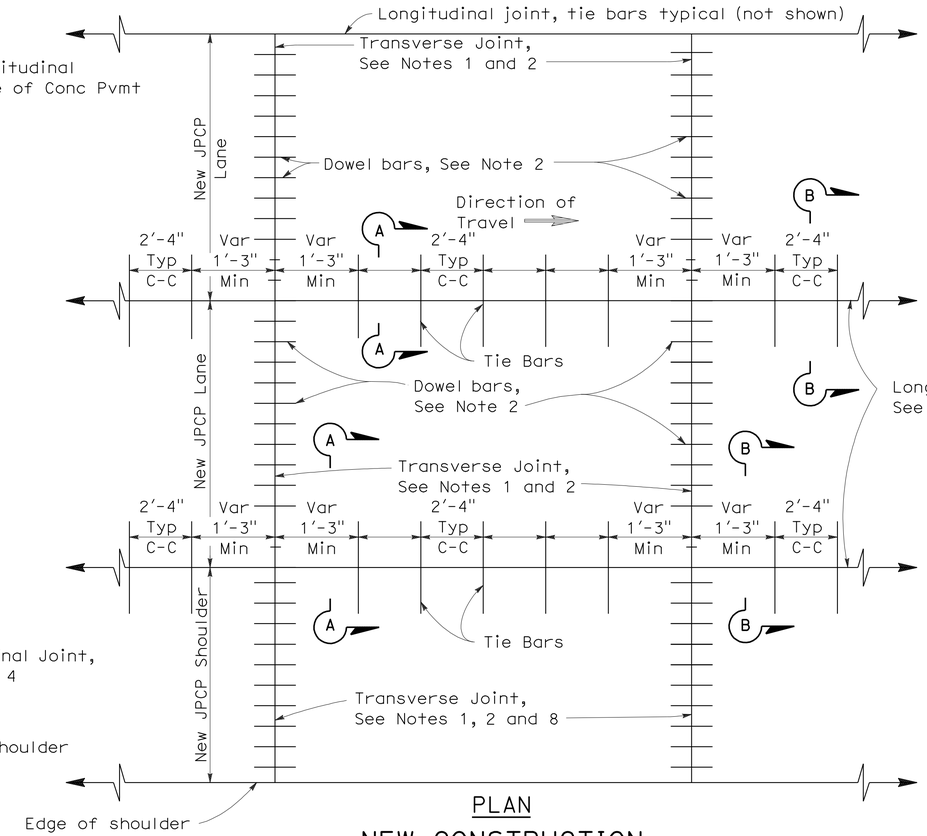

PLAN

NEW CONSTRUCTION

See Notes 6 and 7

NOTES:

1. Transverse joints shall be constructed at right angles to the longitudinal pavement joints in new jointed plain concrete pavement and spaced at successive repeated intervals of 12', 15', 13' and 14'.
2. For transverse joint and dowel bar details not shown, See Revised Standard Plan RSP P10.
3. Construct longitudinal contraction joints as shown in Section A-A when more than one lane or shoulder widths are placed at one time. If constructing one lane at a time, use longitudinal construction joint, as shown in Section B-B.
4. For additional longitudinal joint details, see Revised Standard Plan RSP P18.
5. If fresh concrete is placed adjacent to existing concrete, the top corner of the new hardened concrete does not need to be rounded to the 1/4" radius as shown.
6. Joint spacing patterns do not apply to intersections.
7. Details can also apply to inside widening.
8. Dowel bars may be omitted from shoulders when the shoulder cross slope is not the same as the adjacent traffic lane.

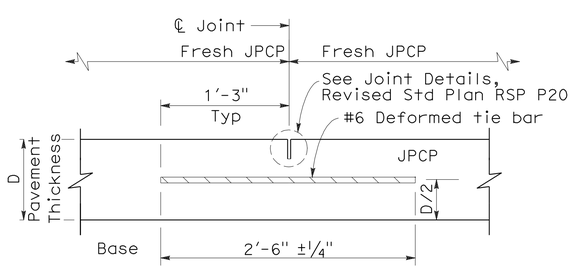

SECTION A-A

LONGITUDINAL CONTRACTION JOINT

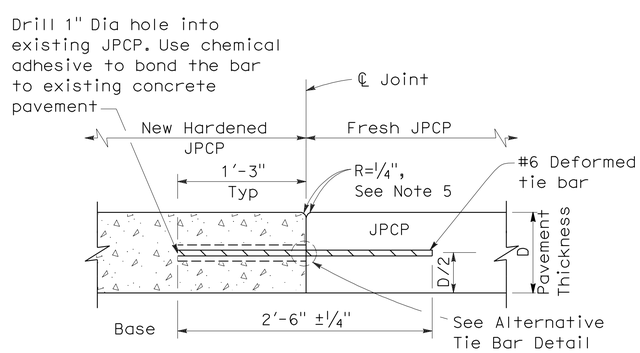

SECTION B-B

LONGITUDINAL CONSTRUCTION JOINT

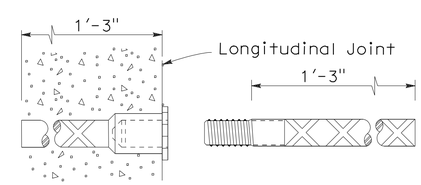

ALTERNATIVE TIE BAR SPLICE DETAIL

(Splice Coupler)

TIE BAR DETAILS

STATE OF CALIFORNIA
DEPARTMENT OF TRANSPORTATION

JOINTED PLAIN CONCRETE PAVEMENT

NO SCALE

RSP P1 DATED MAY 15, 2009 SUPERSEDES STANDARD PLAN P1
DATED MAY 1, 2006 - PAGE 119 OF THE STANDARD PLANS BOOK DATED MAY 2006.

REVISED STANDARD PLAN RSP P1

5-8-09

DIST	COUNTY	ROUTE	POST MILES TOTAL PROJECT	SHEET NO.	TOTAL SHEETS
05	SLO	46	40.7/46.3	493	541

William K. Farnbach
REGISTERED CIVIL ENGINEER

June 5, 2009
PLANS APPROVAL DATE

REGISTERED PROFESSIONAL ENGINEER
William K. Farnbach
No. C49042
Exp. 9-30-10
CIVIL
STATE OF CALIFORNIA

The State of California or its officers or agents shall not be responsible for the accuracy or completeness of electronic copies of this plan sheet.

To accompany plans dated 2-13-12

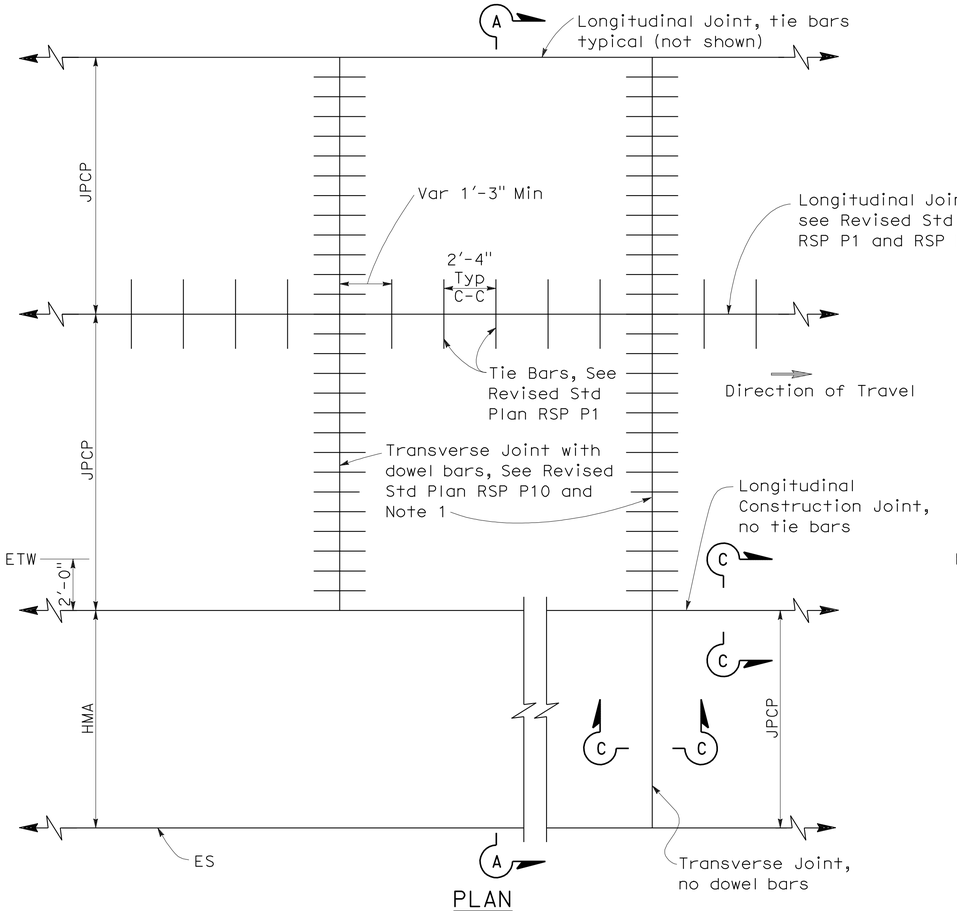

PLAN

NEW CONSTRUCTION

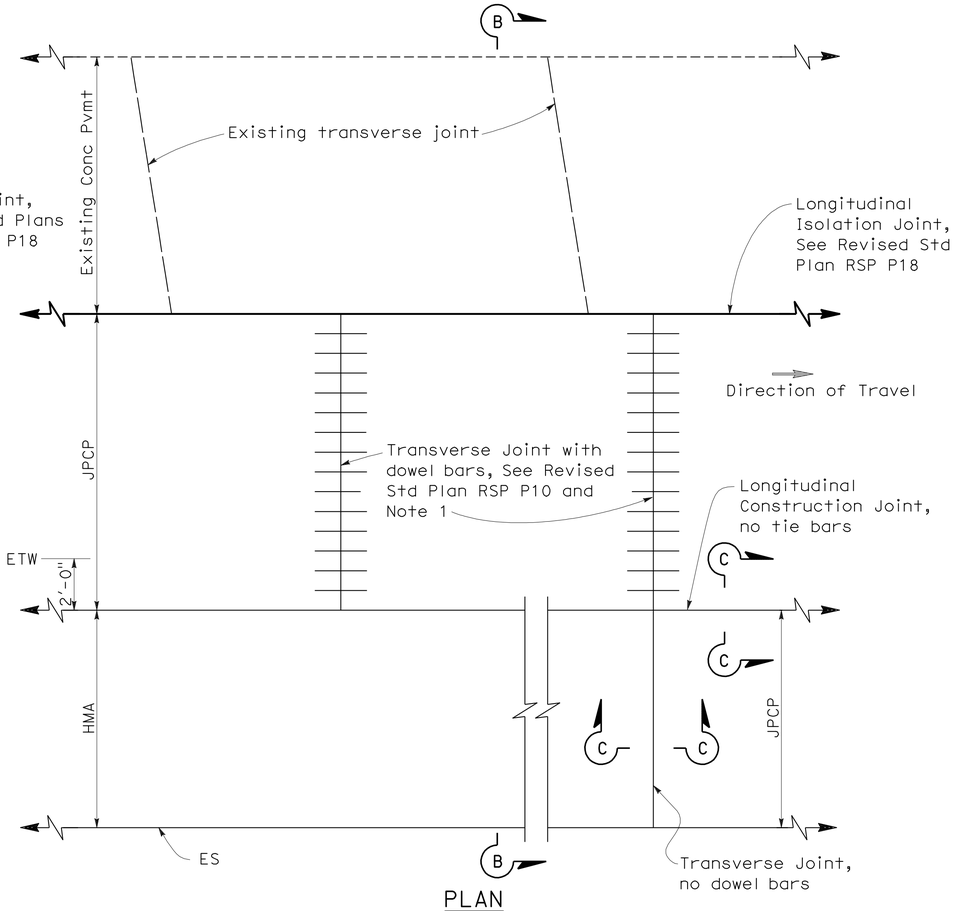

PLAN

LANE/SHOULDER ADDITION OR RECONSTRUCTION

NOTES:

1. Transverse joints shall be constructed at right angles to the longitudinal pavement joints in new Jointed Plain Concrete Pavement and spaced at successive repeated intervals of 12', 15', 13' and 14'.
2. For locations of rumble strips, see project plans. For rumble strip details not shown, see Standard Plans A40A and A40B.
3. Joint spacing patterns do not apply to intersections.

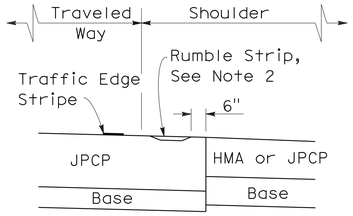

DETAIL "A"

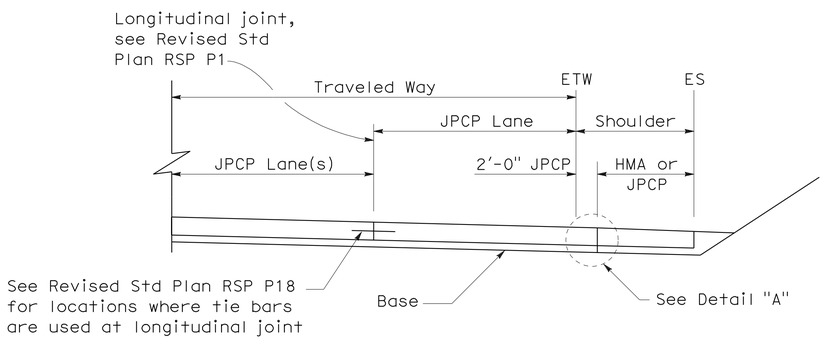

SECTION A-A

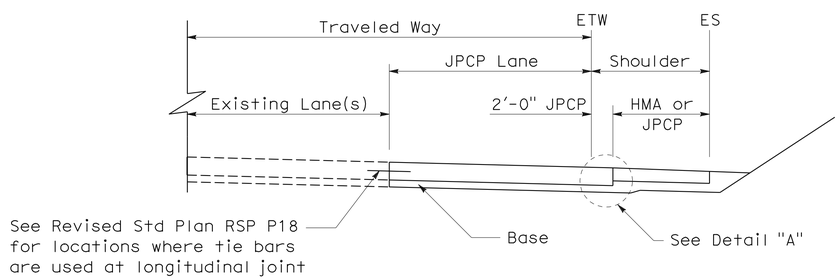

SECTION B-B

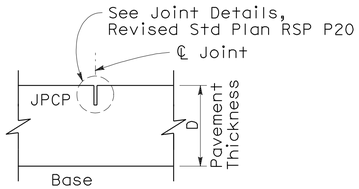

SECTION C-C

TRANSVERSE/LONGITUDINAL JOINT

(no dowel bars/tie bars)

STATE OF CALIFORNIA
DEPARTMENT OF TRANSPORTATION

JOINTED PLAIN CONCRETE PAVEMENT-WIDENED SLAB DETAILS

NO SCALE

RSP P2 DATED JUNE 5, 2009 SUPERCEDES STANDARD PLAN P2
DATED MAY 1, 2006 - PAGE 120 OF THE STANDARD PLANS BOOK DATED MAY 2006.

REVISED STANDARD PLAN RSP P2

2006 REVISED STANDARD PLAN RSP P2

5-19-09

DIST	COUNTY	ROUTE	POST MILES TOTAL PROJECT	SHEET NO.	TOTAL SHEETS
05	SLO	46	40.7/46.3	494	541

William K. Farnbach
REGISTERED CIVIL ENGINEER

May 15, 2009
PLANS APPROVAL DATE

REGISTERED PROFESSIONAL ENGINEER — William K. Farnbach — No. C49042 — Exp. 9-30-10 — CIVIL — STATE OF CALIFORNIA

The State of California or its officers or agents shall not be responsible for the accuracy or completeness of electronic copies of this plan sheet.

To accompany plans dated 2-13-12

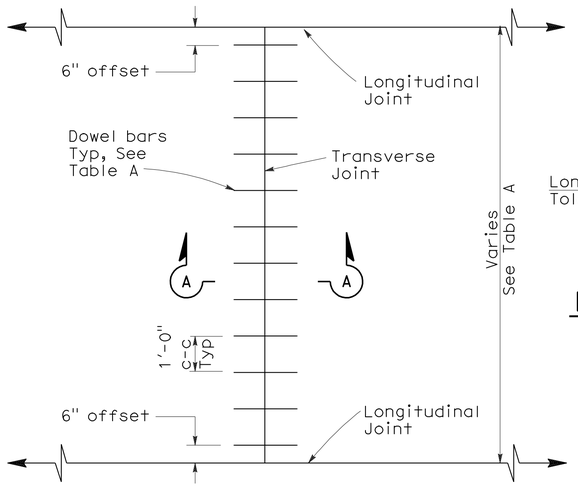

TRANSVERSE JOINT DOWEL BAR LAYOUT

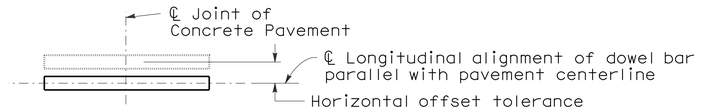

PLAN

HORIZONTAL OFFSET TOLERANCE

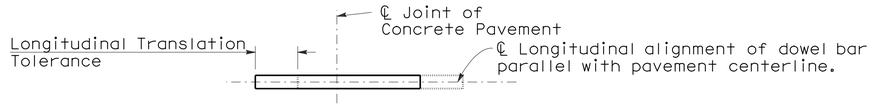

PLAN

LONGITUDINAL TRANSLATION TOLERANCE

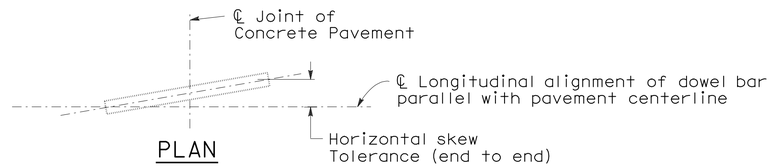

PLAN

HORIZONTAL SKEW TOLERANCE

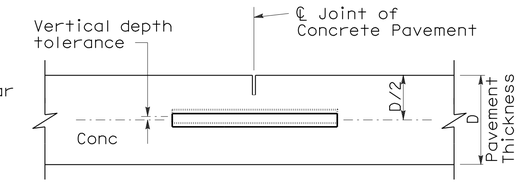

ELEVATION

VERTICAL DEPTH TOLERANCE

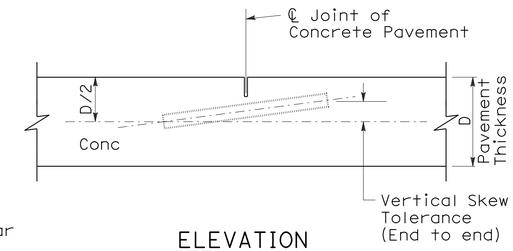

ELEVATION

VERTICAL SKEW TOLERANCE

NOTES:

1. See Revised Standard Plan RSP P1 for typical dowel bar placement and locations.
2. 1½" Dia smooth dowel bars are to be used with a pavement thickness, D, equal to or greater than 0.70 feet. For pavement thickness, D, less than 0.70 feet, use 1¼" Dia smooth dowel bars.
3. For widths not shown, see Project Plans.
4. If fresh concrete pavement is placed adjacent to existing concrete pavement, the top corner of the existing concrete pavement does not need to be rounded to the ¼" radius, as shown.

TABLE A (See Note 3)

Dowel Bar Transverse Spacing Table	
Width between Longitudinal Joints	Number of Dowels between Longitudinal Joints
14'-0"	14
13'-0"	13
12'-0"	12
11'-0"	11
10'-0"	10
8'-0"	8
5'-0"	5
4'-0"	4

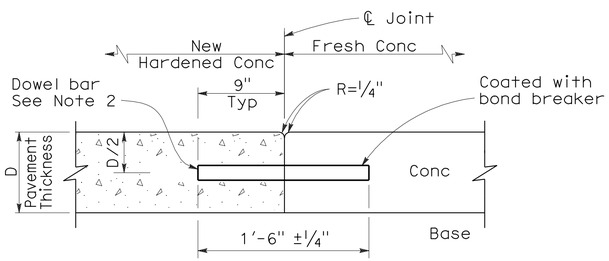

SECTION A-A

TRANSVERSE CONSTRUCTION JOINT DETAIL

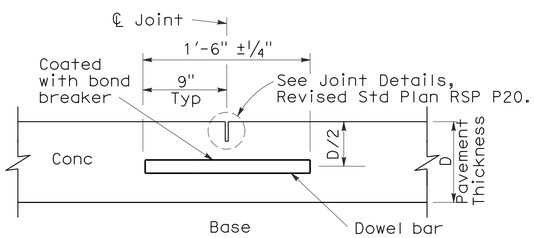

TRANSVERSE CONTRACTION JOINT

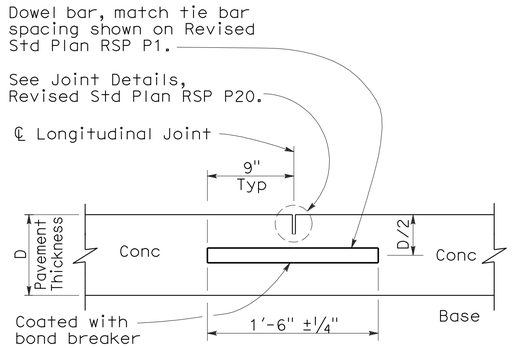

LONGITUDINAL CONTRACTION JOINT WITH DOWEL BARS

(See Revised Std Plan RSP P18)

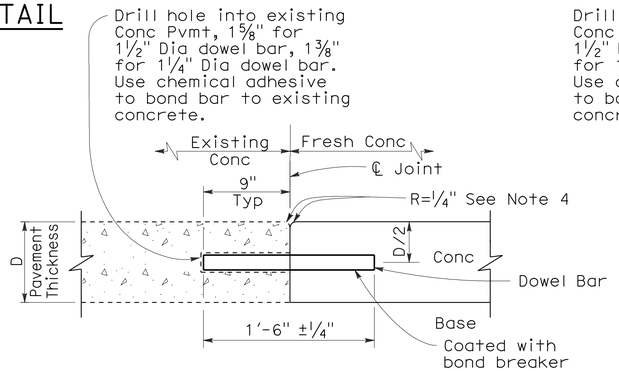

TRANSVERSE CONSTRUCTION JOINT FOR EXISTING CONCRETE PAVEMENT

(Drill and bond locations)

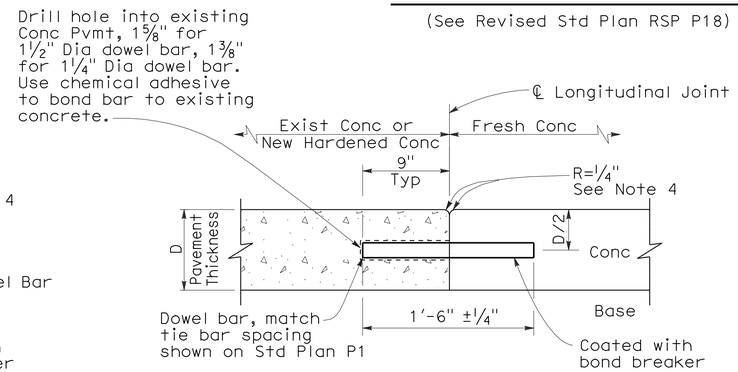

LONGITUDINAL CONSTRUCTION JOINT WITH DOWEL BARS

(See Revised Std Plan RSP P18)

STATE OF CALIFORNIA
DEPARTMENT OF TRANSPORTATION

CONCRETE PAVEMENT-DOWEL BAR DETAILS

NO SCALE

RSP P10 DATED MAY 15, 2009 SUPERSEDES STANDARD PLAN P10 DATED MAY 1, 2006 - PAGE 124 OF THE STANDARD PLANS BOOK DATED MAY 2006.

REVISED STANDARD PLAN RSP P10

2006 REVISED STANDARD PLAN RSP P10

5-8-09

DIST	COUNTY	ROUTE	POST MILES TOTAL PROJECT	SHEET NO.	TOTAL SHEETS
05	SLO	46	40.7/46.3	495	541

William K. Farnbach
REGISTERED CIVIL ENGINEER

May 15, 2009
PLANS APPROVAL DATE

REGISTERED PROFESSIONAL ENGINEER
William K. Farnbach
No. C49042
Exp. 9-30-10
CIVIL
STATE OF CALIFORNIA

The State of California or its officers or agents shall not be responsible for the accuracy or completeness of electronic copies of this plan sheet.

To accompany plans dated 2-13-12

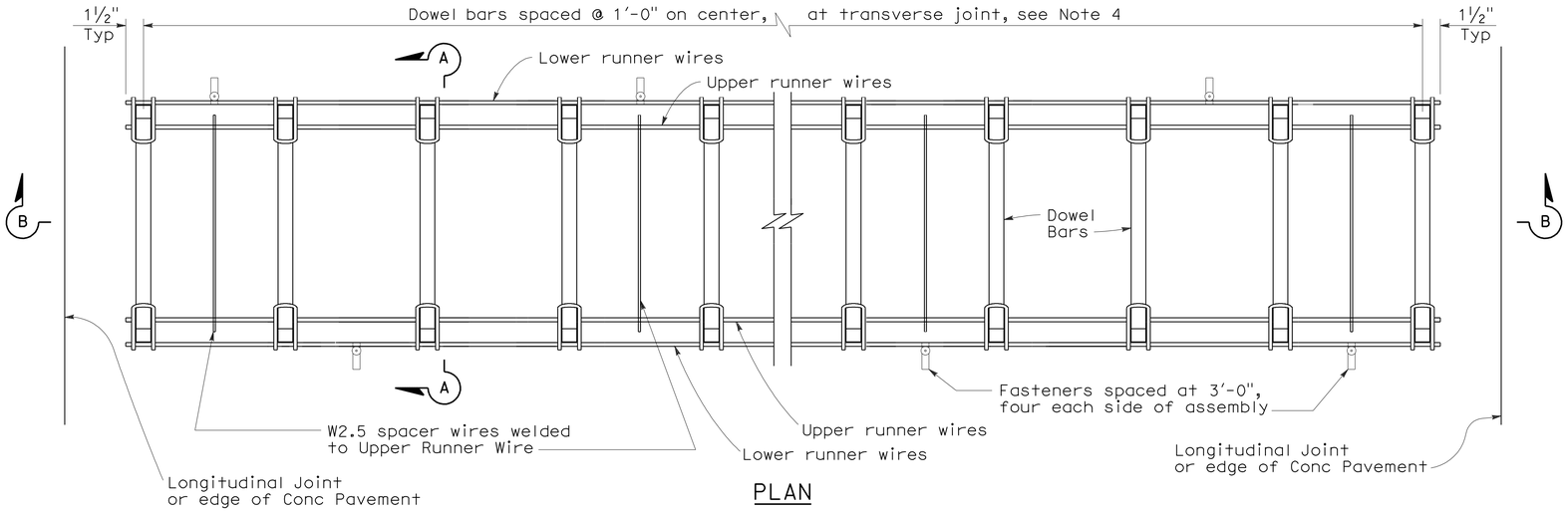

PLAN

DOWEL BAR BASKET (TRANSVERSE JOINT)

See Note 1

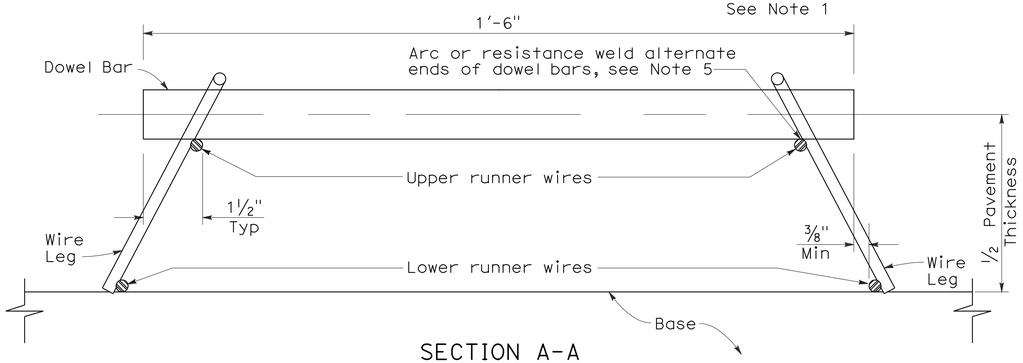

SECTION A-A

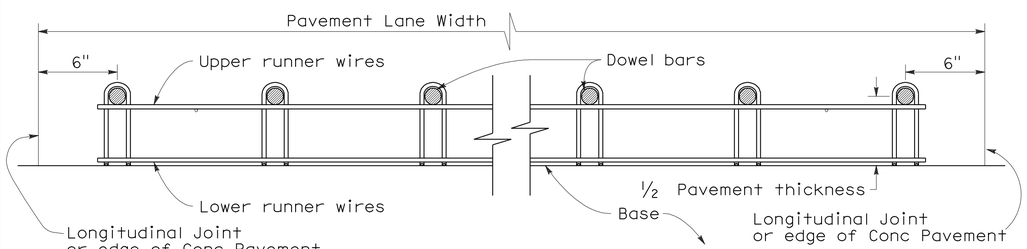

SECTION B-B

See Note 1

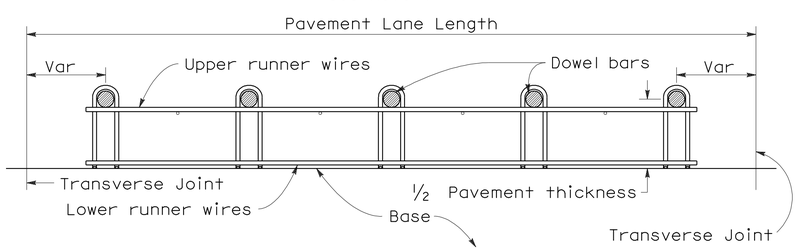

SECTION C-C

See Notes 1 and 4

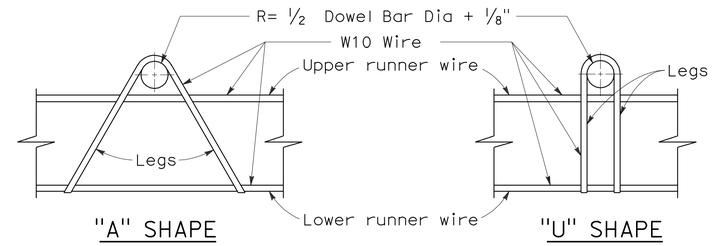

"A" SHAPE "U" SHAPE

ASSEMBLY FRAME DETAILS

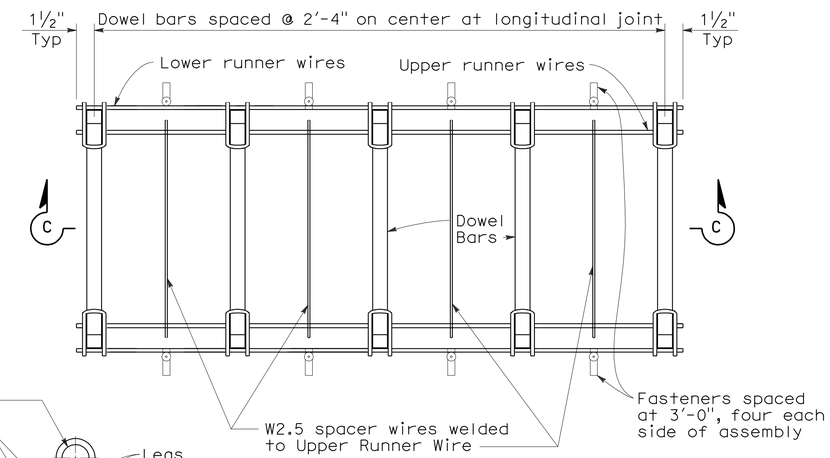

PLAN

DOWEL BAR BASKET (LONGITUDINAL JOINT)

See Note 1

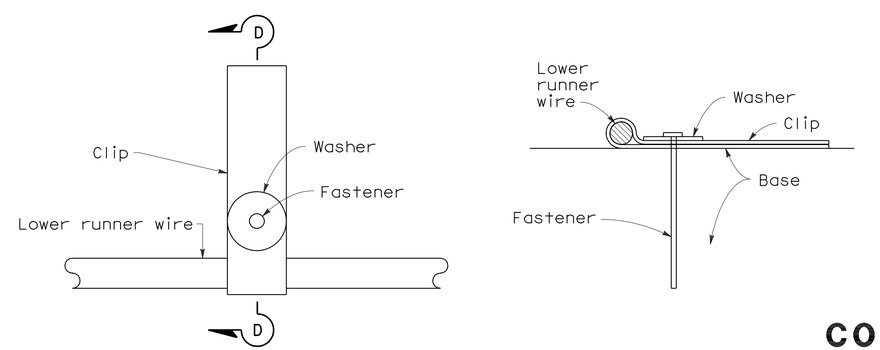

PLAN SECTION D-D

FASTENER DETAIL

NOTES:

1. "U" frame shape assembly shown. "U" frame shape or "A" frame shape are acceptable.
2. Wire sizes shown are minimum required.
3. All wire intersections are to be resistance welded.
4. Use tie bar spacing for longitudinal dowel bar locations. See Revised Std Plans RSPs P1, P2, and P3 for tie bar requirements.
5. Weld may be at top or bottom of dowel bar.

STATE OF CALIFORNIA
DEPARTMENT OF TRANSPORTATION

CONCRETE PAVEMENT-DOWEL BAR BASKET DETAILS

NO SCALE

RSP P12 DATED MAY 15, 2009 SUPERSEDES RSP P12 DATED NOVEMBER 17, 2006 AND STANDARD PLAN P12 DATED MAY 1, 2006 - PAGE 125 OF THE STANDARD PLANS BOOK DATED MAY 2006.

REVISED STANDARD PLAN RSP P12

2006 REVISED STANDARD PLAN RSP P12

5-8-09

DIST	COUNTY	ROUTE	POST MILES TOTAL PROJECT	SHEET NO.	TOTAL SHEETS
05	SLO	46	40.7/46.3	496	541

William K. Farnbach
REGISTERED CIVIL ENGINEER

May 15, 2009
PLANS APPROVAL DATE

REGISTERED PROFESSIONAL ENGINEER
William K. Farnbach
No. C49042
Exp. 9-30-10
CIVIL
STATE OF CALIFORNIA

The State of California or its officers or agents shall not be responsible for the accuracy or completeness of electronic copies of this plan sheet.

To accompany plans dated 2-13-12

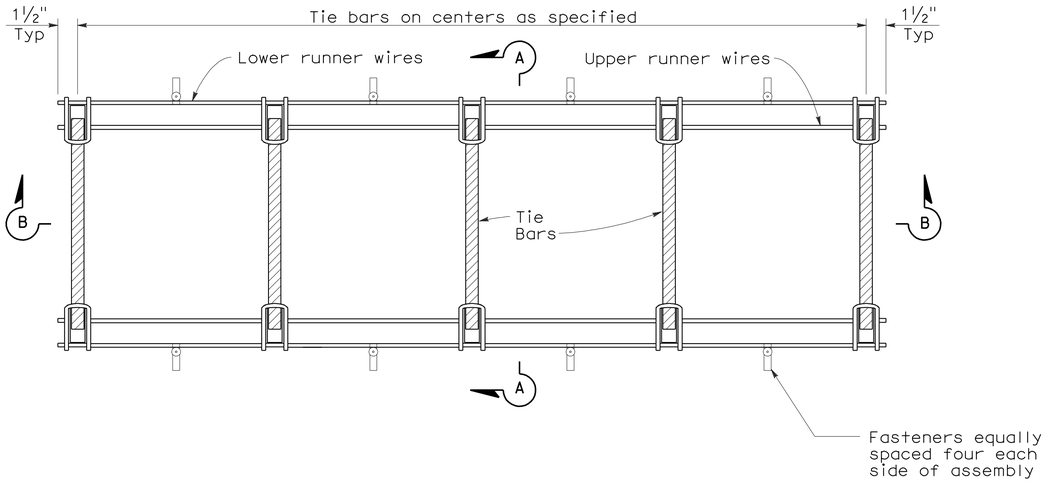

PLAN

TIE BAR BASKET

(TIE BARS AT LONGITUDINAL JOINT)
See Note 1

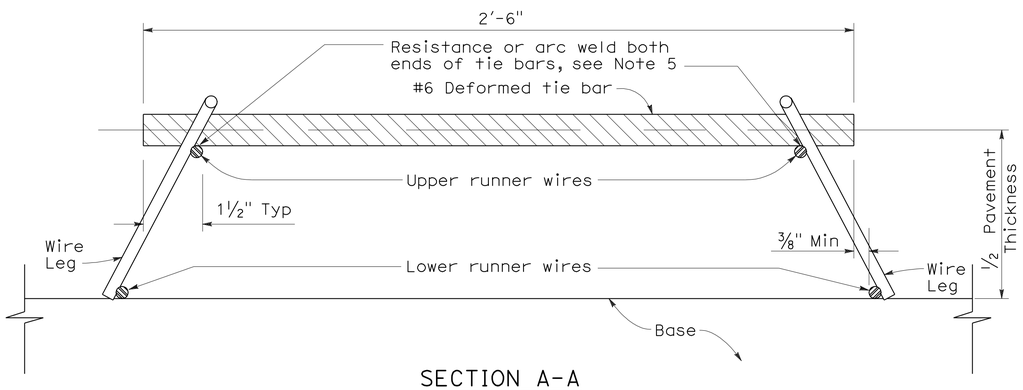

SECTION A-A

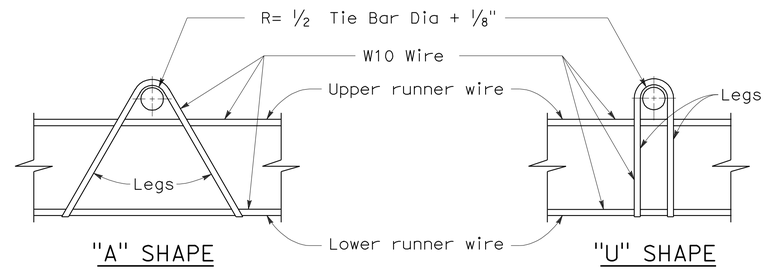

"A" SHAPE "U" SHAPE

ASSEMBLY FRAME DETAILS

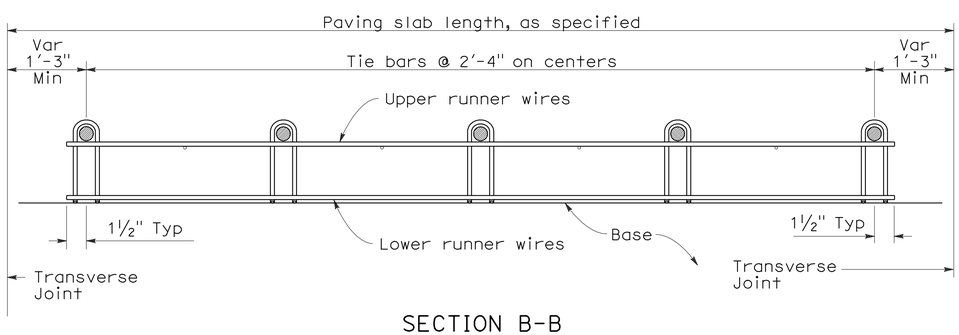

SECTION B-B
See Note 1

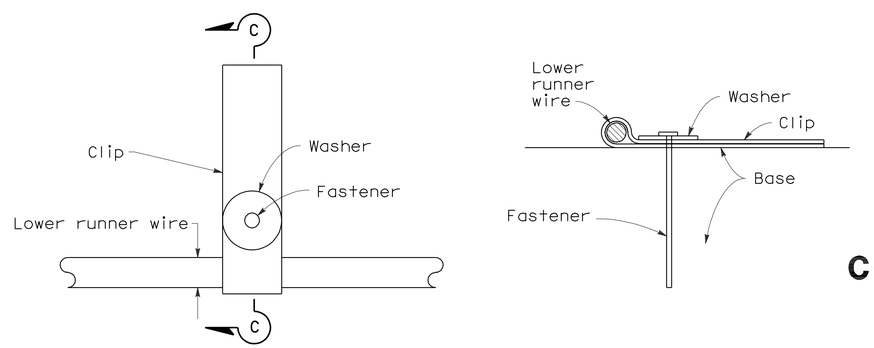

PLAN SECTION C-C

FASTENER DETAIL

NOTES:

1. "U" frame shape assembly shown. "U" frame shape or "A" frame shape are acceptable.
2. Wire sizes shown are minimum required.
3. All wire intersections are to be resistance welded.
4. Not for use on nondoweled skewed jointed plain concrete pavement.
5. Weld may be at top or bottom of tie bar.

STATE OF CALIFORNIA
DEPARTMENT OF TRANSPORTATION

CONCRETE PAVEMENT-TIE BAR BASKET DETAILS

NO SCALE

RSP P17 DATED MAY 15, 2009 SUPERSEDES RSP P17 DATED NOVEMBER 17, 2006 AND STANDARD PLAN P17 DATED MAY 1, 2006 - PAGE 126 OF THE STANDARD PLANS BOOK DATED MAY 2006.

REVISED STANDARD PLAN RSP P17

2006 REVISED STANDARD PLAN RSP P17

5-8-09

DIST	COUNTY	ROUTE	POST MILES TOTAL PROJECT	SHEET NO.	TOTAL SHEETS
05	SLO	46	40.7/46.3	497	541

William K. Farnbach
REGISTERED CIVIL ENGINEER

June 5, 2009
PLANS APPROVAL DATE

REGISTERED PROFESSIONAL ENGINEER
William K. Farnbach
No. C49042
Exp. 9-30-10
CIVIL
STATE OF CALIFORNIA

The State of California or its officers or agents shall not be responsible for the accuracy or completeness of electronic copies of this plan sheet.

To accompany plans dated 2-13-12

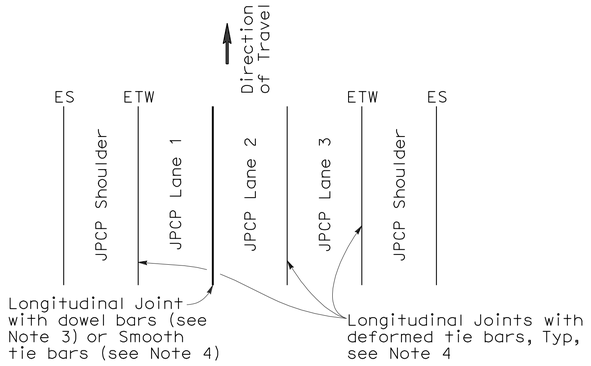

3 LANES WITH TIED CONCRETE SHOULDERS
PLAN

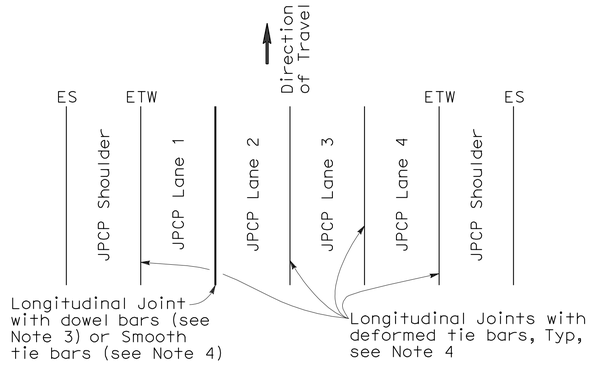

4 LANES WITH TIED CONCRETE SHOULDERS
PLAN

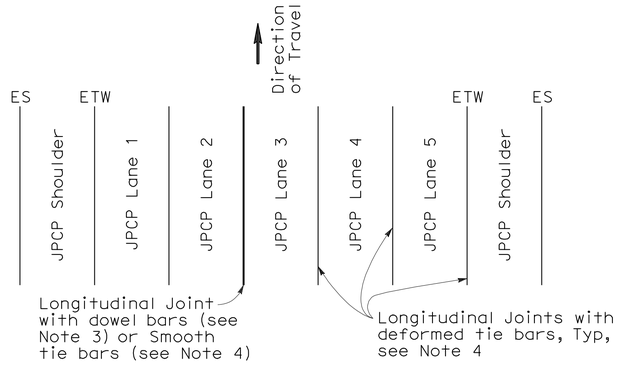

5 LANES WITH TIED CONCRETE SHOULDERS
PLAN

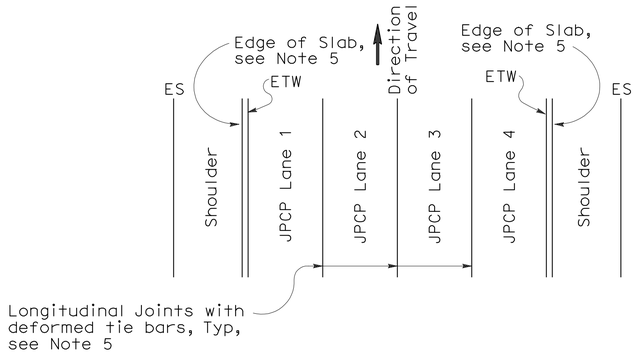

4 LANES OR LESS WITH WIDENED SLAB
PLAN

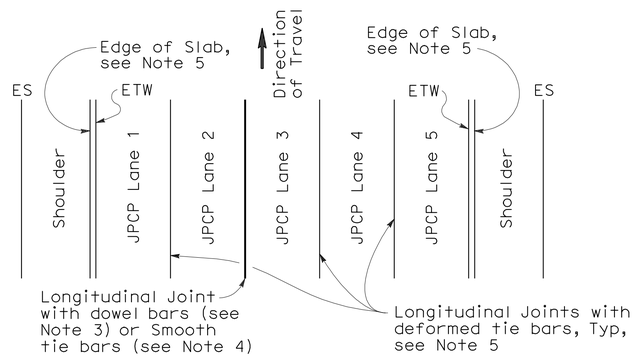

5 LANES WITH WIDENED SLAB
PLAN

NEW CONSTRUCTION

Location of Longitudinal Joints
(For JPCP)

NOTES:

1. Where Lean Concrete Base is not used as base material, the joint filler material used for the longitudinal isolation joint shall only extend to the bottom of the new concrete slab. See Detail A.
2. Use 5/8" ±1/16" dimension for silicone sealant.
3. See Revised Standard Plan RSP P10 for longitudinal joint with dowel bars.
4. See Revised Standard Plan RSP P1.
5. See Revised Standard Plan RSP P2.

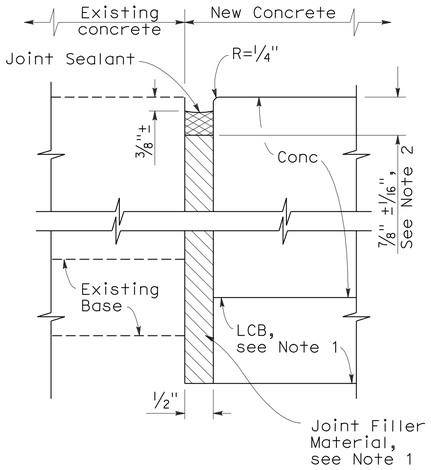

DETAIL A

ISOLATION JOINT

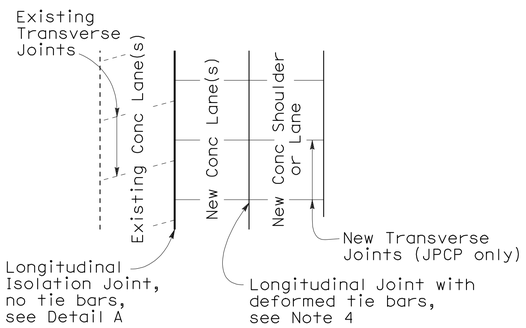

CASE 1
PLAN

Transverse Joints do not align between new and existing

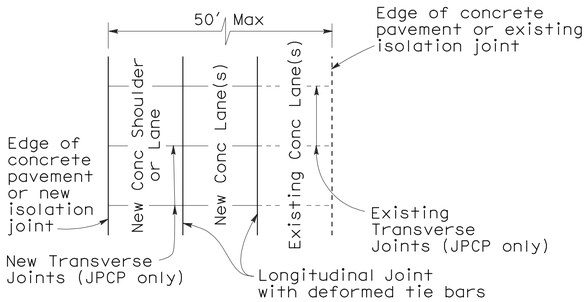

CASE 2
PLAN

Transverse Joints align between new and existing

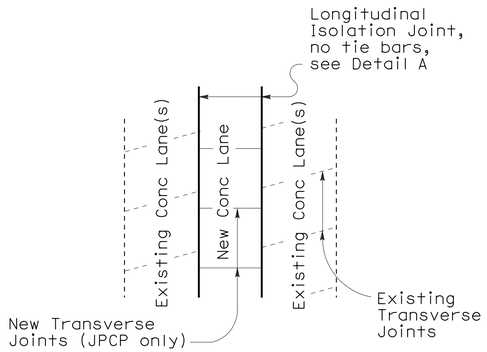

CASE 3 (INTERIOR LANE REPLACEMENT)
PLAN

Transverse Joints do not align between new and existing

LANE/SHOULDER ADDITION OR RECONSTRUCTION

(For JPCP and CRCP)

STATE OF CALIFORNIA
DEPARTMENT OF TRANSPORTATION

CONCRETE PAVEMENT-LANE SCHEMATICS AND ISOLATION JOINT DETAIL

NO SCALE

RSP P18 DATED JUNE 5, 2009 SUPERSEDES RSP P18 DATED MAY 15, 2009, RSP P18 DATED NOVEMBER 17, 2006 AND STANDARD PLAN P18 DATED MAY 1, 2006 - PAGE 127 OF THE STANDARD PLANS BOOK DATED MAY 2006.

REVISED STANDARD PLAN RSP P18

2006 REVISED STANDARD PLAN RSP P18

5-14-09

NOTE:

1. Tie bars, dowel bars, and reinforcement are not shown in joint seal details, see Revised Standard Plans RSP P1, RSP P3, RSP P10, RSP P35, RSP P45, or RSP P46 as applicable.

DIST	COUNTY	ROUTE	POST MILES TOTAL PROJECT	SHEET NO.	TOTAL SHEETS
05	SLO	46	40.7/46.3	498	541

William K. Farnbach
REGISTERED CIVIL ENGINEER

May 15, 2009
PLANS APPROVAL DATE

REGISTERED PROFESSIONAL ENGINEER William K. Farnbach No. C49042 Exp. 9-30-10 CIVIL STATE OF CALIFORNIA

The State of California or its officers or agents shall not be responsible for the accuracy or completeness of electronic copies of this plan sheet.

To accompany plans dated 2-13-12

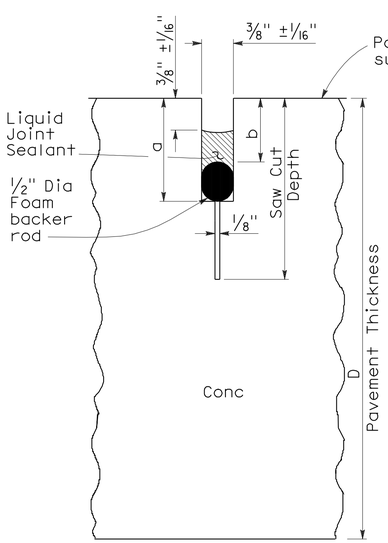

LIQUID SEALANT

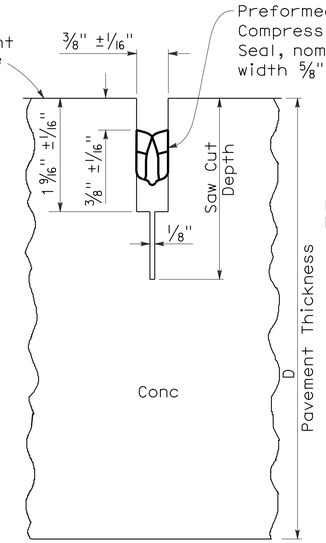

COMPRESSION SEAL

TYPE A1

Transverse Contraction Joints

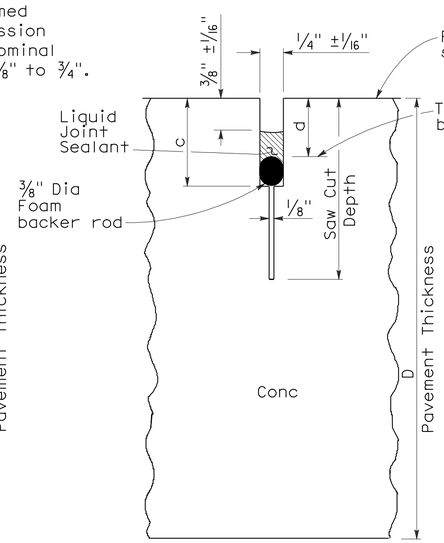

LIQUID SEALANT

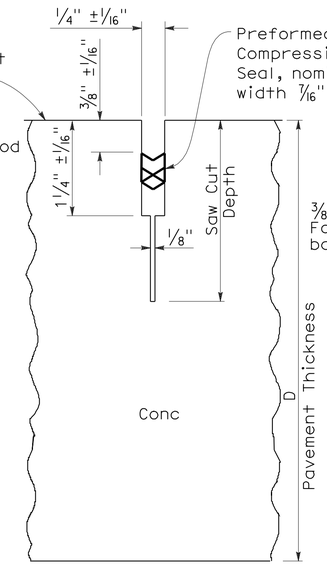

COMPRESSION SEAL

TYPE A2

Longitudinal Contraction Joints

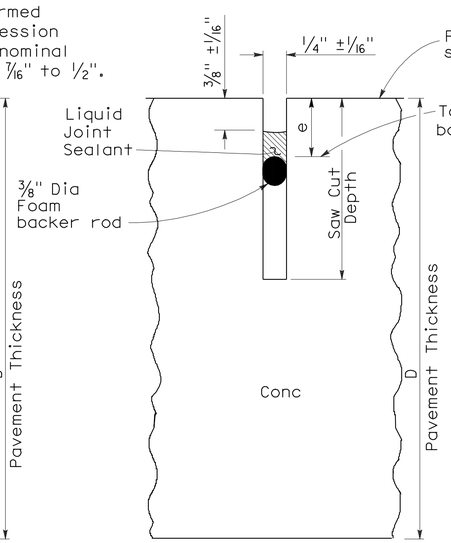

LIQUID SEALANT

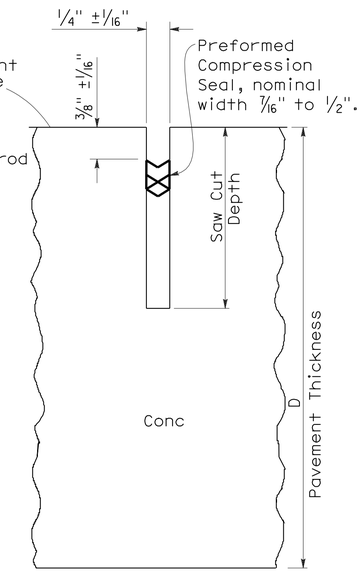

COMPRESSION SEAL

TYPE B

Longitudinal or Transverse Contraction Joint

LIQUID SEALANT RESERVOIR DEPTH

LIQUID SEALANT MATERIAL	3/8" Joint Width Type A1		1/4" Joint Width Type A2		1/4" Joint Width Type B
	DIMENSION		DIMENSION		DIMENSION
	a	b	c	d	e
SILCONE	1" ±1/16"	5/8" ±1/16"	15/16" ±1/16"	9/16" ±1/16"	9/16" ±1/16"
ASPHALT RUBBER	1 3/16" ±1/16"	3/4" ±1/16"	1 1/16" ±1/16"	11/16" ±1/16"	11/16" ±1/16"

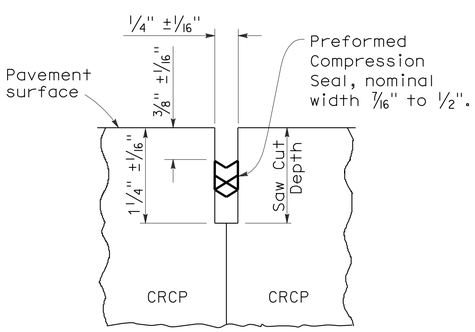

COMPRESSION SEAL

TYPE C

Transverse and Longitudinal Construction Joints (For CRCP)

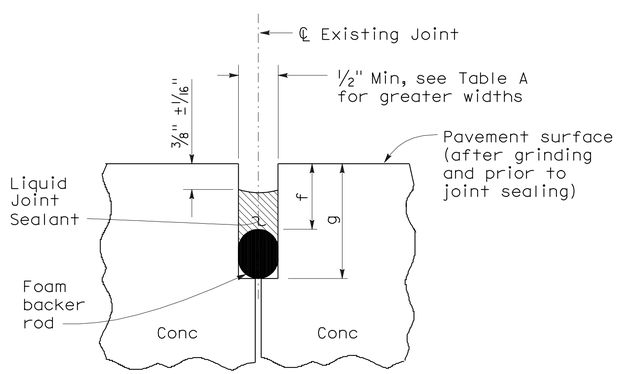

LIQUID SEALANT

TYPE R

Retrofit Transverse and Longitudinal Joints

TABLE A (TYPE R JOINT)

Sawn Joint Width	Backer Rod Diameter ± 1/16"	DIMENSION "f"	DIMENSION "g"
1"	1 5/16"	7/8"	2 1/4"
7/8"	1 3/16"	13/16"	2"
3/4"	1"	3/4"	1 3/4"
5/8"	7/8"	11/16"	1 1/2"
1/2"	11/16"	5/8"	1 1/4"

STATE OF CALIFORNIA
DEPARTMENT OF TRANSPORTATION

CONCRETE PAVEMENT-JOINT DETAILS

NO SCALE

RSP P20 DATED MAY 15, 2009 SUPERSEDES STANDARD PLAN P20
DATED MAY 1, 2006 - PAGE 128 OF THE STANDARD PLANS BOOK DATED MAY 2006.

REVISED STANDARD PLAN RSP P20

2006 REVISED STANDARD PLAN RSP P20

5-8-09

DIST	COUNTY	ROUTE	POST MILES TOTAL PROJECT	SHEET NO.	TOTAL SHEETS
05	SLO	46	40.7/46.3	499	541

William K. Farnbach
REGISTERED CIVIL ENGINEER

May 15, 2009
PLANS APPROVAL DATE

REGISTERED PROFESSIONAL ENGINEER
William K. Farnbach
No. C49042
Exp. 9-30-10
CIVIL
STATE OF CALIFORNIA

The State of California or its officers or agents shall not be responsible for the accuracy or completeness of electronic copies of this plan sheet.

To accompany plans dated 2-13-12

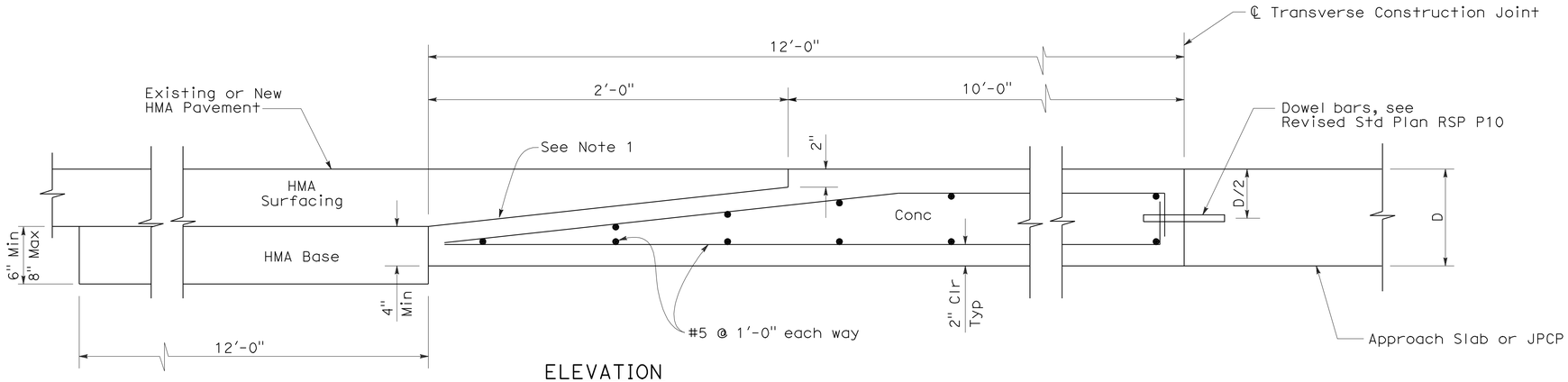

ELEVATION

CONCRETE PAVEMENT TO HOT MIXED ASPHALT PAVEMENT TRANSITION PANEL

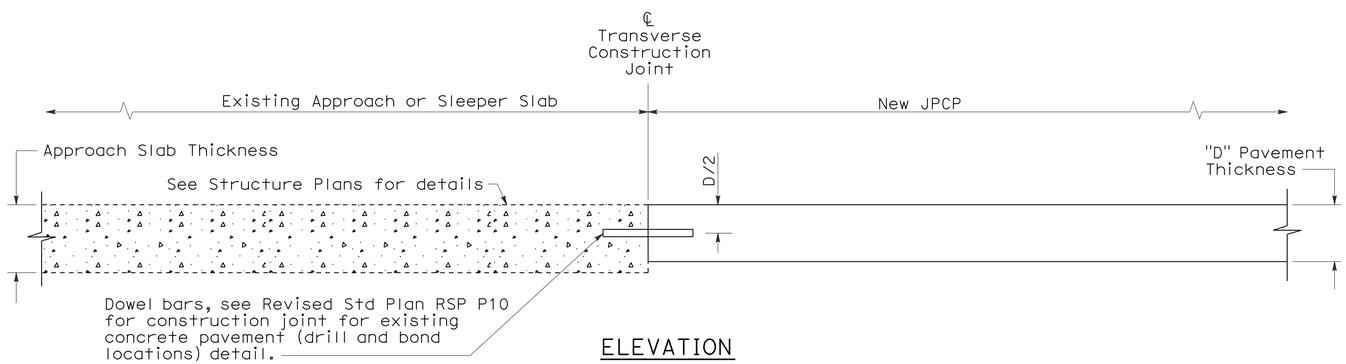

ELEVATION

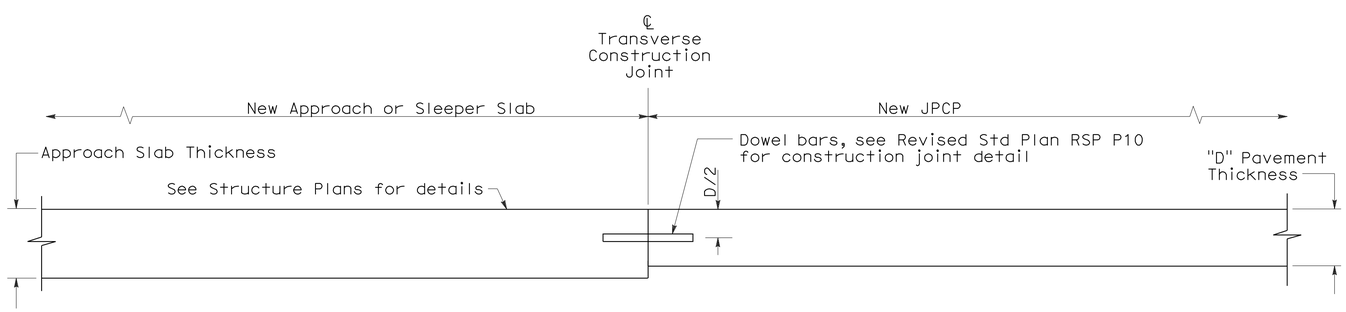

ELEVATION

CONCRETE PAVEMENT TRANSITION TO APPROACH OR SLEEPER SLAB

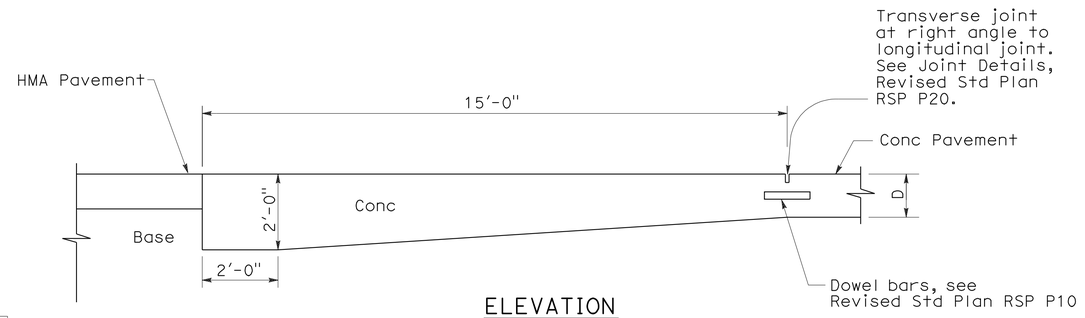

ELEVATION

PAVEMENT END ANCHOR

NOTE:

1. Heavy broom finish.

STATE OF CALIFORNIA
DEPARTMENT OF TRANSPORTATION

JOINTED PLAIN CONCRETE PAVEMENT-END PANEL PAVEMENT TRANSITIONS

NO SCALE

RSP P30 DATED MAY 15, 2009 SUPERSEDES STANDARD PLAN P30
DATED MAY 1, 2006 - PAGE 129 OF THE STANDARD PLANS BOOK DATED MAY 2006.

REVISED STANDARD PLAN RSP P30

2006 REVISED STANDARD PLAN RSP P30

5-8-09

DIST	COUNTY	ROUTE	POST MILES TOTAL PROJECT	SHEET NO.	TOTAL SHEETS
05	SLO	46	40.7/46.3	500	541

REGISTERED CIVIL ENGINEER

June 15, 2007
PLANS APPROVAL DATE

REGISTERED PROFESSIONAL ENGINEER Glenn DeCou No. C34547 Exp. 9-30-07 CIVIL STATE OF CALIFORNIA

The State of California or its officers or agents shall not be responsible for the accuracy or completeness of electronic copies of this plan sheet.

To accompany plans dated 2-13-12

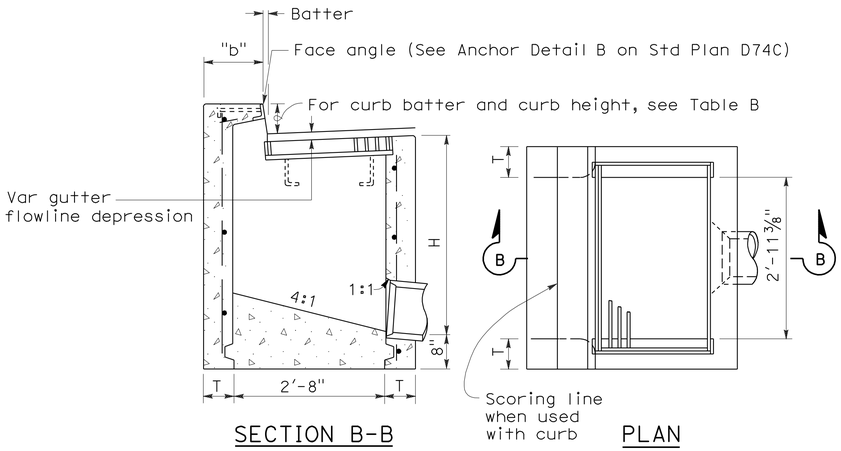

SECTION B-B PLAN

TYPE GO

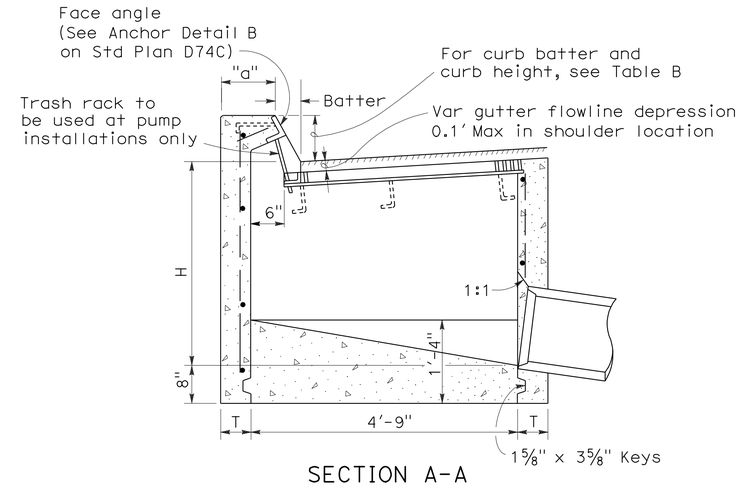

SECTION A-A

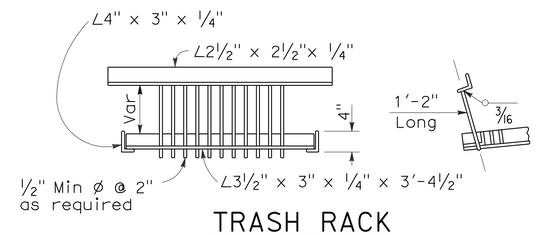

TRASH RACK

(For use with pump installation)

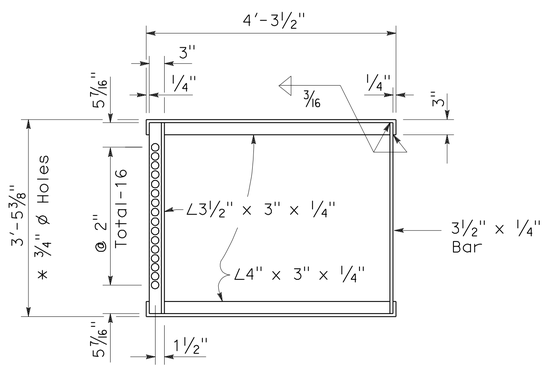

* 3/4" ø Holes required only with trash rack

GRATE FRAME FOR TYPE GDO INLET

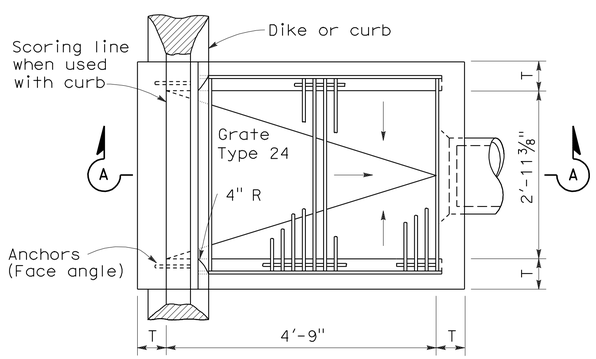

PLAN

TYPE GDO

TABLE A

CONCRETE QUANTITIES				
TYPE	H=3'-0" TO 8'-0" (T=6")		H=8'-1" TO 20'-0" (T=8")	
	H=3'-0" (CY)	ADDITIONAL PCC PER FOOT (CY)	H=8'-1" (CY)	ADDITIONAL PCC PER FOOT (CY)
GO	1.24	0.245	3.39	0.346
GDO	1.62	0.322	4.36	0.446

Table based on 8" floor slab, no deduction for pipe openings, and curb type giving highest quantity of concrete. No deductions or adjustments are to be made to these quantities because of pipe openings, different floor alternatives or different curb type.

TABLE B

CURB TYPE	NORMAL CURB HEIGHT	CURB BATTER	"a" DIMENSION	"b" DIMENSION
A1-6	6"	1 1/2"	T+7 1/2"	T+6 1/2"
A1-8	8"	2"	T+7"	T+6"
B1-6	6"	4"	T+5"	T+4"
Type A Dike	6"	3"	T+6"	T+5"

NOTES:

1. "H" is the difference in elevation between the outlet pipe flow line and the normal gutter grade line undepressed.
2. For "T" wall thickness, see Table A below.
3. Wall reinforcing not required when "H" is 8'-0" or less and the unsupported width or length is 7'-0" or less. Walls exceeding these limits shall be reinforced with #4 @ 18"± centers placed 1 1/2" clear to inside of box unless otherwise shown.
4. Inlet bottom reinforcing not required. See Standard Plan D74C for alternative reinforced bottom.
5. Steps - None required where "H" is less than 2'-6" Where "H" is 2'-6" or more, install steps with lowest rung 1'-0" above the floor and highest rung not more than 6" below top of inlet. The distance between steps shall not exceed 1'-0" and shall be uniform throughout the length of the wall. Place steps in the wall without an opening. Step inserts may be substituted for the bar steps. Step Inserts shall comply with State Industrial Safety requirements. See Standard Plan D74C for step details.
6. When shown on the project plans, place a 3/4" plain round protection bar horizontally across the length of the opening and bend back 4" into the inlet wall on each side.
7. Pipe(s) can be placed in any wall.
8. Curb section shall match adjacent curb.
9. Basin floors shall have wood trowel finish and shall slope toward the outlet pipe as shown.
10. Galvanizing - See Standard Specifications or Special Provisions.
11. See Standard Plan D77A and D77B for grate and frame details and weights of miscellaneous iron and Steel.
12. See Standard Plan D78A for gutter depression details.
13. Full penetration butt welds may be substituted for the fillet welds on all anchors.
14. Standard square, hexagon, round or equivalent headed anchors may be substituted for the right angle hooks on the anchors shown on this plan.
15. Cast-in-place or precast alternative is optional with contractor. See Standard Specifications.
16. Cast-in-place inlets to be formed around all pipes/stubs intersecing the inlet and concrete poured in one continuous operation. Precast inlets shall have mortared pipe connections conforming to details for Type GCP inlets on Standard Plan D75B. See Standard Specifications for mortar composition.

STATE OF CALIFORNIA
DEPARTMENT OF TRANSPORTATION

DRAINAGE INLETS

NO SCALE

RSP D74B DATED JUNE 15, 2007 SUPERSEDES STANDARD PLAN D74B DATED MAY 1, 2006 - PAGE 150 OF THE STANDARD PLANS BOOK DATED MAY 2006.

REVISED STANDARD PLAN RSP D74B

2006 REVISED STANDARD PLAN RSP D74B

4-16-07