ACNHP-Q101(297)E

Dist	COUNTY	ROUTE	POST MILES TOTAL PROJECT	SHEET No.	TOTAL SHEETS
05	SB	101	0.4/11.7	1	57

STATE OF CALIFORNIA

DEPARTMENT OF TRANSPORTATION

PROJECT PLANS FOR CONSTRUCTION ON

STATE HIGHWAY

IN SANTA BARBARA COUNTY AT VARIOUS LOCATIONS FROM 0.2 MILE SOUTH OF ROUTE 150/101 SEPARATION TO 0.3 MILE NORTH OF CABRILLO BOULEVARD UNDERCROSSING

TO BE SUPPLEMENTED BY STANDARD PLANS DATED 2010

INDEX OF PLANS

SHEET No.	DESCRIPTION
1	TITLE AND LOCATION MAP
2	LOCATIONS OF CONSTRUCTION
3-13	CONSTRUCTION DETAILS
14	CONSTRUCTION AREA SIGNS
15	PAVEMENT DELINEATION QUANTITIES
16-19	SIGN PLANS AND QUANTITIES
20-22	SUMMARY OF QUANTITIES
23-28	LANDSCAPE LAYOUT PLANS
29-33	IRRIGATION PLANS AND QUANTITIES
34-36	ELECTRICAL PLANS
37-57	REVISED STANDARD PLANS

THE STANDARD PLANS LIST APPLICABLE TO THIS CONTRACT IS INCLUDED IN THE NOTICE TO BIDDERS AND SPECIAL PROVISIONS BOOK.

LOCATION MAP

NOTE:

THE TABLE OF LOCATIONS OF CONSTRUCTION IS SHOWN ON THE LOCATIONS OF CONSTRUCTION SHEET.

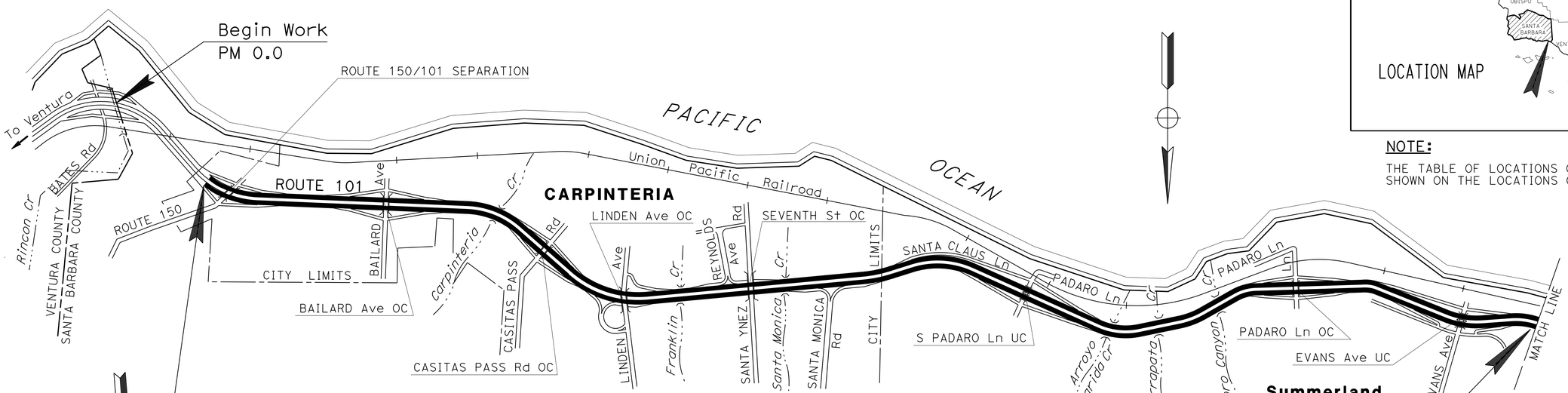

LOCATIONS OF CONSTRUCTION Nos. 1 THROUGH 51

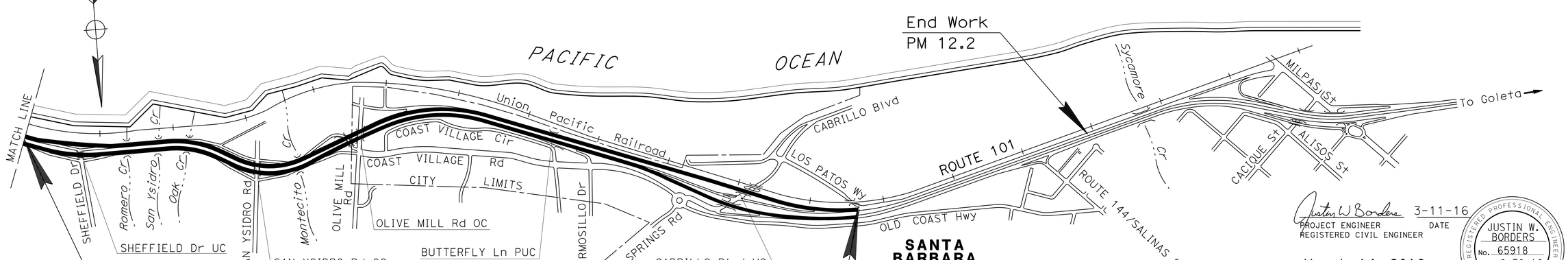

LOCATIONS OF CONSTRUCTION Nos. 52 THROUGH 87

NO SCALE

THE CONTRACTOR SHALL POSSESS THE CLASS (OR CLASSES) OF LICENSE AS SPECIFIED IN THE "NOTICE TO BIDDERS."

PROJECT MANAGER SCOTT EADES

DESIGN MANAGER DAVID BEARD

Justin W Borders 3-11-16
PROJECT ENGINEER DATE
REGISTERED CIVIL ENGINEER

March 14, 2016
PLANS APPROVAL DATE

REGISTERED PROFESSIONAL ENGINEER JUSTIN W. BORDERS No. 65918 Exp. 6-30-16 CIVIL STATE OF CALIFORNIA

THE STATE OF CALIFORNIA OR ITS OFFICERS OR AGENTS SHALL NOT BE RESPONSIBLE FOR THE ACCURACY OR COMPLETENESS OF SCANNED COPIES OF THIS PLAN SHEET.

CONTRACT No.	05-1C1204
PROJECT ID	0512000072

LAST REVISION 03-11-16 DATE PLOTTED => 16-MAY-2016 TIME PLOTTED => 0157

Dist	COUNTY	ROUTE	POST MILES TOTAL PROJECT	SHEET No.	TOTAL SHEETS
05	SB	101	0.4/11.7	2	57

REGISTERED CIVIL ENGINEER DATE 3-11-16

PLANS APPROVAL DATE 3-14-16

REGISTERED PROFESSIONAL ENGINEER JUSTIN W. BORDERS No. 65918 Exp 6-30-16 CIVIL STATE OF CALIFORNIA

THE STATE OF CALIFORNIA OR ITS OFFICERS OR AGENTS SHALL NOT BE RESPONSIBLE FOR THE ACCURACY OR COMPLETENESS OF SCANNED COPIES OF THIS PLAN SHEET.

ABBREVIATIONS:

VCCS - VEGETATION CONTROL (CRUSHED SHALE)

DG - DECOMPOSED GRANITE

AGC - ANTI-GRAFFITI COATING

LOCATIONS OF CONSTRUCTION

Loc No.	COUNTY	ROUTE	PM	LOCATION	DIRECTION	DESCRIPTION
1	SB	101	0.46	RINCON Rd NB OFF-RAMP	NB	GORE PAVING
2	SB	101	0.60	RINCON INTERSECTION	SB	MULCH
3	SB	101	0.61	RINCON INTERSECTION	SB	MULCH
4	SB	101	0.62	RINCON INTERSECTION	SB	MULCH
5	SB	101	0.62	RINCON OFF-RAMP OUTSIDE SHOULDER	SB	MULCH
6	SB	101	0.62	RINCON INTERSECTION	NB	MULCH
7	SB	101	0.63	RINCON ON-RAMP INSIDE SHOULDER	NB	DG
8	SB	101	0.67	RINCON OFF-RAMP OUTSIDE SHOULDER	SB	DG / Irr
9	SB	101	0.72	RINCON Rd NB ON-RAMP	NB	GORE PAVING
10	SB	101	0.99	ALONG VIA REAL NEAR LOMITA Ln	NB	GATE
11	SB	101	1.39	ALONG VIA REAL NEAR CALLE DEL NORTE	NB	GATE
12	SB	101	1.47	SB ON-RAMP Rt Shld WHERE RAMP MEETS MAINLINE	SB	VCCS
13	SB	101	1.59	SB ON-RAMP TO BAILARD Ave BOTH SIDES	SB	VCCS
14	SB	101	1.62	SB OFF-RAMP ONTO BAILARD Ave BOTH SIDES	SB	VCCS
15	SB	101	1.62	SB MAINLINE Rt SIDE UP TO OH STRUCTURE	SB	VCCS
16	SB	101	1.62	NB MAINLINE Rt SIDE UP TO OH STRUCTURE	NB	VCCS
17	SB	101	1.63	NB ON-RAMP Lt SIDE	NB	VCCS
18	SB	101	1.64	NB ON-RAMP BOTH SIDES	NB	VCCS
19	SB	101	1.79	ALONG VIA REAL NEAR POPLAR STREET	NB	GATE
20	SB	101	2.08	ALONG VIA REAL NEAR VIA LINDA	NB	GATE
21	SB	101	3.57	REYNOLDS Ave SB ON-RAMP	SB	GORE PAVING
22	SB	101	3.58	REYNOLDS Ave SB ON-RAMP/OFF-RAMP	SB	GORE PAVING
23	SB	101	3.59	REYNOLDS Ave SB OFF-RAMP	SB	GORE PAVING
24	SB	101	3.60	REYNOLDS Ave OFF-RAMP OUTSIDE SHOULDER	SB	MVP
25	SB	101	3.67	SB MAINLINE Rt SIDE	SB	VCCS
26	SB	101	3.87	SANTA MONICA OFF-RAMP IN/OUT SHOULDERS	NB	Irr
27	SB	101	4.17	ALONG VIA REAL NORTH OF SANTA MONICA Rd	NB	GATE
28	SB	101	4.41	ALONG VIA REAL NEAR CRAVENS LANE	NB	GATE
29	SB	101	4.74	NB MAINLINE Rt Shld NEAR CRAVENS LANE	NB	VCCS
30	SB	101	4.80	ALONG VIA REAL NORTH OF SANDPIPER DRIVE	NB	GATE
31	SB	101	5.08	SB MAINLINE Rt SIDE	SB	VCCS
32	SB	101	5.13	NB MAINLINE Rt SIDE	NB	VCCS
33	SB	101	5.40	SB MAINLINE Rt SIDE	SB	VCCS
34	SB	101	6.04	ALONG VIA REAL NORTH OF NIDEVER ROAD	NB	GATE
35	SB	101	6.44	NB MAINLINE Rt Shld	NB	VCCS
36	SB	101	7.00	PADARO LANE NB ON-RAMP	NB	GORE PAVING/Irr
37	SB	101	7.03	PADARO LANE OFF-RAMP Shld	SB	Irr
38	SB	101	7.03	PADARO LANE SB ON-RAMP	SB	GORE PAVING/Irr
39	SB	101	7.09	SB ON-RAMP TO PADARO Ln BOTH SIDES	SB	VCCS
40	SB	101	7.10	SB OFF-RAMP TO PADARO Ln Rt Shld	SB	VCCS
41	SB	101	7.24	PADARO LANE SB OFF-RAMP	SB	GORE PAVING/Irr
42	SB	101	7.26	PADARO LANE NB ON-RAMP	NB	GORE PAVING/Irr
43	SB	101	8.16	EVANS Ave NB OFF-RAMP	NB	GORE PAVING
44	SB	101	8.16	NB MAINLINE Rt Shld BEFORE EVANS Ave Br	NB	VCCS

LOCATIONS OF CONSTRUCTION

Loc No.	COUNTY	ROUTE	PM	LOCATION	DIRECTION	DESCRIPTION
45	SB	101	8.25	AT EVANS Ave & HARDINGE Ave	NB	GATE
46	SB	101	8.27	AT EVANS Ave RAMPS & UC	NB/SB	AGC
47	SB	101	8.28	AT EVANS Ave & WALLACE Ave	NB	GATE
48	SB	101	8.29	EVANS Ave OFF-RAMP OUTSIDE SHOULDER	SB	MVP
49	SB	101	8.29	NB MAINLINE Rt Shld AFTER EVANS Ave Br	NB	VCCS
50	SB	101	8.40	EVANS Ave NB ON-RAMP	NB	GORE PAVING
51	SB	101	8.43	EVANS Ave SB OFF-RAMP	SB	GORE PAVING
52	SB	101	9.00	SHEFFIELD INTERSECTION	SB	MULCH
53	SB	101	9.00	SHEFFIELD INTERSECTION	NB	MULCH
54	SB	101	9.03	SHEFFIELD ON-RAMP SHOULDER	NB	MULCH
55	SB	101	9.08	NB MAINLINE Rt Shld	NB	VCCS
56	SB	101	9.34	NB MAINLINE Rt Shld	NB	VCCS
57	SB	101	9.42	SB MAINLINE Rt Shld	SB	VCCS
58	SB	101	9.66	MAINLINE SHOULDER	SB	MULCH
59	SB	101	9.69	ALONG SOUTH JAMESON LANE	SB	GATE
60	SB	101	9.83	ALONG SOUTH JAMESON LANE	SB	GATE
61	SB	101	9.91	SAN YSIDRO Rd INTERSECTION	SB	MULCH
62	SB	101	9.92	SAN YSIDRO Rd INTERSECTION	NB	MULCH
63	SB	101	9.99	NB MAINLINE Rt SIDE	NB	VCCS
64	SB	101	10.02	SAN YSIDRO Rd INTERSECTION	NB	MULCH
65	SB	101	10.02	SB MAINLINE Rt SIDE	SB	VCCS
66	SB	101	10.02	SAN YSIDRO Rd INTERSECTION	SB	MULCH
67	SB	101	10.02	SAN YSIDRO Rd INTERSECTION	NB	MULCH
68	SB	101	10.35	OLIVE MILL Rd OFF-RAMP SHOULDER	NB	MULCH
69	SB	101	10.38	AT SANTA ISABEL LANE ALONG N JAMESON Ln	NB	GATE
70	SB	101	10.50	NB MAINLINE Rt SIDE	NB	VCCS
71	SB	101	10.50	SB MAINLINE Rt SIDE	SB	VCCS
72	SB	101	10.50	SB ON-RAMP FROM OLIVE MILL Rd Rt	SB	VCCS
73	SB	101	10.50	SB ON-RAMP FROM OLIVE MILL Rd Lt	SB	VCCS
74	SB	101	10.53	NB MAINLINE Rt Shld	NB	VCCS
75	SB	101	10.54	SB MAINLINE Rt Shld	SB	VCCS
76	SB	101	10.66	MAINLINE SHOULDER	NB	MULCH
77	SB	101	10.71	OLIVE MILL Rd SB OFF-RAMP	SB	GORE PAVING
78	SB	101	11.06	HERMOSILLO Rd OFF-RAMP LEFT SHOULDER	NB	MULCH
79	SB	101	11.07	HERMOSILLO Rd OFF-RAMP RIGHT SHOULDER	NB	MULCH
80	SB	101	11.25	SB MAINLINE Rt Shld	SB	VCCS
81	SB	101	11.28	NB MAINLINE Lt Shld	NB	VCCS
82	SB	101	11.33	NB MAINLINE Rt Shld	NB	VCCS
83	SB	101	11.43	NB MAINLINE Rt Shld	NB	VCCS
84	SB	101	11.44	SB MAINLINE Rt Shld	SB	VCCS
85	SB	101	11.46	CABRILLO St ON-RAMP LEFT SHOULDER	NB	MULCH
86	SB	101	11.67	SB MAINLINE Rt Shld AT EXIT 95	SB	VCCS
87	SB	101	11.68	LOS PATOS Ave OFF-RAMP LEFT SHOULDER	SB	MULCH

LOCATIONS OF CONSTRUCTION
LC-1

REVISED BY | DATE REVISED

JUSTIN BORDERS | DAVID BEARD

CALCULATED-DESIGNED BY | CHECKED BY

FUNCTIONAL SUPERVISOR: DAVID BEARD

STATE OF CALIFORNIA - DEPARTMENT OF TRANSPORTATION

Caltrans®

DESIGN

LAST REVISION 03-11-16 | DATE PLOTTED => 16-MAY-2016 | TIME PLOTTED => 10:57

Dist	COUNTY	ROUTE	POST MILES TOTAL PROJECT	SHEET No.	TOTAL SHEETS
05	SB	101	0.4/11.7	3	57

REGISTERED CIVIL ENGINEER 3-11-16 DATE

3-14-16
PLANS APPROVAL DATE

REGISTERED PROFESSIONAL ENGINEER JUSTIN W. BORDERS No. 65918 Exp 6-30-16 CIVIL STATE OF CALIFORNIA

THE STATE OF CALIFORNIA OR ITS OFFICERS OR AGENTS SHALL NOT BE RESPONSIBLE FOR THE ACCURACY OR COMPLETENESS OF SCANNED COPIES OF THIS PLAN SHEET.

ABBREVIATIONS:

NL = NEAT LINE
Rmv = REMOVE

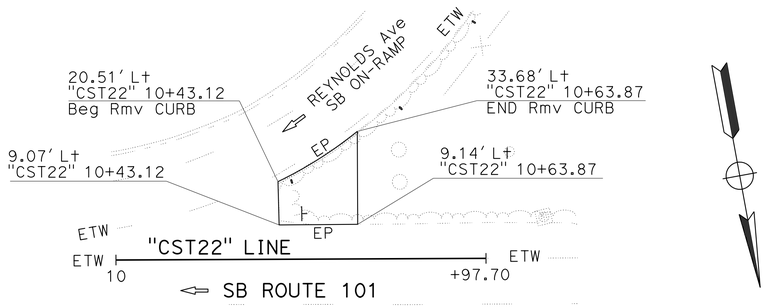

LOCATION No. 21
PM 3.57
REYNOLDS Ave SB ON-RAMP

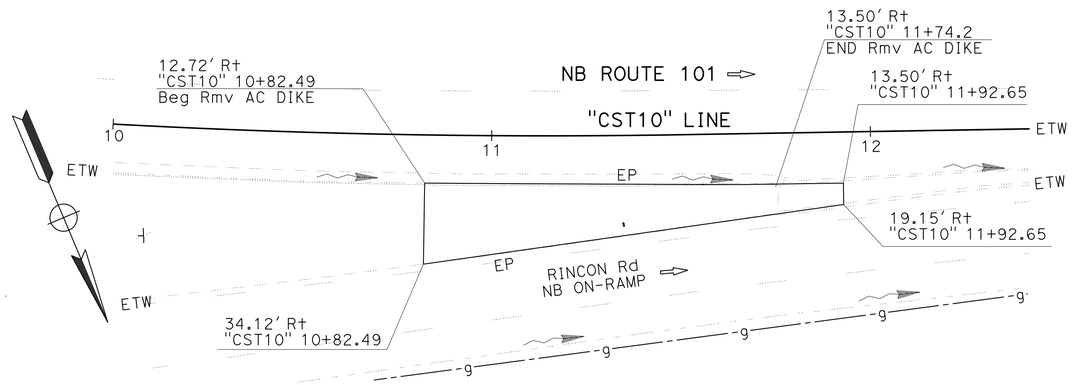

LOCATION No. 9
PM 0.72
RINCON Rd NB ON-RAMP

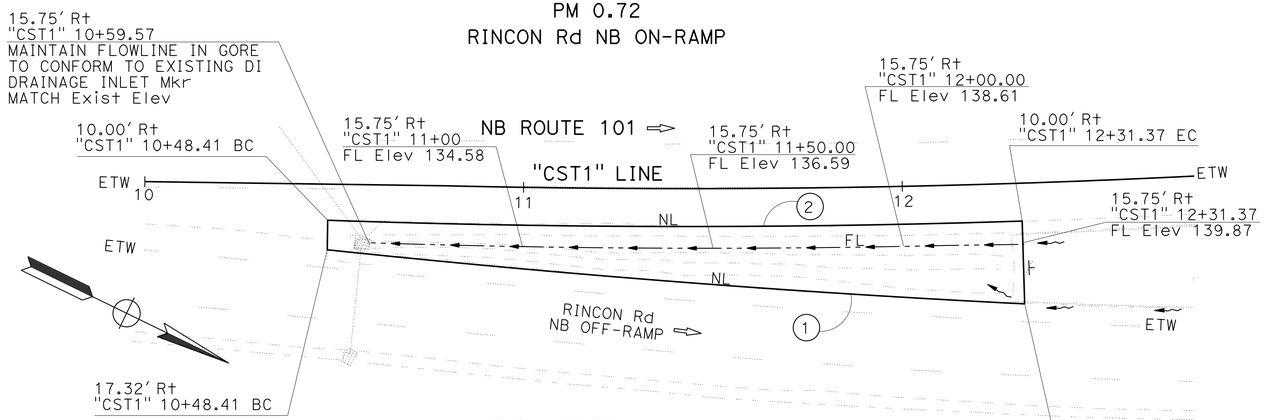

LOCATION No. 1
PM 0.46
RINCON Rd NB OFF-RAMP

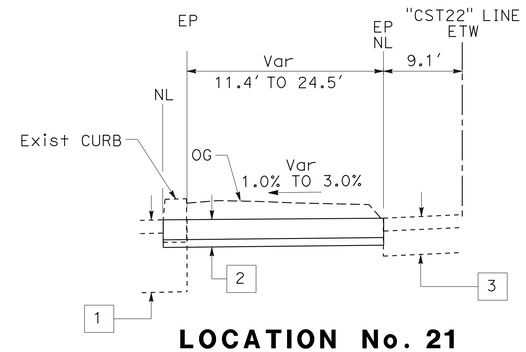

LOCATION No. 21
"CST22" 10+43.12 TO 10+63.87

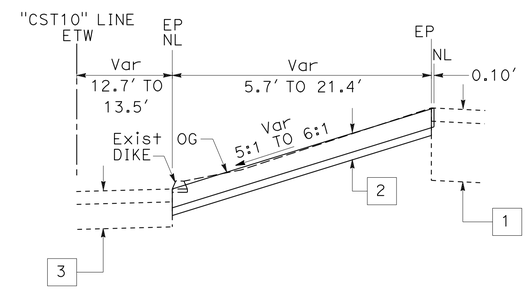

LOCATION No. 9
"CST10" 10+82.49 TO 11+92.65

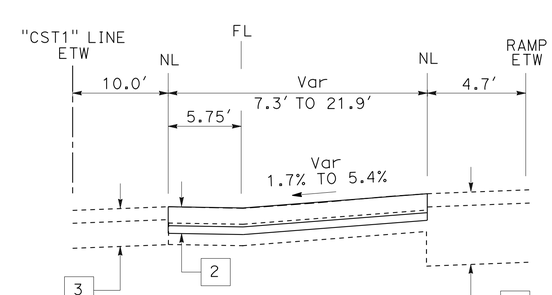

LOCATION No. 1
"CST1" 10+48.41 TO 12+31.37

NOTES:

1. GORE PAVING SHALL CONFORM TO EXISTING PAVEMENT GRADE AND SLOPES.
2. NEAT LINE LOCATION IS 0.10' FROM EP MINIMUM. EXACT LOCATION TO BE DETERMINED BY THE ENGINEER.
3. SAW CUT Conc CURB AND GUTTER TO BE REMOVED AT NEAREST CLEAN JOINT AS DETERMINED BY THE ENGINEER.
4. WHEN TRENCH BETWEEN NEAT LINE AND EP IS GREATER THAN 2", CUT NEAT LINE TO A MINIMUM OF 1.0' FROM EP TO ALLOW FOR FORMS AND HMA COMPACTION. PLACE MINOR HMA TO BACKFILL THE TRENCH.
5. WHEN TRENCH BETWEEN NEAT LINE AND EP IS LESS THAN 2", USE NEAT LINE AND ADJACENT PAVEMENT AS THE FORM AND PLACE CONCRETE UP TO THE NEAT LINE.

STRUCTURAL SECTIONS:

1. Exist RAMP TYPICAL
   0.35' AC
   1.56' CLASS 2 AB
2. 0.50' MINOR CONCRETE (EXPOSED AGGREGATE CONCRETE)
   0.17' CLASS 2 AB
3. Exist SHOULDER TYPICAL
   0.34' AC
   0.66' CLASS 2 AB

CURVE DATA

No. ⊕	R	Δ	T	L
1	3,330'	03°10'40"	92.38'	184.72'
2	2,720'	03°51'50"	91.75'	183.43'

GORE PAVING

CONSTRUCTION DETAILS

NO SCALE

C-1

STATE OF CALIFORNIA - DEPARTMENT OF TRANSPORTATION
Caltrans
DESIGN
FUNCTIONAL SUPERVISOR: DAVID BEARD
CALCULATED-DESIGNED BY: JUSTIN BORDERS
CHECKED BY: DAVID BEARD
REVISED BY
DATE REVISED

LAST REVISION 03-11-16
DATE PLOTTED => 16-MAY-2016
TIME PLOTTED => 10:57

Dist	COUNTY	ROUTE	POST MILES TOTAL PROJECT	SHEET No.	TOTAL SHEETS
05	SB	101	0.4/11.7	4	57

REGISTERED CIVIL ENGINEER 3-11-16 DATE

3-14-16
PLANS APPROVAL DATE

REGISTERED PROFESSIONAL ENGINEER JUSTIN W. BORDERS No. 65918 Exp 6-30-16 CIVIL STATE OF CALIFORNIA

THE STATE OF CALIFORNIA OR ITS OFFICERS OR AGENTS SHALL NOT BE RESPONSIBLE FOR THE ACCURACY OR COMPLETENESS OF SCANNED COPIES OF THIS PLAN SHEET.

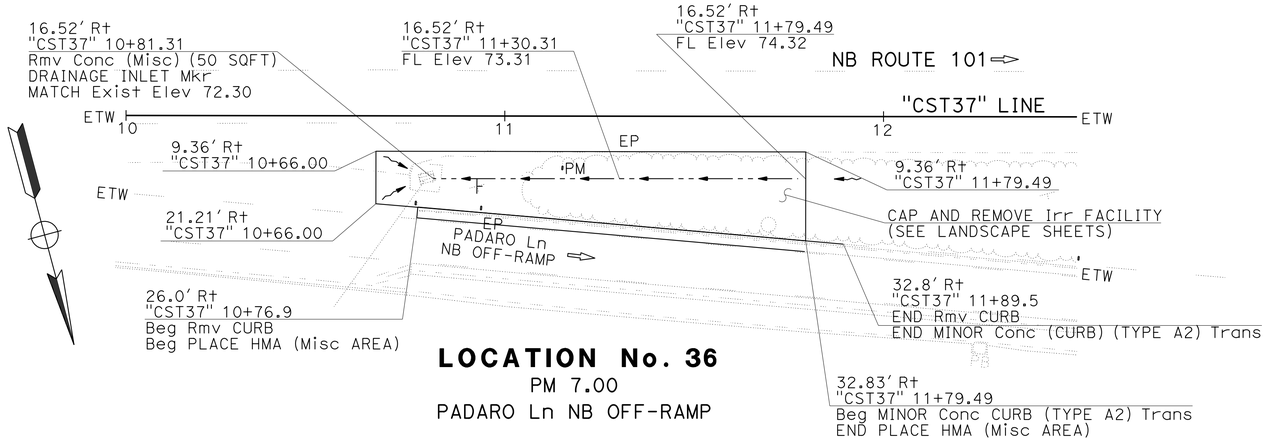

LOCATION No. 36
PM 7.00
PADARO Ln NB OFF-RAMP

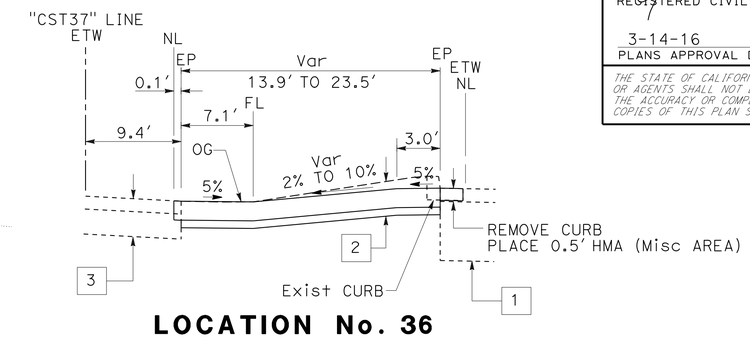

LOCATION No. 36
"CST37" 10+66.00 TO 11+79.49

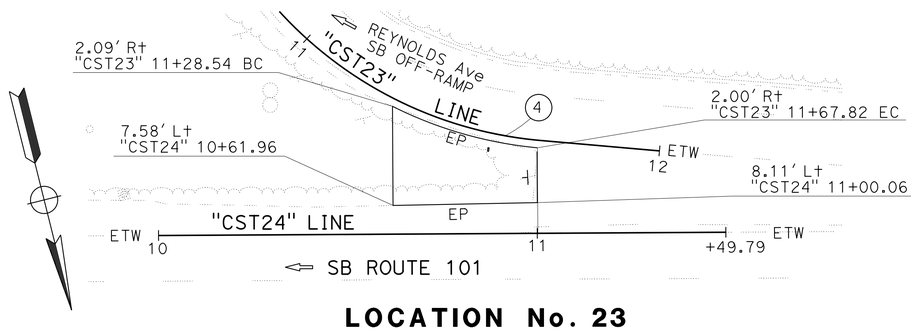

LOCATION No. 23
PM 3.59
REYNOLDS Ave SB OFF-RAMP

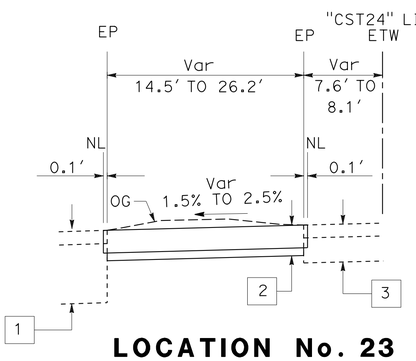

LOCATION No. 23
"CST24" 10+61.96 TO 11+00.06

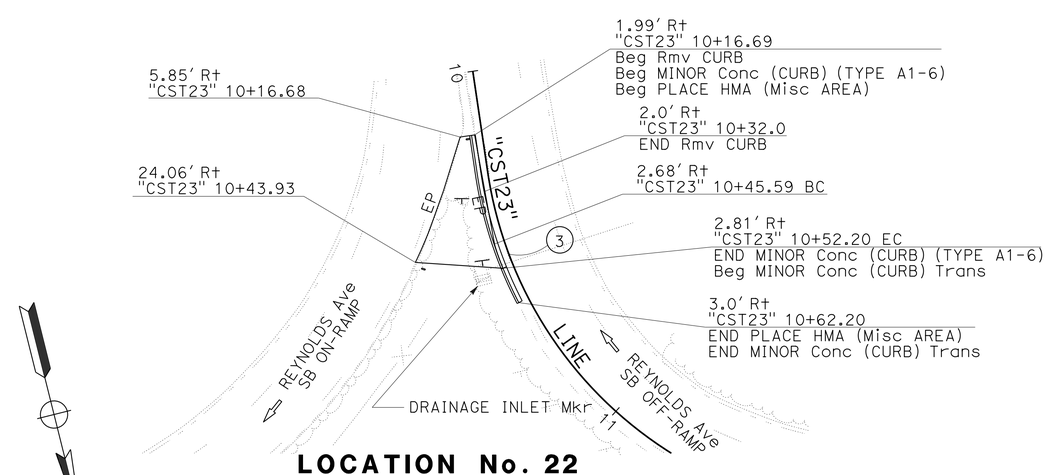

LOCATION No. 22
PM 3.58
REYNOLDS Ave SB ON-RAMP/OFF-RAMP

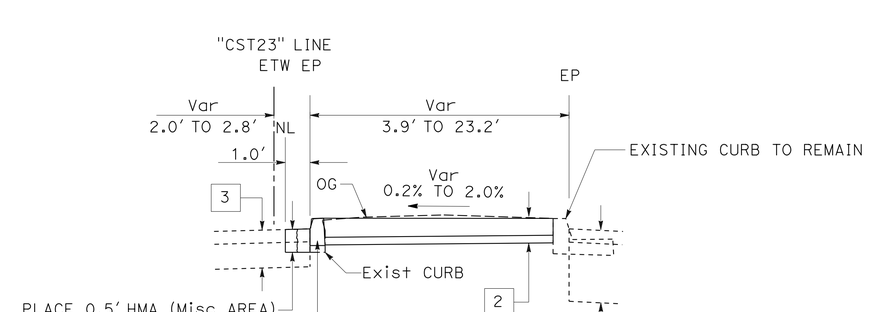

LOCATION No. 22
"CST23" 10+16.68 TO 10+52.20

CURVE DATA

No. ⊕	R	Δ	T	L
3	50′	07°49′14″	3.40′	6.79′
4	311′	07°22′23″	20.04′	40.03′

GORE PAVING

CONSTRUCTION DETAILS

NO SCALE

C-2

STATE OF CALIFORNIA - DEPARTMENT OF TRANSPORTATION
DESIGN
FUNCTIONAL SUPERVISOR: DAVID BEARD
CALCULATED-DESIGNED BY: JUSTIN BORDERS
CHECKED BY: DAVID BEARD
REVISED BY
DATE REVISED

LAST REVISION DATE PLOTTED => 16-MAY-2016
03-11-16 TIME PLOTTED => 10:57

Dist	COUNTY	ROUTE	POST MILES TOTAL PROJECT	SHEET No.	TOTAL SHEETS
05	SB	101	0.4/11.7	5	57

REGISTERED CIVIL ENGINEER 3-11-16 DATE

3-14-16
PLANS APPROVAL DATE

REGISTERED PROFESSIONAL ENGINEER JUSTIN W. BORDERS No. 65918 Exp 6-30-16 CIVIL STATE OF CALIFORNIA

THE STATE OF CALIFORNIA OR ITS OFFICERS OR AGENTS SHALL NOT BE RESPONSIBLE FOR THE ACCURACY OR COMPLETENESS OF SCANNED COPIES OF THIS PLAN SHEET.

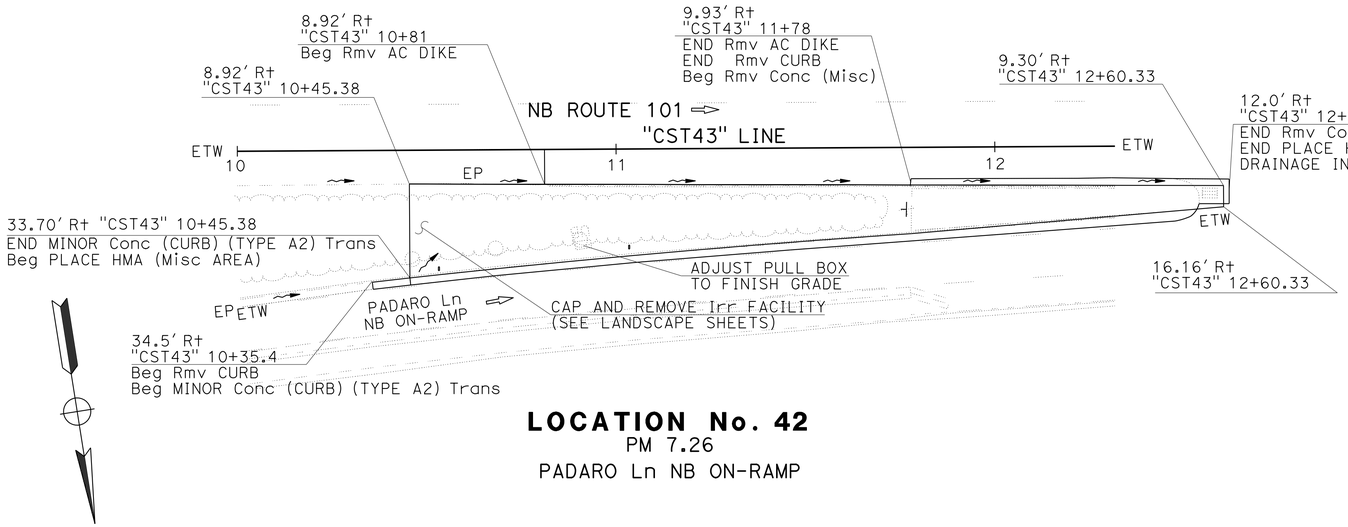

LOCATION No. 42
PM 7.26
PADARO Ln NB ON-RAMP

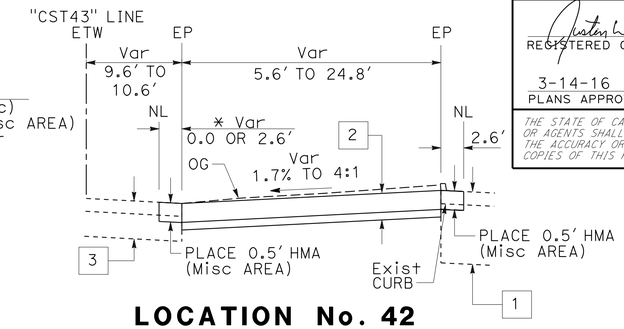

LOCATION No. 42
"CST43" 10+45.38 TO 11+78.10

* NL AT Exist Conc CURB/AC Shld INTERFACE OR AC DIKE FLOW LINE WHICHEVER IS PRESENT

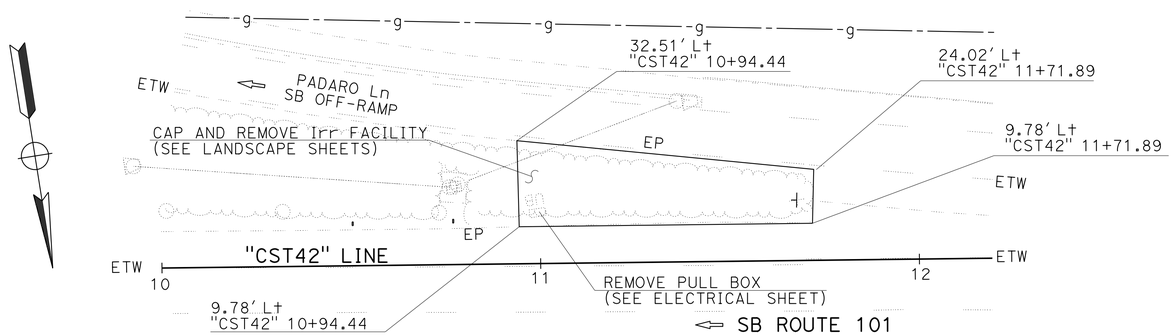

LOCATION No. 41
PM 7.24
PADARO Ln SB OFF-RAMP

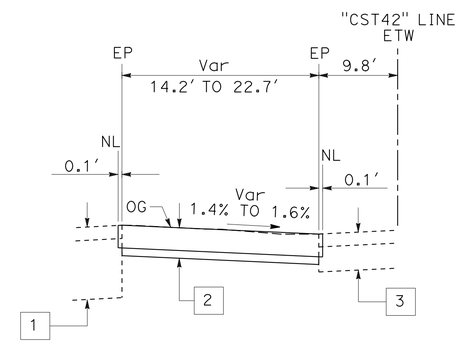

LOCATION No. 41
"CST42" 10+94.44 TO 11+71.89

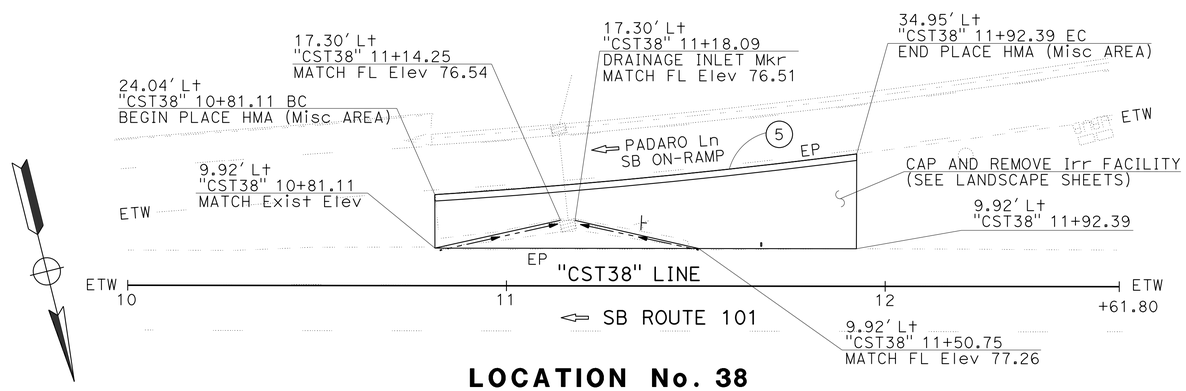

LOCATION No. 38
PM 7.03
PADARO Ln SB ON-RAMP

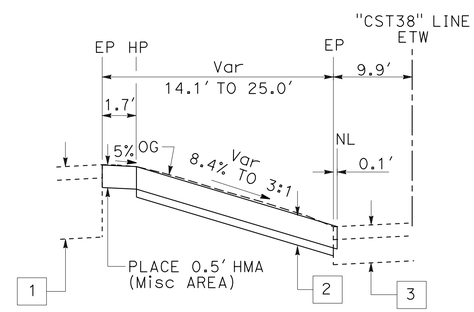

LOCATION No. 38
"CST38" 10+81.11 TO 11+92.39

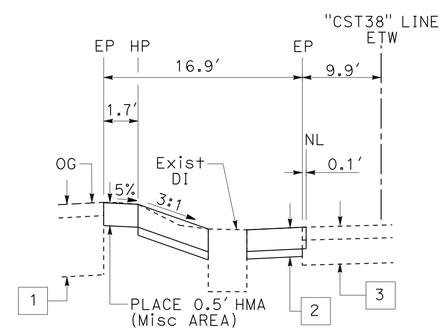

LOCATION No. 38
"CST38" 11+16 AT DI

CURVE DATA

No. ⊕	R	Δ	T	L
5	1,749'	03°40'04"	55.99'	111.93'

GORE PAVING

CONSTRUCTION DETAILS
NO SCALE

C-3

STATE OF CALIFORNIA - DEPARTMENT OF TRANSPORTATION
Caltrans
DESIGN

FUNCTIONAL SUPERVISOR: DAVID BEARD
CALCULATED-DESIGNED BY: JUSTIN BORDERS
CHECKED BY: DAVID BEARD
REVISED BY
DATE REVISED

LAST REVISION 03-11-16
DATE PLOTTED => 16-MAY-2016
TIME PLOTTED => 10:57

Dist	COUNTY	ROUTE	POST MILES TOTAL PROJECT	SHEET No.	TOTAL SHEETS
05	SB	101	0.4/11.7	6	57

REGISTERED CIVIL ENGINEER 3-11-16 DATE

3-14-16
PLANS APPROVAL DATE

REGISTERED PROFESSIONAL ENGINEER JUSTIN W. BORDERS No. 65918 Exp 6-30-16 CIVIL STATE OF CALIFORNIA

THE STATE OF CALIFORNIA OR ITS OFFICERS OR AGENTS SHALL NOT BE RESPONSIBLE FOR THE ACCURACY OR COMPLETENESS OF SCANNED COPIES OF THIS PLAN SHEET.

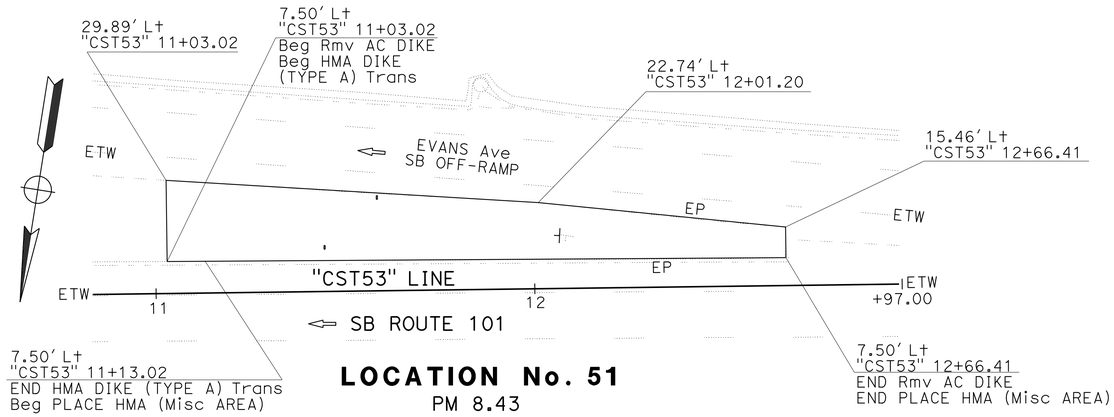

LOCATION No. 51
PM 8.43
EVANS Ave SB OFF-RAMP

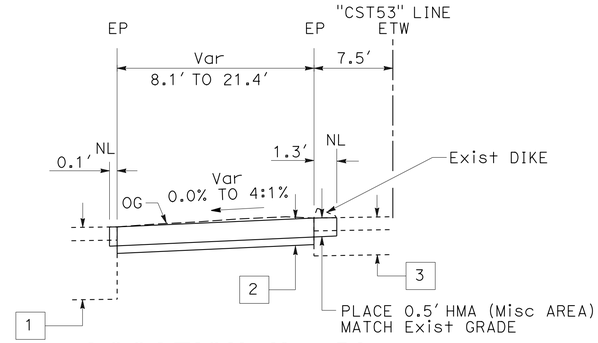

LOCATION No. 51
"CST53" 11+03.02 TO 12+66.41

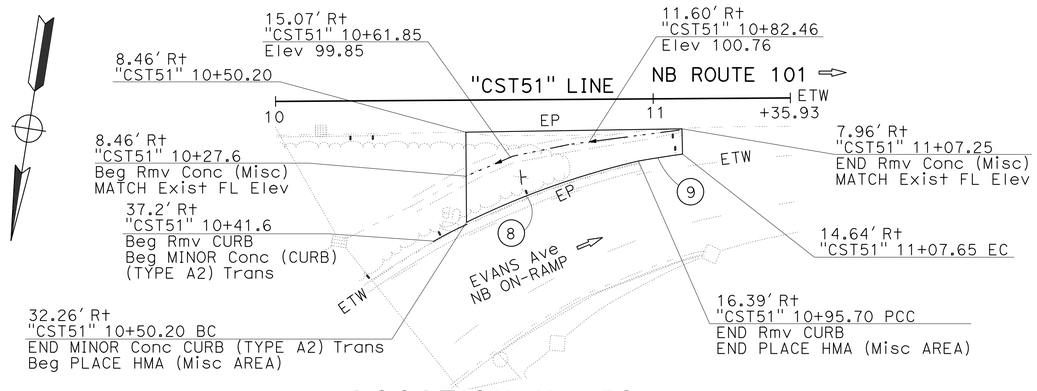

LOCATION No. 50
PM 8.40
EVANS Ave NB ON-RAMP

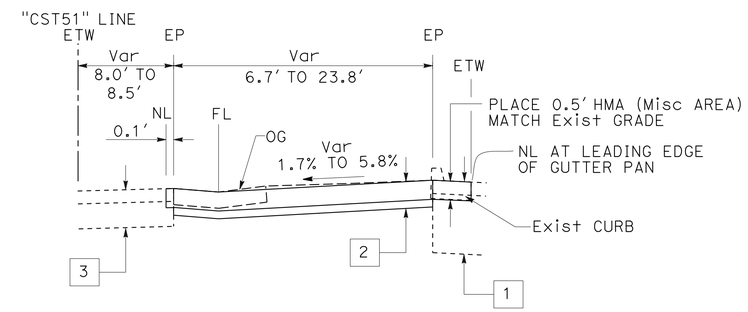

LOCATION No. 50
"CST51" 10+50.20 TO 11+07.65

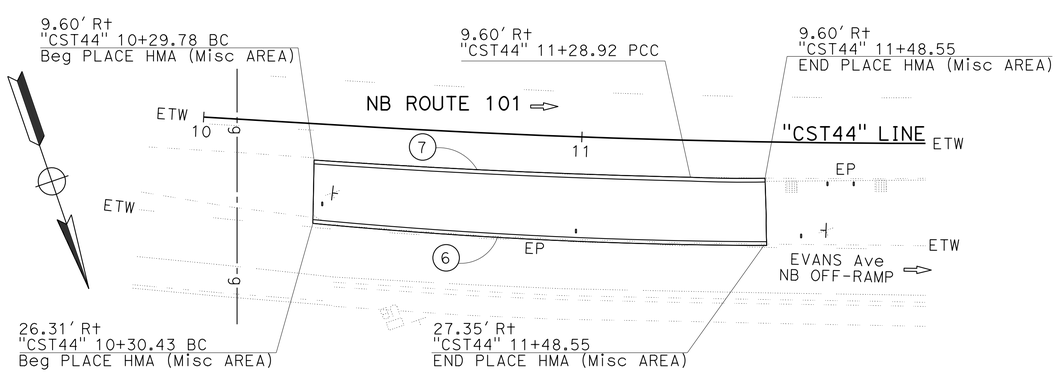

LOCATION No. 43
PM 8.16
EVANS Ave NB OFF-RAMP

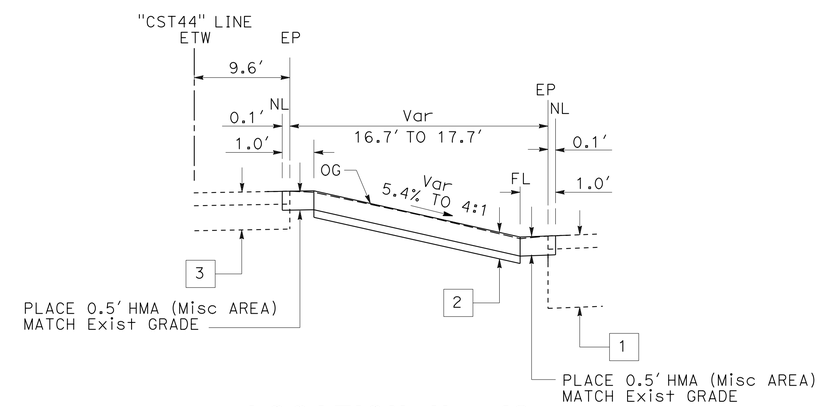

LOCATION No. 43
"CST44" 10+29.78 TO 11+48.55

CURVE DATA

No. ⊕	R	Δ	T	L
6	2,184′	05°12′47"	99.41′	198.69′
7	2,127′	02°40′48"	49.75′	99.48′
8	212′	13°01′58"	24.25′	48.30′
9	286′	02°21′36"	5.90′	11.79′

GORE PAVING

CONSTRUCTION DETAILS
NO SCALE

C-4

STATE OF CALIFORNIA - DEPARTMENT OF TRANSPORTATION
Caltrans
DESIGN
FUNCTIONAL SUPERVISOR: DAVID BEARD
CALCULATED-DESIGNED BY: JUSTIN BORDERS
CHECKED BY: DAVID BEARD
REVISED BY
DATE REVISED

LAST REVISION 03-11-16 | DATE PLOTTED => 16-MAY-2016 | TIME PLOTTED => 10:57

Dist	COUNTY	ROUTE	POST MILES TOTAL PROJECT	SHEET No.	TOTAL SHEETS
05	SB	101	0.4/11.7	7	57

REGISTERED CIVIL ENGINEER 3-11-16 DATE

3-14-16
PLANS APPROVAL DATE

REGISTERED PROFESSIONAL ENGINEER JUSTIN W. BORDERS No. 65918 Exp 6-30-16 CIVIL STATE OF CALIFORNIA

THE STATE OF CALIFORNIA OR ITS OFFICERS OR AGENTS SHALL NOT BE RESPONSIBLE FOR THE ACCURACY OR COMPLETENESS OF SCANNED COPIES OF THIS PLAN SHEET.

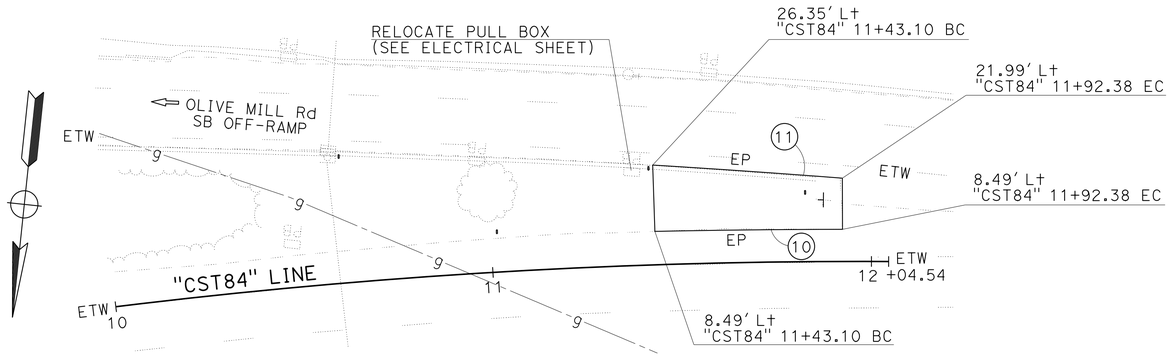

LOCATION No. 77
PM 10.71
OLIVE MILL Rd SB OFF-RAMP

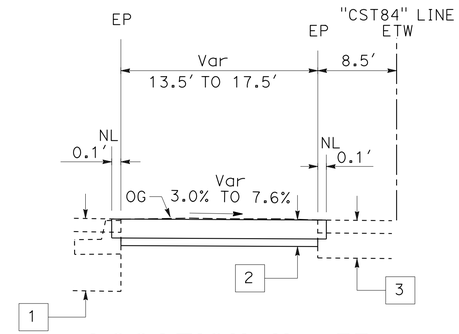

LOCATION No. 77
"CST84" 11+43.10 TO 11+92.38

GORE PAVING

CURVE DATA

No. ⊕	R	Δ	T	L
10	2,560'	01°06'33"	24.77'	49.54'
11	3,072'	00°56'10"	25.10'	50.20'

LEGEND (THIS SHEET ONLY):

VEGETATION CONTROL (CRUSHED SHALE)

NOTES (THIS SHEET ONLY):

1. REMOVE VEGETATION MULCH AND DUFF BEFORE PLACING FABRIC.
2. FINISH GRADE OF VEGETATION CONTROL (CRUSHED SHALE) SHALL BE AT OR BELOW GRADE OF ADJACENT PAVEMENT WHERE NO DIKE IS PRESENT. LIGHT GRADING MAY BE REQUIRED.
3. WHERE DIKE IS PRESENT FABRIC AND CRUSHED SHALE MAY BE PLACED ON OG PROVIDED FINISH GRADE OF CRUSHED SHALE IS BELOW TOP OF DIKE.
4. SLOPES BEHIND FACE OF RAIL VARY BY SITE CONDITION.
5. FOR LOCATIONS OF VEGETATION CONTROL (CRUSHED SHALE) REFER TO SHEET Q-3.

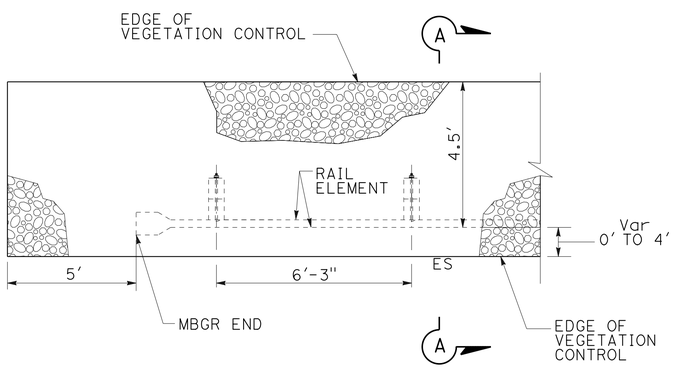

PLAN

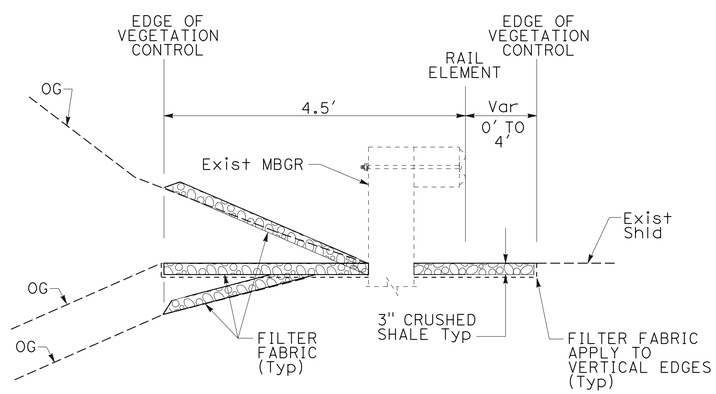

SECTION A-A NO DIKE

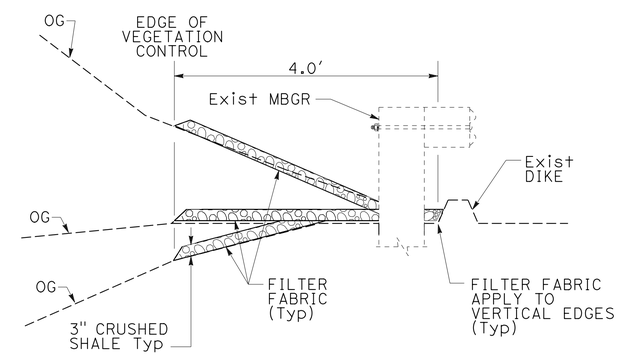

SECTION A-A WITH DIKE

VEGETATION CONTROL (CRUSHED SHALE)

CONSTRUCTION DETAILS

NO SCALE

C-5

STATE OF CALIFORNIA - DEPARTMENT OF TRANSPORTATION
DESIGN
FUNCTIONAL SUPERVISOR: DAVID BEARD
CALCULATED-DESIGNED BY: JUSTIN BORDERS
CHECKED BY: DAVID BEARD
REVISED BY
DATE REVISED

LAST REVISION 03-11-16 | DATE PLOTTED => 16-MAY-2016 | TIME PLOTTED => 10:57

Dist	COUNTY	ROUTE	POST MILES TOTAL PROJECT	SHEET No.	TOTAL SHEETS
05	SB	101	0.4/11.7	8	57

REGISTERED CIVIL ENGINEER 3-11-16 DATE

3-14-16
PLANS APPROVAL DATE

REGISTERED PROFESSIONAL ENGINEER JUSTIN W. BORDERS No. 65918 Exp 6-30-16 CIVIL STATE OF CALIFORNIA

THE STATE OF CALIFORNIA OR ITS OFFICERS OR AGENTS SHALL NOT BE RESPONSIBLE FOR THE ACCURACY OR COMPLETENESS OF SCANNED COPIES OF THIS PLAN SHEET.

NOTES (THIS SHEET ONLY):

1. NEAT LINE SHOWN IS BASED ON 0.1′ MINIMUM. EXACT LOCATION WILL BE DETERMINED BY THE ENGINEER.
2. USE DECOMPOSED GRANITE TO BRING SHOULDER UP TO EXISTING PAVEMENT GRADE AND LEVEL AREA. (SEE LANDSCAPE SHEETS FOR DECOMPOSED GRANITE LOCATIONS)

GORE PAVING STRUCTURAL SECTION (THIS SHEET ONLY):

2 — 0.50′ MINOR CONCRETE (EXPOSED AGGREGATE CONCRETE)
0.17′ CLASS 2 AB

ABBREVIATION (THIS SHEET ONLY):

NL = NEAT LINE

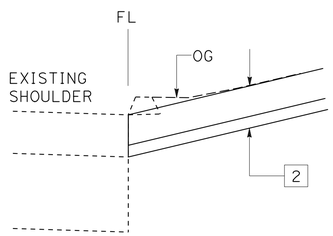

MATCH FLOWLINE

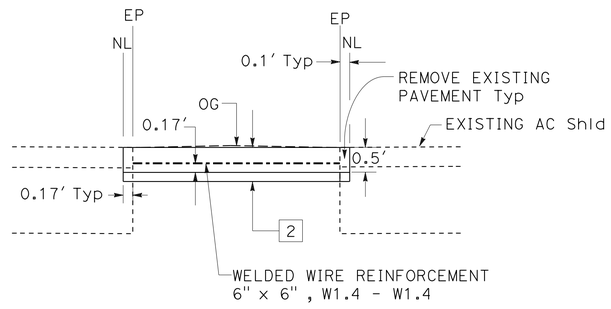

GORE PAVING

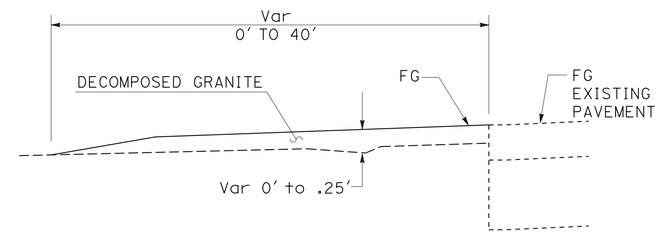

LOCATION No. 7 & 8
DECOMPOSED GRANITE

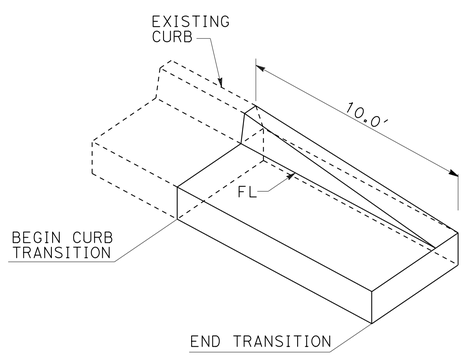

MINOR Conc CURB (TYPES A & B)

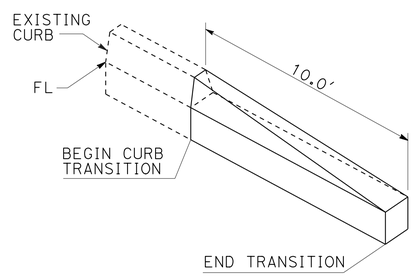

MINOR Conc CURB (TYPE A1-6)

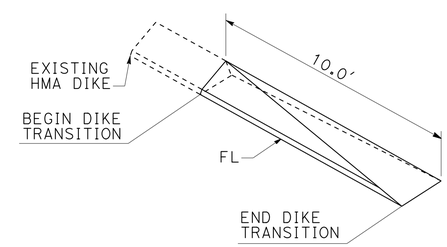

HMA DIKE

CURB AND DIKE TRANSITION

CONSTRUCTION DETAILS

NO SCALE

C-6

STATE OF CALIFORNIA - DEPARTMENT OF TRANSPORTATION
Caltrans® DESIGN
FUNCTIONAL SUPERVISOR: DAVID BEARD
JUSTIN BORDERS | DAVID BEARD
REVISED BY | DATE REVISED
CALCULATED-DESIGNED BY | CHECKED BY

LAST REVISION 03-11-16 | DATE PLOTTED => 16-MAY-2016 | TIME PLOTTED => 10:57

Dist	COUNTY	ROUTE	POST MILES TOTAL PROJECT	SHEET No.	TOTAL SHEETS
05	SB	101	0.4/11.7	9	57

REGISTERED CIVIL ENGINEER 3-11-16 DATE

3-14-16
PLANS APPROVAL DATE

REGISTERED PROFESSIONAL ENGINEER JUSTIN W. BORDERS No. 65918 Exp 6-30-16 CIVIL STATE OF CALIFORNIA

THE STATE OF CALIFORNIA OR ITS OFFICERS OR AGENTS SHALL NOT BE RESPONSIBLE FOR THE ACCURACY OR COMPLETENESS OF SCANNED COPIES OF THIS PLAN SHEET.

LEGEND (THIS SHEET ONLY):

MINOR CONCRETE

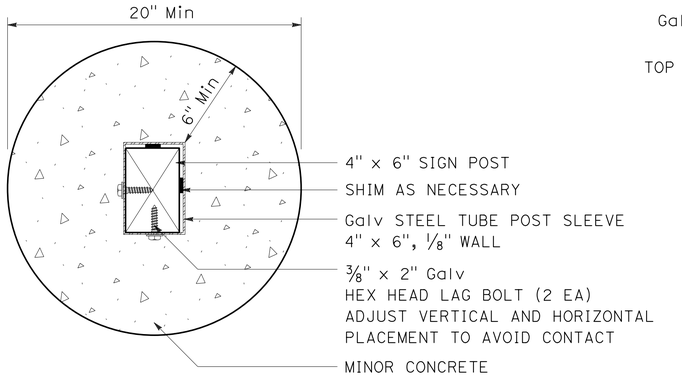

PLAN VIEW

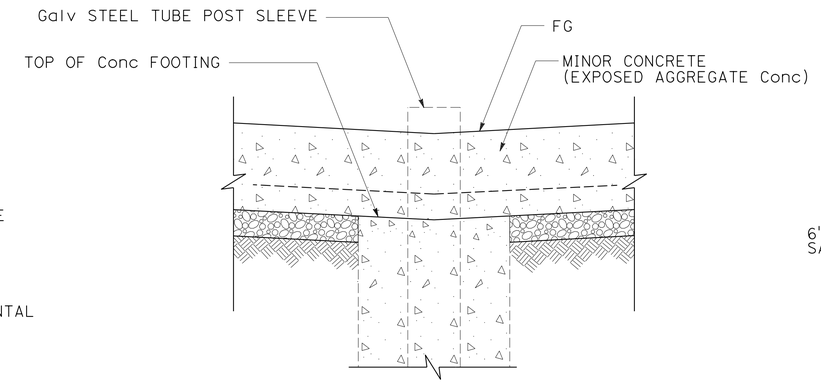

SECTION A-A

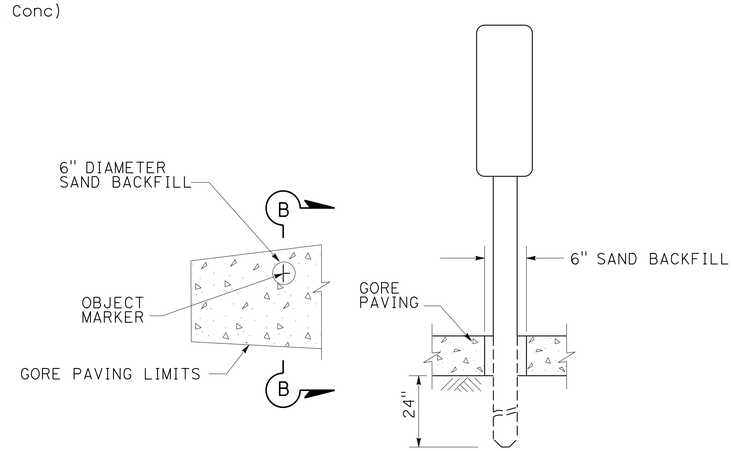

SECTION B-B

OBJECT MARKER

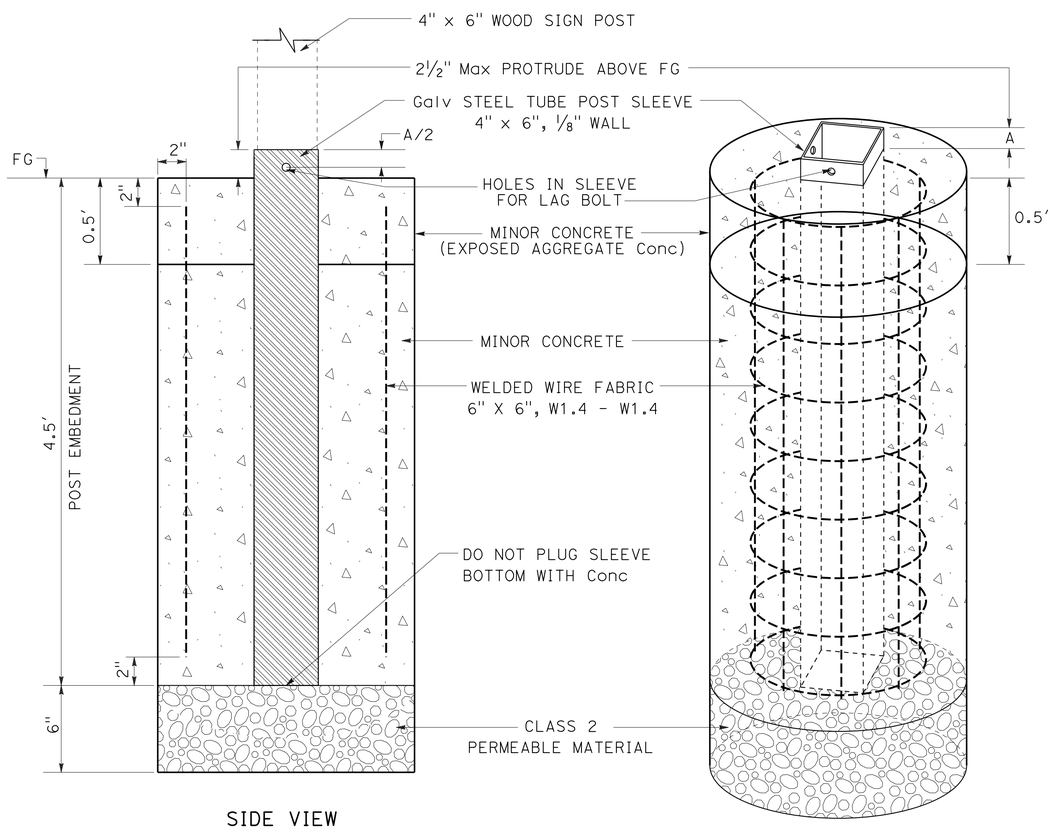

SIDE VIEW

ISOMETRIC VIEW

POST SLEEVE DETAIL

POST SLEEVE QUANTITIES (PER POST)

(N) MINOR CONCRETE	(N) CLASS 2 PERMEABLE MATERIAL	(N) WELDED WIRE FABRIC
CY	CY	SQFT
0.34	0.04	17.2

(N) - NOT A SEPARATE PAY ITEM, FOR INFORMATION ONLY

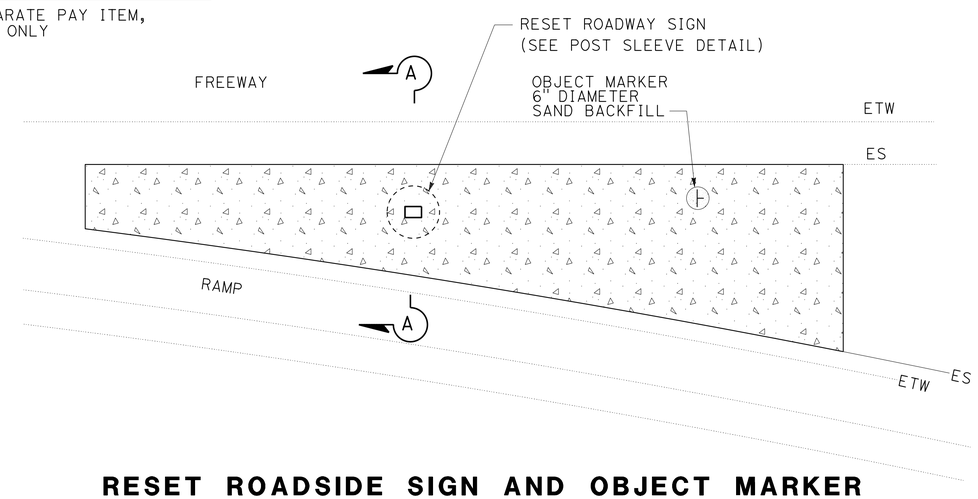

RESET ROADSIDE SIGN AND OBJECT MARKER

CONSTRUCTION DETAILS

NO SCALE

C-7

STATE OF CALIFORNIA - DEPARTMENT OF TRANSPORTATION
Caltrans
DESIGN
FUNCTIONAL SUPERVISOR: DAVID BEARD
CALCULATED-DESIGNED BY: JUSTIN BORDERS
CHECKED BY: DAVID BEARD
REVISED BY
DATE REVISED

LAST REVISION 03-11-16
DATE PLOTTED => 16-MAY-2016
TIME PLOTTED => 10:57

Dist	COUNTY	ROUTE	POST MILES TOTAL PROJECT	SHEET No.	TOTAL SHEETS
05	SB	101	0.4/11.7	10	57

REGISTERED CIVIL ENGINEER 3-11-16 DATE

3-14-16
PLANS APPROVAL DATE

REGISTERED PROFESSIONAL ENGINEER JUSTIN W. BORDERS No. 65918 Exp 6-30-16 CIVIL STATE OF CALIFORNIA

THE STATE OF CALIFORNIA OR ITS OFFICERS OR AGENTS SHALL NOT BE RESPONSIBLE FOR THE ACCURACY OR COMPLETENESS OF SCANNED COPIES OF THIS PLAN SHEET.

NOTE (THIS SHEET ONLY):

1. LOCATE MVP (LOCATION 24) NEAR RAMP LIGHTING AS DIRECTED BY THE ENGINEER

ABBREVIATION (THIS SHEET ONLY):

MCEA - MINOR CONCRETE (EXPOSED AGGREGATE Conc)

LEGEND (THIS SHEET ONLY):

——— SAWCUT BORDER, 1/4" WIDE, 1" DEEP

-------- SAWCUT GRID, 1/8" WIDE, 1/2" DEEP
6' ON CENTER GRID, 45° TO ROUTE 101

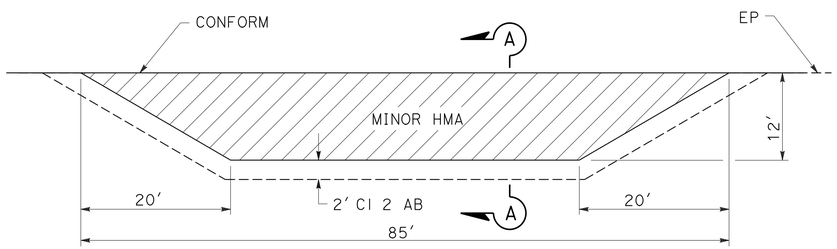

PLAN

LOCATION No. 24
PM 3.60
REYNOLDS Ave SB OFF-RAMP

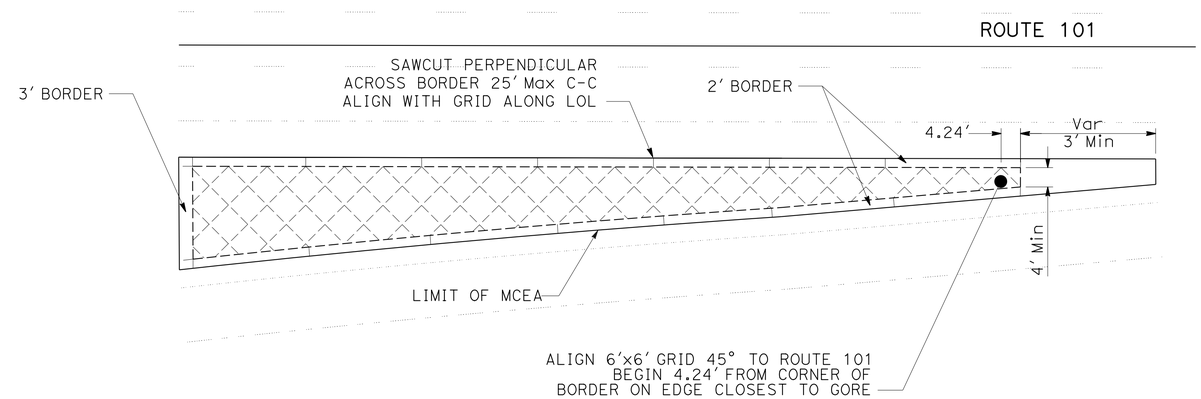

DECORATIVE SAWCUT PATTERN
MINOR CONCRETE (EXPOSED AGGREGATE CONCRETE)

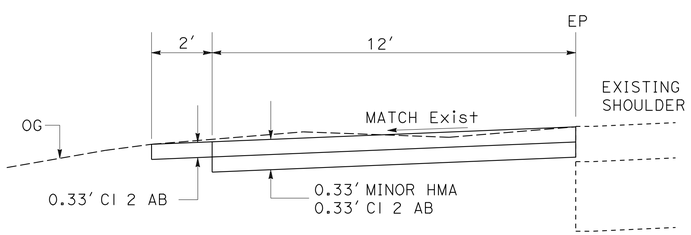

SECTION A-A

LOCATION No. 24
PM 3.60
REYNOLDS Ave SB OFF-RAMP

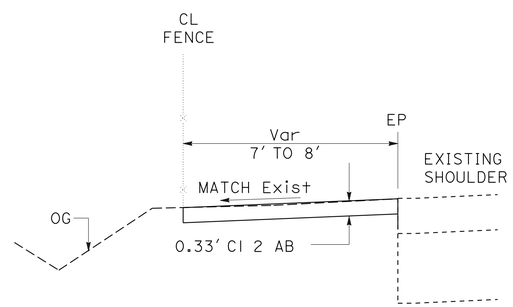

SECTION B-B

LOCATION No. 48
PM 8.29
EVANS Ave SB OFF-RAMP Shld

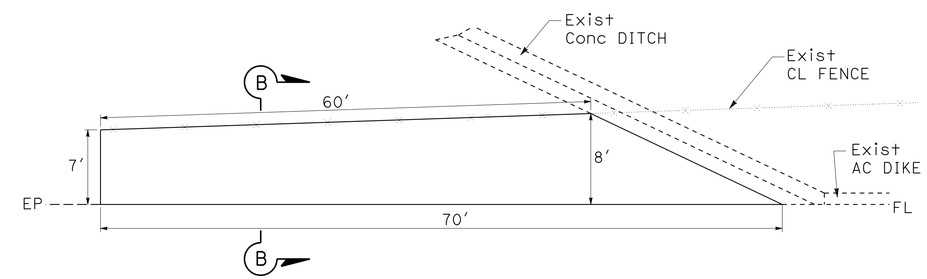

PLAN

LOCATION No. 48
PM 8.29
EVANS Ave SB OFF-RAMP Shld

MAINTENANCE VEHICLE PULLOUT

CONSTRUCTION DETAILS

NO SCALE

C-8

STATE OF CALIFORNIA - DEPARTMENT OF TRANSPORTATION
Caltrans
DESIGN
FUNCTIONAL SUPERVISOR: DAVID BEARD
CALCULATED-DESIGNED BY: JUSTIN BORDERS
CHECKED BY: DAVID BEARD
REVISED BY
DATE REVISED

LAST REVISION 03-11-16 | DATE PLOTTED => 16-MAY-2016 | TIME PLOTTED => 10:57

Dist	COUNTY	ROUTE	POST MILES TOTAL PROJECT	SHEET No.	TOTAL SHEETS
05	SB	101	0.4/11.7	11	57

REGISTERED CIVIL ENGINEER 3-11-16 DATE

3-14-16
PLANS APPROVAL DATE

REGISTERED PROFESSIONAL ENGINEER JUSTIN W. BORDERS No. 65918 Exp 6-30-16 CIVIL STATE OF CALIFORNIA

THE STATE OF CALIFORNIA OR ITS OFFICERS OR AGENTS SHALL NOT BE RESPONSIBLE FOR THE ACCURACY OR COMPLETENESS OF SCANNED COPIES OF THIS PLAN SHEET.

NOTES (SHEET C-9 TO C-11 ONLY):

1. FOR ACCURATE RIGHT OF WAY DATA, CONTACT RIGHT OF WAY ENGINEERING AT THE DISTRICT OFFICE.
2. EXACT LOCATION OF GATES TO BE DETERMINED BY THE ENGINEER.
3. UTILITY OWNERSHIP:
   ELECTRICAL - SOUTHERN CALIFORNIA EDISON
   SEWER - MONTECITO SANITARY DISTRICT
   CABLE - COX CABLE
   GAS - SOUTHERN CALIFORNIA GAS
   WATER - GOLETA WATER DISTRICT
   TELEPHONE - SPRINT

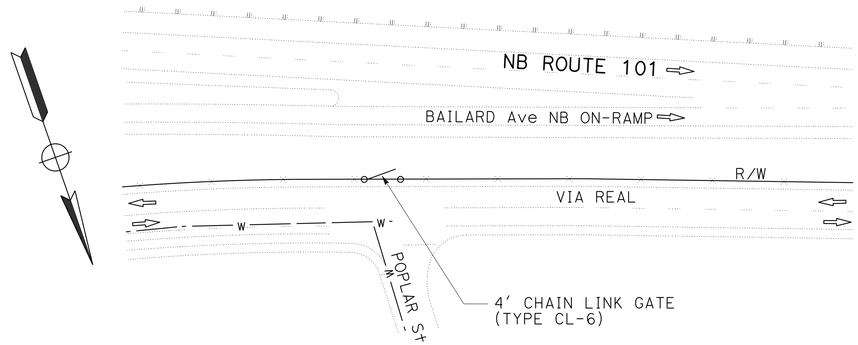

LOCATION No.19
PM 1.79

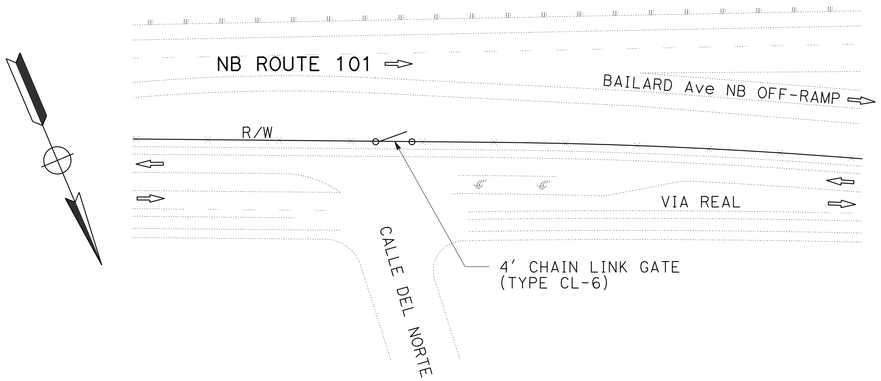

LOCATION No.11
PM 1.39

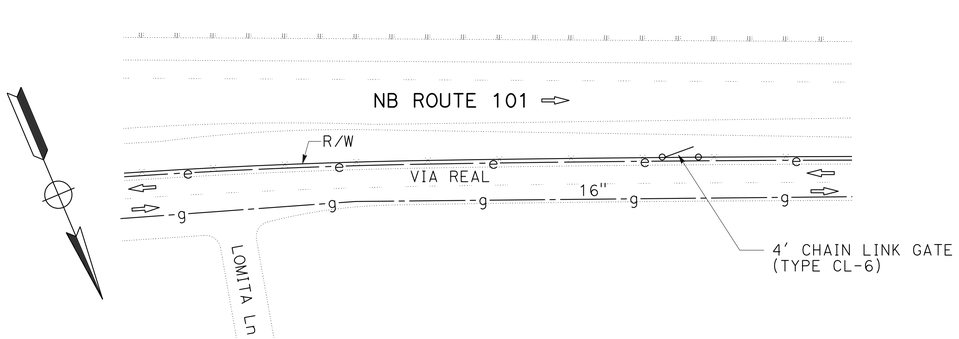

LOCATION No. 10
PM 0.99

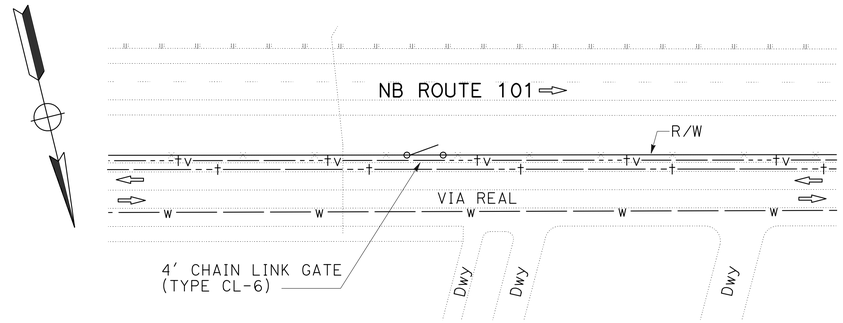

LOCATION No. 27
PM 4.17

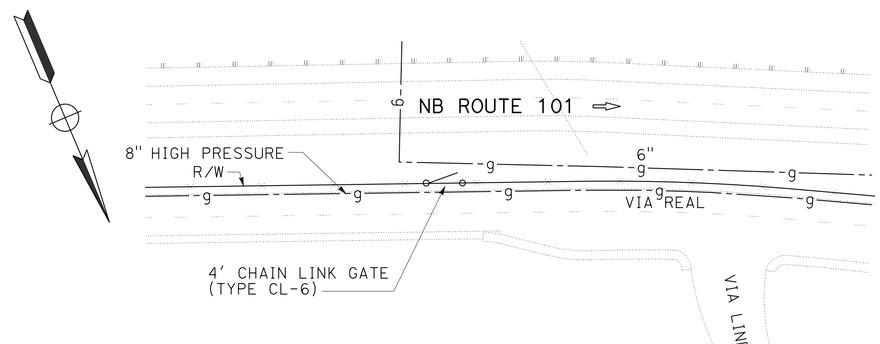

LOCATION No. 20
PM 2.08

GATES

CONSTRUCTION DETAILS

SCALE: 1" = 50'

C-9

STATE OF CALIFORNIA - DEPARTMENT OF TRANSPORTATION
Caltrans
DESIGN
FUNCTIONAL SUPERVISOR: DAVID BEARD
CALCULATED-DESIGNED BY: JUSTIN BORDERS
CHECKED BY: DAVID BEARD
REVISED BY
DATE REVISED

LAST REVISION 03-11-16
DATE PLOTTED => 16-MAY-2016
TIME PLOTTED => 10:57

Dist	COUNTY	ROUTE	POST MILES TOTAL PROJECT	SHEET No.	TOTAL SHEETS
05	SB	101	0.4/11.7	12	57

REGISTERED CIVIL ENGINEER Justin W Borders 3-11-16 DATE

3-14-16
PLANS APPROVAL DATE

REGISTERED PROFESSIONAL ENGINEER JUSTIN W. BORDERS No. 65918 Exp 6-30-16 CIVIL STATE OF CALIFORNIA

THE STATE OF CALIFORNIA OR ITS OFFICERS OR AGENTS SHALL NOT BE RESPONSIBLE FOR THE ACCURACY OR COMPLETENESS OF SCANNED COPIES OF THIS PLAN SHEET.

NOTE:

FOR ACCURATE RIGHT OF WAY DATA, CONTACT RIGHT OF WAY ENGINEERING AT THE DISTRICT OFFICE.

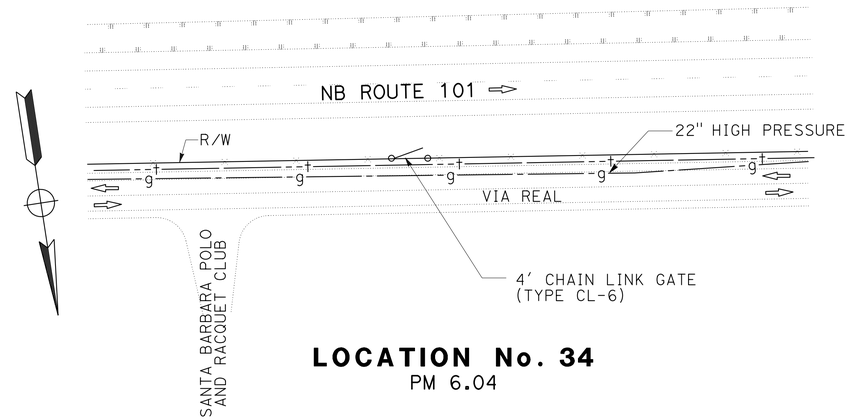

LOCATION No. 34
PM 6.04

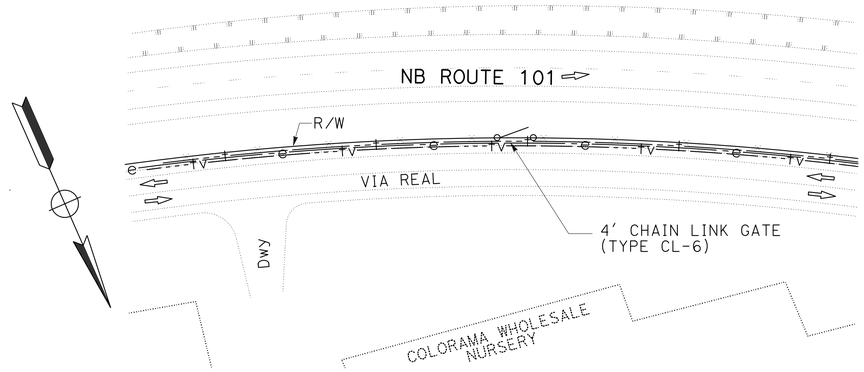

LOCATION No. 30
PM 4.80

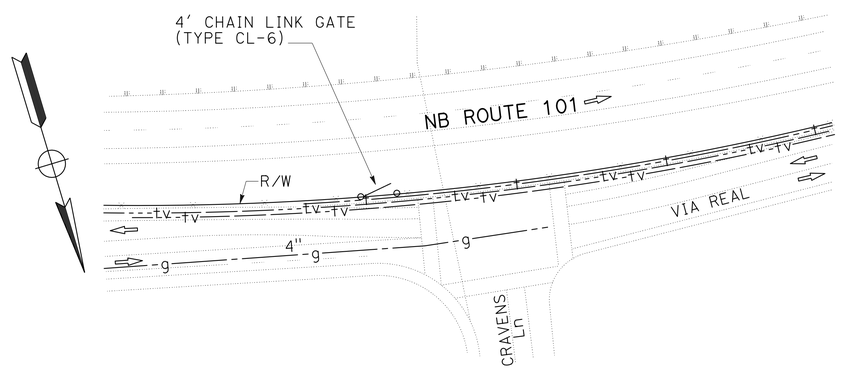

LOCATION No. 28
PM 4.41

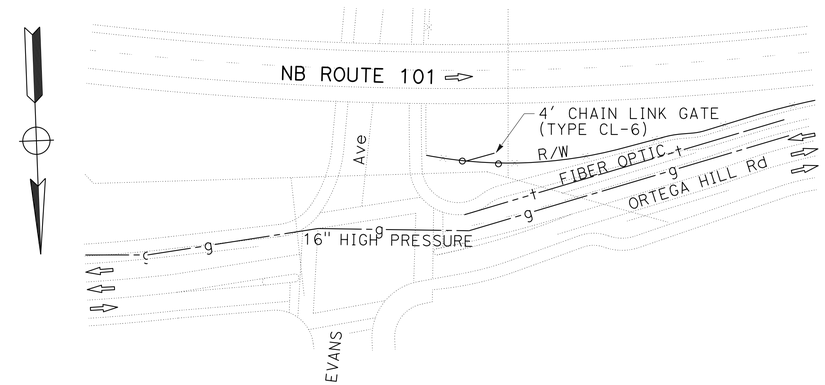

LOCATION No. 47
PM 8.28

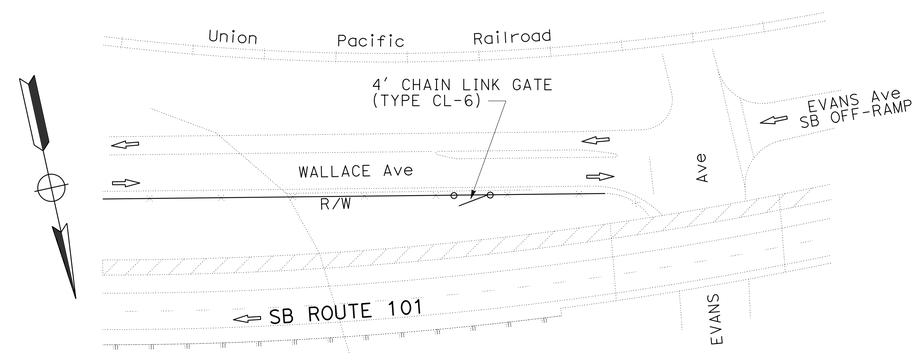

LOCATION No. 45
PM 8.25

GATES

CONSTRUCTION DETAILS

SCALE: 1" = 50'

C-10

STATE OF CALIFORNIA - DEPARTMENT OF TRANSPORTATION
Caltrans®
DESIGN

FUNCTIONAL SUPERVISOR: DAVID BEARD
CALCULATED-DESIGNED BY: JUSTIN BORDERS
CHECKED BY: DAVID BEARD
REVISED BY
DATE REVISED

LAST REVISION 03-11-16
DATE PLOTTED => 16-MAY-2016
TIME PLOTTED => 10:57

Dist	COUNTY	ROUTE	POST MILES TOTAL PROJECT	SHEET No.	TOTAL SHEETS
05	SB	101	0.4/11.7	13	57

REGISTERED CIVIL ENGINEER 3-11-16 DATE

3-14-16
PLANS APPROVAL DATE

REGISTERED PROFESSIONAL ENGINEER
JUSTIN W. BORDERS
No. 65918
Exp 6-30-16
CIVIL
STATE OF CALIFORNIA

THE STATE OF CALIFORNIA OR ITS OFFICERS OR AGENTS SHALL NOT BE RESPONSIBLE FOR THE ACCURACY OR COMPLETENESS OF SCANNED COPIES OF THIS PLAN SHEET.

NOTE:

FOR ACCURATE RIGHT OF WAY DATA, CONTACT
RIGHT OF WAY ENGINEERING AT THE DISTRICT OFFICE.

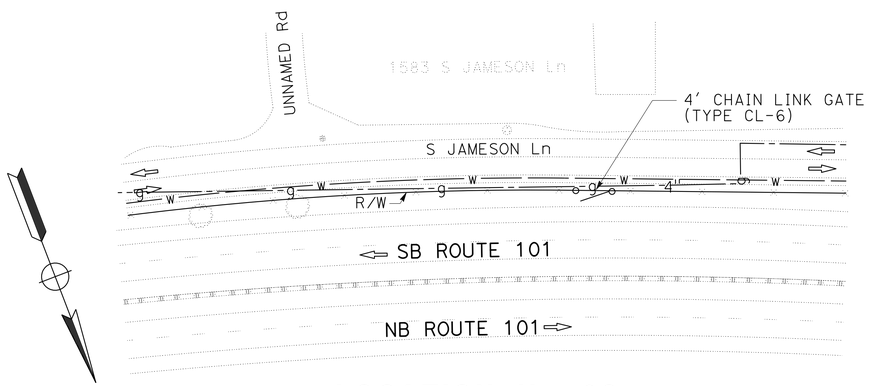

LOCATION No. 60
PM 9.83

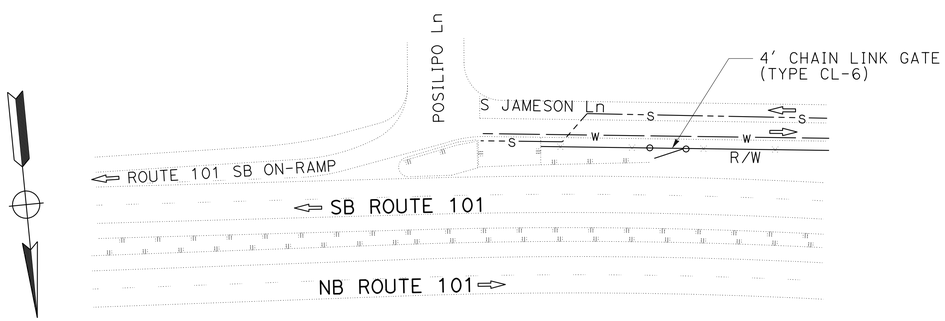

LOCATION No. 59
PM 9.69

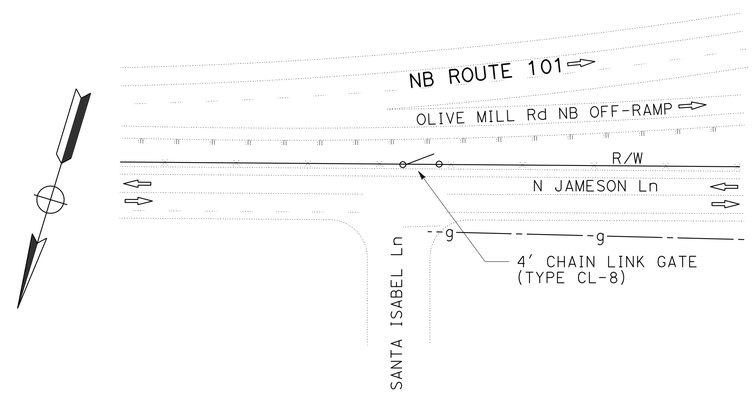

LOCATION No. 69
PM 10.38

GATES

CONSTRUCTION DETAILS
SCALE: 1" = 50'

C-11

STATE OF CALIFORNIA - DEPARTMENT OF TRANSPORTATION
Caltrans
DESIGN

FUNCTIONAL SUPERVISOR: DAVID BEARD
CALCULATED-DESIGNED BY: JUSTIN BORDERS
CHECKED BY: DAVID BEARD
REVISED BY
DATE REVISED

LAST REVISION 03-11-16
DATE PLOTTED => 16-MAY-2016
TIME PLOTTED => 10:57

Dist	COUNTY	ROUTE	POST MILES TOTAL PROJECT	SHEET No.	TOTAL SHEETS
05	SB	101	0.4/11.7	14	57

REGISTERED CIVIL ENGINEER 3-11-16 DATE

3-14-16
PLANS APPROVAL DATE

REGISTERED PROFESSIONAL ENGINEER FAWZI YAGHMOUR No. 54750 Exp. 12-31-17 CIVIL STATE OF CALIFORNIA

THE STATE OF CALIFORNIA OR ITS OFFICERS OR AGENTS SHALL NOT BE RESPONSIBLE FOR THE ACCURACY OR COMPLETENESS OF SCANNED COPIES OF THIS PLAN SHEET.

NOTES:

1. EXACT LOCATIONS TO BE DETERMINED BY THE ENGINEER.
2. FOR SIGN "C40" (TRAFFIC FINES DOUBLED IN CONSTRUCTION ZONES), ALL LETTERS MUST BE BLACK ON WHITE BACKGROUND.
3. SEE STANDARD PLAN (T-10 AND T-14) LANE CLOSURE CHARTS FOR ADDITIONAL REQUIRED SIGNS.

STATIONARY MOUNTED CONSTRUCTION AREA SIGNS

SIGN No.	SIGN CODE FEDERAL	SIGN CODE CALIFORNIA	PANEL SIZE	SIGN MESSAGE	No. OF POST AND POST SIZE	No. OF SIGN
A	W20-1		60" x 60"	ROAD WORK AHEAD	2 - 6" x 6"	2
B	W20-1		48" x 48"	ROAD WORK AHEAD	1 - 6" x 6"	25
C	G20-2		36" x 18"	END ROAD WORK	1 - 4" x 4"	30
D		C40	108" x 42"	TRAFFIC FINES DOUBLED IN CONSTRUCTION ZONES	2 - 6" x 6"	2

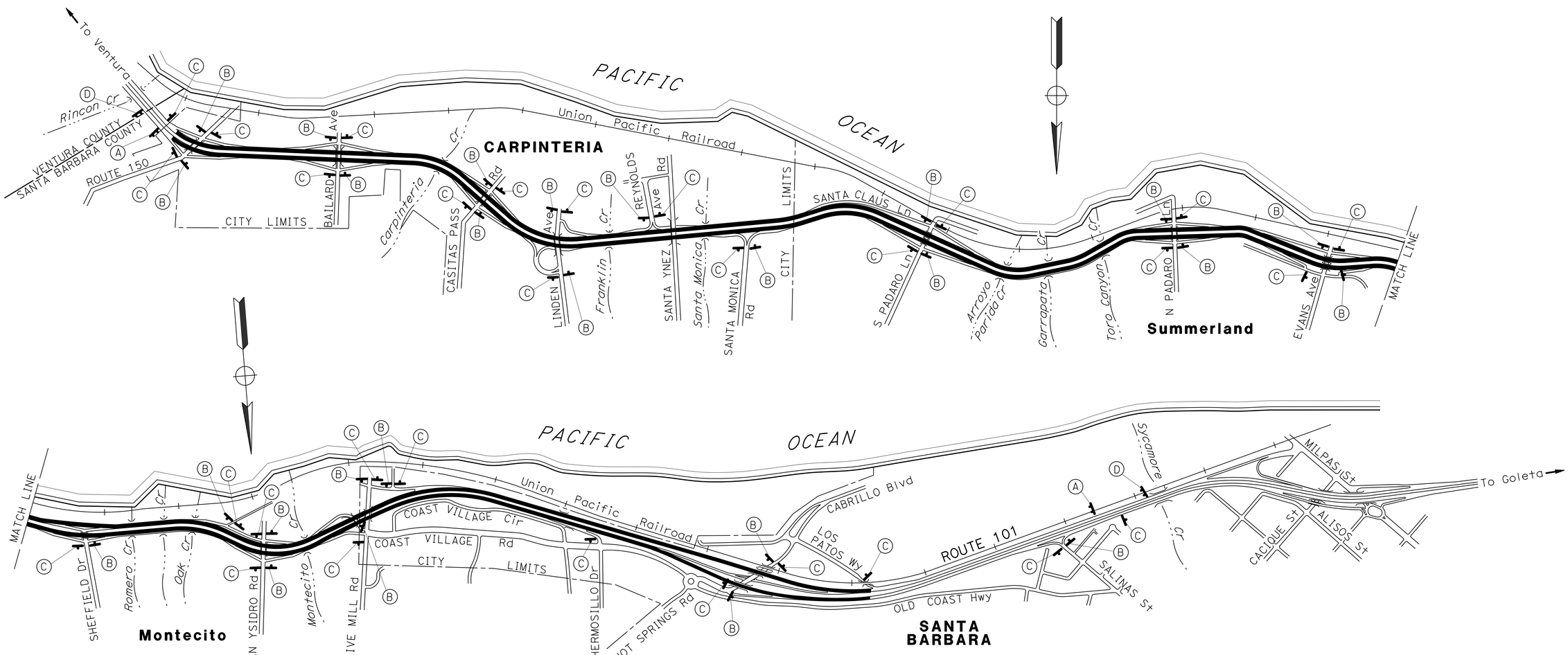

CONSTRUCTION AREA SIGNS

NO SCALE

CS-1

APPROVED FOR CONSTRUCTION AREA SIGN WORK ONLY

STATE OF CALIFORNIA - DEPARTMENT OF TRANSPORTATION
Caltrans
TRAFFIC DESIGN

FUNCTIONAL SUPERVISOR: MOHAMMED QATAMI
CALCULATED-DESIGNED BY: FAWZI YAGMOUR
CHECKED BY: GURMIT GILL
REVISED BY
DATE REVISED

LAST REVISION 03-11-16 | DATE PLOTTED => 16-MAY-2016 | TIME PLOTTED => 10:57

Dist	COUNTY	ROUTE	POST MILES TOTAL PROJECT	SHEET No.	TOTAL SHEETS
05	SB	101	0.4/11.7	15	57

REGISTERED CIVIL ENGINEER 3-11-16 DATE

3-14-16
PLANS APPROVAL DATE

REGISTERED PROFESSIONAL ENGINEER FAWZI YAGHMOUR No. 54750 Exp. 12-31-17 CIVIL STATE OF CALIFORNIA

THE STATE OF CALIFORNIA OR ITS OFFICERS OR AGENTS SHALL NOT BE RESPONSIBLE FOR THE ACCURACY OR COMPLETENESS OF SCANNED COPIES OF THIS PLAN SHEET.

PAVEMENT DELINEATION QUANTITIES

STATION	SHEET No.	PM	DESCRIPTION	DIRECTION	REMOVE DELINEATOR	REMOVE MARKER	OBJECT MARKER TYPE L-1 OM2-2V	DELINEATOR (CLASS 1) FLEXIBLE POST (TYPE F)	DELINEATOR (CLASS 1) FLEXIBLE POST (TYPE G)
					EA	EA	EA	EA	EA
LOCATION No. 1	S1-1	0.46	RINCON Rd NB OFF-RAMP	NB				1	1
LOCATION No. 9	S1-2	0.72	RINCON Rd NB ON-RAMP	NB		1	1		1
LOCATION No. 21	S1-3	3.57	REYNOLDS Ave SB ON-RAMP	SB	1		1		1
LOCATION No. 22	S1-4	3.58	REYNOLDS Ave SB ON-RAMP/OFF-RAMP	SB	2				2
LOCATION No. 23	S2-1	3.59	REYNOLDS Ave SB OFF-RAMP	SB	1		1	1	1
LOCATION No. 36	S2-2	7.00	N PADARO LANE NB OFF-RAMP	NB	1	1			1
LOCATION No. 38	S2-4	7.03	N PADARO LANE SB ON-RAMP	SB	3		1	1	1
LOCATION No. 41	S2-5	7.24	N PADARO LANE SB OFF-RAMP	SB			1		1
LOCATION No. 42	S2-6	7.26	N PADARO LANE NB ON-RAMP	SB	3				1
LOCATION No. 43	S3-1	8.16	EVANS Ave NB OFF-RAMP	NB	3	1	1		1
LOCATION No. 50	S3-2	8.40	EVANS Ave NB ON-RAMP	NB	2				1
LOCATION No. 51	S3-4	8.43	EVANS Ave SB OFF-RAMP	SB					1
LOCATION No. 77	S3-5	10.71	OLIVE MILL Rd OFF-RAMP	SB	2			1	1
SUBTOTAL					18	3	5	4	14
TOTAL					18	3	6	18	

PAVEMENT DELINEATION QUANTITIES
PDQ-1

STATE OF CALIFORNIA - DEPARTMENT OF TRANSPORTATION
Caltrans® TRAFFIC DESIGN

FUNCTIONAL SUPERVISOR: MOHAMMED QATAMI
CALCULATED-DESIGNED BY: GURMIT GILL
CHECKED BY: FAWZI YAGHMOUR
REVISED BY
DATE REVISED

LAST REVISION 03-11-16 | DATE PLOTTED => 16-MAY-2016 TIME PLOTTED => 10:57

Dist	COUNTY	ROUTE	POST MILES TOTAL PROJECT	SHEET No.	TOTAL SHEETS
05	SB	101	0.4/11.7	16	57

REGISTERED CIVIL ENGINEER 3-11-16 DATE

3-14-16
PLANS APPROVAL DATE

REGISTERED PROFESSIONAL ENGINEER FAWZI YAGHMOUR No. 54750 Exp. 12-31-17 CIVIL STATE OF CALIFORNIA

THE STATE OF CALIFORNIA OR ITS OFFICERS OR AGENTS SHALL NOT BE RESPONSIBLE FOR THE ACCURACY OR COMPLETENESS OF SCANNED COPIES OF THIS PLAN SHEET.

LEGEND:

- △ ROADSIDE SIGN ONE-POST / OBJECT MARKER / DELINEATOR
- ⊠ RESET ROADSIDE SIGN
- □ REPLACE WITH NEW POST MILE MARKER
- (X-X) ROADSIDE SIGN NUMBER
- I_L OBJECT MARKER TYPE L-1 (CA) (OM2-1V) OR (OM2-2V)
- I_F DELINEATOR TYPE F (CLASS 1)
- I_G DELINEATOR TYPE G (CLASS 1)
- I_{PM} POST MILE MARKER
- ● REMOVE DELINEATOR (CLASS 1) / REMOVE OBJECT MARKER / REMOVE ROADSIDE SIGN

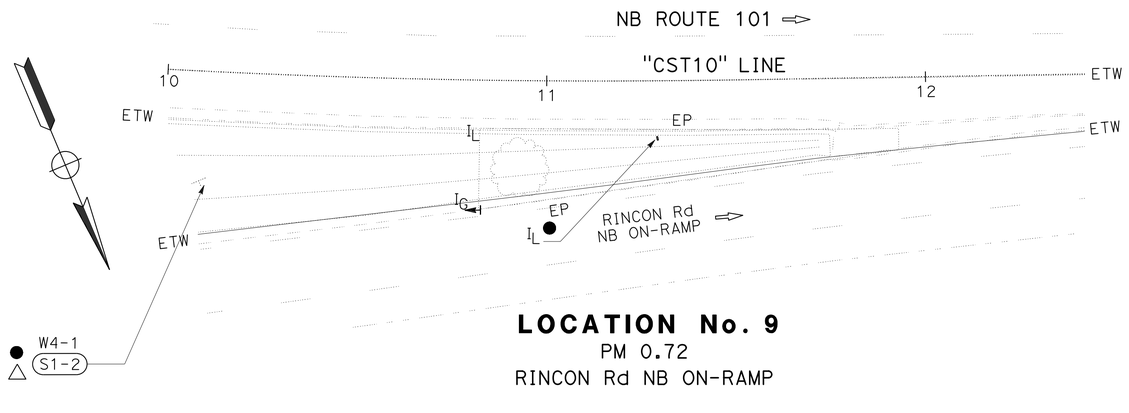

LOCATION No. 9
PM 0.72
RINCON Rd NB ON-RAMP

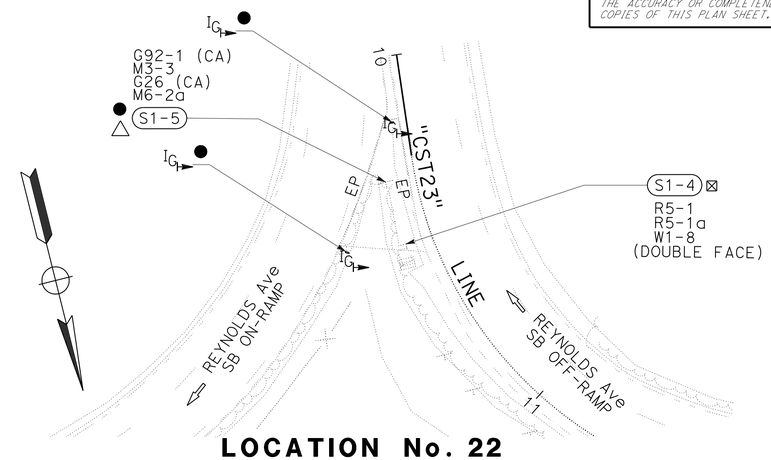

LOCATION No. 22
PM 3.58
REYNOLDS Ave SB ON-RAMP/OFF-RAMP

LOCATION No. 1
PM 0.46
RINCON Rd NB OFF-RAMP

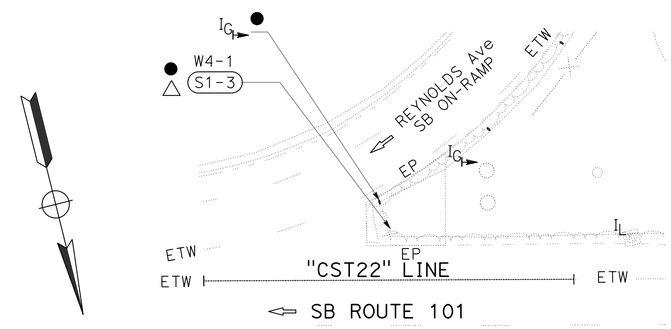

LOCATION No. 21
PM 3.57
REYNOLDS Ave SB ON-RAMP

APPROVED FOR SIGN WORK ONLY

SIGN PLAN
NO SCALE **S-1**

STATE OF CALIFORNIA - DEPARTMENT OF TRANSPORTATION
Caltrans® DESIGN
FUNCTIONAL SUPERVISOR: MOHAMMED QATAMI
CALCULATED-DESIGNED BY: GURMIT GILL
CHECKED BY: FAWZI YAHMOUR
REVISED BY / DATE REVISED

LAST REVISION 03-11-16
DATE PLOTTED => 16-MAY-2016
TIME PLOTTED => 10:57

Dist	COUNTY	ROUTE	POST MILES TOTAL PROJECT	SHEET No.	TOTAL SHEETS
05	SB	101	0.4/11.7	17	57

REGISTERED CIVIL ENGINEER 3-11-16 DATE

3-14-16
PLANS APPROVAL DATE

REGISTERED PROFESSIONAL ENGINEER FAWZI YAGHMOUR No. 54750 Exp. 12-31-17 CIVIL STATE OF CALIFORNIA

THE STATE OF CALIFORNIA OR ITS OFFICERS OR AGENTS SHALL NOT BE RESPONSIBLE FOR THE ACCURACY OR COMPLETENESS OF SCANNED COPIES OF THIS PLAN SHEET.

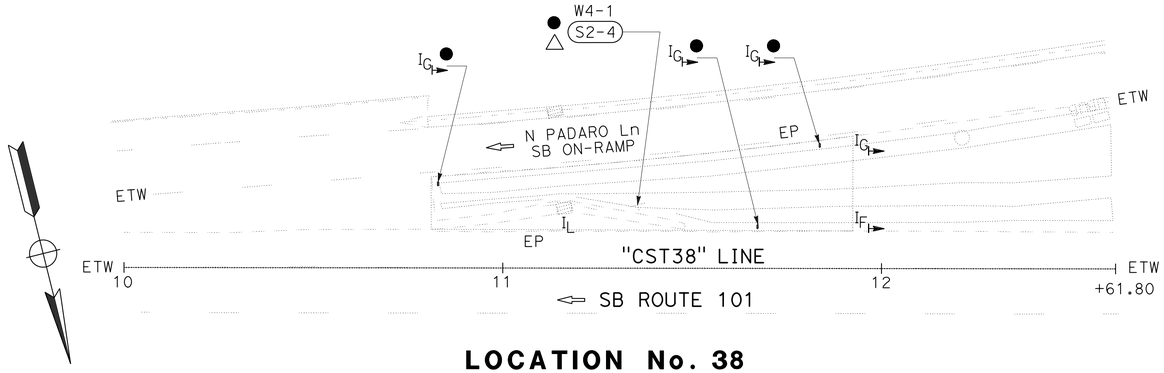

LOCATION No. 38
PM 7.03
N PADARO Ln SB ON-RAMP

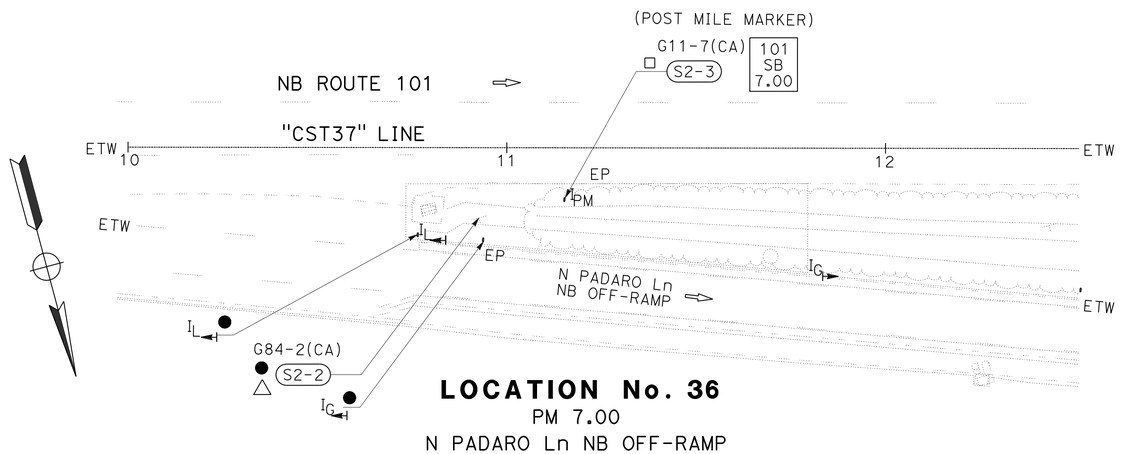

LOCATION No. 36
PM 7.00
N PADARO Ln NB OFF-RAMP

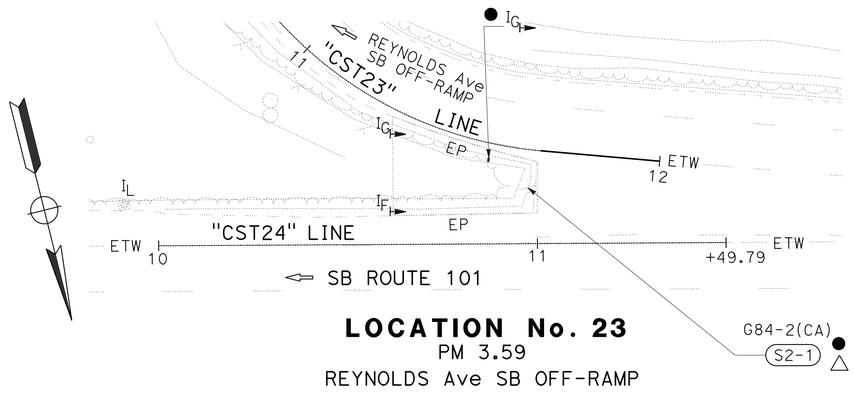

LOCATION No. 23
PM 3.59
REYNOLDS Ave SB OFF-RAMP

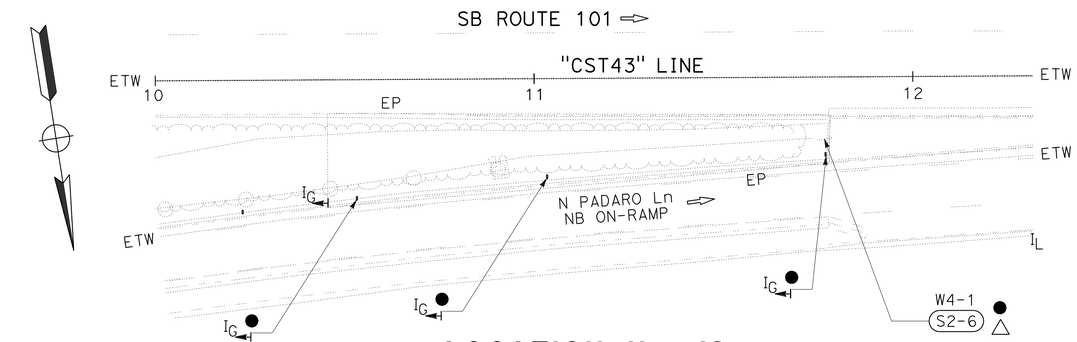

LOCATION No. 42
PM 7.26
N PADARO Ln NB ON-RAMP

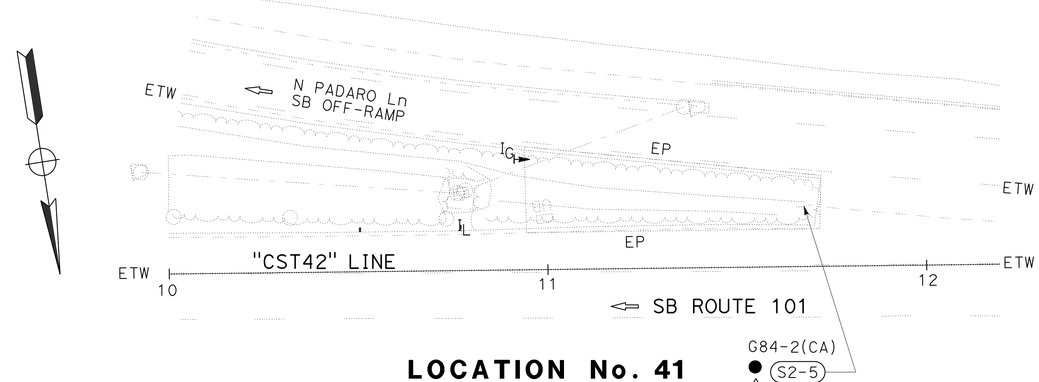

LOCATION No. 41
PM 7.24
N PADARO Ln SB OFF-RAMP

APPROVED FOR SIGN WORK ONLY

SIGN PLAN
NO SCALE **S-2**

STATE OF CALIFORNIA - DEPARTMENT OF TRANSPORTATION
Caltrans®
DESIGN
FUNCTIONAL SUPERVISOR: MOHAMMED QATAMI
CALCULATED-DESIGNED BY: GURMIT GILL
CHECKED BY: FAWZI YAHMOUR
REVISED BY
DATE REVISED

LAST REVISION 03-11-16
DATE PLOTTED => 16-MAY-2016
TIME PLOTTED => 10:57

Dist	COUNTY	ROUTE	POST MILES TOTAL PROJECT	SHEET No.	TOTAL SHEETS
05	SB	101	0.4/11.7	18	57

REGISTERED CIVIL ENGINEER DATE 3-11-16

PLANS APPROVAL DATE 3-14-16

REGISTERED PROFESSIONAL ENGINEER FAWZI YAGHMOUR No. 54750 Exp. 12-31-17 CIVIL STATE OF CALIFORNIA

THE STATE OF CALIFORNIA OR ITS OFFICERS OR AGENTS SHALL NOT BE RESPONSIBLE FOR THE ACCURACY OR COMPLETENESS OF SCANNED COPIES OF THIS PLAN SHEET.

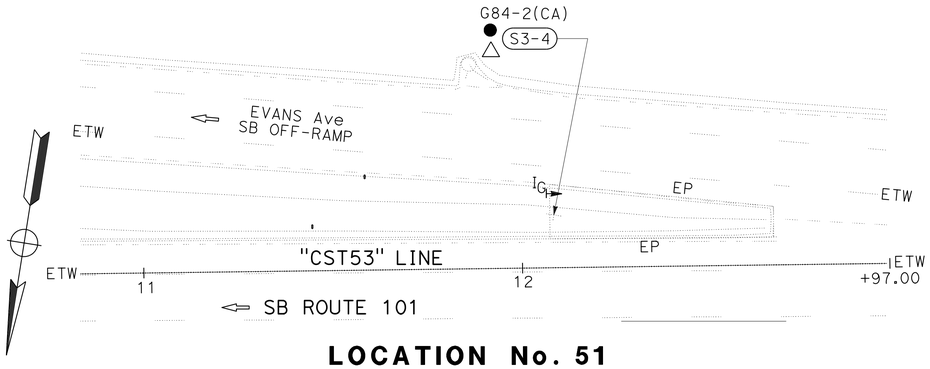

LOCATION No. 51
PM 8.43
EVANS Ave SB OFF-RAMP

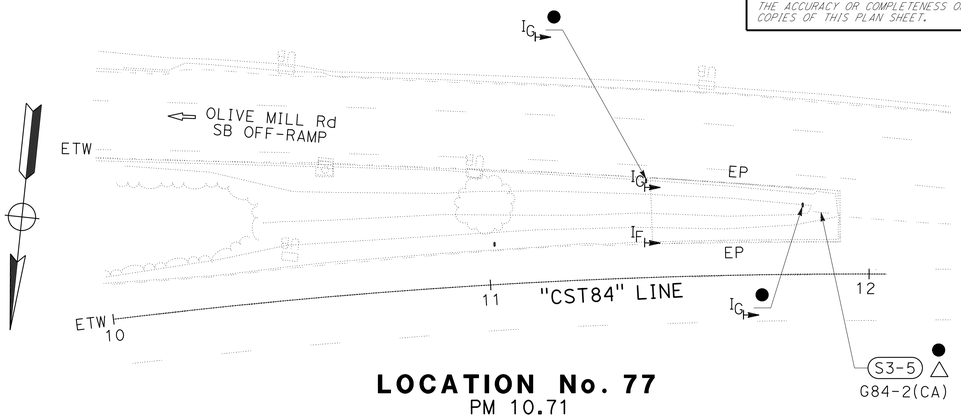

LOCATION No. 77
PM 10.71
OLIVE MILL Rd SB OFF-RAMP

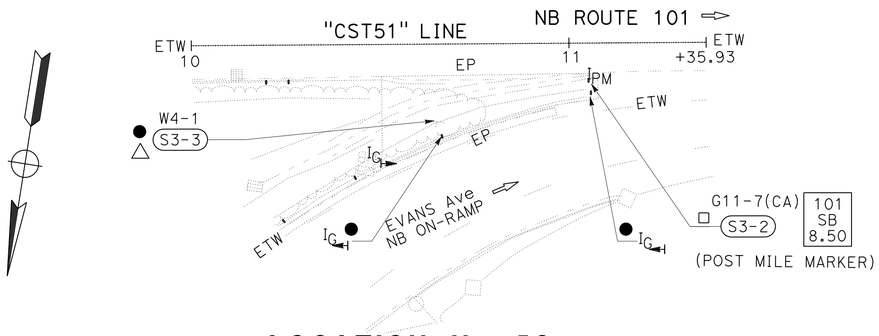

LOCATION No. 50
PM 8.40
EVANS Ave NB ON-RAMP

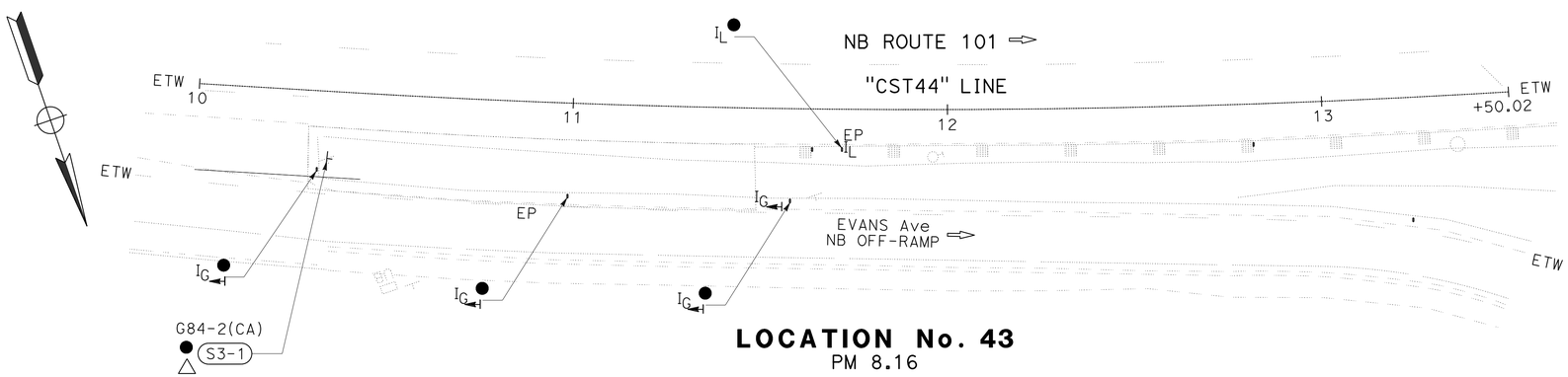

LOCATION No. 43
PM 8.16
EVANS Ave NB OFF-RAMP

APPROVED FOR SIGN WORK ONLY

SIGN PLAN

NO SCALE **S-3**

STATE OF CALIFORNIA - DEPARTMENT OF TRANSPORTATION
Caltrans®
DESIGN

FUNCTIONAL SUPERVISOR: MOHAMMED QATAMI
CALCULATED-DESIGNED BY: GURMIT GILL
CHECKED BY: FAWZI YAHMOUR
REVISED BY
DATE REVISED

LAST REVISION 03-11-16
DATE PLOTTED => 16-MAY-2016
TIME PLOTTED => 10:57

Dist	COUNTY	ROUTE	POST MILES TOTAL PROJECT	SHEET No.	TOTAL SHEETS
05	SB	101	0.4/11.7	19	57

REGISTERED CIVIL ENGINEER 3-11-16 DATE

3-14-16
PLANS APPROVAL DATE

REGISTERED PROFESSIONAL ENGINEER FAWZI YAGHMOUR No. 54750 Exp. 12-31-17 CIVIL STATE OF CALIFORNIA

THE STATE OF CALIFORNIA OR ITS OFFICERS OR AGENTS SHALL NOT BE RESPONSIBLE FOR THE ACCURACY OR COMPLETENESS OF SCANNED COPIES OF THIS PLAN SHEET.

ROADSIDE SIGN QUANTITIES

SHEET No.	SIGN No.	SIGN CODE FEDERAL	SIGN CODE CALIFORNIA	SIGN MESSAGE	STEEL POST (N)	DIRECTION SIGN FACING	No. OF POST AND POST SIZE	PANEL SIZE	SINGLE FACED	BACKGROUND SHEETING COLOR	BACKGROUND RETROREFLECTIVITY ASTM TYPE	LEGEND SHEETING COLOR	LEGEND RETROREFLECTIVITY ASTM TYPE	FURNISH SINGLE SHEET ALUMINUM SIGN (0.063-UNFRAMED) FOR RETROREFLECTIVE SHEETING (TYPE XI) SQFT	RETROREFLECTIVE SHEETING (TYPE XI) SQFT	REMOVE ROADSIDE SIGN EA	MILE POST MARKER EA	RESET ROADSIDE SIGN EA	POST SLEEVE EA	ROADSIDE SIGN (ONE POST) EA
S1	S1-1		G84-2(CA)	EXIT NUMBER W/ ARROW		FNBT	1 - 4" X 6"	48" X 54"	X	GREEN	XI	WHITE	XI	18.0	18.0	1				1
	S1-2	W4-1		MERGE		FNBT	1 - 4" X 6"	36" X 36"	X	YELLOW	XI	BLACK		9.0	9.0	1				1
	S1-3	W4-1		MERGE		FSBT	1 - 4" X 6"	36" X 36"	X	YELLOW	XI	BLACK		9.0	9.0	1				1
	S1-4	R5-1		DO NOT ENTER		FSBT	1 - 4" X 6"											1	1	
		R5-1a		WRONG WAY																
		W1-8		CHEVRON ALIGNMENT																
	S1-5		G92(CA)	HIGHWAY ENTRANCE		FSBT	1 - 4" X 6"	48" X 30"	X	WHITE		GREEN	XI	18.78	18.78	1				1
		M3-3		SOUTH				24" X 12"	X	WHITE	VIII	BLACK	VIII							
			G26(CA)	ROUTE SHIELD				24" X 28"	X	WHITE	VIII	BLACK	VIII							
		M6-2a		ARROW				21" X 15"	X	WHITE	VIII	BLACK	VIII							
S2	S2-1		G84-3(CA)	EXIT NUMBER W/ ARROW		FSBT	1 - 4" X 6"	48" X 60"	X	GREEN	XI	WHITE	XI	20.0	20.0	1			1	1
	S2-2		G84-2(CA)	EXIT NUMBER W/ ARROW		FNBT	1 - 4" X 6"	48" X 54"	X	GREEN	XI	WHITE	XI	18.0	18.0	1			1	1
	S2-3		G11-7(CA)	POST MILE MARKER (101-SB-7.00)	1	FNBT		8" X 12"	X	WHITE	VIII	BLACK	VIII	0.75	0.75	1	1			
	S2-4	W4-1		MERGE		FSBT	1 - 4" X 6"	36" X 36"	X	YELLOW	XI	BLACK		9.0	9.0	1				1
	S2-5		G84-2(CA)	EXIT NUMBER W/ ARROW		FSBT	1 - 4" X 6"	48" X 54"	X	GREEN	XI	WHITE	XI	18.0	18.0	1			1	1
	S2-6	W4-1		MERGE		FNBT	1 - 4" X 6"	36" X 36"	X	YELLOW	XI	BLACK		9.0	9.0					1
S3	S3-1		G84-2(CA)	EXIT NUMBER W/ ARROW		FNBT	1 - 4" X 6"	48" X 54"	X	GREEN	XI	WHITE	XI	18.0	18.0	1			1	1
	S3-2		G11-7(CA)	POST MILE MARKER (101-SB-8.50)	1	FNBT		8" X 12"	X	WHITE	VIII	BLACK	VIII	0.75	0.75	1	1			
	S3-3	W4-3		MERGE		FNBT	1 - 4" X 6"	36" X 36"	X	YELLOW	XI	BLACK		9.0	9.0	1				1
	S3-4		G84-2(CA)	EXIT NUMBER W/ ARROW		FSBT	1 - 4" X 6"	48" X 54"	X	GREEN	XI	WHITE	XI	18.0	18.0	1			1	1
	S3-5		G84-3(CA)	EXIT NUMBER W/ ARROW		FSBT	1 - 4" X 6"	48" X 60"	X	GREEN	XI	WHITE	XI	20.0	20.0	1			1	1
TOTAL														195.3	195.3	14	2	1	7	13

SIGN QUANTITIES
SQ-1

STATE OF CALIFORNIA - DEPARTMENT OF TRANSPORTATION
Caltrans® TRAFFIC DESIGN

FUNCTIONAL SUPERVISOR: MOHAMMED QATAMI
CALCULATED-DESIGNED BY: GURMIT GILL
CHECKED BY: FAWZI YAGHMOUR
REVISED BY
DATE REVISED

LAST REVISION 03-11-16
DATE PLOTTED => 24-MAY-2016
TIME PLOTTED => 14:09

Dist	COUNTY	ROUTE	POST MILES TOTAL PROJECT	SHEET No.	TOTAL SHEETS
05	SB	101	0.4/11.7	20	57

REGISTERED CIVIL ENGINEER 3-11-16 DATE

3-14-16
PLANS APPROVAL DATE

REGISTERED PROFESSIONAL ENGINEER JUSTIN W. BORDERS No. 65918 Exp 6-30-16 CIVIL STATE OF CALIFORNIA

THE STATE OF CALIFORNIA OR ITS OFFICERS OR AGENTS SHALL NOT BE RESPONSIBLE FOR THE ACCURACY OR COMPLETENESS OF SCANNED COPIES OF THIS PLAN SHEET.

PAVEMENT STRUCTURE

SHEET No.	Loc No.	LOCATION	DIRECTION	MINOR CONCRETE (EXPOSED AGGREGATE CONCRETE) SQFT	MINOR HOT MIX ASPHALT TON	CLASS 2 AGGREGATE BASE (CY) CY
C-1	1	SB-101-PM 0.46	NB	2,692		17
	9	SB-101-PM 0.72	NB	1,473		10
	21	SB-101-PM 3.57	SB	365		3
C-2	22	SB-101-PM 3.58	SB	431		3
	23	SB-101-PM 3.59	SB	726		5
	36	SB-101-PM 7.00	NB	2,115		14
C-3	38	SB-101-PM 7.03	SB	2,113		14
	41	SB-101-PM 7.24	SB	1,439		10
	42	SB-101-PM 7.26	NB	3,208		21
C-4	43	SB-101-PM 8.16	NB	2,104		14
	50	SB-101-PM 8.40	NB	776		5
	51	SB-101-PM 8.43	SB	664		16
C-5	77	SB-101-PM 10.71	SB	772		5
		DIKE			15.4	
		PLACE HMA (MISCELLANEOUS AREA)			83.5	
		MAINTENANCE VEHICLE PULLOUTS			19.3	16
			TOTAL	18,878	118.2	153

EARTHWORK

SHEET No.	Loc No.	LOCATION	DIRECTION	ROADWAY EXCAVATION (TYPE Z-2) (AERIALLY DEPOSITED LEAD) CY
C-1	1	SB-101-PM 0.46	NB	67
	9	SB-101-PM 0.72	NB	37
	21	SB-101-PM 3.57	SB	18
C-2	22	SB-101-PM 3.58	SB	11
	23	SB-101-PM 3.59	SB	18
	36	SB-101-PM 7.00	NB	66
C-3	38	SB-101-PM 7.03	SB	53
	41	SB-101-PM 7.24	SB	36
	42	SB-101-PM 7.26	NB	140
C-4	43	SB-101-PM 8.16	NB	52
	50	SB-101-PM 8.40	NB	30
	51	SB-101-PM 8.43	SB	63
C-5	77	SB-101-PM 10.71	SB	20
		MAINTENANCE VEHICLE PULLOUTS		36
		VEGETATION CONTROL (CRUSHED SHALE)		24
			TOTAL	671

DIKE

SHEET No.	Loc No.	LOCATION	DIRECTION	PLACE HOT MIX ASPHALT DIKE (TYPE A) LF	MINOR HOT MIX ASPHALT TON	REMOVE DIKE LF
C-1	9	SB-101-PM 0.72	NB			93
C-3	42	SB-101-PM 7.26	NB			97
C-4	51	SB-101-PM 8.43	SB	10	7.7	164
C-5	77	SB-101-PM 10.71	SB	10	7.7	
			TOTAL	20	15.4*	354

* QUANTITY INCLUDED IN PAVEMENT STRUCTURE QUANTITIES.

CONCRETE

SHEET No.	Loc No.	LOCATION	DIRECTION	REMOVE CURB LF	REMOVE CONCRETE (MISCELLANEOUS)(SQFT) SQFT	MINOR CONCRETE (CURB) (CY) CY	TYPE
C-1	21	SB-101-PM 3.57	SB	25			
C-2	22	SB-101-PM 3.58	SB	15		0.4	A1-6
	36	SB-101-PM 7.00	NB	113	50	6.2	A2
C-3	42	SB-101-PM 7.26	NB	301	85	6.2	A2
C-4	50	SB-101-PM 8.40	NB	58	21	6.2	A2 Trans
			TOTAL	512	156	19.0	

PLACE HOT MIX ASPHALT (MISCELLANEOUS AREA)

SHEET No.	Loc No.	LOCATION	DIRECTION	PLACE HOT MIX ASPHALT (MISCELLANEOUS AREA) SQYD	MINOR HOT MIX ASPHALT TON
C-2	22	SB-101-PM 3.58	SB	6	1.7
	36	SB-101-PM 7.00	NB	34	11.2
C-3	38	SB-101-PM 7.03	SB	21	7.1
	42	SB-101-PM 7.26	NB	87	29.2
C-4	43	SB-101-PM 8.16	NB	27	9.0
	50	SB-101-PM 8.40	NB	18	6.0
C-8	24	SB-101-PM 3.60	SB	87	19.3
			TOTAL	303	83.5*

* QUANTITY INCLUDED IN PAVEMENT STRUCTURE QUANTITIES.

SUMMARY OF QUANTITIES
Q-1

STATE OF CALIFORNIA - DEPARTMENT OF TRANSPORTATION
Caltrans
DESIGN

FUNCTIONAL SUPERVISOR: DAVID BEARD
CALCULATED-DESIGNED BY: JUSTIN BORDERS
CHECKED BY: DAVID BEARD
REVISED BY
DATE REVISED

LAST REVISION 03-11-16 | DATE PLOTTED => 16-MAY-2016 | TIME PLOTTED => 10:57

Dist	COUNTY	ROUTE	POST MILES TOTAL PROJECT	SHEET No.	TOTAL SHEETS
05	SB	101	0.4/11.7	21	57

REGISTERED CIVIL ENGINEER 3-11-16 DATE

3-14-16
PLANS APPROVAL DATE

REGISTERED PROFESSIONAL ENGINEER JUSTIN W. BORDERS No. 65918 Exp 6-30-16 CIVIL STATE OF CALIFORNIA

THE STATE OF CALIFORNIA OR ITS OFFICERS OR AGENTS SHALL NOT BE RESPONSIBLE FOR THE ACCURACY OR COMPLETENESS OF SCANNED COPIES OF THIS PLAN SHEET.

FENCE AND GATE

SHEET No.	Loc No.	LOCATION	DIRECTION	REMOVE CHAIN LINK FENCE	4' CHAIN LINK GATE (TYPE CL-6)	4' CHAIN LINK GATE (TYPE CL-8)
				LF	EA	EA
C-9	10	SB-101-PM 0.99	NB	4	1	
	11	SB-101-PM 1.39	NB	4	1	
	19	SB-101-PM 1.79	NB	4	1	
	20	SB-101-PM 2.08	NB	4	1	
	27	SB-101-PM 4.17	NB	4	1	
C-10	28	SB-101-PM 4.41	NB	4	1	
	30	SB-101-PM 4.80	NB	4	1	
	34	SB-101-PM 6.04	NB	4	1	
	45	SB-101-PM 8.25	SB	4	1	
	47	SB-101-PM 8.28	NB	4	1	
C-11	59	SB-101-PM 9.69	SB	4	1	
	60	SB-101-PM 9.83	SB	4	1	
	69	SB-101-PM 10.38	NB	4		1
			TOTAL	52	12	1

MAINTENANCE VEHICLE PULLOUTS

SHEET No.	Loc No.	LOCATION	DIRECTION	ROADWAY EXCAVATION TYPE Z-2 (AERIALLY DEPOSITED LEAD)	CLASS 2 AGGREGATE BASE (CY)	MINOR HOT MIX ASPHALT
				CY	CY	TON
C-8	24	SB-101-PM 3.60	SB	24	10	19.3
C-8	47	SB-101-PM 8.29	SB	12	6	
			TOTAL	36**	16*	19.3*

* QUANTITY INCLUDED IN PAVEMENT STRUCTURE QUANTITIES.
** QUANTITY INCLUDED IN EARTHWORK QUANTITIES.

TEMPORARY WATER POLLUTION CONTROL

SHEET No.	Loc No.	LOCATION	DIRECTION	TEMPORARY DRAINAGE INLET PROTECTION
				EA
C-1	1	SB-101-PM 0.46	NB	1
	9	SB-101-PM 0.72	NB	1
	21	SB-101-PM 3.57	SB	1
C-2	23	SB-101-PM 3.59	SB	1
	36	SB-101-PM 7.00	NB	1
C-3	38	SB-101-PM 7.03	SB	1
	41	SB-101-PM 7.24	SB	1
	42	SB-101-PM 7.26	NB	1
C-4	50	SB-101-PM 8.40	NB	1
C-5	77	SB-101-PM 10.71	SB	1
			TOTAL	10

DRAINAGE INLET MARKER

SHEET No.	Loc No.	LOCATION	DIRECTION	DRAINAGE INLET MARKER
				EA
C-1	1	SB-101-PM 0.46	NB	1
C-2	22	SB-101-PM 3.58	SB	1
	36	SB-101-PM 7.00	NB	1
C-3	38	SB-101-PM 7.03	SB	1
	42	SB-101-PM 7.26	NB	1
			TOTAL	5

ADJUST PULL BOX

SHEET No.	Loc No.	LOCATION	DIRECTION	ADJUST PULL BOX
				EA
C-3	42	SB-101-PM 7.26	NB	1
			TOTAL	1

SUMMARY OF QUANTITIES

Q-2

STATE OF CALIFORNIA - DEPARTMENT OF TRANSPORTATION
Caltrans DESIGN
FUNCTIONAL SUPERVISOR DAVID BEARD
CALCULATED-DESIGNED BY JUSTIN BORDERS
CHECKED BY DAVID BEARD
REVISED BY
DATE REVISED

LAST REVISION 03-11-16
DATE PLOTTED => 16-MAY-2016
TIME PLOTTED => 10:57

Dist	COUNTY	ROUTE	POST MILES TOTAL PROJECT	SHEET No.	TOTAL SHEETS
05	SB	101	0.4/11.7	22	57

REGISTERED CIVIL ENGINEER DATE 3-11-16

3-14-16
PLANS APPROVAL DATE

REGISTERED PROFESSIONAL ENGINEER JUSTIN W. BORDERS No. 65918 Exp 6-30-16 CIVIL STATE OF CALIFORNIA

THE STATE OF CALIFORNIA OR ITS OFFICERS OR AGENTS SHALL NOT BE RESPONSIBLE FOR THE ACCURACY OR COMPLETENESS OF SCANNED COPIES OF THIS PLAN SHEET.

VEGETATION CONTROL (CRUSHED SHALE)

Loc No.	PM	(N) LENGTH LF	LOCATION DESCRIPTION	VEGETATION CONTROL (CRUSHED SHALE) SQYD	(N) FILTER FABRIC	ROADWAY EXCAVATION (TYPE Z-2) (AERIALLY DEPOSITED LEAD) CY
12	1.47	110	SB ON-RAMP Rt Shld WHERE RAMP MEETS MAINLINE	55	55	
13	1.59	610	SB ON-RAMP TO BAILARD Ave ON BOTH SIDES OF RAMP 410′ Rt SIDE AND 200′ Lt SIDE	305	305	
14	1.62	390	SB OFF-RAMP ONTO BAILARD AVE BOTH SIDES OF RAMP 125′ Lt SIDE AND 165′ Rt SIDE	195	195	
15	1.62	110	SB MAINLINE Rt SIDE LEADING UP TO OH STRUCTURE	55	55	
16	1.62	110	NB MAINLINE Rt SIDE LEADING UP TO OH STRUCTURE	55	55	
17	1.63	130	NB OFFRAMP Lt SIDE CONNECTING TO BAILARD BRIDGE RAIL	65	65	
18	1.64	900	NB ONRAMP BOTH SIDES 191′ Lt STARTING AT BAILARD BRIDGE RAIL, 455′ Rt SIDE BEGINNING AT R/W	450	450	
25	3.67	90	SB MAINLINE Rt SIDE LEADING UP TO OH STRUCTURE	45	45	
29	4.41	675	NB MAINLINE Rt Shld NEAR CRAVENS LANE	338	338	
31	4.73	1,005	SB MAINLINE Rt SIDE BEGINNING JUST NORTH OF SB SANTA CLAUSE Ln ONRAMP	503	503	
32	5.13	693	NB MAINLINE Rt SIDE LEADING UP TO PADARO Ln Br RAIL	347	347	
33	5.40	530	SB MAINLINE Rt SIDE BEGINNING AT PADARO Ln Br RAIL	265	265	
35	6.44	1,435	NB MAINLINE Rt Shld	1,355	1,355	
39	7.09	360	SB ON-RAMP TO PADARO Ln BOTH SIDES 200′ Lt 160′ Rt	180	180	
40	7.10	155	SB OFF-RAMP TO PADARO Ln Rt Shld	78	78	
44	8.16	680	NB MAINLINE Rt Shld 680′ BEFORE EVANS Ave Br	340	340	
49	8.29	110	NB MAINLINE Rt Shld 110′ AFTER EVANS Ave Br	55	55	
55	9.08	1,100	NB MAINLINE Rt Shld FROM NB SHEFFIELD ON-RAMP TERMINUS TO ROMERO Cr — NO WORK ALLOWED WITHIN 100 FEET OF A CREEK	550	550	
56	9.34	900	NB MAINLINE Rt Shld FROM ROMERO Cr TO SAN YSIDRO Cr	450	450	
57	9.42	630	SB MAINLINE Rt Shld FROM SAN YSIDRO Cr TO Ret WALL	315	315	
63	9.99	130	NB MAINLINE Rt SIDE LEADING UP TO OH STRUCTURE	65	65	6
65	10.02	60	SB MAINLINE Rt SIDE LEADING UP TO OH STRUCTURE	30	30	3
70	10.50	65	NB MAINLINE Rt SIDE LEADING UP TO SB ON-RAMP OH STRUCTURE	33	33	3
71	10.50	40	SB MAINLINE Rt SIDE LEADING UP TO SB ON-RAMP OH STRUCTURE	20	20	6
72	10.50	55	SB ON-RAMP FROM OLIVE MILL Rd Rt	27	27	3
73	10.50	67	SB ON-RAMP FROM OLIVE MILL Rd Lt	34	34	3
74	10.53	58	NB MAINLINE Rt Shld LEADING UP TO OLIVE MILL Rd OH Str	29	29	
75	10.54	50	SB MAINLINE Rt Shld LEADING UP TO OLIVE MILL Rd OH STRUCTURE	25	25	
80	11.25	740	SB MAINLINE Rt Shld FROM CABRILLO Blvd Br RAIL SOUTH	370	370	
81	11.28	505	NB MAINLINE Lt Shld LEADING UP TO CABRILLO Blvd Br RAIL	253	253	
82	11.33	155	NB MAINLINE Rt Shld LEADING UP TO CABRILLO Blvd Br RAIL	78	78	
83	11.43	255	NB MAINLINE Rt Shld FROM CABRILLO Blvd Br RAIL NORTH	128	128	
84	11.44	465	SB MAINLINE Rt Shld LEADING TO CABRILLO Blvd Br RAIL	233	233	
86	11.67	60	SB MAINLINE Rt Shld AT EXIT 95 LOS PATOS WAY	30	30	
			TOTAL	7,356		24*

(N) - NOT A SEPARATE PAY ITEM, FOR INFORMATION ONLY
* QUANTITY INCLUDED IN EARTHWORK QUANTITIES.

SUMMARY OF QUANTITIES

Q-3

STATE OF CALIFORNIA - DEPARTMENT OF TRANSPORTATION
Caltrans® DESIGN
FUNCTIONAL SUPERVISOR: DAVID BEARD
CALCULATED-DESIGNED BY: JUSTIN BORDERS
CHECKED BY: DAVID BEARD
REVISED BY / DATE REVISED

LAST REVISION 03-11-16 | DATE PLOTTED => 16-MAY-2016 | TIME PLOTTED => 10:57

Dist	COUNTY	ROUTE	POST MILES TOTAL PROJECT	SHEET No.	TOTAL SHEETS
05	SB	101	0.4/11.7	23	57

LICENSED LANDSCAPE ARCHITECT

3-14-16
PLANS APPROVAL DATE

THE STATE OF CALIFORNIA OR ITS OFFICERS OR AGENTS SHALL NOT BE RESPONSIBLE FOR THE ACCURACY OR COMPLETENESS OF SCANNED COPIES OF THIS PLAN SHEET.

LICENSED LANDSCAPE ARCHITECT
David A. Emerson No. 4356
Signature
10-31-17
Renewal Date
3-11-16
Date
STATE OF CALIFORNIA

NOTES:

1. FOR ACCURATE RIGHT OF WAY DATA, CONTACT RIGHT OF WAY ENGINEERING AT THE DISTRICT OFFICE.
2. WOOD MULCH MUST BE WOOD CHIP MULCH

LEGEND:

- LIMITS OF ROADSIDE CLEARING
- WOOD MULCH (6" DEPTH)
- ANTI-GRAFFITI COATING
- DECOMPOSED GRANITE (3" DEPTH)
- FIBER ROLLS

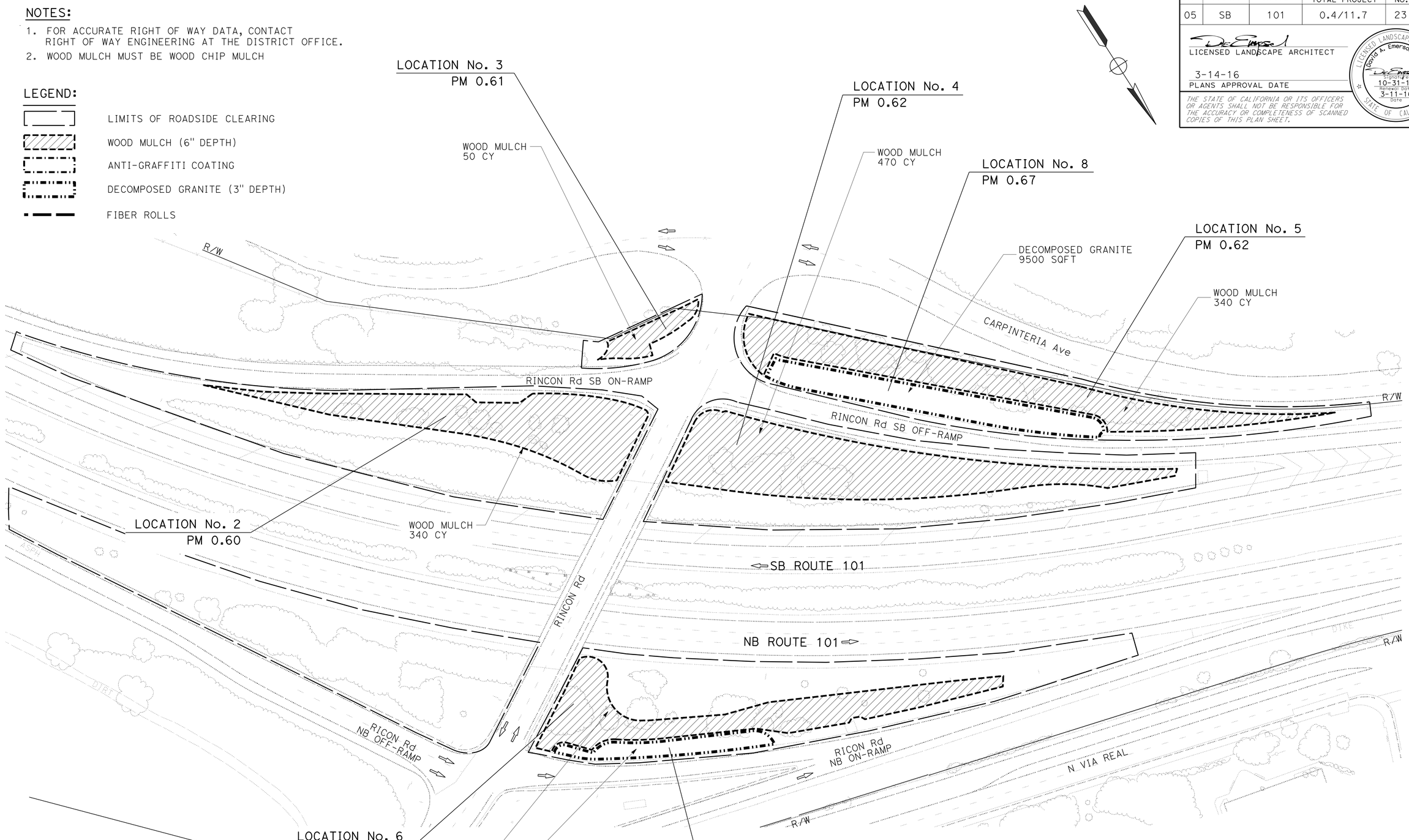

LOCATION No. 2,3,4,5,6,7,8
RINCON Rd

APPROVED FOR LANDSCAPE WORK ONLY

LANDSCAPE LAYOUT PLAN

SCALE: 1" = 50'

LL-1

STATE OF CALIFORNIA - DEPARTMENT OF TRANSPORTATION
Caltrans® LANDSCAPE ARCHITECTURE

SENIOR LANDSCAPE ARCHITECT: DENNIS REEVES
CALCULATED-DESIGNED BY: DAVID EMERSON
CHECKED BY: PATRICK BOLGER
REVISED BY
DATE REVISED

LAST REVISION 03-11-16
DATE PLOTTED => 16-MAY-2016
TIME PLOTTED => 10:57

Dist	COUNTY	ROUTE	POST MILES TOTAL PROJECT	SHEET No.	TOTAL SHEETS
05	SB	101	0.4/11.7	24	57

LICENSED LANDSCAPE ARCHITECT

3-14-16
PLANS APPROVAL DATE

LICENSED LANDSCAPE ARCHITECT
David A. Emerson No. 4356
Signature
10-31-17
Renewal Date
3-11-16
Date
STATE OF CALIFORNIA

THE STATE OF CALIFORNIA OR ITS OFFICERS OR AGENTS SHALL NOT BE RESPONSIBLE FOR THE ACCURACY OR COMPLETENESS OF SCANNED COPIES OF THIS PLAN SHEET.

NOTE:

FOR ACCURATE RIGHT OF WAY DATA, CONTACT
RIGHT OF WAY ENGINEERING AT THE DISTRICT OFFICE.

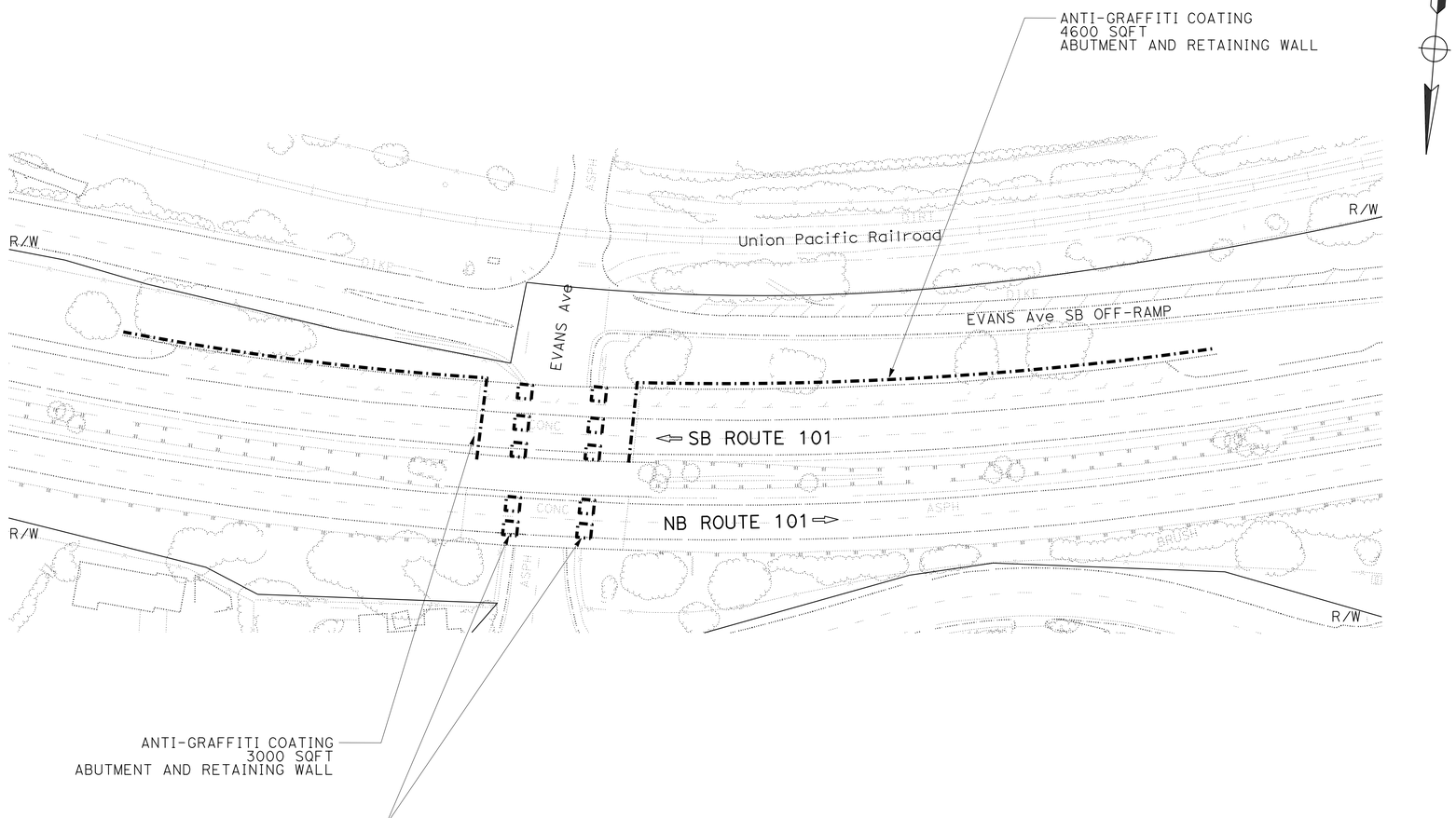

LOCATION No. 46
PM 8.27
EVANS Ave SB OFF-RAMP

APPROVED FOR LANDSCAPE WORK ONLY

LANDSCAPE LAYOUT PLAN

SCALE: 1" = 50'

LL-2

REVISED BY | DATE REVISED
DAVID EMERSON | PATRICK BOLGER
CALCULATED-DESIGNED BY | CHECKED BY
SENIOR LANDSCAPE ARCHITECT | DENNIS REEVES
STATE OF CALIFORNIA - DEPARTMENT OF TRANSPORTATION
Caltrans® LANDSCAPE ARCHITECTURE

LAST REVISION 03-11-16 | DATE PLOTTED => 16-MAY-2016 | TIME PLOTTED => 10:57

Dist	COUNTY	ROUTE	POST MILES TOTAL PROJECT	SHEET No.	TOTAL SHEETS
05	SB	101	0.4/11.7	25	57

LICENSED LANDSCAPE ARCHITECT

3-14-16
PLANS APPROVAL DATE

LICENSED LANDSCAPE ARCHITECT — David A. Emerson No. 4356 — Signature — 10-31-17 Renewal Date — 3-11-16 Date — STATE OF CALIFORNIA

THE STATE OF CALIFORNIA OR ITS OFFICERS OR AGENTS SHALL NOT BE RESPONSIBLE FOR THE ACCURACY OR COMPLETENESS OF SCANNED COPIES OF THIS PLAN SHEET.

NOTE:

FOR ACCURATE RIGHT OF WAY DATA, CONTACT RIGHT OF WAY ENGINEERING AT THE DISTRICT OFFICE.

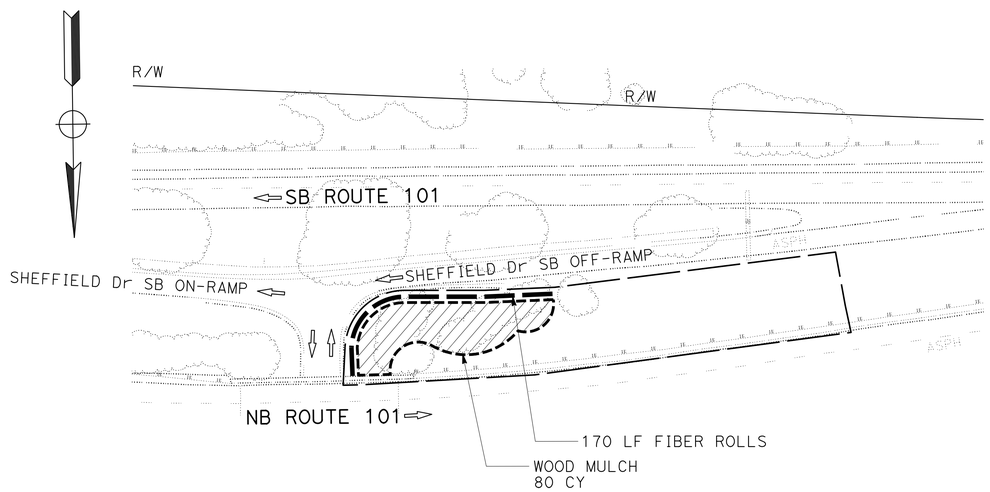

LOCATION No. 52
PM 9.00
SHEFFIELD Dr SB INTERSECTION

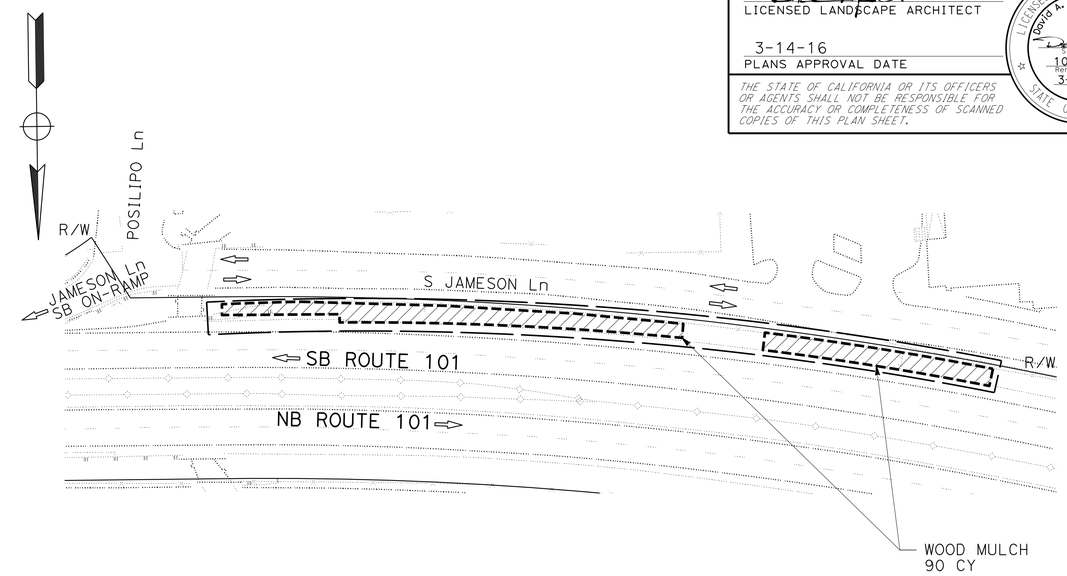

LOCATION No. 58
PM 9.66
MAINLINE SHOULDER

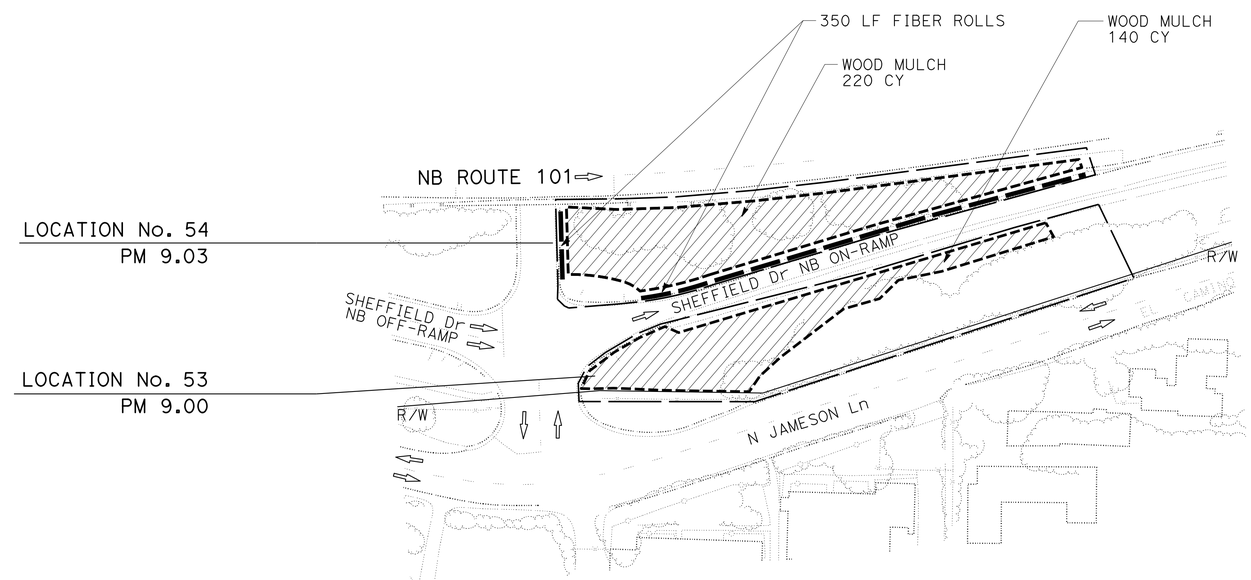

LOCATION No. 53 & 54
SHEFFIELD Dr NB INTERSECTION

APPROVED FOR LANDSCAPE WORK ONLY

LANDSCAPE LAYOUT PLAN

SCALE: 1" = 50'

LL-3

STATE OF CALIFORNIA - DEPARTMENT OF TRANSPORTATION
Caltrans® LANDSCAPE ARCHITECTURE

SENIOR LANDSCAPE ARCHITECT: DENNIS REEVES
CALCULATED-DESIGNED BY: DAVID EMERSON
CHECKED BY: PATRICK BOLGER
REVISED BY
DATE REVISED

LAST REVISION 03-11-16
DATE PLOTTED => 16-MAY-2016
TIME PLOTTED => 10:57

Dist	COUNTY	ROUTE	POST MILES TOTAL PROJECT	SHEET No.	TOTAL SHEETS
05	SB	101	0.4/11.7	26	57

LICENSED LANDSCAPE ARCHITECT

3-14-16
PLANS APPROVAL DATE

LICENSED LANDSCAPE ARCHITECT
David A. Emerson No. 4356
Signature
10-31-17
Renewal Date
3-11-16
Date
STATE OF CALIFORNIA

THE STATE OF CALIFORNIA OR ITS OFFICERS OR AGENTS SHALL NOT BE RESPONSIBLE FOR THE ACCURACY OR COMPLETENESS OF SCANNED COPIES OF THIS PLAN SHEET.

NOTE:

FOR ACCURATE RIGHT OF WAY DATA, CONTACT RIGHT OF WAY ENGINEERING AT THE DISTRICT OFFICE.

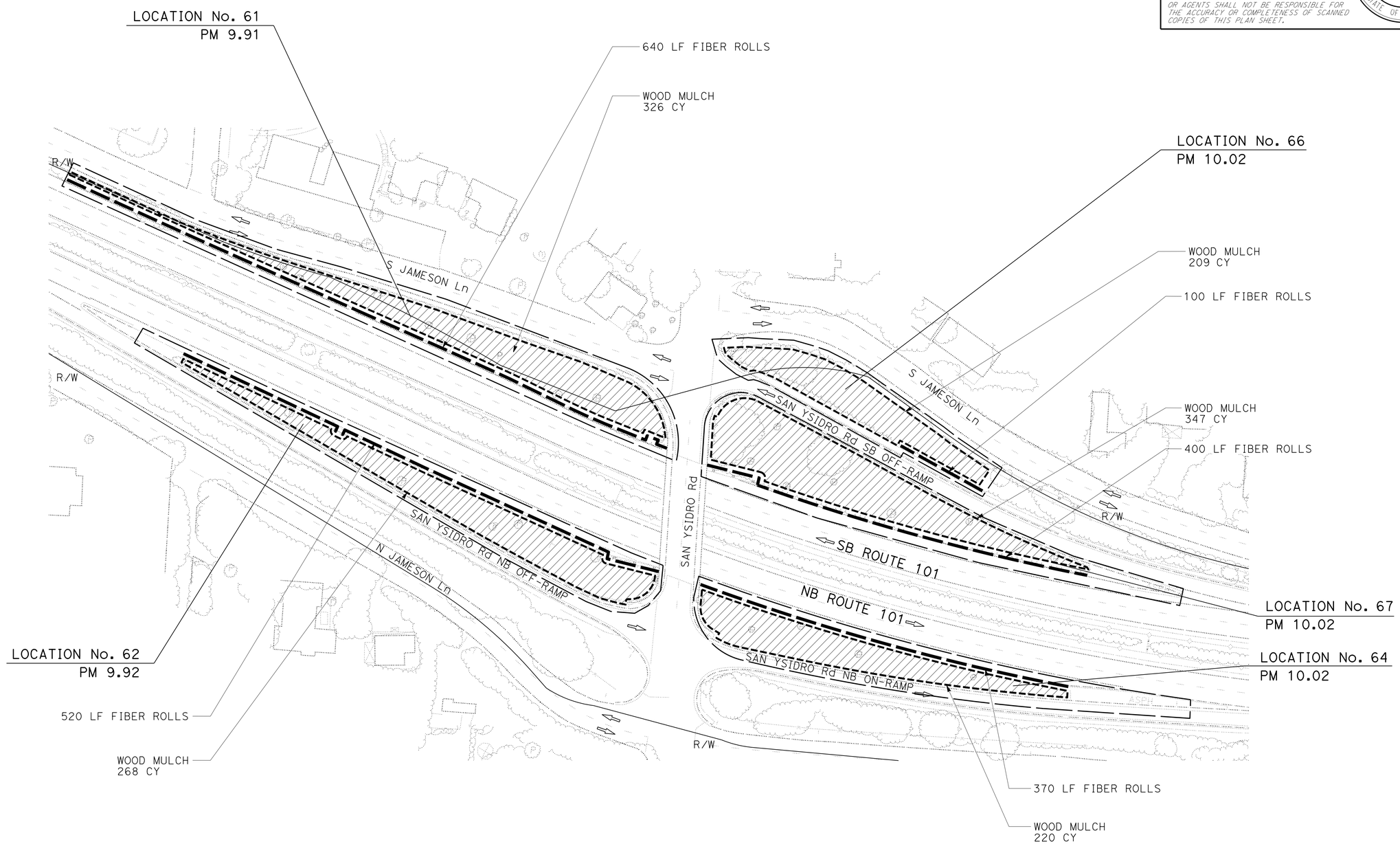

LOCATION No. 61,62,64,66,67

SAN YSIDRO Rd INTERSECTION

APPROVED FOR LANDSCAPE WORK ONLY

LANDSCAPE LAYOUT PLAN

SCALE: 1" = 50'

LL-4

STATE OF CALIFORNIA - DEPARTMENT OF TRANSPORTATION
Caltrans® LANDSCAPE ARCHITECTURE

SENIOR LANDSCAPE ARCHITECT: DENNIS REEVES
CALCULATED-DESIGNED BY: DAVID EMERSON
CHECKED BY: PATRICK BOLGER
REVISED BY
DATE REVISED

LAST REVISION 03-11-16
DATE PLOTTED => 16-MAY-2016
TIME PLOTTED => 10:57

Dist	COUNTY	ROUTE	POST MILES TOTAL PROJECT	SHEET No.	TOTAL SHEETS
05	SB	101	0.4/11.7	27	57

LICENSED LANDSCAPE ARCHITECT

3-14-16
PLANS APPROVAL DATE

THE STATE OF CALIFORNIA OR ITS OFFICERS OR AGENTS SHALL NOT BE RESPONSIBLE FOR THE ACCURACY OR COMPLETENESS OF SCANNED COPIES OF THIS PLAN SHEET.

LICENSED LANDSCAPE ARCHITECT
David A. Emerson No. 4356
Signature
10-31-17
Renewal Date
3-11-16
Date
STATE OF CALIFORNIA

NOTE:

FOR ACCURATE RIGHT OF WAY DATA, CONTACT
RIGHT OF WAY ENGINEERING AT THE DISTRICT OFFICE.

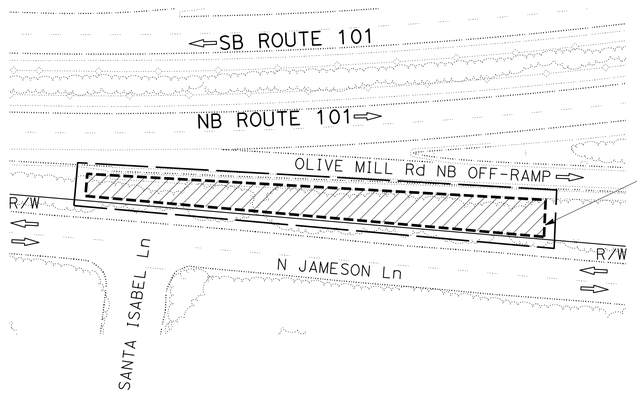

LOCATION No. 68
PM 10.35
OLIVE MILL Rd NB OFF-RAMP

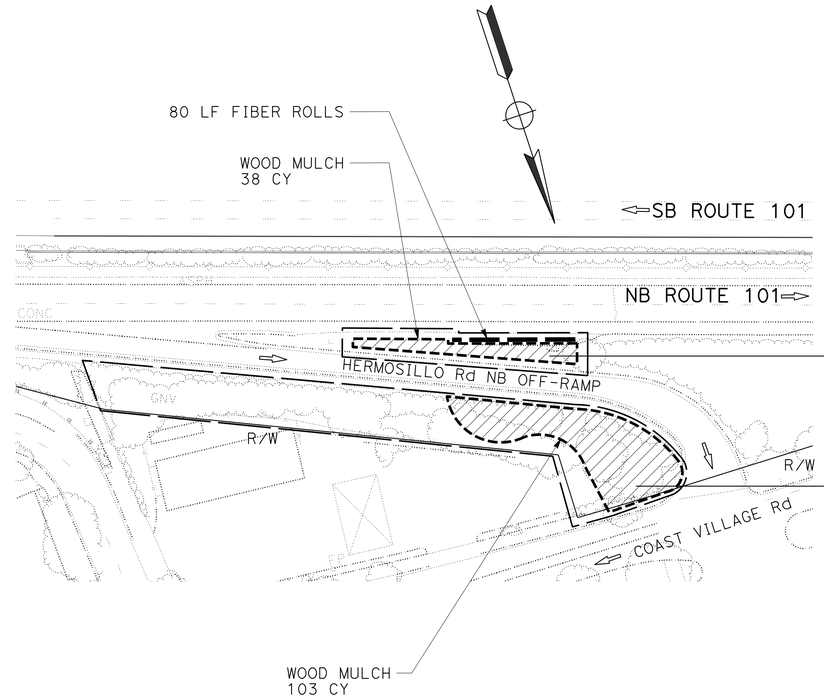

LOCATION No. 78
PM 11.06

LOCATION No. 79
PM 11.07

LOCATION No. 78 & 79
HERMOSILLO Rd NB OFF-RAMP

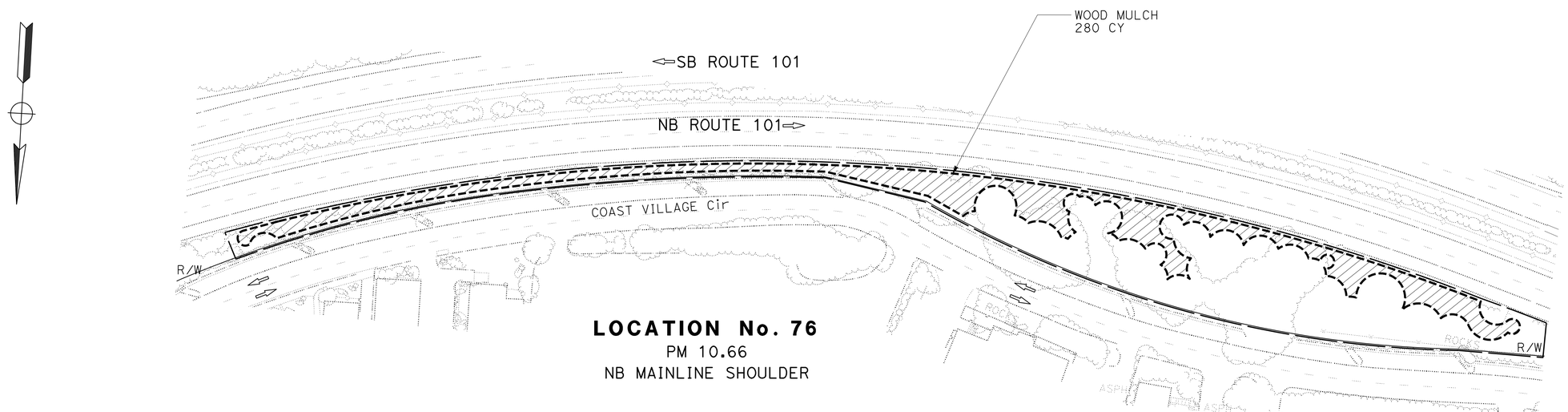

LOCATION No. 76
PM 10.66
NB MAINLINE SHOULDER

LANDSCAPE LAYOUT PLAN
SCALE: 1" = 50'
LL-5

APPROVED FOR LANDSCAPE WORK ONLY

STATE OF CALIFORNIA - DEPARTMENT OF TRANSPORTATION
Caltrans® LANDSCAPE ARCHITECTURE
SENIOR LANDSCAPE ARCHITECT: DENNIS REEVES
CALCULATED-DESIGNED BY: DAVID EMERSON
CHECKED BY: PATRICK BOLGER
REVISED BY
DATE REVISED

LAST REVISION 03-11-16
DATE PLOTTED => 16-MAY-2016
TIME PLOTTED => 10:57

Dist	COUNTY	ROUTE	POST MILES TOTAL PROJECT	SHEET No.	TOTAL SHEETS
05	SB	101	0.4/11.7	28	57

LICENSED LANDSCAPE ARCHITECT

3-14-16
PLANS APPROVAL DATE

LICENSED LANDSCAPE ARCHITECT
David A. Emerson No. 4356
Signature
10-31-17
Renewal Date
3-11-16
Date
STATE OF CALIFORNIA

THE STATE OF CALIFORNIA OR ITS OFFICERS OR AGENTS SHALL NOT BE RESPONSIBLE FOR THE ACCURACY OR COMPLETENESS OF SCANNED COPIES OF THIS PLAN SHEET.

NOTE:

FOR ACCURATE RIGHT OF WAY DATA, CONTACT
RIGHT OF WAY ENGINEERING AT THE DISTRICT OFFICE.

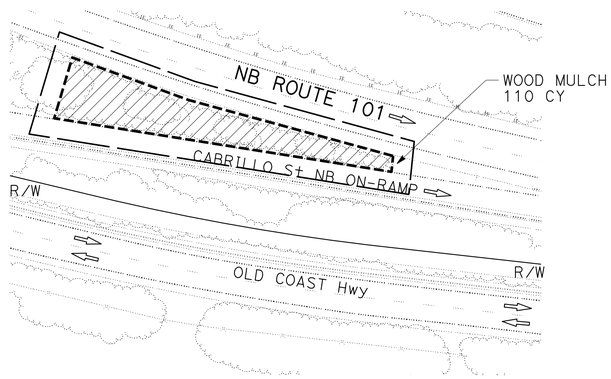

LOCATION No. 85
PM 11.46
CABRILLO St NB ON-RAMP

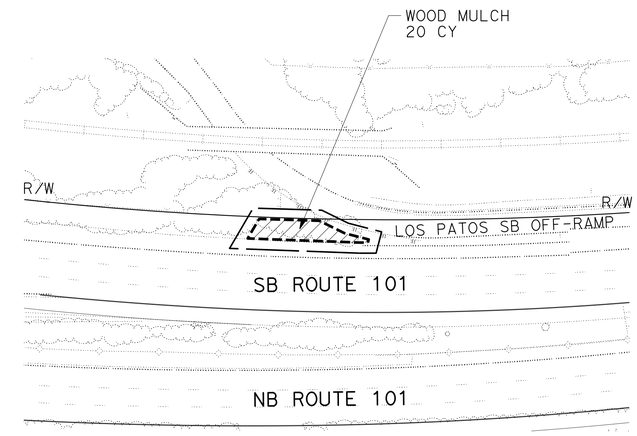

LOCATION No. 87
PM 11.68
LOS PATOS SB OFF-RAMP

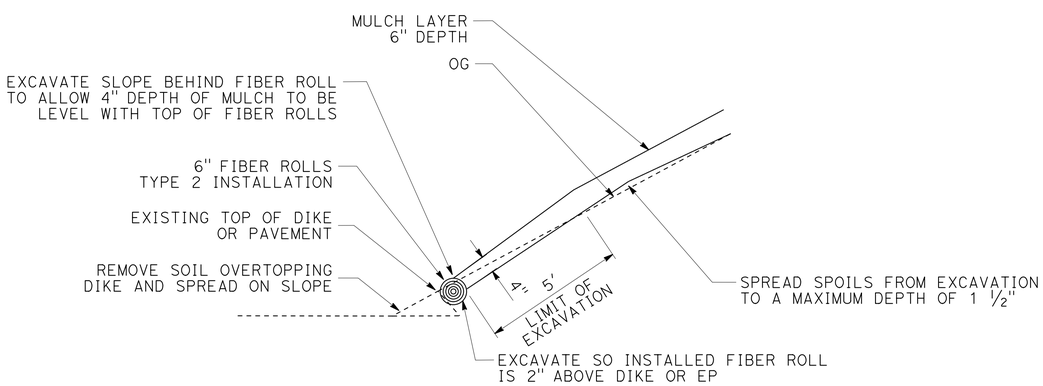

WOOD MULCH
(AT FIBER ROLL)

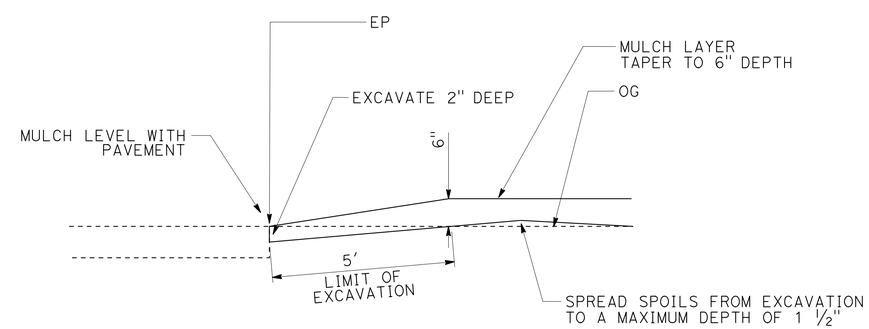

WOOD MULCH
(AT EDGE OF PAVEMENT)

APPROVED FOR LANDSCAPE WORK ONLY

LANDSCAPE LAYOUT PLAN

SCALE: 1" = 50'

LL-6

STATE OF CALIFORNIA - DEPARTMENT OF TRANSPORTATION
Caltrans® LANDSCAPE ARCHITECTURE

SENIOR LANDSCAPE ARCHITECT: DENNIS REEVES
CALCULATED-DESIGNED BY: DAVID EMERSON
CHECKED BY: PATRICK BOLGER
REVISED BY
DATE REVISED

LAST REVISION 03-11-16
DATE PLOTTED => 16-MAY-2016
TIME PLOTTED => 10:58

Dist	COUNTY	ROUTE	POST MILES TOTAL PROJECT	SHEET No.	TOTAL SHEETS
05	SB	101	0.4/11.7	29	57

LICENSED LANDSCAPE ARCHITECT

3-14-16
PLANS APPROVAL DATE

THE STATE OF CALIFORNIA OR ITS OFFICERS OR AGENTS SHALL NOT BE RESPONSIBLE FOR THE ACCURACY OR COMPLETENESS OF SCANNED COPIES OF THIS PLAN SHEET.

LICENSED LANDSCAPE ARCHITECT
David A. Emerson No. 4356
Signed 10-31-17
Renewal Date
3-11-16
Date
STATE OF CALIFORNIA

NOTE:

FOR ACCURATE RIGHT OF WAY DATA, CONTACT
RIGHT OF WAY ENGINEERING AT THE DISTRICT OFFICE.

LEGEND:

- No. 6 PULL BOX (T)
- EXISTING IRRIGATION
- REMOVE IRRIGATION FACILITIES (SALVAGE CONCRETE SPRINKLER PROTECTORS)
- NEW IRRIGATION

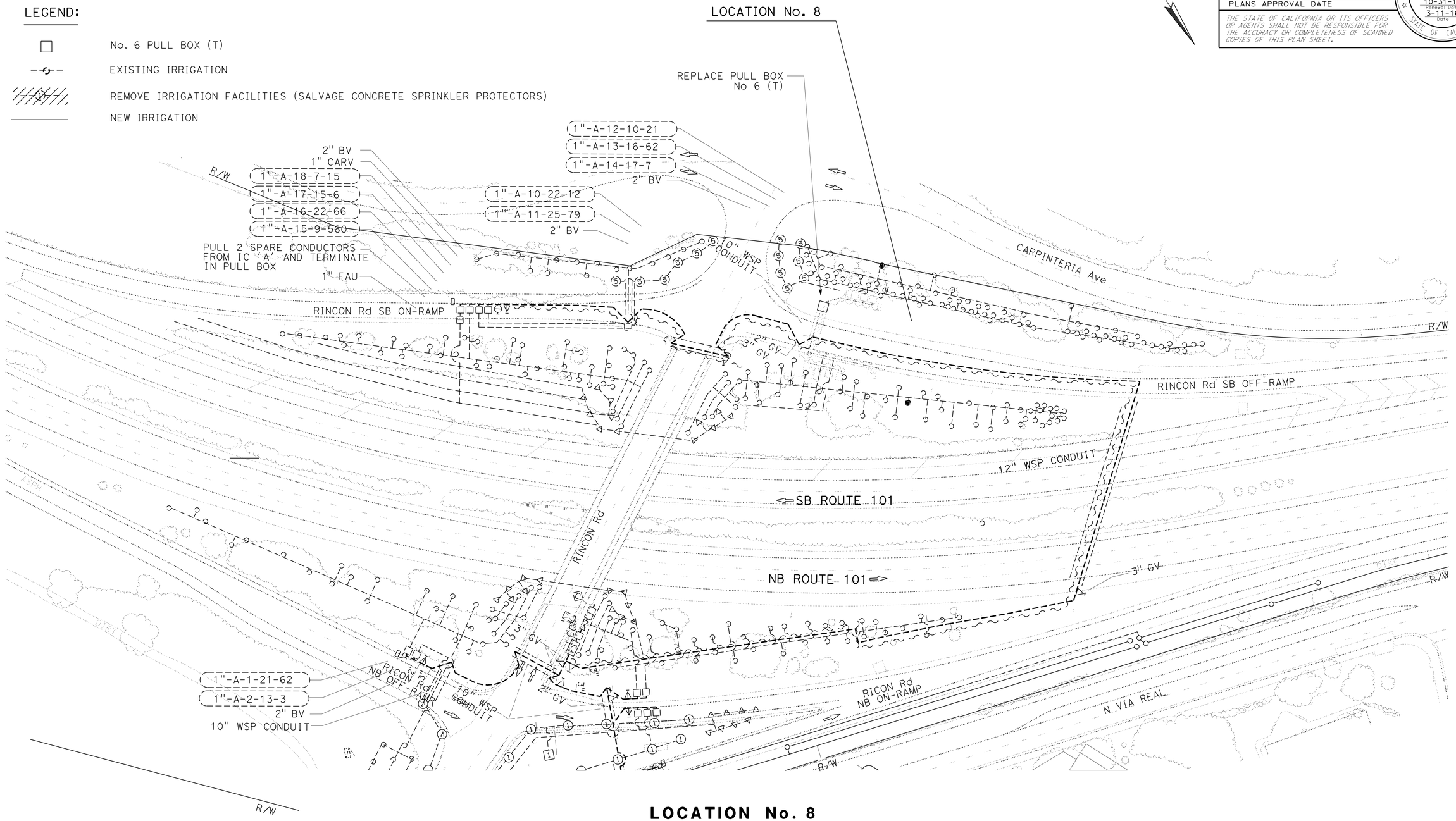

LOCATION No. 8

PM 0.67
RINCON Rd SB OFF-RAMP

APPROVED FOR IRRIGATION WORK ONLY

IRRIGATION PLAN

SCALE: 1" = 50' **IP-1**

STATE OF CALIFORNIA - DEPARTMENT OF TRANSPORTATION
Caltrans® LANDSCAPE ARCHITECTURE

SENIOR LANDSCAPE ARCHITECT: DENNIS REEVES
CALCULATED-DESIGNED BY: DAVID EMERSON
CHECKED BY: PATRICK BOLGER
REVISED BY
DATE REVISED

LAST REVISION 03-11-16
DATE PLOTTED => 16-MAY-2016
TIME PLOTTED => 10:58

Dist	COUNTY	ROUTE	POST MILES TOTAL PROJECT	SHEET No.	TOTAL SHEETS
05	SB	101	0.4/11.7	30	57

LICENSED LANDSCAPE ARCHITECT

3-14-16
PLANS APPROVAL DATE

David A. Emerson No. 4356 — Signature — 10-31-17 Renewal Date — 3-11-16 Date — LICENSED LANDSCAPE ARCHITECT — STATE OF CALIFORNIA

THE STATE OF CALIFORNIA OR ITS OFFICERS OR AGENTS SHALL NOT BE RESPONSIBLE FOR THE ACCURACY OR COMPLETENESS OF SCANNED COPIES OF THIS PLAN SHEET.

NOTE:

FOR ACCURATE RIGHT OF WAY DATA, CONTACT RIGHT OF WAY ENGINEERING AT THE DISTRICT OFFICE.

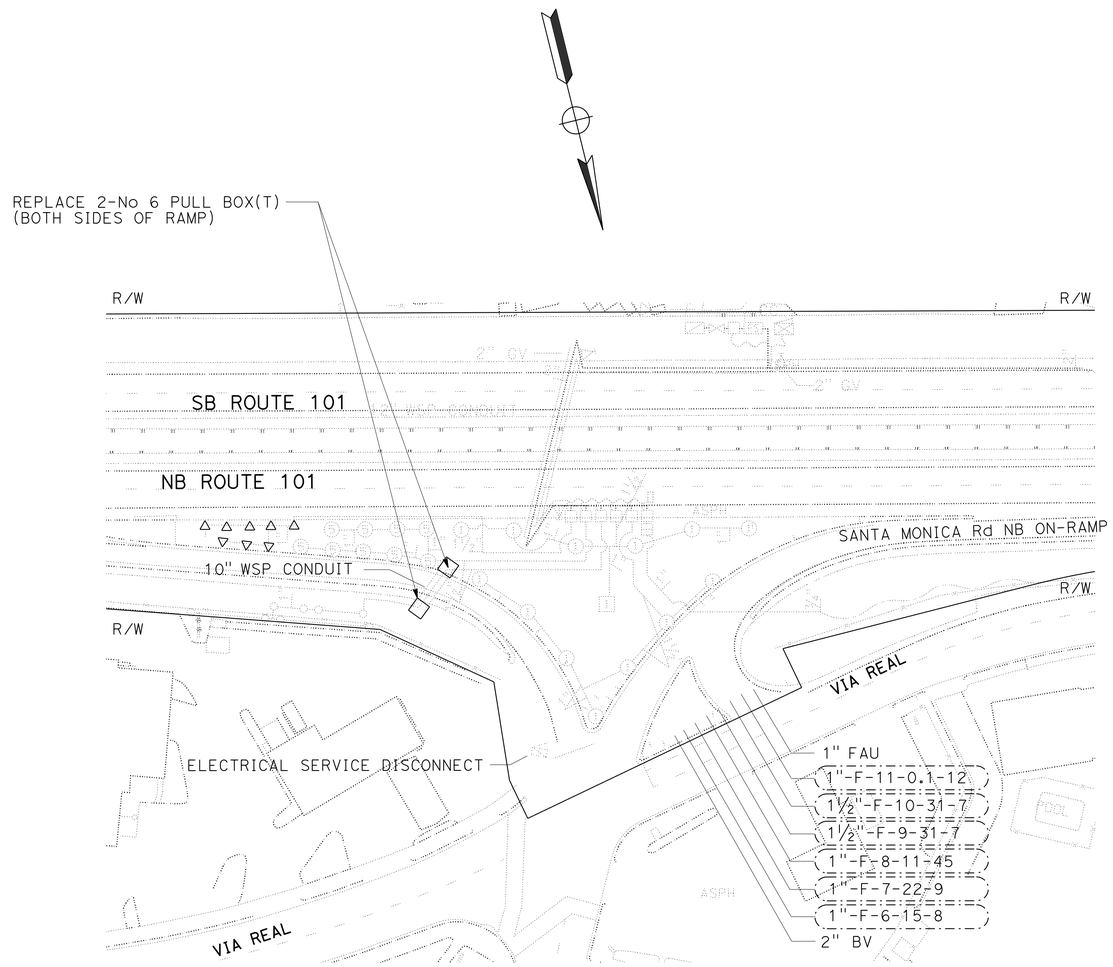

LOCATION No. 26

PM 3.87

SANTA MONICA Rd NB OFF-RAMP

APPROVED FOR IRRIGATION WORK ONLY

IRRIGATION PLAN

SCALE: 1" = 50′ **IP-2**

STATE OF CALIFORNIA - DEPARTMENT OF TRANSPORTATION
Caltrans® LANDSCAPE ARCHITECTURE

SENIOR LANDSCAPE ARCHITECT: DENNIS REEVES

CALCULATED-DESIGNED BY: DAVID EMERSON
CHECKED BY: PATRICK BOLGER

REVISED BY
DATE REVISED

LAST REVISION 03-11-16
DATE PLOTTED => 16-MAY-2016
TIME PLOTTED => 10:58

Dist	COUNTY	ROUTE	POST MILES TOTAL PROJECT	SHEET No.	TOTAL SHEETS
05	SB	101	0.4/11.7	31	57

LICENSED LANDSCAPE ARCHITECT

3-14-16
PLANS APPROVAL DATE

LICENSED LANDSCAPE ARCHITECT — David A. Emerson No. 4356 — Expiration Date 10-31-17 — Renewal Date 3-11-16 — Date — STATE OF CALIFORNIA

THE STATE OF CALIFORNIA OR ITS OFFICERS OR AGENTS SHALL NOT BE RESPONSIBLE FOR THE ACCURACY OR COMPLETENESS OF SCANNED COPIES OF THIS PLAN SHEET.

NOTES (THIS SHEET ONLY):

1. FOR ACCURATE RIGHT OF WAY DATA, CONTACT RIGHT OF WAY ENGINEERING AT THE DISTRICT OFFICE.
2. SEE CONSTRUCTION DETAILS FOR ADDITIONAL ITEMS OF WORK AT LOCATIONS 36, AND 38.

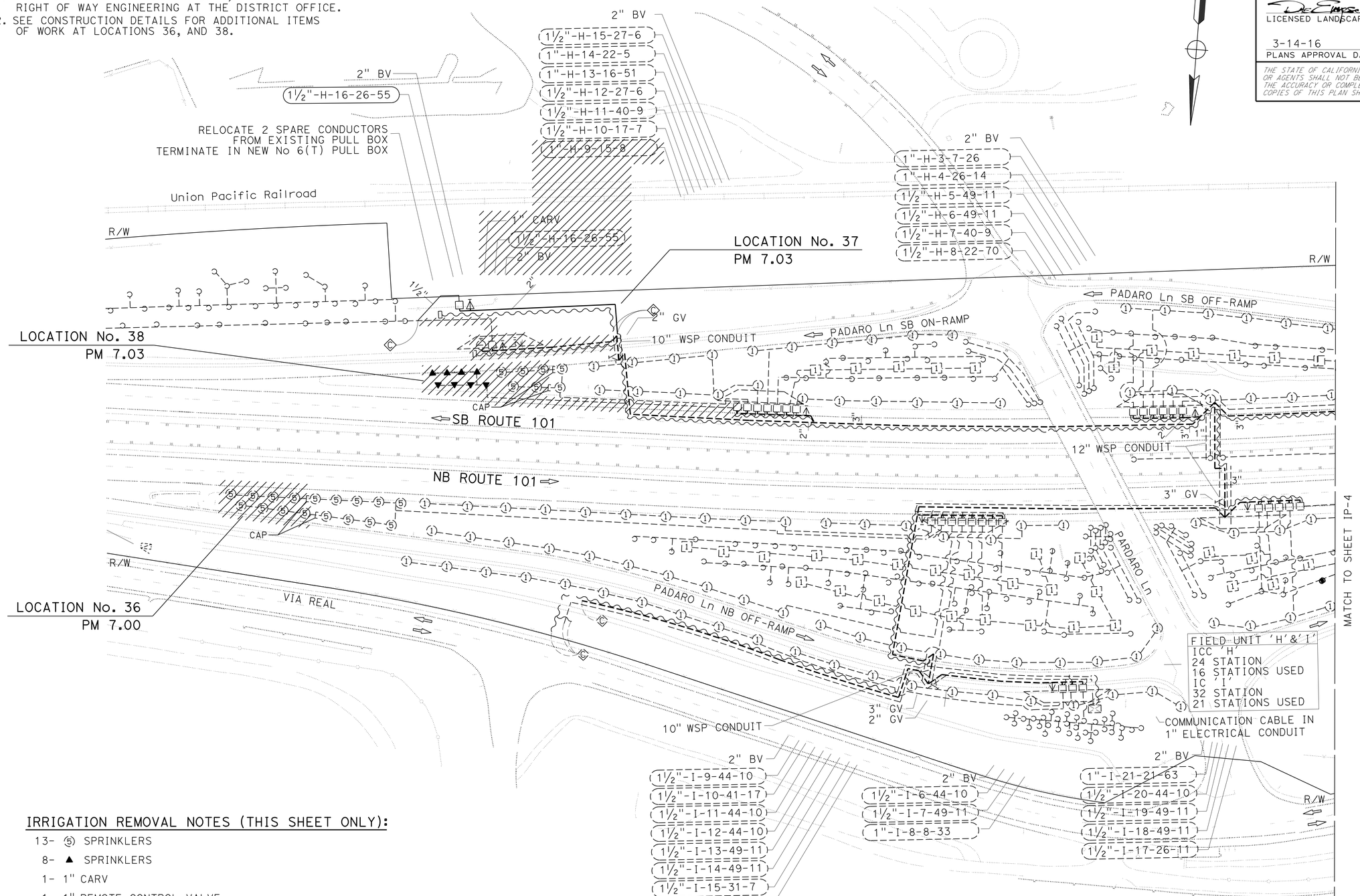

IRRIGATION REMOVAL NOTES (THIS SHEET ONLY):

13- ⑤ SPRINKLERS
8- ▲ SPRINKLERS
1- 1" CARV
1- 1" REMOTE CONTROL VALVE
1- 1½" REMOTE CONTROL VALVE
1- 2" BV
1- PB
21- SPRINKLER PROTECTOR

LOCATION No. 36, 37, & 38

PADARO Ln

APPROVED FOR IRRIGATION WORK ONLY

IRRIGATION PLAN

SCALE: 1" = 50'

IP-3

STATE OF CALIFORNIA - DEPARTMENT OF TRANSPORTATION
Caltrans® LANDSCAPE ARCHITECTURE
SENIOR LANDSCAPE ARCHITECT: DENNIS REEVES
CALCULATED-DESIGNED BY: DAVID EMERSON
CHECKED BY: PATRICK BOLGER
REVISED BY / DATE REVISED

LAST REVISION 03-11-16 | DATE PLOTTED => 16-MAY-2016 | TIME PLOTTED => 10:58

Dist	COUNTY	ROUTE	POST MILES TOTAL PROJECT	SHEET No.	TOTAL SHEETS
05	SB	101	0.4/11.7	32	57

LICENSED LANDSCAPE ARCHITECT

3-14-16
PLANS APPROVAL DATE

LICENSED LANDSCAPE ARCHITECT
David A. Emerson No. 4356
Signature
10-31-17
Renewal Date
3-11-16
Date
STATE OF CALIFORNIA

THE STATE OF CALIFORNIA OR ITS OFFICERS OR AGENTS SHALL NOT BE RESPONSIBLE FOR THE ACCURACY OR COMPLETENESS OF SCANNED COPIES OF THIS PLAN SHEET.

NOTE:

FOR ACCURATE RIGHT OF WAY DATA, CONTACT
RIGHT OF WAY ENGINEERING AT THE DISTRICT OFFICE.

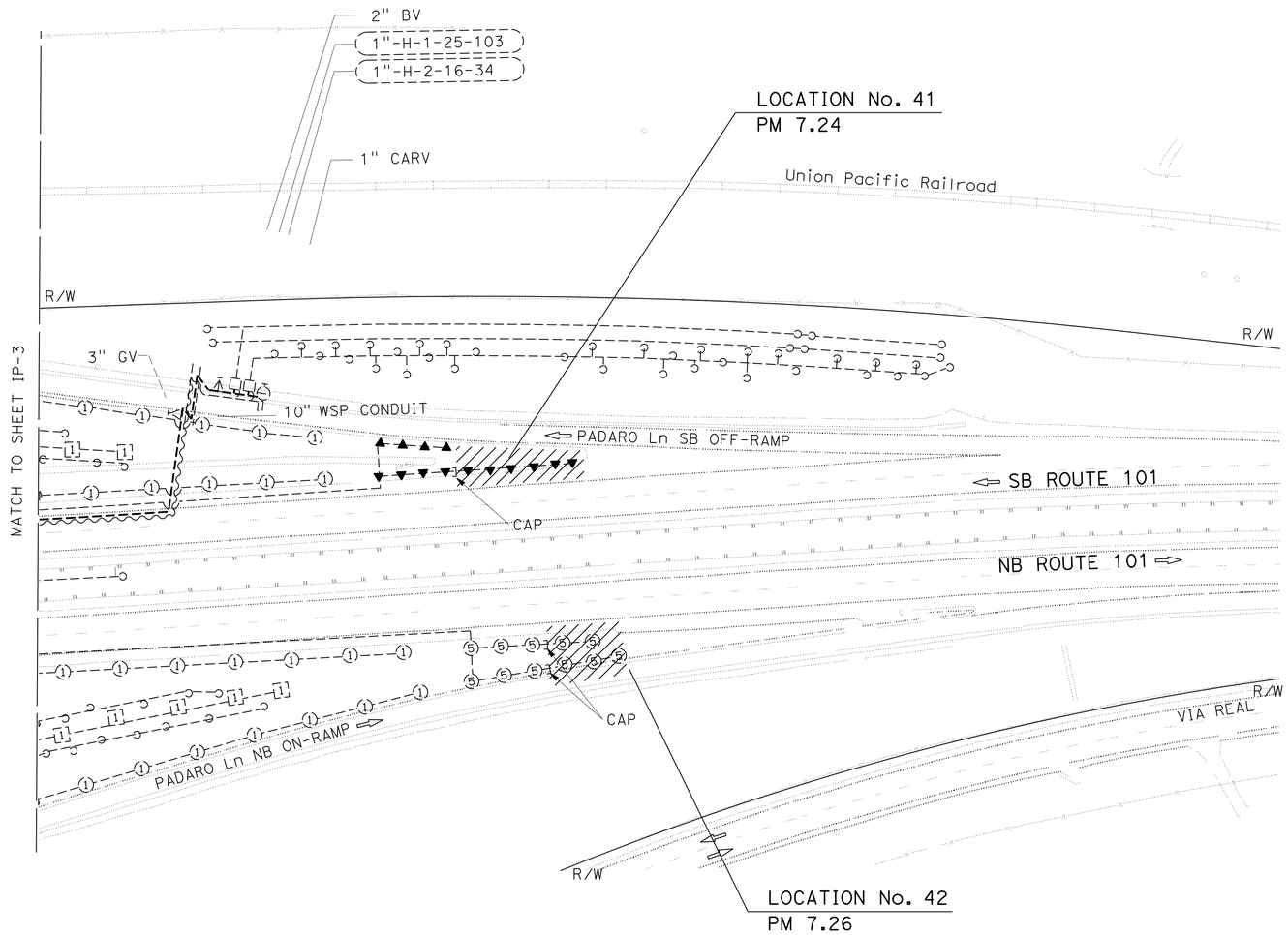

LOCATION No. 41, 42

PADARO Ln

IRRIGATION REMOVAL NOTES (THIS SHEET ONLY):

5- ⑤ SPRINKLERS
6- ▲ SPRINKLERS
11- SPRINKLER PROTECTOR

APPROVED FOR IRRIGATION WORK ONLY

IRRIGATION PLAN

SCALE: 1" = 50′ **IP-4**

STATE OF CALIFORNIA - DEPARTMENT OF TRANSPORTATION
Caltrans® LANDSCAPE ARCHITECTURE

SENIOR LANDSCAPE ARCHITECT: DENNIS REEVES
CALCULATED-DESIGNED BY: DAVID EMERSON
CHECKED BY: PATRICK BOLGER
REVISED BY
DATE REVISED

LAST REVISION 03-11-16
DATE PLOTTED => 16-MAY-2016
TIME PLOTTED => 10:58

Dist	COUNTY	ROUTE	POST MILES TOTAL PROJECT	SHEET No.	TOTAL SHEETS
05	SB	101	0.4/11.7	33	57

LICENSED LANDSCAPE ARCHITECT

3-14-16
PLANS APPROVAL DATE

LICENSED LANDSCAPE ARCHITECT
David A. Emerson No. 4356
Signature
10-31-17
Renewal Date
3-11-16
Date
STATE OF CALIFORNIA

THE STATE OF CALIFORNIA OR ITS OFFICERS OR AGENTS SHALL NOT BE RESPONSIBLE FOR THE ACCURACY OR COMPLETENESS OF SCANNED COPIES OF THIS PLAN SHEET.

WOOD MULCH

SHEET No.	Loc No.	LOCATION	DIRECTION	VOLUME CY
LL-1	2	SB-101-PM 0.60	SB	340
LL-1	3	SB-101-PM 0.61	SB	50
LL-1	4	SB-101-PM 0.62	SB	470
LL-1	5	SB-101-PM 0.62	SB	340
LL-1	6	SB-101-PM 0.62	NB	290
LL-3	52	SB-101-PM 9.00	SB	80
LL-3	53	SB-101-PM 9.00	NB	140
LL-3	54	SB-101-PM 9.03	NB	220
LL-3	58	SB-101-PM 9.66	SB	90
LL-4	61	SB-101-PM 9.91	SB	326
LL-4	62	SB-101-PM 9.92	NB	268
LL-4	64	SB-101-PM 10.02	NB	220
LL-4	66	SB-101-PM 10.02	SB	209
LL-4	67	SB-101-PM 10.02	NB	347
LL-5	68	SB-101-PM 10.35	NB	123
LL-5	76	SB-101-PM 10.66	NB	280
LL-5	78	SB-101-PM 11.06	NB	38
LL-5	79	SB-101-PM 11.07	NB	103
LL-6	85	SB-101-PM 11.46	NB	110
LL-6	87	SB-101-PM 11.68	SB	20
TOTAL				4,064

FIBER ROLLS

SHEET No.	Loc No.	LOCATION	DIRECTION	LENGTH LF
LL-3	52	SB-101-PM 9.00	SB	170
LL-3	53	SB-101-PM 9.03	NB	350
LL-4	61	SB-101-PM 9.91	SB	640
LL-4	62	SB-101-PM 9.92	NB	520
LL-4	64	SB-101-PM 10.02	NB	370
LL-4	66	SB-101-PM 10.02	SB	100
LL-4	67	SB-101-PM 10.02	SB	400
LL-5	78	SB-101-PM 11.06	NB	80
TOTAL				2,630

DECOMPOSED GRANITE

SHEET No.	Loc No.	LOCATION	DIRECTION	VOLUME (N) CY	AREA SQFT
LL-1	7	SB-101-PM 0.62	NB	120	3,500
LL-1	8	SB-101-PM 0.62	SB	50	9,500
TOTAL					13,000

(N) - NOT A SEPARATE PAY ITEM, FOR INFORMATION ONLY

ANTI-GRAFFITI COATING

SHEET No.	Loc No.	LOCATION	DIRECTION	AREA SQFT
LL-2	46	EVANS Ave UC BENTS	SB	1,200
LL-2	46	EVANS Ave UC ABUTMENT AND RETAINING WALL	SB	3,000
LL-2	46	EVANS Ave UC ABUTMENT AND RETAINING WALL	SB	4,600
TOTAL				8,800

IRRIGATION QUANTITIES

SHEET No.	RCV 1½"	RCV 2"	BV 2"	REPLACE No. 6 PULL BOX (T)	PLASTIC PIPE (SCHEDULE 40) (SUPPLY LINE) 2"	PLASTIC PIPE (SCHEDULE 40) (SUPPLY LINE) 2½"	CONTROL AND NEUTRAL CONDUCTORS LS* / LF
	EA	EA	EA	EA	LF	LF	
IP-1				1			
IP-2				2			
IP-3	1		1	1	200		800
TOTAL	1		1	4	200		

* - LUMP SUM

ROADSIDE CLEARING

SHEET No.	Loc No.	LOCATION	DIRECTION	AREA (N) SQFT
LL-1	2	SB-101-PM 0.60	SB	18,000
LL-1	3	SB-101-PM 0.61	SB	2,500
LL-1	4	SB-101-PM 0.62	SB	24,900
LL-1	5	SB-101-PM 0.62	SB	17,900
LL-1	6	SB-101-PM 0.62	NB	13,500
LL-3	52	SB-101-PM 9.00	SB	3,800
LL-3	53	SB-101-PM 9.00	NB	7,200
LL-3	54	SB-101-PM 9.03	NB	10,500
LL-3	58	SB-101-PM 9.66	SB	4,800
LL-4	61	SB-101-PM 9.91	SB	15,700
LL-4	62	SB-101-PM 9.92	NB	13,000
LL-4	64	SB-101-PM 10.02	NB	10,600
LL-4	66	SB-101-PM 10.02	SB	10,000
LL-4	67	SB-101-PM 10.02	NB	16,800
LL-5	68	SB-101-PM 10.35	NB	6,000
LL-5	76	SB-101-PM 10.66	NB	11,000
LL-5	78	SB-101-PM 11.06	NB	1,800
LL-5	79	SB-101-PM 11.07	NB	5,000
LL-6	85	SB-101-PM 11.46	NB	5,400
LL-6	87	SB-101-PM 11.68	SB	800

(N) - NOT A SEPARATE PAY ITEM, FOR INFORMATION ONLY

IRRIGATION AND LANDSCAPE QUANTITIES

IQ-1

STATE OF CALIFORNIA - DEPARTMENT OF TRANSPORTATION
Caltrans® LANDSCAPE ARCHITECTURE

SENIOR LANDSCAPE ARCHITECT: DENNIS REEVES
CALCULATED-DESIGNED BY: DAVID EMERSON
CHECKED BY: PATRICK BOLGER
REVISED BY
DATE REVISED

LAST REVISION 03-11-16
DATE PLOTTED => 16-MAY-2016
TIME PLOTTED => 10:58

Dist	COUNTY	ROUTE	POST MILES TOTAL PROJECT	SHEET No.	TOTAL SHEETS
05	SB	101	0.4/11.7	34	57

Xavier Alfaro 2-25-16
REGISTERED ELECTRICAL ENGINEER DATE

3-14-16
PLANS APPROVAL DATE

REGISTERED PROFESSIONAL ENGINEER XAVIER ALFARO No. 17488 Exp. 6-30-17 ELECTRICAL STATE OF CALIFORNIA

THE STATE OF CALIFORNIA OR ITS OFFICERS OR AGENTS SHALL NOT BE RESPONSIBLE FOR THE ACCURACY OR COMPLETENESS OF SCANNED COPIES OF THIS PLAN SHEET.

NOTE:

FOR ACCURATE RIGHT OF WAY DATA, CONTACT RIGHT OF WAY ENGINEERING AT THE DISTRICT OFFICE.

ABBREVIATIONS:

AP - ACCESS POINT FOR VSN
MVDS - MICROWAVE VEHICLE DETECTION SYSTEM
RP - REPEATER FOR VSN
VSN - VEHICLE SENSOR NODE
WAPB - WIRELESS ACCESS POINT BRIDGE
WCB - WIRELESS CLIENT BRIDGE

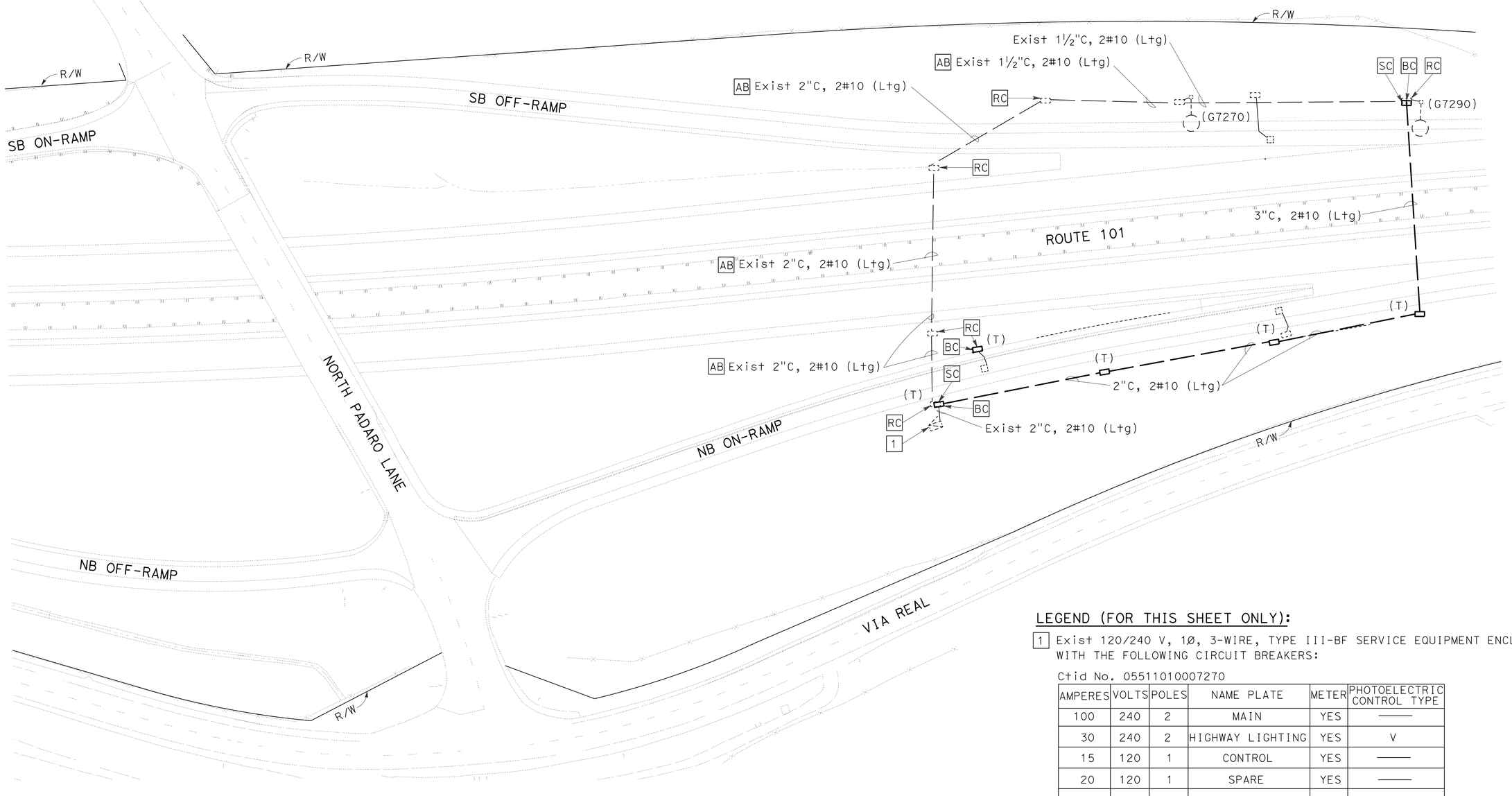

LEGEND (FOR THIS SHEET ONLY):

1 Exist 120/240 V, 1Ø, 3-WIRE, TYPE III-BF SERVICE EQUIPMENT ENCLOSURE WITH THE FOLLOWING CIRCUIT BREAKERS:

Ctid No. 05511010007270

AMPERES	VOLTS	POLES	NAME PLATE	METER	PHOTOELECTRIC CONTROL TYPE
100	240	2	MAIN	YES	———
30	240	2	HIGHWAY LIGHTING	YES	V
15	120	1	CONTROL	YES	———
20	120	1	SPARE	YES	———
30	240	2	SPARE	YES	———

MODIFYING LIGHTING SYSTEM
LOCATION No. 42 AND LOCATION No. 43
PM 7.24 PM 7.26

APPROVED FOR ELECTRICAL WORK ONLY

MODIFYING EXISTING ELECTRICAL SYSTEM

SCALE: 1"=50'

E-1

REVISED BY	DATE REVISED	FUNCTIONAL SUPERVISOR	CALCULATED-DESIGNED BY	CHECKED BY
XIA	12-11-15	ALI BAKHDOUD	YOHANNES CHALLA	XAVIER ALFARO
YC	02-25-16			

STATE OF CALIFORNIA - DEPARTMENT OF TRANSPORTATION
Caltrans® ELECTRICAL DESIGN

LAST REVISION 02-25-16 | DATE PLOTTED => 16-MAY-2016 TIME PLOTTED => 10:58

Dist	COUNTY	ROUTE	POST MILES TOTAL PROJECT	SHEET No.	TOTAL SHEETS
05	SB	101	0.4/11.7	35	57

Xavier Alfaro 2-25-16
REGISTERED ELECTRICAL ENGINEER DATE

3-14-16
PLANS APPROVAL DATE

REGISTERED PROFESSIONAL ENGINEER
XAVIER ALFARO
No. 17488
Exp. 6-30-17
ELECTRICAL
STATE OF CALIFORNIA

THE STATE OF CALIFORNIA OR ITS OFFICERS OR AGENTS SHALL NOT BE RESPONSIBLE FOR THE ACCURACY OR COMPLETENESS OF SCANNED COPIES OF THIS PLAN SHEET.

NOTE:

FOR ACCURATE RIGHT OF WAY DATA, CONTACT RIGHT OF WAY ENGINEERING AT THE DISTRICT OFFICE.

LEGEND (FOR THIS SHEET ONLY):

1 Exist 120/240 V, 1Ø, 3-WIRE, TYPE III-BF SERVICE EQUIPMENT ENCLOSURE WITH THE FOLLOWING CIRCUIT BREAKERS:

Ctid No. 05511010010651

AMPERES	VOLTS	POLES	NAME PLATE	METER	PHOTOELECTRIC CONTROL TYPE
100	240	2	MAIN	YES	———
30	240	2	HIGHWAY LIGHTING	YES	V
15	120	1	CONTROL	YES	———
20	120	1	SPARE	YES	———
40	240	2	SPARE	YES	———

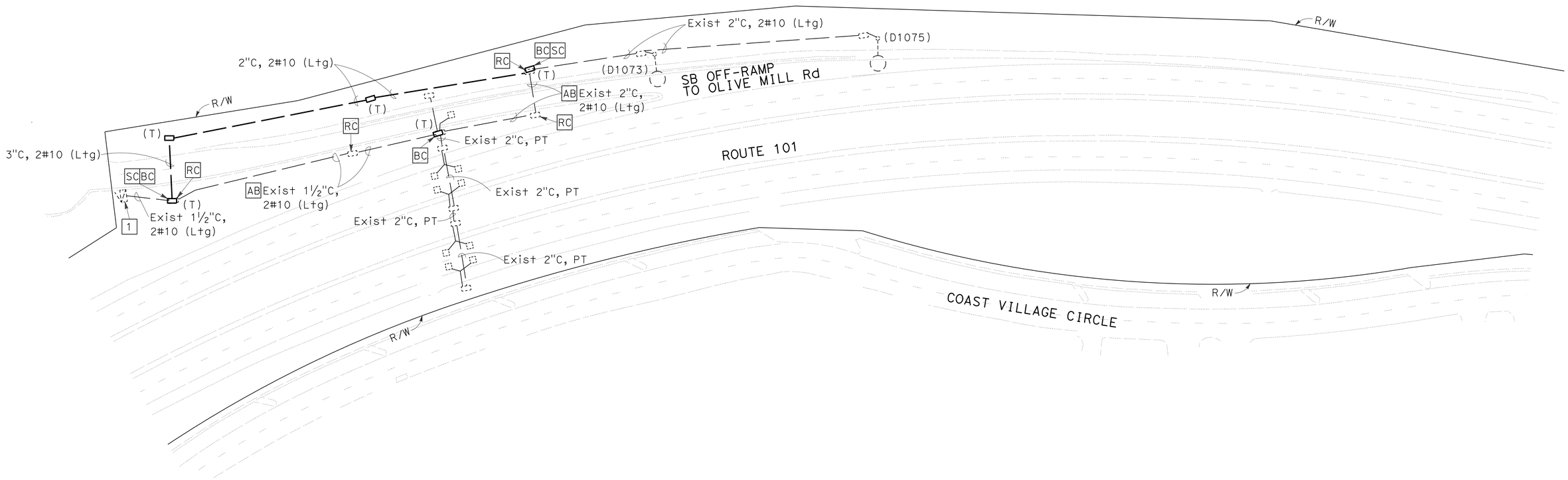

MODIFYING LIGHTING SYSTEM
LOCATION No. 77
PM 10.71

APPROVED FOR ELECTRICAL WORK ONLY

MODIFYING EXISTING ELECTRICAL SYSTEM

SCALE: 1"=50'

E-2

STATE OF CALIFORNIA - DEPARTMENT OF TRANSPORTATION
Caltrans® **ELECTRICAL DESIGN**

FUNCTIONAL SUPERVISOR: ALI BAKHDOUD
CALCULATED-DESIGNED BY: YOHANNES CHALLA
CHECKED BY: XAVIER ALFARO

REVISED BY	DATE REVISED
YC	02-25-16
XIA	12-11-15

LAST REVISION 02-25-16 | DATE PLOTTED => 16-MAY-2016 | TIME PLOTTED => 10:58

Dist	COUNTY	ROUTE	POST MILES TOTAL PROJECT	SHEET No.	TOTAL SHEETS
05	SB	101	0.4/11.7	36	57

Xavier Alfaro 2-25-16
REGISTERED ELECTRICAL ENGINEER DATE

3-14-16
PLANS APPROVAL DATE

REGISTERED PROFESSIONAL ENGINEER
XAVIER ALFARO
No. 17488
Exp. 6-30-17
ELECTRICAL
STATE OF CALIFORNIA

THE STATE OF CALIFORNIA OR ITS OFFICERS OR AGENTS SHALL NOT BE RESPONSIBLE FOR THE ACCURACY OR COMPLETENESS OF SCANNED COPIES OF THIS PLAN SHEET.

NOTE:

THE QUANTITIES SHOWN IN TABLES ARE NOT SEPARATE PAY ITEMS, FOR INFORMATION ONLY.
FOR COMPLETE ELECTRICAL WORK, SEE ELECTRICAL PLAN SHEETS.

MODIFYING EXISTING ELECTRICAL SYSTEM

SHEET No.	No. 5 PB	No. 5(T) PB	2"C TYPE 3	3"C TYPE 3	No. 8 (G) CONDUCTOR	No. 10 CONDUCTOR
	EA		LF			
E-1	1	5	470	210	680	1360
E-2		5	380	70	450	900

ELECTRICAL QUANTITIES
E-3

XIA	12-11-15	YOHANNES CHALLA	CALCULATED-DESIGNED BY
YC	02-25-16	XAVIER ALFARO	CHECKED BY
REVISED BY	DATE REVISED	FUNCTIONAL SUPERVISOR	ALI BAKHDOUD

STATE OF CALIFORNIA - DEPARTMENT OF TRANSPORTATION
Caltrans® ELECTRICAL DESIGN

LAST REVISION 02-25-16 | DATE PLOTTED => 16-MAY-2016 | TIME PLOTTED => 10:58

M

Maint	MAINTENANCE
Max	MAXIMUM
MB	METAL BEAM
MBB	METAL BEAM BARRIER
MBGR	METAL BEAM GUARD RAILING
Med	MEDIAN
MGS	MIDWEST GUARDRAIL SYSTEM
MH	MANHOLE
Min	MINIMUM
Misc	MISCELLANEOUS
Misc I & S	MISCELLANEOUS IRON AND STEEL
Mkr	MARKER
Mod	MODIFIED,
	MODIFY
Mon	MONUMENT
MP	METAL PLATE
MPGR	METAL PLATE GUARD RAILING
MR	MOVEMENT RATING
MSE	MECHANICALLY STABILIZED EMBANKMENT
Mt	MOUNTAIN, MOUNT
Mtl	MATERIAL
MVP	MAINTENANCE VEHICLE PULLOUT

N

N	NORTH
NB	NORTHBOUND
No.	NUMBER (MUST HAVE PERIOD)
Nos.	NUMBERS (MUST HAVE PERIOD)
NPS	NOMINAL PIPE SIZE
NS	NEAR SIDE
NSP	NEW STANDARD PLAN
NTS	NOT TO SCALE

O

Oblr	OBLITERATE
OC	OVERCROSSING
OD	OUTSIDE DIAMETER
OF	OUTSIDE FACE
OG	ORIGINAL GROUND
OGAC	OPEN GRADED ASPHALT CONCRETE
OGFC	OPEN GRADED FRICTION COURSE
OH	OVERHEAD
OHWM	ORDINARY HIGH WATER MARK
O-O	OUT TO OUT
Opp	OPPOSITE
OSD	OVERSIDE DRAIN

P

P	PAGE
PAP	PERFORATED ALUMINUM PIPE
PB	PULL BOX
PC	POINT OF CURVATURE,
	PRECAST
PCC	POINT OF COMPOUND CURVE,
	PORTLAND CEMENT CONCRETE
PCMS	PORTABLE CHANGEABLE MESSAGE SIGN
PCP	PERFORATED CONCRETE PIPE,
	PRESTRESSED CONCRETE PIPE
PCVC	POINT OF COMPOUND VERTICAL CURVE
PEC	PERMIT TO ENTER AND CONSTRUCT
Ped	PEDESTRIAN
Ped OC	PEDESTRIAN OVERCROSSING
Ped UC	PEDESTRIAN UNDERCROSSING
Perm Mtl	PERMEABLE MATERIAL

P continued

PG	PROFILE GRADE
PI	POINT OF INTERSECTION
PJP	PARTIAL JOINT PENETRATION
Pkwy	PARKWAY
ℙ,PL	PLATE
P/L	PROPERTY LINE
PM	POST MILE,
	TIME FROM NOON TO MIDNIGHT
PN	PAVING NOTCH
POC	POINT OF HORIZONTAL CURVE
POT	POINT OF TANGENT
POVC	POINT OF VERTICAL CURVE
PP	PIPE PILE,
	PLASTIC PIPE,
	POWER POLE
PPL	PREFORMED PERMEABLE LINER
PPP	PERFORATED PLASTIC PIPE
PRC	POINT OF REVERSE CURVE
PRF	PAVEMENT REINFORCING FABRIC
PRVC	POINT OF REVERSE VERTICAL CURVE
PS&E	PLANS, SPECIFICATIONS AND ESTIMATES
PS, P/S	PRESTRESSED
PSP	PERFORATED STEEL PIPE
PT	POINT OF TANGENCY
PVC	POLYVINYL CHLORIDE
Pvmt	PAVEMENT

Q

Qty	QUANTITY

R

R	RADIUS
R & D	REMOVE AND DISPOSE
R & S	REMOVE AND SALVAGE
R/C	RATE OF CHANGE
RCA	REINFORCED CONCRETE ARCH
RCB	REINFORCED CONCRETE BOX
RCP	REINFORCED CONCRETE PIPE
RCPA	REINFORCED CONCRETE PIPE ARCH
Rd	ROAD
Reinf	REINFORCED,
	REINFORCEMENT,
	REINFORCING
Rel	RELOCATE
Repl	REPLACEMENT
Ret	RETAINING
Rev	REVISED, REVISION
Rdwy	ROADWAY
RHMA	RUBBERIZED HOT MIX ASPHALT
Riv	RIVER
RM	ROAD-MIXED
RP	RADIUS POINT,
	REFERENCE POINT
RR	RAILROAD
RSP	ROCK SLOPE PROTECTION,
	REVISED STANDARD PLAN
Rt	RIGHT
Rte	ROUTE
RW	REDWOOD,
	RETAINING WALL
R/W	RIGHT OF WAY
Rwy	RAILWAY

S

S	SOUTH,
	SUPPLEMENT
SAE	STRUCTURE APPROACH EMBANKMENT
Salv	SALVAGE
SAPP	STRUCTURAL ALUMINUM PLATE PIPE
SB	SOUTHBOUND
SC	SAND CUSHION
SCSP	SLOTTED CORRUGATED STEEL PIPE
SD	STORM DRAIN
Sec	SECOND,
	SECTION
Sep	SEPARATION
SG	SUBGRADE
Shld	SHOULDER
Sht	SHEET
Sim	SIMILAR
℄	STATION LINE
SM	SELECTED MATERIAL
Spec	SPECIAL,
	SPECIFICATIONS
SPP	SLOTTED PLASTIC PIPE
SS	SLOPE STAKE
SSBM	STRAP AND SADDLE BRACKET METHOD
SSD	STRUCTURAL SECTION DRAIN
SSPA	STRUCTURAL STEEL PLATE ARCH
SSPP	STRUCTURAL STEEL PLATE PIPE
SSPPA	STRUCTURAL STEEL PLATE PIPE ARCH
SSRP	STEEL SPIRAL RIB PIPE
St	STREET
Sta	STATION
STBB	SINGLE THRIE BEAM BARRIER
Std	STANDARD
Str	STRUCTURE
Surf	SURFACING
SW	SIDEWALK,
	SOUND WALL
Swr	SEWER
Sym	SYMMETRICAL
S4S	SURFACE 4 SIDES

T

T	SEMI-TANGENT
Tan	TANGENT
TBB	THRIE BEAM BARRIER
Tbr	TIMBER
TC	TOP OF CURB
TCB	TRAFFIC CONTROL BOX
TCE	TEMPORARY CONSTRUCTION EASEMENT
Tel	TELEPHONE
Temp	TEMPORARY
TG	TOP OF GRADE
Tot	TOTAL
TP	TELEPHONE POLE
TPB	TREATED PERMEABLE BASE
TPM	TREATED PERMEABLE MATERIAL
Trans	TRANSITION

T continued

TS	TRANSVERSE,
	TRAFFIC SIGNAL,
	TUBULAR STEEL
Typ	TYPICAL

U

UC	UNDERCROSSING
UD	UNDERDRAIN
UG	UNDERGROUND
UON	UNLESS OTHERWISE NOTED
UP	UNDERPASS

V

V	VALVE,
	DESIGN SPEED
Var	VARIABLE,
	VARIES
VC	VERTICAL CURVE
VCP	VITRIFIED CLAY PIPE
Vert	VERTICAL
Via	VIADUCT
Vol	VOLUME

W

W	WEST,
	WIDTH
WB	WESTBOUND
WH	WEEP HOLE
WM	WIRE MESH
WS	WATER SURFACE
WSP	WELDED STEEL PIPE
Wt	WEIGHT
WV	WATER VALVE
WW	WINGWALL
WWLOL	WINGWALL LAYOUT LINE

X

X Sec	CROSS SECTION
Xing	CROSSING

Y

Yr	YEAR
Yrs	YEARS

Dist	COUNTY	ROUTE	POST MILES TOTAL PROJECT	SHEET No.	TOTAL SHEETS
05	SB	101	0.4/11.7	37	57

Grace M. Tsushima
REGISTERED CIVIL ENGINEER

July 19, 2013
PLANS APPROVAL DATE

REGISTERED PROFESSIONAL ENGINEER
Grace M. Tsushima
No. C49814
Exp. 9-30-14
CIVIL
STATE OF CALIFORNIA

THE STATE OF CALIFORNIA OR ITS OFFICERS OR AGENTS SHALL NOT BE RESPONSIBLE FOR THE ACCURACY OR COMPLETENESS OF SCANNED COPIES OF THIS PLAN SHEET.

TO ACCOMPANY PLANS DATED 3-14-16

UNIT OF MEASUREMENT SYMBOLS:

Some of the symbols used in the project plan quantity tables and in the Bid Item List are:

TABLE A

SYMBOL USED	DEFINITIONS
ACRE	ACRE
CF	CUBIC FOOT
CY	CUBIC YARD
EA	EACH
GAL	GALLON
LB	POUND
LF	LINEAR FOOT
SQFT	SQUARE FOOT
SQYD	SQUARE YARD
STA	100 FEET
TAB	TABLET
TON	2,000 POUNDS

Some of the symbols used in the plans other than in the project plan quantity tables are:

TABLE B

SYMBOL USED	DEFINITIONS
ksi	KIPS PER SQUARE INCH
ksf	KIPS PER SQUARE FOOT
psi	POUNDS PER SQUARE INCH
psf	POUNDS PER SQUARE FOOT
lb/ft^3, pcf	POUNDS PER CUBIC FOOT
tsf	TONS PER SQUARE FOOT
mph, MPH *	MILES PER HOUR
ø	NOMINAL DIAMETER
oz	OUNCE
lb	POUND
kip	1,000 POUNDS
cal	CALORIE
ft	FOOT OR FEET
gal	GALLON

* For use on a sign panel only

STATE OF CALIFORNIA
DEPARTMENT OF TRANSPORTATION

ABBREVIATIONS (SHEET 2 OF 2)

NO SCALE

RSP A10B DATED JULY 19, 2013 SUPERSEDES STANDARD PLAN A10B DATED MAY 20, 2011 - PAGE 2 OF THE STANDARD PLANS BOOK DATED 2010.

REVISED STANDARD PLAN RSP A10B

2010 REVISED STANDARD PLAN RSP A10B

6-7-13

Dist	COUNTY	ROUTE	POST MILES TOTAL PROJECT	SHEET No.	TOTAL SHEETS
05	SB	101	0.4/11.7	38	57

REGISTERED CIVIL ENGINEER

July 18, 2014
PLANS APPROVAL DATE

REGISTERED PROFESSIONAL ENGINEER Glenn DeCou No. C34547 Exp. 9-30-15 CIVIL STATE OF CALIFORNIA

THE STATE OF CALIFORNIA OR ITS OFFICERS OR AGENTS SHALL NOT BE RESPONSIBLE FOR THE ACCURACY OR COMPLETENESS OF SCANNED COPIES OF THIS PLAN SHEET.

TO ACCOMPANY PLANS DATED 3-14-16

2010 REVISED STANDARD PLAN RSP A85

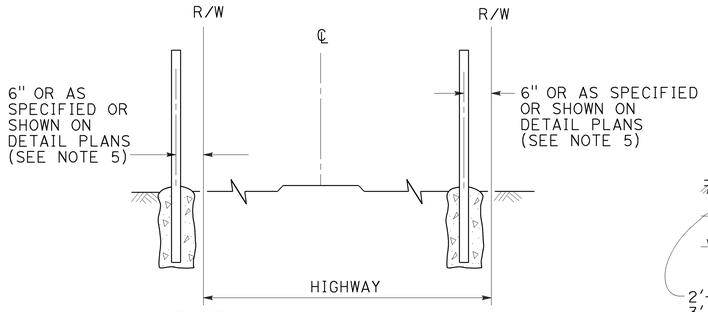

FENCE LOCATION

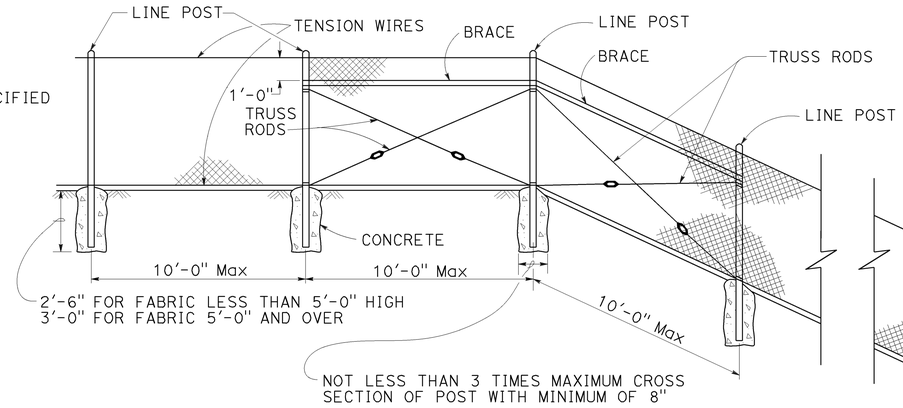

CHAIN LINK FENCE ON SHARP BREAK IN GRADE

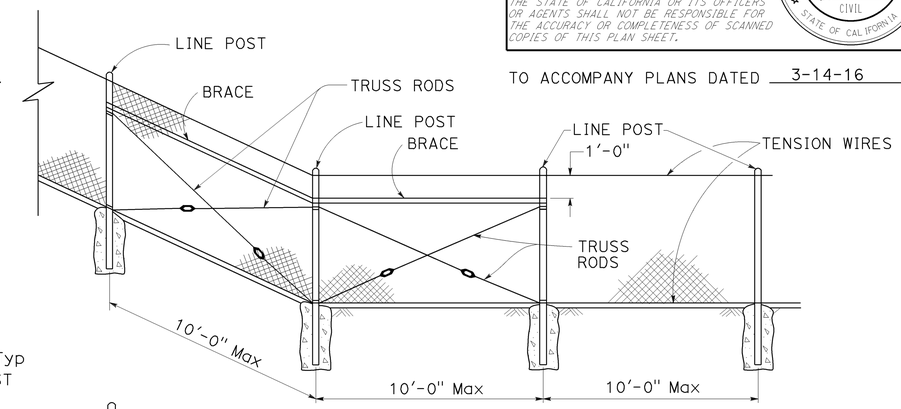

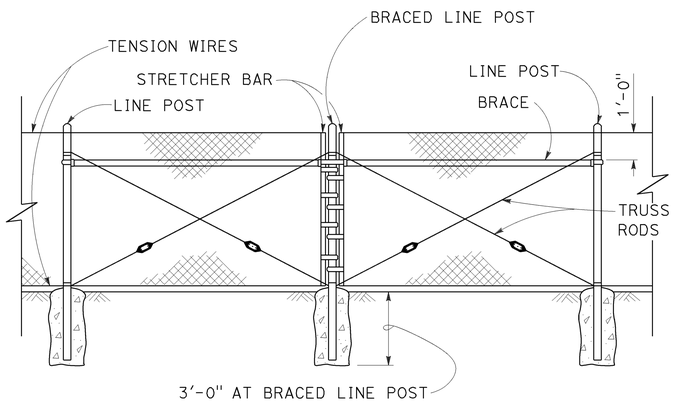

BRACED LINE POST INSTALLATION

Braced line post at intervals not exceeding 1000'

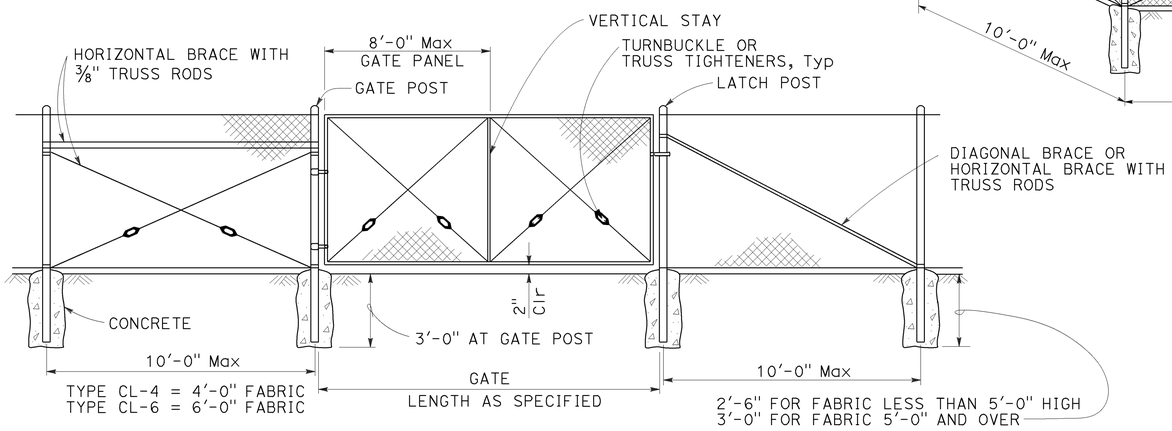

CHAIN LINK GATE INSTALLATION

GATE POST			
FENCE HEIGHT	GATE WIDTHS	ROUND OD PIPE	WEIGHT (lb/ft)
6'-0" AND LESS	UP THRU 6'-0"	2.875"	5.80
	OVER 6'-0" THRU 12'-0"	4.500"	10.80
	OVER 12'-0" THRU 18'-0"	5.563"	14.63
	OVER 18'-0" TO 24'-0" Max	6.625"	18.99
OVER 6'-0" TO 8'-0" Max	UP THRU 6'-0"	3.500"	7.58
	OVER 6'-0" THRU 12'-0"	5.563"	14.63
	OVER 12'-0" THRU 18'-0"	6.625"	18.99
	OVER 18'-0" TO 24'-0" Max	8.625"	28.58

Above post dimensions and weights are minimums. Larger sizes may be used upon approval.

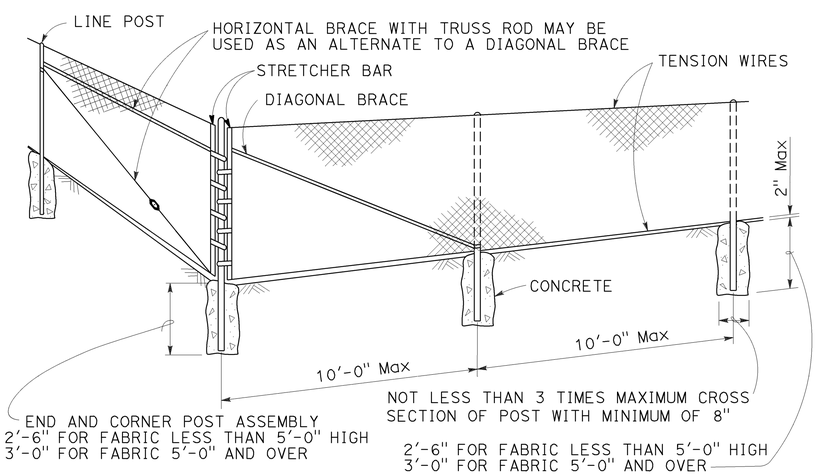

CORNER POST

NOTES:

1. The table below shows minimum sized posts and braces complying with the specifications. Larger or heavier post and brace sizes may be used upon approval.
2. Sections shown in the tables must also comply with the strength requirements and other provisions of the Specifications.
3. Other sections which comply with the strength requirements and other provisions of the Specifications may be used upon approval.
4. Options exercised shall be uniform on any one project.
5. Offset to be 2'-0" at monument locations, measured at right angles to R/W lines. Taper to achieve offset to be at least 20'-0" long.
6. See Revised Standard Plan RSP A85B for Brace, Stretcher Bar, and Truss Tightener Details.

TYPICAL MEMBER DIMENSIONS (See Notes)										
FENCE HEIGHT	LINE POSTS				END, LATCH AND CORNER POSTS		BRACES			
	ROUND OD PIPE	WEIGHT (lb/ft)	ROLL FORMED SECTION	ROLL FORMED WEIGHT (lb/ft)	ROUND OD PIPE	WEIGHT (lb/ft)	ROUND OD PIPE	WEIGHT (lb/ft)	ROLL FORMED SECTION	ROLL FORMED WEIGHT (lb/ft)
6'-0" AND LESS	1.900"	2.72	1.875" x 1.625"	1.85	2.375"	3.65	1.66"	2.27	1.625" x 1.25"	1.35
OVER 6'-0" TO 8'-0" Max	2.375"	3.65	2.25" x 1.70"	2.78	2.875"	5.80	1.66"	2.27	1.625" x 1.25"	1.35

STATE OF CALIFORNIA
DEPARTMENT OF TRANSPORTATION

CHAIN LINK FENCE

NO SCALE

RSP A85 DATED JULY 18, 2014 SUPERSEDES STANDARD PLAN A85 DATED MAY 20, 2011 - PAGE 112 OF THE STANDARD PLANS BOOK DATED 2010.

REVISED STANDARD PLAN RSP A85

7-1-14

Dist	COUNTY	ROUTE	POST MILES TOTAL PROJECT	SHEET No.	TOTAL SHEETS
05	SB	101	0.4/11.7	39	57

REGISTERED CIVIL ENGINEER

October 19, 2012
PLANS APPROVAL DATE

REGISTERED PROFESSIONAL ENGINEER Glenn DeCou No. C34547 Exp. 9-30-13 CIVIL STATE OF CALIFORNIA

THE STATE OF CALIFORNIA OR ITS OFFICERS OR AGENTS SHALL NOT BE RESPONSIBLE FOR THE ACCURACY OR COMPLETENESS OF SCANNED COPIES OF THIS PLAN SHEET.

TO ACCOMPANY PLANS DATED 3-14-16

2010 REVISED STANDARD PLAN RSP A85B

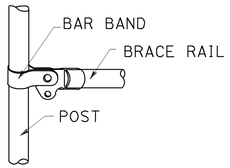

BRACE RAIL

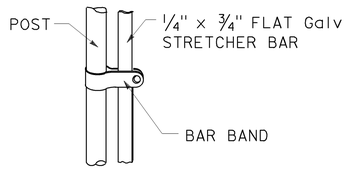

STRETCHER BAR

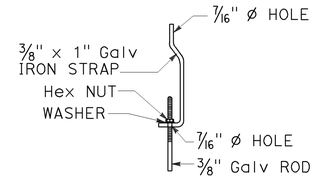

TRUSS TIGHTENER

NOTES:

1. All material for abutment connection to be galvanized.
2. The chain link fabric shall be replaced by barbed wire strands at 12" maximum centers between the double posts.
3. When the width of the culvert makes it necessary to anchor a post to the top of the culvert, a cast iron shoe or other device approved by the Engineer shall be used.
4. Fencing over stream and around headwall may also use Barbed Wire or Wire Mesh fencing with either wood post or steel post installation.
5. See Standard Plan A85 for Chain Link fence dimensions. See Standard Plan A86 for Barbed Wire and Wire Mesh fence dimensions and for wood post and steel post installation.

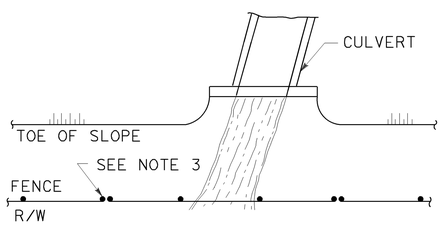

PLAN

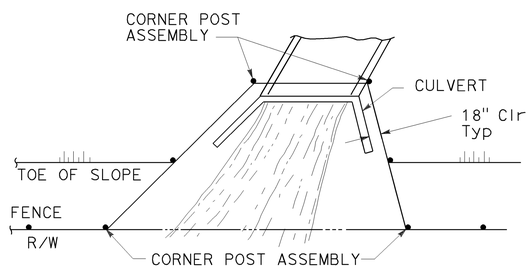

PLAN

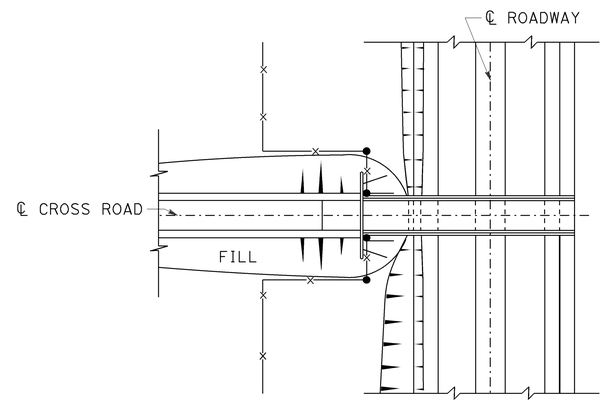

PLAN OF ROADWAY - OVERCROSSING

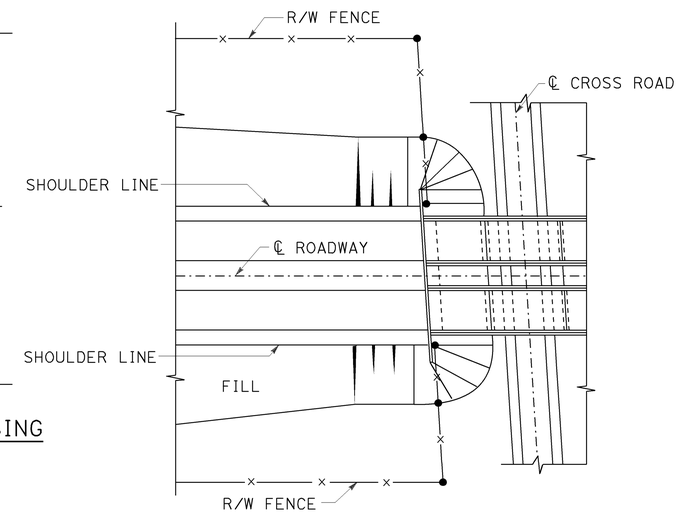

PLAN OF ROADWAY - UNDERCROSSING

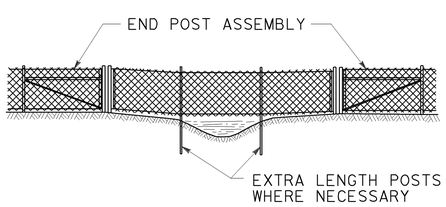

ELEVATION

INSTALLATION OVER STREAM

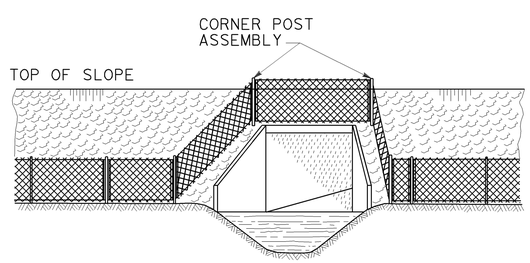

ELEVATION

INSTALLATION AROUND HEADWALL

See Note 4

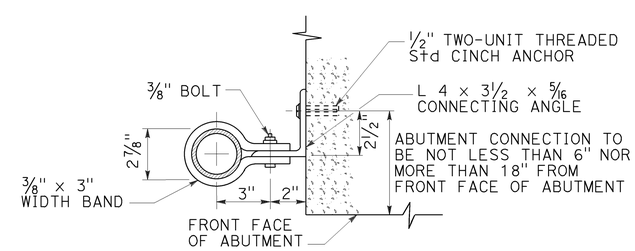

ABUTMENT CONNECTION

TYPICAL INSTALLATION AT BRIDGES

STATE OF CALIFORNIA
DEPARTMENT OF TRANSPORTATION

CHAIN LINK FENCE DETAILS

NO SCALE

RSP A85B DATED OCTOBER 19, 2012 SUPERSEDES STANDARD PLAN A85B DATED MAY 20, 2011 - PAGE 114 OF THE STANDARD PLANS BOOK DATED 2010.

REVISED STANDARD PLAN RSP A85B

7-19-12

Dist	COUNTY	ROUTE	POST MILES TOTAL PROJECT	SHEET No.	TOTAL SHEETS
05	SB	101	0.4/11.7	40	57

REGISTERED CIVIL ENGINEER

July 19, 2013
PLANS APPROVAL DATE

REGISTERED PROFESSIONAL ENGINEER
Michael Janzen
No. 44788
Exp. 03-31-14
CIVIL
STATE OF CALIFORNIA

THE STATE OF CALIFORNIA OR ITS OFFICERS OR AGENTS SHALL NOT BE RESPONSIBLE FOR THE ACCURACY OR COMPLETENESS OF SCANNED COPIES OF THIS PLAN SHEET.

TO ACCOMPANY PLANS DATED 3-14-16

2010 REVISED STANDARD PLAN RSP A87A

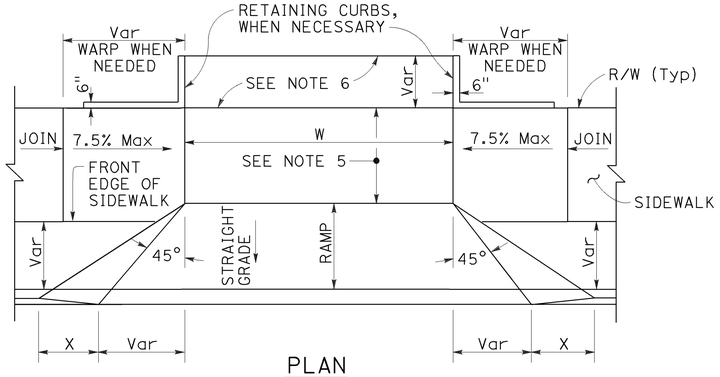

PLAN

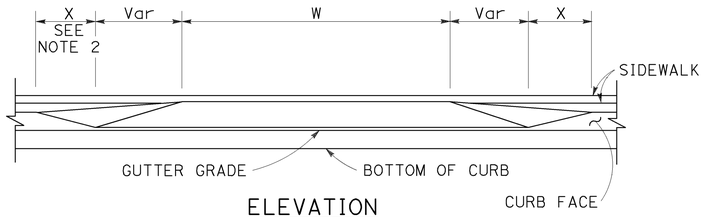

ELEVATION

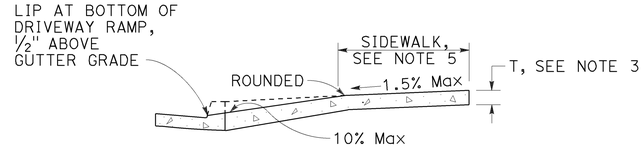

CASE A

Typical driveway, sidewalk not depressed

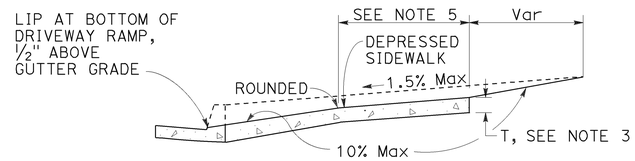

CASE B

Driveway with depressed sidewalk

SECTIONS

DRIVEWAYS

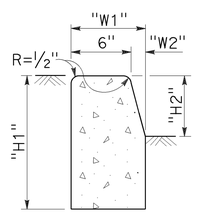

TYPE A1 CURBS

See Table A

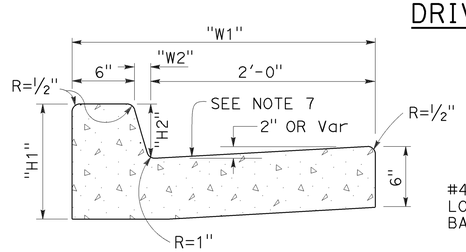

TYPE A2 CURBS

See Table A

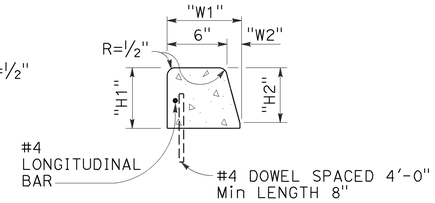

TYPE A3 CURBS

Superimposed on existing pavement
See Table A

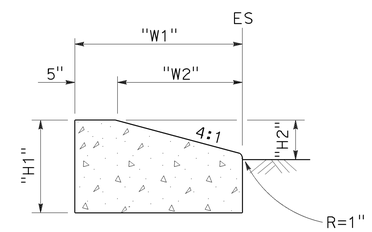

TYPE D CURBS

See Table A

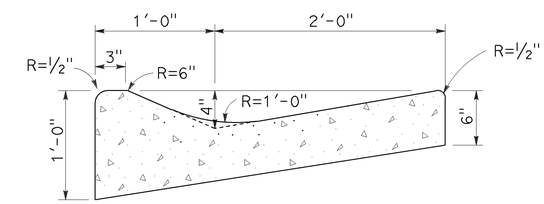

TYPE E CURB

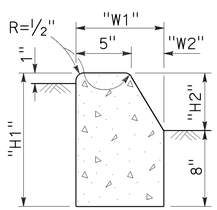

TYPE B1 CURBS

See Table A

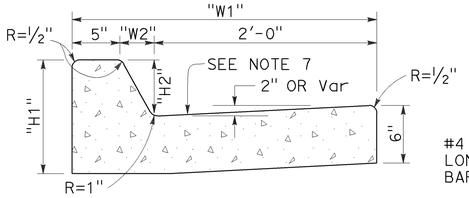

TYPE B2 CURBS

See Table A

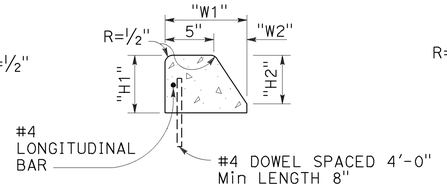

TYPE B3 CURBS

Superimposed on existing pavement
See Table A

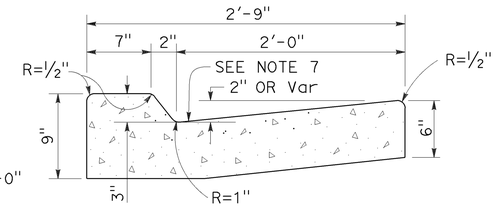

TYPE B4 CURBS

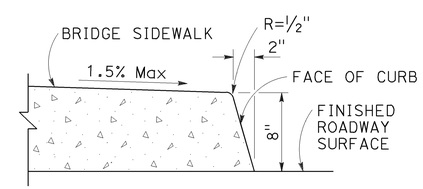

TYPE H CURB

On Bridges

CURBS

TABLE A

CURB TYPE	DIMENSIONS			
	"H1"	"H2"	"W1"	"W2"
A1-6	1'-2"	6"	7½"	1½"
A1-8	1'-4"	8"	8"	2"
A2-6	1'-0"	6"	2'-7½"	1½"
A2-8	1'-2"	8"	2'-8"	2"
A3-6	6"	5"	7¼"	1¼"
A3-8	8"	7"	7¾"	1¾"
B1-4	1'-0"	4"	7½"	2½"
B1-6	1'-2"	6"	9"	4"
B2-4	10"	4"	2'-7½"	2½"
B2-6	1'-0"	6"	2'-9"	4"
B3-4	4"	3"	7"	2"
B3-6	6"	5"	8½"	3½"
D-4	10"	4"	1'-6"	1'-1"
D-6	1'-0"	6"	2'-2"	1'-9"

CURB QUANTITIES

TYPE	CUBIC YARDS PER LINEAR FOOT
A1-6	0.02585
A1-8	0.03084
A2-6	0.05903
A2-8	0.06379
A3-6	0.01036
A3-8	0.01435
B1-4	0.02185
B1-6	0.02930
B2-4	0.05515
B2-6	0.06171
B3-4	0.00641
B3-6	0.01074
B4	0.05709
D-4	0.04083
D-6	0.06804
E	0.06661

NOTES:

1. Case A driveway section typically applies.
2. X=3'-0" except for curb heights over 10" where 4:1 slopes shall be used on curb slope.
3. Sidewalk and ramp thickness "T" at driveway shall be 4" for residental and 6" for commercial.
4. Difference in slope of the driveway ramp and the slope of a line between the gutter and a point on the roadway 5'-0" from gutter line shall not exceed 15%. Reduce driveway ramp slope, not gutter slope, where required.
5. Minimum width of clear passageway for sidewalk shall be 4'-2".
6. Retaining curbs and acquisition of construction easement may be necessary for narrow sidewalks or curb heights in excess of 6".
7. Across the pedestrian route at curb ramp locations, the gutter pan slope shall not exceed 1" of depth for each 2'-0" of width.

STATE OF CALIFORNIA
DEPARTMENT OF TRANSPORTATION

CURBS AND DRIVEWAYS

NO SCALE

RSP A87A DATED JULY 19, 2013 SUPERSEDES STANDARD PLAN A87A
DATED MAY 20, 2011 - PAGE 119 OF THE STANDARD PLANS BOOK DATED 2010.

REVISED STANDARD PLAN RSP A87A

7-8-13

Dist	COUNTY	ROUTE	POST MILES TOTAL PROJECT	SHEET No.	TOTAL SHEETS
05	SB	101	0.4/11.7	41	57

REGISTERED CIVIL ENGINEER

January 15, 2016
PLANS APPROVAL DATE

REGISTERED PROFESSIONAL ENGINEER
Michael Janzen
No. 44788
Exp. 3-31-16
CIVIL
STATE OF CALIFORNIA

THE STATE OF CALIFORNIA OR ITS OFFICERS OR AGENTS SHALL NOT BE RESPONSIBLE FOR THE ACCURACY OR COMPLETENESS OF SCANNED COPIES OF THIS PLAN SHEET.

TO ACCOMPANY PLANS DATED 3-14-16

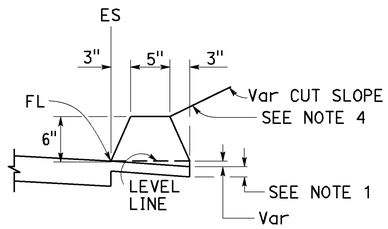

TYPE A
See Notes 3 and 5

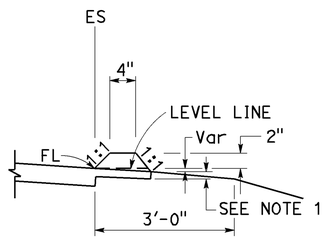

TYPE C

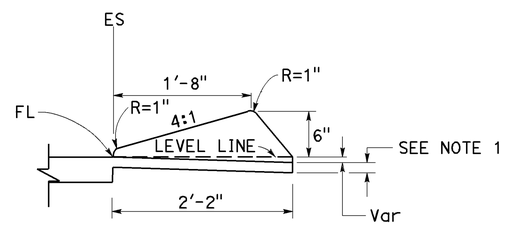

TYPE D

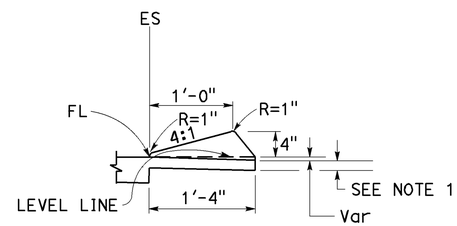

TYPE E

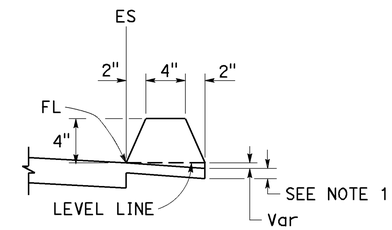

TYPE F
See Note 5

DIKES

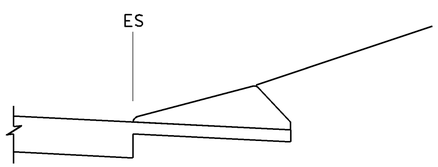

CASE C-1
Cut Slope

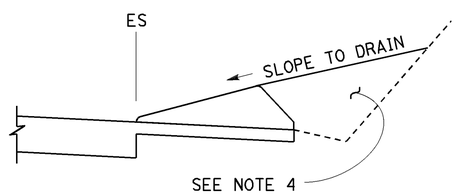

CASE C-2
Cut Slope

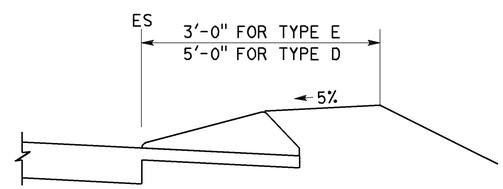

CASE F

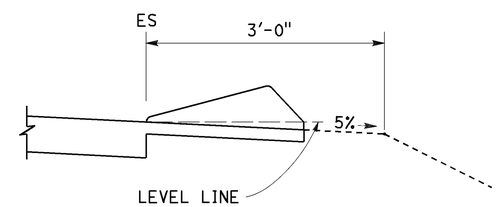

CASE R
See Note 2

TYPE D AND E BACKFILL DETAILS

NOTES:

1. For HMA shoulders only, extend top layer of HMA placed on the shoulder under dike with no joint at the ES. For projects with OGFC shoulders, do not extend OGFC under dike. See project plans for modified dike detail.
2. Case R applies to retrofit only projects where restrictive conditions do not provide enough width for Case F backfill.
3. Type A dike only to be used where restrictive slope conditions do not provide enough width to use Type D or Type E dike.
4. Fill and compact with excavated material to top of dike.
5. Use Type A or F dike, where dike is required with guardrail installations. See Revised Standard Plan RSP A77N4 for dike positioning details. See Revised Standard Plan RSP A77N3 for hinge point offsets with guardrail.

DIKE QUANTITIES

TYPE	CUBIC YARDS PER LINEAR FOOT
A	0.0135
C	0.0038
D	0.0293
E	0.0130
F	0.0066

Quantities based on 5% cross slope.

STATE OF CALIFORNIA
DEPARTMENT OF TRANSPORTATION

HOT MIX ASPHALT DIKES

NO SCALE

RSP A87B DATED JANUARY 15, 2016 SUPERSEDES RSP A87B DATED JULY 19, 2013 AND STANDARD PLAN A87B DATED MAY 20, 2011 - PAGE 120 OF THE STANDARD PLANS BOOK DATED 2010.

REVISED STANDARD PLAN RSP A87B

2010 REVISED STANDARD PLAN RSP A87B

11-17-15

Dist	COUNTY	ROUTE	POST MILES TOTAL PROJECT	SHEET No.	TOTAL SHEETS
05	SB	101	0.4/11.7	42	57

Gregory A. Balzer
LICENSED LANDSCAPE ARCHITECT

July 19, 2013
PLANS APPROVAL DATE

THE STATE OF CALIFORNIA OR ITS OFFICERS OR AGENTS SHALL NOT BE RESPONSIBLE FOR THE ACCURACY OR COMPLETENESS OF SCANNED COPIES OF THIS PLAN SHEET.

LICENSED LANDSCAPE ARCHITECT — Gregory A. Balzer 2576 — 02-28-15 Renewal Date — 7-19-13 Date — STATE OF CALIFORNIA

TO ACCOMPANY PLANS DATED 3-14-16

A

AB	AGGREGATE BASE
ABS	ACRYLONITRILE-BUTADIENE-STYRENE
AC	ASPHALT CONCRETE
ACC	ARMOR-CLAD CONDUCTORS
Adj	ADJACENT/ADJUSTABLE
AIC	AUXILIARY IRRIGATION CONTROLLER
Alt	ALTERNATIVE
AMEND	AMENDMENT
ARV	AIR RELEASE VALVE
AUTO	AUTOMATIC
AUX	AUXILIARY
AVB	ATMOSPHERIC VACUUM BREAKER

B

B&B	BALLED AND BURLAPPED
B/B	BRASS/BRONZE
B/B/PL	BRASS/BRONZE/PLASTIC
B/PL	BRASS/PLASTIC
BFM	BONDED FIBER MATRIX
Bit Ctd	BITUMINOUS COATED
BP	BOOSTER PUMP
BPA	BACKFLOW PREVENTER ASSEMBLY
BPE	BACKFLOW PREVENTER ENCLOSURE
BV	BALL VALVE

C

C	CONDUIT
CAP	CORRUGATED ALUMINUM PIPE
CARV	COMBINATION AIR RELEASE VALVE
CB	COUPLING BAND
CCA	CAM COUPLER ASSEMBLY
CEC	CONTROLLER ENCLOSURE CABINET
CHDPE	CORRUGATED HIGH DENSITY POLYETHYLENE
CL	CHAIN LINK
CNC	CONTROL AND NEUTRAL CONDUCTORS
Conc	CONCRETE
CP	COPPER PIPE
CS	COMPOST SOCK
CSP	CORRUGATED STEEL PIPE
CST	CENTER STRIP
CV	CHECK VALVE

D

Dia	DIAMETER
DIP	DUCTILE IRON PIPE
DIT	DRIP IRRIGATION TUBING
DG	DECOMPOSED GRANITE
DN	DIAMETER NOMINAL
DVA	DRIP VALVE ASSEMBLY

E

EC	EROSION CONTROL
ECTC	EROSION CONTROL TECHNOLOGY COUNCIL
Elect	ELECTRIC/ELECTRICAL
Elev	ELEVATION
ELL	ELBOW
ENCL	ENCLOSURE
EP	EDGE OF PAVEMENT
ES	EDGE OF SHOULDER
EST	END STRIP
ESTB	ESTABLISHMENT
ETW	EDGE OF TRAVELED WAY

F

F	FULL CIRCLE
F/P	FULL/PART CIRCLE
FCV	FLOW CONTROL VALVE
FERT	FERTILIZER
FG	FINISHED GRADE
FH	FLEXIBLE HOSE
FIPT	FEMALE IRON PIPE THREAD
FIS	FERTILIZER INJECTOR SYSTEM
FL	FLOW LINE
FR	FIBER ROLL
FS	FLOW SENSOR
FSC	FLOW SENSOR CABLE
FV	FLUSH VALVE

G

Galv	GALVANIZED
GARV	GARDEN VALVE
GARVA	GARDEN VALVE ASSEMBLY
GM	GRAVEL MULCH
GPH	GALLONS PER HOUR
GPM	GALLONS PER MINUTE
GSP	GALVANIZED STEEL PIPE
GV	GATE VALVE

H

H	HALF CIRCLE
HDPE	HIGH DENSITY POLYETHYLENE
HP	HORSEPOWER/HINGE POINT
HPL	HIGH PRESSURE LINE
Hwy	HIGHWAY

I

IC	IRRIGATION CONTROLLER
ICC	IRRIGATION CONTROLLER(S) IN CONTROLLER ENCLOSURE CABINET
ID	INSIDE DIAMETER
IFS	IRRIGATION FILTRATION SYSTEM
IPS	IRON PIPE SIZE
IPT	IRON PIPE THREAD
Irr	IRRIGATION

L

L	LENGTH

M

Max	MAXIMUM
MBGR	METAL BEAM GUARD RAILING
MCV	MANUAL CONTROL VALVE
MIC	MASTER IRRIGATION CONTROLLER
Min	MINIMUM
MIPT	MALE IRON PIPE THREAD
Misc	MISCELLANEOUS
Mtl	MATERIAL
MVP	MAINTENANCE VEHICLE PULLOUT

N

NCN	NO COMMON NAME
NL	NOZZLE LINE
No.	NUMBER
NPT	NATIONAL PIPE THREAD

O

O/C	ON CENTER
OD	OUTSIDE DIAMETER
OL	OVERLAP

P

P	PART CIRCLE
PB	PULL BOX
PCC	PORTLAND CEMENT CONCRETE
PE	POLYETHYLENE
Pkt	PACKET
PL	PLASTIC
PLS	PURE LIVE SEED
PLT	PLANT/PLANTING
PLT ESTB	PLANT ESTABLISHMENT
PM	POST MILE
PR	PRESSURE RATED
PRLV	PRESSURE RELIEF VALVE
PRV	PRESSURE REGULATING VALVE
PVC	POLYVINYL CHLORIDE
Pvmt	PAVEMENT

Q

Q	QUARTER CIRCLE
QCV	QUICK COUPLING VALVE

NOTE:

For additional abbreviations, see Standard Plans A10A and A10B.

R

R	RADIUS
RCP	REINFORCED CONCRETE PIPE
RCV	REMOTE CONTROL VALVE
RCVM	REMOTE CONTROL VALVE (MASTER)
RCVMF	REMOTE CONTROL VALVE (MASTER) W/FLOW SENSOR
RCVP	REMOTE CONTROL VALVE W/PRESSURE REGULATOR
RCW	RECYCLED WATER
RECP	ROLLED EROSION CONTROL PRODUCT
REQ	REQUIRED
RICS	REMOTE IRRIGATION CONTROL SYSTEM
R/W	RIGHT OF WAY

S

S	SLIP
SCH	SCHEDULE
SF	STATE-FURNISHED
Shld	SHOULDER
Sq	SQUARE
SST	SIDE STRIP
Sta	STATION
Std	STANDARD
SW	SIDEWALK/SOUND WALL

T

T	THIRD CIRCLE/THREAD
TLS	TRUCK LOADING STANDPIPE
TQ	THREE QUARTER CIRCLE
TRM	TURF REINFORCEMENT MAT
TT	TWO-THIRDS CIRCLE
TWSA	TREE WELL SPRINKLER ASSEMBLY
Typ	TYPICAL

U

UG	UNDERGROUND

W

W	WIDTH
W/	WITH
WM	WATER METER
WS	WYE STRAINER
WSA	WYE STRAINER ASSEMBLY
WSP	WELDED STEEL PIPE
WWM	WELDED WIRE MESH

STATE OF CALIFORNIA
DEPARTMENT OF TRANSPORTATION

LANDSCAPE AND EROSION CONTROL ABBREVIATIONS

NO SCALE

RSP H1 DATED JULY 19, 2013 SUPERSEDES STANDARD PLAN H1
DATED MAY 20, 2011 - PAGE 218 OF THE STANDARD PLANS BOOK DATED 2010.

REVISED STANDARD PLAN RSP H1

2010 REVISED STANDARD PLAN RSP H1

6-28-13

Dist	COUNTY	ROUTE	POST MILES TOTAL PROJECT	SHEET No.	TOTAL SHEETS
05	SB	101	0.4/11.7	43	57

LICENSED LANDSCAPE ARCHITECT

November 15, 2013
PLANS APPROVAL DATE

LICENSED LANDSCAPE ARCHITECT
Gregory A. Balzer 2576
REGISTERED PROFESSIONAL ENGINEER
2-28-15
(Renewal) Date
11-15-13
Date
STATE OF CALIFORNIA

THE STATE OF CALIFORNIA OR ITS OFFICERS OR AGENTS SHALL NOT BE RESPONSIBLE FOR THE ACCURACY OR COMPLETENESS OF SCANNED COPIES OF THIS PLAN SHEET.

TO ACCOMPANY PLANS DATED 3-14-16

2010 REVISED STANDARD PLAN RSP H2

EXISTING	NEW	ITEM DESCRIPTION
		WATER METER (WM)
		BACKFLOW PREVENTER ASSEMBLY (BPA)
		BACKFLOW PREVENTER ENCLOSURE (BPE)
		BOOSTER PUMP (BP)
		TRUCK LOADING STANDPIPE (TLS)
	FS	FLOW SENSOR (FS)
		MASTER IRRIGATION CONTROLLER (MIC)
		AUXILIARY IRRIGATION CONTROLLER (AIC)
		IRRIGATION CONTROLLER (IC) IRRIGATION CONTROLLER (IC) (BATTERY) IRRIGATION CONTROLLER (IC) (SOLAR) IRRIGATION CONTROLLER (IC) (TWO WIRE) IRRIGATION CONTROLLER(S) IN CONTROLLER ENCLOSURE CABINET (ICC)
acc	ACC	ARMOR-CLAD CONDUCTORS (ACC)
cnc	CNC	CONTROL AND NEUTRAL CONDUCTORS (CNC)
		IRRIGATION CONDUIT
		EXTEND IRRIGATION CONDUIT
dip	DIP	DUCTILE IRON PIPE (SUPPLY LINE) (MAIN) (DIP)
		GALVANIZED STEEL PIPE (SUPPLY LINE) (MAIN) (GSP)
		GALVANIZED STEEL PIPE (SUPPLY LINE) (LATERAL) (GSP)
		PLASTIC PIPE (SUPPLY LINE) (MAIN)
		PLASTIC PIPE (SUPPLY LINE) (LATERAL)
cp	CP	COPPER PIPE (SUPPLY LINE)
dit	DIT	DRIP IRRIGATION TUBING
		REMOTE CONTROL VALVE (RCV) REMOTE CONTROL VALVE (MASTER) (RCVM) REMOTE CONTROL VALVE (MASTER) W/FLOW METER (RCVMF)
P	P	REMOTE CONTROL VALVE W/PRESSURE REGULATOR (RCVP)
		EXISTING MANUAL CONTROL VALVE (MCV)
V	V	DRIP VALVE ASSEMBLY (DVA)
Y	Y	WYE STRAINER ASSEMBLY (WSA)

EXISTING	NEW	ITEM DESCRIPTION
		GATE VALVE (GV)
		BALL VALVE (BV)
		QUICK COUPLING VALVE (QCV)
		CAM COUPLER ASSEMBLY (CCA)
		GARDEN VALVE ASSEMBLY (GARVA)
		PRESSURE REGULATING VALVE (PRV)
		PRESSURE RELIEF VALVE (PRLV)
		FLOW CONTROL VALVE (FCV)
		COMBINATION AIR RELEASE VALVE (CARV)
		CHECK VALVE (CV)
		FLUSH VALVE (FV)
		EXISTING NOZZLE LINE W/TURNING UNION
		EXISTING IRRIGATION SYSTEM
		EXISTING IRRIGATION SYSTEM TO BE REMOVED
		CHAIN LINK GATE
		QUICK COUPLING VALVE W/SPRINKLER PROTECTOR
3	3	SPRINKLER W/SPRINKLER PROTECTOR
	C	CONNECT TO EXISTING SYSTEM
		CAP
		CAP EXISTING
	\\\FR\\\	FIBER ROLL
	\\\CS\\\	COMPOST SOCK

RCV SIZE
IRRIGATION CONTROLLER
CONTROLLER STATION
VALVE IN PARALLEL (IF APPLICABLE)
GPM
QUANTITY OF SPRINKLERS (WHEN SHOWN)

* 2½"-A-2b-40-60

VALVE CODE

* VALVE CODES FOR EXISTING VALVES ARE SHOWN IN A DASHED ENCLOSURE.

STATE OF CALIFORNIA
DEPARTMENT OF TRANSPORTATION

LANDSCAPE AND EROSION CONTROL SYMBOLS

NO SCALE

RSP H2 DATED NOVEMBER 15, 2013 SUPERSEDES RSP H2 DATED JULY 19, 2013 AND STANDARD PLAN H2 DATED MAY 20, 2011 - PAGE 219 OF THE STANDARD PLANS BOOK DATED 2010.

REVISED STANDARD PLAN RSP H2

10-9-13

Dist	COUNTY	ROUTE	POST MILES TOTAL PROJECT	SHEET No.	TOTAL SHEETS
05	SB	101	0.4/11.7	44	57

LICENSED LANDSCAPE ARCHITECT

July 19, 2013
PLANS APPROVAL DATE

THE STATE OF CALIFORNIA OR ITS OFFICERS OR AGENTS SHALL NOT BE RESPONSIBLE FOR THE ACCURACY OR COMPLETENESS OF SCANNED COPIES OF THIS PLAN SHEET.

LICENSED LANDSCAPE ARCHITECT Gregory A. Balzer 2576 STATE OF CALIFORNIA
Expiration Date 2-28-15
Renewal Date 7-19-13
Date

TO ACCOMPANY PLANS DATED 3-14-16

2010 REVISED STANDARD PLAN RSP H7

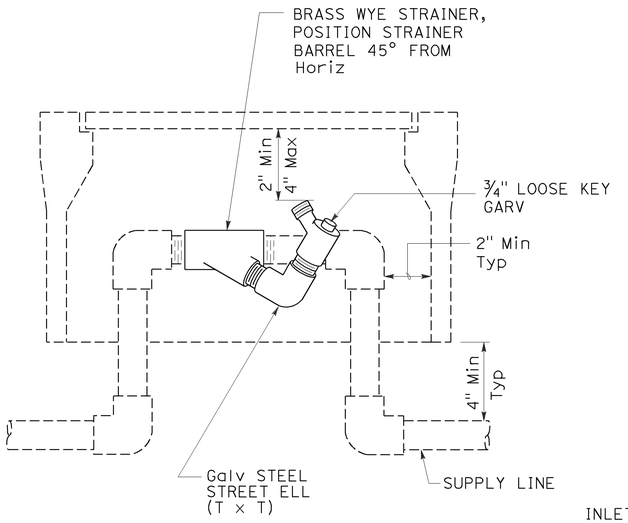

ELEVATION
WYE STRAINER ASSEMBLY

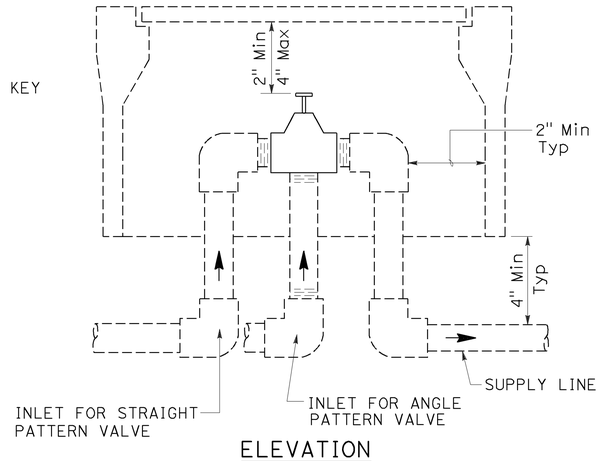

ELEVATION
VALVE

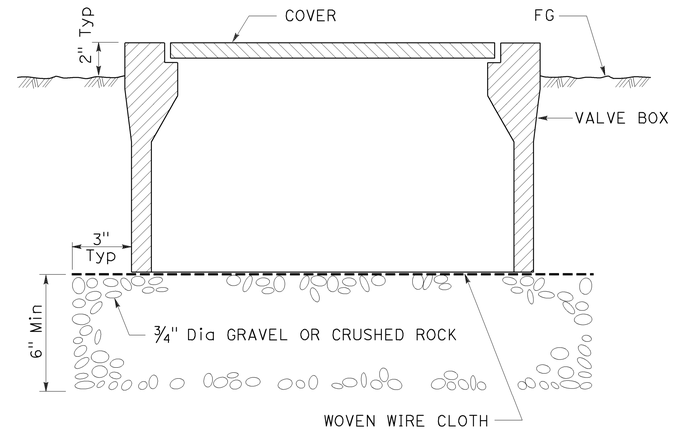

SECTION
VALVE BOX

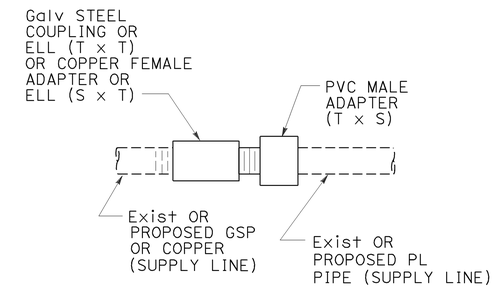

GALVANIZED OR COPPER PIPE CONNECTION TO PLASTIC PIPE

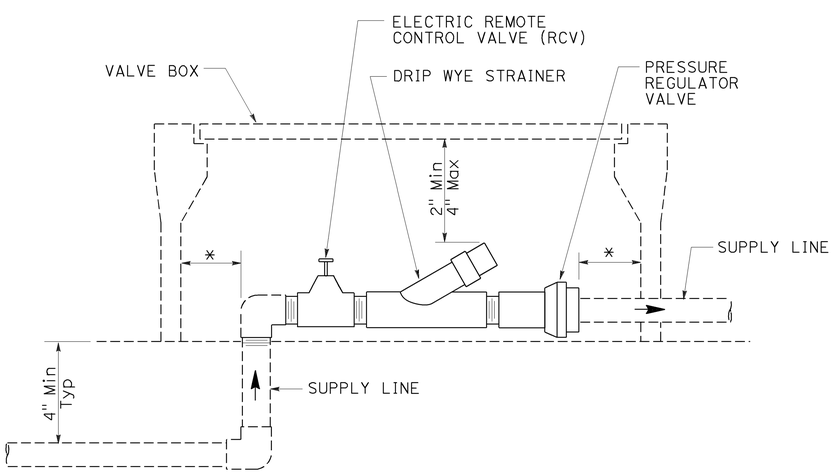

* 2" CLEARANCE ON ALL SIDES

ELEVATION
DRIP VALVE ASSEMBLY

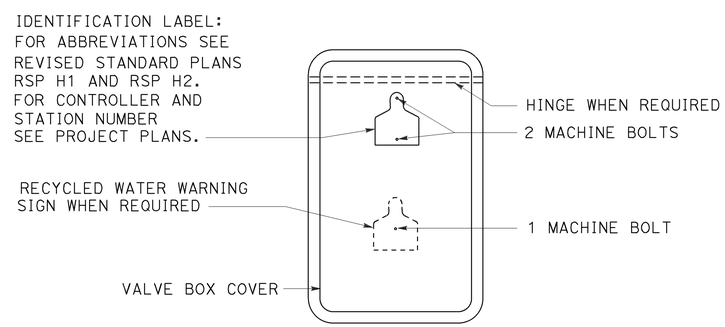

PLAN

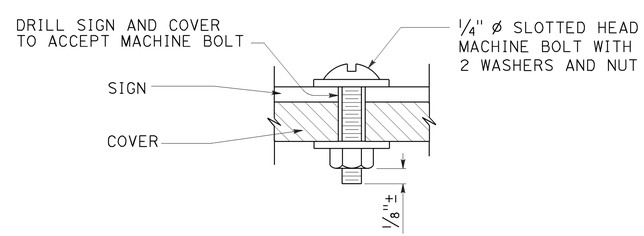

SECTION
VALVE BOX IDENTIFICATION

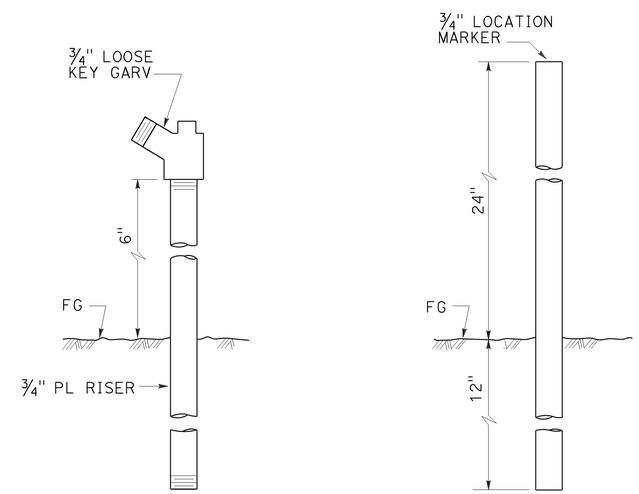

ELEVATION
GARDEN VALVE ASSEMBLY

ELEVATION
LOCATION MARKER

GARDEN VALVE ASSEMBLY

STATE OF CALIFORNIA
DEPARTMENT OF TRANSPORTATION

LANDSCAPE DETAILS

NO SCALE

RSP H7 DATED JULY 19, 2013 SUPERSEDES STANDARD PLAN H7
DATED MAY 20, 2011 - PAGE 224 OF THE STANDARD PLANS BOOK DATED 2010.

REVISED STANDARD PLAN RSP H7

6-20-13

Dist	COUNTY	ROUTE	POST MILES TOTAL PROJECT	SHEET No.	TOTAL SHEETS
05	SB	101	0.4/11.7	45	57

LICENSED LANDSCAPE ARCHITECT

July 19, 2013
PLANS APPROVAL DATE

THE STATE OF CALIFORNIA OR ITS OFFICERS OR AGENTS SHALL NOT BE RESPONSIBLE FOR THE ACCURACY OR COMPLETENESS OF SCANNED COPIES OF THIS PLAN SHEET.

LICENSED LANDSCAPE ARCHITECT
Gregory A. Balzer 2576
Expiration Date 2-28-15
Renewal Date 7-19-13
Date
STATE OF CALIFORNIA

TO ACCOMPANY PLANS DATED 3-14-16

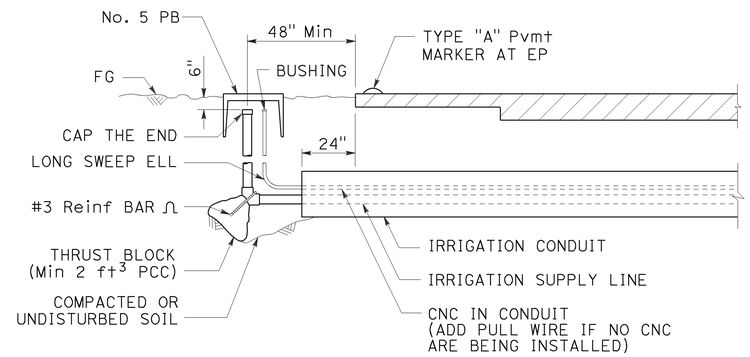

SECTION

IRRIGATION CONDUIT

UNDER TRAVELED WAY

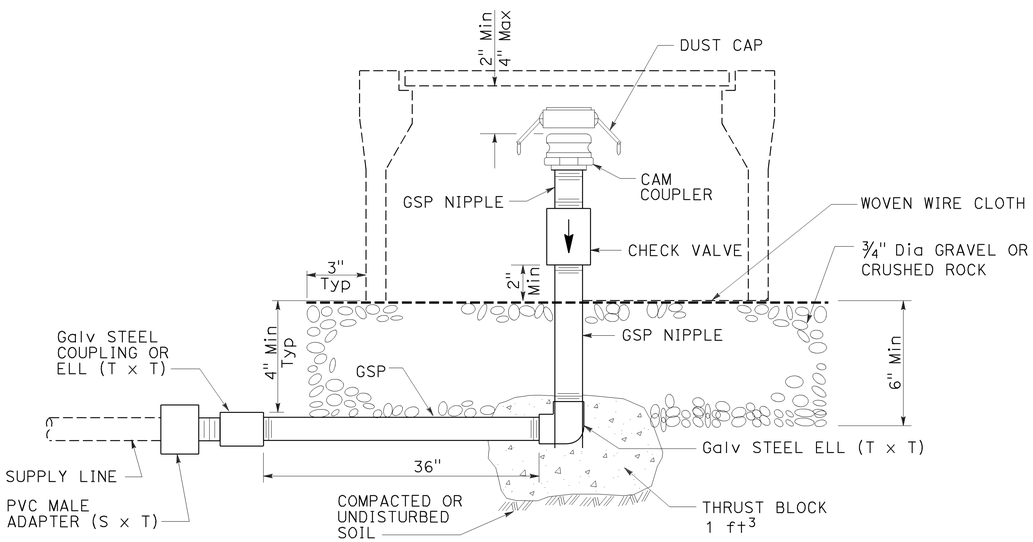

ELEVATION

CAM COUPLER ASSEMBLY

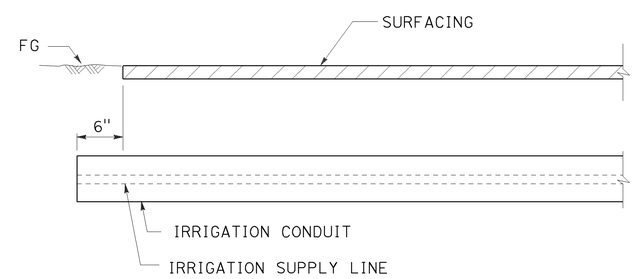

SECTION

IRRIGATION CONDUIT

UNDER SIDEWALKS, DRIVEWAYS AND PATHS

STATE OF CALIFORNIA
DEPARTMENT OF TRANSPORTATION

LANDSCAPE DETAILS

NO SCALE

RSP H9 DATED JULY 19, 2013 SUPERSEDES STANDARD PLAN H9
DATED MAY 20, 2011 - PAGE 226 OF THE STANDARD PLANS BOOK DATED 2010.

REVISED STANDARD PLAN RSP H9

2010 REVISED STANDARD PLAN RSP H9

6-28-13

Dist	COUNTY	ROUTE	POST MILES TOTAL PROJECT	SHEET No.	TOTAL SHEETS
05	SB	101	0.4/11.7	46	57

Gregory A. Balzer
LICENSED LANDSCAPE ARCHITECT

July 19, 2013
PLANS APPROVAL DATE

LICENSED LANDSCAPE ARCHITECT
Gregory A. Balzer 2576
Gregory A. Balzer
Registered Date
2-28-15
Renewal Date
7-19-13
Date
STATE OF CALIFORNIA

THE STATE OF CALIFORNIA OR ITS OFFICERS OR AGENTS SHALL NOT BE RESPONSIBLE FOR THE ACCURACY OR COMPLETENESS OF SCANNED COPIES OF THIS PLAN SHEET.

TO ACCOMPANY PLANS DATED 3-14-16

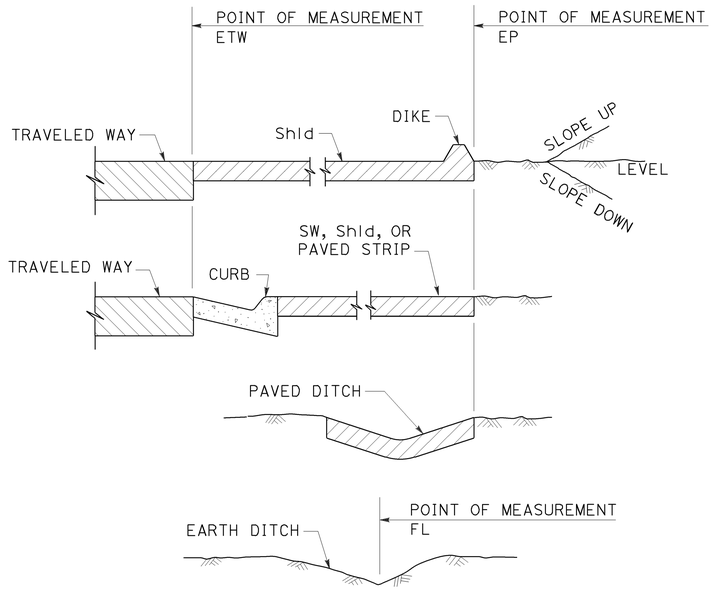

SECTION
POINTS OF MEASUREMENT

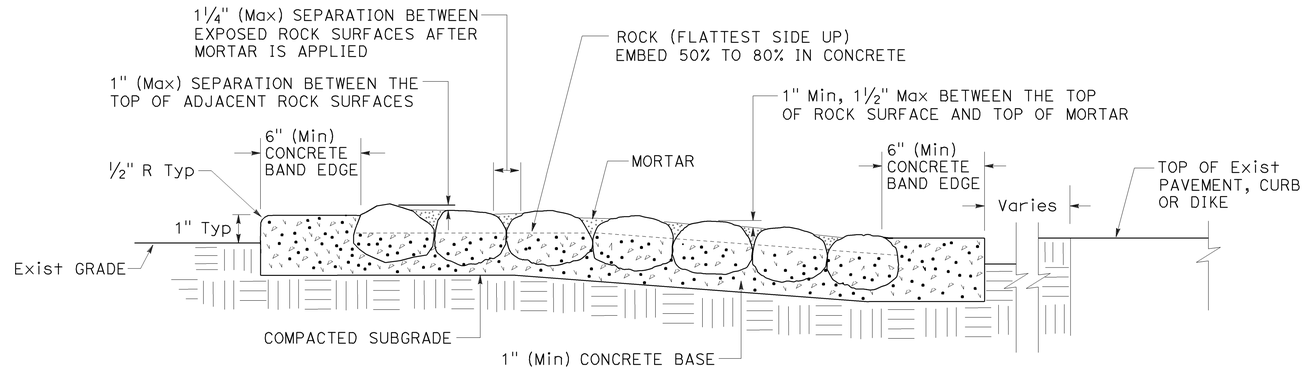

SECTION
ROCK BLANKET

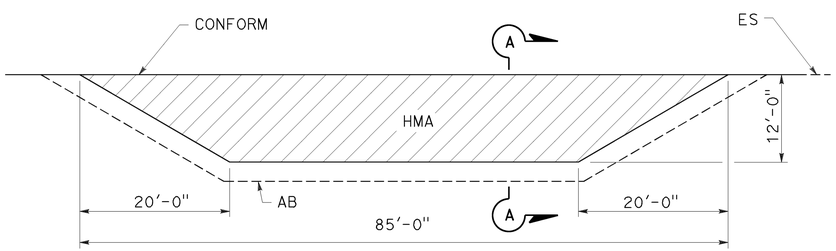

PLAN

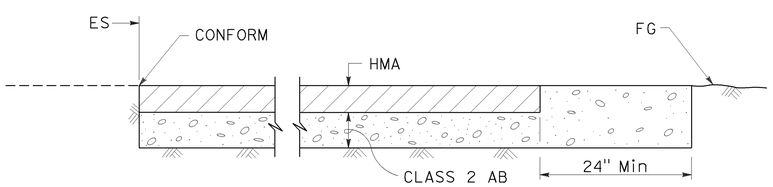

SECTION A-A
MAINTENANCE VEHICLE PULLOUT

STATE OF CALIFORNIA
DEPARTMENT OF TRANSPORTATION

LANDSCAPE DETAILS

NO SCALE

RSP H9A DATED JULY 19, 2013 SUPPLEMENTS THE STANDARD PLANS BOOK DATED 2010.

REVISED STANDARD PLAN RSP H9A

2010 REVISED STANDARD PLAN RSP H9A

6-21-13

Dist	COUNTY	ROUTE	POST MILES TOTAL PROJECT	SHEET No.	TOTAL SHEETS
05	SB	101	0.4/11.7	47	57

REGISTERED CIVIL ENGINEER

July 19, 2013
PLANS APPROVAL DATE

REGISTERED PROFESSIONAL ENGINEER
Gurinderpal Bhullar
No. C48815
Exp. 9-30-14
CIVIL
STATE OF CALIFORNIA

THE STATE OF CALIFORNIA OR ITS OFFICERS OR AGENTS SHALL NOT BE RESPONSIBLE FOR THE ACCURACY OR COMPLETENESS OF SCANNED COPIES OF THIS PLAN SHEET.

TO ACCOMPANY PLANS DATED 3-14-16

2010 REVISED STANDARD PLAN RSP T9

TABLE 1

TAPER LENGTH CRITERIA AND CHANNELIZING DEVICE SPACING

SPEED (S)	MINIMUM TAPER LENGTH * FOR WIDTH OF OFFSET 12 FEET (W)				MAXIMUM CHANNELIZING DEVICE SPACING		
					X	Y	Z **
	TANGENT 2L	MERGING L	SHIFTING L/2	SHOULDER L/3	TAPER	TANGENT	CONFLICT
mph	ft	ft	ft	ft	ft	ft	ft
20	160	80	40	27	20	40	10
25	250	125	63	42	25	50	12
30	360	180	90	60	30	60	15
35	490	245	123	82	35	70	17
40	640	320	160	107	40	80	20
45	1080	540	270	180	45	90	22
50	1200	600	300	200	50	100	25
55	1320	660	330	220	55	110	27
60	1440	720	360	240	60	120	30
65	1560	780	390	260	65	130	32
70	1680	840	420	280	70	140	35

* - For other offsets, use the following merging taper length formula for L:
For speed of 40 mph or less, $L = WS^2/60$
For speed of 45 mph or more, $L = WS$

Where: L = Taper length in feet
W = Width of offset in feet
S = Posted speed limit, off-peak 85th-percentile speed prior to work starting, or the anticipated operating speed in mph

** - Use for taper and tangent sections where there are no pavement markings or where there is a conflict between existing pavement markings and channelizers (CA).

TABLE 2

LONGITUDINAL BUFFER SPACE AND FLAGGER STATION SPACING

SPEED *	Min D **	DOWNGRADE Min D ***		
		-3%	-6%	-9%
mph	ft	ft	ft	ft
20	115	116	120	126
25	155	158	165	173
30	200	205	215	227
35	250	257	271	287
40	305	315	333	354
45	360	378	400	427
50	425	446	474	507
55	495	520	553	593
60	570	598	638	686
65	645	682	728	785
70	730	771	825	891

* - Speed is posted speed limit, off-peak 85th-percentile speed prior to work starting, or the anticipated operating speed in mph

** - Longitudinal buffer space or flagger station spacing

*** - Use on sustained downgrade steeper than -3 percent and longer than 1 mile.

TABLE 3

ADVANCE WARNING SIGN SPACING

ROAD TYPE	DISTANCE BETWEEN SIGNS *		
	A	B	C
	ft	ft	ft
URBAN - 25 mph OR LESS	100	100	100
URBAN - MORE THAN 25 mph TO 40 mph	250	250	250
URBAN - MORE THAN 40 mph	350	350	350
RURAL	500	500	500
EXPRESSWAY / FREEWAY	1000	1500	2640

* - The distances are approximate, are intended for guidance purposes only, and should be applied with engineering judgment. These distances should be adjusted by the Engineer for field conditions, if necessary, by increasing or decreasing the recommmended distances.

STATE OF CALIFORNIA
DEPARTMENT OF TRANSPORTATION

TRAFFIC CONTROL SYSTEM TABLES FOR LANE AND RAMP CLOSURES

NO SCALE

RSP T9 DATED JULY 19, 2013 SUPERSEDES RSP T9 DATED APRIL 19, 2013 THAT SUPPLEMENTS THE STANDARD PLANS BOOK DATED 2010.

REVISED STANDARD PLAN RSP T9

4-30-13

TO ACCOMPANY PLANS DATED 3-14-16

Dist	COUNTY	ROUTE	POST MILES TOTAL PROJECT	SHEET No.	TOTAL SHEETS
05	SB	101	0.4/11.7	48	57

REGISTERED CIVIL ENGINEER

April 19, 2013
PLANS APPROVAL DATE

REGISTERED PROFESSIONAL ENGINEER Gurinderpal Bhullar No. C48815 Exp. 9-30-14 CIVIL STATE OF CALIFORNIA

THE STATE OF CALIFORNIA OR ITS OFFICERS OR AGENTS SHALL NOT BE RESPONSIBLE FOR THE ACCURACY OR COMPLETENESS OF SCANNED COPIES OF THIS PLAN SHEET.

NOTES:

See Revised Standard Plan RSP T9 for tables.

Use cone spacing X for taper segment, Y for tangent segment or Z for conflict situations, as approriate, per Table 1, unless X, Y, or Z cone spacing is shown on this sheet.

Unless otherwise specified in the special provisions, all temporary warning signs shall have black legend on fluorescent orange background.

California codes are designated by (CA). Otherwise, Federal (MUTCD) codes are shown.

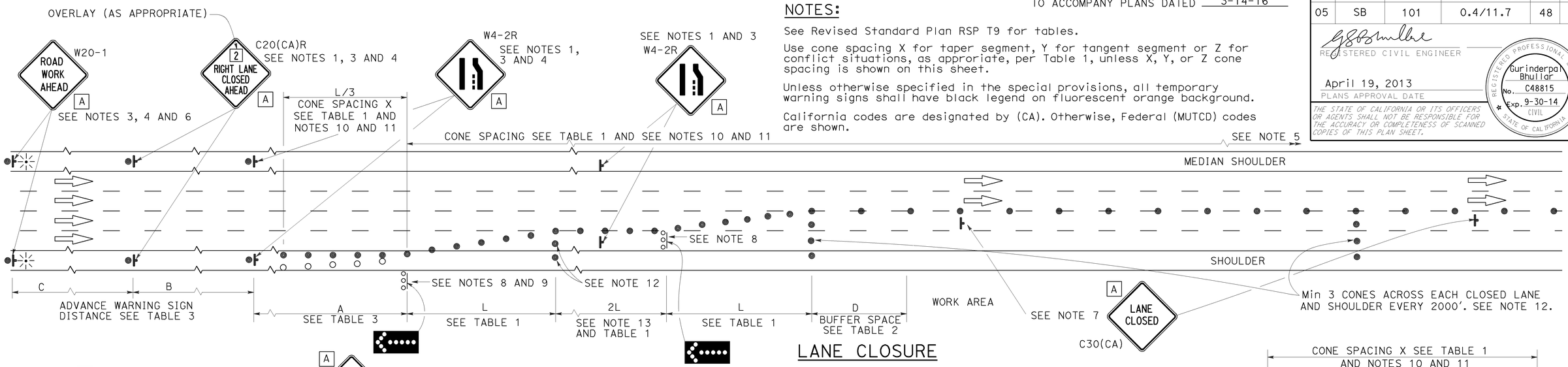

LANE CLOSURE

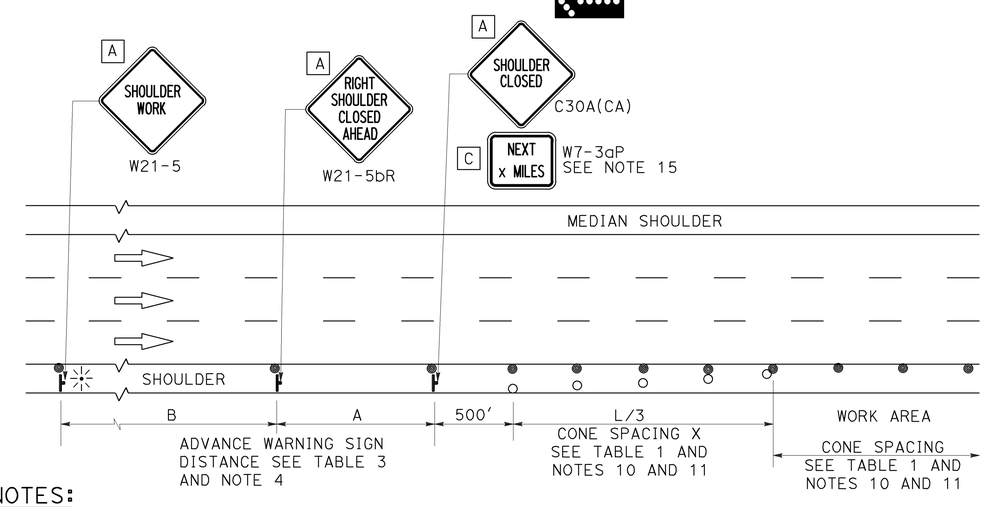

SHOULDER CLOSURE

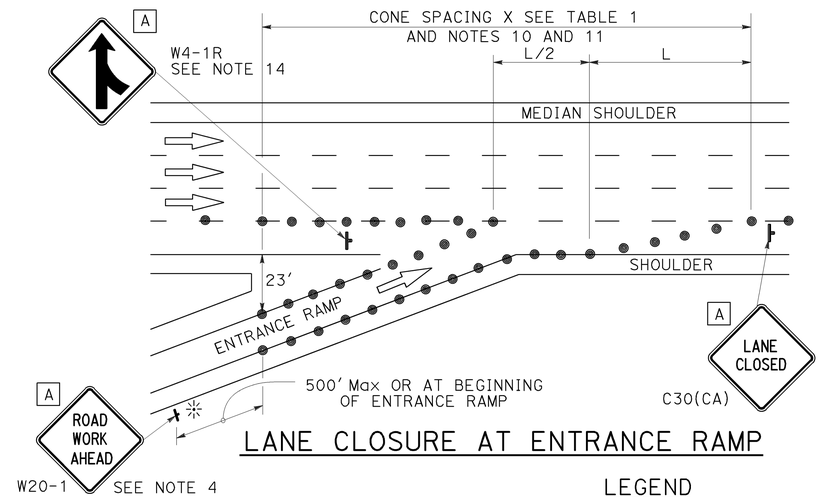

LANE CLOSURE AT ENTRANCE RAMP

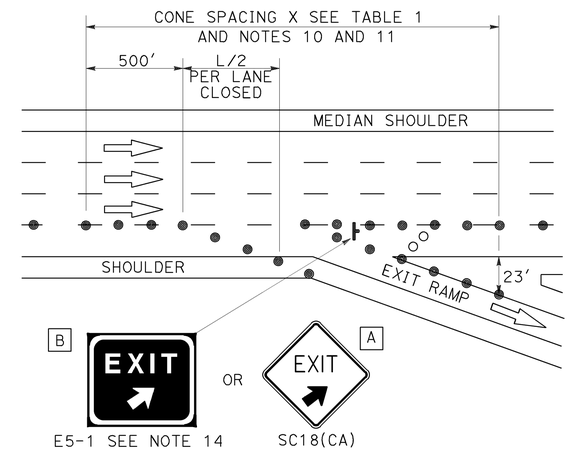

LANE CLOSURE AT EXIT RAMP

NOTES:

1. Median lane closures shall conform to the details as shown except that C20(CA)L and W4-2L signs shall be used.
2. At least one person shall be assigned to provide full time maintenance of traffic control devices for lane closures.
3. Duplicate sign installations are not required:
   a) On opposite shoulder if at least one-half of the available lanes remain open to traffic.
   b) In the median if the width of the median shoulder is less than 8' and the outside lanes are to be closed.
4. Each advance warning sign on each side of the roadway shall be equipped with at least two flags for daytime closure. Each flag shall be at least 16" x 16" in size and shall be orange or fluorescent red-orange in color. Flashing beacons shall be placed at the locations indicated for lane closure during hours of darkness.
5. A G20-2 "END ROAD WORK" sign, with minimum size of 48" x 24" as appropriate, shall be placed at the end of the lane closure unless the end of work area is obvious or ends within a larger project's limits.
6. If the W20-1 sign would follow within 2000' of a stationary W20-1 or G20-1 "ROAD WORK NEXT _____ MILES", use a C20(CA) sign for the first advance warning sign.
7. Place a C30(CA) sign every 2000' throughout length of lane closure.
8. One flashing arrow sign for each lane closed. The flashing arrow signs shall be Type I.
9. A minimum 1500' of sight distance shall be provided where possible for vehicles approaching the first flashing arrow sign. Lane closures shall not begin at top of crest vertical curve or on a horizontal curve.
10. All cones used for lane closures during the hours of darkness shall be fitted with retroreflective bands (or sleeves) as specified in the specifications.
11. Portable delineators, placed at one-half the spacing indicated for traffic cones may be used instead of cones for daytime closures only.
12. Unless otherwise specified in the special provisions, a minimum of 3 cones shall be placed transversely across each closed lane and shoulder at each location where a taper across a traffic lane ends and every 2000' as shown on the "Lane Closure" detail. Two Type II barricades may be used instead of the 3 cones. The transverse alignment of the cones or barricades on the closed shoulder may be shifted from the transverse alignment to provide access to the work.
13. Unless otherwise specified in the special provisions, the 2L tangent shown along lane lines shall be used between the L tapers required for each closed traffic lane.
14. Unless otherwise specified in the special provisions, the E5-1 or SC18(CA) and W4-1 signs shall be used as shown.
15. A W7-3aP "NEXT____ MILES" plaque must be used if theshoulder closure extends beyond the distance that can be perceived by road users.

LEGEND

- TRAFFIC CONE
- TRAFFIC CONE (OPTIONAL TAPER)
- TEMPORARY TRAFFIC CONTROL SIGN
- FLASHING ARROW SIGN (FAS)
- FAS SUPPORT OR TRAILER
- PORTABLE FLASHING BEACON

SIGN PANEL SIZE (Min)

A	48" x 48"
B	72" x 60"
C	36" x 30"

STATE OF CALIFORNIA
DEPARTMENT OF TRANSPORTATION

TRAFFIC CONTROL SYSTEM FOR LANE CLOSURE ON FREEWAYS AND EXPRESSWAYS

NO SCALE

RSP T10 DATED APRIL 19, 2013 SUPERSEDES STANDARD PLAN T10 DATED MAY 20, 2011 - PAGE 237 OF THE STANDARD PLANS BOOK DATED 2010.

REVISED STANDARD PLAN RSP T10

2010 REVISED STANDARD PLAN RSP T10

12-18-12

Dist	COUNTY	ROUTE	POST MILES TOTAL PROJECT	SHEET No.	TOTAL SHEETS
05	SB	101	0.4/11.7	49	57

Devinder Singh
REGISTERED CIVIL ENGINEER

October 30, 2015
PLANS APPROVAL DATE

REGISTERED PROFESSIONAL ENGINEER
Devinder Singh
No. C50470
Exp. 6-30-17
CIVIL
STATE OF CALIFORNIA

THE STATE OF CALIFORNIA OR ITS OFFICERS OR AGENTS SHALL NOT BE RESPONSIBLE FOR THE ACCURACY OR COMPLETENESS OF SCANNED COPIES OF THIS PLAN SHEET.

TO ACCOMPANY PLANS DATED 3-14-16

2010 REVISED STANDARD PLAN RSP T13

NOTES:

See Revised Standard Plan RSP T9 for tables.

Use cone spacing X for taper segment, Y for tangent segment or Z for conflict situations, as approriate, per Table 1, unless X, Y, or Z cone spacing is shown on this sheet.

Unless otherwise specified in the special provisions, all temporary warning signs shall have black legend on fluorescent orange background.

California codes are designated by (CA). Otherwise, Federal (MUTCD) codes are shown.

TYPICAL LANE CLOSURE WITH REVERSIBLE CONTROL

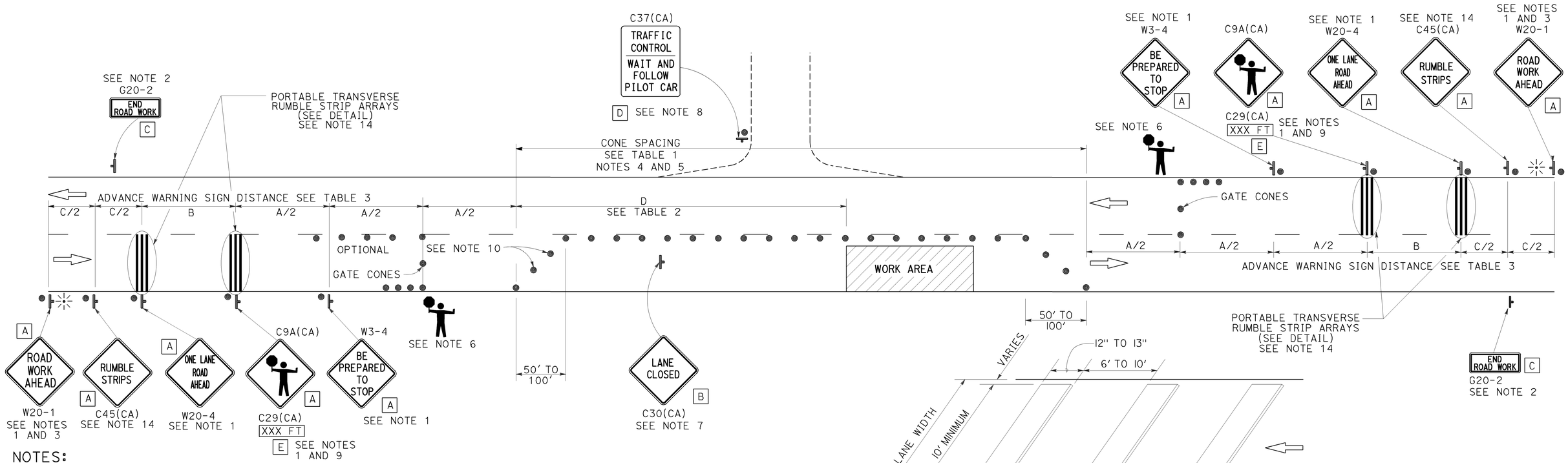

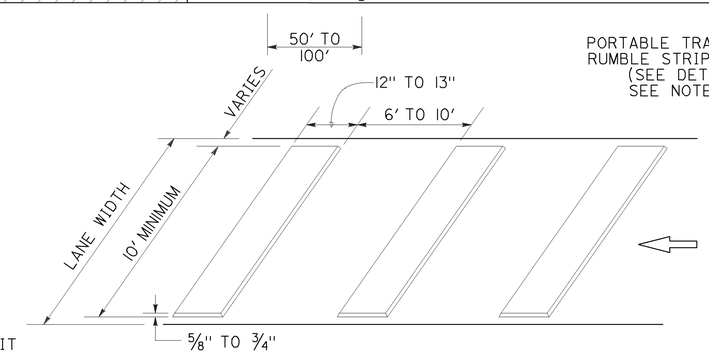

PORTABLE TRANSVERSE RUMBLE STRIP ARRAY DETAIL

NOTES:

1. Each advance warning sign in each direction of travel shall be equipped with at least two flags for daytime closure. Each flag shall be at least 16" x 16" in size and shall be orange or fluorescent red-orange in color. Flashing beacons shall be placed at the locations indicated for lane closure during hours of darkness.
2. A G20-2 "END ROAD WORK" sign, as appropriate, shall be placed at the end of the lane control unless the end of work area is obvious, or ends within a larger project's limits.
3. If the W20-1 sign would follow within 2000' of a stationary W20-1 or G20-1 "ROAD WORK NEXT _____ MILES", use a W20-4 sign for the first advance warning sign.
4. All cones used for lane closures during the hours of darkness shall be fitted with retroreflective bands (or sleeves) as specified in the specifications.
5. Portable delineators, placed at one-half the spacing indicated for traffic cones, may be used instead of cones for daytime closures only.
6. Additional advance flaggers may be required. Flagger should stand in a conspicuous place, be visible to approaching traffic as well as approaching vehicles after the first vehicle has stopped. During the hours of darkness, the flagging-station and flagger shall be illuminated and clearly visible to approaching traffic. The illumination footprint of the lighting on the ground shall be at least 20' in diameter. Place a minimum of four cones at 50' intervals in advance of flagger station as shown.
7. Place C30(CA) "LANE CLOSED" sign at 500' to 1000' intervals throughout extended work areas. They are optional if the work area is visible from the flagger station.
8. When a pilot car is used, place a C37(CA) "TRAFFIC CONTROL-WAIT AND FOLLOW PILOT CAR" sign with black legend on white background at all intersections, driveways and alleys without a flagger within traffic control area. Signs shall be clean and visible at all times. Where traffic can not be effectively self-regulated, at least one flagger shall be used at each intersection within traffic control area.
9. An optional C29(CA) sign may be placed below the C9A(CA) sign.
10. Either traffic cones or barricades shall be placed on the taper. Barricades shall be Type I, II, or III.
11. The color of the portable transverse rumble strips shall be black or orange. Use 2 arrays, each array shall consist of 3 rumble strips.
12. Portable transverse rumble strips shall not be placed on sharp horizontal or vertical curves nor shall they be placed through pedestrian crossings.
13. If the portable transverse rumble strips become out of alignment (skewed) by more than 6 inches, measured from one end to the other, they shall be readjusted to bring the placement back to the original location.
14. Portable transverse rumble strips are not required if any one of the following conditions is satisfied:
    A. Work duration occupies a location for four hours or less
    B. Posted speed limit is below 45 MPH
    C. Work is of emergency nature
    D. Work zone is in snow or icy weather conditions

SIGN PANEL SIZE (Min)

A	48" x 48"
B	30" x 30"
C	36" x 18"
D	36" x 42"
E	20" x 7"

LEGEND

- TRAFFIC CONE
- TEMPORARY TRAFFIC CONTROL SIGN
- PORTABLE FLASHING BEACON
- FLAGGER

STATE OF CALIFORNIA
DEPARTMENT OF TRANSPORTATION

TRAFFIC CONTROL SYSTEM FOR LANE CLOSURE ON TWO LANE CONVENTIONAL HIGHWAYS

NO SCALE

RSP T13 DATED OCTOBER 30, 2015 SUPERSEDES RSP T13 DATED OCTOBER 17, 2014, RSP T13 DATED JULY 18, 2014 AND RSP T13 DATED APRIL 19, 2013 AND STANDARD PLAN T13 DATED MAY 20, 2011 - PAGE 241 OF THE STANDARD PLANS BOOK DATED 2010.

REVISED STANDARD PLAN RSP T13

10-13-15

Dist	COUNTY	ROUTE	POST MILES TOTAL PROJECT	SHEET No.	TOTAL SHEETS
05	SB	101	0.4/11.7	50	57

REGISTERED CIVIL ENGINEER

April 19, 2013
PLANS APPROVAL DATE

REGISTERED PROFESSIONAL ENGINEER Gurinderpal Bhullar No. C48815 Exp. 9-30-14 CIVIL STATE OF CALIFORNIA

THE STATE OF CALIFORNIA OR ITS OFFICERS OR AGENTS SHALL NOT BE RESPONSIBLE FOR THE ACCURACY OR COMPLETENESS OF SCANNED COPIES OF THIS PLAN SHEET.

TO ACCOMPANY PLANS DATED 3-14-16

TYPICAL RAMP CLOSURES

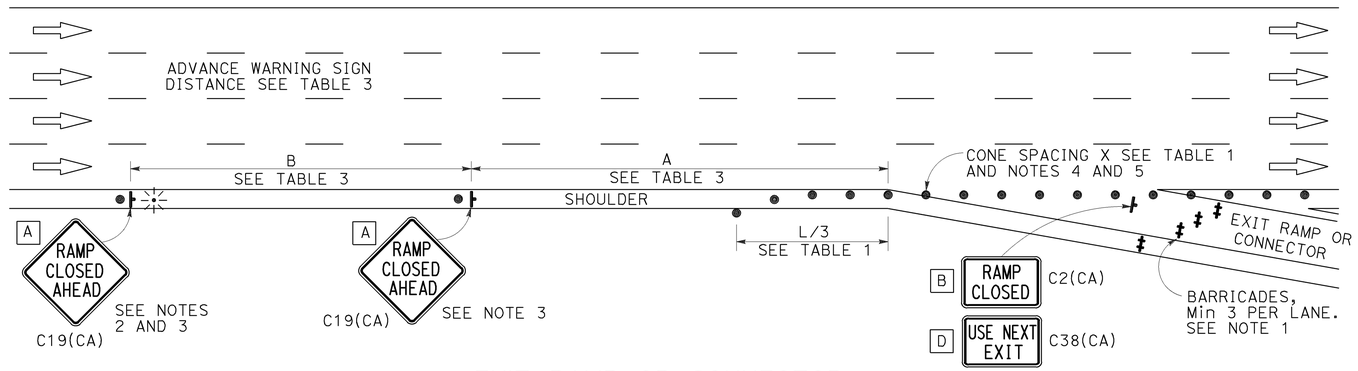

EXIT RAMP OR CONNECTOR

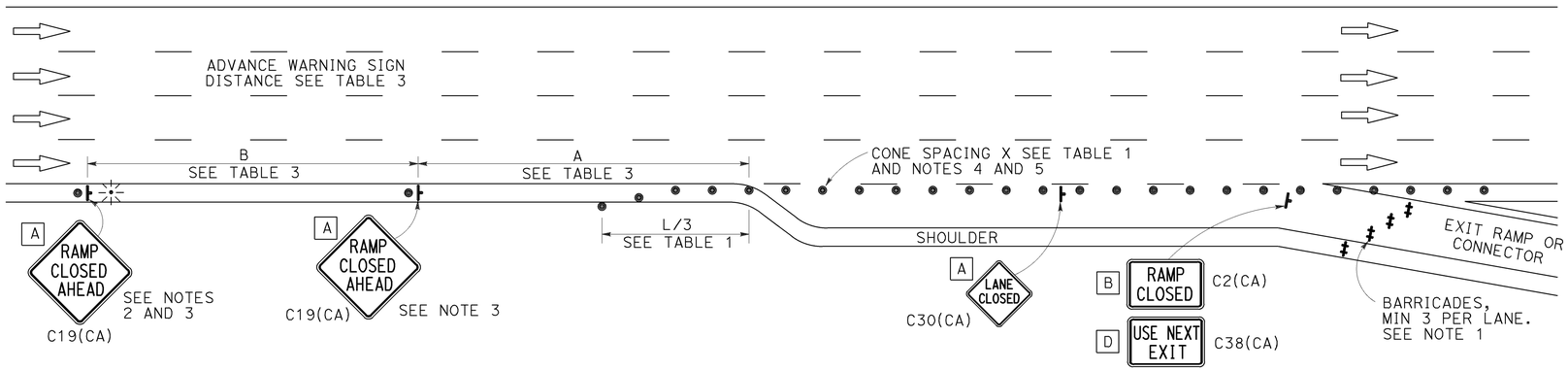

EXIT RAMP OR CONNECTOR WITH ADDITIONAL LANE

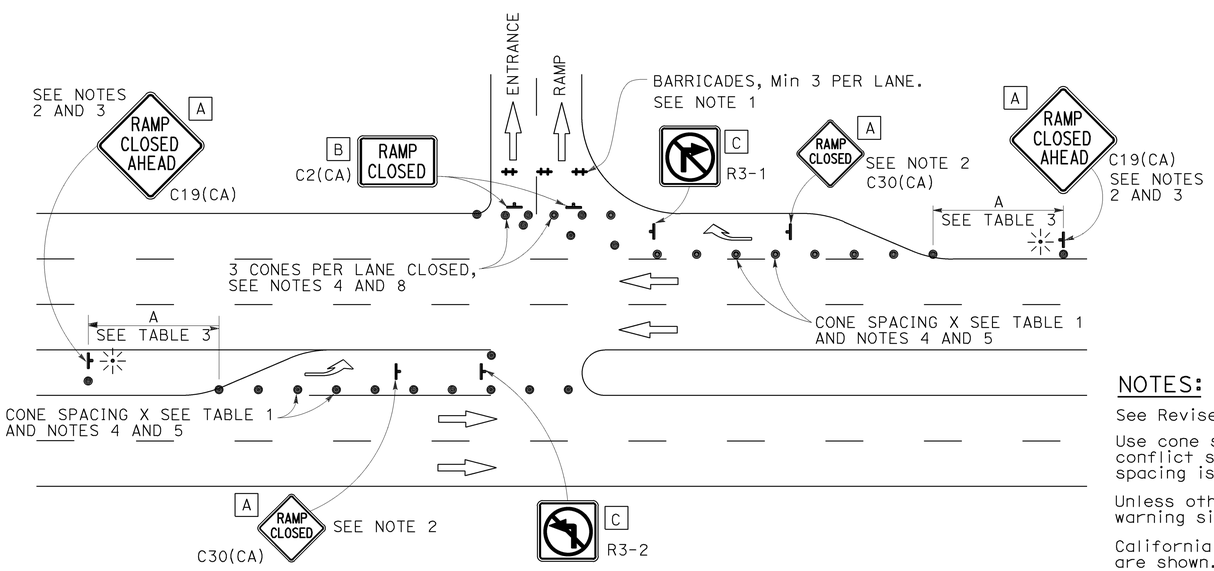

ENTRANCE RAMP WITH TURNING POCKETS

SIGN PANEL SIZE (Min)

- A 48" × 48"
- B 48" × 30"
- C 36" × 36"
- D 48" × 36"

LEGEND

- TRAFFIC CONE
- TEMPORARY TRAFFIC CONTROL SIGN
- BARRICADES
- PORTABLE FLASHING BEACON

NOTES:

1. Barricades shall be Type I, II, or III for closures lasting one week or less and Type III for closures lasting longer than one week.
2. In addition to placing the C19(CA) "RAMP CLOSED AHEAD" and C30(CA) "RAMP CLOSED" signs, black on orange overlay plates with the word "CLOSED" may be mounted, as directed by the Engineer, on all guide signs that refer to the closed ramp. The letter size on the overlay shall be the same as the guide sign.
3. Each advance C19(CA) "RAMP CLOSED AHEAD" sign shall be equipped with at least two flags for daytime closure. Each flag shall be at least 16" × 16" in size and shall be orange or fluorescent red-orange in color. A flashing beacon shall be placed on top of the first C19(CA) sign during hours of darkness.
4. All cones used for ramp closures during the hours of darkness shall be fitted with retroreflective bands (or sleeves) as specified in the specifications.
5. Portable delineators, placed at one-half the spacing indicated for traffic cones, may be used instead of cones for daytime ramp closures only.
6. At least one person shall be assigned to provide full time maintenance of traffic control devices, unless otherwise directed by the Engineer.
7. The existing "EXIT" signs shall be covered during ramp closures.
8. A minimum of 3 cones shall be placed transversely across each closed lane and shoulder.

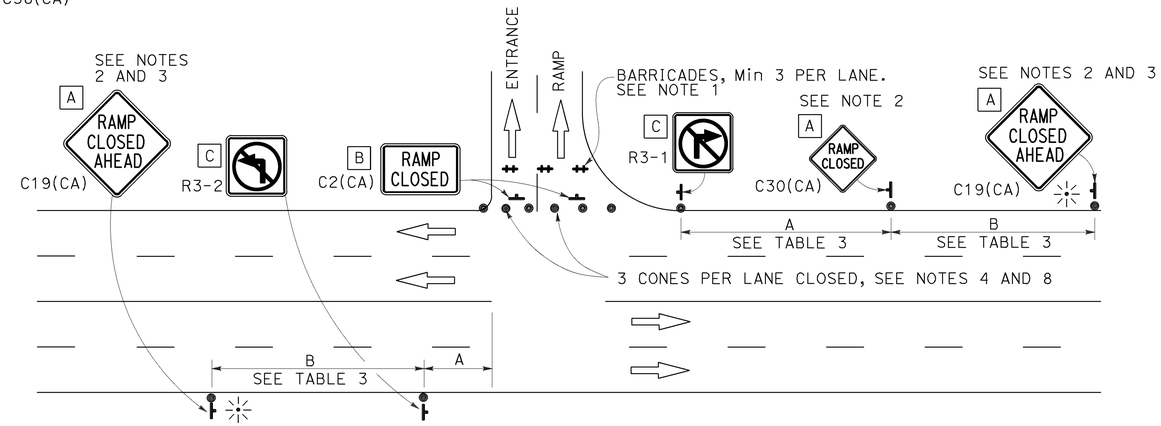

ENTRANCE RAMP WITHOUT TURNING POCKETS

NOTES:

See Revised Standard Plan RSP T9 for tables.

Use cone spacing X for taper segment, Y for tangent segment or Z for conflict situations, as approriate, per Table 1, unless X, Y, or Z cone spacing is shown on this sheet.

Unless otherwise specified in the special provisions, all temporary warning signs shall have black legend on fluorescent orange background.

California codes are designated by (CA). Otherwise, Federal (MUTCD) codes are shown.

STATE OF CALIFORNIA
DEPARTMENT OF TRANSPORTATION

TRAFFIC CONTROL SYSTEM FOR RAMP CLOSURE

NO SCALE

RSP T14 DATED APRIL 19, 2013 SUPERSEDES STANDARD PLAN T14 DATED MAY 20, 2011 - PAGE 242 OF THE STANDARD PLANS BOOK DATED 2010.

REVISED STANDARD PLAN RSP T14

2010 REVISED STANDARD PLAN RSP T14

12-18-12

Dist	COUNTY	ROUTE	POST MILES TOTAL PROJECT	SHEET No.	TOTAL SHEETS
05	SB	101	0.4/11.7	51	57

Theresa Gabriel
REGISTERED ELECTRICAL ENGINEER

October 30, 2015
PLANS APPROVAL DATE

REGISTERED PROFESSIONAL ENGINEER Theresa Aziz Gabriel No. E15129 Exp. 6-30-16 ELECTRICAL STATE OF CALIFORNIA

THE STATE OF CALIFORNIA OR ITS OFFICERS OR AGENTS SHALL NOT BE RESPONSIBLE FOR THE ACCURACY OR COMPLETENESS OF SCANNED COPIES OF THIS PLAN SHEET.

TO ACCOMPANY PLANS DATED 3-14-16

LEGEND:

- AB — ABANDON. IF APPLIED TO CONDUIT, REMOVE CONDUCTORS
- BC — INSTALL PULL BOX IN EXISTING CONDUIT RUN
- BP — PEDESTRIAN BARRICADE, TYPE AS INDICATED ON PLAN
- CB — INSTALL CONDUIT INTO EXISTING PULL BOX
- CC — CONNECT NEW AND EXISTING CONDUIT. REMOVE EXISTING CONDUCTORS AND INSTALL CONDUCTORS AS INDICATED
- CF — CONDUIT TO REMAIN FOR FUTURE USE. REMOVE CONDUCTORS. INSTALL PULL TAPE
- DH — DETECTOR HANDHOLE
- FA — FOUNDATION TO BE ABANDONED
- IS — INSTALL SIGN ON SIGNAL MAST ARM
- NS — NO SLIP BASE ON STANDARD
- PEC — PHOTOELECTRIC CONTROL
- PEU — PHOTOELECTRIC UNIT
- RC — EQUIPMENT OR MATERIAL TO BE REMOVED AND BECOME THE PROPERTY OF THE CONTRACTOR
- RE — REMOVE ELECTROLIER, FUSES AND BALLAST. TAPE ENDS OF CONDUCTORS
- RL — RELOCATE EQUIPMENT
- RR — REMOVE AND REUSE EQUIPMENT
- RS — REMOVE AND SALVAGE EQUIPMENT
- SC — SPLICE NEW TO EXISTING CONDUCTORS
- SD — SERVICE DISCONNECT
- TSP — TELEPHONE SERVICE POINT

ABBREVIATIONS

AC+	UNDERGROUNDED CONDUCTOR
APS	ACCESSIBLE PEDESTRIAN SIGNAL
Batt	BATTERY
BBS	BATTERY BACKUP SYSTEM
BC	BOLT CIRCLE
Blk	BLACK
BP	BYPASS
BPB	BICYCLE PUSH BUTTON
C	CONDUIT
CB	CIRCUIT BREAKER
CCTV	CLOSED CIRCUIT TELEVISION
Ckt	CIRCUIT
CMS	CHANGEABLE MESSAGE SIGN
Ctid	CALTRANS IDENTIFICATION
Comm	COMMUNICATION
Cntl	CONTROL
DF	DEPARTMENT-FURNISHED
DLC	LOOP DETECTOR LEAD-IN CABLE
EMS	EXTINGUISHABLE MESSAGE SIGN
EVUC	EMERGENCY VEHICLE UNIT CABLE
EVUD	EMERGENCY VEHICLE UNIT DETECTOR
FB	FLASHING BEACON
FBCA	FLASHING BEACON CONTROL ASSEMBLY
FBS	FLASHING BEACON WITH SLIP BASE
FO	FIBER OPTIC
G	EQUIPMENT GROUNDING CONDUCTOR
GB	GROUND BUS
GFCI	GROUND FAULT CIRCUIT INTERRUPTER
Grn	GREEN
HAR	HIGHWAY ADVISORY RADIO
Hex	HEXAGONAL
HPS	HIGH PRESSURE SODIUM
IISNS	INTERNALLY ILLUMINATED STREET NAME SIGN
ISL	INDUCTION SIGN LIGHTING
LED	LIGHT EMITTING DIODE
LMA	LUMINAIRE MAST ARM
LPS	LOW PRESSURE SODIUM
Ltg	LIGHTING
Lum	LUMINAIRE
M	METERED
MAT	MAST ARM MOUNTING TOP ATTACHMENT
MAS	MAST ARM MOUNTING SIDE ATTACHMENT
MBPS	MANUAL BYPASS SWITCH
M/M	MULTIPLE TO MULTIPLE TRANSFORMER
Mtg	MOUNTING
MV	MERCURY VAPOR LIGHTING FIXTURE
MVDS	MICROWAVE VEHICLE DETECTION SYSTEM
N	NEUTRAL (GROUNDED CONDUCTOR)
NB	NEUTRAL BUS
NC	NORMALLY CLOSE
NO	NORMALLY OPEN
P	CIRCUIT BREAKER'S POLE
PB	PULL BOX
PBA	PUSH BUTTON ASSEMBLY
PEC	PHOTOELECTRIC CONTROL
Ped	PEDESTRIAN
PEU	PHOTOELECTRIC UNIT
PT	CONDUIT WITH PULL TAPE
PTR	POWER TRANSFER RELAY
RE	RELOCATED EQUIPMENT
RM	RAMP METERING
RWIS	ROADSIDE WEATHER INFORMATION SYSTEM
SB	SLIP BASE
SIC	SIGNAL INTERCONNECT CABLE
Sig	SIGNAL
SMA	SIGNAL MAST ARM
SNS	STREET NAME SIGN
SP	SERVICE POINT
TB	TERMINAL BOARD
TDC	TELEPHONE DEMARCATION CABINET
Temp	TEMPERATURE
TMS	TRAFFIC MONITORING STATION
TOS	TRAFFIC OPERATIONS SYSTEM
UPS	UNINTERRUPTABLE POWER SUPPLY
UPSC	UNINTERRUPTABLE POWER SUPPLY CONTROLLER
Veh	VEHICLE
VIVDS	VIDEO IMAGE VEHICLE DETECTION SYSTEM
Wht	WHITE
WIM	WEIGH-IN-MOTION
Xfmr	TRANSFORMER

SOFFIT AND WALL-MOUNTED LUMINAIRES

- PENDANT SOFFIT LUMINAIRE, 70 W HPS UNLESS OTHERWISE SPECIFIED
- FLUSH-MOUNTED SOFFIT LUMINAIRE, 70 W HPS UNLESS OTHERWISE SPECIFIED
- WALL-MOUNTED LUMINAIRE, 70 W HPS UNLESS OTHERWISE SPECIFIED
- EXISTING SOFFIT OR WALL-MOUNTED LUMINAIRE TO REMAIN UNMODIFIED
- EXISTING SOFFIT OR WALL-MOUNTED LUMINAIRE TO BE MODIFIED AS SPECIFIED

NOTE:
Arrow indicates "street side" of luminaire.

COMMONLY USED SYMBOLS FOR UNITED STATES CUSTOMARY UNITS OF MEASUREMENT:

SYMBOL	DEFINITIONS
Ω	OHMS
min	MINUTE
s	SECOND
bps	BITS PER SECOND
Bps	BYTES PER SECOND
A	AMPERE
V	VOLT
$V_{(dc)}$	VOLT (DIRECT CURRENT)
$V_{(ac)}$	VOLT (ALTERNATING CURRENT)
FC	FOOT - CANDLE
W	WATTS
VA	VOLT-AMPERE
M	MEGA
k	KILO
m	MILLI
μ	MICRO
P	PICO
Hz	HERTZ

MISCELLANEOUS ELECTROLIERS

NEW	EXISTING	
		LUMINAIRE ON WOOD POLE
		NON-STANDARD ELECTROLIER (SEE PROJECT LEGEND)
		CITY ELECTROLIER
		ELECTROLIER FOUNDATION (FUTURE INSTALLATION)

NOTES:

1. LED luminaires shall be 235 W when installed on Type 21, 21D, 30, 31 and 32 Standards, unless otherwise specified. LED luminaires shall be 165 W when installed on other type standards or poles, unless otherwise specified.
2. Luminaires shall be the cutoff type, ANSI Type III medium cutoff lighting distribution, unless otherwise specified.

STANDARD ELECTROLIER

NEW	EXISTING	STANDARD TYPE
		15
		15D
		15 STRUCTURE
		15D STRUCTURE
		21
		21D
		21 STRUCTURE
		21D STRUCTURE
		30
		31
		32

STATE OF CALIFORNIA
DEPARTMENT OF TRANSPORTATION

ELECTRICAL SYSTEMS (LEGEND AND ABBREVIATIONS)

NO SCALE

RSP ES-1A DATED OCTOBER 30, 2015 SUPERSEDES RSP ES-1A DATED JULY 19, 2013 AND STANDARD PLAN ES-1A DATED MAY 20, 2011 - PAGE 425 OF THE STANDARD PLANS BOOK DATED 2010.

REVISED STANDARD PLAN RSP ES-1A

2010 REVISED STANDARD PLAN RSP ES-1A

9-29-15

Dist	COUNTY	ROUTE	POST MILES TOTAL PROJECT	SHEET No.	TOTAL SHEETS
05	SB	101	0.4/11.7	52	57

Theresa Gabriel
REGISTERED ELECTRICAL ENGINEER

October 30, 2015
PLANS APPROVAL DATE

REGISTERED PROFESSIONAL ENGINEER
Theresa Aziz Gabriel
No. E15129
Exp. 6-30-16
ELECTRICAL
STATE OF CALIFORNIA

THE STATE OF CALIFORNIA OR ITS OFFICERS OR AGENTS SHALL NOT BE RESPONSIBLE FOR THE ACCURACY OR COMPLETENESS OF SCANNED COPIES OF THIS PLAN SHEET.

TO ACCOMPANY PLANS DATED 3-14-16

CONDUIT

NEW	EXISTING	
		LIGHTING CONDUIT, UNLESS OTHERWISE INDICATED OR NOTED
		TRAFFIC SIGNAL CONDUIT
C	c	COMMUNICATION CONDUIT
T	t	TELEPHONE CONDUIT
F	f	FIRE ALARM CONDUIT
FO	fo	FIBER OPTIC CONDUIT
		CONDUIT TERMINATION
R	r	CONDUIT RISER ATTACHED TO THE STRUCTURE OR SERVICE POLE

SERVICE EQUIPMENT

NEW	EXISTING	
OH	oh	OVERHEAD LINES
U	U	WOOD POLE, "U" INDICATES UTILITY OWNED
		POLE GUY WITH ANCHOR
		UTILITY TRANSFORMER - GROUND MOUNTED
III	III	SERVICE EQUIPMENT ENCLOSURE TYPE. DOOR INDICATES FRONT OF ENCLOSURE
T	t	TELEPHONE DEMARCATION CABINET

POLE-MOUNTED SERVICE DESIGNATION

TYPE H SERVICE, 28'-10" — TYPE OF INSTALLATION AND POLE HEIGHT ABOVE GRADE

FLASHING BEACON

NEW	EXISTING	
R	R	FLASHING BEACON (ONE VEHICLE SIGNAL HEAD WITH BACKPLATE AND VISOR) "R" INDICATES RED INDICATION, "Y" INDICATES YELLOW INDICATION
Y Y	Y Y	FLASHING BEACON WITH TYPE 15-FBS STANDARD AND A SIGN.
R R	R R	FLASHING BEACON WITH TYPES 9, 9A OR 9B SIGN UNLESS OTHERWISE SPECIFIED OR INDICATED

SIGNAL EQUIPMENT

NEW	EXISTING	
		PEDESTRIAN SIGNAL HEAD
		PUSH BUTTON ASSEMBLY POST
		PEDESTRIAN BARRICADE
		VEHICLE SIGNAL HEAD (WITH BACKPLATE AND 3-SECTIONS: RED, YELLOW AND GREEN)
		VEHICLE SIGNAL HEAD WITH ANGLE VISOR
PV	PV	MODIFICATIONS OF BASIC SYMBOL: "L" INDICATES ALL NON-ARROW SECTIONS LOUVERED "LG" INDICATES LOUVERED GREEN SECTION ONLY "PV" INDICATES ALL 12" SECTIONS PROGRAMMED VISIBILITY "8" INDICATES ALL 8" SECTIONS (ONLY WHEN SPECIFIED)
		VEHICLE SIGNAL HEAD CONSISTING OF RED, YELLOW AND GREEN LEFT ARROW SECTIONS
		VEHICLE SIGNAL HEAD CONSISTING OF RED AND YELLOW SECTIONS WITH AN UP GREEN ARROW SECTION
		VEHICLE SIGNAL HEAD (5 SECTION) CONSISTING OF RED, YELLOW AND GREEN SECTIONS WITH YELLOW AND GREEN RIGHT ARROW SECTIONS
		TYPE 15TS STANDARD WITH VEHICLE SIGNAL HEAD AND LUMINAIRE
		TYPE 21TS STANDARD WITH VEHICLE SIGNAL HEAD AND LUMINAIRE
		STANDARD WITH LUMINAIRE AND SIGNAL MAST ARMS AND ATTACHED VEHICLE SIGNAL HEADS
		TYPE 1 STANDARD WITH ATTACHED VEHICLE SIGNAL HEADS
		STANDARD WITH A SIGNAL MAST ARM, ATTACHED VEHICLE SIGNAL HEADS AND INTERNALLY ILLUMINATED STREET NAME SIGN
		CONTROLLER ASSEMBLY. DOOR INDICATES FRONT OF CABINET

SIGNAL EQUIPMENT Cont

NEW	EXISTING	
		GUARD POST
		TYPE 1 STANDARD WITH RAMP METERING SIGN
		OPTICAL DETECTOR FOR THE EMERGENCY VEHICLE DETECTION

NOTES:

1. All signal sections shall be 12" unless shown otherwise.
2. Signal heads shall be provided with backplates unless shown otherwise.

ILLUMINATED OVERHEAD SIGN

NEW	EXISTING	
		SINGLE POST, SINGLE ILLUMINATED SIGN, BALANCED BUTTERFLY
		SINGLE POST, DOUBLE ILLUMINATED SIGN, BALANCED BUTTERFLY
		SINGLE POST, SINGLE ILLUMINATED SIGN, FULL CANTILEVER
		DOUBLE POST, SINGLE ILLUMINATED SIGN
		SINGLE ILLUMINATED SIGN MOUNTED ON STRUCTURE
		DOUBLE POST, SINGLE ILLUMINATED SIGN WITH ELECTROLIER

STATE OF CALIFORNIA
DEPARTMENT OF TRANSPORTATION

ELECTRICAL SYSTEMS (LEGEND AND ABBREVIATIONS)

NO SCALE

RSP ES-1B DATED OCTOBER 30, 2015 SUPERSEDES RSP ES-1B DATED JULY 19, 2013 AND STANDARD PLAN ES-1B DATED MAY 20, 2011 - PAGE 426 OF THE STANDARD PLANS BOOK DATED 2010.

REVISED STANDARD PLAN RSP ES-1B

2010 REVISED STANDARD PLAN RSP ES-1B

8-19-15

Dist	COUNTY	ROUTE	POST MILES TOTAL PROJECT	SHEET No.	TOTAL SHEETS
05	SB	101	0.4/11.7	53	57

Theresa Gabriel
REGISTERED ELECTRICAL ENGINEER

April 15, 2016
PLANS APPROVAL DATE

REGISTERED PROFESSIONAL ENGINEER
Theresa Aziz Gabriel
No. E15129
Exp. 6-30-16
ELECTRICAL
STATE OF CALIFORNIA

THE STATE OF CALIFORNIA OR ITS OFFICERS OR AGENTS SHALL NOT BE RESPONSIBLE FOR THE ACCURACY OR COMPLETENESS OF SCANNED COPIES OF THIS PLAN SHEET.

TO ACCOMPANY PLANS DATED 3-14-16

EQUIPMENT IDENTIFICATION

ILLUMINATED SIGN IDENTIFICATION:

SIGN No. 12345
10 ISL SCI 1.0

- SIGN EQUIPMENT IDENTIFICATION CHARACTERS - PLACE ON POST OR STRUCTURE
- TRANSFORMER RATING (kVA)
- LIGHTING CONTROL TYPE
- NUMBER AND TYPE OF FIXTURES

} DO NOT PLACE ON STANDARD OR STRUCTURE

ELECTROLIER OR EQUIPMENT IDENTIFICATION:

L2745 - 15'-0"

- MAST ARM LENGTH, IF SHOWN. DO NOT PLACE ON STANDARD OR STRUCTURE
- EQUIPMENT IDENTIFICATION CHARACTERS - PLACE ON STANDARD OR STRUCTURE. EXISTING EQUIPMENT IDENTIFICATION CHARACTERS ARE SHOWN IN PARENTHESIS

CONDUIT AND CONDUCTOR IDENTIFICATION:

1½"C, 2#10, 15#14, 2 DLC, 12P#18 (PAIR)

- NUMBER AND SIZE OF CONDUCTORS AND CABLES
- SIZE OF CONDUIT IN INCHES

ø1, ø2, ø2P, etc.	TRAFFIC PHASE IDENTIFICATION FOR SIGNALS, DETECTORS AND PHASE DIAGRAMS
1 2 3	LEGEND NUMBERS
A B C	EQUIPMENT, SIGNAL POLES, INSTALLATION OR ITEMS
1 2 3	CONDUIT RUN NUMBERS

SIGNAL AND LIGHTING STANDARD (TYPICAL DESIGNATION):

19A - 3 - 100

- WIND VELOCITY = 100 mph
- CASE 3 ARM LOADING
- STANDARD TYPE
- STANDARD PLAN SHEET NUMBER
- DETAIL, NUMBER, SECTION, TYPE OR ELEVATION

MISCELLANEOUS EQUIPMENT

NEW	EXISTING	
CMS	cms	CHANGEABLE MESSAGE SIGN
		CLOSED CIRCUIT TELEVISION CAMERA
		HIGHWAY ADVISORY RADIO POLE AND ANTENNA
EMS	ems	LED EXTINGUISHABLE MESSAGE SIGN
M V	m v	DETECTION DEVICE M = MICROWAVE SENSOR V = VIDEO IMAGE SENSOR

WIRING DIAGRAM LEGEND

----	EXTERNAL CONDUCTOR
——	CONDUCTOR OR BUS
	TIE POINT
	CONTACTOR COIL
	CONTACTOR, NO CONTACT
	TERMINAL BLOCKS
	CONTACTOR, NC CONTACT
	ENCLOSURE BOND
	GROUNDING ELECTRODE
	CIRCUIT BREAKER
	RECEPTACLE

PULL BOXES

NEW	EXISTING	
		PULL BOX, No. 5 UNLESS OTHERWISE INDICATED OR NOTED
3	9A(21)	PULL BOX, ADDITIONAL DESIGNATIONS OR DESCRIPTIONS

3 No. 3½ PULL BOX
5 No. 5 PULL BOX
6 No. 6 PULL BOX
7 No. 7 PULL BOX (CEILING)
8 No. 8 PULL BOX
9 No. 9 PULL BOX (STRUCTURE)
9A No. 9A PULL BOX (STRUCTURE)

(C) COMMUNICATIONS PULL BOX
(E) PULL BOX WITH EXTENSION
(S) SPRINKLER CONTROL PULL BOX
(21) ANCHOR BOLTS AND CONDUIT FOR FUTURE INSTALLATION OF TYPE 21 STANDARD
(T) TRAFFIC PULL BOX

VEHICLE DETECTORS

5 J 9 U

- VEHICLE DETECTOR DESIGNATION
- U = UPPER
  L = LOWER
- SLOT NUMBER IN INPUT FILE
- INPUT FILE (I OR J)
- PHASE

NEW	EXISTING	
		TYPE A LOOP DETECTOR. OUTLINE OF SAW CUT SHOWN
		TYPE B LOOP DETECTOR. OUTLINE OF SAW CUT SHOWN
		TYPE C LOOP DETECTOR. OUTLINE OF SAW CUT SHOWN
		TYPE D LOOP DETECTOR. OUTLINE OF SAW CUT SHOWN
		TYPE E LOOP DETECTOR. OUTLINE OF SAW CUT SHOWN
		TYPE Q LOOP DETECTOR. OUTLINE OF SAW CUT SHOWN
DH	dh	DETECTOR HANDHOLE
		MICROWAVE OR VIDEO DETECTION ZONE

STATE OF CALIFORNIA
DEPARTMENT OF TRANSPORTATION

ELECTRICAL SYSTEMS (LEGEND AND ABBREVIATIONS)

NO SCALE

RSP ES-1C DATED APRIL 15, 2016 SUPERSEDES RSP ES-1C DATED OCTOBER 30, 2015 AND RSP ES-1C DATED JULY 19, 2013 AND STANDARD PLAN ES-1C DATED MAY 20, 2011 - PAGE 427 OF THE STANDARD PLANS BOOK DATED 2010.

REVISED STANDARD PLAN RSP ES-1C

2010 REVISED STANDARD PLAN RSP ES-1C

1-22-16

DIST	COUNTY	ROUTE	POST MILES TOTAL PROJECT	SHEET NO.	TOTAL SHEETS
05	SB	101	0.4/11.7	54	57

Theresa Gabriel
REGISTERED ELECTRICAL ENGINEER

April 15, 2016
PLANS APPROVAL DATE

REGISTERED PROFESSIONAL ENGINEER Theresa Aziz Gabriel No. E15129 Exp. 6-30-16 ELECTRICAL STATE OF CALIFORNIA

THE STATE OF CALIFORNIA OR ITS OFFICERS OR AGENTS SHALL NOT BE RESPONSIBLE FOR THE ACCURACY OR COMPLETENESS OF SCANNED COPIES OF THIS PLAN SHEET.

TO ACCOMPANY PLANS DATED 3-14-16

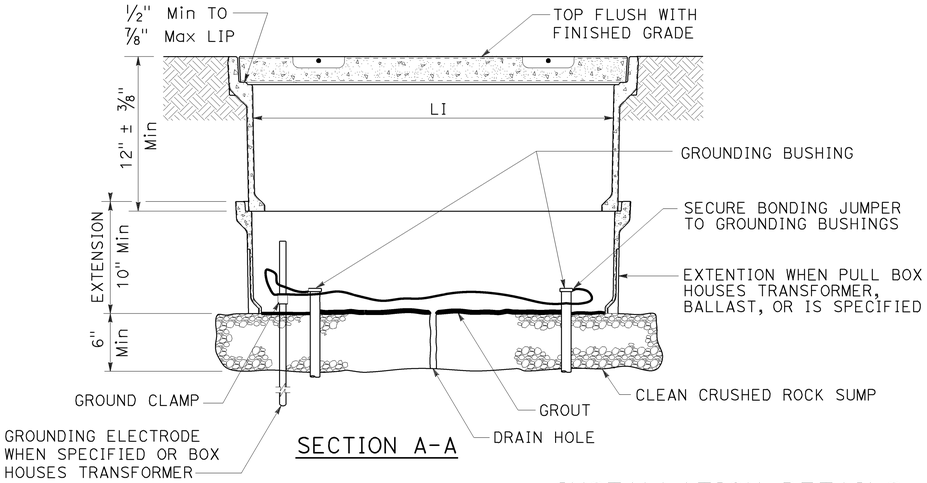

SECTION A-A

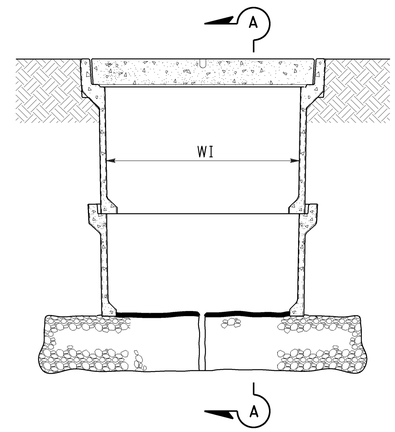

SIDE VIEW

INSTALLATION DETAILS

DETAIL A

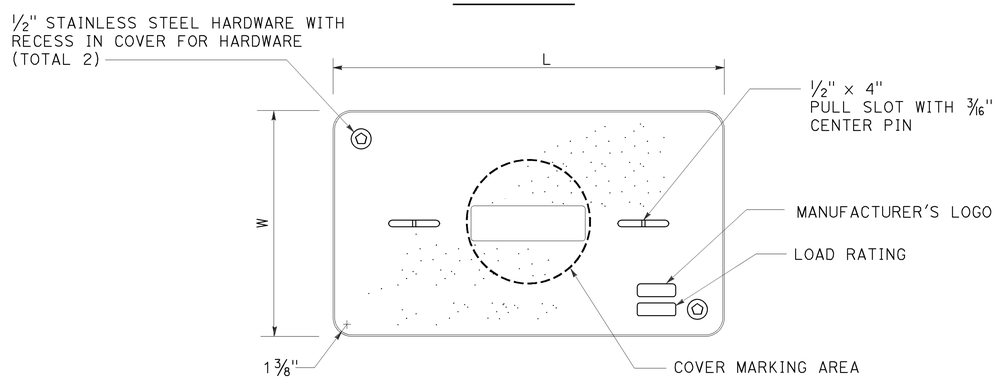

COVER TOP VIEW

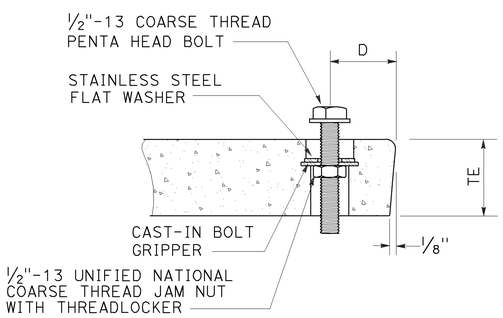

TYPICAL COVER CAPTIVE BOLT

OR SIMILAR

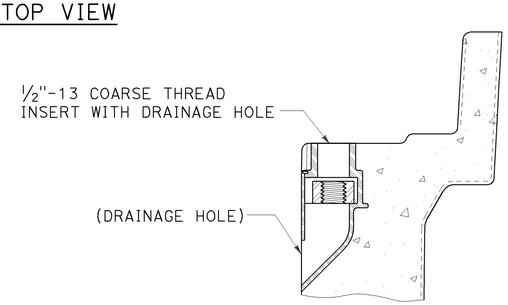

TYPICAL THREADED INSERT

OR SIMILAR

DIMENSION TABLE

PULL BOX	PULL BOX					COVER				
	MINIMUM DEPTH BOX	MINIMUM DEPTH EXTENSION	MINIMUM WEIGHT	LI Min	WI Min	TE	D	L	W	MINIMUM WEIGHT
No. 3 1/2	12"	N/A	40 lb	1′ - 3"	9"	1 3/4"	1 3/4"	1′-3 1/4" - 1′-3 3/8"	10" - 10 1/8"	30 lb
No. 5	12"	10"	55 lb	1′ - 8"	11"	2"	1 3/4"	1′-11 1/4"	1′-1 3/4"	60 lb
No. 6	12"	10"	70 lb	2′ - 4 1/4"	1′ - 3 1/4"	2"	2"	2′-6 1/2"	1′-5 1/2"	85 lb

NOTES:

1. The nominal dimensions of the opening in which the cover sets shall be the same as the cover dimensions except the length and width dimensions shall be 1/8" greater.
2. Covers and boxes shall be interchangeable with California standard male and female gages. When interchanged with a standard male or female gage, the top surfaces shall be flush within 1/8". Top outside radius of covers and pull boxes shall have a 1/8" radius.
3. Dimensions for the cover for non-traffic pull box are nominal values.

STATE OF CALIFORNIA
DEPARTMENT OF TRANSPORTATION

ELECTRICAL SYSTEMS (NON-TRAFFIC PULL BOX)

NO SCALE

RSP ES-8A DATED APRIL 15, 2016 SUPERSEDES RSP ES-8A DATED OCTOBER 30, 2015 AND RSP ES-8A DATED JULY 19, 2013 AND RSP ES-8A DATED JANUARY 20, 2012 THAT SUPPLEMENTS THE STANDARD PLANS BOOK DATED 2010.

REVISED STANDARD PLAN RSP ES-8A

2010 REVISED STANDARD PLAN RSP ES-8A

1-22-16

DIST	COUNTY	ROUTE	POST MILES TOTAL PROJECT	SHEET NO.	TOTAL SHEETS
05	SB	101	0.4/11.7	55	57

Theresa Gabriel
REGISTERED ELECTRICAL ENGINEER

April 15, 2016
PLANS APPROVAL DATE

REGISTERED PROFESSIONAL ENGINEER
Theresa Aziz Gabriel
No. E15129
Exp. 6-30-16
ELECTRICAL
STATE OF CALIFORNIA

THE STATE OF CALIFORNIA OR ITS OFFICERS OR AGENTS SHALL NOT BE RESPONSIBLE FOR THE ACCURACY OR COMPLETENESS OF SCANNED COPIES OF THIS PLAN SHEET.

TO ACCOMPANY PLANS DATED 3-14-16

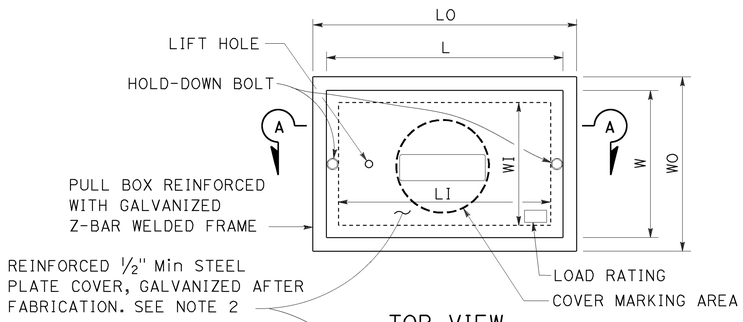

TOP VIEW

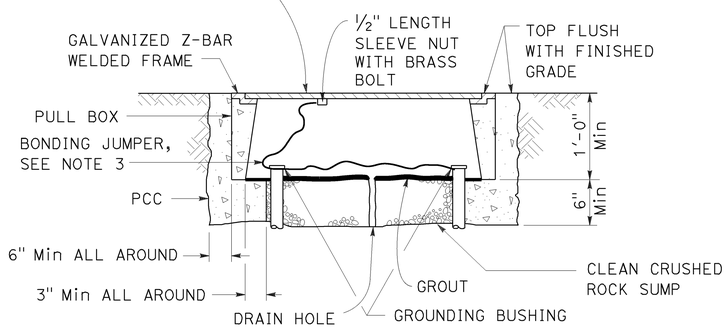

SECTION A-A

No. 3½(T), No. 5(T) AND No. 6(T) TRAFFIC PULL BOX

NOTES:

1. Traffic pull box shall be provided with steel cover and special concrete footing. Steel cover shall have embossed non-skid pattern.
2. Steel reinforcing shall be as regularly used in the standard products of the respective manufacturer.
3. Bonding jumper for metal covers shall be 3' long, minimum.
4. The nominal dimensions of the opening in which the cover sets shall be the same as the cover dimensions except the length and width dimensions shall be ⅛" greater.
5. Covers and boxes shall be interchangeable with California standard male and female gages. When interchanged with a standard male or female gage, the top surfaces shall be flush within ⅛".

DIMENSION TABLE

PULL BOX	PULL BOX						COVER	
	MINIMUM * THICKNESS	MINIMUM DEPTH BOX AND EXTENSION	LO	LI	WO	WI	L **	W **
No. 3½(T)	1½"	1'-0"	1'-10" - 1'-11"	1'-5" - 1'-6½"	1'-3" - 1'-4"	10" - 1'-0"	1'-8" -1'-8½"	1'-1" - 1'-2"
No. 5(T)	1¾"	1'-0"	2'-5" - 2'-6"	2'-0" - 2'-1"	1'-6" - 1'-7"	1'-1" - 1'-2"	2'-3" - 2'-3½"	1'-4" - 1'-4½"
No. 6(T)	2"	1'-0"	2'-11" - 3'-1"	2'-6" - 2'-7"	1'-10" - 2'-0"	1'-5" - 1'-6"	2'-9" - 2'-9½"	1'-8" - 1'-8½"

* EXCLUDING CONDUIT WEB ** TOP DIMENSION

STATE OF CALIFORNIA
DEPARTMENT OF TRANSPORTATION

ELECTRICAL SYSTEMS (TRAFFIC PULL BOX)

NO SCALE

RSP ES-8B DATED APRIL 15, 2016 SUPERSEDES RSP ES-8B DATED OCTOBER 30, 2015 AND RSP ES-8B DATED JULY 19, 2013 AND RSP ES-8B DATED JANUARY 20, 2012 THAT SUPPLEMENTS THE STANDARD PLANS BOOK DATED 2010.

REVISED STANDARD PLAN RSP ES-8B

2010 REVISED STANDARD PLAN RSP ES-8B

1-22-16

Dist	COUNTY	ROUTE	POST MILES TOTAL PROJECT	SHEET No.	TOTAL SHEETS
05	SB	101	0.4/11.7	56	57

Theresa Gabriel
REGISTERED ELECTRICAL ENGINEER

April 15, 2016
PLANS APPROVAL DATE

REGISTERED PROFESSIONAL ENGINEER
Theresa Aziz Gabriel
No. E15129
Exp. 6-30-16
ELECTRICAL
STATE OF CALIFORNIA

THE STATE OF CALIFORNIA OR ITS OFFICERS OR AGENTS SHALL NOT BE RESPONSIBLE FOR THE ACCURACY OR COMPLETENESS OF SCANNED COPIES OF THIS PLAN SHEET.

TO ACCOMPANY PLANS DATED 3-14-16

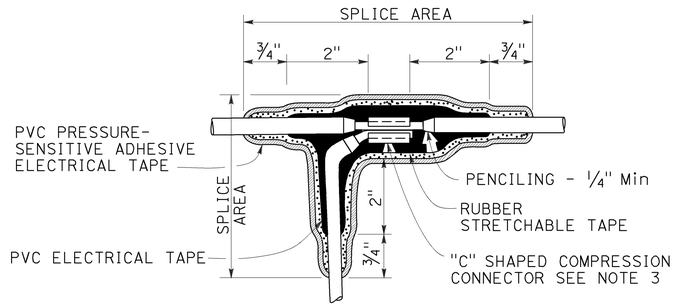

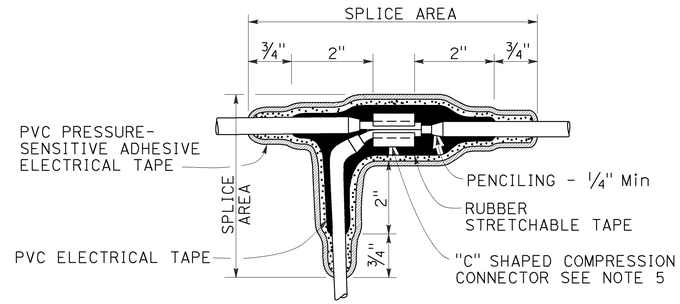

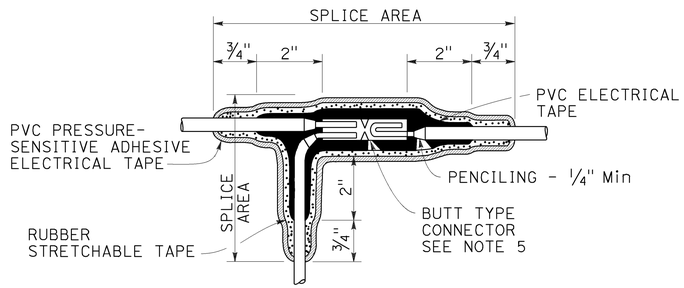

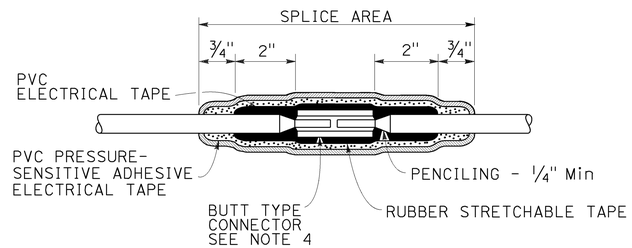

TYPICAL SPLICE INSULATION METHOD B

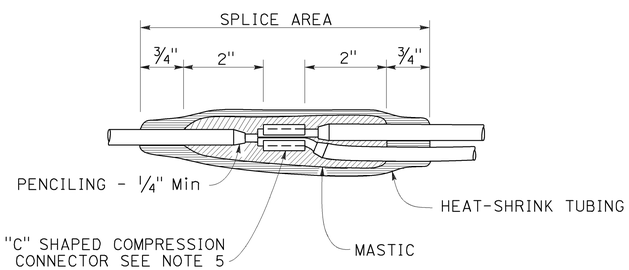

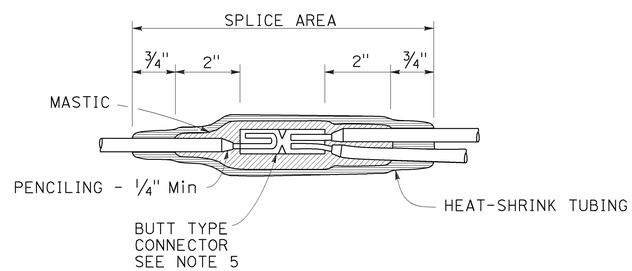

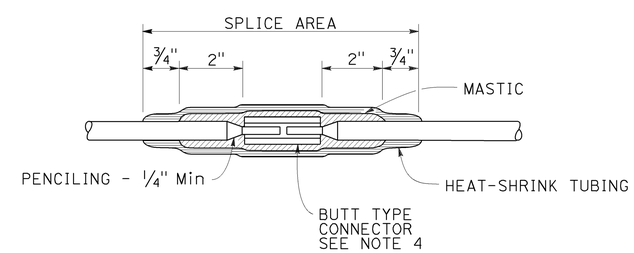

TYPICAL SPLICE INSULATION HEAT-SHRINK TUBING

NOTES:

1. Dimensions are minimum.
2. Rubber tapes shall be rolled after application.
3. Between 1 free-end and 1 through conductor.
4. Between 2 free-end conductors.
5. Between 3 free-end conductors.

STATE OF CALIFORNIA
DEPARTMENT OF TRANSPORTATION

ELECTRICAL SYSTEMS (SPLICE INSULATION METHODS DETAILS)

NO SCALE

RSP ES-13A DATED APRIL 15, 2016 SUPERSEDES RSP ES-13A DATED OCTOBER 30, 2015 AND STANDARD PLAN ES-13A DATED MAY 20, 2011 - PAGE 491 OF THE STANDARD PLANS BOOK DATED 2010.

REVISED STANDARD PLAN RSP ES-13A

2010 REVISED STANDARD PLAN RSP ES-13A

1-22-16

Dist	COUNTY	ROUTE	POST MILES TOTAL PROJECT	SHEET No.	TOTAL SHEETS
05	SB	101	0.4/11.7	57	57

Theresa Gabriel
REGISTERED ELECTRICAL ENGINEER

April 15, 2016
PLANS APPROVAL DATE

REGISTERED PROFESSIONAL ENGINEER
Theresa Aziz Gabriel
No. E15129
Exp. 6-30-16
ELECTRICAL
STATE OF CALIFORNIA

THE STATE OF CALIFORNIA OR ITS OFFICERS OR AGENTS SHALL NOT BE RESPONSIBLE FOR THE ACCURACY OR COMPLETENESS OF SCANNED COPIES OF THIS PLAN SHEET.

TO ACCOMPANY PLANS DATED 3-14-16

CIRCUIT VOLTAGE	FUSE VOLTAGE RATING	FUSE CURRENT RATING						
		HPS LAMP BALLAST		LOW PRESSURE SODIUM BALLAST	INDUCTION SIGN LIGHTING	SINGLE PHASE (TWO WIRE) TRANSFORMERS (PRIMARY SIDE)		
		70 W	100 W	180 W	85 W	1 kVA	2 kVA	3 kVA
120 V	250 V	5 A	5 A	5 A	5 A	10 A	20 A	30 A
240 V	250 V	5 A	5 A	5 A	5 A	6 A	10 A	20 A
480 V	500-600 V	5 A	5 A	3 A	1 A (SEE NOTE 2)	3 A	6 A	10 A

NOTES:

1. Primary lines of multiple ballasts shall be provided with fused connectors. Fuse ratings shall be as noted above.
2. See Revised Standard Plan RSP ES-15D, Type SC3 control.

FUSE RATINGS FOR FUSED CONNECTORS

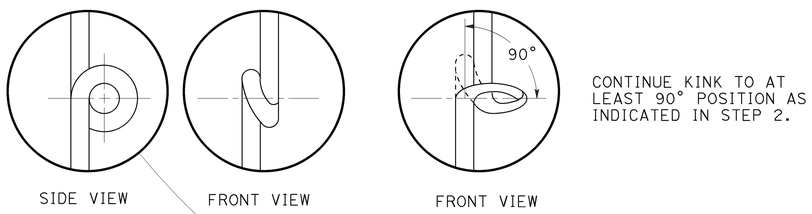

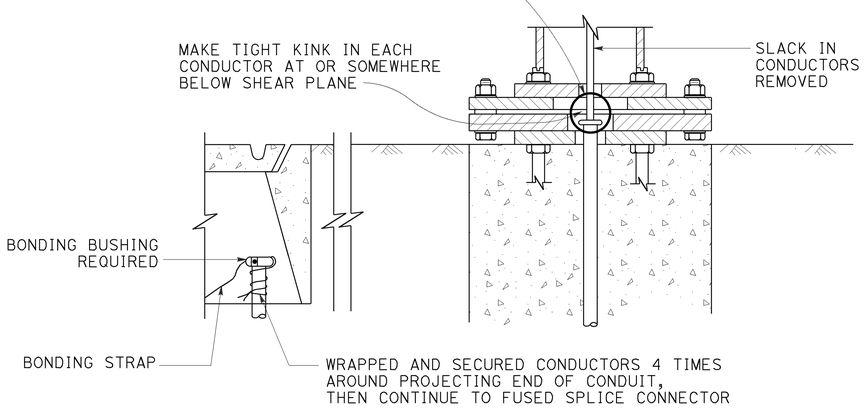

KINKING DETAIL FOR SLIP BASE STANDARDS

DETAIL A

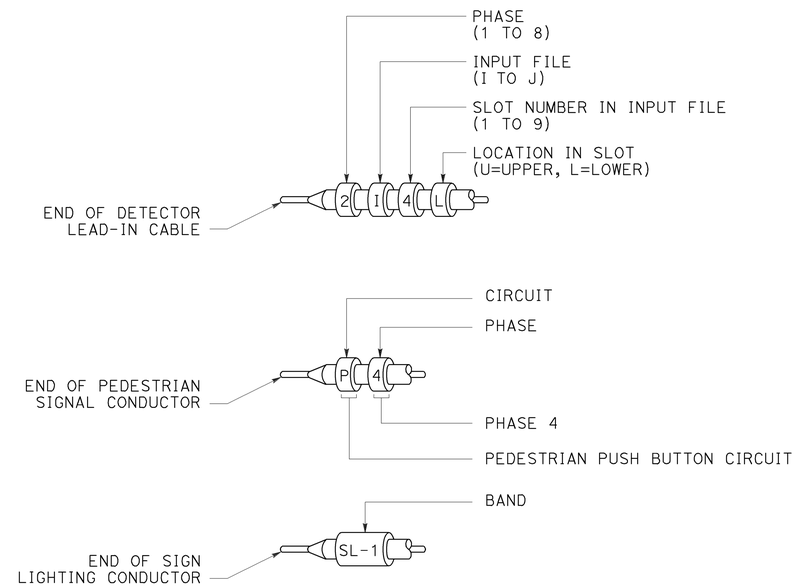

TYPICAL BANDING DETAILS

DETAIL B

STATE OF CALIFORNIA
DEPARTMENT OF TRANSPORTATION

ELECTRICAL SYSTEMS (FUSE RATING, KINKING AND BANDING DETAIL)

NO SCALE

RSP ES-13B DATED APRIL 15, 2016 SUPERSEDES STANDARD PLAN ES-13B DATED MAY 20, 2011 - PAGE 492 OF THE STANDARD PLANS BOOK DATED 2010.

REVISED STANDARD PLAN RSP ES-13B

2010 REVISED STANDARD PLAN RSP ES-13B

1-12-16