Dist	COUNTY	ROUTE	POST MILES TOTAL PROJECT	SHEET No.	TOTAL SHEETS
05	SLO	101	12.4/29.7	1	54

ACNHP-Q101(302)E

STATE OF CALIFORNIA
DEPARTMENT OF TRANSPORTATION

PROJECT PLANS FOR CONSTRUCTION ON
STATE HIGHWAY
IN SAN LUIS OBISPO COUNTY
AT VARIOUS LOCATIONS
FROM 0.1 MILE SOUTH OF BRIDGE STREET UNDERCROSSING TO GRAND AVENUE UNDERCROSSING

TO BE SUPPLEMENTED BY STANDARD PLANS DATED 2010

INDEX OF PLANS

SHEET No.	DESCRIPTION
1	TITLE AND LOCATION MAP
2	LOCATIONS OF CONSTRUCTION
3-19	CONSTRUCTION DETAILS
20	CONSTRUCTION AREA SIGNS
21	PAVEMENT DELINEATION QUANTITIES
22-29	SIGN PLANS AND QUANTITIES
30-31	SUMMARY OF QUANTITIES
32	EROSION CONTROL LEGEND AND QUANTITIES
33-36	ELECTRICAL PLANS
37-54	REVISED STANDARD PLANS

THE STANDARD PLANS LIST APPLICABLE TO THIS CONTRACT IS INCLUDED IN THE NOTICE TO BIDDERS AND SPECIAL PROVISIONS BOOK.

LOCATION MAP

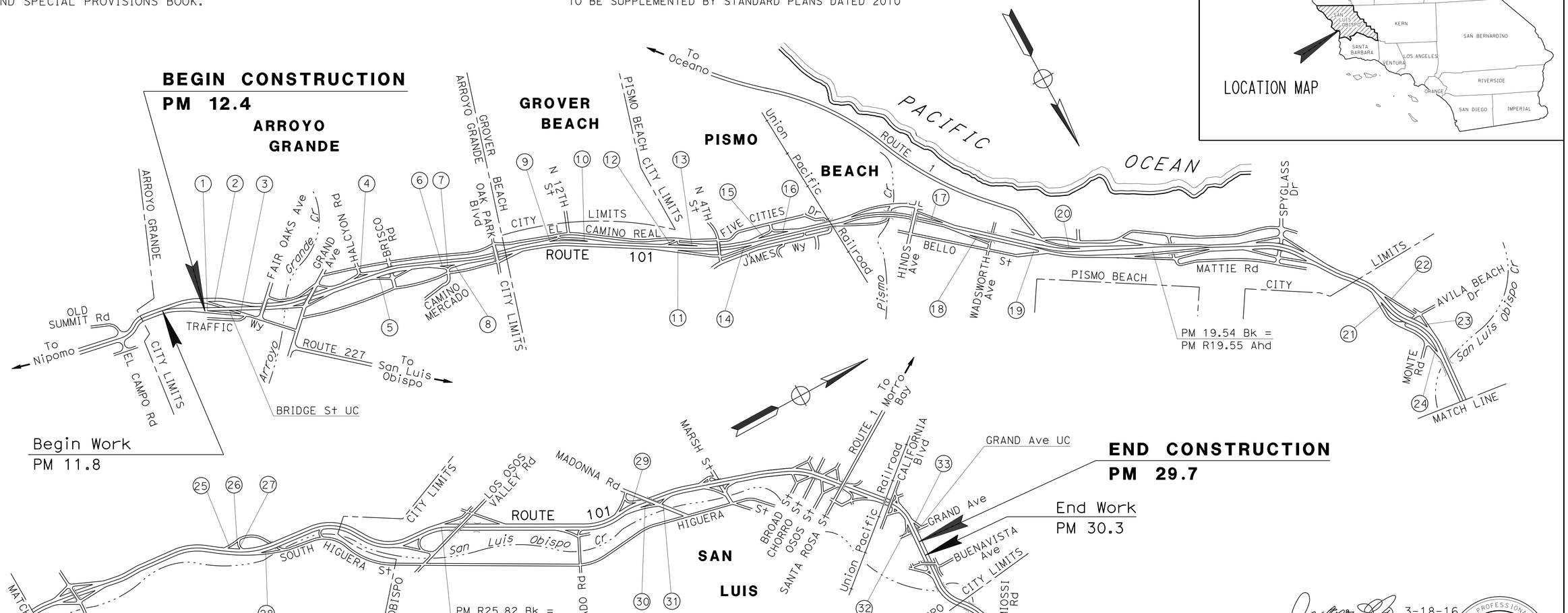

NOTE:

THE TABLE OF LOCATIONS OF CONSTRUCTION IS SHOWN ON THE LOCATIONS OF CONSTRUCTION SHEET.

NO SCALE

THE CONTRACTOR SHALL POSSESS THE CLASS (OR CLASSES) OF LICENSE AS SPECIFIED IN THE "NOTICE TO BIDDERS."

PROJECT MANAGER: KEN DOSTALEK
DESIGN MANAGER: DAVID BEARD

3-18-16
PROJECT ENGINEER REGISTERED CIVIL ENGINEER — DATE

REGISTERED PROFESSIONAL ENGINEER — JACKSON S.L. HO — No. 75625 — Exp. 6-30-16 — CIVIL — STATE OF CALIFORNIA

March 21, 2016
PLANS APPROVAL DATE

THE STATE OF CALIFORNIA OR ITS OFFICERS OR AGENTS SHALL NOT BE RESPONSIBLE FOR THE ACCURACY OR COMPLETENESS OF SCANNED COPIES OF THIS PLAN SHEET.

CONTRACT No.	05-1C1104
PROJECT ID	0512000075

LAST REVISION 03-18-16 — DATE PLOTTED => 08-JUN-2016 — TIME PLOTTED => 10:25

Dist	COUNTY	ROUTE	POST MILES TOTAL PROJECT	SHEET No.	TOTAL SHEETS
05	SLO	101	12.4/29.7	2	54

REGISTERED CIVIL ENGINEER 3-18-16 DATE

3-21-16
PLANS APPROVAL DATE

REGISTERED PROFESSIONAL ENGINEER
JACKSON S.L. HO
No. 75625
Exp 6-30-16
CIVIL
STATE OF CALIFORNIA

THE STATE OF CALIFORNIA OR ITS OFFICERS OR AGENTS SHALL NOT BE RESPONSIBLE FOR THE ACCURACY OR COMPLETENESS OF SCANNED COPIES OF THIS PLAN SHEET.

LOCATIONS OF CONSTRUCTION

Loc No. ⊞	COUNTY	ROUTE	PM	DESCRIPTION	DIRECTION
1	SLO	101	12.45	TRAFFIC WAY OFF-RAMP	NB
2	SLO	101	12.50	TRAFFIC WAY ON-RAMP	SB
3	SLO	101	12.55	TRAFFIC WAY OFF-RAMP/ON-RAMP	NB
4	SLO	101	13.65	N HALCYON ROAD OFF-RAMP/ON-RAMP	SB
5	SLO	101	13.67	BRISCO ROAD OFF-RAMP	NB
6	SLO	101	14.20	W BRANCH/CAMINO OFF-RAMP	NB
7	SLO	101	14.25	W BRANCH/CAMINO OFF-RAMP/ON-RAMP	NB
8	SLO	101	14.30	W BRANCH/CAMINO ON-RAMP	NB
9	SLO	101	14.80	OAK PARK ROAD ON-RAMP	SB
10	SLO	101	15.00	OAK PARK ROAD OFF-RAMP	SB
11	SLO	101	15.35	N 4TH STREET OFF-RAMP	NB
12	SLO	101	15.38	N 4TH STREET ON-RAMP	SB
13	SLO	101	15.50	N 4TH STREET OFF-RAMP	SB
14	SLO	101	15.70	N 4TH STREET ON-RAMP	NB
15	SLO	101	15.87	FIVE CITIES DRIVE ON-RAMP	SB
16	SLO	101	15.95	FIVE CITIES DRIVE OFF-RAMP	SB
17	SLO	101	16.67	HINDS AVENUE/PRICE CANYON ROAD OFF-RAMP	SB
18	SLO	101	16.80	WADSWORTH AVENUE OFF-RAMP	NB
19	SLO	101	17.10	BELLO STREET ON-RAMP	NB
20	SLO	101	17.15	ROUTE 1/PISMO OFF-RAMP	SB
21	SLO	101	R20.89	AVILA BEACH DRIVE OFF-RAMP	NB
22	SLO	101	R20.95	AVILA BEACH DRIVE ON-RAMP	SB
23	SLO	101	R21.25	AVILA BEACH DRIVE OFF-RAMP	SB
24	SLO	101	R21.32	AVILA BEACH DRIVE ON-RAMP	NB
25	SLO	101	R24.00	SOUTH HIGUERA STREET ON-RAMP	SB
26	SLO	101	R24.13	SOUTH HIGUERA STREET OFF-RAMP/ON-RAMP	SB
27	SLO	101	R24.14	SOUTH HIGUERA STREET OFF-RAMP	SB
28	SLO	101	R24.15	SOUTH HIGUERA STREET OFF-RAMP	NB
29	SLO	101	27.39	MADONNA ROAD OFF-RAMP	SB
30	SLO	101	27.40	MADONNA ROAD OFF-RAMP	NB
31	SLO	101	27.57	MADONNA ROAD ON-RAMP	NB
32	SLO	101	29.65	GRAND AVENUE OFF-RAMP	NB
33	SLO	101	29.66	GRAND AVENUE ON-RAMP	SB

REVISED BY | DATE REVISED

JACKSON HO | STEVE SENET

CALCULATED-DESIGNED BY | CHECKED BY

FUNCTIONAL SUPERVISOR: DAVID BEARD

STATE OF CALIFORNIA - DEPARTMENT OF TRANSPORTATION
Caltrans
DESIGN

LOCATIONS OF CONSTRUCTION
LC-1

LAST REVISION 03-18-16 | DATE PLOTTED => 12-MAY-2016 | TIME PLOTTED => 08:32

Dist	COUNTY	ROUTE	POST MILES TOTAL PROJECT	SHEET No.	TOTAL SHEETS
05	SLO	101	12.4/29.7	3	54

REGISTERED CIVIL ENGINEER 3-18-16 DATE

3-21-16
PLANS APPROVAL DATE

REGISTERED PROFESSIONAL ENGINEER JACKSON S.L. HO No. 75625 Exp 6-30-16 CIVIL STATE OF CALIFORNIA

THE STATE OF CALIFORNIA OR ITS OFFICERS OR AGENTS SHALL NOT BE RESPONSIBLE FOR THE ACCURACY OR COMPLETENESS OF SCANNED COPIES OF THIS PLAN SHEET.

NOTES:

1. DIMENSIONS OF THE STRUCTURAL SECTIONS ARE SUBJECT TO TOLERANCES SPECIFIED IN THE STANDARD SPECIFICATIONS.
2. UTILITY OWNERSHIP:
   GAS - SOUTHERN CALIFORNIA GAS (SGC)
   ELECTRIC - SOUTHERN CALIFORNIA EDISON (SCE)
   TELEPHONE - AMERICAN TELEPHONE & TELEGRAPH (AT&T)
   TELECOMMUNICATION - AMERICAN TELEPHONE & TELEGRAPH (AT&T)
3. APPLY NEAT LINE (TYPICAL) ALONG ALL SIDES OF THE CST THAT ARE ADJACENT TO ASPHALT PAVEMENT.
4. SEE REMOVE/RELOCATE IRRIGATION FACILITY LOCATIONS TABLE ON SHEET C-17 FOR REMOVAL AND RELOCATION OF IRRIGATION FACILITIES IN AREAS OF NEW CONTRASTING SURFACE TREATMENT:
   A. CAP EXISTING IRRIGATION PRIOR TO CLEARING & GRUBBING.
   B. CAP ALL PIPES TO PREVENT DEBRIS FROM ENTERING IRRIGATION SYSTEM.
   C. THE TYPE, QUANTITY, DEPTH, AND LOCATION OF IRRIGATION EQUIPMENT VARY BY LOCATION.
   D. RELOCATE VALVES OUTSIDE OF THE PAVED AREA.
   E. ALL EXISTING EQUIPMENT TO REMAIN WILL BE PROTECTED IN PLACE.

ABBREVIATIONS:

CST = CONTRASTING SURFACE TREATMENT
"CSTLINE" = LAYOUT CENTERLINE ALONG ETW
NL = NEAT LINE

STRUCTURAL SECTIONS:

1 — 0.50' MINOR HOT MIX ASPHALT
0.17' CLASS 2 AB

2 — 0.50' MINOR CONCRETE
(STAMPED CONCRETE)
0.17' CLASS 2 AB

3 — 0.50' MINOR CONCRETE
(EXPOSED AGGREGATE CONCRETE)
0.17' CLASS 2 AB

4 — 0.50' TO 1.00' MINOR CONCRETE
(STAMPED CONCRETE)
0.17' CLASS 2 AB

5 — 0.50' TO 1.00' MINOR CONCRETE
(EXPOSED AGGREGATE CONCRETE)
0.17' CLASS 2 AB

6 — 0.50" MINOR CONCRETE (STAMPED CONCRETE)
1.50" BLOCKOUT MATERIAL

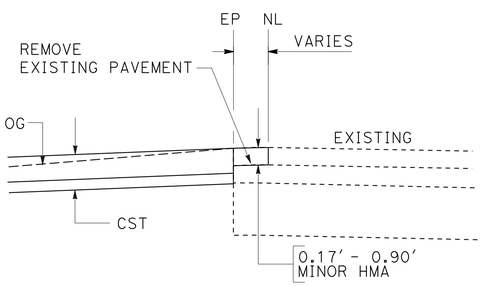

NEAT LINE (TYPICAL)

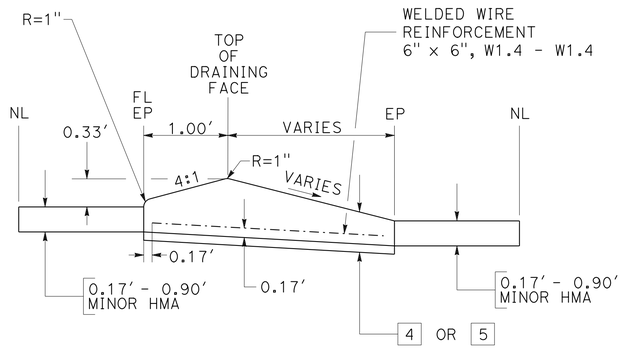

DRAINING FACE (TYPE E)

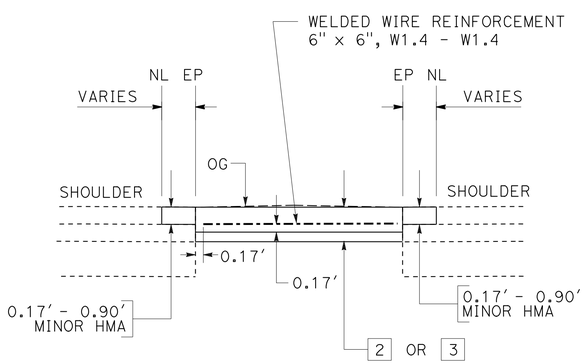

CONTRASTING SURFACE TREATMENT (TYPICAL)

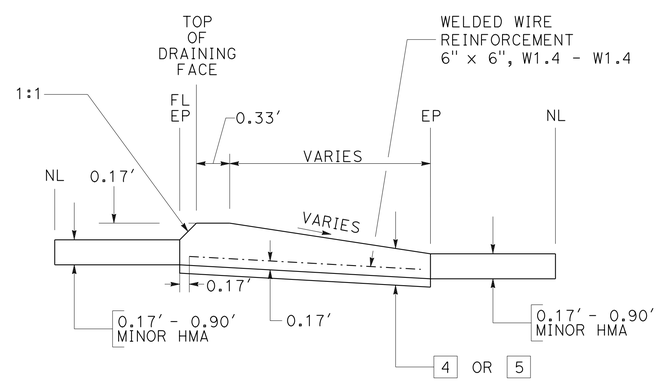

DRAINING FACE (TYPE C)

CONTRASTING SURFACE TREATMENT WITH DRAINING FACE

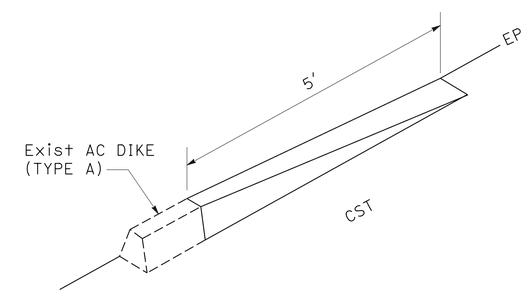

HMA DIKE (TYPE A) TRANSITIONS
LOCATION No. 10, 14, 17, 22

CONSTRUCTION DETAILS

NO SCALE

C-1

STATE OF CALIFORNIA - DEPARTMENT OF TRANSPORTATION
Caltrans
DESIGN
FUNCTIONAL SUPERVISOR: DAVID BEARD
CALCULATED-DESIGNED BY: JACKSON HO
CHECKED BY: STEVE SENET
REVISED BY
DATE REVISED

LAST REVISION 03-18-16
DATE PLOTTED => 12-MAY-2016
TIME PLOTTED => 08:32

Dist	COUNTY	ROUTE	POST MILES TOTAL PROJECT	SHEET No.	TOTAL SHEETS
05	SLO	101	12.4/29.7	4	54

LICENSED LANDSCAPE ARCHITECT

3-21-16
PLANS APPROVAL DATE

LICENSED LANDSCAPE ARCHITECT Laurie D. Dunn No. 3549 Signature 4-30-16 Renewal Date 3-18-16 Date STATE OF CALIFORNIA

THE STATE OF CALIFORNIA OR ITS OFFICERS OR AGENTS SHALL NOT BE RESPONSIBLE FOR THE ACCURACY OR COMPLETENESS OF SCANNED COPIES OF THIS PLAN SHEET.

CONTRASTING SURFACE TREATMENT

LOCATION No.	AESTHETIC TREATMENT	SURFACE TEXTURE PATTERN	INTEGRAL COLOR CONCRETE FEDERAL STANDARD 595C	COLOR HARDENER FEDERAL STANDARD 595C	COLOR RELEASE FEDERAL STANDARD 595C
1 - 8	MINOR CONCRETE (STAMPED CONCRETE)	SANDSTONE	30372	30372	20180
9 - 20	MINOR CONCRETE (STAMPED CONCRETE)	SANDSTONE	23522	23522	30340
21 - 29	MINOR CONCRETE (EXPOSED AGGREGATE CONCRETE)		23522		
30 - 33	MINOR CONCRETE (EXPOSED AGGREGATE CONCRETE)		*		

* THE REFEREE SAMPLE FOR COLOR WILL BE THE CONTRAST SURFACE TREATMENT AND BRIDGE RAIL DETAIL AT THE LOS OSOS VALLEY ROAD AND HIGHWAY 101 INTERCHANGE PROJECT, CITY OF SAN LUIS OBISPO.

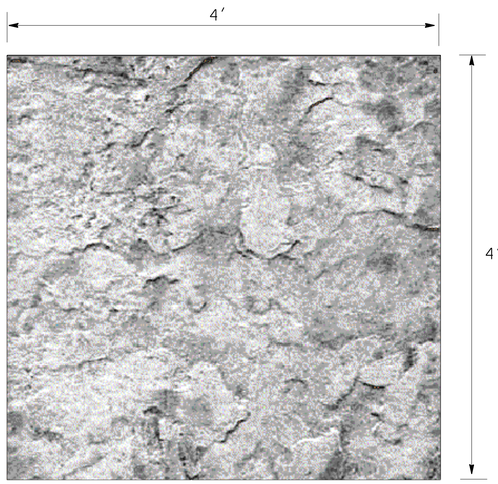

MINOR CONCRETE (STAMPED CONCRETE)
SANDSTONE SURFACE TEXTURE PATTERN

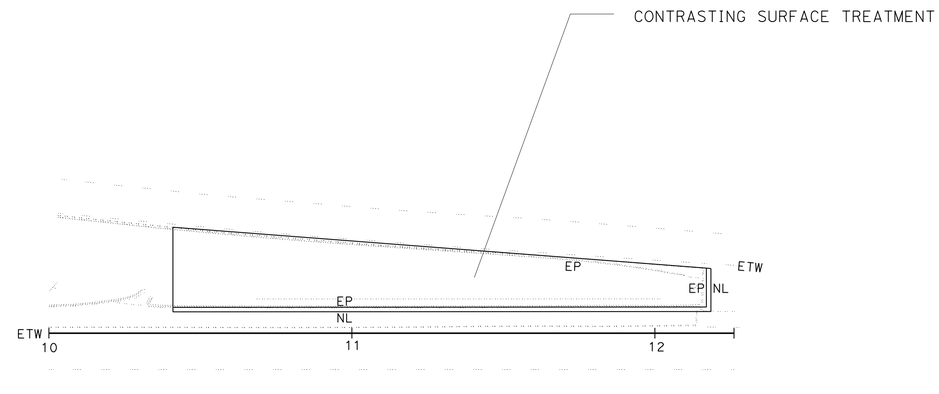

PLAN

CONTRASTING SURFACE TREATMENT (TYPICAL)

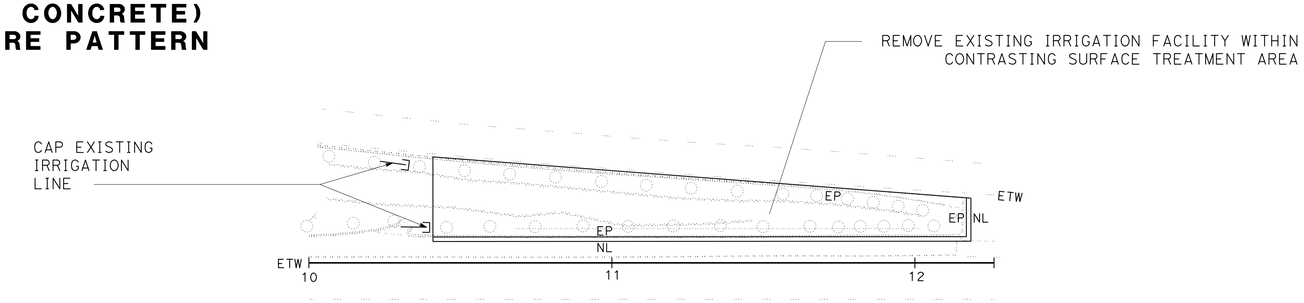

PLAN

REMOVE AND RELOCATE IRRIGATION FACILITIES (TYPICAL)

CONSTRUCTION DETAILS

NO SCALE

C-2

STATE OF CALIFORNIA - DEPARTMENT OF TRANSPORTATION
Caltrans® LANDSCAPE ARCHITECTURE

SENIOR LANDSCAPE ARCHITECT: DENNIS REEVES
CALCULATED-DESIGNED BY: LAURIE D. DUNN (CUMMINGS)
CHECKED BY: SCOTT DOWLAN
REVISED BY
DATE REVISED

LAST REVISION 03-18-16
DATE PLOTTED => 12-MAY-2016
TIME PLOTTED => 08:32

Dist	COUNTY	ROUTE	POST MILES TOTAL PROJECT	SHEET No.	TOTAL SHEETS
05	SLO	101	12.4/29.7	5	54

REGISTERED CIVIL ENGINEER 3-18-16 DATE

3-21-16
PLANS APPROVAL DATE

REGISTERED PROFESSIONAL ENGINEER JACKSON S.L. HO No. 75625 Exp 6-30-16 CIVIL STATE OF CALIFORNIA

THE STATE OF CALIFORNIA OR ITS OFFICERS OR AGENTS SHALL NOT BE RESPONSIBLE FOR THE ACCURACY OR COMPLETENESS OF SCANNED COPIES OF THIS PLAN SHEET.

NOTES (THIS SHEET ONLY):

1. FOR ALTERNATE POST SIZE REFER TO STANDARD PLAN RS2 FOR EMBEDMENT DEPTH.
2. FOR ALTERNATE POST SLEEVE SIZE, INCREASE CONCRETE FOOTING DIAMETER TO PROVIDE MINIMUM OF 6" BETWEEN OD OF POST SLEEVE AND OD OF CONCRETE FOOTING.
3. ALIGN POST SLEEVE SO THAT SIGN MESSAGE FACES TRAFFIC.

POST SLEEVE QUANTITIES

MINOR CONCRETE (N)	CLASS 2 PERMEABLE MATERIAL (N)
CY	CY
0.31	0.04

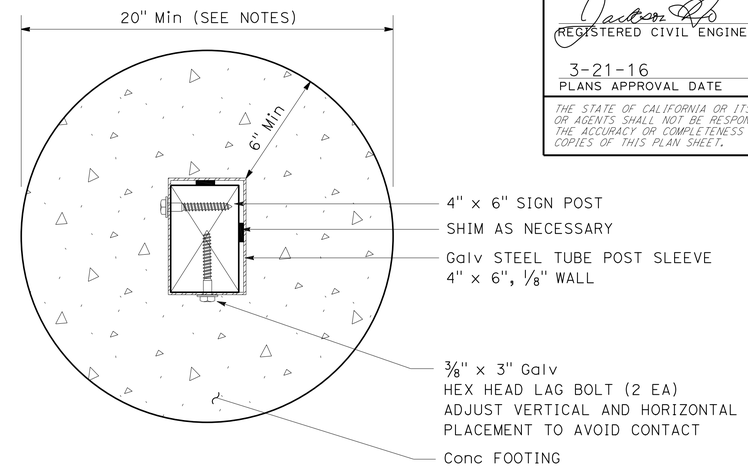

PLAN VIEW

POST SLEEVE

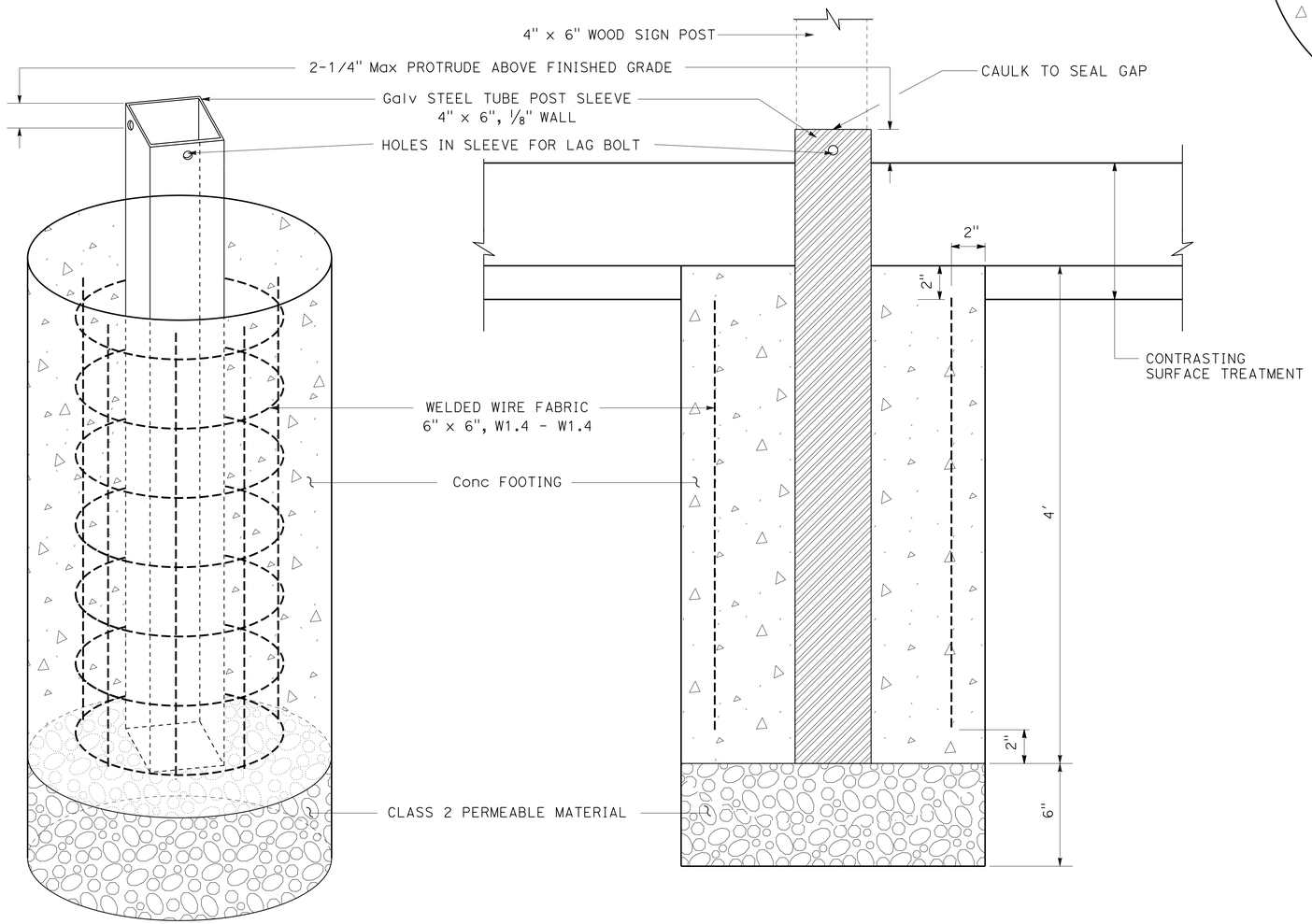

ISOMETRIC VIEW

SIDE VIEW

RESET ROADSIDE SIGN POST SLEEVE

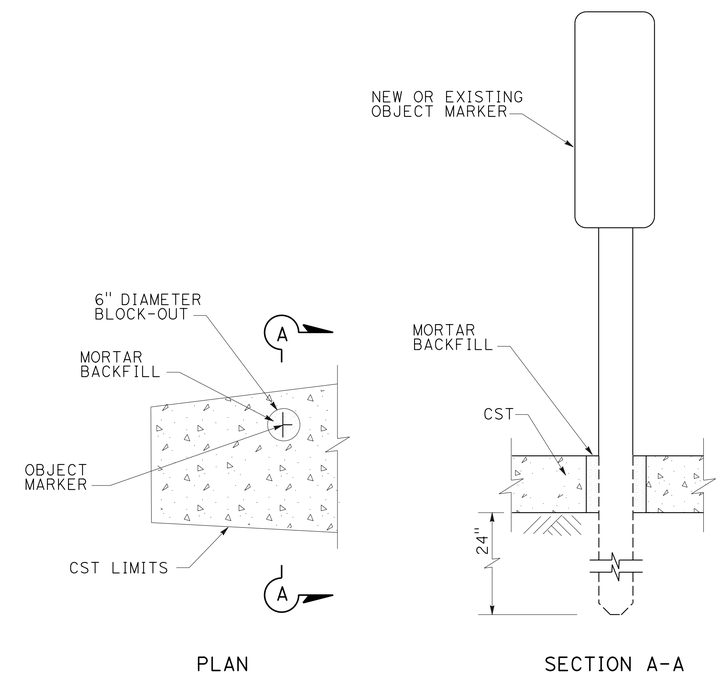

PLAN

SECTION A-A

OBJECT MARKER (TYPE L-1) AND RESET MILEPOST MARKER

CONSTRUCTION DETAILS

NO SCALE

C-3

STATE OF CALIFORNIA - DEPARTMENT OF TRANSPORTATION
Caltrans
DESIGN

FUNCTIONAL SUPERVISOR: DAVID BEARD

CALCULATED-DESIGNED BY: JACKSON HO
CHECKED BY: STEVE SENET

REVISED BY: JH
DATE REVISED: 09-29-15

LAST REVISION 03-18-16 | DATE PLOTTED => 12-MAY-2016 | TIME PLOTTED => 08:33

Dist	COUNTY	ROUTE	POST MILES TOTAL PROJECT	SHEET No.	TOTAL SHEETS
05	SLO	101	12.4/29.7	6	54

REGISTERED CIVIL ENGINEER 3-18-16 DATE

3-21-16
PLANS APPROVAL DATE

REGISTERED PROFESSIONAL ENGINEER JACKSON S.L. HO No. 75625 Exp 6-30-16 CIVIL STATE OF CALIFORNIA

THE STATE OF CALIFORNIA OR ITS OFFICERS OR AGENTS SHALL NOT BE RESPONSIBLE FOR THE ACCURACY OR COMPLETENESS OF SCANNED COPIES OF THIS PLAN SHEET.

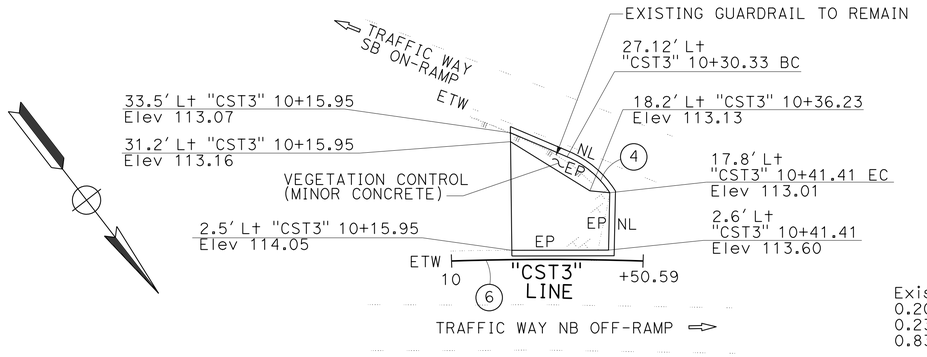

LOCATION No. 3
PM 12.55
NB OFF/ON-RAMP TO/FROM TRAFFIC WAY

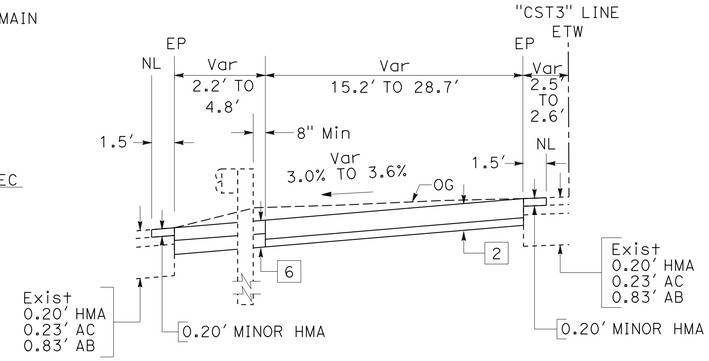

LOCATION No. 3
"CST3" 10+15.95 TO 10+41.41

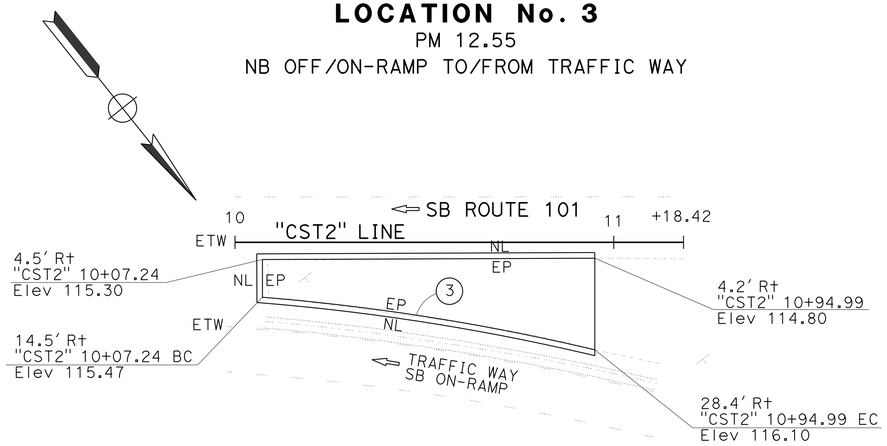

LOCATION No. 2
PM 12.50
SB ON-RAMP FROM TRAFFIC WAY

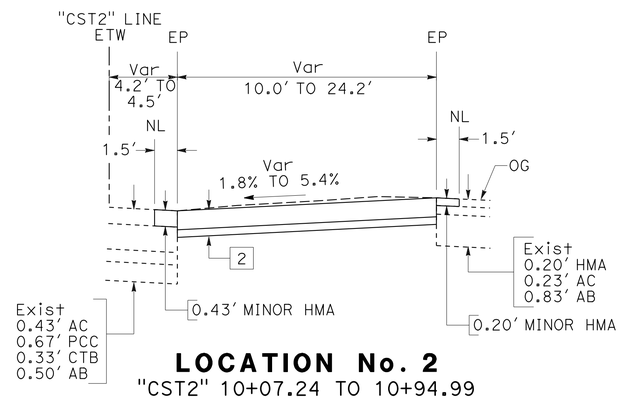

LOCATION No. 2
"CST2" 10+07.24 TO 10+94.99

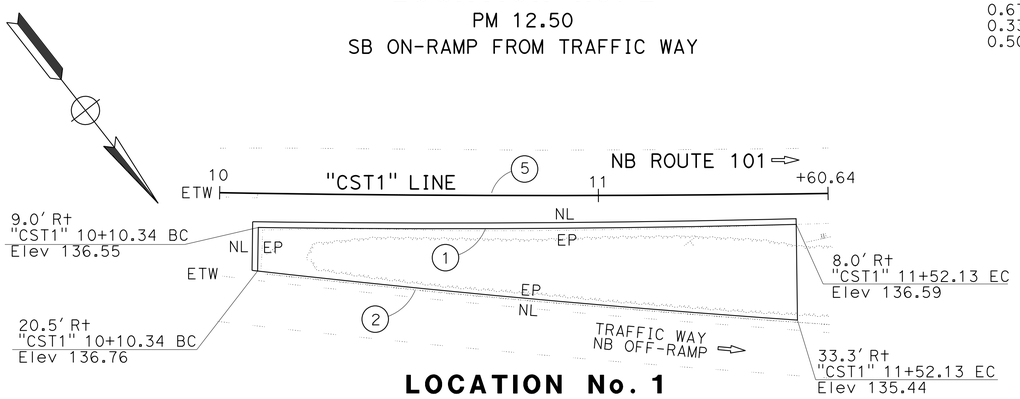

LOCATION No. 1
PM 12.45
NB OFF-RAMP TO TRAFFIC WAY

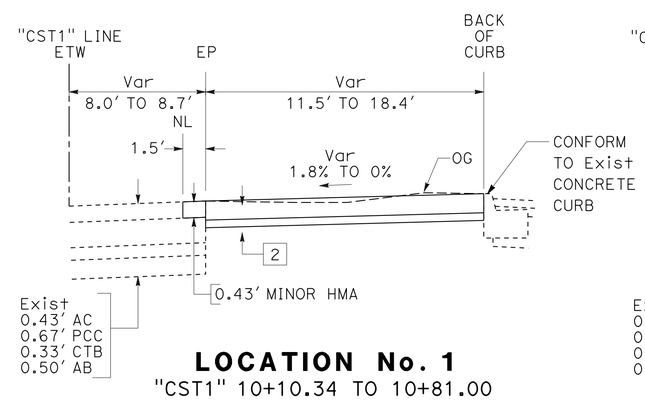

LOCATION No. 1
"CST1" 10+10.34 TO 10+81.00

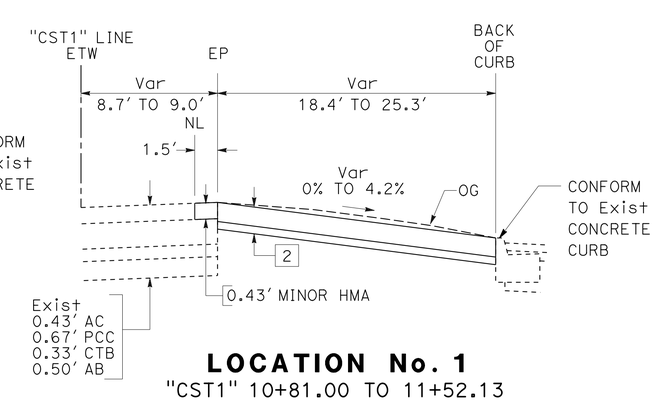

LOCATION No. 1
"CST1" 10+81.00 TO 11+52.13

CURVE DATA

No. ⊕	R	Δ	T	L
1	3,751'	02°10'12"	71.03'	142.02'
2	3,329'	02°27'47"	71.58'	143.13'
3	586'	08°41'36"	44.55'	88.93'
4	25'	34°07'23"	7.70'	14.95'
5	5,018'	01°50'03"	80.33'	160.64'
6	774'	03°44'41"	25.30'	50.59'

CONTRASTING SURFACE TREATMENT

CONSTRUCTION DETAILS
NO SCALE

C-4

REVISED BY | DATE REVISED
JACKSON HO | STEVE SENET
CALCULATED-DESIGNED BY | CHECKED BY
FUNCTIONAL SUPERVISOR: DAVID BEARD
STATE OF CALIFORNIA - DEPARTMENT OF TRANSPORTATION
DESIGN
Caltrans

LAST REVISION | DATE PLOTTED => 12-MAY-2016
03-18-16 | TIME PLOTTED => 08:33

Dist	COUNTY	ROUTE	POST MILES TOTAL PROJECT	SHEET No.	TOTAL SHEETS
05	SLO	101	12.4/29.7	7	54

REGISTERED CIVIL ENGINEER 3-18-16 DATE

3-21-16
PLANS APPROVAL DATE

REGISTERED PROFESSIONAL ENGINEER JACKSON S.L. HO No. 75625 Exp 6-30-16 CIVIL STATE OF CALIFORNIA

THE STATE OF CALIFORNIA OR ITS OFFICERS OR AGENTS SHALL NOT BE RESPONSIBLE FOR THE ACCURACY OR COMPLETENESS OF SCANNED COPIES OF THIS PLAN SHEET.

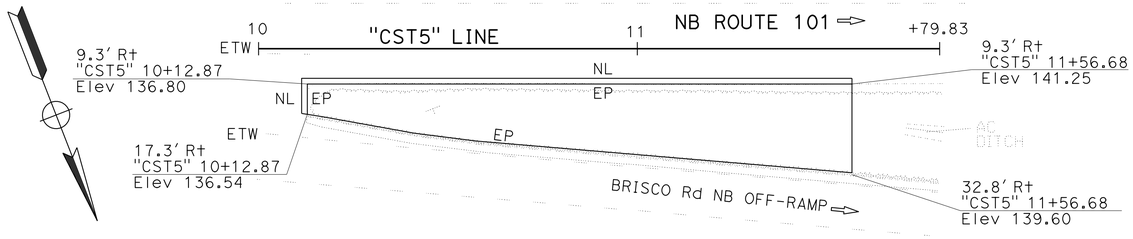

LOCATION No. 5
PM 13.67
NB OFF-RAMP TO BRISCO ROAD

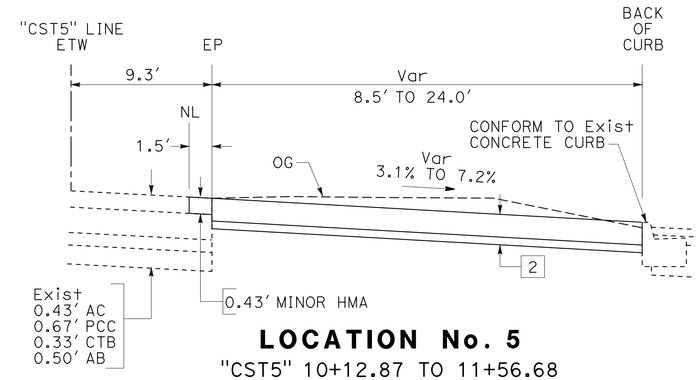

LOCATION No. 5
"CST5" 10+12.87 TO 11+56.68

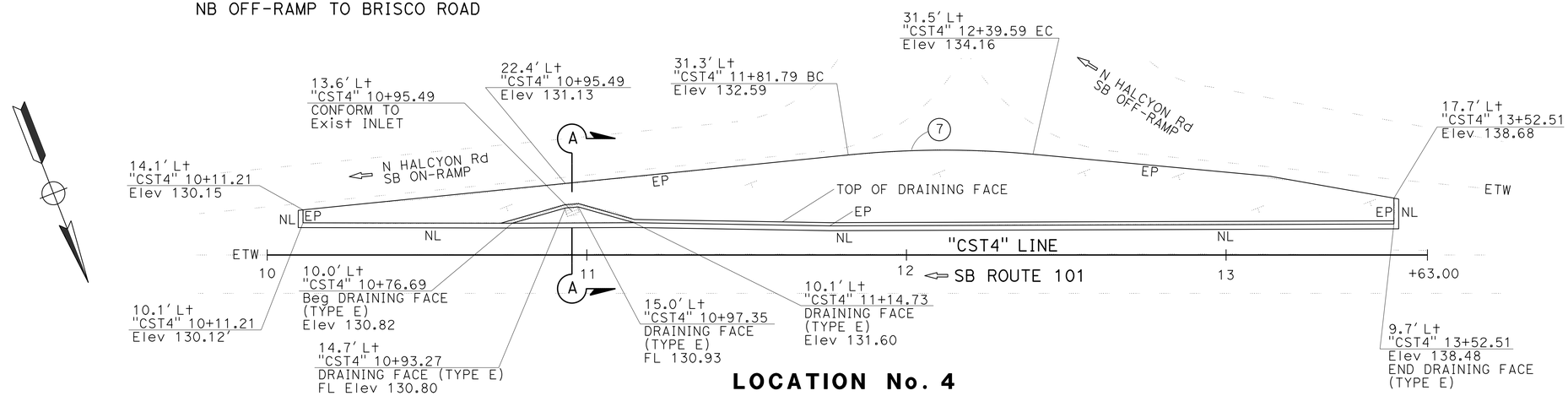

LOCATION No. 4
PM 13.65
SB OFF/ON-RAMP TO/FROM N HALCYON ROAD

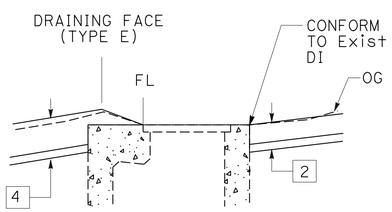

LOCATION No. 4
SECTION A-A

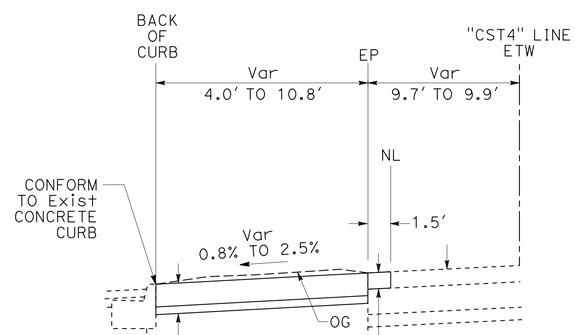

LOCATION No. 4
"CST4" 10+11.21 TO 10+76.69

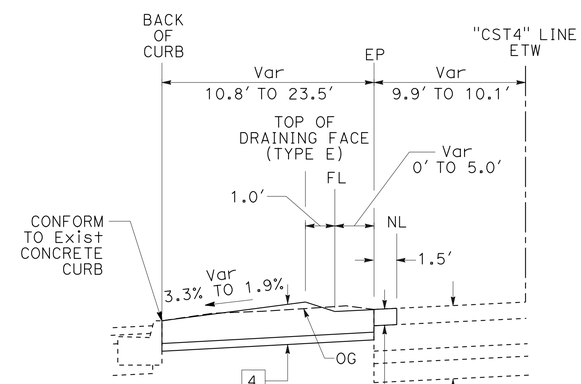

LOCATION No. 4
"CST4" 10+76.69 TO 13+52.51

CURVE DATA

No. ⊕	R	Δ	T	L
7	300'	11°03'23"	29.04'	57.89'

CONTRASTING SURFACE TREATMENT

CONSTRUCTION DETAILS
NO SCALE

C-5

REVISED BY | DATE REVISED
JACKSON HO | STEVE SENET
CALCULATED-DESIGNED BY | CHECKED BY
FUNCTIONAL SUPERVISOR: DAVID BEARD

STATE OF CALIFORNIA - DEPARTMENT OF TRANSPORTATION
Caltrans
DESIGN

LAST REVISION 03-18-16 | DATE PLOTTED => 12-MAY-2016 | TIME PLOTTED => 08:33

Dist	COUNTY	ROUTE	POST MILES TOTAL PROJECT	SHEET No.	TOTAL SHEETS
05	SLO	101	12.4/29.7	8	54

REGISTERED CIVIL ENGINEER 3-18-16 DATE

3-21-16
PLANS APPROVAL DATE

REGISTERED PROFESSIONAL ENGINEER JACKSON S.L. HO No. 75625 Exp 6-30-16 CIVIL STATE OF CALIFORNIA

THE STATE OF CALIFORNIA OR ITS OFFICERS OR AGENTS SHALL NOT BE RESPONSIBLE FOR THE ACCURACY OR COMPLETENESS OF SCANNED COPIES OF THIS PLAN SHEET.

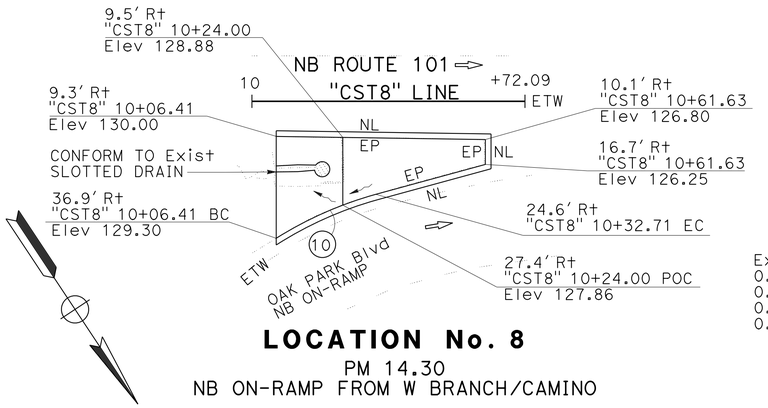

LOCATION No. 8
PM 14.30
NB ON-RAMP FROM W BRANCH/CAMINO

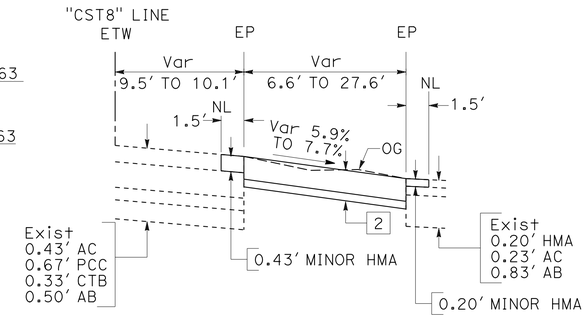

LOCATION No. 8
"CST8" 10+24.00 TO 10+61.63

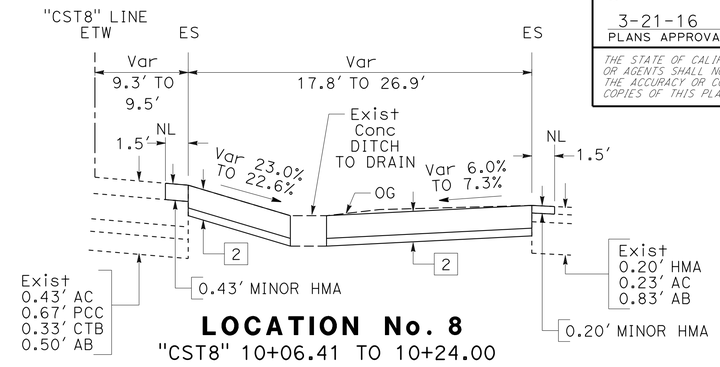

LOCATION No. 8
"CST8" 10+06.41 TO 10+24.00

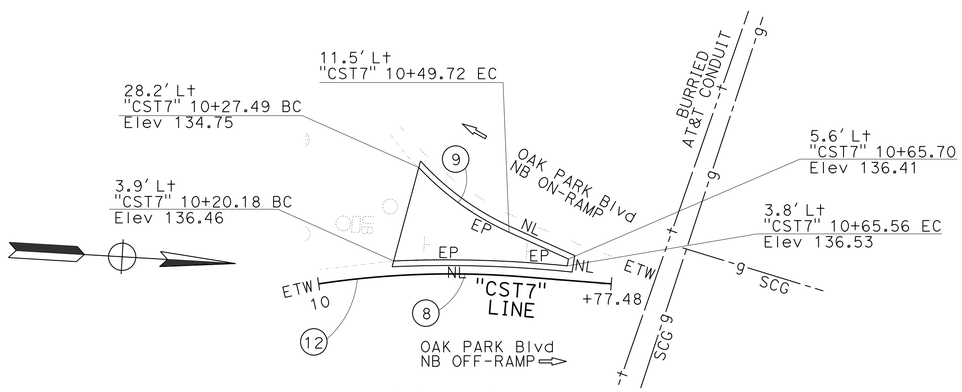

LOCATION No. 7
PM 14.25
NB OFF/ON-RAMP TO/FROM W BRANCH/CAMINO

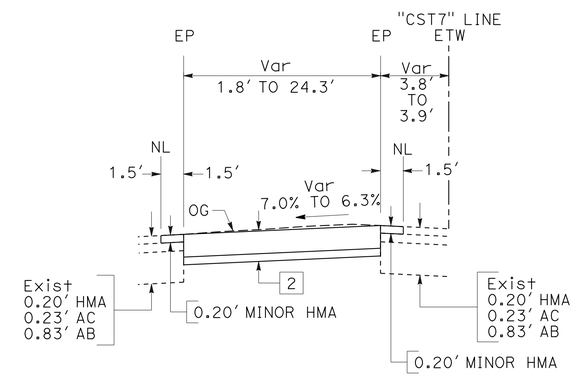

LOCATION No. 7
"CST7" 10+20.18 TO 10+65.70

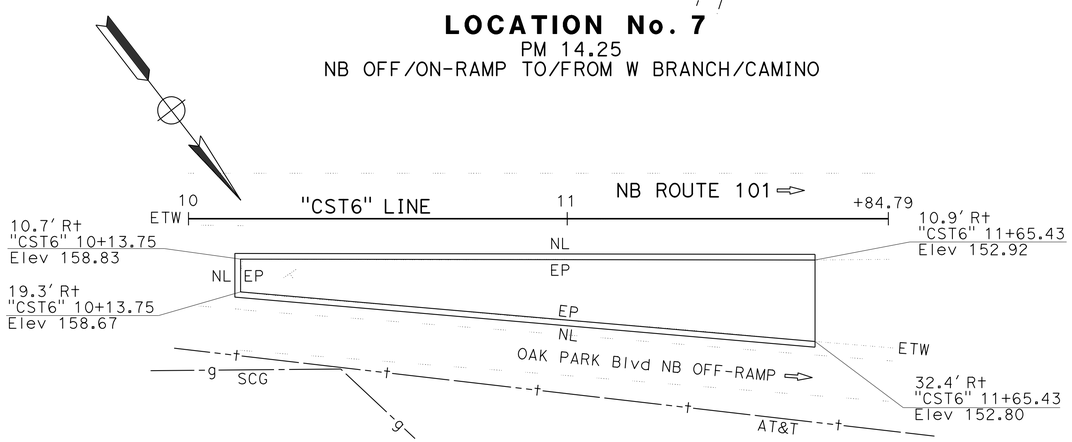

LOCATION No. 6
PM 14.20
NB OFF-RAMP TO W BRANCH/CAMINO

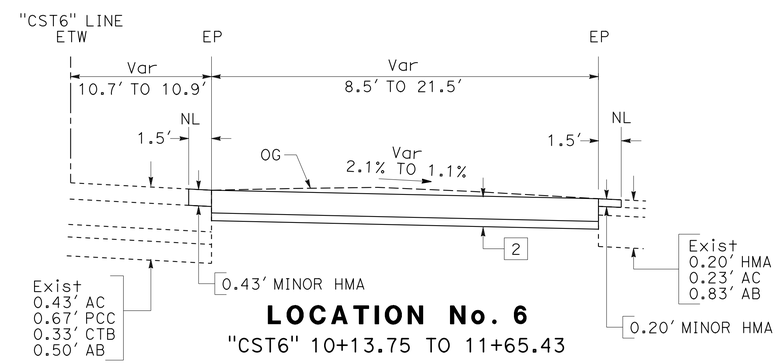

LOCATION No. 6
"CST6" 10+13.75 TO 11+65.43

CURVE DATA

No. ⊕	R	Δ	T	L
8	320'	08°12'35"	23.00'	45.92'
9	74'	22°46'27"	14.97'	29.54'
10	99'	16°38'39"	14.52'	28.84'
12	234'	13°08'57"	27.01'	53.79'

CONTRASTING SURFACE TREATMENT

CONSTRUCTION DETAILS
NO SCALE

C-6

STATE OF CALIFORNIA - DEPARTMENT OF TRANSPORTATION
Caltrans
DESIGN
FUNCTIONAL SUPERVISOR: DAVID BEARD
CALCULATED-DESIGNED BY: JACKSON HO
CHECKED BY: STEVE SENET
REVISED BY
DATE REVISED

LAST REVISION 03-18-16
DATE PLOTTED => 12-MAY-2016
TIME PLOTTED => 08:33

Dist	COUNTY	ROUTE	POST MILES TOTAL PROJECT	SHEET No.	TOTAL SHEETS
05	SLO	101	12.4/29.7	9	54

REGISTERED CIVIL ENGINEER 3-18-16 DATE

3-21-16
PLANS APPROVAL DATE

REGISTERED PROFESSIONAL ENGINEER JACKSON S.L. HO No. 75625 Exp 6-30-16 CIVIL STATE OF CALIFORNIA

THE STATE OF CALIFORNIA OR ITS OFFICERS OR AGENTS SHALL NOT BE RESPONSIBLE FOR THE ACCURACY OR COMPLETENESS OF SCANNED COPIES OF THIS PLAN SHEET.

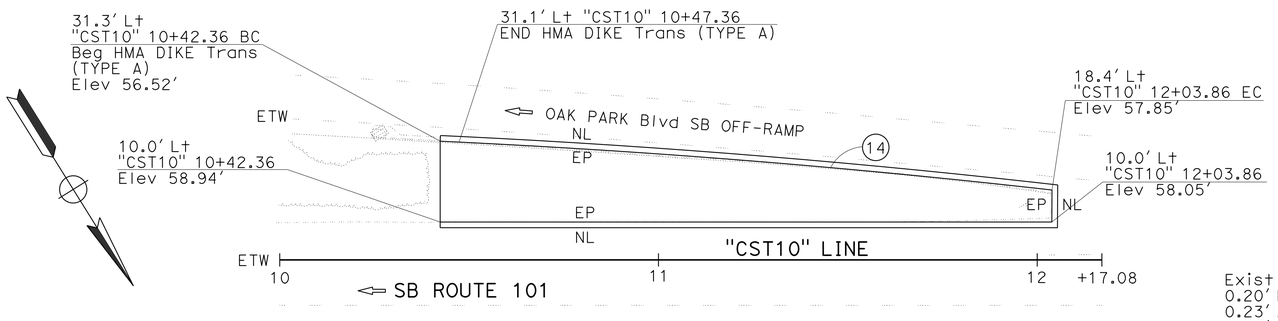

LOCATION No. 10
PM 15.00
SB OFF-RAMP TO OAK PARK ROAD

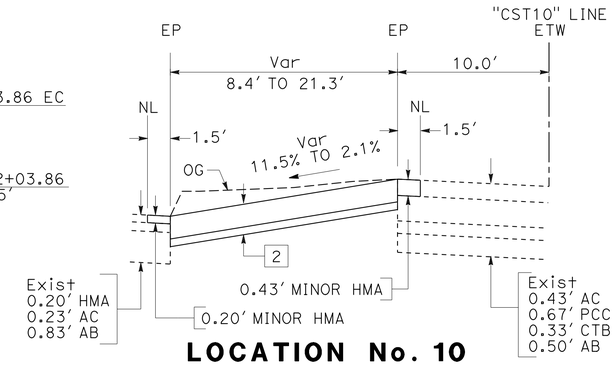

LOCATION No. 10
"CST10" 10+42.36 TO 12+03.86

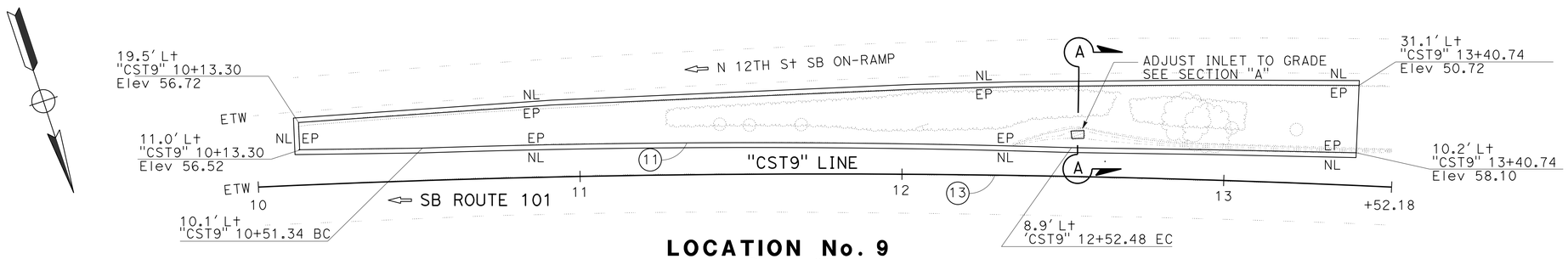

LOCATION No. 9
PM 14.80
SB ON-RAMP FROM OAK PARK ROAD

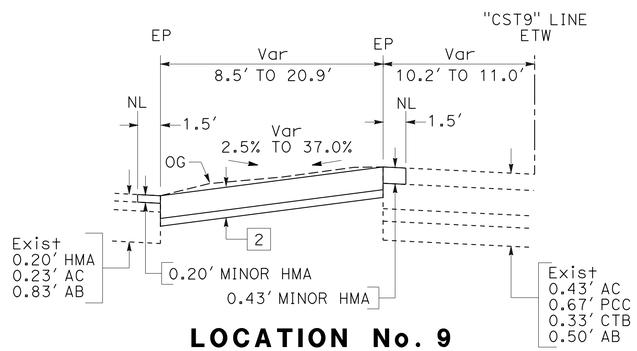

LOCATION No. 9
"CST9" 10+13.30` TO 13+40.74

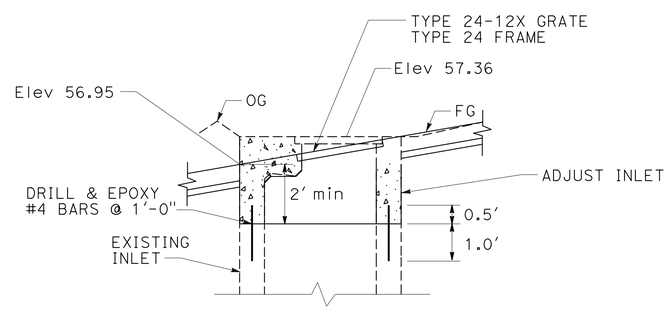

SECTION A-A*
"CST9" 12+52.48

* FOR DIMENSIONS AND BAR REINFORCING NOT SHOWN SEE RSP D73, INLET TYPE G2

CURVE DATA

No. ⊕	R	Δ	T	L
11	3,128'	03°22'21"	92.10'	184.14'
13	3,802'	05°18'26"	176.22'	352.18'
14	2,439'	03°48'28"	81.08'	162.09'

CONTRASTING SURFACE TREATMENT

CONSTRUCTION DETAILS

NO SCALE

C-7

STATE OF CALIFORNIA - DEPARTMENT OF TRANSPORTATION
DESIGN
FUNCTIONAL SUPERVISOR: DAVID BEARD
CALCULATED-DESIGNED BY: JACKSON HO
CHECKED BY: STEVE SENET
REVISED BY
DATE REVISED

LAST REVISION 03-18-16 | DATE PLOTTED => 12-MAY-2016 | TIME PLOTTED => 08:33

Dist	COUNTY	ROUTE	POST MILES TOTAL PROJECT	SHEET No.	TOTAL SHEETS
05	SLO	101	12.4/29.7	10	54

REGISTERED CIVIL ENGINEER 3-18-16 DATE

3-21-16
PLANS APPROVAL DATE

REGISTERED PROFESSIONAL ENGINEER JACKSON S.L. HO No. 75625 Exp 6-30-16 CIVIL STATE OF CALIFORNIA

THE STATE OF CALIFORNIA OR ITS OFFICERS OR AGENTS SHALL NOT BE RESPONSIBLE FOR THE ACCURACY OR COMPLETENESS OF SCANNED COPIES OF THIS PLAN SHEET.

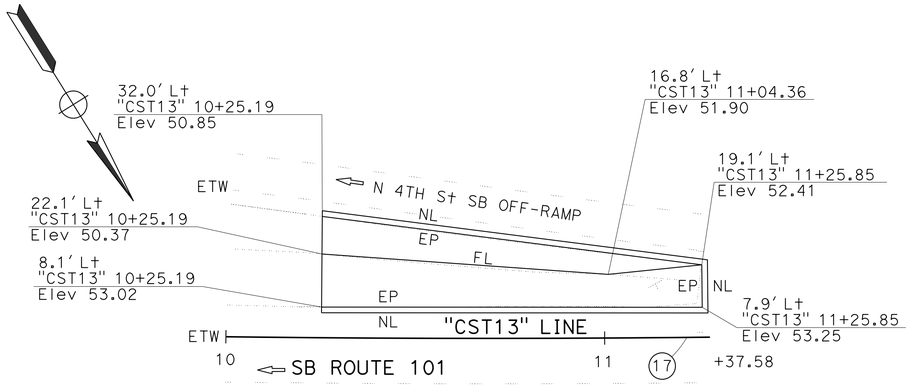

LOCATION No. 13
PM 15.50
SB OFF-RAMP TO N 4TH STREET

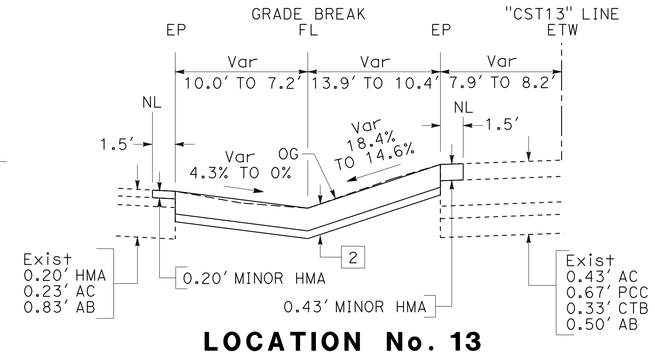

LOCATION No. 13
"CST13" 10+25.19 TO 10+77.00

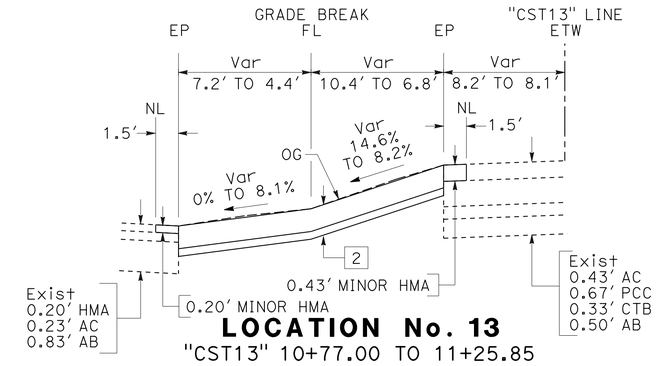

LOCATION No. 13
"CST13" 10+77.00 TO 11+25.85

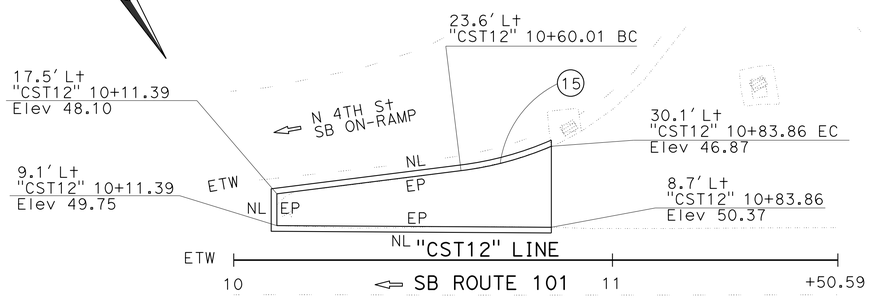

LOCATION No. 12
PM 15.38
SB ON-RAMP FROM N 4TH STREET

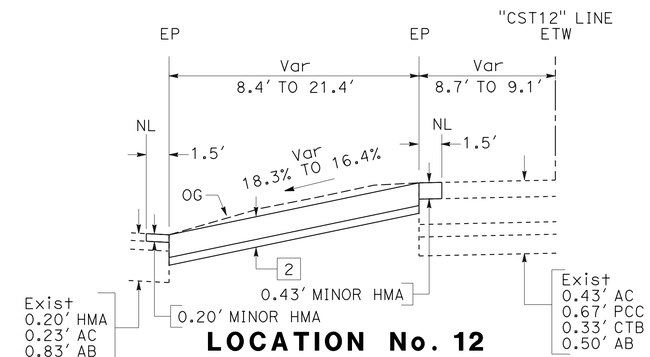

LOCATION No. 12
"CST12" 10+11.39 TO 10+83.86

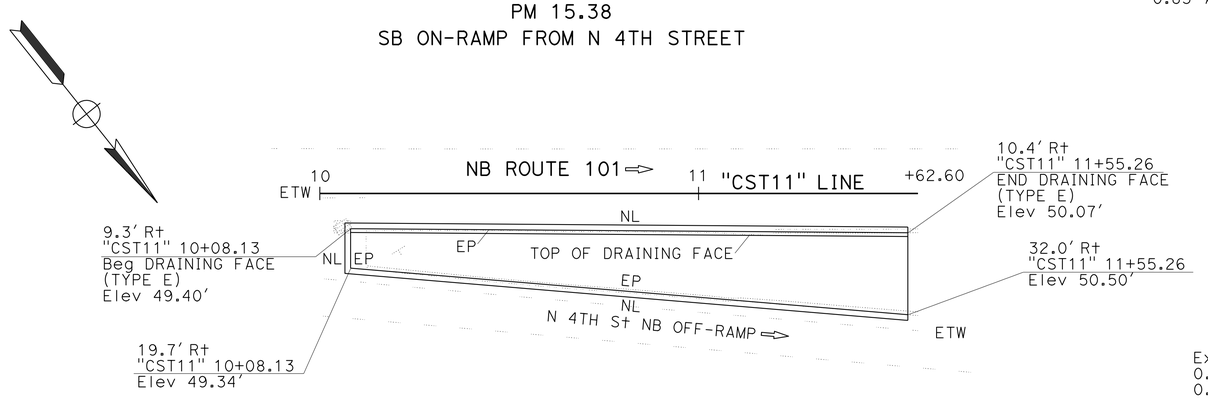

LOCATION No. 11
PM 15.35
NB OFF-RAMP TO N 4TH STREET

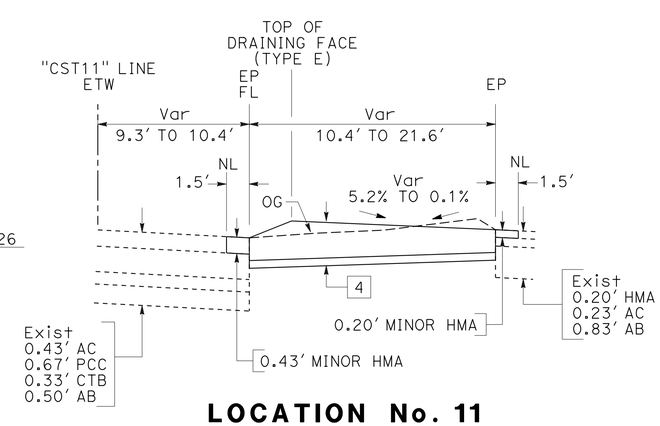

LOCATION No. 11
"CST11" 10+08.08 TO 11+55.26

No. ⊕	R	CURVE DATA Δ	T	L
15	87'	16°17'26"	12.48'	24.79'
17	5,436'	01°27'01"	68.79'	137.58'

CONTRASTING SURFACE TREATMENT

CONSTRUCTION DETAILS
NO SCALE

C-8

STATE OF CALIFORNIA - DEPARTMENT OF TRANSPORTATION
Caltrans DESIGN
FUNCTIONAL SUPERVISOR DAVID BEARD
CALCULATED-DESIGNED BY JACKSON HO
CHECKED BY STEVE SENET
REVISED BY
DATE REVISED

LAST REVISION 03-18-16
DATE PLOTTED => 12-MAY-2016
TIME PLOTTED => 08:33

Dist	COUNTY	ROUTE	POST MILES TOTAL PROJECT	SHEET No.	TOTAL SHEETS
05	SLO	101	12.4/29.7	11	54

REGISTERED CIVIL ENGINEER 3-18-16 DATE

3-21-16
PLANS APPROVAL DATE

REGISTERED PROFESSIONAL ENGINEER JACKSON S.L. HO No. 75625 Exp 6-30-16 CIVIL STATE OF CALIFORNIA

THE STATE OF CALIFORNIA OR ITS OFFICERS OR AGENTS SHALL NOT BE RESPONSIBLE FOR THE ACCURACY OR COMPLETENESS OF SCANNED COPIES OF THIS PLAN SHEET.

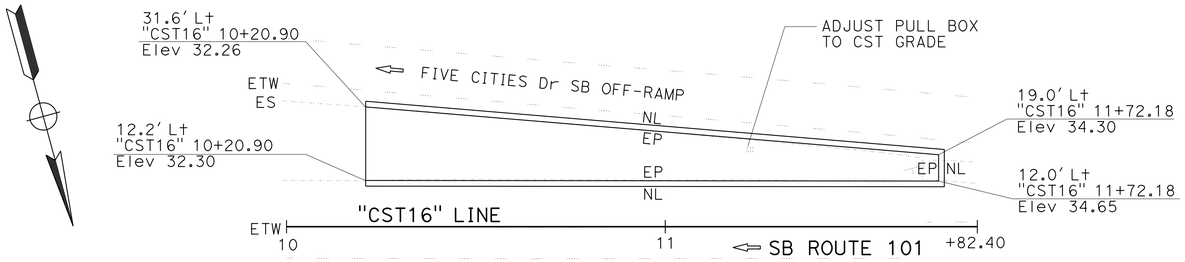

LOCATION No. 16
PM 15.95
SB OFF-RAMP TO FIVE CITIES DRIVE

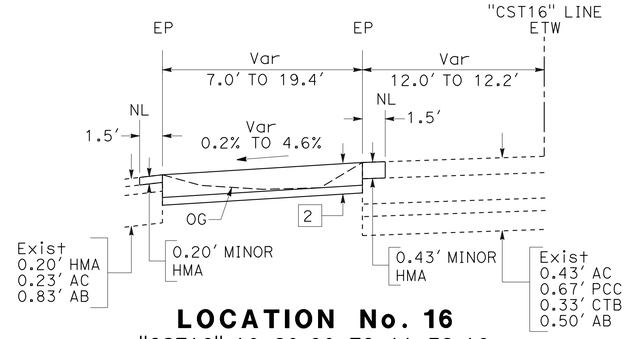

LOCATION No. 16
"CST16" 10+20.90 TO 11+72.18

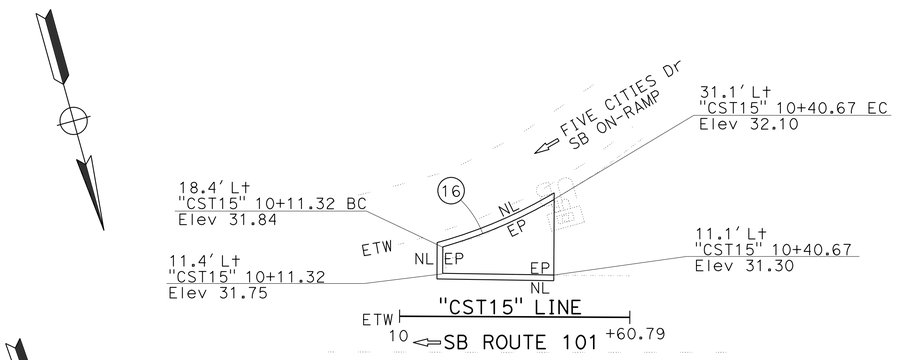

LOCATION No. 15
PM 15.87
SB ON-RAMP FROM FIVE CITIES DRIVE

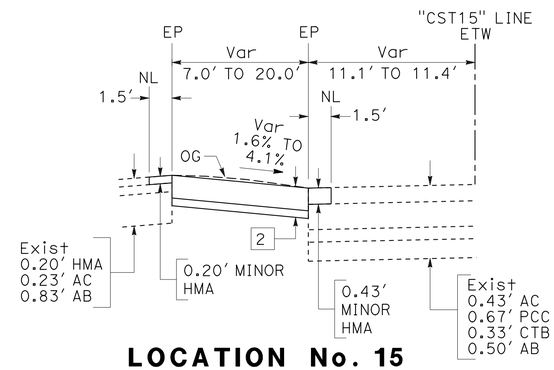

LOCATION No. 15
"CST15" 10+11.32 TO 10+40.67

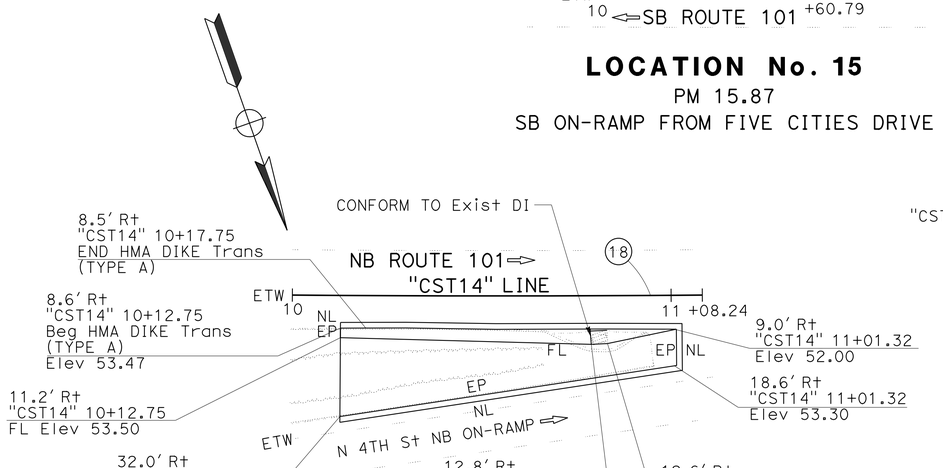

LOCATION No. 14
PM 15.70
NB ON-RAMP FROM N 4TH STREET

CURVE DATA

No. ⊕	R	Δ	T	L
16	126'	14°31"39"	16.11'	32.05'
18	6,462'	00°57'35"	54.12'	108.24'

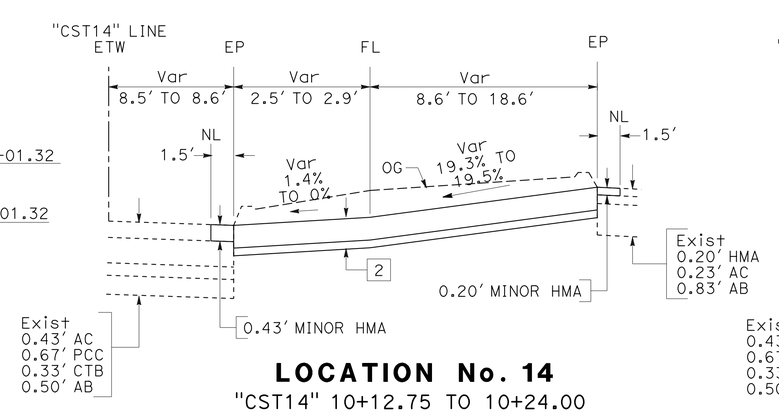

LOCATION No. 14
"CST14" 10+12.75 TO 10+24.00

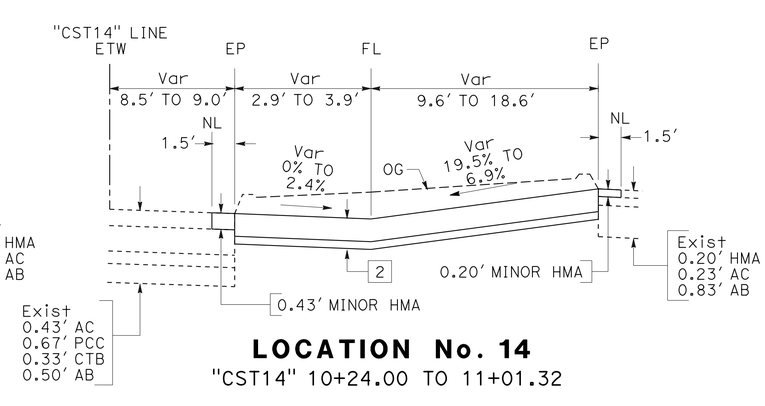

LOCATION No. 14
"CST14" 10+24.00 TO 11+01.32

CONTRASTING SURFACE TREATMENT

CONSTRUCTION DETAILS
NO SCALE

C-9

STATE OF CALIFORNIA - DEPARTMENT OF TRANSPORTATION
Caltrans® DESIGN

FUNCTIONAL SUPERVISOR: DAVID BEARD
CALCULATED-DESIGNED BY: JACKSON HO
CHECKED BY: STEVE SENET
REVISED BY
DATE REVISED

LAST REVISION 03-18-16
DATE PLOTTED => 12-MAY-2016
TIME PLOTTED => 08:33

Dist	COUNTY	ROUTE	POST MILES TOTAL PROJECT	SHEET No.	TOTAL SHEETS
05	SLO	101	12.4/29.7	12	54

REGISTERED CIVIL ENGINEER 3-18-16 DATE

3-21-16
PLANS APPROVAL DATE

REGISTERED PROFESSIONAL ENGINEER JACKSON S.L. HO No. 75625 Exp 6-30-16 CIVIL STATE OF CALIFORNIA

THE STATE OF CALIFORNIA OR ITS OFFICERS OR AGENTS SHALL NOT BE RESPONSIBLE FOR THE ACCURACY OR COMPLETENESS OF SCANNED COPIES OF THIS PLAN SHEET.

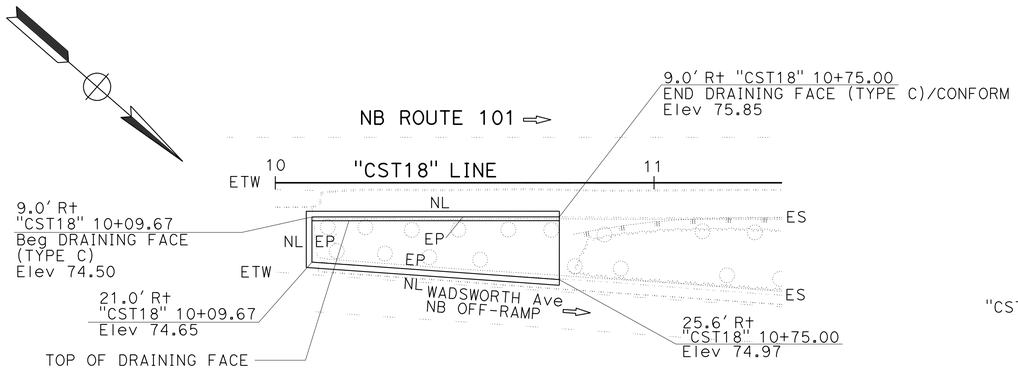

LOCATION No. 18
PM 16.80
NB OFF-RAMP TO WADSWORTH AVENUE

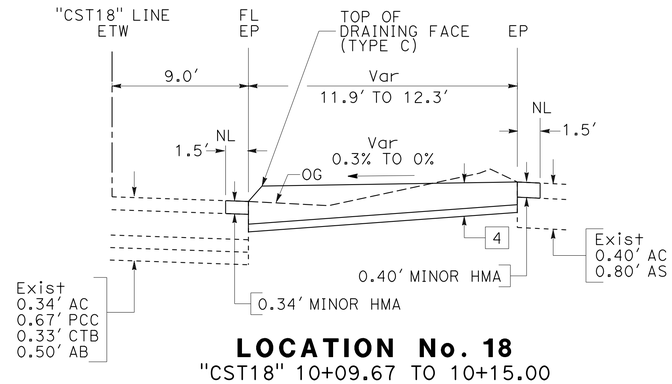

LOCATION No. 18
"CST18" 10+09.67 TO 10+15.00

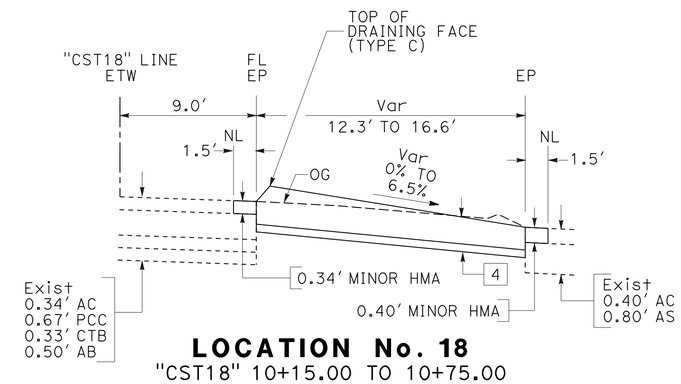

LOCATION No. 18
"CST18" 10+15.00 TO 10+75.00

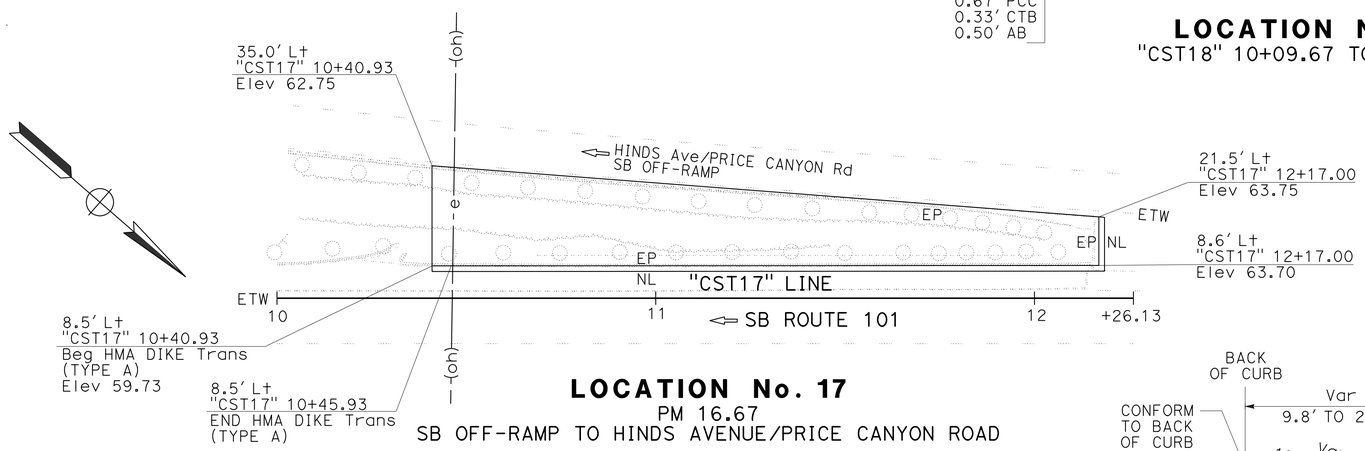

LOCATION No. 17
PM 16.67
SB OFF-RAMP TO HINDS AVENUE/PRICE CANYON ROAD

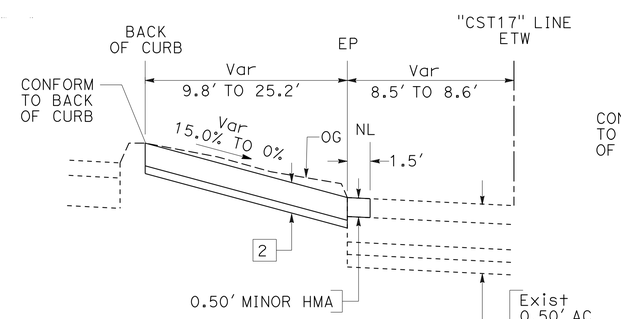

LOCATION No. 17
"CST17" 10+40.93 TO 12+09.00

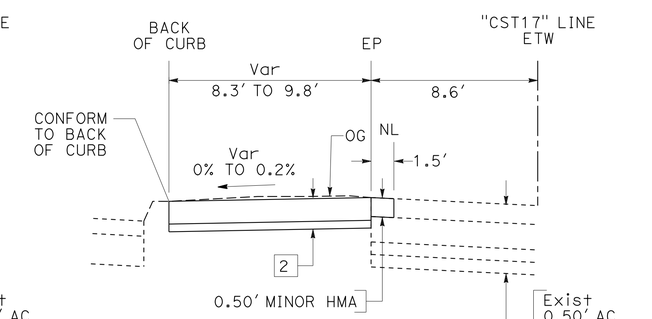

LOCATION No. 17
"CST17" 12+09.00 TO 12+17.00

CONTRASTING SURFACE TREATMENT

CONSTRUCTION DETAILS
NO SCALE

C-10

STATE OF CALIFORNIA - DEPARTMENT OF TRANSPORTATION
Caltrans
DESIGN
FUNCTIONAL SUPERVISOR: DAVID BEARD
CALCULATED-DESIGNED BY: JACKSON HO
CHECKED BY: STEVE SENET
REVISED BY
DATE REVISED

LAST REVISION 03-18-16
DATE PLOTTED => 12-MAY-2016
TIME PLOTTED => 08:33

Dist	COUNTY	ROUTE	POST MILES TOTAL PROJECT	SHEET No.	TOTAL SHEETS
05	SLO	101	12.4/29.7	13	54

REGISTERED CIVIL ENGINEER 3-18-16 DATE

3-21-16
PLANS APPROVAL DATE

REGISTERED PROFESSIONAL ENGINEER JACKSON S.L. HO No. 75625 Exp 6-30-16 CIVIL STATE OF CALIFORNIA

THE STATE OF CALIFORNIA OR ITS OFFICERS OR AGENTS SHALL NOT BE RESPONSIBLE FOR THE ACCURACY OR COMPLETENESS OF SCANNED COPIES OF THIS PLAN SHEET.

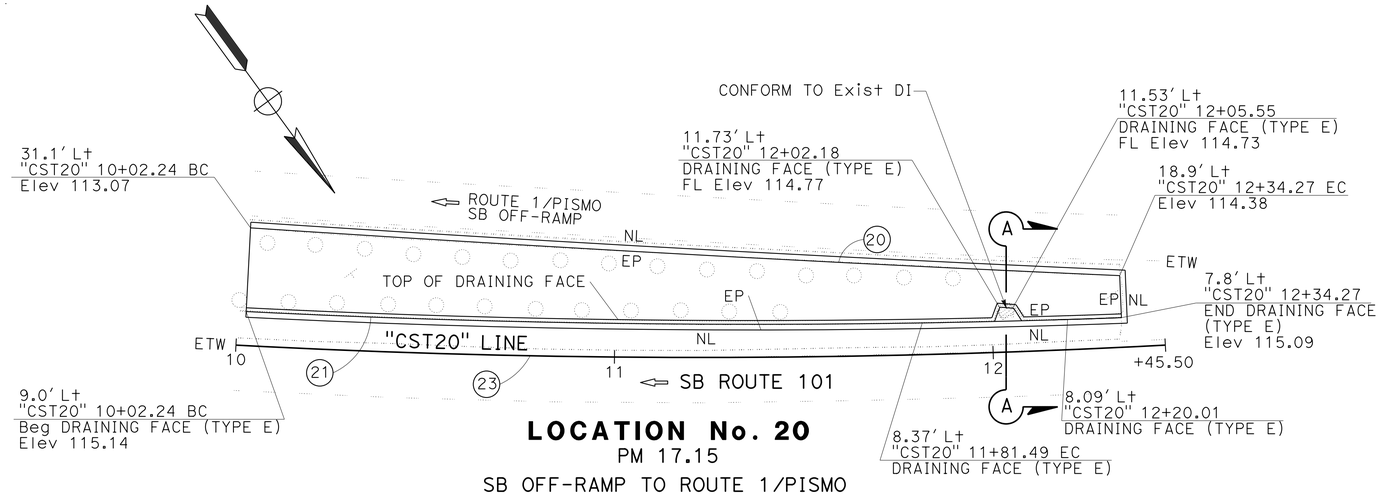

LOCATION No. 20
PM 17.15
SB OFF-RAMP TO ROUTE 1/PISMO

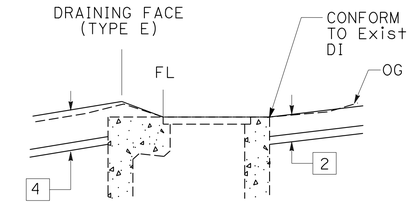

LOCATION No. 20
SECTION A-A

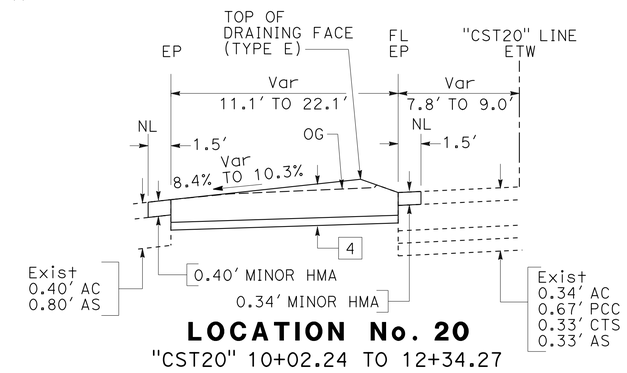

LOCATION No. 20
"CST20" 10+02.24 TO 12+34.27

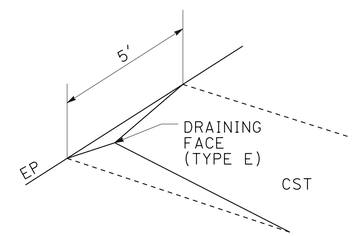

LOCATION No. 19
END PCC DRAINING FACE TRANSITION DETAIL

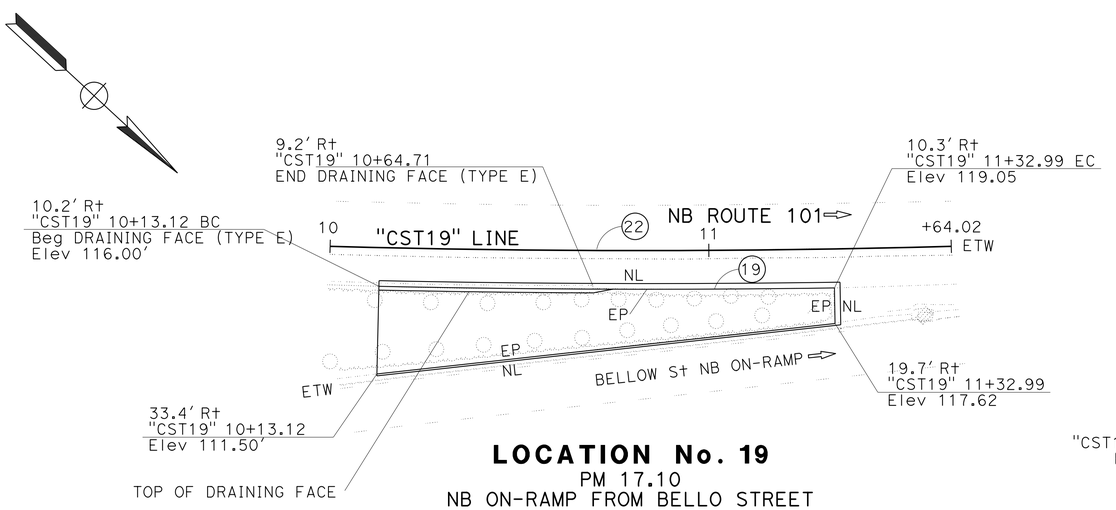

LOCATION No. 19
PM 17.10
NB ON-RAMP FROM BELLO STREET

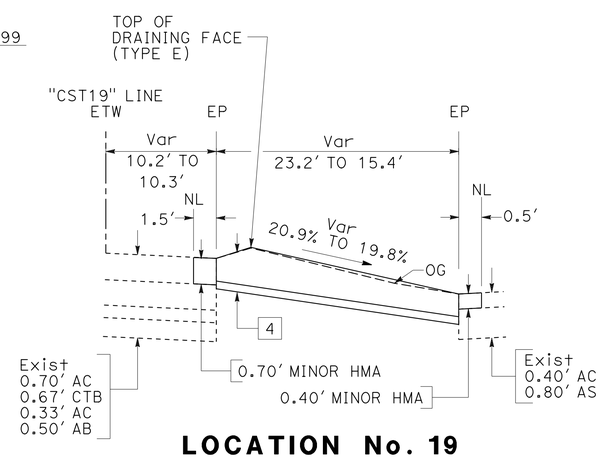

LOCATION No. 19
"CST19" 10+13.12 TO 10+64.71

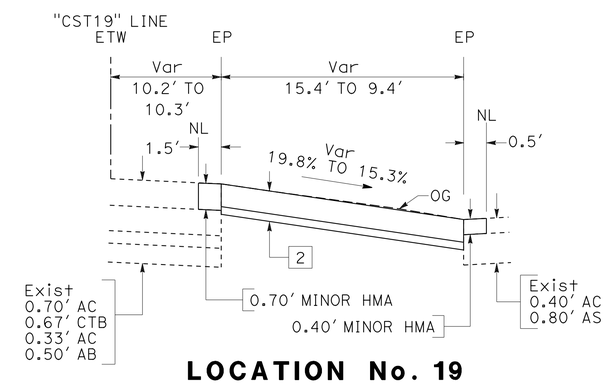

LOCATION No. 19
"CST19" 10+64.71 TO 11+32.99

CURVE DATA

No. ⊕	R	Δ	T	L
19	3,348′	02°03′14"	60.01′	120.01′
20	10,081′	01°18′22"	114.92′	229.83′
21	2,676′	04°56′58"	115.66′	231.17′
22	2,994′	03°08′18"	82.03′	164.02′
23	2,312′	06°04′58"	122.87′	245.51′

CONTRASTING SURFACE TREATMENT

CONSTRUCTION DETAILS
NO SCALE

C-11

STATE OF CALIFORNIA - DEPARTMENT OF TRANSPORTATION
DESIGN
FUNCTIONAL SUPERVISOR: DAVID BEARD
CALCULATED-DESIGNED BY: JACKSON HO
CHECKED BY: STEVE SENET
REVISED BY
DATE REVISED

LAST REVISION 03-18-16
DATE PLOTTED => 12-MAY-2016
TIME PLOTTED => 08:33

Dist	COUNTY	ROUTE	POST MILES TOTAL PROJECT	SHEET No.	TOTAL SHEETS
05	SLO	101	12.4/29.7	14	54

REGISTERED CIVIL ENGINEER 3-18-16 DATE

3-21-16
PLANS APPROVAL DATE

REGISTERED PROFESSIONAL ENGINEER JACKSON S.L. HO No. 75625 Exp 6-30-16 CIVIL STATE OF CALIFORNIA

THE STATE OF CALIFORNIA OR ITS OFFICERS OR AGENTS SHALL NOT BE RESPONSIBLE FOR THE ACCURACY OR COMPLETENESS OF SCANNED COPIES OF THIS PLAN SHEET.

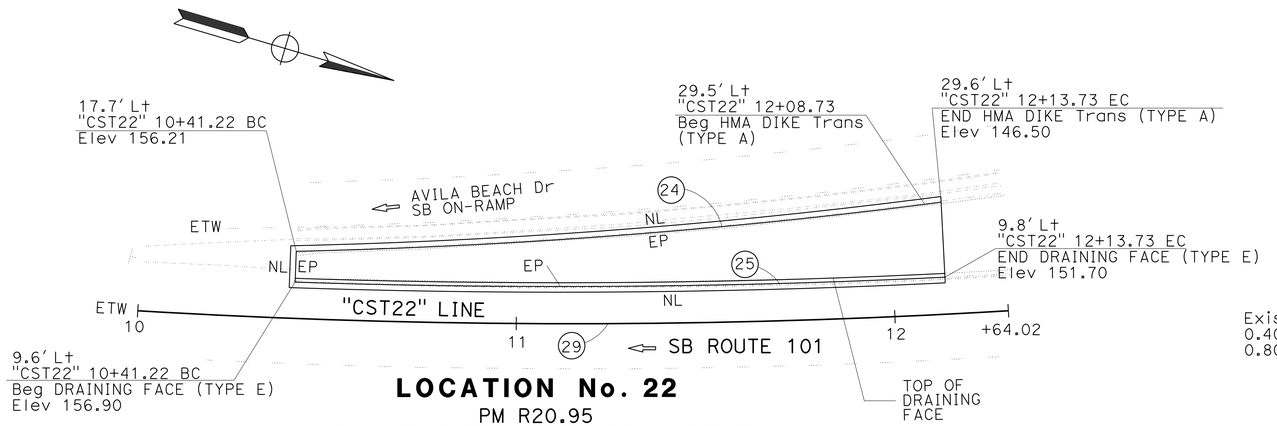

LOCATION No. 22
PM R20.95
SB ON-RAMP FROM AVILA BEACH DRIVE

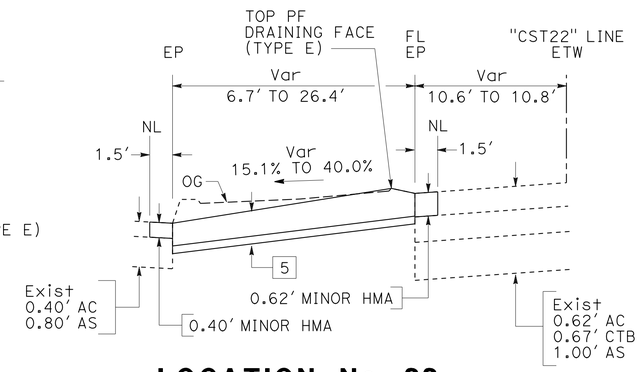

LOCATION No. 22
"CST22" 10+41.22 TO 12+13.73

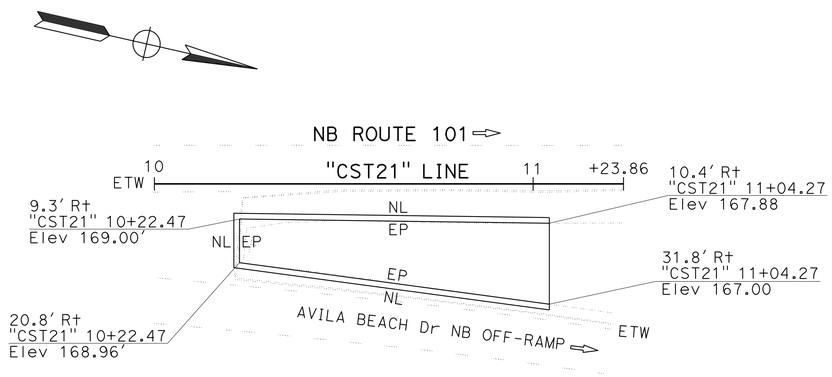

LOCATION No. 21
PM R20.89
NB OFF-RAMP TO AVILA BEACH DRIVE

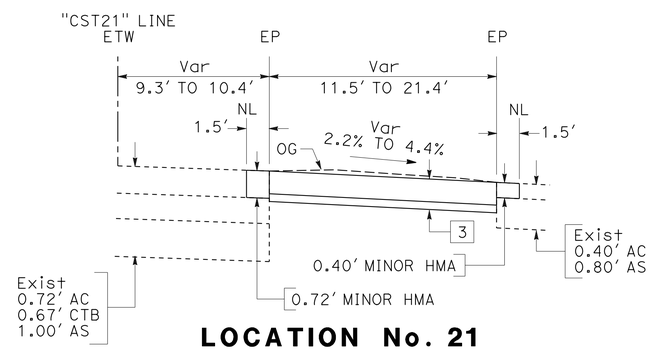

LOCATION No. 21
"CST21" 10+22.47 TO 11+04.27

CURVE DATA

No. ⊕	R	Δ	T	L
24	1,607'	06°05'35"	85.52'	170.87'
25	2,089'	04°42'20"	85.87'	171.65'
29	1,931'	06°49'28"	115.14'	230.00'

CONTRASTING SURFACE TREATMENT

CONSTRUCTION DETAILS
NO SCALE
C-12

STATE OF CALIFORNIA - DEPARTMENT OF TRANSPORTATION
Caltrans
DESIGN
FUNCTIONAL SUPERVISOR: DAVID BEARD
CALCULATED-DESIGNED BY: JACKSON HO
CHECKED BY: STEVE SENET
REVISED BY
DATE REVISED

LAST REVISION 03-18-16
DATE PLOTTED => 12-MAY-2016
TIME PLOTTED => 08:33

Dist	COUNTY	ROUTE	POST MILES TOTAL PROJECT	SHEET No.	TOTAL SHEETS
05	SLO	101	12.4/29.7	15	54

REGISTERED CIVIL ENGINEER 3-18-16 DATE

3-21-16
PLANS APPROVAL DATE

REGISTERED PROFESSIONAL ENGINEER JACKSON S.L. HO No. 75625 Exp 6-30-16 CIVIL STATE OF CALIFORNIA

THE STATE OF CALIFORNIA OR ITS OFFICERS OR AGENTS SHALL NOT BE RESPONSIBLE FOR THE ACCURACY OR COMPLETENESS OF SCANNED COPIES OF THIS PLAN SHEET.

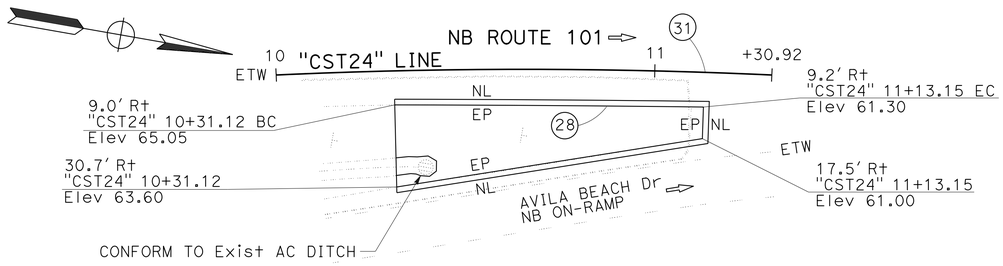

LOCATION No. 24
PM R21.32
NB ON-RAMP FROM AVILA BEACH DRIVE

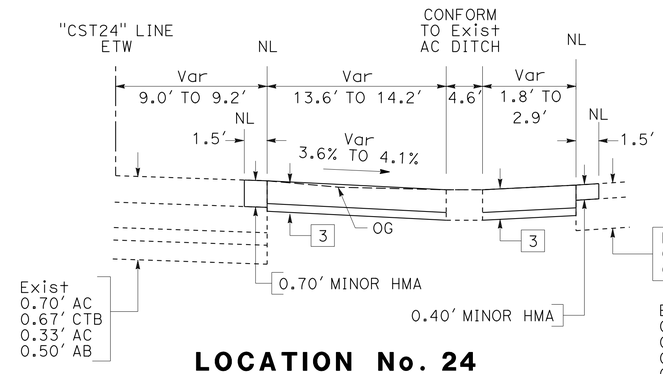

LOCATION No. 24
"CST24" 10+31.12 TO 10+50.00

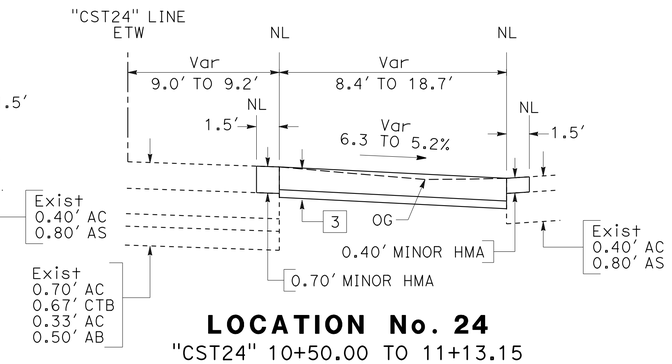

LOCATION No. 24
"CST24" 10+50.00 TO 11+13.15

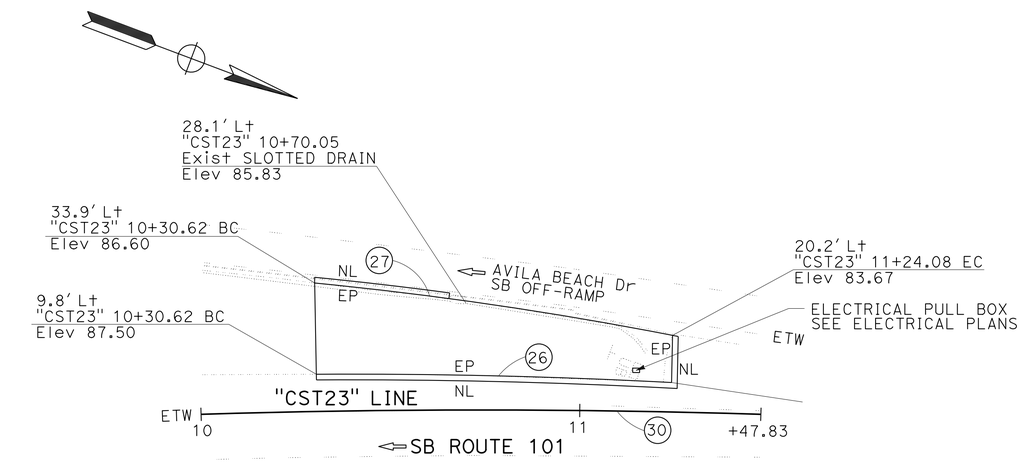

LOCATION No. 23
PM R21.25
SB OFF-RAMP TO AVILA BEACH DRIVE

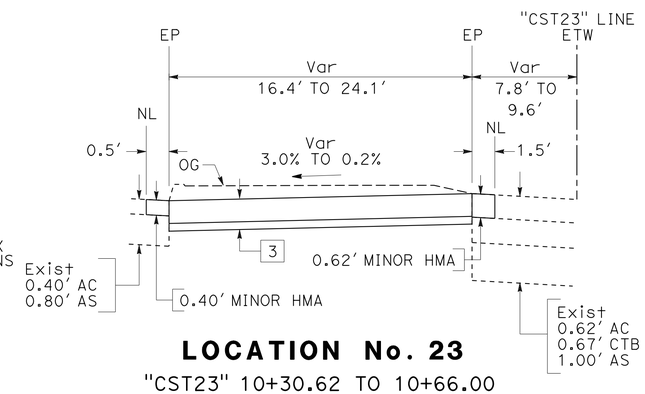

LOCATION No. 23
"CST23" 10+30.62 TO 10+66.00

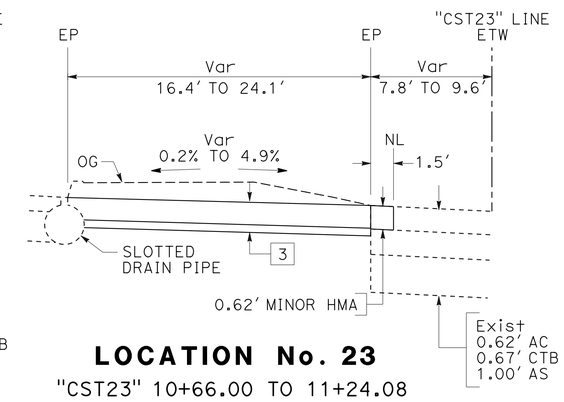

LOCATION No. 23
"CST23" 10+66.00 TO 11+24.08

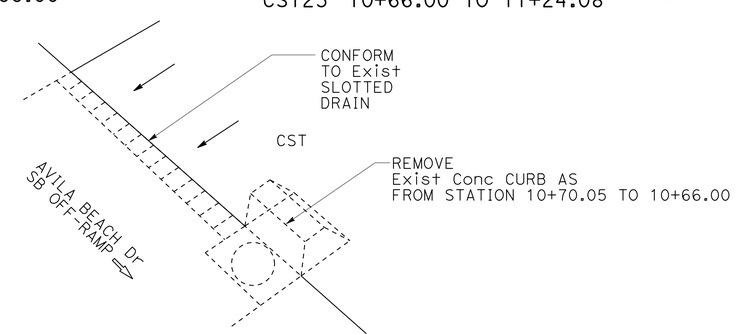

LOCATION No. 23
"CST23" 10+66.00 TO 11+24.08

CURVE DATA

No. ⊕	R	Δ	T	L
26	1,609′	03°20′29"	46.93′	93.84′
27	1,003′	05°27′25"	47.81′	95.54′
28	7,666′	00°36′33"	40.75′	81.50′
30	2,385′	03°33′06"	73.94′	147.83′
31	1,430′	05°14′50"	65.51′	130.92′

CONTRASTING SURFACE TREATMENT

CONSTRUCTION DETAILS
NO SCALE

C-13

STATE OF CALIFORNIA - DEPARTMENT OF TRANSPORTATION
Caltrans
DESIGN
FUNCTIONAL SUPERVISOR: DAVID BEARD
CALCULATED-DESIGNED BY: JACKSON HO
CHECKED BY: STEVE SENET
REVISED BY
DATE REVISED

LAST REVISION 03-18-16 | DATE PLOTTED => 12-MAY-2016 | TIME PLOTTED => 08:33

Dist	COUNTY	ROUTE	POST MILES TOTAL PROJECT	SHEET No.	TOTAL SHEETS
05	SLO	101	12.4/29.7	16	54

REGISTERED CIVIL ENGINEER 3-18-16 DATE

3-21-16
PLANS APPROVAL DATE

REGISTERED PROFESSIONAL ENGINEER JACKSON S.L. HO No. 75625 Exp 6-30-16 CIVIL STATE OF CALIFORNIA

THE STATE OF CALIFORNIA OR ITS OFFICERS OR AGENTS SHALL NOT BE RESPONSIBLE FOR THE ACCURACY OR COMPLETENESS OF SCANNED COPIES OF THIS PLAN SHEET.

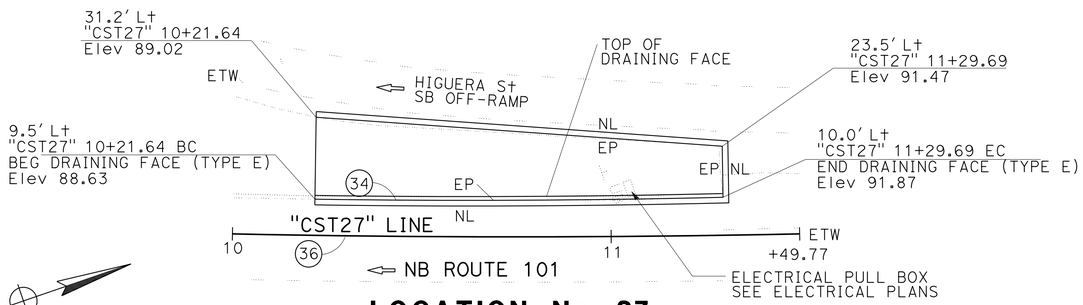

LOCATION No. 27
PM R24.14
SB OFF-RAMP TO HIGUERA STREET

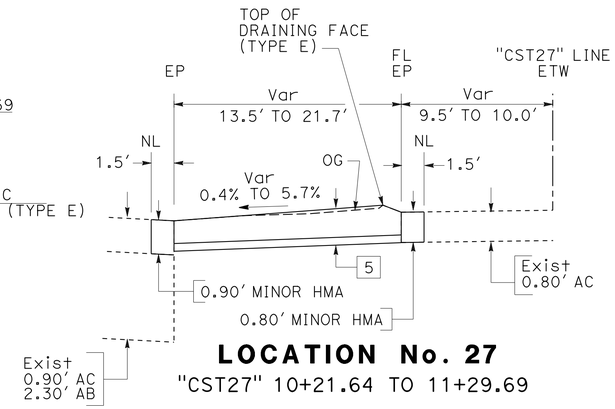

LOCATION No. 27
"CST27" 10+21.64 TO 11+29.69

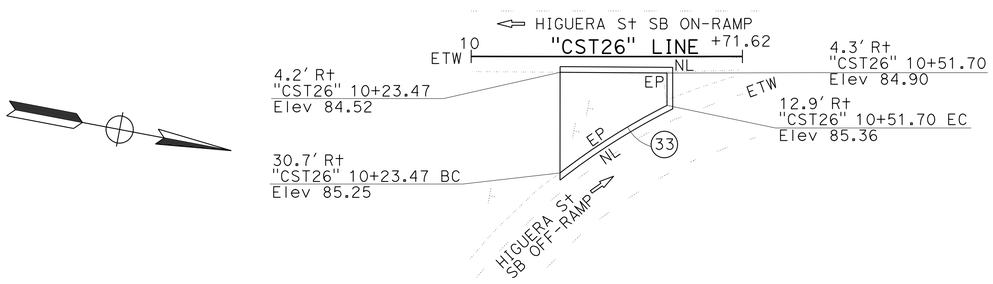

LOCATION No. 26
PM R24.13
SB OFF/ON-RAMP TO/FROM HIGUERA STREET

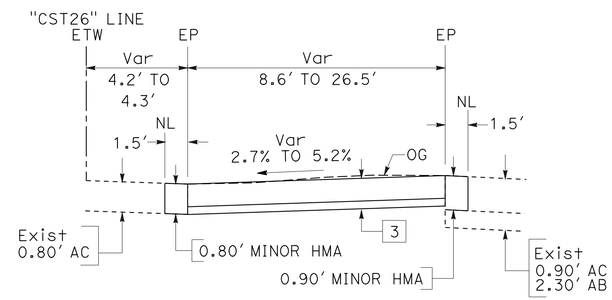

LOCATION No. 26
"CST26" 10+23.47 TO 10+51.70

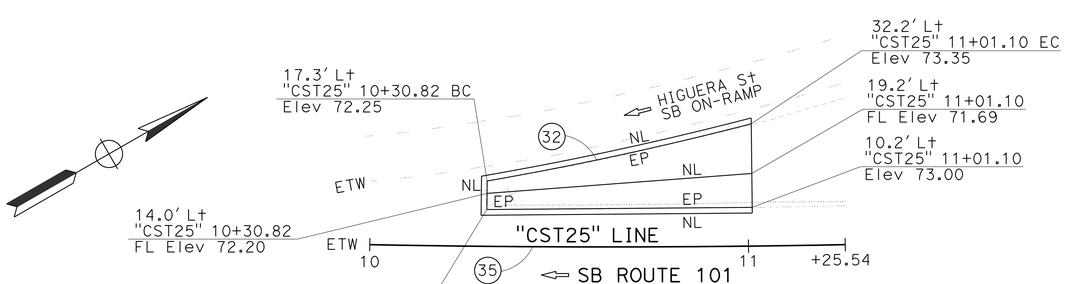

LOCATION No. 25
PM R24.00
SB ON-RAMP FROM HIGUERA STREET

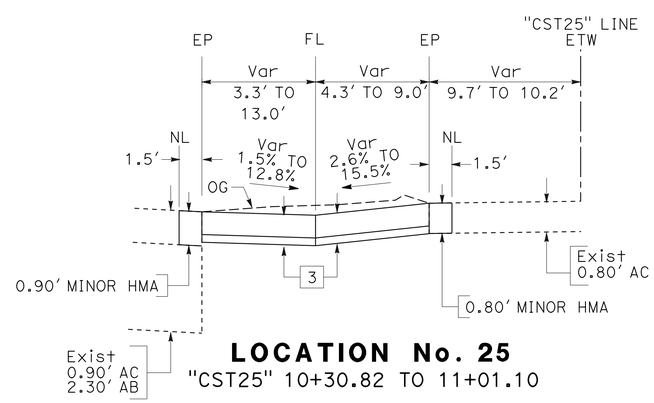

LOCATION No. 25
"CST25" 10+30.82 TO 11+01.10

CURVE DATA

No. ⊕	R	Δ	T	L
32	874'	04°40'41"	35.71'	71.37'
33	173'	11°05'28"	16.79'	33.47'
34	2,774'	02°13'18"	53.79'	107.57'
35	3,287'	02°11'19"	62.78'	125.54'
36	3,573'	02°24'06"	74.89'	149.77'

CONTRASTING SURFACE TREATMENT

CONSTRUCTION DETAILS
NO SCALE
C-14

REVISED BY | DATE REVISED
JACKSON HO | STEVE SENET
CALCULATED-DESIGNED BY | CHECKED BY
FUNCTIONAL SUPERVISOR
DAVID BEARD

STATE OF CALIFORNIA - DEPARTMENT OF TRANSPORTATION
Caltrans
DESIGN

LAST REVISION 03-18-16 | DATE PLOTTED => 12-MAY-2016 | TIME PLOTTED => 08:33

Dist	COUNTY	ROUTE	POST MILES TOTAL PROJECT	SHEET No.	TOTAL SHEETS
05	SLO	101	12.4/29.7	17	54

REGISTERED CIVIL ENGINEER 3-18-16 DATE

3-21-16
PLANS APPROVAL DATE

REGISTERED PROFESSIONAL ENGINEER JACKSON S.L. HO No. 75625 Exp 6-30-16 CIVIL STATE OF CALIFORNIA

THE STATE OF CALIFORNIA OR ITS OFFICERS OR AGENTS SHALL NOT BE RESPONSIBLE FOR THE ACCURACY OR COMPLETENESS OF SCANNED COPIES OF THIS PLAN SHEET.

NOTE (THIS SHEET ONLY):

1. ALL IRRIGATION EQUIPMENT TO REMAIN AND BE PROTECTED IN PLACE.

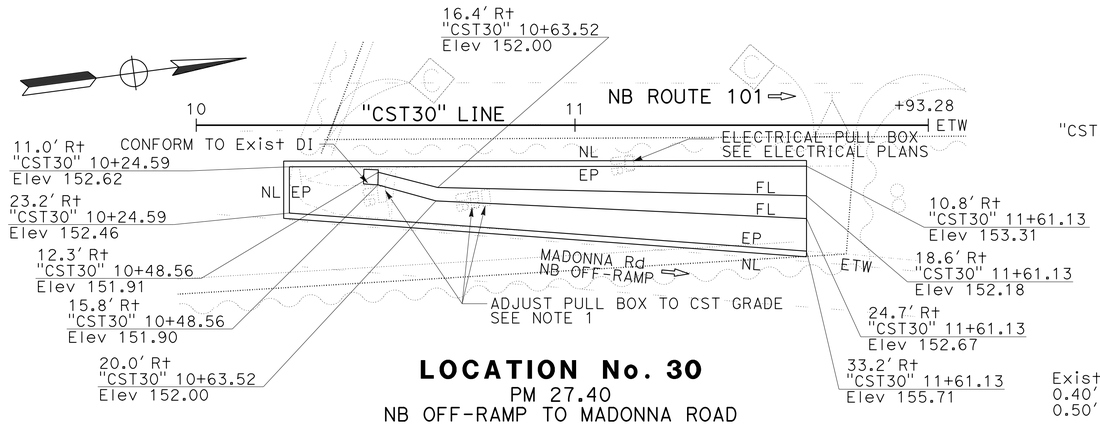

LOCATION No. 30
PM 27.40
NB OFF-RAMP TO MADONNA ROAD

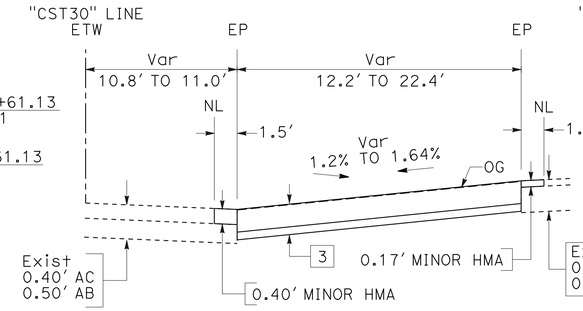

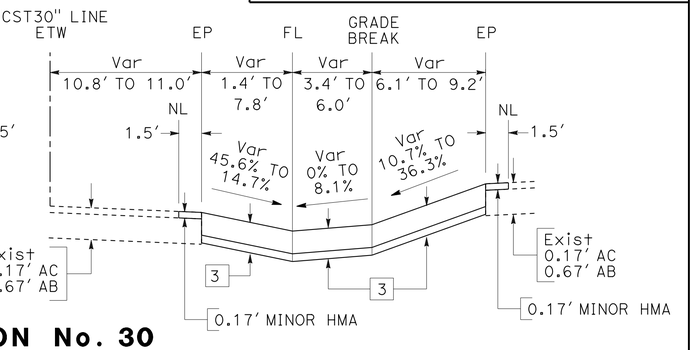

LOCATION No. 30
"CST30" 10+24.59 TO 10+48.56 "CST30" 10+48.56 TO 11+61.13

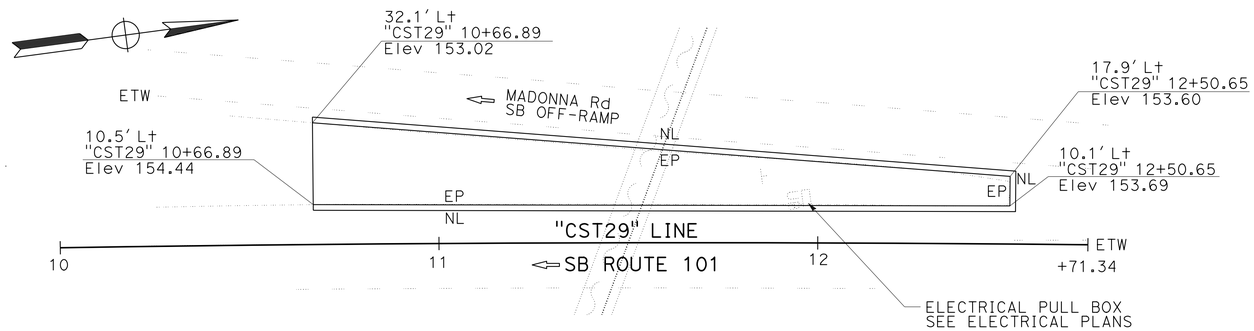

LOCATION No. 29
PM 27.39
SB OFF-RAMP TO MADONNA ROAD

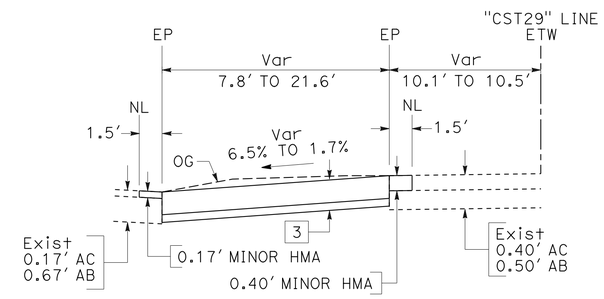

LOCATION No. 29
"CST29" 10+66.89 TO 12+50.65

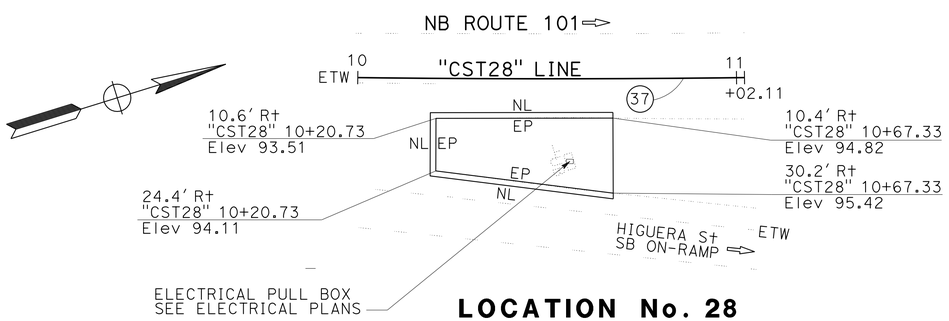

LOCATION No. 28
PM R24.15
NB OFF-RAMP FROM HIGUERA STREET

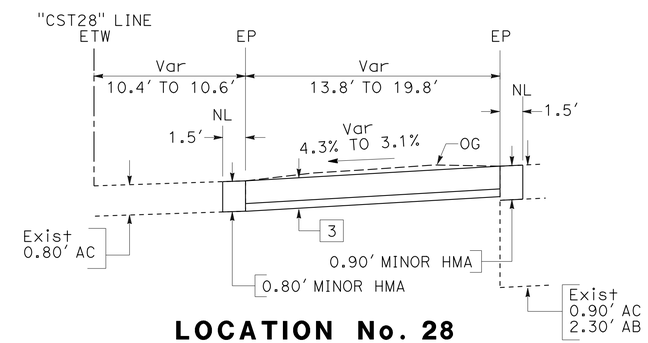

LOCATION No. 28
"CST28" 10+20.73 TO 10+67.33

CURVE DATA

No. ⊕	R	Δ	T	L
37	4,165'	01°24'17"	51.06'	102.11'

CONTRASTING SURFACE TREATMENT

CONSTRUCTION DETAILS

NO SCALE

C-15

STATE OF CALIFORNIA - DEPARTMENT OF TRANSPORTATION
Caltrans
DESIGN
FUNCTIONAL SUPERVISOR: DAVID BEARD
CALCULATED-DESIGNED BY: JACKSON HO
CHECKED BY: STEVE SENET
REVISED BY
DATE REVISED

LAST REVISION 03-18-16
DATE PLOTTED => 12-MAY-2016
TIME PLOTTED => 08:33

Dist	COUNTY	ROUTE	POST MILES TOTAL PROJECT	SHEET No.	TOTAL SHEETS
05	SLO	101	12.4/29.7	18	54

REGISTERED CIVIL ENGINEER 3-18-16 DATE

3-21-16
PLANS APPROVAL DATE

REGISTERED PROFESSIONAL ENGINEER JACKSON S.L. HO No. 75625 Exp 6-30-16 CIVIL STATE OF CALIFORNIA

THE STATE OF CALIFORNIA OR ITS OFFICERS OR AGENTS SHALL NOT BE RESPONSIBLE FOR THE ACCURACY OR COMPLETENESS OF SCANNED COPIES OF THIS PLAN SHEET.

LEGEND (THIS SHEET ONLY):

HOT MIX ASPHALT

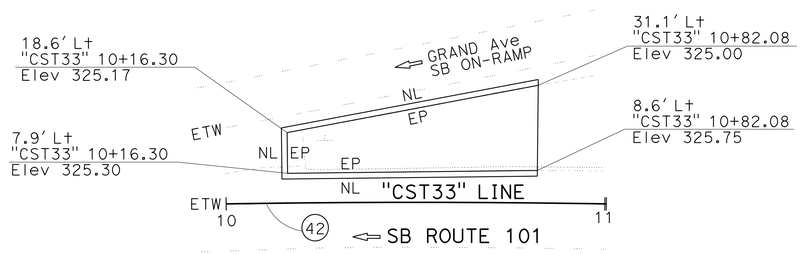

LOCATION No. 33
PM 29.66
SB ON-RAMP FROM GRAND AVENUE

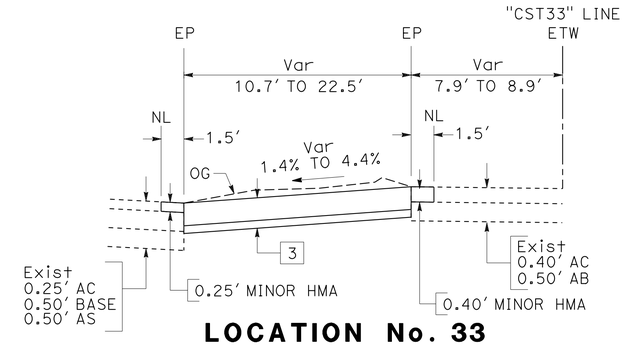

LOCATION No. 33
"CST33" 10+16.30 TO 10+82.08

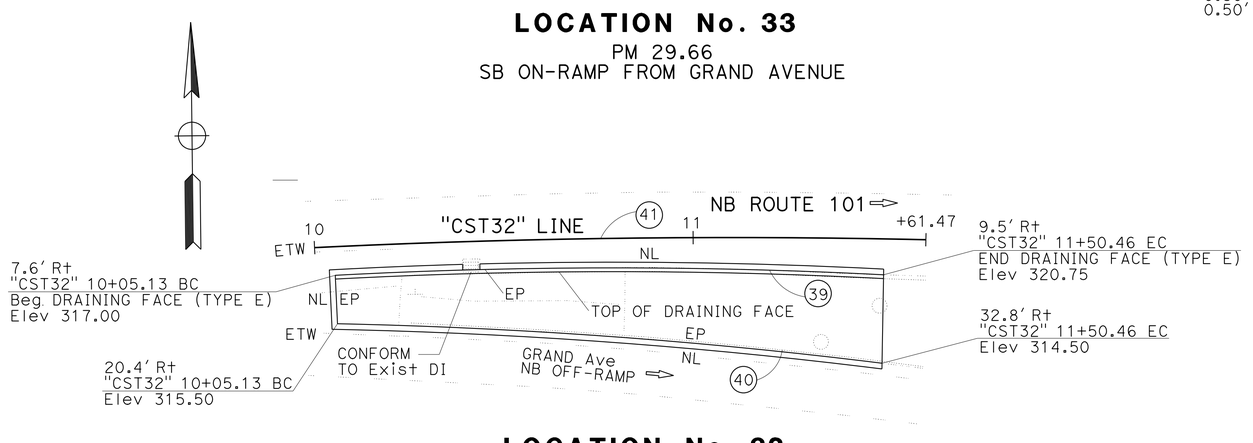

LOCATION No. 32
PM 29.65
NB OFF-RAMP TO GRAND AVENUE

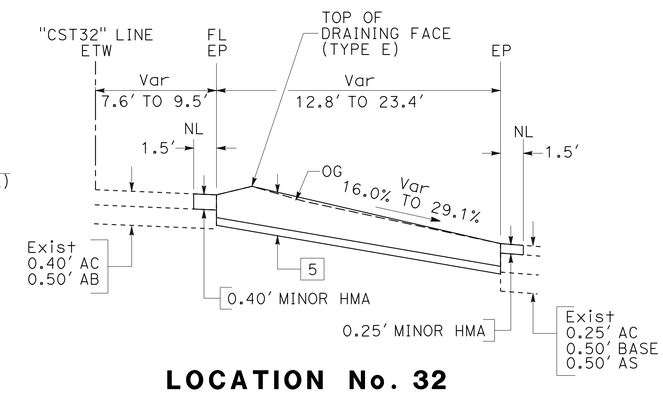

LOCATION No. 32
"CST32" 10+05.13 TO 11+50.46

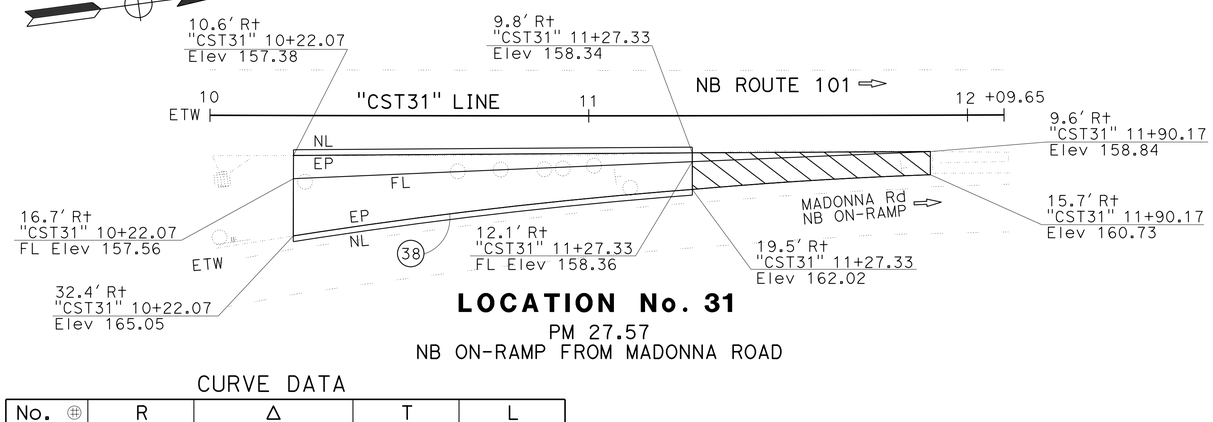

LOCATION No. 31
PM 27.57
NB ON-RAMP FROM MADONNA ROAD

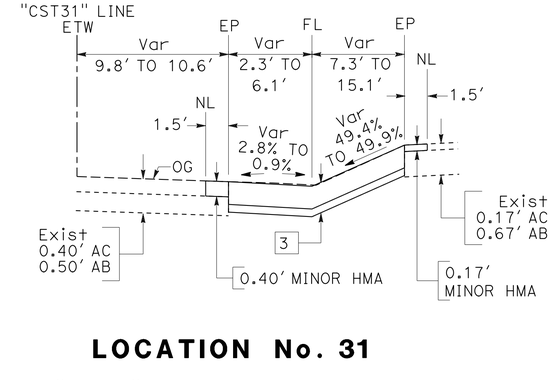

LOCATION No. 31
"CST31" 10+22.07 TO 11+27.33

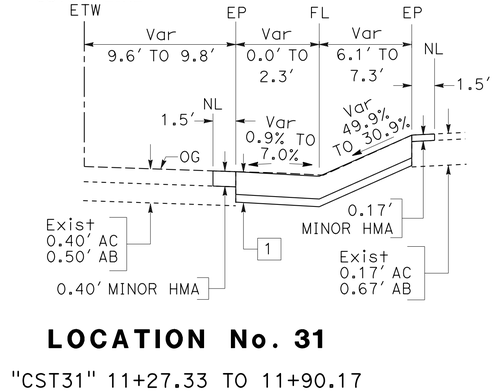

LOCATION No. 31
"CST31" 11+27.33 TO 11+90.17

CURVE DATA

No. ⊕	R	Δ	T	L
38	1,333'	04°44'06"	55.13'	110.20'
39	1,384'	05°59'49"	72.49'	144.84'
40	1,408'	05°52'01"	72.17'	144.22'
41	2,283'	04°03'08"	80.77'	161.47'
42	3,068'	01°52'29"	50.20'	100.39'

CONTRASTING SURFACE TREATMENT

CONSTRUCTION DETAILS
NO SCALE

C-16

STATE OF CALIFORNIA - DEPARTMENT OF TRANSPORTATION
Caltrans
DESIGN
FUNCTIONAL SUPERVISOR: DAVID BEARD
CALCULATED-DESIGNED BY: JACKSON HO
CHECKED BY: STEVE SENET
REVISED BY
DATE REVISED

LAST REVISION 03-18-16 | DATE PLOTTED => 12-MAY-2016 | TIME PLOTTED => 08:33

Dist	COUNTY	ROUTE	POST MILES TOTAL PROJECT	SHEET No.	TOTAL SHEETS
05	SLO	101	12.4/29.7	19	54

LICENSED LANDSCAPE ARCHITECT

3-21-16
PLANS APPROVAL DATE

LICENSED LANDSCAPE ARCHITECT Laurie D. Dunn No. 3549 Signature 4-30-16 Renewal Date 3-18-16 Date STATE OF CALIFORNIA

THE STATE OF CALIFORNIA OR ITS OFFICERS OR AGENTS SHALL NOT BE RESPONSIBLE FOR THE ACCURACY OR COMPLETENESS OF SCANNED COPIES OF THIS PLAN SHEET.

ABBREVIATIONS:

CST - CONTRASTING SURFACE TREATMENT

REMOVE/RELOCATE IRRIGATION FACILITY LOCATIONS

SHEET No.	Loc No.	(N) LATERAL PIPE	(N) SPRINKLERS	(N) MAINLINE	(N) VALVES	(N) IRRIGATION CONDUIT	REMARKS
NOT SHOWN ON PLANS	5	X	X				CAP BEYOND CST
	7			X		X	REROUTE MAINLINE AS NECESSARY, RELOCATE 2" GV
	9	X	X	X	X	X	CAP BEYOND CST, RELOCATE 2" GV, 2" RCV, AND 1" WS
	12			X		X	REROUTE MAINLINE AS NECESSARY
	15	X		X		X	REROUTE MAINLINE AND LATERAL AS NECESSARY
	16	X		X		X	REROUTE MAINLINE AND LATERAL AS NECESSARY
	17	X	X				CAP BEYOND CST
	19	X	X				CAP BEYOND CST
	20	X	X				CAP BEYOND CST
	31	X	X				CAP BEYOND CST
	32	X	X				CAP BEYOND CST
	33	X	X				CAP BEYOND CST

(N) - NOT A SEPARATE PAY ITEM, FOR INFORMATION ONLY

PRUNE EXISTING PLANTS LOCATIONS

SHEET No.	Loc No.	PRUNE PLANTS	REMARKS
NOT SHOWN ON PLANS	5	X	PRUNE SHRUBS AND GROUNDCOVER 5 FEET BEYOND CST
	7	X	
	9	X	
	12	X	
	15	X	
	16	X	
	17	X	
	19	X	
	20	X	
	31	X	
	32	X	
	33	X	

CONSTRUCTION DETAILS

C-17

REVISED BY | DATE REVISED

LAURIE D. DUNN (CUMMINGS) | SCOTT DOWLAN

CALCULATED-DESIGNED BY | CHECKED BY

SENIOR LANDSCAPE ARCHITECT | DENNIS REEVES

STATE OF CALIFORNIA - DEPARTMENT OF TRANSPORTATION

Caltrans® LANDSCAPE ARCHITECTURE

LAST REVISION 03-18-16 | DATE PLOTTED => 12-MAY-2016 TIME PLOTTED => 08:33

Dist	COUNTY	ROUTE	POST MILES TOTAL PROJECT	SHEET No.	TOTAL SHEETS
05	SLO	101	12.4/29.7	20	54

REGISTERED CIVIL ENGINEER 3-10-16 DATE

3-21-16
PLANS APPROVAL DATE

REGISTERED PROFESSIONAL ENGINEER FAWZI YAGHMOUR No. 54750 Exp. 12-31-17 CIVIL STATE OF CALIFORNIA

THE STATE OF CALIFORNIA OR ITS OFFICERS OR AGENTS SHALL NOT BE RESPONSIBLE FOR THE ACCURACY OR COMPLETENESS OF SCANNED COPIES OF THIS PLAN SHEET.

NOTES:
1. EXACT SIGN LOCATIONS TO BE DETERMINED BY THE ENGINEER.
2. FOR SIGN "C40" (TRAFFIC FINES DOUBLED IN CONSTRUCTION ZONES), ALL LETTERS MUST BE BLACK ON WHITE BACKGROUND.

STATIONARY MOUNTED CONSTRUCTION AREA SIGNS

SIGN No.	SIGN CODE FEDERAL	SIGN CODE CALIFORNIA	PANEL SIZE	SIGN MESSAGE	No. OF POST AND POST SIZE	No. OF SIGN
A	W20-1		60" x 60"	ROAD WORK AHEAD	2 - 6" x 6"	2
B	W20-1		48" x 48"	ROAD WORK AHEAD	1 - 6" x 6"	32
C	G20-2		36" x 18"	END ROAD WORK	1 - 4" x 4"	15
D		C40	108" x 42"	TRAFFIC FINES DOUBLED IN CONSTRUCTION ZONES	2 - 6" x 6"	2

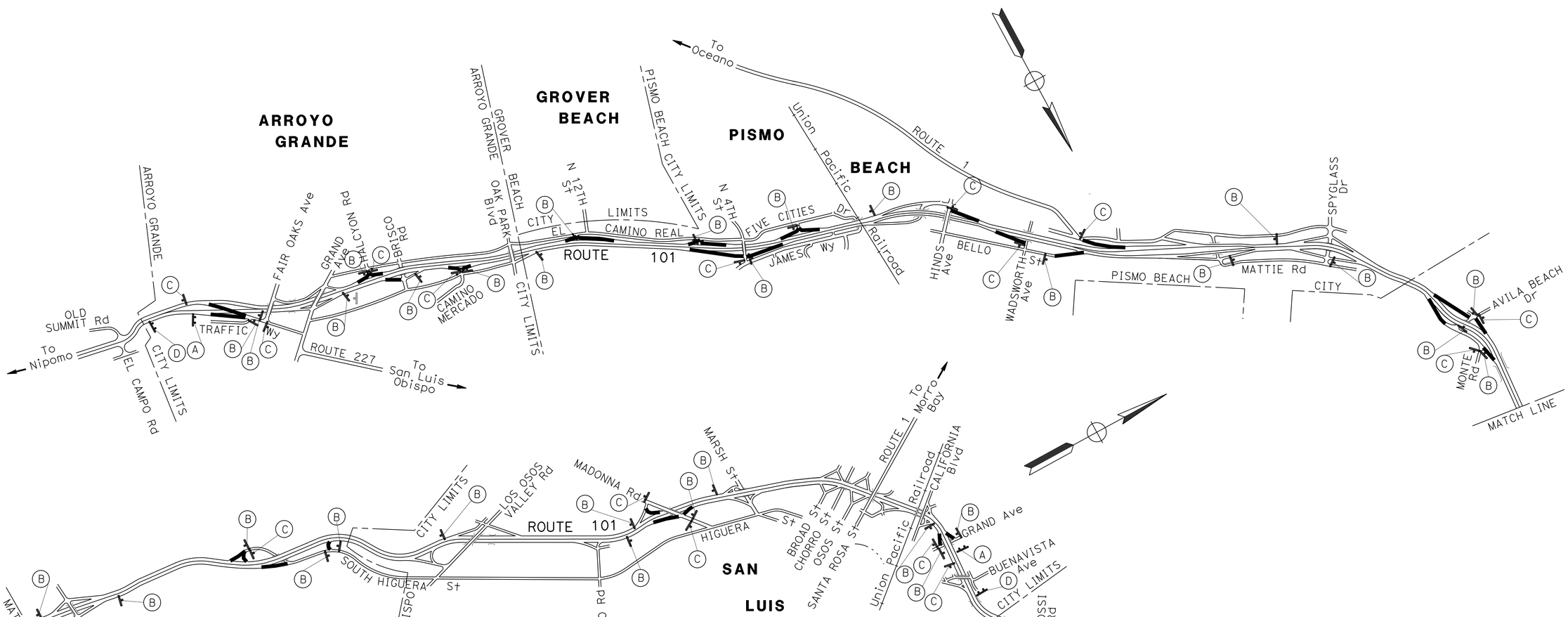

APPROVED FOR CONSTRUCTION AREA SIGN WORK ONLY

CONSTRUCTION AREA SIGNS

NO SCALE

CS-1

STATE OF CALIFORNIA - DEPARTMENT OF TRANSPORTATION
Caltrans® **TRAFFIC DESIGN**

FUNCTIONAL SUPERVISOR: MOHAMMED QATAMI
CALCULATED-DESIGNED BY: FAWZI YAGHMOUR
CHECKED BY: GURMIT GILL
REVISED BY
DATE REVISED

LAST REVISION 03-10-16
DATE PLOTTED => 12-MAY-2016
TIME PLOTTED => 08:33

Dist	COUNTY	ROUTE	POST MILES TOTAL PROJECT	SHEET No.	TOTAL SHEETS
05	SLO	101	12.4/29.7	21	54

REGISTERED CIVIL ENGINEER DATE 3-10-16

3-21-16
PLANS APPROVAL DATE

REGISTERED PROFESSIONAL ENGINEER FAWZI YAGHMOUR No. 54750 Exp. 12-31-17 CIVIL STATE OF CALIFORNIA

THE STATE OF CALIFORNIA OR ITS OFFICERS OR AGENTS SHALL NOT BE RESPONSIBLE FOR THE ACCURACY OR COMPLETENESS OF SCANNED COPIES OF THIS PLAN SHEET.

PAVEMENT DELINEATION QUANTITIES

LOCATION No.	SHEET No.	REMOVE DELINEATOR	REMOVE OBJECT MARKER	OBJECT MARKER	DELINEATOR (CLASS 1)		
				TYPE L	FLEXIBLE POST		FLEXIBLE POST SURFACE MOUNTED
					(TYPE F)	(TYPE G)	(TYPE G)
		EA	EA	EA	EA		EA
1	S-1	1				1	
2	S-1	2				1	
3	S-1		1	1			
4	S-2	4					4
5	S-1	1				1	
6	S-1	3				1	
7	S-2	3				2	
8	S-2	2				1	1
9	S-2	3				2	1
10	S-2	2			1	1	
11	S-3	1	1	1		1	
12	S-3	1				1	
13	S-3	1				1	
14	S-3	1				1	
15	S-3	1				1	
16	S-3	1				1	
17	S-4	1	1	2		1	
18	S-4		1	1		1	
19	S-4	2			1	1	
20	S-4	3			1	1	
21	S-4	1				1	
22	S-5	1				1	
23	S-5	2			1	1	
24	S-5	2				1	1
25	S-5	2				1	
26	S-5	2	1	1	1	1	
27	S-5	1	1	1	1	1	
28	S-6	2	1	1	1	1	
29	S-6	1	1	1	1	1	
30	S-6	1	1	1		1	
31	S-6	2	1	1		1	1
32	S-6	1	1	1	1		
33	S-6	2			1	1	
SUBTOTAL THIS SHEET		53	11	12	9	32	8
TOTAL FROM SQ-2				19			
TOTAL		53	11	31	49		

PAVEMENT DELINEATION QUANTITIES
PDQ-1

STATE OF CALIFORNIA - DEPARTMENT OF TRANSPORTATION
Caltrans® TRAFFIC DESIGN

FUNCTIONAL SUPERVISOR: MOHAMMED QATAMI
CALCULATED-DESIGNED BY: GURMIT GILL
CHECKED BY: FAWZI YAGHMOUR
REVISED BY
DATE REVISED

LAST REVISION 03-10-16 | DATE PLOTTED => 12-MAY-2016 | TIME PLOTTED => 08:33

Dist	COUNTY	ROUTE	POST MILES TOTAL PROJECT	SHEET No.	TOTAL SHEETS
05	SLO	101	12.4/29.7	22	54

REGISTERED CIVIL ENGINEER 3-10-16 DATE

3-21-16
PLANS APPROVAL DATE

REGISTERED PROFESSIONAL ENGINEER FAWZI YAGHMOUR No. 54750 Exp. 12-31-17 CIVIL STATE OF CALIFORNIA

THE STATE OF CALIFORNIA OR ITS OFFICERS OR AGENTS SHALL NOT BE RESPONSIBLE FOR THE ACCURACY OR COMPLETENESS OF SCANNED COPIES OF THIS PLAN SHEET.

LEGEND:

- ⊠ RESET ROADSIDE SIGN
- (X-X) ROADSIDE SIGN NUMBER
- I_G DELINEATOR TYPE G (CLASS 1)
- I_F DELINEATOR TYPE F (CLASS 1)
- I_L OBJECT MARKER TYPE L (CA) (OM2-1V) OR (OM2-2V)
- I_K OBJECT MARKER TYPE K (CA) (OM2-2H) OR (OM2-1H)
- I_N OBJECT MARKER TYPE N (CA) (OM1-3) OR (OM4-3)
- ● REMOVE DELINEATOR (CLASS 1)/OBJECT MARKER
- △ REMOVE AND INSTALL ROADSIDE SIGN /OBJECT MARKER

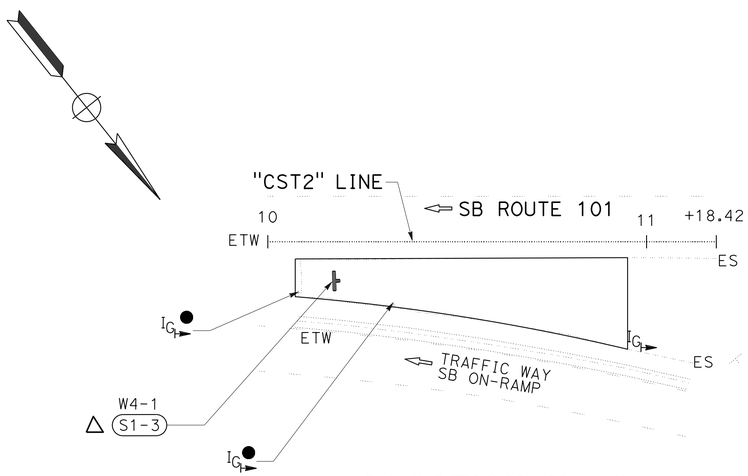

LOCATION No. 2
PM 12.50
SB ON-RAMP FROM TRAFFIC WAY

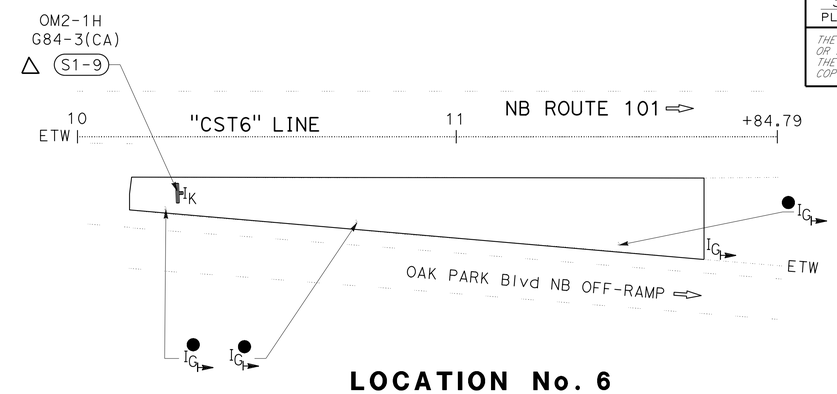

LOCATION No. 6
PM 14.20
NB OFF-RAMP TO OAK PARK BOULEVARD

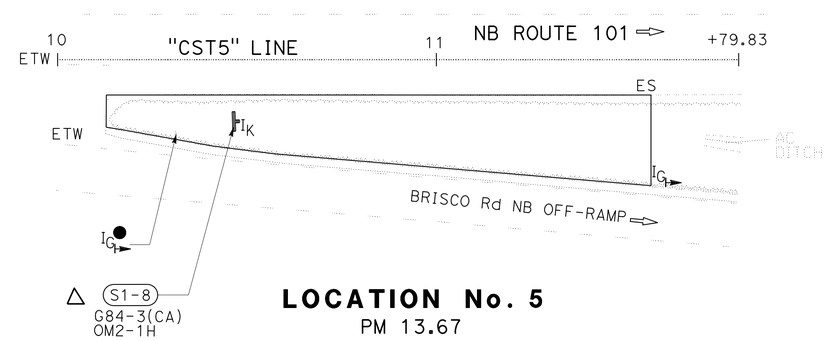

LOCATION No. 5
PM 13.67
NB OFF-RAMP TO BRISCO ROAD

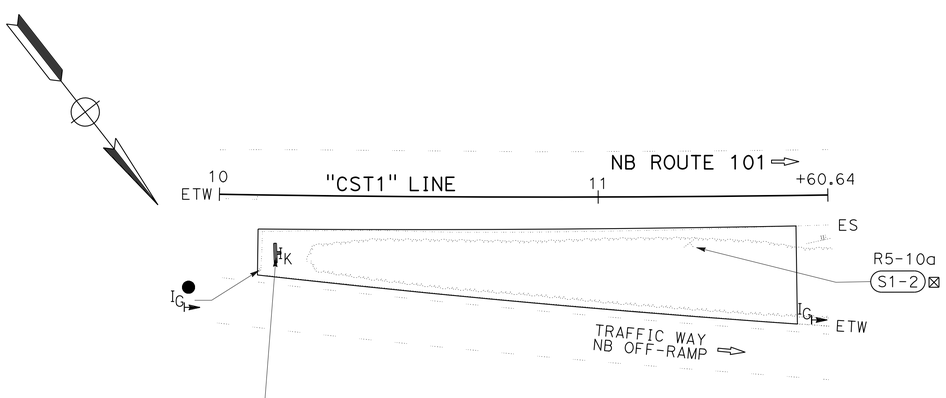

LOCATION No. 1
PM 12.45
NB OFF-RAMP TO TRAFFIC WAY

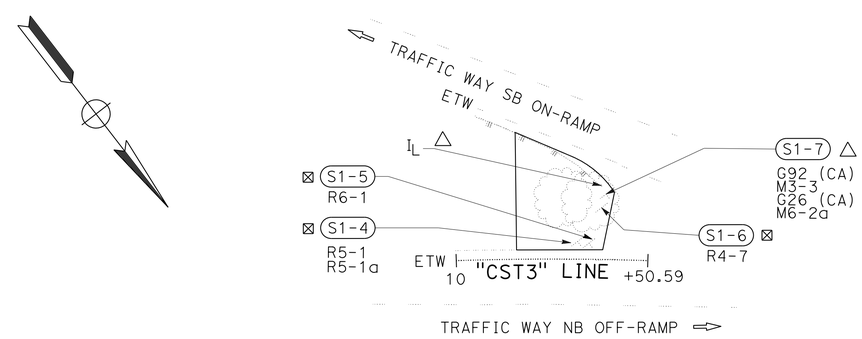

LOCATION No. 3
PM 12.55
NB OFF/ON-RAMP TO/FROM TRAFFIC WAY

APPROVED FOR SIGN WORK ONLY

SIGN PLAN
NO SCALE **S-1**

REVISED BY	DATE REVISED
GURMIT GILL	FAWZI YAGHMOUR
CALCULATED-DESIGNED BY	CHECKED BY
FUNCTIONAL SUPERVISOR	MOHAMMED QATAMI

STATE OF CALIFORNIA - DEPARTMENT OF TRANSPORTATION
Caltrans
TRAFFIC DESIGN

LAST REVISION 03-10-16 | DATE PLOTTED => 12-MAY-2016 | TIME PLOTTED => 08:33

Dist	COUNTY	ROUTE	POST MILES TOTAL PROJECT	SHEET No.	TOTAL SHEETS
05	SLO	101	12.4/29.7	23	54

REGISTERED CIVIL ENGINEER 3-10-16 DATE

3-21-16
PLANS APPROVAL DATE

REGISTERED PROFESSIONAL ENGINEER FAWZI YAGHMOUR No. 54750 Exp. 12-31-17 CIVIL STATE OF CALIFORNIA

THE STATE OF CALIFORNIA OR ITS OFFICERS OR AGENTS SHALL NOT BE RESPONSIBLE FOR THE ACCURACY OR COMPLETENESS OF SCANNED COPIES OF THIS PLAN SHEET.

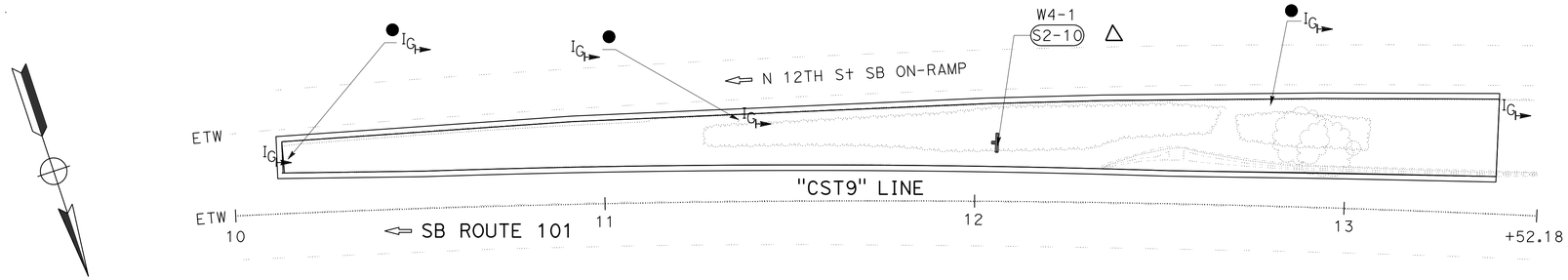

LOCATION No. 9

PM 14.80
SB ON-RAMP FROM N 12TH STREET

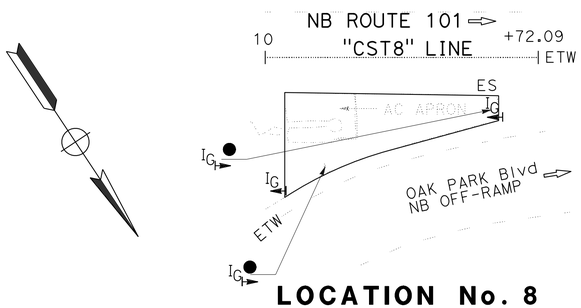

LOCATION No. 8

PM 14.30
NB ON-RAMP FROM OAK PARK BOULEVARD

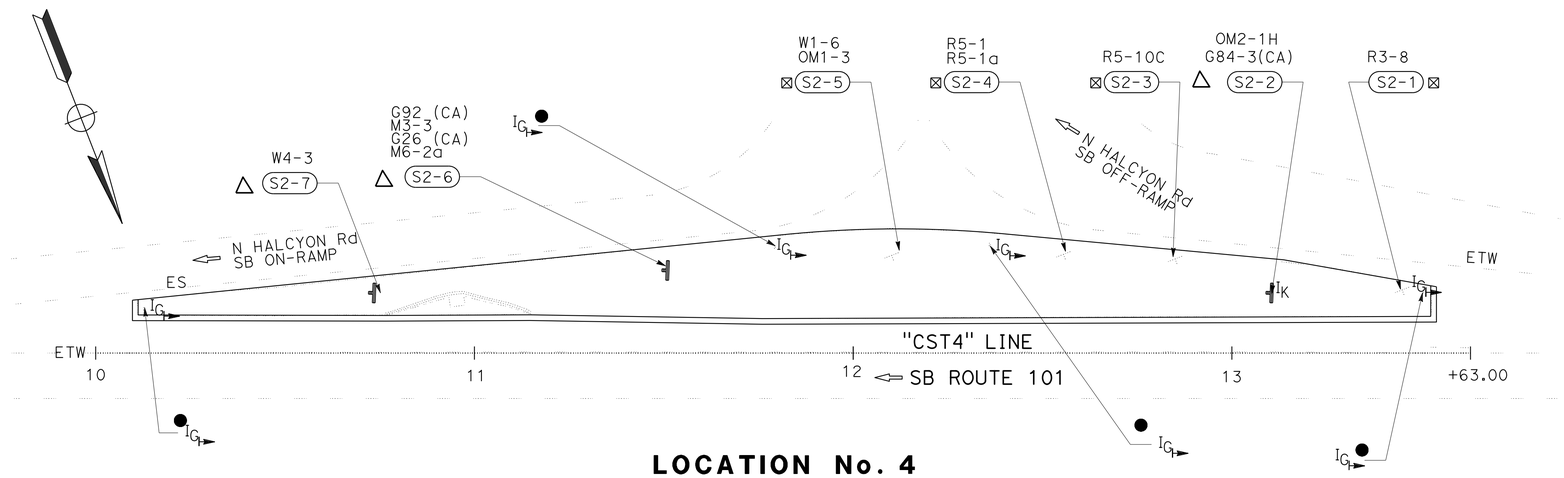

LOCATION No. 4

PM 13.65
SB OFF/ON-RAMP TO/FROM N HALCYON ROAD

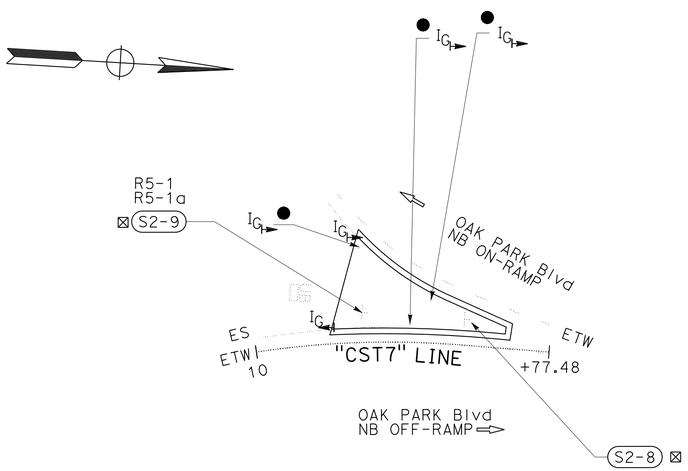

LOCATION No. 7

PM 14.25
NB OFF/ON-RAMP TO/FROM OAK PARK BOULEVARD

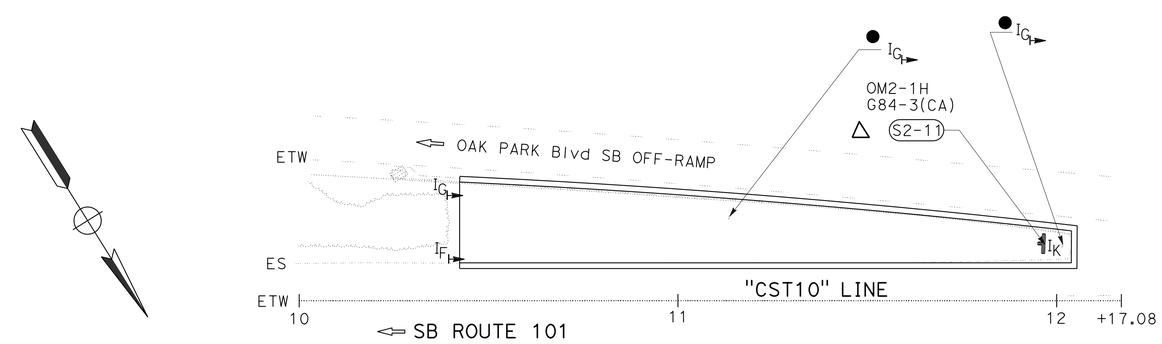

LOCATION No. 10

PM 15.00
SB OFF-RAMP TO OAK PARK BOULEVARD

APPROVED FOR SIGN WORK ONLY

SIGN PLAN

NO SCALE **S-2**

STATE OF CALIFORNIA - DEPARTMENT OF TRANSPORTATION
Caltrans® **TRAFFIC DESIGN**

FUNCTIONAL SUPERVISOR: MOHAMMED QATAMI
CALCULATED-DESIGNED BY: GURMIT GILL
CHECKED BY: FAWZI YAGHMOUR
REVISED BY / DATE REVISED

LAST REVISION 03-10-16 | DATE PLOTTED => 12-MAY-2016 | TIME PLOTTED => 08:33

Dist	COUNTY	ROUTE	POST MILES TOTAL PROJECT	SHEET No.	TOTAL SHEETS
05	SLO	101	12.4/29.7	24	54

REGISTERED CIVIL ENGINEER 3-10-16 DATE

3-21-16
PLANS APPROVAL DATE

REGISTERED PROFESSIONAL ENGINEER
FAWZI YAGHMOUR
No. 54750
Exp. 12-31-17
CIVIL
STATE OF CALIFORNIA

THE STATE OF CALIFORNIA OR ITS OFFICERS OR AGENTS SHALL NOT BE RESPONSIBLE FOR THE ACCURACY OR COMPLETENESS OF SCANNED COPIES OF THIS PLAN SHEET.

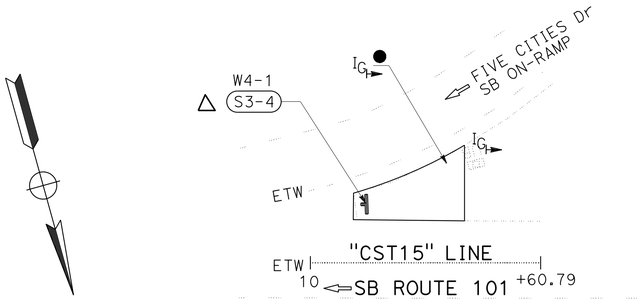

LOCATION No. 15
PM 15.87
SB ON-RAMP TO FIVE CITIES DRIVE

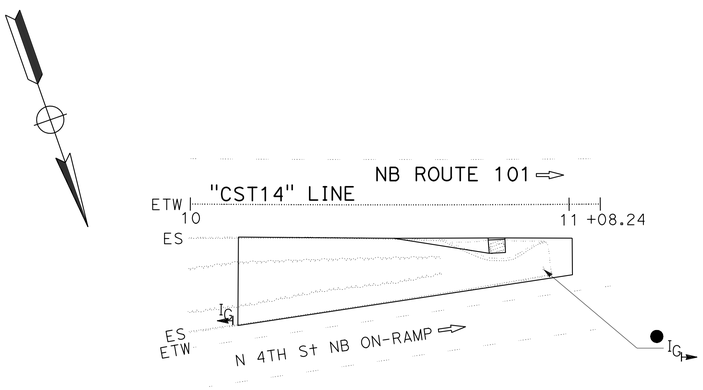

LOCATION No. 14
PM 15.70
NB ON-RAMP FROM N 4TH STREET

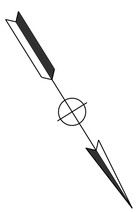

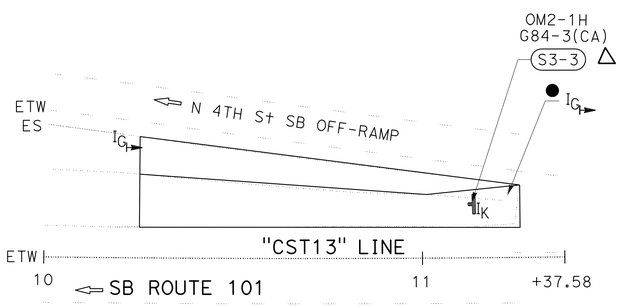

LOCATION No. 13
PM 15.50
SB OFF-RAMP TO N 4TH STREET

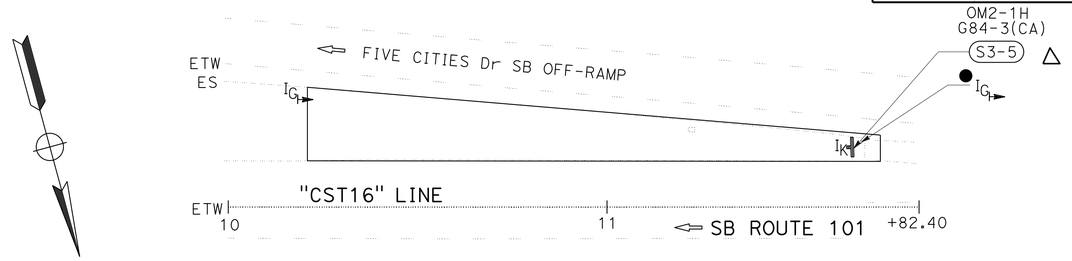

LOCATION No. 16
PM 15.95
SB OFF-RAMP TO FIVE CITIES DRIVE

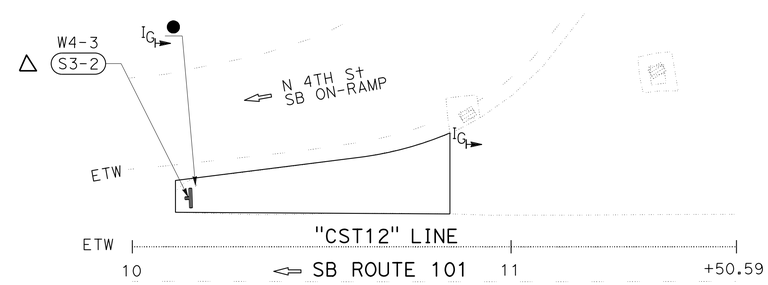

LOCATION No. 12
PM 15.38
SB ON-RAMP FROM N 4TH STREET

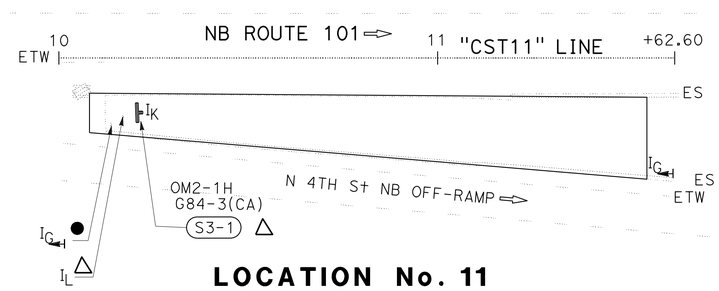

LOCATION No. 11
PM 15.35
NB OFF-RAMP TO N 4TH STREET

APPROVED FOR SIGN WORK ONLY

SIGN PLAN
NO SCALE **S-3**

STATE OF CALIFORNIA - DEPARTMENT OF TRANSPORTATION
Caltrans
TRAFFIC DESIGN

FUNCTIONAL SUPERVISOR: MOHAMMED QATAMI
CALCULATED-DESIGNED BY: GURMIT GILL
CHECKED BY: FAWZI YAGHMOUR
REVISED BY
DATE REVISED

LAST REVISION 03-10-16
DATE PLOTTED => 12-MAY-2016
TIME PLOTTED => 08:33

Dist	COUNTY	ROUTE	POST MILES TOTAL PROJECT	SHEET No.	TOTAL SHEETS
05	SLO	101	12.4/29.7	25	54

REGISTERED CIVIL ENGINEER 3-10-16 DATE

3-21-16
PLANS APPROVAL DATE

REGISTERED PROFESSIONAL ENGINEER FAWZI YAGHMOUR No. 54750 Exp. 12-31-17 CIVIL STATE OF CALIFORNIA

THE STATE OF CALIFORNIA OR ITS OFFICERS OR AGENTS SHALL NOT BE RESPONSIBLE FOR THE ACCURACY OR COMPLETENESS OF SCANNED COPIES OF THIS PLAN SHEET.

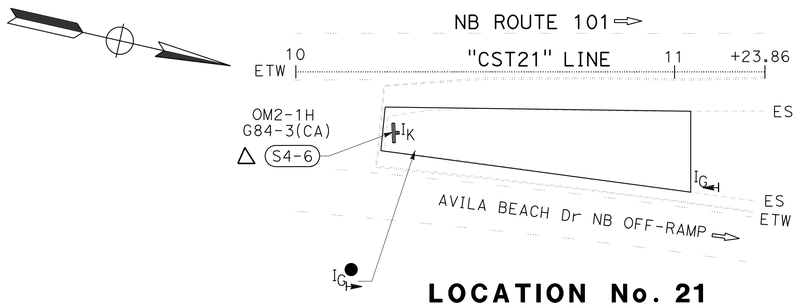

LOCATION No. 21
PM R20.89
NB OFF-RAMP TO AVILA BEACH DRIVE

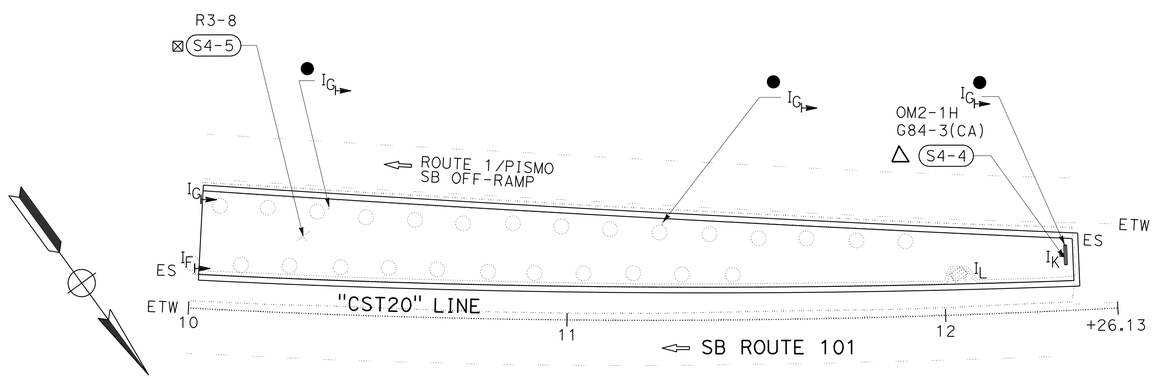

LOCATION No. 20
PM 17.15
SB OFF-RAMP TO ROUTE 1/PISMO

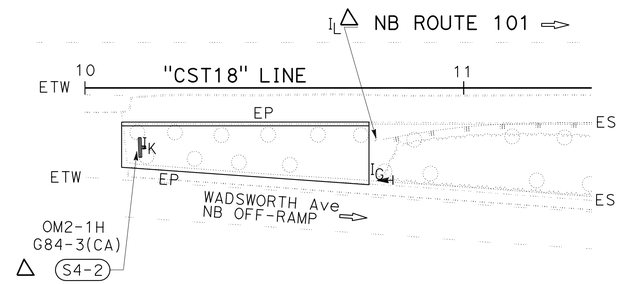

LOCATION No. 18
PM 16.80
NB OFF-RAMP TO WADSWORTH AVENUE

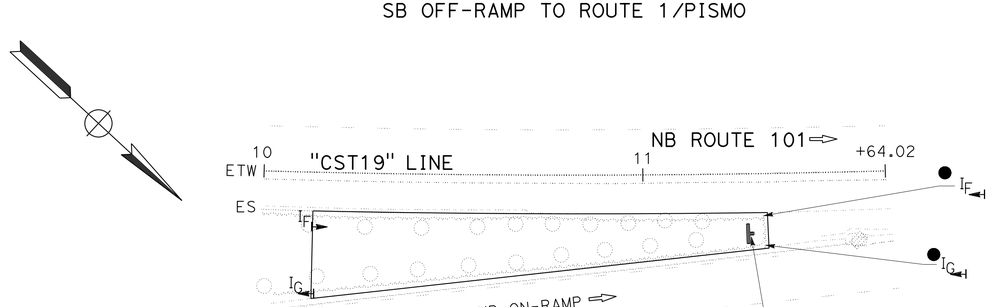

LOCATION No. 19
PM 17.10
NB ON-RAMP FROM BELLO STREET

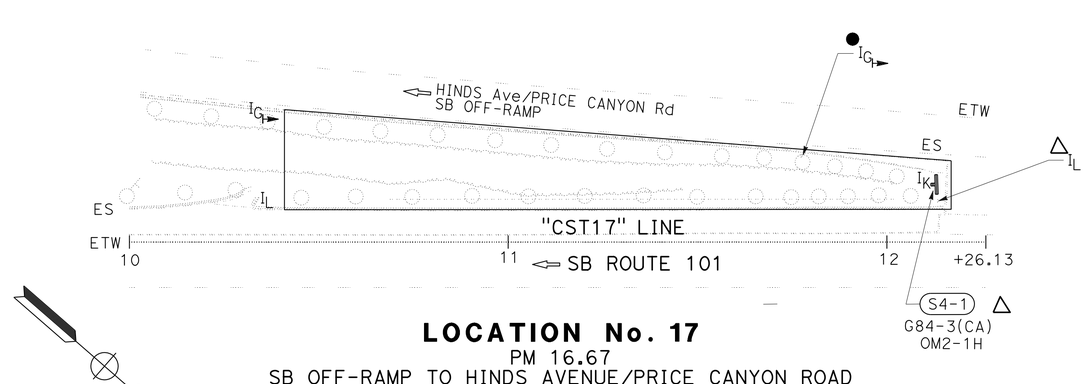

LOCATION No. 17
PM 16.67
SB OFF-RAMP TO HINDS AVENUE/PRICE CANYON ROAD

APPROVED FOR SIGN WORK ONLY

SIGN PLAN

NO SCALE **S-4**

STATE OF CALIFORNIA - DEPARTMENT OF TRANSPORTATION
Caltrans
TRAFFIC DESIGN

FUNCTIONAL SUPERVISOR: MOHAMMED QATAMI
CALCULATED-DESIGNED BY: GURMIT GILL
CHECKED BY: FAWZI YAGHMOUR
REVISED BY
DATE REVISED

LAST REVISION 03-10-16
DATE PLOTTED => 12-MAY-2016
TIME PLOTTED => 08:33

Dist	COUNTY	ROUTE	POST MILES TOTAL PROJECT	SHEET No.	TOTAL SHEETS
05	SLO	101	12.4/29.7	26	54

REGISTERED CIVIL ENGINEER 3-10-16 DATE

3-21-16
PLANS APPROVAL DATE

REGISTERED PROFESSIONAL ENGINEER FAWZI YAGHMOUR No. 54750 Exp. 12-31-17 CIVIL STATE OF CALIFORNIA

THE STATE OF CALIFORNIA OR ITS OFFICERS OR AGENTS SHALL NOT BE RESPONSIBLE FOR THE ACCURACY OR COMPLETENESS OF SCANNED COPIES OF THIS PLAN SHEET.

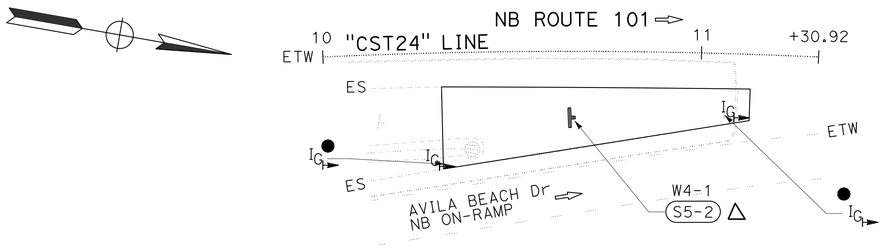

LOCATION No. 24
PM R21.32
NB ON-RAMP FROM AVILA BEACH DRIVE

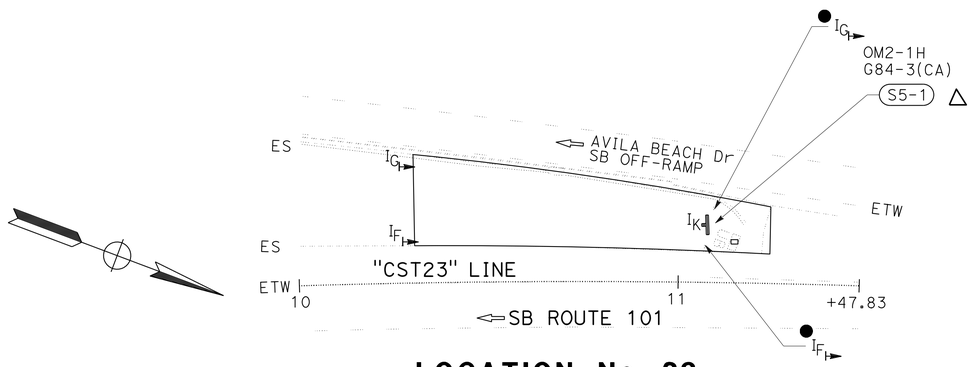

LOCATION No. 23
PM R21.25
SB OFF-RAMP TO AVILA BEACH DRIVE

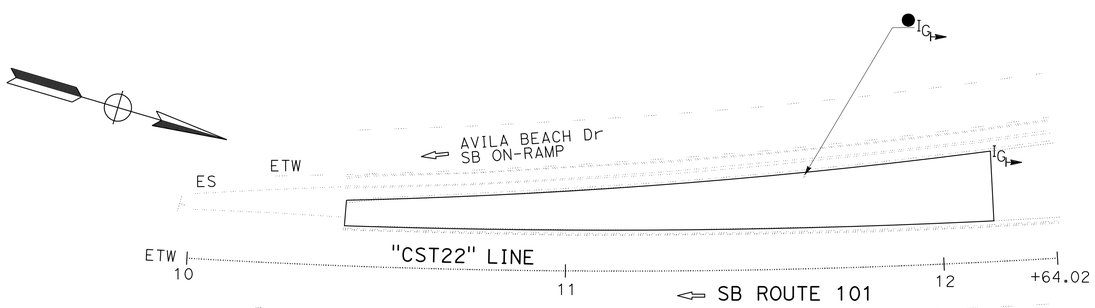

LOCATION No. 22
PM R20.95
SB ON-RAMP FROM AVILA BEACH DRIVE

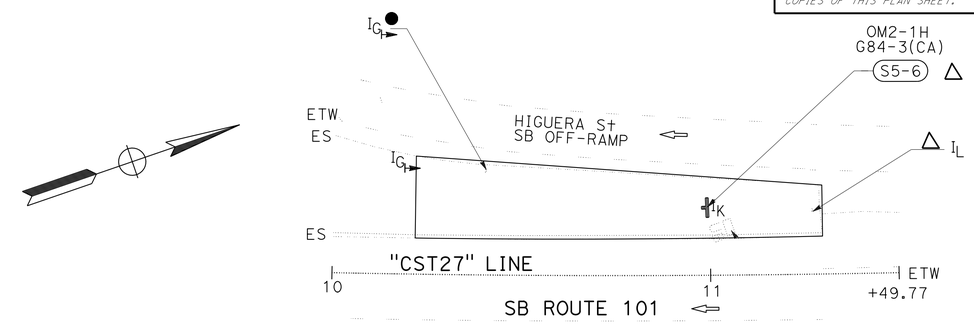

LOCATION No. 27
PM R24.14
SB OFF-RAMP TO HIGUERA STREET

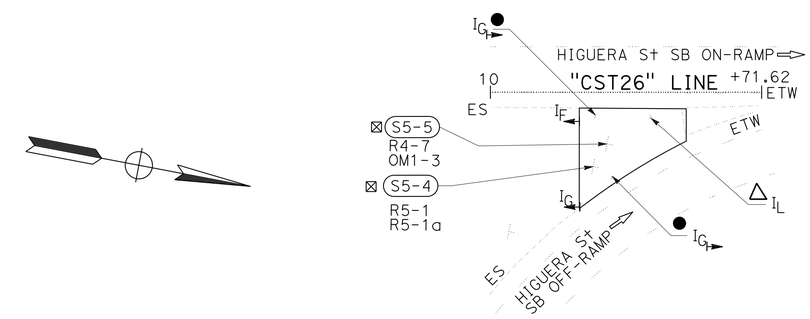

LOCATION No. 26
PM R24.13
SB OFF/ON-RAMP TO/FROM HIGUERA STREET

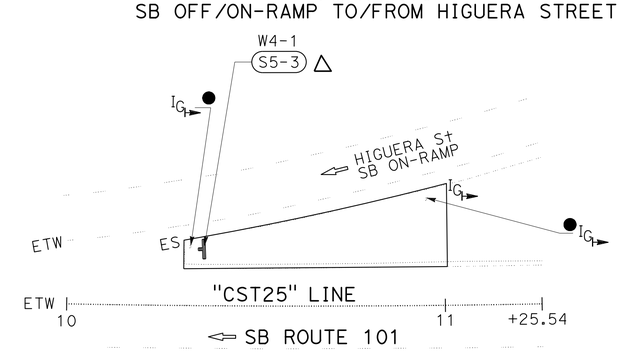

LOCATION No. 25
PM R24.00
SB ON-RAMP FROM HIGUERA STREET

APPROVED FOR SIGN WORK ONLY

SIGN PLAN
NO SCALE **S-5**

REVISED BY	DATE REVISED

CALCULATED-DESIGNED BY	CHECKED BY
GURMIT GILL	FAWZI YAGHMOUR

FUNCTIONAL SUPERVISOR: MOHAMMED QATAMI

STATE OF CALIFORNIA - DEPARTMENT OF TRANSPORTATION
Caltrans
TRAFFIC DESIGN

LAST REVISION 03-10-16 | DATE PLOTTED => 12-MAY-2016 | TIME PLOTTED => 08:33

Dist	COUNTY	ROUTE	POST MILES TOTAL PROJECT	SHEET No.	TOTAL SHEETS
05	SLO	101	12.4/29.7	27	54

REGISTERED CIVIL ENGINEER DATE 3-10-16

PLANS APPROVAL DATE 3-21-16

REGISTERED PROFESSIONAL ENGINEER FAWZI YAGHMOUR No. 54750 Exp. 12-31-17 CIVIL STATE OF CALIFORNIA

THE STATE OF CALIFORNIA OR ITS OFFICERS OR AGENTS SHALL NOT BE RESPONSIBLE FOR THE ACCURACY OR COMPLETENESS OF SCANNED COPIES OF THIS PLAN SHEET.

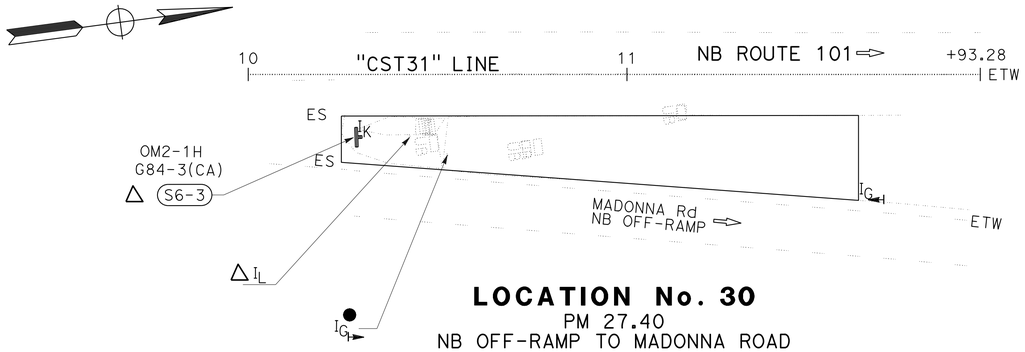

LOCATION No. 30
PM 27.40
NB OFF-RAMP TO MADONNA ROAD

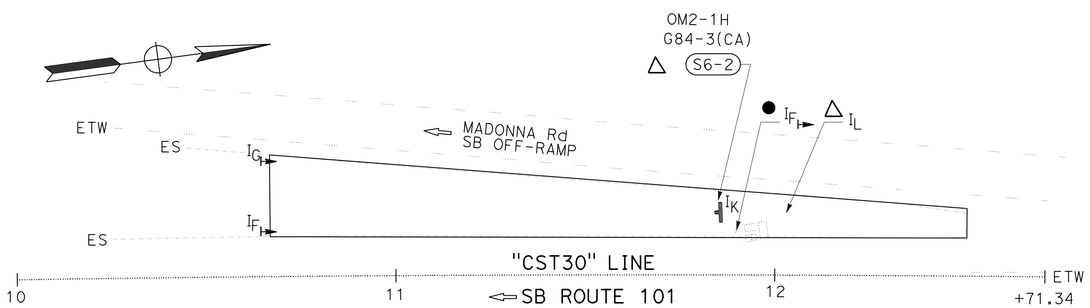

LOCATION No. 29
PM R27.39
SB OFF-RAMP TO MADONNA ROAD

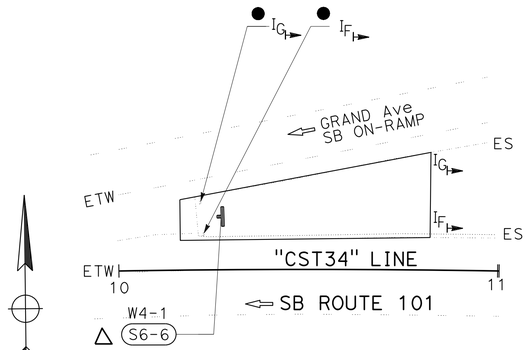

LOCATION No. 33
PM 29.66
SB ON-RAMP FROM GRAND AVENUE

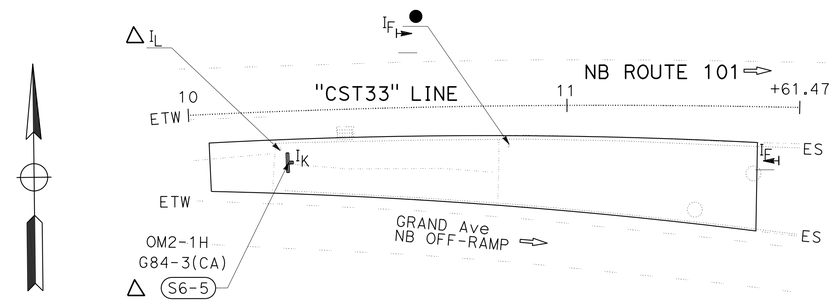

LOCATION No. 32
PM 29.65
NB OFF-RAMP TO GRAND AVENUE

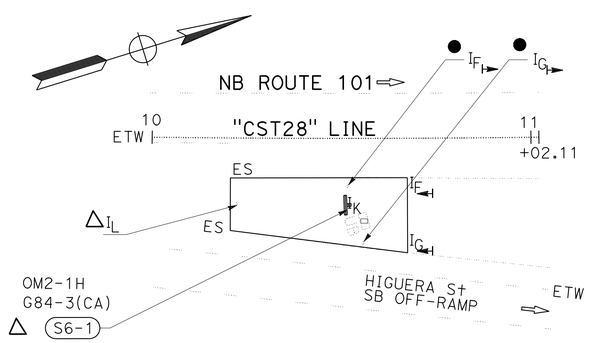

LOCATION No. 28
PM R24.15
NB OFF-RAMP FROM HIGUERA STREET

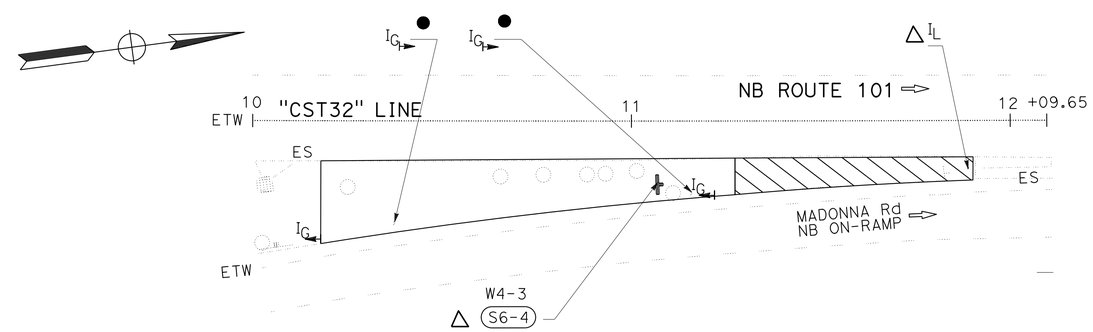

LOCATION No. 31
PM 27.57
NB ON-RAMP FROM MADONNA ROAD

APPROVED FOR SIGN WORK ONLY

SIGN PLAN
NO SCALE **S-6**

STATE OF CALIFORNIA - DEPARTMENT OF TRANSPORTATION
Caltrans
TRAFFIC DESIGN

FUNCTIONAL SUPERVISOR: MOHAMMED QATAMI
CALCULATED-DESIGNED BY: GURMIT GILL
CHECKED BY: FAWZI YAGHMOUR
REVISED BY / DATE REVISED

LAST REVISION 03-10-16 | DATE PLOTTED => 12-MAY-2016 | TIME PLOTTED => 08:33

Dist	COUNTY	ROUTE	POST MILES TOTAL PROJECT	SHEET No.	TOTAL SHEETS
05	SLO	101	12.4/29.7	28	54

REGISTERED CIVIL ENGINEER 3-10-16 DATE

3-21-16
PLANS APPROVAL DATE

REGISTERED PROFESSIONAL ENGINEER FAWZI YAGHMOUR No. 54750 Exp. 12-31-17 CIVIL STATE OF CALIFORNIA

THE STATE OF CALIFORNIA OR ITS OFFICERS OR AGENTS SHALL NOT BE RESPONSIBLE FOR THE ACCURACY OR COMPLETENESS OF SCANNED COPIES OF THIS PLAN SHEET.

ROADSIDE SIGN QUANTITIES

SHEET No.	SIGN No.	SIGN CODE FEDERAL	SIGN CODE CALIFORNIA	SIGN MESSAGE	PANEL SIZE	SINGLE FACED	BACKGROUND SHEETING COLOR	BACKGROUND RETROREFLECTIVITY ASTM TYPE	LEGEND SHEETING COLOR	LEGEND RETROREFLECTIVITY ASTM TYPE	GRAFFITI FILM PREMIUM	FURNISHED SINGLE SHEET ALUMINUM SIGN RETROREFLECTIVE SHEETING (TYPE XI) (0.063"-UNFRAMED) SQFT	FURNISHED SINGLE SHEET ALUMINUM SIGN RETROREFLECTIVE SHEETING (TYPE XI) (0.080"-UNFRAMED) SQFT	ROADSIDE SIGN (ONE POST) EA	REMOVE ROADSIDE SIGN EA	RESET ROADSIDE SIGN EA	** POST SLEEVE EA	RETROREFLECTIVE SHEETING (TYPE XI) SQFT	OBJECT MARKER TYPE K EA	OBJECT MARKER TYPE N EA
S1	S1-1		G84-3	EXIT NUMBER W/ ARROW	48" X 60"	X	GREEN	XI	WHITE	XI	X		20.0	1	1		1	20.0	1	
			OM2-1H																	
	S1-2	R5-1a		WRONG WAY												1	1			
	S1-3	W4-1		MERGE	36" X 36"	X	YELLOW	XI	BLACK		X	9.0		1	1		1	9.0		
	S1-4	R5-1		DO NOT ENTER												1	1			
		R5-1a		WRONG WAY																
	S1-5	R6-1		ONE WAY												1	1			
	S1-6	R4-7		MERGE RIGHT												1	1			
	S1-7		G92	HIGHWAY ENTRANCE	48" X 30"	X	GREEN	XI	WHITE	XI	X	18.8		1	1		1	18.8		
		M3-3		SOUTH	24" X 12"	X	WHITE	VIII	BLACK		X									
			G26	ROUTE SHIELD	24" X 28"	X	WHITE	VIII	BLACK		X									
		M6-2a		ARROW	21" X 15"	X	WHITE	VIII	BLACK		X									
	S1-8		G84-3	EXIT NUMBER W/ARROW	48" X 60"	X	GREEN	XI	WHITE	XI	X		20.0	1	1		1	20.0	1	
			OM2-1H																	
	S1-9		G84-3	EXIT NUMBER W/ ARROW	48" X 60"	X	GREEN	XI	WHITE	XI	X		20.0	1	1		1	20.0	1	
			OM2-1H																	
S2	S2-1	R3-8		ADVANCE LANE CONTROL												1	1			
	S2-2		G84-3	EXIT NUMBER W/ ARROW	48" X 60"	X	GREEN	XI	WHITE	XI	X		20.0	1	1		1	20.0	1	
			OM2-1H																	
	S2-3	R5-10C		NO PEDESTRAIN												1	1			
	S2-4	R5-1		DO NOT ENTER												1	1			
		R5-1a		WRONG WAY																
	S2-5	W1-6		TRAFFIC DRIECIONAL	48" X 24"	X	YELLOW	XI	BLACK		X	8.0		1	1		1	8.0		1
			OM1-3																	
	S2-6		G92	HIGHWAY ENTRANCE	48" X 30"	X	GREEN	XI	WHITE	XI	X	18.8		1	1		1	18.8		
		M3-3		SOUTH	24" X 12"	X	WHITE	VIII	BLACK		X									
			G26	ROUTE SHIELD	24" X 28"	X	WHITE	VIII	BLACK		X									
		M6-2a		ARROW	21" X 15"	X	WHITE	VIII	BLACK		X									
	S2-7	W4-3		MERGE STRAIT AND RIGHT	36" X 36"	X	YELLOW	XI	BLACK		X	9.0		1	1		1	9.0		
	S2-8	R4-7		MEDIAN KEEP RIGHT SYMBOL												1	1			
			OM1-3																	
	S2-9	R5-1		DO NOT ENTER												1	1			
		R5-1a		WRONG WAY																
	S2-10	W4-1		MERGE	36" X 36"	X	YELLOW	XI	BLACK		X	9.0		1	1		1	9.0		
	S2-11		G84-3	EXIT NUMBER W/ARROW	48" X 60"	X	GREEN	XI	WHITE	XI	X		20.0	1	1		1	20.0	1	
			OM2-1H																	
SUBTOTAL												72.6	100.0	11	11	9	20	172.6	5	1

** FOR QUANTITIES OF MINOR CONCRETE AND CLASS II PERMEABLE MATERIAL SEE SHEET Q-1. (FOR INFORMATION ONLY)

SIGN QUANTITIES
SQ-1

STATE OF CALIFORNIA - DEPARTMENT OF TRANSPORTATION
Caltrans TRAFFIC DESIGN

FUNCTIONAL SUPERVISOR: MOHAMMED QATAMI
CALCULATED-DESIGNED BY: GURMIT GILL
CHECKED BY: FAWZI YAGHMOUR
REVISED BY
DATE REVISED

LAST REVISION 03-10-16 | DATE PLOTTED => 12-MAY-2016 | TIME PLOTTED => 08:33

Dist	COUNTY	ROUTE	POST MILES TOTAL PROJECT	SHEET No.	TOTAL SHEETS
05	SLO	101	12.4/29.7	29	54

REGISTERED CIVIL ENGINEER 3-10-16 DATE

3-21-16
PLANS APPROVAL DATE

REGISTERED PROFESSIONAL FAWZI YAGHMOUR No. 54750 Exp. 12-31-17 CIVIL STATE OF CALIFORNIA

THE STATE OF CALIFORNIA OR ITS OFFICERS OR AGENTS SHALL NOT BE RESPONSIBLE FOR THE ACCURACY OR COMPLETENESS OF SCANNED COPIES OF THIS PLAN SHEET.

ROADSIDE SIGN QUANTITIES

SHEET No.	SIGN No.	SIGN CODE FEDERAL	SIGN CODE CALIFORNIA	SIGN MESSAGE	PANEL SIZE	SINGLE FACED	BACKGROUND SHEETING COLOR	BACKGROUND RETROREFLECTIVITY ASTM TYPE	LEGEND SHEETING COLOR	LEGEND RETROREFLECTIVITY ASTM TYPE	GRAFFITI FILM PREMIUM	FURNISHED SINGLE SHEET ALUMINUM SIGN RETROREFLECTIVE SHEETING (TYPE XI) (0.063"-UNFRAMED) SQFT	FURNISHED SINGLE SHEET ALUMINUM SIGN RETROREFLECTIVE SHEETING (TYPE XI) (0.080"-UNFRAMED) SQFT	ROADSIDE SIGN (ONE POST) EA	REMOVE ROADSIDE SIGN EA	RESET ROADSIDE SIGN EA	** POST SLEEVE EA	RETROREFLECTIVE SHEETING (TYPE XI) SQFT	OBJECT MARKER TYPE K EA	OBJECT MARKER TYPE N EA
S3	S3-1		G84-3	EXIT NUMBER W/ ARROW	48" X 60"	X	GREEN	XI	WHITE	XI	X		20.0	1	1		1	20.0	1	
			OM2-1H																	
	S3-2	W4-3		MERGE STRAIT AND RIGHT	36" X 36"	X	YELLOW	XI	BLACK		X	9.0		1	1		1	9.0		
	S3-3		G84-3	EXIT NUMBER W/ ARROW	48" X 60"	X	GREEN	XI	WHITE	XI	X		20.0	1	1		1	20.0	1	
			OM2-1H																	
	S3-4	W4-1		MERGE	36" X 36"	X	YELLOW	XI	BLACK		X	9.0		1	1		1	9.0		
	S3-5		G84-3	EXIT NUMBER W/ ARROW	48" X 60"	X	GREEN	XI	WHITE	XI	X		20.0	1	1		1	20.0	1	
			OM2-1H																	
S4	S4-1		G84-3	EXIT NUMBER W/ ARROW	48" X 60"	X	GREEN	XI	WHITE	XI	X		20.0	1	1		1	20.0	1	
			OM2-1H																	
	S4-2		G84-3	EXIT NUMBER W/ ARROW	48" X 60"	X	GREEN	XI	WHITE	XI	X		20.0	1	1		1	20.0	1	
			OM2-1H																	
	S4-3	W4-3		MERGE STRAIT AND RIGHT	36" X 36"	X	YELLOW	XI	BLACK		X	9.0		1	1		1	9.0		
	S4-4		G84-3	EXIT NUMBER W/ ARROW	48" X 60"	X	GREEN	XI	WHITE	XI	X		20.0	1	1		1	20.0	1	
			OM2-1H																	
	S4-5	R3-8		ADVANCE LANE CONTROL												1	1			
	S4-6		G84-3	EXIT NUMBER W/ ARROW	48" X 60"	X	GREEN	XI	WHITE	XI	X		20.0	1	1		1	20.0	1	
			OM2-1H																	
S5	S5-1		G84-3	EXIT NUMBER W/ ARROW	48" X 60"	X	GREEN	XI	WHITE	XI	X		20.0	1	1		1	20.0	1	
			OM2-1H																	
	S5-2	W4-1		MERGE	36" X 36"	X	YELLOW	XI	BLACK		X	9.0		1	1		1	9.0		
	S5-3	W4-1		MERGE	36" X 36"	X	YELLOW	XI	BLACK		X	9.0		1	1		1	9.0		
	S5-4	R5-1		DO NOT ENTER												1	1			
		R5-1a		WRONG WAY																
	S5-5	R4-7		MEDIAN KEEP RIGHT SYMBOL												1	1			
			OM1-3																	
	S5-6		G84-3(CA)	EXIT NUMBER W/ ARROW	48" X 60"	X	GREEN	XI	WHITE	XI	X		20.0	1	1		1	20.0	1	
			OM2-1H																	
S6	S6-1		G84-3	EXIT NUMBER W/ ARROW	48" X 60"	X	GREEN	XI	WHITE	XI	X		20.0	1	1		1	20.0	1	
			OM2-1H																	
	S6-2		G84-3	EXIT NUMBER W/ ARROW	48" X 60"	X	GREEN	XI	WHITE	XI	X		20.0	1	1		1	20.0	1	
			OM2-1H																	
	S6-3		G84-3	EXIT NUMBER W/ ARROW	48" X 60"	X	GREEN	XI	WHITE	XI	X		20.0	1	1		1	20.0	1	
			OM2-1H																	
	S6-4	W4-3		MERGE STRAIT AND RIGHT	36" X 36"	X	YELLOW	XI	BLACK			9.0		1	1		1	9.0		
	S6-5		G84-3	EXIT NUMBER W/ ARROW	48" X 60"	X	GREEN	XI	WHITE	XI	X		20.0	1	1		1	20.0	1	
			OM2-1H																	
	S6-6	W4-1		MERGE	36" X 36"	X	YELLOW	XI	BLACK		X	9.0		1	1		1	9.0		
SUBTOTAL SHEET SQ-2												63.0	260.0	20	20	3	23	323.0	13	
SUBTOTAL SHEET SQ-1												72.6	100.0	11	11	9	20	172.6	5	1
TOTAL												135.6	360.0	31	31	12	43	495.6	* 19	

* FOR TOTAL QUANTITIES SEE SHEET PDQ-1
** FOR QUANTITIES OF MINOR CONCRETE AND CLASS II PERMEABLE MATERIAL SEE SHEET Q-1. (FOR INFORMATION ONLY)

SIGN QUANTITIES
SQ-2

STATE OF CALIFORNIA - DEPARTMENT OF TRANSPORTATION
Caltrans
TRAFFIC DESIGN

FUNCTIONAL SUPERVISOR: MOHAMMED QATAMI
CALCULATED-DESIGNED BY: GURMIT GILL
CHECKED BY: FAWZI YAGHMOUR
REVISED BY
DATE REVISED

LAST REVISION 03-10-16 | DATE PLOTTED => 12-MAY-2016 | TIME PLOTTED => 08:33

Dist	COUNTY	ROUTE	POST MILES TOTAL PROJECT	SHEET No.	TOTAL SHEETS
05	SLO	101	12.4/29.7	30	54

REGISTERED CIVIL ENGINEER 3-18-16 DATE

3-21-16
PLANS APPROVAL DATE

REGISTERED PROFESSIONAL ENGINEER JACKSON S.L. HO No. 75625 Exp 6-30-16 CIVIL STATE OF CALIFORNIA

THE STATE OF CALIFORNIA OR ITS OFFICERS OR AGENTS SHALL NOT BE RESPONSIBLE FOR THE ACCURACY OR COMPLETENESS OF SCANNED COPIES OF THIS PLAN SHEET.

PAVEMENT STRUCTURE

SHEET No.	Loc No.	MINOR CONCRETE (EXPOSED AGGREGATE CONCRETE)	MINOR CONCRETE (STAMPED CONCRETE)	CLASS 2 AGGREGATE BASE (CY)	MINOR HOT MIX ASPHALT	(N) MINOR CONCRETE (POST SLEEVE)	(N) CLASS II PERMEABLE MATERIAL (POST SLEEVE)	REMOVE CONCRETE CURB (LF)
		SQFT	SQFT	CY	TON	CY	CY	LF
C-4	1		2,625	16.5	7.5	0.68	0.08	
C-4	2		1,399	8.8	7.2	0.34	0.04	
C-4	3		644	4.1	2.2	1.36	0.16	
C-5	4		5,360	33.7	16.3	2.38	0.28	
C-5	5		2,434	15.3	7.5	0.34	0.04	
C-6	6		2,287	14.4	11.4	0.34	0.04	
C-6	7		506	3.2	2.6	0.68	0.08	
C-6	8		840	5.3	5.2			
C-7	9		5,114	32.2	23.9	0.34	0.04	
C-7	10		2,551	16.1	12.3	0.34	0.04	
C-8	11		2,359	14.9	11.4	0.34	0.04	
C-8	12		981	6.2	6.1	0.34	0.04	
C-8	13		1,764	11.1	8.2	0.34	0.04	
C-9	14		1,459	9.2	7.4			
C-9	15		374	2.4	3.1	0.34	0.04	
C-9	16		1,995	12.6	11.4	0.34	0.04	
C-10	17		3,457	21.8	10.7	0.34		
C-10	18		3,176	20.0	15.6	0.34	0.04	
C-11	19		1,918	12.1	11.0	0.34	0.04	
C-11	20		4,109	25.9	19.9	0.68	0.08	
C-12	21	1,345		8.5	12.0	0.34	0.04	
C-12	22	2,331		14.7	20.6			
C-13	23	1,749		11.0	8.4	0.34	0.04	4.0
C-13	24	1,224		7.7	11.5	0.34	0.04	
C-14	25	1,001		6.3	15.8	0.34	0.04	
C-14	26	478		3.0	9.0	0.68	0.08	
C-14	27	1,925		12.1	23.1	0.34	0.04	
C-15	28	788		5.0	11.8	0.34	0.04	
C-15	29	2,705		17.0	12.3	0.34	0.04	
C-15	30	2,366		14.9	9.5	0.34	0.04	
C-16	31	2,032		12.8	48.5	0.34	0.04	
C-16	32	2,612		16.4	11.5	0.34	0.04	
C-16	33	1,099		6.9	5.9	0.34	0.04	
Q-1	Var				0.2			
TOTAL		21,655	45,352	421.9	401.0			4.0

(N) - NOT A SEPARATE PAY ITEM, FOR INFORMATION ONLY

EARTHWORK

SHEET No.	Loc No.	ROADWAY EXCAVATION	(N) EMBANKMENT	ROADWAY EXCAVATION (TYPE Z-2) (AERIALLY DEPOSITED LEAD)
		CY	CY	CY
C-4	1	44.0		21.2
C-4	2	15.1		13.2
C-4	3	7.6		4.9
C-5	4	131.8		
C-5	5	53.0		21.6
C-6	6	48.1		
C-6	7	7.7		6.0
C-6	8	21.7	3.3	
C-7	9	191.9		
C-7	10	99.8		
C-8	11	117.4		
C-8	12	20.9		
C-8	13	31.3		15.3
C-9	14	72.7		
C-9	15	8.2		
C-9	16	42.3		
C-10	17	128.1		
C-10	18	21.5		10.2
C-11	19	67.8	0.5	
C-11	20	37.7		101.5
C-12	21	27.9		12.6
C-12	22	90.9		25.7
C-13	23	37.6		14.7
C-13	24	36.0		
C-14	25	32.4		
C-14	26	10.7		
C-14	27	63.0		
C-15	28	6.1	0.5	7.5
C-15	29	55.9		
C-15	30	69.9		
C-16	31	68.4		
C-16	32	71.2		21.4
C-16	33	29.0		10.3
TOTAL		1,767.4		286.2

(N) - NOT A SEPARATE PAY ITEM, FOR INFORMATION ONLY

DRAINAGE INLET

SHEET No.	Loc No.	ADJUST INLET	MISCELLANEOUS IRON AND STEEL	(N) TYPE 24-12X GRATE	TEMPORARY DRAINAGE INLET PROTECTION
		EA	LB	EA	EA
C-4	1				1
C-5	4				1
C-5	5				1
C-6	7				1
C-6	8				1
C-7	9	1	239	1	1
C-7	10				1
C-8	11				1
C-8	12				1
C-8	13				1
C-9	14				1
C-9	15				1
C-10	17				1
C-10	18				1
C-11	20				3
C-12	21				2
C-12	22				1
C-13	23				1
C-13	24				1
C-15	30				1
C-16	31				1
C-16	32				1
C-16	33				1
TOTAL		1	239		26

(N) - NOT A SEPARATE PAY ITEM, FOR INFORMATION ONLY

VEGETATION CONTROL

SHEET No.	Loc No.	VEGETATION CONTROL (MINOR CONCRETE)
		SQYD
C-4	3	105
TOTAL		105

ADJUST PULLBOX

SHEET No.	Loc No.	ADJUST PULL BOX
		EA
C-9	16	1
C-15	30	3
TOTAL		4

HOT MIX ASPHALT DIKE TRANSITION

SHEET No.	Loc No.	PLACE HOT MIX ASPHALT DIKE (TYPE A)	MINOR HOT MIX ASPHALT
		LF	TON
C-7	10	5.0	0.06
C-9	14	5.0	0.06
C-10	17	5.0	0.06
C-12	22	5.0	0.06
TOTAL		20.0	0.24 *

* QUANTITIES INCLUDED IN PAVEMENT STRUCTURE QUANTITY

SUMMARY OF QUANTITIES
Q-1

REVISED BY | DATE REVISED
JACKSON HO | STEVE SENET
CALCULATED-DESIGNED BY | CHECKED BY
FUNCTIONAL SUPERVISOR: DAVID BEARD
STATE OF CALIFORNIA - DEPARTMENT OF TRANSPORTATION
Caltrans® DESIGN

LAST REVISION 03-18-16 | DATE PLOTTED => 12-MAY-2016 | TIME PLOTTED => 08:33

Dist	COUNTY	ROUTE	POST MILES TOTAL PROJECT	SHEET No.	TOTAL SHEETS
05	SLO	101	12.4/29.7	31	54

LICENSED LANDSCAPE ARCHITECT

3-21-16
PLANS APPROVAL DATE

LICENSED LANDSCAPE ARCHITECT
Laurie D. Dunn No. 3549
Signature
4-30-16
Renewal Date
3-18-16
Date
STATE OF CALIFORNIA

THE STATE OF CALIFORNIA OR ITS OFFICERS OR AGENTS SHALL NOT BE RESPONSIBLE FOR THE ACCURACY OR COMPLETENESS OF SCANNED COPIES OF THIS PLAN SHEET.

NOTE:

1. EXACT LOCATION OF NEW IRRIGATION CONDUITS TO BE DETERMINED BY THE ENGINEER.
2. PROVIDE COMMUNICATION CABLE AND CONTROL AND NEUTRAL CONDUCTOR FROM PULL BOX TO PULL BOX AS DETERMINED BY THE ENGINEER.

LANDSCAPE QUANTITIES

SHEET No.	LOCATION No.	PLASTIC PIPE (CLASS 315) (SUPPLY LINE) 2" LF	PLASTIC PIPE (SCHEDULE 40) (SUPPLY LINE) 2" LF	COMMUNICATION CABLE LF	(N) CONTROL AND NEUTRAL CONDUCTOR ELECTRICAL CONDUIT 2" LF	REMARKS
NOT SHOWN ON PLANS	7	54	-	-	54	ELECTRICAL CONDUIT CONTAINS 10 CONTROL WIRES, 1 EXTRA WIRE, AND I NEUTRAL AT 54' EACH
	9	12	-	-	12	ELECTRICAL CONDUIT CONTAINS 10 CONTROL WIRES, 1 EXTRA WIRE, AND I NEUTRAL AT 12' EACH
	12	-	72	-	-	
	15	82	50	82	82	ELECTRICAL CONDUIT CONTAINS 10 CONTROL WIRES, 1 EXTRA WIRE, AND I NEUTRAL AT 82' EACH
	16	78	32	78	78	ELECTRICAL CONDUIT CONTAINS 10 CONTROL WIRES, 1 EXTRA WIRE, AND I NEUTRAL AT 78' EACH
IRRIGATION CONDUIT TABLE		158	122	80	158	
TOTAL		384	276	240	384	

(N) - NOT A SEPARATE PAY ITEM, FOR INFORMATION ONLY

IRRIGATION CONDUIT

SHEET No.	LOCATION No.	WELDED STEEL PIPE CONDUIT 12" LF	PLASTIC PIPE (CLASS 315) (SUPPLY LINE) 2" LF	PLASTIC PIPE (SCHEDULE 40) (SUPPLY LINE) 2" LF	COMMUNICATION CABLE LF	(N) CONTROL AND NEUTRAL CONDUCTOR ELECTRICAL CONDUIT 2" LF	REMARKS
NOT SHOWN ON PLANS	7	46	46	-	-	46	ELECTRICAL CONDUIT CONTAINS 10 CONTROL WIRES, 1 EXTRA WIRE, AND I NEUTRAL AT 46' EACH
	9	32	32	-	-	32	ELECTRICAL CONDUIT CONTAINS 10 CONTROL WIRES, 1 EXTRA WIRE, AND I NEUTRAL AT 32' EACH
	12	42	-	42	-	-	
	15	38	38	38	38	38	ELECTRICAL CONDUIT CONTAINS 10 CONTROL WIRES, 1 EXTRA WIRE, AND I NEUTRAL AT 38' EACH
	16	42	42	42	42	42	ELECTRICAL CONDUIT CONTAINS 10 CONTROL WIRES, 1 EXTRA WIRE, AND I NEUTRAL AT 42' EACH
	TOTAL	200	158*	122*	80*	158*	

(N) - NOT A SEPARATE PAY ITEM, FOR INFORMATION ONLY
* - QUANTITY INCLUDED IN LANDSCAPE QUANTITIES TABLE

SUMMARY OF QUANTITIES
Q-2

REVISED BY | DATE REVISED
LAURIE D. DUNN (CUMMINGS) | SCOTT DOWLAN
CALCULATED-DESIGNED BY | CHECKED BY
SENIOR LANDSCAPE ARCHITECT | DENNIS REEVES
STATE OF CALIFORNIA - DEPARTMENT OF TRANSPORTATION
Caltrans® LANDSCAPE ARCHITECTURE

LAST REVISION 03-18-16 | DATE PLOTTED => 12-MAY-2016 | TIME PLOTTED => 08:33

Dist	COUNTY	ROUTE	POST MILES TOTAL PROJECT	SHEET No.	TOTAL SHEETS
05	SLO	101	12.4/29.7	32	54

LICENSED LANDSCAPE ARCHITECT

3-21-16
PLANS APPROVAL DATE

LICENSED LANDSCAPE ARCHITECT
Laurie D. Dunn No. 3549
Signature
4-30-16
Renewal Date
3-18-16
Date
STATE OF CALIFORNIA

THE STATE OF CALIFORNIA OR ITS OFFICERS OR AGENTS SHALL NOT BE RESPONSIBLE FOR THE ACCURACY OR COMPLETENESS OF SCANNED COPIES OF THIS PLAN SHEET.

ABBREVIATION:

CST - CONTRASTING SURFACE TREATMENT

EROSION CONTROL

ITEM	MATERIAL		APPLICATION RATE
	DESCRIPTION	TYPE	
COMPOST	COMPOST	MEDIUM	260 CY/ACRE (2" THICKNESS)

EROSION CONTROL QUANTITIES

Loc No.	SHEET No.	COMPOST	REMARKS
		SQFT	
1	C-4	150	APPLY 10 FT BEYOND CST
2	C-4	150	APPLY 10 FT BEYOND CST
3	C-4	150	APPLY 10 FT BEYOND CST
4	C-5	150	APPLY 10 FT BEYOND CST
5	C-5	150	APPLY 10 FT BEYOND CST
6	C-6	150	APPLY 10 FT BEYOND CST
7	C-6	150	APPLY 10 FT BEYOND CST
8	C-6	150	APPLY 10 FT BEYOND CST
9	C-7	150	APPLY 10 FT BEYOND CST
10	C-7	150	APPLY 10 FT BEYOND CST
11	C-8	150	APPLY 10 FT BEYOND CST
12	C-8	150	APPLY 10 FT BEYOND CST
13	C-8	150	APPLY 10 FT BEYOND CST
14	C-9	150	APPLY 10 FT BEYOND CST
15	C-9	150	APPLY 10 FT BEYOND CST
16	C-9	150	APPLY 10 FT BEYOND CST
17	C-10	150	APPLY 10 FT BEYOND CST
18	C-10	150	APPLY 10 FT BEYOND CST
19	C-11	150	APPLY 10 FT BEYOND CST
20	C-11	150	APPLY 10 FT BEYOND CST
21	C-12	150	APPLY 10 FT BEYOND CST
22	C-12	150	APPLY 10 FT BEYOND CST
23	C-13	150	APPLY 10 FT BEYOND CST
24	C-13	150	APPLY 10 FT BEYOND CST
25	C-14	150	APPLY 10 FT BEYOND CST
26	C-14	150	APPLY 10 FT BEYOND CST
27	C-14	150	APPLY 10 FT BEYOND CST
28	C-15	150	APPLY 10 FT BEYOND CST
29	C-15	150	APPLY 10 FT BEYOND CST
30	C-15	150	APPLY 10 FT BEYOND CST
31	C-16	150	APPLY 10 FT BEYOND CST
32	C-16	150	APPLY 10 FT BEYOND CST
33	C-16	150	APPLY 10 FT BEYOND CST
TOTAL		4,950	

EROSION CONTROL LEGEND AND QUANTITIES

ECL-1

REVISED BY | DATE REVISED

LAURIE D. DUNN (CUMMINGS) | SCOTT DOWLAN

CALCULATED-DESIGNED BY | CHECKED BY

SENIOR LANDSCAPE ARCHITECT | DENNIS REEVES

STATE OF CALIFORNIA - DEPARTMENT OF TRANSPORTATION
Caltrans® LANDSCAPE ARCHITECTURE

LAST REVISION 03-18-16 | DATE PLOTTED => 12-MAY-2016 | TIME PLOTTED => 08:33

Dist	COUNTY	ROUTE	POST MILES TOTAL PROJECT	SHEET No.	TOTAL SHEETS
05	SLO	101	12.4/29.7	33	54

Paul Matos 3-15-16
REGISTERED ELECTRICAL ENGINEER DATE

3-21-16
PLANS APPROVAL DATE

REGISTERED PROFESSIONAL ENGINEER PAUL MATOS No. 18757 Exp. 6-30-17 ELECTRICAL STATE OF CALIFORNIA

THE STATE OF CALIFORNIA OR ITS OFFICERS OR AGENTS SHALL NOT BE RESPONSIBLE FOR THE ACCURACY OR COMPLETENESS OF SCANNED COPIES OF THIS PLAN SHEET.

NOTE:

FOR ACCURATE RIGHT OF WAY DATA, CONTACT RIGHT OF WAY ENGINEERING AT THE DISTRICT OFFICE.

LEGEND (FOR THIS SHEET ONLY):

1 Exist 120/240 V, 1Ø, 3-WIRE, TYPE III-BF SERVICE EQUIPMENT ENCLOSURE WITH THE FOLLOWING CIRCUIT BREAKERS:

Ctid No. 0549101Z021440

AMPERES	VOLTS	POLES	NAMEPLATE	METER	PHOTOELECTRIC CONTROL TYPE
100	240	2	MAIN	YES	———
30	240	2	HIGHWAY LIGHTING	YES	V
15	120	1	CONTROL	YES	———
20	120	1	SPARE	YES	———
30	240	2	SPARE	YES	———

ABBREVIATIONS:

WAPB - WIRELESS ACCESS POINT BRIDGE

WDSC - WIRELESS DATA COMMUNICATION SYSTEM WITH WAPB AS A REPEATER

CAT5E - CATEGORY 5E CABLE

DAA - DIRECTIONAL ANTENNA ASSEMBLY

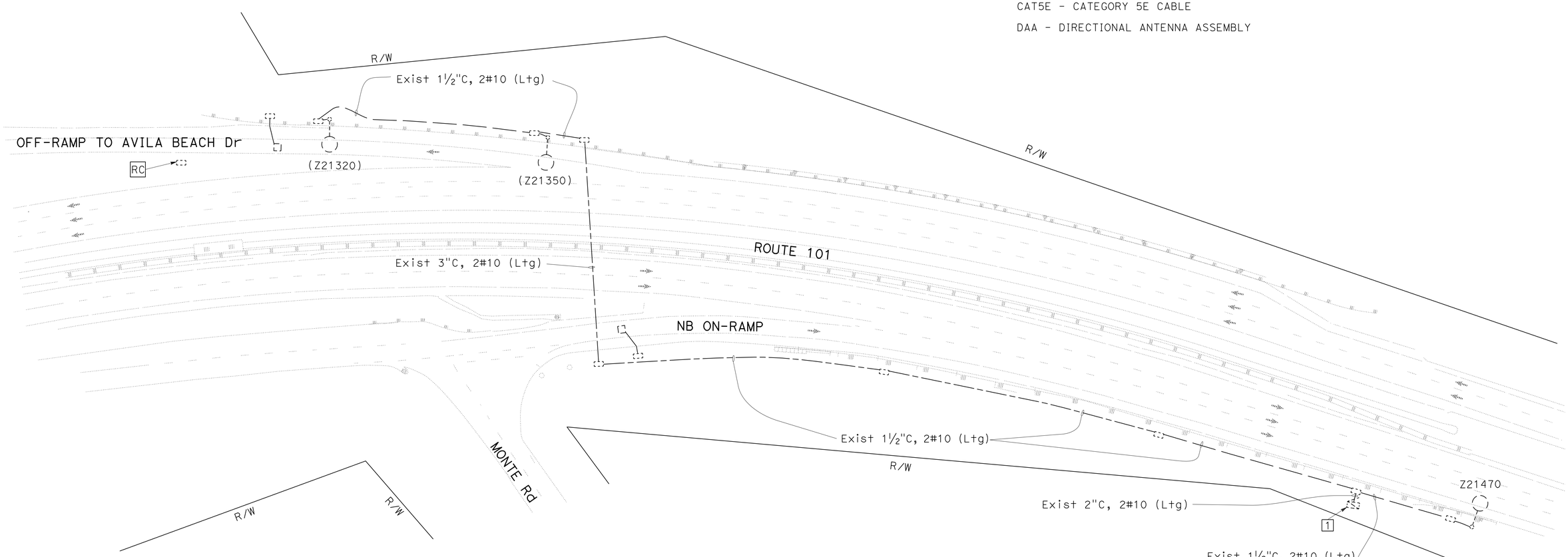

MODIFYING LIGHTING SYSTEM

LOCATION No. 23

PM 21.25

APPROVED FOR ELECTRICAL WORK ONLY

MODIFYING EXISTING ELECTRICAL SYSTEM

SCALE: 1"=50'

E-1

STATE OF CALIFORNIA - DEPARTMENT OF TRANSPORTATION
Caltrans® **ELECTRICAL DESIGN**

FUNCTIONAL SUPERVISOR: ALI BAKHDOUD

CALCULATED-DESIGNED BY: YOHANNES CHALLA
CHECKED BY: PAUL MATOS

REVISED BY: YC
DATE REVISED: 03-14-16

LAST REVISION 03-15-16 | DATE PLOTTED => 12-MAY-2016 | TIME PLOTTED => 08:33

Dist	COUNTY	ROUTE	POST MILES TOTAL PROJECT	SHEET No.	TOTAL SHEETS
05	SLO	101	12.4/29.7	34	54

Paul Matos 3-15-16
REGISTERED ELECTRICAL ENGINEER DATE

3-21-16
PLANS APPROVAL DATE

REGISTERED PROFESSIONAL ENGINEER PAUL MATOS No. 18757 Exp. 6-30-17 ELECTRICAL STATE OF CALIFORNIA

THE STATE OF CALIFORNIA OR ITS OFFICERS OR AGENTS SHALL NOT BE RESPONSIBLE FOR THE ACCURACY OR COMPLETENESS OF SCANNED COPIES OF THIS PLAN SHEET.

NOTE:

FOR ACCURATE RIGHT OF WAY DATA, CONTACT RIGHT OF WAY ENGINEERING AT THE DISTRICT OFFICE.

LEGEND (FOR THIS SHEET ONLY):

1 Exist 120/240 V, 1Ø, 3-WIRE, TYPE III-BF SERVICE EQUIPMENT ENCLOSURE WITH THE FOLLOWING CIRCUIT BREAKERS:

Ctid No. 05491010024150

AMPERES	VOLTS	POLES	NAMEPLATE	METER	PHOTOELECTRIC CONTROL TYPE
100	240	2	MAIN	YES	———
30	240	2	HIGHWAY LIGHTING	YES	V
15	120	1	CONTROL	YES	———
20	120	1	CCTV CABINET	YES	———
20	120	1	MVDS	YES	———
20	120	1	SPARE	YES	———
30	240	2	SPARE	YES	———

2 Exist MODEL 334 CCTV CABINET.

3 Exist CAMERA ASSEMBLY, MVDS, NEMA 3R ENCLOSURE AND DAA ON TYPE CCTV 40 STANDARD.

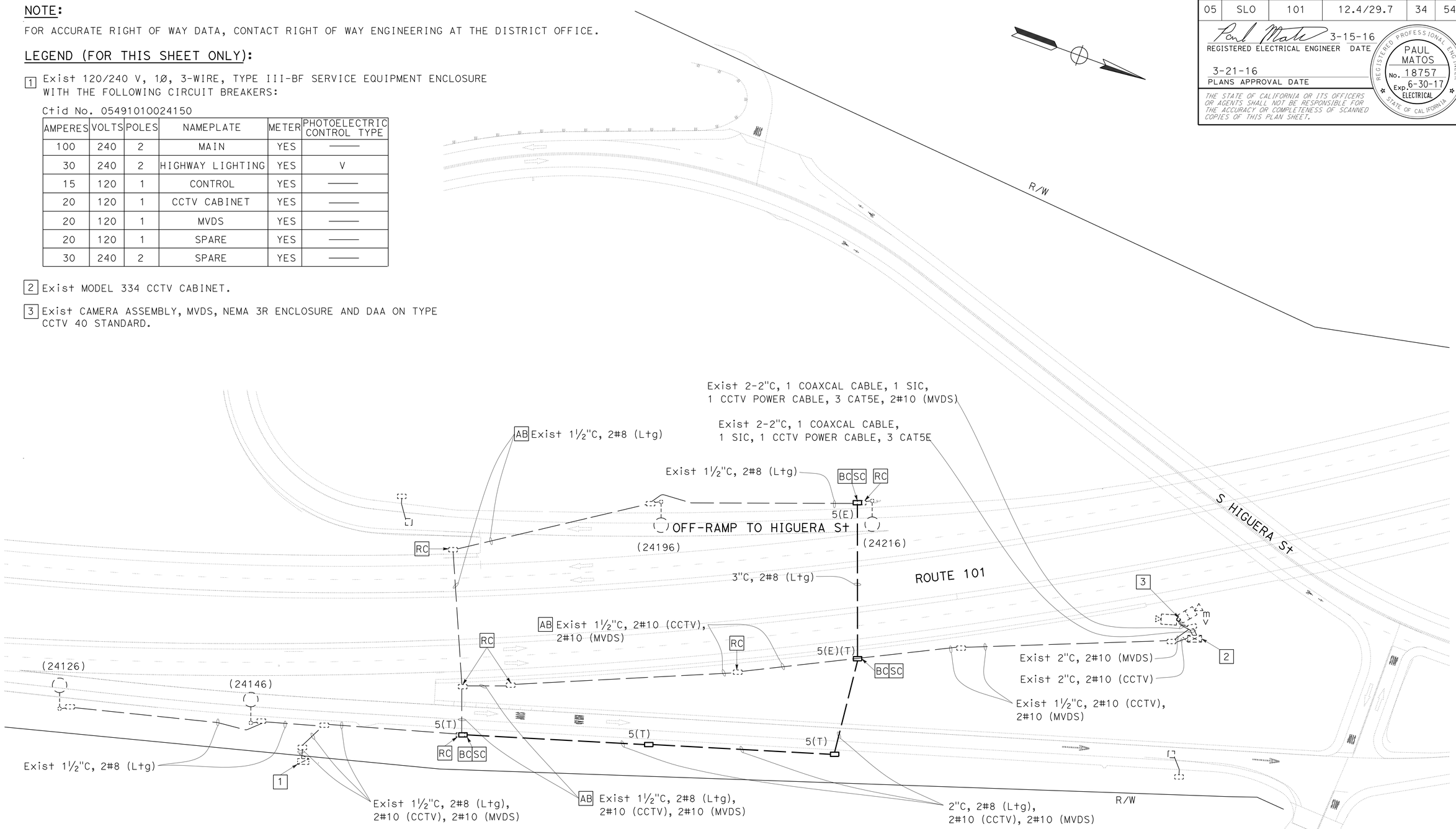

MODIFYING LIGHTING SYSTEM

LOCATION No. 27 AND LOCATION No. 28

PM 24.14 PM 24.15

APPROVED FOR ELECTRICAL WORK ONLY

MODIFYING EXISTING ELECTRICAL SYSTEM

SCALE: 1"=50'

E-2

STATE OF CALIFORNIA - DEPARTMENT OF TRANSPORTATION
Caltrans® **ELECTRICAL DESIGN**

FUNCTIONAL SUPERVISOR: ALI BAKHDOUD
CALCULATED-DESIGNED BY: YOHANNES CHALLA
CHECKED BY: PAUL MATOS
REVISED BY: YC
DATE REVISED: 03-14-16

LAST REVISION 03-15-16 | DATE PLOTTED => 12-MAY-2016 | TIME PLOTTED => 08:33

Dist	COUNTY	ROUTE	POST MILES TOTAL PROJECT	SHEET No.	TOTAL SHEETS
05	SLO	101	12.4/29.7	35	54

REGISTERED ELECTRICAL ENGINEER 3-15-16 DATE

3-21-16
PLANS APPROVAL DATE

REGISTERED PROFESSIONAL ENGINEER PAUL MATOS No. 18757 Exp. 6-30-17 ELECTRICAL STATE OF CALIFORNIA

THE STATE OF CALIFORNIA OR ITS OFFICERS OR AGENTS SHALL NOT BE RESPONSIBLE FOR THE ACCURACY OR COMPLETENESS OF SCANNED COPIES OF THIS PLAN SHEET.

NOTE:

FOR ACCURATE RIGHT OF WAY DATA, CONTACT RIGHT OF WAY ENGINEERING AT THE DISTRICT OFFICE.

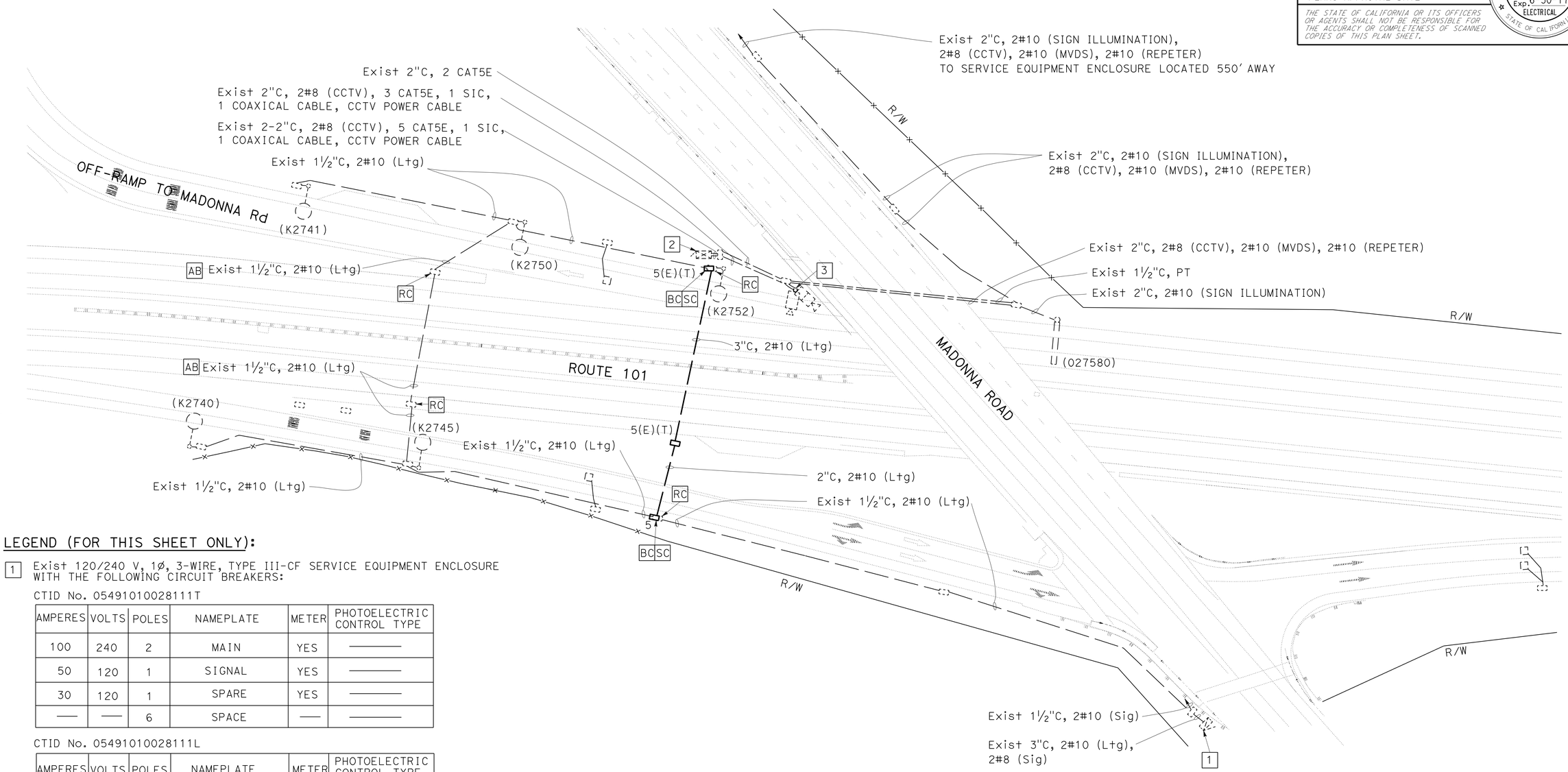

LEGEND (FOR THIS SHEET ONLY):

1 Exist 120/240 V, 1Ø, 3-WIRE, TYPE III-CF SERVICE EQUIPMENT ENCLOSURE WITH THE FOLLOWING CIRCUIT BREAKERS:

CTID No. 05491010028111T

AMPERES	VOLTS	POLES	NAMEPLATE	METER	PHOTOELECTRIC CONTROL TYPE
100	240	2	MAIN	YES	———
50	120	1	SIGNAL	YES	———
30	120	1	SPARE	YES	———
——	——	6	SPACE	——	———

CTID No. 05491010028111L

AMPERES	VOLTS	POLES	NAMEPLATE	METER	PHOTOELECTRIC CONTROL TYPE
100	240	2	MAIN	YES	———
30	240	2	LIGHTING	YES	IV
15	120	1	LIGHTING CONTROL	YES	IV
30	120	1	SPARE	YES	———
——	——	6	SPACE	——	———

2 Exist MODEL 334 CCTV CABINET.

3 Exist CAMERA ASSEMBLY, MVDS, NEMA 3R ENCLOSURE AND DAA ON TYPE CCTV 40 STANDARD.

MODIFYING LIGHTING SYSTEM

LOCATION No. 29 AND LOCARION No. 30

PM 27.39 PM 27.40

APPROVED FOR ELECTRICAL WORK ONLY

MODIFYING EXISTING ELECTRICAL SYSTEM

SCALE: 1"=50'

E-3

STATE OF CALIFORNIA - DEPARTMENT OF TRANSPORTATION
Caltrans® ELECTRICAL DESIGN

FUNCTIONAL SUPERVISOR: ALI BAKHDOUD
CALCULATED-DESIGNED BY: YOHANNES CHALLA
CHECKED BY: PAUL MATOS
REVISED BY: YC
DATE REVISED: 03-14-16

LAST REVISION 03-15-16 | DATE PLOTTED => 12-MAY-2016 | TIME PLOTTED => 08:34

Dist	COUNTY	ROUTE	POST MILES TOTAL PROJECT	SHEET No.	TOTAL SHEETS
05	SLO	101	12.4/29.7	36	54

REGISTERED ELECTRICAL ENGINEER 3-15-16 DATE

3-21-16
PLANS APPROVAL DATE

REGISTERED PROFESSIONAL ENGINEER PAUL MATOS No. 18757 Exp. 6-30-17 ELECTRICAL STATE OF CALIFORNIA

THE STATE OF CALIFORNIA OR ITS OFFICERS OR AGENTS SHALL NOT BE RESPONSIBLE FOR THE ACCURACY OR COMPLETENESS OF SCANNED COPIES OF THIS PLAN SHEET.

NOTE:

THE QUANTITIES SHOWN IN TABLES ARE NOT SEPARATE PAY ITEMS, FOR INFORMATION ONLY.
FOR COMPLETE ELECTRICAL WORK, SEE ELECTRICAL PLAN SHEETS.

MODIFYING EXISTING ELECTRICAL SYSTEM

SHEET No.	No. 5 PB	No. 5(E) PB	No. 5(T) PB	No. 5(E)(T) PB	2"C TYPE 3	3"C TYPE 3	No. 8 CONDUCTOR	No. 10 CONDUCTOR
	EA				LF			
E-2		1	3	1	500	170	2000	4000
E-3	1			2	80	180	250	500

ELECTRICAL QUANTITIES
E-4

STATE OF CALIFORNIA - DEPARTMENT OF TRANSPORTATION
Caltrans® ELECTRICAL DESIGN

FUNCTIONAL SUPERVISOR: ALI BAKHDOUD
CALCULATED-DESIGNED BY: YOHANNES CHALLA
CHECKED BY: PAUL MATOS
REVISED BY: YC
DATE REVISED: 03-14-16

LAST REVISION 03-15-16
DATE PLOTTED => 12-MAY-2016
TIME PLOTTED => 08:34

M

Maint	MAINTENANCE
Max	MAXIMUM
MB	METAL BEAM
MBB	METAL BEAM BARRIER
MBGR	METAL BEAM GUARD RAILING
Med	MEDIAN
MGS	MIDWEST GUARDRAIL SYSTEM
MH	MANHOLE
Min	MINIMUM
Misc	MISCELLANEOUS
Misc I & S	MISCELLANEOUS IRON AND STEEL
Mkr	MARKER
Mod	MODIFIED,
	MODIFY
Mon	MONUMENT
MP	METAL PLATE
MPGR	METAL PLATE GUARD RAILING
MR	MOVEMENT RATING
MSE	MECHANICALLY STABILIZED EMBANKMENT
Mt	MOUNTAIN, MOUNT
Mtl	MATERIAL
MVP	MAINTENANCE VEHICLE PULLOUT

N

N	NORTH
NB	NORTHBOUND
No.	NUMBER (MUST HAVE PERIOD)
Nos.	NUMBERS (MUST HAVE PERIOD)
NPS	NOMINAL PIPE SIZE
NS	NEAR SIDE
NSP	NEW STANDARD PLAN
NTS	NOT TO SCALE

O

Oblr	OBLITERATE
OC	OVERCROSSING
OD	OUTSIDE DIAMETER
OF	OUTSIDE FACE
OG	ORIGINAL GROUND
OGAC	OPEN GRADED ASPHALT CONCRETE
OGFC	OPEN GRADED FRICTION COURSE
OH	OVERHEAD
OHWM	ORDINARY HIGH WATER MARK
O-O	OUT TO OUT
Opp	OPPOSITE
OSD	OVERSIDE DRAIN

P

P	PAGE
PAP	PERFORATED ALUMINUM PIPE
PB	PULL BOX
PC	POINT OF CURVATURE,
	PRECAST
PCC	POINT OF COMPOUND CURVE,
	PORTLAND CEMENT CONCRETE
PCMS	PORTABLE CHANGEABLE MESSAGE SIGN
PCP	PERFORATED CONCRETE PIPE,
	PRESTRESSED CONCRETE PIPE
PCVC	POINT OF COMPOUND VERTICAL CURVE
PEC	PERMIT TO ENTER AND CONSTRUCT
Ped	PEDESTRIAN
Ped OC	PEDESTRIAN OVERCROSSING
Ped UC	PEDESTRIAN UNDERCROSSING
Perm Mtl	PERMEABLE MATERIAL

P continued

PG	PROFILE GRADE
PI	POINT OF INTERSECTION
PJP	PARTIAL JOINT PENETRATION
Pkwy	PARKWAY
ℙ,PL	PLATE
P/L	PROPERTY LINE
PM	POST MILE,
	TIME FROM NOON TO MIDNIGHT
PN	PAVING NOTCH
POC	POINT OF HORIZONTAL CURVE
POT	POINT OF TANGENT
POVC	POINT OF VERTICAL CURVE
PP	PIPE PILE,
	PLASTIC PIPE,
	POWER POLE
PPL	PREFORMED PERMEABLE LINER
PPP	PERFORATED PLASTIC PIPE
PRC	POINT OF REVERSE CURVE
PRF	PAVEMENT REINFORCING FABRIC
PRVC	POINT OF REVERSE VERTICAL CURVE
PS&E	PLANS, SPECIFICATIONS AND ESTIMATES
PS, P/S	PRESTRESSED
PSP	PERFORATED STEEL PIPE
PT	POINT OF TANGENCY
PVC	POLYVINYL CHLORIDE
Pvmt	PAVEMENT

Q

Qty	QUANTITY

R

R	RADIUS
R & D	REMOVE AND DISPOSE
R & S	REMOVE AND SALVAGE
R/C	RATE OF CHANGE
RCA	REINFORCED CONCRETE ARCH
RCB	REINFORCED CONCRETE BOX
RCP	REINFORCED CONCRETE PIPE
RCPA	REINFORCED CONCRETE PIPE ARCH
Rd	ROAD
Reinf	REINFORCED,
	REINFORCEMENT,
	REINFORCING
Rel	RELOCATE
Repl	REPLACEMENT
Ret	RETAINING
Rev	REVISED, REVISION
Rdwy	ROADWAY
RHMA	RUBBERIZED HOT MIX ASPHALT
Riv	RIVER
RM	ROAD-MIXED
RP	RADIUS POINT,
	REFERENCE POINT
RR	RAILROAD
RSP	ROCK SLOPE PROTECTION,
	REVISED STANDARD PLAN
Rt	RIGHT
Rte	ROUTE
RW	REDWOOD,
	RETAINING WALL
R/W	RIGHT OF WAY
Rwy	RAILWAY

S

S	SOUTH,
	SUPPLEMENT
SAE	STRUCTURE APPROACH EMBANKMENT
Salv	SALVAGE
SAPP	STRUCTURAL ALUMINUM PLATE PIPE
SB	SOUTHBOUND
SC	SAND CUSHION
SCSP	SLOTTED CORRUGATED STEEL PIPE
SD	STORM DRAIN
Sec	SECOND,
	SECTION
Sep	SEPARATION
SG	SUBGRADE
Shld	SHOULDER
Sht	SHEET
Sim	SIMILAR
℄	STATION LINE
SM	SELECTED MATERIAL
Spec	SPECIAL,
	SPECIFICATIONS
SPP	SLOTTED PLASTIC PIPE
SS	SLOPE STAKE
SSBM	STRAP AND SADDLE BRACKET METHOD
SSD	STRUCTURAL SECTION DRAIN
SSPA	STRUCTURAL STEEL PLATE ARCH
SSPP	STRUCTURAL STEEL PLATE PIPE
SSPPA	STRUCTURAL STEEL PLATE PIPE ARCH
SSRP	STEEL SPIRAL RIB PIPE
St	STREET
Sta	STATION
STBB	SINGLE THRIE BEAM BARRIER
Std	STANDARD
Str	STRUCTURE
Surf	SURFACING
SW	SIDEWALK,
	SOUND WALL
Swr	SEWER
Sym	SYMMETRICAL
S4S	SURFACE 4 SIDES

T

T	SEMI-TANGENT
Tan	TANGENT
TBB	THRIE BEAM BARRIER
Tbr	TIMBER
TC	TOP OF CURB
TCB	TRAFFIC CONTROL BOX
TCE	TEMPORARY CONSTRUCTION EASEMENT
Tel	TELEPHONE
Temp	TEMPORARY
TG	TOP OF GRADE
Tot	TOTAL
TP	TELEPHONE POLE
TPB	TREATED PERMEABLE BASE
TPM	TREATED PERMEABLE MATERIAL
Trans	TRANSITION

T continued

TS	TRANSVERSE,
	TRAFFIC SIGNAL,
	TUBULAR STEEL
Typ	TYPICAL

U

UC	UNDERCROSSING
UD	UNDERDRAIN
UG	UNDERGROUND
UON	UNLESS OTHERWISE NOTED
UP	UNDERPASS

V

V	VALVE,
	DESIGN SPEED
Var	VARIABLE,
	VARIES
VC	VERTICAL CURVE
VCP	VITRIFIED CLAY PIPE
Vert	VERTICAL
Via	VIADUCT
Vol	VOLUME

W

W	WEST,
	WIDTH
WB	WESTBOUND
WH	WEEP HOLE
WM	WIRE MESH
WS	WATER SURFACE
WSP	WELDED STEEL PIPE
Wt	WEIGHT
WV	WATER VALVE
WW	WINGWALL
WWLOL	WINGWALL LAYOUT LINE

X

X Sec	CROSS SECTION
Xing	CROSSING

Y

Yr	YEAR
Yrs	YEARS

Dist	COUNTY	ROUTE	POST MILES TOTAL PROJECT	SHEET No.	TOTAL SHEETS
05	SLO	101	12.4/29.7	37	54

Grace M. Tsushima
REGISTERED CIVIL ENGINEER

July 19, 2013
PLANS APPROVAL DATE

REGISTERED PROFESSIONAL ENGINEER
Grace M. Tsushima
No. C49814
Exp. 9-30-14
CIVIL
STATE OF CALIFORNIA

THE STATE OF CALIFORNIA OR ITS OFFICERS OR AGENTS SHALL NOT BE RESPONSIBLE FOR THE ACCURACY OR COMPLETENESS OF SCANNED COPIES OF THIS PLAN SHEET.

TO ACCOMPANY PLANS DATED 3-21-16

UNIT OF MEASUREMENT SYMBOLS:

Some of the symbols used in the project plan quantity tables and in the Bid Item List are:

TABLE A

SYMBOL USED	DEFINITIONS
ACRE	ACRE
CF	CUBIC FOOT
CY	CUBIC YARD
EA	EACH
GAL	GALLON
LB	POUND
LF	LINEAR FOOT
SQFT	SQUARE FOOT
SQYD	SQUARE YARD
STA	100 FEET
TAB	TABLET
TON	2,000 POUNDS

Some of the symbols used in the plans other than in the project plan quantity tables are:

TABLE B

SYMBOL USED	DEFINITIONS
ksi	KIPS PER SQUARE INCH
ksf	KIPS PER SQUARE FOOT
psi	POUNDS PER SQUARE INCH
psf	POUNDS PER SQUARE FOOT
lb/ft^3, pcf	POUNDS PER CUBIC FOOT
tsf	TONS PER SQUARE FOOT
mph, MPH *	MILES PER HOUR
ø	NOMINAL DIAMETER
oz	OUNCE
lb	POUND
kip	1,000 POUNDS
cal	CALORIE
ft	FOOT OR FEET
gal	GALLON

* For use on a sign panel only

STATE OF CALIFORNIA
DEPARTMENT OF TRANSPORTATION

ABBREVIATIONS (SHEET 2 OF 2)

NO SCALE

RSP A10B DATED JULY 19, 2013 SUPERSEDES STANDARD PLAN A10B DATED MAY 20, 2011 - PAGE 2 OF THE STANDARD PLANS BOOK DATED 2010.

REVISED STANDARD PLAN RSP A10B

2010 REVISED STANDARD PLAN RSP A10B

6-7-13

Dist	COUNTY	ROUTE	POST MILES TOTAL PROJECT	SHEET No.	TOTAL SHEETS
05	SLO	101	12.4/29.7	38	54

Randell D. Hiatt
REGISTERED CIVIL ENGINEER

July 19, 2013
PLANS APPROVAL DATE

REGISTERED PROFESSIONAL ENGINEER
Randell D. Hiatt
No. C50200
Exp. 6-30-15
CIVIL
STATE OF CALIFORNIA

THE STATE OF CALIFORNIA OR ITS OFFICERS OR AGENTS SHALL NOT BE RESPONSIBLE FOR THE ACCURACY OR COMPLETENESS OF SCANNED COPIES OF THIS PLAN SHEET.

TO ACCOMPANY PLANS DATED 3-21-16

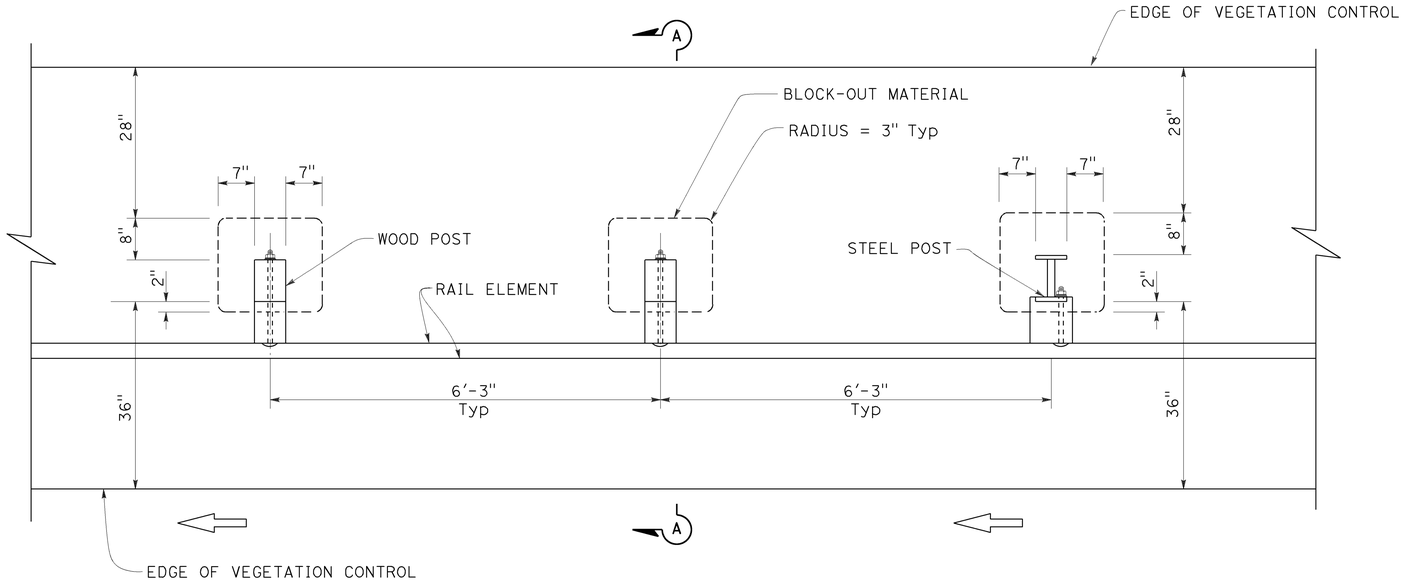

PLAN

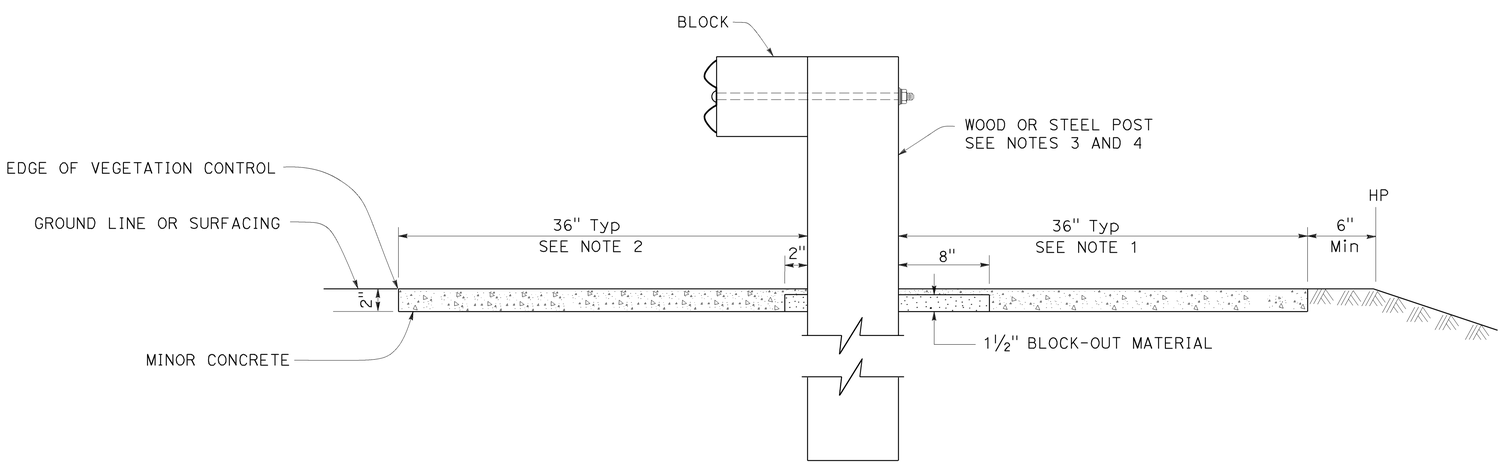

SECTION A-A

NOTES:

1. Where the distance between back of post and hinge point is less than 42", construct vegetation control to 6" from hinge point while maintaining the 8" block-out at back of post. If the 8" block-out at back of post can not be maintained, construct vegetation control flush with the back edge of post.
2. Where dike is constructed under railing, construct vegetation control to back edge of dike. Where paved shoulder is constructed within 36" in front of the post, construct vegetation control to the edge of paved shoulder.
3. For wood post sizes, see Revised Standard Plan RSP A77N1.
4. For steel post sizes, see Revised Standard Plan RSP A77N2.
5. For details not shown, see Revised Standard Plans RSP A77L1 and RSP A77L2.

STATE OF CALIFORNIA
DEPARTMENT OF TRANSPORTATION

MIDWEST GUARDRAIL SYSTEM TYPICAL VEGETATION CONTROL STANDARD RAILING SECTION

NO SCALE

RSP A77N5 DATED JULY 19, 2013 SUPPLEMENTS THE STANDARD PLANS BOOK DATED 2010.

REVISED STANDARD PLAN RSP A77N5

2010 REVISED STANDARD PLAN RSP A77N5

7-3-13

Dist	COUNTY	ROUTE	POST MILES TOTAL PROJECT	SHEET No.	TOTAL SHEETS
05	SLO	101	12.4/29.7	39	54

REGISTERED CIVIL ENGINEER

January 15, 2016
PLANS APPROVAL DATE

REGISTERED PROFESSIONAL ENGINEER
Michael Janzen
No. 44788
Exp. 3-31-16
CIVIL
STATE OF CALIFORNIA

THE STATE OF CALIFORNIA OR ITS OFFICERS OR AGENTS SHALL NOT BE RESPONSIBLE FOR THE ACCURACY OR COMPLETENESS OF SCANNED COPIES OF THIS PLAN SHEET.

TO ACCOMPANY PLANS DATED 3-21-16

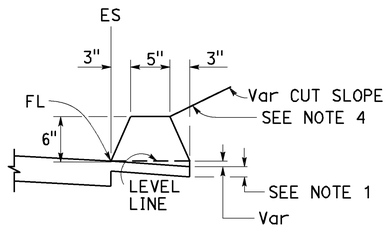

TYPE A
See Notes 3 and 5

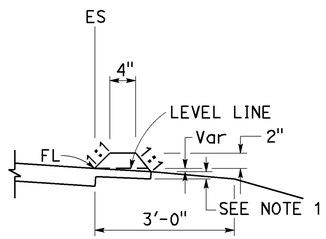

TYPE C

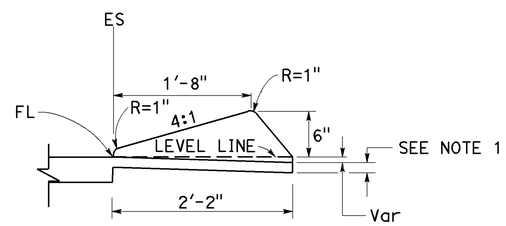

TYPE D

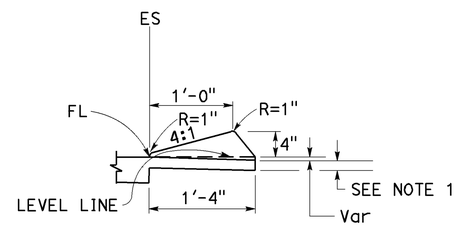

TYPE E

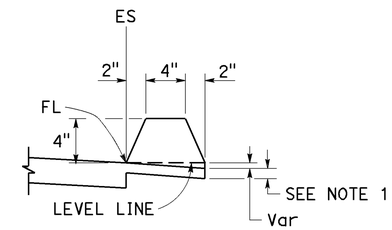

TYPE F
See Note 5

DIKES

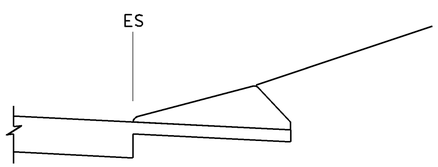

CASE C-1
Cut Slope

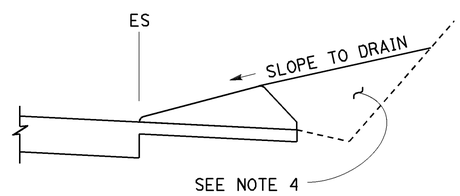

CASE C-2
Cut Slope

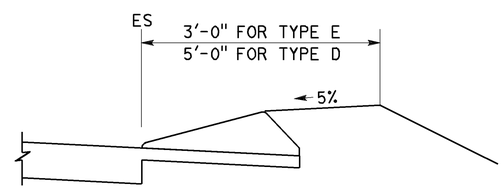

CASE F

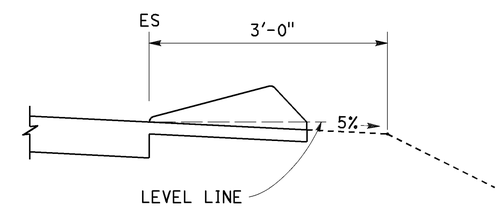

CASE R
See Note 2

TYPE D AND E BACKFILL DETAILS

NOTES:

1. For HMA shoulders only, extend top layer of HMA placed on the shoulder under dike with no joint at the ES. For projects with OGFC shoulders, do not extend OGFC under dike. See project plans for modified dike detail.
2. Case R applies to retrofit only projects where restrictive conditions do not provide enough width for Case F backfill.
3. Type A dike only to be used where restrictive slope conditions do not provide enough width to use Type D or Type E dike.
4. Fill and compact with excavated material to top of dike.
5. Use Type A or F dike, where dike is required with guardrail installations. See Revised Standard Plan RSP A77N4 for dike positioning details. See Revised Standard Plan RSP A77N3 for hinge point offsets with guardrail.

DIKE QUANTITIES

TYPE	CUBIC YARDS PER LINEAR FOOT
A	0.0135
C	0.0038
D	0.0293
E	0.0130
F	0.0066

Quantities based on 5% cross slope.

STATE OF CALIFORNIA
DEPARTMENT OF TRANSPORTATION

HOT MIX ASPHALT DIKES

NO SCALE

RSP A87B DATED JANUARY 15, 2016 SUPERSEDES RSP A87B DATED JULY 19, 2013 AND STANDARD PLAN A87B DATED MAY 20, 2011 - PAGE 120 OF THE STANDARD PLANS BOOK DATED 2010.

REVISED STANDARD PLAN RSP A87B

2010 REVISED STANDARD PLAN RSP A87B

11-17-15

TO ACCOMPANY PLANS DATED 3-21-16

Dist	COUNTY	ROUTE	POST MILES TOTAL PROJECT	SHEET No.	TOTAL SHEETS
05	SLO	101	12.4/29.7	40	54

REGISTERED CIVIL ENGINEER

October 19, 2012
PLANS APPROVAL DATE

REGISTERED PROFESSIONAL ENGINEER Glenn DeCou No. C34547 Exp. 9-30-13 CIVIL STATE OF CALIFORNIA

THE STATE OF CALIFORNIA OR ITS OFFICERS OR AGENTS SHALL NOT BE RESPONSIBLE FOR THE ACCURACY OR COMPLETENESS OF SCANNED COPIES OF THIS PLAN SHEET.

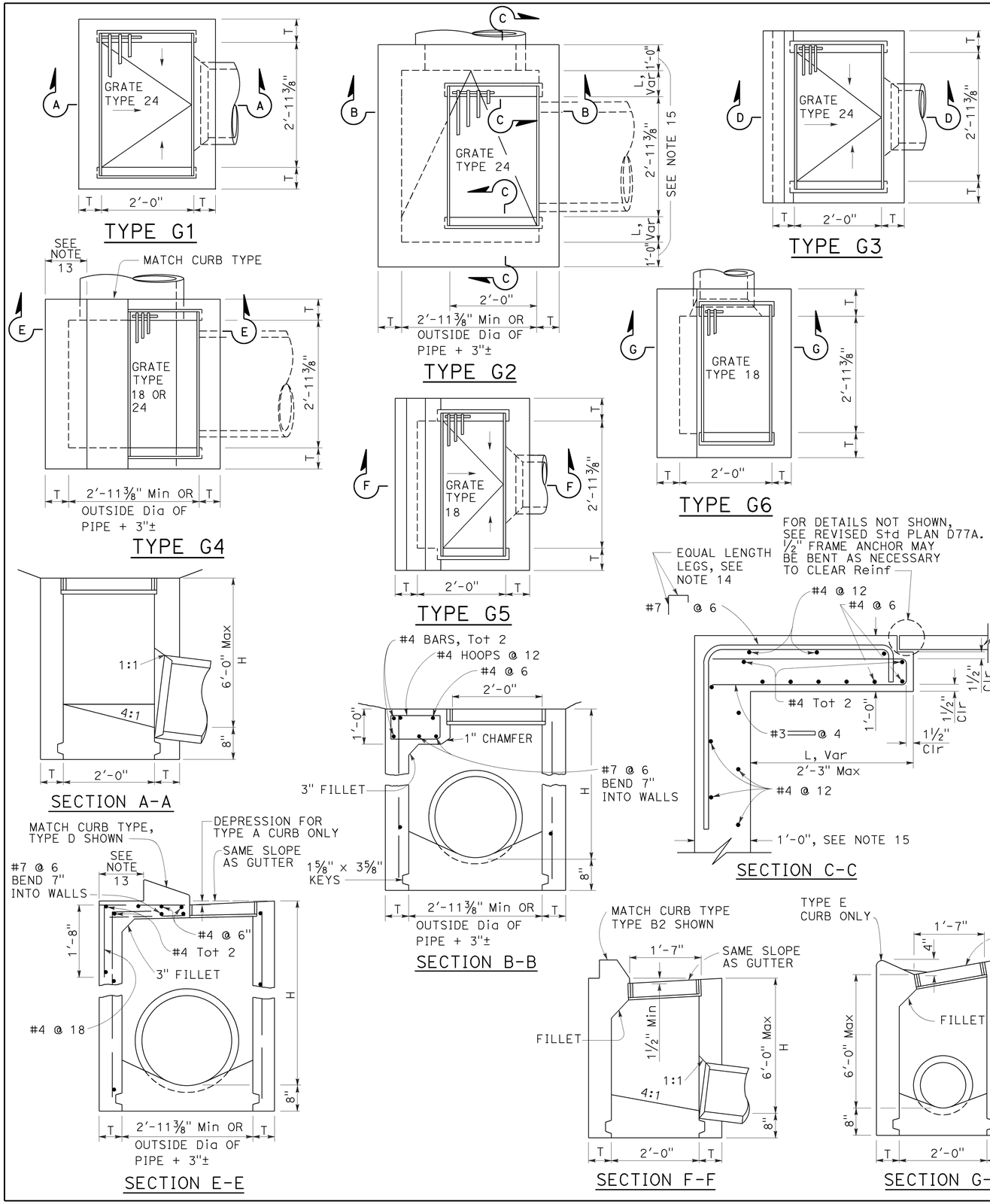

NOTES:

1. "H" is the difference in elevation between the outlet pipe flow line and the normal gutter grade line undepressed.
2. For "T" wall thickness, see Table A below.
3. Wall reinforcing not required when "H" is 8'-0" or less and the unsupported width or length is 7'-0" or less. Walls exceeding these limits shall be reinforced with #4 bars @ 1'-6" ± centers placed 1½" clear to inside of box unless otherwise shown.
4. Inlet bottom reinforcing not required. See Standard Plan D74C for alternative reinforced bottom and alternative half round bottom.
5. Steps-None required where "H" is less than 2'-6". Where "H" is 2'-6" or more, install steps with lowest rung 1'-0" above the floor and highest rung not more than 6" below top of inlet. The distance between steps shall not exceed 1'-0" and shall be uniform throughout the length of the wall. Place steps in the wall without an opening. Steps inserts may be substituted for the bar steps. Step inserts shall comply with State Industrial Safety requirements. See Standard Plan D74C for step details.
6. Details shown apply to both metal and concrete pipe.
7. Pipe(s) can be placed in any wall.
8. Curb section shall match adjacent curb.
9. Basin floors shall have wood trowel finish and a minimum slope of 12:3 from all directions toward outlet pipe.
10. Set inlet so that grate bars are parallel to direction of principal surface flow.
11. See Revised Standard Plans D77A and D77B for grate and frame details and weights of miscellaneous iron and steel.
12. See Standard Plan D78A for gutter depression details.
13. This dimenison will vary with different grates, curbs types, box width and wall thickness.
14. Bar may be rotated as necessary to clear opening. Where "L" is 6" or less, bar may be omitted.
15. Where "L" is 6" or less, wall thickness shall be as shown in Table A.
16. Cast-in-place inlets to be formed around all pipes/stubs intersecting the inlet, and concrete poured in one continuous operation. Precast inlets shall have mortared connections conforming to details for Type GCP Inlet shown on Standard Plan D75B. See Standard Specifications for mortar composition.

TABLE A

CONCRETE QUANTITIES				
TYPE	H=3'-0" TO 8'-0" (T=6")		H=8'-1" TO 20'-0" (T=8")	
	H=3'-0" (CY)	ADDITIONAL PCC PER FOOT (CY)	H=8'-1" (CY)	ADDITIONAL PCC PER FOOT (CY)
G-1	0.95	0.220	See Note A	SEE NOTE A
G-2*	1.31	0.255	3.50	0.357
G-3	1.03	0.220	See Note A	SEE NOTE A
G-4* (TYPE 24)	1.27	0.255	3.48	0.357
G-4* (TYPE 18)	1.30	0.255	3.50	0.357
G-5	1.02	0.220	SEE NOTE A	SEE NOTE A
G-6	1.04	0.220	SEE NOTE A	SEE NOTE A

TABLE BASED ON 8" FLOOR SLAB. NO DEDUCTIONS ARE TO BE MADE TO THESE QUANTITIES BECAUSE OF PIPE OPENINGS, DIFFERENT FLOOR ALTERNATIVES OR DIFFERENT CURB TYPES. * QUANTITIES FOR TYPE G-2 AND G-4 INLETS BASED ON THE MINIMUM INTERIOR DIMENSIONS.

NOTE A:

Maximum allowable height 6'-0".

STATE OF CALIFORNIA
DEPARTMENT OF TRANSPORTATION

DRAINAGE INLETS

NO SCALE

RSP D73 DATED OCTOBER 19, 2012 SUPERSEDES STANDARD PLAN D73 DATED MAY 20, 2011 - PAGE 156 OF THE STANDARD PLANS BOOK DATED 2010.

REVISED STANDARD PLAN RSP D73

2010 REVISED STANDARD PLAN RSP D73

7-19-12

Dist	COUNTY	ROUTE	POST MILES TOTAL PROJECT	SHEET No.	TOTAL SHEETS
05	SLO	101	12.4/29.7	41	54

REGISTERED CIVIL ENGINEER

April 19, 2013
PLANS APPROVAL DATE

Raymond Don Tsztoo No. C37332 Exp. 6-30-14 CIVIL — REGISTERED PROFESSIONAL ENGINEER — STATE OF CALIFORNIA

THE STATE OF CALIFORNIA OR ITS OFFICERS OR AGENTS SHALL NOT BE RESPONSIBLE FOR THE ACCURACY OR COMPLETENESS OF SCANNED COPIES OF THIS PLAN SHEET.

TO ACCOMPANY PLANS DATED 3-21-16

2010 REVISED STANDARD PLAN RSP D77B

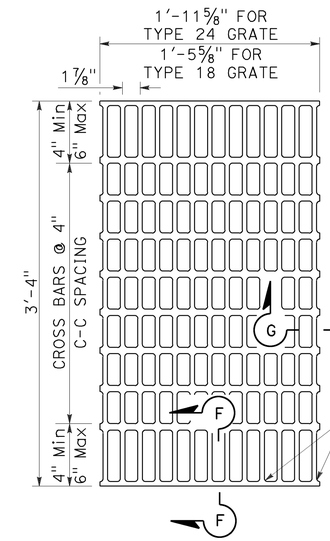

NOTES:

Bearing bars to be 3½" × ¼" bars on 1⅞" centers.

⅜"± ø Cross bars may be fillet welded, resistance welded or electroforged to bearing bars.

Weight of Type 24 grate = 141 LBS.

Weight of Type 18 grate = 107 LBS. (Type 24 grate shown).

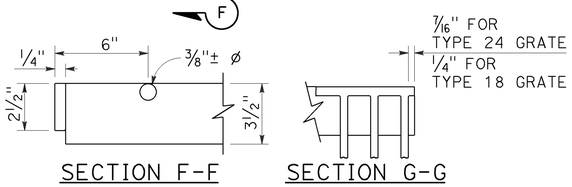

SECTION F-F SECTION G-G

TYPE 18-10 AND 24-13 GRATE

(Welded Steel)

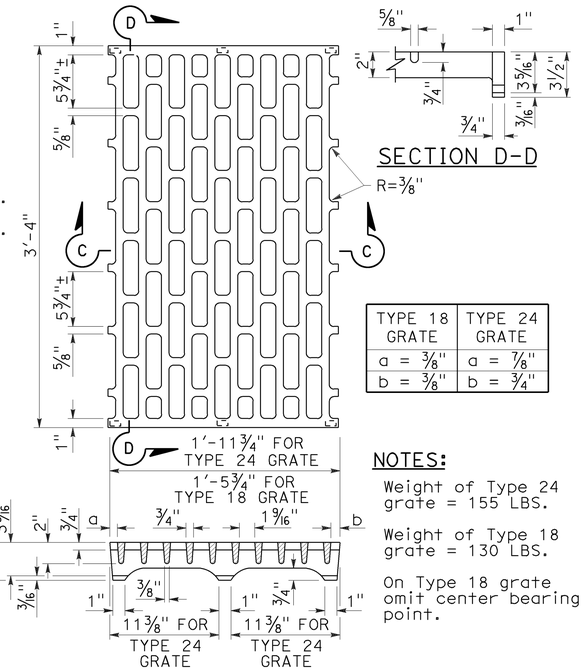

SECTION D-D

TYPE 18 GRATE	TYPE 24 GRATE
a = ⅜"	a = ⅞"
b = ⅜"	b = ¾"

NOTES:

Weight of Type 24 grate = 155 LBS.

Weight of Type 18 grate = 130 LBS.

On Type 18 grate omit center bearing point.

SECTION C-C

TYPE 18-8C AND 24-10C GRATE

(Cast ductile iron)

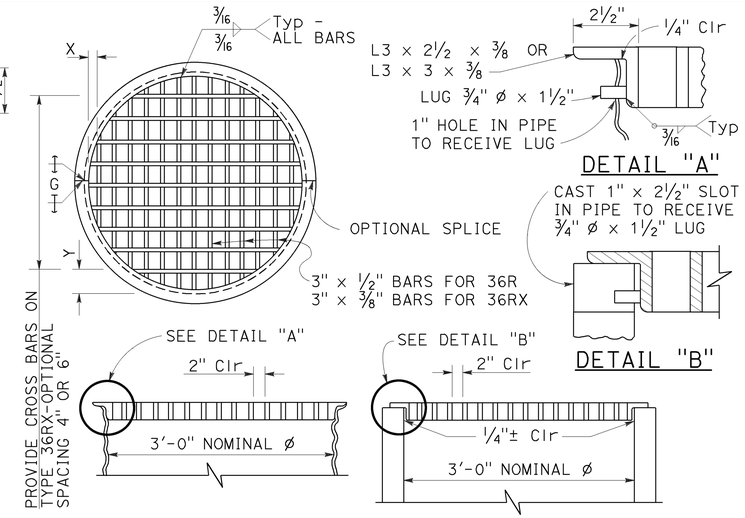

DETAIL "A"

DETAIL "B"

TYPE 36R AND 36RX GRATE DETAILS

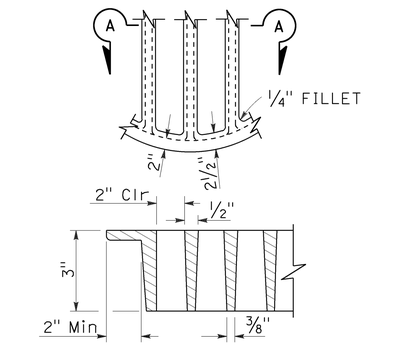

SECTION A-A

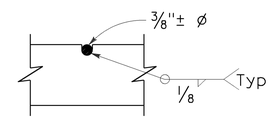

⅜"± ø Cross bars may be fillet welded, resistance welded or electroforged to bearing bars.

CROSS BAR DETAIL TYPE 36RX GRATE (WELDED STEEL)

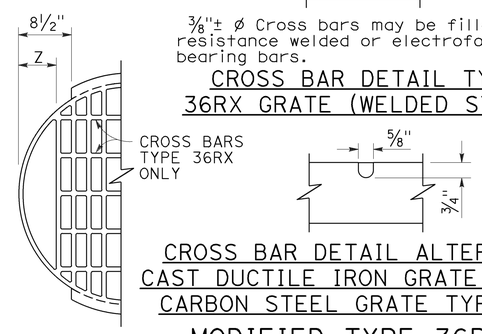

CROSS BAR DETAIL ALTERNATIVE CAST DUCTILE IRON GRATE OR CAST CARBON STEEL GRATE TYPE 36RX

MODIFIED TYPE 36R AND 36RX GRATE FOR ODI INLET

ALTERNATIVE CAST DUCTILE IRON GRATE OR CAST CARBON STEEL GRATE TYPE 36R AND 36RX

BASIS FOR Misc IRON AND STEEL FINAL PAY WEIGHTS FOR DRAINAGE INLETS

INLET TYPE	GRATE TYPE	No. OF GRATES	WEIGHT LB
GDO (SEE NOTE 4)	24-10C	2	391
	24-10S	2	456
	24-12X	2	473
	24-13	2	374
GO,GOL,G1,G2, G3,G4 (TYPE 24)	24-10C	1	202
	24-10S	1	229
	24-12X	1	239
	24-13	1	188
G4 (TYPE 18) G5,G6	18-8S	1	187
	18-9X	1	187
	18-10	1	149
GT1,GT2	18-8S	2	374
	18-9X	2	374
	18-10	2	298
GT3,GT4	24-10C	2	404
	24-10S	2	458
	24-12X	2	478
	24-13	2	376
ODI	36RX (Mod)	1	196
GMP,GCP,GCPI	36RX	1	215
ODI	36R (Mod)	1	220
GMP,GCP,GCPI	36R	1	236
TRASH RACK			22
GRATE CHAIN			3

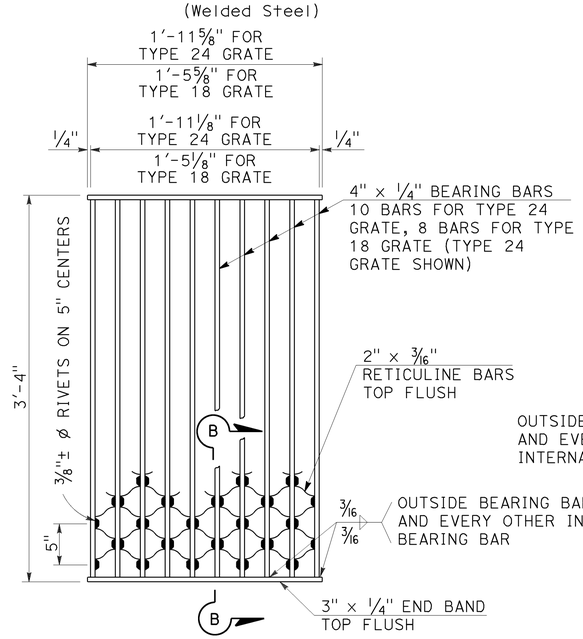

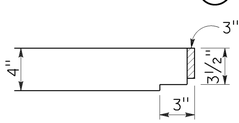

NOTES:

Weight of Type 24 grate = 182 LBS.
Weight of Type 18 grate = 145 LBS.

SECTION B-B

TYPE 18-8S AND 24-10S GRATE

(Welded Steel) Reticuline type

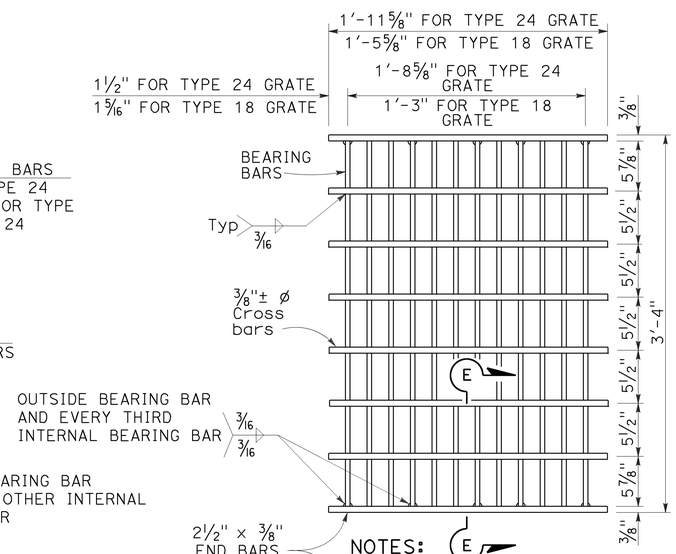

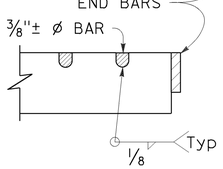

SECTION E-E

NOTES:

Bearing bars to be 3½" × ⅜" bars on 1⅞" centers.

12 Bars for Type 24 grate - 9 bars for Type 18 grates. (Type 24 grate shown).

Weight of Type 24 grate = 192 LBS.

Weight of Type 18 grate = 145 LBS.

⅜"± ø Cross bars may be fillet welded, resistance welded or electroforged to bearing bars.

TYPE 18-9X AND 24-12X GRATE

(Welded Steel)

NOTES:

1. When alternative grates are allowed - Final pay based on alternative with the lesser weight.
2. Use frame shown on Standard Plan D74A, D74B or RSP D77A as appropriate.
3. When Type 24-10S, 24-12X or 24-13 grates are used with GDO Inlets, a ¼" × 3½" × 3'-4⅞" steel bar shall be welded across the center of inlet frame to separate the individual grates.
4. See Revised Standard Plan RSP D77A for connecting chain to welded grate and frame. When chain is required, do not use cast ductile iron grate.

GRATE BAR SPACING TABLE

TYPE	No. OF BARS	CLEAR BAR SPACING	X	Y 4" SPACING	Y 6" SPACING	Z
36R	13	2"	2⅛"	-	-	-
36RX (STEEL)	15	2"	9/16"	3¾"	5¾"	-
36RX (CAST)	13	2"	2⅛"	3¾"	5¾"	-
36R Mod	12	2"	2⅛"	-	-	5"
36RX Mod (STEEL)	13	2"	9/16"	3¾"	5¾"	5 11/16"
36RX Mod (CAST)	12	2"	2⅛"	3¾"	5¾"	5"

STATE OF CALIFORNIA
DEPARTMENT OF TRANSPORTATION

GRATE DETAILS No. 2

NO SCALE

RSP D77B DATED APRIL 19, 2013 SUPERSEDES RSP D77B DATED JULY 20, 2012 AND STANDARD PLAN D77B DATED MAY 20, 2011 - PAGE 165 OF THE STANDARD PLANS BOOK DATED 2010.

REVISED STANDARD PLAN RSP D77B

4-4-13

Dist	COUNTY	ROUTE	POST MILES TOTAL PROJECT	SHEET No.	TOTAL SHEETS
05	SLO	101	12.4/29.7	42	54

REGISTERED CIVIL ENGINEER

July 19, 2013
PLANS APPROVAL DATE

REGISTERED PROFESSIONAL ENGINEER Gurinderpal Bhullar No. C48815 Exp. 9-30-14 CIVIL STATE OF CALIFORNIA

THE STATE OF CALIFORNIA OR ITS OFFICERS OR AGENTS SHALL NOT BE RESPONSIBLE FOR THE ACCURACY OR COMPLETENESS OF SCANNED COPIES OF THIS PLAN SHEET.

TO ACCOMPANY PLANS DATED 3-21-16

2010 REVISED STANDARD PLAN RSP T9

TABLE 1

TAPER LENGTH CRITERIA AND CHANNELIZING DEVICE SPACING

SPEED (S)	MINIMUM TAPER LENGTH * FOR WIDTH OF OFFSET 12 FEET (W)				MAXIMUM CHANNELIZING DEVICE SPACING		
					X	Y	Z **
	TANGENT 2L	MERGING L	SHIFTING L/2	SHOULDER L/3	TAPER	TANGENT	CONFLICT
mph	ft	ft	ft	ft	ft	ft	ft
20	160	80	40	27	20	40	10
25	250	125	63	42	25	50	12
30	360	180	90	60	30	60	15
35	490	245	123	82	35	70	17
40	640	320	160	107	40	80	20
45	1080	540	270	180	45	90	22
50	1200	600	300	200	50	100	25
55	1320	660	330	220	55	110	27
60	1440	720	360	240	60	120	30
65	1560	780	390	260	65	130	32
70	1680	840	420	280	70	140	35

* - For other offsets, use the following merging taper length formula for L:
For speed of 40 mph or less, $L = WS^2/60$
For speed of 45 mph or more, $L = WS$

Where: L = Taper length in feet
W = Width of offset in feet
S = Posted speed limit, off-peak 85th-percentile speed prior to work starting, or the anticipated operating speed in mph

** - Use for taper and tangent sections where there are no pavement markings or where there is a conflict between existing pavement markings and channelizers (CA).

TABLE 2

LONGITUDINAL BUFFER SPACE AND FLAGGER STATION SPACING

SPEED *	Min D **	DOWNGRADE Min D ***		
		-3%	-6%	-9%
mph	ft	ft	ft	ft
20	115	116	120	126
25	155	158	165	173
30	200	205	215	227
35	250	257	271	287
40	305	315	333	354
45	360	378	400	427
50	425	446	474	507
55	495	520	553	593
60	570	598	638	686
65	645	682	728	785
70	730	771	825	891

* - Speed is posted speed limit, off-peak 85th-percentile speed prior to work starting, or the anticipated operating speed in mph

** - Longitudinal buffer space or flagger station spacing

*** - Use on sustained downgrade steeper than -3 percent and longer than 1 mile.

TABLE 3

ADVANCE WARNING SIGN SPACING

ROAD TYPE	DISTANCE BETWEEN SIGNS *		
	A	B	C
	ft	ft	ft
URBAN - 25 mph OR LESS	100	100	100
URBAN - MORE THAN 25 mph TO 40 mph	250	250	250
URBAN - MORE THAN 40 mph	350	350	350
RURAL	500	500	500
EXPRESSWAY / FREEWAY	1000	1500	2640

* - The distances are approximate, are intended for guidance purposes only, and should be applied with engineering judgment. These distances should be adjusted by the Engineer for field conditions, if necessary, by increasing or decreasing the recommmended distances.

STATE OF CALIFORNIA
DEPARTMENT OF TRANSPORTATION

TRAFFIC CONTROL SYSTEM TABLES FOR LANE AND RAMP CLOSURES

NO SCALE

RSP T9 DATED JULY 19, 2013 SUPERSEDES RSP T9 DATED APRIL 19, 2013 THAT SUPPLEMENTS THE STANDARD PLANS BOOK DATED 2010.

REVISED STANDARD PLAN RSP T9

4-30-13

TO ACCOMPANY PLANS DATED 3-21-16

Dist	COUNTY	ROUTE	POST MILES TOTAL PROJECT	SHEET No.	TOTAL SHEETS
05	SLO	101	12.4/29.7	43	54

REGISTERED CIVIL ENGINEER

April 19, 2013
PLANS APPROVAL DATE

REGISTERED PROFESSIONAL ENGINEER Gurinderpal Bhullar No. C48815 Exp. 9-30-14 CIVIL STATE OF CALIFORNIA

THE STATE OF CALIFORNIA OR ITS OFFICERS OR AGENTS SHALL NOT BE RESPONSIBLE FOR THE ACCURACY OR COMPLETENESS OF SCANNED COPIES OF THIS PLAN SHEET.

NOTES:

See Revised Standard Plan RSP T9 for tables.

Use cone spacing X for taper segment, Y for tangent segment or Z for conflict situations, as approriate, per Table 1, unless X, Y, or Z cone spacing is shown on this sheet.

Unless otherwise specified in the special provisions, all temporary warning signs shall have black legend on fluorescent orange background.

California codes are designated by (CA). Otherwise, Federal (MUTCD) codes are shown.

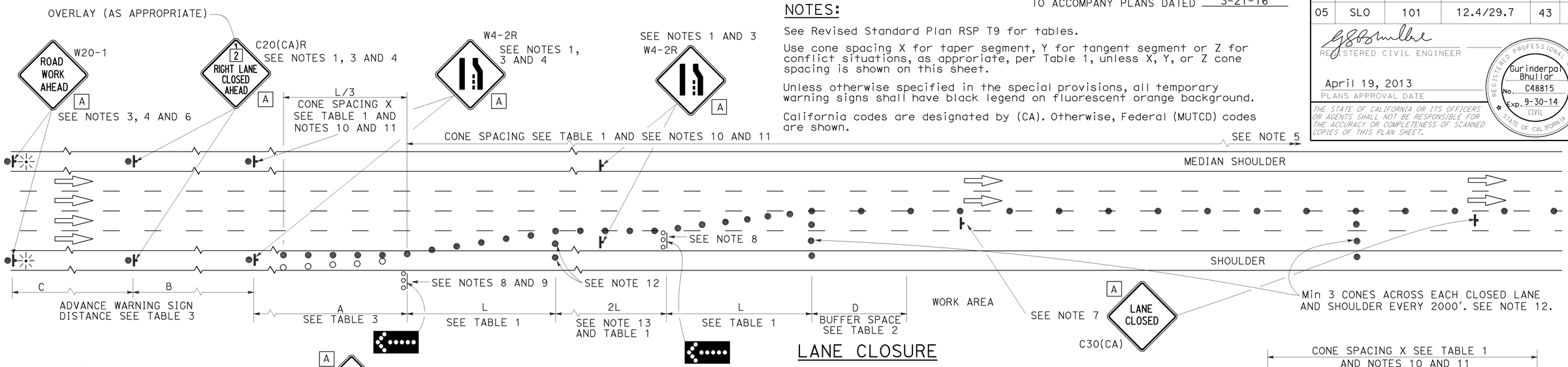

LANE CLOSURE

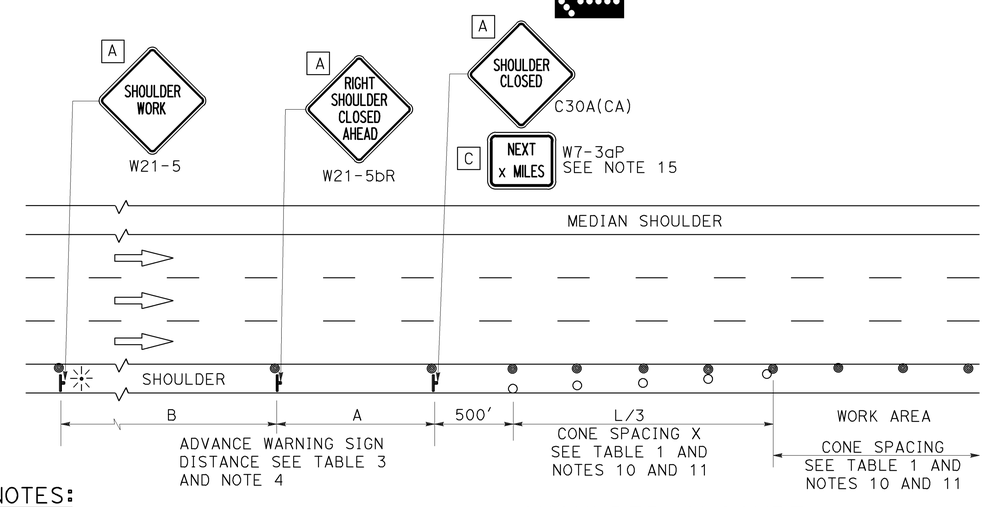

SHOULDER CLOSURE

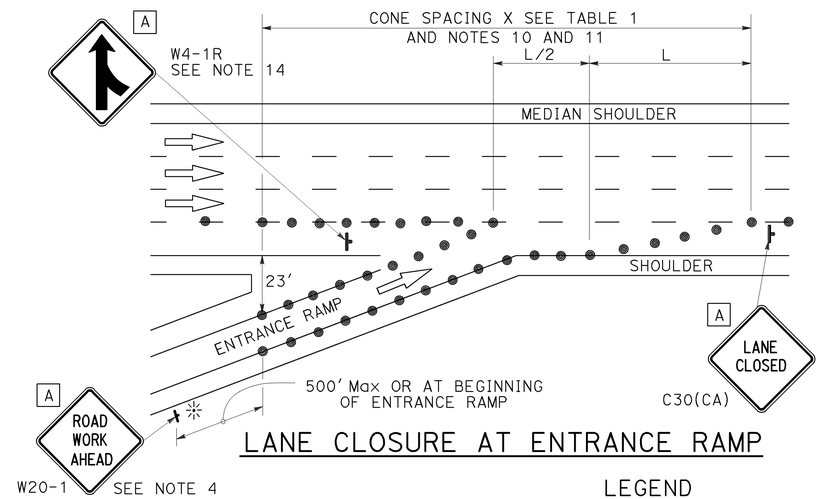

LANE CLOSURE AT ENTRANCE RAMP

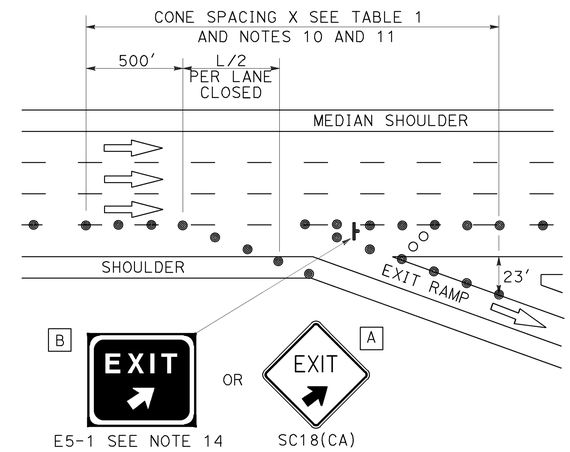

LANE CLOSURE AT EXIT RAMP

NOTES:

1. Median lane closures shall conform to the details as shown except that C20(CA)L and W4-2L signs shall be used.
2. At least one person shall be assigned to provide full time maintenance of traffic control devices for lane closures.
3. Duplicate sign installations are not required:
   a) On opposite shoulder if at least one-half of the available lanes remain open to traffic.
   b) In the median if the width of the median shoulder is less than 8' and the outside lanes are to be closed.
4. Each advance warning sign on each side of the roadway shall be equipped with at least two flags for daytime closure. Each flag shall be at least 16" x 16" in size and shall be orange or fluorescent red-orange in color. Flashing beacons shall be placed at the locations indicated for lane closure during hours of darkness.
5. A G20-2 "END ROAD WORK" sign, with minimum size of 48" x 24" as appropriate, shall be placed at the end of the lane closure unless the end of work area is obvious or ends within a larger project's limits.
6. If the W20-1 sign would follow within 2000' of a stationary W20-1 or G20-1 "ROAD WORK NEXT _____ MILES", use a C20(CA) sign for the first advance warning sign.
7. Place a C30(CA) sign every 2000' throughout length of lane closure.
8. One flashing arrow sign for each lane closed. The flashing arrow signs shall be Type I.
9. A minimum 1500' of sight distance shall be provided where possible for vehicles approaching the first flashing arrow sign. Lane closures shall not begin at top of crest vertical curve or on a horizontal curve.
10. All cones used for lane closures during the hours of darkness shall be fitted with retroreflective bands (or sleeves) as specified in the specifications.
11. Portable delineators, placed at one-half the spacing indicated for traffic cones may be used instead of cones for daytime closures only.
12. Unless otherwise specified in the special provisions, a minimum of 3 cones shall be placed transversely across each closed lane and shoulder at each location where a taper across a traffic lane ends and every 2000' as shown on the "Lane Closure" detail. Two Type II barricades may be used instead of the 3 cones. The transverse alignment of the cones or barricades on the closed shoulder may be shifted from the transverse alignment to provide access to the work.
13. Unless otherwise specified in the special provisions, the 2L tangent shown along lane lines shall be used between the L tapers required for each closed traffic lane.
14. Unless otherwise specified in the special provisions, the E5-1 or SC18(CA) and W4-1 signs shall be used as shown.
15. A W7-3aP "NEXT____ MILES" plaque must be used if theshoulder closure extends beyond the distance that can be perceived by road users.

LEGEND

- TRAFFIC CONE
- TRAFFIC CONE (OPTIONAL TAPER)
- TEMPORARY TRAFFIC CONTROL SIGN
- FLASHING ARROW SIGN (FAS)
- FAS SUPPORT OR TRAILER
- PORTABLE FLASHING BEACON

SIGN PANEL SIZE (Min)

A	48" x 48"
B	72" x 60"
C	36" x 30"

STATE OF CALIFORNIA
DEPARTMENT OF TRANSPORTATION

TRAFFIC CONTROL SYSTEM FOR LANE CLOSURE ON FREEWAYS AND EXPRESSWAYS

NO SCALE

RSP T10 DATED APRIL 19, 2013 SUPERSEDES STANDARD PLAN T10 DATED MAY 20, 2011 - PAGE 237 OF THE STANDARD PLANS BOOK DATED 2010.

REVISED STANDARD PLAN RSP T10

2010 REVISED STANDARD PLAN RSP T10

12-18-12

TO ACCOMPANY PLANS DATED 3-21-16

Dist	COUNTY	ROUTE	POST MILES TOTAL PROJECT	SHEET No.	TOTAL SHEETS
05	SLO	101	12.4/29.7	44	54

REGISTERED CIVIL ENGINEER

April 19, 2013
PLANS APPROVAL DATE

REGISTERED PROFESSIONAL ENGINEER Gurinderpal Bhullar No. C48815 Exp. 9-30-14 CIVIL STATE OF CALIFORNIA

THE STATE OF CALIFORNIA OR ITS OFFICERS OR AGENTS SHALL NOT BE RESPONSIBLE FOR THE ACCURACY OR COMPLETENESS OF SCANNED COPIES OF THIS PLAN SHEET.

NOTES: See Revised Standard Plan RSP T9 for tables.

Use cone spacing X for taper segment, Y for tangent segment or Z for conflict situations, as approriate, per Table 1, unless X, Y, or Z cone spacing is shown on this sheet.

Unless otherwise specified in the special provisions, all temporary warning signs shall have black legend on fluorescent orange background.

California codes are designated by (CA). Otherwise, Federal (MUTCD) codes are shown.

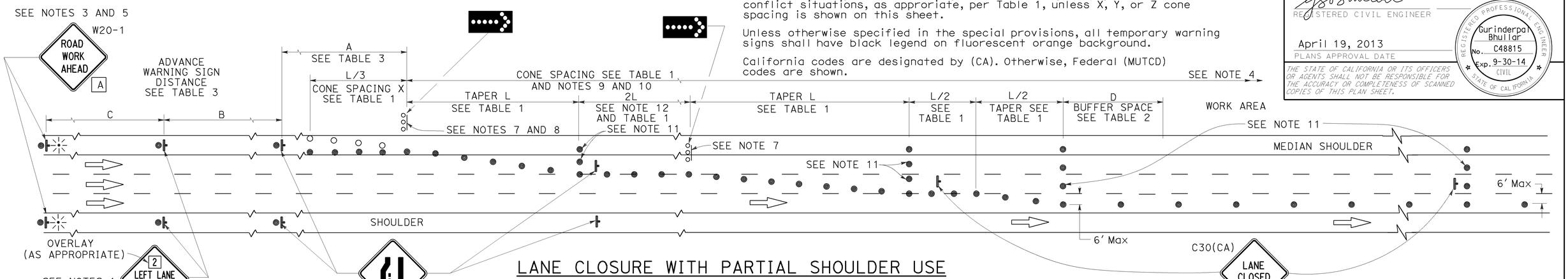

LANE CLOSURE WITH PARTIAL SHOULDER USE

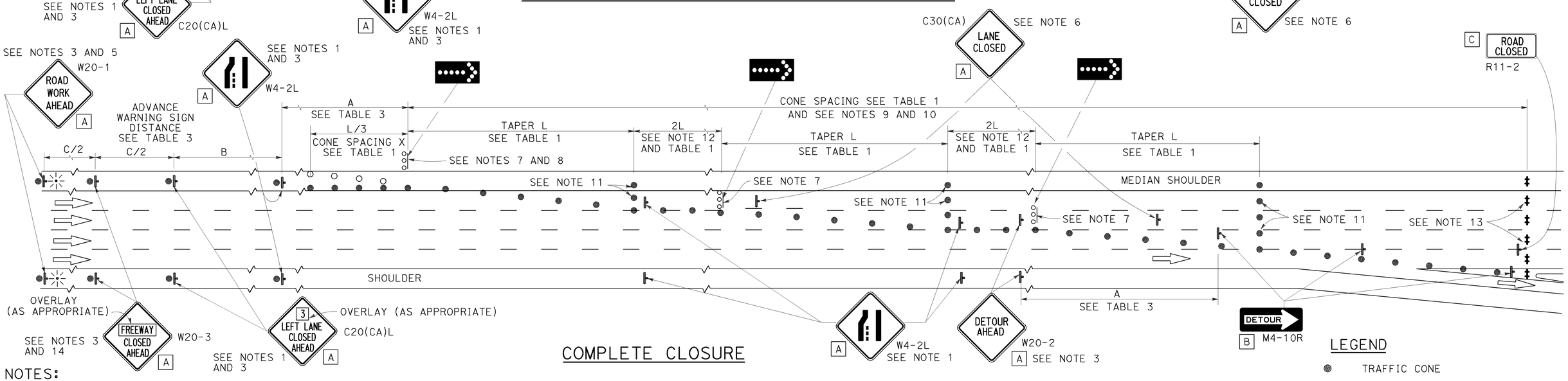

COMPLETE CLOSURE

NOTES:

1. Lane closures on the right side using partial median shoulder as a traffic lane shall conform to the details as shown except that C20(CA)R and W4-2R signs shall be used.
2. At least one person shall be assigned to provide full time maintenance of traffic control devices for lane closures.
3. Each advance warning sign on each side of the roadway shall be equipped with at least two flags for daytime closure. Each flag shall be at least 16" X 16" in size and shall be orange or fluorescent red-orange in color. Flashing beacons shall be placed at the locations indicated for lane closure during hours of darkness.
4. A G20-2 "END ROAD WORK" sign, with minimum size of 48" x 24" as appropriate, shall be placed at the end of the lane closure unless the end of work area is obvious or ends within a larger project's limits.
5. If the W20-1 sign would follow within 2000' of a stationary W20-1 or G20-1 "ROAD WORK NEXT ___ MILES", use a C20(CA) sign for the first advance warning sign.
6. Place a C30(CA) sign every 2000' throughout length of lane closure.
7. One flashing arrow sign for each lane closed. The flashing arrow signs shall be Type I.
8. A minimum 1500' of sight distance shall be provided where possible for vehicles approaching the first flashing arrow sign. Lane closures shall not begin at the top of crest vertical curve or on a horizontal curve.
9. All cones used for lane closures during the hours of darkness shall be fitted with retroreflective bands (or sleeves) as specified in the specifications.
10. Portable delineators, placed at one-half the spacing indicated for traffic cones, may be used instead of cones for daytime closures only.
11. Unless otherwise specified in the special provisions, a minimum of 3 cones shall be placed transversely across each closed lane and shoulder at each location where a taper across a traffic lane ends and every 2000' as shown on the "Lane Closure With Partial Shoulder Use" detail. Two Type II barricades may be used instead of the 3 cones. The transverse alignment of the cones or barricades on the closed shoulder may be shifted from the transverse alignment to provide access to the work.
12. Unless otherwise specified in the special provisions, the 2L tangent shown along lane lines shall be used between the L tapers required for each closed traffic lane.
13. A minimum of Two Type II or III barricades shall be placed across each closed lane and shoulder at the location shown and every 2000' within the complete closure area. Within the complete closure area, the transverse alignment of the barricades on the closed shoulder may be shifted from the transverse alignment to provide access to the work.
14. When specified in the special provisions, a W20-2 "DETOUR AHEAD" sign is to be used in place of the W20-3 "FREEWAY CLOSED AHEAD" sign.

SIGN PANEL SIZE (Min)

A	48" x 48"
B	48" x 18"
C	48" x 30"

LEGEND

- TRAFFIC CONE
- TRAFFIC CONE (OPTIONAL TAPER)
- TEMPORARY TRAFFIC CONTROL SIGN
- FLASHING ARROW SIGN (FAS)
- FAS SUPPORT OR TRAILER
- PORTABLE FLASHING BEACON

STATE OF CALIFORNIA
DEPARTMENT OF TRANSPORTATION

TRAFFIC CONTROL SYSTEM FOR LANE CLOSURES ON FREEWAYS AND EXPRESSWAYS

NO SCALE

RSP T10A DATED APRIL 19, 2013 SUPERSEDES STANDARD PLAN T10A DATED MAY 20, 2011 - PAGE 238 OF THE STANDARD PLANS BOOK DATED 2010.

REVISED STANDARD PLAN RSP T10A

2010 REVISED STANDARD PLAN RSP T10A

12-18-13

Dist	COUNTY	ROUTE	POST MILES TOTAL PROJECT	SHEET No.	TOTAL SHEETS
05	SLO	101	12.4/29.7	45	54

REGISTERED CIVIL ENGINEER

April 19, 2013
PLANS APPROVAL DATE

REGISTERED PROFESSIONAL ENGINEER Gurinderpal Bhullar No. C48815 Exp. 9-30-14 CIVIL STATE OF CALIFORNIA

THE STATE OF CALIFORNIA OR ITS OFFICERS OR AGENTS SHALL NOT BE RESPONSIBLE FOR THE ACCURACY OR COMPLETENESS OF SCANNED COPIES OF THIS PLAN SHEET.

TO ACCOMPANY PLANS DATED 3-21-16

TYPICAL RAMP CLOSURES

SIGN PANEL SIZE (Min)

- A 48" x 48"
- B 48" x 30"
- C 36" x 36"
- D 48" x 36"

LEGEND

- TRAFFIC CONE
- TEMPORARY TRAFFIC CONTROL SIGN
- BARRICADES
- PORTABLE FLASHING BEACON

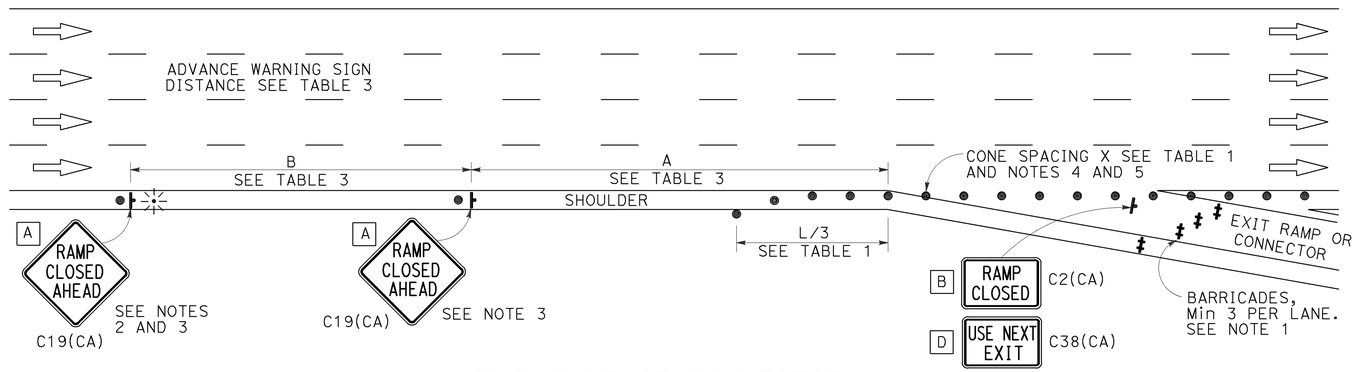

EXIT RAMP OR CONNECTOR

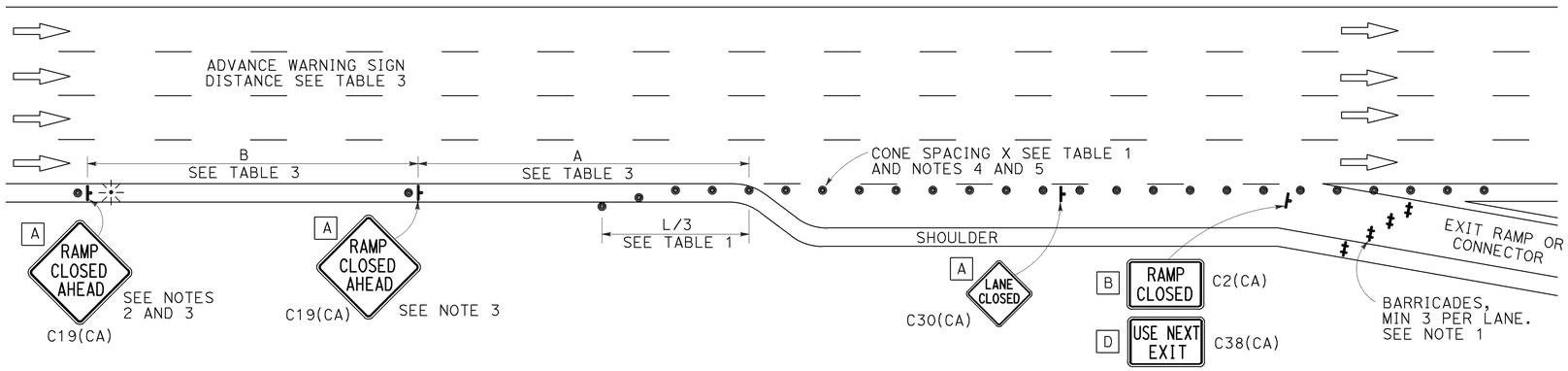

EXIT RAMP OR CONNECTOR WITH ADDITIONAL LANE

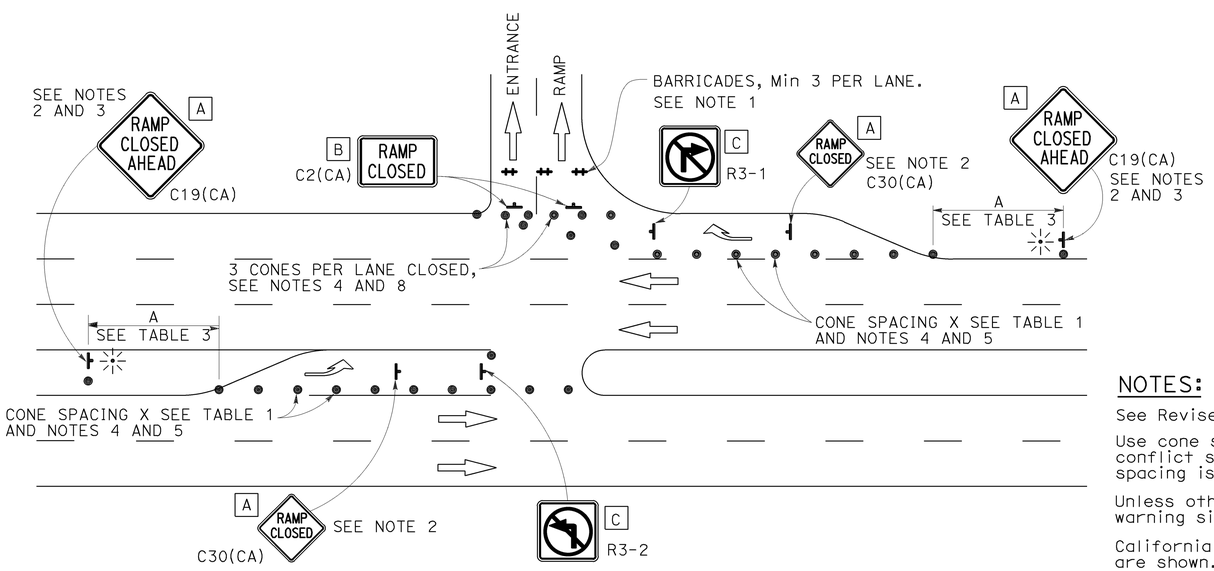

ENTRANCE RAMP WITH TURNING POCKETS

NOTES:

1. Barricades shall be Type I, II, or III for closures lasting one week or less and Type III for closures lasting longer than one week.
2. In addition to placing the C19(CA) "RAMP CLOSED AHEAD" and C30(CA) "RAMP CLOSED" signs, black on orange overlay plates with the word "CLOSED" may be mounted, as directed by the Engineer, on all guide signs that refer to the closed ramp. The letter size on the overlay shall be the same as the guide sign.
3. Each advance C19(CA) "RAMP CLOSED AHEAD" sign shall be equipped with at least two flags for daytime closure. Each flag shall be at least 16" x 16" in size and shall be orange or fluorescent red-orange in color. A flashing beacon shall be placed on top of the first C19(CA) sign during hours of darkness.
4. All cones used for ramp closures during the hours of darkness shall be fitted with retroreflective bands (or sleeves) as specified in the specifications.
5. Portable delineators, placed at one-half the spacing indicated for traffic cones, may be used instead of cones for daytime ramp closures only.
6. At least one person shall be assigned to provide full time maintenance of traffic control devices, unless otherwise directed by the Engineer.
7. The existing "EXIT" signs shall be covered during ramp closures.
8. A minimum of 3 cones shall be placed transversely across each closed lane and shoulder.

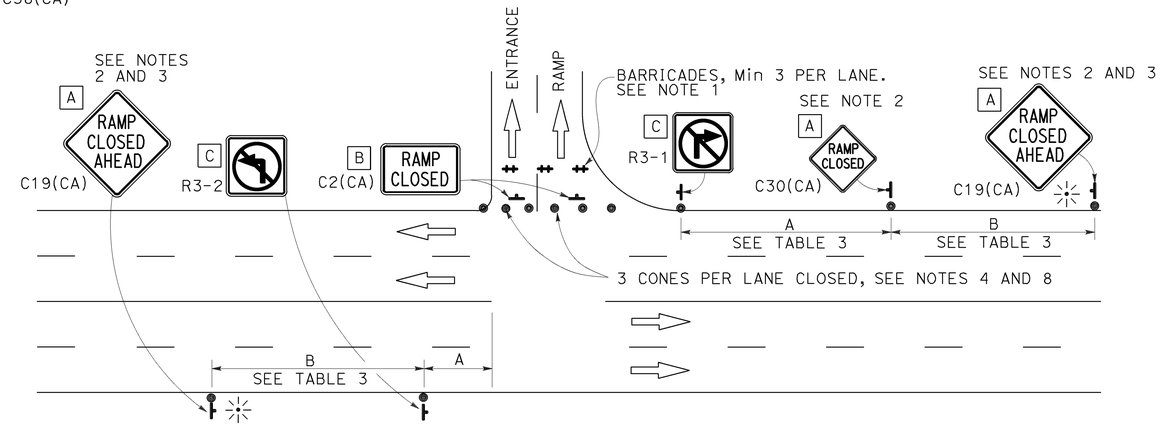

ENTRANCE RAMP WITHOUT TURNING POCKETS

NOTES:

See Revised Standard Plan RSP T9 for tables.

Use cone spacing X for taper segment, Y for tangent segment or Z for conflict situations, as approriate, per Table 1, unless X, Y, or Z cone spacing is shown on this sheet.

Unless otherwise specified in the special provisions, all temporary warning signs shall have black legend on fluorescent orange background.

California codes are designated by (CA). Otherwise, Federal (MUTCD) codes are shown.

STATE OF CALIFORNIA
DEPARTMENT OF TRANSPORTATION

TRAFFIC CONTROL SYSTEM FOR RAMP CLOSURE

NO SCALE

RSP T14 DATED APRIL 19, 2013 SUPERSEDES STANDARD PLAN T14 DATED MAY 20, 2011 - PAGE 242 OF THE STANDARD PLANS BOOK DATED 2010.

REVISED STANDARD PLAN RSP T14

2010 REVISED STANDARD PLAN RSP T14

12-18-12

Dist	COUNTY	ROUTE	POST MILES TOTAL PROJECT	SHEET No.	TOTAL SHEETS
05	SLO	101	12.4/29.7	46	54

REGISTERED CIVIL ENGINEER

April 19, 2013
PLANS APPROVAL DATE

REGISTERED PROFESSIONAL ENGINEER Gurinderpal Bhullar No. C48815 Exp. 9-30-14 CIVIL STATE OF CALIFORNIA

THE STATE OF CALIFORNIA OR ITS OFFICERS OR AGENTS SHALL NOT BE RESPONSIBLE FOR THE ACCURACY OR COMPLETENESS OF SCANNED COPIES OF THIS PLAN SHEET.

TO ACCOMPANY PLANS DATED 3-21-16

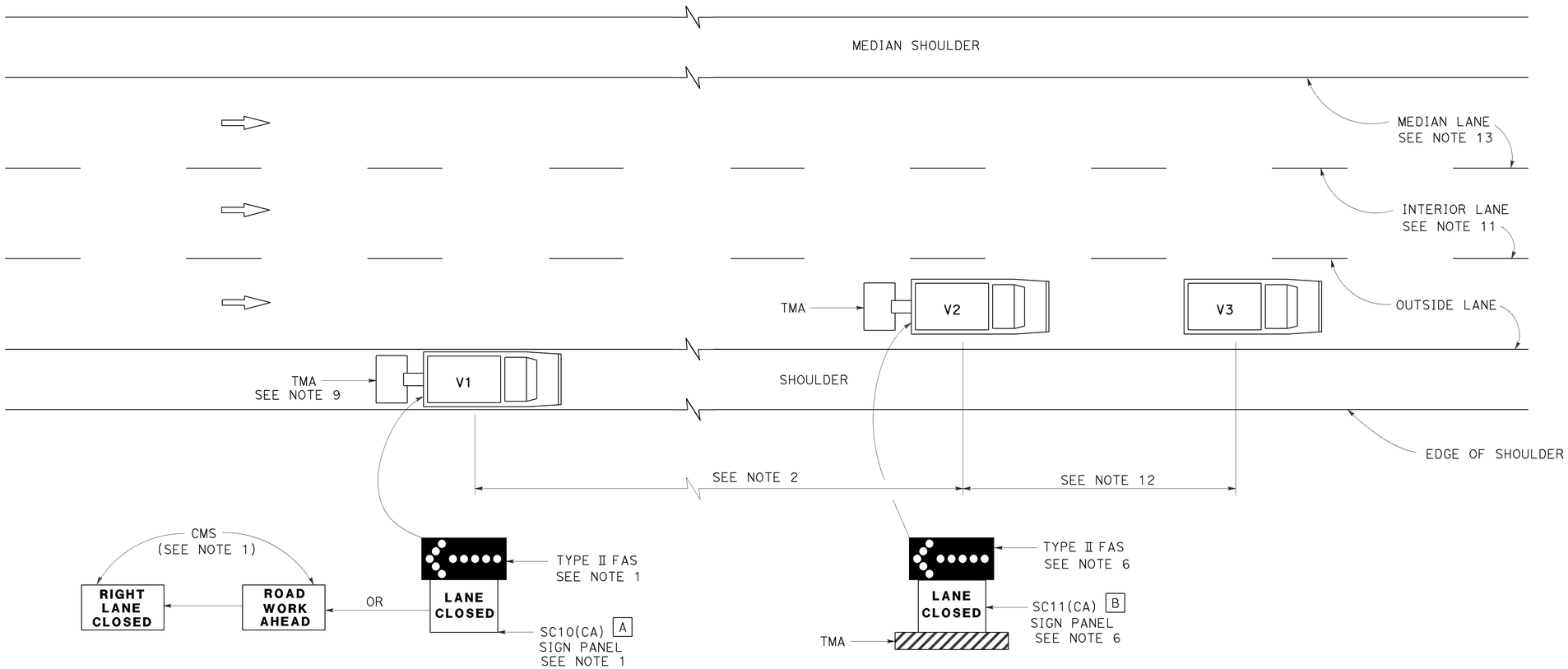

MOVING LANE CLOSURE ON MEDIAN LANE OR OUTSIDE LANE OF MULTILANE HIGHWAYS

SIGN PANEL SIZE (Min)

A 66" x 36"

B 54" x 42"

LEGEND

V1	SIGN VEHICLE
V2	SHADOW VEHICLE
V3	WORK/APPLICATION VEHICLE
	FLASHING ARROW SIGN (FAS)
CMS	CHANGEABLE MESSAGE SIGN
TMA	TRUCK-MOUNTED ATTENUATOR

NOTES:

1. Either a changeable message sign or a SC10(CA) sign panel and a Type II flashing arrow sign shall be mounted on the rear of sign vehicle V1. The changeable message sign shall be sequenced to show the "ROAD WORK AHEAD" message first, followed by the "RIGHT LANE CLOSED" message. For median lane closure, the flashing arrow symbol shall be reversed with the arrowhead on the right and the changeable message sign shall show "LEFT LANE CLOSED".
2. If traffic queues develop, sign vehicle V1 should be positioned upstream from the end of queue. Sign vehicle V1 shall be positioned where highly visible when shoulders are not available.
3. A minimum sight distance of 1500′ should be provided in advance of sign vehicle V1.
4. Sign vehicle V1 should remain at the beginning of horizontal or vertical curves until the other vehicles (V2 and V3) are far enough beyond the curve to resume the minimum sight distance of 1500′.
5. Vehicle-mounted sign panels shall have Type III or above retroreflective sheeting, black on white, or black on fluorescent orange, with 6" minimum series D letters per Caltrans sign specifications.
6. Shadow vehicle V2 shall be equipped with a truck-mounted attenuator. The sign panel shown and a Type II flashing arrow sign shall be mounted on the rear of shadow vehicle V2. For median lane closure the flashing arrow sign symbol shall be displayed with the arrowhead on the right.
7. All vehicles used for lane closures shall be equipped with two-way radios, and the vehicle operators shall maintain communication during the work or application operation.
8. All vehicles shall be equipped with flashing or rotating amber lights.
9. If sign vehicle V1 encroaches into the traffic lane due to insufficient shoulder width, sign vehicle V1 shall be equipped with a truck-mounted attenuator. Sign vehicle V1 shall stay as close to the edge of shoulder as practicable.
10. Where workers would be on foot in the work area, a stationary type lane closure (Revised Standard Plan T10, T11, etc., as applicable) shall be used instead of this plan.
11. For moving lane closure on interior lane of multilane highways, use Revised Standard Plan T16.
12. The spacing between work vehicle(s) and the shadow vehicles, and between each shadow vehicle should be minimized to deter road users from driving in between.
13. When the work/application vehicle V3 occupies the median lane, sign vehicle V1 should drive in the median shoulder and indicate left lane closed ahead.

STATE OF CALIFORNIA
DEPARTMENT OF TRANSPORTATION

TRAFFIC CONTROL SYSTEM FOR MOVING LANE CLOSURE ON MULTILANE HIGHWAYS

NO SCALE

RSP T15 DATED APRIL 19, 2013 SUPERSEDES STANDARD PLAN T15
DATED MAY 20, 2011 - PAGE 243 OF THE STANDARD PLANS BOOK DATED 2010.

REVISED STANDARD PLAN RSP T15

2010 REVISED STANDARD PLAN RSP T15

12-18-12

Dist	COUNTY	ROUTE	POST MILES TOTAL PROJECT	SHEET No.	TOTAL SHEETS
05	SLO	101	12.4/29.7	47	54

REGISTERED CIVIL ENGINEER

April 19, 2013
PLANS APPROVAL DATE

REGISTERED PROFESSIONAL ENGINEER Gurinderpal Bhullar No. C48815 Exp. 9-30-14 CIVIL STATE OF CALIFORNIA

THE STATE OF CALIFORNIA OR ITS OFFICERS OR AGENTS SHALL NOT BE RESPONSIBLE FOR THE ACCURACY OR COMPLETENESS OF SCANNED COPIES OF THIS PLAN SHEET.

TO ACCOMPANY PLANS DATED 3-21-16

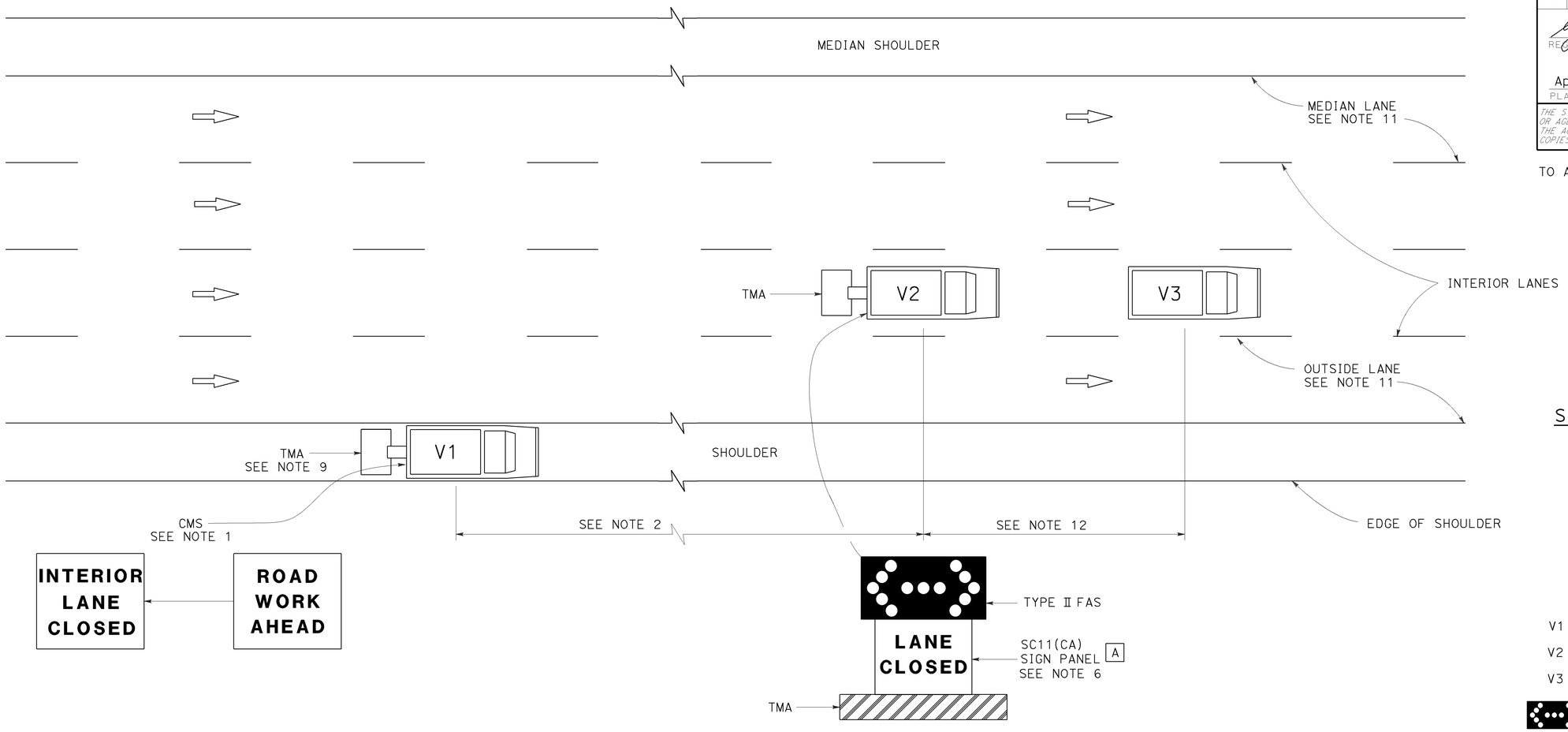

MOVING LANE CLOSURE ON INTERIOR LANE OF MULTILANE HIGHWAYS

SIGN PANEL SIZE (Min)

A 54" x 42"

LEGEND

V1	SIGN VEHICLE
V2	SHADOW VEHICLE
V3	WORK/APPLICATION VEHICLE
	FLASHING ARROW SIGN (FAS) IN FLASHING DOUBLE ARROW MODE
CMS	CHANGEABLE MESSAGE SIGN
TMA	TRUCK-MOUNTED ATTENUATOR

NOTES:

1. A changeable message sign shall be mounted on the rear of sign vehicle V1. The changeable message sign shall be sequenced to show the "ROAD WORK AHEAD" message first, followed by the "INTERIOR LANE CLOSED" message. The message "CENTER LANE CLOSED" may be used in place of the "INTERIOR LANE CLOSED" message.
2. If traffic queues develop, sign vehicle V1 should be positioned upstream from the end of queue. Sign vehicle V1 shall be positioned where highly visible when shoulders are not available.
3. A minimum sight distance of 1500′ should be provided in advance of sign vehicle V1.
4. Sign vehicle V1 should remain at the beginning of horizontal or vertical curves until the other vehicles (V2 and V3) are far enough beyond the curve to resume the minimum sight distance of 1500′.
5. Vehicle-mounted sign panels shall have Type III or above retroreflective sheeting, black on white, or black on fluorescent orange, with 6" minimum series D letters per Caltrans sign specifications.
6. Shadow vehicle V2 shall be equipped with a truck-mounted attenuator. The sign panel shown and a Type II flashing arrow sign shall be mounted on the rear of shadow vehicle V2.
7. All vehicles used for lane closures shall be equipped with two-way radios, and the vehicle operators shall maintain communication during the work or application operation.
8. All vehicles shall be equipped with flashing or rotating amber lights.
9. If sign vehicle V1 encroaches into the traffic lane due to insufficient shoulder width, sign vehicle V1 shall be equipped with a truck-mounted attenuator. Sign vehicle V1 shall stay as close to the edge of shoulder as practicable.
10. Where workers would be on foot in the work area, a stationary type lane closure (Revised Standard Plan T10, T11 etc., as applicable) shall be used instead of this plan.
11. For moving lane closure on median lane or outside lane of multilane highways, use Revised Standard Plan T15.
12. The spacing between work vehicle(s) and the shadow vehicles, and between each shadow vehicle should be minimized to deter road users from driving in between.

STATE OF CALIFORNIA
DEPARTMENT OF TRANSPORTATION

TRAFFIC CONTROL SYSTEM FOR MOVING LANE CLOSURE ON MULTILANE HIGHWAYS

NO SCALE

RSP T16 DATED APRIL 19, 2013 SUPERSEDES STANDARD PLAN T16
DATED MAY 20, 2011 - PAGE 244 OF THE STANDARD PLANS BOOK DATED 2010.

REVISED STANDARD PLAN RSP T16

2010 REVISED STANDARD PLAN RSP T16

12-18-12

Dist	COUNTY	ROUTE	POST MILES TOTAL PROJECT	SHEET No.	TOTAL SHEETS
05	SLO	101	12.4/29.7	48	54

Theresa Gabriel
REGISTERED ELECTRICAL ENGINEER

October 30, 2015
PLANS APPROVAL DATE

REGISTERED PROFESSIONAL ENGINEER Theresa Aziz Gabriel No. E15129 Exp. 6-30-16 ELECTRICAL STATE OF CALIFORNIA

THE STATE OF CALIFORNIA OR ITS OFFICERS OR AGENTS SHALL NOT BE RESPONSIBLE FOR THE ACCURACY OR COMPLETENESS OF SCANNED COPIES OF THIS PLAN SHEET.

TO ACCOMPANY PLANS DATED 3-21-16

LEGEND:

AB	ABANDON. IF APPLIED TO CONDUIT, REMOVE CONDUCTORS
BC	INSTALL PULL BOX IN EXISTING CONDUIT RUN
BP	PEDESTRIAN BARRICADE, TYPE AS INDICATED ON PLAN
CB	INSTALL CONDUIT INTO EXISTING PULL BOX
CC	CONNECT NEW AND EXISTING CONDUIT. REMOVE EXISTING CONDUCTORS AND INSTALL CONDUCTORS AS INDICATED
CF	CONDUIT TO REMAIN FOR FUTURE USE. REMOVE CONDUCTORS. INSTALL PULL TAPE
DH	DETECTOR HANDHOLE
FA	FOUNDATION TO BE ABANDONED
IS	INSTALL SIGN ON SIGNAL MAST ARM
NS	NO SLIP BASE ON STANDARD
PEC	PHOTOELECTRIC CONTROL
PEU	PHOTOELECTRIC UNIT
RC	EQUIPMENT OR MATERIAL TO BE REMOVED AND BECOME THE PROPERTY OF THE CONTRACTOR
RE	REMOVE ELECTROLIER, FUSES AND BALLAST. TAPE ENDS OF CONDUCTORS
RL	RELOCATE EQUIPMENT
RR	REMOVE AND REUSE EQUIPMENT
RS	REMOVE AND SALVAGE EQUIPMENT
SC	SPLICE NEW TO EXISTING CONDUCTORS
SD	SERVICE DISCONNECT
TSP	TELEPHONE SERVICE POINT

ABBREVIATIONS

AC+	UNDERGROUNDED CONDUCTOR
APS	ACCESSIBLE PEDESTRIAN SIGNAL
Batt	BATTERY
BBS	BATTERY BACKUP SYSTEM
BC	BOLT CIRCLE
Blk	BLACK
BP	BYPASS
BPB	BICYCLE PUSH BUTTON
C	CONDUIT
CB	CIRCUIT BREAKER
CCTV	CLOSED CIRCUIT TELEVISION
Ckt	CIRCUIT
CMS	CHANGEABLE MESSAGE SIGN
Ctid	CALTRANS IDENTIFICATION
Comm	COMMUNICATION
Cntl	CONTROL
DF	DEPARTMENT-FURNISHED
DLC	LOOP DETECTOR LEAD-IN CABLE
EMS	EXTINGUISHABLE MESSAGE SIGN
EVUC	EMERGENCY VEHICLE UNIT CABLE
EVUD	EMERGENCY VEHICLE UNIT DETECTOR
FB	FLASHING BEACON
FBCA	FLASHING BEACON CONTROL ASSEMBLY
FBS	FLASHING BEACON WITH SLIP BASE
FO	FIBER OPTIC
G	EQUIPMENT GROUNDING CONDUCTOR
GB	GROUND BUS
GFCI	GROUND FAULT CIRCUIT INTERRUPTER
Grn	GREEN
HAR	HIGHWAY ADVISORY RADIO
Hex	HEXAGONAL
HPS	HIGH PRESSURE SODIUM
IISNS	INTERNALLY ILLUMINATED STREET NAME SIGN
ISL	INDUCTION SIGN LIGHTING
LED	LIGHT EMITTING DIODE
LMA	LUMINAIRE MAST ARM
LPS	LOW PRESSURE SODIUM
Ltg	LIGHTING
Lum	LUMINAIRE
M	METERED
MAT	MAST ARM MOUNTING TOP ATTACHMENT
MAS	MAST ARM MOUNTING SIDE ATTACHMENT
MBPS	MANUAL BYPASS SWITCH
M/M	MULTIPLE TO MULTIPLE TRANSFORMER
Mtg	MOUNTING
MV	MERCURY VAPOR LIGHTING FIXTURE
MVDS	MICROWAVE VEHICLE DETECTION SYSTEM
N	NEUTRAL (GROUNDED CONDUCTOR)
NB	NEUTRAL BUS
NC	NORMALLY CLOSE
NO	NORMALLY OPEN
P	CIRCUIT BREAKER'S POLE
PB	PULL BOX
PBA	PUSH BUTTON ASSEMBLY
PEC	PHOTOELECTRIC CONTROL
Ped	PEDESTRIAN
PEU	PHOTOELECTRIC UNIT
PT	CONDUIT WITH PULL TAPE
PTR	POWER TRANSFER RELAY
RE	RELOCATED EQUIPMENT
RM	RAMP METERING
RWIS	ROADSIDE WEATHER INFORMATION SYSTEM
SB	SLIP BASE
SIC	SIGNAL INTERCONNECT CABLE
Sig	SIGNAL
SMA	SIGNAL MAST ARM
SNS	STREET NAME SIGN
SP	SERVICE POINT
TB	TERMINAL BOARD
TDC	TELEPHONE DEMARCATION CABINET
Temp	TEMPERATURE
TMS	TRAFFIC MONITORING STATION
TOS	TRAFFIC OPERATIONS SYSTEM
UPS	UNINTERRUPTABLE POWER SUPPLY
UPSC	UNINTERRUPTABLE POWER SUPPLY CONTROLLER
Veh	VEHICLE
VIVDS	VIDEO IMAGE VEHICLE DETECTION SYSTEM
Wht	WHITE
WIM	WEIGH-IN-MOTION
Xfmr	TRANSFORMER

SOFFIT AND WALL-MOUNTED LUMINAIRES

PENDANT SOFFIT LUMINAIRE, 70 W HPS UNLESS OTHERWISE SPECIFIED

FLUSH-MOUNTED SOFFIT LUMINAIRE, 70 W HPS UNLESS OTHERWISE SPECIFIED

WALL-MOUNTED LUMINAIRE, 70 W HPS UNLESS OTHERWISE SPECIFIED

EXISTING SOFFIT OR WALL-MOUNTED LUMINAIRE TO REMAIN UNMODIFIED

EXISTING SOFFIT OR WALL-MOUNTED LUMINAIRE TO BE MODIFIED AS SPECIFIED

NOTE:
Arrow indicates "street side" of luminaire.

COMMONLY USED SYMBOLS FOR UNITED STATES CUSTOMARY UNITS OF MEASUREMENT:

SYMBOL	DEFINITIONS
Ω	OHMS
min	MINUTE
s	SECOND
bps	BITS PER SECOND
Bps	BYTES PER SECOND
A	AMPERE
V	VOLT
V(dc)	VOLT (DIRECT CURRENT)
V(ac)	VOLT (ALTERNATING CURRENT)
FC	FOOT - CANDLE
W	WATTS
VA	VOLT-AMPERE
M	MEGA
k	KILO
m	MILLI
μ	MICRO
P	PICO
Hz	HERTZ

MISCELLANEOUS ELECTROLIERS

NEW	EXISTING	
		LUMINAIRE ON WOOD POLE
		NON-STANDARD ELECTROLIER (SEE PROJECT LEGEND)
		CITY ELECTROLIER
		ELECTROLIER FOUNDATION (FUTURE INSTALLATION)

NOTES:

1. LED luminaires shall be 235 W when installed on Type 21, 21D, 30, 31 and 32 Standards, unless otherwise specified. LED luminaires shall be 165 W when installed on other type standards or poles, unless otherwise specified.
2. Luminaires shall be the cutoff type, ANSI Type III medium cutoff lighting distribution, unless otherwise specified.

STANDARD ELECTROLIER

NEW	EXISTING	STANDARD TYPE
		15
		15D
		15 STRUCTURE
		15D STRUCTURE
		21
		21D
		21 STRUCTURE
		21D STRUCTURE
		30
		31
		32

STATE OF CALIFORNIA
DEPARTMENT OF TRANSPORTATION

ELECTRICAL SYSTEMS (LEGEND AND ABBREVIATIONS)

NO SCALE

RSP ES-1A DATED OCTOBER 30, 2015 SUPERSEDES RSP ES-1A DATED JULY 19, 2013 AND STANDARD PLAN ES-1A DATED MAY 20, 2011 - PAGE 425 OF THE STANDARD PLANS BOOK DATED 2010.

REVISED STANDARD PLAN RSP ES-1A

2010 REVISED STANDARD PLAN RSP ES-1A

9-29-15

Dist	COUNTY	ROUTE	POST MILES TOTAL PROJECT	SHEET No.	TOTAL SHEETS
05	SLO	101	12.4/29.7	49	54

Theresa Gabriel
REGISTERED ELECTRICAL ENGINEER

October 30, 2015
PLANS APPROVAL DATE

REGISTERED PROFESSIONAL ENGINEER
Theresa Aziz Gabriel
No. E15129
Exp. 6-30-16
ELECTRICAL
STATE OF CALIFORNIA

THE STATE OF CALIFORNIA OR ITS OFFICERS OR AGENTS SHALL NOT BE RESPONSIBLE FOR THE ACCURACY OR COMPLETENESS OF SCANNED COPIES OF THIS PLAN SHEET.

TO ACCOMPANY PLANS DATED 3-21-16

CONDUIT

NEW	EXISTING	
		LIGHTING CONDUIT, UNLESS OTHERWISE INDICATED OR NOTED
		TRAFFIC SIGNAL CONDUIT
C	c	COMMUNICATION CONDUIT
T	t	TELEPHONE CONDUIT
F	f	FIRE ALARM CONDUIT
FO	fo	FIBER OPTIC CONDUIT
		CONDUIT TERMINATION
R	r	CONDUIT RISER ATTACHED TO THE STRUCTURE OR SERVICE POLE

SERVICE EQUIPMENT

NEW	EXISTING	
OH	oh	OVERHEAD LINES
U	U	WOOD POLE, "U" INDICATES UTILITY OWNED
		POLE GUY WITH ANCHOR
		UTILITY TRANSFORMER - GROUND MOUNTED
III	III	SERVICE EQUIPMENT ENCLOSURE TYPE. DOOR INDICATES FRONT OF ENCLOSURE
T	t	TELEPHONE DEMARCATION CABINET

POLE-MOUNTED SERVICE DESIGNATION

TYPE H SERVICE, 28'-10" — TYPE OF INSTALLATION AND POLE HEIGHT ABOVE GRADE

FLASHING BEACON

NEW	EXISTING	
R	R	FLASHING BEACON (ONE VEHICLE SIGNAL HEAD WITH BACKPLATE AND VISOR) "R" INDICATES RED INDICATION, "Y" INDICATES YELLOW INDICATION
Y Y	Y Y	FLASHING BEACON WITH TYPE 15-FBS STANDARD AND A SIGN.
R R	R R	FLASHING BEACON WITH TYPES 9, 9A OR 9B SIGN UNLESS OTHERWISE SPECIFIED OR INDICATED

SIGNAL EQUIPMENT

NEW	EXISTING	
		PEDESTRIAN SIGNAL HEAD
		PUSH BUTTON ASSEMBLY POST
		PEDESTRIAN BARRICADE
		VEHICLE SIGNAL HEAD (WITH BACKPLATE AND 3-SECTIONS: RED, YELLOW AND GREEN)
		VEHICLE SIGNAL HEAD WITH ANGLE VISOR
PV	PV	MODIFICATIONS OF BASIC SYMBOL: "L" INDICATES ALL NON-ARROW SECTIONS LOUVERED "LG" INDICATES LOUVERED GREEN SECTION ONLY "PV" INDICATES ALL 12" SECTIONS PROGRAMMED VISIBILITY "8" INDICATES ALL 8" SECTIONS (ONLY WHEN SPECIFIED)
		VEHICLE SIGNAL HEAD CONSISTING OF RED, YELLOW AND GREEN LEFT ARROW SECTIONS
		VEHICLE SIGNAL HEAD CONSISTING OF RED AND YELLOW SECTIONS WITH AN UP GREEN ARROW SECTION
		VEHICLE SIGNAL HEAD (5 SECTION) CONSISTING OF RED, YELLOW AND GREEN SECTIONS WITH YELLOW AND GREEN RIGHT ARROW SECTIONS
		TYPE 15TS STANDARD WITH VEHICLE SIGNAL HEAD AND LUMINAIRE
		TYPE 21TS STANDARD WITH VEHICLE SIGNAL HEAD AND LUMINAIRE
		STANDARD WITH LUMINAIRE AND SIGNAL MAST ARMS AND ATTACHED VEHICLE SIGNAL HEADS
		TYPE 1 STANDARD WITH ATTACHED VEHICLE SIGNAL HEADS
		STANDARD WITH A SIGNAL MAST ARM, ATTACHED VEHICLE SIGNAL HEADS AND INTERNALLY ILLUMINATED STREET NAME SIGN
		CONTROLLER ASSEMBLY. DOOR INDICATES FRONT OF CABINET

SIGNAL EQUIPMENT Cont

NEW	EXISTING	
		GUARD POST
		TYPE 1 STANDARD WITH RAMP METERING SIGN
		OPTICAL DETECTOR FOR THE EMERGENCY VEHICLE DETECTION

NOTES:

1. All signal sections shall be 12" unless shown otherwise.
2. Signal heads shall be provided with backplates unless shown otherwise.

ILLUMINATED OVERHEAD SIGN

NEW	EXISTING	
		SINGLE POST, SINGLE ILLUMINATED SIGN, BALANCED BUTTERFLY
		SINGLE POST, DOUBLE ILLUMINATED SIGN, BALANCED BUTTERFLY
		SINGLE POST, SINGLE ILLUMINATED SIGN, FULL CANTILEVER
		DOUBLE POST, SINGLE ILLUMINATED SIGN
		SINGLE ILLUMINATED SIGN MOUNTED ON STRUCTURE
		DOUBLE POST, SINGLE ILLUMINATED SIGN WITH ELECTROLIER

STATE OF CALIFORNIA
DEPARTMENT OF TRANSPORTATION

ELECTRICAL SYSTEMS (LEGEND AND ABBREVIATIONS)

NO SCALE

RSP ES-1B DATED OCTOBER 30, 2015 SUPERSEDES RSP ES-1B DATED JULY 19, 2013 AND STANDARD PLAN ES-1B DATED MAY 20, 2011 - PAGE 426 OF THE STANDARD PLANS BOOK DATED 2010.

REVISED STANDARD PLAN RSP ES-1B

2010 REVISED STANDARD PLAN RSP ES-1B

8-19-15

Dist	COUNTY	ROUTE	POST MILES TOTAL PROJECT	SHEET No.	TOTAL SHEETS
05	SLO	101	12.4/29.7	50	54

Theresa Gabriel
REGISTERED ELECTRICAL ENGINEER

April 15, 2016
PLANS APPROVAL DATE

REGISTERED PROFESSIONAL ENGINEER
Theresa Aziz Gabriel
No. E15129
Exp. 6-30-16
ELECTRICAL
STATE OF CALIFORNIA

THE STATE OF CALIFORNIA OR ITS OFFICERS OR AGENTS SHALL NOT BE RESPONSIBLE FOR THE ACCURACY OR COMPLETENESS OF SCANNED COPIES OF THIS PLAN SHEET.

TO ACCOMPANY PLANS DATED 3-21-16

EQUIPMENT IDENTIFICATION

ILLUMINATED SIGN IDENTIFICATION:

SIGN No. 12345
10 ISL SCI 1.0

- SIGN EQUIPMENT IDENTIFICATION CHARACTERS - PLACE ON POST OR STRUCTURE
- TRANSFORMER RATING (kVA)
- LIGHTING CONTROL TYPE
- NUMBER AND TYPE OF FIXTURES

} DO NOT PLACE ON STANDARD OR STRUCTURE

ELECTROLIER OR EQUIPMENT IDENTIFICATION:

L2745 - 15'-0"

- MAST ARM LENGTH, IF SHOWN. DO NOT PLACE ON STANDARD OR STRUCTURE
- EQUIPMENT IDENTIFICATION CHARACTERS - PLACE ON STANDARD OR STRUCTURE. EXISTING EQUIPMENT IDENTIFICATION CHARACTERS ARE SHOWN IN PARENTHESIS

CONDUIT AND CONDUCTOR IDENTIFICATION:

1½"C, 2#10, 15#14, 2 DLC, 12P#18 (PAIR)

- NUMBER AND SIZE OF CONDUCTORS AND CABLES
- SIZE OF CONDUIT IN INCHES

ø1, ø2, ø2P, etc.	TRAFFIC PHASE IDENTIFICATION FOR SIGNALS, DETECTORS AND PHASE DIAGRAMS
1 2 3	LEGEND NUMBERS
A B C	EQUIPMENT, SIGNAL POLES, INSTALLATION OR ITEMS
1 2 3	CONDUIT RUN NUMBERS

SIGNAL AND LIGHTING STANDARD (TYPICAL DESIGNATION):

19A - 3 - 100

- WIND VELOCITY = 100 mph
- CASE 3 ARM LOADING
- STANDARD TYPE
- STANDARD PLAN SHEET NUMBER
- DETAIL, NUMBER, SECTION, TYPE OR ELEVATION

MISCELLANEOUS EQUIPMENT

NEW	EXISTING	
CMS	cms	CHANGEABLE MESSAGE SIGN
		CLOSED CIRCUIT TELEVISION CAMERA
		HIGHWAY ADVISORY RADIO POLE AND ANTENNA
EMS	ems	LED EXTINGUISHABLE MESSAGE SIGN
M V	m v	DETECTION DEVICE M = MICROWAVE SENSOR V = VIDEO IMAGE SENSOR

WIRING DIAGRAM LEGEND

- EXTERNAL CONDUCTOR
- CONDUCTOR OR BUS
- TIE POINT
- CONTACTOR COIL
- CONTACTOR, NO CONTACT
- TERMINAL BLOCKS
- CONTACTOR, NC CONTACT
- ENCLOSURE BOND
- GROUNDING ELECTRODE
- CIRCUIT BREAKER
- RECEPTACLE

PULL BOXES

NEW	EXISTING	
		PULL BOX, No. 5 UNLESS OTHERWISE INDICATED OR NOTED
3	9A(21)	PULL BOX, ADDITIONAL DESIGNATIONS OR DESCRIPTIONS

3 No. 3½ PULL BOX
5 No. 5 PULL BOX
6 No. 6 PULL BOX
7 No. 7 PULL BOX (CEILING)
8 No. 8 PULL BOX
9 No. 9 PULL BOX (STRUCTURE)
9A No. 9A PULL BOX (STRUCTURE)

(C) COMMUNICATIONS PULL BOX
(E) PULL BOX WITH EXTENSION
(S) SPRINKLER CONTROL PULL BOX
(21) ANCHOR BOLTS AND CONDUIT FOR FUTURE INSTALLATION OF TYPE 21 STANDARD
(T) TRAFFIC PULL BOX

VEHICLE DETECTORS

5 J 9 U

- VEHICLE DETECTOR DESIGNATION
- U = UPPER
  L = LOWER
- SLOT NUMBER IN INPUT FILE
- INPUT FILE (I OR J)
- PHASE

NEW	EXISTING	
		TYPE A LOOP DETECTOR. OUTLINE OF SAW CUT SHOWN
		TYPE B LOOP DETECTOR. OUTLINE OF SAW CUT SHOWN
		TYPE C LOOP DETECTOR. OUTLINE OF SAW CUT SHOWN
		TYPE D LOOP DETECTOR. OUTLINE OF SAW CUT SHOWN
		TYPE E LOOP DETECTOR. OUTLINE OF SAW CUT SHOWN
		TYPE Q LOOP DETECTOR. OUTLINE OF SAW CUT SHOWN
DH	dh	DETECTOR HANDHOLE
		MICROWAVE OR VIDEO DETECTION ZONE

STATE OF CALIFORNIA
DEPARTMENT OF TRANSPORTATION

ELECTRICAL SYSTEMS (LEGEND AND ABBREVIATIONS)

NO SCALE

RSP ES-1C DATED APRIL 15, 2016 SUPERSEDES RSP ES-1C DATED OCTOBER 30, 2015 AND RSP ES-1C DATED JULY 19, 2013 AND STANDARD PLAN ES-1C DATED MAY 20, 2011 - PAGE 427 OF THE STANDARD PLANS BOOK DATED 2010.

REVISED STANDARD PLAN RSP ES-1C

2010 REVISED STANDARD PLAN RSP ES-1C

1-22-16

DIST	COUNTY	ROUTE	POST MILES TOTAL PROJECT	SHEET NO.	TOTAL SHEETS
05	SLO	101	12.4/29.7	51	54

Theresa Gabriel
REGISTERED ELECTRICAL ENGINEER

April 15, 2016
PLANS APPROVAL DATE

REGISTERED PROFESSIONAL ENGINEER Theresa Aziz Gabriel No. E15129 Exp. 6-30-16 ELECTRICAL STATE OF CALIFORNIA

THE STATE OF CALIFORNIA OR ITS OFFICERS OR AGENTS SHALL NOT BE RESPONSIBLE FOR THE ACCURACY OR COMPLETENESS OF SCANNED COPIES OF THIS PLAN SHEET.

TO ACCOMPANY PLANS DATED 3-21-16

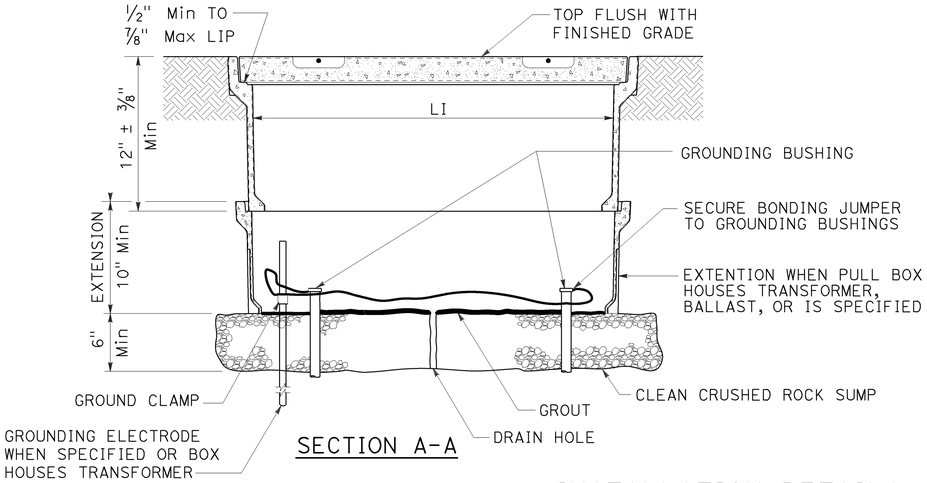

SECTION A-A

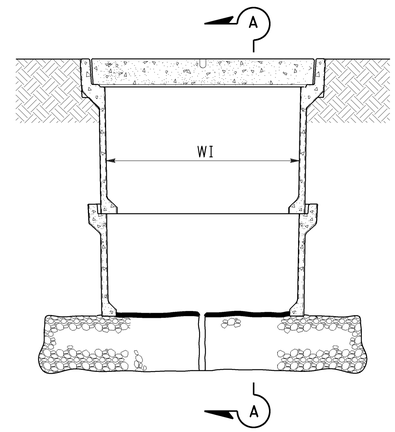

SIDE VIEW

INSTALLATION DETAILS

DETAIL A

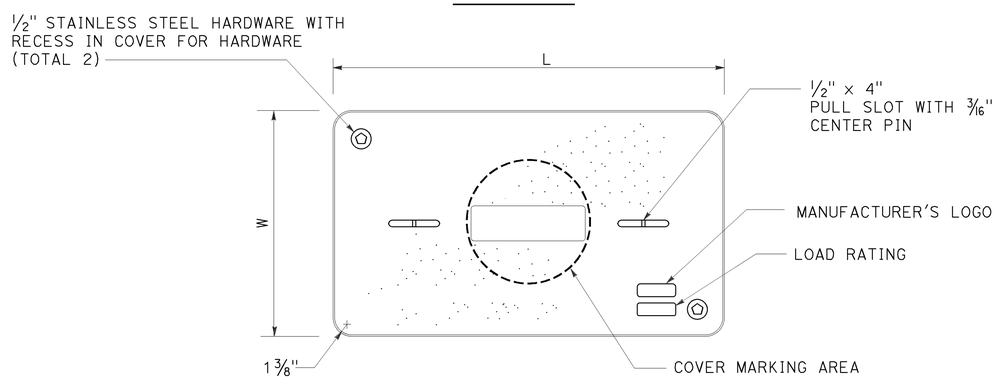

COVER TOP VIEW

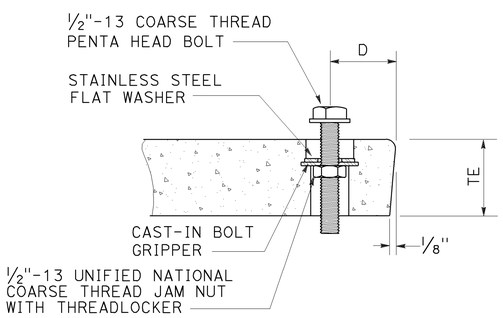

TYPICAL COVER CAPTIVE BOLT

OR SIMILAR

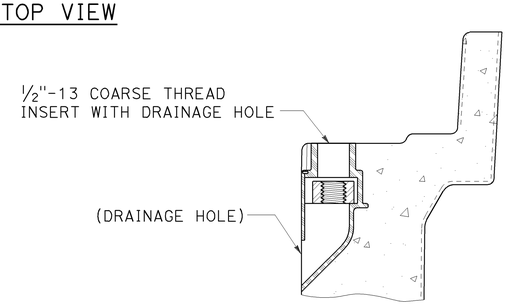

TYPICAL THREADED INSERT

OR SIMILAR

NOTES:

1. The nominal dimensions of the opening in which the cover sets shall be the same as the cover dimensions except the length and width dimensions shall be 1/8" greater.
2. Covers and boxes shall be interchangeable with California standard male and female gages. When interchanged with a standard male or female gage, the top surfaces shall be flush within 1/8". Top outside radius of covers and pull boxes shall have a 1/8" radius.
3. Dimensions for the cover for non-traffic pull box are nominal values.

DIMENSION TABLE

PULL BOX	PULL BOX					COVER				
	MINIMUM DEPTH BOX	MINIMUM DEPTH EXTENSION	MINIMUM WEIGHT	LI Min	WI Min	TE	D	L	W	MINIMUM WEIGHT
No. 3 1/2	12"	N/A	40 lb	1' - 3"	9"	1 3/4"	1 3/4"	1'-3 1/4" - 1'-3 3/8"	10" - 10 1/8"	30 lb
No. 5	12"	10"	55 lb	1' - 8"	11"	2"	1 3/4"	1'-11 1/4"	1'-1 3/4"	60 lb
No. 6	12"	10"	70 lb	2' - 4 1/4"	1' - 3 1/4"	2"	2"	2'-6 1/2"	1'-5 1/2"	85 lb

STATE OF CALIFORNIA
DEPARTMENT OF TRANSPORTATION

ELECTRICAL SYSTEMS (NON-TRAFFIC PULL BOX)

NO SCALE

RSP ES-8A DATED APRIL 15, 2016 SUPERSEDES RSP ES-8A DATED OCTOBER 30, 2015 AND RSP ES-8A DATED JULY 19, 2013 AND RSP ES-8A DATED JANUARY 20, 2012 THAT SUPPLEMENTS THE STANDARD PLANS BOOK DATED 2010.

REVISED STANDARD PLAN RSP ES-8A

2010 REVISED STANDARD PLAN RSP ES-8A

1-22-16

DIST	COUNTY	ROUTE	POST MILES TOTAL PROJECT	SHEET NO.	TOTAL SHEETS
05	SLO	101	12.4/29.7	52	54

Theresa Gabriel
REGISTERED ELECTRICAL ENGINEER

April 15, 2016
PLANS APPROVAL DATE

REGISTERED PROFESSIONAL ENGINEER
Theresa Aziz Gabriel
No. E15129
Exp. 6-30-16
ELECTRICAL
STATE OF CALIFORNIA

THE STATE OF CALIFORNIA OR ITS OFFICERS OR AGENTS SHALL NOT BE RESPONSIBLE FOR THE ACCURACY OR COMPLETENESS OF SCANNED COPIES OF THIS PLAN SHEET.

TO ACCOMPANY PLANS DATED 3-21-16

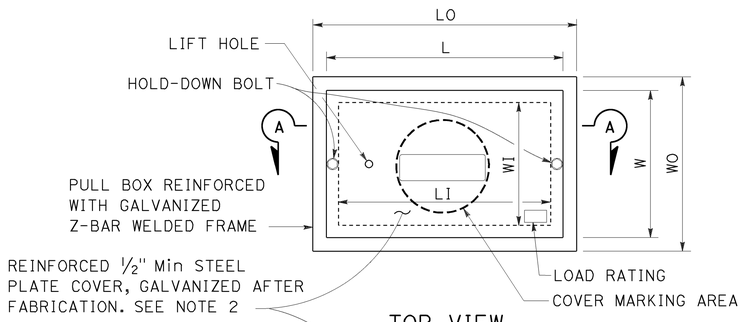

TOP VIEW

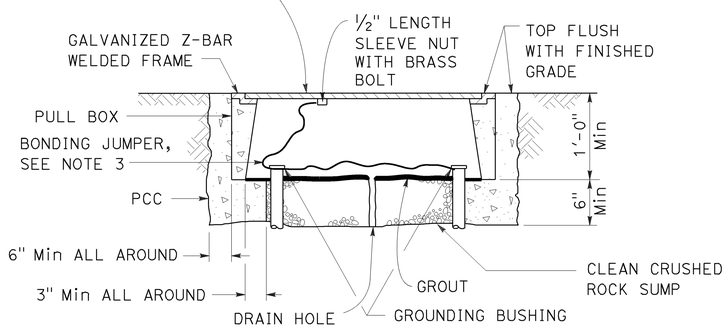

SECTION A-A

No. 3½(T), No. 5(T) AND No. 6(T) TRAFFIC PULL BOX

NOTES:

1. Traffic pull box shall be provided with steel cover and special concrete footing. Steel cover shall have embossed non-skid pattern.
2. Steel reinforcing shall be as regularly used in the standard products of the respective manufacturer.
3. Bonding jumper for metal covers shall be 3' long, minimum.
4. The nominal dimensions of the opening in which the cover sets shall be the same as the cover dimensions except the length and width dimensions shall be ⅛" greater.
5. Covers and boxes shall be interchangeable with California standard male and female gages. When interchanged with a standard male or female gage, the top surfaces shall be flush within ⅛".

DIMENSION TABLE

PULL BOX	PULL BOX						COVER	
	MINIMUM * THICKNESS	MINIMUM DEPTH BOX AND EXTENSION	LO	LI	WO	WI	L **	W **
No. 3½(T)	1½"	1'-0"	1'-10" - 1'-11"	1'-5" - 1'-6½"	1'-3" - 1'-4"	10" - 1'-0"	1'-8" -1'-8½"	1'-1" - 1'-2"
No. 5(T)	1¾"	1'-0"	2'-5" - 2'-6"	2'-0" - 2'-1"	1'-6" - 1'-7"	1'-1" - 1'-2"	2'-3" - 2'-3½"	1'-4" - 1'-4½"
No. 6(T)	2"	1'-0"	2'-11" - 3'-1"	2'-6" - 2'-7"	1'-10" - 2'-0"	1'-5" - 1'-6"	2'-9" - 2'-9½"	1'-8" - 1'-8½"

* EXCLUDING CONDUIT WEB ** TOP DIMENSION

STATE OF CALIFORNIA
DEPARTMENT OF TRANSPORTATION

ELECTRICAL SYSTEMS (TRAFFIC PULL BOX)

NO SCALE

RSP ES-8B DATED APRIL 15, 2016 SUPERSEDES RSP ES-8B DATED OCTOBER 30, 2015 AND RSP ES-8B DATED JULY 19, 2013 AND RSP ES-8B DATED JANUARY 20, 2012 THAT SUPPLEMENTS THE STANDARD PLANS BOOK DATED 2010.

REVISED STANDARD PLAN RSP ES-8B

2010 REVISED STANDARD PLAN RSP ES-8B

1-22-16

Dist	COUNTY	ROUTE	POST MILES TOTAL PROJECT	SHEET No.	TOTAL SHEETS
05	SLO	101	12.4/29.7	53	54

Theresa Gabriel
REGISTERED ELECTRICAL ENGINEER

April 15, 2016
PLANS APPROVAL DATE

REGISTERED PROFESSIONAL ENGINEER Theresa Aziz Gabriel No. E15129 Exp. 6-30-16 ELECTRICAL STATE OF CALIFORNIA

THE STATE OF CALIFORNIA OR ITS OFFICERS OR AGENTS SHALL NOT BE RESPONSIBLE FOR THE ACCURACY OR COMPLETENESS OF SCANNED COPIES OF THIS PLAN SHEET.

TO ACCOMPANY PLANS DATED 3-21-16

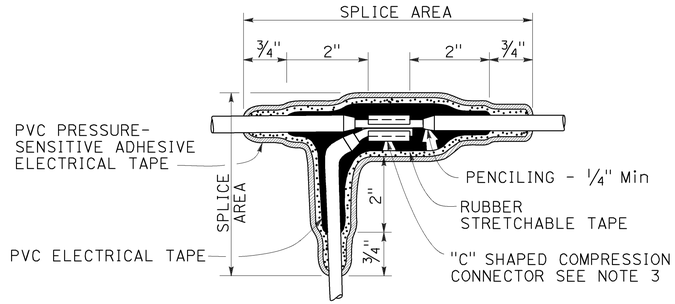

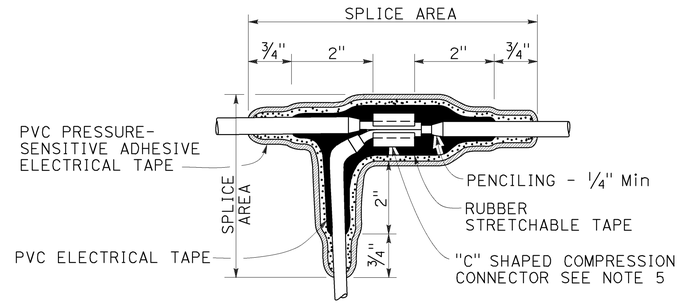

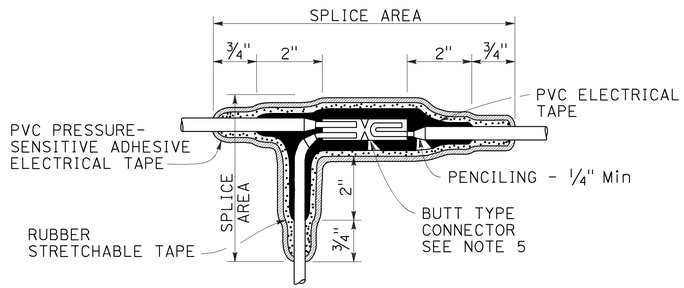

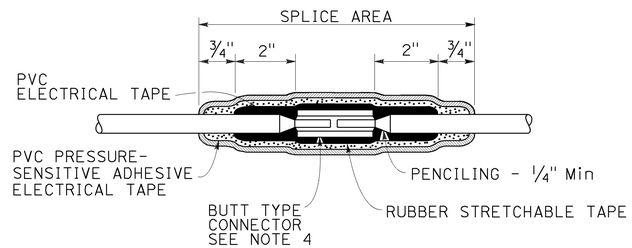

TYPICAL SPLICE INSULATION METHOD B

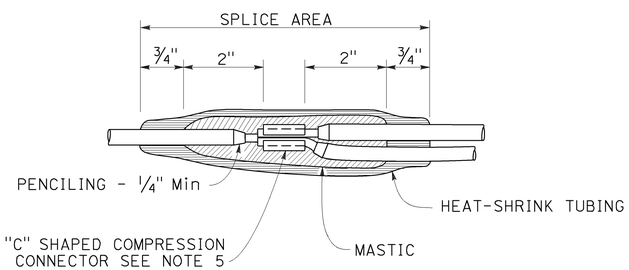

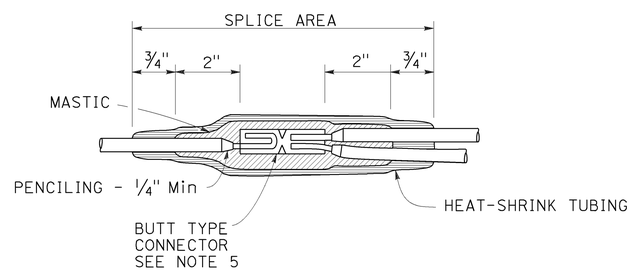

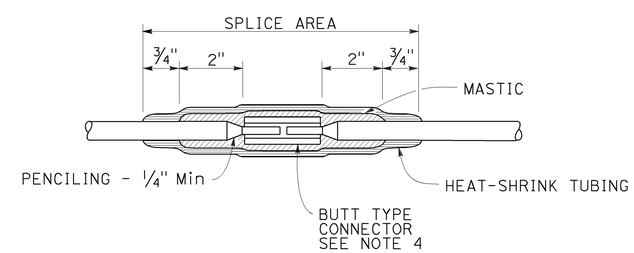

TYPICAL SPLICE INSULATION HEAT-SHRINK TUBING

NOTES:

1. Dimensions are minimum.
2. Rubber tapes shall be rolled after application.
3. Between 1 free-end and 1 through conductor.
4. Between 2 free-end conductors.
5. Between 3 free-end conductors.

STATE OF CALIFORNIA
DEPARTMENT OF TRANSPORTATION

ELECTRICAL SYSTEMS (SPLICE INSULATION METHODS DETAILS)

NO SCALE

RSP ES-13A DATED APRIL 15, 2016 SUPERSEDES RSP ES-13A DATED OCTOBER 30, 2015 AND STANDARD PLAN ES-13A DATED MAY 20, 2011 - PAGE 491 OF THE STANDARD PLANS BOOK DATED 2010.

REVISED STANDARD PLAN RSP ES-13A

2010 REVISED STANDARD PLAN RSP ES-13A

1-22-16

Dist	COUNTY	ROUTE	POST MILES TOTAL PROJECT	SHEET No.	TOTAL SHEETS
05	SLO	101	12.4/29.7	54	54

Theresa Gabriel
REGISTERED ELECTRICAL ENGINEER

April 15, 2016
PLANS APPROVAL DATE

REGISTERED PROFESSIONAL ENGINEER Theresa Aziz Gabriel No. E15129 Exp. 6-30-16 ELECTRICAL STATE OF CALIFORNIA

THE STATE OF CALIFORNIA OR ITS OFFICERS OR AGENTS SHALL NOT BE RESPONSIBLE FOR THE ACCURACY OR COMPLETENESS OF SCANNED COPIES OF THIS PLAN SHEET.

TO ACCOMPANY PLANS DATED 3-21-16

CIRCUIT VOLTAGE	FUSE VOLTAGE RATING	FUSE CURRENT RATING						
		HPS LAMP BALLAST		LOW PRESSURE SODIUM BALLAST	INDUCTION SIGN LIGHTING	SINGLE PHASE (TWO WIRE) TRANSFORMERS (PRIMARY SIDE)		
		70 W	100 W	180 W	85 W	1 kVA	2 kVA	3 kVA
120 V	250 V	5 A	5 A	5 A	5 A	10 A	20 A	30 A
240 V	250 V	5 A	5 A	5 A	5 A	6 A	10 A	20 A
480 V	500-600 V	5 A	5 A	3 A	1 A (SEE NOTE 2)	3 A	6 A	10 A

NOTES:

1. Primary lines of multiple ballasts shall be provided with fused connectors. Fuse ratings shall be as noted above.
2. See Revised Standard Plan RSP ES-15D, Type SC3 control.

FUSE RATINGS FOR FUSED CONNECTORS

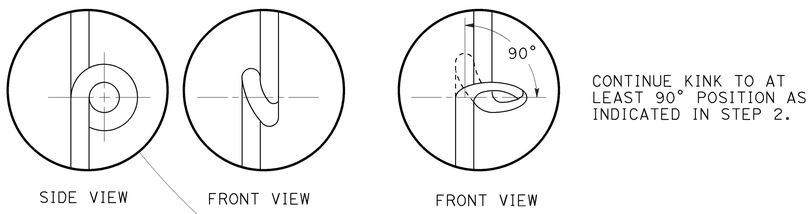

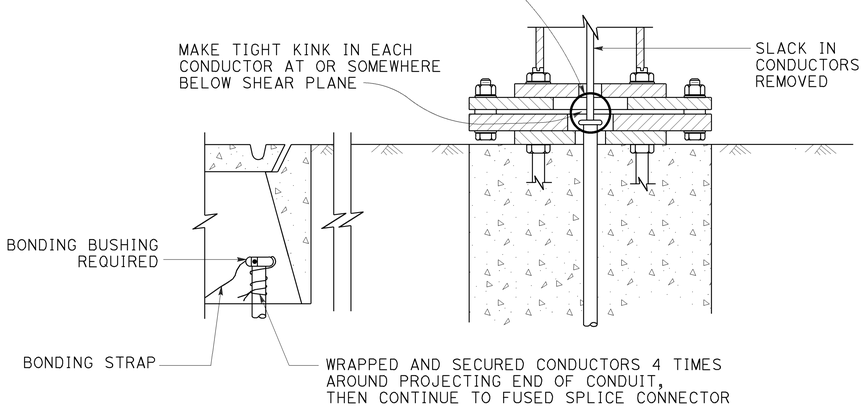

KINKING DETAIL FOR SLIP BASE STANDARDS

DETAIL A

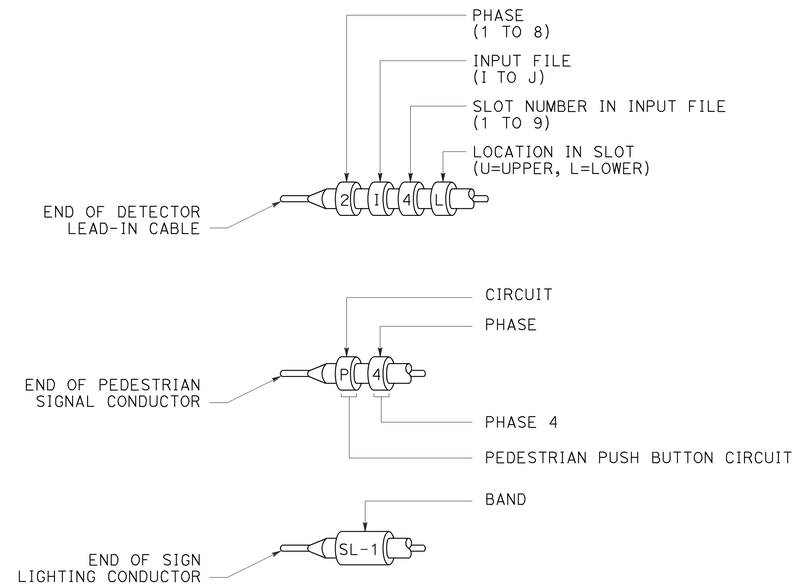

TYPICAL BANDING DETAILS

DETAIL B

STATE OF CALIFORNIA
DEPARTMENT OF TRANSPORTATION

ELECTRICAL SYSTEMS (FUSE RATING, KINKING AND BANDING DETAIL)

NO SCALE

RSP ES-13B DATED APRIL 15, 2016 SUPERSEDES STANDARD PLAN ES-13B DATED MAY 20, 2011 - PAGE 492 OF THE STANDARD PLANS BOOK DATED 2010.

REVISED STANDARD PLAN RSP ES-13B

2010 REVISED STANDARD PLAN RSP ES-13B

1-12-16