Dist	COUNTY	ROUTE	POST MILES TOTAL PROJECT	SHEET No.	TOTAL SHEETS
05	Mon	1	R77.6/R85.3	1	101

ACNHP-P001(596)E

STATE OF CALIFORNIA
DEPARTMENT OF TRANSPORTATION

PROJECT PLANS FOR CONSTRUCTION ON
STATE HIGHWAY

IN MONTEREY COUNTY
IN AND NEAR MONTEREY
FROM SLOAT AVENUE UNDERCROSSING
TO SOUTH MARINA OVERHEAD

TO BE SUPPLEMENTED BY STANDARD PLANS DATED 2010

INDEX OF PLANS

SHEET No.	DESCRIPTION
1	TITLE AND LOCATION MAP
2-3	TYPICAL CROSS SECTIONS
4-20	CONSTRUCTION DETAILS
21	CONSTRUCTION AREA SIGNS
22	TRAFFIC HANDLING PLAN AND QUANTITIES
23-28	PAVEMENT DELINEATION DETAILS AND QUANTITIES
29-32	SUMMARY OF QUANTITIES
33-48	ELECTRICAL PLANS
49-94	REVISED STANDARD PLANS

STRUCTURE PLANS

95	CONCRETE BARRIER TRANSITION - GENERAL PLANS
96-101	CONCRETE BARRIER TRANSITION - DETAILS

THE STANDARD PLANS LIST APPLICABLE TO THIS CONTRACT IS INCLUDED IN THE NOTICE TO BIDDERS AND SPECIAL PROVISIONS BOOK.

LOCATION MAP

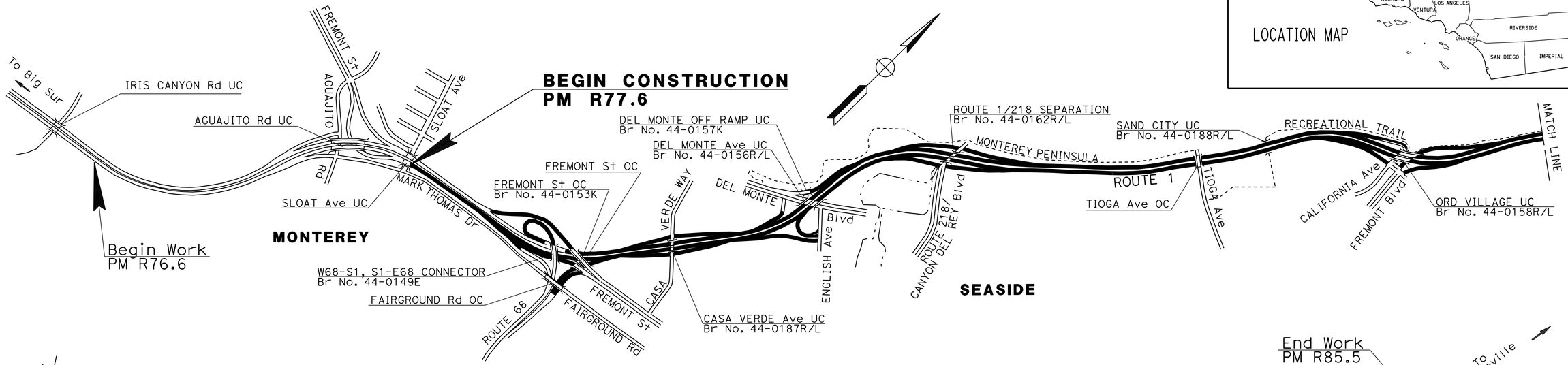

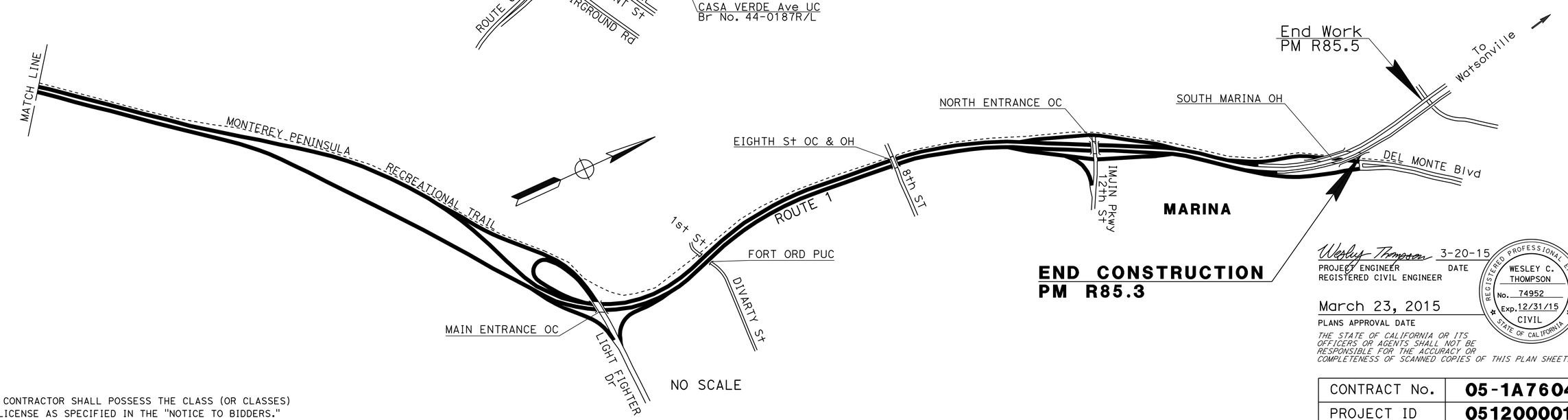

NO SCALE

THE CONTRACTOR SHALL POSSESS THE CLASS (OR CLASSES) OF LICENSE AS SPECIFIED IN THE "NOTICE TO BIDDERS."

Wesley Thompson 3-20-15
PROJECT ENGINEER DATE
REGISTERED CIVIL ENGINEER

March 23, 2015
PLANS APPROVAL DATE

REGISTERED PROFESSIONAL ENGINEER
WESLEY C. THOMPSON
No. 74952
Exp. 12/31/15
CIVIL
STATE OF CALIFORNIA

THE STATE OF CALIFORNIA OR ITS OFFICERS OR AGENTS SHALL NOT BE RESPONSIBLE FOR THE ACCURACY OR COMPLETENESS OF SCANNED COPIES OF THIS PLAN SHEET.

CONTRACT No.	**05-1A7604**
PROJECT ID	**0512000019**

PROJECT MANAGER: RICHARD ROSALES
DESIGN MANAGER: JOHN FOUCHE

LAST REVISION 03-20-15
DATE PLOTTED => 13-MAY-2015
TIME PLOTTED => 10:46

Dist	COUNTY	ROUTE	POST MILES TOTAL PROJECT	SHEET No.	TOTAL SHEETS
05	Mon	1	R77.6/R85.3	2	101

Wesley Thompson 3-20-15
REGISTERED CIVIL ENGINEER DATE

3-23-15
PLANS APPROVAL DATE

REGISTERED PROFESSIONAL ENGINEER
WESLEY C. THOMPSON
No. 74952
Exp. 12/31/15
CIVIL
STATE OF CALIFORNIA

THE STATE OF CALIFORNIA OR ITS OFFICERS OR AGENTS SHALL NOT BE RESPONSIBLE FOR THE ACCURACY OR COMPLETENESS OF SCANNED COPIES OF THIS PLAN SHEET.

NOTES:

1. DIMENSIONS OF THE PAVEMENT STRUCTURES (STRUCTURAL SECTIONS) ARE SUBJECT TO TOLERANCES SPECIFIED IN THE STANDARD SPECIFICATIONS.
2. SUPERELEVATION AS SHOWN OR AS DIRECTED BY THE ENGINEER.
3. HMA SHALL NOT BE PLACED ON PCC STRUCTURES OR SURFACES.
4. ASPHALTIC EMULSION (FOG SEAL COAT) SHALL BE PLACED ON EXISTING AC DIKE AND OVERSIDE DRAINS.
5. SEE SUMMARY OF QUANTITIES FOR MGS LOCATIONS.
6. EXISTING UTILITY FACILITIES HAVE NOT BEEN PLOTTED ON THESE PLANS.
7. FOR ACCURATE RIGHT OF WAY DATA, CONTACT RIGHT OF WAY ENGINEERING AT THE DISTRICT OFFICE.

TYPICAL PAVEMENT STRUCTURE SECTIONS

1. 0.15′ COLD PLANE AC PAVEMENT
   0.15′ HMA (TYPE A)
2. 0.20′ COLD PLANE AC PAVEMENT
   0.10′ HMA-OGFC
   0.10′ HMA (TYPE A)
3. 0.20′ COLD PLANE AC PAVEMENT
   0.20′ HMA (TYPE A)
4. Exist
   0.67′ PCC SLAB
   0.33′ CTB
   0.17′ AB
5. Exist
   0.33′ AC
   0.92′ AB
6. Exist
   0.25′ AC
   0.92′ AB
7. Exist
   0.06′ OGAC
   0.33′ AC
   0.67′ CTB
   0.17′ AB
8. Exist
   0.06′ OGAC
   0.33′ AC
   0.92′ AB
9. Exist
   0.06′ OGAC
   0.25′ AC
   0.92′ AB
10. Exist
    0.10′ OGAC
    0.25′ AC
    0.92′ AB
11. Exist
    0.25′ AC
    0.50′ CTB
    0.17′ AB
    0.33′ SM
12. Exist
    0.25′ AC
    0.67′ AB
    0.33′ SM
13. Exist
    0.17′ AC
    0.67′ AB
    0.33′ SM
14. Exist
    0.10′ OGAC
    0.25′ AC
    0.50′ CTB
    0.17′ AB
    0.33′ SM
15. Exist
    0.10′ OGAC
    0.25′ AC
    0.67′ AB
    0.33′ SM

ABBREVIATION:

Aux = AUXILIARY

PAVEMENT CLIMATE REGION

CENTRAL COAST

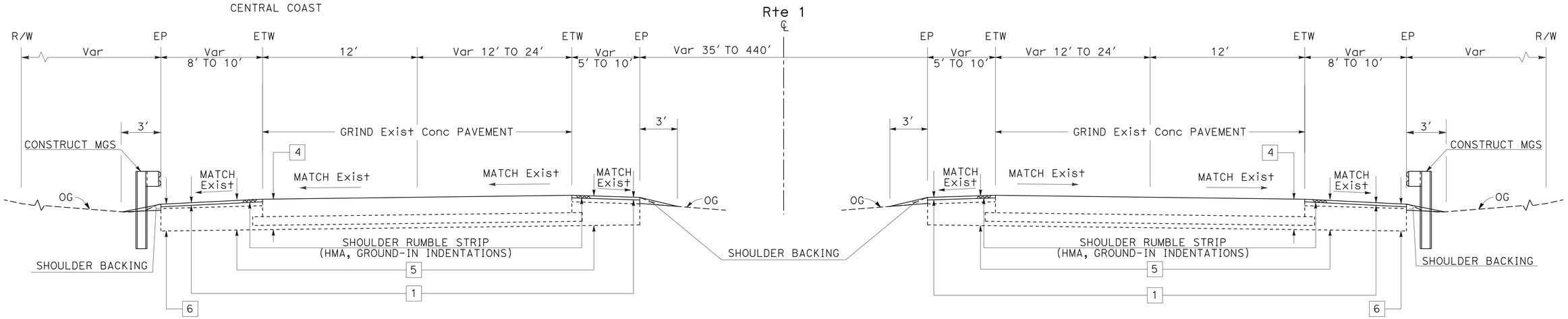

SOUTHBOUND
PM R78.13 / R78.90
PM R79.33 / R84.99

NORTHBOUND
PM R78.13 / R78.90
PM R79.33 / R85.02

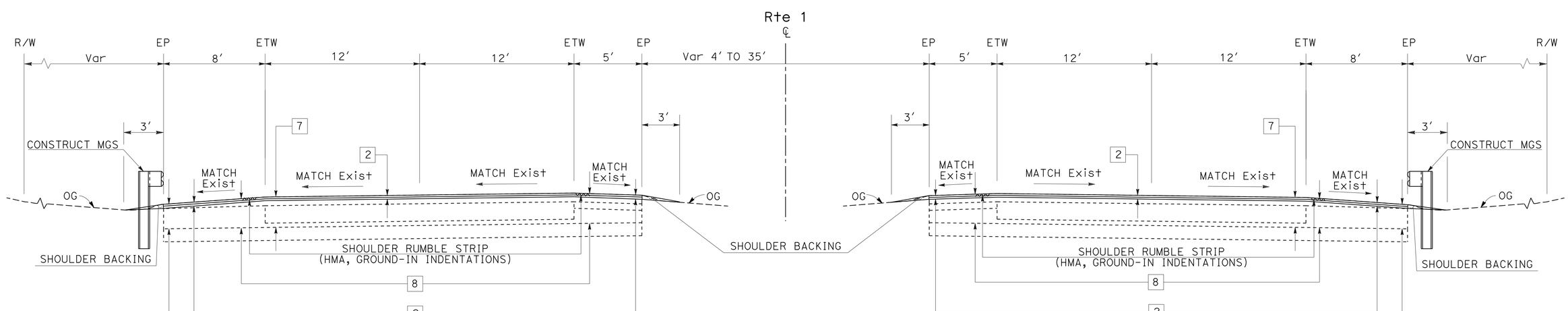

SOUTHBOUND
PM R78.90 / R79.33

NORTHBOUND
PM R77.60 / R78.13
PM R78.90 / R79.33

TYPICAL CROSS SECTIONS

NO SCALE

X-1

STATE OF CALIFORNIA - DEPARTMENT OF TRANSPORTATION
Caltrans
DESIGN

FUNCTIONAL SUPERVISOR: JOHN H. FOUCHE
CALCULATED-DESIGNED BY: WESLEY C. THOMPSON
CHECKED BY: ASHRAF M. RAHIM
REVISED BY / DATE REVISED

LAST REVISION 03-20-15 | DATE PLOTTED => 27-MAR-2015 | TIME PLOTTED => 11:06

Dist	COUNTY	ROUTE	POST MILES TOTAL PROJECT	SHEET No.	TOTAL SHEETS
05	Mon	1	R77.6/R85.3	3	101

Wesley Thompson 3-20-15
REGISTERED CIVIL ENGINEER DATE

3-23-15
PLANS APPROVAL DATE

REGISTERED PROFESSIONAL ENGINEER
WESLEY C. THOMPSON
No. 74952
Exp. 12/31/15
CIVIL
STATE OF CALIFORNIA

THE STATE OF CALIFORNIA OR ITS OFFICERS OR AGENTS SHALL NOT BE RESPONSIBLE FOR THE ACCURACY OR COMPLETENESS OF SCANNED COPIES OF THIS PLAN SHEET.

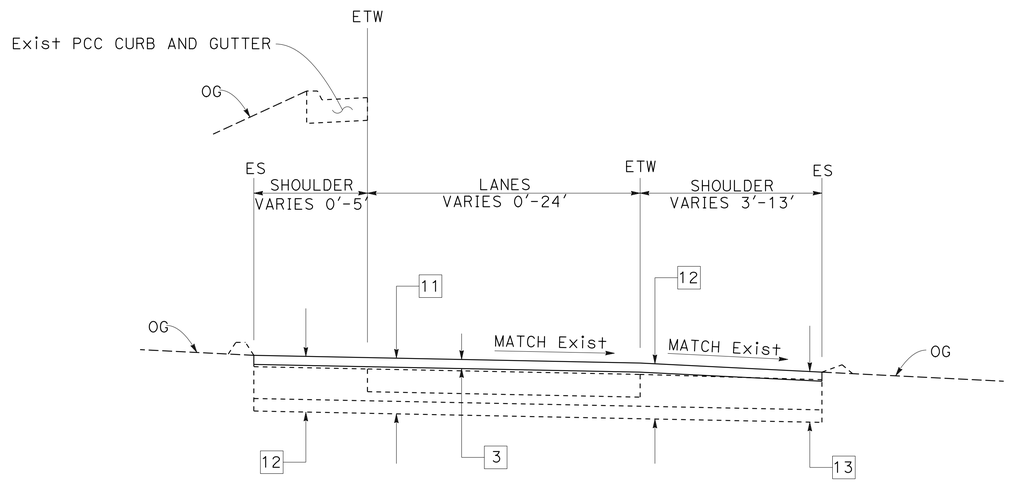

RAMPS

W68-S1, S1-E68 CONNECTOR
CASA VERDE Ave UC
DEL MONTE Ave UC
Rte 1/218 SEPARATION
ORD VILLAGE UC
MAIN ENTRANCE OC
NORTH ENTRANCE OC
SOUTH MARINA OH

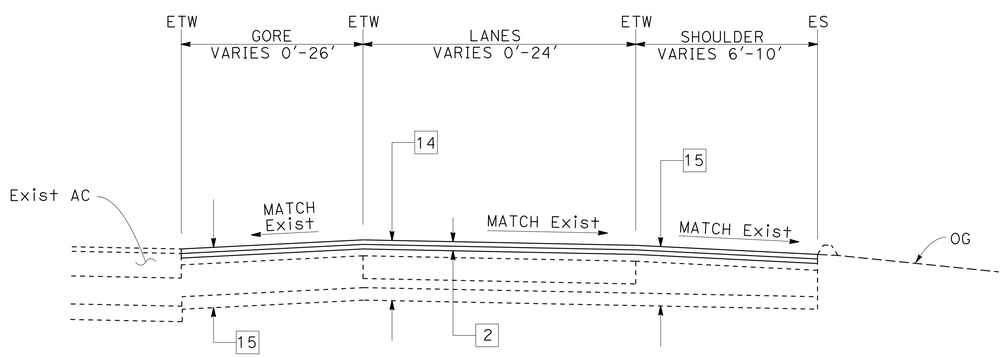

RAMP TAPERS AND Aux LANES (AC MAINLINE)

NB-SLOAT Ave UC TO Rte 1/68 CONNECTOR
NB-DEL MONTE Ave UC TO Rte 1/218 SEPARATION
SB-Rte 1/218 SEPARATION TO DEL MONTE Ave UC

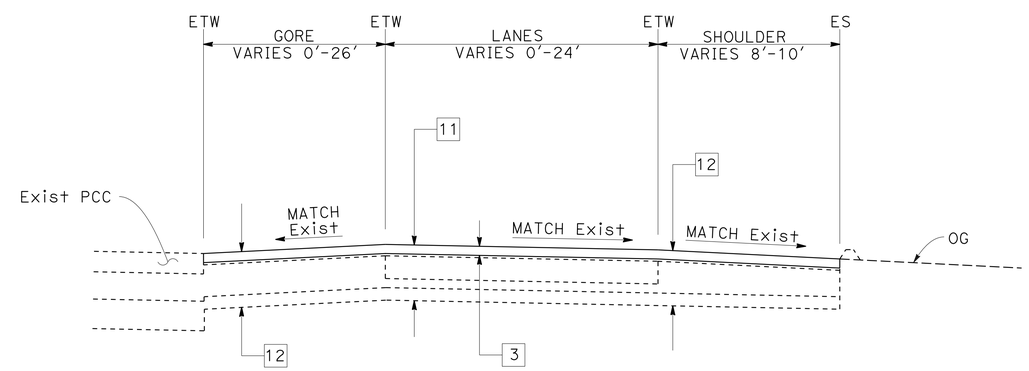

RAMP TAPERS AND Aux LANES (PCC MAINLINE)

Rte 1/68 CONNECTOR TO CASA VERDE Ave UC
CASA VERDE Ave UC TO DEL MONTE Ave UC
ROUTE 1/218 SEPARATION
ORD VILLAGE UC
MAIN ENTRANCE OC
NORTH ENTRANCE OC
SOUTH MARINA OH

Rte 1

TYPICAL CROSS SECTIONS

NO SCALE

X-2

STATE OF CALIFORNIA - DEPARTMENT OF TRANSPORTATION
Caltrans®
DESIGN

FUNCTIONAL SUPERVISOR: JOHN H. FOUCHE
CALCULATED-DESIGNED BY: WESLEY C. THOMPSON
CHECKED BY: ASHRAF M. RAHIM
REVISED BY
DATE REVISED

LAST REVISION 03-20-15
DATE PLOTTED => 27-MAR-2015
TIME PLOTTED => 11:06

Dist	COUNTY	ROUTE	POST MILES TOTAL PROJECT	SHEET No.	TOTAL SHEETS
05	Mon	1	R77.6/R85.3	4	101

Wesley Thompson 3-20-15
REGISTERED CIVIL ENGINEER DATE

3-23-15
PLANS APPROVAL DATE

REGISTERED PROFESSIONAL ENGINEER
WESLEY C. THOMPSON
No. 74952
Exp.12/31/15
CIVIL
STATE OF CALIFORNIA

THE STATE OF CALIFORNIA OR ITS OFFICERS OR AGENTS SHALL NOT BE RESPONSIBLE FOR THE ACCURACY OR COMPLETENESS OF SCANNED COPIES OF THIS PLAN SHEET.

LEGEND:

MAINLINE
GRIND Exist Conc PAVEMENT
1 — 0.15' COLD PLANE AC PAVEMENT
0.15' HMA (TYPE A)

MAINLINE
2 — 0.20' COLD PLANE AC PAVEMENT
0.10' HMA-OGFC
0.10' HMA (TYPE A)

Aux LANES
2 — 0.20' COLD PLANE AC PAVEMENT
0.10' HMA-OGFC
0.10' HMA (TYPE A)

RAMPS AND Aux LANES
3 — 0.20' COLD PLANE AC PAVEMENT
0.20' HMA (TYPE A)

3 — 0.20' COLD PLANE AC PAVEMENT
0.20' HMA (TYPE A)

HMA (MISCELLANEOUS AREA)

REPLACE AC SURFACING

FAILED AREA

SPECIES PROTECTION AREA 2

ABBREVIATIONS:

Aux = AUXILIARY
GL = GUTTER LIP

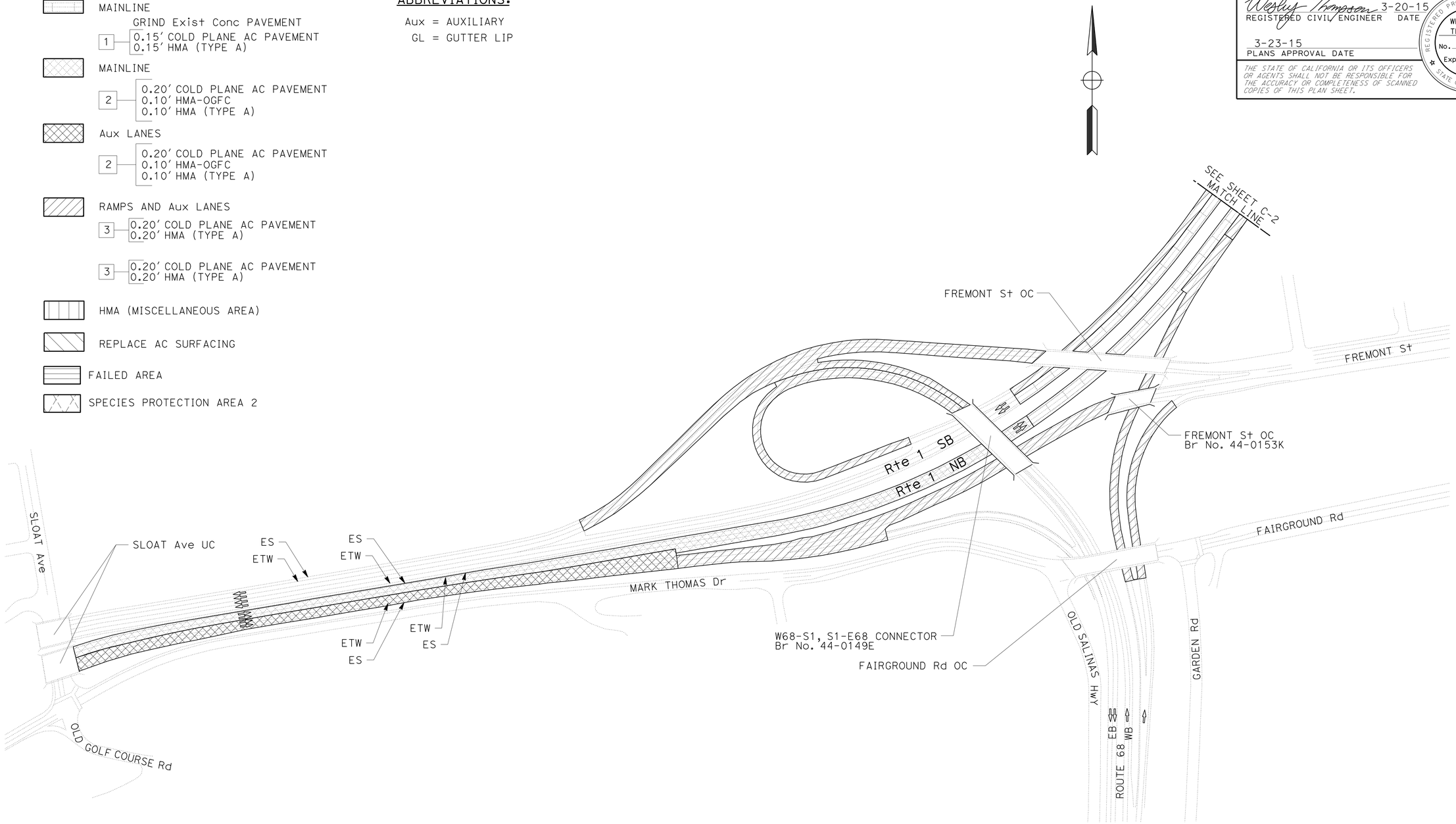

LIMITS OF WORK
W68-S1, S1-E68 CONNECTOR

CONSTRUCTION DETAILS
NO SCALE

C-1

STATE OF CALIFORNIA - DEPARTMENT OF TRANSPORTATION
Caltrans
DESIGN

FUNCTIONAL SUPERVISOR: JOHN H. FOUCHE
CALCULATED-DESIGNED BY: WESLEY C. THOMPSON
CHECKED BY: ASHRAF M. RAHIM
REVISED BY
DATE REVISED

LAST REVISION 03-20-15
DATE PLOTTED => 13-APR-2015
TIME PLOTTED => 14:46

Dist	COUNTY	ROUTE	POST MILES TOTAL PROJECT	SHEET No.	TOTAL SHEETS
05	Mon	1	R77.6/R85.3	5	101

Wesley Thompson 3-20-15
REGISTERED CIVIL ENGINEER DATE

3-23-15
PLANS APPROVAL DATE

REGISTERED PROFESSIONAL ENGINEER
WESLEY C. THOMPSON
No. 74952
Exp. 12/31/15
CIVIL
STATE OF CALIFORNIA

THE STATE OF CALIFORNIA OR ITS OFFICERS OR AGENTS SHALL NOT BE RESPONSIBLE FOR THE ACCURACY OR COMPLETENESS OF SCANNED COPIES OF THIS PLAN SHEET.

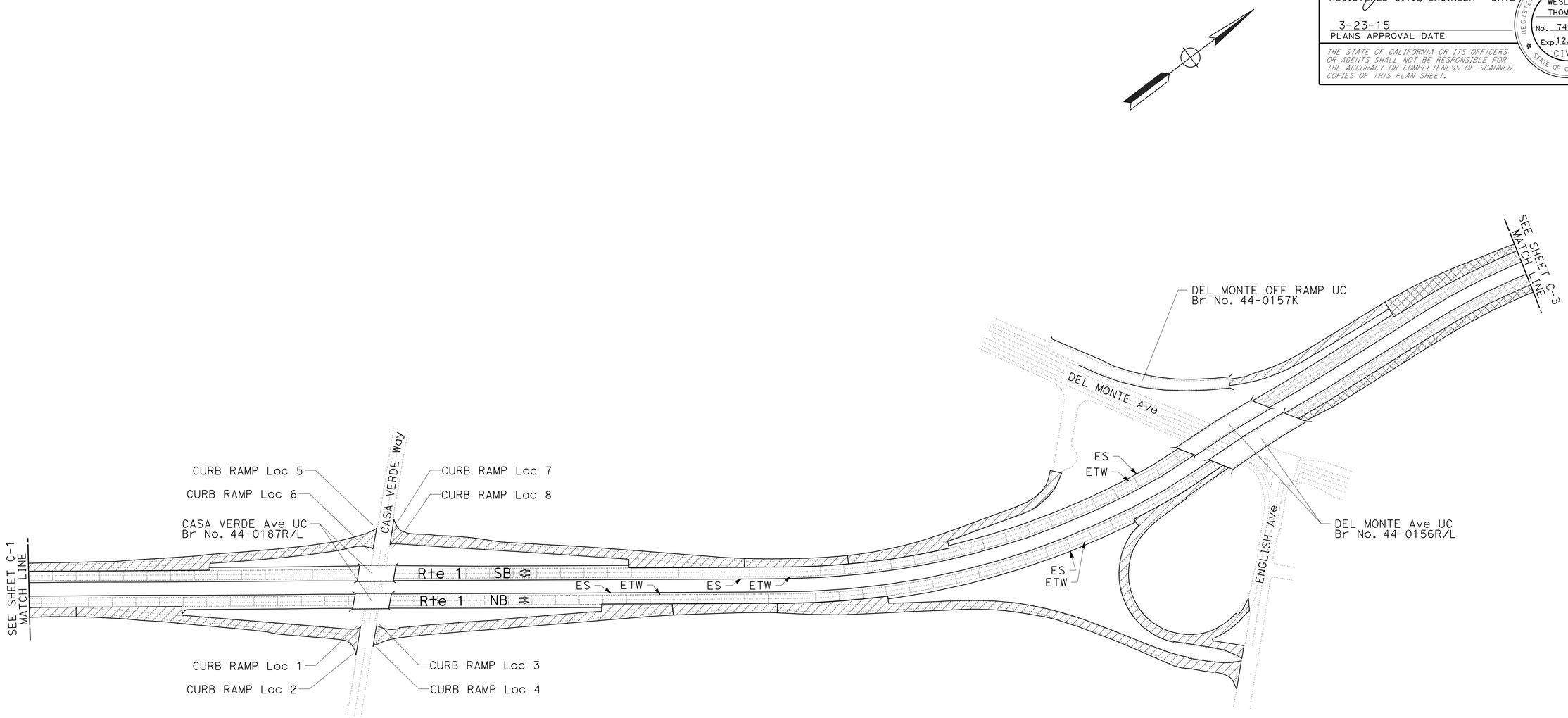

LIMITS OF WORK
CASA VERDE Ave UC AND DEL MONTE Ave UC

CONSTRUCTION DETAILS

NO SCALE

C-2

STATE OF CALIFORNIA - DEPARTMENT OF TRANSPORTATION
Caltrans
DESIGN

FUNCTIONAL SUPERVISOR: JOHN H. FOUCHE
CALCULATED-DESIGNED BY: WESLEY C. THOMPSON
CHECKED BY: ASHRAF M. RAHIM
REVISED BY
DATE REVISED

LAST REVISION 03-20-15
DATE PLOTTED => 27-MAR-2015
TIME PLOTTED => 11:06

Dist	COUNTY	ROUTE	POST MILES TOTAL PROJECT	SHEET No.	TOTAL SHEETS
05	Mon	1	R77.6/R85.3	6	101

Wesley Thompson 3-20-15
REGISTERED CIVIL ENGINEER DATE

3-23-15
PLANS APPROVAL DATE

REGISTERED PROFESSIONAL ENGINEER
WESLEY C. THOMPSON
No. 74952
Exp. 12/31/15
CIVIL
STATE OF CALIFORNIA

THE STATE OF CALIFORNIA OR ITS OFFICERS OR AGENTS SHALL NOT BE RESPONSIBLE FOR THE ACCURACY OR COMPLETENESS OF SCANNED COPIES OF THIS PLAN SHEET.

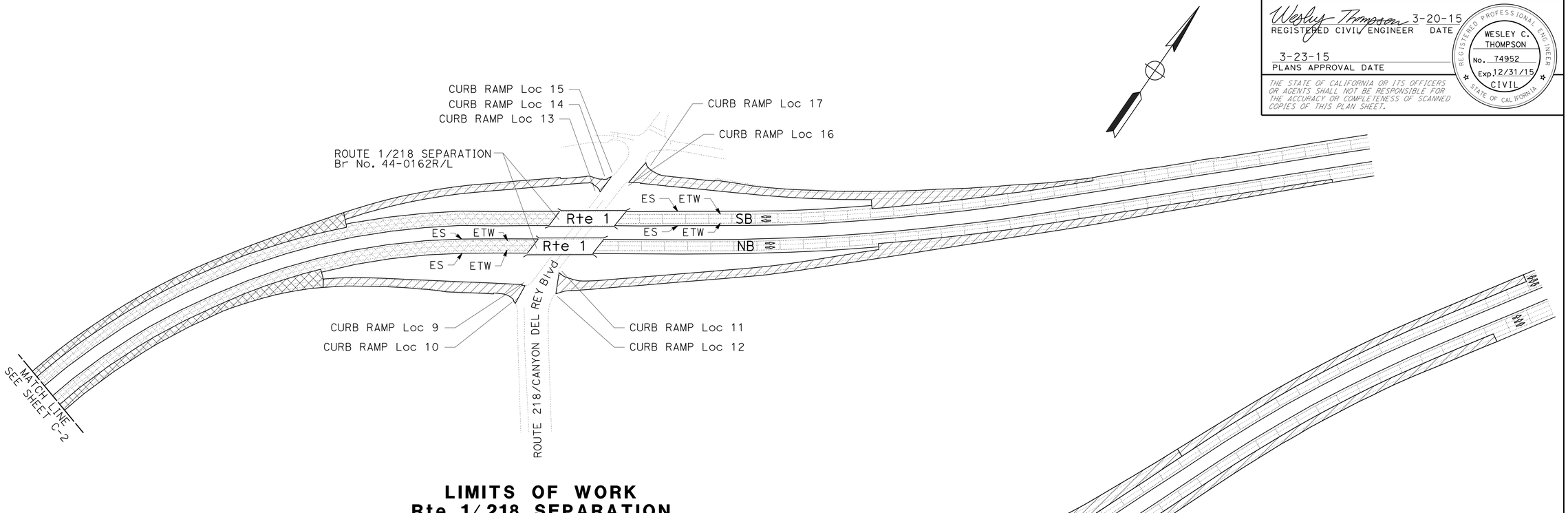

LIMITS OF WORK
Rte 1/218 SEPARATION

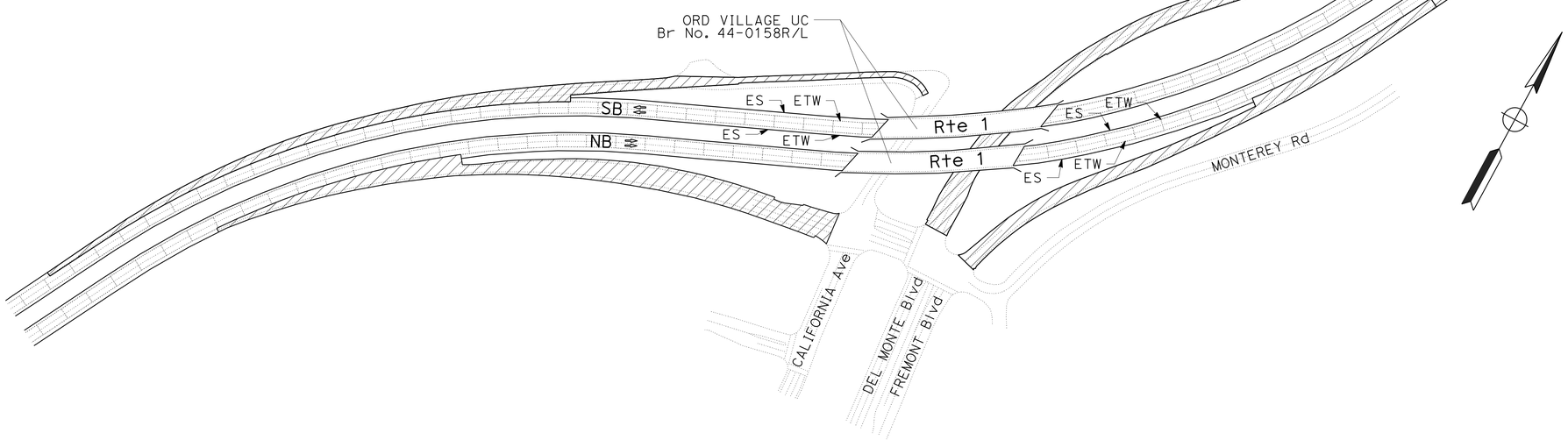

LIMITS OF WORK
ORD VILLAGE UC

CONSTRUCTION DETAILS

NO SCALE

C-3

STATE OF CALIFORNIA - DEPARTMENT OF TRANSPORTATION
Caltrans®
DESIGN

FUNCTIONAL SUPERVISOR: JOHN H. FOUCHE
CALCULATED-DESIGNED BY: WESLEY C. THOMPSON
CHECKED BY: ASHRAF M. RAHIM
REVISED BY
DATE REVISED

LAST REVISION 03-20-15
DATE PLOTTED => 27-MAR-2015
TIME PLOTTED => 11:06

Dist	COUNTY	ROUTE	POST MILES TOTAL PROJECT	SHEET No.	TOTAL SHEETS
05	Mon	1	R77.6/R85.3	7	101

Wesley Thompson 3-20-15
REGISTERED CIVIL ENGINEER DATE

3-23-15
PLANS APPROVAL DATE

REGISTERED PROFESSIONAL ENGINEER
WESLEY C. THOMPSON
No. 74952
Exp. 12/31/15
CIVIL
STATE OF CALIFORNIA

THE STATE OF CALIFORNIA OR ITS OFFICERS OR AGENTS SHALL NOT BE RESPONSIBLE FOR THE ACCURACY OR COMPLETENESS OF SCANNED COPIES OF THIS PLAN SHEET.

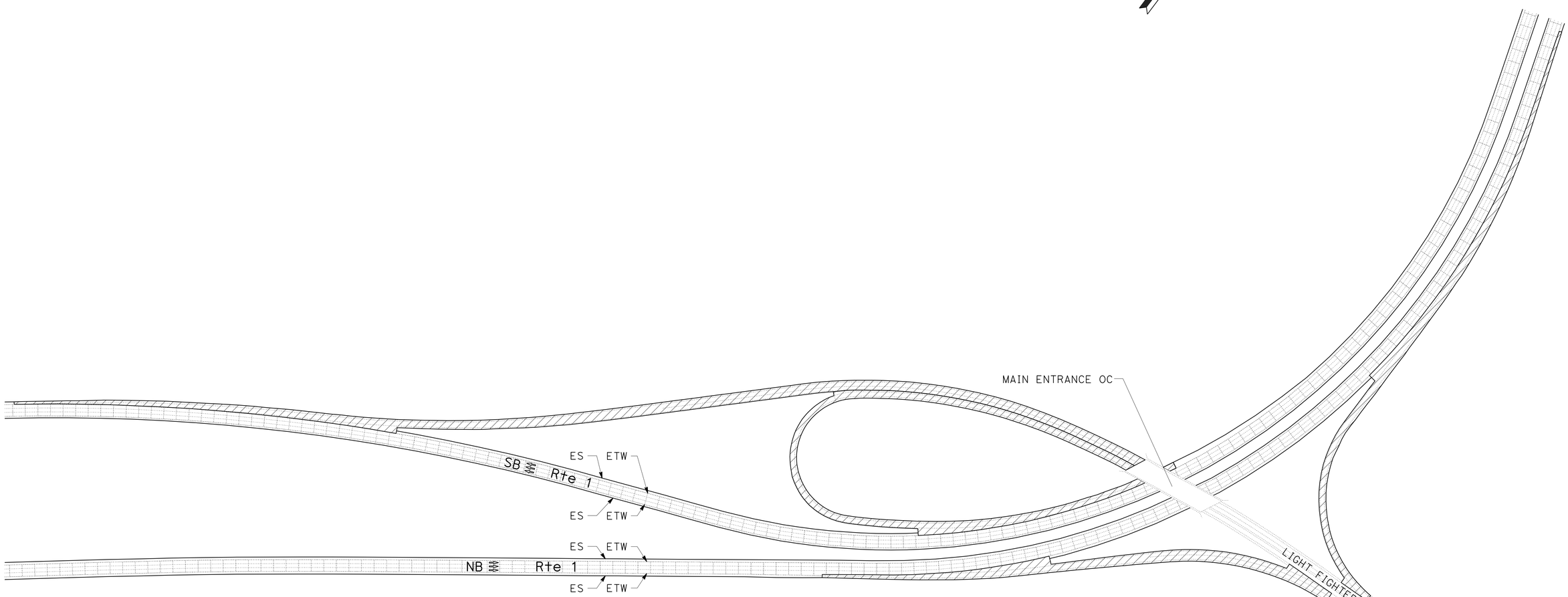

LIMITS OF WORK
MAIN ENTRANCE OC

CONSTRUCTION DETAILS

NO SCALE

C-4

STATE OF CALIFORNIA - DEPARTMENT OF TRANSPORTATION
Caltrans®
DESIGN

FUNCTIONAL SUPERVISOR: JOHN H. FOUCHE
CALCULATED-DESIGNED BY: WESLEY C. THOMPSON
CHECKED BY: ASHRAF M. RAHIM
REVISED BY
DATE REVISED

LAST REVISION 03-20-15
DATE PLOTTED => 27-MAR-2015
TIME PLOTTED => 11:06

Dist	COUNTY	ROUTE	POST MILES TOTAL PROJECT	SHEET No.	TOTAL SHEETS
05	Mon	1	R77.6/R85.3	8	101

Wesley Thompson 3-20-15
REGISTERED CIVIL ENGINEER DATE

3-23-15
PLANS APPROVAL DATE

REGISTERED PROFESSIONAL ENGINEER
WESLEY C. THOMPSON
No. 74952
Exp. 12/31/15
CIVIL
STATE OF CALIFORNIA

THE STATE OF CALIFORNIA OR ITS OFFICERS OR AGENTS SHALL NOT BE RESPONSIBLE FOR THE ACCURACY OR COMPLETENESS OF SCANNED COPIES OF THIS PLAN SHEET.

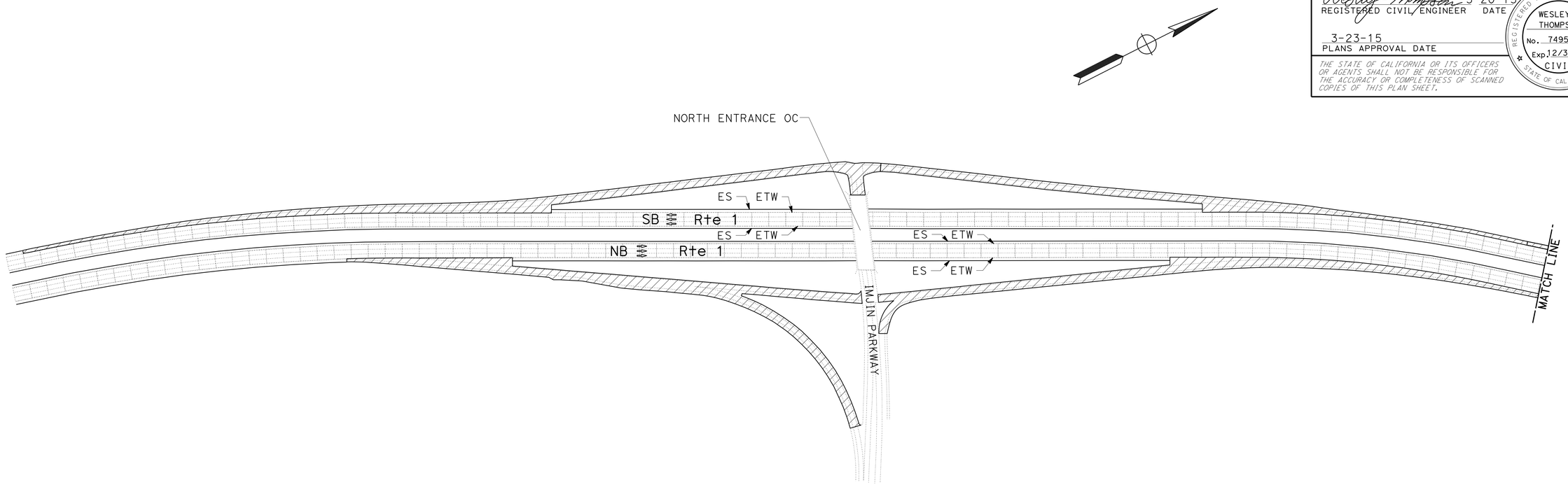

LIMITS OF WORK
NORTH ENTRANCE OC

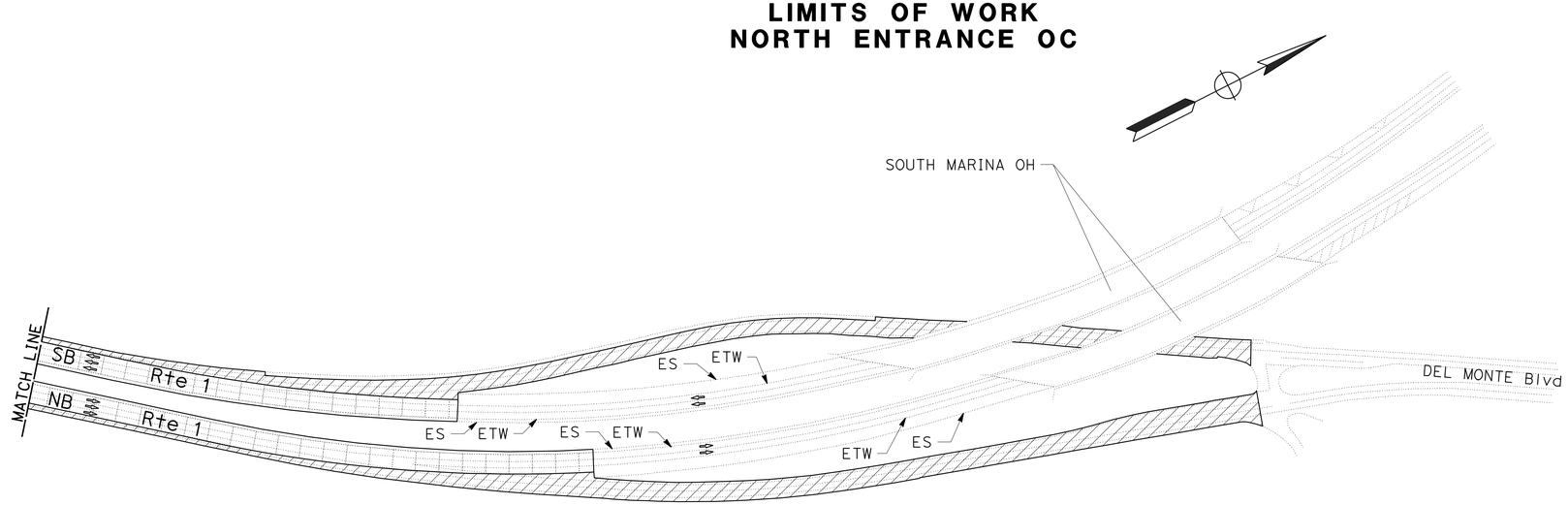

LIMITS OF WORK
SOUTH MARINA OH

CONSTRUCTION DETAILS

NO SCALE

C-5

STATE OF CALIFORNIA - DEPARTMENT OF TRANSPORTATION
Caltrans
DESIGN

FUNCTIONAL SUPERVISOR: JOHN H. FOUCHE
CALCULATED-DESIGNED BY: WESLEY C. THOMPSON
CHECKED BY: ASHRAF M. RAHIM
REVISED BY
DATE REVISED

LAST REVISION 03-20-15
DATE PLOTTED => 27-MAR-2015
TIME PLOTTED => 11:06

Dist	COUNTY	ROUTE	POST MILES TOTAL PROJECT	SHEET No.	TOTAL SHEETS
05	Mon	1	R77.6/R85.3	9	101

Wesley Thompson 3-20-15
REGISTERED CIVIL ENGINEER DATE

3-23-15
PLANS APPROVAL DATE

REGISTERED PROFESSIONAL ENGINEER WESLEY C. THOMPSON No. 74952 Exp.12/31/15 CIVIL STATE OF CALIFORNIA

THE STATE OF CALIFORNIA OR ITS OFFICERS OR AGENTS SHALL NOT BE RESPONSIBLE FOR THE ACCURACY OR COMPLETENESS OF SCANNED COPIES OF THIS PLAN SHEET.

NOTES:

1. FOR ACCURATE RIGHT OF WAY DATA, CONTACT RIGHT OF WAY ENGINEERING AT THE DISTRICT OFFICE.
2. FOR DETAILS NOT SHOWN, SEE REVISED STANDARD PLAN A88A AND A88B.
3. SEE SHEETS X-1 AND X-2 FOR Exist AND PROPOSED STRUCTURAL SECTIONS.

LEGEND:

REPLACE AC SURFACING

ABBREVIATION:

GL - GUTTER LIP

CURVE DATA

No. ⊛	R	Δ	T	L
1	15′	66°36′32″	9.85′	17.44′
2	40′	14°00′53″	4.92′	9.78′
3	45′	36°32′07″	14.85′	28.69′

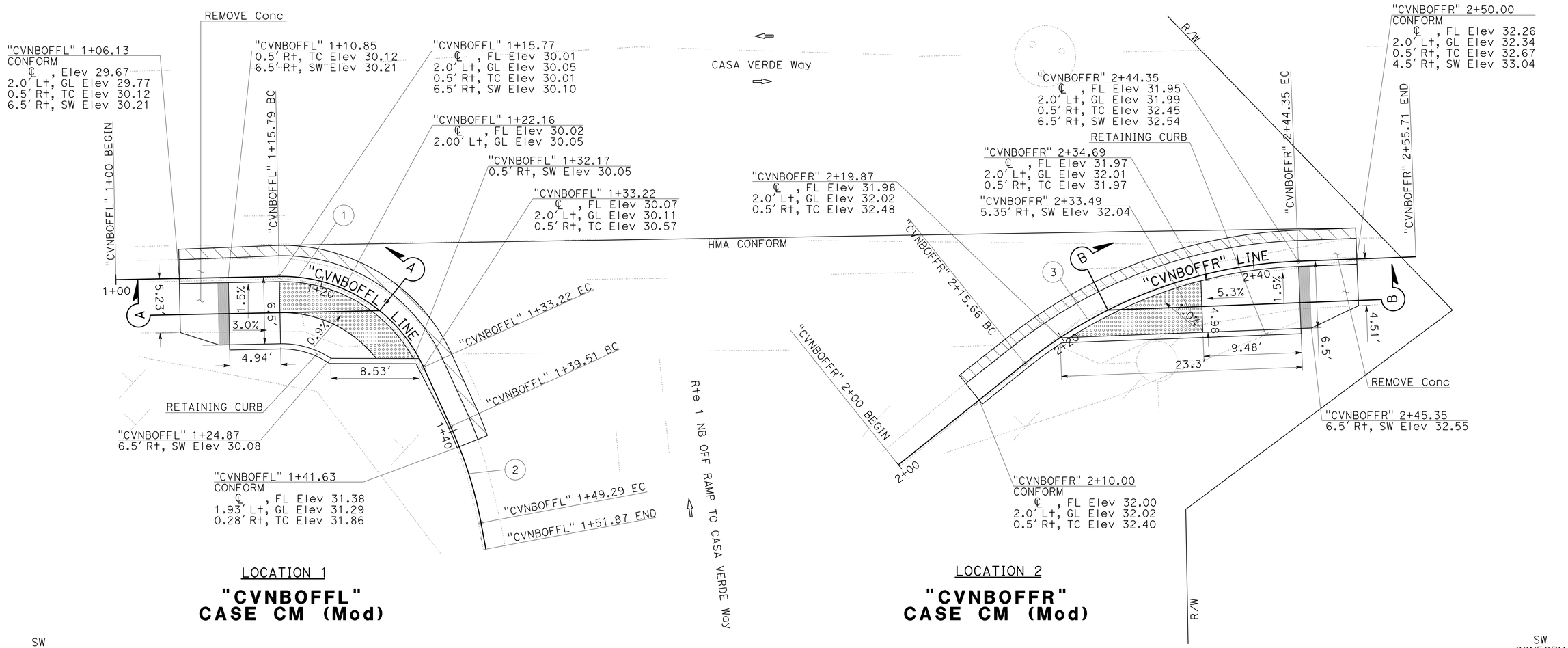

REPLACE AC SURFACING DETAIL

SEE NOTE 3.

CONSTRUCTION DETAILS

SCALE: 1" = 5′

C-6

STATE OF CALIFORNIA - DEPARTMENT OF TRANSPORTATION
DESIGN
FUNCTIONAL SUPERVISOR: JOHN H. FOUCHE
CALCULATED-DESIGNED BY: WESLEY C. THOMPSON
CHECKED BY: RAY RIAHI
REVISED BY
DATE REVISED

LAST REVISION 03-20-15
DATE PLOTTED => 27-MAR-2015
TIME PLOTTED => 11:06

Dist	COUNTY	ROUTE	POST MILES TOTAL PROJECT	SHEET No.	TOTAL SHEETS
05	Mon	1	R77.6/R85.3	10	101

Wesley Thompson 3-20-15
REGISTERED CIVIL ENGINEER DATE

3-23-15
PLANS APPROVAL DATE

REGISTERED PROFESSIONAL ENGINEER WESLEY C. THOMPSON No. 74952 Exp. 12/31/15 CIVIL STATE OF CALIFORNIA

THE STATE OF CALIFORNIA OR ITS OFFICERS OR AGENTS SHALL NOT BE RESPONSIBLE FOR THE ACCURACY OR COMPLETENESS OF SCANNED COPIES OF THIS PLAN SHEET.

NOTE:

FOR ACCURATE RIGHT OF WAY DATA, CONTACT RIGHT OF WAY ENGINEERING AT THE DISTRICT OFFICE.

CURVE DATA

No. ⊕	R	Δ	T	L
4	6.50′	86°00′29″	6.06′	9.76′
5	18.25′	60°04′23″	10.55′	19.13′

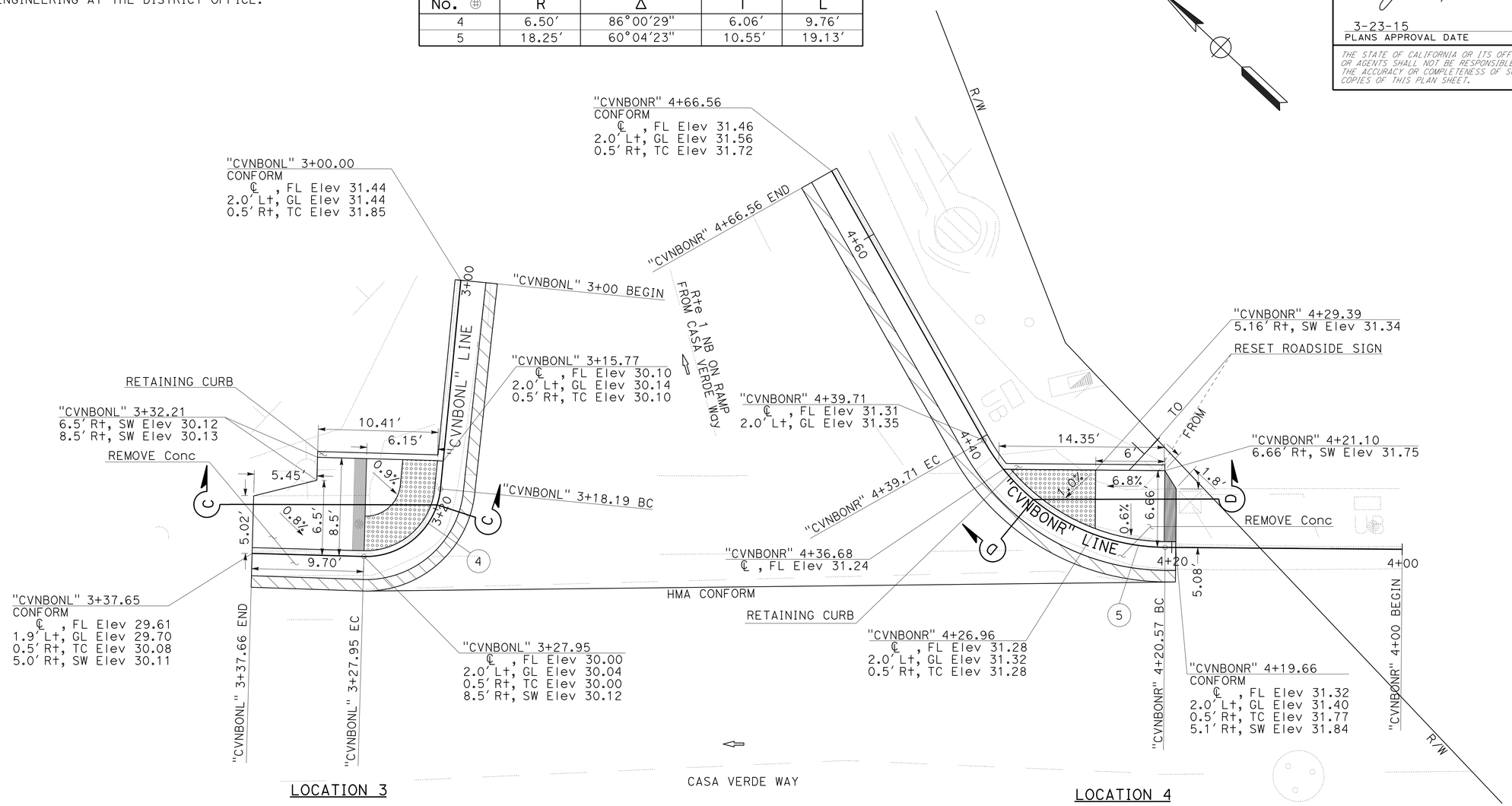

LOCATION 3

"CVNBONL"
CASE CM (Mod)

LOCATION 4

"CVNBONR"
CASE CM (Mod)

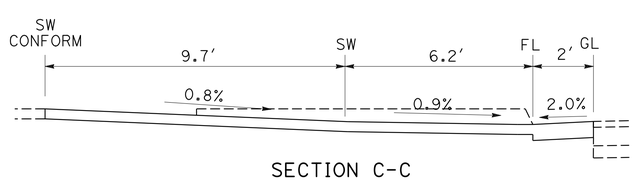

SECTION C-C

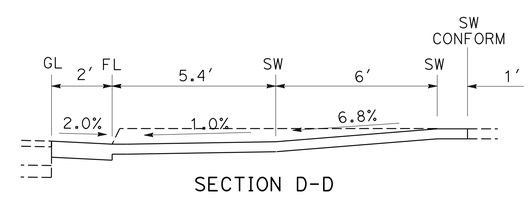

SECTION D-D

CONSTRUCTION DETAILS

SCALE: 1" = 5′

C-7

STATE OF CALIFORNIA - DEPARTMENT OF TRANSPORTATION
Caltrans
DESIGN

FUNCTIONAL SUPERVISOR: JOHN H. FOUCHE
CALCULATED-DESIGNED BY: WESLEY C. THOMPSON
CHECKED BY: RAY RIAHI
REVISED BY
DATE REVISED

LAST REVISION 03-20-15
DATE PLOTTED => 27-MAR-2015
TIME PLOTTED => 11:06

Dist	COUNTY	ROUTE	POST MILES TOTAL PROJECT	SHEET No.	TOTAL SHEETS
05	Mon	1	R77.6/R85.3	11	101

Wesley Thompson 3-20-15
REGISTERED CIVIL ENGINEER DATE

3-23-15
PLANS APPROVAL DATE

REGISTERED PROFESSIONAL ENGINEER
WESLEY C. THOMPSON
No. 74952
Exp. 12/31/15
CIVIL
STATE OF CALIFORNIA

THE STATE OF CALIFORNIA OR ITS OFFICERS OR AGENTS SHALL NOT BE RESPONSIBLE FOR THE ACCURACY OR COMPLETENESS OF SCANNED COPIES OF THIS PLAN SHEET.

NOTE:

FOR ACCURATE RIGHT OF WAY DATA, CONTACT RIGHT OF WAY ENGINEERING AT THE DISTRICT OFFICE.

CURVE DATA

No. ⑥	R	Δ	T	L
6	20′	55°18′55"	10.48′	19.31′
7	7′	83°58′24"	6.30′	10.26′

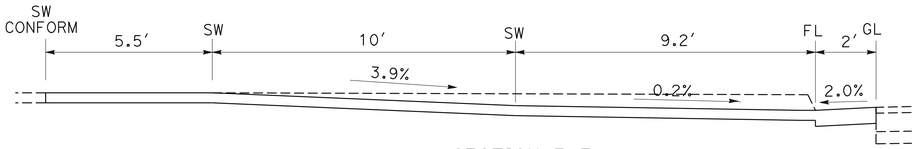

SECTION E-E

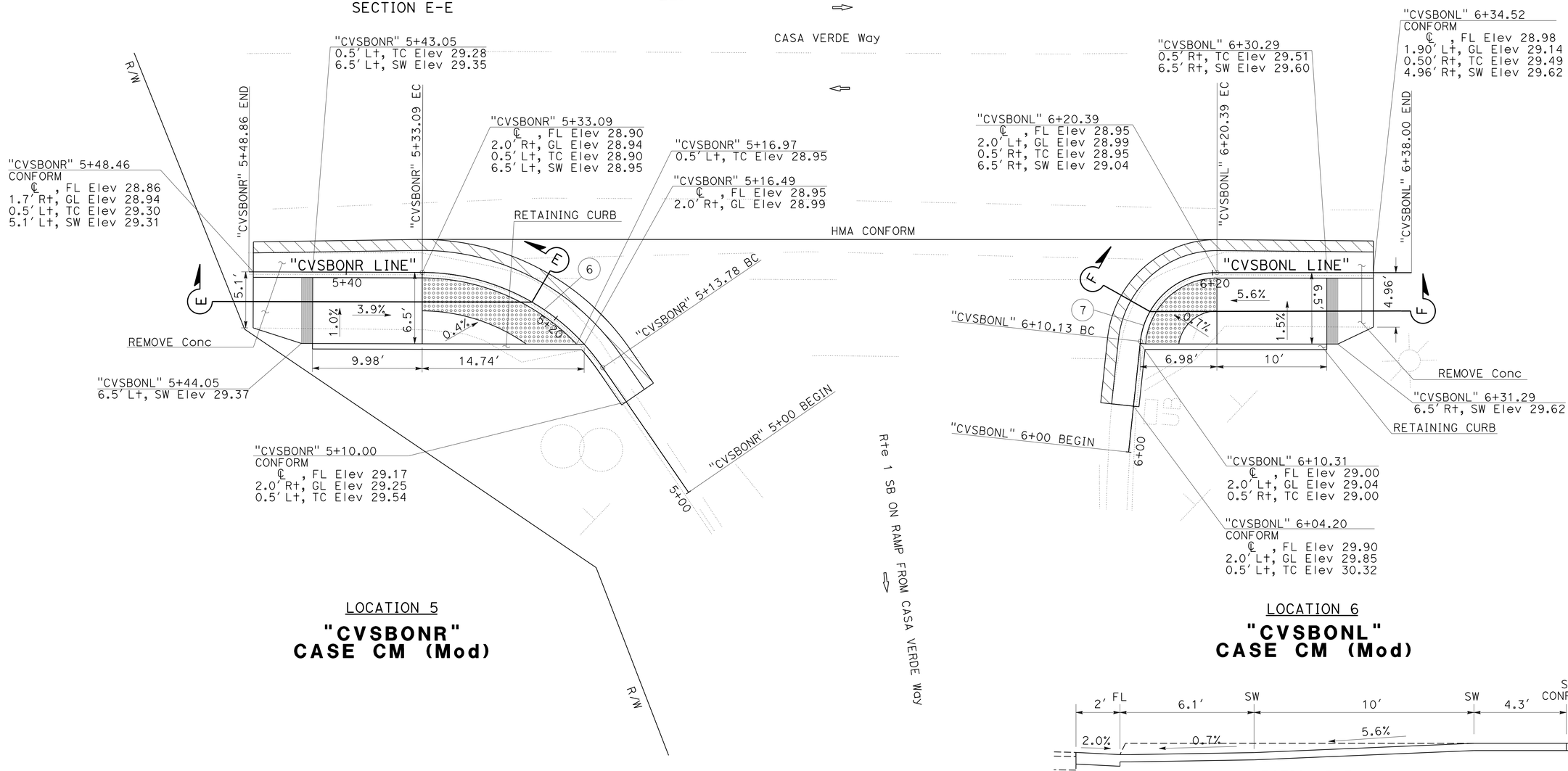

LOCATION 5

"CVSBONR"
CASE CM (Mod)

LOCATION 6

"CVSBONL"
CASE CM (Mod)

SECTION F-F

CONSTRUCTION DETAILS

SCALE: 1" = 5′

C-8

STATE OF CALIFORNIA - DEPARTMENT OF TRANSPORTATION
Caltrans
DESIGN

FUNCTIONAL SUPERVISOR: JOHN H. FOUCHE
CALCULATED-DESIGNED BY: WESLEY C. THOMPSON
CHECKED BY: ASHRAF M. RAHIM
REVISED BY
DATE REVISED

LAST REVISION 03-20-15
DATE PLOTTED => 27-MAR-2015
TIME PLOTTED => 11:07

Dist	COUNTY	ROUTE	POST MILES TOTAL PROJECT	SHEET No.	TOTAL SHEETS
05	Mon	1	R77.6/R85.3	12	101

Wesley Thompson 3-20-15
REGISTERED CIVIL ENGINEER DATE

3-23-15
PLANS APPROVAL DATE

REGISTERED PROFESSIONAL ENGINEER
WESLEY C. THOMPSON
No. 74952
Exp. 12/31/15
CIVIL
STATE OF CALIFORNIA

THE STATE OF CALIFORNIA OR ITS OFFICERS OR AGENTS SHALL NOT BE RESPONSIBLE FOR THE ACCURACY OR COMPLETENESS OF SCANNED COPIES OF THIS PLAN SHEET.

NOTE:

FOR ACCURATE RIGHT OF WAY DATA, CONTACT RIGHT OF WAY ENGINEERING AT THE DISTRICT OFFICE.

CURVE DATA

No. ⊕	R	Δ	T	L
8	40′	38°34′55.4″	14′	26.94′
9	11′	75°59′33.9″	8.59′	14.59′

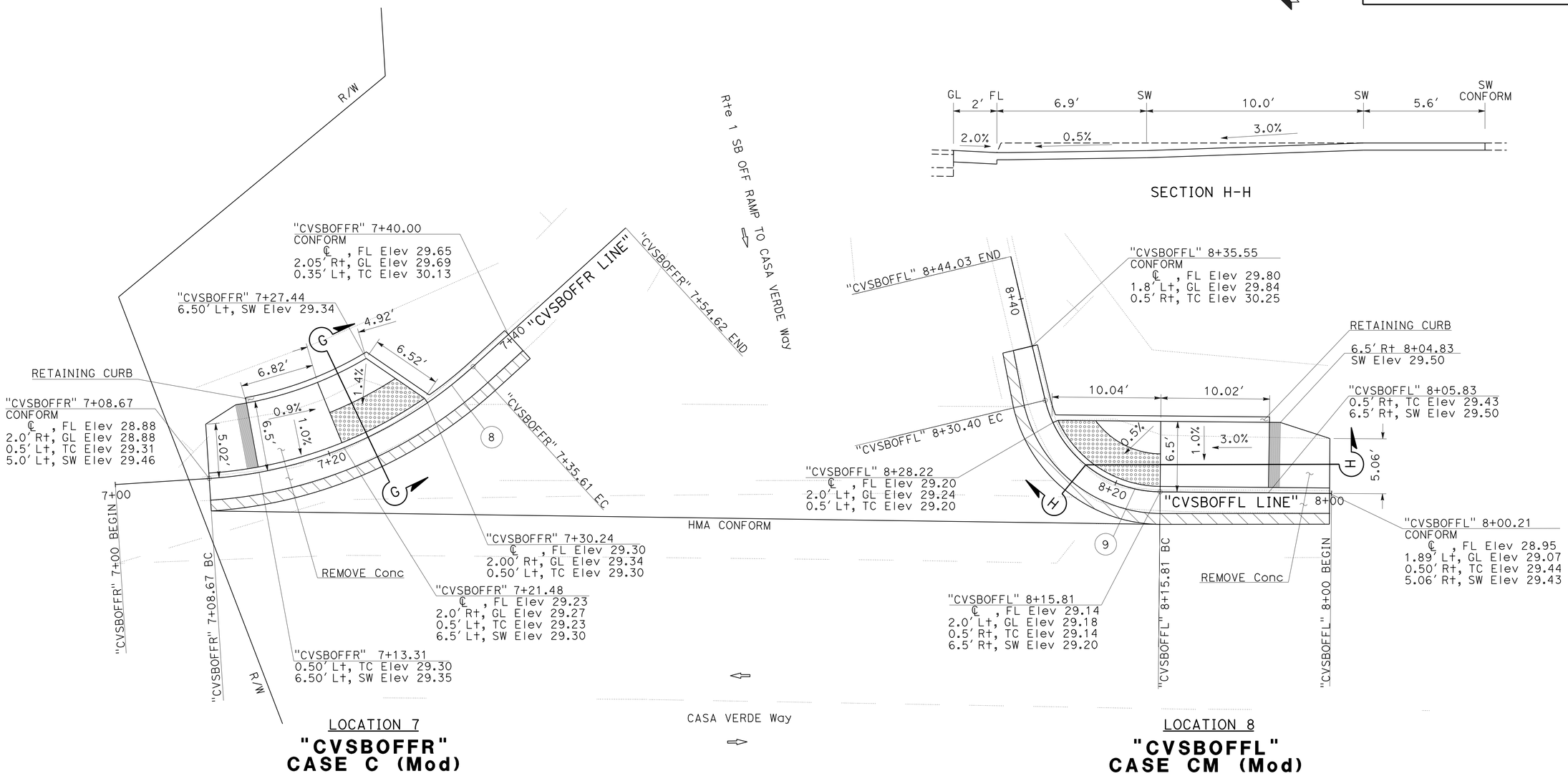

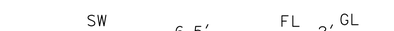

SECTION G-G

CONSTRUCTION DETAILS

SCALE: 1" = 5′

C-9

STATE OF CALIFORNIA - DEPARTMENT OF TRANSPORTATION
Caltrans
DESIGN

FUNCTIONAL SUPERVISOR: JOHN H. FOUCHE
CALCULATED-DESIGNED BY: WESLEY C. THOMPSON
CHECKED BY: ASHRAF M. RAHIM
REVISED BY
DATE REVISED

LAST REVISION 03-20-15
DATE PLOTTED => 27-MAR-2015
TIME PLOTTED => 11:07

Dist	COUNTY	ROUTE	POST MILES TOTAL PROJECT	SHEET No.	TOTAL SHEETS
05	Mon	1	R77.6/R85.3	13	101

Wesley Thompson 3-20-15
REGISTERED CIVIL ENGINEER DATE

3-23-15
PLANS APPROVAL DATE

REGISTERED PROFESSIONAL ENGINEER WESLEY C. THOMPSON No. 74952 Exp. 12/31/15 CIVIL STATE OF CALIFORNIA

THE STATE OF CALIFORNIA OR ITS OFFICERS OR AGENTS SHALL NOT BE RESPONSIBLE FOR THE ACCURACY OR COMPLETENESS OF SCANNED COPIES OF THIS PLAN SHEET.

NOTE:

FOR ACCURATE RIGHT OF WAY DATA, CONTACT RIGHT OF WAY ENGINEERING AT THE DISTRICT OFFICE.

CURVE DATA

No. ⊕	R	Δ	T	L
10	20′	55°37′58"	10.55′	19.42′
11	43′	44°17′24.5"	17.50′	33.24′

SECTION I-I

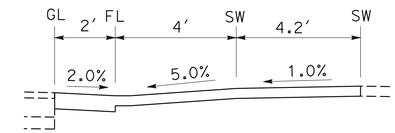

SECTION J-J

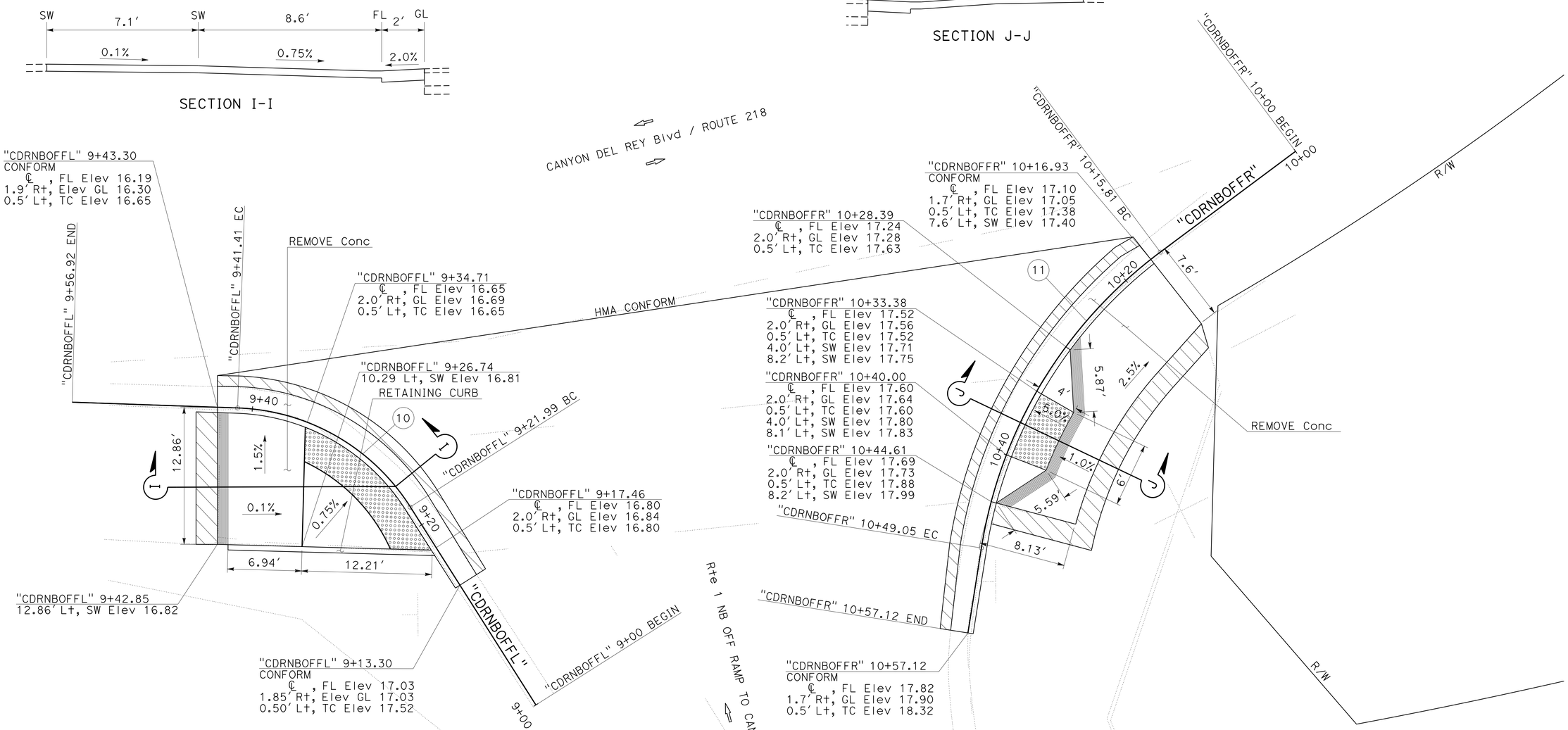

LOCATION 9

"CDRNBOFFL"
CASE CM (Mod)

LOCATION 10

"CDRNBOFFR"
CASE A (Mod)

CONSTRUCTION DETAILS

SCALE: 1" = 5′

C-10

STATE OF CALIFORNIA - DEPARTMENT OF TRANSPORTATION
Caltrans® DESIGN
FUNCTIONAL SUPERVISOR: JOHN H. FOUCHE
CALCULATED-DESIGNED BY: WESLEY C. THOMPSON
CHECKED BY: ASHRAF M. RAHIM
REVISED BY
DATE REVISED

LAST REVISION 03-20-15
DATE PLOTTED => 27-MAR-2015
TIME PLOTTED => 11:07

Dist	COUNTY	ROUTE	POST MILES TOTAL PROJECT	SHEET No.	TOTAL SHEETS
05	Mon	1	R77.6/R85.3	14	101

Wesley Thompson 3-20-15
REGISTERED CIVIL ENGINEER DATE

3-23-15
PLANS APPROVAL DATE

REGISTERED PROFESSIONAL ENGINEER
WESLEY C. THOMPSON
No. 74952
Exp. 12/31/15
CIVIL
STATE OF CALIFORNIA

THE STATE OF CALIFORNIA OR ITS OFFICERS OR AGENTS SHALL NOT BE RESPONSIBLE FOR THE ACCURACY OR COMPLETENESS OF SCANNED COPIES OF THIS PLAN SHEET.

NOTE:

FOR ACCURATE RIGHT OF WAY DATA, CONTACT RIGHT OF WAY ENGINEERING AT THE DISTRICT OFFICE.

CURVE DATA

No.	R	Δ	T	L
12	10.5′	100°48′07"	12.69′	18.47′
13	30′	53°15′17.5"	15.04′	27.88′

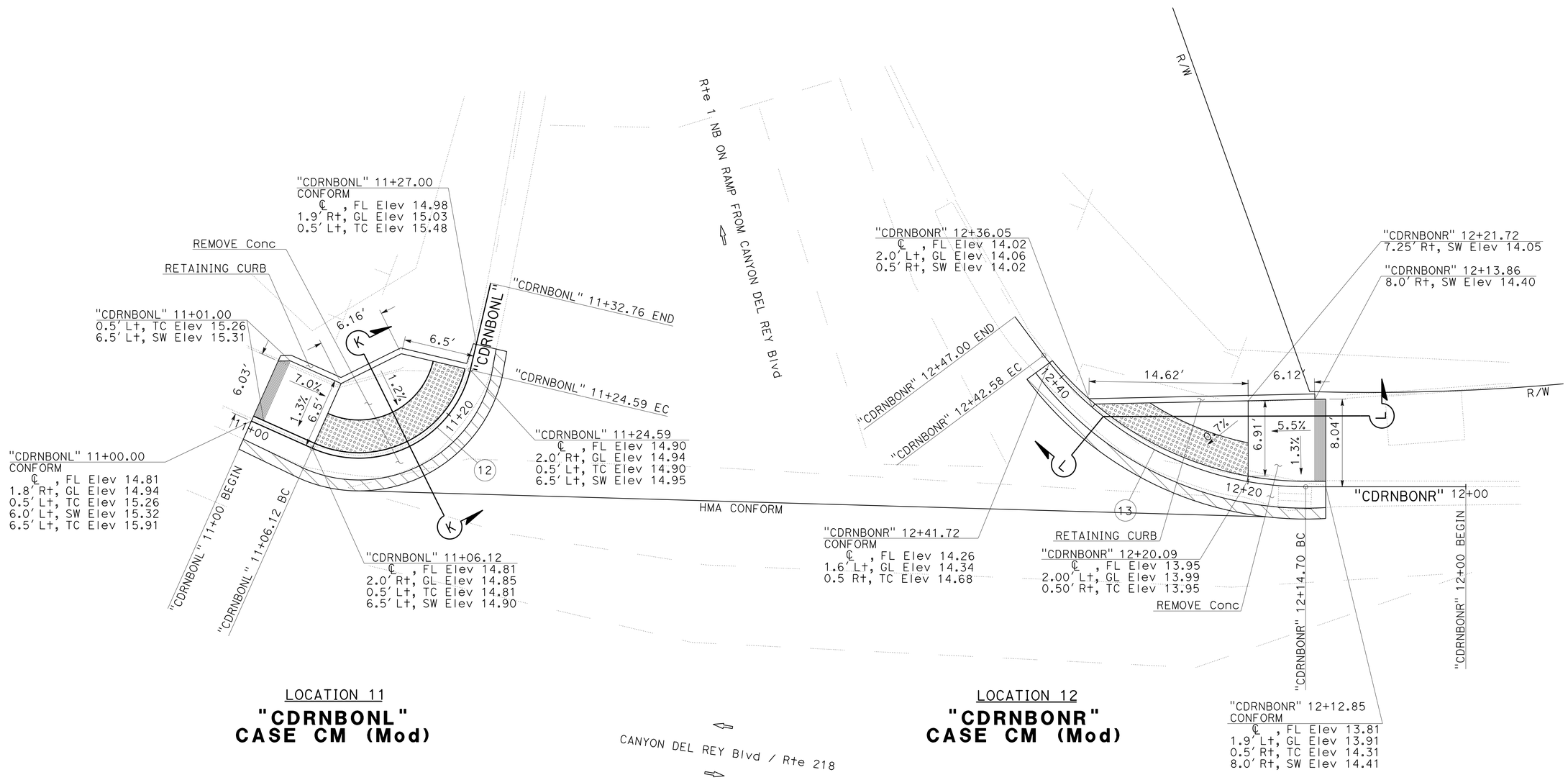

LOCATION 11
"CDRNBONL"
CASE CM (Mod)

LOCATION 12
"CDRNBONR"
CASE CM (Mod)

SECTION K-K

SECTION L-L

CONSTRUCTION DETAILS

SCALE: 1" = 5′

C-11

STATE OF CALIFORNIA - DEPARTMENT OF TRANSPORTATION
Caltrans
DESIGN

FUNCTIONAL SUPERVISOR: JOHN H. FOUCHE
CALCULATED-DESIGNED BY: WESLEY C. THOMPSON
CHECKED BY: ASHRAF M. RAHIM
REVISED BY
DATE REVISED

LAST REVISION 03-20-15
DATE PLOTTED => 27-MAR-2015
TIME PLOTTED => 11:07

Dist	COUNTY	ROUTE	POST MILES TOTAL PROJECT	SHEET No.	TOTAL SHEETS
05	Mon	1	R77.6/R85.3	15	101

Wesley Thompson 3-20-15
REGISTERED CIVIL ENGINEER DATE

3-23-15
PLANS APPROVAL DATE

REGISTERED PROFESSIONAL ENGINEER WESLEY C. THOMPSON No. 74952 Exp. 12/31/15 CIVIL STATE OF CALIFORNIA

THE STATE OF CALIFORNIA OR ITS OFFICERS OR AGENTS SHALL NOT BE RESPONSIBLE FOR THE ACCURACY OR COMPLETENESS OF SCANNED COPIES OF THIS PLAN SHEET.

NOTE:

FOR ACCURATE RIGHT OF WAY DATA, CONTACT RIGHT OF WAY ENGINEERING AT THE DISTRICT OFFICE.

CURVE DATA

No. ⊕	R	Δ	T	L
14	35′	20°12′31"	6.24′	12.34′
15	20′	15°38′11"	5.46′	5.46′
16	7′	45°23′53"	2.93′	5.55′
17	28′	25°32′57"	6.35′	12.49′
18	35′	27°28′55"	8.56′	16.79′
19	35′	13°31′07"	4.15′	8.26′

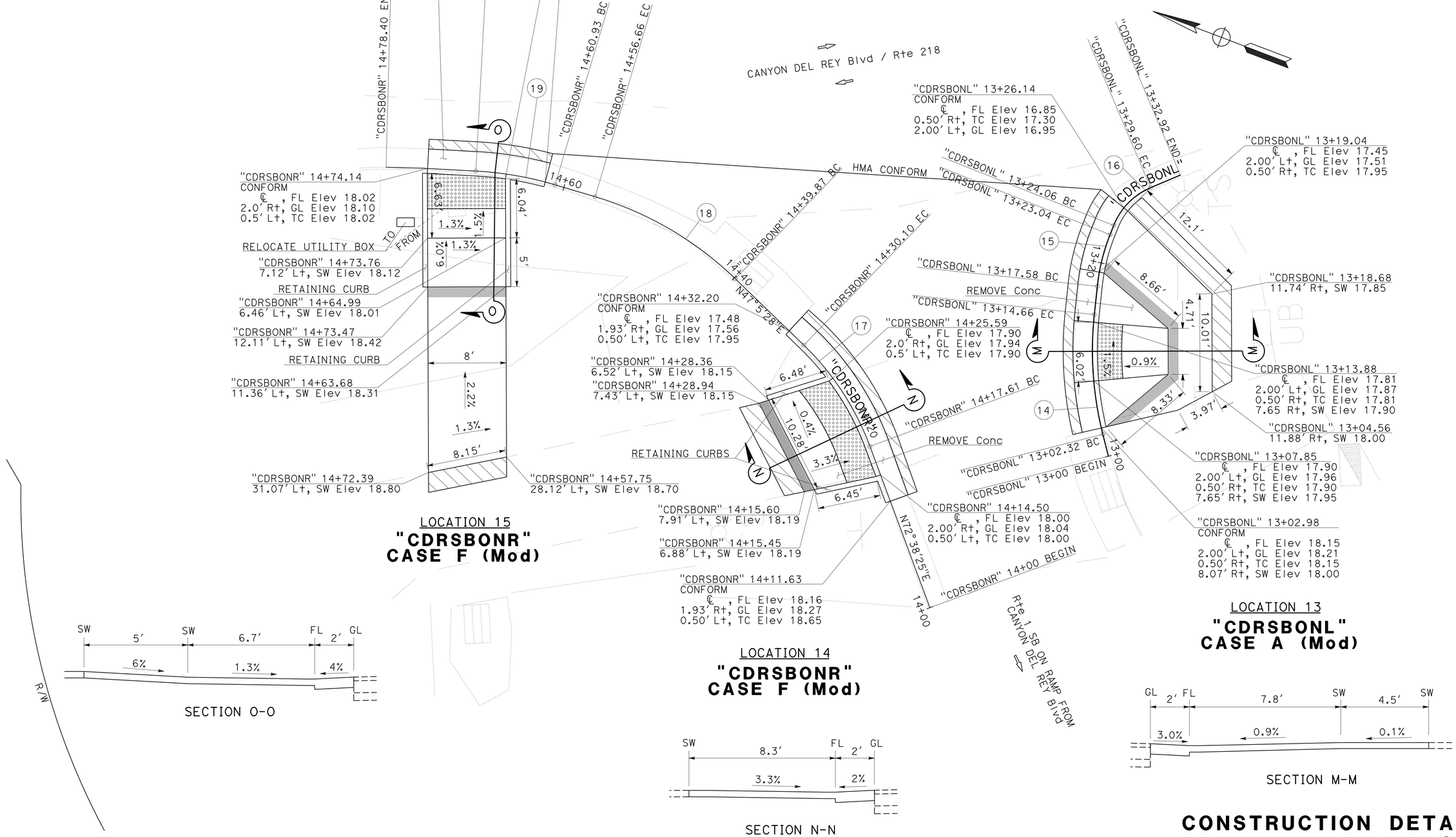

CONSTRUCTION DETAILS

SCALE: 1" = 5′

C-12

STATE OF CALIFORNIA - DEPARTMENT OF TRANSPORTATION
Caltrans® DESIGN
FUNCTIONAL SUPERVISOR: JOHN H. FOUCHE
CALCULATED-DESIGNED BY: WESLEY C. THOMPSON
CHECKED BY: RAY RIAHI
REVISED BY
DATE REVISED

LAST REVISION 03-20-15
DATE PLOTTED => 27-MAR-2015
TIME PLOTTED => 11:07

Dist	COUNTY	ROUTE	POST MILES TOTAL PROJECT	SHEET No.	TOTAL SHEETS
05	Mon	1	R77.6/R85.3	16	101

Wesley Thompson 3-20-15
REGISTERED CIVIL ENGINEER DATE

3-23-15
PLANS APPROVAL DATE

REGISTERED PROFESSIONAL ENGINEER
WESLEY C. THOMPSON
No. 74952
Exp.12/31/15
CIVIL
STATE OF CALIFORNIA

THE STATE OF CALIFORNIA OR ITS OFFICERS OR AGENTS SHALL NOT BE RESPONSIBLE FOR THE ACCURACY OR COMPLETENESS OF SCANNED COPIES OF THIS PLAN SHEET.

NOTE:

FOR ACCURATE RIGHT OF WAY DATA, CONTACT RIGHT OF WAY ENGINEERING AT THE DISTRICT OFFICE.

CURVE DATA

No. ⊕	R	Δ	T	L
20	10′	50°55′57″	4.76′	8.89′
21	24′	92°42′04″	25.16′	38.83′

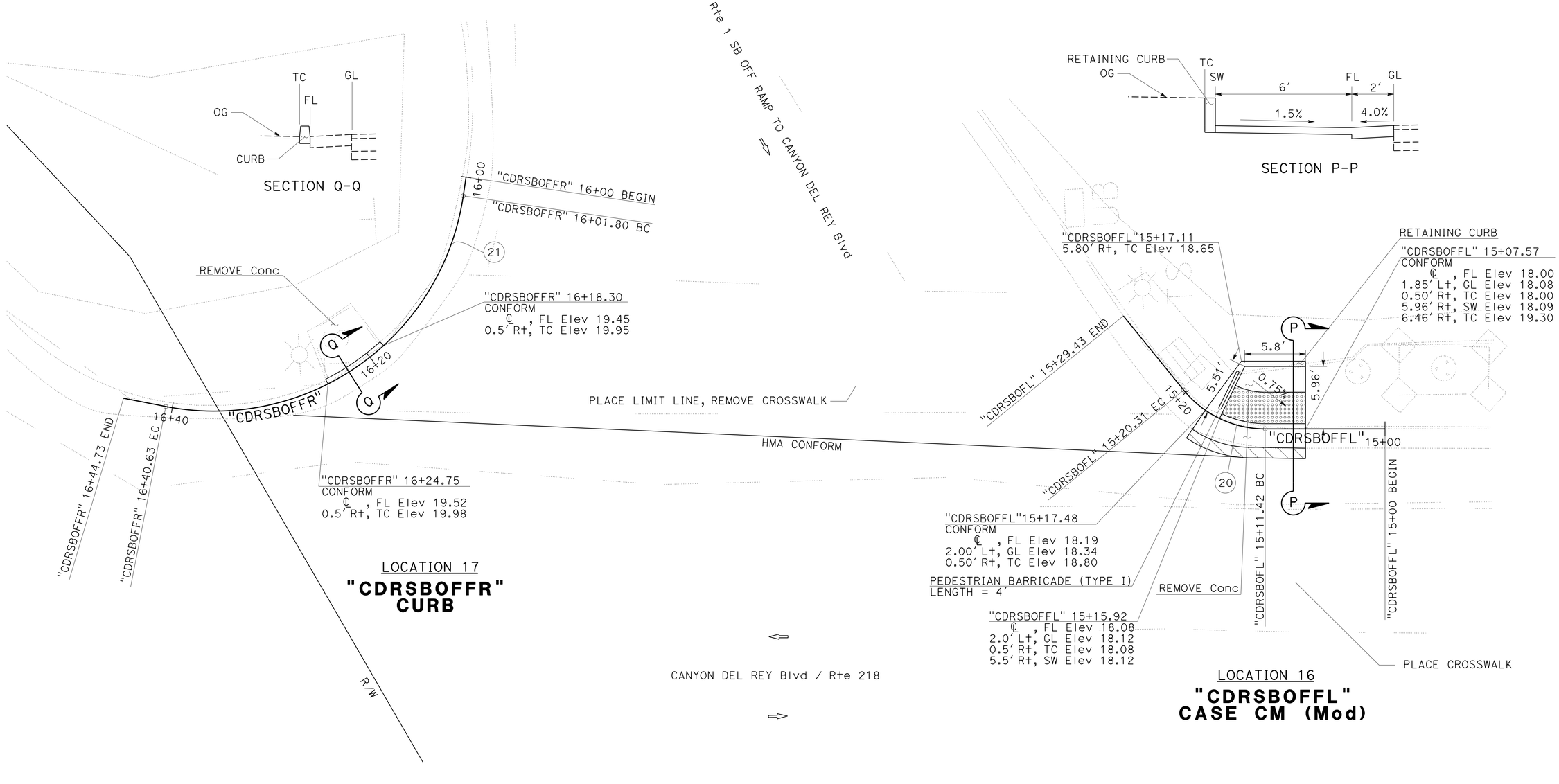

CONSTRUCTION DETAILS
SCALE: 1" = 5′

C-13

STATE OF CALIFORNIA - DEPARTMENT OF TRANSPORTATION
Caltrans
DESIGN

FUNCTIONAL SUPERVISOR: JOHN H. FOUCHE
CALCULATED-DESIGNED BY: WESLEY C. THOMPSON
CHECKED BY: RAY RIAHI
REVISED BY
DATE REVISED

LAST REVISION 03-20-15
DATE PLOTTED => 27-MAR-2015
TIME PLOTTED => 11:07

Dist	COUNTY	ROUTE	POST MILES TOTAL PROJECT	SHEET No.	TOTAL SHEETS
05	Mon	1	R77.6/R85.3	17	101

Wesley Thompson 3-20-15
REGISTERED CIVIL ENGINEER DATE

3-23-15
PLANS APPROVAL DATE

REGISTERED PROFESSIONAL ENGINEER WESLEY C. THOMPSON No. 74952 Exp. 12/31/15 CIVIL STATE OF CALIFORNIA

THE STATE OF CALIFORNIA OR ITS OFFICERS OR AGENTS SHALL NOT BE RESPONSIBLE FOR THE ACCURACY OR COMPLETENESS OF SCANNED COPIES OF THIS PLAN SHEET.

NOTES:

1. FOR ACCURATE RIGHT OF WAY DATA, CONTACT RIGHT OF WAY ENGINEERING AT THE DISTRICT OFFICE.
2. EXACT LOCATION OF Temp FENCE (TYPE ESA) PLACEMENT IS TO BE DETERMINED BY THE ENGINEER.
3. ADJUST GUARDRAIL BY RAISING RAIL ELEMENT AND BLOCK ON Exist WOOD POST TO 29".
4. SEE SHEETS X-1 AND X-2 FOR Exist AND PROPOSED STRUCTURAL SECTIONS.

LEGEND:

FAILED AREA

SPECIES PROTECTION AREA 2

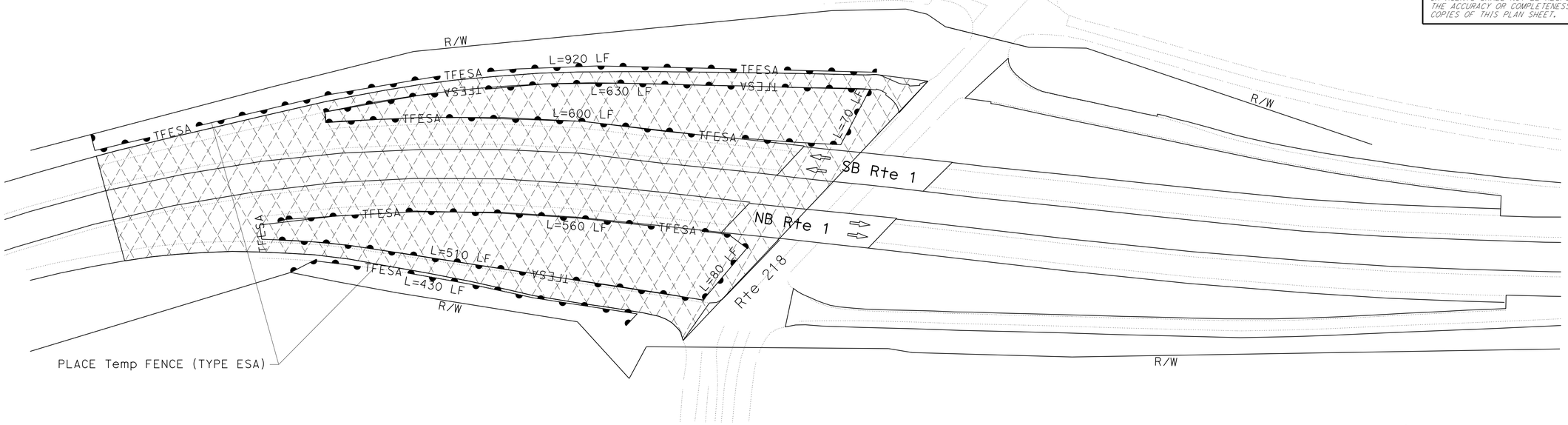

Rte 1/218 SEPARATION, PM R79.25
TEMPORARY FENCE (TYPE ESA)

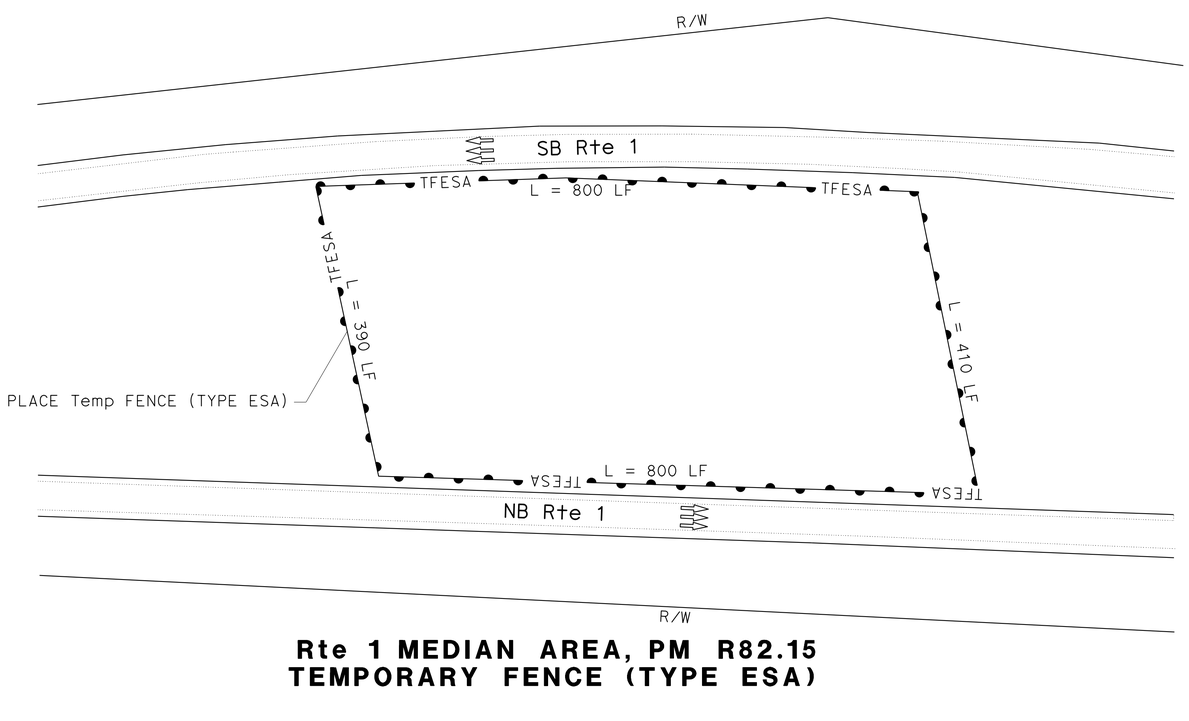

Rte 1 MEDIAN AREA, PM R82.15
TEMPORARY FENCE (TYPE ESA)

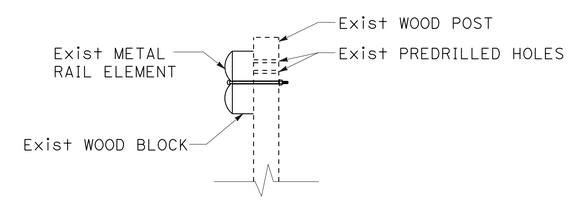

ADJUST GUARDRAIL DETAIL
SEE NOTE 3.

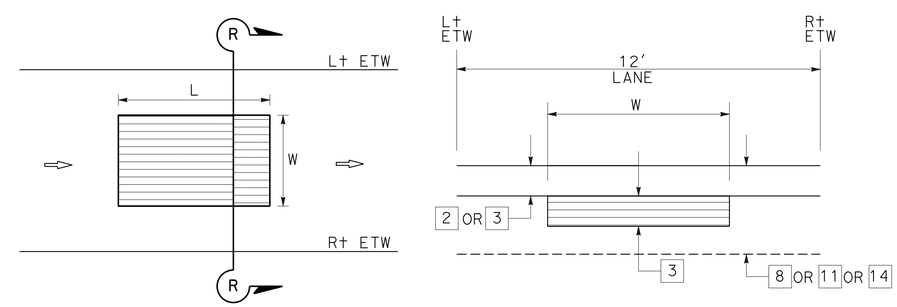

PLAN

SECTION R-R

REPAIR FAILED AREAS DETAIL
SEE NOTE 4.

CONSTRUCTION DETAILS
NO SCALE

C-14

STATE OF CALIFORNIA - DEPARTMENT OF TRANSPORTATION
Caltrans
DESIGN

FUNCTIONAL SUPERVISOR: JOHN H. FOUCHE
CALCULATED-DESIGNED BY: WESLEY C. THOMPSON
CHECKED BY: ASHRAF M. RAHIM
REVISED BY
DATE REVISED

LAST REVISION 03-20-15
DATE PLOTTED => 13-APR-2015
TIME PLOTTED => 14:48

Dist	COUNTY	ROUTE	POST MILES TOTAL PROJECT	SHEET No.	TOTAL SHEETS
05	Mon	1	R77.6/R85.3	18	101

Wesley Thompson 3-20-15
REGISTERED CIVIL ENGINEER DATE

3-23-15
PLANS APPROVAL DATE

REGISTERED PROFESSIONAL ENGINEER WESLEY C. THOMPSON No. 74952 Exp. 12/31/15 CIVIL STATE OF CALIFORNIA

THE STATE OF CALIFORNIA OR ITS OFFICERS OR AGENTS SHALL NOT BE RESPONSIBLE FOR THE ACCURACY OR COMPLETENESS OF SCANNED COPIES OF THIS PLAN SHEET.

NOTES:

1. FOR DETAILS NOT SHOWN, SEE STANDARD PLAN D87A.
2. PLACE HMA DIKE FROM BRIDGE RAIL TO THE FACE OF CONCRETE BARRIER (TRANSITION). SEE SHEET Q-4 FOR HMA DIKE LOCATIONS.

LEGEND:

HMA (MISCELLANEOUS AREA)

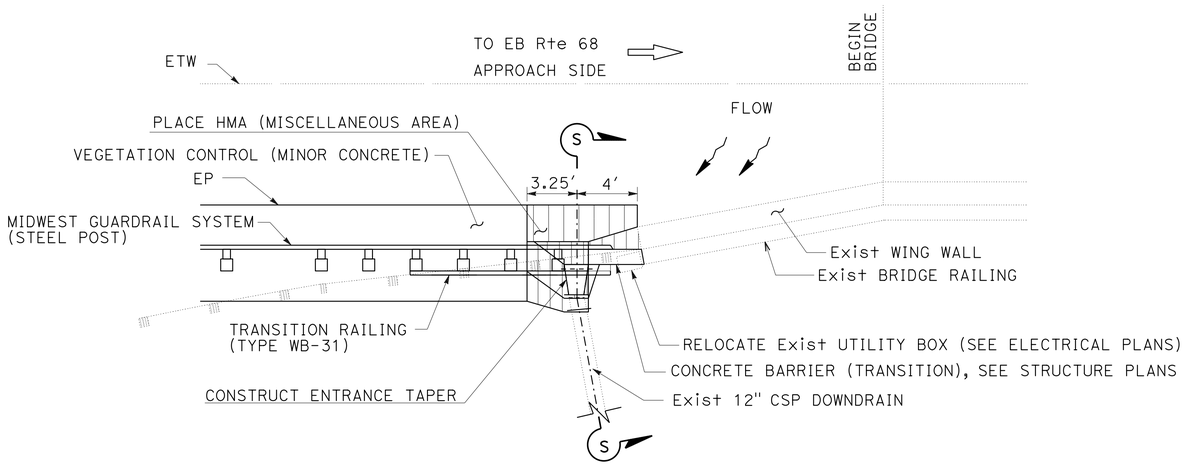

DRAINAGE FACILITY - LOCATION 1
W68-S1, S1-E68 CONNECTOR (Br No. 44-0149E), PM R78.12

SEE NOTES 1 AND 2.

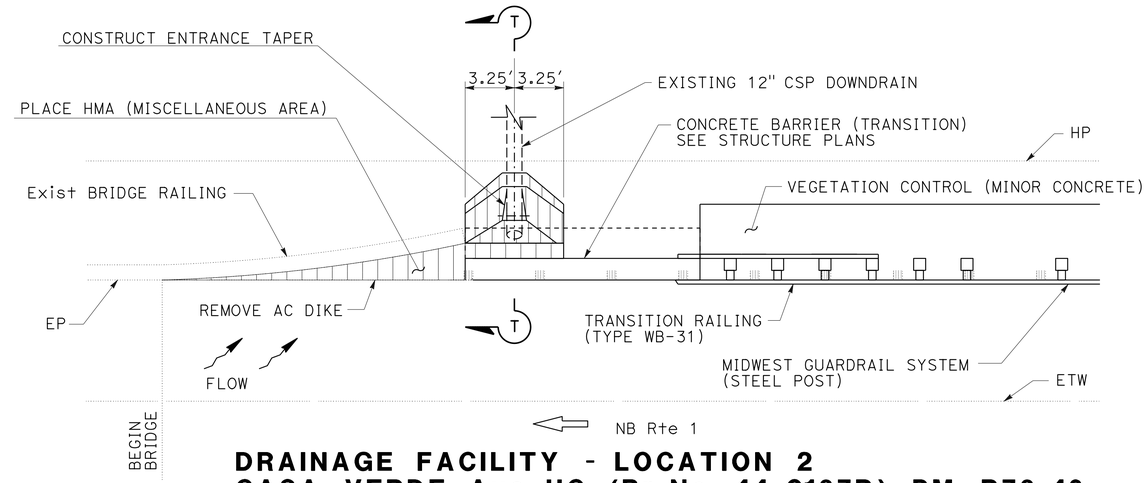

DRAINAGE FACILITY - LOCATION 2
CASA VERDE Ave UC (Br No. 44-0187R), PM R78.46

SEE NOTES 1 AND 2.

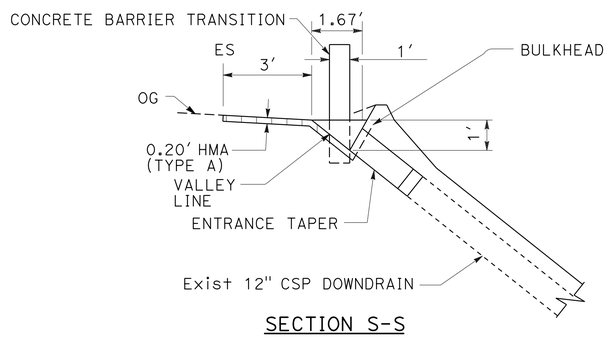

SECTION S-S

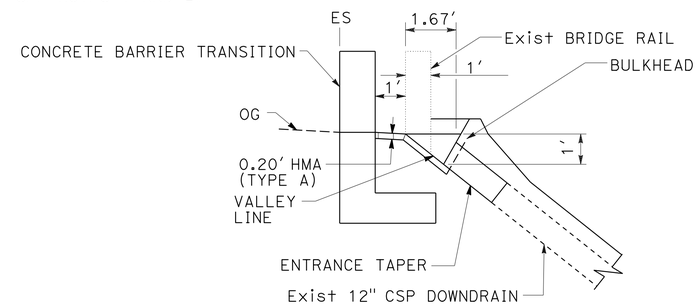

SECTION T-T

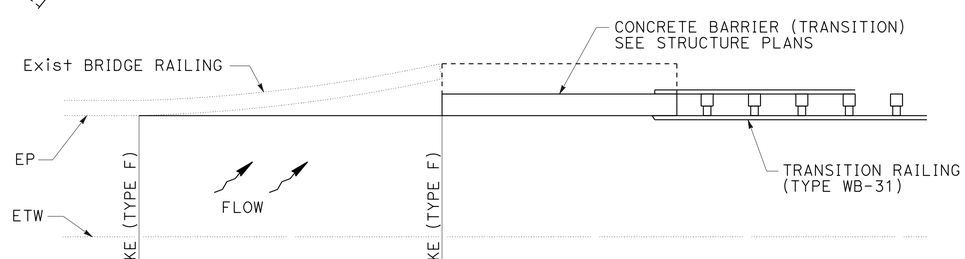

PLACE HOT MIX ASPHALT DIKE (TYPE F) DETAIL

SEE NOTE 3.

CONSTRUCTION DETAILS
NO SCALE

C-15

STATE OF CALIFORNIA - DEPARTMENT OF TRANSPORTATION
Caltrans® DESIGN
FUNCTIONAL SUPERVISOR: JOHN H. FOUCHE
CALCULATED-DESIGNED BY: WESLEY C. THOMPSON
CHECKED BY: ASHRAF M. RAHIM
REVISED BY / DATE REVISED

LAST REVISION 03-20-15 | DATE PLOTTED => 27-MAR-2015 | TIME PLOTTED => 11:07

Dist	COUNTY	ROUTE	POST MILES TOTAL PROJECT	SHEET No.	TOTAL SHEETS
05	Mon	1	R77.6/R85.3	19	101

Wesley Thompson 3-20-15
REGISTERED CIVIL ENGINEER DATE

3-23-15
PLANS APPROVAL DATE

REGISTERED PROFESSIONAL ENGINEER WESLEY C. THOMPSON No. 74952 Exp.12/31/15 CIVIL STATE OF CALIFORNIA

THE STATE OF CALIFORNIA OR ITS OFFICERS OR AGENTS SHALL NOT BE RESPONSIBLE FOR THE ACCURACY OR COMPLETENESS OF SCANNED COPIES OF THIS PLAN SHEET.

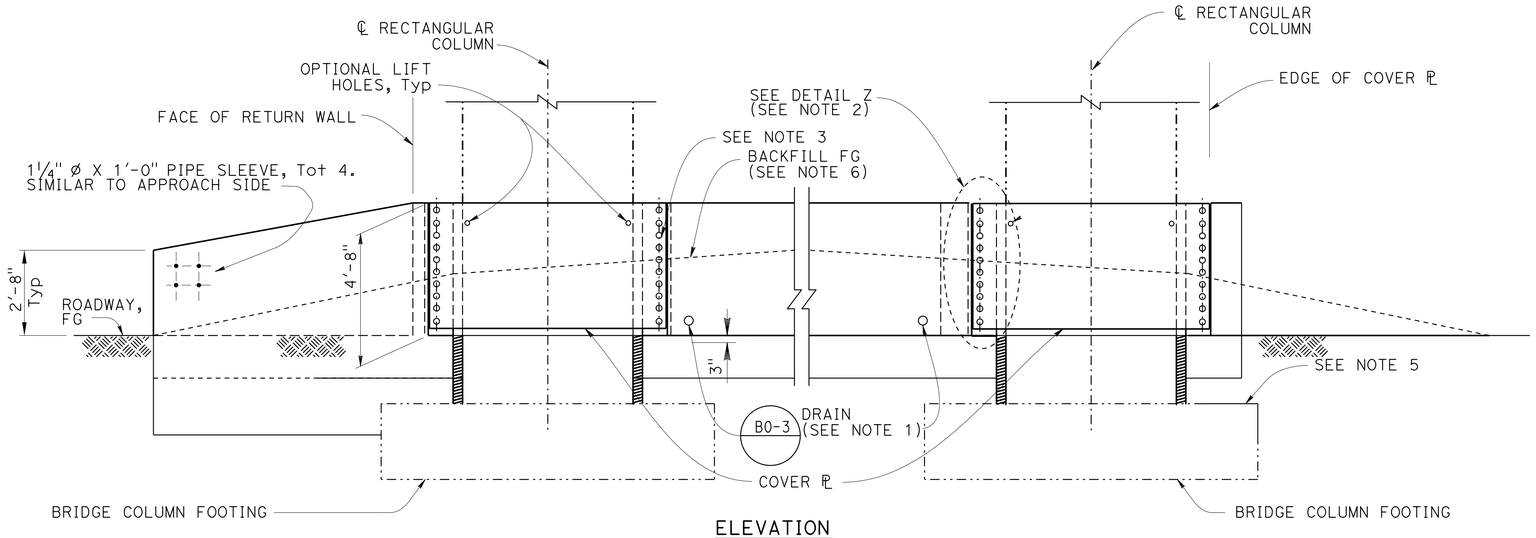

ELEVATION

A77U1 A77U2 A77U4

NOTES:

1. 4" Ø DRAINS AT 9'-0" CENTER TO CENTER.
2. FOR "DETAIL X", "DETAIL Y", "DETAIL Z", "TABLE 1", "ALTERNATIVE ANCHORAGE" AND "BACKFILL DETAILS, SEE SHEET C-17.
3. ALL PLATES AND CONNECTIONS MUST BE GALVANIZED.
4. MAINTAIN 4" (Min) GAP TO EXISTING STRUCTURE.
5. WHERE EXISTING BRIDGE FOOTING IS ENCOUNTERED, APPLY BOND BREAKER BETWEEN BRIDGE FOOTING AND NEW STRUCTURE.
6. SLOPE BACKFILL TO DRAIN.

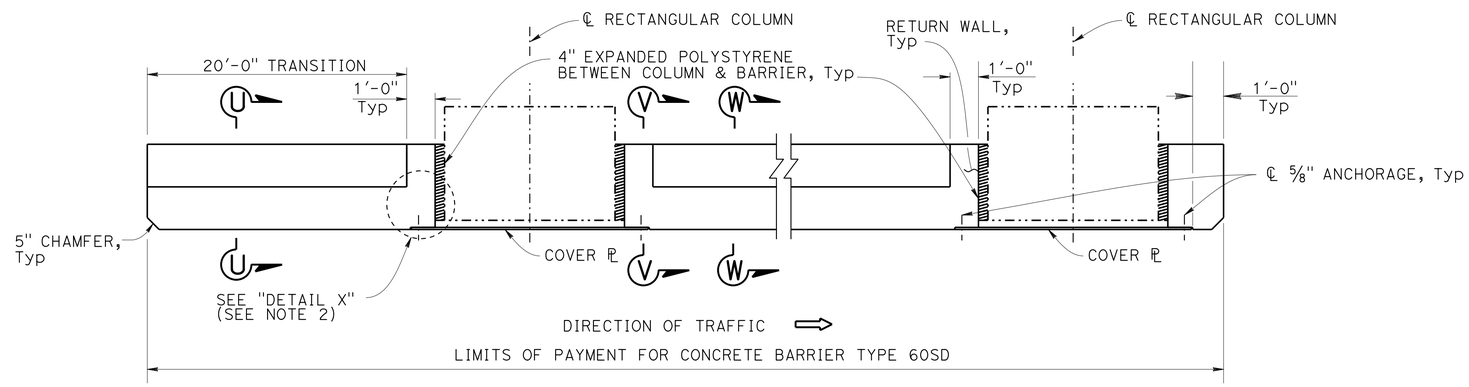

PLAN

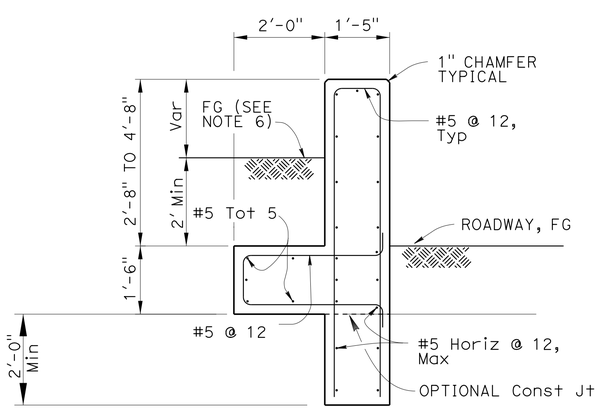

SECTION U-U

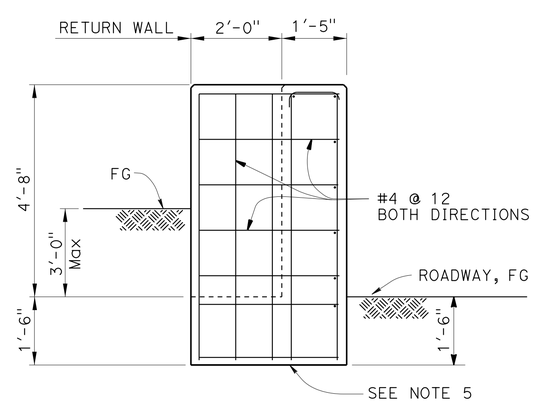

SECTION V-V

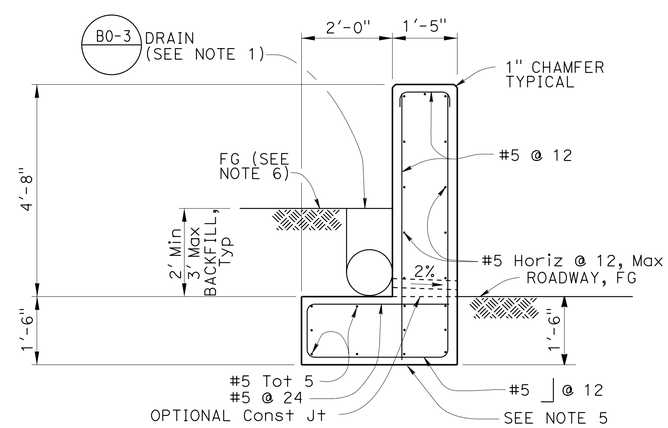

SECTION W-W

CONCRETE BARRIER (TYPE 60SD)

Rte 68 TO Rte 1 ON RAMP Lt, NB (PM R78.16)

CONSTRUCTION DETAILS

NO SCALE

C-16

STATE OF CALIFORNIA - DEPARTMENT OF TRANSPORTATION
Caltrans DESIGN

FUNCTIONAL SUPERVISOR: JOHN H. FOUCHE
CALCULATED-DESIGNED BY: WESLEY C. THOMPSON
CHECKED BY: ASHRAF M. RAHIM
REVISED BY
DATE REVISED

LAST REVISION 03-20-15
DATE PLOTTED => 27-MAR-2015
TIME PLOTTED => 11:07

Dist	COUNTY	ROUTE	POST MILES TOTAL PROJECT	SHEET No.	TOTAL SHEETS
05	Mon	1	R77.6/R85.3	20	101

Wesley Thompson 3-20-15
REGISTERED CIVIL ENGINEER DATE

3-23-15
PLANS APPROVAL DATE

REGISTERED PROFESSIONAL ENGINEER
WESLEY C. THOMPSON
No. 74952
Exp. 12/31/15
CIVIL
STATE OF CALIFORNIA

THE STATE OF CALIFORNIA OR ITS OFFICERS OR AGENTS SHALL NOT BE RESPONSIBLE FOR THE ACCURACY OR COMPLETENESS OF SCANNED COPIES OF THIS PLAN SHEET.

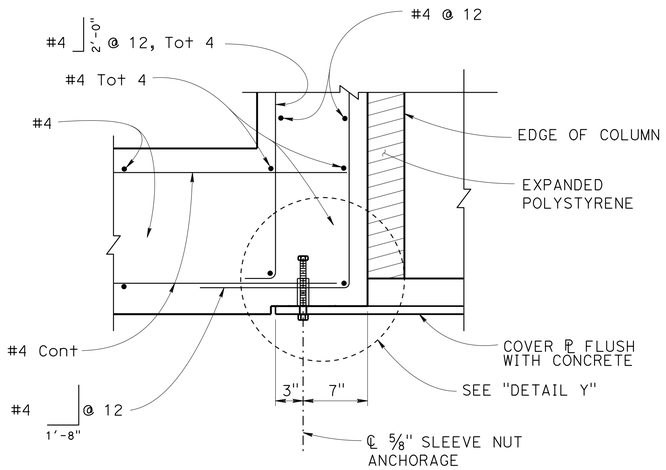

DETAIL X

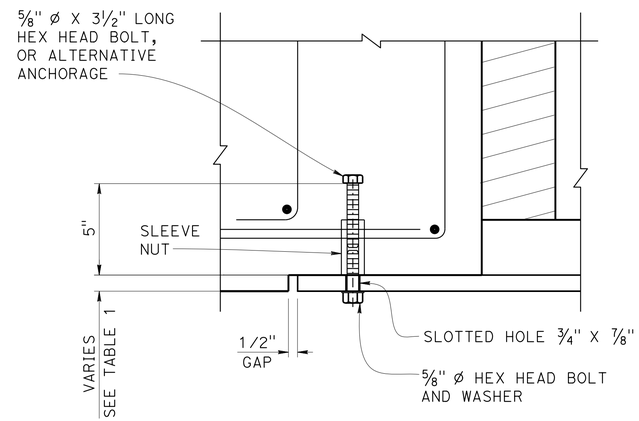

DETAIL Y

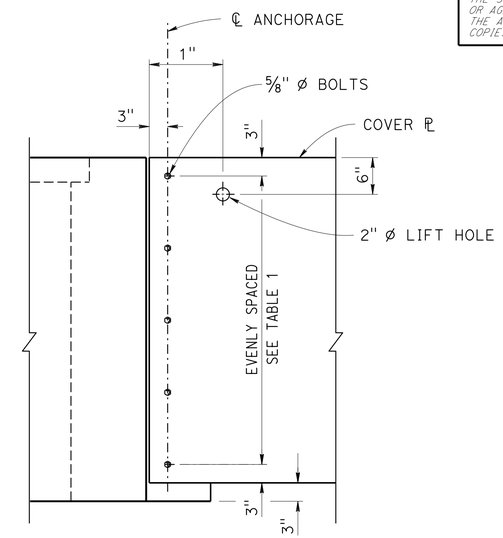

DETAIL Z

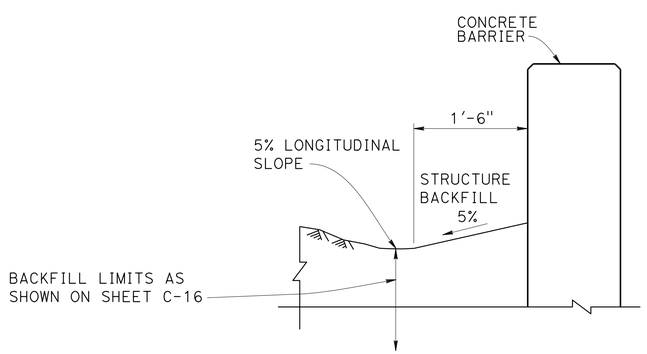

BACKFILL DETAIL

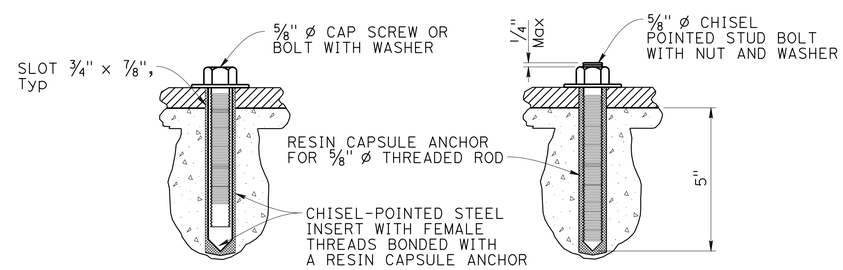

ALTERNATIVE A **ALTERNATIVE B**

ALTERNATIVE ANCHORAGE

TABLE 1		
L (ft)	PLATE THICKNESS (in)	TOTAL No. OF BOLTS
8'-6" Max	7/8	10
6'-6" Max	11/16	7
4'-6" Max	7/16	5

NOTE:
STRUCTURAL STEEL, f_y = 50,000 psi UNLESS OTHERWISE NOTED.

CONCRETE BARRIER (TYPE 60SD)
Rte 68 TO Rte 1 ON RAMP Lt, NB (PM R78.16)

CONSTRUCTION DETAILS
NO SCALE **C-17**

STATE OF CALIFORNIA - DEPARTMENT OF TRANSPORTATION
Caltrans® DESIGN
FUNCTIONAL SUPERVISOR: JOHN H. FOUCHE
CALCULATED-DESIGNED BY: WESLEY C. THOMPSON
CHECKED BY: ASHRAF M. RAHIM
REVISED BY / DATE REVISED

LAST REVISION 03-20-15 | DATE PLOTTED => 27-MAR-2015 | TIME PLOTTED => 11:07

Dist	COUNTY	ROUTE	POST MILES TOTAL PROJECT	SHEET No.	TOTAL SHEETS
05	Mon	1	R77.6/R85.3	21	101

Wesley Thompson 3-20-15
REGISTERED CIVIL ENGINEER DATE

3-23-15
PLANS APPROVAL DATE

REGISTERED PROFESSIONAL ENGINEER
WESLEY C. THOMPSON
No. 74952
Exp.12/31/15
CIVIL
STATE OF CALIFORNIA

THE STATE OF CALIFORNIA OR ITS OFFICERS OR AGENTS SHALL NOT BE RESPONSIBLE FOR THE ACCURACY OR COMPLETENESS OF SCANNED COPIES OF THIS PLAN SHEET.

NOTES:

1. LOCATION OF CONSTRUCTION AREA SIGNS ARE APPROXIMATE. EXACT LOCATIONS WILL BE DETERMINED BY THE ENGINEER.
2. FOR ADDITIONAL CONSTRUCTION AREA SIGNS, SEE TRAFFIC HANDLING PLANS.

STATIONARY MOUNTED CONSTRUCTION AREA SIGNS

SIGN No.	SIGN CODE		PANEL SIZE	SIGN MESSAGE	No. OF POSTS AND SIZE	No. OF SIGNS
	FEDERAL	CALIFORNIA				
A	W20-1		48" x 48"	ROAD WORK AHEAD	1 - 4" x 6"	2
B	G20-2	C14	36" x 18"	END ROAD WORK	1 - 4" x 4"	2
C	W20-1	C23	36" x 36"	ROAD WORK AHEAD	1 - 4" x 4"	14

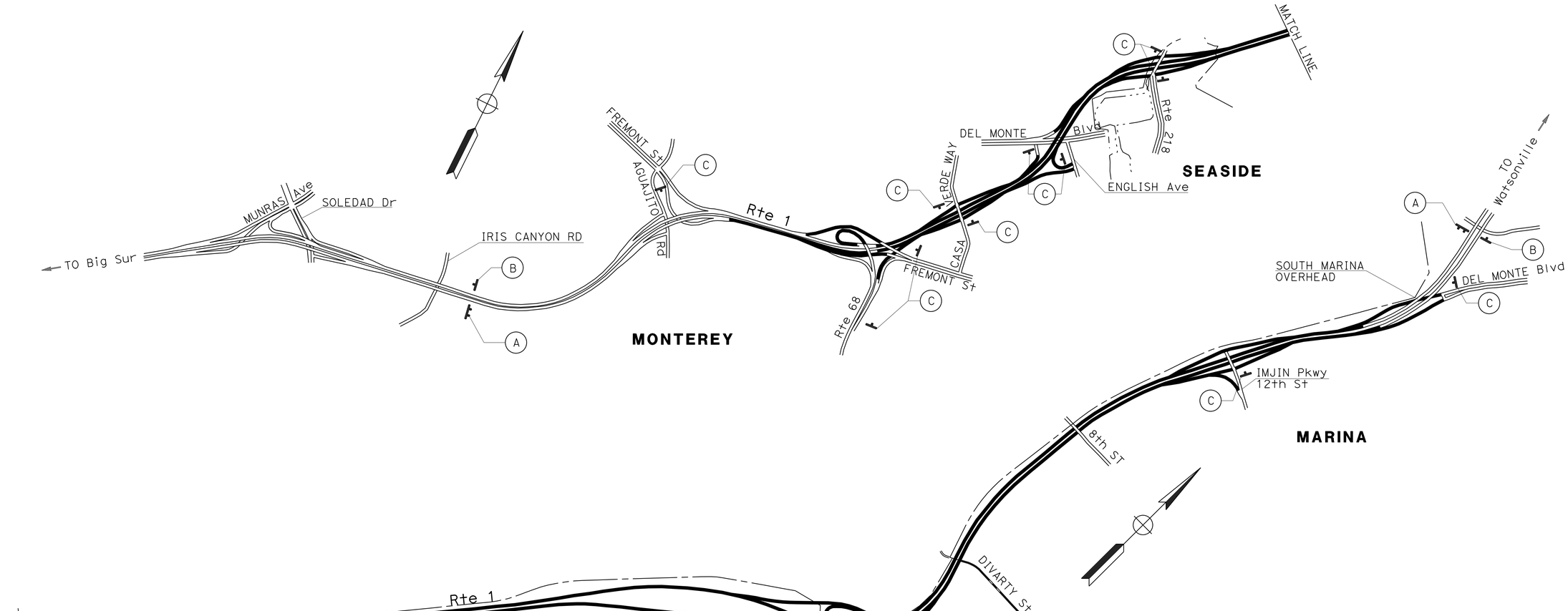

APPROVED FOR CONSTRUCTION AREA SIGN WORK ONLY

CONSTRUCTION AREA SIGNS

NO SCALE

CS-1

STATE OF CALIFORNIA - DEPARTMENT OF TRANSPORTATION
Caltrans®
DESIGN

FUNCTIONAL SUPERVISOR: JOHN H. FOUCHE
CALCULATED-DESIGNED BY: WESLEY C. THOMPSON
CHECKED BY: ASHRAF M. RAHIM
REVISED BY
DATE REVISED

LAST REVISION 03-20-15
DATE PLOTTED => 27-MAR-2015
TIME PLOTTED => 11:07

Dist	COUNTY	ROUTE	POST MILES TOTAL PROJECT	SHEET No.	TOTAL SHEETS
05	Mon	1	R77.6/R85.3	22	101

Wesley Thompson 3-20-15
REGISTERED CIVIL ENGINEER DATE

3-23-15
PLANS APPROVAL DATE

REGISTERED PROFESSIONAL ENGINEER WESLEY C. THOMPSON No. 74952 Exp. 12/31/15 CIVIL STATE OF CALIFORNIA

THE STATE OF CALIFORNIA OR ITS OFFICERS OR AGENTS SHALL NOT BE RESPONSIBLE FOR THE ACCURACY OR COMPLETENESS OF SCANNED COPIES OF THIS PLAN SHEET.

NOTE:

1. EXACT LOCATION OF SIGNS WILL BE DETERMINED BY THE ENGINEER.

LEGEND:

- WORK AREA
- CHANNELIZER (SURFACE MOUNTED)
- Temp CRASH CUSHION MODULE

STATIONARY MOUNTED CONSTRUCTION AREA SIGNS (TRAFFIC HANDLING)

SIGN No. (X)	SIGN CODE FEDERAL	SIGN CODE CALIFORNIA	PANEL SIZE	SIGN MESSAGE	NUMBER OF POSTS AND SIZE	NUMBER OF SIGNS
(D)		C30A	48" x 48"	SHOULDER CLOSED	1 - 4" x 6"	16
(E)	W21-5b		48" x 48"	RIGHT SHOULDER CLOSED 1500'	1 - 4" x 6"	12
(F)	W21-5b		48" x 48"	LEFT SHOULDER CLOSED 1500'	1 - 4" x 6"	4
(G)	W21-5		48" x 48"	SHOULDER WORK	1 - 4" x 6"	16

TRAFFIC HANDLING QUANTITIES

CHANNELIZER (SURFACE MOUNTED)	TEMPORARY CRASH CUSHION MODULE	TEMPORARY RAILING (TYPE K)
EA	EA	LF
160	252	2,320

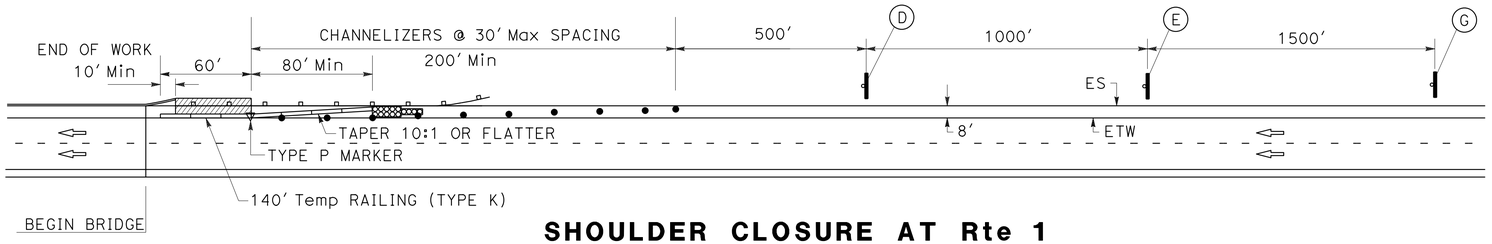

SHOULDER CLOSURE AT Rte 1

CASA VERDE Ave UC
DEL MONTE Ave UC
ROUTE 1/218 SEPARATION
SAND CITY UC
ORD VILLAGE UC

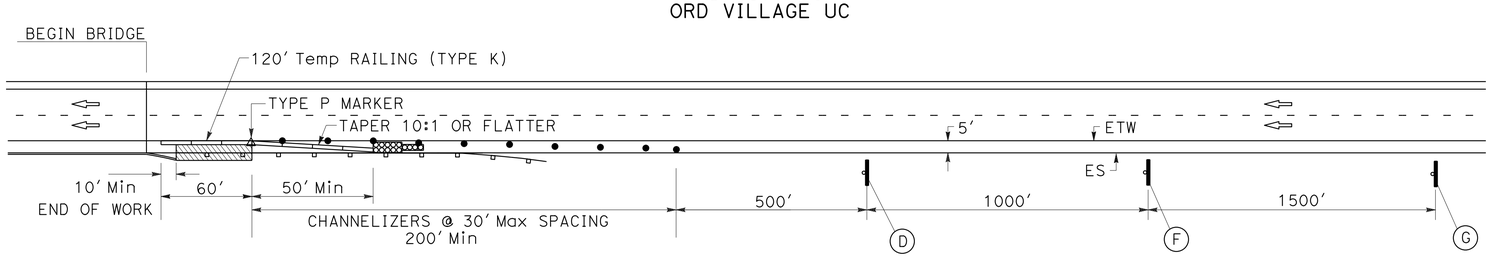

SHOULDER CLOSURE AT RAMPS

FREMONT St NB OFF RAMP
WB Rte 68 TO NB Rte 1 ON RAMP
DEL MONTE Ave SB OFF RAMP
ORD VILLAGE NB OFF RAMP

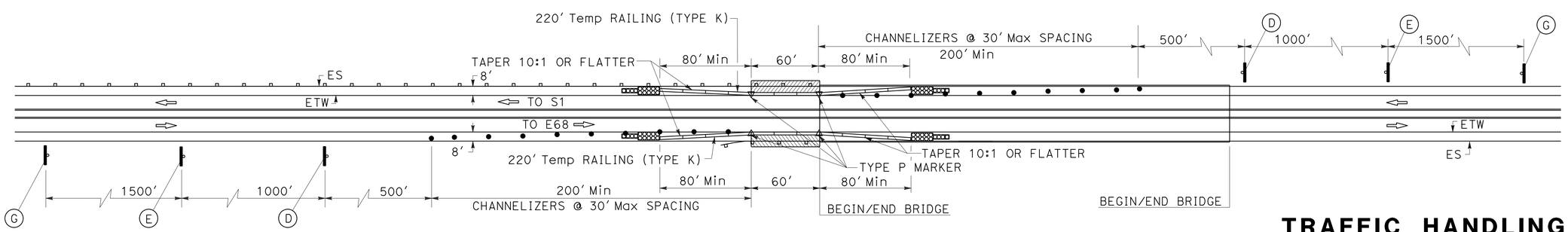

SHOULDER CLOSURES AT S1-E68, W68-S1 CONNECTOR

TRAFFIC HANDLING PLAN AND QUANTITIES

NO SCALE

TH-1

STATE OF CALIFORNIA - DEPARTMENT OF TRANSPORTATION
DESIGN
FUNCTIONAL SUPERVISOR: JOHN H. FOUCHE
CALCULATED-DESIGNED BY: WESLEY C. THOMPSON
CHECKED BY: ASHRAF M. RAHIM
REVISED BY
DATE REVISED

LAST REVISION 03-20-15
DATE PLOTTED => 27-MAR-2015
TIME PLOTTED => 11:07

Dist	COUNTY	ROUTE	POST MILES TOTAL PROJECT	SHEET No.	TOTAL SHEETS
05	Mon	1	R77.6/R85.3	23	101

Wesley Thompson 3-20-15
REGISTERED CIVIL ENGINEER DATE

3-23-15
PLANS APPROVAL DATE

REGISTERED PROFESSIONAL ENGINEER WESLEY C. THOMPSON No. 74952 Exp. 12/31/15 CIVIL STATE OF CALIFORNIA

THE STATE OF CALIFORNIA OR ITS OFFICERS OR AGENTS SHALL NOT BE RESPONSIBLE FOR THE ACCURACY OR COMPLETENESS OF SCANNED COPIES OF THIS PLAN SHEET.

PAVEMENT DELINEATION

LOCATION		DIRECTION	DETAIL No.	4" THERMOPLASTIC TRAFFIC STRIPE WHITE LF	4" THERMOPLASTIC TRAFFIC STRIPE YELLOW LF	4" THERMOPLASTIC TRAFFIC STRIPE (BROKEN 36-12) WHITE LF	8" THERMOPLASTIC TRAFFIC STRIPE WHITE LF	8" THERMOPLASTIC TRAFFIC STRIPE (BROKEN 12-3) WHITE LF	PAVEMENT MARKER (RETROREFLECTIVE) TYPE C EA	PAVEMENT MARKER (RETROREFLECTIVE) TYPE G EA	PAVEMENT MARKER (RETROREFLECTIVE) TYPE H EA	PAVEMENT MARKER (NON-REFLECTIVE) TYPE A EA	THERMOPLASTIC PAVEMENT MARKING SQFT	DESCRIPTION/ COMMENTS
MAINLINE ROUTE 1	PM R77.60 TO R85.02	NB	11/13			55,770				1163		4,652		
			25A		39,190						1,633			
	PM R77.93 TO R78.23	NB	27B	1,585										
	PM R78.36 TO R78.56	NB	27B	1,060										
	PM R78.70 TO R78.83	NB	27B	690										
	PM R79.21 TO R79.49	NB	27B	1,480										
	PM R79.73 TO R80.40	NB	27B	3,540										
	PM R80.51 TO R80.83	NB	27B	1,690										
	PM R81.17 TO R82.67	NB	27B	7,920										
	PM R82.83 TO R83.04	NB	27B	1,110										
	PM R83.27 TO R84.23	NB	27B	5,070										
	PM R84.31 TO R84.64	NB	27B	1,745										
	PM R84.82 TO R84.95	NB	27B	690										
	PM R84.31 TO R84.82	NB	37					2,695	180	2				
													96	AERIAL PATROL MARKING
	PM R78.13 TO R84.99	SB	11/13			54,290				1132		4,528		
			25A		36,230						1,510			
	PM R78.37 TO R78.57	SB	27B	1,060										
	PM R78.73 TO R78.90	SB	27B	900										
	PM R79.22 TO R79.49	SB	27B	1,425										
	PM R79.61 TO R80.35	SB	27B	900										
	PM R78.73 TO R78.90	SB	27B	3,910										
	PM R80.55 TO R80.93	SB	27B	2,010										
	PM R81.19 TO R82.24	SB	27B	5,545										
	PM R82.46 TO R82.77	SB	27B	1,640										
	PM R82.92 TO R84.08	SB	27B	6,125										
	PM R84.34 TO R84.66	SB	27B	1,690										
	PM R81.19 TO R81.49	SB	37					1,585	106	2				
													96	AERIAL PATROL MARKING
RAMPS / Aux LANES	S1-E68, W68-S1 CONNECTOR (PM R78.1)	NB ON RAMP FROM Rte 68	36A	115			160			7				
			25A		750						32			
			27B	950										
		WB Rte 68 TO FREMONT St												
			25A		535						23			
			27B	570										
													66	TYPE V ARROW
		NB Aux LANE TO Rte 68	36B	155			155			7				
			37/37A					1,165	78	6		311		
			11/13			1,315				29		110		
			27B	1,315										
		NB OFF RAMP TO Rte 68	36				565			25				
			27B	975										
		NB OFF RAMP TO FREMONT St	36				765			34				
			25A		1,315						55			
			11/13			685				15		58		
			12	1,005						21				
			27B	710										
SUBTOTAL				57,580	78,020	112,060	1,645	5,445	364	2,443	3,253	9,659	258	
TOTAL (THIS SHEET)				135,600		112,060	1,645	5,445	6,060			9,659	258	

ABBREVIATION:

AUXILIARY - Aux

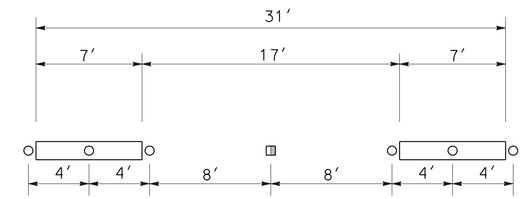

DETAIL No. 8/10

SEE Std PLAN A20A FOR MORE INFORMATION.

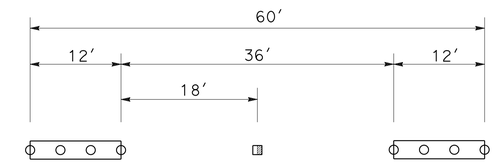

DETAIL No. 11/13

SEE Std PLAN A20A FOR MORE INFORMATION.

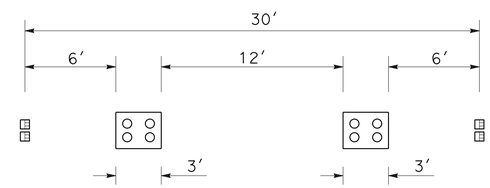

DETAIL No. 37/37A

SEE Std PLAN A20C FOR MORE INFORMATION.

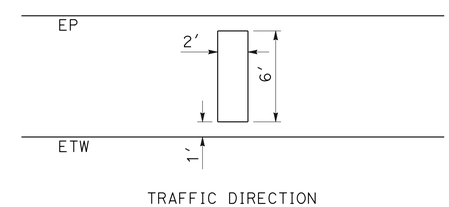

AERIAL PATROL MARKING

PAVEMENT DELINEATION DETAILS AND QUANTITIES

PDQ-1

STATE OF CALIFORNIA - DEPARTMENT OF TRANSPORTATION
Caltrans DESIGN
FUNCTIONAL SUPERVISOR: JOHN H. FOUCHE
CALCULATED-DESIGNED BY: WESLEY C. THOMPSON
CHECKED BY: ASHRAF M. RAHIM
REVISED BY / DATE REVISED

LAST REVISION 03-20-15 | DATE PLOTTED => 27-MAR-2015 | TIME PLOTTED => 11:07

Dist	COUNTY	ROUTE	POST MILES TOTAL PROJECT	SHEET No.	TOTAL SHEETS
05	Mon	1	R77.6/R85.3	24	101

Wesley Thompson 3-20-15
REGISTERED CIVIL ENGINEER DATE

3-23-15
PLANS APPROVAL DATE

REGISTERED PROFESSIONAL ENGINEER WESLEY C. THOMPSON No. 74952 Exp.12/31/15 CIVIL STATE OF CALIFORNIA

THE STATE OF CALIFORNIA OR ITS OFFICERS OR AGENTS SHALL NOT BE RESPONSIBLE FOR THE ACCURACY OR COMPLETENESS OF SCANNED COPIES OF THIS PLAN SHEET.

PAVEMENT DELINEATION

LOCATION		DIRECTION	DETAIL No.	4" THERMOPLASTIC TRAFFIC STRIPE WHITE LF	4" THERMOPLASTIC TRAFFIC STRIPE YELLOW LF	4" THERMOPLASTIC TRAFFIC STRIPE (BROKEN 36-12) WHITE LF	8" THERMOPLASTIC TRAFFIC STRIPE WHITE LF	8" THERMOPLASTIC TRAFFIC STRIPE (BROKEN 12-3) WHITE LF	PAVEMENT MARKER (RETROREFLECTIVE) TYPE C EA	PAVEMENT MARKER (RETROREFLECTIVE) TYPE G EA	PAVEMENT MARKER (RETROREFLECTIVE) TYPE H EA	PAVEMENT MARKER (NON-REFLECTIVE) TYPE A EA	THERMOPLASTIC PAVEMENT MARKING SQFT	DESCRIPTION/ COMMENTS
RAMPS / Aux LANES	S1-E68, W68-S1 CONNECTOR (PM R78.1)	SB ON RAMP FROM Rte 68	27B	1,630										
			27		560						12			
			11/13			550				12		46		
			25A		680						29			
													50	TYPE I 18' ARROW
		SB ON RAMP FROM FREMONT St	27B	545										
			27		895						19			
													50	TYPE I 18' ARROW
													860	HASH LINE
		SB OFF RAMP TO Rte 68	27		545						12			
			25A		680						29			
			27B	1,170										
													99	TYPE V ARROW
	Rte 68 TO CASA VERDE Aux LANE (PM R78.3)	NB	37					285	20	2				
			27B	195										
	CASA VERDE TO Rte 68 Aux LANE (PM R78.2)	SB	37					795	34	2				
			27B	790										
	CASA VERDE Ave UC (PM R78.45)	NB OFF RAMP	36				545			25				
			25A		460						20			
			27B	740										
			9	190						5				
													15	TYPE IV (L) ARROW
													15	TYPE IV (R) ARROW
													66	TYPE V ARROW
													66	STOP
													31	AHEAD
													130	CROSSWALK
		SB OFF RAMP	36				610			28				
			27B	925										
			25A		615						26			
			9	155						5				
													15	TYPE IV (L) ARROW
													15	TYPE IV (R) ARROW
													66	TYPE V ARROW
													66	STOP
													31	AHEAD
													120	CROSSWALK
		NB ON RAMP	36A	185			185			8				
			27B	780										
			25A		590						25			
													31	TYPE I 24' ARROW
													96	CROSSWALK
		SB ON RAMP	36A	260			265			12				
			27B	910										
			25A		430						18			
			8	220									25	TYPE I 18' ARROW
													100	CROSSWALK
	CASA VERDE Ave UC TO DEL MONTE Ave UC Aux LANE (PM R78.62)	NB	37					275	20	2				
			27B	270										
	DEL MONTE Ave UC TO CASA VERDE Ave UC Aux LANE (PM R78.65)	SB	37					275	20	2				
			27B	270										
SUBTOTAL				9,235	5,455	550	1,605	1,630	94	103	190	46	1,947	
TOTAL (THIS SHEET)				14,690		550	1,605	1,630	387			46	1,947	

PAVEMENT DELINEATION QUANTITIES

PDQ-2

STATE OF CALIFORNIA - DEPARTMENT OF TRANSPORTATION
Caltrans DESIGN

FUNCTIONAL SUPERVISOR: JOHN H. FOUCHE
CALCULATED-DESIGNED BY: WESLEY C. THOMPSON
CHECKED BY: ASHRAF M. RAHIM
REVISED BY
DATE REVISED

LAST REVISION 03-20-15
DATE PLOTTED => 27-MAR-2015
TIME PLOTTED => 11:07

PAVEMENT DELINEATION

Dist	COUNTY	ROUTE	POST MILES TOTAL PROJECT	SHEET No.	TOTAL SHEETS
05	Mon	1	R77.6/R85.3	25	101

Wesley Thompson 3-20-15
REGISTERED CIVIL ENGINEER DATE

3-23-15
PLANS APPROVAL DATE

REGISTERED PROFESSIONAL ENGINEER WESLEY C. THOMPSON No. 74952 Exp.12/31/15 CIVIL STATE OF CALIFORNIA

THE STATE OF CALIFORNIA OR ITS OFFICERS OR AGENTS SHALL NOT BE RESPONSIBLE FOR THE ACCURACY OR COMPLETENESS OF SCANNED COPIES OF THIS PLAN SHEET.

	LOCATION	DIRECTION	DETAIL No.	4" THERMOPLASTIC TRAFFIC STRIPE WHITE LF	4" THERMOPLASTIC TRAFFIC STRIPE YELLOW LF	8" THERMOPLASTIC TRAFFIC STRIPE WHITE LF	8" THERMOPLASTIC TRAFFIC STRIPE (BROKEN 12-3) WHITE LF	PAVEMENT MARKER (RETROREFLECTIVE) TYPE C EA	PAVEMENT MARKER (RETROREFLECTIVE) TYPE G EA	PAVEMENT MARKER (RETROREFLECTIVE) TYPE H EA	PAVEMENT MARKER (NON-REFLECTIVE) TYPE A EA	THERMOPLASTIC PAVEMENT MARKING SQFT	DESCRIPTION/ COMMENTS
RAMPS / Aux LANES	DEL MONTE Ave UC (PM R78.90)	NB OFF RAMP	36			600			27				
			25A		795					35			
			27B	1,075									
			13						4		12		
												84	TYPE III (R) ARROW
												84	TYPE III (L) ARROW
												66	TYPE V ARROW
												66	STOP
												31	AHEAD
												137	CROSSWALK
		NB ON RAMP	36B	130		130			6				
			25A		675					29			
			27B	915									
												75	TYPE I 18' ARROW
												130	CROSSWALK
		SB OFF RAMP	36			740			33				
			25A		815					34			
			27B	830									
		SB ON RAMP	36A	155		160			8				
			25A		355					15			
			27B	605									
			8	115									
												66	TYPE V ARROW
	DEL MONTE Ave UC TO Rte 218 Aux LANE (PM R79.05)	NB	37				1,510	102	2				
			27B	270									
	Rte 218 TO DEL MONTE Ave UC Aux LANE (PM R79.10)	SB	37				795	54	2				
			27B	660									
	Rte 1/218 SEPARATION (PM R79.35)	NB OFF RAMP	36			570			26				
			25A		530					23			
			27B	795									
			38			190			9				
												15	TYPE IV (R) ARROW
												15	TYPE IV (L) ARROW
												66	TYPE V ARROW
												66	STOP
												31	AHEAD
												100	CROSSWALK
		NB ON RAMP	36A	180		185			9				
			25A		865					37			
			27B	2,095									
			8	160									
												25	TYPE I 18' ARROW
		SB OFF RAMP	36			730			32				
			25A		635					27			
			27B	1210									
			8	100									
			38			100			5				
												90	TYPE II (L) ARROW
												84	TYPE III (R) ARROW
												33	TYPE V ARROW
												32	SIGNAL
												31	AHEAD
												145	PLACE LIMIT LINE AND NEW CROSSWALK
		SB ON RAMP	36A	155		160			8				
			25A		660					28			
			27B	865									
												31	TYPE I 24' ARROW
												45	CROSSWALK
SUBTOTAL				10,315	5,330	3,565	2,305	156	171	228	12	1,548	
TOTAL (THIS SHEET)				15,645		3,565	2,305	555			12	1,548	

PAVEMENT DELINEATION QUANTITIES

PDQ-3

STATE OF CALIFORNIA - DEPARTMENT OF TRANSPORTATION
Caltrans DESIGN

FUNCTIONAL SUPERVISOR: JOHN H. FOUCHE
CALCULATED-DESIGNED BY: WESLEY C. THOMPSON
CHECKED BY: ASHRAF M. RAHIM
REVISED BY
DATE REVISED

LAST REVISION 03-20-15
DATE PLOTTED => 27-MAR-2015
TIME PLOTTED => 11:07

Dist	COUNTY	ROUTE	POST MILES TOTAL PROJECT	SHEET No.	TOTAL SHEETS
05	Mon	1	R77.6/R85.3	26	101

Wesley Thompson 3-20-15
REGISTERED CIVIL ENGINEER DATE

3-23-15
PLANS APPROVAL DATE

REGISTERED PROFESSIONAL ENGINEER
WESLEY C. THOMPSON
No. 74952
Exp. 12/31/15
CIVIL
STATE OF CALIFORNIA

THE STATE OF CALIFORNIA OR ITS OFFICERS OR AGENTS SHALL NOT BE RESPONSIBLE FOR THE ACCURACY OR COMPLETENESS OF SCANNED COPIES OF THIS PLAN SHEET.

PAVEMENT DELINEATION

LOCATION		DIRECTION	DETAIL No.	4" THERMOPLASTIC TRAFFIC STRIPE		4" THERMOPLASTIC TRAFFIC STRIPE (BROKEN 36-12)	4" THERMOPLASTIC TRAFFIC STRIPE (BROKEN 17-7)	8" THERMOPLASTIC TRAFFIC STRIPE	8" THERMOPLASTIC TRAFFIC STRIPE (BROKEN 12-3)	PAVEMENT MARKER (RETROREFLECTIVE)				PAVEMENT MARKER (NON-REFLECTIVE)	THERMOPLASTIC PAVEMENT MARKING	DESCRIPTION/ COMMENTS
				WHITE	YELLOW	WHITE	WHITE	WHITE	WHITE	TYPE C	TYPE G	TYPE H	TYPE D	TYPE A		
				LF	LF	LF	LF	LF	LF	EA	EA	EA	EA	EA	SQFT	
RAMPS	ORD VILLAGE UC (PM R80.70)	NB OFF RAMP	36					680			30					
			25A		800							35				
			27B	1,315												
			38					355			16					
			10								17			90		
															75	TYPE I 18' ARROW
															135	TYPE II (L) ARROW
															126	TYPE III (R) ARROW
															66	TYPE V ARROW
															32	SIGNAL
															31	AHEAD
															70	LIMIT LINE
															354	RAILROAD CROSSING SYMBOL
		NB ON RAMP	25A		700							30				
			27B	2,470												
			36A	205				210			9					
			11			110										
			8				220									
															50	TYPE I 18' ARROW
		SB OFF RAMP	36					790			34					
			25A		1,260							53				
			27B	2,705												
			38					370			16					
			12	855							19					
			37						1,030	70	2					
															45	TYPE IV (R) ARROW
															30	TYPE IV (L) ARROW
															198	TYPE V ARROW
															64	SIGNAL
															62	AHEAD
															51	LIMIT LINE
		SB ON RAMP	36A	240				240			12					
			25A		315							14				
			27B	1,400												
			22		800								36			
			8				125									
															66	TYPE V ARROW
SUBTOTAL				9,190	3,875	110	345	2,645	1,030	70	155	132	36	90	1,455	
TOTAL (THIS SHEET)				13,065		110	345	2,645	1,030	393				90	1,455	

STATE OF CALIFORNIA - DEPARTMENT OF TRANSPORTATION
Caltrans
DESIGN

FUNCTIONAL SUPERVISOR: JOHN H. FOUCHE
CALCULATED-DESIGNED BY: WESLEY C. THOMPSON
CHECKED BY: ASHRAF M. RAHIM
REVISED BY
DATE REVISED

PAVEMENT DELINEATION QUANTITIES

PDQ-4

LAST REVISION 03-20-15
DATE PLOTTED => 27-MAR-2015
TIME PLOTTED => 11:07

Dist	COUNTY	ROUTE	POST MILES TOTAL PROJECT	SHEET No.	TOTAL SHEETS
05	Mon	1	R77.6/R85.3	27	101

Wesley Thompson 3-20-15
REGISTERED CIVIL ENGINEER DATE

3-23-15
PLANS APPROVAL DATE

REGISTERED PROFESSIONAL ENGINEER
WESLEY C. THOMPSON
No. 74952
Exp. 12/31/15
CIVIL
STATE OF CALIFORNIA

THE STATE OF CALIFORNIA OR ITS OFFICERS OR AGENTS SHALL NOT BE RESPONSIBLE FOR THE ACCURACY OR COMPLETENESS OF SCANNED COPIES OF THIS PLAN SHEET.

PAVEMENT DELINEATION

LOCATION		DIRECTION	DETAIL No.	4" THERMOPLASTIC TRAFFIC STRIPE		4" THERMOPLASTIC TRAFFIC STRIPE (BROKEN 17-7)	8" THERMOPLASTIC TRAFFIC STRIPE	PAVEMENT MARKER (RETROREFLECTIVE)			PAVEMENT MARKER (NON-REFLECTIVE)	THERMOPLASTIC PAVEMENT MARKING	DESCRIPTION/ COMMENTS
				WHITE	YELLOW	WHITE	WHITE	TYPE G	TYPE H	TYPE D	TYPE A		
				LF	LF	LF	LF	EA	EA	EA	EA	SQFT	
RAMPS	MAIN ENTRANCE OC (PM R82.90)	NB OFF RAMP	36				965	44					
			25A		725				31				
			27B	1,565									
			8/10			575		13			72		
												50	TYPE I 18' ARROW
												66	TYPE V ARROW
												128	SIGNAL
												124	AHEAD
		NB ON RAMP	36				190	10					
			36A	305			275	12					
			25A		695				29				
			27B	1,955									
			8			260							
												66	TYPE V ARROW
		SB OFF RAMP	36				855	38					
			25A		745				32				
			27B	2,455									
												32	SIGNAL
												31	AHEAD
												84	TYPE III (R) ARROW
												66	TYPE V ARROW
												54	SLOW TO 30
		SB ON RAMP	36A	235			245	11					
			25A		1,320				55				
			27B	3,495									
			29		3,820					82			
			8/10			1,500		32			192		
			8			295							
												132	TYPE V ARROW
												126	TYPE VI ARROW
												260	HASH LINE
SUBTOTAL				10,010	7,305	2,630	2,530	160	147	82	264	1,219	
TOTAL (THIS SHEET)				17,315		2,630	2,530	389			264	1,219	

PAVEMENT DELINEATION QUANTITIES PDQ-5

WESLEY C. THOMPSON	REVISED BY		
ASHRAF M. RAHIM	DATE REVISED		
CALCULATED-DESIGNED BY			
CHECKED BY			
FUNCTIONAL SUPERVISOR			
JOHN H. FOUCHE			

STATE OF CALIFORNIA - DEPARTMENT OF TRANSPORTATION
Caltrans®
DESIGN

LAST REVISION 03-20-15 | DATE PLOTTED => 27-MAR-2015 | TIME PLOTTED => 11:07

Dist	COUNTY	ROUTE	POST MILES TOTAL PROJECT	SHEET No.	TOTAL SHEETS
05	Mon	1	R77.6/R85.3	28	101

Wesley Thompson 3-20-15
REGISTERED CIVIL ENGINEER DATE

3-23-15
PLANS APPROVAL DATE

REGISTERED PROFESSIONAL ENGINEER
WESLEY C. THOMPSON
No. 74952
Exp. 12/31/15
CIVIL
STATE OF CALIFORNIA

THE STATE OF CALIFORNIA OR ITS OFFICERS OR AGENTS SHALL NOT BE RESPONSIBLE FOR THE ACCURACY OR COMPLETENESS OF SCANNED COPIES OF THIS PLAN SHEET.

PAVEMENT DELINEATION

LOCATION		DIRECTION	DETAIL No.	4" THERMOPLASTIC TRAFFIC STRIPE WHITE LF	4" THERMOPLASTIC TRAFFIC STRIPE YELLOW LF	4" THERMOPLASTIC TRAFFIC STRIPE (BROKEN 36-12) WHITE LF	4" THERMOPLASTIC TRAFFIC STRIPE (BROKEN 17-7) WHITE LF	8" THERMOPLASTIC TRAFFIC STRIPE WHITE LF	8" THERMOPLASTIC TRAFFIC STRIPE (BROKEN 12-3) WHITE LF	PAVEMENT MARKER (RETROREFLECTIVE) TYPE G EA	PAVEMENT MARKER (RETROREFLECTIVE) TYPE H EA	PAVEMENT MARKER (NON-REFLECTIVE) TYPE A EA	THERMOPLASTIC PAVEMENT MARKING SQFT	DESCRIPTION/ COMMENTS
RAMPS	NORTH ENTRANCE OC (PM R84.5)	NB OFF RAMP	36					520		24				
			25A		1,375						58			
			27B	1,815										
			38B					200		10				
													132	TYPE V ARROW
													44	STOP
													31	AHEAD
													20	LIMIT LINE
		NB ON RAMP	36A	245				250		11				
			38					150		7				
			25A		760						32			
			27B	1,775										
			8				235							
													62	TYPE I 24' ARROW
													42	TYPE III (R) ARROW
		SB OFF RAMP	36					500		24				
			25A		890						38			
			27B	1,425										
													45	TYPE II (L) ARROW
													99	TYPE V ARROW
													44	STOP
													31	AHEAD
													34	LIMIT LINE
		SB ON RAMP	36A	240				240		11				
			25A		765						35			
			27B	2,295										
			8				185							
			22		80						6			
													42	TYPE III (L) ARROW
													31	TYPE I 24' ARROW
													33	TYPE V ARROW
	SOUTH MARINA OH (PM R85.0)	NB OFF RAMP	38					880		37				
			36					695		30				
			25A		1,260						54			
			27B	2,380										
			11/13			1,440				31		124		
													84	TYPE III (L) ARROW
													132	TYPE V ARROW
													64	SIGNAL
													62	AHEAD
													22	ONLY
													213	HASH LINE
		SB ON RAMP	36A	370				380		16				
			25A		1,430						60			
			27B	3,965										
			11/13			720					16	60		
													126	TYPE VI ARROW
													351	HASH LINE
SUBTOTAL				14,510	6,560	2,160	420	3,815		201	299	184	1,744	
TOTAL (THIS SHEET)				21,070		2,160	420	3,815		500		184	1,744	
TOTAL (ALL SHEETS)				217,385		114,880	3,395	15,805	10,410	8,284		10,255	8,171	

PAVEMENT DELINEATION QUANTITIES PDQ-6

STATE OF CALIFORNIA - DEPARTMENT OF TRANSPORTATION
Caltrans DESIGN

FUNCTIONAL SUPERVISOR: JOHN H. FOUCHE
CALCULATED-DESIGNED BY: WESLEY C. THOMPSON
CHECKED BY: ASHRAF M. RAHIM
REVISED BY
DATE REVISED

LAST REVISION 03-20-15 | DATE PLOTTED => 27-MAR-2015 | TIME PLOTTED => 11:07

Dist	COUNTY	ROUTE	POST MILES TOTAL PROJECT	SHEET No.	TOTAL SHEETS
05	Mon	1	R77.6/R85.3	29	101

Wesley Thompson 3-20-15
REGISTERED CIVIL ENGINEER DATE

3-23-15
PLANS APPROVAL DATE

REGISTERED PROFESSIONAL ENGINEER WESLEY C. THOMPSON No. 74952 Exp.12/31/15 CIVIL STATE OF CALIFORNIA

THE STATE OF CALIFORNIA OR ITS OFFICERS OR AGENTS SHALL NOT BE RESPONSIBLE FOR THE ACCURACY OR COMPLETENESS OF SCANNED COPIES OF THIS PLAN SHEET.

PAVEMENT STRUCTURE

LOCATION			COLD PLANE ASPHALT CONCRETE PAVEMENT	SHOULDER BACKING	ASPHALTIC EMULSION (FOG SEAL COAT)	HOT MIX ASPHALT (TYPE A)	HOT MIX ASPHALT-OPEN GRADED (OPEN GRADED FRICTION COURSE)	SHOULDER RUMBLE STRIP (HMA, GROUND-IN INDENTATIONS)	TACK COAT	GRIND EXISTING CONCRETE PAVEMENT	COMMENTS
	DIRECTION	POSTMILES	SQYD	TON	TON	TON	TON	STA	TON	SQYD	
Rte 1 MAINLINE	NB	R77.60 TO R77.85	4,254	58		287	287	26.4	1.95		HMA (OGFC) LANES, L+ SHOULDER
	NB	R77.85 TO R77.93	1,363	19		92	92	4.2	0.62		HMA (OGFC) LANES, L+ SHOULDER
	NB	R77.93 TO R78.13	4,342	46		293	293	21.1	1.99		HMA (OGFC) LANES, R+ AND L+ SHOULDER
	NB	R78.13 TO R78.23	765	24		77		10.6	0.35	1,411	PCC LANES, R+ AND L+ SHOULDER
	NB	R78.23 TO R78.36	382	30		39		6.9	0.17	1,832	PCC LANES, L+ SHOULDER
	NB	R78.36 TO R78.56	1,527	46		155		19.1	0.70	2,819	PCC LANES, L+ AND R+ SHOULDER
	NB	R78.56 TO R78.70	412	33		42		7.4	0.19	1,974	PCC LANES, L+ SHOULDER
	NB	R78.70 TO R78.83	993	30		100		13.7	0.45	1,832	PCC LANES, L+ AND R+ SHOULDER
	NB	R78.83 TO R78.90	206	17		21		2.1	0.09	987	PCC LANES, L+ SHOULDER
	NB	R78.90 TO R79.15	4,254	58		366	366	24.3	1.95		HMA (OGFC) LANES, L+ SHOULDER
	NB	R79.15 TO R79.21	1,022	14		69	69	3.2	0.47		HMA (OGFC) LANES, L+ SHOULDER
	NB	R79.21 TO R79.33	2,607	28		176	176	10.6	1.19		HMA (OGFC) LANES, L+ AND R+ SHOULDER
	NB	R79.33 TO R79.49	1,221	37		124		15.8	0.56	2,254	PCC LANES, L+ AND R+ SHOULDER
	NB	R79.49 TO R79.73	705	56	0.07	71		11.1	0.32	3,382	PCC LANES, L+ SHOULDER
	NB	R79.73 TO R80.40	5,111	154	0.17	517		73.9	2.34	9,435	PCC LANES, L+ AND R+ SHOULDER
	NB	R80.40 TO R80.51	323	26	0.03	33		5.8	0.15	1,550	PCC LANES, L+ SHOULDER
	NB	R80.51 TO R80.83	2,442	74		247		28.5	1.12	4,507	PCC LANES, L+ AND R+ SHOULDER
	NB	R80.83 TO R81.17	1,198	79	0.09	121		18.0	0.55	4,790	PCC LANES, L+ SHOULDER
	NB	R81.17 TO R82.67	15,840	345		1,604		158.4	7.26	31,680	PCC LANES, L+ AND R+ SHOULDER
	NB	R82.67 TO R82.83	939	37		95		8.5	0.43	3,380	PCC LANES, L+ SHOULDER
	NB	R82.83 TO R83.04	2,465	49		250		22.2	1.13	4,436	PCC LANES, L+ AND R+ SHOULDER
	NB	R83.04 TO R83.27	810	53		82		12.2	0.37	4,860	PCC LANES, L+ SHOULDER
	NB	R83.27 TO R84.23	9,012	221	0.15	912		101.4	4.13	20,276	PCC LANES, L+ AND R+ SHOULDER
	NB	R84.23 TO R84.31	376	19		38		4.2	0.17	1,692	PCC LANES, L+ SHOULDER
	NB	R84.31 TO R84.64	3,486	76		353		34.9	1.60	6,972	PCC LANES, L+ AND R+ SHOULDER
	NB	R84.64 TO R85.02	1,784	88		181		20.1	0.82	8,028	PCC LANES, L+ SHOULDER
	SB	R78.13 TO R78.37	705	56		71		12.7	0.32	3,382	PCC LANES, L+ SHOULDER
	SB	R78.37 TO R78.57	1,526	46		154		20.1	0.70	2,816	PCC LANES, L+ AND R+ SHOULDER
	SB	R78.57 TO R78.73	470	37		48		7.9	0.22	2,254	PCC LANES, L+ SHOULDER
	SB	R78.73 TO R78.90	1,298	40	0.06	131		15.8	0.59	2,395	PCC LANES, L+ AND R+ SHOULDER
	SB	R78.90 TO R78.99	1,957	21	0.04	132	132	8.5	0.90		HMA (OGFC) LANES, L+ AND R+ SHOULDER
	SB	R78.99 TO R79.05	1,022	14		69	69	3.2	0.47		HMA (OGFC) LANES, L+ SHOULDER
	SB	R79.05 TO R79.19	3,043	33		205	205	14.8	1.09		HMA (OGFC) LANES, L+ SHOULDER
	SB	R79.19 TO R79.22	513	7		35	35	1.6	0.23		HMA (OGFC) LANES, L+ SHOULDER
	SB	R79.22 TO R79.33	2,389	26		161	161	10.6	1.09		HMA (OGFC) LANES, L+ AND R+ SHOULDER
	SB	R79.33 TO R79.49	1,221	37		124		15.8	0.56	2,254	PCC LANES, L+ AND R+ SHOULDER
	SB	R79.49 TO R79.61	353	28		36		6.3	0.16	1,691	PCC LANES, L+ SHOULDER
	SB	R79.61 TO R80.35	5,645	170	0.29	572		78.2	2.59	10,422	PCC LANES, L+ AND R+ SHOULDER
	SB	R80.35 TO R80.55	588	46		59		10.6	0.27	2,819	PCC LANES, L+ SHOULDER
	SB	R80.55 TO R80.93	2,899	88	0.03	294		35.9	1.33	5,352	PCC LANES, L+ AND R+ SHOULDER
	SB	R80.93 TO R81.19	763	60		77		13.7	0.35	3,662	PCC LANES, L+ SHOULDER
	SB	R81.19 TO R82.24	11,088	242		1,123		110.9	5.08	22,176	PCC LANES, L+ AND R+ SHOULDER
	SB	R82.24 TO R82.46	1,033	51		105		11.6	0.47	4,648	PCC LANES, L+ SHOULDER
	SB	R82.46 TO R82.77	3,274	72		331		32.7	1.50	6,548	PCC LANES, L+ AND R+ SHOULDER
	SB	R82.77 TO R82.92	441	35		45		7.9	0.20	3,172	PCC LANES, L+ SHOULDER
	SB	R82.92 TO R84.08	12,250	267	0.19	1,240		122.5	5.61	24,500	PCC LANES, L+ AND R+ SHOULDER
	SB	R84.08 TO R84.34	1,221	60		124		13.7	0.56	5,492	PCC LANES, L+ SHOULDER
	SB	R84.34 TO R84.66	3,380	74		342		33.8	1.55	6,760	PCC LANES, L+ AND R+ SHOULDER
	SB	R84.66 TO R84.99	969	76		98		17.4	0.44	6,972	PCC LANES, L+ SHOULDER
SHEET TOTAL			125,887	3,303	1.12	11,921	1,885	1270.7	57.39	235,412	
TOTAL				3,303				1270.7		235,412	

ABBREVIATIONS:

AUXILIARY - Aux

SUMMARY OF QUANTITIES

Q-1

STATE OF CALIFORNIA - DEPARTMENT OF TRANSPORTATION

Caltrans® DESIGN

FUNCTIONAL SUPERVISOR: JOHN H. FOUCHE

CALCULATED-DESIGNED BY: WESLEY C. THOMPSON

CHECKED BY: ASHRAF M. RAHIM

REVISED BY / DATE REVISED

LAST REVISION 03-20-15

DATE PLOTTED => 27-MAR-2015
TIME PLOTTED => 11:07

Dist	COUNTY	ROUTE	POST MILES TOTAL PROJECT	SHEET No.	TOTAL SHEETS
05	Mon	1	R77.6/R85.3	30	101

Wesley Thompson 3-20-15
REGISTERED CIVIL ENGINEER DATE

3-23-15
PLANS APPROVAL DATE

REGISTERED PROFESSIONAL ENGINEER
WESLEY C. THOMPSON
No. 74952
Exp. 12/31/15
CIVIL
STATE OF CALIFORNIA

THE STATE OF CALIFORNIA OR ITS OFFICERS OR AGENTS SHALL NOT BE RESPONSIBLE FOR THE ACCURACY OR COMPLETENESS OF SCANNED COPIES OF THIS PLAN SHEET.

PAVEMENT STRUCTURE

LOCATION			COLD PLANE ASPHALT CONCRETE PAVEMENT	ASPHALTIC EMULSION (FOG SEAL COAT)	HOT MIX ASPHALT (TYPE A)	HOT MIX ASPHALT-OPEN GRADED (OPEN GRADED FRICTION COURSE)	TACK COAT	COMMENTS
	DIRECTION	POSTMILES	SQYD	TON	TON	TON	TON	
RAMPS AND Aux LANES	NB	R77.7	4,408	0.17	298	298	2.02	Aux LANE (SLOAT Ave UC TO Rte 1/68 CONNECTOR)
	NB	R78.1	5,113	0.06	690		2.34	NB Rte 1 TO EB Rte 68 RAMP
	NB	R78.1	2,852	0.01	385		1.31	Rte 1 TO FREMONT St OFF RAMP
	NB	R78.1	2,864	0.09	387		1.31	WB Rte 68 TO NB Rte 1 RAMP
	WB	Rte 68, R4.0	1,330	0.03	180		0.61	WB Rte 68 TO FREMONT St OFF RAMP
	SB	R78.1	4,132	0.05	558		1.89	WB Rte 68 TO SB Rte 1 RAMP
	SB	R78.1	3,279	0.01	443		1.50	FREMONT St TO SB Rte 1 ON RAMP
	SB	R78.1	3,361	0.04	454		1.54	SB Rte 1 TO EB Rte 68 OFF RAMP
	NB	R78.3	543	0.06	73		0.25	Aux LANE (WB Rte 68 TO CASA VERDE Ave UC)
	SB	R78.3	1,748	0.11	236		0.80	Aux LANE (CASA VERDE Ave UC TO EB Rte 68)
	NB	R78.4	2,393	0.05	323		1.10	CASA VERDE Ave UC TO Rte 1 ON RAMP
	NB	R78.4	2,393	0.02	323		1.10	Rte 1 TO CASA VERDE Ave UC OFF RAMP
	SB	R78.4	2,665	0.06	360		1.22	CASA VERDE Ave UC TO Rte 1 ON RAMP
	SB	R78.4	2,952	0.04	398		1.35	Rte 1 TO CASA VERDE Ave UC OFF RAMP
	NB	R78.6	777	0.05	105		0.36	Aux LANE (CASA VERDE Ave UC TO DEL MONTE Ave UC)
	SB	R78.6	652	0.05	88		0.30	Aux LANE (DEL MONTE Ave UC TO CASA VERDE Way UC)
	NB	R78.9	3,698	0.10	499		1.69	Rte 1 TO DEL MONTE Ave UC OFF RAMP
	NB	R78.9	2,433	0.03	328		1.12	DEL MONTE Ave UC TO Rte 1 ON RAMP
	SB	R78.9	2,330	0.02	314		1.07	Rte 1 TO DEL MONTE Ave UC OFF RAMP
	SB	R78.9	1,764		238		0.81	DEL MONTE Ave UC TO Rte 1 ON RAMP
	NB	R79.1	2,623	0.14	177	177	1.20	Aux LANE (DEL MONTE Ave UC TO Rte 1/218 SEPARATION)
	SB	R79.1	1,375		93	93	0.63	Aux LANE (Rte 1/218 SEPARATION TO DEL MONTE Ave UC)
	NB	R79.3	4,934	0.07	666		2.26	Rte 1/218 SEPARATION TO Rte 1 ON RAMP
	NB	R79.3	2,526	0.03	341		1.16	Rte 1 TO Rte 1/218 SEPARATION OFF RAMP
	SB	R79.3	2,383		322		1.09	Rte 1/218 SEPARATION TO Rte 1 ON RAMP
	SB	R79.3	3,484	0.09	470		1.60	Rte 1 TO Rte 1/218 SEPARATION OFF RAMP
	NB	R80.7	5,365	0.10	724		2.46	Rte 1 TO ORD VILLAGE UC OFF RAMP
	NB	R80.7	6,483	0.03	875		2.97	ORD VILLAGE UC TO Rte 1 ON RAMP
	SB	R80.7	4,032		544		1.85	ORD VILLAGE UC TO Rte 1 ON RAMP
	SB	R80.7	8,839	0.05	1,193		4.05	Rte 1 TO ORD VILLAGE UC OFF RAMP
	NB	R82.9	4,937	0.04	666		2.26	MAIN ENTRANCE OC TO Rte 1 ON RAMP
	NB	R82.9	5,212	0.04	696		2.36	Rte 1 TO MAIN ENTRANCE OC OFF RAMP
	SB	R82.9	10,554	0.12	1,425		4.84	MAIN ENTRANCE OC TO Rte 1 ON RAMP
	SB	R82.9	6,658	0.14	898		3.05	Rte 1 TO MAIN ENTRANCE OC OFF RAMP
	NB	R84.5	5,367	0.08	724		2.46	Rte 1 TO NORTH ENTRANCE OC OFF RAMP
	NB	R84.5	4,664		630		2.14	NORTH ENTRANCE OC TO Rte 1 ON RAMP
	SB	R84.5	3,641	0.09	491		1.67	Rte 1 TO NORTH ENTRANCE OC OFF RAMP
	SB	R84.5	5,312	0.05	717		2.43	NORTH ENTRANCE OC TO Rte 1 ON RAMP
	NB	R85.2	7,916	0.06	1,069		3.63	Rte 1 TO SOUTH MARINA OVERHEAD OFF RAMP
	SB	R85.2	7,549		1,019		3.46	SOUTH MARINA OVERHEAD TO Rte 1 ON RAMP
	NB/SB	R77.6 TO R79.3	1,867		252		0.86	REPAIR FAILED AREAS, SEE SHEET Q-3
	NB/SB	R78.1 TO R78.5			1.3			PLACE HOT MIX ASPHALT (MISCELLANEOUS AREA), SEE SHEET Q-3
	NB/SB	R78.5 TO R80.7			1			HOT MIX ASPHALT DIKE, SEE SHEET Q-4
SHEET TOTAL			157,346	2.18	20,675	568	72.11	
Q-1 SHEET TOTAL			125,887	1.12	11,921	1,885	57.39	
GRAND TOTAL			283,233	3.30	32,596	2,453	129.50	

SUMMARY OF QUANTITIES
Q-2

STATE OF CALIFORNIA - DEPARTMENT OF TRANSPORTATION
Caltrans® DESIGN

FUNCTIONAL SUPERVISOR: JOHN H. FOUCHE
CALCULATED-DESIGNED BY: WESLEY C. THOMPSON
CHECKED BY: ASHRAF M. RAHIM
REVISED BY
DATE REVISED

LAST REVISION 03-20-15
DATE PLOTTED => 27-MAR-2015
TIME PLOTTED => 11:07

Dist	COUNTY	ROUTE	POST MILES TOTAL PROJECT	SHEET No.	TOTAL SHEETS
05	Mon	1	R77.6/R85.3	31	101

Wesley Thompson 3-20-15
REGISTERED CIVIL ENGINEER DATE

3-23-15
PLANS APPROVAL DATE

REGISTERED PROFESSIONAL ENGINEER
WESLEY C. THOMPSON
No. 74952
Exp. 12/31/15
CIVIL
STATE OF CALIFORNIA

THE STATE OF CALIFORNIA OR ITS OFFICERS OR AGENTS SHALL NOT BE RESPONSIBLE FOR THE ACCURACY OR COMPLETENESS OF SCANNED COPIES OF THIS PLAN SHEET.

CURB RAMPS

PLAN SHEET No.	LOCATION No.	STATION	REMOVE CONCRETE (CY)	REPLACE ASPHALT CONCRETE SURFACING	HOT MIX ASPHALT (TYPE A) (N)	MINOR CONCRETE (CURB, SIDEWALK AND CURB RAMP)	PEDESTRIAN BARRICADE	DETECTABLE WARNING SURFACE (N)
			CY	CY	TON	CY	EA	SQFT
C-6	1	"CVNBOFFL" 1+06.13 TO 1+51.87	2.2	0.4	0.8	2.7		39.6
C-6	2	"CVNBOFFR" 2+10.00 TO 2+50.00	2.5	0.4	0.8	2.9		36.9
C-7	3	"CVNBONL" 3+00.00 TO 3+37.63	2.2	0.4	0.8	2.5		24.2
C-7	4	"CVNBONR" 4+19.66 TO 4+66.56	1.3	0.5	1.0	2.3		22.1
C-8	5	"CVSBONR" 5+10.00 TO 5+48.46	2.5	0.4	0.8	3.2		38.9
C-8	6	"CVSBONL" 6+04.20 TO 6+34.52	2.2	0.4	0.8	2.5		22.1
C-9	7	"CVSBOFFR" 7+08.67 TO 7+40.00	2.0	0.3	0.6	2.5		21.7
C-9	8	"CVSBOFFL" 8+00.21 TO 8+35.55	2.4	0.4	0.8	2.8		28.2
C-10	9	"CDRNBOFFL" 9+13.30 TO 9+43.30	3.1	0.6	1.2	3.3		43.4
C-10	10	"CDRNBOFFR" 10+16.93 TO 10+57.12	3.4	1.0	2.1	3.6		22.0
C-11	11	"CDRNBONL" 11+00.00 TO 11+27.00	2.1	0.3	0.6	2.4		44.8
C-11	12	"CDRNBONR" 12+12.85 TO 12+41.72	2.4	0.3	0.6	2.3		38.8
C-12	13	"CDRSBONL" 13+02.98 TO 13+26.14	2.5	0.7	1.4	3.1		14.3
C-12	14	"CDRSBONR" 14+11.63 TO 14+32.20	1.8	0.4	0.8	1.7		32.4
C-12	15	"CDRSBONR" 14+62.00 TO 14+74.14	0.4	0.3	0.6	3.5		27.1
C-13	16	"CDRSBOFFL" 15+07.57 TO 15+17.48	0.8	0.1	0.4	0.9	1	22.3
C-13	17	"CDRSBOFFR" 16+18.30 TO 16+24.75	0.3			0.1		
		TOTAL	34.0	6.9		41.8	1	

(N) - NOT A SEPARATE PAY ITEM, FOR INFORMATION ONLY

RELOCATE ROADSIDE SIGN - ONE POST

LOCATION	RELOCATE ROADSIDE SIGN - ONE POST
	EA
CURB RAMP LOCATION 4, "CVNBONR" 04+21.71, 6.42' R†	1
TOTAL	1

DRAINAGE FACILITY

LOCATION / POSTMILE	DIRECTION	SIDE	HOT MIX ASPHALT (TYPE A)	PLACE HOT MIX ASPHALT (MISCALANEOUS AREA)	ENTRANCE TAPER
			TON	SQYD	EA
1. S1-E68 CONNECTOR BRIDGE APPROACH / PM R78.12	EB	R†	0.5	3.8	1
2. CASA VERDE Ave UC BRIDGE APPROACH / PM R78.46	NB	R†	0.8	5.6	1
TOTAL			1.3*	9.4	2

* QUANTITY INCLUDED IN PAVEMENT STRUCTURE TABLE, SEE SHEET Q-2.

REPAIR FAILED AREAS

LOCATION / POST MILE	DIRECTION	LENGTH	WIDTH	COLD PLANE ASPHALT CONCRETE PAVEMENT	HOT MIX ASPHALT (TYPE A)	REMARKS
		LF	LF	SQYD	TON	
R†e 1 - LANE No. 1, 2, 3, 4 / PM R77.60	NB	50	48	267	36	SLOAT Ave UC BRIDGE DEPARTURE
R†e 1 - LANE No. 2 / PM R77.88	NB	50	12	67	9	GORE SECTION WHERE MAINLINE & RAMP SPLIT
R†e 68E, FREMONT S† OFF RAMP - LANE No. 2 / PM R77.91	NB	50	12	67	9	GORE SECTION WHERE MAINLINE & RAMP SPLIT
R†e 68E OFF RAMP - LANE / PM R77.99	NB	100	12	133	18	GORE SECTION WHERE FREMONT S† & R†e 68E RAMP SPLIT
R†e 1 - LANE No. 2 / PM R78.04	NB	50	6	33	4.5	
R†e 1 - LANE No. 1, 2 / PM R78.13	NB	50	24	133	18	END AC, BEGIN PCC
CASA VERDE Ave OFF RAMP - LANE / PM R78.31	NB	50	6	33	4.5	BEGIN GORE SECTION WHERE MAINLINE & RAMP SPLIT
CASA VERDE Ave OFF RAMP - LANE / PM R78.34	NB	50	6	33	4.5	END GORE SECTION WHERE MAINLINE & RAMP SPLIT
CASA VERDE Ave ON RAMP - LANE / PM R78.55	NB	50	12	67	9	PRIOR TO ON RAMP GORE
R†e 1 - LANE No. 1, 2, 3 / PM R78.91	NB	50	36	200	27	DEL MONTE Ave UC BRIDGE DEPARTURE
R†e 1 - LANE No. 1, 2, 3 / PM R79.31	NB	50	36	200	27	R†e 1/218 SEPARATION APPROACH, END AC MAINLINE
R†e 218 ON RAMP - LANE / PM R79.32	NB	50	12	67	9	BEGIN RAMP, R†
FREMONT S† ON RAMP - LANE / PM R78.15	SB	150	12	200	27	BEGIN OF RAMP AFTER STRUCTURE DEPARTURE
R†e 1 - LANE No. 1, 2 / PM R79.32	SB	50	24	133	18	R†e 1/218 SEPARATION DEPARTURE, END PCC, BEGIN AC
R†e 218 OFF RAMP - LANE / PM R79.41	SB	50	6	33	4.5	HALF WAY DOWN RAMP, L† SIDE
ORD VILLAGE OFF RAMP - LANE No. 1 / PM R80.75	SB	100	6	67	9	PRIOR TO OC, L† SIDE
R†e 1 - LANE 3 / PM R81.14	SB	50	12	67	9	AC Aux LANE TO ORD VILLAGE OFF RAMP
R†e 1 - LANE 3 / PM R81.18	SB	50	12	67	9	NEAR BEGIN AC Aux LANE TO ORD VILLAGE OFF RAMP
TOTALS				1,867*	252*	

* QUANTITIES INCLUDED IN PAVEMENT STRUCTURE TABLE, SEE SHEET Q-2.

SUMMARY OF QUANTITIES
Q-3

REVISED BY | DATE REVISED
WESLEY C. THOMPSON | ASHRAF M. RAHIM
CALCULATED-DESIGNED BY | CHECKED BY
FUNCTIONAL SUPERVISOR: JOHN H. FOUCHE
STATE OF CALIFORNIA - DEPARTMENT OF TRANSPORTATION
Caltrans® DESIGN

LAST REVISION 03-20-15 | DATE PLOTTED => 27-MAR-2015 | TIME PLOTTED => 11:07

Dist	COUNTY	ROUTE	POST MILES TOTAL PROJECT	SHEET No.	TOTAL SHEETS
05	Mon	1	R77.6/R85.3	32	101

Wesley Thompson 3-20-15
REGISTERED CIVIL ENGINEER DATE

3-23-15
PLANS APPROVAL DATE

REGISTERED PROFESSIONAL ENGINEER WESLEY C. THOMPSON No. 74952 Exp. 12/31/15 CIVIL STATE OF CALIFORNIA

THE STATE OF CALIFORNIA OR ITS OFFICERS OR AGENTS SHALL NOT BE RESPONSIBLE FOR THE ACCURACY OR COMPLETENESS OF SCANNED COPIES OF THIS PLAN SHEET.

TEMPORARY FENCE (TYPE ESA)

LOCATION / POSTMILE	TEMPORARY FENCE (TYPE ESA) LF	COMMENTS
Rte 1/218 SEPARATION / PM R79.25	3,800	SEE SHEET C-14
Rte 1 MEDIAN AREA / PM R82.15	2,400	SEE SHEET C-14
TOTAL	6,200	

PLACE HOT MIX ASPHALT DIKE (TYPE F)

LOCATION / POSTMILE	DIRECTION	SIDE	HOT MIX ASPHALT (TYPE A) TON	PLACE HOT MIX ASPHALT DIKE (TYPE F) LF
CASA VERDE Ave UC (Br. No. 44-0187L) / PM R78.48	SB	Rt	0.13	10
DEL MONTE Ave UC (Br. No. 44-0156L) / PM R78.93	SB	Rt	0.13	10
Rte 1/218 SEPARATION (Br. No. 44-0162R) / PM R79.33	NB	Rt	0.20	15
Rte 1/218 SEPARATION (Br. No. 44-0162L) / PM R79.38	SB	Rt	0.13	10
SAND CITY UC (Br. No. 44-0188L) / PM R80.27	SB	Rt	0.20	15
ORD VILLAGE UC (Br. No. 44-0158L) / PM R80.67	SB	Rt	0.20	15
TOTAL			1.00*	75

* QUANTITY INCLUDED IN PAVEMENT STRUCTURE TABLE, SEE SHEET Q-2.

MIDWEST GUARDRAIL SYSTEMS, END TREATMENTS, CONCRETE BARRIER (TYPE 60SD)

No.	LOCATION DESCRIPTION	LOCATION POSTMILE	DIRECTION	SIDE	TREATED WOOD WASTE LB	SALVAGE GUARDRAIL LF	ADJUST GUARDRAIL LF	GUARD RAILING DELINEATOR EA	MIDWEST GUARDRAIL SYSTEM (STEEL POST) LF	VEGETATION CONTROL (MINOR CONCRETE) SQYD	TRANSITION RAILING (TYPE WB-31) EA	END ANCHOR ASSEMBLY (TYPE SFT) EA	ALTERNATIVE CRASH CUSHION SYSTEM EA	ALTERNATIVE IN-LINE TERMINAL SYSTEM EA	ALTERNATIVE FLARED TERMINAL SYSTEM EA	CONCRETE BARRIER (TYPE 60SD) LF	BURIED POST END ANCHOR (N) EA	EMBANKMENT (N) CY	REMARKS
1	Rte 1 AUXILLARY LANE	PM R77.70	NB	Rt	1932	175		7	175	41		1					1		INSTALL VEGETATION CONTROL AROUND Exist DRAINAGE SYSTEM AND TO BACK OF POST
2	Rte 1 TO Rte 68 OFF RAMP	PM R77.88	NB	Rt	828	75		3	75	18		1					1		INSTALL VEGETATION CONTROL TO BACK OF POST
3	Rte 1 MAINLINE	PM R78.00	NB	Rt	1,800	163		7	175	122		1			1				
4	Rte 1 TO Rte 68 OFF RAMP	PM R77.98	NB	Rt	1,656	150		7	175	73		1					1		EXTEND RAIL 30' AT APPROACH AND INSTALL BURIED END
5	Rte 1 TO FREMONT St OFF RAMP	PM R78.00	NB	Lt	1,248	113		3	75	27		1			1				Exist VEGETATION CONTROL TO REMAIN, EXTEND NORTH
6	Rte 1 TO FREMONT St OFF RAMP	PM R78.12	NB	Lt	4,967	450		17	413	42	1		1						Exist VEGETATION CONTROL TO REMAIN, EXTEND NORTH
7	Rte 68 TO FREMONT St OFF RAMP	Rte 68 PM R4.00	WB	Lt	4,746	430		15	375	144		1	1						
8	Rte 1 MAINLINE	PM R78.10	NB	Rt		160		6	150	87		1							CONNECTS TO TERMINAL SYSTEM (TYPE CAT) AT LOCATION 6
9	Rte 68 TO Rte 1 ON RAMP	Rte 68 PM R4.00	NB	Lt	718	65		2	50	32		1			1				
10	Rte 68 TO Rte 1 ON RAMP	PM R78.16	NB	Lt		100		3		53	1				1	60			CONSTRUCT CONCRETE BARRIER (TYPE 60SD) AT FACE OF RECTANGULAR BRIDGE COLUMNS. PLACE VEGETATION CONTROL TO EP ALONG BARRIER, TRANSITION, AND END TREATMENT.
11	Rte 1 MAINLINE & CASA VERDE UC	PM R78.42	NB	Rt	2,351	213		6	138	90	1				1				PLACE TRANSITION POSTS AROUND DRAINAGE FACILITY, SEE SHEET C-15
12	Rte 1 MAINLINE & DEL MONTE Ave UC	PM R78.86	NB	Rt	1,380	125		2	50	63	1				1				
13	Rte 1 MAINLINE & Rte 1/218 SEPARATION	PM R79.30	NB	Rt	1,380	125		2	50		1				1				
14	Rte 1 MAINLINE & SAND CITY UC	PM R80.26	NB	Rt	1,380	125		2	63		1				1			15	EMBANKMENT WORK REQUIRED TO CONSTRUCT CONCRETE BARRIER (TRANSITION)
15	Rte 1 TO ORD VILLAGE OFF RAMP	PM R80.43	NB	Rt			305					1							ADJUST GUARDRAIL, SEE SHEET C-14
16	ORD VILLAGE OFF RAMP	PM R80.53	NB	Lt	619	56		4			1			1					REPLACE BURIED POST WITH IN-LINE TERMINAL SYSTEM
17	Rte 1 MAINLINE & ORD VILLAGE UC	PM R80.63	NB	Rt		68			28	13	1								REPLACE VEGETATION CONTROL UNDER NEW RAIL AND CONNECT TO Exist GUARDRAIL
18a	Rte 1/68 CONNECTOR TO Rte 1, DEPARTURE	PM R78.05	SB	Rt	3,510	318		12	288	174	1								
18b	Rte 1/68 CONNECTOR TO Rte 1	PM R78.10	SB	Rt	828	75		3	150	45		1							FINAL 75 LF IS DOUBLE SIDED MGS
19	Rte 1 TO Rte 1/68 CONNECTOR, APPROACH	PM R78.11	SB	Rt	773	70			13	68	1				1				RELOCATE PULL BOX FOR CONCRETE BARRIER (TRANSITION), PLACE TRANSITION POSTS AROUND DRAINAGE FACILITY. PLACE VEGETATION CONTROL TO EP.
20	Rte 1 MAINLINE & CASA VERDE Ave UC	PM R78.48	SB	Rt	1,391	126		2	50	38	1				1				
21	DEL MONTE Ave OFF RAMP	PM R78.92	SB	Lt		68			28	13	1								INSTALL VEGETATION CONTROL UNDER NEW RAIL AND CONNECT TO Exist GUARDRAIL
22	Rte 1 MAINLINE & DEL MONTE Ave UC	PM R78.92	SB	Rt		68			28	13	1								INSTALL VEGETATION CONTROL UNDER NEW RAIL AND CONNECT TO Exist GUARDRAIL
23	Rte 1 MAINLINE & Rte 1/218 SEPARATION	PM R79.38	SB	Rt	1,402	127		2	50		1				1				
24	Rte 1 MAINLINE & SAND CITY UC	PM R80.30	SB	Rt	1,259	114		5	113		1						1		EXTEND AT APPROACH END AND INSTALL BURIED END POST ANCHOR
25	Rte 1 MAINLINE	PM R80.43	SB	Rt			277												ADJUST GUARDRAIL, SEE SHEET C-14
26	Rte 1 MAINLINE & ORD VILLAGE UC	PM R80.76	SB	Rt	1,380	125		2	50		1				1				
27	ORD VILLAGE OFF RAMP	PM R80.72	SB	Lt	2,373	215		9	213			1					1		INSTALL FACE OF RAIL AT FLOWLINE OF CURB WITH 4' Min OFFSET FROM RAIL FACE TO BRIDGE BENTS
		TOTALS			37,921	3,899	582	121	2,975	1,156	16	13	2	1	12	60			

(N) - NOT A SEPARATE PAY ITEM, FOR INFORMATION ONLY

SUMMARY OF QUANTITIES

Q-4

STATE OF CALIFORNIA - DEPARTMENT OF TRANSPORTATION
Caltrans DESIGN

FUNCTIONAL SUPERVISOR: JOHN H. FOUCHE
CALCULATED-DESIGNED BY: WESLEY C. THOMPSON
CHECKED BY: ASHRAF M. RAHIM
REVISED BY / DATE REVISED

LAST REVISION 03-20-15
DATE PLOTTED => 27-MAR-2015
TIME PLOTTED => 11:07

Dist	COUNTY	ROUTE	POST MILES TOTAL PROJECT	SHEET No.	TOTAL SHEETS
05	Mon	1	R77.6/R85.3	33	101

Xavier Alfaro 3-20-15
REGISTERED ELECTRICAL ENGINEER DATE

3-23-15
PLANS APPROVAL DATE

REGISTERED PROFESSIONAL ENGINEER XAVIER I. ALFARO No. E17488 Exp. 6-30-15 ELECTRICAL STATE OF CALIFORNIA

THE STATE OF CALIFORNIA OR ITS OFFICERS OR AGENTS SHALL NOT BE RESPONSIBLE FOR THE ACCURACY OR COMPLETENESS OF SCANNED COPIES OF THIS PLAN SHEET.

NOTE:

FOR ACCURATE RIGHT OF WAY DATA, CONTACT RIGHT OF WAY ENGINEERING AT THE DISTRICT OFFICE.

LEGEND: (FOR THIS SHEET ONLY)

1. RC Exist PSF. FURNISH AND INSTALL COUNTDOWN PSF. INSTALL LED COUNTDOWN PEDESTRIAN SIGNAL HEAD INTO Exist TYPE A PED SIGNAL HEAD HOUSING. PRESERVE Exist PED PHASING.
2. RC Exist PBA. FURNISH AND INSTALL APS.
3. FURNISH AND INSTALL PSF.
4. FURNISH AND INSTALL APS.
5. RC Exist Lum, INSTALL 165 W LED Lum.
6. SEE DETAIL A FOR LOOP DETECTOR PLACEMENT.
7. RC Exist PSF.

CONDUIT RUN:

1. Exist 3"C, RC Exist CONDUCTORS ADD 3-12CSC, 2-9CSC, 4-3CSC, 8 DLC
2. Exist 3"C, RC Exist CONDUCTORS ADD 2#10 (Ltg), 1-12CSC, 1-3CSC
3. Exist 3"C, RC Exist CONDUCTORS ADD 2#10 (Ltg), 2-12CSC, 2-9CSC, 3-3CSC, 6 DLC
4. Exist 3"C, RC Exist CONDUCTORS ADD 2#10 (Ltg), 2-12CSC, 1-9CSC, 2-3CSC, 6 DLC
5. Exist 3"C, RC Exist CONDUCTORS ADD 2#10 (Ltg), 1-12CSC, 1-9CSC, 1-3CSC, 5 DLC
6. 3"C, 2#10 (Ltg), 1-12CSC, 3 DLC
7. Exist 1½"C, RC Exist CONDUCTORS ADD 2#10 (Ltg), 1-9CSC, 2 DLC
8. Exist 1½"C, RC Exist CONDUCTORS ADD 1-9CSC, 1 DLC

ABBREVIATIONS:

VSN - VEHICLE SENSOR NODE
PG&E - PACIFIC GAS AND ELECTRIC

SYMBOLS:

- Exist REPEATER
- Exist ACCESS POINT
- Exist VSN
- Exist Sig STANDARD
- Exist CONDUIT RUN
- VSN

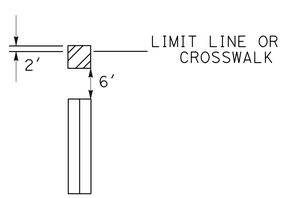

DETAIL A
TYPICAL TYPE C AND TYPE D LOOP DETECTOR PLACEMENT

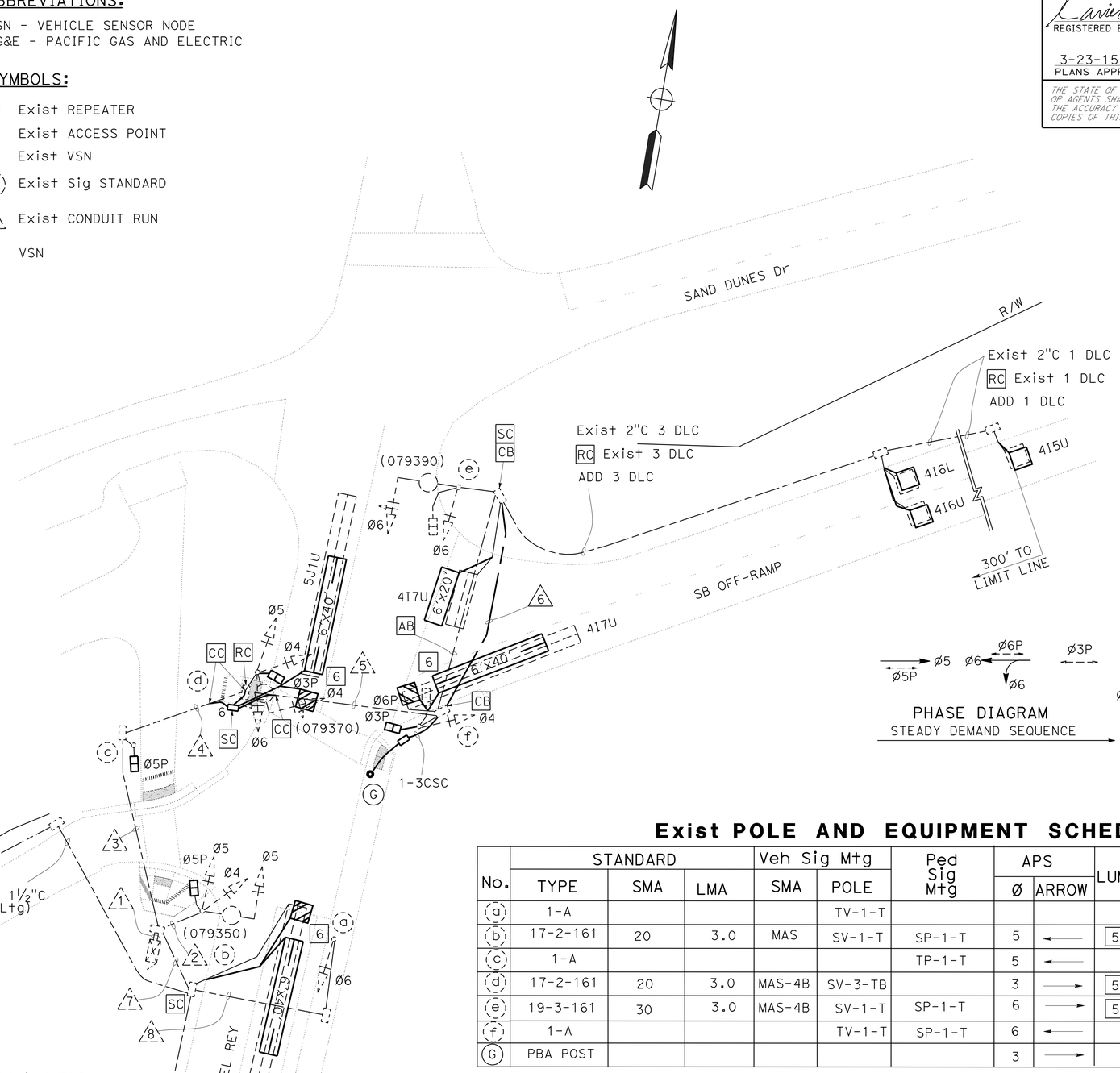

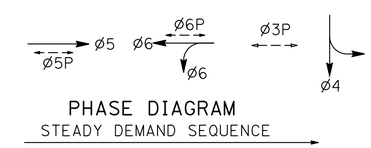

PHASE DIAGRAM
STEADY DEMAND SEQUENCE

Exist POLE AND EQUIPMENT SCHEDULE

No.	STANDARD TYPE	STANDARD SMA	STANDARD LMA	Veh Sig Mtg SMA	Veh Sig Mtg POLE	Ped Sig Mtg	APS Ø	APS ARROW	LUMINAIRE	SPECIAL REQUIREMENTS
a	1-A				TV-1-T					
b	17-2-161	20	3.0	MAS	SV-1-T	SP-1-T	5	←	5 200 W	1 2
c	1-A					TP-1-T	5	←		1 2
d	17-2-161	20	3.0	MAS-4B	SV-3-TB		3	→	5 200 W	3 4
e	19-3-161	30	3.0	MAS-4B	SV-1-T	SP-1-T	6	→	5 200 W	7
f	1-A				TV-1-T	SP-1-T	6	←		7
G	PBA POST						3	→		4

APPROVED FOR ELECTRICAL WORK ONLY

SCALE: 1"=20'

MODIFY SIGNAL
E-1

PJM	03-25-15		
XIA	03-18-15		
PJM	03-17-15		
REVISED BY	DATE REVISED		
XAVIER ALFARO	PAUL MATOS		
CALCULATED-DESIGNED BY	CHECKED BY		
FUNCTIONAL SUPERVISOR	ALI BAKHDOUD		

STATE OF CALIFORNIA - DEPARTMENT OF TRANSPORTATION
Caltrans® ELECTRICAL DESIGN

LAST REVISION 03-20-13 | DATE PLOTTED => 27-MAR-2015 | TIME PLOTTED => 14:08

Dist	COUNTY	ROUTE	POST MILES TOTAL PROJECT	SHEET No.	TOTAL SHEETS
05	Mon	1	R77.6/R85.3	34	101

REGISTERED ELECTRICAL ENGINEER 3-20-15

3-23-15
PLANS APPROVAL DATE

REGISTERED PROFESSIONAL ENGINEER XAVIER I. ALFARO No. E17488 Exp. 6-30-15 ELECTRICAL STATE OF CALIFORNIA

THE STATE OF CALIFORNIA OR ITS OFFICERS OR AGENTS SHALL NOT BE RESPONSIBLE FOR THE ACCURACY OR COMPLETENESS OF SCANNED COPIES OF THIS PLAN SHEET.

NOTE:

FOR ACCURATE RIGHT OF WAY DATA, CONTACT RIGHT OF WAY ENGINEERING AT THE DISTRICT OFFICE.

LEGEND: (FOR THIS SHEET ONLY)

1 SEE DETAIL A FOR LOOP DETECTOR PLACEMENT.

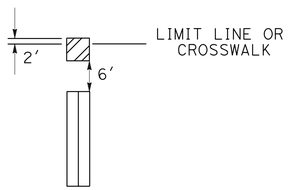

DETAIL A
TYPICAL TYPE C AND TYPE D LOOP DETECTOR PLACEMENT

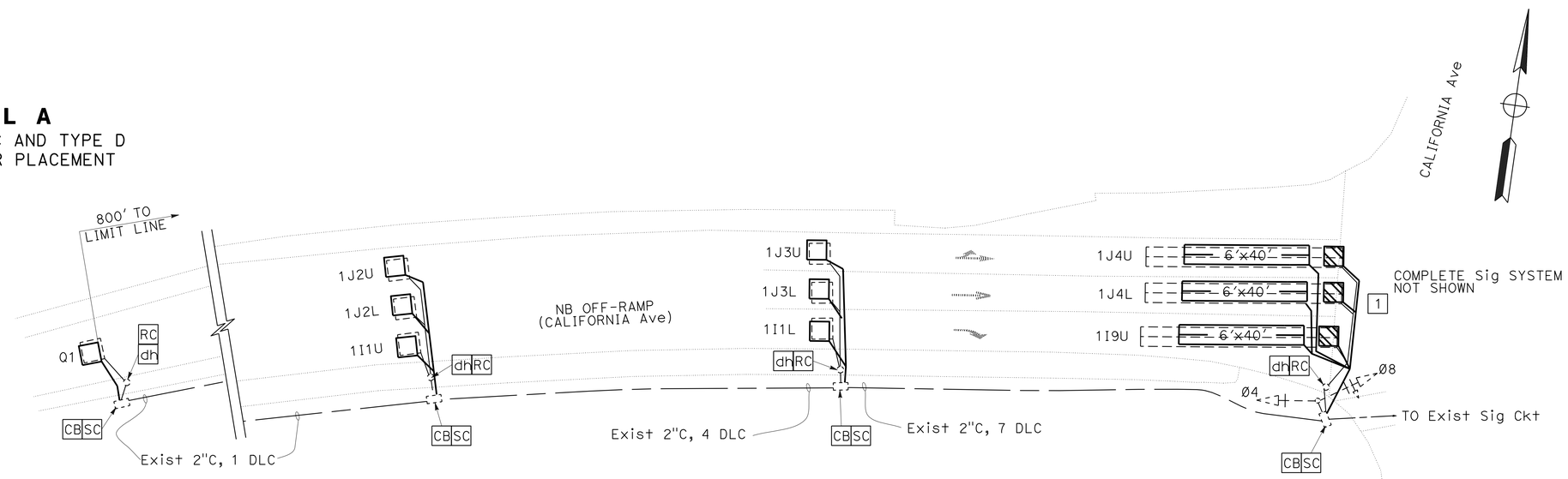

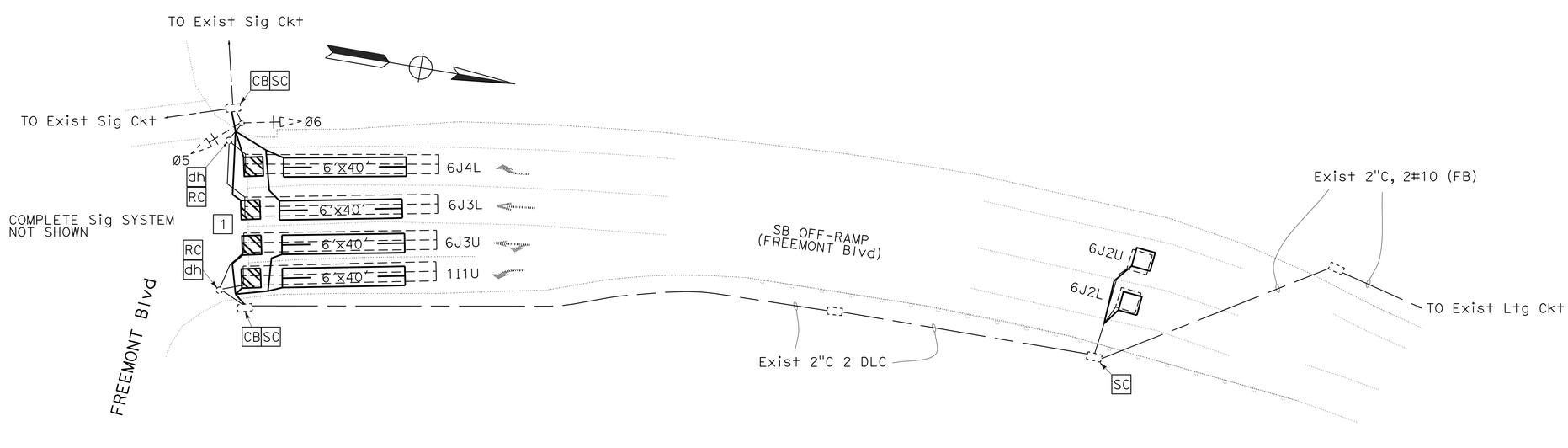

APPROVED FOR ELECTRICAL WORK ONLY

SCALE: 1"=20'

MODIFY SIGNAL
E-2

STATE OF CALIFORNIA - DEPARTMENT OF TRANSPORTATION
Caltrans® ELECTRICAL DESIGN

CALCULATED-DESIGNED BY	XAVIER ALFARO	REVISED BY	PJM
CHECKED BY	PAUL MATOS	DATE REVISED	03-17-15
FUNCTIONAL SUPERVISOR	ALI BAKHDOUD		XIA 03-18-15
			PJM 03-25-15

LAST REVISION 03-20-15 | DATE PLOTTED => 27-MAR-2015 | TIME PLOTTED => 14:08

Dist	COUNTY	ROUTE	POST MILES TOTAL PROJECT	SHEET No.	TOTAL SHEETS
05	Mon	1	R77.6/R85.3	35	101

Xavier Alfaro 3-20-15
REGISTERED ELECTRICAL ENGINEER DATE

3-23-15
PLANS APPROVAL DATE

REGISTERED PROFESSIONAL ENGINEER XAVIER I. ALFARO No. E17488 Exp. 6-30-15 ELECTRICAL STATE OF CALIFORNIA

THE STATE OF CALIFORNIA OR ITS OFFICERS OR AGENTS SHALL NOT BE RESPONSIBLE FOR THE ACCURACY OR COMPLETENESS OF SCANNED COPIES OF THIS PLAN SHEET.

NOTE:

FOR ACCURATE RIGHT OF WAY DATA, CONTACT RIGHT OF WAY ENGINEERING AT THE DISTRICT OFFICE.

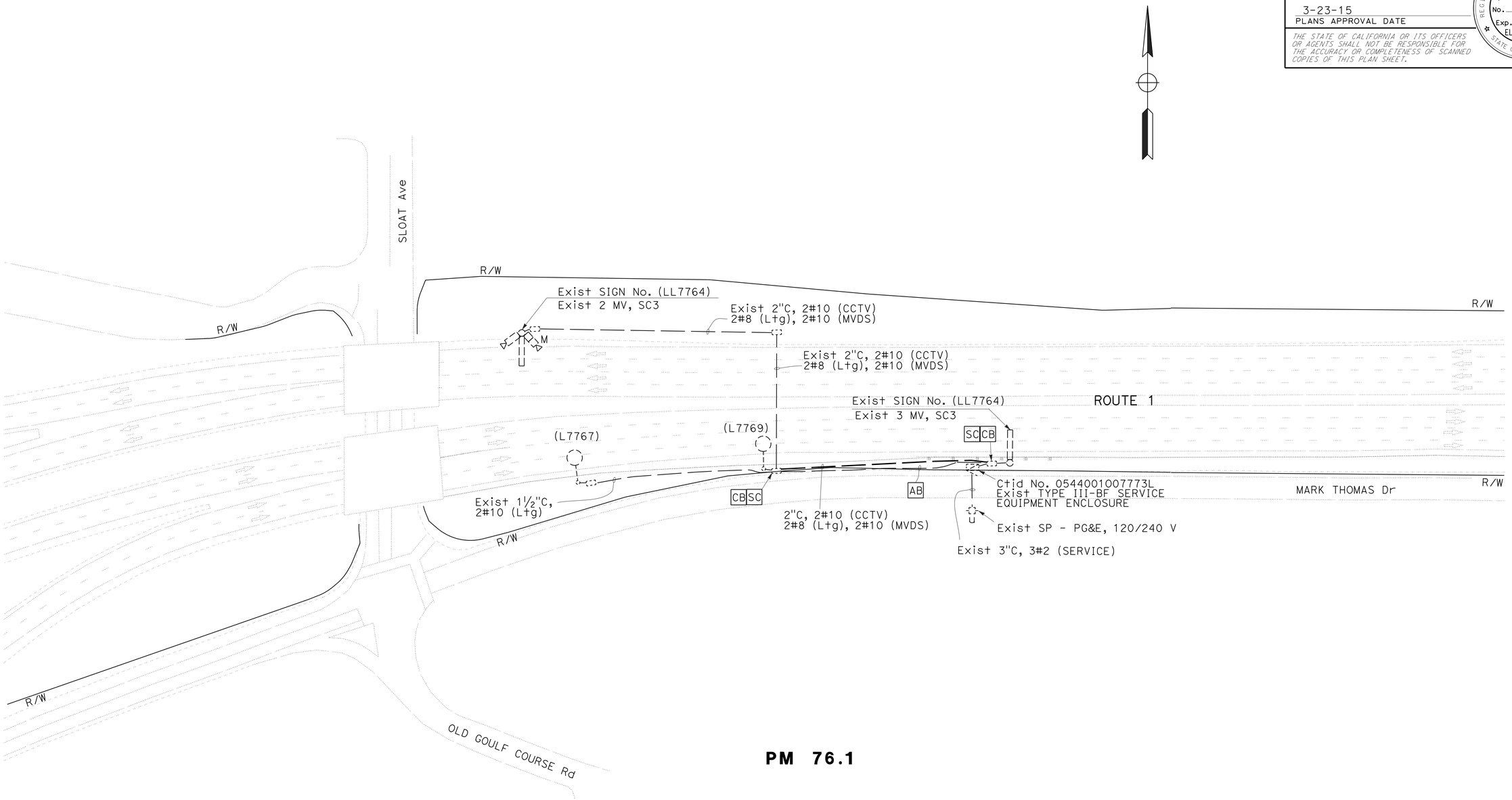

PM 76.1

MODIFY LIGHTING

E-3

APPROVED FOR ELECTRICAL WORK ONLY

SCALE: 1"=50'

PJM	03-25-15		
XIA	03-18-15		
REVISED BY	DATE REVISED		
XAVIER ALFARO	PAUL MATOS		
CALCULATED-DESIGNED BY	CHECKED BY		
FUNCTIONAL SUPERVISOR	ALI BAKHDOUD		

STATE OF CALIFORNIA - DEPARTMENT OF TRANSPORTATION
Caltrans® ELECTRICAL DESIGN

LAST REVISION 03-20-15 | DATE PLOTTED => 27-MAR-2015 | TIME PLOTTED => 14:08

Dist	COUNTY	ROUTE	POST MILES TOTAL PROJECT	SHEET No.	TOTAL SHEETS
05	Mon	1	R77.6/R85.3	36	101

Xavier Alfaro 3-20-15
REGISTERED ELECTRICAL ENGINEER DATE

3-23-15
PLANS APPROVAL DATE

REGISTERED PROFESSIONAL ENGINEER XAVIER I. ALFARO No. E17488 Exp. 6-30-15 ELECTRICAL STATE OF CALIFORNIA

THE STATE OF CALIFORNIA OR ITS OFFICERS OR AGENTS SHALL NOT BE RESPONSIBLE FOR THE ACCURACY OR COMPLETENESS OF SCANNED COPIES OF THIS PLAN SHEET.

LEGEND: (FOR SHEET THIS SHEET ONLY)

1 120/240 V, 1Ø, 3-WIRE TYPE III-BF SERVICE EQUIPMENT ENCLOSURE WITH THE FOLLOWING CIRCUIT BREAKERS:

Ctid No. 05441010077900

AMPERES	VOLTS	POLES	NAMEPLATE DESCRIPTION	METER	PHOTOELECTRIC CONTROL TYPE
100	240	2	MAIN BREAKER	YES	——
30	240	2	HIGHWAY LIGHTING	YES	——
15	120	1	CONTROL	YES	V
20	120	1	SPARE	YES	——
30	240	2	SPARE	YES	——

2 RS Exist VSN. FURNISH AND INSTALL VSN. SEE E-15 FOR DETAILS.

NOTE:

FOR ACCURATE RIGHT OF WAY DATA, CONTACT RIGHT OF WAY ENGINEERING AT THE DISTRICT OFFICE.

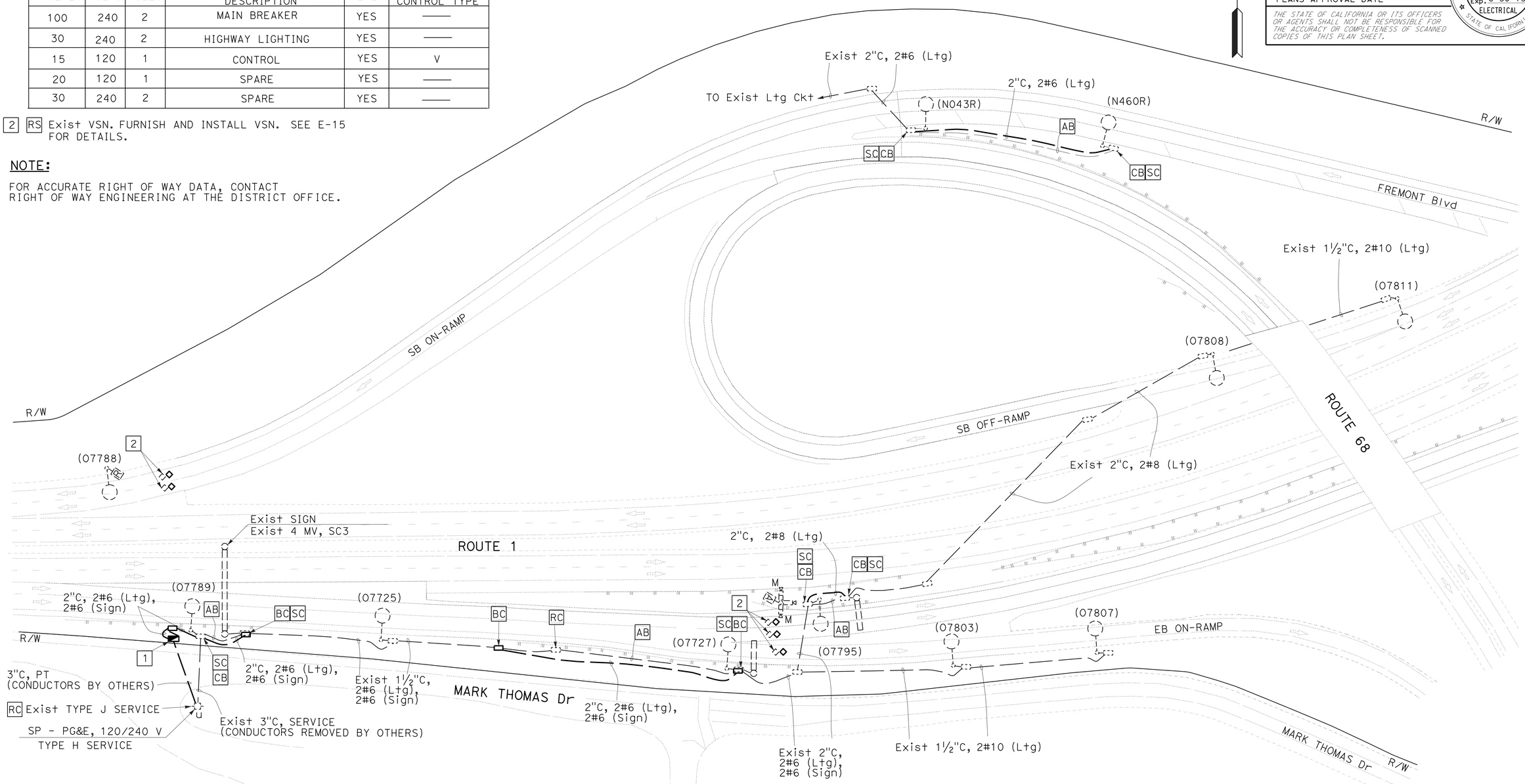

PM 78.1

APPROVED FOR ELECTRICAL WORK ONLY

SCALE: 1"=50'

MODIFY LIGHTING
E-4

STATE OF CALIFORNIA - DEPARTMENT OF TRANSPORTATION
Caltrans® ELECTRICAL DESIGN

FUNCTIONAL SUPERVISOR: ALI BAKHDOUD
CALCULATED-DESIGNED BY: XAVIER ALFARO
CHECKED BY: PAUL MATOS
REVISED BY: XIA — DATE REVISED: 03-18-15
PJM — 03-25-15

LAST REVISION 03-20-15
DATE PLOTTED => 27-MAR-2015
TIME PLOTTED => 14:08

Dist	COUNTY	ROUTE	POST MILES TOTAL PROJECT	SHEET No.	TOTAL SHEETS
05	Mon	1	R77.6/R85.3	37	101

REGISTERED ELECTRICAL ENGINEER 3-20-15 DATE

3-23-15
PLANS APPROVAL DATE

REGISTERED PROFESSIONAL ENGINEER XAVIER I. ALFARO No. E17488 Exp. 6-30-15 ELECTRICAL STATE OF CALIFORNIA

THE STATE OF CALIFORNIA OR ITS OFFICERS OR AGENTS SHALL NOT BE RESPONSIBLE FOR THE ACCURACY OR COMPLETENESS OF SCANNED COPIES OF THIS PLAN SHEET.

NOTE:

FOR ACCURATE RIGHT OF WAY DATA, CONTACT RIGHT OF WAY ENGINEERING AT THE DISTRICT OFFICE.

LEGEND: (FOR SHEET THIS SHEET ONLY)

1 RS Exist VSN. FURNISH AND INSTALL VSN. SEE E-15 FOR DETAILS.

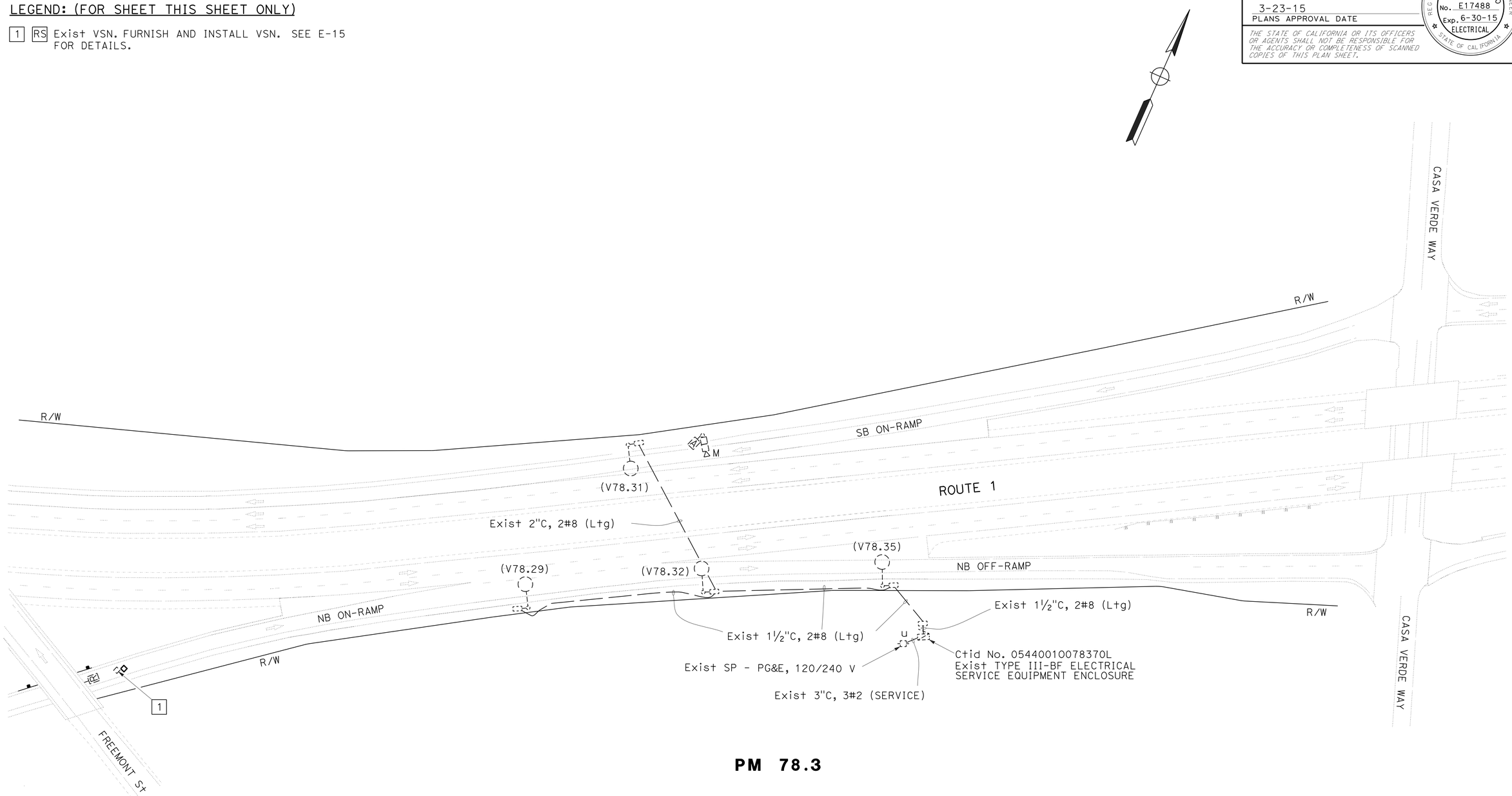

PM 78.3

MODIFY LIGHTING

E-5

APPROVED FOR ELECTRICAL WORK ONLY

SCALE: 1"=50'

STATE OF CALIFORNIA - DEPARTMENT OF TRANSPORTATION
Caltrans® **ELECTRICAL DESIGN**

FUNCTIONAL SUPERVISOR: ALI BAKHDOUD

CALCULATED-DESIGNED BY: XAVIER ALFARO
CHECKED BY: PAUL MATOS

REVISED BY: PJM XIA
DATE REVISED: 03-25-15 03-18-15

LAST REVISION 03-20-15
DATE PLOTTED => 27-MAR-2015
TIME PLOTTED => 14:08

Dist	COUNTY	ROUTE	POST MILES TOTAL PROJECT	SHEET No.	TOTAL SHEETS
05	Mon	1	R77.6/R85.3	38	101

Xavier Alfaro 3-20-15
REGISTERED ELECTRICAL ENGINEER DATE

3-23-15
PLANS APPROVAL DATE

REGISTERED PROFESSIONAL ENGINEER XAVIER I. ALFARO No. E17488 Exp. 6-30-15 ELECTRICAL STATE OF CALIFORNIA

THE STATE OF CALIFORNIA OR ITS OFFICERS OR AGENTS SHALL NOT BE RESPONSIBLE FOR THE ACCURACY OR COMPLETENESS OF SCANNED COPIES OF THIS PLAN SHEET.

NOTE:

FOR ACCURATE RIGHT OF WAY DATA, CONTACT RIGHT OF WAY ENGINEERING AT THE DISTRICT OFFICE.

LEGEND: (FOR SHEET THIS SHEET ONLY)

1 RS Exist VSN. FURNISH AND INSTALL VSN. SEE E-15 FOR DETAILS.

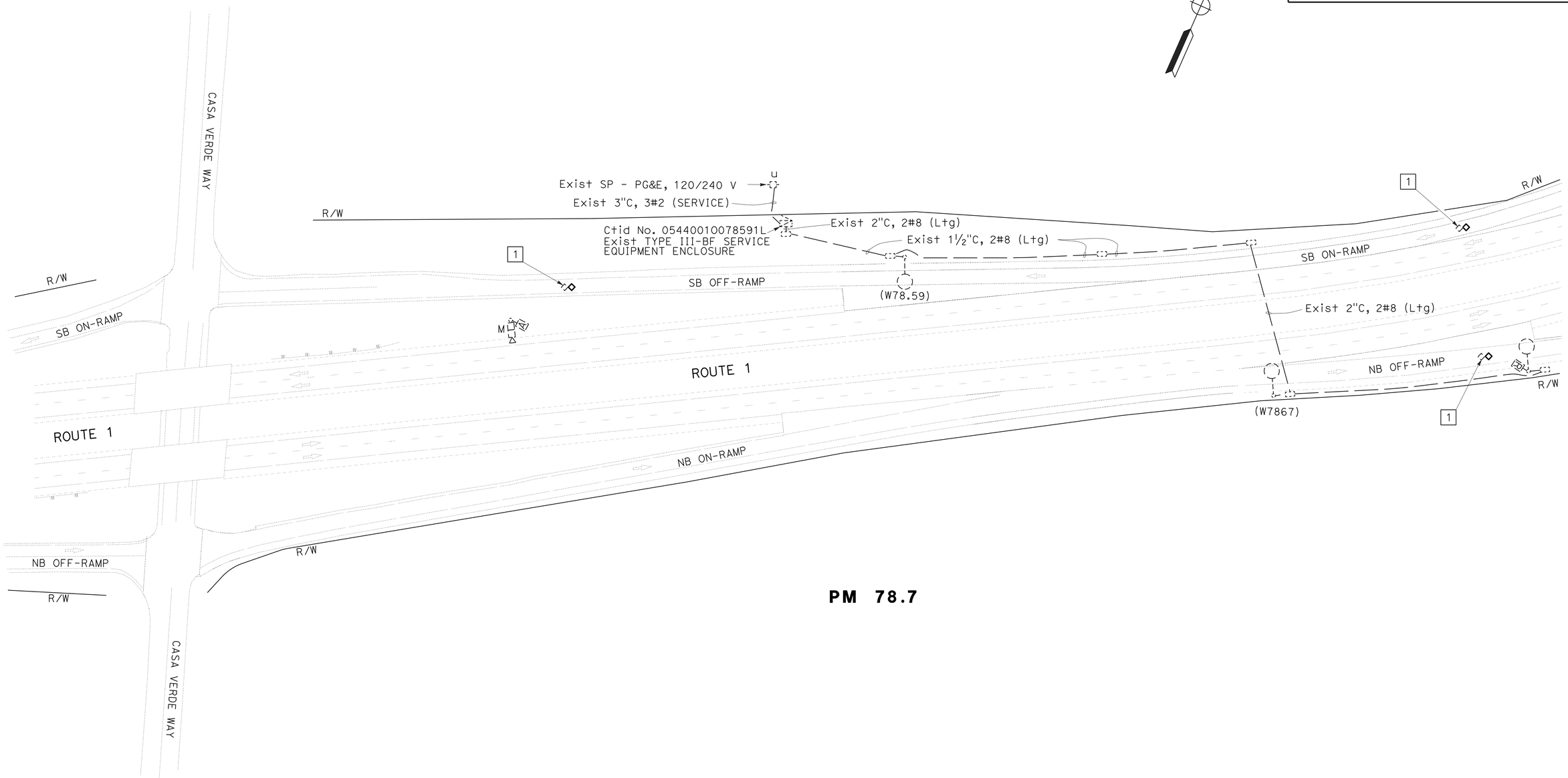

MODIFY LIGHTING
E-6

APPROVED FOR ELECTRICAL WORK ONLY

SCALE: 1"=50'

STATE OF CALIFORNIA - DEPARTMENT OF TRANSPORTATION
Caltrans® **ELECTRICAL DESIGN**

FUNCTIONAL SUPERVISOR: ALI BAKHDOUD
CALCULATED-DESIGNED BY: XAVIER ALFARO
CHECKED BY: PAUL MATOS
REVISED BY: XIA PJM
DATE REVISED: 03-18-15 03-25-15

LAST REVISION 03-20-15 | DATE PLOTTED => 27-MAR-2015 | TIME PLOTTED => 14:08

Dist	COUNTY	ROUTE	POST MILES TOTAL PROJECT	SHEET No.	TOTAL SHEETS
05	Mon	1	R77.6/R85.3	39	101

REGISTERED ELECTRICAL ENGINEER 3-20-15 DATE

3-23-15
PLANS APPROVAL DATE

REGISTERED PROFESSIONAL ENGINEER XAVIER I. ALFARO No. E17488 Exp. 6-30-15 ELECTRICAL STATE OF CALIFORNIA

THE STATE OF CALIFORNIA OR ITS OFFICERS OR AGENTS SHALL NOT BE RESPONSIBLE FOR THE ACCURACY OR COMPLETENESS OF SCANNED COPIES OF THIS PLAN SHEET.

NOTE:

FOR ACCURATE RIGHT OF WAY DATA, CONTACT RIGHT OF WAY ENGINEERING AT THE DISTRICT OFFICE.

LEGEND: (FOR SHEET THIS SHEET ONLY)

1 RS Exist VSN. FURNISH AND INSTALL VSN. SEE E-15 FOR DETAILS.

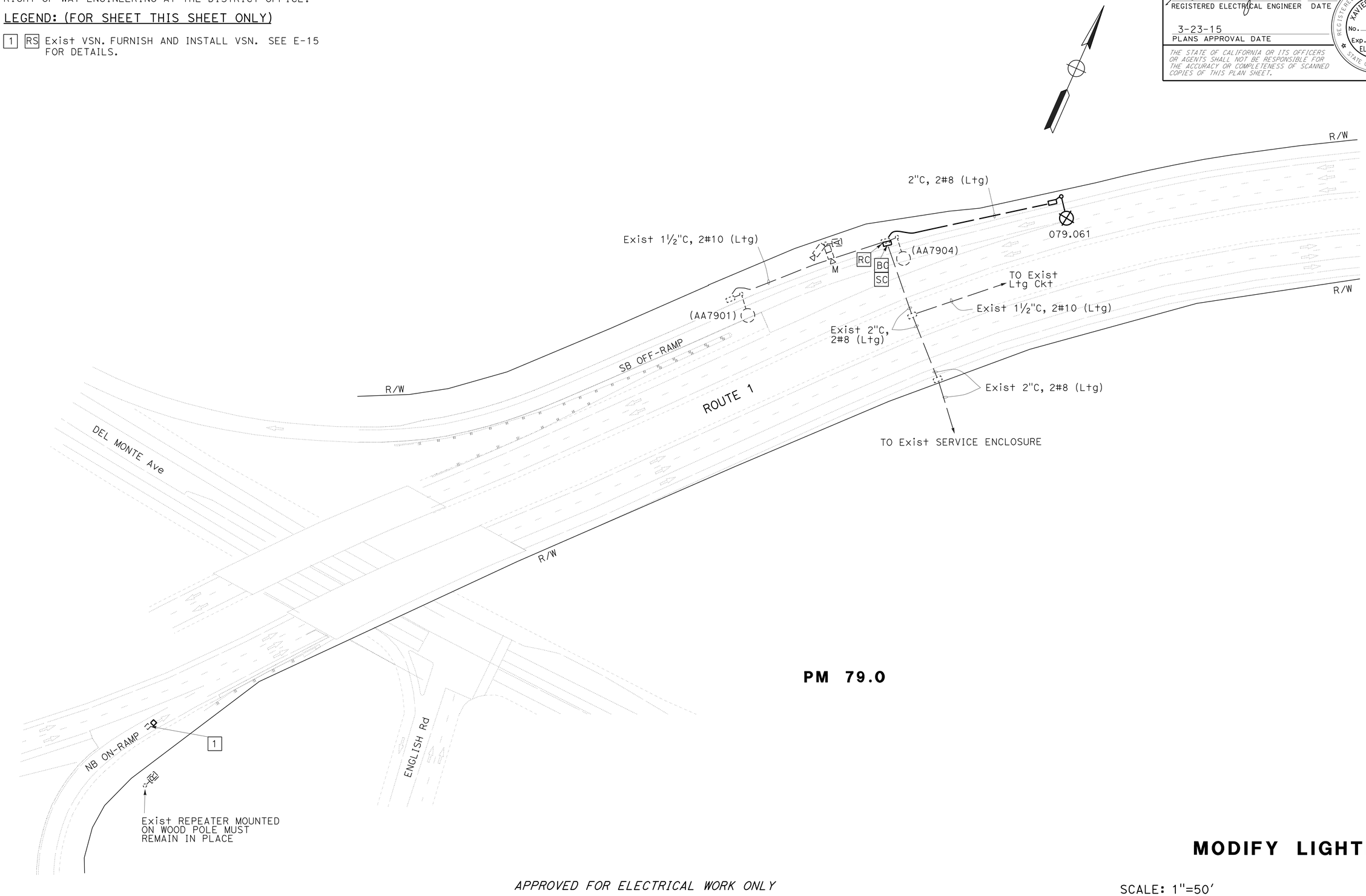

PM 79.0

MODIFY LIGHTING
E-7

APPROVED FOR ELECTRICAL WORK ONLY

SCALE: 1"=50'

STATE OF CALIFORNIA - DEPARTMENT OF TRANSPORTATION
Caltrans® ELECTRICAL DESIGN

FUNCTIONAL SUPERVISOR: ALI BAKHDOUD
CALCULATED-DESIGNED BY: XAVIER ALFARO
CHECKED BY: PAUL MATOS
REVISED BY: XIA 03-18-15 PJM 03-25-15
DATE REVISED

LAST REVISION 03-20-15
DATE PLOTTED => 27-MAR-2015
TIME PLOTTED => 14:08

Dist	COUNTY	ROUTE	POST MILES TOTAL PROJECT	SHEET No.	TOTAL SHEETS
05	Mon	1	R77.6/R85.3	40	101

Xavier Alfaro 3-20-15
REGISTERED ELECTRICAL ENGINEER DATE

3-23-15
PLANS APPROVAL DATE

REGISTERED PROFESSIONAL ENGINEER XAVIER I. ALFARO No. E17488 Exp. 6-30-15 ELECTRICAL STATE OF CALIFORNIA

THE STATE OF CALIFORNIA OR ITS OFFICERS OR AGENTS SHALL NOT BE RESPONSIBLE FOR THE ACCURACY OR COMPLETENESS OF SCANNED COPIES OF THIS PLAN SHEET.

NOTE:

FOR ACCURATE RIGHT OF WAY DATA, CONTACT RIGHT OF WAY ENGINEERING AT THE DISTRICT OFFICE.

LEGEND: (FOR SHEET THIS SHEET ONLY)

1 RS Exist VSN. FURNISH AND INSTALL VSN. SEE E-15 FOR DETAILS.

2 COIL 10' OF LOOP WIRE IN PB.

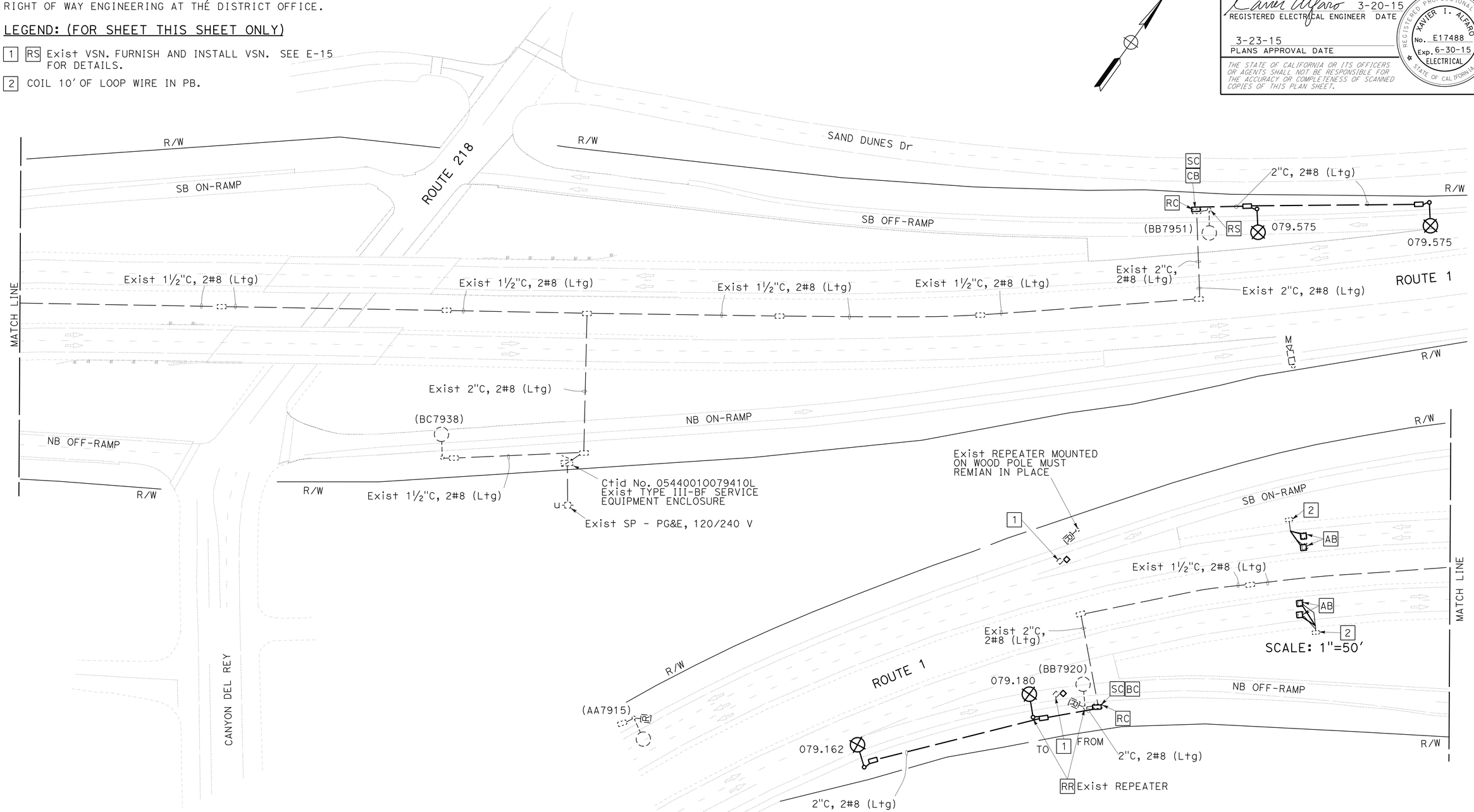

PM 79.2

APPROVED FOR ELECTRICAL WORK ONLY

SCALE: 1"=50'

MODIFY LIGHTING
E-8

STATE OF CALIFORNIA - DEPARTMENT OF TRANSPORTATION
Caltrans® ELECTRICAL DESIGN

FUNCTIONAL SUPERVISOR: ALI BAKHDOUD
CALCULATED-DESIGNED BY: XAVIER ALFARO
CHECKED BY: PAUL MATOS
REVISED BY: XIA PJM
DATE REVISED: 03-18-15 03-25-15

LAST REVISION 03-20-15
DATE PLOTTED => 27-MAR-2015
TIME PLOTTED => 14:08

BORDER LAST REVISED 7/2/2010
USERNAME => s118989
DGN FILE => 0512000019ua008.dgn
RELATIVE BORDER SCALE IS IN INCHES 0 1 2 3
UNIT 1515
PROJECT NUMBER & PHASE 05120000191

Dist	COUNTY	ROUTE	POST MILES TOTAL PROJECT	SHEET No.	TOTAL SHEETS
05	Mon	1	R77.6/R85.3	41	101

Xavier Alfaro 3-20-15
REGISTERED ELECTRICAL ENGINEER DATE

3-23-15
PLANS APPROVAL DATE

REGISTERED PROFESSIONAL ENGINEER XAVIER I. ALFARO No. E17488 Exp. 6-30-15 ELECTRICAL STATE OF CALIFORNIA

THE STATE OF CALIFORNIA OR ITS OFFICERS OR AGENTS SHALL NOT BE RESPONSIBLE FOR THE ACCURACY OR COMPLETENESS OF SCANNED COPIES OF THIS PLAN SHEET.

NOTE:

FOR ACCURATE RIGHT OF WAY DATA, CONTACT RIGHT OF WAY ENGINEERING AT THE DISTRICT OFFICE.

LEGEND: (FOR SHEET THIS SHEET ONLY)

1 RS Exist VSN. FURNISH AND INSTALL VSN. SEE E-15 FOR DETAILS.

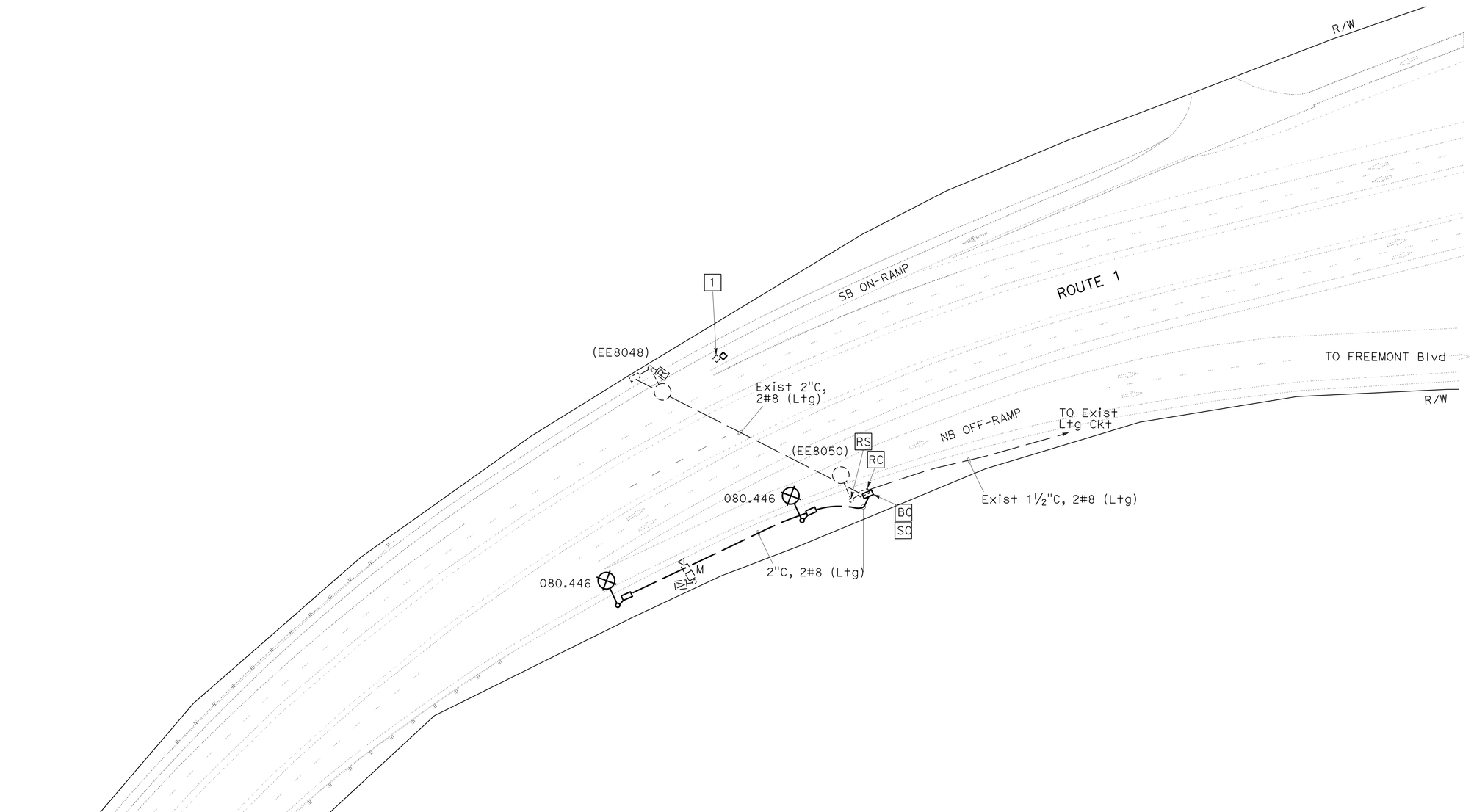

PM 80.5

APPROVED FOR ELECTRICAL WORK ONLY

SCALE: 1"=50'

MODIFY LIGHTING

E-9

STATE OF CALIFORNIA - DEPARTMENT OF TRANSPORTATION
Caltrans® **ELECTRICAL DESIGN**

FUNCTIONAL SUPERVISOR: ALI BAKHDOUD

CALCULATED-DESIGNED BY: XAVIER ALFARO
CHECKED BY: PAUL MATOS

REVISED BY: XIA — DATE REVISED: 03-18-15
PJM — 03-25-15

LAST REVISION 03-20-15 | DATE PLOTTED => 27-MAR-2015 | TIME PLOTTED => 14:08

BORDER LAST REVISED 7/2/2010 | USERNAME => s118989 | DGN FILE => 0512000019ua009.dgn | RELATIVE BORDER SCALE IS IN INCHES 0 1 2 3 | UNIT 1515 | PROJECT NUMBER & PHASE | 05120000191

Dist	COUNTY	ROUTE	POST MILES TOTAL PROJECT	SHEET No.	TOTAL SHEETS
05	Mon	1	R77.6/R85.3	42	101

REGISTERED ELECTRICAL ENGINEER 3-20-15 DATE

3-23-15
PLANS APPROVAL DATE

REGISTERED PROFESSIONAL ENGINEER XAVIER I. ALFARO No. E17488 Exp. 6-30-15 ELECTRICAL STATE OF CALIFORNIA

THE STATE OF CALIFORNIA OR ITS OFFICERS OR AGENTS SHALL NOT BE RESPONSIBLE FOR THE ACCURACY OR COMPLETENESS OF SCANNED COPIES OF THIS PLAN SHEET.

NOTE:

FOR ACCURATE RIGHT OF WAY DATA, CONTACT RIGHT OF WAY ENGINEERING AT THE DISTRICT OFFICE.

LEGEND: (FOR SHEET THIS SHEET ONLY)

1 RS Exist VSN. FURNISH AND INSTALL VSN. SEE E-15 FOR DETAILS.

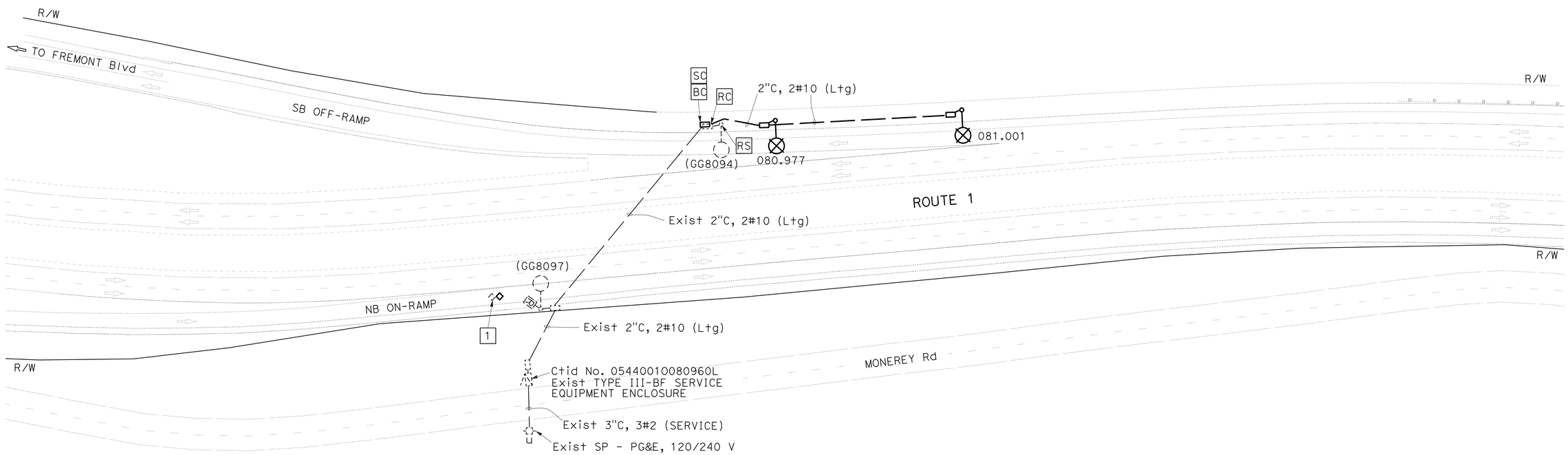

PM 80.9

APPROVED FOR ELECTRICAL WORK ONLY

MODIFY LIGHTING
E-10

SCALE: 1"=50'

REVISED BY	DATE REVISED
PJM	03-25-15
XIA	03-18-15

XAVIER ALFARO — PAUL MATOS — CALCULATED-DESIGNED BY — CHECKED BY

FUNCTIONAL SUPERVISOR: ALI BAKHDOUD

STATE OF CALIFORNIA - DEPARTMENT OF TRANSPORTATION

Caltrans® ELECTRICAL DESIGN

LAST REVISION 03-20-15 | DATE PLOTTED => 27-MAR-2015 | TIME PLOTTED => 14:08

Dist	COUNTY	ROUTE	POST MILES TOTAL PROJECT	SHEET No.	TOTAL SHEETS
05	Mon	1	R77.6/R85.3	43	101

Xavier Alfaro 3-20-15
REGISTERED ELECTRICAL ENGINEER DATE

3-23-15
PLANS APPROVAL DATE

REGISTERED PROFESSIONAL ENGINEER XAVIER I. ALFARO No. E17488 Exp. 6-30-15 ELECTRICAL STATE OF CALIFORNIA

THE STATE OF CALIFORNIA OR ITS OFFICERS OR AGENTS SHALL NOT BE RESPONSIBLE FOR THE ACCURACY OR COMPLETENESS OF SCANNED COPIES OF THIS PLAN SHEET.

NOTE:

FOR ACCURATE RIGHT OF WAY DATA, CONTACT RIGHT OF WAY ENGINEERING AT THE DISTRICT OFFICE.

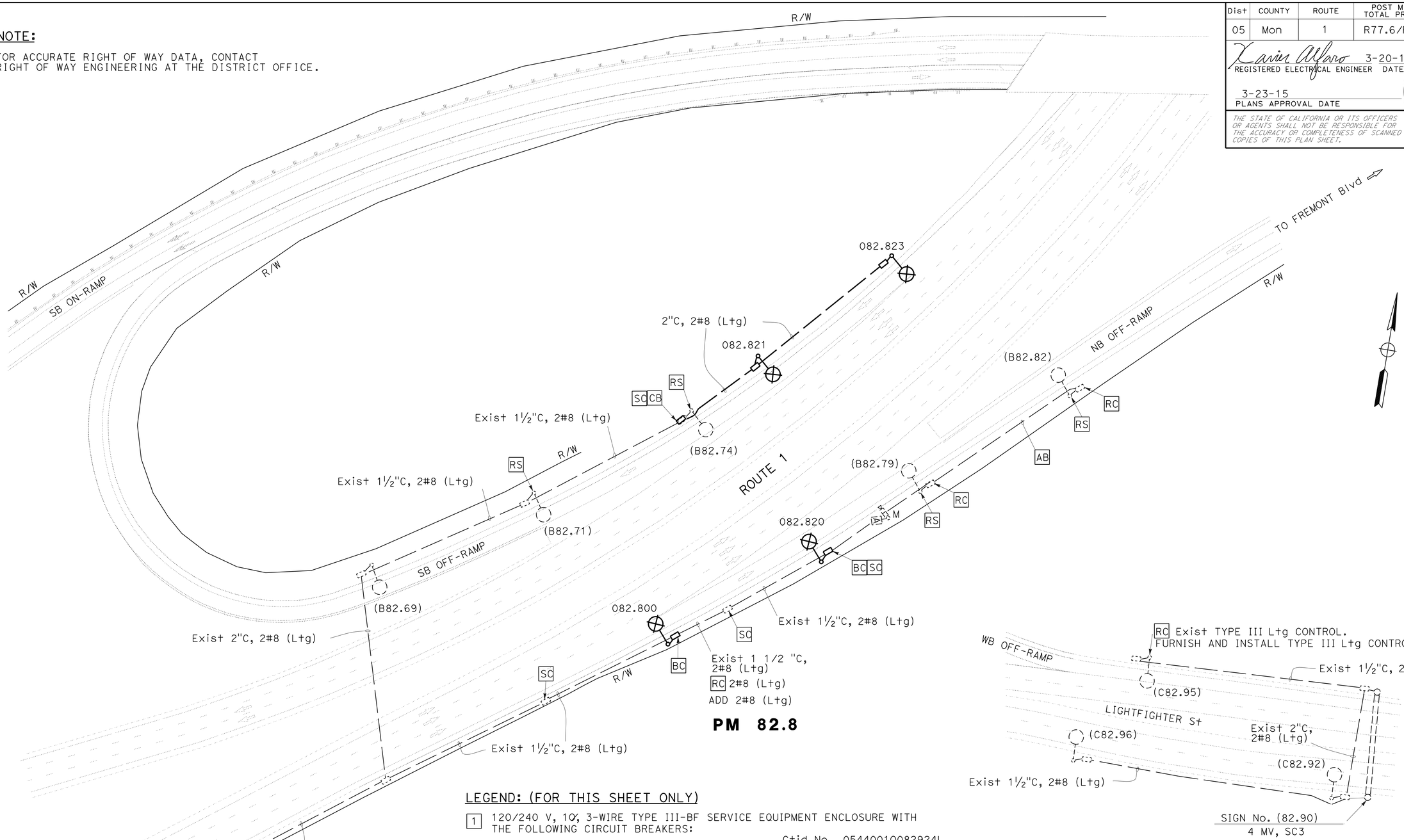

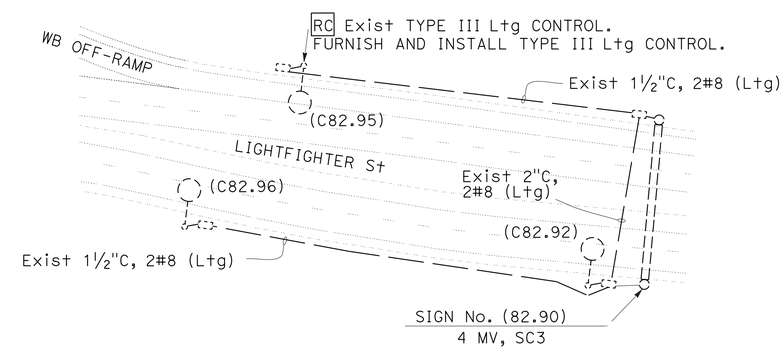

LEGEND: (FOR THIS SHEET ONLY)

1 120/240 V, 1Ø, 3-WIRE TYPE III-BF SERVICE EQUIPMENT ENCLOSURE WITH THE FOLLOWING CIRCUIT BREAKERS:

Ctid No. 05440010082924L

AMPERES	VOLTS	POLES	NAMEPLATE DESCRIPTION	METER	PHOTOELECTRIC CONTROL TYPE
100	240	2	MAIN BREAKER	YES	——
30	240	2	HIGHWAY LIGHTING	YES	——
15	120	1	CONTROL	YES	V
30	240	2	SPARE	YES	——
20	120	1	SPARE	YES	——

APPROVED FOR ELECTRICAL WORK ONLY

MODIFY LIGHTING

SCALE: 1"=50'

E-11

XAVIER ALFARO	PAUL MATOS	REVISED BY XIA	DATE REVISED 03-18-15
CALCULATED-DESIGNED BY	CHECKED BY	FUNCTIONAL SUPERVISOR ALI BAKHDOUD	PJM 03-25-15

STATE OF CALIFORNIA - DEPARTMENT OF TRANSPORTATION
Caltrans® ELECTRICAL DESIGN

LAST REVISION 03-20-15 | DATE PLOTTED => 27-MAR-2015 | TIME PLOTTED => 14:08

BORDER LAST REVISED 7/2/2010 | USERNAME => s118989 | DGN FILE => 0512000019ua011.dgn | RELATIVE BORDER SCALE IS IN INCHES 0 1 2 3 | UNIT 1515 | PROJECT NUMBER & PHASE 05120000191

Dist	COUNTY	ROUTE	POST MILES TOTAL PROJECT	SHEET No.	TOTAL SHEETS
05	Mon	1	R77.6/R85.3	44	101

REGISTERED ELECTRICAL ENGINEER 3-20-15 DATE

3-23-15
PLANS APPROVAL DATE

REGISTERED PROFESSIONAL ENGINEER XAVIER I. ALFARO No. E17488 Exp. 6-30-15 ELECTRICAL STATE OF CALIFORNIA

THE STATE OF CALIFORNIA OR ITS OFFICERS OR AGENTS SHALL NOT BE RESPONSIBLE FOR THE ACCURACY OR COMPLETENESS OF SCANNED COPIES OF THIS PLAN SHEET.

NOTE:

FOR ACCURATE RIGHT OF WAY DATA, CONTACT RIGHT OF WAY ENGINEERING AT THE DISTRICT OFFICE.

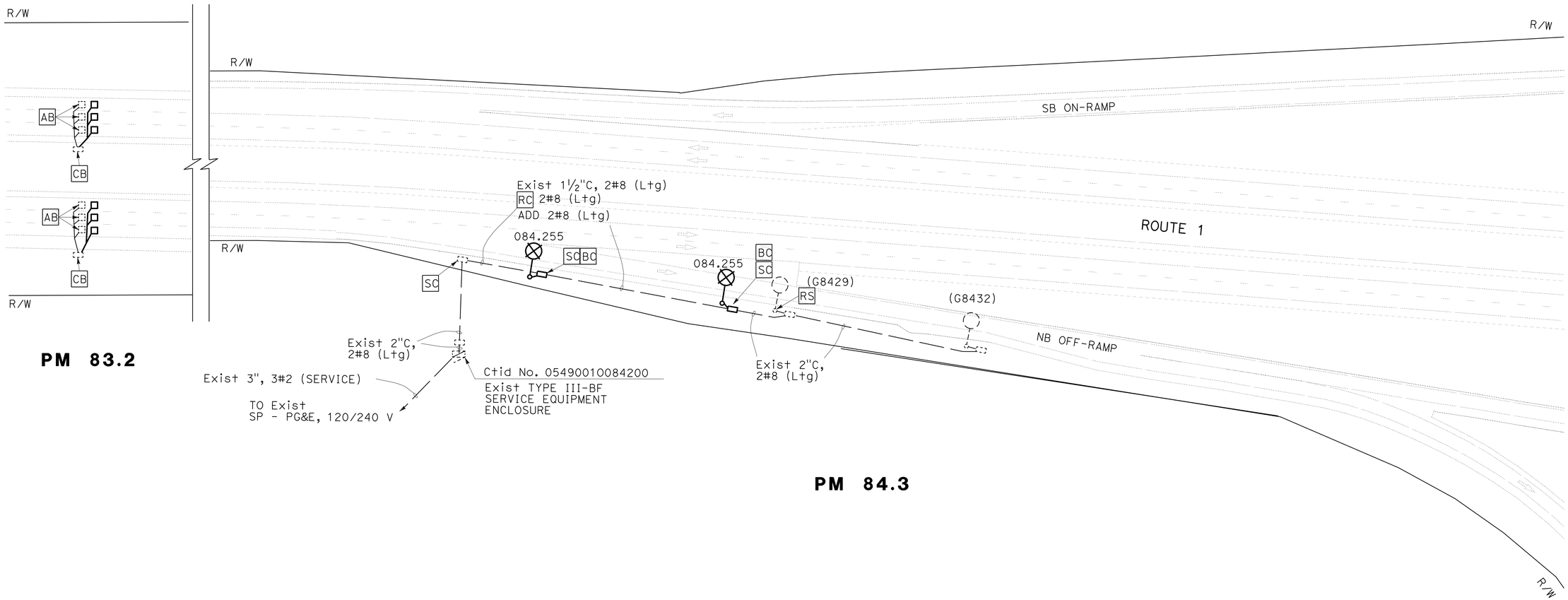

APPROVED FOR ELECTRICAL WORK ONLY

MODIFY LIGHTING
E-12

SCALE: 1"=50'

STATE OF CALIFORNIA - DEPARTMENT OF TRANSPORTATION
Caltrans® **ELECTRICAL DESIGN**

FUNCTIONAL SUPERVISOR: ALI BAKHDOUD
CALCULATED-DESIGNED BY: XAVIER ALFARO
CHECKED BY: PAUL MATOS
REVISED BY: XIA PJM
DATE REVISED: 03-18-15 03-25-15

LAST REVISION 03-20-15
DATE PLOTTED => 27-MAR-2015
TIME PLOTTED => 14:08

Dist	COUNTY	ROUTE	POST MILES TOTAL PROJECT	SHEET No.	TOTAL SHEETS
05	Mon	1	R77.6/R85.3	45	101

Xavier Alfaro 3-20-15
REGISTERED ELECTRICAL ENGINEER DATE

3-23-15
PLANS APPROVAL DATE

REGISTERED PROFESSIONAL ENGINEER XAVIER I. ALFARO No. E17488 Exp. 6-30-15 ELECTRICAL STATE OF CALIFORNIA

THE STATE OF CALIFORNIA OR ITS OFFICERS OR AGENTS SHALL NOT BE RESPONSIBLE FOR THE ACCURACY OR COMPLETENESS OF SCANNED COPIES OF THIS PLAN SHEET.

NOTE:

FOR ACCURATE RIGHT OF WAY AND ACCESS DATA, CONTACT RIGHT OF WAY ENGINEERING AT THE DISTRICT OFFICE.

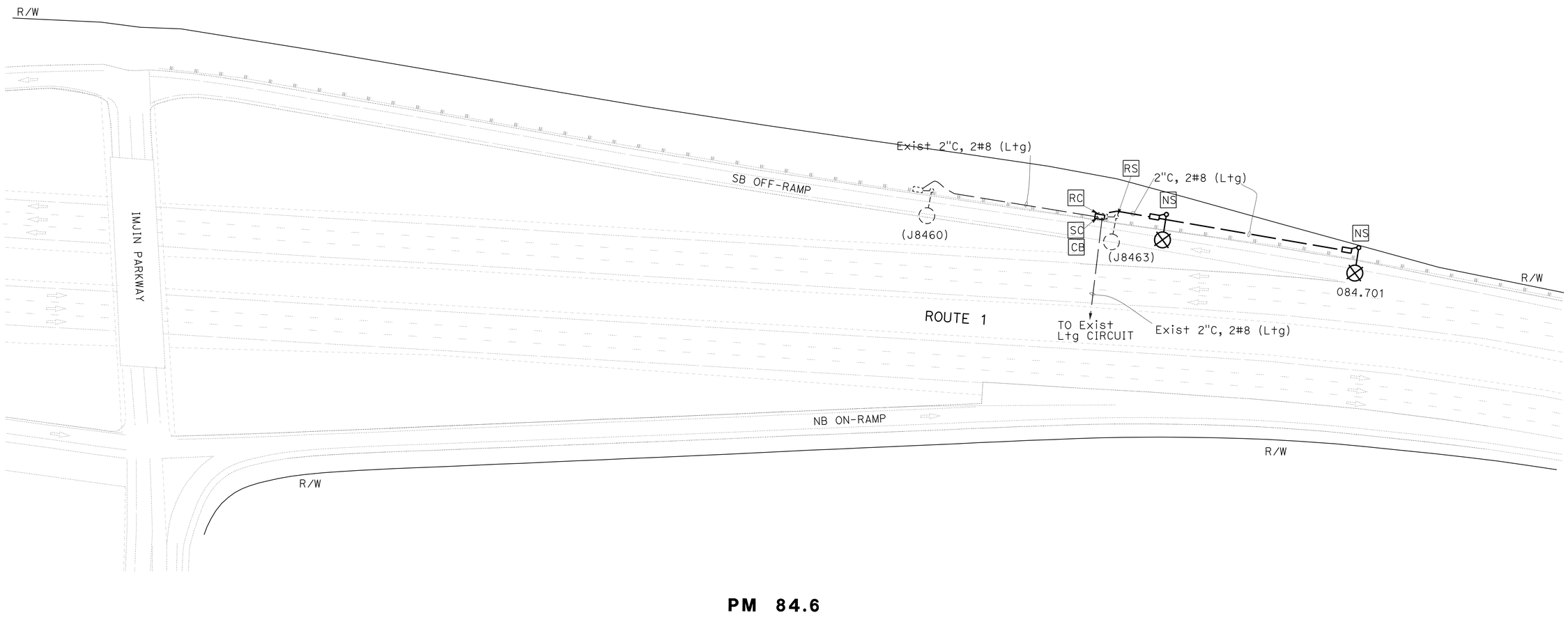

PM 84.6

APPROVED FOR ELECTRICAL WORK ONLY

MODIFY LIGHTING

SCALE: 1"=50'

E-13

STATE OF CALIFORNIA - DEPARTMENT OF TRANSPORTATION
Caltrans® **ELECTRICAL DESIGN**

FUNCTIONAL SUPERVISOR: ALI BAKHDOUD
CALCULATED-DESIGNED BY: XAVIER ALFARO
CHECKED BY: PAUL MATOS
REVISED BY: XIA — DATE REVISED: 03-18-15
PJM — 03-25-15

LAST REVISION 03-20-15
DATE PLOTTED => 27-MAR-2015
TIME PLOTTED => 14:08

Dist	COUNTY	ROUTE	POST MILES TOTAL PROJECT	SHEET No.	TOTAL SHEETS
05	Mon	1	R77.6/R85.3	46	101

Xavier Alfaro 3-20-15
REGISTERED ELECTRICAL ENGINEER DATE

3-23-15
PLANS APPROVAL DATE

REGISTERED PROFESSIONAL ENGINEER XAVIER I. ALFARO No. E17488 Exp. 6-30-15 ELECTRICAL STATE OF CALIFORNIA

THE STATE OF CALIFORNIA OR ITS OFFICERS OR AGENTS SHALL NOT BE RESPONSIBLE FOR THE ACCURACY OR COMPLETENESS OF SCANNED COPIES OF THIS PLAN SHEET.

NOTE:

FOR ACCURATE RIGHT OF WAY DATA, CONTACT
RIGHT OF WAY ENGINEERING AT THE DISTRICT OFFICE.

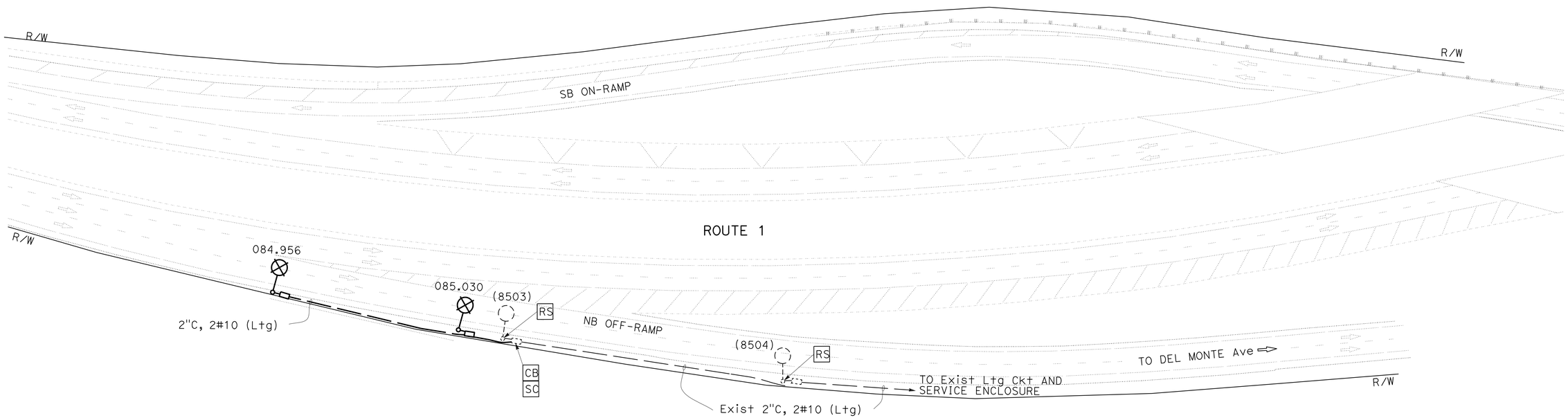

PM 85.0

APPROVED FOR ELECTRICAL WORK ONLY

MODIFY LIGHTING
E-14

SCALE: 1"=50'

STATE OF CALIFORNIA - DEPARTMENT OF TRANSPORTATION
Caltrans® **ELECTRICAL DESIGN**

FUNCTIONAL SUPERVISOR: ALI BAKHDOUD
CALCULATED-DESIGNED BY: XAVIER ALFARO
CHECKED BY: PAUL MATOS
REVISED BY: XIA — DATE REVISED: 03-18-15
PJM — 03-25-15

LAST REVISION 03-20-15 | DATE PLOTTED => 27-MAR-2015 | TIME PLOTTED => 14:08

Dist	COUNTY	ROUTE	POST MILES TOTAL PROJECT	SHEET No.	TOTAL SHEETS
05	Mon	1	R77.6/R85.3	47	101

Xavier Alfaro 3-20-15
REGISTERED ELECTRICAL ENGINEER DATE

3-23-15
PLANS APPROVAL DATE

REGISTERED PROFESSIONAL ENGINEER XAVIER I. ALFARO No. E17488 Exp. 6-30-15 ELECTRICAL STATE OF CALIFORNIA

THE STATE OF CALIFORNIA OR ITS OFFICERS OR AGENTS SHALL NOT BE RESPONSIBLE FOR THE ACCURACY OR COMPLETENESS OF SCANNED COPIES OF THIS PLAN SHEET.

NOTES:

1. PRIOR TO INSTALLATION, NOTE SENSOR'S ID, LANE NUMBER, AND LOCATION IN LANE.
2. UNLESS OTHERWISE SPECIFIED, INSTALL SENSOR IN THE MIDDLE OF THE LANE.
3. USE DOUBLE-CYLINDER 4" CORING BIT, WITH 1.25" STANDARD MACHINE THREADED SLEEVE.
4. MARK A LINE 2.25" FROM THE BOTTOM OF THE DOUBLE-CYLINDER CORING BIT, AND DRILL THROUGH THE ASPHALT CONCRETE OR PORTLAND CEMENT TO THIS DEPTH.
5. CORE A HOLE AT LEAST 2.25" DEEP SO THAT WHEN INSTALLED THE TOP OF THE SENSOR IS AT LEAST 0.25" BELOW THE SURFACE.
6. MAKE SURE THE SENSOR INSTALLS FLAT IN THE CORED HOLE AND IS NOT TILTED.
7. ONCE THE CORRECT DEPTH IS REACHED, USE THE HAMMER DRILL TO REMOVE THE INNER AND OUTER CYLINDRICAL "SHELLS", AND THE BUSHING BIT TO FLATTEN THE SURFACE.
8. ONCE COMPLETE, REMOVE ALL DUST AND DEBRIS OUT OF THE CORED HOLE.
9. USE THE HEAT-GUN OR HOT COMPRESSED AIR TO DRY THE INSIDE OF THE CORED HOLE.
10. IF THE HOLE IS TOO DEEP OR UNEVEN, SAND CAN BE USED TO FLATTEN THE SURFACE.
11. FILL THE HOLE ABOUT 1/4 FULL OF THE SENSOR EPOXY/ADHESIVE.
12. PLACE SENSOR IN THE HOLE WITH ARROW POINTING IN THE DIRECTION OF TRAFFIC. THE EPOXY SHOULD STILL HAVE WORK TIME, SO THE SENSOR CAN BE ROTATED TO THE RIGHT POSITION. PUSH SENSOR DOWN SO IT LAYS FLAT ON THE BOTTOM OF THE HOLE. THIS ASSURES THAT THERE IS A BOND UNDERNEATH THE SENSOR WITH THE EPOXY.
13. FILL IN THE REMAINING EMPTY SPACE OF THE HOLE WITH EPOXY AND COVER THE SENSOR WITH EPOXY TO MAKE IT LEVEL WITH THE SURFACE OF THE ROAD.
14. THERE MUST BE ABSOLUTELY NO MOISTURE ON THE APPLIED SURFACE.
15. AFTER THE FIRST APPLICATION, DO NOT LET THE EPOXY SIT FOR MORE THAN 30 SECONDS BEFORE THE NEXT APPLICATION.
16. DEPENDING ON AMBIENT TEMPERATURE AND HUMIDITY, EPOXY DRYING TIME CAN VARY FROM 5 MINUTES TO 15 MINUTES. VERIFY HARDNESS OF EPOXY BEFORE REOPENING THE LANE FOR TRAFFIC.
17. INSTALL AT TEMPERATURE GREATER THAN -37 °C.
18. EXACT PLACEMENT OF TRAFFIC MONITORING LOOP DETECTORS AND VEHICLE SENSOR NODES MUST BE DETERMINED BY THE ENGINEER. SEE DETAIL 1 FOR TYPICAL LOOP DETCTOR INSTALLATION DETAILS.

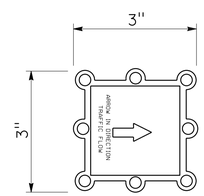

VEHICLE SENSOR NODE

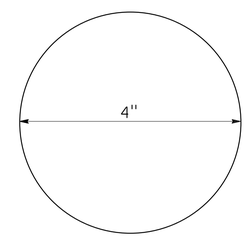

VEHICLE SENSOR NODE CORED HOLE

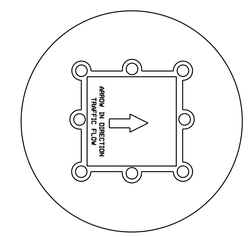

VEHICLE SENSOR NODE IN HOLE

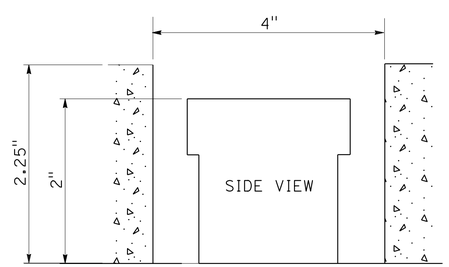

VEHICLE SENSOR NODE IN HOLE

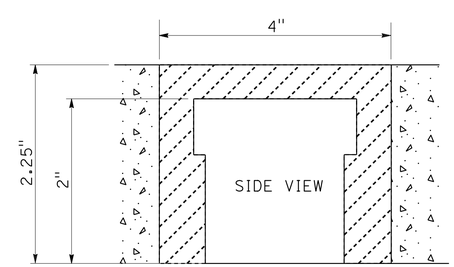

VEHICLE SENSOR NODE IN HOLE WITH EPOXY

WIRELESS VEHICLE SENSOR NODES

ELECTRICAL DETAILS
E-15

NO SCALE

REVISED BY	PJM	PJM	PJM
DATE REVISED	03-18-15	03-25-15	
XAVIER ALFARO			
PAUL MATOS			
CALCULATED-DESIGNED BY			
CHECKED BY			
FUNCTIONAL SUPERVISOR			
ALI BAKHDOUD			

STATE OF CALIFORNIA - DEPARTMENT OF TRANSPORTATION
Caltrans® ELECTRICAL DESIGN

LAST REVISION 03-20-15
DATE PLOTTED => 27-MAR-2015
TIME PLOTTED => 14:08

Dist	COUNTY	ROUTE	POST MILES TOTAL PROJECT	SHEET No.	TOTAL SHEETS
05	Mon	1	R77.6/R85.3	48	101

Xavier Alfaro 3-20-15
REGISTERED ELECTRICAL ENGINEER

3-23-15
PLANS APPROVAL DATE

REGISTERED PROFESSIONAL ENGINEER XAVIER I. ALFARO No. E17488 Exp. 6-30-15 ELECTRICAL STATE OF CALIFORNIA

THE STATE OF CALIFORNIA OR ITS OFFICERS OR AGENTS SHALL NOT BE RESPONSIBLE FOR THE ACCURACY OR COMPLETENESS OF SCANNED COPIES OF THIS PLAN SHEET.

NOTE:

THE QUANTITIES SHOWN IN THE TABLES ARE NOT A SEPARATE PAY ITEM, FOR INFORMATION ONLY. FOR COMPLETE ELECTRICAL WORK, SEE THE ELECTRICAL PLAN SHEETS.

MODIFY SIGNAL

SHEET No.	2"C, TYPE 3	3"C, TYPE 3	No. 10 CONDUCTOR	No. 8 CONDUCTOR (G)	DLC	3CSC CABLE	9CSC CABLE	12CSC CABLE	TYPE A DETECTOR LOOP	TYPE C DETECTOR LOOP	TYPE A (6' X 20') DETECTOR LOOP	TYPE D DETECTOR LOOP	No. 5 PB	No. 6 PB	PBA POLE	PBA FOUNDATION	LED COUNTDOWN PSF MODULE	APS
	LF								EA									
E-1	50	70	900	400	1600	500	200	600	3	3	1	3	1	1	1	1	4	4
E-2									9	7		7						

MODIFY LIGHTING

SHEET No.	No. 5 PB	DETECTOR LOOP, TYPE A	TYPE 30 STANDARD FOUNDATION	TYPE 30 STANDARD	TYPE III LIGHTING CONTROL	TYPE III-BF SERVICE EQUIPMENT ENCLOSURE FOUNDATION	TYPE III-BF SERVICE EQUIPMENT ENCLOSURE	VSN	2" CONDUIT (TYPE 3)	3" CONDUIT (TYPE 3)	No. 14 CONDUCTOR	No. 10 CONDUCTOR	No. 8 CONDUCTOR	No. 8 CONDUCTOR (G)	No. 6 CONDUCTOR (G)
	EA								FT						
E-3									200			800	400	200	
E-4	4					1	1	5	550	100				650	1800
E-5								1							
E-6								3							
E-7	2		1	1				1	200		100		200	100	
E-8	6	4	4	4				2	500		400		1000	500	
E-9	3		2	2				1	250		200		500	250	
E-10	3		2	2				1	230		200	460		230	
E-11	6		4	4	1	1	1		250	50	400		700	350	
E-12	2	6	2	2					20		200		500	250	
E-13	3		2	2					250		200		500	250	
E-14	2		2	2					250		200	500		250	

ELECTRICAL QUANTITIES
E-16

REVISED BY	DATE REVISED
XIA	03-18-15
PJM	03-25-15

XAVIER ALFARO — CALCULATED-DESIGNED BY
PAUL MATOS — CHECKED BY
FUNCTION-RAMPAL SUPERVISOR: ALI BAKHDOUD

STATE OF CALIFORNIA - DEPARTMENT OF TRANSPORTATION-RAMP
Caltrans® ELECTRICAL DESIGN

LAST REVISION 03-20-15 | DATE PLOTTED => 27-MAR-2015 | TIME PLOTTED => 14:08

M

Maint	MAINTENANCE
Max	MAXIMUM
MB	METAL BEAM
MBB	METAL BEAM BARRIER
MBGR	METAL BEAM GUARD RAILING
Med	MEDIAN
MGS	MIDWEST GUARDRAIL SYSTEM
MH	MANHOLE
Min	MINIMUM
Misc	MISCELLANEOUS
Misc I & S	MISCELLANEOUS IRON AND STEEL
Mkr	MARKER
Mod	MODIFIED,
	MODIFY
Mon	MONUMENT
MP	METAL PLATE
MPGR	METAL PLATE GUARD RAILING
MR	MOVEMENT RATING
MSE	MECHANICALLY STABILIZED EMBANKMENT
Mt	MOUNTAIN, MOUNT
Mtl	MATERIAL
MVP	MAINTENANCE VEHICLE PULLOUT

N

N	NORTH
NB	NORTHBOUND
No.	NUMBER (MUST HAVE PERIOD)
Nos.	NUMBERS (MUST HAVE PERIOD)
NPS	NOMINAL PIPE SIZE
NS	NEAR SIDE
NSP	NEW STANDARD PLAN
NTS	NOT TO SCALE

O

Oblr	OBLITERATE
OC	OVERCROSSING
OD	OUTSIDE DIAMETER
OF	OUTSIDE FACE
OG	ORIGINAL GROUND
OGAC	OPEN GRADED ASPHALT CONCRETE
OGFC	OPEN GRADED FRICTION COURSE
OH	OVERHEAD
OHWM	ORDINARY HIGH WATER MARK
O-O	OUT TO OUT
Opp	OPPOSITE
OSD	OVERSIDE DRAIN

P

p	PAGE
PAP	PERFORATED ALUMINUM PIPE
PB	PULL BOX
PC	POINT OF CURVATURE,
	PRECAST
PCC	POINT OF COMPOUND CURVE,
	PORTLAND CEMENT CONCRETE
PCMS	PORTABLE CHANGEABLE MESSAGE SIGN
PCP	PERFORATED CONCRETE PIPE,
	PRESTRESSED CONCRETE PIPE
PCVC	POINT OF COMPOUND VERTICAL CURVE
PEC	PERMIT TO ENTER AND CONSTRUCT
Ped	PEDESTRIAN
Ped OC	PEDESTRIAN OVERCROSSING
Ped UC	PEDESTRIAN UNDERCROSSING
Perm Mtl	PERMEABLE MATERIAL

P continued

PG	PROFILE GRADE
PI	POINT OF INTERSECTION
PJP	PARTIAL JOINT PENETRATION
Pkwy	PARKWAY
ℙ,PL	PLATE
P/L	PROPERTY LINE
PM	POST MILE,
	TIME FROM NOON TO MIDNIGHT
PN	PAVING NOTCH
POC	POINT OF HORIZONTAL CURVE
POT	POINT OF TANGENT
POVC	POINT OF VERTICAL CURVE
PP	PIPE PILE,
	PLASTIC PIPE,
	POWER POLE
PPL	PREFORMED PERMEABLE LINER
PPP	PERFORATED PLASTIC PIPE
PRC	POINT OF REVERSE CURVE
PRF	PAVEMENT REINFORCING FABRIC
PRVC	POINT OF REVERSE VERTICAL CURVE
PS&E	PLANS, SPECIFICATIONS AND ESTIMATES
PS, P/S	PRESTRESSED
PSP	PERFORATED STEEL PIPE
PT	POINT OF TANGENCY
PVC	POLYVINYL CHLORIDE
Pvmt	PAVEMENT

Q

Qty	QUANTITY

R

R	RADIUS
R & D	REMOVE AND DISPOSE
R & S	REMOVE AND SALVAGE
R/C	RATE OF CHANGE
RCA	REINFORCED CONCRETE ARCH
RCB	REINFORCED CONCRETE BOX
RCP	REINFORCED CONCRETE PIPE
RCPA	REINFORCED CONCRETE PIPE ARCH
Rd	ROAD
Reinf	REINFORCED,
	REINFORCEMENT,
	REINFORCING
Rel	RELOCATE
Repl	REPLACEMENT
Ret	RETAINING
Rev	REVISED, REVISION
Rdwy	ROADWAY
RHMA	RUBBERIZED HOT MIX ASPHALT
Riv	RIVER
RM	ROAD-MIXED
RP	RADIUS POINT,
	REFERENCE POINT
RR	RAILROAD
RSP	ROCK SLOPE PROTECTION,
	REVISED STANDARD PLAN
Rt	RIGHT
Rte	ROUTE
RW	REDWOOD,
	RETAINING WALL
R/W	RIGHT OF WAY
Rwy	RAILWAY

S

S	SOUTH,
	SUPPLEMENT
SAE	STRUCTURE APPROACH EMBANKMENT
Salv	SALVAGE
SAPP	STRUCTURAL ALUMINUM PLATE PIPE
SB	SOUTHBOUND
SC	SAND CUSHION
SCSP	SLOTTED CORRUGATED STEEL PIPE
SD	STORM DRAIN
Sec	SECOND,
	SECTION
Sep	SEPARATION
SG	SUBGRADE
Shld	SHOULDER
Sht	SHEET
Sim	SIMILAR
℄	STATION LINE
SM	SELECTED MATERIAL
Spec	SPECIAL,
	SPECIFICATIONS
SPP	SLOTTED PLASTIC PIPE
SS	SLOPE STAKE
SSBM	STRAP AND SADDLE BRACKET METHOD
SSD	STRUCTURAL SECTION DRAIN
SSPA	STRUCTURAL STEEL PLATE ARCH
SSPP	STRUCTURAL STEEL PLATE PIPE
SSPPA	STRUCTURAL STEEL PLATE PIPE ARCH
SSRP	STEEL SPIRAL RIB PIPE
St	STREET
Sta	STATION
STBB	SINGLE THRIE BEAM BARRIER
Std	STANDARD
Str	STRUCTURE
Surf	SURFACING
SW	SIDEWALK,
	SOUND WALL
Swr	SEWER
Sym	SYMMETRICAL
S4S	SURFACE 4 SIDES

T

T	SEMI-TANGENT
Tan	TANGENT
TBB	THRIE BEAM BARRIER
Tbr	TIMBER
TC	TOP OF CURB
TCB	TRAFFIC CONTROL BOX
TCE	TEMPORARY CONSTRUCTION EASEMENT
Tel	TELEPHONE
Temp	TEMPORARY
TG	TOP OF GRADE
Tot	TOTAL
TP	TELEPHONE POLE
TPB	TREATED PERMEABLE BASE
TPM	TREATED PERMEABLE MATERIAL
Trans	TRANSITION

T continued

TS	TRANSVERSE,
	TRAFFIC SIGNAL,
	TUBULAR STEEL
Typ	TYPICAL

U

UC	UNDERCROSSING
UD	UNDERDRAIN
UG	UNDERGROUND
UON	UNLESS OTHERWISE NOTED
UP	UNDERPASS

V

V	VALVE,
	DESIGN SPEED
Var	VARIABLE,
	VARIES
VC	VERTICAL CURVE
VCP	VITRIFIED CLAY PIPE
Vert	VERTICAL
Via	VIADUCT
Vol	VOLUME

W

W	WEST,
	WIDTH
WB	WESTBOUND
WH	WEEP HOLE
WM	WIRE MESH
WS	WATER SURFACE
WSP	WELDED STEEL PIPE
Wt	WEIGHT
WV	WATER VALVE
WW	WINGWALL
WWLOL	WINGWALL LAYOUT LINE

X

X Sec	CROSS SECTION
Xing	CROSSING

Y

Yr	YEAR
Yrs	YEARS

Dist	COUNTY	ROUTE	POST MILES TOTAL PROJECT	SHEET No.	TOTAL SHEETS
05	Mon	1	R77.6/R85.3	49	101

Grace M. Tsushima
REGISTERED CIVIL ENGINEER

July 19, 2013
PLANS APPROVAL DATE

REGISTERED PROFESSIONAL ENGINEER Grace M. Tsushima No. C49814 Exp. 9-30-14 CIVIL STATE OF CALIFORNIA

THE STATE OF CALIFORNIA OR ITS OFFICERS OR AGENTS SHALL NOT BE RESPONSIBLE FOR THE ACCURACY OR COMPLETENESS OF SCANNED COPIES OF THIS PLAN SHEET.

TO ACCOMPANY PLANS DATED 3-23-15

UNIT OF MEASUREMENT SYMBOLS:

Some of the symbols used in the project plan quantity tables and in the Bid Item List are:

TABLE A

SYMBOL USED	DEFINITIONS
ACRE	ACRE
CF	CUBIC FOOT
CY	CUBIC YARD
EA	EACH
GAL	GALLON
LB	POUND
LF	LINEAR FOOT
SQFT	SQUARE FOOT
SQYD	SQUARE YARD
STA	100 FEET
TAB	TABLET
TON	2,000 POUNDS

Some of the symbols used in the plans other than in the project plan quantity tables are:

TABLE B

SYMBOL USED	DEFINITIONS
ksi	KIPS PER SQUARE INCH
ksf	KIPS PER SQUARE FOOT
psi	POUNDS PER SQUARE INCH
psf	POUNDS PER SQUARE FOOT
lb/ft^3, pcf	POUNDS PER CUBIC FOOT
tsf	TONS PER SQUARE FOOT
mph, MPH *	MILES PER HOUR
ø	NOMINAL DIAMETER
oz	OUNCE
lb	POUND
kip	1,000 POUNDS
cal	CALORIE
ft	FOOT OR FEET
gal	GALLON

* For use on a sign panel only

STATE OF CALIFORNIA
DEPARTMENT OF TRANSPORTATION

ABBREVIATIONS (SHEET 2 OF 2)

NO SCALE

RSP A10B DATED JULY 19, 2013 SUPERSEDES STANDARD PLAN A10B DATED MAY 20, 2011 - PAGE 2 OF THE STANDARD PLANS BOOK DATED 2010.

REVISED STANDARD PLAN RSP A10B

2010 REVISED STANDARD PLAN RSP A10B

6-7-13

Dist	COUNTY	ROUTE	POST MILES TOTAL PROJECT	SHEET No.	TOTAL SHEETS
05	Mon	1	R77.6/R85.3	50	101

REGISTERED CIVIL ENGINEER

July 19, 2013
PLANS APPROVAL DATE

REGISTERED PROFESSIONAL ENGINEER Roberta L. McLaughlin No. C40375 Exp. 3-31-15 CIVIL STATE OF CALIFORNIA

THE STATE OF CALIFORNIA OR ITS OFFICERS OR AGENTS SHALL NOT BE RESPONSIBLE FOR THE ACCURACY OR COMPLETENESS OF SCANNED COPIES OF THIS PLAN SHEET.

TO ACCOMPANY PLANS DATED 3-23-15

2010 REVISED STANDARD PLAN RSP A20C

EXIT RAMP NEUTRAL AREA (GORE) TREATMENT

DETAIL 36

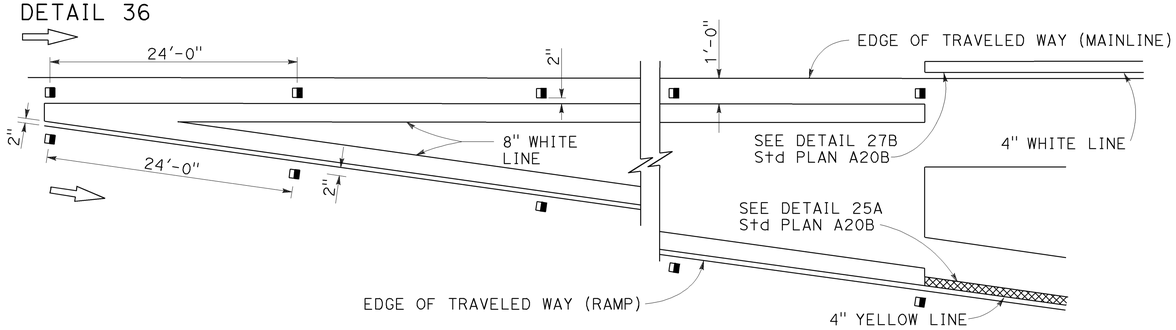

ENTRANCE RAMP NEUTRAL AREA (MERGE) TREATMENT

DETAIL 36A

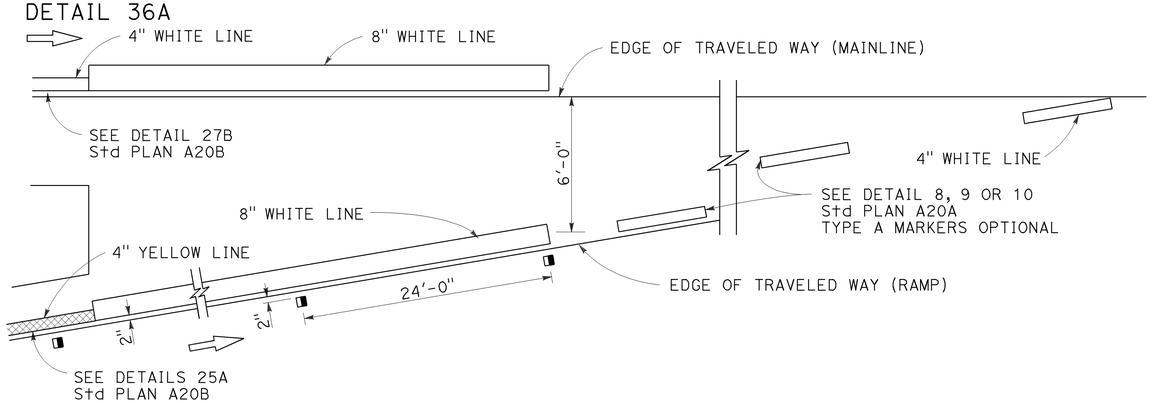

ENTRANCE RAMP NEUTRAL AREA (ACCELERATION LANE) TREATMENT

DETAIL 36B

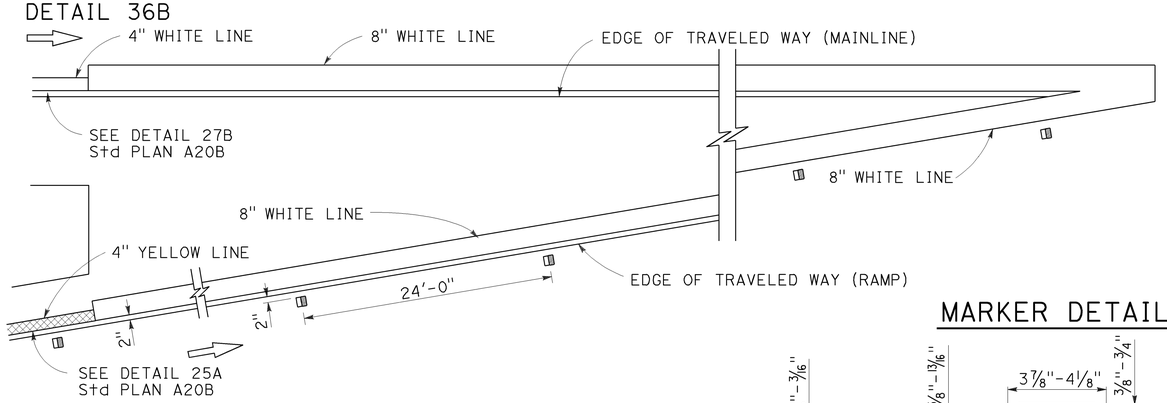

LANE DROP AT EXIT RAMPS

DETAIL 37

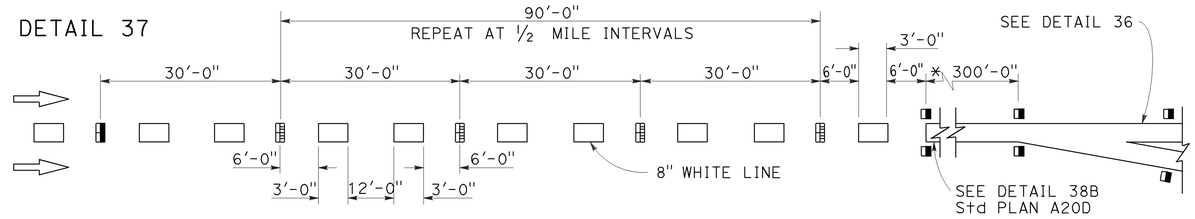

DETAIL 37A

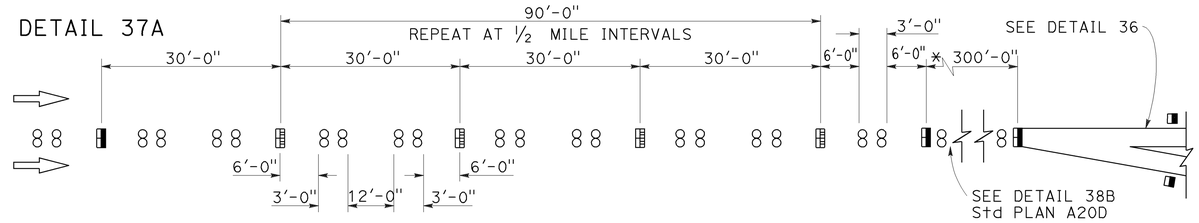

* The solid channelizing line shown may be omitted on short auxiliary lanes where weaving length is critical.

LANE DROP AT INTERSECTIONS

DETAIL 37B

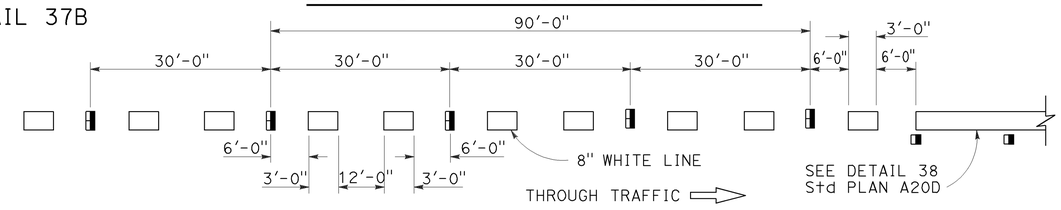

DETAIL 37C

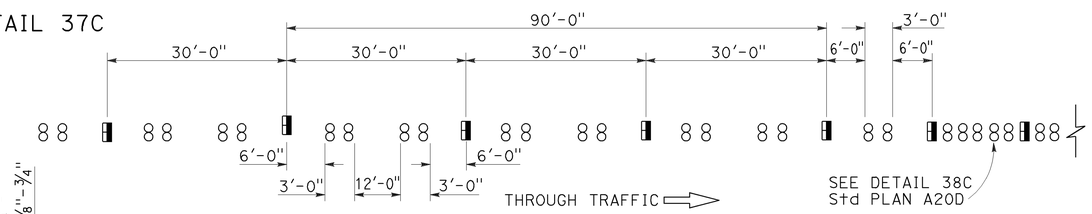

MARKER DETAILS

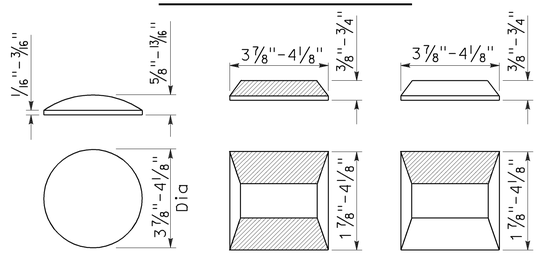

RETROREFLECTIVE FACE

LEGEND:

MARKERS

- ○ TYPE A WHITE NON-REFLECTIVE
- ⊟ TYPE C RED-CLEAR RETROREFLECTIVE
- ◨ TYPE G ONE-WAY CLEAR RETROREFLECTIVE

STATE OF CALIFORNIA
DEPARTMENT OF TRANSPORTATION

PAVEMENT MARKERS AND TRAFFIC LINE TYPICAL DETAILS

NO SCALE

RSP A20C DATED JULY 19, 2013 SUPERSEDES STANDARD PLAN A20C DATED MAY 20, 2011 - PAGE 11 OF THE STANDARD PLANS BOOK DATED 2010.

REVISED STANDARD PLAN RSP A20C

4-29-13

Dist	COUNTY	ROUTE	POST MILES TOTAL PROJECT	SHEET No.	TOTAL SHEETS
05	Mon	1	R77.6/R85.3	51	101

REGISTERED CIVIL ENGINEER

April 20, 2012
PLANS APPROVAL DATE

Roberta L. McLaughlin
No. C40375
Exp. 3-31-13
CIVIL
REGISTERED PROFESSIONAL ENGINEER
STATE OF CALIFORNIA

THE STATE OF CALIFORNIA OR ITS OFFICERS OR AGENTS SHALL NOT BE RESPONSIBLE FOR THE ACCURACY OR COMPLETENESS OF SCANNED COPIES OF THIS PLAN SHEET.

TO ACCOMPANY PLANS DATED 3-23-15

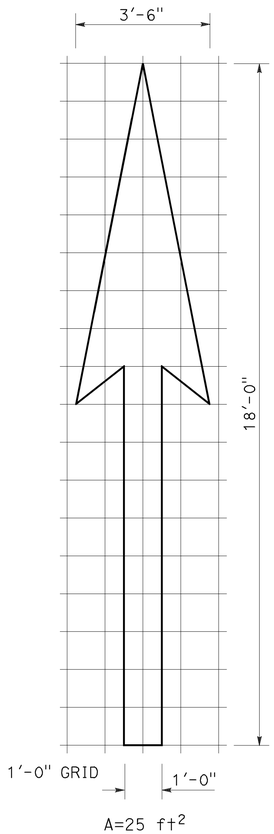

A=25 ft^2

TYPE I 18'-0" ARROW

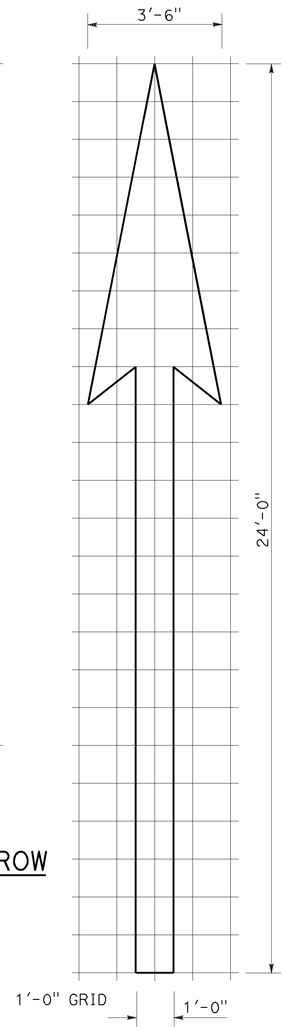

A=31 ft^2

TYPE I 24'-0" ARROW

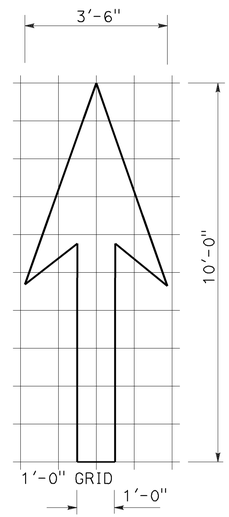

A=14 ft^2

TYPE I 10'-0" ARROW

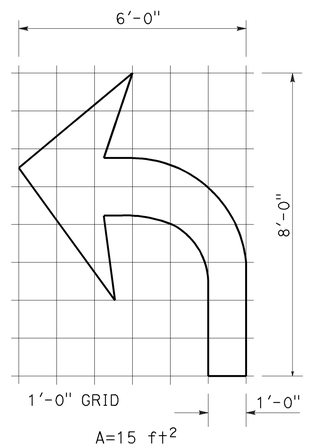

A=15 ft^2

TYPE IV (L) ARROW

(For Type IV (R) arrow, use mirror image)

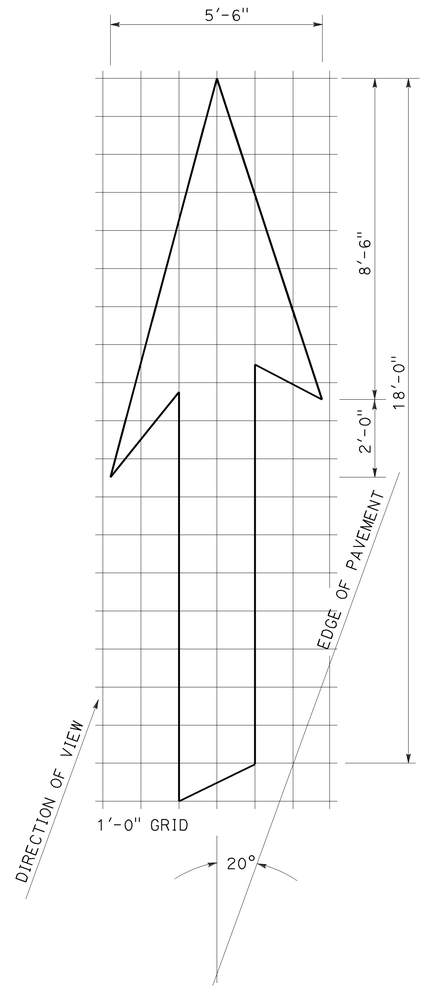

A=42 ft^2

TYPE VI ARROW

Right lane drop arrow
(For left lane, use mirror image)

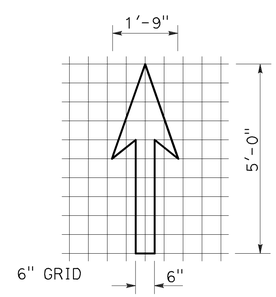

A=3.5 ft^2

BIKE LANE ARROW

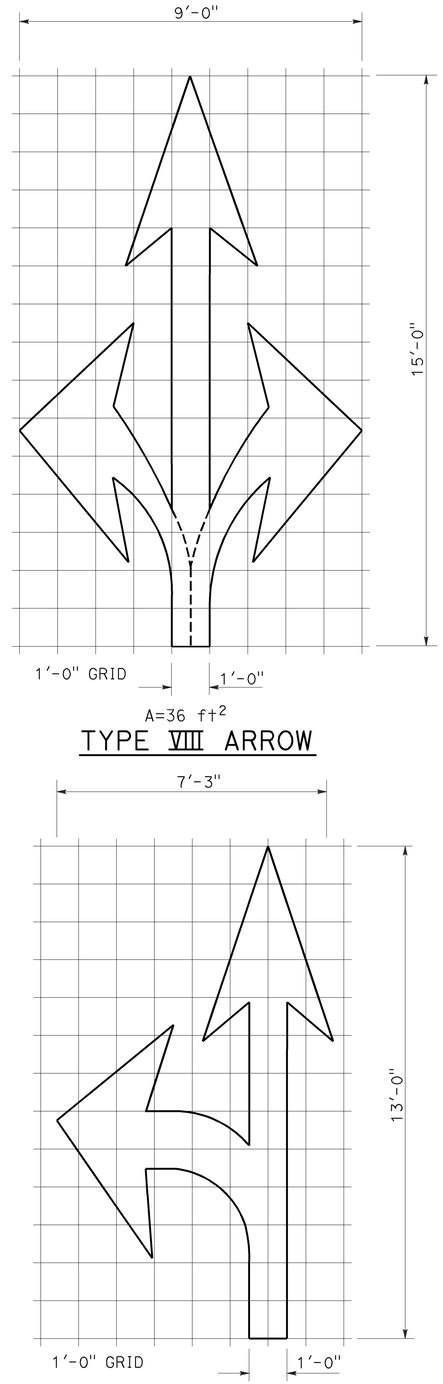

A=36 ft^2

TYPE VIII ARROW

A=27 ft^2

TYPE VII (L) ARROW

(For Type VII (R) arrow, use mirror image)

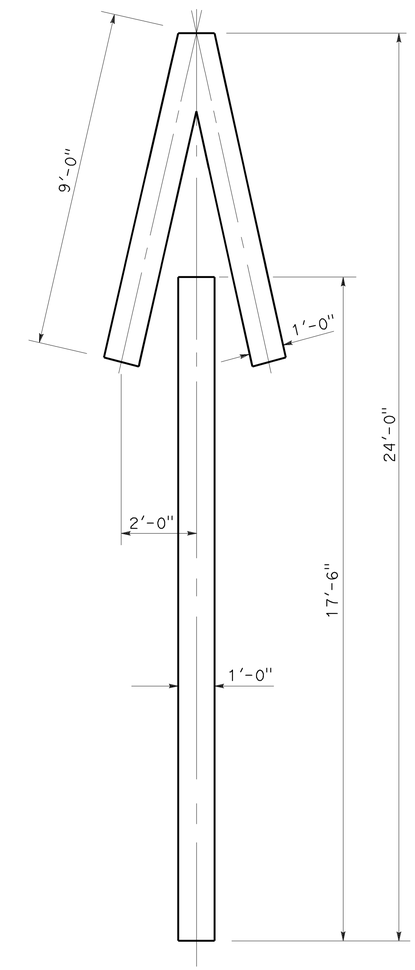

A=33 ft^2

TYPE V ARROW

NOTE:
Minor variations in dimensions may be accepted by the Engineer.

STATE OF CALIFORNIA
DEPARTMENT OF TRANSPORTATION

PAVEMENT MARKINGS ARROWS

NO SCALE

RSP A24A DATED APRIL 20, 2012 SUPERSEDES STANDARD PLAN A24A DATED MAY 20, 2011 - PAGE 13 OF THE STANDARD PLANS BOOK DATED 2010.

REVISED STANDARD PLAN RSP A24A

2010 REVISED STANDARD PLAN RSP A24A

3-14-12

Dist	COUNTY	ROUTE	POST MILES TOTAL PROJECT	SHEET No.	TOTAL SHEETS
05	Mon	1	R77.6/R85.3	52	101

REGISTERED CIVIL ENGINEER

October 19, 2012
PLANS APPROVAL DATE

Roberta L. McLaughlin
No. C40375
Exp. 3-31-13
CIVIL
STATE OF CALIFORNIA
REGISTERED PROFESSIONAL ENGINEER

THE STATE OF CALIFORNIA OR ITS OFFICERS OR AGENTS SHALL NOT BE RESPONSIBLE FOR THE ACCURACY OR COMPLETENESS OF SCANNED COPIES OF THIS PLAN SHEET.

NOTE: TO ACCOMPANY PLANS DATED 3-23-15

Minor variations in dimensions may be accepted by the Engineer.

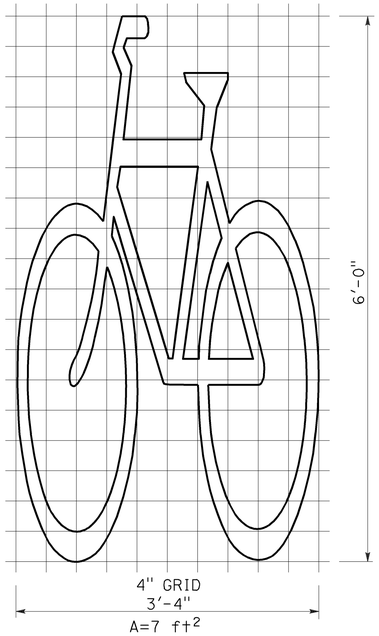

BIKE LANE SYMBOL WITHOUT PERSON

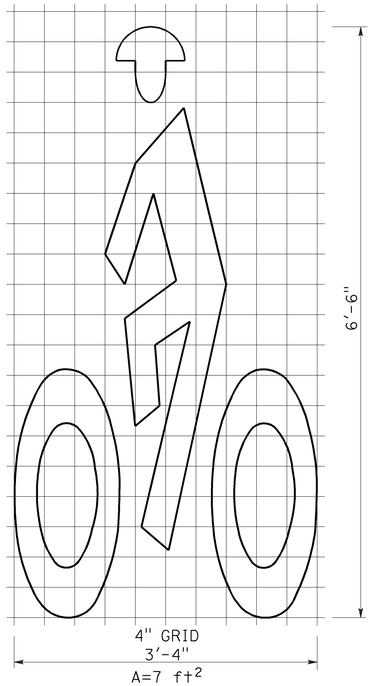

BIKE LANE SYMBOL WITH PERSON

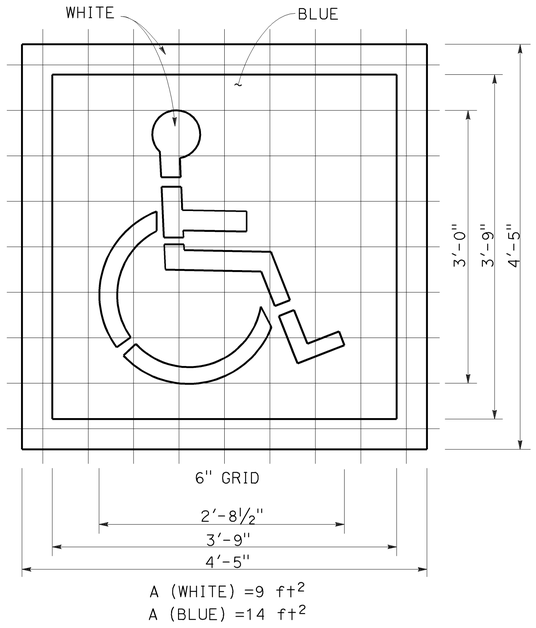

INTERNATIONAL SYMBOL OF ACCESSIBILITY (ISA) MARKING

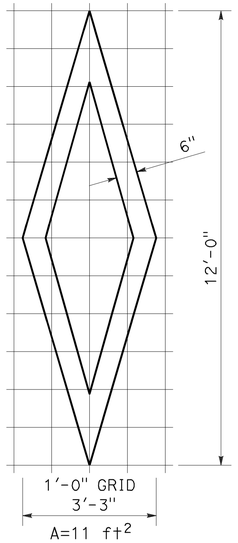

DIAMOND SYMBOL

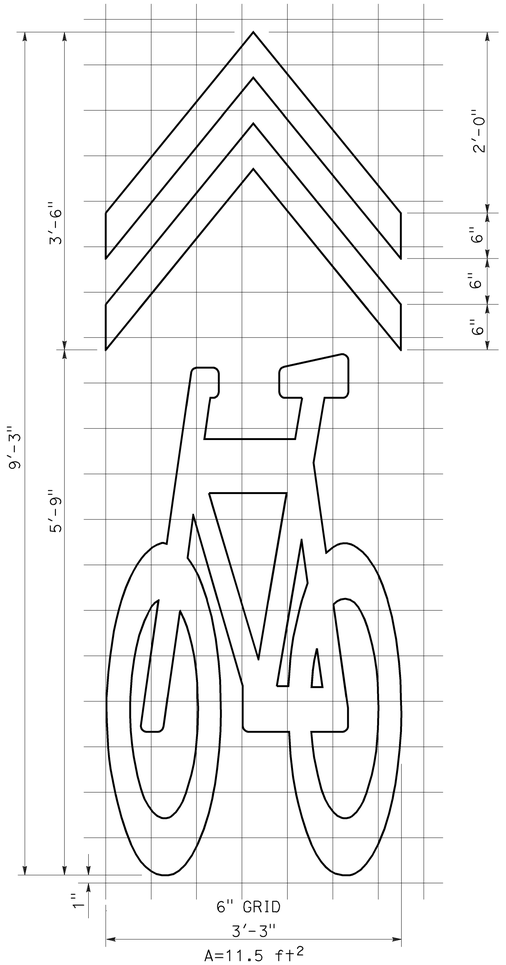

SHARED ROADWAY BICYCLE MARKING

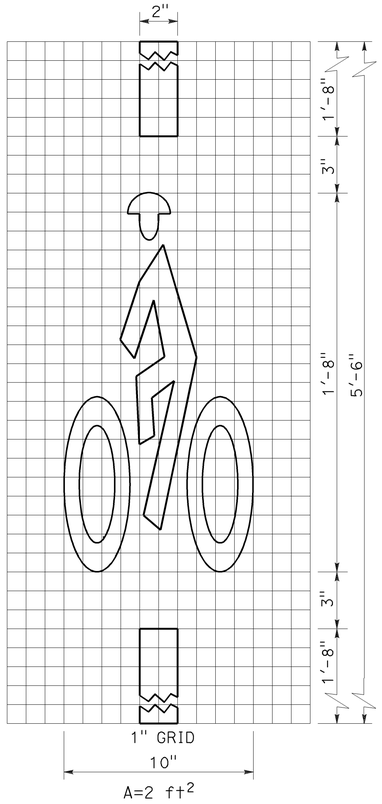

BICYCLE LOOP DETECTOR SYMBOL

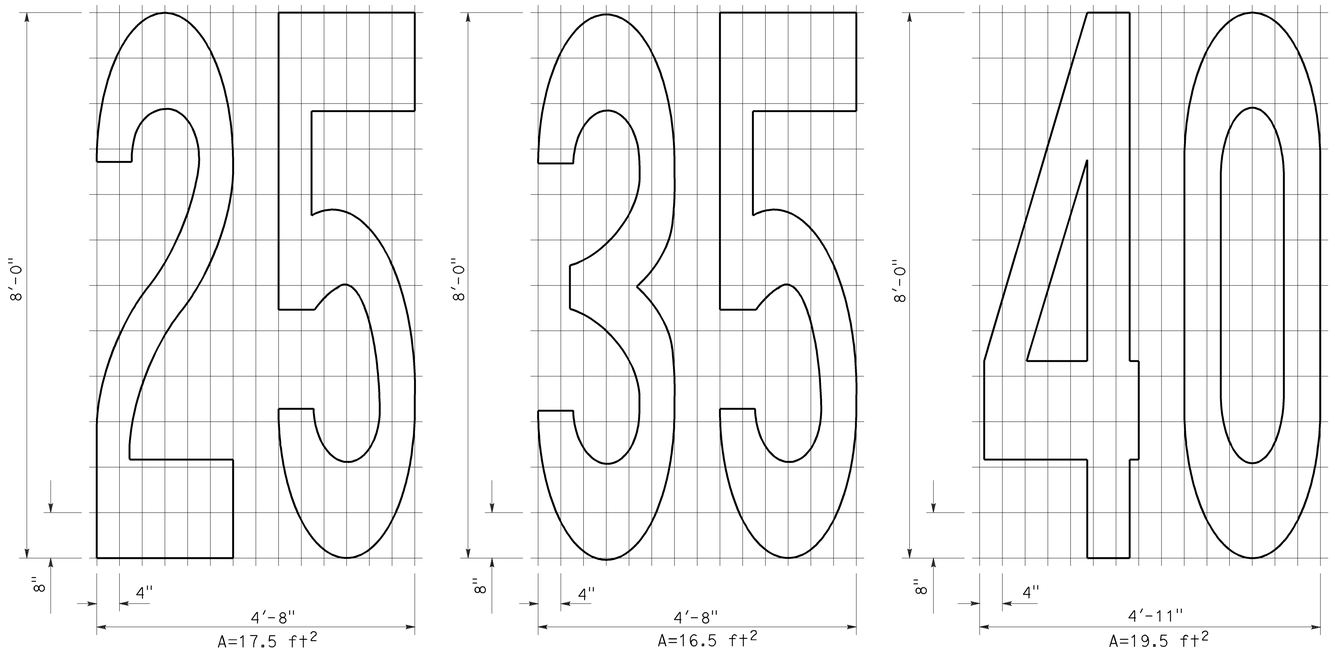

NUMERALS

STATE OF CALIFORNIA
DEPARTMENT OF TRANSPORTATION

PAVEMENT MARKINGS SYMBOLS AND NUMERALS

NO SCALE

RSP A24C DATED OCTOBER 19, 2012 SUPERSEDES STANDARD PLAN A24C DATED MAY 20, 2011 - PAGE 15 OF THE STANDARD PLANS BOOK DATED 2010.

REVISED STANDARD PLAN RSP A24C

2010 REVISED STANDARD PLAN RSP A24C

6-28-12

Dist	COUNTY	ROUTE	POST MILES TOTAL PROJECT	SHEET No.	TOTAL SHEETS
05	Mon	1	R77.6/R85.3	53	101

REGISTERED CIVIL ENGINEER

July 20, 2012
PLANS APPROVAL DATE

REGISTERED PROFESSIONAL ENGINEER
Roberta L. McLaughlin
No. C40375
Exp. 3-31-13
CIVIL
STATE OF CALIFORNIA

THE STATE OF CALIFORNIA OR ITS OFFICERS OR AGENTS SHALL NOT BE RESPONSIBLE FOR THE ACCURACY OR COMPLETENESS OF SCANNED COPIES OF THIS PLAN SHEET.

TO ACCOMPANY PLANS DATED 3-23-15

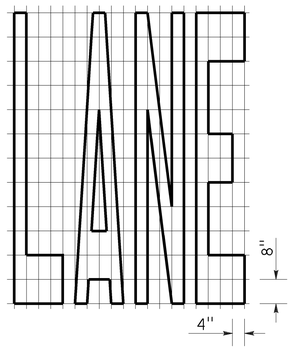

A=24 ft^2

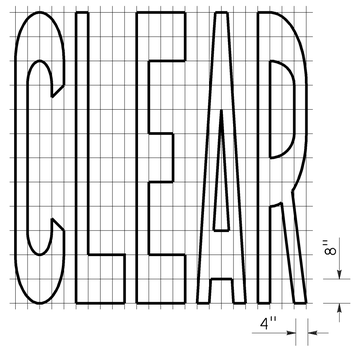

A=27 ft^2

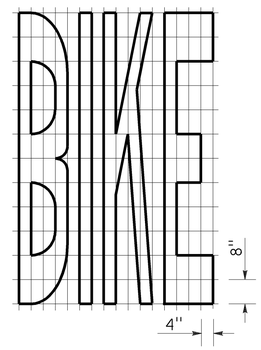

A=21 ft^2

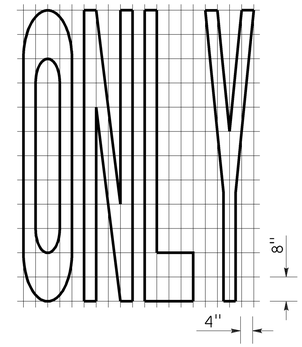

A=22 ft^2

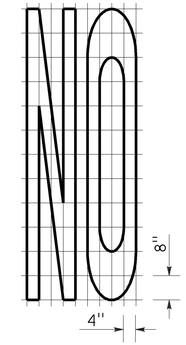

A=14 ft^2

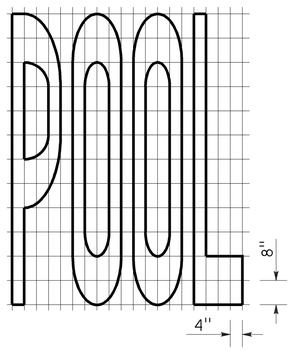

A=23 ft^2

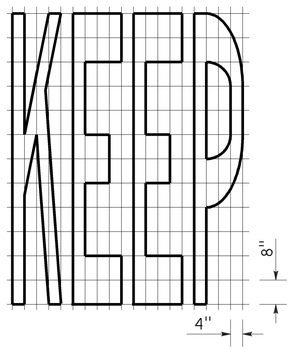

A=24 ft^2

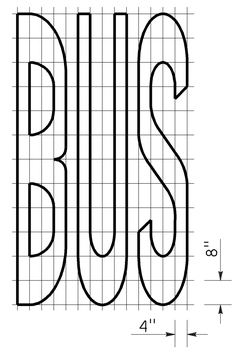

A=20 ft^2

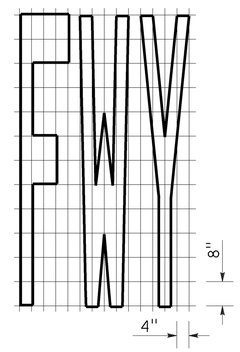

A=16 ft^2

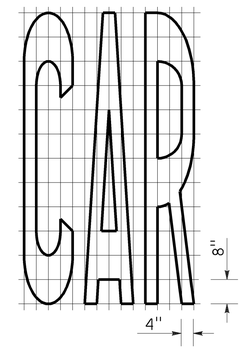

A=17 ft^2

WORD MARKINGS			
ITEM	ft^2	ITEM	ft^2
LANE	24	NO	14
POOL	23	BIKE	21
CAR	17	BUS	20
CLEAR	27	ONLY	22
KEEP	24	FWY	16

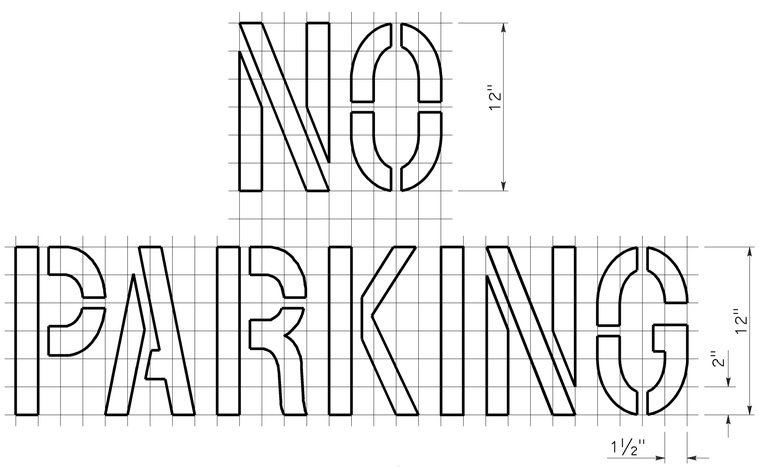

A=2 ft^2
See Notes 6 and 7

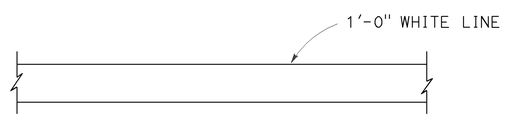

LIMIT LINE (STOP LINE)

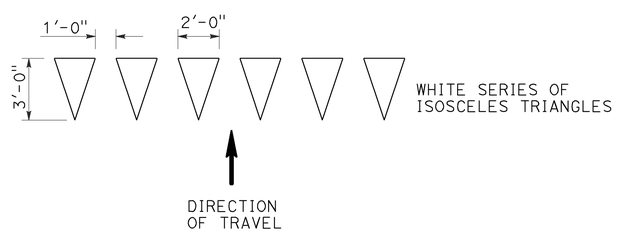

YIELD LINE

NOTES:

1. If a message consists of more than one word, it should read "UP", i.e., the first word should be nearest the driver.
2. The space between words should be at least four times the height of the characters for low speed roads, but not more than ten times the height of the characters. The space may be reduced appropriately where there is limited space because of local conditions.
3. Minor variations in dimensions may be accepted by the Engineer.
4. Portions of a letter, number or symbol may be separated by connecting segments not to exceed 2" in width.
5. The words "NO PARKING" pavement marking is to be used for parking facilities. For typical locations of markings, see Standard Plans A90A and A90B.
6. The words "NO PARKING", shall be painted in white letters no less than 1'-0" high on a contrasting background and located so that it is visible to traffic enforcement officials.

STATE OF CALIFORNIA
DEPARTMENT OF TRANSPORTATION

PAVEMENT MARKINGS WORDS, LIMIT AND YIELD LINES

NO SCALE

RSP A24E DATED JULY 20, 2012 SUPERSEDES STANDARD PLAN A24E
DATED MAY 20, 2011 - PAGE 17 OF THE STANDARD PLANS BOOK DATED 2010.

REVISED STANDARD PLAN RSP A24E

2010 REVISED STANDARD PLAN RSP A24E

6-12-12

Dist	COUNTY	ROUTE	POST MILES TOTAL PROJECT	SHEET No.	TOTAL SHEETS
05	Mon	1	R77.6/R85.3	54	101

REGISTERED CIVIL ENGINEER

July 20, 2012
PLANS APPROVAL DATE

REGISTERED PROFESSIONAL ENGINEER
Roberta L. McLaughlin
No. C40375
Exp. 3-31-13
CIVIL
STATE OF CALIFORNIA

THE STATE OF CALIFORNIA OR ITS OFFICERS OR AGENTS SHALL NOT BE RESPONSIBLE FOR THE ACCURACY OR COMPLETENESS OF SCANNED COPIES OF THIS PLAN SHEET.

TO ACCOMPANY PLANS DATED 3-23-15

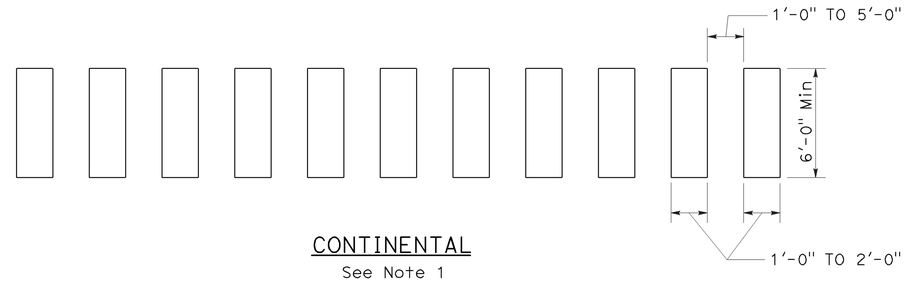

CONTINENTAL
See Note 1

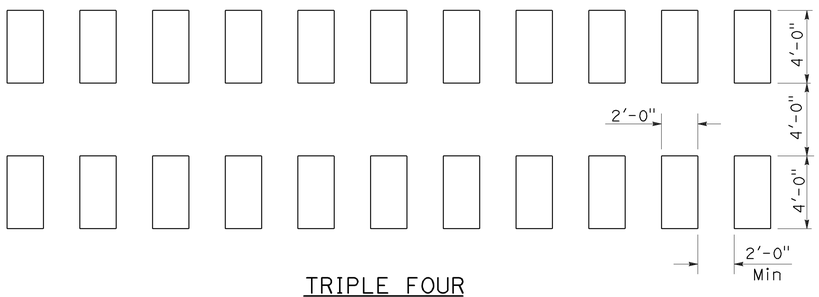

TRIPLE FOUR
See Note 1

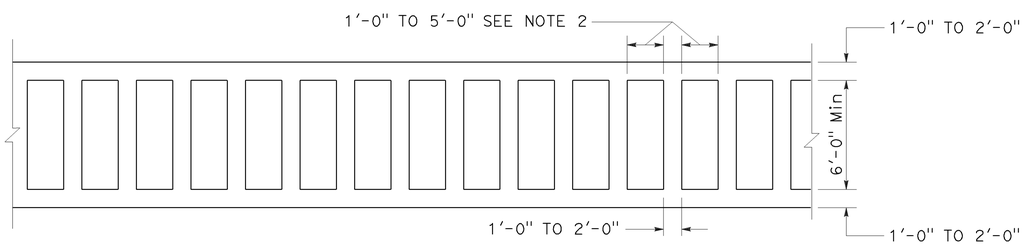

LADDER

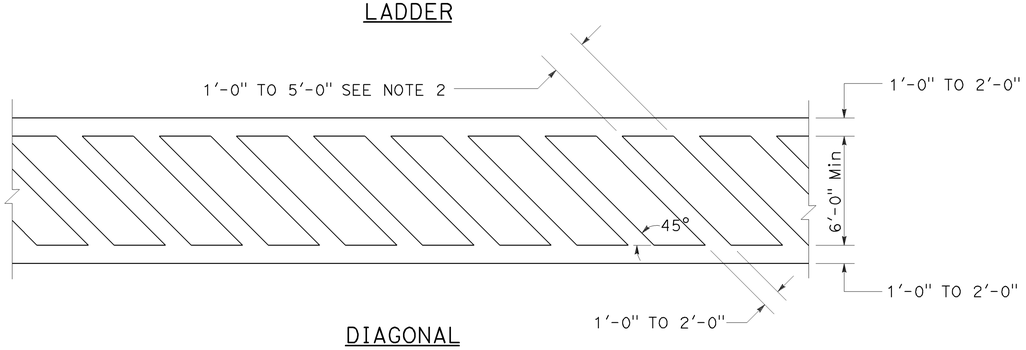

DIAGONAL

HIGHER VISIBILITY CROSSWALKS

NOTES:

1. Spaces between markings should be placed in wheel tracks of each lane.
2. Spacings not to exceed 2.5 times width of longitudinal line.
3. All crosswalk markings must be white except for those near schools must be yellow.

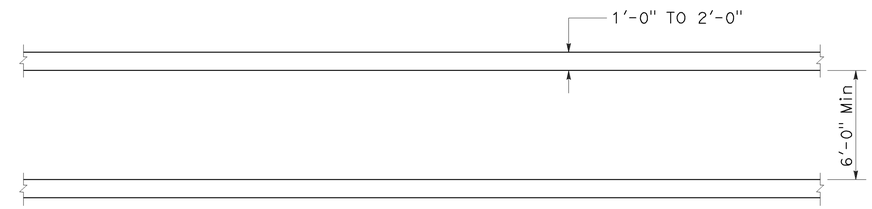

BASIC

STATE OF CALIFORNIA
DEPARTMENT OF TRANSPORTATION

PAVEMENT MARKINGS CROSSWALKS

NO SCALE

RSP A24F DATED JULY 20, 2012 SUPPLEMENTS THE STANDARD PLANS BOOK DATED 2010.

REVISED STANDARD PLAN RSP A24F

2010 REVISED STANDARD PLAN RSP A24F

6-28-12

Dist	COUNTY	ROUTE	POST MILES TOTAL PROJECT	SHEET No.	TOTAL SHEETS
05	Mon	1	R77.6/R85.3	55	101

Randell D. Hiatt
REGISTERED CIVIL ENGINEER

July 19, 2013
PLANS APPROVAL DATE

REGISTERED PROFESSIONAL ENGINEER
Randell D. Hiatt
No. C50200
Exp. 6-30-15
CIVIL
STATE OF CALIFORNIA

THE STATE OF CALIFORNIA OR ITS OFFICERS OR AGENTS SHALL NOT BE RESPONSIBLE FOR THE ACCURACY OR COMPLETENESS OF SCANNED COPIES OF THIS PLAN SHEET.

TO ACCOMPANY PLANS DATED 3-23-15

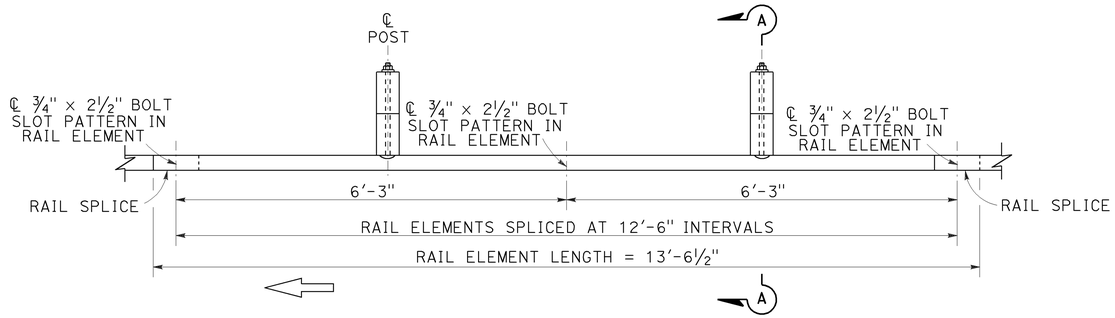

PLAN

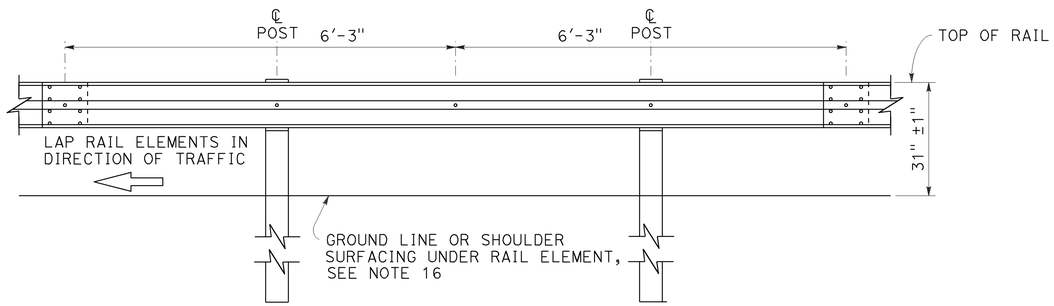

ELEVATION

MIDWEST GUARDRAIL SYSTEM WITH WOOD POST AND BLOCKS

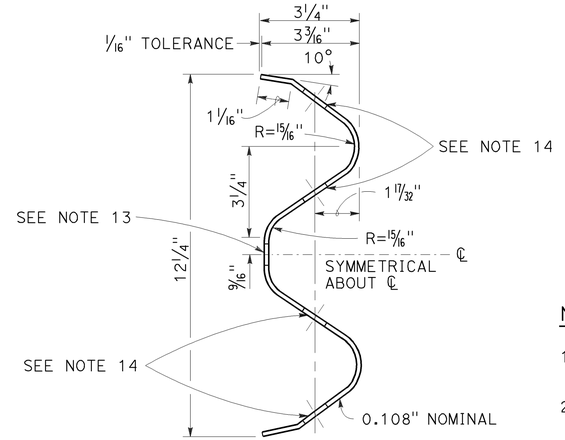

SECTION THRU RAIL ELEMENT

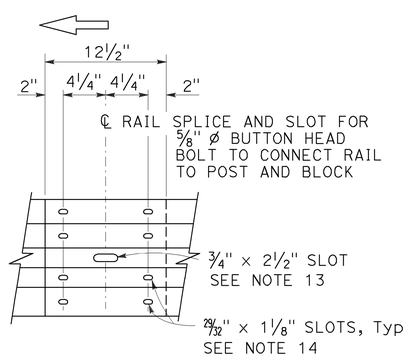

ELEVATION

RAIL ELEMENT SPLICE DETAIL

a) Connect the over lapped end of the rail elements with ⅝" ø × 1⅜" button head oval shoulder splice bolts inserted into the 29/32" × 1⅛" slots and bolted together with ⅝" ø recessed hex nuts. Recess of hex nut points toward rail element. A total of 8 bolts and nuts are to be used at each rail splice connection.

b) The ends of the rail elements are to be overlapped in the direction of traffic (see details).

c) Where end cap is to be attached to the end of a rail element, a total of 4 of the above described splice bolts and nuts are to be used.

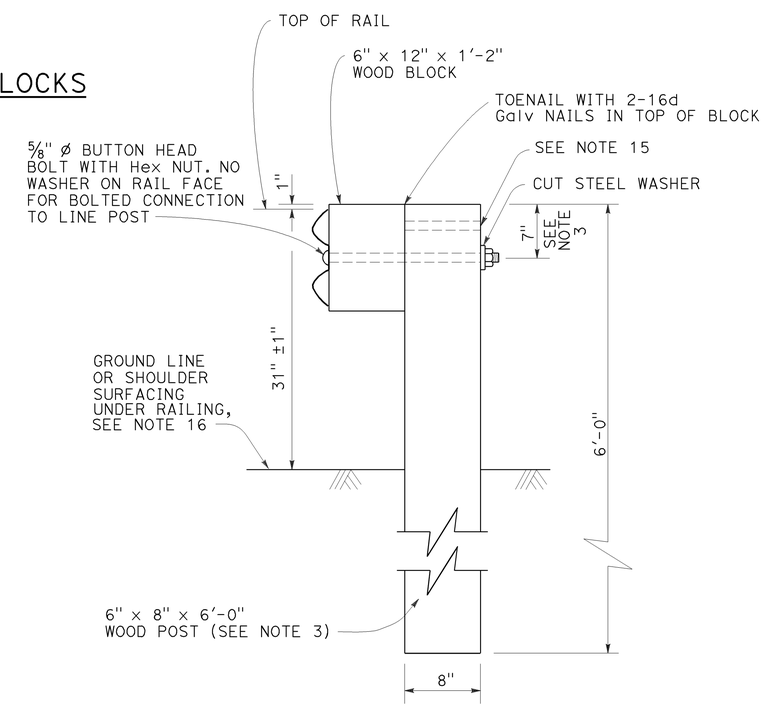

SECTION A-A

TYPICAL WOOD LINE POST INSTALLATION

See Note 4

NOTES:

1. For details of steel post installations, see Revised Standard Plan RSP A77L2.
2. For details of standard hardware used to construct MGS, see Revised Standard Plan RSP A77M1.
3. For details of wood posts and wood blocks used to construct MGS, see Revised Standard Plan RSP A77N1.
4. For additional installation details, see Revised Standard Plan RSP A77N3.
5. MGS post spacing to be 6'-3" center to center, except as otherwise noted.
6. For MGS typical layouts, see the A77P, A77Q and A77R Series of Standard Plans.
7. If railing is connected to terminal system end treatment, use 31" height terminal system end treatment.
8. For MGS end anchor details, see Revised Standard Plans RSP A77S1 and RSP A77T2.
9. For details of MGS transition to bridge railing, see Revised Standard Plan RSP A77U4.
10. For additional details of MSG connection to bridge railing, see Revised Standard Plans RSP A77U1, RSP A77U2 and RSP A77V1.
11. For MGS connection details to abutments and walls, see Revised Standard Plan RSP A77U3.
12. For typical MGS delineation and dike positioning details, see Revised Standard Plan RSP A77N4.
13. Slotted hole for bolted connection of rail element to block and post. See "Section Thru Rail Element".
14. Slotted holes for splice bolts to overlap ends of rail element. See "Section Thru Rail Element".
15. Additional hole in uppermost portion of line post is for potential future adjustments of railing height. See Revised Standard Plan RSP A77N1.
16. Install posts in soil.

STATE OF CALIFORNIA
DEPARTMENT OF TRANSPORTATION

MIDWEST GUARDRAIL SYSTEM STANDARD RAILING SECTION (WOOD POST WITH WOOD BLOCK)

NO SCALE

RSP A77L1 DATED JULY 19, 2013 SUPPLEMENTS STANDARD PLANS BOOK DATED 2010.

REVISED STANDARD PLAN RSP A77L1

2010 REVISED STANDARD PLAN RSP A77L1

Dist	COUNTY	ROUTE	POST MILES TOTAL PROJECT	SHEET No.	TOTAL SHEETS
05	Mon	1	R77.6/R85.3	56	101

Randell D. Hiatt
REGISTERED CIVIL ENGINEER

July 19, 2013
PLANS APPROVAL DATE

REGISTERED PROFESSIONAL ENGINEER
Randell D. Hiatt
No. C50200
Exp. 6-30-15
CIVIL
STATE OF CALIFORNIA

THE STATE OF CALIFORNIA OR ITS OFFICERS OR AGENTS SHALL NOT BE RESPONSIBLE FOR THE ACCURACY OR COMPLETENESS OF SCANNED COPIES OF THIS PLAN SHEET.

TO ACCOMPANY PLANS DATED 3-23-15

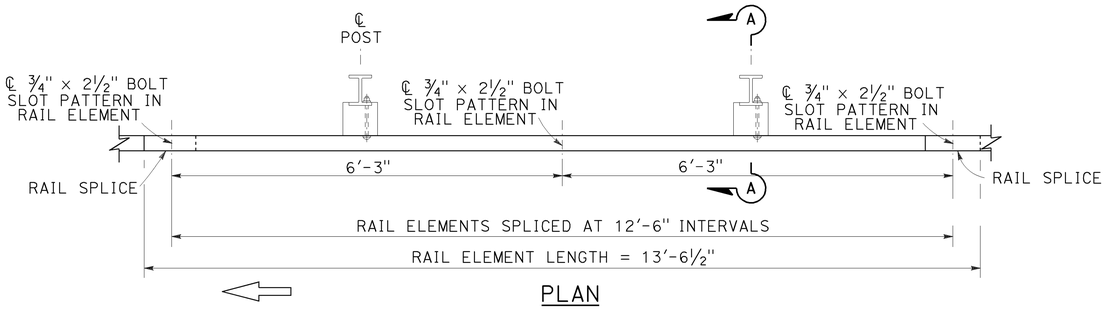

PLAN

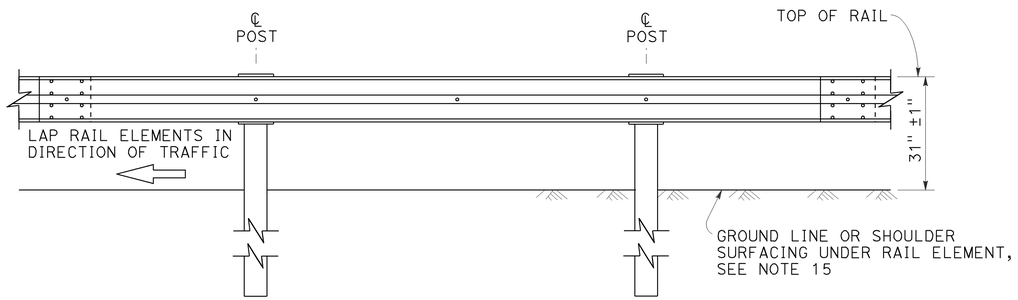

ELEVATION

MIDWEST GUARDRAIL SYSTEM WITH STEEL POSTS AND NOTCHED WOOD OR NOTCHED RECYCLED PLASTIC BLOCKS

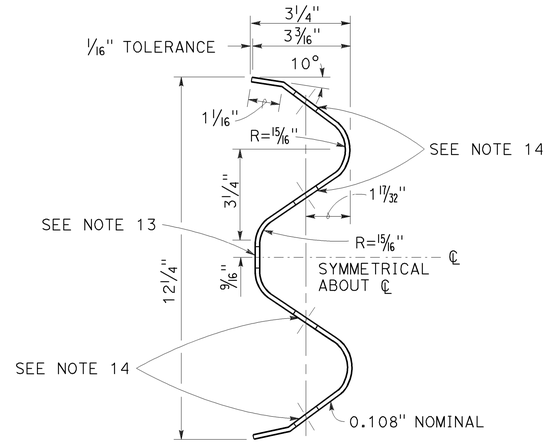

SECTION THRU RAIL ELEMENT

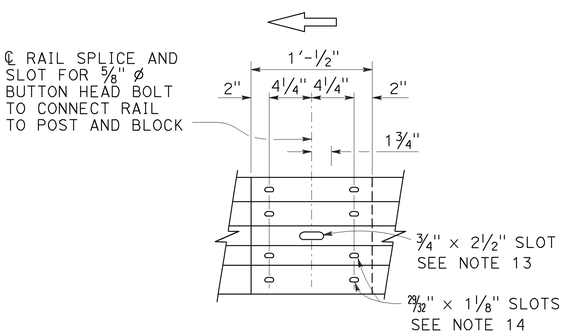

ELEVATION

RAIL ELEMENT SPLICE DETAIL

a) Connect the over lapped end of the rail elements with ⅝" ø × 1⅜" button head oval shoulder splice bolts inserted into the 29⁄32" × 1⅛" slots and bolted together with ⅝" ø recessed hex nuts. Recess of hex nut points toward rail element. A total of 8 bolts and nuts are to be used at each rail splice connection.

b) The ends of the rail elements are to be overlapped in the direction of traffic (see details).

c) Where end cap is to be attached to the end of a rail element, a total of 4 of the above described splice bolts and nuts are to be used.

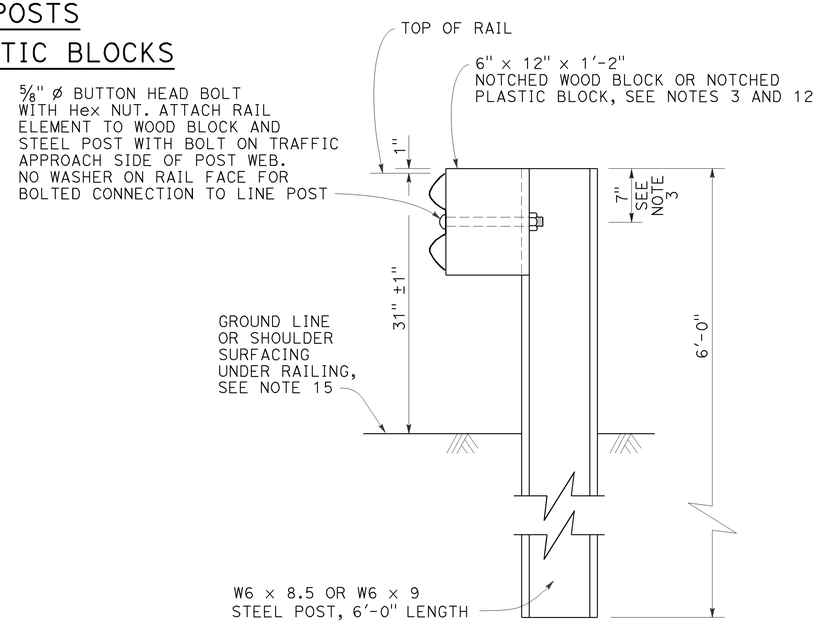

SECTION A-A

TYPICAL STEEL LINE POST INSTALLATION

See Note 4

NOTES:

1. For details of wood post installations, see Revised Standard Plan RSP A77L1.
2. For details of standard hardware used to construct MGS, see Revised Standard Plan RSP A77M1.
3. For details of steel posts and notched wood blocks used to construct MGS, see Revised Standard Plan RSP A77N2.
4. For additional installation details, see Revised Standard Plan RSP A77N3.
5. MGS post spacing to be 6'-3" center to center, except as otherwise noted.
6. For MGS typical layouts, see the A77P, A77Q and A77R Series of Standard Plans.
7. If railing is connected to terminal system end treatment, use 31" height terminal system end treatment.
8. For MGS end anchor details, see Revised Standard Plans RSP A77S1 and RSP A77T2.
9. For details of MGS transition to bridge railing, see Revised Standard Plan RSP A77U4.
10. For additional details of MGS connection to bridge railings, see Revised Standard Plans RSP A77U1, RSP A77U2 and RSP A77V1.
11. For dike positioning and MGS delineation details, see Revised Standard Plan RSP A77N4.
12. Notched face of block faces steel post.
13. Slotted hole for bolted connection of rail element to block and post. See "Section Thru Rail Element".
14. Slotted holes for splice bolts to overlap ends of rail element. See "Section Thru Rail Element".
15. Install posts in soil.

STATE OF CALIFORNIA
DEPARTMENT OF TRANSPORTATION

MIDWEST GUARDRAIL SYSTEM STANDARD RAILING SECTION (STEEL POST WITH NOTCHED WOOD OR NOTCHED RECYCLED PLASTIC BLOCK)

NO SCALE

RSP A77L2 DATED JULY 19, 2013 SUPPLEMENTS THE STANDARD PLANS BOOK DATED 2010.

REVISED STANDARD PLAN RSP A77L2

2010 REVISED STANDARD PLAN RSP A77L2

Dist	COUNTY	ROUTE	POST MILES TOTAL PROJECT	SHEET No.	TOTAL SHEETS
05	Mon	1	R77.6/R85.3	57	101

Randell D. Hiatt
REGISTERED CIVIL ENGINEER

July 19, 2013
PLANS APPROVAL DATE

REGISTERED PROFESSIONAL ENGINEER
Randell D. Hiatt
No. C50200
Exp. 6-30-15
CIVIL
STATE OF CALIFORNIA

THE STATE OF CALIFORNIA OR ITS OFFICERS OR AGENTS SHALL NOT BE RESPONSIBLE FOR THE ACCURACY OR COMPLETENESS OF SCANNED COPIES OF THIS PLAN SHEET.

TO ACCOMPANY PLANS DATED 3-23-15

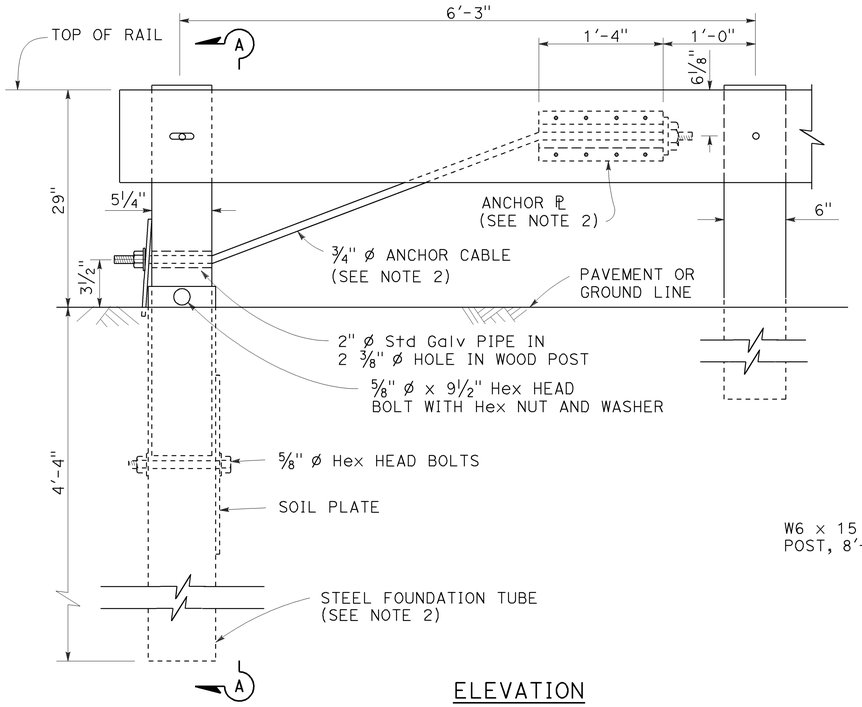

ELEVATION
END ANCHOR
ASSEMBLY (TYPE SFT)

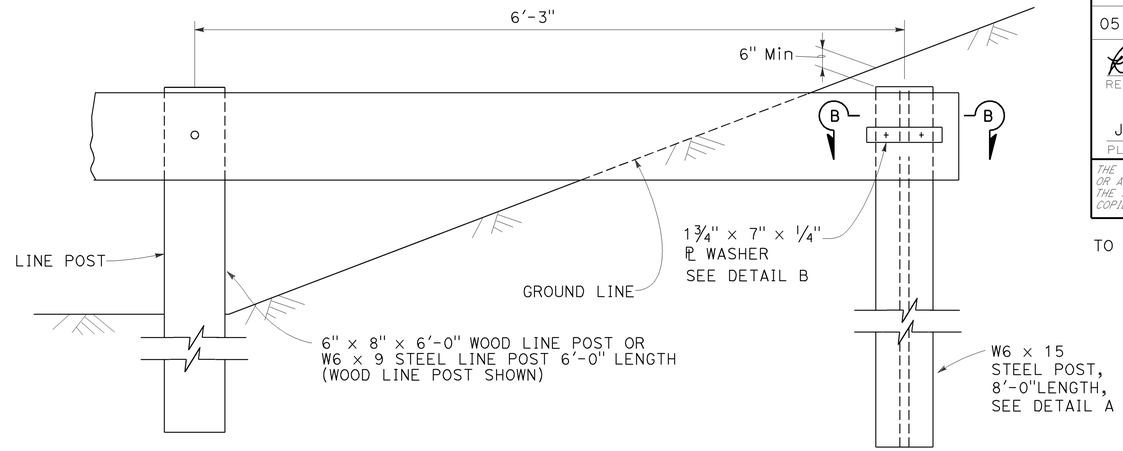

BURIED POST END ANCHOR

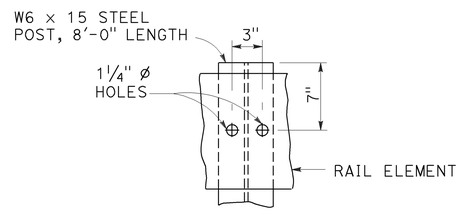

DETAIL A

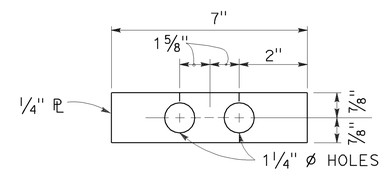

DETAIL B

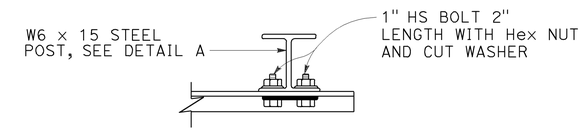

SECTION B-B

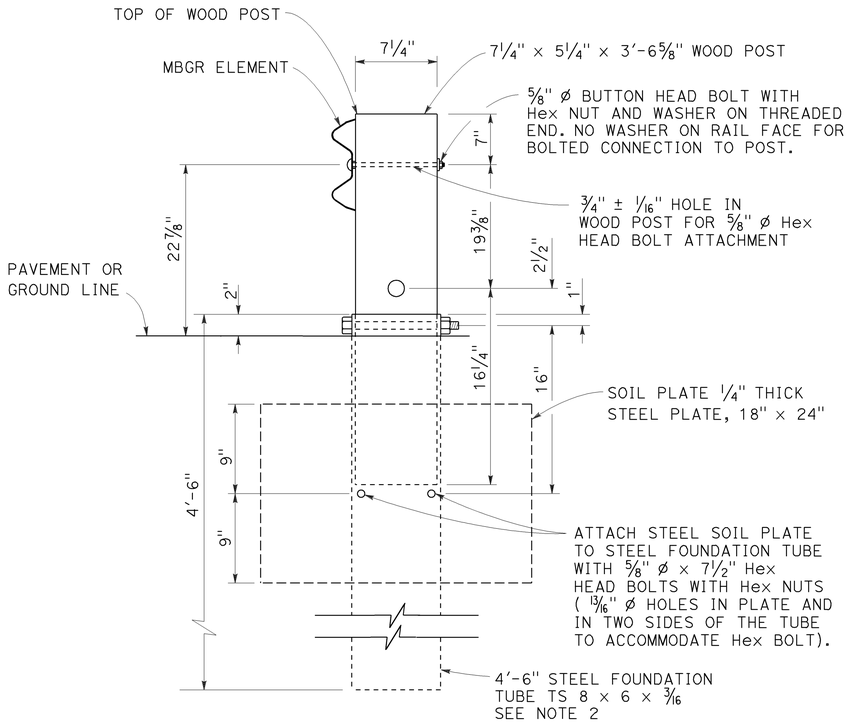

SECTION A-A

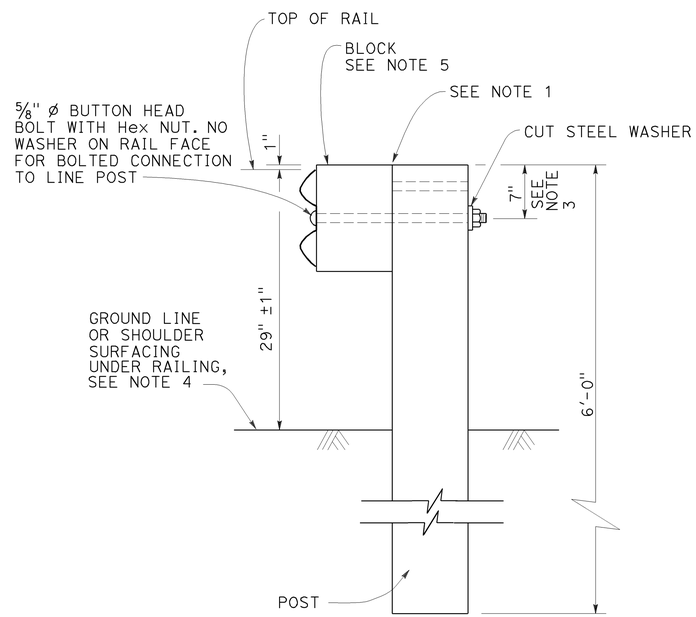

TYPICAL LINE
POST INSTALLATION

NOTES:

1. For wood post and wood block, toenail with 2-16d Galv nails in top of block. For steel post and notched wood or plastic block, notched face of block faces steel post.
2. A 6'-0" Length steel foundation tube, TS 8 x 6 x 3/16, without a soil plate, may be furnished and installed in place of the 4'-6" length steel foundation tube and soil plate shown, Minimum embadment of the 6'-0" length tube shall be 5'-9". A 5/8" ø Hex head bolt and nut shall be installed in the hole in the 6'-0" length tube to keep the wood post from dropping into the tube.
3. To connect railing to 27" terminal system end treatment, transition the top of railing height at a ratio of 120:1 to terminal system end treatment height plus one 12'-6" standard railing section at the transitioned height for a horizontal connection to the end treatment.
4. Install posts in soil.
5. See Revised Standard Plans RSP A77N1 and RSP A77N2 for details.
6. Holes excavation in the slope to construct the buried post end anchor shall be backfilled with selected earth, placed in layers approximately 1'-0" thick. Each layer shall be moistened and thoroughly compacted.

STATE OF CALIFORNIA
DEPARTMENT OF TRANSPORTATION

METAL BEAM GUARD RAILING RECONSTRUCT INSTALLATION

NO SCALE

RSP A77L3 DATED JULY 19, 2013 SUPPLEMENTS THE STANDARD PLANS BOOK DATED 2010.

REVISED STANDARD PLAN RSP A77L3

2010 REVISED STANDARD PLAN RSP A77L3

7-16-13

Dist	COUNTY	ROUTE	POST MILES TOTAL PROJECT	SHEET No.	TOTAL SHEETS
05	Mon	1	R77.6/R85.3	58	101

Randell D. Hiatt
REGISTERED CIVIL ENGINEER

July 19, 2013
PLANS APPROVAL DATE

REGISTERED PROFESSIONAL ENGINEER
Randell D. Hiatt
No. C50200
Exp. 6-30-15
CIVIL
STATE OF CALIFORNIA

THE STATE OF CALIFORNIA OR ITS OFFICERS OR AGENTS SHALL NOT BE RESPONSIBLE FOR THE ACCURACY OR COMPLETENESS OF SCANNED COPIES OF THIS PLAN SHEET.

TO ACCOMPANY PLANS DATED 3-23-15

2010 REVISED STANDARD PLAN RSP A77M1

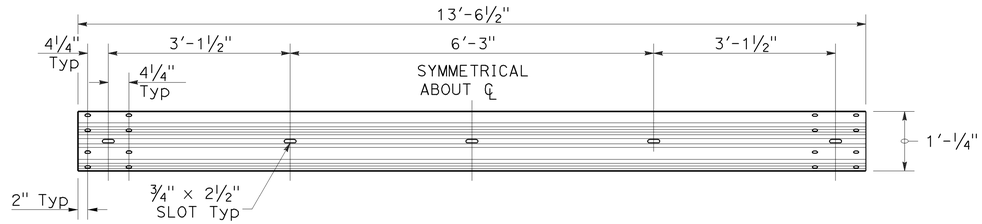

TYPICAL RAIL ELEMENT

NOTE:

1. Slotted holes for splice bolts to overlap ends of rail element.

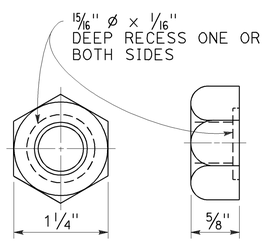

⅝" Ø RECESS NUT

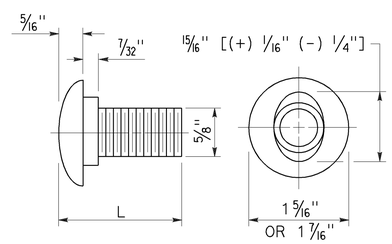

⅝" Ø BUTTON HEAD BOLT

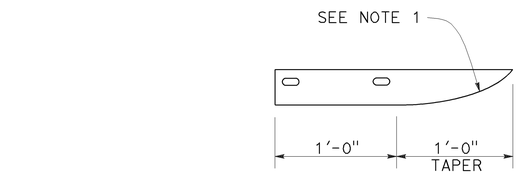

PLAN

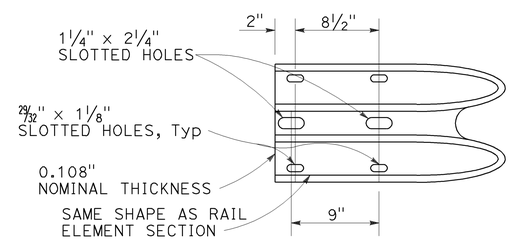

ELEVATION

END CAP (TYPE A)

BUTTON HEAD BOLT

L	THREAD LENGTH
1⅜"	FULL THREAD LENGTH
2"	FULL THREAD LENGTH
10"	4" Min THREAD LENGTH
18"	4" Min THREAD LENGTH
20"	4" Min THREAD LENGTH
22"	4" Min THREAD LENGTH
26"	4" Min THREAD LENGTH
36"	4" Min THREAD LENGTH
** 2¾"	2" Min THREAD LENGTH
** 19"	4" Min THREAD LENGTH

** For nested rail applications.

STATE OF CALIFORNIA
DEPARTMENT OF TRANSPORTATION

MIDWEST GUARDRAIL SYSTEM STANDARD HARDWARE

NO SCALE

RSP A77M1 DATED JULY 19, 2013 SUPPLEMENTS THE STANDARD PLANS BOOK DATED 2010.

REVISED STANDARD PLAN RSP A77M1

Dist	COUNTY	ROUTE	POST MILES TOTAL PROJECT	SHEET No.	TOTAL SHEETS
05	Mon	1	R77.6/R85.3	59	101

Randell D. Hiatt
REGISTERED CIVIL ENGINEER

November 15, 2013
PLANS APPROVAL DATE

REGISTERED PROFESSIONAL ENGINEER
Randell D. Hiatt
No. C50200
Exp. 6-30-15
CIVIL
STATE OF CALIFORNIA

THE STATE OF CALIFORNIA OR ITS OFFICERS OR AGENTS SHALL NOT BE RESPONSIBLE FOR THE ACCURACY OR COMPLETENESS OF SCANNED COPIES OF THIS PLAN SHEET.

TO ACCOMPANY PLANS DATED 3-23-15

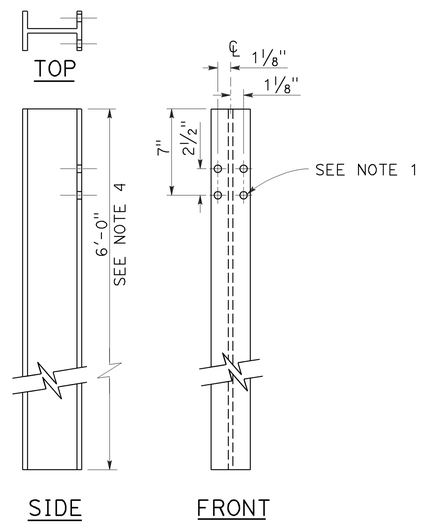

W6 x 9 OR W6 x 8.5
STEEL POST
See Note 4

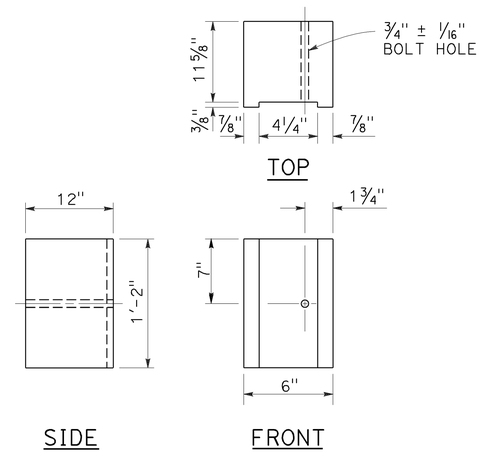

6" x 12"
NOTCHED WOOD BLOCK
See Notes 2 and 3

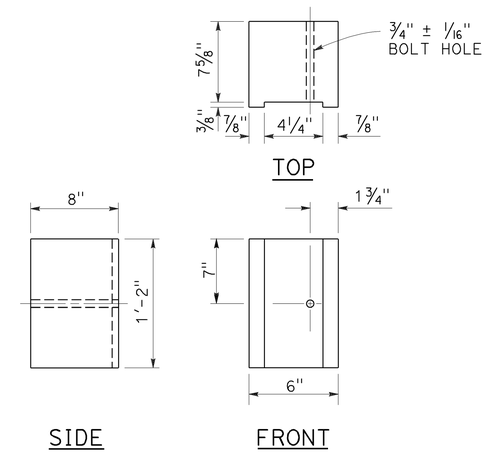

6" x 8"
NOTCHED WOOD BLOCK
Only for use with metal beam guard railing. See Note 5

NOTES:

1. All holes in steel post shall be 13/16" Dia maximum.
2. Dimensions shown for wood block are nominal.
3. Notched face of block faces steel post.
4. 6'-0" length posts to be used for typical roadway installation. See Revised Standard Plan RSP A77N3.
5. See Revised Standard Plan RSP A77L3 for use of 6" x 8" and 8" x 8" notched wood blocks.
6. This post and 8" x 12" block combination to be used for line post sections of MGS on narrow roadways and where strengthened line post sections of MGS are warranted to shield fixed objects.

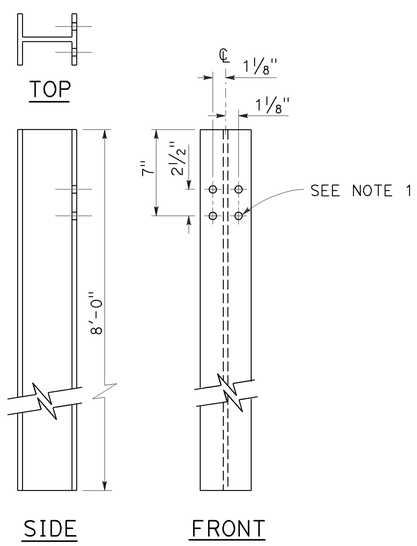

W6 x 15
STEEL POST
See Note 6

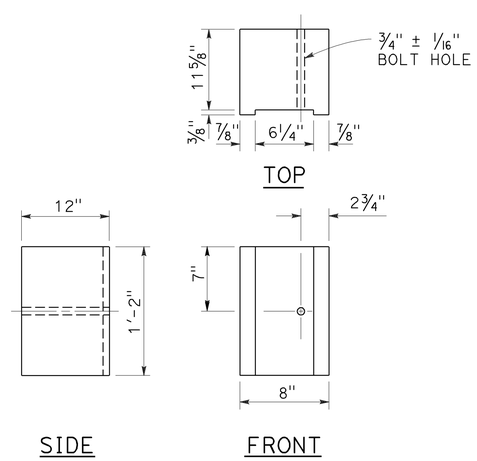

8" x 12"
NOTCHED WOOD BLOCK
See Notes 2 and 3

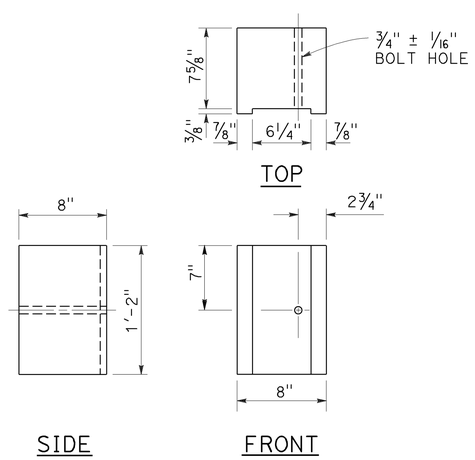

8" x 8"
NOTCHED WOOD BLOCK
Only for use with metal beam guard railing. See Note 5

STATE OF CALIFORNIA
DEPARTMENT OF TRANSPORTATION

MIDWEST GUARDRAIL SYSTEM STEEL POST AND NOTCHED WOOD BLOCK DETAILS

NO SCALE

RSP A77N2 DATED NOVEMBER 15, 2013 SUPERSEDES RSP A77N2
DATED JULY 19, 2013 THAT SUPPLEMENTS THE STANDARD PLANS BOOK DATED 2010.

REVISED STANDARD PLAN RSP A77N2

2010 REVISED STANDARD PLAN RSP A77N2

10-29-13

Dist	COUNTY	ROUTE	POST MILES TOTAL PROJECT	SHEET No.	TOTAL SHEETS
05	Mon	1	R77.6/R85.3	60	101

Randell D. Hiatt
REGISTERED CIVIL ENGINEER

July 19, 2013
PLANS APPROVAL DATE

REGISTERED PROFESSIONAL ENGINEER
Randell D. Hiatt
No. C50200
Exp. 6-30-15
CIVIL
STATE OF CALIFORNIA

THE STATE OF CALIFORNIA OR ITS OFFICERS OR AGENTS SHALL NOT BE RESPONSIBLE FOR THE ACCURACY OR COMPLETENESS OF SCANNED COPIES OF THIS PLAN SHEET.

TO ACCOMPANY PLANS DATED 3-23-15

NOTES:

1. When necessary to place dike more than 7" in front of face of MGS, only Type C dike may be used. For dike details, see Revised Standard Plan RSP A87B.
2. For standard railing post embedment, see Revised Standard Plan RSP A77N3.
3. MGS delineation to be used where shown on the Project Plans.
4. When dike or curb is placed under MGS, the maximum height of the dike or curb shall be 6". Mountable dike should not be used. For dike and curb details, see Revised Standard Plans RSP A87A and RSP A87B.
5. For details of typical distance between the face of rail and hinge point, see Revised Standard Plan RSP A77N3.
6. For steel line posts, use 1/4 - 20 self-tapping screws in 0.22" diameter holes or 1/4" bolts in 9/32" diameter holes.

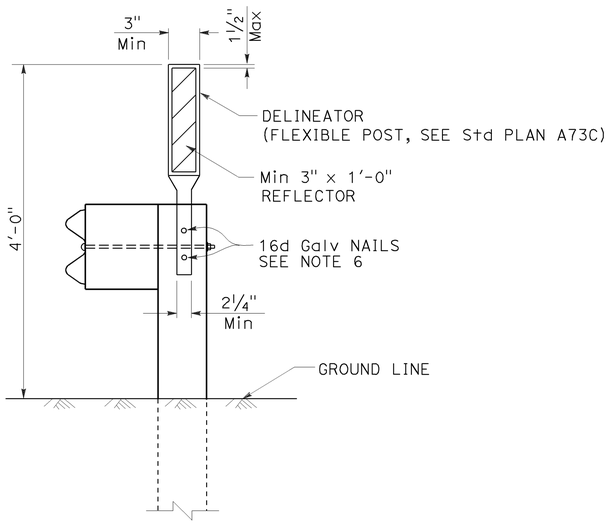

MGS DELINEATION
See Note 3

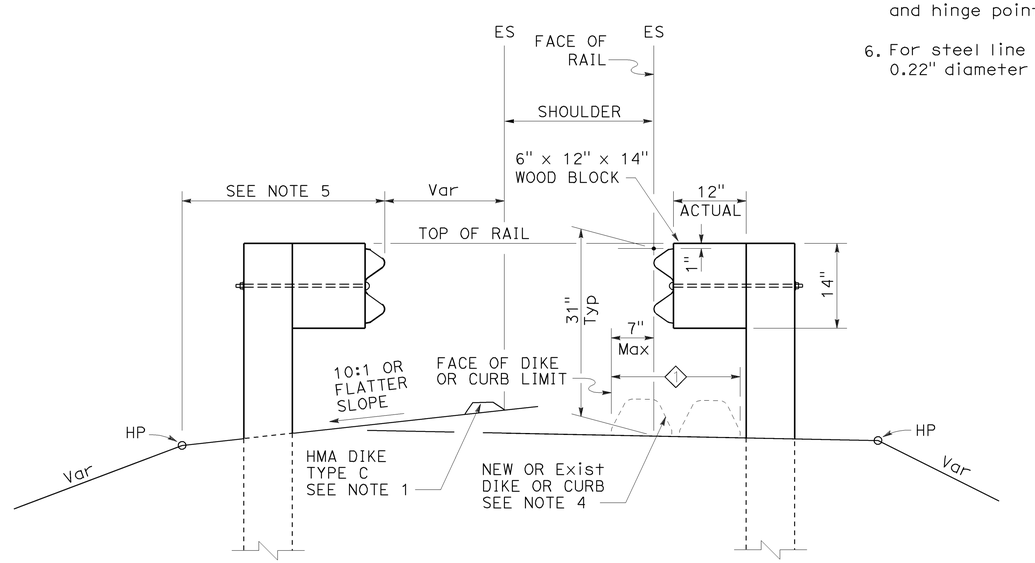

DIKE POSITIONING
See Note 1

1 PERMISSIBLE DIKE OR CURB PLACEMENT AREA

STATE OF CALIFORNIA
DEPARTMENT OF TRANSPORTATION

MIDWEST GUARDRAIL SYSTEM TYPICAL RAILING DELINEATION AND DIKE POSITIONING DETAILS

NO SCALE

RSP A77N4 DATED JULY 19, 2013 SUPPLEMENTS THE STANDARD PLANS BOOK DATED 2010.

REVISED STANDARD PLAN RSP A77N4

2010 REVISED STANDARD PLAN RSP A77N4

Dist	COUNTY	ROUTE	POST MILES TOTAL PROJECT	SHEET No.	TOTAL SHEETS
05	Mon	1	R77.6/R85.3	61	101

Randell D. Hiatt
REGISTERED CIVIL ENGINEER

July 19, 2013
PLANS APPROVAL DATE

REGISTERED PROFESSIONAL ENGINEER
Randell D. Hiatt
No. C50200
Exp. 6-30-15
CIVIL
STATE OF CALIFORNIA

THE STATE OF CALIFORNIA OR ITS OFFICERS OR AGENTS SHALL NOT BE RESPONSIBLE FOR THE ACCURACY OR COMPLETENESS OF SCANNED COPIES OF THIS PLAN SHEET.

TO ACCOMPANY PLANS DATED 3-23-15

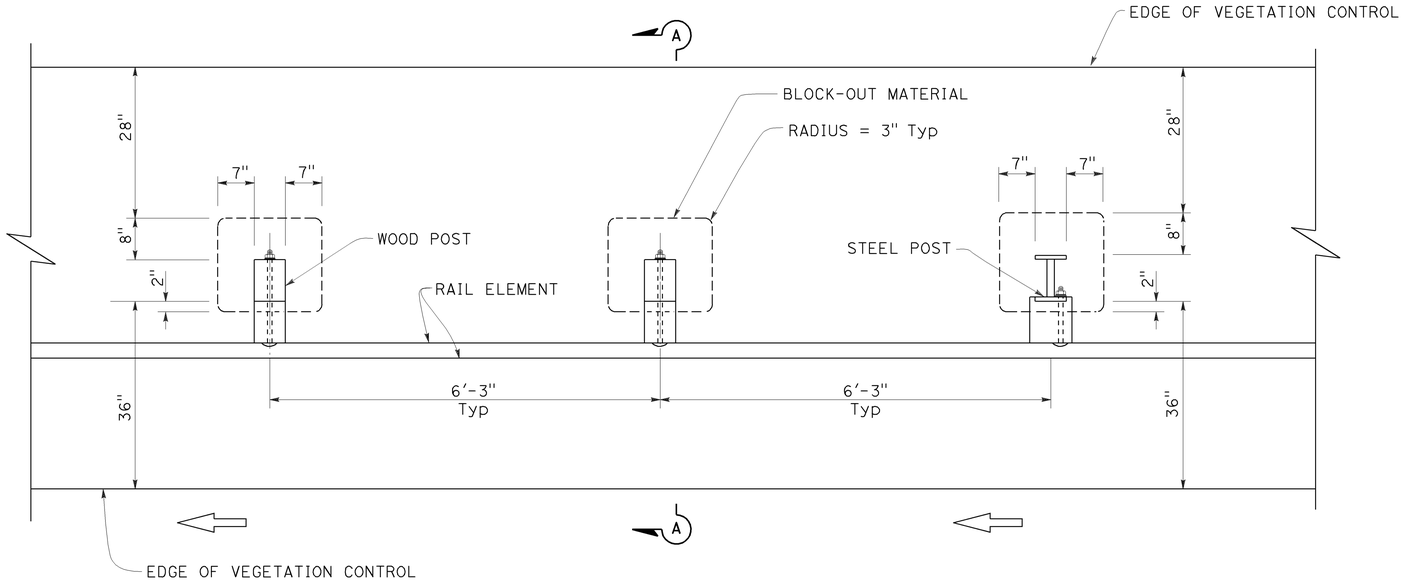

PLAN

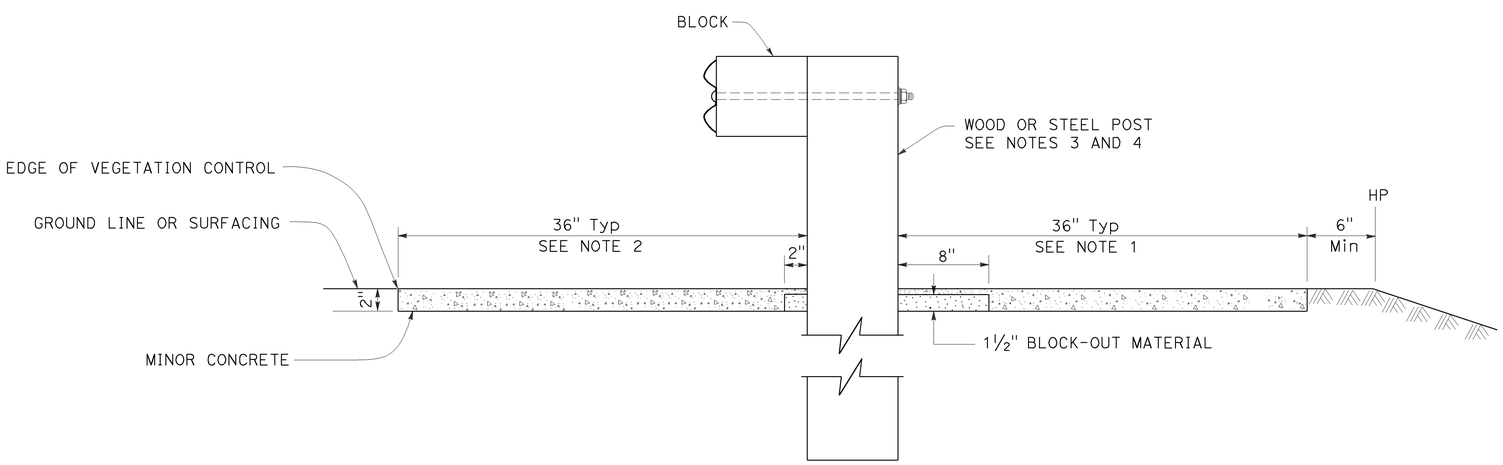

SECTION A-A

NOTES:

1. Where the distance between back of post and hinge point is less than 42", construct vegetation control to 6" from hinge point while maintaining the 8" block-out at back of post. If the 8" block-out at back of post can not be maintained, construct vegetation control flush with the back edge of post.
2. Where dike is constructed under railing, construct vegetation control to back edge of dike. Where paved shoulder is constructed within 36" in front of the post, construct vegetation control to the edge of paved shoulder.
3. For wood post sizes, see Revised Standard Plan RSP A77N1.
4. For steel post sizes, see Revised Standard Plan RSP A77N2.
5. For details not shown, see Revised Standard Plans RSP A77L1 and RSP A77L2.

STATE OF CALIFORNIA
DEPARTMENT OF TRANSPORTATION

MIDWEST GUARDRAIL SYSTEM TYPICAL VEGETATION CONTROL STANDARD RAILING SECTION

NO SCALE

RSP A77N5 DATED JULY 19, 2013 SUPPLEMENTS THE STANDARD PLANS BOOK DATED 2010.

REVISED STANDARD PLAN RSP A77N5

2010 REVISED STANDARD PLAN RSP A77N5

7-3-13

Dist	COUNTY	ROUTE	POST MILES TOTAL PROJECT	SHEET No.	TOTAL SHEETS
05	Mon	1	R77.6/R85.3	62	101

Randell D. Hiatt
REGISTERED CIVIL ENGINEER

July 19, 2013
PLANS APPROVAL DATE

REGISTERED PROFESSIONAL ENGINEER
Randell D. Hiatt
No. C50200
Exp. 6-30-15
CIVIL
STATE OF CALIFORNIA

THE STATE OF CALIFORNIA OR ITS OFFICERS OR AGENTS SHALL NOT BE RESPONSIBLE FOR THE ACCURACY OR COMPLETENESS OF SCANNED COPIES OF THIS PLAN SHEET.

TO ACCOMPANY PLANS DATED 3-23-15

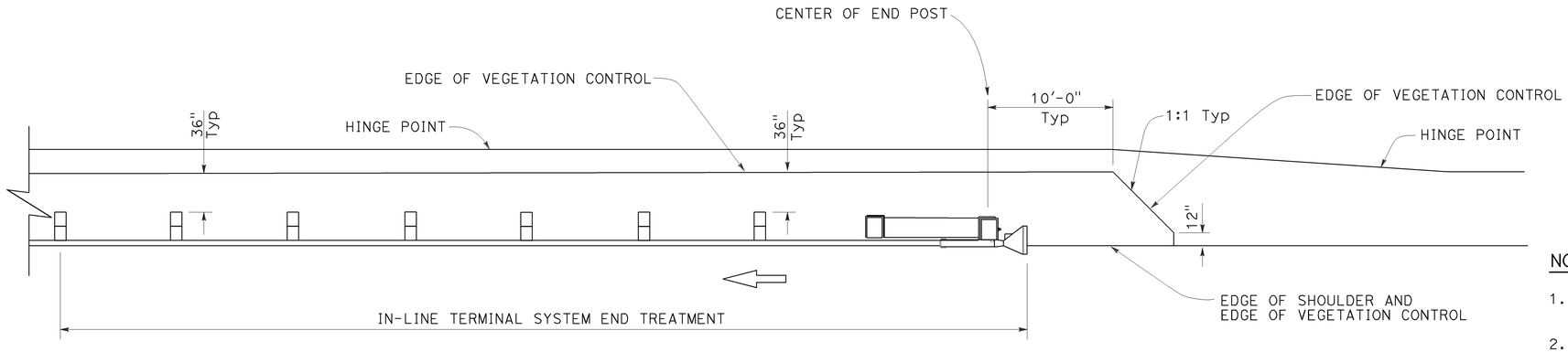

PLAN

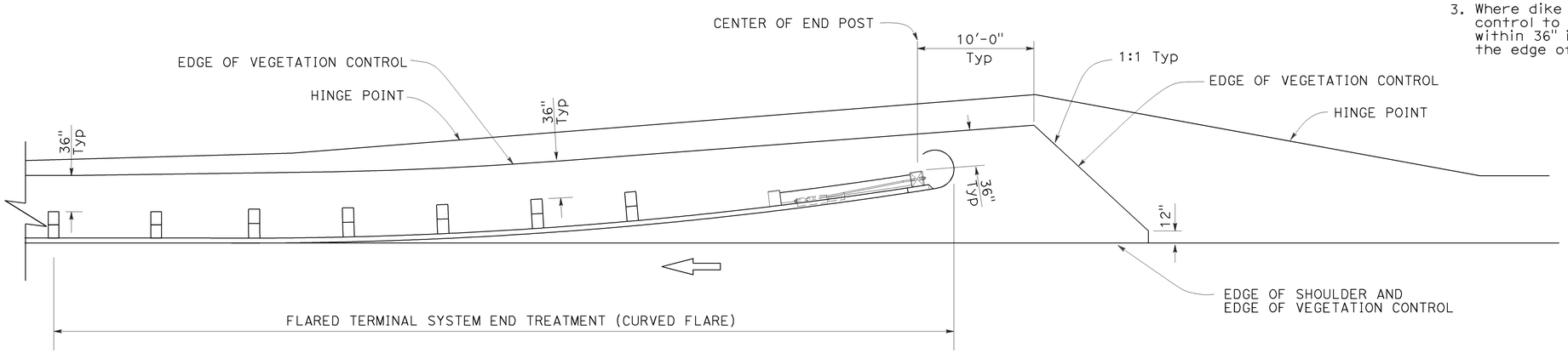

PLAN

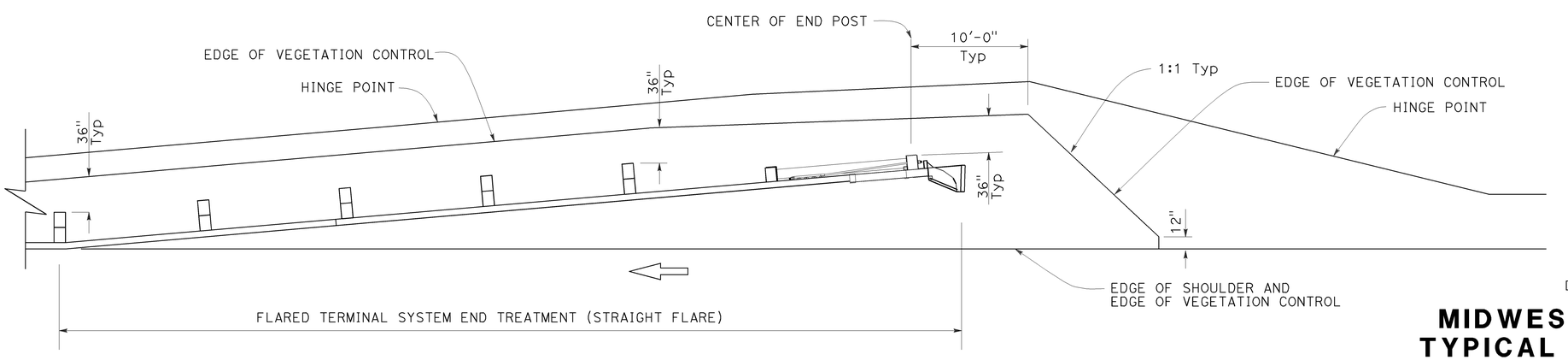

PLAN

NOTES:

1. See Revised Standard Plan RSP A77N5 for additional vegetation control details.
2. Where the distance between back of post and hinge point is less than 42", construct vegetation control to 6" from hinge point while maintaining the 8" block-out at back of post. If the 8" block-out at back of post can not be maintained, construct vegetation control flush with the back edge of post.
3. Where dike is constructed under railing, construct vegetation control to back edge of dike. Where paved shoulder is constructed within 36" in front of the post, construct vegetation control to the edge of paved shoulder.

STATE OF CALIFORNIA
DEPARTMENT OF TRANSPORTATION

MIDWEST GUARDRAIL SYSTEM TYPICAL VEGETATION CONTROL FOR TERMINAL SYSTEM END TREATMENTS

NO SCALE

RSP A77N6 DATED JULY 19, 2013 SUPPLEMENTS THE STANDARD PLANS BOOK DATED 2010.

REVISED STANDARD PLAN RSP A77N6

2010 REVISED STANDARD PLAN RSP A77N6

6-12-13

Dist	COUNTY	ROUTE	POST MILES TOTAL PROJECT	SHEET No.	TOTAL SHEETS
05	Mon	1	R77.6/R85.3	63	101

Randell D. Hiatt
REGISTERED CIVIL ENGINEER

July 19, 2013
PLANS APPROVAL DATE

REGISTERED PROFESSIONAL ENGINEER
Randell D. Hiatt
No. C50200
Exp. 6-30-15
CIVIL
STATE OF CALIFORNIA

THE STATE OF CALIFORNIA OR ITS OFFICERS OR AGENTS SHALL NOT BE RESPONSIBLE FOR THE ACCURACY OR COMPLETENESS OF SCANNED COPIES OF THIS PLAN SHEET.

TO ACCOMPANY PLANS DATED 3-23-15

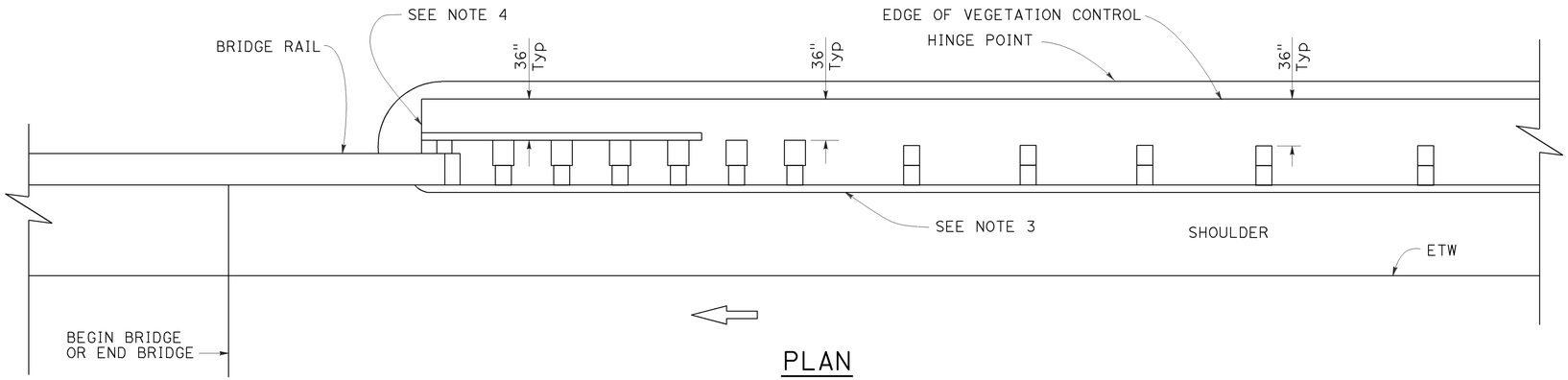

PLAN

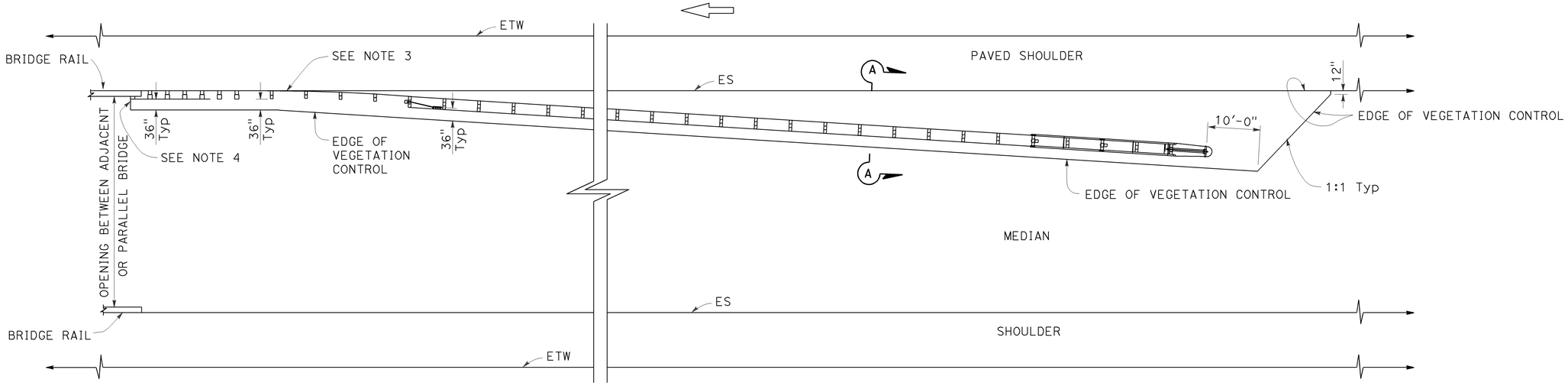

PLAN

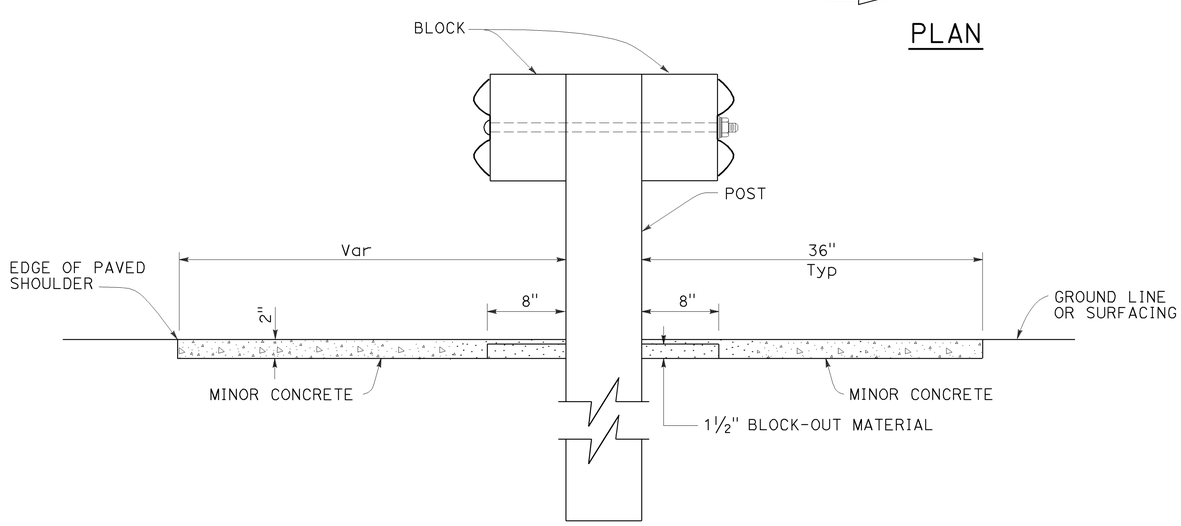

SECTION A-A

NOTES:

1. See Revised Standard Plan RSP A77N5 for additional vegetation control details.
2. Where the distance between back of post and hinge point is less than 42", construct vegetation control to 6" from hinge point while maintaining the 8" block-out at back of post. If the 8" block-out at back of post can not be maintained, construct vegetation control flush with the back edge of post.
3. Where dike is constructed under railing, construct vegetation control to back edge of dike. Where paved shoulder is constructed within 36" in front of the post, construct vegetation control to the edge of paved shoulder.
4. End vegetation control at end of backside rail element.

STATE OF CALIFORNIA
DEPARTMENT OF TRANSPORTATION

MIDWEST GUARDRAIL SYSTEM TYPICAL VEGETATION CONTROL AT STRUCTURE APPROACH

NO SCALE

RSP A77N7 DATED JULY 19, 2013 SUPPLEMENTS THE STANDARD PLANS BOOK DATED 2010.

REVISED STANDARD PLAN RSP A77N7

2010 REVISED STANDARD PLAN RSP A77N7

6-12-13

Dist	COUNTY	ROUTE	POST MILES TOTAL PROJECT	SHEET No.	TOTAL SHEETS
05	Mon	1	R77.6/R85.3	64	101

Randell D. Hiatt
REGISTERED CIVIL ENGINEER

November 15, 2013
PLANS APPROVAL DATE

REGISTERED PROFESSIONAL ENGINEER
Randell D. Hiatt
No. C50200
Exp. 6-30-15
CIVIL
STATE OF CALIFORNIA

THE STATE OF CALIFORNIA OR ITS OFFICERS OR AGENTS SHALL NOT BE RESPONSIBLE FOR THE ACCURACY OR COMPLETENESS OF SCANNED COPIES OF THIS PLAN SHEET.

TO ACCOMPANY PLANS DATED 3-23-15

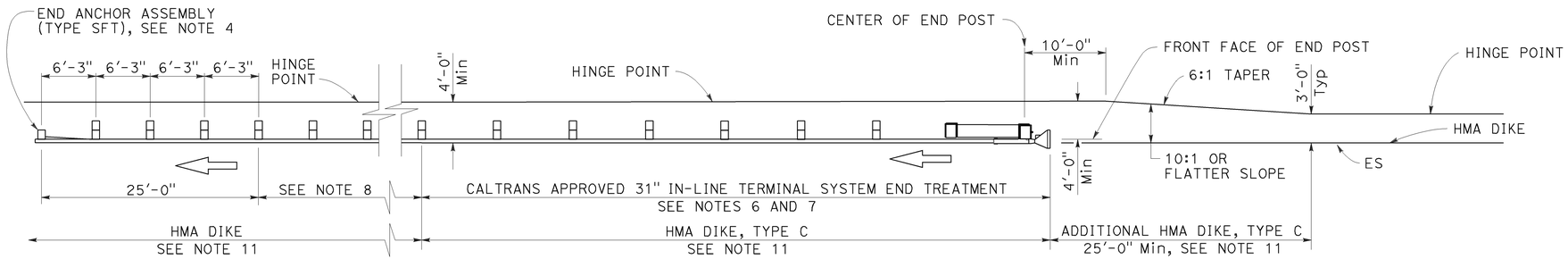

TYPE 11A LAYOUT

(Embankment MGS installation with 31" in-line end treatment at traffic approach end of railing) see Note 5

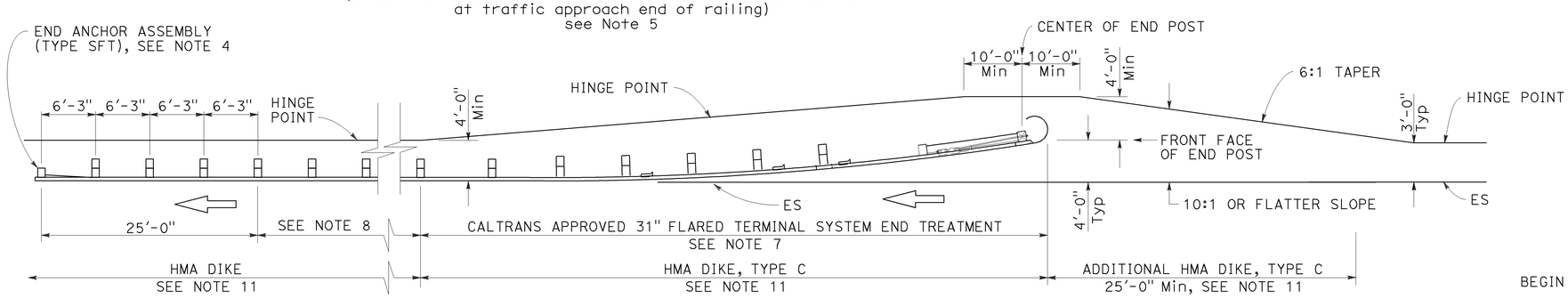

TYPE 11B LAYOUT

(Embankment MGS installation with 31" flared end treatment at traffic approach end of railing) see Note 5

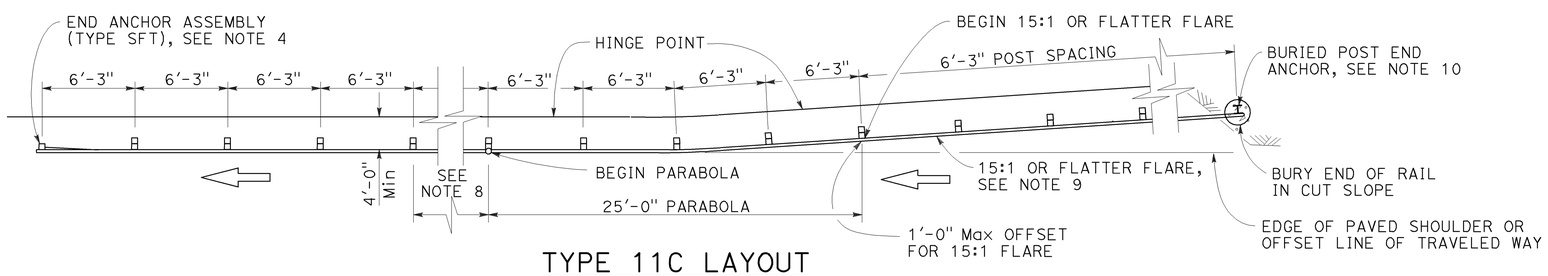

TYPE 11C LAYOUT

(Embankment MGS installation with buried end anchor treatment at traffic approach end of railing) see Notes 5 and 11

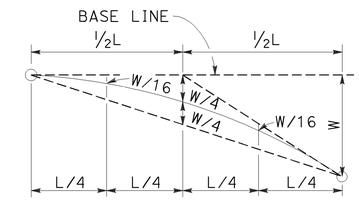

TYPICAL PARABOLIC LAYOUT

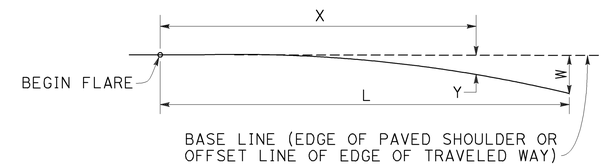

$$Y = \frac{WX^2}{L^2}$$

Y = OFFSET FROM BASE LINE
W = MAXIMUM OFFSET
X = DISTANCE ALONG BASE LINE
L = LENGTH OF FLARE

PARABOLIC FLARE OFFSETS

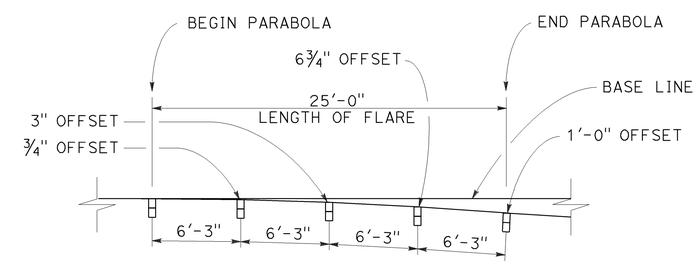

TYPICAL FLARE OFFSETS FOR 1 FOOT Max END OFFSET

NOTES:

1. Line post, blocks and hardware to be used are shown on Revised Standard Plans RSP A77L1, RSP A77L2, RSP A77M1, RSP A77N1 and RSP A77N2.
2. MGS post spacing to be 6'-3" center to center, except as otherwise noted.
3. Except as noted, line posts are 6" x 8" x 6'-0" wood with 6" x 12" x 1'-2" wood blocks. W6 x 8.5 or W6 x 9 steel posts, 6'-0" in length, with 6" x 12" x 1'-2" notched wood blocks or recycled plastic blocks may be used for 6" x 8" x 6'-0" wood post with 6" x 12" x 1'-2" wood blocks where applicable and when specified.
4. For End Anchor Assembly (Type SFT) details, see Revised Standard Plan RSP A77S1.
5. Layout Types 11A, 11B or 11C are typically used where MGS is recommended to shield embankment slopes and a crashworthy end treatment is required for only one direction of traffic.
6. 31" in-line terminal system end treatments are used where site conditions will not accommodate a flared end treatment.
7. The type of 31" terminal system end treatment to be used will be shown on the Project Plans.
8. Dependent on site conditions (embankment height and side slope), construction of additional MGS (length equal to multiples of 12'-6" with 6'-3" post spacing) may be advisable.
9. The 15:1 or flatter flare used with buried end anchors is based on the edge of the paved shoulder or offset line of edge of the traveled way. The length of MGS within the 15:1 or flatter flare is based on site conditions and should be a length equal to multiples of 12'-6".
10. For details of the buried post end anchor used with Type 11C Layout, see Revised Standard Plan RSP A77T2.
11. Where placement of dike is required with MGS installations, see Revised Standard Plan RSP A77N4 for dike positioning details.

STATE OF CALIFORNIA
DEPARTMENT OF TRANSPORTATION

MIDWEST GUARDRAIL SYSTEM TYPICAL LAYOUTS FOR EMBANKMENTS

NO SCALE

RSP A77P1 DATED NOVEMBER 15, 2013 SUPERSEDES RSP A77P1 DATED JULY 19, 2013 THAT SUPPLEMENTS THE STANDARD PLANS BOOK DATED 2010.

REVISED STANDARD PLAN RSP A77P1

2010 REVISED STANDARD PLAN RSP A77P1

10-4-13

Dist	COUNTY	ROUTE	POST MILES TOTAL PROJECT	SHEET No.	TOTAL SHEETS
05	Mon	1	R77.6/R85.3	65	101

Randell D. Hiatt
REGISTERED CIVIL ENGINEER

July 19, 2013
PLANS APPROVAL DATE

REGISTERED PROFESSIONAL ENGINEER
Randell D. Hiatt
No. C50200
Exp. 6-30-15
CIVIL
STATE OF CALIFORNIA

THE STATE OF CALIFORNIA OR ITS OFFICERS OR AGENTS SHALL NOT BE RESPONSIBLE FOR THE ACCURACY OR COMPLETENESS OF SCANNED COPIES OF THIS PLAN SHEET.

TO ACCOMPANY PLANS DATED 3-23-15

2010 REVISED STANDARD PLAN RSP A77Q1

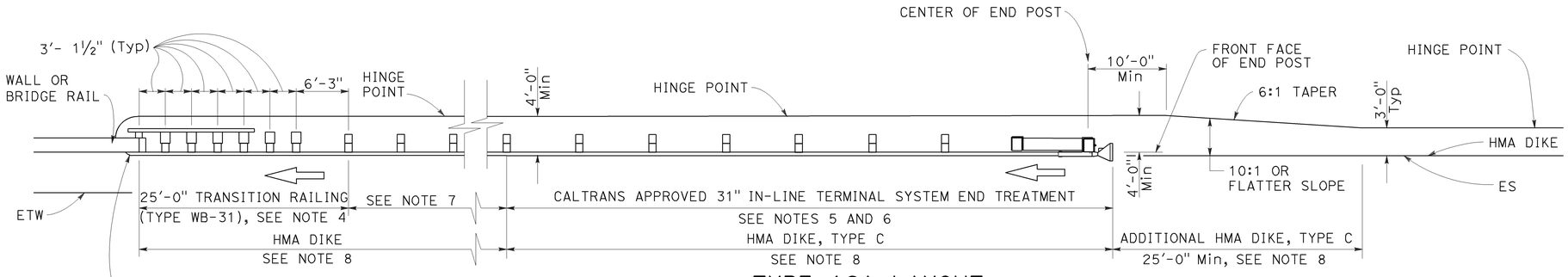

TYPE 12A LAYOUT

(MGS installation at structure approach with
31" In-line end treatment at traffic approach end of railing)
See Notes 9

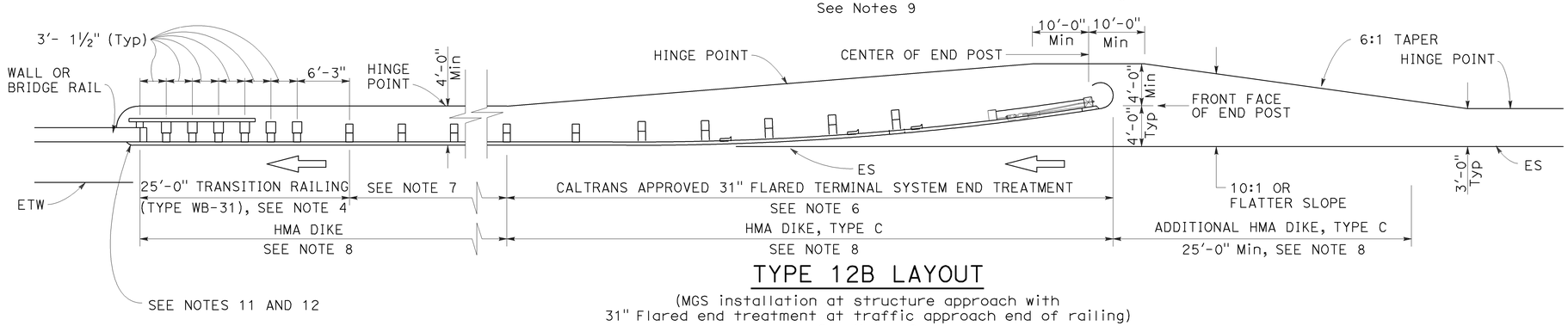

TYPE 12B LAYOUT

(MGS installation at structure approach with
31" Flared end treatment at traffic approach end of railing)
See Notes 9

NOTES:

1. Line post, blocks and hardware to be used are shown on Revised Standard Plans RSP A77L1, RSP A77L2, RSP A77M1, RSP A77N1 and RSP A77N2.
2. MGS post spacing to be 6'-3" center to center, except as otherwise noted.
3. Except as noted, line posts are 6" x 8" x 6'-0" wood with 6" x 12" x 1'-2" wood blocks. W6 x 8.5 or W6 x 9 steel posts, 6'-0" in length, with 6" x 12" x 1'-2" notched wood blocks or plastic blocks may be used for 6" x 8" x 6'-0" wood posts with 6" x 12" x 1'-2" wood blocks where applicable and when specified.
4. For Transition Railing (Type WB-31) details for Types 12A and 12B Layouts, see Revised Standard Plan RSP A77U4.
5. 31" in-line terminal system end treatments are used where site conditions will not accommodate a 31" flared end treatment.
6. The type 31" of terminal system end treatment to be used will be shown on the Project Plans.
7. Dependent on site conditions (embankment height, side slopes, or other fixed objects), it may be advisable to construct additional guard railing (a length equal to multiples of 12'-6" with 6'-3" post spacing) between the transition railing and end treatment. A 12.5 degree angle of departure can be drawn on the Project Plans from the edge of traveled way through the outer most point of the fixed object to determine the additional length of railing needed.
8. Where placement of dike is required with guard railing installations, see Revised Standard Plan RSP A77N4 for dike positioning details.
9. Type 12A or Type 12B Layouts are typically used:
   a. To the right of approaching traffic, at the end of a structure, on two-lane conventional highway where the roadbed width across the structure is less than 40 feet.
   b. To the left of approaching traffic, at the end of a structure, on two-lane conventional highway where the roadbed width across the structure is less than 40 feet.
   c. To the right of approaching traffic at the end of each structure on multilane freeways or expressways with separate adjacent or parallel bridges.
   d. To the right of approaching traffic at the end of the structure on multilane freeways or expressways with decked median on the bridge.
10. See Revised Standard Plan RSP A77Q3 for typical layout used left of approaching traffic at the ends of each structure on multilane freeways or expressways with separate adjacent or parallel bridges.
11. For additional details of typical connections to bridge rail, see Connection Detail AA on Revised Standard Plans RSP A77U1 and RSP A77U2 and Connection Detail FF on Revised Standard Plans RSP A77V1 and RSP A77V2.
12. For additional details of a typical connection to walls or abutments, see Revised Standard Plan RSP A77U3.

STATE OF CALIFORNIA
DEPARTMENT OF TRANSPORTATION

MIDWEST GUARDRAIL SYSTEM TYPICAL LAYOUTS FOR STRUCTURE APPROACH

NO SCALE

RSP A77Q1 DATED JULY 19, 2013 SUPPLEMENTS THE STANDARD PLANS BOOK DATED 2010.

REVISED STANDARD PLAN RSP A77Q1

Dist	COUNTY	ROUTE	POST MILES TOTAL PROJECT	SHEET No.	TOTAL SHEETS
05	Mon	1	R77.6/R85.3	66	101

Randell D. Hiatt
REGISTERED CIVIL ENGINEER

July 19, 2013
PLANS APPROVAL DATE

REGISTERED PROFESSIONAL ENGINEER
Randell D. Hiatt
No. C50200
Exp. 6-30-15
CIVIL
STATE OF CALIFORNIA

THE STATE OF CALIFORNIA OR ITS OFFICERS OR AGENTS SHALL NOT BE RESPONSIBLE FOR THE ACCURACY OR COMPLETENESS OF SCANNED COPIES OF THIS PLAN SHEET.

TO ACCOMPANY PLANS DATED 3-23-15

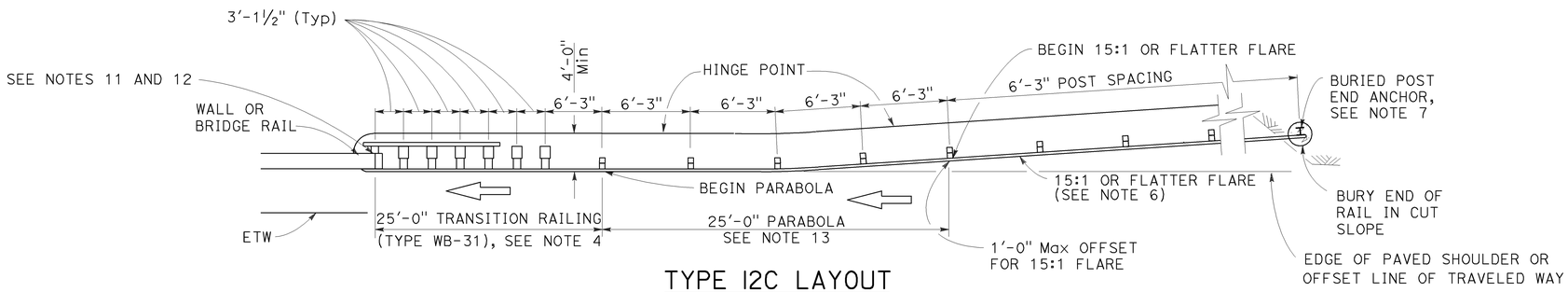

TYPE 12C LAYOUT

(MGS installation at structure approach with a Buried end anchor treatment at traffic approach end of railing)
See Notes 8 and 9

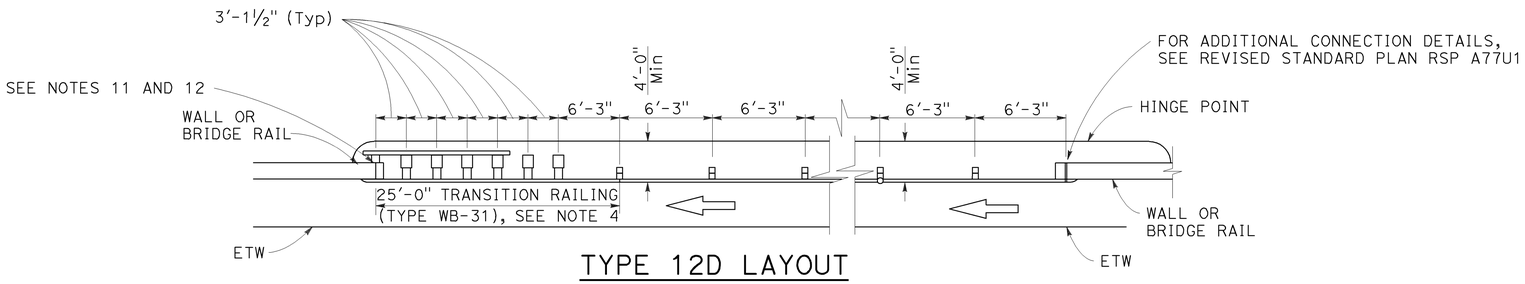

TYPE 12D LAYOUT

(Continuous MGS installation between structures)
See Notes 5 and 9

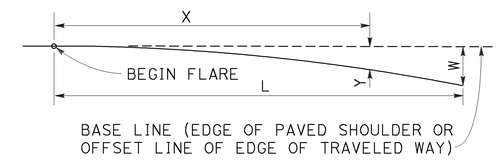

$$Y = \frac{WX^2}{L^2}$$

Y = OFFSET FROM BASE LINE
W = MAXIMUM OFFSET
X = DISTANCE ALONG BASE LINE
L = LENGTH OF FLARE

PARABOLIC FLARE OFFSETS

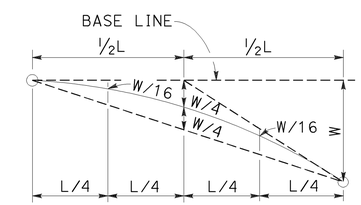

TYPICAL PARABOLIC LAYOUT

NOTES:

1. Line post, blocks and hardware to be used are shown on Revised Standard Plans RSP A77L1, RSP A77L2, RSP A77M1, RSP A77N1 and RSP A77N2.
2. MGS post spacing to be 6'-3" center to center, except as otherwise noted.
3. Except as noted, line posts are 6" x 8" x 6'-0" m wood with 6" x 12" x 1'-2" wood blocks. W6 x 8.5 or W6 x 9 steel posts, 6'-0" in length, with 6" x 12" x 1'-2" notched wood blocks or plastic blocks may be used for 6" x 8" x 6'-0" wood posts with 6" x 12" x 1'-2" wood blocks where applicable and when specified.
4. For Transition Railing (Type WB-31) details for Types 12C and 12D Layouts, see Revised Standard Plan RSP A77U4.
5. Type 12D layout is typically used where continous MGS is recommended between structures.
6. The 15:1 or flatter flare for Type 12C Layout is based on the edge of the paved shoulder or offset line of edge of the traveled way. The length of MGS with the 15:1 or flatter flare is based on site conditions and should be a length equal to multiples of 12'-6".
7. For details of the buried post end anchor used with Type 12C Layout, see Revised Standard Plan RSP A77T2.
8. Where placement of dike is required with MGS installations, see Revised Standard Plan RSP A77N4 for dike positioning details.
9. Type 12C Layout is typically used:
   a. To the right of approaching traffic, at the end of the structure, on two-lane conventional highway where the roadbed width across the structure is less than 40 feet.
   b. To the left of approaching traffic, at each of a structure, on two-lane conventional highway where the roadbed width across the structure is less than 40 feet.
   c. To the right of approaching traffic at the end of each structure on multilane freeways or expressways with separate adjacent or parallel bridges.
   d. To the right of approaching traffic at the end of the structure on multilane freeways or expressways with decked median on the bridge.
10. See Revised Standard Plan RSP A77Q3 for typical layout used left of approaching traffic at the ends of each structure on multilane freeways or expressways with separate adjacent or parallel bridges.
11. For additional details of typical connections to bridge rail, see Connection Detail AA on Revised Standard Plans RSP A77U1 and RSP A77U2 and Connection Detail FF on Revised Standard Plans RSP A77V1 and RSP A77V2.
12. For additional details of a typical connection to walls or abutments, see Revised Standard Plan RSP A77U3.
13. For typical flare offsets for 25'-0" length parabola with maximum offset of 1'-0", see Revised Standard Plan RSP A77P1.

STATE OF CALIFORNIA
DEPARTMENT OF TRANSPORTATION

MIDWEST GUARDRAIL SYSTEM TYPICAL LAYOUTS FOR STRUCTURE APPROACH AND BETWEEN STRUCTURES

NO SCALE

RSP A77Q2 DATED JULY 19, 2013 SUPPLEMENTS THE STANDARD PLANS BOOK DATED 2010.

REVISED STANDARD PLAN RSP A77Q2

2010 REVISED STANDARD PLAN RSP A77Q2

7-8-13

Dist	COUNTY	ROUTE	POST MILES TOTAL PROJECT	SHEET No.	TOTAL SHEETS
05	Mon	1	R77.6/R85.3	67	101

Randell D. Hiatt
REGISTERED CIVIL ENGINEER

July 19, 2013
PLANS APPROVAL DATE

REGISTERED PROFESSIONAL ENGINEER
Randell D. Hiatt
No. C50200
Exp. 6-30-15
CIVIL
STATE OF CALIFORNIA

THE STATE OF CALIFORNIA OR ITS OFFICERS OR AGENTS SHALL NOT BE RESPONSIBLE FOR THE ACCURACY OR COMPLETENESS OF SCANNED COPIES OF THIS PLAN SHEET.

TO ACCOMPANY PLANS DATED 3-23-15

NOTES:

1. Line post, blocks and hardware to be used are shown on Revised Standard Plans RSP A77L1, RSP A77L2, RSP A77M1, RSP A77N1 and RSP A77N2.
2. MGS post spacing to be 6'-3" center to center, except as otherwise noted.
3. Except as noted, line posts are 6" x 8" x 6'-0" wood with 6" x 12" x 1'-2" wood blocks. W6 x 8.5 or W6 x 9 steel posts, 6'-0" in length, with 6" x 12" x 1'-2" notched wood blocks or notched recycled plastic blocks may be used for 6" x 8" x 6'-0" wood line posts with 6" x 12" x 1'-2" wood blocks where applicable and when specified.
4. A 4'-0" minimum clearance is required between the face of the railing and the face of a fixed object located directly behind MGS section with post spacing of 6'-3". Construct MGS as shown in the detail "Strengthened Midwest Guardrail System Sections for Fixed Object" on this plan, where the clearance between the face of the railing and the face of a fixed object is less than 4'-0", but not less than 3'-0". Where the clearance is less than 3'-0", a concrete wall or barrier should be constructed to shield the fixed object(s).
5. For End Anchor Assembly (Type SFT) details, see Standard Plan RSP A77S1.
6. Type of crash cushion to be used will be shown on the Project Plans.
7. Type 15A layout is typically used on multilane freeways or expressways to shield fixed objects in the area between separated one-way roadbeds.
8. For typical flare offsets for 25'-0" length parabola with maximum offset of 1'-0", see Revised Standard Plan RSP A77P1.
9. The 15:1 or flatter flare is measured off of the edge of the traveled way.
10. W6 x 15 steel post, 8'-0" in length, with 8" x 12" x 1'-2" notched wood block or notched recycled plastic blocks may be used in place of the 10" x 10" x 8'-0" wood post with 8" x 12" x 1'-2" wood block shown in the detail "Strengthened Midwest Guardrail System Sections for Fixed Object".

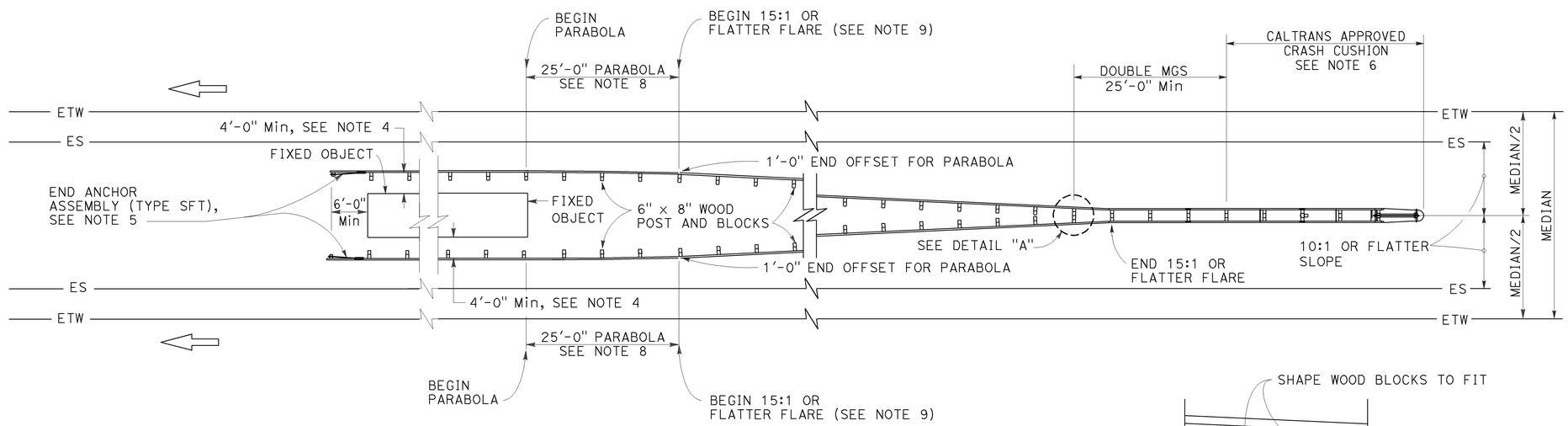

TYPE 15A LAYOUT

See Note 7

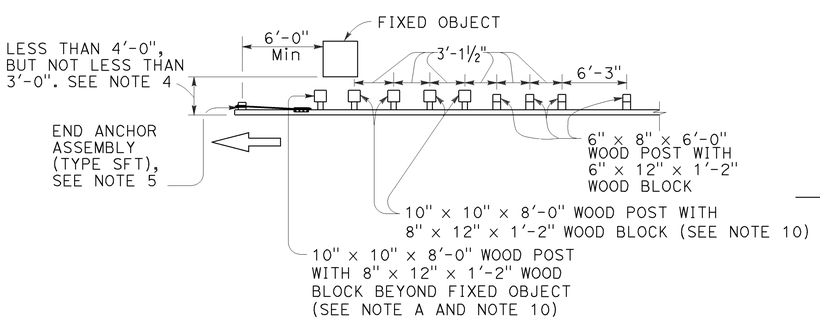

NOTE A: For a series of fixed objects (bridge columns, overhead sign supports, etc.) additional 10" x 10" x 8'-0" wood post with 8" x 12" x 1'-2" wood blocks at 3'-1½" center to center spacing are to be used between fixed objects.

STRENGTHENED MIDWEST GUARDRAIL SYSTEM SECTIONS FOR FIXED OBJECT

Use strengthened MGS sections with Type 15A layout where minimum clearance between the face of the MGS and the fixed object(s) is less than 4'-0", but not less than 3'-0". See Note 4.

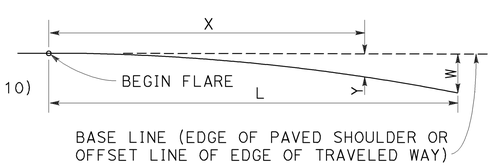

$$Y = \frac{WX^2}{L^2}$$

Y = OFFSET FROM BASE LINE
W = MAXIMUM OFFSET
X = DISTANCE ALONG BASE LINE
L = LENGTH OF FLARE

PARABOLIC FLARE OFFSETS

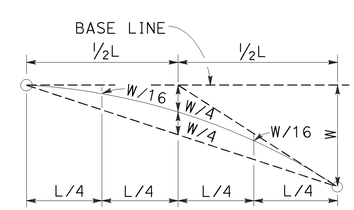

TYPICAL PARABOLIC LAYOUT

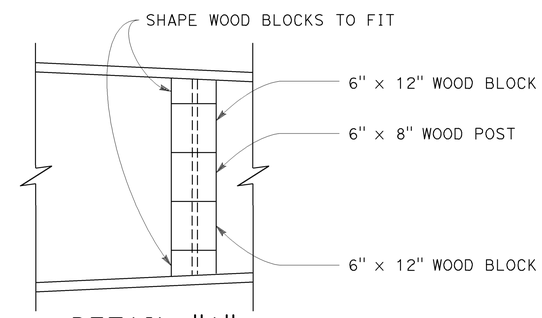

DETAIL "A"

STATE OF CALIFORNIA
DEPARTMENT OF TRANSPORTATION

MIDWEST GUARDRAIL SYSTEM TYPICAL LAYOUTS FOR FIXED OBJECTS BETWEEN SEPARATE ROADBEDS (ONE-WAY TRAFFIC)

NO SCALE

RSP A77R2 DATED JULY 19, 2013 SUPPLEMENTS THE STANDARD PLANS BOOK DATED 2010.

REVISED STANDARD PLAN RSP A77R2

2010 REVISED STANDARD PLAN RSP A77R2

6-20-13

Dist	COUNTY	ROUTE	POST MILES TOTAL PROJECT	SHEET No.	TOTAL SHEETS
05	Mon	1	R77.6/R85.3	68	101

Randell D. Hiatt
REGISTERED CIVIL ENGINEER

July 19, 2013
PLANS APPROVAL DATE

REGISTERED PROFESSIONAL ENGINEER Randell D. Hiatt No. C50200 Exp. 6-30-15 CIVIL STATE OF CALIFORNIA

THE STATE OF CALIFORNIA OR ITS OFFICERS OR AGENTS SHALL NOT BE RESPONSIBLE FOR THE ACCURACY OR COMPLETENESS OF SCANNED COPIES OF THIS PLAN SHEET.

TO ACCOMPANY PLANS DATED 3-23-15

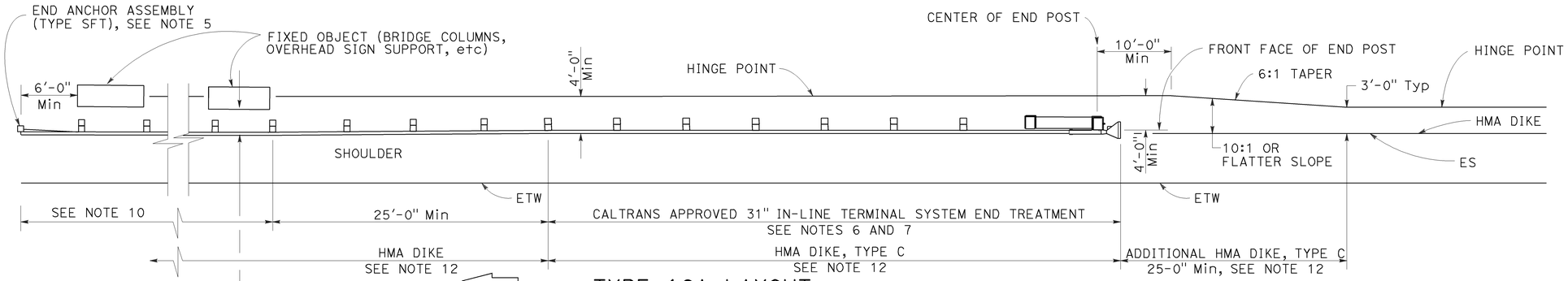

TYPE 16A LAYOUT

(MGS installation at roadside fixed object or objects with 31" in-line end treatment at traffic approach end of railing)
See Notes 11 and 12

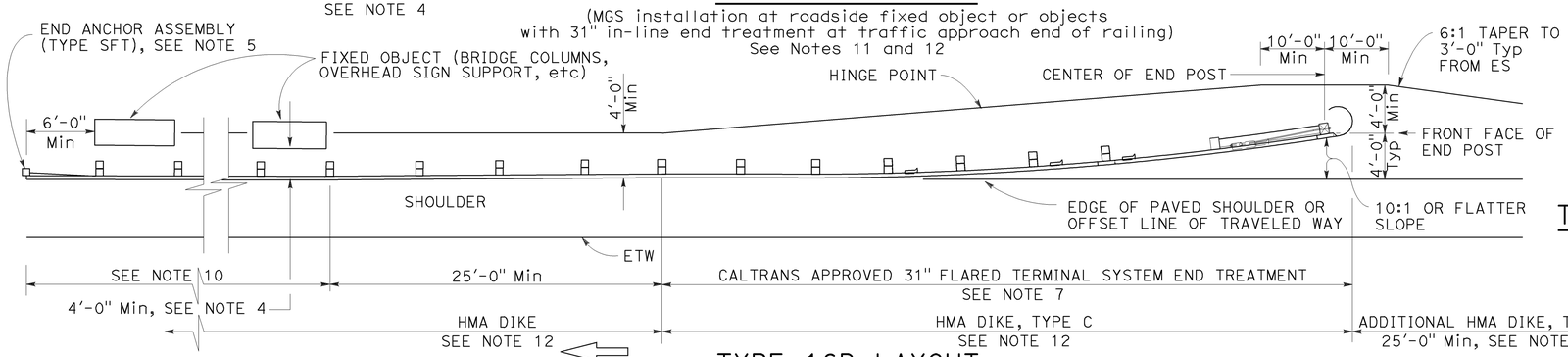

TYPE 16B LAYOUT

(MGS installation at roadside fixed object or objects with 31' flared end treatment at traffic approach end of railing)
See Notes 11 and 12

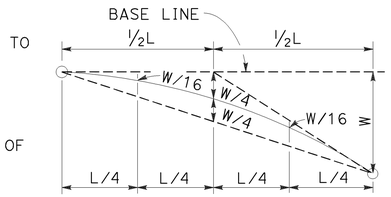

TYPIC AL PARABOLIC LAYOUT

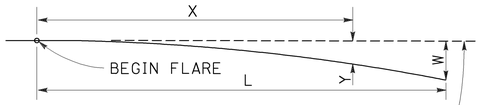

BASE LINE (EDGE OF PAVED SHOULDER OR OFFSET LINE OF EDGE OF TRAVELED WAY)

$$Y = \frac{WX^2}{L^2}$$

Y = OFFSET FROM BASE LINE
W = MAXIMUM OFFSET
X = DISTANCE ALONG BASE LINE
L = LENGTH OF FLARE

PARABOLIC FLARE OFFSETS

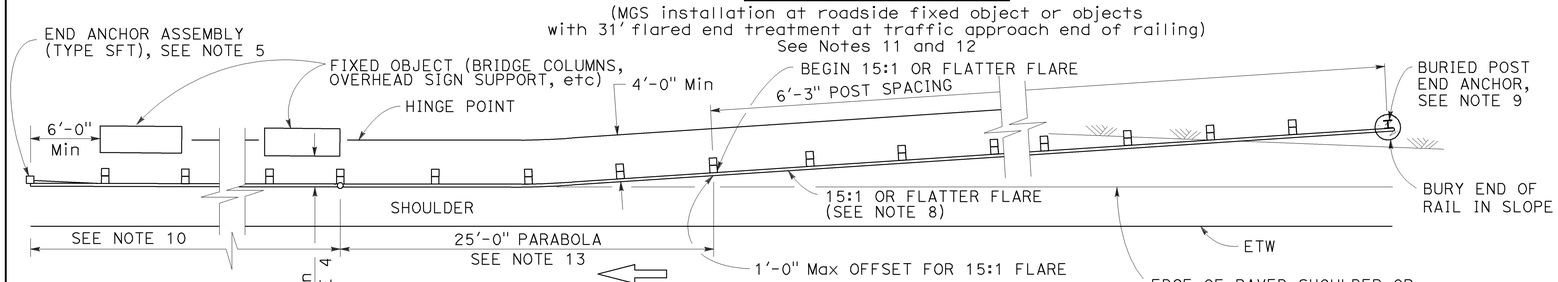

TYPE 16C LAYOUT

(MGS installation at roadside fixed object or objects with a buried end anchor treatment at traffic approach end of railing)
See Notes 11 and 12

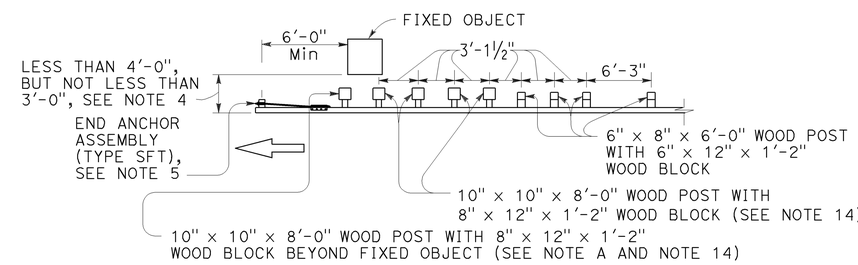

NOTE A: For a series of fixed objects (bridge columns, overhead sign supports, etc.) additional 10" x 10" x 8'-0" wood post with 8" x 12" x 1'-2" wood blocks at 3'-1½" center to center spacing are to be used between fixed objects.

STRENGTHENED MIDWEST GUARDRAIL SYSTEM SECTIONS FOR FIXED OBJECT

Use strengthened MGS sections with Types 16A, 16B or 16C layouts where minimum clearance between the face of the railing and fixed object(s) is less than 4'-0", but not less than 3'-0". See Note 4

NOTES:

1. Line post, blocks and hardware to be used are shown on Revised Standard Plans RSP A77L1, RSP A77L2, RSP A77M1, RSP A77N1 and RSP A77N2.
2. MGS post spacing to be 6'-3" center to center, except as otherwise noted.
3. Except as noted, line posts are 6" x 8" x 6'-0" wood with 6" x 12" x 1'-2" wood blocks. W6 x 8.5 or W6 x 9 steel posts, 6'-0" in length, with 6" x 12" x 1'-2" notched wood blocks or notched recycled plastic blocks may be used for 6" x 8" x 6'-0" wood line posts with 6" x 12" x 1'-2" wood blocks where applicable and when specified.
4. A 4'-0" minimum clearance is required between the face of the railing and the face of a fixed object located directly behind MGS sections with post spacing of 6'-3". Construct MGS as shown in the detail "Strengthened Midwest Guardrail System Sections for Fixed Object" on this plan, where the clearance between the face of the railing and the face of a fixed object is less than 4'-0", but not less than 3'-0". Where the clearance is less than 3'-0", a concrete wall or barrier should be constructed to shield the fixed object(s).
5. For End Anchor Assembly (Type SFT) details, see Revised Standard Plan RSP A77S1.
6. 31" in-line terminal system end treatments are used where site conditions will not accommodate a 31" flared end treatment.
7. The type of 31" terminal system to be used will be shown on the Project Plans.
8. The 15:1 or flatter flare used with Type 16C Layout is based on the edge of the paved shoulder or offset line of edge of the traveled way. The length of MGS within the 15:1 or flatter flare is based on site conditions and should be a length equal to multiples of 12'-6".
9. For details of the Buried Post End Anchor used with Type 16C Layout, see Revised Standard Plan RSP A77T2.
10. As site conditions dictate, construct additional MGS to shield fixed object(s). Additional MGS length equal to multiples of 12'-6". Post spacing at 6'-3" except as specified in Note 4.
11. Layout Types 16A, 16B or 16C are typically used where MGS is recommended to shield roadside fixed object(s) and a crashworthy 31" end treatment is required for only one direction of traffic.
12. Where placement of dike is required with MGS, see Revised Standard Plan RSP A77N4 for dike positioning details.
13. For typical flare offsets for 25'-0" length parabola with maximum offset of 1'-0", see Revised Standard Plan RSP A77P1.
14. W6 x 15 steel post, 8'-0" in length, with 8" x 12" x 1'-2" notched wood block or notched recycled plastic blocks may be used in place of the 10" x 10" x 8'-0" wood post with 8" x 12" x 1'-2" wood block shown in the detail "Strengthened Midwest Guardrail System Sections for Fixed Object".

STATE OF CALIFORNIA
DEPARTMENT OF TRANSPORTATION

MIDWEST GUARDRAIL SYSTEM TYPICAL LAYOUTS FOR ROADSIDE FIXED OBJECTS

NO SCALE

RSP A77R3 DATED JULY 19, 2013 SUPPLEMENTS THE STANDARD PLANS BOOK DATED 2010.

REVISED STANDARD PLAN RSP A77R3

2010 REVISED STANDARD PLAN RSP A77R3

6-20-13

Dist	COUNTY	ROUTE	POST MILES TOTAL PROJECT	SHEET No.	TOTAL SHEETS
05	Mon	1	R77.6/R85.3	69	101

Randell D. Hiatt
REGISTERED CIVIL ENGINEER

November 15, 2013
PLANS APPROVAL DATE

REGISTERED PROFESSIONAL ENGINEER
Randell D. Hiatt
No. C50200
Exp. 6-30-15
CIVIL
STATE OF CALIFORNIA

THE STATE OF CALIFORNIA OR ITS OFFICERS OR AGENTS SHALL NOT BE RESPONSIBLE FOR THE ACCURACY OR COMPLETENESS OF SCANNED COPIES OF THIS PLAN SHEET.

TO ACCOMPANY PLANS DATED 3-23-15

2010 REVISED STANDARD PLAN RSP A77S1

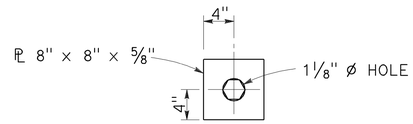

DETAIL "A"
CABLE CONNECTION
END PLATE

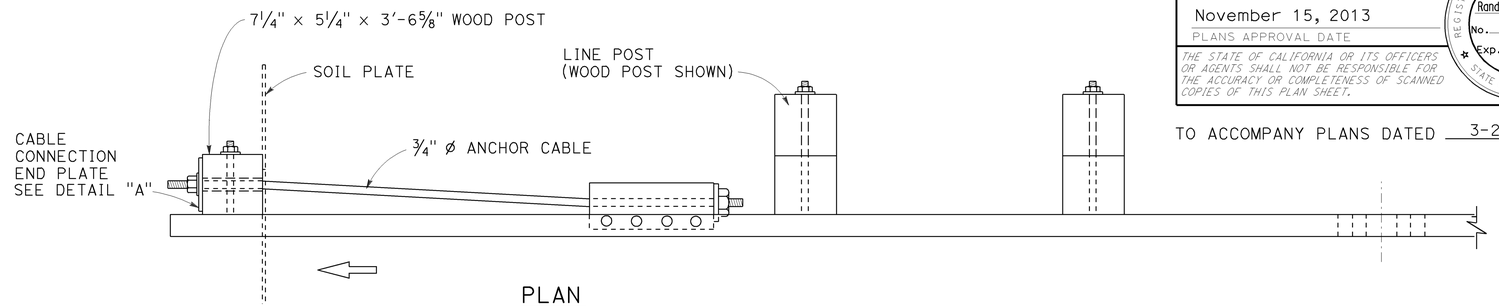

PLAN

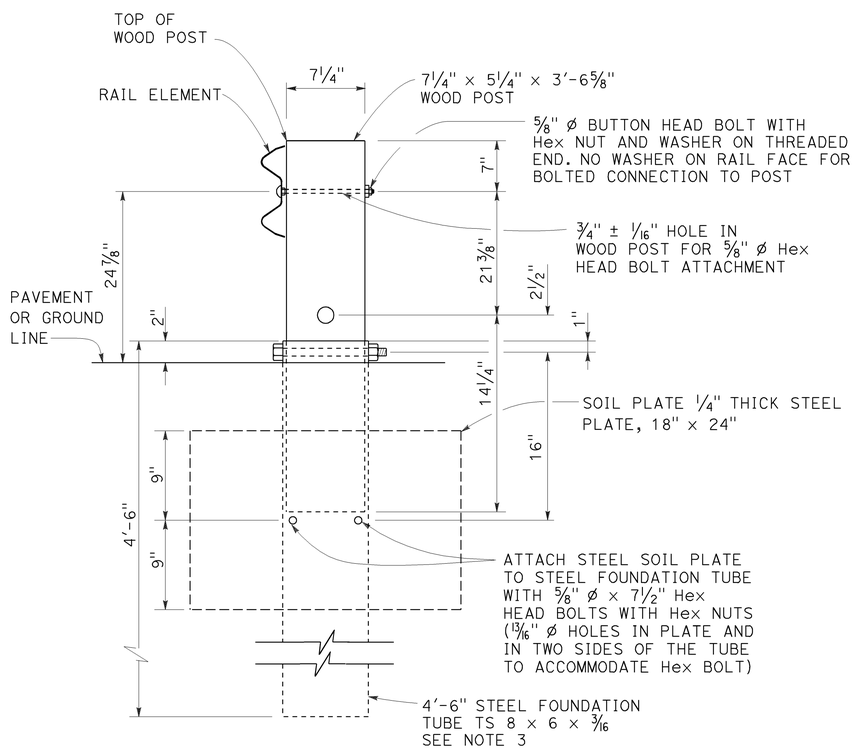

SECTION A-A

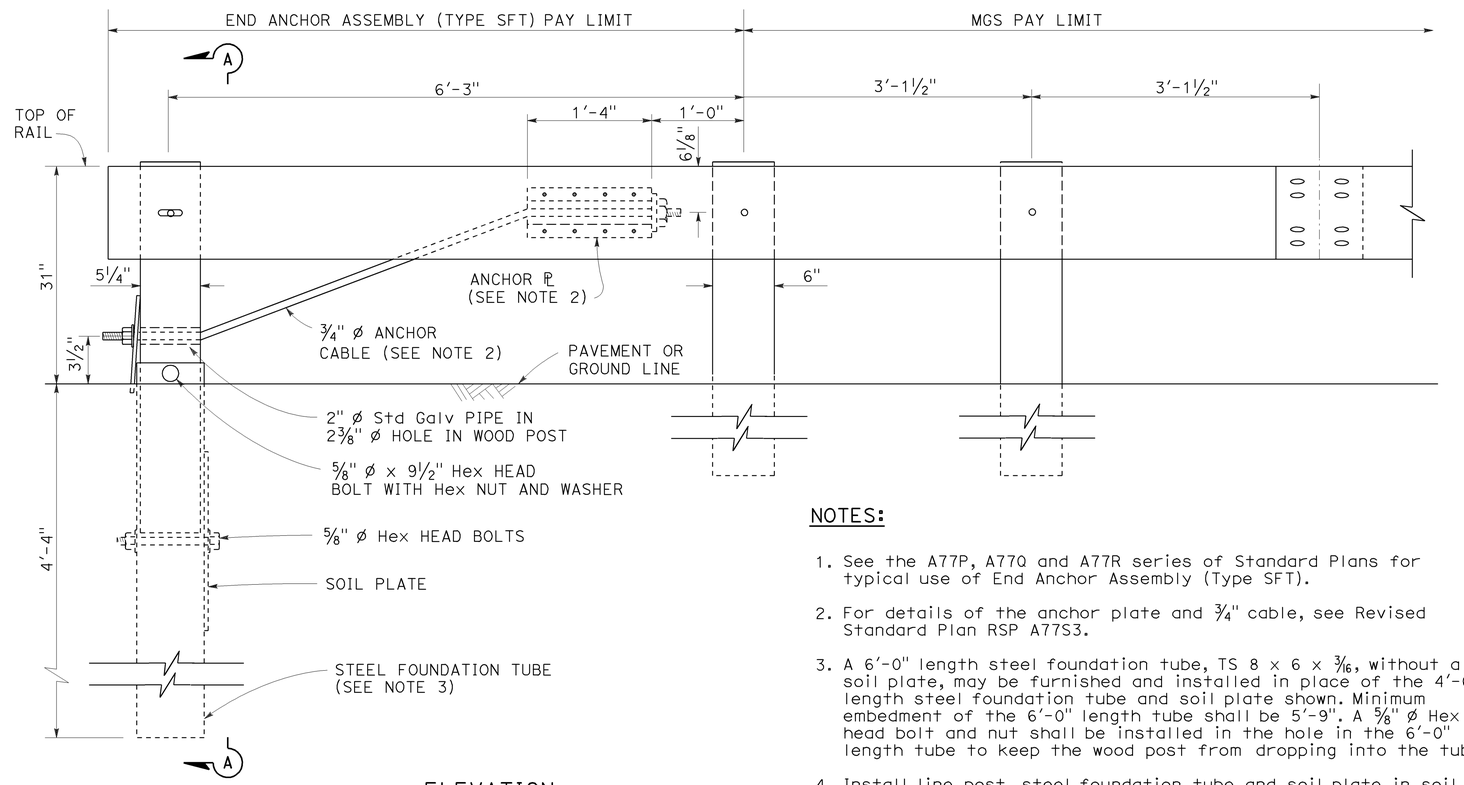

ELEVATION

END ANCHOR
ASSEMBLY (TYPE SFT)
See Note 1

NOTES:

1. See the A77P, A77Q and A77R series of Standard Plans for typical use of End Anchor Assembly (Type SFT).
2. For details of the anchor plate and 3/4" cable, see Revised Standard Plan RSP A77S3.
3. A 6'-0" length steel foundation tube, TS 8 x 6 x 3/16, without a soil plate, may be furnished and installed in place of the 4'-6" length steel foundation tube and soil plate shown. Minimum embedment of the 6'-0" length tube shall be 5'-9". A 5/8" ø Hex head bolt and nut shall be installed in the hole in the 6'-0" length tube to keep the wood post from dropping into the tube.
4. Install line post, steel foundation tube and soil plate in soil.

STATE OF CALIFORNIA
DEPARTMENT OF TRANSPORTATION

MIDWEST GUARDRAIL SYSTEM END ANCHOR ASSEMBLY (TYPE SFT)

NO SCALE

RSP A77S1 DATED NOVEMBER 15, 2013 SUPERSEDES RSP A77S1
DATED JULY 19, 2013 THAT SUPPLEMENTS THE STANDARD PLANS BOOK DATED 2010.

REVISED STANDARD PLAN RSP A77S1

10-4-13

Dist	COUNTY	ROUTE	POST MILES TOTAL PROJECT	SHEET No.	TOTAL SHEETS
05	Mon	1	R77.6/R85.3	70	101

Randell D. Hiatt
REGISTERED CIVIL ENGINEER

July 19, 2013
PLANS APPROVAL DATE

REGISTERED PROFESSIONAL ENGINEER
Randell D. Hiatt
No. C50200
Exp. 6-30-15
CIVIL
STATE OF CALIFORNIA

THE STATE OF CALIFORNIA OR ITS OFFICERS OR AGENTS SHALL NOT BE RESPONSIBLE FOR THE ACCURACY OR COMPLETENESS OF SCANNED COPIES OF THIS PLAN SHEET.

TO ACCOMPANY PLANS DATED 3-23-15

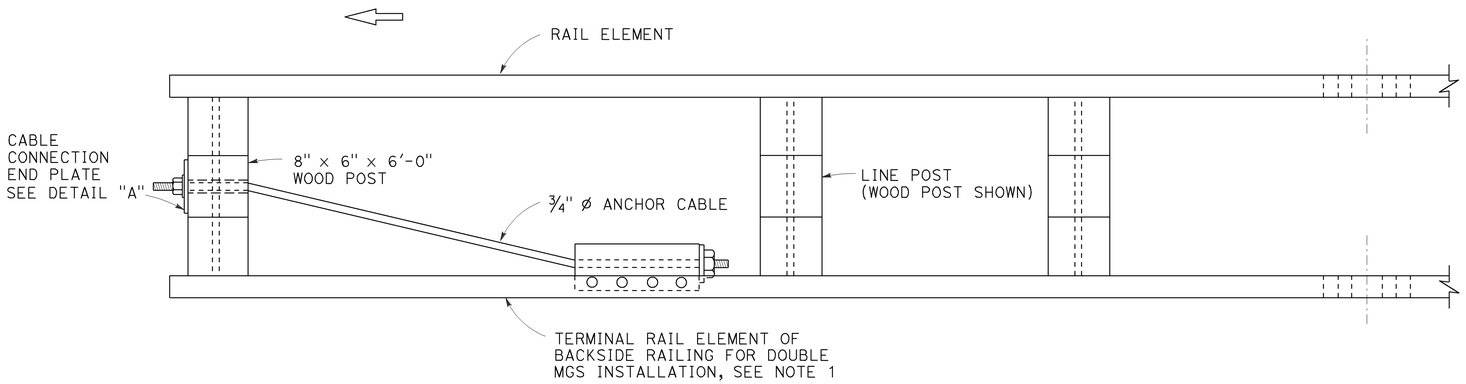

PLAN

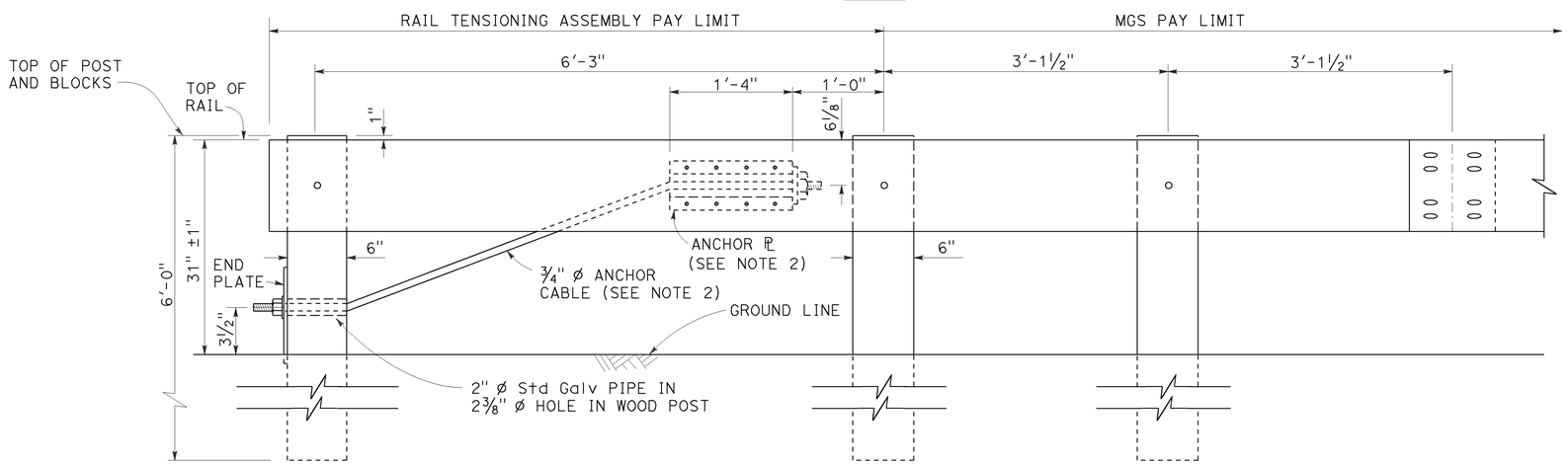

ELEVATION
RAIL TENSIONING ASSEMBLY
See Note 1

NOTES:

1. See Revised Standard Plans RSP A77Q3 and RSP A77R1 for typical use of rail tensioning assembly.
2. For details of the anchor plate and ¾" cable, see Revised Standard Plan RSP A77S3.

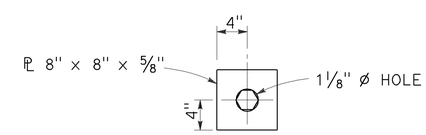

DETAIL "A"
CABLE CONNECTION END PLATE

STATE OF CALIFORNIA
DEPARTMENT OF TRANSPORTATION

MIDWEST GUARDRAIL SYSTEM RAIL TENSIONING ASSEMBLY

NO SCALE

RSP A77S2 DATED JULY 19, 2013 SUPPLEMENTS THE STANDARD PLANS BOOK DATED 2010.

REVISED STANDARD PLAN RSP A77S2

2010 REVISED STANDARD PLAN RSP A77S2

7-3-13

Dist	COUNTY	ROUTE	POST MILES TOTAL PROJECT	SHEET No.	TOTAL SHEETS
05	Mon	1	R77.6/R85.3	71	101

Randell D. Hiatt
REGISTERED CIVIL ENGINEER

November 15, 2013
PLANS APPROVAL DATE

REGISTERED PROFESSIONAL ENGINEER
Randell D. Hiatt
No. C50200
Exp. 6-30-15
CIVIL
STATE OF CALIFORNIA

THE STATE OF CALIFORNIA OR ITS OFFICERS OR AGENTS SHALL NOT BE RESPONSIBLE FOR THE ACCURACY OR COMPLETENESS OF SCANNED COPIES OF THIS PLAN SHEET.

TO ACCOMPANY PLANS DATED 3-23-15

2010 REVISED STANDARD PLAN RSP A77S3

NOTE:

See Revised Standard Plans RSP A77S1, RSP A77S2 and RSP A77T1 for typical use of anchor cable and anchor plate.

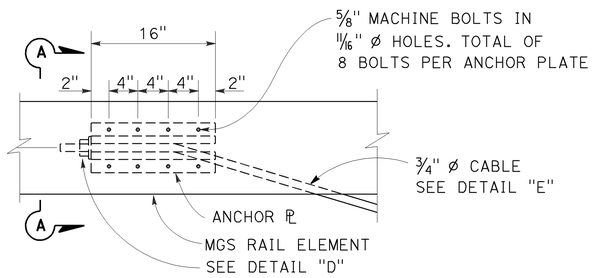

ANCHOR PLATE DETAIL
(MGS shown, TBB similar)

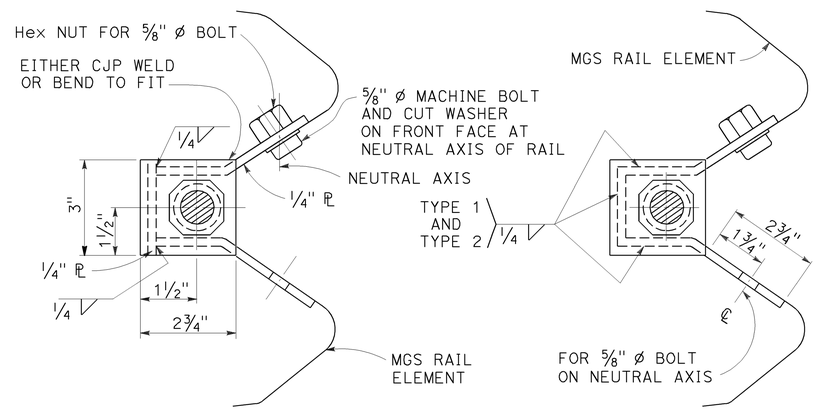

NOTE:
Dimensioning applies to both types.

SECTION A-A
(ALTERNATIVE TYPE 1)

SECTION A-A
(ALTERNATIVE TYPE 2)

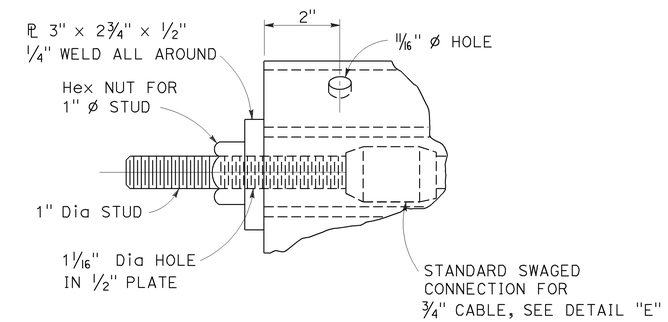

DETAIL "D"

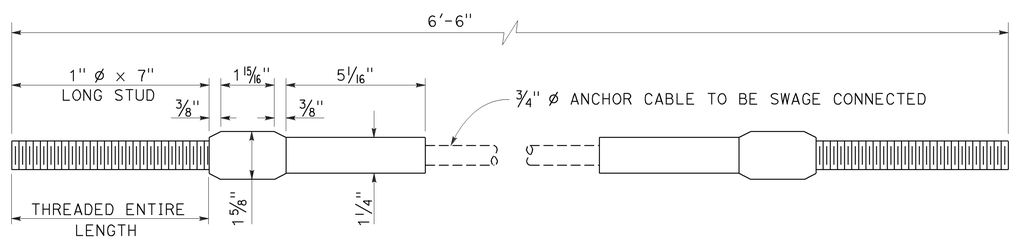

ANCHOR CABLE WITH
SWAGED FITTING AND STUD
DETAIL "E"

STATE OF CALIFORNIA
DEPARTMENT OF TRANSPORTATION

METAL RAILING ANCHOR CABLE AND ANCHOR PLATE DETAILS

NO SCALE

RSP A77S3 DATED NOVEMBER 15, 2013 SUPERSEDES RSP A77S3
DATED JULY 19, 2013 THAT SUPPLEMENTS THE STANDARD PLANS BOOK DATED 2010.

REVISED STANDARD PLAN RSP A77S3

10-4-13

Dist	COUNTY	ROUTE	POST MILES TOTAL PROJECT	SHEET No.	TOTAL SHEETS
05	Mon	1	R77.6/R85.3	72	101

Randell D. Hiatt
REGISTERED CIVIL ENGINEER

November 15, 2013
PLANS APPROVAL DATE

REGISTERED PROFESSIONAL ENGINEER
Randell D. Hiatt
No. C50200
Exp. 6-30-15
CIVIL
STATE OF CALIFORNIA

THE STATE OF CALIFORNIA OR ITS OFFICERS OR AGENTS SHALL NOT BE RESPONSIBLE FOR THE ACCURACY OR COMPLETENESS OF SCANNED COPIES OF THIS PLAN SHEET.

TO ACCOMPANY PLANS DATED 3-23-15

2010 REVISED STANDARD PLAN RSP A77T2

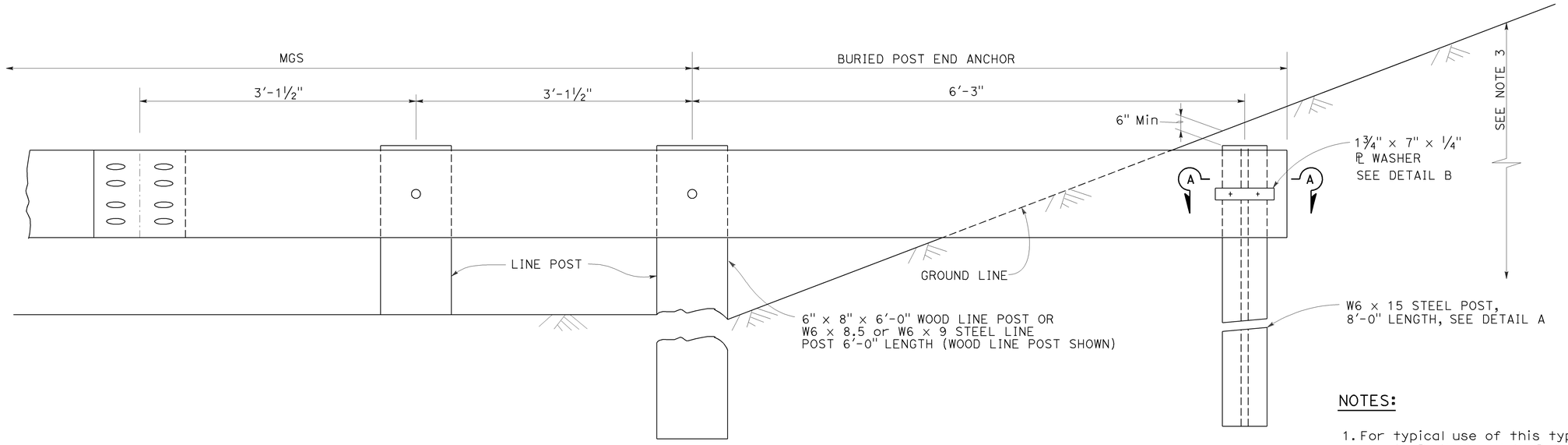

BURIED POST END ANCHOR

See Note 3

NOTES:

1. For typical use of this type of end anchor with MGS see the A77P, A77Q and A77R Series of the Standard Plans.
2. Holes excavation in the slope to construct the buried post end anchor shall be backfilled with selected earth, placed in layers approximately 1'-0" thick. Each layer shall be moistened and thoroughly compacted.
3. The buried post end anchor shall only be constructed at those locations where the slope perpendicular to the roadway is non-traversable.

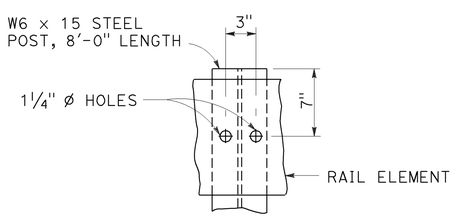

DETAIL A

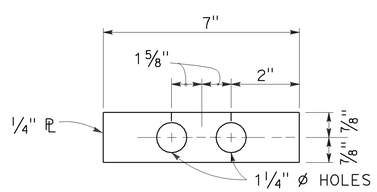

DETAIL B

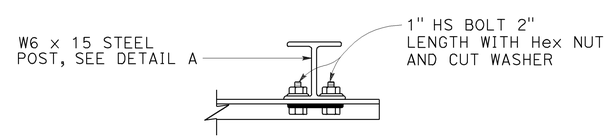

SECTION A-A

STATE OF CALIFORNIA
DEPARTMENT OF TRANSPORTATION

MIDWEST GUARDRAIL SYSTEM BURIED POST END ANCHOR

NO SCALE

RSP A77T2 DATED NOVEMBER 15, 2013 SUPERSEDES RSP A77T2
DATED JULY 19, 2013 THAT SUPPLEMENTS THE STANDARD PLANS BOOK DATED 2010.

REVISED STANDARD PLAN RSP A77T2

10-4-13

Dist	COUNTY	ROUTE	POST MILES TOTAL PROJECT	SHEET No.	TOTAL SHEETS
05	Mon	1	R77.6/R85.3	73	101

Randell D. Hiatt
REGISTERED CIVIL ENGINEER

July 19, 2013
PLANS APPROVAL DATE

REGISTERED PROFESSIONAL ENGINEER
Randell D. Hiatt
No. C50200
Exp. 6-30-15
CIVIL
STATE OF CALIFORNIA

THE STATE OF CALIFORNIA OR ITS OFFICERS OR AGENTS SHALL NOT BE RESPONSIBLE FOR THE ACCURACY OR COMPLETENESS OF SCANNED COPIES OF THIS PLAN SHEET.

TO ACCOMPANY PLANS DATED 3-23-15

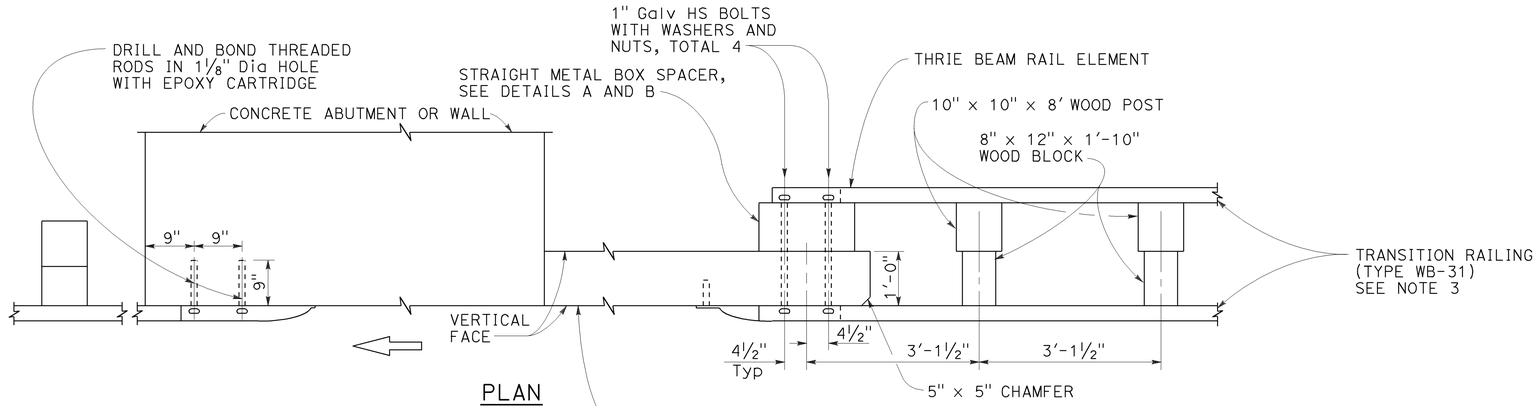

PLAN

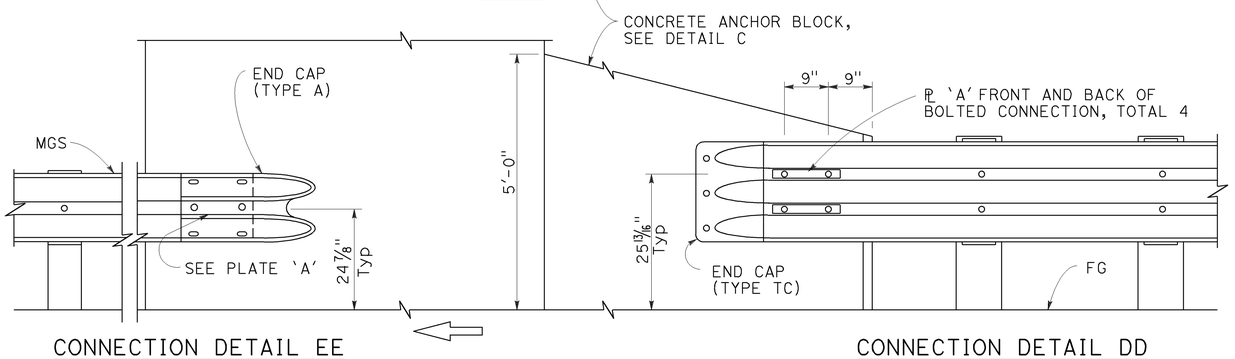

CONNECTION DETAIL EE
See Note 5

ELEVATION

CONNECTION DETAIL DD
See Note 4

MIDWEST GUARDRAIL SYSTEM CONNECTION TO ABUTMENT OR WALL

NOTES:

1. These connection details apply to abutments and walls.
2. Additional details of posts, blocks and hardware are shown on Revised Standard Plans RSP A77M1, RSP A77N1 and RSP A77N2.
3. For additional details of Transition Railing (Type WB-31), see Revised Standard Plan RSP A77U4. Transition Railing (Type WB-31) transitions the 12 gauge MGS railing section to a heavier gage nested thrie beam railingsection which is connected to the concrete anchor block.
4. For typical use of Connection Details DD, see Layout Types 12A and 12B on Revised Standard Plan RSP A77Q1 and Layout Types 12C and 12D on Revised Standard Plan RSP A77Q2.
5. For typical use of Connection Detail EE, see Layout Type 12D on Revised Standard Plan RSP A77Q2 and Layout Type 12DD on Revised Standard Plan RSP A77Q5.

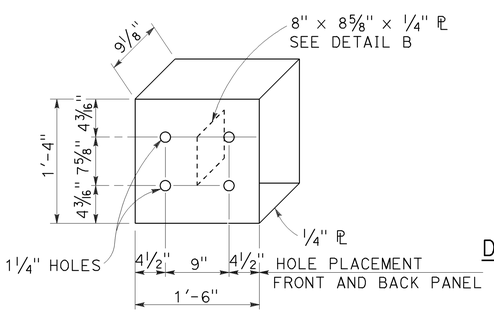

DETAIL A

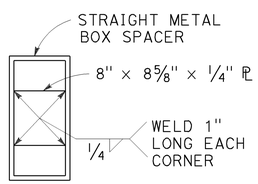

DETAIL B

STRAIGHT METAL BOX SPACER

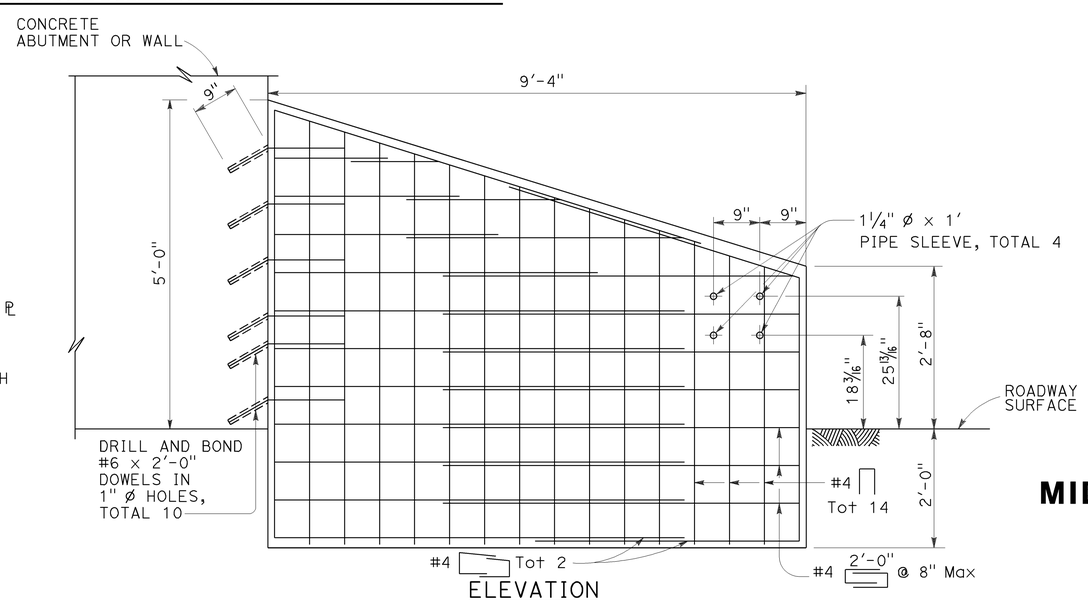

ELEVATION

ANCHOR BLOCK FOR TRANSITION RAILING CONNECTION

DETAIL C

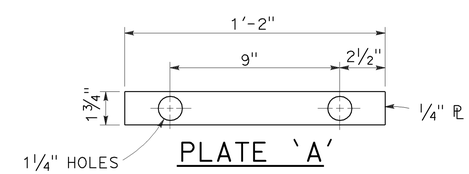

PLATE 'A'

STATE OF CALIFORNIA
DEPARTMENT OF TRANSPORTATION

MIDWEST GUARDRAIL SYSTEM CONNECTIONS TO ABUTMENTS AND WALLS

NO SCALE

RSP A77U3 DATED JULY 19, 2013 SUPPLEMENTS THE STANDARD PLANS BOOK DATED 2010.

REVISED STANDARD PLAN RSP A77U3

2010 REVISED STANDARD PLAN RSP A77U3

7-8-13

Dist	COUNTY	ROUTE	POST MILES TOTAL PROJECT	SHEET No.	TOTAL SHEETS
05	Mon	1	R77.6/R85.3	74	101

Randell D. Hiatt
REGISTERED CIVIL ENGINEER

January 23, 2015
PLANS APPROVAL DATE

REGISTERED PROFESSIONAL ENGINEER
Randell D. Hiatt
No. C50200
Exp. 6-30-15
CIVIL
STATE OF CALIFORNIA

THE STATE OF CALIFORNIA OR ITS OFFICERS OR AGENTS SHALL NOT BE RESPONSIBLE FOR THE ACCURACY OR COMPLETENESS OF SCANNED COPIES OF THIS PLAN SHEET.

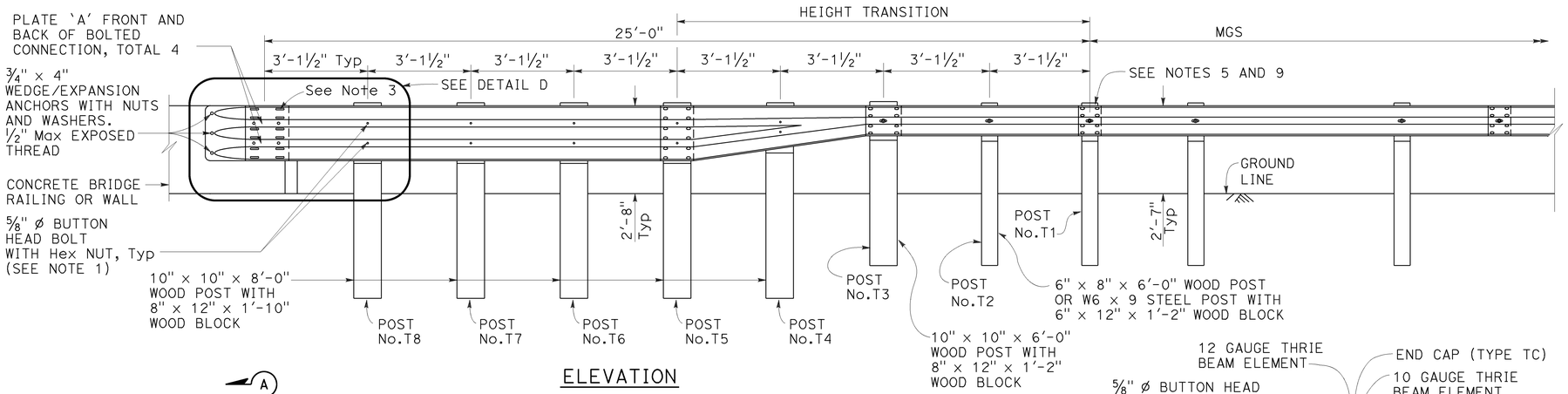

ELEVATION

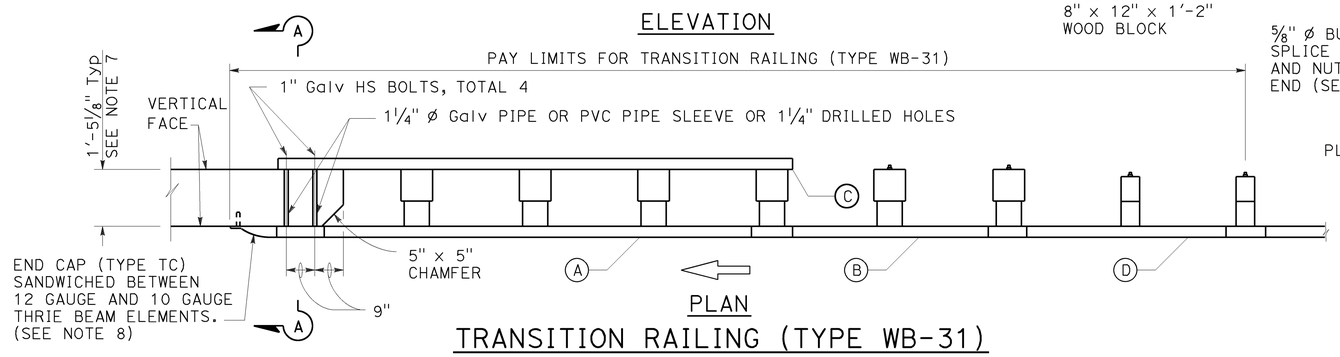

PLAN

TRANSITION RAILING (TYPE WB-31)

(No Blockout Attachment)

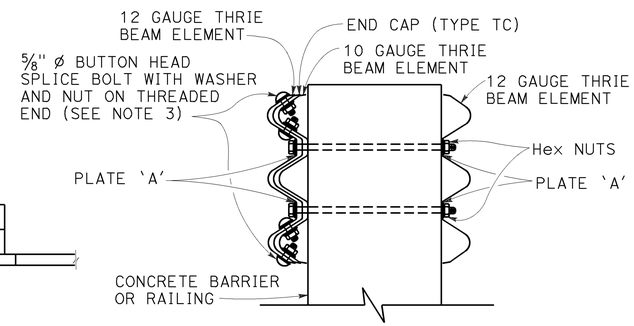

SECTION A-A

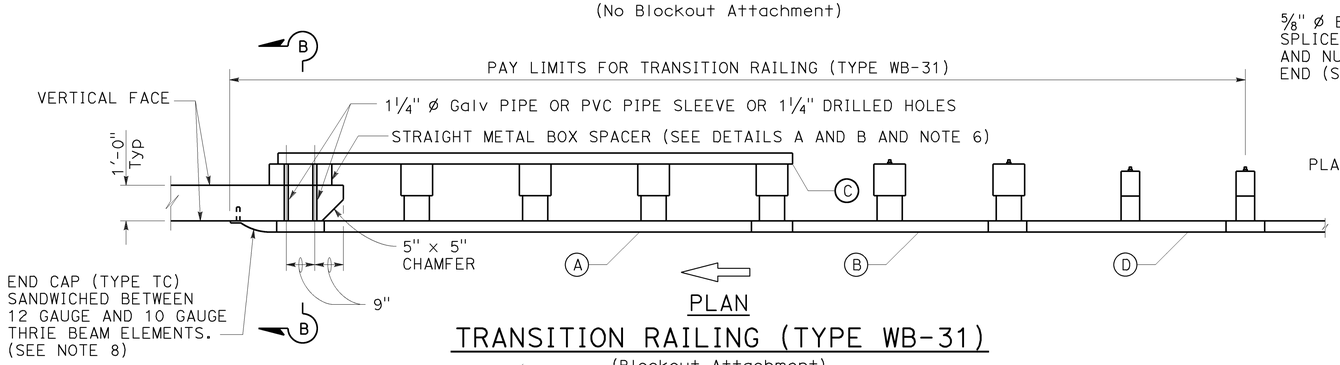

PLAN

TRANSITION RAILING (TYPE WB-31)

(Blockout Attachment)

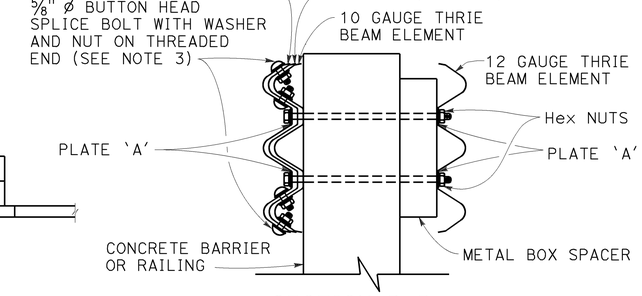

SECTION B-B

NOTES:

TO ACCOMPANY PLANS DATED 3-23-15

1. Use 5/8" ø Button head bolts and hex nuts for connections to posts. No washer on rail face for bolted connections to post.
2. The nested rail elements, end cap, and 'W' beam to thrie beam element may be spliced together prior to bolting the elements to the wood post and concrete barrier or railing.
3. Exterior splice bolt holes for rail element splices at Post No. T5 and the connection to the concrete barrier or railing shall be the standard 29/32" x 1 1/8" slot size. Interior splice bolt holes at these locations may be increased up to 1 1/4" ø. Only the top 4 and the bottom 4 splice bolts with washers and nuts are required for rail splices at Post No. T5 and the connection to the concrete barrier or railing.
4. The top elevation of Posts No. T2 through No. T7 shall not project more than 1" above the top elevation of the rail element.
5. Typically, the railing connected to Transition Railing (Type WB-31) will be either standard railing section of MGS with height transition ratio of 150:1 or a Caltrans approved 31" end treatment attached to Post No. T1.
6. The depth of the metal box spacer varies from the 9 1/8" to 1 1/2" and is dependent on the width of the concrete railing or wall. The combined dimension for the depth of the metal box spacer plus the width of railing or wall is typically 21 1/8". Where the space between the backside of the concrete railing or wall and the rear thrie beam element is less than 1 1/2", metal plates similar to Plate 'A' are to be used as spacers.
7. Where the width of the concrete railing or wall is greater than 17 1/8", wood blocks are to be used to fill the space created between the backside of Posts No. T5 through No. T8 and the rear thrie beam element. These wood blocks shall be 8" in width and 1'-2" in length. The dimension between the front thrie beam element and the rear thrie beam element is to match the width of the concrete railing or wall.
8. End cap may be installed over 12 gauge and 10 gauge thrie beam elements where transition railing is installed on the departure end of bridge railing.
9. Conform standard railing section height to 31" at Post No. T1 using height transition ratio of 150:1.

LEGEND:

(A) NESTED THRIE BEAM ELEMENTS (ONE 12 GAUGE ELEMENT NESTED OVER ONE 10 GAUGE ELEMENT).

(B) ONE ASYMMETRICAL 10 GAUGE "W" BEAM TO THRIE BEAM ELEMENT.

(C) ONE 12 GAUGE THRIE BEAM ELEMENT.

(D) ONE 10 GAUGE "W" BEAM RAIL ELEMENT (7'-3 1/2"LENGTH)

10 GAUGE = 0.138" THICK
12 GAUGE = 0.108" THICK

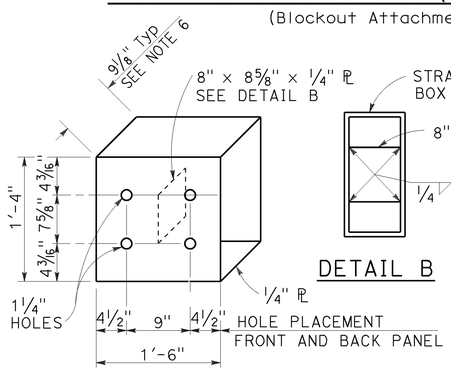

DETAIL A

STRAIGHT METAL BOX SPACER

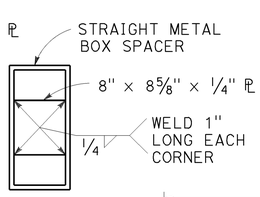

DETAIL B

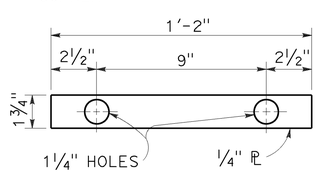

DETAIL C

PLATE 'A'

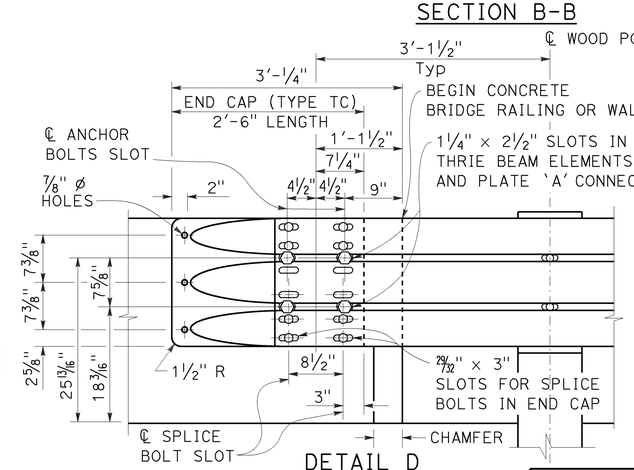

DETAIL D

STATE OF CALIFORNIA
DEPARTMENT OF TRANSPORTATION

MIDWEST GUARDRAIL SYSTEM TRANSITION RAILING (TYPE WB-31)

NO SCALE

RSP A77U4 DATED JANUARY 23, 2015 SUPERSEDES RSP A77U4 DATED NOVEMBER 15, 2013 AND RSP A77U4 DATED JULY 19, 2013 THAT SUPPLEMENTS THE STANDARD PLANS BOOK DATED 2010.

REVISED STANDARD PLAN RSP A77U4

2010 REVISED STANDARD PLAN RSP A77U4

1-8-15

Dist	COUNTY	ROUTE	POST MILES TOTAL PROJECT	SHEET No.	TOTAL SHEETS
05	Mon	1	R77.6/R85.3	75	101

Randell D. Hiatt
REGISTERED CIVIL ENGINEER

July 19, 2013
PLANS APPROVAL DATE

REGISTERED PROFESSIONAL ENGINEER
Randell D. Hiatt
No. C50200
Exp. 6-30-15
CIVIL
STATE OF CALIFORNIA

THE STATE OF CALIFORNIA OR ITS OFFICERS OR AGENTS SHALL NOT BE RESPONSIBLE FOR THE ACCURACY OR COMPLETENESS OF SCANNED COPIES OF THIS PLAN SHEET.

TO ACCOMPANY PLANS DATED 3-23-15

NOTES:

1. Refer to Revised Standard Plans RSP A77L1 and RSP A77L2 for component details for MGS not shown on this plan.
2. All posts for any standard barrier run shall be of the same type: Wood or Steel.
3. Install posts in soil.

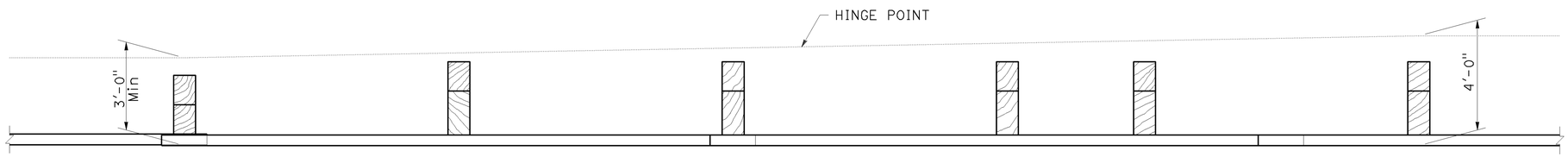

PLAN

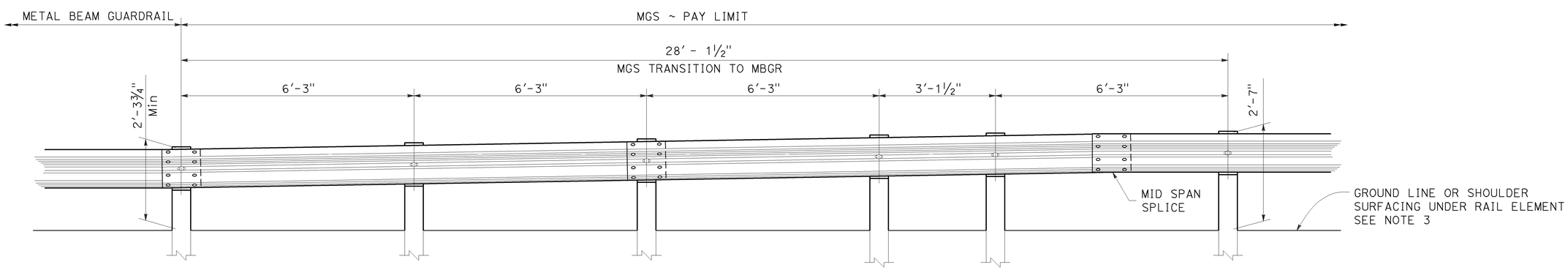

ELEVATION

STATE OF CALIFORNIA
DEPARTMENT OF TRANSPORTATION

MIDWEST GUARDRAIL SYSTEM TRANSITION TO METAL BEAM GUARDRAIL

NO SCALE

RSP A77U5 DATED JULY 19, 2013 SUPPLEMENTS THE STANDARD PLANS BOOK DATED 2010.

REVISED STANDARD PLAN RSP A77U5

2010 REVISED STANDARD PLAN RSP A77U5

Dist	COUNTY	ROUTE	POST MILES TOTAL PROJECT	SHEET No.	TOTAL SHEETS
05	Mon	1	R77.6/R85.3	76	101

REGISTERED CIVIL ENGINEER

July 19, 2013
PLANS APPROVAL DATE

REGISTERED PROFESSIONAL ENGINEER
Michael Janzen
No. 44788
Exp. 03-31-14
CIVIL
STATE OF CALIFORNIA

THE STATE OF CALIFORNIA OR ITS OFFICERS OR AGENTS SHALL NOT BE RESPONSIBLE FOR THE ACCURACY OR COMPLETENESS OF SCANNED COPIES OF THIS PLAN SHEET.

TO ACCOMPANY PLANS DATED 3-23-15

2010 REVISED STANDARD PLAN RSP A87A

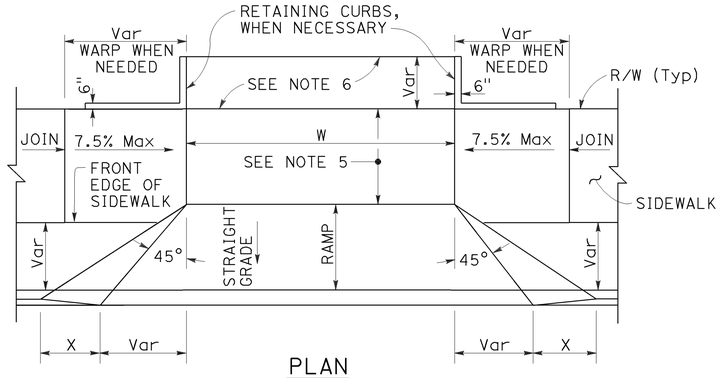

PLAN

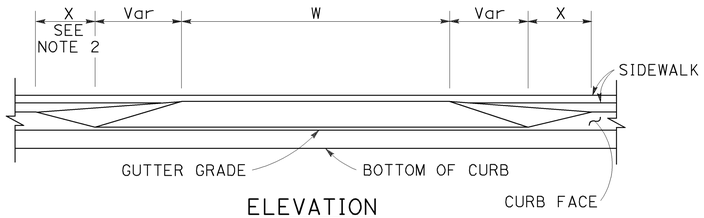

ELEVATION

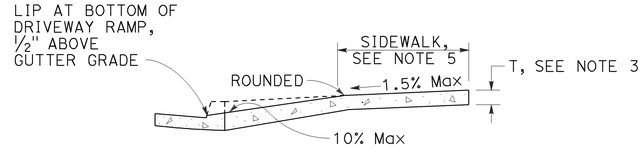

CASE A

Typical driveway, sidewalk not depressed

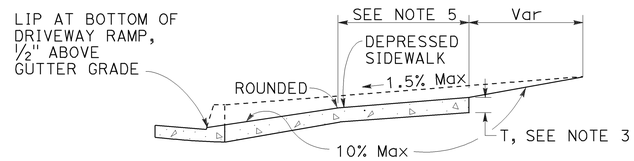

CASE B

Driveway with depressed sidewalk

SECTIONS

DRIVEWAYS

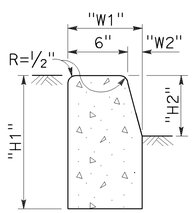

TYPE A1 CURBS

See Table A

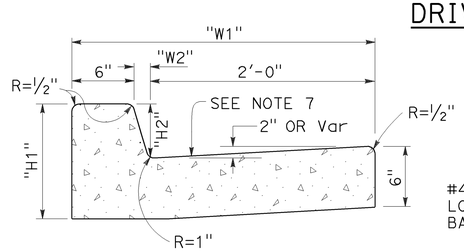

TYPE A2 CURBS

See Table A

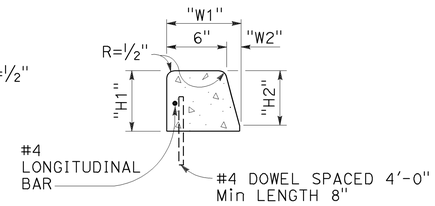

TYPE A3 CURBS

Superimposed on existing pavement
See Table A

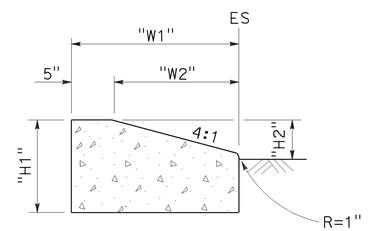

TYPE D CURBS

See Table A

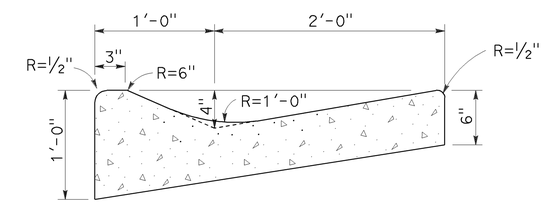

TYPE E CURB

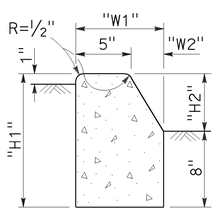

TYPE B1 CURBS

See Table A

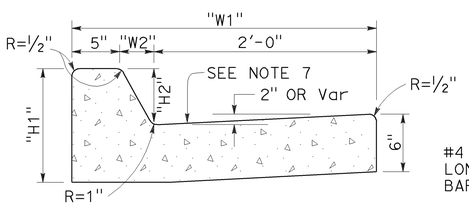

TYPE B2 CURBS

See Table A

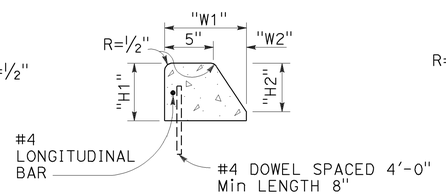

TYPE B3 CURBS

Superimposed on existing pavement
See Table A

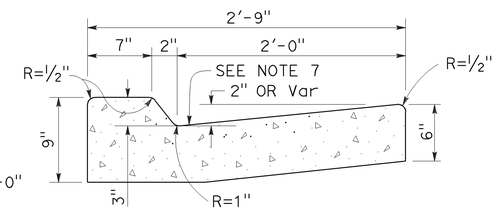

TYPE B4 CURBS

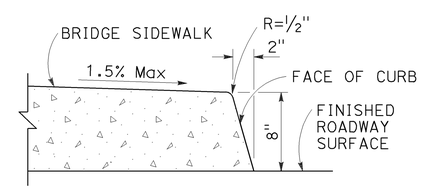

TYPE H CURB

On Bridges

CURBS

TABLE A

CURB TYPE	DIMENSIONS			
	"H1"	"H2"	"W1"	"W2"
A1-6	1'-2"	6"	7½"	1½"
A1-8	1'-4"	8"	8"	2"
A2-6	1'-0"	6"	2'-7½"	1½"
A2-8	1'-2"	8"	2'-8"	2"
A3-6	6"	5"	7¼"	1¼"
A3-8	8"	7"	7¾"	1¾"
B1-4	1'-0"	4"	7½"	2½"
B1-6	1'-2"	6"	9"	4"
B2-4	10"	4"	2'-7½"	2½"
B2-6	1'-0"	6"	2'-9"	4"
B3-4	4"	3"	7"	2"
B3-6	6"	5"	8½"	3½"
D-4	10"	4"	1'-6"	1'-1"
D-6	1'-0"	6"	2'-2"	1'-9"

CURB QUANTITIES

TYPE	CUBIC YARDS PER LINEAR FOOT
A1-6	0.02585
A1-8	0.03084
A2-6	0.05903
A2-8	0.06379
A3-6	0.01036
A3-8	0.01435
B1-4	0.02185
B1-6	0.02930
B2-4	0.05515
B2-6	0.06171
B3-4	0.00641
B3-6	0.01074
B4	0.05709
D-4	0.04083
D-6	0.06804
E	0.06661

NOTES:

1. Case A driveway section typically applies.
2. X=3'-0" except for curb heights over 10" where 4:1 slopes shall be used on curb slope.
3. Sidewalk and ramp thickness "T" at driveway shall be 4" for residental and 6" for commercial.
4. Difference in slope of the driveway ramp and the slope of a line between the gutter and a point on the roadway 5'-0" from gutter line shall not exceed 15%. Reduce driveway ramp slope, not gutter slope, where required.
5. Minimum width of clear passageway for sidewalk shall be 4'-2".
6. Retaining curbs and acquisition of construction easement may be necessary for narrow sidewalks or curb heights in excess of 6".
7. Across the pedestrian route at curb ramp locations, the gutter pan slope shall not exceed 1" of depth for each 2'-0" of width.

STATE OF CALIFORNIA
DEPARTMENT OF TRANSPORTATION

CURBS AND DRIVEWAYS

NO SCALE

RSP A87A DATED JULY 19, 2013 SUPERSEDES STANDARD PLAN A87A
DATED MAY 20, 2011 - PAGE 119 OF THE STANDARD PLANS BOOK DATED 2010.

REVISED STANDARD PLAN RSP A87A

Dist	COUNTY	ROUTE	POST MILES TOTAL PROJECT	SHEET No.	TOTAL SHEETS
05	Mon	1	R77.6/R85.3	77	101

REGISTERED CIVIL ENGINEER

July 19, 2013
PLANS APPROVAL DATE

REGISTERED PROFESSIONAL ENGINEER
Michael Janzen
No. 44788
Exp. 03-31-14
CIVIL
STATE OF CALIFORNIA

THE STATE OF CALIFORNIA OR ITS OFFICERS OR AGENTS SHALL NOT BE RESPONSIBLE FOR THE ACCURACY OR COMPLETENESS OF SCANNED COPIES OF THIS PLAN SHEET.

TO ACCOMPANY PLANS DATED 3-23-15

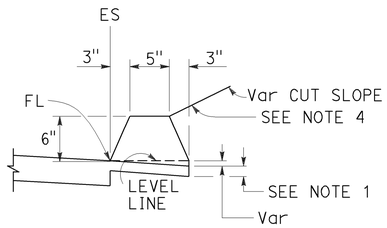

TYPE A
See Note 3

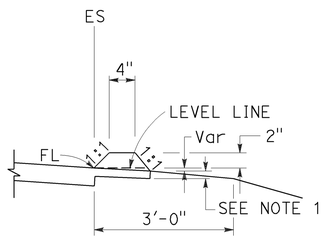

TYPE C

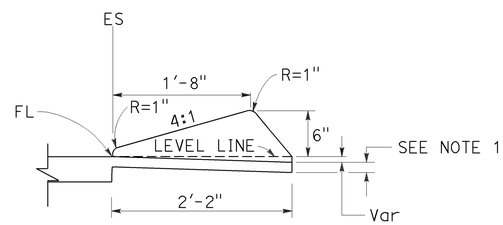

TYPE D

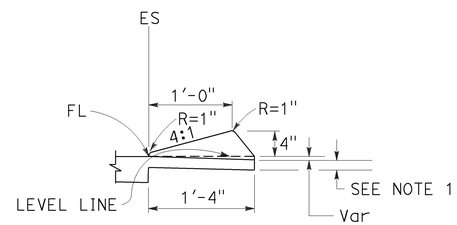

TYPE E

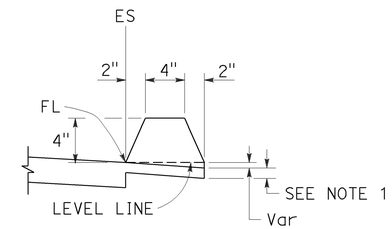

TYPE F
See Note 5

DIKES

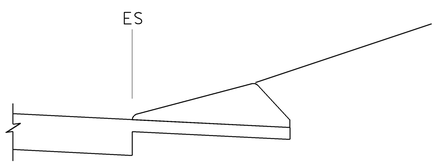

CASE C-1
Cut Slope

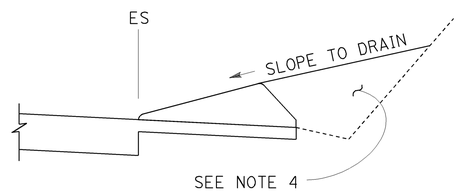

CASE C-2
Cut Slope

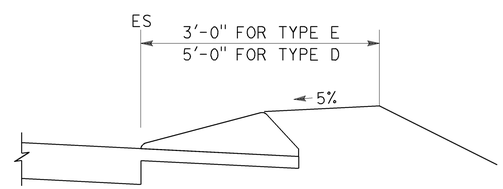

CASE F

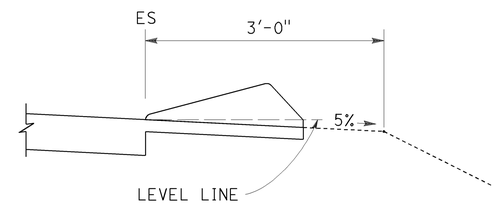

CASE R
See Note 2

TYPE D AND E BACKFILL DETAILS

NOTES:

1. For HMA shoulders only, extend top layer of HMA placed on the shoulder under dike with no joint at the ES. For projects with OGFC shoulders, do not extend OGFC under dike. See project plans for modified dike detail.
2. Case R applies to retrofit only projects where restrictive conditions do not provide enough width for Case F backfill.
3. Type A dike only to be used where restrictive slope conditions do not provide enough width to use Type D or Type E dike.
4. Fill and compact with excavated material to top of dike.
5. Use Type F dike, where dike is required with guard railing installations. See Revised Standard Plan RSP A77N4 for dike positioning details.

DIKE QUANTITIES

TYPE	CUBIC YARDS PER LINEAR FOOT
A	0.0135
C	0.0038
D	0.0293
E	0.0130
F	0.0066

Quantities based on 5% cross slope.

STATE OF CALIFORNIA
DEPARTMENT OF TRANSPORTATION

HOT MIX ASPHALT DIKES

NO SCALE

RSP A87B DATED JULY 19, 2013 SUPERSEDES STANDARD PLAN A87B
DATED MAY 20, 2011 - PAGE 120 OF THE STANDARD PLANS BOOK DATED 2010.

REVISED STANDARD PLAN RSP A87B

2010 REVISED STANDARD PLAN RSP A87B

6-27-13

Dist	COUNTY	ROUTE	POST MILES TOTAL PROJECT	SHEET No.	TOTAL SHEETS
05	Mon	1	R77.6/R85.3	78	101

REGISTERED CIVIL ENGINEER

March 21, 2014
PLANS APPROVAL DATE

REGISTERED PROFESSIONAL ENGINEER Hector David Cordova No. C41957 Exp. 3-31-14 CIVIL STATE OF CALIFORNIA

THE STATE OF CALIFORNIA OR ITS OFFICERS OR AGENTS SHALL NOT BE RESPONSIBLE FOR THE ACCURACY OR COMPLETENESS OF SCANNED COPIES OF THIS PLAN SHEET.

TO ACCOMPANY PLANS DATED 3-23-15

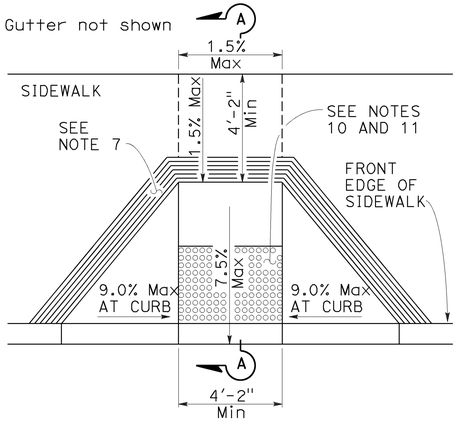

CASE A

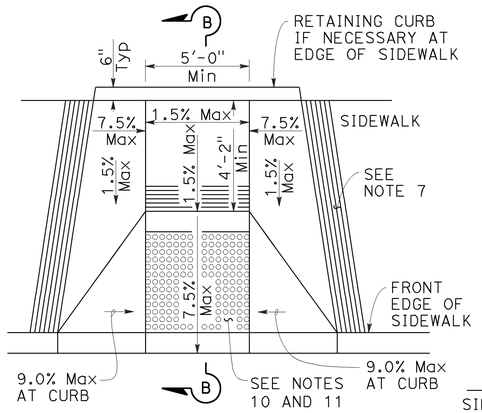

CASE B

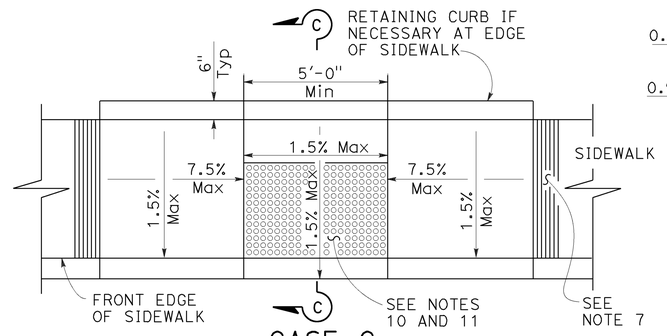

CASE C

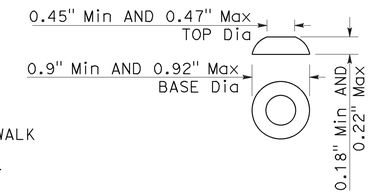

RAISED TRUNCATED DOME

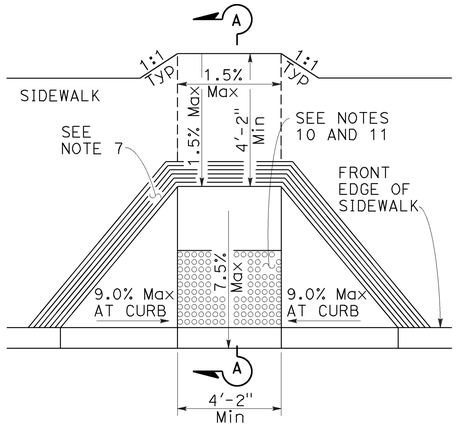

CASE D

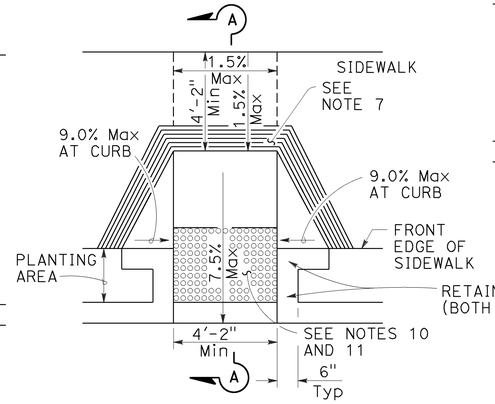

CASE E

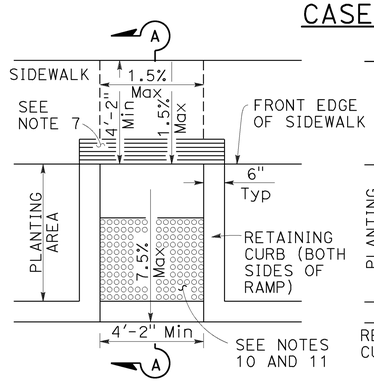

CASE F

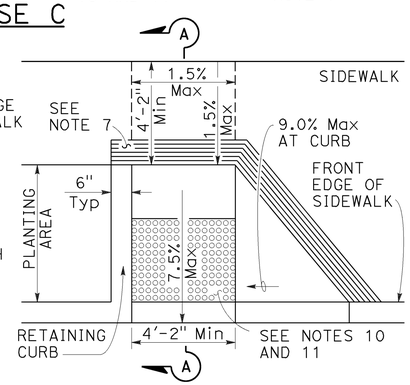

CASE G

See Note 4

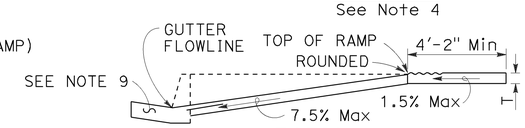

SECTION A-A

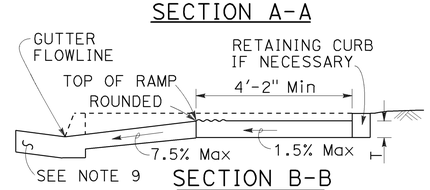

SECTION B-B

Depress entire sidewalk as required

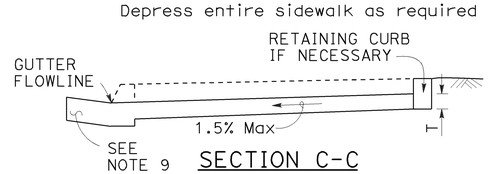

SECTION C-C

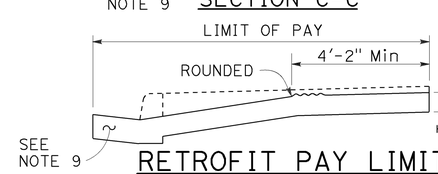

RETROFIT PAY LIMITS

Existing curb and sidewalk

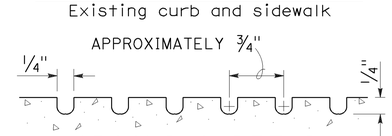

GROOVING DETAIL

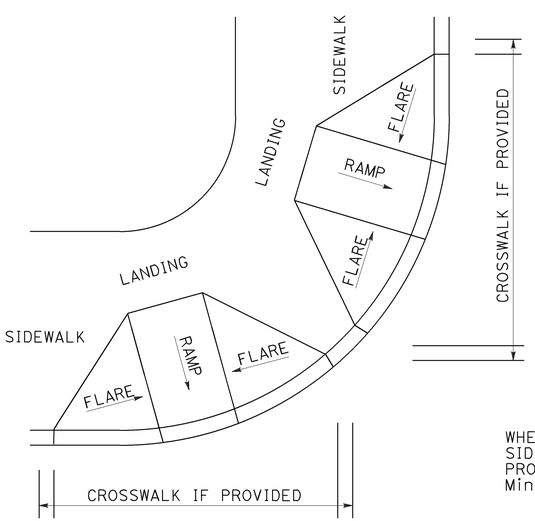

DETAIL A

TYPICAL TWO-RAMP CORNER INSTALLATION

See Note 1

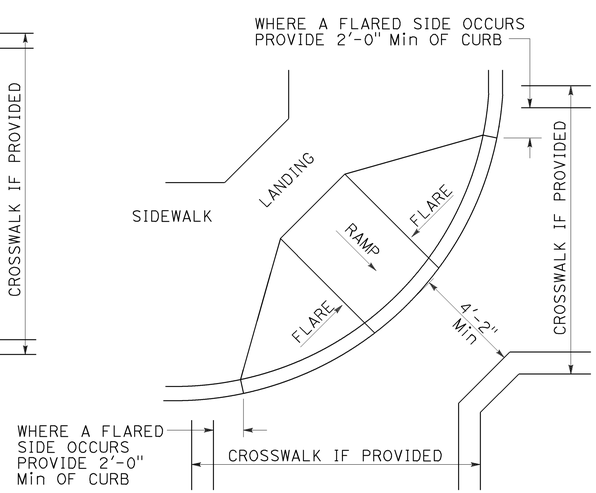

DETAIL B

TYPICAL ONE-RAMP CORNER INSTALLATION

See Notes 1 and 3

NOTES:

1. As site conditions dictate, Case A through Case G curb ramps may be used for corner installations similar to those shown in Detail A and Detail B. The case of curb ramps used in Detail A do not have to be the same. Case A through Case G curb ramps also may be used at mid block locations, as site conditions dictate.
2. If distance from curb to back of sidewalk is too short to accommodate ramp and 4'-2" platform (landing) as shown in Case A, the sidewalk may be depressed longitudinally as in Case B, or C or may be widened as in Case D.
3. When ramp is located in center of curb return, crosswalk configuration must be similar to that shown for Detail B.
4. As site conditions dictate, the retaining curb side and the flared side of the Case G ramp shall be constructed in reversed position.
5. If located on a curve, the sides of the ramp need not be parallel, but the minimum width of the ramp shall be 4'-2".
6. Side slope of ramp flares vary uniformly from a maximum of 9.0% at curb to conform with longitudinal sidewalk slope adjacent to top of the ramp, except in Case C and Case F.
7. The curb ramp shall be outlined, as shown, with a 1'-0" wide border with 1/4" grooves approximately 3/4" on center. See grooving detail.
8. Transitions from ramps and landing to walks, gutters or streets shall be flush (no lip) and free of abrupt changes.
9. Counter slopes of adjoining gutters and road surfaces immediately adjacent to and within 24 inches of the curb ramp shall not be steeper than 1:20 (5.0%). Gutter pan slope shall not exceed 1" of depth for each 2'-0" of width.
10. Curb ramps shall have a detectable warning surface that extends the full width and 3'-0" depth of the ramp. A 4'-0" wide detectable warning surface may be used on a 4'-2" wide curb ramp. Detectable Warning Surfaces shall conform to the requirements in the Standard Specifications.
11. The edge of the detectable warning surface nearest the street shall be between 6" and 8" from the gutter flowline.
12. Sidewalk and ramp thickness, "T", shall be 3 1/2" minimum.
13. Utility pull boxes, manholes, vaults and all other utility facilities within the boundaries of the curb ramp will be relocated or adjusted to grade by the owner prior to, or in conjunction with, curb ramp construction.
14. Detectable warning surface may have to be cut to allow removal of utility covers while maintaining full detectable warning width and depth.

RAISED TRUNCATED DOME PATTERN (IN-LINE)

DETECTABLE WARNING SURFACE

See Note 10

STATE OF CALIFORNIA
DEPARTMENT OF TRANSPORTATION

CURB RAMP DETAILS

NO SCALE

RSP A88A DATED MARCH 21, 2014 SUPERSEDES RSP A88A DATED JULY 19, 2013 AND STANDARD PLAN A88A DATED MAY 20, 2011 - PAGE 121 OF THE STANDARD PLANS BOOK DATED 2010.

REVISED STANDARD PLAN RSP A88A

2010 REVISED STANDARD PLAN RSP A88A

2-25-14

Dist	COUNTY	ROUTE	POST MILES TOTAL PROJECT	SHEET No.	TOTAL SHEETS
05	Mon	1	R77.6/R85.3	79	101

REGISTERED CIVIL ENGINEER

March 21, 2014
PLANS APPROVAL DATE

REGISTERED PROFESSIONAL ENGINEER
Hector David Cordova
No. C41957
Exp. 3-31-14
CIVIL
STATE OF CALIFORNIA

THE STATE OF CALIFORNIA OR ITS OFFICERS OR AGENTS SHALL NOT BE RESPONSIBLE FOR THE ACCURACY OR COMPLETENESS OF SCANNED COPIES OF THIS PLAN SHEET.

TO ACCOMPANY PLANS DATED 3-23-15

Gutter not shown

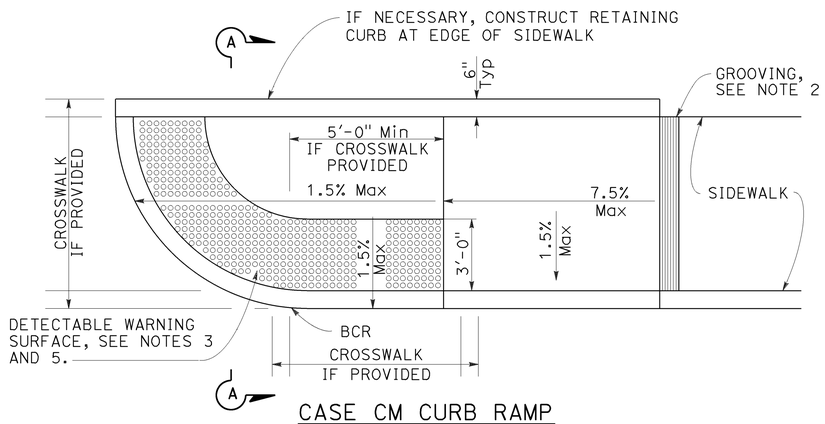

CASE CM CURB RAMP

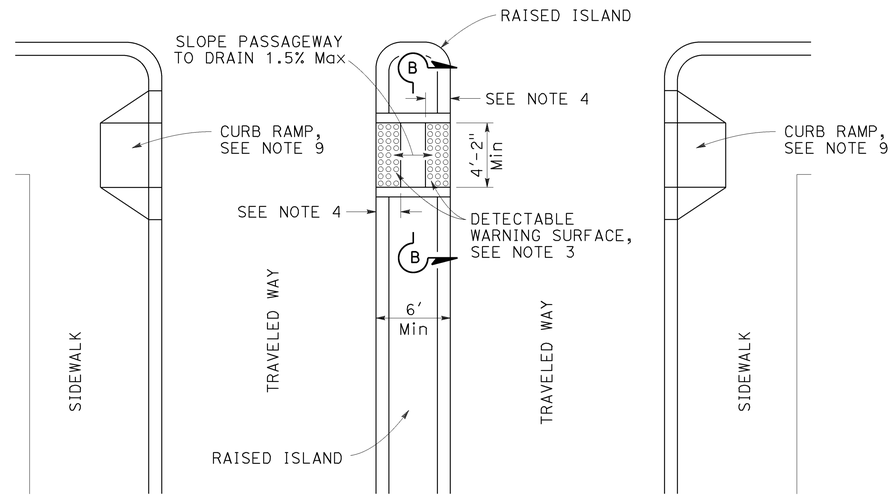

TYPE A PASSAGEWAY

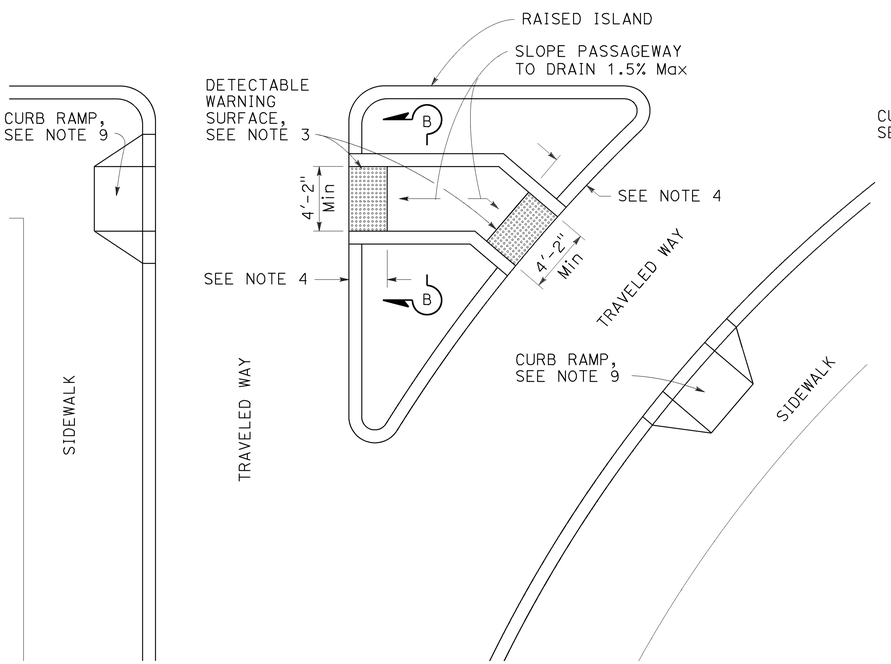

TYPE B PASSAGEWAY

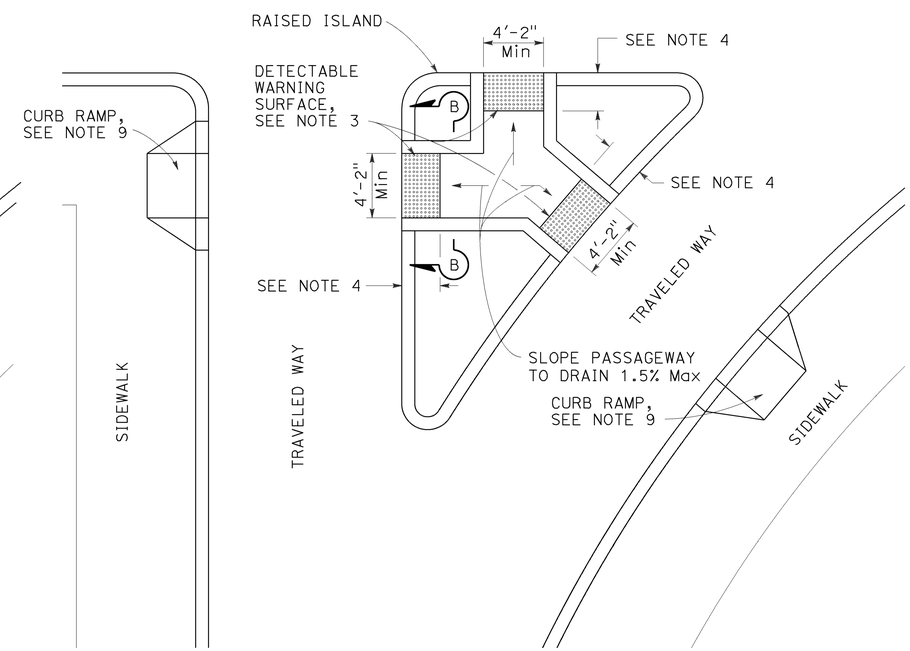

TYPE C PASSAGEWAY

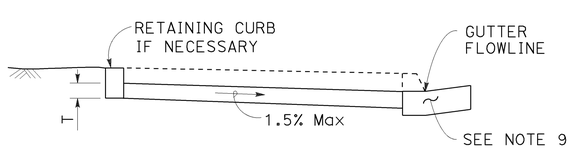

SECTION A-A

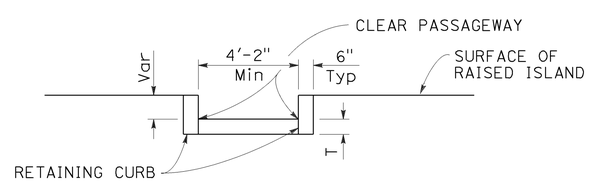

SECTION B-B

NOTES:

1. Sidewalk, ramp and passageway thickness, "T", shall be 3½" minimum.
2. For details of grooving used with Case CM curb ramp, see Revised Standard Plan RSP A88A.
3. For details of detectable warning surfaces, see Revised Standard Plan RSP A88A.
4. Where an island passageway length is greater than or equal to 6'-0", but less than 8'-0", each detectable warning surface shall extend the full width and 2'-0" depth of the passageway length. Where an island passageway length is greater than or equal to 8'-0", each detectable warning surface shall extend the full width and 3'-0" depth of the passageway length. A 4'-0" wide detectable warning surface may be used on a 4'-2" wide island passageway.
5. For Case CM curb ramp, the edge of the detectable warning surface nearest the street shall be between 6" and 8" from the gutter flowline.
6. Transitions from ramps to walks, gutters or streets shall be flush (no lip) and free of abrupt changes.
7. Utility pull boxes, manholes, vaults and all other utility facilities within the boundaries of the curb ramp will be relocated or adjusted to grade by the owner prior to, or in conjunction with, curb ramp construction.
8. Detectable warning surface may have to be cut to allow removal of utility covers while maintaining full detectable warning width and depth.
9. For additional curb ramp details, see Revised Standard Plan RSP A88A.

STATE OF CALIFORNIA
DEPARTMENT OF TRANSPORTATION

CURB RAMP AND ISLAND PASSAGEWAY DETAILS

NO SCALE

RSP A88B DATED MARCH 21, 2014 SUPERSEDES RSP A88B DATED JULY 19, 2013 AND STANDARD PLAN A88B DATED MAY 20, 2011 - PAGE 122 OF THE STANDARD PLANS BOOK DATED 2010.

REVISED STANDARD PLAN RSP A88B

2010 REVISED STANDARD PLAN RSP A88B

2-25-14

Dist	COUNTY	ROUTE	POST MILES TOTAL PROJECT	SHEET No.	TOTAL SHEETS
05	Mon	1	R77.6/R85.3	80	101

REGISTERED CIVIL ENGINEER

July 19, 2013
PLANS APPROVAL DATE

REGISTERED PROFESSIONAL ENGINEER
Gurinderpal Bhullar
No. C48815
Exp. 9-30-14
CIVIL
STATE OF CALIFORNIA

THE STATE OF CALIFORNIA OR ITS OFFICERS OR AGENTS SHALL NOT BE RESPONSIBLE FOR THE ACCURACY OR COMPLETENESS OF SCANNED COPIES OF THIS PLAN SHEET.

TO ACCOMPANY PLANS DATED 3-23-15

2010 REVISED STANDARD PLAN RSP T9

TABLE 1

TAPER LENGTH CRITERIA AND CHANNELIZING DEVICE SPACING

SPEED (S)	MINIMUM TAPER LENGTH * FOR WIDTH OF OFFSET 12 FEET (W)				MAXIMUM CHANNELIZING DEVICE SPACING		
					X	Y	Z **
	TANGENT 2L	MERGING L	SHIFTING L/2	SHOULDER L/3	TAPER	TANGENT	CONFLICT
mph	ft	ft	ft	ft	ft	ft	ft
20	160	80	40	27	20	40	10
25	250	125	63	42	25	50	12
30	360	180	90	60	30	60	15
35	490	245	123	82	35	70	17
40	640	320	160	107	40	80	20
45	1080	540	270	180	45	90	22
50	1200	600	300	200	50	100	25
55	1320	660	330	220	55	110	27
60	1440	720	360	240	60	120	30
65	1560	780	390	260	65	130	32
70	1680	840	420	280	70	140	35

* - For other offsets, use the following merging taper length formula for L:
For speed of 40 mph or less, $L = WS^2/60$
For speed of 45 mph or more, $L = WS$

Where: L = Taper length in feet
W = Width of offset in feet
S = Posted speed limit, off-peak 85th-percentile speed prior to work starting, or the anticipated operating speed in mph

** - Use for taper and tangent sections where there are no pavement markings or where there is a conflict between existing pavement markings and channelizers (CA).

TABLE 2

LONGITUDINAL BUFFER SPACE AND FLAGGER STATION SPACING

SPEED *	Min D **	DOWNGRADE Min D ***		
		-3%	-6%	-9%
mph	ft	ft	ft	ft
20	115	116	120	126
25	155	158	165	173
30	200	205	215	227
35	250	257	271	287
40	305	315	333	354
45	360	378	400	427
50	425	446	474	507
55	495	520	553	593
60	570	598	638	686
65	645	682	728	785
70	730	771	825	891

* - Speed is posted speed limit, off-peak 85th-percentile speed prior to work starting, or the anticipated operating speed in mph

** - Longitudinal buffer space or flagger station spacing

*** - Use on sustained downgrade steeper than -3 percent and longer than 1 mile.

TABLE 3

ADVANCE WARNING SIGN SPACING

ROAD TYPE	DISTANCE BETWEEN SIGNS *		
	A	B	C
	ft	ft	ft
URBAN - 25 mph OR LESS	100	100	100
URBAN - MORE THAN 25 mph TO 40 mph	250	250	250
URBAN - MORE THAN 40 mph	350	350	350
RURAL	500	500	500
EXPRESSWAY / FREEWAY	1000	1500	2640

* - The distances are approximate, are intended for guidance purposes only, and should be applied with engineering judgment. These distances should be adjusted by the Engineer for field conditions, if necessary, by increasing or decreasing the recommmended distances.

STATE OF CALIFORNIA
DEPARTMENT OF TRANSPORTATION

TRAFFIC CONTROL SYSTEM TABLES FOR LANE AND RAMP CLOSURES

NO SCALE

RSP T9 DATED JULY 19, 2013 SUPERSEDES RSP T9 DATED APRIL 19, 2013 THAT SUPPLEMENTS THE STANDARD PLANS BOOK DATED 2010.

REVISED STANDARD PLAN RSP T9

TO ACCOMPANY PLANS DATED 3-23-15

Dist	COUNTY	ROUTE	POST MILES TOTAL PROJECT	SHEET No.	TOTAL SHEETS
05	Mon	1	R77.6/R85.3	81	101

REGISTERED CIVIL ENGINEER

April 19, 2013
PLANS APPROVAL DATE

REGISTERED PROFESSIONAL ENGINEER Gurinderpal Bhullar No. C48815 Exp. 9-30-14 CIVIL STATE OF CALIFORNIA

THE STATE OF CALIFORNIA OR ITS OFFICERS OR AGENTS SHALL NOT BE RESPONSIBLE FOR THE ACCURACY OR COMPLETENESS OF SCANNED COPIES OF THIS PLAN SHEET.

NOTES:

See Revised Standard Plan RSP T9 for tables.

Use cone spacing X for taper segment, Y for tangent segment or Z for conflict situations, as approriate, per Table 1, unless X, Y, or Z cone spacing is shown on this sheet.

Unless otherwise specified in the special provisions, all temporary warning signs shall have black legend on fluorescent orange background.

California codes are designated by (CA). Otherwise, Federal (MUTCD) codes are shown.

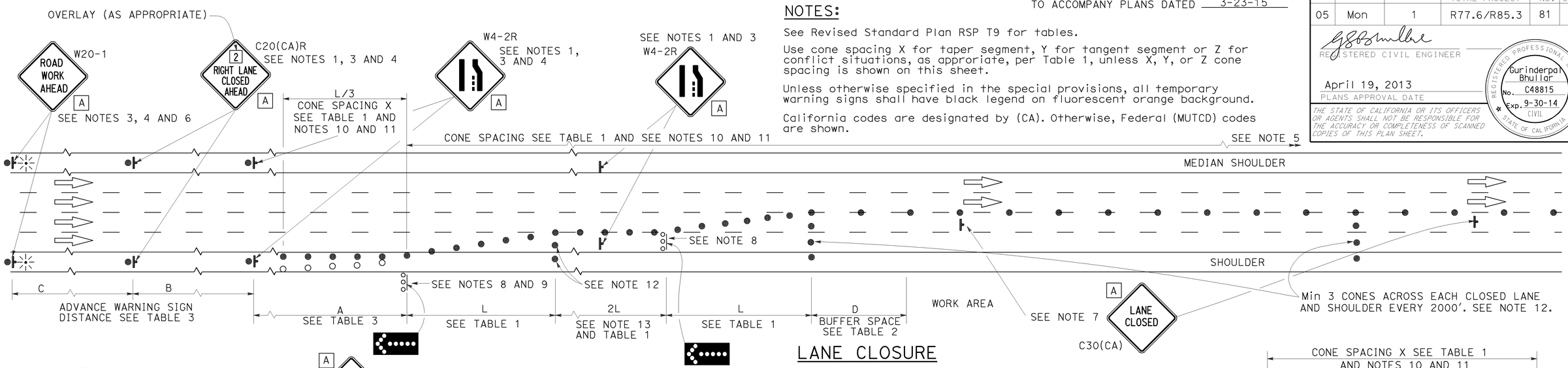

LANE CLOSURE

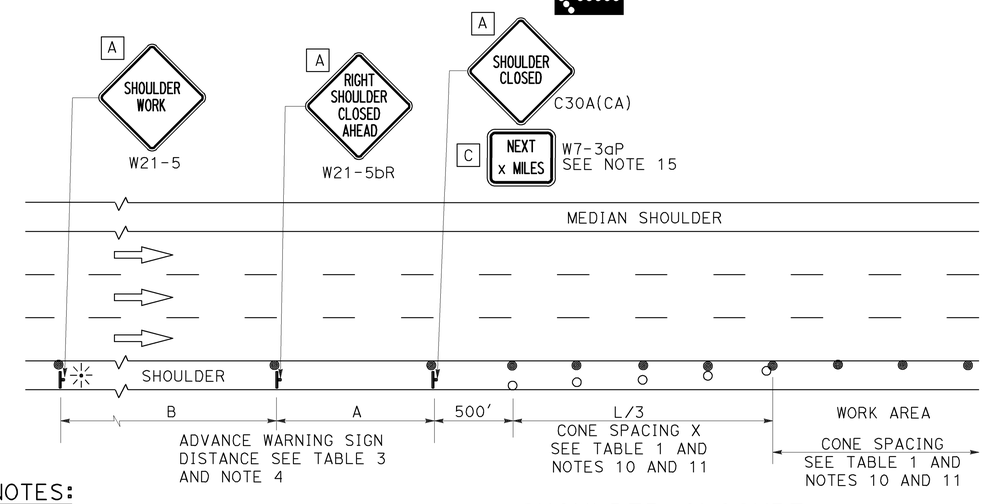

SHOULDER CLOSURE

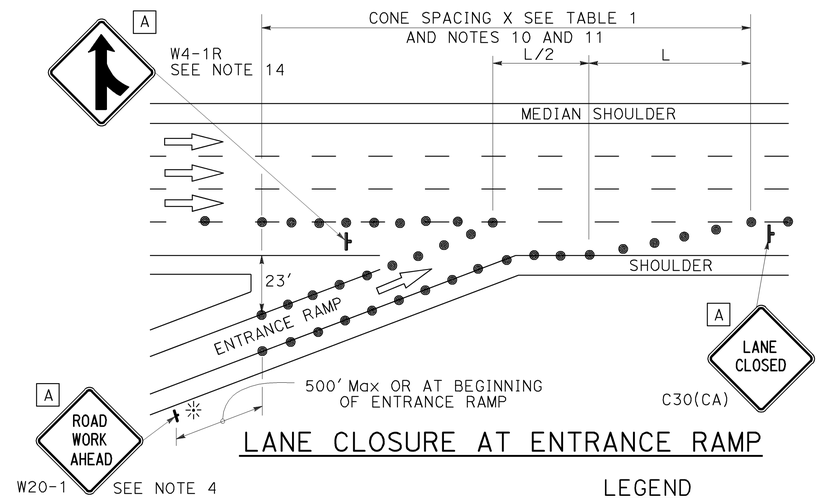

LANE CLOSURE AT ENTRANCE RAMP

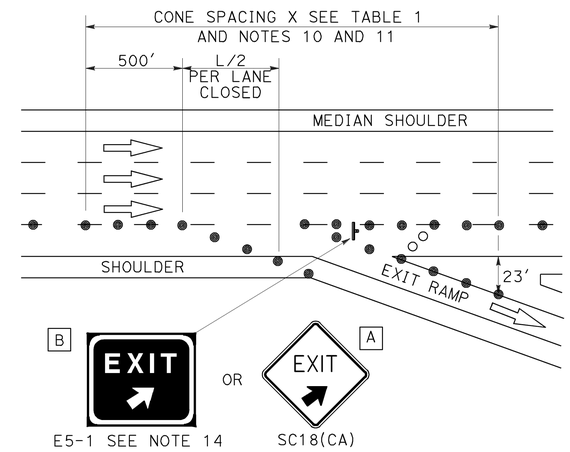

LANE CLOSURE AT EXIT RAMP

NOTES:

1. Median lane closures shall conform to the details as shown except that C20(CA)L and W4-2L signs shall be used.
2. At least one person shall be assigned to provide full time maintenance of traffic control devices for lane closures.
3. Duplicate sign installations are not required:
   a) On opposite shoulder if at least one-half of the available lanes remain open to traffic.
   b) In the median if the width of the median shoulder is less than 8' and the outside lanes are to be closed.
4. Each advance warning sign on each side of the roadway shall be equipped with at least two flags for daytime closure. Each flag shall be at least 16" x 16" in size and shall be orange or fluorescent red-orange in color. Flashing beacons shall be placed at the locations indicated for lane closure during hours of darkness.
5. A G20-2 "END ROAD WORK" sign, with minimum size of 48" x 24" as appropriate, shall be placed at the end of the lane closure unless the end of work area is obvious or ends within a larger project's limits.
6. If the W20-1 sign would follow within 2000' of a stationary W20-1 or G20-1 "ROAD WORK NEXT _____ MILES", use a C20(CA) sign for the first advance warning sign.
7. Place a C30(CA) sign every 2000' throughout length of lane closure.
8. One flashing arrow sign for each lane closed. The flashing arrow signs shall be Type I.
9. A minimum 1500' of sight distance shall be provided where possible for vehicles approaching the first flashing arrow sign. Lane closures shall not begin at top of crest vertical curve or on a horizontal curve.
10. All cones used for lane closures during the hours of darkness shall be fitted with retroreflective bands (or sleeves) as specified in the specifications.
11. Portable delineators, placed at one-half the spacing indicated for traffic cones may be used instead of cones for daytime closures only.
12. Unless otherwise specified in the special provisions, a minimum of 3 cones shall be placed transversely across each closed lane and shoulder at each location where a taper across a traffic lane ends and every 2000' as shown on the "Lane Closure" detail. Two Type II barricades may be used instead of the 3 cones. The transverse alignment of the cones or barricades on the closed shoulder may be shifted from the transverse alignment to provide access to the work.
13. Unless otherwise specified in the special provisions, the 2L tangent shown along lane lines shall be used between the L tapers required for each closed traffic lane.
14. Unless otherwise specified in the special provisions, the E5-1 or SC18(CA) and W4-1 signs shall be used as shown.
15. A W7-3aP "NEXT____ MILES" plaque must be used if theshoulder closure extends beyond the distance that can be perceived by road users.

LEGEND

- TRAFFIC CONE
- TRAFFIC CONE (OPTIONAL TAPER)
- TEMPORARY TRAFFIC CONTROL SIGN
- FLASHING ARROW SIGN (FAS)
- FAS SUPPORT OR TRAILER
- PORTABLE FLASHING BEACON

SIGN PANEL SIZE (Min)

A	48" x 48"
B	72" x 60"
C	36" x 30"

STATE OF CALIFORNIA
DEPARTMENT OF TRANSPORTATION

TRAFFIC CONTROL SYSTEM FOR LANE CLOSURE ON FREEWAYS AND EXPRESSWAYS

NO SCALE

RSP T10 DATED APRIL 19, 2013 SUPERSEDES STANDARD PLAN T10 DATED MAY 20, 2011 - PAGE 237 OF THE STANDARD PLANS BOOK DATED 2010.

REVISED STANDARD PLAN RSP T10

2010 REVISED STANDARD PLAN RSP T10

12-18-12

Dist	COUNTY	ROUTE	POST MILES TOTAL PROJECT	SHEET No.	TOTAL SHEETS
05	Mon	1	R77.6/R85.3	82	101

REGISTERED CIVIL ENGINEER

April 19, 2013
PLANS APPROVAL DATE

REGISTERED PROFESSIONAL ENGINEER Gurinderpal Bhullar No. C48815 Exp. 9-30-14 CIVIL STATE OF CALIFORNIA

THE STATE OF CALIFORNIA OR ITS OFFICERS OR AGENTS SHALL NOT BE RESPONSIBLE FOR THE ACCURACY OR COMPLETENESS OF SCANNED COPIES OF THIS PLAN SHEET.

TO ACCOMPANY PLANS DATED 3-23-15

TYPICAL RAMP CLOSURES

SIGN PANEL SIZE (Min)

- A 48" × 48"
- B 48" × 30"
- C 36" × 36"
- D 48" × 36"

LEGEND

- TRAFFIC CONE
- TEMPORARY TRAFFIC CONTROL SIGN
- BARRICADES
- PORTABLE FLASHING BEACON

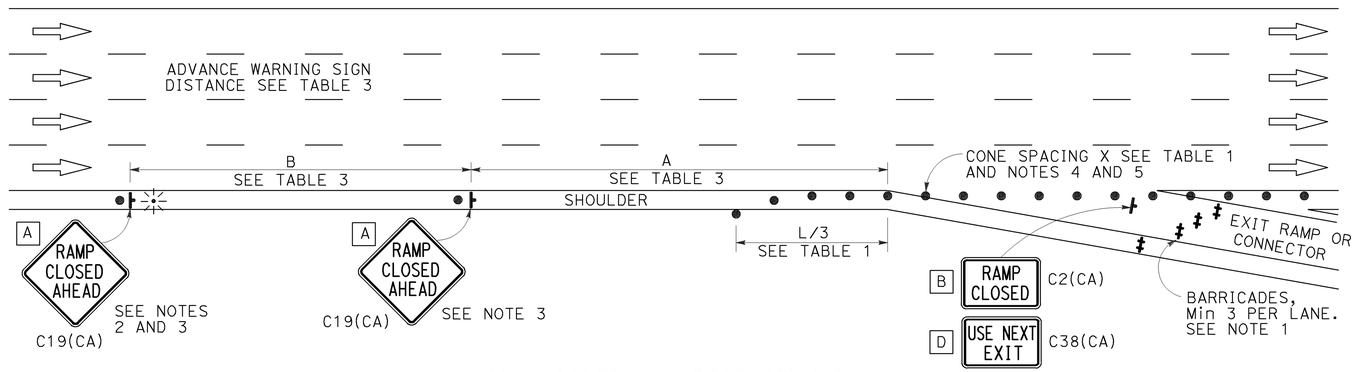

EXIT RAMP OR CONNECTOR

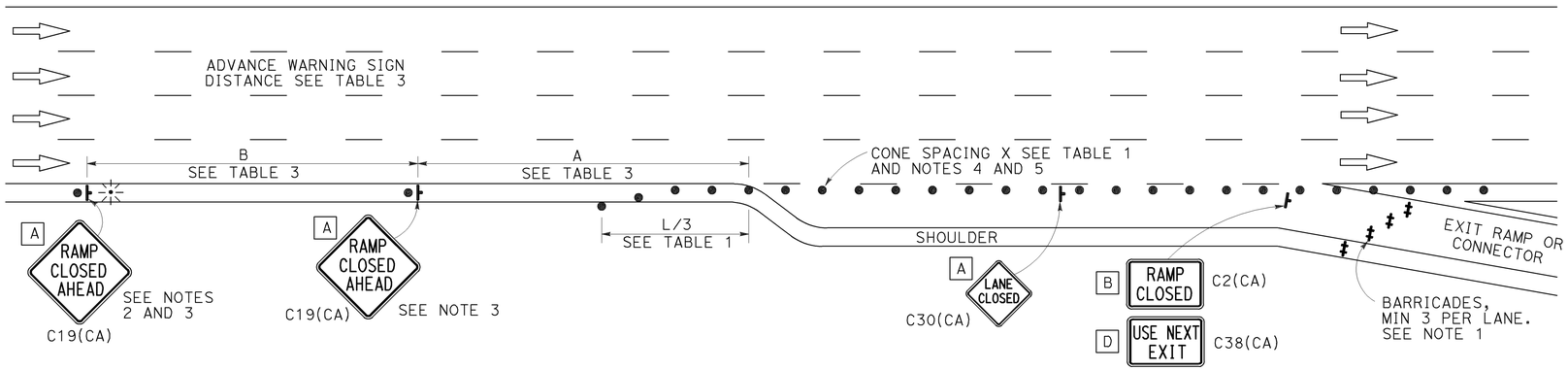

EXIT RAMP OR CONNECTOR WITH ADDITIONAL LANE

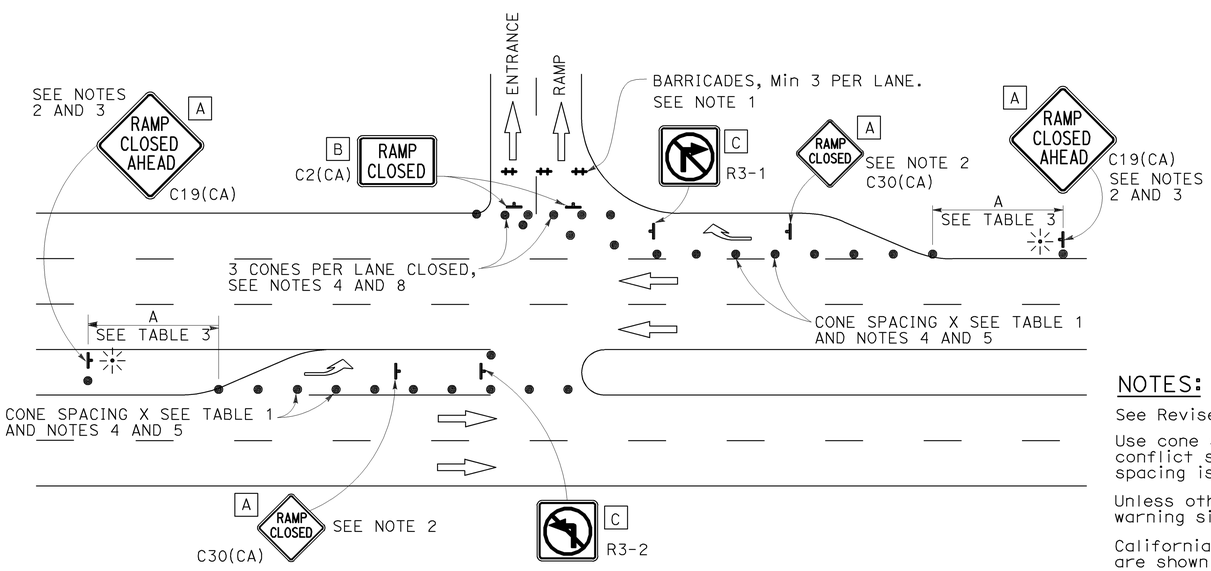

ENTRANCE RAMP WITH TURNING POCKETS

NOTES:

1. Barricades shall be Type I, II, or III for closures lasting one week or less and Type III for closures lasting longer than one week.
2. In addition to placing the C19(CA) "RAMP CLOSED AHEAD" and C30(CA) "RAMP CLOSED" signs, black on orange overlay plates with the word "CLOSED" may be mounted, as directed by the Engineer, on all guide signs that refer to the closed ramp. The letter size on the overlay shall be the same as the guide sign.
3. Each advance C19(CA) "RAMP CLOSED AHEAD" sign shall be equipped with at least two flags for daytime closure. Each flag shall be at least 16" × 16" in size and shall be orange or fluorescent red-orange in color. A flashing beacon shall be placed on top of the first C19(CA) sign during hours of darkness.
4. All cones used for ramp closures during the hours of darkness shall be fitted with retroreflective bands (or sleeves) as specified in the specifications.
5. Portable delineators, placed at one-half the spacing indicated for traffic cones, may be used instead of cones for daytime ramp closures only.
6. At least one person shall be assigned to provide full time maintenance of traffic control devices, unless otherwise directed by the Engineer.
7. The existing "EXIT" signs shall be covered during ramp closures.
8. A minimum of 3 cones shall be placed transversely across each closed lane and shoulder.

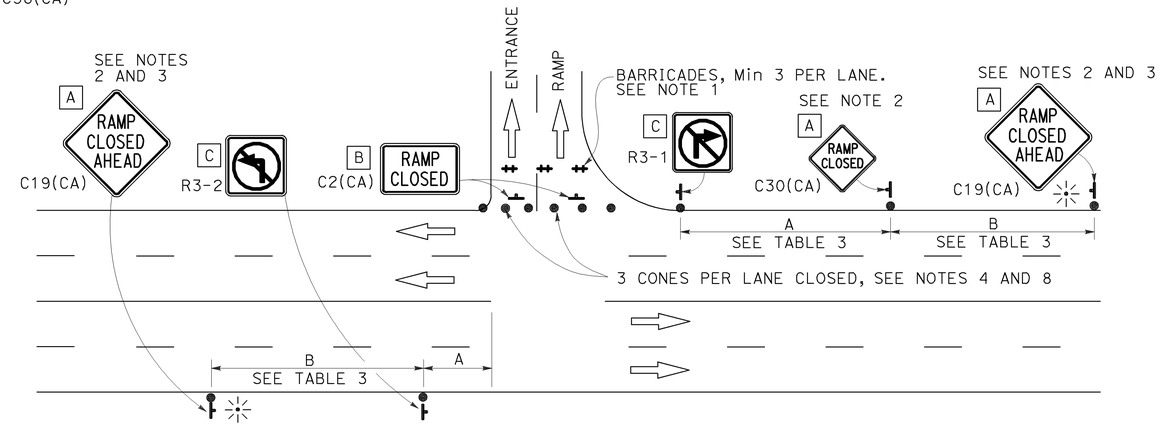

ENTRANCE RAMP WITHOUT TURNING POCKETS

NOTES:

See Revised Standard Plan RSP T9 for tables.

Use cone spacing X for taper segment, Y for tangent segment or Z for conflict situations, as approriate, per Table 1, unless X, Y, or Z cone spacing is shown on this sheet.

Unless otherwise specified in the special provisions, all temporary warning signs shall have black legend on fluorescent orange background.

California codes are designated by (CA). Otherwise, Federal (MUTCD) codes are shown.

STATE OF CALIFORNIA
DEPARTMENT OF TRANSPORTATION

TRAFFIC CONTROL SYSTEM FOR RAMP CLOSURE

NO SCALE

RSP T14 DATED APRIL 19, 2013 SUPERSEDES STANDARD PLAN T14 DATED MAY 20, 2011 - PAGE 242 OF THE STANDARD PLANS BOOK DATED 2010.

REVISED STANDARD PLAN RSP T14

2010 REVISED STANDARD PLAN RSP T14

12-18-12

Dist	COUNTY	ROUTE	POST MILES TOTAL PROJECT	SHEET No.	TOTAL SHEETS
05	Mon	1	R77.6/R85.3	83	101

REGISTERED CIVIL ENGINEER

April 19, 2013
PLANS APPROVAL DATE

REGISTERED PROFESSIONAL ENGINEER Gurinderpal Bhullar No. C48815 Exp. 9-30-14 CIVIL STATE OF CALIFORNIA

THE STATE OF CALIFORNIA OR ITS OFFICERS OR AGENTS SHALL NOT BE RESPONSIBLE FOR THE ACCURACY OR COMPLETENESS OF SCANNED COPIES OF THIS PLAN SHEET.

TO ACCOMPANY PLANS DATED 3-23-15

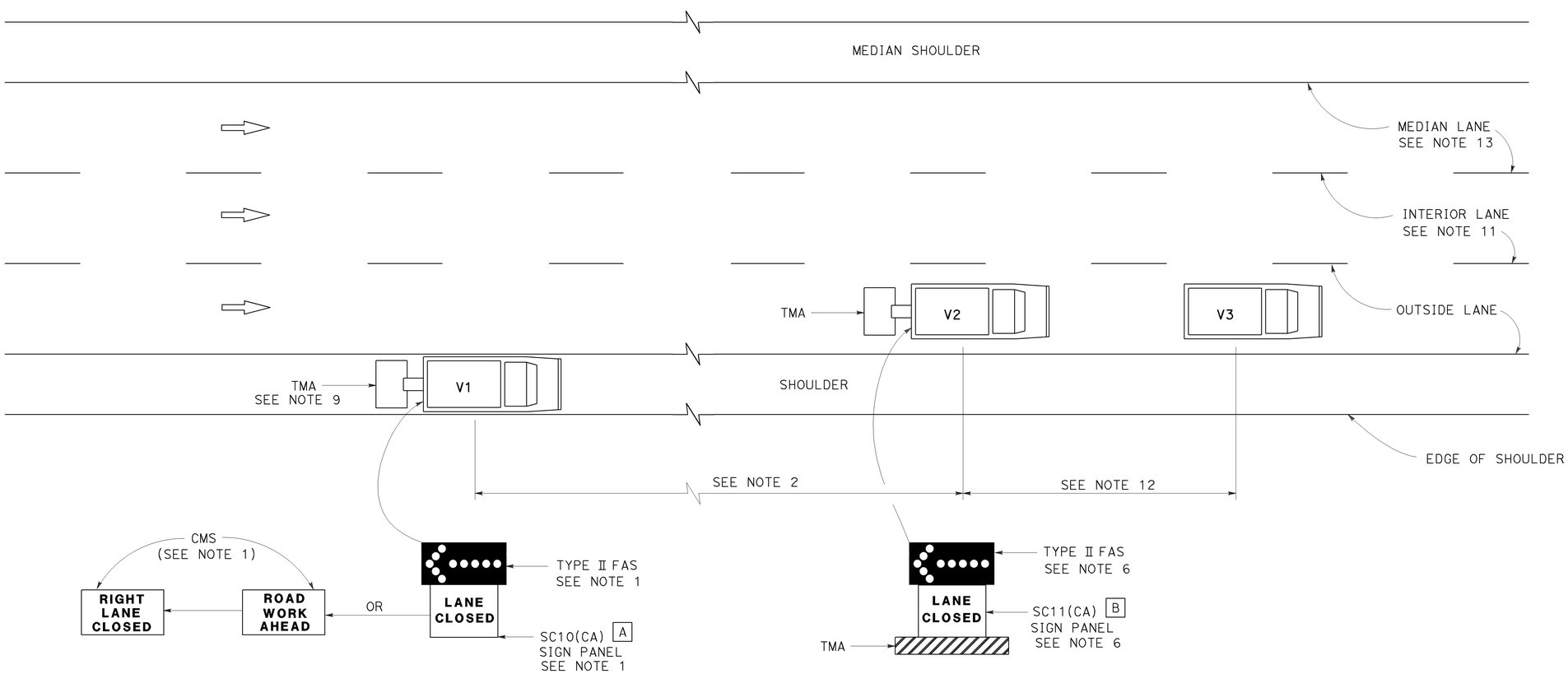

MOVING LANE CLOSURE ON MEDIAN LANE OR OUTSIDE LANE OF MULTILANE HIGHWAYS

SIGN PANEL SIZE (Min)

A 66" x 36"

B 54" x 42"

LEGEND

V1	SIGN VEHICLE
V2	SHADOW VEHICLE
V3	WORK/APPLICATION VEHICLE
	FLASHING ARROW SIGN (FAS)
CMS	CHANGEABLE MESSAGE SIGN
TMA	TRUCK-MOUNTED ATTENUATOR

NOTES:

1. Either a changeable message sign or a SC10(CA) sign panel and a Type II flashing arrow sign shall be mounted on the rear of sign vehicle V1. The changeable message sign shall be sequenced to show the "ROAD WORK AHEAD" message first, followed by the "RIGHT LANE CLOSED" message. For median lane closure, the flashing arrow symbol shall be reversed with the arrowhead on the right and the changeable message sign shall show "LEFT LANE CLOSED".
2. If traffic queues develop, sign vehicle V1 should be positioned upstream from the end of queue. Sign vehicle V1 shall be positioned where highly visible when shoulders are not available.
3. A minimum sight distance of 1500′ should be provided in advance of sign vehicle V1.
4. Sign vehicle V1 should remain at the beginning of horizontal or vertical curves until the other vehicles (V2 and V3) are far enough beyond the curve to resume the minimum sight distance of 1500′.
5. Vehicle-mounted sign panels shall have Type III or above retroreflective sheeting, black on white, or black on fluorescent orange, with 6" minimum series D letters per Caltrans sign specifications.
6. Shadow vehicle V2 shall be equipped with a truck-mounted attenuator. The sign panel shown and a Type II flashing arrow sign shall be mounted on the rear of shadow vehicle V2. For median lane closure the flashing arrow sign symbol shall be displayed with the arrowhead on the right.
7. All vehicles used for lane closures shall be equipped with two-way radios, and the vehicle operators shall maintain communication during the work or application operation.
8. All vehicles shall be equipped with flashing or rotating amber lights.
9. If sign vehicle V1 encroaches into the traffic lane due to insufficient shoulder width, sign vehicle V1 shall be equipped with a truck-mounted attenuator. Sign vehicle V1 shall stay as close to the edge of shoulder as practicable.
10. Where workers would be on foot in the work area, a stationary type lane closure (Revised Standard Plan T10, T11, etc., as applicable) shall be used instead of this plan.
11. For moving lane closure on interior lane of multilane highways, use Revised Standard Plan T16.
12. The spacing between work vehicle(s) and the shadow vehicles, and between each shadow vehicle should be minimized to deter road users from driving in between.
13. When the work/application vehicle V3 occupies the median lane, sign vehicle V1 should drive in the median shoulder and indicate left lane closed ahead.

STATE OF CALIFORNIA
DEPARTMENT OF TRANSPORTATION

TRAFFIC CONTROL SYSTEM FOR MOVING LANE CLOSURE ON MULTILANE HIGHWAYS

NO SCALE

RSP T15 DATED APRIL 19, 2013 SUPERSEDES STANDARD PLAN T15
DATED MAY 20, 2011 - PAGE 243 OF THE STANDARD PLANS BOOK DATED 2010.

REVISED STANDARD PLAN RSP T15

2010 REVISED STANDARD PLAN RSP T15

12-18-12

Dist	COUNTY	ROUTE	POST MILES TOTAL PROJECT	SHEET No.	TOTAL SHEETS
05	Mon	1	R77.6/R85.3	84	101

REGISTERED CIVIL ENGINEER

April 19, 2013
PLANS APPROVAL DATE

REGISTERED PROFESSIONAL ENGINEER Gurinderpal Bhullar No. C48815 Exp. 9-30-14 CIVIL STATE OF CALIFORNIA

THE STATE OF CALIFORNIA OR ITS OFFICERS OR AGENTS SHALL NOT BE RESPONSIBLE FOR THE ACCURACY OR COMPLETENESS OF SCANNED COPIES OF THIS PLAN SHEET.

TO ACCOMPANY PLANS DATED 3-23-15

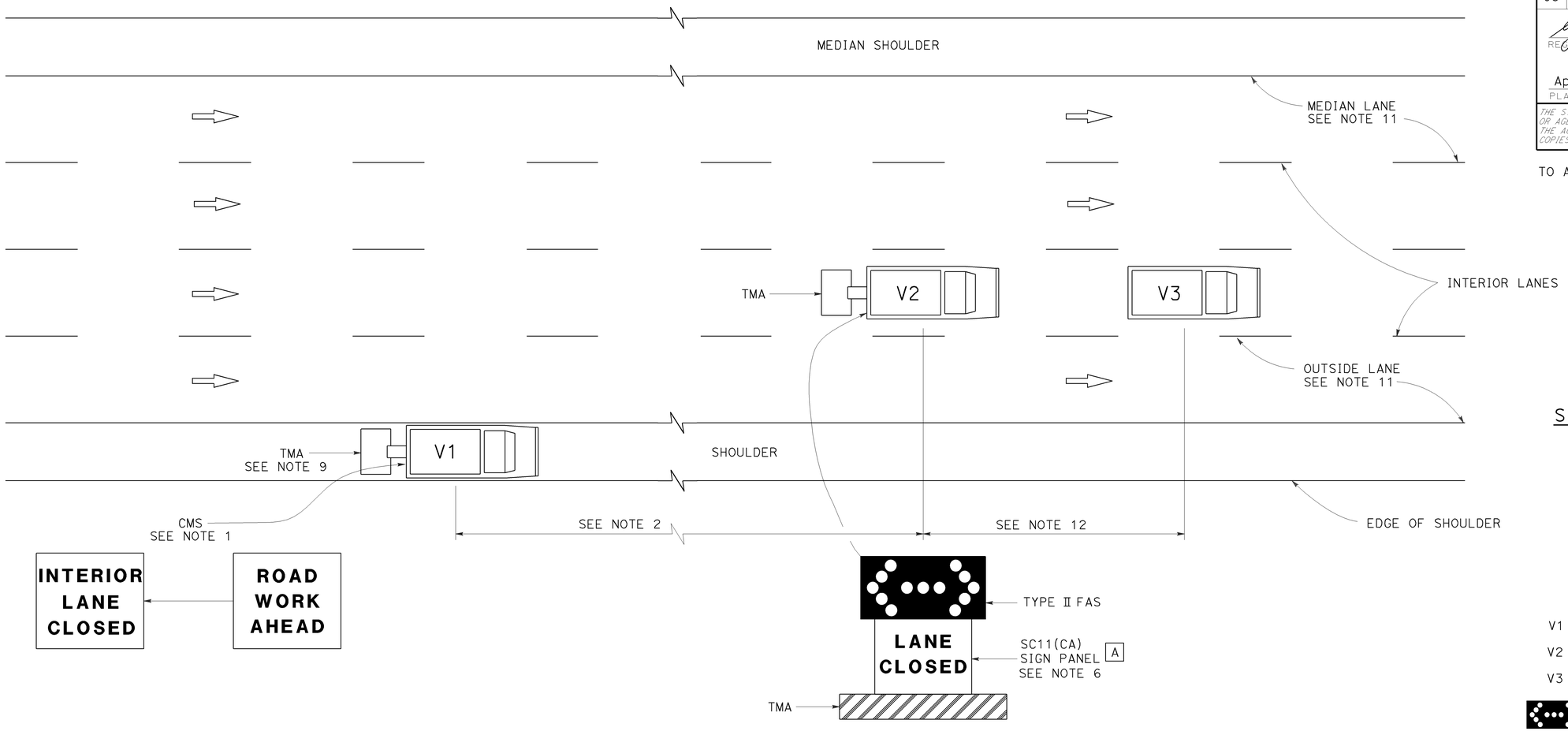

MOVING LANE CLOSURE ON INTERIOR LANE OF MULTILANE HIGHWAYS

SIGN PANEL SIZE (Min)

A 54" x 42"

LEGEND

V1	SIGN VEHICLE
V2	SHADOW VEHICLE
V3	WORK/APPLICATION VEHICLE
	FLASHING ARROW SIGN (FAS) IN FLASHING DOUBLE ARROW MODE
CMS	CHANGEABLE MESSAGE SIGN
TMA	TRUCK-MOUNTED ATTENUATOR

NOTES:

1. A changeable message sign shall be mounted on the rear of sign vehicle V1. The changeable message sign shall be sequenced to show the "ROAD WORK AHEAD" message first, followed by the "INTERIOR LANE CLOSED" message. The message "CENTER LANE CLOSED" may be used in place of the "INTERIOR LANE CLOSED" message.
2. If traffic queues develop, sign vehicle V1 should be positioned upstream from the end of queue. Sign vehicle V1 shall be positioned where highly visible when shoulders are not available.
3. A minimum sight distance of 1500′ should be provided in advance of sign vehicle V1.
4. Sign vehicle V1 should remain at the beginning of horizontal or vertical curves until the other vehicles (V2 and V3) are far enough beyond the curve to resume the minimum sight distance of 1500′.
5. Vehicle-mounted sign panels shall have Type III or above retroreflective sheeting, black on white, or black on fluorescent orange, with 6" minimum series D letters per Caltrans sign specifications.
6. Shadow vehicle V2 shall be equipped with a truck-mounted attenuator. The sign panel shown and a Type II flashing arrow sign shall be mounted on the rear of shadow vehicle V2.
7. All vehicles used for lane closures shall be equipped with two-way radios, and the vehicle operators shall maintain communication during the work or application operation.
8. All vehicles shall be equipped with flashing or rotating amber lights.
9. If sign vehicle V1 encroaches into the traffic lane due to insufficient shoulder width, sign vehicle V1 shall be equipped with a truck-mounted attenuator. Sign vehicle V1 shall stay as close to the edge of shoulder as practicable.
10. Where workers would be on foot in the work area, a stationary type lane closure (Revised Standard Plan T10, T11 etc., as applicable) shall be used instead of this plan.
11. For moving lane closure on median lane or outside lane of multilane highways, use Revised Standard Plan T15.
12. The spacing between work vehicle(s) and the shadow vehicles, and between each shadow vehicle should be minimized to deter road users from driving in between.

STATE OF CALIFORNIA
DEPARTMENT OF TRANSPORTATION

TRAFFIC CONTROL SYSTEM FOR MOVING LANE CLOSURE ON MULTILANE HIGHWAYS

NO SCALE

RSP T16 DATED APRIL 19, 2013 SUPERSEDES STANDARD PLAN T16
DATED MAY 20, 2011 - PAGE 244 OF THE STANDARD PLANS BOOK DATED 2010.

REVISED STANDARD PLAN RSP T16

2010 REVISED STANDARD PLAN RSP T16

12-18-12

Dist	COUNTY	ROUTE	POST MILES TOTAL PROJECT	SHEET No.	TOTAL SHEETS
05	Mon	1	R77.6/R85.3	85	101

Theresa Gabriel
REGISTERED ELECTRICAL ENGINEER

July 19, 2013
PLANS APPROVAL DATE

REGISTERED PROFESSIONAL ENGINEER Theresa Aziz Gabriel No. E15129 Exp. 6-30-14 ELECTRICAL STATE OF CALIFORNIA

THE STATE OF CALIFORNIA OR ITS OFFICERS OR AGENTS SHALL NOT BE RESPONSIBLE FOR THE ACCURACY OR COMPLETENESS OF SCANNED COPIES OF THIS PLAN SHEET.

TO ACCOMPANY PLANS DATED 3-23-15

LEGEND:

AB	ABANDON. IF APPLIED TO CONDUIT, REMOVE CONDUCTORS
BC	INSTALL PULL BOX IN EXISTING CONDUIT RUN
BP	PEDESTRIAN BARRICADE, TYPE AS INDICATED ON PLAN
CB	INSTALL CONDUIT INTO EXISTING PULL BOX
CC	CONNECT NEW AND EXISTING CONDUIT. REMOVE EXISTING CONDUCTORS AND INSTALL CONDUCTORS AS INDICATED
CF	CONDUIT TO REMAIN FOR FUTURE USE. REMOVE CONDUCTORS. INSTALL PULL TAPE
DH	DETECTOR HANDHOLE
FA	FOUNDATION TO BE ABANDONED
IS	INSTALL SIGN ON SIGNAL MAST ARM
NS	NO SLIP BASE ON STANDARD
PEC	PHOTOELECTRIC CONTROL
PEU	PHOTOELECTRIC UNIT
RC	EQUIPMENT OR MATERIAL TO BE REMOVED AND BECOME THE PROPERTY OF THE CONTRACTOR
RE	REMOVE ELECTROLIER, FUSES AND BALLAST. TAPE ENDS OF CONDUCTORS
RL	RELOCATE EQUIPMENT
RR	REMOVE AND REUSE EQUIPMENT
RS	REMOVE AND SALVAGE EQUIPMENT
SC	SPLICE NEW TO EXISTING CONDUCTORS
SD	SERVICE DISCONNECT
TSP	TELEPHONE SERVICE POINT

ABBREVIATIONS

APS	ACCESSIBLE PEDESTRIAN SIGNAL
BBS	BATTERY BACKUP SYSTEM
BC	BOLT CIRCLE
BPB	BICYCLE PUSH BUTTON
C	CONDUIT
CB	CIRCUIT BREAKER
CCTV	CLOSED CIRCUIT TELEVISION
Ckt	CIRCUIT
CMS	CHANGEABLE MESSAGE SIGN
Ctid	CALTRANS IDENTIFICATION
Comm	COMMUNICATION
DLC	LOOP DETECTOR LEAD-IN CABLE
EMS	EXTINGUISHABLE MESSAGE SIGN
EVUC	EMERGENCY VEHICLE UNIT CABLE
EVUD	EMERGENCY VEHICLE UNIT DETECTOR
FB	FLASHING BEACON
FBCA	FLASHING BEACON CONTROL ASSEMBLY
FBS	FLASHING BEACON WITH SLIP BASE
FO	FIBER OPTIC
G	EQUIPMENT GROUNDING CONDUCTOR
GB	GROUND BUS
GFCI	GROUND FAULT CIRCUIT INTERRUPTER
HAR	HIGHWAY ADVISORY RADIO
Hex	HEXAGONAL
HPS	HIGH PRESSURE SODIUM
IISNS	INTERNALLY ILLUMINATED STREET NAME SIGN
ISL	INDUCTION SIGN LIGHTING
LED	LIGHT EMITTING DIODE
LMA	LUMINAIRE MAST ARM
LPS	LOW PRESSURE SODIUM
Ltg	LIGHTING
Lum	LUMINAIRE
M	METERED
MAT	MAST ARM MOUNTING TOP ATTACHMENT
MAS	MAST ARM MOUNTING SIDE ATTACHMENT
M/M	MULTIPLE TO MULTIPLE TRANSFORMER
Mtg	MOUNTING
MV	MERCURY VAPOR LIGHTING FIXTURE
MVDS	MICROWAVE VEHICLE DETECTION SYSTEM
N	NEUTRAL (GROUNDED CONDUCTOR)
NB	NEUTRAL BUS
NC	NORMALLY CLOSE
NO	NORMALLY OPEN
P	CIRCUIT BREAKER'S POLE
PB	PULL BOX
PBA	PUSH BUTTON ASSEMBLY
PEC	PHOTOELECTRIC CONTROL
Ped	PEDESTRIAN
PEU	PHOTOELECTRIC UNIT
PT	CONDUIT WITH PULL TAPE
RE	RELOCATED EQUIPMENT
RM	RAMP METERING
RWIS	ROADSIDE WEATHER INFORMATION SYSTEM
SB	SLIP BASE
SIC	SIGNAL INTERCONNECT CABLE
Sig	SIGNAL
SMA	SIGNAL MAST ARM
SNS	STREET NAME SIGN
SP	SERVICE POINT
TDC	TELEPHONE DEMARCATION CABINET
TMS	TRAFFIC MONITORING STATION
TOS	TRAFFIC OPERATIONS SYSTEM
Veh	VEHICLE
VIVDS	VIDEO IMAGE VEHICLE DETECTION SYSTEM
WIM	WEIGH-IN-MOTION
Xfmr	TRANSFORMER

SOFFIT AND WALL MOUNTED LUMINAIRES

PENDANT, 70 W HPS UNLESS OTHERWISE SPECIFIED

FLUSH, 70 W HPS UNLESS OTHERWISE SPECIFIED

WALL SURFACE, 70 W HPS UNLESS OTHERWISE SPECIFIED

EXISTING SOFFIT OR WALL LUMINAIRE TO REMAIN UNMODIFIED

EXISTING SOFFIT OR WALL LUMINAIRE TO BE MODIFIED AS SPECIFIED

NOTE:

Arrow indicates "street side" of luminaire.

COMMONLY USED SYMBOLS FOR UNITED STATES CUSTOMARY UNITS OF MEASUREMENT:

SYMBOL USED	DEFINITIONS
Ω	OHMS
min	MINUTE
s	SECOND
bps	BITS PER SECOND
Bps	BYTES PER SECOND
A	AMPERE
V	VOLT
V(dc)	VOLT (DIRECT CURRENT)
V(ac)	VOLT (ALTERNATING CURRENT)
FC	FOOT - CANDLE
W	WATTS
VA	VOLT-AMPERE
M	MEGA
k	KILO
m	MILLI
μ	MICRO
P	PICO
Hz	HERTZ

MISCELLANEOUS ELECTROLIERS

NEW	EXISTING	
		LUMINAIRE ON WOOD POLE
		NON-STANDARD ELECTROLIER (SEE PROJECT NOTES OR PROJECT PLANS)
		CITY ELECTROLIER
		ELECTROLIER FOUNDATION (FUTURE INSTALLATION)

NOTES:

1. HPS luminaires shall be 310 W HPS when installed on Type 21, 21D, 30, 31 and 32 Standards, unless otherwise specified. HPS luminaires shall be 200 W when installed on other type standards or poles, unless otherwise specified.
2. LED luminaires shall be 235 W when installed on Type 21, 21D, 30, 31 and 32 Standards, unless otherwise specified. LED luminaires shall be 165 W when installed on other type standards or poles, unless otherwise specified.
3. Luminaires shall be the cutoff type, ANSI Type III medium cutoff lighting distribution, unless otherwise specified.

STANDARD ELECTROLIER

NEW	EXISTING	STANDARD TYPE
		15
		15D
		15 STRUCTURE
		15D STRUCTURE
		21
		21D
		21 STRUCTURE
		21D STRUCTURE
		30
		31
		32

STATE OF CALIFORNIA
DEPARTMENT OF TRANSPORTATION

ELECTRICAL SYSTEMS (LEGEND AND ABBREVIATIONS)

NO SCALE

RSP ES-1A DATED JULY 19, 2013 SUPERSEDES STANDARD PLAN ES-1A DATED MAY 20, 2011 - PAGE 425 OF THE STANDARD PLANS BOOK DATED 2010.

REVISED STANDARD PLAN RSP ES-1A

2010 REVISED STANDARD PLAN RSP ES-1A

Dist	COUNTY	ROUTE	POST MILES TOTAL PROJECT	SHEET No.	TOTAL SHEETS
05	Mon	1	R77.6/R85.3	86	101

Theresa Gabriel
REGISTERED ELECTRICAL ENGINEER

July 19, 2013
PLANS APPROVAL DATE

REGISTERED PROFESSIONAL ENGINEER
Theresa Aziz Gabriel
No. E15129
Exp. 6-30-14
ELECTRICAL
STATE OF CALIFORNIA

THE STATE OF CALIFORNIA OR ITS OFFICERS OR AGENTS SHALL NOT BE RESPONSIBLE FOR THE ACCURACY OR COMPLETENESS OF SCANNED COPIES OF THIS PLAN SHEET.

TO ACCOMPANY PLANS DATED 3-23-15

CONDUIT

NEW	EXISTING	
		LIGHTING CONDUIT, UNLESS OTHERWISE INDICATED OR NOTED
		TRAFFIC SIGNAL CONDUIT
C	c	COMMUNICATION CONDUIT
T	t	TELEPHONE CONDUIT
F	f	FIRE ALARM CONDUIT
FO	fo	FIBER OPTIC CONDUIT
		CONDUIT TERMINATION
R	r	CONDUIT RISER ATTACHED TO THE STRUCTURE OR SERVICE POLE

SERVICE EQUIPMENT

NEW	EXISTING	
OH	oh	OVERHEAD LINES
U	U	WOOD POLE, "U" INDICATES UTILITY OWNED
		POLE GUY WITH ANCHOR
		UTILITY TRANSFORMER - GROUND MOUNTED
III	III	SERVICE EQUIPMENT ENCLOSURE TYPE. DOOR INDICATES FRONT OF ENCLOSURE
T	t	TELEPHONE DEMARCATION CABINET

POLE-MOUNTED SERVICE DESIGNATION

TYPE H SERVICE, 28'-10" — TYPE OF INSTALLATION AND POLE HEIGHT ABOVE GRADE

FLASHING BEACON

NEW	EXISTING	
R	R	FLASHING BEACON (ONE VEHICLE SIGNAL HEAD WITH BACKPLATE AND VISOR) "R" INDICATES RED INDICATION, "Y" INDICATES YELLOW INDICATION
Y Y	Y Y	FLASHING BEACON WITH TYPE 15-FBS STANDARD AND A SIGN.
R R	R R	FLASHING BEACON WITH TYPES 9, 9A OR 9B SIGN UNLESS OTHERWISE SPECIFIED OR INDICATED

SIGNAL EQUIPMENT

NEW	EXISTING	
C	C	PEDESTRIAN SIGNAL HEAD "C" INDICATES COUNTDOWN PEDESTRIAN HEAD
		PUSH BUTTON ASSEMBLY POST
		PEDESTRIAN BARRICADE
		VEHICLE SIGNAL HEAD (WITH BACKPLATE AND 3-SECTIONS: RED, YELLOW AND GREEN)
		VEHICLE SIGNAL HEAD WITH ANGLE VISOR
PV	PV	MODIFICATIONS OF BASIC SYMBOL: "L" INDICATES ALL NON-ARROW SECTIONS LOUVERED "LG" INDICATES LOUVERED GREEN SECTION ONLY "PV" INDICATES ALL 12" SECTIONS PROGRAMMED VISIBILITY "8" INDICATES ALL 8" SECTIONS (ONLY WHEN SPECIFIED)
		VEHICLE SIGNAL HEAD CONSISTING OF RED, YELLOW AND GREEN LEFT ARROW SECTIONS
		VEHICLE SIGNAL HEAD CONSISTING OF RED AND YELLOW SECTIONS WITH AN UP GREEN ARROW SECTION
		VEHICLE SIGNAL HEAD (5 SECTION) CONSISTING OF RED, YELLOW AND GREEN SECTIONS WITH YELLOW AND GREEN RIGHT ARROW SECTIONS
		TYPE 15TS STANDARD WITH VEHICLE SIGNAL HEAD AND LUMINAIRE
		TYPE 21TS STANDARD WITH VEHICLE SIGNAL HEAD AND LUMINAIRE
		STANDARD WITH LUMINAIRE AND SIGNAL MAST ARMS AND ATTACHED VEHICLE SIGNAL HEADS
		TYPE 1 STANDARD WITH ATTACHED VEHICLE SIGNAL HEADS
		STANDARD WITH A SIGNAL MAST ARM, ATTACHED VEHICLE SIGNAL HEADS AND INTERNALLY ILLUMINATED STREET NAME SIGN
		CONTROLLER ASSEMBLY. DOOR INDICATES FRONT OF CABINET

SIGNAL EQUIPMENT Cont

NEW	EXISTING	
		GUARD POST
		TYPE 1 STANDARD WITH RAMP METERING SIGN
		OPTICAL DETECTOR FOR THE EMERGENCY VEHICLE DETECTION SYSTEM

NOTES:

1. All signal sections shall be 12" unless shown otherwise.
2. Signal heads shall be provided with backplates unless shown otherwise.

ILLUMINATED OVERHEAD SIGN

NEW	EXISTING	
		SINGLE POST, SINGLE ILLUMINATED SIGN, BALANCED BUTTERFLY
		SINGLE POST, DOUBLE ILLUMINATED SIGN, BALANCED BUTTERFLY
		SINGLE POST, SINGLE ILLUMINATED SIGN, FULL CANTILEVER
		DOUBLE POST, SINGLE ILLUMINATED SIGN
		SINGLE ILLUMINATED SIGN MOUNTED ON STRUCTURE
		DOUBLE POST, SINGLE ILLUMINATED SIGN WITH ELECTROLIER

STATE OF CALIFORNIA
DEPARTMENT OF TRANSPORTATION

ELECTRICAL SYSTEMS (LEGEND AND ABBREVIATIONS)

NO SCALE

RSP ES-1B DATED JULY 19, 2013 SUPERSEDES STANDARD PLAN ES-1B DATED MAY 20, 2011 - PAGE 426 OF THE STANDARD PLANS BOOK DATED 2010.

REVISED STANDARD PLAN RSP ES-1B

2010 REVISED STANDARD PLAN RSP ES-1B

7-15-13

Dist	COUNTY	ROUTE	POST MILES TOTAL PROJECT	SHEET No.	TOTAL SHEETS
05	Mon	1	R77.6/R85.3	87	101

Theresa Gabriel
REGISTERED ELECTRICAL ENGINEER

July 19, 2013
PLANS APPROVAL DATE

REGISTERED PROFESSIONAL ENGINEER
Theresa Aziz Gabriel
No. E15129
Exp. 6-30-14
ELECTRICAL
STATE OF CALIFORNIA

THE STATE OF CALIFORNIA OR ITS OFFICERS OR AGENTS SHALL NOT BE RESPONSIBLE FOR THE ACCURACY OR COMPLETENESS OF SCANNED COPIES OF THIS PLAN SHEET.

TO ACCOMPANY PLANS DATED 3-23-15

EQUIPMENT IDENTIFICATION

ILLUMINATED SIGN IDENTIFICATION NUMBER:

SIGN No. 12345
10 ISL SCI 1.0

- SIGN NUMBER - PLACE ON POST OR STRUCTURE
- TRANSFORMER RATING (kVA)
- LIGHTING CONTROL TYPE
- NUMBER AND TYPE OF FIXTURES

} DO NOT PLACE ON STANDARD OR STRUCTURE

ELECTROLIER OR EQUIPMENT IDENTIFICATION NUMBER:

12345 - 15'-0"

- MAST ARM LENGTH, IF SHOWN. DO NOT PLACE ON STANDARD OR STRUCTURE
- EQUIPMENT NUMBER - PLACE ON STANDARD OR STRUCTURE. EXISTING EQUIPMENT NUMBERS ARE SHOWN IN PARENTHESIS

CONDUIT AND CONDUCTOR IDENTIFICATION:

1½"C, 2#10, 15#14, 2 DLC, 12P#18 (PAIR)

- NUMBER AND SIZE OF CONDUCTORS AND CABLES
- SIZE OF CONDUIT IN INCHES

ø1, ø2, ø2P, etc.	TRAFFIC PHASE IDENTIFICATION FOR SIGNAL FACES, DETECTORS AND PHASE DIAGRAMS
1 2 3	LEGEND NUMBERS
A B C	EQUIPMENT, SIGNAL POLES, INSTALLATION OR ITEMS
1 2 3	CONDUIT RUN NUMBERS

SIGNAL AND LIGHTING STANDARD (TYPICAL DESIGNATION):

19A - 3 - 100

- WIND VELOCITY = 100 mph
- CASE 3 ARM LOADING
- STANDARD TYPE
- STANDARD PLAN SHEET NUMBER
- DETAIL, NUMBER, SECTION, TYPE OR ELEVATION

MISCELLANEOUS EQUIPMENT

NEW	EXISTING	
CMS	cms	CHANGEABLE MESSAGE SIGN
		CLOSED CIRCUIT TELEVISION CAMERA
		HIGHWAY ADVISORY RADIO POLE AND ANTENNA
EMS	ems	EXTINGUISHABLE MESSAGE SIGN
M V	m v	DETECTION DEVICE M = MICROWAVE SENSOR V = VIDEO IMAGE SENSOR

WIRING DIAGRAM LEGEND

- EXTERNAL CONDUCTOR
- CONDUCTOR OR BUS
- TIE POINT
- CONTACTOR COIL
- CONTACTOR, NO CONTACT
- TERMINAL BLOCKS
- CONTACTOR, NC CONTACT
- ENCLOSURE BOND
- GROUNDING ELECTRODE
- CIRCUIT BREAKER
- RECEPTACLE

PULL BOXES

NEW	EXISTING	
		PULL BOX, No. 5 UNLESS OTHERWISE INDICATED OR NOTED
3	9A(21)	PULL BOX, ADDITIONAL DESIGNATIONS OR DESCRIPTIONS

3 No. 3½ PULL BOX
5 No. 5 PULL BOX
6 No. 6 PULL BOX
7 No. 7 (CEILING PULL BOX)
8 No. 8 (PENDANT SOFFIT PULL BOX)
9 No. 9 PULL BOX
9A No. 9A PULL BOX

(C) COMMUNICATIONS PULL BOX
(E) PULL BOX WITH EXTENSION
(S) SPRINKLER CONTROL PULL BOX
(21) ANCHOR BOLTS AND CONDUIT FOR FUTURE INSTALLATION OF TYPE 21 STANDARD
(T) TRAFFIC PULL BOX

VEHICLE DETECTORS

5 J 9 U

- VEHICLE DETECTOR DESIGNATION
- U = UPPER
  L = LOWER
- SLOT NUMBER IN INPUT FILE
- INPUT FILE (I OR J)
- PHASE

NEW	EXISTING	
		TYPE A DETECTOR LOOP. OUTLINE OF SAWCUT SHOWN
		TYPE B DETECTOR LOOP. OUTLINE OF SAWCUT SHOWN
		TYPE C DETECTOR LOOP. OUTLINE OF SAWCUT SHOWN
		TYPE D DETECTOR LOOP. OUTLINE OF SAWCUT SHOWN
		TYPE E DETECTOR LOOP. OUTLINE OF SAWCUT SHOWN
		TYPE Q DETECTOR LOOP. OUTLINE OF SAWCUT SHOWN
		MAGNETIC DETECTOR
DH	dh	DETECTOR HANDHOLE
		MICROWAVE OR VIDEO DETECTION ZONE

STATE OF CALIFORNIA
DEPARTMENT OF TRANSPORTATION

ELECTRICAL SYSTEMS (LEGEND AND ABBREVIATIONS)

NO SCALE

RSP ES-1C DATED JULY 19, 2013 SUPERSEDES STANDARD PLAN ES-1C DATED MAY 20, 2011 - PAGE 427 OF THE STANDARD PLANS BOOK DATED 2010.

REVISED STANDARD PLAN RSP ES-1C

2010 REVISED STANDARD PLAN RSP ES-1C

7-11-13

Dist	COUNTY	ROUTE	POST MILES TOTAL PROJECT	SHEET No.	TOTAL SHEETS
05	Mon	1	R77.6/R85.3	88	101

Theresa Gabriel
REGISTERED ELECTRICAL ENGINEER

October 17, 2014
PLANS APPROVAL DATE

REGISTERED PROFESSIONAL ENGINEER
Theresa Aziz Gabriel
No. E15129
Exp. 6-30-16
ELECTRICAL
STATE OF CALIFORNIA

THE STATE OF CALIFORNIA OR ITS OFFICERS OR AGENTS SHALL NOT BE RESPONSIBLE FOR THE ACCURACY OR COMPLETENESS OF SCANNED COPIES OF THIS PLAN SHEET.

TO ACCOMPANY PLANS DATED 3-23-15

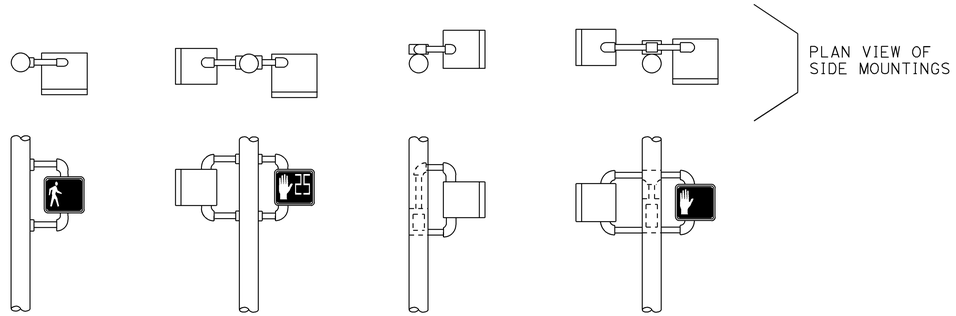

SP-1 SP-2 SP-1-T SP-2-T

SIDE MOUNTINGS

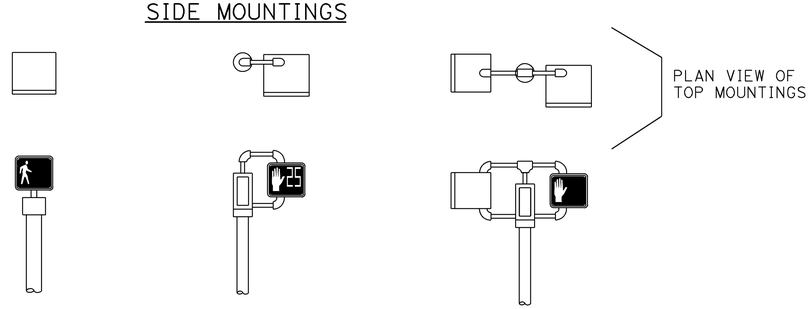

TP-1 TP-1-T TP-2-T

TOP MOUNTINGS

PEDESTRIAN SIGNALS AND MOUNTINGS

DETAIL A

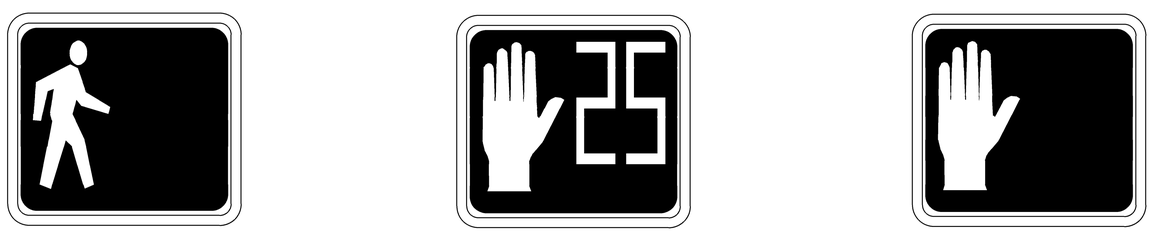

PERSON WALKING INTERVAL FLASHING UPRAISED HAND INTERVAL STEADY UPRAISED HAND INTERVAL

PEDESTRIAN SIGNAL MODULE WITH COUNTDOWN

DETAIL B

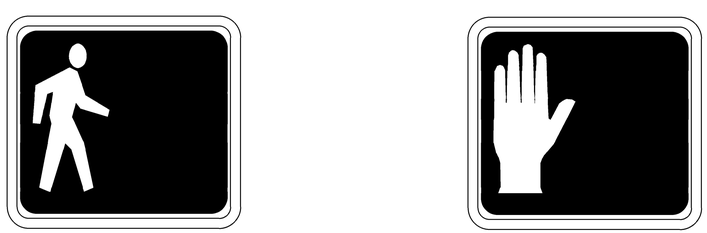

PERSON WALKING INTERVAL STEADY UPRAISED HAND INTERVAL

PEDESTRIAN SIGNAL MODULE WITHOUT COUNTDOWN

DETAIL C

NOTES:

1. Mounting shall be oriented to provide maximum horizontal clearance to adjacent roadway.
2. Bracket arms shall be long enough to permit proper alignment of signals.
3. See Standard Plan ES-4D for attachment fittings details.

ABBREVIATIONS:

1, 2	NUMBER OF SIGNAL FACES
SP	SIDE MOUNTED PEDESTRIAN SIGNAL
T	TERMINAL COMPARTMENT
TP	TOP MOUNTED PEDESTRIAN SIGNAL

STATE OF CALIFORNIA
DEPARTMENT OF TRANSPORTATION

ELECTRICAL SYSTEMS (PEDESTRIAN SIGNAL)

NO SCALE

RSP ES-4B DATED OCTOBER 17, 2014 SUPERSEDES RSP ES-4B DATED JULY 19, 2013 AND STANDARD PLAN ES-4B DATED MAY 20, 2011 - PAGE 444 OF THE STANDARD PLANS BOOK DATED 2010.

REVISED STANDARD PLAN RSP ES-4B

2010 REVISED STANDARD PLAN RSP ES-4B

9-23-14

Dist	COUNTY	ROUTE	POST MILES TOTAL PROJECT	SHEET No.	TOTAL SHEETS
05	Mon	1	R77.6/R85.3	89	101

Theresa Gabriel
REGISTERED ELECTRICAL ENGINEER

July 19, 2013
PLANS APPROVAL DATE

REGISTERED PROFESSIONAL ENGINEER
Theresa Aziz Gabriel
No. E15129
Exp. 6-30-14
ELECTRICAL
STATE OF CALIFORNIA

THE STATE OF CALIFORNIA OR ITS OFFICERS OR AGENTS SHALL NOT BE RESPONSIBLE FOR THE ACCURACY OR COMPLETENESS OF SCANNED COPIES OF THIS PLAN SHEET.

TO ACCOMPANY PLANS DATED 3-23-15

VISORS

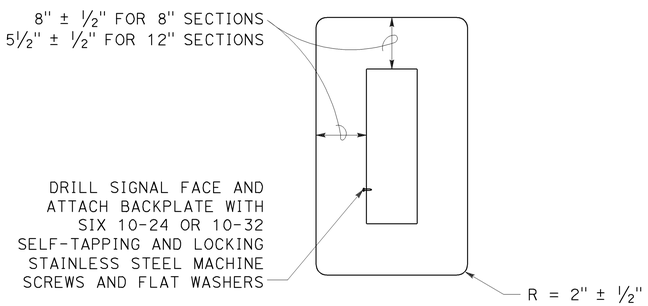

8" AND 12" SECTIONS

BACKPLATE

1/16" minimum thickness
3001-14 aluminum or plastic
when specified

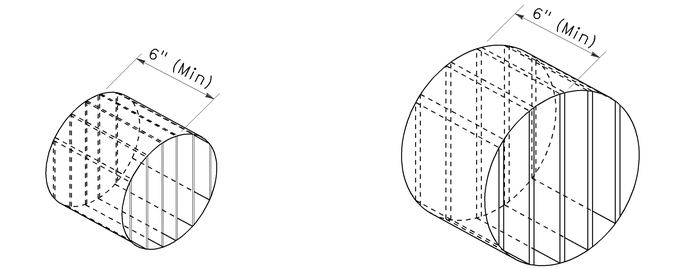

ISOMETRIC VIEW

ISOMETRIC VIEW

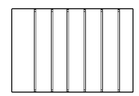

SECTION A-A

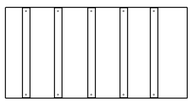

SECTION B-B

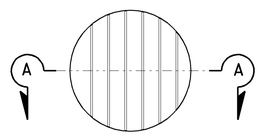

8" DIAMETER FRONT VIEW

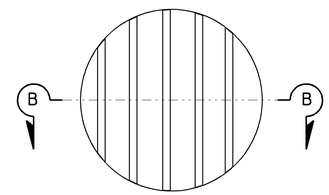

12" DIAMETER FRONT VIEW

DIRECTIONAL LOUVER

Directional louvers shall be oriented as directed by the Engineer and secured in place with one plated brass machine screw and nut.

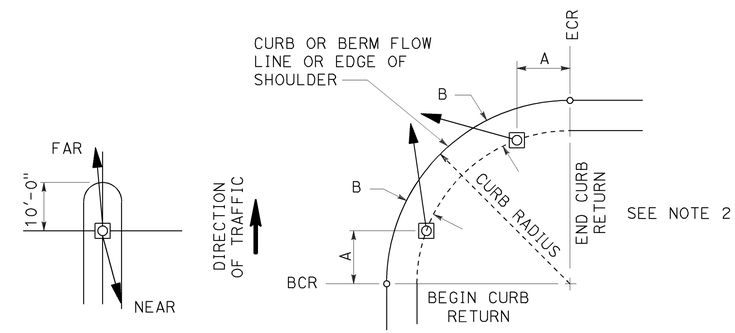

NOTES:

1. Typical signal pole placement unless dimensioned on plans.
2. For A and B dimensions, see Pole Schedule, or as directed by the Engineer.

SIGNAL STANDARD PLACEMENT DIMENSIONS AND EQUIPMENT LOCATIONS

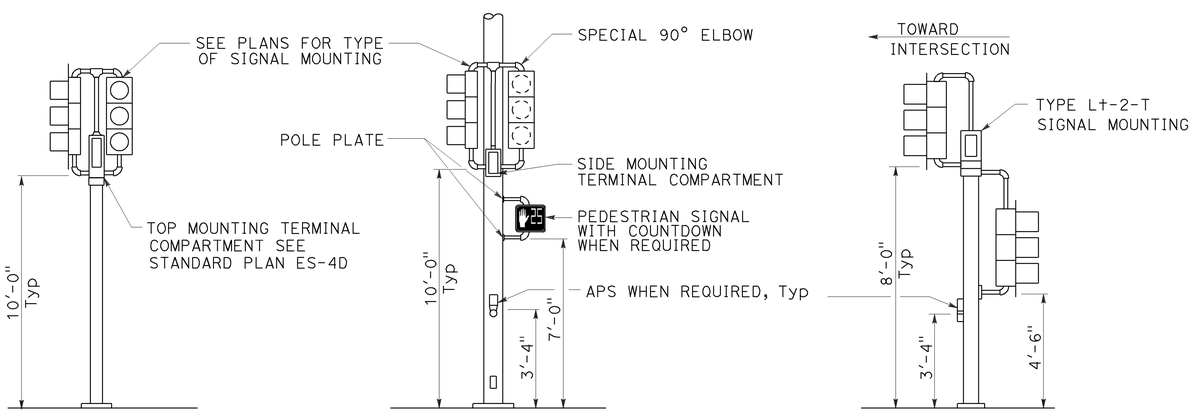

TOP MOUNTED SIGNALS (TV)

Type 1-A, 1-B, 1-C and 1-D standard as indicated on the plans

SIDE MOUNTED SIGNALS (SV AND SP)

Normally used on standards with luminaire or signal mast arm

LEFT TURN LANE SIGNAL

Type 1-A, 1-B, 1-C and 1-D standard as indicated on plans

TYPICAL SIGNAL INSTALLATIONS

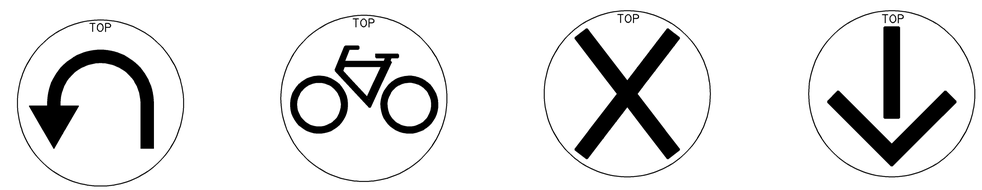

U-TURN

BICYCLE

LANE CONTROL

LANE CONTROL

SIGNAL FACES

STATE OF CALIFORNIA
DEPARTMENT OF TRANSPORTATION

ELECTRICAL SYSTEMS (VEHICULAR SIGNAL HEADS AND MOUNTINGS)

NO SCALE

RSP ES-4C DATED JULY 19, 2013 SUPERSEDES STANDARD PLAN ES-04C DATED MAY 20, 2011 - PAGE 445 OF THE STANDARD PLANS BOOK DATED 2010.

REVISED STANDARD PLAN RSP ES-4C

2010 REVISED STANDARD PLAN RSP ES-4C

7-10-13

Dist	COUNTY	ROUTE	POST MILES TOTAL PROJECT	SHEET No.	TOTAL SHEETS
05	Mon	1	R77.6/R85.3	90	101

Theresa Gabriel
REGISTERED ELECTRICAL ENGINEER

July 19, 2013
PLANS APPROVAL DATE

REGISTERED PROFESSIONAL ENGINEER
Theresa Aziz Gabriel
No. E15129
Exp. 6-30-14
ELECTRICAL
STATE OF CALIFORNIA

THE STATE OF CALIFORNIA OR ITS OFFICERS OR AGENTS SHALL NOT BE RESPONSIBLE FOR THE ACCURACY OR COMPLETENESS OF SCANNED COPIES OF THIS PLAN SHEET.

TO ACCOMPANY PLANS DATED 3-23-15

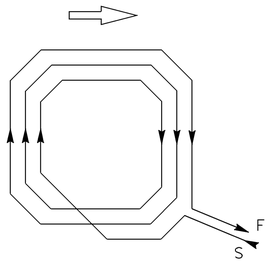

WINDING DETAIL

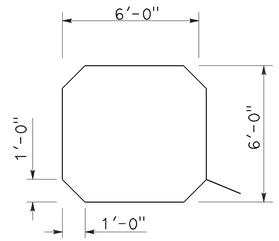

SAWCUT DETAIL

TYPE A LOOP DETECTOR CONFIGURATION

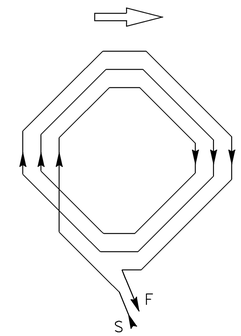

WINDING DETAIL

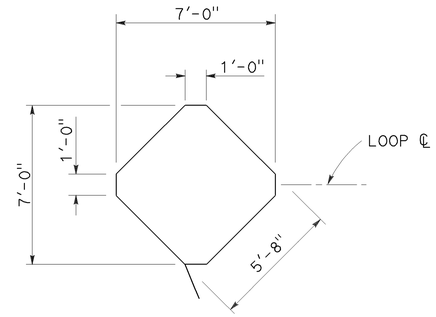

SAWCUT DETAIL

TYPE B LOOP DETECTOR CONFIGURATION

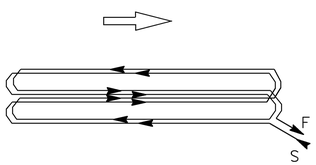

WINDING DETAIL

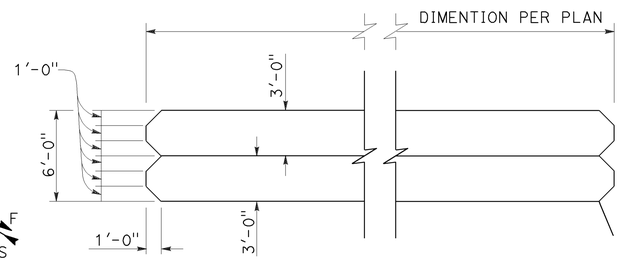

SAWCUT DETAIL

TYPE C LOOP DETECTOR CONFIGURATION

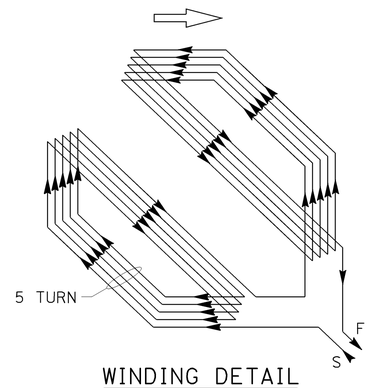

WINDING DETAIL

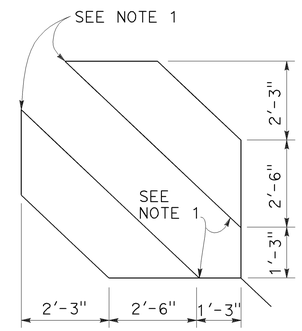

SAWCUT DETAIL

TYPE D LOOP DETECTOR CONFIGURATION

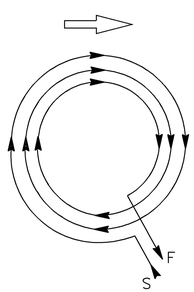

WINDING DETAIL

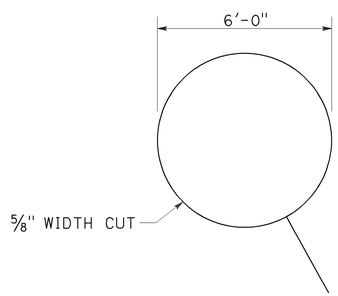

SAWCUT DETAIL

TYPE E LOOP DETECTOR CONFIGURATION

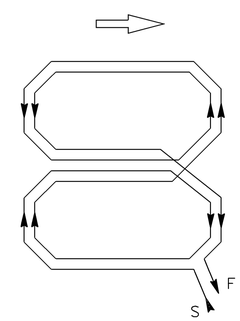

WINDING DETAIL

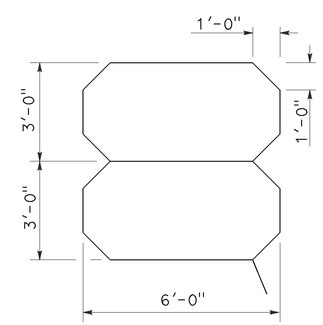

SAWCUT DETAIL

TYPE Q LOOP DETECTOR CONFIGURATION

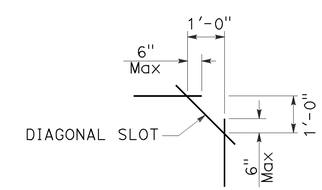

PLAN VIEW OF DIAGONAL SLOT AT CORNERS

NOTES:

1. Round corners of acute angle sawcuts to prevent damage to conductors.
2. Typical distance separating loops from edge to edge is 10' for Type A, B, D and E installation in single lane.

STATE OF CALIFORNIA
DEPARTMENT OF TRANSPORTATION

ELECTRICAL SYSTEMS (DETECTORS)

NO SCALE

RSP ES-5B DATED JULY 19, 2013 SUPERSEDES STANDARD PLAN ES-5B DATED MAY 20, 2011 - PAGE 449 OF THE STANDARD PLANS BOOK DATED 2010.

REVISED STANDARD PLAN RSP ES-5B

2010 REVISED STANDARD PLAN RSP ES-5B

7-9-13

Dist	COUNTY	ROUTE	POST MILES TOTAL PROJECT	SHEET No.	TOTAL SHEETS
05	Mon	1	R77.6/R85.3	91	101

Theresa Gabriel
REGISTERED ELECTRICAL ENGINEER

July 19, 2013
PLANS APPROVAL DATE

REGISTERED PROFESSIONAL ENGINEER
Theresa Aziz Gabriel
No. E15129
Exp. 6-30-14
ELECTRICAL
STATE OF CALIFORNIA

THE STATE OF CALIFORNIA OR ITS OFFICERS OR AGENTS SHALL NOT BE RESPONSIBLE FOR THE ACCURACY OR COMPLETENESS OF SCANNED COPIES OF THIS PLAN SHEET.

TO ACCOMPANY PLANS DATED 3-23-15

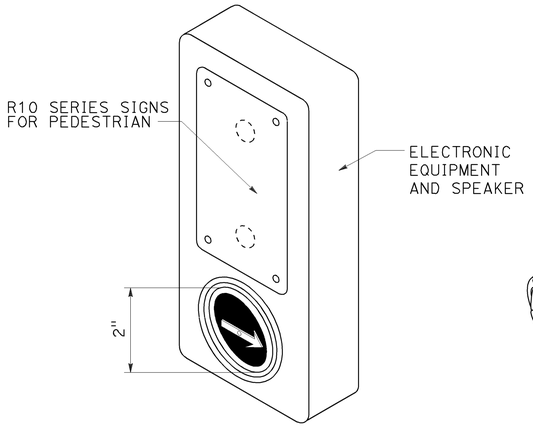

ACCESSIBLE PEDESTRIAN SIGNAL

DETAIL A
(See note 1 to 4)

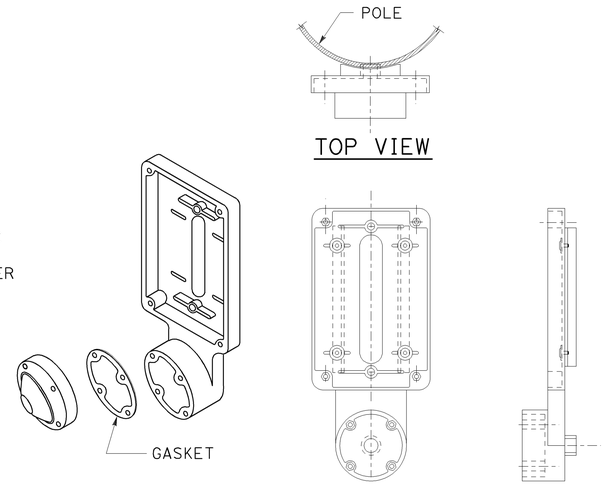

TYPE B PUSH BUTTON ASSEMBLY

DETAIL B
(See note 1 to 4)

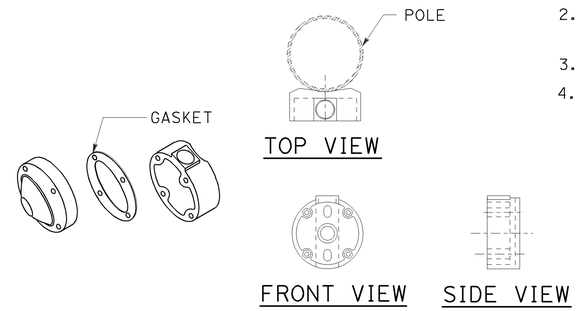

TYPE C PUSH BUTTON ASSEMBLY

DETAIL C
(See note 1 to 4)

NOTES:

1. Back casting shape to fit curvature of pole.
2. Provide cover fitting for top of post, when PBA is mounted on push button assembly post.
3. Install push button on crosswalk side of standard.
4. Use R10 series regulatory signs and plaques for pedestrian and bicycle facilities.

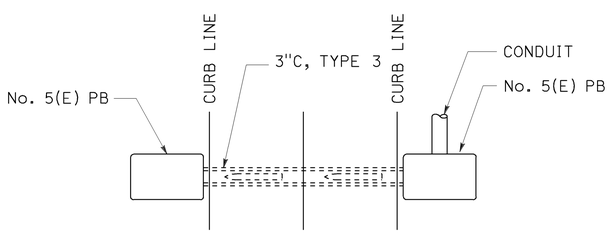

PLAN

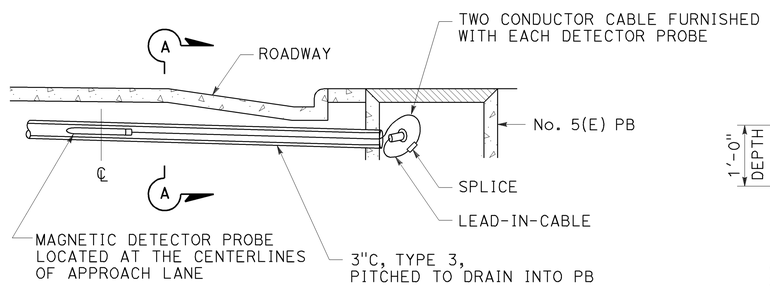

ELEVATION

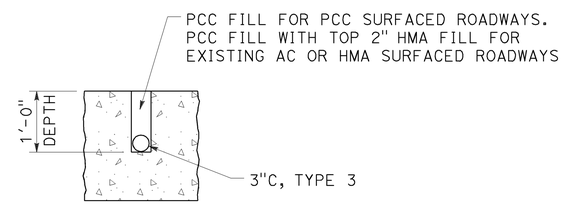

SECTION A-A

MAGNETIC VEHICLE DETECTOR
INSTALLATION DETAILS
DETAIL D

STATE OF CALIFORNIA
DEPARTMENT OF TRANSPORTATION

ELECTRICAL SYSTEMS (ACCESSIBLE PEDESTRIAN SIGNAL, PUSH BUTTON ASSEMBLIES AND MAGNETIC VEHICLE DETECTOR)

NO SCALE

RSP ES-5C DATED JULY 19, 2013 SUPERSEDES STANDARD PLAN ES-5C
DATED MAY 20, 2011 - PAGE 450 OF THE STANDARD PLANS BOOK DATED 2010.

REVISED STANDARD PLAN RSP ES-5C

2010 REVISED STANDARD PLAN RSP ES-5C

7-9-13

Dist	COUNTY	ROUTE	POST MILES TOTAL PROJECT	SHEET No.	TOTAL SHEETS
05	Mon	1	R77.6/R85.3	92	101

REGISTERED CIVIL ENGINEER

July 19, 2013
PLANS APPROVAL DATE

REGISTERED PROFESSIONAL ENGINEER
Stanley P. Johnson
No. C57793
Exp. 3-31-14
CIVIL
STATE OF CALIFORNIA

THE STATE OF CALIFORNIA OR ITS OFFICERS OR AGENTS SHALL NOT BE RESPONSIBLE FOR THE ACCURACY OR COMPLETENESS OF SCANNED COPIES OF THIS PLAN SHEET.

TO ACCOMPANY PLANS DATED 3-23-15

2010 REVISED STANDARD PLAN RSP ES-7A

NOTES:

1. For additional notes, details and data for Type 15TS and Type 21TS Standards, see Standard Plan ES-6A.
2. Handhole shall be located on the downstream side of traffic.

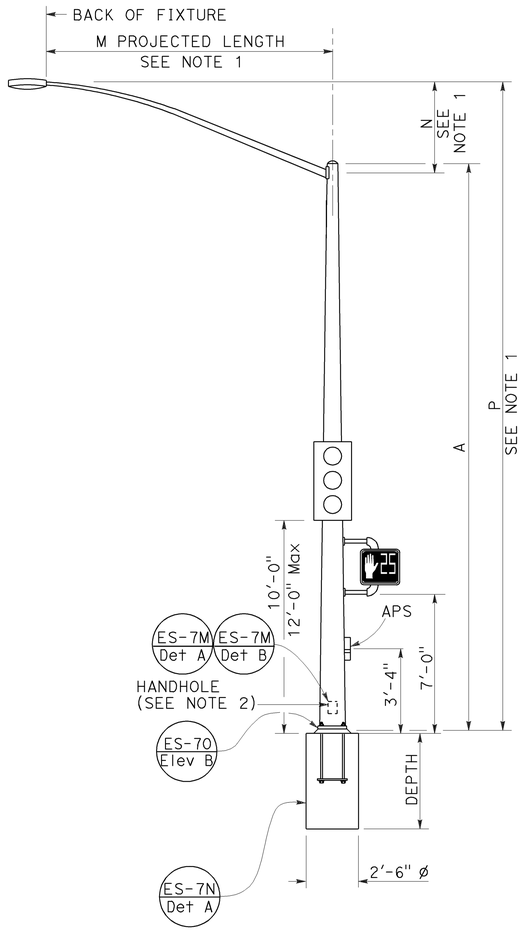

TYPE 15TS AND 21TS STANDARD

ELEVATION A

(See Note 1)

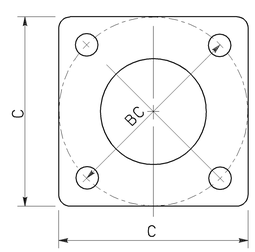

BASE PLATE

TYPE 15TS AND 21TS

DETAIL A

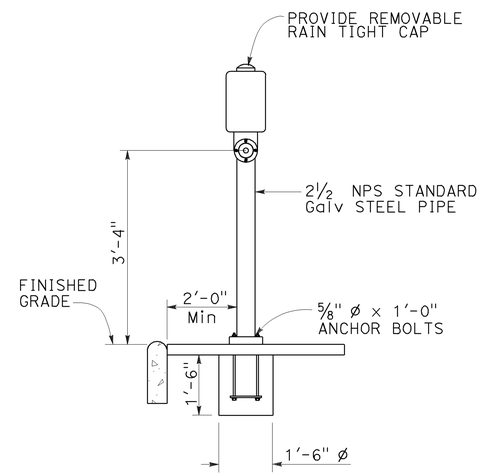

ELEVATION

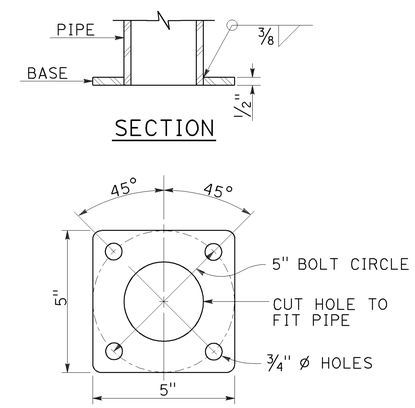

BASE PLATE

PBA POST

PUSH BUTTON ASSEMBLY POST

DETAIL B

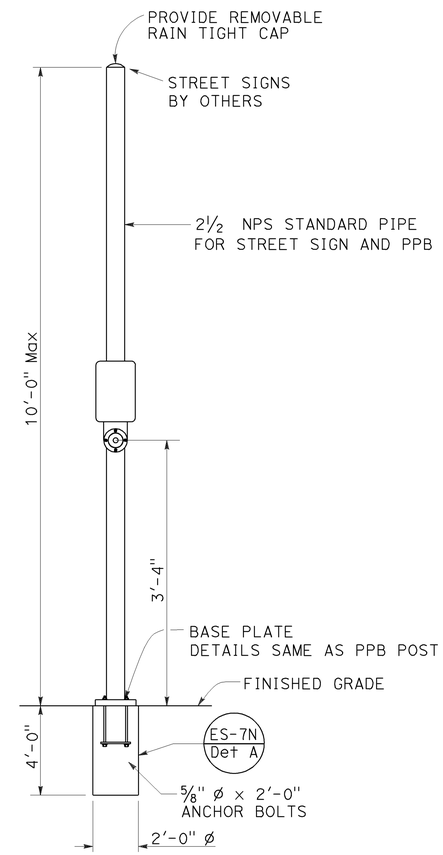

COMBINED STREET SIGN

PUSH BUTTON ASSEMBLY POST

DETAIL C

POLE TYPE	POLE DATA				BASE PLATE DATA				CIDH
	A HEIGHT	Min OD BASE	Min OD TOP	WALL THICKNESS	C	BC = BOLT CIRCLE	THICKNESS	ANCHOR BOLT SIZE	DEPTH
15TS	30'-0"	8"	3 11/16"	0.1793"	1'-1½"	1'-0"	2"	1½" ø x 42"	7'-6"
21TS	35'-0"	9⅜"	3 9/16"		1'-3"	1'-2"			8'-6"

STATE OF CALIFORNIA
DEPARTMENT OF TRANSPORTATION

ELECTRICAL SYSTEMS (SIGNAL AND LIGHTING STANDARD, TYPE TS, AND PUSH BUTTON ASSEMBLY POST)

NO SCALE

RSP ES-7A DATED JULY 19, 2013 SUPERSEDES STANDARD PLAN ES-7A DATED MAY 20, 2011 - PAGE 462 OF THE STANDARD PLANS BOOK DATED 2010.

REVISED STANDARD PLAN RSP ES-7A

Dist	COUNTY	ROUTE	POST MILES TOTAL PROJECT	SHEET No.	TOTAL SHEETS
05	Mon	1	R77.6/R85.3	93	101

Theresa Gabriel
REGISTERED ELECTRICAL ENGINEER

July 19, 2013
PLANS APPROVAL DATE

REGISTERED PROFESSIONAL ENGINEER
Theresa Aziz Gabriel
No. E15129
Exp. 6-30-14
ELECTRICAL
STATE OF CALIFORNIA

THE STATE OF CALIFORNIA OR ITS OFFICERS OR AGENTS SHALL NOT BE RESPONSIBLE FOR THE ACCURACY OR COMPLETENESS OF SCANNED COPIES OF THIS PLAN SHEET.

TO ACCOMPANY PLANS DATED 3-23-15

ISOFOOTCANDLE CURVE - MINIMUM

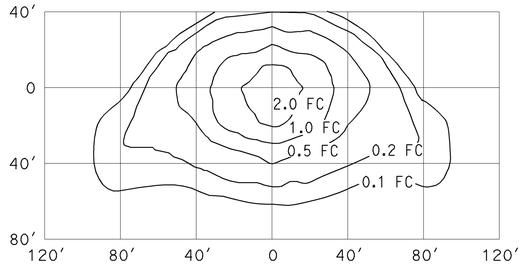

TYPE III MEDIUM CUTOFF

Cutoff Luminaire
34′ Mounting Height
Lamp operated at 22,000 lm
200-W high pressure sodium lamp
ANSI Designation S66

ISOFOOTCANDLE CURVE - MINIMUM

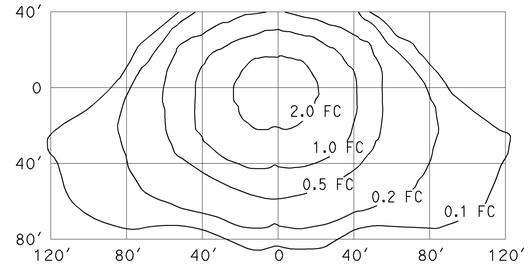

TYPE III MEDIUM CUTOFF

Cutoff Luminaire
40′ Mounting Height
Lamp operated at 37,000 lm
310-W high pressure sodium lamp
ANSI Designation S67

ISOFOOTCANDLE CURVE - MINIMUM

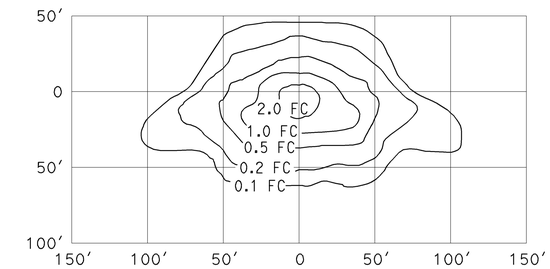

TYPE III MEDIUM CUTOFF

Cutoff Luminaire
30′ Mounting Height
Lamp operated at 16,000 lm
150-W high pressure sodium lamp
ANSI Designation S55

ISOFOOTCANDLE CURVE - MINIMUM

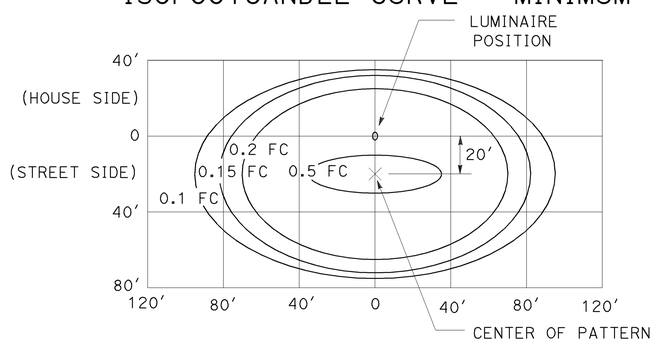

LED LUMINAIRE ROADWAY 1

165-W at 34′ Mounting Height

ISOFOOTCANDLE CURVE - MINIMUM

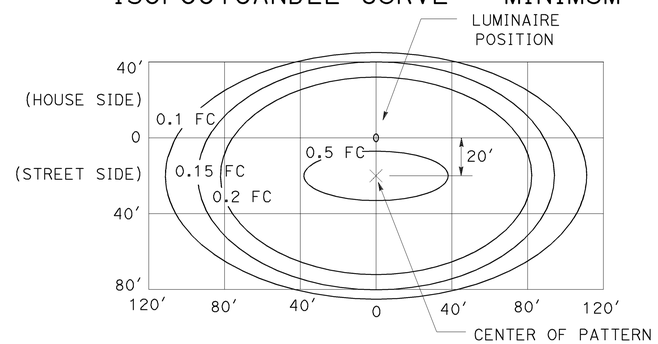

LED LUMINAIRE ROADWAY 2

235-W at 40′ Mounting Height

ISOFOOTCANDLE CURVE - MINIMUM

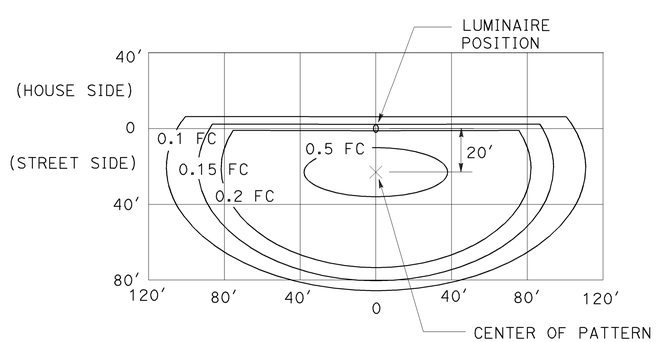

LED LUMINAIRE ROADWAY 3

235-W at 40′ Mounting Height
with back side control

ISOFOOTCANDLE CURVE - MINIMUM

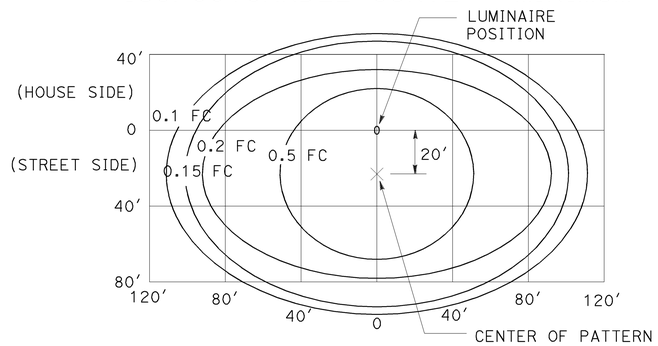

LED LUMINAIRE ROADWAY 4

300-W at 40′ Mounting Height

ISOFOOTCANDLE CURVE - MINIMUM

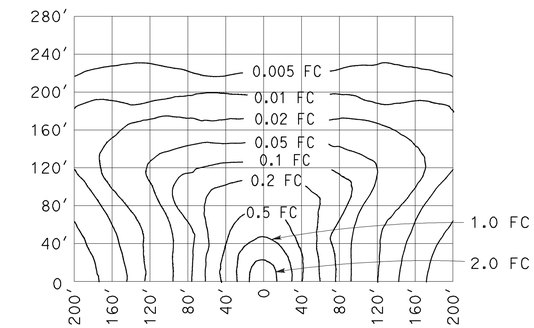

LOW PRESSURE SODIUM LUMINAIRE

40′ Mounting Height
Lamp operated at 33,000 lm
180-W low pressure sodium lamp

STATE OF CALIFORNIA
DEPARTMENT OF TRANSPORTATION

ELECTRICAL SYSTEMS (ISOFOOTCANDLE DIAGRAMS)

NO SCALE

RSP ES-10A DATED JULY 19, 2013 SUPERSEDES RSP ES-10A DATED JULY 20, 2012 THAT SUPPLEMENTS THE STANDARD PLANS BOOK DATED 2010.

REVISED STANDARD PLAN RSP ES-10A

2010 REVISED STANDARD PLAN RSP ES-10A

Dist	COUNTY	ROUTE	POST MILES TOTAL PROJECT	SHEET No.	TOTAL SHEETS
05	Mon	1	R77.6/R85.3	94	101

REGISTERED CIVIL ENGINEER

July 19, 2013
PLANS APPROVAL DATE

REGISTERED PROFESSIONAL ENGINEER
Stanley P. Johnson
No. C57793
Exp. 3-31-14
CIVIL
STATE OF CALIFORNIA

THE STATE OF CALIFORNIA OR ITS OFFICERS OR AGENTS SHALL NOT BE RESPONSIBLE FOR THE ACCURACY OR COMPLETENESS OF SCANNED COPIES OF THIS PLAN SHEET.

TO ACCOMPANY PLANS DATED 3-23-15

STANDARD TYPE	SETBACK (DIMENSION A)
32	30'-0" (Min)
31	20'-0" (Min)
15, 15D, 15-SB, 21, 21D, 30	ARM LENGTH (Min)

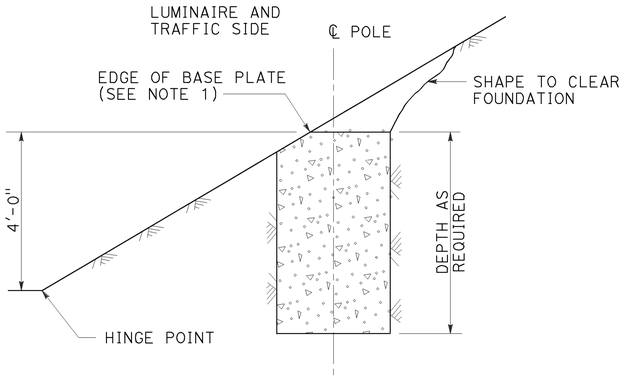

CUT SLOPES
STEEPER THAN 4:1,
LESS THAN 2:1
DETAIL A-1
See Note 2 and 3

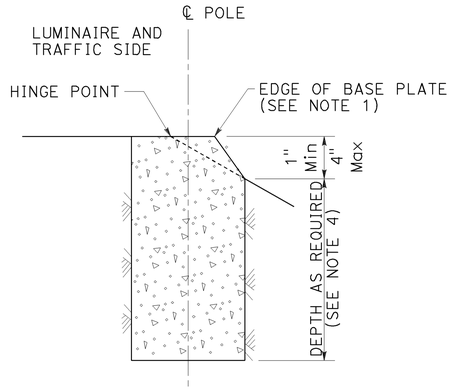

FILL SLOPES
STEEPER THAN 4:1,
LESS THAN 2:1
DETAIL A-2
See Note 2 and 3

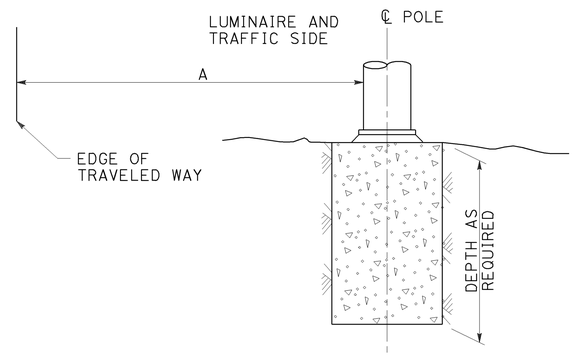

FLAT SECTIONS, CUT OR FILL SLOPES
4:1 OR FLATTER
DETAIL A-3
See Note 2

FOUNDATIONS ADJACENT TO ALL ROADWAYS EXCEPT
IN SIDEWALK, MEDIAN AND ISLAND AREAS
DETAIL A

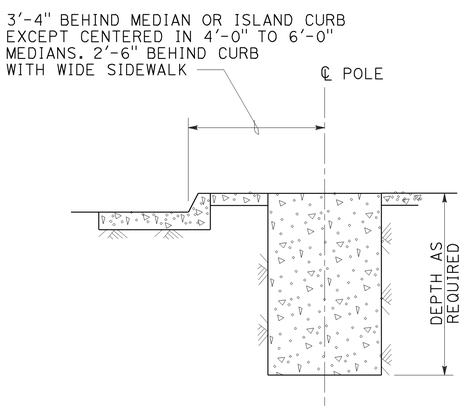

MEDIAN, ISLAND
OR WIDE SIDEWALK
DETAIL B-1
7' Wide and wider

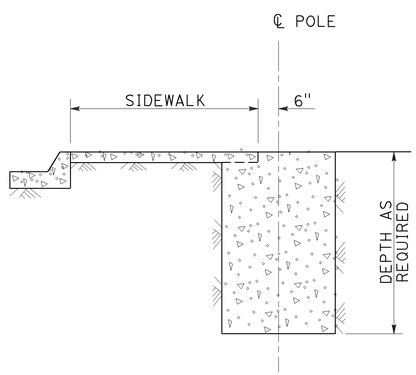

NARROW SIDEWALK
DETAIL B-2
Less than 7' wide

FOUNDATIONS IN SIDEWALK, MEDIAN AND ISLAND AREAS
DETAIL B

NOTES:

1. Where a portion of the foundation is above grade, the top edges shall have a 1" chamfer.
2. Slopes shall be horizontal to vertical ratio (Horizontal : Vertical).
3. Horizontal setbacks on cut and fill slopes steeper than 4:1 shall not exceed the distance shown for flat sections.
4. CIDH embedment depth shall be increased beyond standard depths by the diameter of the CIDH.

STATE OF CALIFORNIA
DEPARTMENT OF TRANSPORTATION

ELECTRICAL SYSTEMS (FOUNDATION INSTALLATIONS)

NO SCALE

RSP ES-11 DATED JULY 19, 2013 SUPERSEDES STANDARD PLAN ES-11
DATED MAY 20, 2011 - PAGE 488 OF THE STANDARD PLANS BOOK DATED 2010.

REVISED STANDARD PLAN RSP ES-11

2010 REVISED STANDARD PLAN RSP ES-11

7-9-13

DIST	COUNTY	ROUTE	POST MILES TOTAL PROJECT	SHEET No.	TOTAL SHEETS
05	Mon	1	R77.6/R85.3	95	101

REGISTERED CIVIL ENGINEER 12/10/14 DATE

3-23-15
PLANS APPROVAL DATE

REGISTERED PROFESSIONAL ENGINEER YU SONG No. C71687 Exp. 12/31/15 CIVIL STATE OF CALIFORNIA

The State of California or its officers or agents shall not be responsible for the accuracy or completeness of scanned copies of this plan sheet.

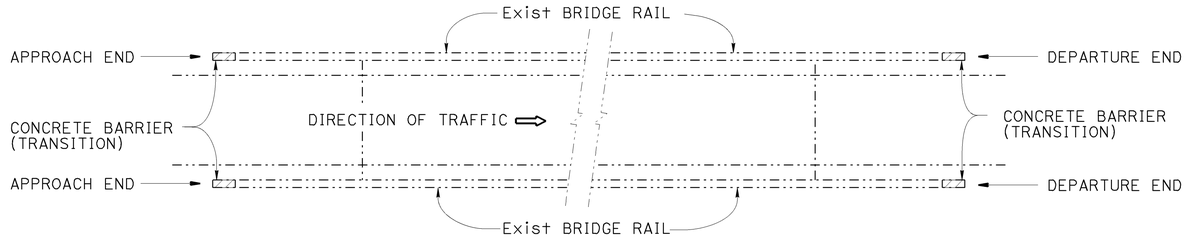

ONE WAY BRIDGES (PLAN TYPE A)

NO SCALE

Note:
For MBGR see ROADWAY PLANS

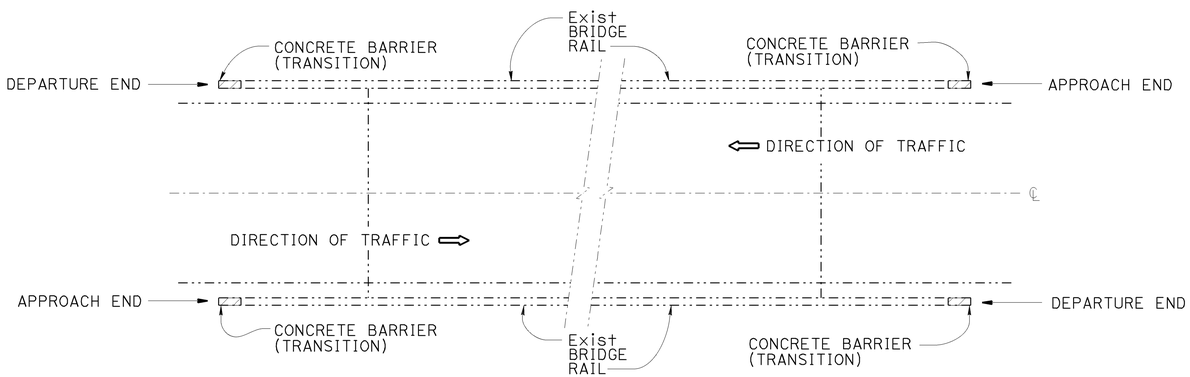

TWO WAY BRIDGES (PLAN TYPE B)

NO SCALE

01 - CASA VERDE AVE UC (BRG #44-0187R/L)
QUANTITIES
CONCRETE BARRIER (TRANSITION) 30 LF

02 - DEL MONTE OFF RAMP UC (BRG #44-0157K)
QUANTITIES
CONCRETE BARRIER (TRANSITION) 15 LF

03 - DEL MONTE AVE UC (BRG #44-0156L)
QUANTITIES
CONCRETE BARRIER (TRANSITION) 15 LF

04 - ROUTE 1/218 SEPARATION (BRG #44-0162R/L)
QUANTITIES
CONCRETE BARRIER (TRANSITION) 30 LF

05 - SAND CITY UC (BRG # 44-0188L)
QUANTITIES
CONCRETE BARRIER (TRANSITION) 15 LF

06 - ORD VILLAGE (BRG #44-0158 L)
QUANTITIES
CONCRETE BARRIER (TRANSITION) 15 LF

07 - ORD VILLAGE (BRG #44-0158 R)
QUANTITIES
CONCRETE BARRIER (TRANSITION) 15 LF

08 - DEL MONTE AVE UC (BRG #44-0156R)
QUANTITIES
CONCRETE BARRIER (TRANSITION) 15 LF

09 - FREMONT ST. OC (BRG #44-0153K)
QUANTITIES
CONCRETE BARRIER (TRANSITION) 15 LF

10 - SAND CITY UC (BRG #44-0188R)
QUANTITIES
CONCRETE BARRIER (TRANSITION) 6.5 LF

11 - W68-S1,S1-E68 CONNECTOR (BRG #44-0149E)
QUANTITIES
CONCRETE BARRIER (TRANSITION) 7 LF

12 - OFF RAMP TO ORD VILLAGE
QUANTITIES
CONCRETE BARRIER (TRANSITION) 4.5 LF

INDEX TO PLANS

SHEET NO.	TITLE
1.	CONCRETE BARRIER TRANSITION - GENERAL PLAN
2.	STAND ALONE - CONCRETE BARRIER TRANSITION (CASE 1)
3.	STAND ALONE - CONCRETE BARRIER TRANSITION (CASE 2)
4.	STAND ALONE - CONCRETE BARRIER TRANSITION (CASE 3)
5.	CONCRETE BARRIER TRANSITION - TYPE 1 BARRIER (CASE 1)
6.	CONCRETE BARRIER TRANSITION - TYPE 1 BARRIER (CASE 2)
7.	CONCRETE BARRIER TRANSITION - TYPE 27 BARRIER

STANDARD PLANS 2010

A10A	ABBREVIATIONS (SHEET 1 OF 2)
RSP A10B	ABBREVIATIONS (SHEET 2 OF 2)
RSP A77U4	MIDWEST GUARDRAIL SYSTEM TRANSITION RAILING (TYPE WB-31)

Note:
See "Roadway Plans" for work locations and Midwest Guardrail System.

JOEL MAGANA
DESIGN ENGINEER

	BY	CHECKED
DESIGN	YU SONG	A. HOUGH
DETAILS	HUNG NGUYEN	YU SONG
QUANTITIES	YU SONG	A. HOUGH

LOAD & RESISTANCE FACTOR DESIGN — LIVE LOADING: HL93 W/"LOW-BOY"; PERMIT DESIGN VEHICLE
LAYOUT — BY YU SONG — CHECKED A. HOUGH
SPECIFICATIONS — BY DAVE KLEIN — PLANS AND SPECS COMPARED DAVE KLEIN

ORIGINAL SCALE IN INCHES FOR REDUCED PLANS 0 1 2 3

STATE OF CALIFORNIA
DEPARTMENT OF TRANSPORTATION

DIVISION OF ENGINEERING SERVICES
STRUCTURE DESIGN
DESIGN BRANCH B

BRIDGE NO.
POST MILE R77.6/R85.3

CONCRETE BARRIER TRANSITION
GENERAL PLAN

UNIT: 3619
PROJECT NUMBER & PHASE: 0512000019
CONTRACT NO.: 05-1A7601

DISREGARD PRINTS BEARING EARLIER REVISION DATES 4-7-14

REVISION DATES | SHEET 1 | OF 7

STRUCTURES DESIGN GENERAL PLAN SHEET (ENGLISH) (REV.09-01-10)

FILE => 05-1a7601-u-ggp01.dgn

USERNAME => s115755 DATE PLOTTED => 25-MAR-2015 TIME PLOTTED => 13:51

DIST	COUNTY	ROUTE	POST MILES TOTAL PROJECT	SHEET No.	TOTAL SHEETS
05	Mon	1	R77.6/R85.3	96	101

REGISTERED CIVIL ENGINEER 12/10/14 DATE

3-23-15
PLANS APPROVAL DATE

REGISTERED PROFESSIONAL ENGINEER YU SONG No. C73687 Exp. 12/31/15 CIVIL STATE OF CALIFORNIA

The State of California or its officers or agents shall not be responsible for the accuracy or completeness of scanned copies of this plan sheet.

Notes:

1. See "GENERAL PLAN" sheet for identification of the PLAN TYPE.
2. See "ROADWAY PLANS" for work locations.
3. Remove existing MBGR, posts, curbs, gutters and dikes for construction of concrete barrier (transition). See "ROADWAY PLANS".
4. Stand alone concrete barrier (transition) must start where the bridge rail ends.
5. The alignment of the concrete barrier (transition) must follow that of the existing MBGR.
6. At Casa Verde Ave UC Right Bridge, reconstruct drainage facility behind the concrete barrier (transition). See "ROADWAY PLANS".
7. At Del Monte Off Ramp UC, concrete barrier (transition) must start 2 feet from the end of the bridge rail. See "ROADWAY PLANS".
8. Place HMA dike from bridge rail to face of the concrete barrier (transition). See "ROADWAY PLANS".
9. Epoxy coated reinforcement must be used at the following locations: Route 1/218 Separation, Sand City UC and Ord Village UC.

LOCATION TABLE OF STAND ALONE CONCRETE BARRIER TRANSITIONS

BRIDGE NO.	BRIDGE NAME	ROUTE	POST MILE	DIRECTION	APPROACH END	DEPARTURE END	TOTAL LENGTH	PLAN TYPE	SEE NOTE
44-0187R/L	Casa Verde Ave UC	1	R78.46	NB RIGHT	1		30'-0"	A	6,8
			R78.48	SB RIGHT	1				
44-0157K	Del Monte Off Ramp UC	1	R78.85	SB LEFT	1		15'-0"	A	7
44-0156L	Del Monte Ave UC	1	R78.93	SB RIGHT	1		15'-0"	A	8
44-0162R/L	Route 1/218 Separation	1	R79.33	NB RIGHT	1		30'-0"	A	8
			R79.38	SB RIGHT	1				
44-0188L	Sand City UC	1	R80.29	SB RIGHT	1		15'-0"	A	8
44-0158L	Ord Village UC	1	R80.75	SB RIGHT	1		15'-0"	A	8

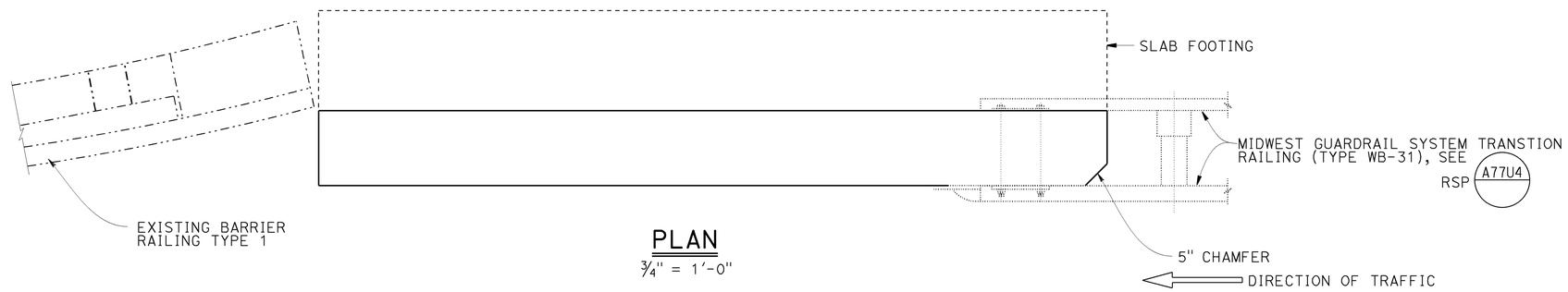

PLAN
3/4" = 1'-0"

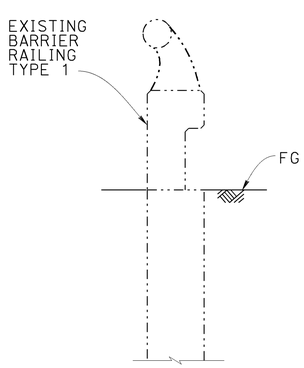

SECTION A-A
3/4" = 1'-0"

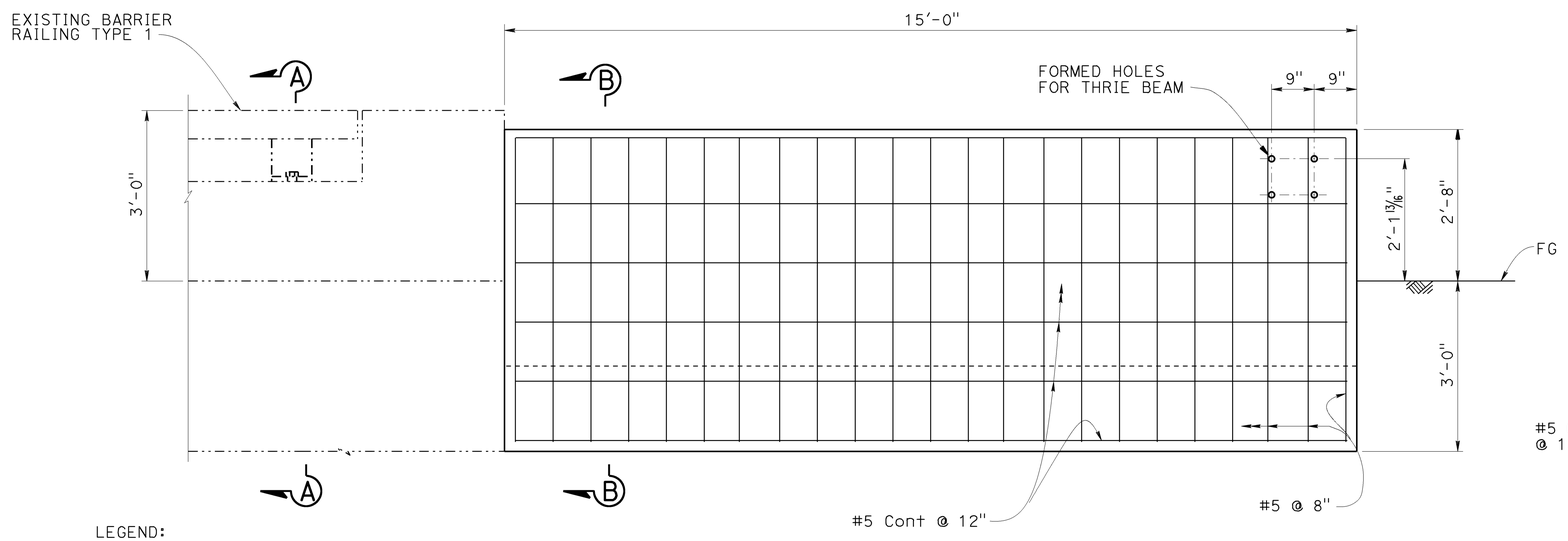

ELEVATION
3/4" = 1'-0"

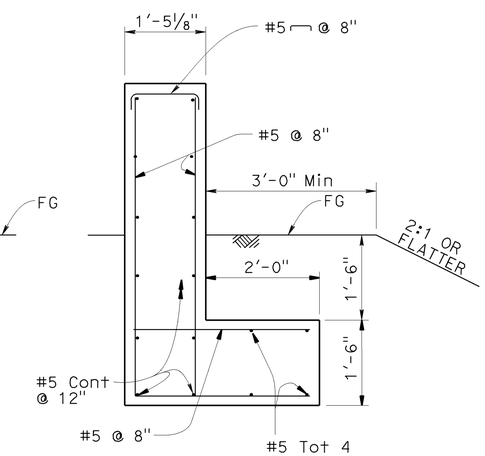

SECTION B-B
3/4" = 1'-0"

LEGEND:

Indicates Existing

Indicates new structure

THE CONTRACTOR MUST VERIFY ALL CONTROLLING FIELD DIMENSIONS BEFORE ORDERING OR FABRICATING ANY MATERIAL.

BRANCH CHIEF JOEL MAGANA

	BY	CHECKED
DESIGN	YU SONG	A. HOUGH
DETAILS	HUNG NGUYEN	YU SONG
QUANTITIES	YU SONG	A. HOUGH

STATE OF CALIFORNIA
DEPARTMENT OF TRANSPORTATION

DIVISION OF ENGINEERING SERVICES
STRUCTURE DESIGN
DESIGN BRANCH B

BRIDGE NO. X
POST MILE R77.6/R85.3

STAND ALONE CONCRETE BARRIER TRANSITION (CASE 1)

STRUCTURES DESIGN DETAIL SHEET (ENGLISH) (REV. 09-01-10)

ORIGINAL SCALE IN INCHES FOR REDUCED PLANS 0 1 2 3

UNIT: X
PROJECT NUMBER & PHASE: 0512000019
CONTRACT NO.: 05-1A7601

DISREGARD PRINTS BEARING EARLIER REVISION DATES

REVISION DATES 4-7-14

SHEET 2 OF 7

FILE => 05-1a7601-u-det02.dgn

USERNAME => s115755 DATE PLOTTED => 25-MAR-2015 TIME PLOTTED => 13:51

DIST	COUNTY	ROUTE	POST MILES TOTAL PROJECT	SHEET No.	TOTAL SHEETS
05	Mon	1	R77.6/R85.3	97	101

REGISTERED CIVIL ENGINEER 12/10/14 DATE

3-23-15
PLANS APPROVAL DATE

REGISTERED PROFESSIONAL ENGINEER YU SONG No. C71687 Exp. 12/31/15 CIVIL STATE OF CALIFORNIA

The State of California or its officers or agents shall not be responsible for the accuracy or completeness of scanned copies of this plan sheet.

Notes:

1. See "GENERAL PLAN" sheet for identification of the Plan Type.
2. See "ROADWAY PLANS" for work locations.
3. Remove existing MBGR, posts, and vegetation control for construction of concrete barrier (transition). See "ROADWAY PLANS".
4. Stand alone concrete barrier (transition) must start where the bridge rail ends.
5. The alignment of the concrete barrier (transition) must follow that of existing MBGR.
6. Construct stand alone concrete barrier (transition) stem without slab footing along 4 ft long drainage junction box. Construct remaining 11 ft concrete barrier (transition) with slab footing.
7. Apply 3/8" thick expansion boards to all sides of DI in contact with newly formed concrete barrier transition.
8. Place dike from bridge rail to face of the concrete barrier (transition). See "ROADWAY PLANS".
9. Epoxy coated reinforcement must be used at this location.

LOCATION TABLE OF STAND ALONE CONCRETE BARRIER TRANSITION

BRIDGE NO.	BRIDGE NAME	ROUTE	POST MILE	DIRECTION	APPROACH END	DEPARTURE END	TOTAL LENGTH	PLAN TYPE
44-0158R	Ord Village UC	1	R80.67	NB RIGHT	1		15'-0"	A

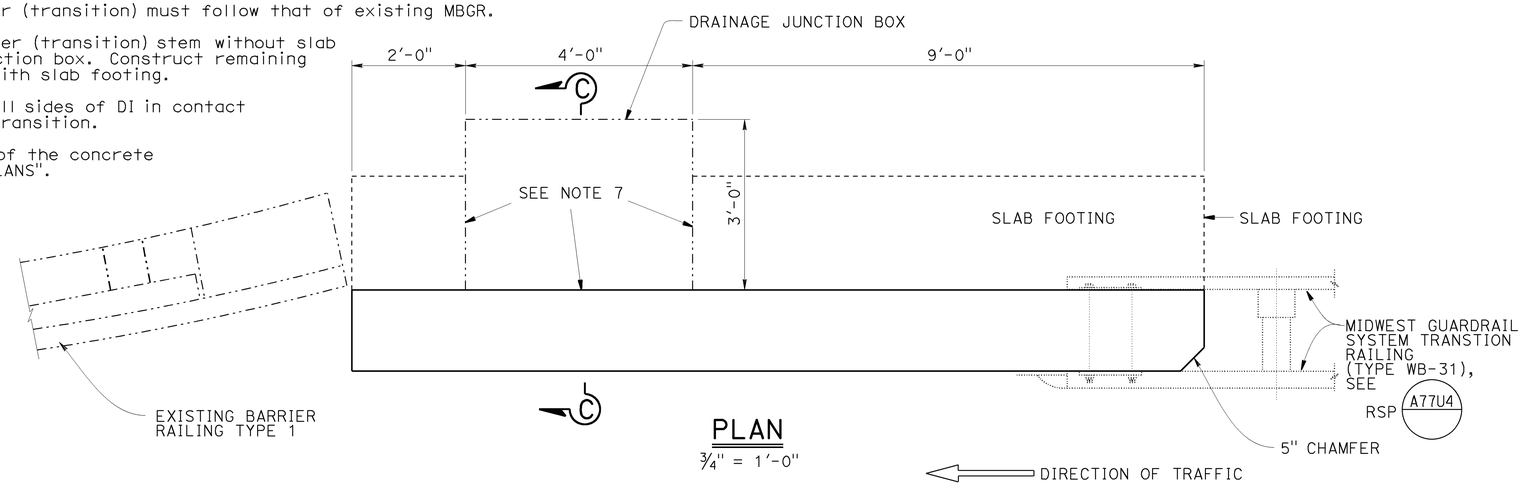

PLAN

3/4" = 1'-0"

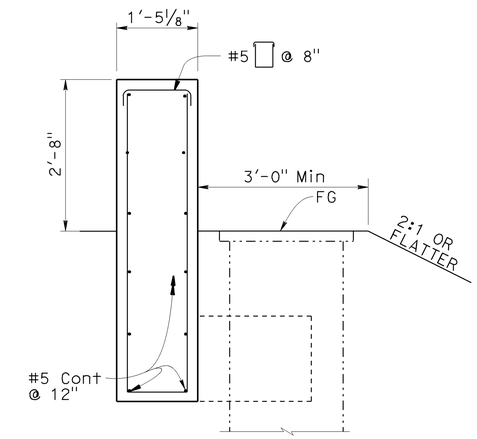

SECTION C-C

3/4" = 1'-0"

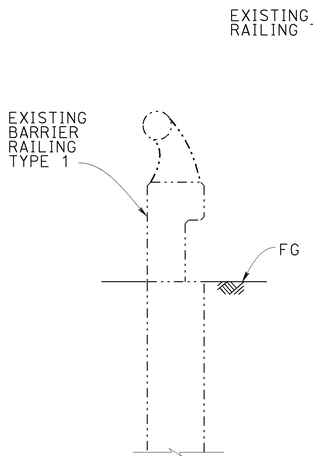

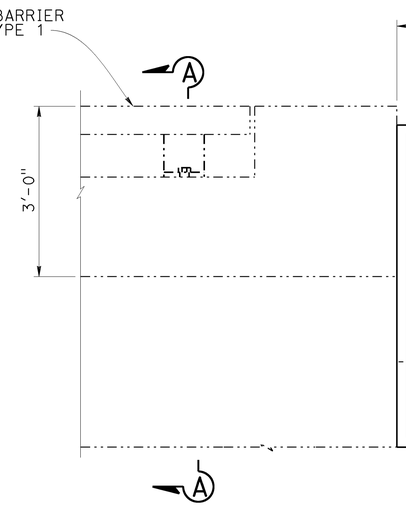

SECTION A-A

3/4" = 1'-0"

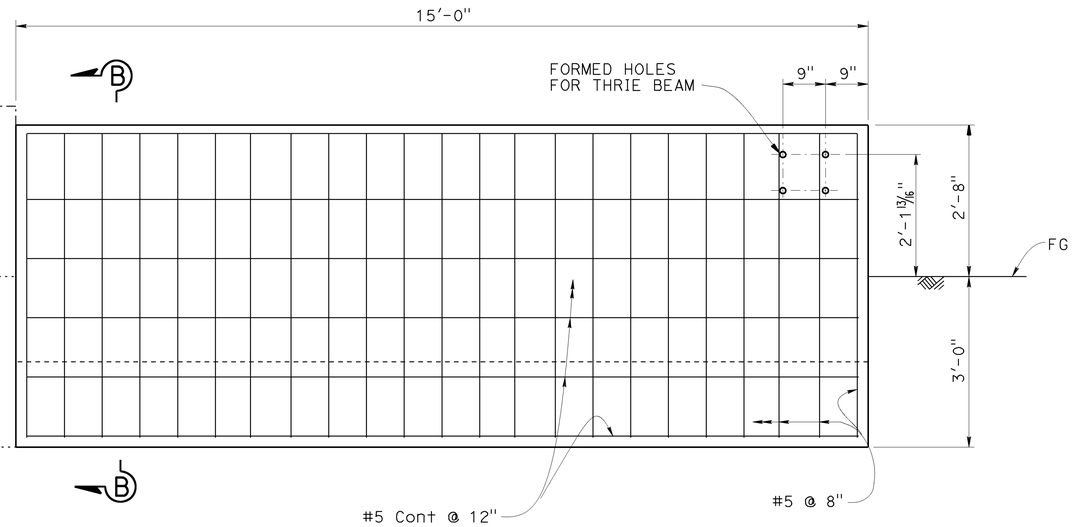

ELEVATION

3/4" = 1'-0"

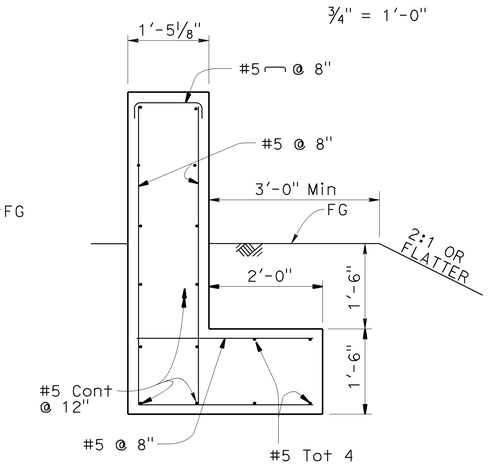

SECTION B-B

3/4" = 1'-0"

LEGEND:

Indicates Existing

Indicates new structure

THE CONTRACTOR MUST VERIFY ALL CONTROLLING FIELD DIMENSIONS BEFORE ORDERING OR FABRICATING ANY MATERIAL.

BRANCH CHIEF JOEL MAGANA

	BY	CHECKED
DESIGN	YU SONG	A. HOUGH
DETAILS	HUNG NGUYEN	YU SONG
QUANTITIES	YU SONG	A. HOUGH

STATE OF CALIFORNIA DEPARTMENT OF TRANSPORTATION

DIVISION OF ENGINEERING SERVICES STRUCTURE DESIGN DESIGN BRANCH B

BRIDGE NO. X
POST MILE R77.6/R85.3

STAND ALONE CONCRETE BARRIER TRANSITION (CASE 2)

STRUCTURES DESIGN DETAIL SHEET (ENGLISH) (REV. 09-01-10)

ORIGINAL SCALE IN INCHES FOR REDUCED PLANS 0 1 2 3

UNIT: X
PROJECT NUMBER & PHASE: 0512000019
CONTRACT NO.: 05-1A7601

DISREGARD PRINTS BEARING EARLIER REVISION DATES

REVISION DATES 4-7-14 SHEET 3 OF 7

FILE => 05-1a7601-u-det03.dgn

USERNAME => s115755 DATE PLOTTED => 25-MAR-2015 TIME PLOTTED => 13:51

DIST	COUNTY	ROUTE	POST MILES TOTAL PROJECT	SHEET No.	TOTAL SHEETS
05	Mon	1	R77.6/R85.3	98	101

REGISTERED CIVIL ENGINEER 12-10-14 DATE

3-23-15
PLANS APPROVAL DATE

REGISTERED PROFESSIONAL ENGINEER YU SONG No. C71687 Exp. 12/31/13 CIVIL STATE OF CALIFORNIA

The State of California or its officers or agents shall not be responsible for the accuracy or completeness of scanned copies of this plan sheet.

LOCATION TABLE OF STAND ALONE CONCRETE BARRIER TRANSITIONS

BRIDGE NO.	BRIDGE NAME	ROUTE	POST MILE	DIRECTION	APPROACH END	DEPARTURE END	TOTAL LENGTH	PLAN TYPE
44-0156R	Del Monte Ave UC	1	R78.89	NB RIGHT	1		15'-0"	A
44-0153K	Fremont St OC (North)	1	R78.18	SB LEFT	1		15'-0"	A

LEGEND:

-·-·- Indicates Existing Structure

——— Indicates New Structure

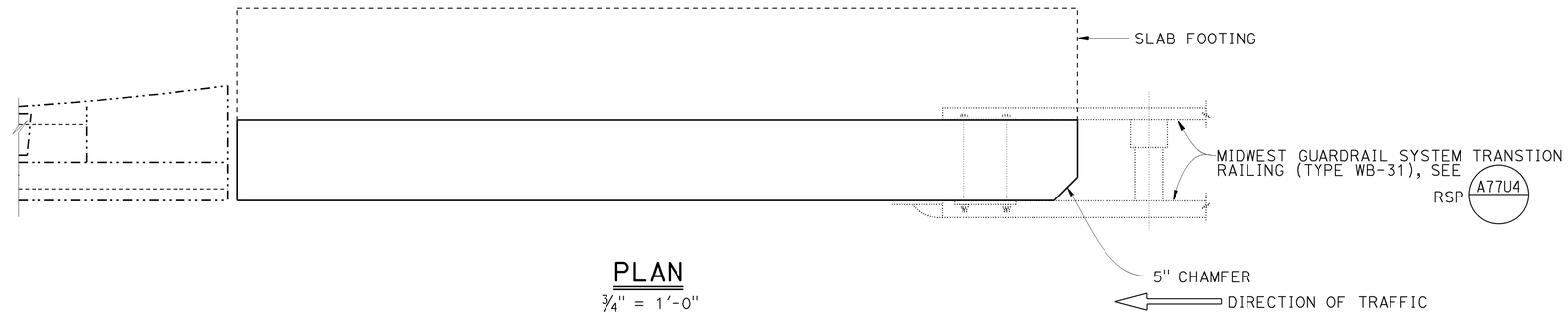

PLAN

3/4" = 1'-0"

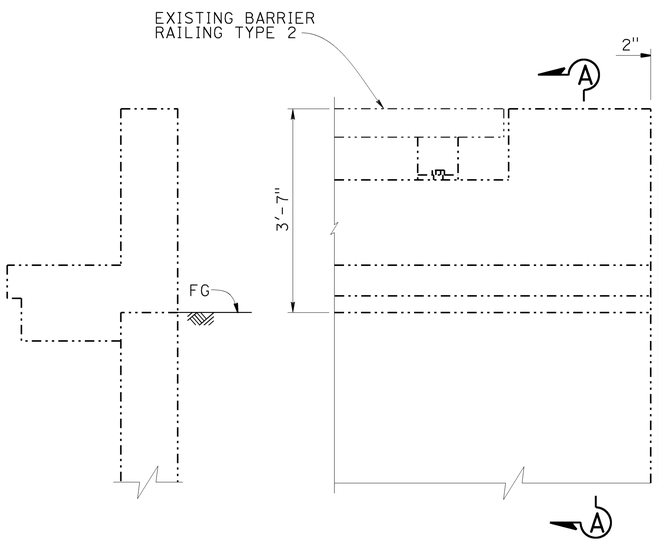

SECTION A-A

3/4" = 1'-0"

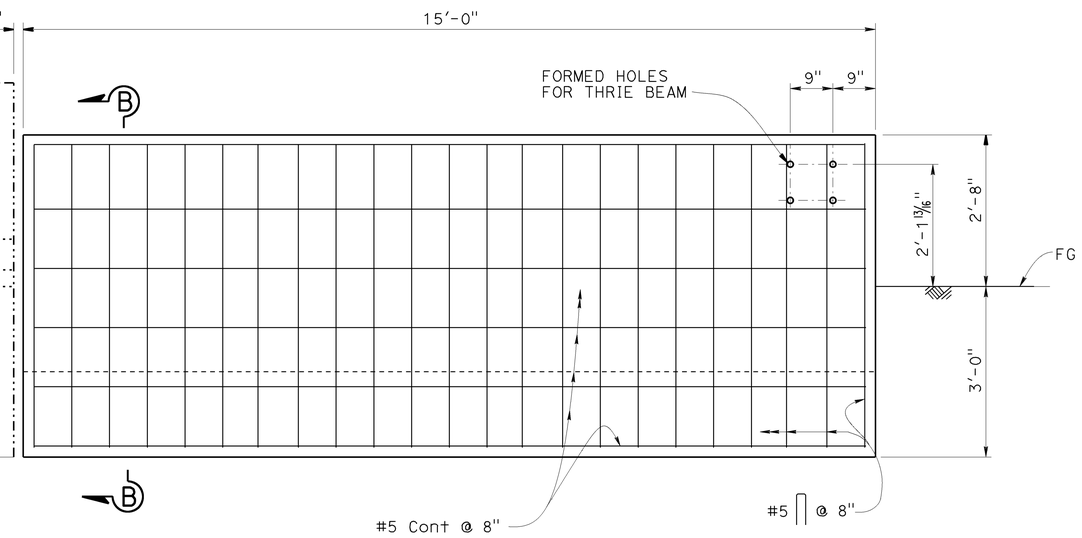

ELEVATION

3/4" = 1'-0"

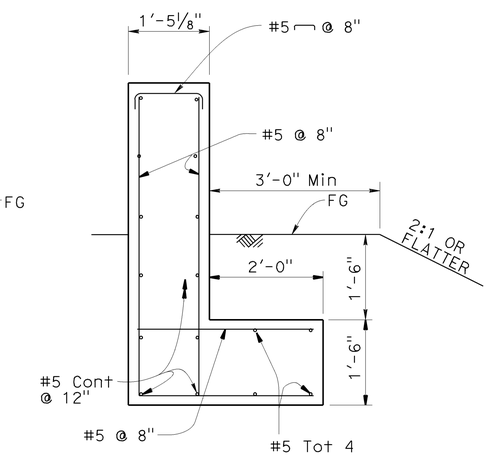

SECTION B-B

3/4" = 1'-0"

Notes:

1. See "GENERAL PLAN" sheet for identification of the PLAN TYPE.
2. See "ROADWAY PLANS" for work locations.
3. Remove existing MBGR, posts, curbs and gutters for construction of concrete barrier (transition). See "ROADWAY PLANS".
4. Stand alone concrete barrier (transition) must start where the bridge rail ends.
5. The alignment of the concrete barrier (transition) must follow that of the existing MBGR.

NOTE:
THE CONTRACTOR MUST VERIFY ALL CONTROLLING FIELD DIMENSIONS BEFORE ORDERING OR FABRICATING ANY MATERIAL.

BRANCH CHIEF JOEL MAGANA

	BY	CHECKED
DESIGN	YU SONG	A. HOUGH
DETAILS	HUNG NGUYEN	YU SONG
QUANTITIES	YU SONG	A. HOUGH

STATE OF CALIFORNIA DEPARTMENT OF TRANSPORTATION

DIVISION OF ENGINEERING SERVICES STRUCTURE DESIGN DESIGN BRANCH B

BRIDGE NO. X

POST MILE R77.6/R85.3

STAND ALONE CONCRETE BARRIER TRANSITION (CASE 3)

STRUCTURES DESIGN SPECIAL DESIGN SHEET (ENGLISH) (REV. 09-01-10)

ORIGINAL SCALE IN INCHES FOR REDUCED PLANS 0 1 2 3

UNIT: X
PROJECT NUMBER & PHASE: 0512000019
CONTRACT NO.: 05-1A7601

DISREGARD PRINTS BEARING EARLIER REVISION DATES

REVISION DATES

SHEET 4 OF 7

FILE => 05-1a7601-u-det04.dgn

USERNAME => s115755 DATE PLOTTED => 25-MAR-2015 TIME PLOTTED => 13:51

DIST	COUNTY	ROUTE	POST MILES TOTAL PROJECT	SHEET No.	TOTAL SHEETS
05	Mon	1	R77.6/R85.3	99	101

REGISTERED CIVIL ENGINEER 12/10/14 DATE

3-23-15
PLANS APPROVAL DATE

REGISTERED PROFESSIONAL ENGINEER YU SONG No. C71687 Exp. 12/31/15 CIVIL STATE OF CALIFORNIA

The State of California or its officers or agents shall not be responsible for the accuracy or completeness of scanned copies of this plan sheet.

LOCATION TABLE OF TYPE 1 CONCRETE BARRIER TRANSITION

BRIDGE NO.	BRIDGE NAME	ROUTE	POST MILE	DIRECTION	APPROACH END	DEPARTURE END	TOTAL LENGTH	PLAN TYPE
44-0188R	Sand City UC	1	R80.27	NB RIGHT	1		6'-6"	B

Notes:

1. See "GENERAL PLAN" sheet for identification of the PLAN TYPE.
2. See "ROADWAY PLANS" for work locations.
3. Remove existing MBGR, posts, and dikes for construction of concrete barrier (transition). See "ROADWAY PLANS".
4. Remove approximate 20 ft of the existing Type 1 rail flare at the bridge end.
5. Construct doweled concrete barrier (transition) to connect to the bridge wing wall.
6. The alignment of the concrete barrier (transition) must follow that of the existing MBGR.
7. Epoxy coated reinforcement must be used at this location.
8. Embankment work is required at this location. See "ROADWAY PLANS".

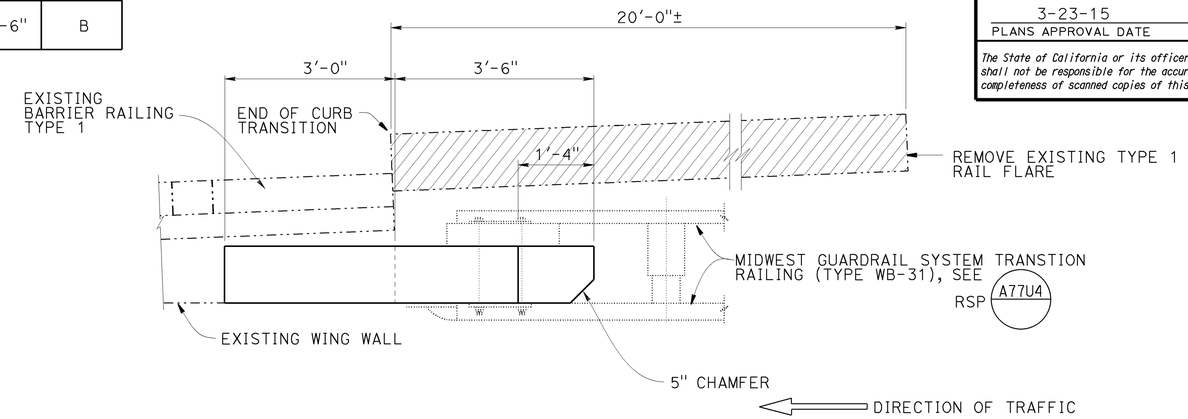

PLAN
3/4" = 1'-0"

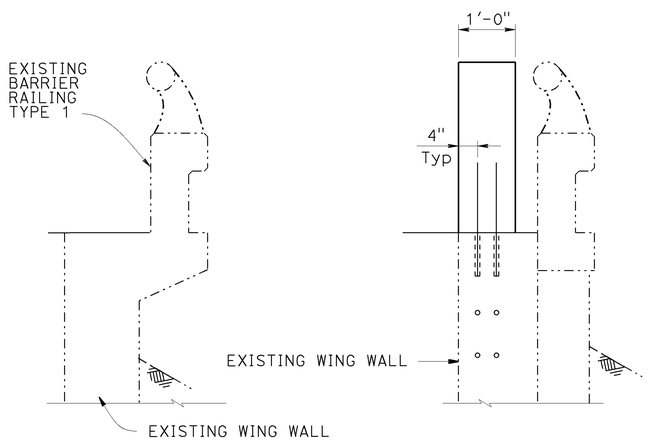

SECTION A-A
3/4" = 1'-0"

SECTION B-B
3/4" = 1'-0"

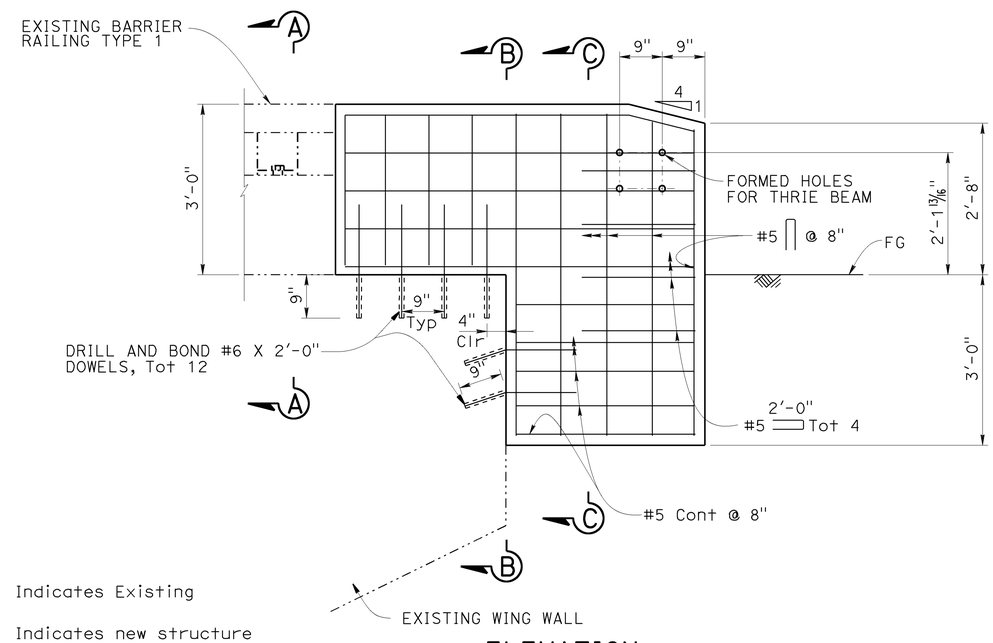

ELEVATION
3/4" = 1'-0"

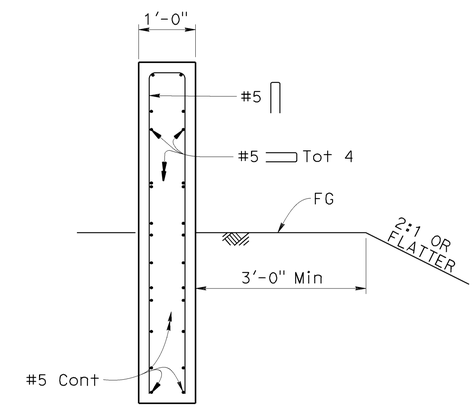

SECTION C-C
3/4" = 1'-0"

LEGEND:

- Indicates Existing
- Indicates new structure
- Indicates concrete removal

THE CONTRACTOR MUST VERIFY ALL CONTROLLING FIELD DIMENSIONS BEFORE ORDERING OR FABRICATING ANY MATERIAL.

BRANCH CHIEF JOEL MAGANA	DESIGN	BY YU SONG	CHECKED A. HOUGH
	DETAILS	BY HUNG NGUYEN	CHECKED YU SONG
	QUANTITIES	BY YU SONG	CHECKED A. HOUGH

STATE OF CALIFORNIA
DEPARTMENT OF TRANSPORTATION

DIVISION OF ENGINEERING SERVICES
STRUCTURE DESIGN
DESIGN BRANCH B

BRIDGE NO. X
POST MILE R77.6/R85.3

CONCRETE BARRIER TRANSITION
TYPE 1 BARRIER (CASE 1)

STRUCTURES DESIGN DETAIL SHEET (ENGLISH) (REV. 09-01-10)

ORIGINAL SCALE IN INCHES FOR REDUCED PLANS 0 1 2 3

UNIT: X
PROJECT NUMBER & PHASE: 0512000019
CONTRACT NO.: 05-1A7601

DISREGARD PRINTS BEARING EARLIER REVISION DATES

REVISION DATES 4-8-14

SHEET 5 OF 7

FILE => 05-1a7601-u-det05.dgn

USERNAME => s115755 DATE PLOTTED => 25-MAR-2015 TIME PLOTTED => 13:51

DIST	COUNTY	ROUTE	POST MILES TOTAL PROJECT	SHEET No.	TOTAL SHEETS
05	Mon	1	R77.6/R85.3	100	101

REGISTERED CIVIL ENGINEER 12/10/14 DATE

3-23-15
PLANS APPROVAL DATE

REGISTERED PROFESSIONAL ENGINEER YU SONG No. C71687 Exp. 12/31/15 CIVIL STATE OF CALIFORNIA

The State of California or its officers or agents shall not be responsible for the accuracy or completeness of scanned copies of this plan sheet.

LEGEND:

Indicates Existing

Indicates new structure

LOCATION TABLE OF TYPE 1 CONCRETE BARRIER TRANSITION

BRIDGE NO.	BRIDGE NAME	ROUTE	POST MILE	DIRECTION	APPROACH END	DEPARTURE END	TOTAL LENGTH	PLAN TYPE
44-0149E	W68-S1, S1-E68 Connector	1	R78.12	EB RIGHT	1		7'-0"	B
				WB RIGHT		1		

Notes:

1. See "GENERAL PLAN" sheet for identification of the PLAN TYPE.
2. See "ROADWAY PLANS" for work locations.
3. Remove existing MBGR and posts for construction of concrete barrier (transition). See "ROADWAY PLANS".
4. At EB approach end, reconstruct drainage facility at the end of concrete barrier (transition). See "ROADWAY PLANS".
5. The alignment of the concrete barrier (transition) must be parallel to the edge of shoulder at EB approach end and follow that of the existing MBGR at WB departure end.

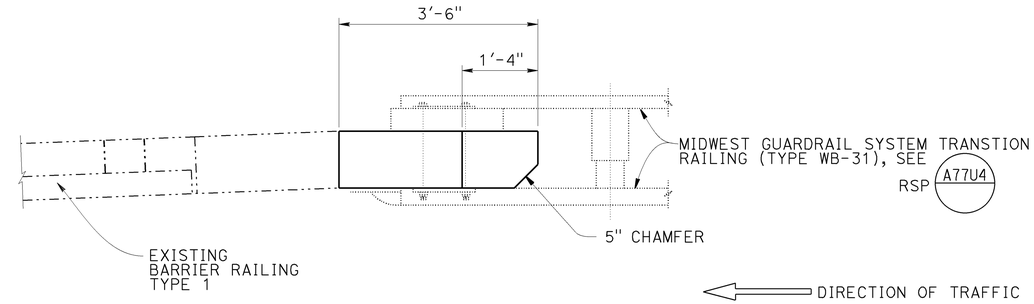

PLAN
3/4" = 1'-0"

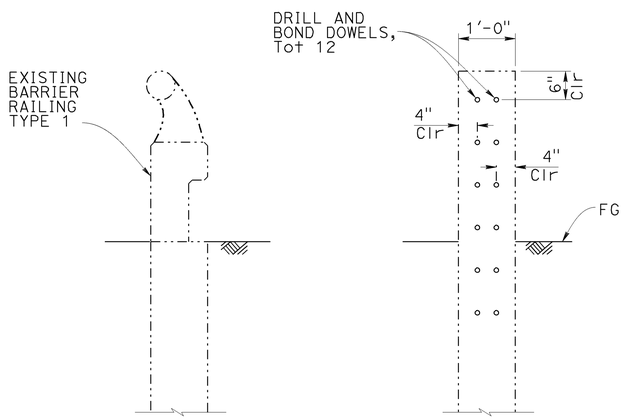

SECTION A-A
3/4" = 1'-0"

SECTION B-B
3/4" = 1'-0"

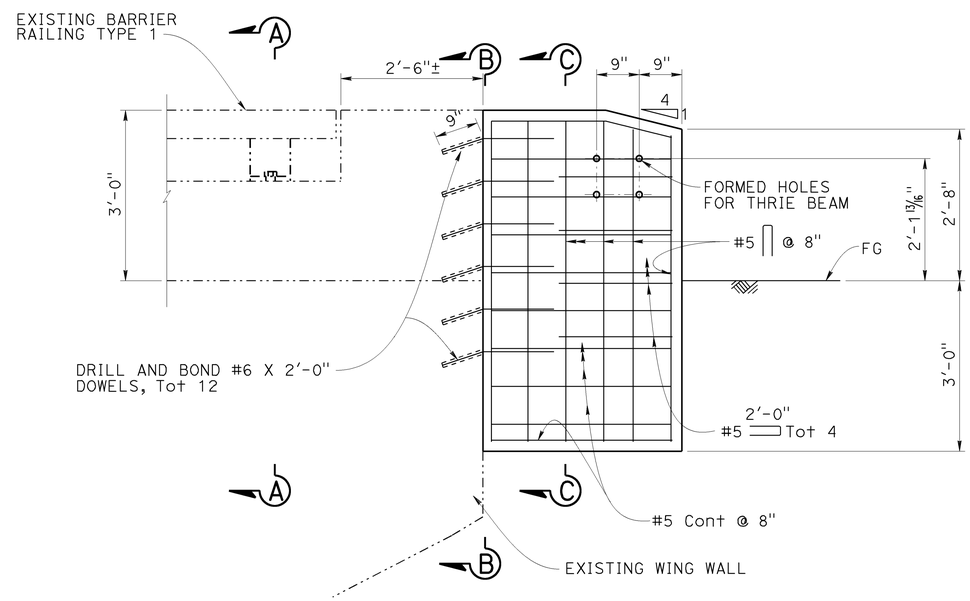

ELEVATION
3/4" = 1'-0"

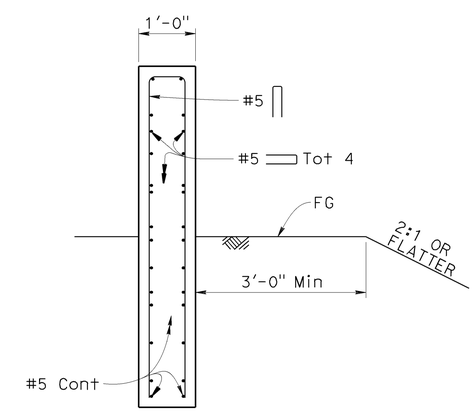

SECTION C-C
3/4" = 1'-0"

THE CONTRACTOR MUST VERIFY ALL CONTROLLING FIELD DIMENSIONS BEFORE ORDERING OR FABRICATING ANY MATERIAL.

BRANCH CHIEF JOEL MAGANA

	BY	CHECKED
DESIGN	YU SONG	A. HOUGH
DETAILS	HUNG NGUYEN	YU SONG
QUANTITIES	YU SONG	A. HOUGH

STATE OF CALIFORNIA
DEPARTMENT OF TRANSPORTATION

DIVISION OF ENGINEERING SERVICES
STRUCTURE DESIGN
DESIGN BRANCH B

BRIDGE NO. X
POST MILE R77.6/R85.3

CONCRETE BARRIER TRANSITION
TYPE 1 BARRIER (CASE 2)

STRUCTURES DESIGN DETAIL SHEET (ENGLISH) (REV. 09-01-10)

ORIGINAL SCALE IN INCHES FOR REDUCED PLANS 0 1 2 3

UNIT: X
PROJECT NUMBER & PHASE: 0512000019
CONTRACT NO.: 05-1A7601

DISREGARD PRINTS BEARING EARLIER REVISION DATES

REVISION DATES 4-8-14

SHEET 6 OF 7

FILE => 05-1a7601-u-det06.dgn

USERNAME => s115755 DATE PLOTTED => 25-MAR-2015 TIME PLOTTED => 13:51

DIST	COUNTY	ROUTE	POST MILES TOTAL PROJECT	SHEET No.	TOTAL SHEETS
05	Mon	1	R77.6/R85.3	101	101

REGISTERED CIVIL ENGINEER 12/10/14 DATE

3-23-15
PLANS APPROVAL DATE

REGISTERED PROFESSIONAL ENGINEER YU SONG No. C71687 Exp. 12/31/15 CIVIL STATE OF CALIFORNIA

The State of California or its officers or agents shall not be responsible for the accuracy or completeness of scanned copies of this plan sheet.

Notes:

1. See "GENERAL PLAN" sheet for identification of the PLAN TYPE.
2. See "ROADWAY PLANS" for work locations.
3. Remove existing MBGR and posts for construction of concrete barrier (transition). See "ROADWAY PLANS".
4. The alignment of the concrete barrier (transition) must follow that of the existing MBGR.
5. Epoxy coated reinforcement must be used at this location.

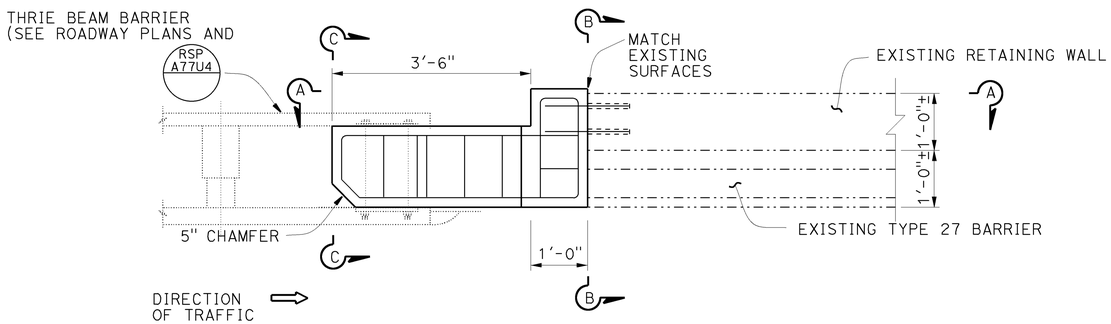

PLAN
3/4" = 1'-0"

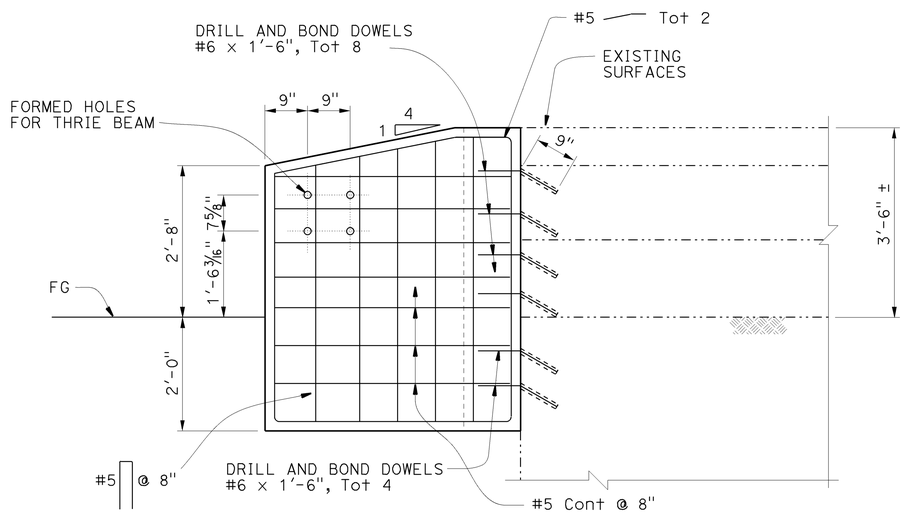

ELEVATION
3/4" = 1'-0"

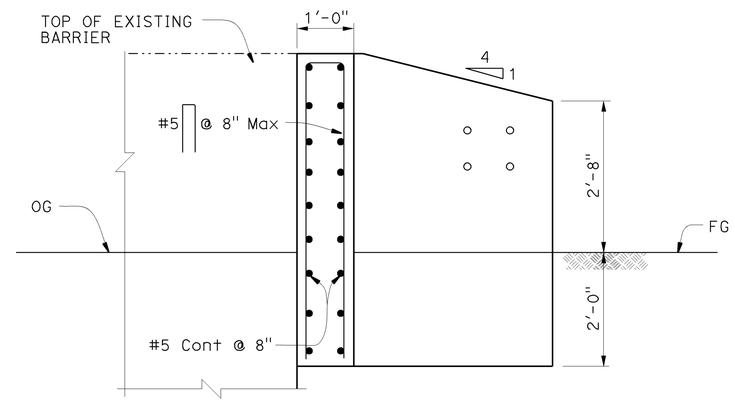

SECTION A-A
3/4" = 1'-0"

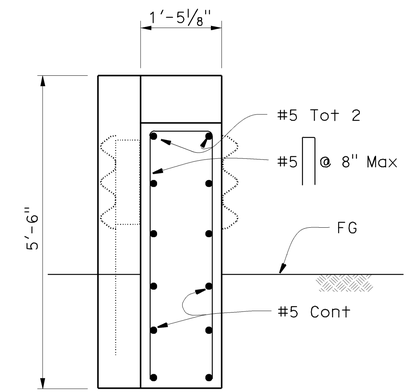

SECTION C-C
3/4" = 1'-0"

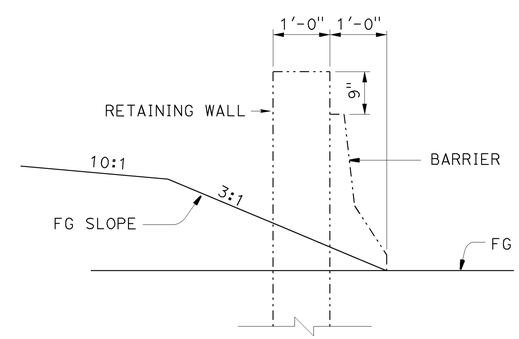

SECTION B-B
3/4" = 1'-0"

LOCATION TABLE OF TYPE 27 CONCRETE BARRIER TRANSITION

BRIDGE NO.	LOCATION	ROUTE	POST MILE	DIRECTION	APPROACH END	DEPARTURE END	TOTAL LENGTH	PLAN TYPE
N/A	Off Ramp to Ord Village	1	R80.52	NB LEFT	1		4'-6"	A

NOTE:
THE CONTRACTOR MUST VERIFY ALL CONTROLLING FIELD DIMENSIONS BEFORE ORDERING OR FABRICATING ANY MATERIAL.

BRANCH CHIEF JOEL MAGANA

	BY	CHECKED
DESIGN	YU SONG	A. HOUGH
DETAILS	HUNG NGUYEN	YU SONG
QUANTITIES	YU SONG	A. HOUGH

STATE OF CALIFORNIA
DEPARTMENT OF TRANSPORTATION

DIVISION OF ENGINEERING SERVICES
STRUCTURE DESIGN
DESIGN BRANCH B

BRIDGE NO. X
POST MILE R77.6/R85.3

CONCRETE BARRIER TRANSITION
TYPE 27 BARRIER

(ENGLISH) SPECIAL DESIGNS BRANCH BORDER SHEET (REV. 7-1-09)

ORIGINAL SCALE IN INCHES FOR REDUCED PLANS 0 1 2 3

UNIT: 3619
PROJECT NUMBER & PHASE: 0512000019
CONTRACT NO.: 05-1A7601

DISREGARD PRINTS BEARING EARLIER REVISION DATES

REVISION DATES 9/2/14

SHEET 7 OF 7

FILE => 05-1a7601-u-det07.dgn

USERNAME => s115755 DATE PLOTTED => 25-MAR-2015 TIME PLOTTED => 13:51