DIST	COUNTY	ROUTE	KILOMETER POST TOTAL PROJECT	SHEET No	TOTAL SHEETS
05	Mon	101	R146.8/159.7	1301	1402

Michael S. Finegan 10-20-09
REGISTERED CIVIL ENGINEER

7-26-10
PLANS APPROVAL DATE

REGISTERED PROFESSIONAL ENGINEER Michael S. Finegan No. C50138 Exp. 6-30-11 CIVIL STATE OF CALIFORNIA

The State of California or its officers or agents shall not be responsible for the accuracy or completeness of electronic copies of this plan sheet.

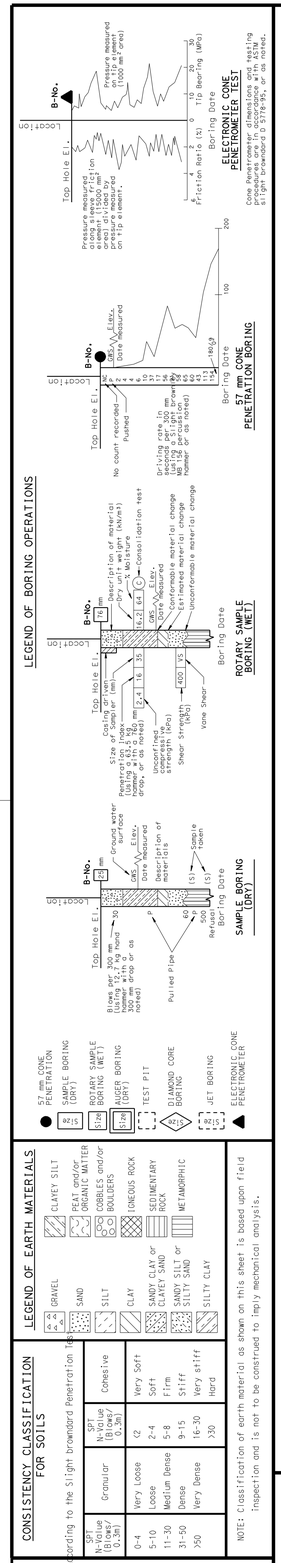

OGS CIVIL LOG OF TEST BORINGS SHEET (METRIC) (REV. 4/04)

BENCH MARK

SURVEY CONTROL

MON101 PM98.35 (NOT SHOWN ON PLAN)
Fnd 1" IP W/CALTRANS CONTROL PP & NAIL
14.251 m Lt. ℄ "CRZHS1" Line
Sta. 15+07.609
N 667981.788
E 1765138.115
Elev. = 119.206 m

MON101 PM98.361
Fnd 1" IP W/CALTRANS CONTROL PP & NAIL
5.129 m Lt. ℄ "CRZHS1" Line
Sta. 12+01.103
N 667813.990
E 1765394.892
Elev. = 120.490 m

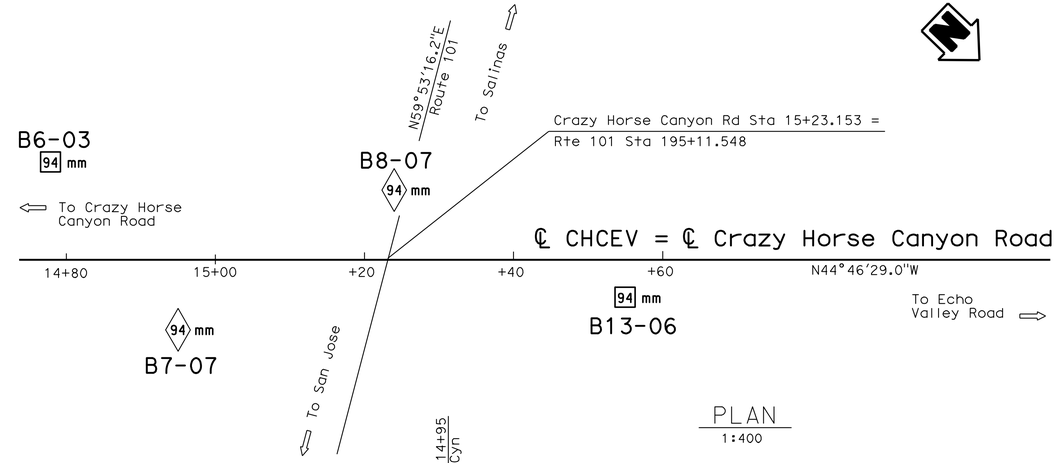

PLAN
1:400

Note: No groundwater was encountered during field investigation

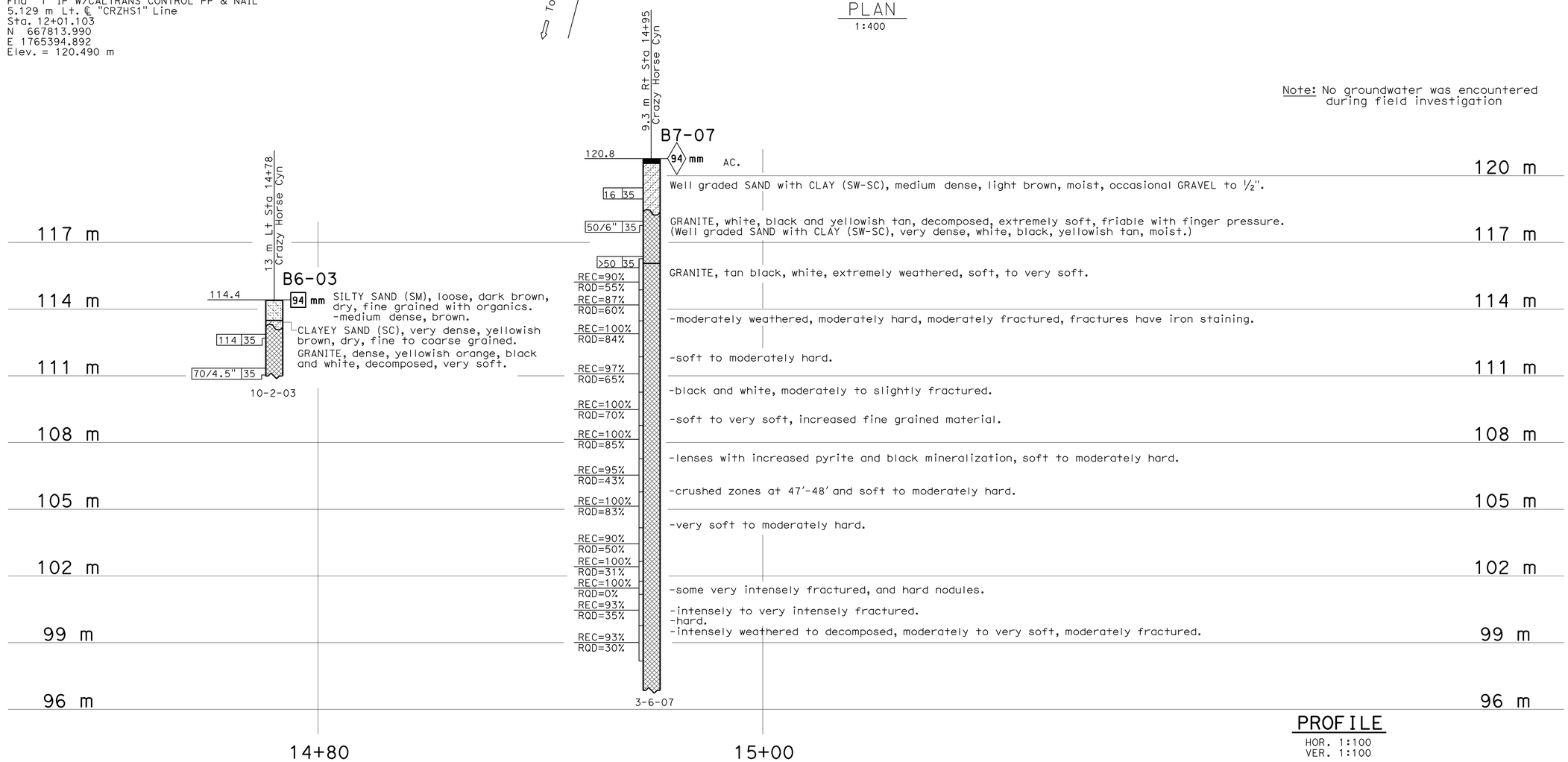

PROFILE
HOR. 1:100
VER. 1:100

Caltrans Metric

ENGINEERING SERVICES	GEOTECHNICAL SERVICES
DRAWN BY	W. Tang 10/09
CHECKED BY	W. Hoon

FIELD INVESTIGATION BY: W. Hoon, Sara von Schwind

STATE OF CALIFORNIA DEPARTMENT OF TRANSPORTATION

DIVISION OF ENGINEERING SERVICES STRUCTURE DESIGN
DESIGN BRANCH 6

BRIDGE NO. 44-0286
KILOMETER POST 158.4

CRAZY HORSE CYN/ECHO VALLEY RD OC
LOG OF TEST BORINGS 1 OF 3

ALL DIMENSIONS ARE IN METERS UNLESS OTHERWISE SHOWN

ORIGINAL SCALE IN MILLIMETERS FOR REDUCED PLANS 0 10 20 30 40 50 60 70 80 90 100

CU 05
EA 0161E1

DISREGARD PRINTS BEARING EARLIER REVISION DATES 10-20-09

REVISION DATES (PRELIMINARY STAGE ONLY)

SHEET 19 OF 21

FILE => 44-0286-z-lotb01.dgn

USERNAME => friehard DATE PLOTTED => 12-AUG-2010 TIME PLOTTED => 06:13

DIST	COUNTY	ROUTE	KILOMETER POST TOTAL PROJECT	SHEET No	TOTAL SHEETS
05	Mon	101	R146.8/159.7	1302	1402

Michael S. Finegan 10-20-09
REGISTERED CIVIL ENGINEER

7-26-10
PLANS APPROVAL DATE

REGISTERED PROFESSIONAL ENGINEER Michael S. Finegan No. C50138 Exp. 6-30-11 CIVIL STATE OF CALIFORNIA

The State of California or its officers or agents shall not be responsible for the accuracy or completeness of electronic copies of this plan sheet.

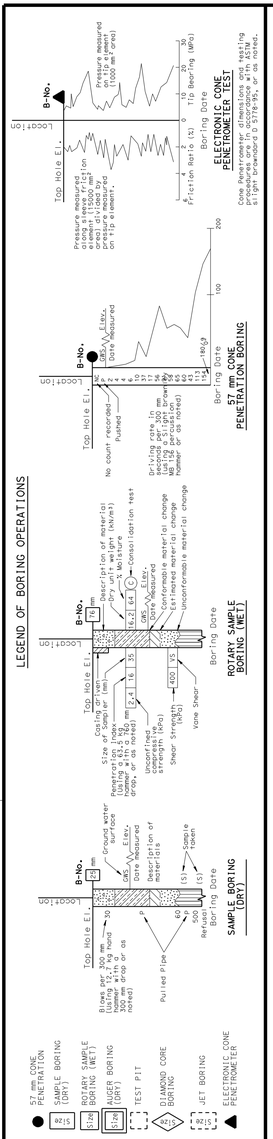

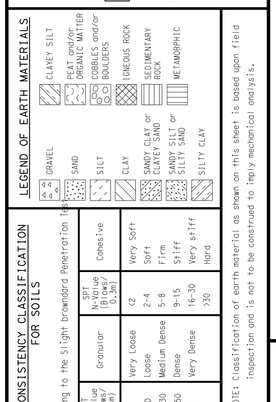

CONSISTENCY CLASSIFICATION FOR SOILS

According to the Slight brownard Penetration Test

SPT N-Value (Blows/0.3m)	Granular	SPT N-Value (Blows/0.3m)	Cohesive
0-4	Very Loose	<2	Very Soft
5-10	Loose	2-4	Soft
11-30	Medium Dense	5-8	Firm
31-50	Dense	9-15	Stiff
>50	Very Dense	16-30	Very stiff
		>30	Hard

NOTE: Classification of earth material as shown on this sheet is based upon field inspection and is not to be construed to imply mechanical analysis.

OGS CIVIL LOG OF TEST BORINGS SHEET (METRIC) (REV. 4/04)

FOR PLAN VIEW, SEE
"LOG OF TEST BORINGS 1 OF 3"

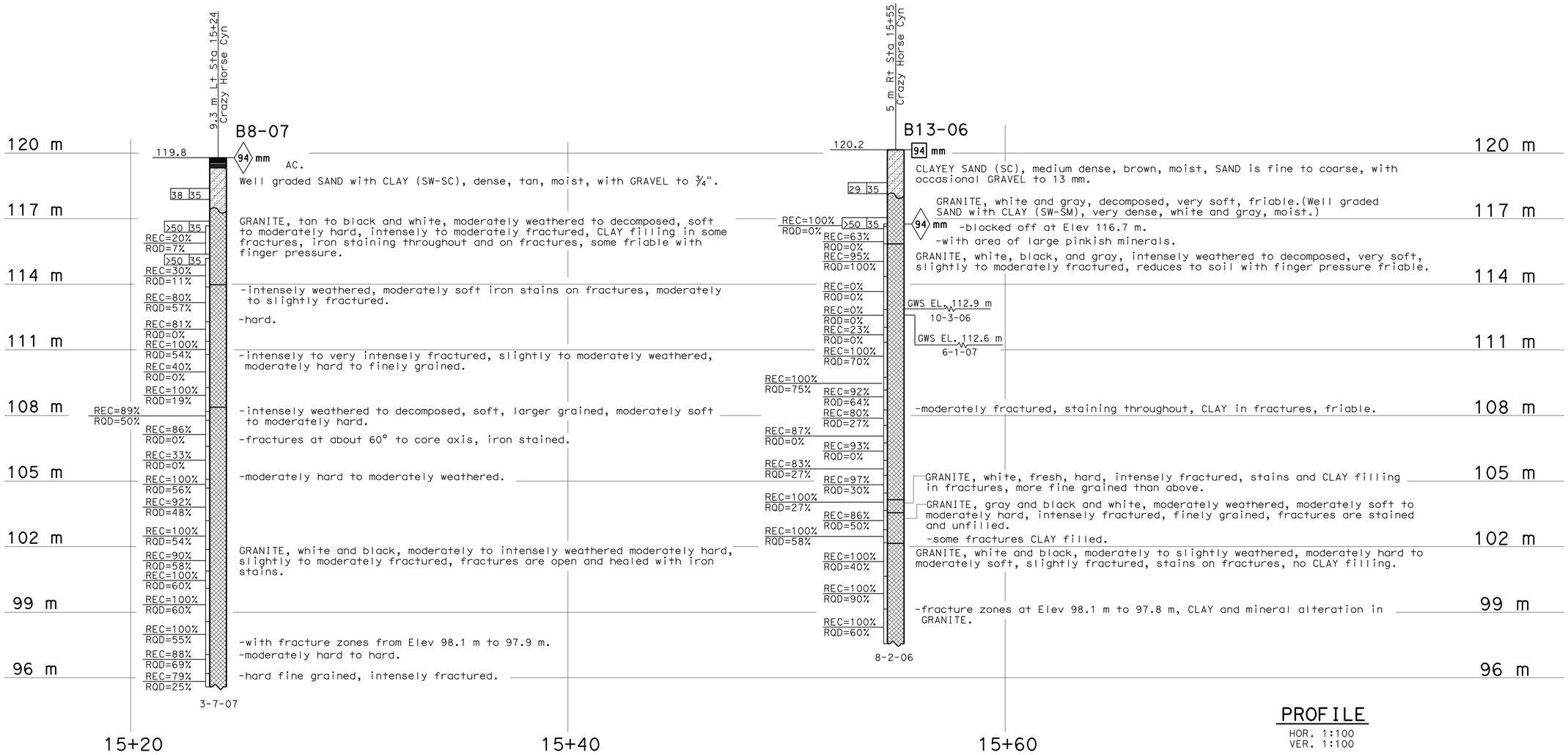

PROFILE
HOR. 1:100
VER. 1:100

Caltrans Metric

ENGINEERING SERVICES	GEOTECHNICAL SERVICES
DRAWN BY	W. Tang 10/09
CHECKED BY	W. Hoon

ALL DIMENSIONS ARE IN METERS UNLESS OTHERWISE SHOWN

FIELD INVESTIGATION BY: W. Hoon

ORIGINAL SCALE IN MILLIMETERS FOR REDUCED PLANS 0 10 20 30 40 50 60 70 80 90 100

STATE OF CALIFORNIA
DEPARTMENT OF TRANSPORTATION

DIVISION OF ENGINEERING SERVICES
STRUCTURE DESIGN
DESIGN BRANCH 6

CU 05
EA 0161E1

BRIDGE NO. 44-0286
KILOMETER POST 158.4

CRAZY HORSE CYN/ECHO VALLEY RD OC
LOG OF TEST BORINGS 2 OF 3

DISREGARD PRINTS BEARING EARLIER REVISION DATES

REVISION DATES (PRELIMINARY STAGE ONLY): 10-20-09

SHEET 20 OF 21

FILE => 44-0286-z-lotb02.dgn

USERNAME => trrenard DATE PLOTTED => 03-AUG-2010 TIME PLOTTED => 10:50

DIST	COUNTY	ROUTE	KILOMETER POST TOTAL PROJECT	SHEET No	TOTAL SHEETS
05	Mon	101	R146.8/159.7	1303	1402

Michael S. Finegan 10-20-09
REGISTERED CIVIL ENGINEER

7-26-10
PLANS APPROVAL DATE

REGISTERED PROFESSIONAL ENGINEER Michael S. Finegan No. C50138 Exp. 6-30-11 CIVIL STATE OF CALIFORNIA

The State of California or its officers or agents shall not be responsible for the accuracy or completeness of electronic copies of this plan sheet.

WEATHERING DESCRIPTORS

Modified from United States Bureau of Reclamation, Engineering Geology Field Manual.

Descriptors		Diagnostic features					General characteristics § (strength, excavation, etc.)
		Chemical weathering-Discoloration and/or oxidation		Mechanical weathering-Grain boundary conditions (disaggregation) primarily for granitics and some coarse-grained sediments	Texture and solutioning		
Alphanumeric descriptor	Descriptive term	Body of rock	Fracture surfaces †		Texture	Solutioning	
W1	Fresh	No discoloration, not oxidized.	No discoloration or oxidation.	No separation, intact (tight).	No change.	No solutioning.	Hammer rings when crystalline rocks are struck. Almost always rock excavation except for naturally weak or weakly cemented rocks such as siltstones or shales.
W2	Slightly weathered to fresh °						
W3	Slightly weathered	Discoloration or oxidation is limited to surface of, or short distance from, fractures; some feldspar crystals are dull.	Minor to complete discoloration or oxidation of most surfaces.	No visible separation, intact (tight).	Preserved.	Minor leaching of some soluble minerals may be noted.	Hammer rings when crystalline rocks are struck. Body of rock not weakened. With few exceptions, such as siltstones or shales, classified as rock excavation.
W4	Moderately to slightly weathered °						
W5	Moderately weathered	Discoloration or oxidation extends from fractures usually throughout; Fe-Mg minerals are "rusty," feldspar crystals are "cloudy."	All fracture surfaces are discolored or oxidized.	Partial separation of boundaries visible.	Generally preserved.	Soluble minerals may be mostly leached.	Hammer does not ring when rock is struck. Body of rock is slightly weakened. Depending on fracturing, usually is rock excavation except in naturally weak rocks such as siltstones or shales.
W6	Intensely to moderately weathered°						
W7	Intensely weathered	Discoloration or oxidation throughout; all feldspars and Fe-Mg minerals are altered to clay to some extent; or chemical alteration produces in-situ disaggregation, see grain boundary conditions.	All fracture surfaces are discolored or oxidized, surfaces friable.	Partial separation, rock is friable; in semiarid conditions granitics are disaggregated.	Texture altered by chemical disintegration (hydration, argillation).	Leaching of soluble minerals may be complete.	Dull sound when struck with hammer, usually can be broken with moderate to heavy manual pressure or by light hammer blow without reference to planes of weakness such as incipient or hairline fractures, or veinlets. Rock is significantly weakened. Usually common excavation.
W8	Very intensely weathered						
W9	Decomposed	Discolored or oxidized throughout, but resistant minerals such as quartz may be unaltered; all feldspars and Fe-Mg minerals are completely altered to clay.		Complete separation of grain boundaries (disaggregated).	Resembles a soil, partial or complete remnant rock structure may be preserved; leaching of soluble minerals usually complete.		Can be granulated by hand. Always common excavation. Resistant minerals such as quartz may be present as "stringers" or "dikes."

Note: This chart and its horizontal categories are more readily applied to rocks with feldspars and mafic minerals. Weathering in various sedimentary rocks, particularly limestones and poorly indurated sediments, will not always fit the categories established. This chart and weathering categories may have to be modified for particular site conditions or alteration such as hydrothermal effects; however, the basic framework and similar descriptors are to be used.

° Combination descriptors are permissible where equal distribution of both weathering characteristics are present over significant intervals or where characteristics present are "in between" the diagnostic feature. However, dual descriptors should not be used where significant, identifiable zones can be delineated. When given as a range only two adjacent terms may be combined. "Decomposed to slightly weathered," or "moderately weathered to fresh" are not acceptable.

† Does not include directional weathering along shears or faults and their associated features. For example, a shear zone that carried weathering to great depths into a fresh rock mass would not require the rock mass to be classified as weathered.

§ These are generalizations and should not be used as diagnostic features for weathering or excavation classification. These characteristics vary to a large extent based on naturally weak materials or cementation and type of excavation

ROCK QUALITY DESIGNATION (RQD) & PERCENT RECOVERY (REC) LOGGING

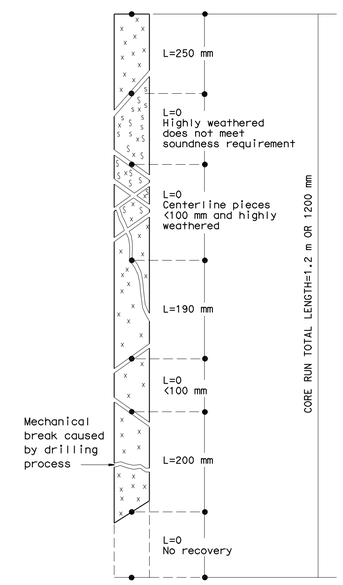

RQD (ROCK QUALITY DESIGNATION)	DESCRIPTION OF ROCK QUALITY
0 - 25%	VERY POOR
25 - 50%	POOR
50 - 75%	FAIR
75 - 90%	GOOD
90 - 100%	EXCELLENT

REC = Percent Core Recovery

$$REC = \frac{\sum \text{Length of all core pieces}}{\text{Total core run length}}$$

$$RQD = \frac{\sum \text{Length of sound core pieces} \geq 100 \text{ mm}}{\text{Total core run length}}$$

$$RQD = \frac{250+190+200}{1200} \times 100\%$$

RQD = 53% (fair)

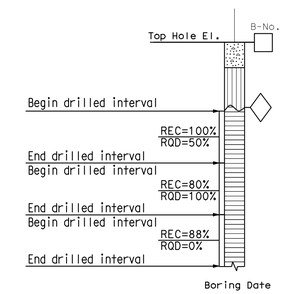

(No Scale)
After Deere & Deere, 1989

FRACTURE DENSITY

Modified from United States Bureau of Reclamation, Engineering Geology Field Manual.

FRACTURE DENSITY- Based on the spacing of all natural fractures in an exposure or core recovery lengths in boreholes; excludes mechanical breaks, shears, and shear zones; however, shear-disturbed zones (fracturing outside the shear) are included. Descriptors for fracture density apply to all rock exposures such as tunnel walls, dozer trenches, outcrops, or foundation cut slopes and inverts, as well as boreholes. Descriptive criteria presented below are based on borehole cores where lengths are measured along the core axis, for other exposures the criteria is distance measured between fractures (size of blocks).

UNFRACTURED (FD0): No fractures.

VERY SLIGHTLY FRACTURED (FD1): Core recovered mostly in lengths greater than 1 m.

SLIGHTLY TO VERY SLIGHTLY FRACTURED (FD2)*

SLIGHTLY FRACTURED (FD3): Core recovered mostly in lengths from 300 to 1000 mm, with few scattered lengths less than 300 mm or greater than 1000 mm.

MODERATELY TO SLIGHTLY FRACTURED (FD4)*

MODERATELY FRACTURED (FD5): Core recovered mostly in 100 to 300 mm lengths with most lengths about 200 mm.

INTENSELY TO MODERATELY FRACTURED (FD6)*

INTENSELY FRACTURED (FD7): Lengths average from 30 to 100 mm with scattered fragmented intervals. Core recovered mostly in lengths less than 100 mm.

VERY INTENSELY TO INTENSELY FRACTURED (FD8)*

VERY INTENSELY FRACTURED (FD9): Core recovered mostly as chips and fragments with a few scattered short core lengths.

* Combinations of fracture densities (e.g. very intensely to intensely fractured, or moderately to slightly fractured) are used where equal distribution of both fracture density characteristics are present over a significant interval or exposure, or where characteristics are "in between" the descriptor definitions.

ROCK HARDNESS DESCRIPTORS

Alphanumeric Descriptor	Descriptor	Criteria
H1	Extremely hard	Core, fragment, or exposure cannot be scratched with knife or sharp pick; can only be chipped with repeated heavy hammer blows.
H2	Very hard	Cannot be scratched with knife of sharp pick. Core or fragment breaks with repeated heavy hammer blows.
H3	Hard	Can be scratched with knife or sharp pick with difficulty (heavy pressure). Heavy hammer blow required to break specimen.
H4	Moderately hard	Can be scratched with knife or sharp pick with light or moderate pressure. Core or fragment breaks with moderate hammer blow.
H5	Moderately soft	Can be grooved 2 mm deep by knife or sharp pick with moderate or heavy pressure. Core or fragment breaks with light hammer blow or heavy manual pressure.
H6	Soft	Can be grooved or gouged easily by knife or sharp pick with light pressure, can be scratched with fingernail. Breaks with light to moderate manual pressure.
H7	Very soft	Can be readily indented, grooved or gouged with fingernail, or carved with a knife. Breaks with light manual pressure.

Any bedrock unit softer than H7, very soft, is to be described using ASTM D-2488 consistency descriptors.

Note: Although "sharp pick" is included in these definitions, descriptions of ability to be scratched, grooved or gouged by a knife is the preferred criteria.

Modified from United States Bureau of Reclamation, Engineering Geology Field Manual.

BEDDING, FOLIATION, OR FLOW TEXTURE DESCRIPTORS

Descriptors	Thickness / Spacing
Massive	Greater than 3 m
Very thickly (bedded, foliated, or banded)	1 to 3 m
Thickly	300 mm to 1 m
Moderately	100 to 300 mm
Thinly	30 to 100 mm
Very thinly	10 to 30 mm
Laminated (intensely foliated or banded)	Less than 10 mm

Modified from United States Bureau of Reclamation, Engineering Geology Field Manual.

Caltrans Metric

ENGINEERING SERVICES	GEOTECHNICAL SERVICES
PREPARED BY	I. G-Remmen
CHECKED BY	

OGS CIVIL LOG OF TEST BORINGS SHEET (METRIC) (REV. 8/05)

ORIGINAL SCALE IN MILLIMETERS FOR REDUCED PLANS 0 10 20 30 40 50 60 70 80 90 100

STATE OF CALIFORNIA
DEPARTMENT OF TRANSPORTATION

DIVISION OF ENGINEERING SERVICES
STRUCTURE DESIGN
DESIGN BRANCH 6

CU 05
EA 0161E1

BRIDGE NO. 44-0286
KILOMETER POST 158.4

CRAZY HORSE CYN/ECHO VALLEY RD OC
LOG OF TEST BORINGS 3 OF 3

DISREGARD PRINTS BEARING EARLIER REVISION DATES → 10-20-09

REVISION DATES

SHEET 21 OF 21

FILE => 44-0286-z-lotb03.dgn

USERNAME => trlenard DATE PLOTTED => 03-AUG-2010 TIME PLOTTED => 10:50

DIST.	COUNTY	ROUTE	KILOMETER POST TOTAL PROJECT	SHEET NO.	TOTAL SHEETS
05	Mon	101	R146.8/159.7	1304	1402

Caltrans Metric

Jerome R. Marcotte 5-03-10
REGISTERED CIVIL ENGINEER DATE

7-26-10
PLANS APPROVAL DATE

REGISTERED PROFESSIONAL ENGINEER J. MARCOTTE No. C 36844 Exp. 6-30-10 Civil STATE OF CALIFORNIA

The State of California or its officers or agents shall not be responsible for the accuracy or completeness of electronic copies of this plan sheet.

INDEX OF SHEETS

SHEET NO.	DESCRIPTION
GP-2	GENERAL PLAN
WATER	
W2-0	NOTES, LEGEND & ABBREVIATIONS
W2-1	SITE PLAN
W2-2	BOOSTER PUMP PLAN AND DETAILS
W2-3	DETAILS
ELECTRICAL	
EE2-1	ELECTRICAL SITE PLAN AND LEGEND
EE2-2	BOOSTER PUMP CONTROL PANEL ENCLOSURE DETAILS
EE2-3	BOOSTER PUMP CONTROL SCHEMATIC AND INTERCONNECTION BLOCK DIAGRAM

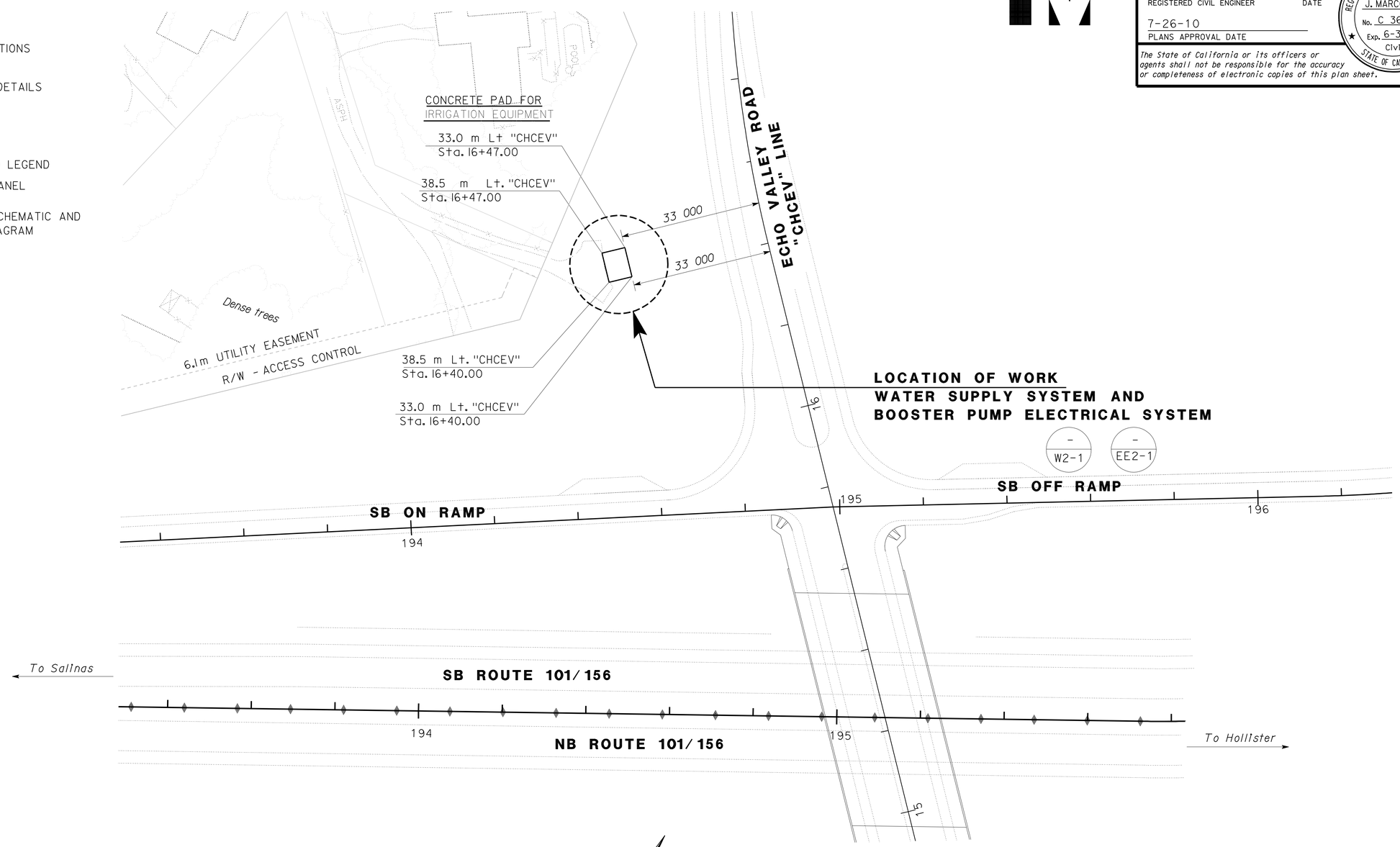

GENERAL PLAN

SCALE 1:500

QUANTITIES

WATER SUPPLY SYSTEM	LUMP SUM
BOOSTER PUMP ELECTRICAL SYSTEM	LUMP SUM

ALL DIMENSIONS SHOWN IN MILLIMETERS, EXCEPT AS NOTED

DESIGN SUPERVISOR	DESIGN	BY Amar Baldwan	CHECKED Jerry Marcotte
DESIGN ENGINEER	DETAILS	BY Amar Baldwan	CHECKED Don Hansen
	QUANTITIES	BY Amar Baldwan	CHECKED Jerry Marcotte

STATE OF CALIFORNIA DEPARTMENT OF TRANSPORTATION

DIVISION OF ENGINEERING SERVICES ELECTRICAL-MECHANICAL-WATER AND WASTEWATER DESIGN

BRIDGE NO. 44-0286
KM POST R158.26

CRAZY HORSE BOOSTER PUMPS

GENERAL PLAN

SHEET **GP**

DOS ELEC (10/98) FILE => bgp2.dgn DATE PLOTTED => 12-AUG-2010 TIME PLOTTED => 06:13

ORIGINAL SCALE IN MILLIMETERS FOR REDUCED PLANS 0 10 20 30 40 50 60 70 80 90 100

CU 06226
EA 0161E1

DISREGARD PRINTS BEARING EARLIER REVISION DATES

REVISION DATES (PRELIMINARY STAGE ONLY) 2-26-08 10-15-08 11-19-08 12-30-08 1-27-09 5-03-10

SHEET 1 OF 8

FILE => bgp2.dgn

USERNAME => trlenard DATE PLOTTED => 12-AUG-2010 TIME PLOTTED => 06:13

VI=1

DIST.	COUNTY	ROUTE	KILOMETER POST TOTAL PROJECT	SHEET NO.	TOTAL SHEETS
05	Mon	101	R146.8/159.7	1305	1402

Caltrans Metric

REGISTERED CIVIL ENGINEER — DATE 5-03-10

7-26-10
PLANS APPROVAL DATE

REGISTERED PROFESSIONAL ENGINEER — J. MARCOTTE — No. C 36844 — Exp. 6-30-10 — Civil — STATE OF CALIFORNIA

The State of California or its officers or agents shall not be responsible for the accuracy or completeness of electronic copies of this plan sheet.

ABBREVIATIONS

AB	AGGREGATE BASE	m	METER (S)
ABS	ACRYLONITRILE BUTADIENE STYRENE (PIPE)	MAX	MAXIMUM
AC	ASPHALT CONCRETE	MFR	MANUFACTURER
AVC	AIR VOLUME CONTROLLER	MH	MANHOLE
B	BUNG	MIN	MINIMUM
BLDG	BUILDING	mm	MILLIMETER
C	CONDUIT	N	NORTH
C-C	CENTER TO CENTER	NIC	NOT IN CONTRACT
CI	CAST-IRON	NO	NUMBER
cm	CENTIMETERS	OC	ON CENTER
CMP	CORRUGATED METAL PIPE	OD	OUTSIDE DIAMETER
CONC	CONCRETE	OG	ORIGINAL GROUND
COTF	CLEANOUT TO FLOOR	O/W	OIL WATER SEPARATOR
COTG	CLEANOUT TO GRADE	P	PITCH
CW	COLD WATER PIPE	PCC	PORTLAND CEMENT CONCRETE
D	DRAIN	PH	PHASE
DI	DRAIN INLET	PRV	PRESSURE REDUCING VALVE
DIA	DIAMETER	PVC	POLYVINYL CHLORIDE (PIPE)
DP	DRAIN PIPE	PW	PRESSURE WASHER
E	ELECTRICAL	R	RADIUS
(E)	EXISTING	RCP	REINFORCED CONCRETE PIPE
EA	EACH	REQ	REQUIRED
EL	ELEVATION	RPM	REVOLUTIONS PER MINUTE
EP	EDGE OF PAVEMENT	RPU	RECYCLE PROCESS UNIT
FF	FINISH FLOOR	RT	RIGHT
FG	FINISH GRADE	RW	RETURN WATER
FL	FLOW LINE	R/W	RIGHT-OF-WAY
FM	FORCE MAIN	S	SEWER
FOC	FACE OF CONCRETE	SCH	SCHEDULE
GA	GAUGE	SD	STORM DRAIN
GAC	GRANULAR ACTIVATED CARBON	SQ	SQUARE
GSP	GALVANIZED STEEL PIPE	STA	STATION
GV	GATE VALVE	STD	STANDARD
HF	HOSE FAUCET	TBM	TEMPORARY BENCH MARK
HP	HORSEPOWER	TOC	TOP OF CURB OR CONCRETE
HT	HEIGHT	TOT	TOTAL
HZ	HERTZ	TYP	TYPICAL
ID	INSIDE DIAMETER	VP	VENT PIPE
IE	INVERT ELEVATION	VCP	VITRIFIED CLAY PIPE
kg	KILOGRAMS	W	WATER
Kw	KILOWATT	W/O	WITHOUT
L	LITER(S)	WP	WATER PIPE
LPM	LITERS PER MINUTE	WSP	WELDED STEEL PIPE
LT	LEFT		

LEGEND

S	SANITARY SEWER	
D	DRAIN	
RD	RETURN DRAIN	
V	VENT	
W	WATER	
FM	FORCE MAIN	
L	LEACH LINES	

7 / SS-5	DETAIL / SHEET NUMBER
99.00	NEW GRADE IN METERS
X (100.00)	EXISTING SPOT GRADE IN METERS
	SURFACE DRAINAGE
	ABANDON (E)
	BENCHMARK ELEVATION
℄	CENTERLINE
ø	DIAMETER
	SECTION / ELEVATION LETTER / SHEET NUMBER
	TREE

GENERAL WORK NOTES

The Contractor shall verify all controlling field dimensions and conditions before ordering or fabricating any materials.

The Contractor shall verify exact location of all underground facilities and utilities prior to start of construction.

No 90 degree bends allowed on drain or sewer pipe.

REQUIRED THRUST BLOCK BEARING AREA- TOTAL SQUARE METERS

TYPE OF FITTING		90 BEND	45 BEND	11-1/4 BEND 22-1/2 BEND	TEE OR DEAD END
TYPICAL INSTALLATION		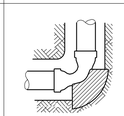	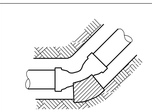	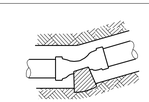	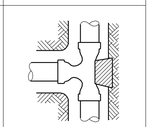
PIPE SIZE (mm)	≤100	0.2	0.1	0.1	0.2
	150	0.4	0.2	0.1	0.3
	200	0.7	0.4	0.2	0.5
	250	1.1	0.6	0.3	0.8

PIPE FITTINGS AND VALVES

- CAP, THREADED
- ELBOW, TURNED DOWN
- FLEXIBLE CONNECTOR
- REDUCER, CONCENTRIC
- REDUCER, ECCENTRIC
- PRESSURE GAUGE (WITH VALVE AND SNUBBER)
- UNION
- UNION, INSULATING
- VALVE, BALL
- VALVE, CHECK
- VALVE, GATE
- VALVE, SAFETY RELIEF
- VALVE, PRESSURE REDUCING

ALL DIMENSIONS SHOWN IN MILLIMETERS, EXCEPT AS NOTED

	BY	CHECKED
DESIGN	Amar Baldwan	Jerry Marcotte
DETAILS	Amar Baldwan	Don Hansen
QUANTITIES	Amar Baldwan	Jerry Marcotte

STATE OF CALIFORNIA
DEPARTMENT OF TRANSPORTATION

DIVISION OF ENGINEERING SERVICES
ELECTRICAL-MECHANICAL-WATER AND WASTEWATER DESIGN

BRIDGE NO. 44-0286
KM POST R158.26

CRAZY HORSE BOOSTER PUMPS

NOTES, LEGEND & ABBREVIATIONS

SHEET **W2-0**

DISREGARD PRINTS BEARING EARLIER REVISION DATES → 2-26-08 | 10-15-08 | 11-19-08 | 2-20-09 | 1-27-09 | 5-03-10

SHEET 2 OF 8

DOS ELEC (10/98) FILE => bw2_0.dgn DATE PLOTTED => 12-AUG-2010 TIME PLOTTED => 06:14

ORIGINAL SCALE IN MILLIMETERS FOR REDUCED PLANS 0 10 20 30 40 50 60 70 80 90 100

CU 06226
EA 0161E1

FILE => bw2_0.dgn

USERNAME => trlenard DATE PLOTTED => 12-AUG-2010 TIME PLOTTED => 06:14

VI=1

DIST.	COUNTY	ROUTE	KILOMETER POST TOTAL PROJECT	SHEET NO.	TOTAL SHEETS
05	Mon	101	R146.8/159.7	1306	1402

Caltrans Metric

Jerome R. Marcotte 5-03-10
REGISTERED CIVIL ENGINEER DATE

7-26-10
PLANS APPROVAL DATE

REGISTERED PROFESSIONAL ENGINEER J. MARCOTTE No. C 36844 Exp. 6-30-10 Civil STATE OF CALIFORNIA

The State of California or its officers or agents shall not be responsible for the accuracy or completeness of electronic copies of this plan sheet.

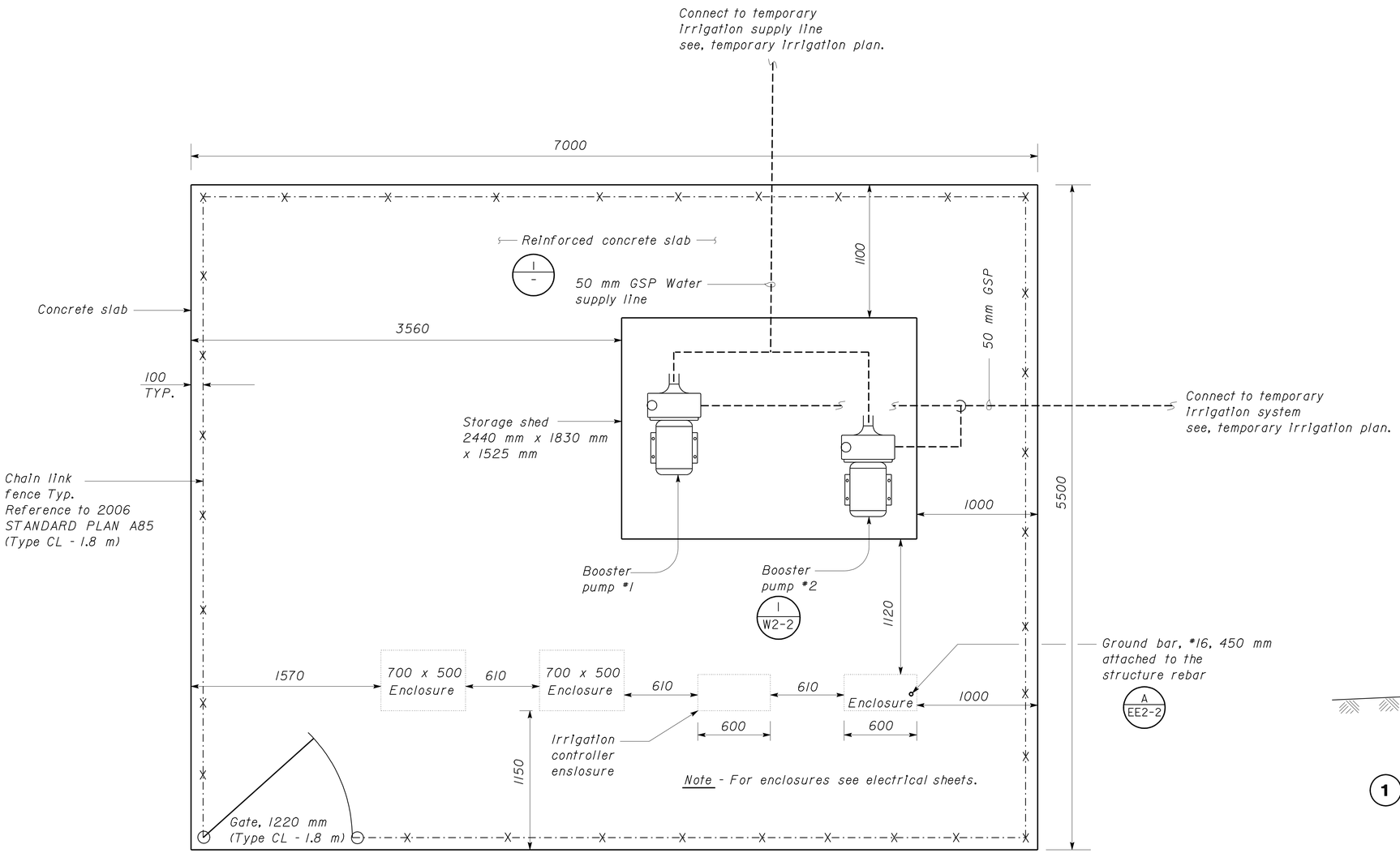

LOL "CHCEV" STA. 16+40
CRAZY HORSE BOOSTER PUMPS
SITE PLAN

SCALE 1 : 20

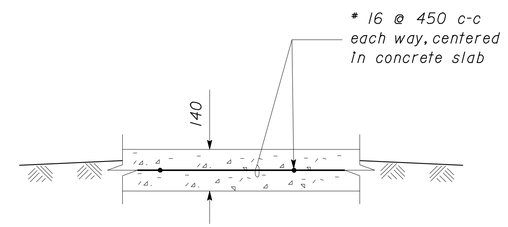

1 **CONCRETE SLAB**
NO SCALE

ALL DIMENSIONS SHOWN IN MILLIMETERS, EXCEPT AS NOTED

	BY		CHECKED	
DESIGN	BY	Amar Baldwan	CHECKED	Jerry Marcotte
DETAILS	BY	Amar Baldwan	CHECKED	Don Hansen
QUANTITIES	BY	Amar Baldwan	CHECKED	Jerry Marcotte

STATE OF CALIFORNIA DEPARTMENT OF TRANSPORTATION

DIVISION OF ENGINEERING SERVICES
ELECTRICAL-MECHANICAL-WATER AND WASTEWATER DESIGN

BRIDGE NO. 44-0286
KM POST R158.26

CRAZY HORSE BOOSTER PUMPS
SITE PLAN

SHEET **W2-1**

DOS ELEC (10/98) FILE => bw2_1.dgn
DATE PLOTTED => 12-AUG-2010 TIME PLOTTED => 06:14

ORIGINAL SCALE IN MILLIMETERS FOR REDUCED PLANS 0 10 20 30 40 50 60 70 80 90 100

CU 06226
EA 0161E1

DISREGARD PRINTS BEARING EARLIER REVISION DATES

REVISION DATES (PRELIMINARY STAGE ONLY) 2-26-08 10-15-08 11-19-08 12-30-08 1-27-09 9-22-09 5-03-10

SHEET 3 OF 8

FILE => bw2_1.dgn

USERNAME => frlenord DATE PLOTTED => 12-AUG-2010 TIME PLOTTED => 06:14

VI=I

DIST.	COUNTY	ROUTE	KILOMETER POST TOTAL PROJECT	SHEET NO.	TOTAL SHEETS
05	Mon	101	R146.8/159.7	1307	1402

Caltrans Metric

REGISTERED CIVIL ENGINEER — DATE 5-03-10

7-26-10
PLANS APPROVAL DATE

REGISTERED PROFESSIONAL ENGINEER J. MARCOTTE No. C 36844 Exp. 6-30-10 Civil STATE OF CALIFORNIA

The State of California or its officers or agents shall not be responsible for the accuracy or completeness of electronic copies of this plan sheet.

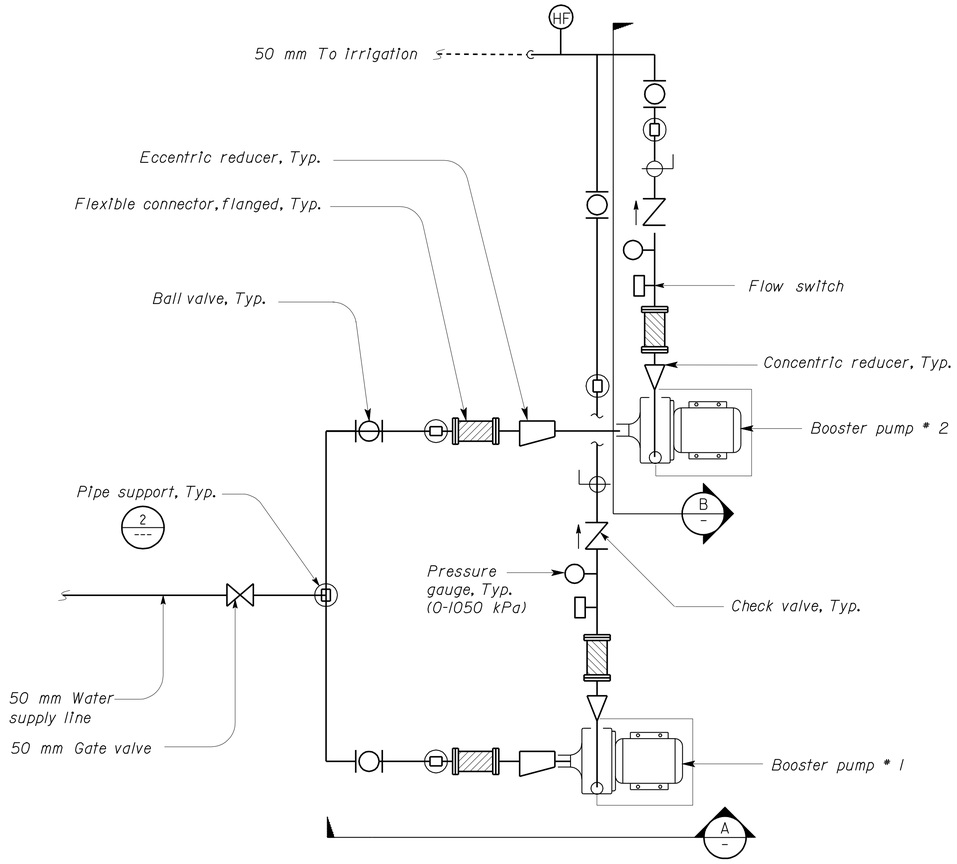

1 BOOSTER PUMP PLAN

NO SCALE

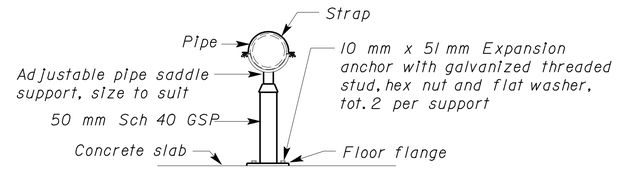

2 VALVE/PIPE SUPPORT

NO SCALE

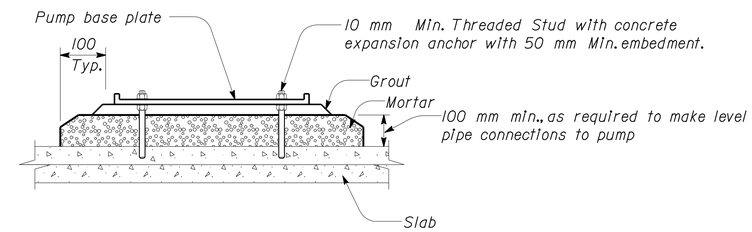

3 PUMP FOUNDATION

NO SCALE

EQUIPMENT SCHEDULE

EQUIPMENT	SPEED (RPM)	kW	VOLTS	PHASE	PUMPING RATE (LPM)	TOTAL DYNAMIC HEAD (m)
BOOSTER PUMP #1,#2	3450	3.7	230	3	117	137
					132	119
					148	98

NOTE:
Heat tape shall be installed on all exposed water pipes.

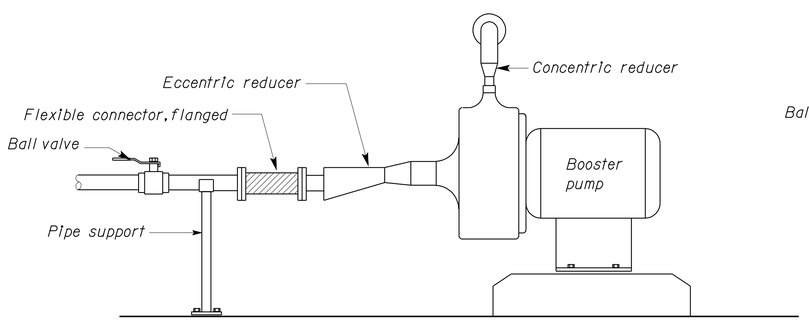

A ELEVATION

NO SCALE

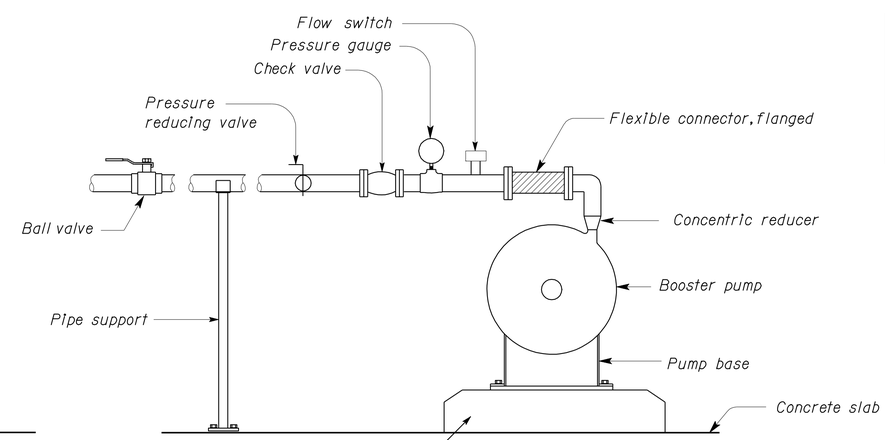

B ELEVATION

NO SCALE

ALL DIMENSIONS SHOWN IN MILLIMETERS, EXCEPT AS NOTED

	BY	CHECKED
DESIGN	Amar Baldwan	Jerry Marcotte
DETAILS	Amar Baldwan	Don Hansen
QUANTITIES	Amar Baldwan	Jerry Marcotte

STATE OF CALIFORNIA DEPARTMENT OF TRANSPORTATION

DIVISION OF ENGINEERING SERVICES
ELECTRICAL-MECHANICAL-WATER AND WASTEWATER DESIGN

BRIDGE NO. 44-0286
KM POST R158.26

CRAZY HORSE BOOSTER PUMPS

BOOSTER PUMP PLAN AND DETAILS

SHEET **W2-2**

DOS ELEC (10/98)
FILE => bw2_2.dgn
DATE PLOTTED => 03-AUG-2010 TIME PLOTTED => 10:51

ORIGINAL SCALE IN MILLIMETERS FOR REDUCED PLANS 0 10 20 30 40 50 60 70 80 90 100

CU 06226
EA 0161E1

DISREGARD PRINTS BEARING EARLIER REVISION DATES

REVISION DATES (PRELIMINARY STAGE ONLY) 2-26-08 10-15-08 11-19-08 12-30-08 1-27-09 5-03-10

SHEET 4 OF 8

FILE => bw2_2.dgn

USERNAME => trlenord DATE PLOTTED => 03-AUG-2010 TIME PLOTTED => 10:51

VI=1

DIST.	COUNTY	ROUTE	KILOMETER POST TOTAL PROJECT	SHEET NO.	TOTAL SHEETS
05	Mon	101	R146.8/159.7	1308	1402

Caltrans Metric

REGISTERED CIVIL ENGINEER — DATE 5-03-10

7-26-10
PLANS APPROVAL DATE

REGISTERED PROFESSIONAL ENGINEER J. MARCOTTE No. C 36844 Exp. 6-30-10 Civil STATE OF CALIFORNIA

The State of California or its officers or agents shall not be responsible for the accuracy or completeness of electronic copies of this plan sheet.

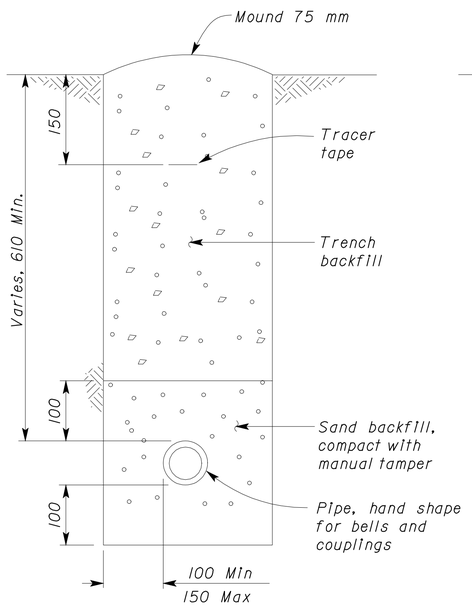

PIPE UNDER EARTH

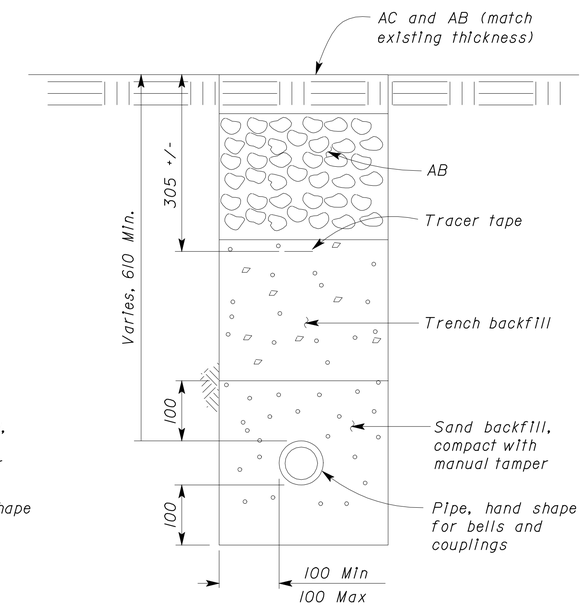

PIPE UNDER AC AND AB

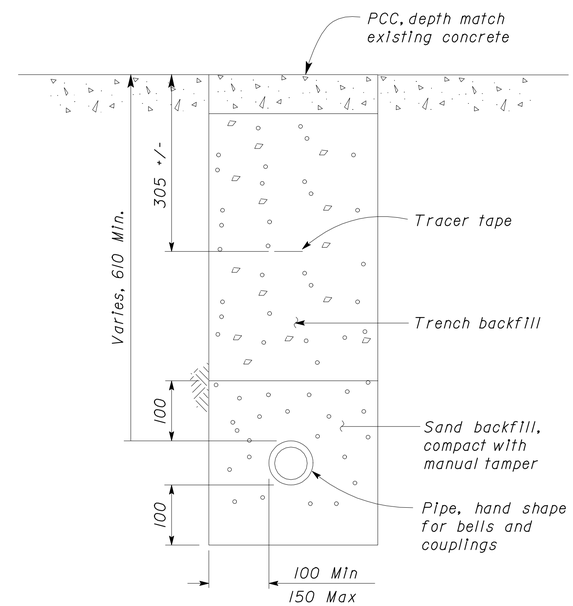

PIPE UNDER PCC

PIPE DETAILS

NO SCALE

ALL DIMENSIONS SHOWN IN MILLIMETERS, EXCEPT AS NOTED

	BY	CHECKED
DESIGN	Amar Baldwan	Jerry Marcotte
DETAILS	Amar Baldwan	Don Hansen
QUANTITIES	Amar Baldwan	Jerry Marcotte

STATE OF CALIFORNIA DEPARTMENT OF TRANSPORTATION

DIVISION OF ENGINEERING SERVICES
ELECTRICAL-MECHANICAL-WATER AND WASTEWATER DESIGN

BRIDGE NO. 44-0286
KM POST R158.26

CRAZY HORSE BOOSTER PUMPS

DETAILS

SHEET **W2-3**

DOS ELEC (10/98)
FILE => bw2_3.dgn
DATE PLOTTED => 03-AUG-2010 TIME PLOTTED => 10:51

ORIGINAL SCALE IN MILLIMETERS FOR REDUCED PLANS 0 10 20 30 40 50 60 70 80 90 100

CU 06226
EA 0161E1

DISREGARD PRINTS BEARING EARLIER REVISION DATES

REVISION DATES (PRELIMINARY STAGE ONLY): 2-26-08 10-15-08 11-19-08 2-20-08 1-27-09 5-03-10

SHEET 5 OF 8

FILE => bw2_3.dgn

USERNAME => trlenard DATE PLOTTED => 03-AUG-2010 TIME PLOTTED => 10:51

VI=I

DIST	COUNTY	ROUTE	KILOMETER POST TOTAL PROJECT	SHEET NO.	TOTAL SHEETS
05	Mon	101	R146.8/159.7	1309	1402

REGISTERED ELECTRICAL ENGINEER — 5-3-10 DATE

REGISTERED PROFESSIONAL ENGINEER — IMRAN SAEED — No. E 18781 — Exp. 06-30-11 — ELEC — STATE OF CALIFORNIA

7-26-10
PLANS APPROVAL DATE

The State of California or its officers or agents shall not be responsible for the accuracy or completeness of electronic copies of this plan sheet.

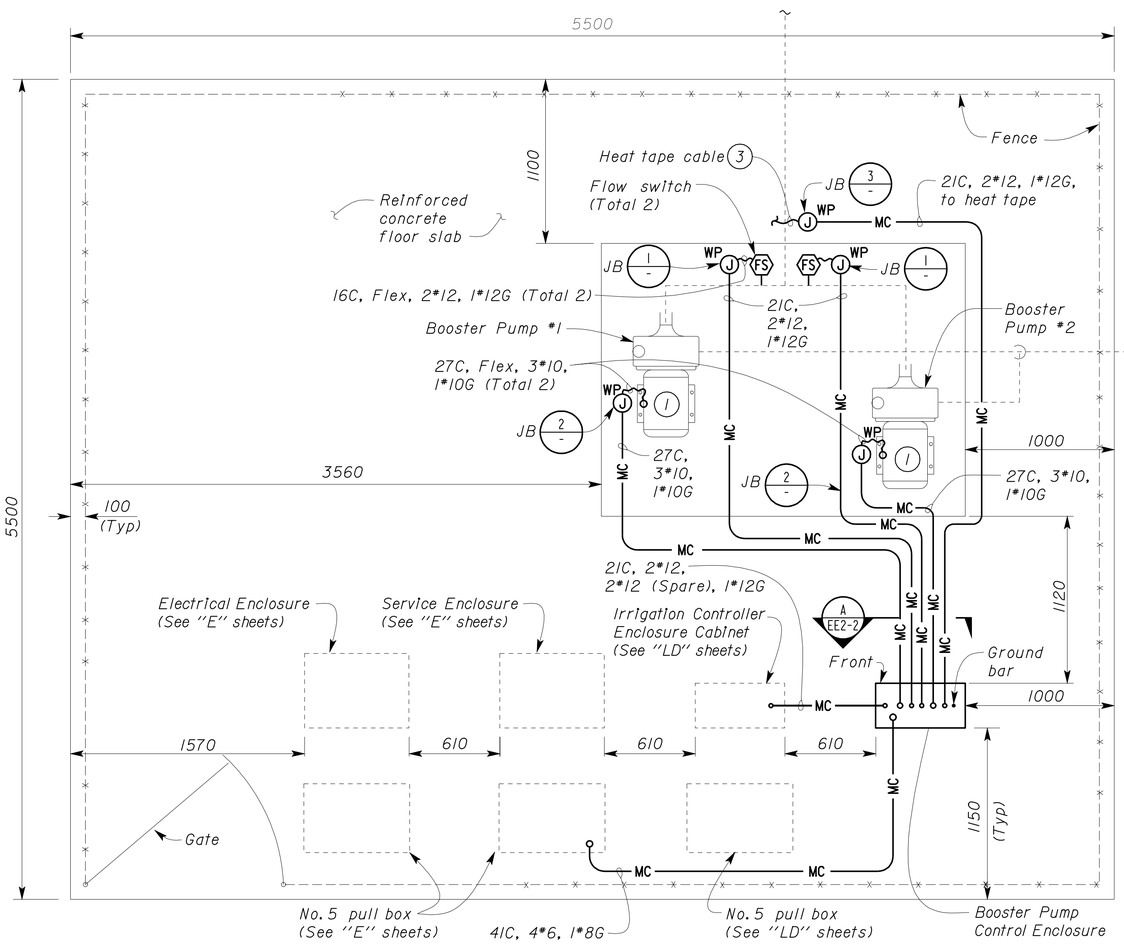

LOL "CHCEV" STA. 16+40
CRAZY HORSE BOOSTER PUMPS PLAN

SCALE 1:20

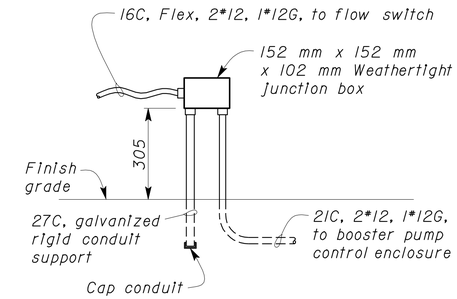

JUNCTION BOX MOUNTING DETAIL 1

NO SCALE

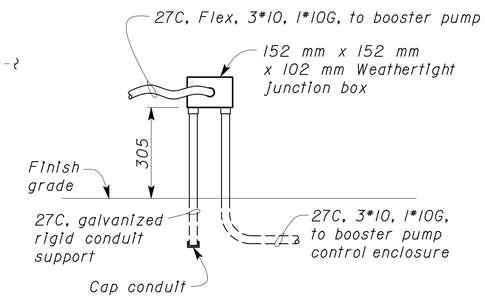

JUNCTION BOX MOUNTING DETAIL 2

NO SCALE

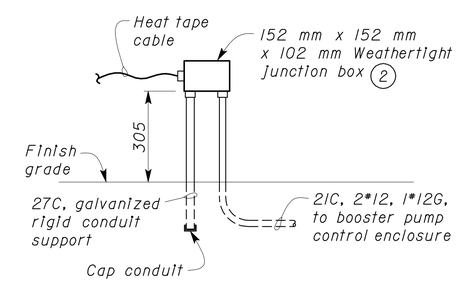

JUNCTION BOX MOUNTING DETAIL 3

NO SCALE

Notes:

1. For exact location, see "W" sheets.
2. Splice 2*12, 1*12G to heat tape cable.
3. See note on sheet W2-2.

LEGEND & GRAPHIC SYMBOLS

(2) 16C, MC, 2*12
- CONDUCTOR INFO (PER CONDUIT)
- CONDUIT TYPE
- CONDUIT SIZE
- NUMBER OF CONDUITS (NO NUMBER INDICATES ONE CONDUIT)

- MC — CONDUIT, METALLIC UNDERGROUND, TYPE 1
- CONDUIT, TURN UP
- CONDUIT, FLEXIBLE, TYPE 4
- A — PILOT LIGHT (A=AMBER, G=GREEN, R=RED)
- CIRCUIT BREAKER, SINGLE POLE
- CIRCUIT BREAKER, THREE POLE
- CONTACT, NORMALLY OPEN
- CONTACT, NORMALLY CLOSED
- OPERATING COIL
- CONTACT, NORMALLY OPEN, TIME DELAY CLOSING ON ENERGIZING
- CONTACT, NORMALLY CLOSED, TIME DELAY OPENING ON ENERGIZING
- FLOW ACTUATED SWITCH, NORMALLY CLOSED

- SWITCH, SINGLE-POLE, 3-POSITION
- THERMAL OVERLOAD
- GROUNDING ELECTRODE
- ENCLOSURE BOND
- M — MOTOR
- TM — TIME METER
- J WP — WEATHERPROOF JUNCTION BOX
- A / EE2-2 — SECTION/ELEVATION LETTER; SHEET NUMBER
- 1 / EE-2 — DETAIL NUMBER; SHEET NUMBER

ABBREVIATIONS

AC	ALTERNATING CURRENT	NC	NORMALLY CLOSED
AL	ALARM LIGHT	NO	NORMALLY OPEN
AR	PUMP ALTERNATION RELAY	OL	OVERLOAD
C	CONDUIT	Ø	PHASE
CD	CONTROL DISCONNECT	PD	PUMP DISCONNECT
CR	CONTROL RELAY	PL	PILOT LIGHT
DP	DUPLEX RECEPTACLE	RB	RESET PUSHBUTTON
FLEX	FLEXIBLE CONDUIT	RD	RECEPTACLE DISCONNECT
FR	PUMP FAIL RELAY	RL	PUMP ON LIGHT
G	GROUND	S	STARTER COIL/CONTACT
GB	GROUND BUS	SP	SPARE
GFCI	GROUND FAULT CIRCUIT INTERRUPTER	SS	SELECTOR SWITCH
HD	HEAT TAPE DISCONNECT	ST	STARTER
JB	JUNCTION BOX	TB	TERMINAL BLOCK
kW	KILOWATT	TDR	TIME DELAY RELAY
Min	MINIMUM	TM	TIME METER
mm	MILLIMETER	TYP	TYPICAL
MB	BOOSTER PUMP MAIN BREAKER	V	VOLT
MS	MOTOR SAVER	WP	WEATHERPROOF
NB	NEUTRAL BUS		

THIS DRAWING ACCURATE FOR ELECTRICAL WORK ONLY.

DESIGN SUPERVISOR — DESIGN ENGINEER

	BY	CHECKED
DESIGN	Imran Saeed	Baldev S. Dehal
DETAILS	Kathi Andreasen	Imran Saeed
QUANTITIES	Imran Saeed	Baldev S. Dehal

STATE OF CALIFORNIA DEPARTMENT OF TRANSPORTATION

DIVISION OF ENGINEERING SERVICES ELECTRICAL-MECHANICAL-WATER AND WASTEWATER DESIGN

BRIDGE NO. 44-0286 — KM POST R158.26

CRAZY HORSE BOOSTER PUMPS

ELECTRICAL SITE PLAN AND LEGEND

SHEET EE2-1

DOES SD metric Rev. 1/07

SCALE: ALL DIMENSIONS ARE IN MILLIMETERS UNLESS OTHERWISE NOTED.

ORIGINAL SCALE IN MILLIMETERS FOR REDUCED PLANS 0 10 20 30 40 50 60 70 80 90 100

CU 06226
EA 0161E1

DISREGARD PRINTS BEARING EARLIER REVISION DATES → 9/23/08 5/3/10 11/3/08 11/7/08 11/14/08 12/12/08 12/29/08 1/26/09 9/28/09

REVISION DATES (PRELIMINARY STAGE ONLY) — SHEET 6 OF 8

03-AUG-2010 10:51

bxee2_01.dgn

DIST	COUNTY	ROUTE	KILOMETER POST TOTAL PROJECT	SHEET NO.	TOTAL SHEETS
05	Mon	101	R146.8/159.7	1310	1402

Caltrans Metric

REGISTERED ELECTRICAL ENGINEER — 5-3-10 DATE

REGISTERED PROFESSIONAL ENGINEER — IMRAN SAEED — No. E 18781 — Exp. 06-30-11 — ELEC — STATE OF CALIFORNIA

7-26-10
PLANS APPROVAL DATE

The State of California or its officers or agents shall not be responsible for the accuracy or completeness of electronic copies of this plan sheet.

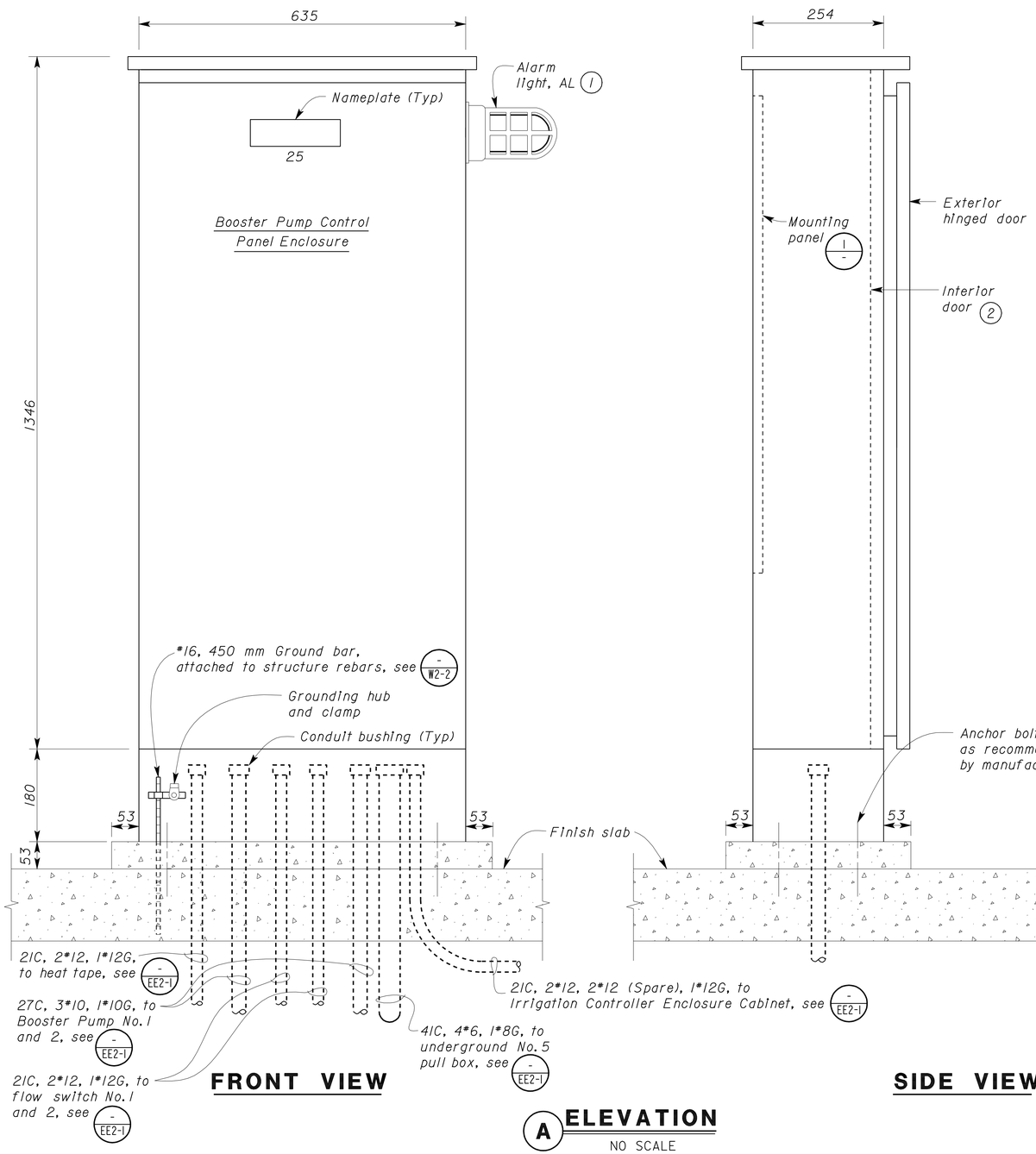

A ELEVATION
NO SCALE

NAMEPLATE SCHEDULE

ITEM NO.	INSCRIPTION	LETTER HEIGHT
1	TDR1	3 mm
2	TDR2	3 mm
3	ALTERNATING RELAY - AR	3 mm
4	PUMP NO.1 FAIL RELAY - FR1	3 mm
5	PUMP NO.2 FAIL RELAY - FR2	3 mm
6	RECEPTACLE DISCONNECT	3 mm
7	CONTROL DISCONNECT	3 mm
8	HEAT TAPE DISCONNECT	3 mm
9	MAIN BREAKER	3 mm
10	PUMP NO.1 DISCONNECT	3 mm
11	PUMP NO.1 STARTER	3 mm
12	PUMP NO.1	3 mm
13	PUMP NO.1 FAIL LIGHT RESET	3 mm
14	PUMP NO.1 FAIL	3 mm
15	PUMP NO.1 TIME METER	3 mm
16	PUMP NO.1 OVERLOAD RESET	3 mm
17	PUMP NO.2 DISCONNECT	3 mm
18	PUMP NO.2 STARTER	3 mm
19	PUMP NO.2	3 mm
20	PUMP NO.2 FAIL LIGHT RESET	3 mm
21	PUMP NO.2 FAIL	3 mm
22	PUMP NO.2 TIME METER	3 mm
23	PUMP NO.2 OVERLOAD RESET	3 mm

Notes:

(1) Install a nameplate labeled "PUMP FAILED", with 6 mm high lettering, below the alarm light.

(2) Door mounted electrical components not shown.

NAMEPLATE SCHEDULE (Cont.)

ITEM NO.	INSCRIPTION	LETTER HEIGHT
24	PUMP DISCONNECT DOES NOT DE-ENERGIZE CONTROL CIRCUIT ✱	3 mm
25	BOOSTER PUMP CONTROL PANEL	6 mm
26	PUMP NO.1 ON - RL1	3 mm
27	PUMP NO.2 ON - RL2	3 mm
28	CONTROL RELAY	3 mm
29	SPARE	3 mm

✱ White letters against a red field for this warning sign.

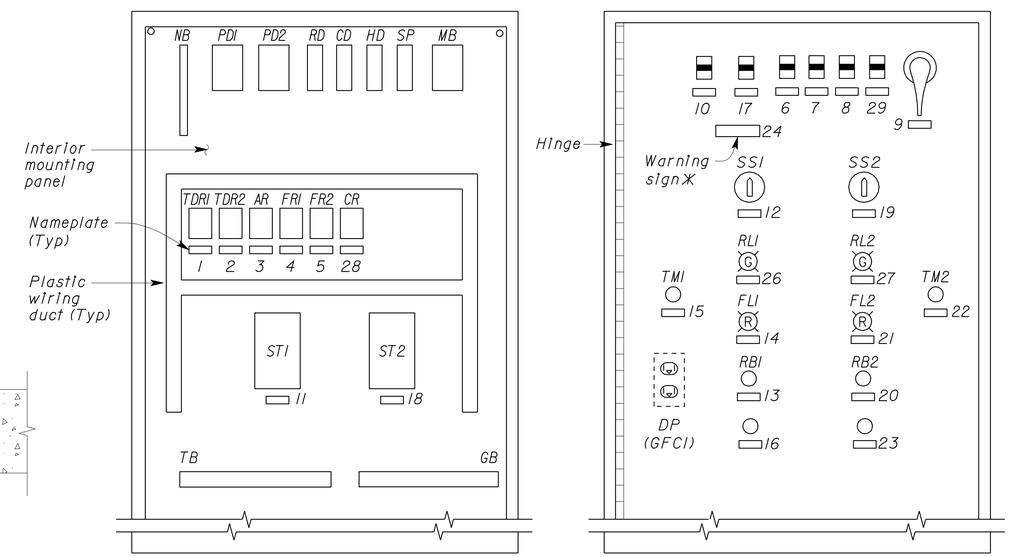

MOUNTING PANEL

INTERIOR DOOR

(1) BOOSTER PUMP CONTROL PANEL ENCLOSURE
NO SCALE
(Exterior door not shown)

THIS DRAWING ACCURATE FOR ELECTRICAL WORK ONLY.

	BY	CHECKED
DESIGN	Imran Saeed	Baldev S. Dehal
DETAILS	Kathi Andreasen	Imran Saeed
QUANTITIES	Imran Saeed	Baldev S. Dehal

STATE OF CALIFORNIA
DEPARTMENT OF TRANSPORTATION

DIVISION OF ENGINEERING SERVICES
ELECTRICAL-MECHANICAL-WATER AND WASTEWATER DESIGN

BRIDGE NO. 44-0286
KM POST R158.26

CRAZY HORSE BOOSTER PUMPS
BOOSTER PUMP CONTROL PANEL ENCLOSURE DETAILS

SHEET EE2-2

DOES SD metric Rev. 1/07

SCALE: ALL DIMENSIONS ARE IN MILLIMETERS UNLESS OTHERWISE NOTED.

ORIGINAL SCALE IN MILLIMETERS FOR REDUCED PLANS 0 10 20 30 40 50 60 70 80 90 100

CU 06226
EA 0161E1

DISREGARD PRINTS BEARING EARLIER REVISION DATES → REVISION DATES (PRELIMINARY STAGE ONLY) 9/22/08 10/8/08 10/15/08 10/31/08 11/7/08 11/14/08 12/12/08 1/26/09 5/3/10

SHEET 7 OF 8

03-AUG-2010 10:51
bxee2_02.dgn

DIST	COUNTY	ROUTE	KILOMETER POST TOTAL PROJECT	SHEET NO.	TOTAL SHEETS
05	Mon	101	R146.8/159.7	1311	1402

Caltrans Metric

REGISTERED ELECTRICAL ENGINEER — DATE 5-3-10

REGISTERED PROFESSIONAL ENGINEER IMRAN SAEED No. E 18781 Exp. 06-30-11 ELEC STATE OF CALIFORNIA

7-26-10
PLANS APPROVAL DATE

The State of California or its officers or agents shall not be responsible for the accuracy or completeness of electronic copies of this plan sheet.

Booster Pump Control Panel Enclosure

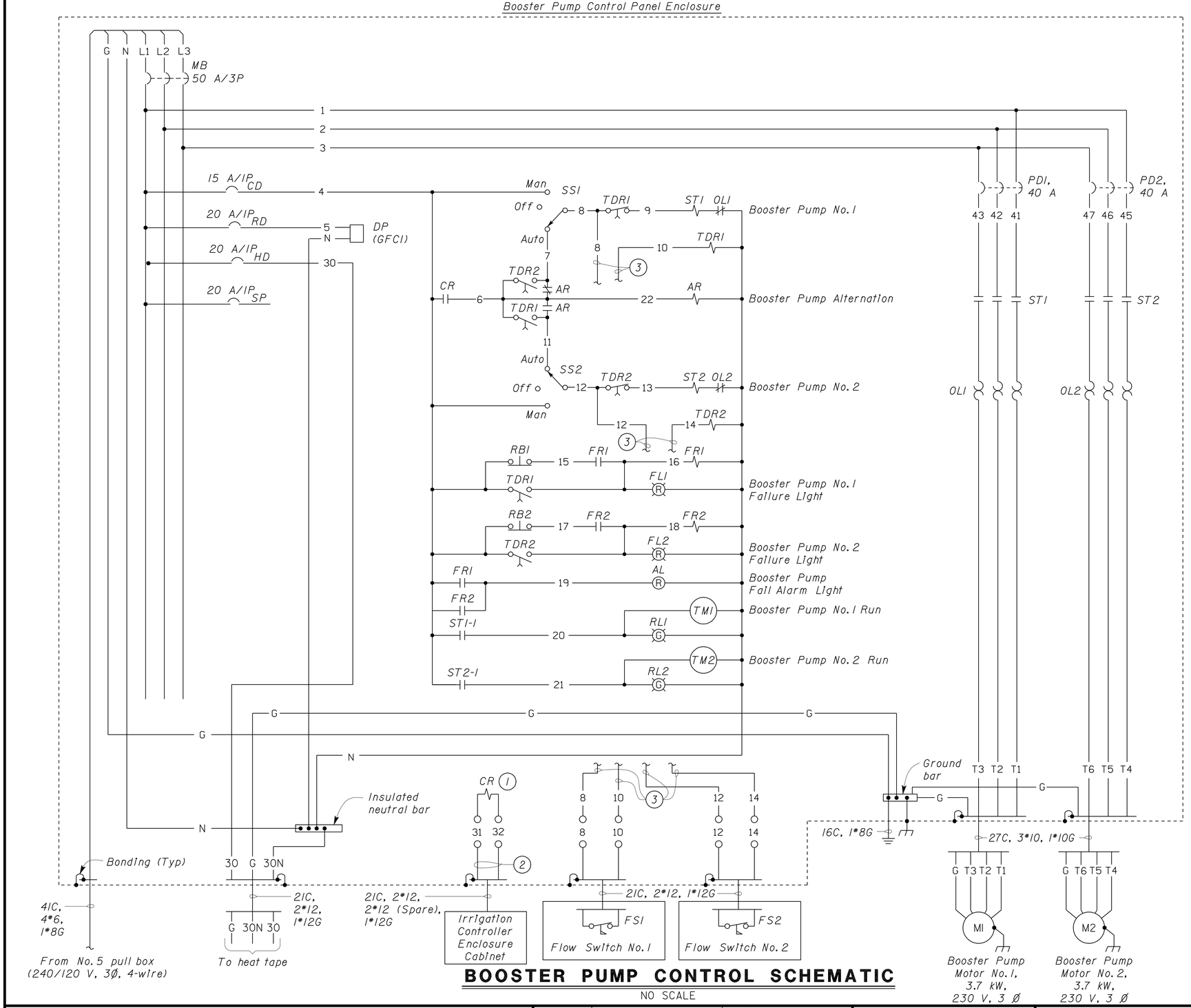

BOOSTER PUMP CONTROL SCHEMATIC

NO SCALE

Notes:

1. Booster pump control relay, 24 V(AC) coil.
2. To pump start terminals in the irrigation controller enclosure.
3. Normally closed contact of flow switch.

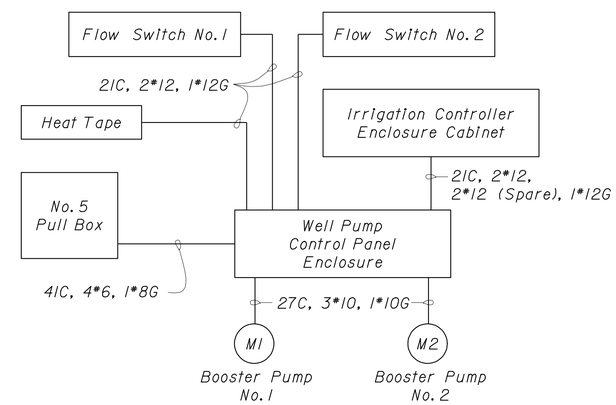

INTERCONNECTION BLOCK DIAGRAM

NO SCALE

DESIGN	BY Imran Saeed	CHECKED Baldev S. Dehal	
DETAILS	BY Kathi Andreasen	CHECKED Imran Saeed	
QUANTITIES	BY Imran Saeed	CHECKED Baldev S. Dehal	

STATE OF CALIFORNIA DEPARTMENT OF TRANSPORTATION

DIVISION OF ENGINEERING SERVICES ELECTRICAL-MECHANICAL-WATER AND WASTEWATER DESIGN

BRIDGE NO. 44-0286 KM POST R158.26

CRAZY HORSE BOOSTER PUMPS

BOOSTER PUMP CONTROL SCHEMATIC AND INTERCONNECTION BLOCK DIAGRAM

SHEET EE2-3

DOES SD metric Rev. 1/07

SCALE: ALL DIMENSIONS ARE IN MILLIMETERS UNLESS OTHERWISE NOTED.

ORIGINAL SCALE IN MILLIMETERS FOR REDUCED PLANS 0 10 20 30 40 50 60 70 80 90 100

CU 06226
EA 0161E1

DISREGARD PRINTS BEARING EARLIER REVISION DATES → REVISION DATES (PRELIMINARY STAGE ONLY) 9/22/08 10/28/08 10/15/08 11/4/08 11/14/08 11/14/08 12/12/08 1/26/09 5/3/10

SHEET 8 OF 8

03-AUG-2010 10:51

bxee2_03.dgn

DIST	COUNTY	ROUTE	KILOMETER POST TOTAL PROJECT	SHEET No	TOTAL SHEETS
05	Mon	101	R146.8/159.7	1312	1402

Hernan Perez 05-06-10
REGISTERED CIVIL ENGINEER DATE

7-26-10
PLANS APPROVAL DATE

REGISTERED PROFESSIONAL ENGINEER HERNAN PEREZ No. 60993 Exp. 12-31-10 CIVIL STATE OF CALIFORNIA

The State of California or its officers or agents shall not be responsible for the accuracy or completeness of electronic copies of this plan sheet.

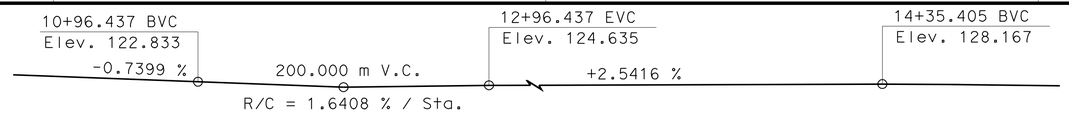

PROFILE GRADE

NO SCALE

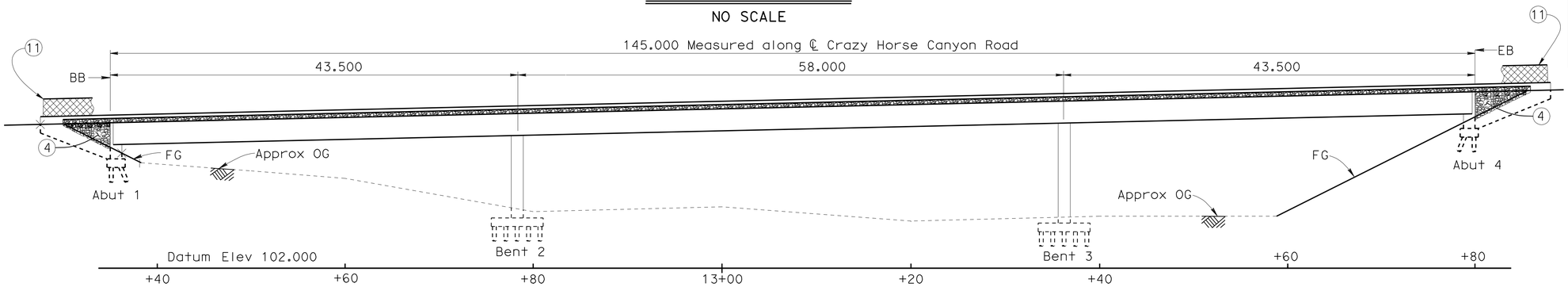

ELEVATION

1:250

Notes:

1. Paint "Crazy Horse Canyon Viaduct"
2. Paint "Br. No. 44-0288"
3. M.B.G.R., see "Road Plans"
4. Architectural Treatment, Typ
5. 75 mm ø Water Supply Line NPS 3
6. 75 mm ø Sprinkler Control Conduit
7. Structure Approach Type N(9S)
8. Sidewalk, see "Road Plans"
9. 2-50 mm ø conduit, see "ELECTRICAL PLANS"
10. No.5 Pull Box on sidewalk, see "ELECTRICAL PLANS"
11. Chain Link Railing (Type 7, Black Vinyl Coated)
12. Deck Drain Pipe
13. For Sidewalk and Curb Ramp details, see "ROAD PLANS"

Notes:

For Index to Plans, Quantities, General Notes, Standard Plans and Foundation Data Table, see "Index to Plans" sheet.

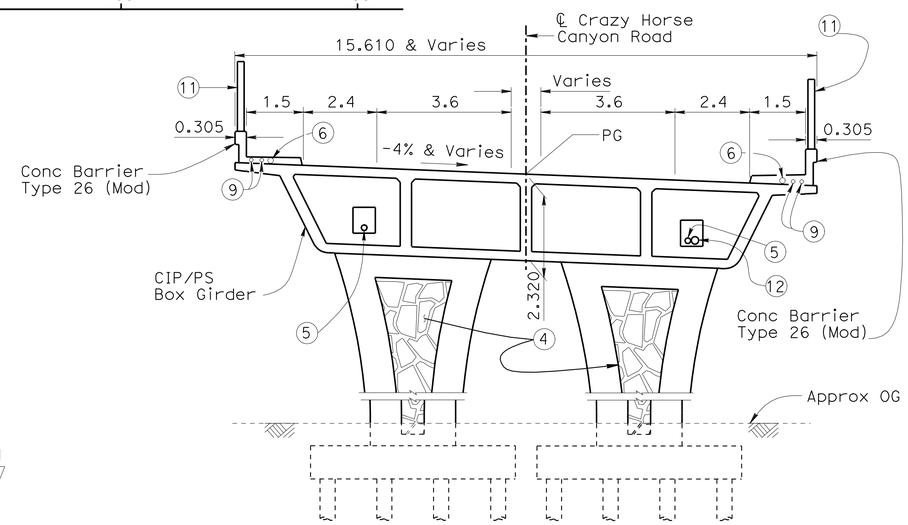

TYPICAL SECTION

1:80

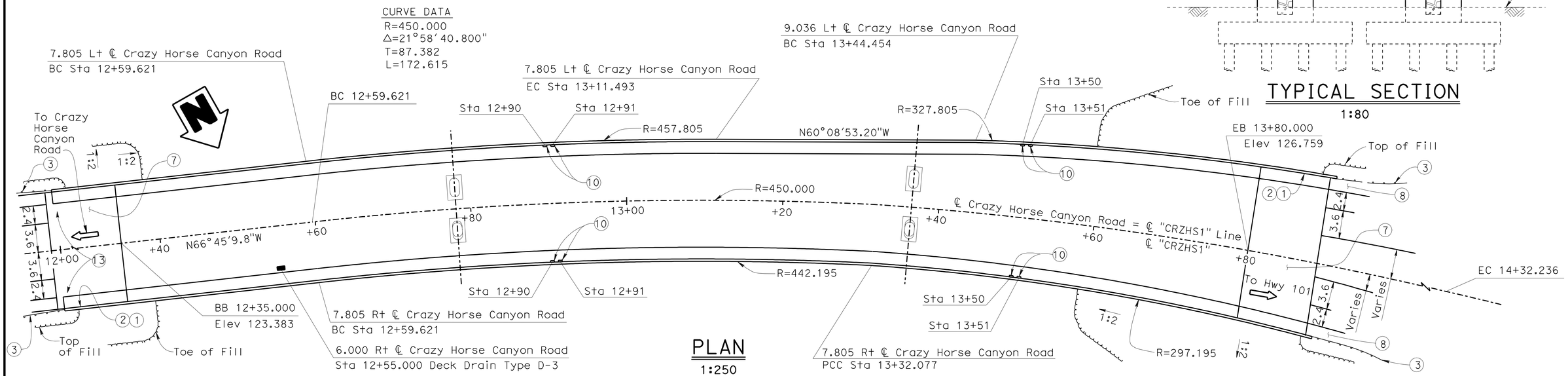

PLAN

1:250

Caltrans Metric								
Fritz Hoffman, DESIGN ENGINEER	DESIGN	BY Elijah Hall	CHECKED Richard Melko	LOAD & RESISTANCE FACTOR DESIGN	LIVE LOADING: HL93 W/"LOW-BOY"; PERMIT DESIGN VEHICLE			
	DETAILS	BY George Zweier	CHECKED Elijah Hall	LAYOUT	BY George Zweier	CHECKED Elijah Hall		
	QUANTITIES	BY Ubong Inyang	CHECKED Elijah Hall	SPECIFICATIONS	BY Sirisha Nelapatla	PLANS AND SPECS COMPARED Sirisha Nelapatla		

STATE OF CALIFORNIA
DEPARTMENT OF TRANSPORTATION

DIVISION OF ENGINEERING SERVICES
STRUCTURE DESIGN
DESIGN BRANCH 6

BRIDGE NO. 44-0288
KILOMETER POST 158.4

CRAZY HORSE CANYON VIADUCT(NEW)

GENERAL PLAN

ALL DIMENSIONS ARE IN METERS UNLESS OTHERWISE SHOWN

ORIGINAL SCALE IN MILLIMETERS FOR REDUCED PLANS 0 10 20 30 40 50 60 70 80 90 100

CU 05
EA 0161E1

DISREGARD PRINTS BEARING EARLIER REVISION DATES

REVISION DATES: 05-24-07 10-26-09 11-18-09 12-08-09 03-11-10 05-06-10 04-30-09 05-05-09 05-11-09 10-15-09

SHEET 1 OF 23

FILE => 44-0288-a-gp.dgn

STRUCTURES DESIGN GENERAL PLAN SHEET (METRIC) (REV.07-24-06)

USERNAME => friehard DATE PLOTTED => 03-AUG-2010 TIME PLOTTED => 10:51

DIST	COUNTY	ROUTE	KILOMETER POST TOTAL PROJECT	SHEET No	TOTAL SHEETS
05	Mon	101	R146.8/159.7	1313	1402

REGISTERED CIVIL ENGINEER 05-06-10 DATE

7-26-10
PLANS APPROVAL DATE

REGISTERED PROFESSIONAL ENGINEER HERNAN PEREZ No. 60993 Exp. 12-31-10 CIVIL STATE OF CALIFORNIA

The State of California or its officers or agents shall not be responsible for the accuracy or completeness of electronic copies of this plan sheet.

GENERAL NOTES
LOAD AND RESISTANCE FACTOR DESIGN SUPERSTRUCTURE
WITH LOAD FACTOR DESIGN SUBSTRUCTURE

INDEX TO PLANS

SHEET NO.	TITLE
1.	GENERAL PLAN
2.	INDEX TO PLANS
3.	DECK CONTOURS
4.	FOUNDATION PLAN
5.	ABUTMENT 1 LAYOUT
6.	ABUTMENT 4 LAYOUT
7.	ABUTMENT DETAILS
8.	BENT LAYOUT
9.	BENT DETAILS
10.	TYPICAL SECTION
11.	GIRDER LAYOUT
12.	GIRDER REINFORCEMENT
13.	PRESTRESSING LAYOUT
14.	JOINT ASSEMBLY (MAXIMUM MOVEMENT RATIO
15.	DECK DRAIN DETAILS
16.	STRUCTURE APPROACH TYPE N(9S)
17.	STRUCTURE APPROACH DRAINAGE DETAILS
18.	ARCHITECTURAL TREATMENT
19.	LOG OF TEST BORINGS 1 OF 5
20.	LOG OF TEST BORINGS 2 OF 5
21.	LOG OF TEST BORINGS 3 OF 5
22.	LOG OF TEST BORINGS 4 OF 5
23.	LOG OF TEST BORINGS 5 OF 5

STANDARD PLANS DATED JULY 2004

A10A	ACRONYMS AND ABBREVIATIONS (A-L)
A10B	ACRONYMS AND ABBREVIATIONS (M-Z)
A62C	LIMITS OF PAYMENT FOR EXCAVATION AND BACKFILL BRIDGE
B0-1	BRIDGE DETAILS
B0-5	BRIDGE DETAILS
B0-13	BRIDGE DETAILS
B2-5	PILE DETAILS CLASS 400 AND CLASS 625
B2-8	PILE DETAILS CLASS 900
RSP B8-5	CAST-IN-PLACE PRESTRSSED GIRDER DETAILS
B7-1	BOX GIRDER DETAILS
B7-7	DECK DRAIN TYPE D-3
B7-8	DECK DRAINAGE DETAILS
B7-10	UTILITY OPENING BOX GIRDER
B11-52	CHAIN LINK RAILING TYPE 7
B11-54	CONCRETE BARRIER TYPE 26 (MOD)
B14-3	COMMUNICATION AND SPRINKLER CONTROL CONDUITS (CONDUIT LESS THAN SIZE 103)
B14-4	WATER SUPPLY LINE (BRIDGE) (PIPE SIZES LESS THAN NPS 4)
B14-5	WATER SUPPLY LINE (DETAILS) (PIPE SIZES LESS THAN NPS 4)

DESIGN: AASHTO LRFD Design Specifications, 3rd Edition with 2005 and 2006 Interims and the Caltrans Admendments v3.06.01; except that abutments, deep foundations, earth retaining systems, bridge details taken from Standard Plans July 2004 and XS Sheets are designed using Caltrans Bridge Design Specifications LFD Version April 2000 (1996 AASHTO with Revisions by Caltrans)

SEISMIC DESIGN: CALTRANS SEISMIC DESIGN CRITERIA (SDC), Version 1.4, dated June 2006

DEAD LOAD: Includes 1675 Pa for future wearing surface

LIVE LOAD: HL-93 with "low-boy" and Permit Design Vehicle

SEISMIC LOADING: See "ACCELERATION RESPONSE SPECTRUM" on "DECK CONTOURS" sheet

REINFORCED CONCRETE: f_y = 420 MPa
f'_c = 25 MPa (except as shown or specified)

PRESTRESSED CONCRETE: See "Prestressing Notes" on "PRESTRESSING LAYOUT" sheet

STRUCTURAL STEEL: Steel Pipe Piles ASTM-A252m, Grade 3

QUANTITIES

STRUCTURE EXCAVATION (BRIDGE)	1024	m^3
STRUCTURE BACKFILL (BRIDGE)	740	m^3
NPS 3 SUPPLY LINE (BRIDGE)	334	m
FURNISH PILING (CLASS 900) (ALTERNATIVE W)	657	m
DRIVE PILE (CLASS 900) (ALTERNATIVE W)	72	EA
FURNISH PILING (CLASS 625) (ALTERNATIVE W)	980	m
DRIVE PILE (CLASS 625) (ALTERNATIVE W)	44	EA
PRESTRESSING CAST-IN-PLACE CONCRETE	LUMP	SUM
STRUCTURAL CONCRETE, BRIDGE FOOTING	220	m^3
STRUCTURAL CONCRETE, BRIDGE	2065	m^3
STRUCTURAL CONCRETE, APPROACH SLAB (TYPE N)	98	m^3
ARCHITECTURAL TREATMENT (DRYSTACK STONE TEXTURE)	415	m^2
JOINT SEAL ASSEMBLY (MR 80 MM)	29	m
BAR REINFORCING STEEL (BRIDGE)	343 500	kg
BRIDGE DECK DRAINAGE SYSTEM	496	kg
CHAIN LINK RAILING (TYPE 7) (BLACK VINYL-COATED)	314	m
CONCRETE BARRIER (TYPE 26 MODIFIED)	314	m
SPRINKLER CONTROL CONDUIT (BRIDGE)	165	m

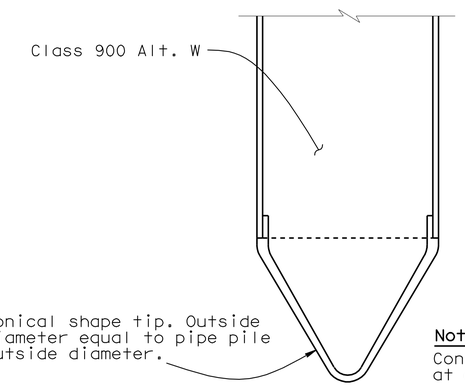

Note:
Conical configuration at option of contractor.

PILE TIP AT BENT 2
No Scale

PILE DATA TABLE						
Location	Pile Type	Nominal Resistance (kN)		Design Tip Elevation (m)	Specified Tip Elevation (m)	Nominal Driving Resistance (kN)
		Compression	Tension			
Abut. 1	Class 625 Alt. W	1240	0	97.0 (a), 98.0 (c)	97.0	1240
Bent 2	Class 900 Alt. W with closed tip	1690	0	102.3 (a), 103.6 (c)	102.3	1690
Bent 3	Class 900 Alt. W	1690	0	98.0 (a), 103.6 (c)	98.0	1690
Abut. 4	Class 625 Alt. W	1240	0	99.6 (a), 108.2 (c)	99.6	1240

Notes:
1) Design tip elevations for Abutments are controlled by: (a) Compression, (c) Settlement
2) Design tip elevations for Bents are controlled by: (a) Compression, (c) Settlement
3) The specified tip elevation shall not be raised above the design tip elevations for settlement

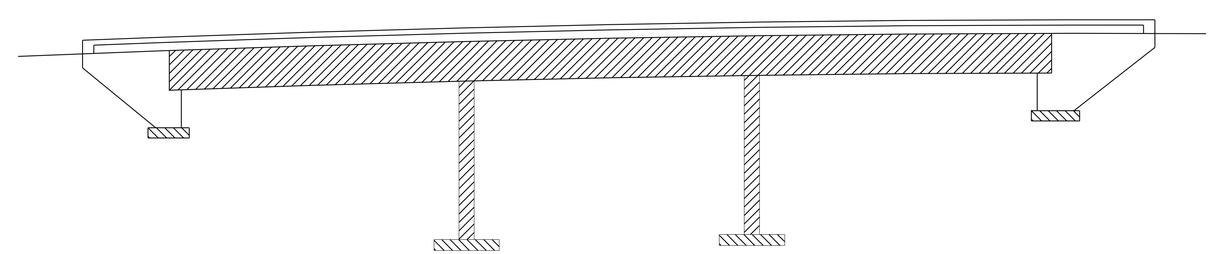

CONCRETE STRENGTH AND TYPE LIMITS
NO SCALE

STANDARD PLAN SHEET NO.
DETAIL NO.

Structure Concrete, Bridge Footing
Structure Concrete, Bridge
Structure Concrete, Bridge (35 MPa @ 28 Days)

Caltrans Metric

	BY	CHECKED
DESIGN	Elijah Hall	Richard Melko
DETAILS	P. von Savoye	Elijah Hall
QUANTITIES	Ubong Inyang	Elijah Hall

STATE OF CALIFORNIA
DEPARTMENT OF TRANSPORTATION

DIVISION OF ENGINEERING SERVICES
STRUCTURE DESIGN
DESIGN BRANCH 6

BRIDGE NO. 44-0288
KILOMETER POST 158.4

CRAZY HORSE CANYON VIADUCT (NEW)
INDEX TO PLANS

ALL DIMENSIONS ARE IN MILLIMETERS UNLESS OTHERWISE SHOWN

ORIGINAL SCALE IN MILLIMETERS FOR REDUCED PLANS 0 10 20 30 40 50 60 70 80 90 100

CU 05
EA 0161E1

DISREGARD PRINTS BEARING EARLIER REVISION DATES

REVISION DATES: 12-08-07 | 03-30-10 | 05-06-10 | 12-23-08 | 04-30-09 | 10-23-09 | 11-18-09 | 12-01-09 | 12-08-09 | 12-08-09

SHEET 2 OF 23

FILE => 44-0288-b-itp.dgn

STRUCTURES DESIGN DETAIL SHEET (METRIC) (REV.03-17-04)

USERNAME => rtfernard DATE PLOTTED => 03-AUG-2010 TIME PLOTTED => 10:51

DIST	COUNTY	ROUTE	KILOMETER POST TOTAL PROJECT	SHEET No	TOTAL SHEETS
05	Mon	101	R146.8/159.7	1314	1402

REGISTERED CIVIL ENGINEER — DATE 05-06-10

7-26-10
PLANS APPROVAL DATE

REGISTERED PROFESSIONAL ENGINEER — HERNAN PEREZ — No. 60993 — Exp. 12-31-10 — CIVIL — STATE OF CALIFORNIA

The State of California or its officers or agents shall not be responsible for the accuracy or completeness of electronic copies of this plan sheet.

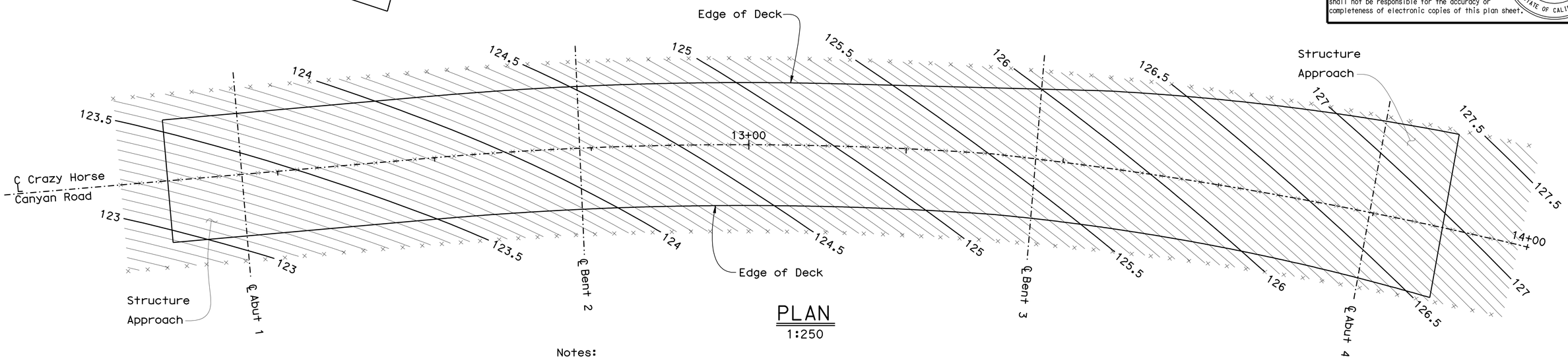

PLAN
1:250

Notes:

1. Contour interval = .05 m
2. X = 2.5 m intervals along station line
3. Contours do not include camber

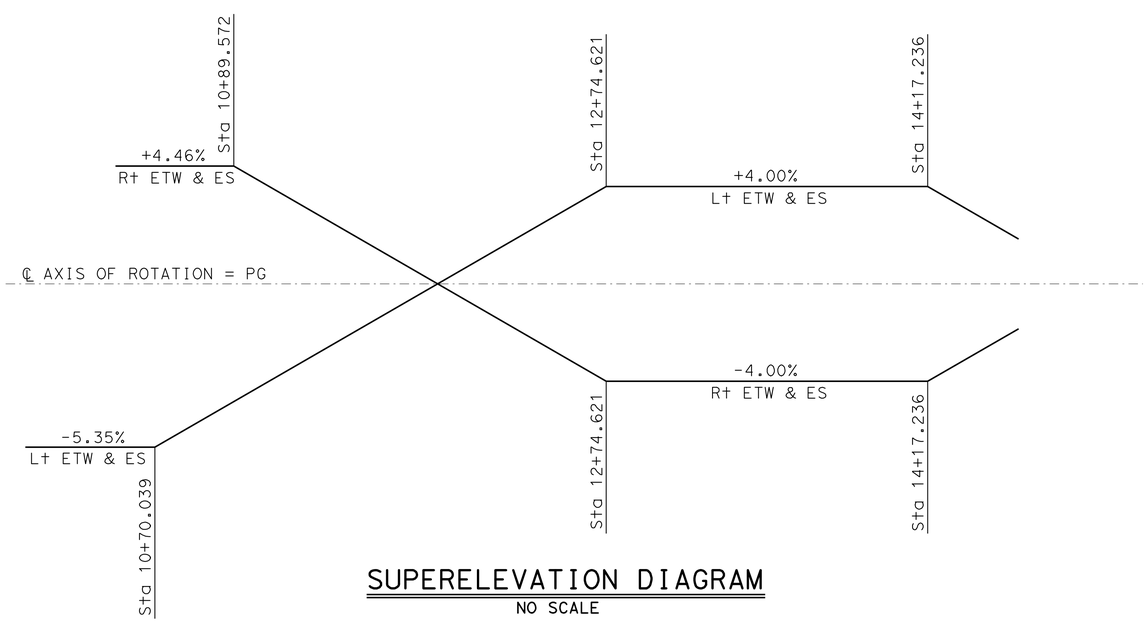

SUPERELEVATION DIAGRAM
NO SCALE

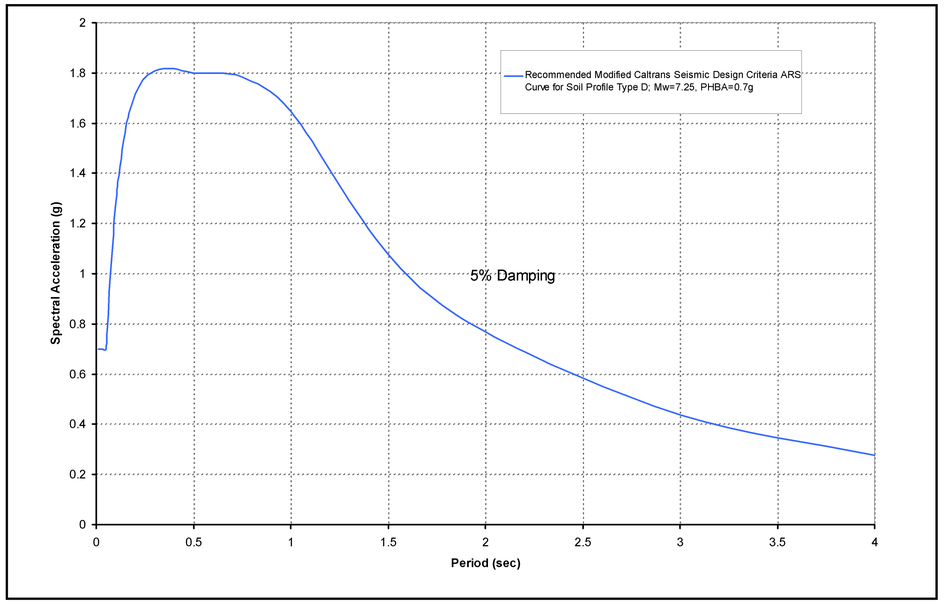

ACCELERATION RESPONSE SPECTRUM
NO SCALE

DESIGN	BY Elijah Hall	CHECKED Richard Melko	
DETAILS	BY P. von Savoye	CHECKED Elijah Hall	
QUANTITIES	BY Ubong Inyang	CHECKED Elijah Hall	

STATE OF CALIFORNIA
DEPARTMENT OF TRANSPORTATION

DIVISION OF ENGINEERING SERVICES
STRUCTURE DESIGN
DESIGN BRANCH 6

BRIDGE NO. 44-0288
KILOMETER POST 158.4

CRAZY HORSE CANYON VIADUCT (NEW)
DECK CONTOURS

Caltrans Metric

ALL DIMENSIONS ARE IN MILLIMETERS UNLESS OTHERWISE SHOWN

ORIGINAL SCALE IN MILLIMETERS FOR REDUCED PLANS 0 10 20 30 40 50 60 70 80 90 100

CU 05
EA 0161E1

DISREGARD PRINTS BEARING EARLIER REVISION DATES

REVISION DATES: 11-16-07, 10-10-08, 10-24-08, 12-23-08, 11-18-09, 05-06-10

SHEET 3 OF 23

FILE => 44-0288-c-dcon.dgn

STRUCTURES DESIGN DETAIL SHEET (METRIC) (REV.03-17-04)

USERNAME => tfrenard DATE PLOTTED => 03-AUG-2010 TIME PLOTTED => 10:51

DIST	COUNTY	ROUTE	KILOMETER POST TOTAL PROJECT	SHEET No	TOTAL SHEETS
05	Mon	101	R146.8/159.7	1315	1402

Caltrans Metric

REGISTERED CIVIL ENGINEER — DATE 05-06-10

7-26-10
PLANS APPROVAL DATE

REGISTERED PROFESSIONAL ENGINEER — HERNAN PEREZ — No. 60993 — Exp. 12-31-10 — CIVIL — STATE OF CALIFORNIA

The State of California or its officers or agents shall not be responsible for the accuracy or completeness of electronic copies of this plan sheet.

NO	R	Δ	T	L
1	450.000	21°58'41"	87.382	172.615

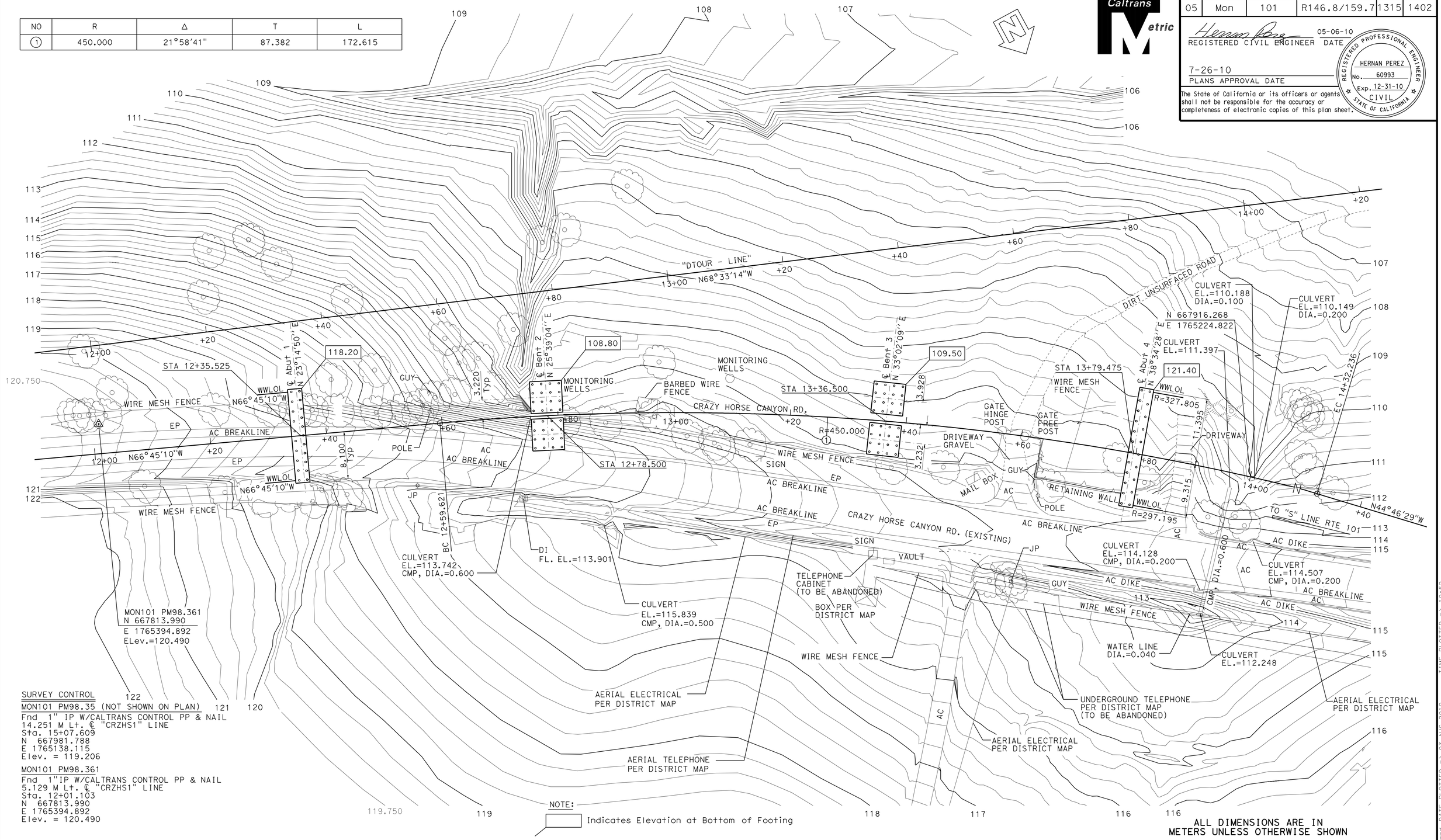

SURVEY CONTROL

MON101 PM98.35 (NOT SHOWN ON PLAN)
Fnd 1" IP W/CALTRANS CONTROL PP & NAIL
14.251 M Lt. ℄ "CRZHS1" LINE
Sta. 15+07.609
N 667981.788
E 1765138.115
Elev. = 119.206

MON101 PM98.361
Fnd 1"IP W/CALTRANS CONTROL PP & NAIL
5.129 M Lt. ℄ "CRZHS1" LINE
Sta. 12+01.103
N 667813.990
E 1765394.892
Elev. = 120.490

NOTE:
Indicates Elevation at Bottom of Footing

ALL DIMENSIONS ARE IN METERS UNLESS OTHERWISE SHOWN

PRELIMINARY INVESTIGATION SECTION

SCALE	VERT. DATUM NGVD 29	PHOTOGRAMMETRY AS OF:			
1:300	HORZ. DATUM NAD83 (1991.35)	SURVEYED	BY DISTRICT/K.ELLINGSON	CHECKED	BY E. LOPEZ 05/2006
ALIGNMENT TIES DIST. TRAVERSE SHEET		DRAFTED	BY Y. ZHANG 05/2006	CHECKED	BY T. ZOLNIKOVA 05/2006

	BY	CHECKED
DESIGN	Elijah Hall	Richard Melko
DETAILS	P. von Savoye	Elijah Hall
QUANTITIES	Ubong Inyang	Elijah Hall

STATE OF CALIFORNIA
DEPARTMENT OF TRANSPORTATION

DIVISION OF ENGINEERING SERVICES
STRUCTURE DESIGN
DESIGN BRANCH 6

BRIDGE NO. 44-0288
KILOMETER POST 158.4

CRAZY HORSE CANYON VIADUCT (NEW)
FOUNDATION PLAN

STRUCTURES FOUNDATION PLAN SHEET (METRIC) (REV.10-27-05)

ORIGINAL SCALE IN MILLIMETERS FOR REDUCED PLANS 0 10 20 30 40 50 60 70 80 90 100

CU 05
EA 0161E1

DISREGARD PRINTS BEARING EARLIER REVISION DATES

REVISION DATES (PRELIMINARY STAGE ONLY): 5-23-2006 05-13-08 09-27-08 10-10-08 10-28-08 12-23-08 10-19-09 11-18-09 05-06-10

SHEET 4 OF 23

FILE => 44-vaid-e-fp101.dgn

USERNAME => trfriehard DATE PLOTTED => 03-AUG-2010 TIME PLOTTED => 10:52

DIST	COUNTY	ROUTE	KILOMETER POST TOTAL PROJECT	SHEET No	TOTAL SHEETS
05	Mon	101	R146.8/159.7	1316	1402

REGISTERED CIVIL ENGINEER — DATE 05-06-10

7-26-10
PLANS APPROVAL DATE

REGISTERED PROFESSIONAL ENGINEER — HERNAN PEREZ — No. 60993 — Exp. 12-31-10 — CIVIL — STATE OF CALIFORNIA

The State of California or its officers or agents shall not be responsible for the accuracy or completeness of electronic copies of this plan sheet.

NOTES:

1. 450x410x115 (ELASTOMERIC ONLY) Steel Reinf Elastomeric Bearing Pad (tot 5). For details, see "ABUTMENT 4 LAYOUT" sheet.
2. Expanded Polystyrene at same thickness as bearing pads (B0-13 / 13-1)

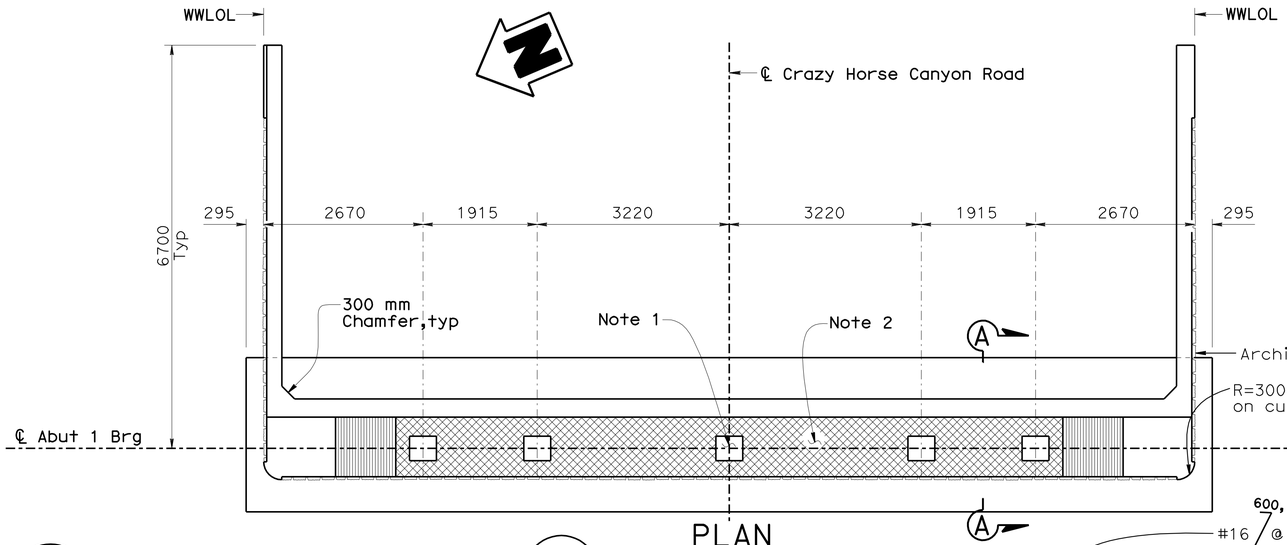

PLAN
1:50

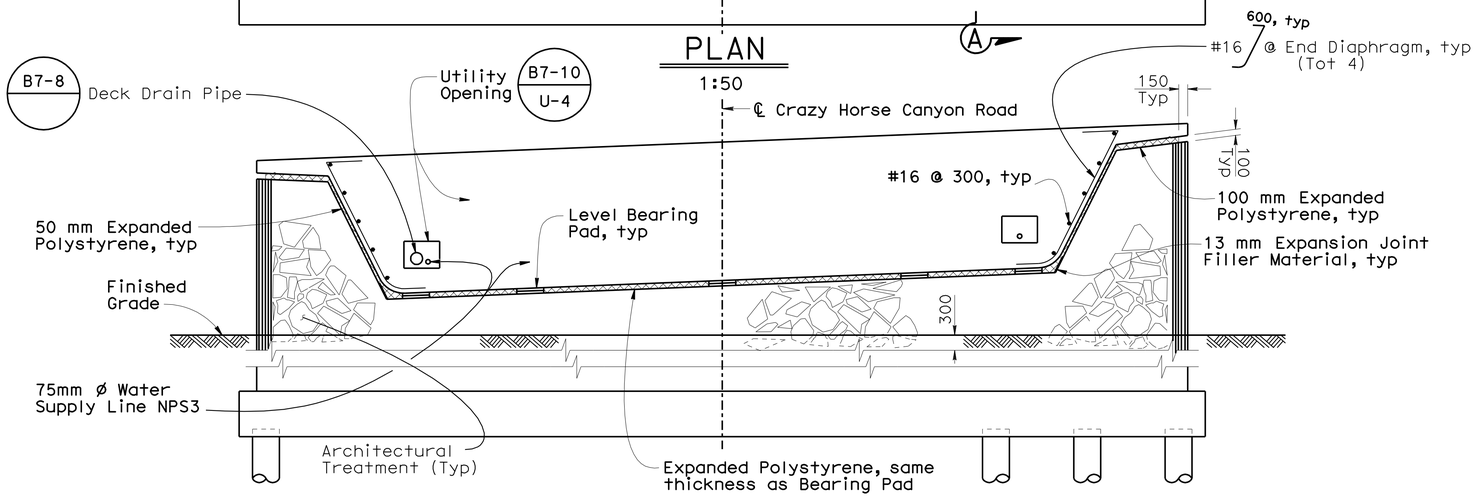

NOTE: Not all Piles are shown.

ELEVATION
1:50

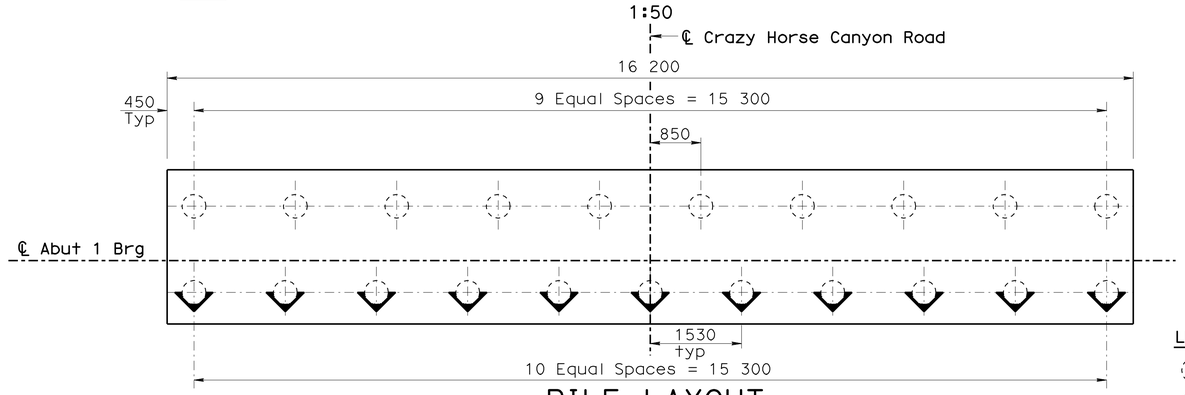

PILE LAYOUT
1:50

LEGEND

- Indicates Vertical Piles
- Indicates 3:1 Battered Piles

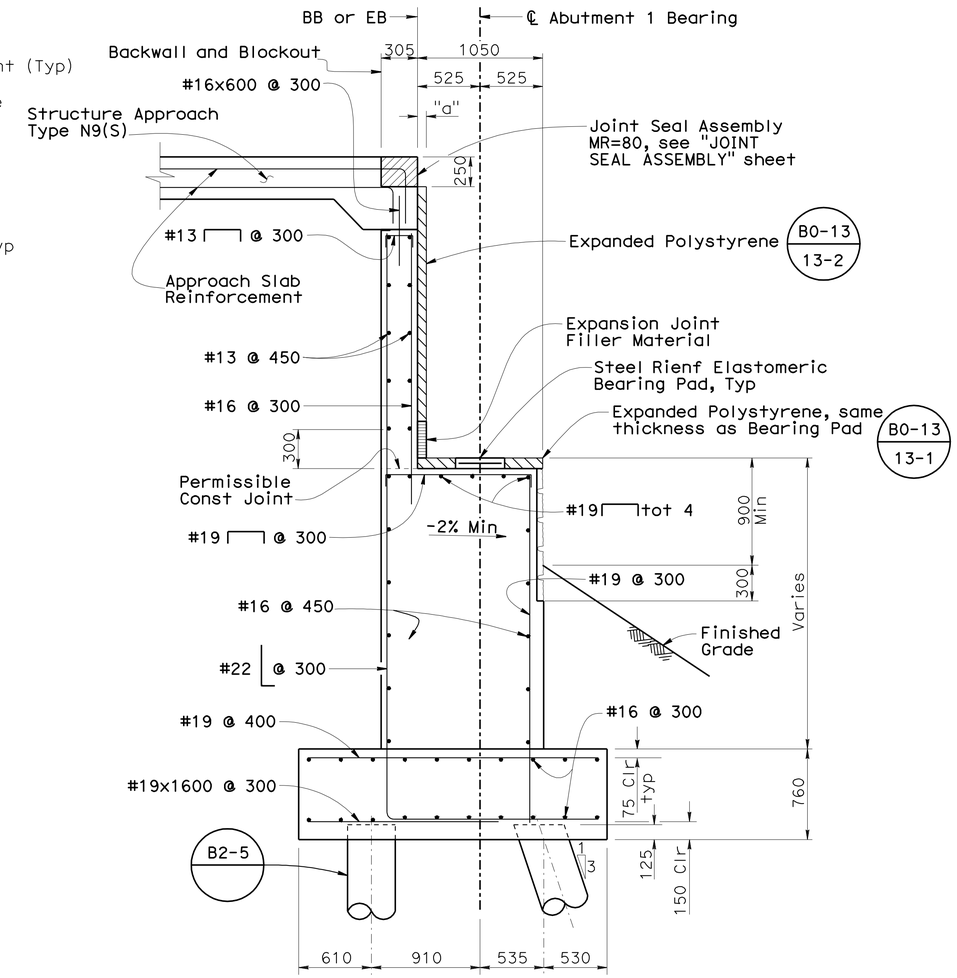

SECTION A-A
1:25

NOTES:

① Abutment 1 shown, Abutment 4 similar except as noted
② Extend Structure Approach reinforcement into Joint Seal Assembly blockout
③ Geocomposite Drain not shown

Caltrans Metric

	BY	CHECKED
DESIGN	Elijah Hall	Richard Melko
DETAILS	P. von Savoye	Elijah Hall
QUANTITIES	Ubong Inyang	Elijah Hall

STATE OF CALIFORNIA
DEPARTMENT OF TRANSPORTATION

DIVISION OF ENGINEERING SERVICES
STRUCTURE DESIGN
DESIGN BRANCH 6

BRIDGE NO. 44-0288
KILOMETER POST 158.4

CRAZY HORSE CANYON VIADUCT (NEW)

ABUTMENT 1 LAYOUT

ALL DIMENSIONS ARE IN MILLIMETERS UNLESS OTHERWISE SHOWN

ORIGINAL SCALE IN MILLIMETERS FOR REDUCED PLANS 0 10 20 30 40 50 60 70 80 90 100

CU 05
EA 0161E1

DISREGARD PRINTS BEARING EARLIER REVISION DATES

REVISION DATES: 05-08-08 | 05-06-10 | 10-15-08 | 10-28-08 | 12-23-08 | 01-02-09 | 04-30-09 | 11-18-09 | 12-08-09 | 12-17-09

SHEET 5 OF 23

FILE => 44-0288-f-a01_lo1.dgn

STRUCTURES DESIGN DETAIL SHEET (METRIC) (REV.03-17-04)

USERNAME => trlehard DATE PLOTTED => 03-AUG-2010 TIME PLOTTED => 10:52

DIST	COUNTY	ROUTE	KILOMETER POST TOTAL PROJECT	SHEET No	TOTAL SHEETS
05	Mon	101	R146.8/159.7	1317	1402

REGISTERED CIVIL ENGINEER — DATE 05-06-10

7-26-10
PLANS APPROVAL DATE

REGISTERED PROFESSIONAL ENGINEER — HERNAN PEREZ — No. 60993 — Exp. 12-31-10 — CIVIL — STATE OF CALIFORNIA

The State of California or its officers or agents shall not be responsible for the accuracy or completeness of electronic copies of this plan sheet.

NOTES:

1. 450x410x115 (ELASTOMERIC ONLY) Steel Reinf Elastomeric Bearing Pad (tot 5). For details, see "BEARING PAD DETAIL
2. Expanded Polystyrene at same thickness as Bearing Pads (B0-13 / 13-1)
3. For "Section A-A", see "ABUTMENT 1 LAYOUT" sheet

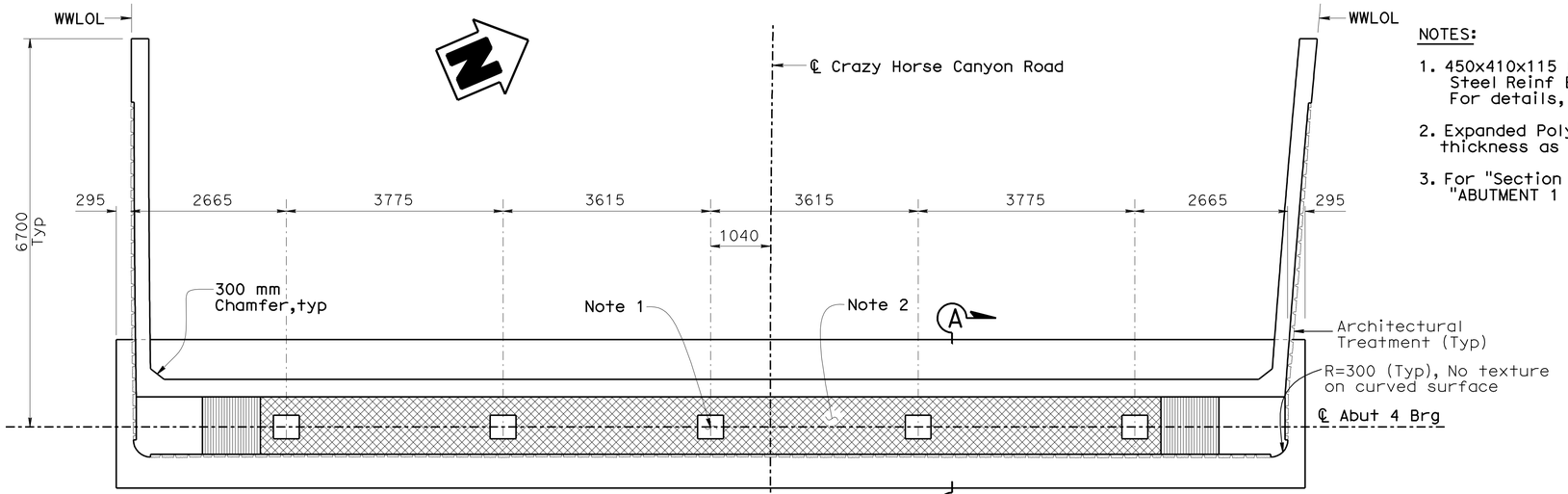

PLAN
1:50

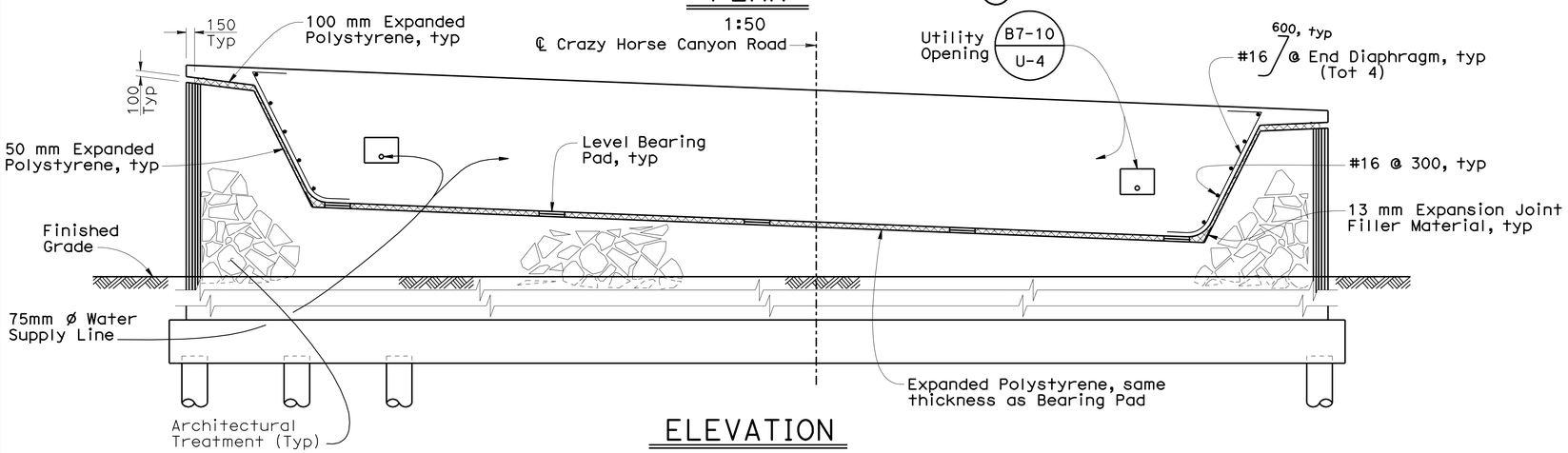

ELEVATION
1:50

NOTE: Not all Piles are shown.

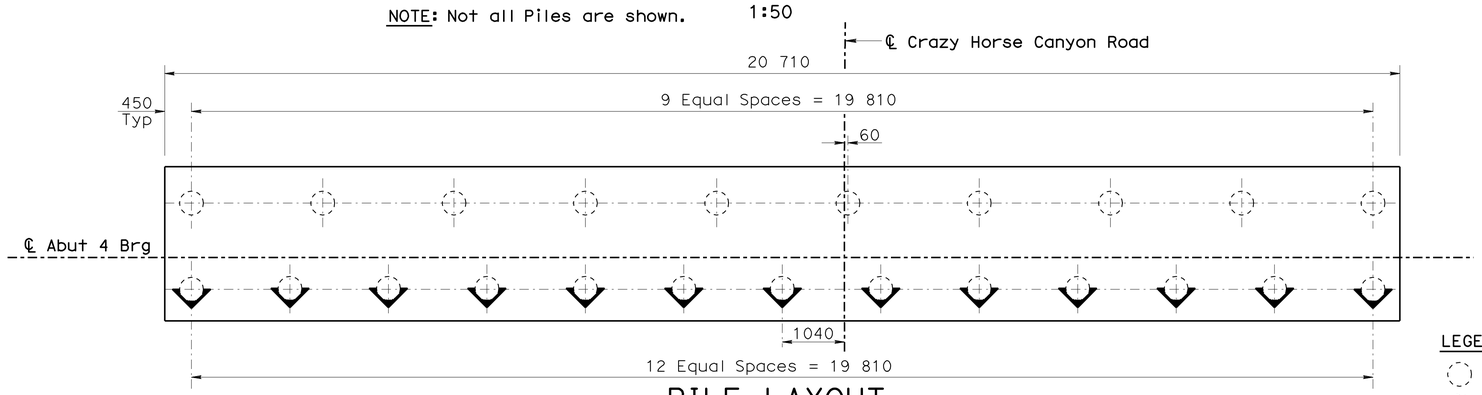

PILE LAYOUT
1:50

LEGEND

- Indicates Vertical Piles
- Indicates 3:1 Battered Piles

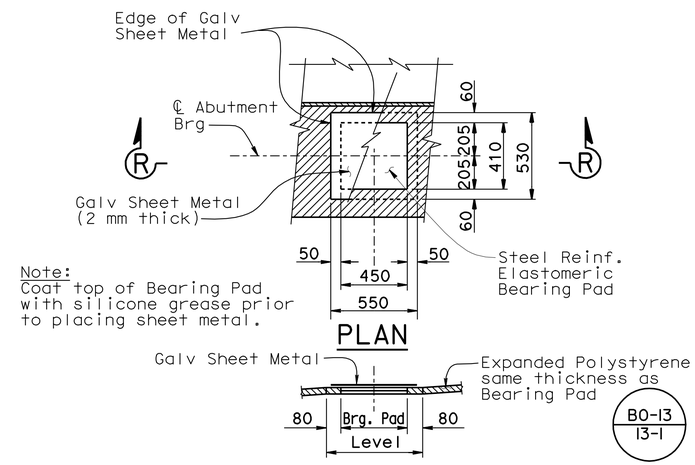

Note: Coat top of Bearing Pad with silicone grease prior to placing sheet metal.

PLAN

SECTION R-R
BEARING PAD DETAIL
No Scale
Details typical at all bearing pads

DESIGN	BY Elijah Hall	CHECKED Richard Melko	
DETAILS	BY P. von Savoye	CHECKED Elijah Hall	
QUANTITIES	BY Ubong Inyang	CHECKED Elijah Hall	

STATE OF CALIFORNIA
DEPARTMENT OF TRANSPORTATION

DIVISION OF ENGINEERING SERVICES
STRUCTURE DESIGN
DESIGN BRANCH 6

BRIDGE NO. 44-0288
KILOMETER POST 158.4

CRAZY HORSE CANYON VIADUCT (NEW)
ABUTMENT 4 LAYOUT

ALL DIMENSIONS ARE IN MILLIMETERS UNLESS OTHERWISE SHOWN

ORIGINAL SCALE IN MILLIMETERS FOR REDUCED PLANS 0 10 20 30 40 50 60 70 80 90 100

CU 05
EA 0161E1

DISREGARD PRINTS BEARING EARLIER REVISION DATES

REVISION DATES: 05-08-08 09-29-08 10-13-08 10-28-08 12-23-08 03-02-09 11-18-09 12-09-09 05-06-10

SHEET 6 OF 23

FILE => 44-0288-f-a01_to2.dgn

STRUCTURES DESIGN DETAIL SHEET (METRIC) (REV.03-17-04)

USERNAME => hfernard DATE PLOTTED => 03-AUG-2010 TIME PLOTTED => 10:52

DIST	COUNTY	ROUTE	KILOMETER POST TOTAL PROJECT	SHEET No	TOTAL SHEETS
05	Mon	101	R146.8/159.7	1318	1402

REGISTERED CIVIL ENGINEER — DATE 05-06-10

7-26-10
PLANS APPROVAL DATE

REGISTERED PROFESSIONAL ENGINEER — HERNAN PEREZ — No. 60993 — Exp. 12-31-10 — CIVIL — STATE OF CALIFORNIA

The State of California or its officers or agents shall not be responsible for the accuracy or completeness of electronic copies of this plan sheet.

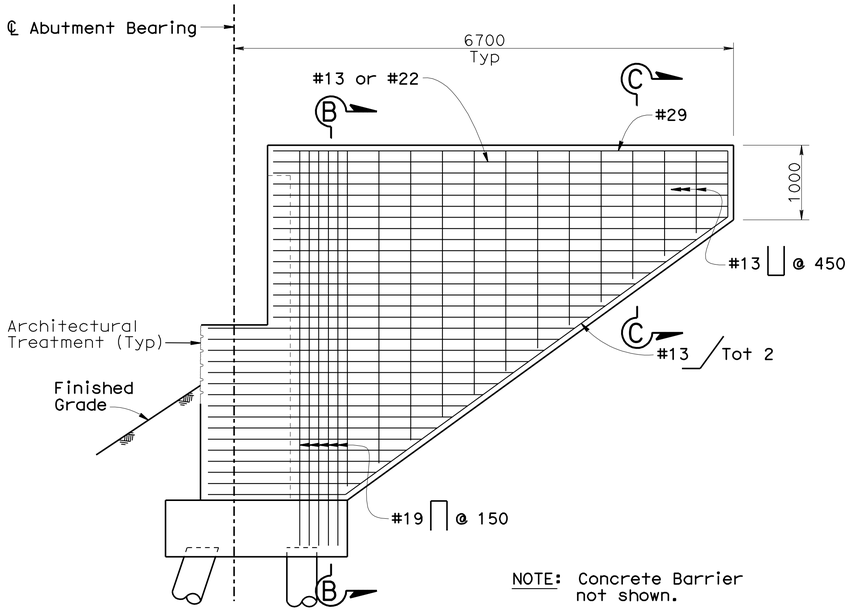

NOTE: Concrete Barrier not shown.

WINGWALL ELEVATION
1:40

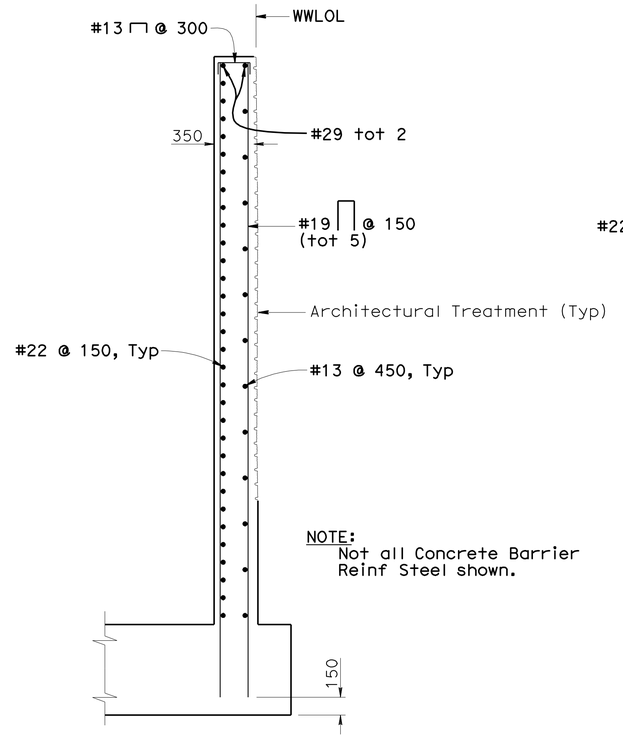

NOTE:
Not all Concrete Barrier Reinf Steel shown.

SECTION B-B
1:25

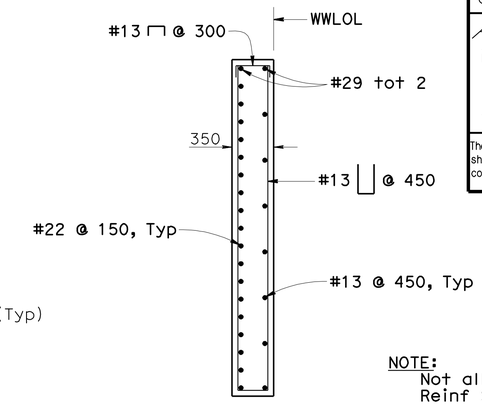

NOTE:
Not all Concrete Barrier Reinf Steel shown.

SECTION C-C
1:25

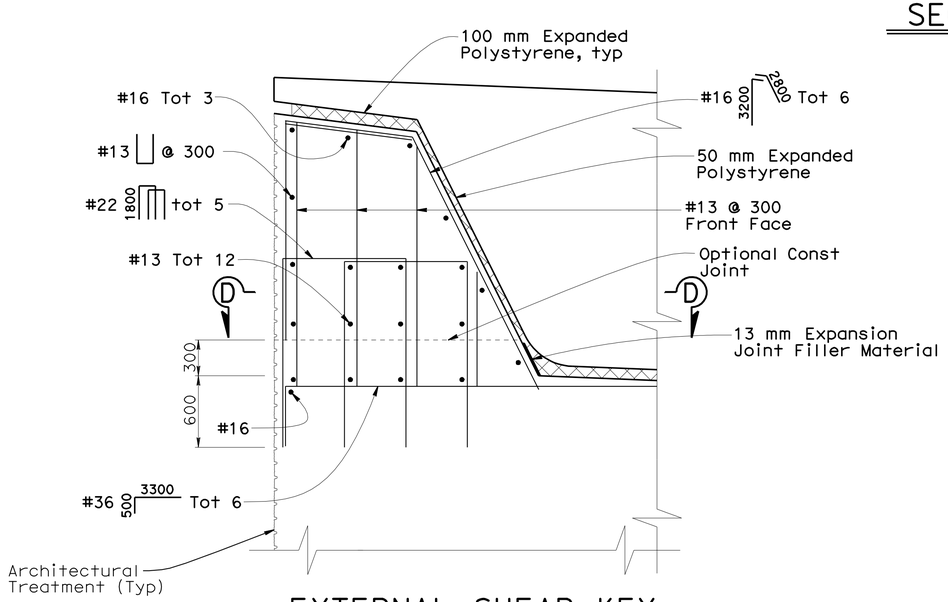

EXTERNAL SHEAR KEY
NO SCALE

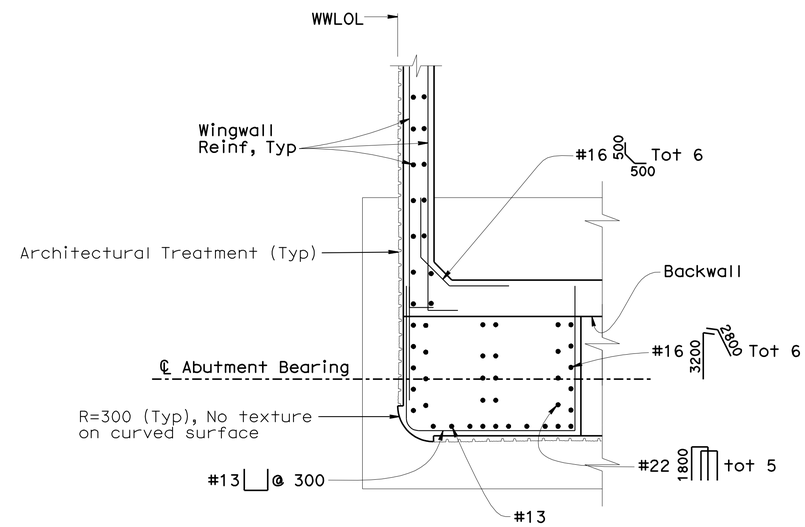

NOTE:
Geocomposite Drain not shown. See "Structure Approach Drainage Details" sheet.

SECTION D-D
1:25

NOTE: For Architectural Treatment, see "ARCHITECTURAL DETAILS" sheet.

Caltrans Metric

	BY	CHECKED
DESIGN	Elijah Hall	Richard Melko
DETAILS	P. von Savoye	Elijah Hall
QUANTITIES	Ubong Inyang	Elijah Hall

STATE OF CALIFORNIA
DEPARTMENT OF TRANSPORTATION

DIVISION OF ENGINEERING SERVICES
STRUCTURE DESIGN
DESIGN BRANCH 6

BRIDGE NO. 44-0288
KILOMETER POST 158.4

CRAZY HORSE CANYON VIADUCT (NEW)
ABUTMENT DETAILS

ALL DIMENSIONS ARE IN MILLIMETERS UNLESS OTHERWISE SHOWN

ORIGINAL SCALE IN MILLIMETERS FOR REDUCED PLANS 0 10 20 30 40 50 60 70 80 90 100

CU 05
EA 0161E1

DISREGARD PRINTS BEARING EARLIER REVISION DATES

REVISION DATES: 09-22-08 10-13-08 12-23-08 11-18-09 12-08-09 05-06-10

SHEET 7 OF 23

FILE => 44-0288-f-a01dt01t.dgn

STRUCTURES DESIGN DETAIL SHEET (METRIC) (REV.03-17-04)

USERNAME => tfrenard DATE PLOTTED => 12-AUG-2010 TIME PLOTTED => 06:14

DIST	COUNTY	ROUTE	KILOMETER POST TOTAL PROJECT	SHEET No	TOTAL SHEETS
05	Mon	101	R146.8/159.7	1319	1402

REGISTERED CIVIL ENGINEER — DATE 05-06-10

7-26-10
PLANS APPROVAL DATE

REGISTERED PROFESSIONAL ENGINEER — HERNAN PEREZ — No. 60993 — Exp. 12-31-10 — CIVIL — STATE OF CALIFORNIA

The State of California or its officers or agents shall not be responsible for the accuracy or completeness of electronic copies of this plan sheet.

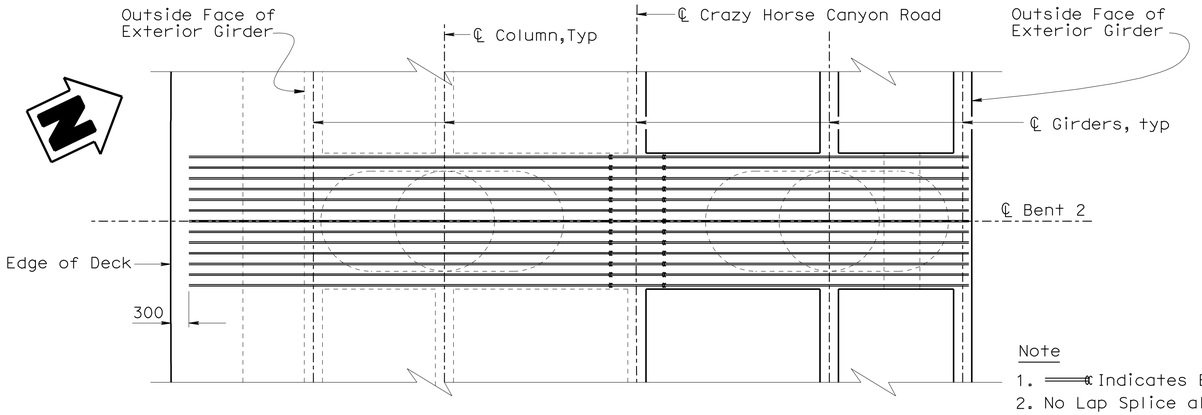

TOP REINFORCEMENT

PLAN
1:50

BOTTOM REINFORCEMENT

Note
1. ═══ Indicates Bundled Reinforcement
2. No Lap Splice allowed in #43 Bent Cap reinforcement, Service Splice only
3. Bent 2 shown, Bent 3 similar

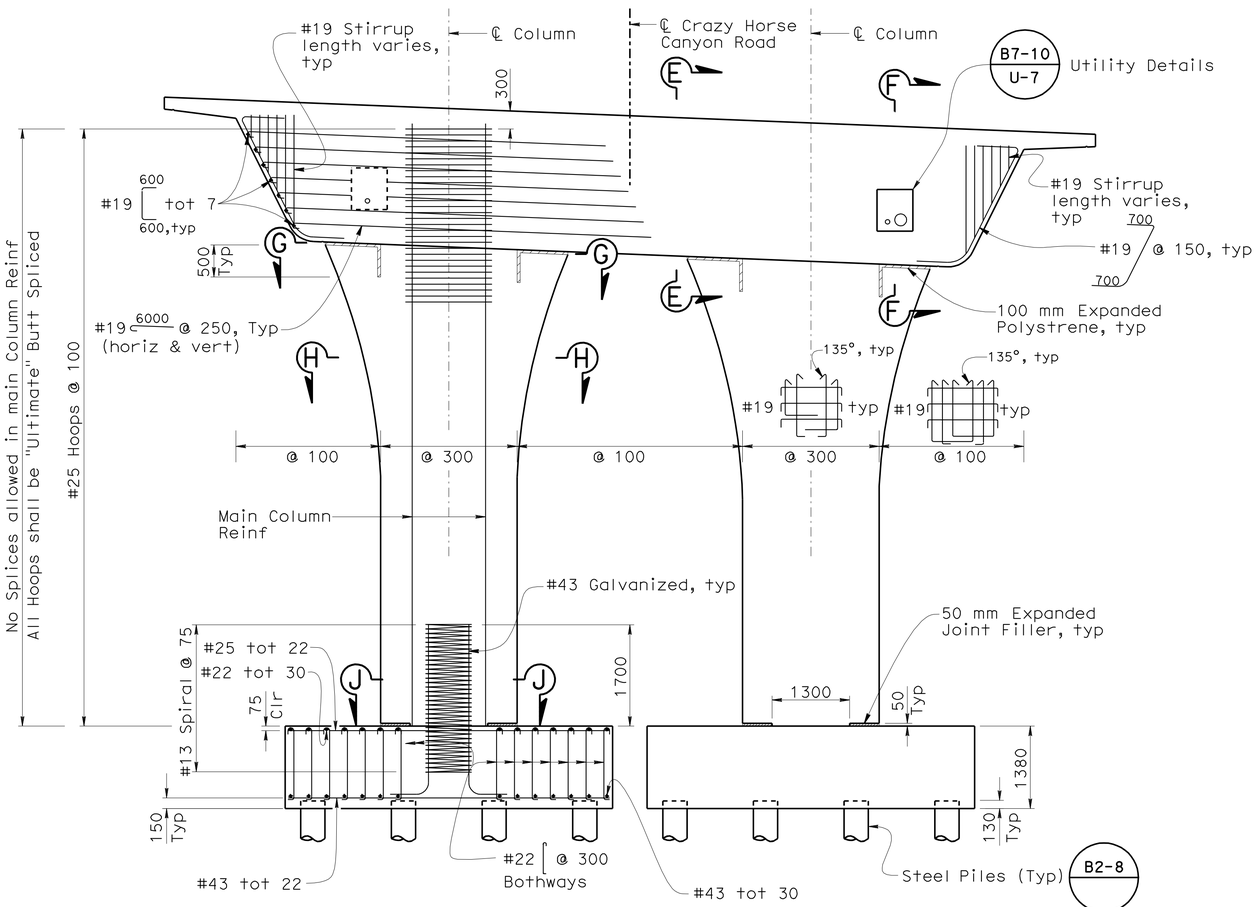

ELEVATION
1:50

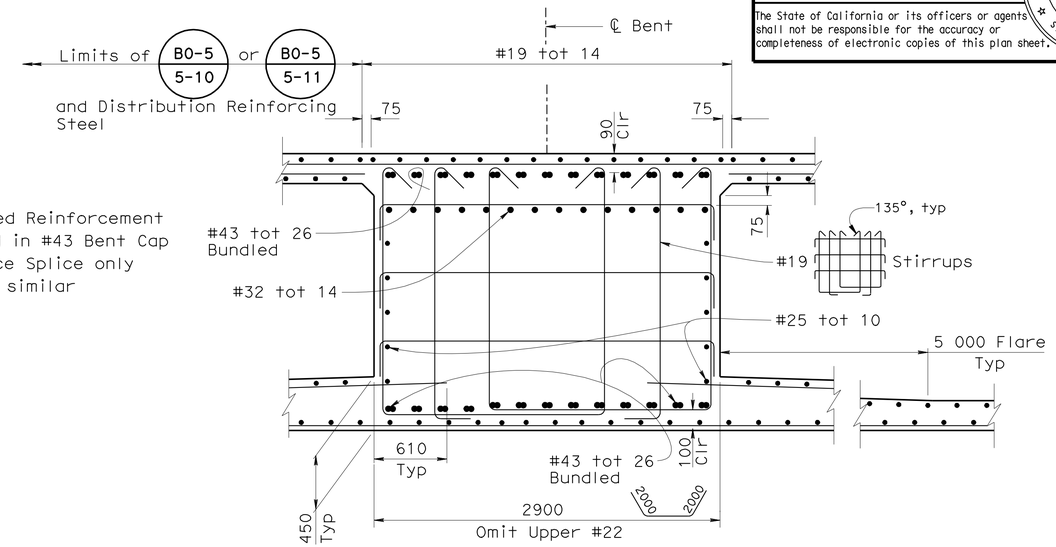

SECTION E-E
1:25

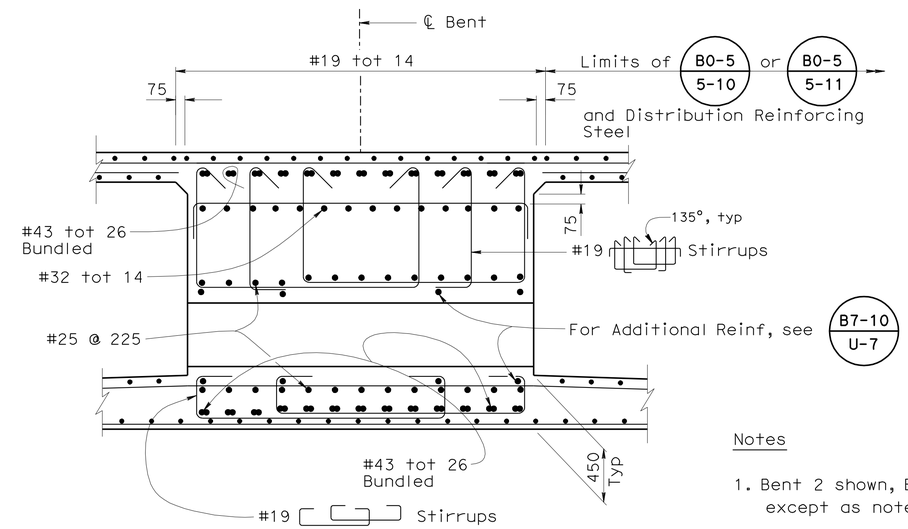

SECTION F-F
1:25

Notes

1. Bent 2 shown, Bent 3 similar, except as noted
2. Reinf may be bent or lowered to clear P/S Ducts
3. For Sections G-G, H-H, and J-J, see "Bent Details" sheet

DESIGN	BY Elijah Hall	CHECKED Richard Melko	
DETAILS	BY P. von Savoye	CHECKED Elijah Hall	
QUANTITIES	BY Ubong Inyang	CHECKED Elijah Hall	

STATE OF CALIFORNIA
DEPARTMENT OF TRANSPORTATION

DIVISION OF ENGINEERING SERVICES
STRUCTURE DESIGN
DESIGN BRANCH 6

BRIDGE NO. 44-0288
KILOMETER POST 158.4

CRAZY HORSE CANYON VIADUCT (NEW)
BENT LAYOUT

ALL DIMENSIONS ARE IN MILLIMETERS UNLESS OTHERWISE SHOWN

ORIGINAL SCALE IN MILLIMETERS FOR REDUCED PLANS 0 10 20 30 40 50 60 70 80 90 100

CU 05
EA 0161E1

DISREGARD PRINTS BEARING EARLIER REVISION DATES

REVISION DATES: 06-12-07 05-08-08 09-30-08 10-30-08 12-23-08 03-02-09 11-16-09 12-17-09 05-06-10

SHEET 8 OF 23

FILE => 44-0288-h-b01_1o01.dgn

STRUCTURES DESIGN DETAIL SHEET (METRIC) (REV.03-17-04)

USERNAME => hfenard DATE PLOTTED => 03-AUG-2010 TIME PLOTTED => 10:52

DIST	COUNTY	ROUTE	KILOMETER POST TOTAL PROJECT	SHEET No	TOTAL SHEETS
05	Mon	101	R146.8/159.7	1320	1402

REGISTERED CIVIL ENGINEER — DATE 05-06-10

7-26-10
PLANS APPROVAL DATE

REGISTERED PROFESSIONAL ENGINEER — HERNAN PEREZ — No. 60993 — Exp. 12-31-10 — CIVIL — STATE OF CALIFORNIA

The State of California or its officers or agents shall not be responsible for the accuracy or completeness of electronic copies of this plan sheet.

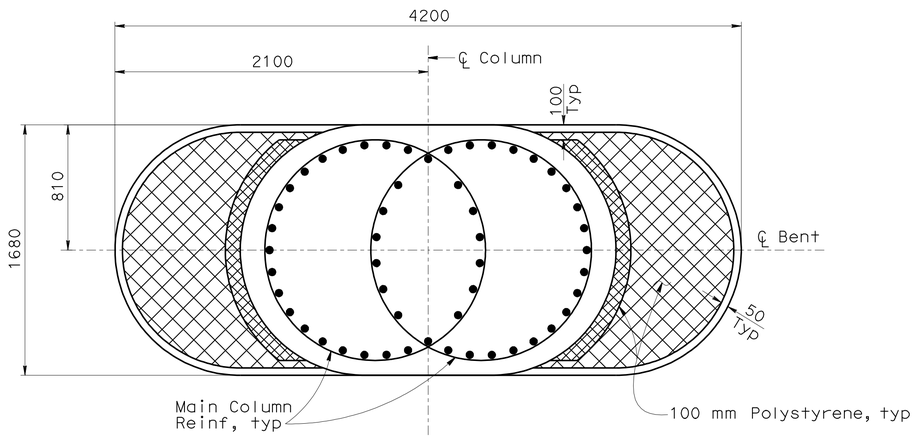

SECTION G-G
1:20

Vertical 100 mm Polystyrene

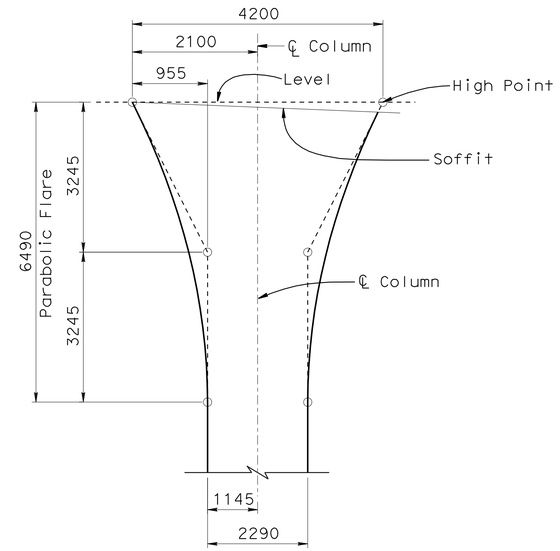

COLUMN GEOMETRICS
NO SCALE

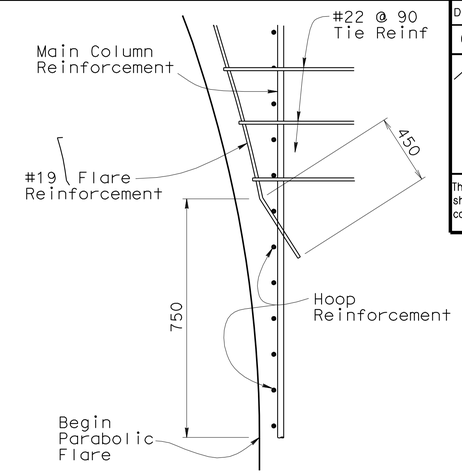

HOOP & TIE DETAIL
NO SCALE

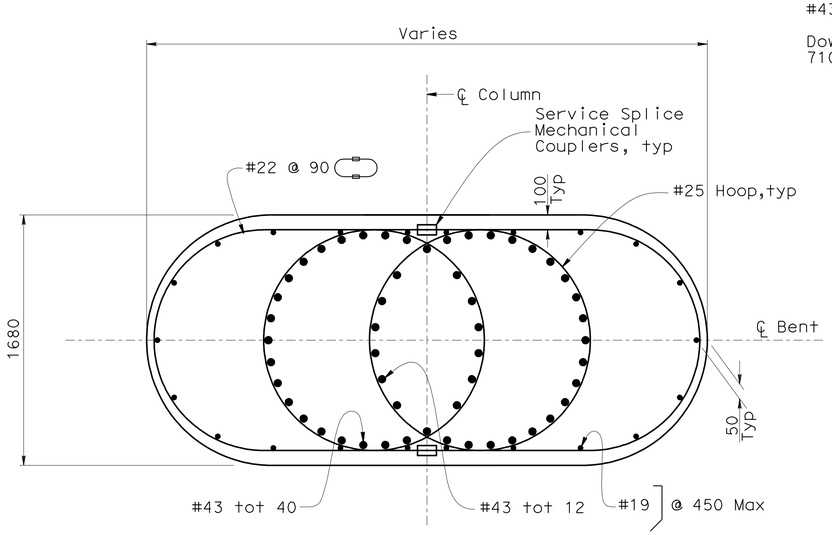

NOTE:
Typical reinforcement within column parabolic flare.

SECTION H-H
1:20

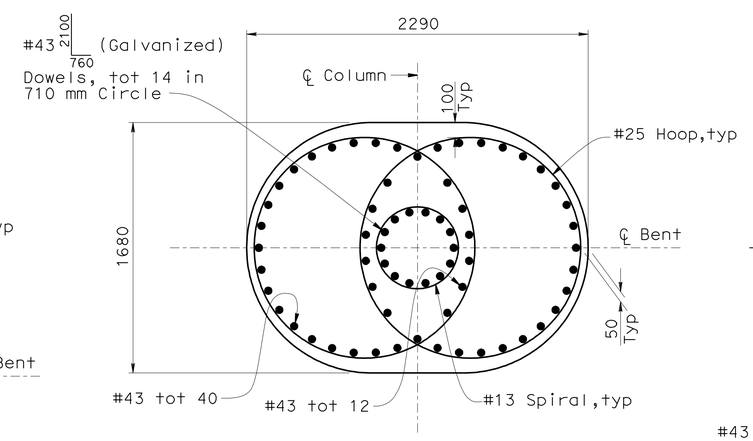

SECTION J-J
1:20

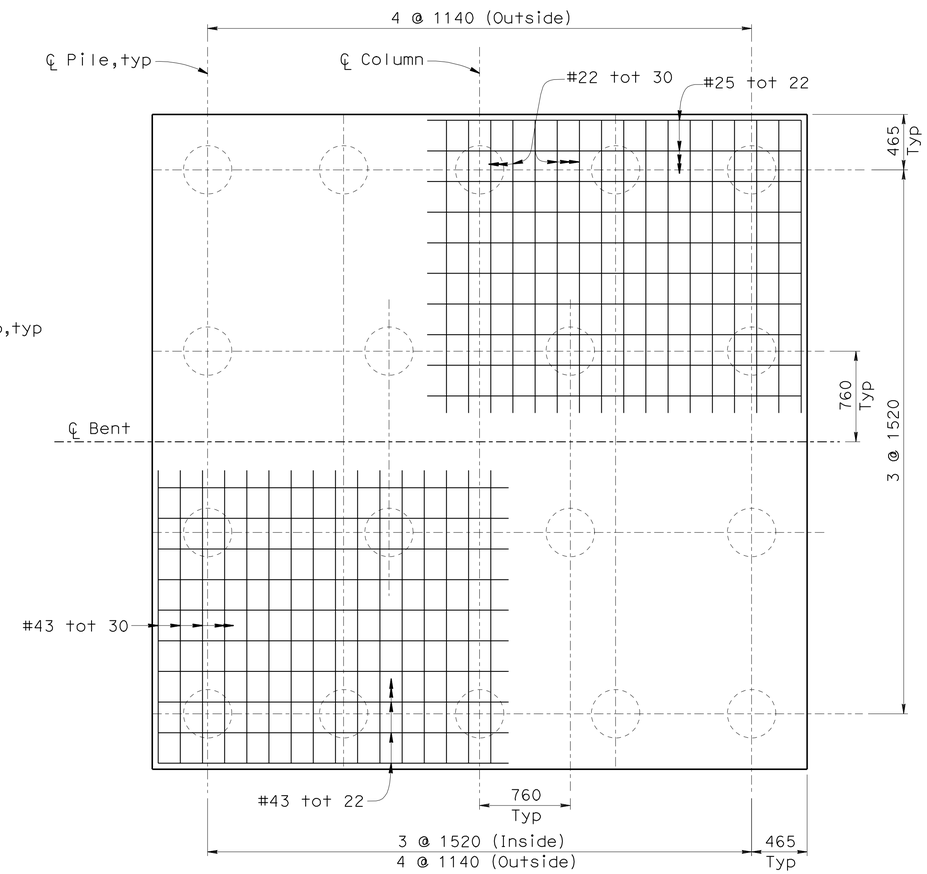

TYPICAL FOOTING PLAN
1:25

Caltrans Metric

	BY	CHECKED
DESIGN	Elijah Hall	Richard Melko
DETAILS	George Zweier	Elijah Hall
QUANTITIES	Ubong Inyang	Elijah Hall

STATE OF CALIFORNIA
DEPARTMENT OF TRANSPORTATION

DIVISION OF ENGINEERING SERVICES
STRUCTURE DESIGN
DESIGN BRANCH 6

BRIDGE NO. 44-0288
KILOMETER POST 158.4

CRAZY HORSE CANYON VIADUCT (NEW)

BENT DETAILS

ALL DIMENSIONS ARE IN MILLIMETERS UNLESS OTHERWISE SHOWN

ORIGINAL SCALE IN MILLIMETERS FOR REDUCED PLANS 0 10 20 30 40 50 60 70 80 90 100

CU 05
EA 0161E1

DISREGARD PRINTS BEARING EARLIER REVISION DATES

REVISION DATES: 12-10-07 09-26-08 10-30-08 12-23-08 04-30-09 11-18-09 12-17-09 05-06-10

SHEET 9 OF 23

FILE => 44-0288-h-b01dt01.dgn

STRUCTURES DESIGN DETAIL SHEET (METRIC) (REV.03-17-04)

USERNAME => tfrenard DATE PLOTTED => 03-AUG-2010 TIME PLOTTED => 11:21

DIST	COUNTY	ROUTE	KILOMETER POST TOTAL PROJECT	SHEET No	TOTAL SHEETS
05	Mon	101	R146.8/159.7	1321	1402

REGISTERED CIVIL ENGINEER 05-06-10 DATE

7-26-10
PLANS APPROVAL DATE

REGISTERED PROFESSIONAL ENGINEER HERNAN PEREZ No. 60993 Exp. 12-31-10 CIVIL STATE OF CALIFORNIA

The State of California or its officers or agents shall not be responsible for the accuracy or completeness of electronic copies of this plan sheet.

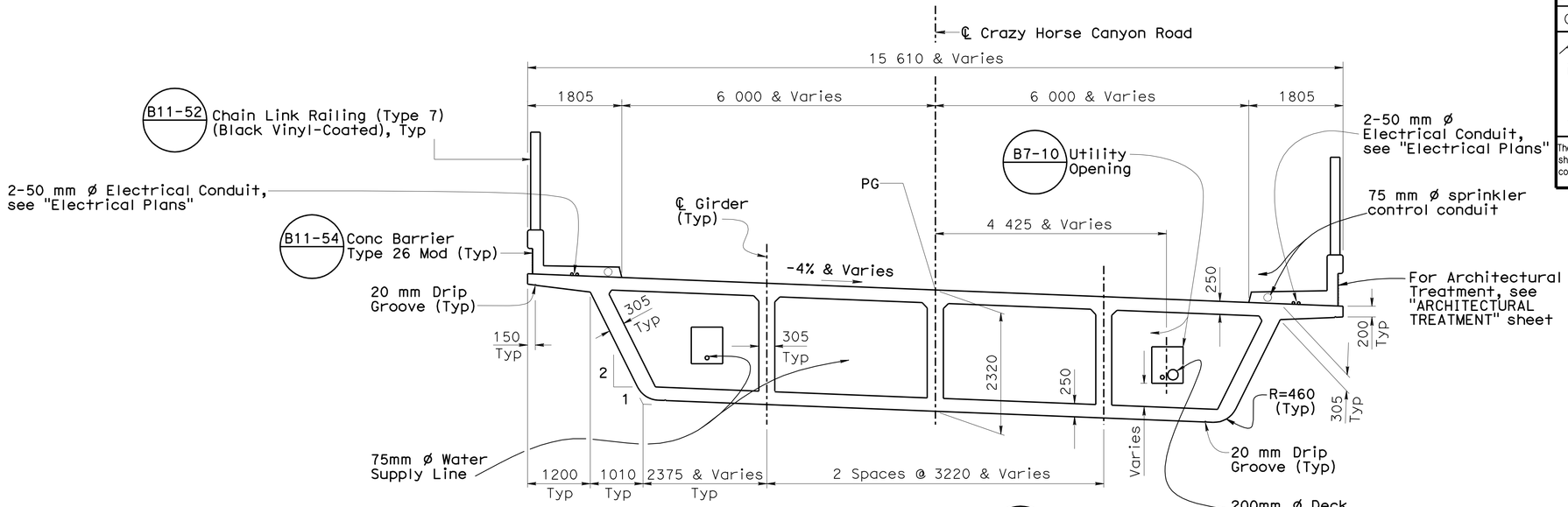

TYPICAL SECTION (B7-1 / B-1)

1:50

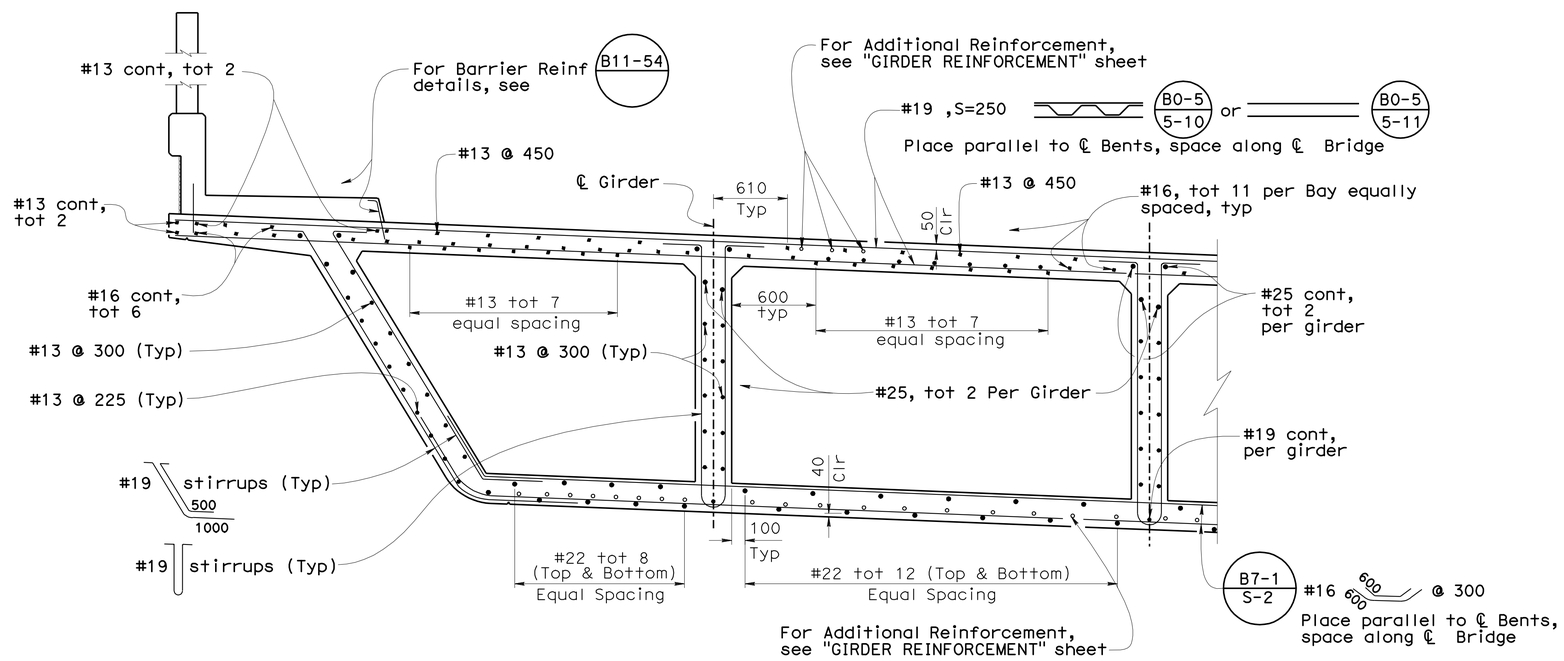

PART TYPICAL SECTION (B8-5 / B7-1 / B0-5)

1:25

Caltrans Metric

	BY	CHECKED
DESIGN	Elijah Hall	Richard Melko
DETAILS	P. von Savoye	Elijah Hall
QUANTITIES	Ubong Inyang	Elijah Hall

STATE OF CALIFORNIA
DEPARTMENT OF TRANSPORTATION

DIVISION OF ENGINEERING SERVICES
STRUCTURE DESIGN
DESIGN BRANCH 6

BRIDGE NO. 44-0288
KILOMETER POST 158.4

CRAZY HORSE CANYON VIADUCT (NEW)

TYPICAL SECTION

ALL DIMENSIONS ARE IN MILLIMETERS UNLESS OTHERWISE SHOWN

ORIGINAL SCALE IN MILLIMETERS FOR REDUCED PLANS 0 10 20 30 40 50 60 70 80 90 100

CU 05
EA 0161E1

DISREGARD PRINTS BEARING EARLIER REVISION DATES

REVISION DATES: 05-17-07 | 05-06-10 | 12-14-07 | 09-25-08 | 10-14-08 | 10-28-08 | 12-23-08 | 03-02-09 | 04-30-09 | 11-14-09

SHEET 10 OF 23

STRUCTURES DESIGN DETAIL SHEET (METRIC) (REV.03-17-04)

FILE => 44-0288-k-ts.dgn

USERNAME => trlenard DATE PLOTTED => 03-AUG-2010 TIME PLOTTED => 11:21

DIST	COUNTY	ROUTE	KILOMETER POST TOTAL PROJECT	SHEET No	TOTAL SHEETS
05	Mon	101	R146.8/159.7	1322	1402

REGISTERED CIVIL ENGINEER 05-06-10 DATE

7-26-10
PLANS APPROVAL DATE

REGISTERED PROFESSIONAL ENGINEER HERNAN PEREZ No. 60993 Exp. 12-31-10 CIVIL STATE OF CALIFORNIA

The State of California or its officers or agents shall not be responsible for the accuracy or completeness of electronic copies of this plan sheet.

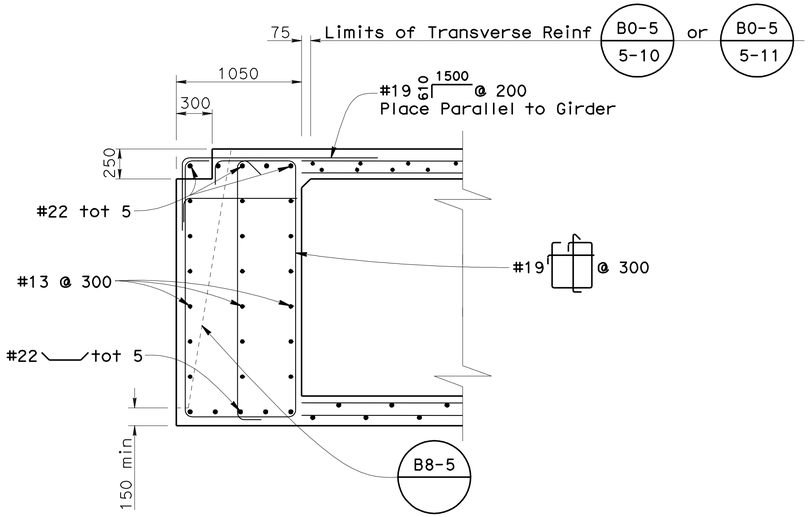

END DIAPHRAM
1:25

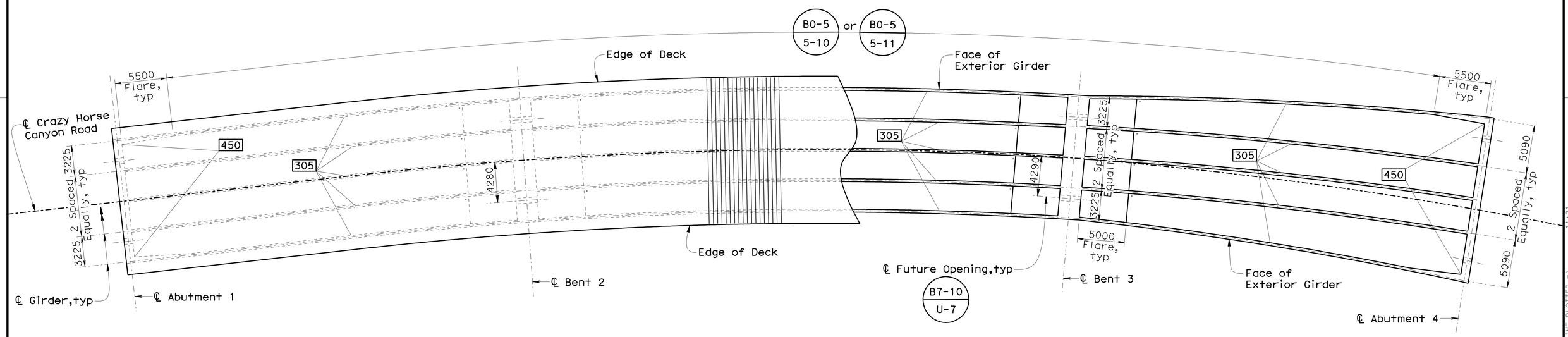

NOTE:
See "TYPICAL SECTION" on "TYPICAL SECTION SHEET", for additional information.

GIRDER LAYOUT
1:200

B0-5 | B7-1 / S-3 | B7-1 / V-1

NOTE
▭ - Indicates Girder Stem Width

DESIGN	BY Elijah Hall	CHECKED Richard Melko	
DETAILS	BY P. von Savoye	CHECKED Elijah Hall	
QUANTITIES	BY Ubong Inyang	CHECKED Elijah Hall	

STATE OF CALIFORNIA
DEPARTMENT OF TRANSPORTATION

DIVISION OF ENGINEERING SERVICES
STRUCTURE DESIGN
DESIGN BRANCH 6

BRIDGE NO. 44-0288
KILOMETER POST 158.4

CRAZY HORSE CANYON VIADUCT(NEW)
GIRDER LAYOUT

Caltrans Metric

ALL DIMENSIONS ARE IN MILLIMETERS UNLESS OTHERWISE SHOWN

ORIGINAL SCALE IN MILLIMETERS FOR REDUCED PLANS 0 10 20 30 40 50 60 70 80 90 100

CU 05
EA 0161E1

DISREGARD PRINTS BEARING EARLIER REVISION DATES

REVISION DATES: 09-24-08 10-30-08 12-23-08 03-02-09 11-18-09 05-06-10

SHEET 11 OF 23

FILE => 44-0288-1-glo.dgn

STRUCTURES DESIGN DETAIL SHEET (METRIC) (REV.03-17-04)

USERNAME => ttlenard DATE PLOTTED => 03-AUG-2010 TIME PLOTTED => 11:21

DIST	COUNTY	ROUTE	KILOMETER POST TOTAL PROJECT	SHEET No	TOTAL SHEETS
05	Mon	101	R146.8/159.7	1323	1402

REGISTERED CIVIL ENGINEER 05-06-10 DATE

7-26-10
PLANS APPROVAL DATE

REGISTERED PROFESSIONAL ENGINEER HERNAN PEREZ No. 60993 Exp. 12-31-10 CIVIL STATE OF CALIFORNIA

The State of California or its officers or agents shall not be responsible for the accuracy or completeness of electronic copies of this plan sheet.

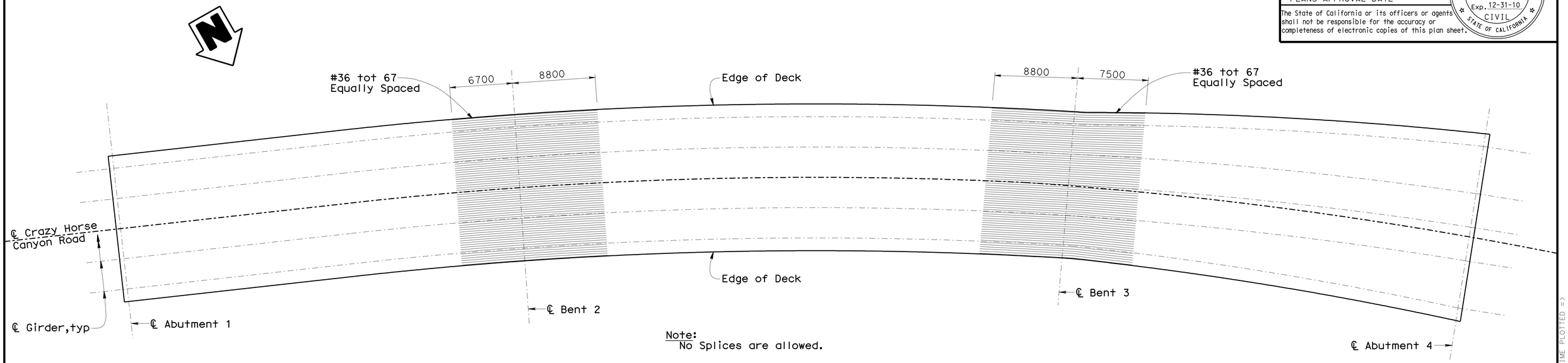

Note:
No Splices are allowed.

TOP REINFORCEMENT

1:200

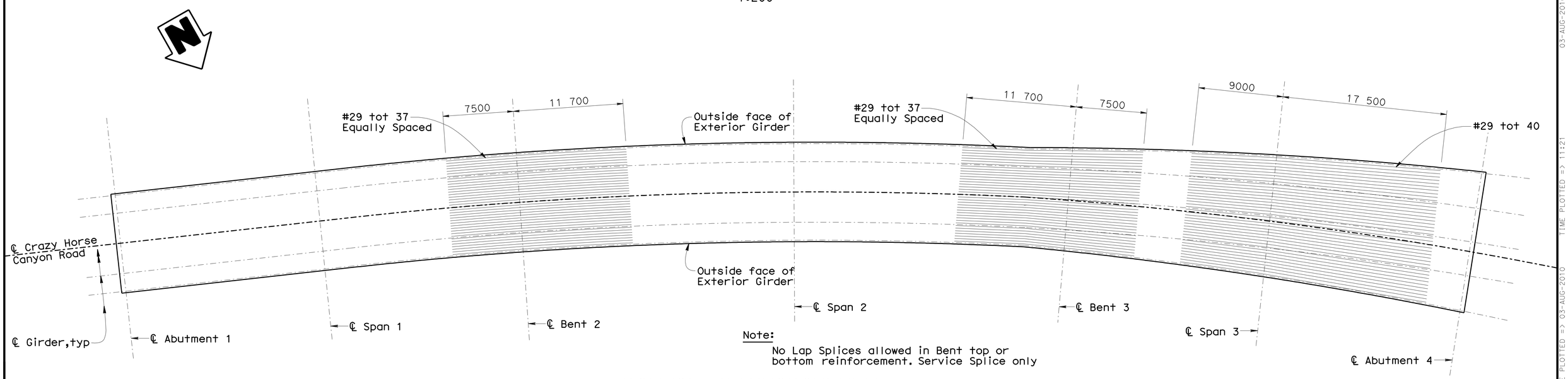

Note:
No Lap Splices allowed in Bent top or bottom reinforcement. Service Splice only

BOTTOM REINFORCEMENT

1:200

Caltrans Metric

	BY	CHECKED
DESIGN	Elijah Hall	Richard Melko
DETAILS	P. von Savoye	Elijah Hall
QUANTITIES	Ubong Inyang	Elijah Hall

STATE OF CALIFORNIA
DEPARTMENT OF TRANSPORTATION

DIVISION OF ENGINEERING SERVICES
STRUCTURE DESIGN
DESIGN BRANCH 6

BRIDGE NO. 44-0288
KILOMETER POST 158.4

CRAZY HORSE CANYON VIADUCT (NEW)
GIRDER REINFORCEMENT

ALL DIMENSIONS ARE IN MILLIMETERS UNLESS OTHERWISE SHOWN

ORIGINAL SCALE IN MILLIMETERS FOR REDUCED PLANS 0 10 20 30 40 50 60 70 80 90 100

CU 05
EA 0161E1

DISREGARD PRINTS BEARING EARLIER REVISION DATES

REVISION DATES: 09-21-08 10-26-08 12-23-08 11-19-09 05-06-10

SHEET 12 OF 23

FILE => 44-0288-o-greinf.dgn

STRUCTURES DESIGN DETAIL SHEET (METRIC) (REV.03-17-04)

USERNAME => HHernard DATE PLOTTED => 03-AUG-2010 TIME PLOTTED => 11:21

DIST	COUNTY	ROUTE	KILOMETER POST TOTAL PROJECT	SHEET No	TOTAL SHEETS
05	Mon	101	R146.8/159.7	1324	1402

REGISTERED CIVIL ENGINEER 05-06-10 DATE

7-26-10
PLANS APPROVAL DATE

REGISTERED PROFESSIONAL ENGINEER HERNAN PEREZ No. 60993 Exp. 12-31-10 CIVIL STATE OF CALIFORNIA

The State of California or its officers or agents shall not be responsible for the accuracy or completeness of electronic copies of this plan sheet.

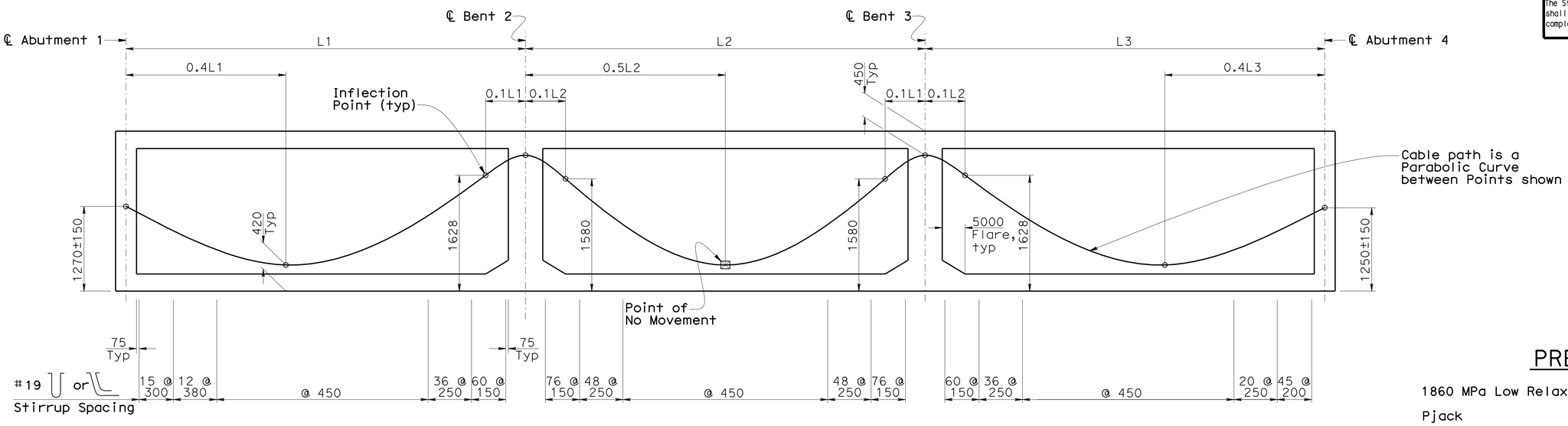

LONGITUDINAL SECTION

NO SCALE

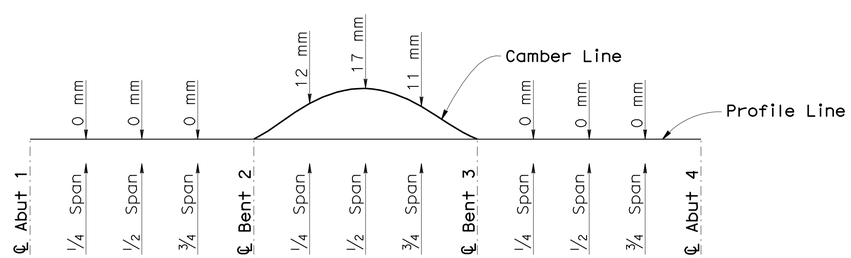

CAMBER DIAGRAM

NO SCALE

Does not include allowance for falsework settlement.

PRESTRESSING NOTES

1860 MPa Low Relaxation Strands:

Pjack = 57400 kN

Anchor Set = 10 mm

Total Number of Girders = 5

Friction curvature coefficient μ = 15 $\times 10^{-2}$(1/rad)

Friction wobble coefficient K = 6.6 $\times 10^{-4}$(1/m)

Distribution of prestress force (Pjack) between girders shall not exceed the ratio of 3:2.

Maximum final force variation between girders shall not exceed 3200 kN.

Concrete: f'_c = 35 Mpa @ 28 days

f'_{ci} = 28 Mpa @ time of stressing

Contractor shall submit elongation calculations based on initial stress at ☒ =0.8792 times jacking stress

Two end stressing shall be performed.

Caltrans Metric

	BY	CHECKED
DESIGN	Elijah Hall	Richard Melko
DETAILS	P. von Savoye	Elijah Hall
QUANTITIES	Ubong Inyang	Elijah Hall

STATE OF CALIFORNIA
DEPARTMENT OF TRANSPORTATION

DIVISION OF ENGINEERING SERVICES
STRUCTURE DESIGN
DESIGN BRANCH 6

CU 05
EA 0161E1

BRIDGE NO. 44-0288
KILOMETER POST 158.4

CRAZY HORSE CANYON VIADUCT (NEW)

PRESTRESSING LAYOUT

ALL DIMENSIONS ARE IN MILLIMETERS UNLESS OTHERWISE SHOWN

ORIGINAL SCALE IN MILLIMETERS FOR REDUCED PLANS 0 10 20 30 40 50 60 70 80 90 100

DISREGARD PRINTS BEARING EARLIER REVISION DATES

REVISION DATES 09-28-08 10-13-08 12-23-08 11-19-09 05-06-10

SHEET 13 OF 23

FILE => 44-0288-p-pslay.dgn

STRUCTURES DESIGN DETAIL SHEET (METRIC) (REV.03-17-04)

USERNAME => HFehnard DATE PLOTTED => 03-AUG-2010 TIME PLOTTED => 11:21

DIST.	COUNTY	ROUTE	KILOMETER POST TOTAL PROJECT	SHEET NO.	TOTAL SHEETS
05	Mon	101	R146.8/159.7	1325	1402

Caltrans Metric

REGISTERED ENGINEER - CIVIL 05-06-10

7-26-10
PLANS APPROVAL DATE

REGISTERED PROFESSIONAL ENGINEER HERNAN PEREZ No. 60993 Exp. 12-31-10 CIVIL STATE OF CALIFORNIA

The State of California or its officers or agents shall not be responsible for the accuracy or completeness of electronic copies of this plan sheet.

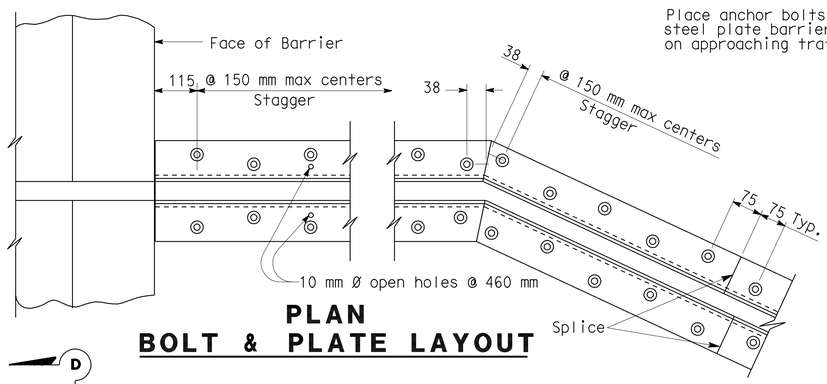

PLAN
BOLT & PLATE LAYOUT

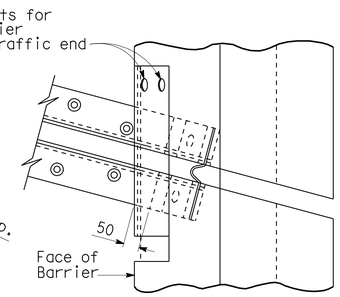

SKEW ≤ 20

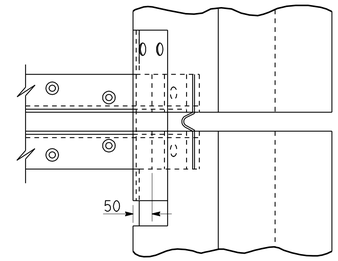

SKEW > 20

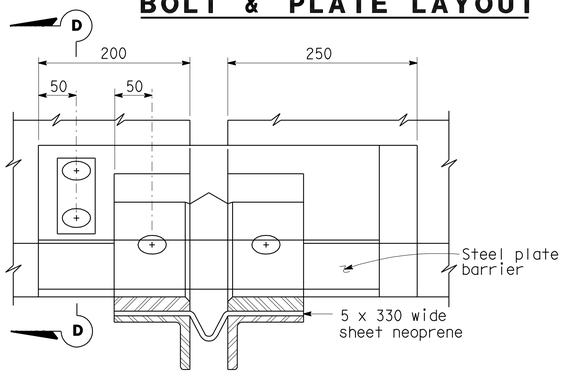

VIEW B-B

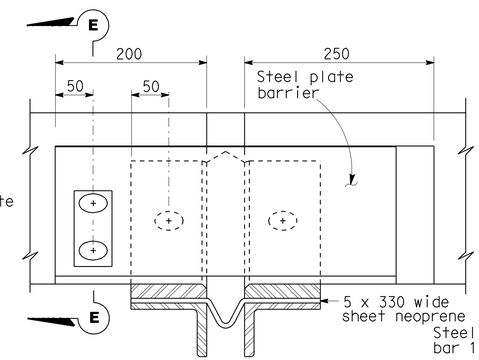

VIEW C-C

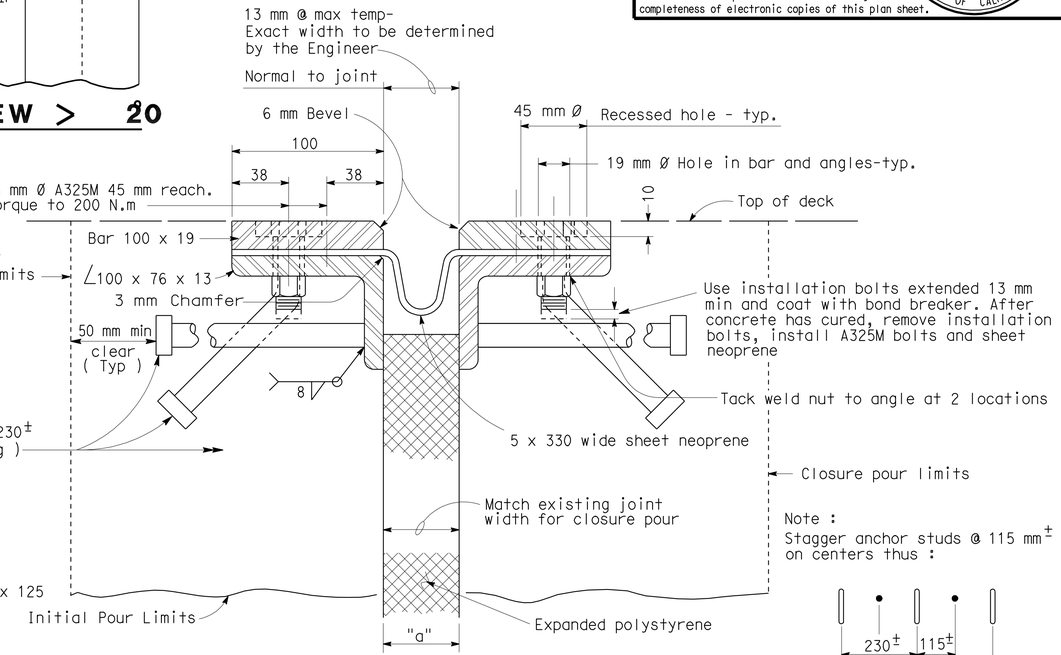

SECTION A-A

Note :
Stagger anchor studs @ 115 mm± on centers thus :

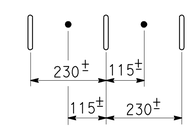

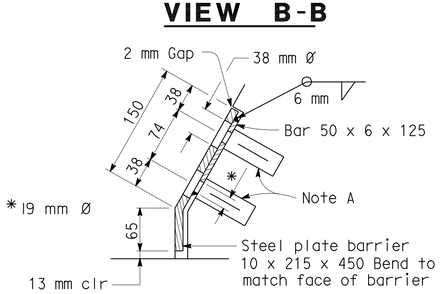

SECTION D-D

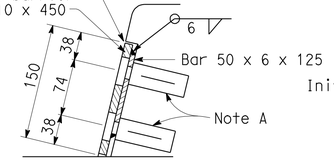

SECTION E-E

Joint Information			"a" Dimensions		
Location	Movement Rating (MR)	Skew	Winter	Spring & Fall	Summer
Abut 1 & Abut 4	80	0	35	60	40

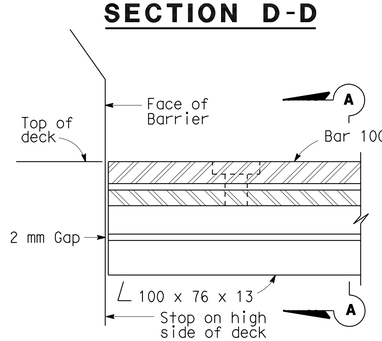

HIGH SIDE BARRIER DETAIL

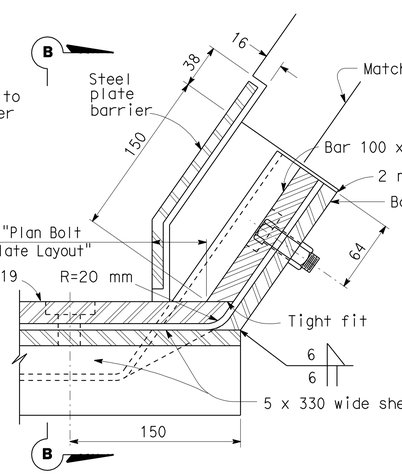

LOW SIDE BARRIER DETAIL
(See Note B)

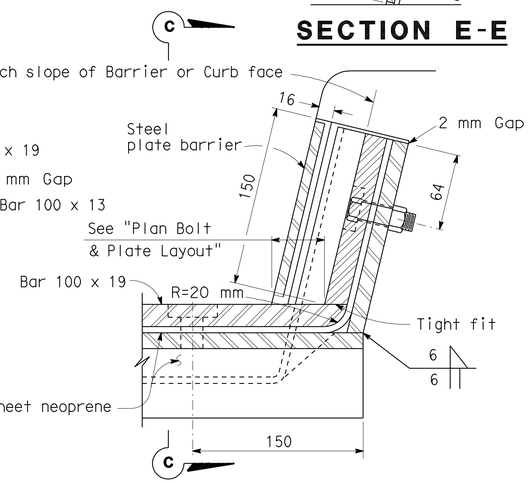

SIDEWALK DETAIL
(See Note B)

NOTES:

Full penetration butt welds may be substituted for fillet welds on all anchor studs.

Alternate types of anchor studs may be permitted subject to the approval by the Engineer.

Joint seal assembly to be used in conjunction with closure pour. (See other sheets for limits). Closure pour shall not be placed until final deck surface is within the tolerance specified.

Use joint at crown of roadway, at any change in transverse slope in deck and at changes in horizontal direction. Place other joints at or near lanes. All metal parts to be painted or galvanized after fabrication.

Sheet neoprene shall be fabricated in one continuous piece or joints shall be vulcanized. Neoprene shall be fabricated to bend around corners. 25 mm holes in neoprene sheets shall be drilled or punched so that the neoprene is not distorted at the time of installation.

NOTE A

Insert assembly or expansion anchorage for 16 x 45 A325M bolt.

NOTE B

Use the Sidewalk Detail at all sidewalk joints. Use the Barrier Detail at both sides if the roadway is crowned or if the difference in elevation between the ends of the seal is 150 mm or less.

ALL DIMENSIONS ARE IN MILLIMETERS UNLESS OTHERWISE SHOWN

NO SCALE

STANDARD DRAWING

RELEASE DATE	4/1/97	DESIGN	BY H. HERR	CHECKED R. LACALLE	RELEASED BY
FILE NO.	xs8-010	DETAILS	BY R. YEE	CHECKED R. LACALLE	
		SUBMITTED	BY C.W. PURKISS	DRAWING DATE 9/93	OFFICE CHIEF

STATE OF CALIFORNIA
DEPARTMENT OF TRANSPORTATION

DIVISION OF ENGINEERING SERVICES
STRUCTURE DESIGN
DESIGN BRANCH 6

BRIDGE NO. 44-0288
KILOMETER POST 158.4

CRAZY HORSE CANYON VIADUCT (NEW)
JOINT SEAL ASSEMBLY (MAXIMUM MOVEMENT RATING = 100 mm)

DS OSD 2147A (METRIC) (REV. 2/25/97)

ORIGINAL SCALE IN MILLIMETERS FOR REDUCED PLANS 0 10 20 30 40 50 60 70 80 90 100

CU 05
EA 0161E1

DISREGARD PRINTS BEARING EARLIER REVISION DATES

REVISION DATES (PRELIMINARY STAGE ONLY) 09-28-08 10-13-08 12-23-08 11-19-09 12-08-09 03-09-10 05-06-10

SHEET 14 OF 23

USERNAME => trlenard

DATE PLOTTED => 03-AUG-2010 TIME PLOTTED => 11:22

44-0288-q-jsa.dgn

DIST	COUNTY	ROUTE	KILOMETER POST TOTAL PROJECT	SHEET No	TOTAL SHEETS
05	Mon	101	R146.8/159.7	1326	1402

REGISTERED CIVIL ENGINEER 05-06-10 DATE

7-26-10
PLANS APPROVAL DATE

REGISTERED PROFESSIONAL ENGINEER HERNAN PEREZ No. 60993 Exp. 12-31-10 CIVIL STATE OF CALIFORNIA

The State of California or its officers or agents shall not be responsible for the accuracy or completeness of electronic copies of this plan sheet.

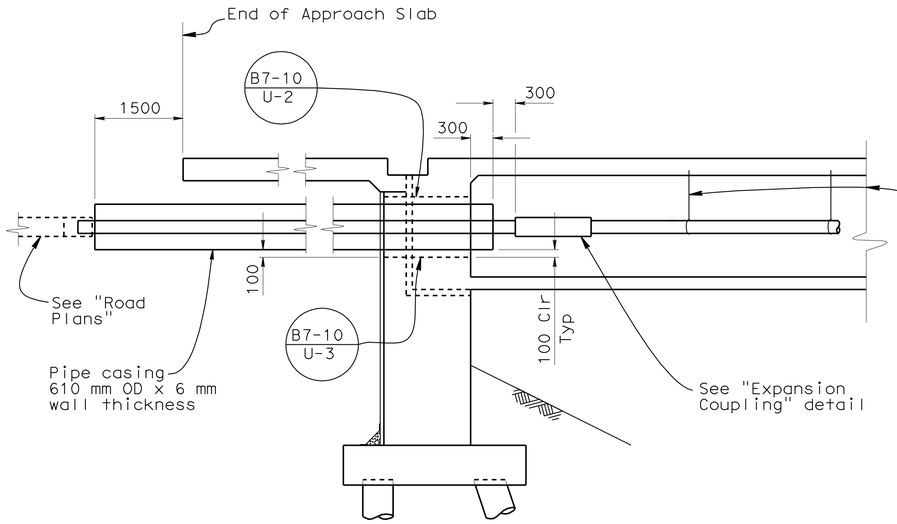

DECK DRAIN PIPE DETAIL AT ABUTMENTS

NO SCALE

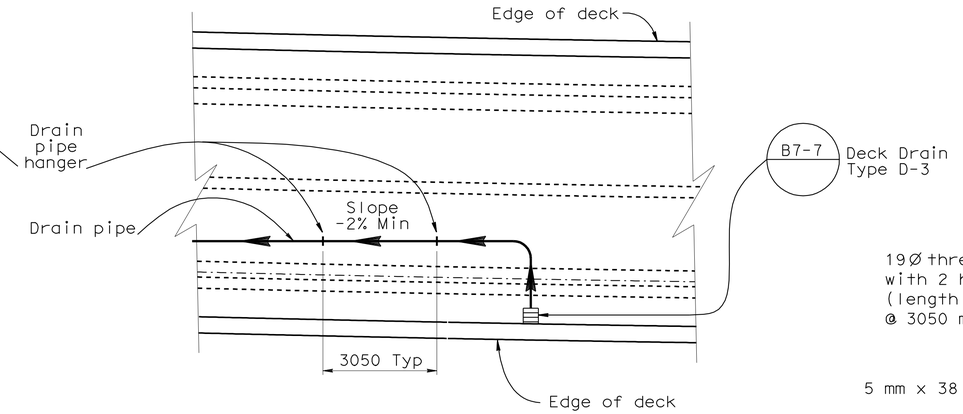

PLAN

1:80

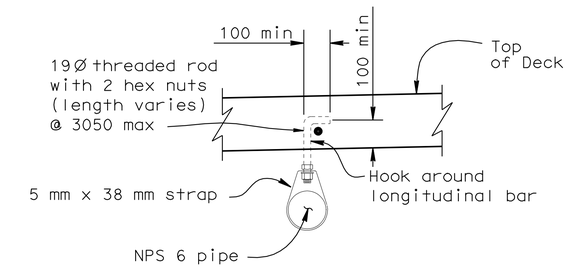

PIPE HANGER DETAIL

NO SCALE

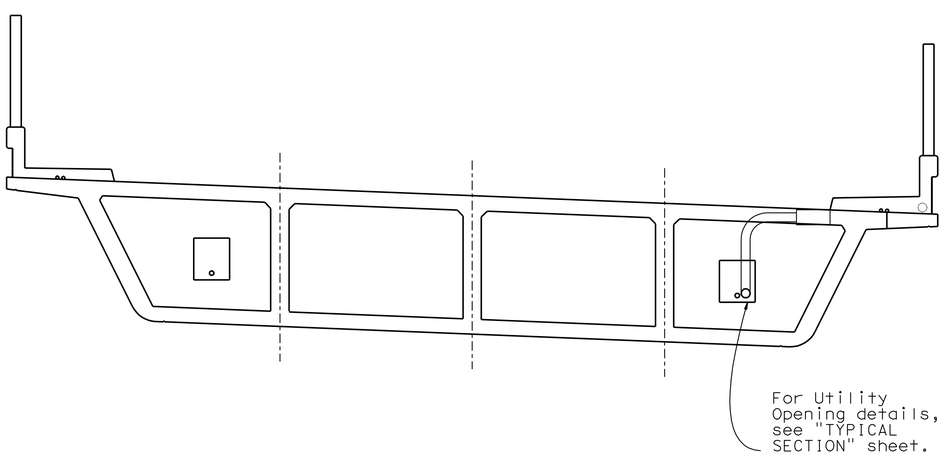

TYICAL SECTION

1:50

B7-7
7-9

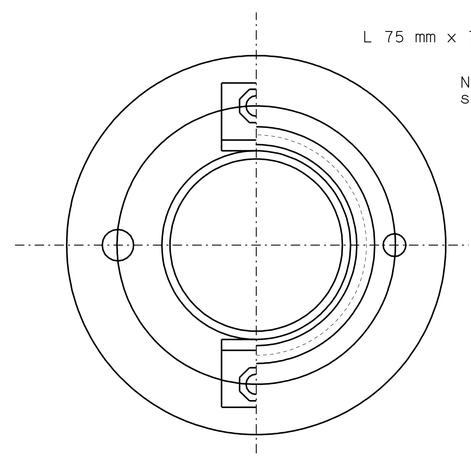

END VIEW

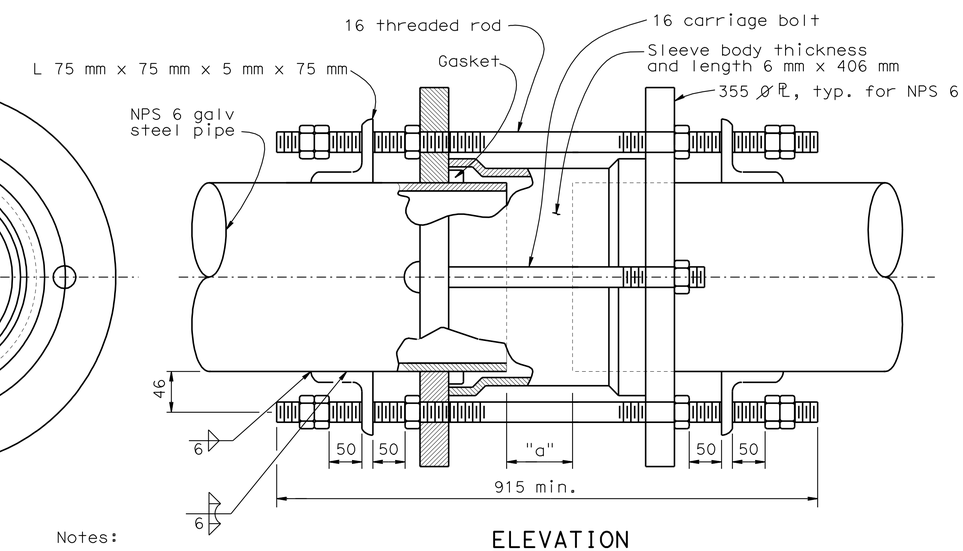

ELEVATION

Notes:

1. All hardware to be galvanized
2. For "a" dimension see, "Abutment 1 Layout" sheet

EXPANSION COUPLING

NO SCALE

DESIGN	BY Elijah Hall	CHECKED Richard Melko	
DETAILS	BY Kamal Chonkria	CHECKED Elijah Hall	
QUANTITIES	BY Ubong Inyang	CHECKED Elijah Hall	

STATE OF CALIFORNIA
DEPARTMENT OF TRANSPORTATION

DIVISION OF ENGINEERING SERVICES
STRUCTURE DESIGN
DESIGN BRANCH 6

BRIDGE NO. 44-0288
KILOMETER POST 158.4

CRAZY HORSE CANYON VIADUCT (NEW)

DECK DRAIN DETAILS

Caltrans Metric

ALL DIMENSIONS ARE IN MILLIMETERS UNLESS OTHERWISE SHOWN

ORIGINAL SCALE IN MILLIMETERS FOR REDUCED PLANS 0 10 20 30 40 50 60 70 80 90 100

CU 05
EA 0161E1

DISREGARD PRINTS BEARING EARLIER REVISION DATES

REVISION DATES: 10-23-09 03-09-10 05-06-10

SHEET 15 OF 23

FILE => 44-0288-r-deckdrain.dgn

STRUCTURES DESIGN DETAIL SHEET (METRIC) (REV.03-17-04)

USERNAME => fffright DATE PLOTTED => 03-AUG-2010 TIME PLOTTED => 11:07

DIST.	COUNTY	ROUTE	KILOMETER POST TOTAL PROJECT	SHEET NO.	TOTAL SHEETS
05	Mon	101	R146.8/159.7	1327	1402

Caltrans Metric

REGISTERED ENGINEER 05-06-10 CIVIL

7-26-10
PLANS APPROVAL DATE

The State of California or its officers or agents shall not be responsible for the accuracy or completeness of electronic copies of this plan sheet.

REGISTERED PROFESSIONAL ENGINEER HERNAN PEREZ No. 60993 Exp. 12-31-10 CIVIL STATE OF CALIFORNIA

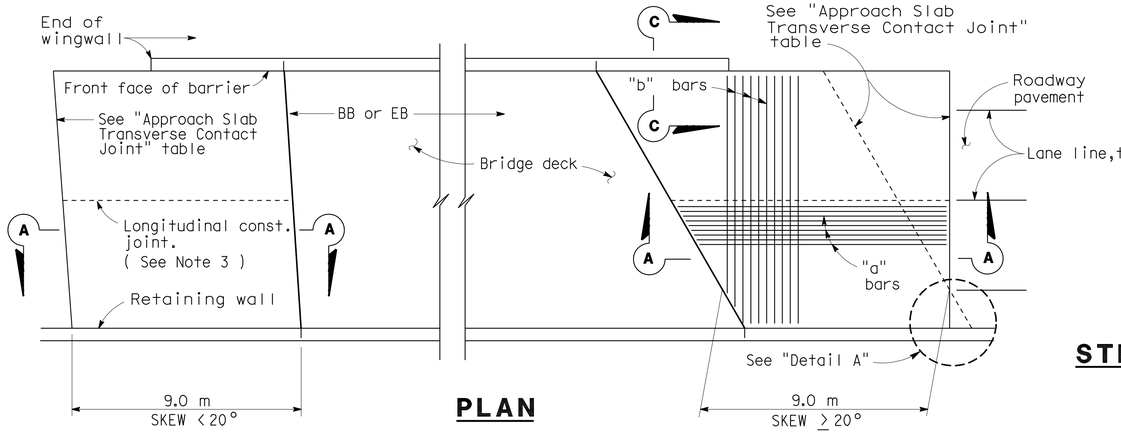

PLAN

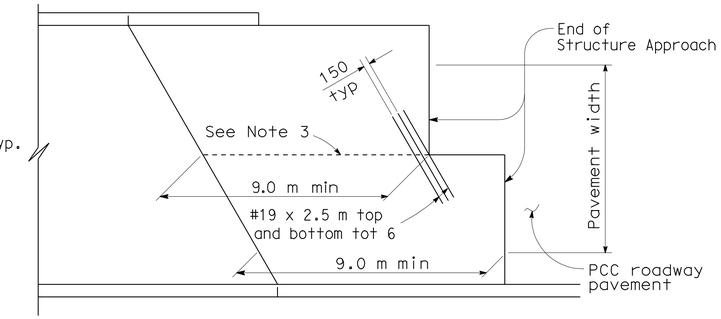

STRUCTURE APPROACH - END STAGGER DETAIL

APPROACH SLAB TRANSVERSE CONTACT JOINT		
APPROACH SKEW	WITH AC ROADWAY PAVEMENT	WITH PCC ROADWAY PAVEMENT
< 20°	Parallel to face of paving notch	Parallel to face of paving notch
20°- 45°	Parallel to face of P N use (Detail A)	Stagger lines 7.2 m to 10.8 m apart.
> 45°	Parallel to face of P N use (Detail A)	Stagger at each lane line.

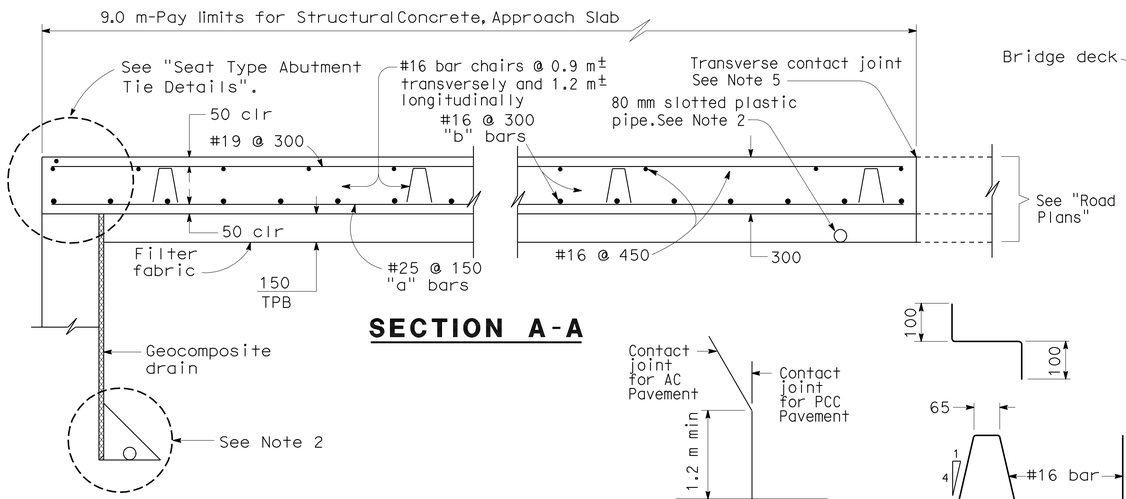

SECTION A-A

DETAIL A

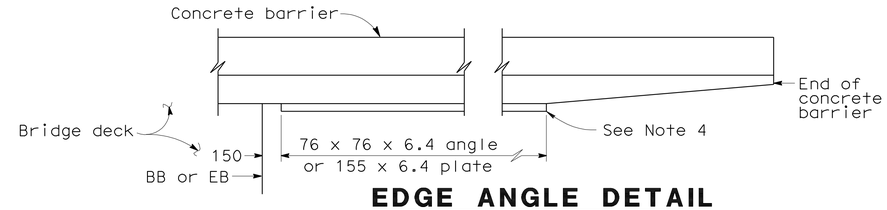

EDGE ANGLE DETAIL

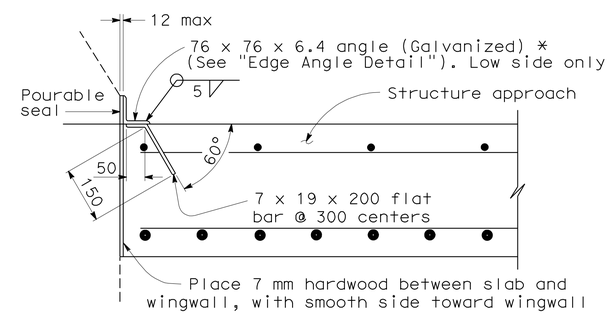

*(TO BE USED WITH TYPE 25 OR TYPE 27 CONCRETE BARRIER)

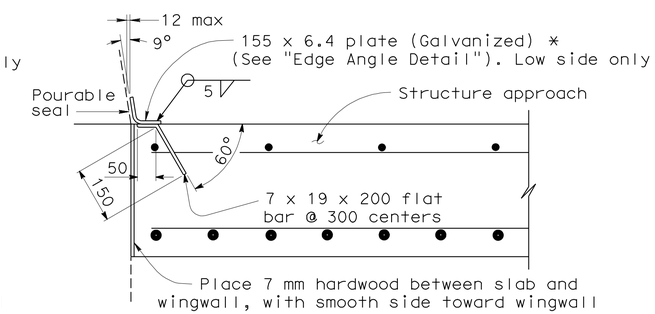

*(TO BE USED WITH TYPE 732 OR TYPE 736 CONCRETE BARRIER)

DETAIL B

BAR CHAIR DETAIL

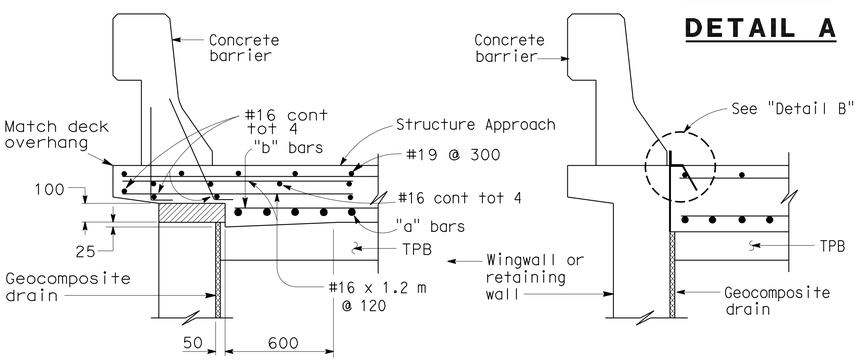

TYPE E-1

TYPE E-2

SECTION C-C

(Type E-1 to be used,unless otherwise shown on plans)

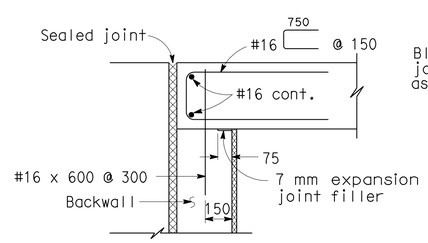

MR ≤ 50 mm

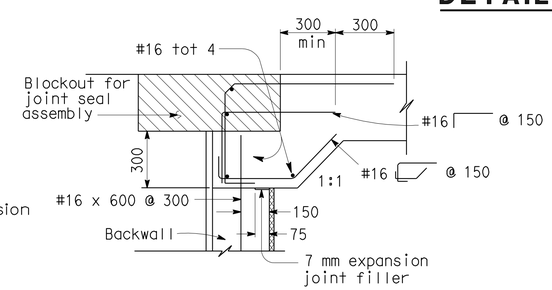

MR > 50 mm

SEAT TYPE ABUTMENT TIE DETAILS (SEE NOTE 1)

NOTES:

1. For details not shown,see Structure Plans. For MR ≤ 50 mm,adjust bar reinforcement to clear a sawcut for sealed joint,when required.
2. For drainage details,see "Structure Approach Drainage Details" sheet.
3. Longitudinal construction joints,when permitted by the Engineer, shall be located on lane lines.
4. End angle or plate at beginning of barrier transition, end of wingwall or end of structure approach as applicable.
5. For transverse contact joint with new PCC paving, refer to Standard Plan P10.
6. At the contractor's option, approach slab transverse reinforcement may be placed parallel to paving notch. Spacing of transverse reinforcement is measured along ℄ roadway.

Remove all polystyrene.

NO SCALE

ALL DIMENSIONS ARE IN MILLIMETERS UNLESS OTHERWISE SHOWN

STANDARD DRAWING				
RELEASE DATE 3/14/05	DESIGN	BY M. TRAFFALIS	CHECKED E. THORKILDSEN	RELEASED BY
FILE NO. xs3-120	DETAILS	BY R. YEE	CHECKED E. THORKILDSEN	OFFICE CHIEF
	SUBMITTED	BY M. HA	DRAWING DATE 4/98	

DS OSD 2147A (METRIC) (REV. 2/25/97)

ORIGINAL SCALE IN MILLIMETERS FOR REDUCED PLANS 0 10 20 30 40 50 60 70 80 90 100

STATE OF CALIFORNIA DEPARTMENT OF TRANSPORTATION

DIVISION OF ENGINEERING SERVICES STRUCTURE DESIGN DESIGN BRANCH 6

CU 05
EA 0161E1

BRIDGE NO. 44-0288
KILOMETER POST 158.4

CRAZY HORSE CANYON VIADUCT (NEW)

STRUCTURE APPROACH TYPE N(9S)

DISREGARD PRINTS BEARING EARLIER REVISION DATES

REVISION DATES (PRELIMINARY STAGE ONLY) 9-28-08 10-13-08 12-23-08 11-19-09 12-08-09 03-09-10 05-06-10

SHEET 16 OF 23

USERNAME => trrichf

44-0288-s-sa.dgn

DATE PLOTTED => 03-AUG-2010 TIME PLOTTED => 11:07

DIST.	COUNTY	ROUTE	KILOMETER POST TOTAL PROJECT	SHEET NO.	TOTAL SHEETS
05	Mon	101	R146.8/159.7	1328	1402

Caltrans Metric

REGISTERED ENGINEER - CIVIL 05-06-10

7-26-10
PLANS APPROVAL DATE

REGISTERED PROFESSIONAL ENGINEER HERNAN PEREZ No. 60993 Exp. 12-31-10 CIVIL STATE OF CALIFORNIA

The State of California or its officers or agents shall not be responsible for the accuracy or completeness of electronic copies of this plan sheet.

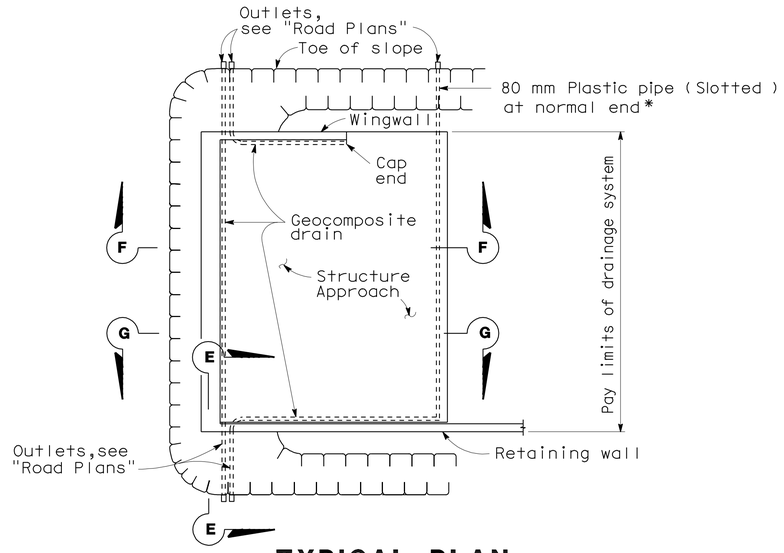

TYPICAL PLAN

*For pipe layout at staggered end, see "Detail B".

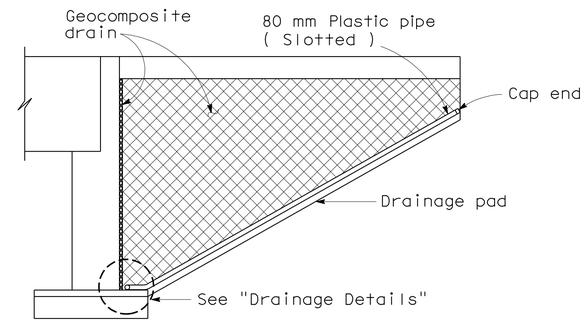

CANTILEVER WINGWALL SECTION F-F

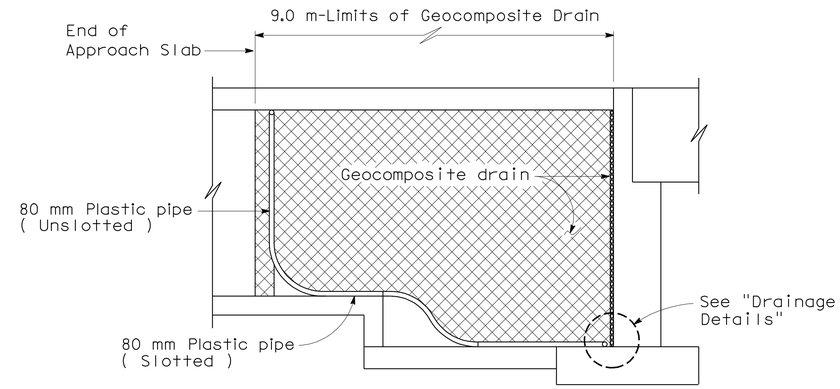

RETAINING WALL WINGWALL SECTION G-G

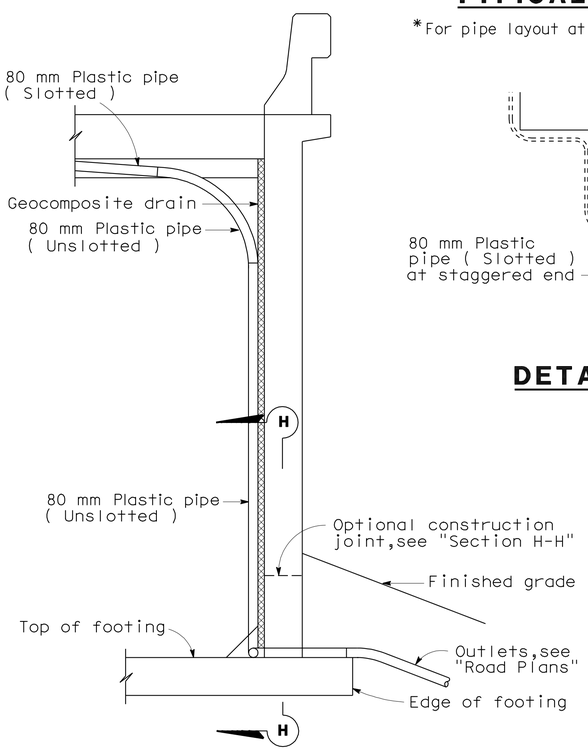

SECTION E-E

NOTE: Bends and junctions in 80 mm plastic pipe are 750 mm radius min.

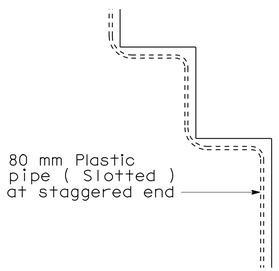

DETAIL B

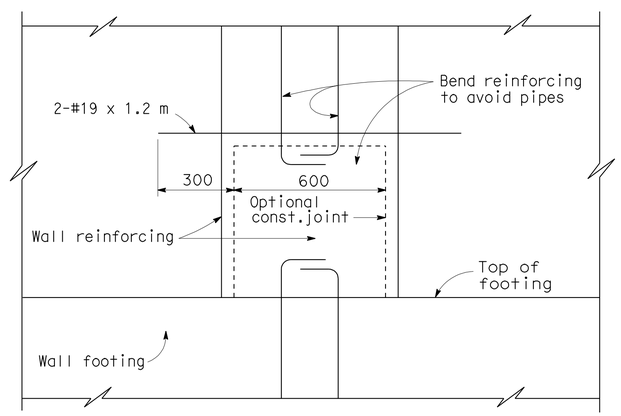

SECTION H-H

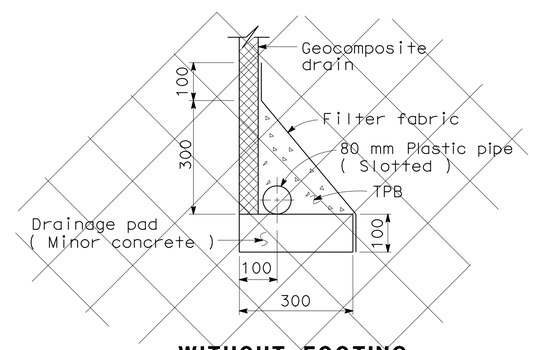

WITHOUT FOOTING

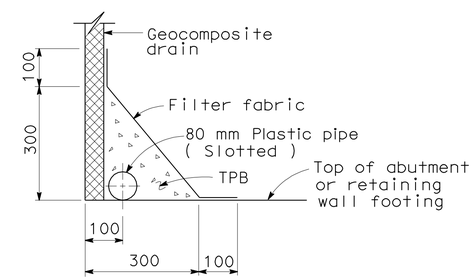

WITH FOOTING

DRAINAGE DETAILS

NO SCALE

ALL DIMENSIONS ARE IN MILLIMETERS UNLESS OTHERWISE SHOWN

STANDARD DRAWING				
RELEASE DATE 4/23/98	DESIGN BY M. TRAFFALIS	CHECKED E. THORKILDSEN	RELEASED BY	
FILE NO. xs3-110	DETAILS BY R. YEE	CHECKED E. THORKILDSEN	OFFICE CHIEF	
	SUBMITTED BY M. HA	DRAWING DATE 4/98		

DS OSD 2147A (METRIC) (REV. 2/25/97)

STATE OF CALIFORNIA DEPARTMENT OF TRANSPORTATION

DIVISION OF ENGINEERING SERVICES STRUCTURE DESIGN

DESIGN BRANCH 6

ORIGINAL SCALE IN MILLIMETERS FOR REDUCED PLANS 0 10 20 30 40 50 60 70 80 90 100

CU 05
EA 0161E1

BRIDGE NO. 44-0288

KILOMETER POST 158.4

CRAZY HORSE CANYON VIADUCT (NEW)

STRUCTURE APPROACH DRAINAGE DETAILS

DISREGARD PRINTS BEARING EARLIER REVISION DATES

REVISION DATES (PRELIMINARY STAGE ONLY) 10-18-08 12-23-08 11-19-09 12-09-09 12-17-09 03-11-10 05-06-10

SHEET 17 OF 23

USERNAME => trrichf

44-0288-s-sadd.dgn

DATE PLOTTED => 03-AUG-2010 TIME PLOTTED => 11:07

DIST	COUNTY	ROUTE	KILOMETER POST TOTAL PROJECT	SHEET No	TOTAL SHEETS
05	Mon	101	R146.8/159.7	1329	1402

REGISTERED CIVIL ENGINEER 05-06-10 DATE

7-26-10
PLANS APPROVAL DATE

REGISTERED PROFESSIONAL ENGINEER HERNAN PEREZ No. 60993 Exp. 12-31-10 CIVIL STATE OF CALIFORNIA

The State of California or its officers or agents shall not be responsible for the accuracy or completeness of electronic copies of this plan sheet.

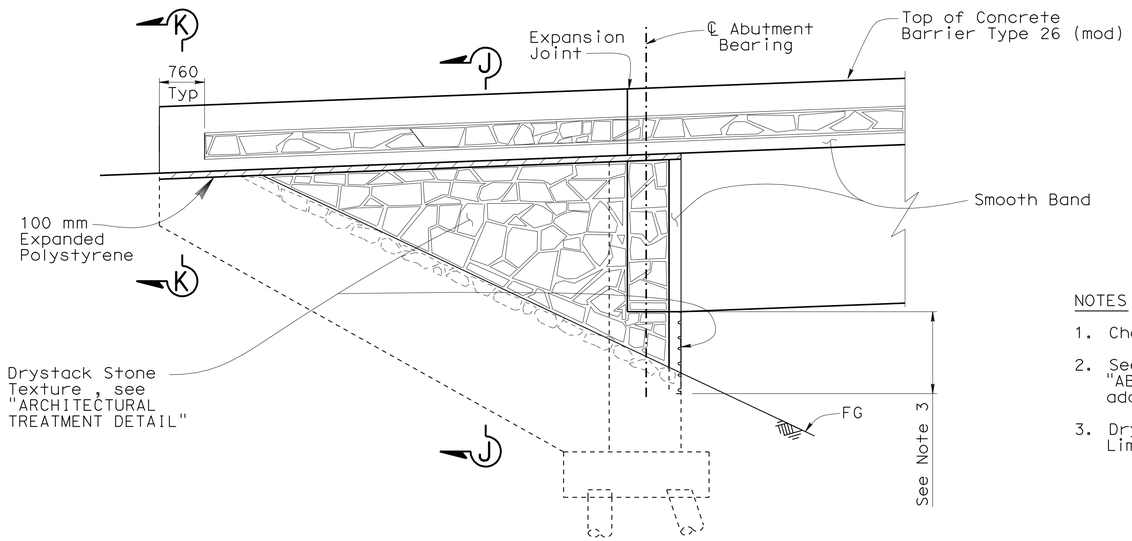

WINGWALL ELEVATION
1:50 B11-54

NOTES

1. Chain Link Railing not shown
2. See "WINGWALL ELEVATION" on "ABUTMENT DETAIL" sheet for additional details
3. Drystack Stone Texture, Limits of Payment

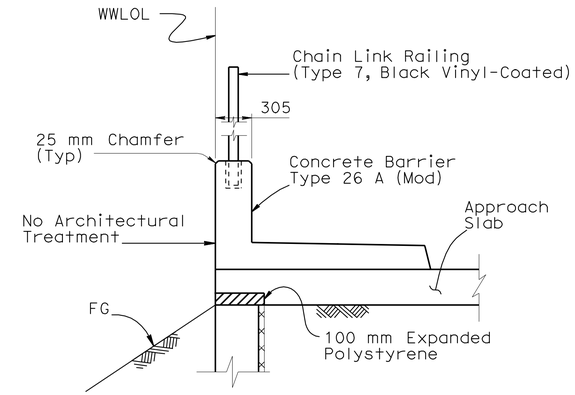

SECTION K-K
1:25 B11-54

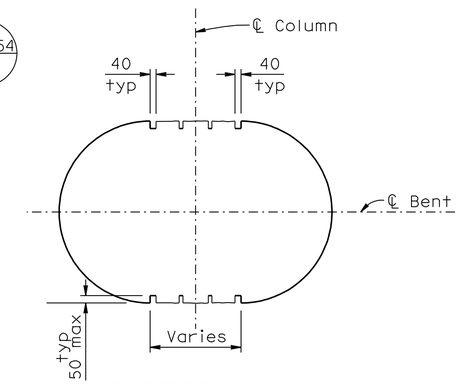

SECTION L-L
1:20

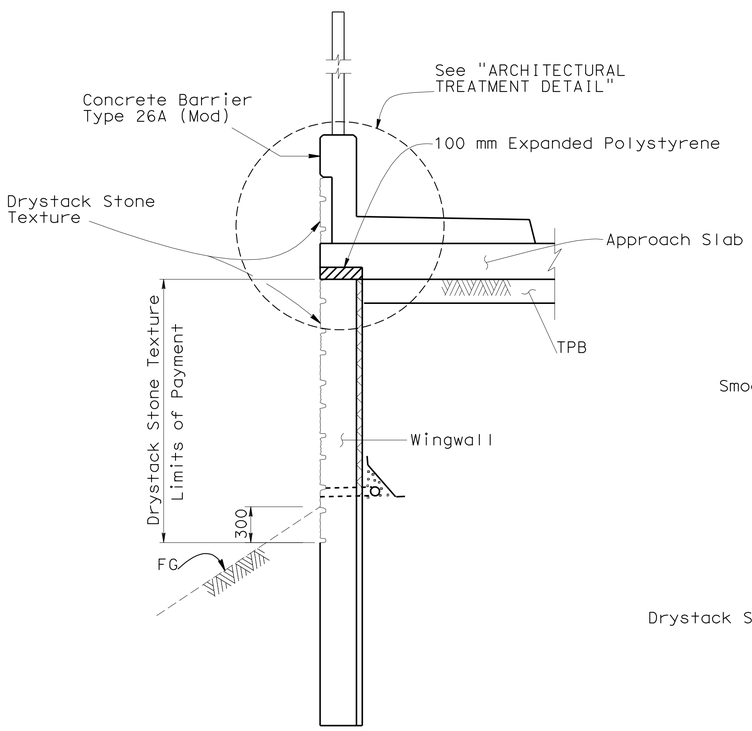

SECTION J-J
1:25 B3-8 B11-54

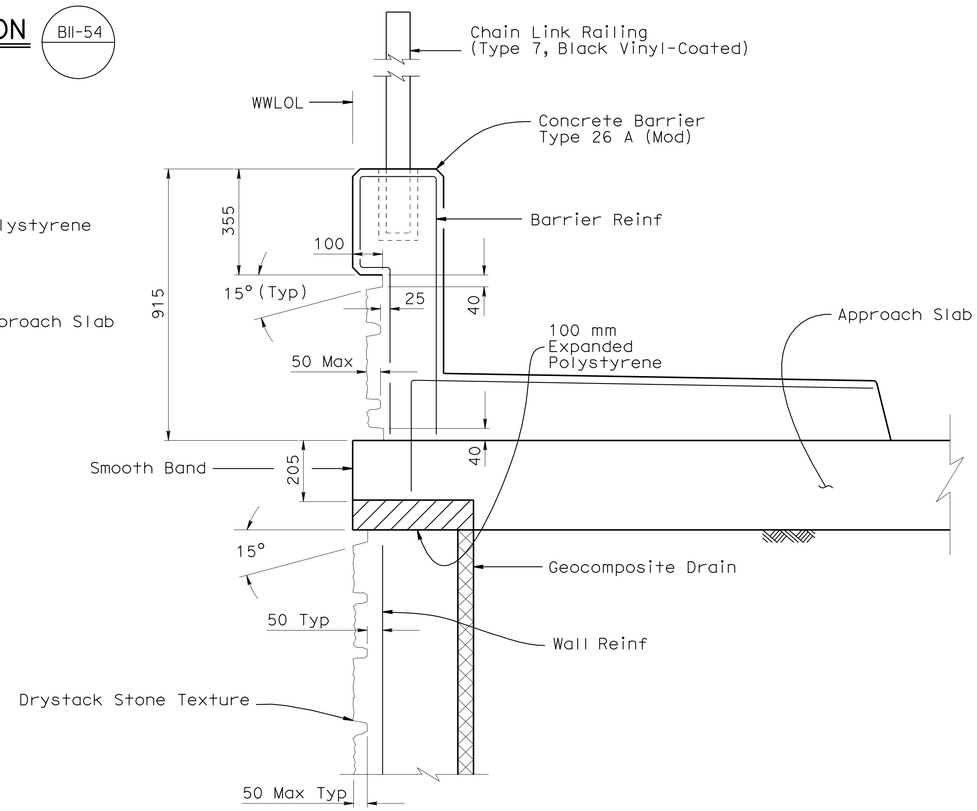

ARCHITECTURAL TREATMENT DETAIL
1:10

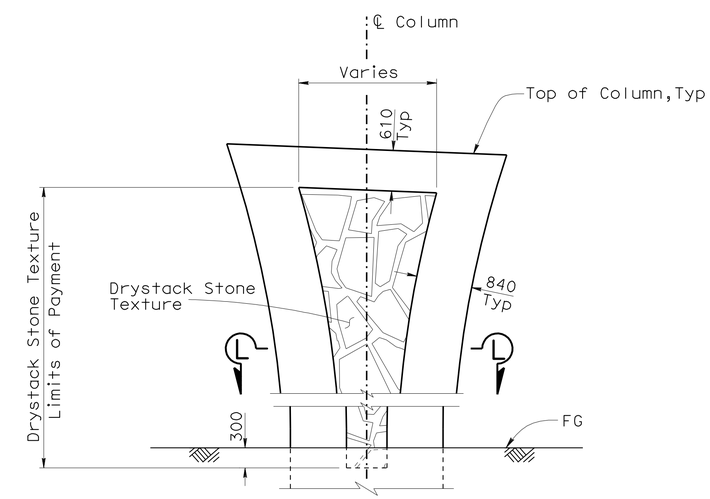

COLUMN DETAIL
NO SCALE

DESIGN	BY Prakarn Paksaichol	CHECKED Ryan Odell	
DETAILS	BY George Zweier	CHECKED Ryan Odell	
QUANTITIES	BY Ubong Inyang	CHECKED Elijah Hall	

STATE OF CALIFORNIA
DEPARTMENT OF TRANSPORTATION

DIVISION OF ENGINEERING SERVICES
STRUCTURE DESIGN
DESIGN BRANCH 6

BRIDGE NO. 44-0288
KILOMETER POST 158.4

CRAZY HORSE CANYON VIADUCT (NEW)
ARCHITECTURAL TREATMENT

ALL DIMENSIONS ARE IN MILLIMETERS UNLESS OTHERWISE SHOWN

ORIGINAL SCALE IN MILLIMETERS FOR REDUCED PLANS 0 10 20 30 40 50 60 70 80 90 100

CU 05
EA 0161E1

DISREGARD PRINTS BEARING EARLIER REVISION DATES

REVISION DATES: 09-21-08 10-16-08 12-23-08 01-30-09 09-24-09 09-28-09 11-19-09 12-17-09 03-09-10 05-06-10

SHEET 18 OF 23

STRUCTURES DESIGN DETAIL SHEET (METRIC) (REV.03-17-04)

FILE => 44-0288-y-archtrt.dgn

USERNAME => trrichf DATE PLOTTED => 03-AUG-2010 TIME PLOTTED => 11:08

DIST	COUNTY	ROUTE	KILOMETER POST TOTAL PROJECT	SHEET No	TOTAL SHEETS
05	Mon	101	R146.8/159.7	1330	1402

Michael S. Finegan 10-13-09
REGISTERED CIVIL ENGINEER

7-26-10
PLANS APPROVAL DATE

REGISTERED PROFESSIONAL ENGINEER Michael S. Finegan No. C50138 Exp. 6-30-11 CIVIL STATE OF CALIFORNIA

The State of California or its officers or agents shall not be responsible for the accuracy or completeness of electronic copies of this plan sheet.

BENCH MARK

SURVEY CONTROL

MON101 PM98.35 (NOT SHOWN ON PLAN)
Fnd 1" IP W/CALTRANS CONTROL PP & NAIL
14.251 m Lt. ℄ "CRZHS1" Line
Sta. 15+07.609
N 667981.788
E 1765138.115
Elev. = 119.206

MON101 PM98.361
Fnd 1" IP W/CALTRANS CONTROL PP & NAIL
5.129 m Lt. ℄ "CRZHS1" Line
Sta. 12+01.103
N 667813.990
E 1765394.892
Elev. = 120.490

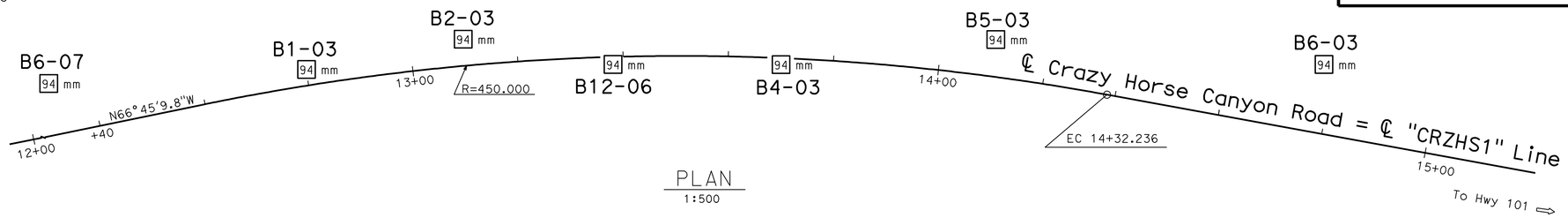

PLAN
1:500

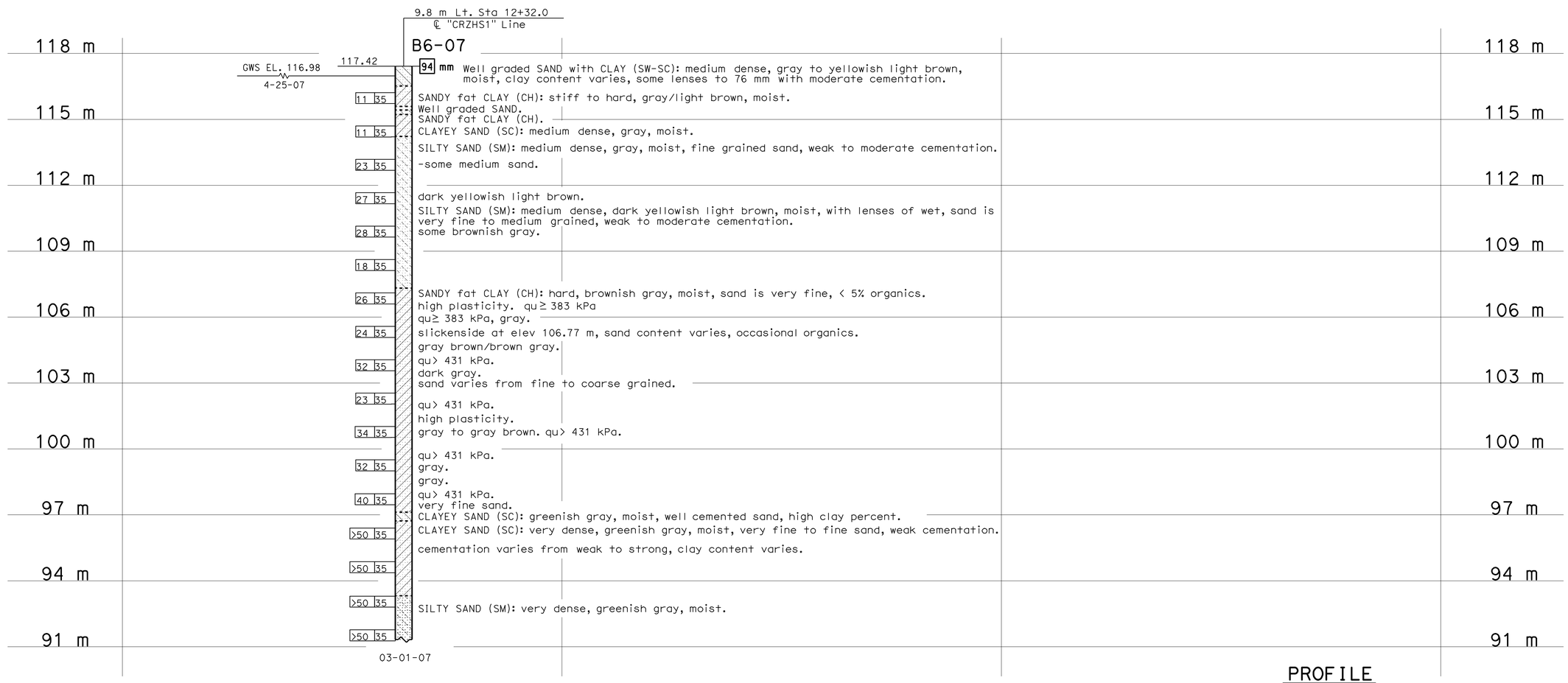

PROFILE
HOR. 1:250
VER. 1:100

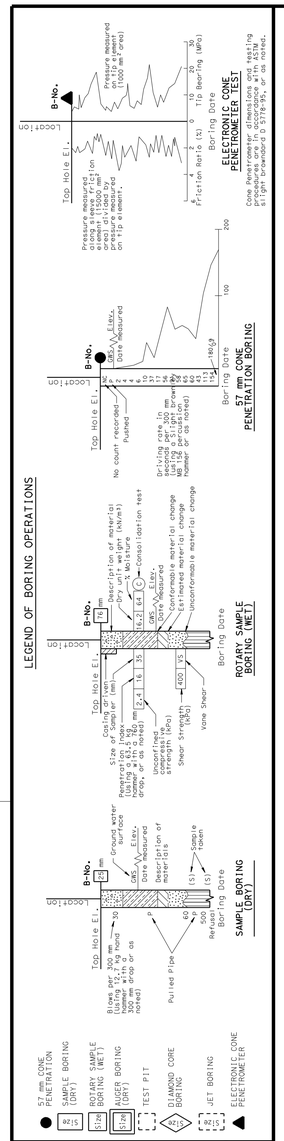

LEGEND OF EARTH MATERIALS

GRAVEL, SAND, SILT, CLAY, SANDY CLAY or CLAYEY SAND, SANDY SILT or SILTY SAND, SILTY CLAY, CLAYEY SILT, PEAT and/or ORGANIC MATTER, COBBLES and/or BOULDERS, IGNEOUS ROCK, SEDIMENTARY ROCK, METAMORPHIC

CONSISTENCY CLASSIFICATION FOR SOILS

According to the Slight brownsard Penetration Test

SPT N-Value (Blows/0.3m)	Granular	SPT N-Value (Blows/0.3m)	Cohesive
0-4	Very Loose	<2	Very Soft
5-10	Loose	2-4	Soft
11-30	Medium Dense	5-8	Firm
31-50	Dense	9-15	Stiff
>50	Very Dense	16-30	Very stiff
		>30	Hard

NOTE: Classification of earth material as shown on this sheet is based upon field inspection and is not to be construed to imply mechanical analysis.

OGS CIVIL LOG OF TEST BORINGS SHEET (METRIC) (REV. 4/04)

Caltrans Metric

ENGINEERING SERVICES	GEOTECHNICAL SERVICES
DRAWN BY	F. Nguyen 2/08
CHECKED BY	W. Hoon

FIELD INVESTIGATION BY: W. Hoon

STATE OF CALIFORNIA DEPARTMENT OF TRANSPORTATION

DIVISION OF ENGINEERING SERVICES STRUCTURE DESIGN
DESIGN BRANCH 6

BRIDGE NO. 44-0288
KILOMETER POST 158.4

CRAZY HORSE CANYON ROAD VIADUCT
LOG OF TEST BORINGS 1 OF 5

ALL DIMENSIONS ARE IN METERS UNLESS OTHERWISE SHOWN

ORIGINAL SCALE IN MILLIMETERS FOR REDUCED PLANS 0 10 20 30 40 50 60 70 80 90 100

CU 05
EA 0161E1

DISREGARD PRINTS BEARING EARLIER REVISION DATES

REVISION DATES (PRELIMINARY STAGE ONLY) 06-19-09 10-13-09

SHEET 19 OF 23

FILE => 44-0288-z-lotb01.dgn

USERNAME => trrright DATE PLOTTED => 03-AUG-2010 TIME PLOTTED => 11:08

DIST	COUNTY	ROUTE	KILOMETER POST TOTAL PROJECT	SHEET No	TOTAL SHEETS
05	Mon	101	R146.8/159.7	1331	1402

Michael S. Finegan 10-13-09
REGISTERED CIVIL ENGINEER

7-26-10
PLANS APPROVAL DATE

REGISTERED PROFESSIONAL ENGINEER
Michael S. Finegan
No. C50138
Exp. 6-30-11
CIVIL
STATE OF CALIFORNIA

The State of California or its officers or agents shall not be responsible for the accuracy or completeness of electronic copies of this plan sheet.

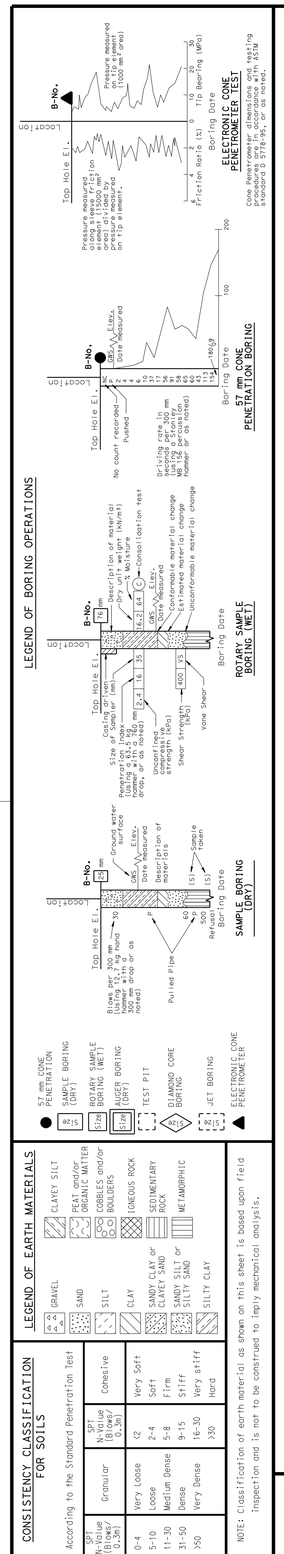

OGS CIVIL LOG OF TEST BORINGS SHEET (METRIC) (REV. 4/04)

FOR PLAN VIEW, SEE
"LOG OF TEST BORINGS" 1 OF 5

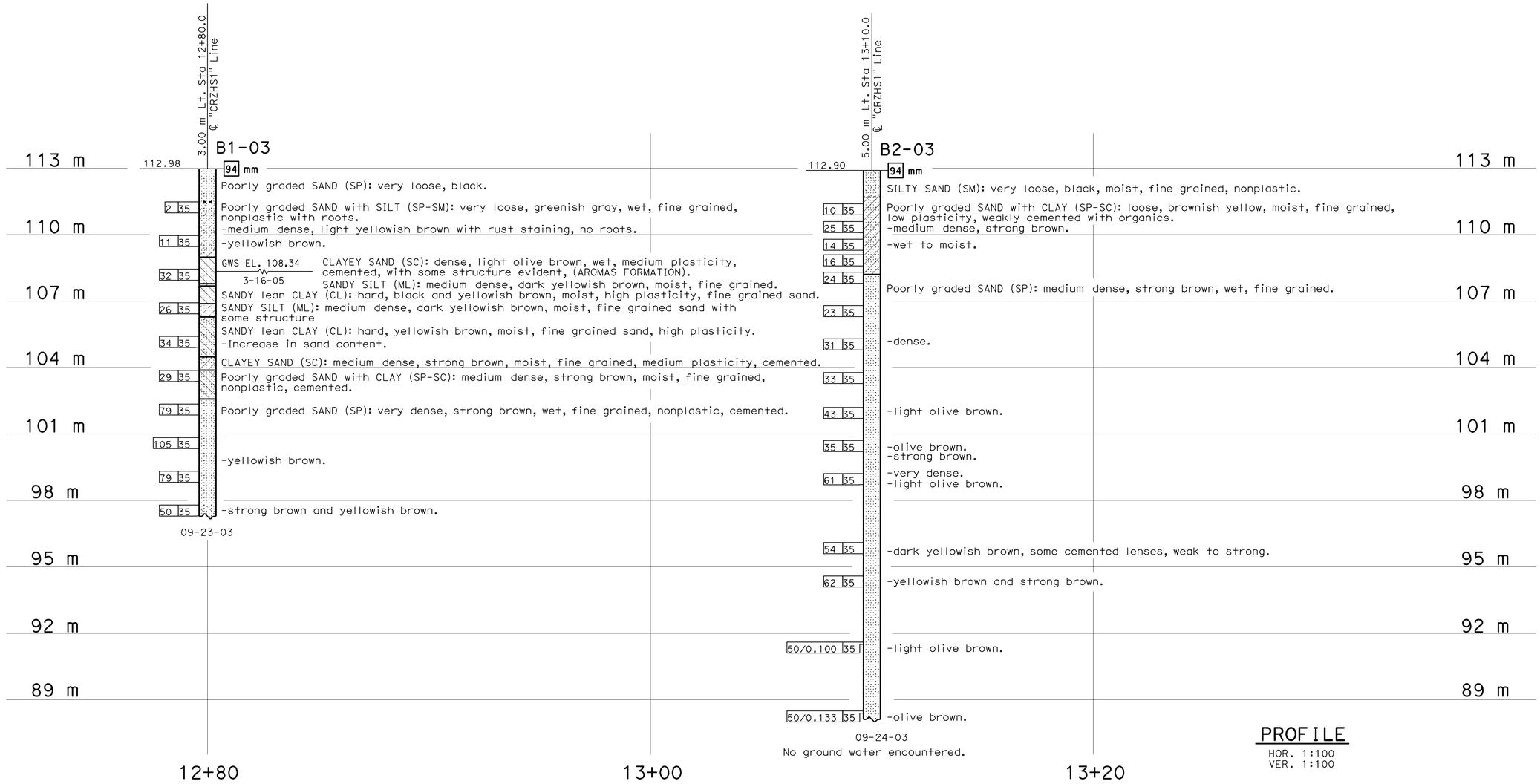

Caltrans Metric

ENGINEERING SERVICES	GEOTECHNICAL SERVICES
DRAWN BY F. Nguyen 2/08	
CHECKED BY W. Hoon	

FIELD INVESTIGATION BY: S. von Schwind

STATE OF CALIFORNIA DEPARTMENT OF TRANSPORTATION

DIVISION OF ENGINEERING SERVICES STRUCTURE DESIGN
DESIGN BRANCH 6

BRIDGE NO. 44-0288
KILOMETER POST 158.4

CRAZY HORSE CANYON ROAD VIADUCT
LOG OF TEST BORINGS 2 OF 5

ALL DIMENSIONS ARE IN METERS UNLESS OTHERWISE SHOWN

ORIGINAL SCALE IN MILLIMETERS FOR REDUCED PLANS 0 10 20 30 40 50 60 70 80 90 100

CU 05
EA 0161E1

DISREGARD PRINTS BEARING EARLIER REVISION DATES 06-18-09 10-13-09

REVISION DATES (PRELIMINARY STAGE ONLY)

SHEET 20 OF 23

FILE => 44-0288-z-lotb02.dgn

USERNAME => trrfrchf DATE PLOTTED => 03-AUG-2010 TIME PLOTTED => 11:08

DIST	COUNTY	ROUTE	KILOMETER POST TOTAL PROJECT	SHEET No	TOTAL SHEETS
05	Mon	101	R146.8/159.7	1332	1402

Michael S. Finegan 10-13-09
REGISTERED CIVIL ENGINEER

7-26-10
PLANS APPROVAL DATE

REGISTERED PROFESSIONAL ENGINEER Michael S. Finegan No. C50138 Exp. 6-30-11 CIVIL STATE OF CALIFORNIA

The State of California or its officers or agents shall not be responsible for the accuracy or completeness of electronic copies of this plan sheet.

FOR PLAN VIEW, SEE
"LOG OF TEST BORINGS" 1 OF 5

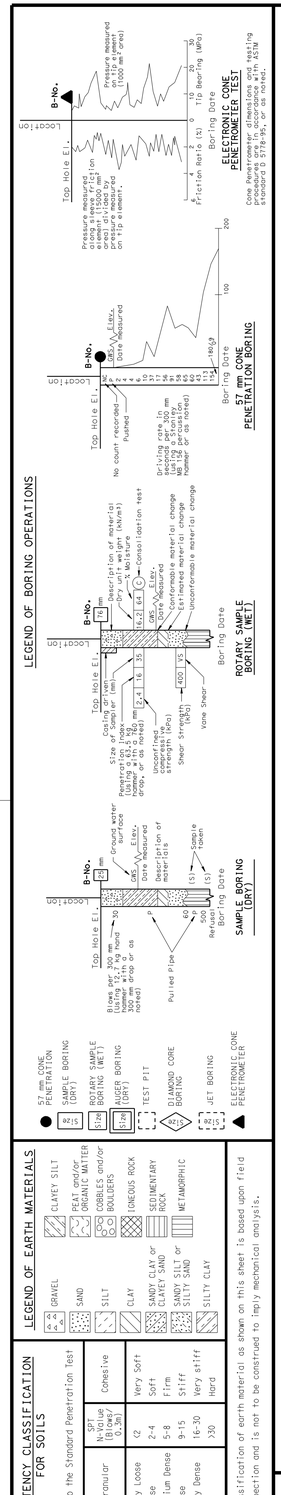

OGS CIVIL LOG OF TEST BORINGS SHEET (METRIC) (REV. 4/04)

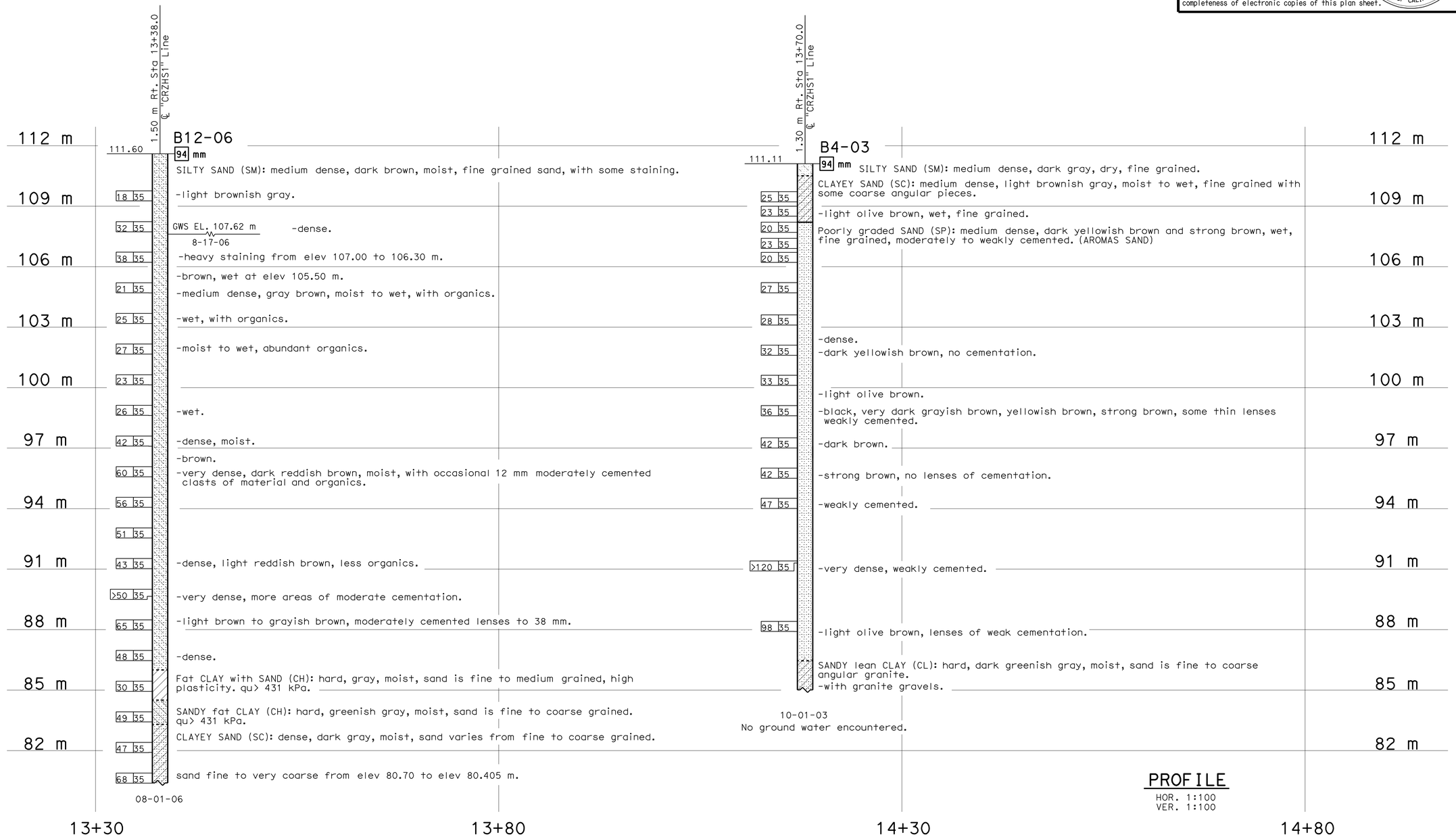

PROFILE
HOR. 1:100
VER. 1:100

Caltrans Metric

ENGINEERING SERVICES	GEOTECHNICAL SERVICES
DRAWN BY	F. Nguyen 2/08
CHECKED BY	W. Hoon

FIELD INVESTIGATION BY: W. Hoon, S. von Schwind

STATE OF CALIFORNIA DEPARTMENT OF TRANSPORTATION

DIVISION OF ENGINEERING SERVICES STRUCTURE DESIGN DESIGN BRANCH 6

BRIDGE NO. 44-0288
KILOMETER POST 158.4

CRAZY HORSE CANYON ROAD VIADUCT
LOG OF TEST BORINGS 3 OF 5

ALL DIMENSIONS ARE IN METERS UNLESS OTHERWISE SHOWN

ORIGINAL SCALE IN MILLIMETERS FOR REDUCED PLANS 0 10 20 30 40 50 60 70 80 90 100

CU 05
EA 0161E1

DISREGARD PRINTS BEARING EARLIER REVISION DATES 06-19-09 10-13-09

REVISION DATES (PRELIMINARY STAGE ONLY)

SHEET 21 OF 23

FILE => 44-0288-z-lotb03.dgn

USERNAME => fffrlcnf DATE PLOTTED => 03-AUG-2010 TIME PLOTTED => 11:08

DIST	COUNTY	ROUTE	KILOMETER POST TOTAL PROJECT	SHEET No	TOTAL SHEETS
05	Mon	101	R146.8/159.7	1333	1402

Michael S. Finegan 10-13-09
REGISTERED CIVIL ENGINEER

7-26-10
PLANS APPROVAL DATE

REGISTERED PROFESSIONAL ENGINEER
Michael S. Finegan
No. C50138
Exp. 6-30-11
CIVIL
STATE OF CALIFORNIA

The State of California or its officers or agents shall not be responsible for the accuracy or completeness of electronic copies of this plan sheet.

LEGEND OF BORING OPERATIONS

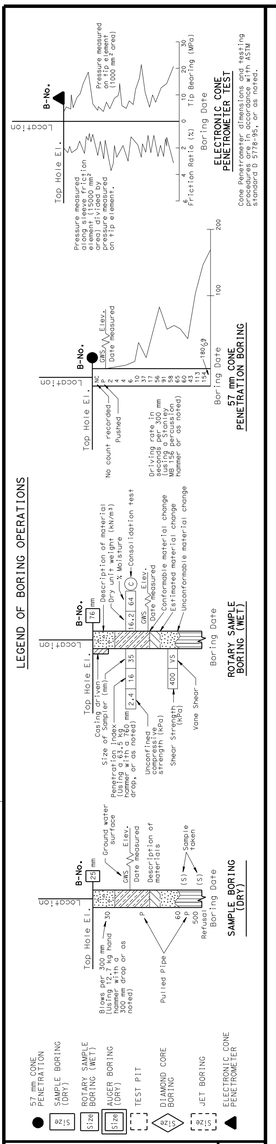

LEGEND OF EARTH MATERIALS

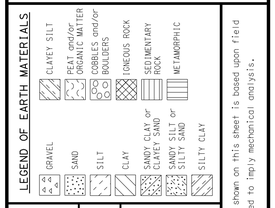

CONSISTENCY CLASSIFICATION FOR SOILS

According to the Standard Penetration Test

SPT N-Value (Blows/0.3m)	Granular	SPT N-Value (Blows/0.3m)	Cohesive
0-4	Very Loose	<2	Very Soft
5-10	Loose	2-4	Soft
11-30	Medium Dense	5-8	Firm
31-50	Dense	9-15	Stiff
>50	Very Dense	16-30	Very stiff
		>30	Hard

NOTE: Classification of earth material as shown on this sheet is based upon field inspection and is not to be construed to imply mechanical analysis.

OGS CIVIL LOG OF TEST BORINGS SHEET (METRIC) (REV. 4/04)

FOR PLAN VIEW, SEE
"LOG OF TEST BORINGS" 1 OF 5

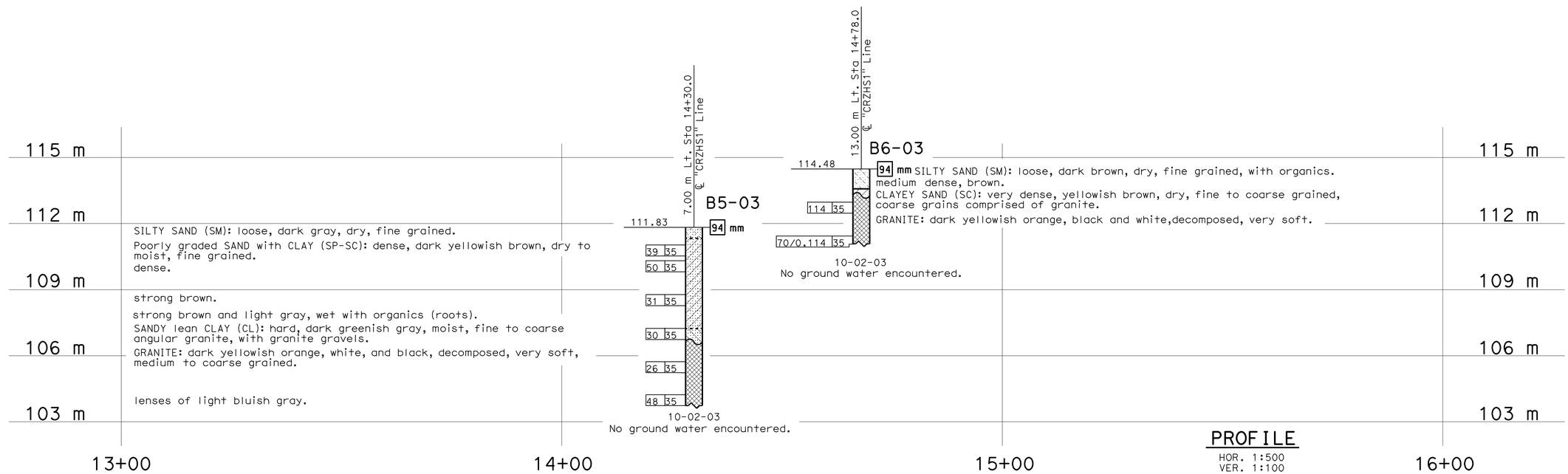

Caltrans Metric

ENGINEERING SERVICES	GEOTECHNICAL SERVICES
DRAWN BY F. Nguyen 2/08	
CHECKED BY W. Hoon	

FIELD INVESTIGATION BY: S. von Schwind

STATE OF CALIFORNIA
DEPARTMENT OF TRANSPORTATION

DIVISION OF ENGINEERING SERVICES
STRUCTURE DESIGN
DESIGN BRANCH 6

BRIDGE NO. 44-0288
KILOMETER POST 158.4

CRAZY HORSE CANYON ROAD VIADUCT
LOG OF TEST BORINGS 4 OF 5

ALL DIMENSIONS ARE IN METERS UNLESS OTHERWISE SHOWN

ORIGINAL SCALE IN MILLIMETERS FOR REDUCED PLANS 0 10 20 30 40 50 60 70 80 90 100

CU 05
EA 0161E1

DISREGARD PRINTS BEARING EARLIER REVISION DATES

REVISION DATES (PRELIMINARY STAGE ONLY) 06-18-09 10-13-09

SHEET 22 OF 23

FILE => 44-0288-z-lotb04.dgn

USERNAME => ffrfcht DATE PLOTTED => 03-AUG-2010 TIME PLOTTED => 11:09

DIST	COUNTY	ROUTE	KILOMETER POST TOTAL PROJECT	SHEET No	TOTAL SHEETS
05	Mon	101	R146.8/159.7	1334	1402

Michael S. Finegan 10-13-09
REGISTERED CIVIL ENGINEER

7-26-10
PLANS APPROVAL DATE

REGISTERED PROFESSIONAL ENGINEER
Michael S. Finegan
No. C50138
Exp. 6-30-11
CIVIL
STATE OF CALIFORNIA

The State of California or its officers or agents shall not be responsible for the accuracy or completeness of electronic copies of this plan sheet.

WEATHERING DESCRIPTORS

Modified from United States Bureau of Reclamation, Engineering Geology Field Manual.

Descriptors		Diagnostic features					General characteristics § (strength, excavation, etc.)
		Chemical weathering-Discoloration and/or oxidation		Mechanical weathering-Grain boundary conditions (disaggregation) primarily for granitics and some coarse-grained sediments	Texture and solutioning		
Alphanumeric descriptor	Descriptive term	Body of rock	Fracture surfaces †		Texture	Solutioning	
W1	Fresh	No discoloration, not oxidized.	No discoloration or oxidation.	No separation, intact (tight).	No change.	No solutioning.	Hammer rings when crystalline rocks are struck. Almost always rock excavation except for naturally weak or weakly cemented rocks such as siltstones or shales.
W2	Slightly weathered to fresh °						
W3	Slightly weathered	Discoloration or oxidation is limited to surface of, or short distance from, fractures; some feldspar crystals are dull.	Minor to complete discoloration or oxidation of most surfaces.	No visible separation, intact (tight).	Preserved.	Minor leaching of some soluble minerals may be noted.	Hammer rings when crystalline rocks are struck. Body of rock not weakened. With few exceptions, such as siltstones or shales, classified as rock excavation.
W4	Moderately to slightly weathered °						
W5	Moderately weathered	Discoloration or oxidation extends from fractures usually throughout; Fe-Mg minerals are "rusty," feldspar crystals are "cloudy."	All fracture surfaces are discolored or oxidized.	Partial separation of boundaries visible.	Generally preserved.	Soluble minerals may be mostly leached.	Hammer does not ring when rock is struck. Body of rock is slightly weakened. Depending on fracturing, usually is rock excavation except in naturally weak rocks such as siltstones or shales.
W6	Intensely to moderately weathered°						
W7	Intensely weathered	Discoloration or oxidation throughout; all feldspars and Fe-Mg minerals are altered to clay to some extent; or chemical alteration produces in-situ disaggregation, see grain boundary conditions.	All fracture surfaces are discolored or oxidized, surfaces friable.	Partial separation, rock is friable; in semiarid conditions granitics are disaggregated.	Texture altered by chemical disintegration (hydration, argillation).	Leaching of soluble minerals may be complete.	Dull sound when struck with hammer, usually can be broken with moderate to heavy manual pressure or by light hammer blow without reference to planes of weakness such as incipient or hairline fractures, or veinlets. Rock is significantly weakened. Usually common excavation.
W8	Very intensely weathered						
W9	Decomposed	Discolored or oxidized throughout, but resistant minerals such as quartz may be unaltered; all feldspars and Fe-Mg minerals are completely altered to clay.		Complete separation of grain boundaries (disaggregated).	Resembles a soil, partial or complete remnant rock structure may be preserved; leaching of soluble minerals usually complete.		Can be granulated by hand. Always common excavation. Resistant minerals such as quartz may be present as "stringers" or "dikes."

Note: This chart and its horizontal categories are more readily applied to rocks with feldspars and mafic minerals. Weathering in various sedimentary rocks, particularly limestones and poorly indurated sediments, will not always fit the categories established. This chart and weathering categories may have to be modified for particular site conditions or alteration such as hydrothermal effects; however, the basic framework and similar descriptors are to be used.

° Combination descriptors are permissible where equal distribution of both weathering characteristics are present over significant intervals or where characteristics present are "in between" the diagnostic feature. However, dual descriptors should not be used where significant, identifiable zones can be delineated. When given as a range only two adjacent terms may be combined. "Decomposed to slightly weathered," or "moderately weathered to fresh" are not acceptable.

† Does not include directional weathering along shears or faults and their associated features. For example, a shear zone that carried weathering to great depths into a fresh rock mass would not require the rock mass to be classified as weathered.

§ These are generalizations and should not be used as diagnostic features for weathering or excavation classification. These characteristics vary to a large extent based on naturally weak materials or cementation and type of excavation

ROCK QUALITY DESIGNATION (RQD) & PERCENT RECOVERY (REC) LOGGING

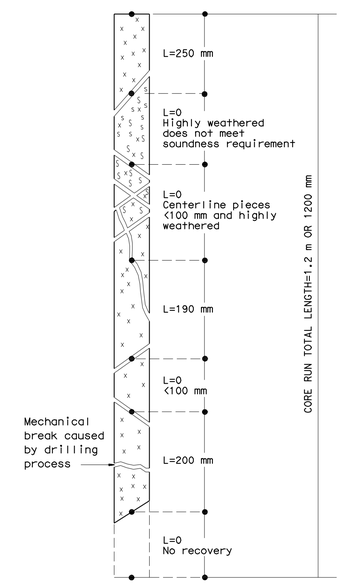

RQD (ROCK QUALITY DESIGNATION)	DESCRIPTION OF ROCK QUALITY
0 - 25%	VERY POOR
25 - 50%	POOR
50 - 75%	FAIR
75 - 90%	GOOD
90 - 100%	EXCELLENT

REC = Percent Core Recovery

$$REC = \frac{\sum \text{Length of all core pieces}}{\text{Total core run length}}$$

$$RQD = \frac{\sum \text{Length of sound core pieces} \geq 100 \text{ mm}}{\text{Total core run length}}$$

$$RQD = \frac{250+190+200}{1200} \times 100\%$$

RQD = 53% (fair)

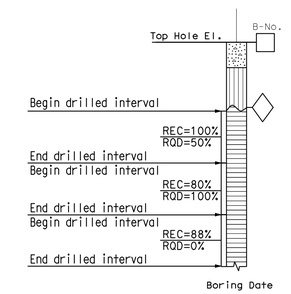

(No Scale)
After Deere & Deere, 1989

FRACTURE DENSITY

Modified from United States Bureau of Reclamation, Engineering Geology Field Manual.

FRACTURE DENSITY- Based on the spacing of all natural fractures in an exposure or core recovery lengths in boreholes; excludes mechanical breaks, shears, and shear zones; however, shear-disturbed zones (fracturing outside the shear) are included. Descriptors for fracture density apply to all rock exposures such as tunnel walls, dozer trenches, outcrops, or foundation cut slopes and inverts, as well as boreholes. Descriptive criteria presented below are based on borehole cores where lengths are measured along the core axis, for other exposures the criteria is distance measured between fractures (size of blocks).

UNFRACTURED (FD0): No fractures.

VERY SLIGHTLY FRACTURED (FD1): Core recovered mostly in lengths greater than 1 m.

SLIGHTLY TO VERY SLIGHTLY FRACTURED (FD2)*

SLIGHTLY FRACTURED (FD3): Core recovered mostly in lengths from 300 to 1000 mm, with few scattered lengths less than 300 mm or greater than 1000 mm.

MODERATELY TO SLIGHTLY FRACTURED (FD4)*

MODERATELY FRACTURED (FD5): Core recovered mostly in 100 to 300 mm lengths with most lengths about 200 mm.

INTENSELY TO MODERATELY FRACTURED (FD6)*

INTENSELY FRACTURED (FD7): Lengths average from 30 to 100 mm with scattered fragmented intervals. Core recovered mostly in lengths less than 100 mm.

VERY INTENSELY TO INTENSELY FRACTURED (FD8)*

VERY INTENSELY FRACTURED (FD9): Core recovered mostly as chips and fragments with a few scattered short core lengths.

* Combinations of fracture densities (e.g. very intensely to intensely fractured, or moderately to slightly fractured) are used where equal distribution of both fracture density characteristics are present over a significant interval or exposure, or where characteristics are "in between" the descriptor definitions.

ROCK HARDNESS DESCRIPTORS

Alphanumeric Descriptor	Descriptor	Criteria
H1	Extremely hard	Core, fragment, or exposure cannot be scratched with knife or sharp pick; can only be chipped with repeated heavy hammer blows.
H2	Very hard	Cannot be scratched with knife of sharp pick. Core or fragment breaks with repeated heavy hammer blows.
H3	Hard	Can be scratched with knife or sharp pick with difficulty (heavy pressure). Heavy hammer blow required to break specimen.
H4	Moderately hard	Can be scratched with knife or sharp pick with light or moderate pressure. Core or fragment breaks with moderate hammer blow.
H5	Moderately soft	Can be grooved 2 mm deep by knife or sharp pick with moderate or heavy pressure. Core or fragment breaks with light hammer blow or heavy manual pressure.
H6	Soft	Can be grooved or gouged easily by knife or sharp pick with light pressure, can be scratched with fingernail. Breaks with light to moderate manual pressure.
H7	Very soft	Can be readily indented, grooved or gouged with fingernail, or carved with a knife. Breaks with light manual pressure.

Any bedrock unit softer than H7, very soft, is to be described using ASTM D-2488 consistency descriptors.

Note: Although "sharp pick" is included in these definitions, descriptions of ability to be scratched, grooved or gouged by a knife is the preferred criteria.

Modified from United States Bureau of Reclamation, Engineering Geology Field Manual.

BEDDING, FOLIATION, OR FLOW TEXTURE DESCRIPTORS

Descriptors	Thickness / Spacing
Massive	Greater than 3 m
Very thickly (bedded, foliated, or banded)	1 to 3 m
Thickly	300 mm to 1 m
Moderately	100 to 300 mm
Thinly	30 to 100 mm
Very thinly	10 to 30 mm
Laminated (intensely foliated or banded)	Less than 10 mm

Modified from United States Bureau of Reclamation, Engineering Geology Field Manual.

Caltrans Metric

ENGINEERING SERVICES	GEOTECHNICAL SERVICES
PREPARED BY	F. Nguyen 2/08
CHECKED BY	

OGS CIVIL LOG OF TEST BORINGS SHEET (METRIC) (REV. 8/05)

ORIGINAL SCALE IN MILLIMETERS FOR REDUCED PLANS 0 10 20 30 40 50 60 70 80 90 100

STATE OF CALIFORNIA
DEPARTMENT OF TRANSPORTATION

DIVISION OF ENGINEERING SERVICES
STRUCTURE DESIGN
DESIGN BRANCH 6

CU 05
EA 0161E1

BRIDGE NO. 44-0288
KILOMETER POST 158.4

CRAZY HORSE CANYON ROAD VIADUCT
LOG OF TEST BORINGS 5 OF 5

DISREGARD PRINTS BEARING EARLIER REVISION DATES → 10-13-09

REVISION DATES

SHEET 23 OF 23

FILE => 44-0288-z-lotb05.dgn

USERNAME => trrichf DATE PLOTTED => 03-AUG-2010 TIME PLOTTED => 11:09

DIST	COUNTY	ROUTE	KILOMETER POST TOTAL PROJECT	SHEET No	TOTAL SHEETS
05	Mon	101	R146.8/159.7	1335	1402

REGISTERED CIVIL ENGINEER 05-06-10 DATE

7-26-10
PLANS APPROVAL DATE

REGISTERED PROFESSIONAL ENGINEER HERNAN PEREZ No. 60993 Exp. 12-31-10 CIVIL STATE OF CALIFORNIA

The State of California or its officers or agents shall not be responsible for the accuracy or completeness of electronic copies of this plan sheet.

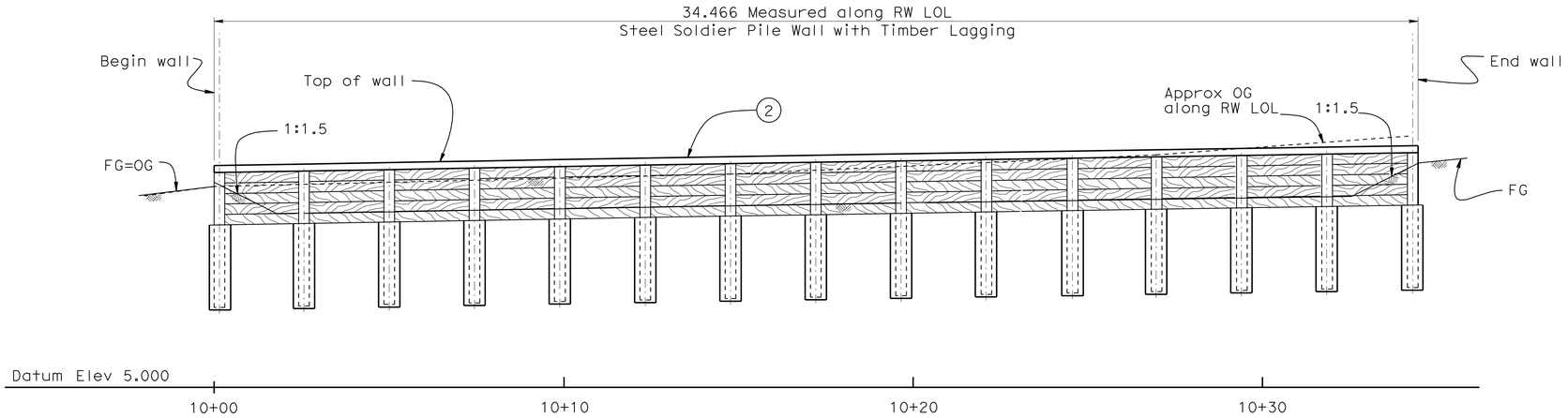

DEVELOPED ELEVATION

1:80

INDEX TO PLANS

SHEET NO.	TITLE
1	GENERAL PLAN
2	STRUCTURE PLAN
3	WALL DETAILS
4	TYPIICAL SECTION
5	LOG OF TEST BORINGS

STANDARD PLANS DATED JULY 2004

A10A	ACRONYMS AND ABBREVIATIONS (SHEET 1 OF 2)
A10B	ACRONYMS AND ABBREVIATIONS (SHEET 2 OF 2)
A10C	SYMBOLS (SHEET 1 OF 2)
A10D	SYMBOLS (SHEET 2 OF 2)

STANDARD PLAN SHEET NO.

DETAIL NO.

QUANTITIES

STRUCTURE EXCAVATION (SOLDIER PILE WALL)	19	m^3
STRUCTURE BACKFILL (SOLDIER PILE WALL)	3	m^3
LEAN CONCRETE BACKFILL	6	m^3
STEEL SOLDIER PILE (W 310 X 79)	60	m
DRILLED HOLE (610 MM)	60	m
CLASS 2 CONCRETE (BACKFILL)	10	m^3
BAR REINFORCING STEEL (RETAINING WALL)	280	kg
TIMBER LAGGING	8	m^3
CLEAN AND PAINT STEEL SOLDIER PILING	LUMP	SUM
STRUCTURAL CONCRETE, RETAINING WALL	3	m^3

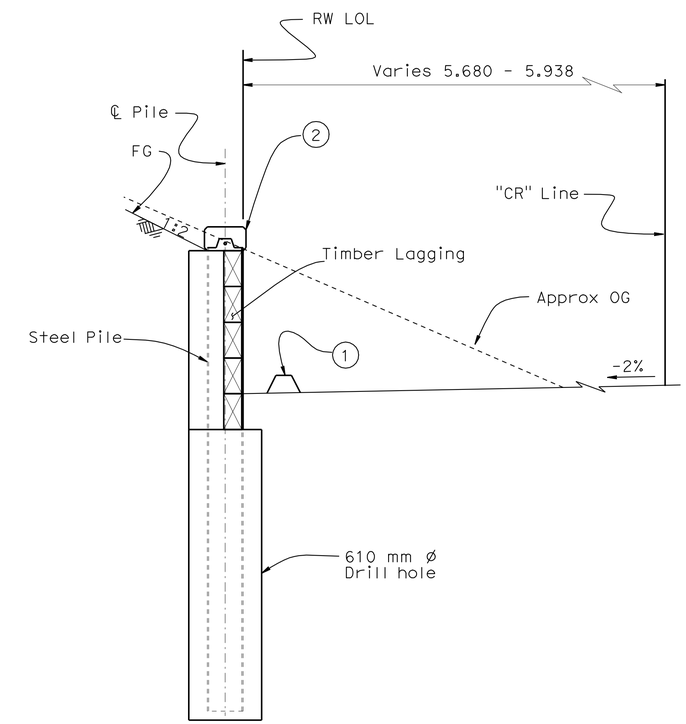

TYPICAL SECTION

1:25

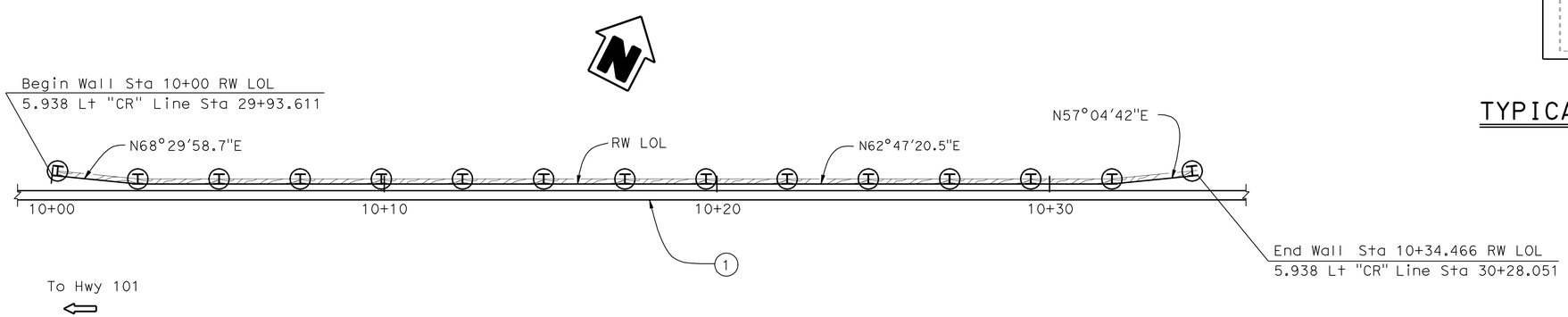

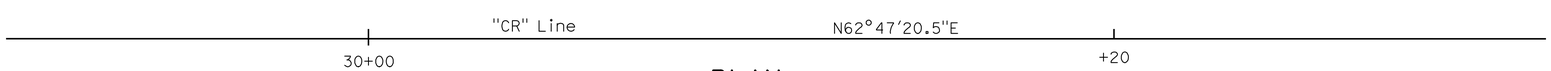

PLAN

1:80

Notes:

1. HMA Dike (Type A), see "Road Plans"
2. Concrete Cap

For "General Notes", see "Typical Section" sheet

Caltrans Metric

Fritz Hoffman
DESIGN ENGINEER

	BY	CHECKED
DESIGN	Hernan Perez	Aram Salimi
DETAILS	M. Lane / B. Jenko	Hernan Perez
QUANTITIES	Rachel Washington	Vivian Dang

LOAD & RESISTANCE FACTOR DESIGN — LIVE LOADING: HL93 W/"LOW-BOY"; PERMIT DESIGN VEHICLE

	BY	CHECKED
LAYOUT	M. Lane	Hernan Perez
SPECIFICATIONS	Sirisha Nelapatla	PLANS AND SPECS COMPARED Sirisha Nelapatla

STATE OF CALIFORNIA DEPARTMENT OF TRANSPORTATION

DIVISION OF ENGINEERING SERVICES STRUCTURE DESIGN
DESIGN BRANCH 6

BRIDGE NO. N/A
KILOMETER POST R146.8/161

RETAINING WALL NO. 30 AT CROSS RD
GENERAL PLAN

ALL DIMENSIONS ARE IN METERS UNLESS OTHERWISE SHOWN

ORIGINAL SCALE IN MILLIMETERS FOR REDUCED PLANS 0 10 20 30 40 50 60 70 80 90 100

CU 05
EA 0161E1

DISREGARD PRINTS BEARING EARLIER REVISION DATES

REVISION DATES: 1-14-09 12-18-09 05-06-10 05-11-09 06-08-09 09-23-09 10-18-09 10-27-09 10-28-09 11-03-09

SHEET 1 OF 5

FILE => 44e0000-a-gp.dgn

STRUCTURES DESIGN GENERAL PLAN SHEET (METRIC) (REV.07-24-06)

USERNAME => trrichf DATE PLOTTED => 03-AUG-2010 TIME PLOTTED => 11:09

DIST	COUNTY	ROUTE	KILOMETER POST TOTAL PROJECT	SHEET No	TOTAL SHEETS
05	Mon	101	R146.8/159.7	1336	1402

Hernan Perez 05-06-10
REGISTERED CIVIL ENGINEER DATE

7-26-10
PLANS APPROVAL DATE

REGISTERED PROFESSIONAL ENGINEER HERNAN PEREZ No. 60993 Exp. 12-31-10 CIVIL STATE OF CALIFORNIA

The State of California or its officers or agents shall not be responsible for the accuracy or completeness of electronic copies of this plan sheet.

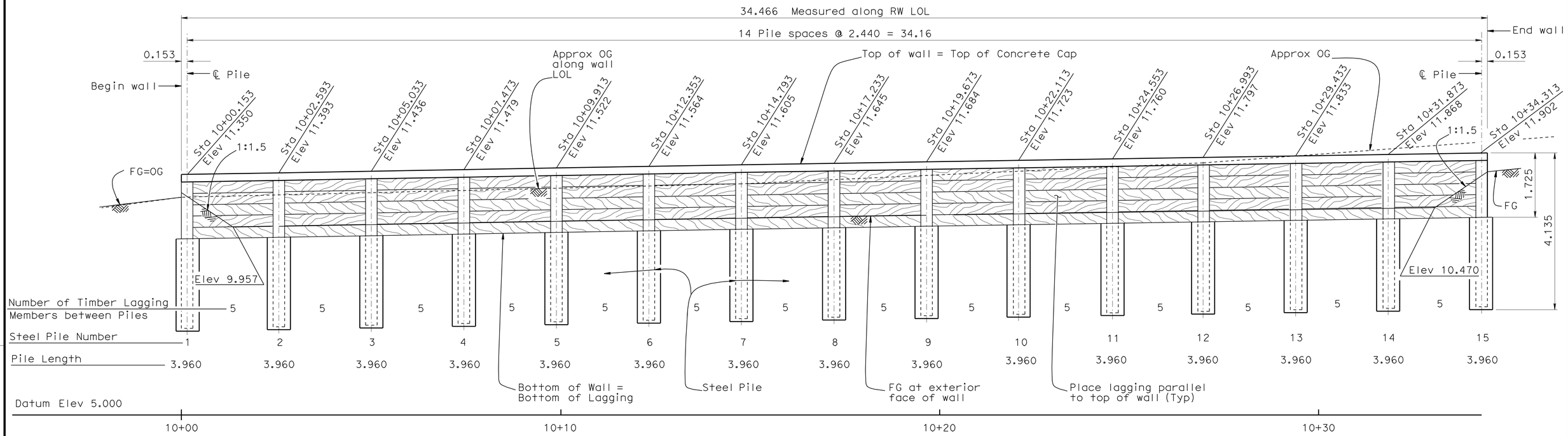

DEVELOPED ELEVATION

1:50

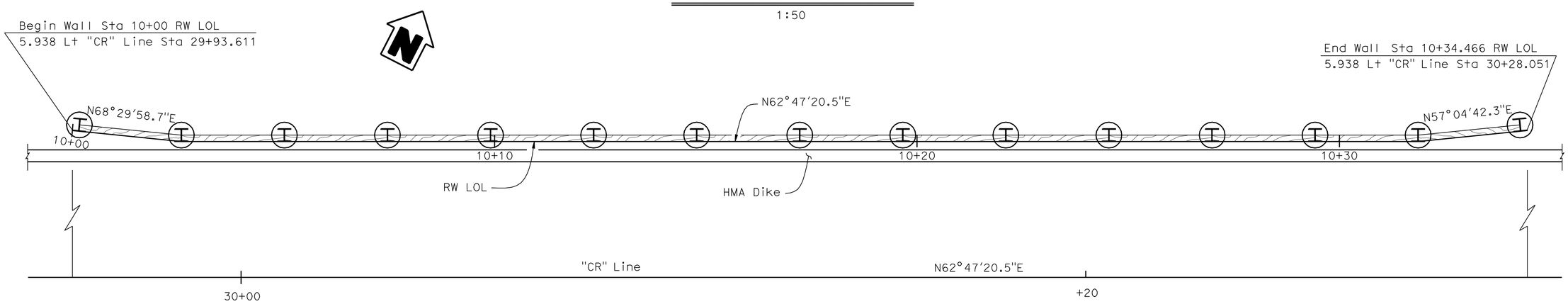

PLAN

1:50

Caltrans Metric

	BY	CHECKED
DESIGN	Hernan Perez	Aram Salimi
DETAILS	M. Lane / B. Jenko	Hernan Perez
QUANTITIES	Rachel Washington	Vivian Dang

STATE OF CALIFORNIA
DEPARTMENT OF TRANSPORTATION

DIVISION OF ENGINEERING SERVICES
STRUCTURE DESIGN
DESIGN BRANCH 6

BRIDGE NO. N/A
KILOMETER POST R146.8/161

RETAINING WALL NO. 30 AT CROSS RD
STRUCTURE PLAN

ALL DIMENSIONS ARE IN METERS UNLESS OTHERWISE SHOWN

ORIGINAL SCALE IN MILLIMETERS FOR REDUCED PLANS 0 10 20 30 40 50 60 70 80 90 100

CU 05
EA 0161E1

DISREGARD PRINTS BEARING EARLIER REVISION DATES

REVISION DATES: 01-15-09 01-22-09 02-18-09 03-06-09 05-14-09 09-25-09 10-26-09 11-03-09 12-14-09 05-06-10

SHEET 2 OF 5

STRUCTURES DESIGN DETAIL SHEET (METRIC) (REV.03-17-04)

FILE => 44e0000-c-sp.dgn

USERNAME => trmrguye DATE PLOTTED => 03-AUG-2010 TIME PLOTTED => 11:13

DIST	COUNTY	ROUTE	KILOMETER POST TOTAL PROJECT	SHEET No	TOTAL SHEETS
05	Mon	101	R146.8/159.7	1337	1402

REGISTERED CIVIL ENGINEER 05-06-10 DATE

7-26-10
PLANS APPROVAL DATE

REGISTERED PROFESSIONAL ENGINEER HERNAN PEREZ No. 60993 Exp. 12-31-10 CIVIL STATE OF CALIFORNIA

The State of California or its officers or agents shall not be responsible for the accuracy or completeness of electronic copies of this plan sheet.

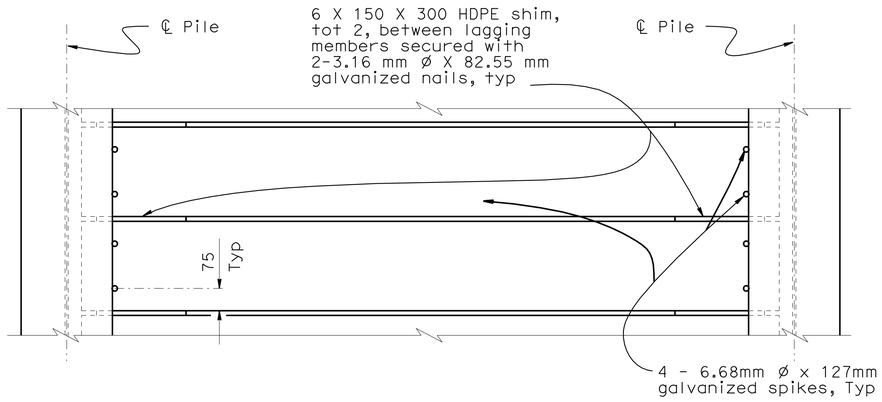

PART ELEVATION

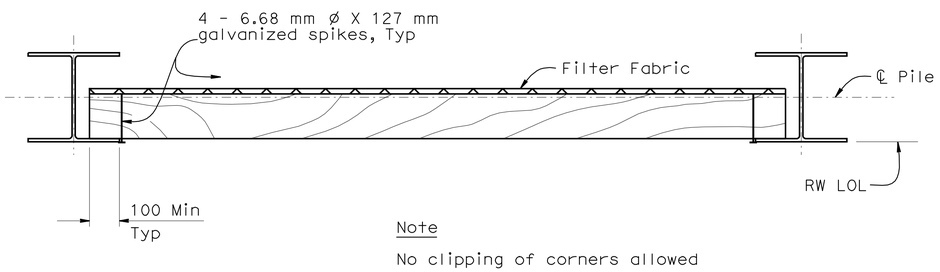

Note

No clipping of corners allowed

PART PLAN OF LAGGING MEMBER

LAGGING DETAILS - ALTERNATIVE 1

No Scale

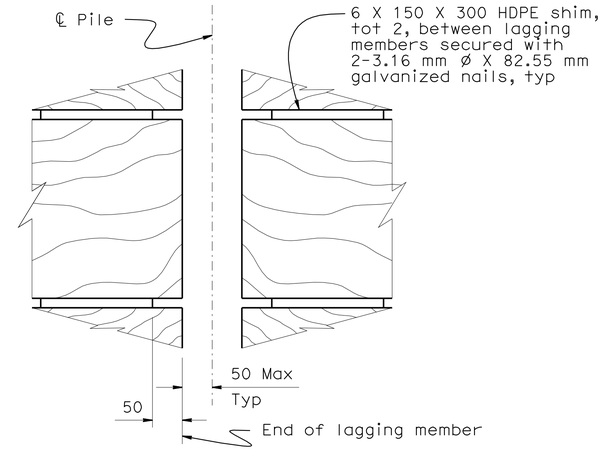

PART ELEVATION

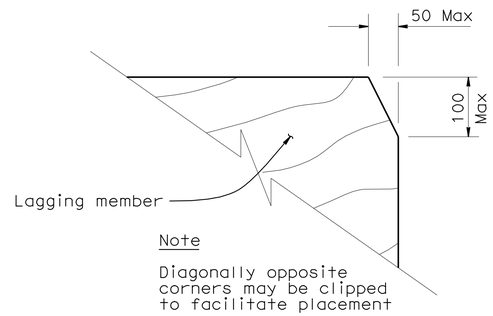

Note

Diagonally opposite corners may be clipped to facilitate placement

PART PLAN OF LAGGING MEMBER

LAGGING DETAILS - ALTERNATIVE 2

No Scale

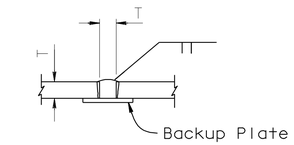

SQUARE GROOVE

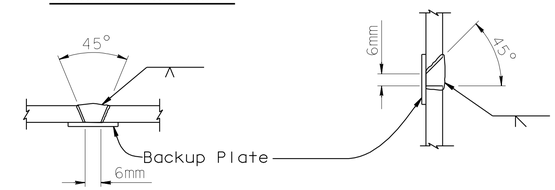

SINGLE VEE-GROOVE SINGLE BEVEL-GROOVE

PILE WELDING DETAIL-BUTT JOINTS

No Scale

Notes:

1. Single Vee-Groove And Square Groove Permitted for all positions.
2. Single Bevel-Groove permitted for horizontal joints only

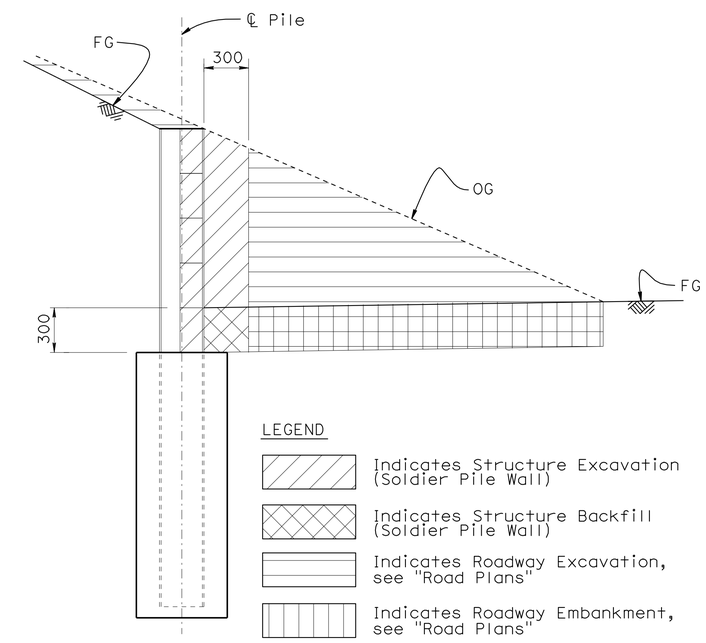

LIMITS OF PAYMENT FOR EXCAVAITION AND BACKFILL

1:20

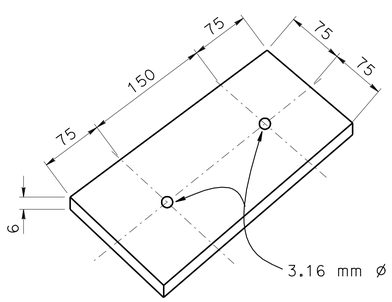

HDPE SHIM DETAIL

No scale

	BY	CHECKED
DESIGN	Hernan Perez	A. Salimi
DETAILS	M. Lane / B. Jenko	Hernan Perez
QUANTITIES	Rachel Washington	Vivian Dang

STATE OF CALIFORNIA
DEPARTMENT OF TRANSPORTATION

DIVISION OF ENGINEERING SERVICES
STRUCTURE DESIGN
DESIGN BRANCH 6

BRIDGE NO. N/A
KILOMETER POST R146.8/161

RETAINING WALL NO. 30 AT CROSS RD
WALL DETAILS

ALL DIMENSIONS ARE IN MILLIMETERS UNLESS OTHERWISE SHOWN

ORIGINAL SCALE IN MILLIMETERS FOR REDUCED PLANS 0 10 20 30 40 50 60 70 80 90 100

CU 05
EA 0161E1

DISREGARD PRINTS BEARING EARLIER REVISION DATES

REVISION DATES: 01-15-09 02-22-09 03-02-09 05-11-09 9-28-09 11-12-09 11-18-09 05-06-10

SHEET 3 OF 5

FILE => 44e0000-g-rwdt.dgn

STRUCTURES DESIGN DETAIL SHEET (METRIC) (REV.03-17-04)

USERNAME => rrmngaye DATE PLOTTED => 03-AUG-2010 TIME PLOTTED => 11:13

DIST	COUNTY	ROUTE	KILOMETER POST TOTAL PROJECT	SHEET No	TOTAL SHEETS
05	Mon	101	R146.8/159.7	1338	1402

REGISTERED CIVIL ENGINEER 05-06-10 DATE

7-26-10
PLANS APPROVAL DATE

REGISTERED PROFESSIONAL ENGINEER HERNAN PEREZ No. 60993 Exp. 12-31-10 CIVIL STATE OF CALIFORNIA

The State of California or its officers or agents shall not be responsible for the accuracy or completeness of electronic copies of this plan sheet.

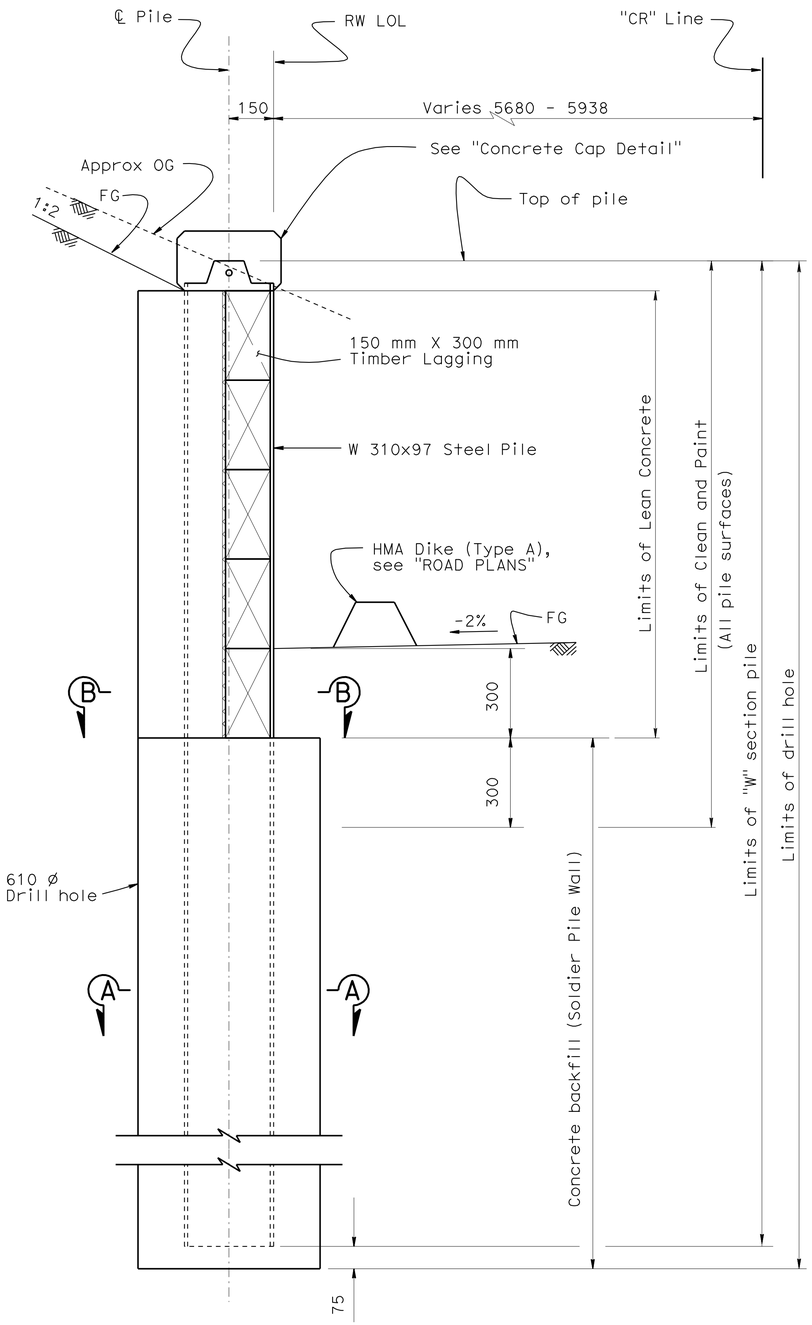

TYPICAL SECTION

1:10

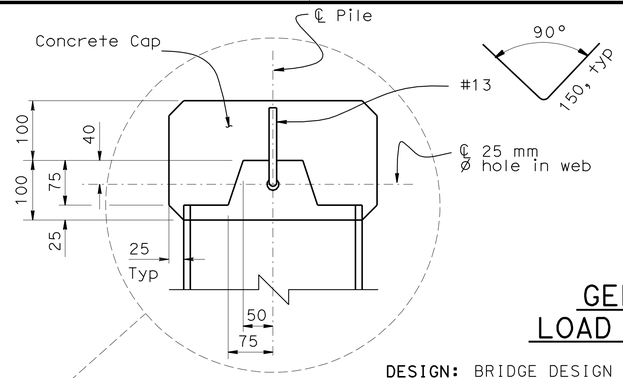

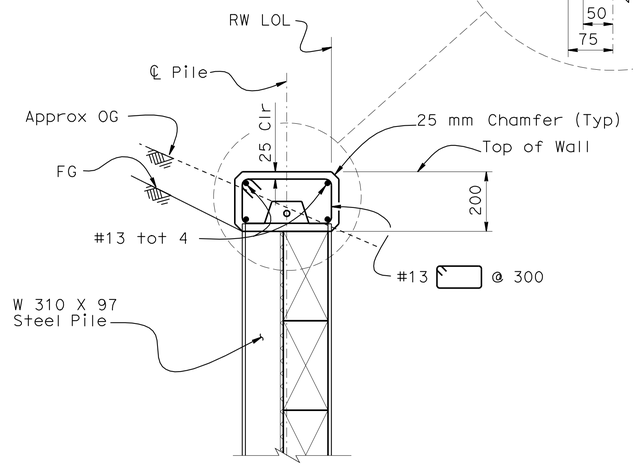

CONCRETE CAP DETAIL

1:10

GENERAL NOTES
LOAD FACTOR DESIGN

DESIGN: BRIDGE DESIGN SPECIFICATIONS - April 2000 (LFD)
(1996 AASHTO with interims and Revisions by CALTRANS)

SOIL PARAMETERS: (For determination of Design Lateral Earth Pressures)
Backfill weight = 18.9 kN/m^3
Friction Angle = 34°
Active Pressure coefficient, K_a = 0.56 (Above lagging)
Active Pressure coefficient, K_a = 0.28 (Below lagging)
Passive Pressure coefficient, K_p = 3.5

REINFORCED CONCRETE: f_c' = 25 MPa f_y = 420 MPa

STRUCTURAL TIMBER: Treated Douglas Fir. Grade No. 1 or better
Timber to be full sawn

STRUCTURAL STEEL: f_y = 345 MPa, ASTM A709/A709M Grade 50

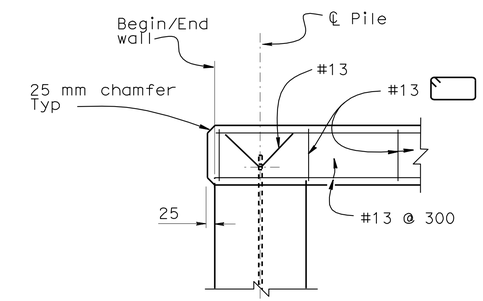

BEGIN / END WALL DETAIL

1:10

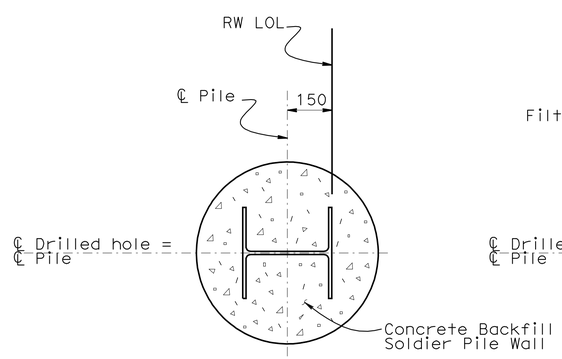

SECTION A-A

1:10

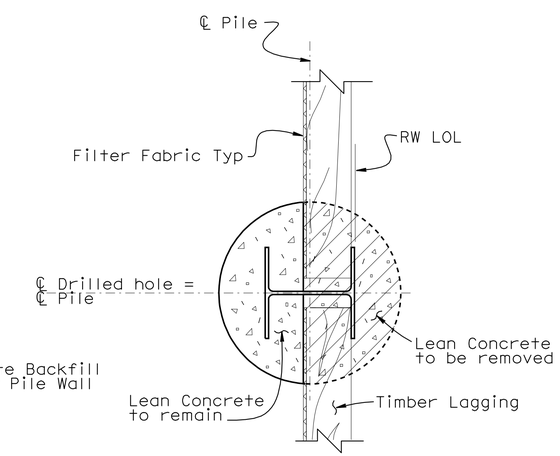

SECTION B-B

1:10

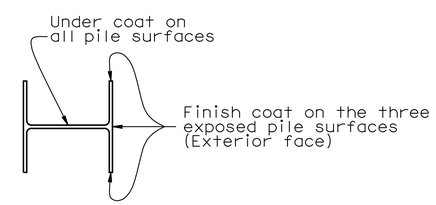

LIMITS OF CLEAN & PAINT
STEEL PILE

NO SCALE

Notes

1. Treated timber to be placed parallel to top of wall
2. For number of lagging members and pile length, see "Structure Plan" sheet

	BY	CHECKED
DESIGN	Hernan Perez	Aram Salimi
DETAILS	M. Lane / B. Jenko	Hernan Perez
QUANTITIES	Rachel Washington	Vivian Dang

STATE OF CALIFORNIA
DEPARTMENT OF TRANSPORTATION

DIVISION OF ENGINEERING SERVICES
STRUCTURE DESIGN
DESIGN BRANCH 6

BRIDGE NO. N/A
KILOMETER POST R146.8/161

RETAINING WALL NO. 30 AT CROSS RD

TYPICAL SECTION

ALL DIMENSIONS ARE IN MILLIMETERS UNLESS OTHERWISE SHOWN

ORIGINAL SCALE IN MILLIMETERS FOR REDUCED PLANS 0 10 20 30 40 50 60 70 80 90 100

CU 05
EA 0161E1

DISREGARD PRINTS BEARING EARLIER REVISION DATES

REVISION DATES: 01-15-09 12-18-09 05-06-10 03-02-09 05-11-09 9-28-09 10-19-09 10-28-09 11-05-09 12-14-09

SHEET 4 OF 5

FILE => 44e0000-k-ts.dgn

STRUCTURES DESIGN DETAIL SHEET (METRIC) (REV.03-17-04)

USERNAME => trmmgoye DATE PLOTTED => 03-AUG-2010 TIME PLOTTED => 11:14

DIST	COUNTY	ROUTE	KILOMETER POST TOTAL PROJECT	SHEET No	TOTAL SHEETS
05	Mon	101	R146.8/159.7	1339	1402

Michael S. Finegan 4-21-09
REGISTERED CIVIL ENGINEER

7-26-10
PLANS APPROVAL DATE

REGISTERED PROFESSIONAL ENGINEER
Michael S. Finegan
No. C50138
Exp. 6-30-09
CIVIL
STATE OF CALIFORNIA

The State of California or its officers or agents shall not be responsible for the accuracy or completeness of electronic copies of this plan sheet.

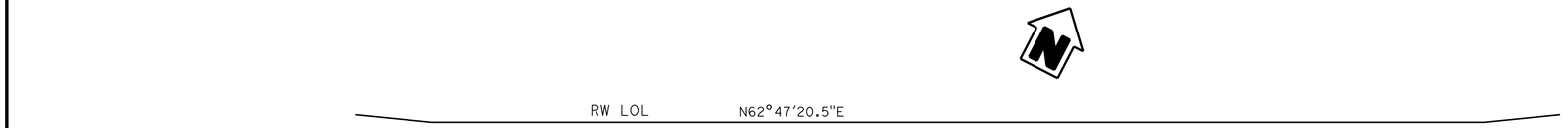

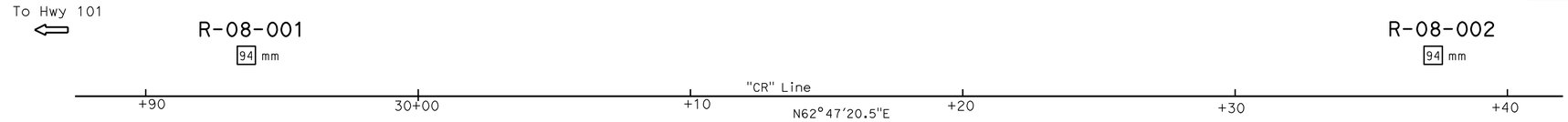

BENCH MARK

NGVD 29 Elev 15.716 m
Nail & CT tag in AC
0.3 m NE of SW of EP Cunha Rd,
6.6 m SE of ℄ Driveway # 17558
13.2 m NW of Driveway #17570
2.8 m Sw of ℄ Cunha Rd

PLAN
1:100

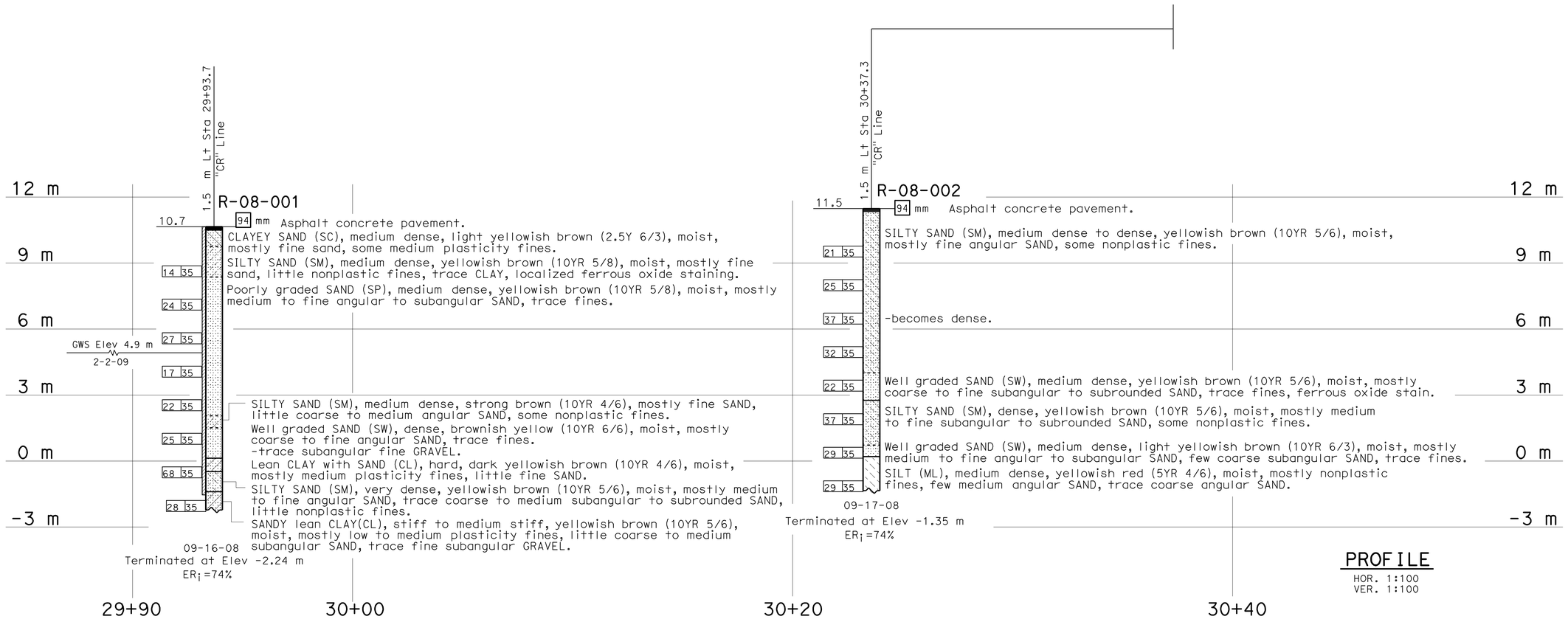

PROFILE
HOR. 1:100
VER. 1:100

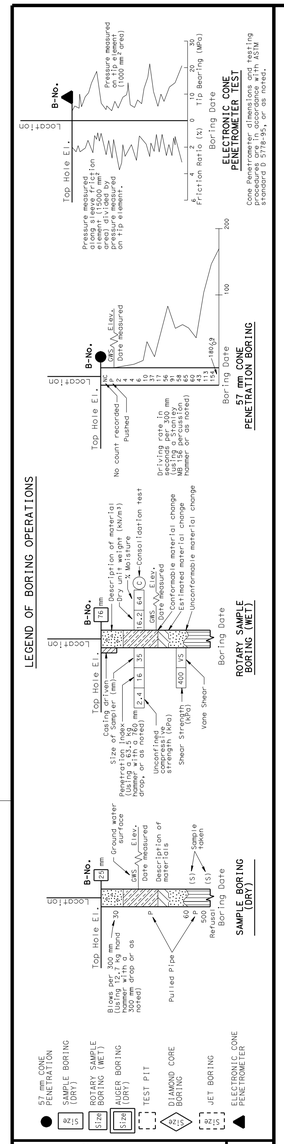

CONSISTENCY CLASSIFICATION FOR SOILS

According to the Standard Penetration Test

SPT N-Value (Blows/ 0.3m)	Granular	SPT N-Value (Blows/ 0.3m)	Cohesive
0-4	Very Loose	<2	Very Soft
5-10	Loose	2-4	Soft
11-30	Medium Dense	5-8	Firm
31-50	Dense	9-15	Stiff
>50	Very Dense	16-30	Very stiff
		>30	Hard

LEGEND OF EARTH MATERIALS

GRAVEL, SAND, SILT, CLAY, SANDY CLAY or CLAYEY SAND, SANDY SILT or SILTY SAND, SILTY CLAY, CLAYEY SILT, PEAT and/or ORGANIC MATTER, COBBLES and/or BOULDERS, CRECIOUS ROCK, SEDIMENTARY ROCK, METAMORPHIC

NOTE: Classification of earth material as shown on this sheet is based upon field inspection and is not to be construed to imply mechanical analysis.

OGS CIVIL LOG OF TEST BORINGS SHEET (METRIC) (REV. 4/04)

Caltrans Metric

ENGINEERING SERVICES	GEOTECHNICAL SERVICES
DRAWN BY	F. Nguyen 3/09
CHECKED BY	M. Jurasius

ALL DIMENSIONS ARE IN METERS UNLESS OTHERWISE SHOWN

FIELD INVESTIGATION BY: M. Jurasius/R. Turner

ORIGINAL SCALE IN MILLIMETERS FOR REDUCED PLANS 0 10 20 30 40 50 60 70 80 90 100

STATE OF CALIFORNIA
DEPARTMENT OF TRANSPORTATION

DIVISION OF ENGINEERING SERVICES
STRUCTURE DESIGN
DESIGN BRANCH 6

BRIDGE NO. N/A
KILOMETER POST R146.8/161

RETAINING WALL NO. 30 AT CROSS RD
LOG OF TEST BORINGS

CU 05
EA 0161E1

DISREGARD PRINTS BEARING EARLIER REVISION DATES

REVISION DATES (PRELIMINARY STAGE ONLY) 04-14-09 04-21-09

SHEET 5 OF 5

FILE => 44e0000-z-lotb.dgn

USERNAME => trmnguye DATE PLOTTED => 03-AUG-2010 TIME PLOTTED => 11:14

DIST	COUNTY	ROUTE	KILOMETER POST TOTAL PROJECT	SHEET No	TOTAL SHEETS
05	Mon	101	R146.8/159.7	1340	1402

REGISTERED CIVIL ENGINEER — DATE 05-06-10

7-26-10
PLANS APPROVAL DATE

REGISTERED PROFESSIONAL ENGINEER — HERNAN PEREZ — No. 60993 — Exp. 12-31-10 — CIVIL — STATE OF CALIFORNIA

The State of California or its officers or agents shall not be responsible for the accuracy or completeness of electronic copies of this plan sheet.

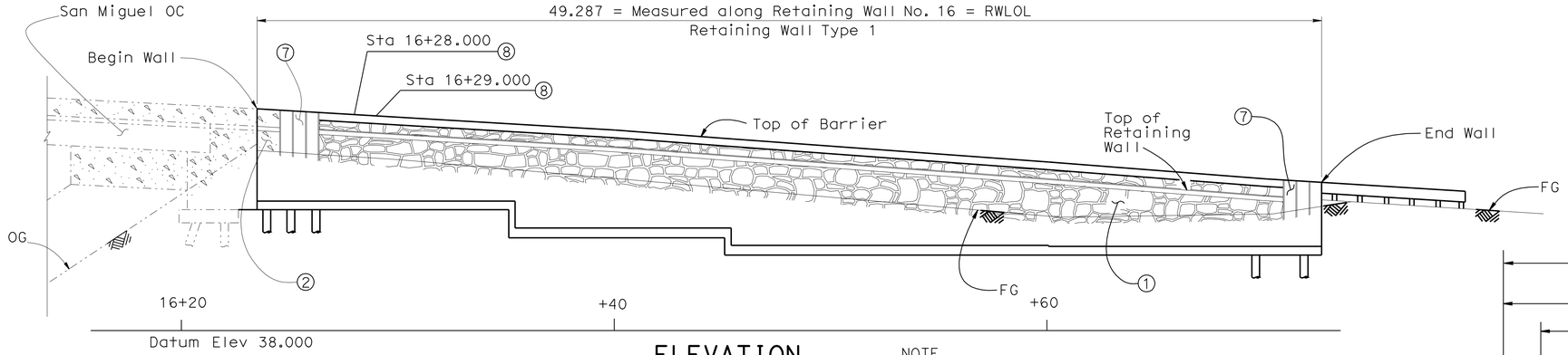

ELEVATION

1:125

NOTE

Not all Piles shown, see "Retaining Wall Layout" sheet

NOTES

1. Drystack Stone Texture, see "Architectural Treatment" sheet
2. Fractured Granite Architectural Treatment
3. MBGR, see "Road Plans"
4. 75 mm ø Sprinkler Control Conduit, see "Road Plans"
5. 50 mm ø Conduit, see "Electircal Plans"
6. 50 mm ø Conduit, see "Electircal Plans"
7. Smooth Concrete Texture face, see "Architectural Treatment" sheet
8. Pull Box No. 9A on rail, see "Electrical Plans"
9. Temporary Railing (Type K), see "Road Plans"
10. 75mm ø Galvanized Steel Pipe (Supply Line), See "Road Plans"

QUANTITIES

STRUCTURE EXCAVATION (RETAINING WALL)	325	m^3
STRUCTURE BACKFILL (RETAINING WALL)	318	m^3
FURNISH PILING (CLASS 400) (ALTERNATIVE W)	592	m
DRIVE PILE (CLASS 400) (ALTERNATIVE W)	40	EA
STRUCTURAL CONCRETE, RETAINING WALL	118	m^3
ARCHITECTURAL TREATMENT (FRACTURED GRANITE TEXTURE)	3	m^2
ARCHITECTURAL TREATMENT (DRYSTACK STONE TEXTURE)	80	m^2
BAR REINFORCING STEEL (RETAINING WALL)	9600	kg
CONCRETE BARRIER (TYPE 27A MODIFIED)	50	m

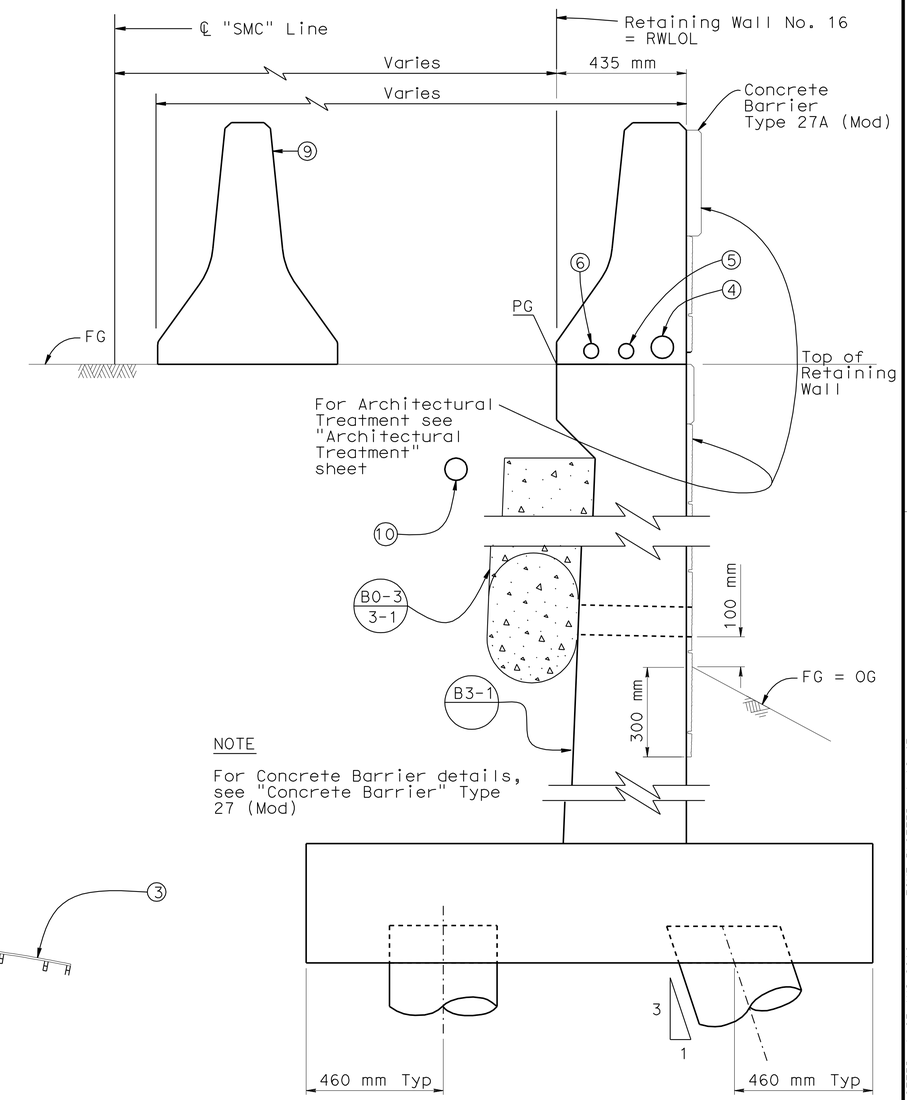

NOTE

For Concrete Barrier details, see "Concrete Barrier" Type 27 (Mod)

TYPICAL SECTION

1:10

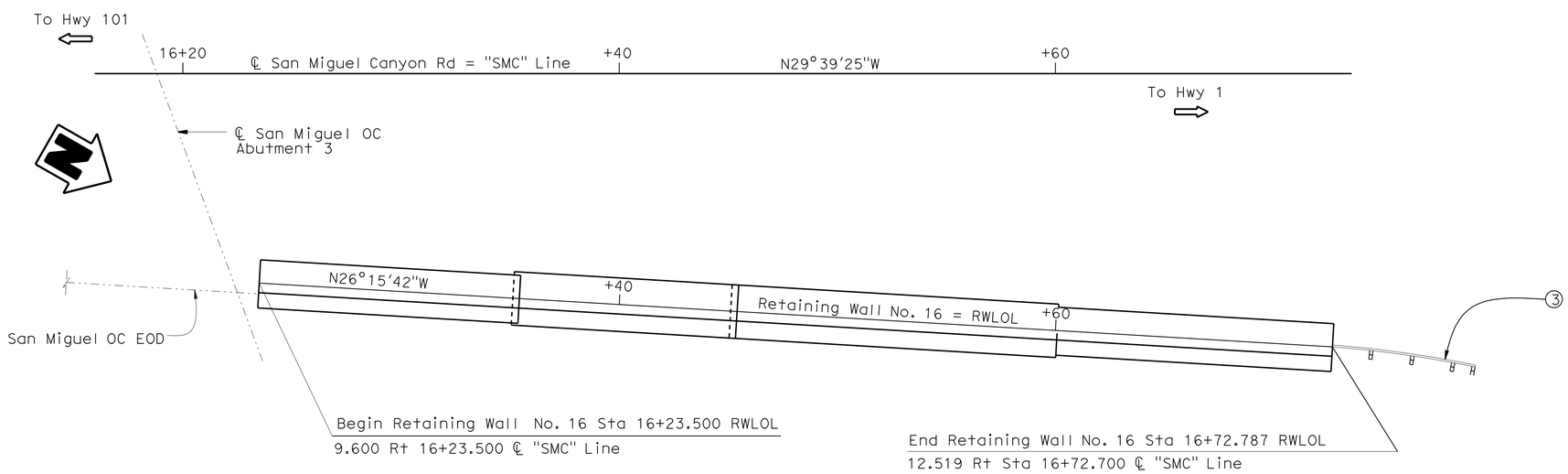

PLAN

1:125

NOTE:
THE CONTRACTOR SHALL VERIFY ALL CONTROLLING FIELD DIMENSIONS BEFORE ORDERING OR FABRICATING ANY MATERIAL.

For "General Notes" and "Index to Plans", see "Index to Plans" sheet

Caltrans Metric

Fritz Hoffman — DESIGN ENGINEER

	BY	CHECKED
DESIGN	Sherman Stake	Rene Coria
DETAILS	G.Zweier/K.Chonkria	Rene Coria
QUANTITIES	Chris Udarbe	Rene Coria

LOAD & RESISTANCE FACTOR DESIGN — LIVE LOADING: HL93 W/"LOW-BOY"; PERMIT DESIGN VEHICLE

	BY	CHECKED
LAYOUT	G.Zweier/K.Chonkria	Hernan Perez
SPECIFICATIONS	Sirisha Nelapatla	PLANS AND SPECS COMPARED: Sirisha Nelapatla

STATE OF CALIFORNIA — DEPARTMENT OF TRANSPORTATION

DIVISION OF ENGINEERING SERVICES — STRUCTURE DESIGN — DESIGN BRANCH 6

BRIDGE NO. 44E0012 — KILOMETER POST R154.71

RETAINING WALL NO. 16
GENERAL PLAN

ALL DIMENSIONS ARE IN METERS UNLESS OTHERWISE SHOWN

ORIGINAL SCALE IN MILLIMETERS FOR REDUCED PLANS: 0 10 20 30 40 50 60 70 80 90 100

CU 05
EA 0161E1

DISREGARD PRINTS BEARING EARLIER REVISION DATES

REVISION DATES: 02-20-08 | 12-17-09 | 05-06-10 | 04-03-08 | 06-23-08 | 10-08-08 | 05-06-09 | 05-11-09 | 09-30-09 | 10-28-09

SHEET 1 OF 7

FILE => 44e0012-a-gp.dgn

STRUCTURES DESIGN GENERAL PLAN SHEET (METRIC) (REV.07-24-06)

USERNAME => trrichf DATE PLOTTED => 03-AUG-2010 TIME PLOTTED => 12:47

DIST	COUNTY	ROUTE	KILOMETER POST TOTAL PROJECT	SHEET No	TOTAL SHEETS
05	Mon	101	R146.8/159.7	1341	1402

Hernan Perez 05-06-10
REGISTERED CIVIL ENGINEER DATE

7-26-10
PLANS APPROVAL DATE

REGISTERED PROFESSIONAL ENGINEER HERNAN PEREZ No. 60993 Exp. 12-31-10 CIVIL STATE OF CALIFORNIA

The State of California or its officers or agents shall not be responsible for the accuracy or completeness of electronic copies of this plan sheet.

INDEX TO PLANS

SHEET NO.	SHEET TITLE
1	GENERAL PLAN
2	INDEX TO PLANS
3	FOUNDATION PLAN
4	RETAINING WALL LAYOUT
5	BARRIER - CONCRETE TYPE 27 (MOD)
6	ARCHITECTURAL TREATMENT
7	LOG OF TEST BORINGS

STANDARD PLANS DATED JULY 2004

A10A	Acronyms and Abbreviations (A-L)
A10B	Acronyms and Abbreviations (M-Z)
A62B	Limits of Payment for Excavation and Backfill - Bridge Surcharge and Wall
B0-3	Bridge Details
B2-5	Pile Details - Class 400 and Class 625
B3-1	Retaining Wall Type 1 H=1200 Through 9100 mm
B3-8	Retaining Wall Details No.1
B14-3	Communication and Sprinkler Control Conduits (Conduit less than size 103)
T-3	Temporary Railing (Type K)

STANDARD PLAN SHEET NO.

DETAIL NO.

PILE DATA TABLE

Wall Station (meters)	Pile Type	Design Loading	Nominal Resistance kN		Design Tip Elevations (meters)	Specified Tip Elevations (meters)
			Compression	Tension		
16+22.634 to 16+35.00	Class 400 Alt W	400 kN	800 kN	N/A	29.0	29.0
16+35.00 to 16+60.00	Class 400 Alt W	400 kN	800 kN	N/A	27.0	27.0
16+60.00 to 16+72.784	Class 400 Alt W	400 kN	800 kN	N/A	29.0	29.0

Note: Design tip elevation is controlled by compression demand.

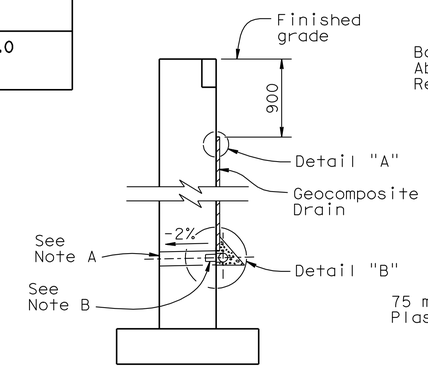

WALL SECTION

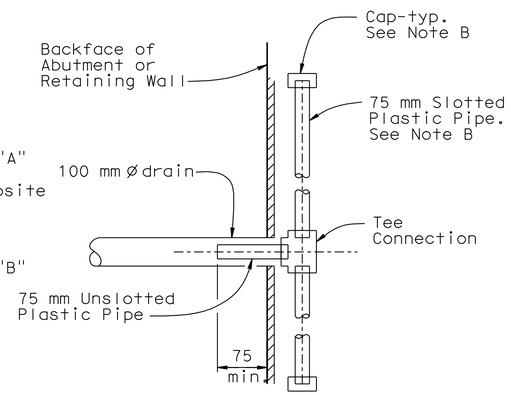

SECTION A-A

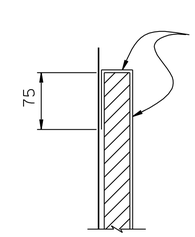

DETAIL "A"

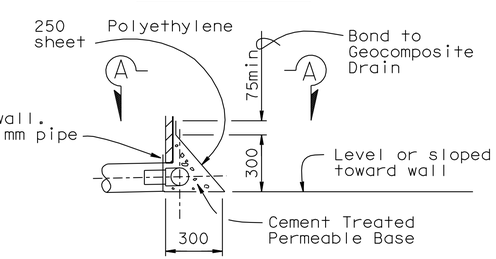

DETAIL "B"

WEEP HOLE AND GEOCOMPOSITE DRAIN

ALTERNATIVE TO BRIDGE DETAIL B0-3 / 3-1

GENERAL NOTES
LOAD FACTOR DESIGN

DESIGN: CALTRANS BRIDGE DESIGN SPECIFICATIONS LFD Version April 2000 (1996 AASHTO with Interims and Revision by Caltrans)

LIVE LOAD: 11.5 kPa Surcharge

REINFORCED CONCRETE: f_y = 420 MPa
f'_c = 25 MPa

STRUCTURAL STEEL: Steel Pipe Piles - ASTM A252, Grade 3
f_y = 310 MPa
f_u = 455 MPa

Notes:

A. 100mm ø drains at intermediate sag points and at 7.60 meters center to center (2.75 meters c-c for Type 3 and 2.80 meters c-c for Type 4 retaining walls). For walls adjacent to sidewalks or curbs, provide 100 mm cast iron or asbestos cement pipe under the sidewalk to discharge through curb face. Exposed wall drains shall be located 75±mm above finished grade.

B. Geocomposite drain, cement treated permeable base, and 75 mm ø slotted plastic pipe continuous behind retaining wall or abutment. Cap ends of pipe. Provide "Tee" connection at each 100 mm ø drain.

C. Connect the low end of plastic pipe to the main outlet pipe as applicable.

Caltrans Metric

	BY	CHECKED
DESIGN	Sherman Stake	Rene Coria
DETAILS	Marvin Lane	Rene Coria
QUANTITIES	Chris Udarbe	Rene Coria

ALL DIMENSIONS ARE IN MILLIMETERS UNLESS OTHERWISE SHOWN

ORIGINAL SCALE IN MILLIMETERS FOR REDUCED PLANS 0 10 20 30 40 50 60 70 80 90 100

STATE OF CALIFORNIA DEPARTMENT OF TRANSPORTATION

DIVISION OF ENGINEERING SERVICES STRUCTURE DESIGN
DESIGN BRANCH 6

CU 05
EA 0161E

BRIDGE NO. 44E0012
KILOMETER POST R154.71

RETAINING WALL NO. 16
INDEX TO PLANS

DISREGARD PRINTS BEARING EARLIER REVISION DATES 09-30-09 05-06-10

REVISION DATES

SHEET 2 OF 7

FILE => 44e0012-g-itp.dgn

STRUCTURES DESIGN DETAIL SHEET (METRIC) (REV.03-17-04)

USERNAME => trrichf DATE PLOTTED => 03-AUG-2010 TIME PLOTTED => 12:47

DIST	COUNTY	ROUTE	KILOMETER POST TOTAL PROJECT	SHEET No	TOTAL SHEETS
05	Mon	101	R146.8/159.7	1342	1402

Caltrans Metric

REGISTERED CIVIL ENGINEER 05-06-10 DATE

7-26-10
PLANS APPROVAL DATE

REGISTERED PROFESSIONAL ENGINEER HERNAN PEREZ No. 60993 Exp. 12-31-10 CIVIL STATE OF CALIFORNIA

The State of California or its officers or agents shall not be responsible for the accuracy or completeness of electronic copies of this plan sheet.

CURVE TABLE

NO	R	Δ	T	L
A	890.491	15°27'47"	120.897	240.325
B	894.922	4°0'34"	31.326	62.627
C	767.600	47°46'18"	339.925	640.002

LEGEND

XX.XXX Indicates bottom of footing

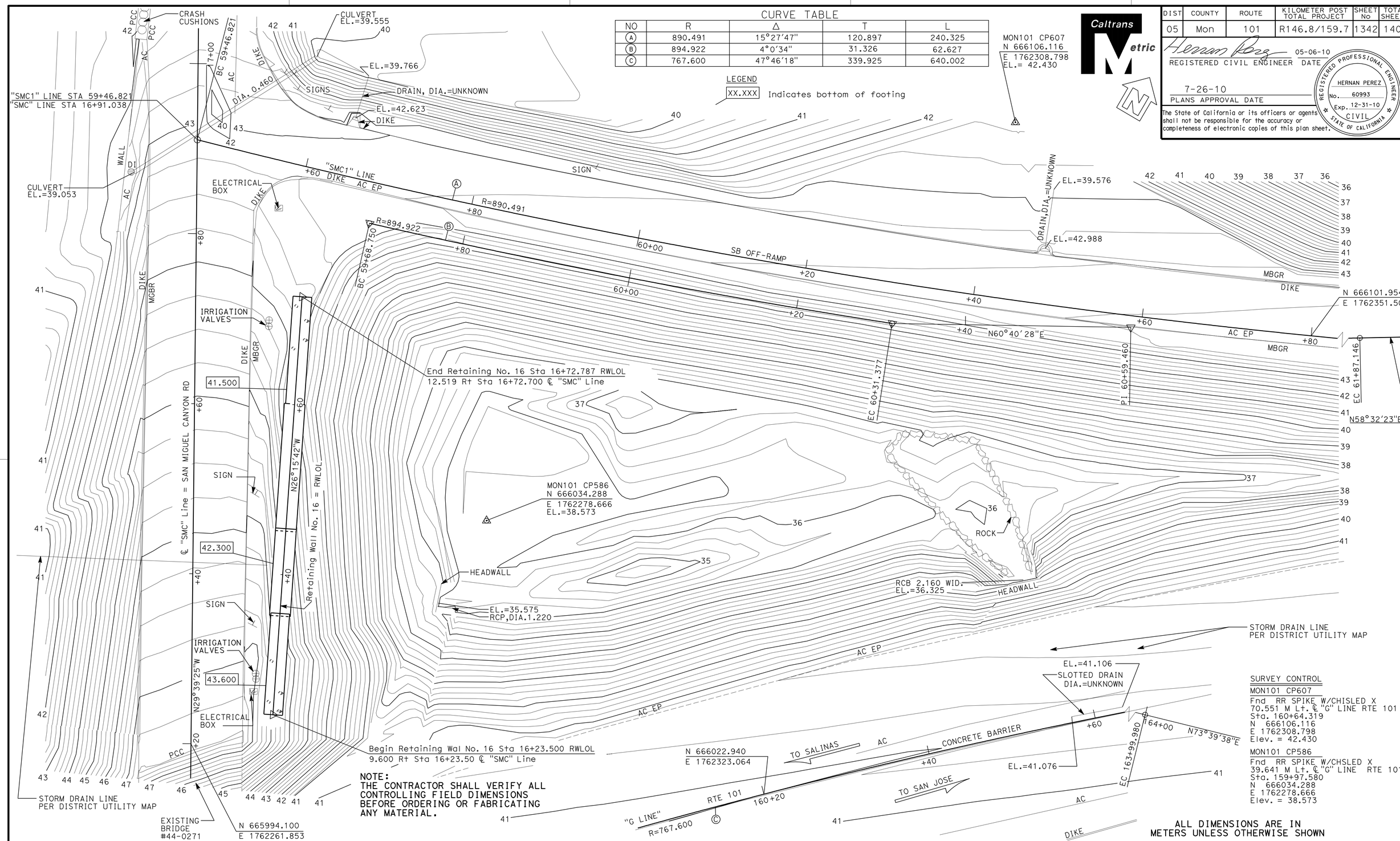

NOTE:
THE CONTRACTOR SHALL VERIFY ALL CONTROLLING FIELD DIMENSIONS BEFORE ORDERING OR FABRICATING ANY MATERIAL.

SURVEY CONTROL

MON101 CP607
Fnd RR SPIKE W/CHISLED X
70.551 M Lt. ℄ "G" LINE RTE 101
Sta. 160+64.319
N 666106.116
E 1762308.798
Elev. = 42.430

MON101 CP586
Fnd RR SPIKE W/CHSLED X
39.641 M Lt. ℄ "G" LINE RTE 101
Sta. 159+97.580
N 666034.288
E 1762278.666
Elev. = 38.573

ALL DIMENSIONS ARE IN METERS UNLESS OTHERWISE SHOWN

PRELIMINARY INVESTIGATION SECTION

SCALE	VERT. DATUM NGVD29	PHOTOGRAMMETRY AS OF:		
1:200	HORZ. DATUM NAD83(1991.35)	SURVEYED	BY DISTRICT	CHECKED BY E.LOPEZ 07/2006
ALIGNMENT TIES DIST.TRAVERSE SHEET		DRAFTED	BY T.MARCHENKO 07/2006	CHECKED BY T.ZOLNIKOVA 07/2006

	BY	CHECKED
DESIGN	Sherman Stake	Rene Coria
DETAILS	G.Zweier/K.Chonkria	Rene Coria
QUANTITIES	Chris Udarbe	Rene Coria

STATE OF CALIFORNIA
DEPARTMENT OF TRANSPORTATION

DIVISION OF ENGINEERING SERVICES
STRUCTURE DESIGN
DESIGN BRANCH 6

BRIDGE NO. 44E0012
KILOMETER POST R154.71

RETAINING WALL NO.16
FOUNDATION PLAN

STRUCTURES FOUNDATION PLAN SHEET (METRIC) (REV.10-27-05)

ORIGINAL SCALE IN MILLIMETERS FOR REDUCED PLANS 0 10 20 30 40 50 60 70 80 90 100

CU 05
EA 0161E1

DISREGARD PRINTS BEARING EARLIER REVISION DATES

REVISION DATES (PRELIMINARY STAGE ONLY) 07-13-06 8-29-07 06-13-08 06-24-08 06-30-08 11-05-09 05-06-10

SHEET 3 OF 7

FILE => 44e0012-e-fp101.dgn

USERNAME => trrichf DATE PLOTTED => 03-AUG-2010 TIME PLOTTED => 12:47

DIST	COUNTY	ROUTE	KILOMETER POST TOTAL PROJECT	SHEET No	TOTAL SHEETS
05	Mon	101	R146.8/159.7	1343	1402

REGISTERED CIVIL ENGINEER — DATE 05-06-10

7-26-10
PLANS APPROVAL DATE

REGISTERED PROFESSIONAL ENGINEER — HERNAN PEREZ — No. 60993 — Exp. 12-31-10 — CIVIL — STATE OF CALIFORNIA

The State of California or its officers or agents shall not be responsible for the accuracy or completeness of electronic copies of this plan sheet.

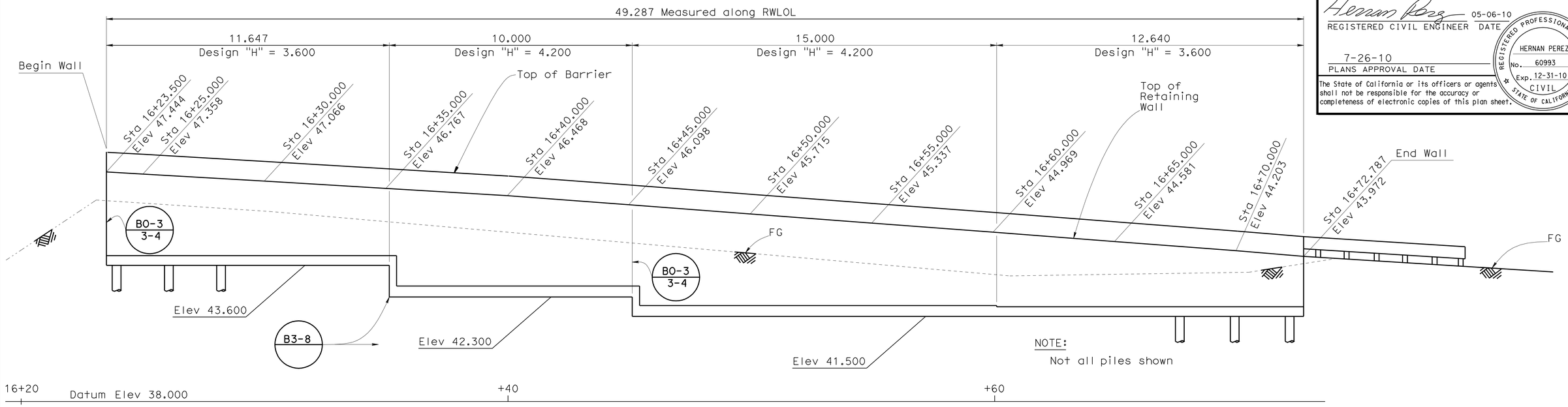

ELEVATION (B3-1) (B0-3)
1:80

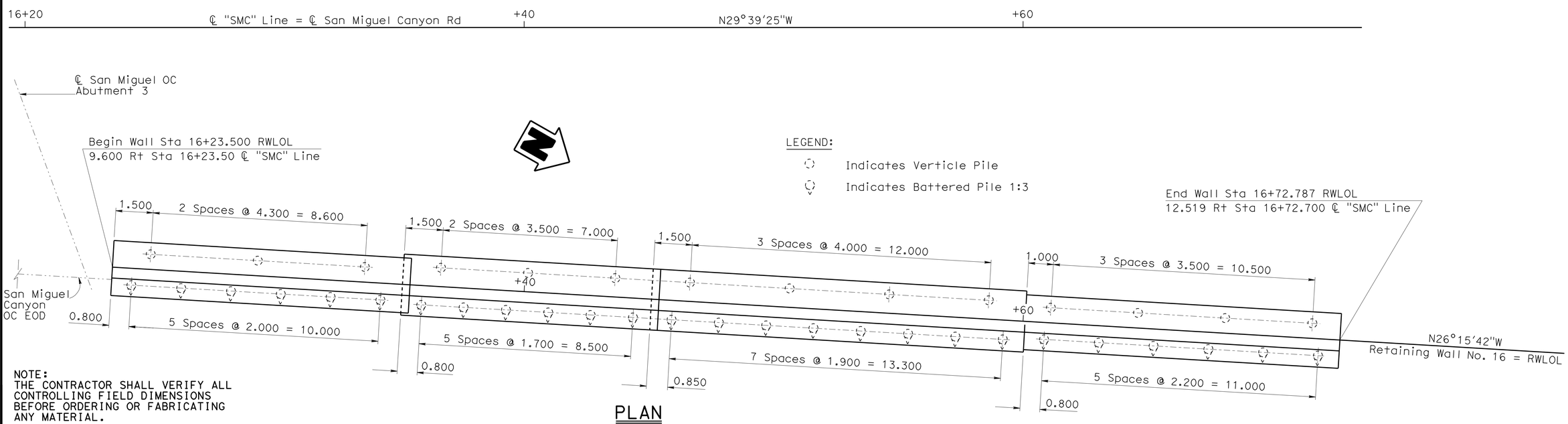

NOTE:
THE CONTRACTOR SHALL VERIFY ALL CONTROLLING FIELD DIMENSIONS BEFORE ORDERING OR FABRICATING ANY MATERIAL.

PLAN
1:80

Caltrans Metric

	BY	CHECKED
DESIGN	Sherman Stake	Rene Coria
DETAILS	G.Zweier / K.Chonkria	Rene Coria
QUANTITIES	Chris Udarbe	Rene Coria

STATE OF CALIFORNIA
DEPARTMENT OF TRANSPORTATION

DIVISION OF ENGINEERING SERVICES
STRUCTURE DESIGN
DESIGN BRANCH 6

BRIDGE NO. 44E0012
KILOMETER POST R154.71

RETAINING WALL NO. 16
RETAINING WALL LAYOUT

ALL DIMENSIONS ARE IN METERS UNLESS OTHERWISE SHOWN

ORIGINAL SCALE IN MILLIMETERS FOR REDUCED PLANS 0 10 20 30 40 50 60 70 80 90 100

CU 05
EA 0161E1

DISREGARD PRINTS BEARING EARLIER REVISION DATES

REVISION DATES: 06-18-08 10-08-08 10-30-09 11-04-09 11-18-09 05-06-10

SHEET 4 OF 7

FILE => 44e0012-g-rwlo.dgn

STRUCTURES DESIGN DETAIL SHEET (METRIC) (REV.03-17-04)

USERNAME => trrichf DATE PLOTTED => 03-AUG-2010 TIME PLOTTED => 12:47

DIST.	COUNTY	ROUTE	KILOMETER POST TOTAL PROJECT	SHEET NO.	TOTAL SHEETS
05	Mon	101	R146.8/159.7	1344	1402

Caltrans Metric

Hernan Perez 05-06-10
REGISTERED ENGINEER - CIVIL

7-26-10
PLANS APPROVAL DATE

The State of California or its officers or agents shall not be responsible for the accuracy or completeness of electronic copies of this plan sheet.

REGISTERED PROFESSIONAL ENGINEER HERNAN PEREZ No. 60993 Exp. 12-31-10 CIVIL STATE OF CALIFORNIA

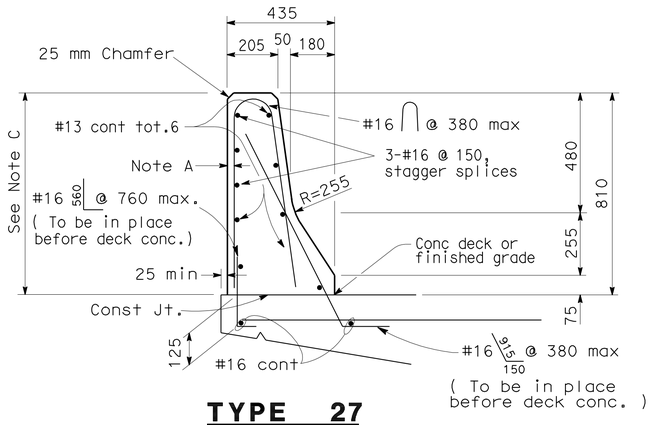

TYPE 27

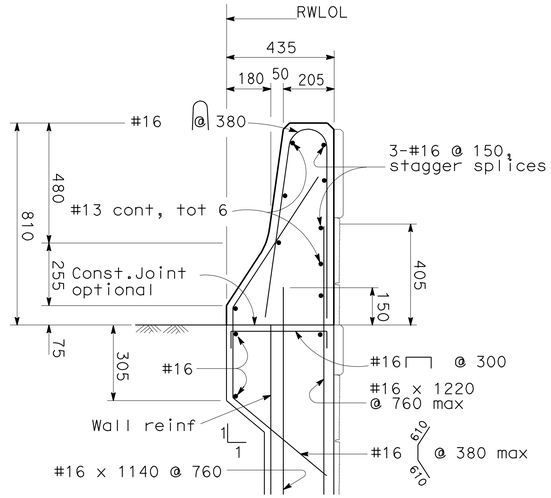

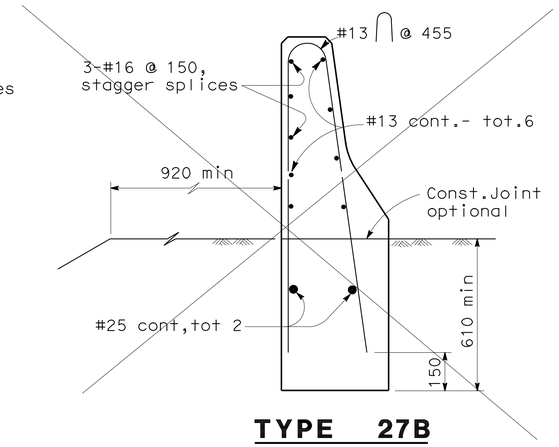

TYPE 27B

NOTES

1. For Architectural Treatment Details,see "Architectural Treatment" sheet
2. For additional Deminsions see, "Type 27" detail

TYPE 27A (Mod)

NOTES

A. Clearance to reinforcing steel in rail to be 25 mm. Longitudinal reinforcement to stop at expansion joints, and be continuous at construction joints. Hairpin stirrups to be rotated to meet clearance.

B. Rail joints shall be located at deck and principal wall joints.

C. Dimension may vary with cross-slope and with certain thickness of surfacing. See Bridge Plans.

D. When glare screen is required, see "Concrete Barrier Type 50".

E. For Metal Beam Guardrail details not shown see Standard Plans.

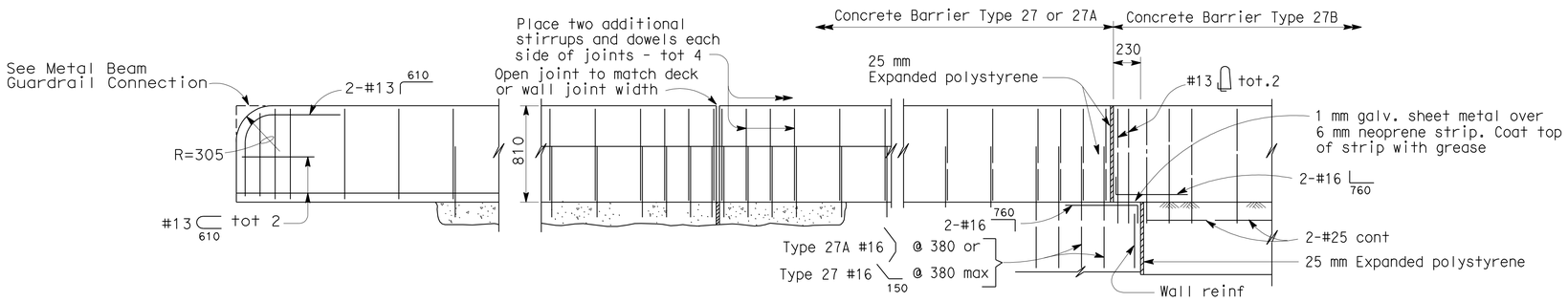

END DETAIL **DECK OR WALL JOINT** **AT CONNECTION TO STRUCTURE**

See Note B

ELEVATION

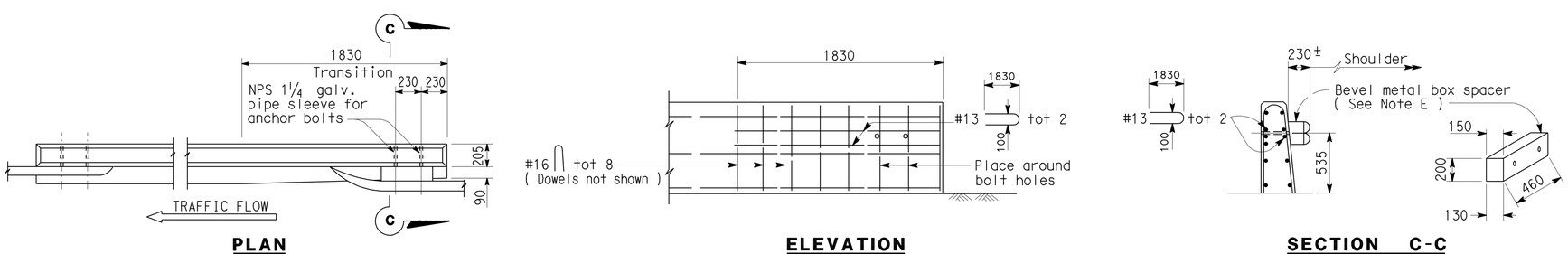

PLAN **ELEVATION** **SECTION C-C**

METAL BEAM GUARDRAIL CONNECTION

NO SCALE

ALL DIMENSIONS ARE IN MILLIMETERS UNLESS OTHERWISE SHOWN

STANDARD DRAWING					
RELEASE DATE 4/4/97	DESIGN	BY R.W. BISHOP	CHECKED P. HALE	RELEASED BY	
FILE NO. xs16-010	DETAILS	BY R. YEE	CHECKED P. HALE		
	SUBMITTED	BY J. HAMAGUCHI	DRAWING DATE 12/87	OFFICE CHIEF	

STATE OF CALIFORNIA DEPARTMENT OF TRANSPORTATION

DIVISION OF ENGINEERING SERVICES

BRIDGE NO. 44E0012

KILOMETER POST R154.71

RETAINING WALL NO.16
CONCRETE BARRIER TYPE 27 (MOD)

DS OSD 2147A (METRIC) (REV. 2/25/97)

ORIGINAL SCALE IN MILLIMETERS FOR REDUCED PLANS 0 10 20 30 40 50 60 70 80 90 100

CU 05
EA 0161E1

DISREGARD PRINTS BEARING EARLIER REVISION DATES

REVISION DATES (PRELIMINARY STAGE ONLY) 06-24-08 06-30-08 10-26-08 11-09-09 12-17-09 05-26-10

SHEET 5 OF 7

USERNAME => trrichf

44e0012-x-brdt.dgn

DATE PLOTTED => 03-AUG-2010 TIME PLOTTED => 12:47

DIST	COUNTY	ROUTE	KILOMETER POST TOTAL PROJECT	SHEET No	TOTAL SHEETS
05	Mon	101	R146.8/159.7	1345	1402

Hernan Perez 05-06-10
REGISTERED CIVIL ENGINEER DATE

7-26-10
PLANS APPROVAL DATE

REGISTERED PROFESSIONAL ENGINEER HERNAN PEREZ No. 60993 Exp. 12-31-10 CIVIL STATE OF CALIFORNIA

The State of California or its officers or agents shall not be responsible for the accuracy or completeness of electronic copies of this plan sheet.

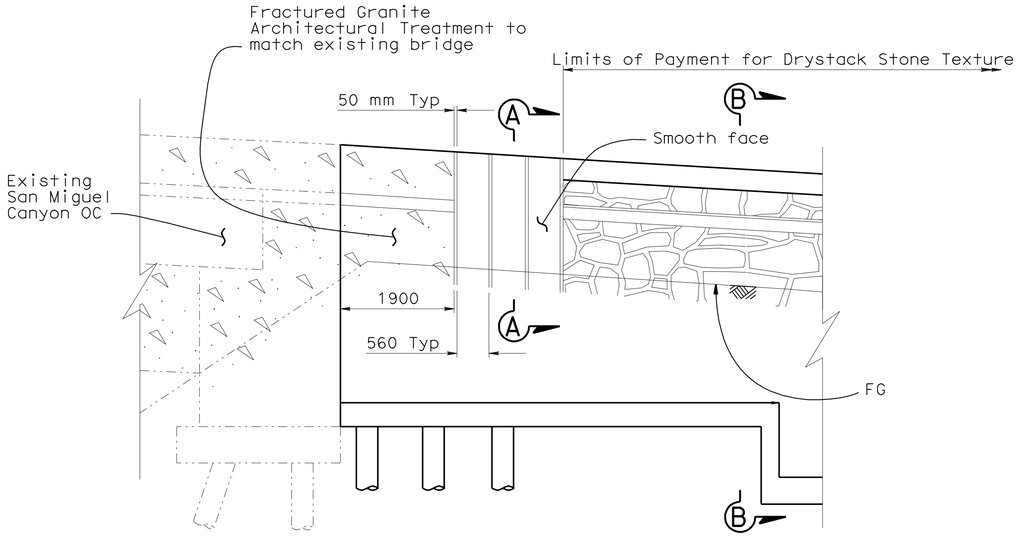

RETAINING WALL ELEVATION
1:50

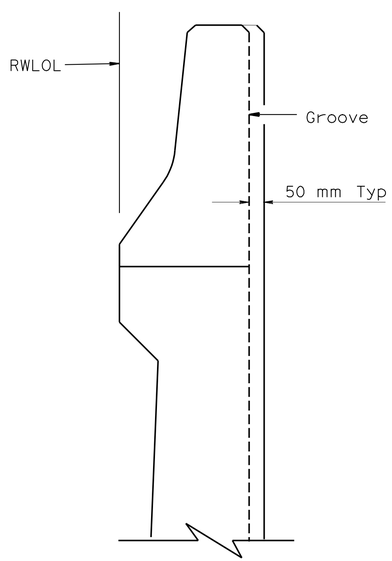

SECTION A-A
1:10

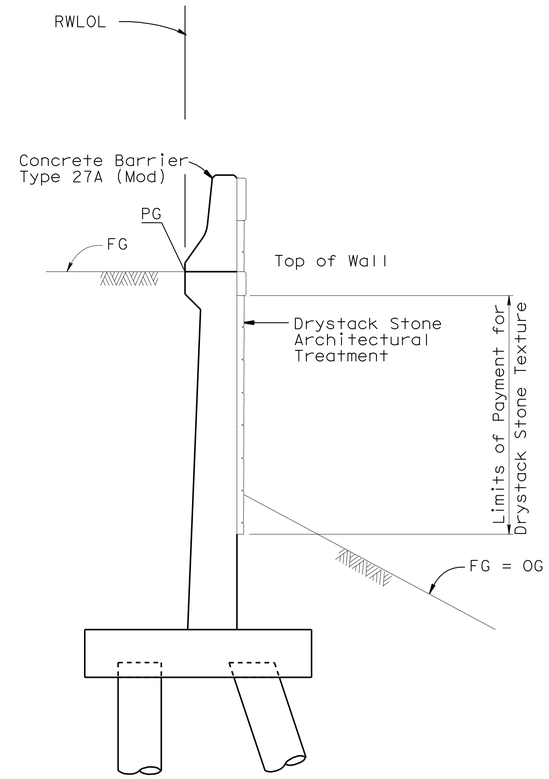

SECTION B-B
1:25

Drainage system not shown.

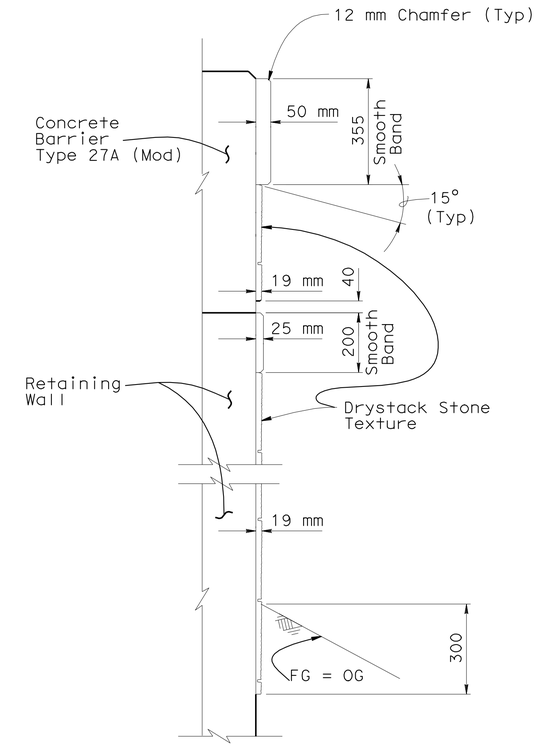

ARCHITECTURAL TREATMENT
NO SCALE

DESIGN	BY Sherman Stake	CHECKED Rene Coria	
DETAILS	BY George Zweier	CHECKED Rene Coria	
QUANTITIES	BY Chris Udarbe	CHECKED Rene Coria	

STATE OF CALIFORNIA
DEPARTMENT OF TRANSPORTATION

DIVISION OF ENGINEERING SERVICES
STRUCTURE DESIGN
DESIGN BRANCH

BRIDGE NO. 44E0012
KILOMETER POST R154.71

RETAINING WALL NO.16
ARCHITECTURAL TREATMENT

ALL DIMENSIONS ARE IN MILLIMETERS UNLESS OTHERWISE SHOWN

ORIGINAL SCALE IN MILLIMETERS FOR REDUCED PLANS 0 10 20 30 40 50 60 70 80 90 100

CU 05
EA 0161E1

DISREGARD PRINTS BEARING EARLIER REVISION DATES

REVISION DATES: 10-08-08, 4-30-09, 11-04-09, 12-17-09, 05-06-10

SHEET 6 OF 7

FILE => 44e0012-y-archtrt.dgn

STRUCTURES DESIGN DETAIL SHEET (METRIC) (REV.03-17-04)

USERNAME => trrichf DATE PLOTTED => 03-AUG-2010 TIME PLOTTED => 12:48

DIST	COUNTY	ROUTE	KILOMETER POST TOTAL PROJECT	SHEET No	TOTAL SHEETS
05	Mon	101	R146.8/159.7	1346	1402

Michael S. Finegan 10-8-09
REGISTERED CIVIL ENGINEER

7-26-10
PLANS APPROVAL DATE

REGISTERED PROFESSIONAL ENGINEER Michael S. Finegan No. C50138 Exp. 6-30-09 CIVIL STATE OF CALIFORNIA

The State of California or its officers or agents shall not be responsible for the accuracy or completeness of electronic copies of this plan sheet.

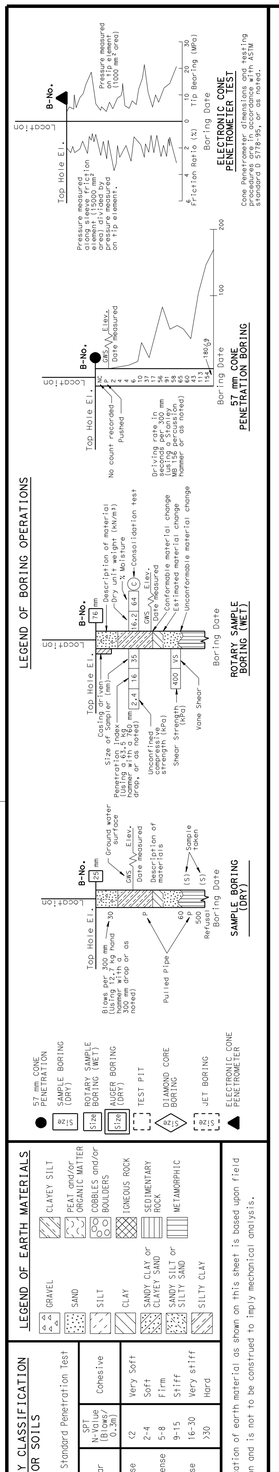

OGS CIVIL LOG OF TEST BORINGS SHEET (METRIC) (REV. 4/04)

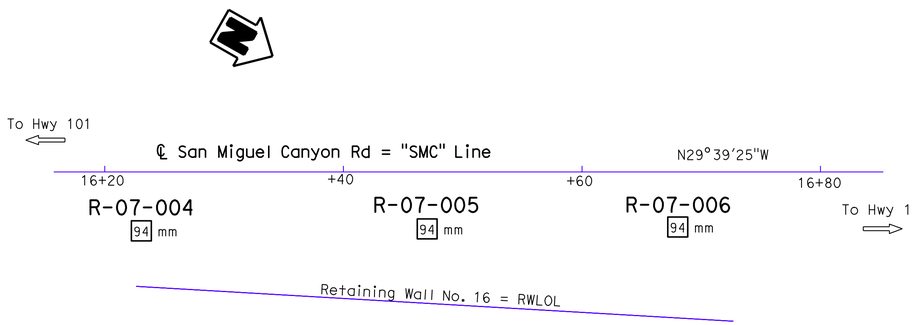

PLAN
1:250

BENCH MARK
MON-101-96.14 (PM)
Elev. 50.948 NGVD29

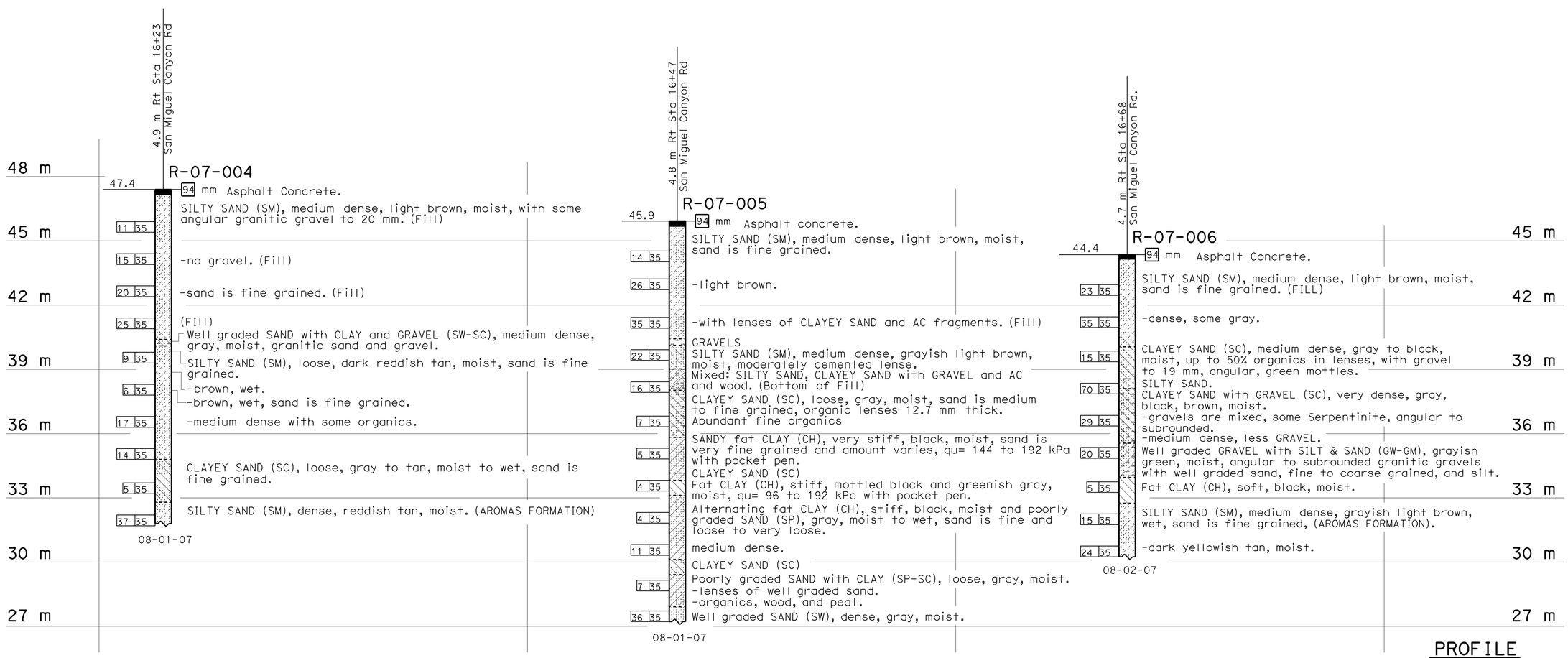

PROFILE
HOR. 1:100
VER. 1:100

Caltrans Metric

ENGINEERING SERVICES	GEOTECHNICAL SERVICES
DRAWN BY	W. Tang 12/07
CHECKED BY	W. Hoon

FIELD INVESTIGATION BY: W. Hoon

STATE OF CALIFORNIA DEPARTMENT OF TRANSPORTATION

DIVISION OF ENGINEERING SERVICES STRUCTURE DESIGN
DESIGN BRANCH 6

BRIDGE NO. 44E0012
KILOMETER POST R 154.71

RETAINING WALL No. 16
LOG OF TEST BORINGS

ALL DIMENSIONS ARE IN METERS UNLESS OTHERWISE SHOWN

ORIGINAL SCALE IN MILLIMETERS FOR REDUCED PLANS 0 10 20 30 40 50 60 70 80 90 100

CU 05
EA 0161E1

DISREGARD PRINTS BEARING EARLIER REVISION DATES

REVISION DATES (PRELIMINARY STAGE ONLY) 06-17-09 10-08-09

SHEET 7 OF 7

FILE => 44e0012-z-ltbo1.dgn

USERNAME => trrichf DATE PLOTTED => 03-AUG-2010 TIME PLOTTED => 12:48

DIST	COUNTY	ROUTE	KILOMETER POST TOTAL PROJECT	SHEET No	TOTAL SHEETS
05	Mon	101	R146.8/159.7	1347	1402

REGISTERED CIVIL ENGINEER — DATE 05-06-10

7-26-10
PLANS APPROVAL DATE

REGISTERED PROFESSIONAL ENGINEER — Hernan Perez — No. 60993 — Exp. 12-31-10 — CIVIL — STATE OF CALIFORNIA

The State of California or its officers or agents shall not be responsible for the accuracy or completeness of electronic copies of this plan sheet.

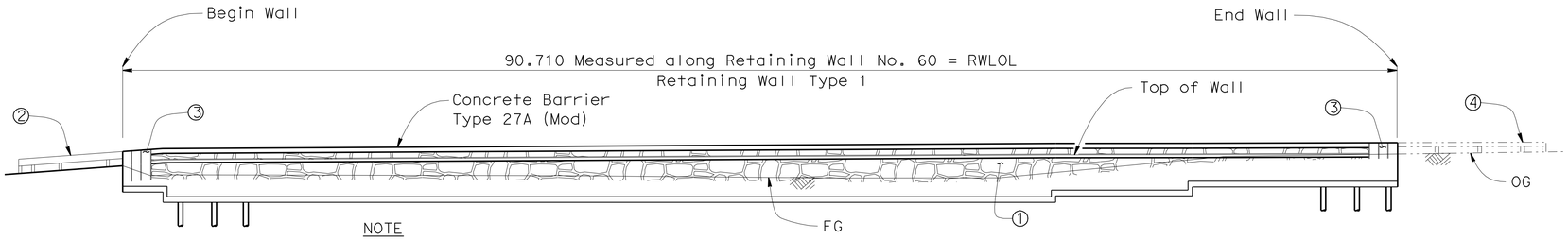

NOTE

Not all piles shown, see "Retaining Wall Layout" sheet

ELEVATION

1:200

QUANTITIES:

STRUCTURE EXCAVATION (RETAINING WALL)	375	m^3
STRUCTURE BACKFILL (RETAINING WALL)	305	m^3
FURNISH PILING (CLASS 400) (ALTERNATIVE W)	570	m
DRIVE PILE (CLASS 400) (ALTERNATIVE W)	57	EA
STRUCTURAL CONCRETE, RETAINING WALL	157	m^3
ARCHITECTURAL TREATMENT (DRYSTACK STONE TEXTURE)	220	m^2
BAR REINFORCING STEEL (RETAINING WALL)	11 370	kg
CONCRETE BARRIER (TYPE 27A MODIFIED)	91	m

NOTES

① Drystack Stone Texture, see "Architectural Treatment" sheet

② MBGR, see "Road Plans"

③ Smooth Concrete Texture face with 50 mm x 50 mm Grooves, see, "Architectural Treatment" sheet

④ Existing MBGR, see "Road Plans"

⑤ Temporary Raling (Type K), see "Road Plans"

STANDARD PLAN SHEET No.

DETAIL No.

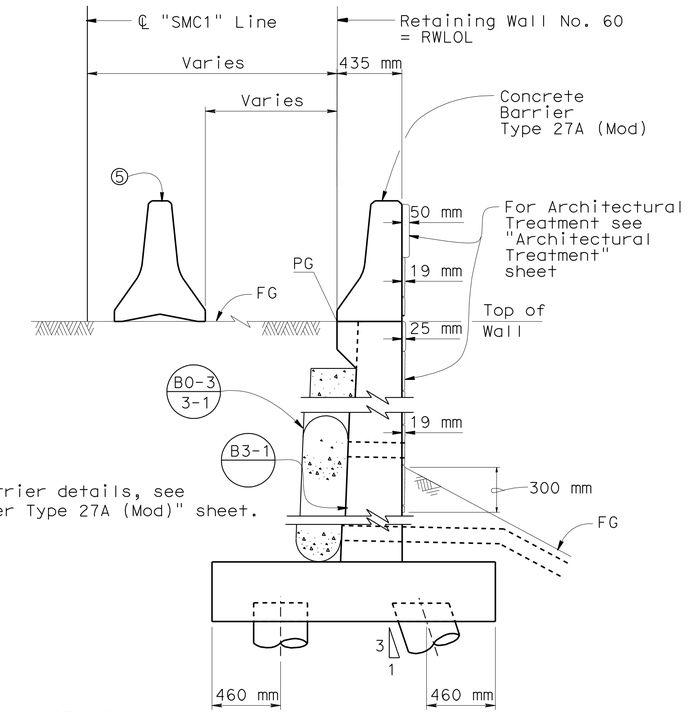

NOTE:
For Concrete Barrier details, see "Concrete Barrier Type 27A (Mod)" sheet.

TYPICAL SECTION

1:20

CURVE DATA
RWLOL
R=894.922
Δ=4°0'34"
T=31.326
L=62.627

CURVE DATA
"SMC1" Line
R=890.491
Δ=15°27'46.6"
T=120.897
L=240.325

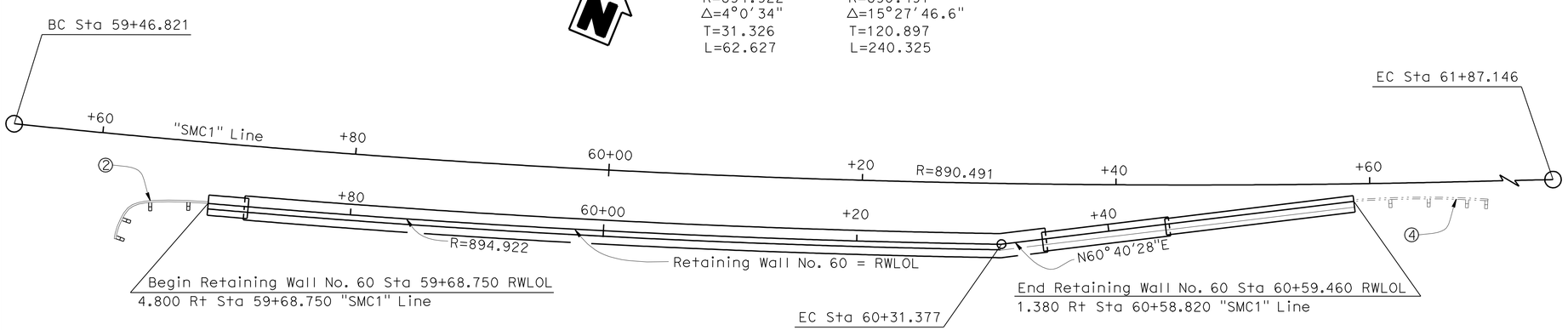

NOTE:
THE CONTRACTOR SHALL VERIFY ALL CONTROLLING FIELD DIMENSIONS BEFORE ORDERING OR FABRICATING ANY MATERIAL.

PLAN

1:200

For "General Notes" and "Index to Plans", see "Index to Plans" sheet.

Caltrans Metric

Fritz Hoffman
DESIGN ENGINEER

	BY	CHECKED
DESIGN	Sherman Stake	Hernan Perez
DETAILS	George Zweier	Hernan Perez
QUANTITIES	Ubong Inyang	Marvin Lane

LOAD FACTOR DESIGN — LIVE LOADING: HS20-44 AND ALTERNATIVE AND PERMIT DESIGN LOAD

	BY	CHECKED
LAYOUT	George Zweier	Hernan Perez
SPECIFICATIONS	Sirisha Nelapatla	PLANS AND SPECS COMPARED: Sirisha Nelapatla

STATE OF CALIFORNIA
DEPARTMENT OF TRANSPORTATION

DIVISION OF ENGINEERING SERVICES
STRUCTURE DESIGN
DESIGN BRANCH 6

BRIDGE NO. 44E0013
KILOMETER POST R154.72

RETAINING WALL NO. 60
GENERAL PLAN

ALL DIMENSIONS ARE IN METERS UNLESS OTHERWISE SHOWN

ORIGINAL SCALE IN MILLIMETERS FOR REDUCED PLANS 0 10 20 30 40 50 60 70 80 90 100

CU 05
EA 0161E1

DISREGARD PRINTS BEARING EARLIER REVISION DATES

REVISION DATES: 3-6-07 | 12-14-09 | 02-08-10 | 05-06-10 | 06-05-08 | 06-25-08 | 06-30-08 | 10-07-08 | 11-26-08 | 11-18-08

SHEET 1 OF 8

STRUCTURES DESIGN GENERAL PLAN SHEET (METRIC) (REV.03-17-04)

FILE => 44e0013-a-gp.dgn

USERNAME => trmartin DATE PLOTTED => 03-AUG-2010 TIME PLOTTED => 13:20

DIST	COUNTY	ROUTE	KILOMETER POST TOTAL PROJECT	SHEET No	TOTAL SHEETS
05	Mon	101	R146.8/159.7	1348	1402

Hernan Perez 05-06-10
REGISTERED CIVIL ENGINEER DATE

7-26-10
PLANS APPROVAL DATE

REGISTERED PROFESSIONAL ENGINEER HERNAN PEREZ No. 60993 Exp. 12-31-10 CIVIL STATE OF CALIFORNIA

The State of California or its officers or agents shall not be responsible for the accuracy or completeness of electronic copies of this plan sheet.

INDEX TO PLANS

SHEET No.	SHEET TITLE
1	GENERAL PLAN
2	INDEX TO PLANS
3	FOUNDATION PLAN
4	RETAINING WALL LAYOUT NO.1
5	RETAINING WALL LAYOUT NO.2
6	BARRIER -CONCETE TYPE 27 (MOD)
7	ARCHITECTURAL TREATMENT
8	LOG

STANDARD PLANS DATED JULY 2004

A10A	Acronyms and Abbreviations (A-L)
A10B	Acronyms and Abbreviations (M-Z)
A62B	Limits of Payment for Excavation and Backfill - Bridge Surcharge and Wall
B0-3	Bridge Details
B2-5	Pile Details - Class 400 and Class 625
B3-1	Retaining Wall Type 1 H=1200 Through 9100 mm
B3-8	Retaining Wall Details No.1

PILE DATA TABLE

Wall Station (meters)	Pile Type	Design Loading	Nominal Resistance kN		Design Tip Elevations (meters)	Specified Tip Elevations (meters)
			Compression	Tension		
59+68.75 to 59+71.61	CLASS 400 ALT W	400 kN	800 kN	N/A	32.0	32.0
59+71.61 to 60+35.91	CLASS 400 ALT W	400 kN	800 kN	N/A	31.0	31.0
60+35.91 to 60+45.67	CLASS 400 ALT W	400 kN	800 kN	N/A	31.0	31.0
60+45.67 to 60+59.46	CLASS 400 ALT W	400 kN	800 kN	N/A	31.5	31.5

NOTE: Design tip elevation is controlled by compression demand.

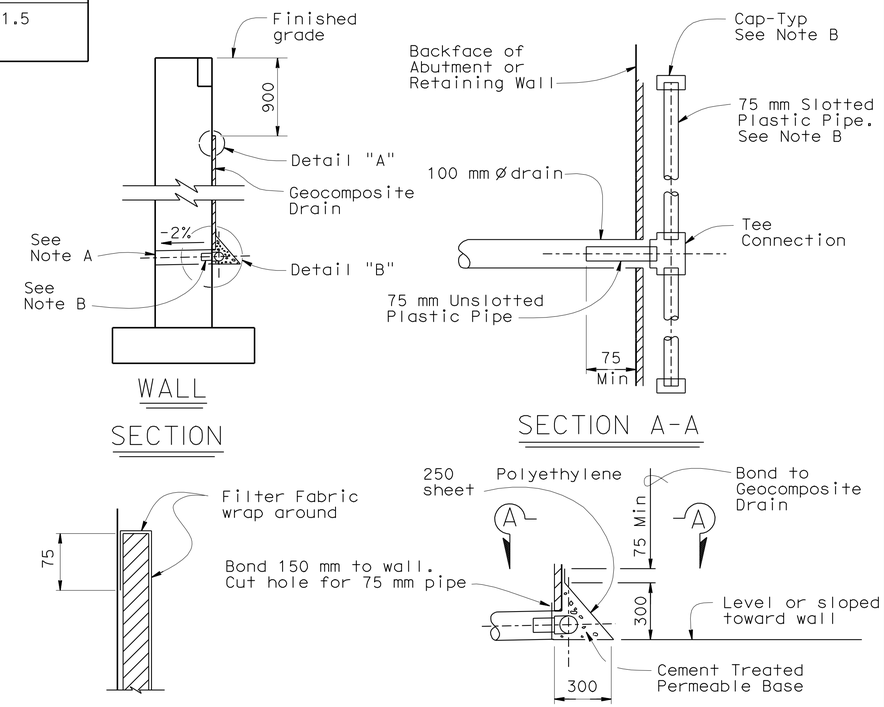

WEEP HOLE AND GEOCOMPOSITE DRAIN

ALTERNATIVE TO BRIDGE DETAIL B0-3 / 3-1

NOTES:

A. 100 mm Ø drains at intermediate sag points and at 7.60 meters center to center (2.75 meters c-c for Type 3 and 2.80 meters c-c for Type 4 retaining walls). For walls adjacent to sidewalks or curbs, provide 100 mm cast iron or asbestos cement pipe under the sidewalk to discharge through curb face. Exposed wall drains shall be located 75± mm above finished grade.

B. Geocomposite drain, cement treated permeable base, and 75 mm Ø slotted plastic pipe continuous behind retaining wall or abutment. Cap ends of pipe. Provide "Tee" connection at each 100 mm Ø drain.

C. Connect the low end of plastic pipe to the main outlet pipe as applicable.

GENERAL NOTES
LOAD FACTOR DESIGN

DESIGN: CALTRANS BRIDGE DESIGN SPECIFICATIONS LFD Version April 2000 (1996 AASHTO with Interims and Revision by Caltrans)

LIVE LOAD: 11.5 kPa Surcharge

REINFORCED CONCRETE: f_y = 420 MPa
f'_c = 25 MPa

STRUCTURAL STEEL: Steel Pipe Piles - ASTM A252, Grade 3
f_y = 310 MPa
f_u = 455 MPa

Caltrans Metric

	BY	CHECKED
DESIGN	Sherman Stake	Hernan Perez
DETAILS	Marvin Lane	Hernan Perez
QUANTITIES	Ubong Inyang	Marvin Lane

STATE OF CALIFORNIA
DEPARTMENT OF TRANSPORTATION

DIVISION OF ENGINEERING SERVICES
STRUCTURE DESIGN
DESIGN BRANCH 6

BRIDGE NO. 44E0013
KILOMETER POST R154.72

RETAINING WALL NO. 60
INDEX TO PLANS

ALL DIMENSIONS ARE IN MILLIMETERS UNLESS OTHERWISE SHOWN

ORIGINAL SCALE IN MILLIMETERS FOR REDUCED PLANS 0 10 20 30 40 50 60 70 80 90 100

CU 05
EA 0161E1

DISREGARD PRINTS BEARING EARLIER REVISION DATES

REVISION DATES 10-07-08 11-18-09 05-06-10

SHEET 2 OF 8

FILE => 44e0013-a-itp.dgn

STRUCTURES DESIGN DETAIL SHEET (METRIC) (REV.03-17-04)

USERNAME => trmartin DATE PLOTTED =>

DIST	COUNTY	ROUTE	KILOMETER POST TOTAL PROJECT	SHEET No	TOTAL SHEETS
05	Mon	101	R146.8/159.7	1349	1402

Hernan Perez 05-06-10
REGISTERED CIVIL ENGINEER DATE

7-26-10
PLANS APPROVAL DATE

REGISTERED PROFESSIONAL ENGINEER HERNAN PEREZ No. 60993 Exp. 12-31-10 CIVIL STATE OF CALIFORNIA

The State of California or its officers or agents shall not be responsible for the accuracy or completeness of electronic copies of this plan sheet.

Caltrans Metric

CURVE TABLE

No.	R	Δ	T	L
A	890.491	15°27'47"	120.897	240.325
B	894.922	4°0'34"	31.326	62.627
C	767.600	47°46'18"	339.925	640.002

LEGEND:

XX.XXX Indicates bottom of footing

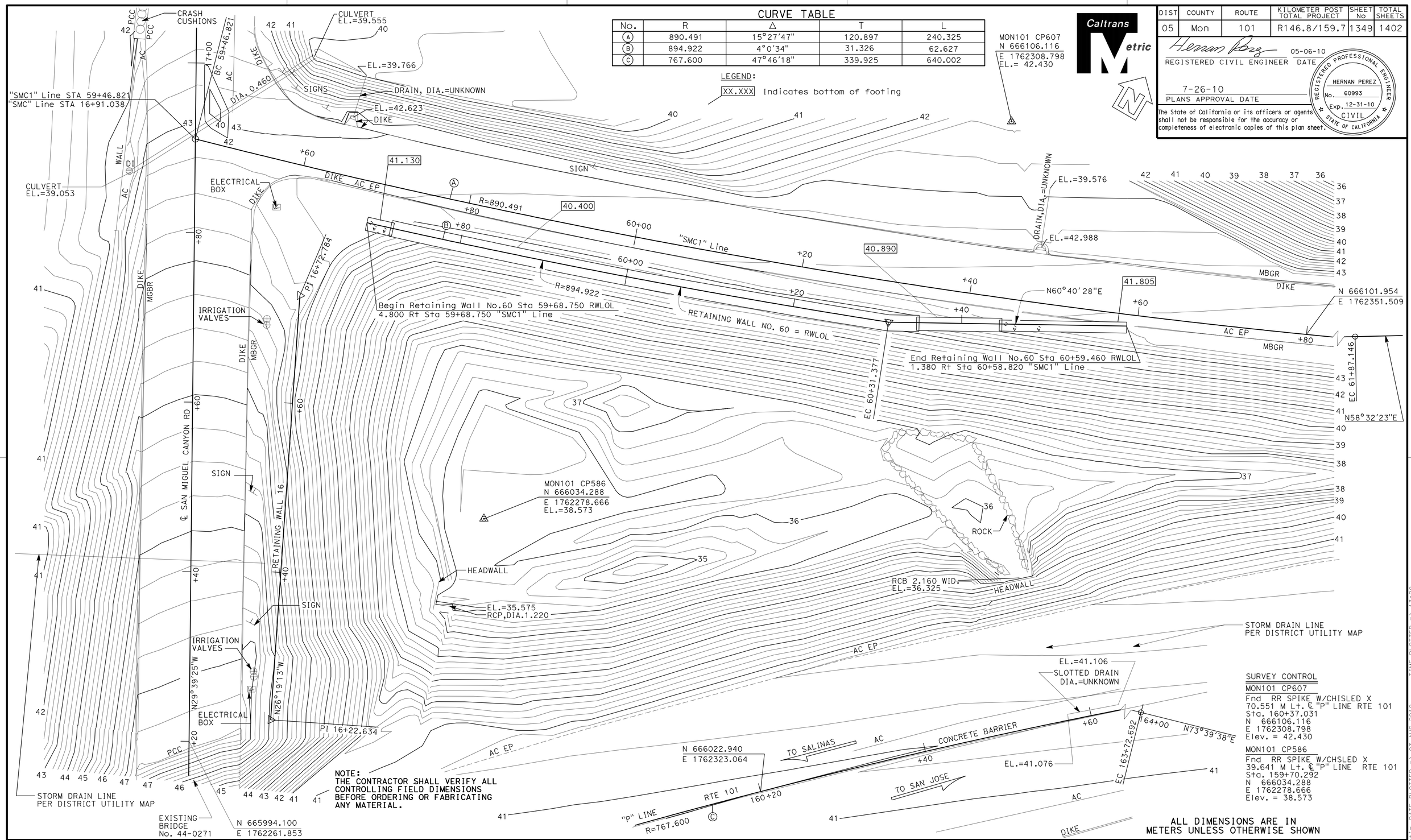

NOTE:
THE CONTRACTOR SHALL VERIFY ALL CONTROLLING FIELD DIMENSIONS BEFORE ORDERING OR FABRICATING ANY MATERIAL.

SURVEY CONTROL

MON101 CP607
Fnd RR SPIKE W/CHISLED X
70.551 M Lt. ℄ "P" LINE RTE 101
Sta. 160+37.031
N 666106.116
E 1762308.798
Elev. = 42.430

MON101 CP586
Fnd RR SPIKE W/CHSLED X
39.641 M Lt. ℄ "P" LINE RTE 101
Sta. 159+70.292
N 666034.288
E 1762278.666
Elev. = 38.573

ALL DIMENSIONS ARE IN METERS UNLESS OTHERWISE SHOWN

PRELIMINARY INVESTIGATION SECTION							
SCALE 1:200	VERT. DATUM NGVD29	PHOTOGRAMMETRY AS OF:					
	HORZ. DATUM NAD83(1991.35)	SURVEYED	BY DISTRICT	CHECKED	BY E.LOPEZ 07/2006		
ALIGNMENT TIES DIST.TRAVERSE SHEET		DRAFTED	BY T.MARCHENKO 07/2006	CHECKED	BY T.ZOLNIKOVA 07/2006		

	BY	CHECKED
DESIGN	Sherman Stake	Hernan Perez
DETAILS	George Zweier	Hernan Perez
QUANTITIES	Ubong Inyang	Marvin Lane

STATE OF CALIFORNIA
DEPARTMENT OF TRANSPORTATION

DIVISION OF ENGINEERING SERVICES
STRUCTURE DESIGN
DESIGN BRANCH 6

CU 05
EA 0161E1

BRIDGE NO. 44E0013
KILOMETER POST R154.72

RETAINING WALL NO.60
FOUNDATION PLAN

STRUCTURES FOUNDATION PLAN SHEET (METRIC) (REV.10-27-05)

ORIGINAL SCALE IN MILLIMETERS FOR REDUCED PLANS 0 10 20 30 40 50 60 70 80 90 100

DISREGARD PRINTS BEARING EARLIER REVISION DATES

REVISION DATES (PRELIMINARY STAGE ONLY): 07-14-06 | 9-29-2007 | 06-14-08 | 07-08-08 | 12-01-08 | 11-18-09 | 02-08-10 | 05-06-10

SHEET 3 OF 8

FILE => 44e0013-e-fp101.dgn

USERNAME => trmartin DATE PLOTTED => 03-AUG-2010 TIME PLOTTED => 13:20

DIST	COUNTY	ROUTE	KILOMETER POST TOTAL PROJECT	SHEET No	TOTAL SHEETS
05	Mon	101	R146.8/159.7	1350	1402

Hernan Perez 05-06-10
REGISTERED CIVIL ENGINEER DATE

7-26-10
PLANS APPROVAL DATE

REGISTERED PROFESSIONAL ENGINEER
HERNAN PEREZ
No. 60993
Exp. 12-31-10
CIVIL
STATE OF CALIFORNIA

The State of California or its officers or agents shall not be responsible for the accuracy or completeness of electronic copies of this plan sheet.

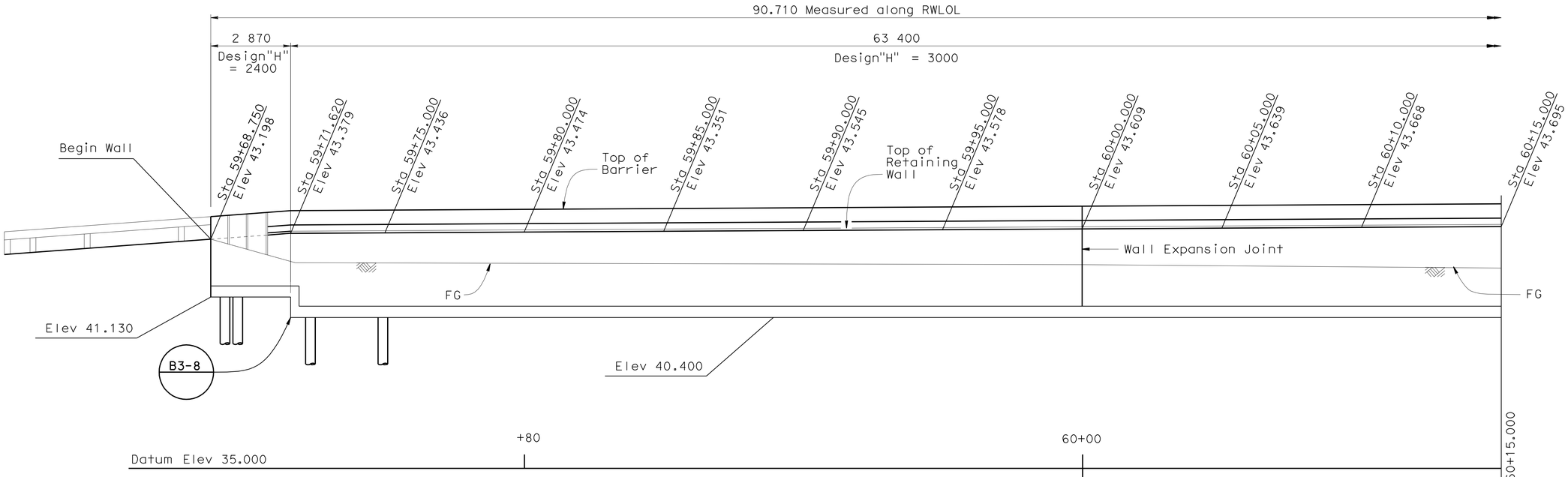

ELEVATION
1:80

B3-1 | B0-3 3-3 | B0-3 3-4

NOTE:
Not all Piles shown.

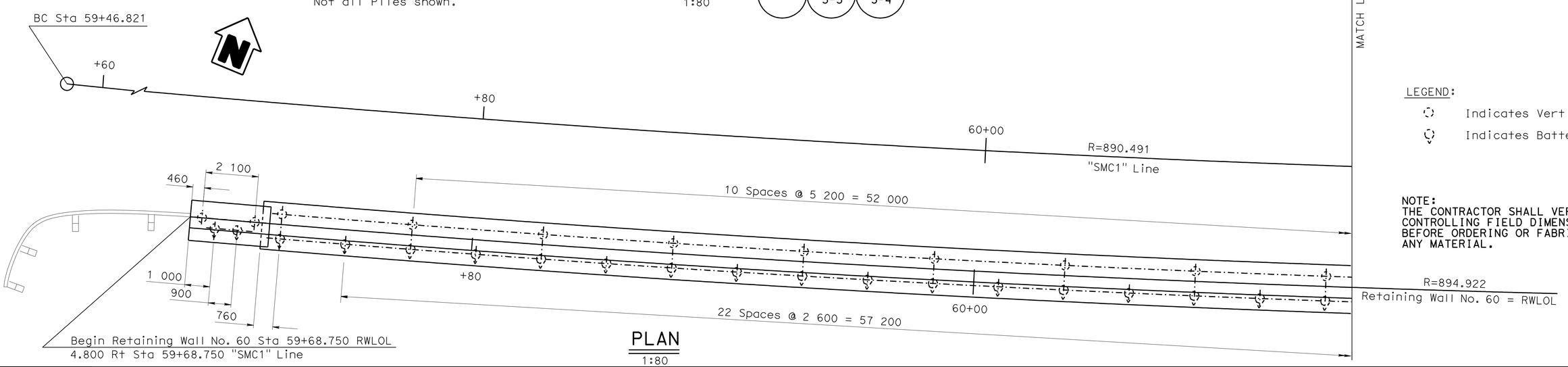

PLAN
1:80

LEGEND:
Indicates Vertical Pile
Indicates Battered Pile

NOTE:
THE CONTRACTOR SHALL VERIFY ALL CONTROLLING FIELD DIMENSIONS BEFORE ORDERING OR FABRICATING ANY MATERIAL.

Caltrans Metric

	BY	CHECKED
DESIGN	Sherman Stake	Hernan Perez
DETAILS	George Zweier	Hernan Perez
QUANTITIES	Ubong Inyang	Marvin Lane

STATE OF CALIFORNIA
DEPARTMENT OF TRANSPORTATION

DIVISION OF ENGINEERING SERVICES
STRUCTURE DESIGN
DESIGN BRANCH 6

BRIDGE NO. 44E0013
KILOMETER POST R154.72

RETAINING WALL NO. 60
RETAINING WALL LAYOUT NO.1

ALL DIMENSIONS ARE IN MILLIMETERS UNLESS OTHERWISE SHOWN

ORIGINAL SCALE IN MILLIMETERS FOR REDUCED PLANS 0 10 20 30 40 50 60 70 80 90 100

CU 05
EA 0161E1

DISREGARD PRINTS BEARING EARLIER REVISION DATES

REVISION DATES: 06-12-08 06-23-08 06-30-08 10-07-08 12-1-08 11-18-09 02-08-10 05-06-10

SHEET 4 OF 8

FILE => 44e0013-g-sp01.dgn

STRUCTURES DESIGN DETAIL SHEET (METRIC) (REV.03-17-04)

USERNAME => trmartin DATE PLOTTED =>

DIST	COUNTY	ROUTE	KILOMETER POST TOTAL PROJECT	SHEET No	TOTAL SHEETS
05	Mon	101	R146.8/159.7	1351	1402

REGISTERED CIVIL ENGINEER — DATE 05-06-10

7-26-10
PLANS APPROVAL DATE

REGISTERED PROFESSIONAL ENGINEER — HERNAN PEREZ — No. 60993 — Exp. 12-31-10 — CIVIL — STATE OF CALIFORNIA

The State of California or its officers or agents shall not be responsible for the accuracy or completeness of electronic copies of this plan sheet.

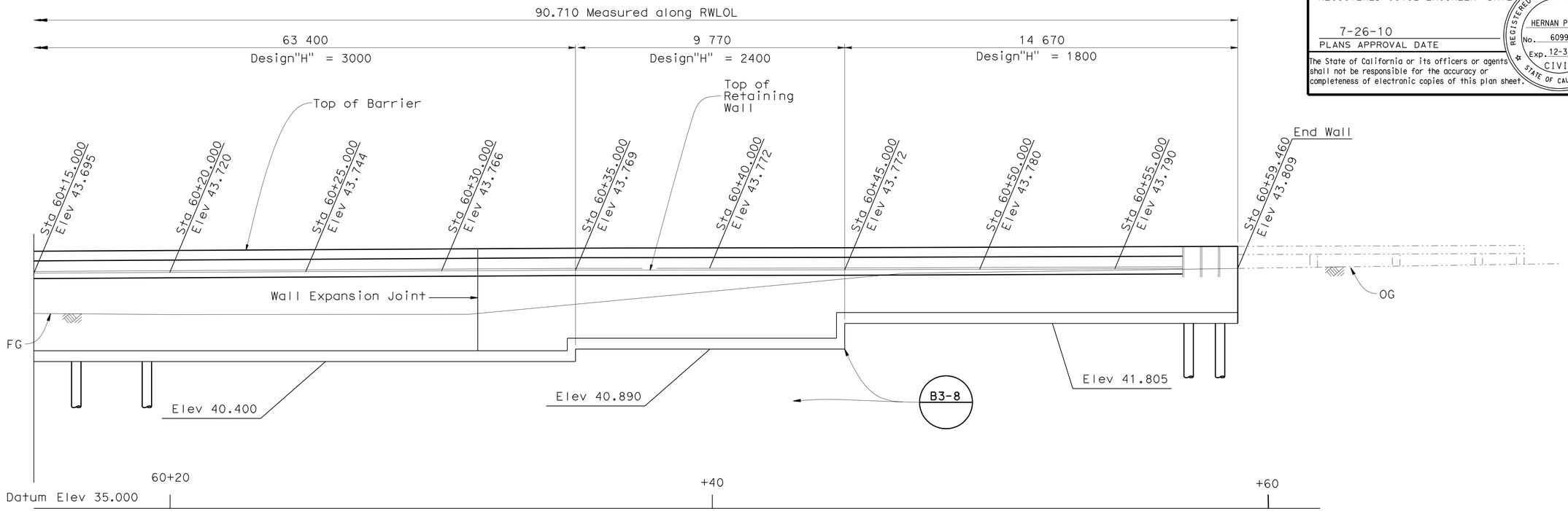

ELEVATION

1:80

B3-1 | B0-3 3-3 | B0-3 3-4

NOTE:
Not all Piles shown, see "Retaining Wall Layout" sheet.

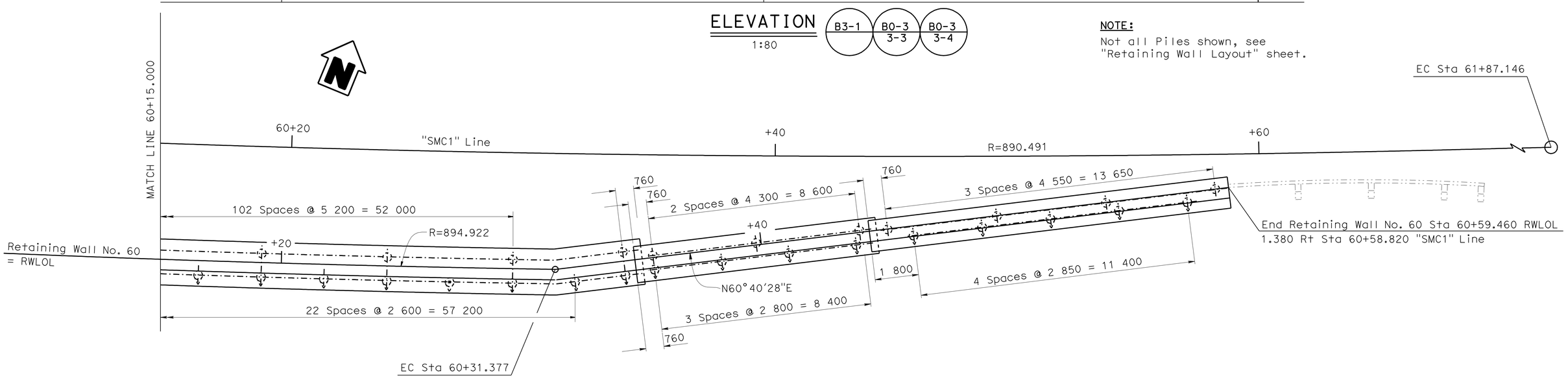

PLAN

1:80

NOTE:
THE CONTRACTOR SHALL VERIFY ALL CONTROLLING FIELD DIMENSIONS BEFORE ORDERING OR FABRICATING ANY MATERIAL.

DESIGN	BY Sherman Stake	CHECKED Hernan Perez	
DETAILS	BY George Zweier	CHECKED Hernan Perez	
QUANTITIES	BY Ubong Inyang	CHECKED Marvin Lane	

STATE OF CALIFORNIA
DEPARTMENT OF TRANSPORTATION

DIVISION OF ENGINEERING SERVICES
STRUCTURE DESIGN
DESIGN BRANCH 6

BRIDGE NO. 44E0013
KILOMETER POST R154.72

RETAINING WALL NO. 60
RETAINING WALL LAYOUT NO.2

ALL DIMENSIONS ARE IN MILLIMETERS UNLESS OTHERWISE SHOWN

ORIGINAL SCALE IN MILLIMETERS FOR REDUCED PLANS 0 10 20 30 40 50 60 70 80 90 100

CU 05
EA 0161E1

DISREGARD PRINTS BEARING EARLIER REVISION DATES

REVISION DATES: 06-23-08 06-03-08 12-2-08 11-18-09 02-08-10 05-06-10

SHEET 5 OF 8

FILE => 44e0013-g-sp02.dgn

STRUCTURES DESIGN DETAIL SHEET (METRIC) (REV.03-17-04)

USERNAME => trmartin DATE PLOTTED => 03-AUG-2010 TIME PLOTTED => 13:21

DIST.	COUNTY	ROUTE	KILOMETER POST TOTAL PROJECT	SHEET NO.	TOTAL SHEETS
05	Mon	101	R146.8/159.7	1352	1402

Caltrans Metric

Hernan Perez 05-06-10
REGISTERED ENGINEER - CIVIL

7-26-10
PLANS APPROVAL DATE

The State of California or its officers or agents shall not be responsible for the accuracy or completeness of electronic copies of this plan sheet.

REGISTERED PROFESSIONAL ENGINEER HERNAN PEREZ No. 60993 Exp. 12-31-10 CIVIL STATE OF CALIFORNIA

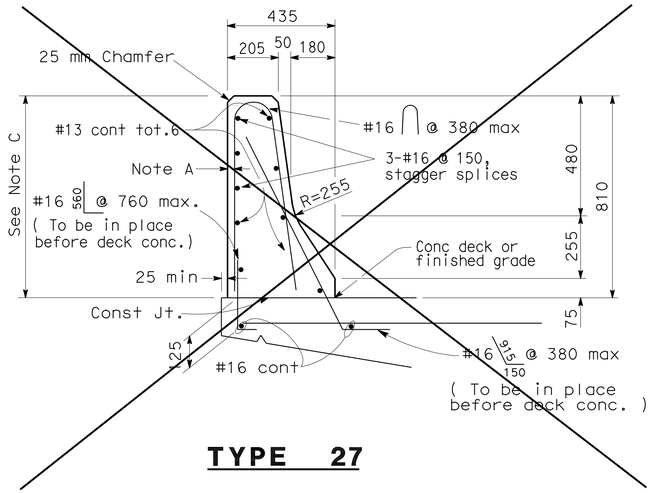

TYPE 27

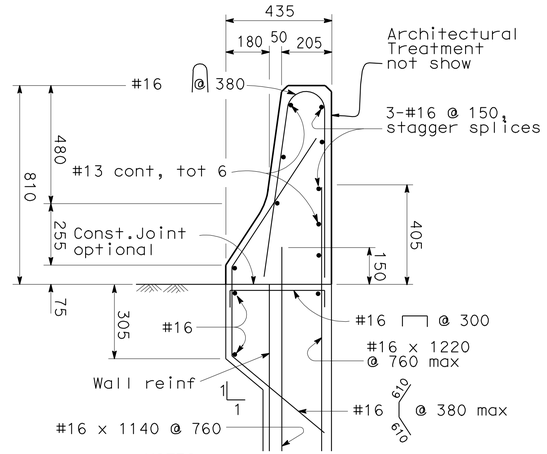

NOTES:
1. Architectural Treatment not shown.
2. For additional Deminsions see, "Type 27" detail.

TYPE 27A (Mod)

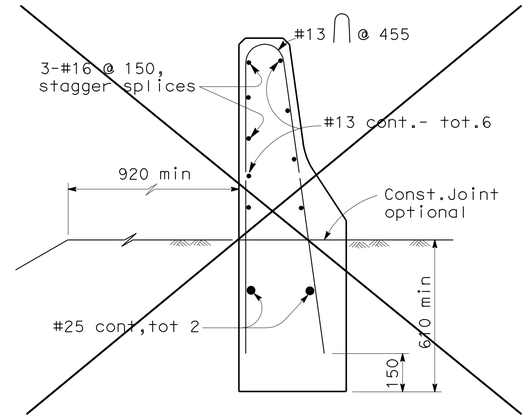

TYPE 27B

NOTES:

A. Clearance to reinforcing steel in rail to be 25 mm. Longitudinal reinforcement to stop at expansion joints, and be continuous at construction joints. Hairpin stirrups to be rotated to meet clearance.

B. Rail joints shall be located at deck and principal wall joints.

C. Dimension may vary with cross-slope and with certain thickness of surfacing. See Bridge Plans.

D. When glare screen is required, see "Concrete Barrier Type 50".

E. For Metal Beam Guardrail details not shown see Standard Plans.

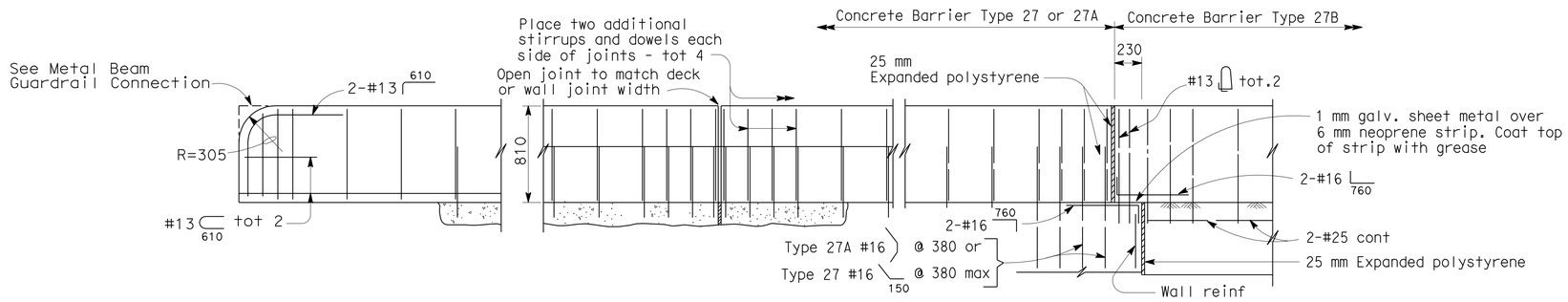

END DETAIL **DECK OR WALL JOINT** **AT CONNECTION TO STRUCTURE**

See Note B

ELEVATION

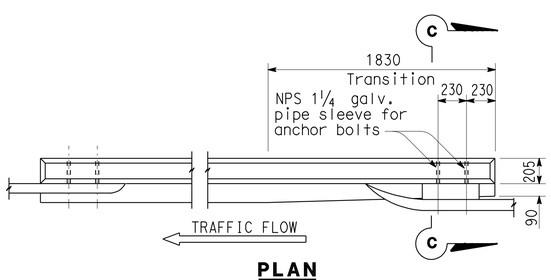

PLAN

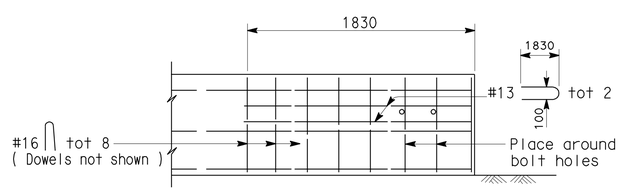

ELEVATION

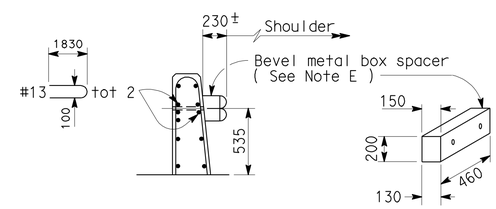

SECTION C-C

METAL BEAM GUARDRAIL CONNECTION

NO SCALE

ALL DIMENSIONS ARE IN MILLIMETERS UNLESS OTHERWISE SHOWN

STANDARD DRAWING					
RELEASE DATE 4/4/97	DESIGN	BY R.W. BISHOP	CHECKED P. HALE	RELEASED BY	
FILE NO. xs16-010	DETAILS	BY R. YEE	CHECKED P. HALE		
	SUBMITTED	BY J. HAMAGUCHI	DRAWING DATE 12/87	OFFICE CHIEF	

DS OSD 2147A (METRIC) (REV. 2/25/97)

STATE OF CALIFORNIA DEPARTMENT OF TRANSPORTATION

DIVISION OF ENGINEERING SERVICES

CU 05
EA 0161E1

ORIGINAL SCALE IN MILLIMETERS FOR REDUCED PLANS 0 10 20 30 40 50 60 70 80 90 100

BRIDGE NO. 44E0013
KILOMETER POST R154.72

RETAINING WALL NO. 60
CONCRETE BARRIER TYPE 27 (MOD)

DISREGARD PRINTS BEARING EARLIER REVISION DATES

REVISION DATES (PRELIMINARY STAGE ONLY) 06-30-08 11-18-08 12-17-08 05-06-10

SHEET 6 OF 8

USERNAME => trmartin

44e0013-xs-16-010.dgn

DATE PLOTTED => 03-AUG-2010 TIME PLOTTED => 13:21

DIST	COUNTY	ROUTE	KILOMETER POST TOTAL PROJECT	SHEET No	TOTAL SHEETS
05	Mon	101	R146.8/159.7	1353	1402

Hernan Perez 05-06-10
REGISTERED CIVIL ENGINEER DATE

7-26-10
PLANS APPROVAL DATE

REGISTERED PROFESSIONAL ENGINEER HERNAN PEREZ No. 60993 Exp. 12-31-10 CIVIL STATE OF CALIFORNIA

The State of California or its officers or agents shall not be responsible for the accuracy or completeness of electronic copies of this plan sheet.

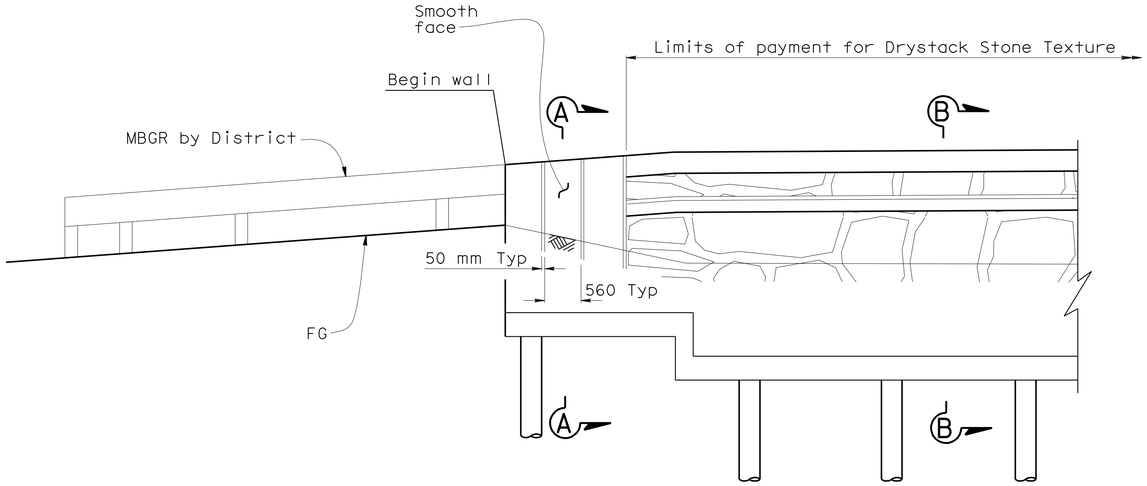

RETAINING WALL ELEVATION
1:50

NOTES:

1. End of wall similar.
2. Not all piles shown.

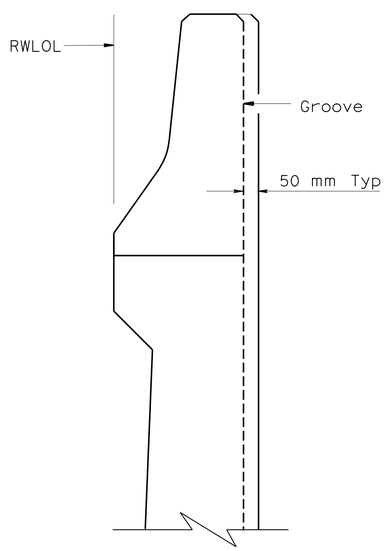

SECTION A-A
1:10

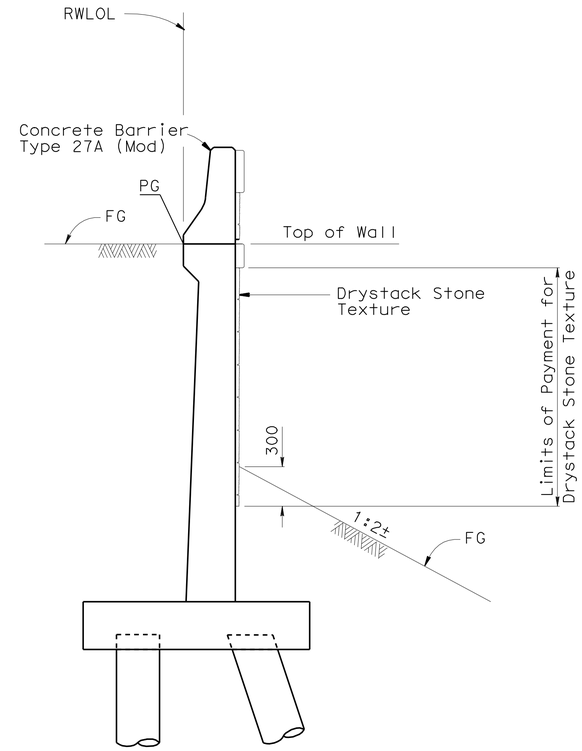

SECTION B-B
1:25
Drainage system not shown.

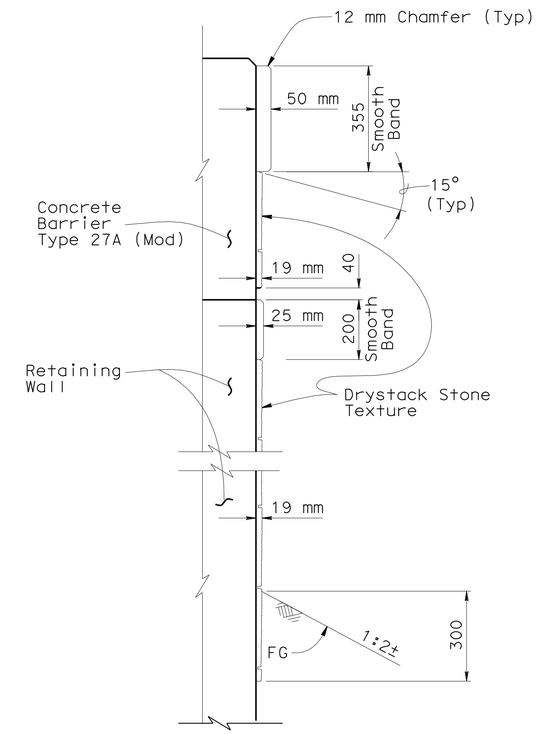

ARCHITECTURAL TREATMENT
NO SCALE

Caltrans Metric

	BY	CHECKED
DESIGN	Sherman Stake	Hernan Perez
DETAILS	George Zweier	Hernan Perez
QUANTITIES	Ubong Inyang	Marvin Lane

STATE OF CALIFORNIA
DEPARTMENT OF TRANSPORTATION

DIVISION OF ENGINEERING SERVICES
STRUCTURE DESIGN
DESIGN BRANCH 6

BRIDGE NO. 44E0013
KILOMETER POST R154.72

RETAINING WALL NO.60
ARCHITECTURAL TREATMENT

ALL DIMENSIONS ARE IN MILLIMETERS UNLESS OTHERWISE SHOWN

ORIGINAL SCALE IN MILLIMETERS FOR REDUCED PLANS 0 10 20 30 40 50 60 70 80 90 100

CU 05
EA 0161E1

DISREGARD PRINTS BEARING EARLIER REVISION DATES

REVISION DATES: 07-28-08 08-06-08 10-07-08 4-30-09 11-18-09 12-17-09 05-06-10

SHEET 7 OF 8

FILE => 44e0013-y-archtrt01.dgn

STRUCTURES DESIGN DETAIL SHEET (METRIC) (REV.03-17-04)

USERNAME => trmartin DATE PLOTTED => 03-AUG-2010 TIME PLOTTED => 13:21

DIST	COUNTY	ROUTE	KILOMETER POST TOTAL PROJECT	SHEET No	TOTAL SHEETS
05	Mon	101	R146.8/159.7	1354	1402

Michael S. Finegan 10-8-09
REGISTERED CIVIL ENGINEER

7-26-10
PLANS APPROVAL DATE

REGISTERED PROFESSIONAL ENGINEER
Michael S. Finegan
No. C50138
Exp. 6-30-11
CIVIL
STATE OF CALIFORNIA

The State of California or its officers or agents shall not be responsible for the accuracy or completeness of electronic copies of this plan sheet.

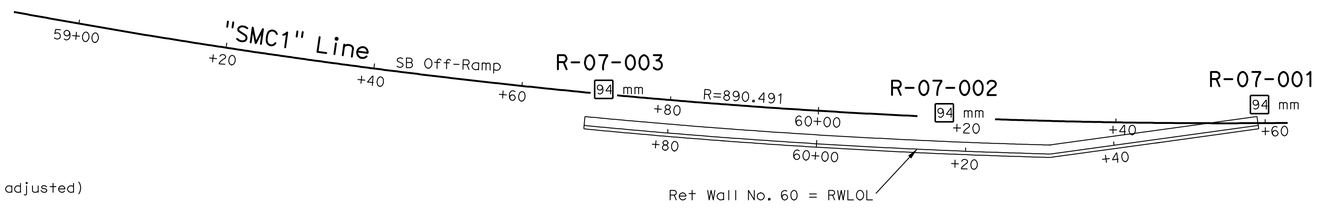

BENCH MARK

PM 96.31 Elev 45.122 (NGVD29)
(NAVD2988 adjusted)

PLAN

1:400

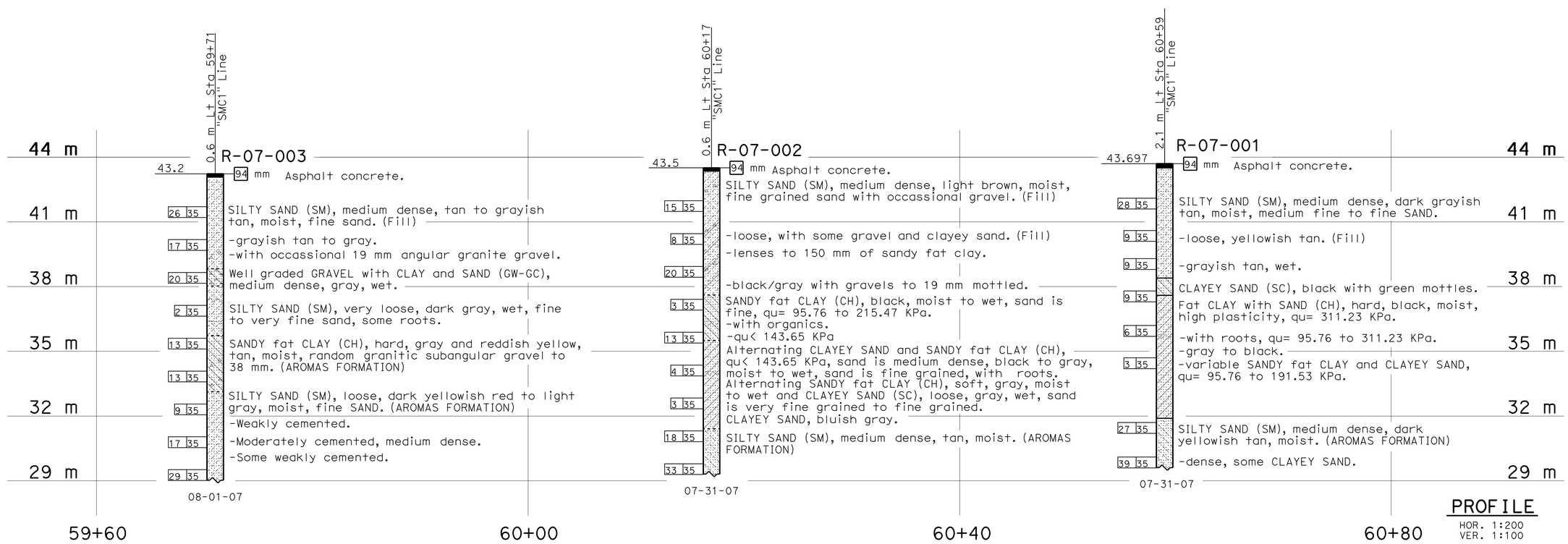

PROFILE

HOR. 1:200
VER. 1:100

LEGEND OF BORING OPERATIONS

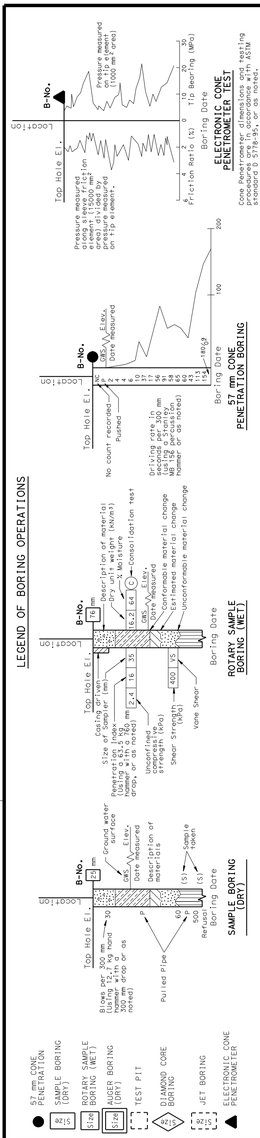

LEGEND OF EARTH MATERIALS

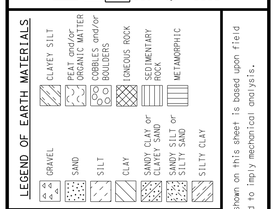

CONSISTENCY CLASSIFICATION FOR SOILS

According to the Standard Penetration Test

SPT N-Value (Blows/0.3m)	Granular	SPT N-Value (Blows/0.3m)	Cohesive
0-4	Very Loose	<2	Very Soft
5-10	Loose	2-4	Soft
11-30	Medium Dense	5-8	Firm
31-50	Dense	9-15	Stiff
>50	Very Dense	16-30	Very stiff
		>30	Hard

NOTE: Classification of earth material as shown on this sheet is based upon field inspection and is not to be construed to imply mechanical analysis.

OGS CIVIL LOG OF TEST BORINGS SHEET (METRIC) (REV. 4/04)

Caltrans Metric

ENGINEERING SERVICES	GEOTECHNICAL SERVICES
DRAWN BY	W. Tang 12/07
CHECKED BY	W. Hoon

ALL DIMENSIONS ARE IN METERS UNLESS OTHERWISE SHOWN

FIELD INVESTIGATION BY: W. Hoon

ORIGINAL SCALE IN MILLIMETERS FOR REDUCED PLANS 0 10 20 30 40 50 60 70 80 90 100

STATE OF CALIFORNIA
DEPARTMENT OF TRANSPORTATION

DIVISION OF ENGINEERING SERVICES
STRUCTURE DESIGN
DESIGN BRANCH 6

CU 05
EA 0161E1

BRIDGE NO. 44E0013
KILOMETER POST R 154.72

RETAINING WALL No. 60
LOG OF TEST BORINGS

DISREGARD PRINTS BEARING EARLIER REVISION DATES

REVISION DATES (PRELIMINARY STAGE ONLY): 10-24-08 06-18-09 10-08-09

SHEET 8 OF 8

FILE => 44e0013-z-lotb01.dgn

USERNAME => trmartin DATE PLOTTED => 03-AUG-2010 TIME PLOTTED => 13:21

DIST	COUNTY	ROUTE	KILOMETER POST TOTAL PROJECT	SHEET No	TOTAL SHEETS
05	Mon	101	R146.8/159.7	1355	1402

Hernan Perez 05-06-10
REGISTERED CIVIL ENGINEER DATE

7-26-10
PLANS APPROVAL DATE

REGISTERED PROFESSIONAL ENGINEER HERNAN PEREZ No. 60993 Exp. 12-31-10 CIVIL STATE OF CALIFORNIA

The State of California or its officers or agents shall not be responsible for the accuracy or completeness of electronic copies of this plan sheet.

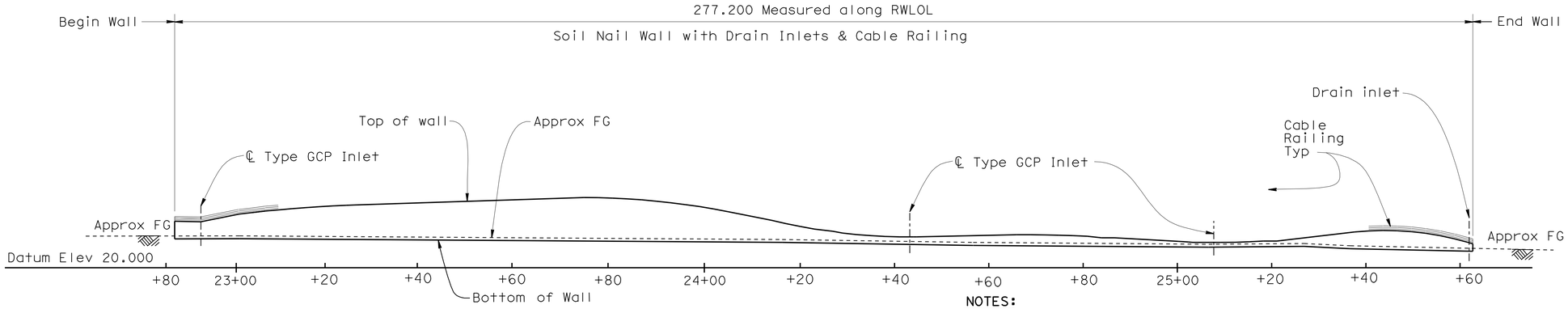

DEVELOPED ELEVATION

1:500

NOTES:

1. Architectural Treatment not shown.
2. For Drainage Inlet Type, see "Road Plans".
3. For Drainage Station locations see, "Stucture Plan No. 1, 2, 3 & 4 sheets.
4. OG not shown, see "Structure Plans No. 1, 2, 3 & 4" sheets.

INDEX TO PLANS

SHEET No.	TITLE
1.	GENERAL PLAN
2.	STRUCTURE PLAN No. 1
3.	STRUCTURE PLAN No. 2
4.	STRUCTURE PLAN No. 3
5.	STRUCTURE PLAN No. 4
6.	FOUNDATION PLAN No. 1
7.	FOUNDATION PLAN No. 2
8.	RETAINING WALL DETAILS No. 1
9.	RETAINING WALL DETAILS No. 2
10.	RETAINING WALL DETAILS No. 3
11.	DRAINAGE DETAILS
12.	ARCHITECTURAL TREATMENT
13.	LOG OF TEST BORINGS 1 of 3
14.	LOG OF TEST BORINGS 2 of 3
15.	LOG OF TEST BORINGS 3 of 3

STANDARD PLAN DATED JULY 2004

A10A	ACRONYMS AND ABBREVIATIONS (A-L)
A10B	ACRONYMS AND ABBREVIATIONS (M-Z)
B0-3	BRIDGE DETAILS
B3-9	RETAINING WALL DETAILS No.2
B11-47	CABLE RAILING

STANDARD PLAN SHEET No.

DETAIL No.

QUANTITIES:

STRUCTURE EXCAVATION (SOIL NAIL WALL)	475	m^3
STRUCTURE BACKFILL (SOIL NAIL WALL)	23	m^3
SOIL NAIL ASSEMBLY	5380	m
STRUCTURAL CONCRETE, RETAINING WALL	295	m^3
ARCHITECTURAL TREATMENT (DRYSTACK STONE TEXTURE)	1185	m^2
BAR REINFORCING STEEL (RETAINING WALL)	32 600	kg
SHOTCRETE	113	m^3
MINOR CONCRETE (GUTTER)	278	m
CABLE RAILING	278	m

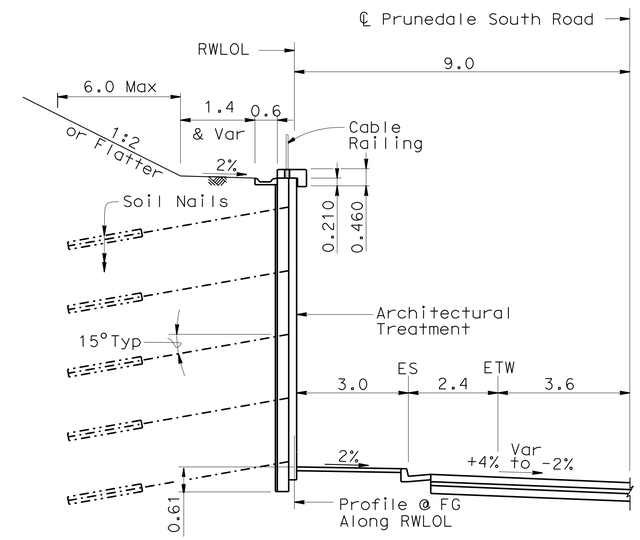

TYPICAL SECTION

1:80

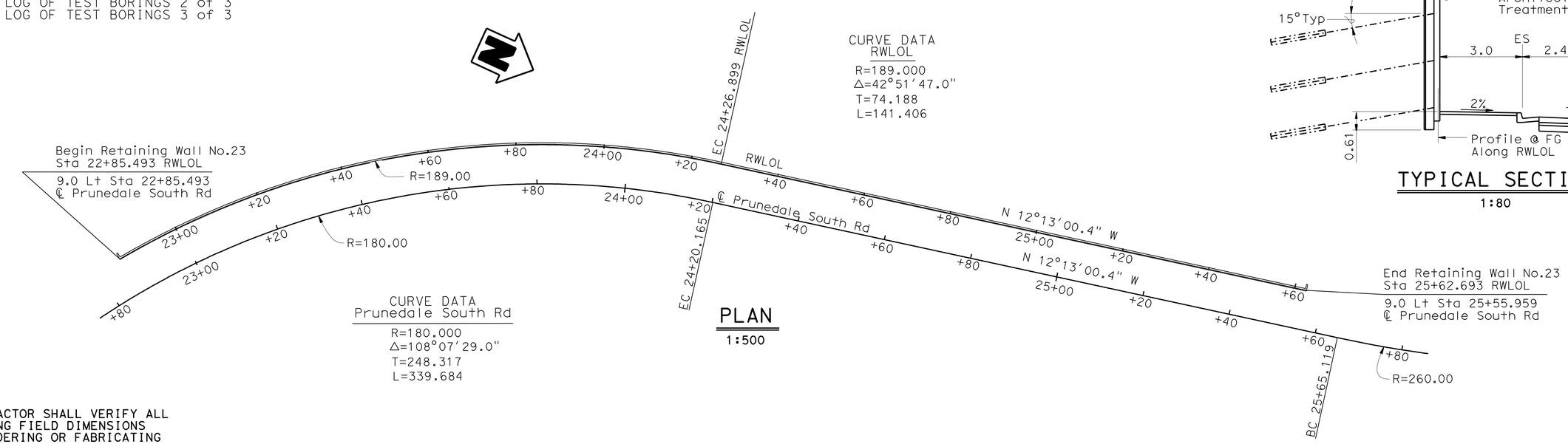

CURVE DATA
RWLOL

R=189.000
Δ=42°51'47.0"
T=74.188
L=141.406

CURVE DATA
Prunedale South Rd

R=180.000
Δ=108°07'29.0"
T=248.317
L=339.684

PLAN

1:500

NOTE:
THE CONTRACTOR SHALL VERIFY ALL CONTROLLING FIELD DIMENSIONS BEFORE ORDERING OR FABRICATING ANY MATERIAL.

Caltrans Metric

Fritz Hoffman
DESIGN ENGINEER

	BY	CHECKED
DESIGN	R. Coria	C. Udarbe
DETAILS	P.Savoye\G.Zweier	Hernan Perez
QUANTITIES	R. Coria	C. Udarbe

LOAD & RESISTANCE FACTOR DESIGN — LIVE LOADING: HL93 W/"LOW-BOY"; PERMIT DESIGN VEHICLE

	BY	CHECKED
LAYOUT	P.Savoye\G.Zweier	Hernan Perez
SPECIFICATIONS	Sirisha Nelapatla	PLANS AND SPECS COMPARED Sirisha Nelapatla

ALL DIMENSIONS ARE IN METERS UNLESS OTHERWISE SHOWN

ORIGINAL SCALE IN MILLIMETERS FOR REDUCED PLANS 0 10 20 30 40 50 60 70 80 90 100

STATE OF CALIFORNIA
DEPARTMENT OF TRANSPORTATION

DIVISION OF ENGINEERING SERVICES
STRUCTURE DESIGN
DESIGN BRANCH 6

CU 05
EA 0161E1

BRIDGE NO. 44E0014
KILOMETER POST 151.4

RETAINING WALL NO.23
GENERAL PLAN

DISREGARD PRINTS BEARING EARLIER REVISION DATES

REVISION DATES: 3-27-08 2-5-09 4-30-09 6-16-09 06-29-09 07-07-09 07-14-09 07-29-09 05-06-10

SHEET 1 OF 15

FILE => 44e0014-g-gp.dgn

STRUCTURES DESIGN GENERAL PLAN SHEET (METRIC) (REV.07-24-06)

USERNAME => trmartin DATE PLOTTED => 03-AUG-2010 TIME PLOTTED => 13:21

DIST	COUNTY	ROUTE	KILOMETER POST TOTAL PROJECT	SHEET No	TOTAL SHEETS
05	Mon	101	R146.8/159.7	1356	1402

REGISTERED CIVIL ENGINEER 05-06-10 DATE

7-26-10
PLANS APPROVAL DATE

REGISTERED PROFESSIONAL ENGINEER HERNAN PEREZ No. 60993 Exp. 12-31-10 CIVIL STATE OF CALIFORNIA

The State of California or its officers or agents shall not be responsible for the accuracy or completeness of electronic copies of this plan sheet.

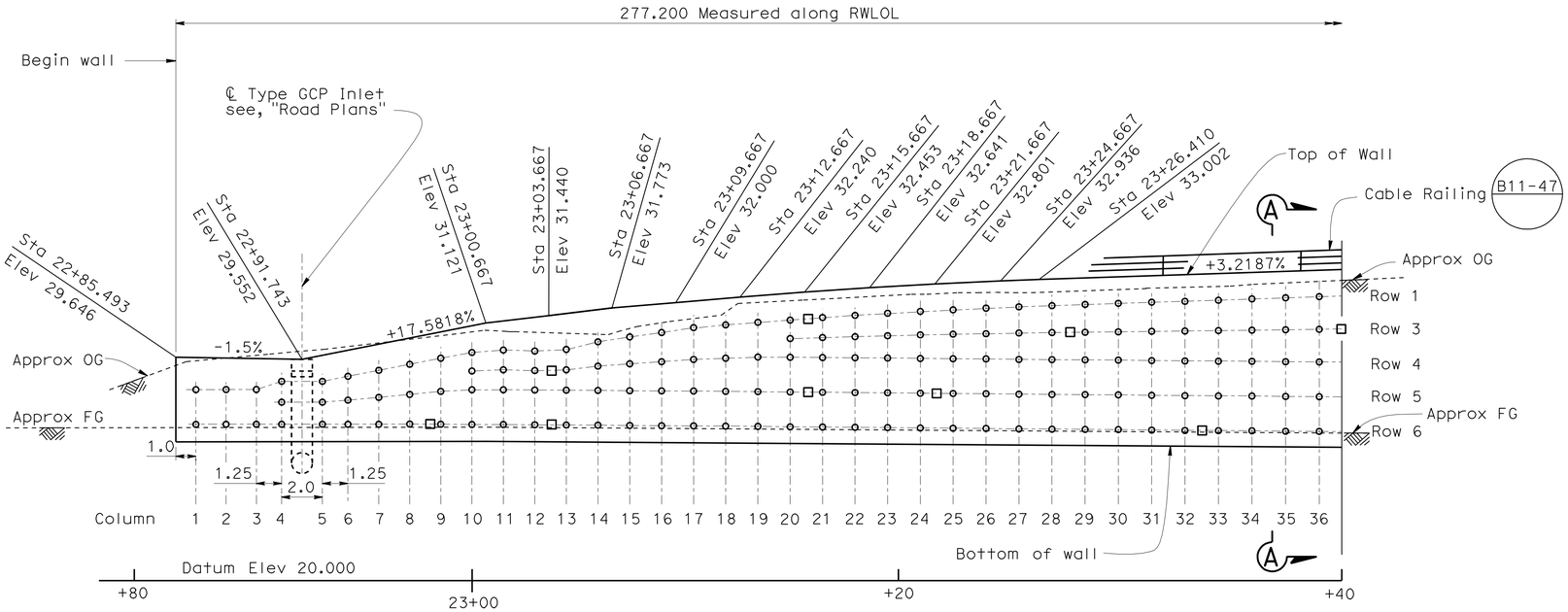

DEVELOPED ELEVATION

1:125

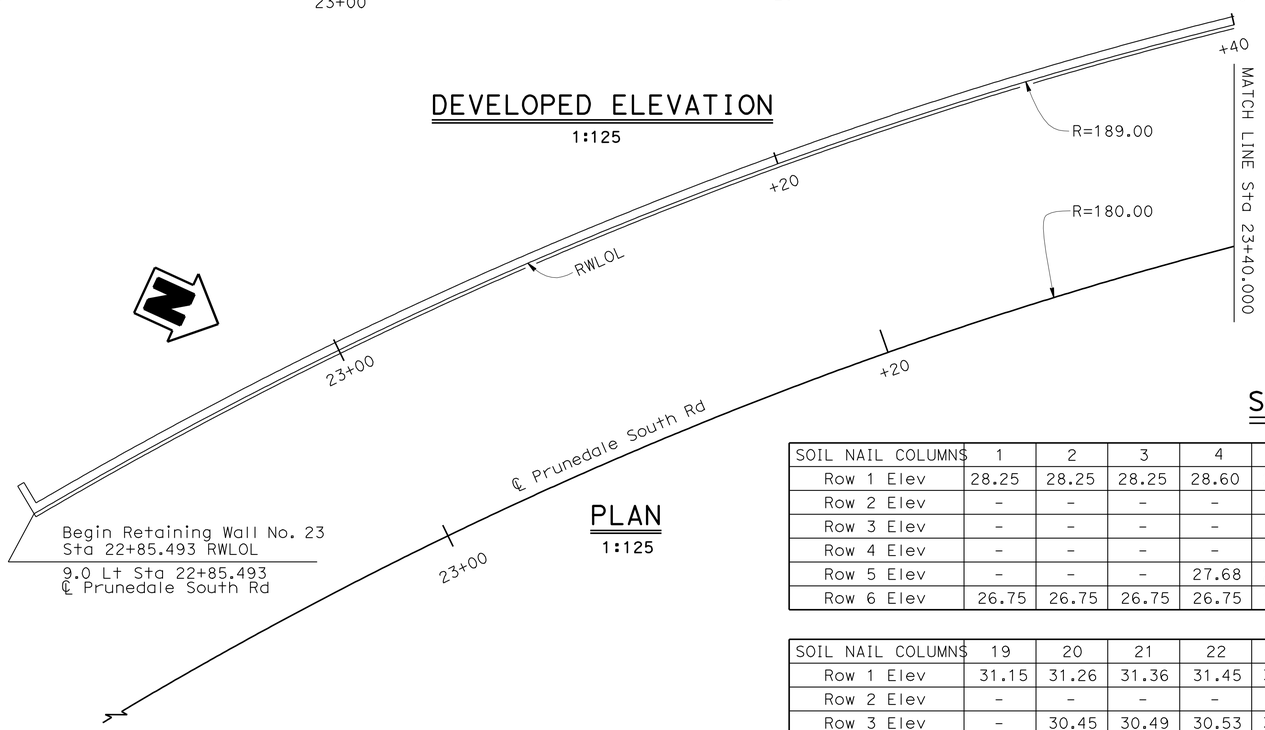

PLAN

1:125

NOTES:

1. Horizontal spacing of Soil Nail measured along RWLOL.
2. Horizontal Soil Nail spacing at 1.5 m unless otherwise specified.

LEGEND:

○ Soil Nail

□ Proof Test Soil Nail (Additional Proof Test Soil Nail Locations to be determined by the Engineer. See Special Provisions)

NOTE:

For "SECTION A-A", see "RETAINING WALL DETAILS No. 1 sheet.

STATION LIMITS ALONG RWLOL	ROW 1-5 NAIL LENGTHS	ROW 6 NAIL LENGTHS
22+85.5 to 23+05	8.5 meters	6.5 meters
23+05 to 23+40	10 meters	7 meters
23+40 to 23+90	12 meters	11 meters

SOIL NAIL ELEVATON AND LOCATION

SOIL NAIL COLUMNS	1	2	3	4	5	6	7	8	9	10	11	12	13	14	15	16	17	18
Row 1 Elev	28.25	28.25	28.25	28.60	28.60	28.82	29.08	29.34	29.6	29.85	29.95	29.91	29.98	30.31	30.52	30.71	30.92	31.04
Row 2 Elev	-	-	-	-	-	-	-	-	-	-	-	-	-	-	-	-	-	-
Row 3 Elev	-	-	-	-	-	-	-	-	-	-	-	-	-	-	-	-	-	-
Row 4 Elev	-	-	-	-	-	-	-	-		29.05	29.10	29.07	29.10	29.26	29.36	29.45	29.55	29.60
Row 5 Elev	-	-	-	27.68	27.68	27.79	27.91	28.04	28.17	28.24	28.24	28.23	28.22	28.21	28.20	28.19	28.19	28.17
Row 6 Elev	26.75	26.75	26.75	26.75	26.75	26.75	26.75	26.75	26.75	26.74	26.74	26.73	26.72	26.71	26.70	26.69	26.68	26.67

SOIL NAIL COLUMNS	19	20	21	22	23	24	25	26	27	28	29	30	31	32	33	34	35	36
Row 1 Elev	31.15	31.26	31.36	31.45	31.54	31.62	31.69	31.76	31.82	31.87	31.92	31.97	32.02	32.06	32.11	32.16	32.21	32.26
Row 2 Elev	-	-	-	-	-	-	-	-	-	-	-	-	-	-	-	-	-	-
Row 3 Elev	-	30.45	30.49	30.53	30.57	30.61	30.64	30.66	30.69	30.71	30.72	30.74	30.76	30.78	30.80	30.81	30.83	30.85
Row 4 Elev	29.65	29.64	29.63	29.62	29.61	29.59	29.58	29.57	29.55	29.54	29.53	29.52	29.5	29.49	29.48	29.47	29.45	29.44
Row 5 Elev	28.16	28.14	28.13	28.12	28.11	28.09	28.08	28.07	28.05	28.04	28.03	28.02	28.0	27.99	27.98	27.97	27.95	27.94
Row 6 Elev	26.66	26.64	26.63	26.62	26.61	26.59	26.58	26.57	26.55	26.54	26.53	26.52	26.5	26.49	26.48	26.47	26.45	26.44

NOTE:
THE CONTRACTOR SHALL VERIFY ALL CONTROLLING FIELD DIMENSIONS BEFORE ORDERING OR FABRICATING ANY MATERIAL.

Caltrans Metric

ALL DIMENSIONS ARE IN METERS UNLESS OTHERWISE SHOWN

	BY	CHECKED
DESIGN	R. Coria	C. Udarbe
DETAILS	G.Leung\G.Zweier	C. Udarbe
QUANTITIES	R. Coria	C. Udarbe

ORIGINAL SCALE IN MILLIMETERS FOR REDUCED PLANS 0 10 20 30 40 50 60 70 80 90 100

STATE OF CALIFORNIA DEPARTMENT OF TRANSPORTATION

DIVISION OF ENGINEERING SERVICES STRUCTURE DESIGN
DESIGN BRANCH 6

CU 05
EA 0161E1

BRIDGE NO. 44E0014
KILOMETER POST 151.4

RETAINING WALL NO. 23
STRUCTURE PLAN NO. 1

DISREGARD PRINTS BEARING EARLIER REVISION DATES
REVISION DATES: 10-26-08 2-12-09 03-09-09 07-28-09 07-28-09 07-30-09 05-06-10

SHEET 2 OF 15

FILE => 44e0014-c-sp01.dgn

STRUCTURES DESIGN DETAIL SHEET (METRIC) (REV.03-17-04)

USERNAME => trmartin DATE PLOTTED => 03-AUG-2010 TIME PLOTTED => 13:21

DIST	COUNTY	ROUTE	KILOMETER POST TOTAL PROJECT	SHEET No	TOTAL SHEETS
05	Mon	101	R146.8/159.7	1357	1402

Hernan Perez 05-06-10
REGISTERED CIVIL ENGINEER DATE

7-26-10
PLANS APPROVAL DATE

REGISTERED PROFESSIONAL ENGINEER HERNAN PEREZ No. 60993 Exp. 12-31-10 CIVIL STATE OF CALIFORNIA

The State of California or its officers or agents shall not be responsible for the accuracy or completeness of electronic copies of this plan sheet.

Soil Nail Columns	37	38	39	40	41	42	43	44	45	46	47	48	49	50	51	52	53	54	55	56	57	58	59	60	61
Row 1 Elev	32.3	32.35	32.40	32.45	32.5	32.55	32.59	32.64	32.65	32.61	32.57	32.53	32.5	32.56	32.62	32.72	32.82	32.93	32.98	33.01	33.01	33.25	33.27	33.25	33.23
Row 2 Elev	-	-	-	-	31.69	31.71	31.72	31.74	31.74	31.71	31.69	31.66	31.64	31.66	31.68	31.73	31.77	31.82	31.84	31.85	31.84	31.96	31.96	31.94	31.93
Row 3 Elev	30.87	30.88	30.90	30.89	30.88	30.87	30.85	30.84	30.83	30.82	30.8	30.79	30.78	30.77	30.75	30.74	30.73	30.71	30.70	30.69	30.68	30.66	30.65	30.64	30.63
Row 4 Elev	29.43	29.42	29.40	29.39	29.38	29.37	29.35	29.34	29.33	29.32	29.3	29.29	29.28	29.27	29.25	29.24	29.23	29.21	29.2	29.19	29.18	29.16	29.15	29.14	29.13
Row 5 Elev	27.93	27.92	27.90	27.89	27.88	27.87	27.85	27.84	27.83	27.82	27.8	27.79	27.78	27.77	27.75	27.74	27.73	27.71	27.70	27.69	27.68	27.66	27.65	27.64	27.63
Row 6 Elev	26.43	26.42	26.40	26.39	26.38	26.37	26.35	26.34	26.33	26.32	26.3	26.29	26.28	26.27	26.25	26.24	26.23	26.21	26.20	26.19	26.18	26.16	26.15	26.14	26.13

Soil Nail Columns	62	63	64	65	66	67	68	69	70	71	72	73	74	75	76	77
Row 1 Elev	33.38	33.34	33.28	33.21	33.13	33.03	32.92	32.8	32.66	32.51	32.34	32.16	31.96	31.75	31.52	31.28
Row 2 Elev	32.0	31.97	31.93	31.89	31.85	31.79	31.73	31.66	31.59	31.51	31.42	31.32	-	-	-	-
Row 3 Elev	30.72	30.6	30.59	30.58	30.56	30.55	30.54	30.53	30.52	30.51	30.5	30.49	30.47	30.36	30.24	30.12
Row 4 Elev	29.22	29.1	29.09	29.08	29.06	29.05	29.04	29.03	29.02	29.01	29.00	28.98	28.98	28.97	28.96	28.95
Row 5 Elev	27.72	27.6	27.59	27.58	27.56	27.55	27.54	27.53	27.52	27.51	27.5	27.49	27.48	27.47	27.46	27.45
Row 6 Elev	26.22	26.1	26.09	26.08	26.06	26.05	26.04	26.03	26.02	26.01	26.0	25.99	25.98	25.97	25.96	25.95

Soil Nail Columns	78	79	80	81	82	83	84	85	86	87	88	89	90
Row 1 Elev	31.03	30.75	30.47	30.17	29.87	29.57	29.27	28.8	28.23	27.67	27.5	27.7	27.41
Row 2 Elev	-	-	-	-	-	-	-	-	-	-	-	-	-
Row 3 Elev	29.98	29.84	-	-	-	-	-	-	-	-	-	-	-
Row 4 Elev	28.94	28.93	28.92	28.79	28.63	28.48	28.32	-	-	-	-	-	-
Row 5 Elev	27.44	27.43	27.42	27.41	27.4	27.39	27.38	27.33	27.04	26.76	26.66	26.75	26.6
Row 6 Elev	25.94	25.93	25.92	25.91	25.9	25.89	25.88	25.83	25.86	25.85	25.83	25.81	25.79

SOIL NAIL ELEVATON AND LOCATION

Station Limits Along RWLOL	Row 1-5 Nail Lengths	Row 6 Nail Lengths
23+40 to 23+90	12 meters	11 meters
23+90 to 24+20	8 meters	5.5 meters
24+20 to 25+20	5 meters	5 meters

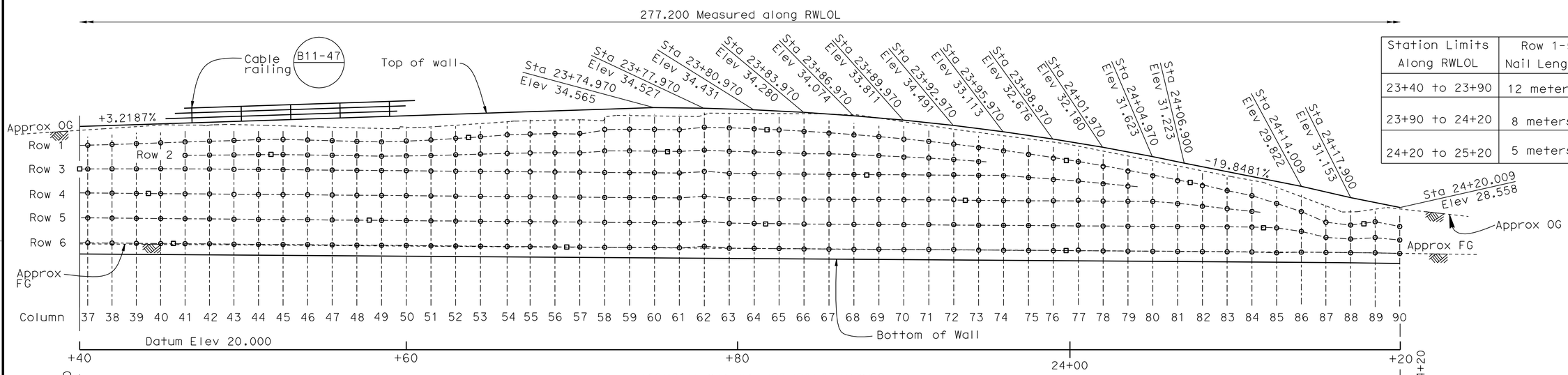

DEVELOPED ELEVATION

1:125

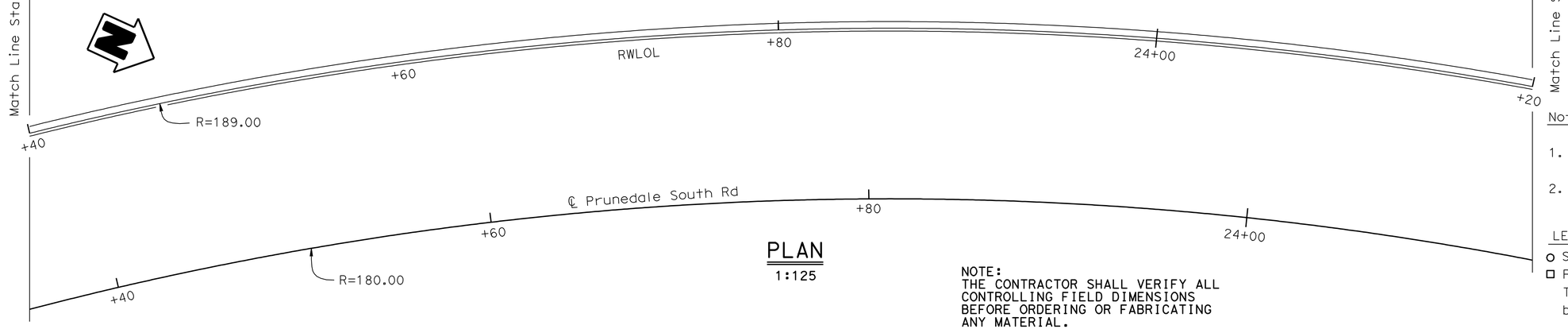

PLAN

1:125

NOTE:
THE CONTRACTOR SHALL VERIFY ALL CONTROLLING FIELD DIMENSIONS BEFORE ORDERING OR FABRICATING ANY MATERIAL.

Notes

1. Horizontal spacing of Soil Nail measured along RWLOL
2. Horizontal Soil Nail spacing at 1.5 m unless otherwise specified

LEGEND

- o Soil Nail
- □ Proof Test Soil Nail (Additional Proof Test Soil Nail Locations to be determined by the Engineer. See Special Provisions)

Caltrans Metric

	BY	CHECKED
DESIGN	R. Coria	C. Udarbe
DETAILS	G.Leung\G.Zweier	C. Udarbe
QUANTITIES	R. Coria	C. Udarbe

STATE OF CALIFORNIA
DEPARTMENT OF TRANSPORTATION

DIVISION OF ENGINEERING SERVICES
STRUCTURE DESIGN
DESIGN BRANCH 6

BRIDGE NO. 44E0014
KILOMETER POST 151.4

RETAINING WALL NO. 23
STRUCTURE PLAN NO. 2

ALL DIMENSIONS ARE IN METERS UNLESS OTHERWISE SHOWN

ORIGINAL SCALE IN MILLIMETERS FOR REDUCED PLANS 0 10 20 30 40 50 60 70 80 90 100

CU 05
EA 0161E1

DISREGARD PRINTS BEARING EARLIER REVISION DATES

REVISION DATES: 10-20-08 1-5-09 07-15-09 07-21-09 07-22-09 07-28-09 05-06-10

SHEET 3 OF 15

FILE => 44e0014-c-sp02.dgn

STRUCTURES DESIGN DETAIL SHEET (METRIC) (REV.03-17-04)

USERNAME => ttrmnguye DATE PLOTTED => 03-AUG-2010 TIME PLOTTED => 10:51

DIST	COUNTY	ROUTE	KILOMETER POST TOTAL PROJECT	SHEET No	TOTAL SHEETS
05	Mon	101	R146.8/159.7	1358	1402

Hernan Perez 05-06-10
REGISTERED CIVIL ENGINEER DATE

7-26-10
PLANS APPROVAL DATE

REGISTERED PROFESSIONAL ENGINEER HERNAN PEREZ No. 60993 Exp. 12-31-10 CIVIL STATE OF CALIFORNIA

The State of California or its officers or agents shall not be responsible for the accuracy or completeness of electronic copies of this plan sheet.

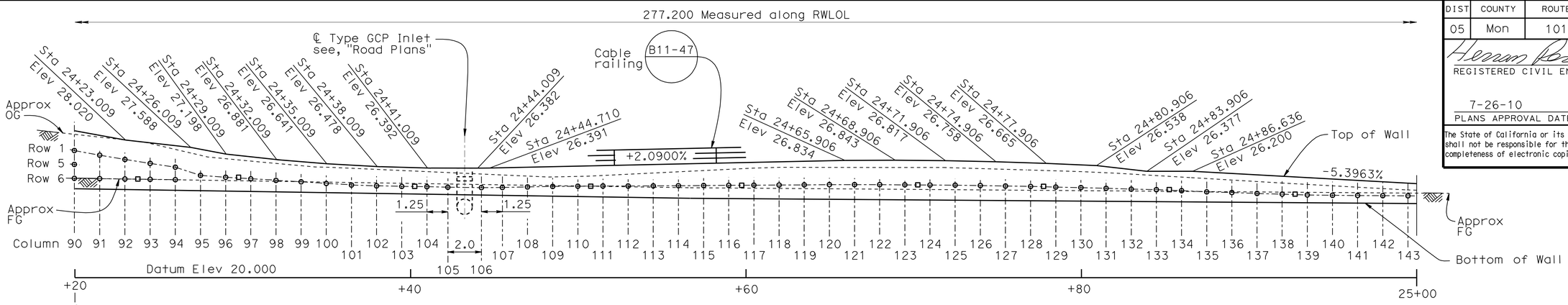

DEVELOPED ELEVATION

1:125

Notes

1. Horizontal spacing of Soil Nail measured along RWLOL
2. Horizontal Soil Nail spacing at 1.5 m unless otherwise specified

LEGEND

- ○ Soil Nail
- □ Proof Test Soil Nail (Additional Proof Test Soil Nail Locations to be determined by the Engineer. See Special Provisions)

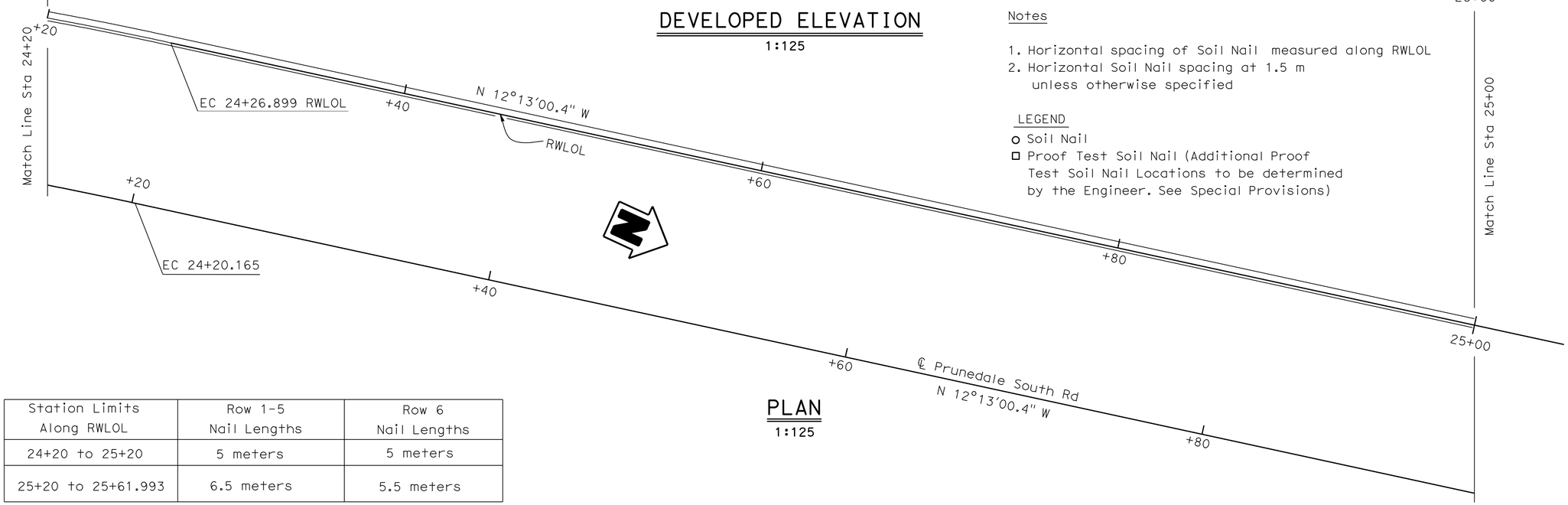

PLAN

1:125

Station Limits Along RWLOL	Row 1-5 Nail Lengths	Row 6 Nail Lengths
24+20 to 25+20	5 meters	5 meters
25+20 to 25+61.993	6.5 meters	5.5 meters

Soil Nail Columns	90	91	92	93	94	95	96	97	98	99	100	101	102	103	104	105	106	107	108	109	110	111	112	113	114	115	116	117	118	119
Row 1 Elev	27.41	26.89	26.66	26.66	26.44	25.96	25.85	25.76	25.67	25.59	25.49	25.4	25.35	25.32	25.3	25.27	25.25	25.26	25.29	25.32	25.33	25.34	25.34	25.35	25.36	25.37	25.38	26.39	25.04	25.41
Row 2 Elev	-	-	-	-	-	-	-	-	-	-	-	-	-	-	-	-	-	-	-	-	-	-	-	-	-	-	-	-	-	-
Row 3 Elev	-	-	-	-	-	-	-	-	-	-	-	-	-	-	-	-	-	-	-	-	-	-	-	-	-	-	-	-	-	-
Row 4 Elev	-	-	-	-	-	-	-	-	-	-	-	-	-	-	-	-	-	-	-	-	-	-	-	-	-	-	-	-	-	-
Row 5 Elev	26.6	-	-	-	-	-	-	-	-	-	-	-	-	-	-	-	-	-	-	-	-	-	-	-	-	-	-	-	-	-
Row 6 Elev	25.79	25.77	25.75	25.73	25.71	-	-	-	-	-	-	-	-	-	-	-	-	-	-	-	-	-	-	-	-	-	-	-	-	-

Soil Nail Columns	120	121	122	123	124	125	126	127	128	129	130	131	132	133	134	135	136	137	138	139	140	141	142	143	144
Row 1 Elev	25.42	25.42	25.42	25.41	25.4	25.39	25.37	25.34	25.32	25.28	25.25	25.21	25.16	25.13	25.07	25.0	24.96	24.91	24.87	24.82	24.80	24.79	24.78	24.77	24.75
Row 2 Elev	-	-	-	-	-	-	-	-	-	-	-	-	-	-	-	-	-	-	-	-	-	-	-	-	-
Row 3 Elev	-	-	-	-	-	-	-	-	-	-	-	-	-	-	-	-	-	-	-	-	-	-	-	-	-
Row 4 Elev	-	-	-	-	-	-	-	-	-	-	-	-	-	-	-	-	-	-	-	-	-	-	-	-	-
Row 5 Elev	-	-	-	-	-	-	-	-	-	-	-	-	-	-	-	-	-	-	-	-	-	-	-	-	-
Row 6 Elev	-	-	-	-	-	-	-	-	-	-	-	-	-	-	-	-	-	-	-	-	-	-	-	-	-

NOTE:
THE CONTRACTOR SHALL VERIFY ALL CONTROLLING FIELD DIMENSIONS BEFORE ORDERING OR FABRICATING ANY MATERIAL.

Caltrans Metric

	BY	CHECKED
DESIGN	R. Coria	C. Udarbe
DETAILS	G.Leung\G.Zweier	C. Udarbe
QUANTITIES	R. Coria	C. Udarbe

STATE OF CALIFORNIA
DEPARTMENT OF TRANSPORTATION

DIVISION OF ENGINEERING SERVICES
STRUCTURE DESIGN
DESIGN BRANCH 6

BRIDGE NO. 44E0014
KILOMETER POST 151.4

RETAINING WALL NO. 23
STRUCTURE PLAN NO. 3

ALL DIMENSIONS ARE IN METERS UNLESS OTHERWISE SHOWN

ORIGINAL SCALE IN MILLIMETERS FOR REDUCED PLANS 0 10 20 30 40 50 60 70 80 90 100

CU 05
EA 0161E1

DISREGARD PRINTS BEARING EARLIER REVISION DATES → 10-20-08 2-5-09 07-23-09 07-29-09 05-06-10

REVISION DATES

SHEET 4 OF 15

FILE => 44e0014-c-sp03.dgn

STRUCTURES DESIGN DETAIL SHEET (METRIC) (REV.03-17-04)

USERNAME => trmoguye DATE PLOTTED => 03-AUG-2010 TIME PLOTTED => 10:52

DIST	COUNTY	ROUTE	KILOMETER POST TOTAL PROJECT	SHEET No	TOTAL SHEETS
05	Mon	101	R146.8/159.7	1359	1402

Hernan Perez 05-06-10
REGISTERED CIVIL ENGINEER DATE

7-26-10
PLANS APPROVAL DATE

REGISTERED PROFESSIONAL ENGINEER HERNAN PEREZ No. 60993 Exp. 12-31-10 CIVIL STATE OF CALIFORNIA

The State of California or its officers or agents shall not be responsible for the accuracy or completeness of electronic copies of this plan sheet.

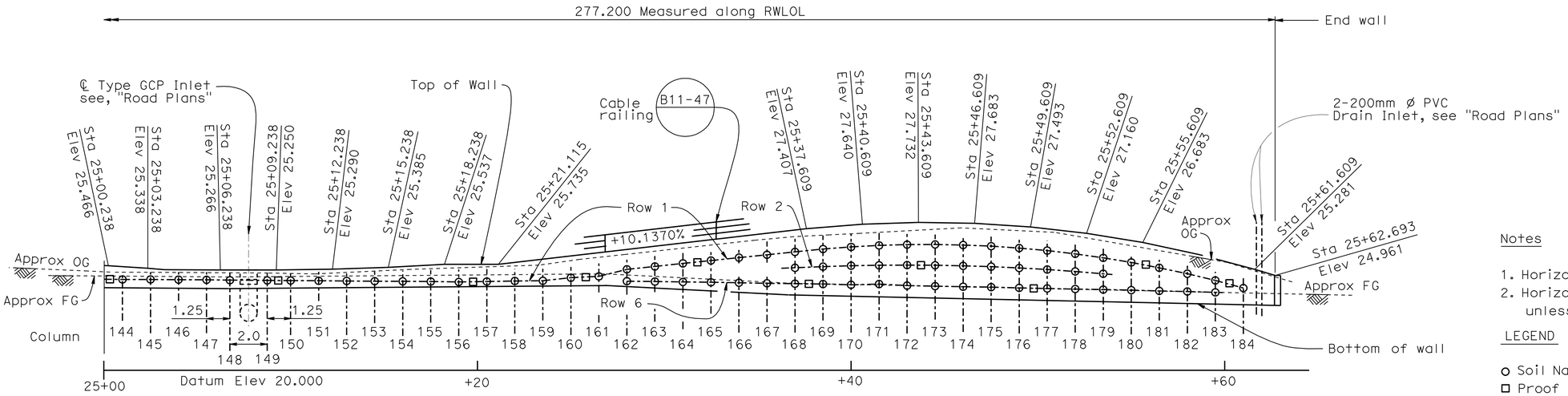

DEVELOPED ELEVATION

1:125

Notes

1. Horizontal spacing of Soil Nail measured along RWLOL
2. Horizontal Soil Nail spacing at 1.5 m unless otherwise specified

LEGEND

○ Soil Nail
□ Proof Test Soil Nail (Additional Proof Test Soil Nail Locations to be determined by the Engineer. See Special Provisions)

Station Limits Along RWLOL	Row 1-5 Nail Lengths	Row 6 Nail Lengths
22+85.5 to 23+05	8.5 meters	6.5 meters
23+05 to 23+40	10 meters	7 meters
23+40 to 23+90	12 meters	11 meters

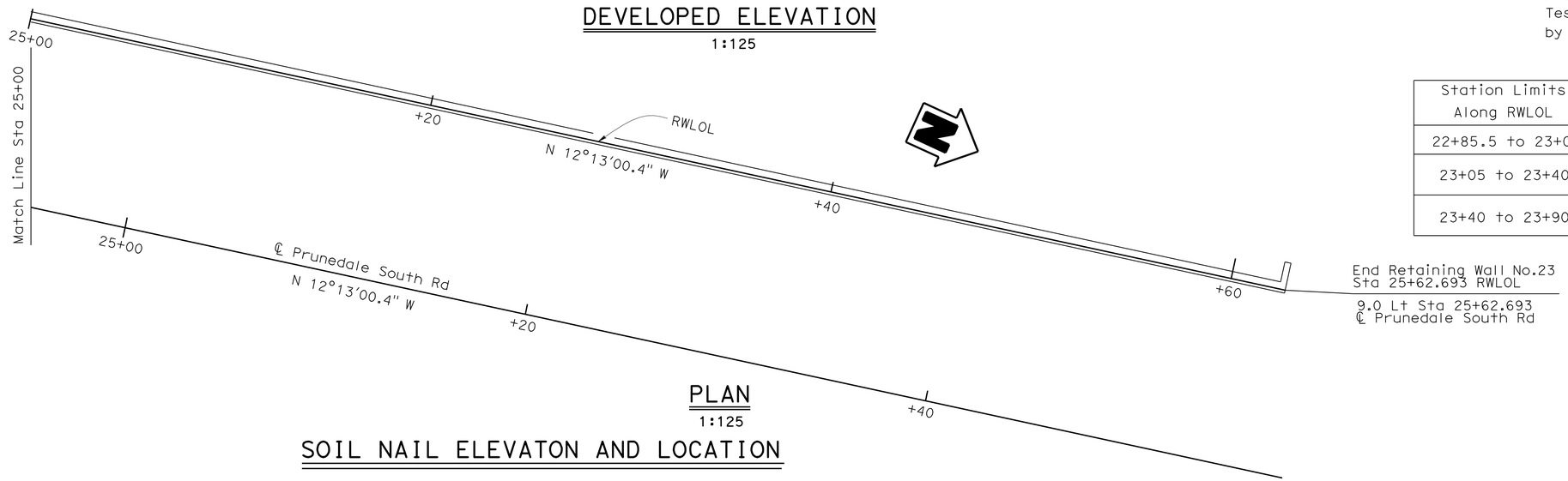

PLAN

1:125

SOIL NAIL ELEVATON AND LOCATION

Soil Nail Columns	144	145	146	147	148	149	150	151	152	153	154	155	156	157	158	159	160	161
Row 1 Elev	24.75	24.75	24.74	24.73	24.711	24.70	24.69	24.68	24.67	24.66	24.65	24.64	24.62	24.64	24.67	24.68	24.84	24.91
Row 2 Elev	-	-	-	-	-	-	-	-	-	-	-	-	-	-	-	-	-	-
Row 3 Elev	-	-	-	-	-	-	-	-	-	-	-	-	-	-	-	-	-	-
Row 4 Elev	-	-	-	-	-	-	-	-	-	-	-	-	-	-	-	-	-	-
Row 5 Elev	-	-	-	-	-	-	-	-	-	-	-	-	-	-	-	-	-	-
Row 6 Elev	-	-	-	-	-	-	-	-	-	-	-	-	-	-	-	-	-	-

Soil Nail Columns	162	163	164	165	166	167	168	169	170	171	172	173	174	175	176	177	178	179	180	181	182	183	184
Row 1 Elev	25.28	25.43	25.59	25.74	25.89	26.04	26.19	26.34	26.45	26.53	26.57	26.58	26.55	26.49	26.39	26.26	26.09	25.88	25.64	25.36	25.05	24.7	24.3
Row 2 Elev	-	-	-	-	-	-	25.36	25.42	25.47	25.49	25.5	25.49	25.46	25.42	25.35	25.27	25.17	25.05	-	-	-	-	-
Row 3 Elev	-	-	-	-	-	-	-	-	-	-	-	-	-	-	-	-	-	-	-	-	-	-	-
Row 4 Elev	-	-	-	-	-	-	-	-	-	-	-	-	-	-	-	-	-	-	-	-	-	-	-
Row 5 Elev	-	-	-	-	-	-	-	-	-	-	-	-	-	-	-	-	-	-	-	-	-	-	-
Row 6 Elev	24.66	24.64	24.62	24.6	24.58	24.55	24.53	24.51	24.47	24.51	24.43	24.4	24.37	24.35	24.31	24.28	24.25	24.22	24.19	24.15	24.12	24.08	-

NOTE:
THE CONTRACTOR SHALL VERIFY ALL CONTROLLING FIELD DIMENSIONS BEFORE ORDERING OR FABRICATING ANY MATERIAL.

Caltrans Metric

	BY	CHECKED
DESIGN	R. Coria	Chris Udarbe
DETAILS	George Zweier	Chris Udarbe
QUANTITIES	R. Coria	Chris Udarbe

STATE OF CALIFORNIA
DEPARTMENT OF TRANSPORTATION

DIVISION OF ENGINEERING SERVICES
STRUCTURE DESIGN
DESIGN BRANCH 6

BRIDGE NO. 44E0014
KILOMETER POST 151.4

RETAINING WALL NO. 23
STRUCTURE PLAN NO. 4

ALL DIMENSIONS ARE IN MILLIMETERS UNLESS OTHERWISE SHOWN

ORIGINAL SCALE IN MILLIMETERS FOR REDUCED PLANS 0 10 20 30 40 50 60 70 80 90 100

CU 05
EA 0161E1

DISREGARD PRINTS BEARING EARLIER REVISION DATES
REVISION DATES 07-26-09 07-29-09 05-06-10

SHEET 5 OF 15

FILE => 44e0014-c-sp04.dgn

STRUCTURES DESIGN DETAIL SHEET (METRIC) (REV.03-17-04)

USERNAME => trmnguye DATE PLOTTED => 03-AUG-2010 TIME PLOTTED => 10:52

DIST	COUNTY	ROUTE	KILOMETER POST TOTAL PROJECT	SHEET No	TOTAL SHEETS
05	Mon	101	R146.8/159.7	1360	1402

Hernan Perez 05-06-10
REGISTERED CIVIL ENGINEER DATE

7-26-10
PLANS APPROVAL DATE

REGISTERED PROFESSIONAL ENGINEER HERNAN PEREZ No. 60993 Exp. 12-31-10 CIVIL STATE OF CALIFORNIA

The State of California or its officers or agents shall not be responsible for the accuracy or completeness of electronic copies of this plan sheet.

Caltrans Metric

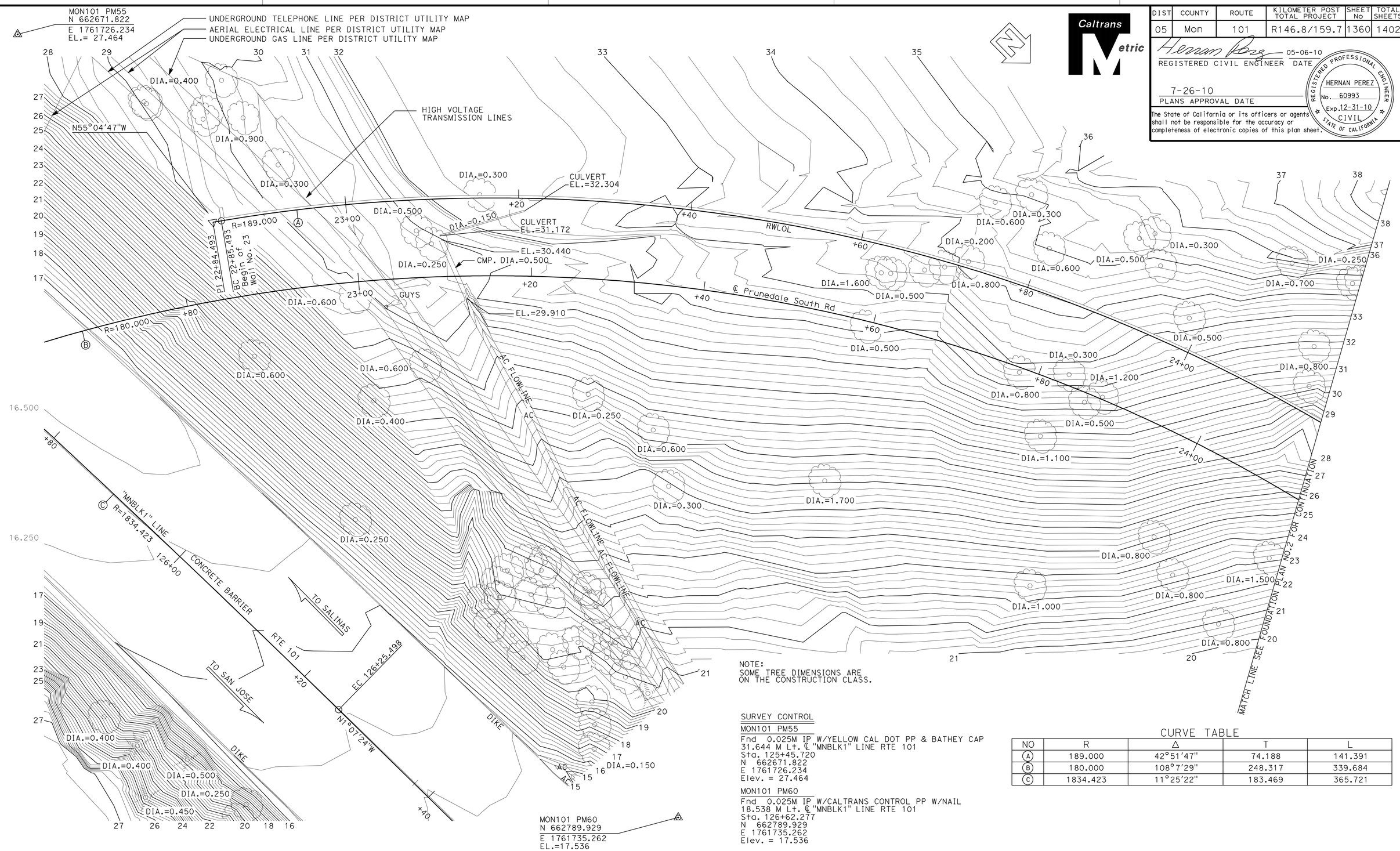

NOTE:
SOME TREE DIMENSIONS ARE ON THE CONSTRUCTION CLASS.

SURVEY CONTROL

MON101 PM55

Fnd 0.025M IP W/YELLOW CAL DOT PP & BATHEY CAP
31.644 M Lt. ℄ "MNBLK1" LINE RTE 101
Sta. 125+45.720
N 662671.822
E 1761726.234
Elev. = 27.464

MON101 PM60

Fnd 0.025M IP W/CALTRANS CONTROL PP W/NAIL
18.538 M Lt. ℄ "MNBLK1" LINE RTE 101
Sta. 126+62.277
N 662789.929
E 1761735.262
Elev. = 17.536

CURVE TABLE

NO	R	Δ	T	L
A	189.000	42°51'47"	74.188	141.391
B	180.000	108°7'29"	248.317	339.684
C	1834.423	11°25'22"	183.469	365.721

PRELIMINARY INVESTIGATION SECTION

SCALE	VERT. DATUM NGVD29	PHOTOGRAMMETRY AS OF:		
	HORZ. DATUM NAD83(1991.5)	SURVEYED	BY DISTRICT	CHECKED BY T.GILLET 07/2006
ALIGNMENT TIES DISTR.TRAVERSE SHEET		DRAFTED	BY T.MARCHENKO 07/2006	CHECKED BY Y.ZHANG 07/2006

DESIGN	BY R. Coria	CHECKED C. Udarbe
DETAILS	BY G. Leung	CHECKED C. Udarbe
QUANTITIES	BY R. Coria	CHECKED C. Udarbe

STATE OF CALIFORNIA
DEPARTMENT OF TRANSPORTATION

DIVISION OF ENGINEERING SERVICES
STRUCTURE DESIGN
DESIGN BRANCH 6

BRIDGE NO. 44E0014
KILOMETER POST 151.4

RETAINING WALL NO. 23
FOUNDATION PLAN NO.1

STRUCTURES FOUNDATION PLAN SHEET (METRIC) (REV.10-27-05)

ORIGINAL SCALE IN MILLIMETERS FOR REDUCED PLANS 0 10 20 30 40 50 60 70 80 90 100

CU 05
EA 0161E1

DISREGARD PRINTS BEARING EARLIER REVISION DATES

REVISION DATES (PRELIMINARY STAGE ONLY) 3/13/08 1/8/09 07-30-09 05-06-10

SHEET 6 OF 15

FILE => 44e0014-e-fp101.dgn

USERNAME => trmguye DATE PLOTTED => 03-AUG-2010 TIME PLOTTED => 10:52

DIST	COUNTY	ROUTE	KILOMETER POST TOTAL PROJECT	SHEET No	TOTAL SHEETS
05	Mon	101	R146.8/159.7	1361	1402

Caltrans Metric

Hernan Perez 05-06-10
REGISTERED CIVIL ENGINEER DATE

7-26-10
PLANS APPROVAL DATE

REGISTERED PROFESSIONAL ENGINEER HERNAN PEREZ No. 60993 Exp. 12-31-10 CIVIL STATE OF CALIFORNIA

The State of California or its officers or agents shall not be responsible for the accuracy or completeness of electronic copies of this plan sheet.

CURVE TABLE

NO	R	Δ	T	L
(D)	260.000	21°30'17"	49.374	97.586

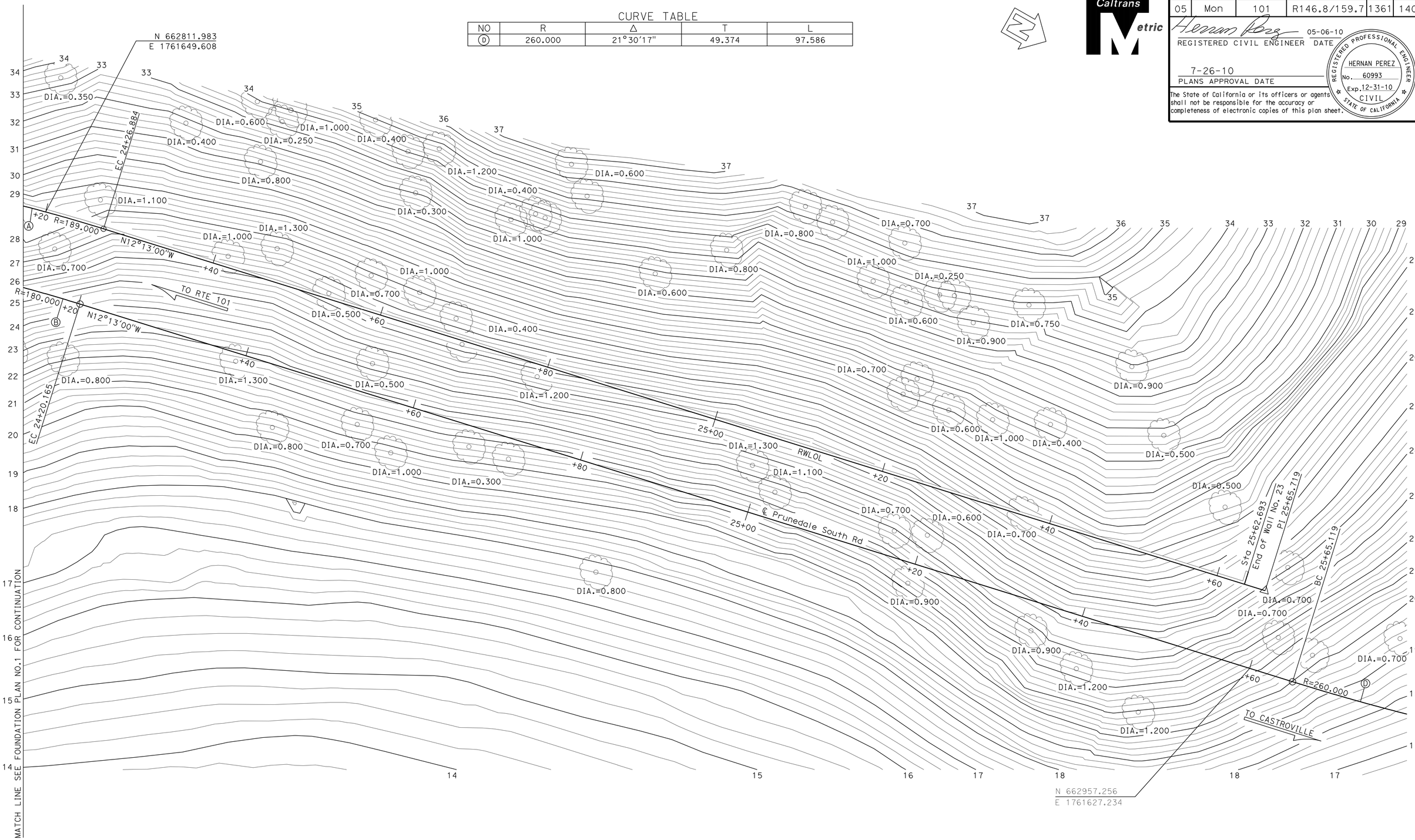

PRELIMINARY INVESTIGATION SECTION							
SCALE 1:200	VERT. DATUM NGVD29(1959)	PHOTOGRAMMETRY AS OF:					
	HORZ. DATUM NAD83(1991.5)	SURVEYED	BY DISTRICT	CHECKED	BY T.GILLET 07/2006		
ALIGNMENT TIES DISTR.TRAVERSE SHEET		DRAFTED	BY T.MARCHENKO 07/2006	CHECKED	BY Y.ZHANG 07/2006		

	BY	CHECKED
DESIGN	R. Coria	C. Udarbe
DETAILS	G. Leung	C. Udarbe
QUANTITIES	R. Coria	C. Udarbe

STATE OF CALIFORNIA
DEPARTMENT OF TRANSPORTATION

DIVISION OF ENGINEERING SERVICES
STRUCTURE DESIGN
DESIGN BRANCH 6

BRIDGE NO. 44E0014
KILOMETER POST 151.4

RETAINING WALL NO. 23
FOUNDATION PLAN NO.2

STRUCTURES FOUNDATION PLAN SHEET (METRIC) (REV.10-27-05)

ORIGINAL SCALE IN MILLIMETERS FOR REDUCED PLANS 0 10 20 30 40 50 60 70 80 90 100

CU 05
EA 0161E1

DISREGARD PRINTS BEARING EARLIER REVISION DATES →

REVISION DATES (PRELIMINARY STAGE ONLY): 3/13/08 1-05-09 07-30-09 05-06-10

SHEET 7 OF 15

FILE => 44e0014-e-fp102.dgn

USERNAME => frmguye DATE PLOTTED => 03-AUG-2010 TIME PLOTTED => 10:52

DIST	COUNTY	ROUTE	KILOMETER POST TOTAL PROJECT	SHEET No	TOTAL SHEETS
05	Mon	101	R146.8/159.7	1362	1402

Hernan Perez 05-06-10
REGISTERED CIVIL ENGINEER DATE

7-26-10
PLANS APPROVAL DATE

REGISTERED PROFESSIONAL ENGINEER HERNAN PEREZ No. 60993 Exp. 12-31-10 CIVIL STATE OF CALIFORNIA

The State of California or its officers or agents shall not be responsible for the accuracy or completeness of electronic copies of this plan sheet.

GENERAL NOTES

DESIGN: BRIDGE DESIGN SPECIFICATIONS - APRIL 2000
(1996 AASHTO with Interims and Revisions by CALTRANS)

Federal Highway Administration Publication, Manual for Design and Construction Monitoring of Soil Nail Walls, Publication No. FHWA-SA-96-069

SOIL PARAMETERS: (For determination of design lateral earth pressure on wall)

Unit weight of soil (γ)= 18.8 kN / m^3

Soil angle of internal friction (ϕ)= 34 deg.

Cohesion (C) = 0 kpa

REINFORCED CONCRETE/SHOTCRETE: (Working Stress Design)

fs = 166 MPa

fc = 11.2 MPa

n = 8

Nail Grout: f'_c = 21 MPa

Min Shotcrete : f'_c = 28 MPa

STRUCTURAL STEEL: (Working Stress Design)

ASTM Designation: A709/A709M, Grade 520 MPa

fy = 248 MPa (Yield strength of steel)

fs = 136 MPa (Allowable stress in steel)

SOIL NAILS: (Epoxy Coated)

ASTM Designation: A615, Grade 520 MPa

fy = 414 MPa (Yield strength of steel)

Qd = Design Pullout Resistance = 14 kN per m

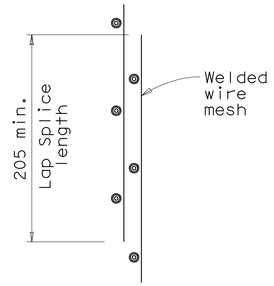

LAP SPLICE DETAIL

NO SCALE

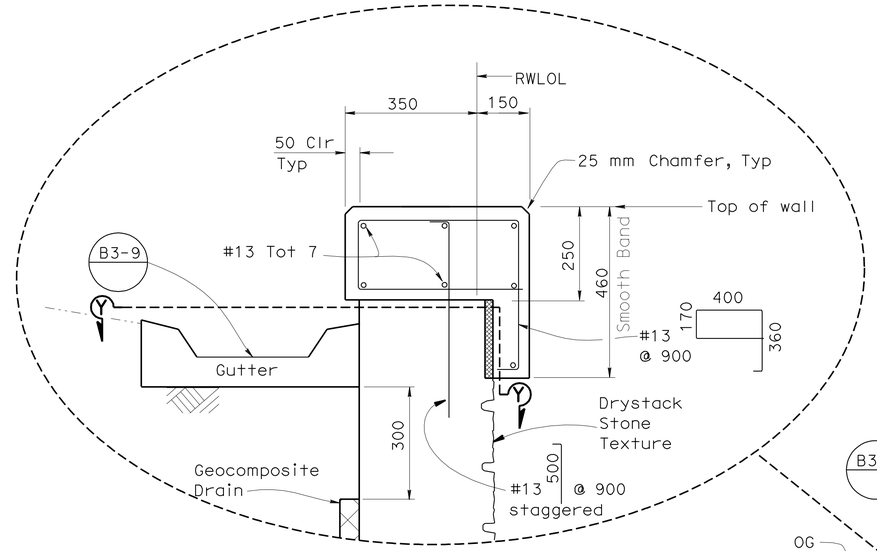

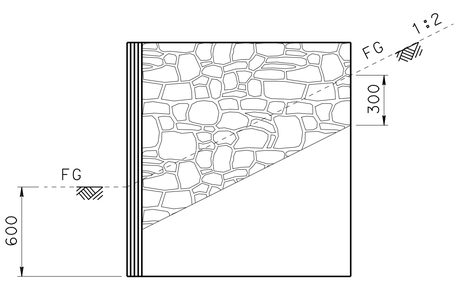

SECTION X-X

1:20

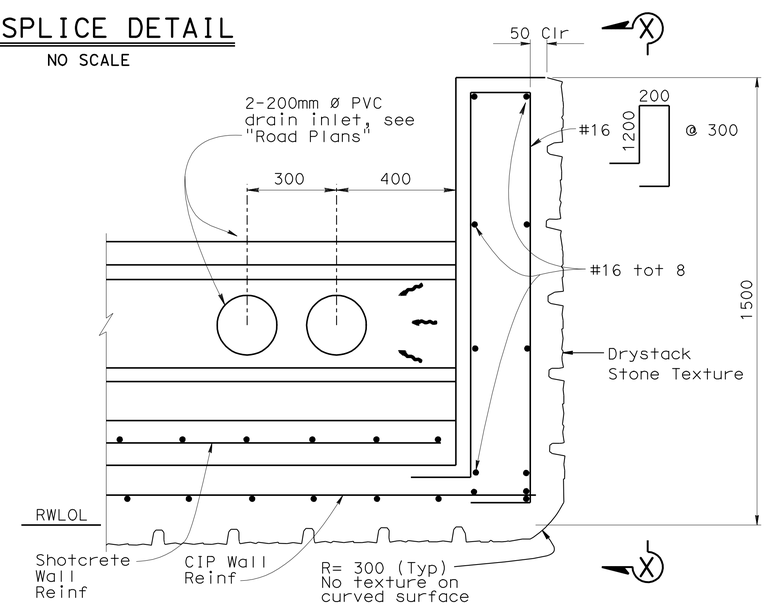

SECTION Y-Y

END SOIL NAIL WALL DETAIL

1:10

B3-9 (Begin wall similar)

NOTES

1. No PVC drain inlet at begin wall
2. For architectural treatment details, see "Architectural Treatment" sheet

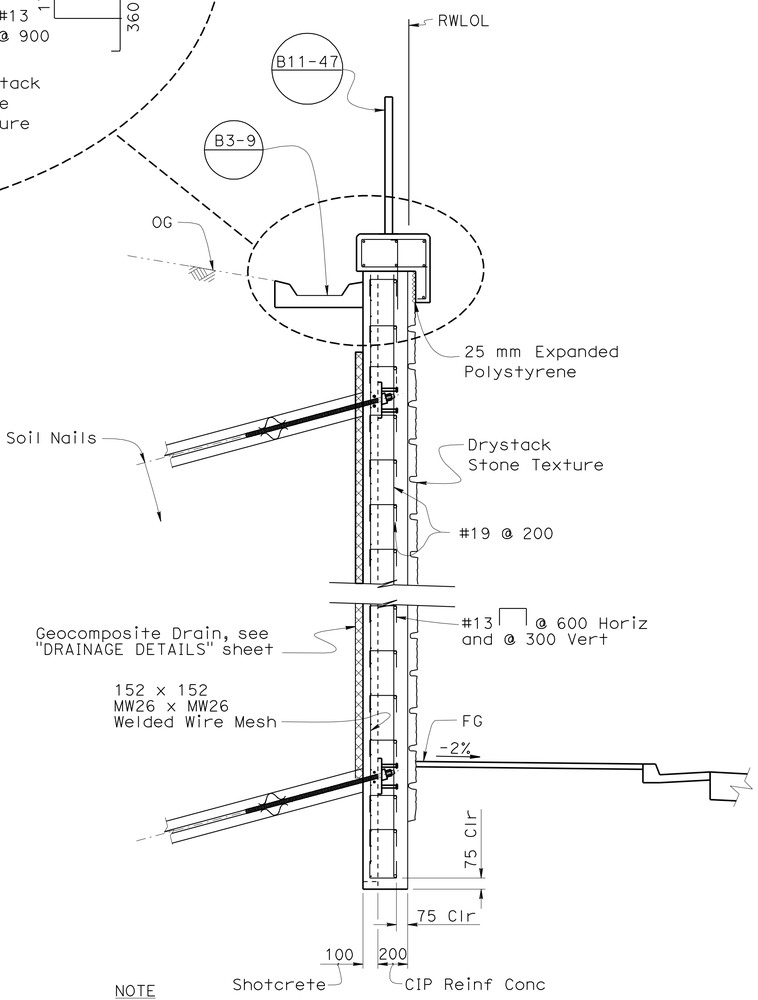

NOTE

For "SOIL NAIL ASSEMBLY DETAIL", see "RETAINING WALL DETAILS NO. 3" sheet.

SECTION A-A

1:20

NOTE:
THE CONTRACTOR SHALL VERIFY ALL CONTROLLING FIELD DIMENSIONS BEFORE ORDERING OR FABRICATING ANY MATERIAL.

	BY	CHECKED
DESIGN	R. Coria	C. Udarbe
DETAILS	G. Leung\ G. Zweier	C. Udarbe
QUANTITIES	R. Coria	C. Udarbe

STATE OF CALIFORNIA
DEPARTMENT OF TRANSPORTATION

DIVISION OF ENGINEERING SERVICES
STRUCTURE DESIGN
DESIGN BRANCH 6

BRIDGE NO. 44E0014
KILOMETER POST 151.4

RETAINING WALL NO. 23
RETAINING WALL DETAILS NO. 1

ALL DIMENSIONS ARE IN MILLIMETERS UNLESS OTHERWISE SHOWN

ORIGINAL SCALE IN MILLIMETERS FOR REDUCED PLANS 0 10 20 30 40 50 60 70 80 90 100

CU 05
EA 0161E1

DISREGARD PRINTS BEARING EARLIER REVISION DATES

REVISION DATES: 3/13/08 1/8/09 07-08-09 07-29-09 01-30-09 05-06-10

SHEET 8 OF 15

FILE => 44e0014-g-rwdt01.dgn

STRUCTURES DESIGN DETAIL SHEET (METRIC) (REV.03-17-04)

USERNAME => trmnguye DATE PLOTTED => 03-AUG-2010 TIME PLOTTED => 10:53

DIST	COUNTY	ROUTE	KILOMETER POST TOTAL PROJECT	SHEET No	TOTAL SHEETS
05	Mon	101	R146.8/159.7	1363	1402

Hernan Perez 05-06-10
REGISTERED CIVIL ENGINEER DATE

7-26-10
PLANS APPROVAL DATE

REGISTERED PROFESSIONAL ENGINEER HERNAN PEREZ No. 60993 Exp. 12-31-10 CIVIL STATE OF CALIFORNIA

The State of California or its officers or agents shall not be responsible for the accuracy or completeness of electronic copies of this plan sheet.

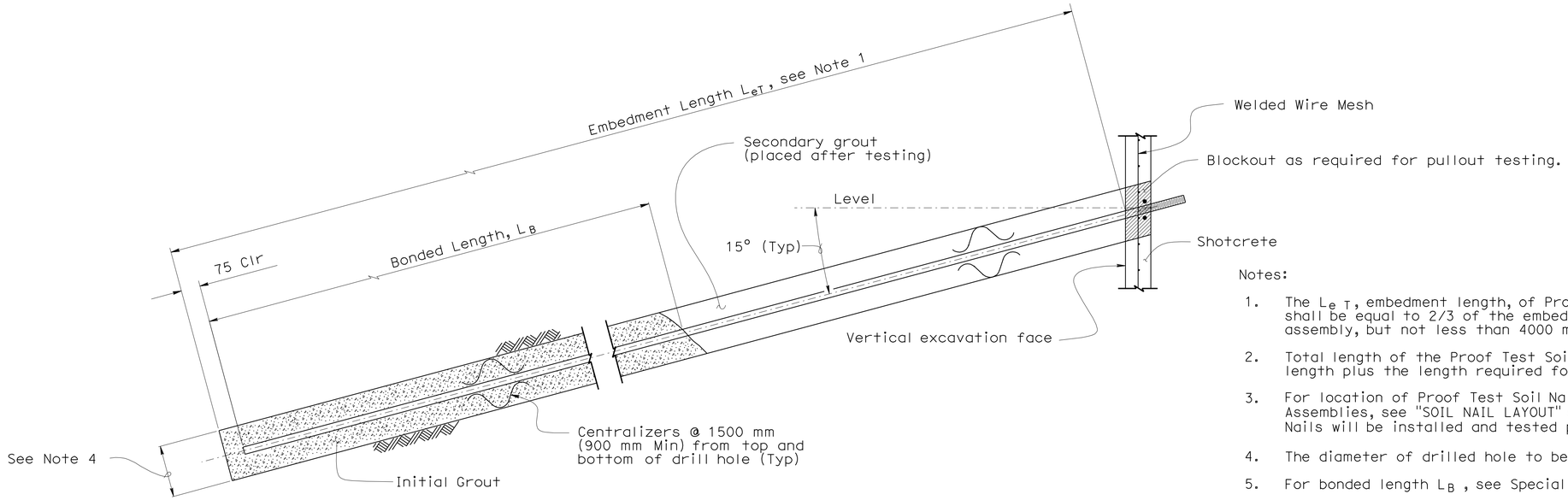

Notes:

1. The L_{eT}, embedment length, of Proof Test Nails and Verification Test Nails shall be equal to 2/3 of the embedment length, L_e of adjacent soil nail assembly, but not less than 4000 mm.
2. Total length of the Proof Test Soil Nail Assembly equals to the embedment length plus the length required for jacking equipment.
3. For location of Proof Test Soil Nail Assemblies and Verification Test Soil Nail Assemblies, see "SOIL NAIL LAYOUT" sheets. Additional Proof Test Soil Nails will be installed and tested per Special Provisions.
4. The diameter of drilled hole to be determined by Contractor.
5. For bonded length L_B, see Special Provisions.
6. Architectural texture not shown, see "ARCHITECTURAL TREATMENT" sheet.
7. Not all reinforcement shown, see "RETAINING WALL DETAILS NO. 1" sheet.

PROOF TEST SOIL NAIL ASSEMBLY

NO SCALE

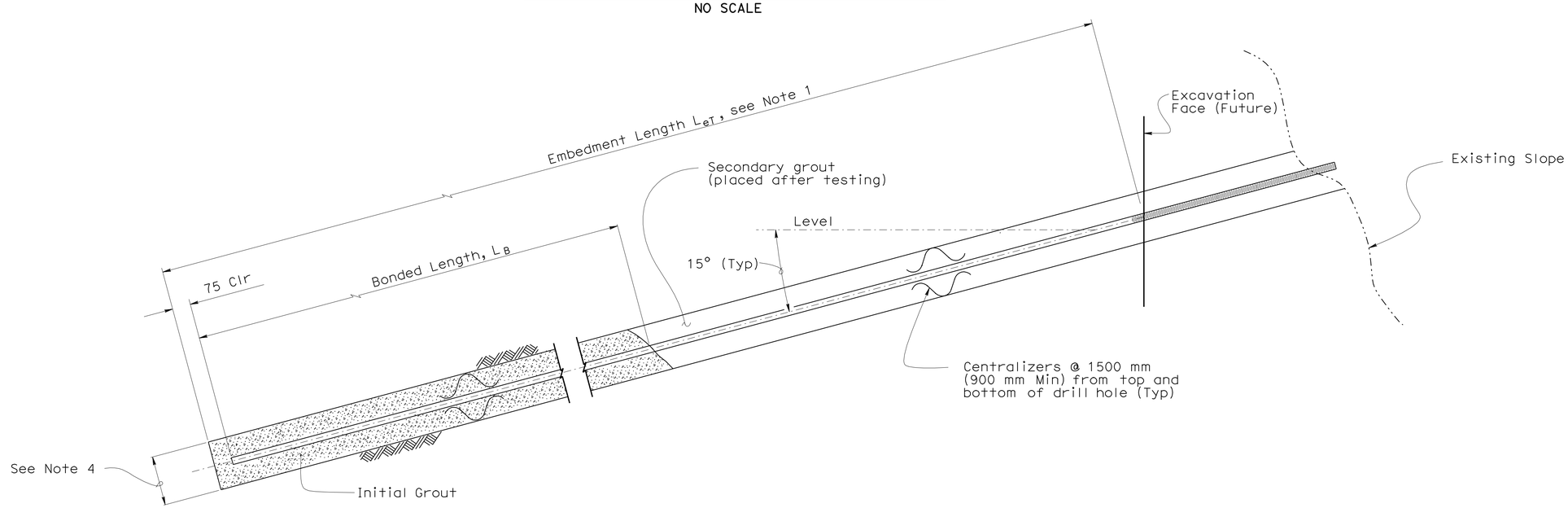

NOTE:
THE CONTRACTOR SHALL VERIFY ALL CONTROLLING FIELD DIMENSIONS BEFORE ORDERING OR FABRICATING ANY MATERIAL.

VERIFICATION TEST SOIL NAIL ASSEMBLY

NO SCALE

Caltrans Metric

	BY	CHECKED
DESIGN	R. Coria	C. Udarbe
DETAILS	G. Leung	C. Udarbe
QUANTITIES	R. Coria	C. Udarbe

STATE OF CALIFORNIA
DEPARTMENT OF TRANSPORTATION

DIVISION OF ENGINEERING SERVICES
STRUCTURE DESIGN
DESIGN BRANCH 6

BRIDGE NO. 44E0014
KILOMETER POST 151.4

RETAINING WALL NO. 23
RETAINING WALL DETAILS NO. 2

ALL DIMENSIONS ARE IN MILLIMETERS UNLESS OTHERWISE SHOWN

ORIGINAL SCALE IN MILLIMETERS FOR REDUCED PLANS 0 10 20 30 40 50 60 70 80 90 100

CU 05
EA 0161E1

DISREGARD PRINTS BEARING EARLIER REVISION DATES

REVISION DATES: 3/13/08 2/5/09 07-29-09 05-06-10

SHEET 9 OF 15

FILE => 44e0014-g-rwdt2.dgn

STRUCTURES DESIGN DETAIL SHEET (METRIC) (REV.03-17-04)

USERNAME => trmnguye DATE PLOTTED => 03-AUG-2010 TIME PLOTTED => 10:53

DIST	COUNTY	ROUTE	KILOMETER POST TOTAL PROJECT	SHEET No	TOTAL SHEETS
05	Mon	101	R146.8/159.7	1364	1402

REGISTERED CIVIL ENGINEER 05-06-10 DATE

7-26-10
PLANS APPROVAL DATE

REGISTERED PROFESSIONAL ENGINEER Hernan Perez No. 60993 Exp. 12-31-10 CIVIL STATE OF CALIFORNIA

The State of California or its officers or agents shall not be responsible for the accuracy or completeness of electronic copies of this plan sheet.

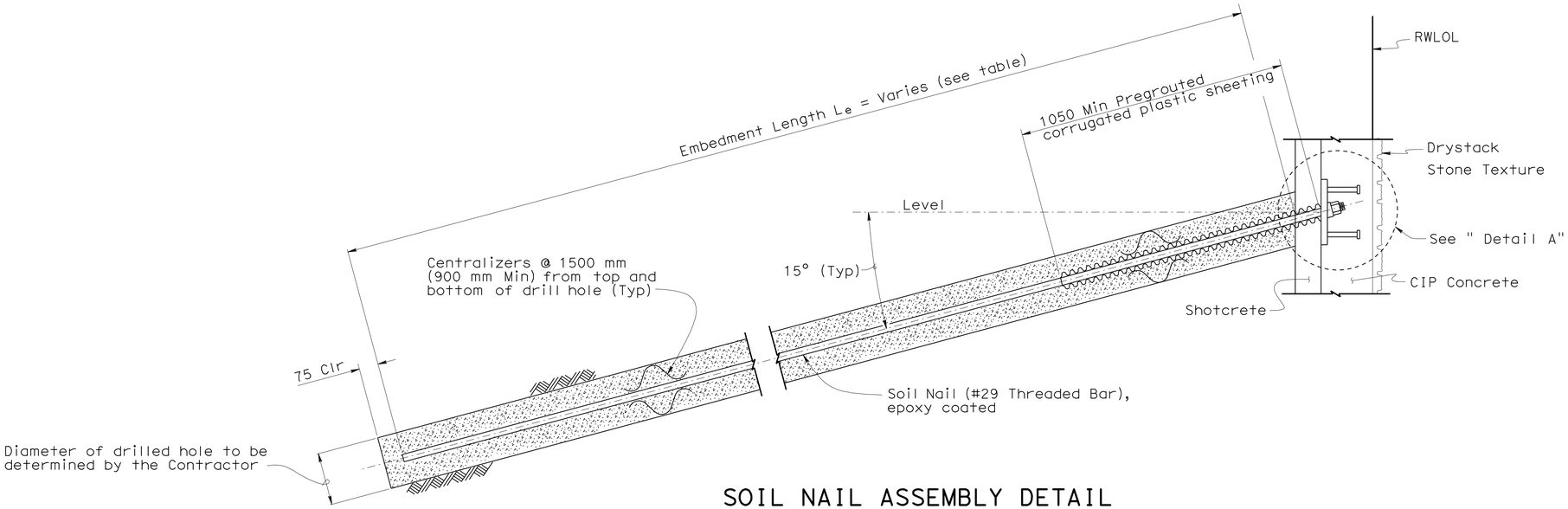

SOIL NAIL ASSEMBLY DETAIL

1:10

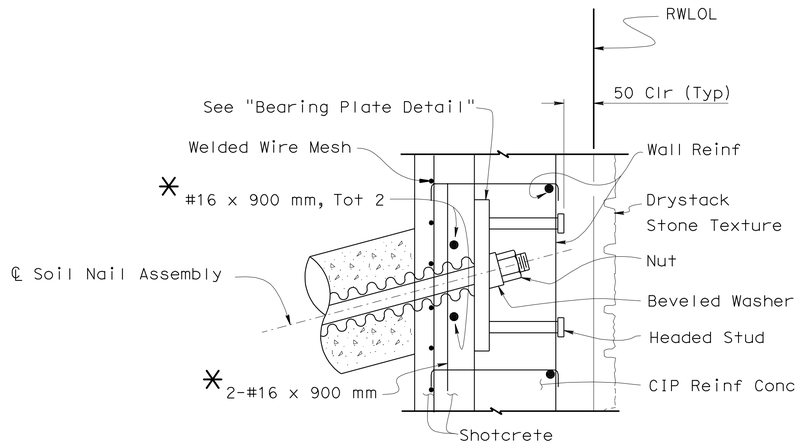

DETAIL A

1:5

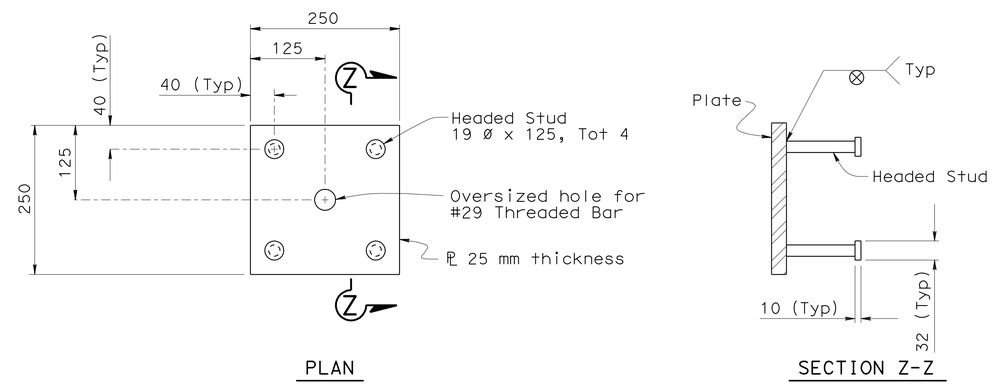

PLAN

SECTION Z-Z

BEARING PLATE DETAIL

1:5

Notes:

Other reinforcement not shown for clarity.

* - Bars to be centered about Soil Nail Assembly

For Wall Expansion Joints detail, see BO-3 of Standard Plan Dated July 2004.

NOTE:
THE CONTRACTOR SHALL VERIFY ALL CONTROLLING FIELD DIMENSIONS BEFORE ORDERING OR FABRICATING ANY MATERIAL.

Caltrans Metric

	BY	CHECKED
DESIGN	R. Coria	C. Udarbe
DETAILS	G. Leung	C. Udarbe
QUANTITIES	R. Coria	C. Udarbe

STATE OF CALIFORNIA
DEPARTMENT OF TRANSPORTATION

DIVISION OF ENGINEERING SERVICES
STRUCTURE DESIGN
DESIGN BRANCH 6

BRIDGE NO. 44E0014
KILOMETER POST 151.4

RETAINING WALL NO. 23
RETAINING WALL DETAILS NO. 3

ALL DIMENSIONS ARE IN MILLIMETERS UNLESS OTHERWISE SHOWN

ORIGINAL SCALE IN MILLIMETERS FOR REDUCED PLANS 0 10 20 30 40 50 60 70 80 90 100

CU 05
EA 0161E1

DISREGARD PRINTS BEARING EARLIER REVISION DATES

REVISION DATES: 3/13/08 2/5/09 07-28-09 07-30-09 05-06-10

SHEET 10 OF 15

FILE => 44e0014-g-rwdt3.dgn

STRUCTURES DESIGN DETAIL SHEET (METRIC) (REV.03-17-04)

USERNAME => hrmnguye DATE PLOTTED => 03-AUG-2010 TIME PLOTTED => 10:53

DIST	COUNTY	ROUTE	KILOMETER POST TOTAL PROJECT	SHEET No	TOTAL SHEETS
05	Mon	101	R146.8/159.7	1365	1402

REGISTERED CIVIL ENGINEER — DATE 05-06-10

7-26-10
PLANS APPROVAL DATE

REGISTERED PROFESSIONAL ENGINEER — HERNAN PEREZ — No. 60993 — Exp. 12-31-10 — CIVIL — STATE OF CALIFORNIA

The State of California or its officers or agents shall not be responsible for the accuracy or completeness of electronic copies of this plan sheet.

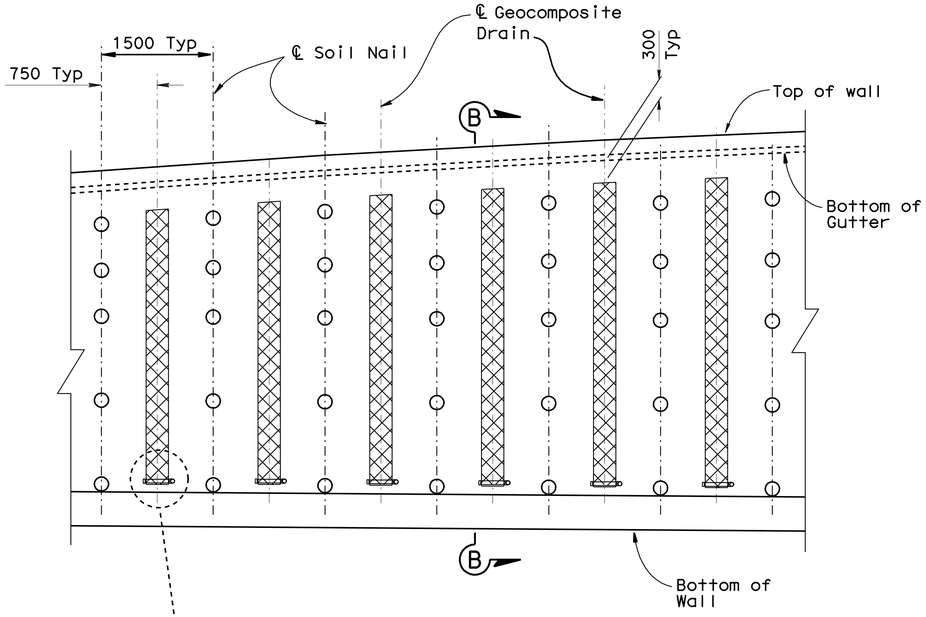

SOIL NAIL WALL - ELEVATION

1:40

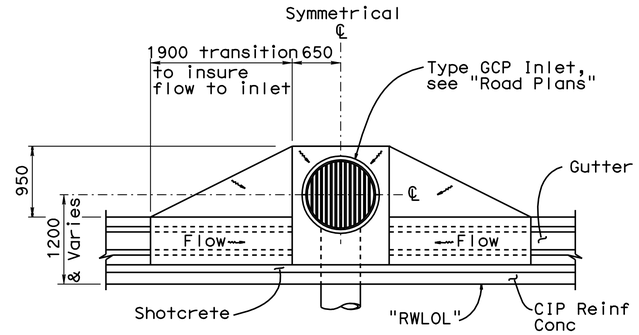

INLET APRON

1:40

ROADWAY EXCAVATION (SEE ROAD PLANS)

STRUCTURE EXCAVATION (SOIL NAIL WALL)

STRUCTURE BACKFILL (SOIL NAIL WALL)

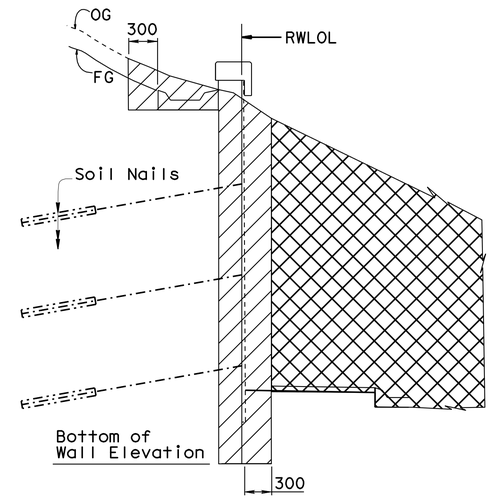

EXCAVATION LIMITS

No Scale

Note:

Subsequent lift excavation shall not be started until previous soil nail anchors are locked off.

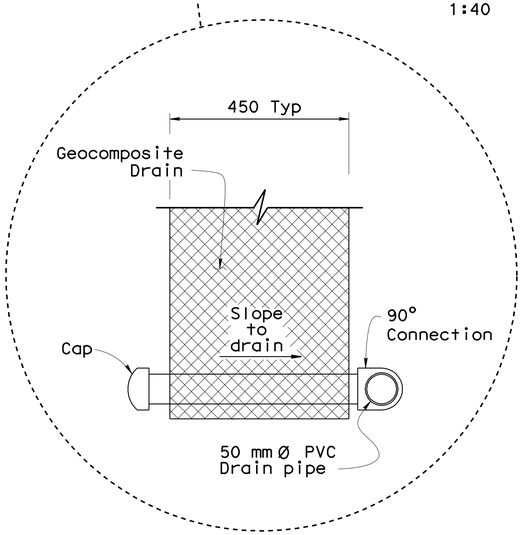

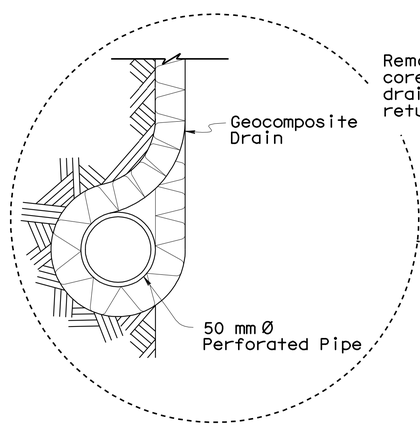

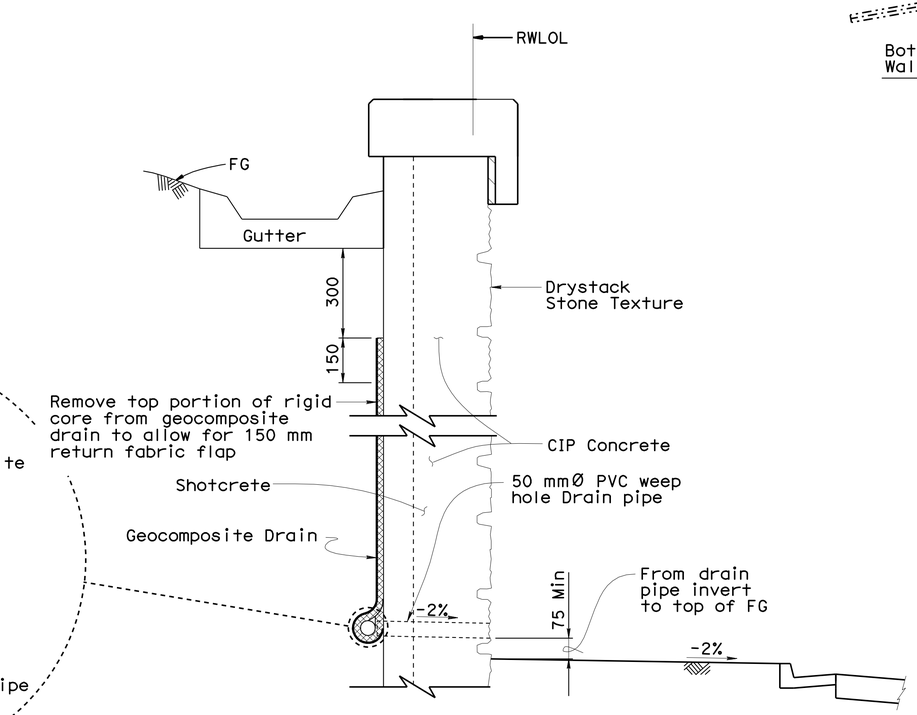

SECTION B-B

1:10

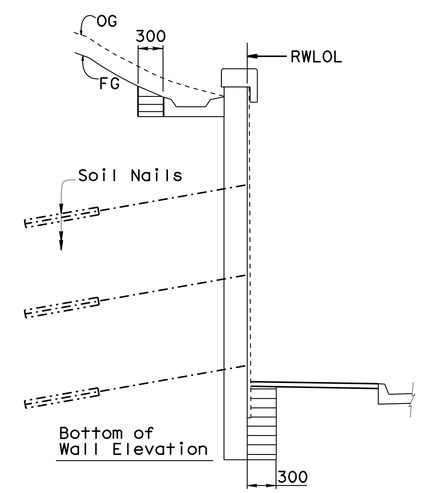

BACKFILL LIMITS

No Scale

NOTE:
THE CONTRACTOR SHALL VERIFY ALL CONTROLLING FIELD DIMENSIONS BEFORE ORDERING OR FABRICATING ANY MATERIAL.

Caltrans Metric

	BY	CHECKED
DESIGN	R. Coria	C. Udarbe
DETAILS	G. Leung	C. Udarbe
QUANTITIES	R. Coria	C. Udarbe

STATE OF CALIFORNIA
DEPARTMENT OF TRANSPORTATION

DIVISION OF ENGINEERING SERVICES
STRUCTURE DESIGN
DESIGN BRANCH 6

BRIDGE NO. 44E0014
KILOMETER POST 151.4

RETAINING WALL NO. 23
DRAINAGE DETAILS

ALL DIMENSIONS ARE IN MILLIMETERS UNLESS OTHERWISE SHOWN

ORIGINAL SCALE IN MILLIMETERS FOR REDUCED PLANS 0 10 20 30 40 50 60 70 80 90 100

CU 05
EA 0161E1

DISREGARD PRINTS BEARING EARLIER REVISION DATES

REVISION DATES: ~~3/18/08~~ ~~1/5/09~~ ~~07-30-09~~ 05-06-10

SHEET 11 OF 15

FILE => 44e0014-r-ddet.dgn

STRUCTURES DESIGN DETAIL SHEET (METRIC) (REV.03-17-04)

USERNAME => ttrmmguye DATE PLOTTED => 03-AUG-2010 TIME PLOTTED => 10:53

DIST	COUNTY	ROUTE	KILOMETER POST TOTAL PROJECT	SHEET No	TOTAL SHEETS
05	Mon	101	R146.8/159.7	1366	1402

Hernan Perez 05-06-10
REGISTERED CIVIL ENGINEER DATE

7-26-10
PLANS APPROVAL DATE

REGISTERED PROFESSIONAL ENGINEER HERNAN PEREZ No. 60993 Exp. 12-31-10 CIVIL STATE OF CALIFORNIA

The State of California or its officers or agents shall not be responsible for the accuracy or completeness of electronic copies of this plan sheet.

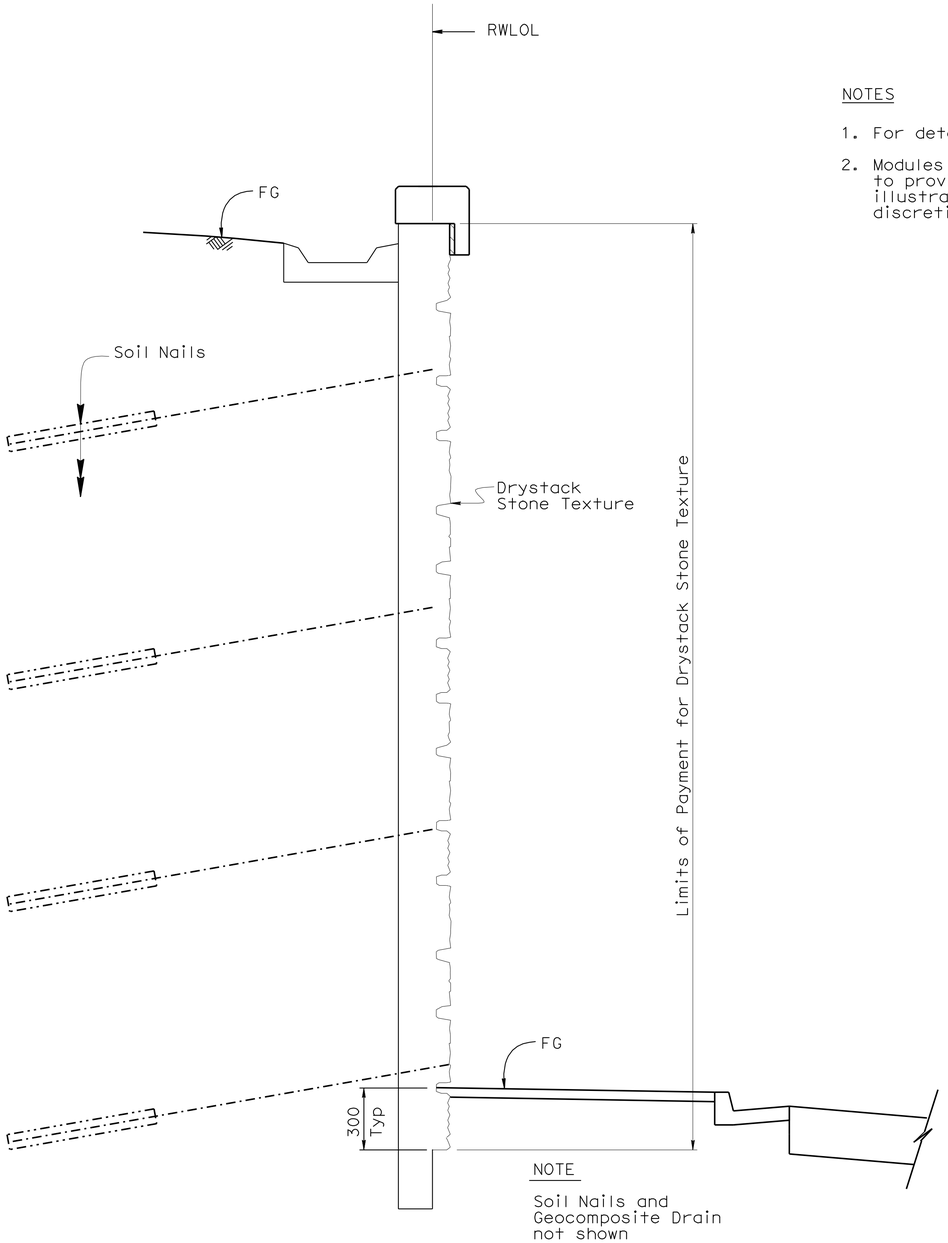

TYPICAL SECTION

No Scale

NOTES

1. For details and elevations not shown see "STRUCTURE PLAN" sheets.
2. Modules shall be utilized in random order throughout wall face to provide natural Drystack Stone texture. Sample elevation illustrates possible Random Layout. Actual Layout is at contractor's discretion provided that no two adjacent Modules are identical.

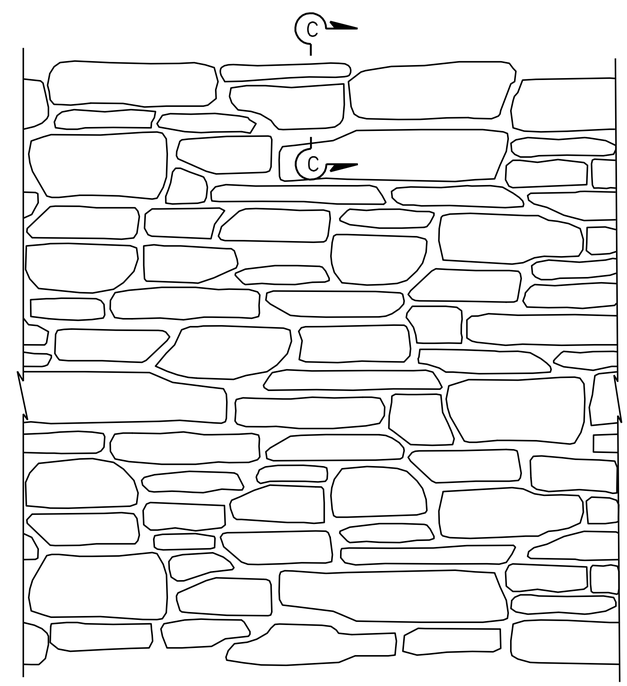

SAMPLE ELEVATION

No Scale

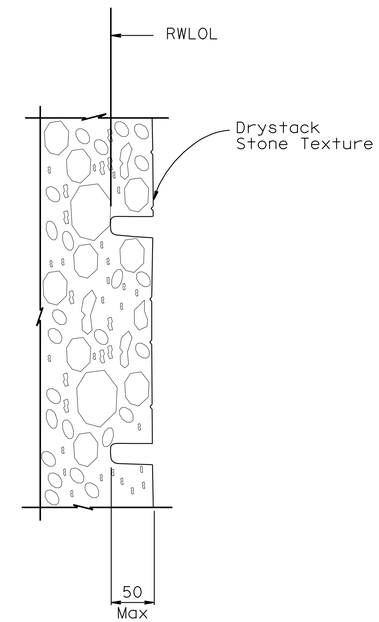

SECTION C-C

No Scale

NOTE:
THE CONTRACTOR SHALL VERIFY ALL CONTROLLING FIELD DIMENSIONS BEFORE ORDERING OR FABRICATING ANY MATERIAL.

Caltrans Metric

	BY	CHECKED
DESIGN	R. Coria	C. Udarbe
DETAILS	G. Leung	C. Udarbe
QUANTITIES	R. Coria	C. Udarbe

STATE OF CALIFORNIA
DEPARTMENT OF TRANSPORTATION

DIVISION OF ENGINEERING SERVICES
STRUCTURE DESIGN
DESIGN BRANCH 6

BRIDGE NO. 44E0014
KILOMETER POST 151.4

RETAINING WALL NO. 23
ARCHITECTURAL TREATMENT

ALL DIMENSIONS ARE IN MILLIMETERS UNLESS OTHERWISE SHOWN

ORIGINAL SCALE IN MILLIMETERS FOR REDUCED PLANS 0 10 20 30 40 50 60 70 80 90 100

CU 05
EA 0161E1

DISREGARD PRINTS BEARING EARLIER REVISION DATES

REVISION DATES: 3-18-08 1-15-09 01-30-09 12-17-09 05-06-10

SHEET 12 OF 15

FILE => 44e0014-u-archtrt.dgn

STRUCTURES DESIGN DETAIL SHEET (METRIC) (REV.03-17-04)

USERNAME => trmrguye DATE PLOTTED => 03-AUG-2010 TIME PLOTTED => 10:53

DIST	COUNTY	ROUTE	KILOMETER POST TOTAL PROJECT	SHEET No	TOTAL SHEETS
05	Mon	101	R146.8/159.7	1367	1402

REGISTERED CIVIL ENGINEER 6-08-09

7-26-10
PLANS APPROVAL DATE

REGISTERED PROFESSIONAL ENGINEER Dan Appelbaum No. C50001 Exp. 06-30-11 CIVIL STATE OF CALIFORNIA

The State of California or its officers or agents shall not be responsible for the accuracy or completeness of electronic copies of this plan sheet.

BENCH MARK

PM 94.04 Elev. 27.464 m (NGVD29)
0.025m IP w/yellow cal dot pp & bathey cap, stamped 94.04, above big cut on lt, 45.72 m bk of highest part of cut, 7.62 m bk of jp #196, 5.18 m inside r/w fc, 3.05 m outside top of cut, down 0.12m.

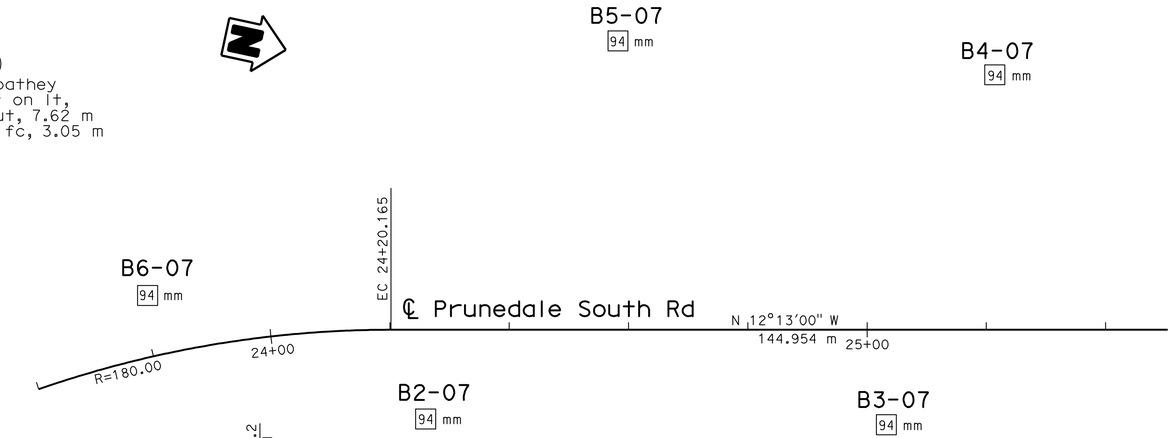

PLAN
1:500

Notes:

1. 35 mm samples were taken using a standard split barrel sampler with an inside diameter (I.D.) of 35 mm and an outside diameter (O.D.) of 51 mm.
2. A safety driver hammer with an average efficiency of 59% was used for borings B2-07 and B3-07 to advance the sampler using a 63.5 kg hammer with a 762 mm drop. A CME automatic hammer with an average efficiency of approximately 85% was used to advance the sampler for borings B4-07 through B6-07.
3. Borings were drilled using a "HX" wireline with "HQ" drill rod, outside diameter (O.D.) of 89 mm and inside diameter (I.D.) of 78 mm.
4. qu=unconfined compressive strength as determined by pocket penetrometer (kPa).

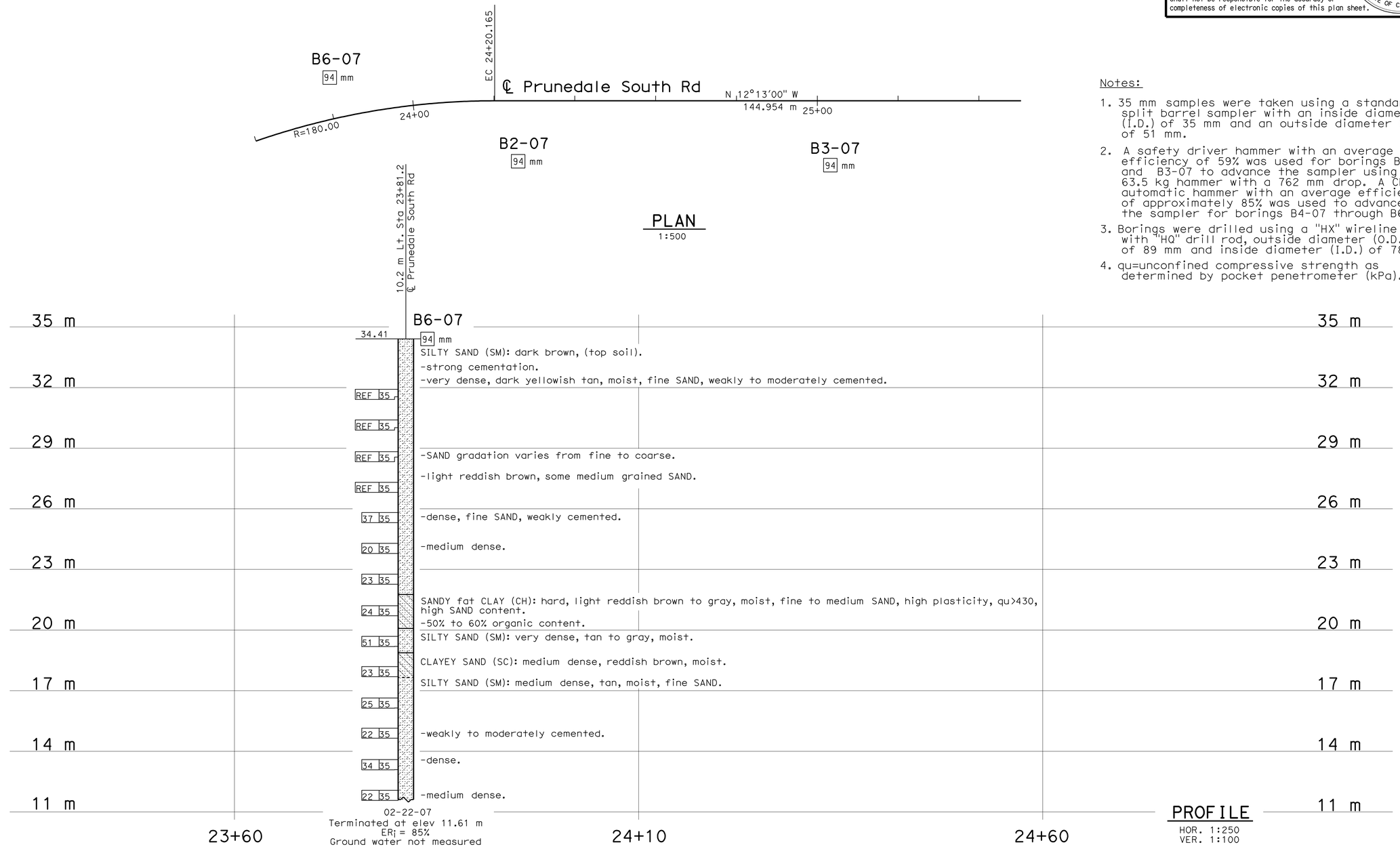

02-22-07
Terminated at elev 11.61 m
ERj = 85%
Ground water not measured

PROFILE
HOR. 1:250
VER. 1:100

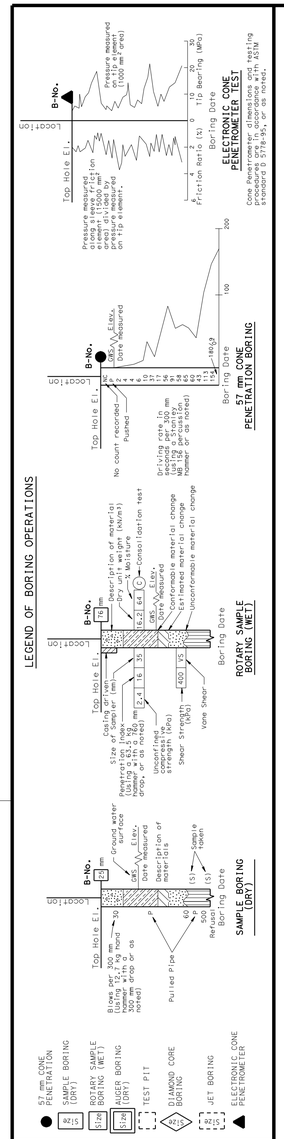

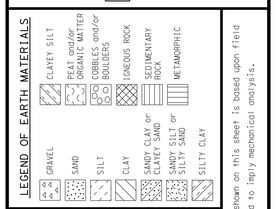

CONSISTENCY CLASSIFICATION FOR SOILS

According to the Standard Penetration Test

SPT N-Value (Blows/0.3m)	Granular	SPT N-Value (Blows/0.3m)	Cohesive
0-4	Very Loose	<2	Very Soft
5-10	Loose	2-4	Soft
11-30	Medium Dense	5-8	Firm
31-50	Dense	9-15	Stiff
>50	Very Dense	16-30	Very stiff
		>30	Hard

NOTE: Classification of earth material as shown on this sheet is based upon field inspection and is not to be construed to imply mechanical analysis.

OGS CIVIL LOG OF TEST BORINGS SHEET (METRIC) (REV. 4/04)

Caltrans Metric

ENGINEERING SERVICES	GEOTECHNICAL SERVICES
DRAWN BY	F. Nguyen 1/08
CHECKED BY	D. Appelbaum

FIELD INVESTIGATION BY: W. Hoon

STATE OF CALIFORNIA DEPARTMENT OF TRANSPORTATION

DIVISION OF ENGINEERING SERVICES STRUCTURE DESIGN
DESIGN BRANCH 6

BRIDGE NO. 44E0014
KILOMETER POST 151.4

RETAINING WALL NO. 23
LOG OF TEST BORINGS 1 OF 3

ALL DIMENSIONS ARE IN METERS UNLESS OTHERWISE SHOWN

ORIGINAL SCALE IN MILLIMETERS FOR REDUCED PLANS 0 10 20 30 40 50 60 70 80 90 100

CU 05
EA 0161E1

DISREGARD PRINTS BEARING EARLIER REVISION DATES

REVISION DATES (PRELIMINARY STAGE ONLY) 03-14-08 06-08-09

SHEET 13 OF 15

FILE => 44e0014-z-lotb1of3.dgn

USERNAME => frmnguye DATE PLOTTED => 03-AUG-2010 TIME PLOTTED => 10:53

DIST	COUNTY	ROUTE	KILOMETER POST TOTAL PROJECT	SHEET No	TOTAL SHEETS
05	Mon	101	R146.8/159.7	1368	1402

REGISTERED CIVIL ENGINEER 6-08-09

7-26-10
PLANS APPROVAL DATE

REGISTERED PROFESSIONAL ENGINEER Dan Appelbaum No. C50001 Exp. 06-30-11 CIVIL STATE OF CALIFORNIA

The State of California or its officers or agents shall not be responsible for the accuracy or completeness of electronic copies of this plan sheet.

FOR PLAN VIEW, SEE
"LOG OF TEST BORINGS" 1 OF 3

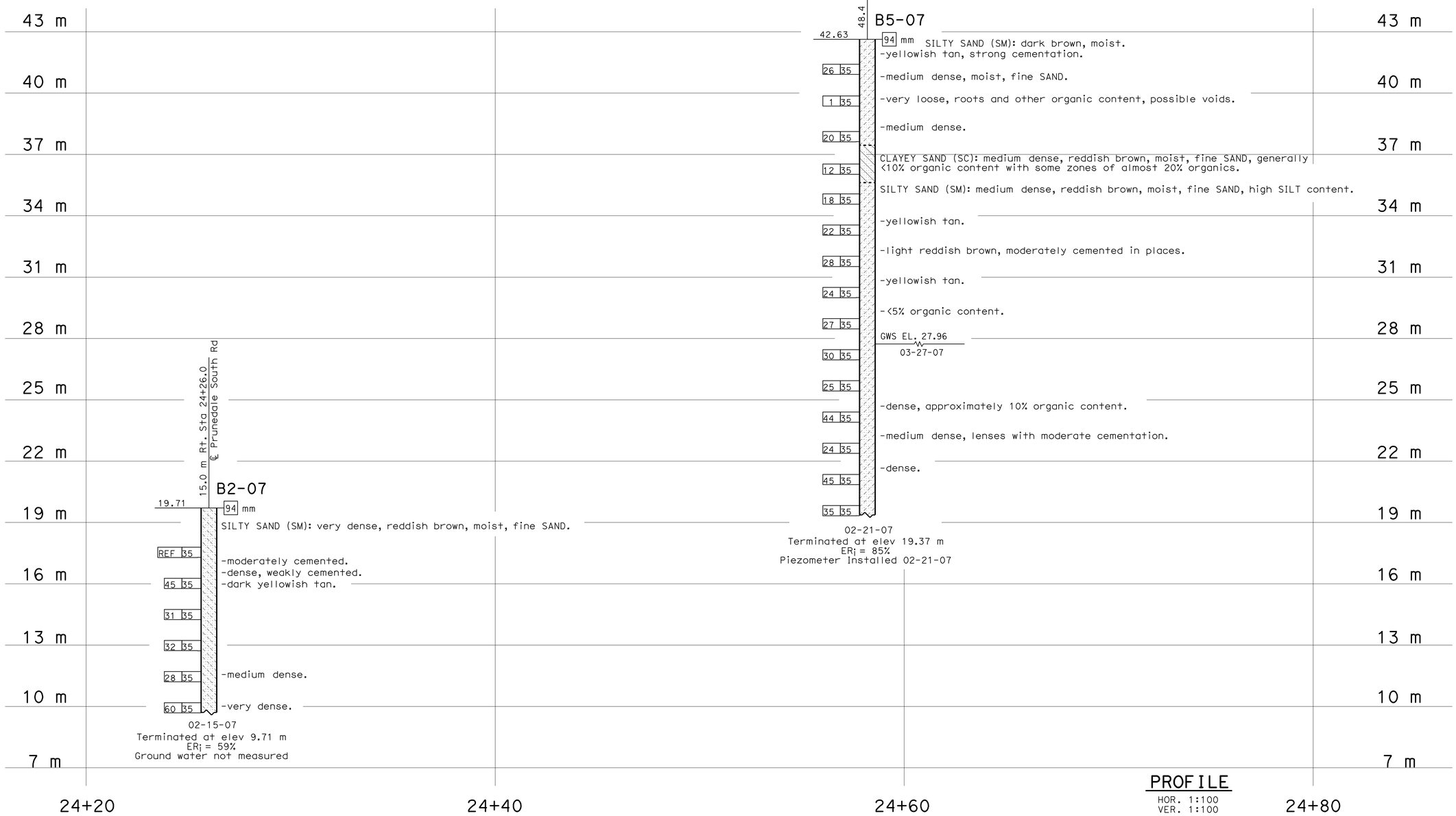

PROFILE
HOR. 1:100
VER. 1:100

LEGEND OF BORING OPERATIONS

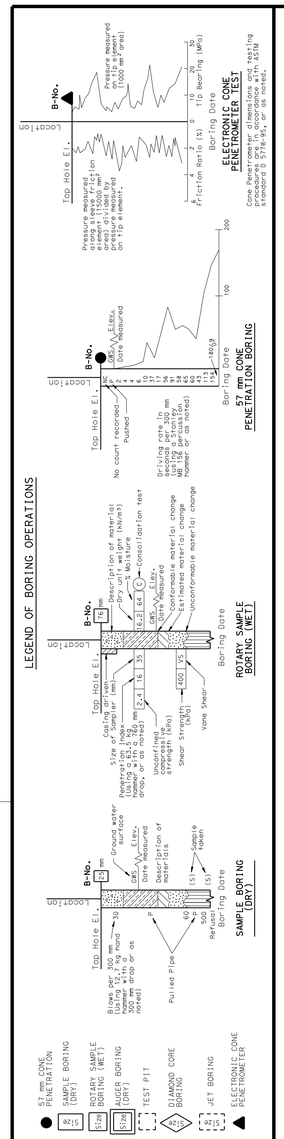

LEGEND OF EARTH MATERIALS

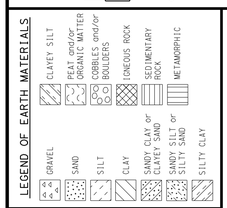

CONSISTENCY CLASSIFICATION FOR SOILS
According to the Standard Penetration Test

SPT N-Value (Blows/0.3m)	Granular	SPT N-Value (Blows/0.3m)	Cohesive
0-4	Very Loose	<2	Very Soft
5-10	Loose	2-4	Soft
11-30	Medium Dense	5-8	Firm
31-50	Dense	9-15	Stiff
>50	Very Dense	16-30	Very stiff
		>30	Hard

NOTE: Classification of earth material as shown on this sheet is based upon field inspection and is not to be construed to imply mechanical analysis.

OGS CIVIL LOG OF TEST BORINGS SHEET (METRIC) (REV. 4/04)

Caltrans Metric

ENGINEERING SERVICES	GEOTECHNICAL SERVICES
DRAWN BY	F. Nguyen 1/08
CHECKED BY	D. Appelbaum

FIELD INVESTIGATION BY: W. Hoon

STATE OF CALIFORNIA DEPARTMENT OF TRANSPORTATION

DIVISION OF ENGINEERING SERVICES STRUCTURE DESIGN
DESIGN BRANCH 6

BRIDGE NO. 44E0014
KILOMETER POST 151.4

RETAINING WALL NO. 23
LOG OF TEST BORINGS 2 OF 3

ALL DIMENSIONS ARE IN METERS UNLESS OTHERWISE SHOWN

ORIGINAL SCALE IN MILLIMETERS FOR REDUCED PLANS 0 10 20 30 40 50 60 70 80 90 100

CU 05
EA 0161E1

DISREGARD PRINTS BEARING EARLIER REVISION DATES 03-14-08 06-08-09

REVISION DATES (PRELIMINARY STAGE ONLY)

SHEET 14 OF 15

FILE => 44e0014-z-lotb2of3.dgn

USERNAME => trmnguye DATE PLOTTED => 03-AUG-2010 TIME PLOTTED => 10:54

DIST	COUNTY	ROUTE	KILOMETER POST TOTAL PROJECT	SHEET No	TOTAL SHEETS
05	Mon	101	R146.8/159.7	1369	1402

REGISTERED CIVIL ENGINEER 6-08-09

7-26-10
PLANS APPROVAL DATE

REGISTERED PROFESSIONAL ENGINEER Dan Appelbaum No. C50001 Exp. 06-30-11 CIVIL STATE OF CALIFORNIA

The State of California or its officers or agents shall not be responsible for the accuracy or completeness of electronic copies of this plan sheet.

FOR PLAN VIEW, SEE
"LOG OF TEST BORINGS" 1 OF 3

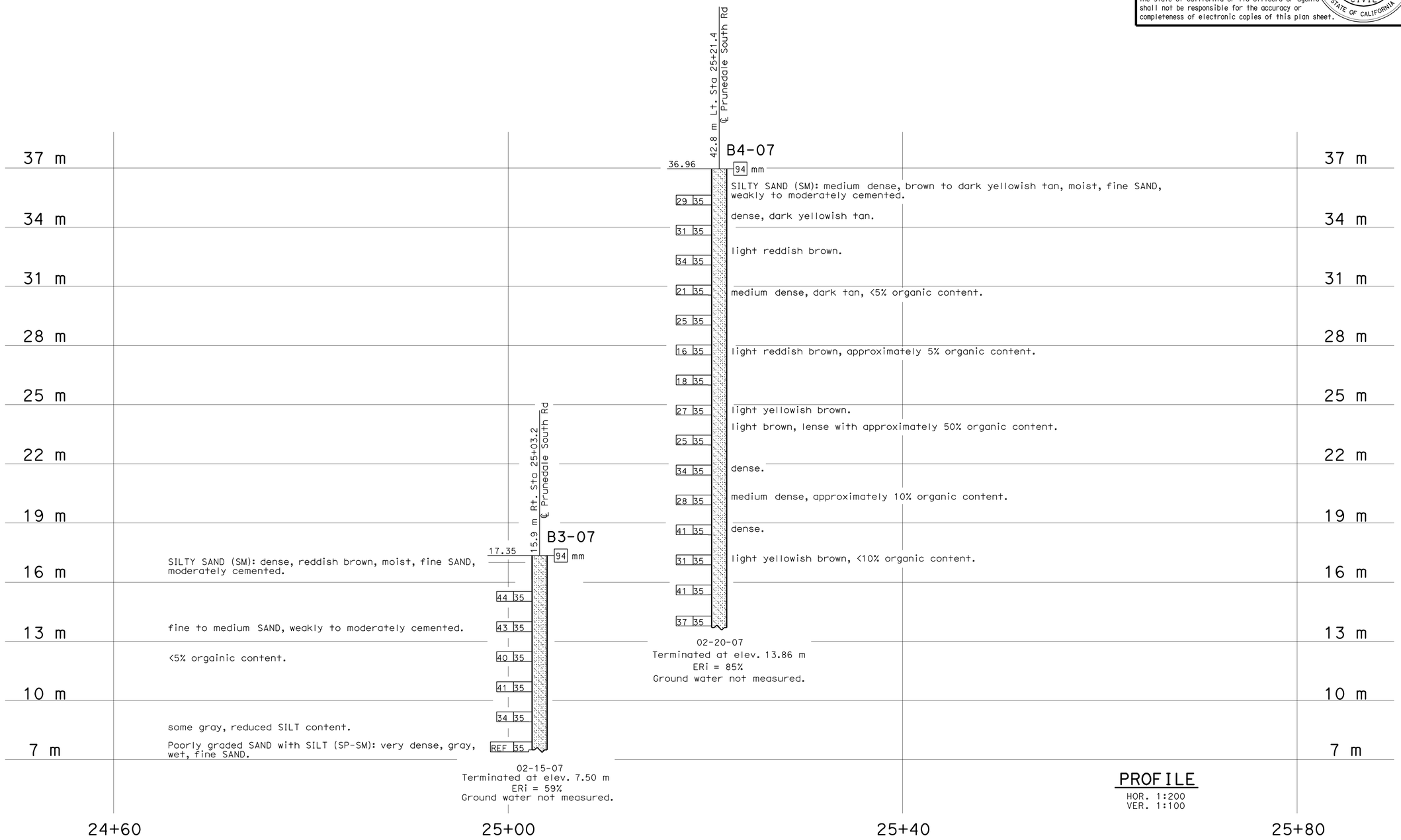

PROFILE
HOR. 1:200
VER. 1:100

LEGEND OF BORING OPERATIONS

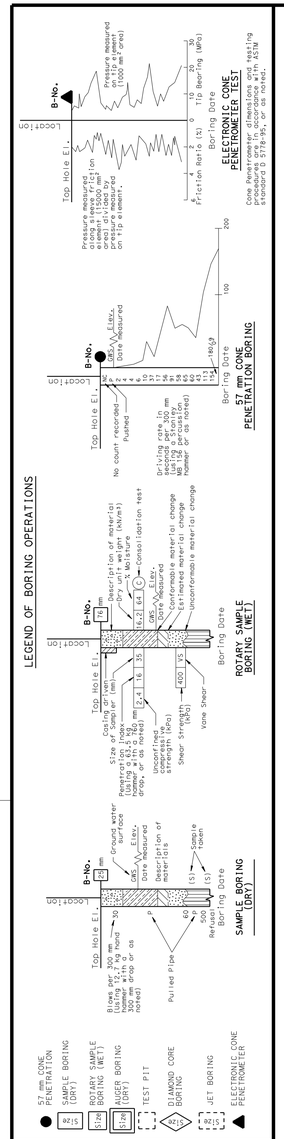

LEGEND OF EARTH MATERIALS

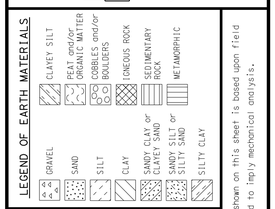

CONSISTENCY CLASSIFICATION FOR SOILS

According to the Standard Penetration Test

SPT N-Value (Blows/0.3m)	Granular	SPT N-Value (Blows/0.3m)	Cohesive
0-4	Very Loose	<2	Very Soft
5-10	Loose	2-4	Soft
11-30	Medium Dense	5-8	Firm
31-50	Dense	9-15	Stiff
>50	Very Dense	16-30	Very stiff
		>30	Hard

NOTE: Classification of earth material as shown on this sheet is based upon field inspection and is not to be construed to imply mechanical analysis.

OGS CIVIL LOG OF TEST BORINGS SHEET (METRIC) (REV. 4/04)

Caltrans Metric

ENGINEERING SERVICES	GEOTECHNICAL SERVICES
DRAWN BY	F. Nguyen 1/08
CHECKED BY	D. Appelbaum

FIELD INVESTIGATION BY: W. Hoon

STATE OF CALIFORNIA DEPARTMENT OF TRANSPORTATION

DIVISION OF ENGINEERING SERVICES STRUCTURE DESIGN
DESIGN BRANCH 6

BRIDGE NO. 44E0014
KILOMETER POST 151.4

RETAINING WALL NO. 23
LOG OF TEST BORINGS 3 OF 3

ALL DIMENSIONS ARE IN METERS UNLESS OTHERWISE SHOWN

ORIGINAL SCALE IN MILLIMETERS FOR REDUCED PLANS 0 10 20 30 40 50 60 70 80 90 100

CU 05
EA 0161E1

DISREGARD PRINTS BEARING EARLIER REVISION DATES

REVISION DATES (PRELIMINARY STAGE ONLY) 03-14-08 06-04-09 07-29-09 07-30-09

SHEET 15 OF 15

FILE => 44e0014-z-lotb3of3.dgn

USERNAME => trcarol DATE PLOTTED => 03-AUG-2010 TIME PLOTTED => 11:05

DIST	COUNTY	ROUTE	KILOMETER POST TOTAL PROJECT	SHEET No	TOTAL SHEETS
05	Mon	101	R146.8/159.7	1370	1402

Hernan Perez 05-06-10
REGISTERED CIVIL ENGINEER DATE

7-26-10
PLANS APPROVAL DATE

REGISTERED PROFESSIONAL ENGINEER HERNAN PEREZ No. 60993 Exp. 12-31-10 CIVIL STATE OF CALIFORNIA

The State of California or its officers or agents shall not be responsible for the accuracy or completeness of electronic copies of this plan sheet.

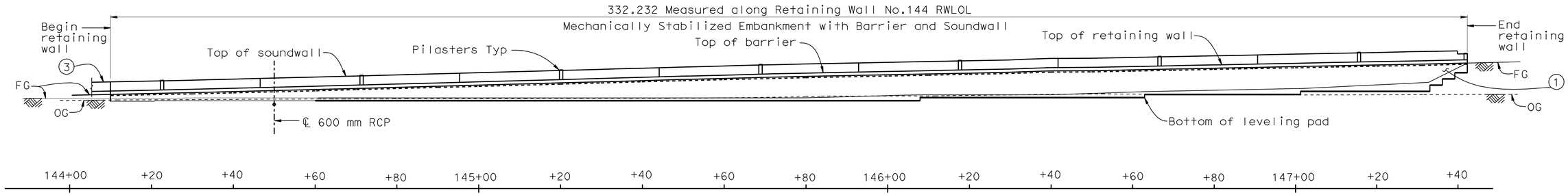

DEVELOPED ELEVATION
1:500

NOTES

1. Paint "Br. No. 44E0015"
2. Concrete Barrier Type 736 (Mod)
3. Soundwall, "See Road Plans"
4. Top of retaining wall.

INDEX TO PLANS

Sheet No.	Sheet No.
1.	General Plan
2.	Structure Plan No.1
3.	Structure Plan No.2
4.	Structure Plan No.3
5.	Structure Plan No.4
6.	Structure Plan No.5
7.	Structure Plan No.6
8.	Foundation Plan No.1
9.	Foundation Plan No.2
10.	Mechanically Stabilized Embankment Detail No.1
11.	Mechanically Stabilized Embankment Detail No.2
12.	Mechanically Stabilized Embankment Detail No.3
13.	Mechanically Stabilized Embankment Detail No.4
14.	Mechanically Stabilized Embankment Detail No.5
15.	Barrier 736 (Mod) Sound Wall Details
16.	Architectural Treatment
17.	Log of Test Borings 1 of 4
18.	Log of Test Borings 2 of 4
19.	Log of Test Borings 3 of 4
20	Log of Test Borings 4 of 4

STANDARD PLANS DATED JULY 2004

A10A	Acronyms and Abbreviations (A-L)
A10B	Acronyms and Abbreviations (M-Z)
A10C	Symbols (Sheet 1 of 2)
A10D	Symbols (Sheet 2 of 2)
B11-56	Concrete Barrier Type 736
RSP B15-6	Soundwall Masonry Block on Type 736/SV Barrier Details (1)
RSP B15-7	Soundwall Masonry Block on Type 736/SV Barrier Details (2)
B15-8	Soundwall Masonry Block on Type 736/SV Barrier Details (3)
D102	Underdrains

STANDARD PLAN SHEET NO.

DETAIL NO.

QUANTITIES

EARTH RETAINING STRUCTURE	1520	m^2
450 MM CAST-IN-DRILLED-HOLE CONCRETE PILING	341	m
STRUCTURAL CONCRETE, BARRIER SLAB	359	m^3
ARCHITECTURAL TREATMENT (DRYSTACK STONE TEXTURE)	1506	m^2
SOUND WALL (MASONRY BLOCK)	709	m^2
CONCRETE BARRIER (TYPE 736 MODIFIED)	331	m

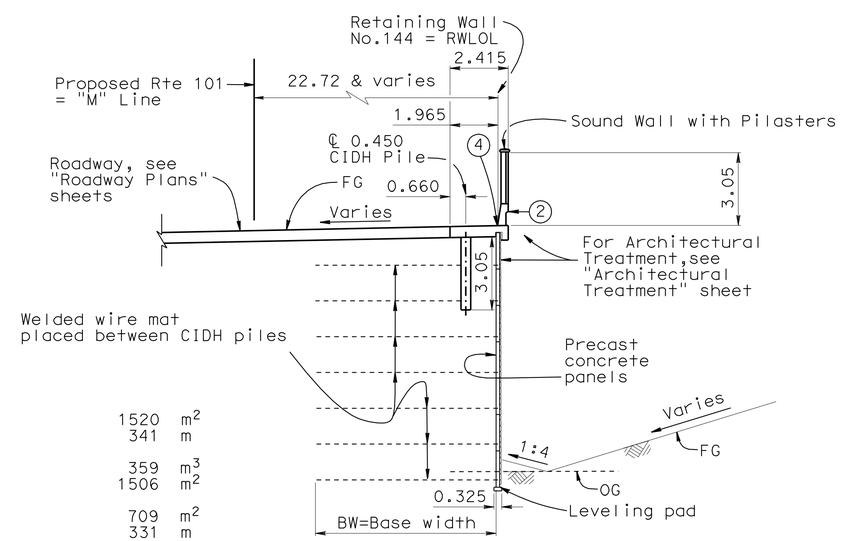

TYPICAL SECTION
1:125

CURVE DATA
RTE 101 = "M" Line

R=1500.000
Δ=29°20′16.5"
T=392.649
L=768.065

CURVE DATA
RETAINING WALL NO.144 RWLOL

R=1524.300
Δ=7°56′59.8"
T=105.920
L=211.501

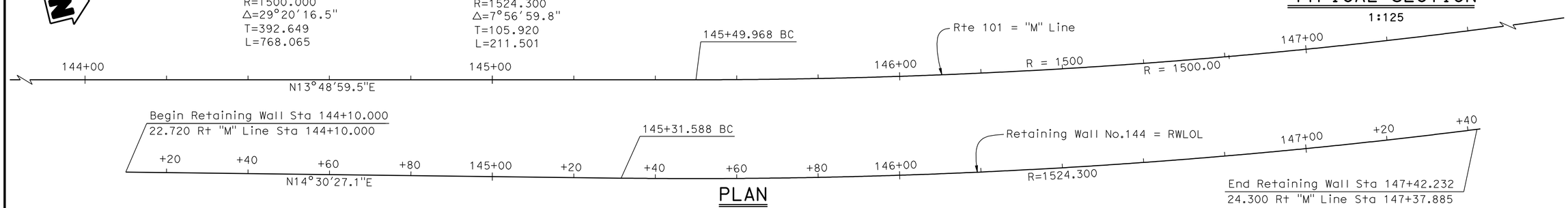

PLAN
1:500

Caltrans Metric							
Fritz Hoffman — DESIGN ENGINEER	DESIGN	BY Aram Salimi	CHECKED C. Udarbe	LOAD & RESISTANCE FACTOR DESIGN	LIVE LOADING: HL93 W/"LOW-BOY"; PERMIT DESIGN VEHICLE		
	DETAILS	BY George Zweier	CHECKED C. Udarbe	LAYOUT	BY George Zweier	CHECKED Aram Salimi	
	QUANTITIES	BY C. Udarbe	CHECKED R. Coria	SPECIFICATIONS	BY Sirisha Nelapatla	PLANS AND SPECS COMPARED Sirisha Nelapatla	

STATE OF CALIFORNIA
DEPARTMENT OF TRANSPORTATION

DIVISION OF ENGINEERING SERVICES
STRUCTURE DESIGN
DESIGN BRANCH 6

BRIDGE NO. 44E0015
KILOMETER POST R146.8/161.6

RETAINING WALL NO.144
GENERAL PLAN

ALL DIMENSIONS ARE IN METERS UNLESS OTHERWISE SHOWN

ORIGINAL SCALE IN MILLIMETERS FOR REDUCED PLANS 0 10 20 30 40 50 60 70 80 90 100

CU 05
EA 0161E1

DISREGARD PRINTS BEARING EARLIER REVISION DATES

REVISION DATES: 07-26-08 | 10-16-09 | 10-23-09 | 11-13-09 | 11-30-09 | 12-11-09 | 05-06-10 | 03-08-09 | 09-23-09

SHEET 1 OF 20

FILE => 44e0015-a-gp.dgn

STRUCTURES DESIGN GENERAL PLAN SHEET (METRIC) (REV.07-24-06)

USERNAME => trlenard DATE PLOTTED => 12-AUG-2010 TIME PLOTTED => 06:14

DIST	COUNTY	ROUTE	KILOMETER POST TOTAL PROJECT	SHEET No	TOTAL SHEETS
05	Mon	101	R146.8/159.7	1371	1402

REGISTERED CIVIL ENGINEER — DATE 05-06-10

7-26-10
PLANS APPROVAL DATE

REGISTERED PROFESSIONAL ENGINEER — HERNAN PEREZ — No. 60993 — Exp. 12-31-10 — CIVIL — STATE OF CALIFORNIA

The State of California or its officers or agents shall not be responsible for the accuracy or completeness of electronic copies of this plan sheet.

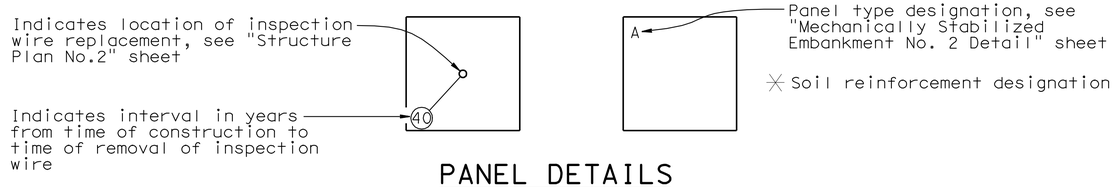

PANEL DETAILS
1:40

NOTES

1. For General Notes, see "Mechanically Stabilized Embankment Details No.4" sheet
2. For Architectural Treatment see, "Architectural Treatment" sheet
3. Concrete slab lip on "Elevation" view, not shown
4. All piles are not shown
5. For Barrier Expansion Joint spacing, see "Structure Plans No.2 - No.6" sheet

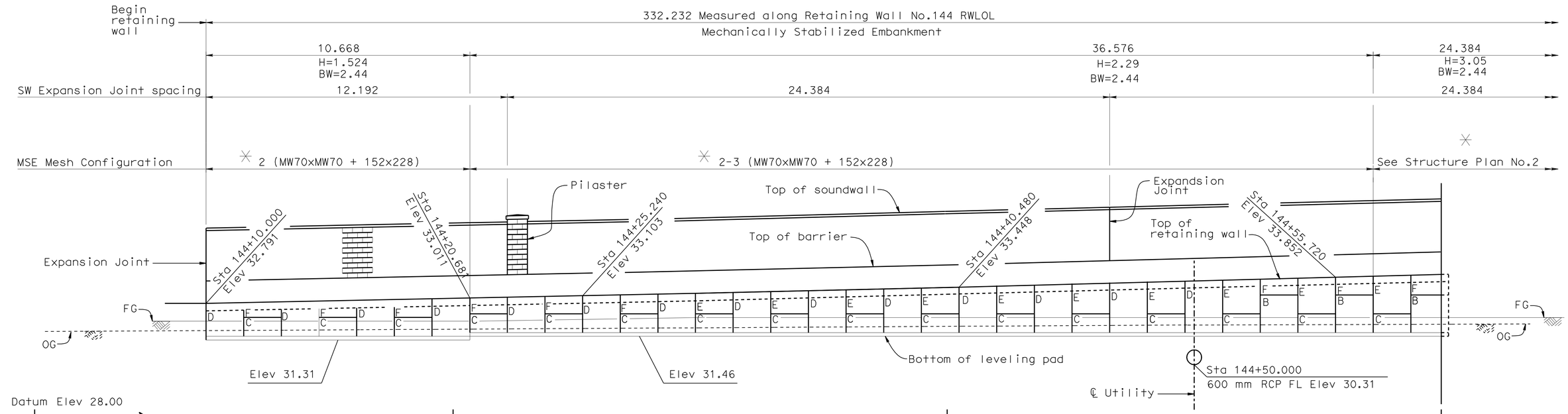

DEVELOPED ELEVATION
1:80

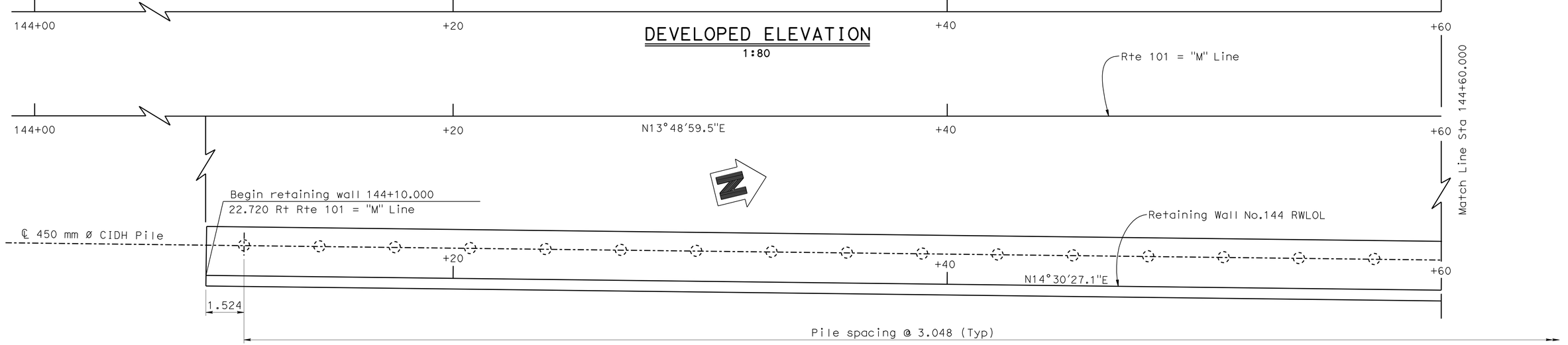

PLAN
1:80

LEGEND

Indicates vertical pile

DESIGN	BY Aram Salimi	CHECKED C. Udarbe	STATE OF CALIFORNIA DEPARTMENT OF TRANSPORTATION	DIVISION OF ENGINEERING SERVICES STRUCTURE DESIGN DESIGN BRANCH 6	BRIDGE NO. 44E0015
DETAILS	BY George Zweier	CHECKED C. Udarbe			KILOMETER POST R146.8/161.6
QUANTITIES	BY C. Udarbe	CHECKED R. Coria		CU 05 EA 0161E1	

RETAINING WALL NO.144
STRUCTURE PLAN NO.1

Caltrans Metric

ALL DIMENSIONS ARE IN METERS UNLESS OTHERWISE SHOWN

ORIGINAL SCALE IN MILLIMETERS FOR REDUCED PLANS 0 10 20 30 40 50 60 70 80 90 100

DISREGARD PRINTS BEARING EARLIER REVISION DATES

REVISION DATES: 09-18-08 11-18-09 05-06-10 10-06-08 10-30-08 02-09-09 02-24-09 03-02-09 11-23-09 11-12-09

SHEET 2 OF 20

FILE => 44e0015-c-sp01.dgn

STRUCTURES DESIGN DETAIL SHEET (METRIC) (REV.03-17-04)

USERNAME => trmikesl DATE PLOTTED => 13-AUG-2010 TIME PLOTTED => 06:58

DIST	COUNTY	ROUTE	KILOMETER POST TOTAL PROJECT	SHEET No	TOTAL SHEETS
05	Mon	101	R146.8/159.7	1372	1402

Hernan Perez 05-06-10
REGISTERED CIVIL ENGINEER DATE

7-26-10
PLANS APPROVAL DATE

REGISTERED PROFESSIONAL ENGINEER HERNAN PEREZ No. 60993 Exp. 12-31-10 CIVIL STATE OF CALIFORNIA

The State of California or its officers or agents shall not be responsible for the accuracy or completeness of electronic copies of this plan sheet.

LEGEND

(1) SW Expansion Joint spacing

(2) MSE Mesh Configuration

✳ Soil reinforcement designation

NOTES

1. For General Notes, see "Mechanically Stabilized Embankment Details No.4" sheet
2. For Architectural Treatment see, "Architectural Treatment" sheet
3. Concrete slab lip on "Elevation" view, not shown
4. All piles are not shown
5. For Barrier Expansion Joint spacing, see "Structure Plans No.2 - No.6" sheet

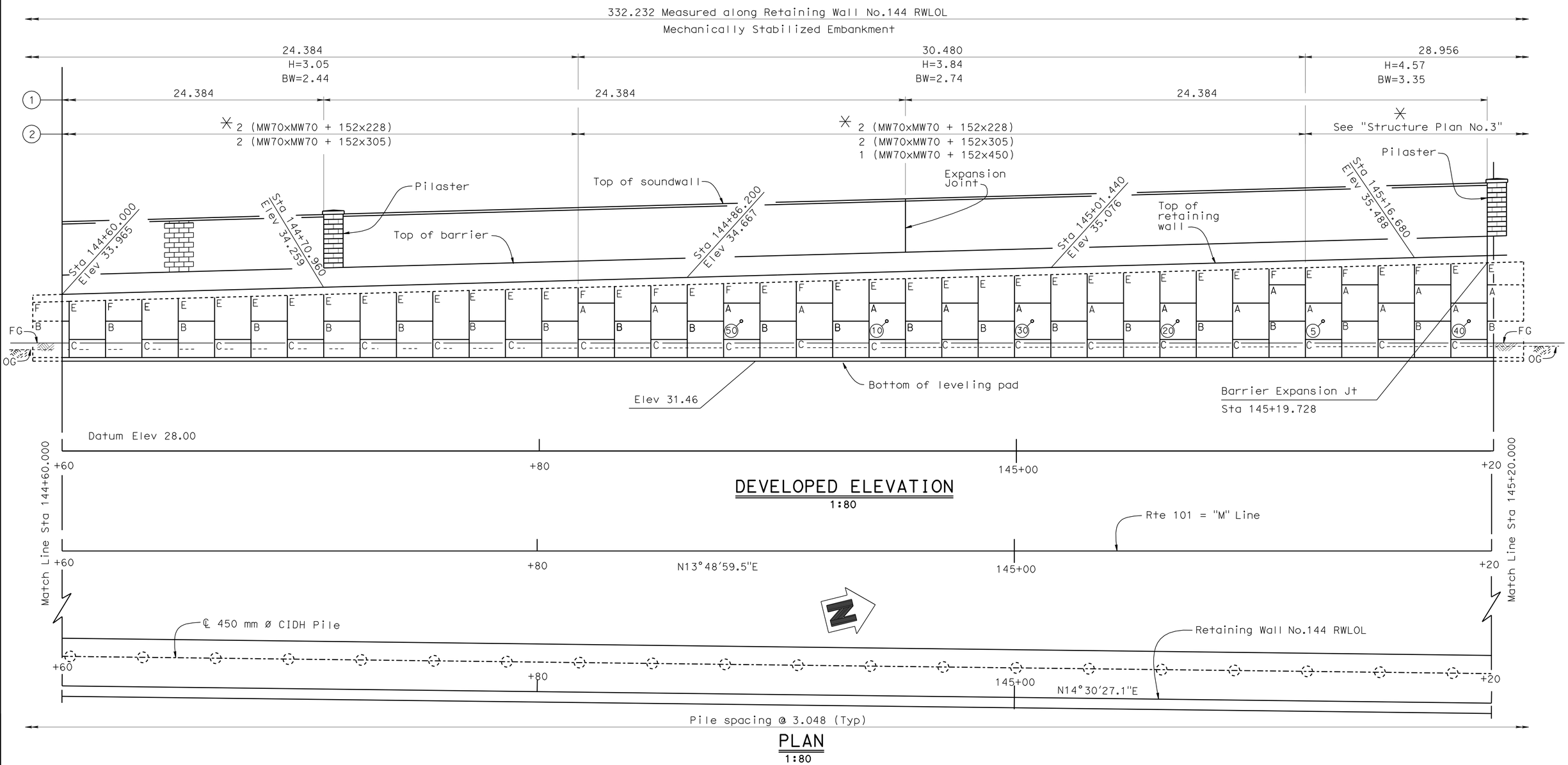

DESIGN	BY Aram Salimi	CHECKED C. Udarbe	
DETAILS	BY George Zweier	CHECKED C. Udarbe	
QUANTITIES	BY C. Udarbe	CHECKED R Coria	

STATE OF CALIFORNIA DEPARTMENT OF TRANSPORTATION

DIVISION OF ENGINEERING SERVICES STRUCTURE DESIGN

DESIGN BRANCH 6

BRIDGE NO. 44E0015

KILOMETER POST R146.8/161.6

RETAINING WALL NO.144

STRUCTURE PLAN NO.2

ALL DIMENSIONS ARE METERS UNLESS OTHERWISE SHOWN

ORIGINAL SCALE IN MILLIMETERS FOR REDUCED PLANS 0 10 20 30 40 50 60 70 80 90 100

CU 05
EA 0161E1

DISREGARD PRINTS BEARING EARLIER REVISION DATES

REVISION DATES: 9-12-08 10-1-08 10-06-08 10-29-08 02-09-09 03-02-09 11-03-09 11-12-09 11-18-09 05-06-10

SHEET 3 OF 20

FILE => 44e0015-c-sp02.dgn

STRUCTURES DESIGN DETAIL SHEET (METRIC) (REV.03-17-04)

USERNAME => trmikest DATE PLOTTED => 13-AUG-2010 TIME PLOTTED => 06:58

DIST	COUNTY	ROUTE	KILOMETER POST TOTAL PROJECT	SHEET No	TOTAL SHEETS
05	Mon	101	R146.8/159.7	1373	1402

REGISTERED CIVIL ENGINEER 05-06-10 DATE

7-26-10
PLANS APPROVAL DATE

REGISTERED PROFESSIONAL ENGINEER HERNAN PEREZ No. 60993 Exp. 12-31-10 CIVIL STATE OF CALIFORNIA

The State of California or its officers or agents shall not be responsible for the accuracy or completeness of electronic copies of this plan sheet.

LEGEND

(1) SW Expansion Joint spacing

(2) MSE Mesh Configuration

✳ Soil reinforcement designation

NOTES

1. For General Notes, see "Mechanically Stabilized Embankment Details No.4" sheet
2. For Architectural Treatment see, "Architectural Treatment" sheet
3. Concrete slab lip on "Elevation" view, not shown
4. All piles are not shown
5. For Barrier Expansion Joint spacing, see "Structure Plans No.2 - No.6" sheet

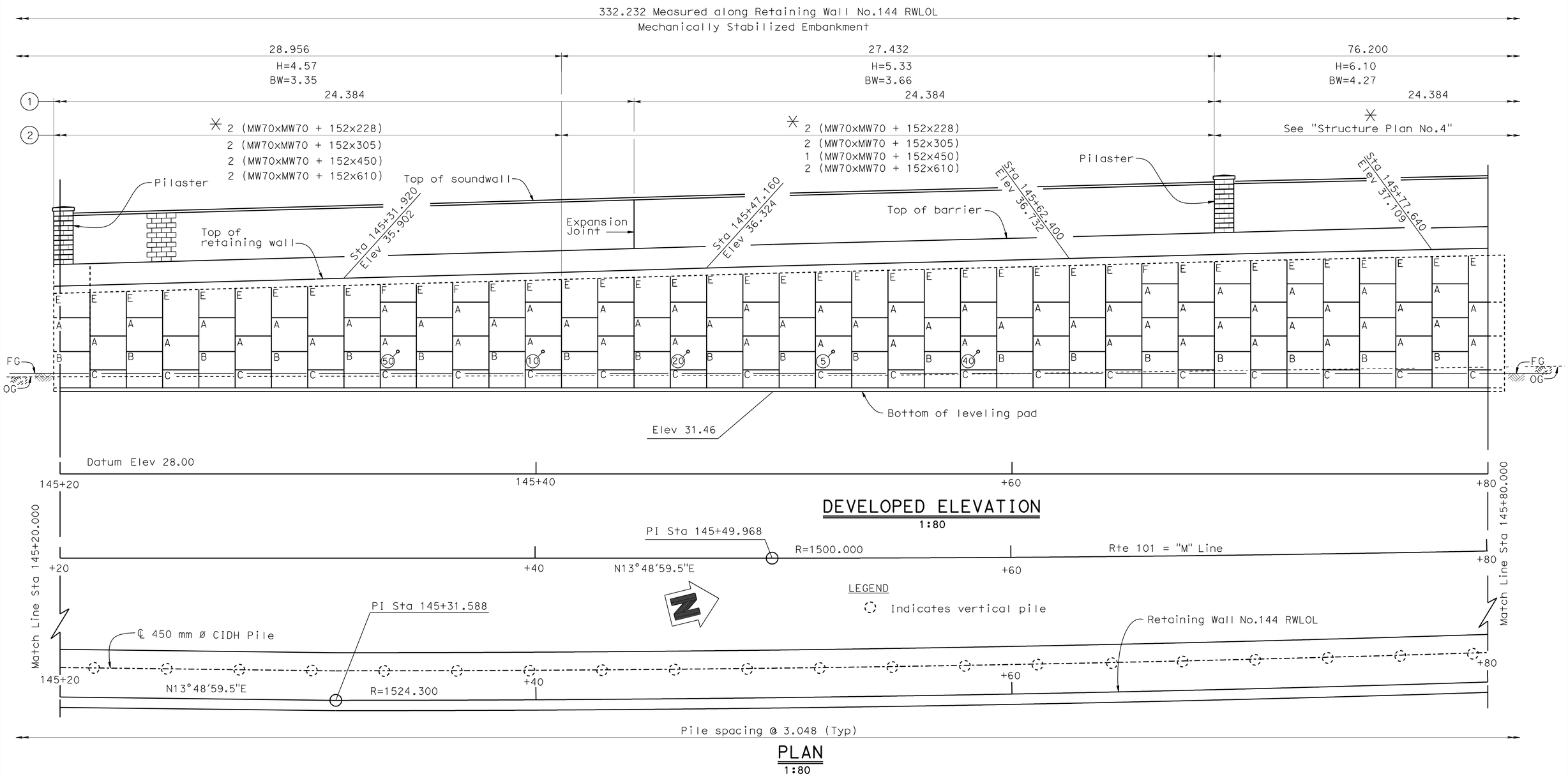

DESIGN	BY Aram Salimi	CHECKED C. Udarbe	
DETAILS	BY George Zweier	CHECKED C. Udarbe	
QUANTITIES	BY C. Udarbe	CHECKED R. Coria	

Caltrans Metric

ALL DIMENSIONS ARE IN METERS UNLESS OTHERWISE SHOWN

ORIGINAL SCALE IN MILLIMETERS FOR REDUCED PLANS 0 10 20 30 40 50 60 70 80 90 100

STATE OF CALIFORNIA DEPARTMENT OF TRANSPORTATION

DIVISION OF ENGINEERING SERVICES STRUCTURE DESIGN DESIGN BRANCH 6

CU 05
EA 0161E1

BRIDGE NO. 44E0015
KILOMETER POST R146.8/161.6

RETAINING WALL NO.144
STRUCTURE PLAN NO.3

DISREGARD PRINTS BEARING EARLIER REVISION DATES

REVISION DATES: 09-12-08 10-01-08 10-06-08 10-30-08 02-09-09 03-02-09 11-06-09 11-12-09 11-18-09 05-06-10

SHEET 4 OF 20

FILE => 44e0015-c-sp03.dgn

STRUCTURES DESIGN DETAIL SHEET (METRIC) (REV.03-17-04)

USERNAME => ttmirkes1 DATE PLOTTED => 13-AUG-2010 TIME PLOTTED => 06:59

DIST	COUNTY	ROUTE	KILOMETER POST TOTAL PROJECT	SHEET No	TOTAL SHEETS
05	Mon	101	R146.8/159.7	1374	1402

REGISTERED CIVIL ENGINEER — DATE 05-06-10

7-26-10
PLANS APPROVAL DATE

REGISTERED PROFESSIONAL ENGINEER — HERNAN PEREZ — No. 60993 — Exp. 12-31-10 — CIVIL — STATE OF CALIFORNIA

The State of California or its officers or agents shall not be responsible for the accuracy or completeness of electronic copies of this plan sheet.

LEGEND

1 — SW Expansion Joint spacing

2 — MSE Mesh Configuration

✳ — Soil reinforcement designation

NOTES

1. For General Notes, see "Mechanically Stabilized Embankment Details No.4" sheet
2. For Architectural Treatment see, "Architectural Treatment" sheet
3. Concrete slab lip on "Elevation" view, not shown
4. All piles are not shown
5. For Barrier Expansion Joint spacing, see "Structure Plans No.2 - No.6" sheet

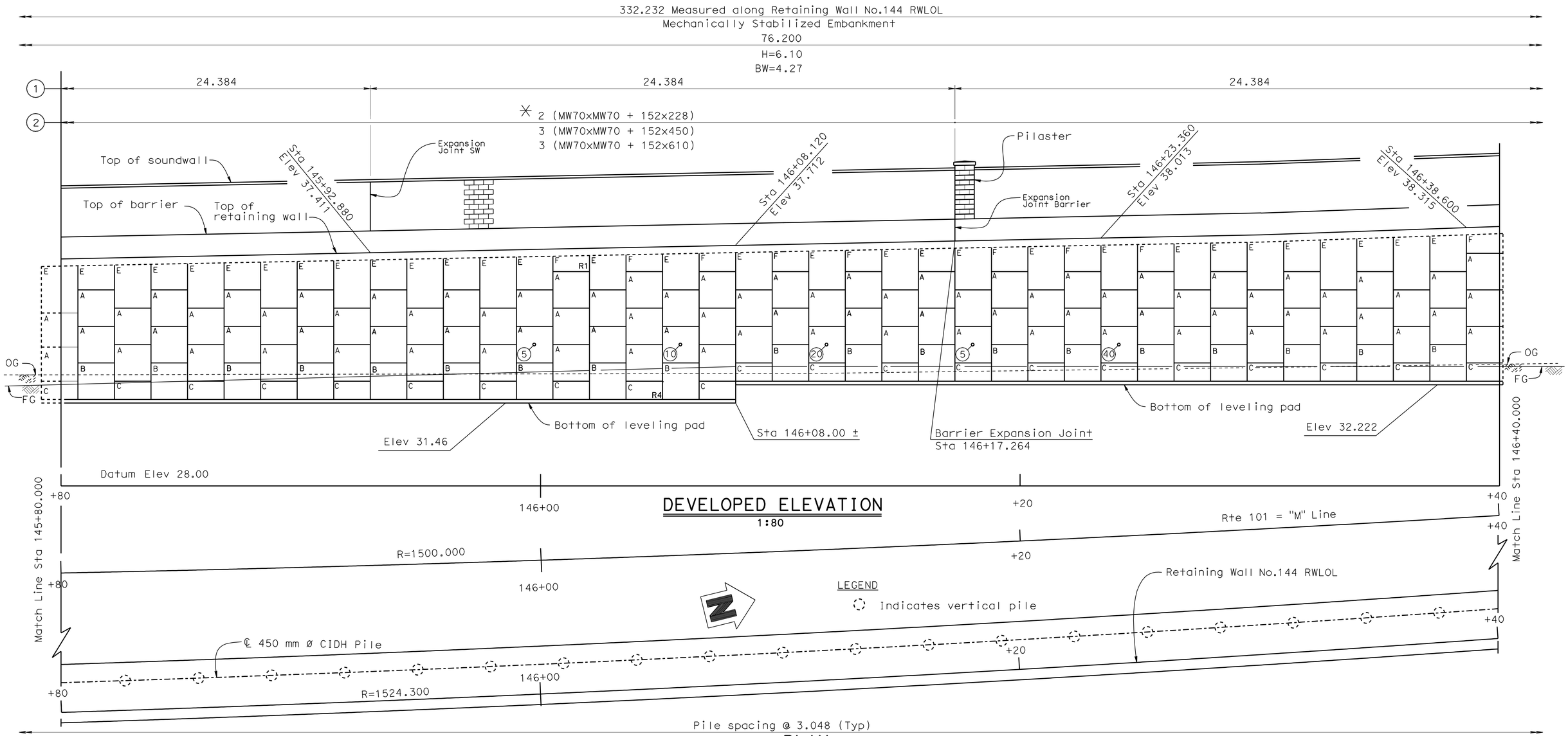

DEVELOPED ELEVATION
1:80

PLAN
1:80

DESIGN	BY Aram Salimi	CHECKED C. Udarbe	
DETAILS	BY George Zweier	CHECKED C. Udarbe	
QUANTITIES	BY C. Udarbe	CHECKED R. Coria	

STATE OF CALIFORNIA
DEPARTMENT OF TRANSPORTATION

DIVISION OF ENGINEERING SERVICES
STRUCTURE DESIGN
DESIGN BRANCH 6

BRIDGE NO. 44E0015
KILOMETER POST R146.8/161.6

RETAINING WALL NO.144
STRUCTURE PLAN NO.4

ALL DIMENSIONS ARE IN METERS UNLESS OTHERWISE SHOWN

ORIGINAL SCALE IN MILLIMETERS FOR REDUCED PLANS 0 10 20 30 40 50 60 70 80 90 100

CU 05
EA 0161E1

DISREGARD PRINTS BEARING EARLIER REVISION DATES

REVISION DATES: 09-22-08 11-19-09 05-06-10 10-06-08 10-30-08 02-09-09 02-24-09 03-02-09 11-06-09 11-12-09

SHEET 5 OF 20

FILE => 44e0015-c-sp04.dgn

STRUCTURES DESIGN DETAIL SHEET (METRIC) (REV.03-17-04)

USERNAME => trmikesl DATE PLOTTED => 13-AUG-2010 TIME PLOTTED => 06:53

DIST	COUNTY	ROUTE	KILOMETER POST TOTAL PROJECT	SHEET No	TOTAL SHEETS
05	Mon	101	R146.8/159.7	1375	1402

REGISTERED CIVIL ENGINEER 05-06-10 DATE

7-26-10
PLANS APPROVAL DATE

REGISTERED PROFESSIONAL ENGINEER HERNAN PEREZ No. 60993 Exp. 12-31-10 CIVIL STATE OF CALIFORNIA

The State of California or its officers or agents shall not be responsible for the accuracy or completeness of electronic copies of this plan sheet.

LEGEND

(1) SW Expansion Joint spacing

(2) MSE Mesh Configuration

✳ Soil reinforcement designation

NOTES

1. For General Notes, see "Mechanically Stabilized Embankment Details No.4" sheet
2. For Architectural Treatment see, "Architectural Treatment" sheet
3. Concrete slab lip on "Elevation" view, not shown
4. All piles are not shown
5. For Barrier Expansion Joint spacing, see "Structure Plans No.2 - No.6" sheet

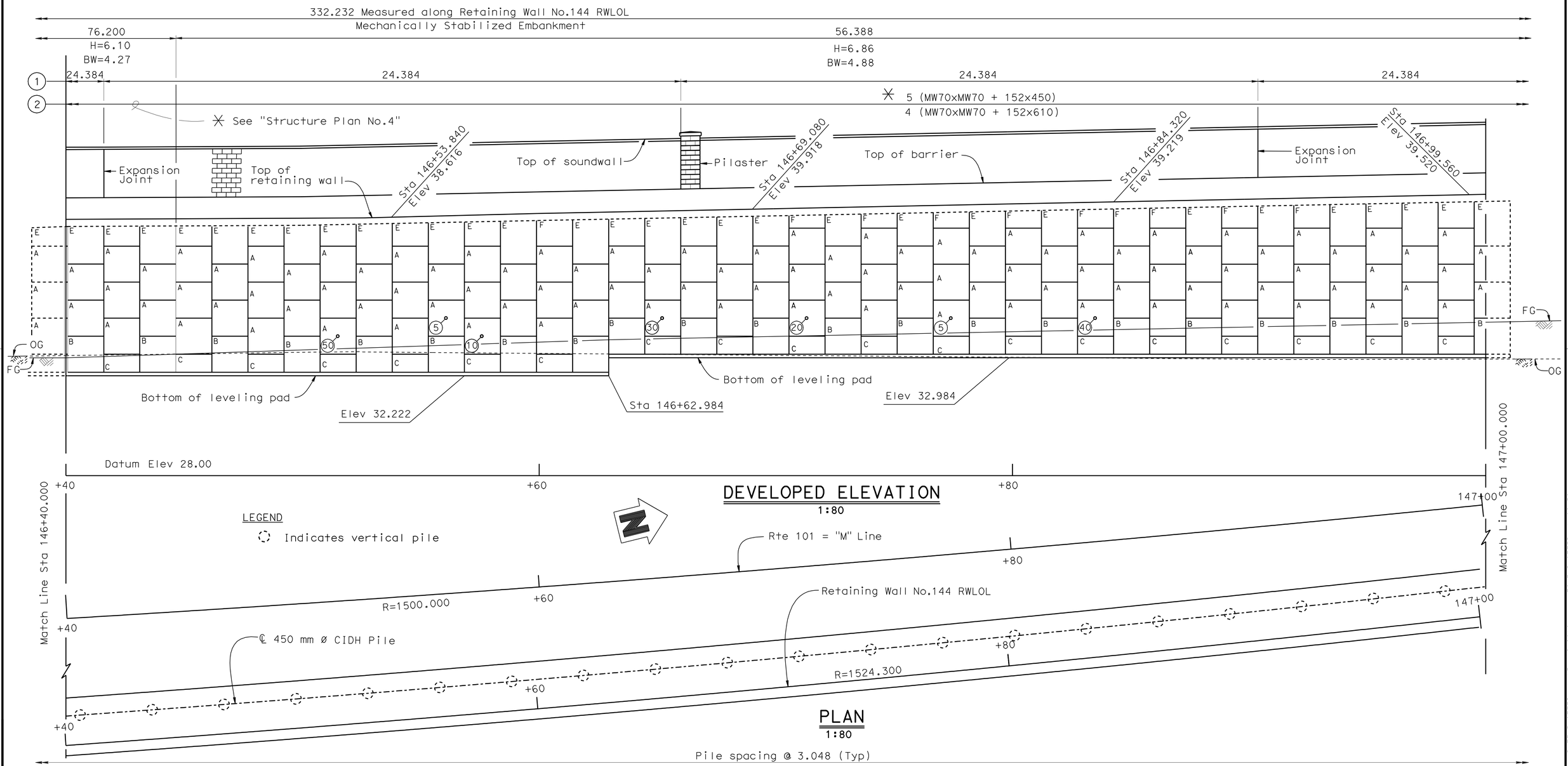

	BY	CHECKED
DESIGN	Aram Salimi	C. Udarbe
DETAILS	George Zweier	C. Udarbe
QUANTITIES	C. Udarbe	R. Coria

STATE OF CALIFORNIA
DEPARTMENT OF TRANSPORTATION

DIVISION OF ENGINEERING SERVICES
STRUCTURE DESIGN
DESIGN BRANCH 6

BRIDGE NO. 44E0015
KILOMETER POST R146.8/161.6

RETAINING WALL NO.144
STRUCTURE PLAN NO.5

ALL DIMENSIONS ARE IN METERS UNLESS OTHERWISE SHOWN

ORIGINAL SCALE IN MILLIMETERS FOR REDUCED PLANS 0 10 20 30 40 50 60 70 80 90 100

CU 05
EA 0161E1

DISREGARD PRINTS BEARING EARLIER REVISION DATES

REVISION DATES: 09-26-08 | 05-06-10 | 10-06-08 | 10-30-08 | 02-09-09 | 03-02-09 | 11-06-09 | 11-12-09 | 11-16-09 | 11-19-09

SHEET 6 OF 20

FILE => 44e0015-c-sp05.dgn

STRUCTURES DESIGN DETAIL SHEET (METRIC) (REV.03-17-04)

USERNAME => trmikesl DATE PLOTTED => 13-AUG-2010 TIME PLOTTED => 06:59

DIST	COUNTY	ROUTE	KILOMETER POST TOTAL PROJECT	SHEET No	TOTAL SHEETS
05	Mon	101	R146.8/159.7	1376	1402

REGISTERED CIVIL ENGINEER 05-06-10 DATE

7-26-10
PLANS APPROVAL DATE

REGISTERED PROFESSIONAL ENGINEER HERNAN PEREZ No. 60993 Exp. 12-31-10 CIVIL STATE OF CALIFORNIA

The State of California or its officers or agents shall not be responsible for the accuracy or completeness of electronic copies of this plan sheet.

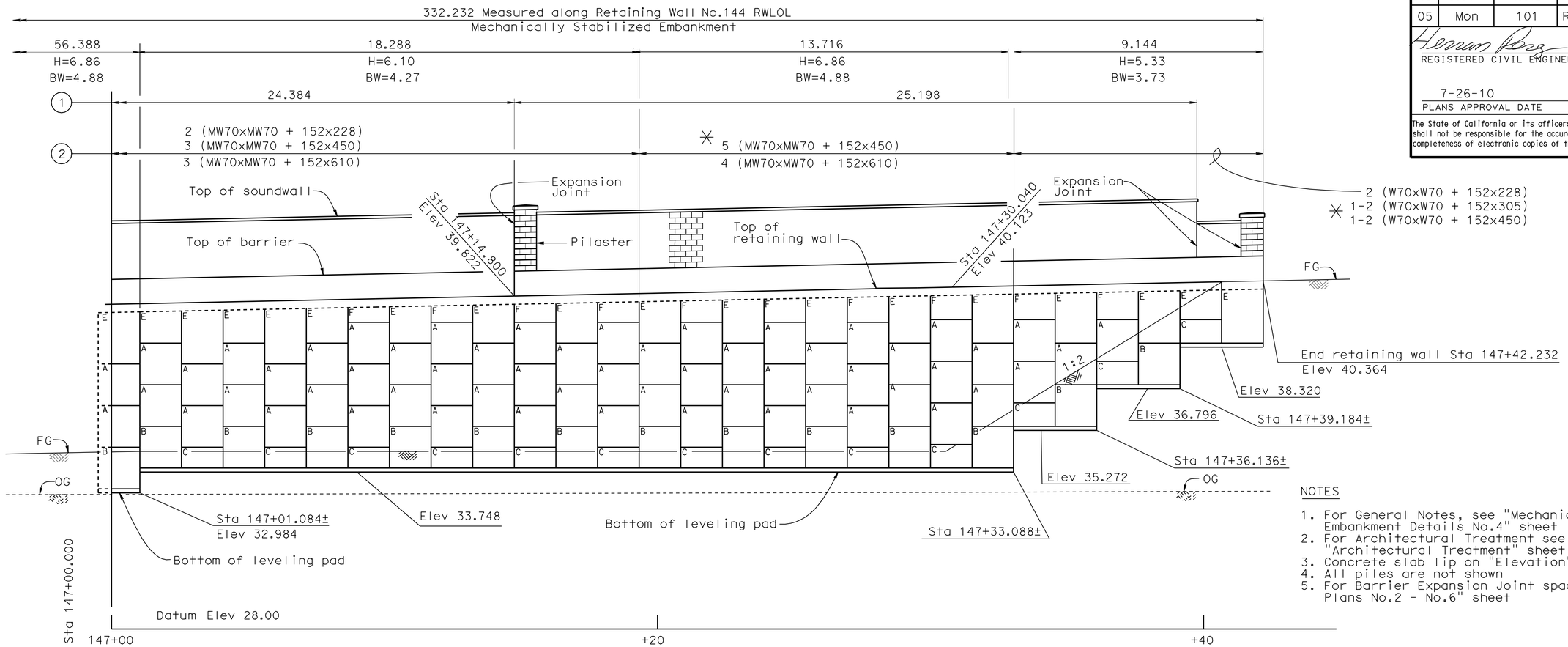

DEVELOPED ELEVATION
1:80

NOTES

1. For General Notes, see "Mechanically Stabilized Embankment Details No.4" sheet
2. For Architectural Treatment see, "Architectural Treatment" sheet
3. Concrete slab lip on "Elevation" view, not shown
4. All piles are not shown
5. For Barrier Expansion Joint spacing, see "Structure Plans No.2 - No.6" sheet

LEGEND

(1) SW Expansion Joint spacing

(2) MSE Mesh Configuration

✳ Soil reinforcement designation

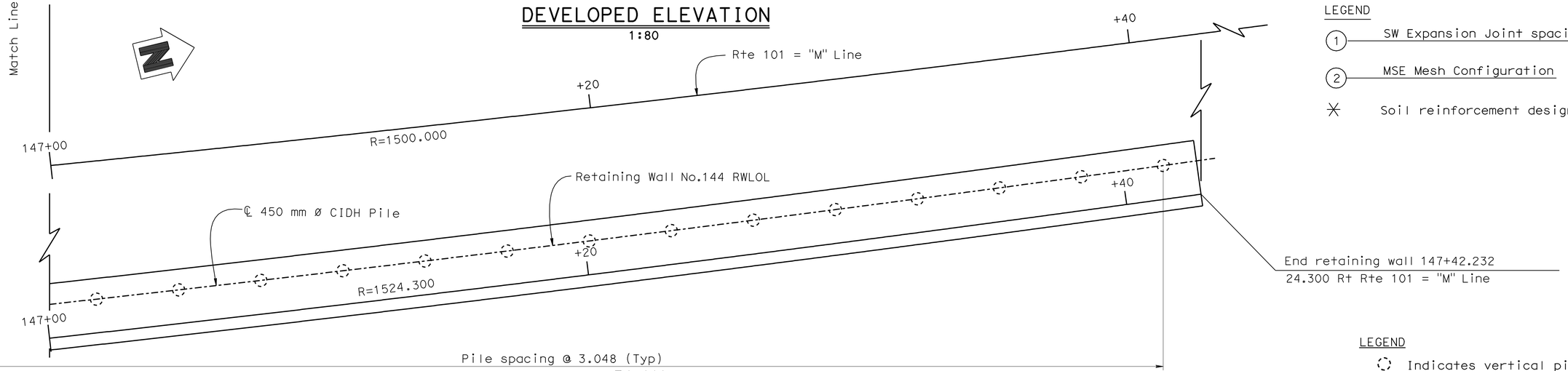

PLAN
1:80

LEGEND

◌ Indicates vertical pile

DESIGN	BY Aram Salimi	CHECKED C. Udarbe	
DETAILS	BY George Zweier	CHECKED C. Udarbe	
QUANTITIES	BY C. Udarbe	CHECKED R. Coria	

STATE OF CALIFORNIA DEPARTMENT OF TRANSPORTATION

DIVISION OF ENGINEERING SERVICES STRUCTURE DESIGN

DESIGN BRANCH 6

BRIDGE NO. 44E0015

KILOMETER POST R146.8/161.6

RETAINING WALL NO.144
STRUCTURE PLAN NO.6

ALL DIMENSIONS ARE IN METERS UNLESS OTHERWISE SHOWN

ORIGINAL SCALE IN MILLIMETERS FOR REDUCED PLANS 0 10 20 30 40 50 60 70 80 90 100

CU 05
EA 0161E1

DISREGARD PRINTS BEARING EARLIER REVISION DATES

REVISION DATES: 09-30-08 05-06-10 10-29-08 02-09-09 03-02-09 10-15-09 11-09-09 11-12-09 11-16-09 11-19-09

SHEET 7 OF 20

FILE => 44e0015-c-sp06.dgn

STRUCTURES DESIGN DETAIL SHEET (METRIC) (REV.03-17-04)

USERNAME => rtmikes DATE PLOTTED => 13-AUG-2010 TIME PLOTTED => 06:59

DIST	COUNTY	ROUTE	KILOMETER POST TOTAL PROJECT	SHEET No	TOTAL SHEETS
05	Mon	101	R146.8/159.7	1377	1402

Caltrans Metric

REGISTERED CIVIL ENGINEER — DATE 05-06-10

7-26-10
PLANS APPROVAL DATE

REGISTERED PROFESSIONAL ENGINEER — HERNAN PEREZ — No. 60993 — Exp. 12-31-10 — CIVIL — STATE OF CALIFORNIA

The State of California or its officers or agents shall not be responsible for the accuracy or completeness of electronic copies of this plan sheet.

CURVE DATA

No.	R	Δ	T	L
Ⓐ	1500.000	29°20′16"	392.649	768.065
Ⓑ	1524.300	7°57′0"	105.920	211.501

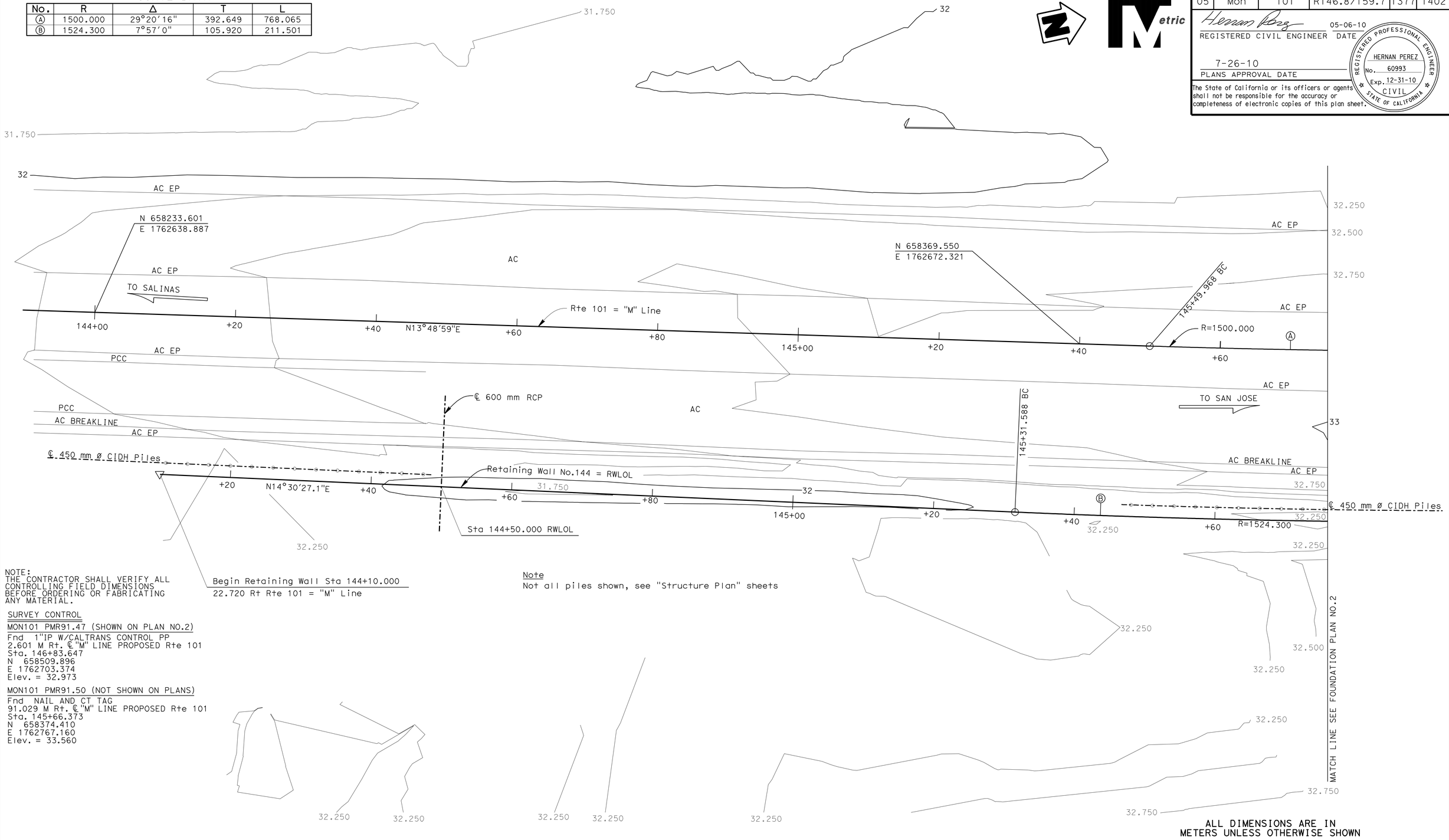

NOTE:
THE CONTRACTOR SHALL VERIFY ALL CONTROLLING FIELD DIMENSIONS BEFORE ORDERING OR FABRICATING ANY MATERIAL.

Begin Retaining Wall Sta 144+10.000
22.720 Rt Rte 101 = "M" Line

Note
Not all piles shown, see "Structure Plan" sheets

SURVEY CONTROL

MON101 PMR91.47 (SHOWN ON PLAN NO.2)
Fnd 1"IP W/CALTRANS CONTROL PP
2.601 M Rt. ℄ "M" LINE PROPOSED Rte 101
Sta. 146+83.647
N 658509.896
E 1762703.374
Elev. = 32.973

MON101 PMR91.50 (NOT SHOWN ON PLANS)
Fnd NAIL AND CT TAG
91.029 M Rt. ℄ "M" LINE PROPOSED Rte 101
Sta. 145+66.373
N 658374.410
E 1762767.160
Elev. = 33.560

ALL DIMENSIONS ARE IN METERS UNLESS OTHERWISE SHOWN

PRELIMINARY INVESTIGATION SECTION

SCALE	VERT. DATUM NGVD 1929	PHOTOGRAMMETRY AS OF:				
1:250	HORZ. DATUM NAD 83 (1991.35)	SURVEYED	BY DISTRICT/E.LOPEZ	CHECKED	BY E.LOPEZ	09/2006
ALIGNMENT TIES DIST.TRAVERSE SHEET		DRAFTED	BY T.ZOLNIKOVA 09/2006	CHECKED	BY E.LOPEZ	09/2006

	BY	CHECKED
DESIGN	Aram Salimi	C. Udarbe
DETAILS	George Zweier	C. Udarbe
QUANTITIES	C. Udarbe	R. Coria

STATE OF CALIFORNIA
DEPARTMENT OF TRANSPORTATION

DIVISION OF ENGINEERING SERVICES
STRUCTURE DESIGN
DESIGN BRANCH 6

BRIDGE NO. 44E0015
KILOMETER POST R146.8/161.6

RETAINING WALL NO.144
FOUNDATION PLAN NO.1

STRUCTURES FOUNDATION PLAN SHEET (METRIC) (REV.10-27-05)

ORIGINAL SCALE IN MILLIMETERS FOR REDUCED PLANS 0 10 20 30 40 50 60 70 80 90 100

CU 05
EA 0161E1

DISREGARD PRINTS BEARING EARLIER REVISION DATES

REVISION DATES (PRELIMINARY STAGE ONLY): 09/25/06 06/19/08 09-03-08 10-01-08 10-30-08 02-09-09 03-06-09 09-29-09 05-06-10

SHEET 8 OF 20

FILE => 44e0015-e-fp101.dgn

USERNAME => friehard DATE PLOTTED => 12-AUG-2010 TIME PLOTTED => 06:14

DIST	COUNTY	ROUTE	KILOMETER POST TOTAL PROJECT	SHEET No	TOTAL SHEETS
05	Mon	101	R146.8/159.7	1378	1402

Caltrans Metric

Hernan Perez 05-06-10
REGISTERED CIVIL ENGINEER DATE

7-26-10
PLANS APPROVAL DATE

REGISTERED PROFESSIONAL ENGINEER HERNAN PEREZ No. 60993 Exp. 12-31-10 CIVIL STATE OF CALIFORNIA

The State of California or its officers or agents shall not be responsible for the accuracy or completeness of electronic copies of this plan sheet.

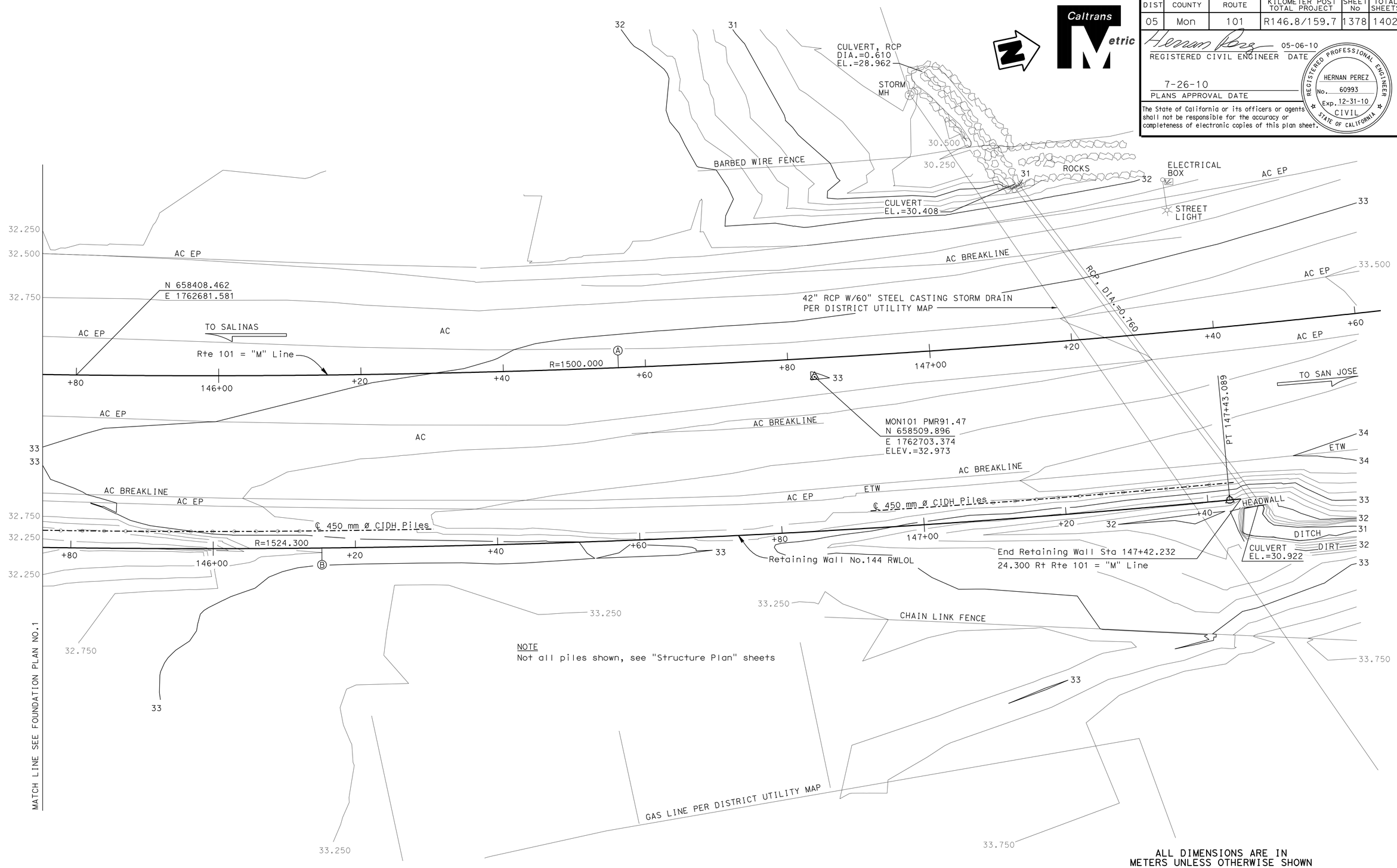

NOTE
Not all piles shown, see "Structure Plan" sheets

ALL DIMENSIONS ARE IN METERS UNLESS OTHERWISE SHOWN

PRELIMINARY INVESTIGATION SECTION							
SCALE	VERT. DATUM NGVD 1929	PHOTOGRAMMETRY AS OF:					
1:250	HORZ. DATUM NAD 83 (1991.35)	SURVEYED	BY DISTRICT/E.LOPEZ	CHECKED	BY E.LOPEZ	09/2006	
ALIGNMENT TIES DIST.TRAVERSE SHEET		DRAFTED	BY T.ZOLNIKOVA 09/2006	CHECKED	BY E.LOPEZ	09/2006	

	BY	CHECKED
DESIGN	Aram Salimi	C. Udarbe
DETAILS	George Zweier	C. Udarbe
QUANTITIES	C. Udarbe	R. Coria

STATE OF CALIFORNIA
DEPARTMENT OF TRANSPORTATION

DIVISION OF ENGINEERING SERVICES
STRUCTURE DESIGN
DESIGN BRANCH 6

BRIDGE NO. 44E0015
KILOMETER POST R146.8/161.6

RETAINING WALL NO.144
FOUNDATION PLAN NO.2

STRUCTURES FOUNDATION PLAN SHEET (METRIC) (REV.10-27-05)

ORIGINAL SCALE IN MILLIMETERS FOR REDUCED PLANS 0 10 20 30 40 50 60 70 80 90 100

CU 05
EA 0161E1

DISREGARD PRINTS BEARING EARLIER REVISION DATES

REVISION DATES (PRELIMINARY STAGE ONLY): 09-25-06 05-29-08 09-05-08 10-30-08 02-09-09 03-02-09 09-29-09 11-18-09 05-06-10

SHEET 9 OF 20

FILE => 44e0015-e-fp102.dgn

USERNAME => ttienard DATE PLOTTED => 12-AUG-2010 TIME PLOTTED => 06:14

DIST	COUNTY	ROUTE	KILOMETER POST TOTAL PROJECT	SHEET No	TOTAL SHEETS
05	Mon	101	R146.8/159.7	1379	1402

Hernan Perez 05-06-10
REGISTERED CIVIL ENGINEER DATE

7-26-10
PLANS APPROVAL DATE

REGISTERED PROFESSIONAL ENGINEER HERNAN PEREZ No. 60993 Exp. 12-31-10 CIVIL STATE OF CALIFORNIA

The State of California or its officers or agents shall not be responsible for the accuracy or completeness of electronic copies of this plan sheet.

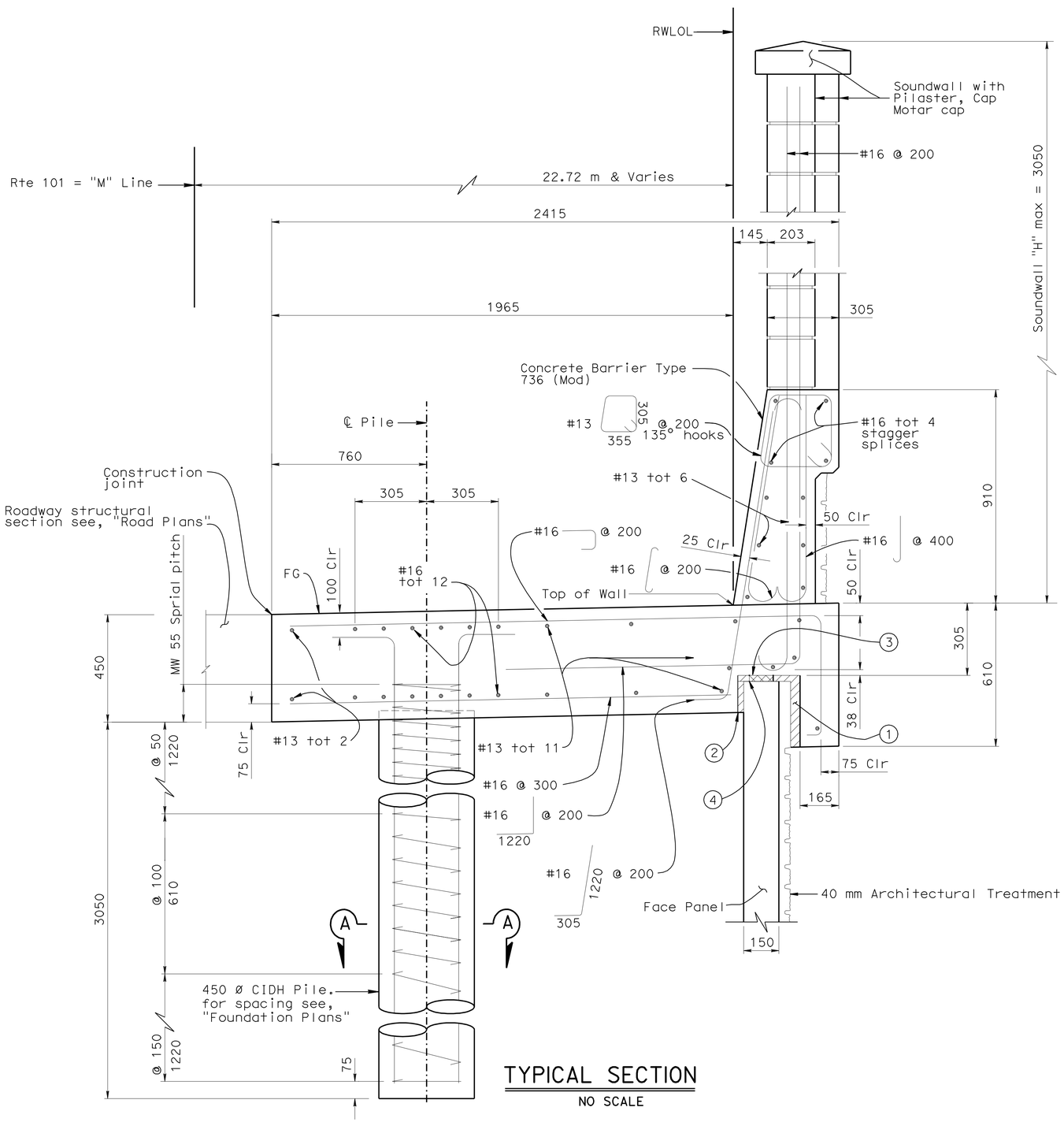

TYPICAL SECTION

NO SCALE

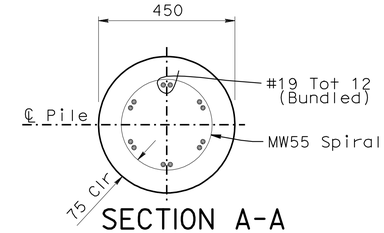

SECTION A-A

1:10

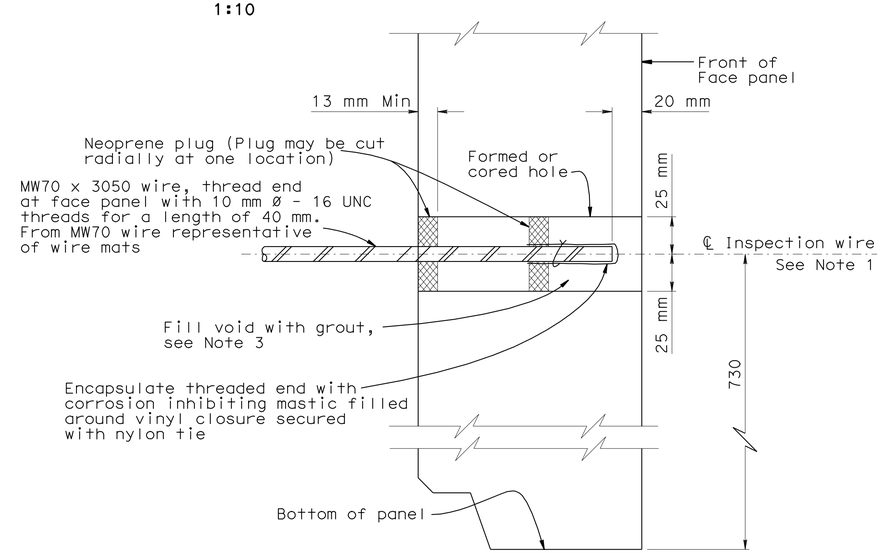

SECTION THRU INSPECTION WIRE

1:2

NOTES

1. Locate inspection wire at mid-length of full face panels, or centered between two welded wire mats of half face panels
2. Place inspection wire horizontal and perpendicular to wall prior to backfilling. After backfill placement to a level at least 610 mm above the inspection wire, dry pack opening with 7.0 to 10.5 MPa motar. Trowel motar smooth and flush with face of panel
3. Contractor shall provide spacers in addition to the neoprene plug indicated to maintain the inspection wire in the center of the 50 mm diameter hole during backfill placement. Prior to backfilling over inspection wire, inspection wire shall be so that its final position will be horizontal and perpendicular to the wall panel After backfill placement to a level at least 600 mm above the inspection wire, remove additional spacers and dry pack opening with 7.0 to 10.5 Mpa grout. Trowel grout smooth and flush with face panel
4. UNC = Unified coarse threads

LEGEND

(1) 50 mm Expanded polystyrene recessed 50 mm into barrier slab at front of MSE face panel

(2) 25 mm Expanded polystyrene

(3) Five elastomeric bearing pads 19 x 100 x 152 bonded to top of MSE face panel

(4) 12.5 mm Expanded polystyrene

Caltrans Metric

	BY	CHECKED
DESIGN	Aram Salimi	C. Udarbe
DETAILS	George Zweier	C. Udarbe
QUANTITIES	C. Udarbe	R.Coria

STATE OF CALIFORNIA
DEPARTMENT OF TRANSPORTATION

DIVISION OF ENGINEERING SERVICES
STRUCTURE DESIGN
DESIGN BRANCH 6

BRIDGE NO. 44E0015
KILOMETER POST R146.8/161.6

RETAINING WALL NO.144

MECHANICALLY STABILIZED EMBANKMENT DETAIL NO.1

ALL DIMENSIONS ARE IN MILLIMETERS UNLESS OTHERWISE SHOWN

ORIGINAL SCALE IN MILLIMETERS FOR REDUCED PLANS 0 10 20 30 40 50 60 70 80 90 100

CU 05
EA 01E161

DISREGARD PRINTS BEARING EARLIER REVISION DATES

REVISION DATES: 08-20-08 | 08-26-08 | 10-29-08 | 02-09-09 | 10-15-09 | 11-12-09 | 11-18-09 | 12-03-09 | 05-06-10

SHEET 10 OF 20

FILE => 44e0015-w-rwdet01.dgn

STRUCTURES DESIGN DETAIL SHEET (METRIC) (REV.03-17-04)

USERNAME => trlenard DATE PLOTTED => 12-AUG-2010 TIME PLOTTED => 06:14

DIST	COUNTY	ROUTE	KILOMETER POST TOTAL PROJECT	SHEET No	TOTAL SHEETS
05	Mon	101	R146.8/159.7	1380	1402

Hernan Perez 05-06-10
REGISTERED CIVIL ENGINEER DATE

7-26-10
PLANS APPROVAL DATE

REGISTERED PROFESSIONAL ENGINEER HERNAN PEREZ No. 60993 Exp. 12-31-10 CIVIL STATE OF CALIFORNIA

The State of California or its officers or agents shall not be responsible for the accuracy or completeness of electronic copies of this plan sheet.

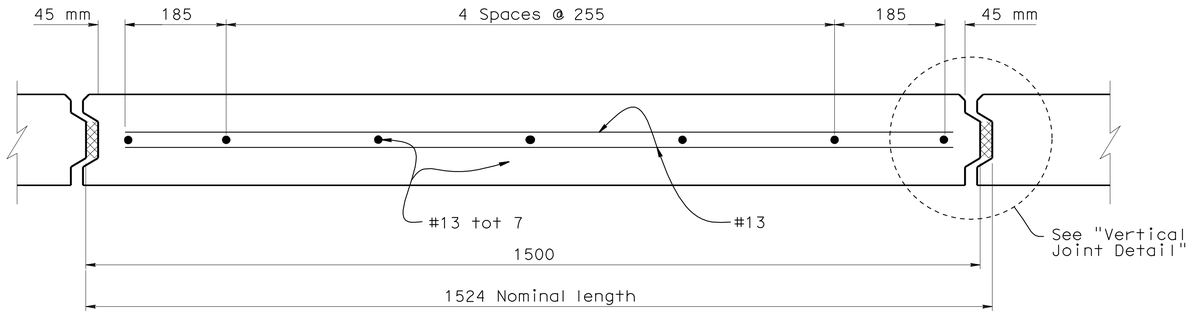

PLAN - FACE PANEL
1:5

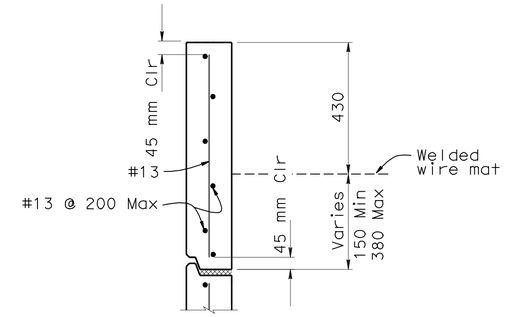

TYPE F
TOP PANEL
1:10

NOTES

1. Place reinforced elastomeric bearing pads in all of the panel joints between the panels. Place one in each vertical joint where the horizontal joint intersects it. Place two per panel in each horizontal joint:
   19 mm x 60 mm x 150 mm for vertical joints
   19 mm x 100 mm x 150 mm for horizontal joints
2. Bond a strip of filter fabric, 305 mm wide, over the full length of all panel joints
3. For "Horizontal Joint Detail" and "Vertical Joint Detail" see, "Mechanically Stabilized Embankment Detail No.5" sheet
4. Inspection wires are to be fabricated from wire represenative of wire used for welded wire mats for the wall
5. For "General Notes" see, "Mechanically Stabilized Embankment Details No. 4" sheet
6. Architectural treatment not shown

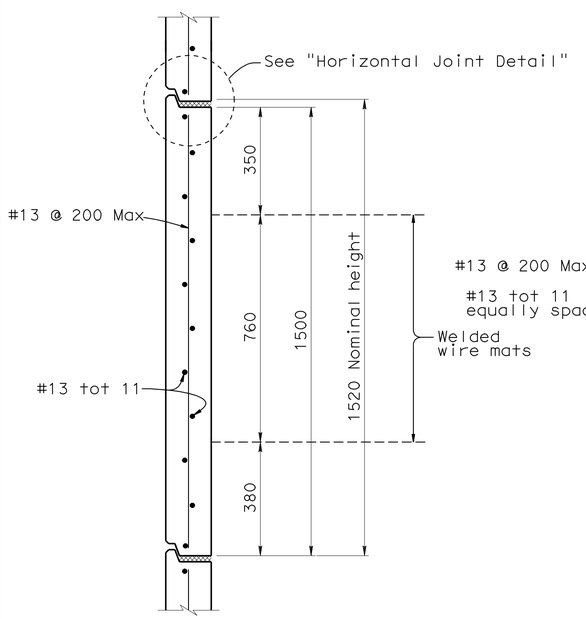

TYPE A
INTERMEDIATE PANEL
1:10

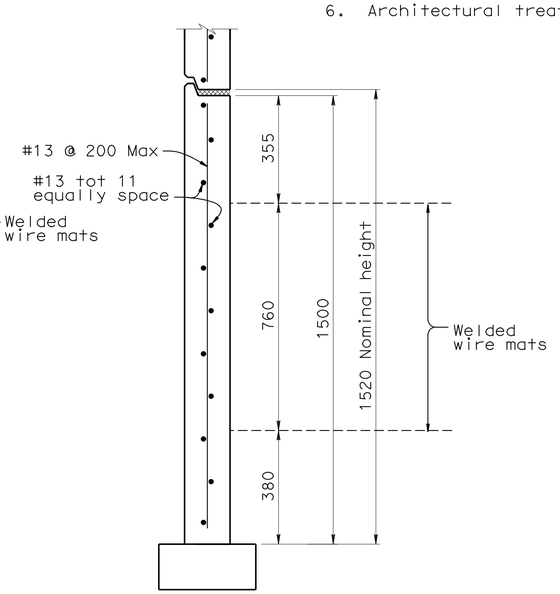

TYPE B
BOTTOM PANEL
1:10

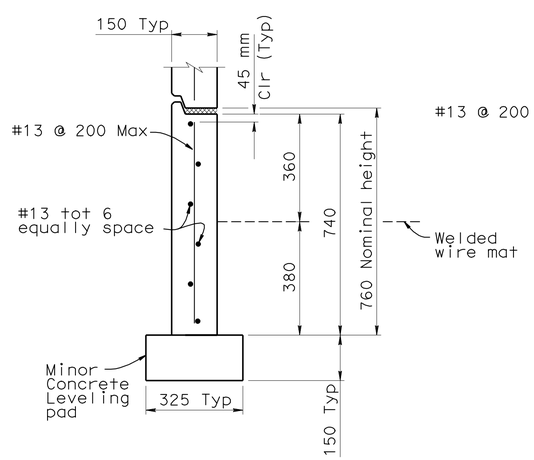

TYPE C
BOTTOM HALF PANEL
1:10

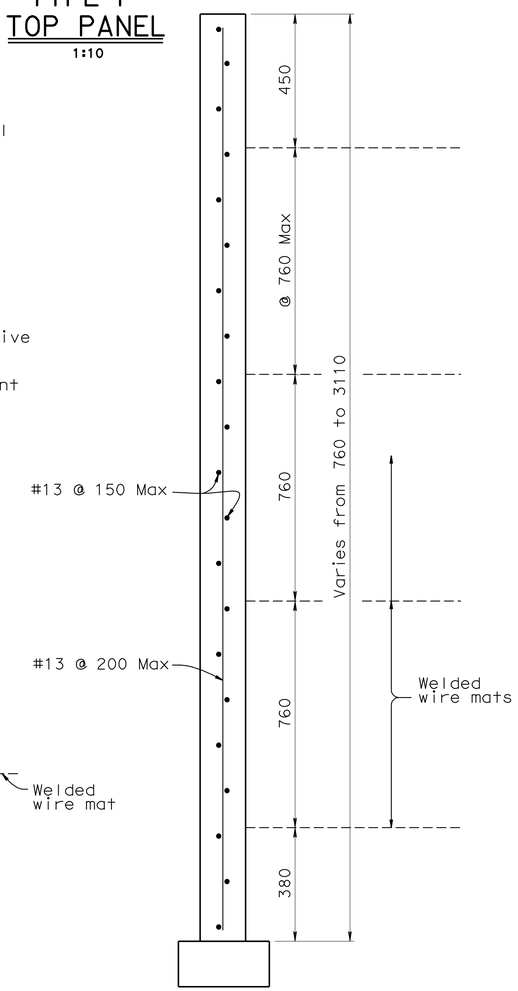

TYPE D
BOTTOM FULL PANEL
1:10

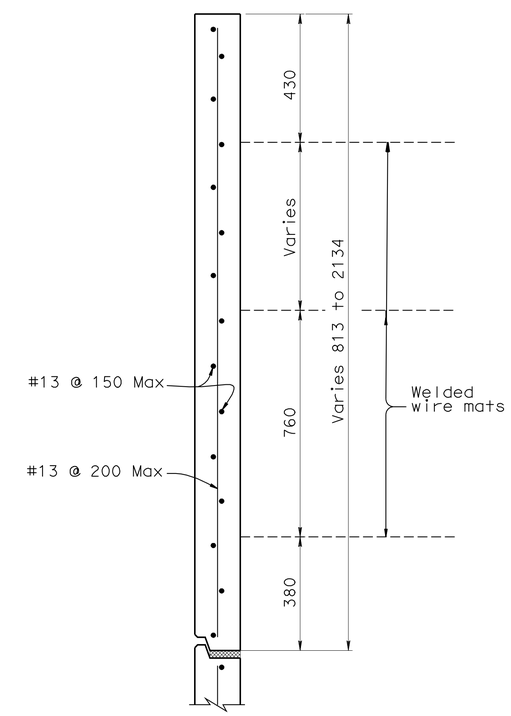

TYPE E
TOP PANEL
1:10

DESIGN	BY Aram Salimi	CHECKED C. Udarbe	
DETAILS	BY George Zweier	CHECKED C. Udarbe	
QUANTITIES	BY C. Udarbe	CHECKED R. Coria	

STATE OF CALIFORNIA
DEPARTMENT OF TRANSPORTATION

DIVISION OF ENGINEERING SERVICES
STRUCTURE DESIGN
DESIGN BRANCH 6

CU 05
EA 0161E1

BRIDGE NO. 44E0015
KILOMETER POST R146.8/161.6

RETAINING WALL NO. 144
MECHANICALLY STABILIZED EMBANKMENT DETAIL NO.2

ALL DIMENSIONS ARE IN MILLIMETERS UNLESS OTHERWISE SHOWN

ORIGINAL SCALE IN MILLIMETERS FOR REDUCED PLANS 0 10 20 30 40 50 60 70 80 90 100

DISREGARD PRINTS BEARING EARLIER REVISION DATES

REVISION DATES: 08-28-08 08-28-08 08-29-08 10-07-08 10-29-08 05-06-10

SHEET 11 OF 20

FILE => 44e0015-w-rwdet02.dgn

STRUCTURES DESIGN DETAIL SHEET (METRIC) (REV.03-17-04)

USERNAME => trricht DATE PLOTTED => 03-AUG-2010 TIME PLOTTED => 11:15

DIST	COUNTY	ROUTE	KILOMETER POST TOTAL PROJECT	SHEET No	TOTAL SHEETS
05	Mon	101	R146.8/159.7	1381	1402

REGISTERED CIVIL ENGINEER 05-06-10 DATE

7-26-10
PLANS APPROVAL DATE

REGISTERED PROFESSIONAL ENGINEER HERNAN PEREZ No. 60993 Exp. 12-31-10 CIVIL STATE OF CALIFORNIA

The State of California or its officers or agents shall not be responsible for the accuracy or completeness of electronic copies of this plan sheet.

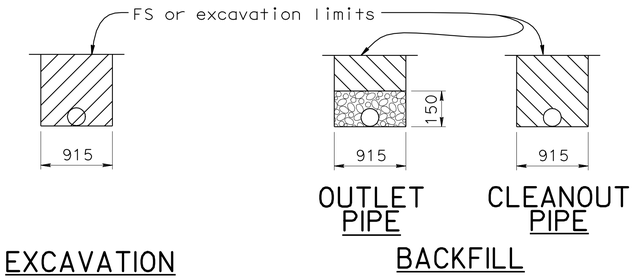

OUTLET OR CLEANOUT PIPE FOR UNDERDRAIN

NO SCALE

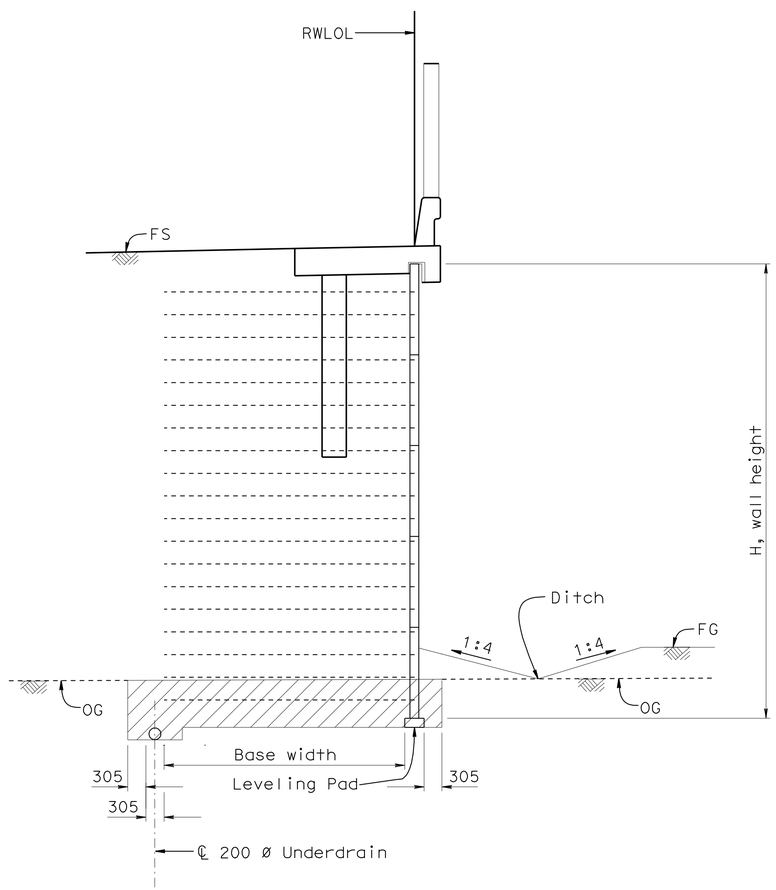

LIMITS OF EXCAVATION

1:50

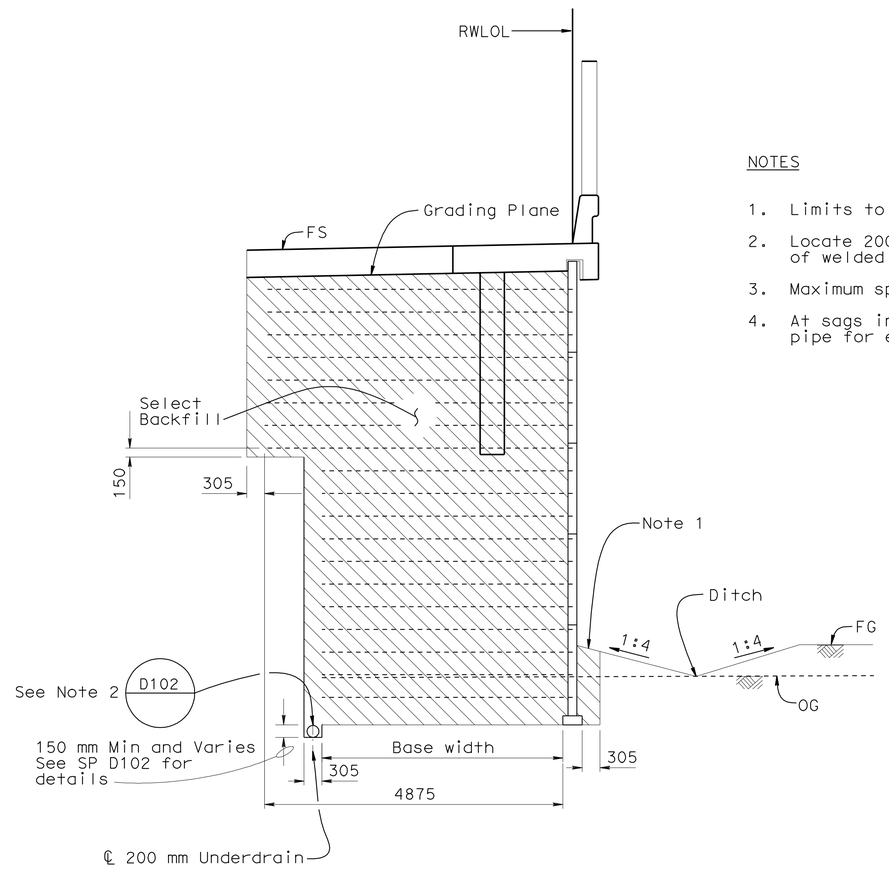

LIMITS OF BACK FILL

1:50

NOTES

1. Limits to FS except to GP when in roadway section
2. Locate 200 mm perforated underdrain below bottom level of welded wire mats
3. Maximum spacing of outlet pipes is 61 m
4. At sags in profile of underdrain, install outlet pipe for each direction of flow

LEGEND

Limits of structure excavation

Limits of structure backfill

Limits of permeable material

ABBREVIATIONS

OG - Original ground
FS - Planned Finished grade
GP - Planned Grading plan

Caltrans Metric

	BY	CHECKED
DESIGN	Aram Salimi	C. Udarbe
DETAILS	George Zweier	C. Udarbe
QUANTITIES	C. Udarbe	R. Coria

STATE OF CALIFORNIA DEPARTMENT OF TRANSPORTATION

DIVISION OF ENGINEERING SERVICES STRUCTURE DESIGN DESIGN BRANCH 6

BRIDGE NO. 44E0015
KILOMETER POST R146.8/161.6

RETAINING WALL NO. 144

MECHANICALLY STABILIZED EMBANKMENT DETAIL NO.3

ALL DIMENSIONS ARE IN MILLIMETERS UNLESS OTHERWISE SHOWN

ORIGINAL SCALE IN MILLIMETERS FOR REDUCED PLANS 0 10 20 30 40 50 60 70 80 90 100

CU 05
EA 0161E1

DISREGARD PRINTS BEARING EARLIER REVISION DATES

REVISION DATES 08-22-08 10-29-08 02-09-09 04-09-09 11-12-09 05-06-10

SHEET 12 OF 20

FILE => 44e0015-w-rwdet03.dgn

STRUCTURES DESIGN DETAIL SHEET (METRIC) (REV.03-17-04)

USERNAME => trlehard DATE PLOTTED => 12-AUG-2010 TIME PLOTTED => 06:15

DIST	COUNTY	ROUTE	KILOMETER POST TOTAL PROJECT	SHEET No	TOTAL SHEETS
05	Mon	101	R146.8/159.7	1382	1402

Hernan Perez 05-06-10
REGISTERED CIVIL ENGINEER DATE

7-26-10
PLANS APPROVAL DATE

REGISTERED PROFESSIONAL ENGINEER HERNAN PEREZ No. 60993 Exp. 12-31-10 CIVIL STATE OF CALIFORNIA

The State of California or its officers or agents shall not be responsible for the accuracy or completeness of electronic copies of this plan sheet.

GENERAL NOTES (MSE WALLS)

Live loading: Surcharge = 11.5 kPa

Soil parameters:
Internal design ϕ = 34°, γ= 19 kN/m^3
External design ϕ (Backfill) = 34°, γ = 19 kN/m^3
ø (Foundation) = 30

Precast concrete panels:
f'c = 28 MPa (Concrete compressive strength at 28 days)

fy = 420 MPa (Yield strength of reinforcement)

Soil reinforcement:
Welded wire mats: fy = 480 MPa (Yield strength)
Coupler: fy = 250 MPa (Yield strength)
Corrosion rate = 33 Um/year

Reinforced concrete:
f'c = 25 MPa, (Concrete compressive strength at 28 days)
fy = 420 MPa (Yield strength of reinforcement)

MSE = Mechanically stabilized embankment

Mesh Configuration:
Longitudinal wire size X transverse wire size
+ Longitudinal wire spacing X transverse wire spacing

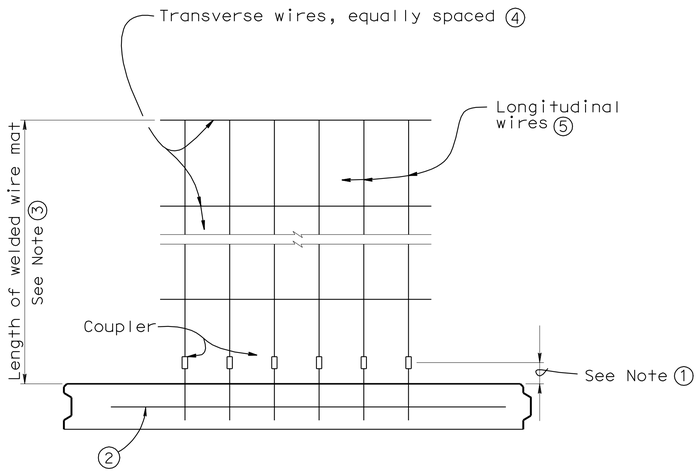

PLAN OF PANEL WITH WELDED WIRE MAT

1:10

NOTES & LEGEND

1. Distance as required to permit coupler to be swagged.
2. Place #13 bar, 965 mm long, centered on connector mat, but not welded to it.
3. Length equals "Base width" of wall, except it shall not be less than 5.25 m for the top 2 levels of mats at the top of the wall.
4. All Transverse Wires size MW70 and the spacings as shown on the Structure Plans.
5. All Logitudinal Wires at 152 mm spacing, as shown on the Structure Plans.
6. Top reinforcing mat maybe sloped up to 15 degrees to avoid conflict with the roadway section or barrier slab.
7. Panel reinforcement not shown.

✳ Buttonheaded at coupler end

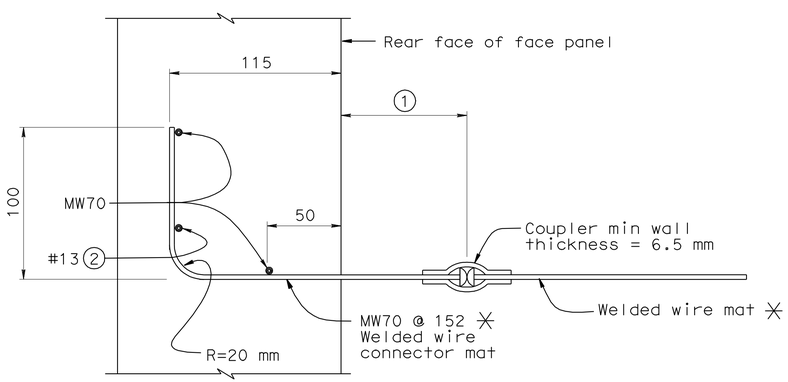

MW70 LONGITUDINAL WIRES

1:2

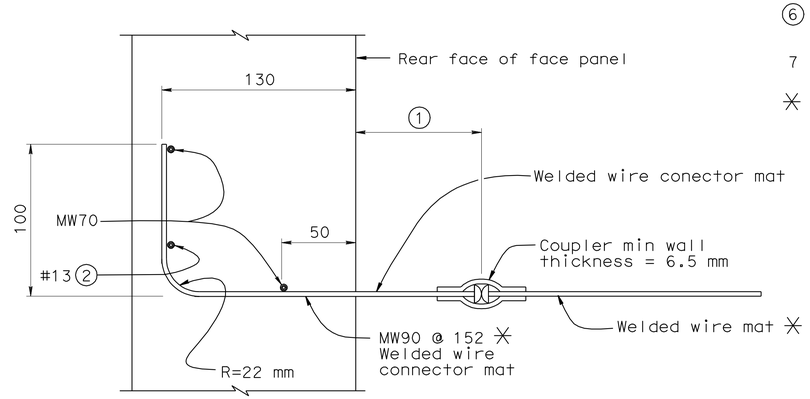

MW90 LONGITUDINAL WIRES

1:2

Caltrans Metric	DESIGN	BY Aram Salimi	CHECKED C. Udarbe	STATE OF CALIFORNIA DEPARTMENT OF TRANSPORTATION	DIVISION OF ENGINEERING SERVICES STRUCTURE DESIGN DESIGN BRANCH 6
	DETAILS	BY George Zweier	CHECKED C. Udarbe		
	QUANTITIES	BY C. Udarbe	CHECKED R. Coria		

BRIDGE NO. 44E0015
KILOMETER POST R146.8/161.6

RETAINING WALL NO. 144
MECHANICALLY STABILIZED EMBANKMENT DETAIL NO.4

ALL DIMENSIONS ARE IN MILLIMETERS UNLESS OTHERWISE SHOWN

ORIGINAL SCALE IN MILLIMETERS FOR REDUCED PLANS 0 10 20 30 40 50 60 70 80 90 100

CU 05
EA 0161E1

DISREGARD PRINTS BEARING EARLIER REVISION DATES

REVISION DATES: 08-28-08 10-22-08 02-04-09 11-12-09 05-06-10

SHEET 13 OF 20

FILE => 44e0015-w-rwdet04.dgn

STRUCTURES DESIGN DETAIL SHEET (METRIC) (REV.03-17-04)

USERNAME => trmikesl DATE PLOTTED => 13-AUG-2010 TIME PLOTTED => 06:59

DIST	COUNTY	ROUTE	KILOMETER POST TOTAL PROJECT	SHEET No	TOTAL SHEETS
05	Mon	101	R146.8/159.7	1383	1402

REGISTERED CIVIL ENGINEER 05-06-10 DATE

7-26-10
PLANS APPROVAL DATE

REGISTERED PROFESSIONAL ENGINEER HERNAN PEREZ No. 60993 Exp. 12-31-10 CIVIL STATE OF CALIFORNIA

The State of California or its officers or agents shall not be responsible for the accuracy or completeness of electronic copies of this plan sheet.

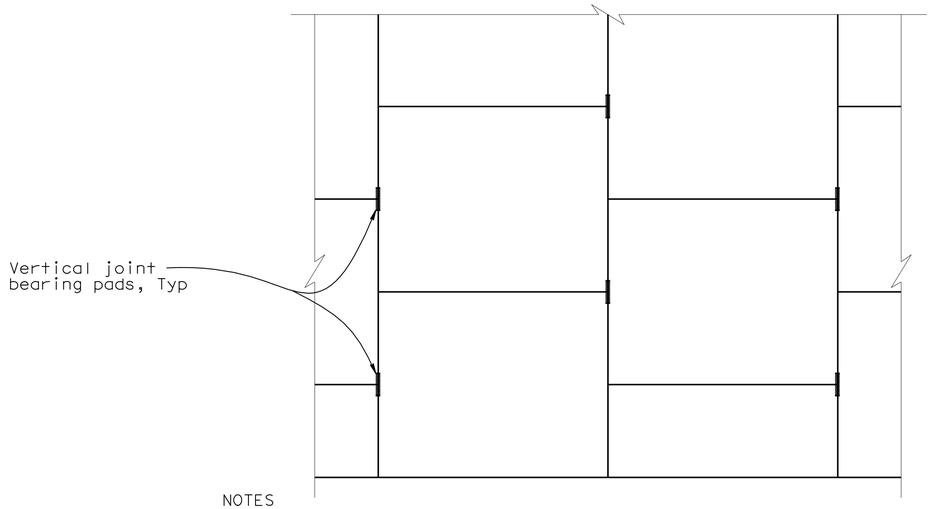

NOTES

1. Horizontal joint bearing pads not shown
2. Bearing pads to be located at end of panel joints where horizontal panel joints intersect vertical panel joints (except at top and bottom wall)
3. For details not shown, see "Mechanically Stabilized Embankment Detail No.2" sheet

VERTICAL JOINT BEARING PAD DETAIL

NO SCALE

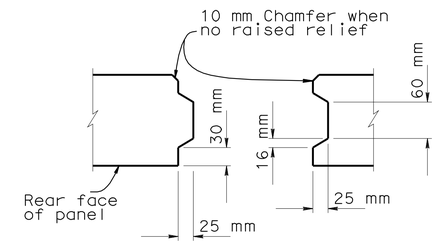

VERTICAL JOINT DETAIL

1:5

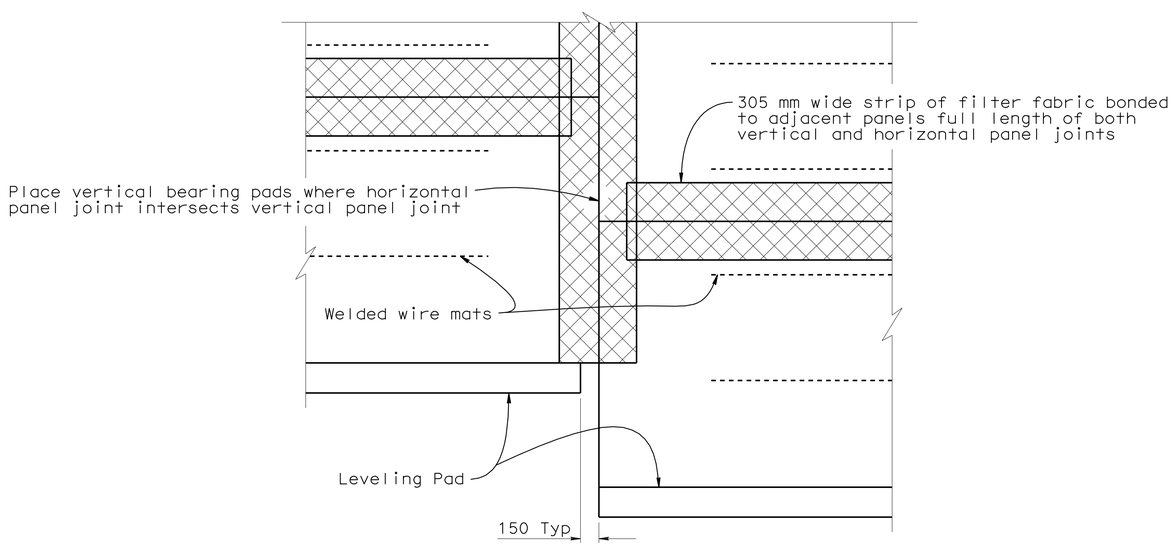

REAR ELEVATION

NO SCALE

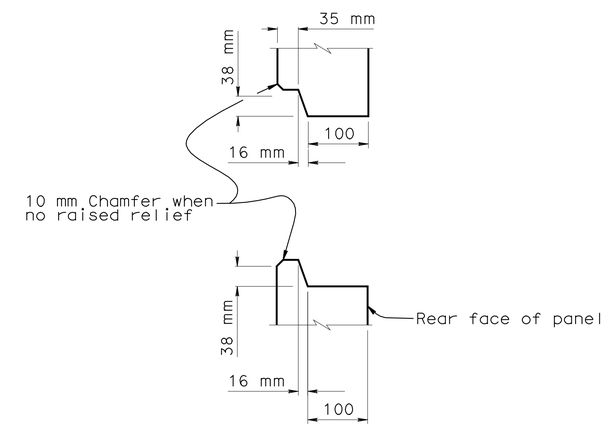

HORIZONTAL JOINT DETAIL

1:5

DESIGN	BY Aram Salimi	CHECKED C. Udarbe	
DETAILS	BY George Zweier	CHECKED C. Udarbe	
QUANTITIES	BY C. Udarbe	CHECKED R. Coria	

STATE OF CALIFORNIA DEPARTMENT OF TRANSPORTATION

DIVISION OF ENGINEERING SERVICES STRUCTURE DESIGN

DESIGN BRANCH 6

BRIDGE NO. 44E0015

KILOMETER POST R146.8/161.6

RETAINING WALL NO. 144

MECHANICALLY STABILIZED EMBANKMENT DETAIL NO.5

ALL DIMENSIONS ARE IN MILLIMETERS UNLESS OTHERWISE SHOWN

ORIGINAL SCALE IN MILLIMETERS FOR REDUCED PLANS 0 10 20 30 40 50 60 70 80 90 100

CU 05
EA 0161E1

DISREGARD PRINTS BEARING EARLIER REVISION DATES 09-02-08 10-22-08 02-08-09 11-12-09 05-06-10

SHEET 14 OF 20

FILE => 44e0015-w-rwdet05.dgn

STRUCTURES DESIGN DETAIL SHEET (METRIC) (REV.03-17-04)

USERNAME => trrichf DATE PLOTTED => 03-AUG-2010 TIME PLOTTED => 11:15

DIST	COUNTY	ROUTE	KILOMETER POST TOTAL PROJECT	SHEET No	TOTAL SHEETS
05	Mon	101	R146.8/159.7	1384	1402

Hernan Perez 05-06-10
REGISTERED CIVIL ENGINEER DATE

7-26-10
PLANS APPROVAL DATE

REGISTERED PROFESSIONAL ENGINEER HERNAN PEREZ No. 60993 Exp. 12-31-10 CIVIL STATE OF CALIFORNIA

The State of California or its officers or agents shall not be responsible for the accuracy or completeness of electronic copies of this plan sheet.

NOTES

1. Details shown are primarily to conform design of sound walls to Type 736 (mod) Concrete Barriers. For sound wall details conforming with barriers, see Revised Standard Plan B15-7 and Standard Plan RSP B15-8
2. For details and sections not shown, see Revised Standard Plan B15-7, Standard Plan RSP B15-6 and Standard Plan RSP B15-7
3. Slope ground at traffic side of barrier to drain
4. Maximum slope ±10%. See Std Plan B11-56, Note D
5. When blocks are laid in stacked bond, layer type, galvanized joint reinforcement shall be provided. A minimum of 2-9 gauge wires continuous at 1200 mm maximum to be used. Locate reinforcement in joints that are at the approximate midpoint between bond beams
6. Horizontal joints shall be tooled concave or may be weathered. Vertical joints shall be tooled concave or may be raked
7. For details not shown, see "Road Plans"
8. Masonary blocks shall be arranged in a running bond pattern
9. All line and terminal pilasters shall be constructed plumb
10. All exposed full block ends at wall and pilasters shall be split face block
11. All exposed wall cap ends and pilaster caps shall be split face block

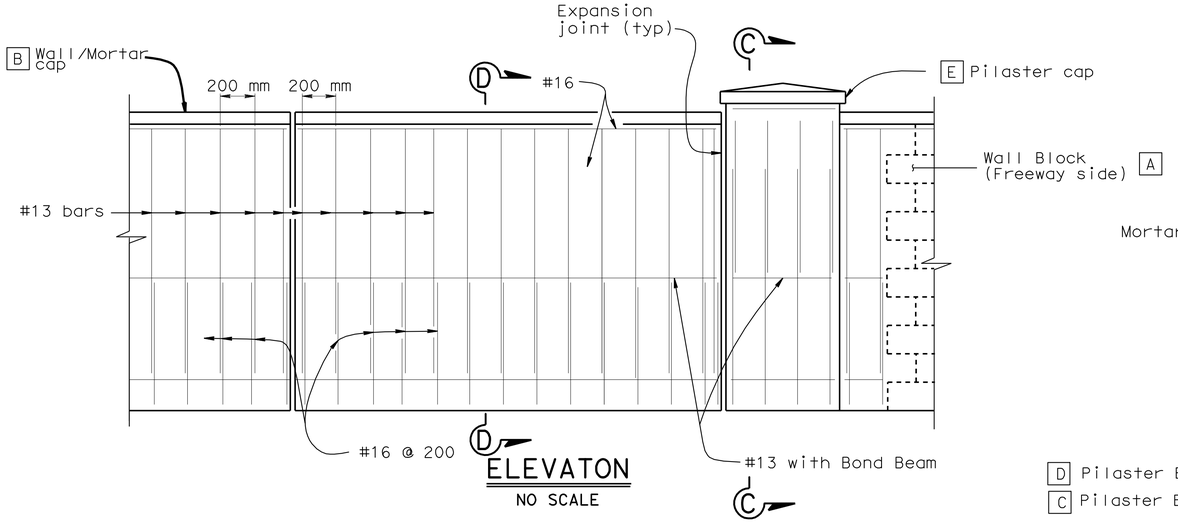

ELEVATON
NO SCALE

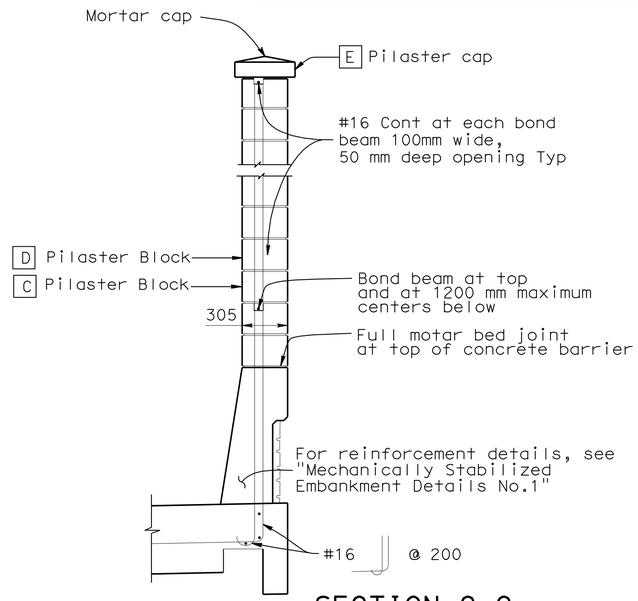

SECTION C-C
1:20

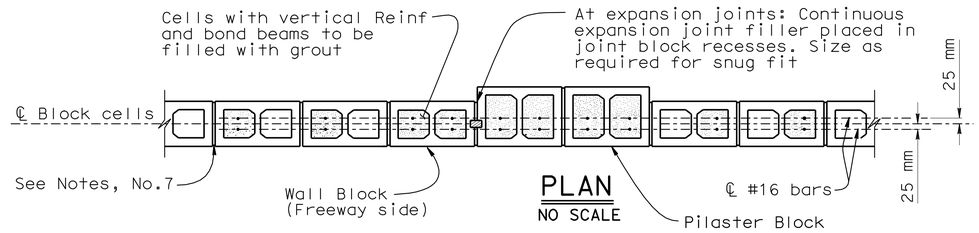

PLAN
NO SCALE

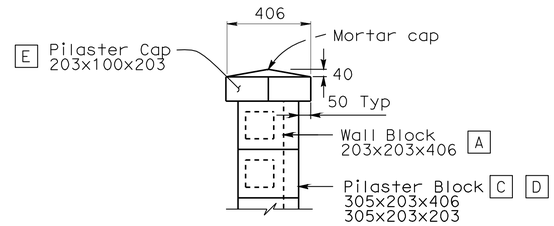

SECTION A-A
NO SCALE

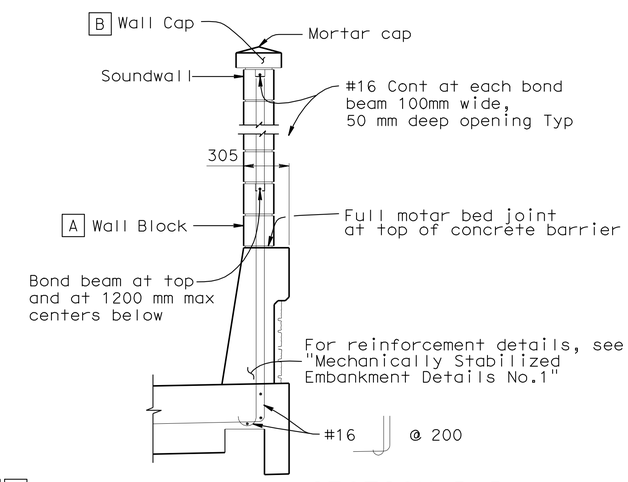

SECTION D-D
1:20

DESIGN NOTES

DESIGN
Uniform Building Code, 1997 Edition and the Bridge Design Specifications.

DESIGN WIND LOAD
1300 pa

DESIGN SEISMIC LOAD
0.57 Dead load

REINFORCED CONCRETE
f'c = 23 Mpa
fy = 415 Mpa

CONCRETE MASONRY

REGULAR STRENGTH	HIGH STRENGTH	
f'm = 10.34 Mpa	f'm = 13.79 Mpa	f'm = 17.24 Mpa
fb = 3.41 Mpa	fb = 4.55 Mpa	fb = 5.72 Mpa
fs = 165.5 Mpa	fs = 165.5 Mpa	fs = 165.5 Mpa
n = 25.8	n = 19.3	n = 15.5

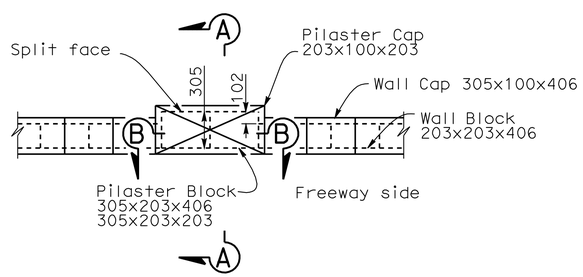

PLAN VIEW
PILASTER
NO SCALE

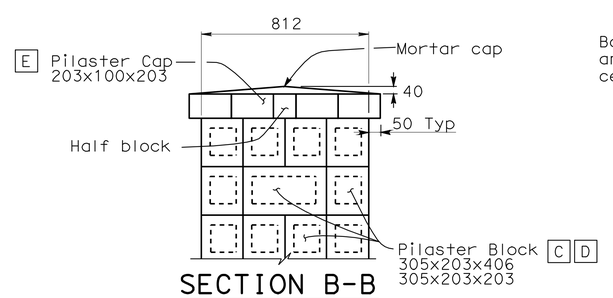

SECTION B-B
NO SCALE

MASONRY UNIT KEY

A WALL BLOCK - SPLIT FACE 2 SIDES. EXPOSED WALL ENDS SPLIT FACE, 2 SIDES 1 END. FEDERAL COLOR NO. 20095

B WALL CAP - SPLIT FACE 2 SIDES. EXPOSED CAP ENDS SPLIT FACE, 2 SIDES 1 END. FEDERAL COLOR NO. 30340

C PILASTER BLOCK - SPLIT FACE 2 SIDES. FEDERAL COLOR NO. 36440

D PILASTER BLOCK - SPLIT FACE 2 SIDES. EXPOSED FULL BLOCK ENDS SPLIT FACE, 2 SIDES 1 END. FEDERAL COLOR NO. 30340

E PILASTER CAP - SPLIT FACE 1 SIDE 1 END AND SPLIT FACE 1 END. FEDERAL COLOR NO. 30340

Caltrans Metric

	BY	CHECKED
DESIGN	Aram Salimi	C. Udarbe
DETAILS	George Zweier	C. Udarbe
QUANTITIES	C. Udarbe	R. Coria

STATE OF CALIFORNIA
DEPARTMENT OF TRANSPORTATION

DIVISION OF ENGINEERING SERVICES
STRUCTURE DESIGN
DESIGN BRANCH 6

BRIDGE NO. 44E0015
KILOMETER POST R146.8/161.6

RETAINING WALL NO.144
BARRIER 736 (MOD) SOUND WALL DETAILS

ALL DIMENSIONS ARE IN MILLIMETERS UNLESS OTHERWISE SHOWN

ORIGINAL SCALE IN MILLIMETERS FOR REDUCED PLANS 0 10 20 30 40 50 60 70 80 90 100

CU 05
EA 0161E1

DISREGARD PRINTS BEARING EARLIER REVISION DATES

REVISION DATES: 10-27-06 10-22-08 02-09-09 03-09-09 11-18-09 12-08-09 12-08-09 05-06-10

SHEET 15 OF 20

FILE => 44e0015-x-bswdet.dgn

STRUCTURES DESIGN DETAIL SHEET (METRIC) (REV.03-17-04)

USERNAME => trrichf DATE PLOTTED => 03-AUG-2010 TIME PLOTTED => 11:15

DIST	COUNTY	ROUTE	KILOMETER POST TOTAL PROJECT	SHEET No	TOTAL SHEETS
05	Mon	101	R146.8/159.7	1385	1402

REGISTERED CIVIL ENGINEER 05-06-10 DATE

7-26-10
PLANS APPROVAL DATE

REGISTERED PROFESSIONAL ENGINEER HERNAN PEREZ No. 60993 Exp. 12-31-10 CIVIL STATE OF CALIFORNIA

The State of California or its officers or agents shall not be responsible for the accuracy or completeness of electronic copies of this plan sheet.

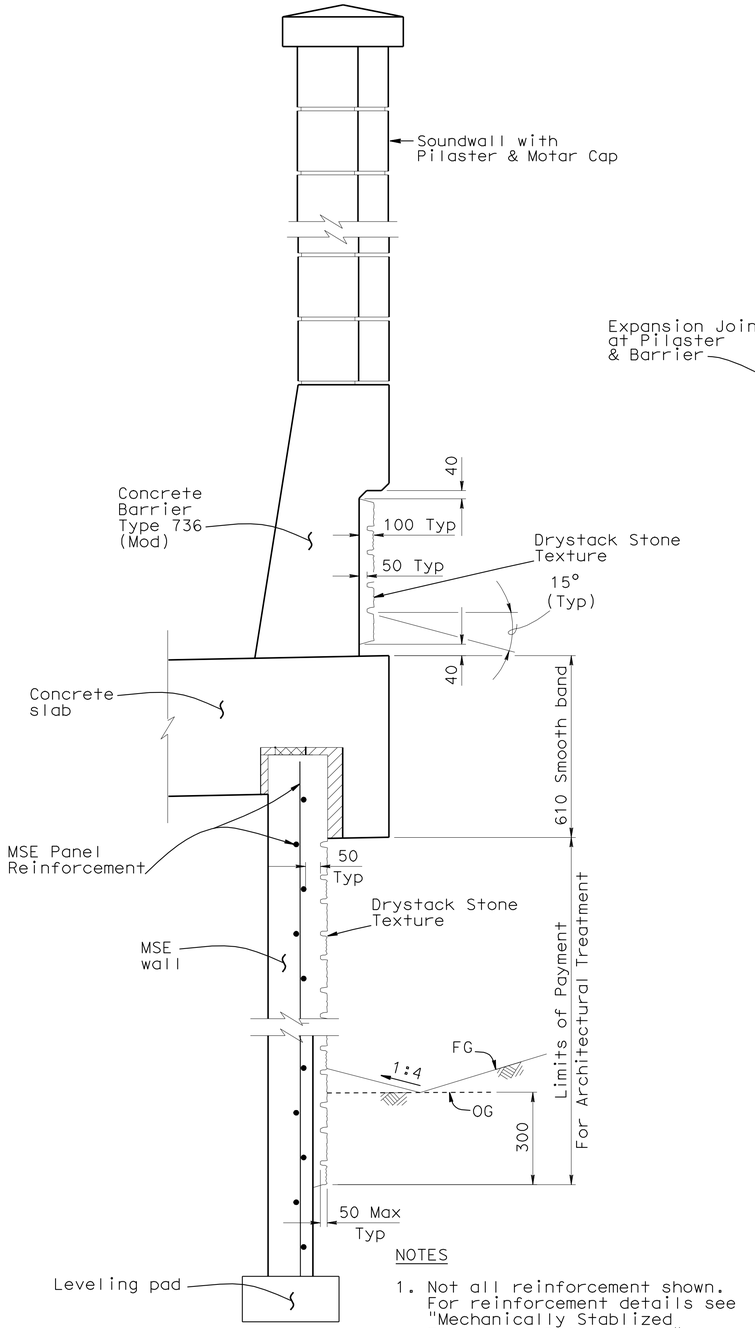

SECTION B-B

NO SCALE

NOTES

1. Not all reinforcement shown. For reinforcement details see "Mechanically Stablized Embankment Detail No. 1" and "Mechanically Stabilized Embankment Detail No 2" Sheets

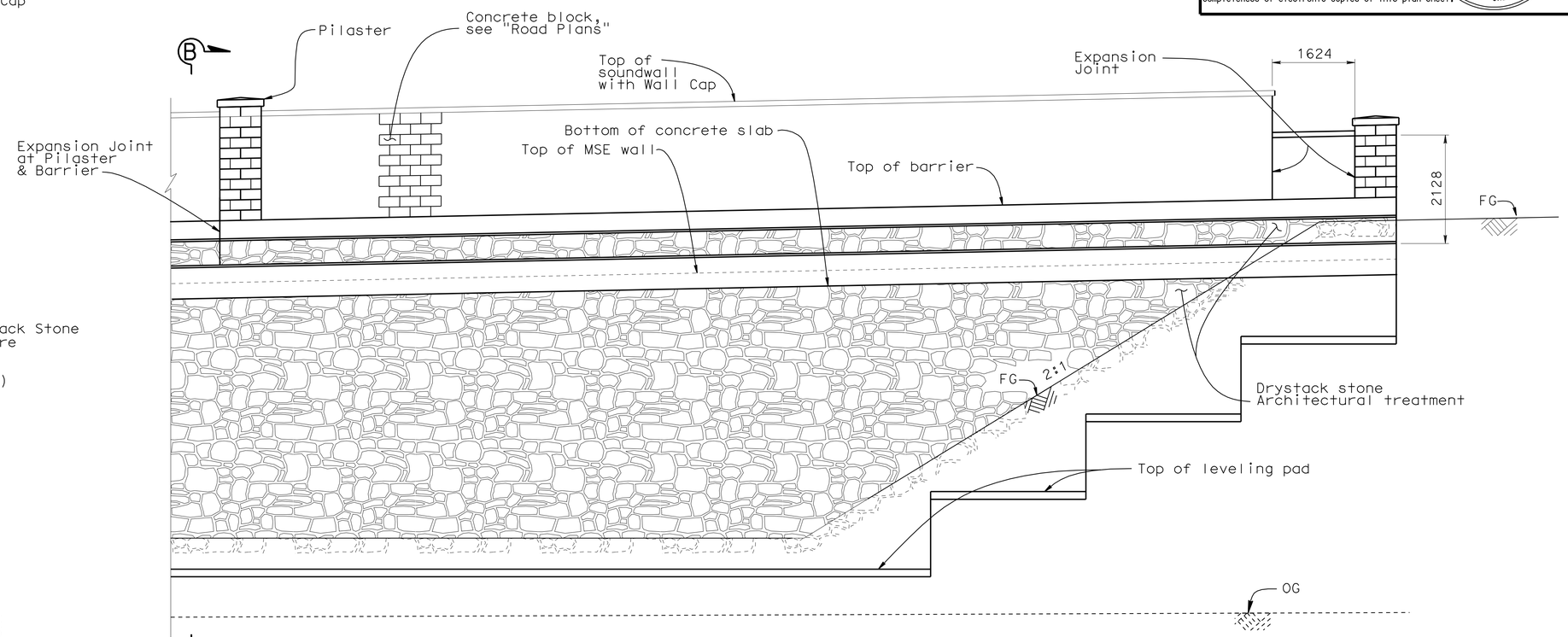

ELEVATION

1:50

NOTES

1. End of wall shown, see "Structure Plan No.1" for Beginning of wall
2. Architectural treatment not shown beyond bottom of concrete slab
3. For soundwall architectural treatment, see "Road Plans"
4. For details not shown, see "Barrier 736 (Mod) Sound Wall Details" sheet

Caltrans Metric

	BY	CHECKED
DESIGN	Aram Salimi	C. Udarbe
DETAILS	George Zweier	C. Udarbe
QUANTITIES	C. Udarbe	R. Coria

STATE OF CALIFORNIA DEPARTMENT OF TRANSPORTATION

DIVISION OF ENGINEERING SERVICES STRUCTURE DESIGN DESIGN BRANCH 6

BRIDGE NO. 44E0015
KILOMETER POST R146.8/161.6

RETAINING WALL NO. 144
ARCHITECTURAL TREATMENT

ALL DIMENSIONS ARE IN MILLIMETERS UNLESS OTHERWISE SHOWN

ORIGINAL SCALE IN MILLIMETERS FOR REDUCED PLANS 0 10 20 30 40 50 60 70 80 90 100

CU 05
EA 0161E1

DISREGARD PRINTS BEARING EARLIER REVISION DATES

REVISION DATES: 09-22-08 10-22-08 02-04-09 04-30-09 10-16-09 11-16-09 12-03-09 05-06-10

SHEET 16 OF 20

FILE => 44e0015-y-rwarchtrt.dgn

STRUCTURES DESIGN DETAIL SHEET (METRIC) (REV.03-17-04)

USERNAME => trrichf DATE PLOTTED => 03-AUG-2010 TIME PLOTTED => 11:15

DIST	COUNTY	ROUTE	KILOMETER POST TOTAL PROJECT	SHEET No	TOTAL SHEETS
05	Mon	101	R146.8/159.7	1386	1402

REGISTERED CIVIL ENGINEER 6-17-09

7-26-10
PLANS APPROVAL DATE

REGISTERED PROFESSIONAL ENGINEER — Dan Appelbaum — No. C50001 — Exp. 06-30-11 — CIVIL — STATE OF CALIFORNIA

The State of California or its officers or agents shall not be responsible for the accuracy or completeness of electronic copies of this plan sheet.

BENCH MARK

PM 91.42 Elev. 31.715 m (NGVD29)
0.025m IP w/caltrans control pp, in median, 1.0 m W of carsonite post on MBGR post.

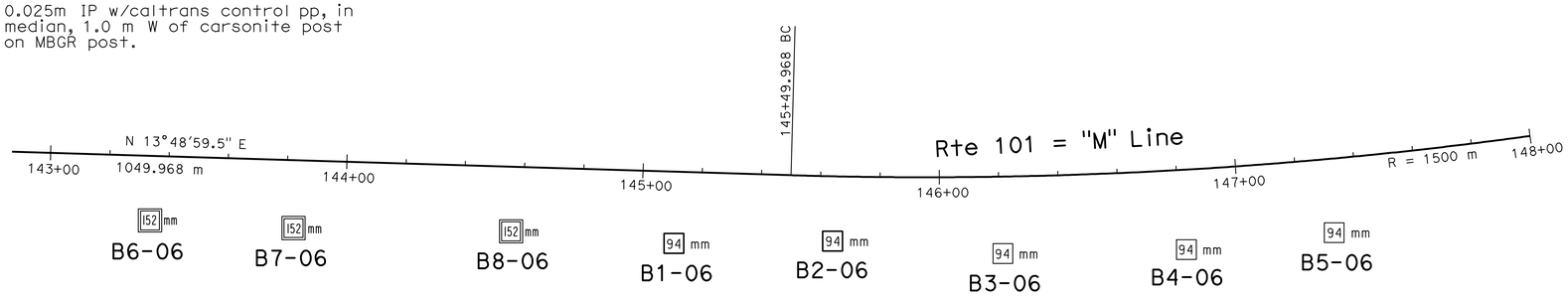

PLAN
1:1000

Notes,

1. 35 mm samples were taken using a standard split barrel sampler with an inside diameter (I.D.) of 35 mm and an outside diameter (O.D.) of 51 mm.
2. A Boart/Longyear automatic hammer was used to advance the sampler using a 63.5 Kg hammer with a 762 mm drop.
3. Borings B1-06 through B5-06 were drilled using a "HX" wireline core barrel with "HQ" drill rod, outside diameter (O.D.) of 89 mm and inside diameter (I.D.) of 78 mm. Borings B6-06 through B8-06 were drilled using 152 mm hollow stem augers.
4. qu=unconfined compressive strength as determined by pocket penetrometer (kPa).
5. tv=undrained shear strength as determined by hand TORVANE (kPa).
6. Groundwater not encountered during subsurface investigation.

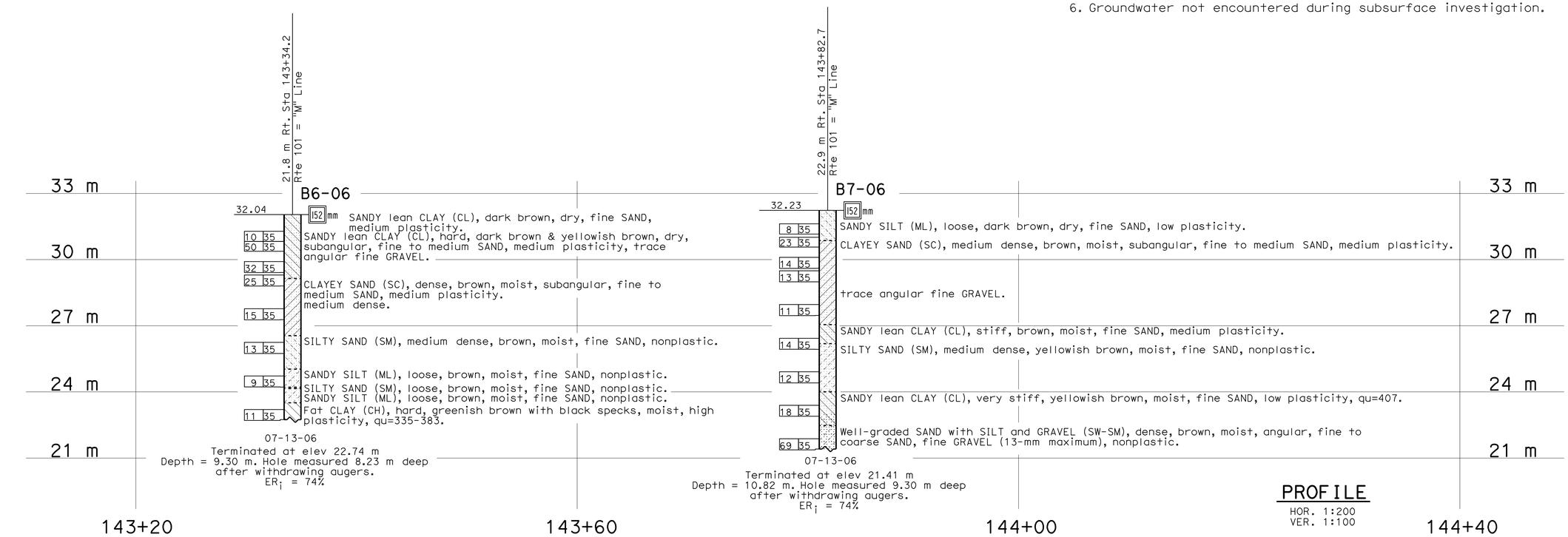

PROFILE
HOR. 1:200
VER. 1:100

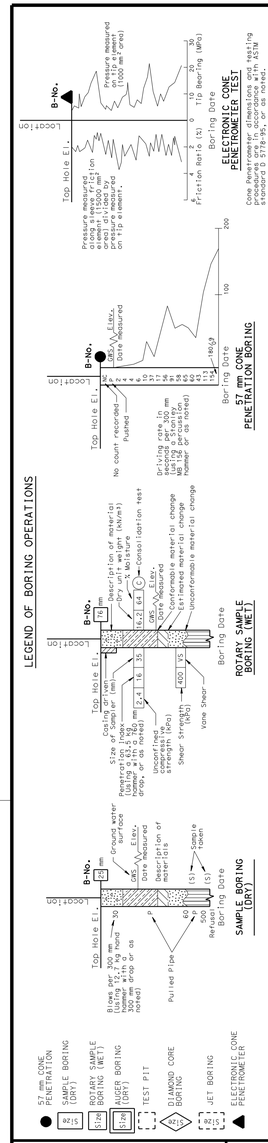

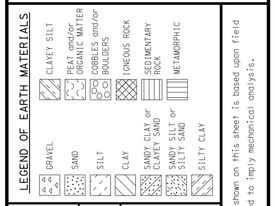

NOTE, Classification of earth material as shown on this sheet is based upon field inspection and is not to be construed to imply mechanical analysis.

CONSISTENCY CLASSIFICATION FOR SOILS

According to the Standard Penetration Test

SPT N-Value (Blows/0.3m)	Granular	SPT N-Value (Blows/0.3m)	Cohesive
0-4	Very Loose	<2	Very Soft
5-10	Loose	2-4	Soft
11-30	Medium Dense	5-8	Firm
31-50	Dense	9-15	Stiff
>50	Very Dense	16-30	Very stiff
		>30	Hard

OGS CIVIL LOG OF TEST BORINGS SHEET (METRIC) (REV. 4/04)

Caltrans Metric

ENGINEERING SERVICES	GEOTECHNICAL SERVICES
DRAWN BY	F. Nguyen 1/08
CHECKED BY	D. Appelbaum

ALL DIMENSIONS ARE IN METERS UNLESS OTHERWISE SHOWN

FIELD INVESTIGATION BY, D. Appelbaum

ORIGINAL SCALE IN MILLIMETERS FOR REDUCED PLANS 0 10 20 30 40 50 60 70 80 90 100

STATE OF CALIFORNIA DEPARTMENT OF TRANSPORTATION

DIVISION OF ENGINEERING SERVICES STRUCTURE DESIGN
DESIGN BRANCH 6

CU 05
EA 0161E1

BRIDGE NO. 44E0015
KILOMETER POST R146.8/161.6

RETAINING WALL NO. 144
LOG OF TEST BORINGS 1 OF 4

DISREGARD PRINTS BEARING EARLIER REVISION DATES

REVISION DATES (PRELIMINARY STAGE ONLY) 03-14-08 06-04-09 06-12-09 09-29-09

SHEET 17 OF 20

FILE => 44e0015-z-ltb01.dgn

USERNAME => trhenard DATE PLOTTED => 12-AUG-2010 TIME PLOTTED => 06:15

DIST	COUNTY	ROUTE	KILOMETER POST TOTAL PROJECT	SHEET No	TOTAL SHEETS
05	Mon	101	R146.8/159.7	1387	1402

REGISTERED CIVIL ENGINEER 6-17-09

7-26-10
PLANS APPROVAL DATE

REGISTERED PROFESSIONAL ENGINEER
Dan Appelbaum
No. C50001
Exp. 06-30-11
CIVIL
STATE OF CALIFORNIA

The State of California or its officers or agents shall not be responsible for the accuracy or completeness of electronic copies of this plan sheet.

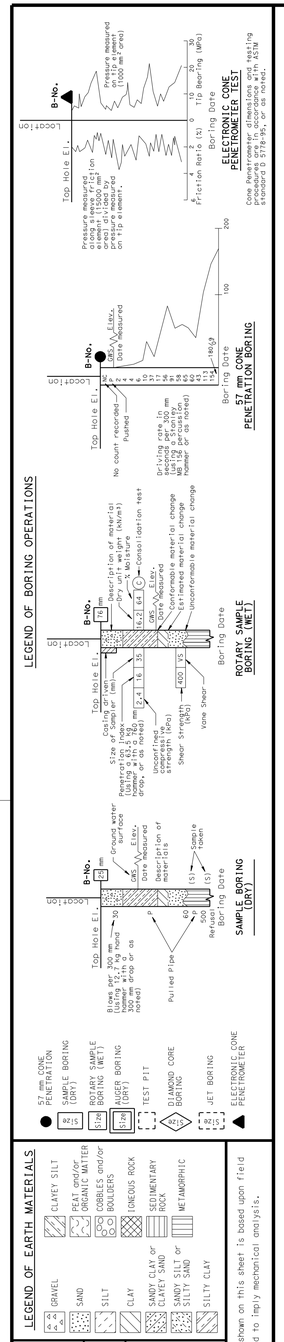

FOR PLAN VIEW, SEE
"LOG OF TEST BORINGS" 1 OF 4

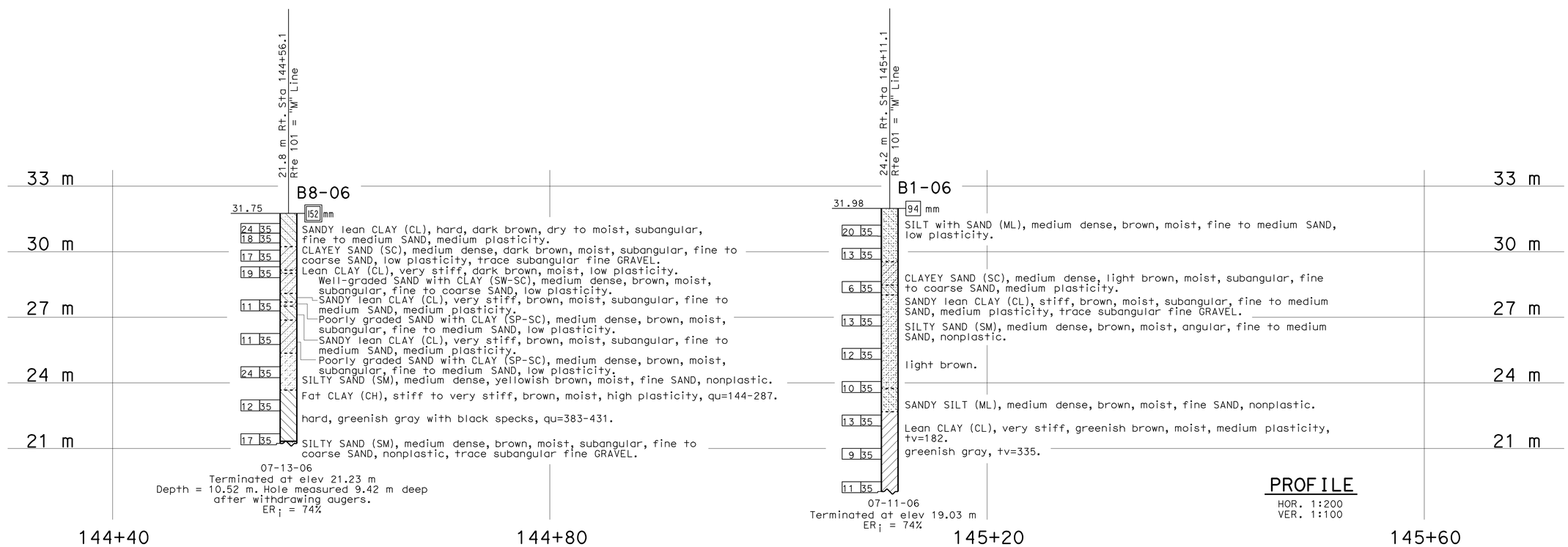

Caltrans Metric

ENGINEERING SERVICES	GEOTECHNICAL SERVICES
DRAWN BY	F. Nguyen 1/08
CHECKED BY	D. Appelbaum

FIELD INVESTIGATION BY, D. Appelbaum

STATE OF CALIFORNIA DEPARTMENT OF TRANSPORTATION

DIVISION OF ENGINEERING SERVICES STRUCTURE DESIGN
DESIGN BRANCH 6

BRIDGE NO. 44E0015
KILOMETER POST R146.8/161.6

RETAINING WALL NO. 144
LOG OF TEST BORINGS 2 OF 4

ALL DIMENSIONS ARE IN METERS UNLESS OTHERWISE SHOWN

ORIGINAL SCALE IN MILLIMETERS FOR REDUCED PLANS 0 10 20 30 40 50 60 70 80 90 100

CU 05
EA 0161E1

DISREGARD PRINTS BEARING EARLIER REVISION DATES

REVISION DATES (PRELIMINARY STAGE ONLY) 03-14-08 06-04-09 06-12-09 09-29-09

SHEET 18 OF 20

OGS CIVIL LOG OF TEST BORINGS SHEET (METRIC) (REV. 4/04)

FILE => 44e0015-z-lttb02.dgn

USERNAME => ttrenord DATE PLOTTED => 12-AUG-2010 TIME PLOTTED => 06:15

DIST	COUNTY	ROUTE	KILOMETER POST TOTAL PROJECT	SHEET No	TOTAL SHEETS
05	Mon	101	R146.8/159.7	1388	1402

REGISTERED CIVIL ENGINEER 6-17-09

7-26-10
PLANS APPROVAL DATE

REGISTERED PROFESSIONAL ENGINEER
Dan Appelbaum
No. C50001
Exp. 06-30-10
CIVIL
STATE OF CALIFORNIA

The State of California or its officers or agents shall not be responsible for the accuracy or completeness of electronic copies of this plan sheet.

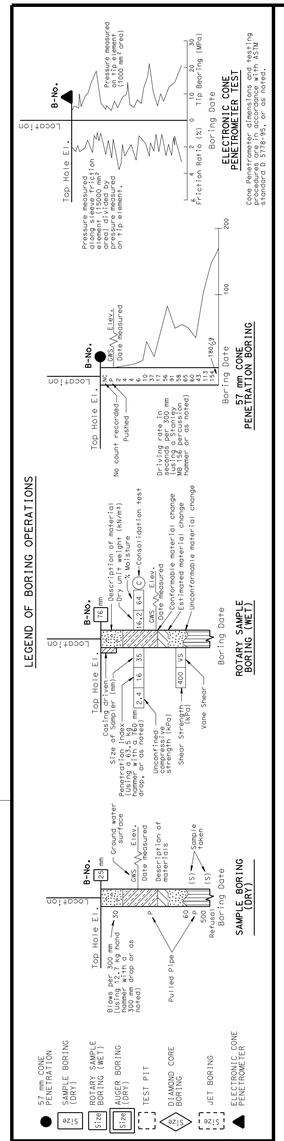

LEGEND OF EARTH MATERIALS

GRAVEL · SAND · SILT · CLAY · SANDY CLAY or CLAYEY SAND · SANDY SILT or SILTY SAND · SILTY CLAY · CLAYEY SILT · PEAT and/or ORGANIC MATTER · COBBLES and/or BOULDERS · IGNEOUS ROCK · SEDIMENTARY ROCK · METAMORPHIC

CONSISTENCY CLASSIFICATION FOR SOILS

According to the Standard Penetration Test

SPT N-Value (Blows/0.3m)	Granular	SPT N-Value (Blows/0.3m)	Cohesive
0-4	Very Loose	<2	Very Soft
5-10	Loose	2-4	Soft
11-30	Medium Dense	5-8	Firm
31-50	Dense	9-15	Stiff
>50	Very Dense	16-30	Very stiff
		>30	Hard

NOTE: Classification of earth material as shown on this sheet is based upon field inspection and is not to be construed to imply mechanical analysis.

OGS CIVIL LOG OF TEST BORINGS SHEET (METRIC) (REV. 4/04)

FOR PLAN VIEW, SEE
"LOG OF TEST BORINGS" 1 OF 4

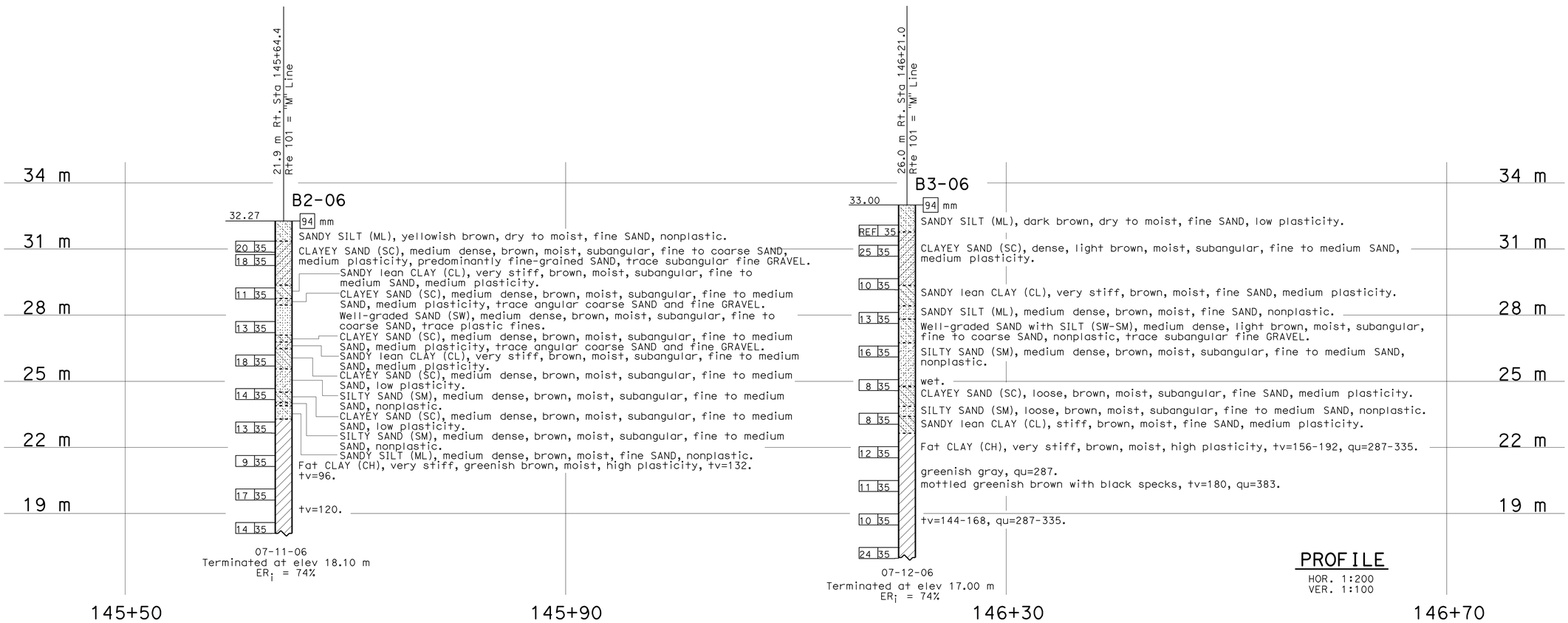

Caltrans Metric

ENGINEERING SERVICES	GEOTECHNICAL SERVICES
DRAWN BY	F. Nguyen 1/08
CHECKED BY	D. Appelbaum

FIELD INVESTIGATION BY, D. Appelbaum

STATE OF CALIFORNIA DEPARTMENT OF TRANSPORTATION

DIVISION OF ENGINEERING SERVICES STRUCTURE DESIGN
DESIGN BRANCH 6

BRIDGE NO. 44E0015
KILOMETER POST R146.8/161.6

RETAINING WALL NO. 144
LOG OF TEST BORINGS 3 OF 4

ALL DIMENSIONS ARE IN METERS UNLESS OTHERWISE SHOWN

ORIGINAL SCALE IN MILLIMETERS FOR REDUCED PLANS 0 10 20 30 40 50 60 70 80 90 100

CU 05
EA 0161E1

DISREGARD PRINTS BEARING EARLIER REVISION DATES

REVISION DATES (PRELIMINARY STAGE ONLY) 03-14-08 06-04-09 06-12-09 09-29-09

SHEET 19 OF 20

FILE => 44e0015-z-lltb03.dgn

USERNAME => rfrietsord DATE PLOTTED => 12-AUG-2010 TIME PLOTTED => 06:15

DIST	COUNTY	ROUTE	KILOMETER POST TOTAL PROJECT	SHEET No	TOTAL SHEETS
05	Mon	101	R146.8/159.7	1389	1402

REGISTERED CIVIL ENGINEER 6-17-09

7-26-10
PLANS APPROVAL DATE

REGISTERED PROFESSIONAL ENGINEER
Dan Appelbaum
No. C50001
Exp. 06-30-11
CIVIL
STATE OF CALIFORNIA

The State of California or its officers or agents shall not be responsible for the accuracy or completeness of electronic copies of this plan sheet.

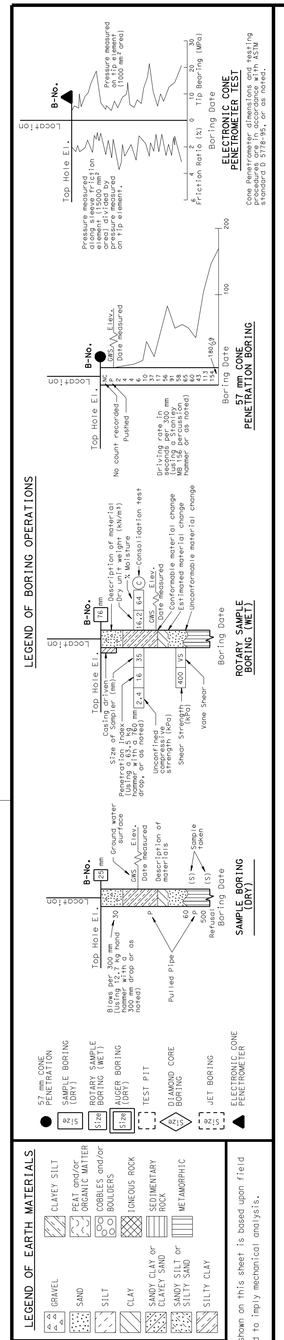

OGS CIVIL LOG OF TEST BORINGS SHEET (METRIC) (REV. 4/04)

FOR PLAN VIEW, SEE
"LOG OF TEST BORINGS" 1 OF 4

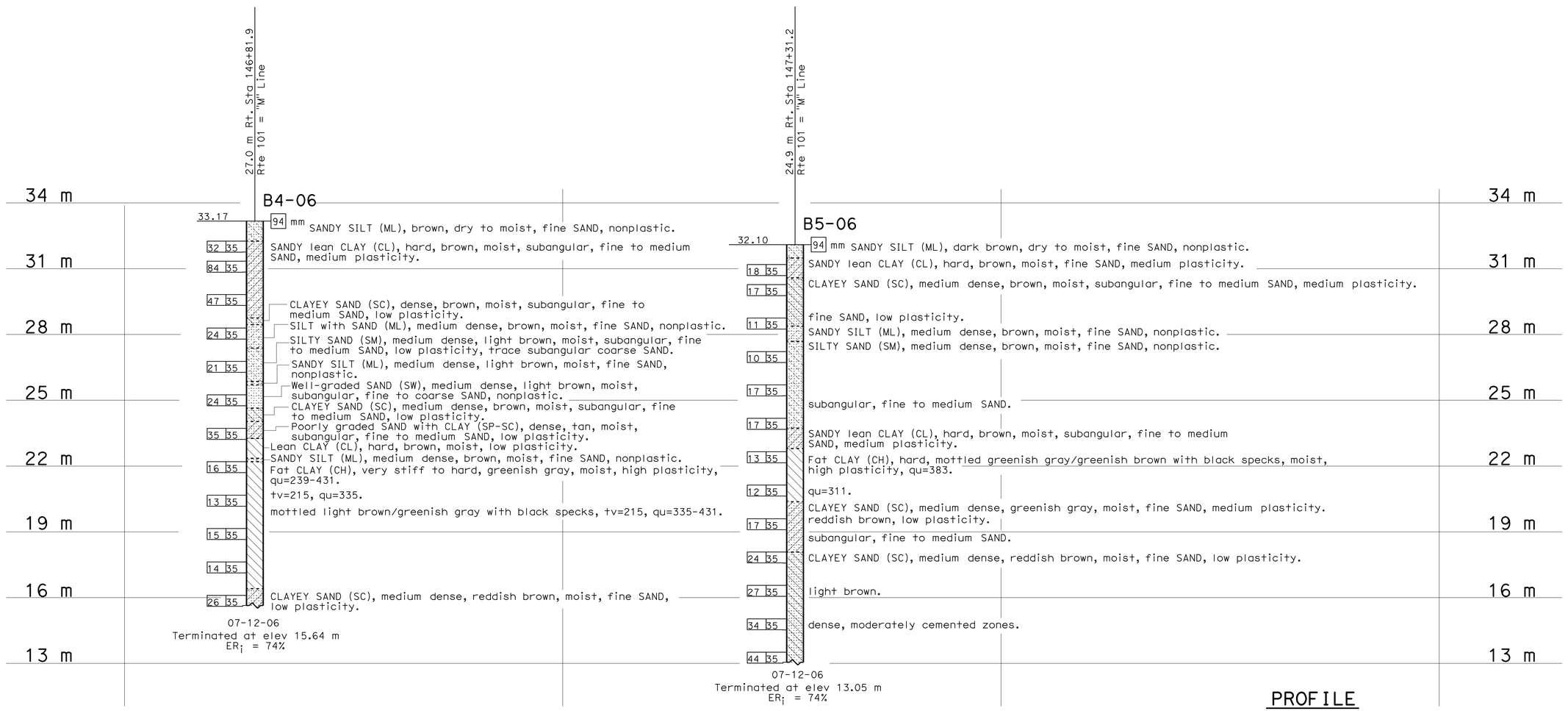

Caltrans Metric

ENGINEERING SERVICES	GEOTECHNICAL SERVICES
DRAWN BY	F. Nguyen 1/08
CHECKED BY	D. Appelbaum

FIELD INVESTIGATION BY, D. Appelbaum

STATE OF CALIFORNIA
DEPARTMENT OF TRANSPORTATION

DIVISION OF ENGINEERING SERVICES
STRUCTURE DESIGN
DESIGN BRANCH 6

BRIDGE NO. 44E0015
KILOMETER POST R146.8/161.6

RETAINING WALL NO. 144
LOG OF TEST BORINGS 4 OF 4

ALL DIMENSIONS ARE IN METERS UNLESS OTHERWISE SHOWN

ORIGINAL SCALE IN MILLIMETERS FOR REDUCED PLANS 0 10 20 30 40 50 60 70 80 90 100

CU 05
EA 0161E1

DISREGARD PRINTS BEARING EARLIER REVISION DATES

REVISION DATES (PRELIMINARY STAGE ONLY) 03-14-08 06-04-09 06-12-09 09-29-09

SHEET 20 OF 20

FILE => 44e0015-z-ltb04.dgn

USERNAME => trlenard DATE PLOTTED => 12-AUG-2010 TIME PLOTTED => 06:15

DIST	COUNTY	ROUTE	KILOMETER POST TOTAL PROJECT	SHEET No	TOTAL SHEETS
05	Mon	101	R146.8/159.7	1390	1402

REGISTERED CIVIL ENGINEER 05-06-10 DATE

7-26-10
PLANS APPROVAL DATE

REGISTERED PROFESSIONAL ENGINEER HERNAN PEREZ No. 60993 Exp. 12/31/10 CIVIL STATE OF CALIFORNIA

The State of California or its officers or agents shall not be responsible for the accuracy or completeness of electronic copies of this plan sheet.

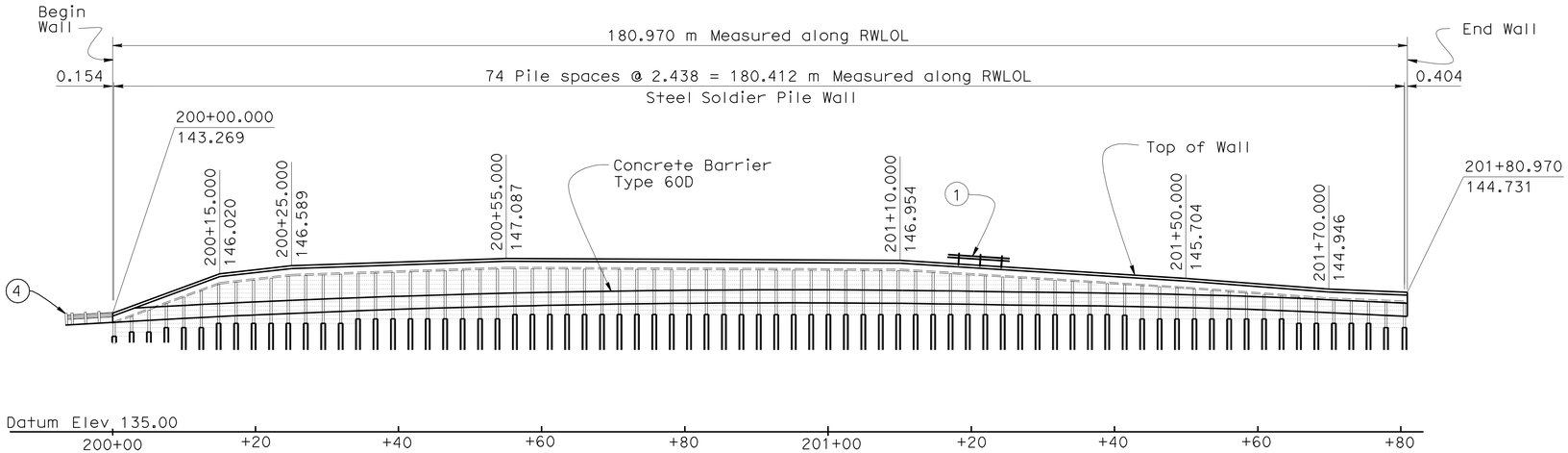

DEVELOPED ELEVATION

Horizontal 1:400
Vertical 1:200

NOTE

Architectural Treatment not shown, see "Architectural Treatment" details

Notes:

1. Cable Railing, see Std Plans B11-47
2. Temporary Railing (Type K), see "Road Plans"
3. Concrete Barrier, Type 60D
4. MBGR, See "Road Plans"

QUANTITIES

STRUCTURE EXCAVATION (SOLDIER PILE WALL)	294	m^3
STRUCTURE BACKFILL (SOLDIER PILE WALL)	40	m^3
LEAN CONCRETE BACKFILL	59	m^3
STEEL SOLDIER PILE (W310 X 129)	466	m
DRILLED HOLE (610 MM)	265	m
STRUCTURAL CONCRETE, RETAINING WALL	150	m^3
CLASS 2 CONCRETE (BACKFILL)	78	m^3
ARCHITECTURAL TREATMENT (DRYSTACK STONE TEXTURE)	320	m^2
BAR REINFORCING STEEL (RETAINING WALL)	20 500	kg
TIMBER LAGGING	69	m^3
CLEAN AND PAINT STEEL SOLDIER PILING	LUMP SUM	
MINOR CONCRETE (GUTTER)	180	m
CABLE RAILING	180	m
CONCRETE BARRIER (TYPE 60D)	180	m

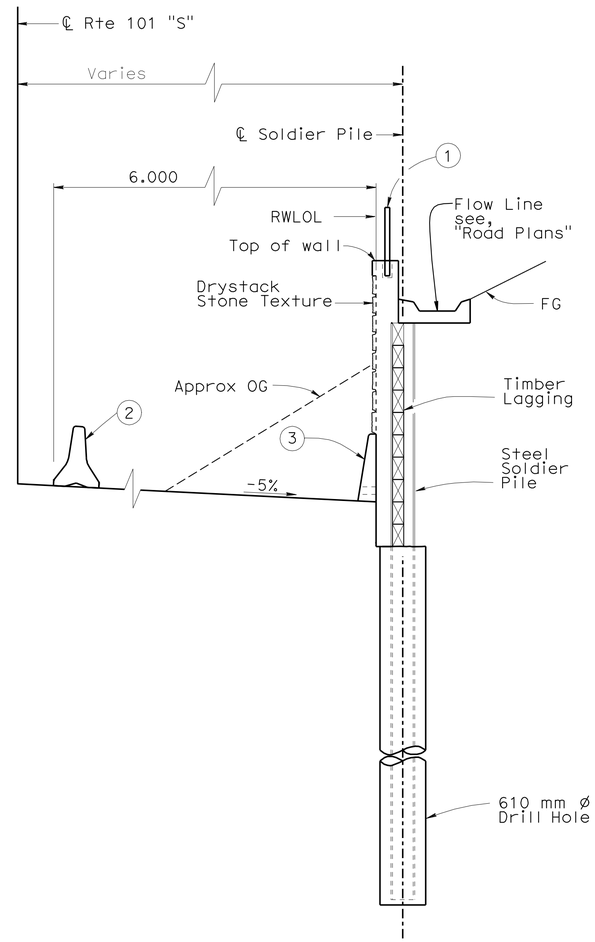

TYPICAL SECTION

1:40

CURVE DATA
Rte 101 "S"

R = 940.000
Δ = 13°28′ 47.8"
T = 111.089
L = 221.153

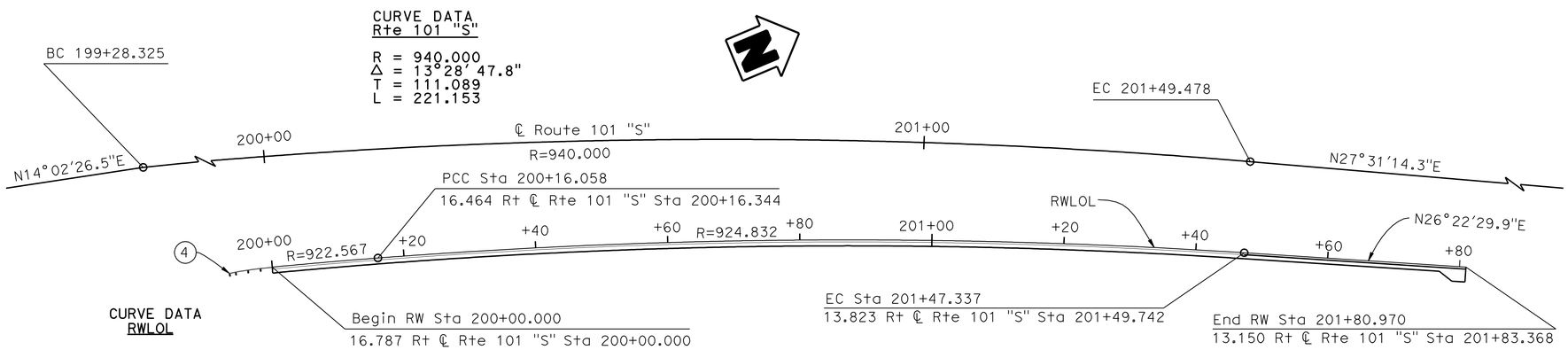

CURVE DATA
RWLOL

R = 922.567
Δ = 0°59′ 50"
T = 8.029
L = 16.058

PLAN

1:400

Note

Soldier Piles not shown. For details see, "Structure Plan" sheets

CURVE DATA
RWLOL

R = 924.832
Δ = 8°7′ 59"
T = 65.750
L = 131.279

For "General Notes" and "Index to Plans", see "Index to Plans" sheet

Caltrans Metric

Fritz Hoffman
DESIGN ENGINEER

	BY	CHECKED
DESIGN	A. Salimi	R. Coria
DETAILS	K.Chonkria/M.Lane	H. Coria
QUANTITIES	H. Coria	R. Auer

LOAD & RESISTANCE FACTOR DESIGN — LIVE LOADING: HL93 W/"LOW-BOY"; PERMIT DESIGN VEHICLE

	BY	CHECKED
LAYOUT	K. Chonkria	G. Reyes
SPECIFICATIONS	Serisha Nelapatla	PLANS AND SPECS COMPARED Serisha Nelapatla

STATE OF CALIFORNIA
DEPARTMENT OF TRANSPORTATION

DIVISION OF ENGINEERING SERVICES
STRUCTURE DESIGN
DESIGN BRANCH 6

BRIDGE NO. 44E0016
KILOMETER POST 158.85

RETAINING WALL NO. 200
GENERAL PLAN

ALL DIMENSIONS ARE IN METERS UNLESS OTHERWISE SHOWN

ORIGINAL SCALE IN MILLIMETERS FOR REDUCED PLANS 0 10 20 30 40 50 60 70 80 90 100

CU 05
EA 0161E1

DISREGARD PRINTS BEARING EARLIER REVISION DATES

REVISION DATES: 07-22-08 | 03-29-10 | 05-06-10 | 2-3-09 | 02-26-09 | 10-15-09 | 12-11-09 | 03-16-10 | 03-18-10 | 03-24-10

SHEET 1 OF 13

STRUCTURES DESIGN GENERAL PLAN SHEET (METRIC) (REV.07-24-06)

FILE => 44e0016-a-gp1.dgn

USERNAME => rtrenard DATE PLOTTED => 12-AUG-2010 TIME PLOTTED => 06:15

DIST	COUNTY	ROUTE	KILOMETER POST TOTAL PROJECT	SHEET No	TOTAL SHEETS
05	Mon	101	R146.8/159.7	1391	1402

Hernan Perez 05-06-10
REGISTERED CIVIL ENGINEER DATE

7-26-10
PLANS APPROVAL DATE

REGISTERED PROFESSIONAL ENGINEER HERNAN PEREZ No. 60993 Exp. 12-31-10 CIVIL STATE OF CALIFORNIA

The State of California or its officers or agents shall not be responsible for the accuracy or completeness of electronic copies of this plan sheet.

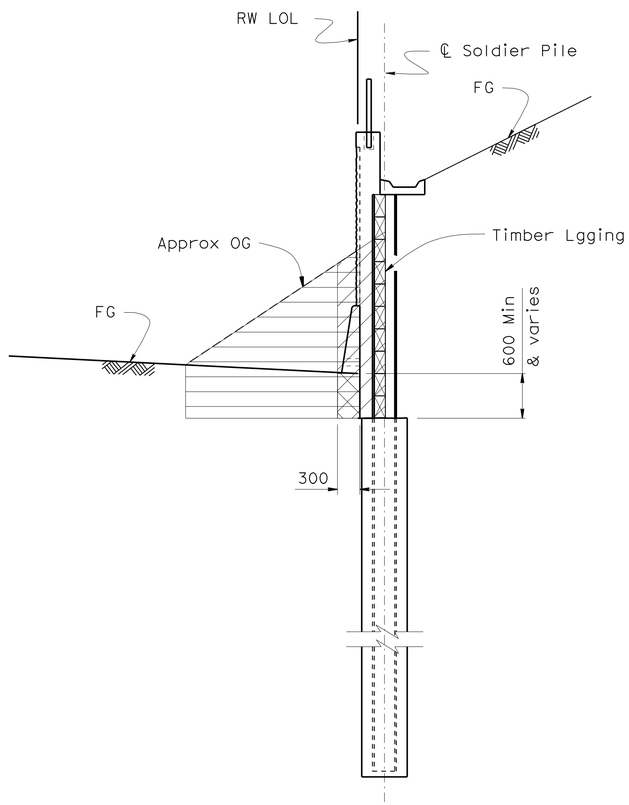

LIMITS OF PAYMENT FOR EXCAVATION AND BACKFILL

No Scale

LEGEND

Roadway Excavation, see "Road Plans"

Structure Excavation (Soildier Pile Wall)

Structure Backfill (Soldier Pile Wall)

GENERAL NOTES
LOAD FACTOR DESIGN

DESIGN: CALTRANS Bridge Design Specifications - April 2000 (LFD)
(1996 AASHTO with Interims and Revisions by Caltrans)

SOIL PARAMETERS: (For determination of design lateral earth pressuere)
$\emptyset = 34^{\circ}$ $\gamma = 18.8$ KN/m³ (Above Bottom of Lagging)

LOADING: 11.5 kPa (Surcharge)

REINFORCED CONCRETE: f_y = 420 MPa(Yield strength of reinforcement)
f'_c = 28 MPa
n = 9

STRUCTURAL TIMBER: Treated Douglas Fir Grade No. 1 or better.
Timber to be full sawn.

STRUCTURAL STEEL: A 709 M Gr 345

INDEX TO PLANS

SHEET NO.	TITLE
1	General Plan
2	Index to Plans
3	Structure Plan No. 1
4	Structure Plan No. 2
5	Structure Plan No. 3
6	Foundation Plan No. 1
7	Foundation Plan No. 2
8	Wall Details No. 1
9	Wall Details No. 2
10	Typical Section
11	Architectural Details
12	Log of Test Boring 1 of 2
13	Log of Test Boring 2 of 2

STANDARD PLANS DATED JULY 2004

A10A	ACRONYMS AND ABBREVIATIONS (SHEET 1 OF 2)
A10B	ACRONYMS AND ABBREVIATIONS (SHEET 2 OF 2)
A10C	SYMBOLS (SHEET 1 OF 2)
A10D	SYMBOLS (SHEET 2 OF 2)
A62C	LIMITS OF PAYMENT FOR EXCAVATION AND BACKFILL-BRIDGE
RSP A76A	CONCRETE BARRIER TYPE 60
B0-3	BRIDGE DETAILS
B3-9	RETAINING WALL DETAIL NO. 2
B11-47	CABLE RAILING

STANDARD PLAN SHEET NO.

DETAIL NO.

Caltrans Metric

DESIGN	BY A. Salimi	CHECKED R. Coria
DETAILS	BY K. Chonkria/M. Lane	CHECKED R. Coria
QUANTITIES	BY R.Coria	CHECKED R. Auer

STATE OF CALIFORNIA
DEPARTMENT OF TRANSPORTATION

DIVISION OF ENGINEERING SERVICES
STRUCTURE DESIGN
DESIGN BRANCH 6

BRIDGE NO. 44E0016
KILOMETER POST 158.85

RETAINING WALL NO. 200
INDEX TO PLANS

ALL DIMENSIONS ARE IN MILLIMETERS UNLESS OTHERWISE SHOWN

ORIGINAL SCALE IN MILLIMETERS FOR REDUCED PLANS 0 10 20 30 40 50 60 70 80 90 100

CU 05
EA 0161E1

DISREGARD PRINTS BEARING EARLIER REVISION DATES

REVISION DATES: 09-25-08 12-19-08 2-3-09 02-26-09 10-15-09 12-08-09 12-03-09 12-11-09 03-25-10 05-06-10

SHEET 2 OF 13

FILE => 44e0016-a-itp.dgn

STRUCTURES DESIGN DETAIL SHEET (METRIC) (REV.03-17-04)

USERNAME => ttcarol DATE PLOTTED => 03-AUG-2010 TIME PLOTTED => 13:02

DIST	COUNTY	ROUTE	KILOMETER POST TOTAL PROJECT	SHEET No	TOTAL SHEETS
05	Mon	101	R146.8/159.7	1392	1402

Hernan Perez 05-06-10
REGISTERED CIVIL ENGINEER DATE

7-26-10
PLANS APPROVAL DATE

REGISTERED PROFESSIONAL ENGINEER HERNAN PEREZ No. 60993 Exp. 12-31-10 CIVIL STATE OF CALIFORNIA

The State of California or its officers or agents shall not be responsible for the accuracy or completeness of electronic copies of this plan sheet.

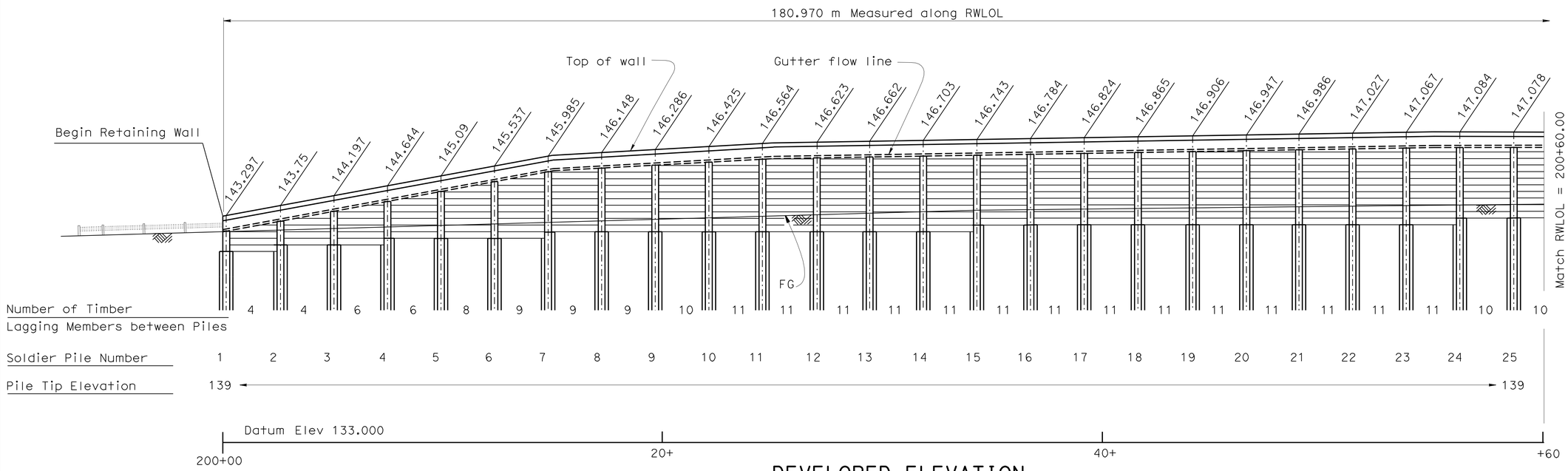

DEVELOPED ELEVATION

1:100

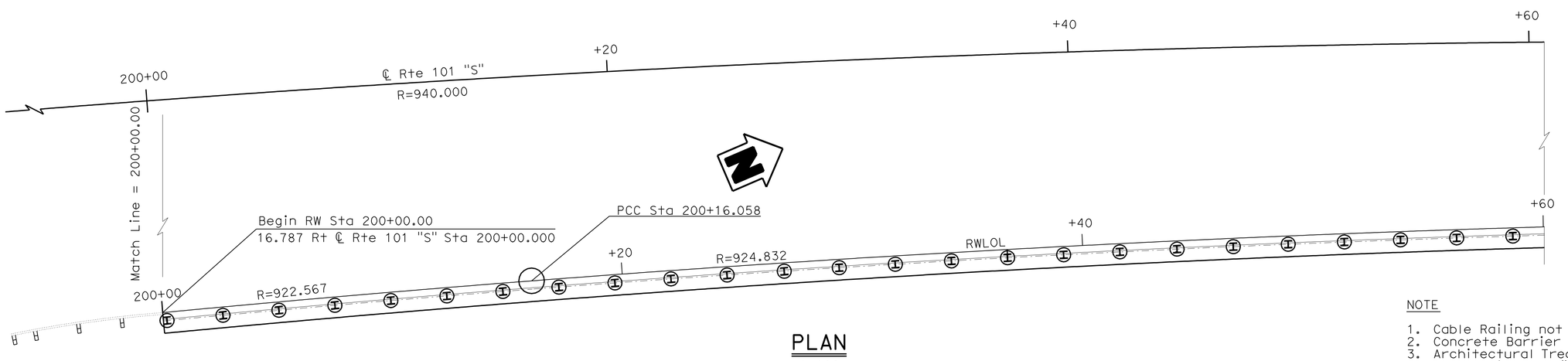

PLAN

1:100

NOTE

1. Cable Railing not shown.
2. Concrete Barrier not shown.
3. Architectural Treatment not shown.
   For details see, "Architectural Treatment" sheet.

DESIGN	BY A. Salimi	CHECKED R.Coria	
DETAILS	BY M. Lane\G.Zweier	CHECKED R.Coria	
QUANTITIES	BY R.Coria	CHECKED R. Auer	

STATE OF CALIFORNIA
DEPARTMENT OF TRANSPORTATION

DIVISION OF ENGINEERING SERVICES
STRUCTURE DESIGN
DESIGN BRANCH 6

BRIDGE NO. 44E0016
KILOMETER POST 158.85

RETAINING WALL NO. 200
STRUCTURE PLAN NO. 1

ALL DIMENSIONS ARE IN MILLIMETERS UNLESS OTHERWISE SHOWN

ORIGINAL SCALE IN MILLIMETERS FOR REDUCED PLANS 0 10 20 30 40 50 60 70 80 90 100

CU 05
EA 0161E1

DISREGARD PRINTS BEARING EARLIER REVISION DATES

REVISION DATES: 12-30-08 1-15-09 02-26-09 10-15-09 12-08-09 12-09-09 03-25-10 03-25-10 04-01-10 05-06-10

SHEET 3 OF 13

FILE => 44e0016-c-sp01.dgn

STRUCTURES DESIGN DETAIL SHEET (METRIC) (REV.03-17-04)

USERNAME => ttcarol DATE PLOTTED => 03-AUG-2010 TIME PLOTTED => 13:02

DIST	COUNTY	ROUTE	KILOMETER POST TOTAL PROJECT	SHEET No	TOTAL SHEETS
05	Mon	101	R146.8/159.7	1393	1402

Hernan Perez 05-06-10
REGISTERED CIVIL ENGINEER DATE

7-26-10
PLANS APPROVAL DATE

REGISTERED PROFESSIONAL ENGINEER HERNAN PEREZ No. 60993 Exp. 12-31-10 CIVIL STATE OF CALIFORNIA

The State of California or its officers or agents shall not be responsible for the accuracy or completeness of electronic copies of this plan sheet.

NOTE

1. Cable Railing not shown
2. Concrete Barrier not shown
3. Architectural Treatment not shown.
   For details see, "Architectural Treatment" sheet

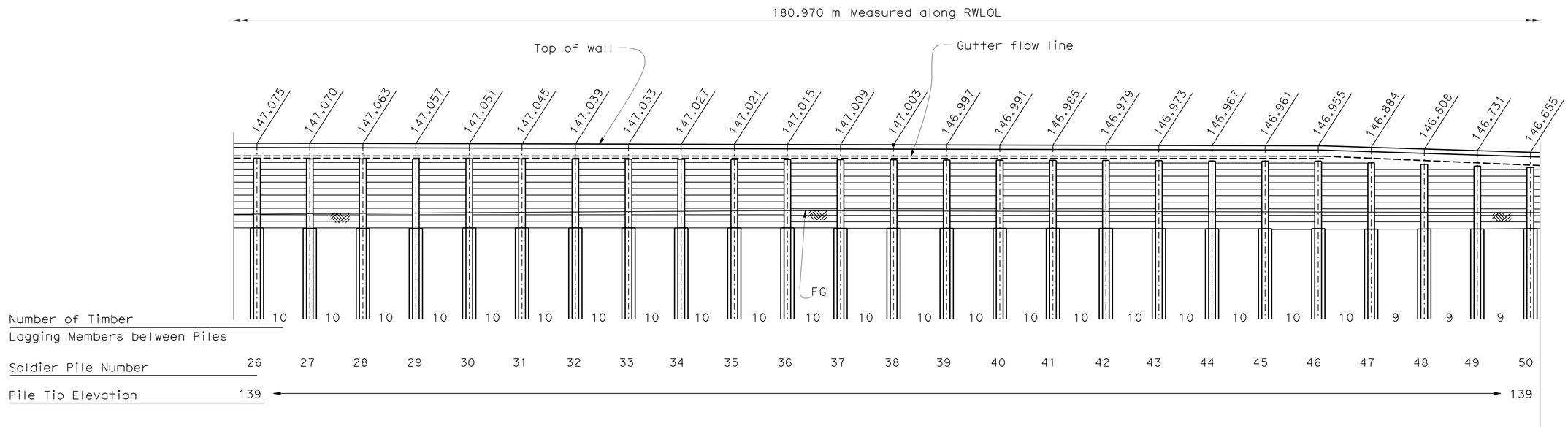

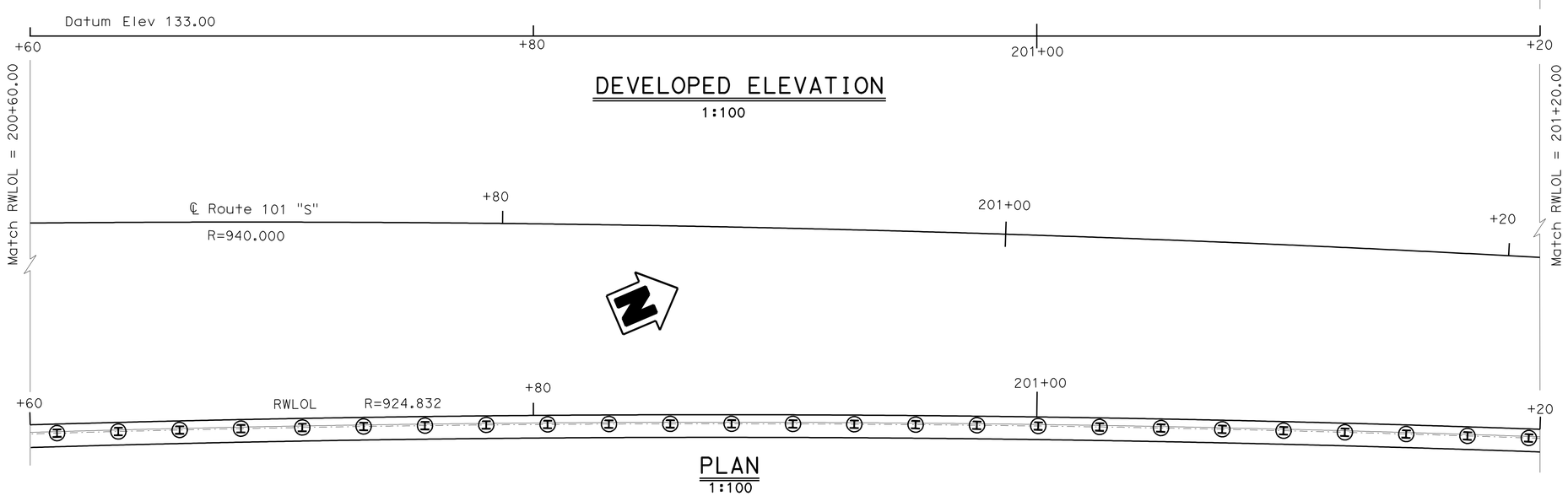

Caltrans Metric

	BY	CHECKED
DESIGN	A. Salimi	R.Coria
DETAILS	M. Lane\G. Zweier	R.Coria
QUANTITIES	R.Coria	R. Auer

STATE OF CALIFORNIA
DEPARTMENT OF TRANSPORTATION

DIVISION OF ENGINEERING SERVICES
STRUCTURE DESIGN
DESIGN BRANCH 6

BRIDGE NO. 44E0016
KILOMETER POST 158.85

RETAINING WALL NO. 200
STRUCTURE PLAN NO. 2

ALL DIMENSIONS ARE IN MILLIMETERS UNLESS OTHERWISE SHOWN

ORIGINAL SCALE IN MILLIMETERS FOR REDUCED PLANS 0 10 20 30 40 50 60 70 80 90 100

CU 05
EA 0161E1

DISREGARD PRINTS BEARING EARLIER REVISION DATES

REVISION DATES: 12-30-08 1-13-09 02-26-09 10-15-09 12-03-09 03-24-10 03-26-10 04-01-10 05-06-10

SHEET 4 OF 13

FILE => 44e0016-c-sp02.dgn

STRUCTURES DESIGN DETAIL SHEET (METRIC) (REV.03-17-04)

USERNAME => trcarto1 DATE PLOTTED => 03-AUG-2010 TIME PLOTTED => 13:02

DIST	COUNTY	ROUTE	KILOMETER POST TOTAL PROJECT	SHEET No	TOTAL SHEETS
05	Mon	101	R146.8/159.7	1394	1402

REGISTERED CIVIL ENGINEER 05-06-10 DATE

7-26-10
PLANS APPROVAL DATE

REGISTERED PROFESSIONAL ENGINEER HERNAN PEREZ No. 60993 Exp. 12-31-10 CIVIL STATE OF CALIFORNIA

The State of California or its officers or agents shall not be responsible for the accuracy or completeness of electronic copies of this plan sheet.

NOTE

1. Cable Railing not shown
2. Concrete Barrier not shown
3. Architectural Treatment not shown.
   For details see, "Architectural Treatment" sheet

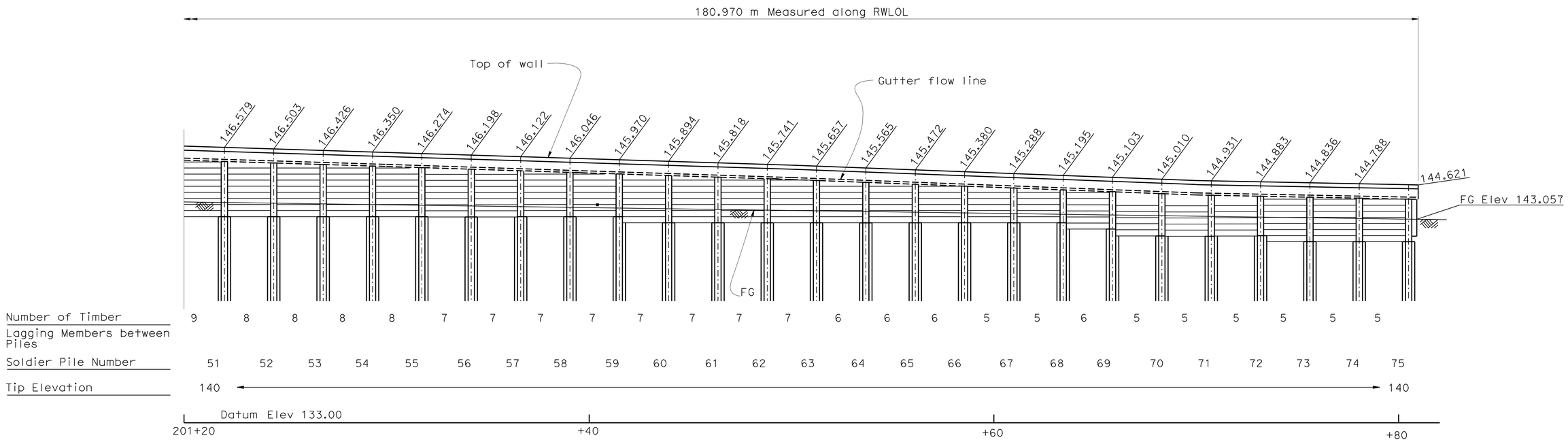

DEVELOPED ELEVATION

1:100

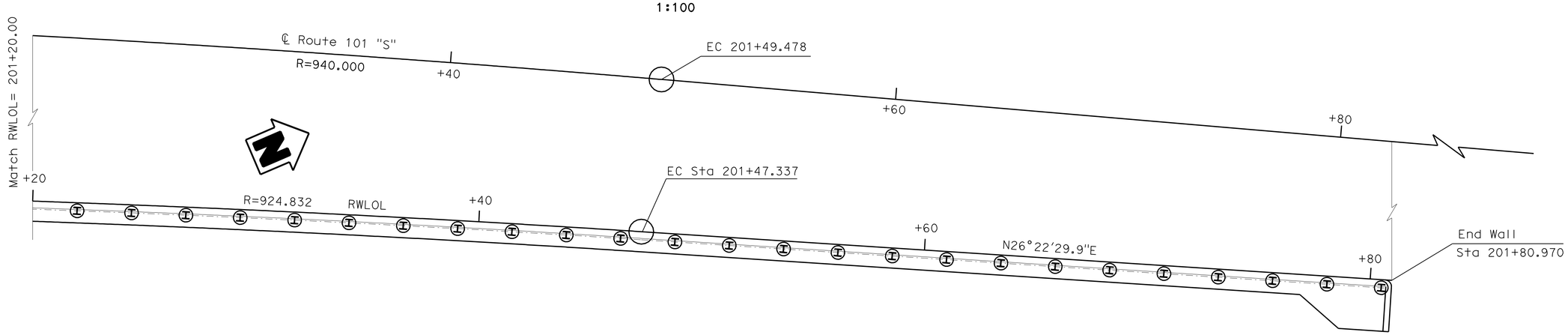

PLAN

1:100

DESIGN	BY A. Salimi	CHECKED R.Coria	
DETAILS	BY M. Lane\G. Zweier	CHECKED R.Coria	
QUANTITIES	BY R.Coria	CHECKED R. Auer	

STATE OF CALIFORNIA DEPARTMENT OF TRANSPORTATION

DIVISION OF ENGINEERING SERVICES STRUCTURE DESIGN DESIGN BRANCH 6

BRIDGE NO. 44E0016
KILOMETER POST 158.85

RETAINING WALL NO. 200
STRUCTURE PLAN NO. 3

ALL DIMENSIONS ARE IN MILLIMETERS UNLESS OTHERWISE SHOWN

ORIGINAL SCALE IN MILLIMETERS FOR REDUCED PLANS 0 10 20 30 40 50 60 70 80 90 100

CU 05
EA 0161E1

DISREGARD PRINTS BEARING EARLIER REVISION DATES

REVISION DATES 12-30-08 03-26-10 04-04-10 05-06-10 10-15-09 11-13-09 11-19-09 12-01-09 02-23-10 03-24-10

SHEET 5 OF 13

FILE => 44e0016-c-sp03.dgn

STRUCTURES DESIGN DETAIL SHEET (METRIC) (REV.03-17-04)

USERNAME => ttcarol DATE PLOTTED => 03-AUG-2010 TIME PLOTTED => 13:02

DIST	COUNTY	ROUTE	KILOMETER POST TOTAL PROJECT	SHEET No	TOTAL SHEETS
05	Mon	101	R146.8/159.7	1395	1402

Caltrans Metric

REGISTERED CIVIL ENGINEER — DATE 05-06-10

7-26-10
PLANS APPROVAL DATE

REGISTERED PROFESSIONAL ENGINEER — HERNAN PEREZ — No. 60993 — Exp. 12/31/10 — CIVIL — STATE OF CALIFORNIA

The State of California or its officers or agents shall not be responsible for the accuracy or completeness of electronic copies of this plan sheet.

CURVE DATA

No.	R	Δ	T	L
A	940.000	13°28′48"	111.089	221.153
B	929.416	5°25′6"	43.980	87.894
C	922.567	0°59′50"	8.029	16.058
D	924.832	8°07′59"	65.750	131.279

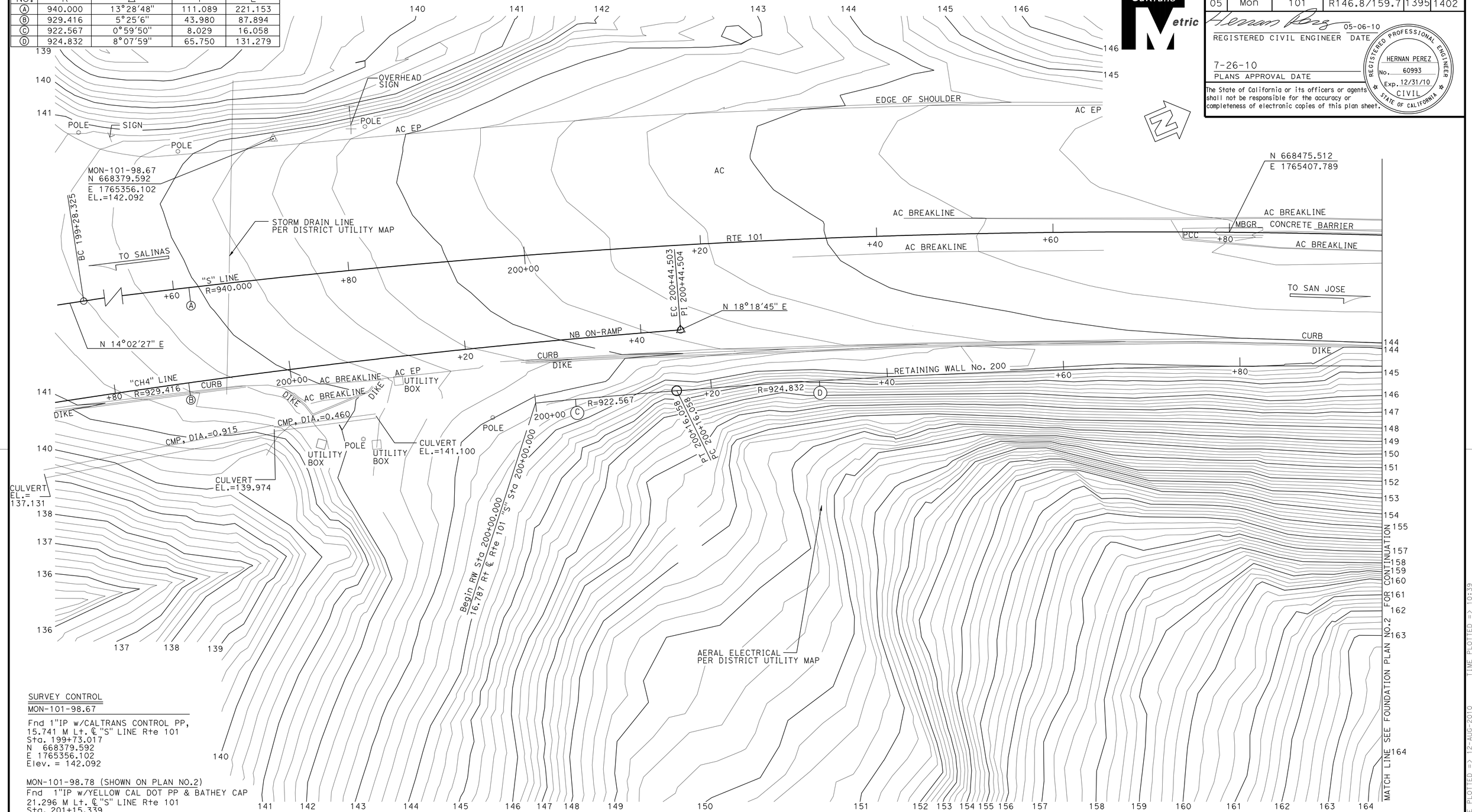

SURVEY CONTROL

MON-101-98.67

Fnd 1"IP w/CALTRANS CONTROL PP,
15.741 M Lt. ℄ "S" LINE Rte 101
Sta. 199+73.017
N 668379.592
E 1765356.102
Elev. = 142.092

MON-101-98.78 (SHOWN ON PLAN NO.2)

Fnd 1"IP w/YELLOW CAL DOT PP & BATHEY CAP
21.296 M Lt. ℄ "S" LINE Rte 101
Sta. 201+15.339
N 668516.850
E 1765403.135
Elev. = 149.277

ALL DIMENSIONS ARE IN METERS UNLESS OTHERWISE SHOWN

PRELIMINARY INVESTIGATION SECTION

SCALE	VERT. DATUM NGVD29	PHOTOGRAMMETRY AS OF:			
1:200	HORZ. DATUM NAD83 1991.35	SURVEYED	BY DISTRICT	CHECKED	BY E.LOPEZ 09/2006
ALIGNMENT TIES DIST.TRAVERSE SHEET		DRAFTED	BY T.MARCHENKO 09/2006	CHECKED	BY T.ZOLNIKOVA 09/2006

	BY	CHECKED
DESIGN	A. Salimi	R.Coria
DETAILS	M. Lane	R.Coria
QUANTITIES	R.Coria	R. Auer

STATE OF CALIFORNIA
DEPARTMENT OF TRANSPORTATION

DIVISION OF ENGINEERING SERVICES
STRUCTURE DESIGN
DESIGN BRANCH 6

BRIDGE NO. 44E0016
KILOMETER POST 158.85

RETAINING WALL NO.200
FOUNDATION PLAN NO.1

STRUCTURES FOUNDATION PLAN SHEET (METRIC) (REV.10-27-05)

ORIGINAL SCALE IN MILLIMETERS FOR REDUCED PLANS 0 10 20 30 40 50 60 70 80 90 100

CU 05
EA 0161E1

DISREGARD PRINTS BEARING EARLIER REVISION DATES

REVISION DATES (PRELIMINARY STAGE ONLY): 09-21-06 | 06-18-08 | 10-14-09 | 03-25-10 | 05-06-10

SHEET 6 OF 13

FILE => 44e0016-e-fp101.dgn

USERNAME => trlenard DATE PLOTTED => 12-AUG-2010 TIME PLOTTED => 10:39

DIST	COUNTY	ROUTE	KILOMETER POST TOTAL PROJECT	SHEET No	TOTAL SHEETS
05	Mon	101	R146.8/159.7	1396	1402

Caltrans Metric

Hernan Perez 05-06-10
REGISTERED CIVIL ENGINEER DATE

7-26-10
PLANS APPROVAL DATE

REGISTERED PROFESSIONAL ENGINEER HERNAN PEREZ No. 60993 Exp. 12/31/10 CIVIL STATE OF CALIFORNIA

The State of California or its officers or agents shall not be responsible for the accuracy or completeness of electronic copies of this plan sheet.

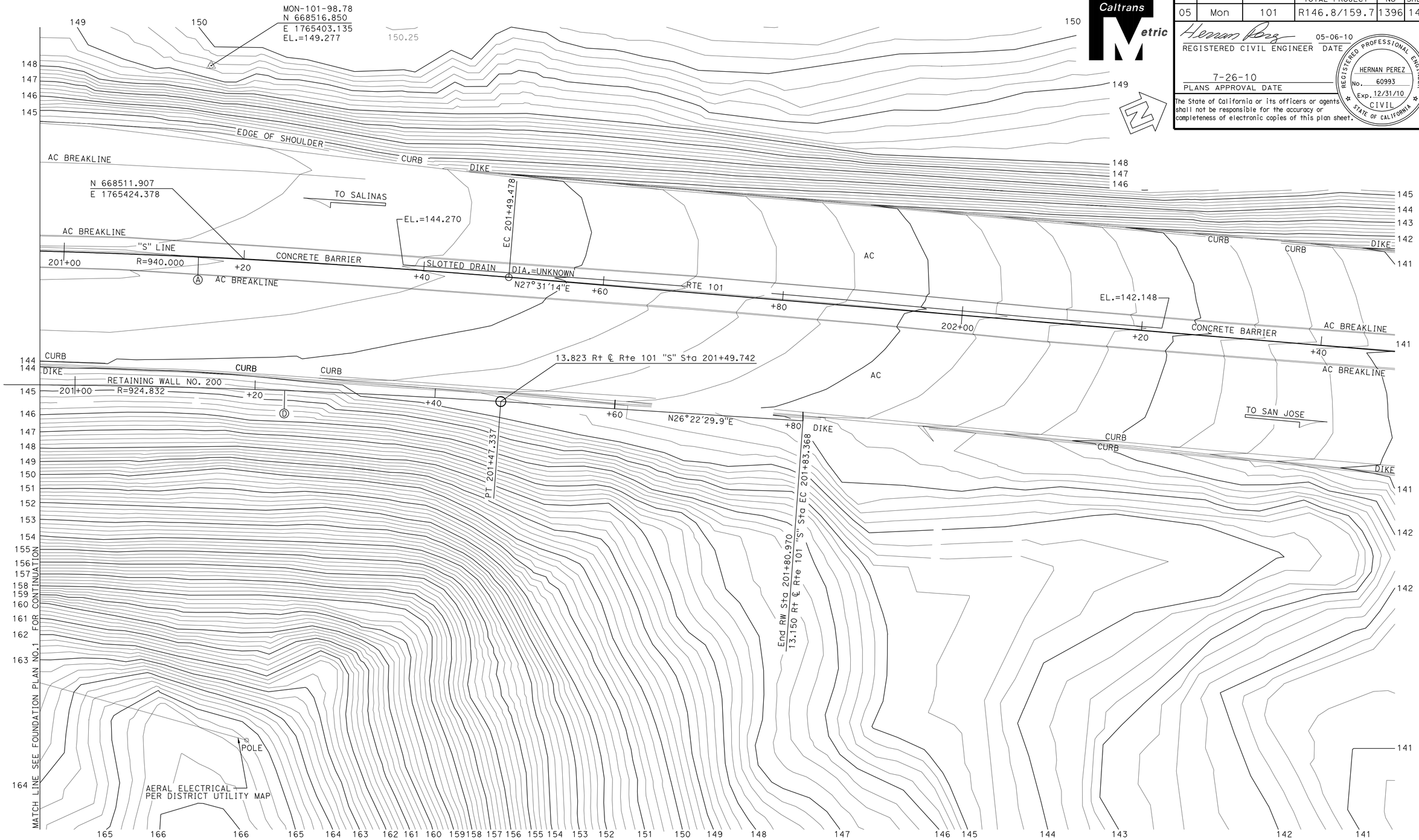

ALL DIMENSIONS ARE IN METERS UNLESS OTHERWISE SHOWN

PRELIMINARY INVESTIGATION SECTION					
SCALE	VERT. DATUM NGVD29	PHOTOGRAMMETRY AS OF:			
1:200	HORZ. DATUM NAD83 1991.35	SURVEYED	BY DISTRICT	CHECKED	BY E.LOPEZ 09/2006
ALIGNMENT TIES DIST.TRAVERSE SHEET		DRAFTED	BY T.MARCHENKO 09/2006	CHECKED	BY T.ZOLNIKOVA 09/2006

	BY	CHECKED
DESIGN	A. Salimi	R.Coria
DETAILS	M. Lane	R.Coria
QUANTITIES	R.Coria	R. Auer

STATE OF CALIFORNIA
DEPARTMENT OF TRANSPORTATION

DIVISION OF ENGINEERING SERVICES
STRUCTURE DESIGN
DESIGN BRANCH 6

BRIDGE NO. 44E0016
KILOMETER POST 158.85

RETAINING WALL NO.200
FOUNDATION PLAN NO.2

STRUCTURES FOUNDATION PLAN SHEET (METRIC) (REV.10-27-05)

ORIGINAL SCALE IN MILLIMETERS FOR REDUCED PLANS 0 10 20 30 40 50 60 70 80 90 100

CU 05
EA 0161E1

DISREGARD PRINTS BEARING EARLIER REVISION DATES

REVISION DATES (PRELIMINARY STAGE ONLY) 09/29/06 06/19/08 10-15-09 03-29-10 05-06-10

SHEET 7 OF 13

FILE => 44e0016-e-fp102.dgn

USERNAME => ttmorlok DATE PLOTTED => 03-AUG-2010 TIME PLOTTED => 13:13

DIST	COUNTY	ROUTE	KILOMETER POST TOTAL PROJECT	SHEET No	TOTAL SHEETS
05	Mon	101	R146.8/159.7	1397	1402

REGISTERED CIVIL ENGINEER 05-06-10 DATE

7-26-10
PLANS APPROVAL DATE

REGISTERED PROFESSIONAL ENGINEER HERNAN PEREZ No. 60993 Exp. 12/31/10 CIVIL STATE OF CALIFORNIA

The State of California or its officers or agents shall not be responsible for the accuracy or completeness of electronic copies of this plan sheet.

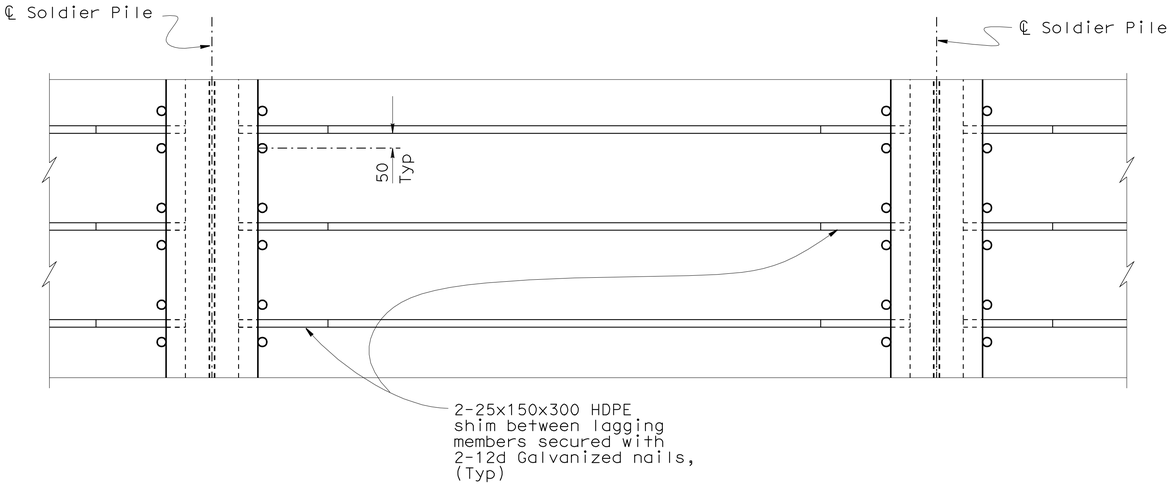

PART ELEVATION

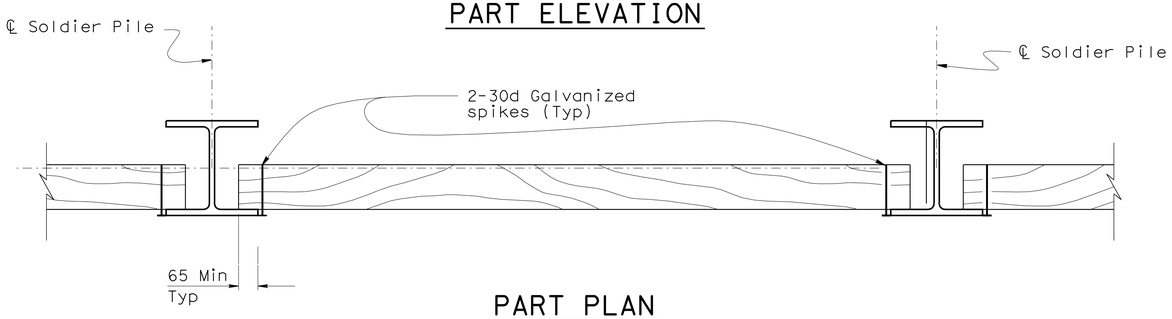

PART PLAN

Note:
No clipping of corners allowed except opposite corners to facilitate placement.

LAGGING DETAILS

1:10

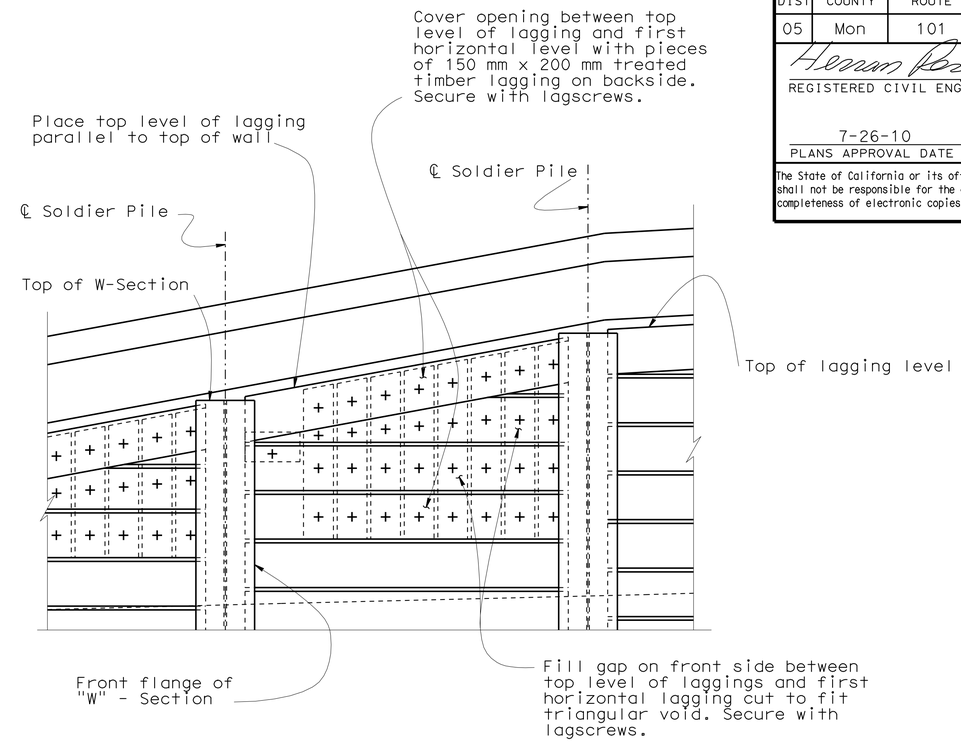

LAGGING AND PILE DETAIL

No Scale

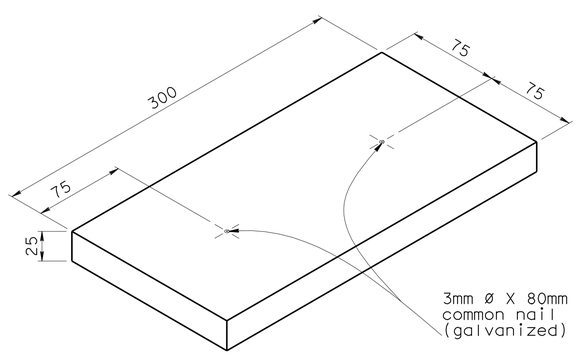

HDPE DETAIL

1:2.5

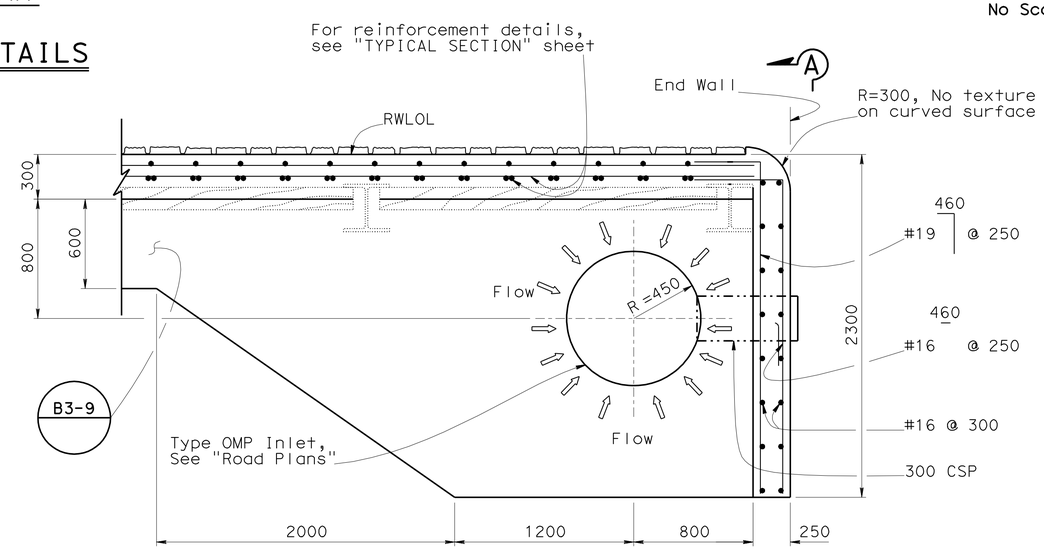

END WALL DETAIL

1:20

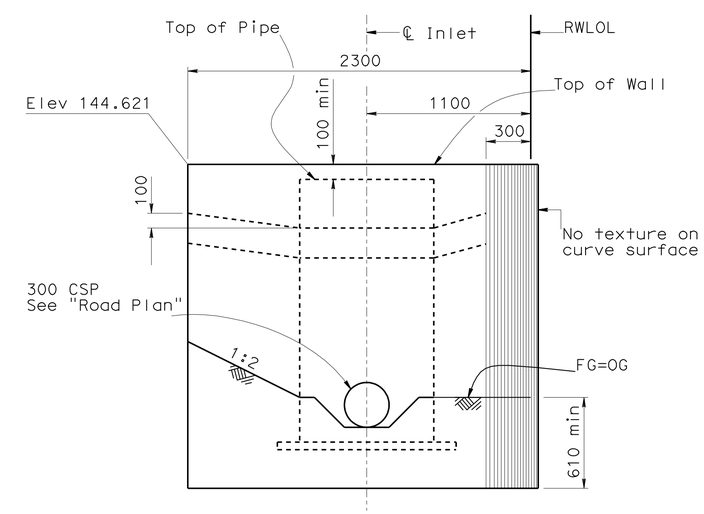

SECTION A-A

1:20

DESIGN	BY A. Salimi	CHECKED R.Coria	
DETAILS	BY M. Lane / K. Chonkria	CHECKED R.Coria	
QUANTITIES	BY R.Coria	CHECKED R. Auer	

STATE OF CALIFORNIA
DEPARTMENT OF TRANSPORTATION

DIVISION OF ENGINEERING SERVICES
STRUCTURE DESIGN
DESIGN BRANCH 6

BRIDGE NO. 44E0016
KILOMETER POST 158.85

RETAINING WALL NO. 200
WALL DETAILS NO. 1

ALL DIMENSIONS ARE IN MILLIMETERS UNLESS OTHERWISE SHOWN

ORIGINAL SCALE IN MILLIMETERS FOR REDUCED PLANS 0 10 20 30 40 50 60 70 80 90 100

CU 05
EA 0161E1

DISREGARD PRINTS BEARING EARLIER REVISION DATES

REVISION DATES: 12-30-08 03-26-10 05-06-10 11-16-09 11-17-09 11-19-09 12-03-09 02-18-10 03-16-10 03-24-10

SHEET 8 OF 13

FILE => 44e0016-g-rwdt01.dgn

STRUCTURES DESIGN DETAIL SHEET (METRIC) (REV.03-17-04)

USERNAME => trmorlok DATE PLOTTED => 03-AUG-2010 TIME PLOTTED => 13:13

DIST	COUNTY	ROUTE	KILOMETER POST TOTAL PROJECT	SHEET No	TOTAL SHEETS
05	Mon	101	R146.8/159.7	1398	1402

REGISTERED CIVIL ENGINEER — DATE 05-06-10

7-26-10
PLANS APPROVAL DATE

REGISTERED PROFESSIONAL ENGINEER HERNAN PEREZ No. 60993 Exp. 12/31/10 CIVIL STATE OF CALIFORNIA

The State of California or its officers or agents shall not be responsible for the accuracy or completeness of electronic copies of this plan sheet.

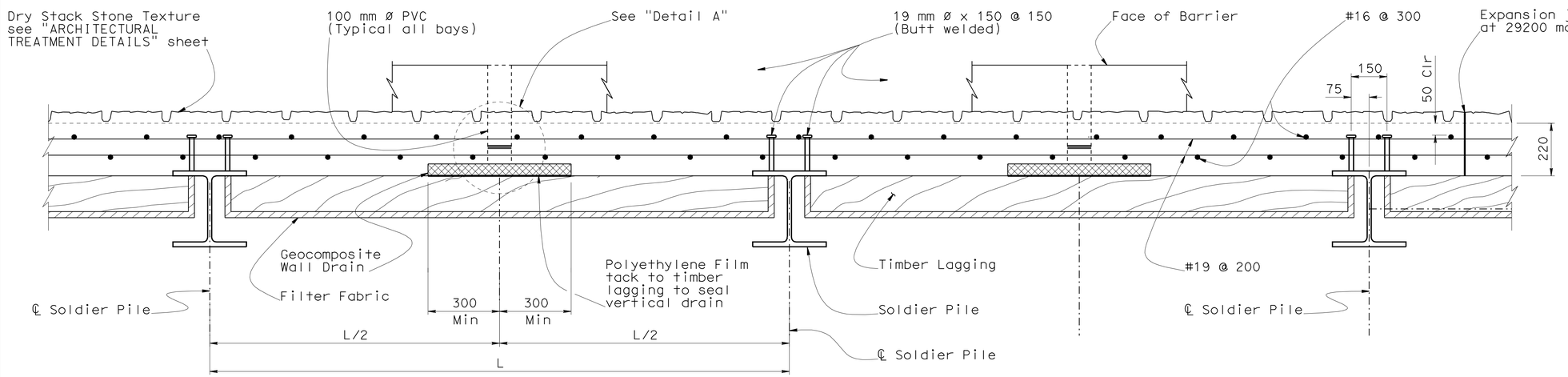

PART PLAN
1:10

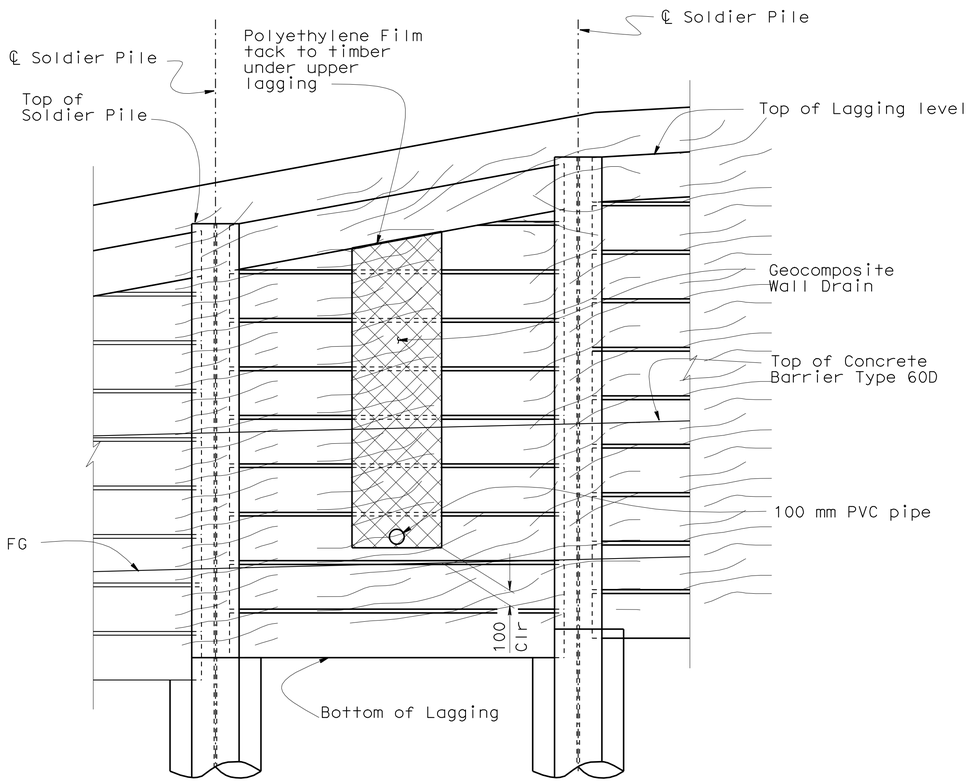

PART ELEVATION
1:20

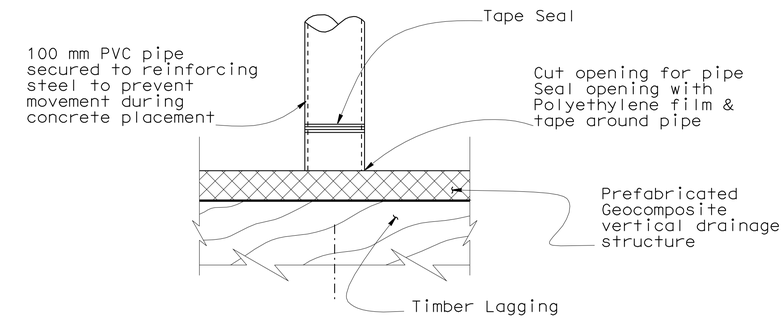

DETAIL "A"
1:5

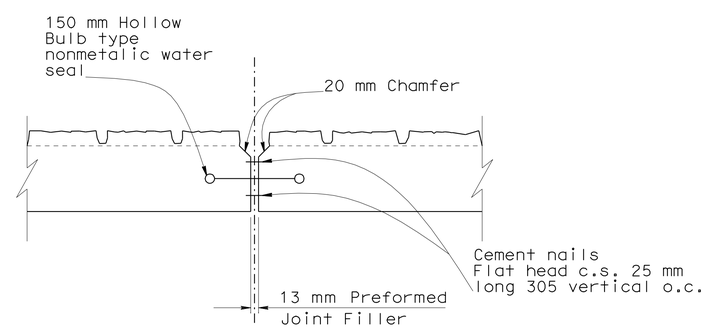

EXPANSION JOINT DETAIL
No Scale

B0-3 / 3-3

DESIGN	BY A. Salimi	CHECKED R.Coria	
DETAILS	BY M. Lane	CHECKED R.Coria	
QUANTITIES	BY R.Coria	CHECKED R. Auer	

STATE OF CALIFORNIA
DEPARTMENT OF TRANSPORTATION

DIVISION OF ENGINEERING SERVICES
STRUCTURE DESIGN
DESIGN BRANCH 6

BRIDGE NO. 44E0016
KILOMETER POST 158.85

RETAINING WALL NO. 200
WALL DETAILS NO. 2

ALL DIMENSIONS ARE IN MILLIMETERS UNLESS OTHERWISE SHOWN

ORIGINAL SCALE IN MILLIMETERS FOR REDUCED PLANS 0 10 20 30 40 50 60 70 80 90 100

CU 05
EA 0161E1

DISREGARD PRINTS BEARING EARLIER REVISION DATES

REVISION DATES: 12-29-08 | 1-15-09 | 10-15-09 | 12-03-09 | 03-24-10 | 03-29-10 | 05-06-10

SHEET 9 OF 13

FILE => 44e0016-g-rwdt02.dgn

STRUCTURES DESIGN DETAIL SHEET (METRIC) (REV.03-17-04)

USERNAME => trmartok DATE PLOTTED => 03-AUG-2010 TIME PLOTTED => 13:13

DIST	COUNTY	ROUTE	KILOMETER POST TOTAL PROJECT	SHEET No	TOTAL SHEETS
05	Mon	101	R146.8/159.7	1399	1402

REGISTERED CIVIL ENGINEER 05-06-10 DATE

7-26-10
PLANS APPROVAL DATE

REGISTERED PROFESSIONAL ENGINEER HERNAN PEREZ No. 60993 Exp. 12-31-10 CIVIL STATE OF CALIFORNIA

The State of California or its officers or agents shall not be responsible for the accuracy or completeness of electronic copies of this plan sheet.

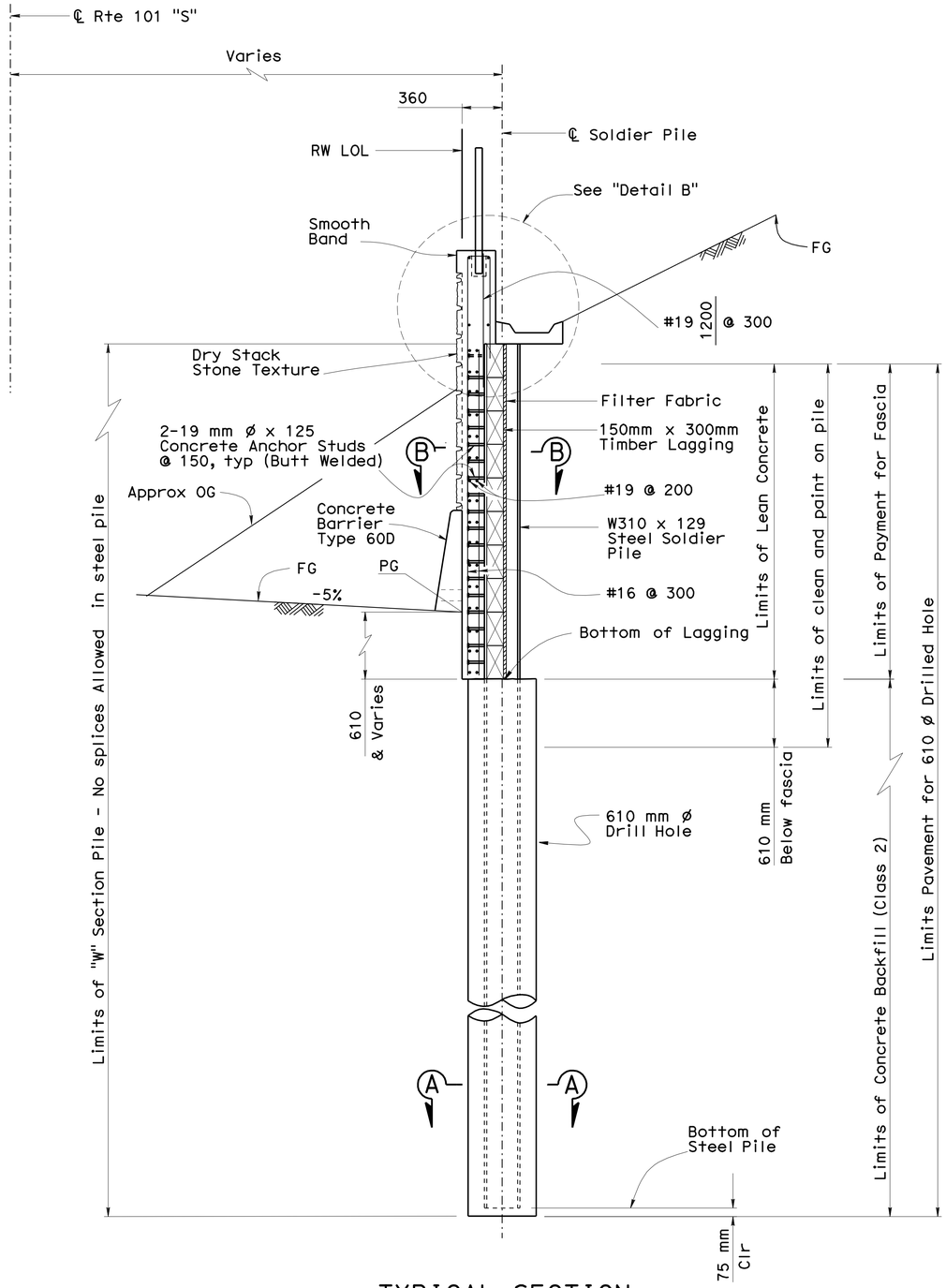

TYPICAL SECTION
1:25

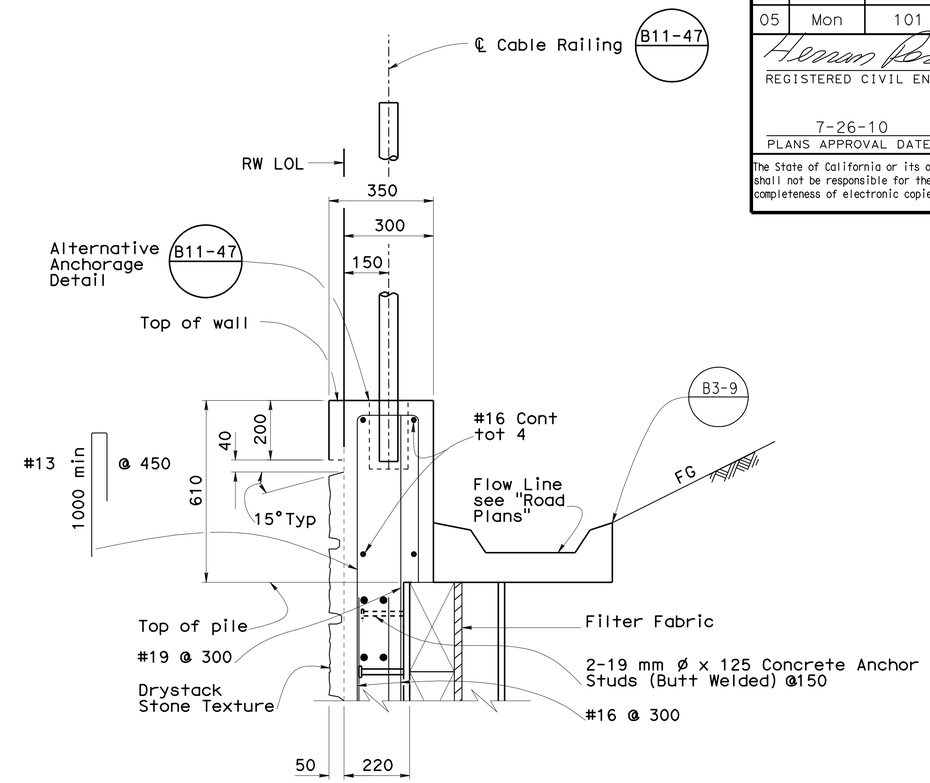

DETAIL "B"
1:10

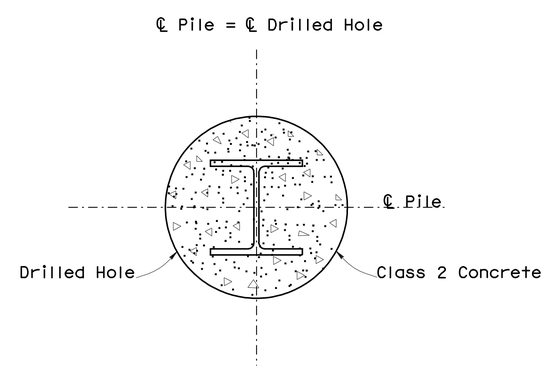

SECTION A-A
1:10

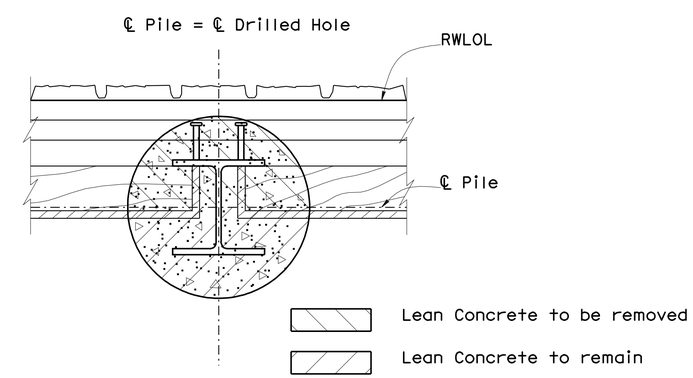

SECTION B-B
1:10

Caltrans Metric

	BY	CHECKED
DESIGN	A. Salimi	R.Coria
DETAILS	M. Lane	R.Coria
QUANTITIES	R.Coria	R. Auer

STATE OF CALIFORNIA
DEPARTMENT OF TRANSPORTATION

DIVISION OF ENGINEERING SERVICES
STRUCTURE DESIGN
DESIGN BRANCH 6

BRIDGE NO. 44E0016
KILOMETER POST 158.85

RETAINING WALL NO. 200
TYPICAL SECTION

ALL DIMENSIONS ARE IN MILLIMETERS UNLESS OTHERWISE SHOWN

ORIGINAL SCALE IN MILLIMETERS FOR REDUCED PLANS 0 10 20 30 40 50 60 70 80 90 100

CU 05
EA 0161E1

DISREGARD PRINTS BEARING EARLIER REVISION DATES

REVISION DATES: 12-30-08 05-06-10 02-04-09 02-26-09 11-19-09 12-09-09 12-03-09 12-11-09 03-22-10 03-29-10

SHEET 10 OF 13

FILE => 44e0016-k-ts01.dgn

STRUCTURES DESIGN DETAIL SHEET (METRIC) (REV.03-17-04)

USERNAME => trmorlok DATE PLOTTED => 03-AUG-2010 TIME PLOTTED => 13:13

DIST	COUNTY	ROUTE	KILOMETER POST TOTAL PROJECT	SHEET No	TOTAL SHEETS
05	Mon	101	R146.8/159.7	1400	1402

REGISTERED CIVIL ENGINEER 05-06-10 DATE

7-26-10
PLANS APPROVAL DATE

REGISTERED PROFESSIONAL ENGINEER HERNAN PEREZ No. 60993 Exp. 12/31/10 CIVIL STATE OF CALIFORNIA

The State of California or its officers or agents shall not be responsible for the accuracy or completeness of electronic copies of this plan sheet.

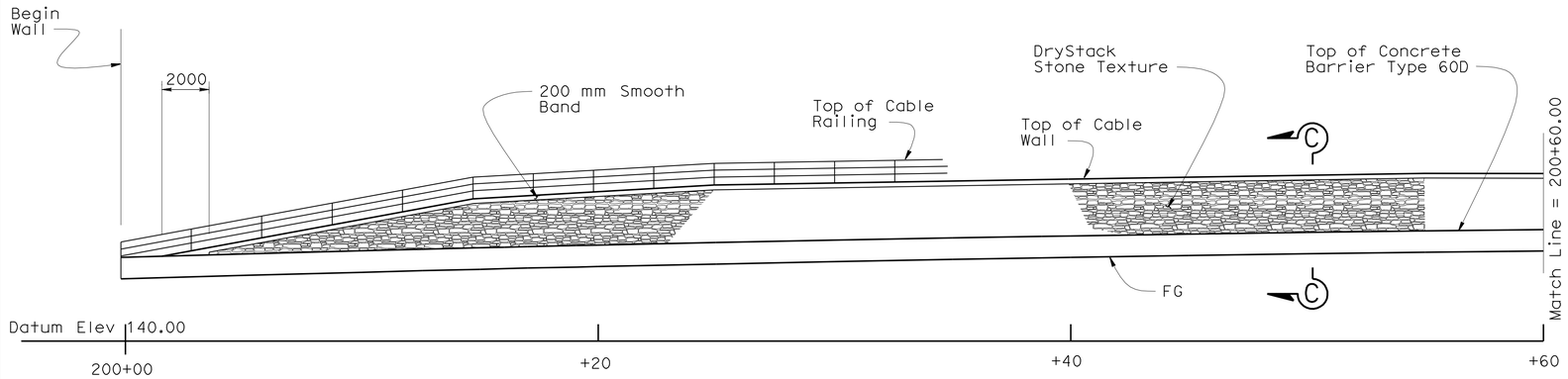

DEVELOPED ELEVATION
1:125

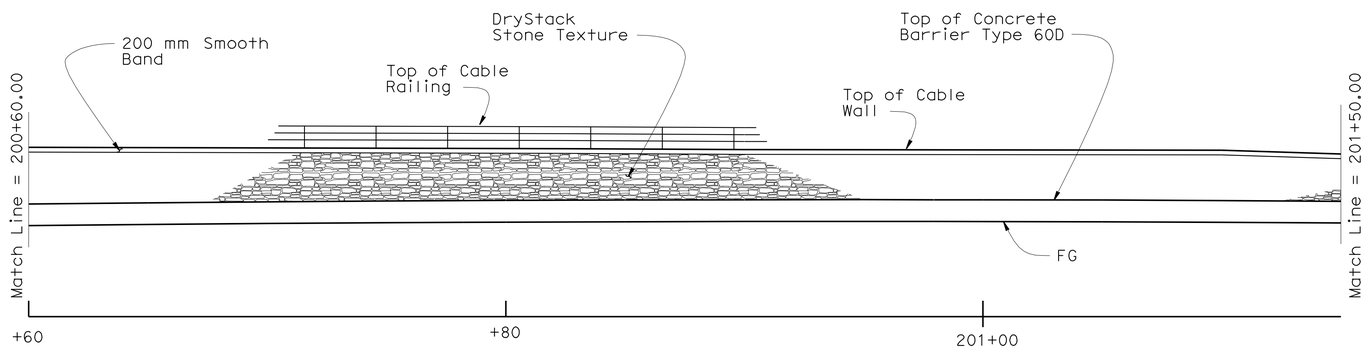

DEVELOPED ELEVATION
1:125

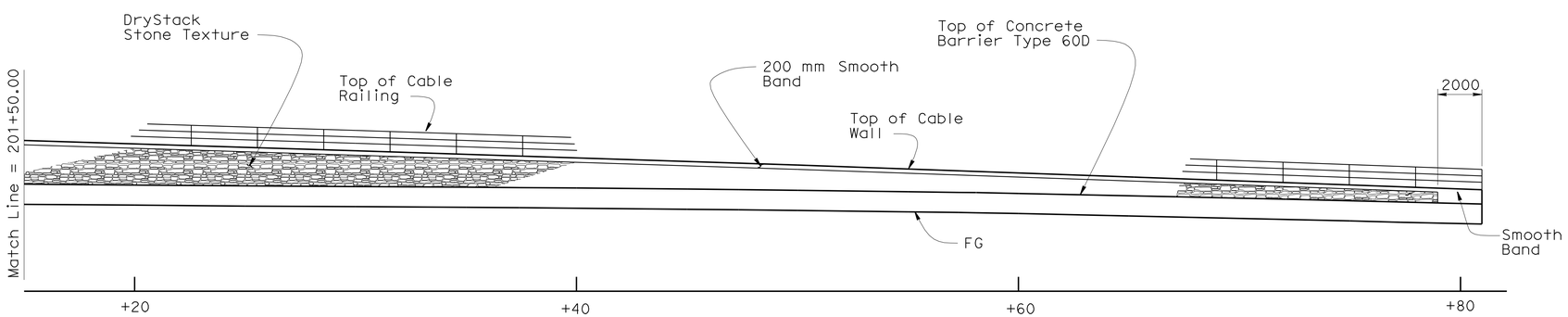

DEVELOPED ELEVATION
1:125

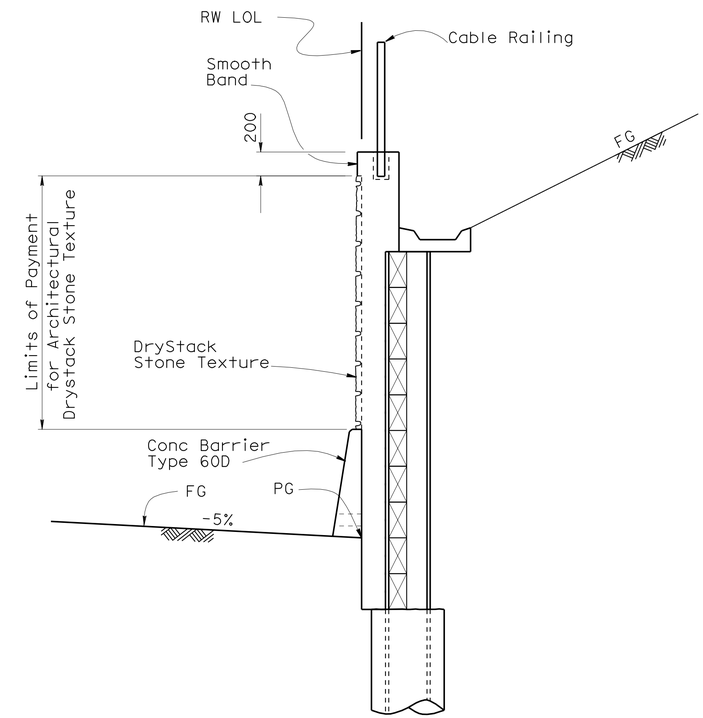

SECTION C-C
1:25

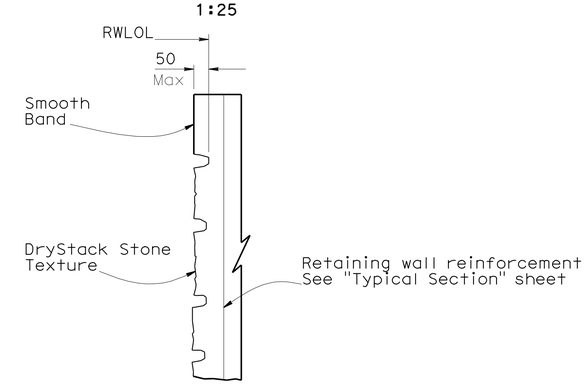

DRYSTACK STONE TEXTURE DETAIL
1:10

Caltrans Metric

	BY	CHECKED
DESIGN	A. Salimi	R.Coria
DETAILS	M. Lane / K. Chonkria	R.Coria
QUANTITIES	R.Coria	R. Auer

STATE OF CALIFORNIA
DEPARTMENT OF TRANSPORTATION

DIVISION OF ENGINEERING SERVICES
STRUCTURE DESIGN
DESIGN BRANCH 6

BRIDGE NO. 44E0016
KILOMETER POST 158.85

RETAINING WALL NO. 200
ARCHITECTURAL DETAILS

ALL DIMENSIONS ARE IN MILLIMETERS UNLESS OTHERWISE SHOWN

ORIGINAL SCALE IN MILLIMETERS FOR REDUCED PLANS 0 10 20 30 40 50 60 70 80 90 100

CU 05
EA 0161E1

DISREGARD PRINTS BEARING EARLIER REVISION DATES

REVISION DATES: 01-8-09 02-3-09 04-28-09 10-15-09 12-02-09 12-17-09 03-26-10 03-29-10 05-06-10

SHEET 11 OF 13

FILE => 44e0016-p-archrt.dgn

STRUCTURES DESIGN DETAIL SHEET (METRIC) (REV.03-17-04)

USERNAME => trmartok DATE PLOTTED => 03-AUG-2010 TIME PLOTTED => 13:13

DIST	COUNTY	ROUTE	KILOMETER POST TOTAL PROJECT	SHEET No	TOTAL SHEETS
05	Mon	101	R146.8/159.7	1401	1402

Michael S. Finegan 10-8-09
REGISTERED CIVIL ENGINEER

7-26-10
PLANS APPROVAL DATE

REGISTERED PROFESSIONAL ENGINEER
Michael S. Finegan
No. C50138
Exp. 6-30-11
CIVIL
STATE OF CALIFORNIA

The State of California or its officers or agents shall not be responsible for the accuracy or completeness of electronic copies of this plan sheet.

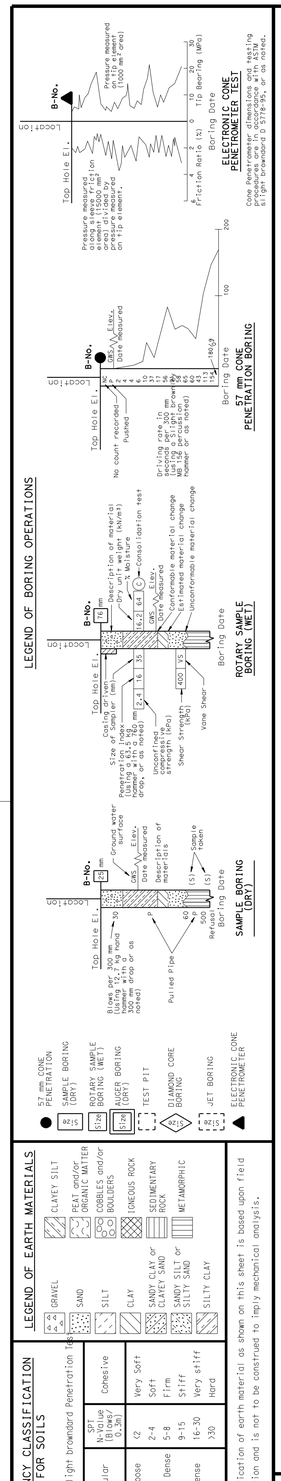

OGS CIVIL LOG OF TEST BORINGS SHEET (METRIC) (REV. 4/04)

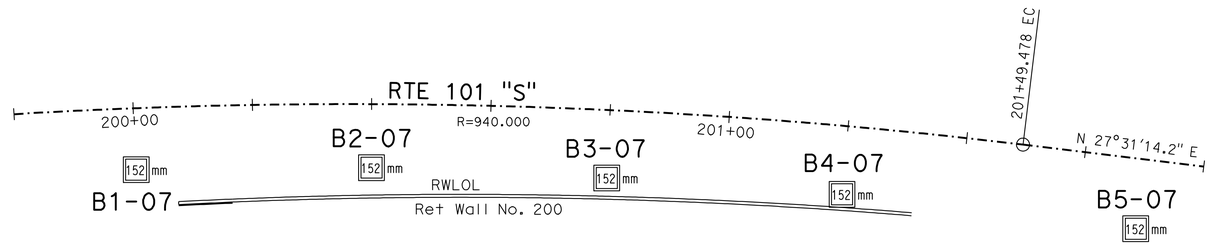

BENCH MARK

BM MON-101-98.65 (PM)
Elev 140.091 m (NGVD29)

PLAN

1:500

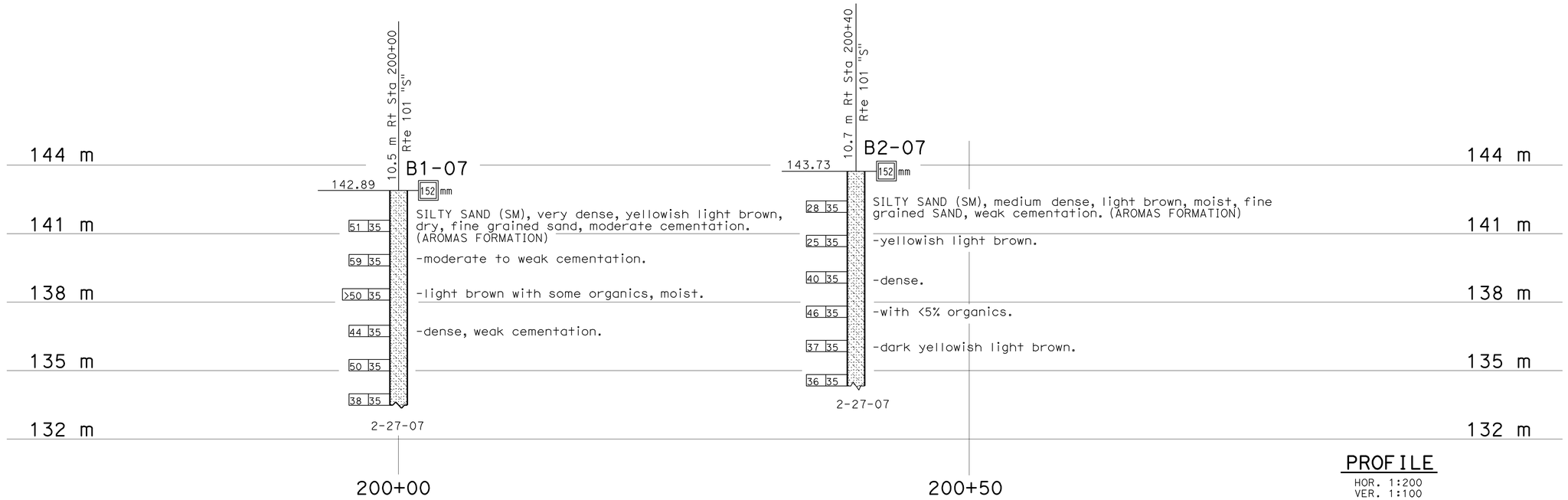

PROFILE

HOR. 1:200
VER. 1:100

Caltrans Metric

GEOTECHNICAL SERVICES	
DRAWN BY	A. Yan, I-G-Remmen 3/08
CHECKED BY	W. Hoon

FIELD INVESTIGATION BY: W. Hoon

STATE OF CALIFORNIA DEPARTMENT OF TRANSPORTATION

DIVISION OF ENGINEERING SERVICES STRUCTURE DESIGN
DESIGN BRANCH 6

BRIDGE NO. 44E0016
KILOMETER POST 158.85

RETAINING WALL No. 200
LOG OF TEST BORINGS

ALL DIMENSIONS ARE IN METERS UNLESS OTHERWISE SHOWN

ORIGINAL SCALE IN MILLIMETERS FOR REDUCED PLANS 0 10 20 30 40 50 60 70 80 90 100

CU 05
EA 0161E1

DISREGARD PRINTS BEARING EARLIER REVISION DATES

REVISION DATES (PRELIMINARY STAGE ONLY) 06-18-09 10-08-09 10-14-09 10-15-09 03-25-10

SHEET 12 OF 13

FILE => 44e0016-z-lotb01.dgn

USERNAME => trmorlok DATE PLOTTED => 03-AUG-2010 TIME PLOTTED => 13:13

DIST	COUNTY	ROUTE	KILOMETER POST TOTAL PROJECT	SHEET No	TOTAL SHEETS
05	Mon	101	R146.8/159.7	1402	1402

Michael S. Finegan 10-8-09
REGISTERED CIVIL ENGINEER

7-26-10
PLANS APPROVAL DATE

REGISTERED PROFESSIONAL ENGINEER
Michael S. Finegan
No. C50138
Exp. 6-30-11
CIVIL
STATE OF CALIFORNIA

The State of California or its officers or agents shall not be responsible for the accuracy or completeness of electronic copies of this plan sheet.

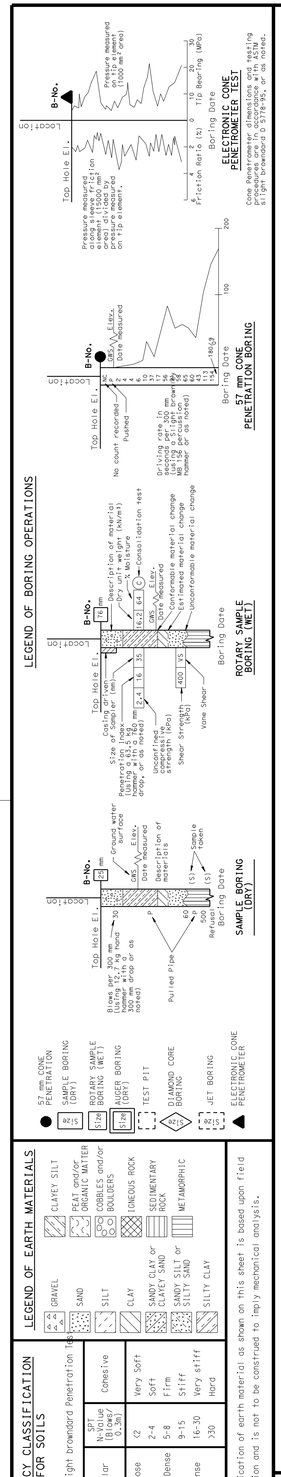

OGS CIVIL LOG OF TEST BORINGS SHEET (METRIC) (REV. 4/04)

FOR PLAN VIEW, SEE
"LOG OF TEST BORINGS" 1 OF 2

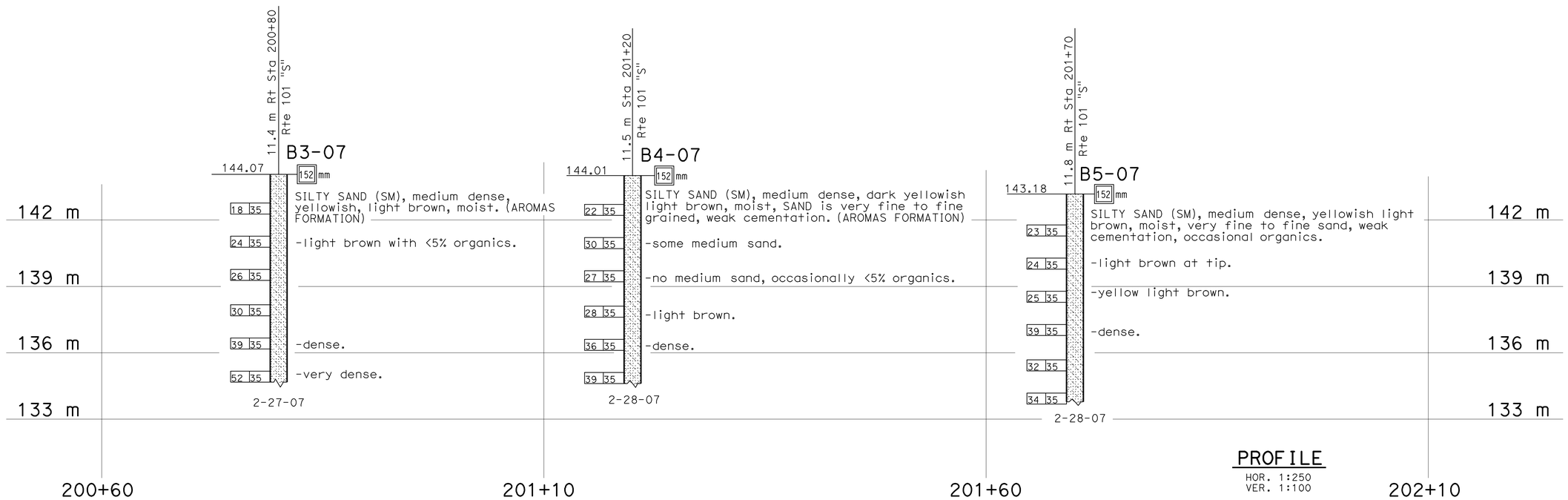

Caltrans Metric

GEOTECHNICAL SERVICES	
DRAWN BY	A. Yan, I-G-Remmen 3/08
CHECKED BY	W. Hoon

FIELD INVESTIGATION BY: W. Hoon

STATE OF CALIFORNIA
DEPARTMENT OF TRANSPORTATION

DIVISION OF ENGINEERING SERVICES
STRUCTURE DESIGN
DESIGN BRANCH 6

BRIDGE NO. 44E0016
KILOMETER POST 158.85

RETAINING WALL No. 200
LOG OF TEST BORINGS 2 OF 2

ALL DIMENSIONS ARE IN METERS UNLESS OTHERWISE SHOWN

ORIGINAL SCALE IN MILLIMETERS FOR REDUCED PLANS 0 10 20 30 40 50 60 70 80 90 100

CU 05
EA 0161E1

DISREGARD PRINTS BEARING EARLIER REVISION DATES

REVISION DATES (PRELIMINARY STAGE ONLY) 06-18-09 10-06-09 10-15-09

SHEET 13 OF 13

FILE => 44e0016-z-lotb02.dgn

USERNAME => trlenard DATE PLOTTED => 03-AUG-2010 TIME PLOTTED => 12:44