DIST	COUNTY	ROUTE	KILOMETER POST TOTAL PROJECT	SHEET No	TOTAL SHEETS
05	Mon	101	R146.8/159.7	1201	1402

Hernan Perez 05-06-10
REGISTERED CIVIL ENGINEER DATE

7-26-10
PLANS APPROVAL DATE

REGISTERED PROFESSIONAL ENGINEER HERNAN PEREZ No. C60993 Exp. 12-31-10 CIVIL STATE OF CALIFORNIA

The State of California or its officers or agents shall not be responsible for the accuracy or completeness of electronic copies of this plan sheet.

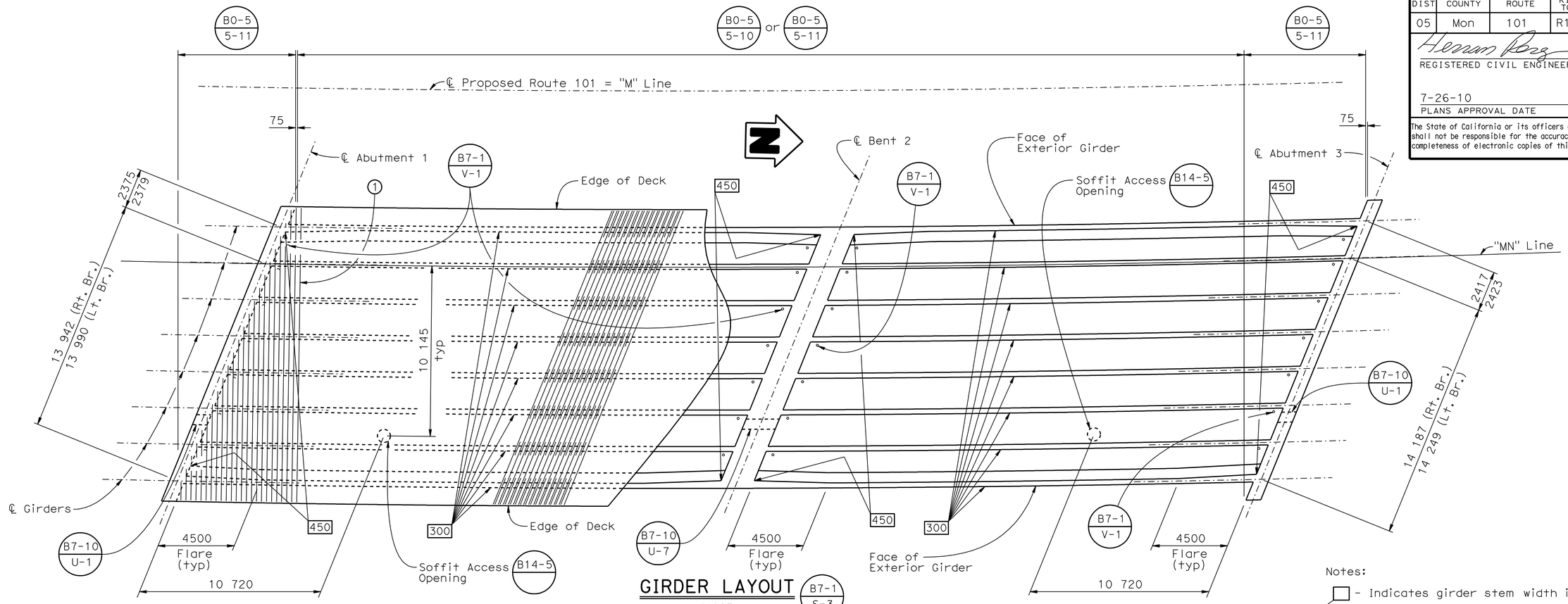

GIRDER LAYOUT B7-1 / S-3
1:125

Notes:

□ - Indicates girder stem width in millimeters.

① - #16 @ 300, extend top & bottom slab transverse reinforcement 450 mm into abutment diaphragm.

Right bridge shown, Left bridge similar except as noted.

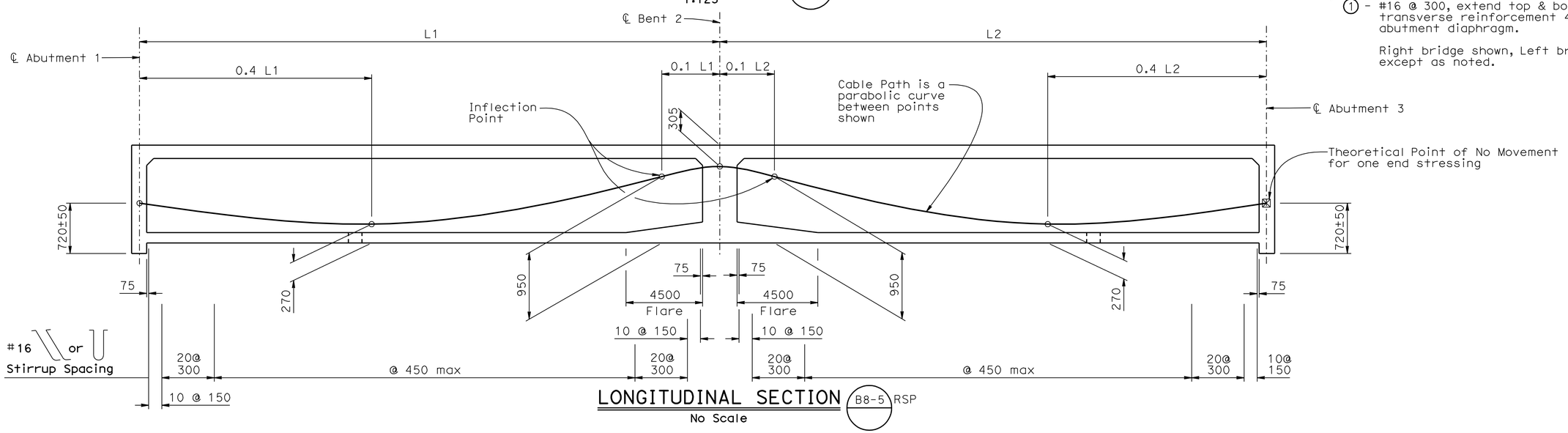

LONGITUDINAL SECTION B8-5 RSP
No Scale

DESIGN	BY A. Salimi	CHECKED R. Thompson	
DETAILS	BY D. Pato	CHECKED R. Thompson	
QUANTITIES	BY U. Inyang	CHECKED J. Klieby	

Caltrans Metric

ALL DIMENSIONS ARE IN MILLIMETERS UNLESS OTHERWISE SHOWN

ORIGINAL SCALE IN MILLIMETERS FOR REDUCED PLANS 0 10 20 30 40 50 60 70 80 90 100

STATE OF CALIFORNIA
DEPARTMENT OF TRANSPORTATION

DIVISION OF ENGINEERING SERVICES
STRUCTURE DESIGN
DESIGN BRANCH 6

CU 05
EA 0161E1

BRIDGE NO. 44-0282R/L
KILOMETER POST 147.90

ESPINOSA ROAD UC
GIRDER LAYOUT

DISREGARD PRINTS BEARING EARLIER REVISION DATES

REVISION DATES: 1-11-08, 2-24-09, 6-14-09, 12-11-09, 1-28-10, 05-06-10

SHEET 13 OF 22

FILE => 44-0282-1-gdrlay.dgn

STRUCTURES DESIGN DETAIL SHEET (METRIC) (REV.03-17-04)

USERNAME => trlenard DATE PLOTTED => 02-AUG-2010 TIME PLOTTED => 13:28

DIST	COUNTY	ROUTE	KILOMETER POST TOTAL PROJECT	SHEET No	TOTAL SHEETS
05	Mon	101	R146.8/159.7	1202	1402

REGISTERED CIVIL ENGINEER 05-06-10 DATE

7-26-10
PLANS APPROVAL DATE

REGISTERED PROFESSIONAL ENGINEER HERNAN PEREZ No. C60993 Exp. 12-31-10 CIVIL STATE OF CALIFORNIA

The State of California or its officers or agents shall not be responsible for the accuracy or completeness of electronic copies of this plan sheet.

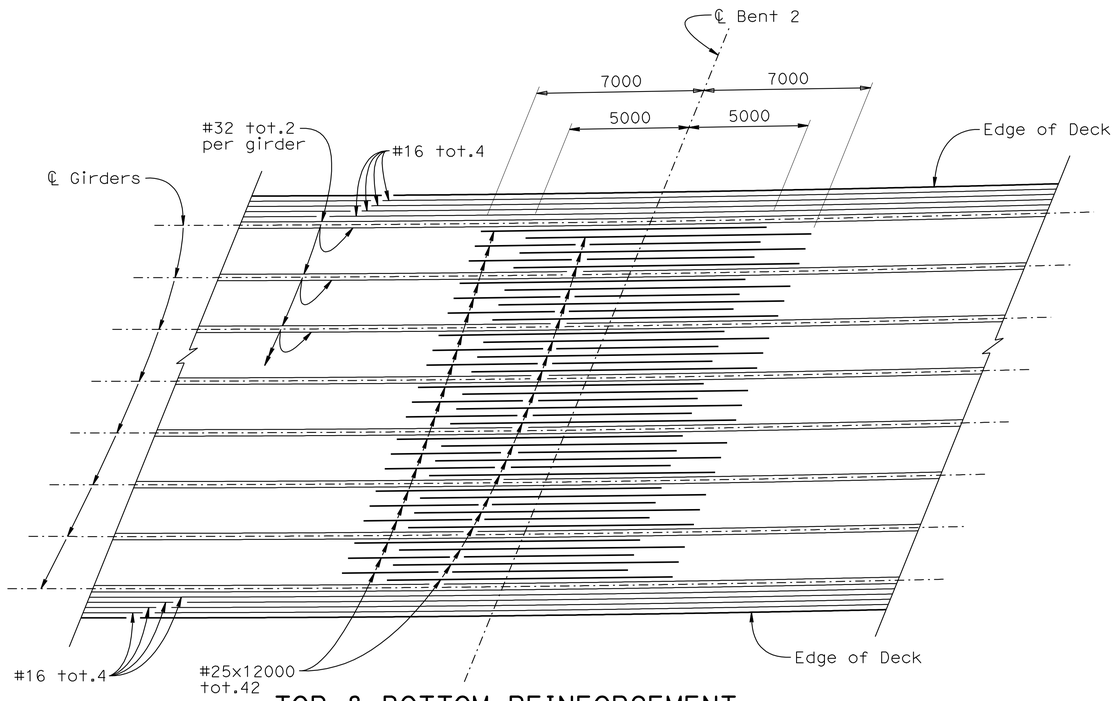

TOP & BOTTOM REINFORCEMENT

1:125

Note

1. Right Bridge shown, Left Bridge similar
2. Bottom reinforcement is only #25 x 12000 tot 42
3. No lap splices allowed in #25 reinforcement. Service splices only

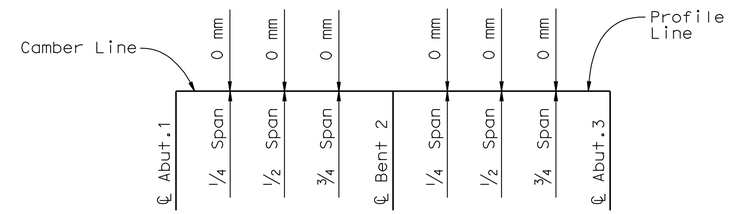

CAMBER DIAGRAM

Does not include allowance for falsework settlement.

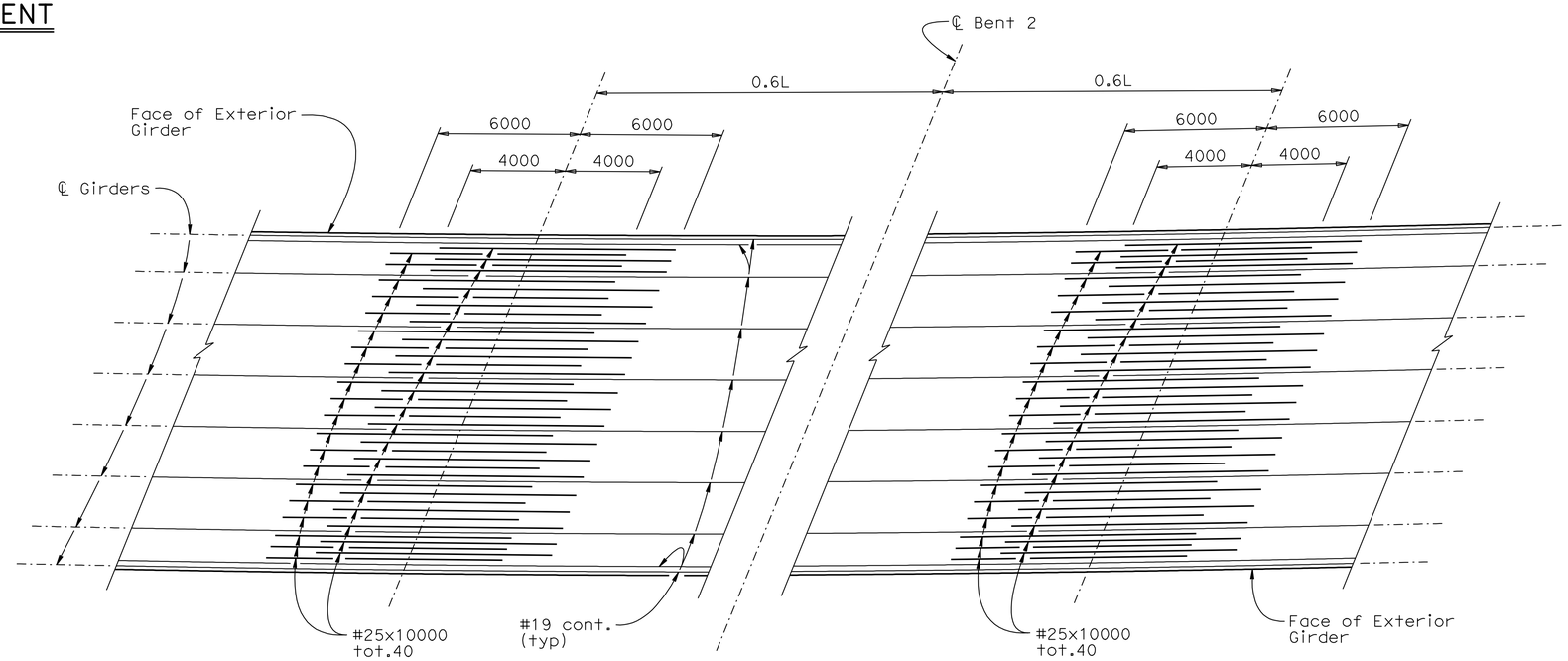

BOTTOM REINFORCEMENT

1:125

Note:
Right Bridge shown, Left Bridge similar.

PRESTRESSING NOTES

1860 MPa Low Relaxation Strands:

Pjack = 48,000 kN (Per Bridge)

Anchor Set = 10 mm

Total Number of Girders = 8

Friction curvature coefficient μ = 15 $\times 10^{-2}$(1/rad)

Friction wobble coefficient K = 6.6 $\times 10^{-4}$(1/m)

Distribution of prestress force (Pjack) between girders shall not exceed the ratio of 3:2.

Maximum final force variation between girders shall not exceed 3200 kN.

Concrete: f'_c = 28 Mpa @ 28 days

f'_{ci} = 25 Mpa @ time of stressing

Contractor shall submit elongation calculations based on initial stress at $\boxed{x}$ = 0.88 times jacking stress

One end stressing shall be performed from the long-span end only

	BY	CHECKED
DESIGN	A. Salimi	R. Thompson
DETAILS	D. Pato	R. Thompson
QUANTITIES	U. Inyang	J. Klieby

STATE OF CALIFORNIA
DEPARTMENT OF TRANSPORTATION

DIVISION OF ENGINEERING SERVICES
STRUCTURE DESIGN
DESIGN BRANCH 6

BRIDGE NO. 44-0282R/L
KILOMETER POST 147.90

ESPINOSA ROAD UC
GIRDER REINFORCEMENT

Caltrans Metric

ALL DIMENSIONS ARE IN MILLIMETERS UNLESS OTHERWISE SHOWN

ORIGINAL SCALE IN MILLIMETERS FOR REDUCED PLANS 0 10 20 30 40 50 60 70 80 90 100

CU 05
EA 0161E1

DISREGARD PRINTS BEARING EARLIER REVISION DATES

REVISION DATES: 2-28-08 2-24-09 6-14-09 05-06-10

SHEET 14 OF 22

FILE => 44-0282-o-gdrrf.dgn

STRUCTURES DESIGN DETAIL SHEET (METRIC) (REV.03-17-04)

USERNAME => trleonard DATE PLOTTED => 02-AUG-2010 TIME PLOTTED => 13:28

DIST.	COUNTY	ROUTE	KILOMETER POST TOTAL PROJECT	SHEET NO.	TOTAL SHEETS
05	Mon	101	R146.8/159.7	1203	1402

Caltrans Metric

Hernan Perez 05-06-10
REGISTERED ENGINEER - CIVIL

7-26-10
PLANS APPROVAL DATE

The State of California or its officers or agents shall not be responsible for the accuracy or completeness of electronic copies of this plan sheet.

REGISTERED PROFESSIONAL ENGINEER HERNAN PEREZ No. C60993 Exp. 12-31-10 CIVIL STATE OF CALIFORNIA

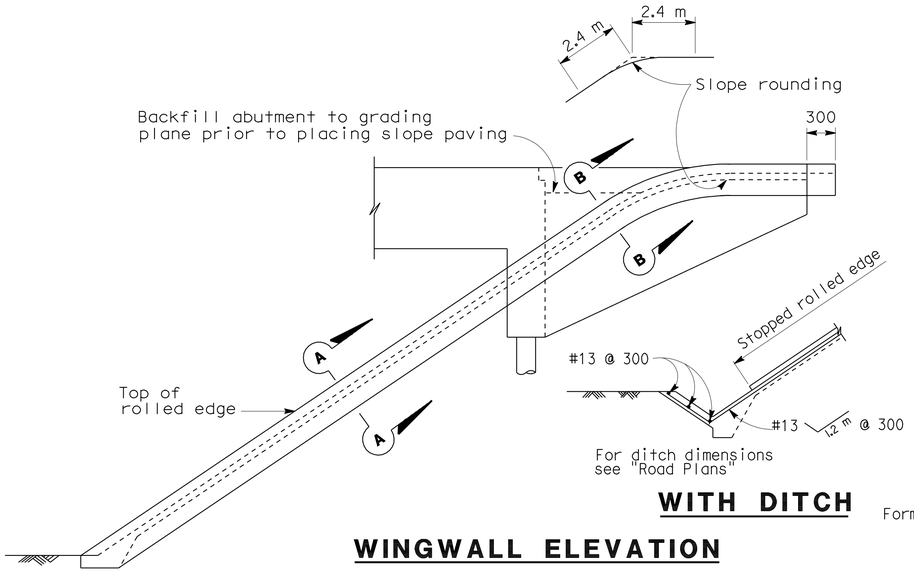

WITH DITCH

WINGWALL ELEVATION

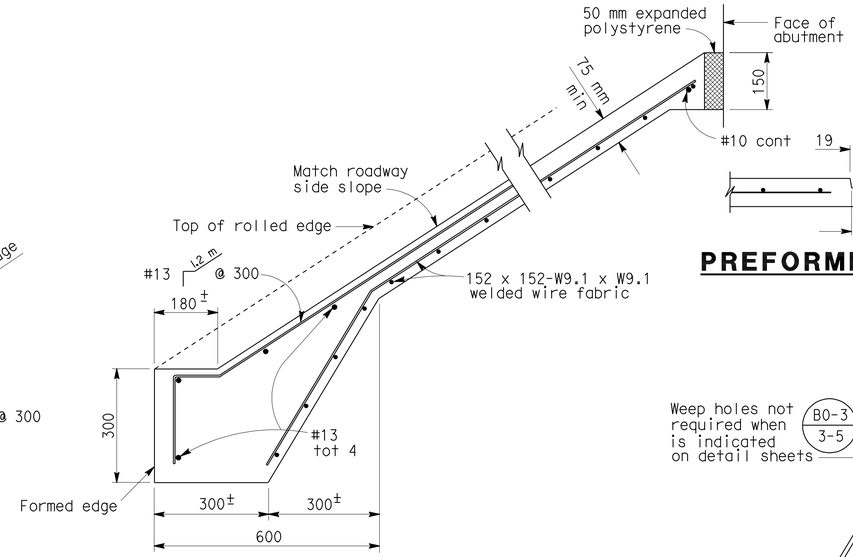

TYPICAL SECTION - CONCRETE PAVING

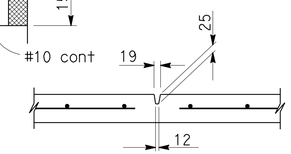

PREFORMED GROOVE

Note: Architectural Treatment is not shown.

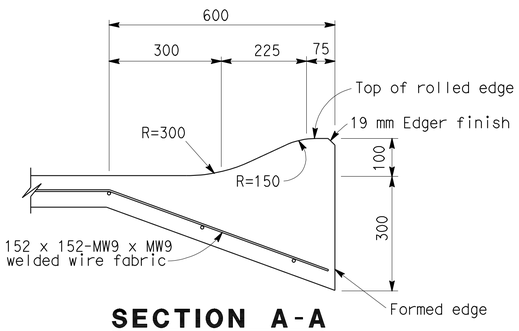

SECTION A-A

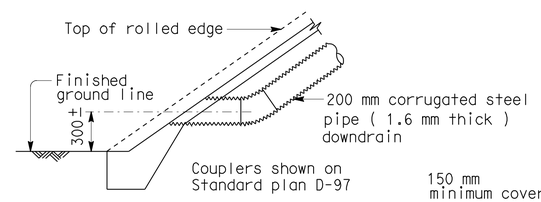

TYPICAL - NO CURB

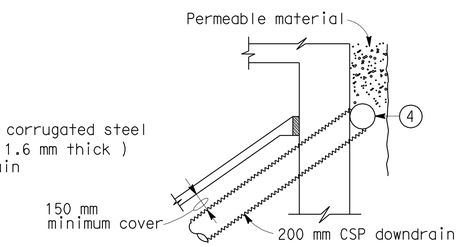

TYPICAL - DRAIN CONNECTION

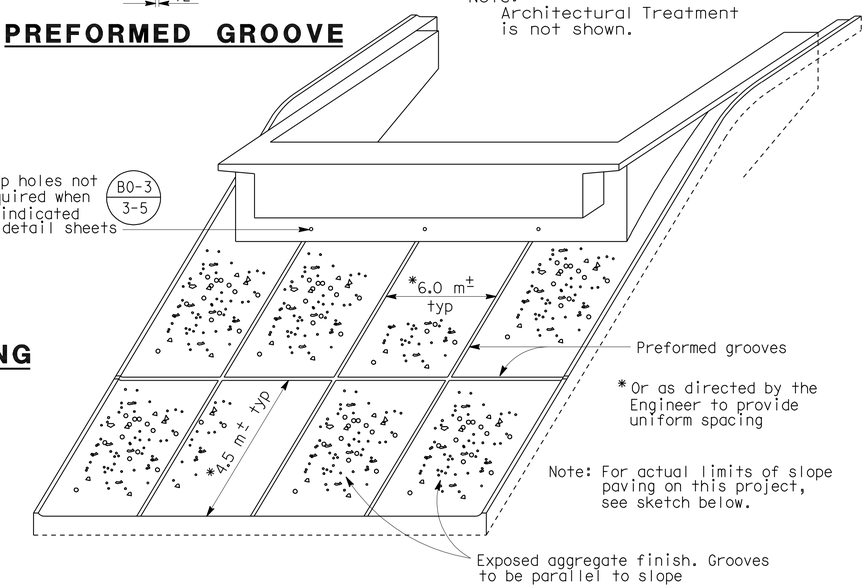

PICTORIAL VIEW OF TYPICAL INSTALLATION

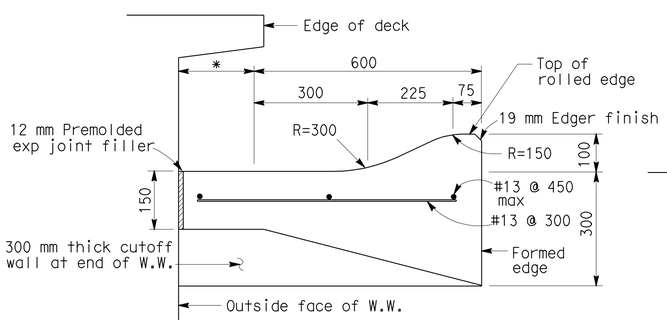

SECTION B-B

*This dimension becomes zero when edge of deck is at outside face of W.W.

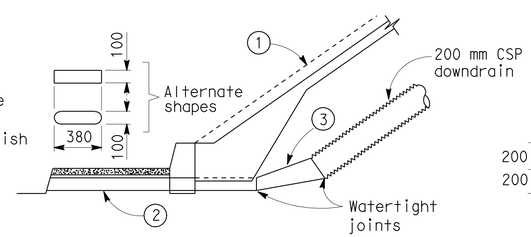

TYPICAL - WITH SIDEWALK

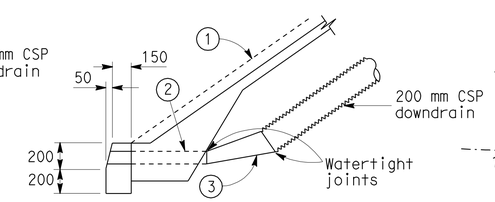

TYPICAL - WITH CURB

DRAINAGE DETAILS

Note: Drainage details are only applicable when B0-3 / 3-5 is indicated on detail sheets.

1. Top of rolled edge
2. Conduit: 1.6 mm galv corrugated steel or 2.8 mm smooth galv steel
3. Taper: 1.6 mm / 2.8 mm smooth galv steel
4. 200 mm perforated steel pipe (1.6 mm thick) underdrain behind abutment. Connect to downdrain as shown on limits of Slope Paving & Drainage layout.

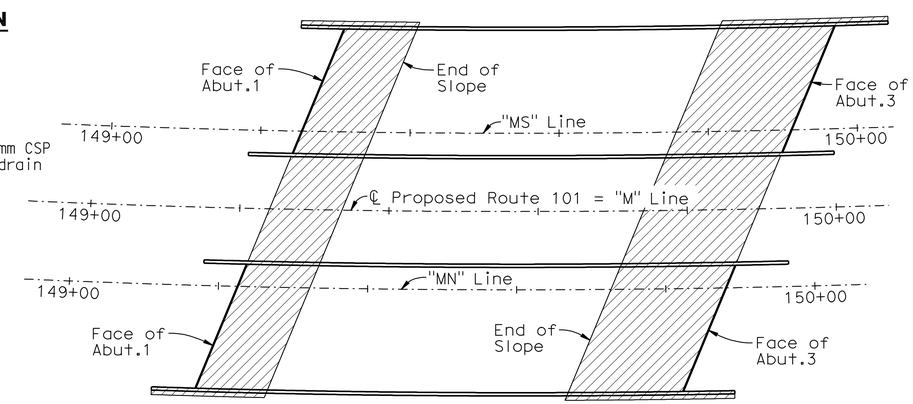

LIMITS OF SLOPE PAVING & DRAINAGE LAYOUT

NO SCALE

Notes:

- Indicates Limits of Slope Paving and Drainage Layout.

ALL DIMENSIONS ARE IN MILLIMETERS UNLESS OTHERWISE SHOWN

STANDARD DRAWING

RELEASE DATE 4/20/00	DESIGN BY A. Salimi	CHECKED H. Perez	RELEASED BY Roberto Lucelle OFFICE CHIEF	
FILE NO. xs4-210	DETAILS BY R. YEE	CHECKED H. Perez		
	SUBMITTED BY C.W. PURKISS	DRAWING DATE 3/89		

STATE OF CALIFORNIA DEPARTMENT OF TRANSPORTATION

DIVISION OF ENGINEERING SERVICES STRUCTURE DESIGN

DESIGN BRANCH 6

BRIDGE NO. 44-0282R/L

KILOMETER POST 147.90

ESPINOSA ROAD UC

SLOPE PAVING - FULL SLOPE

DS OSD 2147A (METRIC) (REV. 2/25/97)

ORIGINAL SCALE IN MILLIMETERS FOR REDUCED PLANS 0 10 20 30 40 50 60 70 80 90 100

CU 05
EA 0161E1

DISREGARD PRINTS BEARING EARLIER REVISION DATES

REVISION DATES (PRELIMINARY STAGE ONLY) 2-9-09 2-24-09 4-24-09 4-28-09 6-11-09 7-13-09 11-04-09 1-28-10 03-09-10 05-06-10

SHEET 15 OF 22

USERNAME => trlenard

44-0282-q-slopepav

DATE PLOTTED => 02-AUG-2010 TIME PLOTTED => 13:28

DIST.	COUNTY	ROUTE	KILOMETER POST TOTAL PROJECT	SHEET NO.	TOTAL SHEETS
05	Mon	101	R146.8/159.7	1204	1402

Caltrans Metric

Hernan Perez 05-06-10
REGISTERED ENGINEER - CIVIL

7-26-10
PLANS APPROVAL DATE

REGISTERED PROFESSIONAL ENGINEER HERNAN PEREZ No. C60993 Exp. 12-31-10 CIVIL STATE OF CALIFORNIA

The State of California or its officers or agents shall not be responsible for the accuracy or completeness of electronic copies of this plan sheet.

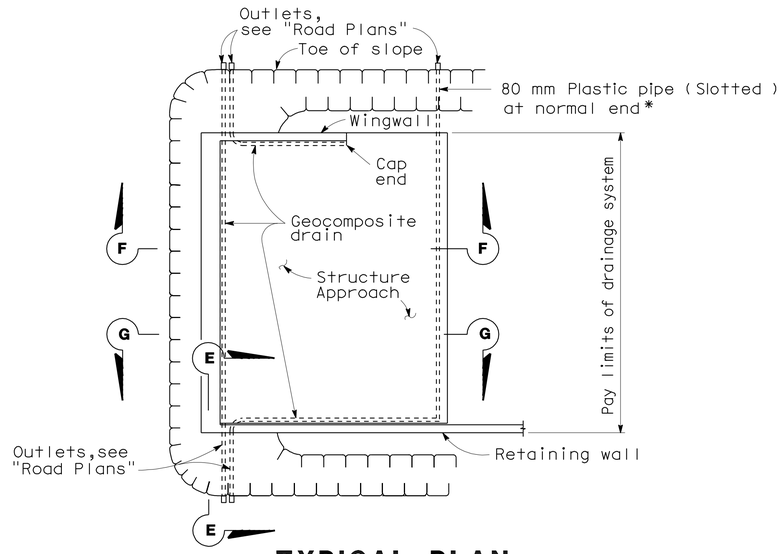

TYPICAL PLAN

*For pipe layout at staggered end, see "Detail B".

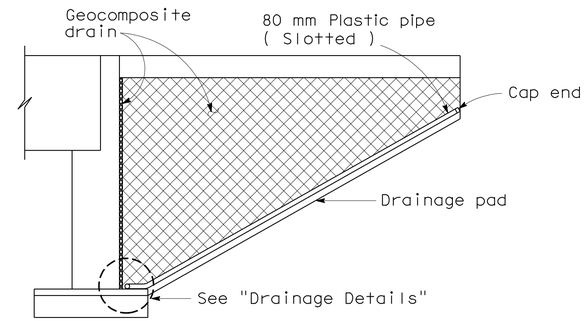

CANTILEVER WINGWALL
SECTION F-F

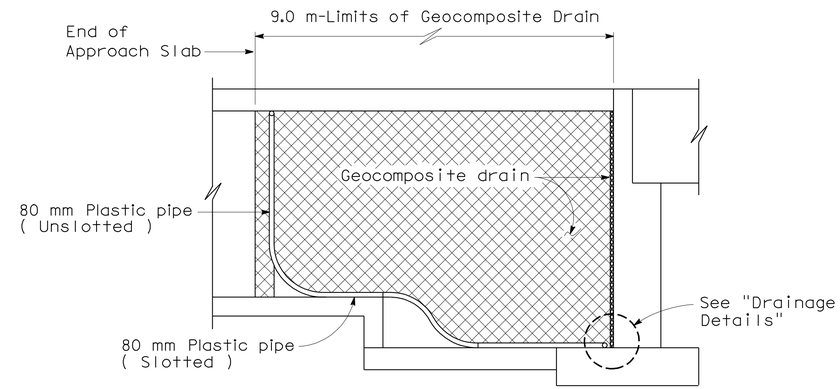

RETAINING WALL WINGWALL
SECTION G-G

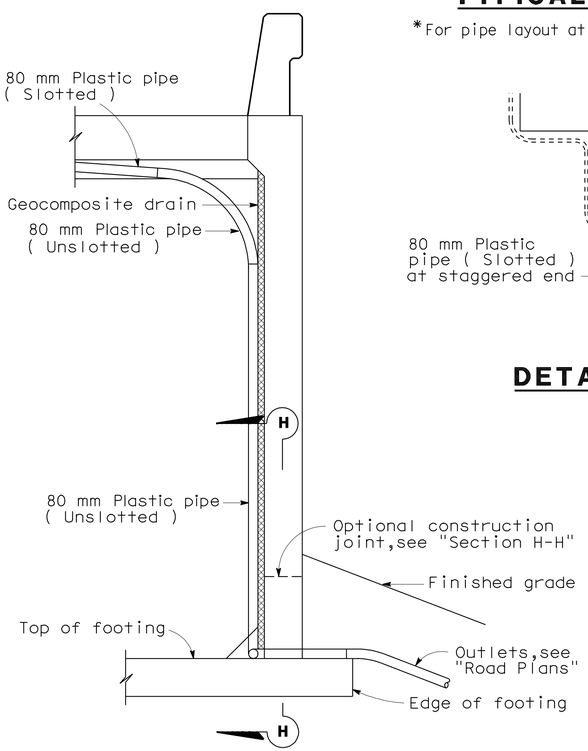

SECTION E-E

NOTE: Bends and junctions in 80 mm plastic pipe are 750 mm radius min.

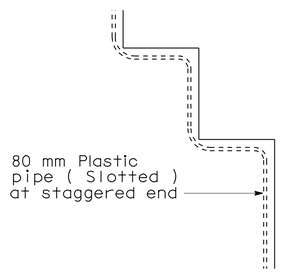

DETAIL B

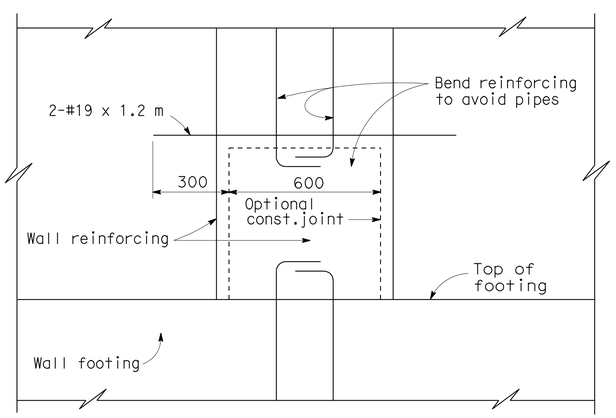

SECTION H-H

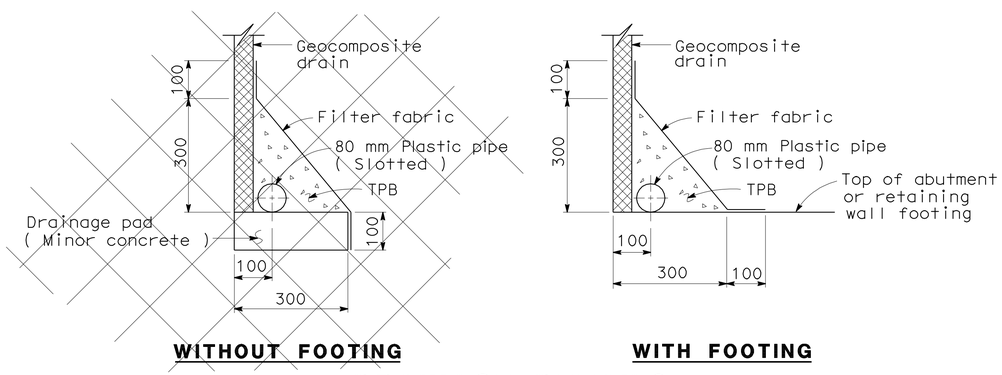

WITHOUT FOOTING

WITH FOOTING

DRAINAGE DETAILS

NO SCALE

ALL DIMENSIONS ARE IN MILLIMETERS UNLESS OTHERWISE SHOWN

STANDARD DRAWING					
RELEASE DATE 4/23/98	DESIGN	BY M. TRAFFALIS	CHECKED E. THORKILDSEN	RELEASED BY	
FILE NO. xs3-110	DETAILS	BY R. YEE	CHECKED E. THORKILDSEN		
	SUBMITTED	BY M. HA	DRAWING DATE 4/98	OFFICE CHIEF	

STATE OF CALIFORNIA DEPARTMENT OF TRANSPORTATION

DIVISION OF ENGINEERING SERVICES STRUCTURE DESIGN
DESIGN BRANCH 6

BRIDGE NO. 44-0282R/L
KILOMETER POST 147.90

ESPINOSA ROAD UC
STRUCTURE APPROACH DRAINAGE DETAILS

DS OSD 2147A (METRIC) (REV. 2/25/97)

ORIGINAL SCALE IN MILLIMETERS FOR REDUCED PLANS 0 10 20 30 40 50 60 70 80 90 100

CU 05
EA 0161E1

DISREGARD PRINTS BEARING EARLIER REVISION DATES

REVISION DATES (PRELIMINARY STAGE ONLY) 7-31-08 2-24-09 6-14-09 12-11-09 1-28-10 03-09-10 05-06-10

SHEET 16 OF 22

USERNAME => trlenard

44-0282-r-sadd.dgn

DATE PLOTTED => 02-AUG-2010 TIME PLOTTED => 13:29

DIST.	COUNTY	ROUTE	KILOMETER POST TOTAL PROJECT	SHEET NO.	TOTAL SHEETS
05	Mon	101	R146.8/159.7	1205	1402

Caltrans Metric

Hernan Perez 05-06-10
REGISTERED ENGINEER - CIVIL

7-26-10
PLANS APPROVAL DATE

The State of California or its officers or agents shall not be responsible for the accuracy or completeness of electronic copies of this plan sheet.

REGISTERED PROFESSIONAL ENGINEER HERNAN PEREZ No. C60993 Exp. 12-31-10 CIVIL STATE OF CALIFORNIA

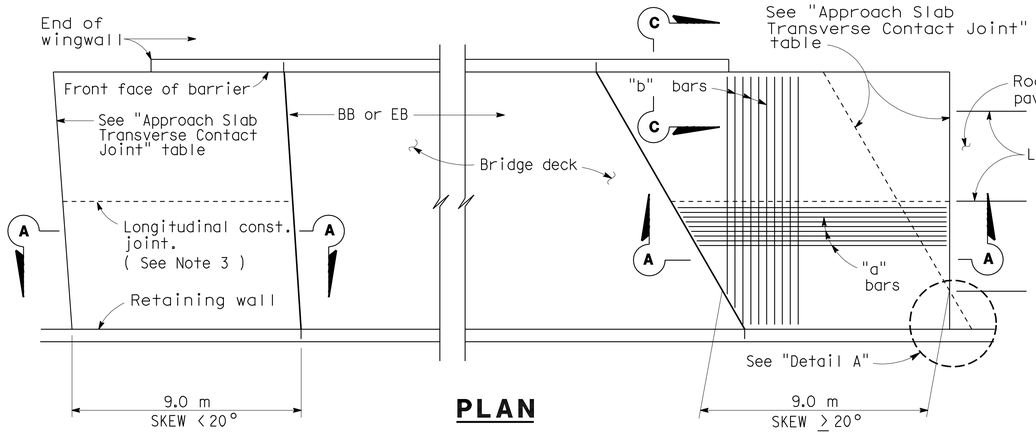

PLAN

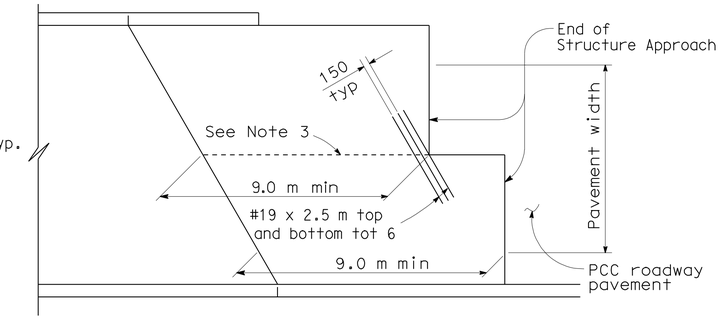

STRUCTURE APPROACH - END STAGGER DETAIL

APPROACH SLAB TRANSVERSE CONTACT JOINT		
APPROACH SKEW	WITH AC ROADWAY PAVEMENT	WITH PCC ROADWAY PAVEMENT
< 20°	Parallel to face of paving notch	Parallel to face of paving notch
20°- 45°	Parallel to face of P N use (Detail A)	Stagger lines 7.2 m to 10.8 m apart.
> 45°	Parallel to face of P N use (Detail A)	Stagger at each lane line.

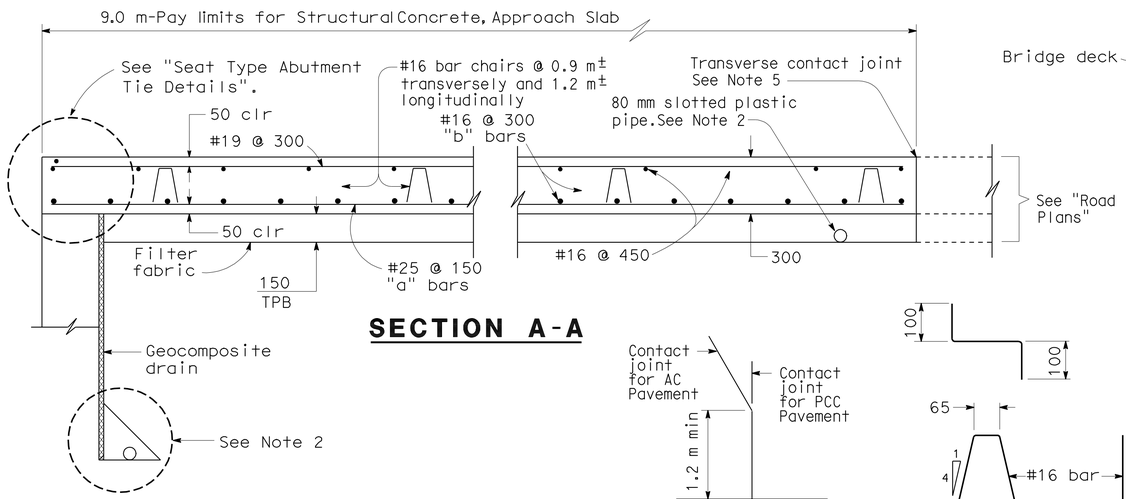

SECTION A-A

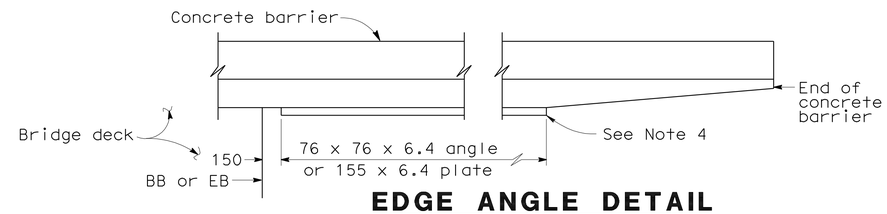

EDGE ANGLE DETAIL

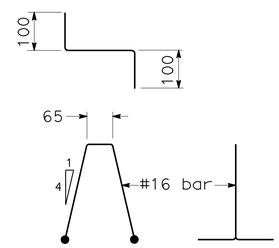

BAR CHAIR DETAIL

DETAIL A

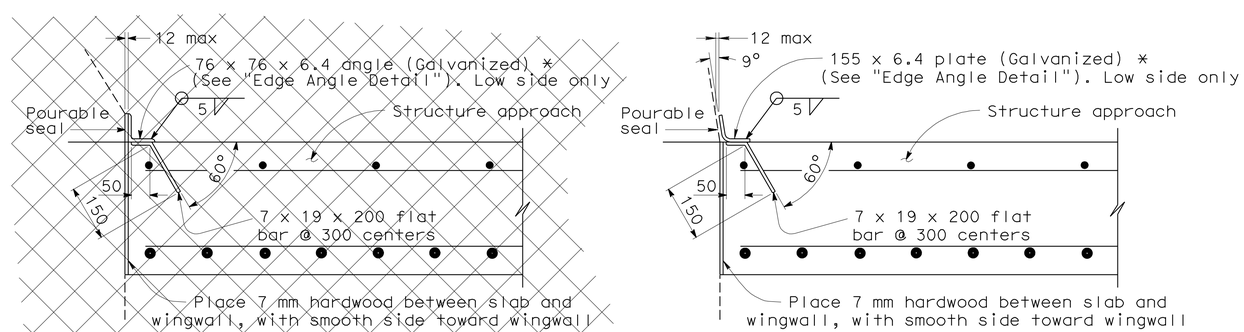

*(TO BE USED WITH TYPE 25 OR TYPE 27 CONCRETE BARRIER)

*(TO BE USED WITH TYPE 732 OR TYPE 736 CONCRETE BARRIER)

DETAIL B

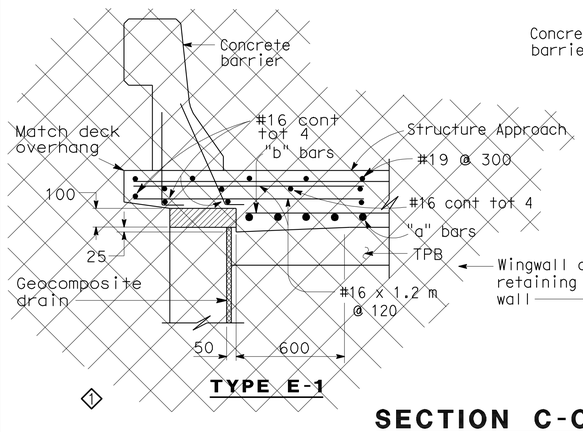

TYPE E-1

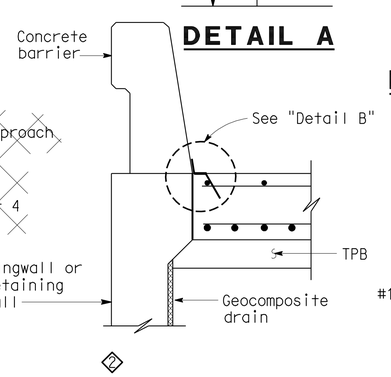

TYPE E-2

SECTION C-C

(Type E-1 to be used,unless otherwise shown on plans)

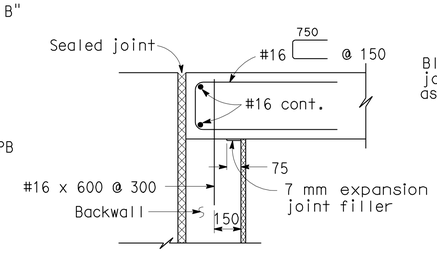

MR ≤ 50 mm

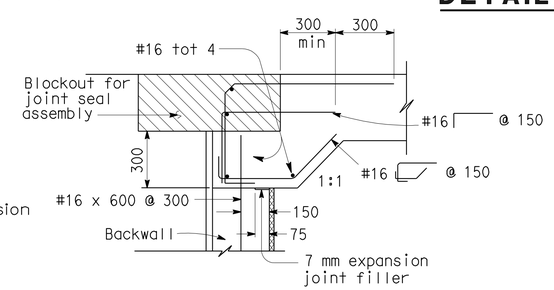

MR > 50 mm

SEAT TYPE ABUTMENT TIE DETAILS (SEE NOTE 1)

NOTES:

1. For details not shown,see Structure Plans. For MR ≤ 50 mm,adjust bar reinforcement to clear a sawcut for sealed joint,when required.
2. For drainage details,see "Structure Approach Drainage Details" sheet.
3. Longitudinal construction joints,when permitted by the Engineer, shall be located on lane lines.
4. End angle or plate at beginning of barrier transition, end of wingwall or end of structure approach as applicable.
5. For transverse contact joint with new PCC paving, refer to Standard Plan P10.
6. At the contractor's option, approach slab transverse reinforcement may be placed parallel to paving notch. Spacing of transverse reinforcement is measured along ℄ roadway.

Remove all polystyrene.

NO SCALE

ALL DIMENSIONS ARE IN MILLIMETERS UNLESS OTHERWISE SHOWN

STANDARD DRAWING

RELEASE DATE	3/14/05	DESIGN	BY M. TRAFFALIS	CHECKED E. THORKILDSEN	RELEASED BY
FILE NO.	xs3-120	DETAILS	BY R. YEE	CHECKED E. THORKILDSEN	
		SUBMITTED	BY M. HA	DRAWING DATE 4/98	OFFICE CHIEF

1 Detail not being used.
2 Revised detail.

STATE OF CALIFORNIA
DEPARTMENT OF TRANSPORTATION

DIVISION OF ENGINEERING SERVICES
STRUCTURE DESIGN
DESIGN BRANCH 6

BRIDGE NO. 44-0282R/L
KILOMETER POST 147.90

ESPINOSA ROAD UC

STRUCTURE APPROACH TYPE N(9S)

DS OSD 2147A (METRIC) (REV. 2/25/97)

ORIGINAL SCALE IN MILLIMETERS FOR REDUCED PLANS 0 10 20 30 40 50 60 70 80 90 100

CU 05
EA 0161E1

DISREGARD PRINTS BEARING EARLIER REVISION DATES

REVISION DATES (PRELIMINARY STAGE ONLY) 7-31-08 2-24-09 6-11-09 1-28-10 03-09-10 05-06-10

SHEET 17 OF 22

USERNAME => trlenard

44-0282-s-structap

DATE PLOTTED => 02-AUG-2010 TIME PLOTTED => 13:23

DIST	COUNTY	ROUTE	KILOMETER POST TOTAL PROJECT	SHEET No	TOTAL SHEETS
05	Mon	101	R146.8/159.7	1206	1402

REGISTERED CIVIL ENGINEER 05-06-10 DATE

7-26-10
PLANS APPROVAL DATE

REGISTERED PROFESSIONAL ENGINEER HERNAN PEREZ No. C60993 Exp. 12-31-10 CIVIL STATE OF CALIFORNIA

The State of California or its officers or agents shall not be responsible for the accuracy or completeness of electronic copies of this plan sheet.

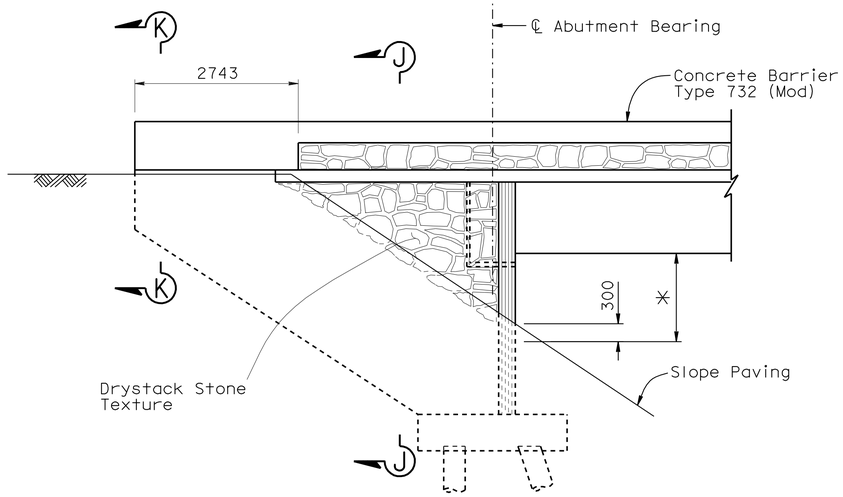

WINGWALL ELEVATION
1:50

Note:
* - Limits of Payment for Drystack Stone Texture.

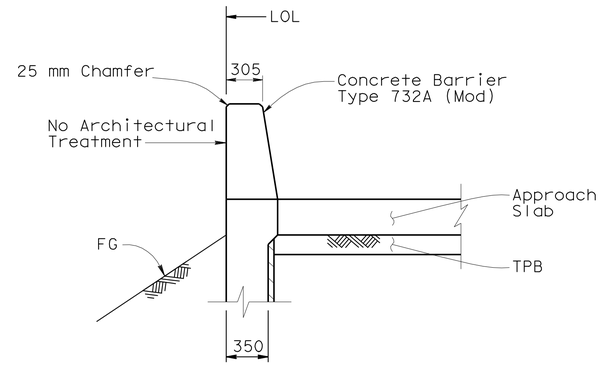

SECTION K-K
1:25

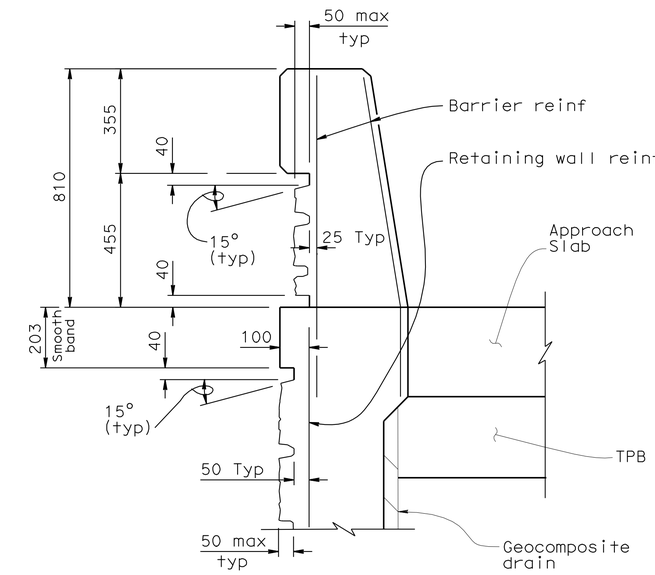

NOTE

Not all reinf shown. For reinf details see, "Abutment Details No.2" sheet

DETAIL A
1:10

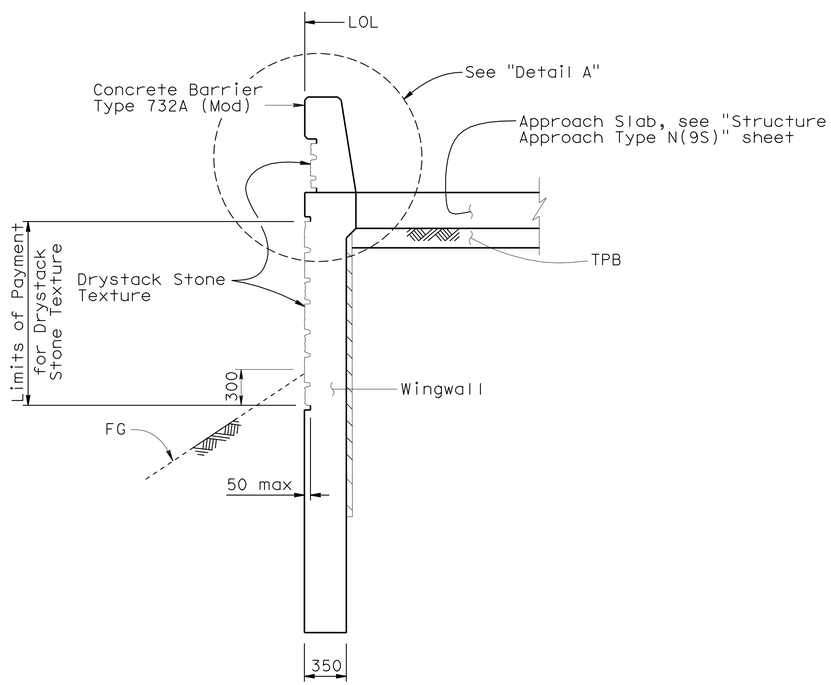

SECTION J-J
1:25

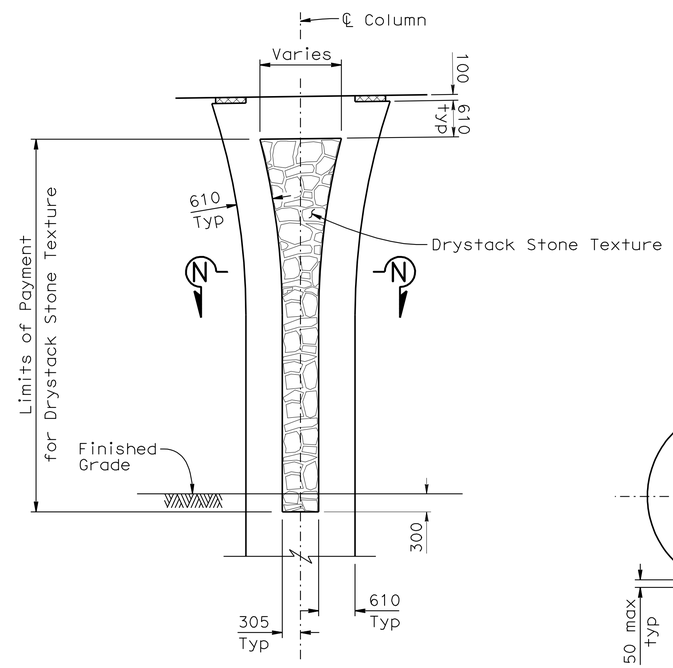

ELEVATION
1:50

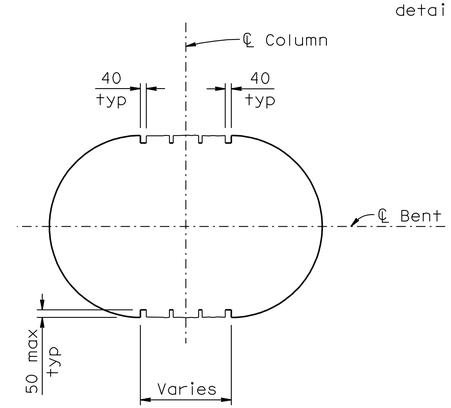

SECTION N-N
1:20

DESIGN	BY A. Salimi	CHECKED R. Thompson	
DETAILS	BY K. Chonkria	CHECKED R. Thompson	
QUANTITIES	BY U. Inyang	CHECKED J. Klieby	

STATE OF CALIFORNIA
DEPARTMENT OF TRANSPORTATION

DIVISION OF ENGINEERING SERVICES
STRUCTURE DESIGN
DESIGN BRANCH 6

BRIDGE NO. 44-0282R/L
KILOMETER POST 147.90

ESPINOSA ROAD UC
ARCHITECTURAL TREATMENT

ALL DIMENSIONS ARE IN MILLIMETERS UNLESS OTHERWISE SHOWN

ORIGINAL SCALE IN MILLIMETERS FOR REDUCED PLANS 0 10 20 30 40 50 60 70 80 90 100

CU 05
EA 0161E1

DISREGARD PRINTS BEARING EARLIER REVISION DATES

REVISION DATES: 05-23-08 | 2-11-09 | 2-24-09 | 4-24-09 | 4-28-09 | 6-11-09 | 7-08-09 | 12-11-09 | 03-09-10 | 05-06-10

SHEET 18 OF 22

FILE => 44-0282-y-archdet1.dgn

STRUCTURES DESIGN DETAIL SHEET (METRIC) (REV.03-17-04)

USERNAME => friehard DATE PLOTTED => 12-AUG-2010 TIME PLOTTED => 06:08

DIST	COUNTY	ROUTE	KILOMETER POST TOTAL PROJECT	SHEET No	TOTAL SHEETS
05	Mon	101	R146.8/159.7	1207	1402

REGISTERED CIVIL ENGINEER 6-08-09

7-26-10
PLANS APPROVAL DATE

REGISTERED PROFESSIONAL ENGINEER — Dan Appelbaum — No. C50001 — Exp. 06-30-11 — CIVIL — STATE OF CALIFORNIA

The State of California or its officers or agents shall not be responsible for the accuracy or completeness of electronic copies of this plan sheet.

LEGEND OF BORING OPERATIONS

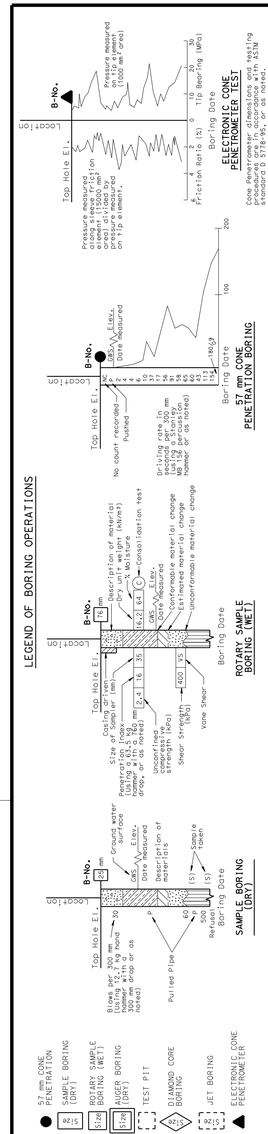

CONSISTENCY CLASSIFICATION FOR SOILS

According to the Standard Penetration Test

SPT N-Value (Blows/ 0.3m)	Granular	SPT N-Value (Blows/ 0.3m)	Cohesive
0-4	Very Loose	<2	Very Soft
5-10	Loose	2-4	Soft
11-30	Medium Dense	5-8	Firm
31-50	Dense	9-15	Stiff
>50	Very Dense	16-30	Very stiff
		>30	Hard

LEGEND OF EARTH MATERIALS

GRAVEL, SAND, SILT, CLAY, SANDY CLAY or CLAYEY SAND, SANDY SILT or SILTY SAND, SILTY CLAY, CLAYEY SILT, PEAT and/or ORGANIC MATTER, COBBLES and/or BOULDERS, IGNEOUS ROCK, SEDIMENTARY ROCK, METAMORPHIC

NOTE: Classification of earth material as shown on this sheet is based upon field inspection and is not to be construed to imply mechanical analysis.

OGS CIVIL LOG OF TEST BORINGS SHEET (METRIC) (REV. 4/04)

PLAN
1:500

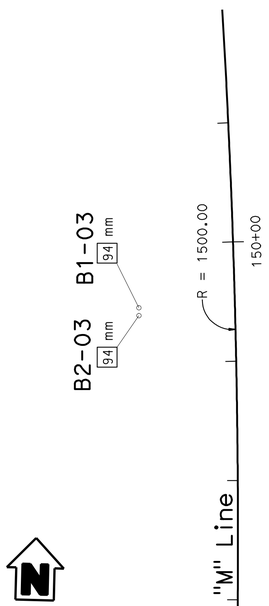

BENCH MARK

PM 91.47 Elev. 32.973 m (NGVD29) 0.025m IP w/caltrans control pp, in median @ begin of turn pocket to espinosa rd, 1.0 m E of carsonite post on MBGR post.

Notes:

1. 35 mm samples were taken using a standard split barrel sampler with an inside diameter (I.D.) of 35 mm and an outside diameter (O.D.) of 51 mm.
2. A safety driver hammer with an average efficiency of 59% was used for borings B1-03 through B5-03 and B7-03 to advance the sampler using a 63.5 kg hammer with a 762 mm drop. A Boart/Longyear automatic hammer with an average efficiency of 74% was used to advance the sampler for borings B9-06 and B10-06.
3. Borings were drilled using a "HX" wireline with "HQ" drill rod, outside diameter (O.D.) of 89 mm and inside diameter (I.D.) of 78 mm.
4. qu=unconfined compressive strength as determined by pocket penetrometer (kPa).
5. tv=undrained shear strength as determined by hand TORVANE (kPa).

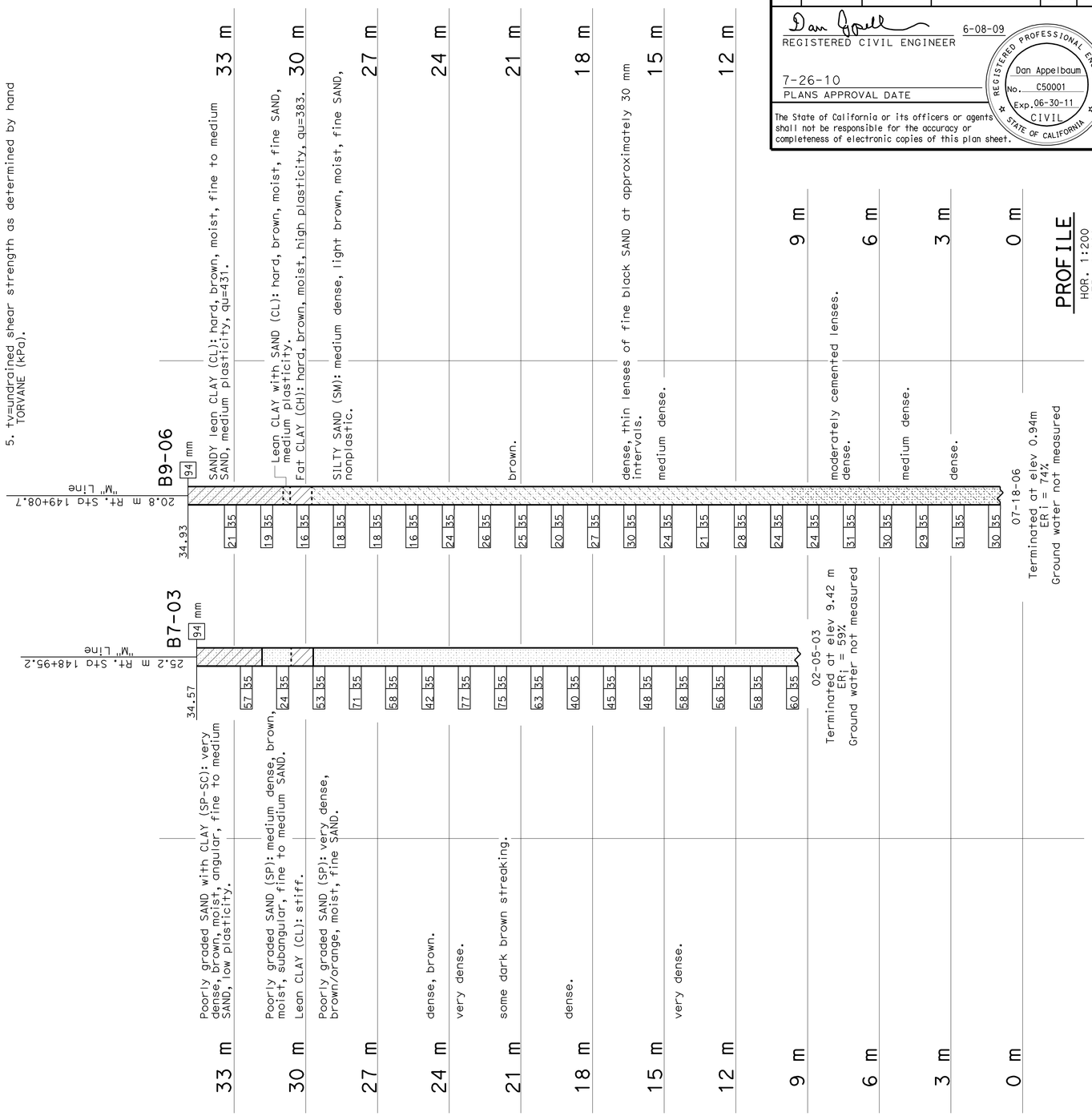

ENGINEERING SERVICES	GEOTECHNICAL SERVICES
DRAWN BY	F. Nguyen 2/08
CHECKED BY	D. Appelbaum

ALL DIMENSIONS ARE IN METERS UNLESS OTHERWISE SHOWN

FIELD INVESTIGATION BY: M. Ballentine, D. Appelbaum

ORIGINAL SCALE IN MILLIMETERS FOR REDUCED PLANS 0 10 20 30 40 50 60 70 80 90 100

STATE OF CALIFORNIA DEPARTMENT OF TRANSPORTATION

DIVISION OF ENGINEERING SERVICES STRUCTURE DESIGN — DESIGN BRANCH 6

CU 05
EA 0161E1

BRIDGE NO. 44-0282R/L
KILOMETER POST 147.90

ESPINOSA ROAD UC
LOG OF TEST BORINGS 1 OF 4

DISREGARD PRINTS BEARING EARLIER REVISION DATES

REVISION DATES (PRELIMINARY STAGE ONLY): 03-14-08 02-18-09 06-04-09 06-08-09

SHEET 19 OF 22

FILE => 44-0282-z-1otb1of4.dgn

USERNAME => trrichard DATE PLOTTED => 02-AUG-2010 TIME PLOTTED => 13:29

DIST	COUNTY	ROUTE	KILOMETER POST TOTAL PROJECT	SHEET No	TOTAL SHEETS
05	Mon	101	R146.8/159.7	1208	1402

REGISTERED CIVIL ENGINEER 6-08-09

7-26-10
PLANS APPROVAL DATE

REGISTERED PROFESSIONAL ENGINEER Dan Appelbaum No. C50001 Exp. 06-30-11 CIVIL STATE OF CALIFORNIA

The State of California or its officers or agents shall not be responsible for the accuracy or completeness of electronic copies of this plan sheet.

FOR PLAN VIEW, SEE
"LOG OF TEST BORINGS" 1 OF 4

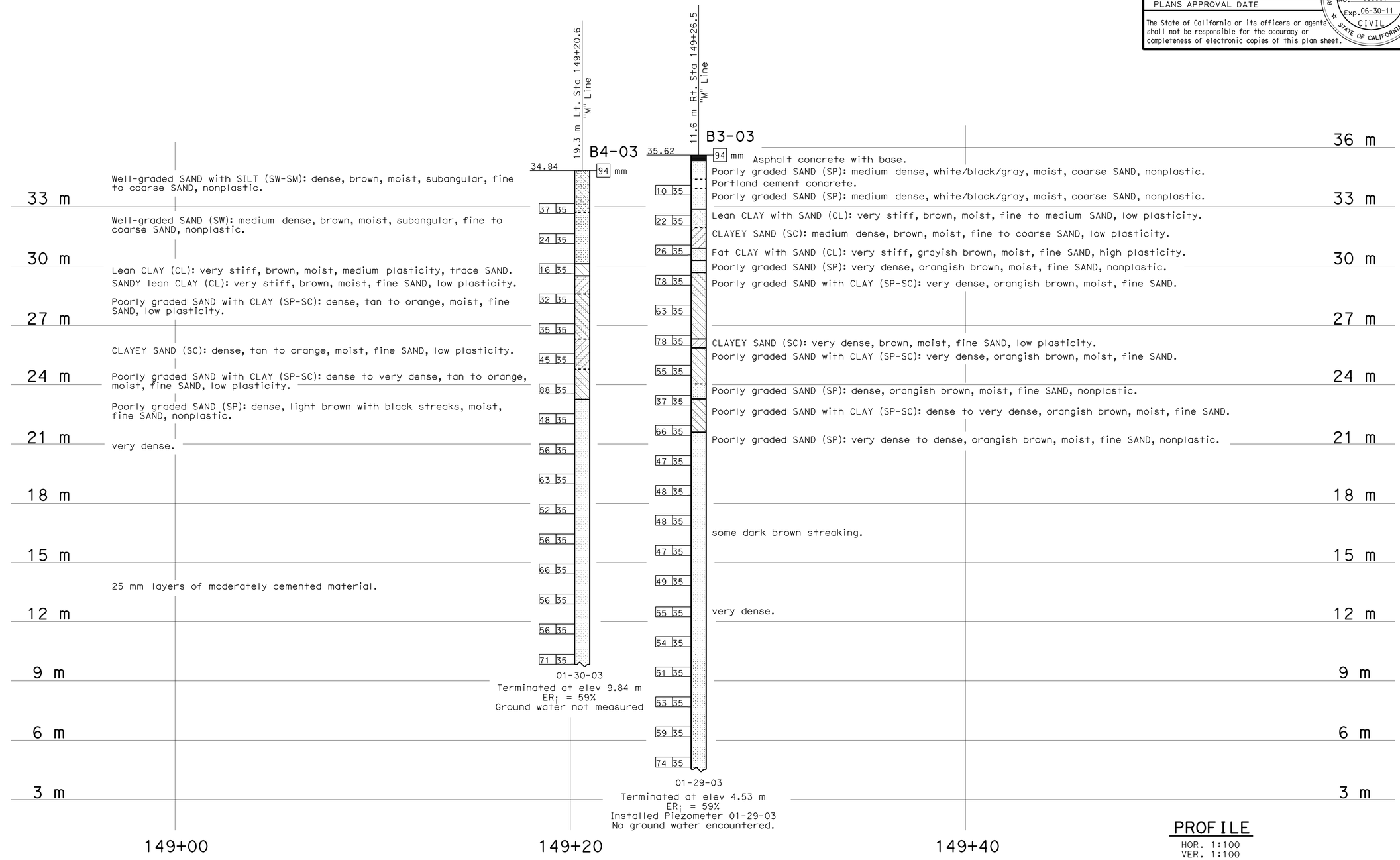

PROFILE
HOR. 1:100
VER. 1:100

LEGEND OF BORING OPERATIONS

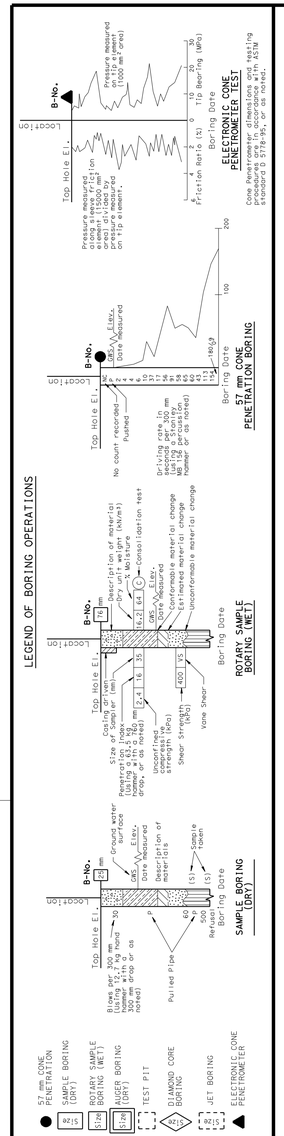

LEGEND OF EARTH MATERIALS

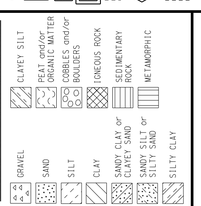

CONSISTENCY CLASSIFICATION FOR SOILS

According to the Standard Penetration Test

SPT N-Value (Blows/ 0.3m)	Granular	SPT N-Value (Blows/ 0.3m)	Cohesive
0-4	Very Loose	<2	Very Soft
5-10	Loose	2-4	Soft
11-30	Medium Dense	5-8	Firm
31-50	Dense	9-15	Stiff
>50	Very Dense	16-30	Very stiff
		>30	Hard

NOTE: Classification of earth material as shown on this sheet is based upon field inspection and is not to be construed to imply mechanical analysis.

OGS CIVIL LOG OF TEST BORINGS SHEET (METRIC) (REV. 4/04)

Caltrans Metric

ENGINEERING SERVICES	GEOTECHNICAL SERVICES
DRAWN BY	F. Nguyen 2/08
CHECKED BY	D. Appelbaum

FIELD INVESTIGATION BY: M. Ballentine

STATE OF CALIFORNIA DEPARTMENT OF TRANSPORTATION

DIVISION OF ENGINEERING SERVICES STRUCTURE DESIGN
DESIGN BRANCH 6

BRIDGE NO. 44-0282R/L
KILOMETER POST 147.90

ESPINOSA ROAD UC
LOG OF TEST BORINGS 2 OF 4

ALL DIMENSIONS ARE IN METERS UNLESS OTHERWISE SHOWN

ORIGINAL SCALE IN MILLIMETERS FOR REDUCED PLANS 0 10 20 30 40 50 60 70 80 90 100

CU 05
EA 0161E1

DISREGARD PRINTS BEARING EARLIER REVISION DATES

REVISION DATES (PRELIMINARY STAGE ONLY) 03-14-08 02-16-09 06-08-09

SHEET 20 OF 22

FILE => 44-0282-z-lotb2of4.dgn

USERNAME => friehard DATE PLOTTED => 02-AUG-2010 TIME PLOTTED => 13:23

DIST	COUNTY	ROUTE	KILOMETER POST TOTAL PROJECT	SHEET No	TOTAL SHEETS
05	Mon	101	R146.8/159.7	1209	1402

REGISTERED CIVIL ENGINEER 6-08-09

7-26-10
PLANS APPROVAL DATE

REGISTERED PROFESSIONAL ENGINEER Dan Appelbaum No. C50001 Exp. 06-30-11 CIVIL STATE OF CALIFORNIA

The State of California or its officers or agents shall not be responsible for the accuracy or completeness of electronic copies of this plan sheet.

FOR PLAN VIEW, SEE
"LOG OF TEST BORINGS" 1 OF 4

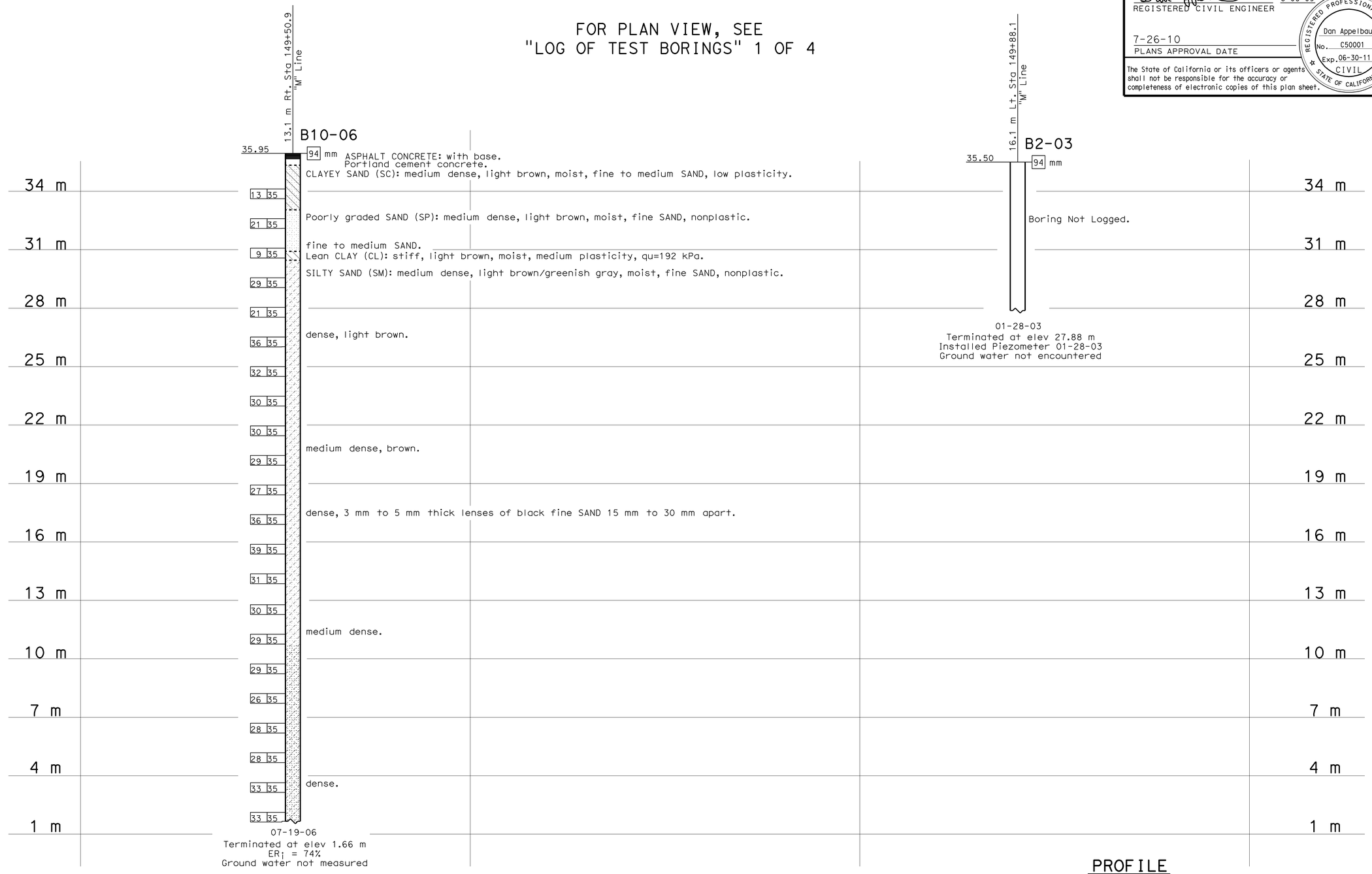

PROFILE
HOR. 1:100
VER. 1:100

LEGEND OF BORING OPERATIONS

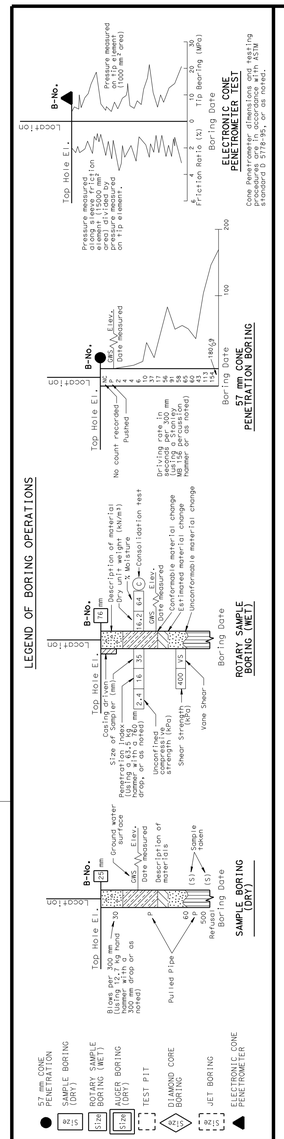

LEGEND OF EARTH MATERIALS

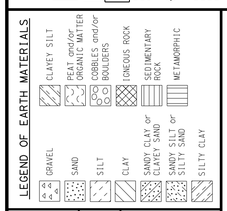

CONSISTENCY CLASSIFICATION FOR SOILS

According to the Standard Penetration Test

SPT N-Value (Blows/0.3m)	Granular	SPT N-Value (Blows/0.3m)	Cohesive
0-4	Very Loose	<2	Very Soft
5-10	Loose	2-4	Soft
11-30	Medium Dense	5-8	Firm
31-50	Dense	9-15	Stiff
>50	Very Dense	16-30	Very stiff
		>30	Hard

NOTE: Classification of earth material as shown on this sheet is based upon field inspection and is not to be construed to imply mechanical analysis.

OGS CIVIL LOG OF TEST BORINGS SHEET (METRIC) (REV. 4/04)

Caltrans Metric

ENGINEERING SERVICES	GEOTECHNICAL SERVICES
DRAWN BY	F. Nguyen 2/08
CHECKED BY	D. Appelbaum

ALL DIMENSIONS ARE IN METERS UNLESS OTHERWISE SHOWN

FIELD INVESTIGATION BY: D. Appelbaum, M. Ballentine

ORIGINAL SCALE IN MILLIMETERS FOR REDUCED PLANS 0 10 20 30 40 50 60 70 80 90 100

STATE OF CALIFORNIA DEPARTMENT OF TRANSPORTATION

DIVISION OF ENGINEERING SERVICES STRUCTURE DESIGN
DESIGN BRANCH 6

CU 05
EA 0161E1

BRIDGE NO. 44-0282R/L
KILOMETER POST 147.90

ESPINOSA ROAD UC
LOG OF TEST BORINGS 3 OF 4

DISREGARD PRINTS BEARING EARLIER REVISION DATES

REVISION DATES (PRELIMINARY STAGE ONLY) 03-14-08 02-18-09 06-08-09

SHEET 21 OF 22

FILE => 44-0282-z-lotb3of4.dgn

USERNAME => friehard DATE PLOTTED => 02-AUG-2010 TIME PLOTTED => 13:29

DIST	COUNTY	ROUTE	KILOMETER POST TOTAL PROJECT	SHEET No	TOTAL SHEETS
05	Mon	101	R146.8/159.7	1210	1402

REGISTERED CIVIL ENGINEER 6-08-09

7-26-10
PLANS APPROVAL DATE

REGISTERED PROFESSIONAL ENGINEER Dan Appelbaum No. C50001 Exp. 06-30-11 CIVIL STATE OF CALIFORNIA

The State of California or its officers or agents shall not be responsible for the accuracy or completeness of electronic copies of this plan sheet.

FOR PLAN VIEW, SEE
"LOG OF TEST BORINGS" 1 OF 4

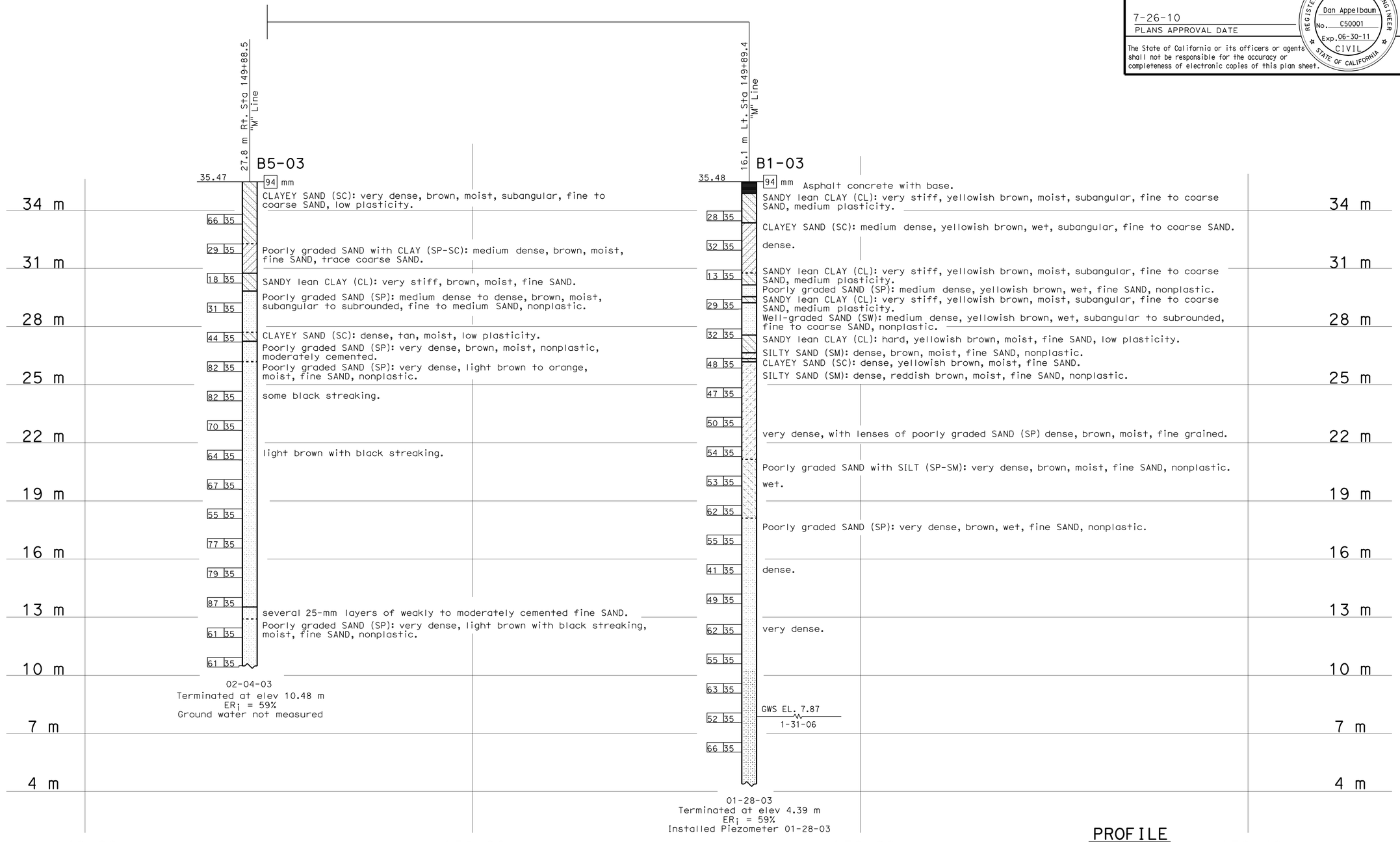

PROFILE
HOR. 1:100
VER. 1:100

LEGEND OF BORING OPERATIONS

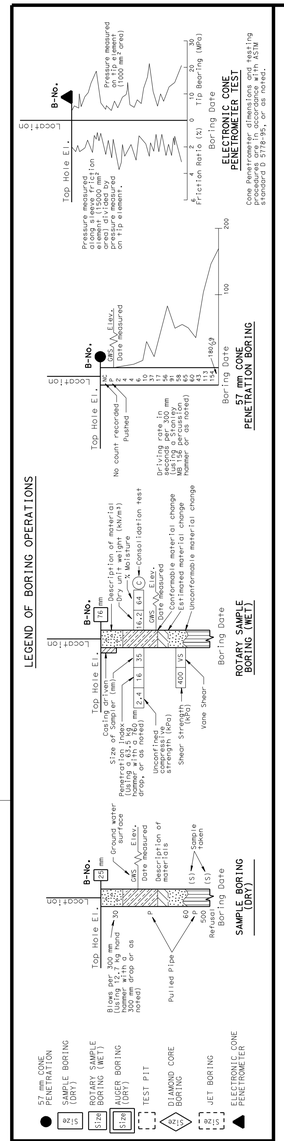

LEGEND OF EARTH MATERIALS

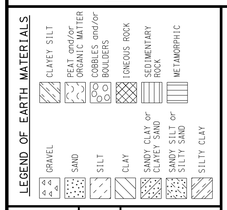

CONSISTENCY CLASSIFICATION FOR SOILS

According to the Standard Penetration Test

SPT N-Value (Blows/0.3m)	Granular	SPT N-Value (Blows/0.3m)	Cohesive
0-4	Very Loose	<2	Very Soft
5-10	Loose	2-4	Soft
11-30	Medium Dense	5-8	Firm
31-50	Dense	9-15	Stiff
>50	Very Dense	16-30	Very stiff
		>30	Hard

NOTE: Classification of earth material as shown on this sheet is based upon field inspection and is not to be construed to imply mechanical analysis.

OGS CIVIL LOG OF TEST BORINGS SHEET (METRIC) (REV. 4/04)

Caltrans Metric

ENGINEERING SERVICES	GEOTECHNICAL SERVICES
DRAWN BY	F. Nguyen 2/08
CHECKED BY	D. Appelbaum

FIELD INVESTIGATION BY: M. Ballentine, S. von Schwind

STATE OF CALIFORNIA DEPARTMENT OF TRANSPORTATION

DIVISION OF ENGINEERING SERVICES STRUCTURE DESIGN
DESIGN BRANCH 6

BRIDGE NO. 44-0282R/L
KILOMETER POST 147.90

ESPINOSA ROAD UC
LOG OF TEST BORINGS 4 OF 4

ALL DIMENSIONS ARE IN METERS UNLESS OTHERWISE SHOWN

ORIGINAL SCALE IN MILLIMETERS FOR REDUCED PLANS 0 10 20 30 40 50 60 70 80 90 100

CU 05
EA 0161E1

DISREGARD PRINTS BEARING EARLIER REVISION DATES

REVISION DATES (PRELIMINARY STAGE ONLY) 03-14-08 02-18-09 06-08-09

SHEET 22 OF 22

FILE => 44-0282-z-lotb4of4.dgn

USERNAME => trlenard DATE PLOTTED => 02-AUG-2010 TIME PLOTTED => 13:30

DIST	COUNTY	ROUTE	KILOMETER POST TOTAL PROJECT	SHEET No	TOTAL SHEETS
05	Mon	101	R146.8/159.7	1211	1402

REGISTERED CIVIL ENGINEER — DATE 05-06-10

7-26-10
PLANS APPROVAL DATE

REGISTERED PROFESSIONAL ENGINEER — HERNAN PEREZ — No. 60993 — Exp. 12-31-10 — CIVIL — STATE OF CALIFORNIA

The State of California or its officers or agents shall not be responsible for the accuracy or completeness of electronic copies of this plan sheet.

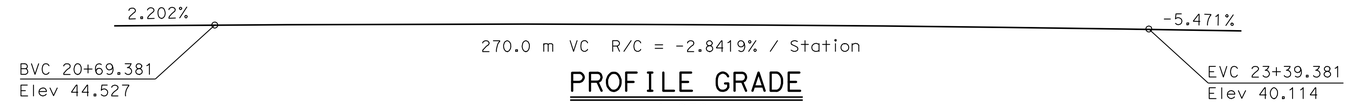

PROFILE GRADE
1:250

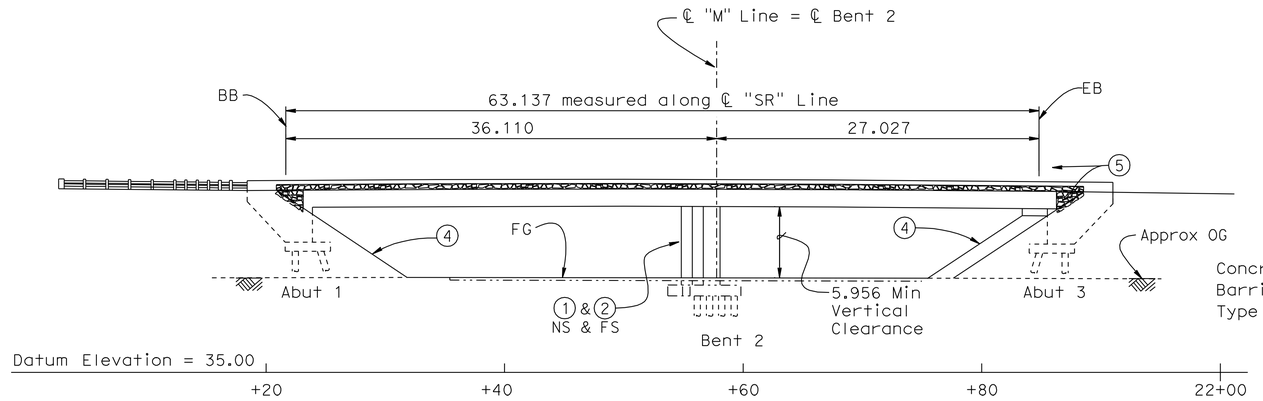

ELEVATION
1:250

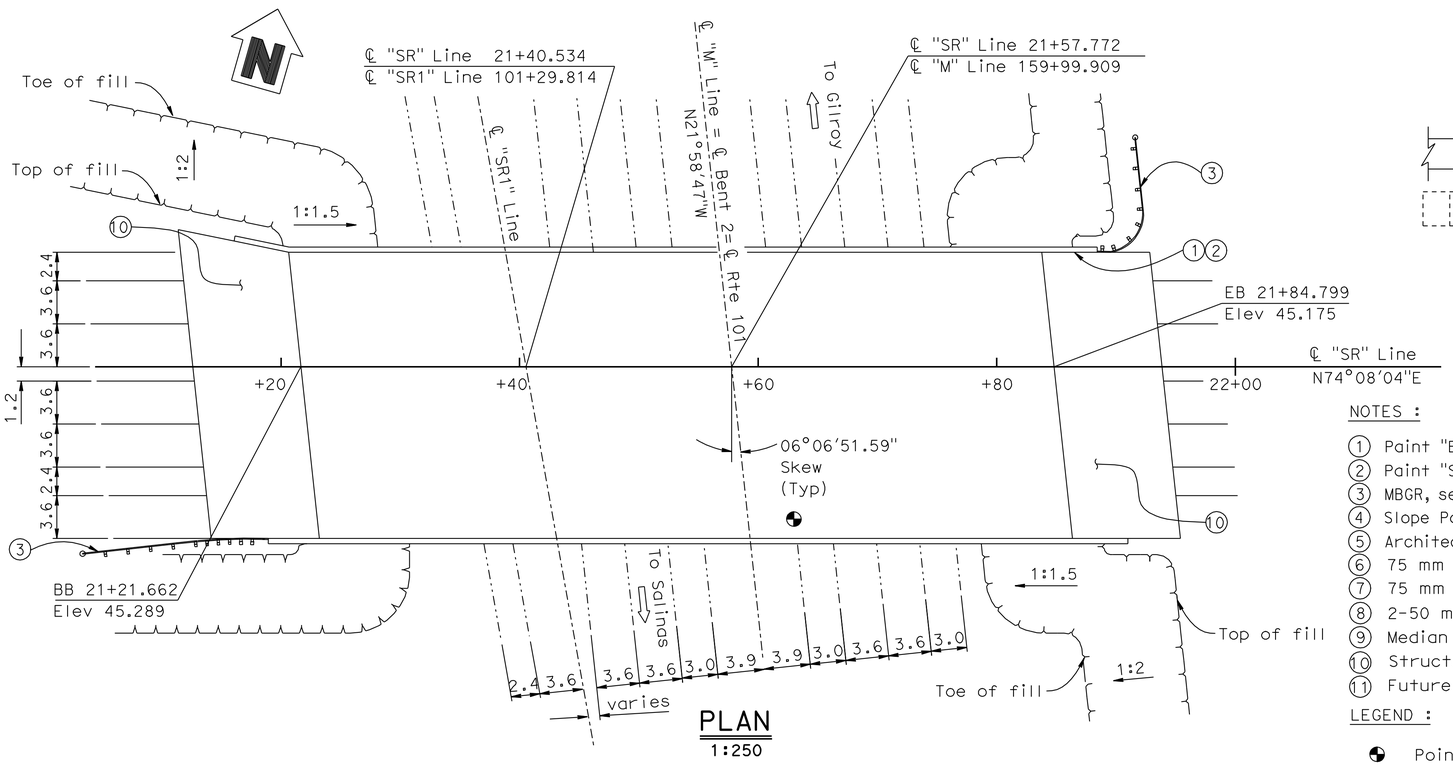

PLAN
1:250

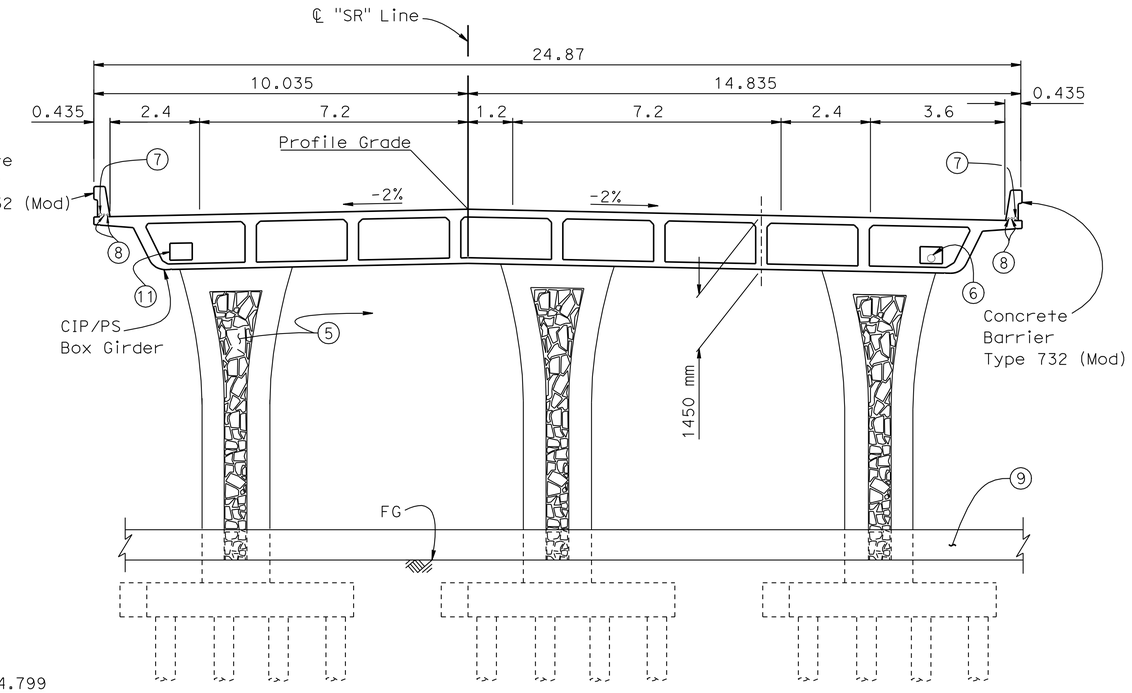

TYPICAL SECTION
1:80

For "General Notes" and "Index to Plans", see "Index to Plans" sheet

NOTES :

1. Paint "Br. No. 44-0283"
2. Paint "Sala Road" Overcrossing
3. MBGR, see "Road Plans"
4. Slope Paving
5. Architectural Treatment
6. 75 mm ø Water Supply Line NPS 3
7. 75 mm ø sprinkler control conduit
8. 2-50 mm ø conduit, see "Electrical Plans"
9. Median Concrete Barrier, see "Road Plans"
10. Structure Approach Type N(9S)
11. Future Utility Opening

LEGEND :

◐ Point of minimum Vertical Clearance
—·—·— Indicates Existing Highway

QUANTITIES

STRUCTURE EXCAVATION (BRIDGE)	650	m^3
STRUCTURE BACKFILL (BRIDGE)	390	m^3
NPS 3 SUPPLY LINE (BRIDGE)	85	m
FURNISH PILING (CLASS 900) (ALTERNATIVE W)	420	m
DRIVE PILE (CLASS 900) (ALTERNATIVE W)	36	EA
FURNISH PILING (CLASS 625) (ALTERNATIVE W)	760	m
DRIVE PILE (CLASS 625) (ALTERNATIVE W)	43	EA
PRESTRESSING CAST-IN-PLACE CONCRETE	LUMP	SUM
STRUCTURAL CONCRETE, BRIDGE FOOTING	152	m^3
STRUCTURAL CONCRETE, BRIDGE	820	m^3
STRUCTURAL CONCRETE, APPROACH SLAB (TYPE N)	133	m^3
ARCHITECTURAL TREATMENT (DRYSTACK STONE TEXTURE)	165	m^2
JOINT SEAL (MR 40 MM)	50	m
BAR REINFORCING STEEL (BRIDGE)	153 100	kg
SLOPE PAVING (CONCRETE) (EXPOSED AGGREGATE)	50	m^3
CONCRETE BARRIER (TYPE 732 MODIFIED)	147	m
SPRINKLER CONTROL CONDUIT (BRIDGE)	170	m
WELDED STEEL PIPE CASING (BRIDGE)	24	m

Caltrans Metric

Fritz Hoffman — DESIGN ENGINEER

	BY	CHECKED
DESIGN	Hilario Tuazon	Rachel Washington
DETAILS	R Martinez\G Zweier	Hilario Tuazon
QUANTITIES	Aram Salimi	Fayek Tannous

LOAD & RESISTANCE FACTOR DESIGN — LIVE LOADING: HL93 W/"LOW-BOY"; PERMIT DESIGN VEHICLE

	BY	CHECKED
LAYOUT	Roelina Martinez	Hilario Tuazon
SPECIFICATIONS	Sirisha Nelapatla	PLANS AND SPECS COMPARED Sirisha Nelapatla

ALL DIMENSIONS ARE IN METERS UNLESS OTHERWISE SHOWN

ORIGINAL SCALE IN MILLIMETERS FOR REDUCED PLANS 0 10 20 30 40 50 60 70 80 90 100

STATE OF CALIFORNIA
DEPARTMENT OF TRANSPORTATION

DIVISION OF ENGINEERING SERVICES
STRUCTURE DESIGN
DESIGN BRANCH 6

CU 05
EA 0161E

FILE => 44-0283-a-gp.dgn

BRIDGE NO. 44-0283
KILOMETER POST 148.9

SALA ROAD OC
GENERAL PLAN

DISREGARD PRINTS BEARING EARLIER REVISION DATES

REVISION DATES: 8-24-05 | 03-08-10 | 04-22-10 | 05-06-10 | 02-26-09 | 08-13-09 | 08-19-09 | 10-22-09 | 10-23-09 | 12-01-09

SHEET 1 OF 19

STRUCTURES DESIGN GENERAL PLAN SHEET (METRIC) (REV.07-24-06)

USERNAME => trlenard DATE PLOTTED => 02-AUG-2010 TIME PLOTTED => 13:52

DIST	COUNTY	ROUTE	KILOMETER POST TOTAL PROJECT	SHEET No	TOTAL SHEETS
05	Mon	101	R146.8/159.7	1212	1402

REGISTERED CIVIL ENGINEER 05-06-10 DATE

7-26-10
PLANS APPROVAL DATE

REGISTERED PROFESSIONAL ENGINEER HERNAN PEREZ No. 60993 Exp. 12-31-10 CIVIL STATE OF CALIFORNIA

The State of California or its officers or agents shall not be responsible for the accuracy or completeness of electronic copies of this plan sheet.

INDEX TO PLANS

SHEET NO.	SHEET TITLE
1	GENERAL PLAN
2	INDEX TO PLANS
3	DECK CONTOURS
4	FOUNDATION PLAN
5	ABUTMENT NO.1 LAYOUT
6	ABUTMENT NO.3 LAYOUT
7	ABUTMENT DETAILS NO.1
8	ABUTMENT DETAILS NO.2
9	BENT DETAILS NO. 1
10	BENT DETAILS NO. 2
11	TYPICAL SECTION
12	GIRDER LAYOUT
13	GIRDER REINFORCEMENT
14	STRUCTURE APPROACH TYPE N(9S)
15	STRUCTURE APPROACH DRAINAGE DETAILS
16	SLOPE PAVING - FULL SLOPE
17	ARCHITECTURAL TREATMENT
18	LOG OF TEST BORINGS 1 OF 2
19	LOG OF TEST BORINGS 2 OF 2

STANDARD PLANS DATED JULY 2004

	A10A	Abbreviations and Acronyms (A-L)
	A10B	Abbreviations and Acronyms (M-Z)
	A10C	Symbols (Sheet 1 of 2)
	A10D	Symbols (Sheet 2 of 2)
	A62C	Limits of Payment for Excavation and Backfill - Bridge
	B0-1	Bridge Details
	B0-3	Bridge Details
	B0-5	Bridge Details
	B0-13	Bridge Details
	B2-5	Pile Details Class 400 and Class 625
	B3-1	Retaining Wall Type 1 H=9700 Through 10 900 mm
	B3-8	Retaining Wall Details No. 1
	RSP B6-21	Joint Seals
	B7-1	Box Girder Details
	B7-10	Utility Opening Box Girder
RSP	B8-5	Cast-In-Place Prestressed Girder Details
	B11-55	Concrete Barrier Type 732
	B14-3	Communication and Sprinkler Control Conduits (Conduit Less than 103)
	B14-4	WATER SUPPLY LINE (BRIDGE) (PIPE SIZES LESS THAN NPS 4)
	B14-5	Water Supply Line (Details) (Pipe Sizes Less Than NPS 4)

STANDARD PLAN SHEET NO.

DETAIL NO.

PILE DATA TABLE

Location	Pile Type	Nominal Resistance		Design Tip Elevation (M)	Specified Tip Elevation (M)	Nominal Driving Resistance (kN)
		Compression	Tension			
Abutment 1	Class 625 Alt. W	1210	0	23.2 (a), 26.6 (c)	23.2	1210
Bent 2	Class 900 Alt. W	1900	0	23.8 (a), 26.0 (c)	23.8	1900
Abutment 3	Class 625 Alt. W	1160	0	24.4 (a), 32.0 (c)	24.4	1160

NOTES

1. Design Tip Elevations for Abutments controlled by: (a) Compression, (c) Settlement, (d) Lateral Load
2. Design Tip Elevations for Bents are controlled by: (a) Compression, (c) Settlement
3. The specified Tip Elevation shall not be raised above the design Tip Elevation for Settlement

GENERAL NOTES
LOAD AND RESISTANCE FACTOR DESIGN
Super Structure
with LOAD FACTOR DESIGN
Substructure

DESIGN: AASHTO LRFD Design Specifications, 3rd Edition with 2005 and 2006 Interims and the Caltrans Admendments v3.06.01; except that abutments, deep foundations, earth retaining systems, bridge details taken from Standard Plans July 2004 and XS Sheets are designed using Caltrans Bridge Design Specifications LFD Version April 2000 (1996 AASHTO with Revisions by Caltrans)

SEISMIC DESIGN: Caltrans Seismic Design Criteria (SDC), Version 1.4, June 2006

DEAD LOAD: Includes 1675 Pa for future wearing surface

LIVE LOAD: HL-93 with "low-boy" and Permit Design Load

SEISMIC LOAD: See "Acceleration Response Spectrum"

REINFORCED CONCRETE: f_y = 420 MPa
f'_c = 25 MPa (except as shown or specified)
n = 8

REINFORCED CONCRETE: See "Prestressing Notes" on " Typical Section" sheet

STRUCTURAL STEEL: Steel Pipe Piles - ASTM A252M; Grade 3
f_y = 310 MPa
f_u = 455 MPa

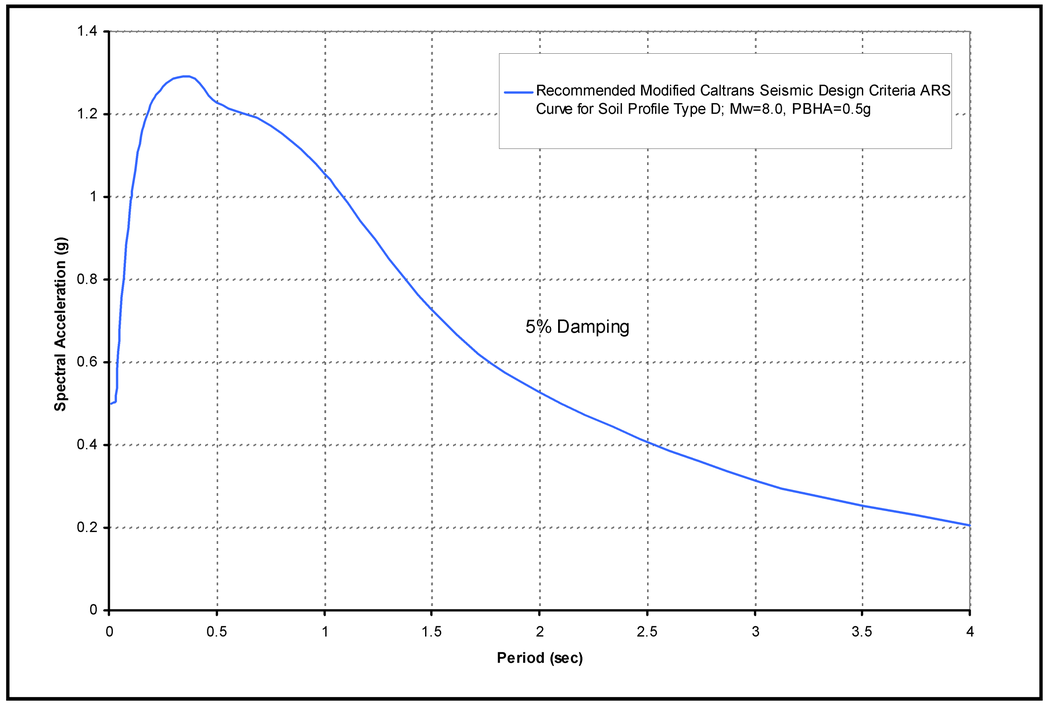

ACCELERATION RESPONSE SPECTRUM

NO SCALE

DESIGN	BY Hilario Tuazon	CHECKED Rachel Washington	
DETAILS	BY George Zweier	CHECKED Hilario Tuazon	
QUANTITIES	BY Aram Salimi	CHECKED Fayek Tannous	

STATE OF CALIFORNIA
DEPARTMENT OF TRANSPORTATION

DIVISION OF ENGINEERING SERVICES
STRUCTURE DESIGN
DESIGN BRANCH 6

BRIDGE NO. 44-0283
KILOMETER POST 148.9

SALA ROAD OC
INDEX TO PLANS

ALL DIMENSIONS ARE IN MILLIMETERS UNLESS OTHERWISE SHOWN

ORIGINAL SCALE IN MILLIMETERS FOR REDUCED PLANS 0 10 20 30 40 50 60 70 80 90 100

CU 05
EA 0161E1

DISREGARD PRINTS BEARING EARLIER REVISION DATES

REVISION DATES: 02-07-08 08-28-09 08-06-09 08-17-09 08-18-09 12-04-09 12-14-09 05-06-10 02-18-09 04-28-09

SHEET 2 OF 19

FILE => 44-0283-b-itp.dgn

STRUCTURES DESIGN DETAIL SHEET (METRIC) (REV.03-17-04)

USERNAME => trienard DATE PLOTTED => 02-AUG-2010 TIME PLOTTED => 13:52

DIST	COUNTY	ROUTE	KILOMETER POST TOTAL PROJECT	SHEET No	TOTAL SHEETS
05	Mon	101	R146.8/159.7	1213	1402

REGISTERED CIVIL ENGINEER 05-06-10 DATE

7-26-10
PLANS APPROVAL DATE

REGISTERED PROFESSIONAL ENGINEER HERNAN PEREZ No. 60993 Exp. 12-31-10 CIVIL STATE OF CALIFORNIA

The State of California or its officers or agents shall not be responsible for the accuracy or completeness of electronic copies of this plan sheet.

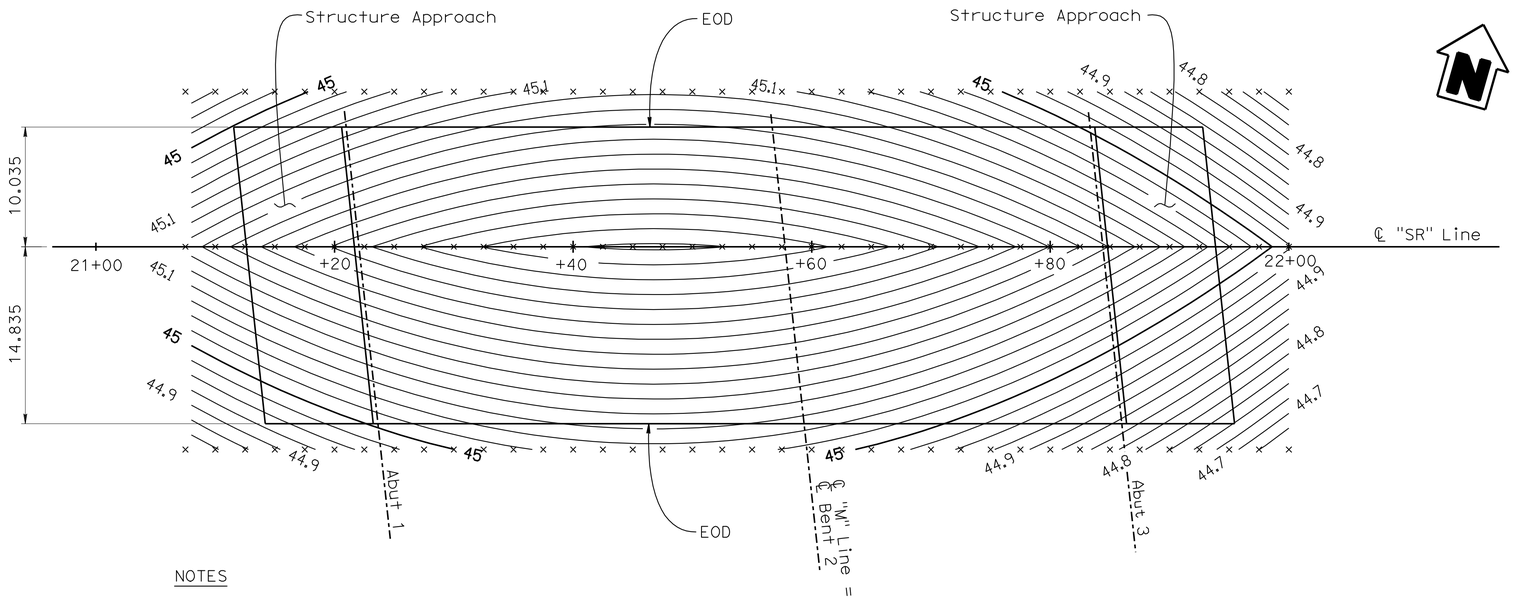

NOTES

1. 0.025 m Contour Interval
2. × = 2.5 Station Interval
3. Contours do not include Camber

PLAN
1:250

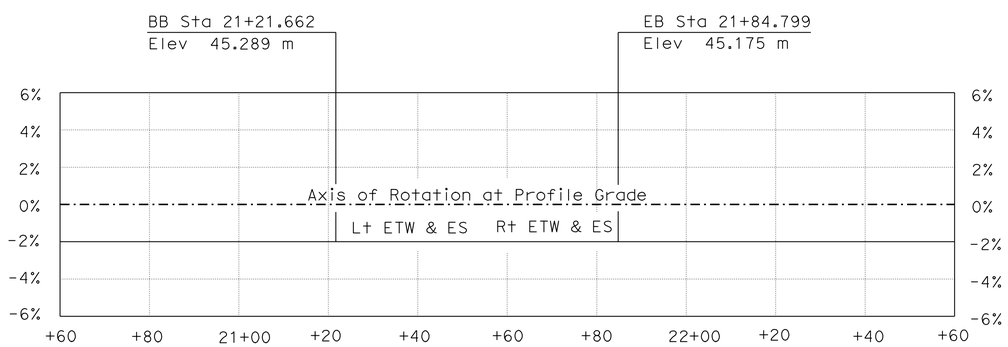

SUPERELEVATION DIAGRAM
NO SCALE

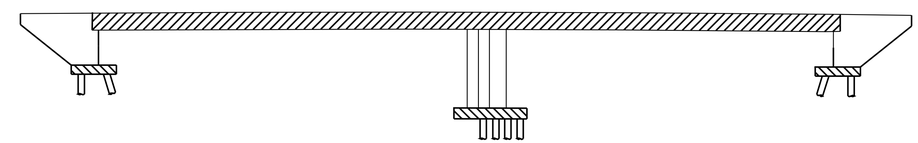

CONCRETE STRENGTH AND TYPE LIMITS
NO SCALE

- Structure Concrete, Bridge Footing
- Structure Concrete, Bridge
- Structure Concrete, Bridge (28 MPa at 28 Days)

Caltrans Metric

ALL DIMENSIONS ARE IN METERS UNLESS OTHERWISE SHOWN

ORIGINAL SCALE IN MILLIMETERS FOR REDUCED PLANS 0 10 20 30 40 50 60 70 80 90 100

	BY	CHECKED
DESIGN	Hilario Tuazon	Rachel Washington
DETAILS	George Zweier	Hilario Tuazon
QUANTITIES	Aram Salimi	Fayek Tannous

STATE OF CALIFORNIA DEPARTMENT OF TRANSPORTATION

DIVISION OF ENGINEERING SERVICES STRUCTURE DESIGN
DESIGN BRANCH 6

CU 05
EA 0161E1

BRIDGE NO. 44-0283
KILOMETER POST 148.9

SALA ROAD OC DECK CONTOURS

DISREGARD PRINTS BEARING EARLIER REVISION DATES

REVISION DATES: 05-20-08 05-27-08 08-07-08 01-16-09 08-03-09 08-05-09 08-17-09 12-01-09 05-06-10

SHEET 3 OF 19

FILE => 44-0283-d-dc.dgn

STRUCTURES DESIGN DETAIL SHEET (METRIC) (REV.03-17-04)

USERNAME => ttrienard DATE PLOTTED => 02-AUG-2010 TIME PLOTTED => 13:52

DIST	COUNTY	ROUTE	KILOMETER POST TOTAL PROJECT	SHEET No	TOTAL SHEETS
05	Mon	101	R146.8/159.7	1214	1402

Hernan Perez 05-06-10
REGISTERED CIVIL ENGINEER DATE

7-26-10
PLANS APPROVAL DATE

REGISTERED PROFESSIONAL ENGINEER HERNAN PEREZ No. 60993 Exp. 12-31-10 CIVIL STATE OF CALIFORNIA

The State of California or its officers or agents shall not be responsible for the accuracy or completeness of electronic copies of this plan sheet.

Caltrans Metric

CURVE DATA

NO	R	Δ	T	L
(A)	1000.000	2°51'54"	25.007	50.004

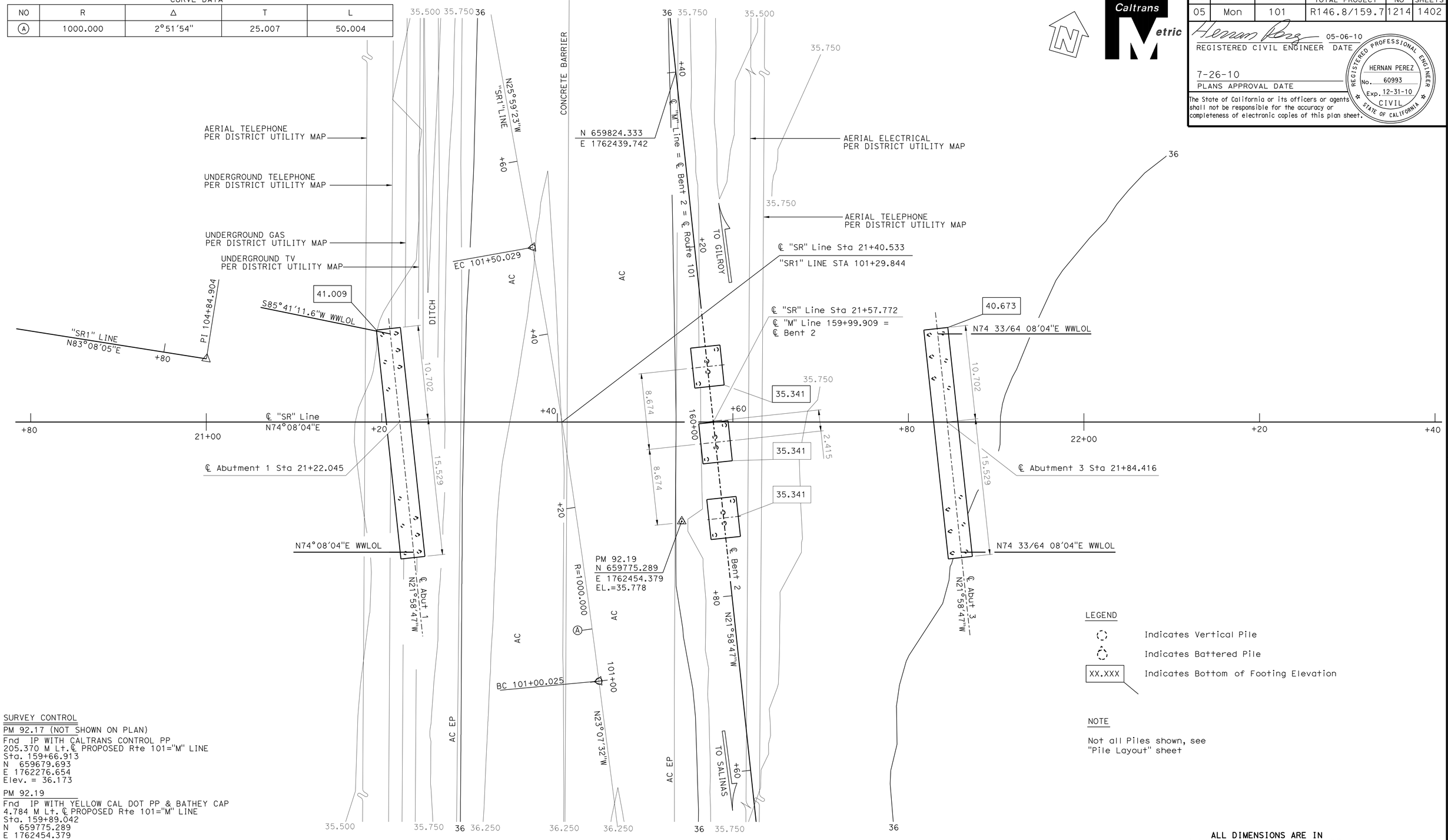

LEGEND

Indicates Vertical Pile

Indicates Battered Pile

XX.XXX Indicates Bottom of Footing Elevation

NOTE

Not all Piles shown, see "Pile Layout" sheet

SURVEY CONTROL

PM 92.17 (NOT SHOWN ON PLAN)
Fnd IP WITH CALTRANS CONTROL PP
205.370 M Lt.℄ PROPOSED Rte 101="M" LINE
Sta. 159+66.913
N 659679.693
E 1762276.654
Elev. = 36.173

PM 92.19
Fnd IP WITH YELLOW CAL DOT PP & BATHEY CAP
4.784 M Lt. ℄ PROPOSED Rte 101="M" LINE
Sta. 159+89.042
N 659775.289
E 1762454.379
Elev. = 35.778

ALL DIMENSIONS ARE IN METERS UNLESS OTHERWISE SHOWN

PRELIMINARY INVESTIGATION SECTION

SCALE	VERT. DATUM NAVD88	PHOTOGRAMMETRY AS OF:		
1:200	HORZ. DATUM NAD83 (1991.35)	SURVEYED	BY DISTRICT/E.LOPEZ	DRAFTED BY T.ZOLNIKOVA 10/2005
ALIGNMENT TIES DIST.TRAVERSE SHEET		FIELD CHECKED	BY	CHECKED BY L.T.TRAN 10/2005

	BY	CHECKED
DESIGN	Hilario Tuazon	Rachel Washington
DETAILS	George Zweier	Hilario Tuazon
QUANTITIES	Aram Salimi	Fayek Tannous

STATE OF CALIFORNIA
DEPARTMENT OF TRANSPORTATION

DIVISION OF ENGINEERING SERVICES
STRUCTURE DESIGN
DESIGN BRANCH 6

BRIDGE NO. 44-0283
KILOMETER POST 148.9

SALA ROAD OC
FOUNDATION PLAN

STRUCTURES FOUNDATION PLAN SHEET (METRIC) (REV.12-1-01)

ORIGINAL SCALE IN MILLIMETERS FOR REDUCED PLANS 0 10 20 30 40 50 60 70 80 90 100

CU 05
EA 0161E1

DISREGARD PRINTS BEARING EARLIER REVISION DATES

REVISION DATES (PRELIMINARY STAGE ONLY): 10/24/05 12/01/09 05-06-10 02-04-08 04-16-08 05-16-08 08-04-08 08-05-08 08-18-08 08-21-08

SHEET 4 OF 19

FILE => 44-0283-e-fp101.dgn

USERNAME => trlenard DATE PLOTTED => 02-AUG-2010 TIME PLOTTED => 13:52

DIST	COUNTY	ROUTE	KILOMETER POST TOTAL PROJECT	SHEET No	TOTAL SHEETS
05	Mon	101	R146.8/159.7	1215	1402

Hernan Perez 05-06-10
REGISTERED CIVIL ENGINEER DATE

7-26-10
PLANS APPROVAL DATE

REGISTERED PROFESSIONAL ENGINEER HERNAN PEREZ No. 60993 Exp. 12-31-10 CIVIL STATE OF CALIFORNIA

The State of California or its officers or agents shall not be responsible for the accuracy or completeness of electronic copies of this plan sheet.

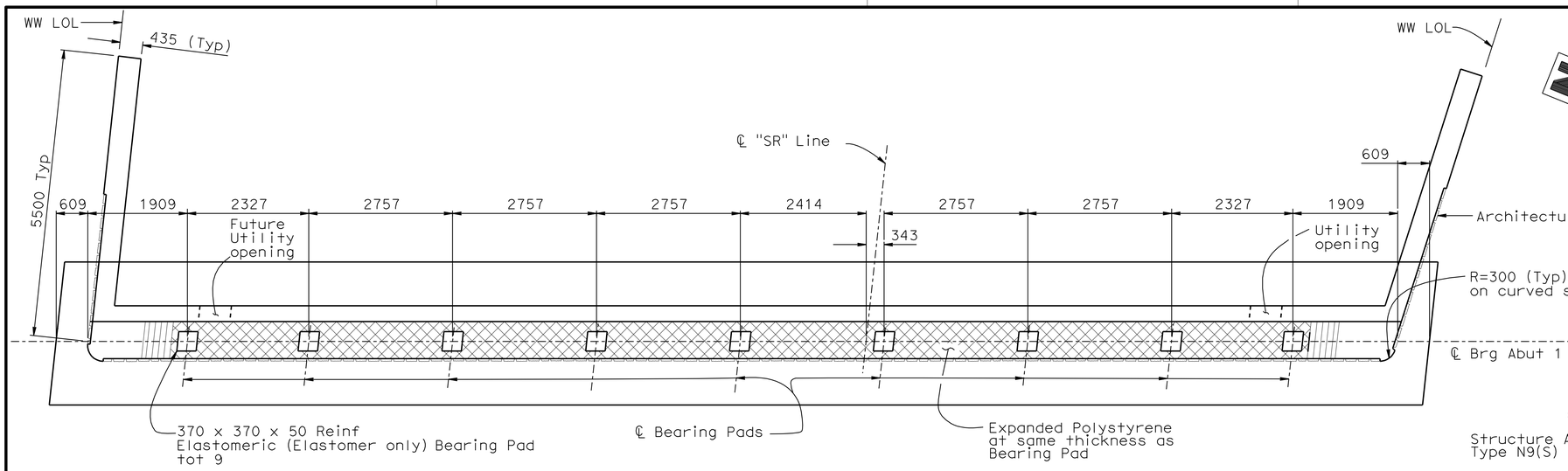

ABUTMENT 1 PLAN

1:50

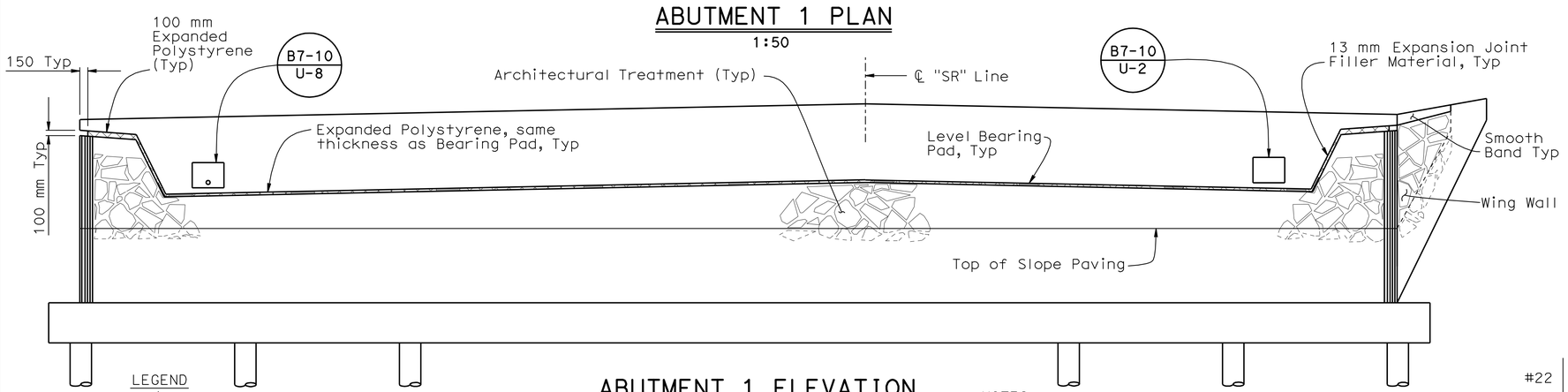

ABUTMENT 1 ELEVATION

1:50

LEGEND

Indicates Vertical Pile

Indicates Battered Pile

NOTES

1. For Architectural Treatment Details, see, "Architectural Treatment" sheet
2. Not all Piles shown

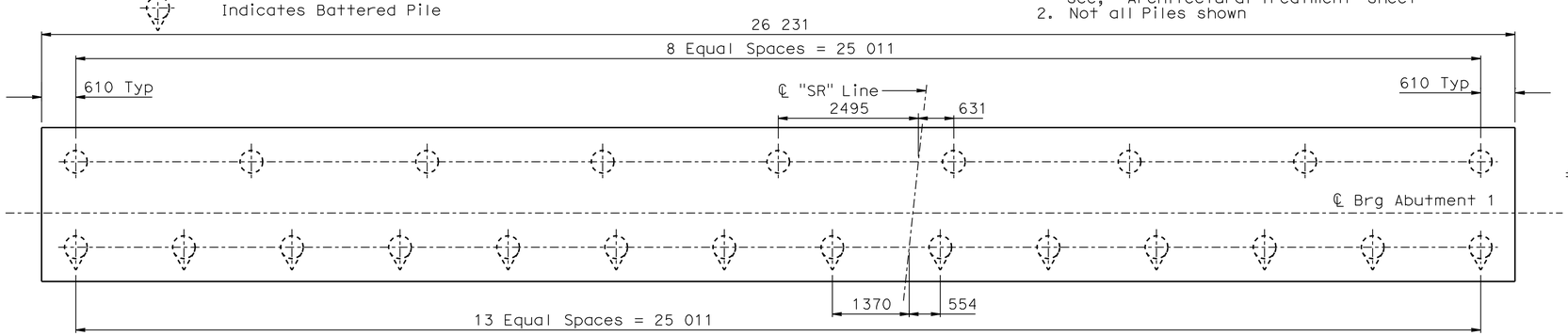

ABUTMENT 1 PILE LAYOUT

1:50

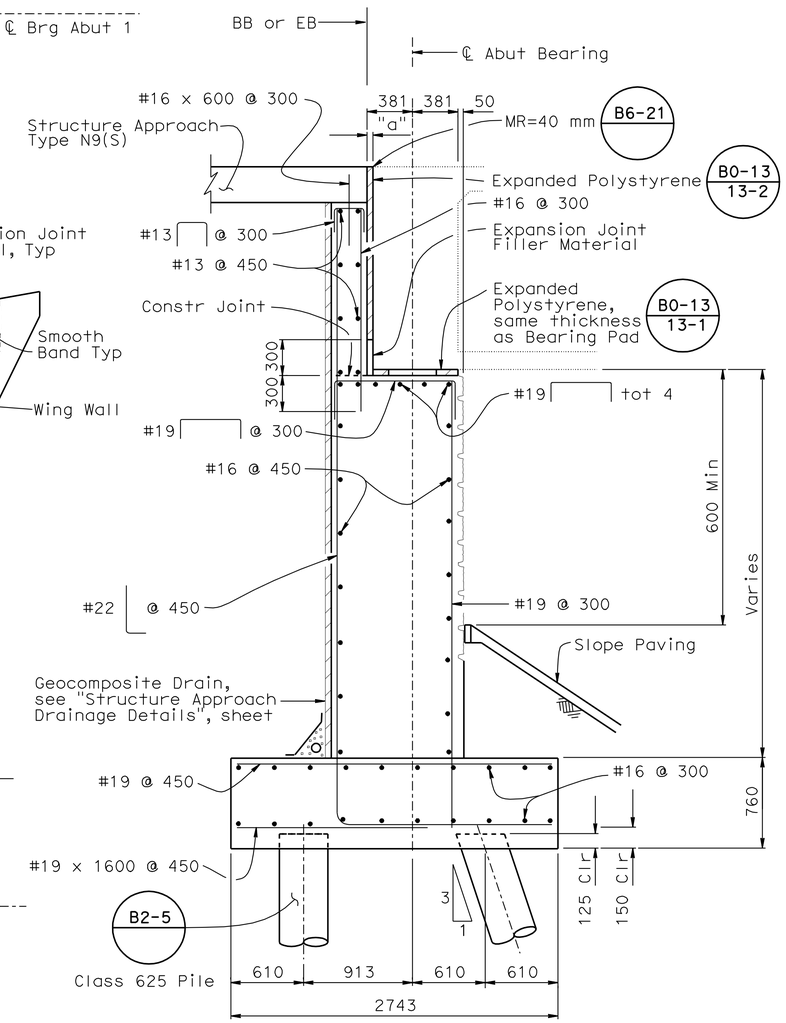

TYPICAL SECTION

1:25

DESIGN	BY Hilario Tuazon	CHECKED Rachel Washington	
DETAILS	BY George Zweier	CHECKED Hilario Tuazon	
QUANTITIES	BY Aram Salimi	CHECKED Fayek Tannous	

STATE OF CALIFORNIA
DEPARTMENT OF TRANSPORTATION

DIVISION OF ENGINEERING SERVICES
STRUCTURE DESIGN
DESIGN BRANCH 6

BRIDGE NO. 44-0283
KILOMETER POST 148.9

SALA ROAD OC
ABUTMENT NO. 1 LAYOUT

ALL DIMENSIONS ARE IN MILLIMETERS UNLESS OTHERWISE SHOWN

ORIGINAL SCALE IN MILLIMETERS FOR REDUCED PLANS 0 10 20 30 40 50 60 70 80 90 100

CU 05
EA 0161E1

DISREGARD PRINTS BEARING EARLIER REVISION DATES

REVISION DATES: 4-22-08 08-12-09 10-23-09 12-01-09 03-18-10 05-06-10 08-09-08 01-29-09 02-19-09 08-08-09

SHEET 5 OF 19

FILE => 44-0283-f-a01_lol.dgn

STRUCTURES DESIGN DETAIL SHEET (METRIC) (REV.03-17-04)

USERNAME => tfriehard DATE PLOTTED => 12-AUG-2010 TIME PLOTTED => 06:08

DIST	COUNTY	ROUTE	KILOMETER POST TOTAL PROJECT	SHEET No	TOTAL SHEETS
05	Mon	101	R146.8/159.7	1216	1402

REGISTERED CIVIL ENGINEER — DATE 05-06-10

7-26-10
PLANS APPROVAL DATE

REGISTERED PROFESSIONAL ENGINEER — HERNAN PEREZ — No. 60993 — Exp. 12-31-10 — CIVIL — STATE OF CALIFORNIA

The State of California or its officers or agents shall not be responsible for the accuracy or completeness of electronic copies of this plan sheet.

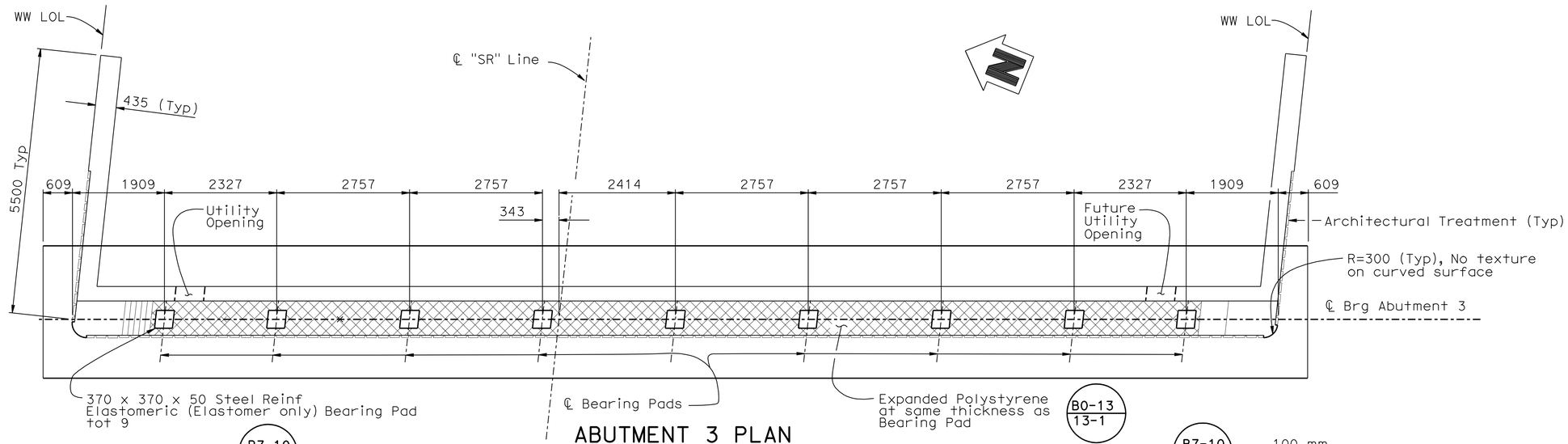

ABUTMENT 3 PLAN

1:50

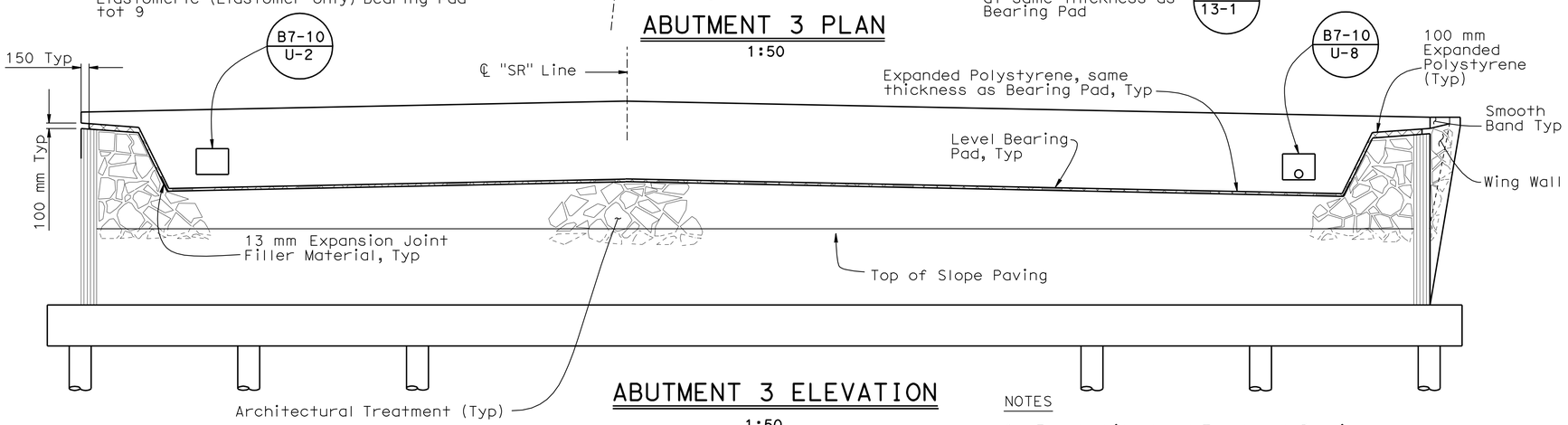

ABUTMENT 3 ELEVATION

1:50

NOTES

1. For Architectural Treatment Details, see, "Architectural Treatment" sheet
2. Not all Piles shown

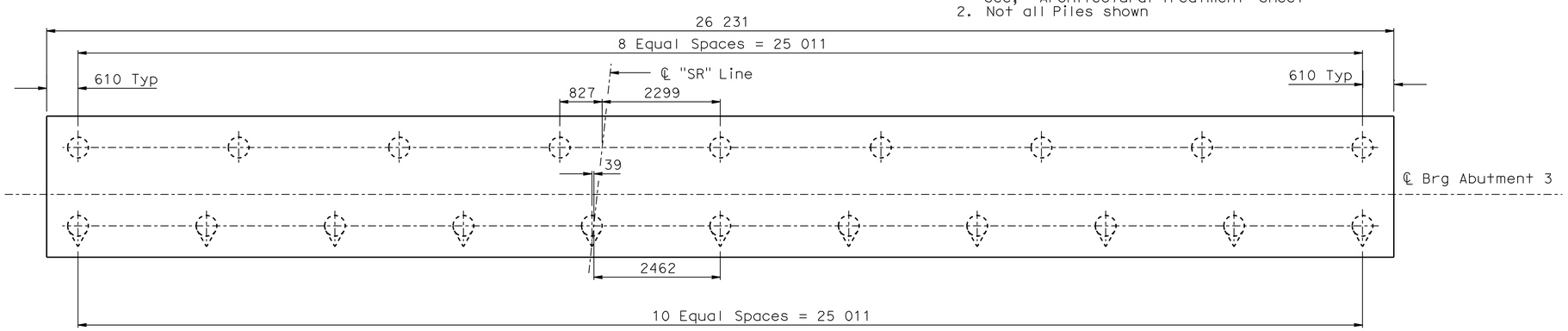

ABUTMENT 3 PILE LAYOUT

1:50

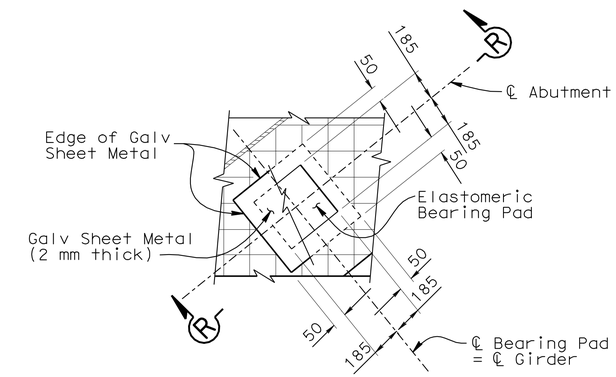

PLAN

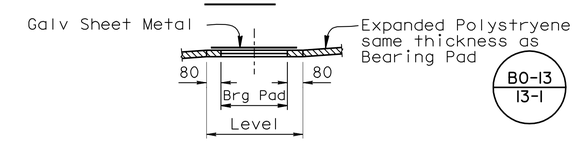

SECTION R-R

BEARING PAD DETAIL

No Scale

NOTES

1. Coat top of Bearing Pad with grease prior to placing sheet metal
2. Details Typical at all Bearing Pads

LEGEND

Indicates Vertical Pile

Indicates Battered Pile

DESIGN	BY Hilario Tuazon	CHECKED Rachel Washington
DETAILS	BY George Zweier	CHECKED Hilario Tuazon
QUANTITIES	BY Aram Salimi	CHECKED Fayek Tannous

STATE OF CALIFORNIA
DEPARTMENT OF TRANSPORTATION

DIVISION OF ENGINEERING SERVICES
STRUCTURE DESIGN
DESIGN BRANCH 6

BRIDGE NO. 44-0283
KILOMETER POST 148.9

SALA ROAD OC
ABUTMENT NO. 3 LAYOUT

Caltrans Metric

ALL DIMENSIONS ARE IN MILLIMETERS UNLESS OTHERWISE SHOWN

ORIGINAL SCALE IN MILLIMETERS FOR REDUCED PLANS 0 10 20 30 40 50 60 70 80 90 100

CU 05
EA 0161E1

DISREGARD PRINTS BEARING EARLIER REVISION DATES

REVISION DATES: 04-02-08 12-01-09 12-17-09 03-18-10 05-06-10 01-27-09 02-18-09 08-05-09 08-12-09 10-23-09

SHEET 6 OF 19

FILE => 44-0283-f-a02_1o1.dgn

STRUCTURES DESIGN DETAIL SHEET (METRIC) (REV.03-17-04)

USERNAME => friehard DATE PLOTTED => 02-AUG-2010 TIME PLOTTED => 13:52

DIST	COUNTY	ROUTE	KILOMETER POST TOTAL PROJECT	SHEET No	TOTAL SHEETS
05	Mon	101	R146.8/159.7	1217	1402

Hernan Perez 05-06-10
REGISTERED CIVIL ENGINEER DATE

7-26-10
PLANS APPROVAL DATE

REGISTERED PROFESSIONAL ENGINEER HERNAN PEREZ No. 60993 Exp. 12-31-10 CIVIL STATE OF CALIFORNIA

The State of California or its officers or agents shall not be responsible for the accuracy or completeness of electronic copies of this plan sheet.

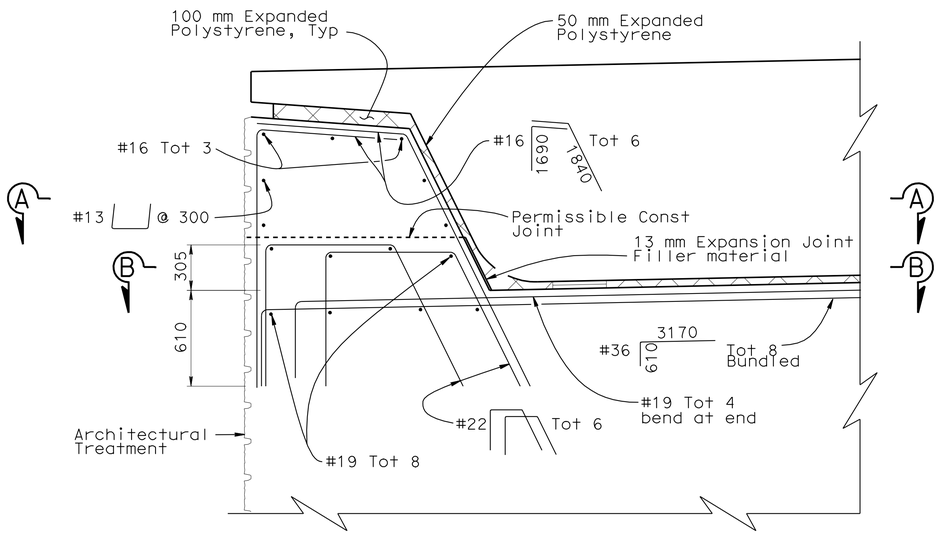

EXTERNAL SHEAR KEY
1:20

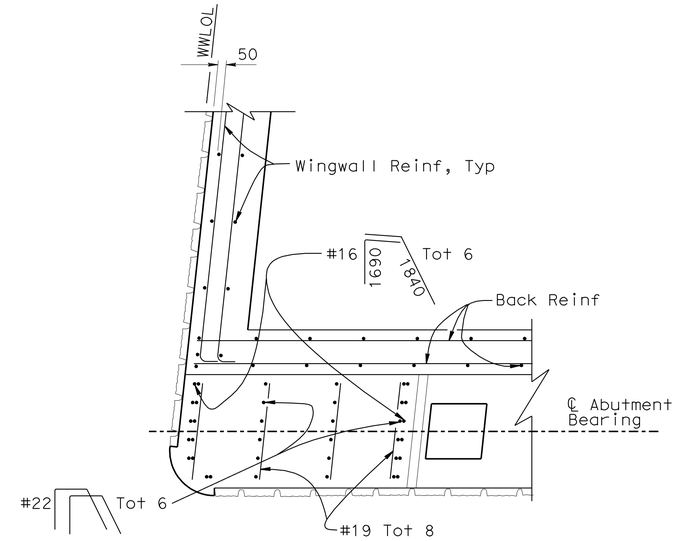

SECTION B-B
1:20

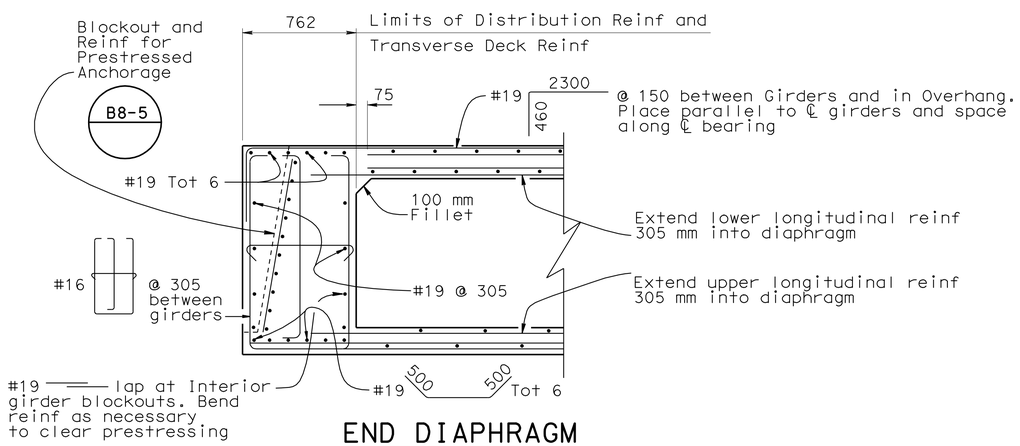

END DIAPHRAGM
1:20

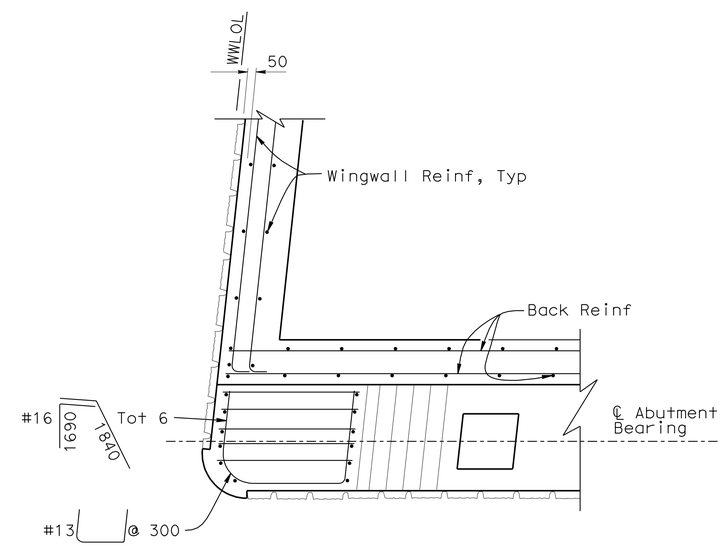

SECTION A-A
1:20

DESIGN	BY Hilario Tuazon	CHECKED Rachel Washington	
DETAILS	BY George Zweier	CHECKED Hilario Tuazon	
QUANTITIES	BY Aram Salimi	CHECKED Fayek Tannous	

STATE OF CALIFORNIA
DEPARTMENT OF TRANSPORTATION

DIVISION OF ENGINEERING SERVICES
STRUCTURE DESIGN
DESIGN BRANCH 6

BRIDGE NO. 44-0283
KILOMETER POST 148.9

SALA RD OC
ABUTMENT DETAILS NO.1

Caltrans Metric

ALL DIMENSIONS ARE IN MILLIMETERS UNLESS OTHERWISE SHOWN

ORIGINAL SCALE IN MILLIMETERS FOR REDUCED PLANS 0 10 20 30 40 50 60 70 80 90 100

CU 05
EA 0161E1

DISREGARD PRINTS BEARING EARLIER REVISION DATES

REVISION DATES: 05-06-08 06-04-08 08-07-08 02-23-09 08-11-09 08-18-09 05-06-10

SHEET 7 OF 19

FILE => 44-0283-f-adt01.dgn

STRUCTURES DESIGN DETAIL SHEET (METRIC) (REV.03-17-04)

USERNAME => rtleonard DATE PLOTTED => 02-AUG-2010 TIME PLOTTED => 13:52

DIST	COUNTY	ROUTE	KILOMETER POST TOTAL PROJECT	SHEET No	TOTAL SHEETS
05	Mon	101	R146.8/159.7	1218	1402

Hernan Perez 05-06-10
REGISTERED CIVIL ENGINEER DATE

7-26-10
PLANS APPROVAL DATE

REGISTERED PROFESSIONAL ENGINEER HERNAN PEREZ No. 60993 Exp. 12-31-10 CIVIL STATE OF CALIFORNIA

The State of California or its officers or agents shall not be responsible for the accuracy or completeness of electronic copies of this plan sheet.

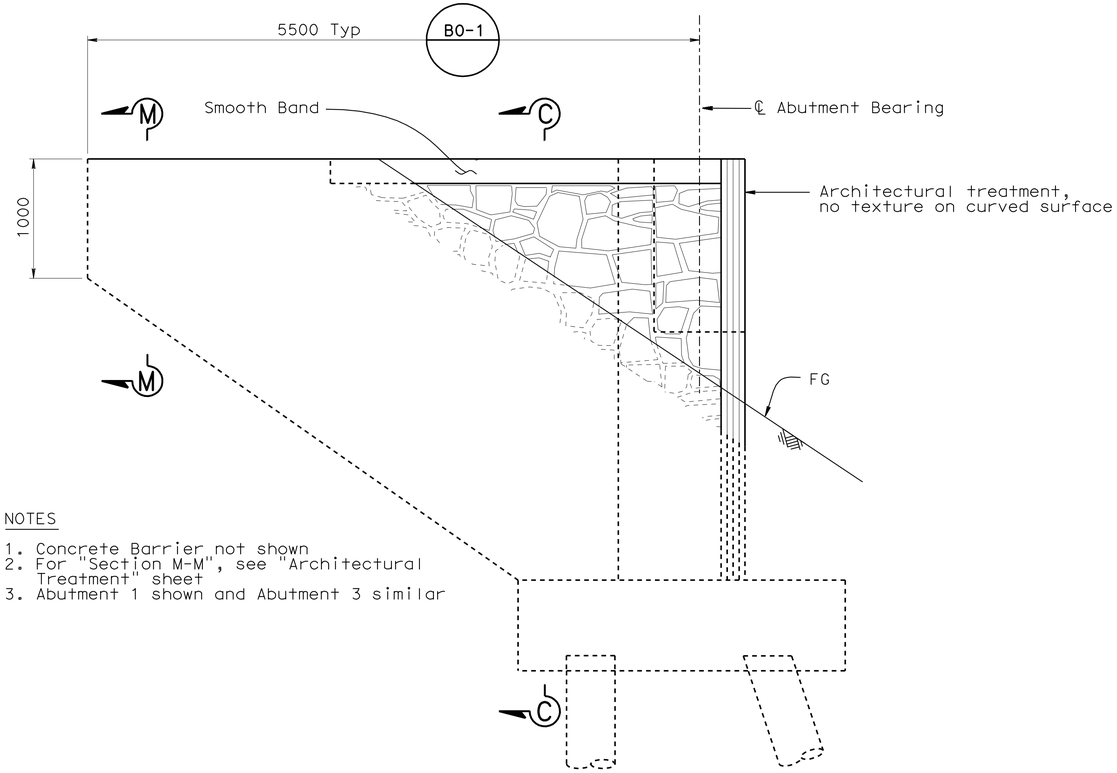

NOTES

1. Concrete Barrier not shown
2. For "Section M-M", see "Architectural Treatment" sheet
3. Abutment 1 shown and Abutment 3 similar

WINGWALL ELEVATION

1:25

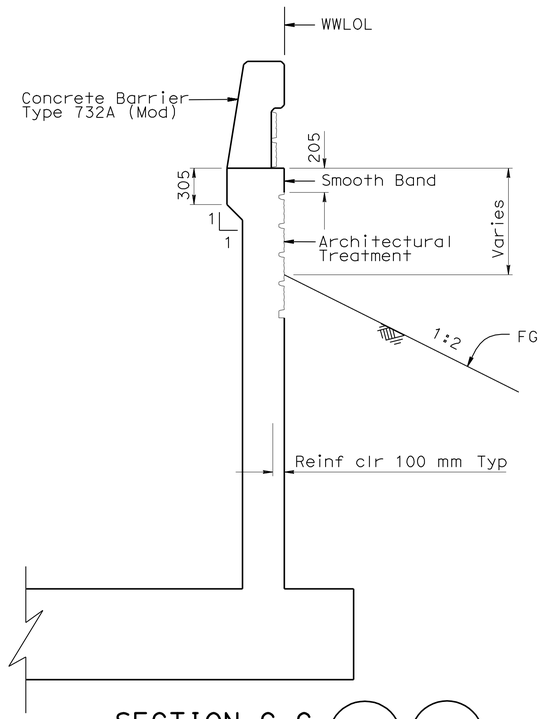

SECTION C-C

B11-55 B0-1

1:25

NOTE

For architectural treatment details, see "Architectural Treatment" sheet

DESIGN	BY Hilario Tuazon	CHECKED Rachel Washington	
DETAILS	BY George Zweier	CHECKED Hilario Tuazon	
QUANTITIES	BY Aram Salimi	CHECKED Fayek Tannous	

STATE OF CALIFORNIA
DEPARTMENT OF TRANSPORTATION

DIVISION OF ENGINEERING SERVICES
STRUCTURE DESIGN
DESIGN BRANCH 6

BRIDGE NO. 44-0283
KILOMETER POST 148.9

SALA RD OC
ABUTMENT DETAILS NO.2

ALL DIMENSIONS ARE IN MILLIMETERS UNLESS OTHERWISE SHOWN

ORIGINAL SCALE IN MILLIMETERS FOR REDUCED PLANS 0 10 20 30 40 50 60 70 80 90 100

CU 05
EA 0161E1

DISREGARD PRINTS BEARING EARLIER REVISION DATES → 08-14-09 08-18-09 12-14-09 03-14-10 05-06-10

REVISION DATES

SHEET 8 OF 19

FILE => 44-0283-f-adt02.dgn

STRUCTURES DESIGN DETAIL SHEET (METRIC) (REV.03-17-04)

USERNAME => trlenard DATE PLOTTED => 02-AUG-2010 TIME PLOTTED => 13:52

DIST	COUNTY	ROUTE	KILOMETER POST TOTAL PROJECT	SHEET No	TOTAL SHEETS
05	Mon	101	R146.8/159.7	1219	1402

REGISTERED CIVIL ENGINEER — DATE 05-06-10

7-26-10
PLANS APPROVAL DATE

REGISTERED PROFESSIONAL ENGINEER — HERNAN PEREZ — No. 60993 — Exp. 12-31-10 — CIVIL — STATE OF CALIFORNIA

The State of California or its officers or agents shall not be responsible for the accuracy or completeness of electronic copies of this plan sheet.

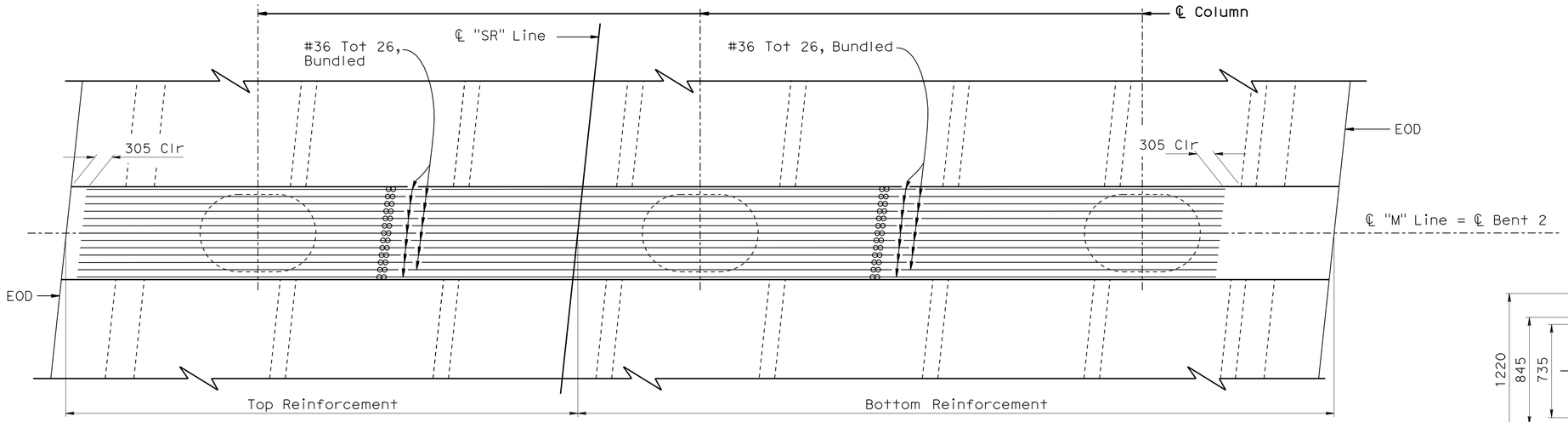

PLAN
1:50

NOTES & LEGEND

1. Reinforcement Similar about ℄ "SR" Line
2. No Lap Splices allowed in #36 Bent Cap Reinforcement, "Service" Splices only

Denotes Bundled Reinforcement

NOTES

1. For other "Section Views", see "Bent Details No. 2" sheet
2. See "Architectural Treatment" sheet for Column Architectural Treatment

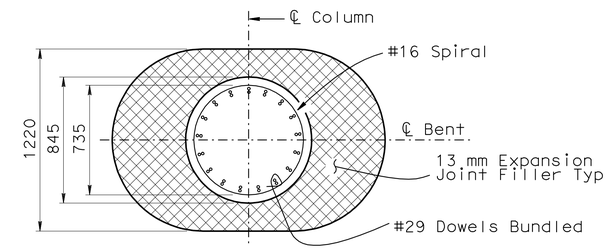

SECTION G-G
1:20

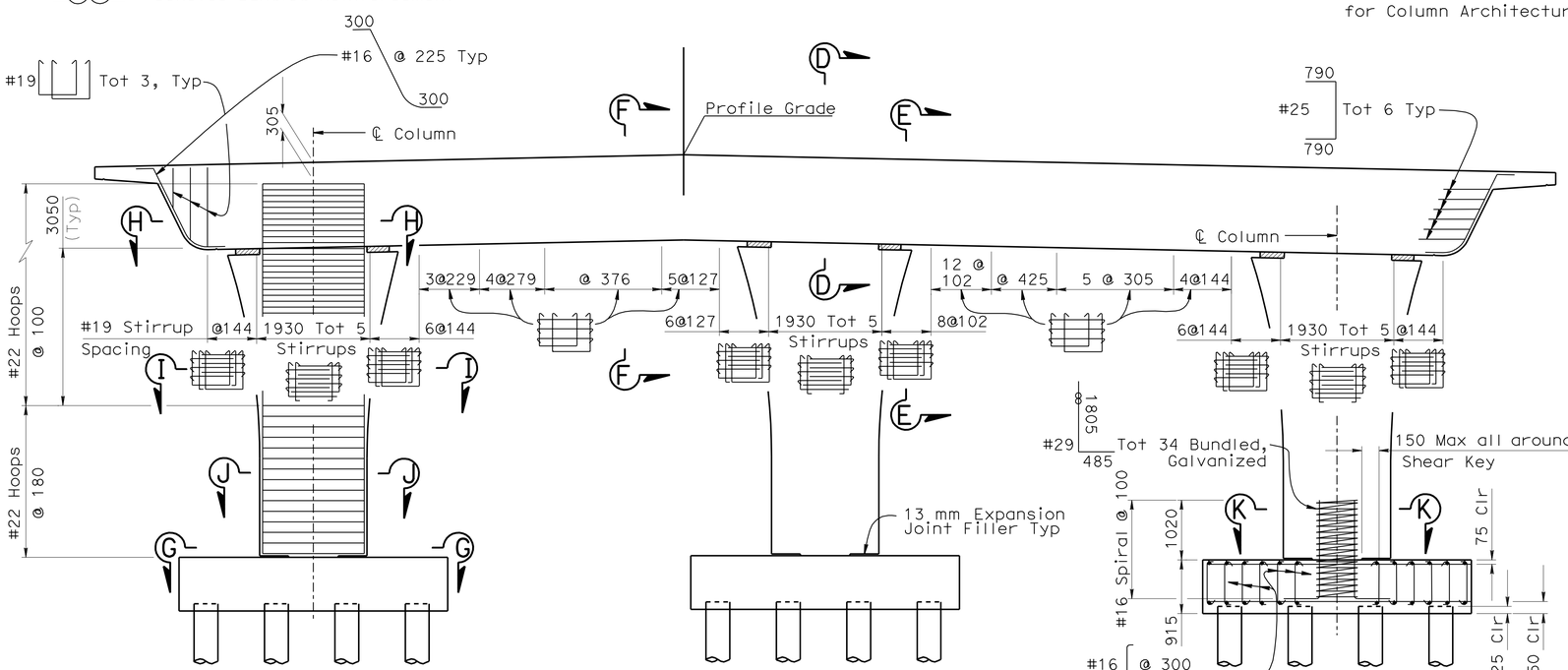

ELEVATION
1:50

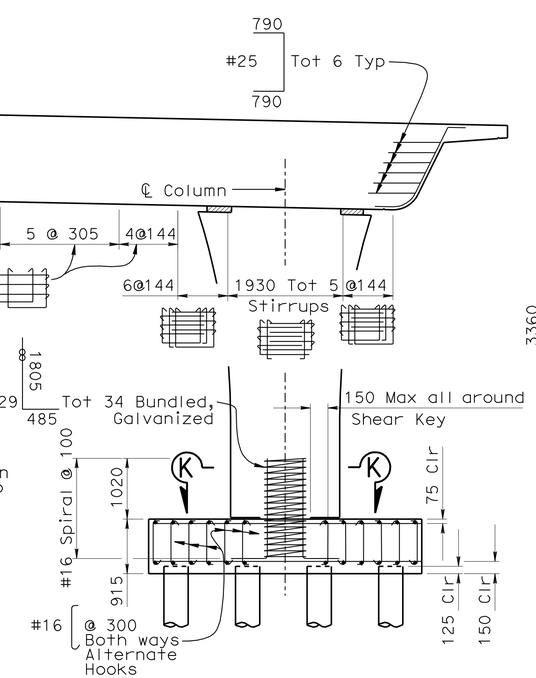

NOTES

1. No Splices allowed in Main Column Reinf
2. All Column Hoops are "Ultimate" butt spliced continuous

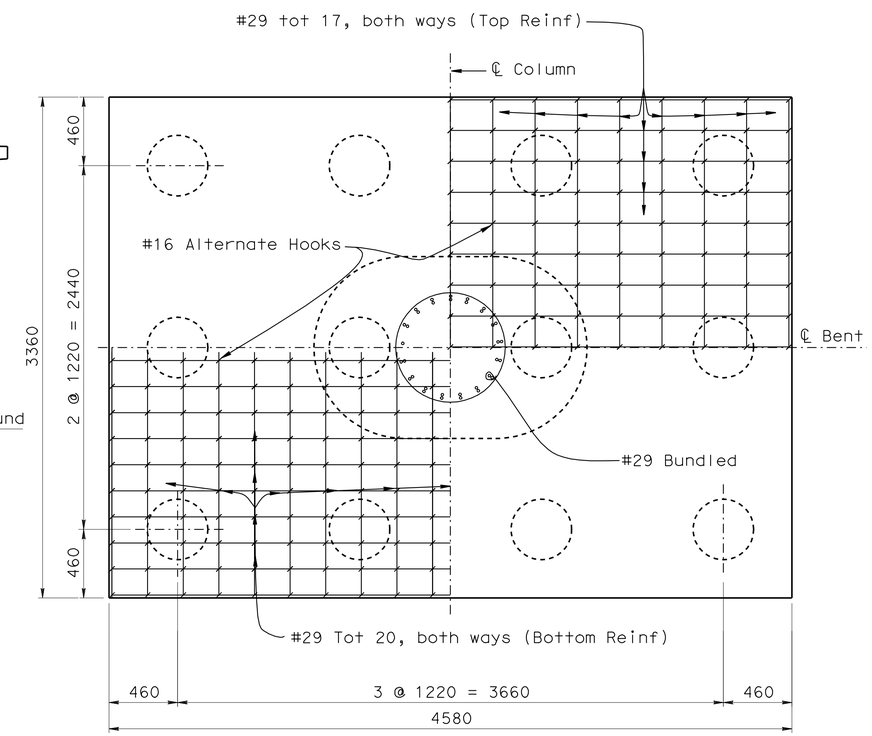

FOOTING PLAN
1:20

DESIGN	BY Hilario Tuazon	CHECKED Rachel Washington	
DETAILS	BY George Zweier	CHECKED Hilario Tuazon	
QUANTITIES	BY Aram Salimi	CHECKED Fayek Tannous	

STATE OF CALIFORNIA
DEPARTMENT OF TRANSPORTATION

DIVISION OF ENGINEERING SERVICES
STRUCTURE DESIGN
DESIGN BRANCH 6

BRIDGE NO. 44-0283
KILOMETER POST 148.9

SALA ROAD OC
BENT DETAILS NO. 1

ALL DIMENSIONS ARE IN MILLIMETERS UNLESS OTHERWISE SHOWN

ORIGINAL SCALE IN MILLIMETERS FOR REDUCED PLANS 0 10 20 30 40 50 60 70 80 90 100

CU 05
EA 0161E1

DISREGARD PRINTS BEARING EARLIER REVISION DATES

REVISION DATES: 4-18-08 | 05-06-10 | 05-29-08 | 06-11-08 | 08-07-08 | 01-09-09 | 02-23-09 | 08-14-09 | 08-18-09 | 12-04-09

SHEET 9 OF 19

FILE => 44-0283-h-bntdt01.dgn

STRUCTURES DESIGN DETAIL SHEET (METRIC) (REV.03-17-04)

USERNAME => trlehard DATE PLOTTED => 02-AUG-2010 TIME PLOTTED => 13:53

DIST	COUNTY	ROUTE	KILOMETER POST TOTAL PROJECT	SHEET No	TOTAL SHEETS
05	Mon	101	R146.8/159.7	1220	1402

REGISTERED CIVIL ENGINEER — DATE 05-06-10

7-26-10
PLANS APPROVAL DATE

REGISTERED PROFESSIONAL ENGINEER — HERNAN PEREZ — No. 60993 — Exp. 12-31-10 — CIVIL — STATE OF CALIFORNIA

The State of California or its officers or agents shall not be responsible for the accuracy or completeness of electronic copies of this plan sheet.

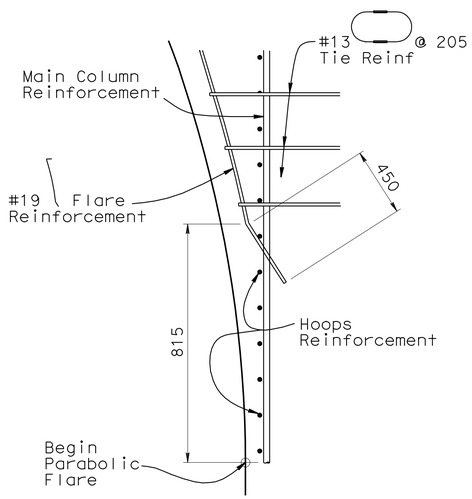

SPIRAL & TIE DETAIL
NO SCALE

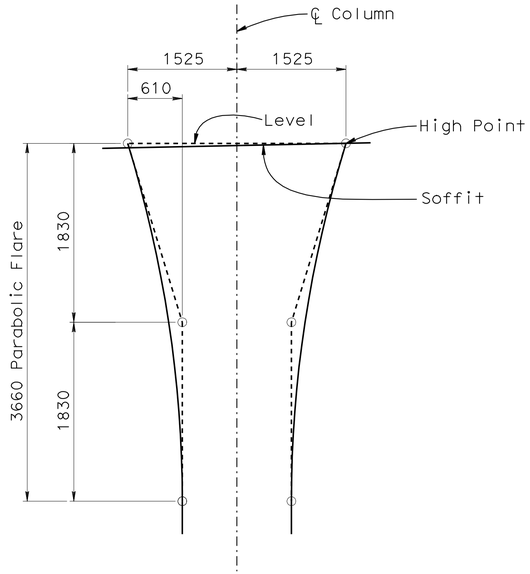

FLARE DETAILS
NO SCALE

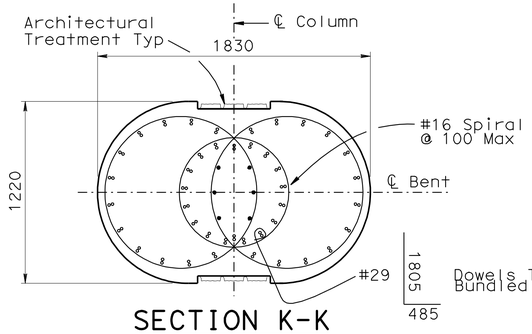

SECTION K-K
1:20

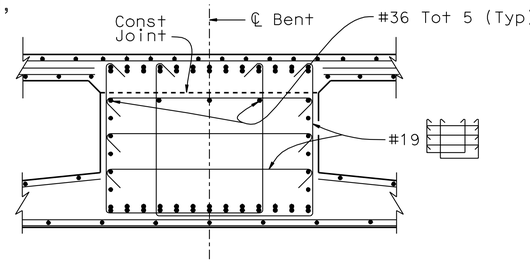

SECTION F-F
1:25

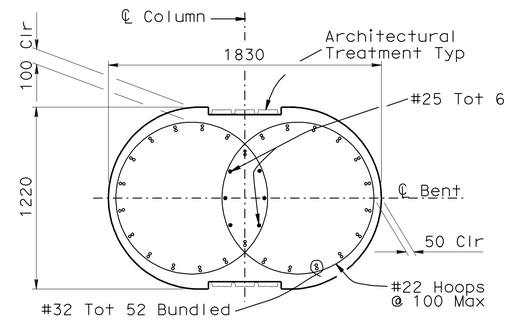

SECTION J-J
1:20

NOTE

See "Architectural Treatment" sheet for Column Architectural Treatment

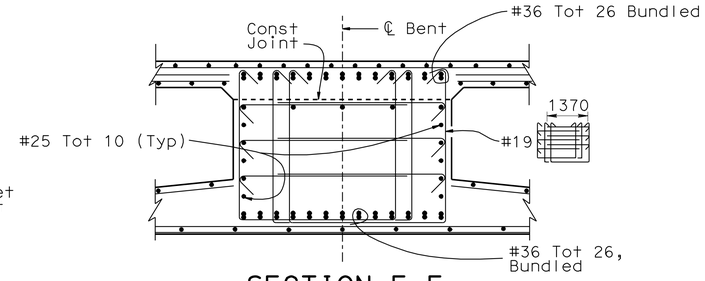

SECTION E-E
1:25

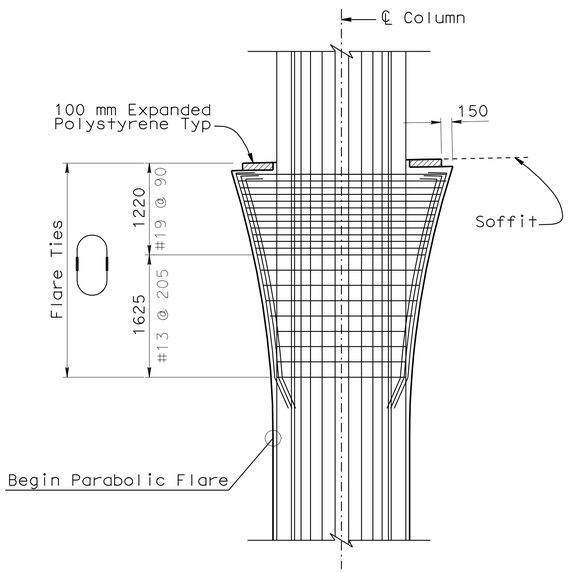

COLUMN FLARE REINFORCEMENT
1:40

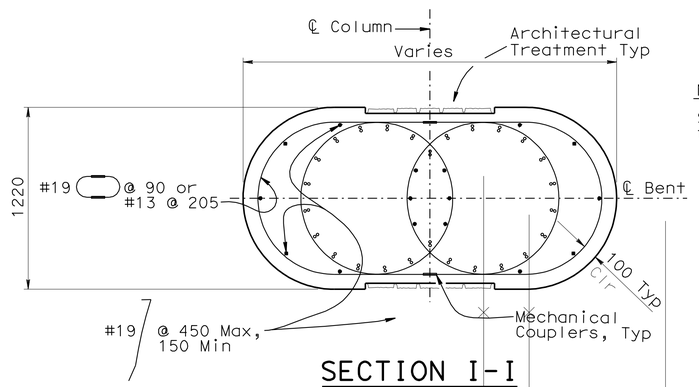

SECTION I-I
1:20

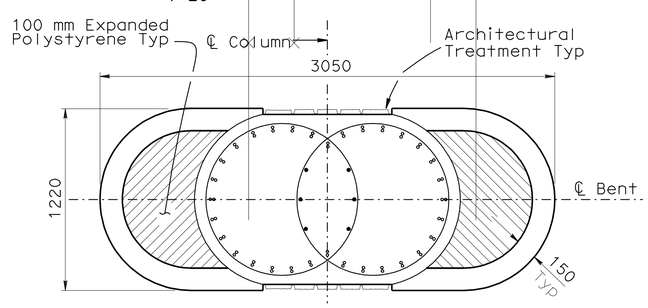

SECTION H-H
1:20

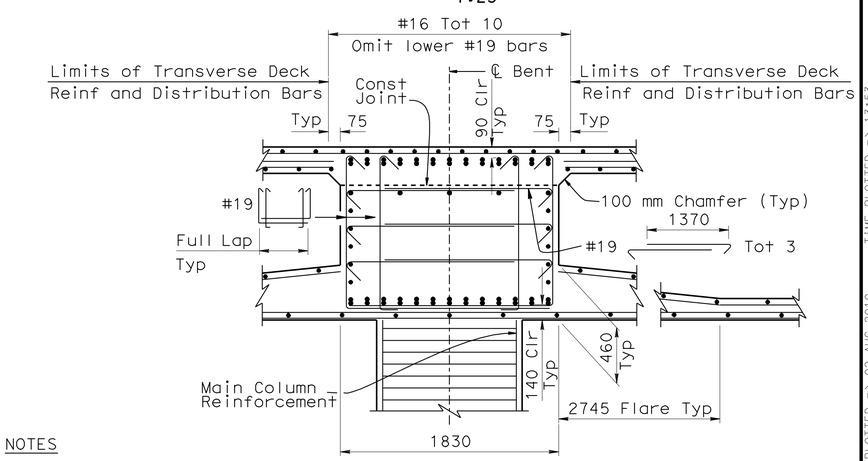

NOTES

1. Reinforcement may be bent or lowered to clear P/S Ducts
2. Main Column reinf and spiral not shown above Bent soffit

SECTION D-D
1:25

Caltrans Metric

	BY	CHECKED
DESIGN	Hilario Tuazon	Rachel Washington
DETAILS	George Zweier	Hilario Tuazon
QUANTITIES	Aram Salimi	Fayek Tannous

STATE OF CALIFORNIA
DEPARTMENT OF TRANSPORTATION

DIVISION OF ENGINEERING SERVICES
STRUCTURE DESIGN
DESIGN BRANCH 6

BRIDGE NO. 44-0283
KILOMETER POST 148.9

SALA ROAD OC
BENT DETAILS NO. 2

ALL DIMENSIONS ARE IN MILLIMETERS UNLESS OTHERWISE SHOWN

ORIGINAL SCALE IN MILLIMETERS FOR REDUCED PLANS 0 10 20 30 40 50 60 70 80 90 100

CU 05
EA 0161E1

DISREGARD PRINTS BEARING EARLIER REVISION DATES

REVISION DATES: 04-17-08 | 05-06-10 | 05-29-08 | 06-12-08 | 07-02-08 | 08-07-08 | 01-09-09 | 02-23-09 | 08-11-09 | 08-18-09

SHEET 10 OF 19

FILE => 44-0283-h-bntdt02.dgn

STRUCTURES DESIGN DETAIL SHEET (METRIC) (REV.03-17-04)

USERNAME => trlenard DATE PLOTTED => 02-AUG-2010 TIME PLOTTED => 13:53

DIST	COUNTY	ROUTE	KILOMETER POST TOTAL PROJECT	SHEET No	TOTAL SHEETS
05	Mon	101	R146.8/159.7	1221	1402

REGISTERED CIVIL ENGINEER — DATE 05-06-10

7-26-10
PLANS APPROVAL DATE

REGISTERED PROFESSIONAL ENGINEER — HERNAN PEREZ — No. 60993 — Exp. 12-31-10 — CIVIL — STATE OF CALIFORNIA

The State of California or its officers or agents shall not be responsible for the accuracy or completeness of electronic copies of this plan sheet.

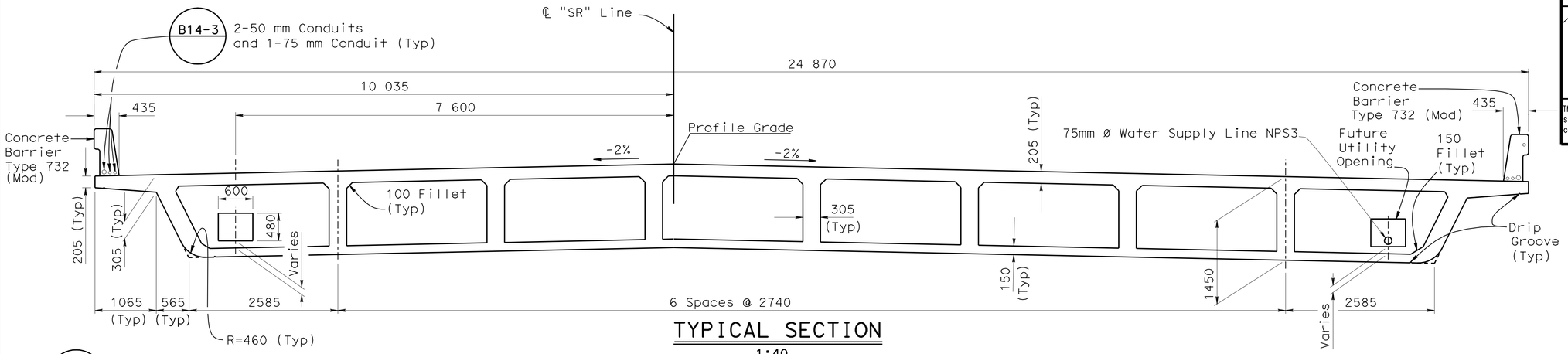

TYPICAL SECTION

1:40

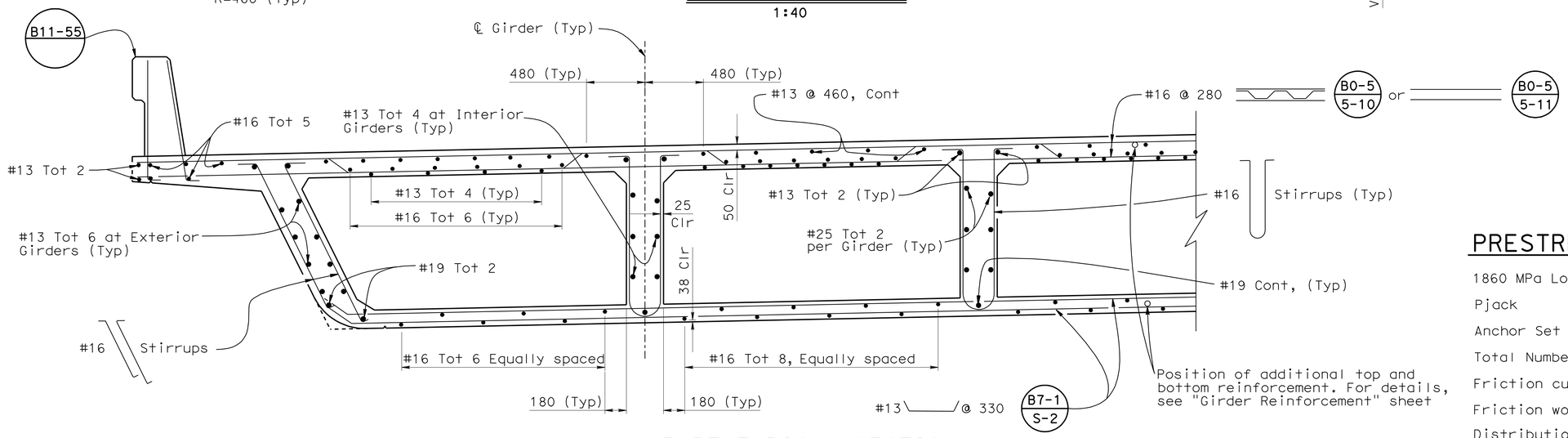

PART TYPICAL SECTION

1:20

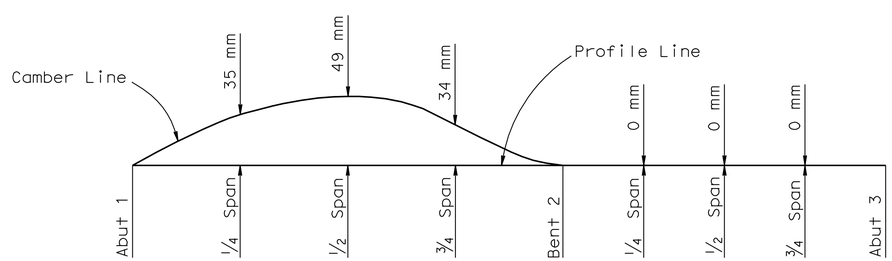

CAMBER DIAGRAM

NO SCALE

Does not include allowance for falsework settlement

PRESTRESSING NOTES

1860 MPa Low Relaxation Strands:

Pjack = 57610 kN

Anchor Set = 10 mm

Total Number of Girders = 9

Friction curvature coefficient μ = 15 x 10^{-2} (1/rad)

Friction wobble coefficient K = 6.6 x 10^{-4} (1/m)

Distribution of prestress force (Pjack) between girders shall not exceed the ratio of 3:2.

Maximum final force variation between girders shall not exceed 3200 kN.

Concrete: f'_c = 28 Mpa @ 28 days

f'_{ci} = 25 Mpa @ time of stressing

Contractor shall submit elongation calculations based on initial stress at ☒ = .890 times jacking stress

One end stressing shall be performed from the long-span end only

Caltrans Metric

	BY	CHECKED
DESIGN	Hilario Tuazon	Rachel Washington
DETAILS	George Zweier	Hilario Tuazon
QUANTITIES	Aram Salimi	Fayek Tannous

STATE OF CALIFORNIA
DEPARTMENT OF TRANSPORTATION

DIVISION OF ENGINEERING SERVICES
STRUCTURE DESIGN
DESIGN BRANCH 6

BRIDGE NO. 44-0283
KILOMETER POST 148.9

SALA ROAD OC
TYPICAL SECTION

ALL DIMENSIONS ARE IN MILLIMETERS UNLESS OTHERWISE SHOWN

ORIGINAL SCALE IN MILLIMETERS FOR REDUCED PLANS 0 10 20 30 40 50 60 70 80 90 100

CU 05
EA 0161E1

DISREGARD PRINTS BEARING EARLIER REVISION DATES

REVISION DATES: 1-11-08 03-09-10 05-06-10 01-08-09 01-16-09 02-23-09 08-14-09 08-19-09 10-23-09 12-01-09

SHEET 11 OF 19

FILE => 44-0283-k-ts.dgn

STRUCTURES DESIGN DETAIL SHEET (METRIC) (REV.03-17-04)

USERNAME => friehard DATE PLOTTED => 02-AUG-2010 TIME PLOTTED => 14:24

DIST	COUNTY	ROUTE	KILOMETER POST TOTAL PROJECT	SHEET No	TOTAL SHEETS
05	Mon	101	R146.8/159.7	1222	1402

Hernan Perez 05-06-10
REGISTERED CIVIL ENGINEER DATE

7-26-10
PLANS APPROVAL DATE

REGISTERED PROFESSIONAL ENGINEER HERNAN PEREZ No. 60993 Exp. 12-31-10 CIVIL STATE OF CALIFORNIA

The State of California or its officers or agents shall not be responsible for the accuracy or completeness of electronic copies of this plan sheet.

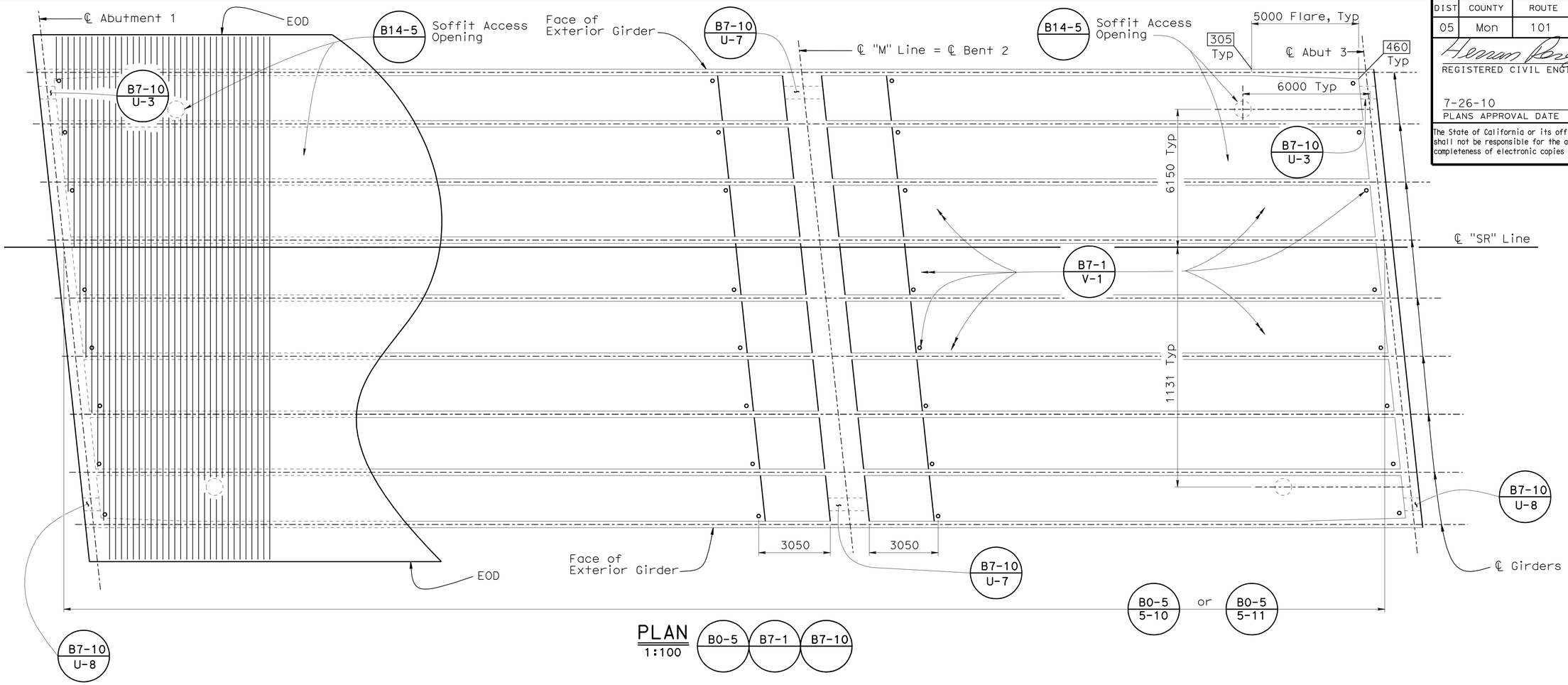

PLAN
1:100
B0-5 B7-1 B7-10

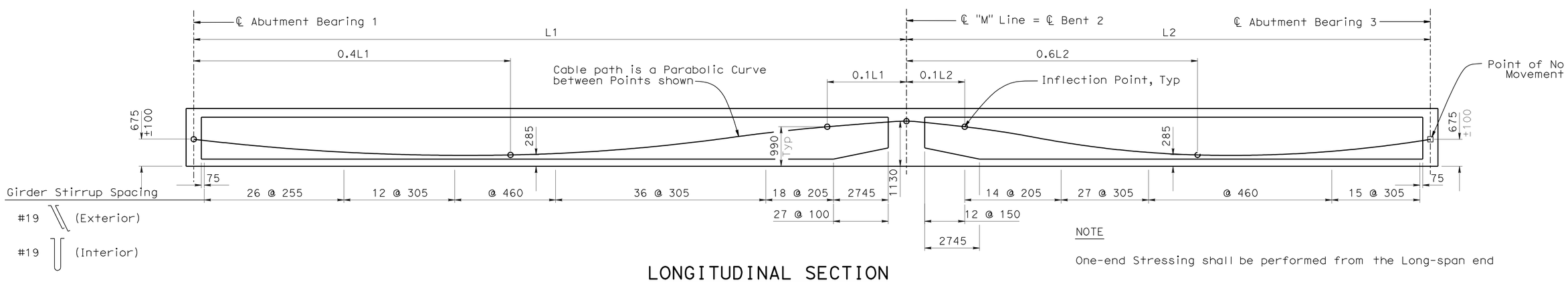

NOTE

One-end Stressing shall be performed from the Long-span end

LONGITUDINAL SECTION
HORIZONTAL 1:100
VERTICAL 1:50

DESIGN	BY Hilario Tuazon	CHECKED Rachel Washington	
DETAILS	BY George Zweier	CHECKED Hilario Tuazon	
QUANTITIES	BY Aram Salimi	CHECKED Fayek Tannous	

STATE OF CALIFORNIA
DEPARTMENT OF TRANSPORTATION

DIVISION OF ENGINEERING SERVICES
STRUCTURE DESIGN
DESIGN BRANCH 6

BRIDGE NO. 44-0283
KILOMETER POST 148.9

SALA ROAD OC
GIRDER LAYOUT

ALL DIMENSIONS ARE IN MILLIMETERS UNLESS OTHERWISE SHOWN

ORIGINAL SCALE IN MILLIMETERS FOR REDUCED PLANS 0 10 20 30 40 50 60 70 80 90 100

CU 05
EA 0161E1

DISREGARD PRINTS BEARING EARLIER REVISION DATES

REVISION DATES: 05-28-08 05-06-10 05-18-06 08-07-08 01-28-09 02-23-09 08-14-09 08-19-09 10-23-09 12-04-09

SHEET 12 OF 19

FILE => 44-0283-1-glo.dgn

STRUCTURES DESIGN DETAIL SHEET (METRIC) (REV.03-17-04)

USERNAME => trlenard DATE PLOTTED => 12-AUG-2010 TIME PLOTTED => 06:08

DIST	COUNTY	ROUTE	KILOMETER POST TOTAL PROJECT	SHEET No	TOTAL SHEETS
05	Mon	101	R146.8/159.7	1223	1402

Hernan Perez 05-06-10
REGISTERED CIVIL ENGINEER DATE

7-26-10
PLANS APPROVAL DATE

REGISTERED PROFESSIONAL ENGINEER HERNAN PEREZ No. 60993 Exp. 12-31-10 CIVIL STATE OF CALIFORNIA

The State of California or its officers or agents shall not be responsible for the accuracy or completeness of electronic copies of this plan sheet.

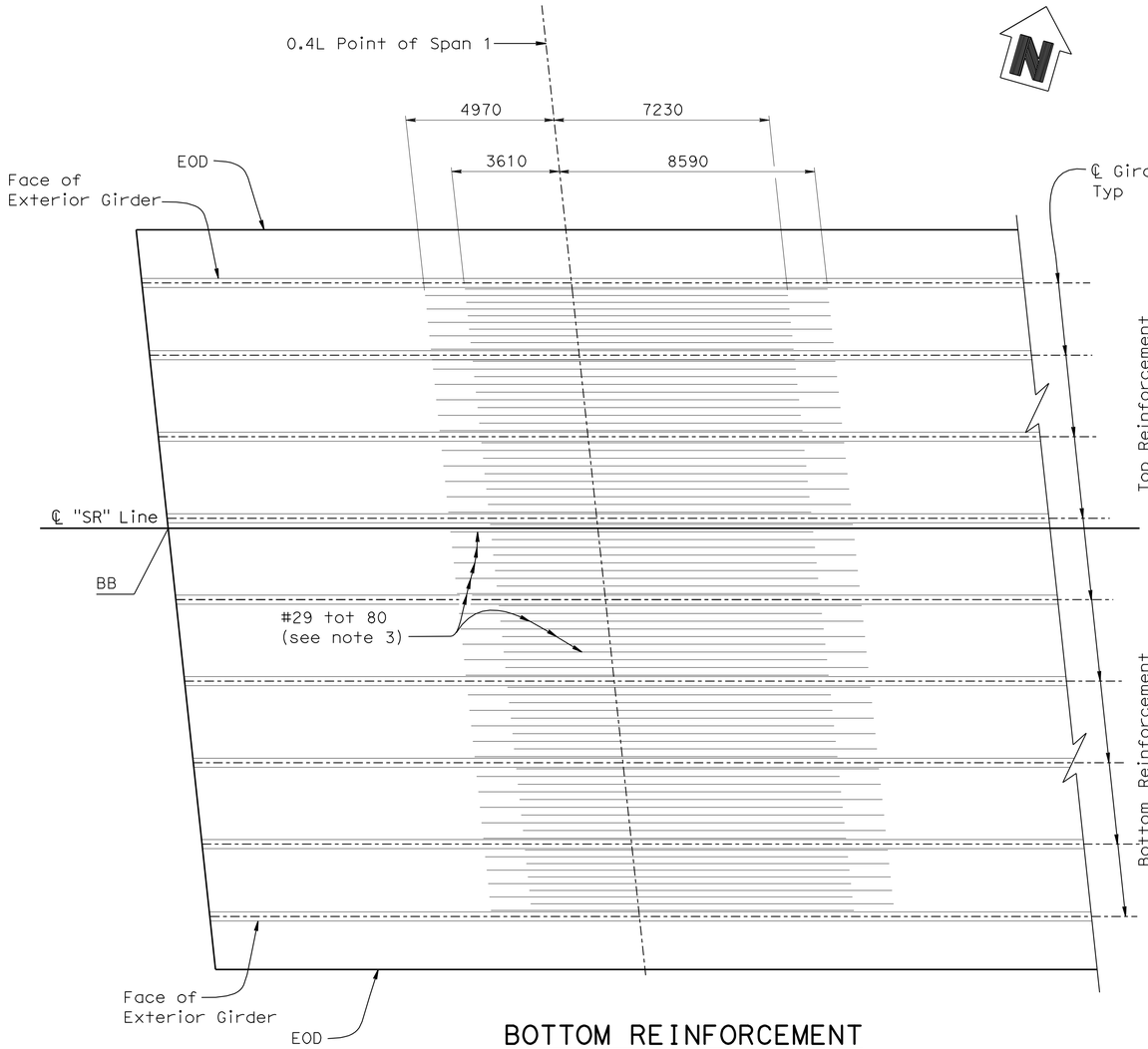

BOTTOM REINFORCEMENT

1:100

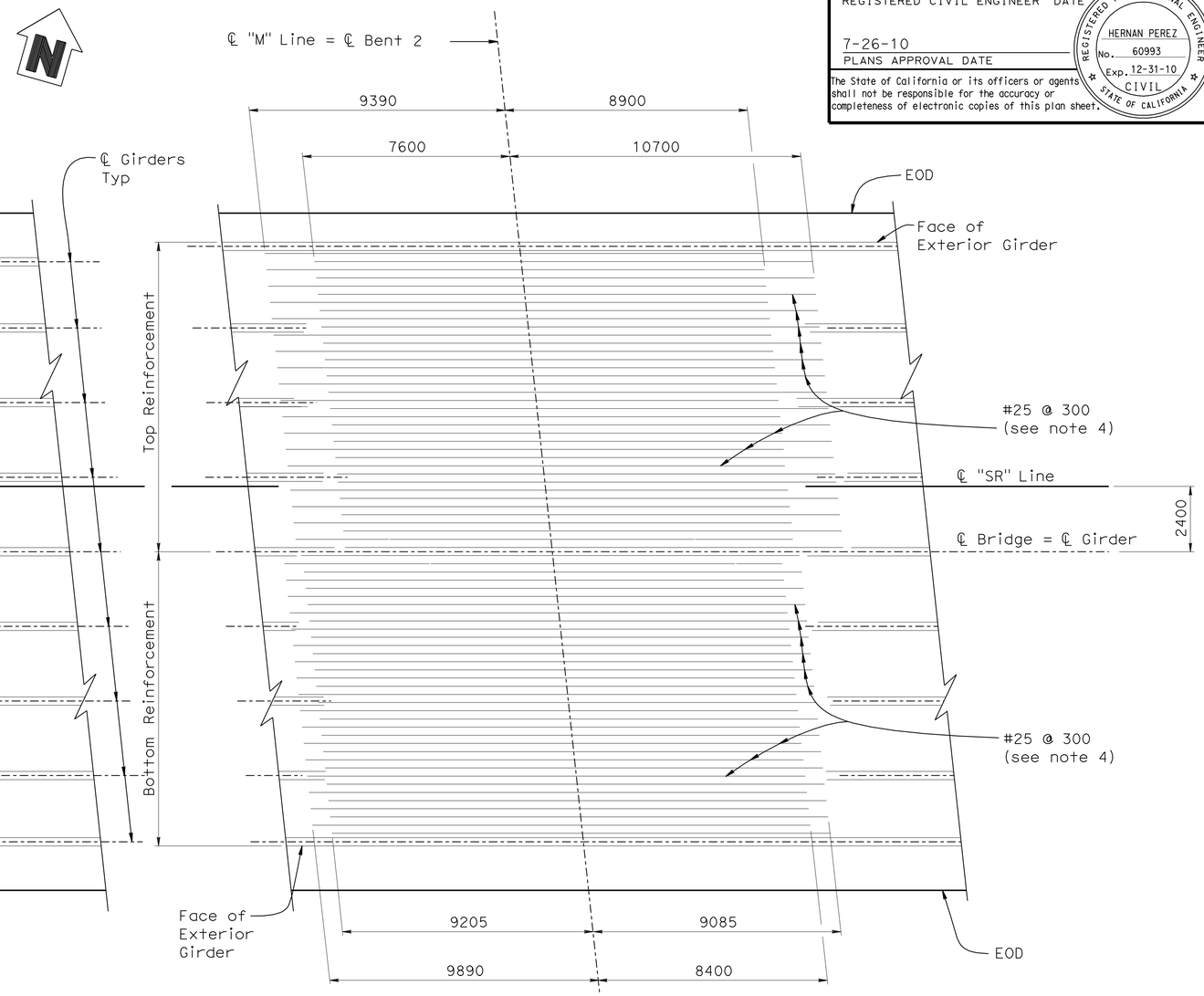

TOP & BOTTOM REINFORCEMENT AT BENT

1:100

NOTES

1. Reinforcement clearance 38 mm from soffit
2. For Additional Details, see "Typical Section" sheet
3. Space bars evenly, not to exceed 300 mm
4. Reinforcement symmetrical about ℄ Bridge
5. No lap splices allowed in #25 reinforcement. Service splices only

Caltrans Metric

	BY	CHECKED
DESIGN	Hilario Tuazon	Rachel Washington
DETAILS	George Zweier	Hilario Tuazon
QUANTITIES	Aram Salimi	Fayek Tannous

STATE OF CALIFORNIA
DEPARTMENT OF TRANSPORTATION

DIVISION OF ENGINEERING SERVICES
STRUCTURE DESIGN
DESIGN BRANCH 6

BRIDGE NO. 44-0283
KILOMETER POST 148.9

SALA ROAD OC
GIRDER REINFORCEMENT

ALL DIMENSIONS ARE IN MILLIMETERS UNLESS OTHERWISE SHOWN

ORIGINAL SCALE IN MILLIMETERS FOR REDUCED PLANS 0 10 20 30 40 50 60 70 80 90 100

CU 05
EA 0161E1

DISREGARD PRINTS BEARING EARLIER REVISION DATES

REVISION DATES: 02-01-08 05-02-08 08-02-06 02-14-09 08-11-09 08-08-09 12-04-09 05-06-10

SHEET 13 OF 19

FILE => 44-0283-o-gir_rf.dgn

STRUCTURES DESIGN DETAIL SHEET (METRIC) (REV.03-17-04)

USERNAME => trlenard DATE PLOTTED => 02-AUG-2010 TIME PLOTTED => 14:24

DIST.	COUNTY	ROUTE	KILOMETER POST TOTAL PROJECT	SHEET NO.	TOTAL SHEETS
05	Mon	101	R146.8/159.7	1224	1402

Caltrans Metric

Hernan Perez 05-06-10
REGISTERED ENGINEER - CIVIL
7-26-10
PLANS APPROVAL DATE
The State of California or its officers or agents shall not be responsible for the accuracy or completeness of electronic copies of this plan sheet.

REGISTERED PROFESSIONAL ENGINEER HERNAN PEREZ No. 60993 Exp. 12-31-10 CIVIL STATE OF CALIFORNIA

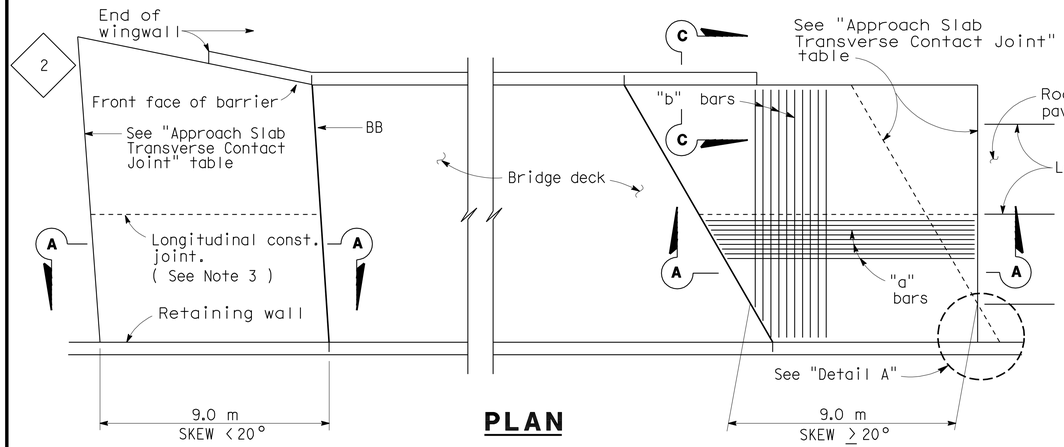

PLAN

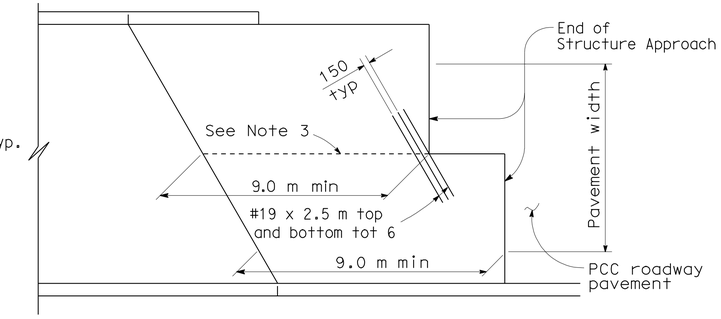

STRUCTURE APPROACH - END STAGGER DETAIL

APPROACH SLAB TRANSVERSE CONTACT JOINT		
APPROACH SKEW	WITH AC ROADWAY PAVEMENT	WITH PCC ROADWAY PAVEMENT
< 20°	Parallel to face of paving notch	Parallel to face of paving notch
20°- 45°	Parallel to face of P N use (Detail A)	Stagger lines 7.2 m to 10.8 m apart.
> 45°	Parallel to face of P N use (Detail A)	Stagger at each lane line.

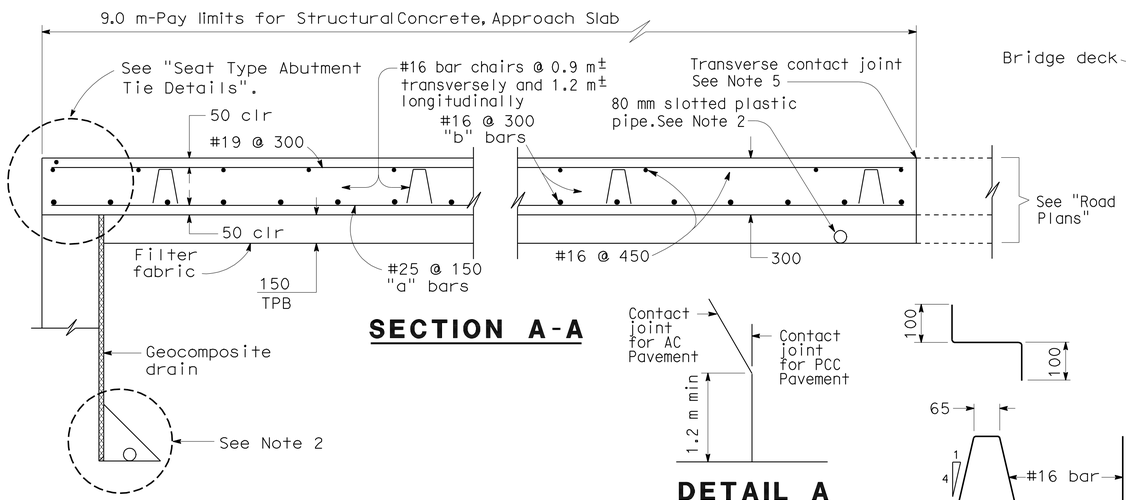

SECTION A-A

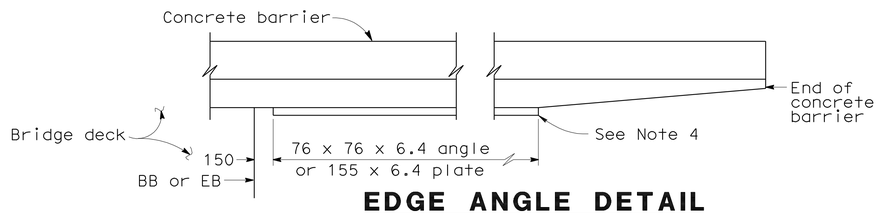

EDGE ANGLE DETAIL

DETAIL A

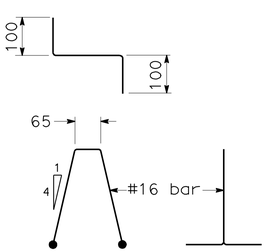

BAR CHAIR DETAIL

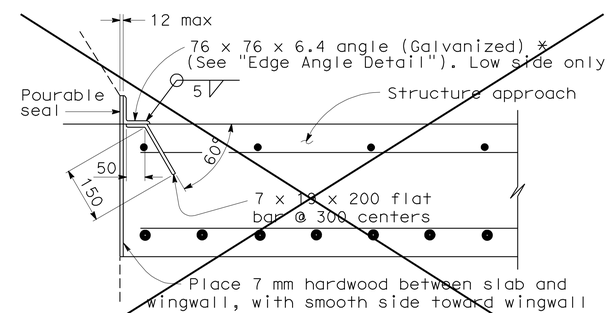

*(TO BE USED WITH TYPE 25 OR TYPE 27 CONCRETE BARRIER)

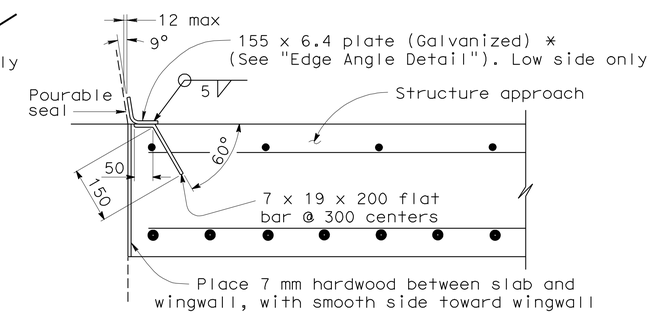

*(TO BE USED WITH TYPE 732 OR TYPE 736 CONCRETE BARRIER)

DETAIL B

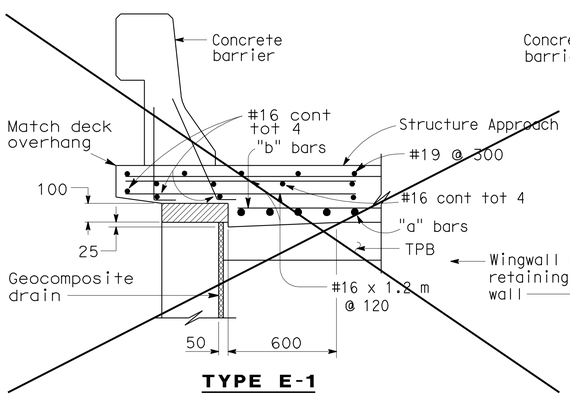

TYPE E-1

SECTION C-C

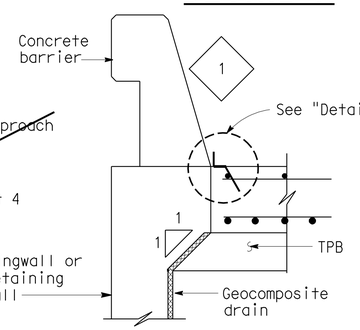

TYPE E-2

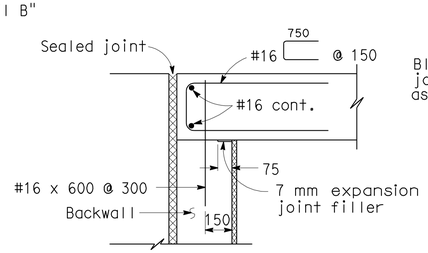

MR ≤ 50 mm

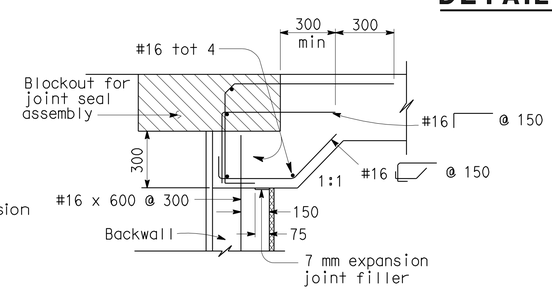

MR > 50 mm

SEAT TYPE ABUTMENT TIE DETAILS (SEE NOTE 1)

NOTES:

1. For details not shown, see Structure Plans. For MR ≤ 50 mm, adjust bar reinforcement to clear a sawcut for sealed joint, when required.
2. For drainage details, see "Structure Approach Drainage Details" sheet.
3. Longitudinal construction joints, when permitted by the Engineer, shall be located on lane lines.
4. End angle or plate at beginning of barrier transition, end of wingwall or end of structure approach as applicable.
5. For transverse contact joint with new PCC paving, refer to Standard Plan A35-A.
6. At the contractor's option, approach slab transverse reinforcement may be placed parallel to paving notch. Spacing of transverse reinforcement is measured along ℄ roadway.

Remove all polystyrene.

NO SCALE

ALL DIMENSIONS ARE IN MILLIMETERS UNLESS OTHERWISE SHOWN

STANDARD DRAWING				
RELEASE DATE 7/9/03	DESIGN BY M. TRAFFALIS	CHECKED E. THORKILDSEN	RELEASED BY	
FILE NO. xs3-120	DETAILS BY R. YEE	CHECKED E. THORKILDSEN		
	SUBMITTED BY M. HA	DRAWING DATE 4/98	OFFICE CHIEF	

DS OSD 2147A (METRIC) (REV. 2/25/97)

1 Revised Detail 2 Revised Approach Slab

ORIGINAL SCALE IN MILLIMETERS FOR REDUCED PLANS 0 10 20 30 40 50 60 70 80 90 100

STATE OF CALIFORNIA
DEPARTMENT OF TRANSPORTATION

DIVISION OF ENGINEERING SERVICES
STRUCTURE DESIGN
DESIGN BRANCH 6

CU 05
EA 0161E1

BRIDGE NO. 44-0283
KILOMETER POST 148.9

SALA ROAD OC
STRUCTURE APPROACH TYPE N(9S)

DISREGARD PRINTS BEARING EARLIER REVISION DATES
REVISION DATES (PRELIMINARY STAGE ONLY) 08-07-0802-24-0808-11-0808-19-0803-10-1005-06-10

SHEET 14 OF 19

USERNAME => trlenard

DATE PLOTTED => 02-AUG-2010 TIME PLOTTED => 14:24

44-0283-s-sa.dgn

DIST.	COUNTY	ROUTE	KILOMETER POST TOTAL PROJECT	SHEET NO.	TOTAL SHEETS
05	Mon	101	R146.8/159.7	1225	1402

Caltrans Metric

Hernan Perez 05-06-10
REGISTERED ENGINEER - CIVIL

7-26-10
PLANS APPROVAL DATE

REGISTERED PROFESSIONAL ENGINEER HERNAN PEREZ No. 60993 Exp. 12-31-10 CIVIL STATE OF CALIFORNIA

The State of California or its officers or agents shall not be responsible for the accuracy or completeness of electronic copies of this plan sheet.

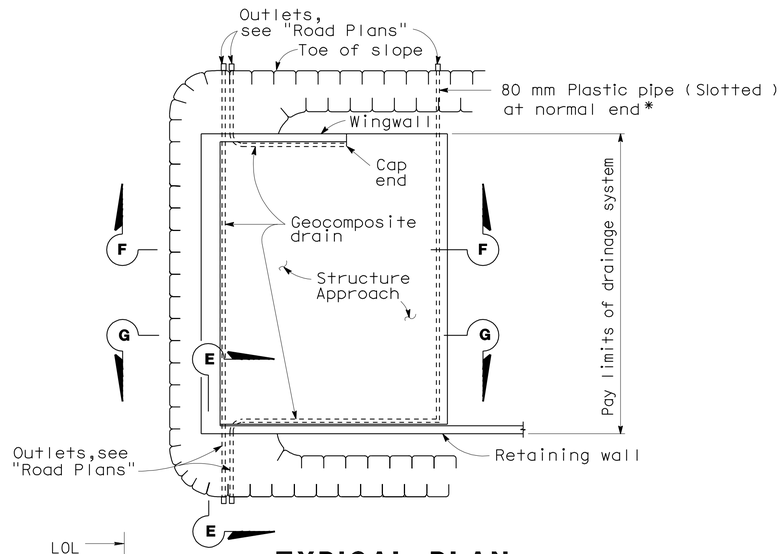

TYPICAL PLAN

*For pipe layout at staggered end, see "Detail B".

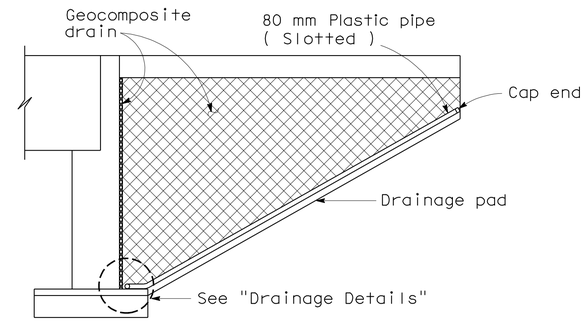

CANTILEVER WINGWALL
SECTION F-F

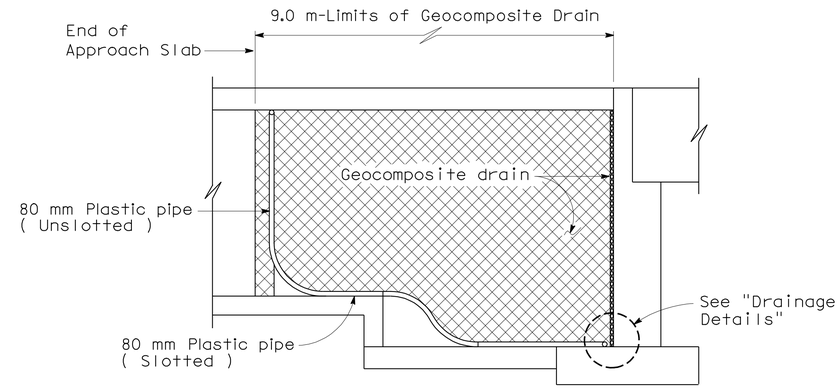

RETAINING WALL WINGWALL
SECTION G-G

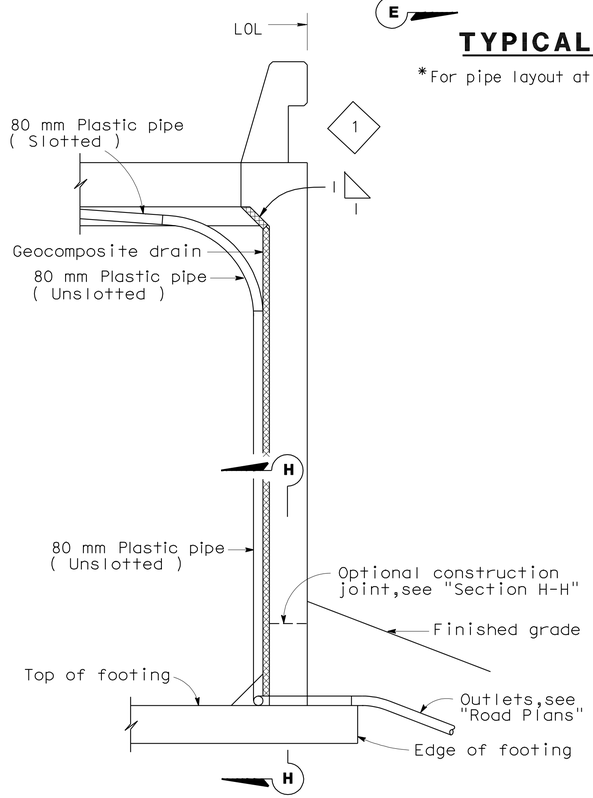

SECTION E-E

NOTE: Bends and junctions in 80 mm plastic pipe are 750 mm radius min.

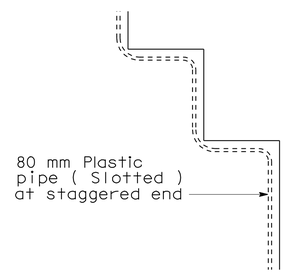

DETAIL B

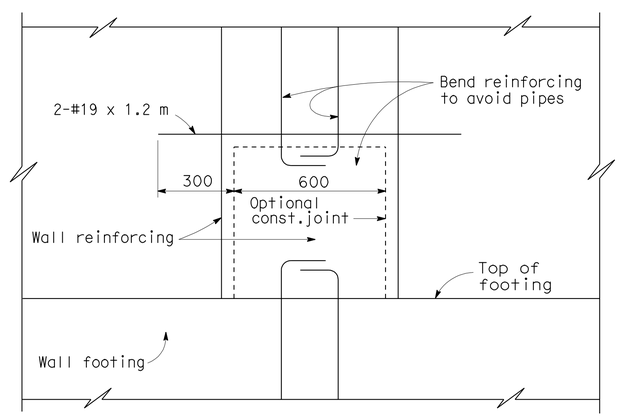

SECTION H-H

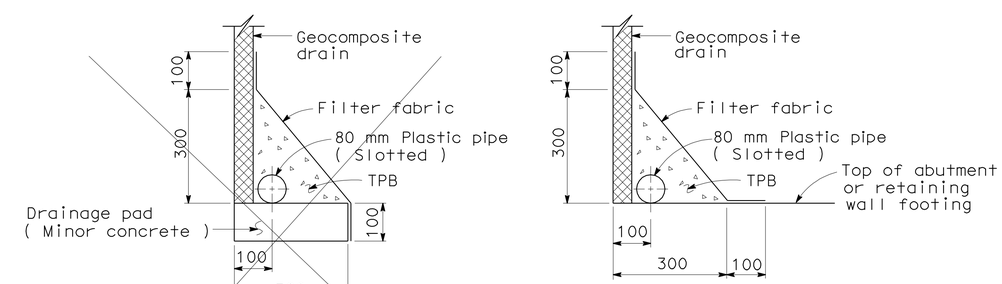

WITHOUT FOOTING **WITH FOOTING**

DRAINAGE DETAILS

NO SCALE

ALL DIMENSIONS ARE IN MILLIMETERS UNLESS OTHERWISE SHOWN

STANDARD DRAWING					
RELEASE DATE 4/23/98	DESIGN	BY M. TRAFFALIS	CHECKED E. THORKILDSEN	RELEASED BY	
FILE NO. xs3-110	DETAILS	BY R. YEE	CHECKED E. THORKILDSEN		
	SUBMITTED	BY M. HA	DRAWING DATE 4/98	OFFICE CHIEF	

1 Revised Detail

STATE OF CALIFORNIA
DEPARTMENT OF TRANSPORTATION

DIVISION OF ENGINEERING SERVICES
STRUCTURE DESIGN
DESIGN BRANCH 6

BRIDGE NO. 44-0283
KILOMETER POST 149.8

SALA ROAD OC
STRUCTURE APPROACH DRAINAGE DETAILS

DS OSD 2147A (METRIC) (REV. 2/25/97)

ORIGINAL SCALE IN MILLIMETERS FOR REDUCED PLANS 0 10 20 30 40 50 60 70 80 90 100

CU 05
EA 0161E1

DISREGARD PRINTS BEARING EARLIER REVISION DATES

REVISION DATES (PRELIMINARY STAGE ONLY) 08-07-08 02-24-09 08-11-09 08-19-09 12-17-09 03-10-10 05-06-10

SHEET 15 OF 19

USERNAME => trlenard

44-0283-s-sadd.dgn

DATE PLOTTED => 02-AUG-2010 TIME PLOTTED => 14:24

DIST.	COUNTY	ROUTE	KILOMETER POST TOTAL PROJECT	SHEET NO.	TOTAL SHEETS
05	Mon	101	R146.8/159.7	1226	1402

Caltrans Metric

Hernan Perez 05-06-10
REGISTERED ENGINEER - CIVIL

7-26-10
PLANS APPROVAL DATE

REGISTERED PROFESSIONAL ENGINEER HERNAN PEREZ No. 60993 Exp. 12-31-10 CIVIL STATE OF CALIFORNIA

The State of California or its officers or agents shall not be responsible for the accuracy or completeness of electronic copies of this plan sheet.

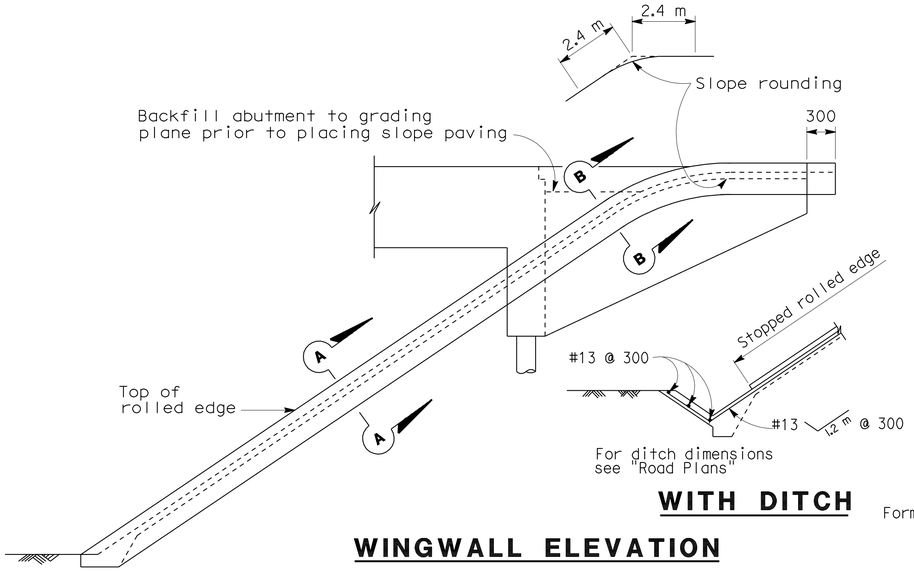

WITH DITCH

WINGWALL ELEVATION

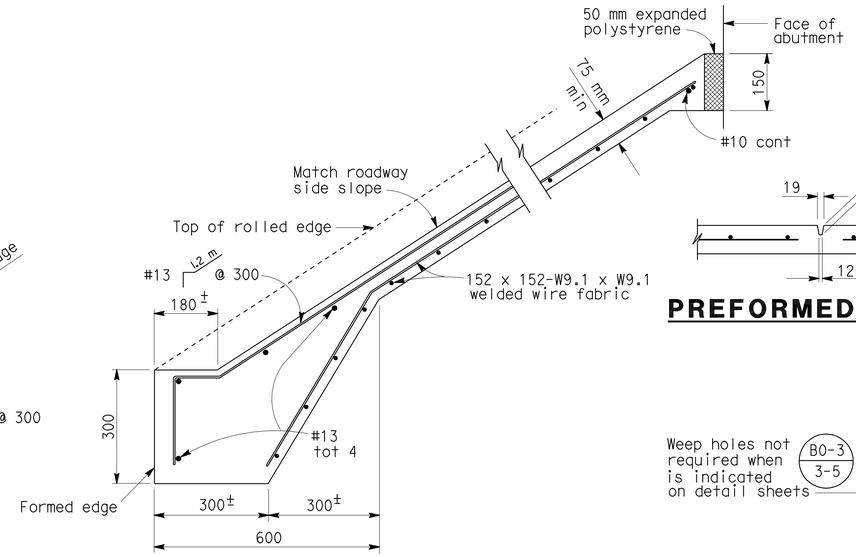

TYPICAL SECTION - CONCRETE PAVING

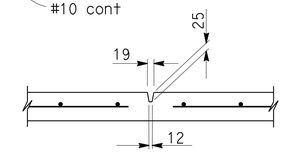

PREFORMED GROOVE

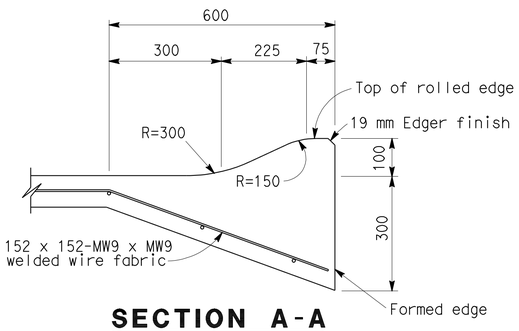

SECTION A-A

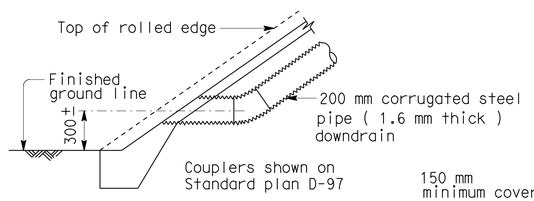

TYPICAL - NO CURB

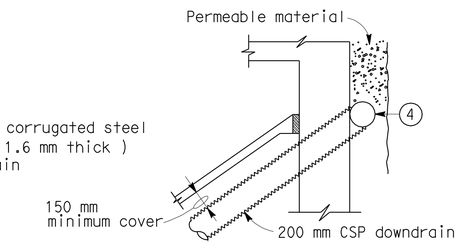

TYPICAL - DRAIN CONNECTION

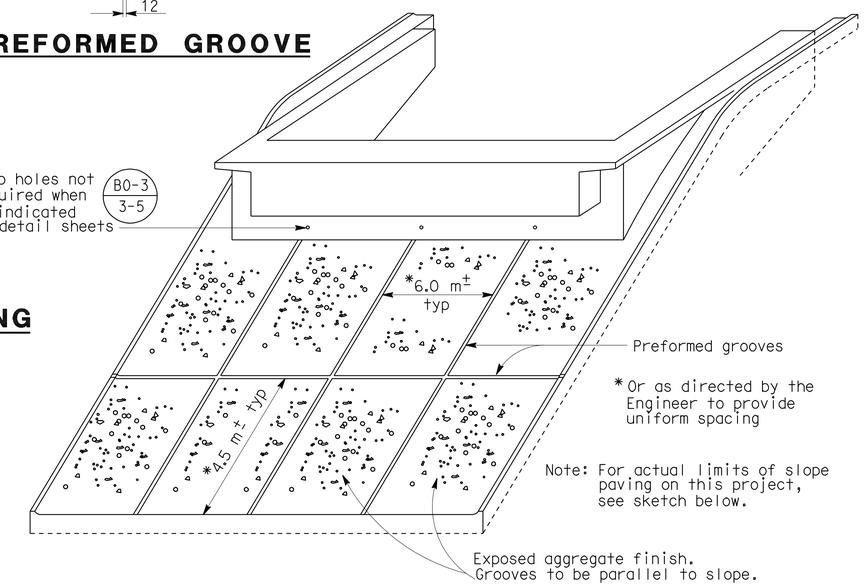

PICTORIAL VIEW OF TYPICAL INSTALLATION

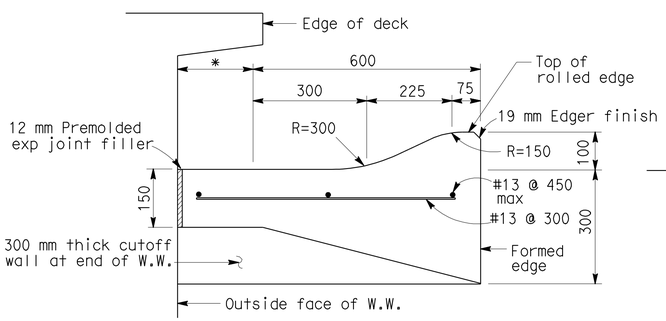

SECTION B-B

*This dimension becomes zero when edge of deck is at outside face of W.W.

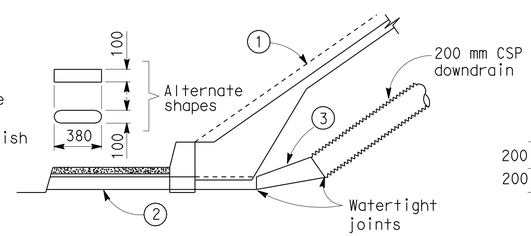

TYPICAL - WITH SIDEWALK

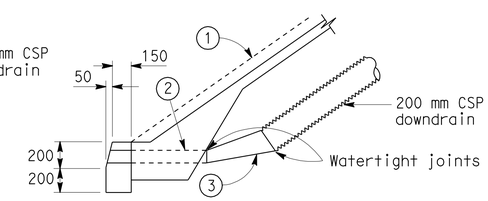

TYPICAL - WITH CURB

DRAINAGE DETAILS

Note: Drainage details are only applicable when B0-3 / 3-5 is indicated on detail sheets.

1. Top of rolled edge
2. Conduit: 1.6 mm galv corrugated steel or 2.8 mm smooth galv steel
3. Taper: 1.6 mm / 2.8 mm smooth galv steel
4. 200 mm perforated steel pipe (1.6 mm thick) underdrain behind abutment. Connect to downdrain as shown on limits of Slope Paving & Drainage layout.

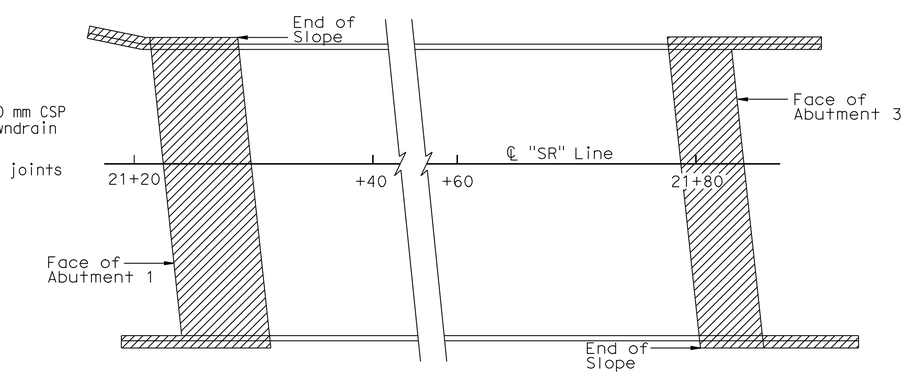

LIMITS OF SLOPE PAVING & DRAINAGE LAYOUT

Indicates Limits of Slope Paving and Drainage Layout

NO SCALE
ALL DIMENSIONS ARE IN MILLIMETERS UNLESS OTHERWISE SHOWN

STANDARD DRAWING				
RELEASE DATE 4/20/00	DESIGN	BY	CHECKED	RELEASED BY
FILE NO. xs4-210	DETAILS	BY R. YEE	CHECKED	
	SUBMITTED	BY C.W. PURKISS	DRAWING DATE 3/89	OFFICE CHIEF

DS OSD 2147A (METRIC) (REV. 2/25/97)

STATE OF CALIFORNIA DEPARTMENT OF TRANSPORTATION

DIVISION OF ENGINEERING SERVICES STRUCTURE DESIGN
DESIGN BRANCH 6

BRIDGE NO. 44-0283
KILOMETER POST 148.9

SALA ROAD OC
SLOPE PAVING-FULL SLOPE

ORIGINAL SCALE IN MILLIMETERS FOR REDUCED PLANS 0 10 20 30 40 50 60 70 80 90 100

CU 05
EA 0161E1

DISREGARD PRINTS BEARING EARLIER REVISION DATES

REVISION DATES (PRELIMINARY STAGE ONLY) 05-27-08 08-07-08 02-24-09 04-28-09 12-01-09 03-16-10 05-06-10

SHEET 16 OF 19

USERNAME => trlenard

DATE PLOTTED => 02-AUG-2010 TIME PLOTTED => 14:24

44-0283-s-slp.dgn

DIST	COUNTY	ROUTE	KILOMETER POST TOTAL PROJECT	SHEET No	TOTAL SHEETS
05	Mon	101	R146.8/159.7	1227	1402

REGISTERED CIVIL ENGINEER 05-06-10 DATE

7-26-10
PLANS APPROVAL DATE

REGISTERED PROFESSIONAL ENGINEER HERNAN PEREZ No. 60993 Exp. 12-31-10 CIVIL STATE OF CALIFORNIA

The State of California or its officers or agents shall not be responsible for the accuracy or completeness of electronic copies of this plan sheet.

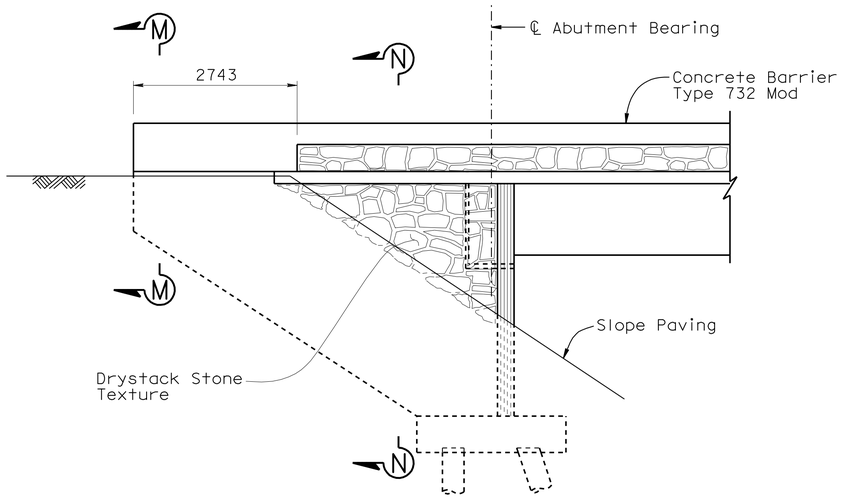

WINGWALL ELEVATION
1:50

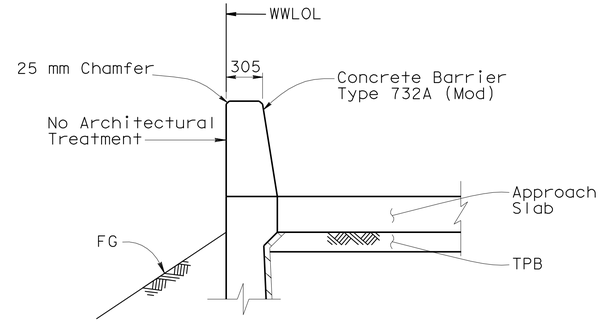

SECTION M-M
1:25

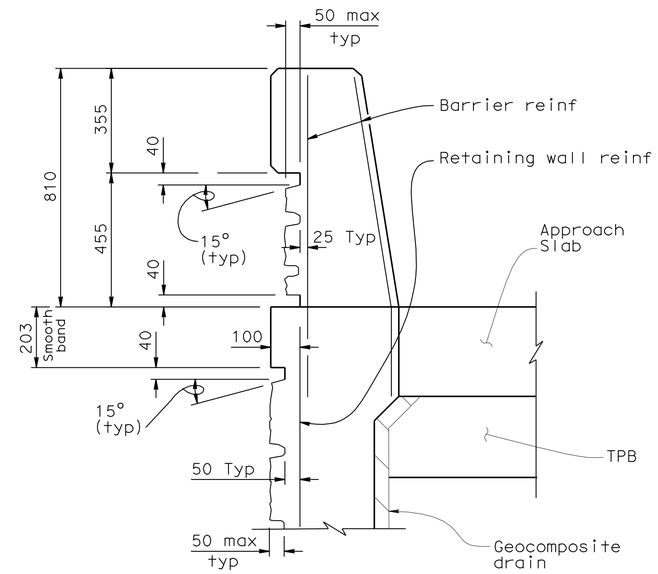

NOTE

Not all reinf shown. For reinf details see, "Abutment Details No.2" sheet

DETAIL A
1:10

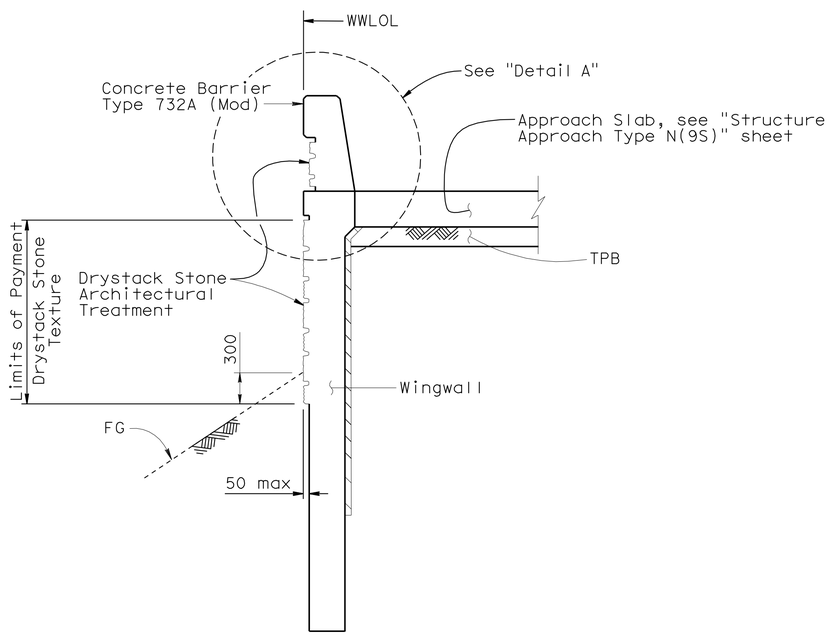

SECTION N-N
1:25

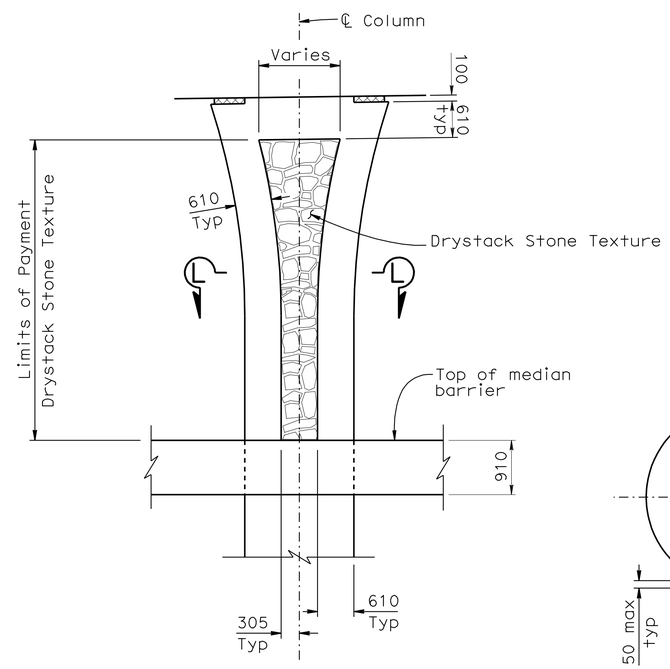

ELEVATION
1:50

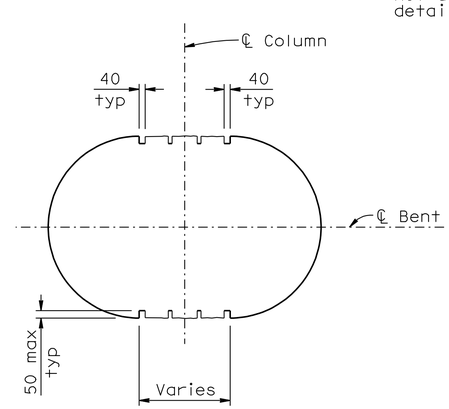

SECTION L-L
1:20

DESIGN	BY Hilario Tuazon	CHECKED Rachel Washington	
DETAILS	BY Kamal Chonkria	CHECKED Hilario Tuazon	
QUANTITIES	BY Aram Salimi	CHECKED Fayek Tannous	

STATE OF CALIFORNIA
DEPARTMENT OF TRANSPORTATION

DIVISION OF ENGINEERING SERVICES
STRUCTURE DESIGN
DESIGN BRANCH 6

BRIDGE NO. 44-0283
KILOMETER POST 148.9

SALA ROAD OC
ARCHITECTURAL TREATMENT

Caltrans Metric

ALL DIMENSIONS ARE IN MILLIMETERS UNLESS OTHERWISE SHOWN

ORIGINAL SCALE IN MILLIMETERS FOR REDUCED PLANS 0 10 20 30 40 50 60 70 80 90 100

CU 05
EA 0161E1

DISREGARD PRINTS BEARING EARLIER REVISION DATES

REVISION DATES: 05-20-08 | 07-02-08 | 08-07-08 | 02-24-09 | 4-30-09 | 08-18-09 | 12-17-09 | 05-06-10

SHEET 17 OF 19

FILE => 44-0283-y-arch01.dgn

STRUCTURES DESIGN DETAIL SHEET (METRIC) (REV.03-17-04)

USERNAME => trienard DATE PLOTTED => 02-AUG-2010 TIME PLOTTED => 14:24

DIST	COUNTY	ROUTE	KILOMETER POST TOTAL PROJECT	SHEET No	TOTAL SHEETS
05	Mon	101	R146.8/159.7	1228	1402

REGISTERED CIVIL ENGINEER 6-11-09

7-26-10
PLANS APPROVAL DATE

REGISTERED PROFESSIONAL ENGINEER Dan Appelbaum No. C50001 Exp. 6-30-11 CIVIL STATE OF CALIFORNIA

The State of California or its officers or agents shall not be responsible for the accuracy or completeness of electronic copies of this plan sheet.

BENCH MARK

SURVEY CONTROL

PM 92.17 Elev. = 36.173 (NGVD29)
Fnd IP WITH CALTRANS CONTROL PP
205.370 M Lt. ℄ PROPOSED Rte 101
Sta. 159+66.913
N 659679.693
E 1762276.654

PM 92.19 Elev. = 35.778 (NGVD29)
Fnd IP WITH YELLOW CAL DOT PP & BATHEY CAP
4.784 M Lt. ℄ PROPOSED Rte 101
Sta. 159+89.042
N 659775.289
E 1762454.379

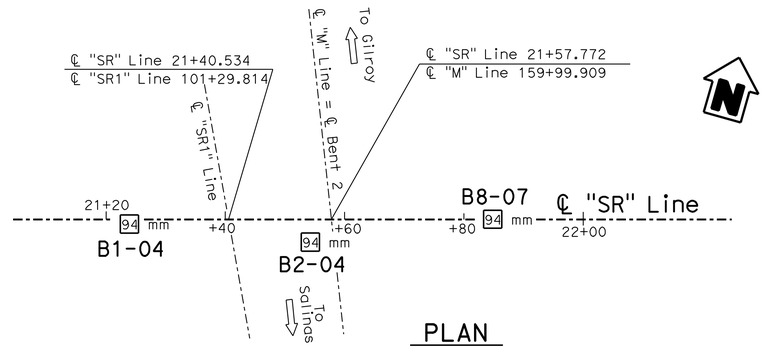

PLAN
1:500

Notes:

1. 35 mm samples were taken using a standard split barrel sampler with an inside diameter (I.D.) of 35 mm and an outside diameter (O.D.) of 51 mm.
2. A CME automatic hammer with a 63.5 kg hammer dropped 762 mm and an average efficiency of 87% was used to advance the sampler for borings B1-04 and B2-04. A Deidrich automatic hammer with an average efficiency of 80% was used to advance the sampler for boring B8-07.
3. Borings were drilled using an "HX" wireline core barrel with "HQ" drill rod, outside diameter (O.D.) of 89 mm and inside diameter (I.D.) of 78 mm.
4. qu= Unconfined compressive strength as determined by pocket penetrometer (kPa).

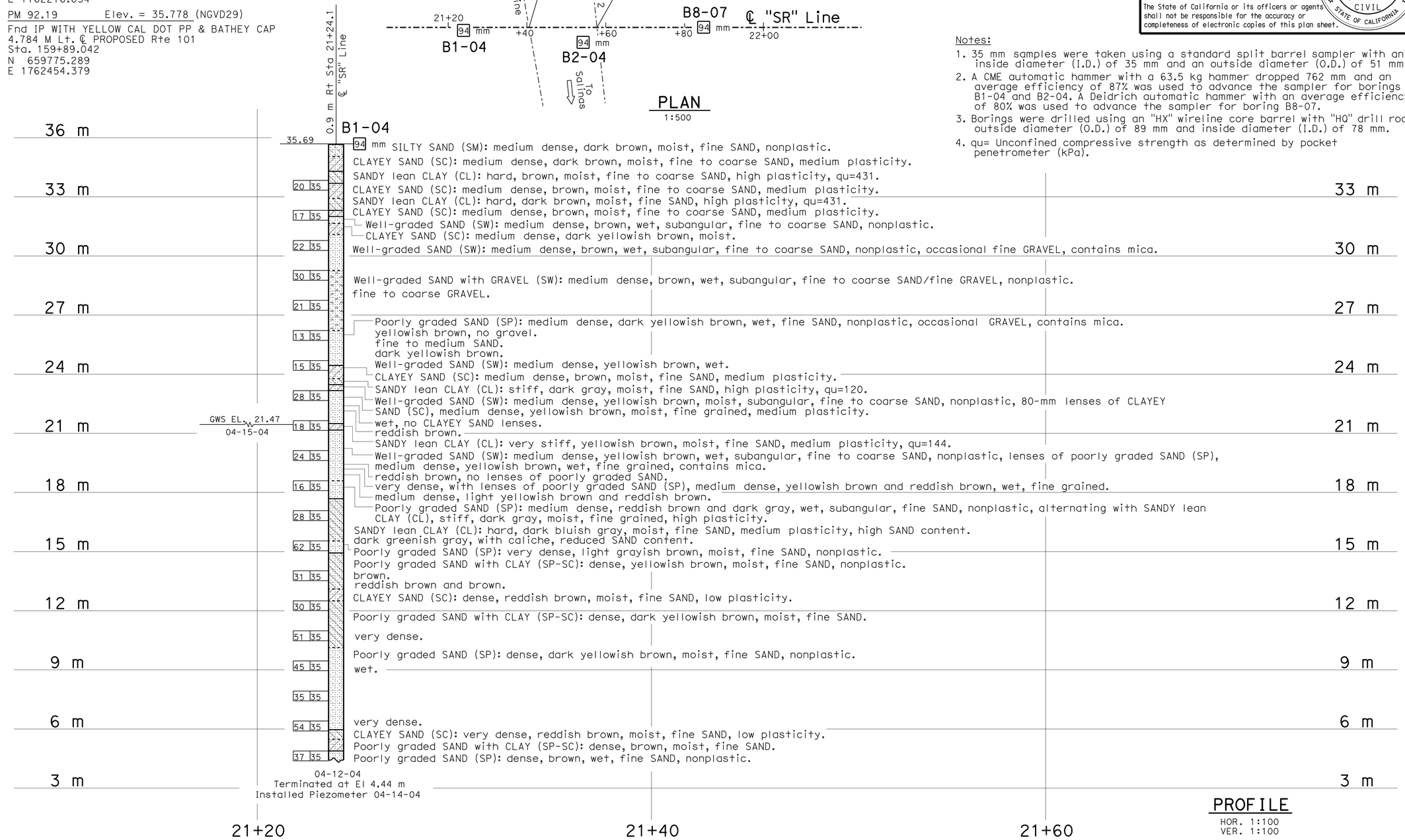

PROFILE
HOR. 1:100
VER. 1:100

LEGEND OF BORING OPERATIONS

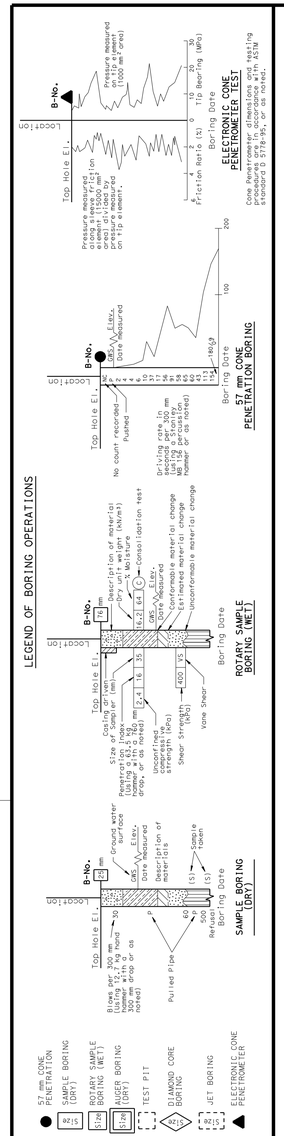

LEGEND OF EARTH MATERIALS

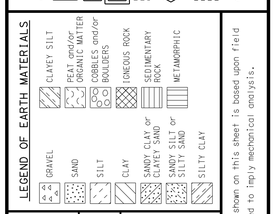

CONSISTENCY CLASSIFICATION FOR SOILS

According to the Standard Penetration Test

SPT N-Value (Blows/0.3m)	Granular	SPT N-Value (Blows/0.3m)	Cohesive
0-4	Very Loose	<2	Very Soft
5-10	Loose	2-4	Soft
11-30	Medium Dense	5-8	Firm
31-50	Dense	9-15	Stiff
>50	Very Dense	16-30	Very stiff
		>30	Hard

NOTE: Classification of earth material as shown on this sheet is based upon field inspection and is not to be construed to imply mechanical analysis.

OGS CIVIL LOG OF TEST BORINGS SHEET (METRIC) (REV. 4/04)

Caltrans Metric

ENGINEERING SERVICES	GEOTECHNICAL SERVICES
DRAWN BY	W. Tang 02/08
CHECKED BY	W. Hoon, D. Appelbaum

ALL DIMENSIONS ARE IN METERS UNLESS OTHERWISE SHOWN

FIELD INVESTIGATION BY: W. Hoon & S. von Schwind

STATE OF CALIFORNIA DEPARTMENT OF TRANSPORTATION

DIVISION OF ENGINEERING SERVICES STRUCTURE DESIGN
DESIGN BRANCH 6

CU 05
EA 0161E1

ORIGINAL SCALE IN MILLIMETERS FOR REDUCED PLANS 0 10 20 30 40 50 60 70 80 90 100

BRIDGE NO. 44-0283
KILOMETER POST 148.9

SALA ROAD OC
LOG OF TEST BORINGS 1 OF 2

DISREGARD PRINTS BEARING EARLIER REVISION DATES

REVISION DATES (PRELIMINARY STAGE ONLY) 02-19-08 06-05-09 06-09-09 06-11-09

SHEET 18 OF 19

FILE => 44-0283-z-lotb1of2.dgn

USERNAME => friehard DATE PLOTTED => 02-AUG-2010 TIME PLOTTED => 14:25

DIST	COUNTY	ROUTE	KILOMETER POST TOTAL PROJECT	SHEET No	TOTAL SHEETS
05	Mon	101	R146.8/159.7	1229	1402

REGISTERED CIVIL ENGINEER 6-11-09

7-26-10
PLANS APPROVAL DATE

REGISTERED PROFESSIONAL ENGINEER Dan Appelbaum No. C50001 Exp. 6-30-11 CIVIL STATE OF CALIFORNIA

The State of California or its officers or agents shall not be responsible for the accuracy or completeness of electronic copies of this plan sheet.

FOR PLAN VIEW, SEE
"LOG OF TEST BORINGS" 1 OF 2

LEGEND OF BORING OPERATIONS

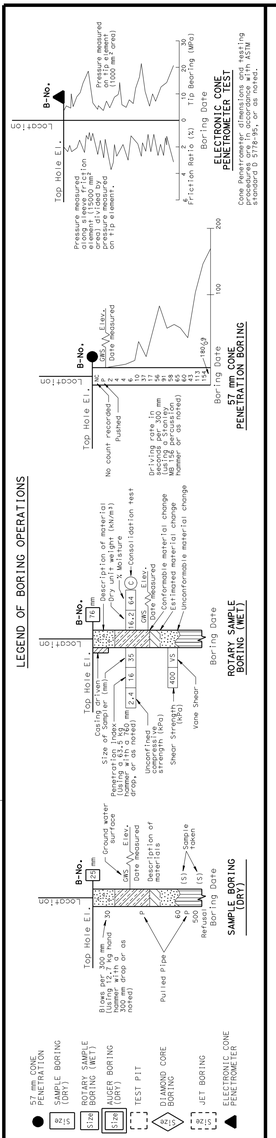

LEGEND OF EARTH MATERIALS

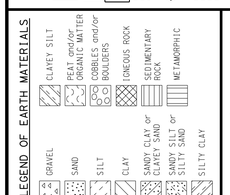

CONSISTENCY CLASSIFICATION FOR SOILS

According to the Standard Penetration Test

SPT N-Value (Blows/0.3m)	Granular	SPT N-Value (Blows/0.3m)	Cohesive
0-4	Very Loose	<2	Very Soft
5-10	Loose	2-4	Soft
11-30	Medium Dense	5-8	Firm
31-50	Dense	9-15	Stiff
>50	Very Dense	16-30	Very stiff
		>30	Hard

NOTE: Classification of earth material as shown on this sheet is based upon field inspection and is not to be construed to imply mechanical analysis.

OGS CIVIL LOG OF TEST BORINGS SHEET (METRIC) (REV. 4/04)

Caltrans Metric

ENGINEERING SERVICES	GEOTECHNICAL SERVICES
DRAWN BY	W. Tang 02/08
CHECKED BY	W. Hoon

FIELD INVESTIGATION BY: W. Hoon , S. von Schwind

STATE OF CALIFORNIA DEPARTMENT OF TRANSPORTATION

DIVISION OF ENGINEERING SERVICES STRUCTURE DESIGN
DESIGN BRANCH 6

BRIDGE NO. 44-0283
KILOMETER POST 148.9

SALA ROAD OC
LOG OF TEST BORINGS 2 OF 2

ALL DIMENSIONS ARE IN METERS UNLESS OTHERWISE SHOWN

ORIGINAL SCALE IN MILLIMETERS FOR REDUCED PLANS 0 10 20 30 40 50 60 70 80 90 100

CU 05
EA 0161E1

DISREGARD PRINTS BEARING EARLIER REVISION DATES

REVISION DATES (PRELIMINARY STAGE ONLY) 02-19-08 06-05-09 06-11-09

SHEET 19 OF 19

FILE => 44-0283-z-1otb2of2.dgn

USERNAME => trrenford DATE PLOTTED => 02-AUG-2010 TIME PLOTTED => 14:25

DIST	COUNTY	ROUTE	KILOMETER POST TOTAL PROJECT	SHEET No	TOTAL SHEETS
05	Mon	101	R146.8/159.7	1230	1402

Hernan Perez 05-06-10
REGISTERED CIVIL ENGINEER DATE

7-26-10
PLANS APPROVAL DATE

REGISTERED PROFESSIONAL ENGINEER HERNAN PEREZ No. 60993 Exp. 12-31-10 CIVIL STATE OF CALIFORNIA

The State of California or its officers or agents shall not be responsible for the accuracy or completeness of electronic copies of this plan sheet.

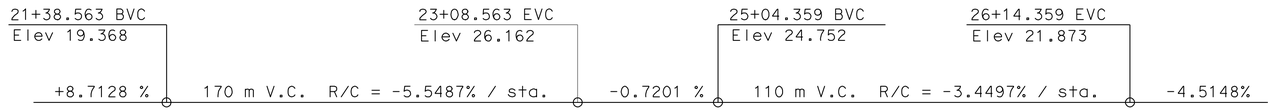

PROFILE GRADE
No Scale

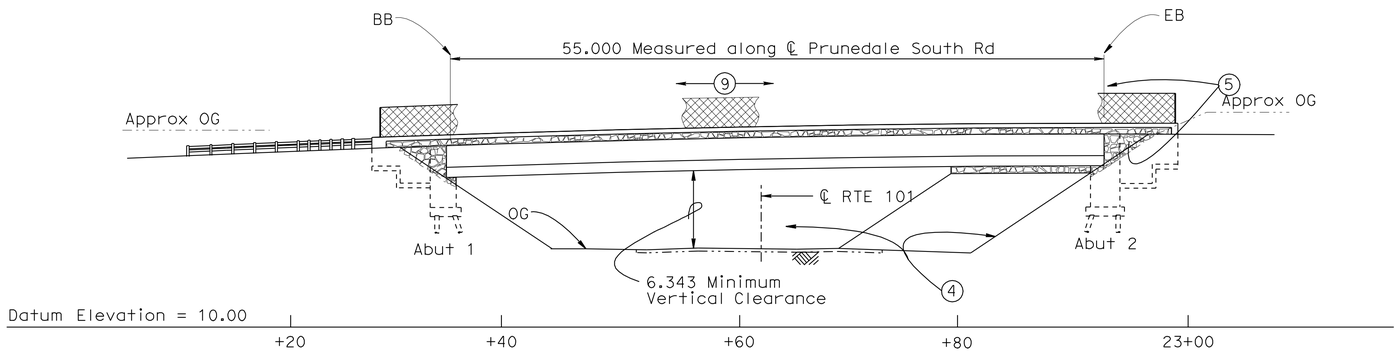

ELEVATION
1:250

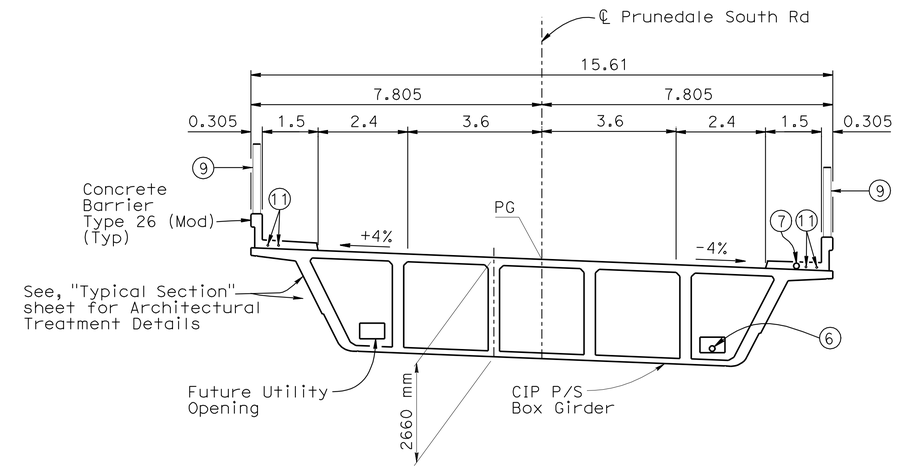

TYPICAL SECTION
1:80

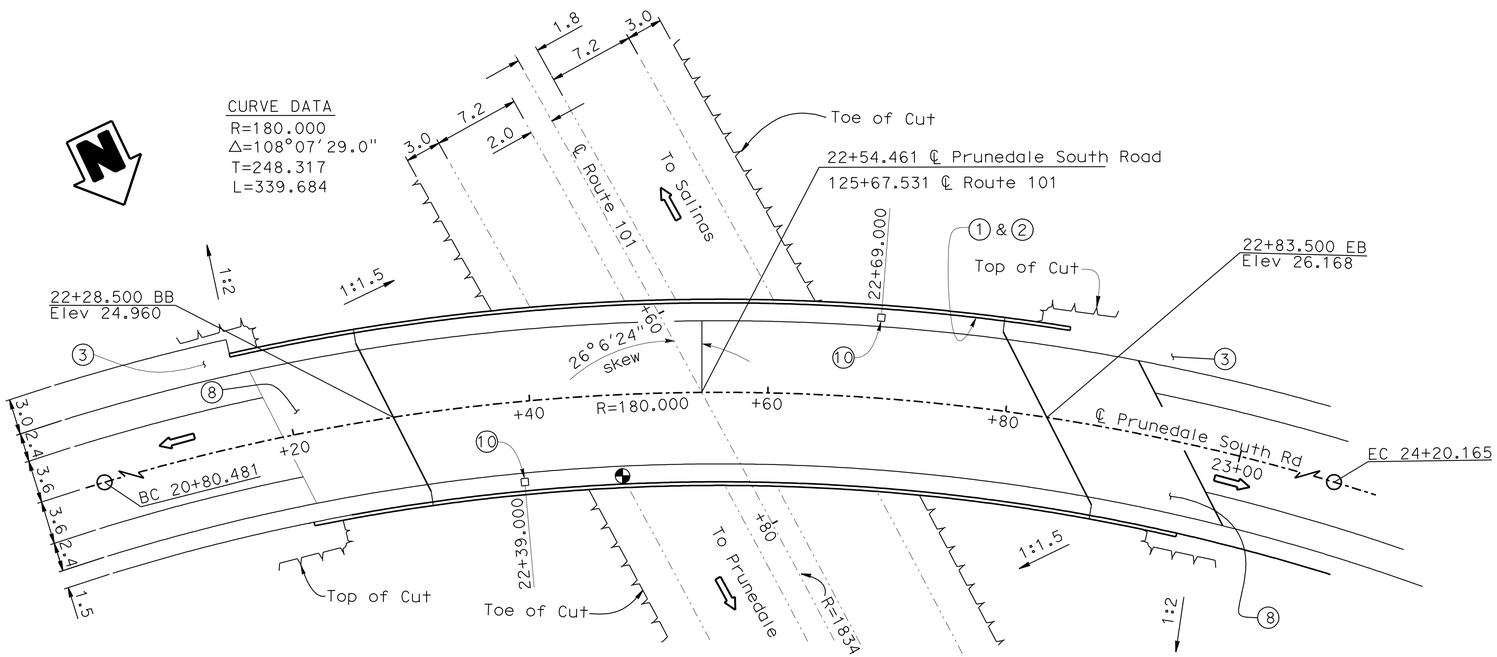

PLAN
1:250

NOTES
1. Paint "Br. No. 44-0284"
2. Paint "PRUNEDALE SOUTH ROAD OC"
3. Sidewalk, see "Road Plans"
4. Slope Paving
5. Architectural Treatment.
6. 75 mm ø Water Supply Line NPS3
7. 75 mm ø Sprinkler Control Conduit
8. Structure Approach Type N(9S)
9. Chain Link Railing (Type 7, Black Vinyl-Coated)
10. No. 5 Pull Box on Sidewalk, see "ELECTRICAL PLANS"
11. 2-50 mm ø conduits, see "ELECTRICAL PLANS"

LEGEND
- Indicates Minimum Vertical Clearance
- Indicates Existing Highway or OG

For "Quantities", see "Deck Contours" sheet.
For "General Notes" and "Index to Plans", see "Index to Pans" sheet

Caltrans Metric

Fritz Hoffman
DESIGN ENGINEER

	BY	CHECKED
DESIGN	Prakarn Paksaichol	Ryan Odell
DETAILS	R.Martinez\G.Zweier	Ryan Odell
QUANTITIES	Ryan Odell	Ae Tern

LOAD & RESISTANCE FACTOR DESIGN — LIVE LOADING: HL93 W/"LOW-BOY"; PERMIT DESIGN VEHICLE

	BY	CHECKED
LAYOUT	Roelina Martinez	H. Perez
SPECIFICATIONS	Sirisha Nelapatla	PLANS AND SPECS COMPARED Sirisha Nelapatla

STATE OF CALIFORNIA
DEPARTMENT OF TRANSPORTATION

DIVISION OF ENGINEERING SERVICES
STRUCTURE DESIGN
DESIGN BRANCH 6

BRIDGE NO. 44-0284
KILOMETER POST 151.4

PRUNEDALE SOUTH ROAD OC
GENERAL PLAN

ALL DIMENSIONS ARE IN METERS UNLESS OTHERWISE SHOWN

ORIGINAL SCALE IN MILLIMETERS FOR REDUCED PLANS 0 10 20 30 40 50 60 70 80 90 100

CU 05
EA 0161E1

DISREGARD PRINTS BEARING EARLIER REVISION DATES

REVISION DATES: 11-18-05 03-13-10 05-06-10 05-11-09 05-11-09 08-11-09 12-22-09 05-06-10 08-11-09 09-11-09

SHEET 1 OF 17

FILE => 44-0284-a-gp.dgn

STRUCTURES DESIGN GENERAL PLAN SHEET (METRIC) (REV.07-24-06)

USERNAME => friehard DATE PLOTTED => 12-AUG-2010 TIME PLOTTED => 06:08

DIST	COUNTY	ROUTE	KILOMETER POST TOTAL PROJECT	SHEET No	TOTAL SHEETS
05	Mon	101	R146.8/159.7	1231	1402

REGISTERED CIVIL ENGINEER 05-06-10 DATE

7-26-10
PLANS APPROVAL DATE

REGISTERED PROFESSIONAL ENGINEER HERNAN PEREZ No. 60993 Exp. 12-31-10 CIVIL STATE OF CALIFORNIA

The State of California or its officers or agents shall not be responsible for the accuracy or completeness of electronic copies of this plan sheet.

INDEX TO PLANS

SHEET NO.	SHEET TITLE
1	GENERAL PLAN
2	INDEX TO PLANS
3	DECK CONTOURS
4	FOUNDATION PLAN
5	ABUTMENT NO.1 LAYOUT
6	ABUTMENT NO.2 LAYOUT
7	ABUTMENT DETAILS NO.1
8	ABUTMENT DETAILS NO.2
9	ABUTMENT DETAILS NO.3
10	TYPICAL SECTION
11	GIRDER LAYOUT
12	GIRDER REINFORCEMEN
13	STRUCTURE APPROACH TYPE N(9S)
14	STRUCTURE APPROACH DRAINAGE DETAILS
15	SLOPE PAVING - FULL SLOPE
16	ARCHITECTURAL TREATMENT
17	LOG OF TEST BORINGS 1 OF 1

STANDARD PLANS DATED JULY 2004

A10A	Abbreviations and Acronyms
A10B	Abbreviations and Acronyms
A62C	Limits of Payment for Excavation and Backfill - Bridge
B0-1	Bridge Details
B0-3	Bridge Details
B0-5	Bridge Details
B0-13	Bridge Details
B3-1	Retaining Wall Type 1 H=9700 Through 10 900 mm
B3-8	Retaining Wall Details No. 1
RSP B6-21	Joint Seals
B7-1	Box Girder Details
B7-10	Utility Opening Box Girder
RSP B8-5	Cast-In-Place Prestressed Girder Details
B11-52	Chain Link Railing Type 7
B11-54	Concrete Barrier Type 26
B14-3	Communication and Sprinkler Control Conduits (Conduit Less Than Size 103)
B14-4	Water Supply Line (Bridge) (Pipe Sizes Less Than NPS 4)
B14-5	Water Supply Line Details (Pipe Sizes Less Than NPS 4)

STANDARD PLAN SHEET NO.

DETAIL NO.

PILE DATA TABLE						
Location	Pile Type	Nominal Resistance (kN)		Design Tip Elevation (m)	Specified Tip Elevation (m)	Nominal Driving Resistance (kN)
		Compression	Tension			
Abut. 1	Class 625 Alt. W	1220	0	5.2(a), 7.2(c)	5.2	1220
Abut. 2	Class 625 Alt. W	1200	0	5.2(a), 9.2(c)	5.2	1200

Notes:
1) Design tip elevations for Abutments are controlled by: (a) Compression, (c) Settlement

2) The specified tip elevation shall not be raised above the design tip elevations for tolerable settlement.

GENERAL NOTES
LOAD AND RESISTANCE FACTOR DESIGN
Super Structure
with LOAD FACTOR DESIGN
Substructure

DESIGN: AASHTO LRFD Design Specifications, 3rd Edition with 2005 and 2006 Interims and the Caltrans Admendments v3.06.01; except that abutments, deep foundations, earth retaining systems, bridge details taken from Standard Plans July 2004 and XS Sheets are designed using Caltrans Bridge Design Specifications LFD Version April 2000 (1996 AASHTO with Revisions by Caltrans)

SEISMIC DESIGN: Caltrans Seismic Design Criteria (SDC), Version 1.4, June 2006

DEAD LOAD: Includes 1675 Pa for future wearing surface

LIVE LOAD: HL-93 with "low-boy" and Permit Design Load

SEISMIC LOAD: See "Acceleration Response Spectrum"

REINFORCED CONCRETE: f_y = 420 MPa
f'_c = 25 MPa (except as shown or specified)
n = 8

REINFORCED CONCRETE: See "Prestressing Notes" on " Typical Section" sheet

STRUCTURAL STEEL: Steel Pipe Piles - ASTM A252M; Grade 3
f_y = 310 MPa
f_u = 455 MPa

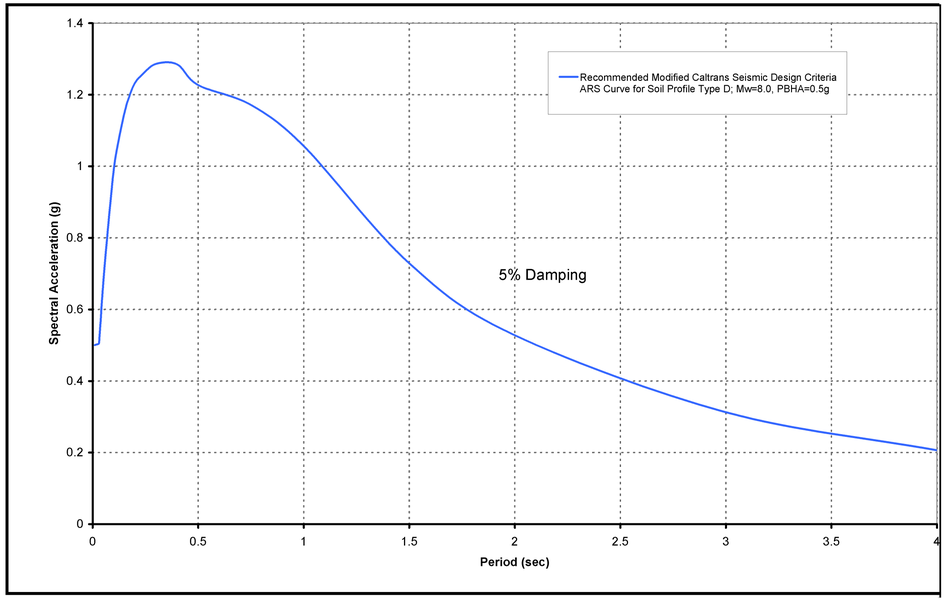

ACCELERATION RESPONSE SPECTRUM
NO SCALE

Caltrans Metric

ALL DIMENSIONS ARE IN MILLIMETERS UNLESS OTHERWISE SHOWN

ORIGINAL SCALE IN MILLIMETERS FOR REDUCED PLANS 0 10 20 30 40 50 60 70 80 90 100

	BY	CHECKED
DESIGN	Prakarn Paksaichol	Ryan Odell
DETAILS	P. von Savoye	Ryan Odell
QUANTITIES	Ryan Odell	Ae Tern

STATE OF CALIFORNIA
DEPARTMENT OF TRANSPORTATION

DIVISION OF ENGINEERING SERVICES
STRUCTURE DESIGN
DESIGN BRANCH 6

CU 05
EA 0161E1

BRIDGE NO. 44-0284
KILOMETER POST 151.4

PRUNEDALE SOUTH ROAD OC
INDEX TO PLANS

DISREGARD PRINTS BEARING EARLIER REVISION DATES

REVISION DATES: 04-24-07 03-09-10 12-14-09 12-16-09 05-06-10 12-23-08 02-16-09 2-28-09 04-29-09 08-24-09

SHEET 2 OF 17

FILE => 44-0284-b-itp.dgn

STRUCTURES DESIGN DETAIL SHEET (METRIC) (REV.03-17-04)

USERNAME => friehard DATE PLOTTED => 03-AUG-2010 TIME PLOTTED => 06:16

DIST	COUNTY	ROUTE	KILOMETER POST TOTAL PROJECT	SHEET No	TOTAL SHEETS
05	Mon	101	R146.8/159.7	1232	1402

REGISTERED CIVIL ENGINEER — DATE 05-06-10

7-26-10
PLANS APPROVAL DATE

REGISTERED PROFESSIONAL ENGINEER — HERNAN PEREZ — No. 60993 — Exp. 12-31-10 — CIVIL — STATE OF CALIFORNIA

The State of California or its officers or agents shall not be responsible for the accuracy or completeness of electronic copies of this plan sheet.

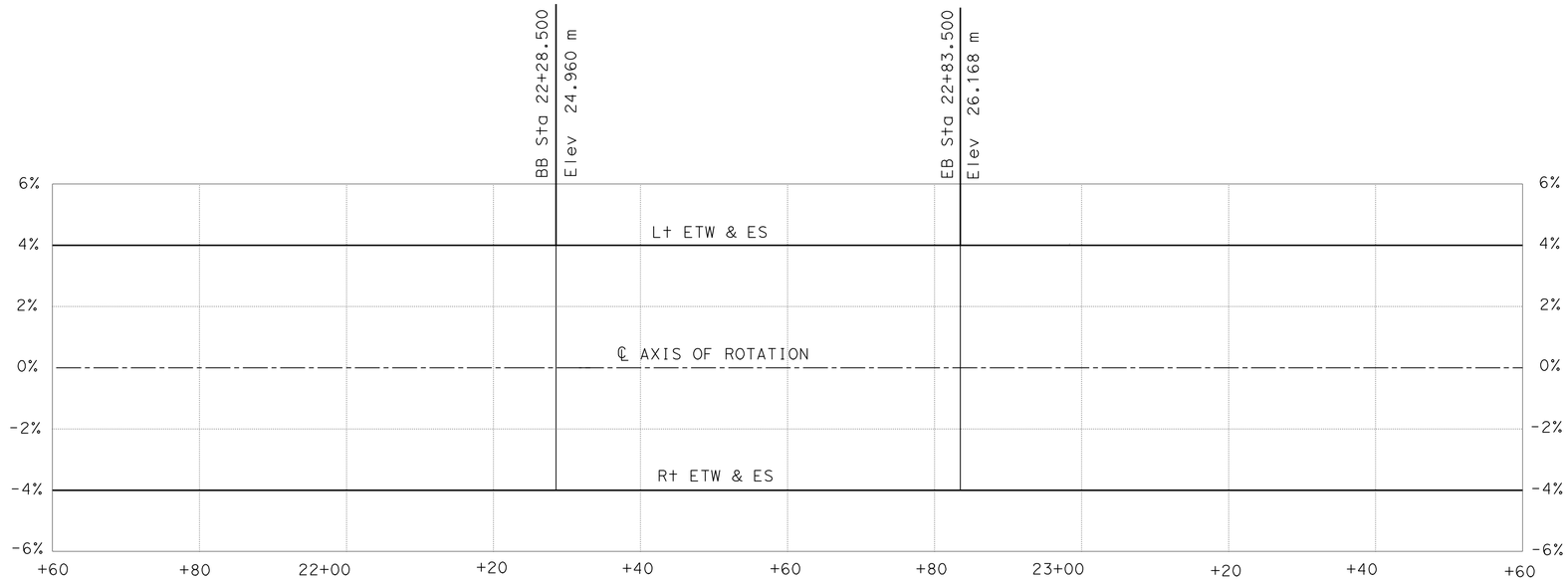

SUPERELEVATION DIAGRAM

NO SCALE

QUANTITIES

STRUCTURE EXCAVATION (BRIDGE)	505	m^3
STRUCTURE BACKFILL (BRIDGE)	260	m^3
NPS 3 SUPPLY LINE (BRIDGE)	77	m
FURNISH PILING (CLASS 625) (ALTERNATIVE W)	821	m
DRIVE PILE (CLASS 625) (ALTERNATIVE W)	54	EA
PRESTRESSING CAST-IN-PLACE CONCRETE	LUMP	SUM
STRUCTURAL CONCRETE, BRIDGE FOOTING	91	m^3
STRUCTURAL CONCRETE, BRIDGE	775	m^3
STRUCTURAL CONCRETE, APPROACH SLAB (TYPE N)	97	m^3
ARCHITECTURAL TREATMENT (DRYSTACK STONE TEXTURE)	166	m^2
JOINT SEAL (MR 50 MM)	36	m
BAR REINFORCING STEEL (BRIDGE)	79 500	kg
SLOPE PAVING (CONCRETE) (EXPOSED AGGREGATE)	48	m^3
CHAIN LINK RAILING (TYPE 7) (BLACK VINYL-COATED)	136	m
CONCRETE BARRIER (TYPE 26 MODIFIED)	136	m
SPRINKLER CONTROL CONDUIT (BRIDGE)	75	m
WELDED STEEL PIPE CASING (BRIDGE)	24	m

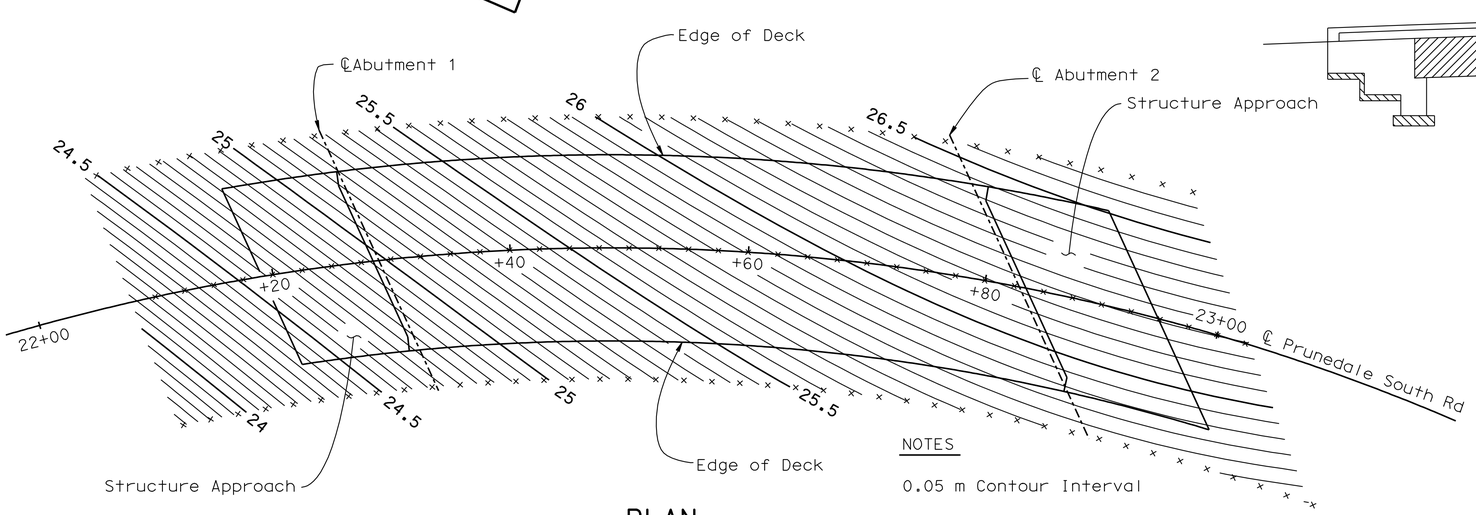

PLAN

1:250

NOTES

0.05 m Contour Interval

- 2.5 Station Interval

Contours do not include Camber

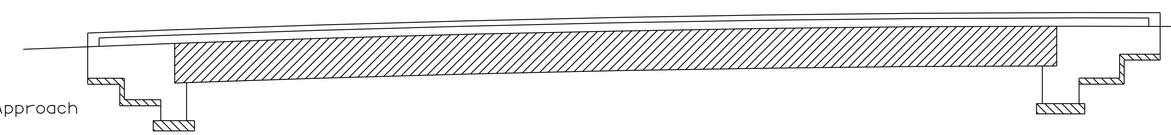

CONCRETE STRENGTH AND TYPE LIMITS

NO SCALE

- Structure Concrete, Bridge Footing
- Structure Concrete, Bridge
- Structure Concrete, Bridge (42 MPa @ 28 Days)

Caltrans Metric

	BY	CHECKED
DESIGN	Prakarn Paksaichol	Ryan Odell
DETAILS	George Zweier	Ryan Odell
QUANTITIES	Ryan Odell	Ae Tern

STATE OF CALIFORNIA
DEPARTMENT OF TRANSPORTATION

DIVISION OF ENGINEERING SERVICES
STRUCTURE DESIGN
DESIGN BRANCH 6

BRIDGE NO. 44-0284
KILOMETER POST 151.4

PRUNEDALE SOUTH ROAD OC
DECK CONTOURS

ALL DIMENSIONS ARE IN MILLIMETERS UNLESS OTHERWISE SHOWN

ORIGINAL SCALE IN MILLIMETERS FOR REDUCED PLANS 0 10 20 30 40 50 60 70 80 90 100

CU 05
EA 0161E1

DISREGARD PRINTS BEARING EARLIER REVISION DATES

REVISION DATES: 03-12-07 10-30-07 06-25-08 09-08-08 10-03-08 12-23-08 02-16-09 08-24-09 05-06-10

SHEET 3 OF 17

FILE => 44-0284-c-dc.dgn

STRUCTURES DESIGN DETAIL SHEET (METRIC) (REV.03-17-04)

USERNAME => trlenard DATE PLOTTED => 12-AUG-2010 TIME PLOTTED => 06:08

DIST	COUNTY	ROUTE	KILOMETER POST TOTAL PROJECT	SHEET No	TOTAL SHEETS
05	Mon	101	R146.8/159.7	1233	1402

Caltrans Metric

REGISTERED CIVIL ENGINEER — DATE 05-06-10

7-26-10
PLANS APPROVAL DATE

REGISTERED PROFESSIONAL ENGINEER — HERNAN PEREZ — No. 60993 — Exp. 12-31-10 — CIVIL — STATE OF CALIFORNIA

The State of California or its officers or agents shall not be responsible for the accuracy or completeness of electronic copies of this plan sheet.

CURVE DATA

NO	R	Δ	T	L
A	1834.423	11°25'22"	183.469	365.721
B	180.000	108°7'29"	248.317	339.684

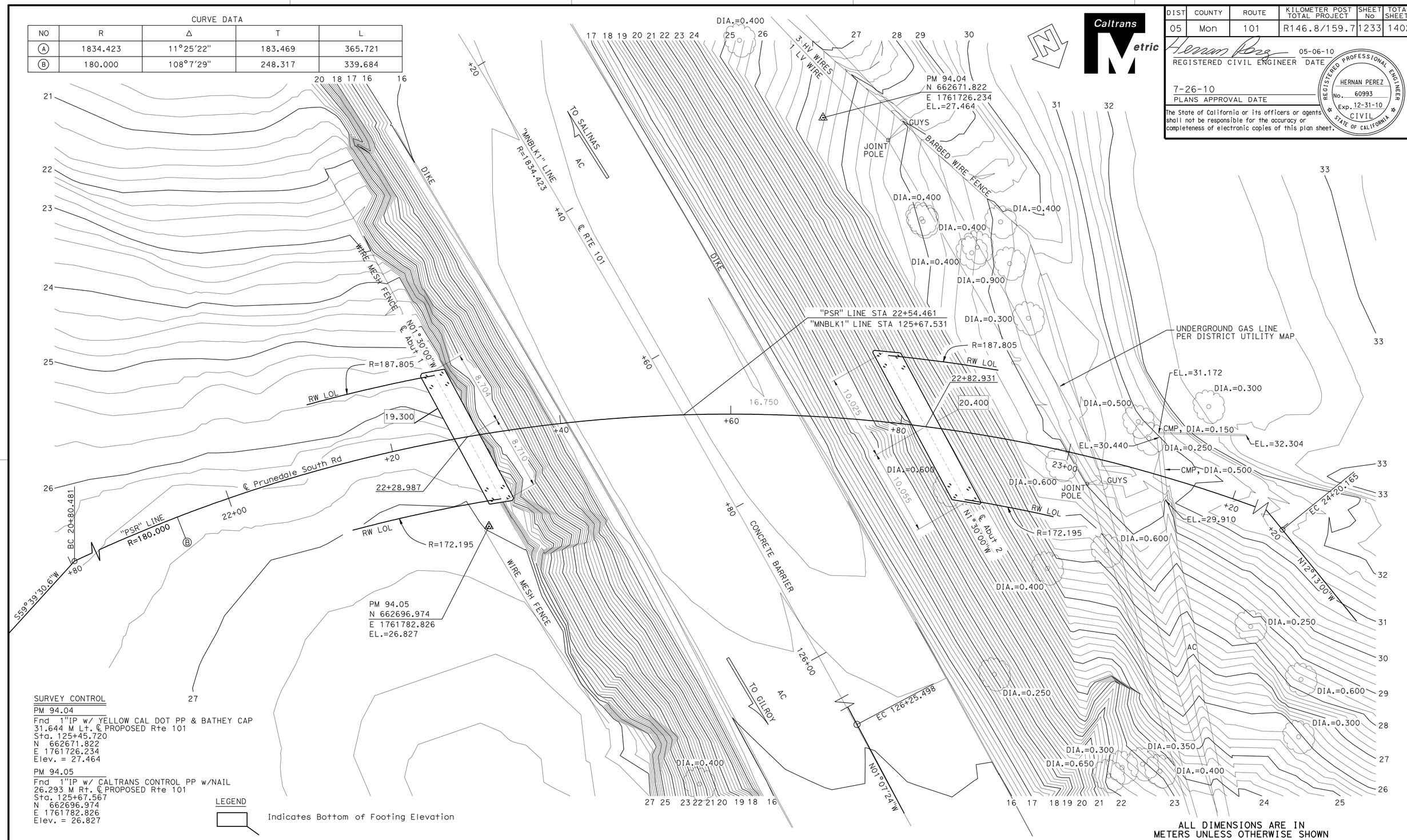

SURVEY CONTROL

PM 94.04
Fnd 1"IP w/ YELLOW CAL DOT PP & BATHEY CAP
31.644 M Lt. ℄ PROPOSED Rte 101
Sta. 125+45.720
N 662671.822
E 1761726.234
Elev. = 27.464

PM 94.05
Fnd 1"IP w/ CALTRANS CONTROL PP w/NAIL
26.293 M Rt. ℄ PROPOSED Rte 101
Sta. 125+67.567
N 662696.974
E 1761782.826
Elev. = 27.826

LEGEND

Indicates Bottom of Footing Elevation

ALL DIMENSIONS ARE IN METERS UNLESS OTHERWISE SHOWN

PRELIMINARY INVESTIGATION SECTION

SCALE 1:200	VERT. DATUM NGVD29	PHOTOGRAMMETRY AS OF:		
	HORZ. DATUM NAD83 (1991.35)	SURVEYED	BY DISTRICT/E.LOPEZ	CHECKED BY E.LOPEZ 09/2005
ALIGNMENT TIES DIST. TRAVERSE SHEET		DRAFTED	BY T.ZOLNIKOVA 01/2006	CHECKED BY

	BY	CHECKED
DESIGN	Prakarn Paksaichol	Ryan Odell
DETAILS	George Zweier	Ryan Odell
QUANTITIES	Ryan Odell	Ae Tern

STATE OF CALIFORNIA
DEPARTMENT OF TRANSPORTATION

DIVISION OF ENGINEERING SERVICES
STRUCTURE DESIGN
DESIGN BRANCH 6

CU 05
EA 0161E1

BRIDGE NO. 44-0284
KILOMETER POST 151.4

PRUNEDALE SOUTH ROAD OC
FOUNDATION PLAN

STRUCTURES FOUNDATION PLAN SHEET (METRIC) (REV.10-27-05)

ORIGINAL SCALE IN MILLIMETERS FOR REDUCED PLANS 0 10 20 30 40 50 60 70 80 90 100

DISREGARD PRINTS BEARING EARLIER REVISION DATES

REVISION DATES (PRELIMINARY STAGE ONLY): 01-12-06 02-16-09 08-24-09 09-29-09 05-06-10 07-18-07 07-26-07 08-28-08 10-03-08 12-23-08

SHEET 4 OF 17

FILE => 44-0284-e-fp101.dgn

USERNAME => trlenard DATE PLOTTED => 12-AUG-2010 TIME PLOTTED => 06:08

DIST	COUNTY	ROUTE	KILOMETER POST TOTAL PROJECT	SHEET No	TOTAL SHEETS
05	Mon	101	R146.8/159.7	1234	1402

REGISTERED CIVIL ENGINEER 05-06-10 DATE

7-26-10
PLANS APPROVAL DATE

REGISTERED PROFESSIONAL ENGINEER HERNAN PEREZ No. 60993 Exp. 12-31-10 CIVIL STATE OF CALIFORNIA

The State of California or its officers or agents shall not be responsible for the accuracy or completeness of electronic copies of this plan sheet.

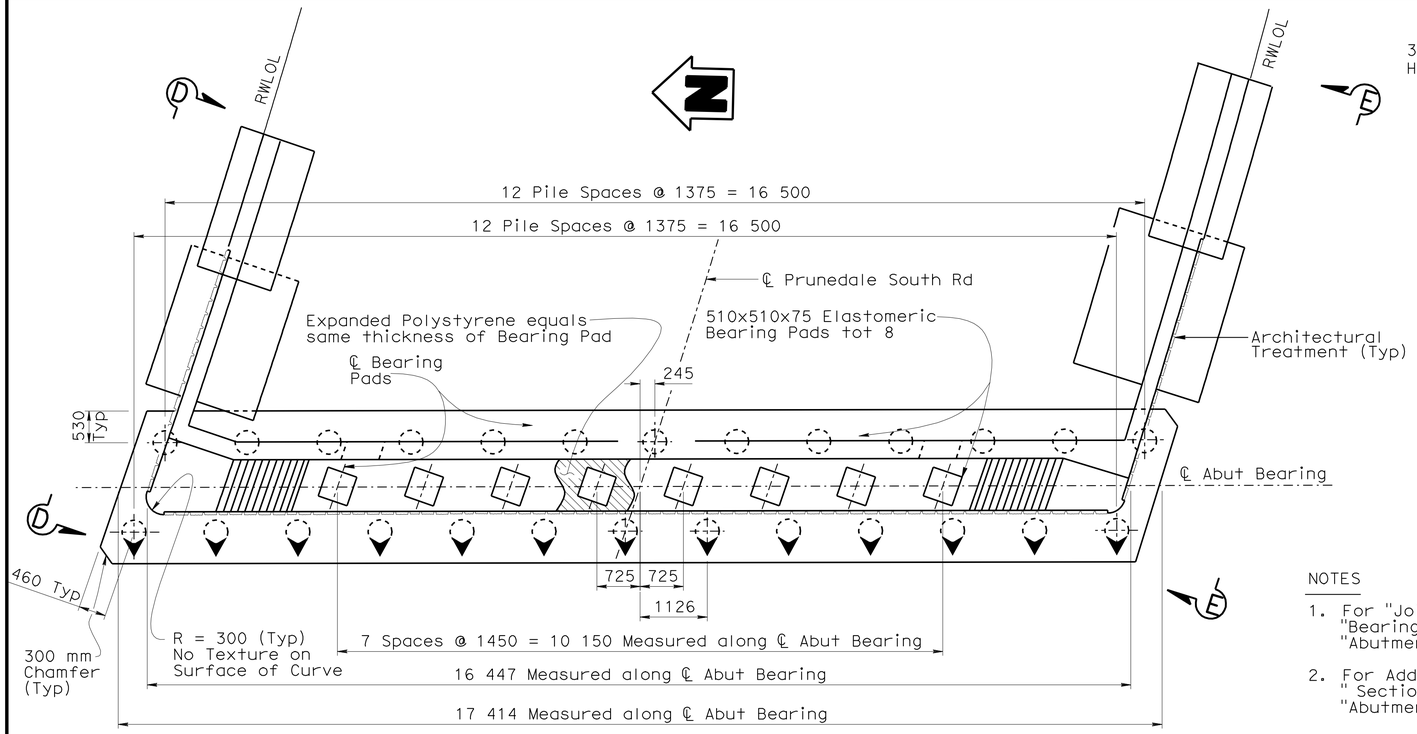

PLAN
1:50

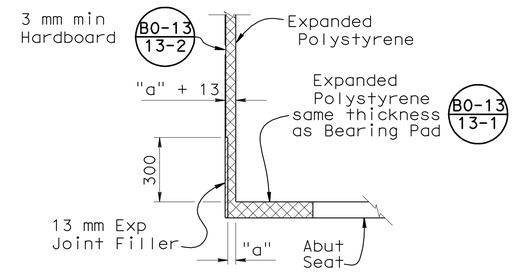

DETAIL 'E'
NO SCALE

NOTES

1. For "Joint Protection Detail" and "Bearing Pad Detail" see, "Abutment No.2 Layout" sheet
2. For Additional Details of Retaining Walls, see " Section D-D" and "Section E-E" on "Abutment Details No. 1" sheet

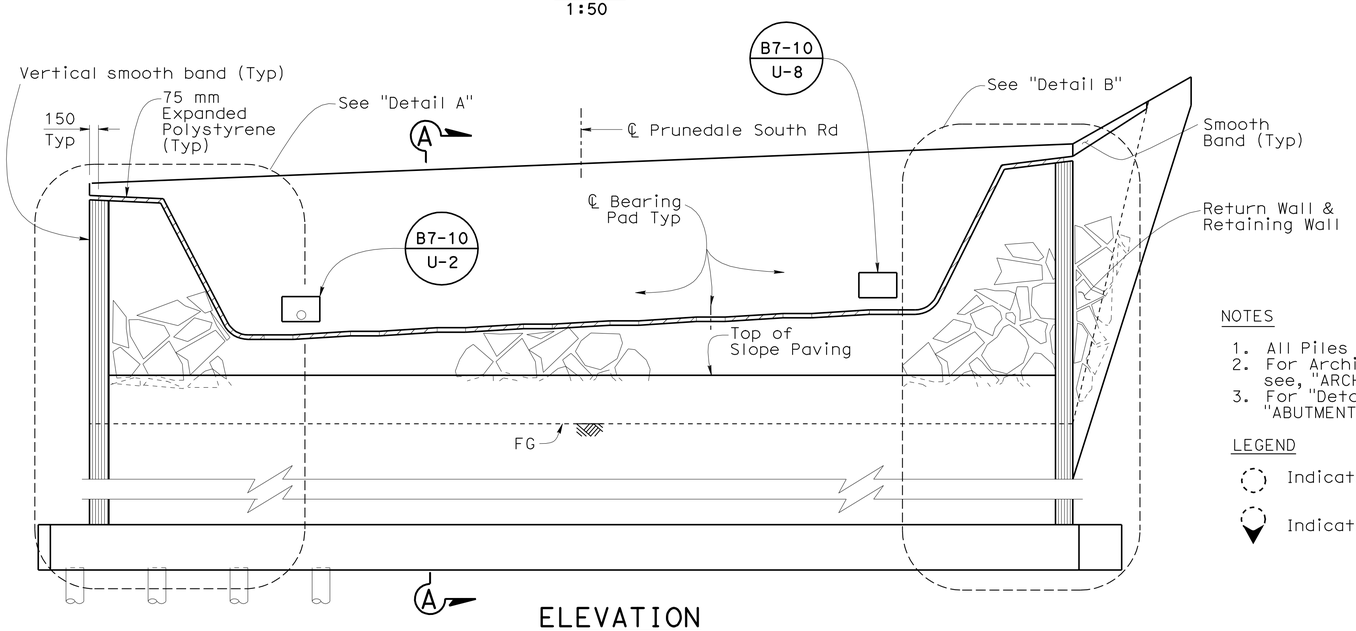

ELEVATION
1:50

NOTES

1. All Piles not shown.
2. For Architectural Treatment Details, see, "ARCHITECTURAL TREATMENT" sheet.
3. For "Detail A" and "Detail B", see "ABUTMENT DETAILS NO.2" sheet.

LEGEND

Indicates Vertical Pile

Indicates Battered Pile

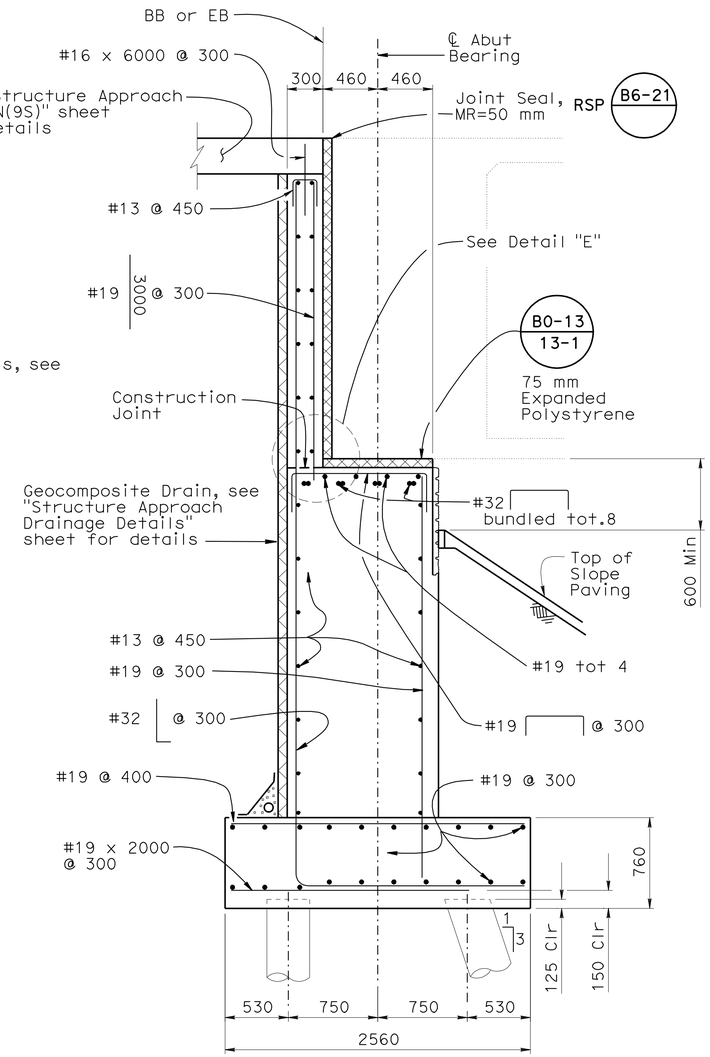

SECTION A-A
1:25

DESIGN	BY Prakarn Paksaichol	CHECKED Ryan Odell	
DETAILS	BY P.Savoye\G.Zweier	CHECKED Ryan Odell	
QUANTITIES	BY Ryan Odell	CHECKED Ae Tern	

STATE OF CALIFORNIA DEPARTMENT OF TRANSPORTATION

DIVISION OF ENGINEERING SERVICES STRUCTURE DESIGN
DESIGN BRANCH 6

BRIDGE NO. 44-0284
KILOMETER POST 151.4

PRUNEDALE SOUTH ROAD OC
ABUTMENT NO.1 LAYOUT

Caltrans Metric

ALL DIMENSIONS ARE IN MILLIMETERS UNLESS OTHERWISE SHOWN

ORIGINAL SCALE IN MILLIMETERS FOR REDUCED PLANS 0 10 20 30 40 50 60 70 80 90 100

CU 05
EA 0161E1

DISREGARD PRINTS BEARING EARLIER REVISION DATES

REVISION DATES: 02-14-08 05-06-10 12-22-08 2-16-09 08-24-09 8-26-09 9-02-09 9-03-09 09-29-09 03-11-10

SHEET 5 OF 17

FILE => 44-0284-f-abtlyt01.dgn

STRUCTURES DESIGN DETAIL SHEET (METRIC) (REV.03-17-04)

USERNAME => trlenard DATE PLOTTED => 03-AUG-2010 TIME PLOTTED => 06:17

DIST	COUNTY	ROUTE	KILOMETER POST TOTAL PROJECT	SHEET No	TOTAL SHEETS
05	Mon	101	R146.8/159.7	1235	1402

REGISTERED CIVIL ENGINEER 05-06-10 DATE

7-26-10
PLANS APPROVAL DATE

REGISTERED PROFESSIONAL ENGINEER HERNAN PEREZ No. 60993 Exp. 12-31-10 CIVIL STATE OF CALIFORNIA

The State of California or its officers or agents shall not be responsible for the accuracy or completeness of electronic copies of this plan sheet.

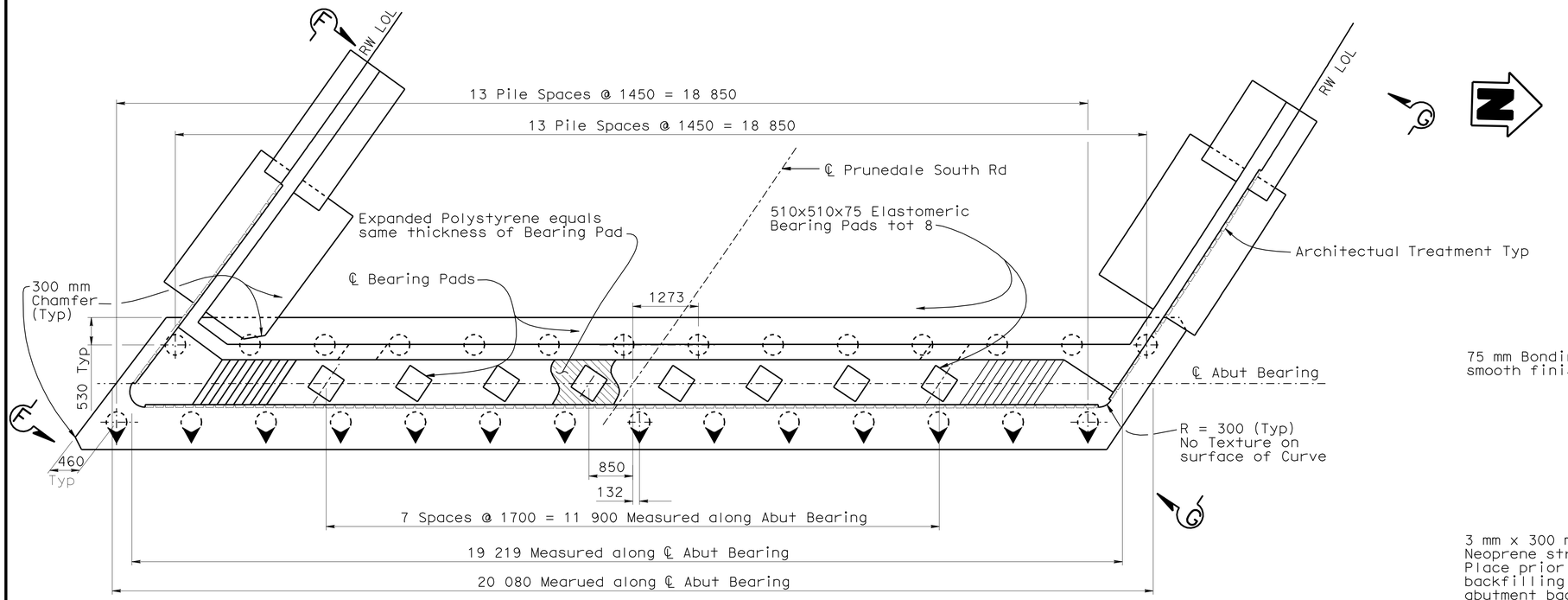

PLAN
1:50

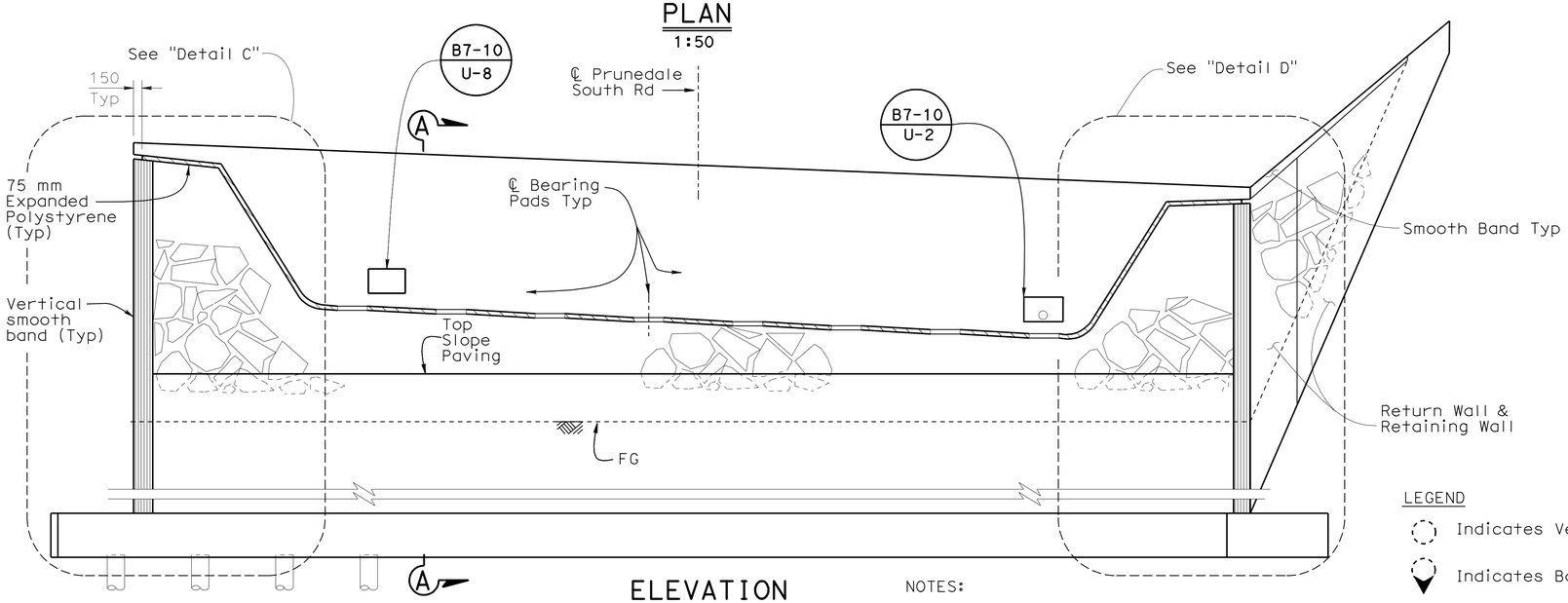

ELEVATION
1:50

NOTES:

1. All Piles not shown.
2. For Architectural Treatment Details, see, "Architectural Treatment" sheet.
3. For "Detail C" and "Detail D", see "Abutment Details No.3" sheet.
4. For additional Details of Retaining Walls, see "Section F-F" and "Section G-G" on "Abutment Details No.1" sheet.

LEGEND

Indicates Vertical Pile

Indicates Battered Pile

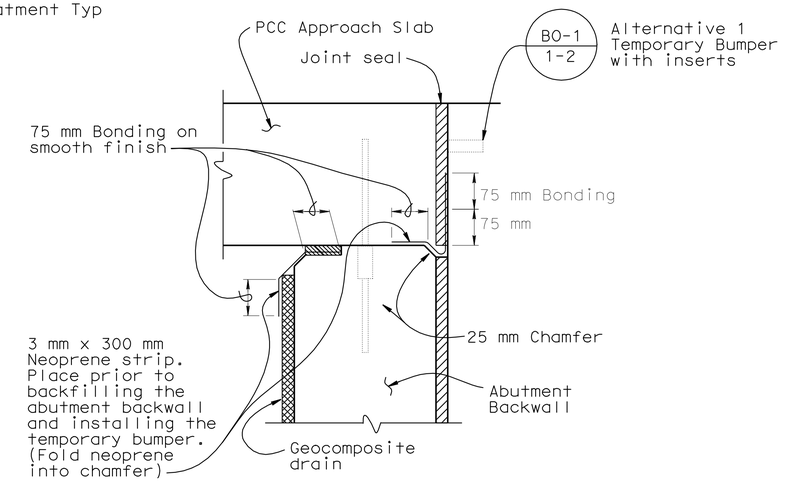

JOINT PROTECTION DETAIL
No Scale

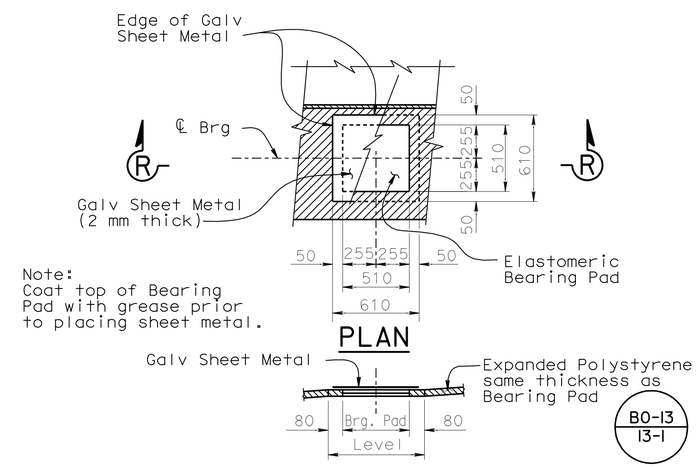

SECTION R-R
BEARING PAD DETAIL
No Scale

Details typical at all bearing pads

DESIGN	BY Prakarn Paksaichol	CHECKED Ryan Odell	
DETAILS	BY P.Savoye\G. Zweier	CHECKED Ryan Odell	
QUANTITIES	BY Ryan Odell	CHECKED Ae Tern	

STATE OF CALIFORNIA DEPARTMENT OF TRANSPORTATION

DIVISION OF ENGINEERING SERVICES STRUCTURE DESIGN

DESIGN BRANCH 6

BRIDGE NO. 44-0284

KILOMETER POST 151.4

PRUNEDALE SOUTH ROAD OC
ABUTMENT NO.2 LAYOUT

Caltrans Metric

ALL DIMENSIONS ARE IN MILLIMETERS UNLESS OTHERWISE SHOWN

ORIGINAL SCALE IN MILLIMETERS FOR REDUCED PLANS 0 10 20 30 40 50 60 70 80 90 100

CU 05
EA 0161E1

DISREGARD PRINTS BEARING EARLIER REVISION DATES

REVISION DATES: 03-15-01 09-28-09 03-14-10 05-06-10 11-07-01 02-13-08 08-28-08 12-28-08 02-16-09 09-08-09

SHEET 6 OF 17

STRUCTURES DESIGN DETAIL SHEET (METRIC) (REV.03-17-04)

FILE => 44-0284-f-abtlyt02.dgn

USERNAME => trlenard DATE PLOTTED => 03-AUG-2010 TIME PLOTTED => 06:17

DIST	COUNTY	ROUTE	KILOMETER POST TOTAL PROJECT	SHEET No	TOTAL SHEETS
05	Mon	101	R146.8/159.7	1236	1402

REGISTERED CIVIL ENGINEER 05-06-10 DATE

7-26-10
PLANS APPROVAL DATE

REGISTERED PROFESSIONAL ENGINEER HERNAN PEREZ No. 60993 Exp. 12-31-10 CIVIL STATE OF CALIFORNIA

The State of California or its officers or agents shall not be responsible for the accuracy or completeness of electronic copies of this plan sheet.

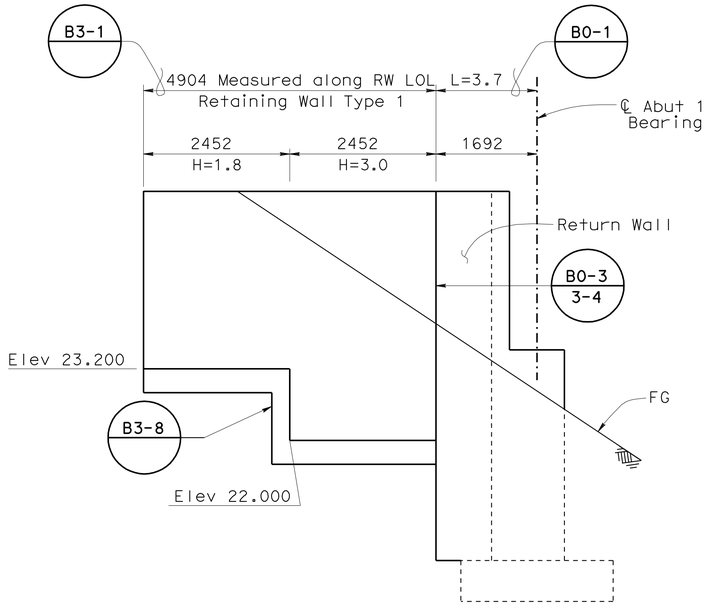

SECTION D-D
1:50

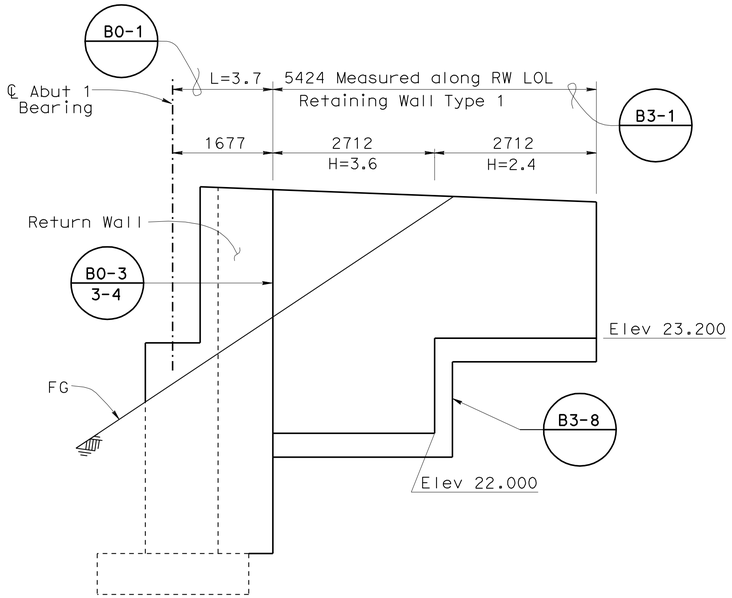

SECTION E-E
1:50

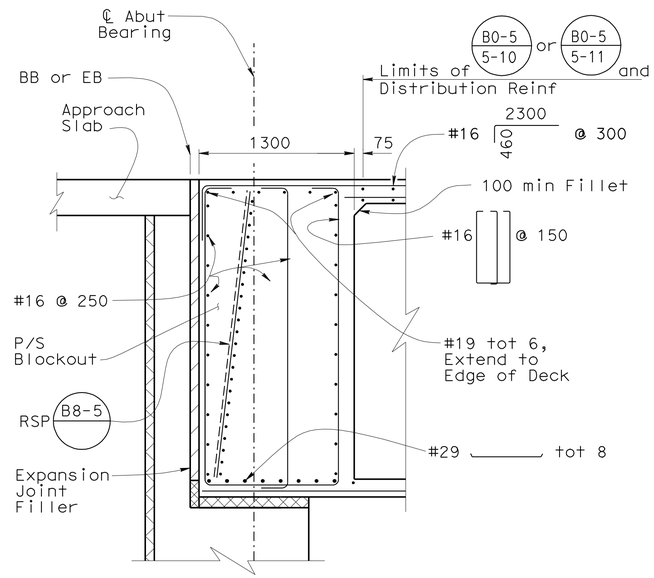

END DIAPHRAGM
1:25

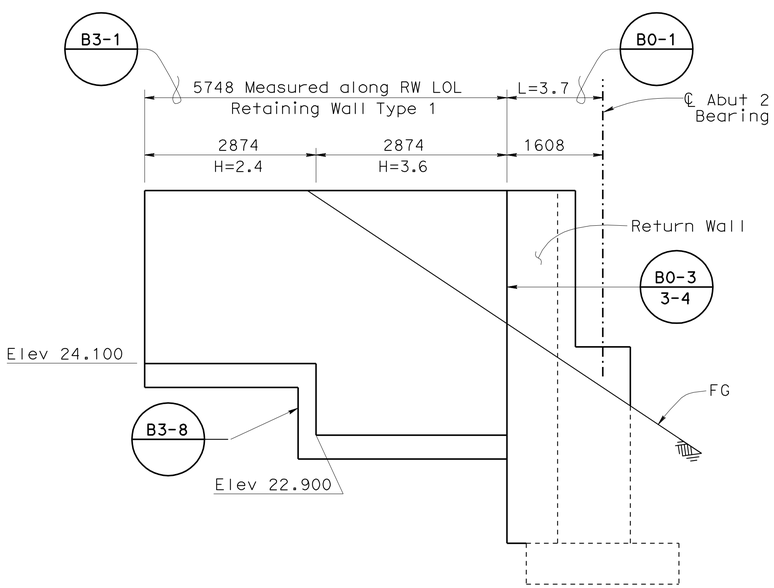

SECTION F-F
1:50

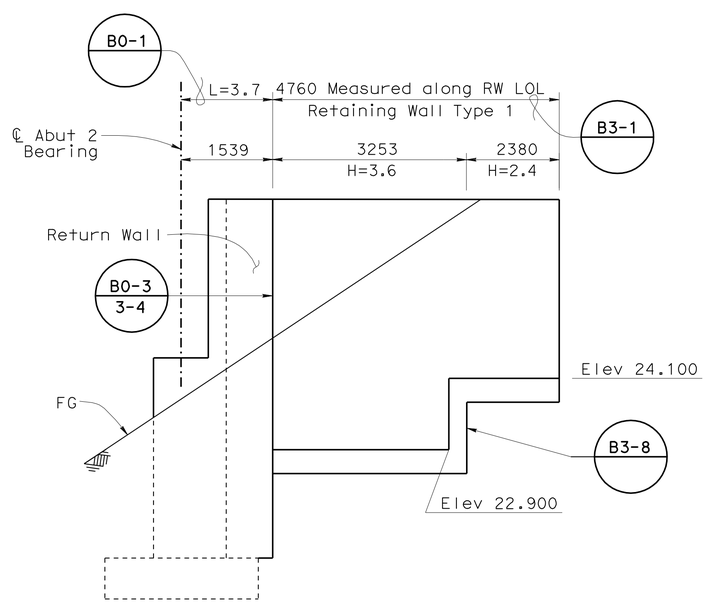

SECTION G-G
1:50

NOTES:

1. For Plan Views of Retaining Walls, see "Abutment Layout No. 1 & No. 2" sheets
2. Retaining Wall Type 1 Footing Elevations are from Top of Footing
3. 100 mm Expanded Polystyrene not shown. For details see, "Architectural Treatment" sheet

Caltrans Metric

	BY	CHECKED
DESIGN	Prakarn Paksaichol	Ryan Odell
DETAILS	P.Savoye\G.Zweier	Ryan Odell
QUANTITIES	Ryan Odell	Ae Tern

STATE OF CALIFORNIA
DEPARTMENT OF TRANSPORTATION

DIVISION OF ENGINEERING SERVICES
STRUCTURE DESIGN
DESIGN BRANCH 6

BRIDGE NO. 44-0284
KILOMETER POST 151.4

PRUNEDALE SOUTH ROAD OC
ABUTMENT DETAILS NO.1

ALL DIMENSIONS ARE IN MILLIMETERS UNLESS OTHERWISE SHOWN

ORIGINAL SCALE IN MILLIMETERS FOR REDUCED PLANS 0 10 20 30 40 50 60 70 80 90 100

CU 05
EA 0161E1

DISREGARD PRINTS BEARING EARLIER REVISION DATES

REVISION DATES: 01-18-07 02-16-09 09-03-09 12-14-09 03-11-10 05-06-10 02-13-08 08-28-08 12-23-08 08-28-09

SHEET 7 OF 17

FILE => 44-0284-f-adt1.dgn

STRUCTURES DESIGN DETAIL SHEET (METRIC) (REV.03-17-04)

USERNAME => trienard DATE PLOTTED => 03-AUG-2010 TIME PLOTTED => 06:17

DIST	COUNTY	ROUTE	KILOMETER POST TOTAL PROJECT	SHEET No	TOTAL SHEETS
05	Mon	101	R146.8/159.7	1237	1402

REGISTERED CIVIL ENGINEER 05-06-10 DATE

7-26-10
PLANS APPROVAL DATE

REGISTERED PROFESSIONAL ENGINEER HERNAN PEREZ No. 60993 Exp. 12-31-10 CIVIL STATE OF CALIFORNIA

The State of California or its officers or agents shall not be responsible for the accuracy or completeness of electronic copies of this plan sheet.

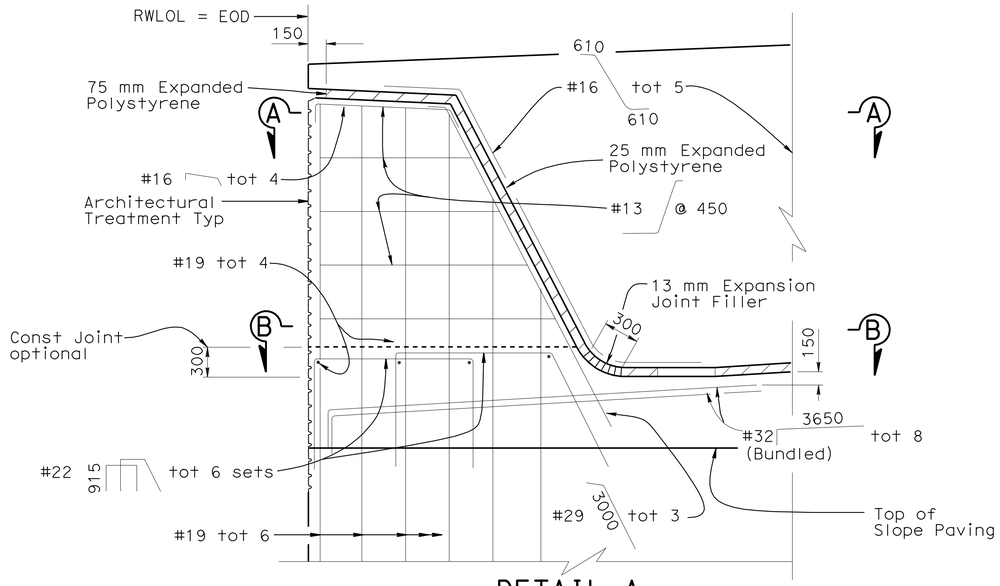

DETAIL A
1:25

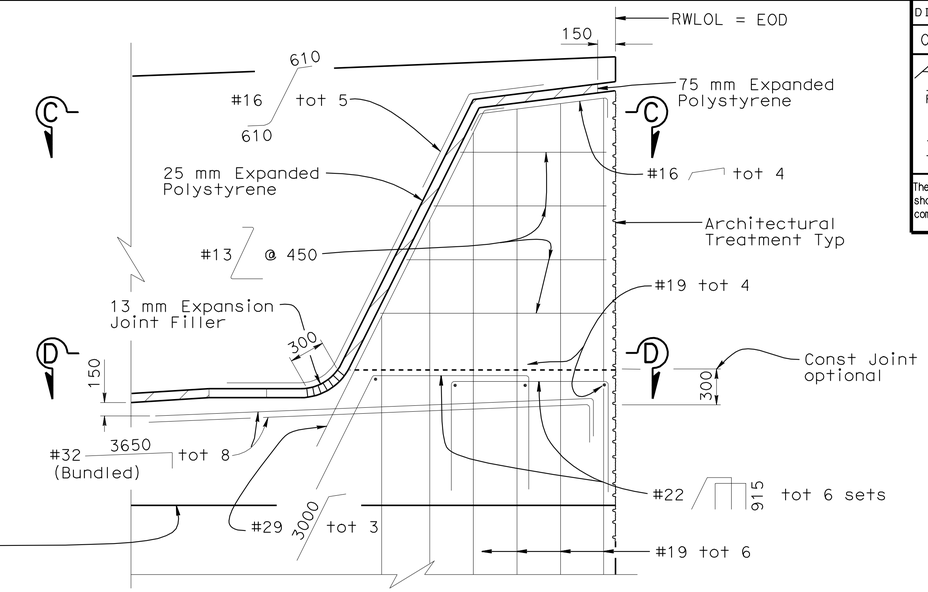

DETAIL B
1:25

NOTES

1. Retaining walls not shown
2. Retaining wall reinf not shown
3. Abutmnet reinf not shown
4. For "Detail A" and "Detail B" Locations, see "Abutment No.1 Layout" sheet

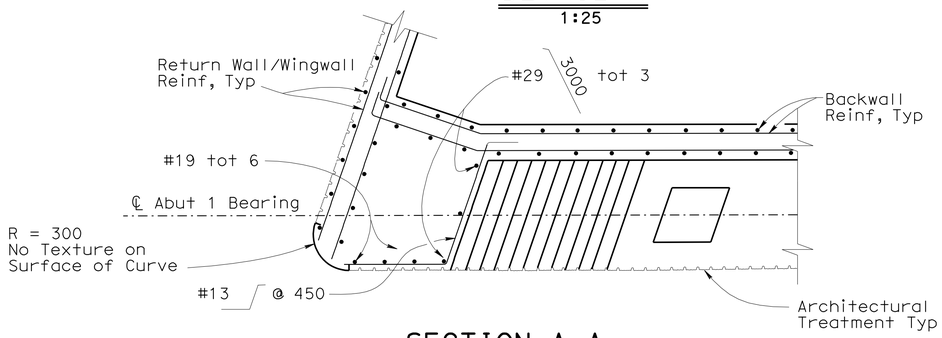

SECTION A-A
1:25

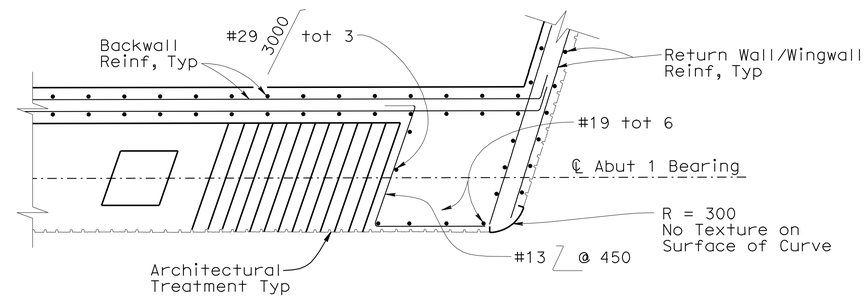

SECTION C-C
1:25

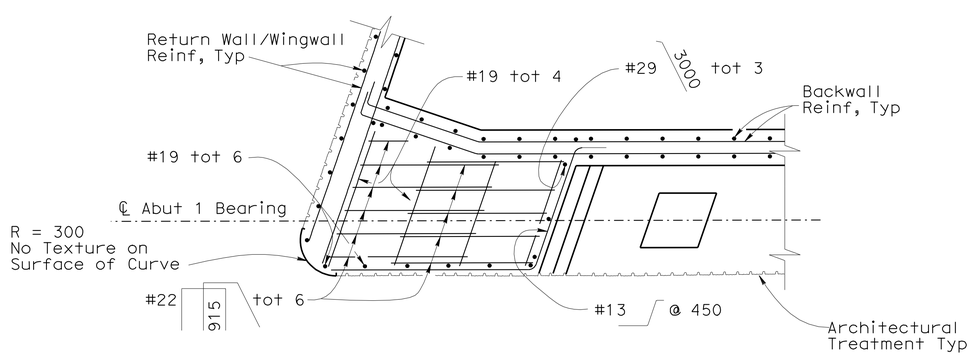

SECTION B-B
1:25

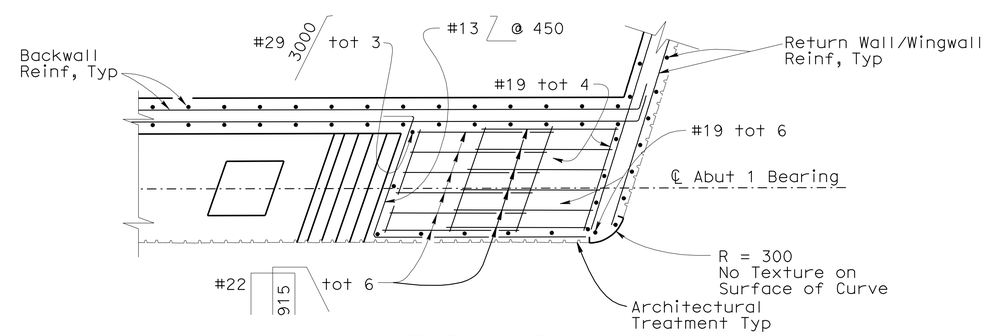

SECTION D-D
1:25

DESIGN	BY Prakarn Paksaichol	CHECKED Ryan Odell	
DETAILS	BY George Zweier	CHECKED Ryan Odell	
QUANTITIES	BY Ryan Odell	CHECKED Ae Tern	

STATE OF CALIFORNIA
DEPARTMENT OF TRANSPORTATION

DIVISION OF ENGINEERING SERVICES
STRUCTURE DESIGN
DESIGN BRANCH 6

BRIDGE NO. 44-0284
KILOMETER POST 151.4

PRUNEDALE SOUTH ROAD OC
ABUTMENT DETAILS NO.2

ALL DIMENSIONS ARE IN MILLIMETERS UNLESS OTHERWISE SHOWN

ORIGINAL SCALE IN MILLIMETERS FOR REDUCED PLANS 0 10 20 30 40 50 60 70 80 90 100

CU 05
EA 0161E1

DISREGARD PRINTS BEARING EARLIER REVISION DATES

REVISION DATES: 02-14-08, 08-28-08, 12-23-08, 02-16-09, 09-08-09, 09-15-09, 05-06-10

SHEET 8 OF 17

FILE => 44-0284-f-adt2.dgn

STRUCTURES DESIGN DETAIL SHEET (METRIC) (REV.03-17-04)

USERNAME => friehard DATE PLOTTED => 03-AUG-2010 TIME PLOTTED => 06:17

DIST	COUNTY	ROUTE	KILOMETER POST TOTAL PROJECT	SHEET No	TOTAL SHEETS
05	Mon	101	R146.8/159.7	1238	1402

REGISTERED CIVIL ENGINEER 05-06-10 DATE

7-26-10
PLANS APPROVAL DATE

REGISTERED PROFESSIONAL ENGINEER HERNAN PEREZ No. 60993 Exp. 12-31-10 CIVIL STATE OF CALIFORNIA

The State of California or its officers or agents shall not be responsible for the accuracy or completeness of electronic copies of this plan sheet.

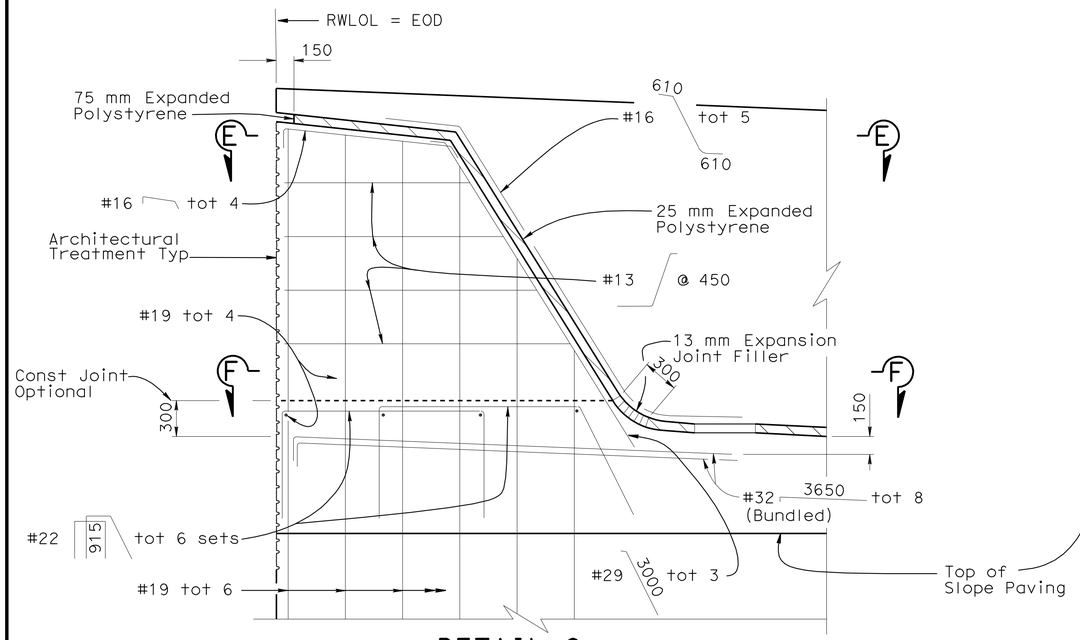

DETAIL C
1:25

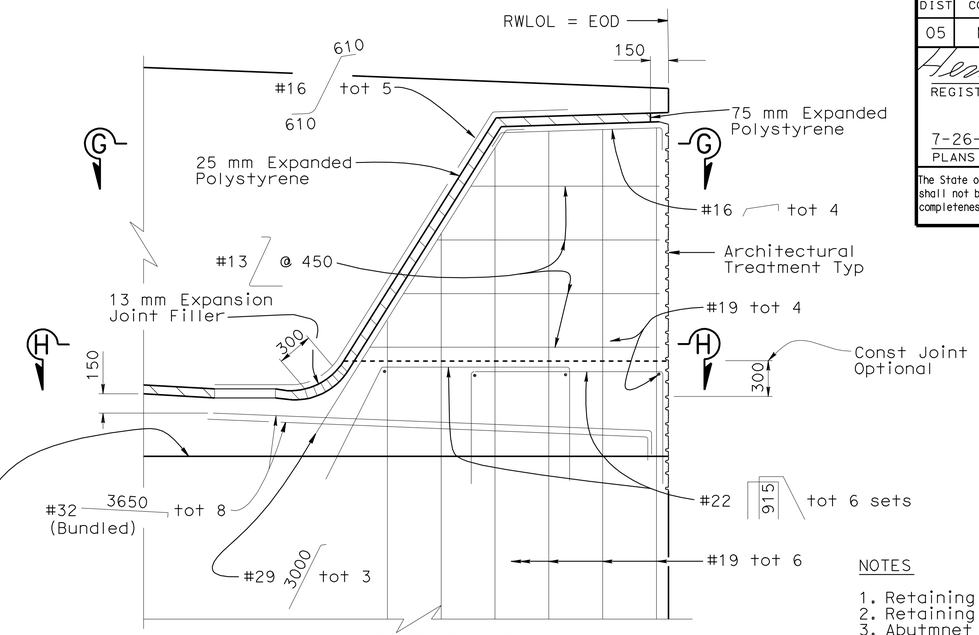

DETAIL D
1:25

NOTES

1. Retaining walls not shown
2. Retaining wall reinf not shown
3. Abutmnet reinf not shown
4. For "Detail A" and "Detail B" Locations, see "Abutment No.1 Layout" sheet

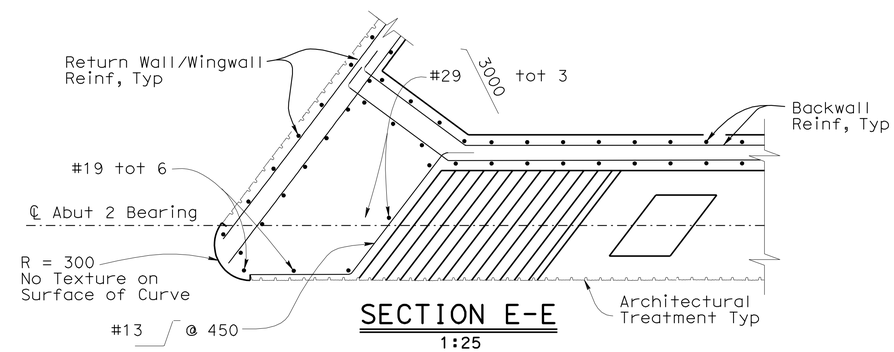

SECTION E-E
1:25

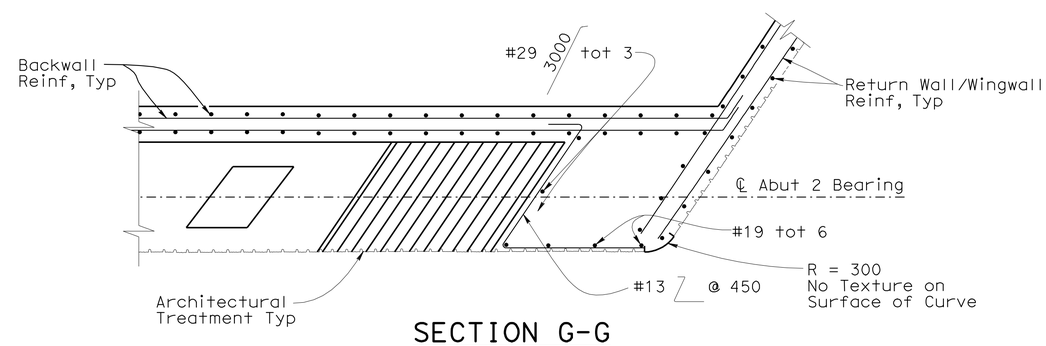

SECTION G-G
1:25

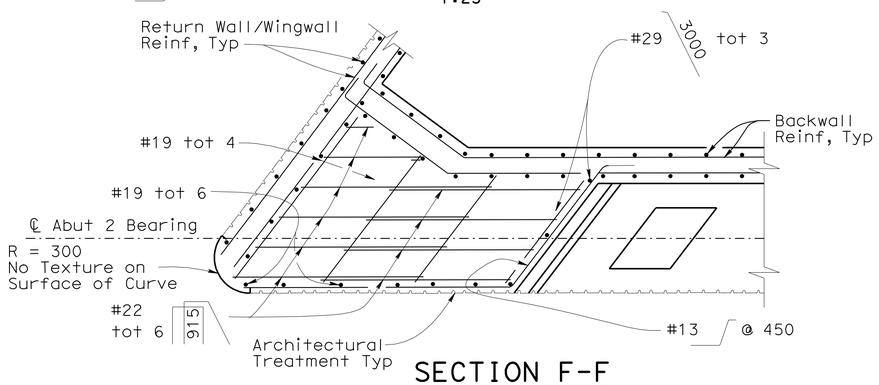

SECTION F-F
1:25

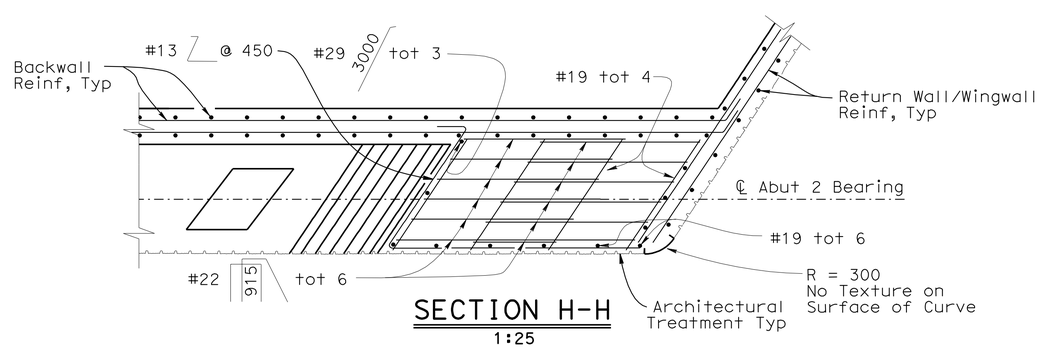

SECTION H-H
1:25

DESIGN	BY Prakarn Paksaichol	CHECKED Ryan Odell	
DETAILS	BY George Zweier	CHECKED Ryan Odell	
QUANTITIES	BY Ryan Odell	CHECKED Ae Tern	

STATE OF CALIFORNIA
DEPARTMENT OF TRANSPORTATION

DIVISION OF ENGINEERING SERVICES
STRUCTURE DESIGN
DESIGN BRANCH 6

BRIDGE NO. 44-0284
KILOMETER POST 151.4

PRUNEDALE SOUTH ROAD OC
ABUTMENT DETAILS NO.3

ALL DIMENSIONS ARE IN MILLIMETERS UNLESS OTHERWISE SHOWN

ORIGINAL SCALE IN MILLIMETERS FOR REDUCED PLANS 0 10 20 30 40 50 60 70 80 90 100

CU 05
EA 0161E1

DISREGARD PRINTS BEARING EARLIER REVISION DATES

REVISION DATES: 09-04-08 | 12-23-08 | 02-16-09 | 09-08-09 | 09-28-09 | 05-06-10

SHEET 9 OF 17

FILE => 44-0284-f-adt3.dgn

STRUCTURES DESIGN DETAIL SHEET (METRIC) (REV.03-17-04)

USERNAME => trlenard DATE PLOTTED => 03-AUG-2010 TIME PLOTTED => 06:17

DIST	COUNTY	ROUTE	KILOMETER POST TOTAL PROJECT	SHEET No	TOTAL SHEETS
05	Mon	101	R146.8/159.7	1239	1402

REGISTERED CIVIL ENGINEER — DATE 05-06-10

7-26-10
PLANS APPROVAL DATE

REGISTERED PROFESSIONAL ENGINEER — HERNAN PEREZ — No. 60993 — Exp. 12-31-10 — CIVIL — STATE OF CALIFORNIA

The State of California or its officers or agents shall not be responsible for the accuracy or completeness of electronic copies of this plan sheet.

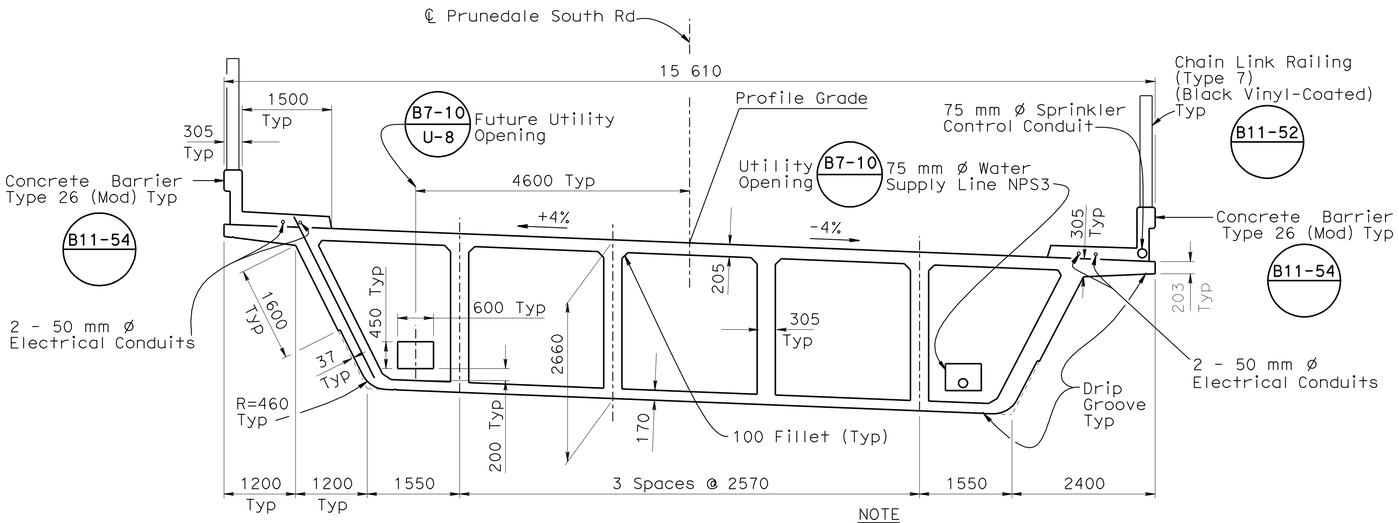

NOTE

For Additional Architectural Treatment Details, see "Architectural Treatment" sheet

TYPICAL SECTION

1:50

PRESTRESSING NOTES

1860 MPa Low Relaxation Strands:

Pjack = 81,150 kN

Anchor Set = 10 mm

Total Number of Girders = 6

Friction curvature coefficient μ = 15 $\times 10^{2}$ (1/rad)

Friction wobble coefficient $K = 6.6 \times 10^{-4}$ (1/m)

Distribution of prestress force (Pjack) between girders shall not exceed the ratio of 3:2.

Maximum final force variation between girders shall not exceed 3200 kN.

Concrete: f'_c = 42 Mpa @ 28 days

f'_{ci} = 24.5 Mpa @ time of stressing

Contractor shall submit elongation calculations based on initial stress at ☒ =0.9188 times jacking stress

One end stressing shall be performed from Abutment 1

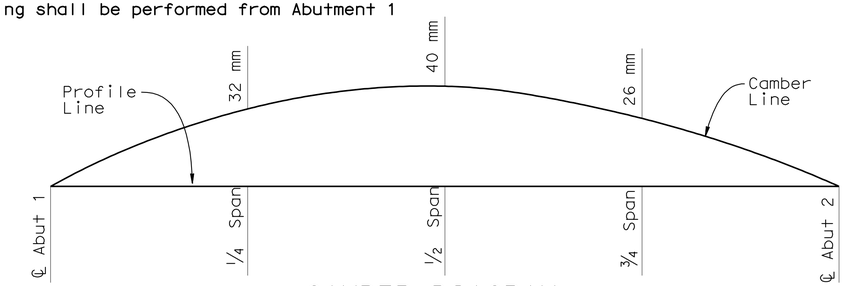

CAMBER DIAGRAM

NO SCALE

Does not include Allowance for Falsework Settlement

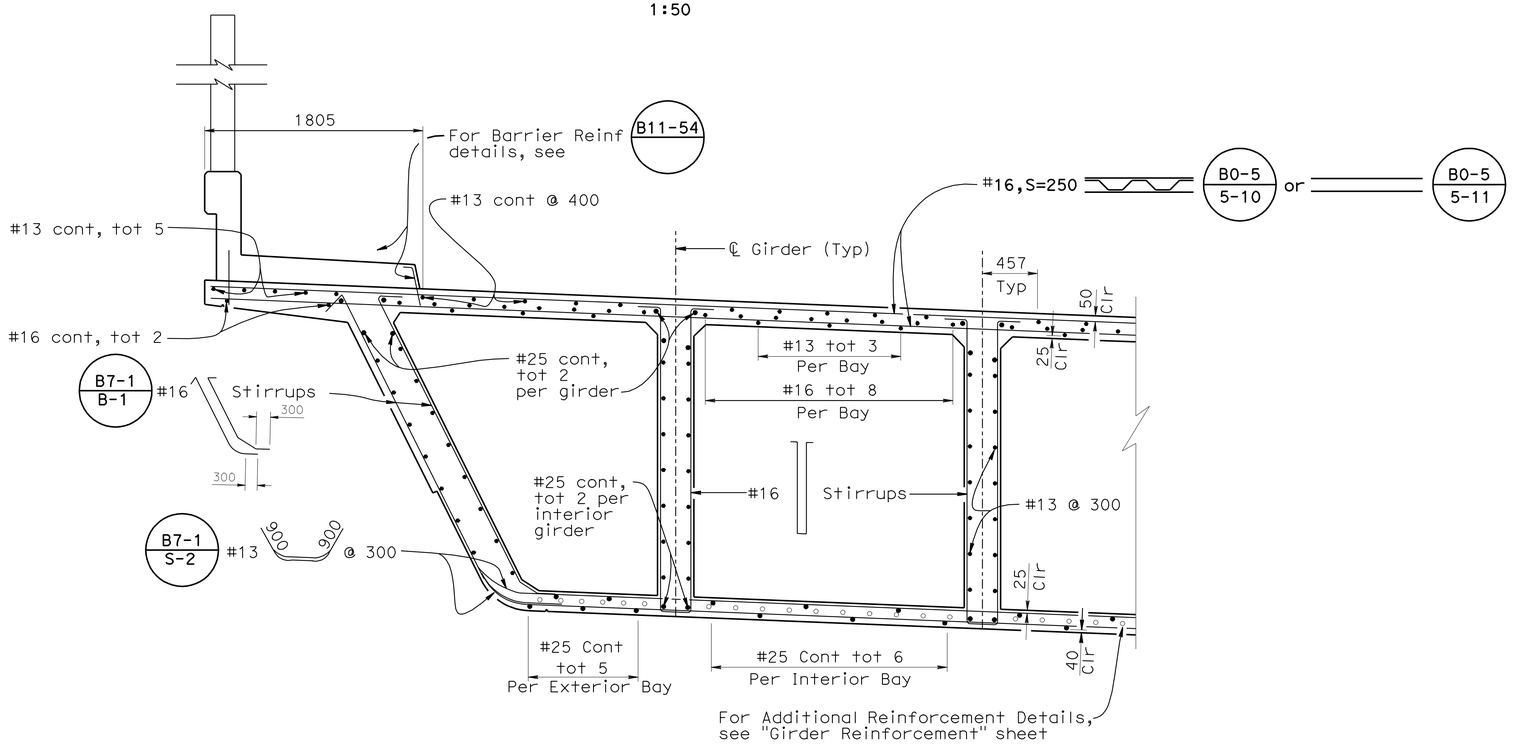

For Additional Reinforcement Details, see "Girder Reinforcement" sheet

PART TYPICAL SECTION

1:25

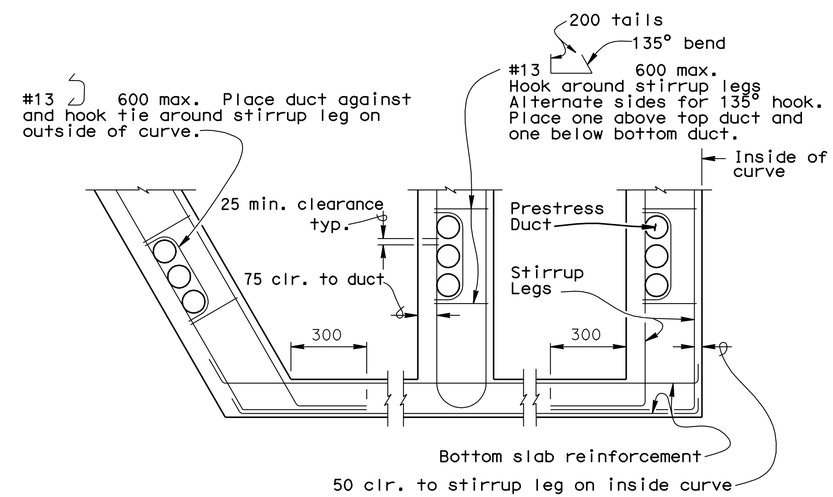

Note: Details shown are for a curve to the right with the section taken looking ahead on station. These details supersede duct patterns shown in Stabdard Plan B8-5.

PART GIRDER SECTION

NO SCALE

Caltrans Metric

ALL DIMENSIONS ARE IN MILLIMETERS UNLESS OTHERWISE SHOWN

ORIGINAL SCALE IN MILLIMETERS FOR REDUCED PLANS 0 10 20 30 40 50 60 70 80 90 100

	BY	CHECKED
DESIGN	Prakarn Paksaichol	Ryan Odell
DETAILS	P. von Savoye	Ryan Odell
QUANTITIES	Ryan Odell	Ae Tern

STATE OF CALIFORNIA DEPARTMENT OF TRANSPORTATION

DIVISION OF ENGINEERING SERVICES STRUCTURE DESIGN

DESIGN BRANCH 6

CU 05
EA 0161E1

BRIDGE NO. 44-0284
KILOMETER POST 151.4

PRUNEDALE SOUTH ROAD OC

TYPICAL SECTION

DISREGARD PRINTS BEARING EARLIER REVISION DATES

REVISION DATES: 11-30-06 02-28-09 04-01-09 08-24-09 11-03-09 11-18-09 11-24-09 05-06-10 12-23-08 02-16-09

SHEET 10 OF 17

STRUCTURES DESIGN DETAIL SHEET (METRIC) (REV.03-17-04)

FILE => 44-0284-k-ts.dgn

USERNAME => trienard DATE PLOTTED => 03-AUG-2010 TIME PLOTTED => 06:17

DIST	COUNTY	ROUTE	KILOMETER POST TOTAL PROJECT	SHEET No	TOTAL SHEETS
05	Mon	101	R146.8/159.7	1240	1402

Hernan Perez 05-06-10
REGISTERED CIVIL ENGINEER DATE

7-26-10
PLANS APPROVAL DATE

REGISTERED PROFESSIONAL ENGINEER HERNAN PEREZ No. 60993 Exp. 12-31-10 CIVIL STATE OF CALIFORNIA

The State of California or its officers or agents shall not be responsible for the accuracy or completeness of electronic copies of this plan sheet.

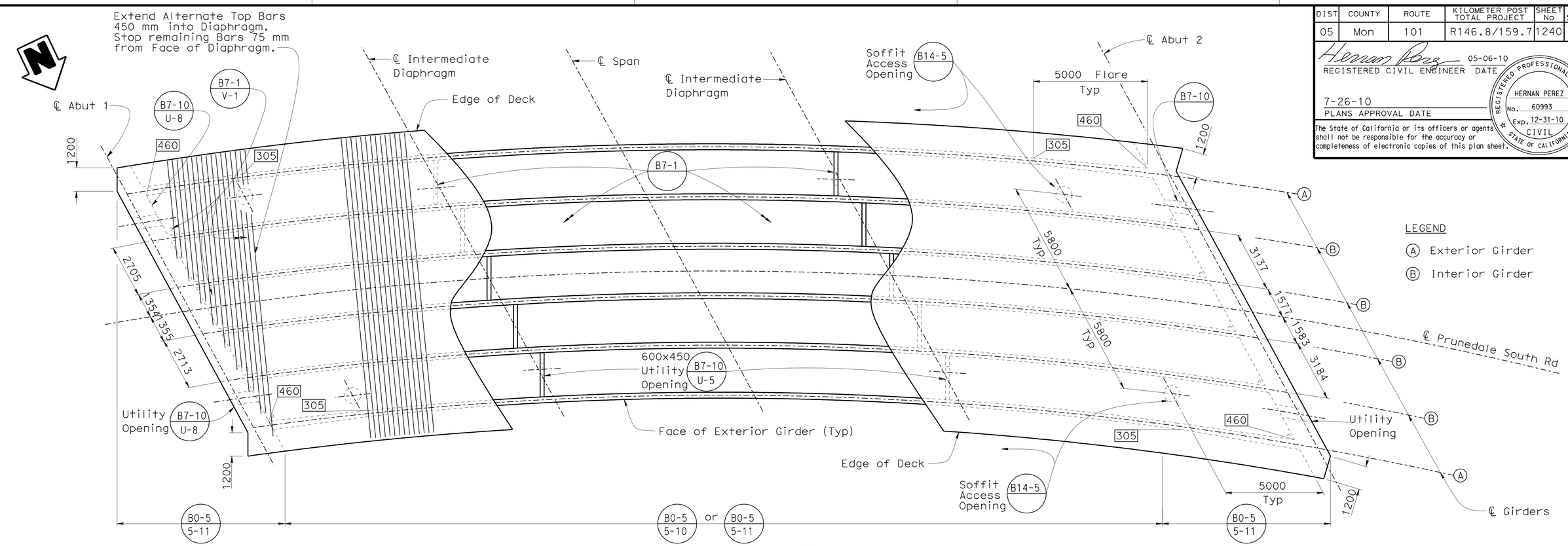

GIRDER LAYOUT (B8-5)

1:100

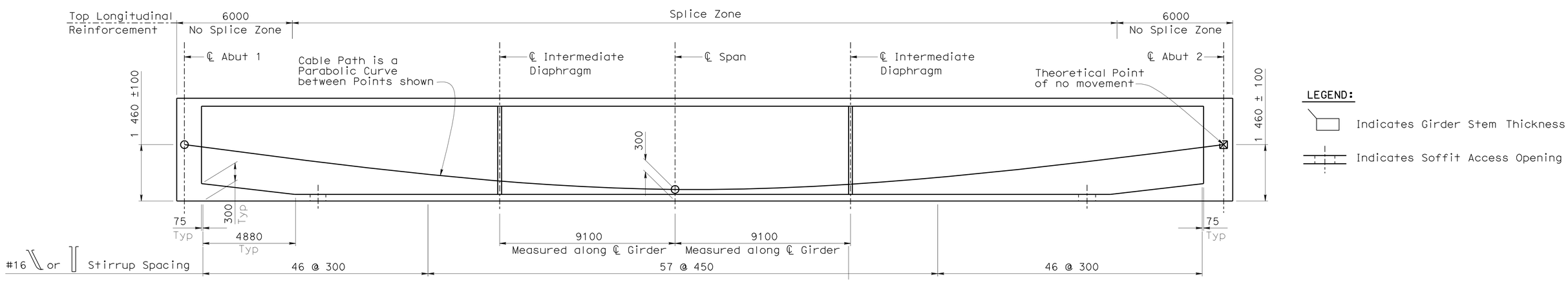

LONGITUDINAL SECTION (B8-5)

VERTICAL 1:50
HORIZONTAL 1:100

For "Prestressing Notes", see "Typical Section" sheet

DESIGN	BY Prakarn Paksaichol	CHECKED Ryan Odell
DETAILS	BY P. von Savoye	CHECKED Ryan Odell
QUANTITIES	BY Ryan Odell	CHECKED Ae Tern

STATE OF CALIFORNIA
DEPARTMENT OF TRANSPORTATION

DIVISION OF ENGINEERING SERVICES
STRUCTURE DESIGN
DESIGN BRANCH 6

BRIDGE NO. 44-0284
KILOMETER POST 151.4

PRUNEDALE SOUTH ROAD OC
GIRDER LAYOUT

ALL DIMENSIONS ARE IN MILLIMETERS UNLESS OTHERWISE SHOWN

ORIGINAL SCALE IN MILLIMETERS FOR REDUCED PLANS 0 10 20 30 40 50 60 70 80 90 100

CU 05
EA 0161E1

DISREGARD PRINTS BEARING EARLIER REVISION DATES

REVISION DATES: 04-03-07 06-22-07 02-15-08 08-30-08 10-04-08 12-23-08 02-18-09 11-03-09 11-18-09 05-06-10

SHEET 11 OF 17

FILE => 44-0284-1-glo.dgn

STRUCTURES DESIGN DETAIL SHEET (METRIC) (REV.03-17-04)

USERNAME => trienhard DATE PLOTTED => 03-AUG-2010 TIME PLOTTED => 06:17

DIST	COUNTY	ROUTE	KILOMETER POST TOTAL PROJECT	SHEET No	TOTAL SHEETS
05	Mon	101	R146.8/159.7	1241	1402

REGISTERED CIVIL ENGINEER 05-06-10 DATE

7-26-10
PLANS APPROVAL DATE

REGISTERED PROFESSIONAL ENGINEER
HERNAN PEREZ
No. 60993
Exp. 12-31-10
CIVIL
STATE OF CALIFORNIA

The State of California or its officers or agents shall not be responsible for the accuracy or completeness of electronic copies of this plan sheet.

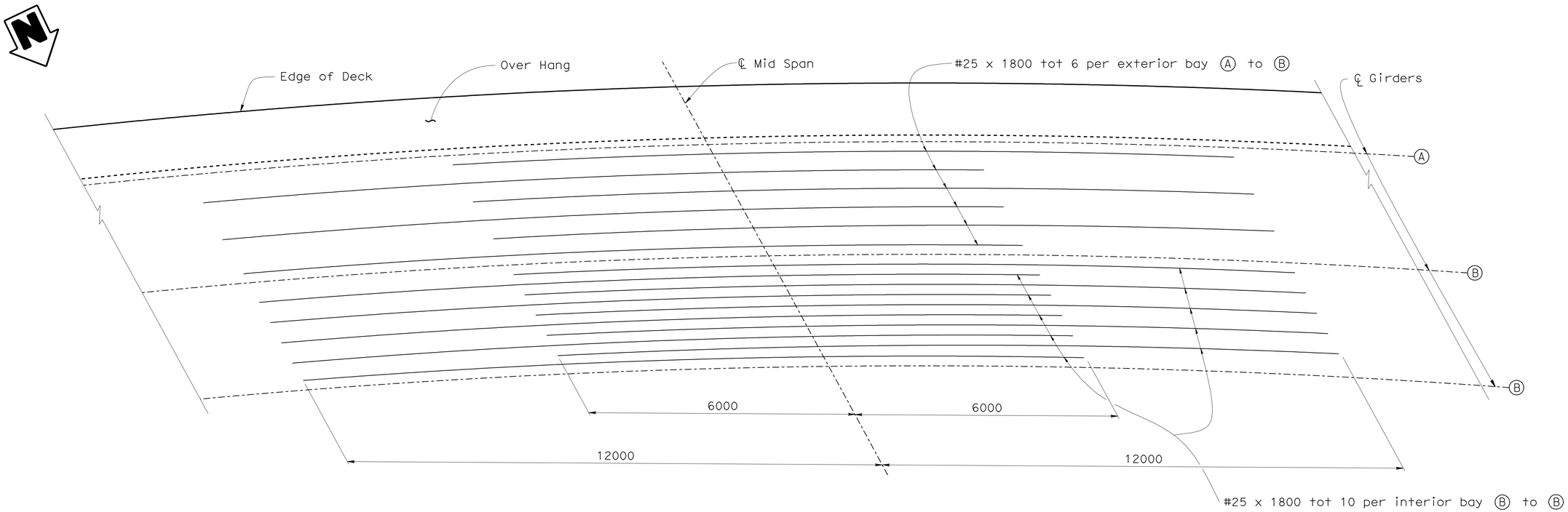

PARTIAL BOTTOM REINFORCEMENT

SCALE 1:50

LEGEND

Ⓐ Indicates ℄ Exterior Girder

Ⓑ Indicates ℄ Interior Girder

Caltrans Metric

	BY	CHECKED
DESIGN	Prakarn Paksaichol	Ryan Odell
DETAILS	George Zweier	Ryan Odell
QUANTITIES	Ryan Odell	Ae Tern

STATE OF CALIFORNIA
DEPARTMENT OF TRANSPORTATION

DIVISION OF ENGINEERING SERVICES
STRUCTURE DESIGN
DESIGN BRANCH 6

BRIDGE NO. 44-0284
KILOMETER POST 151.4

PRUNEDALE SOUTH ROAD OC
GIRDER REINFORCEMENT

ALL DIMENSIONS ARE IN MILLIMETERS UNLESS OTHERWISE SHOWN

ORIGINAL SCALE IN MILLIMETERS FOR REDUCED PLANS 0 10 20 30 40 50 60 70 80 90 100

CU 05
EA 0161E1

DISREGARD PRINTS BEARING EARLIER REVISION DATES

REVISION DATES: 04-10-07 | 09-14-07 | 08-28-08 | 12-23-08 | 2-28-09 | 11-18-09 | 05-06-10

SHEET 12 OF 17

FILE => 44-0284-o-greinf.dgn

STRUCTURES DESIGN DETAIL SHEET (METRIC) (REV.03-17-04)

USERNAME => trlenard DATE PLOTTED => 03-AUG-2010 TIME PLOTTED => 06:17

DIST.	COUNTY	ROUTE	KILOMETER POST TOTAL PROJECT	SHEET NO.	TOTAL SHEETS
05	Mon	101	R146.8/159.7	1242	1402

Caltrans Metric

Hernan Perez 05-06-10
REGISTERED ENGINEER - CIVIL

7-26-10
PLANS APPROVAL DATE

The State of California or its officers or agents shall not be responsible for the accuracy or completeness of electronic copies of this plan sheet.

REGISTERED PROFESSIONAL ENGINEER HERNAN PEREZ No. 60993 Exp. 12-31-10 CIVIL STATE OF CALIFORNIA

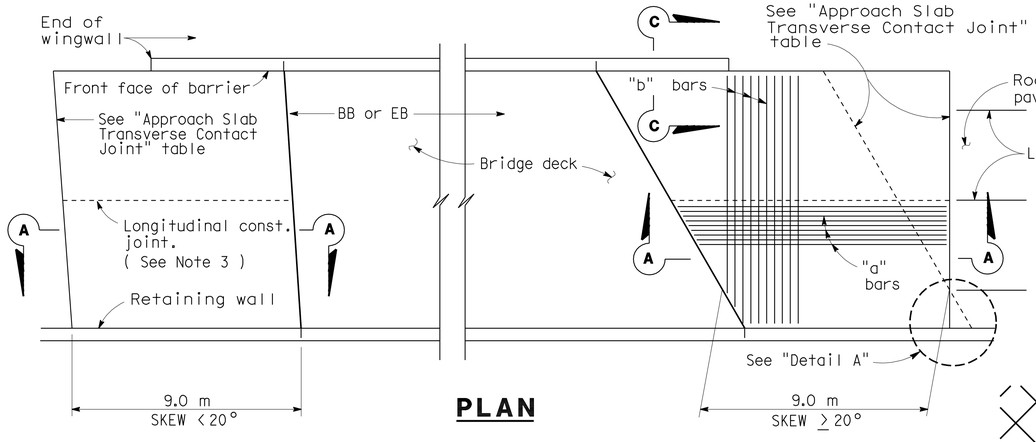

PLAN

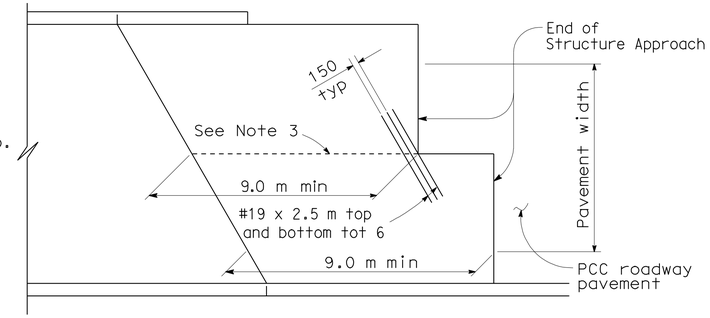

STRUCTURE APPROACH - END STAGGER DETAIL

APPROACH SLAB TRANSVERSE CONTACT JOINT		
APPROACH SKEW	WITH AC ROADWAY PAVEMENT	WITH PCC ROADWAY PAVEMENT
< 20°	Parallel to face of paving notch	Parallel to face of paving notch
20°- 45°	Parallel to face of P N use (Detail A)	Stagger lines 7.2 m to 10.8 m apart.
> 45°	Parallel to face of P N use (Detail A)	Stagger at each lane line.

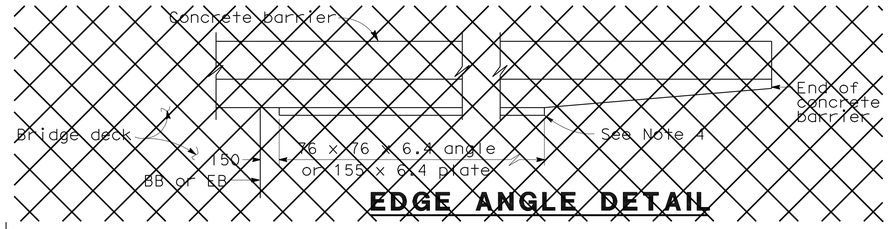

EDGE ANGLE DETAIL

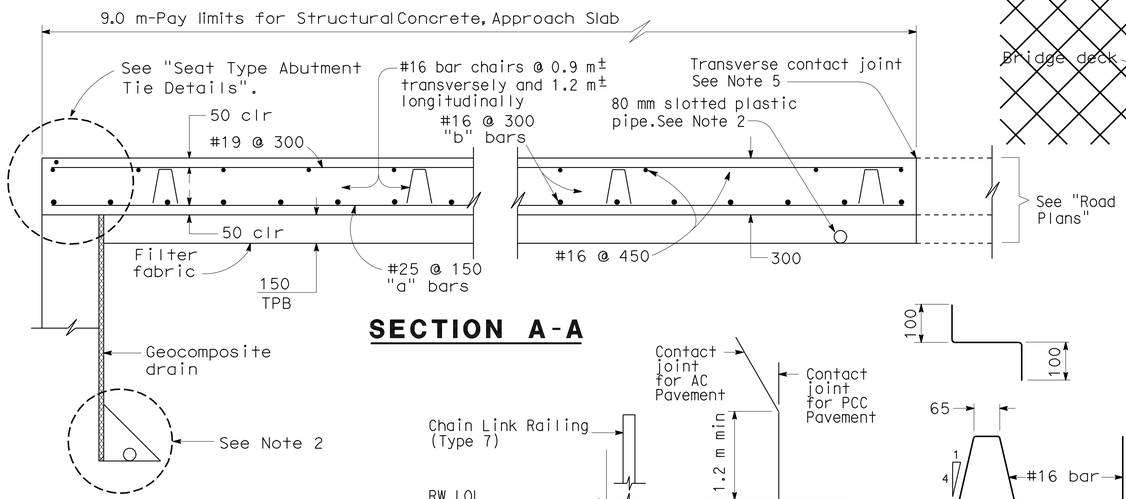

SECTION A-A

DETAIL A

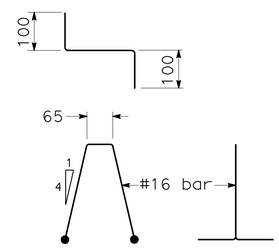

BAR CHAIR DETAIL

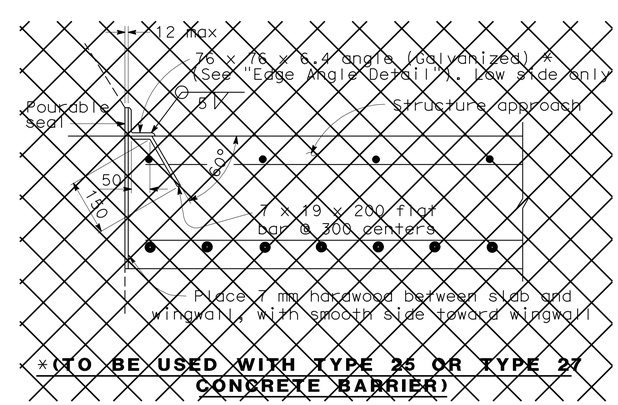

*(TO BE USED WITH TYPE 25 OR TYPE 27 CONCRETE BARRIER)

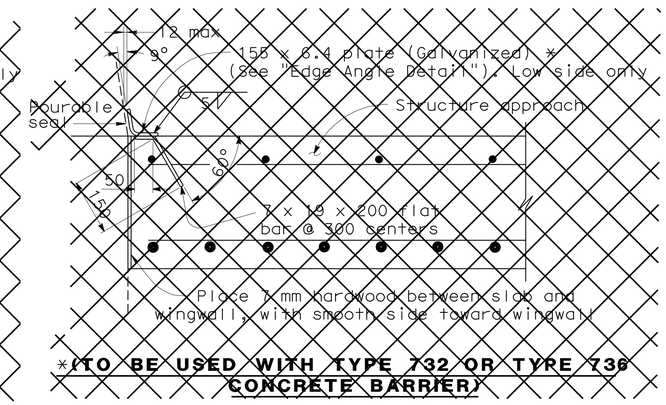

*(TO BE USED WITH TYPE 732 OR TYPE 736 CONCRETE BARRIER)

DETAIL B

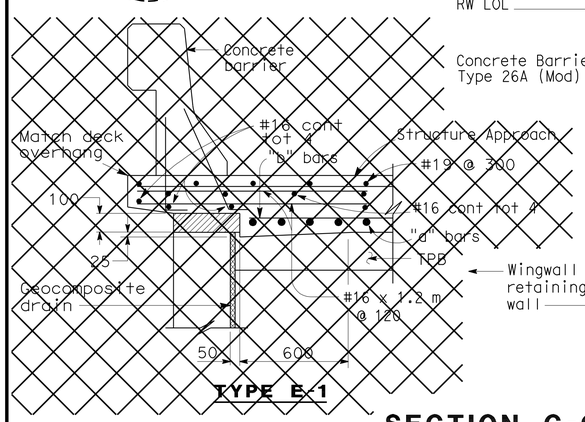

TYPE E-1

SECTION C-C

(Type E-2 to be used)

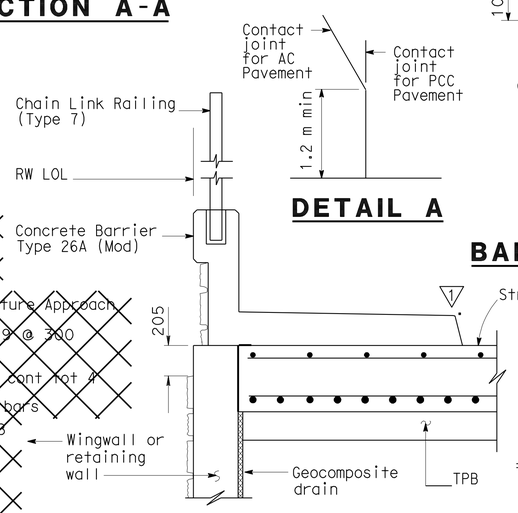

TYPE E-2

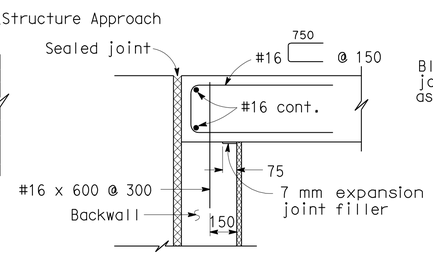

MR ≤ 50 mm

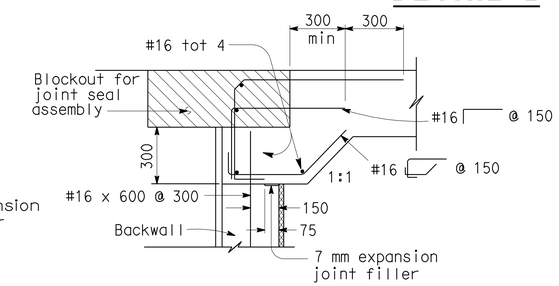

MR > 50 mm

SEAT TYPE ABUTMENT TIE DETAILS (SEE NOTE 1)

NOTES:

1. For details not shown, see Structure Plans. For MR ≤ 50 mm, adjust bar reinforcement to clear a sawcut for sealed joint, when required.
2. For drainage details, see "Structure Approach Drainage Details" sheet.
3. Longitudinal construction joints, when permitted by the Engineer, shall be located on lane lines.
4. End angle or plate at beginning of barrier transition, end of wingwall or end of structure approach as applicable.
5. For transverse contact joint with new PCC paving, refer to Standard Plan A35-A.
6. At the contractor's option, approach slab transverse reinforcement may be placed parallel to paving notch. Spacing of transverse reinforcement is measured along ℄ roadway.

Remove all polystyrene.

NO SCALE

ALL DIMENSIONS ARE IN MILLIMETERS UNLESS OTHERWISE SHOWN

STANDARD DRAWING					
RELEASE DATE 7/9/03	DESIGN	BY M. TRAFFALIS	CHECKED E. THORKILDSEN	RELEASED BY	
FILE NO. xs3-120	DETAILS	BY R. YEE	CHECKED E. THORKILDSEN		
	SUBMITTED	BY M. HA	DRAWING DATE 4/98	OFFICE CHIEF	

1 Revised Type E-2 Detail

STATE OF CALIFORNIA DEPARTMENT OF TRANSPORTATION

DIVISION OF ENGINEERING SERVICES STRUCTURE DESIGN DESIGN BRANCH 6

BRIDGE NO. 44-0284
KILOMETER POST 151.4

PRUNEDALE SOUTH ROAD OC
STRUCTURE APPROACH TYPE N(9S)

DS OSD 2147A (METRIC) (REV. 2/25/97)

ORIGINAL SCALE IN MILLIMETERS FOR REDUCED PLANS 0 10 20 30 40 50 60 70 80 90 100

CU 05
EA 0161E1

DISREGARD PRINTS BEARING EARLIER REVISION DATES

REVISION DATES (PRELIMINARY STAGE ONLY) 12-23-08 02-13-09 03-16-05-06-10

SHEET 13 OF 17

USERNAME => trlenard

44-0284-s-sa.dgn

DATE PLOTTED => 12-AUG-2010 TIME PLOTTED => 06:08

DIST.	COUNTY	ROUTE	KILOMETER POST TOTAL PROJECT	SHEET NO.	TOTAL SHEETS
05	Mon	101	R146.8/159.7	1243	1402

Caltrans Metric

Hernan Perez 05-06-10
REGISTERED ENGINEER - CIVIL

7-26-10
PLANS APPROVAL DATE

REGISTERED PROFESSIONAL ENGINEER HERNAN PEREZ No. 60993 Exp. 12-31-10 CIVIL STATE OF CALIFORNIA

The State of California or its officers or agents shall not be responsible for the accuracy or completeness of electronic copies of this plan sheet.

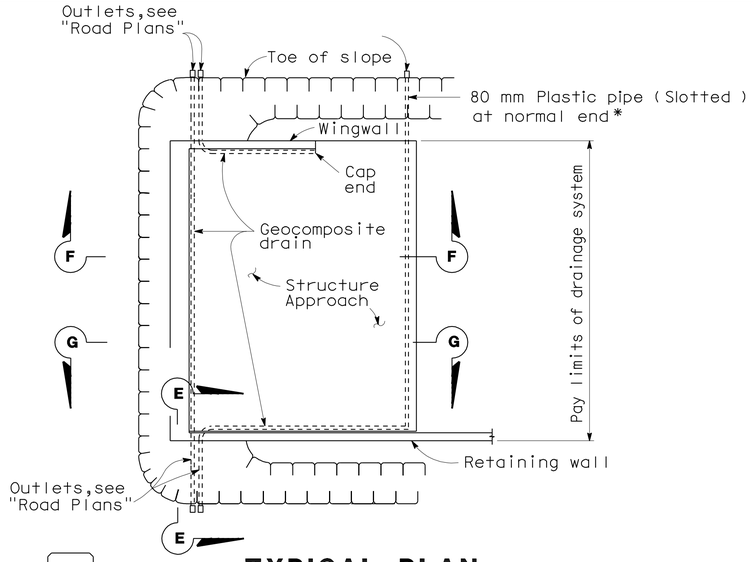

TYPICAL PLAN

*For pipe layout at staggered end, see "Detail B".

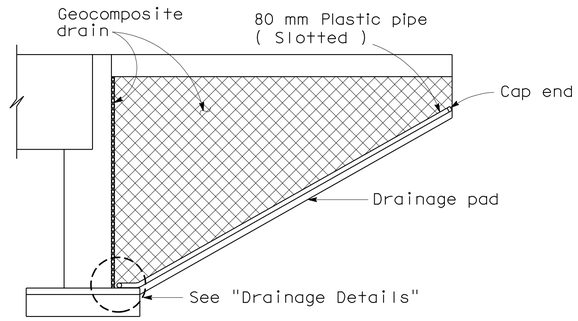

CANTILEVER WINGWALL
SECTION F-F

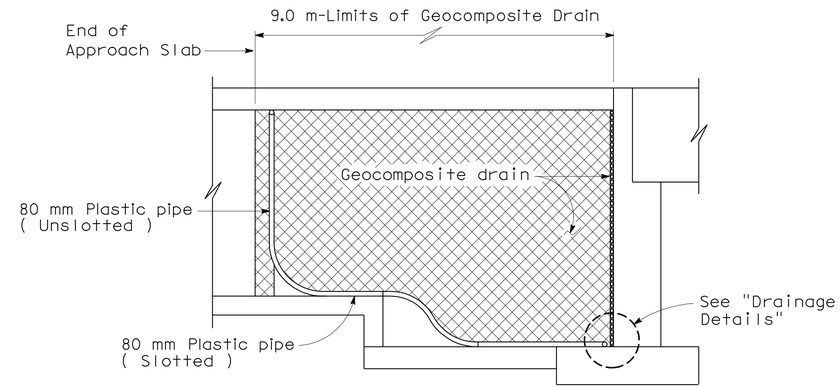

RETAINING WALL WINGWALL
SECTION G-G

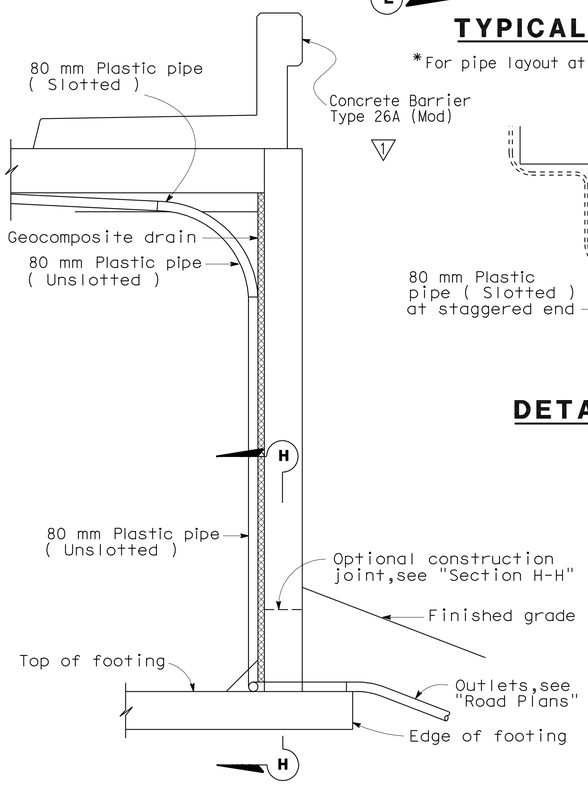

SECTION E-E

NOTE: Bends and junctions in 80 mm plastic pipe are 750 mm radius min.

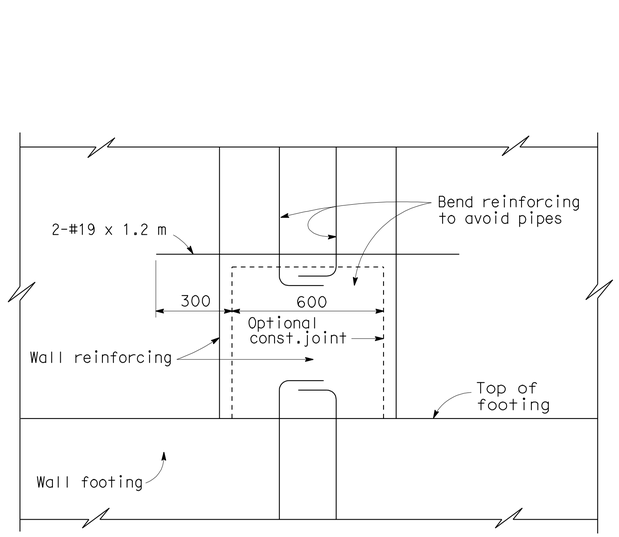

DETAIL B

SECTION H-H

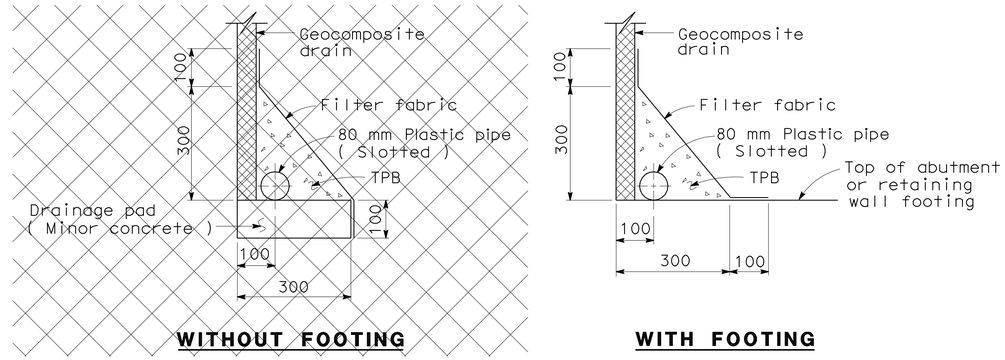

WITHOUT FOOTING — WITH FOOTING

DRAINAGE DETAILS

NO SCALE

ALL DIMENSIONS ARE IN MILLIMETERS UNLESS OTHERWISE SHOWN

STANDARD DRAWING				
RELEASE DATE 4/23/98	DESIGN	BY M. TRAFFALIS	CHECKED E. THORKILDSEN	RELEASED BY
FILE NO. xs3-110	DETAILS	BY R. YEE	CHECKED E. THORKILDSEN	OFFICE CHIEF
	SUBMITTED	BY M. HA	DRAWING DATE 4/98	

DS OSD 2147A (METRIC) (REV. 2/25/97)

1 Revised "SECTION E-E"

STATE OF CALIFORNIA
DEPARTMENT OF TRANSPORTATION

DIVISION OF ENGINEERING SERVICES
STRUCTURE DESIGN
DESIGN BRANCH 6

BRIDGE NO. 44-0284
KILOMETER POST 151.4

PRUNEDALE SOUTH ROAD OC
STRUCTURE APPROACH DRAINAGE DETAILS

ORIGINAL SCALE IN MILLIMETERS FOR REDUCED PLANS 0 10 20 30 40 50 60 70 80 90 100

CU 05
EA 0161E1

DISREGARD PRINTS BEARING EARLIER REVISION DATES

REVISION DATES (PRELIMINARY STAGE ONLY) 01-18-07 12-23-08 02-24-09 02-26-09 03-16-10 05-06-10

SHEET 14 OF 17

USERNAME => trlenard

44-0284-s-sadd.dgn

DATE PLOTTED => 12-AUG-2010 TIME PLOTTED => 06:08

DIST.	COUNTY	ROUTE	KILOMETER POST TOTAL PROJECT	SHEET NO.	TOTAL SHEETS
05	Mon	101	R146.8/159.7	1244	1402

Caltrans Metric

REGISTERED ENGINEER - CIVIL

7-26-10

PLANS APPROVAL DATE

REGISTERED PROFESSIONAL ENGINEER HERNAN PEREZ No. 60993 Exp. 12-31-10 CIVIL STATE OF CALIFORNIA

The State of California or its officers or agents shall not be responsible for the accuracy or completeness of electronic copies of this plan sheet.

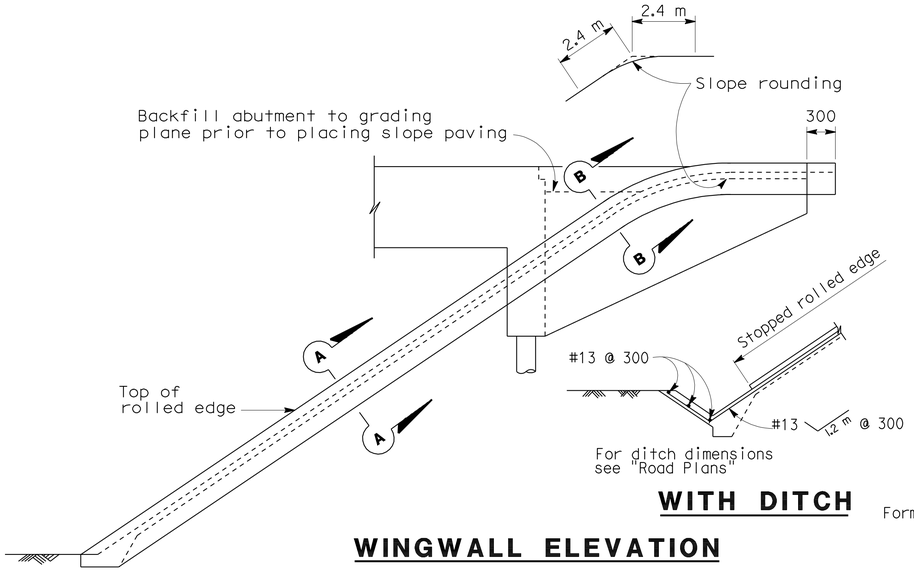

WITH DITCH

WINGWALL ELEVATION

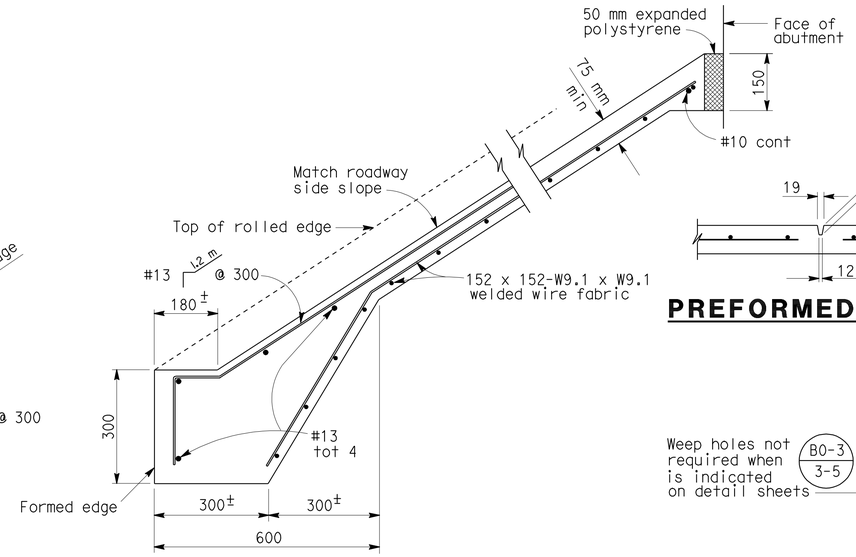

TYPICAL SECTION - CONCRETE PAVING

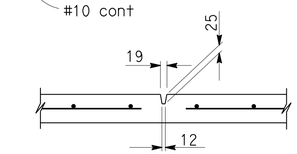

PREFORMED GROOVE

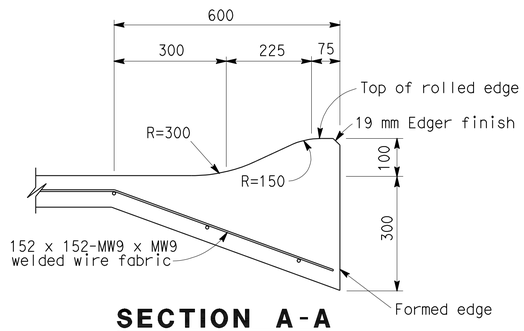

SECTION A-A

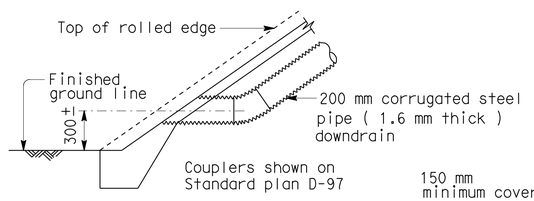

TYPICAL - NO CURB

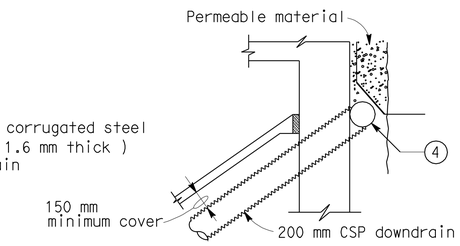

TYPICAL - DRAIN CONNECTION

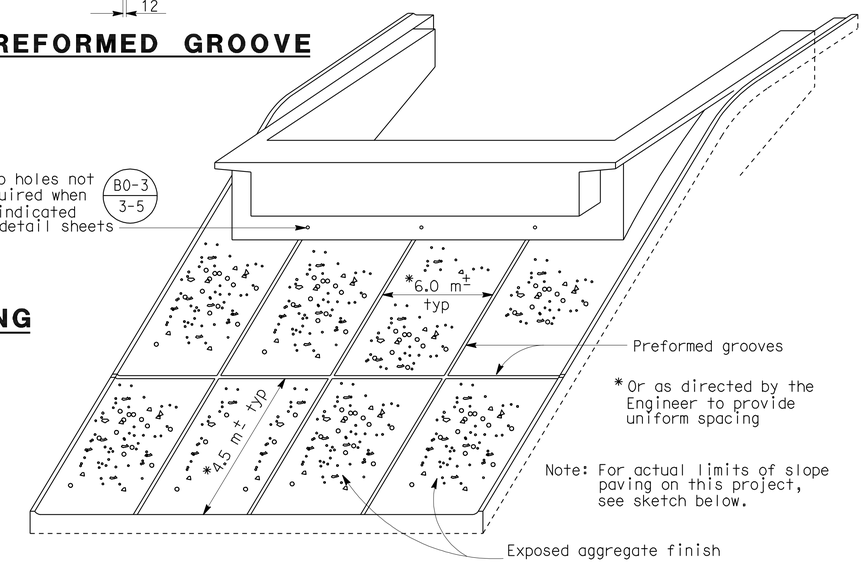

PICTORIAL VIEW OF TYPICAL INSTALLATION

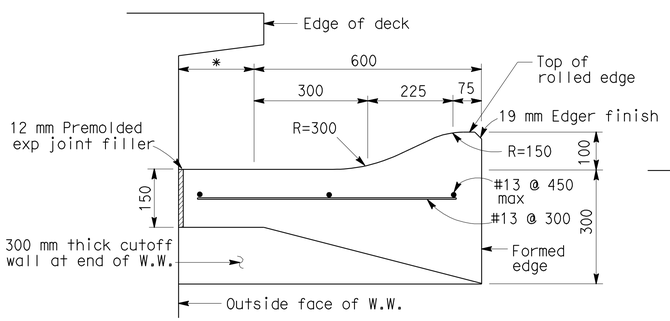

SECTION B-B

*This dimension becomes zero when edge of deck is at outside face of W.W.

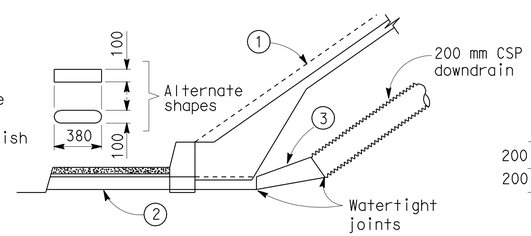

TYPICAL - WITH SIDEWALK

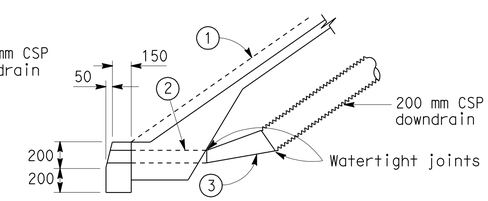

TYPICAL - WITH CURB

DRAINAGE DETAILS

Note: Drainage details are only applicable when B0-3 / 3-5 is indicated on detail sheets.

1. Top of rolled edge
2. Conduit: 1.6 mm galv corrugated steel or 2.8 mm smooth galv steel
3. Taper: 1.6 mm / 2.8 mm smooth galv steel
4. 200 mm perforated steel pipe (1.6 mm thick) underdrain behind abutment. Connect to downdrain as shown on limits of Slope Paving & Drainage layout.

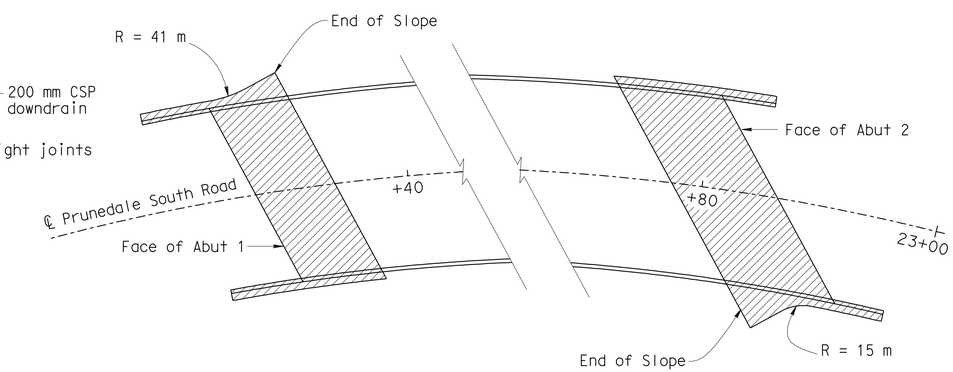

LIMITS OF SLOPE PAVING & DRAINAGE LAYOUT

Indicates Limits of Slope Paving and Drainage Layout

NO SCALE

ALL DIMENSIONS ARE IN MILLIMETERS UNLESS OTHERWISE SHOWN

STANDARD DRAWING				
RELEASE DATE 4/20/00	DESIGN	BY	CHECKED	RELEASED BY
	DETAILS	BY R. YEE	CHECKED	
FILE NO. xs4-210	SUBMITTED	BY C.W. PURKISS	DRAWING DATE 3/89	OFFICE CHIEF

STATE OF CALIFORNIA DEPARTMENT OF TRANSPORTATION

DIVISION OF ENGINEERING SERVICES STRUCTURE DESIGN

DESIGN BRANCH 6

BRIDGE NO. 44-0284

KILOMETER POST 151.4

PRUNEDALE SOUTH ROAD OC

SLOPE PAVING-FULL SLOPE

DS OSD 2147A (METRIC) (REV. 2/25/97)

ORIGINAL SCALE IN MILLIMETERS FOR REDUCED PLANS 0 10 20 30 40 50 60 70 80 90 100

CU 05
EA 0161E1

DISREGARD PRINTS BEARING EARLIER REVISION DATES

REVISION DATES (PRELIMINARY STAGE ONLY) 03-12-07 02-23-08 02-24-08 04-28-08 03-10-10 05-06-10

SHEET 15 OF 17

USERNAME => trlenard

44-0284-s-slp.dgn

DATE PLOTTED => 03-AUG-2010 TIME PLOTTED => 06:18

DIST	COUNTY	ROUTE	KILOMETER POST TOTAL PROJECT	SHEET No	TOTAL SHEETS
05	Mon	101	R146.8/159.7	1245	1402

REGISTERED CIVIL ENGINEER — DATE 05-06-10

7-26-10
PLANS APPROVAL DATE

REGISTERED PROFESSIONAL ENGINEER — HERNAN PEREZ — No. 60993 — Exp. 12-31-10 — CIVIL — STATE OF CALIFORNIA

The State of California or its officers or agents shall not be responsible for the accuracy or completeness of electronic copies of this plan sheet.

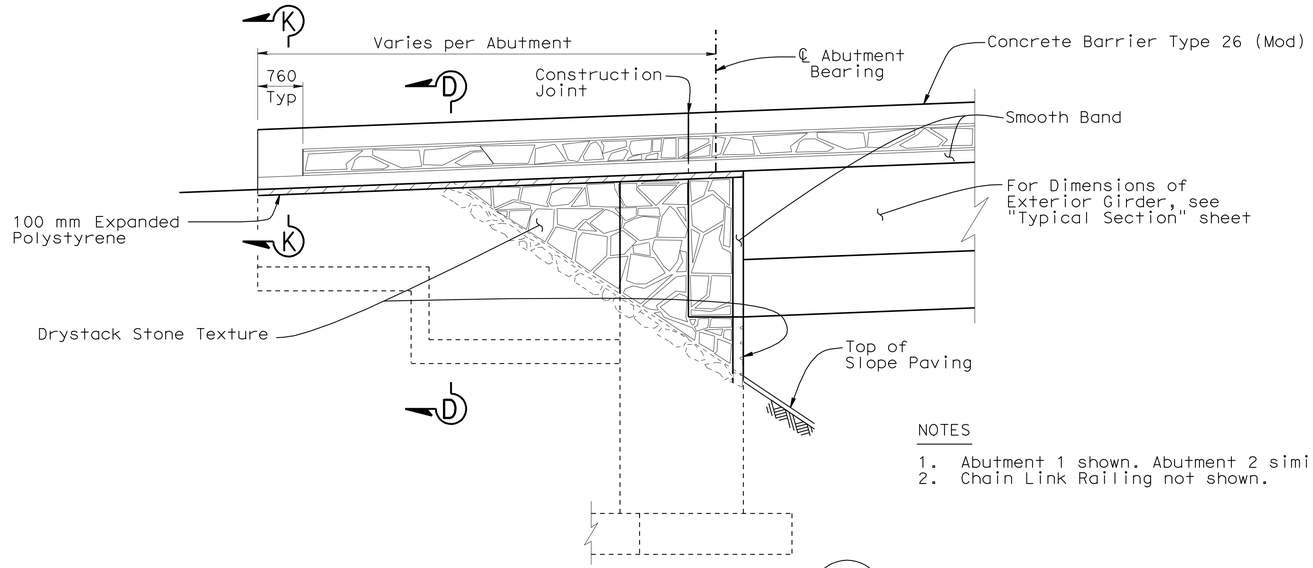

NOTES

1. Abutment 1 shown. Abutment 2 similar
2. Chain Link Railing not shown.

RETAINING WALL ELEVATION

1:50 — B11-54

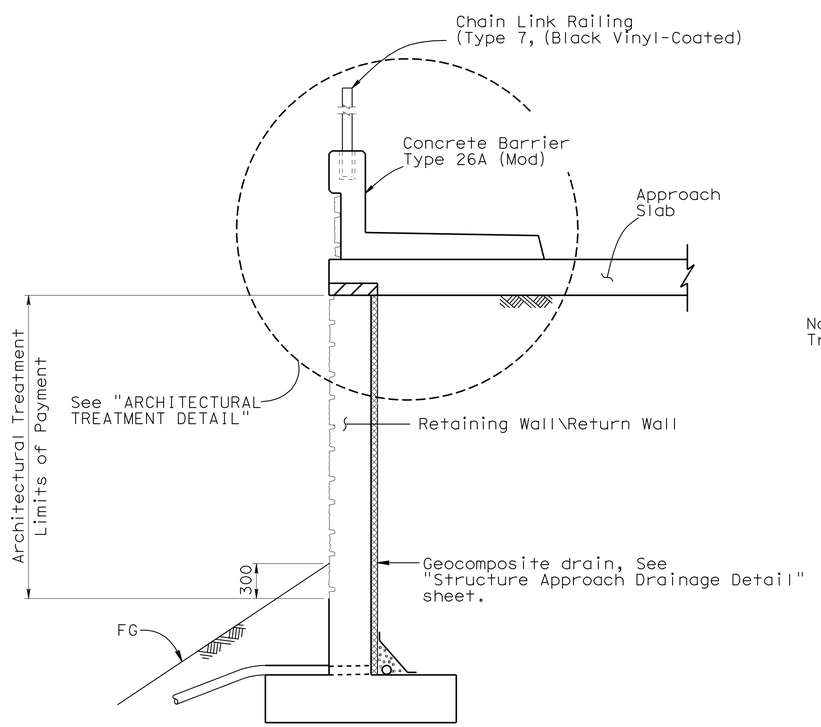

SECTION D-D

1:25 — B11-54 B3-8

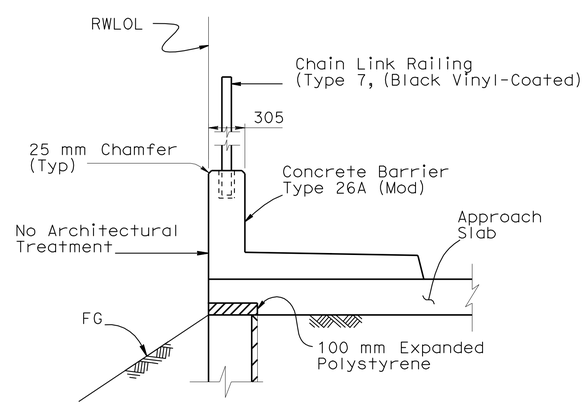

SECTION K-K

1:25 — B11-54

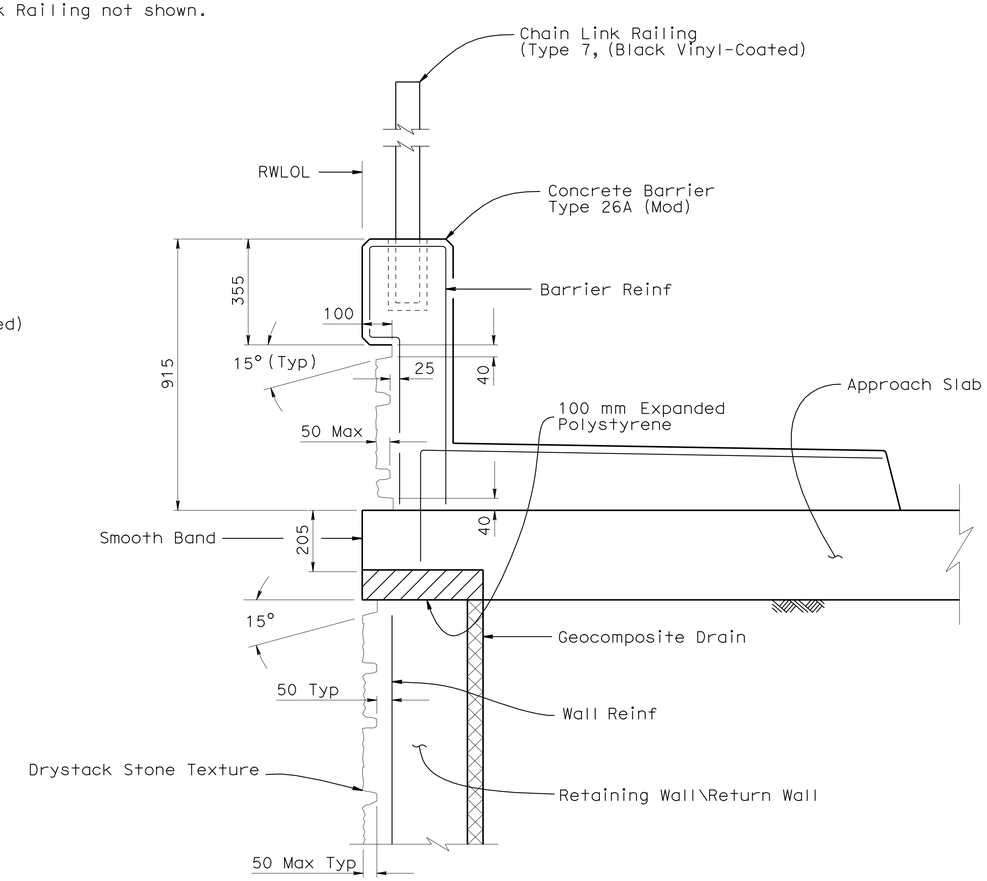

ARCHITECTURAL TREATMENT DETAIL

1:10

Caltrans Metric

	BY	CHECKED
DESIGN	Prakarn Paksaichol	Ryan Odell
DETAILS	George Zweier	Ryan Odell
QUANTITIES	Ryan Odell	Ae Tern

STATE OF CALIFORNIA
DEPARTMENT OF TRANSPORTATION

DIVISION OF ENGINEERING SERVICES
STRUCTURE DESIGN
DESIGN BRANCH 6

BRIDGE NO. 44-0284
KILOMETER POST 151.4

PRUNEDALE SOUTH ROAD OC
ARCHITECTURAL TREATMENT

ALL DIMENSIONS ARE IN MILLIMETERS UNLESS OTHERWISE SHOWN

ORIGINAL SCALE IN MILLIMETERS FOR REDUCED PLANS 0 10 20 30 40 50 60 70 80 90 100

CU 05
EA 0161E1

DISREGARD PRINTS BEARING EARLIER REVISION DATES

REVISION DATES: 04-2-01 04-30-01 09-03-08 10-03-08 12-23-08 02-24-09 09-23-09 09-28-09 03-09-10 05-06-10

SHEET 16 OF 17

STRUCTURES DESIGN DETAIL SHEET (METRIC) (REV.03-17-04)

FILE => 44-0284-y-archtrt.dgn

USERNAME => trrichard DATE PLOTTED => 12-AUG-2010 TIME PLOTTED => 06:08

DIST	COUNTY	ROUTE	KILOMETER POST TOTAL PROJECT	SHEET No	TOTAL SHEETS
05	Mon	101	R146.8/159.7	1246	1402

REGISTERED CIVIL ENGINEER 6-2-08

7-26-10
PLANS APPROVAL DATE

REGISTERED PROFESSIONAL ENGINEER Dan Appelbaum No. C50001 Exp. 6-30-09 CIVIL STATE OF CALIFORNIA

The State of California or its officers or agents shall not be responsible for the accuracy or completeness of electronic copies of this plan sheet.

Notes:

1. 35 mm samples were taken using a standard split barrel sampler with an inside diameter (I.D.) of 35 mm and an outside diameter (O.D.) of 51 mm.
2. A safety driver hammer with a 63.5 kg hammer dropped 762 mm and an assumed efficiency of 60% was used to advance the sampler for boring B1-07. A Deidrich automatic hammer with an average efficiency of 80% was used to advance the sampler for boring B7-07.
3. Borings were drilled using an "HX" wireline core barrel with "HQ" drill rod, outside diameter (O.D.) of 89 mm and inside diameter (I.D.) of 78 mm.
4. qu= Unconfined compressive strength as determined by pocket penetrometer (kPa).

BENCH MARK

PM 94.04 Elev. 28.264 m (NAVD88)
0.025m IP w/yellow cal dot pp & bathey cap, stamped 94.04, above big cut on lt, 45.72 m bk of highest part of cut, 7.62 m bk of jp #196, 5.18 m inside r/w fc, 3.05 m outside top of cut, down 0.12m.

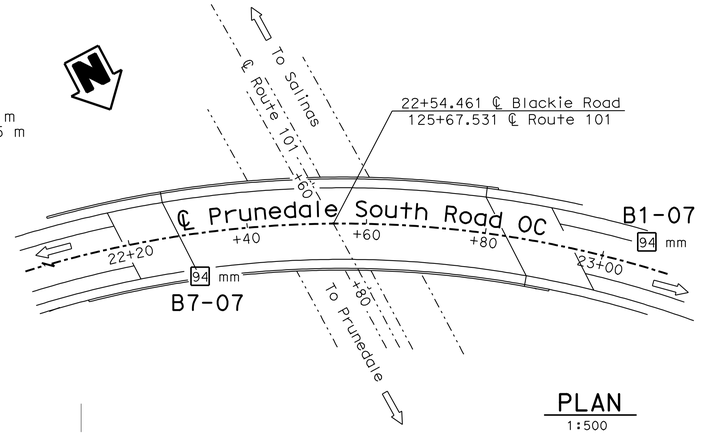

PLAN
1:500

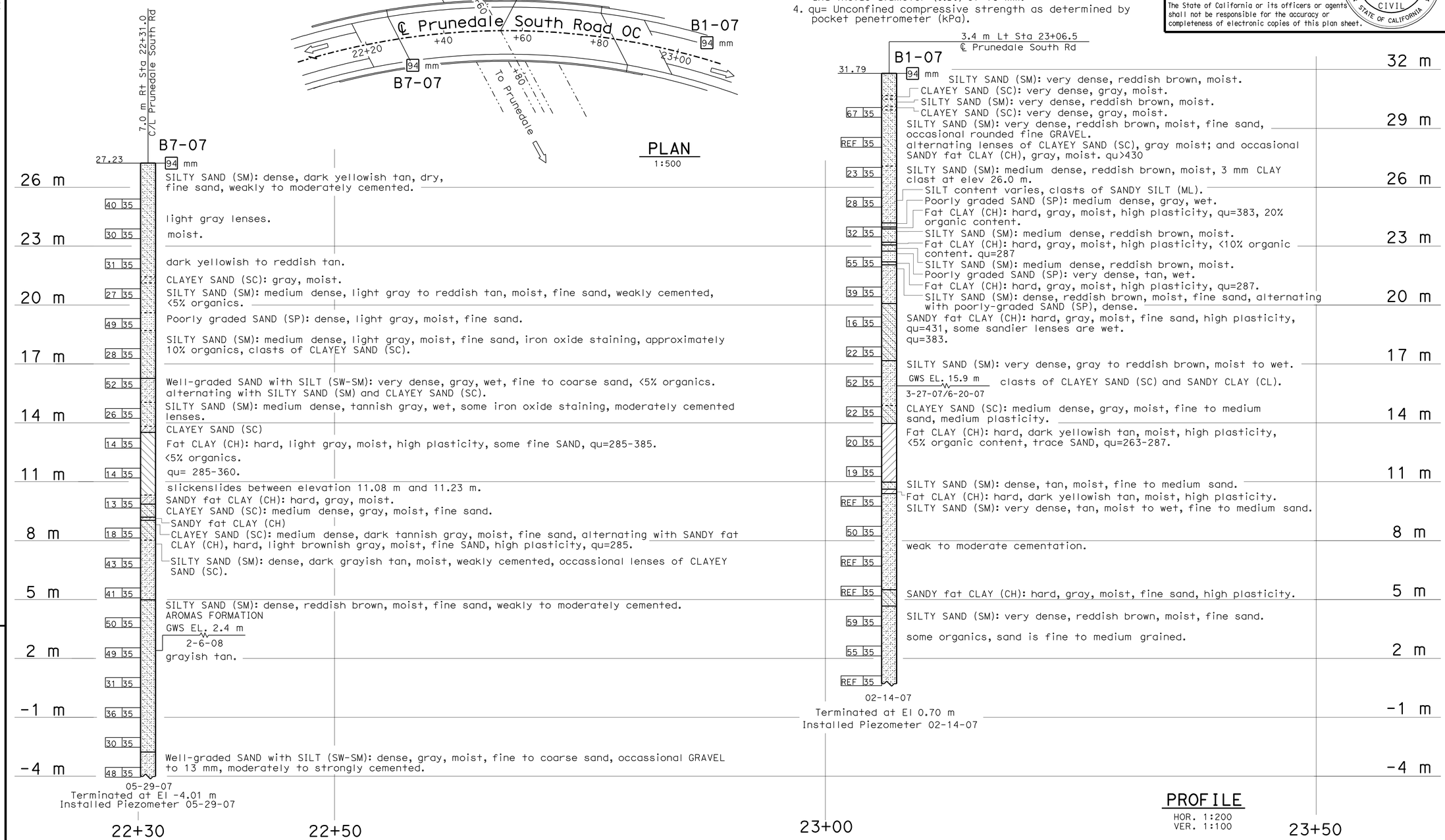

PROFILE
HOR. 1:200
VER. 1:100

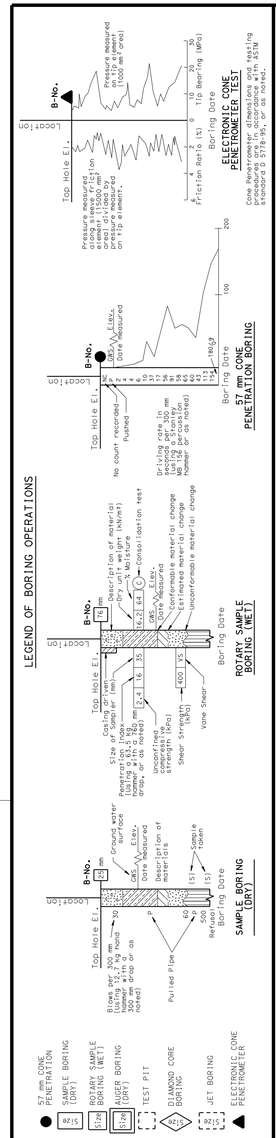

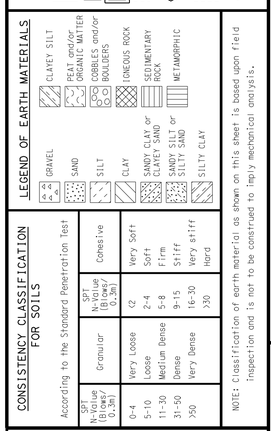

CONSISTENCY CLASSIFICATION FOR SOILS

According to the Standard Penetration Test

SPT N-Value (Blows/0.3m)	Granular	SPT N-Value (Blows/0.3m)	Cohesive
0-4	Very Loose	<2	Very Soft
5-10	Loose	2-4	Soft
11-30	Medium Dense	5-8	Firm
31-50	Dense	9-15	Stiff
>50	Very Dense	16-30	Very stiff
		>30	Hard

NOTE: Classification of earth material as shown on this sheet is based upon field inspection and is not to be construed to imply mechanical analysis.

OGS CIVIL LOG OF TEST BORINGS SHEET (METRIC) (REV. 4/04)

Caltrans Metric

ENGINEERING SERVICES	GEOTECHNICAL SERVICES
DRAWN BY	W. Tang 01/08
CHECKED BY	W. Hoon

FIELD INVESTIGATION BY: W. Hoon

STATE OF CALIFORNIA DEPARTMENT OF TRANSPORTATION

DIVISION OF ENGINEERING SERVICES STRUCTURE DESIGN
DESIGN BRANCH 6

BRIDGE NO. 44-0284
KILOMETER POST 151.4

PRUNEDALE SOUTH ROAD OC
LOG OF TEST BORINGS

ALL DIMENSIONS ARE IN METERS UNLESS OTHERWISE SHOWN

ORIGINAL SCALE IN MILLIMETERS FOR REDUCED PLANS 0 10 20 30 40 50 60 70 80 90 100

CU 05
EA 0161E1

DISREGARD PRINTS BEARING EARLIER REVISION DATES

REVISION DATES (PRELIMINARY STAGE ONLY) 02-14-08 06-02-08

SHEET 17 OF 17

FILE => 44-0284-z-lt01.dgn

USERNAME => trlenard DATE PLOTTED => 03-AUG-2010 TIME PLOTTED => 06:18

DIST.	COUNTY	ROUTE	KILOMETER POST TOTAL PROJECT	SHEET NO.	TOTAL SHEETS
05	Mon	101	R146.8/159.7	1247	1402

Caltrans Metric

Jerome R. Marcotte 5-03-10
REGISTERED CIVIL ENGINEER DATE

7-26-10
PLANS APPROVAL DATE

REGISTERED PROFESSIONAL ENGINEER J. MARCOTTE No. C 36844 Exp. 6-30-10 Civil STATE OF CALIFORNIA

The State of California or its officers or agents shall not be responsible for the accuracy or completeness of electronic copies of this plan sheet.

INDEX OF SHEETS

SHEET NO.	DESCRIPTION
GP-1	GENERAL PLAN
WATER	
WI-0	NOTES, LEGEND AND ABBREVIATIONS
WI-1	SITE PLAN
WI-2	DETAILS 1
WI-3	DETAILS 2
ELECTRICAL	
EEI-1	ELECTRICAL SITE PLAN AND LEGEND
EEI-2	WELL PUMP CONTROL PANEL ENCLOSURE DETAILS
EEI-3	WELL PUMP CONTROL SCHEMATIC AND INTERCONNECTION BLOCK DIAGRAM

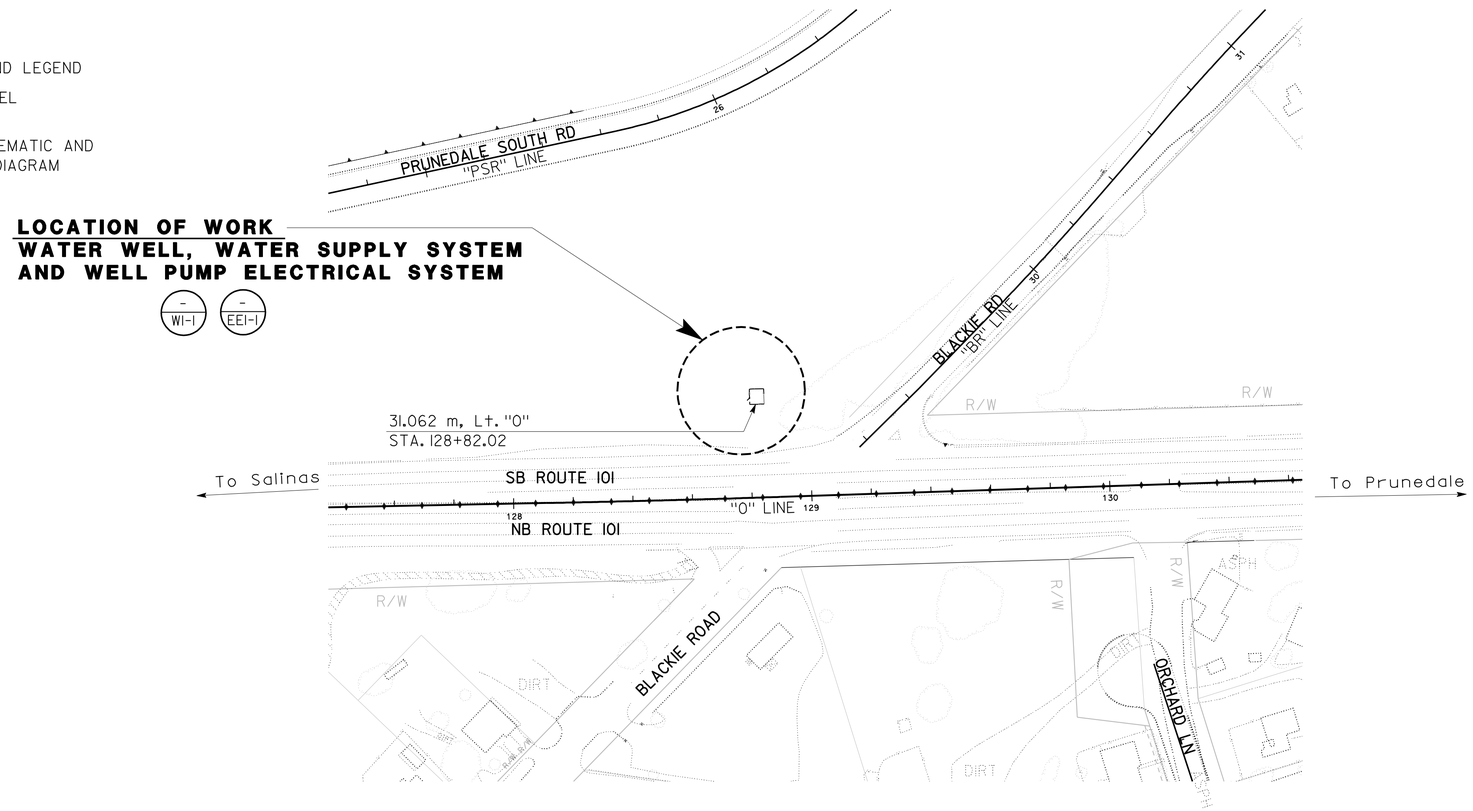

QUANTITIES

WELL DEVELOPMENT	LUMP SUM
TESTING WELL	10 HR
DRILL PILOT HOLE	100 m
REAMING WATER WELL	100 m
CONDUCTOR CASING	16 m
BLANK WELL CASING	98 m
WELL SCREEN	12 m
WATER SUPPLY SYSTEM	LUMP SUM
MOBILIZATION, DEMOBILIZATION, AND FINAL CLEANUP	LUMP SUM
WELL PUMP ELECTRICAL SYSTEM	LUMP SUM

GENERAL PLAN

SCALE 1:1000

ALL DIMENSIONS SHOWN IN MILLIMETERS, EXCEPT AS NOTED

DESIGN SUPERVISOR Jack Schoff
Jerome R. Marcotte
DESIGN ENGINEER

	BY	CHECKED
DESIGN	Amar Baldwan	Jerry Marcotte
DETAILS	Amar Baldwan	Don Hansen
QUANTITIES	Amar Baldwan	Jerry Marcotte

STATE OF CALIFORNIA
DEPARTMENT OF TRANSPORTATION

DIVISION OF ENGINEERING SERVICES
ELECTRICAL-MECHANICAL-WATER AND WASTEWATER DESIGN

BRIDGE NO. 44-0284
KM POST R146.8/161.6

BLACKIE ROAD IRRIGATION WELL
GENERAL PLAN

SHEET **GP**

DOS ELEC (10/98) FILE => agp1.dgn
DATE PLOTTED => 12-AUG-2010 TIME PLOTTED => 06:09

ORIGINAL SCALE IN MILLIMETERS FOR REDUCED PLANS 0 10 20 30 40 50 60 70 80 90 100

CU 06226
EA 0161E1

DISREGARD PRINTS BEARING EARLIER REVISION DATES → 2-26-08 | 10-15-08 | 11-19-08 | 12-30-08 | 1-27-09 | 5-03-10

REVISION DATES (PRELIMINARY STAGE ONLY) SHEET 1 OF 8

FILE => agp1.dgn

USERNAME => trlenard DATE PLOTTED => 12-AUG-2010 TIME PLOTTED => 06:09

VI=1

DIST.	COUNTY	ROUTE	KILOMETER POST TOTAL PROJECT	SHEET NO.	TOTAL SHEETS
05	Mon	101	R146.8/159.7	1248	1402

Caltrans Metric

REGISTERED CIVIL ENGINEER — DATE 5-03-10

7-26-10
PLANS APPROVAL DATE

REGISTERED PROFESSIONAL ENGINEER — J. MARCOTTE — No. C 36844 — Exp. 6-30-10 — Civil — STATE OF CALIFORNIA

The State of California or its officers or agents shall not be responsible for the accuracy or completeness of electronic copies of this plan sheet.

ABBREVIATIONS

AB	AGGREGATE BASE	m	METER (S)
ABS	ACRYLONITRILE BUTADIENE STYRENE (PIPE)	MAX	MAXIMUM
AC	ASPHALT CONCRETE	MFR	MANUFACTURER
AVC	AIR VOLUME CONTROLLER	MH	MANHOLE
B	BUNG	MIN	MINIMUM
BLDG	BUILDING	mm	MILLIMETER
C	CONDUIT	N	NORTH
C-C	CENTER TO CENTER	NIC	NOT IN CONTRACT
CI	CAST-IRON	NO	NUMBER
cm	CENTIMETERS	OC	ON CENTER
CMP	CORRUGATED METAL PIPE	OD	OUTSIDE DIAMETER
CONC	CONCRETE	OG	ORIGINAL GROUND
COTF	CLEANOUT TO FLOOR	O/W	OIL WATER SEPARATOR
COTG	CLEANOUT TO GRADE	P	PITCH
CW	COLD WATER PIPE	PCC	PORTLAND CEMENT CONCRETE
D	DRAIN	PH	PHASE
DI	DRAIN INLET	PRV	PRESSURE REDUCING VALVE
DIA	DIAMETER	PVC	POLYVINYL CHLORIDE (PIPE)
DP	DRAIN PIPE	PW	PRESSURE WASHER
E	ELECTRICAL	R	RADIUS
(E)	EXISTING	RCP	REINFORCED CONCRETE PIPE
EA	EACH	REQ	REQUIRED
EL	ELEVATION	RPM	REVOLUTIONS PER MINUTE
EP	EDGE OF PAVEMENT	RPU	RECYCLE PROCESS UNIT
FF	FINISH FLOOR	RT	RIGHT
FG	FINISH GRADE	RW	RETURN WATER
FL	FLOW LINE	R/W	RIGHT-OF-WAY
FM	FORCE MAIN	S	SEWER
FOC	FACE OF CONCRETE	SCH	SCHEDULE
GA	GAUGE	SD	STORM DRAIN
GAC	GRANULAR ACTIVATED CARBON	SP	SEWER PIPE
GSP	GALVANIZED STEEL PIPE	SQ	SQUARE
GV	GATE VALVE	STA	STATION
HF	HOSE FAUCET	STD	STANDARD
HP	HORSEPOWER	TBM	TEMPORARY BENCH MARK
HT	HEIGHT	TOC	TOP OF CURB OR CONCRETE
HZ	HERTZ	TOT	TOTAL
ID	INSIDE DIAMETER	TYP	TYPICAL
IE	INVERT ELEVATION	VP	VENT PIPE
kg	KILOGRAMS	VCP	VITRIFIED CLAY PIPE
Kw	KILOWATT	W	WATER
L	LITER(S)	W/O	WITHOUT
LPM	LITERS PER MINUTE	WP	WATER PIPE
LT	LEFT	WSP	WELDED STEEL PIPE

LEGEND

S	SANITARY SEWER
D	DRAIN
RD	RETURN DRAIN
V	VENT
W	WATER
FM	FORCE MAIN
L	LEACH LINES

7 / SS-5	DETAIL / SHEET NUMBER
99.00	NEW GRADE IN METERS
X (100.00)	EXISTING SPOT GRADE IN METERS
	SURFACE DRAINAGE
	ABANDON (E)
	BENCHMARK ELEVATION
℄	CENTERLINE
ø	DIAMETER
	SECTION / ELEVATION LETTER / SHEET NUMBER
	TREE

GENERAL WORK NOTES

The Contractor shall verify all controlling field dimensions and conditions before ordering or fabricating any materials.

The Contractor shall verify exact location of all underground facilities and utilities prior to start of construction.

No 90 degree bends allowed on drain or sewer pipe.

REQUIRED THRUST BLOCK BEARING AREA- TOTAL SQUARE METERS

TYPE OF FITTING		90 BEND	45 BEND	11-1/4 BEND 22-1/2 BEND	TEE OR DEAD END
TYPICAL INSTALLATION		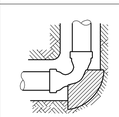	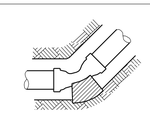	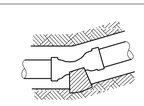	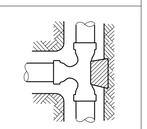
PIPE SIZE (mm)	≤100	0.2	0.1	0.1	0.2
	150	0.4	0.2	0.1	0.3
	200	0.7	0.4	0.2	0.5
	250	1.1	0.6	0.3	0.8

PIPE FITTINGS AND VALVES

- CAP, THREADED
- ELBOW, TURNED DOWN
- FLEXIBLE CONNECTOR
- REDUCER, CONCENTRIC
- REDUCER, ECCENTRIC
- PRESSURE GAUGE (WITH VALVE AND SNUBBER)
- UNION
- UNION, INSULATING
- VALVE, BALL
- VALVE, CHECK
- VALVE, GATE
- VALVE, SAFETY RELIEF
- VALVE, PRESSURE REDUCING

ALL DIMENSIONS SHOWN IN MILLIMETERS, EXCEPT AS NOTED

	BY	CHECKED
DESIGN	Amar Baldwan	Jerry Marcotte
DETAILS	Amar Baldwan	Don Hansen
QUANTITIES	Amar Baldwan	Jerry Marcotte

STATE OF CALIFORNIA
DEPARTMENT OF TRANSPORTATION

DIVISION OF ENGINEERING SERVICES
ELECTRICAL-MECHANICAL-WATER AND WASTEWATER DESIGN

BRIDGE NO. 44-0284
KM POST R146.8/161.6

BLACKIE ROAD IRRIGATION WELL

NOTES, LEGEND & ABBREVIATIONS

SHEET **W1-0**

DOS ELEC (10/98)
FILE => aw1_0.dgn
DATE PLOTTED => 03-AUG-2010 TIME PLOTTED => 06:18

ORIGINAL SCALE IN MILLIMETERS FOR REDUCED PLANS 0 10 20 30 40 50 60 70 80 90 100

CU 06226
EA 0161E1

DISREGARD PRINTS BEARING EARLIER REVISION DATES → 2-26-08 | 10-15-08 | 11-19-08 | 2-26-09 | 1-27-09 | 5-03-10

REVISION DATES (PRELIMINARY STAGE ONLY) — SHEET 2 OF 8

FILE => aw1_0.dgn

USERNAME => trlenard DATE PLOTTED => 03-AUG-2010 TIME PLOTTED => 06:18

VI=I

DIST.	COUNTY	ROUTE	KILOMETER POST TOTAL PROJECT	SHEET NO.	TOTAL SHEETS
05	Mon	101	R146.8/159.7	1249	1402

Caltrans Metric

Jerome R. Marcotte 5-03-10
REGISTERED CIVIL ENGINEER DATE

7-26-10
PLANS APPROVAL DATE

REGISTERED PROFESSIONAL ENGINEER J. MARCOTTE No. C 36844 Exp. 6-30-10 Civil STATE OF CALIFORNIA

The State of California or its officers or agents shall not be responsible for the accuracy or completeness of electronic copies of this plan sheet.

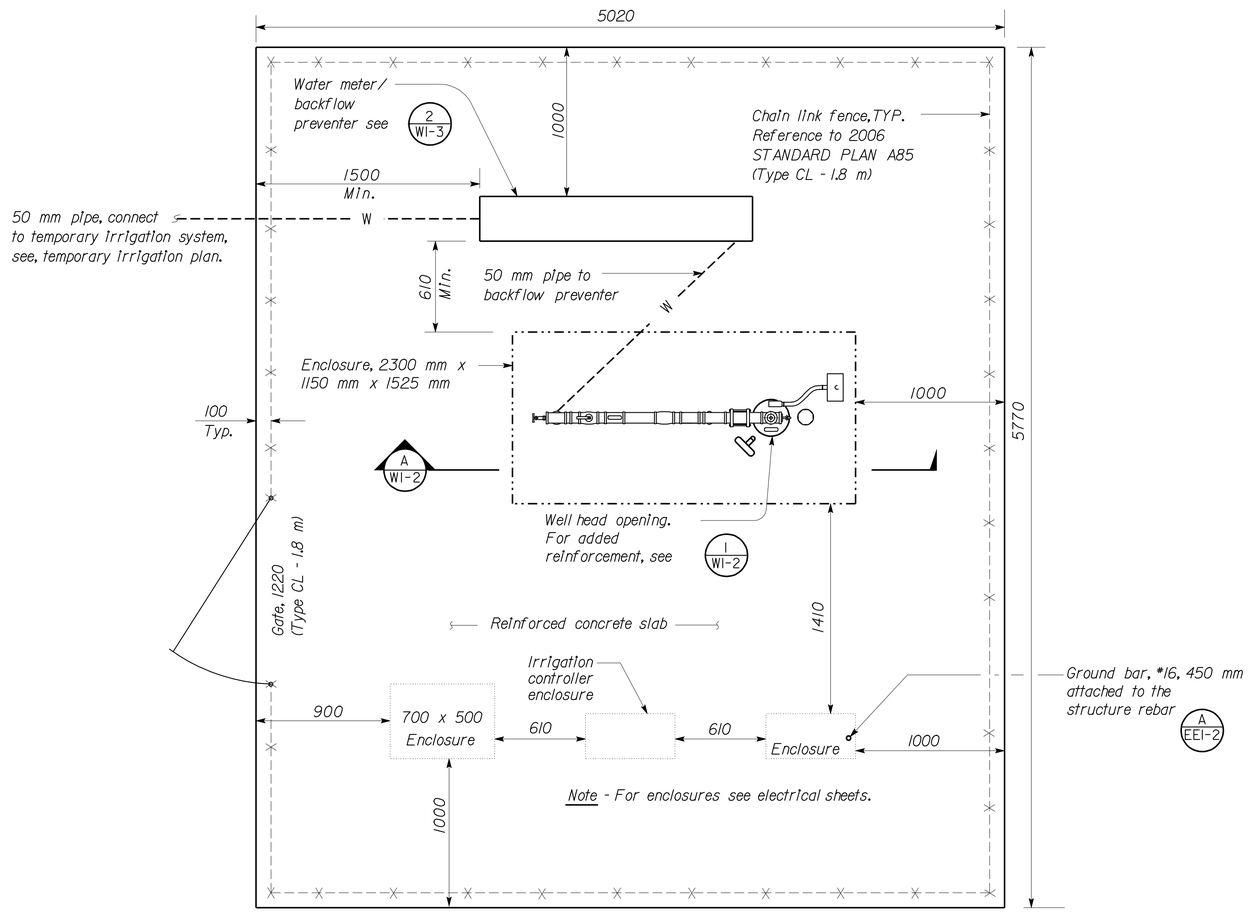

LOL "O", STA. 128+82.02
BLACKIE ROAD IRRIGATION WELL
SITE PLAN

SCALE 1:20

ALL DIMENSIONS SHOWN IN MILLIMETERS, EXCEPT AS NOTED

	BY	CHECKED
DESIGN	Amar Baldwan	Jerry Marcotte
DETAILS	Amar Baldwan	Don Hansen
QUANTITIES	Amar Baldwan	Jerry Marcotte

STATE OF CALIFORNIA DEPARTMENT OF TRANSPORTATION

DIVISION OF ENGINEERING SERVICES ELECTRICAL-MECHANICAL-WATER AND WASTEWATER DESIGN

BRIDGE NO. 44-0284
KM POST R146.8/161.6

BLACKIE ROAD IRRIGATION WELL
SITE PLAN

SHEET **W1-1**

DOS ELEC (10/98)
FILE => aw1_1.dgn
DATE PLOTTED => 03-AUG-2010 TIME PLOTTED => 06:18

ORIGINAL SCALE IN MILLIMETERS FOR REDUCED PLANS 0 10 20 30 40 50 60 70 80 90 100

CU 06226
EA 0161E1

DISREGARD PRINTS BEARING EARLIER REVISION DATES

REVISION DATES (PRELIMINARY STAGE ONLY): 2-26-08 10-15-08 11-19-08 2-20-08 1-27-09 5-03-10

SHEET 3 OF 8

FILE => aw1_1.dgn

USERNAME => rlenard DATE PLOTTED => 03-AUG-2010 TIME PLOTTED => 06:18

V1=1

DIST.	COUNTY	ROUTE	KILOMETER POST TOTAL PROJECT	SHEET NO.	TOTAL SHEETS
05	Mon	101	R146.8/159.7	1250	1402

Caltrans Metric

REGISTERED CIVIL ENGINEER — DATE 1-27-09

7-26-10
PLANS APPROVAL DATE

REGISTERED PROFESSIONAL ENGINEER J. MARCOTTE No. C 36844 Exp. 6-30-10 Civil STATE OF CALIFORNIA

The State of California or its officers or agents shall not be responsible for the accuracy or completeness of electronic copies of this plan sheet.

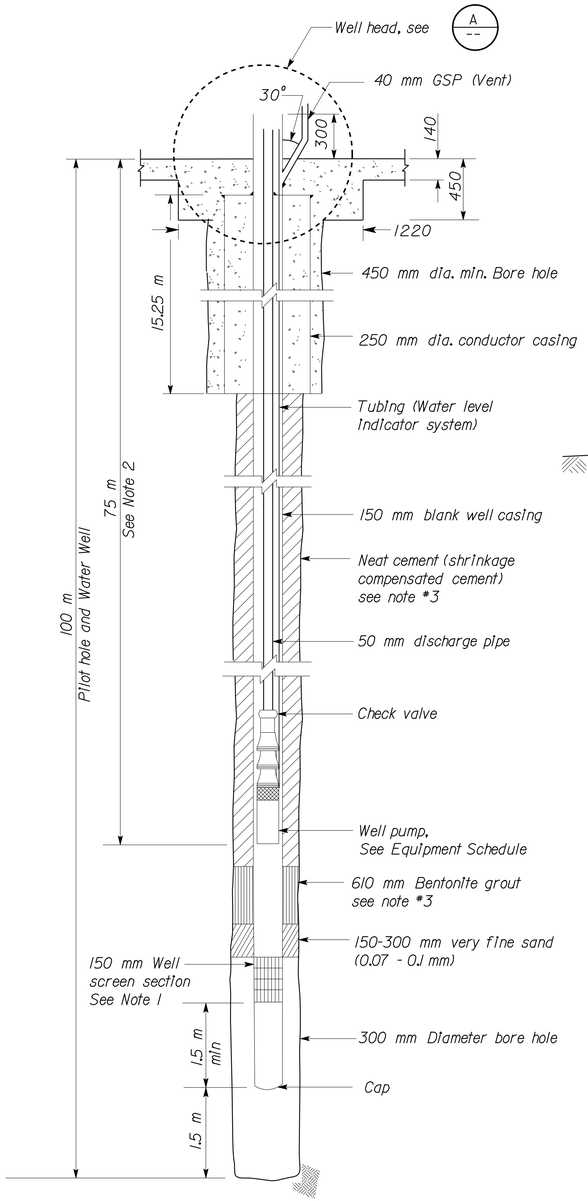

WATER WELL - SECTION

NO SCALE

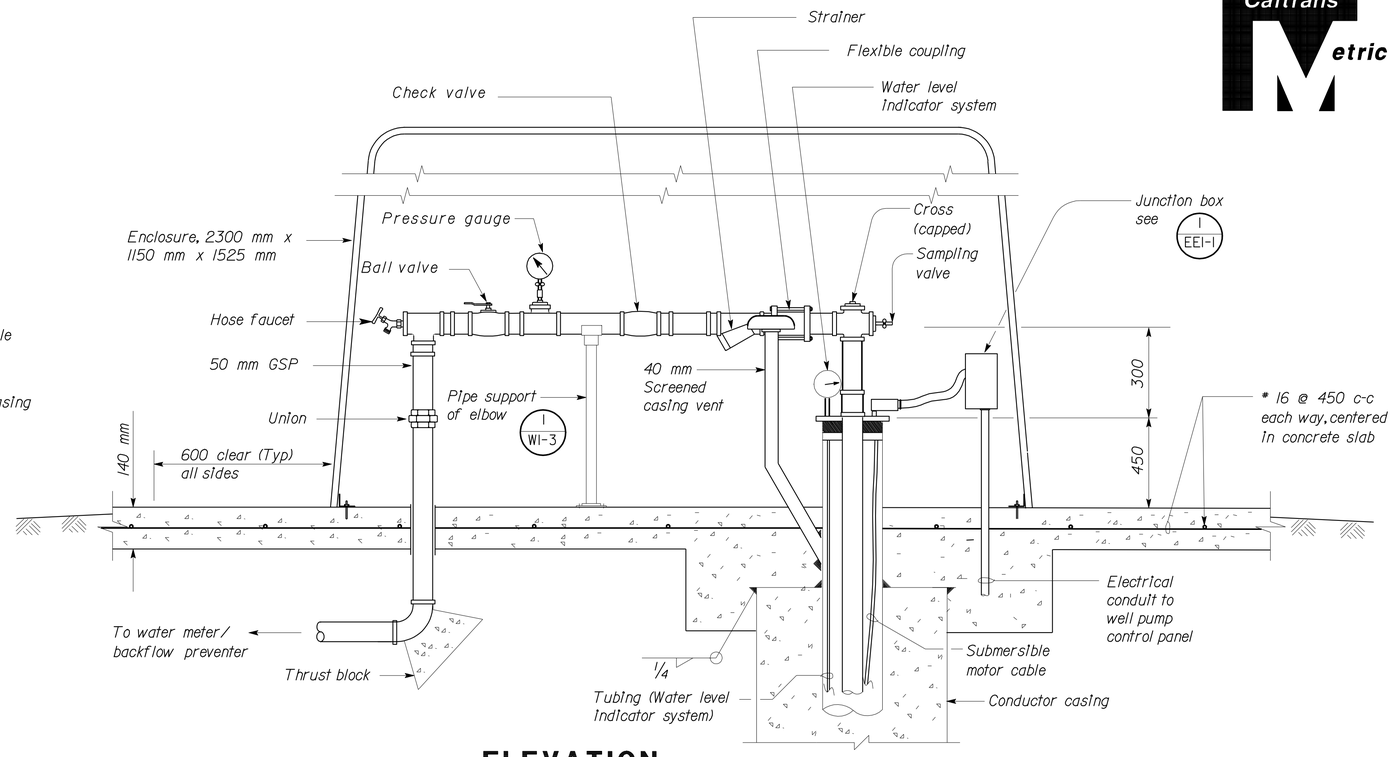

ELEVATION

A WELL HEAD

SCALE 1:10

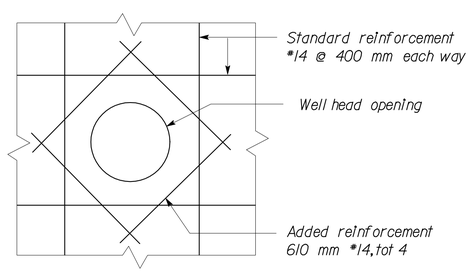

1 WELL OPENING REINFORCEMENT

NO SCALE

EQUIPMENT SCHEDULE

EQUIPMENT	SPEED (RPM)	kW	VOLTS	PHASE	PUMPING RATE (LPM)	TOTAL DYNAMIC HEAD (M)
SUBMERSIBLE WELL PUMP	3450	3.7	230	3	117	104
					132	99
					147	94

Notes:

1. *Exact locations and lengths of well screen sections shall be field determined.*
2. *Actual depth of well pump shall be determined from well testing data. For bidding purposes use depth shown.*
3. *Shall be constructed according to AWWA, A100-06*

ALL DIMENSIONS SHOWN IN MILLIMETERS, EXCEPT AS NOTED

	BY	CHECKED
DESIGN	Amar Baldwan	Jerry Marcotte
DETAILS	Amar Baldwan	Don Hansen
QUANTITIES	Amar Baldwan	Jerry Marcotte

STATE OF CALIFORNIA DEPARTMENT OF TRANSPORTATION

DIVISION OF ENGINEERING SERVICES
ELECTRICAL-MECHANICAL-WATER AND WASTEWATER DESIGN

BRIDGE NO. 44-0284
KM POST 146.8/161.6

BLACKIE ROAD IRRIGATION WELL

DETAILS 1

SHEET **W1-2**

DOS ELEC (10/98) FILE => aw1_2.dgn
DATE PLOTTED => 03-AUG-2010 TIME PLOTTED => 06:19

ORIGINAL SCALE IN MILLIMETERS FOR REDUCED PLANS 0 10 20 30 40 50 60 70 80 90 100

CU 06226
EA 0161E1

DISREGARD PRINTS BEARING EARLIER REVISION DATES

REVISION DATES (PRELIMINARY STAGE ONLY): 2-26-08, 10-15-08, 11-19-08, 12-30-08, 1-27-09

SHEET 4 OF 8

FILE => aw1_2.dgn

USERNAME => trlenard DATE PLOTTED => 03-AUG-2010 TIME PLOTTED => 06:19

V1=1

DIST.	COUNTY	ROUTE	KILOMETER POST TOTAL PROJECT	SHEET NO.	TOTAL SHEETS
05	Mon	101	R146.8/159.7	1251	1402

Caltrans Metric

REGISTERED CIVIL ENGINEER — DATE 5-03-10

7-26-10
PLANS APPROVAL DATE

REGISTERED PROFESSIONAL ENGINEER J. MARCOTTE No. C 36844 Exp. 6-30-10 Civil STATE OF CALIFORNIA

The State of California or its officers or agents shall not be responsible for the accuracy or completeness of electronic copies of this plan sheet.

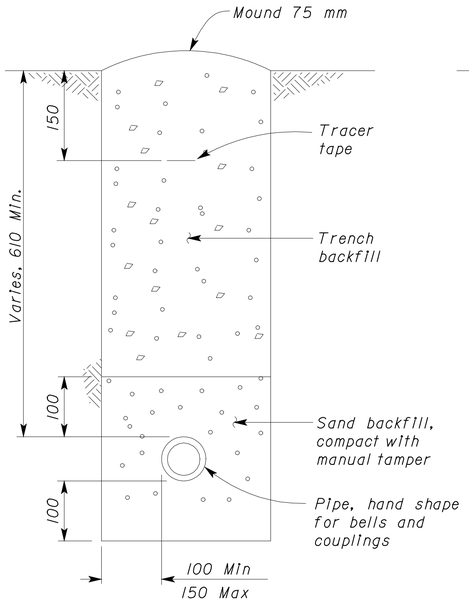

PIPE UNDER EARTH

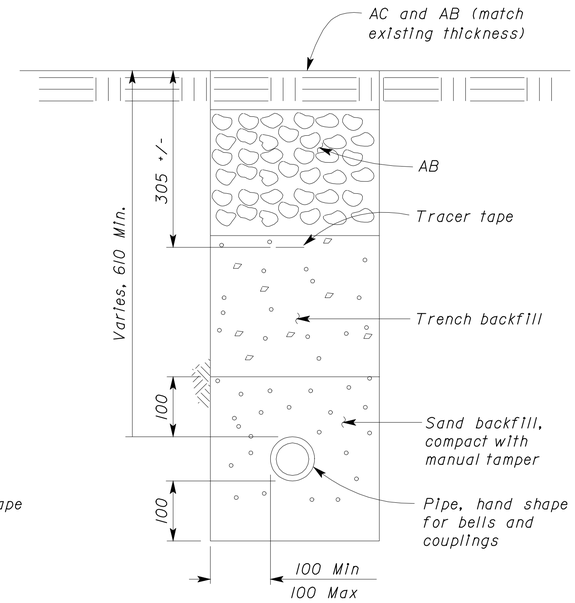

PIPE UNDER AC AND AB

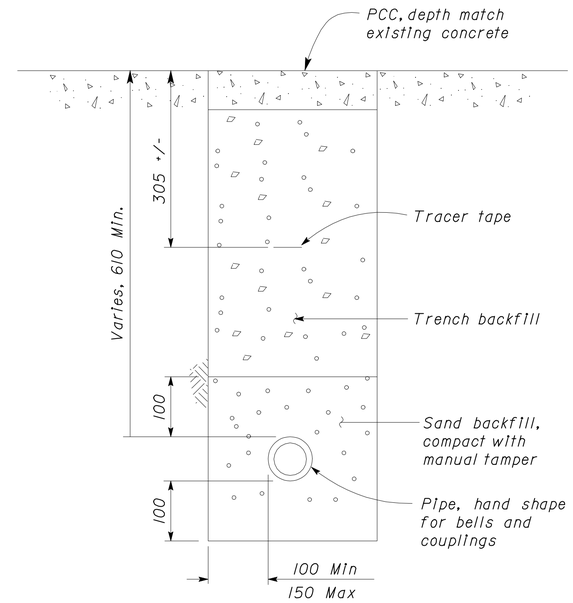

PIPE UNDER PCC

3 WATER PIPE

NO SCALE

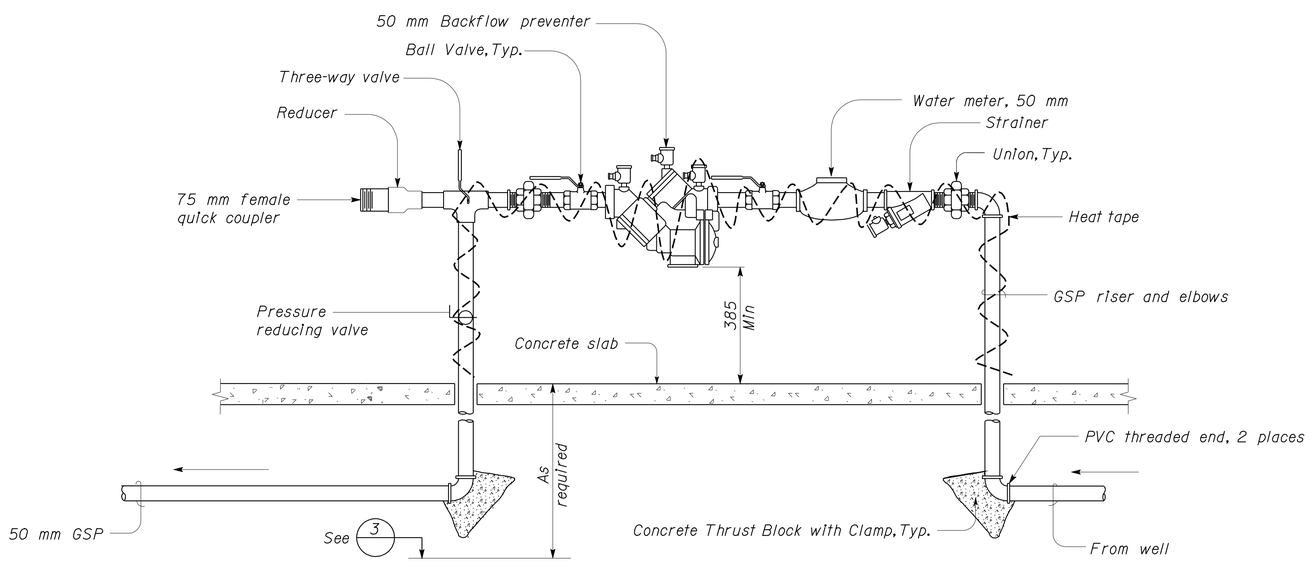

2 WATER METER/BACKFLOW PREVENTER ASSEMBLY

NO SCALE

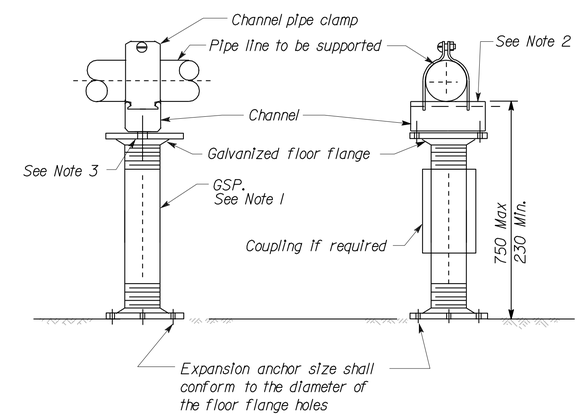

1 PIPE SUPPORT

SCALE 1:10

NOTES:

1. Galvanized steel pipe diameter shall be equal to pipe line supported.
2. Channel shall be Uni-Strut, Kin-Line, or equal.
3. Bolt channel to floor flange using bolt with the same diameter as the floor flange bolt hole.
4. For supports less than 230 high, use Uni-Strut, Kin-Line, or equal.
5. All fasteners to concrete shall be expansion anchorage devices with galvanized threaded stud, hex nut and flat washer.

NOTE:

1. Heat tape shall be installed on all exposed water piping of backflow preventer.

ALL DIMENSIONS SHOWN IN MILLIMETERS, EXCEPT AS NOTED

	BY		CHECKED	
DESIGN	BY	Amar Baldwan	CHECKED	Jerry Marcotte
DETAILS	BY	Amar Baldwan	CHECKED	Don Hansen
QUANTITIES	BY	Amar Baldwan	CHECKED	Jerry Marcotte

STATE OF CALIFORNIA
DEPARTMENT OF TRANSPORTATION

DIVISION OF ENGINEERING SERVICES
ELECTRICAL-MECHANICAL-WATER AND WASTEWATER DESIGN

BRIDGE NO. 44-0284
KM POST R146.8/161.6

BLACKIE ROAD IRRIGATION WELL

DETAILS - 2

SHEET **W1-3**

DOS ELEC (10/98)
FILE => aw1_3.dgn
DATE PLOTTED => 12-AUG-2010 TIME PLOTTED => 06:09

ORIGINAL SCALE IN MILLIMETERS FOR REDUCED PLANS 0 10 20 30 40 50 60 70 80 90 100

CU 06226
EA 0161E1

DISREGARD PRINTS BEARING EARLIER REVISION DATES

REVISION DATES (PRELIMINARY STAGE ONLY): 2-26-08 10-15-08 11-19-08 12-30-08 1-21-09 5-03-10

SHEET 5 OF 8

FILE => aw1_3.dgn

USERNAME => friehard DATE PLOTTED => 12-AUG-2010 TIME PLOTTED => 06:09

VI=1

DIST	COUNTY	ROUTE	KILOMETER POST TOTAL PROJECT	SHEET NO.	TOTAL SHEETS
05	Mon	101	R146.8/159.7	1252	1402

Caltrans Metric

REGISTERED ELECTRICAL ENGINEER — 5-3-10 DATE

REGISTERED PROFESSIONAL ENGINEER — IMRAN SAEED No. E 18781 Exp. 06-30-11 ELEC — STATE OF CALIFORNIA

7-26-10
PLANS APPROVAL DATE

The State of California or its officers or agents shall not be responsible for the accuracy or completeness of electronic copies of this plan sheet.

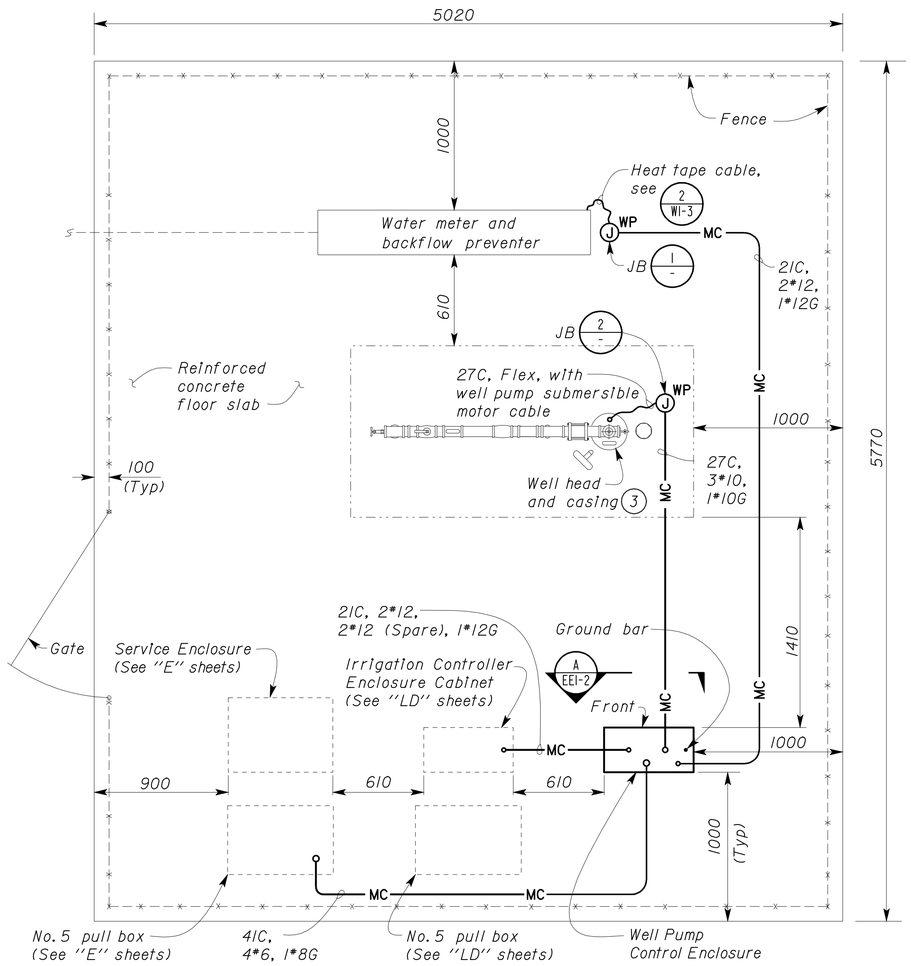

LOL "O" STA 128+82.02
BLACKIE ROAD IRRIGATION WELL PLAN

SCALE 1:20

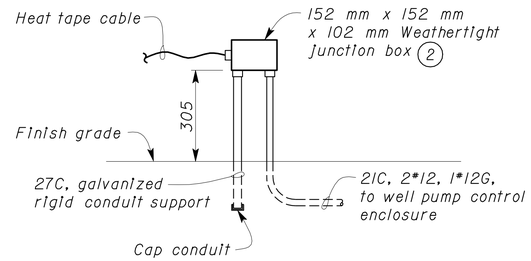

1 JUNCTION BOX MOUNTING DETAIL

NO SCALE

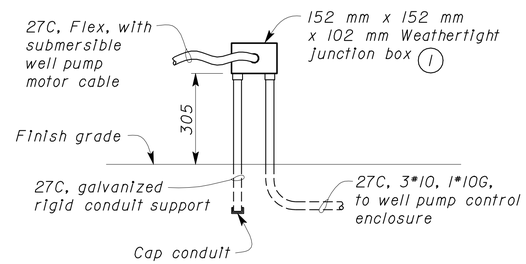

2 JUNCTION BOX MOUNTING DETAIL

NO SCALE

Notes:

1. Splice 3*10, 1*10G to submersible well pump motor cable.
2. Splice 2*12, 1*12G to heat tape cable.
3. For exact location, see "W" sheets.

LEGEND & GRAPHIC SYMBOLS

(2) 16C, MC, 2*12
- CONDUCTOR INFO (PER CONDUIT)
- CONDUIT TYPE
- CONDUIT SIZE
- NUMBER OF CONDUITS (NO NUMBER INDICATES ONE CONDUIT)

- MC — CONDUIT, METALLIC UNDERGROUND, TYPE 1
- CONDUIT, TURN UP
- CONDUIT, FLEXIBLE, TYPE 4
- A — PILOT LIGHT (A=AMBER, G=GREEN, R=RED)
- CIRCUIT BREAKER, SINGLE POLE
- CIRCUIT BREAKER, THREE POLE
- CONTACT, NORMALLY OPEN
- CONTACT, NORMALLY CLOSED
- OPERATING COIL
- SWITCH, SINGLE-POLE, 3-POSITION
- THERMAL OVERLOAD
- GROUNDING ELECTRODE
- ENCLOSURE BOND
- M — MOTOR
- TM — TIME METER
- J WP — WEATHERPROOF JUNCTION BOX
- A / EE-2 — SECTION/ELEVATION LETTER; SHEET NUMBER
- 1 / EE-2 — DETAIL NUMBER; SHEET NUMBER

ABBREVIATIONS

AC	ALTERNATING CURRENT
AL	ALARM LIGHT
C	CONDUIT
CD	CONTROL DISCONNECT
CR	CONTROL RELAY
DP	DUPLEX RECEPTACLE
FLEX	FLEXIBLE CONDUIT
G	GROUND
GB	GROUND BUS
GFCI	GROUND FAULT CIRCUIT INTERRUPTER
HD	HEAT TAPE DISCONNECT
JB	JUNCTION BOX
kW	KILOWATT
Min	MINIMUM
mm	MILLIMETER
MS	MOTOR SAVER
NB	NEUTRAL BUS
NC	NORMALLY CLOSED
NO	NORMALLY OPEN
OL	OVERLOAD
Ø	PHASE
PD	PUMP DISCONNECT
PL	PILOT LIGHT
RD	RECEPTACLE DISCONNECT
S	STARTER COIL/CONTACT
SP	SPARE
SS	SELECTOR SWITCH
ST	STARTER
TB	TERMINAL BLOCK
TM	TIME METER
TYP	TYPICAL
V	VOLT
WMB	WELL PUMP MAIN BREAKER
WP	WEATHERPROOF

THIS DRAWING ACCURATE FOR ELECTRICAL WORK ONLY.

DESIGN SUPERVISOR — DESIGN ENGINEER

	BY	CHECKED
DESIGN	Imran Saeed	Baldev S. Dehal
DETAILS	Kathi Andreasen	Imran Saeed
QUANTITIES	Imran Saeed	Baldev S. Dehal

STATE OF CALIFORNIA DEPARTMENT OF TRANSPORTATION

DIVISION OF ENGINEERING SERVICES ELECTRICAL-MECHANICAL-WATER AND WASTEWATER DESIGN

BRIDGE NO. 44-0284 — KM POST R146.8/161.6

BLACKIE ROAD IRRIGATION WELL

ELECTRICAL SITE PLAN AND LEGEND

SHEET EE1-1

DOES SD metric Rev. 1/07

SCALE: ALL DIMENSIONS ARE IN MILLIMETERS UNLESS OTHERWISE NOTED.

ORIGINAL SCALE IN MILLIMETERS FOR REDUCED PLANS 0 10 20 30 40 50 60 70 80 90 100

CU 06226
EA 0161E1

DISREGARD PRINTS BEARING EARLIER REVISION DATES → 4/14/08 11/13/08 11/14/08 12/15/08 12/29/08 1/26/09 5/3/10 6/23/08 10/15/08

REVISION DATES (PRELIMINARY STAGE ONLY) — SHEET 6 OF 8

03-AUG-2010 07:34

axee1_01.dgn

DIST	COUNTY	ROUTE	KILOMETER POST TOTAL PROJECT	SHEET NO.	TOTAL SHEETS
05	Mon	101	R146.8/159.7	1253	1402

REGISTERED ELECTRICAL ENGINEER — 5-3-10 DATE

REGISTERED PROFESSIONAL ENGINEER — IMRAN SAEED — No. E 18781 — Exp. 06-30-11 — ELEC — STATE OF CALIFORNIA

7-26-10
PLANS APPROVAL DATE

The State of California or its officers or agents shall not be responsible for the accuracy or completeness of electronic copies of this plan sheet.

Caltrans Metric

NAMEPLATE SCHEDULE

ITEM NO.	INSCRIPTION	LETTER HEIGHT
1	MAIN BREAKER	3 mm
2	PUMP DISCONNECT	3 mm
3	CONTROL DISCONNECT	3 mm
4	RECEPTACLE DISCONNECT	3 mm
5	HEAT TAPE DISCONNECT	3 mm
6	SPARE	3 mm
7	CONTROL RELAY	3 mm
8	PUMP STARTER	3 mm
9	MOTOR SAVER	3 mm
10	TIME METER	3 mm
11	PUMP ON	3 mm
12	SELECTOR SWITCH	3 mm
13	OVERLOAD RESET	3 mm
14	PUMP DISCONNECT DOES NOT DE-ENERGIZE CONTROL CIRCUIT *	3 mm
15	WELL PUMP CONTROL PANEL	6 mm

* White letters against a red field for this warning sign.

Notes:

1. Install a nameplate labeled "PUMP FAILED", with 6 mm high lettering, below the alarm light.
2. Door mounted electrical components not shown.

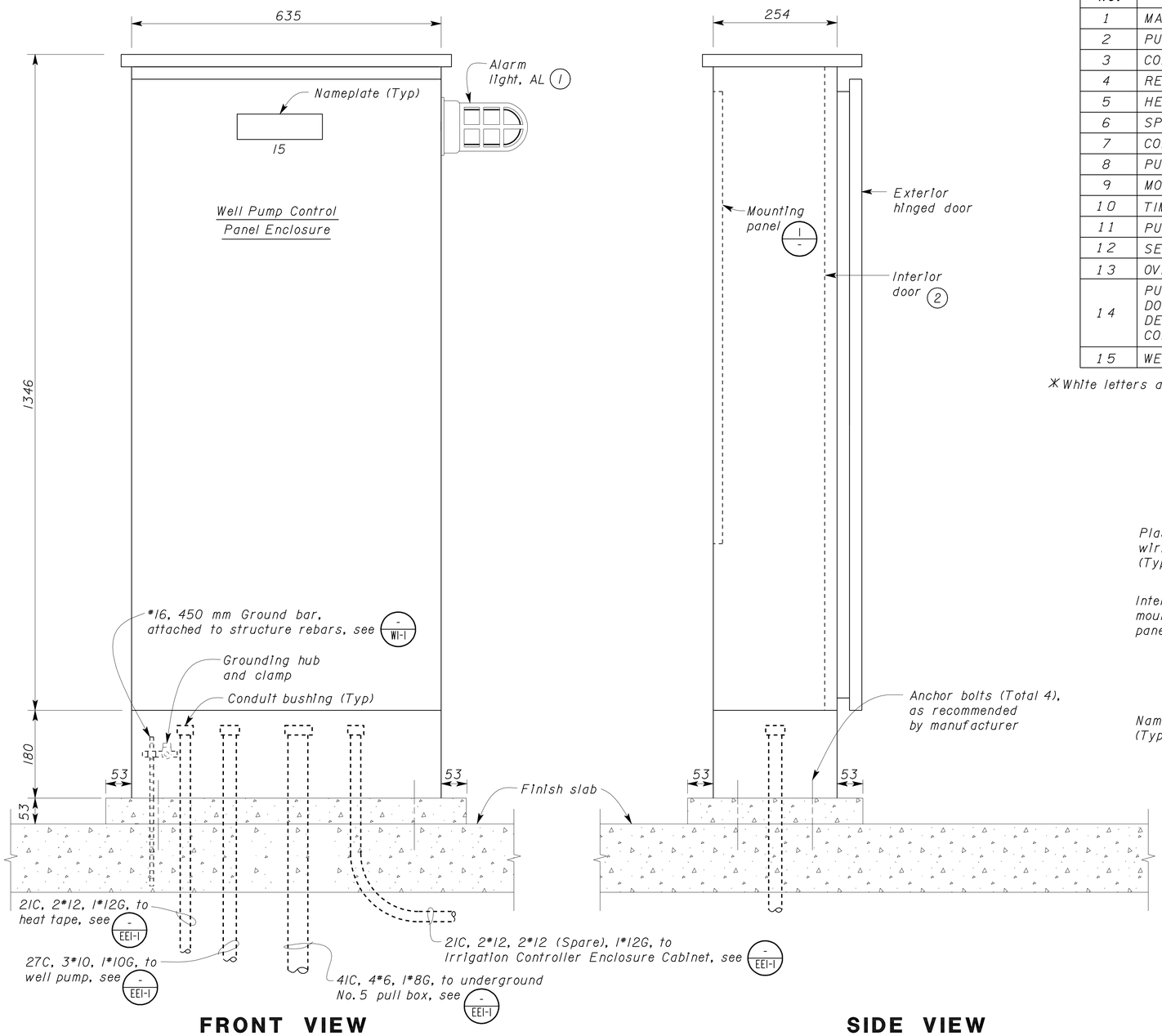

A ELEVATION
NO SCALE

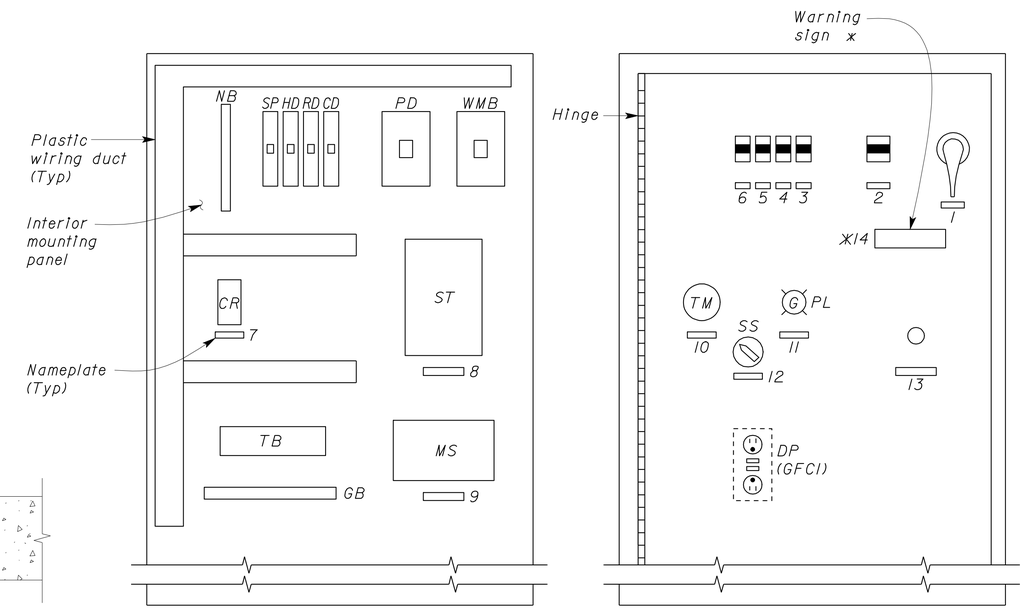

1 WELL PUMP CONTROL PANEL ENCLOSURE
NO SCALE
(Exterior door not shown)

THIS DRAWING ACCURATE FOR ELECTRICAL WORK ONLY.

	BY	CHECKED
DESIGN	Imran Saeed	Baldev S. Dehal
DETAILS	Kathi Andreasen	Imran Saeed
QUANTITIES	Imran Saeed	Baldev S. Dehal

STATE OF CALIFORNIA DEPARTMENT OF TRANSPORTATION

DIVISION OF ENGINEERING SERVICES ELECTRICAL-MECHANICAL-WATER AND WASTEWATER DESIGN

BRIDGE NO. 44-0284
KM POST R146.8/161.6

BLACKIE ROAD IRRIGATION WELL
WELL PUMP CONTROL PANEL ENCLOSURE DETAILS

SHEET EE1-2

DOES SD metric Rev. 1/07

SCALE: ALL DIMENSIONS ARE IN MILLIMETERS UNLESS OTHERWISE NOTED.

ORIGINAL SCALE IN MILLIMETERS FOR REDUCED PLANS 0 10 20 30 40 50 60 70 80 90 100

CU 06226
EA 0161E1

DISREGARD PRINTS BEARING EARLIER REVISION DATES →

REVISION DATES (PRELIMINARY STAGE ONLY): 4/15/08 10/15/08 11/13/08 11/14/08 12/18/08 1/26/09 5/3/10 6/30/08 10/13/08

SHEET 7 OF 8

03-AUG-2010 07:34

axee1_02.dgn

DIST	COUNTY	ROUTE	KILOMETER POST TOTAL PROJECT	SHEET NO.	TOTAL SHEETS
05	Mon	101	R146.8/159.7	1254	1402

REGISTERED ELECTRICAL ENGINEER — 5-3-10 DATE

REGISTERED PROFESSIONAL ENGINEER — IMRAN SAEED — No. E 18781 — Exp. 06-30-11 — ELEC — STATE OF CALIFORNIA

7-26-10
PLANS APPROVAL DATE

The State of California or its officers or agents shall not be responsible for the accuracy or completeness of electronic copies of this plan sheet.

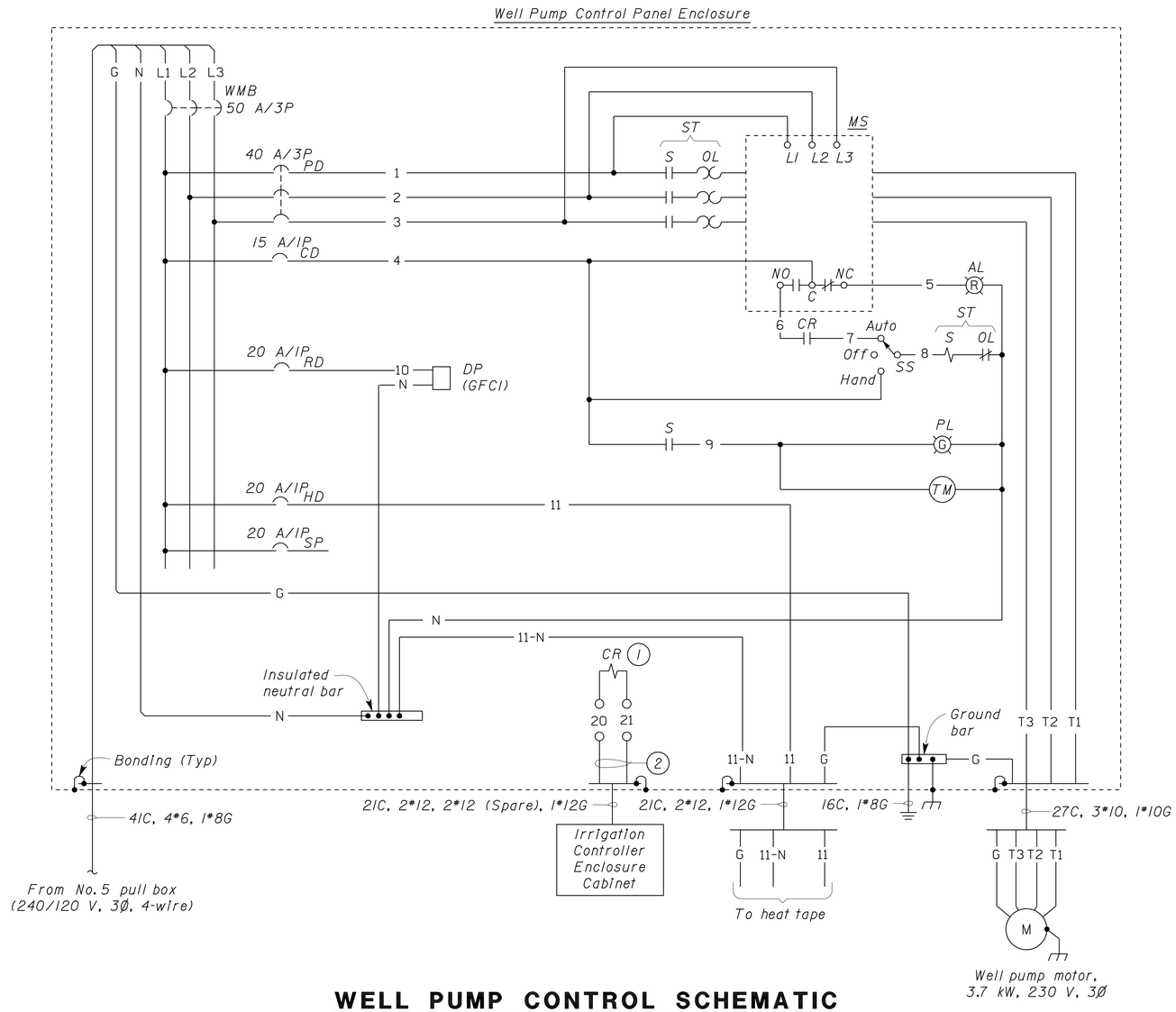

WELL PUMP CONTROL SCHEMATIC

NO SCALE

Notes:

1. Well pump control relay, 24 V(AC) coil.
2. To pump start terminals in the irrigation controller enclosure.

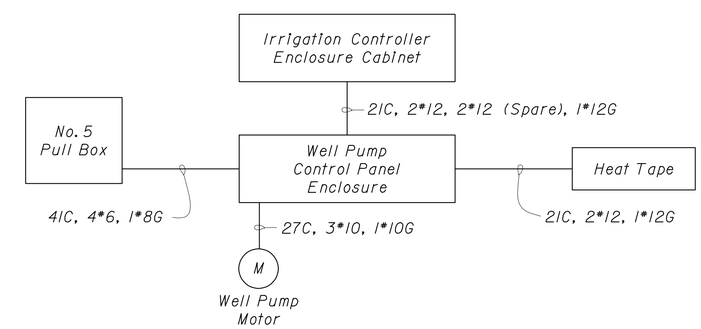

INTERCONNECTION BLOCK DIAGRAM

NO SCALE

DESIGN	BY Imran Saeed	CHECKED Baldev S. Dehal	
DETAILS	BY Kathi Andreasen	CHECKED Imran Saeed	
QUANTITIES	BY Imran Saeed	CHECKED Baldev S. Dehal	

STATE OF CALIFORNIA
DEPARTMENT OF TRANSPORTATION

DIVISION OF ENGINEERING SERVICES
ELECTRICAL-MECHANICAL-WATER AND WASTEWATER DESIGN

BRIDGE NO. 44-0284
KM POST R146.8/161.1

BLACKIE ROAD IRRIGATION WELL

WELL PUMP CONTROL SCHEMATIC AND INTERCONNECTION BLOCK DIAGRAM

SHEET **EE1-3**

DOES SD metric Rev. 1/07

SCALE: ALL DIMENSIONS ARE IN MILLIMETERS UNLESS OTHERWISE NOTED.

ORIGINAL SCALE IN MILLIMETERS FOR REDUCED PLANS 0 10 20 30 40 50 60 70 80 90 100

CU 06226
EA 0161E1

DISREGARD PRINTS BEARING EARLIER REVISION DATES →

REVISION DATES (PRELIMINARY STAGE ONLY): 4/15/08 10/14/08 10/14/08 12/12/08 1/26/09 5/3/10 6/30/08 10/15/08 11/3/08

SHEET 8 OF 8

03-AUG-2010 07:34

axee1_03.dgn

DIST	COUNTY	ROUTE	KILOMETER POST TOTAL PROJECT	SHEET No	TOTAL SHEETS
05	Mon	101	R146.8/159.7	1255	1402

REGISTERED CIVIL ENGINEER — DATE 05-06-10

7-26-10
PLANS APPROVAL DATE

REGISTERED PROFESSIONAL ENGINEER — HERNAN PEREZ — No. 60993 — Exp. 12-31-10 — CIVIL — STATE OF CALIFORNIA

The State of California or its officers or agents shall not be responsible for the accuracy or completeness of electronic copies of this plan sheet.

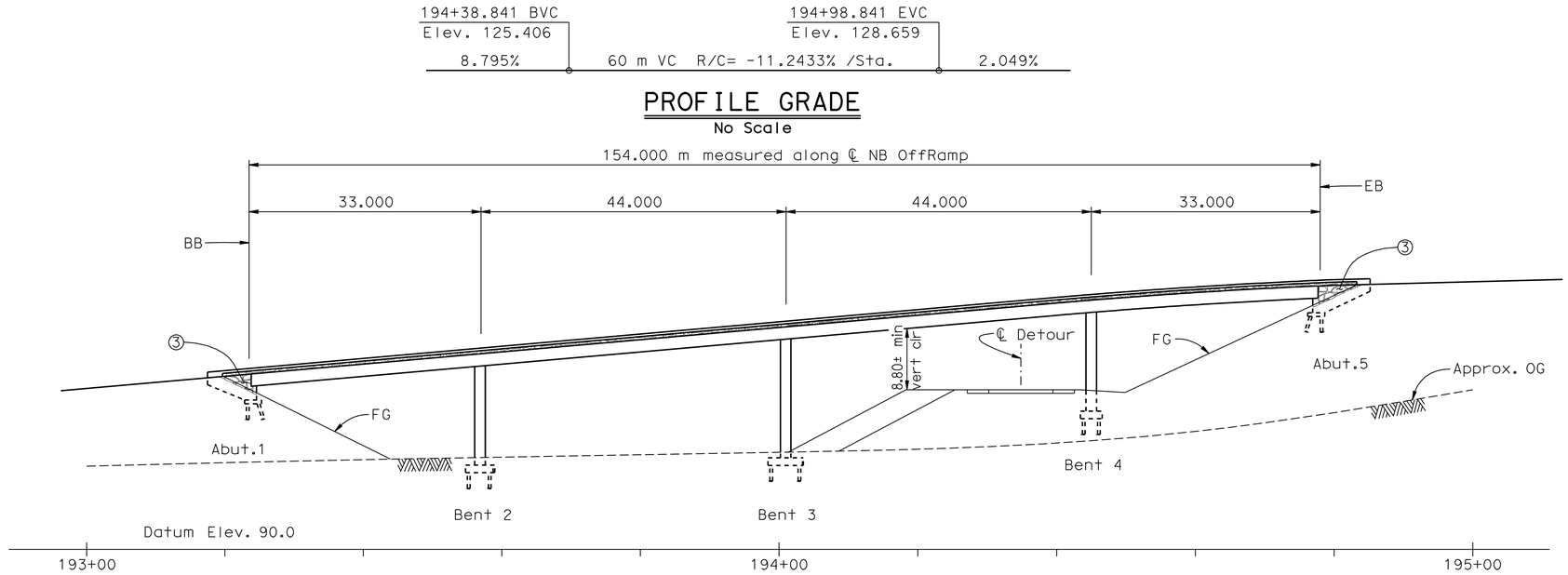

ELEVATION
1:400

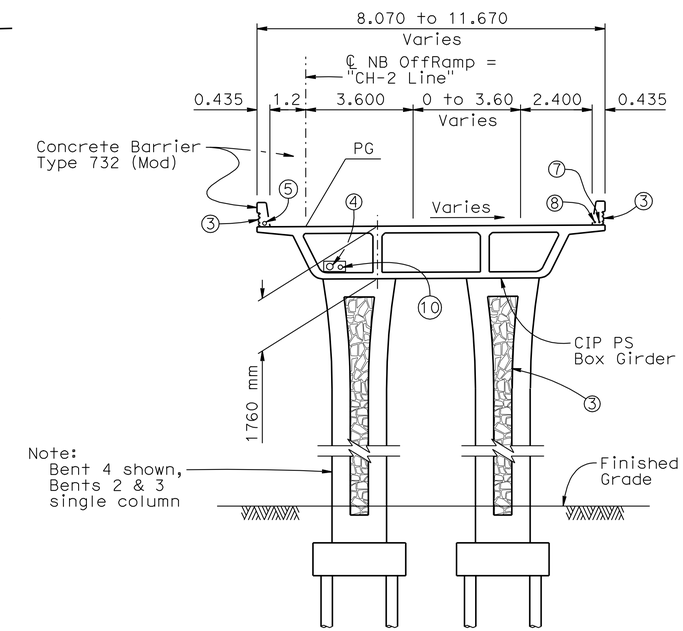

TYPICAL SECTION
1:100

Notes:

① - Paint "NB OFFRAMP VIADUCT".
② - Paint "BR. NO. 44-0285".
③ - Architectural treatment.
④ - Water supply line NPS 3.
⑤ - 75mm ø sprinkler control conduit.
⑥ - Structure Approach Type N(9S).
⑦ - 50 mm ø conduit, see "Electrical Plans".
⑧ - 50 mm ø conduit, see "Electrical Plans".
⑨ - Pull Box No. 9A on Rail, see "Electrical Plans".
⑩ - Deck Drainage Pipe.
⑪ - Preformed Inductive Loop, see "Electrical Plans".
◕ Point of minimum vertical clearance.

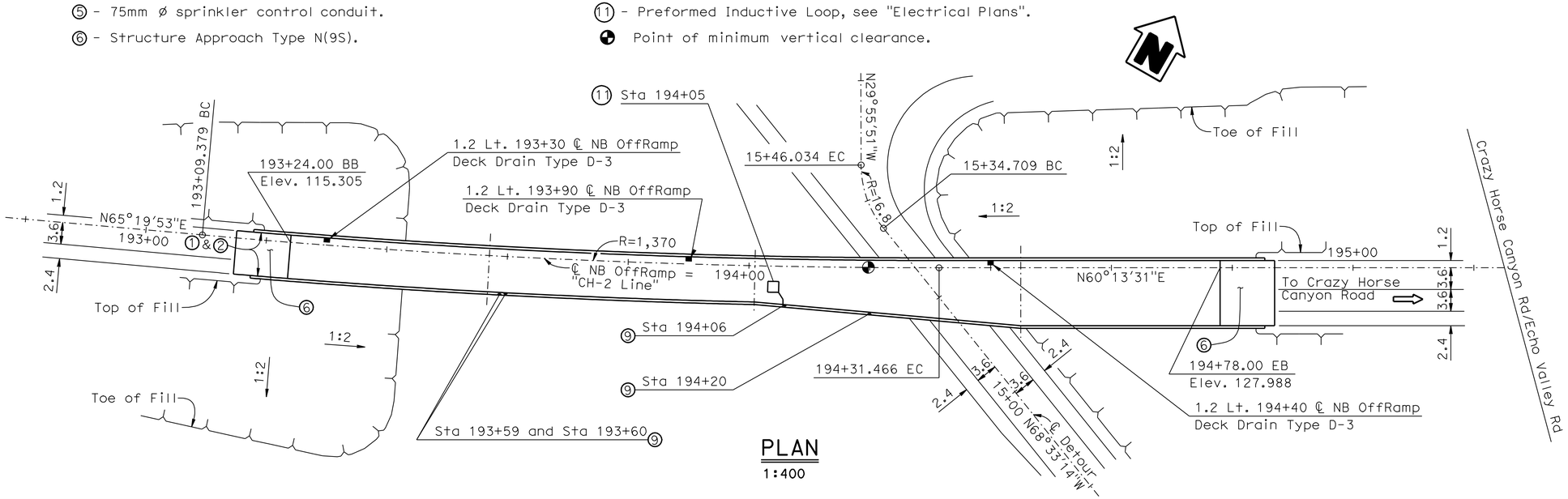

PLAN
1:400

For "General Notes" and "Index to Plans", see "INDEX TO PLANS" sheet
For "Quantities", see "DECK CONTOURS" sheet

Caltrans Metric

FRITZ HOFFMAN

	BY	CHECKED
DESIGN	D. Alvarez	Richard Melko
DETAILS	D. Pato	Richard Melko
QUANTITIES	Ubong Inyang	Fayek Tannous

LOAD & RESISTANCE FACTOR DESIGN — LIVE LOADING: HL93 W/"LOW-BOY"; PERMIT DESIGN VEHICLE
LAYOUT — BY D. Pato — CHECKED D. Alvarez
SPECIFICATIONS — BY S. Nelapatla — PLANS AND SPECS COMPARED S. Nelapatla

ALL DIMENSIONS ARE IN METERS UNLESS OTHERWISE SHOWN

ORIGINAL SCALE IN MILLIMETERS FOR REDUCED PLANS 0 10 20 30 40 50 60 70 80 90 100

STATE OF CALIFORNIA
DEPARTMENT OF TRANSPORTATION

DIVISION OF ENGINEERING SERVICES
STRUCTURE DESIGN
DESIGN BRANCH 6

CU 05
EA 0161E1

BRIDGE NO. 44-0285
KILOMETER POST 158.2

NB OFFRAMP VIADUCT
GENERAL PLAN

DISREGARD PRINTS BEARING EARLIER REVISION DATES

REVISION DATES: 8-18-06 4-08-09 04-24-09 05-11-09 7-14-09 10-29-09 12-11-09 04-23-10 2-28-09 3-08-09

SHEET 1 OF 28

FILE => 44-0285-a-gp.dgn

STRUCTURES DESIGN GENERAL PLAN SHEET (METRIC) (REV.07-24-06)

USERNAME => trlehard DATE PLOTTED => 03-AUG-2010 TIME PLOTTED => 07:34

DIST	COUNTY	ROUTE	KILOMETER POST TOTAL PROJECT	SHEET No	TOTAL SHEETS
05	Mon	101	R146.8/159.7	1256	1402

REGISTERED CIVIL ENGINEER 05-06-10 DATE

7-26-10
PLANS APPROVAL DATE

REGISTERED PROFESSIONAL ENGINEER HERNAN PEREZ No. 60993 Exp. 12-31-10 CIVIL STATE OF CALIFORNIA

The State of California or its officers or agents shall not be responsible for the accuracy or completeness of electronic copies of this plan sheet.

INDEX TO PLANS

1 GENERAL PLAN
2 INDEX TO PLANS
3 DECK CONTOURS
4 FOUNDATION PLAN
5 ABUTMENT 1 LAYOUT
6 ABUTMENT 5 LAYOUT
7 ABUTMENT DETAILS
8 BENT 2 & 3 LAYOUT
9 BENT 4 LAYOUT
10 BENT DETAILS NO.1
11 BENT DETAILS NO.2
12 BENT DETAILS NO.3
13 TYPICAL SECTION NO.1
14 TYPICAL SECTION NO.2
15 GIRDER LAYOUT NO.1
16 GIRDER LAYOUT NO.2
17 GIRDER REINFORCEMENT NO.1
18 GIRDER REINFORCEMENT NO.2
19 JOINT SEAL ASSEMBLY
20 DECK DRAIN DETAILS
21 STRUCTURE APPROACH DRAINAGE DETAILS
22 STRUCTURE APPROACH TYPE N(9S)
23 ARCHITECTURAL TREATMENT
24 LOG OF TEST BORINGS 1 OF 5
25 LOG OF TEST BORINGS 2 OF 5
26 LOG OF TEST BORINGS 3 OF 5
27 LOG OF TEST BORINGS 4 OF 5
28 LOG OF TEST BORINGS 5 OF 5

STANDARD PLANS DATED JULY 2004

A10A ACRONYMS AND ABBREVIATIONS (A-L)
A10B ACRONYMS AND ABBREVIATIONS (M-Z)
A62C LIMITS OF PAYMENT FOR EXCAVATION AND BACKFILL - BRIDGE
B0-1 BRIDGE DETAILS
B0-5 BRIDGE DETAILS
B0-13 BRIDGE DETAILS
B2-5 PILE DETAILS CLASS 400 AND CLASS 625
B7-1 BOX GIRDER DETAILS
B7-7 DECK DRAINS - TYPE D-3
B7-8 DECK DRAINAGE DETAILS
B7-10 UTILITY OPENING - BOX GIRDER
RSP B8-5 CAST-IN-PLACE PRESTRESSED GIRDER DETAILS
B11-55 CONCRETE BARRIER TYPE 732
B14-3 COMMUNICATION AND SPRINKLER CONTROL CONDUITS (CONDUIT LESS THAN SIZE 103)
B14-4 WATER SUPPLY LINE (BRIDGE) (PIPE SIZES LISS THAN NPS 4)
B14-5 WATER SUPPLY LINE (DETAILS) (PIPE LESS THAN NPS 4)

GENERAL NOTES
LOAD AND RESISTANCE FACTOR DESIGN SUPERSTRUCTURE
WITH LOAD FACTOR DESIGN SUBSTRUCTURE

DESIGN: AASHTO LRFD Bridge Design Specifications, Third Edition with 2006 Interims and the California Amendments v3.06.01; except for spread footing foundations are designed using Caltrans Bridge Design Specifications LFD Version April 2000 (1996 AASHTO with Interims and Revisions by Caltrans)

SEISMIC DESIGN: CALTRANS SEISMIC DESIGN CRITERIA (SDC), Version 1.4, dated June 2006

DEAD LOAD: Includes 1675 Pa for Future Wearing Surface

LIVE LOAD: HL-93 with "low-boy" and Permit Design Vehicle

SEISMIC LOADING: See "Acceleration Response Spectrum"

REINFORCED CONCRETE: f_y = 420 MPa
f'_c = 25 MPa (except as shown or specified)
n = 8

PRESTRESSED CONCRETE: See "Prestressing Notes"

STRUCTURAL STEEL: Steel Pipe Piles ASTM-A252m, Grade 3
f_y = 310 MPa
f' = 455 MPa

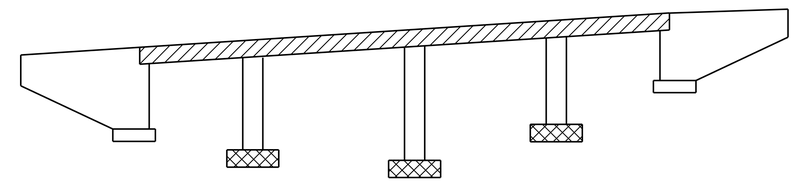

CONCRETE STRENGTH AND TYPE LIMITS

No Scale

Structural Concrete, Bridge (35 MPa at 28 days)
Structural Concrete, Bridge
Structural Concrete, Bridge Footing

PILE DATA TABLE						
Location	Pile Type	Nominal Resistance (kN)		Design Tip Elevation (m)	Specified Tip Elevation (m)	Nominal Driving Resistance (kN)
		Compression	Tension			
Abut.1	Class 625, Alt."W"	1200	0	87.0 (a), 88.0 (c)	87.0	1200
Bent 2	CISS PP 610 X 12.7	1850	700	83.2 (a), 88.7 (b) 90.4 (c), 84.7 (d)	83.2	2270
Bent 3	Class 900, Alt."W"	1700	850	86.0 (a), 89.3 (b) 98.7 (c), 87.1 (d)	86.0	2450
Bent 4	Class 900, Alt."W"	1930	0	90.9 (a), 90.9 (c)	90.9	1930
Abut.5	HP 250 X 85 Piles	1100	0	101.5 (a)	101.5	1100

NOTES:
1. Design Tip Elevations for Abutments and Bents are controlled by: (a) Compression, (b) Tension, (c) Settlement, (d) Lateral Load.
2. There is no Design Tip Elevation for Settlement at Abutment 5.
3. The Specified Tip Elevation shall not be raised above the Design Tip Elevations for Lateral Load and Tolerable Settlement.

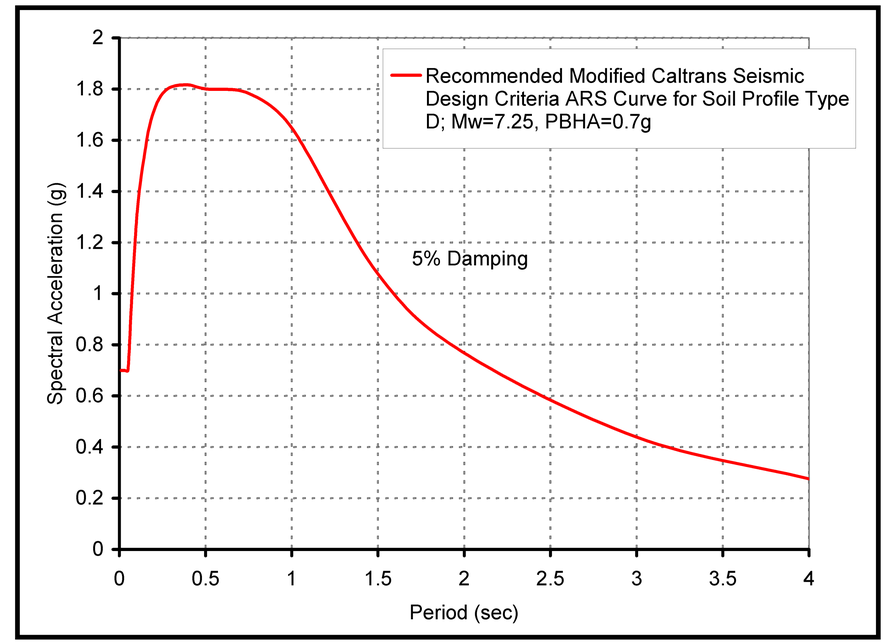

ACCELERATION RESPONSE SPECTRUM

Caltrans Metric

	BY	CHECKED
DESIGN	D. Alvarez	Richard Melko
DETAILS	D. Pato	Richard Melko
QUANTITIES	Ubong Inyang	Fayek Tannous

STATE OF CALIFORNIA DEPARTMENT OF TRANSPORTATION

DIVISION OF ENGINEERING SERVICES STRUCTURE DESIGN
DESIGN BRANCH 6

BRIDGE NO. 44-0285
KILOMETER POST 158.2

NB OFFRAMP VIADUCT
INDEX TO PLANS

ALL DIMENSIONS ARE IN MILLIMETERS UNLESS OTHERWISE SHOWN

ORIGINAL SCALE IN MILLIMETERS FOR REDUCED PLANS 0 10 20 30 40 50 60 70 80 90 100

CU 05
EA 0161E1

DISREGARD PRINTS BEARING EARLIER REVISION DATES

REVISION DATES 02-15-09 02-16-09 04-29-09 10-21-09 10-28-09 11-19-09 03-09-10

SHEET 2 OF 28

FILE => 44-0285-b-itp.dgn

STRUCTURES DESIGN DETAIL SHEET (METRIC) (REV.03-17-04)

USERNAME => trlenard DATE PLOTTED => 03-AUG-2010 TIME PLOTTED => 07:34

DIST	COUNTY	ROUTE	KILOMETER POST TOTAL PROJECT	SHEET No	TOTAL SHEETS
05	Mon	101	R146.8/159.7	1257	1402

REGISTERED CIVIL ENGINEER — DATE 05-06-10

7-26-10
PLANS APPROVAL DATE

REGISTERED PROFESSIONAL ENGINEER — HERNAN PEREZ — No. 60993 — Exp. 12-31-10 — CIVIL — STATE OF CALIFORNIA

The State of California or its officers or agents shall not be responsible for the accuracy or completeness of electronic copies of this plan sheet.

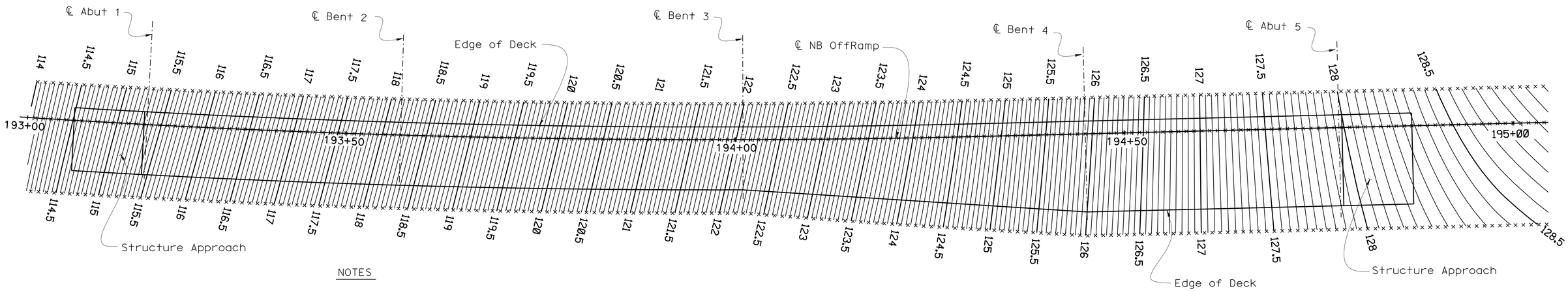

NOTES

0.05 m Contour Interval

- 1.0 Station Interval

Contours do not include Camber

PLAN
1:250

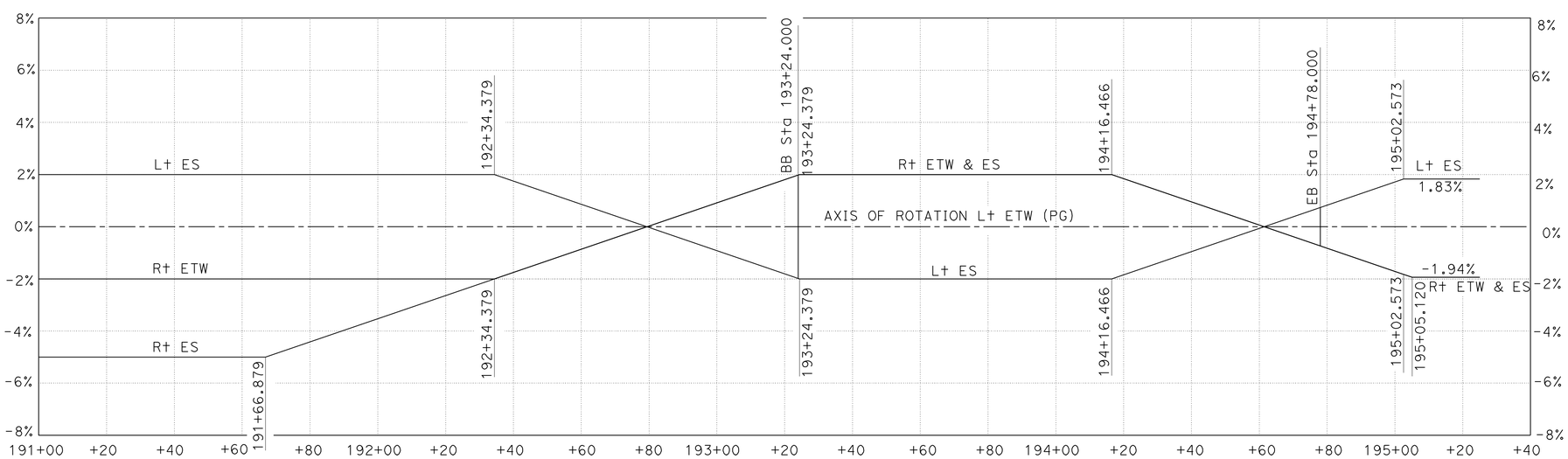

SUPERELEVATION DIAGRAM
NO SCALE

QUANTITIES

STRUCTURE EXCAVATION (BRIDGE)	424	m^3
STRUCTURE BACKFILL (BRIDGE)	265	m^3
NPS 3 SUPPLY LINE (BRIDGE)	176	m
FURNISH STEEL PILING (HP 250 X 85)	274	m
DRIVE STEEL PILE (HP 250 X 85)	12	EA
FURNISH PILING (CLASS 900) (ALTERNATIVE W)	650	m
DRIVE PILE (CLASS 900) (ALTERNATIVE W)	38	EA
FURNISH PILING (CLASS 625) (ALTERNATIVE W)	198	m
DRIVE PILE (CLASS 625) (ALTERNATIVE W)	8	EA
FURNISH CAST-IN-STEEL-SHELL CONCRETE PILING (610 MM)	252	m
DRIVE CAST-IN-STEEL-SHELL CONCRETE PILE (610 MM)	14	EA
PRESTRESSING CAST-IN-PLACE CONCRETE	LUMP	SUM
STRUCTURAL CONCRETE, BRIDGE FOOTING	125	m^3
STRUCTURAL CONCRETE, BRIDGE	1070	m^3
STRUCTURAL CONCRETE, APPROACH SLAB (TYPE N)	53	m^3
ARCHITECTURAL TREATMENT (DRYSTACK STONE TEXTURE)	279	m^2
JOINT SEAL ASSEMBLY (MR 90 MM)	12	m
JOINT SEAL ASSEMBLY (MR 80 MM)	8	m
BAR REINFORCING STEEL (BRIDGE)	177 900	kg
BRIDGE DECK DRAINAGE SYSTEM	1978	kg
CONCRETE BARRIER (TYPE 732 MODIFIED)	335	m
SPRINKLER CONTROL CONDUIT (BRIDGE)	176	m

Caltrans Metric

	BY	CHECKED
DESIGN	D. Alvarez	Richard Melko
DETAILS	Bruno Jenko	Richard Melko
QUANTITIES	Ubang Inyang	Fayek Tannous

STATE OF CALIFORNIA
DEPARTMENT OF TRANSPORTATION

DIVISION OF ENGINEERING SERVICES
STRUCTURE DESIGN
DESIGN BRANCH 6

BRIDGE NO. 44-0285
KILOMETER POST 158.2

NB OFFRAMP VIADUCT
DECK CONTOURS

ALL DIMENSIONS ARE IN MILLIMETERS UNLESS OTHERWISE SHOWN

ORIGINAL SCALE IN MILLIMETERS FOR REDUCED PLANS 0 10 20 30 40 50 60 70 80 90 100

CU 05
EA 0161E1

DISREGARD PRINTS BEARING EARLIER REVISION DATES

REVISION DATES: 10-12-07 10-28-09 5-10-10

SHEET 3 OF 28

FILE => 44-0285-d-dc.dgn

STRUCTURES DESIGN DETAIL SHEET (METRIC) (REV.03-17-04)

USERNAME => trienard DATE PLOTTED => 03-AUG-2010 TIME PLOTTED => 07:35

DIST	COUNTY	ROUTE	KILOMETER POST TOTAL PROJECT	SHEET No	TOTAL SHEETS
05	Mon	101	R146.8/159.7	1258	1402

Caltrans Metric

Hernan Perez 05-06-10
REGISTERED CIVIL ENGINEER DATE

7-26-10
PLANS APPROVAL DATE

REGISTERED PROFESSIONAL ENGINEER HERNAN PEREZ No. 60993 Exp. 12-31-10 CIVIL STATE OF CALIFORNIA

The State of California or its officers or agents shall not be responsible for the accuracy or completeness of electronic copies of this plan sheet.

CURVE DATA

NO	R	Δ	T	L
1	1370.000	5°6'21"	61.084	122.088
2	16.800	38°37'23"	5.887	11.325

SURVEY CONTROL

MON101 W4 (NOT SHOWN ON PLAN)
Fnd 1" IP W/CALTRANS CONTROL PP & NAIL, FLUSH
69.703 M Rt. ℄ Rte 101 "M" LINE
Sta. 192+67.378
N 667820.065
E 1764961.035
Elev. = 100.321

MON101 PM98.35
Fnd 1"IP W/CALTRANS CONTROL PP & NAIL
18.645 M Rt. ℄ Rte 101 "M" LINE
Sta. 195+01.696
N 667981.788
E 1765138.115
Elev. = 119.206

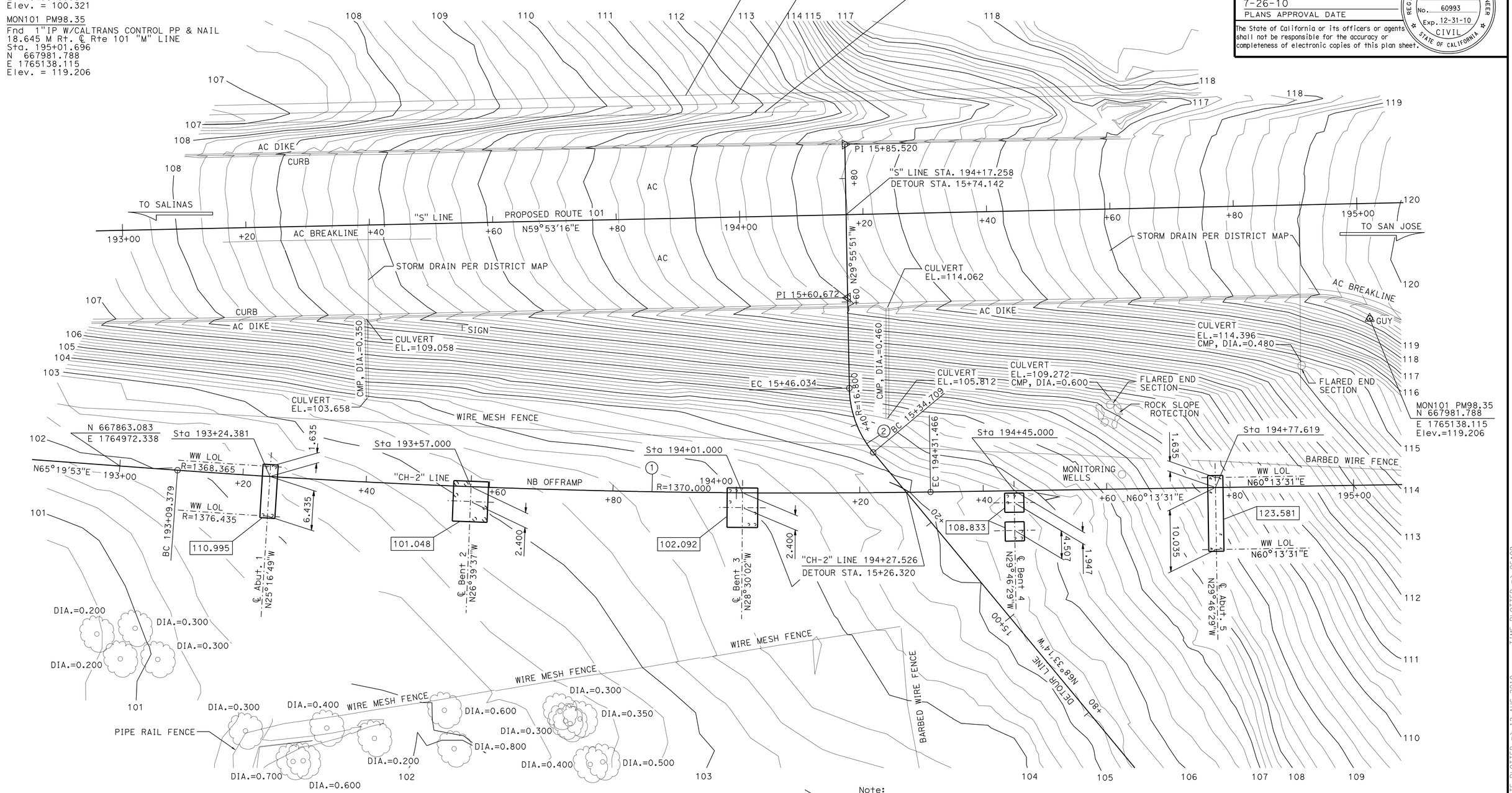

Note:
[ ] - Indicates bottom of footing elevation.

ALL DIMENSIONS ARE IN METERS UNLESS OTHERWISE SHOWN

PRELIMINARY INVESTIGATION SECTION					
SCALE 1:300	VERT. DATUM NGVD 29	PHOTOGRAMMETRY AS OF:			
	HORZ. DATUM NAD83 (1991.35)	SURVEYED	BY DISTRICT/K.ELLINGSON	CHECKED	BY E. LOPEZ 05/2006
ALIGNMENT TIES DIST. TRAVERSE SHEET		DRAFTED	BY Y. ZHANG 05/2006	CHECKED	BY T. ZOLNIKOVA 05/2006

	BY	CHECKED
DESIGN	D. Alvarez	Richard Melko
DETAILS	D. Pato	Richard Melko
QUANTITIES	Ubang Inyang	Fayek Tannous

STATE OF CALIFORNIA
DEPARTMENT OF TRANSPORTATION

DIVISION OF ENGINEERING SERVICES
STRUCTURE DESIGN
DESIGN BRANCH 6

BRIDGE NO. 44-0285
KILOMETER POST 158.2

NB OFFRAMP VIADUCT
FOUNDATION PLAN

STRUCTURES FOUNDATION PLAN SHEET (METRIC) (REV.10-27-05)

ORIGINAL SCALE IN MILLIMETERS FOR REDUCED PLANS 0 10 20 30 40 50 60 70 80 90 100

CU 05
EA 0161E1

DISREGARD PRINTS BEARING EARLIER REVISION DATES

REVISION DATES (PRELIMINARY STAGE ONLY): 5-17-06 02-26-09 3-5-09 3-23-09 10-21-09 10-28-09 04-29-10

SHEET 4 OF 28

FILE => 44-0285-e-fp101.dgn

USERNAME => friehard DATE PLOTTED => 12-AUG-2010 TIME PLOTTED => 06:09

DIST	COUNTY	ROUTE	KILOMETER POST TOTAL PROJECT	SHEET No	TOTAL SHEETS
05	Mon	101	R146.8/159.7	1259	1402

REGISTERED CIVIL ENGINEER — DATE 05-06-10

7-26-10
PLANS APPROVAL DATE

REGISTERED PROFESSIONAL ENGINEER — HERNAN PEREZ — No. 60993 — Exp. 12-31-10 — CIVIL — STATE OF CALIFORNIA

The State of California or its officers or agents shall not be responsible for the accuracy or completeness of electronic copies of this plan sheet.

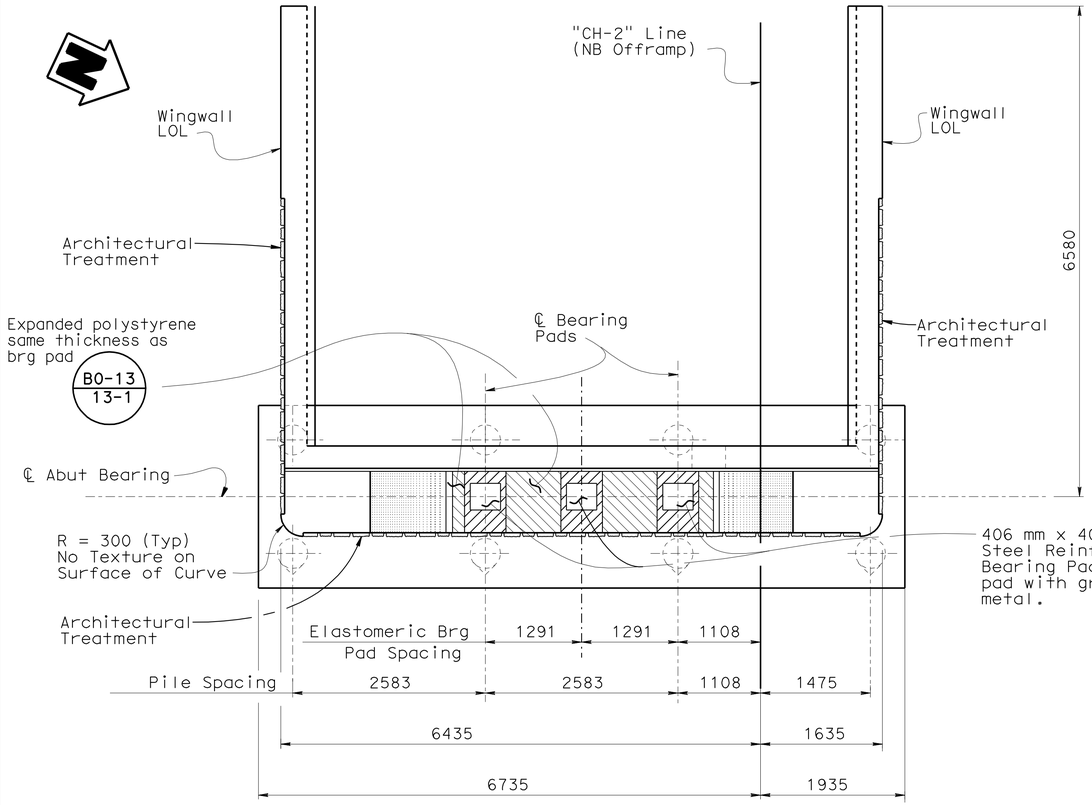

ABUTMENT 1 LAYOUT

1:40

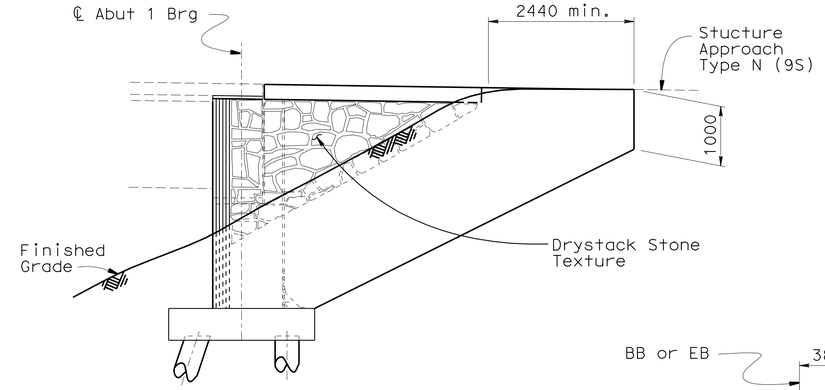

WINGWALL ELEVATION

1:50

NOTES

1. For Architectural Treatment Details, see, "Architectural Treatment" sheet
2. For "Section C-C","D-D" and details and dimensions not shown, see "ABUTMENT DETAILS" sheet.

LEGEND

Indicates Vertical Pile

Indicates 1:3 Battered Pile

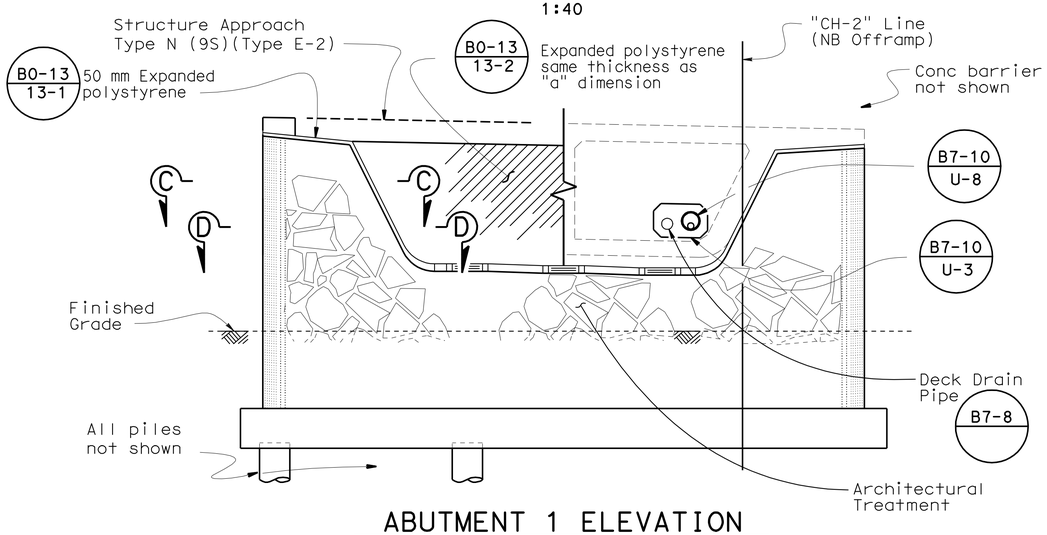

ABUTMENT 1 ELEVATION

1:40

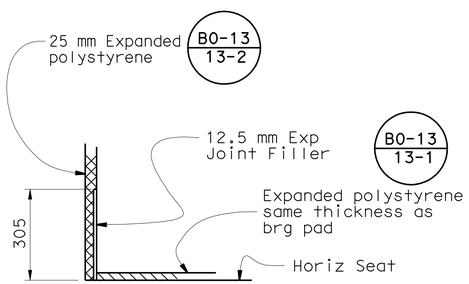

DETAIL B

1:10

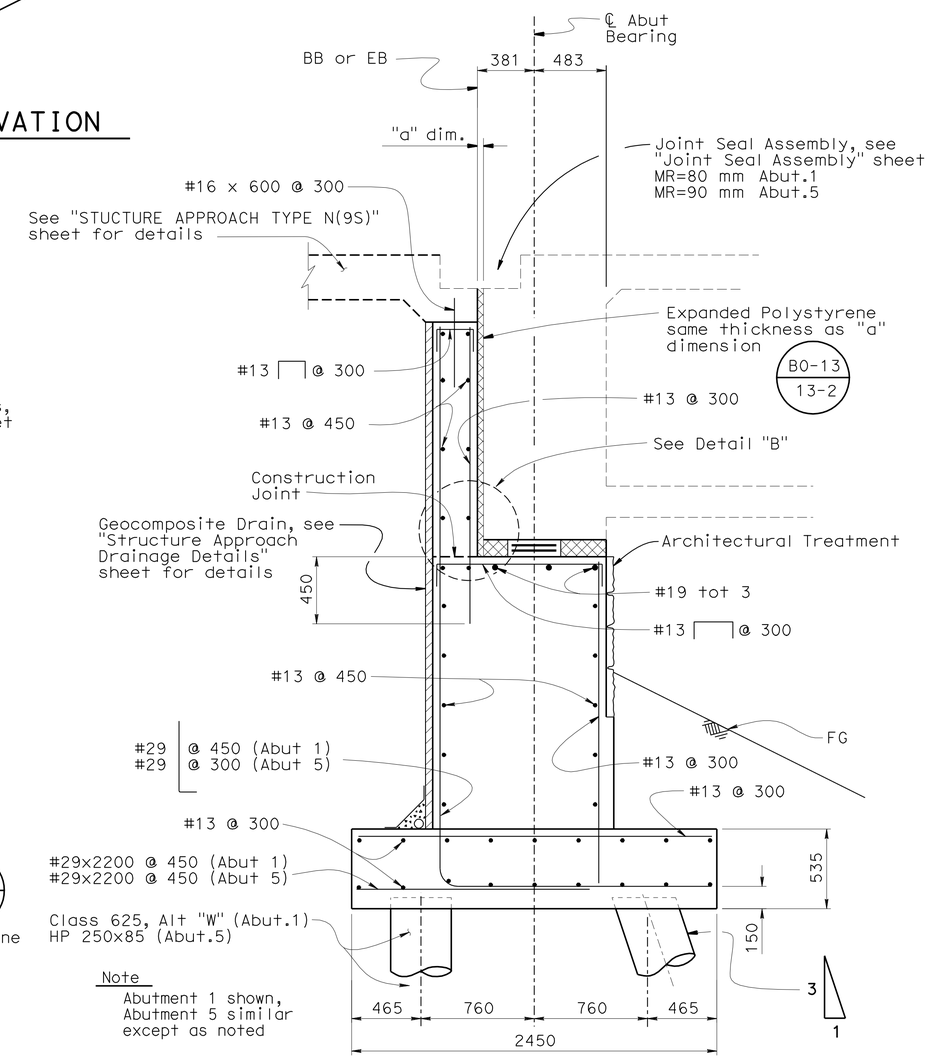

Note

Abutment 1 shown, Abutment 5 similar except as noted

ABUTMENT SECTION

1:20

Caltrans Metric

	BY	CHECKED
DESIGN	David Alvarez	Richard Melko
DETAILS	Jeff Thorne	Richard Melko
QUANTITIES	Ubong Inyang	Fayek Tannous

STATE OF CALIFORNIA
DEPARTMENT OF TRANSPORTATION

DIVISION OF ENGINEERING SERVICES
STRUCTURE DESIGN
DESIGN BRANCH 6

CU 05
EA 0161E1

BRIDGE NO. 44-0285
KILOMETER POST 158.2

NB OFFRAMP VIADUCT
ABUTMENT 1 LAYOUT

ALL DIMENSIONS ARE IN MILLIMETERS UNLESS OTHERWISE SHOWN

ORIGINAL SCALE IN MILLIMETERS FOR REDUCED PLANS 0 10 20 30 40 50 60 70 80 90 100

DISREGARD PRINTS BEARING EARLIER REVISION DATES

REVISION DATES: 9-13-07 | 1-31-09 | 2-28-09 | 3-09-09 | 9-03-09 | 10-30-09 | 11-17-09 | 11-19-09

SHEET 5 OF 28

FILE => 44-0285-f-a1-lo.dgn

STRUCTURES DESIGN DETAIL SHEET (METRIC) (REV.03-17-04)

USERNAME => friehard DATE PLOTTED => 03-AUG-2010 TIME PLOTTED => 07:35

DIST	COUNTY	ROUTE	KILOMETER POST TOTAL PROJECT	SHEET No	TOTAL SHEETS
05	Mon	101	R146.8/159.7	1260	1402

REGISTERED CIVIL ENGINEER 05-06-10 DATE

7-26-10
PLANS APPROVAL DATE

REGISTERED PROFESSIONAL ENGINEER HERNAN PEREZ No. 60993 Exp. 12-31-10 CIVIL STATE OF CALIFORNIA

The State of California or its officers or agents shall not be responsible for the accuracy or completeness of electronic copies of this plan sheet.

NOTES

1. For Architectural Treatment Details, see, "Architectural Treatment" sheet
2. For "Section C-C","D-D" and details and dimensions not shown, see "ABUTMENT DETAILS" sheet.
3. For "Abutment Section", see "ABUTMENT 1 LAYOUT" sheet.

LEGEND

Indicates Vertical Pile

Indicates 1:3 Battered Pile

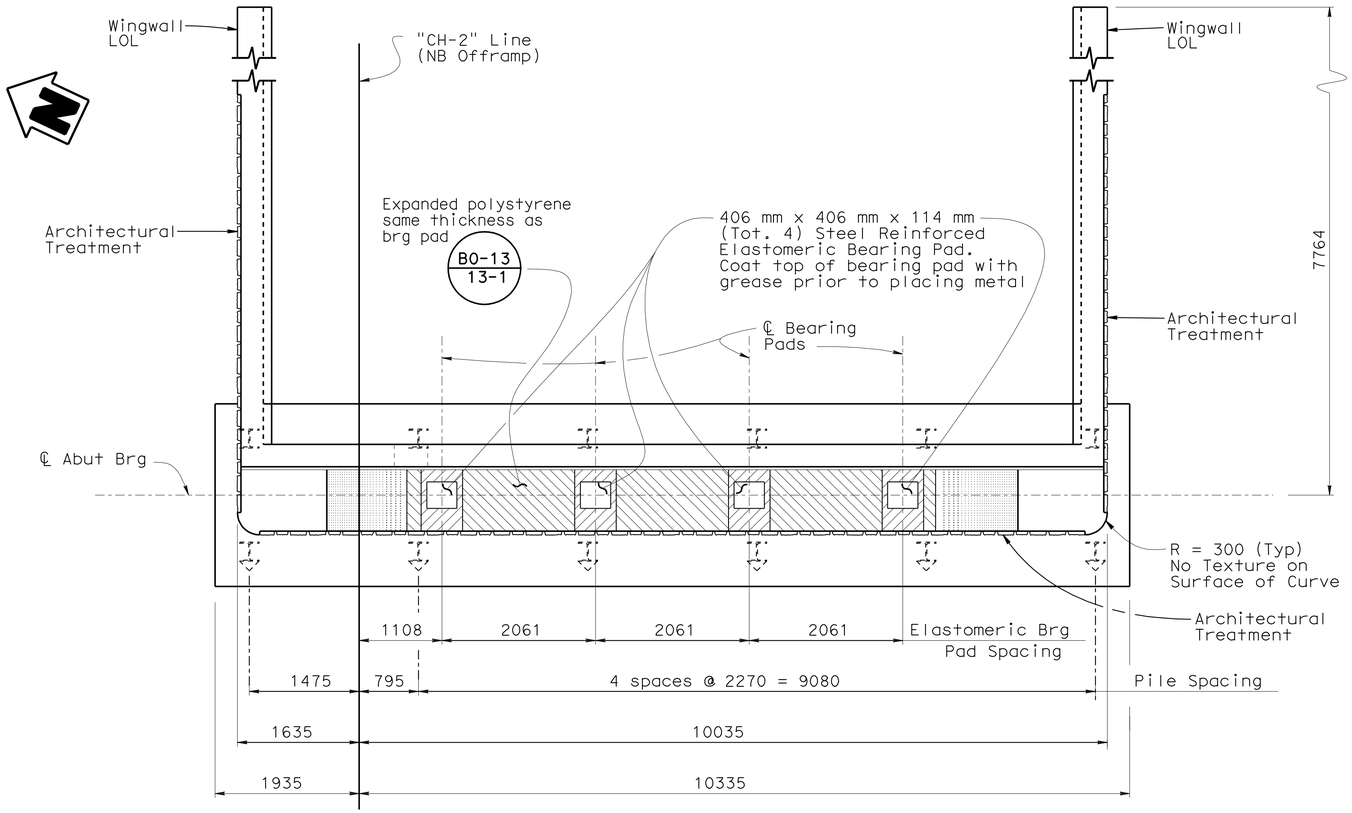

ABUTMENT 5 LAYOUT

1:40

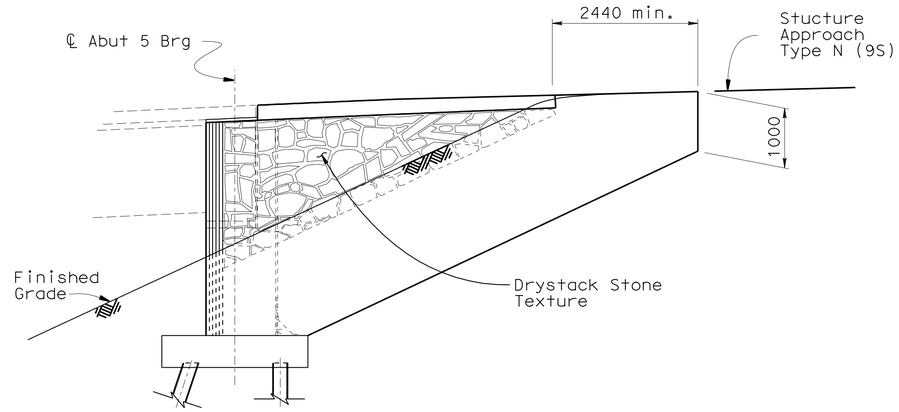

WINGWALL ELEVATION

1:50

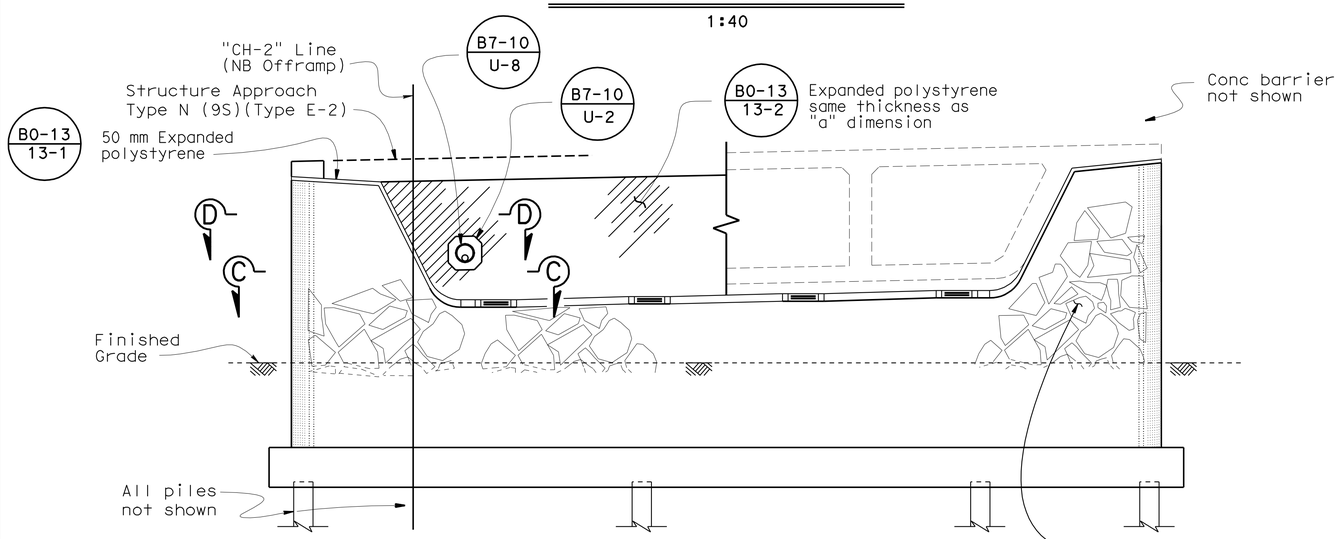

ABUTMENT 5 ELEVATION

1:40

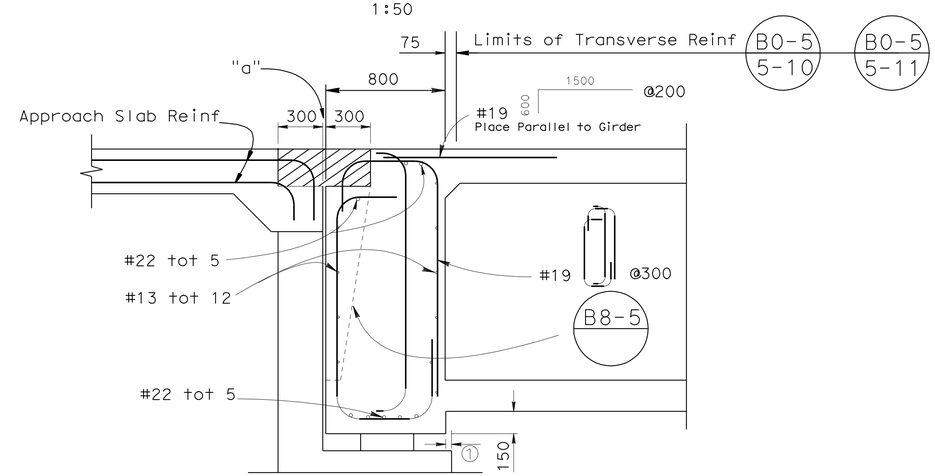

END DIAPHRAGM

No Scale

Notes:

1 Inset diaphragm 40mm to allow for prestress shortening

- Blockout, Depth = 250 mm

DESIGN	BY David Alvarez	CHECKED Richard Melko	
DETAILS	BY Jeff Thorne	CHECKED Richard Melko	
QUANTITIES	BY Ubong Inyang	CHECKED Fayek Tannous	

STATE OF CALIFORNIA DEPARTMENT OF TRANSPORTATION

DIVISION OF ENGINEERING SERVICES STRUCTURE DESIGN

DESIGN BRANCH 6

BRIDGE NO. 44-0285

KILOMETER POST 158.2

NB OFFRAMP VIADUCT

ABUTMENT 5 LAYOUT

ALL DIMENSIONS ARE IN MILLIMETERS UNLESS OTHERWISE SHOWN

ORIGINAL SCALE IN MILLIMETERS FOR REDUCED PLANS 0 10 20 30 40 50 60 70 80 90 100

CU 05
EA 0161E1

DISREGARD PRINTS BEARING EARLIER REVISION DATES

REVISION DATES 1-31-09 2-27-09 3-18-09 9-17-09 10-21-09 10-30-09 11-18-09 12-17-09 04-29-10 05-06-10

SHEET 6 OF 28

FILE => 44-0285-f-a5-lo.dgn

STRUCTURES DESIGN DETAIL SHEET (METRIC) (REV.03-17-04)

USERNAME => trlenard DATE PLOTTED => 03-AUG-2010 TIME PLOTTED => 07:35

DIST	COUNTY	ROUTE	KILOMETER POST TOTAL PROJECT	SHEET No	TOTAL SHEETS
05	Mon	101	R146.8/159.7	1261	1402

REGISTERED CIVIL ENGINEER — DATE 05-06-10

7-26-10
PLANS APPROVAL DATE

REGISTERED PROFESSIONAL ENGINEER — HERNAN PEREZ — No. 60993 — Exp. 12-31-10 — CIVIL — STATE OF CALIFORNIA

The State of California or its officers or agents shall not be responsible for the accuracy or completeness of electronic copies of this plan sheet.

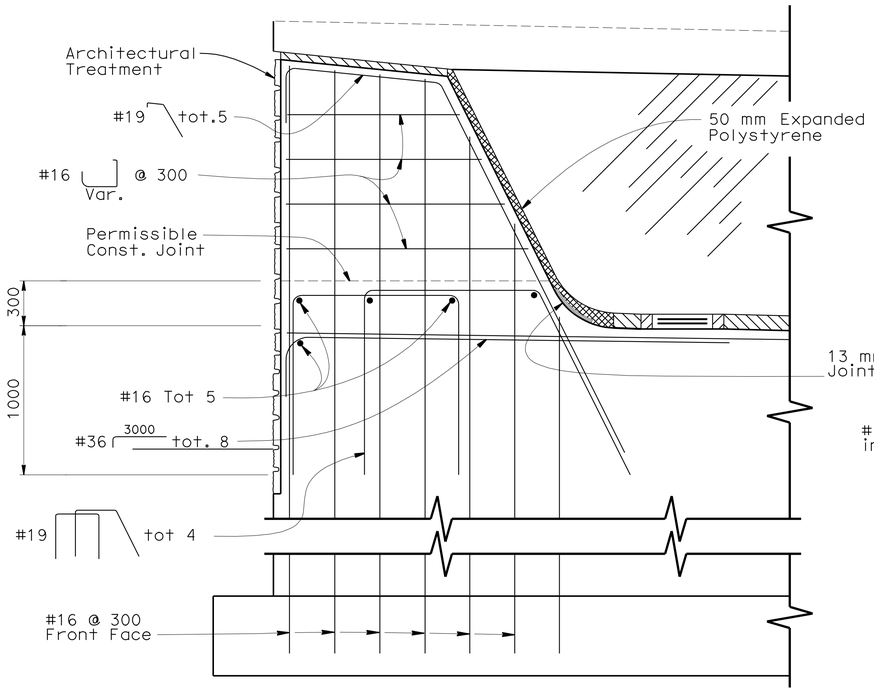

EXTERNAL SHEAR KEY
1:20

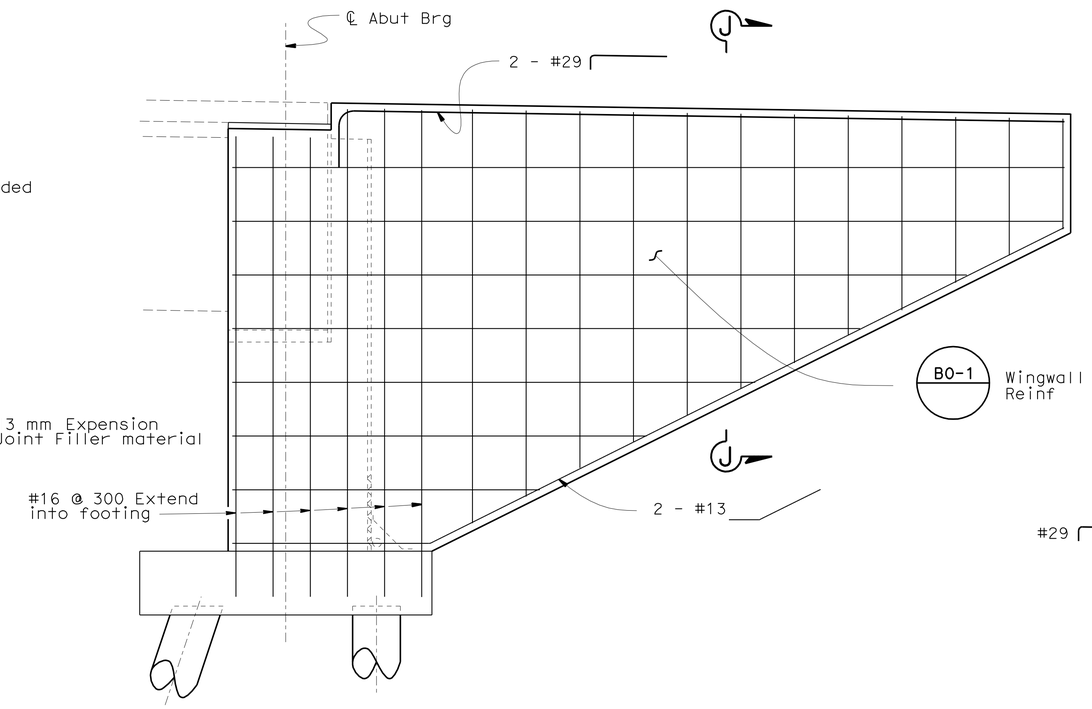

WINGWALL REINFORCEMENT
1:25

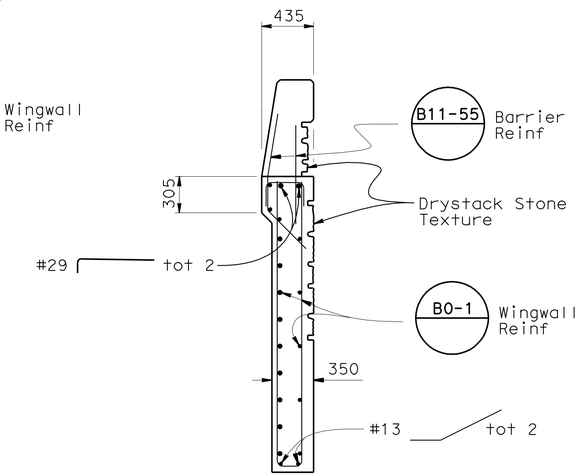

SECTION J-J
1:25

NOTE:
Geocomposite Drain not shown. See "Structure Approach Drainage Details" sheet.

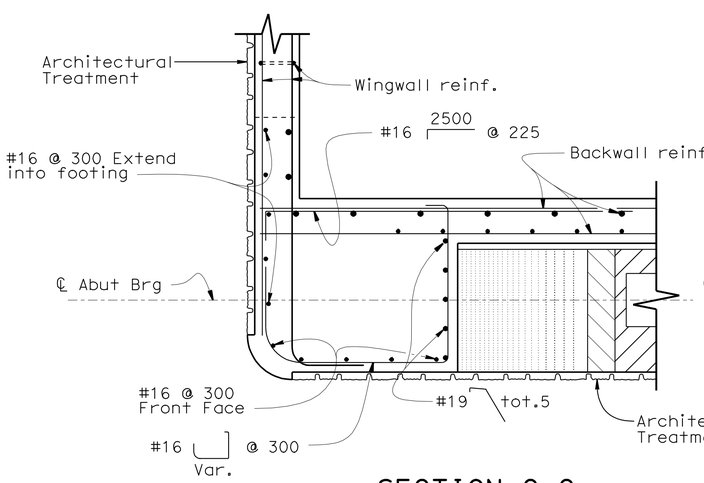

SECTION C-C
1:20

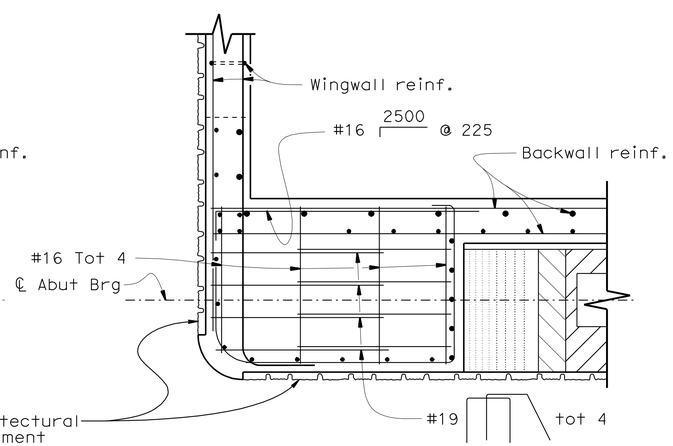

SECTION D-D
1:20

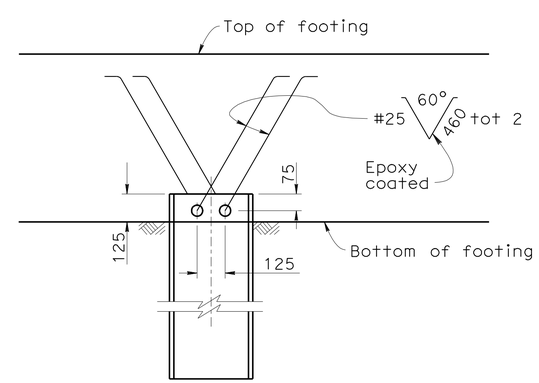

ELEVATION

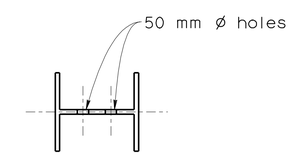

PLAN

STEEL PILE ANCHOR DETAIL (HP 250X85)
No Scale

DESIGN	BY D. Alvarez	CHECKED Richard Melko	
DETAILS	BY Jeff Thorne	CHECKED Richard Melko	
QUANTITIES	BY Ubong Inyang	CHECKED Fayek Tannous	

STATE OF CALIFORNIA
DEPARTMENT OF TRANSPORTATION

DIVISION OF ENGINEERING SERVICES
STRUCTURE DESIGN
DESIGN BRANCH 6

BRIDGE NO. 44-0285
KILOMETER POST 158.2

NB OFFRAMP VIADUCT
ABUTMENT DETAILS

ALL DIMENSIONS ARE IN MILLIMETERS UNLESS OTHERWISE SHOWN

ORIGINAL SCALE IN MILLIMETERS FOR REDUCED PLANS 0 10 20 30 40 50 60 70 80 90 100

CU 05
EA 0161E

DISREGARD PRINTS BEARING EARLIER REVISION DATES

REVISION DATES: 01-14-09 2-1-09 3-13-09 9-23-09 10-30-09 11-17-09 12-11-09 04-29-10

SHEET 7 OF 28

FILE => 44-0285-f-adts01.dgn

STRUCTURES DESIGN DETAIL SHEET (METRIC) (REV.03-17-04)

USERNAME => tfriehard DATE PLOTTED => 12-AUG-2010 TIME PLOTTED => 06:09

DIST	COUNTY	ROUTE	KILOMETER POST TOTAL PROJECT	SHEET No	TOTAL SHEETS
05	Mon	101	R146.8/159.7	1262	1402

REGISTERED CIVIL ENGINEER 05-06-10 DATE

7-26-10
PLANS APPROVAL DATE

REGISTERED PROFESSIONAL ENGINEER HERNAN PEREZ No. 60993 Exp. 12-31-10 CIVIL STATE OF CALIFORNIA

The State of California or its officers or agents shall not be responsible for the accuracy or completeness of electronic copies of this plan sheet.

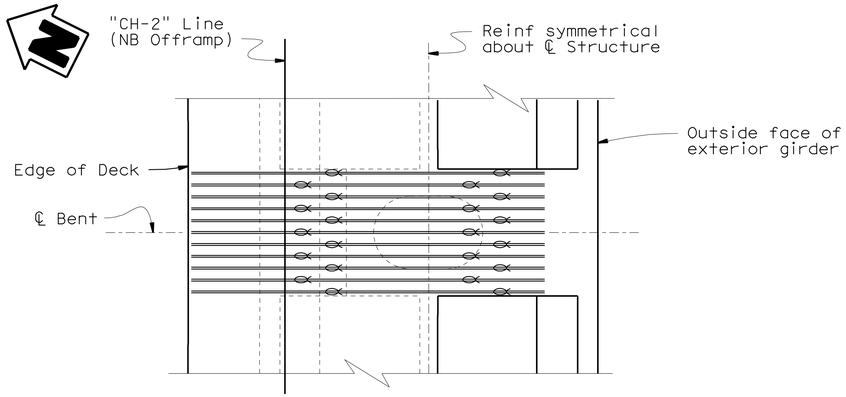

PLAN
1:50

Notes:
All reinforcement #36 unless otherwise noted.
Bundled bars shown thus:
Bent 2 shown, Bent 3 similar.

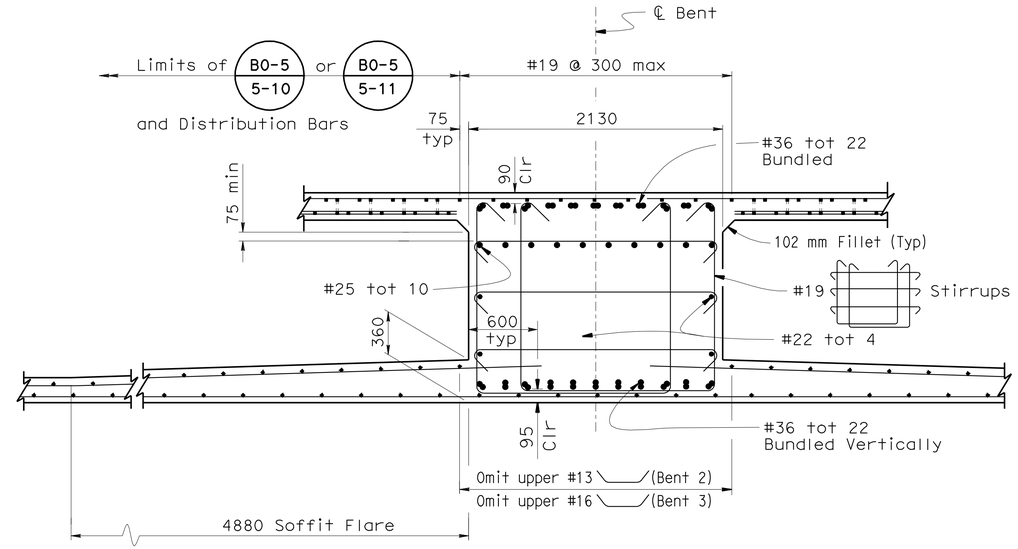

SECTION A-A
1:25

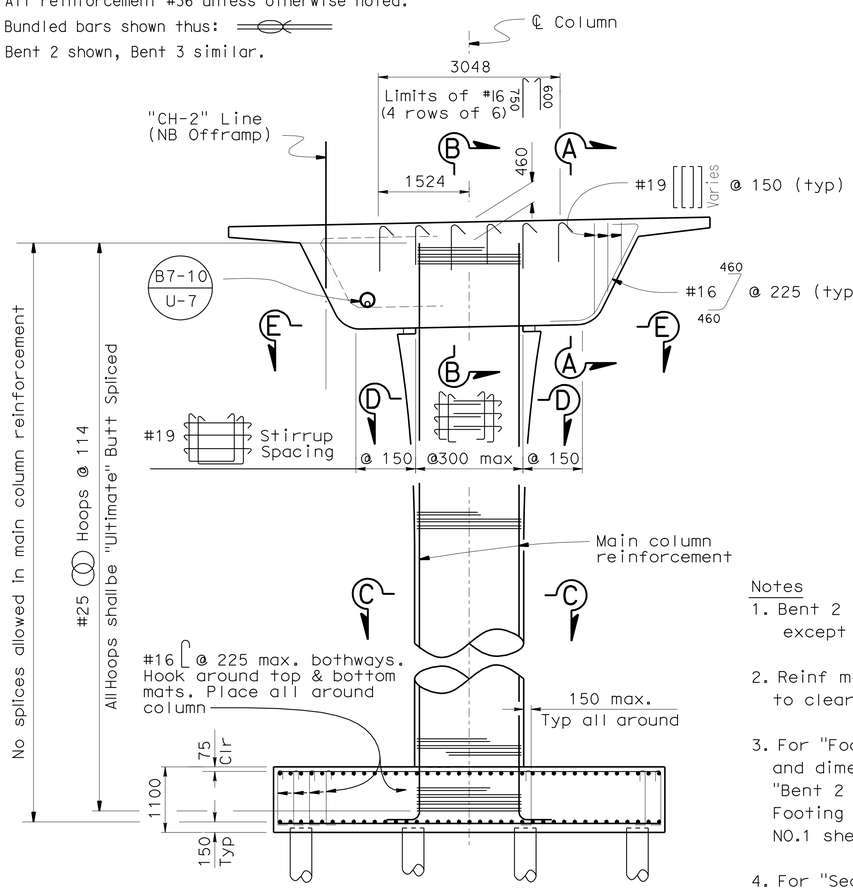

ELEVATION
1:50

Notes
1. Bent 2 shown, Bent 3 similar, except as noted
2. Reinf may be bent or lowered to clear P/S Ducts
3. For "Footing Plan" and details and dimensions not shown, see "Bent 2 Footing Plan" and "Bent 3 Footing Plan" on "BENT DETAILS NO.1 sheet
4. For "Section C-C", "Section D-D" and "Section E-E", see "BENT DETAILS NO.2" sheet

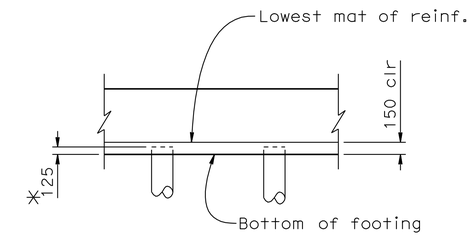

PILE EMBEDMENT
No Scale

Note:
* - For Steel Pipe Piles

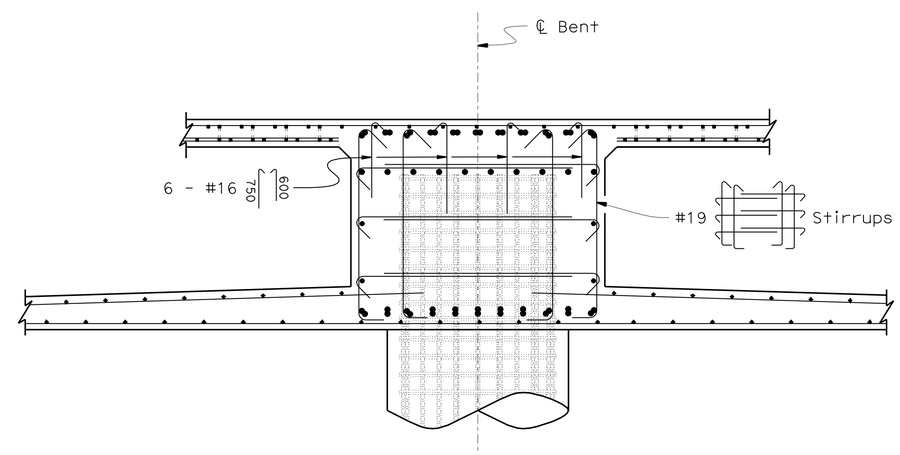

SECTION B-B
1:25

DESIGN	BY David Alvarez	CHECKED Richard Melko	
DETAILS	BY Jeff Thorne	CHECKED Richard Melko	
QUANTITIES	BY Ubong Inyang	CHECKED Fayek Tannous	

STATE OF CALIFORNIA
DEPARTMENT OF TRANSPORTATION

DIVISION OF ENGINEERING SERVICES
STRUCTURE DESIGN
DESIGN BRANCH 6

BRIDGE NO. 44-0285
KILOMETER POST 158.2

NB OFFRAMP VIADUCT
BENT 2 & 3 LAYOUT

ALL DIMENSIONS ARE IN MILLIMETERS UNLESS OTHERWISE SHOWN

ORIGINAL SCALE IN MILLIMETERS FOR REDUCED PLANS 0 10 20 30 40 50 60 70 80 90 100

CU 05
EA 0161E1

DISREGARD PRINTS BEARING EARLIER REVISION DATES

REVISION DATES: 12-19-08 3-14-09 10-26-09 10-30-09 11-17-09 11-19-09

SHEET 8 OF 28

FILE => 44-0285-h-b2&3a1o01.dgn

STRUCTURES DESIGN DETAIL SHEET (METRIC) (REV.03-17-04)

USERNAME => trlenard DATE PLOTTED => 03-AUG-2010 TIME PLOTTED => 07:35

DIST	COUNTY	ROUTE	KILOMETER POST TOTAL PROJECT	SHEET No	TOTAL SHEETS
05	Mon	101	R146.8/159.7	1263	1402

REGISTERED CIVIL ENGINEER — DATE 05-06-10

7-26-10
PLANS APPROVAL DATE

REGISTERED PROFESSIONAL ENGINEER — HERNAN PEREZ — No. 60993 — Exp. 12-31-10 — CIVIL — STATE OF CALIFORNIA

The State of California or its officers or agents shall not be responsible for the accuracy or completeness of electronic copies of this plan sheet.

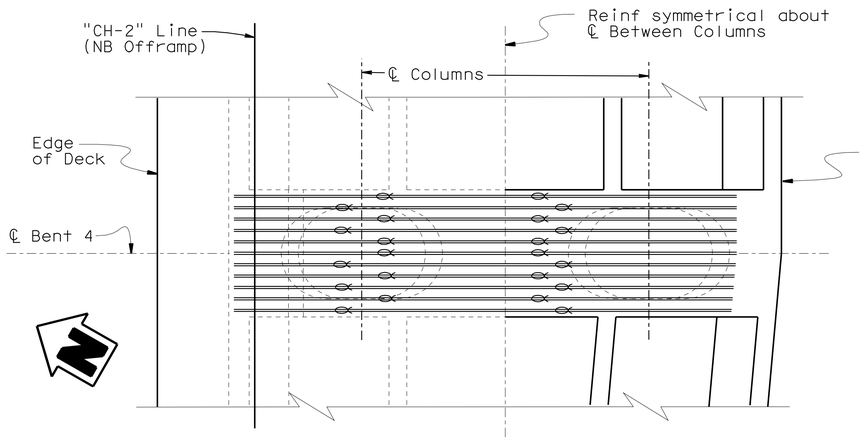

PLAN
1:50

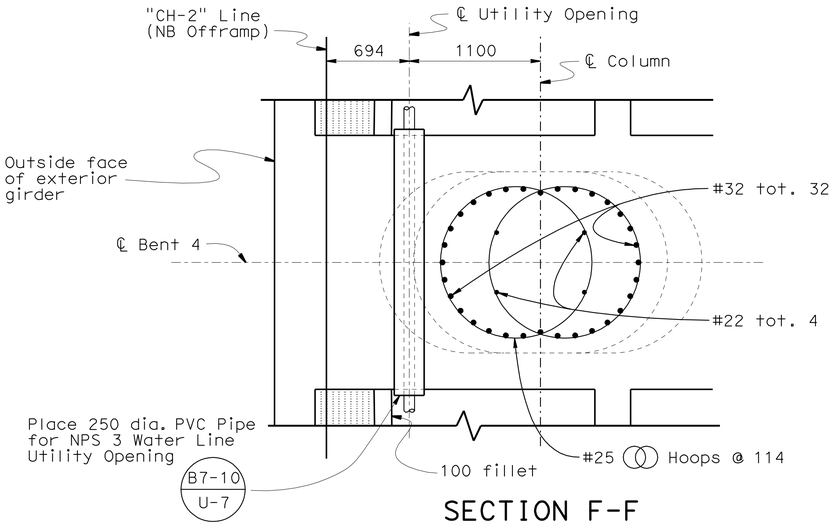

SECTION F-F
1:25

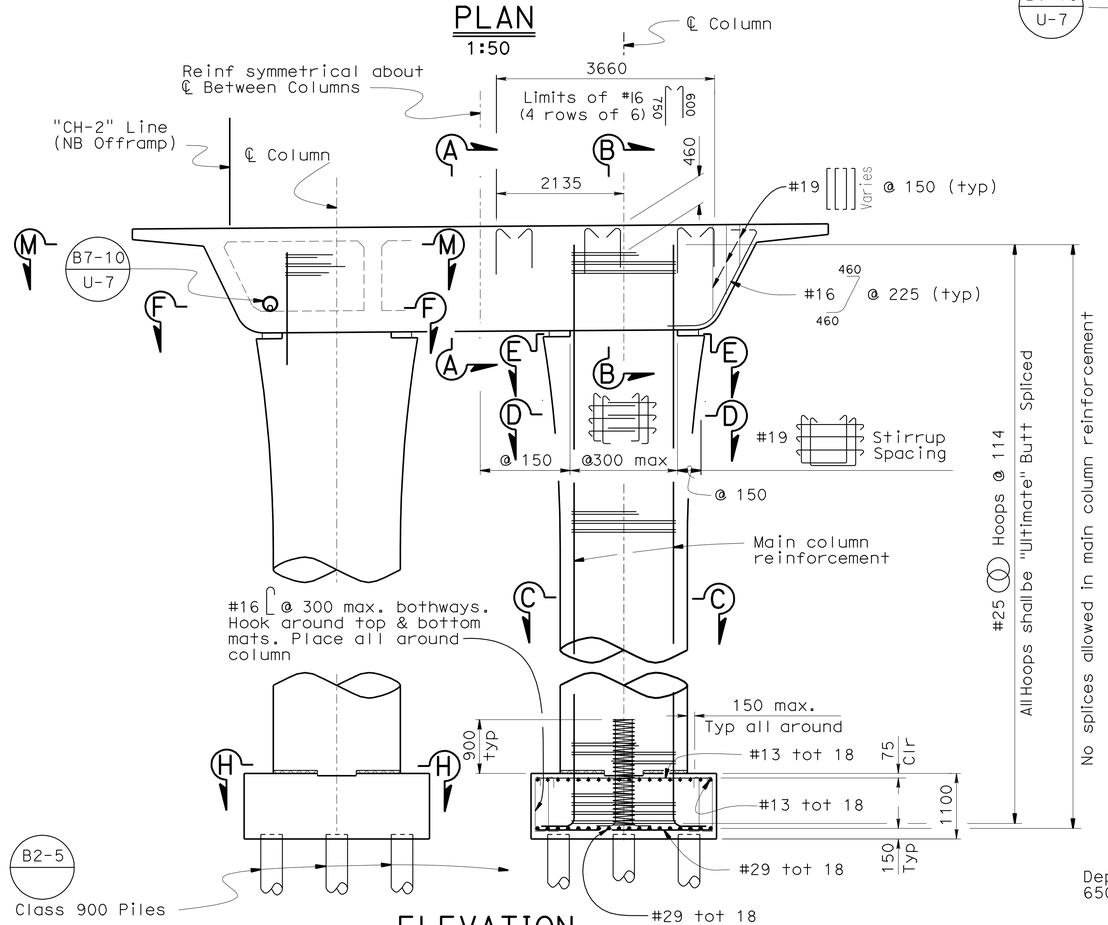

ELEVATION
1:50

Notes

For "Section A-A", "B-B", and details and dimensions not shown, see 'BENT 2 & 3 LAYOUT' sheet.

For "Section C-C", "D-D" and "E-E", see "BENT DETAILS NO.2" sheet.

For "Footing Plan" and Details and Dimensions not shown, see "Bent 4 Footing Plan" on "Bent Details No.3" sheet.

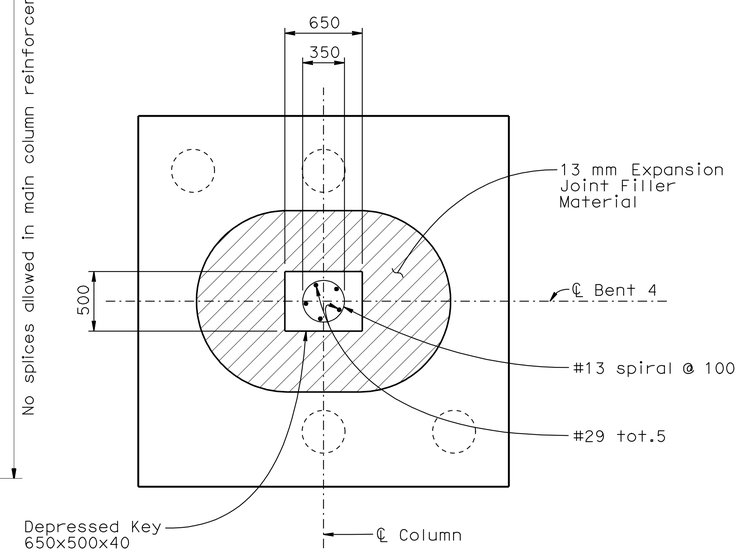

SECTION H-H
1:25

Note:
All piles not shown.

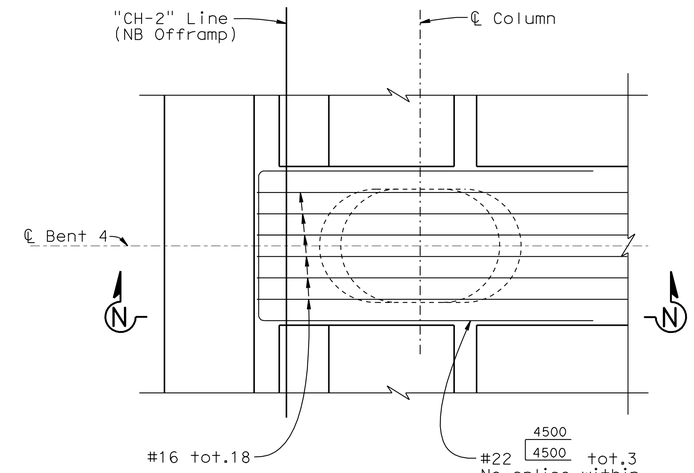

SECTION M-M
1:40

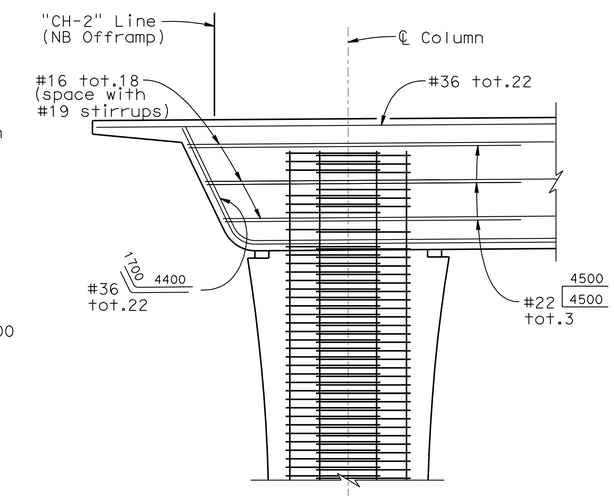

SECTION N-N
1:40

Caltrans Metric

	BY	CHECKED
DESIGN	David Alvarez	Richard Melko
DETAILS	Jeff Thorne	Richard Melko
QUANTITIES	Ubong Inyang	Fayek Tannous

STATE OF CALIFORNIA
DEPARTMENT OF TRANSPORTATION

DIVISION OF ENGINEERING SERVICES
STRUCTURE DESIGN
DESIGN BRANCH 6

BRIDGE NO. 44-0285
KILOMETER POST 158.2

NB OFFRAMP VIADUCT
BENT 4 LAYOUT

ALL DIMENSIONS ARE IN MILLIMETERS UNLESS OTHERWISE SHOWN

ORIGINAL SCALE IN MILLIMETERS FOR REDUCED PLANS 0 10 20 30 40 50 60 70 80 90 100

CU 05
EA 0161E1

DISREGARD PRINTS BEARING EARLIER REVISION DATES

REVISION DATES: 1-12-09 2-27-09 3-24-09 4-28-09 10-20-09 11-19-09 04-29-10 5-10-10

SHEET 9 OF 28

FILE => 44-0285-h-b4lo01.dgn

STRUCTURES DESIGN DETAIL SHEET (METRIC) (REV.03-17-04)

USERNAME => trlenard DATE PLOTTED => 03-AUG-2010 TIME PLOTTED => 07:35

DIST	COUNTY	ROUTE	KILOMETER POST TOTAL PROJECT	SHEET No	TOTAL SHEETS
05	Mon	101	R146.8/159.7	1264	1402

REGISTERED CIVIL ENGINEER — DATE 05-06-10

7-26-10
PLANS APPROVAL DATE

REGISTERED PROFESSIONAL ENGINEER — HERNAN PEREZ — No. 60993 — Exp. 12-31-10 — CIVIL — STATE OF CALIFORNIA

The State of California or its officers or agents shall not be responsible for the accuracy or completeness of electronic copies of this plan sheet.

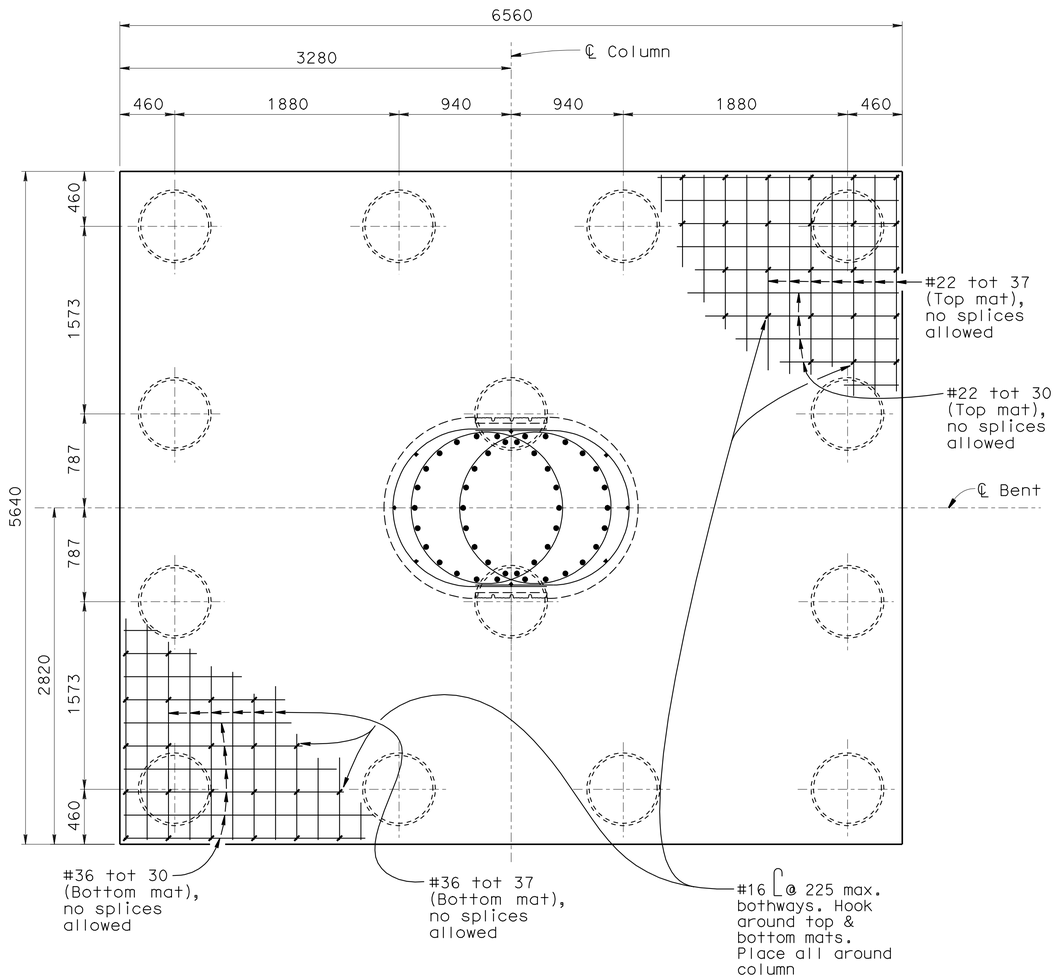

BENT 2 FOOTING PLAN

1:25

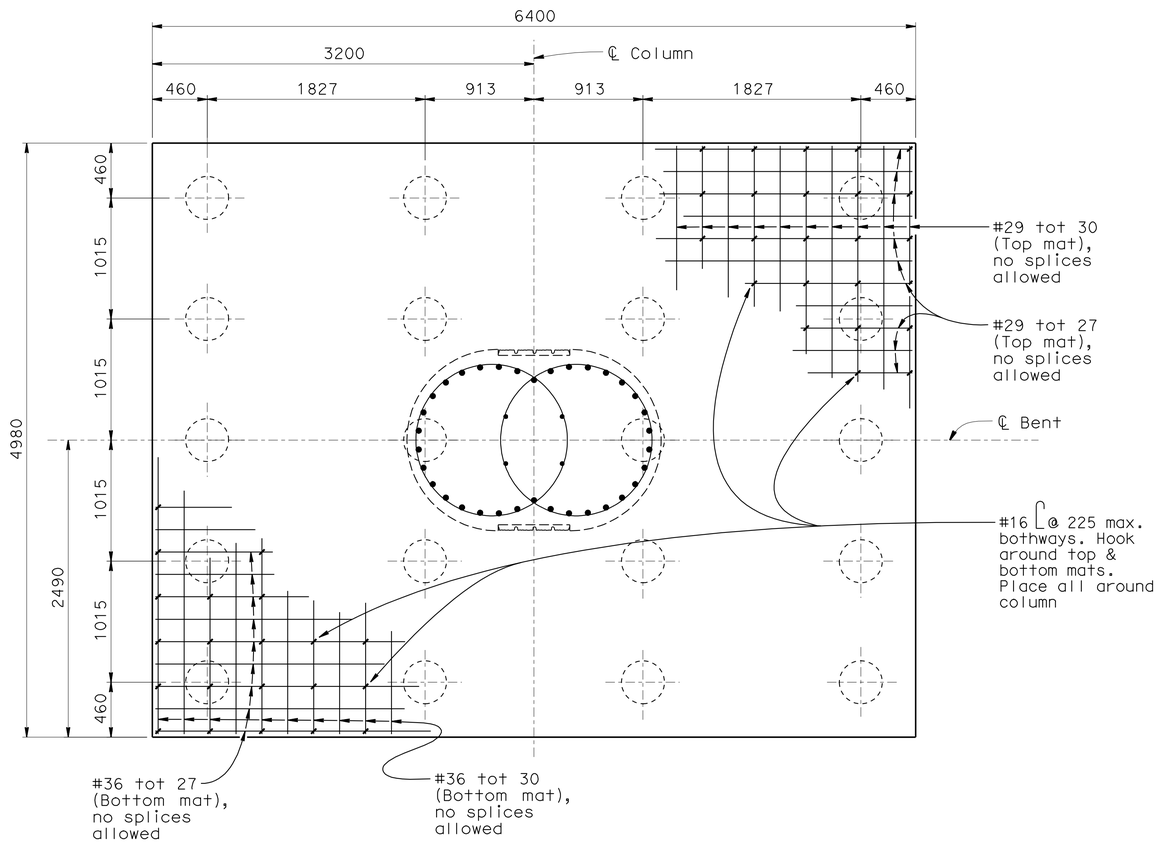

BENT 3 FOOTING PLAN

1:25

Caltrans Metric

	BY	CHECKED
DESIGN	David Alvarez	Richard Melko
DETAILS	Jeff Thorne	Richard Melko
QUANTITIES	Ubong Inyang	Fayek Tannous

STATE OF CALIFORNIA
DEPARTMENT OF TRANSPORTATION

DIVISION OF ENGINEERING SERVICES
STRUCTURE DESIGN
DESIGN BRANCH 6

BRIDGE NO. 44-0285
KILOMETER POST 158.2

NB OFFRAMP VIADUCT
BENT DETAILS NO. 1

ALL DIMENSIONS ARE IN MILLIMETERS UNLESS OTHERWISE SHOWN

ORIGINAL SCALE IN MILLIMETERS FOR REDUCED PLANS 0 10 20 30 40 50 60 70 80 90 100

CU 05
EA 0161E1

DISREGARD PRINTS BEARING EARLIER REVISION DATES

REVISION DATES: 01-09-09, 03-02-09, 3-14-09, 3-19-09, 9-28-09, 10-21-09, 10-26-09, 5-10-10

SHEET 10 OF 28

FILE => 44-0285-h-bdts1.dgn

STRUCTURES DESIGN DETAIL SHEET (METRIC) (REV.03-17-04)

USERNAME => friehard DATE PLOTTED => 03-AUG-2010 TIME PLOTTED => 07:35

DIST	COUNTY	ROUTE	KILOMETER POST TOTAL PROJECT	SHEET No	TOTAL SHEETS
05	Mon	101	R146.8/159.7	1265	1402

REGISTERED CIVIL ENGINEER 05-06-10 DATE

7-26-10
PLANS APPROVAL DATE

REGISTERED PROFESSIONAL ENGINEER HERNAN PEREZ No. C60993 Exp. 12-31-10 CIVIL STATE OF CALIFORNIA

The State of California or its officers or agents shall not be responsible for the accuracy or completeness of electronic copies of this plan sheet.

BENT 2

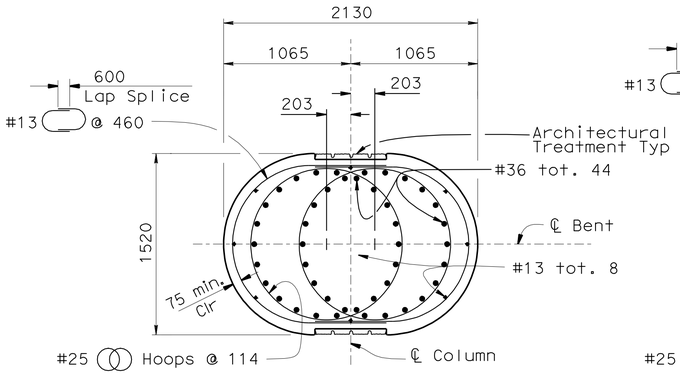

SECTION C-C
1:25

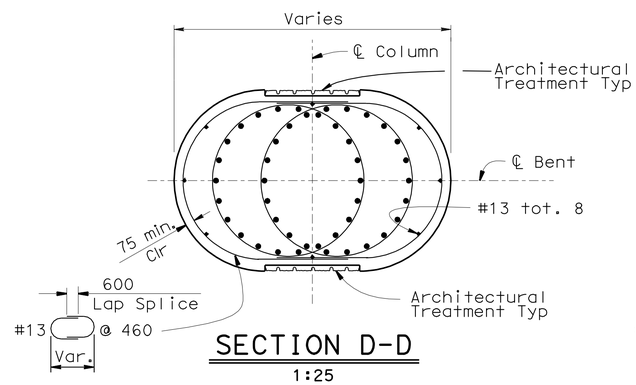

SECTION D-D
1:25

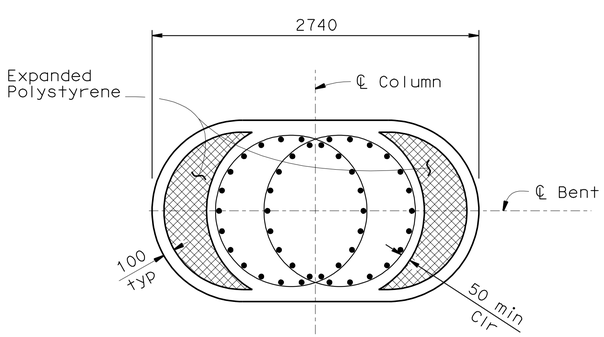

SECTION E-E
1:25

BENT 3

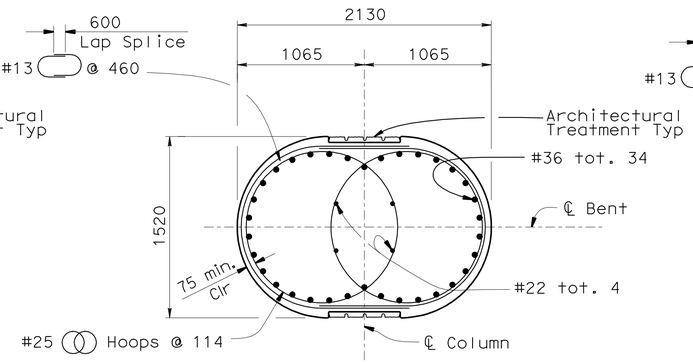

SECTION C-C
1:25

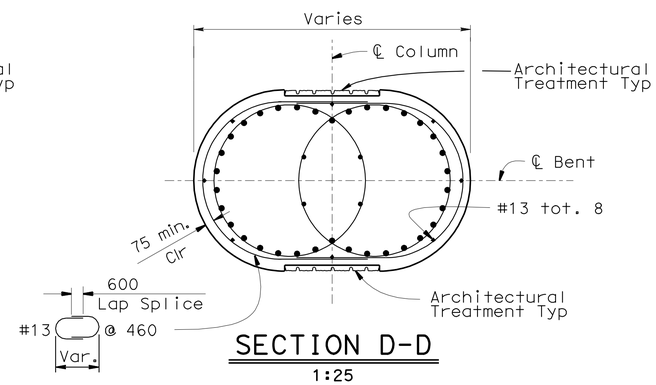

SECTION D-D
1:25

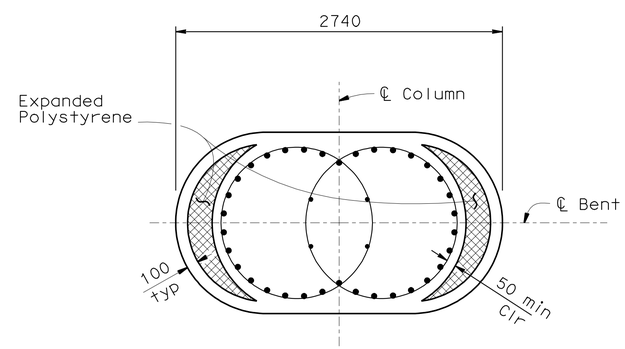

SECTION E-E
1:25

BENT 4

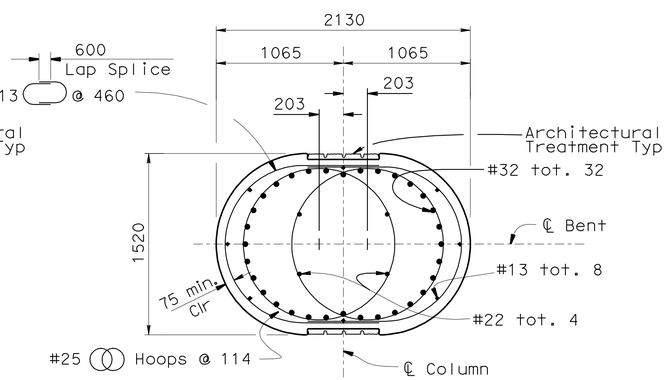

SECTION C-C
1:25

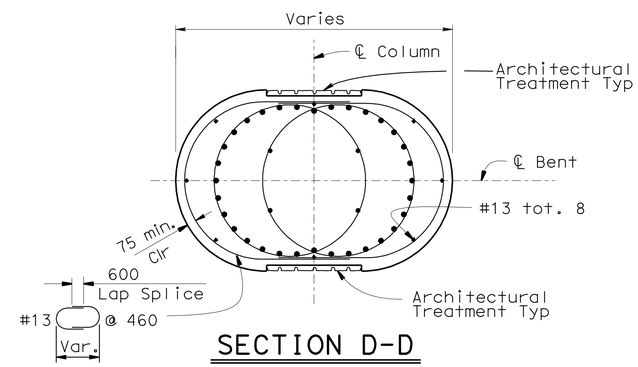

SECTION D-D
1:25

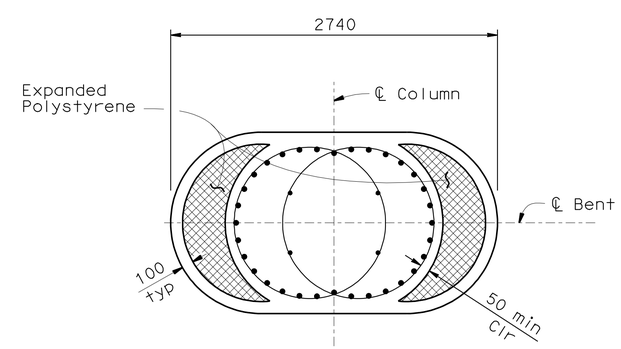

SECTION E-E
1:25

DESIGN	BY D. Alvarez	CHECKED Richard Melko	
DETAILS	BY D. Pato	CHECKED Richard Melko	
QUANTITIES	BY Ubong Inyang	CHECKED Fayek Tannous	

STATE OF CALIFORNIA
DEPARTMENT OF TRANSPORTATION

DIVISION OF ENGINEERING SERVICES
STRUCTURE DESIGN
DESIGN BRANCH 6

BRIDGE NO. 44-0285
KILOMETER POST 158.2

NB OFFRAMP VIADUCT
BENT DETAILS NO.2

ALL DIMENSIONS ARE IN MILLIMETERS UNLESS OTHERWISE SHOWN

ORIGINAL SCALE IN MILLIMETERS FOR REDUCED PLANS 0 10 20 30 40 50 60 70 80 90 100

CU 05
EA 0161E1

DISREGARD PRINTS BEARING EARLIER REVISION DATES

REVISION DATES: 2-13-09 2-24-09 2-27-09 3-20-09 10-15-09 10-26-09 11-17-09 11-18-09 04-29-10 5-10-10

SHEET 11 OF 28

FILE => 44-0285-h-bdts2.dgn

STRUCTURES DESIGN DETAIL SHEET (METRIC) (REV.03-17-04)

USERNAME => trlenard DATE PLOTTED => 03-AUG-2010 TIME PLOTTED => 07:35

DIST	COUNTY	ROUTE	KILOMETER POST TOTAL PROJECT	SHEET No	TOTAL SHEETS
05	Mon	101	R146.8/159.7	1266	1402

REGISTERED CIVIL ENGINEER 05-06-10 DATE

7-26-10
PLANS APPROVAL DATE

REGISTERED PROFESSIONAL ENGINEER HERNAN PEREZ No. 60993 Exp. 12-31-10 CIVIL STATE OF CALIFORNIA

The State of California or its officers or agents shall not be responsible for the accuracy or completeness of electronic copies of this plan sheet.

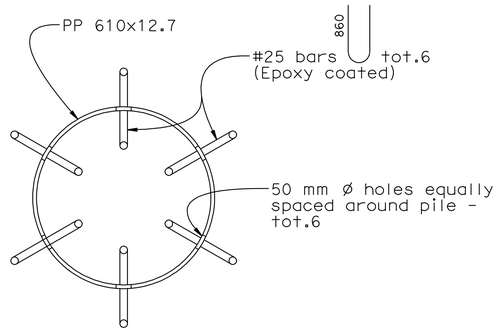

SECTION W-W

1:10

Note:
PP = Steel Pipe Pile.

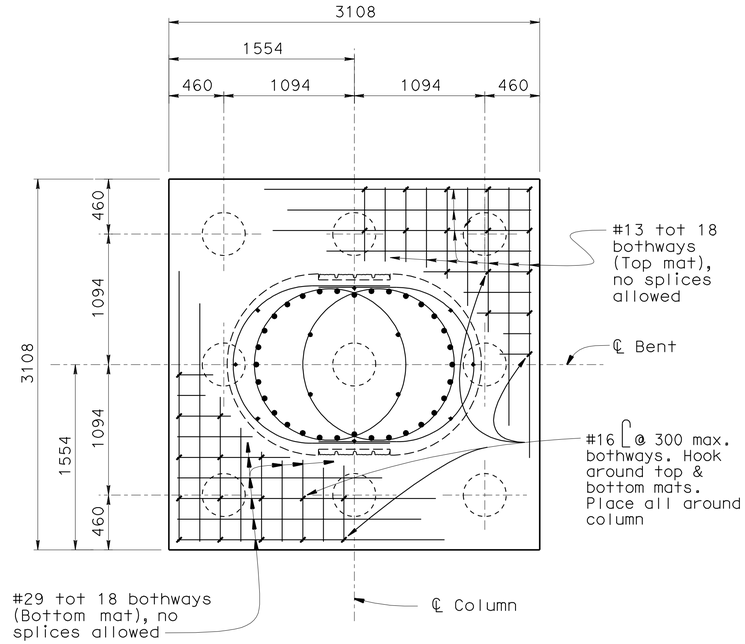

BENT 4 FOOTING PLAN

1:25

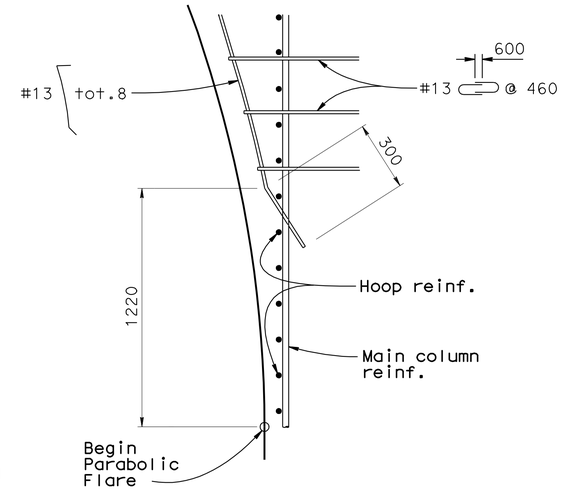

TIE DETAIL

No Scale

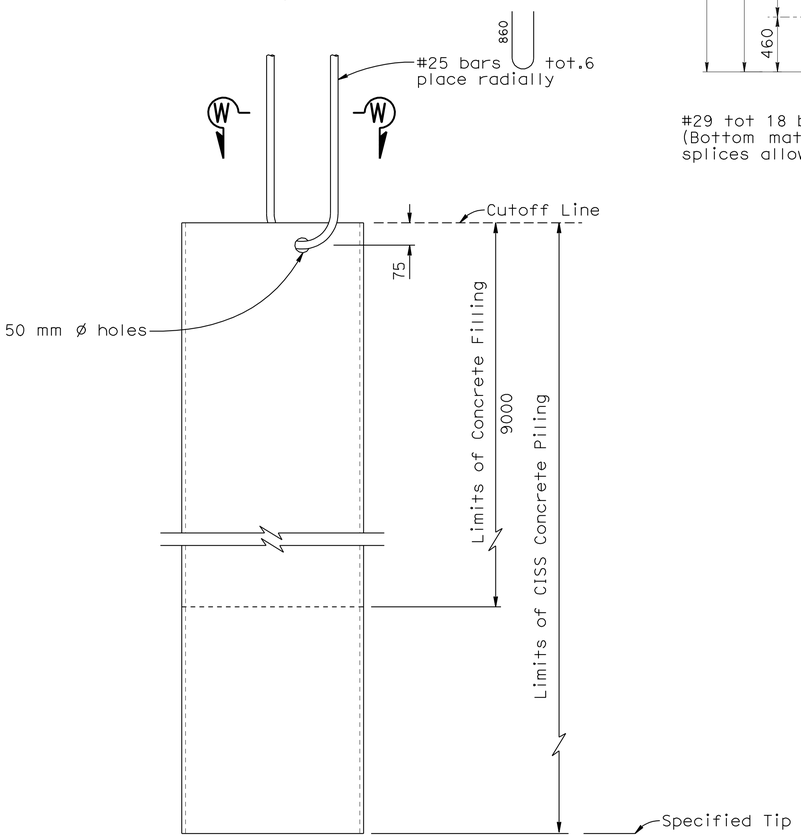

CISS PIPE PILE

1:10

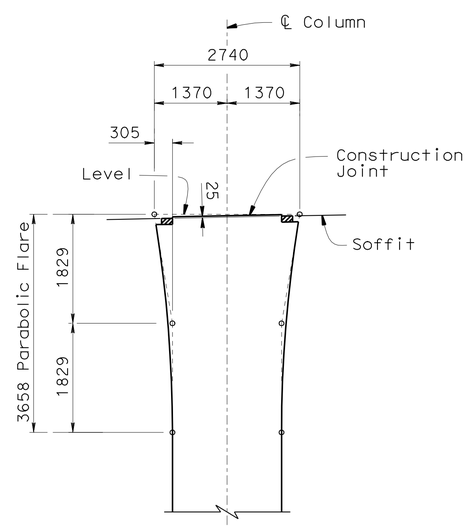

COLUMN GEOMETRICS

No Scale

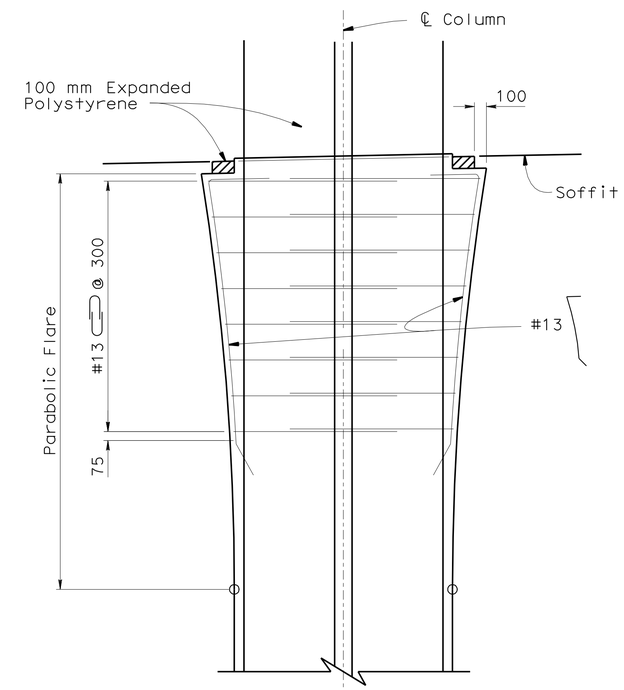

ELEVATION

No Scale

DESIGN	BY David Alvarez	CHECKED Richard Melko	
DETAILS	BY Jeff Thorne	CHECKED Richard Melko	
QUANTITIES	BY Ubong Inyang	CHECKED Fayek Tannous	

STATE OF CALIFORNIA
DEPARTMENT OF TRANSPORTATION

DIVISION OF ENGINEERING SERVICES
STRUCTURE DESIGN
DESIGN BRANCH 6

BRIDGE NO. 44-0285
KILOMETER POST 158.2

NB OFFRAMP VIADUCT
BENT DETAILS NO. 3

Caltrans Metric

ALL DIMENSIONS ARE IN MILLIMETERS UNLESS OTHERWISE SHOWN

ORIGINAL SCALE IN MILLIMETERS FOR REDUCED PLANS 0 10 20 30 40 50 60 70 80 90 100

CU 05
EA 0161E1

DISREGARD PRINTS BEARING EARLIER REVISION DATES

REVISION DATES: 9-24-09 10-20-09 10-26-09 12-11-09 5-10-10

SHEET 12 OF 28

FILE => 44-0285-h-bdts3.dgn

STRUCTURES DESIGN DETAIL SHEET (METRIC) (REV.03-17-04)

USERNAME => trlenard DATE PLOTTED => 03-AUG-2010 TIME PLOTTED => 07:36

DIST	COUNTY	ROUTE	KILOMETER POST TOTAL PROJECT	SHEET No	TOTAL SHEETS
05	Mon	101	R146.8/159.7	1267	1402

REGISTERED CIVIL ENGINEER — DATE 05-06-10

7-26-10
PLANS APPROVAL DATE

REGISTERED PROFESSIONAL ENGINEER — HERNAN PEREZ — No. 60993 — Exp. 12-31-10 — CIVIL — STATE OF CALIFORNIA

The State of California or its officers or agents shall not be responsible for the accuracy or completeness of electronic copies of this plan sheet.

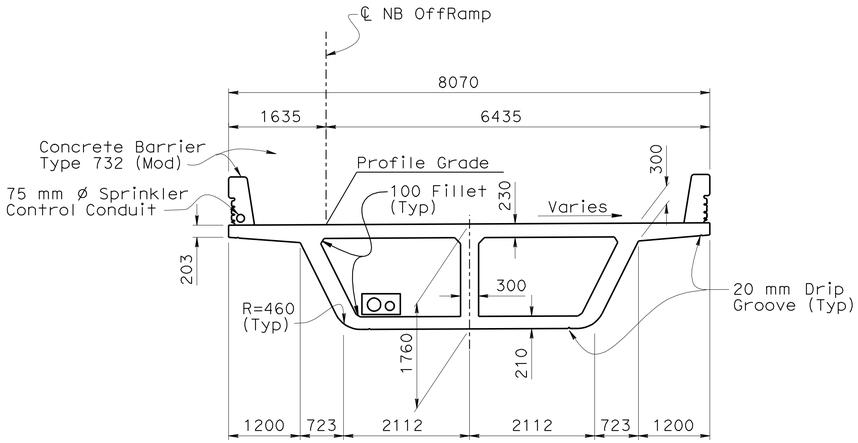

TYPICAL SECTION STA 193+24 TO 194+01

1:50

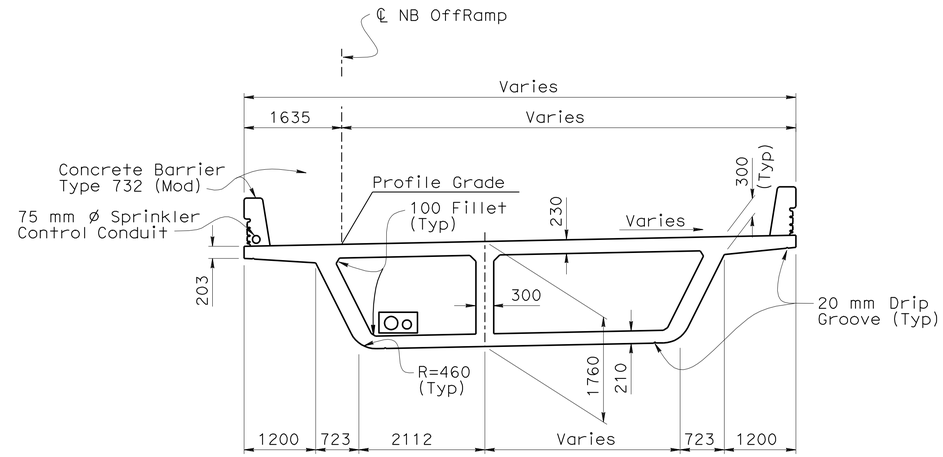

TYPICAL SECTION STA 194+01 TO 194+17

1:50

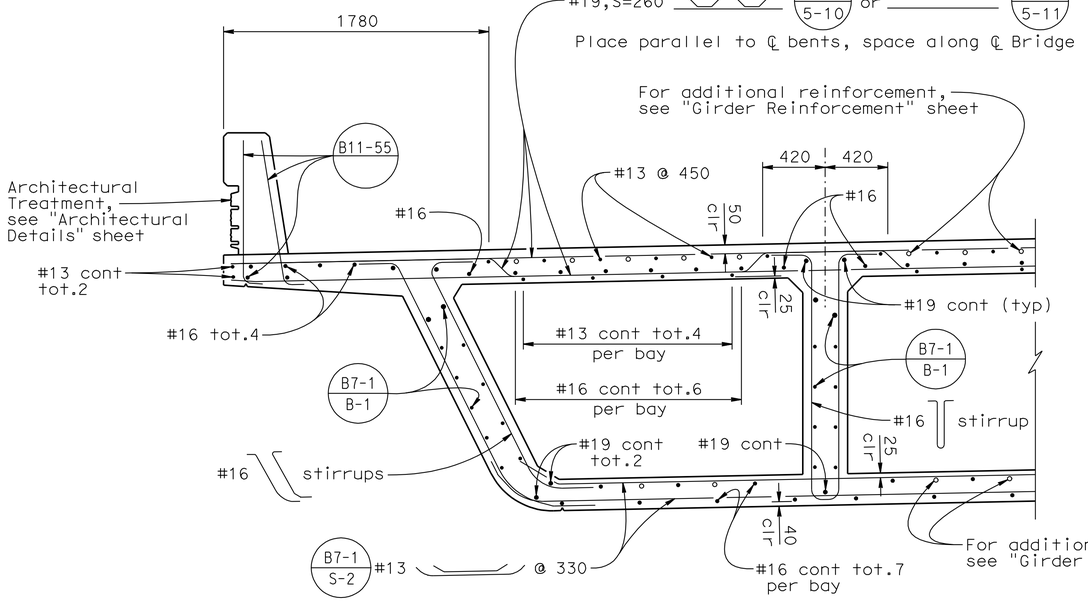

PART TYPICAL SECTION STA 193+24 TO 194+01

1:20

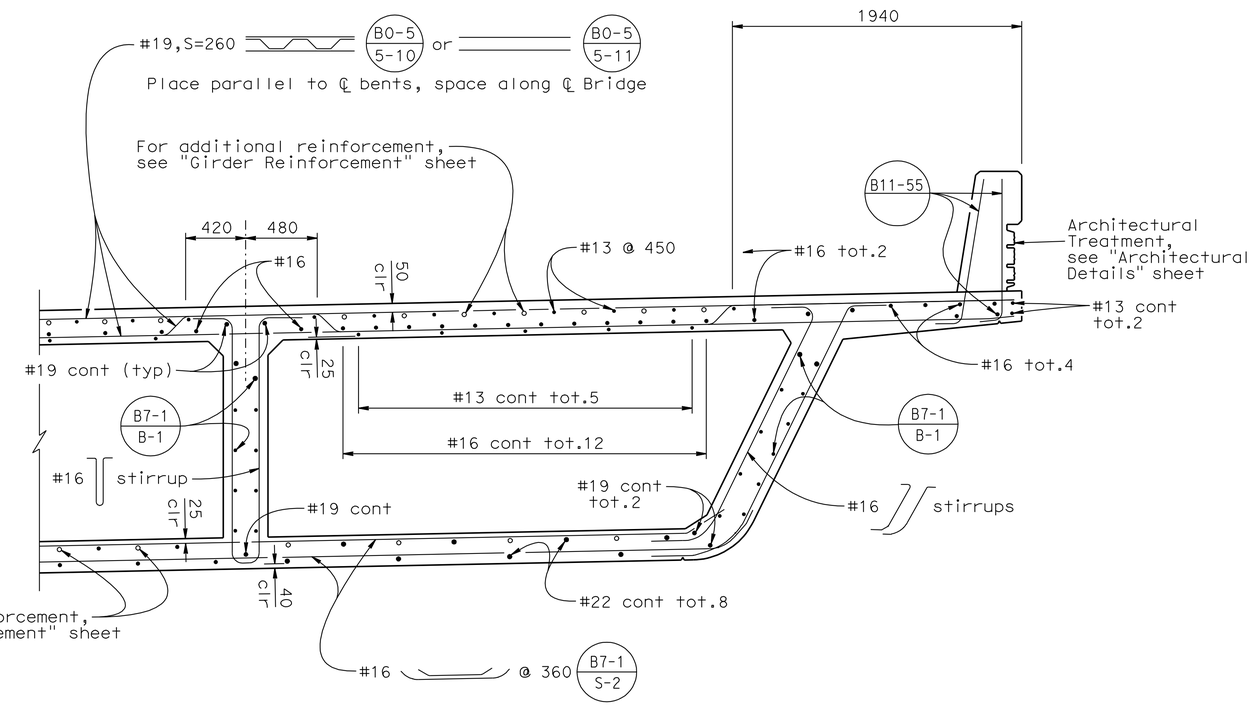

PART TYPICAL SECTION STA 194+01 TO 194+17

1:20

Caltrans Metric

	BY	CHECKED
DESIGN	David Alvarez	Richard Melko
DETAILS	Bruno Jenko	Richard Melko
QUANTITIES	Ubong Inyang	Fayek Tannous

STATE OF CALIFORNIA
DEPARTMENT OF TRANSPORTATION

DIVISION OF ENGINEERING SERVICES
STRUCTURE DESIGN
DESIGN BRANCH 6

BRIDGE NO. 44-0285
KILOMETER POST 158.2

NB OFFRAMP VIADUCT
TYPICAL SECTION NO.1

ALL DIMENSIONS ARE IN MILLIMETERS UNLESS OTHERWISE SHOWN

ORIGINAL SCALE IN MILLIMETERS FOR REDUCED PLANS 0 10 20 30 40 50 60 70 80 90 100

CU 05
EA 0161E1

DISREGARD PRINTS BEARING EARLIER REVISION DATES

REVISION DATES: 9-14-01 2-28-09 4-28-09 10-30-09 11-18-09 12-11-09 5-10-10

SHEET 13 OF 28

FILE => 44-0285-k-ts01.dgn

STRUCTURES DESIGN DETAIL SHEET (METRIC) (REV.03-17-04)

USERNAME => trlenard DATE PLOTTED => 03-AUG-2010 TIME PLOTTED => 07:36

DIST	COUNTY	ROUTE	KILOMETER POST TOTAL PROJECT	SHEET No	TOTAL SHEETS
05	Mon	101	R146.8/159.7	1268	1402

REGISTERED CIVIL ENGINEER — DATE 05-06-10

7-26-10
PLANS APPROVAL DATE

REGISTERED PROFESSIONAL ENGINEER — HERNAN PEREZ — No. 60993 — Exp. 12-31-10 — CIVIL — STATE OF CALIFORNIA

The State of California or its officers or agents shall not be responsible for the accuracy or completeness of electronic copies of this plan sheet.

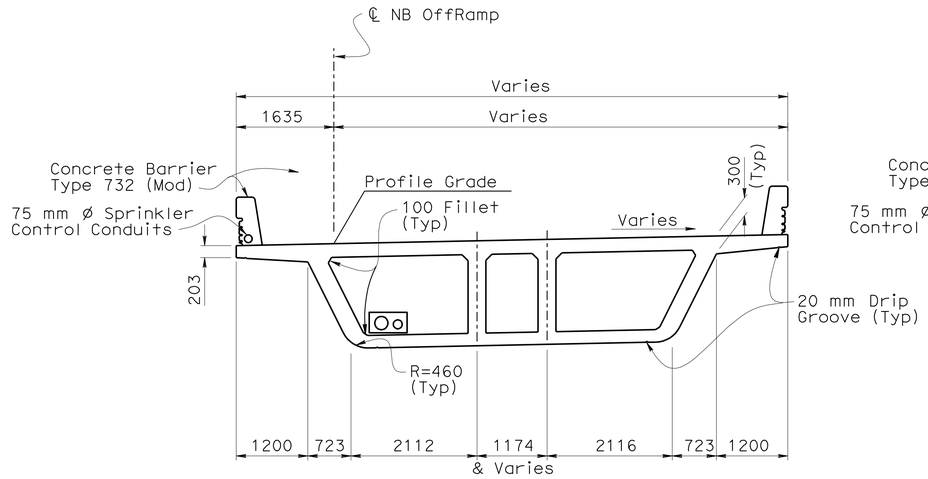

TYPICAL SECTION
STA 194+17 TO 194+45
1:50

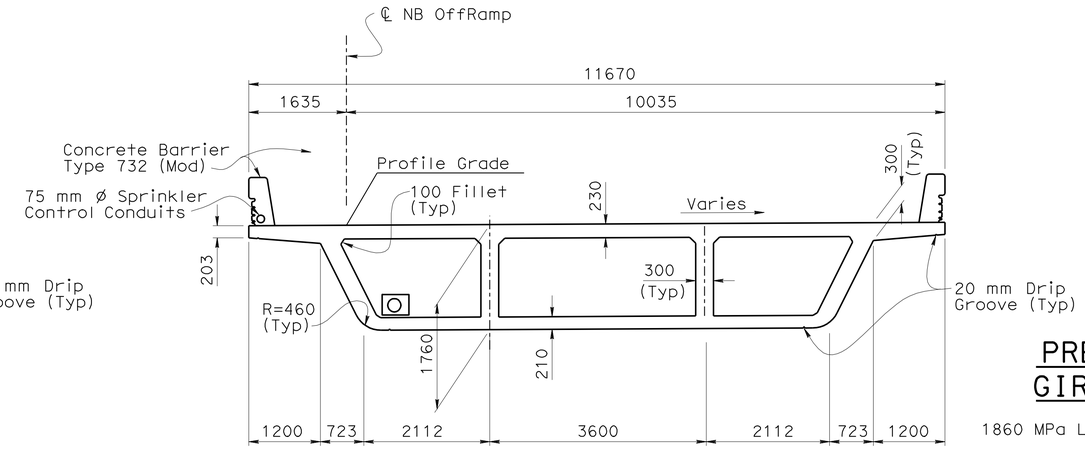

TYPICAL SECTION
STA 194+45 TO 194+78
1:50

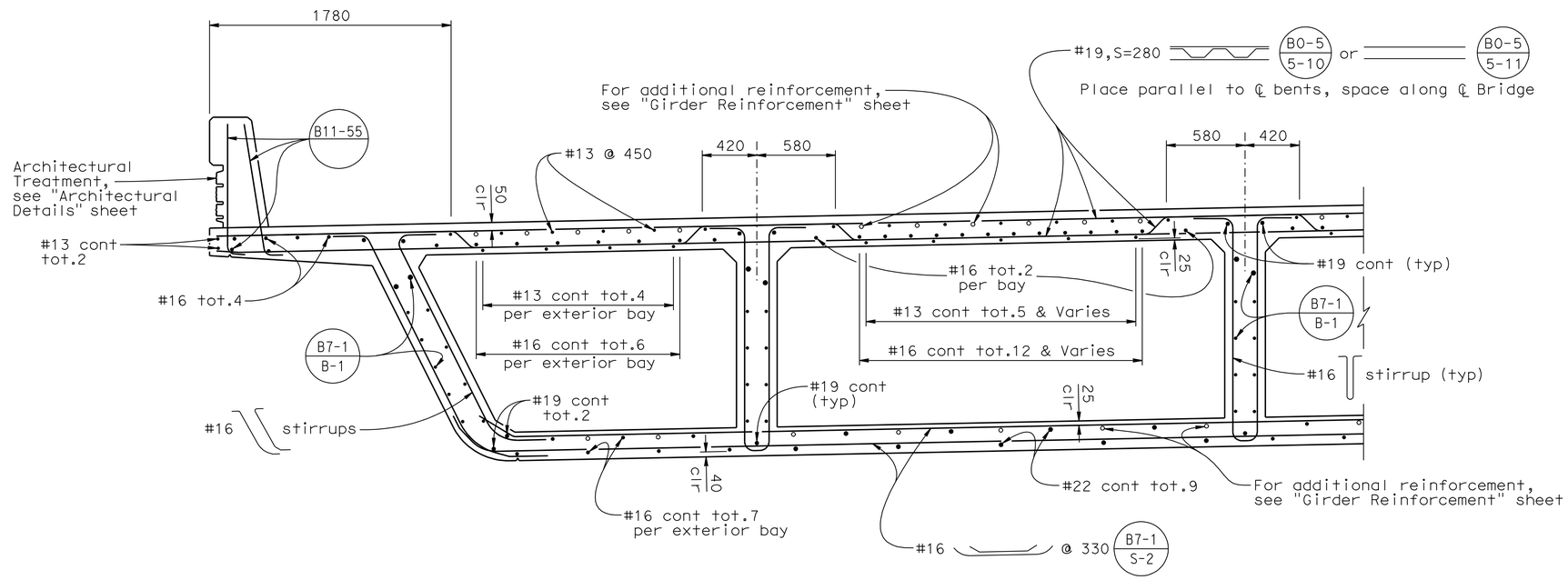

PART TYPICAL SECTION
STA 194+17 TO 194+78
1:20

PRESTRESSING NOTES
GIRDERS A,B & D

1860 MPa Low Relaxation Strands:

Pjack = 26,700kN

Anchor Set = 10 mm

Total Number of Girders = 3

Friction curvature coefficient μ = 15 $\times 10^{-2}$(1/rad)

Friction wobble coefficient K = 6.6 $\times 10^{-4}$(1/m)

Distribution of prestress force (Pjack) between girders shall not exceed the ratio of 3:2.

Maximum final force variation between girders shall not exceed 3200 kN.

Concrete: f'_c = 35 Mpa @ 28 days
f'_{ci} = 28 Mpa @ time of stressing

Contractor shall submit elongation calculations based on initial stress at ☒ =0.7362 times jacking stress

One end stressing shall be performed from Abutment 5

GIRDER C

One end jacking shall be performed from the right end.

Pjack = 8,900kN

Anchor Set = 10

Total Number of Girders = 1

Friction curvature coefficient μ = 15 $\times 10^{-2}$(1/rad)

Friction wobble coefficient K = 6.6 $\times 10^{-4}$(1/m)

Distribution of prestress force (Pjack) between girders shall not exceed the ratio of 3:2.

Maximum final force variation between girders shall not exceed 3200 kN.

Concrete: f'_c = 35 Mpa @ 28 days
f'_{ci} = 28 Mpa @ time of stressing

Contractor shall submit elongation calculations based on initial stress at ☒ =0.8897 times jacking stress

One end stressing shall be performed from Abutment 5

Caltrans Metric

	BY	CHECKED
DESIGN	David Alvarez	Richard Melko
DETAILS	Bruno Jenko	Richard Melko
QUANTITIES	Ubong Inyang	Fayek Tannous

STATE OF CALIFORNIA
DEPARTMENT OF TRANSPORTATION

DIVISION OF ENGINEERING SERVICES
STRUCTURE DESIGN
DESIGN BRANCH 6

BRIDGE NO. 44-0285
KILOMETER POST 158.2

NB OFFRAMP VIADUCT
TYPICAL SECTION NO.2

ALL DIMENSIONS ARE IN MILLIMETERS UNLESS OTHERWISE SHOWN

ORIGINAL SCALE IN MILLIMETERS FOR REDUCED PLANS 0 10 20 30 40 50 60 70 80 90 100

CU 05
EA 0161E1

DISREGARD PRINTS BEARING EARLIER REVISION DATES

REVISION DATES: 2-1-08, 2-22-09, 4-28-09, 10-30-09, 11-18-09, 12-11-09, 5-10-10

SHEET 14 OF 28

FILE => 44-0285-k-ts02.dgn

STRUCTURES DESIGN DETAIL SHEET (METRIC) (REV.03-17-04)

USERNAME => trienard DATE PLOTTED => 03-AUG-2010 TIME PLOTTED => 07:36

DIST	COUNTY	ROUTE	KILOMETER POST TOTAL PROJECT	SHEET No	TOTAL SHEETS
05	Mon	101	R146.8/159.7	1269	1402

Hernan Perez 05-06-10
REGISTERED CIVIL ENGINEER DATE

7-26-10
PLANS APPROVAL DATE

REGISTERED PROFESSIONAL ENGINEER HERNAN PEREZ No. 60993 Exp. 12-31-10 CIVIL STATE OF CALIFORNIA

The State of California or its officers or agents shall not be responsible for the accuracy or completeness of electronic copies of this plan sheet.

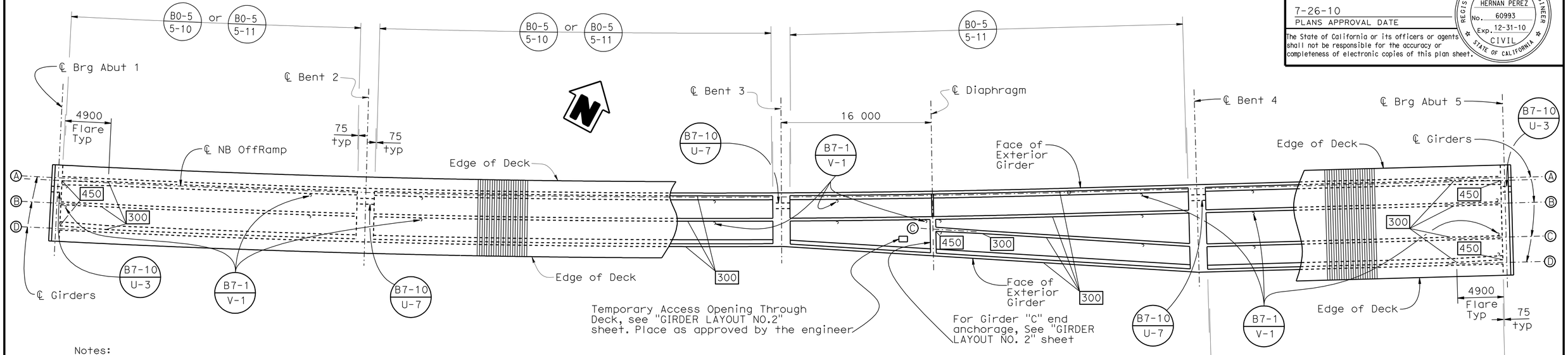

Notes:

☐ - Indicates girder stem width in millimeters.

For Girder Ⓒ "Longitudinal Section", see "Girder Layout No.2" sheet.

GIRDER LAYOUT (B8-5)

1:200

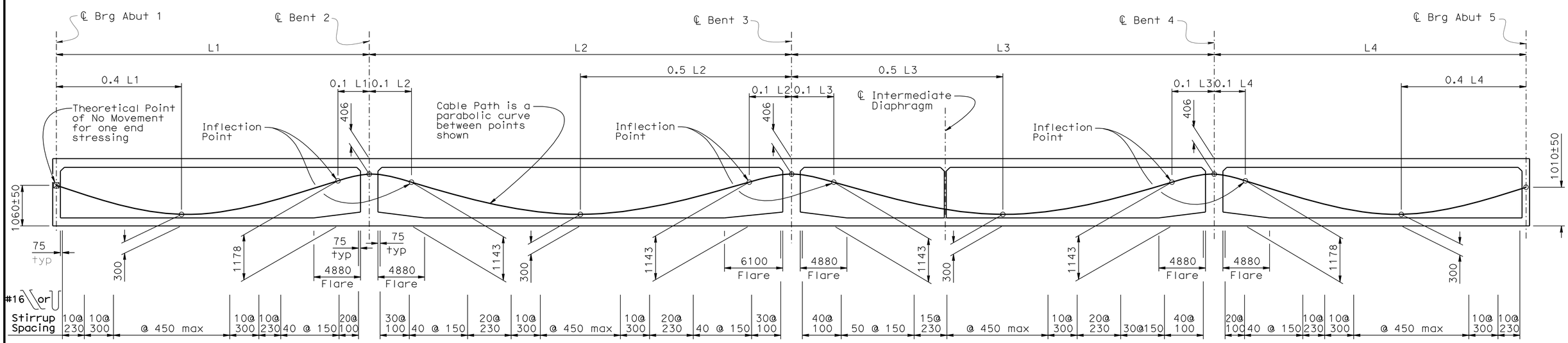

LONGITUDINAL SECTION (B8-5)

No Scale

DESIGN	BY David Alvarez	CHECKED Richard Melko	
DETAILS	BY Bruno Jenko	CHECKED Richard Melko	
QUANTITIES	BY Ubong Inyang	CHECKED Fayek Tannous	

STATE OF CALIFORNIA
DEPARTMENT OF TRANSPORTATION

DIVISION OF ENGINEERING SERVICES
STRUCTURE DESIGN
DESIGN BRANCH 6

BRIDGE NO. 44-0285
KILOMETER POST 158.2

NB OFFRAMP VIADUCT
GIRDER LAYOUT NO.1

ALL DIMENSIONS ARE IN MILLIMETERS UNLESS OTHERWISE SHOWN

ORIGINAL SCALE IN MILLIMETERS FOR REDUCED PLANS 0 10 20 30 40 50 60 70 80 90 100

CU 05
EA 0161E1

DISREGARD PRINTS BEARING EARLIER REVISION DATES

REVISION DATES: 9-16-08 5-08-09 10-30-09 11-19-09 04-30-10 5-10-10

SHEET 15 OF 28

FILE => 44-0285-1-g_lo1.dgn

STRUCTURES DESIGN DETAIL SHEET (METRIC) (REV.03-17-04)

USERNAME => trienard DATE PLOTTED => 03-AUG-2010 TIME PLOTTED => 07:36

DIST	COUNTY	ROUTE	KILOMETER POST TOTAL PROJECT	SHEET No	TOTAL SHEETS
05	Mon	101	R146.8/159.7	1270	1402

REGISTERED CIVIL ENGINEER — DATE 05-06-10

7-26-10
PLANS APPROVAL DATE

REGISTERED PROFESSIONAL ENGINEER — HERNAN PEREZ — No. 60993 — Exp. 12-31-10 — CIVIL — STATE OF CALIFORNIA

The State of California or its officers or agents shall not be responsible for the accuracy or completeness of electronic copies of this plan sheet.

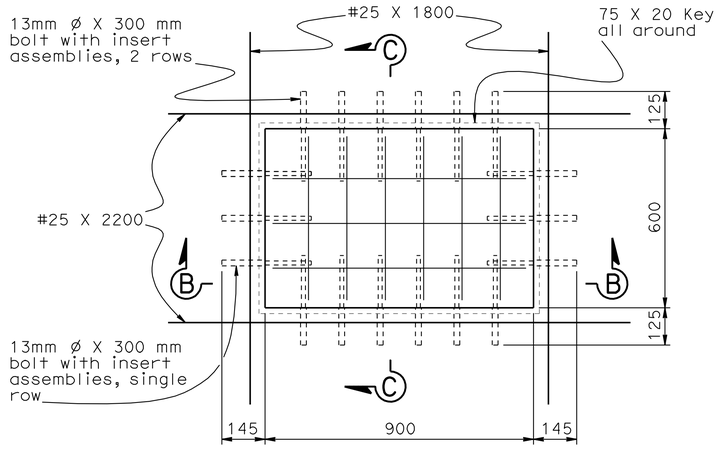

PLAN

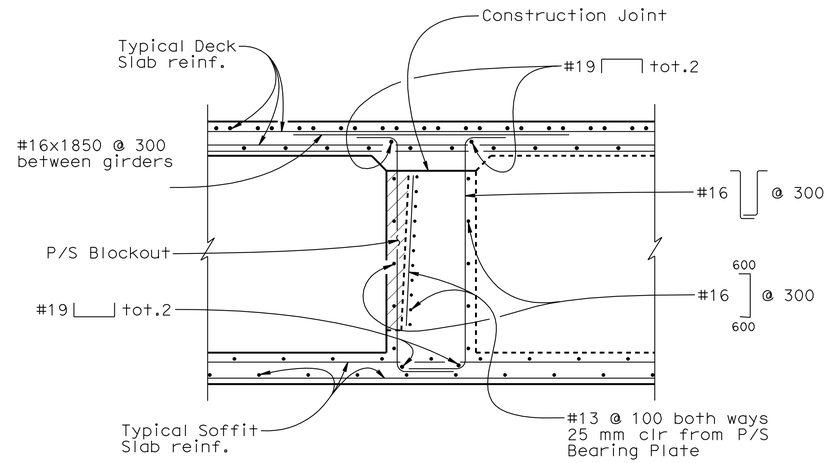

SECTION L-L (B8-5)
1:20

Note:
- Indicates concrete to be placed after prestressing.

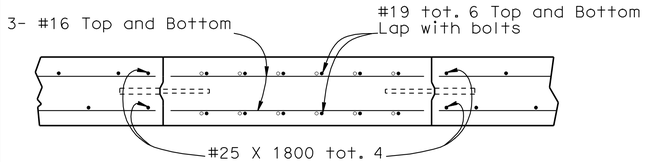

SECTION B-B

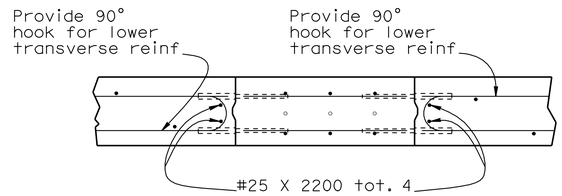

SECTION C-C

TEMPORARY ACCESS OPENING THROUGH DECK
No Scale

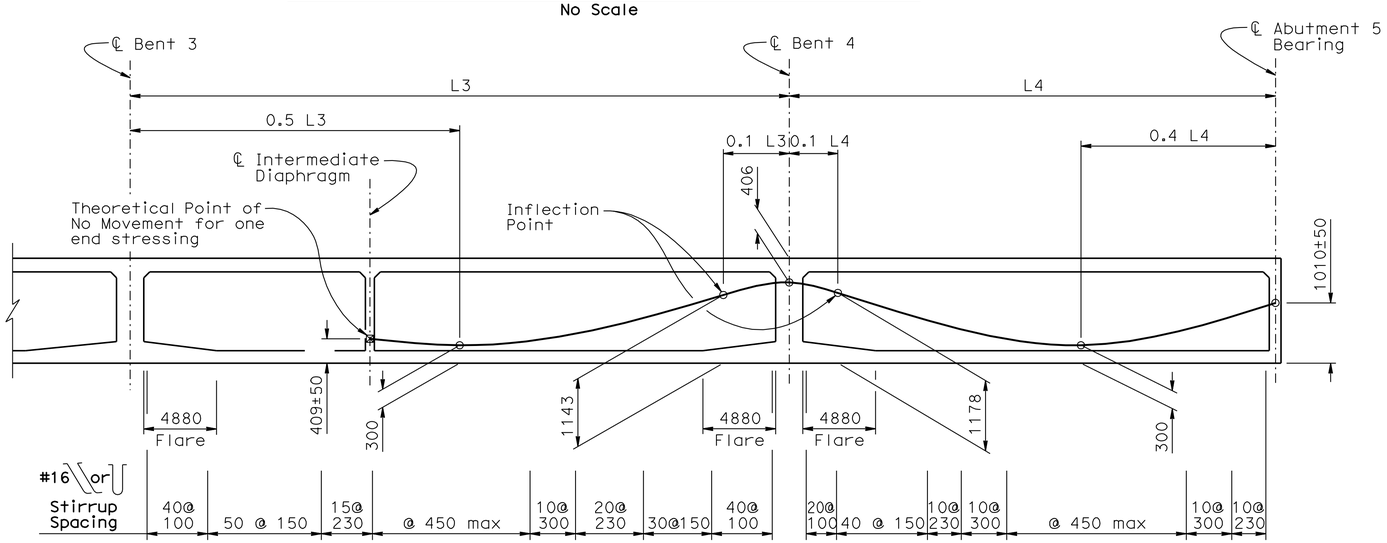

LONGITUDINAL SECTION GIRDER C (B8-5)
No Scale

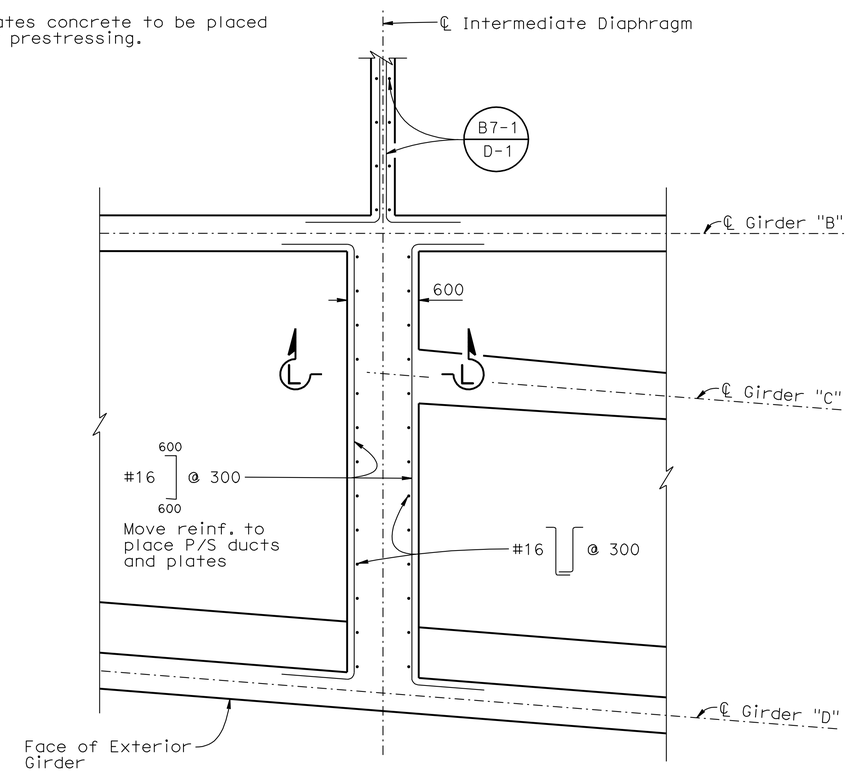

PLAN
END ANCHORAGE GIRDER "C"
1:25

Caltrans Metric

	BY	CHECKED
DESIGN	D. Alvarez	Richard Melko
DETAILS	D. Pato	Richard Melko
QUANTITIES	Ubong Inyang	Fayek Tannous

STATE OF CALIFORNIA
DEPARTMENT OF TRANSPORTATION

DIVISION OF ENGINEERING SERVICES
STRUCTURE DESIGN
DESIGN BRANCH 6

BRIDGE NO. 44-0285
KILOMETER POST 158.2

NB OFFRAMP VIADUCT
GIRDER LAYOUT NO.2

ALL DIMENSIONS ARE IN MILLIMETERS UNLESS OTHERWISE SHOWN

ORIGINAL SCALE IN MILLIMETERS FOR REDUCED PLANS 0 10 20 30 40 50 60 70 80 90 100

CU 05
EA 0161E1

DISREGARD PRINTS BEARING EARLIER REVISION DATES

REVISION DATES: 9-16-08 5-28-09 10-30-09 04-30-10 5-10-10

SHEET 16 OF 28

FILE => 44-0285-1-g_lo2.dgn

STRUCTURES DESIGN DETAIL SHEET (METRIC) (REV.03-17-04)

USERNAME => trlenard DATE PLOTTED => 03-AUG-2010 TIME PLOTTED => 07:36

DIST	COUNTY	ROUTE	KILOMETER POST TOTAL PROJECT	SHEET No	TOTAL SHEETS
05	Mon	101	R146.8/159.7	1271	1402

REGISTERED CIVIL ENGINEER 05-06-10 DATE

7-26-10
PLANS APPROVAL DATE

REGISTERED PROFESSIONAL ENGINEER HERNAN PEREZ No. 60993 Exp. 12-31-10 CIVIL STATE OF CALIFORNIA

The State of California or its officers or agents shall not be responsible for the accuracy or completeness of electronic copies of this plan sheet.

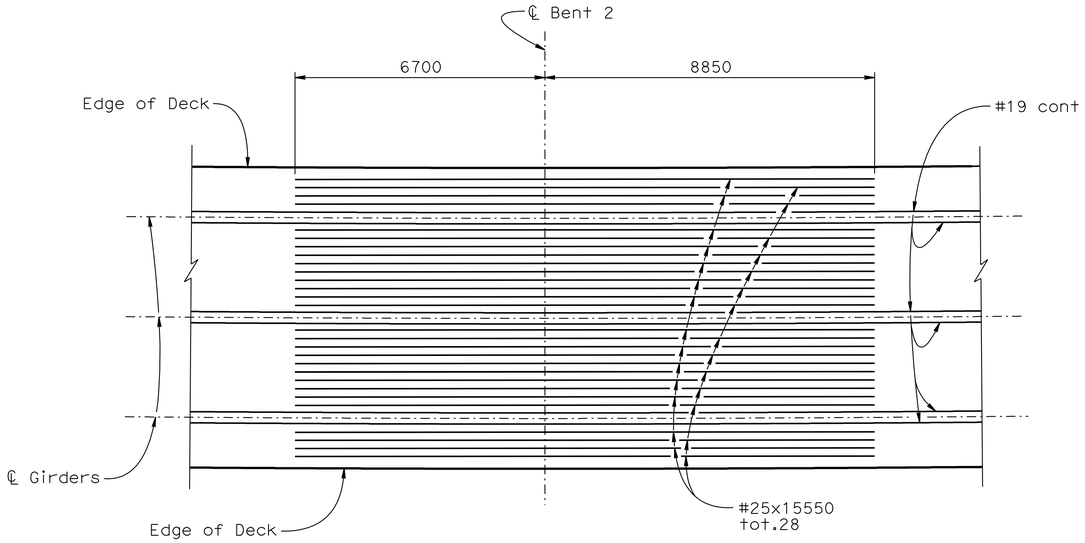

TOP REINFORCEMENT

1:80

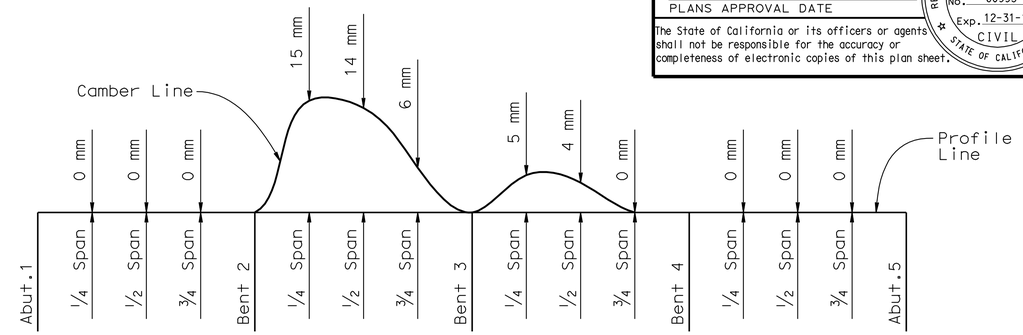

CAMBER DIAGRAM

Does not include allowance for falsework settlement.

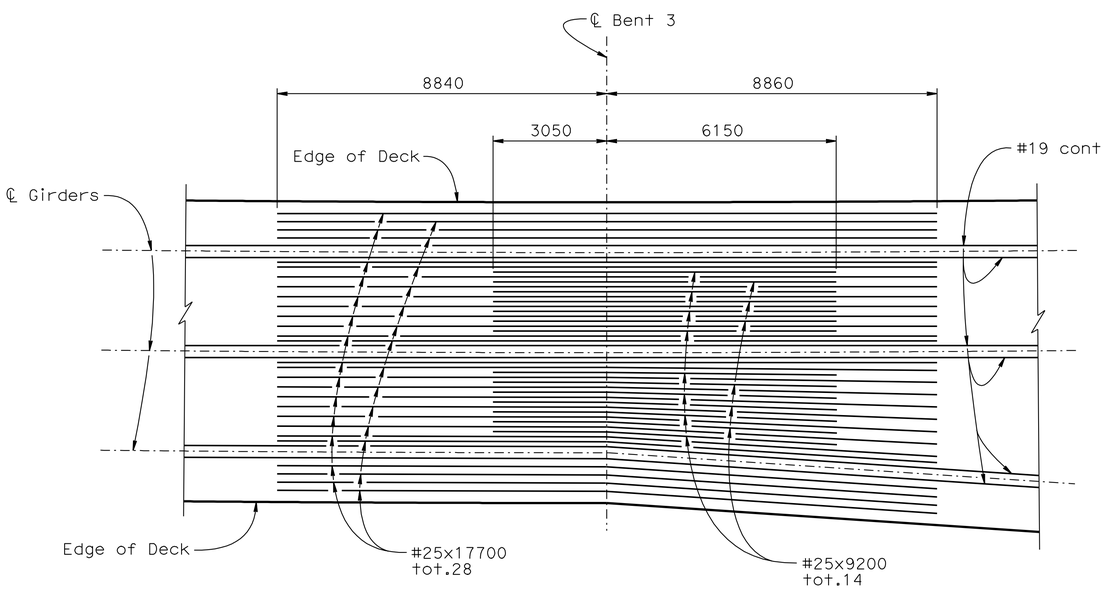

TOP REINFORCEMENT

1:80

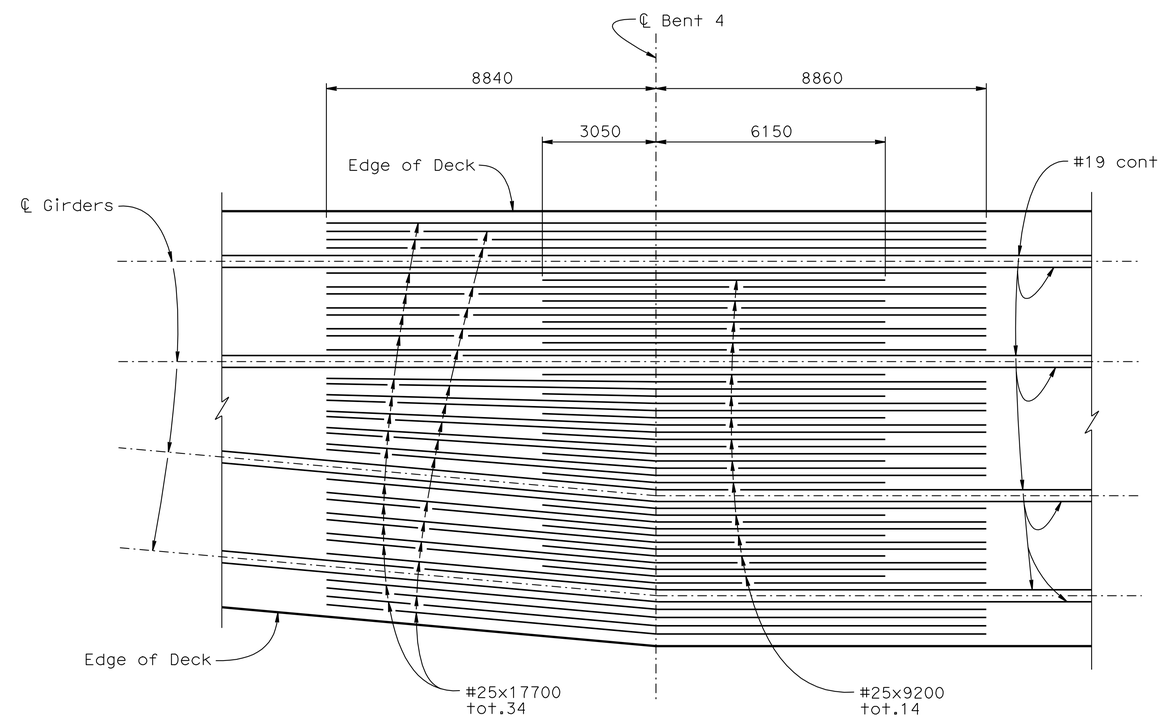

TOP REINFORCEMENT

1:80

NOTES:

1. No lap splices allowed in #25 reinforcement shown
2. Service splice only

Caltrans Metric

	BY	CHECKED
DESIGN	D. Alvarez	Richard Melko
DETAILS	D. Pato	Richard Melko
QUANTITIES	Ubong Inyang	Fayek Tannous

STATE OF CALIFORNIA
DEPARTMENT OF TRANSPORTATION

DIVISION OF ENGINEERING SERVICES
STRUCTURE DESIGN
DESIGN BRANCH 6

BRIDGE NO. 44-0285
KILOMETER POST 158.2

NB OFFRAMP VIADUCT
GIRDER REINFORCEMENT NO.1

ALL DIMENSIONS ARE IN MILLIMETERS UNLESS OTHERWISE SHOWN

ORIGINAL SCALE IN MILLIMETERS FOR REDUCED PLANS 0 10 20 30 40 50 60 70 80 90 100

CU 05
EA 0161E1

DISREGARD PRINTS BEARING EARLIER REVISION DATES → 9-18-08 10-30-09 04-29-10 5-10-10

REVISION DATES

SHEET 17 OF 28

FILE => 44-0285-o-gdrrf.dgn

STRUCTURES DESIGN DETAIL SHEET (METRIC) (REV.03-17-04)

USERNAME => trlenard DATE PLOTTED => 12-AUG-2010 TIME PLOTTED => 06:09

DIST	COUNTY	ROUTE	KILOMETER POST TOTAL PROJECT	SHEET No	TOTAL SHEETS
05	Mon	101	R146.8/159.7	1272	1402

REGISTERED CIVIL ENGINEER 05-06-10 DATE

7-26-10
PLANS APPROVAL DATE

REGISTERED PROFESSIONAL ENGINEER HERNAN PEREZ No. C60993 Exp. 12-31-10 CIVIL STATE OF CALIFORNIA

The State of California or its officers or agents shall not be responsible for the accuracy or completeness of electronic copies of this plan sheet.

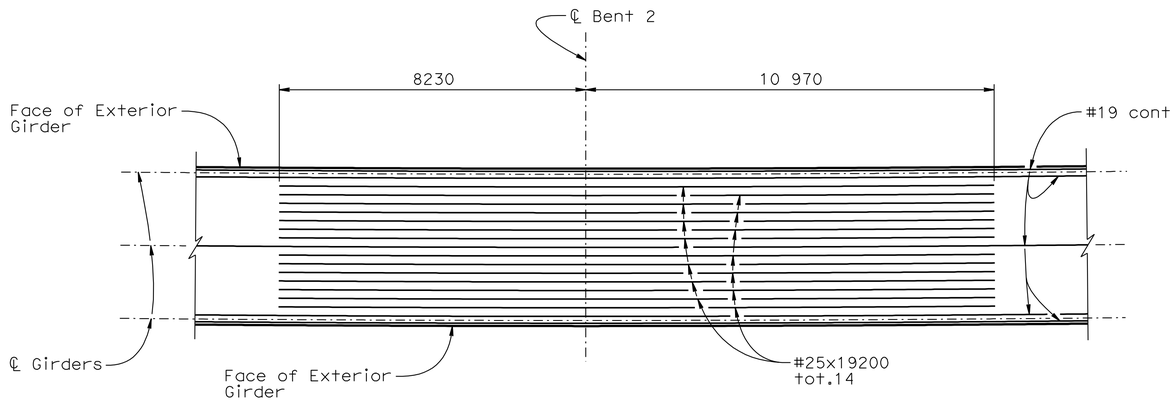

BOTTOM REINFORCEMENT
1:80

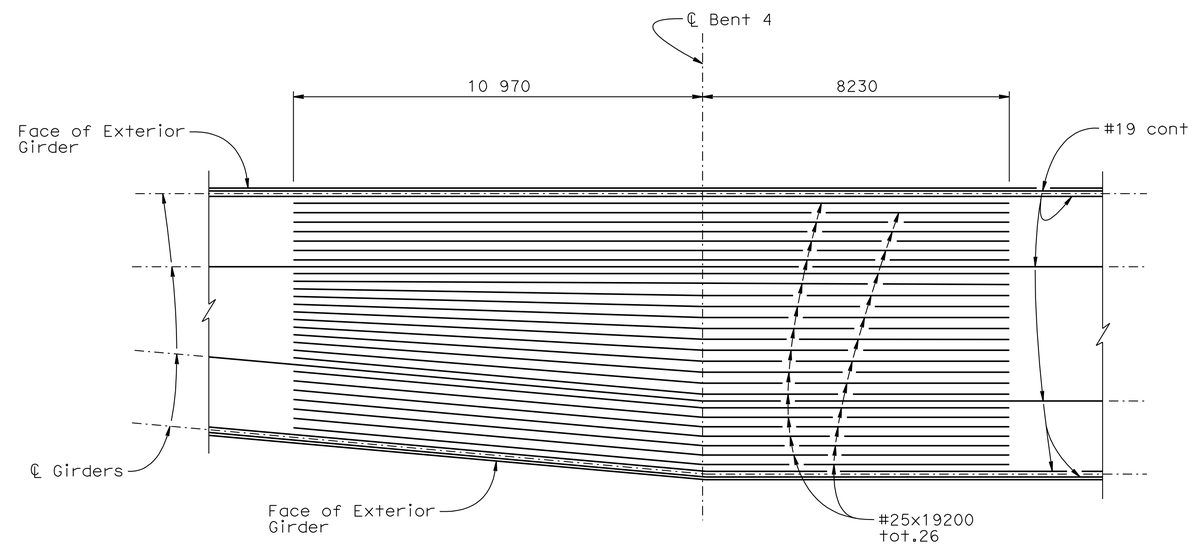

BOTTOM REINFORCEMENT
1:80

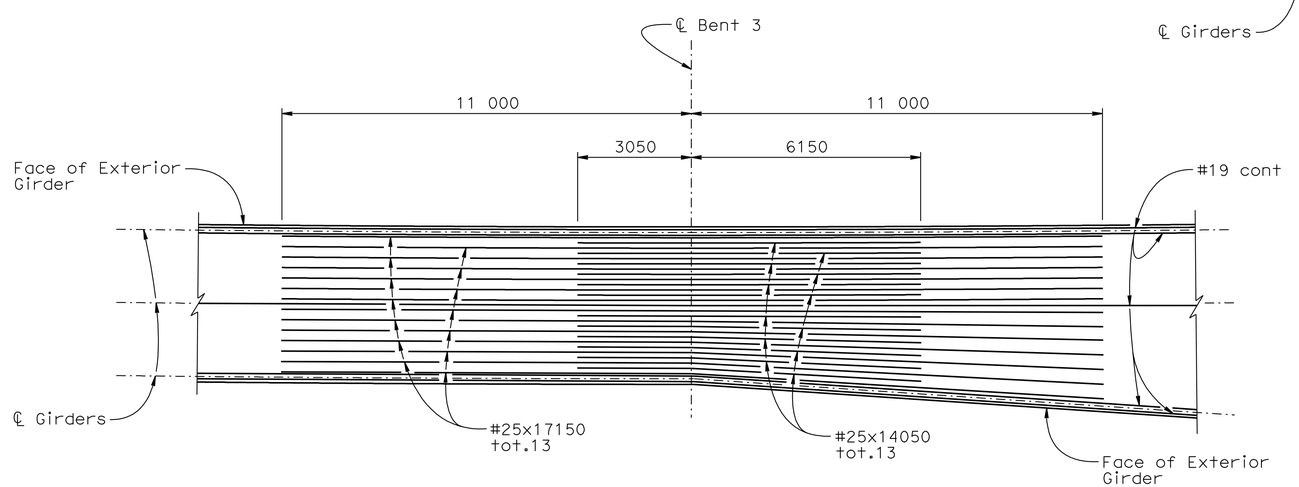

BOTTOM REINFORCEMENT
1:80

NOTES:

① No lap splices allowed in #25 reinforcement shown
② Service splice only

Caltrans Metric

	BY	CHECKED
DESIGN	D. Alvarez	Richard Melko
DETAILS	D. Pato	Richard Melko
QUANTITIES	Ubong Inyang	Fayek Tannous

STATE OF CALIFORNIA
DEPARTMENT OF TRANSPORTATION

DIVISION OF ENGINEERING SERVICES
STRUCTURE DESIGN
DESIGN BRANCH 6

BRIDGE NO. 44-0285
KILOMETER POST 158.2

NB OFFRAMP VIADUCT
GIRDER REINFORCEMENT NO.2

ALL DIMENSIONS ARE IN MILLIMETERS UNLESS OTHERWISE SHOWN

ORIGINAL SCALE IN MILLIMETERS FOR REDUCED PLANS 0 10 20 30 40 50 60 70 80 90 100

CU 05
EA 0161E1

DISREGARD PRINTS BEARING EARLIER REVISION DATES

REVISION DATES: 1-12-09 10-30-09 04-29-10 5-10-10

SHEET 18 OF 28

FILE => 44-0285-o-gdrrf2.dgn

STRUCTURES DESIGN DETAIL SHEET (METRIC) (REV.03-17-04)

USERNAME => trlenard DATE PLOTTED => 03-AUG-2010 TIME PLOTTED => 07:36

DIST.	COUNTY	ROUTE	KILOMETER POST TOTAL PROJECT	SHEET NO.	TOTAL SHEETS
05	Mon	101	R146.8/159.7	1273	1402

Caltrans Metric

Hernan Perez 05-06-10
REGISTERED ENGINEER - CIVIL

7-26-10
PLANS APPROVAL DATE

REGISTERED PROFESSIONAL ENGINEER HERNAN PEREZ No. 60993 Exp. 12-31-10 CIVIL STATE OF CALIFORNIA

The State of California or its officers or agents shall not be responsible for the accuracy or completeness of electronic copies of this plan sheet.

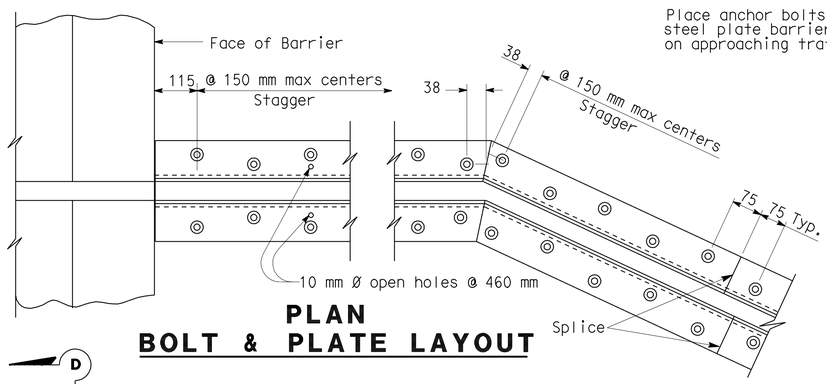

PLAN
BOLT & PLATE LAYOUT

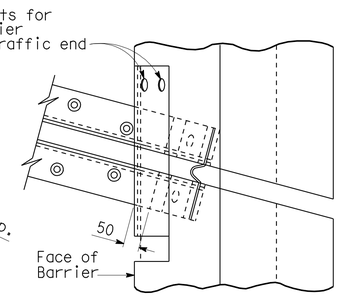

SKEW ≤ 20

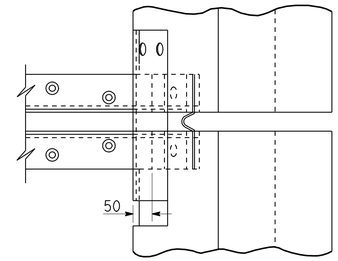

SKEW > 20

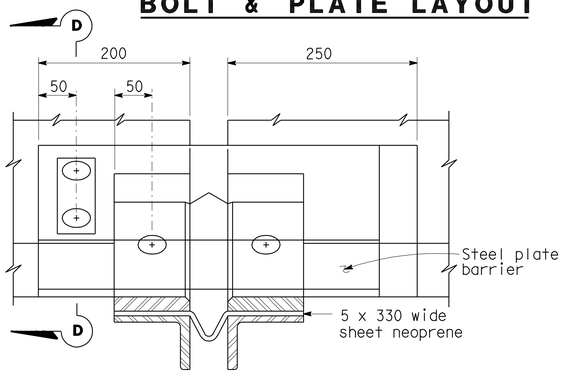

VIEW B-B

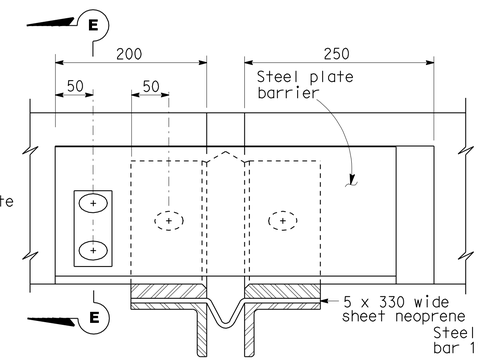

VIEW C-C

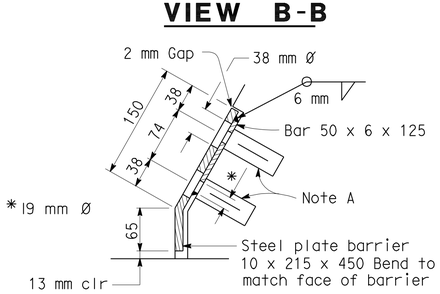

SECTION D-D

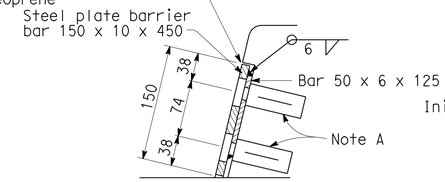

SECTION E-E

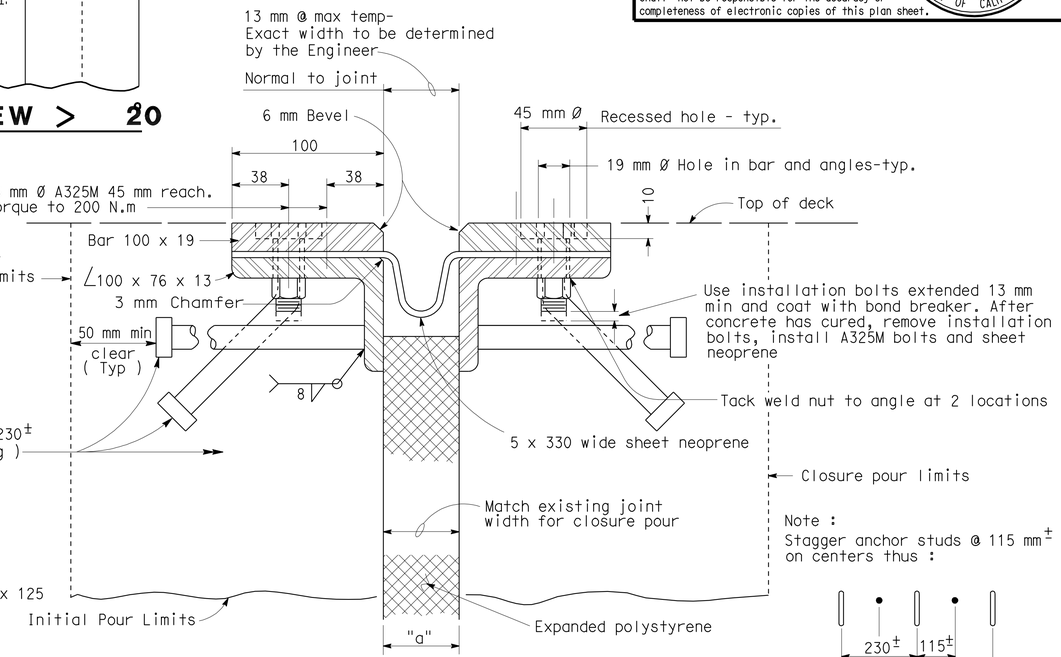

SECTION A-A

Note :
Stagger anchor studs @ 115 mm± on centers thus :

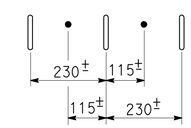

Joint Information			"a" Dimensions		
Location	Movement Rating (MR)	Skew	Winter	Spring & Fall	Summer
Abut # 1	80	0	35	17	0
Abut # 5	90	0	43	21	0

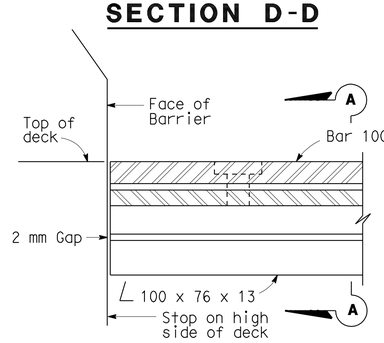

HIGH SIDE BARRIER DETAIL

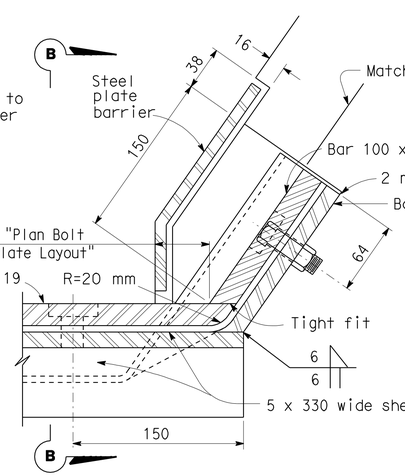

LOW SIDE BARRIER DETAIL
(See Note B)

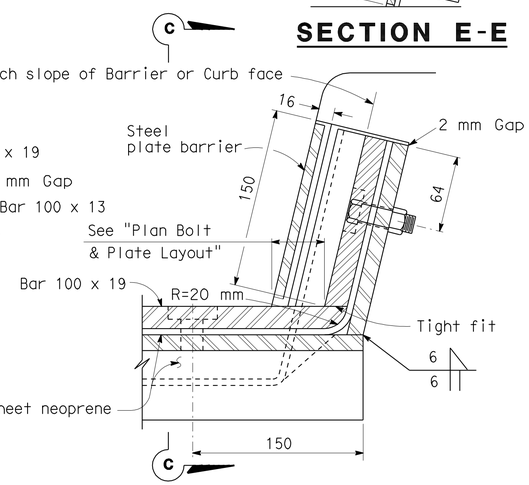

SIDEWALK DETAIL
(See Note B)

NOTES:

Full penetration butt welds may be substituted for fillet welds on all anchor studs.

Alternate types of anchor studs may be permitted subject to the approval by the Engineer.

Joint seal assembly to be used in conjunction with closure pour. (See other sheets for limits). Closure pour shall not be placed until final deck surface is within the tolerance specified.

Use joint at crown of roadway, at any change in transverse slope in deck and at changes in horizontal direction. Place other joints at or near lanes. All metal parts to be painted or galvanized after fabrication.

Sheet neoprene shall be fabricated in one continuous piece or joints shall be vulcanized. Neoprene shall be fabricated to bend around corners. 25 mm holes in neoprene sheets shall be drilled or punched so that the neoprene is not distorted at the time of installation.

NOTE A

Insert assembly or expansion anchorage for 16 x 45 A325M bolt.

NOTE B

Use the Sidewalk Detail at all sidewalk joints. Use the Barrier Detail at both sides if the roadway is crowned or if the difference in elevation between the ends of the seal is 150 mm or less.

ALL DIMENSIONS ARE IN MILLIMETERS UNLESS OTHERWISE SHOWN

NO SCALE

STANDARD DRAWING

RELEASE DATE 4/1/97	DESIGN BY H. HERR	CHECKED R. LACALLE	RELEASED BY
FILE NO. xs8-010	DETAILS BY R. YEE	CHECKED R. LACALLE	
	SUBMITTED BY C.W. PURKISS	DRAWING DATE 9/93	OFFICE CHIEF

STATE OF CALIFORNIA
DEPARTMENT OF TRANSPORTATION

DIVISION OF ENGINEERING SERVICES

BRIDGE NO. 44-0285
KILOMETER POST 158.2

NB OFFRAMP VIADUCT
JOINT SEAL ASSEMBLY (MAXIMUM MOVEMENT RATING = 100 mm)

DS OSD 2147A (METRIC) (REV. 2/25/97)

ORIGINAL SCALE IN MILLIMETERS FOR REDUCED PLANS 0 10 20 30 40 50 60 70 80 90 100

CU 05
EA 0161E1

DISREGARD PRINTS BEARING EARLIER REVISION DATES

REVISION DATES (PRELIMINARY STAGE ONLY) 2-28-09 10-30-09 03-09-10 5-10-10

SHEET 19 OF 28

USERNAME => trlenard

DATE PLOTTED => 03-AUG-2010 TIME PLOTTED => 07:36

44-0285-q-jntseal.

DIST	COUNTY	ROUTE	KILOMETER POST TOTAL PROJECT	SHEET No	TOTAL SHEETS
05	Mon	101	R146.8/159.7	1274	1402

REGISTERED CIVIL ENGINEER — DATE 05-06-10

7-26-10
PLANS APPROVAL DATE

REGISTERED PROFESSIONAL ENGINEER — HERNAN PEREZ — No. 60993 — Exp. 12-31-10 — CIVIL — STATE OF CALIFORNIA

The State of California or its officers or agents shall not be responsible for the accuracy or completeness of electronic copies of this plan sheet.

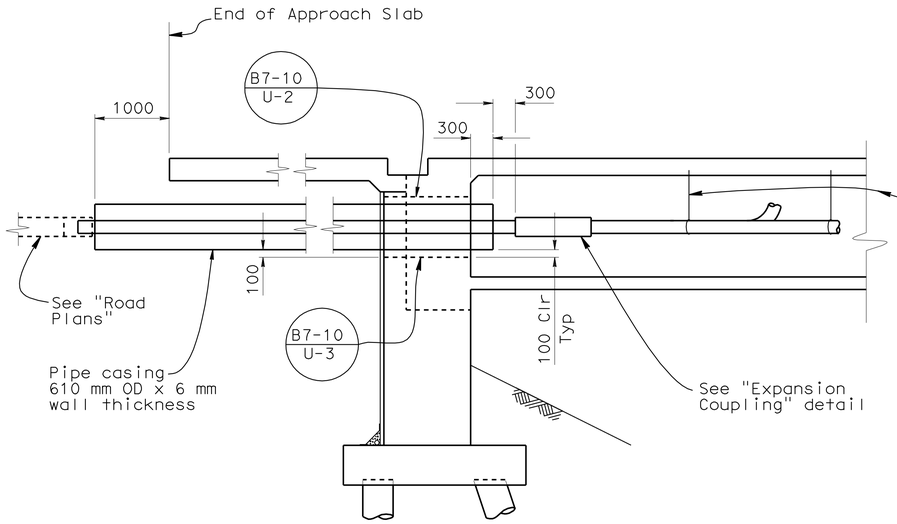

DECK DRAIN PIPE DETAIL AT ABUTMENTS

1:40

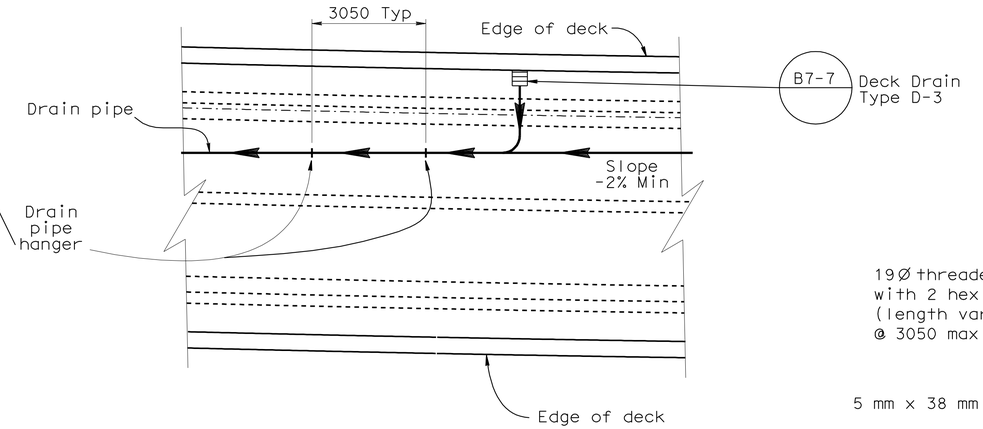

PLAN

1:80

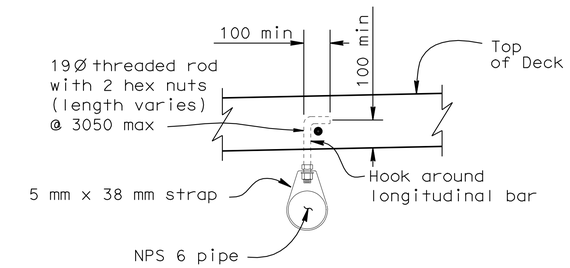

PIPE HANGER DETAIL

NO SCALE

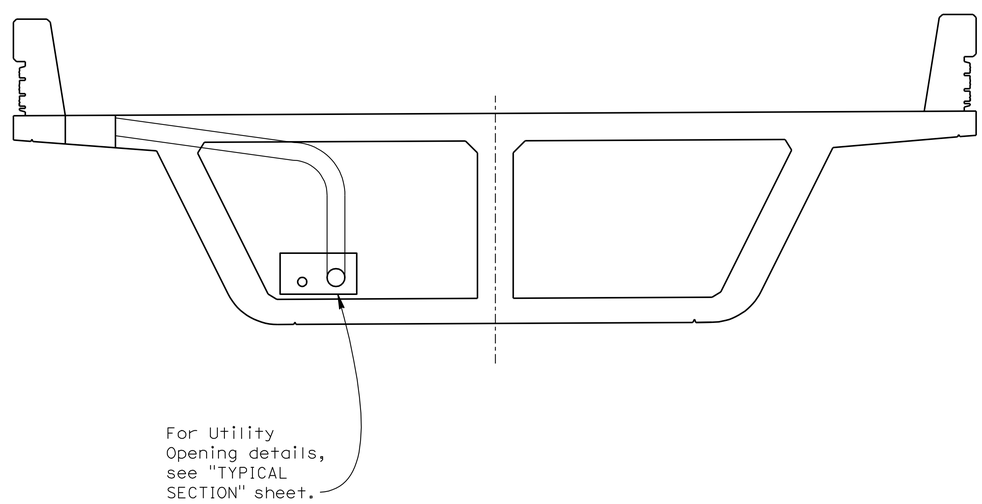

TYICAL SECTION

1:25

B7-7
7-9

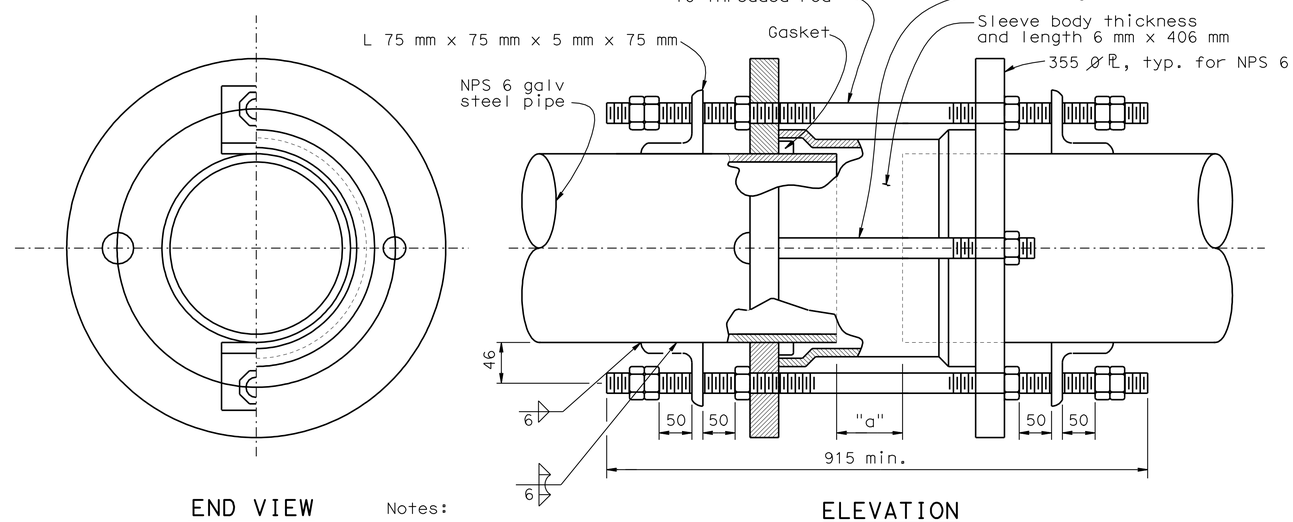

END VIEW

ELEVATION

Notes:

1. All hardware to be galvanized
2. For "a" dimension see, "Abutment 1 Layout" sheet

EXPANSION COUPLING

NO SCALE

ALL DIMENSIONS ARE IN MILLIMETERS UNLESS OTHERWISE SHOWN

Caltrans Metric

	BY	CHECKED
DESIGN	D. Alvarez	Richard Melko
DETAILS	Kamal Chonkria	Richard Melko
QUANTITIES	Ubong Inyang	Fayek Tannous

STATE OF CALIFORNIA
DEPARTMENT OF TRANSPORTATION

DIVISION OF ENGINEERING SERVICES
STRUCTURE DESIGN
DESIGN BRANCH 6

BRIDGE NO. 44-0285
KILOMETER POST 158.2

NB OFFRAMP VIADUCT
DECK DRAIN DETAILS

ALL DIMENSIONS ARE IN MILLIMETERS UNLESS OTHERWISE SHOWN

ORIGINAL SCALE IN MILLIMETERS FOR REDUCED PLANS 0 10 20 30 40 50 60 70 80 90 100

CU 05
EA 0161E1

DISREGARD PRINTS BEARING EARLIER REVISION DATES

REVISION DATES: 05-05-09 05-12-09 10-30-09 03-09-10 5-10-10

SHEET 20 OF 28

FILE => 44-0285-r-deckdrain.dgn

STRUCTURES DESIGN DETAIL SHEET (METRIC) (REV.03-17-04)

USERNAME => friehard DATE PLOTTED => 03-AUG-2010 TIME PLOTTED => 07:36

DIST.	COUNTY	ROUTE	KILOMETER POST TOTAL PROJECT	SHEET NO.	TOTAL SHEETS
05	Mon	101	R146.8/159.7	1275	1402

Caltrans Metric

REGISTERED ENGINEER - CIVIL 05-06-10

7-26-10
PLANS APPROVAL DATE

REGISTERED PROFESSIONAL ENGINEER HERNAN PEREZ No. C60993 Exp. 12-31-10 CIVIL STATE OF CALIFORNIA

The State of California or its officers or agents shall not be responsible for the accuracy or completeness of electronic copies of this plan sheet.

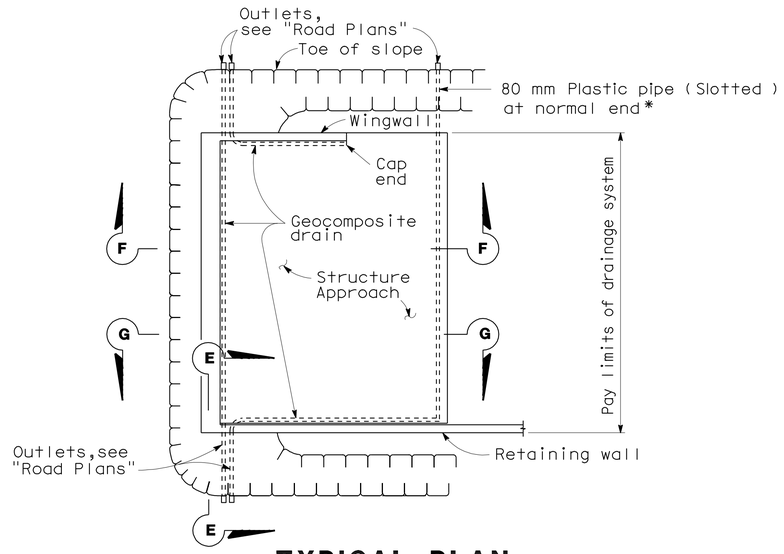

TYPICAL PLAN

*For pipe layout at staggered end, see "Detail B".

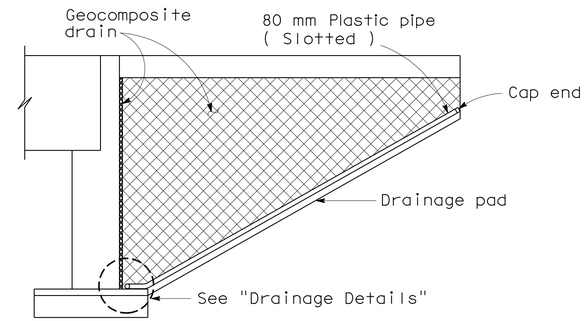

CANTILEVER WINGWALL SECTION F-F

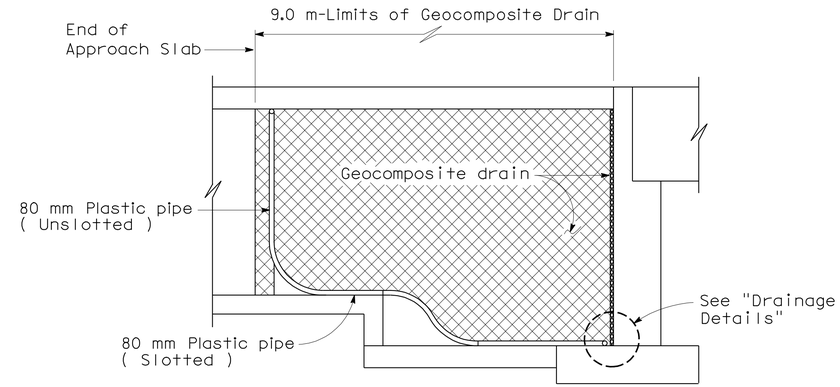

RETAINING WALL WINGWALL SECTION G-G

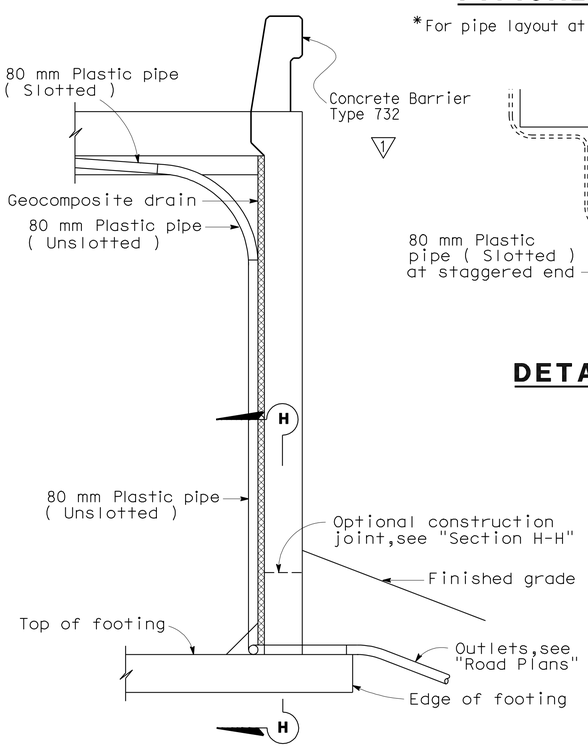

SECTION E-E

NOTES: Bends and junctions in 80 mm plastic pipe are 750 mm radius min.
Architectural treatment not shown.

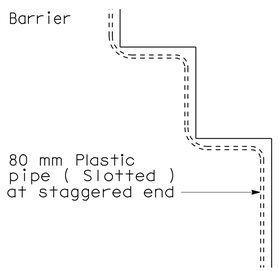

DETAIL B

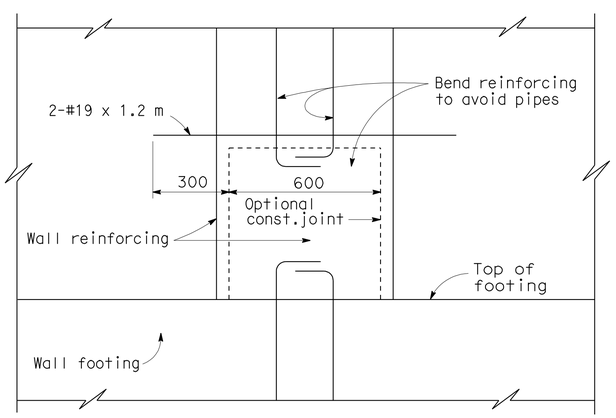

SECTION H-H

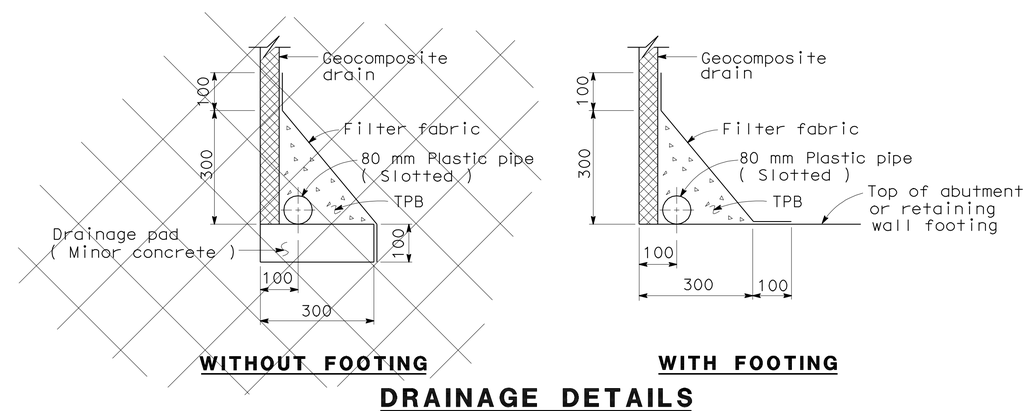

WITHOUT FOOTING WITH FOOTING

DRAINAGE DETAILS

NO SCALE
ALL DIMENSIONS ARE IN MILLIMETERS UNLESS OTHERWISE SHOWN

STANDARD DRAWING				
RELEASE DATE 4/23/98	DESIGN	BY M. TRAFFALIS	CHECKED E. THORKILDSEN	RELEASED BY
FILE NO. xs3-110	DETAILS	BY R. YEE	CHECKED E. THORKILDSEN	OFFICE CHIEF
	SUBMITTED	BY M. HA	DRAWING DATE 4/98	

1 Revised "Modified top of Wingwall"

STATE OF CALIFORNIA DEPARTMENT OF TRANSPORTATION

DIVISION OF ENGINEERING SERVICES STRUCTURE DESIGN DESIGN BRANCH 6

BRIDGE NO. 44-0285
KILOMETER POST 158.2

NB OFFRAMP VIADUCT
STRUCTURE APPROACH DRAINAGE DETAILS

DS OSD 2147A (METRIC) (REV. 2/25/97)

ORIGINAL SCALE IN MILLIMETERS FOR REDUCED PLANS 0 10 20 30 40 50 60 70 80 90 100

CU 05
EA 0161E1

DISREGARD PRINTS BEARING EARLIER REVISION DATES

REVISION DATES (PRELIMINARY STAGE ONLY) 2-5-09 2-27-09 10-30-09 12-11-09 03-11-10 5-10-10

SHEET 21 OF 28

USERNAME => trlenard

44-0285-w-strappdr

DATE PLOTTED => 03-AUG-2010 TIME PLOTTED => 07:37

DIST.	COUNTY	ROUTE	KILOMETER POST TOTAL PROJECT	SHEET NO.	TOTAL SHEETS
05	Mon	101	R146.8/159.7	1276	1402

Caltrans Metric

REGISTERED ENGINEER - CIVIL 05-06-10

7-26-10
PLANS APPROVAL DATE

The State of California or its officers or agents shall not be responsible for the accuracy or completeness of electronic copies of this plan sheet.

REGISTERED PROFESSIONAL ENGINEER HERNAN PEREZ No. C60993 Exp. 12-31-10 CIVIL STATE OF CALIFORNIA

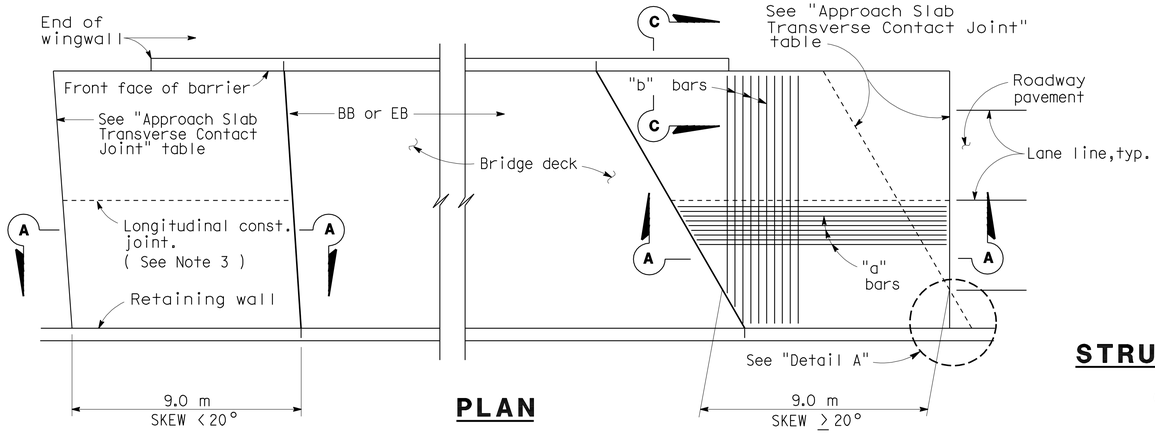

PLAN

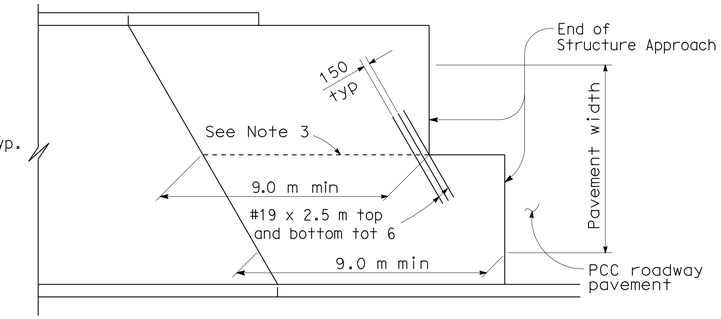

STRUCTURE APPROACH - END STAGGER DETAIL

APPROACH SLAB TRANSVERSE CONTACT JOINT		
APPROACH SKEW	WITH AC ROADWAY PAVEMENT	WITH PCC ROADWAY PAVEMENT
< 20°	Parallel to face of paving notch	Parallel to face of paving notch
20°- 45°	Parallel to face of P N use (Detail A)	Stagger lines 7.2 m to 10.8 m apart.
> 45°	Parallel to face of P N use (Detail A)	Stagger at each lane line.

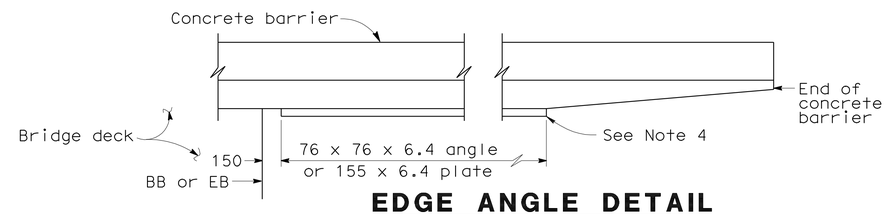

EDGE ANGLE DETAIL

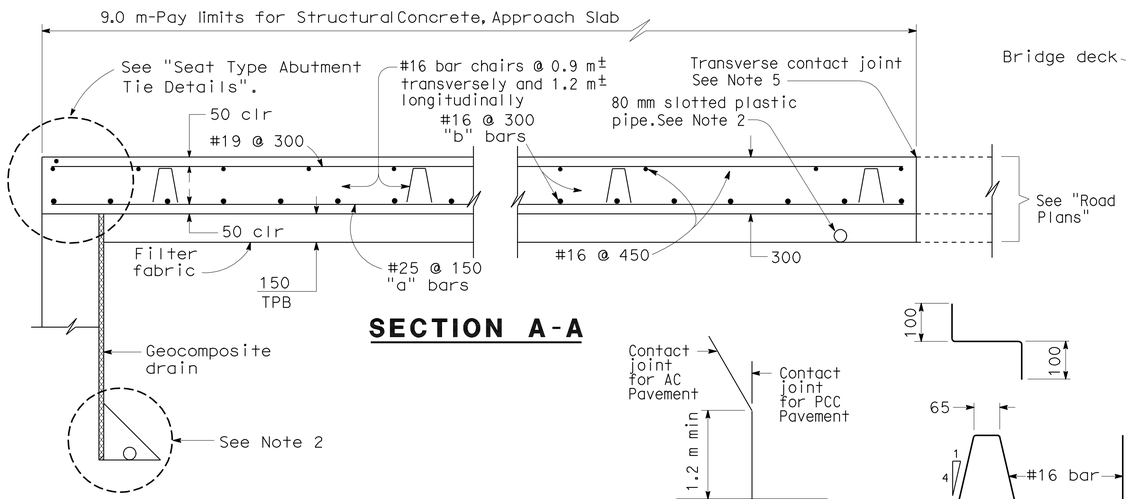

SECTION A-A

DETAIL A

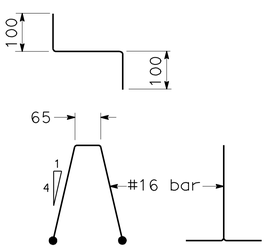

BAR CHAIR DETAIL

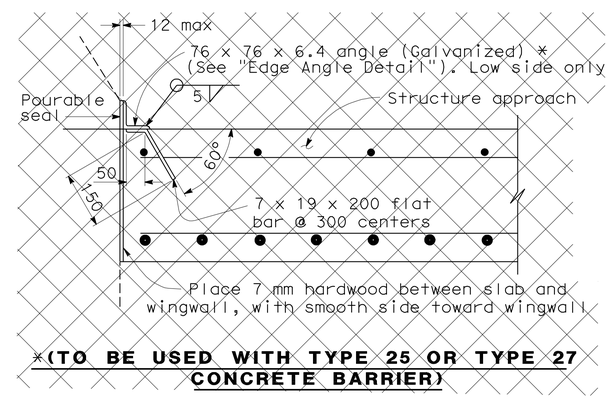

*(TO BE USED WITH TYPE 25 OR TYPE 27 CONCRETE BARRIER)

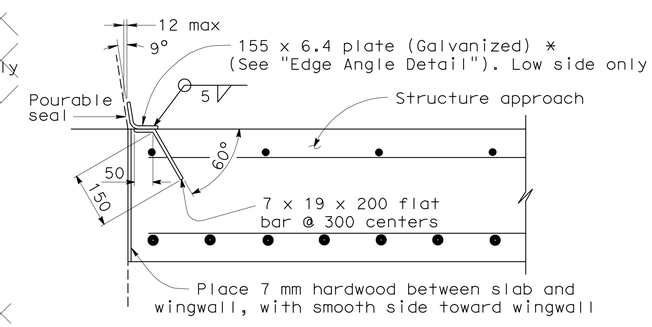

*(TO BE USED WITH TYPE 732 OR TYPE 736 CONCRETE BARRIER)

DETAIL B

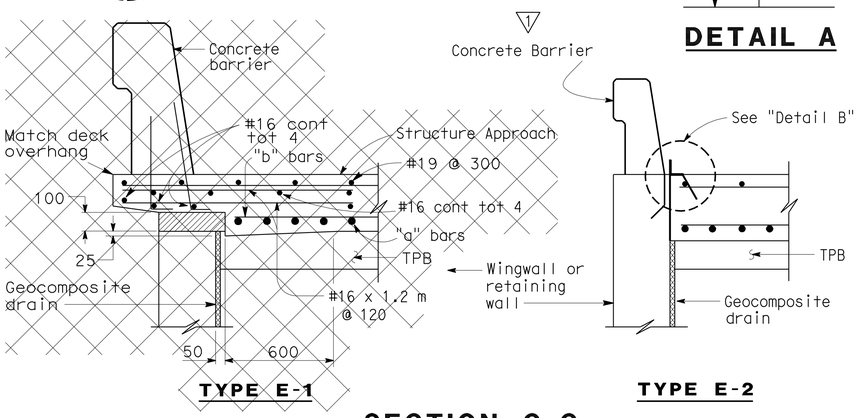

TYPE E-1

TYPE E-2

SECTION C-C

(Type E-1 to be used,unless otherwise shown on plans)

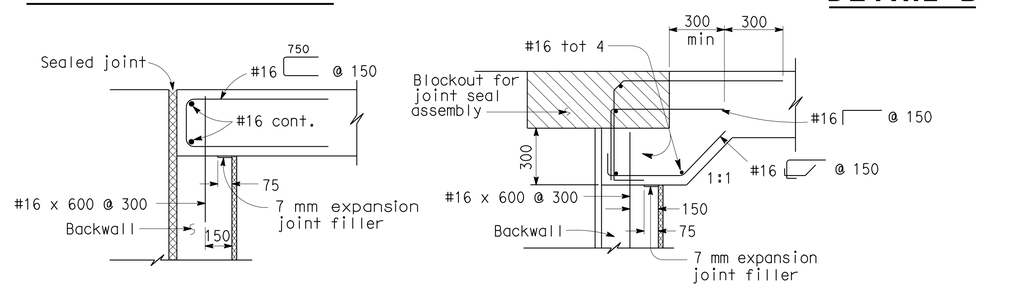

MR ≤ 50 mm

MR > 50 mm

SEAT TYPE ABUTMENT TIE DETAILS (SEE NOTE 1)

NOTES:

1. For details not shown,see Structure Plans. For MR ≤ 50 mm,adjust bar reinforcement to clear a sawcut for sealed joint,when required.
2. For drainage details,see "Structure Approach Drainage Details" sheet.
3. Longitudinal construction joints,when permitted by the Engineer, shall be located on lane lines.
4. End angle or plate at beginning of barrier transition, end of wingwall or end of structure approach as applicable.
5. For transverse contact joint with new PCC paving, refer to Standard Plan P10.
6. At the contractor's option, approach slab transverse reinforcement may be placed parallel to paving notch. Spacing of transverse reinforcement is measured along ℄ roadway.

Remove all polystyrene.

NO SCALE

ALL DIMENSIONS ARE IN MILLIMETERS UNLESS OTHERWISE SHOWN

STANDARD DRAWING				
RELEASE DATE 3/14/05	DESIGN	BY M. TRAFFALIS	CHECKED E. THORKILDSEN	RELEASED BY
FILE NO. xs3-120	DETAILS	BY R. YEE	CHECKED E. THORKILDSEN	OFFICE CHIEF
	SUBMITTED	BY M. HA	DRAWING DATE 4/98	

1 Modified top of Wall

STATE OF CALIFORNIA DEPARTMENT OF TRANSPORTATION

DIVISION OF ENGINEERING SERVICES STRUCTURE DESIGN DESIGN BRANCH 6

BRIDGE NO. 44-0285

KILOMETER POST 158.2

NB OFFRAMP VIADUCT

STRUCTURE APPROACH TYPE N(9S)

DS OSD 2147A (METRIC) (REV. 2/25/97)

ORIGINAL SCALE IN MILLIMETERS FOR REDUCED PLANS 0 10 20 30 40 50 60 70 80 90 100

CU 05
EA 0161E1

DISREGARD PRINTS BEARING EARLIER REVISION DATES

REVISION DATES (PRELIMINARY STAGE ONLY) 2-9-09 2-28-09 10-30-09 03-11-10 5-10-10

SHEET 22 OF 28

USERNAME => trlenard

DATE PLOTTED => 03-AUG-2010 TIME PLOTTED => 07:37

44-0285-x-strappty

DIST	COUNTY	ROUTE	KILOMETER POST TOTAL PROJECT	SHEET No	TOTAL SHEETS
05	Mon	101	R146.8/159.7	1277	1402

REGISTERED CIVIL ENGINEER — DATE 05-06-10

7-26-10
PLANS APPROVAL DATE

REGISTERED PROFESSIONAL ENGINEER — HERNAN PEREZ — No. 60993 — Exp. 12-31-10 — CIVIL — STATE OF CALIFORNIA

The State of California or its officers or agents shall not be responsible for the accuracy or completeness of electronic copies of this plan sheet.

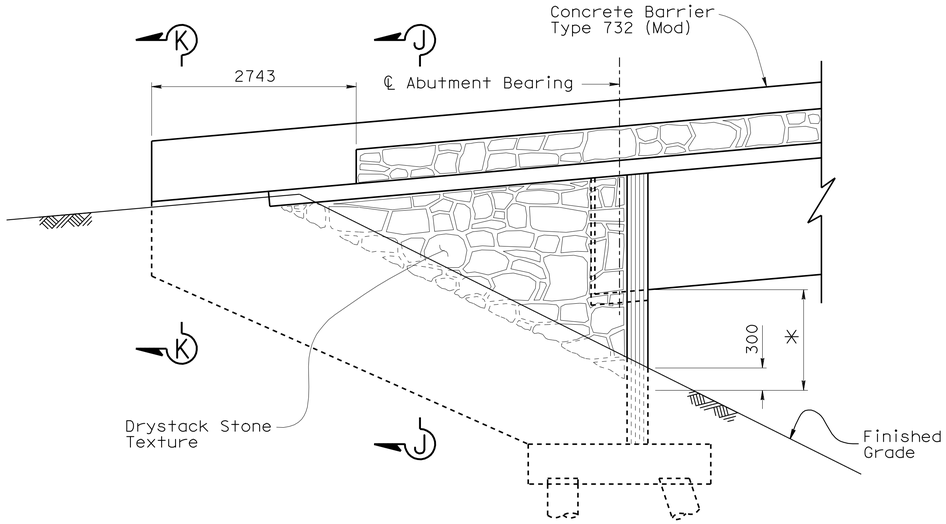

WINGWALL ELEVATION
1:40

Note:
✳ - Limits of Payment for Drystack Stone Texture.

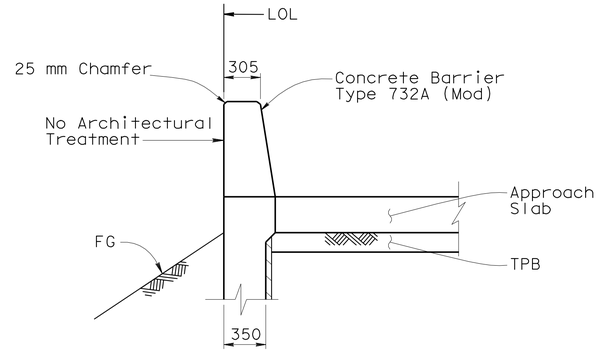

SECTION K-K
1:25

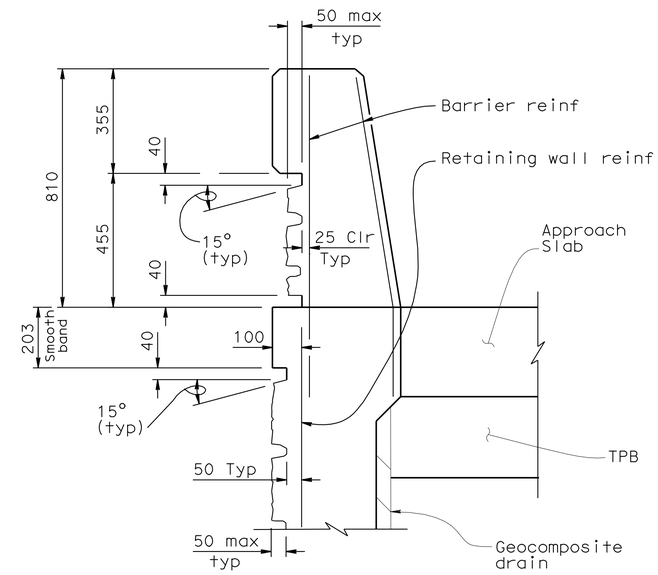

NOTE

Not all reinf shown. For reinf details see, "Abutment Details" sheet

DETAIL A
1:10

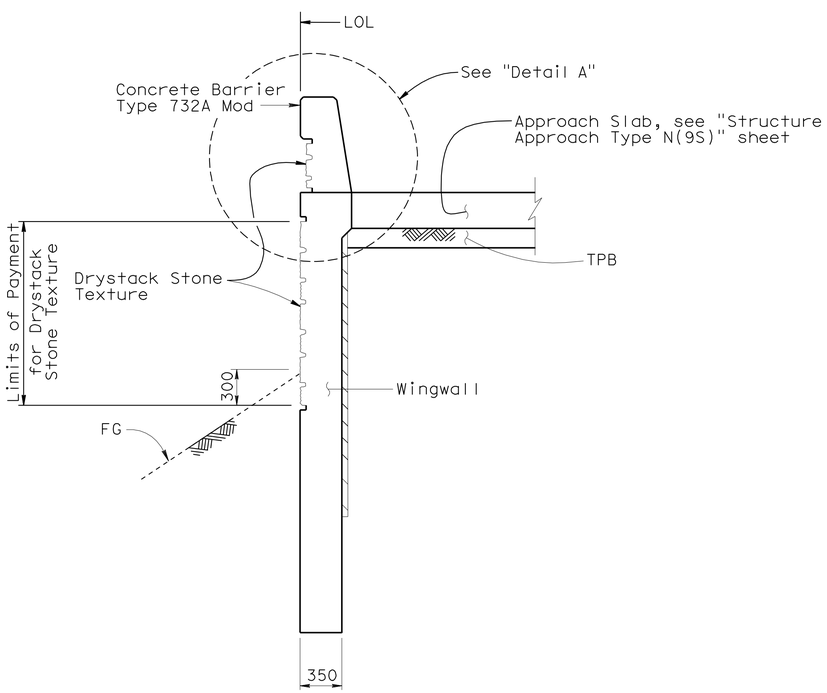

SECTION J-J
1:25

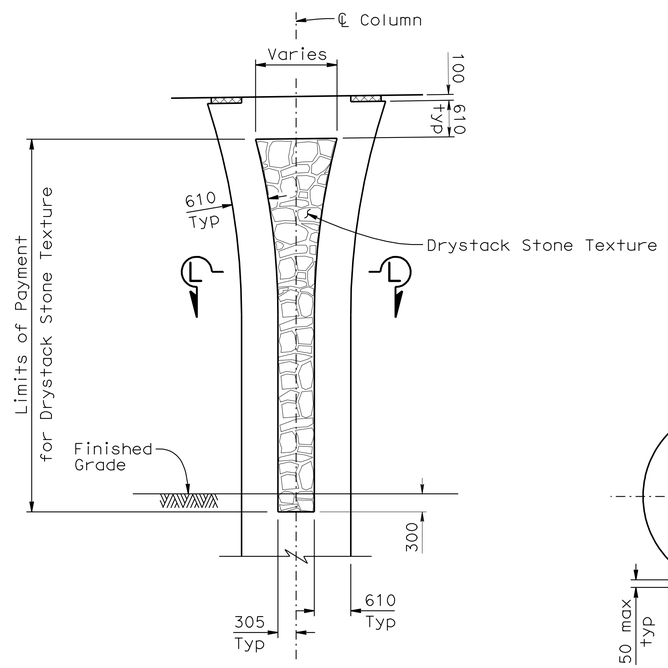

ELEVATION
1:50

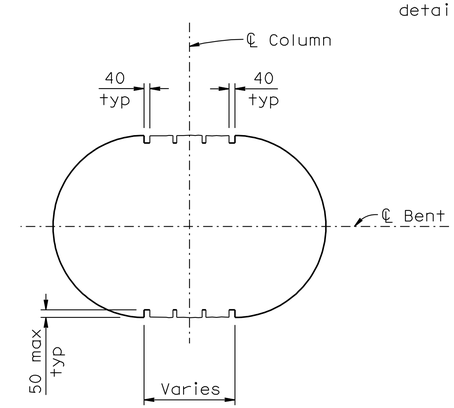

SECTION L-L
1:20

DESIGN	BY D. Alvarez	CHECKED Richard Melko	
DETAILS	BY K. Chonkria	CHECKED Richard Melko	
QUANTITIES	BY Ubong Inyang	CHECKED Fayek Tannous	

STATE OF CALIFORNIA
DEPARTMENT OF TRANSPORTATION

DIVISION OF ENGINEERING SERVICES
STRUCTURE DESIGN
DESIGN BRANCH 6

BRIDGE NO. 44-0285
KILOMETER POST 158.2

NB OFFRAMP VIADUCT
ARCHITECTURAL TREATMENT

Caltrans Metric

ALL DIMENSIONS ARE IN MILLIMETERS UNLESS OTHERWISE SHOWN

ORIGINAL SCALE IN MILLIMETERS FOR REDUCED PLANS 0 10 20 30 40 50 60 70 80 90 100

CU 05
EA 0161E1

DISREGARD PRINTS BEARING EARLIER REVISION DATES

REVISION DATES: 05-27-08 | 2-18-09 | 2-23-09 | 4-29-09 | 9-23-09 | 10-30-09 | 11-19-09 | 12-17-09 | 03-09-10 | 5-10-10

SHEET 23 OF 28

FILE => 44-0285-y-archtreat.dgn

STRUCTURES DESIGN DETAIL SHEET (METRIC) (REV.03-17-04)

USERNAME => friehard DATE PLOTTED => 12-AUG-2010 TIME PLOTTED => 06:09

DIST	COUNTY	ROUTE	KILOMETER POST TOTAL PROJECT	SHEET No	TOTAL SHEETS
05	Mon	101	R146.8/159.7	1278	1402

Michael S. Finegan
REGISTERED CIVIL ENGINEER 11-5-08

7-26-10
PLANS APPROVAL DATE

REGISTERED PROFESSIONAL ENGINEER Michael S. Finegan No. C50138 Exp. 6-30-09 CIVIL STATE OF CALIFORNIA

The State of California or its officers or agents shall not be responsible for the accuracy or completeness of electronic copies of this plan sheet.

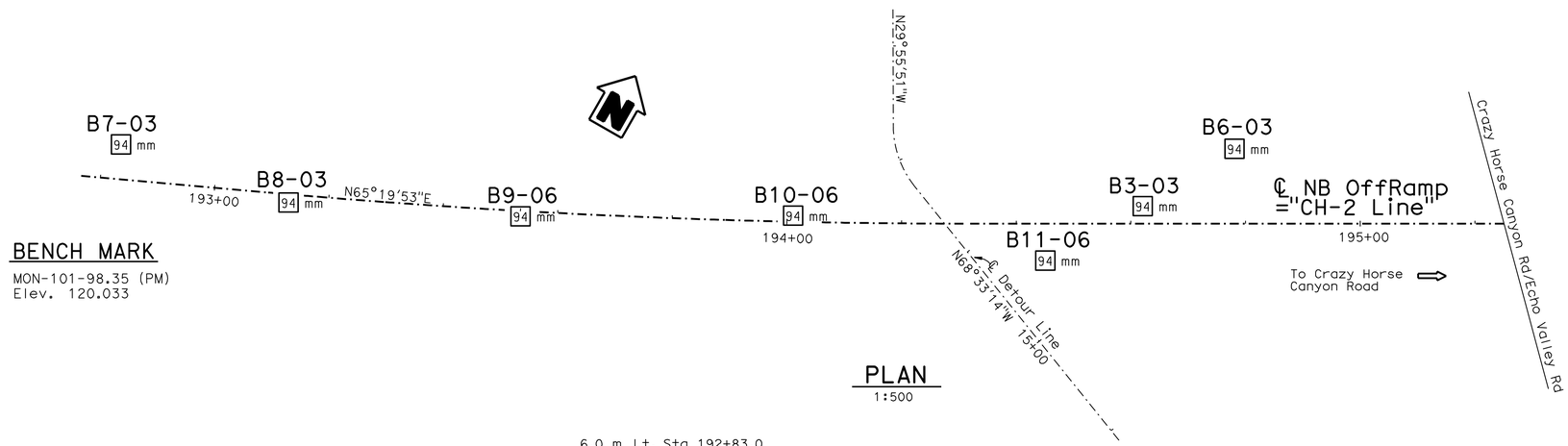

BENCH MARK

MON-101-98.35 (PM)
Elev. 120.033

PLAN

1:500

PROFILE

HOR. 1:250
VER. 1:100

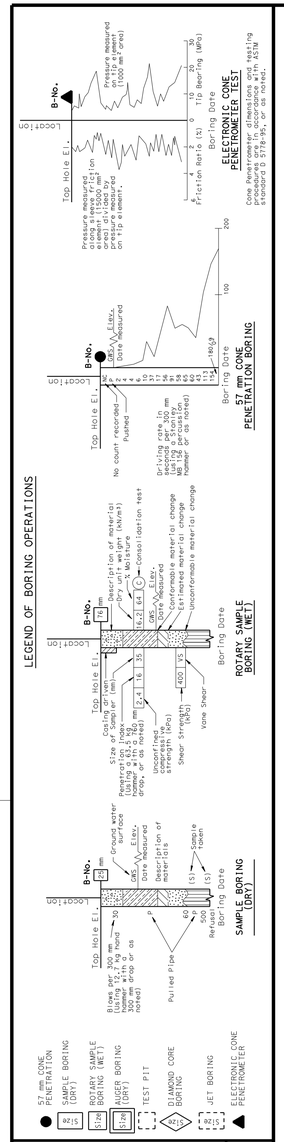

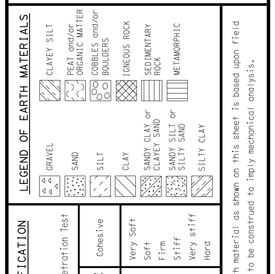

CONSISTENCY CLASSIFICATION FOR SOILS

According to the Standard Penetration Test

SPT N-Value (Blows/0.3m)	Granular	SPT N-Value (Blows/0.3m)	Cohesive
0-4	Very Loose	<2	Very Soft
5-10	Loose	2-4	Soft
11-30	Medium Dense	5-8	Firm
31-50	Dense	9-15	Stiff
>50	Very Dense	16-30	Very stiff
		>30	Hard

NOTE: Classification of earth material as shown on this sheet is based upon field inspection and is not to be construed to imply mechanical analysis.

OGS CIVIL LOG OF TEST BORINGS SHEET (METRIC) (REV. 4/04)

Caltrans Metric

ENGINEERING SERVICES	GEOTECHNICAL SERVICES
DRAWN BY	F. Nguyen 2/08
CHECKED BY	W. Hoon

FIELD INVESTIGATION BY: W. Hoon

STATE OF CALIFORNIA DEPARTMENT OF TRANSPORTATION

DIVISION OF ENGINEERING SERVICES STRUCTURE DESIGN
DESIGN BRANCH 6

BRIDGE NO. 44-0285
KILOMETER POST 158.2

NB OFF RAMP VIADUCT
LOG OF TEST BORINGS 1 OF 5

ALL DIMENSIONS ARE IN METERS UNLESS OTHERWISE SHOWN

ORIGINAL SCALE IN MILLIMETERS FOR REDUCED PLANS 0 10 20 30 40 50 60 70 80 90 100

CU 05
EA 0161E1

DISREGARD PRINTS BEARING EARLIER REVISION DATES

REVISION DATES (PRELIMINARY STAGE ONLY) 07-02-08 10-28-08 03-18-09 5-10-10

SHEET 24 OF 28

FILE => 44-0285-z-lotb1of5.dgn

USERNAME => friehard DATE PLOTTED => 03-AUG-2010 TIME PLOTTED => 07:37

DIST	COUNTY	ROUTE	KILOMETER POST TOTAL PROJECT	SHEET No	TOTAL SHEETS
05	Mon	101	R146.8/159.7	1279	1402

REGISTERED CIVIL ENGINEER 11-5-08

7-26-10
PLANS APPROVAL DATE

REGISTERED PROFESSIONAL ENGINEER Michael S. Finegan No. C50138 Exp. 6-30-09 CIVIL STATE OF CALIFORNIA

The State of California or its officers or agents shall not be responsible for the accuracy or completeness of electronic copies of this plan sheet.

FOR PLAN VIEW, SEE
"LOG OF TEST BORINGS" 1 OF 5

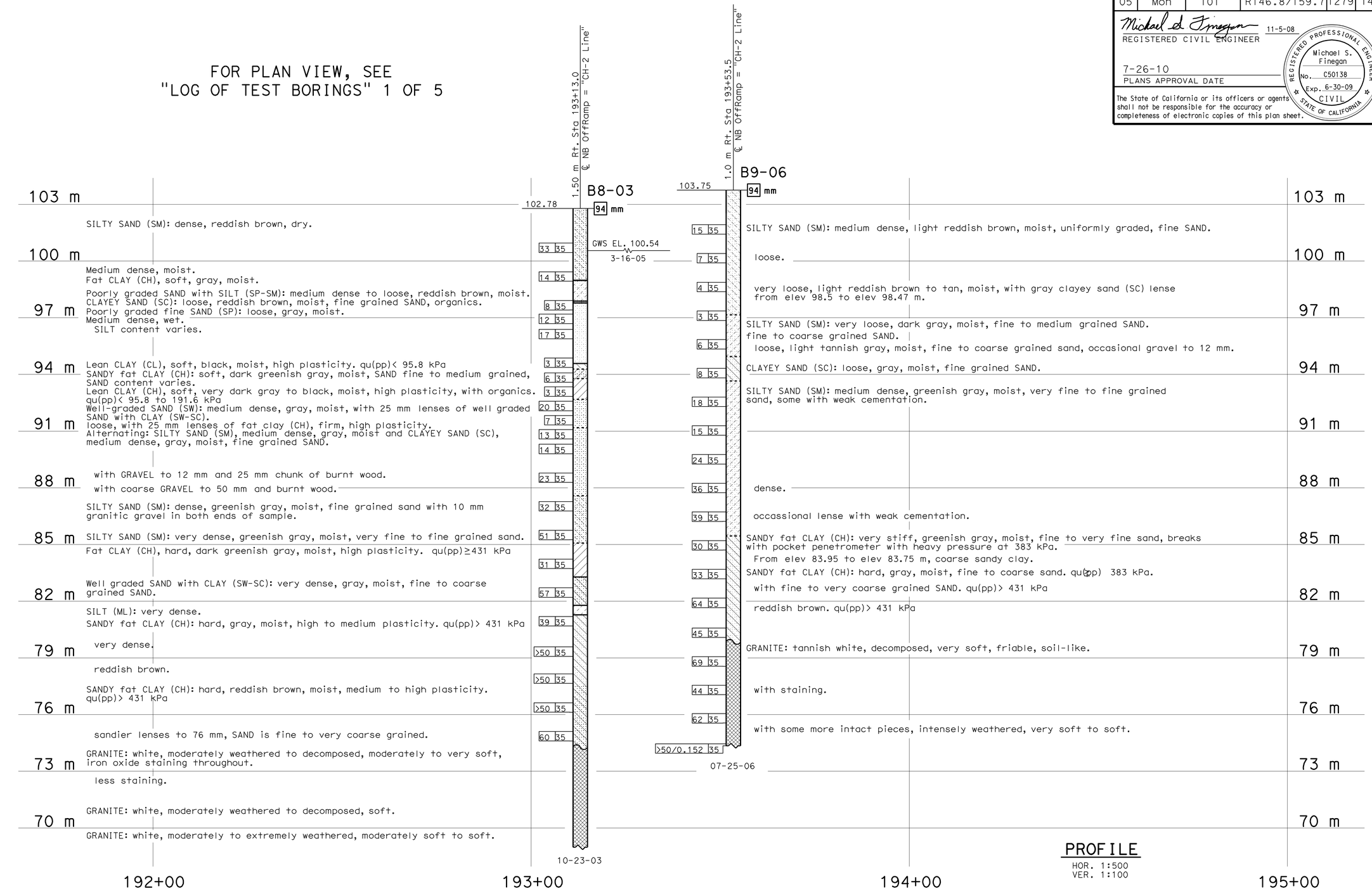

PROFILE
HOR. 1:500
VER. 1:100

LEGEND OF BORING OPERATIONS

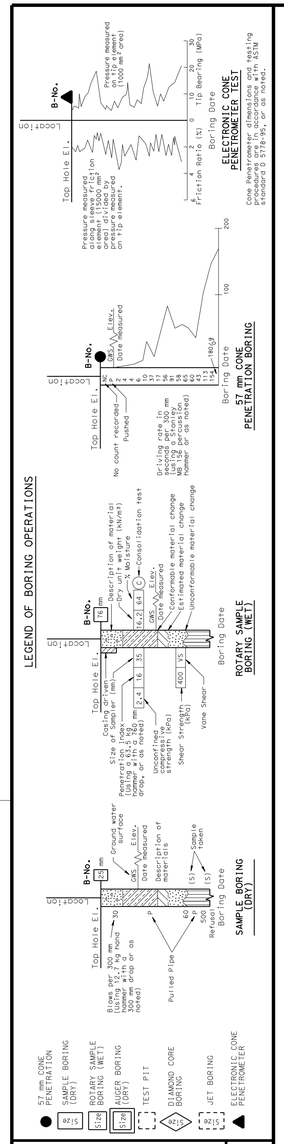

LEGEND OF EARTH MATERIALS

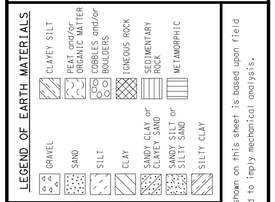

CONSISTENCY CLASSIFICATION FOR SOILS

According to the Standard Penetration Test

SPT N-Value (Blows/0.3m)	Granular	SPT N-Value (Blows/0.3m)	Cohesive
0-4	Very Loose	<2	Very Soft
5-10	Loose	2-4	Soft
11-30	Medium Dense	5-8	Firm
31-50	Dense	9-15	Stiff
>50	Very Dense	16-30	Very stiff
		>30	Hard

NOTE: Classification of earth material as shown on this sheet is based upon field inspection and is not to be construed to imply mechanical analysis.

OGS CIVIL LOG OF TEST BORINGS SHEET (METRIC) (REV. 4/04)

Caltrans Metric

ENGINEERING SERVICES	GEOTECHNICAL SERVICES
DRAWN BY	F. Nguyen 2/08
CHECKED BY	W. Hoon

FIELD INVESTIGATION BY: W. Hoon

STATE OF CALIFORNIA DEPARTMENT OF TRANSPORTATION

DIVISION OF ENGINEERING SERVICES STRUCTURE DESIGN
DESIGN BRANCH 6

BRIDGE NO. 44-0285
KILOMETER POST 158.2

NB OFF RAMP VIADUCT
LOG OF TEST BORINGS 2 OF 5

ALL DIMENSIONS ARE IN METERS UNLESS OTHERWISE SHOWN

ORIGINAL SCALE IN MILLIMETERS FOR REDUCED PLANS 0 10 20 30 40 50 60 70 80 90 100

CU 05
EA 0161E1

DISREGARD PRINTS BEARING EARLIER REVISION DATES

REVISION DATES (PRELIMINARY STAGE ONLY) 07-01-08 10-28-08 03-18-09 5-10-10

SHEET 25 OF 28

FILE => $REqu(pp)EST

USERNAME => rtrenford DATE PLOTTED => 03-AUG-2010 TIME PLOTTED => 07:37

DIST	COUNTY	ROUTE	KILOMETER POST TOTAL PROJECT	SHEET No	TOTAL SHEETS
05	Mon	101	R146.8/159.7	1280	1402

Michael S. Finegan 11-5-08
REGISTERED CIVIL ENGINEER

7-26-10
PLANS APPROVAL DATE

REGISTERED PROFESSIONAL ENGINEER Michael S. Finegan No. C50138 Exp. 6-30-09 CIVIL STATE OF CALIFORNIA

The State of California or its officers or agents shall not be responsible for the accuracy or completeness of electronic copies of this plan sheet.

LEGEND OF BORING OPERATIONS

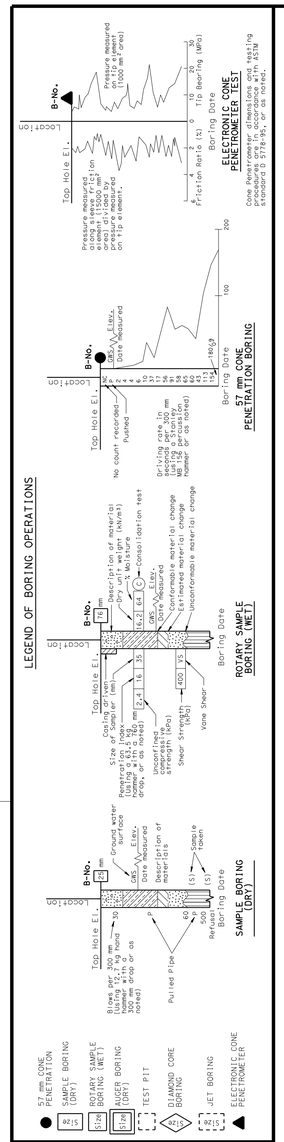

LEGEND OF EARTH MATERIALS

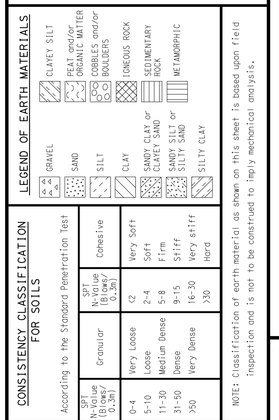

CONSISTENCY CLASSIFICATION FOR SOILS

According to the Standard Penetration Test

SPT N-Value (Blows/ 0.3m)	Granular	SPT N-Value (Blows/ 0.3m)	Cohesive
0-4	Very Loose	<2	Very Soft
5-10	Loose	2-4	Soft
11-30	Medium Dense	5-8	Firm
31-50	Dense	9-15	Stiff
>50	Very Dense	16-30	Very stiff
		>30	Hard

NOTE: Classification of earth material as shown on this sheet is based upon field inspection and is not to be construed to imply mechanical analysis.

OGS CIVIL LOG OF TEST BORINGS SHEET (METRIC) (REV. 4/04)

FOR PLAN VIEW, SEE "LOG OF TEST BORINGS" 1 OF 5

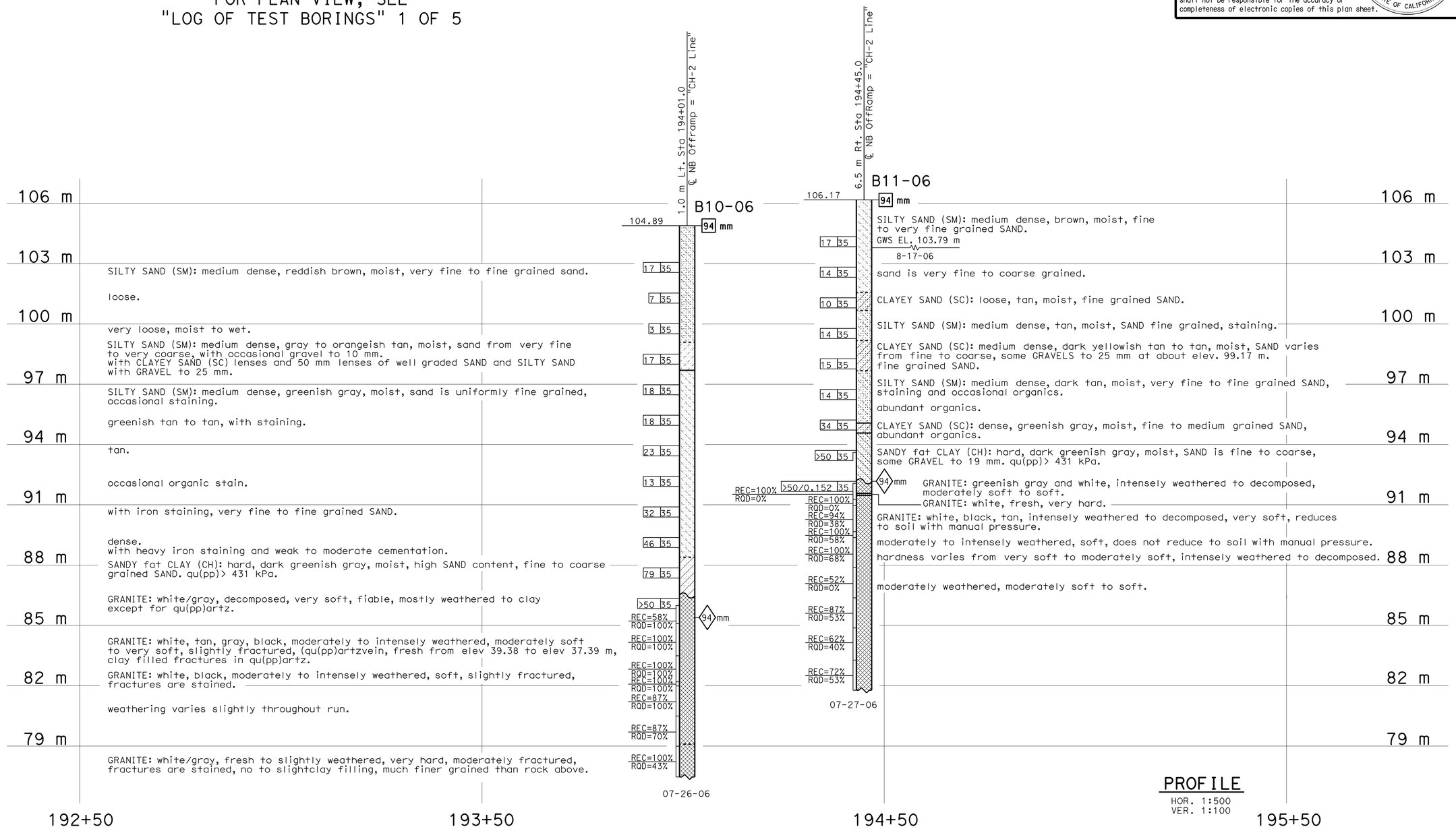

PROFILE
HOR. 1:500
VER. 1:100

Caltrans Metric

ENGINEERING SERVICES	GEOTECHNICAL SERVICES
DRAWN BY	F. Nguyen 2/08
CHECKED BY	W. Hoon

ALL DIMENSIONS ARE IN METERS UNLESS OTHERWISE SHOWN

FIELD INVESTIGATION BY: W. Hoon

ORIGINAL SCALE IN MILLIMETERS FOR REDUCED PLANS 0 10 20 30 40 50 60 70 80 90 100

STATE OF CALIFORNIA DEPARTMENT OF TRANSPORTATION

DIVISION OF ENGINEERING SERVICES STRUCTURE DESIGN
DESIGN BRANCH 6

CU 05
EA 0161E1

BRIDGE NO. 44-0285
KILOMETER POST 158.2

NB OFF RAMP VIADUCT
LOG OF TEST BORINGS 3 OF 5

DISREGARD PRINTS BEARING EARLIER REVISION DATES

REVISION DATES (PRELIMINARY STAGE ONLY): 07-01-08 10-28-08 03-18-09 5-10-10

SHEET 26 OF 28

FILE => $REqu(pp)EST

USERNAME => trrenard DATE PLOTTED => 03-AUG-2010 TIME PLOTTED => 07:37

DIST	COUNTY	ROUTE	KILOMETER POST TOTAL PROJECT	SHEET No	TOTAL SHEETS
05	Mon	101	R146.8/159.7	1281	1402

Michael S. Finegan 11-5-08
REGISTERED CIVIL ENGINEER

7-26-10
PLANS APPROVAL DATE

REGISTERED PROFESSIONAL ENGINEER Michael S. Finegan No. C50138 Exp. 6-30-09 CIVIL STATE OF CALIFORNIA

The State of California or its officers or agents shall not be responsible for the accuracy or completeness of electronic copies of this plan sheet.

FOR PLAN VIEW, SEE
"LOG OF TEST BORINGS" 1 OF 5

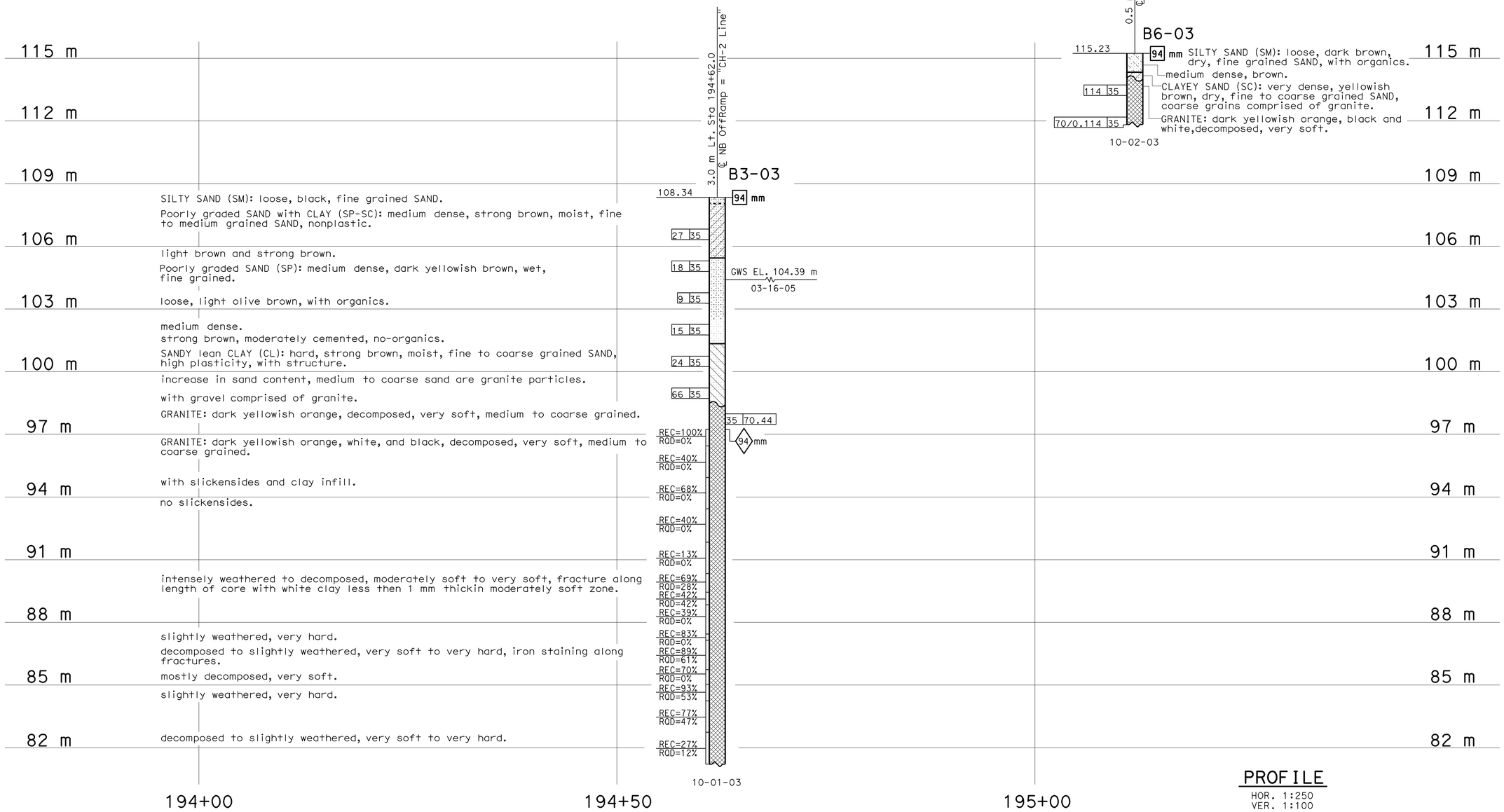

PROFILE
HOR. 1:250
VER. 1:100

LEGEND OF BORING OPERATIONS

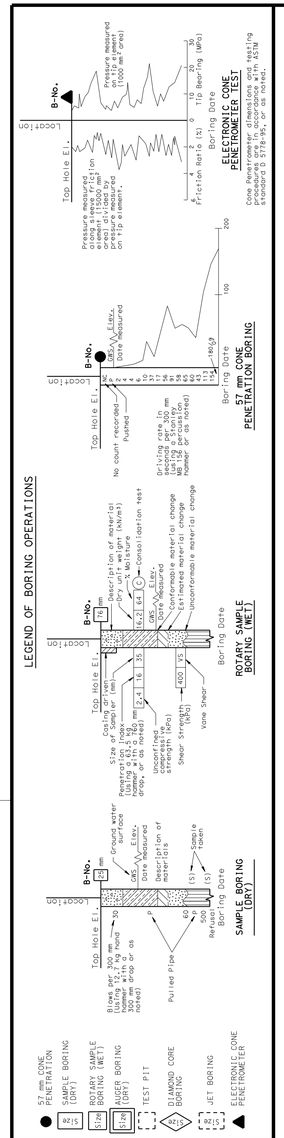

LEGEND OF EARTH MATERIALS

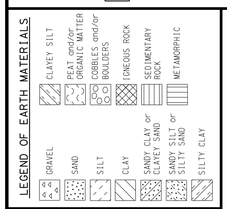

CONSISTENCY CLASSIFICATION FOR SOILS

According to the Standard Penetration Test

SPT N-Value (Blows/0.3m)	Granular	SPT N-Value (Blows/0.3m)	Cohesive
0-4	Very Loose	<2	Very Soft
5-10	Loose	2-4	Soft
11-30	Medium Dense	5-8	Firm
31-50	Dense	9-15	Stiff
>50	Very Dense	16-30	Very stiff
		>30	Hard

NOTE: Classification of earth material as shown on this sheet is based upon field inspection and is not to be construed to imply mechanical analysis.

OGS CIVIL LOG OF TEST BORINGS SHEET (METRIC) (REV. 4/04)

Caltrans Metric

ENGINEERING SERVICES	GEOTECHNICAL SERVICES
DRAWN BY	F. Nguyen 2/08
CHECKED BY	W. Hoon

FIELD INVESTIGATION BY: S. von Schwind

STATE OF CALIFORNIA DEPARTMENT OF TRANSPORTATION

DIVISION OF ENGINEERING SERVICES STRUCTURE DESIGN DESIGN BRANCH 6

BRIDGE NO. 44-0285
KILOMETER POST 158.2

NB OFF RAMP VIADUCT
LOG OF TEST BORINGS 4 OF 5

ALL DIMENSIONS ARE IN METERS UNLESS OTHERWISE SHOWN

ORIGINAL SCALE IN MILLIMETERS FOR REDUCED PLANS 0 10 20 30 40 50 60 70 80 90 100

CU 05
EA 0161E1

DISREGARD PRINTS BEARING EARLIER REVISION DATES

REVISION DATES (PRELIMINARY STAGE ONLY) 07-01-08 10-28-08 03-18-09 5-10-10

SHEET 27 OF 28

FILE => 44-0285-z-lotb4of5.dgn

USERNAME => trlehord DATE PLOTTED => 03-AUG-2010 TIME PLOTTED => 08:45

DIST	COUNTY	ROUTE	KILOMETER POST TOTAL PROJECT	SHEET No	TOTAL SHEETS
05	Mon	101	R146.8/159.7	1282	1402

Michael S. Finegan 11-5-08
REGISTERED CIVIL ENGINEER

7-26-10
PLANS APPROVAL DATE

REGISTERED PROFESSIONAL ENGINEER Michael S. Finegan No. C50138 Exp. 6-30-09 CIVIL STATE OF CALIFORNIA

The State of California or its officers or agents shall not be responsible for the accuracy or completeness of electronic copies of this plan sheet.

WEATHERING DESCRIPTORS

Modified from United States Bureau of Reclamation, Engineering Geology Field Manual.

Descriptors		Diagnostic features					General characteristics § (strength, excavation, etc.)
		Chemical weathering-Discoloration and/or oxidation		Mechanical weathering-Grain boundary conditions (disaggregation) primarily for granitics and some coarse-grained sediments	Texture and solutioning		
Alphanumeric descriptor	Descriptive term	Body of rock	Fracture surfaces †		Texture	Solutioning	
W1	Fresh	No discoloration, not oxidized.	No discoloration or oxidation.	No separation, intact (tight).	No change.	No solutioning.	Hammer rings when crystalline rocks are struck. Almost always rock excavation except for naturally weak or weakly cemented rocks such as siltstones or shales.
W2	Slightly weathered to fresh °						
W3	Slightly weathered	Discoloration or oxidation is limited to surface of, or short distance from, fractures; some feldspar crystals are dull.	Minor to complete discoloration or oxidation of most surfaces.	No visible separation, intact (tight).	Preserved.	Minor leaching of some soluble minerals may be noted.	Hammer rings when crystalline rocks are struck. Body of rock not weakened. With few exceptions, such as siltstones or shales, classified as rock excavation.
W4	Moderately to slightly weathered °						
W5	Moderately weathered	Discoloration or oxidation extends from fractures usually throughout; Fe-Mg minerals are "rusty," feldspar crystals are "cloudy."	All fracture surfaces are discolored or oxidized.	Partial separation of boundaries visible.	Generally preserved.	Soluble minerals may be mostly leached.	Hammer does not ring when rock is struck. Body of rock is slightly weakened. Depending on fracturing, usually is rock excavation except in naturally weak rocks such as siltstones or shales.
W6	Intensely to moderately weathered°						
W7	Intensely weathered	Discoloration or oxidation throughout; all feldspars and Fe-Mg minerals are altered to clay to some extent; or chemical alteration produces in-situ disaggregation, see grain boundary conditions.	All fracture surfaces are discolored or oxidized, surfaces friable.	Partial separation, rock is friable; in semiarid conditions granitics are disaggregated.	Texture altered by chemical disintegration (hydration, argillation).	Leaching of soluble minerals may be complete.	Dull sound when struck with hammer, usually can be broken with moderate to heavy manual pressure or by light hammer blow without reference to planes of weakness such as incipient or hairline fractures, or veinlets. Rock is significantly weakened. Usually common excavation.
W8	Very intensely weathered						
W9	Decomposed	Discolored or oxidized throughout, but resistant minerals such as quartz may be unaltered; all feldspars and Fe-Mg minerals are completely altered to clay.		Complete separation of grain boundaries (disaggregated).	Resembles a soil, partial or complete remnant rock structure may be preserved; leaching of soluble minerals usually complete.		Can be granulated by hand. Always common excavation. Resistant minerals such as quartz may be present as "stringers" or "dikes."

Note: This chart and its horizontal categories are more readily applied to rocks with feldspars and mafic minerals. Weathering in various sedimentary rocks, particularly limestones and poorly indurated sediments, will not always fit the categories established. This chart and weathering categories may have to be modified for particular site conditions or alteration such as hydrothermal effects; however, the basic framework and similar descriptors are to be used.

° Combination descriptors are permissible where equal distribution of both weathering characteristics are present over significant intervals or where characteristics present are "in between" the diagnostic feature. However, dual descriptors should not be used where significant, identifiable zones can be delineated. When given as a range only two adjacent terms may be combined. "Decomposed to slightly weathered," or "moderately weathered to fresh" are not acceptable.

† Does not include directional weathering along shears or faults and their associated features. For example, a shear zone that carried weathering to great depths into a fresh rock mass would not require the rock mass to be classified as weathered.

§ These are generalizations and should not be used as diagnostic features for weathering or excavation classification. These characteristics vary to a large extent based on naturally weak materials or cementation and type of excavation

ROCK QUALITY DESIGNATION (RQD) & PERCENT RECOVERY (REC) LOGGING

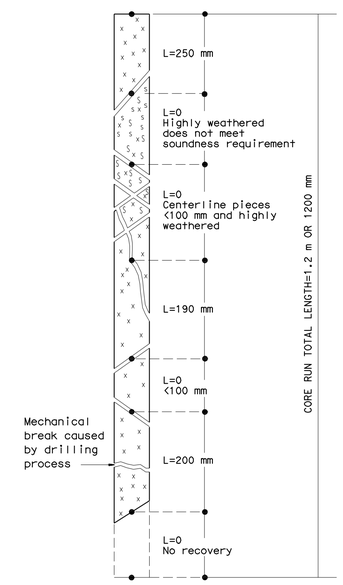

RQD (ROCK QUALITY DESIGNATION)	DESCRIPTION OF ROCK QUALITY
0 - 25%	VERY POOR
25 - 50%	POOR
50 - 75%	FAIR
75 - 90%	GOOD
90 - 100%	EXCELLENT

REC = Percent Core Recovery

$$REC = \frac{\sum \text{Length of all core pieces}}{\text{Total core run length}}$$

$$RQD = \frac{\sum \text{Length of sound core pieces} \geq 100 \text{ mm}}{\text{Total core run length}}$$

$$RQD = \frac{250+190+200}{1200} \times 100\%$$

RQD = 53% (fair)

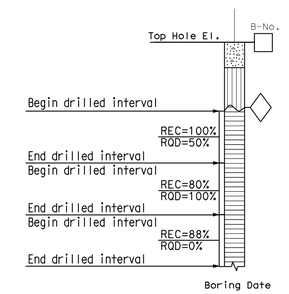

(No Scale)
After Deere & Deere, 1989

FRACTURE DENSITY

Modified from United States Bureau of Reclamation, Engineering Geology Field Manual.

FRACTURE DENSITY- Based on the spacing of all natural fractures in an exposure or core recovery lengths in boreholes; excludes mechanical breaks, shears, and shear zones; however, shear-disturbed zones (fracturing outside the shear) are included. Descriptors for fracture density apply to all rock exposures such as tunnel walls, dozer trenches, outcrops, or foundation cut slopes and inverts, as well as boreholes. Descriptive criteria presented below are based on borehole cores where lengths are measured along the core axis, for other exposures the criteria is distance measured between fractures (size of blocks).

UNFRACTURED (FD0): No fractures.

VERY SLIGHTLY FRACTURED (FD1): Core recovered mostly in lengths greater than 1 m.

SLIGHTLY TO VERY SLIGHTLY FRACTURED (FD2)*

SLIGHTLY FRACTURED (FD3): Core recovered mostly in lengths from 300 to 1000 mm, with few scattered lengths less than 300 mm or greater than 1000 mm.

MODERATELY TO SLIGHTLY FRACTURED (FD4)*

MODERATELY FRACTURED (FD5): Core recovered mostly in 100 to 300 mm lengths with most lengths about 200 mm.

INTENSELY TO MODERATELY FRACTURED (FD6)*

INTENSELY FRACTURED (FD7): Lengths average from 30 to 100 mm with scattered fragmented intervals. Core recovered mostly in lengths less than 100 mm.

VERY INTENSELY TO INTENSELY FRACTURED (FD8)*

VERY INTENSELY FRACTURED (FD9): Core recovered mostly as chips and fragments with a few scattered short core lengths.

* Combinations of fracture densities (e.g. very intensely to intensely fractured, or moderately to slightly fractured) are used where equal distribution of both fracture density characteristics are present over a significant interval or exposure, or where characteristics are "in between" the descriptor definitions.

ROCK HARDNESS DESCRIPTORS

Alphanumeric Descriptor	Descriptor	Criteria
H1	Extremely hard	Core, fragment, or exposure cannot be scratched with knife or sharp pick; can only be chipped with repeated heavy hammer blows.
H2	Very hard	Cannot be scratched with knife of sharp pick. Core or fragment breaks with repeated heavy hammer blows.
H3	Hard	Can be scratched with knife or sharp pick with difficulty (heavy pressure). Heavy hammer blow required to break specimen.
H4	Moderately hard	Can be scratched with knife or sharp pick with light or moderate pressure. Core or fragment breaks with moderate hammer blow.
H5	Moderately soft	Can be grooved 2 mm deep by knife or sharp pick with moderate or heavy pressure. Core or fragment breaks with light hammer blow or heavy manual pressure.
H6	Soft	Can be grooved or gouged easily by knife or sharp pick with light pressure, can be scratched with fingernail. Breaks with light to moderate manual pressure.
H7	Very soft	Can be readily indented, grooved or gouged with fingernail, or carved with a knife. Breaks with light manual pressure.

Any bedrock unit softer than H7, very soft, is to be described using ASTM D-2488 consistency descriptors.

Note: Although "sharp pick" is included in these definitions, descriptions of ability to be scratched, grooved or gouged by a knife is the preferred criteria.

Modified from United States Bureau of Reclamation, Engineering Geology Field Manual.

BEDDING, FOLIATION, OR FLOW TEXTURE DESCRIPTORS

Descriptors	Thickness / Spacing
Massive	Greater than 3 m
Very thickly (bedded, foliated, or banded)	1 to 3 m
Thickly	300 mm to 1 m
Moderately	100 to 300 mm
Thinly	30 to 100 mm
Very thinly	10 to 30 mm
Laminated (intensely foliated or banded)	Less than 10 mm

Modified from United States Bureau of Reclamation, Engineering Geology Field Manual.

Caltrans Metric

ENGINEERING SERVICES	GEOTECHNICAL SERVICES
PREPARED BY	F. Nguyen 2/08
CHECKED BY	W. Hoon

OGS CIVIL LOG OF TEST BORINGS SHEET (METRIC) (REV. 8/05)

ORIGINAL SCALE IN MILLIMETERS FOR REDUCED PLANS 0 10 20 30 40 50 60 70 80 90 100

STATE OF CALIFORNIA
DEPARTMENT OF TRANSPORTATION

DIVISION OF ENGINEERING SERVICES
STRUCTURE DESIGN
DESIGN BRANCH 6

CU 05
EA 0161E1

BRIDGE NO. 44-0285
KILOMETER POST 158.2

NB OFF RAMP VIADUCT
LOG OF TEST BORINGS 5 OF 5

DISREGARD PRINTS BEARING EARLIER REVISION DATES → 03-18-09 5-10-10

REVISION DATES

SHEET 28 OF 28

FILE => 44-0285-z-lotb5of5.dgn

USERNAME => trlenard DATE PLOTTED => 03-AUG-2010 TIME PLOTTED => 08:46

DIST	COUNTY	ROUTE	KILOMETER POST TOTAL PROJECT	SHEET No	TOTAL SHEETS
05	Mon	101	R146.8/159.7	1283	1402

REGISTERED CIVIL ENGINEER — DATE 05-06-10

7-26-10
PLANS APPROVAL DATE

REGISTERED PROFESSIONAL ENGINEER — HERNAN PEREZ — No. 60993 — Exp. 12-31-10 — CIVIL — STATE OF CALIFORNIA

The State of California or its officers or agents shall not be responsible for the accuracy or completeness of electronic copies of this plan sheet.

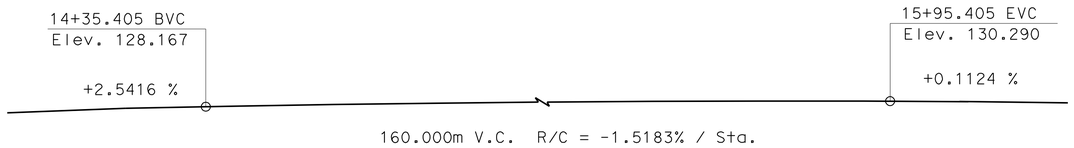

PROFILE GRADE

NO SCALE

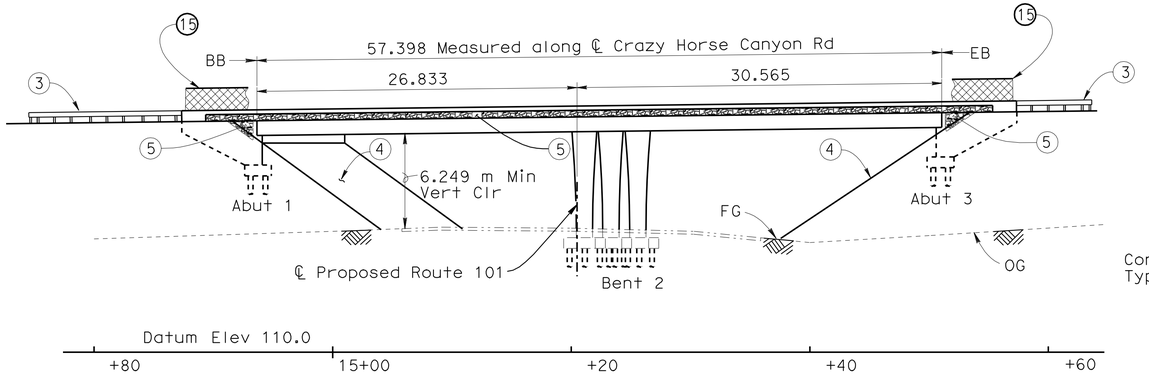

ELEVATION

1:250

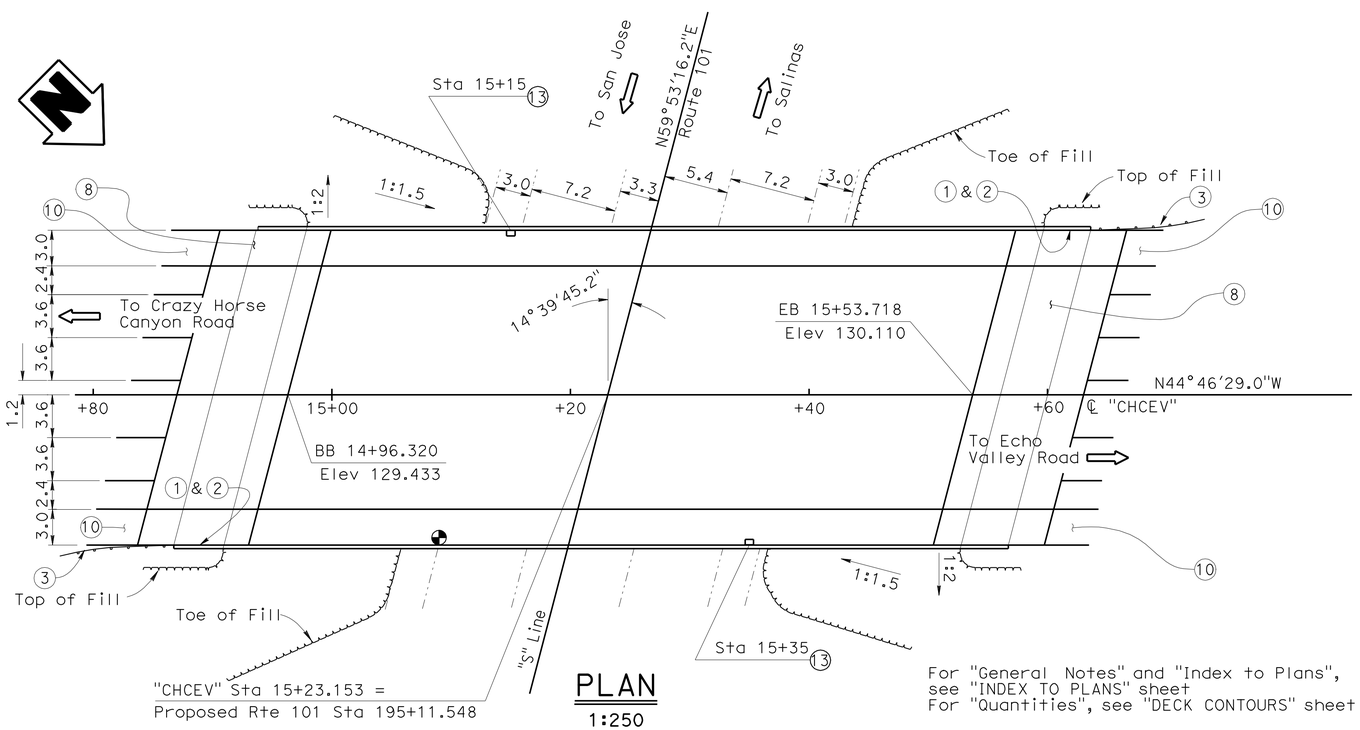

PLAN

1:250

For "General Notes" and "Index to Plans", see "INDEX TO PLANS" sheet
For "Quantities", see "DECK CONTOURS" sheet

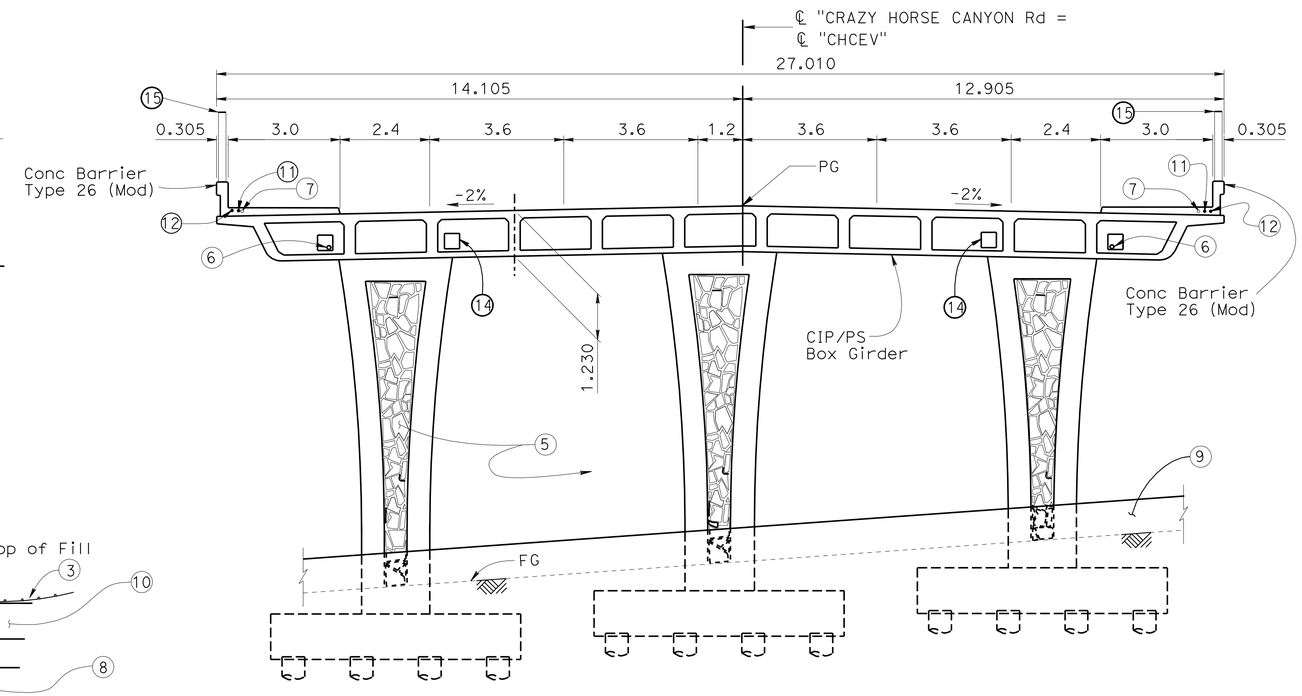

TYPICAL SECTION

1:80

NOTES

1. Paint "Crazy Horse Canyon OC"
2. Paint "Br. No. 44-0286"
3. M.B.G.R., see "Road Plans"
4. Slope Paving
5. Architectural Treatment
6. 75 mm ø Water Supply Line NPS 3
7. 75 mm ø Sprinkler Control Conduit
8. Structure Approach Type N(9S)
9. Median Concrete Barrier, see "Road Plans"
10. Sidewalk, see "Road Plans"
11. 50 mm ø conduit, see "Electrical Plans"
12. 50 mm ø conduit, see "Electrical Plans"
13. No. 5 Pull Box on Sidewalk, see "Electrical Plans"
14. Future Utility Opening
15. Chain link Railing (Type 7, Black Vinyl-Coated)

LEGEND

Indicates Point of Minimum Vertical Clearance
Indicates Existing Highway

Caltrans Metric

Fritz Hoffman
DESIGN ENGINEER

	BY	CHECKED
DESIGN	Ramon Reyes	Hilario Tuazon
DETAILS	George Zweier	Hilario Tuazon
QUANTITIES	Ubong Inyang	Jinrong Wang

LOAD & RESISTANCE FACTOR DESIGN — LIVE LOADING: HL93 W/"LOW-BOY"; PERMIT DESIGN VEHICLE
LAYOUT — BY George Zweier — CHECKED Hilario Tuazon
SPECIFICATIONS — BY Sirisha Nelapatla — PLANS AND SPECS COMPARED Sirisha Nelapatla

STATE OF CALIFORNIA
DEPARTMENT OF TRANSPORTATION

DIVISION OF ENGINEERING SERVICES
STRUCTURE DESIGN
DESIGN BRANCH 6

BRIDGE NO. 44-0286
KILOMETER POST 158.4

CRAZY HORSE CYN/ECHO VALLEY RD OC
GENERAL PLAN

ALL DIMENSIONS ARE IN METERS UNLESS OTHERWISE SHOWN

ORIGINAL SCALE IN MILLIMETERS FOR REDUCED PLANS 0 10 20 30 40 50 60 70 80 90 100

CU 05
EA 0161E1

DISREGARD PRINTS BEARING EARLIER REVISION DATES

REVISION DATES: 08-01-06 10-15-09 11-05-09 05-06-10 01-14-09 01-20-09 1-22-09 01-24-09 02-13-09 03-23-09

SHEET 1 OF 21

FILE => 44-0286-a-gp.dgn

STRUCTURES DESIGN GENERAL PLAN SHEET (METRIC) (REV.07-24-06)

USERNAME => R.Gerard DATE PLOTTED => 12-AUG-2010 TIME PLOTTED => 06:09

DIST	COUNTY	ROUTE	KILOMETER POST TOTAL PROJECT	SHEET No	TOTAL SHEETS
05	Mon	101	R146.8/159.7	1284	1402

REGISTERED CIVIL ENGINEER 05-06-10 DATE

7-26-10
PLANS APPROVAL DATE

REGISTERED PROFESSIONAL ENGINEER HERNAN PEREZ No. 60993 Exp. 12-31-10 CIVIL STATE OF CALIFORNIA

The State of California or its officers or agents shall not be responsible for the accuracy or completeness of electronic copies of this plan sheet.

INDEX TO PLANS

SHEET NO.	SHEET TITLE
1	GENERAL PLAN
2	INDEX TO PLANS
3	DECK CONTOURS
4	FOUNDATION PLAN
5	ABUTMENT 1 LAYOUT
6	ABUTMENT 3 LAYOUT
7	ABUTMENT DETAILS
8	BENT LAYOUT
9	BENT DETAILS No.1
10	BENT DETAILS NO.2
11	TYPICAL SECTION
12	GIRDER LAYOUT
13	GIRDER REINFORCEMENT
14	PRESTRESSING LAYOUT
15	STRUCTURE APPROACH TYPE N(9S)
16	STRUCTURE APPROACH DRAINAGE DETAILS
17	SLOPE PAVING-FULL SLOPE
18	ARCHITECTURAL TREATMENT
19	LOG OF TEST BORINGS 1 of 3
20	LOG OF TEST BORINGS 2 of 3
21	LOG OF TEST BORINGS 3 of 3

STANDARD PLANS DATED JULY 2004

A10A	Abbreviations and Acronyms (A-L)
A10B	Abbreviations and Acronyms (M-Z)
A62C	Limits of Payment for Excavation and Backfill - Bridge
B0-1	Bridge Details
B0-5	Bridge Details
B0-13	Bridge Details
B2-3	400mm and 600mm Cast-In-Drilled-Hole Concrete Pile
B3-1	Retaining Wall Type 1 H=9700 Through 10 900 mm
B3-8	Retaining Wall Details No. 1
RSP B6-21	Joint Seals
B7-1	Box Girder Details
B7-10	Utility Opening Box Girder
RSP B8-5	Cast-In-Place Prestressed Girder Details
B11-52	Chain Link Railing Type 7
B11-54	Concrete Barrier Type 26
B14-3	Communication and Sprinkler Control Conduits (Conduit less than size 103)
B14-4	Water Supply Line (Bridge). (Pipe size less than NPS 4)
B14-5	Water Supply Line (Details). (Pipe size less than NPS 4)

STANDARD PLAN SHEET NO.

DETAIL NO.

GENERAL NOTES
LOAD AND RESISTANCE FACTOR DESIGN

DESIGN: AASHTO LRFD DESIGN SPECIFICATIONS, 3rd Edition with 2005 and 2006 Interims and California Amendments v3.06.01; except for abutments, geotechnical design of deep foundation, bridge details taken from Standard Plans July 2004, and Standard Bridge Details XS Sheets are designed using Caltrans Bridge Design Specification LFD Version April 2000 (1996 AASHTO with Revisions by Caltrans).

SEISMIC DESIGN: CALTRANS SEISMIC DESIGN CRITERIA (SDC) Version 1.4, June 2006

DEAD LOAD: Includes 1.68 Kpa for future wearing surface

LIVE LOAD: HL93 and permit design load

SEISMIC LOAD: See "ACCELERATION RESPONSE SPECTRUM"

CONCRETE: f_y = 420 MPa
f'_c = 25 MPa
n = 8
See Prestressing Notes on " Typical Section No.2 sheet

PRESTRESSED CONCRETE: See "Prestressing Notes"

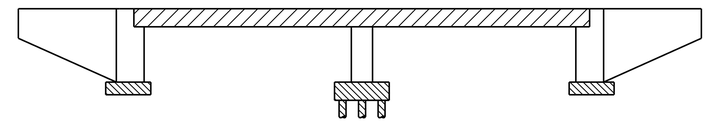

CONCRETE STRENGTH AND TYPE LIMITS

No Scale

- Structural Concrete, Bridge
- Structural Concrete, Bridge Footing
- Structural Concrete, Bridge (28 MPa at 28 days)

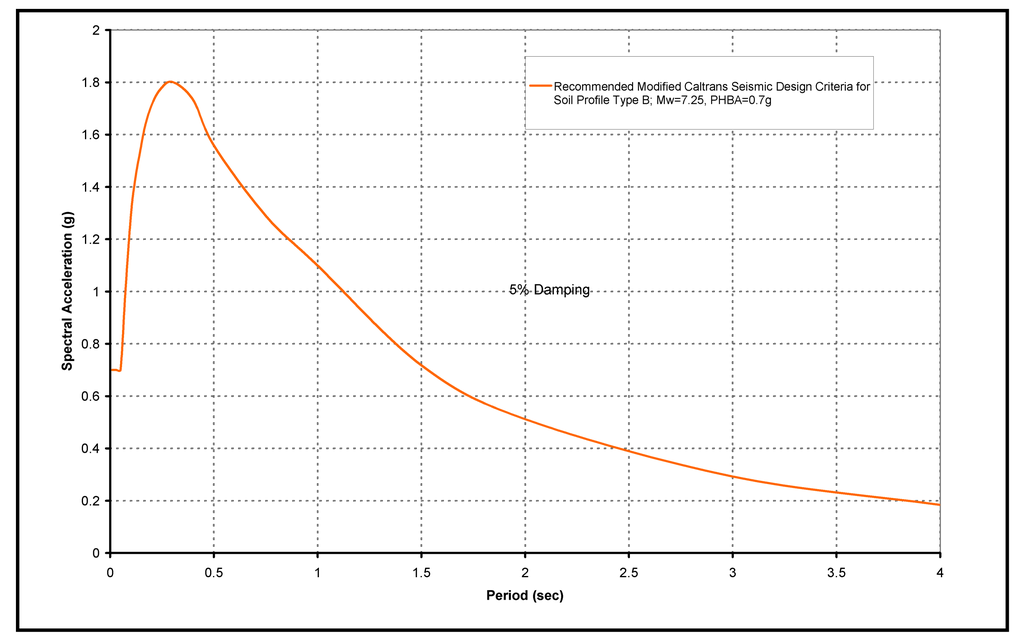

ACCELERATION RESPONSE SPECTRUM

NO SCALE

PILE DATA TABLE

Location	Pile Type	Nominal Resistance (kN) Compression	Nominal Resistance (kN) Tension	Design Tip (m)	Specified Tip Elevation (m)
Abut 1	400 mm CIDH	1200	0	110.2(a), 119.0(c)	110.2
Bent 2	600 mm CIDH	1860	0	108.6(a), 118.5(c)	108.6
Abut 3	400 mm CIDH	1200	0	108.6(a), 118.0(c)	108.6

NOTES:
1. Design Tip Elevations for Abutments and Bents are controlled by: (a) Compression, (c) Settlement.
2. The Specified Tip Elevation shall not be raised above the Design Tip Elevations for Tolerable Settlement.

Caltrans Metric

	BY	CHECKED
DESIGN	Ramon Reyes	Hilario Tuazon
DETAILS	Kamal Chonkria	Hilario Tuazon
QUANTITIES	Ubong Inyang	Jinrong Wang

STATE OF CALIFORNIA
DEPARTMENT OF TRANSPORTATION

DIVISION OF ENGINEERING SERVICES
STRUCTURE DESIGN
DESIGN BRANCH 6

BRIDGE NO. 44-0286
KILOMETER POST 158.4

CRAZY HORSE CYN/ECHO VALLEY RD OC
INDEX TO PLANS

ALL DIMENSIONS ARE IN MILLIMETERS UNLESS OTHERWISE SHOWN

ORIGINAL SCALE IN MILLIMETERS FOR REDUCED PLANS 0 10 20 30 40 50 60 70 80 90 100

CU 05
EA 0161E1

DISREGARD PRINTS BEARING EARLIER REVISION DATES

REVISION DATES: 05-21-08 05-06-10 01-14-09 1-21-09 2-13-09 03-23-09 04-30-09 11-05-09 12-17-09 03-08-10

SHEET 2 OF 21

FILE => 44-0286-a-itp.dgn

STRUCTURES DESIGN DETAIL SHEET (METRIC) (REV.03-17-04)

USERNAME => ffernard DATE PLOTTED => 12-AUG-2010 TIME PLOTTED => 06:09

DIST	COUNTY	ROUTE	KILOMETER POST TOTAL PROJECT	SHEET No	TOTAL SHEETS
05	Mon	101	R146.8/159.7	1285	1402

REGISTERED CIVIL ENGINEER 05-06-10 DATE

7-26-10
PLANS APPROVAL DATE

REGISTERED PROFESSIONAL ENGINEER HERNAN PEREZ No. 60993 Exp. 12-31-10 CIVIL STATE OF CALIFORNIA

The State of California or its officers or agents shall not be responsible for the accuracy or completeness of electronic copies of this plan sheet.

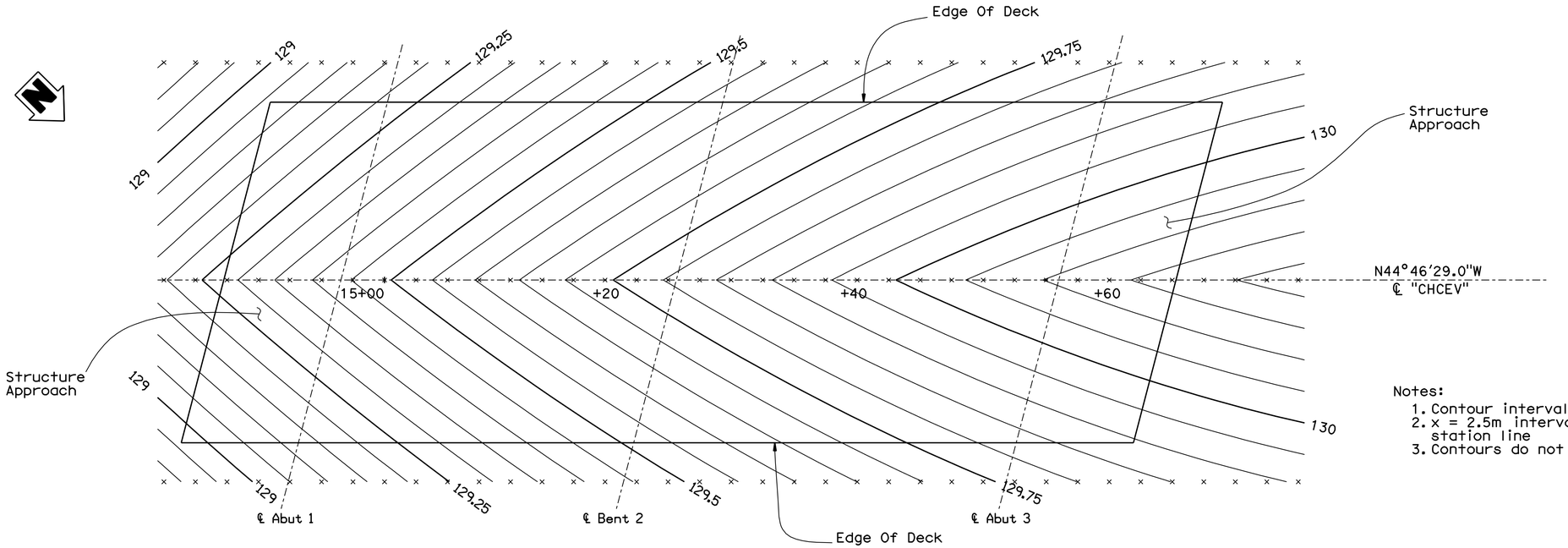

DECK CONTOURS

1:200

Notes:
1. Contour interval = .05 m
2. x = 2.5m interval along station line
3. Contours do not include camber

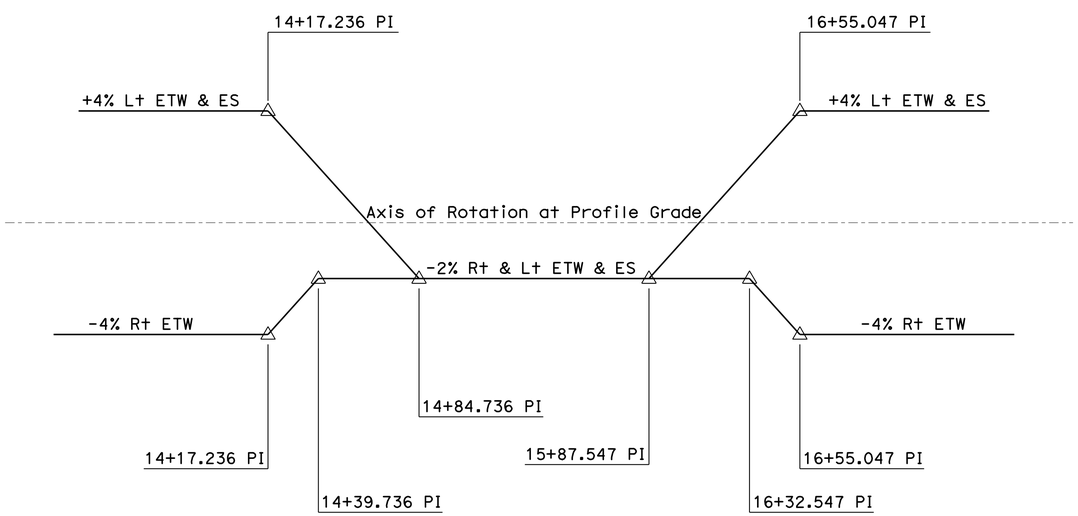

SUPERELEVATION DIAGRAM

NO SCALE

QUANTITIES

STRUCTURE EXCAVATION (BRIDGE)	695	m^3
STRUCTURE BACKFILL (BRIDGE)	365	m^3
NPS 3 SUPPLY LINE (BRIDGE)	159	m
400 MM CAST-IN-DRILLED-HOLE CONCRETE PILING	785	m
600 MM CAST-IN-DRILLED-HOLE CONCRETE PILING	362	m
PRESTRESSING CAST-IN-PLACE CONCRETE	LUMP SUM	
STRUCTURAL CONCRETE, BRIDGE FOOTING	200	m^3
STRUCTURAL CONCRETE, BRIDGE	1045	m^3
STRUCTURAL CONCRETE, APPROACH SLAB (TYPE N)	145	m^3
ARCHITECTURAL TREATMENT (DRYSTACK STONE TEXTURE)	183	m^2
JOINT SEAL (MR 40 MM)	56	m
BAR REINFORCING STEEL (BRIDGE)	177 500	kg
SLOPE PAVING (CONCRETE) (EXPOSED AGGREGATE)	74	m^3
CHAIN LINK RAILING (TYPE 7) (BLACK VINYL-COATED)	139	m
CONCRETE BARRIER (TYPE 26 MODIFIED)	140	m
SPRINKLER CONTROL CONDUIT (BRIDGE)	80	m
WELDED STEEL PIPE CASING (BRIDGE)	48	m

Caltrans Metric

ALL DIMENSIONS ARE IN MILLIMETERS UNLESS OTHERWISE SHOWN

ORIGINAL SCALE IN MILLIMETERS FOR REDUCED PLANS 0 10 20 30 40 50 60 70 80 90 100

	BY	CHECKED
DESIGN	Ramon Reyes	Hilario Tuazon
DETAILS	Kamal Chonkria	Hilario Tuazon
QUANTITIES	Ubong Inyang	Jinrong Wang

STATE OF CALIFORNIA
DEPARTMENT OF TRANSPORTATION

DIVISION OF ENGINEERING SERVICES
STRUCTURE DESIGN
DESIGN BRANCH 6

CU 05
EA 0161E1

BRIDGE NO. 44-0286
KILOMETER POST 158.4

CRAZY HORSE CYN/ECHO VALLEY RD OC

DECK CONTOURS

DISREGARD PRINTS BEARING EARLIER REVISION DATES

REVISION DATES: 04-21-08 01-14-09 02-13-09 10-16-09 11-05-09 05-06-10

SHEET 3 OF 21

FILE => 44-0286-d-dc.dgn

STRUCTURES DESIGN DETAIL SHEET (METRIC) (REV.03-17-04)

USERNAME => rf.benard DATE PLOTTED => 03-AUG-2010 TIME PLOTTED => 08:46

DIST	COUNTY	ROUTE	KILOMETER POST TOTAL PROJECT	SHEET No	TOTAL SHEETS
05	Mon	101	R146.8/159.7	1286	1402

Caltrans Metric

Hernan Perez 05-06-10
REGISTERED CIVIL ENGINEER DATE

7-26-10
PLANS APPROVAL DATE

REGISTERED PROFESSIONAL ENGINEER HERNAN PEREZ No. 60993 Exp. 12-31-10 CIVIL STATE OF CALIFORNIA

The State of California or its officers or agents shall not be responsible for the accuracy or completeness of electronic copies of this plan sheet.

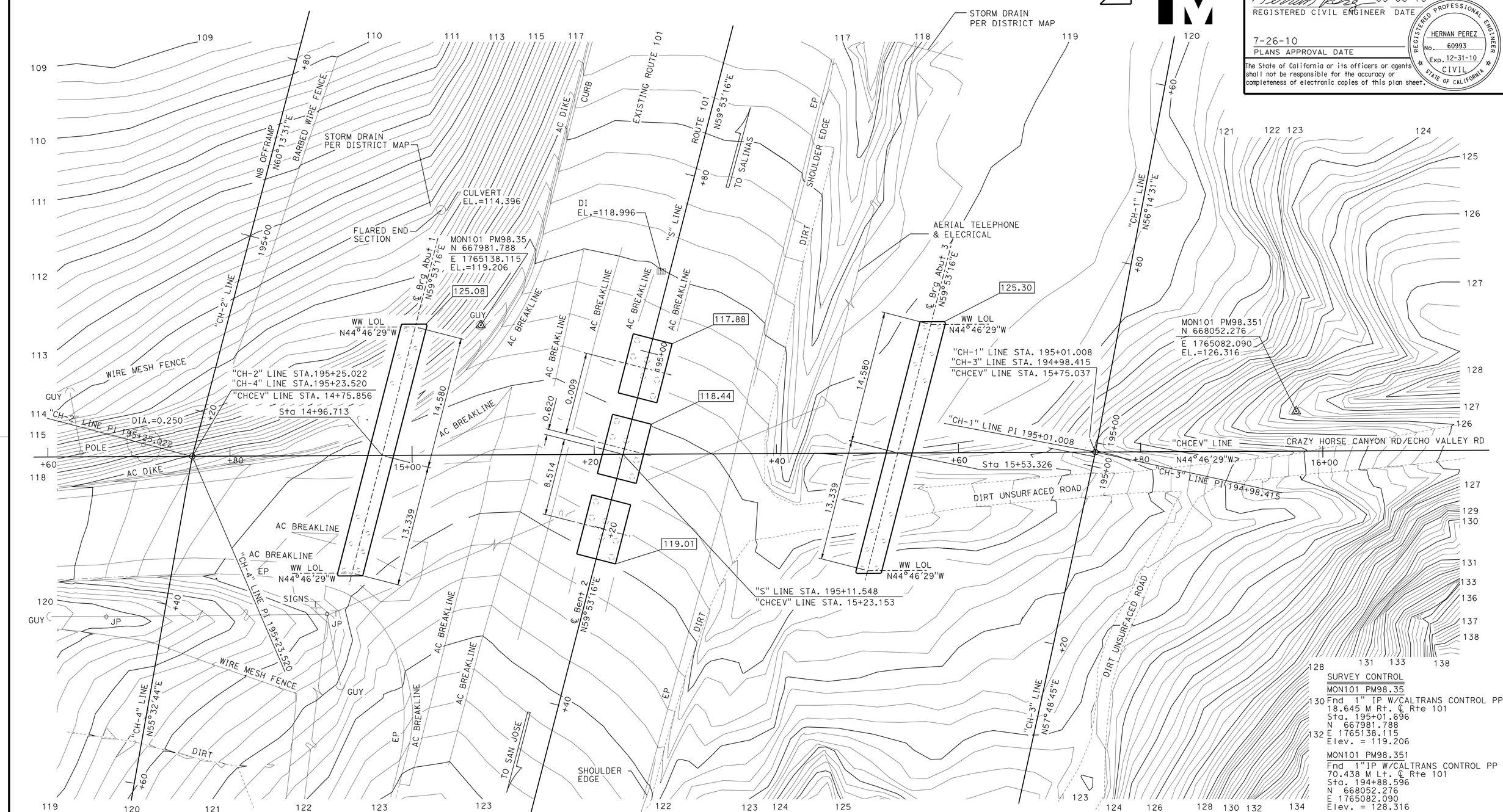

SURVEY CONTROL

MON101 PM98.35
Fnd 1" IP W/CALTRANS CONTROL PP
18.645 M Rt. ℄ Rte 101
Sta. 195+01.696
N 667981.788
E 1765138.115
Elev. = 119.206

MON101 PM98.351
Fnd 1"IP W/CALTRANS CONTROL PP
70.438 M Lt. ℄ Rte 101
Sta. 194+88.596
N 668052.276
E 1765082.090
Elev. = 128.316

ALL DIMENSIONS ARE IN METERS UNLESS OTHERWISE SHOWN

Note :
XXX.XX Indicates Elevation at bottom of footing.

PRELIMINARY INVESTIGATION SECTION

SCALE	VERT. DATUM NGVD 29	PHOTOGRAMMETRY AS OF:		
1:200	HORZ. DATUM NAD83 (1991.35)	SURVEYED	BY DISTRICT/K.ELLINGSON	CHECKED BY E. LOPEZ 05/2006
ALIGNMENT TIES DIST. TRAVERSE SHEET		DRAFTED	BY Y. ZHANG 05/2006	CHECKED BY T. ZOLNIKOVA 05/2006

	BY	CHECKED
DESIGN	Ramon Reyes	Hilario Tuazon
DETAILS	Kamal Chonkria	Hilario Tuazon
QUANTITIES	Ubong Inyang	Jinrong Wang

STATE OF CALIFORNIA
DEPARTMENT OF TRANSPORTATION

DIVISION OF ENGINEERING SERVICES
STRUCTURE DESIGN
DESIGN BRANCH 6

BRIDGE NO. 44-0286
KILOMETER POST 158.4

CRAZY HORSE CYN/ECHO VALLEY RD OC

FOUNDATION PLAN

STRUCTURES FOUNDATION PLAN SHEET (METRIC) (REV.10-27-05)

ORIGINAL SCALE IN MILLIMETERS FOR REDUCED PLANS 0 10 20 30 40 50 60 70 80 90 100

CU 05
EA 0161E1

DISREGARD PRINTS BEARING EARLIER REVISION DATES

REVISION DATES (PRELIMINARY STAGE ONLY): 5-19-06 01-30-09 02-13-09 10-18-09 11-05-09 05-06-10

SHEET 4 OF 21

FILE => 44-0286-e-fp101.dgn

USERNAME => trtenord DATE PLOTTED => 12-AUG-2010 TIME PLOTTED => 06:09

DIST	COUNTY	ROUTE	KILOMETER POST TOTAL PROJECT	SHEET No	TOTAL SHEETS
05	Mon	101	R146.8/159.7	1287	1402

REGISTERED CIVIL ENGINEER — DATE 05-06-10

7-26-10
PLANS APPROVAL DATE

REGISTERED PROFESSIONAL ENGINEER — HERNAN PEREZ — No. 60993 — Exp. 12-31-10 — CIVIL — STATE OF CALIFORNIA

The State of California or its officers or agents shall not be responsible for the accuracy or completeness of electronic copies of this plan sheet.

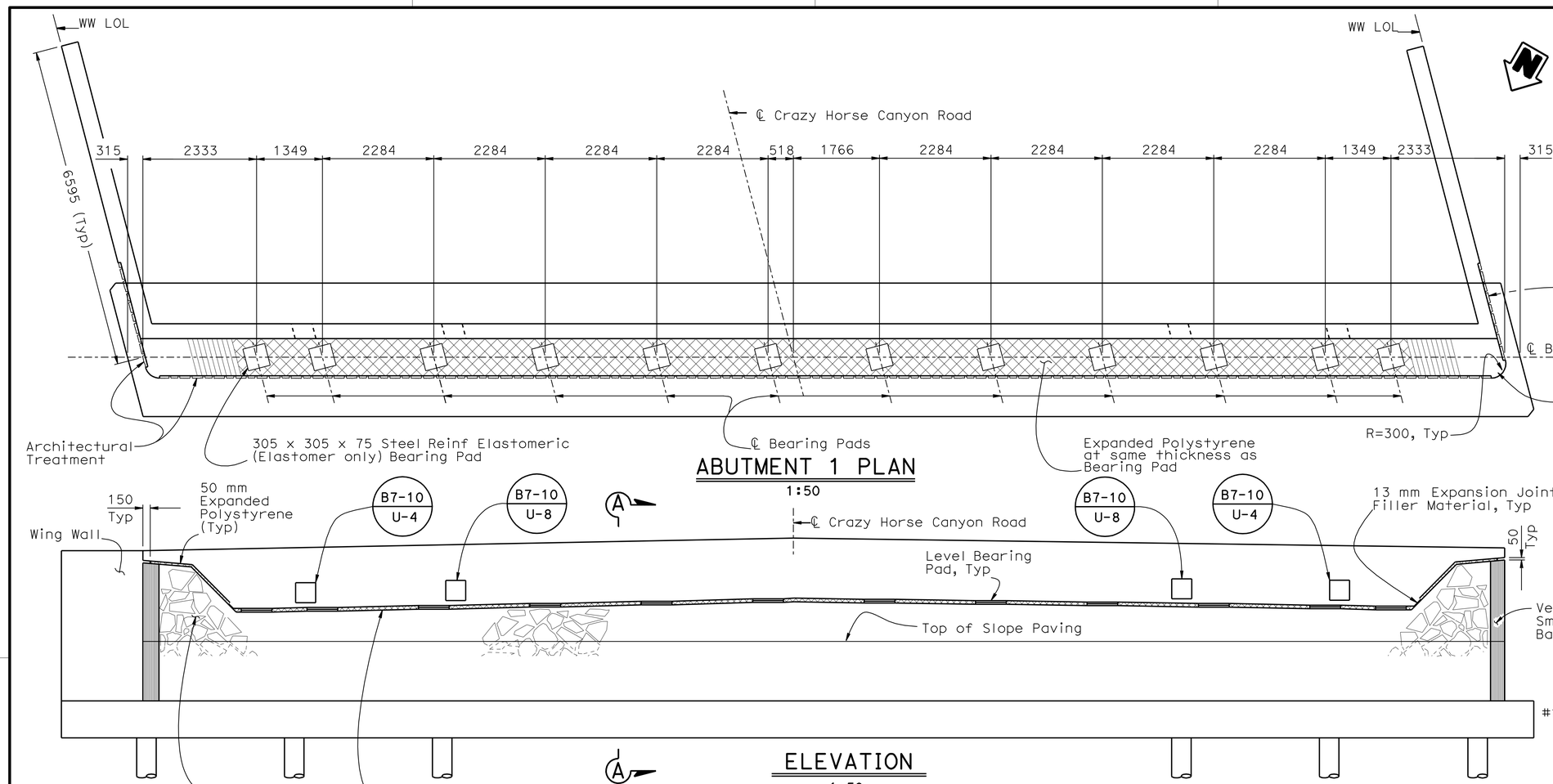

ABUTMENT 1 PLAN
1:50

ELEVATION
1:50

LEGEND

Indicates Vertical Pile

NOTES

1. For Architectural Treatment Details, see, "Architectural Treatment" sheet
2. Not all Piles shown

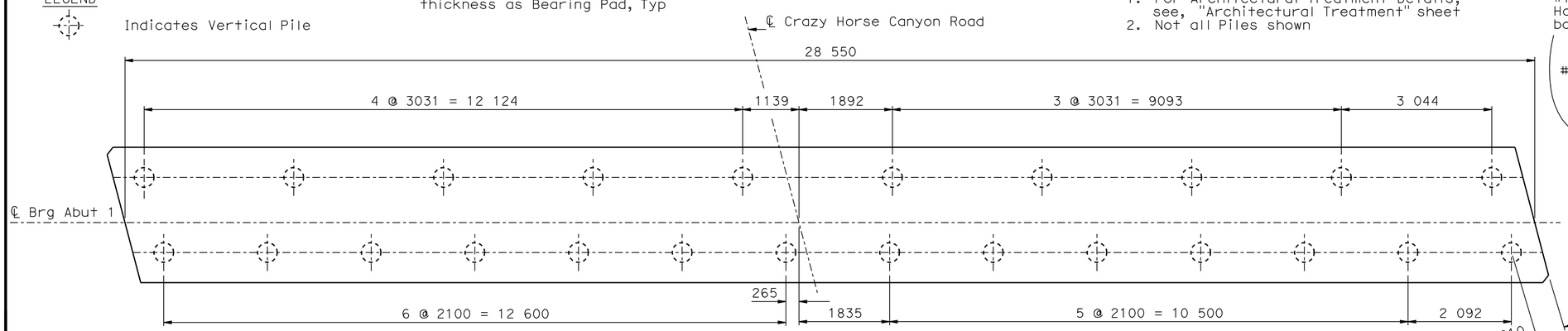

ABUTMENT 1 PILE LAYOUT
1:50

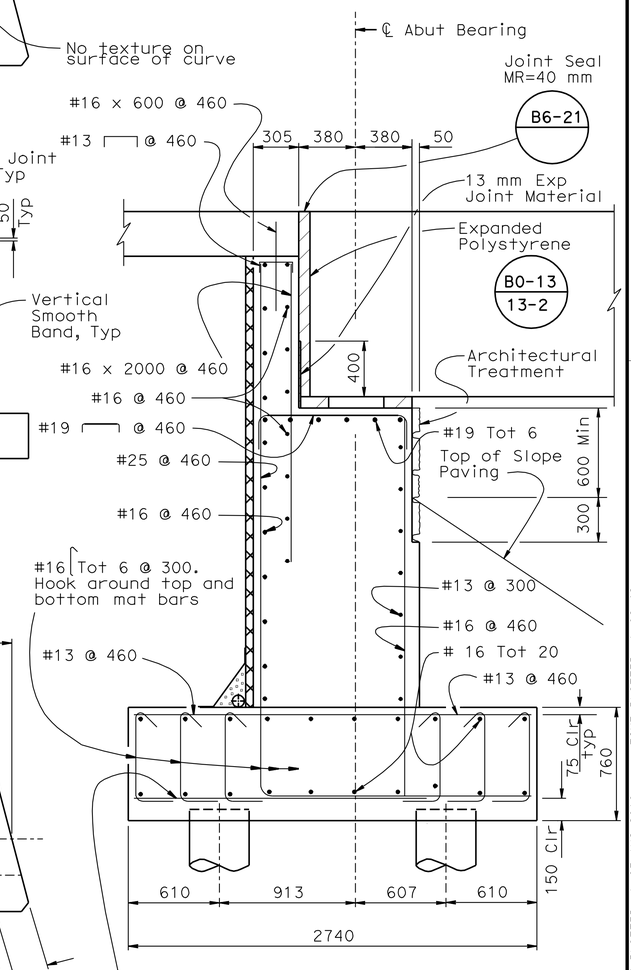

SECTION A-A
1:20

DESIGN	BY Roman Reyes	CHECKED Hilario Tuazon	
DETAILS	BY Kamal Chonkria	CHECKED Hilario Tuazon	
QUANTITIES	BY Ubong Inyang	CHECKED Jinrong Wang	

STATE OF CALIFORNIA
DEPARTMENT OF TRANSPORTATION

DIVISION OF ENGINEERING SERVICES
STRUCTURE DESIGN
DESIGN BRANCH 6

BRIDGE NO. 44-286
KILOMETER POST 158.4

CRAZY HORSE CYN/ECHO VALLEY RD OC
ABUTMENT 1 LAYOUT

ALL DIMENSIONS ARE IN MILLIMETERS UNLESS OTHERWISE SHOWN

ORIGINAL SCALE IN MILLIMETERS FOR REDUCED PLANS 0 10 20 30 40 50 60 70 80 90 100

CU 05
EA 0161E1

DISREGARD PRINTS BEARING EARLIER REVISION DATES

REVISION DATES: 11-28-08 01-14-09 01-24-09 01-26-09 03-24-09 04-30-09 11-05-09 12-11-09 05-06-10

SHEET 5 OF 21

FILE => 44-0286-f-a01_lo1.dgn

STRUCTURES DESIGN DETAIL SHEET (METRIC) (REV.03-17-04)

USERNAME => M. Bernard DATE PLOTTED => 03-AUG-2010 TIME PLOTTED => 08:46

DIST	COUNTY	ROUTE	KILOMETER POST TOTAL PROJECT	SHEET No	TOTAL SHEETS
05	Mon	101	R146.8/159.7	1288	1402

REGISTERED CIVIL ENGINEER — DATE 05-06-10

7-26-10
PLANS APPROVAL DATE

REGISTERED PROFESSIONAL ENGINEER — HERNAN PEREZ — No. 60993 — Exp. 12-31-10 — CIVIL — STATE OF CALIFORNIA

The State of California or its officers or agents shall not be responsible for the accuracy or completeness of electronic copies of this plan sheet.

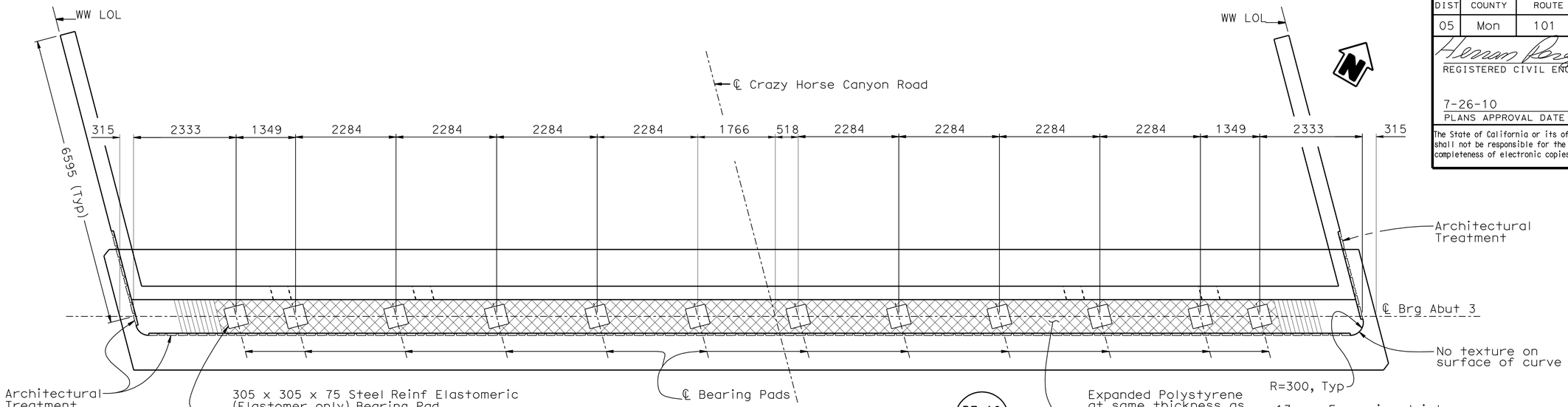

ABUTMENT 3 PLAN

1:50

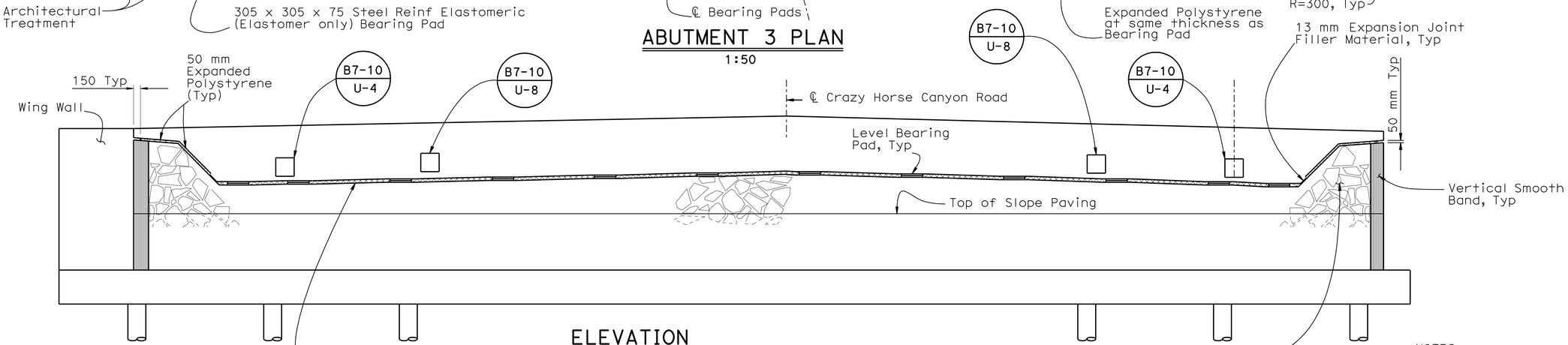

ELEVATION

1:50

NOTES

1. For Architectural Treatment Details, see, "Architectural Treatment" sheet
2. Not all Piles shown

LEGEND

Indicates Vertical Pile

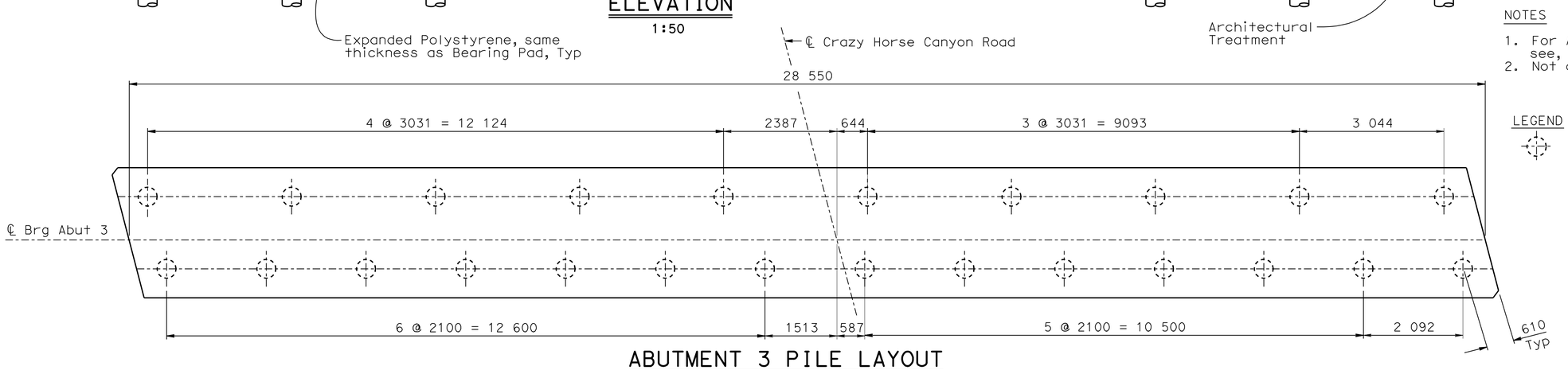

ABUTMENT 3 PILE LAYOUT

1:50

DESIGN	BY Ramon Reyes	CHECKED Hilario Tuazon
DETAILS	BY Kamal Chonkria	CHECKED Hilario Tuazon
QUANTITIES	BY Ubong Inyang	CHECKED Jinrong Wang

STATE OF CALIFORNIA
DEPARTMENT OF TRANSPORTATION

DIVISION OF ENGINEERING SERVICES
STRUCTURE DESIGN
DESIGN BRANCH 6

BRIDGE NO. 44-0286
KILOMETER POST 158.4

CRAZY HORSE CYN/ECHO VALLEY RD OC

ABUTMENT 3 LAYOUT

ALL DIMENSIONS ARE IN MILLIMETERS UNLESS OTHERWISE SHOWN

ORIGINAL SCALE IN MILLIMETERS FOR REDUCED PLANS 0 10 20 30 40 50 60 70 80 90 100

CU 05
EA 0161E1

DISREGARD PRINTS BEARING EARLIER REVISION DATES

REVISION DATES: 11-26-08 05-06-10 1-20-09 01-24-09 01-26-09 1-28-09 03-24-09 04-30-09 11-09-09 12-11-09

SHEET 6 OF 21

FILE => 44-0286-f-a01_to13.dgn

STRUCTURES DESIGN DETAIL SHEET (METRIC) (REV.03-17-04)

USERNAME => rlanard DATE PLOTTED => 03-AUG-2010 TIME PLOTTED => 08:47

DIST	COUNTY	ROUTE	KILOMETER POST TOTAL PROJECT	SHEET No	TOTAL SHEETS
05	Mon	101	R146.8/159.7	1289	1402

Hernan Perez 05-06-10
REGISTERED CIVIL ENGINEER DATE

7-26-10
PLANS APPROVAL DATE

REGISTERED PROFESSIONAL ENGINEER HERNAN PEREZ No. 60993 Exp. 12-31-10 CIVIL STATE OF CALIFORNIA

The State of California or its officers or agents shall not be responsible for the accuracy or completeness of electronic copies of this plan sheet.

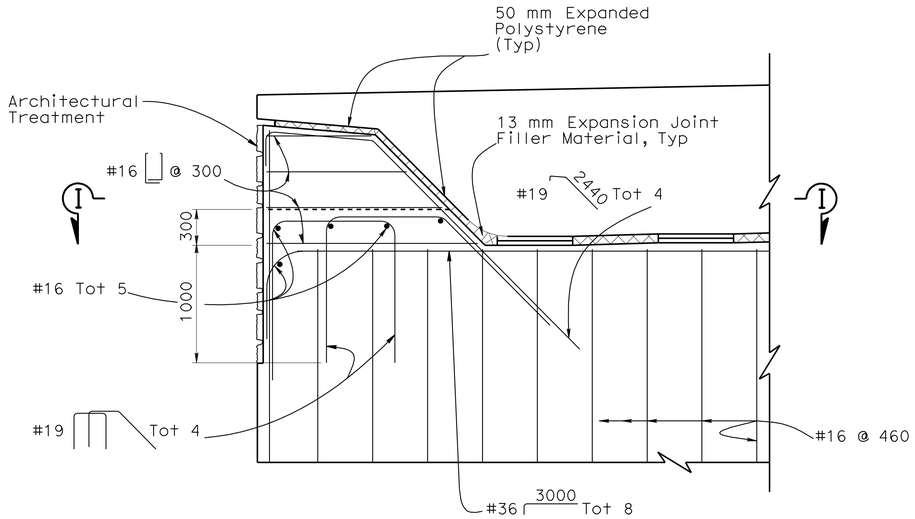

EXTERNAL SHEAR KEY
1:25

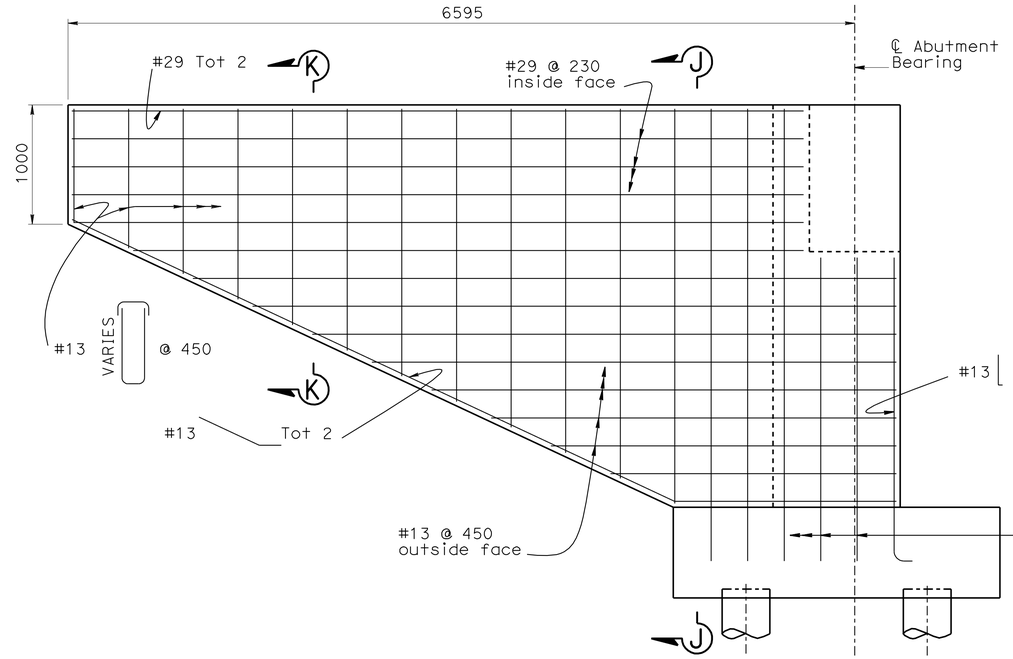

NOTE

1. Concrete Barrier not shown
2. Abutment footing reinforcement not shown for clarity.

WINGWALL ELEVATION
1:25

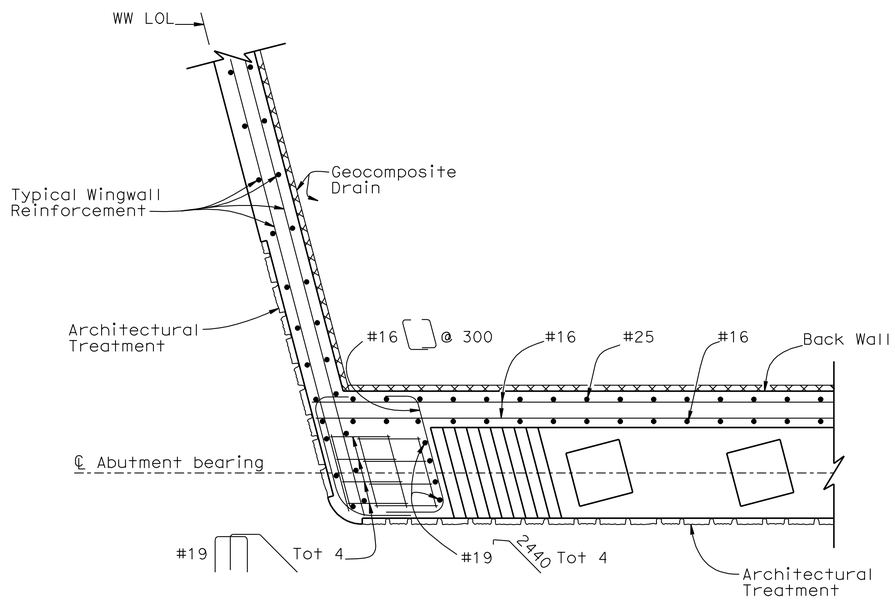

SECTION I-I
1:25

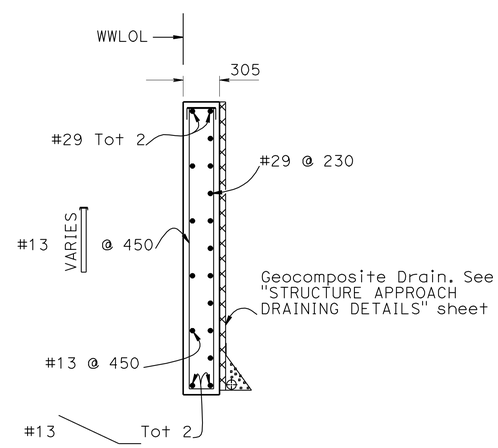

SECTION K-K
1:25

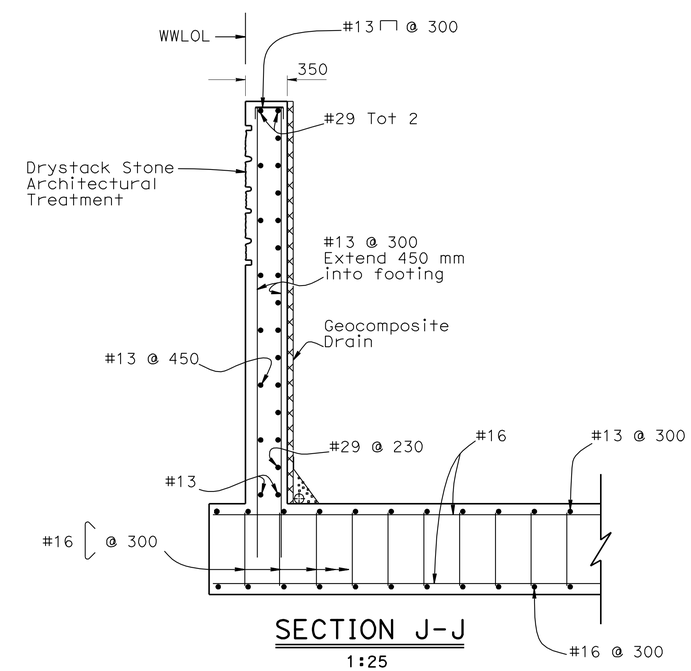

SECTION J-J
1:25

Caltrans Metric

	BY	CHECKED
DESIGN	Roman Reyes	Hilario Tuazon
DETAILS	Kamal Chonkria	Hilario Tuazon
QUANTITIES	Ubong Inyang	Jinrong Wang

STATE OF CALIFORNIA
DEPARTMENT OF TRANSPORTATION

DIVISION OF ENGINEERING SERVICES
STRUCTURE DESIGN
DESIGN BRANCH 6

BRIDGE NO. 44-0286
KILOMETER POST 158.4

CRAZY HORSE CYN/ECHO VALLEY RD OC
ABUTMENT DETAILS

ALL DIMENSIONS ARE IN MILLIMETERS UNLESS OTHERWISE SHOWN

ORIGINAL SCALE IN MILLIMETERS FOR REDUCED PLANS 0 10 20 30 40 50 60 70 80 90 100

CU 05
EA 0161E1

DISREGARD PRINTS BEARING EARLIER REVISION DATES

REVISION DATES: 01-11-08 01-22-08 11-14-08 05-06-10

SHEET 7 OF 21

FILE => 44-0286-f-a01_1o14.dgn

STRUCTURES DESIGN DETAIL SHEET (METRIC) (REV.03-17-04)

USERNAME => rhernard DATE PLOTTED => 03-AUG-2010 TIME PLOTTED => 08:47

DIST	COUNTY	ROUTE	KILOMETER POST TOTAL PROJECT	SHEET No	TOTAL SHEETS
05	Mon	101	R146.8/159.7	1290	1402

Hernan Perez 05-06-10
REGISTERED CIVIL ENGINEER DATE

7-26-10
PLANS APPROVAL DATE

REGISTERED PROFESSIONAL ENGINEER HERNAN PEREZ No. 60993 Exp. 12-31-10 CIVIL STATE OF CALIFORNIA

The State of California or its officers or agents shall not be responsible for the accuracy or completeness of electronic copies of this plan sheet.

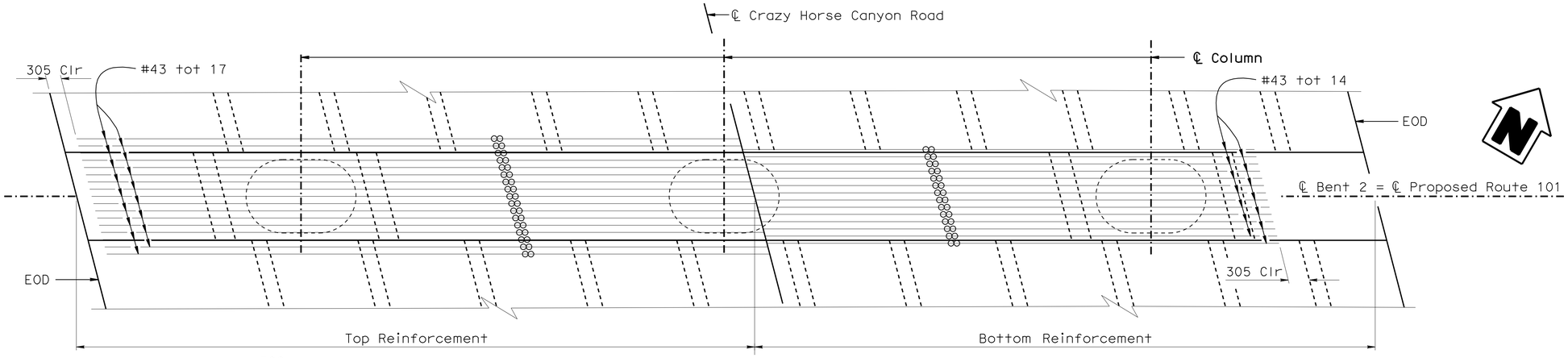

PLAN
1:50

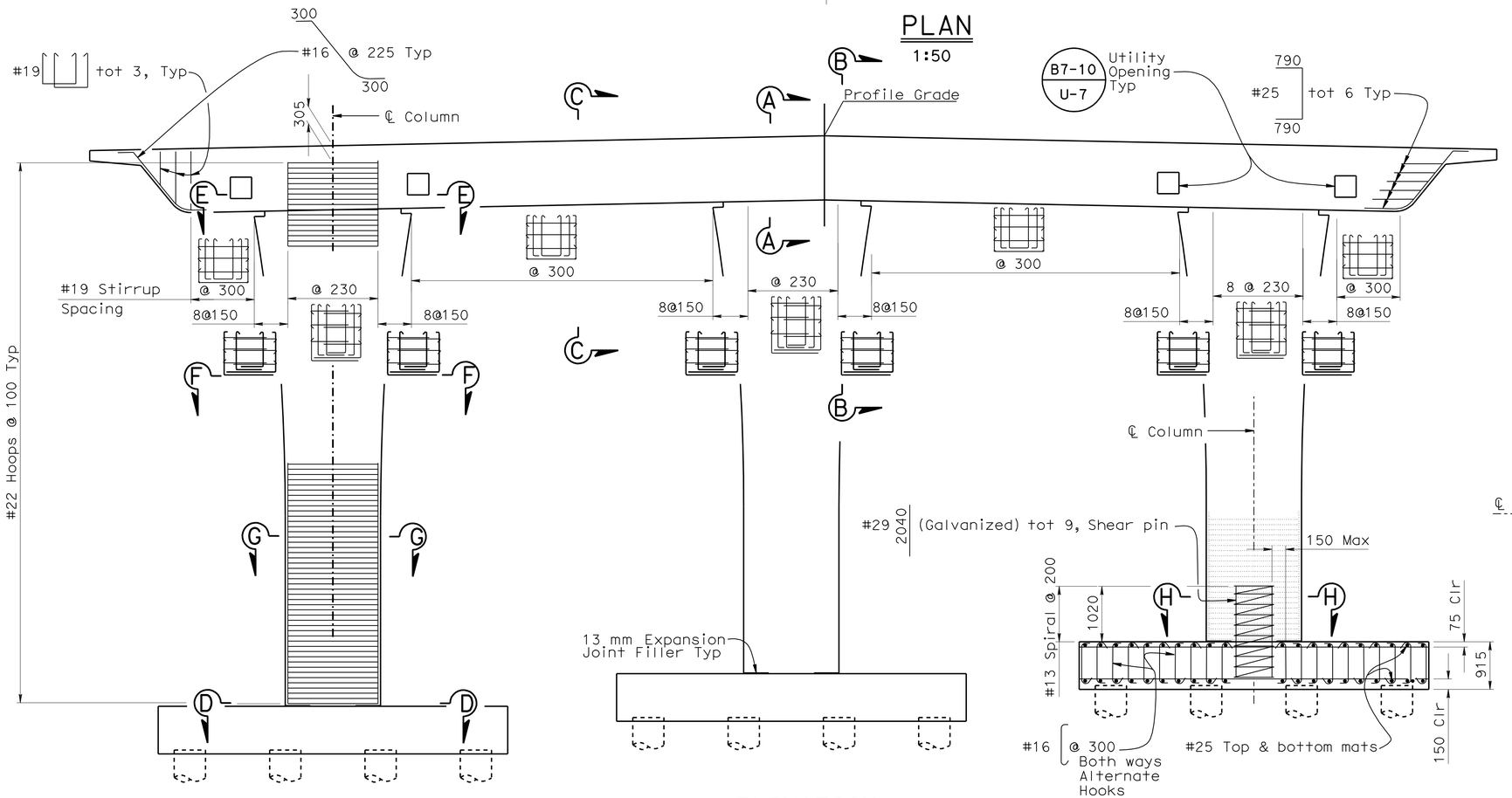

ELEVATION
1:50

NOTES & LEGEND

1. Reinforcement Symetrical about ℄ Crazy Horse Canyon OC
2. No Lap Splices allowed in #36 Bent Cap Reinforcement. Service Splices only
3. For "Section Views", see "Bent Details No.1" and "Bent Details No.2" sheets
4. See "Architectural Treatment" sheet for Column Architectural Treatment

Denotes Bundled Reinforcement

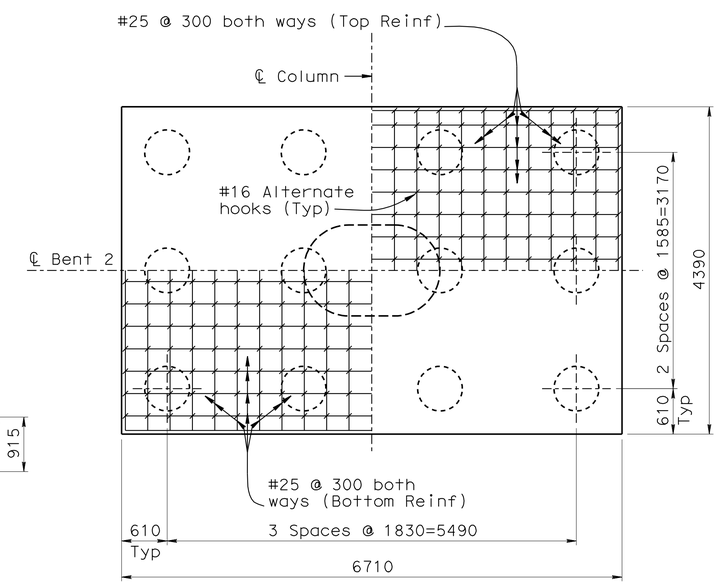

FOOTING PLAN
1:40

NOTES

1. No Splices allowed in Main Column Reinf
2. All Column Hoops are "Ultimate" butt spliced continuous

DESIGN	BY Ramon Reyes	CHECKED Hilario Tuazon	
DETAILS	BY George Zweier	CHECKED Hilario Tuazon	
QUANTITIES	BY Ubong Inyang	CHECKED Jinrong Wang	

STATE OF CALIFORNIA
DEPARTMENT OF TRANSPORTATION

DIVISION OF ENGINEERING SERVICES
STRUCTURE DESIGN
DESIGN BRANCH 6

BRIDGE NO. 44-0286
KILOMETER POST 158.4

CRAZY HORSE CYN/ECHO VALLEY RD OC
BENT LAYOUT

Caltrans Metric

ALL DIMENSIONS ARE IN MILLIMETERS UNLESS OTHERWISE SHOWN

ORIGINAL SCALE IN MILLIMETERS FOR REDUCED PLANS 0 10 20 30 40 50 60 70 80 90 100

CU 05
EA 0161E1

DISREGARD PRINTS BEARING EARLIER REVISION DATES

REVISION DATES: 04-11-08 11-14-08 12-11-08 05-06-10 01-13-09 1-23-09 01-24-09 01-26-09 01-30-09 02-13-09

SHEET 8 OF 21

FILE => 44-0286-h-b01_to01.dgn

STRUCTURES DESIGN DETAIL SHEET (METRIC) (REV.03-17-04)

USERNAME => A. Gerard DATE PLOTTED => 03-AUG-2010 TIME PLOTTED => 08:47

DIST	COUNTY	ROUTE	KILOMETER POST TOTAL PROJECT	SHEET No	TOTAL SHEETS
05	Mon	101	R146.8/159.7	1291	1402

REGISTERED CIVIL ENGINEER 05-06-10 DATE

7-26-10
PLANS APPROVAL DATE

REGISTERED PROFESSIONAL ENGINEER HERNAN PEREZ No. 60993 Exp. 12-31-10 CIVIL STATE OF CALIFORNIA

The State of California or its officers or agents shall not be responsible for the accuracy or completeness of electronic copies of this plan sheet.

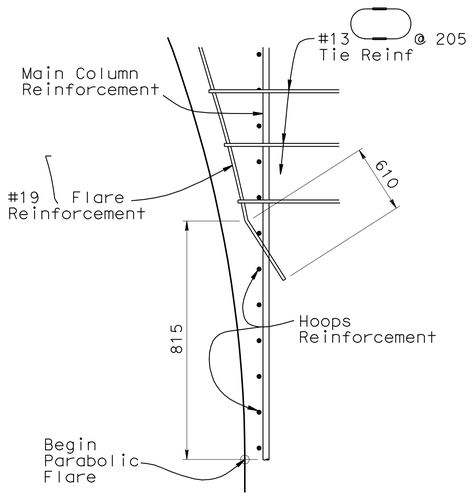

SPIRAL & TIE DETAIL

NO SCALE

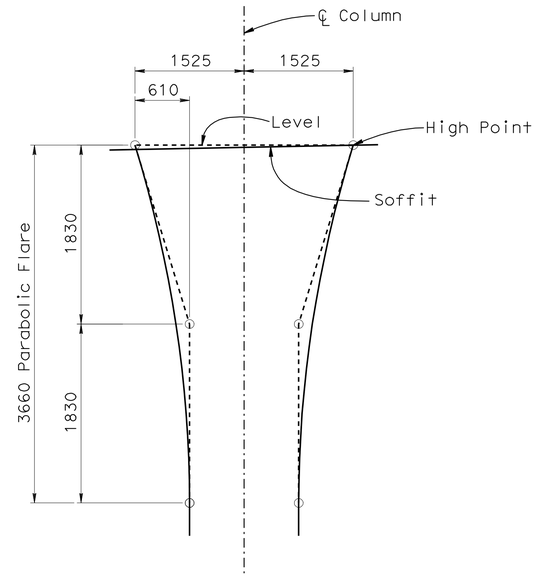

FLARE DETAILS

NO SCALE

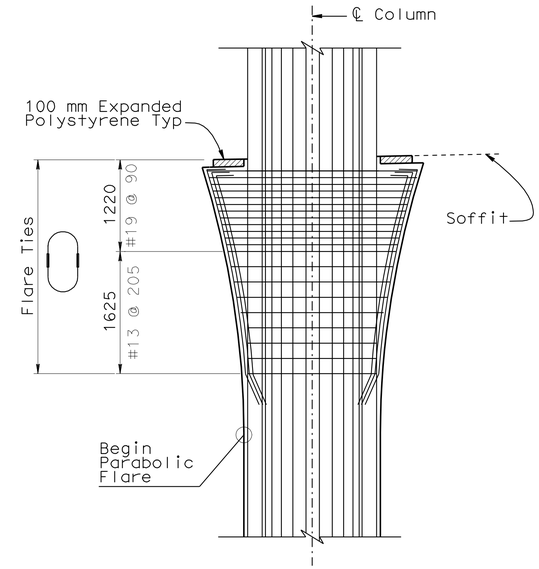

COLUMN FLARE REINFORCEMENT

1:40

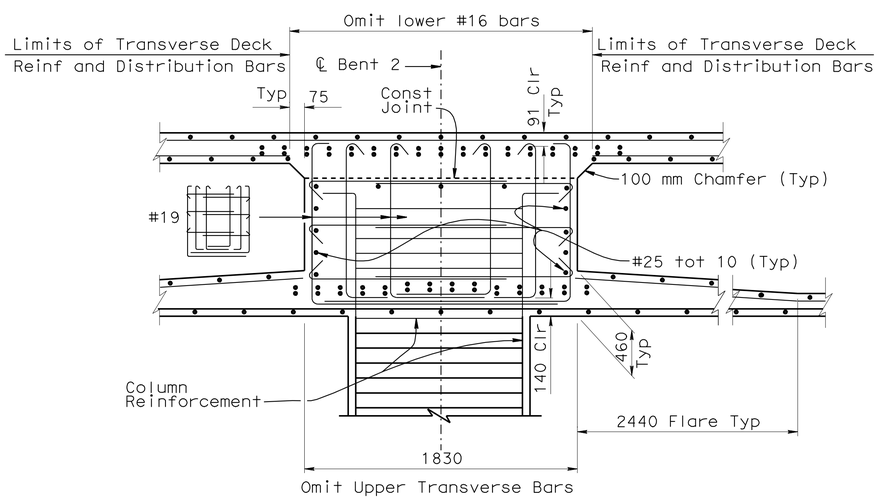

SECTION A-A

1:20

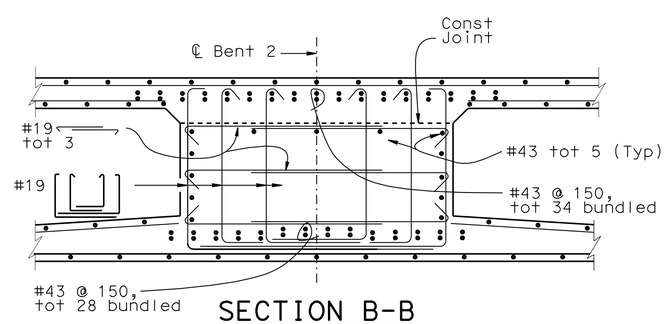

SECTION B-B

1:20

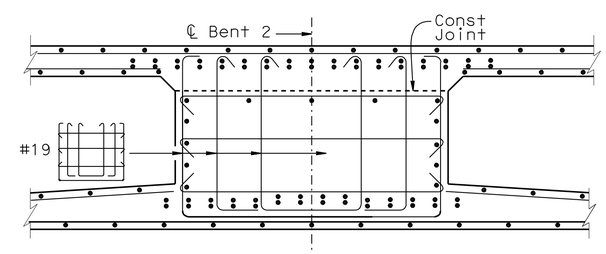

SECTION C-C

1:20

NOTES

1. Reinforcement may be bent or lowered to clear P/S Ducts
2. For stirrup spacing, see "Bent Details No.1" sheet

DESIGN	BY Ramon Reyes	CHECKED Hernan Perez	
DETAILS	BY George Zweier	CHECKED Hilario Tuazon	
QUANTITIES	BY Ubong Inyang	CHECKED Jinrong Wang	

STATE OF CALIFORNIA DEPARTMENT OF TRANSPORTATION

DIVISION OF ENGINEERING SERVICES STRUCTURE DESIGN

DESIGN BRANCH 6

BRIDGE NO. 44-0286

KILOMETER POST 158.4

CRAZY HORSE CYN/ECHO VALLEY RD OC

BENT DETAILS NO.1

ALL DIMENSIONS ARE IN MILLIMETERS UNLESS OTHERWISE SHOWN

ORIGINAL SCALE IN MILLIMETERS FOR REDUCED PLANS 0 10 20 30 40 50 60 70 80 90 100

CU 05
EA 0161E1

DISREGARD PRINTS BEARING EARLIER REVISION DATES

REVISION DATES 04-11-08 12-03-08 12-28-08 01-14-09 01-28-09 11-16-09 05-06-10

SHEET 9 OF 21

FILE => 44-0286-h-b01dt01.dgn

STRUCTURES DESIGN DETAIL SHEET (METRIC) (REV.03-17-04)

USERNAME => hrenard DATE PLOTTED => 03-AUG-2010 TIME PLOTTED => 08:47

DIST	COUNTY	ROUTE	KILOMETER POST TOTAL PROJECT	SHEET No	TOTAL SHEETS
05	Mon	101	R146.8/159.7	1292	1402

REGISTERED CIVIL ENGINEER 05-06-10 DATE

7-26-10
PLANS APPROVAL DATE

REGISTERED PROFESSIONAL ENGINEER HERNAN PEREZ No. 60993 Exp. 12-31-10 CIVIL STATE OF CALIFORNIA

The State of California or its officers or agents shall not be responsible for the accuracy or completeness of electronic copies of this plan sheet.

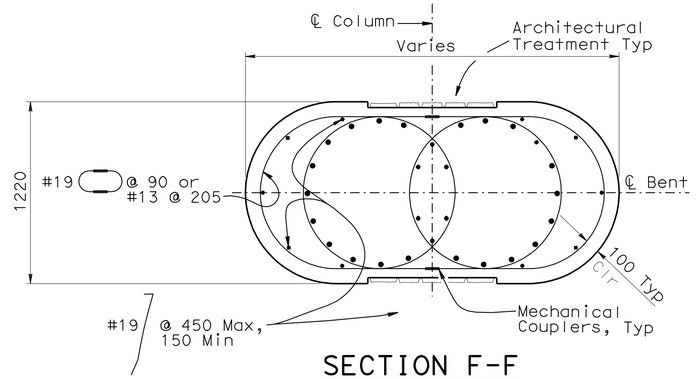

SECTION F-F
1:20

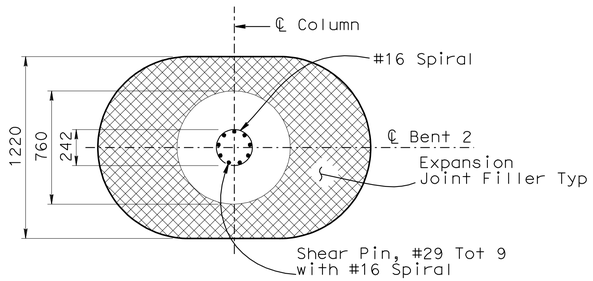

SECTION D-D
1:20

NOTE

See "Architectural Treatment" sheet for Column Architectural Treatment

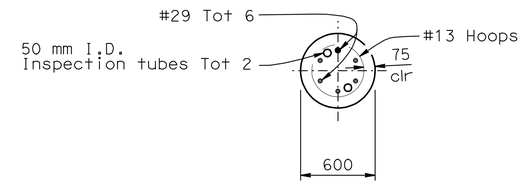

SECTION I-I
1:20

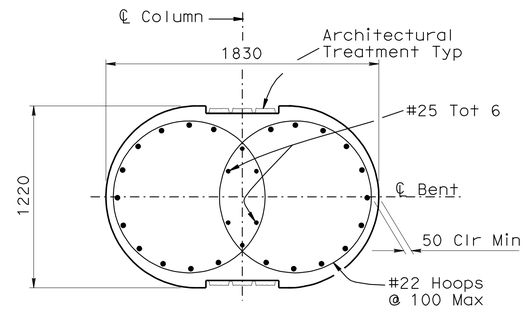

SECTION G-G
1:20

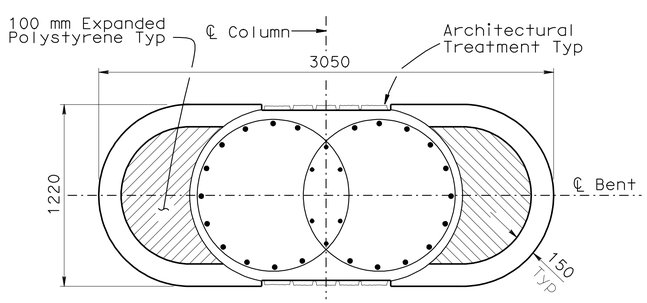

SECTION E-E
1:20

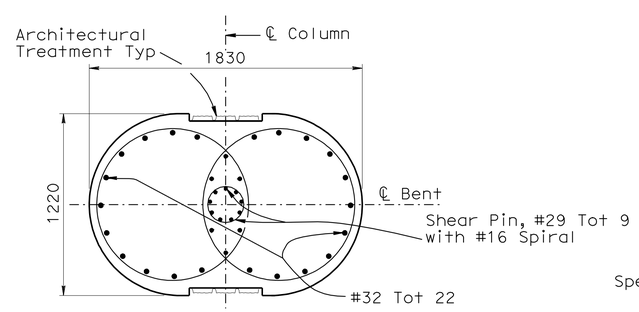

SECTION H-H
1:20

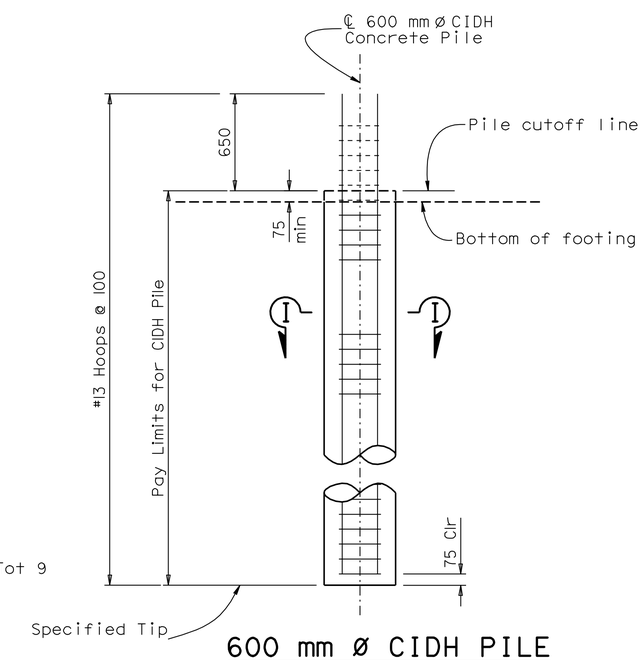

600 mm ø CIDH PILE
1:20

DESIGN	BY Ramon Reyes	CHECKED Hilario Tuazon	
DETAILS	BY George Zweier	CHECKED Hilario Tuazon	
QUANTITIES	BY Ubong Inyang	CHECKED Jinrong Wang	

STATE OF CALIFORNIA
DEPARTMENT OF TRANSPORTATION

DIVISION OF ENGINEERING SERVICES
STRUCTURE DESIGN
DESIGN BRANCH 6

BRIDGE NO. 44-0286
KILOMETER POST 158.4

CRAZY HORSE CYN/ECHO VALLEY RD OC

BENT DETAILS NO.2

ALL DIMENSIONS ARE IN MILLIMETERS UNLESS OTHERWISE SHOWN

ORIGINAL SCALE IN MILLIMETERS FOR REDUCED PLANS 0 10 20 30 40 50 60 70 80 90 100

CU 05
EA 0161E1

DISREGARD PRINTS BEARING EARLIER REVISION DATES

REVISION DATES: 11-18-08 12-08-08 12-29-08 01-14-09 01-21-09 01-26-09 02-13-09 04-01-09 11-16-09 05-06-10

SHEET 10 OF 21

FILE => 44-0286-h-b01dt02.dgn

STRUCTURES DESIGN DETAIL SHEET (METRIC) (REV.03-17-04)

USERNAME => M.Renard DATE PLOTTED => 03-AUG-2010 TIME PLOTTED => 08:47

DIST	COUNTY	ROUTE	KILOMETER POST TOTAL PROJECT	SHEET No	TOTAL SHEETS
05	Mon	101	R146.8/159.7	1293	1402

REGISTERED CIVIL ENGINEER — DATE 05-06-10

7-26-10
PLANS APPROVAL DATE

REGISTERED PROFESSIONAL ENGINEER — HERNAN PEREZ — No. 60993 — Exp. 12-31-10 — CIVIL — STATE OF CALIFORNIA

The State of California or its officers or agents shall not be responsible for the accuracy or completeness of electronic copies of this plan sheet.

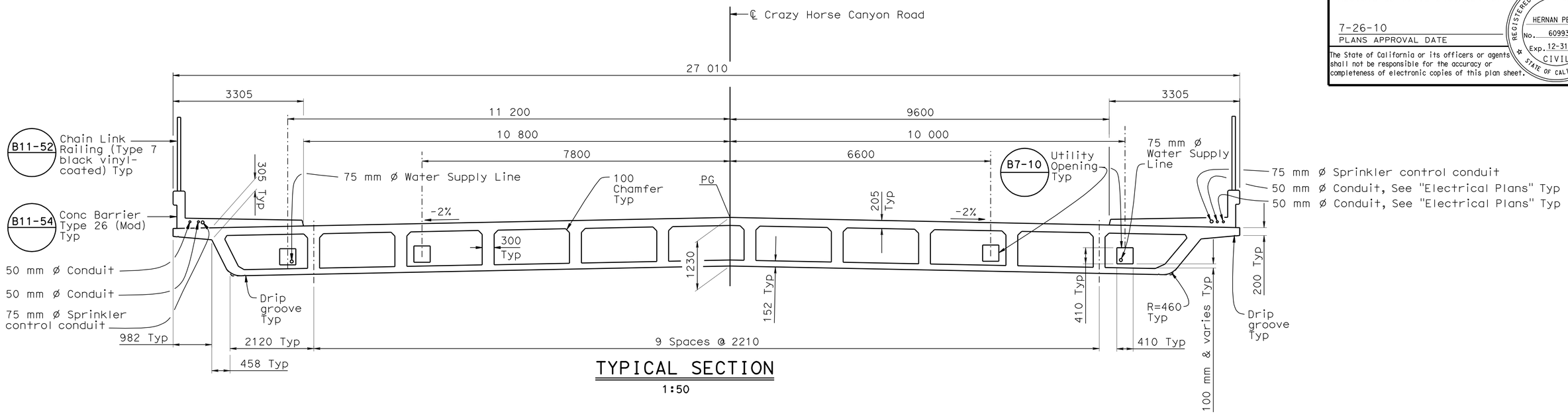

TYPICAL SECTION

1:50

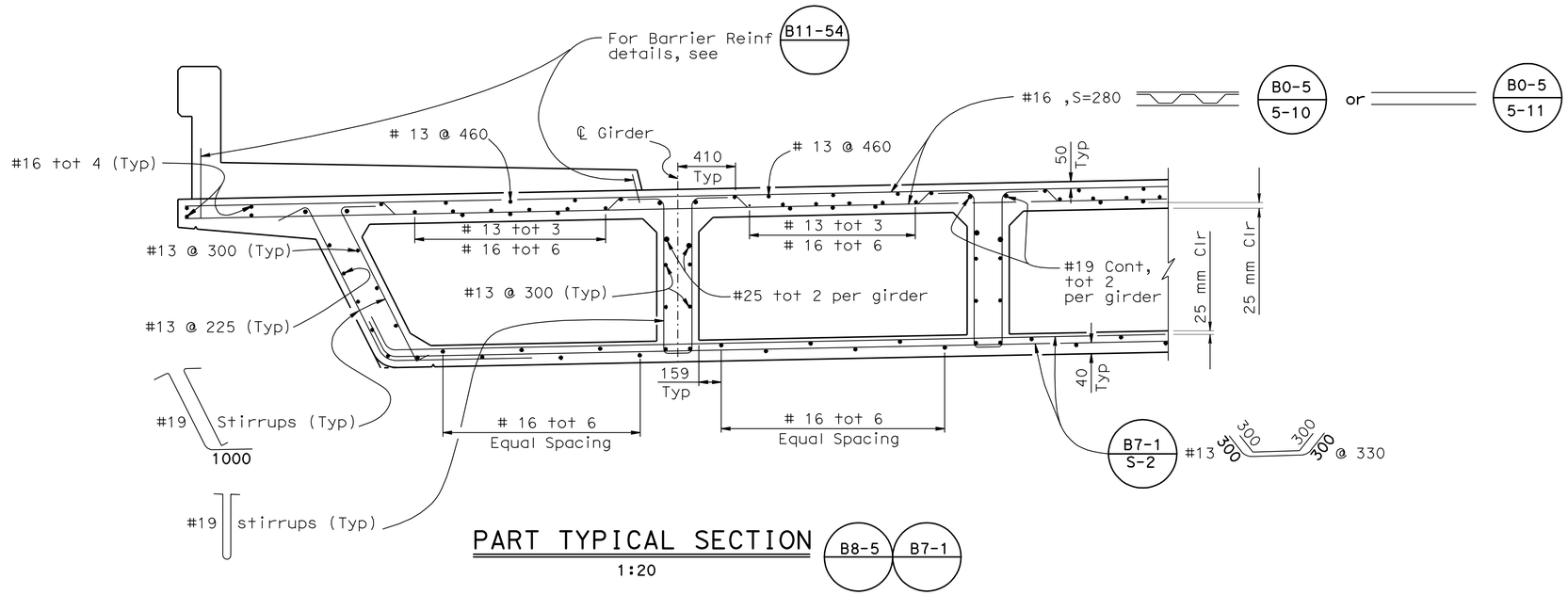

PART TYPICAL SECTION

1:20

B8-5 B7-1

DESIGN	BY Ramon Reyes	CHECKED Hilario Tuazon	
DETAILS	BY K. Chonkria/G. Zweier	CHECKED Hilario Tuazon	
QUANTITIES	BY Ubong Inyang	CHECKED Jinrong Wang	

STATE OF CALIFORNIA
DEPARTMENT OF TRANSPORTATION

DIVISION OF ENGINEERING SERVICES
STRUCTURE DESIGN
DESIGN BRANCH 6

BRIDGE NO. 44-0286
KILOMETER POST 158.4

CRAZY HORSE CYN/ECHO VALLEY RD OC
TYPICAL SECTION

Caltrans Metric

ALL DIMENSIONS ARE IN MILLIMETERS UNLESS OTHERWISE SHOWN

ORIGINAL SCALE IN MILLIMETERS FOR REDUCED PLANS 0 10 20 30 40 50 60 70 80 90 100

CU 05
EA 0161E1

DISREGARD PRINTS BEARING EARLIER REVISION DATES

REVISION DATES: 08-02-08 | 05-06-10 | 01-14-09 | 01-20-09 | 01-22-09 | 01-28-09 | 04-09-09 | 06-08-09 | 11-16-09 | 12-11-09

SHEET 11 OF 21

STRUCTURES DESIGN DETAIL SHEET (METRIC) (REV.03-17-04)

FILE => 44-0286-K-typ.dgn

USERNAME => rtrenard DATE PLOTTED => 03-AUG-2010 TIME PLOTTED => 08:47

DIST	COUNTY	ROUTE	KILOMETER POST TOTAL PROJECT	SHEET No	TOTAL SHEETS
05	Mon	101	R146.8/159.7	1294	1402

REGISTERED CIVIL ENGINEER — DATE 05-06-10

7-26-10
PLANS APPROVAL DATE

REGISTERED PROFESSIONAL ENGINEER — HERNAN PEREZ — No. 60993 — Exp. 12-31-10 — CIVIL — STATE OF CALIFORNIA

The State of California or its officers or agents shall not be responsible for the accuracy or completeness of electronic copies of this plan sheet.

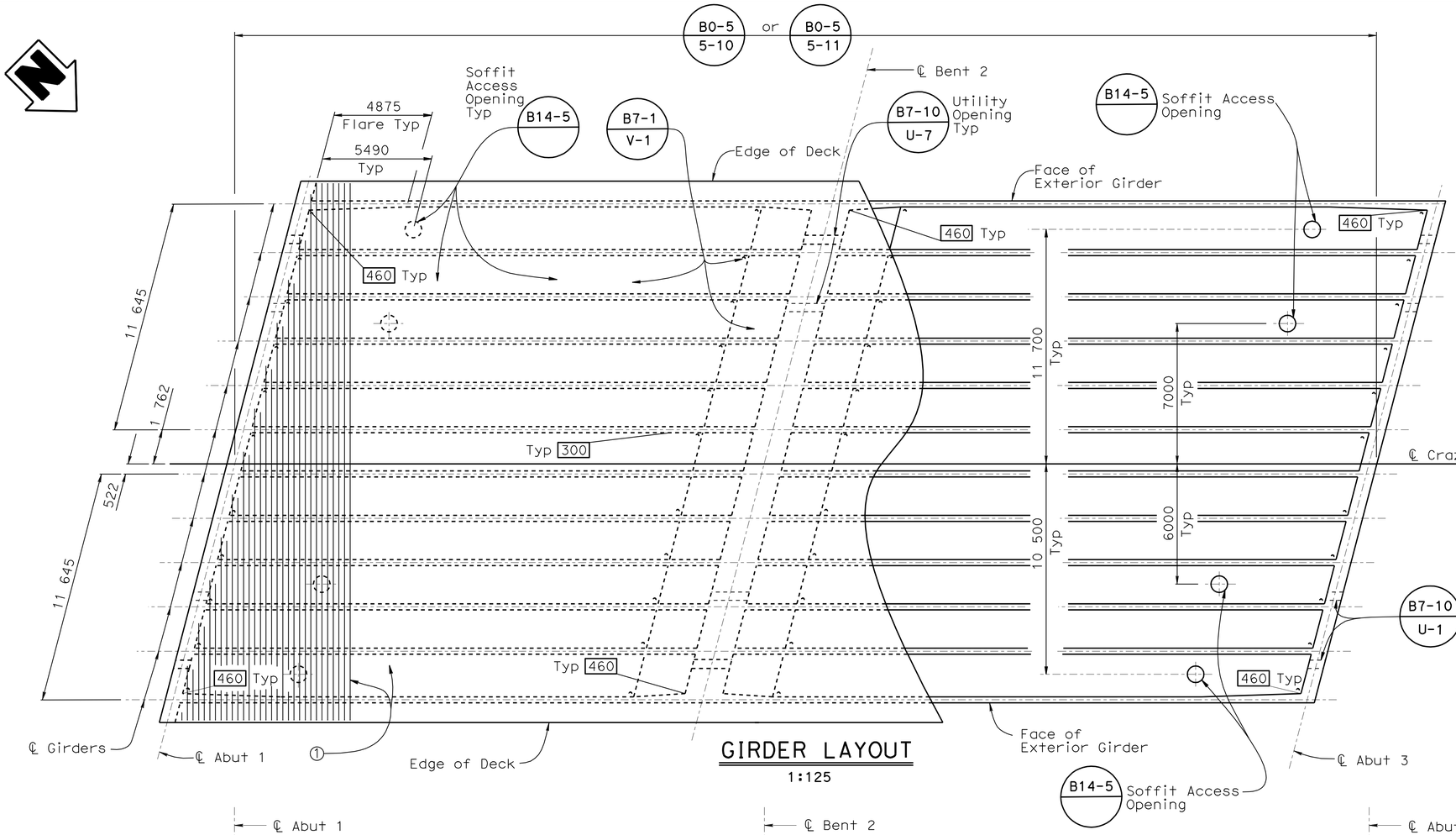

GIRDER LAYOUT

1:125

Note

For additional information see, "TYPICAL SECTION" sheet

1 #16 @ 300, extend top and bottom slab reinf 450 mm into abutment diaphragm

LEGEND

▭ - Indicates Girder Stem Width

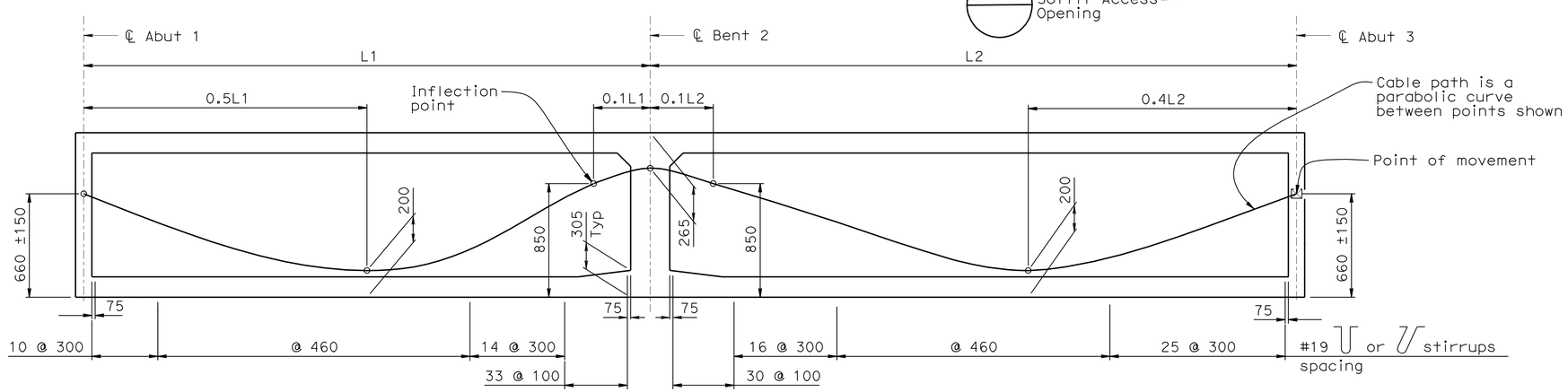

LONGITUDINAL SECTION

Horz 1:125
Vert 1:20

DESIGN	BY Ramon Reyes	CHECKED Hilario Tuazon	
DETAILS	BY K. Chonkria/G. Zweier	CHECKED Hilario Tuazon	
QUANTITIES	BY Ubong Inyang	CHECKED Jinrong Wang	

STATE OF CALIFORNIA
DEPARTMENT OF TRANSPORTATION

DIVISION OF ENGINEERING SERVICES
STRUCTURE DESIGN
DESIGN BRANCH 6

BRIDGE NO. 44-0286
KILOMETER POST 158.4

CRAZY HORSE CYN/ECHO VALLEY RD OC

GIRDER LAYOUT

ALL DIMENSIONS ARE IN MILLIMETERS UNLESS OTHERWISE SHOWN

ORIGINAL SCALE IN MILLIMETERS FOR REDUCED PLANS 0 10 20 30 40 50 60 70 80 90 100

CU 05
EA 0161E1

DISREGARD PRINTS BEARING EARLIER REVISION DATES

REVISION DATES: 12-22-08 01-14-09 1-28-09 01-26-09 1-28-09 04-06-09 06-04-09 11-16-09 05-06-10

SHEET 12 OF 21

FILE => 44-0286-l-g_lo01.dgn

STRUCTURES DESIGN DETAIL SHEET (METRIC) (REV.03-17-04)

USERNAME => ATenbard DATE PLOTTED => 03-AUG-2010 TIME PLOTTED => 08:47

DIST	COUNTY	ROUTE	KILOMETER POST TOTAL PROJECT	SHEET No	TOTAL SHEETS
05	Mon	101	R146.8/159.7	1295	1402

REGISTERED CIVIL ENGINEER 05-06-10 DATE

7-26-10
PLANS APPROVAL DATE

REGISTERED PROFESSIONAL ENGINEER HERNAN PEREZ No. 60993 Exp. 12-31-10 CIVIL STATE OF CALIFORNIA

The State of California or its officers or agents shall not be responsible for the accuracy or completeness of electronic copies of this plan sheet.

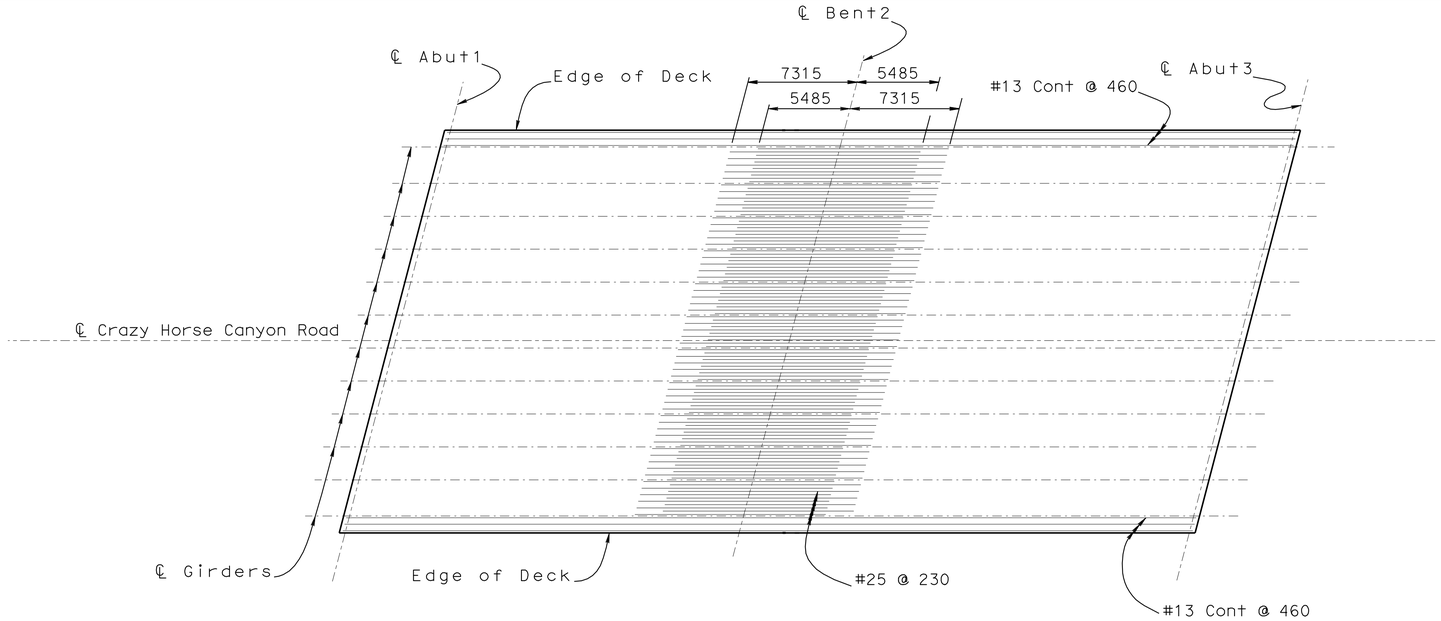

TOP REINFORCEMENT

1:200

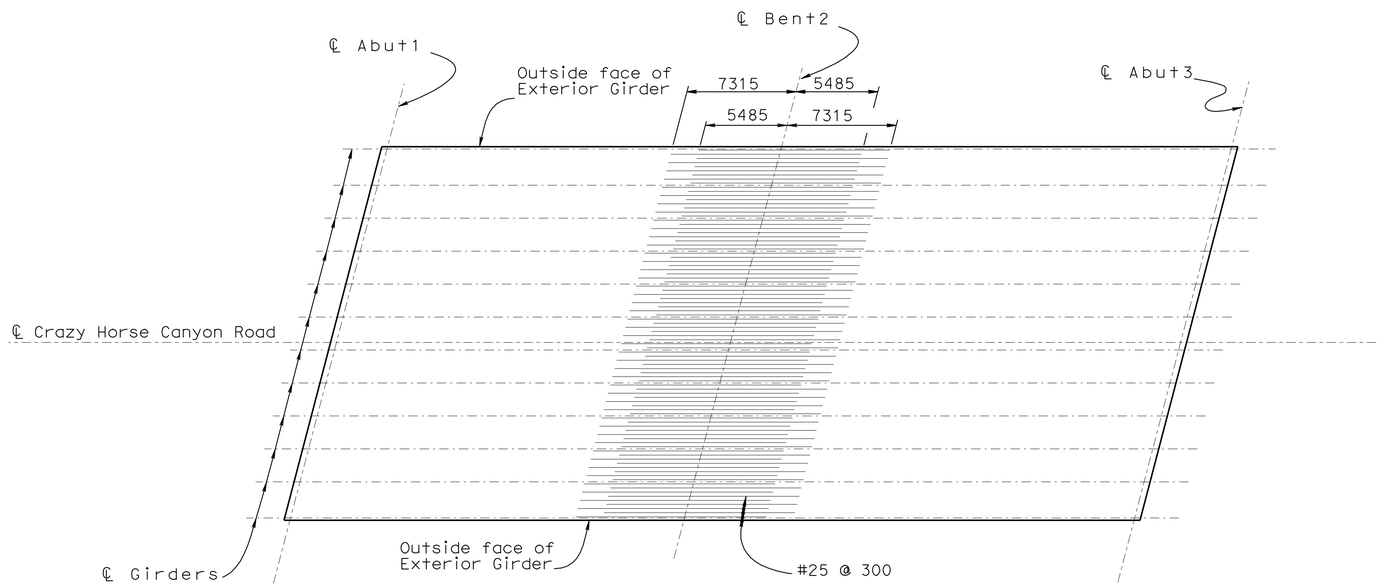

BOTTOM REINFORCEMENT

1:200

Notes:

1. Dimensions measured from ℄ Bent for Top and Bottom Reinforcement
2. All splices in #25 top and bottom longitudinal reinforcement shall be service splices only. No lap splices allowed in #25 reinforcement shown

Caltrans Metric

	BY	CHECKED
DESIGN	Ramon Reyes	Hilario Tuazon
DETAILS	Kamal Chonkria	Hilario Tuazon
QUANTITIES	Ubong Inyang	Jinrong Wang

STATE OF CALIFORNIA
DEPARTMENT OF TRANSPORTATION

DIVISION OF ENGINEERING SERVICES
STRUCTURE DESIGN
DESIGN BRANCH 6

BRIDGE NO. 44- 0286
KILOMETER POST 158.4

CRAZY HORSE CYN/ECHO VALLEY RD OC
GIRDER REINFORCEMENT

ALL DIMENSIONS ARE IN MILLIMETERS UNLESS OTHERWISE SHOWN

ORIGINAL SCALE IN MILLIMETERS FOR REDUCED PLANS 0 10 20 30 40 50 60 70 80 90 100

CU 05
EA 0161E1

DISREGARD PRINTS BEARING EARLIER REVISION DATES

REVISION DATES: 12-22-08 01-14-09 1-28-09 2-26-09 11-17-09 05-06-10

SHEET 13 OF 21

FILE => 44-0286-o-gir-bot01.dgn

STRUCTURES DESIGN DETAIL SHEET (METRIC) (REV.03-17-04)

USERNAME => rfernard DATE PLOTTED => 03-AUG-2010 TIME PLOTTED => 08:47

DIST	COUNTY	ROUTE	KILOMETER POST TOTAL PROJECT	SHEET No	TOTAL SHEETS
05	Mon	101	R146.8/159.7	1296	1402

REGISTERED CIVIL ENGINEER 05-06-10 DATE

7-26-10
PLANS APPROVAL DATE

REGISTERED PROFESSIONAL ENGINEER HERNAN PEREZ No. 60993 Exp. 12-31-10 CIVIL STATE OF CALIFORNIA

The State of California or its officers or agents shall not be responsible for the accuracy or completeness of electronic copies of this plan sheet.

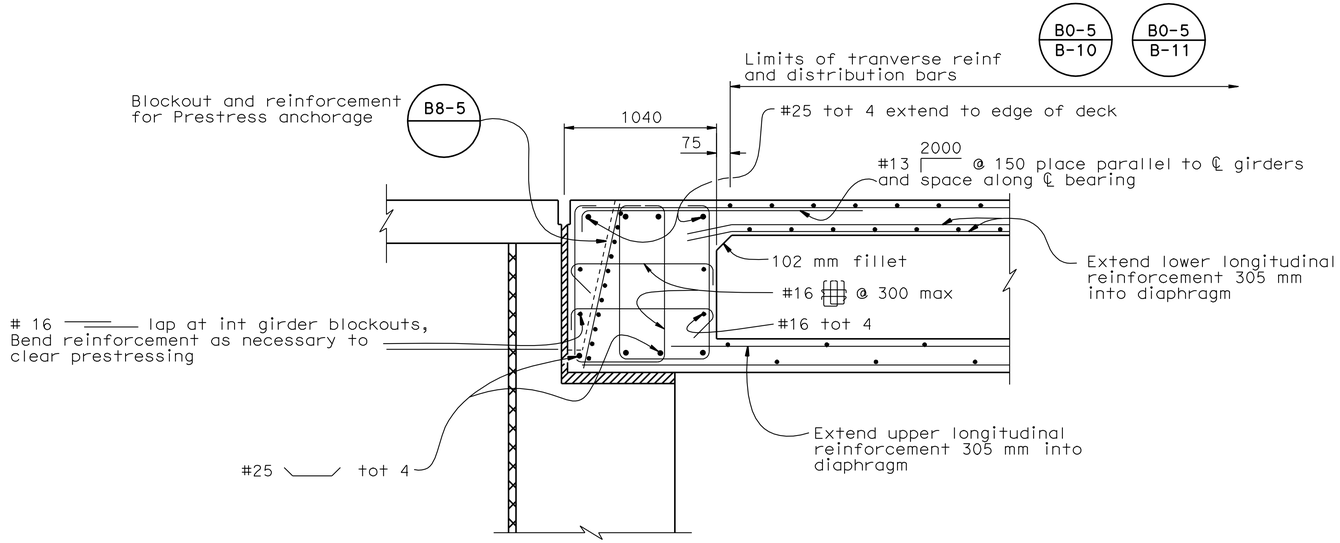

END DIAPHRAGM AT GIRDER

1:20

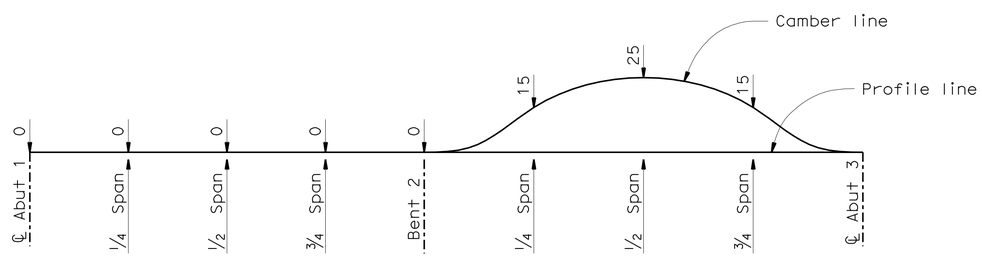

CAMBER DIAGRAM

Horiz 1:200
Vert 1:20

Does not include allowance for falsework settlement

PRESTRESSING NOTES

1860 MPa Low Relaxation Strands:

Pjack = 57,625 kN

Anchor Set = 10 mm

Total Number of Girders = 12

Friction curvature coefficient μ = 15 $\times 10^{-2}$ (1/rad)

Friction wobble coefficient $K = 6.6 \times 10^{-4}$ (1/m)

Distribution of prestress force (Pjack) between girders shall not exceed the ratio of 3:2.

Maximum final force variation between girders shall not exceed 3200 kN.

Concrete: f'_c = 28 Mpa @ 28 days

f'_{ci} = 25 Mpa @ time of stressing

Contractor shall submit elongation calculations based on initial stress at ☒ = 0.902 times jacking stress

One end stressing shall be performed from Abutment 1 only

Caltrans Metric

	BY	CHECKED
DESIGN	Ramon Reyes	Hilario Tuazon
DETAILS	K. Chonkria\G. Zweier	Hilario Tuazon
QUANTITIES	Ubong Inyang	Jinrong Wang

STATE OF CALIFORNIA
DEPARTMENT OF TRANSPORTATION

DIVISION OF ENGINEERING SERVICES
STRUCTURE DESIGN
DESIGN BRANCH 6

BRIDGE NO. 44-0286
KILOMETER POST 158.4

CRAZY HORSE CYN/ECHO VALLEY RD OC
PRESTRESSING LAYOUT

ALL DIMENSIONS ARE IN MILLIMETERS UNLESS OTHERWISE SHOWN

ORIGINAL SCALE IN MILLIMETERS FOR REDUCED PLANS 0 10 20 30 40 50 60 70 80 90 100

CU 05
EA 0161E1

DISREGARD PRINTS BEARING EARLIER REVISION DATES

REVISION DATES: 12-22-08 01-14-09 1-20-09 1-30-09 06-08-09 11-17-09 05-06-10

SHEET 14 OF 21

FILE => 44-0286-p-gir-pslay.dgn

STRUCTURES DESIGN DETAIL SHEET (METRIC) (REV.03-17-04)

USERNAME => rf_benard DATE PLOTTED => 03-AUG-2010 TIME PLOTTED => 08:47

DIST	COUNTY	ROUTE	KILOMETER POST TOTAL PROJECT	SHEET No	TOTAL SHEETS
05	Mon	101	R146.8/159.7	1297	1402

REGISTERED CIVIL ENGINEER — DATE 05-06-10

7-26-10
PLANS APPROVAL DATE

REGISTERED PROFESSIONAL ENGINEER — HERNAN PEREZ — No. 60993 — Exp. 12-31-10 — CIVIL — STATE OF CALIFORNIA

The State of California or its officers or agents shall not be responsible for the accuracy or completeness of electronic copies of this plan sheet.

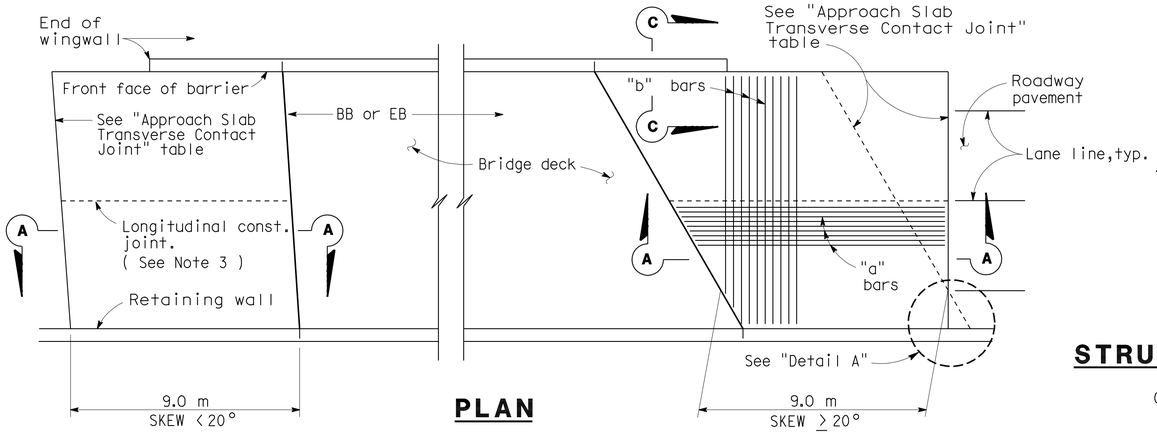

PLAN

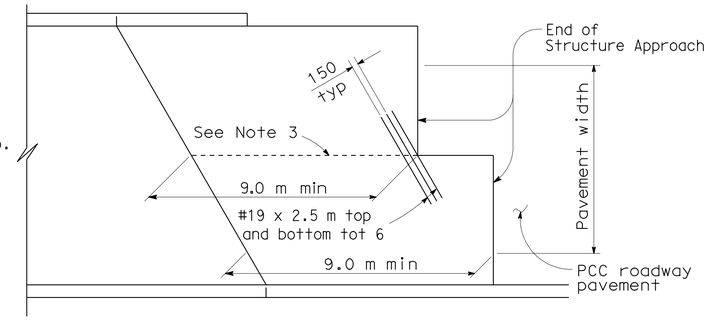

STRUCTURE APPROACH - END STAGGER DETAIL

APPROACH SLAB TRANSVERSE CONTACT JOINT		
APPROACH SKEW	WITH AC ROADWAY PAVEMENT	WITH PCC ROADWAY PAVEMENT
< 20°	Parallel to face of paving notch	Parallel to face of paving notch
20°- 45°	Parallel to face of P N use (Detail A)	Stagger lines 7.2 m to 10.8 m apart.
> 45°	Parallel to face of P N use (Detail A)	Stagger at each lane line.

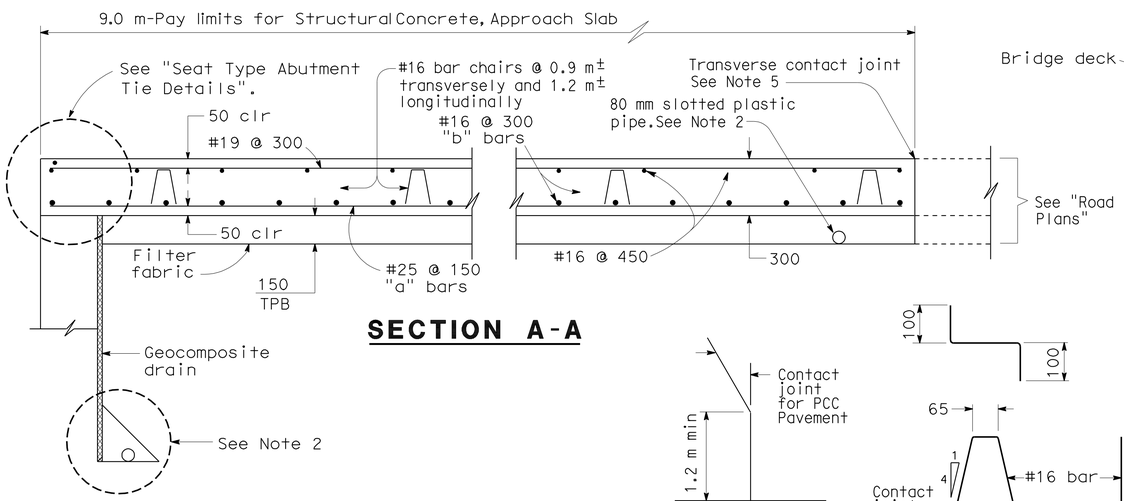

SECTION A-A

DETAIL A

BAR CHAIR DETAIL

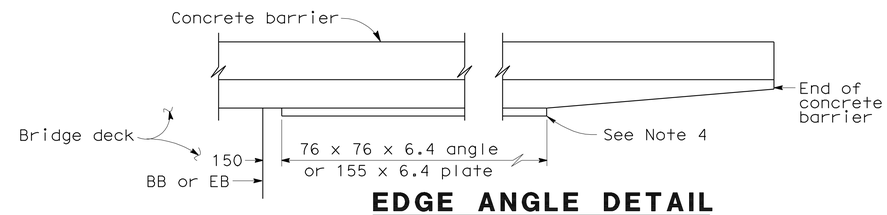

EDGE ANGLE DETAIL

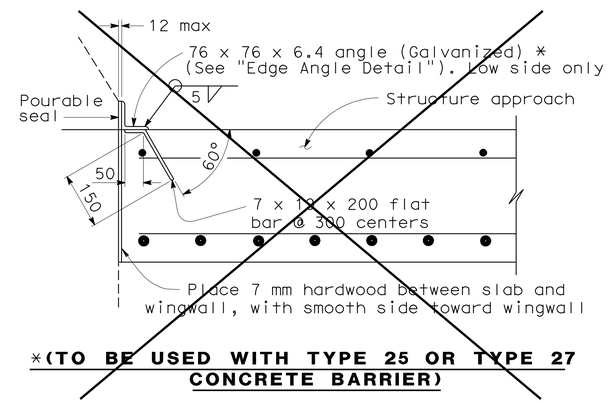

*(TO BE USED WITH TYPE 25 OR TYPE 27 CONCRETE BARRIER)

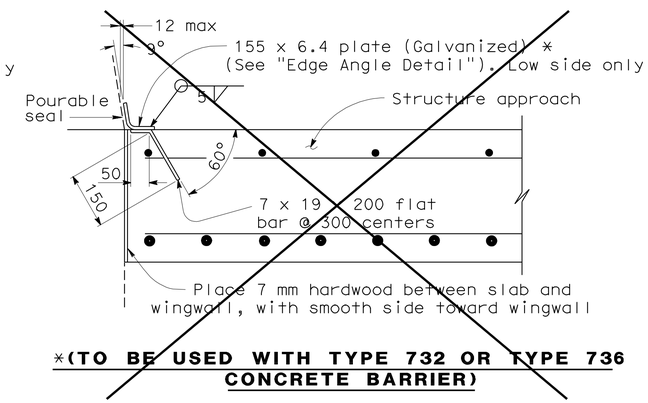

*(TO BE USED WITH TYPE 732 OR TYPE 736 CONCRETE BARRIER)

DETAIL B

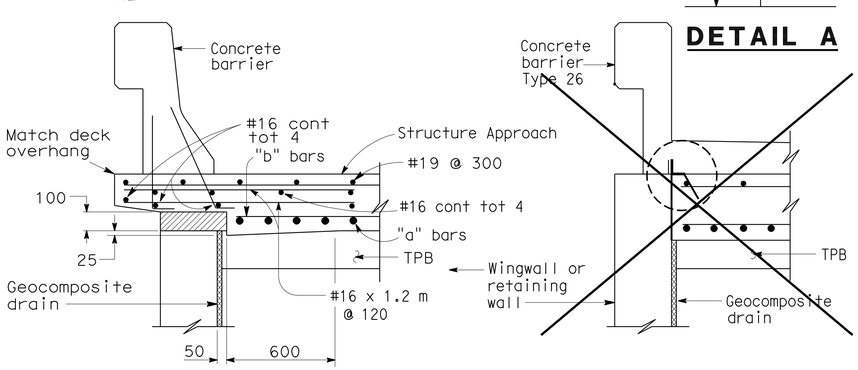

TYPE E-1

TYPE E-2

SECTION C-C

(Type E-1 to be used, unless otherwise shown on the plans)

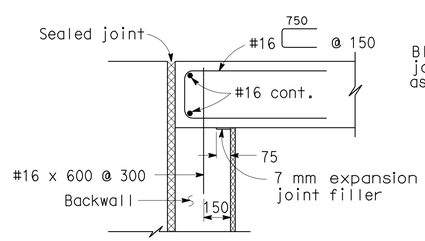

MR ≤ 50 mm

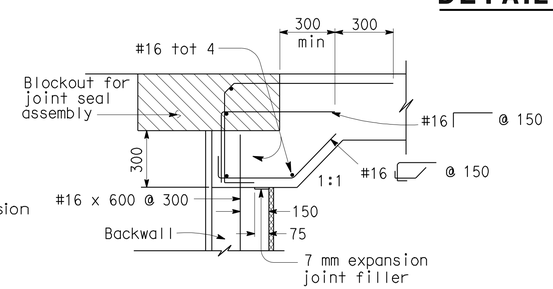

MR > 50 mm

SEAT TYPE ABUTMENT TIE DETAILS (SEE NOTE 1)

NOTES:

1. For details not shown, see Structure Plans. For MR ≤ 50 mm, adjust bar reinforcement to clear a sawcut for sealed joint, when required.
2. For drainage details, see "Structure Approach Drainage Details" sheet.
3. Longitudinal construction joints, when permitted by the Engineer, shall be located on lane lines.
4. End angle or plate at beginning of barrier transition, end of wingwall or end of structure approach as applicable.
5. For transverse contact joint with new PCC paving, refer to Standard Plan A35-A.
6. At the contractor's option, approach slab transverse reinforcement may be placed parallel to paving notch. Spacing of transverse reinforcement is measured along ℄ roadway.

Remove all polystyrene.

NO SCALE

ALL DIMENSIONS ARE IN MILLIMETERS UNLESS OTHERWISE SHOWN

Caltrans Metric

	BY	CHECKED
DESIGN	Ramon Reyes	Hilario Tuazon
DETAILS	George Zweier	Hilario Tuazon
QUANTITIES	Ubong Inyang	Jinrong Wang

STATE OF CALIFORNIA
DEPARTMENT OF TRANSPORTATION

DIVISION OF ENGINEERING SERVICES
STRUCTURE DESIGN
DESIGN BRANCH 6

BRIDGE NO. 44-0286
KILOMETER POST 158.4

CRAZY HORSE CYN/ECHO VALLEY RD OC

STRUCTURE APPROACH TYPE N(9S)

ALL DIMENSIONS ARE IN MILLIMETERS UNLESS OTHERWISE SHOWN

ORIGINAL SCALE IN MILLIMETERS FOR REDUCED PLANS 0 10 20 30 40 50 60 70 80 90 100

CU 05
EA 0161E1

DISREGARD PRINTS BEARING EARLIER REVISION DATES

REVISION DATES: 01-18-07 01-14-08 1-26-09 2-13-09 11-17-09 05-06-10

SHEET 15 OF 21

STRUCTURES DESIGN DETAIL SHEET (METRIC) (REV.03-17-04)

FILE => 44-0286-s-sa.dgn

USERNAME => ffernard DATE PLOTTED => 03-AUG-2010 TIME PLOTTED => 08:48

DIST	COUNTY	ROUTE	KILOMETER POST TOTAL PROJECT	SHEET No	TOTAL SHEETS
05	Mon	101	R146.8/159.7	1298	1402

REGISTERED CIVIL ENGINEER 05-06-10 DATE

7-26-10
PLANS APPROVAL DATE

REGISTERED PROFESSIONAL ENGINEER HERNAN PEREZ No. 60993 Exp. 12-31-10 CIVIL STATE OF CALIFORNIA

The State of California or its officers or agents shall not be responsible for the accuracy or completeness of electronic copies of this plan sheet.

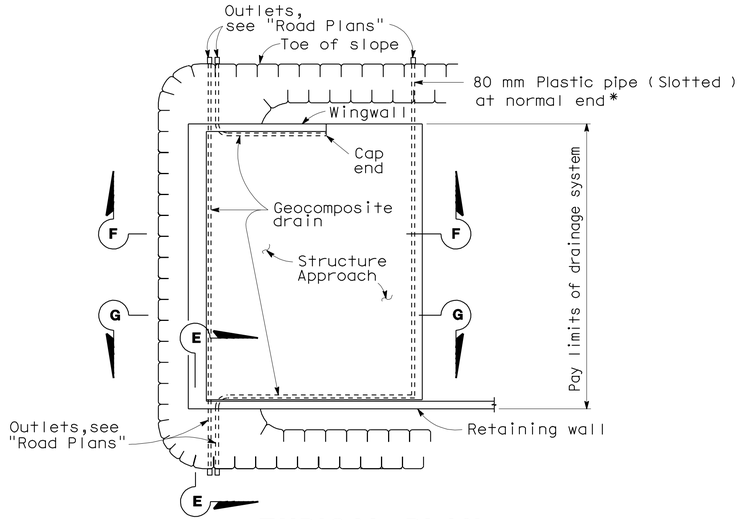

TYPICAL PLAN

*For pipe layout at staggered end,see "Detail B".

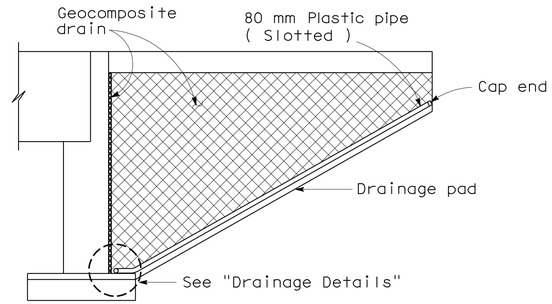

CANTILEVER WINGWALL SECTION F-F

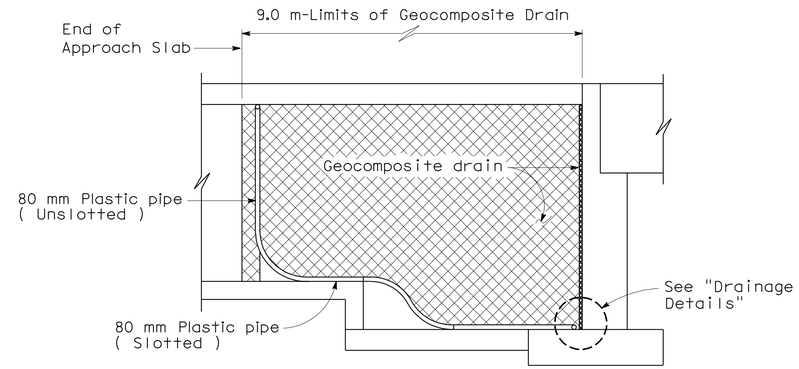

RETAINING WALL WINGWALL SECTION G-G

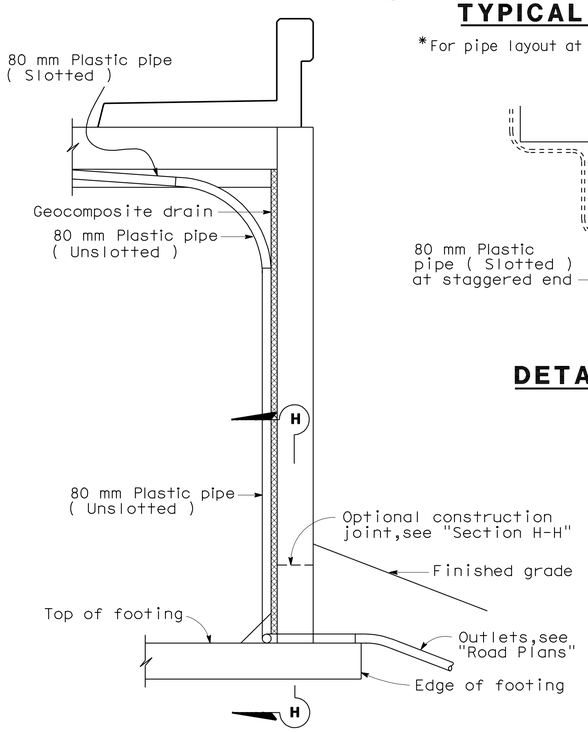

SECTION E-E

NOTE: Bends and junctions in 80 mm plastic pipe are 750 mm radius min.

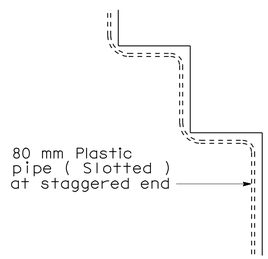

DETAIL B

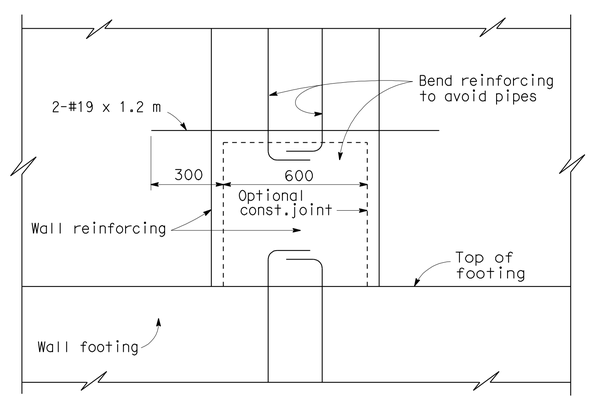

SECTION H-H

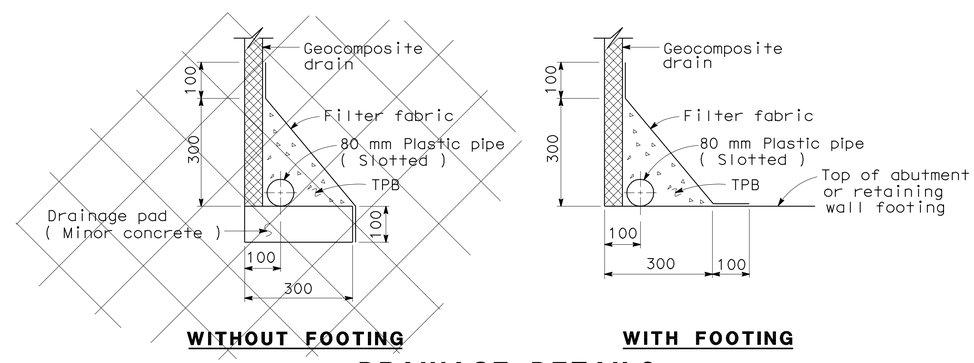

WITHOUT FOOTING

WITH FOOTING

DRAINAGE DETAILS

DESIGN	BY Ramon Reyes	CHECKED Hilario Tuazon
DETAILS	BY George Zweier	CHECKED Hilario Tuazon
QUANTITIES	BY Ubong Inyang	CHECKED Jinrong Wang

STATE OF CALIFORNIA DEPARTMENT OF TRANSPORTATION

DIVISION OF ENGINEERING SERVICES STRUCTURE DESIGN

DESIGN BRANCH 6

BRIDGE NO. 44-0286

KILOMETER POST 158.4

CRAZY HORSE CYN/ECHO VALLEY RD OC

STRUCTURE APPROACH DRAINAGE DETAILS

Caltrans Metric

ALL DIMENSIONS ARE IN MILLIMETERS UNLESS OTHERWISE SHOWN

ORIGINAL SCALE IN MILLIMETERS FOR REDUCED PLANS 0 10 20 30 40 50 60 70 80 90 100

CU 05
EA 0161E1

DISREGARD PRINTS BEARING EARLIER REVISION DATES

REVISION DATES 01-14-09 1-28-09 2-13-09 07-30-09 11-17-09 12-17-09 05-06-10

SHEET 16 OF 21

FILE => 44-0286-s-sadd.dgn

STRUCTURES DESIGN DETAIL SHEET (METRIC) (REV.03-17-04)

USERNAME => ttenard DATE PLOTTED => 03-AUG-2010 TIME PLOTTED => 08:48

DIST	COUNTY	ROUTE	KILOMETER POST TOTAL PROJECT	SHEET No	TOTAL SHEETS
05	Mon	101	R146.8/159.7	1299	1402

REGISTERED CIVIL ENGINEER — DATE 05-06-10

7-26-10
PLANS APPROVAL DATE

REGISTERED PROFESSIONAL ENGINEER — HERNAN PEREZ — No. 60993 — Exp. 12-31-10 — CIVIL — STATE OF CALIFORNIA

The State of California or its officers or agents shall not be responsible for the accuracy or completeness of electronic copies of this plan sheet.

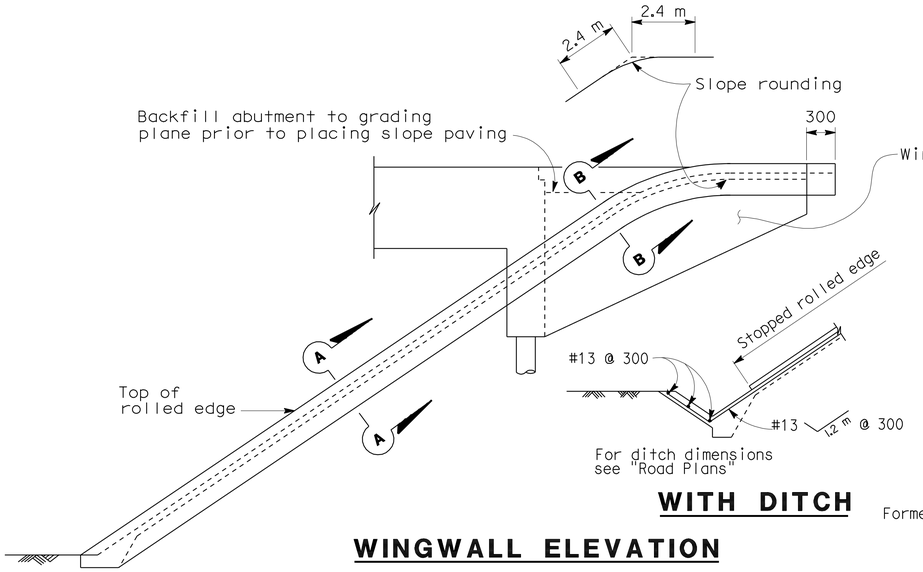

WITH DITCH

WINGWALL ELEVATION

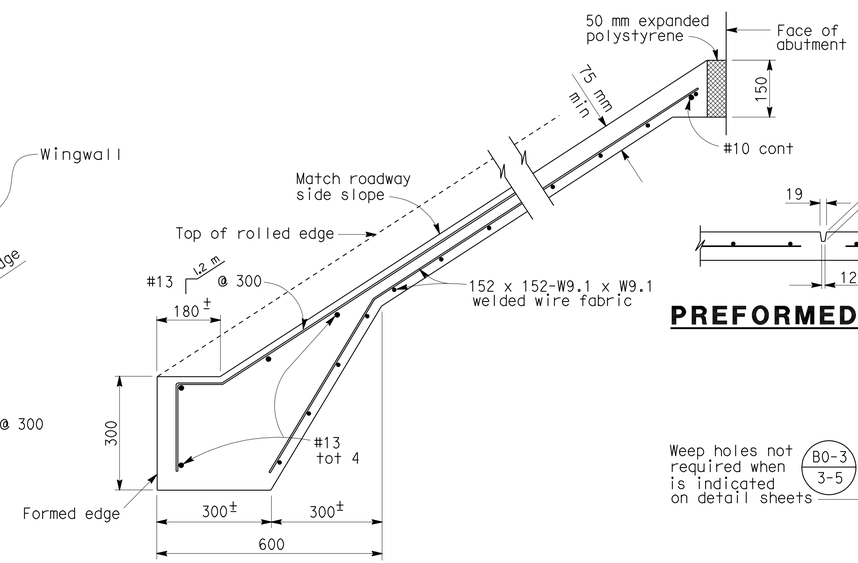

TYPICAL SECTION - CONCRETE PAVING

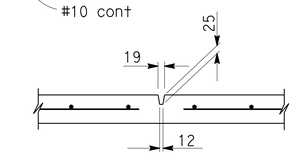

PREFORMED GROOVE

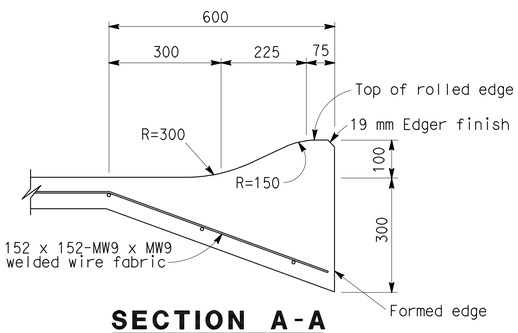

SECTION A-A

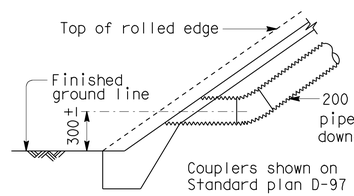

TYPICAL - NO CURB

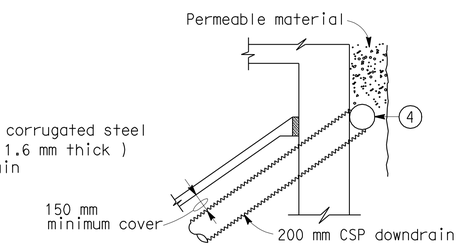

TYPICAL - DRAIN CONNECTION

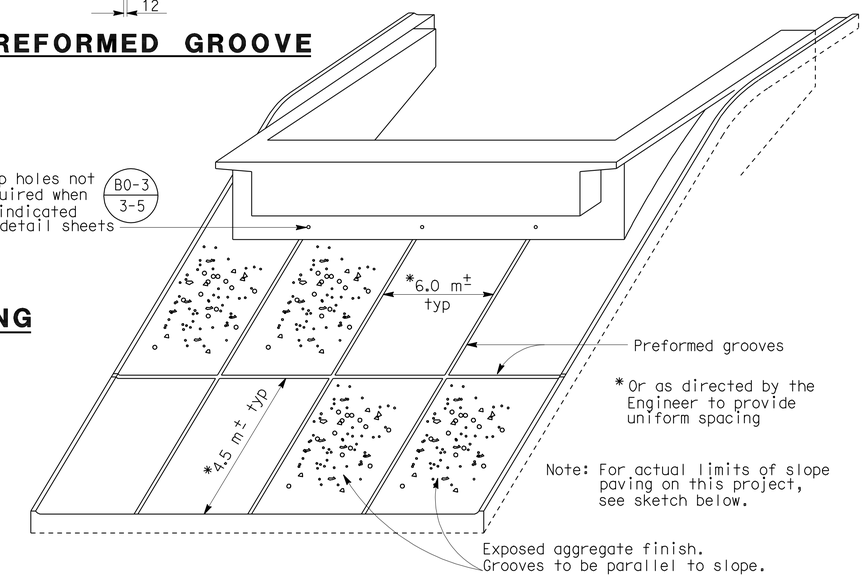

PICTORIAL VIEW OF TYPICAL INSTALLATION

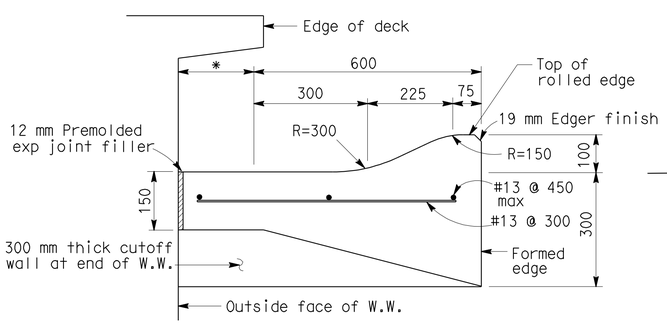

SECTION B-B

*This dimension becomes zero when edge of deck is at outside face of W.W.

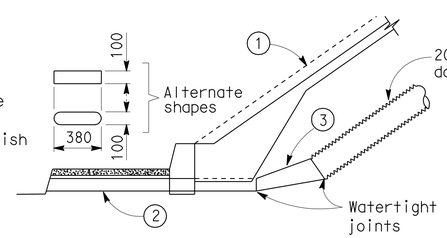

TYPICAL - WITH SIDEWALK

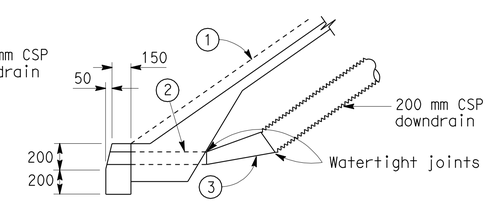

TYPICAL - WITH CURB

DRAINAGE DETAILS

Note: Drainage details are only applicable when B0-3 / 3-5 is indicated on detail sheets.

1. Top of rolled edge
2. Conduit: 1.6 mm galv corrugated steel or 2.8 mm smooth galv steel
3. Taper: 1.6 mm / 2.8 mm smooth galv steel
4. 200 mm perforated steel pipe (1.6 mm thick) underdrain behind abutment. Connect to downdrain as shown on limits of Slope Paving & Drainage layout.

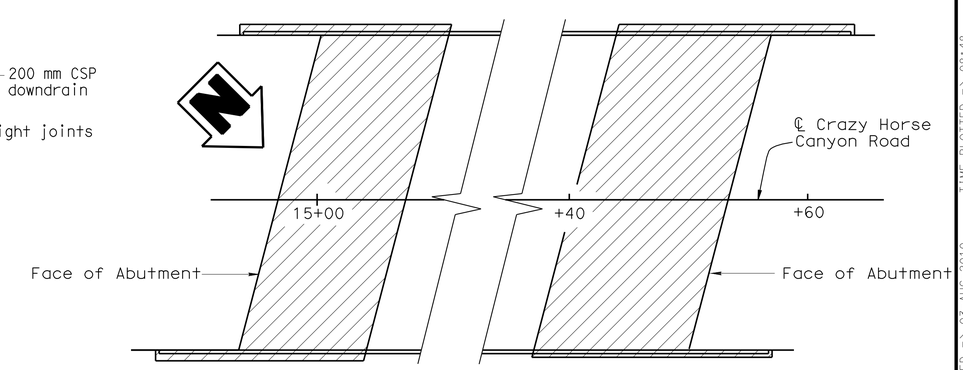

LIMITS OF SLOPE PAVING & DRAINAGE LAYOUT

NO SCALE

Caltrans Metric

	BY	CHECKED
DESIGN	Ramon Reyes	Hilario Tuazon
DETAILS	George Zweier	Hilario Tuazon
QUANTITIES	Ubong Inyang	Jinrong Wang

STATE OF CALIFORNIA
DEPARTMENT OF TRANSPORTATION

DIVISION OF ENGINEERING SERVICES
STRUCTURE DESIGN
DESIGN BRANCH 6

BRIDGE NO. 44-0286
KILOMETER POST 158.4

CRAZY HORSE CYN/ECHO VALLEY RD OC
SLOPE PAVING-FULL SLOPE

ALL DIMENSIONS ARE IN MILLIMETERS UNLESS OTHERWISE SHOWN

ORIGINAL SCALE IN MILLIMETERS FOR REDUCED PLANS 0 10 20 30 40 50 60 70 80 90 100

CU 05
EA 0161E1

DISREGARD PRINTS BEARING EARLIER REVISION DATES

REVISION DATES: 01-18-07, 12-31-08, 01-14-09, 1-20-09, 2-13-09, 4-24-09, 11-17-09, 05-06-10

SHEET 17 OF 21

FILE => 44-0286-u-slp.dgn

STRUCTURES DESIGN DETAIL SHEET (METRIC) (REV.03-17-04)

USERNAME => M.Bernard DATE PLOTTED => 03-AUG-2010 TIME PLOTTED => 08:48

DIST	COUNTY	ROUTE	KILOMETER POST TOTAL PROJECT	SHEET No	TOTAL SHEETS
05	Mon	101	R146.8/159.7	1300	1402

REGISTERED CIVIL ENGINEER 05-06-10 DATE

7-26-10
PLANS APPROVAL DATE

REGISTERED PROFESSIONAL ENGINEER HERNAN PEREZ No. 60993 Exp. 12-31-10 CIVIL STATE OF CALIFORNIA

The State of California or its officers or agents shall not be responsible for the accuracy or completeness of electronic copies of this plan sheet.

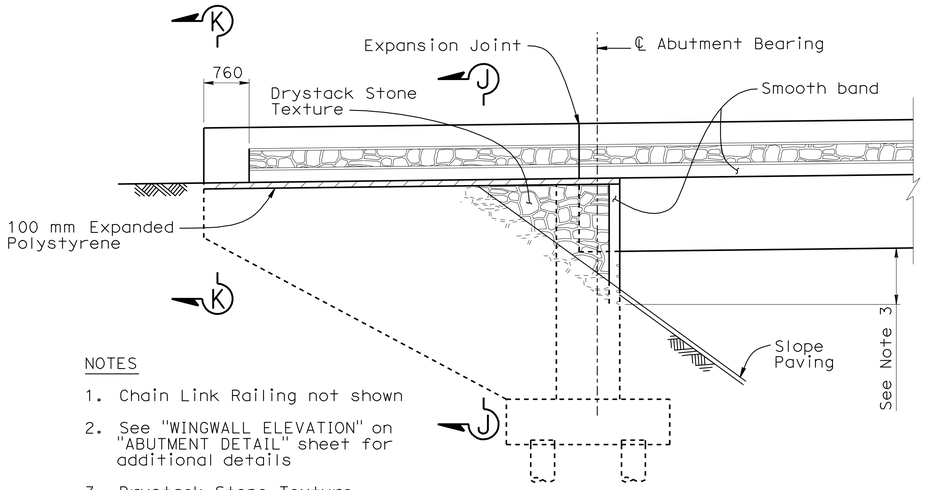

NOTES

1. Chain Link Railing not shown
2. See "WINGWALL ELEVATION" on "ABUTMENT DETAIL" sheet for additional details
3. Drystack Stone Texture, Limits of Payment

WINGWALL ELEVATION

1:50

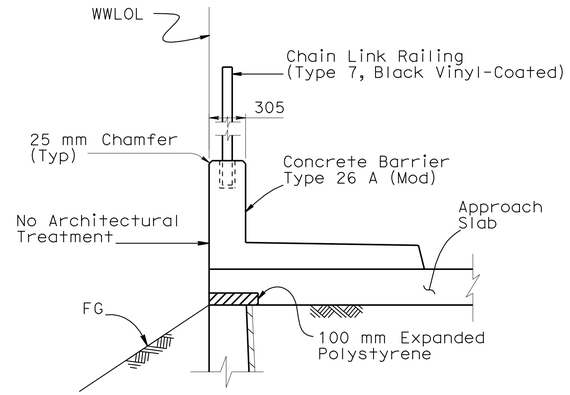

SECTION K-K

1:25

B11-54

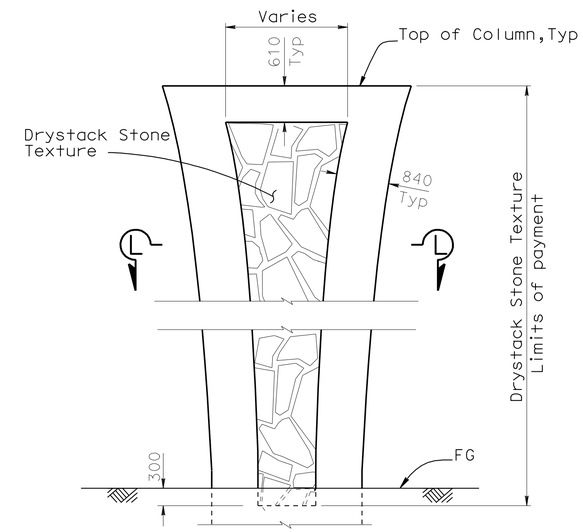

COLUMN DETAIL

NO SCALE

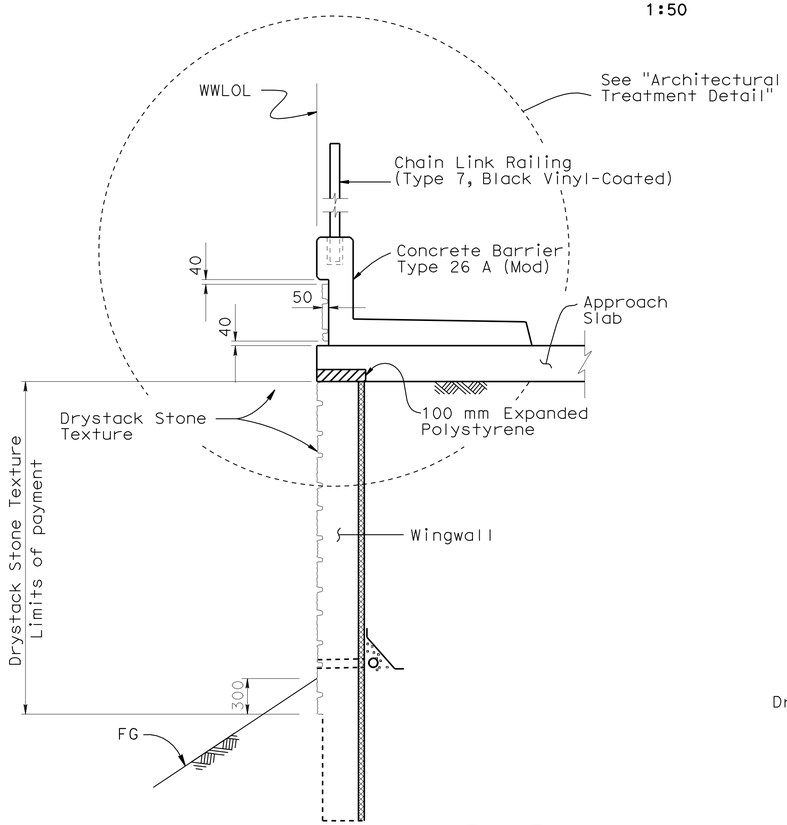

SECTION J-J

1:25

B3-8 B11-54

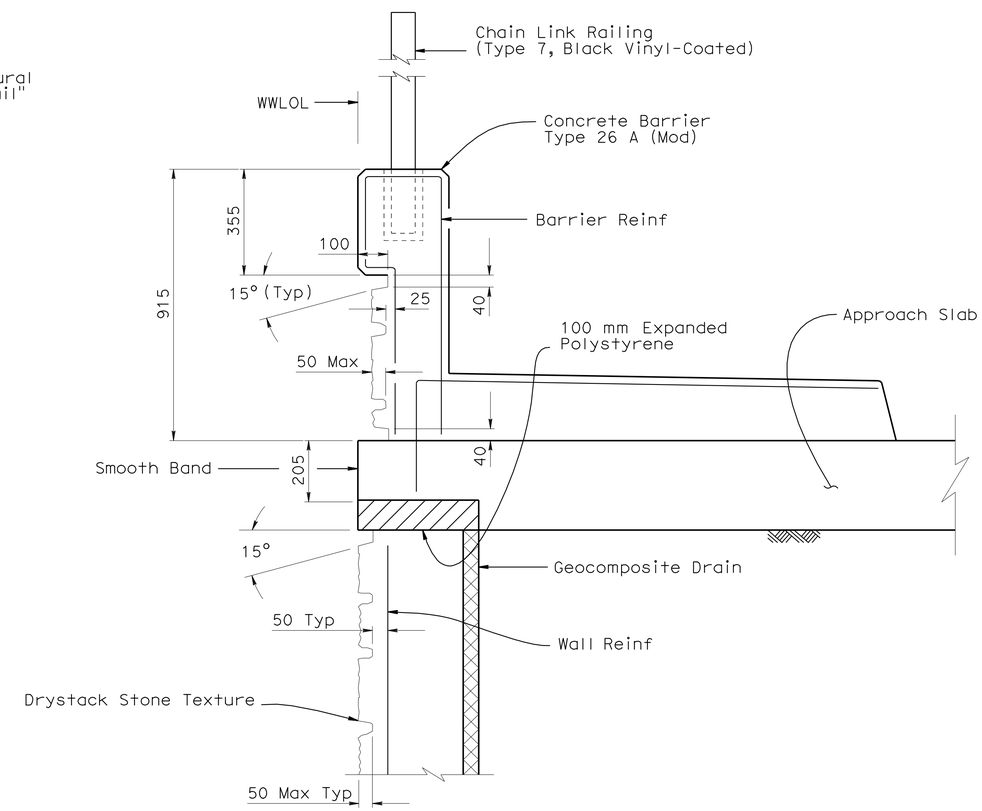

ARCHITECTURAL TREATMENT DETAIL

1:10

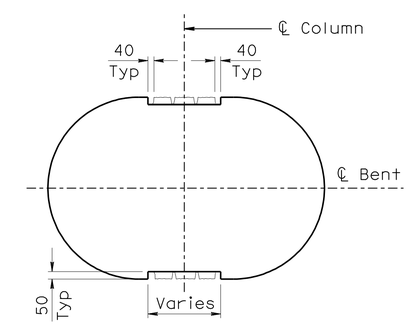

SECTION L-L

1: 20

Caltrans Metric

	BY	CHECKED
DESIGN	Ramon Reyes	Hilario Tuazon
DETAILS	Kamal Chonkria	Hilario Tuazon
QUANTITIES	Ubong Inyang	Jinrong Wang

STATE OF CALIFORNIA DEPARTMENT OF TRANSPORTATION

DIVISION OF ENGINEERING SERVICES STRUCTURE DESIGN

DESIGN BRANCH 6

BRIDGE NO. 44-0286

KILOMETER POST 158.4

CRAZY HORSE CYN/ECHO VALLEY RD OC

ARCHITECTURAL TREATMENT

ALL DIMENSIONS ARE IN MILLIMETERS UNLESS OTHERWISE SHOWN

ORIGINAL SCALE IN MILLIMETERS FOR REDUCED PLANS 0 10 20 30 40 50 60 70 80 90 100

CU 05
EA 0161E1

DISREGARD PRINTS BEARING EARLIER REVISION DATES

REVISION DATES: 12-31-08 05-06-10 1-20-09 01-24-09 02-13-09 04-24-09 09-23-09 09-28-09 11-17-09 12-11-09

SHEET 18 OF 21

FILE => 44-0286-y-arch.dgn

STRUCTURES DESIGN DETAIL SHEET (METRIC) (REV.03-17-04)

USERNAME => ffernard DATE PLOTTED => 03-AUG-2010 TIME PLOTTED => 10:50