Dist	COUNTY	ROUTE	KILOMETER POST TOTAL PROJECT	SHEET No.	TOTAL SHEETS
05	Mon	101	R146.8/159.7	2	1402

REGISTERED CIVIL ENGINEER 5-16-10 DATE

7-26-10
PLANS APPROVAL DATE

REGISTERED PROFESSIONAL ENGINEER DANIEL B. MASSA No. 59095 Exp. 6/30/11 CIVIL STATE OF CALIFORNIA

THE STATE OF CALIFORNIA OR ITS OFFICERS OR AGENTS SHALL NOT BE RESPONSIBLE FOR THE ACCURACY OR COMPLETENESS OF ELECTRONIC COPIES OF THIS PLAN SHEET.

Caltrans Metric

NOTES:

1. DIMENSIONS OF THE PAVEMENT STRUCTURES ARE SUBJECT TO TOLERANCES SPECIFIED IN THE STANDARD SPECIFICATIONS.
2. SUPERELEVATIONS AS SHOWN OR AS DIRECTED BY THE ENGINEER.
3. FOR LOCATION AND TYPE OF DIKE, BARRIER DTBB, AND MBGR SEE LAYOUTS, SUMMARY OF QUANTITIES AND CONSTRUCTION DETAIL SHEETS.
4. FOR CONTOUR GRADING, SEE DRAINAGE SHEETS.
5. FOR COMPLETE RIGHT OF WAY ACCURATE ACCESS DATA, SEE RIGHT OF WAY RECORD MAPS AT DISTRICT OFFICE.

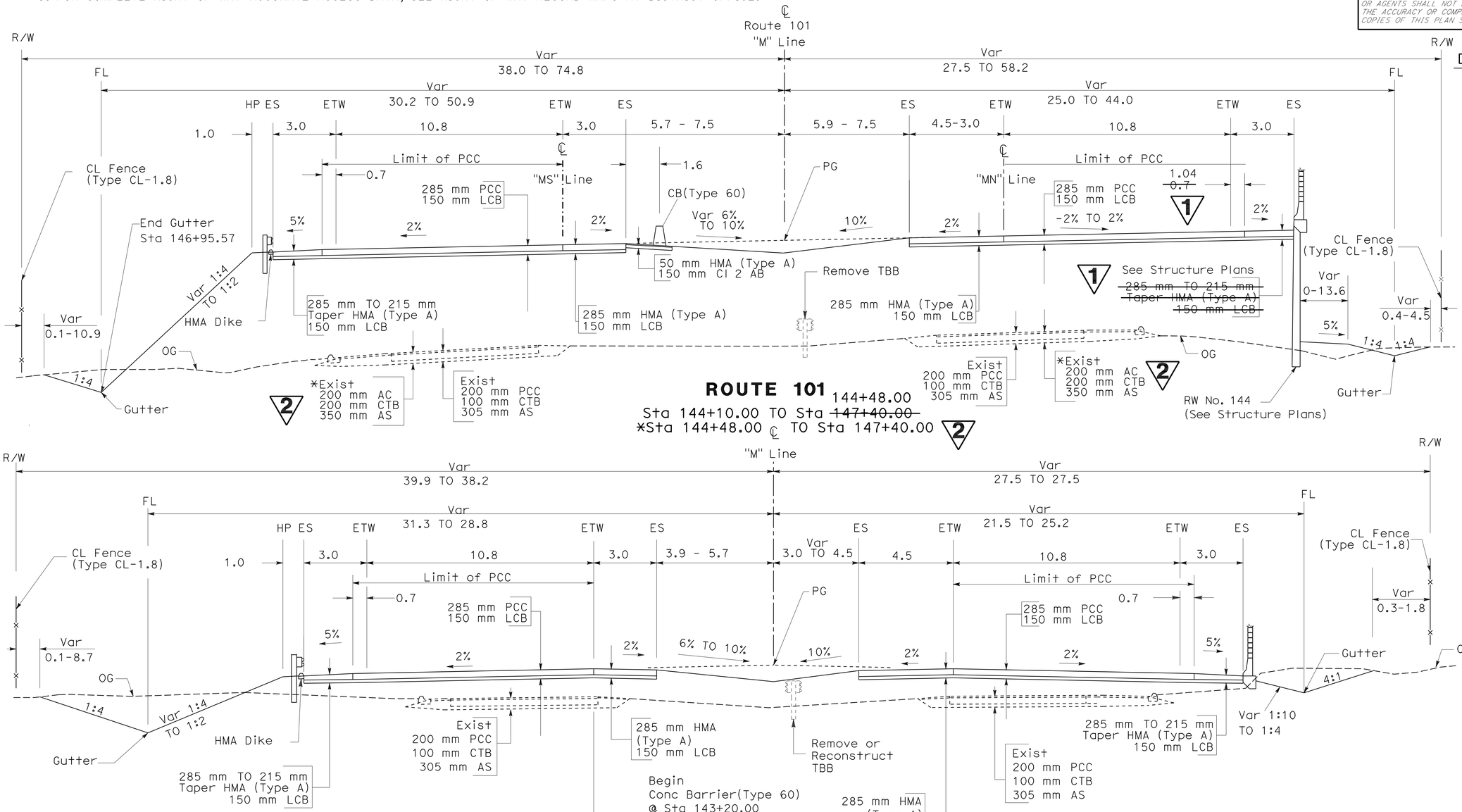

DESIGN DESIGNATION (ROUTE 101)

KP 146.8 TO KP 149.0
ADT (2014) = 80,000
ADT (2034) = 107,000
D = 60%
T = 11%
V = 120 km/hr
TI20 = 14.0

KP 149.0 TO KP 153.6
ADT (2014) = 76,000
ADT (2034) = 97,000
D = 60%
T = 11%
V = 120 km/hr
TI20 = 14.0

KP 153.6 TO KP 154.7
ADT (2014) = 102,000
ADT (2030) = 132,000
D = 60%
T = 11%
V = 120 km/hr
TI20 = 14.0

KP 154.7 TO KP 159.7
ADT (2014) = 67,000
ADT (2034) = 86,000
D = 60%
T = 11%
V = 120 km/hr
TI20 = 14.0

2 REVISED PER ADDENDUM No. 2 DATED NOVEMBER 19, 2010

1 REVISED PER ADDENDUM No. 1 DATED NOVEMBER 16, 2010

ALL DIMENSIONS ARE IN METERS UNLESS OTHERWISE SHOWN

TYPICAL CROSS SECTIONS
(LOCATION 1)

X-1

NO SCALE

STATE OF CALIFORNIA - DEPARTMENT OF TRANSPORTATION
Caltrans
06-DESIGN
FUNCTIONAL SUPERVISOR DAVID FRANKE
CALCULATED-DESIGNED BY JOHNNY SOLANO
CHECKED BY DAN MASSA
REVISED BY
DATE REVISED

LAST REVISION 04-28-10
DATE PLOTTED => 18-NOV-2010
TIME PLOTTED => 10:32

Dist	COUNTY	ROUTE	KILOMETER POST TOTAL PROJECT	SHEET No.	TOTAL SHEETS
05	Mon	101	R146.8/159.7	3	1402

REGISTERED CIVIL ENGINEER 5-16-10 DATE

7-26-10
PLANS APPROVAL DATE

REGISTERED PROFESSIONAL ENGINEER DANIEL B. MASSA No. 59095 Exp. 6/30/11 CIVIL STATE OF CALIFORNIA

THE STATE OF CALIFORNIA OR ITS OFFICERS OR AGENTS SHALL NOT BE RESPONSIBLE FOR THE ACCURACY OR COMPLETENESS OF ELECTRONIC COPIES OF THIS PLAN SHEET.

Caltrans Metric

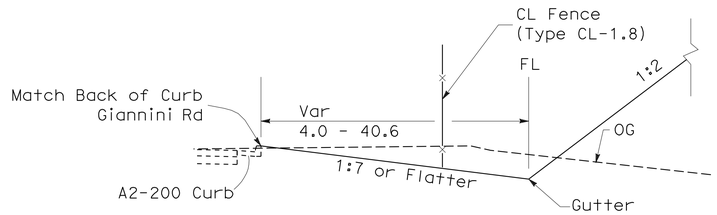

Sta 152+30.00 TO 157+51.90

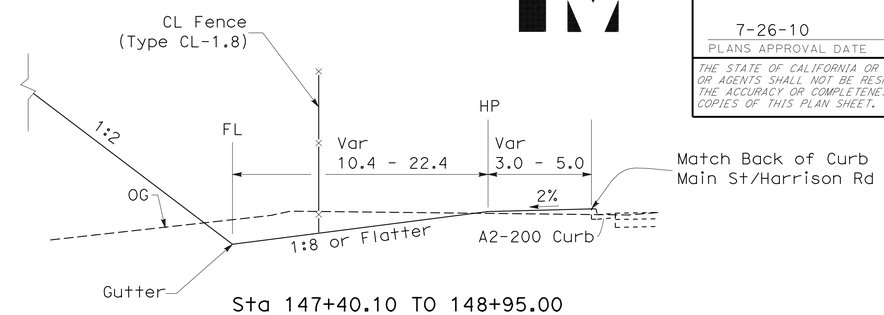

Sta 147+40.10 TO 148+95.00
Sta 149+90.00 TO 151+20.00

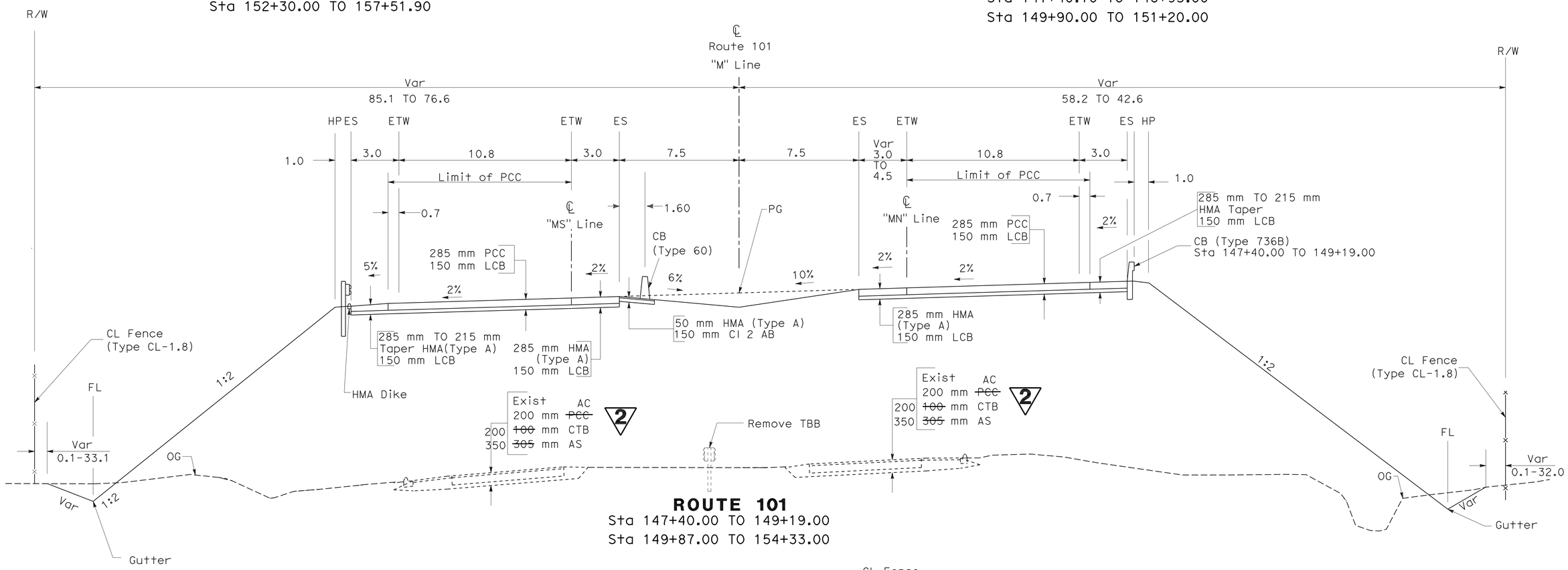

ROUTE 101
Sta 147+40.00 TO 149+19.00
Sta 149+87.00 TO 154+33.00

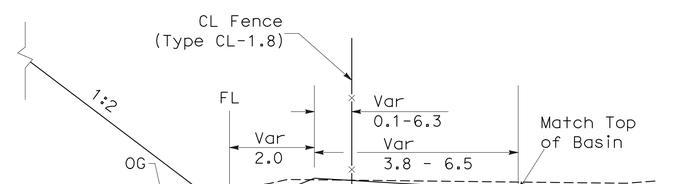

Sta 151+20.00 TO 153+10.00

ALL DIMENSIONS ARE IN METERS UNLESS OTHERWISE SHOWN

TYPICAL CROSS SECTIONS
(LOCATION 1)

X-2

NO SCALE

2 **REVISED PER ADDENDUM No. 2 DATED NOVEMBER 19, 2010**

STATE OF CALIFORNIA - DEPARTMENT OF TRANSPORTATION
Caltrans
06-DESIGN
FUNCTIONAL SUPERVISOR DAVID FRANKE
CALCULATED-DESIGNED BY JOHNNY SOLANO
CHECKED BY DAN MASSA
REVISED BY
DATE REVISED

LAST REVISION 04-28-10
DATE PLOTTED => 18-NOV-2010
TIME PLOTTED => 10:32

Dist	COUNTY	ROUTE	KILOMETER POST TOTAL PROJECT	SHEET No.	TOTAL SHEETS
05	Mon	101	R146.8/159.7	4	1402

Caltrans Metric

DAN 5-16-10
REGISTERED CIVIL ENGINEER DATE

7-26-10
PLANS APPROVAL DATE

REGISTERED PROFESSIONAL ENGINEER DANIEL B. MASSA No. 59095 Exp. 6/30/11 CIVIL STATE OF CALIFORNIA

THE STATE OF CALIFORNIA OR ITS OFFICERS OR AGENTS SHALL NOT BE RESPONSIBLE FOR THE ACCURACY OR COMPLETENESS OF ELECTRONIC COPIES OF THIS PLAN SHEET.

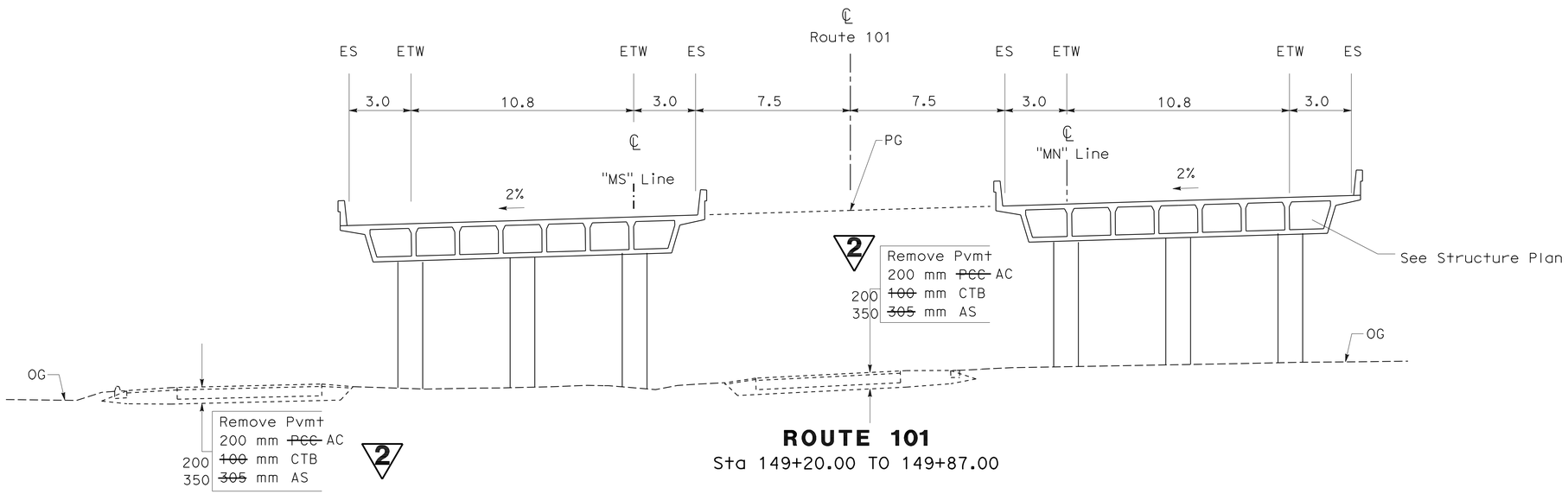

ROUTE 101
Sta 149+20.00 TO 149+87.00

TYPICAL CROSS SECTIONS
(LOCATION 1)

X-3

NO SCALE

2 **REVISED PER ADDENDUM No. 2 DATED NOVEMBER 19, 2010**

REVISED BY	DATE REVISED

CALCULATED-DESIGNED BY: JOHNNY SOLANO
CHECKED BY: DAN MASSA

FUNCTIONAL SUPERVISOR: DAVID FRANKE

STATE OF CALIFORNIA - DEPARTMENT OF TRANSPORTATION
Caltrans 06-DESIGN

LAST REVISION 04-28-10 | DATE PLOTTED => 18-NOV-2010 | TIME PLOTTED => 10:33

Dist	COUNTY	ROUTE	KILOMETER POST TOTAL PROJECT	SHEET No.	TOTAL SHEETS
05	Mon	101	R146.8/159.7	5	1402

Caltrans Metric

REGISTERED CIVIL ENGINEER — DATE 5-16-10

PLANS APPROVAL DATE 7-26-10

REGISTERED PROFESSIONAL ENGINEER DANIEL B. MASSA No. 59095 Exp. 6/30/11 CIVIL STATE OF CALIFORNIA

THE STATE OF CALIFORNIA OR ITS OFFICERS OR AGENTS SHALL NOT BE RESPONSIBLE FOR THE ACCURACY OR COMPLETENESS OF ELECTRONIC COPIES OF THIS PLAN SHEET.

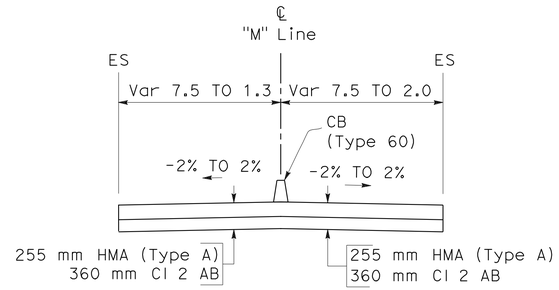

Sta 161+88.60 TO 163+41.50

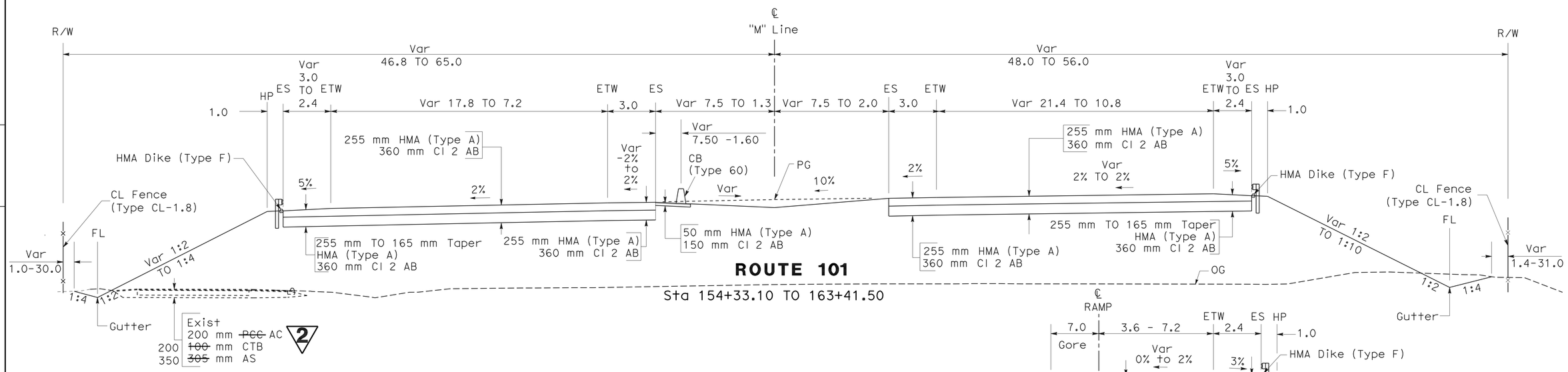

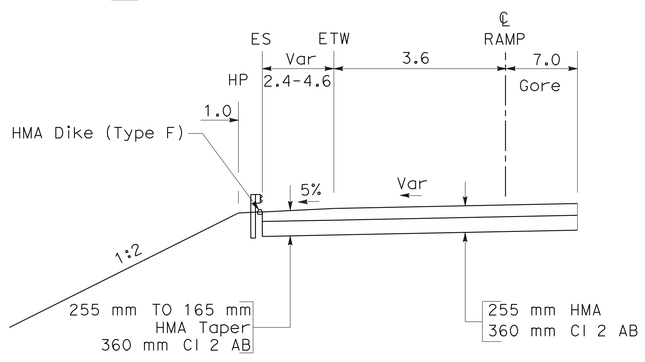

SR-1 Ramp Gore & Taper
Sta 158+72.00 TO 160+59.80

SR-3 Ramp Gore & Taper
Sta 163+41.50 TO 164+65.90

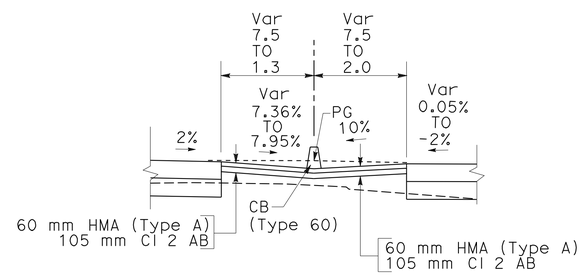

Sta 160+42.60 TO Sta 161+88.60

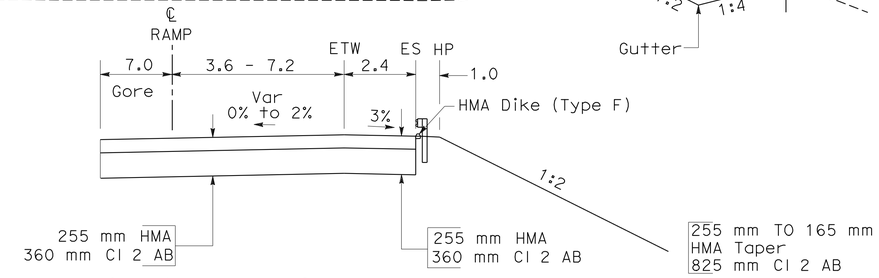

SR-2 Ramp Gore & Taper
Sta 156+28.30 TO 157+51.80

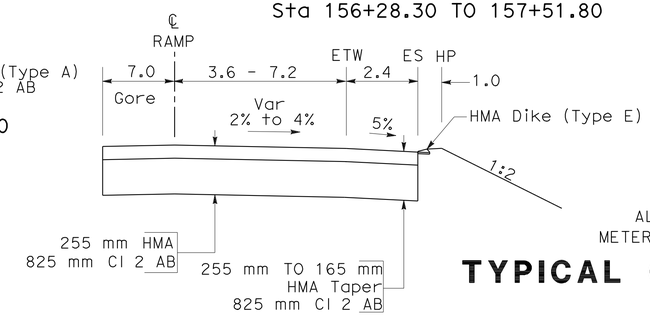

SR-4 Ramp Gore & Taper
Sta 162+33.50 TO 164+21.50

ALL DIMENSIONS ARE IN METERS UNLESS OTHERWISE SHOWN

NO SCALE

TYPICAL CROSS SECTIONS (LOCATION 1)

X-4

2 **REVISED PER ADDENDUM No. 2 DATED NOVEMBER 19, 2010**

REVISED BY	DATE REVISED

CALCULATED-DESIGNED BY	CHECKED BY
JOHNNY SOLANO	DAN MASSA

FUNCTIONAL SUPERVISOR **DAVID FRANKE**

STATE OF CALIFORNIA - DEPARTMENT OF TRANSPORTATION **06-DESIGN**

Caltrans

LAST REVISION 04-28-10 | DATE PLOTTED => 18-NOV-2010 | TIME PLOTTED => 10:33

Dist	COUNTY	ROUTE	KILOMETER POST TOTAL PROJECT	SHEET No.	TOTAL SHEETS
05	Mon	101	R146.8/159.7	222A	1402

LICENSED LANDSCAPE ARCHITECT

7-26-10
PLANS APPROVAL DATE

LICENSED LANDSCAPE ARCHITECT SCOTT P. DOWLAN No. 4401 Signature 9/30/10 Renewal Date 05/17/10 Date Signed STATE OF CALIFORNIA

THE STATE OF CALIFORNIA OR ITS OFFICERS OR AGENTS SHALL NOT BE RESPONSIBLE FOR THE ACCURACY OR COMPLETENESS OF SCANNED COPIES OF THIS PLAN SHEET.

Caltrans Metric

2

NOTE:

FOR ACCURATE RIGHT OF WAY AND ACCESS DATA, CONTACT RIGHT OF WAY ENGINEERING AT THE DISTRICT OFFICE.

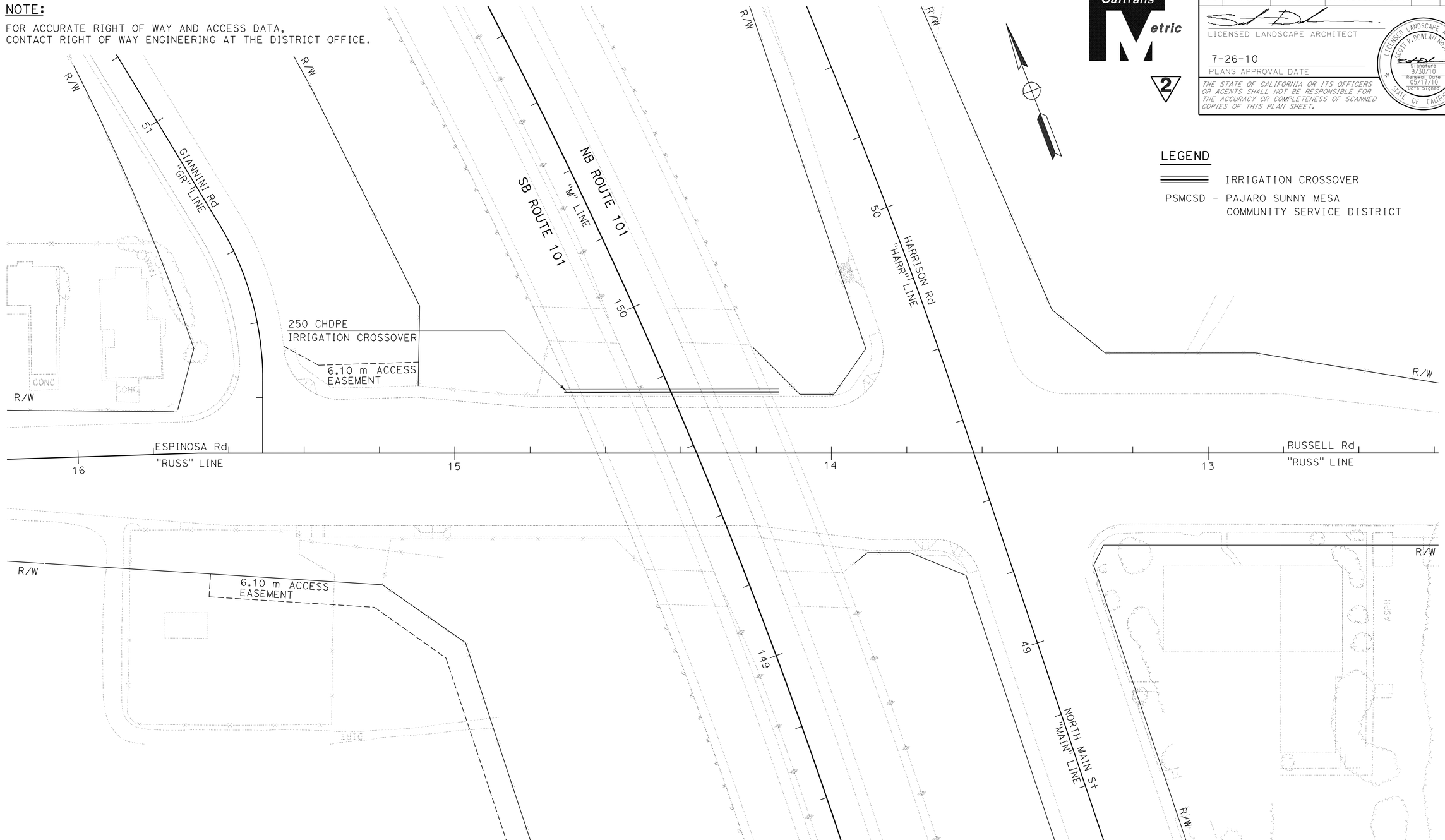

LEGEND

IRRIGATION CROSSOVER

PSMCSD - PAJARO SUNNY MESA COMMUNITY SERVICE DISTRICT

ALL DIMENSIONS ARE IN MILLIMETERS (DIAMETER NOMINAL) UNLESS OTHERWISE SHOWN.

CONSTRUCTION DETAILS (IRRIGATION)

SCALE 1:500 **C-41A**

2 **ADDED PER ADDENDUM No. 2 DATED NOVEMBER 19, 2010**

THIS PLAN ACCURATE FOR IRRIGATION WORK ONLY.

REVISED BY	DATE REVISED
SCOTT DOWLAN	CORBY KILMER
CALCULATED-DESIGNED BY	CHECKED BY
SENIOR LANDSCAPE ARCHITECT	DENNIS REEVES

STATE OF CALIFORNIA - DEPARTMENT OF TRANSPORTATION

Caltrans LANDSCAPE ARCHITECTURE

LAST REVISION 05-17-10 | DATE PLOTTED => 19-NOV-2010 | TIME PLOTTED => 05:57

Dist	COUNTY	ROUTE	KILOMETER POST TOTAL PROJECT	SHEET No.	TOTAL SHEETS
05	Mon	101	R146.8/159.7	243A	1402

LICENSED LANDSCAPE ARCHITECT

7-26-10
PLANS APPROVAL DATE

LICENSED LANDSCAPE ARCHITECT SCOTT P. DOWLAN No. 4161 Signature 9/30/10 Renewal Date 05/17/10 Date Signed STATE OF CALIFORNIA

THE STATE OF CALIFORNIA OR ITS OFFICERS OR AGENTS SHALL NOT BE RESPONSIBLE FOR THE ACCURACY OR COMPLETENESS OF SCANNED COPIES OF THIS PLAN SHEET.

Caltrans Metric

2

LEGEND

DUFF (75 mm THICK)
EROSION CONTROL (COMPOST BLANKET) (25 mm THICK)
ROLLED EROSION CONTROL PRODUCT (NETTING) - TYPE A
EROSION CONTROL (HYDROSEED) - TYPE 1, SEED MIX 1
(INCLUDES 1.10 SLOPE FACTOR)

DUFF (75 mm THICK)
EROSION CONTROL (COMPOST BLANKET) (25 mm THICK)
EROSION CONTROL (PUNCHED STRAW)
(INCLUDES 1.10 SLOPE FACTOR)

COMPOST (INCORPORATE)
EROSION CONTROL (DRILL SEED) - TYPE 1, SEED MIX 1

COMPOST (INCORPORATE)
EROSION CONTROL (DRILL SEED) - TYPE 1, SEED MIX 2

COMPOST (INCORPORATE)
EROSION CONTROL (DRILL SEED) - TYPE 2, SEED MIX 1
(INCLUDES 1.05 SLOPE FACTOR)

EROSION CONTROL (HYDROSEED)- TYPE 2, SEED MIX 1

EROSION CONTROL (HYDROSEED) - TYPE 1, SEED MIX 2

ROLLED EROSION CONTROL PRODUCT (NETTING) - TYPE A
EROSION CONTROL (HYDROSEED) - TYPE 1, SEED MIX 2
(INCLUDES 1.10 SLOPE FACTOR)

COMPOST (INCORPORATE)
EROSION CONTROL (HYDROSEED) - TYPE 1, SEED MIX 1

EROSION CONTROL (COMPOST BLANKET) (25 mm THICK)
CHIPPED MATERIAL (75 mm THICK)
(INCLUDES 1.10 SLOPE FACTOR)

CHIPPED MATERIAL (75 mm THICK)

COMPOST (INCORPORATE)
EROSION CONTROL (HYDROSEED) - TYPE 1, SEED MIX 2

ESA — ENVIRONMENTALLY SENSITIVE AREA

DUFF (STOCKPILE)

DUFF (COLLECT)
CHIPPED MATERIAL (COLLECT)
(INCLUDES 1.10 SLOPE FACTOR)

TFESA — TEMPORARY FENCE (TYPE ESA)

FIBER ROLL

COMPOST SOCK

COMPOST BERM

EROSION CONTROL (NATIVE GRASS SOD)

ROLLED EROSION CONTROL PRODUCT (NETTING) - TYPE B
IN DITCH OR SWALE

ABBREVATIONS

COMPOST = EROSION CONTROL (COMPOST BLANKET)
NETTING A = ROLLED EROSION CONTROL PRODUCT (NETTING) - TYPE A
NETTING B = ROLLED EROSION CONTROL PRODUCT (NETTING) - TYPE B
PUNCHED STRAW = EROSION CONTROL (PUNCHED STRAW)
COMPOST INC = COMPOST (INCORPORATE)
HYDRO T1/S1 = EROSION CONTROL (HYDROSEED) - TYPE 1, SEED MIX 1
HYDRO T1/S2 = EROSION CONTROL (HYDROSEED) - TYPE 1, SEED MIX 2
HYDRO T2/S1 = EROSION CONTROL (HYDROSEED) - TYPE 2, SEED MIX 1
DRILL T1/S1 = EROSION CONTROL DRILL SEED - TYPE 1, SEED MIX 1
DRILL T1/S2 = EROSION CONTROL DRILL SEED - TYPE 1, SEED MIX 2
DRILL T2/S1 = EROSION CONTROL DRILL SEED - TYPE 2, SEED MIX 1
CHIPPED = CHIPPED MATERIAL
ESA FENCE = TEMPORARY FENCE (TYPE ESA)

2 **ADDED PER ADDENDUM No. 2 DATED NOVEMBER 19, 2010**

EROSION CONTROL LEGEND
ECL-1

STATE OF CALIFORNIA - DEPARTMENT OF TRANSPORTATION
Caltrans LANDSCAPE ARCHITECTURE

SENIOR LANDSCAPE ARCHITECT: DENNIS REEVES
CALCULATED-DESIGNED BY: SCOTT DOWLAN
CHECKED BY: CORBY KILMER
REVISED BY / DATE REVISED

LAST REVISION 05-17-10
DATE PLOTTED => 19-NOV-2010
TIME PLOTTED => 08:55

Dist	COUNTY	ROUTE	KILOMETER POST TOTAL PROJECT	SHEET No.	TOTAL SHEETS
05	Mon	101	R146.8/159.7	601	1402

REGISTERED CIVIL ENGINEER 5-16-10 DATE

7-26-10
PLANS APPROVAL DATE

REGISTERED PROFESSIONAL ENGINEER ROY J. SHAVER No. 44587 Exp. 3/31/12 CIVIL STATE OF CALIFORNIA

THE STATE OF CALIFORNIA OR ITS OFFICERS OR AGENTS SHALL NOT BE RESPONSIBLE FOR THE ACCURACY OR COMPLETENESS OF ELECTRONIC COPIES OF THIS PLAN SHEET.

Caltrans Metric

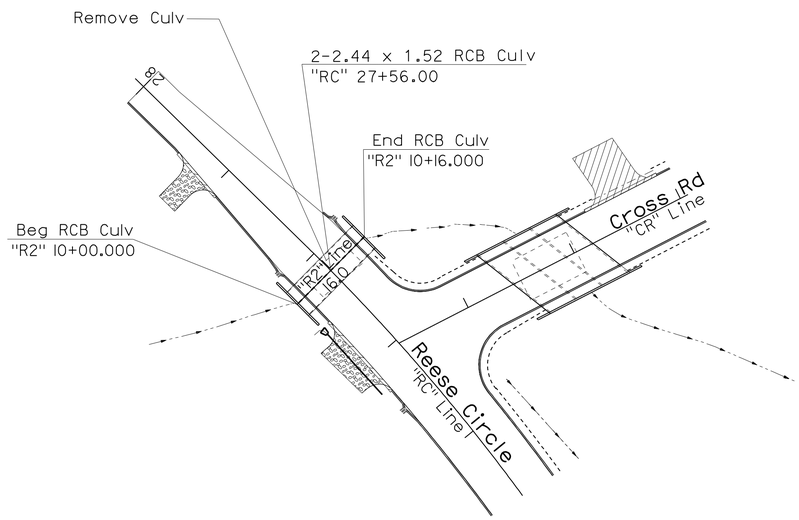

PLAN

DRAINAGE SYSTEM No. 165

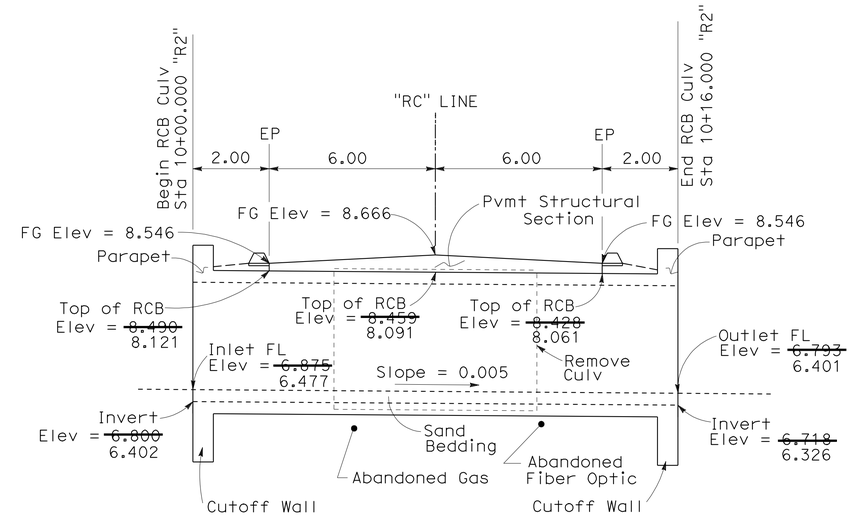

RCB CROSS SECTION
Sta 27+56.000 "RC" Line

2

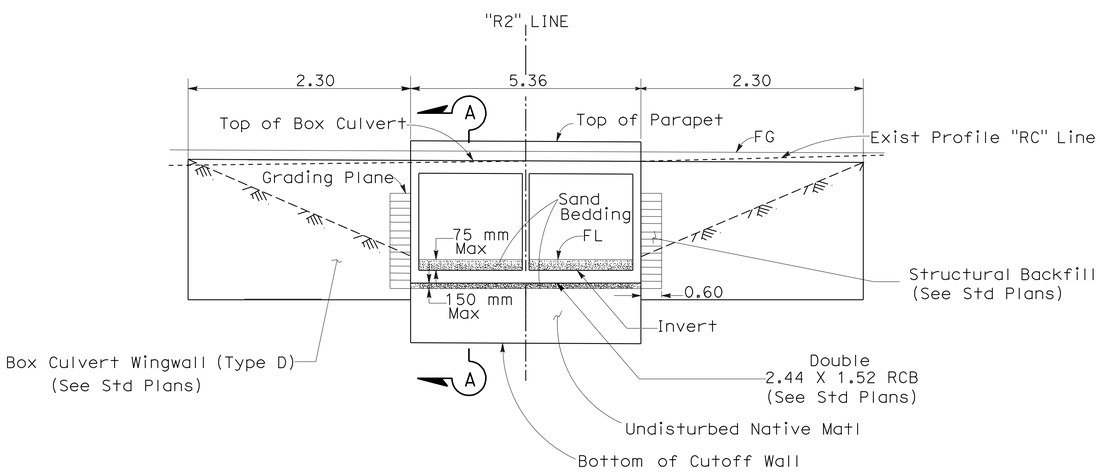

ELEVATION

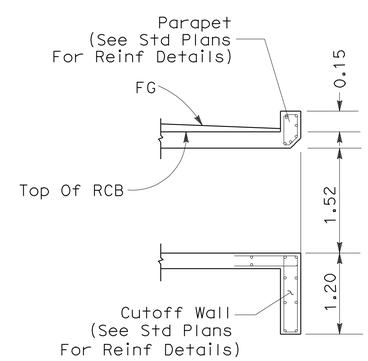

SECTION A-A

ALL DIMENSIONS ARE IN METERS UNLESS OTHERWISE SHOWN.

2 REVISED PER ADDENDUM No. 2 DATED NOVEMBER 19, 2010

DRAINAGE DETAILS

NO SCALE

DD-47

REVISED BY	DATE REVISED

CALCULATED-DESIGNED BY: RITCHIE FERRER
CHECKED BY: ROY J. SHAVER
FUNCTIONAL SUPERVISOR: DAVID FRANKE

STATE OF CALIFORNIA - DEPARTMENT OF TRANSPORTATION
Caltrans 06-DESIGN

LAST REVISION 05-16-10
DATE PLOTTED => 18-NOV-2010
TIME PLOTTED => 09:56

Dist	COUNTY	ROUTE	KILOMETER POST TOTAL PROJECT	SHEET No.	TOTAL SHEETS
05	Mon	101	R146.8/159.7	602	1402

REGISTERED CIVIL ENGINEER 5-16-10 DATE

7-26-10
PLANS APPROVAL DATE

REGISTERED PROFESSIONAL ENGINEER ROY J. SHAVER No. 44587 Exp. 3/31/12 CIVIL STATE OF CALIFORNIA

THE STATE OF CALIFORNIA OR ITS OFFICERS OR AGENTS SHALL NOT BE RESPONSIBLE FOR THE ACCURACY OR COMPLETENESS OF ELECTRONIC COPIES OF THIS PLAN SHEET.

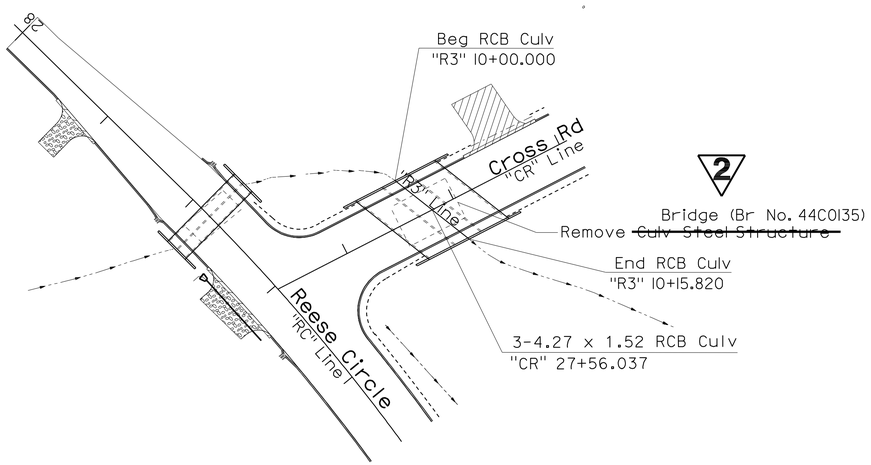

PLAN

DRAINAGE SYSTEM No. 166

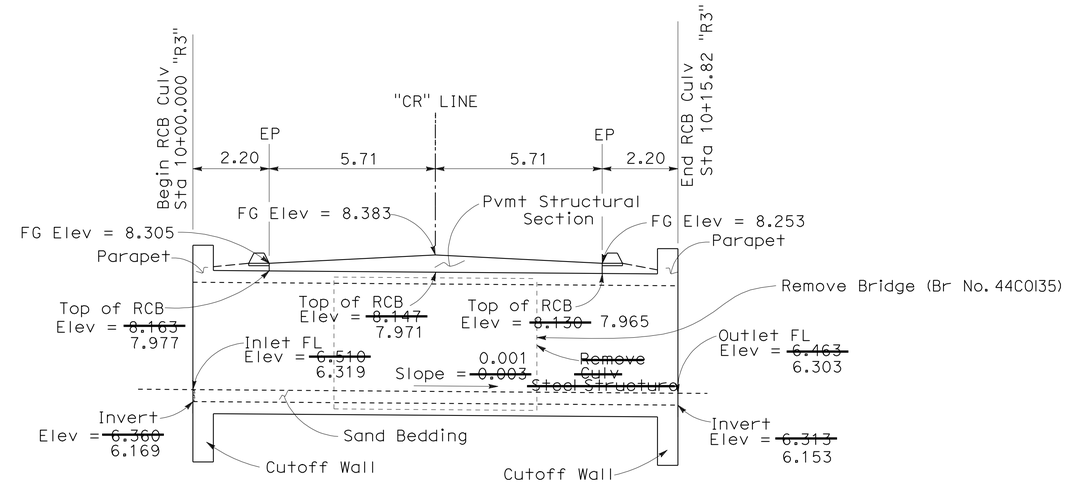

RCB CROSS SECTION

Sta 27+56.037 "CR" Line

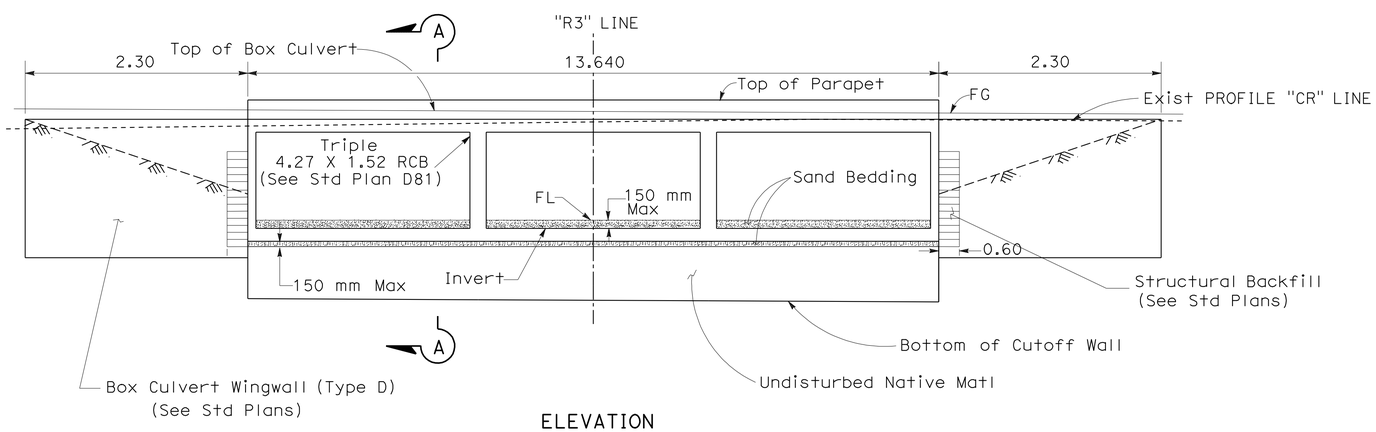

ELEVATION

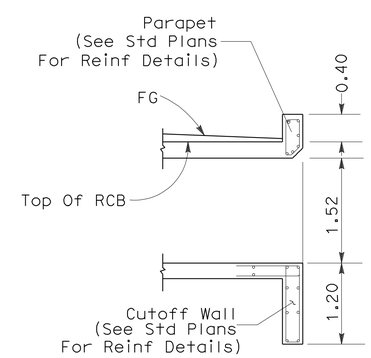

SECTION A-A

ALL DIMENSIONS ARE IN METERS
UNLESS OTHERWISE SHOWN.

2 REVISED PER ADDENDUM No. 2 DATED NOVEMBER 19, 2010

DRAINAGE DETAILS

NO SCALE

DD-48

STATE OF CALIFORNIA - DEPARTMENT OF TRANSPORTATION
Caltrans
06-DESIGN

FUNCTIONAL SUPERVISOR DAVID FRANKE
CALCULATED-DESIGNED BY ROY J. SHAVER
CHECKED BY RITCHIE FERRER
REVISED BY
DATE REVISED

LAST REVISION 05-16-10 DATE PLOTTED => 19-NOV-2010 TIME PLOTTED => 05:54

Dist	COUNTY	ROUTE	KILOMETER POST TOTAL PROJECT	SHEET No.	TOTAL SHEETS
05	Mon	101	R146.8/159.7	605	1402

REGISTERED CIVIL ENGINEER 5-16-10 DATE

7-26-10
PLANS APPROVAL DATE

REGISTERED PROFESSIONAL ENGINEER ROY J. SHAVER No. 44587 Exp. 3/31/12 CIVIL STATE OF CALIFORNIA

THE STATE OF CALIFORNIA OR ITS OFFICERS OR AGENTS SHALL NOT BE RESPONSIBLE FOR THE ACCURACY OR COMPLETENESS OF ELECTRONIC COPIES OF THIS PLAN SHEET.

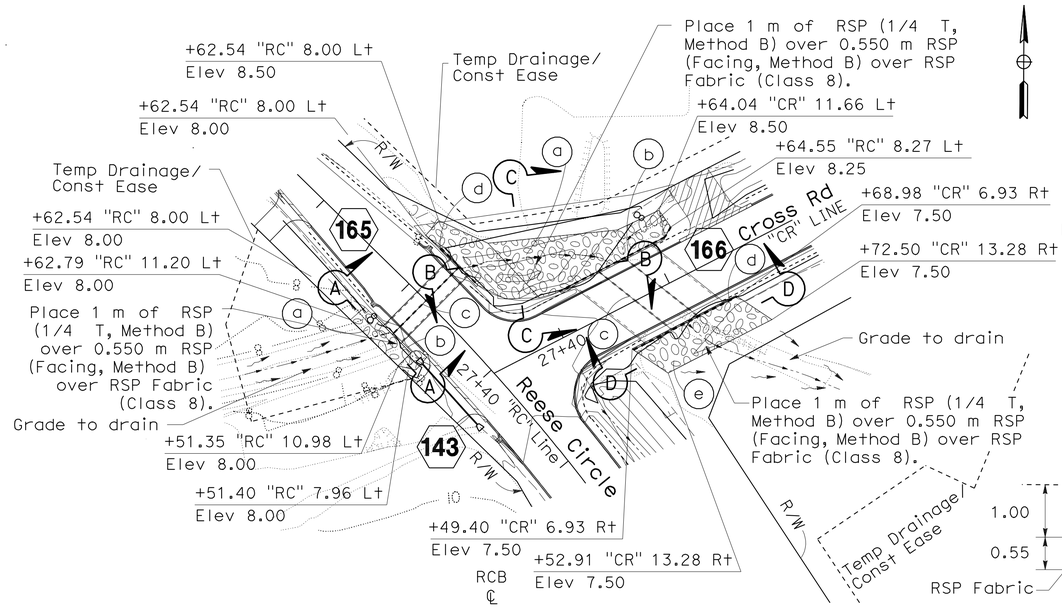

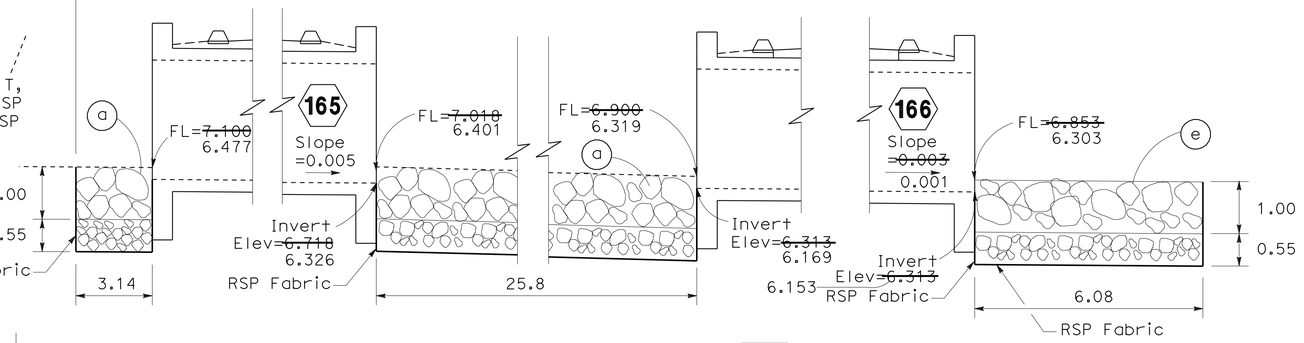

SECTION B-B 2

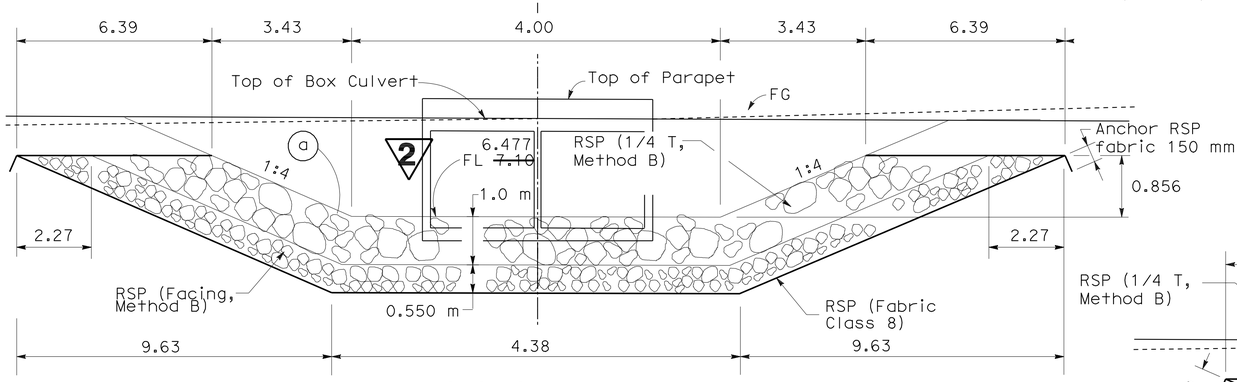

SECTION A-A

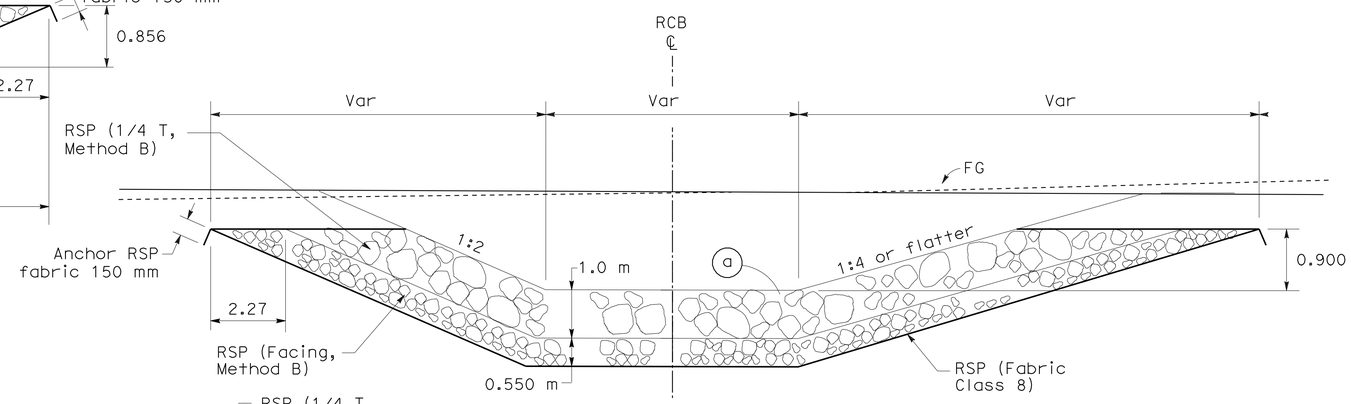

SECTION C-C

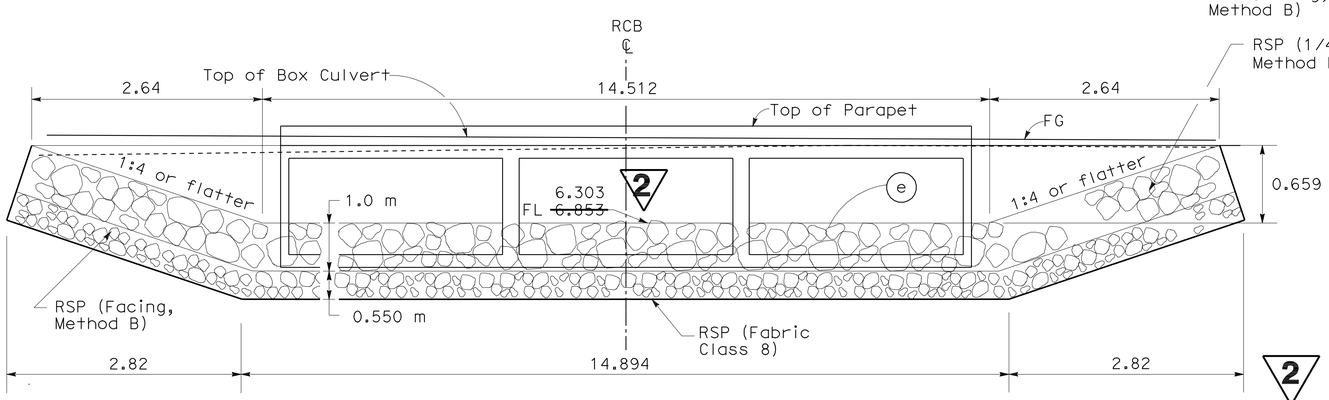

SECTION D-D

ALL DIMENSIONS ARE IN METERS UNLESS OTHERWISE SHOWN.

DRAINAGE DETAILS

2 **REVISED PER ADDENDUM No. 2 DATED NOVEMBER 19, 2010**

NO SCALE

DD-51

REVISED BY	DATE REVISED
D. MASSA	05/06/09

CARLOS BLANCAS
ROY SHAVER

CALCULATED-DESIGNED BY
CHECKED BY

FUNCTIONAL SUPERVISOR
DAVID FRANKE

STATE OF CALIFORNIA - DEPARTMENT OF TRANSPORTATION
Caltrans
06-DESIGN

LAST REVISION 05-16-10 DATE PLOTTED => 18-NOV-2010 TIME PLOTTED => 11:20

Dist	COUNTY	ROUTE	KILOMETER POST TOTAL PROJECT	SHEET No.	TOTAL SHEETS
05	Mon	101	R146.8/159.7	668	1402

REGISTERED CIVIL ENGINEER — DATE 5-16-10

PLANS APPROVAL DATE 7-26-10

REGISTERED PROFESSIONAL ENGINEER DANIEL B. MASSA No. 59095 Exp. 6/30/11 CIVIL STATE OF CALIFORNIA

THE STATE OF CALIFORNIA OR ITS OFFICERS OR AGENTS SHALL NOT BE RESPONSIBLE FOR THE ACCURACY OR COMPLETENESS OF ELECTRONIC COPIES OF THIS PLAN SHEET.

Caltrans Metric

SUMMARY OF DRAINAGE QUANTITIES

DRAINAGE PLAN SHEET No.	Misc IRON & STEEL	MH TYPE A	MH TYPE B	MH TYPE SO	MH FRAME & COVER	MH FRAME & GRATE	MH ADJUST MH	INLET MINOR CONCRETE (MINOR Str)	INLET PLACE HMA (Misc AREA)	MINOR CONCRETE (Misc CONSTRUCTION)	MINOR CONCRETE (BACKFILL)	APC 450 mm	APC 600 mm	APC 900 mm	RCP (RGJ) 300 mm	RCP 375 mm	RCP 450 mm	RCP 600 mm	RCP 750 mm	RCP 900 mm	RCP 1050 mm	RCP 1200 mm	RCP 1500 mm	RCP JACKED 600 mm	RCP JACKED 750 mm	RCP JACKED 900 mm	RCP JACKED 1050 mm	300 mm CSP DD (2.01 mm THICK)	300 mm CSP (2.01 mm THICK)	600 mm CSP DD (2.77 mm THICK)	900 mm CSP INLET (2.77 mm THICK)	1200 mm CSP RISER (2.77 mm THICK)	RSP (FACING, METHOD B)	RSP (1/4 T, METHOD B)	RSP (FABRIC CLASS 8)	200 mm PLASTIC PIPE	AFES 450 mm	AFES 600 mm	AFES 750 mm	AFES 900 mm	AFES 1200 mm	1500 mm WELDED STEEL PIPE (9.53 mm THICK)	CAP INLET	REMOVE INLET	REMOVE RSP	REMOVE CULVERT	REMOVE MH	REMOVE HW	REMOVE CONC DRAINAGE STRUCTURE	ABANDON Culv	SAND BACKFILL	CIPP 450 mm	CIPP 600 mm	CIPP 750 mm	CIPP 900 mm	DRAINAGE PLAN SHEET No.
	kg	EA	EA	EA	EA	EA	EA	m^3	m^2	m^3	m^3	m	m	m	m	m	m	m	m	m	m	m	m	m	m	m	m	m	m	m	m	m	m^3	m^3	m^2	m	EA	EA	EA	EA	EA	m	EA	EA	m^3	m	EA	EA	m^3	m	m^3	m	m	m	m	
DQ-1	1295							14.74	67.77				54.9					2.4						98.3									15.2		43.4			2							17.1										DQ-1
DQ-2	1188							15.17	67.79				169.6											60.3									15.2		43.4			2							6.4										DQ-2
DQ-3	610		1		1			64.81	34.07				161.7							22.0	52.3												495.0	350.0	680.0							16.2				14.8	1		29.4						DQ-3
DQ-4	860	3	2		4	1		12.57	11.39				213.6					12.1			22.8						146.8					3.80	34.6		70.7			2							12.3										DQ-4
DQ-5	970							11.07	42.08				200.3					14.0												54.5		1.90	42.2		92.4			3					1			2.3				41.2	11.7					DQ-5
DQ-6	324		4		4			5.74	15.93				26.5					254.6					73.5								3.7												1			82.2	2			54.7	15.5					DQ-6
DQ-7	540		2		2		3	5.56	19.66								9.7	32.5		13.9		120.7																					1		51.9	1									DQ-7
DQ-8	984		1			1	1	15.25	48.81							4.0		338.0		114.2												2.59	11.7		30.5					1															DQ-8
DQ-9	1403							18.01	85.32				95.5					148.0															7.6		21.7			1																	DQ-9
DQ-10	972							16.83	49.04				229.3					22.8															22.8		65.1			3																	DQ-10
DQ-11	567			1	1			13.66	29.99				64.0		2.0			9.3	~~118.5~~	1					118.5	1				31.5		1.39	26.0		72.1			2	1				1			3.9	1									DQ-11
DQ-12	540		5		4	1		6.26	30.45				101.2					204.3		395.9													14.6	15.2	80.1			2		1															DQ-12
DQ-13	1404							18.44	94.55				539.2																					7.6	21.7			1																	DQ-13
DQ-14	638						1	5.25	22.18				139.4					1.7												7.8			15.2		43.4			2					1			36.1	1									DQ-14
DQ-15	972			1	1			12.60	27.25				46.5					3.5		4.1													1.2		5.6								3			21.7	3									DQ-15
DQ-16	971							13.20	37.97				128.0		3.5			62.9	106.6												1.48	1.37	7.6		21.7			1																	DQ-16
DQ-17	1296							19.85	57.43				136.6					162.2												16.3			22.8		65.1			3																	DQ-17
DQ-18	796							14.77	29.35				33.9					103.3	156.0													2.4	23.6		66.7			2	1																	DQ-18
DQ-19	972		1			1		12.59	36.82				208.9																	18.5			49.8		114.1			4							1	67.4									DQ-19
DQ-20	540			2				6.10	19.65				25.3					72.5	111.0											20.0			46.4		131.8			7	2																	DQ-20
DQ-21	503	5	~~5~~			5		10.78	14.62				64.2		2.5			1	154.9						142.5							1.65			15.2			1	2																	DQ-21
DQ-22	848							12.91	24.58				194.4											174.0									335.2		613.4			2						7.6	71.2										DQ-22
DQ-23	864		2		2			11.19	32.62				104.2					46.1						52.4									30.4		86.8			4																	DQ-23
DQ-24	756		1		1			9.69	29.24				37.6					162.7															7.6		21.7			1							1	30.3									DQ-24
DQ-25	864							12.34	44.86				105.7					6.9						52.4									30.4		86.8			4								24.4									DQ-25
DQ-26	817							8.58	47.04			70.3	32.1											51.4							2.0		26.0		76.7		1	3								0.9									DQ-26
DQ-27	864							10.32	36.70				386.0																				22.8	15.2	108.5			5																	DQ-27
DQ-28													11.0																					7.6	21.7			2						2	1	308.9		3							DQ-28
DQ-29	969							17.41										256.5						23.0						22.0			70.0		185.0			3																	DQ-29
DQ-30	647							7.04										133.0		39.5													67.0		199.0	14.0	3			2															DQ-30
DQ-31	216							2.15									46.0	31.5		31.5													256.0		566.0		5	4		2															DQ-31
SHEET TOTAL	25190	~~3~~ 8	~~24~~ 19	2	20	9	5	404.88	1057.16	1.80		70.3	3509.6		8.0		4.0	55.7	2081.8	~~617.8~~ 528.5	621.1		75.1	120.7	73.5	511.8	~~142.5~~ 261.0	146.8			170.6	7.48	15.10	1696.9	395.6	3650.3	14.0	9	66	6	6		16.2	2	8	10.6	751.8	9	3	29.4	95.9	27.2					

2 2 1 1 2

2 REVISED PER ADDENDUM No. 2 DATED NOVEMBER 19, 2010

1 REVISED PER ADDENDUM No. 1 DATED NOVEMBER 16, 2010

DRAINAGE QUANTITIES DQ-61

STATE OF CALIFORNIA - DEPARTMENT OF TRANSPORTATION
Caltrans
06-DESIGN
FUNCTIONAL SUPERVISOR DAVID FRANKE
CALCULATED-DESIGNED BY DAN MASSA
CHECKED BY JOHNNY SOLANO
REVISED BY D. MASSA
DATE REVISED 01/06/10

LAST REVISION DATE PLOTTED => 18-NOV-2010 TIME PLOTTED => 11:20
05-10-10

Dist	COUNTY	ROUTE	KILOMETER POST TOTAL PROJECT	SHEET No.	TOTAL SHEETS
05	Mon	101	R146.8/159.7	670	1402

REGISTERED CIVIL ENGINEER — DATE 5-16-10

PLANS APPROVAL DATE 7-26-10

REGISTERED PROFESSIONAL ENGINEER — DANIEL B. MASSA No. 59095 Exp. 6/30/11 CIVIL — STATE OF CALIFORNIA

THE STATE OF CALIFORNIA OR ITS OFFICERS OR AGENTS SHALL NOT BE RESPONSIBLE FOR THE ACCURACY OR COMPLETENESS OF ELECTRONIC COPIES OF THIS PLAN SHEET.

Caltrans Metric

* See Sheet DQ-64 for Total

** See Sheet DQ-67 for Total

*** See Sheet Q-9 for Total

SUMMARY OF DRAINAGE QUANTITIES

DRAINAGE PLAN SHEET No.	Misc IRON & STEEL	MH TYPE A	MH TYPE B	MH TYPE SO	MH FRAME & COVER	MH FRAME & GRATE	MH ADJUST MH	INLET MINOR CONCRETE (MINOR STR)	INLET PLACE HMA (Misc AREA)	MINOR CONCRETE (Misc CONSTRUCTION)	MINOR CONCRETE (BACKFILL)	APC 450 mm	APC 600 mm	APC 900 mm	RCP (RGJ) 300 mm	RCP 375 mm	RCP 450 mm	RCP 600 mm	RCP 750 mm	RCP 900 mm	RCP 1050 mm	RCP 1200 mm	RCP 1500 mm	RCP JACKED 600 mm	RCP JACKED 750 mm	RCP JACKED 900 mm	RCP JACKED 1050 mm	300 mm CSP DD (2.01 mm THICK)	300 mm CSP (2.01 mm THICK)	600 mm CSP DD (2.77 mm THICK)	900 mm CSP INLET (2.77 mm THICK)	1200 mm CSP RISER (2.77 mm THICK)	300 mm ENTRANCE TAPER (TYPE 1, ALTERNATIVE A)	RSP (FACING, METHOD B)	RSP (1/4 T, METHOD B)	RSP FABRIC (CLASS 8)	200 mm PLASTIC PIPE	AFES 450 mm	AFES 600 mm	AFES 750 mm	AFES 900 mm	AFES 1200 mm	1500 mm WELDED STEEL PIPE (9.53 mm THICK)	CAP INLET	REMOVE INLET	REMOVE RSP	REMOVE CULVERT	REMOVE MH	REMOVE HW	REMOVE CONC DRAINAGE STRUCTURE	ABANDON Culv	SAND BACKFILL	CIPP 450 mm	CIPP 600 mm	CIPP 750 mm	CIPP 900 mm	DRAINAGE PLAN SHEET No.
	kg	EA	EA	EA	EA	EA	EA	m^3	m^2	m^3	m^3	m	m	m	m	m	m	m	m	m	m	m	m	m	m	m	m	m	m	m	m	m	EA	m^3	m^3	m^2	m	EA	EA	EA	EA	EA	m	EA	EA	m^3	m	EA	EA	m^3	m	m^3	m	m	m	m	
DD-6									1.79																								7.2		33.6																					DD-6
DD-7																												162.0					15	15.0		63.0																					DD-7
DD-8																																																								104.4	51.5	11.2	39.8	DD-8
DD-9										28.35																																															DD-9
DD-21										7.10																								90.0		160.0																					DD-21
DD-22																																		268.9		488.7																					DD-22
DD-25										12.00																								21.0		37.8																					DD-25
DD-33	1404																																	1112.0		1885.0																					DD-33
DD-34																																		1960.0		5416.0																					DD-34
DD-36										352.82																																															DD-36
DD-38									7.58																																																	DD-38
DD-40								54.00																																																			DD-40
SHEET TOTAL	1404	2						54.00	9.37	400.27																		162.0					15	3474.1		8084.1																					SHEET TOTAL
DQ-61	25190	~~7~~ 8 ~~24~~ 19		2	20	9	5	404.88	1057.16	1.80		70.3	3509.6		8.0	4.0	55.7	2081.8	528.5 ~~647.0~~	621.1	75.1	120.7	73.5	511.8	261.0 ~~142.5~~		146.8			170.6	7.48	15.10		1696.9	395.6	3650.3	14.0	9	66	6	6		16.20	2	8	10.6	751.8	9	3	29.4	95.9	27.2					SHEET TOTAL
DQ-62	19237	2	1		3	1		257.35	610.47	26.9	38.5	122.4	1533.3	163.3		25.9	86.3	1257.8	263.6	32.1				174.9	22.5	80.9			29.2	561.3	64.59		1413.3		4100.8		11	49	2	4	2			33	29.8	987.2		9		250.4	70.6					SHEET TOTAL
TOTAL	45831	10 ~~5~~ 20 ~~25~~		2	23	9	6	716.23	1677.00	428.97	38.5	192.7	5042.9	163.3	8.0	29.9	142.0	3339.6	792.1 ~~910.6~~	653.2	75.1	120.7	73.5	686.7	283.5 ~~165.0~~	80.9	146.8	162.0	29.2	731.9	72.07	15.10	15	6584.3	395.6	15835.2	14.0	20	115	8	10	2	16.20	2	41	40.4	1739.0	9	12	29.4	346.3	97.8	104.4	51.5	11.2	39.8	TOTAL
	**	2						**		***									1							1								**		**												*		*	*	*					

1 REVISED PER ADDENDUM No. 1 DATED NOVEMBER 16, 2010

2 REVISED PER ADDENDUM No. 2 DATED NOVEMBER 19, 2010

DRAINAGE QUANTITIES DQ-63

STATE OF CALIFORNIA - DEPARTMENT OF TRANSPORTATION

Caltrans 06-DESIGN

FUNCTIONAL SUPERVISOR DAVID FRANKE

CALCULATED-DESIGNED BY JOHNNY SOLANO

CHECKED BY DAN MASSA

REVISED BY D. MASSA

DATE REVISED 01/06/10

LAST REVISION 05-10-10

DATE PLOTTED => 18-NOV-2010

TIME PLOTTED => 11:20

Dist	COUNTY	ROUTE	KILOMETER POST TOTAL PROJECT	SHEET No.	TOTAL SHEETS
05	Mon	101	R146.8/159.7	671	1402

REGISTERED CIVIL ENGINEER 5-16-10 DATE

7-26-10
PLANS APPROVAL DATE

REGISTERED PROFESSIONAL ENGINEER ROY J. SHAVER No. 44587 Exp. 3/31/12 CIVIL STATE OF CALIFORNIA

THE STATE OF CALIFORNIA OR ITS OFFICERS OR AGENTS SHALL NOT BE RESPONSIBLE FOR THE ACCURACY OR COMPLETENESS OF ELECTRONIC COPIES OF THIS PLAN SHEET.

** See Sheet DQ-67 for Grand Total

(N) NOT A SEPARATE PAY ITEM, FOR INFORMATION ONLY.

1 REINFORCED CONCRETE BOX CULVERTS

DRAINAGE SYSTEM No. ⬡	DRAINAGE UNIT No. ○	Temp CREEK DIVERSION SYSTEM (N)	RSP (FACING, METHOD B)	¼ ~~1/2~~ T, METHOD B)	RSP FABRIC (Class 8)	BAR REINFORCING STEEL (BOX CULVERT)	CLASS 1 CONCRETE (BOX CULVERT)	CLASS 2 CONCRETE (WINGWALL)	REMOVE: CONC DRAINAGE STRUCTURE	REMOVE: CULVERT	SAND BEDDING	DESCRIPTION	STATION	DRAINAGE PLAN SHEET No.	DRAINAGE SYSTEM No. ⬡	DRAINAGE UNIT No. ○
		m	m^3	m^3	m^2	kg	m^3	m^3	m^3	m	m^3					
164	a		109.2	198.6	289.0							RSP w/FABRIC		D-25	164	a
	b							5.5				WINGWALL				b
	c					53584	326		20.1			BOX CULVERT	32+11.996"BR"-LINE			c
	d							5.5				WINGWALL				d
	e		51.6	93.8	160.9							RSP w/FABRIC				e
164	f	45.5										TCDS		D-25	164	f
165	a		19.0	34.5	78.7							RSP w/FABRIC		D-26	165	a
	b							3.5				WINGWALL				b
	c					5865	38		18.3		5.9	BOX CULVERT	27+56.000"RC"-LINE			c
	d							3.5				WINGWALL				d
	e	23.8										TCDS				e
165	f	12.2										TCDS		D-26	165	f
166	a		158.1	287.4	398.1				2			RSP w/FABRIC		D-26	166	a
	b							4.0				WINGWALL				b
	c					23394	163		~~34.1~~		30.4	BOX CULVERT	27+56.037"CR"-LINE			c
	d							4.0				WINGWALL				d
	e		65.5	119.0	193.5							RSP w/FABRIC				e
166	f	31.5										TCDS		D-26	166	f
167	a		14.2	25.8	65.3							RSP w/FABRIC		D-28	167	a
	b							1.5				WINGWALL				b
	c					9669	63			46.0		BOX CULVERT	31+33.554"CR"-LINE			c
	d							1.5				WINGWALL				d
	e		106.0	192.8	285.1							RSP w/FABRIC				e
167	f	42.0										TCDS		D-28	167	f
168	a							1.5				WINGWALL		D-28	168	a
	b					9650	64					BOX CULVERT	29+40.016"PL"-LINE			b
	c							1.5				WINGWALL				c
	d		31.3	56.9	111.1							RSP w/FABRIC				d
168	e	45.5										TCDS		D-28	168	e
		200.5	554.9	1008.8	1581.7	102162	654	32.0	~~72.5~~ 38.4	46.0	36.3			SHEET TOTAL		
			1	395.6				2		29.4	1739.0			SHEET DQ-63 TOTAL		
		200.5	554.9**	~~1008.8~~ 1404.4	1581.7 **	102162	654	32.0	~~181.9~~ 67.8		1785.0	36.3		TOTAL		

ROCK SLOPE PROTECTION (LINED GUTTER)

LOCATION	STATION	RSP (FACING METHOD B) m^3	FABRIC (CLASS 8) m^2
PRUNDALE S. ROAD	26+60.000 TO 28+55.000	135.0	258.0
BLACKIE ROAD	32+53.056 TO 33+41.776	236.0	451.0
BLACKIE ROAD	33+52.002 TO 33+83.932	56.0	107.0
POLLOCK ROAD	29+40.000 TO 31+25.000	248.0	473.0
POLLOCK ROAD	31+45.000 TO 33+10.000	221.0	422.0
TOTAL		896.0 **	1 711.0**

ABANDON DRAINAGE FACILITY

DRAINAGE SHEET No.	STATION	DESCRIPTION	Abn Culv m	SAND Bkf m^3
D-15	164+40.00 ℄ "M" LINE	450 mm CMP	13.6	2.2
D-16	166+73.58 ℄ "M" LINE, 2.3 Lt	450 mm CMP	7.3	1.2
D-16	166+73.58 ℄ "M" LINE, 4.0 Rt	450 mm CMP	6.4	1.0
D-16	166+98.72 ℄ "M" LINE, 2.2 Lt	450 mm CMP	7.3	1.2
D-16	166+98.72 ℄ "M" LINE, 3.6 Rt	450 mm CMP	6.9	1.1
D-25	31+80.00 ℄ "BR" LINE	450 mm CMP	15.0	2.4
D-26	26+08.57 ℄ "RC" LINE	450 mm CMP	12.3	2.0
D-30	128+28.68 ℄ "O" LINE	450 mm CMP	19.1	3.0
D-30	130+42.47 ℄ "O" LINE	450 mm CMP	15.5	2.5
D-41	192+30.27 ℄ "SS" LINE	760 mm CMP	34.1	15.5
D-41	192+88.18 ℄ "SS" LINE	600 mm CMP	13.7	3.9
D-41	193+03.93 ℄ "SS" LINE	450 mm CMP	8.3	1.3
D-42	192+62.15 ℄ "SN" LINE	450 mm CMP	8.1	1.3
D-42	193+38.45 ℄ "SN" LINE	450 mm CMP	13.9	2.2
D-43	194+22.93 ℄ "SN" LINE	450 mm CMP	19.8	3.2
D-45	13+96.85 ℄ "CHCEV" LINE	600 mm CMP	22.4	6.3
D-49	199+32.63 ℄ "CH-4" LINE	300 mm CMP	5.2	0.4
		SHEET TOTAL	228.9	50.7
		SHEET DQ-63 TOTAL	346.3	97.8
		TOTAL	575.2	148.5

2 **REVISED PER ADDENDUM No. 2 DATED NOVEMBER 19, 2010**

1 **REVISED PER ADDENDUM No. 1 DATED NOVEMBER 16, 2010**

DRAINAGE QUANTITIES

DQ-64

STATE OF CALIFORNIA - DEPARTMENT OF TRANSPORTATION
Caltrans
06-DESIGN
FUNCTIONAL SUPERVISOR DAVID FRANKE
CALCULATED-DESIGNED BY JOHNNY SOLANO
CHECKED BY ROY J. SHAVER
REVISED BY
DATE REVISED

LAST REVISION 05-04-10 DATE PLOTTED => 18-NOV-2010 TIME PLOTTED => 11:38

Dist	COUNTY	ROUTE	KILOMETER POST TOTAL PROJECT	SHEET No.	TOTAL SHEETS
05	Mon	101	R146.8/159.7	756	1402

REGISTERED CIVIL ENGINEER 4-30-10 DATE

7-26-10
PLANS APPROVAL DATE

REGISTERED PROFESSIONAL ENGINEER ROY J. SHAVER No. 44587 Exp. 3/31/12 CIVIL STATE OF CALIFORNIA

THE STATE OF CALIFORNIA OR ITS OFFICERS OR AGENTS SHALL NOT BE RESPONSIBLE FOR THE ACCURACY OR COMPLETENESS OF ELECTRONIC COPIES OF THIS PLAN SHEET.

Caltrans Metric

STAGE 2 - PHASE 1:

CONSTRUCTION SEQUENCE: (Br No. 44C0135)

1. REMOVE ~~EXISTING~~ BRIDGE ~~STRUCTURE~~ AT CROSS ROAD AND CONSTRUCT TRIPLE RCB CULVERT ACROSS CROSS ROAD. 2
2. CONSTRUCT EAST PORTION OF REESE CIRCLE/CROSS ROAD INTERSECTION.

TRAFFIC: MAINLINE ON EXISTING. LOCAL ROADS ON EXISTING, OPEN CROSS ROAD AT STA 31+30 TO 31+60 AND CLOSE CROSS ROAD AT REESE CIRCLE, EAST OF RCB CULVERT.

STAGE 2 - PHASE 2:

CONSTRUCTION SEQUENCE:

1. CONSTRUCT ORCHARD LANE CUL-DE-SAC.

TRAFFIC: MAINLINE ON EXISTING. LOCAL ROADS ON EXISTING. ORCHARD LANE ACCESS TO SR 101 CLOSED. ORCHARD LANE TRAFFIC ROUTED TO POLLOCK LANE AND PESANTE ROAD.

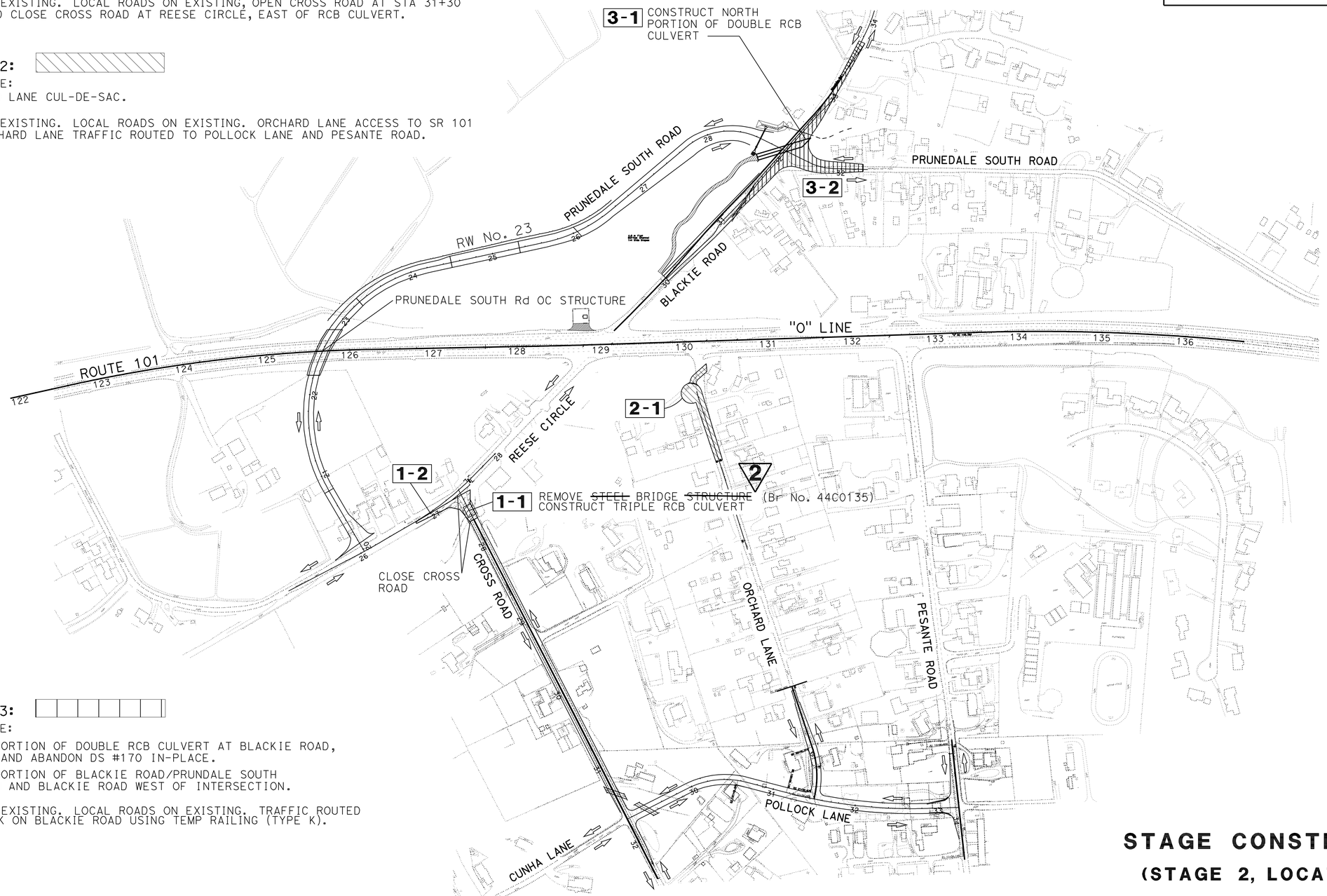

STAGE 2 - PHASE 3:

CONSTRUCTION SEQUENCE:

1. CONSTRUCT NORTH PORTION OF DOUBLE RCB CULVERT AT BLACKIE ROAD, OPEN NEW CULVERT AND ABANDON DS #170 IN-PLACE.
2. CONSTRUCT NORTH PORTION OF BLACKIE ROAD/PRUNDALE SOUTH ROAD INTERSECTION AND BLACKIE ROAD WEST OF INTERSECTION.

TRAFFIC: MAINLINE ON EXISTING. LOCAL ROADS ON EXISTING. TRAFFIC ROUTED THROUGH WORK ON BLACKIE ROAD USING TEMP RAILING (TYPE K).

2 **REVISED PER ADDENDUM No. 2 DATED NOVEMBER 19, 2010**

STAGE CONSTRUCTION
(STAGE 2, LOCATION 2)

NO SCALE **SC-30**

REVISED BY	DATE REVISED

CALCULATED-DESIGNED BY: ROY J. SHAVER
CHECKED BY: RONNIE KIER

FUNCTIONAL SUPERVISOR: DAVID FRANKE

STATE OF CALIFORNIA - DEPARTMENT OF TRANSPORTATION
Caltrans 06-DESIGN

LAST REVISION 05-17-10 | DATE PLOTTED => 18-NOV-2010 | TIME PLOTTED => 11:20

Dist	COUNTY	ROUTE	KILOMETER POST TOTAL PROJECT	SHEET No.	TOTAL SHEETS
05	Mon	101	R146.8/159.7	759	1402

Ronnie K. Kier 5-16-10
REGISTERED CIVIL ENGINEER DATE

7-26-10
PLANS APPROVAL DATE

REGISTERED PROFESSIONAL ENGINEER RONNIE K. KIER No. C60877 Exp. 12/31/11 CIVIL STATE OF CALIFORNIA

THE STATE OF CALIFORNIA OR ITS OFFICERS OR AGENTS SHALL NOT BE RESPONSIBLE FOR THE ACCURACY OR COMPLETENESS OF ELECTRONIC COPIES OF THIS PLAN SHEET.

Caltrans Metric

STAGE 1 - PHASE 1:

CONSTRUCTION SEQUENCE:

1. RE-STRIPE ROUTE 101 NB AND SB ALIGNMENTS AT SAN MIGUEL CANYON Rd OC (SEE TH-35 THROUGH TH-37).
2. UNDER TEMPORARY TRAFFIC CONTROL SYSTEM, REMOVE CONCRETE BARRIER, CONSTRUCT CROSS OVER AND PLACE TEMPORARY RAILING (TYPE K) TO PROTECT 'BOUNDS' ~~(SEE TH-35 THROUGH TH-37 AND SCD-5).~~(SEE THD-7 THROUGH THD-12). 2
3. PLACE TEMPORARY RAILING (TYPE K) ON ROUTE 101 NB OUTSIDE ETW AND CONSTRUCT FOOTING FOR THE SAN MIGUEL CANYON Rd OC.

STAGE 1 - PHASE 2:

CONSTRUCTION SEQUENCE:

1. RELOCATE TEMPORARY RAILING (TYPE K) ON ROUTE 101 INSIDE ETW'S (SEE TH-38).
2. PLACE TEMPORARY RAILING (TYPE K) ON THE SAN MIGUEL CANYON Rd OC AND SB OFF RAMP (SEE TH-38).
3. CONSTRUCT IMPROVEMENTS FOR SAN MIGUEL CANYON Rd OC, SAN MIGUEL CANYON Rd, AND SAN MIGUEL CANYON Rd SB OFF RAMP. (INCLUDES: RW No. 16, RW No. 18, RW No. 60, IRRIGATION PLAN AND PLANTING PLAN)
   NOTE: FOR THE TEMPORARY CLOSURE OF ROUTE 101 NB AND SB FOR FALSEWORK ERECTION OF THE SAN MIGUEL CANYON Rd OC WIDENING SEE TH-39 THROUGH TH-44.

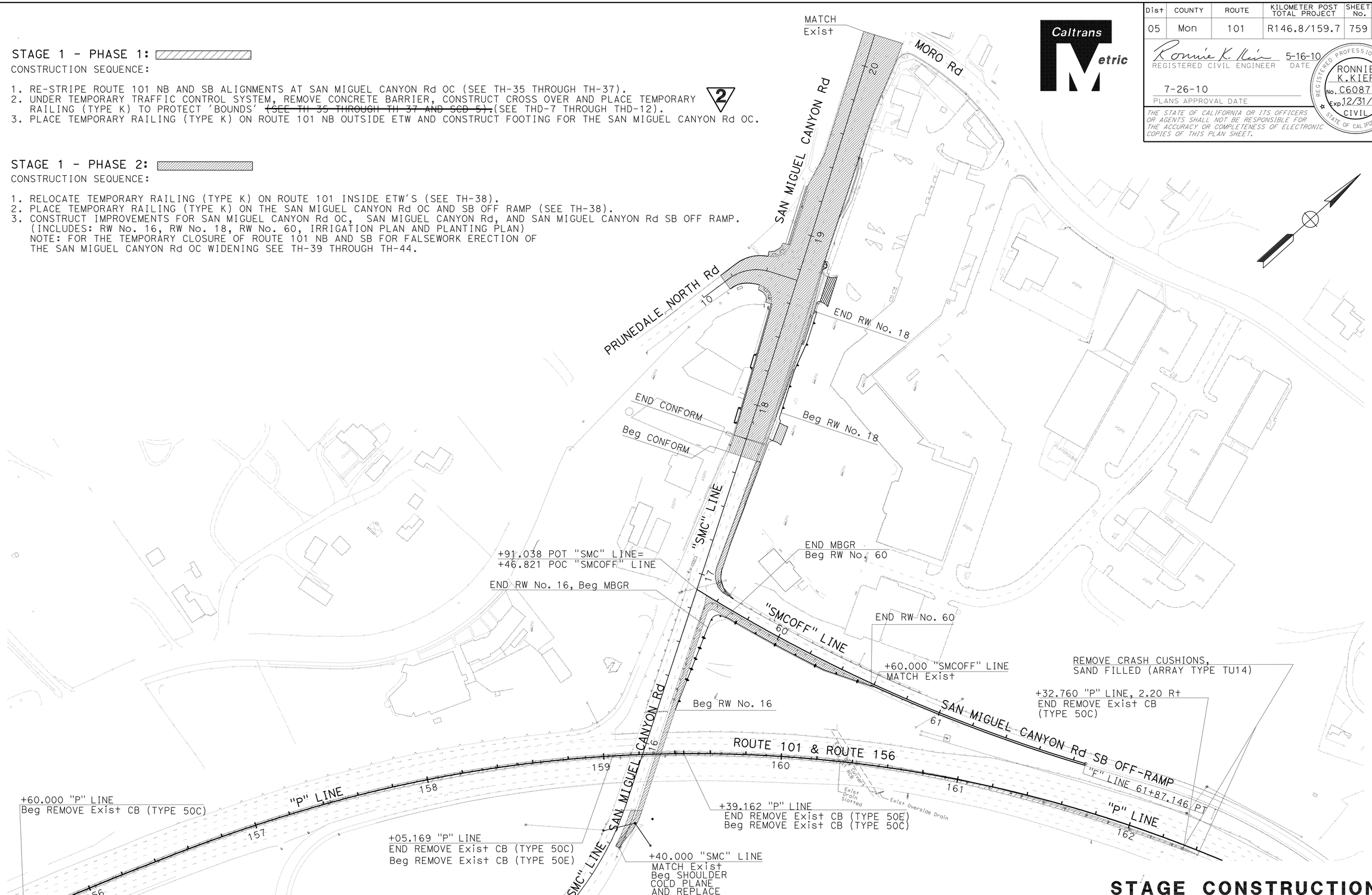

2 **REVISED PER ADDENDUM No. 2**
DATED NOVEMBER 19, 2010

STAGE CONSTRUCTION
(STAGE 1, LOCATION 3)

SCALE 1:1000

SC-33

STATE OF CALIFORNIA - DEPARTMENT OF TRANSPORTATION	FUNCTIONAL SUPERVISOR	CALCULATED-DESIGNED BY	RANDON HOLLAND
Caltrans	DAVID FRANKE	CHECKED BY	DAN MASSA
06-DESIGN		REVISED BY	DATE REVISED

LAST REVISION 05/17/10 | DATE PLOTTED => 18-NOV-2010 | TIME PLOTTED => 10:38

BORDER LAST REVISED 3/1/2007 | RELATIVE BORDER SCALE IS IN MILLIMETERS 0 20 40 60 80 | USERNAME => s135318 | DGN FILE => 50161ema033.add | CU 06226 | EA 0161E1

Dist	COUNTY	ROUTE	KILOMETER POST TOTAL PROJECT	SHEET No.	TOTAL SHEETS
05	Mon	101	R146.8/159.7	1011	1402

REGISTERED CIVIL ENGINEER 5-16-10 DATE

7-26-10
PLANS APPROVAL DATE

REGISTERED PROFESSIONAL ENGINEER DANIEL B. MASSA No. 59095 Exp. 6/30/11 CIVIL STATE OF CALIFORNIA

THE STATE OF CALIFORNIA OR ITS OFFICERS OR AGENTS SHALL NOT BE RESPONSIBLE FOR THE ACCURACY OR COMPLETENESS OF ELECTRONIC COPIES OF THIS PLAN SHEET.

Caltrans Metric

SOUND WALL ITEMS

SOUND WALL / LOL STATION TO LOL STATION	SOUND WALL (BARRIER) (MASONRY BLOCK)	CONCRETE BARRIER (TYPE 736 SV)	400 mm CIDH Conc PILING (BARRIER)	ACCESS GATES (N)	STRUCTURAL CONCRETE, ANCHOR BLOCK TRANSITION
	m^2	m	m	EA	m^3
SOUND WALL 1 / "M" LINE STA 142+80.000 TO STA 144+10.000	321	150	468	1	1
SOUND WALL 2 / "M" LINE STA 164+21.700 TO STA 169+80.000	1 874	558	1 707	2	2
TOTAL	2 195	718	2 175	3	3

(N) NOT A SEPARATE PAY ITEM, FOR INFORMATION ONLY.

MINOR CONCRETE (EXPOSED AGGREGATE CONCRETE)

LOCATION	STATION TO STATION	MINOR CONCRETE (TEXTURE PAVING)
		m^2
SB ON RAMP SALA Rd	"SR-1" LINE 101+88.00 TO 102+20.00	136
NB OFF RAMP SALA Rd	"SR-2" LINE 200+82.49 TO 201+24.92	202
SB OFF RAMP SALA Rd	"SR-3" LINE 303+33.83 TO 303+63.11	241
NB ON RAMP SALA Rd	"SR-4" LINE 401+89.79 TO 402+38.27	234
SB ON RAMP ECHO VALLEY Rd	"CH-1" LINE 189+91.48 TO 190+47.72	238
NB OFF RAMP CRAZY HORSE CANYON Rd	"CH-2" LINE 190+57.69 TO 191+15.15	280
SB OFF RAMP ECHO VALLEY Rd	"CH-3" LINE 197+86.98 TO 198+19.84	141
NB ON CRAZY HORSE CANYON Rd	"CH-4" LINE 198+13.01 TO 198+56.92	191
	TOTAL	1663

RETAINING WALL QUANTITIES

WALL No.	STRUCTURAL CONCRETE (RETAINING WALL)	CONCRETE BARRIER (TYPE 736A)	CONCRETE BARRIER (TYPE 60D)	STRUCTURE EXCAVATION (RETAINING WALL)	STRUCTURE BACKFILL (RETAINING WALL)	ARCHITECTURAL TREATMENT (DRYSTACK STONE TEXTURE)	PERVIOUS BACKFILL MATERIAL (N)	BAR REINFORCING STEEL	CABLE RAILING
	m^3	m	m	m^3	m^3	m^2	m^3	Kg	m
WALL No. 10	205.6		115.8	632.4	519.7	154.7	90.9	9 391.3	115.7
WALL No. 18	97.6	33.5		236.3	155.3	87.3	18.4	3 958.9	
TOTAL	303.2	33.5	115.8	868.7	675.0	242.0	109.3	13 350.2	115.7*

(N) NOT A SEPARATE PAY ITEM, FOR INFORMATION ONLY.

* SEE CABLE RAILING TABLE ON SHEET Q-11 FOR TOTAL QUANTITY.

CONCRETE PAVEMENT JOINT SEALANT

1 LOCATION 1 MAINLINE PCC PAVEMENT	SEAL PAVEMENT JOINT	SEAL LONGITUDINAL ISOLATION JOINT
	m	m
~~SB ON RAMP SALA Rd~~	6 762	2 ~~4 692~~ 330
"M" LINE Sta 142+60 TO 154+33 TOTAL	6 762	~~4 692~~ 330

TRANSVERSE WEAKENED PLANE JOINTS SHALL BE TYPE A1 COMPRESSION SEAL.
LONGITUDINAL WEAKENED PLANE JOINTS SHALL BE TYPE A2 LIQUID SEALANT.

2 REVISED PER ADDENDUM No. 2 DATED NOVEMBER 19, 2010

1 REVISED PER ADDENDUM No. 1 DATED NOVEMBER 16, 2010

SUMMARY OF QUANTITIES

Q-10

RANDON HOLLAND — REVISED BY
DAN MASSA — DATE REVISED
CALCULATED-DESIGNED BY
CHECKED BY
FUNCTIONAL SUPERVISOR DAVID FRANKE

STATE OF CALIFORNIA - DEPARTMENT OF TRANSPORTATION
Caltrans 06-DESIGN

LAST REVISION 05-16-10 DATE PLOTTED => 18-NOV-2010 TIME PLOTTED => 11:21

DIST	COUNTY	ROUTE	KILOMETER POST TOTAL PROJECT	SHEET No	TOTAL SHEETS
05	Mon	101	R146.8/159.7	1338	1402

REGISTERED CIVIL ENGINEER 05-06-10 DATE

7-26-10
PLANS APPROVAL DATE

REGISTERED PROFESSIONAL ENGINEER HERNAN PEREZ No. 60993 Exp. 12-31-10 CIVIL STATE OF CALIFORNIA

The State of California or its officers or agents shall not be responsible for the accuracy or completeness of electronic copies of this plan sheet.

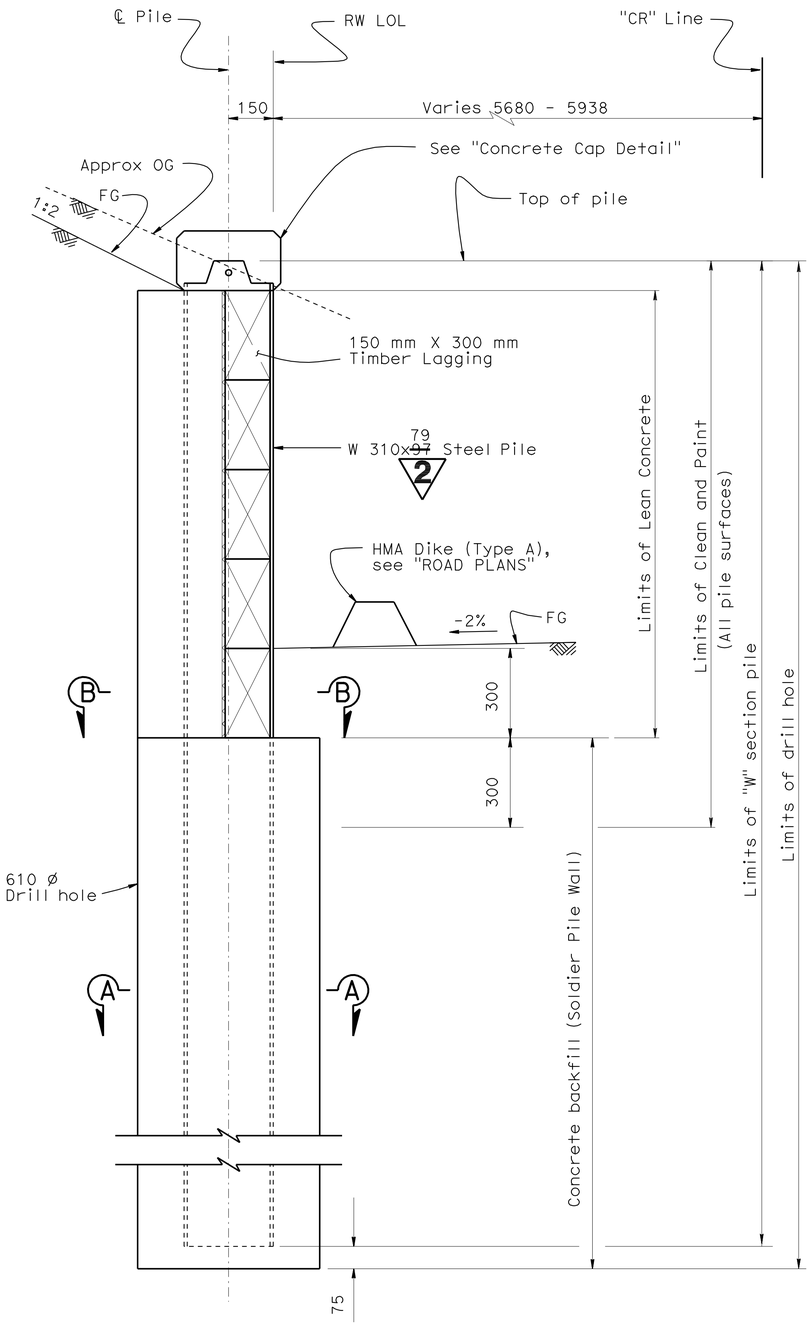

TYPICAL SECTION

1:10

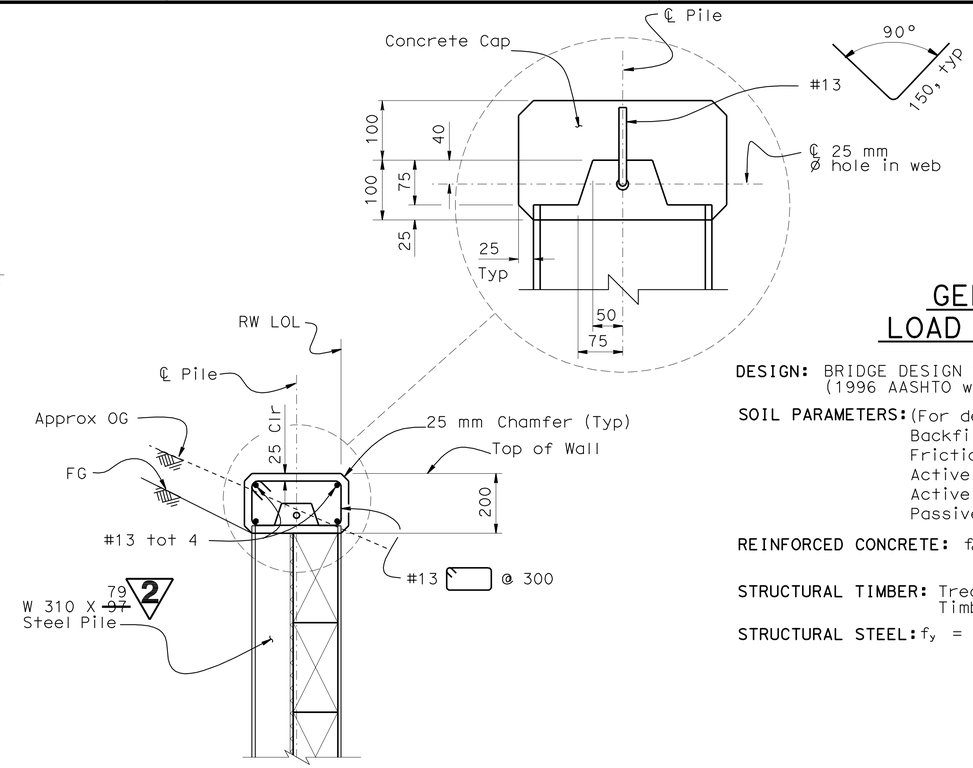

CONCRETE CAP DETAIL

1:10

GENERAL NOTES
LOAD FACTOR DESIGN

DESIGN: BRIDGE DESIGN SPECIFICATIONS - April 2000 (LFD)
(1996 AASHTO with interims and Revisions by CALTRANS)

SOIL PARAMETERS: (For determination of Design Lateral Earth Pressures)
Backfill weight = 18.9 kN/m^3
Friction Angle = 34°
Active Pressure coefficient, K_a = 0.56 (Above lagging)
Active Pressure coefficient, K_a = 0.28 (Below lagging)
Passive Pressure coefficient, K_p = 3.5

REINFORCED CONCRETE: f_c' = 25 MPa f_y = 420 MPa

STRUCTURAL TIMBER: Treated Douglas Fir. Grade No. 1 or better
Timber to be full sawn

STRUCTURAL STEEL: f_y = 345 MPa, ASTM A709/A709M Grade 50

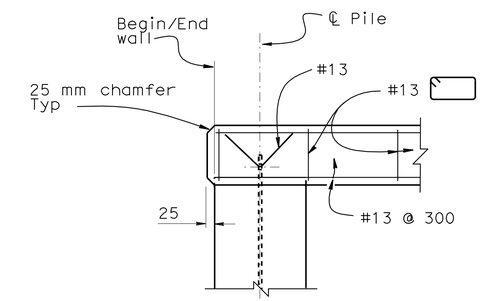

BEGIN / END WALL DETAIL

1:10

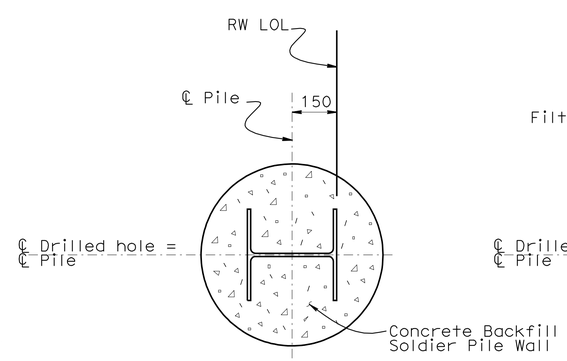

SECTION A-A

1:10

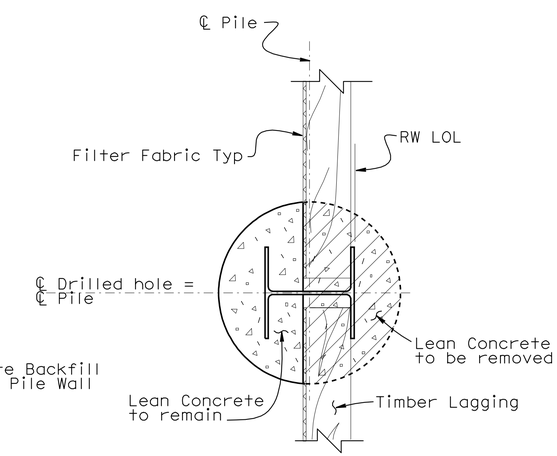

SECTION B-B

1:10

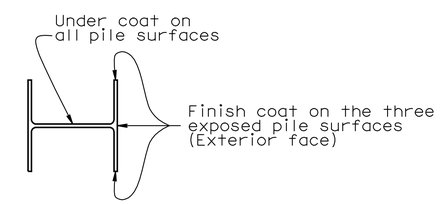

LIMITS OF CLEAN & PAINT
STEEL PILE

NO SCALE

Notes

1. Treated timber to be placed parallel to top of wall
2. For number of lagging members and pile length, see "Structure Plan" sheet

2 REVISED PER ADDENDUM No. 2 DATED NOVEMBER 19, 2010

Caltrans Metric

	BY	CHECKED
DESIGN	Hernan Perez	Aram Salimi
DETAILS	M. Lane / B. Jenko	Hernan Perez
QUANTITIES	Rachel Washington	Vivian Dang

STATE OF CALIFORNIA
DEPARTMENT OF TRANSPORTATION

DIVISION OF ENGINEERING SERVICES
STRUCTURE DESIGN
DESIGN BRANCH 6

BRIDGE NO. N/A
KILOMETER POST R146.8/161

RETAINING WALL NO. 30 AT CROSS RD
TYPICAL SECTION

ALL DIMENSIONS ARE IN MILLIMETERS UNLESS OTHERWISE SHOWN

ORIGINAL SCALE IN MILLIMETERS FOR REDUCED PLANS 0 10 20 30 40 50 60 70 80 90 100

CU 05
EA 0161E1

DISREGARD PRINTS BEARING EARLIER REVISION DATES

REVISION DATES: 01-18-09 12-18-09 05-06-10 03-02-09 05-11-09 9-28-09 10-18-09 10-28-09 11-05-09 12-14-09

SHEET 4 OF 5

FILE => 44e0000-k-ts.add

STRUCTURES DESIGN DETAIL SHEET (METRIC) (REV.03-17-04)

USERNAME => s135318 DATE PLOTTED => 18-NOV-2010 TIME PLOTTED => 10:39

DIST	COUNTY	ROUTE	KILOMETER POST TOTAL PROJECT	SHEET No	TOTAL SHEETS
05	Mon	101	R146.8/159.7	1390	1402

REGISTERED CIVIL ENGINEER 05-06-10 DATE

7-26-10
PLANS APPROVAL DATE

REGISTERED PROFESSIONAL ENGINEER HERNAN PEREZ No. 60993 Exp. 12/31/10 CIVIL STATE OF CALIFORNIA

The State of California or its officers or agents shall not be responsible for the accuracy or completeness of electronic copies of this plan sheet.

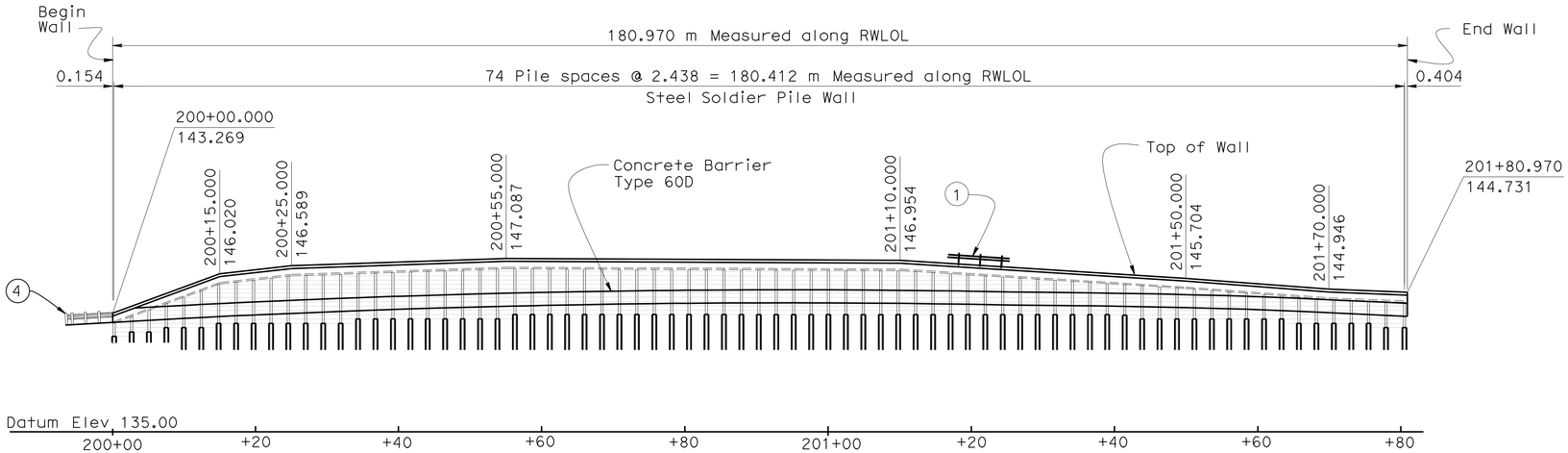

DEVELOPED ELEVATION

Horizontal 1:400
Vertical 1:200

NOTE

Architectural Treatment not shown, see "Architectural Treatment" details

Notes:

1. Cable Railing, see Std Plans B11-47
2. Temporary Railing (Type K), see "Road Plans"
3. Concrete Barrier, Type 60D
4. MBGR, See "Road Plans"

QUANTITIES

STRUCTURE EXCAVATION (SOLDIER PILE WALL)	294	m^3
STRUCTURE BACKFILL (SOLDIER PILE WALL)	40	m^3
LEAN CONCRETE BACKFILL	59	m^3
STEEL SOLDIER PILE (W310 X 129)	466	m
DRILLED HOLE (610 MM)	434 ~~265~~	m
STRUCTURAL CONCRETE, RETAINING WALL	150	m^3
CLASS 2 CONCRETE (BACKFILL)	78	m^3
ARCHITECTURAL TREATMENT (DRYSTACK STONE TEXTURE)	320	m^2
BAR REINFORCING STEEL (RETAINING WALL)	20 500	kg
TIMBER LAGGING	69	m^3
CLEAN AND PAINT STEEL SOLDIER PILING	LUMP SUM	
MINOR CONCRETE (GUTTER)	180	m
CABLE RAILING	180	m
CONCRETE BARRIER (TYPE 60D)	180	m

2

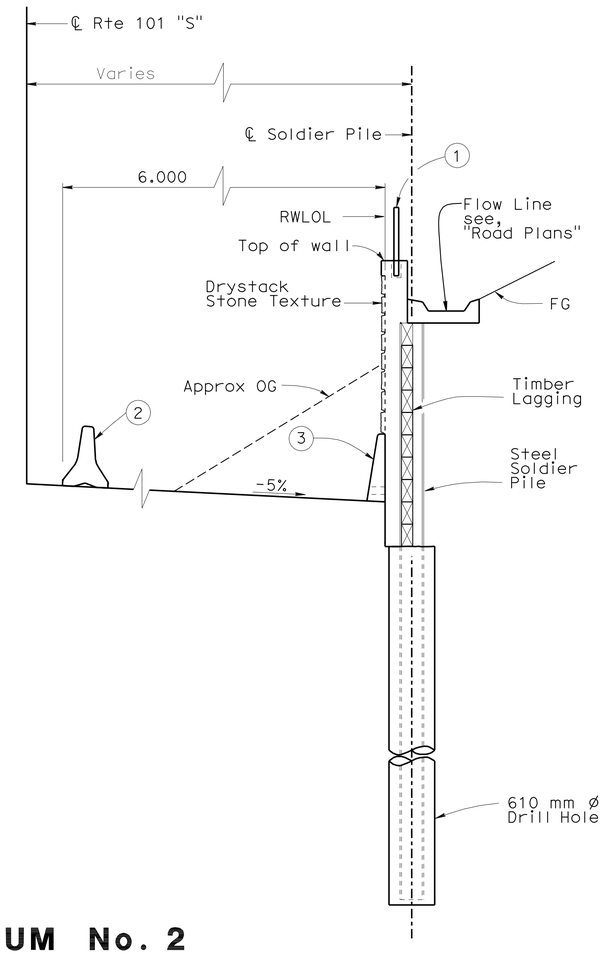

TYPICAL SECTION

1:40

CURVE DATA
Rte 101 "S"

R = 940.000
Δ = 13°28′ 47.8"
T = 111.089
L = 221.153

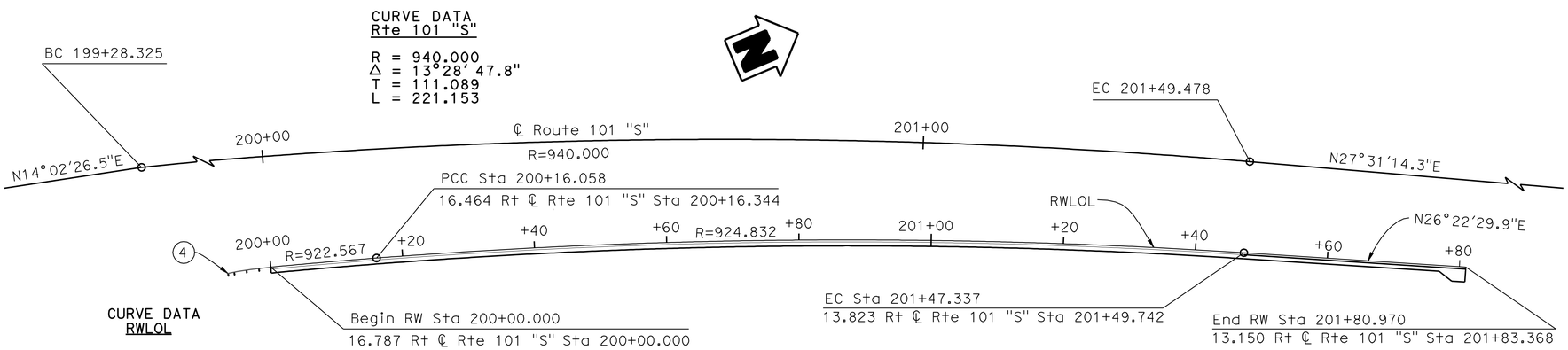

CURVE DATA
RWLOL

R = 922.567
Δ = 0°59′ 50"
T = 8.029
L = 16.058

PLAN

1:400

CURVE DATA
RWLOL

R = 924.832
Δ = 8°7′ 59"
T = 65.750
L = 131.279

Note

Soldier Piles not shown. For details see, "Structure Plan" sheets

2 **REVISED PER ADDENDUM No. 2 DATED NOVEMBER 19, 2010**

For "General Notes" and "Index to Plans", see "Index to Plans" sheet

Caltrans Metric

Fritz Hoffman
DESIGN ENGINEER

	BY	CHECKED
DESIGN	A. Salimi	R. Coria
DETAILS	K.Chonkria/M.Lane	H. Coria
QUANTITIES	H. Coria	R. Auer

LOAD & RESISTANCE FACTOR DESIGN — LIVE LOADING: HL93 W/"LOW-BOY"; PERMIT DESIGN VEHICLE

	BY	CHECKED
LAYOUT	K. Chonkria	G. Reyes
SPECIFICATIONS	Serisha Nelapatla	PLANS AND SPECS COMPARED Serisha Nelapatla

STATE OF CALIFORNIA
DEPARTMENT OF TRANSPORTATION

DIVISION OF ENGINEERING SERVICES
STRUCTURE DESIGN
DESIGN BRANCH 6

BRIDGE NO. 44E0016
KILOMETER POST 158.85

RETAINING WALL NO. 200
GENERAL PLAN

ALL DIMENSIONS ARE IN METERS UNLESS OTHERWISE SHOWN

ORIGINAL SCALE IN MILLIMETERS FOR REDUCED PLANS 0 10 20 30 40 50 60 70 80 90 100

CU 05
EA 0161E1

DISREGARD PRINTS BEARING EARLIER REVISION DATES

REVISION DATES: 07-22-08 | 03-29-10 | 05-06-10 | 2-3-09 | 02-26-09 | 10-15-09 | 12-11-09 | 03-16-10 | 03-18-10 | 03-24-10

SHEET 1 OF 13

FILE => 44e0016-a-gp1.add

STRUCTURES DESIGN GENERAL PLAN SHEET (METRIC) (REV.07-24-06)

USERNAME => s135318 DATE PLOTTED => 18-NOV-2010 TIME PLOTTED => 10:39