Dist	COUNTY	ROUTE	KILOMETER POST TOTAL PROJECT	SHEET No.	TOTAL SHEETS
05	Mon	101	R146.8/159.7	2	1402

REGISTERED CIVIL ENGINEER — DATE 5-16-10

PLANS APPROVAL DATE 7-26-10

REGISTERED PROFESSIONAL ENGINEER — DANIEL B. MASSA No. 59095 Exp. 6/30/11 CIVIL — STATE OF CALIFORNIA

THE STATE OF CALIFORNIA OR ITS OFFICERS OR AGENTS SHALL NOT BE RESPONSIBLE FOR THE ACCURACY OR COMPLETENESS OF ELECTRONIC COPIES OF THIS PLAN SHEET.

Caltrans Metric

NOTES:

1. DIMENSIONS OF THE PAVEMENT STRUCTURES ARE SUBJECT TO TOLERANCES SPECIFIED IN THE STANDARD SPECIFICATIONS.
2. SUPERELEVATIONS AS SHOWN OR AS DIRECTED BY THE ENGINEER.
3. FOR LOCATION AND TYPE OF DIKE, BARRIER DTBB, AND MBGR SEE LAYOUTS, SUMMARY OF QUANTITIES AND CONSTRUCTION DETAIL SHEETS.
4. FOR CONTOUR GRADING, SEE DRAINAGE SHEETS.
5. FOR COMPLETE RIGHT OF WAY ACCURATE ACCESS DATA, SEE RIGHT OF WAY RECORD MAPS AT DISTRICT OFFICE.

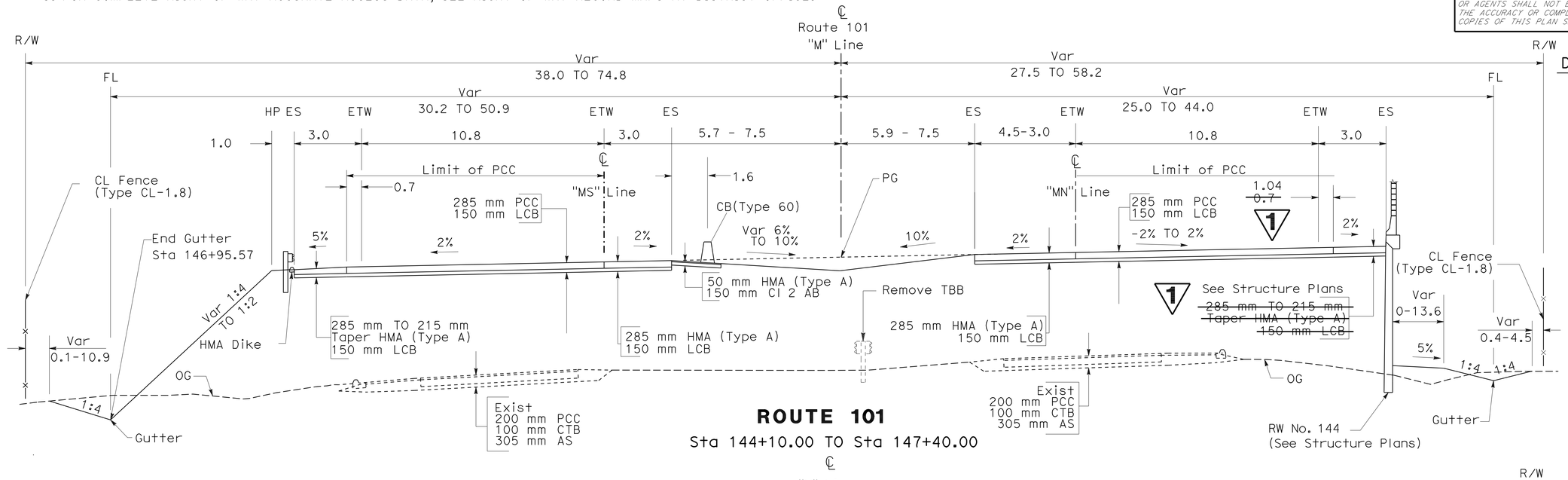

ROUTE 101

Sta 144+10.00 TO Sta 147+40.00

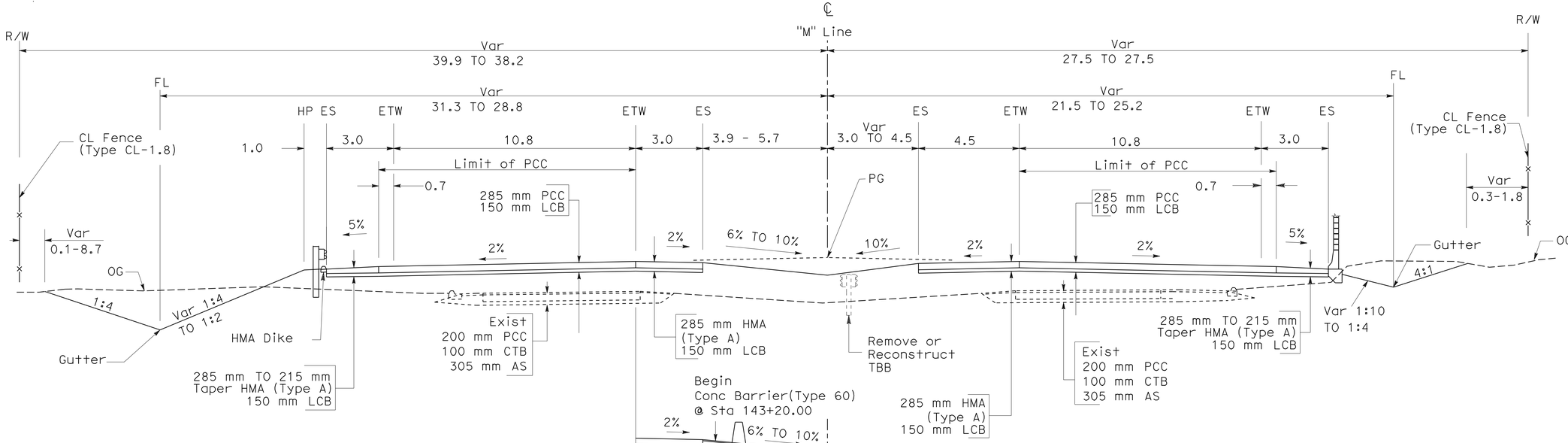

ROUTE 101

Sta 142+60.00 TO Sta 144+10.00

DESIGN DESIGNATION (ROUTE 101)

KP 146.8 TO KP 149.0
ADT (2014) = 80,000
ADT (2034) = 107,000
D = 60%
T = 11%
V = 120 km/hr
TI20 = 14.0

KP 149.0 TO KP 153.6
ADT (2014) = 76,000
ADT (2034) = 97,000
D = 60%
T = 11%
V = 120 km/hr
TI20 = 14.0

KP 153.6 TO KP 154.7
ADT (2014) = 102,000
ADT (2030) = 132,000
D = 60%
T = 11%
V = 120 km/hr
TI20 = 14.0

KP 154.7 TO KP 159.7
ADT (2014) = 67,000
ADT (2034) = 86,000
D = 60%
T = 11%
V = 120 km/hr
TI20 = 14.0

ALL DIMENSIONS ARE IN METERS UNLESS OTHERWISE SHOWN

TYPICAL CROSS SECTIONS (LOCATION 1)

X-1

NO SCALE

1 REVISED PER ADDENDUM No. 1 DATED NOVEMBER 16, 2010

STATE OF CALIFORNIA - DEPARTMENT OF TRANSPORTATION
Caltrans
06-DESIGN
FUNCTIONAL SUPERVISOR DAVID FRANKE
CALCULATED-DESIGNED BY JOHNNY SOLANO
CHECKED BY DAN MASSA
REVISED BY
DATE REVISED

LAST REVISION 04-28-10 | DATE PLOTTED => 10-NOV-2010 | TIME PLOTTED => 10:33

Dist	COUNTY	ROUTE	KILOMETER POST TOTAL PROJECT	SHEET No.	TOTAL SHEETS
05	Mon	101	R146.8/159.7	13	1402

Caltrans Metric

REGISTERED CIVIL ENGINEER — DATE 5-16-10

PLANS APPROVAL DATE 7-26-10

REGISTERED PROFESSIONAL ENGINEER DANIEL B. MASSA No. 59095 Exp. 6/30/11 CIVIL STATE OF CALIFORNIA

THE STATE OF CALIFORNIA OR ITS OFFICERS OR AGENTS SHALL NOT BE RESPONSIBLE FOR THE ACCURACY OR COMPLETENESS OF ELECTRONIC COPIES OF THIS PLAN SHEET.

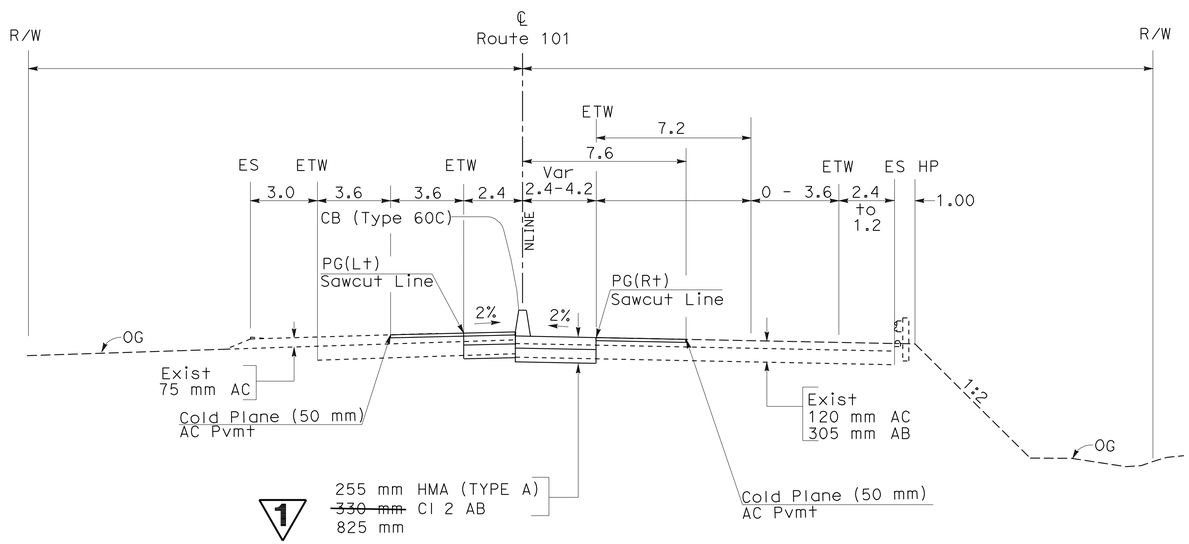

ROUTE 101

Sta 108+74.00 TO Sta 111+60.00

1 **REVISED PER ADDENDUM No. 1 DATED NOVEMBER 16, 2010**

ALL DIMENSIONS ARE IN METERS UNLESS OTHERWISE SHOWN

TYPICAL CROSS SECTIONS (LOCATION 1)

X-12

NO SCALE

STATE OF CALIFORNIA - DEPARTMENT OF TRANSPORTATION

Caltrans 06-DESIGN

FUNCTIONAL SUPERVISOR DAVID FRANKE

CALCULATED-DESIGNED BY ADEL NAJAR

CHECKED BY DAN MASSA

REVISED BY

DATE REVISED

LAST REVISION 04-28-10 | DATE PLOTTED => 10-NOV-2010 | TIME PLOTTED => 10:33

Dist	COUNTY	ROUTE	KILOMETER POST TOTAL PROJECT	SHEET No.	TOTAL SHEETS
05	Mon	101	R146.8/159.7	27	1402

Eric Olson 5-16-10
REGISTERED CIVIL ENGINEER DATE

7-26-10
PLANS APPROVAL DATE

REGISTERED PROFESSIONAL ENGINEER ERIC H. OLSON No. 60801 Exp. 12/31/10 CIVIL STATE OF CALIFORNIA

THE STATE OF CALIFORNIA OR ITS OFFICERS OR AGENTS SHALL NOT BE RESPONSIBLE FOR THE ACCURACY OR COMPLETENESS OF ELECTRONIC COPIES OF THIS PLAN SHEET.

Caltrans Metric

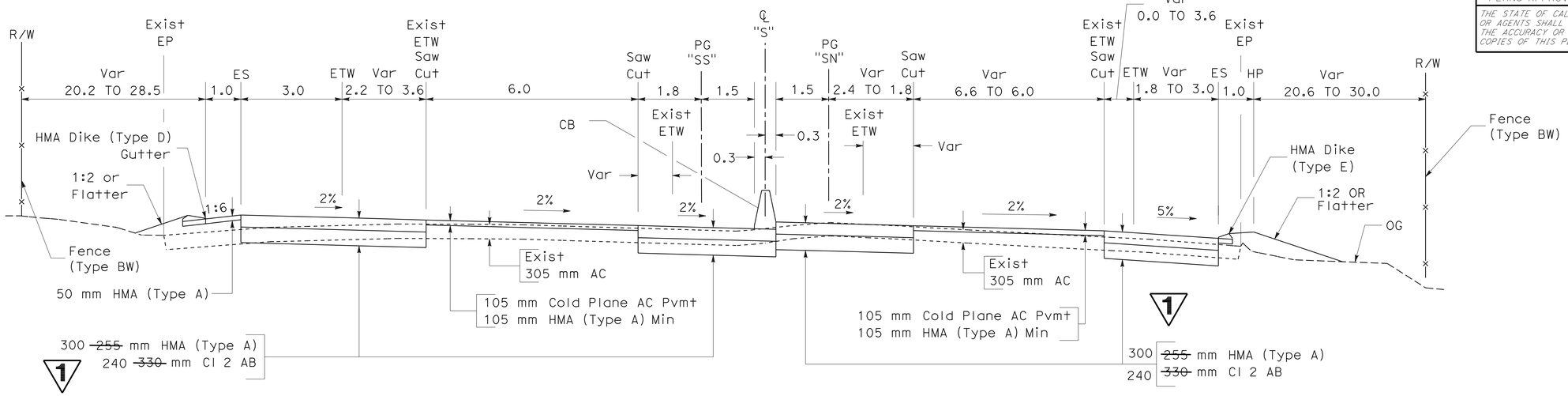

ROUTE 101

Sta "SS" Line
187+40.00 TO 188+07.38

Sta "SN" Line
185+00 TO 189+74.79

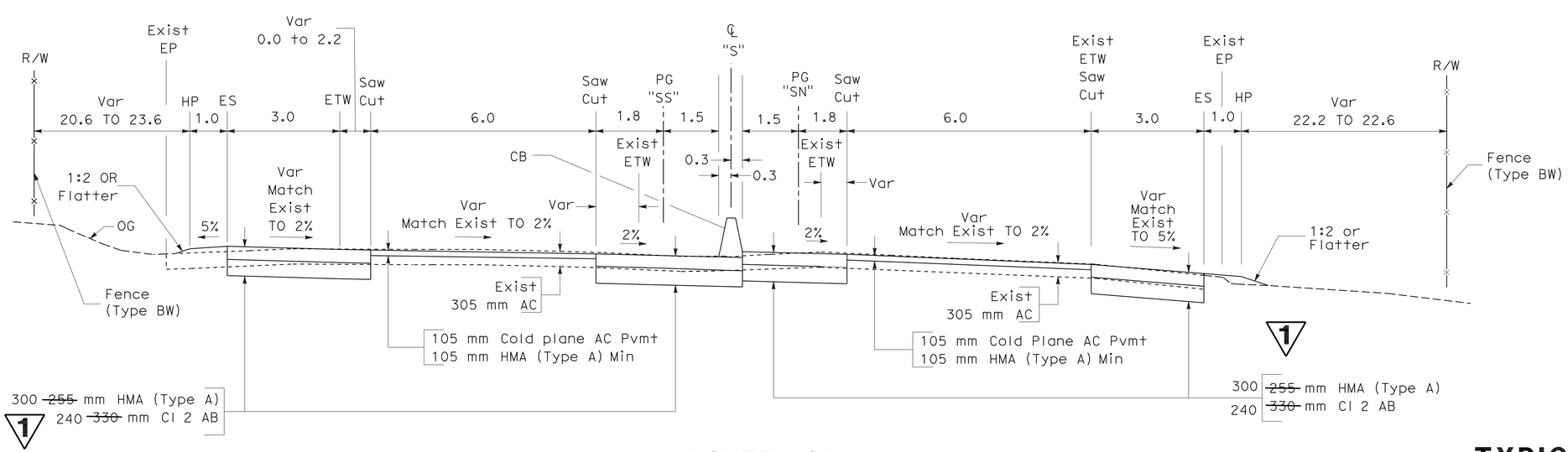

ROUTE 101

Sta "SS" Line
184+48.74 TO 187+40.00

Sta "SN" Line
184+48.56 TO 185+00.00

1 **REVISED PER ADDENDUM No. 1 DATED NOVEMBER 16, 2010**

ALL DIMENSIONS ARE IN METERS UNLESS OTHERWISE SHOWN

TYPICAL CROSS SECTIONS
(LOCATION 4)

X-26

NO SCALE

STATE OF CALIFORNIA - DEPARTMENT OF TRANSPORTATION
Caltrans
06-DESIGN

FUNCTIONAL SUPERVISOR: DAVID FRANKE
CALCULATED-DESIGNED BY: THUAN NGUYEN
CHECKED BY: ERIC OLSON
REVISED BY / DATE REVISED

LAST REVISION 05-10-10
DATE PLOTTED => 10-NOV-2010
TIME PLOTTED => 10:33

Dist	COUNTY	ROUTE	KILOMETER POST TOTAL PROJECT	SHEET No.	TOTAL SHEETS
05	Mon	101	R146.8/159.7	28	1402

Caltrans Metric

Eric Olson 5-16-10
REGISTERED CIVIL ENGINEER DATE

7-26-10
PLANS APPROVAL DATE

REGISTERED PROFESSIONAL ENGINEER ERIC H. OLSON No. 60801 Exp. 12/31/10 CIVIL STATE OF CALIFORNIA

THE STATE OF CALIFORNIA OR ITS OFFICERS OR AGENTS SHALL NOT BE RESPONSIBLE FOR THE ACCURACY OR COMPLETENESS OF ELECTRONIC COPIES OF THIS PLAN SHEET.

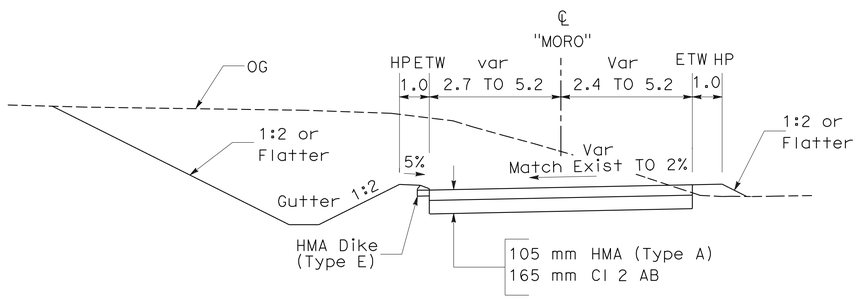

MORO ROAD
Sta 10+37.44 TO 13+13.94

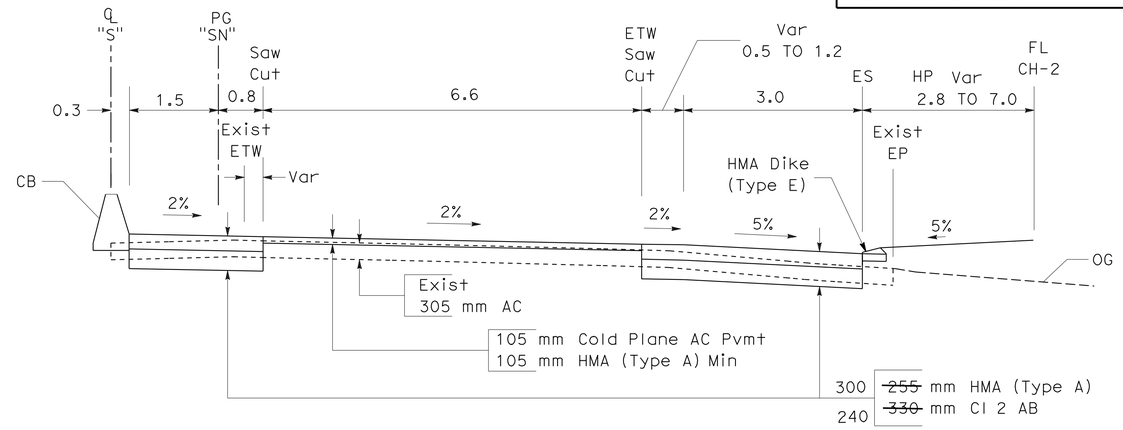

ROUTE 101
Sta "SN" Line
190+80 TO 191+13.95

1

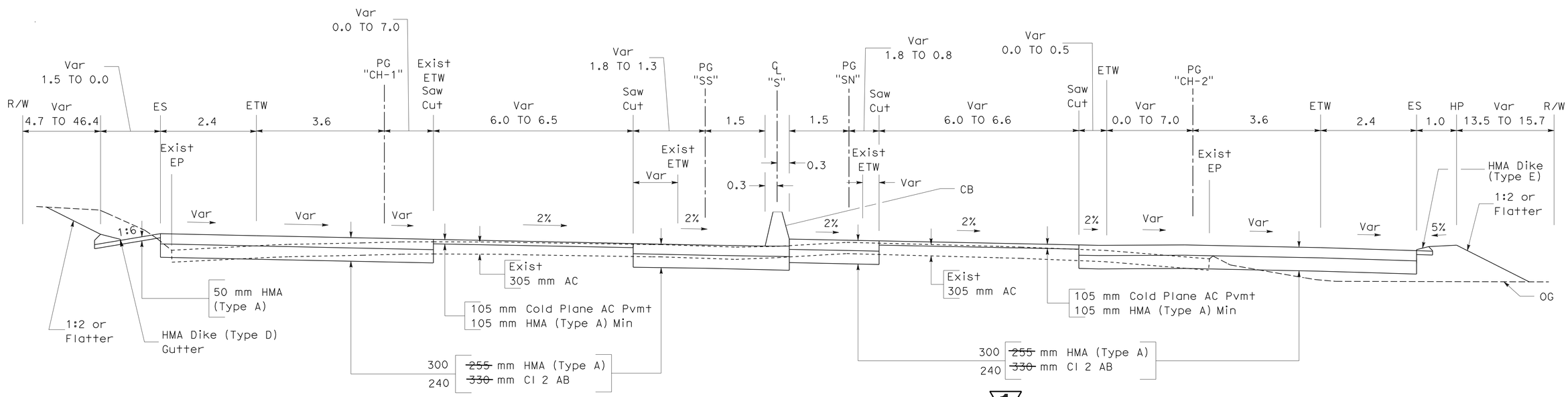

1 1

ROUTE 101

Sta "SS" Line
188+07.38 TO 189+91.04

Sta "SN" Line
189+74.80 TO 190+56.80

ALL DIMENSIONS ARE IN METERS UNLESS OTHERWISE SHOWN

TYPICAL CROSS SECTIONS
(LOCATION 4)

X-27

NO SCALE

1 **REVISED PER ADDENDUM No. 1 DATED NOVEMBER 16, 2010**

REVISED BY	DATE REVISED

CALCULATED-DESIGNED BY: THUAN NGUYEN
CHECKED BY: ERIC OLSON
FUNCTIONAL SUPERVISOR: DAVID FRANKE

STATE OF CALIFORNIA - DEPARTMENT OF TRANSPORTATION
Caltrans
06-DESIGN

LAST REVISION 05-10-10 | DATE PLOTTED => 10-NOV-2010 | TIME PLOTTED => 10:33

Dist	COUNTY	ROUTE	KILOMETER POST TOTAL PROJECT	SHEET No.	TOTAL SHEETS
05	Mon	101	R146.8/159.7	29	1402

Eric Olson 5-16-10
REGISTERED CIVIL ENGINEER DATE

7-26-10
PLANS APPROVAL DATE

REGISTERED PROFESSIONAL ENGINEER ERIC H. OLSON No. 60801 Exp. 12/31/10 CIVIL STATE OF CALIFORNIA

THE STATE OF CALIFORNIA OR ITS OFFICERS OR AGENTS SHALL NOT BE RESPONSIBLE FOR THE ACCURACY OR COMPLETENESS OF ELECTRONIC COPIES OF THIS PLAN SHEET.

Caltrans Metric

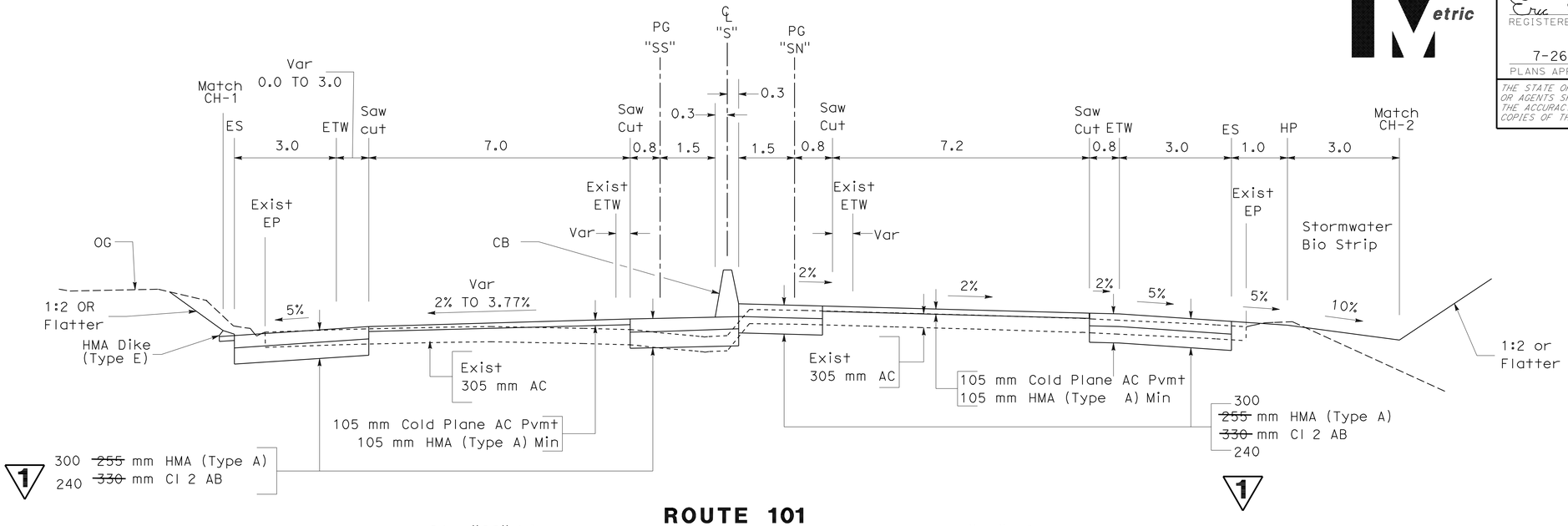

ROUTE 101

Sta "SS" Line
191+18.70 TO 195+30.00

Sta "SN" Line
192+85.00 to 193+21.93

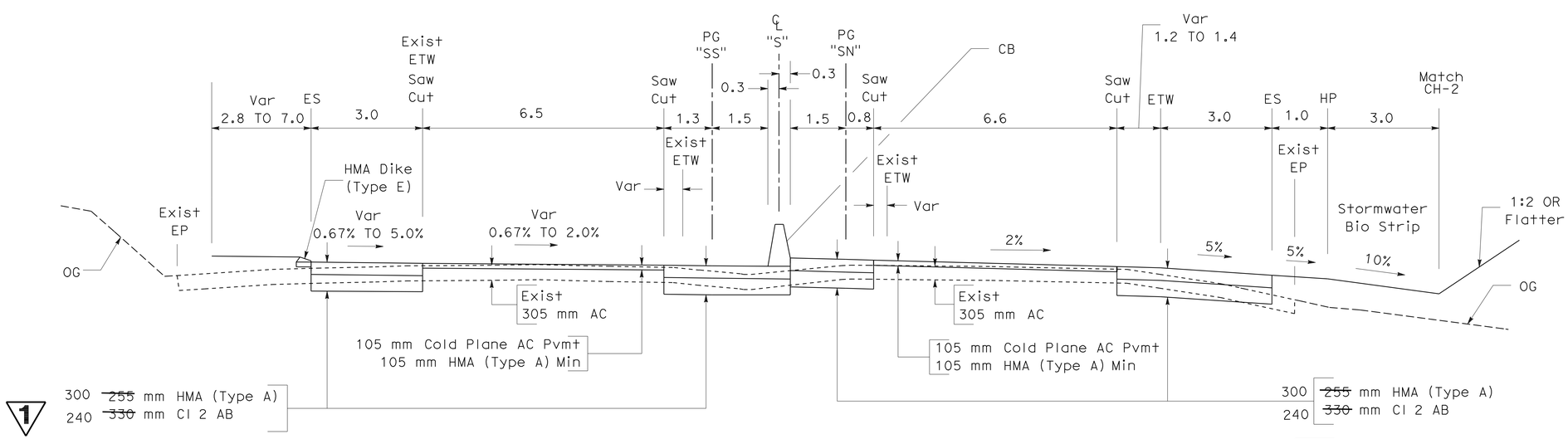

ROUTE 101

Sta "SS" Line
189+91.04 TO 191+18.70

Sta "SN" Line
191+13.95 TO 192+85.00

ALL DIMENSIONS ARE IN METERS UNLESS OTHERWISE SHOWN

TYPICAL CROSS SECTIONS
(LOCATION 4)

X-28

NO SCALE

1 REVISED PER ADDENDUM No. 1 DATED NOVEMBER 16, 2010

REVISED BY	DATE REVISED
THUAN NGUYEN	ERIC OLSON
CALCULATED-DESIGNED BY	CHECKED BY

FUNCTIONAL SUPERVISOR **DAVID FRANKE**

STATE OF CALIFORNIA - DEPARTMENT OF TRANSPORTATION **06-DESIGN**

Caltrans

LAST REVISION 05-10-10 | DATE PLOTTED => 10-NOV-2010 | TIME PLOTTED => 10:33

Dist	COUNTY	ROUTE	KILOMETER POST TOTAL PROJECT	SHEET No.	TOTAL SHEETS
05	Mon	101	R146.8/159.7	30	1402

Caltrans Metric

Eric Olson 5-16-10
REGISTERED CIVIL ENGINEER DATE

7-26-10
PLANS APPROVAL DATE

REGISTERED PROFESSIONAL ENGINEER ERIC H. OLSON No. 60801 Exp. 12/31/10 CIVIL STATE OF CALIFORNIA

THE STATE OF CALIFORNIA OR ITS OFFICERS OR AGENTS SHALL NOT BE RESPONSIBLE FOR THE ACCURACY OR COMPLETENESS OF ELECTRONIC COPIES OF THIS PLAN SHEET.

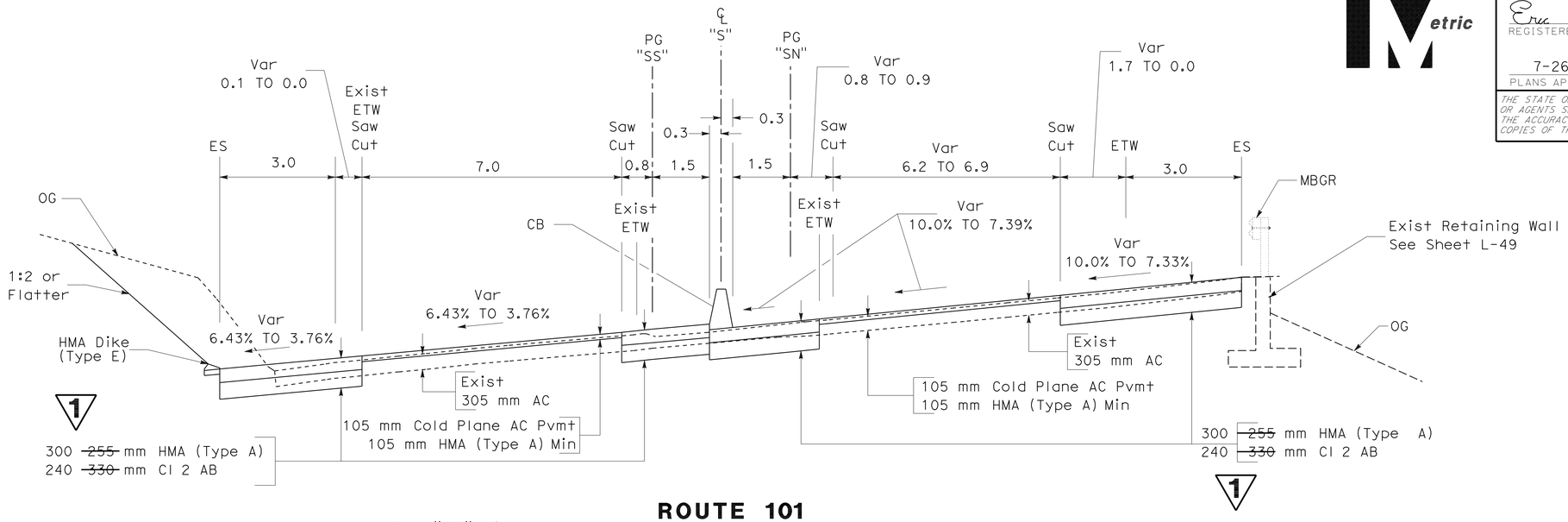

Sta "SS" Line
198+15.82 TO 198+48.58

ROUTE 101

Sta "SN" Line
195+83.90 TO 198+27.90

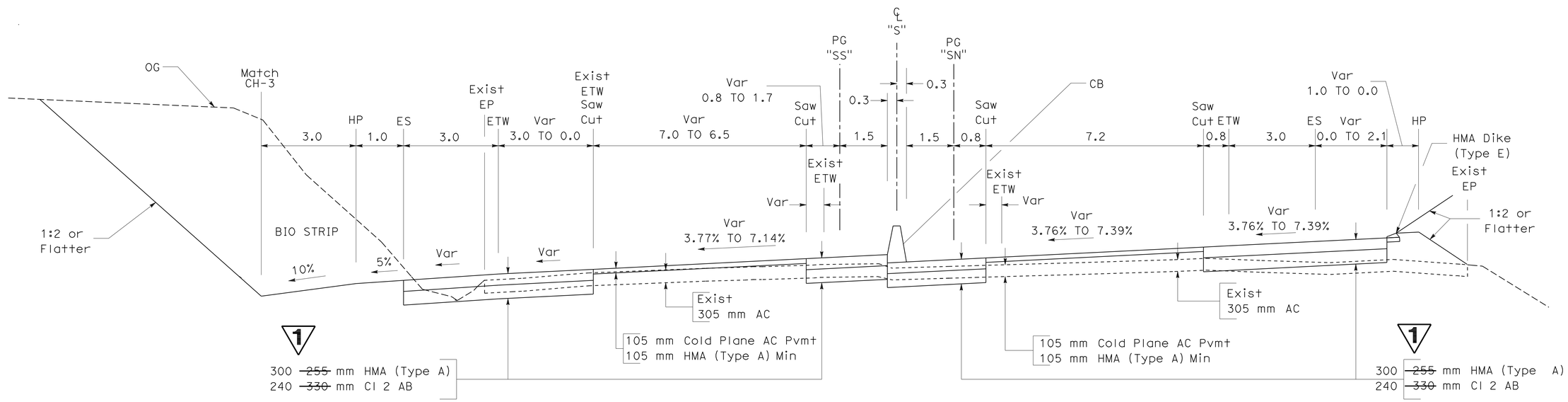

Sta "SS" Line
195+30.00 TO 198+15.82

ROUTE 101

Sta "SN" Line
193+21.93 TO 195+83.90

ALL DIMENSIONS ARE IN METERS UNLESS OTHERWISE SHOWN

TYPICAL CROSS SECTIONS
(LOCATION 4)

X-29

NO SCALE

1 REVISED PER ADDENDUM No. 1 DATED NOVEMBER 16, 2010

REVISED BY	DATE REVISED

CALCULATED-DESIGNED BY	CHECKED BY
THUAN NGUYEN	ERIC OLSON

FUNCTIONAL SUPERVISOR: DAVID FRANKE

STATE OF CALIFORNIA - DEPARTMENT OF TRANSPORTATION
Caltrans 06-DESIGN

LAST REVISION 05-10-10 DATE PLOTTED => 10-NOV-2010 TIME PLOTTED => 12:49

Dist	COUNTY	ROUTE	KILOMETER POST TOTAL PROJECT	SHEET No.	TOTAL SHEETS
05	Mon	101	R146.8/159.7	31	1402

Caltrans Metric

Eric Olson 5-16-10
REGISTERED CIVIL ENGINEER DATE

7-26-10
PLANS APPROVAL DATE

REGISTERED PROFESSIONAL ENGINEER ERIC H. OLSON No. 60801 Exp. 12/31/10 CIVIL STATE OF CALIFORNIA

THE STATE OF CALIFORNIA OR ITS OFFICERS OR AGENTS SHALL NOT BE RESPONSIBLE FOR THE ACCURACY OR COMPLETENESS OF ELECTRONIC COPIES OF THIS PLAN SHEET.

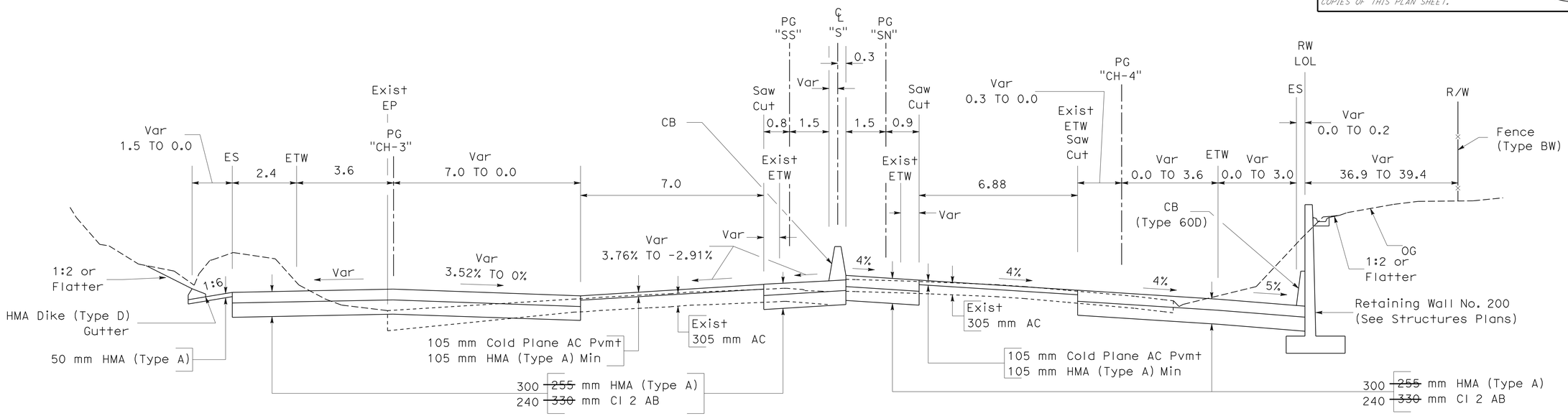

Sta "SS" Line
198+48.58 TO 199+30.61

1

ROUTE 101

Sta "SN" Line
200+00.60 TO 200+60.00

1

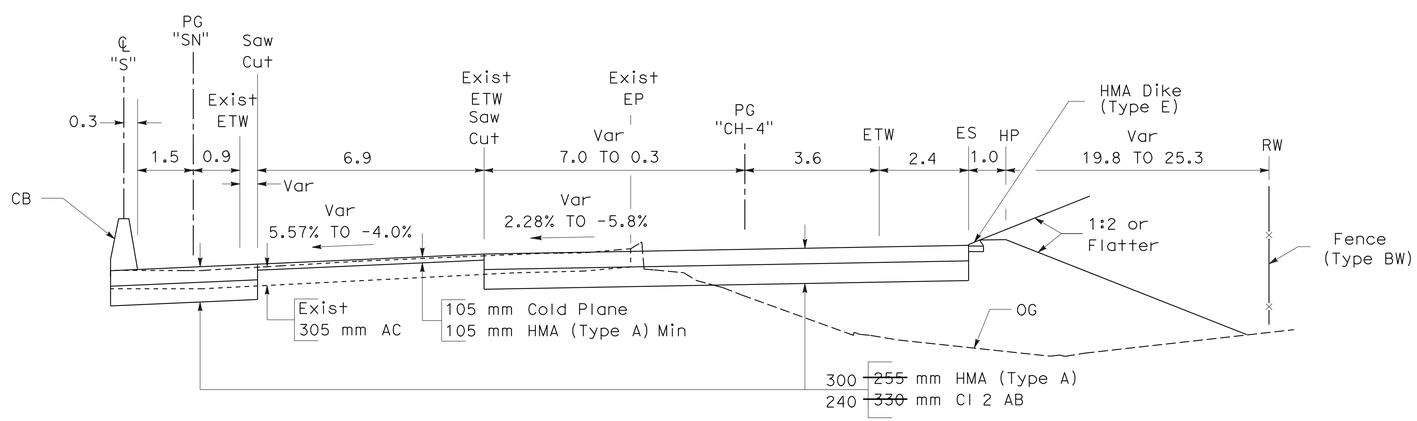

ROUTE 101

Sta "SN" Line
198+27.90 TO 200+00.60

1

ALL DIMENSIONS ARE IN METERS UNLESS OTHERWISE SHOWN

TYPICAL CROSS SECTIONS
(LOCATION 4)

X-30

NO SCALE

1 **REVISED PER ADDENDUM No. 1 DATED NOVEMBER 16, 2010**

REVISED BY	DATE REVISED

CALCULATED-DESIGNED BY	THUAN NGUYEN
CHECKED BY	ERIC OLSON
FUNCTIONAL SUPERVISOR	DAVID FRANKE

STATE OF CALIFORNIA - DEPARTMENT OF TRANSPORTATION
Caltrans 06-DESIGN

LAST REVISION 05-10-10 | DATE PLOTTED => 10-NOV-2010 | TIME PLOTTED => 12:49

Dist	COUNTY	ROUTE	KILOMETER POST TOTAL PROJECT	SHEET No.	TOTAL SHEETS
05	Mon	101	R146.8/159.7	32	1402

Eric Olson 5-16-10
REGISTERED CIVIL ENGINEER DATE

7-26-10
PLANS APPROVAL DATE

REGISTERED PROFESSIONAL ENGINEER ERIC H. OLSON No. 60801 Exp. 12/31/10 CIVIL STATE OF CALIFORNIA

THE STATE OF CALIFORNIA OR ITS OFFICERS OR AGENTS SHALL NOT BE RESPONSIBLE FOR THE ACCURACY OR COMPLETENESS OF ELECTRONIC COPIES OF THIS PLAN SHEET.

Caltrans Metric

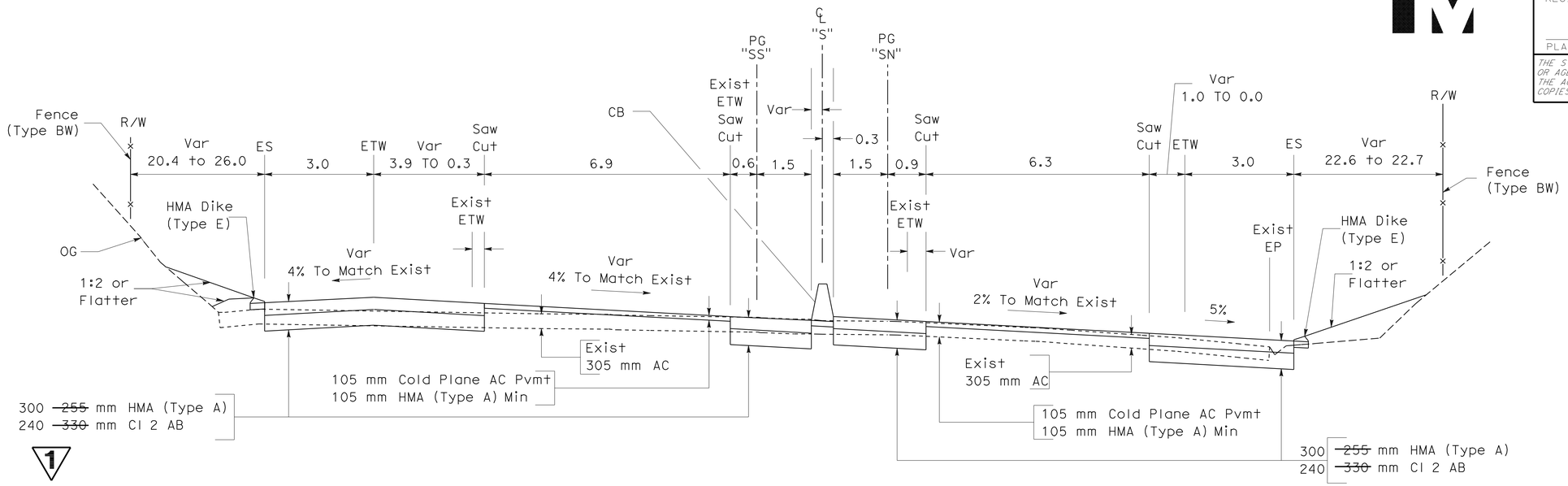

Sta "SS" Line
200+60.00 TO 201+27.16

ROUTE 101

Sta "SN" Line
201+80.00 to 202+00.00

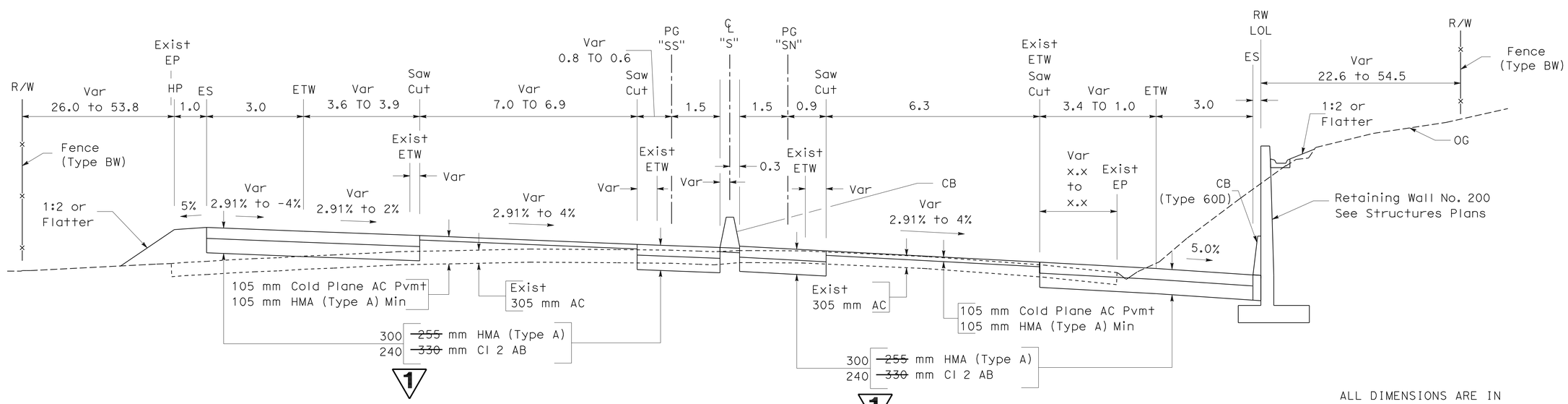

Sta "SS" Line
199+30.61 TO 200+60.00

ROUTE 101

Sta "SN" Line
200+60.00 TO 201+80.00

ALL DIMENSIONS ARE IN METERS UNLESS OTHERWISE SHOWN

TYPICAL CROSS SECTIONS
(LOCATION 4)

X-31

NO SCALE

1 REVISED PER ADDENDUM No. 1 DATED NOVEMBER 16, 2010

REVISED BY	DATE REVISED

CALCULATED-DESIGNED BY	CHECKED BY
THUAN NGUYEN	ERIC OLSON

FUNCTIONAL SUPERVISOR: DAVID FRANKE

STATE OF CALIFORNIA - DEPARTMENT OF TRANSPORTATION
Caltrans 06-DESIGN

LAST REVISION 05-10-10 | DATE PLOTTED => 10-NOV-2010 | TIME PLOTTED => 12:39

Dist	COUNTY	ROUTE	KILOMETER POST TOTAL PROJECT	SHEET No.	TOTAL SHEETS
05	Mon	101	R146.8/159.7	44	1402

REGISTERED CIVIL ENGINEER — DATE 5-16-10

PLANS APPROVAL DATE 7-26-10

REGISTERED PROFESSIONAL ENGINEER DANIEL B. MASSA No. 59095 Exp. 6/30/11 CIVIL STATE OF CALIFORNIA

THE STATE OF CALIFORNIA OR ITS OFFICERS OR AGENTS SHALL NOT BE RESPONSIBLE FOR THE ACCURACY OR COMPLETENESS OF ELECTRONIC COPIES OF THIS PLAN SHEET.

Caltrans Metric

NOTE: FOR ACCURATE RIGHT OF WAY AND ACCESS DATA, CONTACT RIGHT OF WAY ENGINEERING AT THE DISTRICT OFFICE.

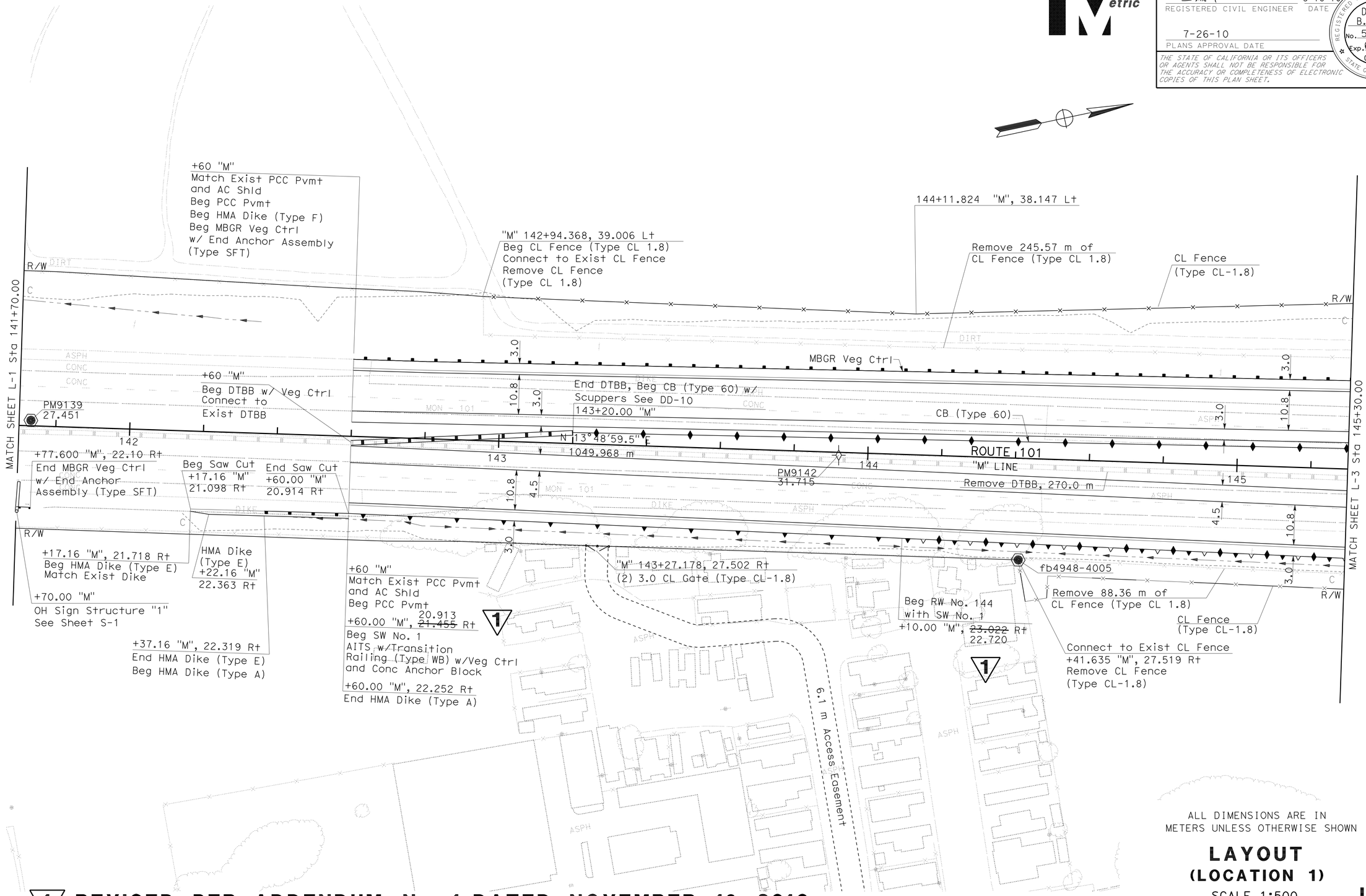

ALL DIMENSIONS ARE IN METERS UNLESS OTHERWISE SHOWN

LAYOUT
(LOCATION 1)

SCALE 1:500

L-2

1 **REVISED PER ADDENDUM No. 1 DATED NOVEMBER 16, 2010**

STATE OF CALIFORNIA - DEPARTMENT OF TRANSPORTATION
Caltrans
06-DESIGN
FUNCTIONAL SUPERVISOR DAVID FRANKE
CALCULATED-DESIGNED BY DAN MASSA
CHECKED BY JOHNNY SOLANO
REVISED BY
DATE REVISED

LAST REVISION 05-04-10 DATE PLOTTED => 10-NOV-2010 TIME PLOTTED => 12:39

Dist	COUNTY	ROUTE	KILOMETER POST TOTAL PROJECT	SHEET No.	TOTAL SHEETS
05	Mon	101	R146.8/159.7	45	1402

REGISTERED CIVIL ENGINEER — DATE 5-16-10

PLANS APPROVAL DATE 7-26-10

REGISTERED PROFESSIONAL ENGINEER — DANIEL B. MASSA No. 59095 Exp. 6/30/11 CIVIL — STATE OF CALIFORNIA

THE STATE OF CALIFORNIA OR ITS OFFICERS OR AGENTS SHALL NOT BE RESPONSIBLE FOR THE ACCURACY OR COMPLETENESS OF ELECTRONIC COPIES OF THIS PLAN SHEET.

Caltrans Metric

NOTE: FOR ACCURATE RIGHT OF WAY AND ACCESS DATA, CONTACT RIGHT OF WAY ENGINEERING AT THE DISTRICT OFFICE.

CURVE DATA

No.	R	Δ	T	L	RP	LOCATION
1	1300.00	01°25'57"	16.24	32.48	BC	BC 100 + 39.884 "MAIN"
2	1300.00	02°24'04"	27.24	54.47	BC	BC 101 + 93.250 "MAIN"
3	1500.00	29°20'17"	392.65	768.06	BC	BC 145 + 49.968 "M"
4	1489.50	28°38'23"	380.22	744.54	BC	BC 145 + 68.141 "MS"
5	1510.50	30°01'44"	405.15	791.66	BC	BC 145 + 31.770 "MN"
5a	80.00	11°13'58"	7.87	15.68	BC	BC 10 + 67.461 "CA"

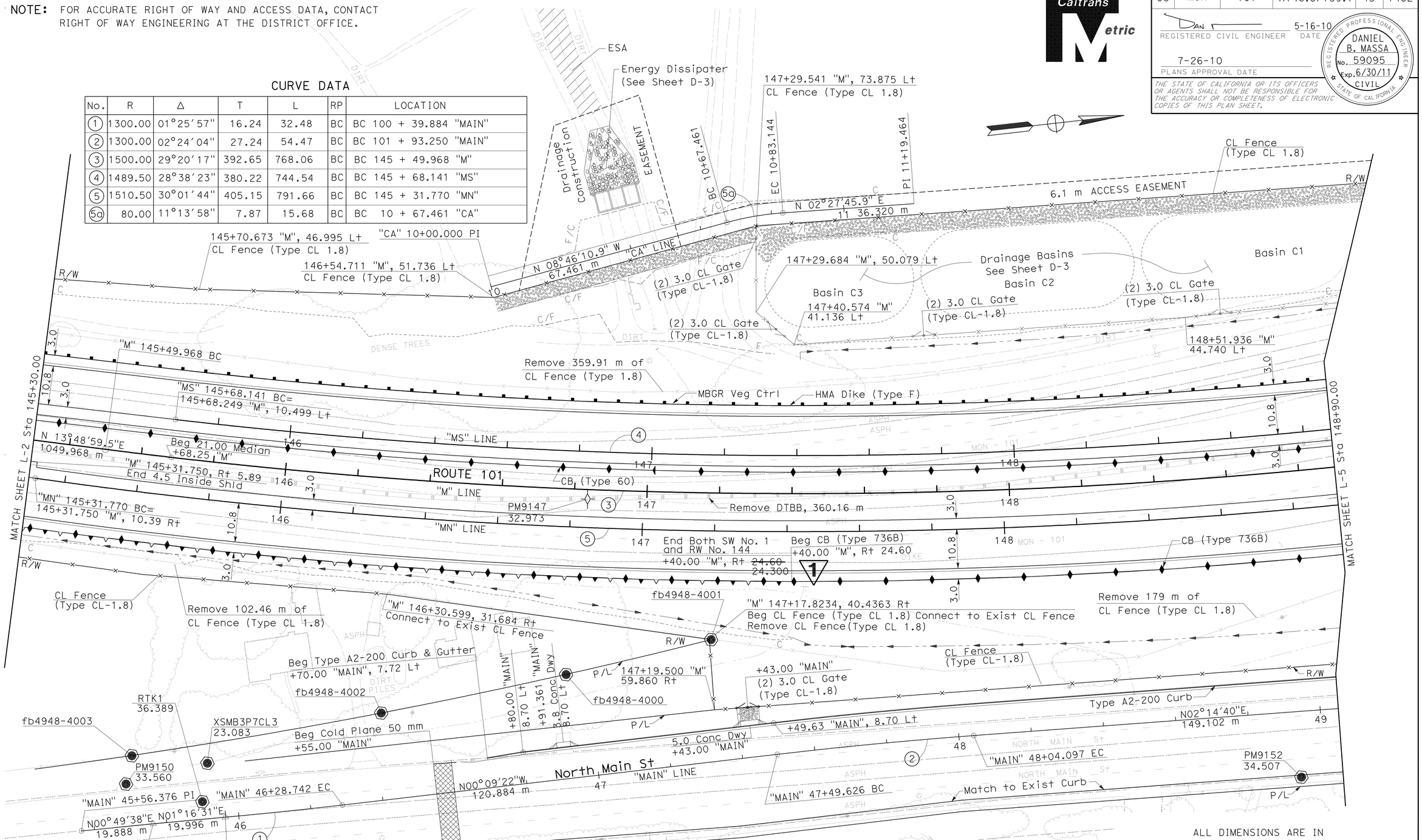

ALL DIMENSIONS ARE IN METERS UNLESS OTHERWISE SHOWN

LAYOUT (LOCATION 1)

SCALE 1:500

L-3

1 REVISED PER ADDENDUM No. 1 DATED NOVEMBER 16, 2010

STATE OF CALIFORNIA - DEPARTMENT OF TRANSPORTATION — 06-DESIGN

FUNCTIONAL SUPERVISOR: DAVID FRANKE

CALCULATED-DESIGNED BY: JOHNNY SOLANO

CHECKED BY: DAN MASSA

REVISED BY / DATE REVISED

LAST REVISION 05-14-10 — DATE PLOTTED => 10-NOV-2010 — TIME PLOTTED => 12:39

Dist	COUNTY	ROUTE	KILOMETER POST TOTAL PROJECT	SHEET No.	TOTAL SHEETS
05	Mon	101	R146.8/159.7	316	1402

REGISTERED CIVIL ENGINEER — DATE 5-16-10

7-26-10
PLANS APPROVAL DATE

REGISTERED PROFESSIONAL ENGINEER — DANIEL B. MASSA No. 59095 Exp. 6/30/11 CIVIL — STATE OF CALIFORNIA

THE STATE OF CALIFORNIA OR ITS OFFICERS OR AGENTS SHALL NOT BE RESPONSIBLE FOR THE ACCURACY OR COMPLETENESS OF ELECTRONIC COPIES OF THIS PLAN SHEET.

Caltrans Metric

NOTES: 1. FOR ACCURATE RIGHT OF WAY AND ACCESS DATA, CONTACT RIGHT OF WAY ENGINEERING AT THE DISTRICT OFFICE.
2. ALL REINFORCED CONCRETE PIPE (RCP) SHALL BE RUBBER GASKETED Jt (RGJ).

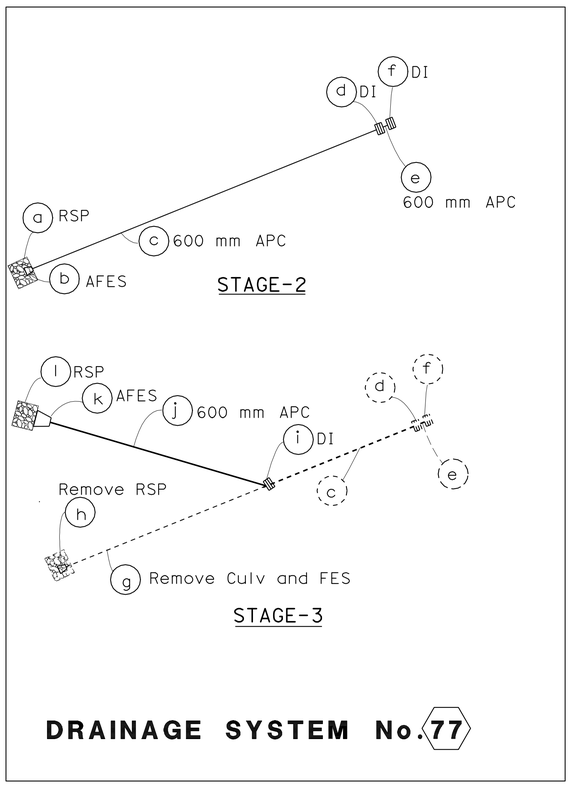

DRAINAGE SYSTEM No. 77

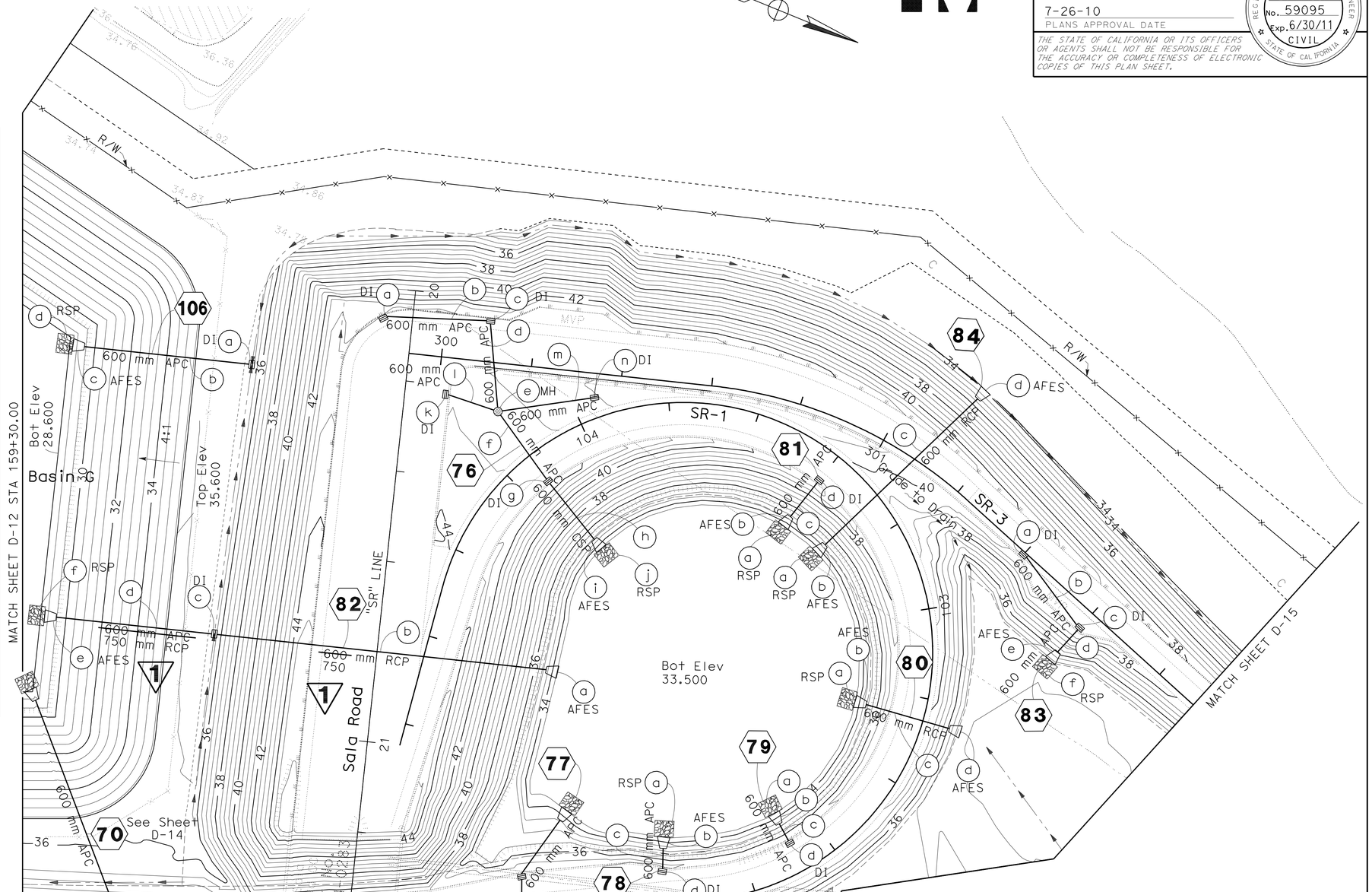

ALL DIMENSIONS ARE IN METERS UNLESS OTHERWISE SHOWN

DRAINAGE AND CONTOUR GRADING PLAN (LOCATION 1)

SCALE 1:500

D-13

1 **REVISED PER ADDENDUM No. 1 DATED NOVEMBER 16, 2010**

THIS PLAN ACCURATE FOR DRAINAGE AND CONTOUR GRADING WORK ONLY.

REVISED BY	D. MASSA
DATE REVISED	04/01/09
CALCULATED-DESIGNED BY	MICHAEL ZAMORA
CHECKED BY	DAN MASSA
FUNCTIONAL SUPERVISOR	DAVID FRANKE

STATE OF CALIFORNIA - DEPARTMENT OF TRANSPORTATION
Caltrans 06-DESIGN

LAST REVISION 05-14-10 | DATE PLOTTED => 10-NOV-2010 | TIME PLOTTED => 12:39

Dist	COUNTY	ROUTE	KILOMETER POST TOTAL PROJECT	SHEET No.	TOTAL SHEETS
05	Mon	101	R146.8/159.7	618	1402

REGISTERED CIVIL ENGINEER 5-16-10 DATE

7-26-10
PLANS APPROVAL DATE

REGISTERED PROFESSIONAL ENGINEER DANIEL B. MASSA No. 59095 Exp. 6/30/11 CIVIL STATE OF CALIFORNIA

THE STATE OF CALIFORNIA OR ITS OFFICERS OR AGENTS SHALL NOT BE RESPONSIBLE FOR THE ACCURACY OR COMPLETENESS OF ELECTRONIC COPIES OF THIS PLAN SHEET.

Caltrans Metric

NOTES:
1. JOINTS FOR CORRUGATED STEEL PIPE SHALL CONFORM TO THE PLANS AND SPECIFICATIONS FOR DOWNDRAIN JOINTS.
2. ALL GRATES SHALL BE 600-12X EXCEPT AS OTHERWISE SHOWN IN THE DESCRIPTION.

ABBREVIATIONS:

DDJ DOWNDRAIN JOINTS
(N) NOT A SEPARATE PAY ITEM, FOR INFORMATION ONLY
PJ POSITIVE JOINTS
RGJ RUBBER GASKETED JOINTS
SO SAND OIL SEPARATOR
DD DOWNDRAIN

ALTERNATIVE PIPE CULVERT (APC)	
RCP(RGJ)	FOR Min ALLOWABLE CLASS SEE STANDARD PLAN A62D.
PLASTIC PIPE	TYPE S WITH WATER TIGHT JOINTS (SMOOTH INTERIOR WALL).

AFES 1 - METAL FLARED END SECTION.
2 - CONCRETE FLARED END SECTION.

DRAINAGE QUANTITIES

Misc IRON & STEEL	MH TYPE A	MH TYPE B	MH TYPE SO	MH FRAME & COVER	MH FRAME & GRATE	MH ADJUST MH	(N) DESIGN H	INLET MINOR CONCRETE (MINOR Str)	INLET PLACE HMA (Misc AREA)	MINOR CONCRETE (Misc CONSTRUCTION)	MINOR CONCRETE (BACKFILL)	APC 450 mm	APC 600 mm	APC 900 mm	RCP (RGJ) 300 mm	RCP (RGJ) 375 mm	RCP (RGJ) 450 mm	RCP (RGJ) 600 mm	RCP (RGJ) 750 mm	RCP (RGJ) 900 mm	RCP (RGJ) 1050 mm	RCP (RGJ) 1200 mm	RCP (RGJ) 1500 mm	RCP (RGJ) JACKED 600 mm	RCP (RGJ) JACKED 750 mm	RCP (RGJ) JACKED 900 mm	RCP (RGJ) JACKED 1050 mm	300 mm CSP (2.01 mm THICK)	600 mm CSP DD (2.77 mm THICK)	900 mm CSP INLET (2.77 mm THICK)	1200 mm CSP RISER (2.77 mm THICK)	RSP (FACING, METHOD B)	RSP (1/4 T, METHOD B)	RSP FABRIC (CLASS 8)	200 mm PLASTIC PIPE	AFES 450 mm	AFES 600 mm	AFES 750 mm	AFES 900 mm	AFES 1200 mm	(N) MAXIMUM COVER	CONCRETE COLLAR	1500 mm WELDED STEEL PIPE	CAP INLET	REMOVE INLET	REMOVE RSP	REMOVE CULVERT	REMOVE MH	REMOVE HW	REMOVE CONC DRAINAGE STRUCTURE	ABANDON Culv	SAND BACKFILL	DESCRIPTION	STATION	DRAINAGE PLAN SHEET No.	DRAINAGE SYSTEM No.	DRAINAGE UNIT No.
kg	EA	EA	EA	EA	EA	EA	m	m^3	m^2	m^3	m^3	m	m	m	m	m	m	m	m	m	m	m	m	m	m	m	m	m	m	m	m	m^3	m^3	m^2	m	EA	EA	EA	EA	EA	m	EA	m	EA	EA	m^3	m	EA	m^3	m	m^3					
																																							2.4						2.4						Remove Culv		D-7	46	a
																																														1				Remove SO Separator	51+31			b
																																								1.7						1.5				Remove Culv				c
																																												1					Remove Inlet	51+32	D-7	46	d
																		6.9																						2.1												600 mm RCP		D-7	47	a
			1	1			3.04																																												SO Separator	51+29			b
																		2.4																						1.8												600 mm RCP		D-7	47	c
108							1.96	1.68	7.56																																										G2 DI W/600-12X	51+29	D-7	47	d
																				1				1								10.8		28.7																		RSP		D-7	48	a
																																					1													750 mm AFES	151+90			b
																				~~118.5~~				118.5																11.3												750 mm RCP				c
27							1.24	4.51																							1.39																				1200 mm CSP Riser w/ Debris Rack	151+90			d
															2.0																																				300 mm RCP		D-7	48	e
																																7.6		21.7																		RSP		D-7	49	a
																																					1													600 mm AFES	152+00			b
												17.5																												1.7												600 mm APC				c
108							1.46	1.36	7.56																																										G2 DI W/600-12X	152+00	D-7	49	d
108							1.54	1.04	3.83																																										G1 DI W/600-12X	152+20	D-7	50	a
												24.4																												1.4												600 mm APC				b
108							1.60	1.45	7.56																																										G2 DI W/600-12X	152+20			c
												22.1																												2.1												600 mm APC				d
108							2.76	3.62	3.48																																										G2 DI W/600-12X	152+20			e
																														31.5										2.1												600 mm CSP W/DDJ				f
																																					1													600 mm AFES	152+20			g
																																7.6		21.7																		RSP		D-7	50	h
																				~~118.5~~				118.5																														
567		1	1				13.60	13.66	29.99			64.0			2.0			9.3		~~118.5~~				118.5				31.5			1.39	26.0		72.1		2	1			26.6			1		3.9		1				SHEET TOTAL				

1 REVISED PER ADDENDUM No. 1 DATED NOVEMBER 16, 2010

DRAINAGE QUANTITIES
DQ-11

STATE OF CALIFORNIA - DEPARTMENT OF TRANSPORTATION
Caltrans
06-DESIGN

FUNCTIONAL SUPERVISOR DAVID FRANKE
CALCULATED-DESIGNED BY MICHAEL ZAMORA
CHECKED BY DAN MASSA
REVISED BY D. MASSA
DATE REVISED 01/06/10

LAST REVISION 05-15-10
DATE PLOTTED => 10-NOV-2010
TIME PLOTTED => 12:39

Dist	COUNTY	ROUTE	KILOMETER POST TOTAL PROJECT	SHEET No.	TOTAL SHEETS
05	Mon	101	R146.8/159.7	628	1402

REGISTERED CIVIL ENGINEER — DATE 4-30-10

PLANS APPROVAL DATE 7-26-10

REGISTERED PROFESSIONAL ENGINEER — DANIEL B. MASSA No. 59095 Exp. 6/30/11 CIVIL — STATE OF CALIFORNIA

THE STATE OF CALIFORNIA OR ITS OFFICERS OR AGENTS SHALL NOT BE RESPONSIBLE FOR THE ACCURACY OR COMPLETENESS OF ELECTRONIC COPIES OF THIS PLAN SHEET.

Caltrans Metric

NOTES:
1. JOINTS FOR CORRUGATED STEEL PIPE SHALL CONFORM TO THE PLANS AND SPECIFICATIONS FOR DOWNDRAIN JOINTS.
2. ALL GRATES SHALL BE 600-12X EXCEPT AS OTHERWISE SHOWN IN THE DESCRIPTION.

ABBREVIATIONS:

DDJ	DOWNDRAIN JOINTS
(N)	NOT A SEPARATE PAY ITEM, FOR INFORMATION ONLY
PJ	POSITIVE JOINTS
RGJ	RUBBER GASKETED JOINTS
SO	SAND OIL SEPARATOR
DD	DOWNDRAIN

ALTERNATIVE PIPE CULVERT (APC)	
RCP(RGJ)	FOR Min ALLOWABLE CLASS SEE STANDARD PLAN A62D.
PLASTIC PIPE	TYPE S WITH WATER TIGHT JOINTS (SMOOTH INTERIOR WALL).

AFES 1 - METAL FLARED END SECTION.
2 - CONCRETE FLARED END SECTION.

DRAINAGE QUANTITIES

Misc IRON & STEEL	MH TYPE A	MH TYPE B	MH TYPE SO	MH FRAME & COVER	MH FRAME & GRATE	MH ADJUST MH	(N) DESIGN H	INLET MINOR CONCRETE (MINOR Str)	INLET PLACE HMA (Misc AREA)	MINOR CONCRETE (Misc CONSTRUCTION)	MINOR CONCRETE (BACKFILL)	APC 450 mm	APC 600 mm	APC 900 mm	RCP (RGJ) 300 mm	RCP 375 mm	RCP 450 mm	RCP 600 mm	RCP 750 mm	RCP 900 mm	RCP 1050 mm	RCP 1200 mm	RCP 1500 mm	RCP JACKED 600 mm	RCP JACKED 750 mm	RCP JACKED 900 mm	RCP JACKED 1050 mm	300 mm CSP (2.01 mm THICK)	600 mm CSP DD (2.77 mm THICK)	900 mm CSP INLET (2.77 mm THICK)	1200 mm CSP RISER (2.77 mm THICK)	RSP (FACING, METHOD B)	RSP (1/4 T, METHOD B)	RSP FABRIC (CLASS 8)	200 mm PLASTIC PIPE	AFES 450 mm	AFES 600 mm	AFES 750 mm	AFES 900 mm	AFES 1200 mm	(N) MAXIMUM COVER	CONCRETE COLLAR	1500 mm WELDED STEEL PIPE	CAP INLET	REMOVE INLET	REMOVE RSP	REMOVE CULVERT	REMOVE MH	REMOVE HW	REMOVE CONC DRAINAGE STRUCTURE	ABANDON Culv	SAND BACKFILL	DESCRIPTION	STATION	DRAINAGE PLAN SHEET No.	DRAINAGE SYSTEM No.	DRAINAGE UNIT No.
kg	EA	EA	EA	EA	EA	EA	m	m^3	m^2	m^3	m^3	m	m	m	m	m	m	m	m	m	m	m	m	m	m	m	m	m	m	m	m	m^3	m^3	m^2	m	EA	EA	EA	EA	EA	m	EA	m	EA	EA	m^3	m	EA	EA	m^3	m	m^3					
40							1.26	1.13																																										Headwall	302+42	D-15	85	a
																									142.5															2.5													750 mm JRCP				b
																																						1															750 mm AFES	401+15	D-15	85	c
108							1.40	1.33	3.48																																										G2 DI W/600-12X	161+50	D-15	86	a
													29.1																											1.4												600 mm APC				b
108							1.52	1.40	3.48																																										G2 DI W/600-12X	161+80			c
																	1																							1.8												600 mm RCP				d
108							1.50	1.39	3.83																																										G1 DI W/600-12X	161+80			e
													21.0																											1.7												600 mm APC				f
																																				1																600 mm AFES				g
																															7.6		21.7																			RSP		D-15	86	h
																															7.6		21.7																			RSP		D-15	87	a
																																						1															750 mm AFES	401+27			b
																			50.0																					4.1													750 mm RCP				c
	1	+			1		3.60																																													TYPE A MH CASE I	401+74			d
																			23.9																					3.5													750 mm RCP				e
	1	+			1		3.20																																													TYPE A MH CASE I	402+00			f
																			18.6																					3.1													750 mm RCP				g
	1	+			1		3.12																																													TYPE A MH CASE I	402+20			h
																			16.6																					2.8													750 mm RCP				i
	1	+			1		3.00																																													TYPE A MH CASE I	402+38			j
																			7.8																					2.6													750 mm RCP				k
	1	+			1		2.96																																													TYPE A MH CASE I	402+48			l
																			38.0																					2.7													750 mm RCP				m
31							1.50	4.51																						1.65																						1200 mm CSP Riser w/ Debris Rack	402+89			n
															2.5																																					300 mm RCP		D-15	87	o
108							1.5	1.02	3.83																																											G1 DI W/600-12X	402+00	D-15	88	a
													14.1																											3.2													600 mm APC		D-15	88	b
503	5	5			5		24.56	10.78	14.62				64.2		2.5			1	154.9					142.5						1.65			15.2		1	2				29.4													SHEET TOTAL				

1 1 1 REVISED PER ADDENDUM No. 1 DATED NOVEMBER 16, 2010

DRAINAGE QUANTITIES
DQ-21

STATE OF CALIFORNIA - DEPARTMENT OF TRANSPORTATION
06-DESIGN
Caltrans

FUNCTIONAL SUPERVISOR: DAVID FRANKE
CALCULATED-DESIGNED BY: MICHAEL ZAMORA
CHECKED BY: DAN MASSA
REVISED BY: D. MASSA
DATE REVISED: 01/06/10

LAST REVISION 05-16-10
DATE PLOTTED => 15-NOV-2010
TIME PLOTTED => 11:10

Dist	COUNTY	ROUTE	KILOMETER POST TOTAL PROJECT	SHEET No.	TOTAL SHEETS
05	Mon	101	R146.8/159.7	640	1402

REGISTERED CIVIL ENGINEER 4-30-10 DATE

7-26-10
PLANS APPROVAL DATE

REGISTERED PROFESSIONAL ENGINEER ROY J. SHAVER No. 44587 Exp. 3/31/12 CIVIL STATE OF CALIFORNIA

THE STATE OF CALIFORNIA OR ITS OFFICERS OR AGENTS SHALL NOT BE RESPONSIBLE FOR THE ACCURACY OR COMPLETENESS OF ELECTRONIC COPIES OF THIS PLAN SHEET.

Caltrans Metric

NOTES:
1. JOINTS FOR CORRUGATED STEEL PIPE SHALL CONFORM TO THE PLANS AND SPECIFICATIONS FOR DOWNDRAIN JOINTS.
2. ALL GRATES SHALL BE 600-12X EXCEPT AS OTHERWISE SHOWN IN THE DESCRIPTION.

ABBREVIATIONS:

DDJ	DOWNDRAIN JOINTS
(N)	NOT A SEPARATE PAY ITEM, FOR INFORMATION ONLY
PJ	POSITIVE JOINTS
RGJ	RUBBER GASKETED JOINTS
SO	SAND OIL SEPARATOR
DD	DOWNDRAIN

ALTERNATIVE PIPE CULVERT (APC)	
RCP(RGJ)	FOR Min ALLOWABLE CLASS SEE STANDARD PLAN A62D.
PLASTIC PIPE	TYPE S WITH WATER TIGHT JOINTS (SMOOTH INTERIOR WALL).

AFES 1 - METAL FLARED END SECTION.
2 - CONCRETE FLARED END SECTION.

DRAINAGE QUANTITIES

Misc IRON & STEEL	MH TYPE A	MH TYPE B	MH TYPE SO	MH FRAME & COVER	MH FRAME & GRATE	MH ADJUST MH	(N) DESIGN H	INLET MINOR CONCRETE (MINOR Str)	INLET PLACE HMA (Misc AREA)	MINOR CONCRETE (Misc CONSTRUCTION)	MINOR CONCRETE (BACKFILL)	APC 450 mm	APC 600 mm	APC 900 mm	RCP (RGJ) 300 mm	RCP (RGJ) 375 mm	RCP (RGJ) 450 mm	RCP (RGJ) 600 mm	RCP (RGJ) 750 mm	RCP (RGJ) 900 mm	RCP (RGJ) 1050 mm	RCP (RGJ) 1200 mm	RCP (RGJ) 1500 mm	RCP (RGJ) JACKED 600 mm	RCP (RGJ) JACKED 750 mm	RCP (RGJ) JACKED 900 mm	RCP (RGJ) JACKED 1050 mm	300 mm CSP (2.01 mm THICK)	600 mm CSP DD (2.77 mm THICK)	900 mm CSP INLET (2.77 mm THICK)	1200 mm CSP RISER (2.77 mm THICK)	RSP (FACING, METHOD B)	RSP (1/4 T, METHOD B)	RSP FABRIC (CLASS 8)	200 mm PLASTIC PIPE	AFES 450 mm	AFES 600 mm	AFES 750 mm	AFES 900 mm	AFES 1200 mm	(N) MAXIMUM COVER	CONCRETE COLLAR (N)	1500 mm WELDED STEEL PIPE	CAP INLET	REMOVE INLET	REMOVE RSP	REMOVE CULVERT	REMOVE MH	REMOVE HW	REMOVE CONC DRAINAGE STRUCTURE	ABANDON Culv	SAND BACKFILL	DESCRIPTION	STATION	DRAINAGE PLAN SHEET No.	DRAINAGE SYSTEM No.	DRAINAGE UNIT No.
kg	EA	EA	EA	EA	EA	EA	m	m^3	m^2	m^3	m^3	m	m	m	m	m	m	m	m	m	m	m	m	m	m	m	m	m	m	m	m	m^3	m^3	m^2	m	EA	EA	EA	EA	EA	m	EA	m	EA	EA	m^3	m	EA	m^3	m	m^3					
																															4		14																	RSP		D-27	145	a
																																				1															600 mm AFES	28+27			b
													~~9.0~~	1				9.0																						0.8												600 mm RCP				c
																																				1															600 mm AFES	28+36	D-27	145	d
							0.95	0.77																																												CATCH BASIN (TYPE C)	28+27	D-27	146	a
													~~1.5~~	1				1.5																						0.4												600 mm RCP				b
																																				1															600 mm AFES	28+27			c
																															3		14																			RSP		D-27	146	d
							1.01	0.80																																												CATCH BASIN (TYPE C)	20+28	D-27	147	a
													~~1.5~~	1				1.5																						1.5												600 mm RCP				b
																															9		25																			RSP		D-27	147	c
																															33		73																			RSP		D-27	148	a
																																								1											1200 mm AFES	28+99			b
																	~~11.0~~		1		11.0																			0.5												1200 mm RCP				c
																																								1											1200 mm AFES	28+99	D-27	148	d
																															3		12																			RSP		D-27	149	a
																																				1															450 mm AFES	29+15			b
												23.5																													0.4												450 mm RCP				c
																																				1															450 mm AFES	29+39	D-27	149	d
							1.50	1.08																																												CATCH BASIN (TYPE C)	29+51	D-27	150	a
													~~2.5~~	1				2.5																						1.0												600 mm RCP				b
																																				1															600 mm AFES	29+51			c
108																															7		22																			RSP		D-27	150	d
							0.95	0.76																																												CATCH BASIN (TYPE C)	28+62	D-27	151	a
													~~1.5~~	1				1.5																						0.4												600 mm RCP				b
																																				1															600 mm AFES	28+62			c
																															4		15																			RSP		D-27	151	d
108							4.41	3.41				23.5	~~16.0~~	1			~~11.0~~	16.0	1		11.0	1									63		175		2	5			2	5.0												SHEET TOTAL				

1 REVISED PER ADDENDUM No. 1 DATED NOVEMBER 16, 2010

DRAINAGE QUANTITIES
DQ-33

STATE OF CALIFORNIA - DEPARTMENT OF TRANSPORTATION
Caltrans
06-DESIGN

FUNCTIONAL SUPERVISOR DAVID FRANKE
CALCULATED-DESIGNED BY ROY J SHAVER
CHECKED BY MOHAMMAD HASHEM
REVISED BY D. MASSA
DATE REVISED 01/06/10

LAST REVISION 05-16-10
DATE PLOTTED => 10-NOV-2010
TIME PLOTTED => 12:40

Dist	COUNTY	ROUTE	KILOMETER POST TOTAL PROJECT	SHEET No.	TOTAL SHEETS
05	Mon	101	R146.8/159.7	668	1402

REGISTERED CIVIL ENGINEER 5-16-10 DATE

7-26-10
PLANS APPROVAL DATE

REGISTERED PROFESSIONAL ENGINEER DANIEL B. MASSA No. 59095 Exp. 6/30/11 CIVIL STATE OF CALIFORNIA

THE STATE OF CALIFORNIA OR ITS OFFICERS OR AGENTS SHALL NOT BE RESPONSIBLE FOR THE ACCURACY OR COMPLETENESS OF ELECTRONIC COPIES OF THIS PLAN SHEET.

Caltrans Metric

SUMMARY OF DRAINAGE QUANTITIES

DRAINAGE PLAN SHEET No.	Misc IRON & STEEL	MH TYPE A	MH TYPE B	MH TYPE SO	MH FRAME & COVER	MH FRAME & GRATE	MH ADJUST MH	INLET MINOR CONCRETE (MINOR Str)	INLET PLACE HMA (Misc AREA)	MINOR CONCRETE (Misc CONSTRUCTION)	MINOR CONCRETE (BACKFILL)	APC 450 mm	APC 600 mm	APC 900 mm	RCP (RGJ) 300 mm	RCP 375 mm	RCP 450 mm	RCP 600 mm	RCP 750 mm	RCP 900 mm	RCP 1050 mm	RCP 1200 mm	RCP 1500 mm	RCP JACKED 600 mm	RCP JACKED 750 mm	RCP JACKED 900 mm	RCP JACKED 1050 mm	300 mm CSP DD (2.01 mm THICK)	300 mm CSP (2.01 mm THICK)	600 mm CSP DD (2.77 mm THICK)	900 mm CSP INLET (2.77 mm THICK)	1200 mm CSP RISER (2.77 mm THICK)	RSP (FACING, METHOD B)	RSP (1/4 T, METHOD B)	RSP (FABRIC CLASS 8)	200 mm PLASTIC PIPE	AFES 450 mm	AFES 600 mm	AFES 750 mm	AFES 900 mm	AFES 1200 mm	1500 mm WELDED STEEL PIPE (9.53 mm THICK)	CAP INLET	REMOVE INLET	REMOVE RSP	REMOVE CULVERT	REMOVE MH	REMOVE HW	REMOVE CONC DRAINAGE STRUCTURE	ABANDON CULV	SAND BACKFILL	CIPP 450 mm	CIPP 600 mm	CIPP 750 mm	CIPP 900 mm	DRAINAGE PLAN SHEET No.
	kg	EA	EA	EA	EA	EA	EA	m^3	m^2	m^3	m^3	m	m	m	m	m	m	m	m	m	m	m	m	m	m	m	m	m	m	m	m	m	m^3	m^3	m^2	m	EA	EA	EA	EA	EA	m	EA	EA	m^3	m	EA	EA	m^3	m	m^3	m	m	m	m	
DQ-1	1295							14.74	67.77				54.9					2.4						98.3									15.2		43.4			2							17.1										DQ-1
DQ-2	1188							15.17	67.79				169.6											60.3									15.2		43.4			2							6.4										DQ-2
DQ-3	610		1		1			64.81	34.07				161.7							22.0	52.3												495.0	350.0	680.0							16.2				14.8	1		29.4						DQ-3
DQ-4	860	3	2		4	1		12.57	11.39				213.6					12.1			22.8						146.8					3.80	34.6		70.7			2							12.3										DQ-4
DQ-5	970							11.07	42.08				200.3					14.0												54.5		1.90	42.2		92.4			3					1			2.3				41.2	11.7					DQ-5
DQ-6	324		4		4			5.74	15.93				26.5					254.6					73.5								3.7												1			82.2	2			54.7	15.5					DQ-6
DQ-7	540		2		2		3	5.56	19.66								9.7	32.5		13.9		120.7																					1		51.9	1									DQ-7
DQ-8	984		1			1	1	15.25	48.81							4.0		338.0		114.2												2.59	11.7		30.5					1															DQ-8
DQ-9	1403							18.01	85.32				95.5					148.0															7.6		21.7			1																	DQ-9
DQ-10	972							16.83	49.04				229.3					22.8															22.8		65.1			3																	DQ-10
DQ-11	567			1	1			13.66	29.99				64.0		2.0			9.3	~~118.5~~	1						118.5	1			31.5		1.39	26.0		72.1			2	1				1		3.9	1									DQ-11
DQ-12	540	5		4	1			6.26	30.45				101.2					204.3		395.9													14.6	15.2	80.1			2		1															DQ-12
DQ-13	1404							18.44	94.55				539.2																					7.6	21.7			1																	DQ-13
DQ-14	638						1	5.25	22.18				139.4					1.7												7.8			15.2		43.4			2					1		36.1	1									DQ-14
DQ-15	972			1	1			12.60	27.25				46.5					3.5		4.1													1.2		5.6								3		21.7	3									DQ-15
DQ-16	971							13.20	37.97				128.0		3.5			62.9	106.6												1.48	1.37	7.6		21.7			1																	DQ-16
DQ-17	1296							19.85	57.43				136.6					162.2												16.3			22.8		65.1			3																	DQ-17
DQ-18	796							14.77	29.35				33.9					103.3	156.0													2.4	23.6		66.7			2	1																	DQ-18
DQ-19	972	1			1			12.59	36.82				208.9																	18.5			49.8		114.1			4						1	67.4										DQ-19
DQ-20	540							6.10	19.65				25.3					72.5	111.0											20.0			46.4		131.8			7	2																	DQ-20
DQ-21	503	5			5			10.78	14.62				64.2		2.5			1	154.9							142.5						1.65			15.2			1	2																	DQ-21
DQ-22	848							12.91	24.58				194.4											174.0									335.2		613.4			2						7.6	71.2										DQ-22
DQ-23	864	2		2				11.19	32.62				104.2					46.1						52.4									30.4		86.8			4																	DQ-23
DQ-24	756	1		1				9.69	29.24				37.6					162.7															7.6		21.7			1						1	30.3										DQ-24
DQ-25	864							12.34	44.86				105.7					6.9						52.4									30.4		86.8			4							24.4										DQ-25
DQ-26	817							8.58	47.04			70.3	32.1											51.4							2.0		26.0		76.7		1	3							0.9										DQ-26
DQ-27	864							10.32	36.70				386.0																				22.8	15.2	108.5			5																	DQ-27
DQ-28													11.0																					7.6	21.7			2						2	1	308.9		3							DQ-28
DQ-29	969							17.41										256.5						23.0						22.0			70.0		185.0			3																	DQ-29
DQ-30	647							7.04										133.0		39.5													67.0		199.0	14.0	3			2															DQ-30
DQ-31	216							2.15									46.0	31.5		31.5													256.0		566.0		5	4		2															DQ-31
SHEET TOTAL	25190	3	24	2	20	9	5	404.88	1057.16	1.80		70.3	3509.6		8.0		4.0	55.7	2081.8	~~647.8~~ 528.5 1	621.1		75.1	120.7	73.5	511.8	~~142.5~~ 261.0 1	146.8			170.6	7.48	15.10	1696.9	395.6	3650.3	14.0	9	66	6	6		16.2	2	8	10.6	751.8	9	3	29.4	95.9	27.2				

1 REVISED PER ADDENDUM No. 1 DATED NOVEMBER 16, 2010

DRAINAGE QUANTITIES
DQ-61

STATE OF CALIFORNIA - DEPARTMENT OF TRANSPORTATION
Caltrans
06-DESIGN
FUNCTIONAL SUPERVISOR DAVID FRANKE
CALCULATED-DESIGNED BY DAN MASSA
CHECKED BY JOHNNY SOLANO
REVISED BY D. MASSA
DATE REVISED 01/06/10

LAST REVISION 05-10-10
DATE PLOTTED => 10-NOV-2010
TIME PLOTTED => 12:50

Dist	COUNTY	ROUTE	KILOMETER POST TOTAL PROJECT	SHEET No.	TOTAL SHEETS
05	Mon	101	R146.8/159.7	669	1402

REGISTERED CIVIL ENGINEER 5-16-10 DATE

7-26-10
PLANS APPROVAL DATE

REGISTERED PROFESSIONAL ENGINEER DANIEL B. MASSA No. 59095 Exp. 6/30/11 CIVIL STATE OF CALIFORNIA

THE STATE OF CALIFORNIA OR ITS OFFICERS OR AGENTS SHALL NOT BE RESPONSIBLE FOR THE ACCURACY OR COMPLETENESS OF ELECTRONIC COPIES OF THIS PLAN SHEET.

Caltrans Metric

SUMMARY OF DRAINAGE QUANTITIES

DRAINAGE PLAN SHEET No.	Misc IRON & STEEL	MH TYPE A	MH TYPE B	MH TYPE SO	MH FRAME & COVER	MH FRAME & GRATE	MH ADJUST MH	INLET MINOR CONCRETE (MINOR Str)	INLET PLACE HMA (Misc AREA)	MINOR CONCRETE (Misc CONSTRUCTION)	MINOR CONCRETE (BACKFILL)	APC 450 mm	APC 600 mm	APC 900 mm	RCP (RGJ) 300 mm	RCP 375 mm	RCP 450 mm	RCP 600 mm	RCP 750 mm	RCP 900 mm	RCP 1050 mm	RCP 1200 mm	RCP 1500 mm	RCP JACKED 600 mm	RCP JACKED 750 mm	RCP JACKED 900 mm	RCP JACKED 1050 mm	300 mm CSP DD (2.01 mm THICK)	300 mm CSP (2.01 mm THICK)	600 mm CSP DD (2.77 mm THICK)	900 mm CSP INLET (2.77 mm THICK)	1200 mm CSP RISER (2.77 mm THICK)	RSP (FACING, METHOD B)	RSP (1/4 T, METHOD B)	RSP (FABRIC CLASS 8)	200 mm PLASTIC PIPE	AFES 450 mm	AFES 600 mm	AFES 750 mm	AFES 900 mm	AFES 1200 mm	1500 mm WELDED STEEL PIPE (9.53 mm THICK)	CAP INLET	REMOVE INLET	REMOVE RSP	REMOVE CULVERT	REMOVE MH	REMOVE HW	REMOVE CONCRETE	ABANDON Culv	SAND BACKFILL	CIPP 450 mm	CIPP 600 mm	CIPP 750 mm	CIPP 900 mm	DRAINAGE PLAN SHEET No.
	kg	EA	EA	EA	EA	EA	EA	m^3	m^2	m^3	m^3	m	m	m	m	m	m	m	m	m	m	m	m	m	m	m	m	m	m	m	m	m	m^3	m^3	m^2	m	EA	EA	EA	EA	EA	m	EA	EA	m^3	m	EA	EA	m^3	m	m^3	m	m	m	m	
DQ-32	648							7.81			0.9	13.5						92.4												18.8					305.0			6																DQ-32
DQ-33	108							3.41				23.5	~~16.0~~	1			~~11.0~~	16.0	1			11.0	1										63.0		175.0		2	5			2														DQ-33
DQ-34	540		1		1			7.02									50.0	139.0															37.0		99.0		4	2																DQ-34
DQ-35	432	1			1			5.72									19.5	4.0												17.6			54.0		151.0		3	1																DQ-35
DQ-36	736	1			1		1	6.47	60.87			9.7				25.9	5.8														3.7					1							6		22.5								DQ-36
DQ-37	864							11.95	60.48				245.5					8.8																									3		85.0								DQ-37
DQ-38	1080							11.91	69.09			75.7	43.7																				18.4		55.0		1	1						1										DQ-38
DQ-39	108							1.39	7.56				14.6																														1						17.5	5.0					DQ-39
DQ-40	756							10.03	3.48				176.4					19.0						12.5									15.0		43.4								2		19.2				16.0	2.5					DQ-40
DQ-41	1296							21.66	13.92				209.5					13.9		17.1				13.9		17.0							14.6		36.7						1														DQ-41
DQ-42													19.6																	1.8			219.5		573.9			1					4		61.6			24.7	6.9					DQ-42
DQ-43	1295							16.23	39.46				64.9					43.6						42.8									15.2		43.4			2																DQ-43
DQ-44	756							9.6	21.23				157.3											24.0						17.2			8.8		25.5			1					1		34.4		2		18.0	5.0					DQ-44
DQ-45	944							12.44	10.55				59.3					33.0	83.5						22.5					22.0	2.19		196.0		546.6			3																DQ-45
DQ-46	864							21.12	17.40				10.8	163.3					45.3					31.0		27.9					14.5		262.7		650.0				1	1			1		7.6		1		66.8	15.6					DQ-46
DQ-47	944							11.34	26.41				130.5					90.2						8.5						61.4	1.33		15.2		43.4			5																DQ-47
DQ-48	1052							12.5	26.41				139.3																	92.3	1.57		6.6		12.0																			DQ-48
DQ-49	512							9.15	21.38				27.1					20.7						22.6						41.1	1.87		7.6		21.7			1					3		199.5				34.0	9.5					DQ-49
DQ-50	524							6.16					29.8					6.5		15.0				11.2		36.0							39.4		104.3			1					1		16.3				29.6	18.7					DQ-50
DQ-51	330							4.22	10.94	15.0			13.0					25.4						8.4					0.5		1.27		70.2		163.4			2					1		45.1		2								DQ-51
DQ-52	906							13.1	35.0	11.9			70.4					144.7											6.6		24.59		37.0		95.1			1		2				14.6	16.5									DQ-52
DQ-53	216							2.4	6.96				61.8																				7.6		21.7			1					3	7.6	133.2										DQ-53
DQ-54	404							4.08	19.45		37.6							59.5												10.8	1.09		42.5		122.4			8																DQ-54
DQ-55	1052							12.71	39.74				43.8																	164.3	1.65		19.7		57.3			3					3	7.6	60.1										DQ-55
DQ-56	762							13.73	20.88									243.9	134.8											21.7			251.2		719.4			4	1																DQ-56
DQ-57	1136							9.89	71.42									117.5												92.3	10.83		4.5		13.9																				DQ-57
DQ-58	972							11.31	27.84									195.7															7.6		21.7			1					1		38.5		1								DQ-58
DQ-59																																											2		227.2		3		27.9	4.8					DQ-59
DQ-60																													22.1																20.5				15.9	2.6					DQ-60
SHEET TOTAL	19237	2	1		3		1	257.35	610.47	26.9	38.5	122.4	~~1537.5~~ 1517.3	163.3			25.9	~~80.3~~ 75.3	~~1237.8~~ 1241.8	263.6	32.1		11.0	174.9	22.5	80.9			29.2	561.3	64.59		1413.3		4100.8		11	49	2	4	2			33	29.8	987.2		9		250.4	70.6					

1 REVISED PER ADDENDUM No. 1 DATED NOVEMBER 16, 2010

DRAINAGE QUANTITIES
DQ-62

STATE OF CALIFORNIA - DEPARTMENT OF TRANSPORTATION
Caltrans
06-DESIGN
FUNCTIONAL SUPERVISOR DAVID FRANKE
CALCULATED-DESIGNED BY DAN MASSA
CHECKED BY JOHNNY SOLANO
REVISED BY D. MASSA
DATE REVISED 01/06/10

LAST REVISION 05-10-10
DATE PLOTTED => 10-NOV-2010
TIME PLOTTED => 13:35

Dist	COUNTY	ROUTE	KILOMETER POST TOTAL PROJECT	SHEET No.	TOTAL SHEETS
05	Mon	101	R146.8/159.7	670	1402

REGISTERED CIVIL ENGINEER — DATE 5-16-10

PLANS APPROVAL DATE 7-26-10

REGISTERED PROFESSIONAL ENGINEER — DANIEL B. MASSA No. 59095 Exp. 6/30/11 CIVIL — STATE OF CALIFORNIA

THE STATE OF CALIFORNIA OR ITS OFFICERS OR AGENTS SHALL NOT BE RESPONSIBLE FOR THE ACCURACY OR COMPLETENESS OF ELECTRONIC COPIES OF THIS PLAN SHEET.

Caltrans Metric

* See Sheet DQ-64 for Total

** See Sheet DQ-67 for Total

*** See Sheet Q-9 for Total

SUMMARY OF DRAINAGE QUANTITIES

DRAINAGE PLAN SHEET No.	Misc IRON & STEEL	MH TYPE A	MH TYPE B	MH TYPE SO	MH FRAME & COVER	MH FRAME & GRATE	MH ADJUST MH	INLET MINOR CONCRETE (MINOR STR)	INLET PLACE HMA (Misc AREA)	MINOR CONCRETE (Misc CONSTRUCTION)	MINOR CONCRETE (BACKFILL)	APC 450 mm	APC 600 mm	APC 900 mm	RCP (RGJ) 300 mm	RCP 375 mm	RCP 450 mm	RCP 600 mm	RCP 750 mm	RCP 900 mm	RCP 1050 mm	RCP 1200 mm	RCP 1500 mm	RCP JACKED 600 mm	RCP JACKED 750 mm	RCP JACKED 900 mm	RCP JACKED 1050 mm	300 mm CSP DD (2.01 mm THICK)	300 mm CSP (2.01 mm THICK)	600 mm CSP DD (2.77 mm THICK)	900 mm CSP INLET (2.77 mm THICK)	1200 mm CSP RISER (2.77 mm THICK)	300 mm ENTRANCE TAPER (TYPE 1, ALTERNATIVE A)	RSP (FACING, METHOD B)	RSP (1/4 T, METHOD B)	RSP FABRIC (CLASS 8)	200 mm PLASTIC PIPE	AFES 450 mm	AFES 600 mm	AFES 750 mm	AFES 900 mm	AFES 1200 mm	1500 mm WELDED STEEL PIPE (9.53 mm THICK)	CAP INLET	REMOVE INLET	REMOVE RSP	REMOVE CULVERT	REMOVE MH	REMOVE HW	REMOVE CONC DRAINAGE STRUCTURE	ABANDON Culv	SAND BACKFILL	CIPP 450 mm	CIPP 600 mm	CIPP 750 mm	CIPP 900 mm	DRAINAGE PLAN SHEET No.
	kg	EA	EA	EA	EA	EA	EA	m^3	m^2	m^3	m^3	m	m	m	m	m	m	m	m	m	m	m	m	m	m	m	m	m	m	m	m	m	EA	m^3	m^3	m^2	m	EA	EA	EA	EA	EA	m	EA	EA	m^3	m	EA	EA	m^3	m	m^3	m	m	m	m	
DD-6									1.79																								7.2		33.6																					DD-6
DD-7																												162.0				15	15.0		63.0																					DD-7
DD-8																																																				104.4	51.5	11.2	39.8	DD-8
DD-9										28.35																																													DD-9
DD-21										7.10																							90.0		160.0																					DD-21
DD-22																																	268.9		488.7																					DD-22
DD-25										12.00																							21.0		37.8																					DD-25
DD-33	1404																																1112.0		1885.0																					DD-33
DD-34																																	1960.0		5416.0																					DD-34
DD-36										352.82																																													DD-36
DD-38									7.58																																															DD-38
DD-40								54.00																																																DD-40
SHEET TOTAL	1404							54.00	9.37	400.27																		162.0				15	3474.1		8084.1																					SHEET TOTAL
DQ-61	25190	3	24	2	20	9	5	404.88	1057.16	1.80		70.3	3509.6		8.0	4.0	55.7	2081.8	~~528.5~~ ~~647.0~~	621.1	75.1	120.7	73.5	511.8	~~261.0~~ ~~142.5~~		146.8			170.6	7.48	15.10		1696.9	395.6	3650.3	14.0	9	66	6	6		16.20	2	8	10.6	751.8	3	29.4	95.9	27.2					SHEET TOTAL
DQ-62	19237	2	1	3	1			257.35	610.47	26.9	38.5	122.4	1533.3	163.3		25.9	86.3	1257.8	263.6	32.1				174.9	22.5		80.9		29.2	561.3	64.59			1413.3		4100.8		11	49	2	4	2		33	29.8	987.2	9			250.4	70.6				SHEET TOTAL
TOTAL	45831	5	25	2	23	9	6	716.23	1677.00	428.97	38.5	192.7	5042.9	163.3	8.0	29.9	142.0	3339.6	792.1 ~~910.6~~	653.2	75.1	120.7	73.5	686.7	283.5 ~~165.0~~		80.9	146.8	162.0	29.2	731.9	72.07	15.10	15	6584.3	395.6	15835.2	14.0	20	115	8	10	2	16.20	2	41	40.4	1739.0	9	12	29.4	346.3	97.8	104.4	51.5	11.2	39.8	TOTAL
	**							**		***									1							1								**		**														*		*	*	*				

1 REVISED PER ADDENDUM No. 1 DATED NOVEMBER 16, 2010

DRAINAGE QUANTITIES DQ-63

STATE OF CALIFORNIA - DEPARTMENT OF TRANSPORTATION

Caltrans 06-DESIGN

FUNCTIONAL SUPERVISOR DAVID FRANKE

CALCULATED-DESIGNED BY JOHNNY SOLANO

CHECKED BY DAN MASSA

REVISED BY D. MASSA

DATE REVISED 01/06/10

LAST REVISION 05-10-10

DATE PLOTTED => 10-NOV-2010

TIME PLOTTED => 12:40

Dist	COUNTY	ROUTE	KILOMETER POST TOTAL PROJECT	SHEET No.	TOTAL SHEETS
05	Mon	101	R146.8/159.7	671	1402

REGISTERED CIVIL ENGINEER 5-16-10 DATE

7-26-10
PLANS APPROVAL DATE

REGISTERED PROFESSIONAL ENGINEER ROY J. SHAVER No. 44587 Exp. 3/31/12 CIVIL STATE OF CALIFORNIA

THE STATE OF CALIFORNIA OR ITS OFFICERS OR AGENTS SHALL NOT BE RESPONSIBLE FOR THE ACCURACY OR COMPLETENESS OF ELECTRONIC COPIES OF THIS PLAN SHEET.

Caltrans Metric

** See Sheet DQ-67 for Grand Total

(N) NOT A SEPARATE PAY ITEM, FOR INFORMATION ONLY.

1 REINFORCED CONCRETE BOX CULVERTS

DRAINAGE SYSTEM No. ⬡	DRAINAGE UNIT No. ○	Temp CREEK DIVERSION SYSTEM (N)	RSP (FACING, METHOD B)	1/4 RSP (~~1/2~~ T, METHOD B)	RSP FABRIC (Class 8)	BAR REINFORCING STEEL (BOX CULVERT)	CLASS 1 CONCRETE (BOX CULVERT)	CLASS 2 CONCRETE (WINGWALL)	REMOVE: CONC DRAINAGE STRUCTURE	REMOVE: CULVERT	SAND BEDDING	DESCRIPTION	STATION	DRAINAGE PLAN SHEET No.	DRAINAGE SYSTEM No. ⬡	DRAINAGE UNIT No. ○
		m	m^3	m^3	m^2	kg	m^3	m^3	m^3	m	m^3					
164	a		109.2	198.6	289.0							RSP w/FABRIC		D-25	164	a
	b							5.5				WINGWALL				b
	c					53584	326		20.1			BOX CULVERT	32+11.996"BR"-LINE			c
	d							5.5				WINGWALL				d
	e		51.6	93.8	160.9							RSP w/FABRIC				e
164	f	45.5										TCDS		D-25	164	f
165	a		19.0	34.5	78.7							RSP w/FABRIC		D-26	165	a
	b							3.5				WINGWALL				b
	c					5865	38		18.3		5.9	BOX CULVERT	27+56.000"RC"-LINE			c
	d							3.5				WINGWALL				d
	e	23.8										TCDS				e
165	f	12.2										TCDS		D-26	165	f
166	a		158.1	287.4	398.1							RSP w/FABRIC		D-26	166	a
	b							4.0				WINGWALL				b
	c					23394	163		34.1		30.4	BOX CULVERT	27+56.037"CR"-LINE			c
	d							4.0				WINGWALL				d
	e		65.5	119.0	193.5							RSP w/FABRIC				e
166	f	31.5										TCDS		D-26	166	f
167	a		14.2	25.8	65.3							RSP w/FABRIC		D-28	167	a
	b							1.5				WINGWALL				b
	c					9669	63			46.0		BOX CULVERT	31+33.554"CR"-LINE			c
	d							1.5				WINGWALL				d
	e		106.0	192.8	285.1							RSP w/FABRIC				e
167	f	42.0										TCDS		D-28	167	f
168	a							1.5				WINGWALL		D-28	168	a
	b					9650	64					BOX CULVERT	29+40.016"PL"-LINE			b
	c							1.5				WINGWALL				c
	d		31.3	56.9	111.1							RSP w/FABRIC				d
168	e	45.5										TCDS		D-28	168	e
		200.5	554.9	1008.8	1581.7	102162	654	32.0	72.5	46.0	36.3			SHEET TOTAL		
				1 395.6						29.4	1739.0			SHEET DQ-63 TOTAL		
		200.5	554.9**	~~1008.8~~ 1404.4	1581.7 **	102162	654	32.0		101.9	1785.0	36.3		TOTAL		

ROCK SLOPE PROTECTION (LINED GUTTER)

LOCATION	STATION	RSP (FACING METHOD B) m^3	FABRIC (CLASS 8) m^2
PRUNDALE S. ROAD	26+60.000 TO 28+55.000	135.0	258.0
BLACKIE ROAD	32+53.056 TO 33+41.776	236.0	451.0
BLACKIE ROAD	33+52.002 TO 33+83.932	56.0	107.0
POLLOCK ROAD	29+40.000 TO 31+25.000	248.0	473.0
POLLOCK ROAD	31+45.000 TO 33+10.000	221.0	422.0
TOTAL		896.0 **	1 711.0**

ABANDON DRAINAGE FACILITY

DRAINAGE SHEET No.	STATION	DESCRIPTION	Abn Culv m	SAND Bkf m^3
D-15	164+40.00 ℄ "M" LINE	450 mm CMP	13.6	2.2
D-16	166+73.58 ℄ "M" LINE, 2.3 Lt	450 mm CMP	7.3	1.2
D-16	166+73.58 ℄ "M" LINE, 4.0 Rt	450 mm CMP	6.4	1.0
D-16	166+98.72 ℄ "M" LINE, 2.2 Lt	450 mm CMP	7.3	1.2
D-16	166+98.72 ℄ "M" LINE, 3.6 Rt	450 mm CMP	6.9	1.1
D-25	31+80.00 ℄ "BR" LINE	450 mm CMP	15.0	2.4
D-26	26+08.57 ℄ "RC" LINE	450 mm CMP	12.3	2.0
D-30	128+28.68 ℄ "O" LINE	450 mm CMP	19.1	3.0
D-30	130+42.47 ℄ "O" LINE	450 mm CMP	15.5	2.5
D-41	192+30.27 ℄ "SS" LINE	760 mm CMP	34.1	15.5
D-41	192+88.18 ℄ "SS" LINE	600 mm CMP	13.7	3.9
D-41	193+03.93 ℄ "SS" LINE	450 mm CMP	8.3	1.3
D-42	192+62.15 ℄ "SN" LINE	450 mm CMP	8.1	1.3
D-42	193+38.45 ℄ "SN" LINE	450 mm CMP	13.9	2.2
D-43	194+22.93 ℄ "SN" LINE	450 mm CMP	19.8	3.2
D-45	13+96.85 ℄ "CHCEV" LINE	600 mm CMP	22.4	6.3
D-49	199+32.63 ℄ "CH-4" LINE	300 mm CMP	5.2	0.4
		SHEET TOTAL	228.9	50.7
		SHEET DQ-63 TOTAL	346.3	97.8
		TOTAL	575.2	148.5

DRAINAGE QUANTITIES

1 REVISED PER ADDENDUM No. 1 DATED NOVEMBER 16, 2010

DQ-64

STATE OF CALIFORNIA - DEPARTMENT OF TRANSPORTATION
Caltrans 06-DESIGN
FUNCTIONAL SUPERVISOR DAVID FRANKE
CALCULATED-DESIGNED BY JOHNNY SOLANO
CHECKED BY ROY J. SHAVER
REVISED BY
DATE REVISED

LAST REVISION 05-04-10 DATE PLOTTED => 10-NOV-2010 TIME PLOTTED => 12:40

1 REVISED PER ADDENDUM No. 1 DATED NOVEMBER 16, 2010

TEMPORARY DRAINAGE QUANTITIES

Dist	COUNTY	ROUTE	KILOMETER POST TOTAL PROJECT	SHEET No.	TOTAL SHEETS
05	Mon	101	R146.8/159.7	672	1402

Ronnie K. Kier 05/17/10
REGISTERED CIVIL ENGINEER DATE

7-26-10
PLANS APPROVAL DATE

REGISTERED PROFESSIONAL ENGINEER RONNIE K.KIER No. C60877 Exp. 12/31/10 CIVIL STATE OF CALIFORNIA

THE STATE OF CALIFORNIA OR ITS OFFICERS OR AGENTS SHALL NOT BE RESPONSIBLE FOR THE ACCURACY OR COMPLETENESS OF ELECTRONIC COPIES OF THIS PLAN SHEET.

Caltrans Metric

1

LOCATION 1

STAGE CONSTRUCTION Sht No.	DRAINAGE SYSTEM No.	DRAINAGE UNIT	600 mm Temp FES	750 mm Temp FES	1200 mm Temp RISER	DESIGN H (N)	600 mm Temp CULVERT	750 mm Temp CULVERT	900 mm Temp CULVERT	Max COVER (N)	MINOR CONCRETE (MINOR STRUCTURE)	Misc IRON & STEEL	RSP (FACING, METHOD B)	RSP FABRIC (CLASS 8)	DESCRIPTION	STATION	DRAINAGE SYSTEM No.	DRAINAGE UNIT	STAGE CONSTRUCTION Sht No.
			EA	EA	m	m	m	m	m	m	m3	Kg	m3	m2					
10	T1	a											5.3	8.7	RSP FACING		T1	a	10
		b					23.0			1.0					Temp CULVERT			b	
		c				1.4			1.5		0.3	107.0			GMP DI TYPE 900R GRATE	"DET1" 142+81.340 L+ 16.68		c	
		d					79.4			2.2					Temp CULVERT			d	
		e				1.8			1.9		0.3	107.0			GMP DI TYPE 900R GRATE	"DET1" 143+61.190 L+ 16.68		e	
		f					39.8			1.8					Temp CULVERT			f	
		g				1.6			1.7		0.3	107.0			GMP DI TYPE 900R GRATE	"DET1" 144+01.520 L+ 17.30		g	
		h					49.2			1.5					Temp CULVERT			h	
		i				1.3			1.4		0.3	107.0			GMP DI TYPE 900R GRATE	"DET1" 144+51.430 L+ 17.90		i	
		j					59.5			1.2					Temp CULVERT			j	
		k				1.1			1.2		0.3	107.0			GMP DI TYPE 900R GRATE	"DET1" 145+11.570 L+ 17.99		k	
		l					105.2			1.2					Temp CULVERT			l	
11		m				1.0			1.1		0.3	107.0			GMP DI TYPE 900R GRATE	"DET1" 146+17.840 L+ 17.99		m	11
16	T2	a					31.0			1.5					Temp CULVERT	"DET1" 144+01.000	T2	a	16
		b				0.9			1.0		0.3	107.0			GMP DI TYPE 900R GRATE	"DET1" 144+00.090 R+ 14.58		b	
16	T3	a					34.4			1.2					Temp CULVERT	"DET1" 145+10.000	T3	a	16
		b				0.9			1.0		0.3	107.0			GMP DI TYPE 900R GRATE	"DET1" 145+09.850 R+ 17.22		b	
17	T4	a					37.4			1.2					Temp CULVERT	"DET1" 146+16.500	T4	a	17
		b				0.9			1.0		0.3	107.0			GMP DI TYPE 900R GRATE	"DET1" 146+16.00 R+ 20.21		b	
11	T5	a											5.3	8.7	RSP FACING		T5	a	11
		b					30.5			1.9					Temp CULVERT	"DET1" 147+41.739		b	
		c			1.2	1.1					0.45	40.0			Temp RISER w/o DEBRIS RACK	"DET1" 147+41.739 L+ 25.91		c	
17	T6	a											5.3	8.7	RSP FACING		T6	a	17
		b	1												Temp FES			b	
		c					44.5			1.6					Temp CULVERT	"DET1" 147+35.000		c	
		d				0.9			1.0		0.3	107.0			GMP DI TYPE 900R GRATE	"DET1" 147+28.333 R+ 19.763		d	
11	T7	a											5.3	8.7	RSP FACING		T7	a	11
		b	1												Temp FES			b	
		c					20.3			1.8					Temp CULVERT			c	
		d			1.1	1.0					0.45	40.0			Temp RISER w/DEBRIS RACK	"DET1" 147+85.532 L+ 26.885		d	
11	T8	a											5.3	8.7	RSP FACING		T8	a	11
		b	1												Temp FES			b	
		c					19.9			1.8					Temp CULVERT			c	
		d			1.1	1.0					0.45	40.0			Temp RISER w/DEBRIS RACK	"DET1" 148+47.298 L+ 26.147		d	
17	T9	a					73.9			1.3					Temp CULVERT	"RUSS1" 14+55.000	T9	a	17
		b				0.9			1.0		0.3	107.0			GMP DI TYPE 900R GRATE			b	
17	T10	a											5.3	8.7	RSP FACING		T10	a	17
		b	1												Temp FES			b	
		c					50.5			1.6					Temp CULVERT			c	
		d				0.9			1.0		0.3	107.0			GMP DI TYPE 900R GRATE	"DET1" 150+59.337 R+ 23.536		d	
			4.0		3.4	16.7	698.5	0.0	14.8	22.8	5.0	1404.0	31.8	52.2	SHEET TOTAL				

DRAINAGE QUANTITIES (TEMPORARY)

DQ-65

STATE OF CALIFORNIA - DEPARTMENT OF TRANSPORTATION
Caltrans
06-DESIGN

FUNCTIONAL SUPERVISOR: DAVID FRANKE
CALCULATED-DESIGNED BY: JOHNNY SOLANO
CHECKED BY: RONNIE KIER
REVISED BY: D. MASSA
DATE REVISED: 02/10/10

LAST REVISION 05/17/10
DATE PLOTTED => 10-NOV-2010
TIME PLOTTED => 12:40

Dist	COUNTY	ROUTE	KILOMETER POST TOTAL PROJECT	SHEET No.	TOTAL SHEETS
05	Mon	101	R146.8/159.7	673	1402

Ronnie K. Kier 05/17/10
REGISTERED CIVIL ENGINEER DATE

7-26-10
PLANS APPROVAL DATE

REGISTERED PROFESSIONAL ENGINEER RONNIE K. KIER No. C60877 Exp. 12/31/10 CIVIL STATE OF CALIFORNIA

THE STATE OF CALIFORNIA OR ITS OFFICERS OR AGENTS SHALL NOT BE RESPONSIBLE FOR THE ACCURACY OR COMPLETENESS OF ELECTRONIC COPIES OF THIS PLAN SHEET.

Caltrans Metric

TEMPORARY DRAINAGE QUANTITIES

LOCATION 1

STAGE CONSTRUCTION Sht No.	DRAINAGE SYSTEM No.	DRAINAGE UNIT	600 mm Temp FES	750 mm Temp FES	1200 mm Temp RISER	DESIGN H (N)	600 mm Temp CULVERT	750 mm Temp CULVERT	900 mm Temp CULVERT	Max COVER (N)	MINOR CONCRETE (MINOR STRUCTURE) 1	Misc IRON & STEEL	RSP (FACING, METHOD B)	RSP FABRIC (CLASS 8)	DESCRIPTION	STATION	DRAINAGE SYSTEM No.	DRAINAGE UNIT	STAGE CONSTRUCTION Sht No.
			EA	EA	m	m	m	m	m	m	m3	Kg	m3	m2					
12	T11	a											5.3	8.7	RSP FACING		T11	a	12
		b	1												Temp FES			b	
		c					51.9			2.3					Temp CULVERT			c	
		d				0.9			1.0		0.3	107.0			GMP DI TYPE 900R GRATE	"DET1" 151+60.639 R+ 25.065		d	
12	T12	a	1												Temp FES		T12	a	12
		b					22.7			1.2					Temp CULVERT			b	
		c				0.9			1.0		0.3	107.0			GMP DI TYPE 900R GRATE	"M" LINE 156+58.535 R+ 46.341		c	
14		d					151.0			1.2					Temp CULVERT			d	14
14	T13	a											5.3	8.7	RSP FACING		T13	a	14
		b	1												Temp FES			b	
		c					15.0								Temp CULVERT			c	
		d					62.5			1.2					Temp CULVERT			d	
		e				1.75			1.9		0.3	107.0			GMP DI TYPE 900R GRATE	"DET2" 157+70.819 L+ 16.332		e	
		f					36.6			1.7					Temp CULVERT			f	
		g	1												Temp FES			g	
19	T14	a	1												Temp FES		T14	a	19
		b					75.1			2.1					Temp CULVERT			b	
		c	1												Temp FES			c	
		d											5.3	8.7	RSP FACING			d	
15	T15	a					78.3			1.1					Temp CULVERT		T15	a	15
15	T16	a											5.3	8.7	RSP FACING		T16	a	15
		b	1												Temp FES			b	
		c					26.7			1.0					Temp CULVERT			c	
		d				0.9			1.0		0.3	107.0			GMP DI TYPE 900R GRATE	"DET2" 165+40.000 R+ 14.100		d	
14	T17	a											5.3	8.7	RSP FACING		T17	a	14
		b	1												Temp FES			b	
		c					28.3								Temp CULVERT	"DET2" 162+42.000		c	
		d	1												Temp FES			d	
			9			4.4	548.1		4.9	11.8	1.2	428.0	26.5	43.5	SHEET TOTAL				

1

1 REVISED PER ADDENDUM No. 1 DATED NOVEMBER 16, 2010

DRAINAGE QUANTITIES (TEMPORARY) DQ-66

STATE OF CALIFORNIA - DEPARTMENT OF TRANSPORTATION
Caltrans
06-DESIGN

FUNCTIONAL SUPERVISOR: DAVID FRANKE
CALCULATED-DESIGNED BY: JOHNNY SOLANO
CHECKED BY: RONNIE KIER
REVISED BY: D. MASSA
DATE REVISED: 02/10/10

LAST REVISION 05/17/10
DATE PLOTTED => 10-NOV-2010
TIME PLOTTED => 13:35

Dist	COUNTY	ROUTE	KILOMETER POST TOTAL PROJECT	SHEET No.	TOTAL SHEETS
05	Mon	101	R146.8/159.7	674	1402

Ronnie K. Kier 05/17/10
REGISTERED CIVIL ENGINEER DATE

7-26-10
PLANS APPROVAL DATE

REGISTERED PROFESSIONAL ENGINEER RONNIE K. KIER No. C60877 Exp. 12/31/10 CIVIL STATE OF CALIFORNIA

THE STATE OF CALIFORNIA OR ITS OFFICERS OR AGENTS SHALL NOT BE RESPONSIBLE FOR THE ACCURACY OR COMPLETENESS OF ELECTRONIC COPIES OF THIS PLAN SHEET.

Caltrans Metric

TEMPORARY DRAINAGE QUANTITIES

LOCATION 4	STAGE CONSTRUCTION Sht No.	DRAINAGE SYSTEM No.	DRAINAGE UNIT	600 mm Temp FES	750 mm Temp FES	1200 mm Temp RISER	DESIGN H (N)	600 mm Temp CULVERT	750 mm Temp CULVERT	900 mm Temp CULVERT	Max COVER (N)	MINOR CONCRETE (MINOR STRUCTURE)	Misc IRON & STEEL	RSP (FACING, METHOD B)	RSP FABRIC (CLASS 8)	DESCRIPTION	STATION	DRAINAGE SYSTEM No.	DRAINAGE UNIT	STAGE CONSTRUCTION Sht No.
				EA	EA	m	m	m	m	m	m	m3	Kg	m3	m2					
	38	T18	a											7.6	21.7	RSP FACING		T18	a	38
			b	1												Temp FES			b	
			c					29.0								Temp CULVERT	"DET3" 12+75.880		c	
			d	1												Temp FES			d	
	38	T19	a											10.8	28.7	RSP FACING		T19	a	38
			b		1											Temp FES			b	
			c						20.5							Temp CULVERT	"DET3" 13+473.000		c	
			d		1											Temp FES			d	
	37	T20	a											7.6	21.7	RSP FACING		T20	a	37
			b	1												Temp FES			b	
			c					35.0								Temp CULVERT	"DET3" 15+30.000		c	
			d	1												Temp FES			d	
				4	2			64.0	20.5					26.0	72.1	SHEET TOTAL				
												716.23	45831	6584.3	15835.2	SHEET DQ-63 TOTAL				
														1450.9	3292.7	SHEET DQ-64 TOTAL ****				
				4		3.4	16.7	698.5		14.8	22.8	5.0 ~~4.0~~	1404 ~~1284~~	31.8	52.2	SHEET DQ-65 TOTAL				
				9			4.4	548.1		4.9	11.8	1.2	428	26.5	43.5	SHEET DQ-66 TOTAL				
				17	2	3.4	21.1	1310.6	20.5	19.7	34.6	~~720.63~~ 722.43 1	~~47543~~ 47663 1	8119.5	19295.7	TOTAL				

**** SHEET 64 TOTAL INCLUDES ROCK SLOPE PROTECTION (LINED GUTTER)

(N) - NOT A SEPARATE PAY ITEM, FOR INFORMATION ONLY

1 REVISED PER ADDENDUM No. 1 DATED NOVEMBER 16, 2010

DRAINAGE QUANTITIES (TEMPORARY) DQ-67

STATE OF CALIFORNIA - DEPARTMENT OF TRANSPORTATION
Caltrans
06-DESIGN

FUNCTIONAL SUPERVISOR: DAVID FRANKE
CALCULATED-DESIGNED BY: JOHNNY SOLANO
CHECKED BY: RONNIE KIER
REVISED BY: D. MASSA
DATE REVISED: 02/10/10

LAST REVISION 05/17/10 DATE PLOTTED => 10-NOV-2010 TIME PLOTTED => 13:35

Dist	COUNTY	ROUTE	KILOMETER POST TOTAL PROJECT	SHEET No.	TOTAL SHEETS
05	Mon	101	R146.8/159.7	760	1402

Ronnie K. Kier 5-16-10
REGISTERED CIVIL ENGINEER DATE

7-26-10
PLANS APPROVAL DATE

REGISTERED PROFESSIONAL ENGINEER RONNIE K. KIER No. C60877 Exp. 12/31/11 CIVIL STATE OF CALIFORNIA

THE STATE OF CALIFORNIA OR ITS OFFICERS OR AGENTS SHALL NOT BE RESPONSIBLE FOR THE ACCURACY OR COMPLETENESS OF ELECTRONIC COPIES OF THIS PLAN SHEET.

Caltrans Metric

STAGE 2 - PHASE 1:

CONSTRUCTION SEQUENCE:

1. REMOVE TEMPORARY RAILING (TYPE K) ON ROUTE 101 SB OFF RAMP, RE-STRIPE ROUTE 101 NB, SB, AND SB OFF RAMP AND PLACE TEMPORARY RAILING (TYPE K) ON ROUTE 101 NB AND SB INSIDE ETW'S (SEE ~~TH-45~~ THROUGH ~~TH-47~~ AND PD-30)
2. RECONSTRUCT ROUTE 101 MEDIAN INCLUDING DRAINAGE WITH ROUTE 101 NB CROSSINGS. (SC-05)
3. UNDER TRAFFIC CONTROL SYSTEM REMOVE TEMPORARY RAILING (TYPE K) AND CONSTRUCT MEDIAN BARRIER (TYPE 60SC AND 60SE SEE SC-05)

TH-33 1 TH-35 1

STAGE 2 - PHASE 2:

CONSTRUCTION SEQUENCE:

1. RESTRIPE ROUTE 101 NB AND SB (SEE PD-29 THROUGH PD-34).
2. UNDER TRAFFIC CONTROL SYSTEM CONSTRUCT ROUTE 101 NB OUTSIDE SHOULDER IMPROVEMENTS.

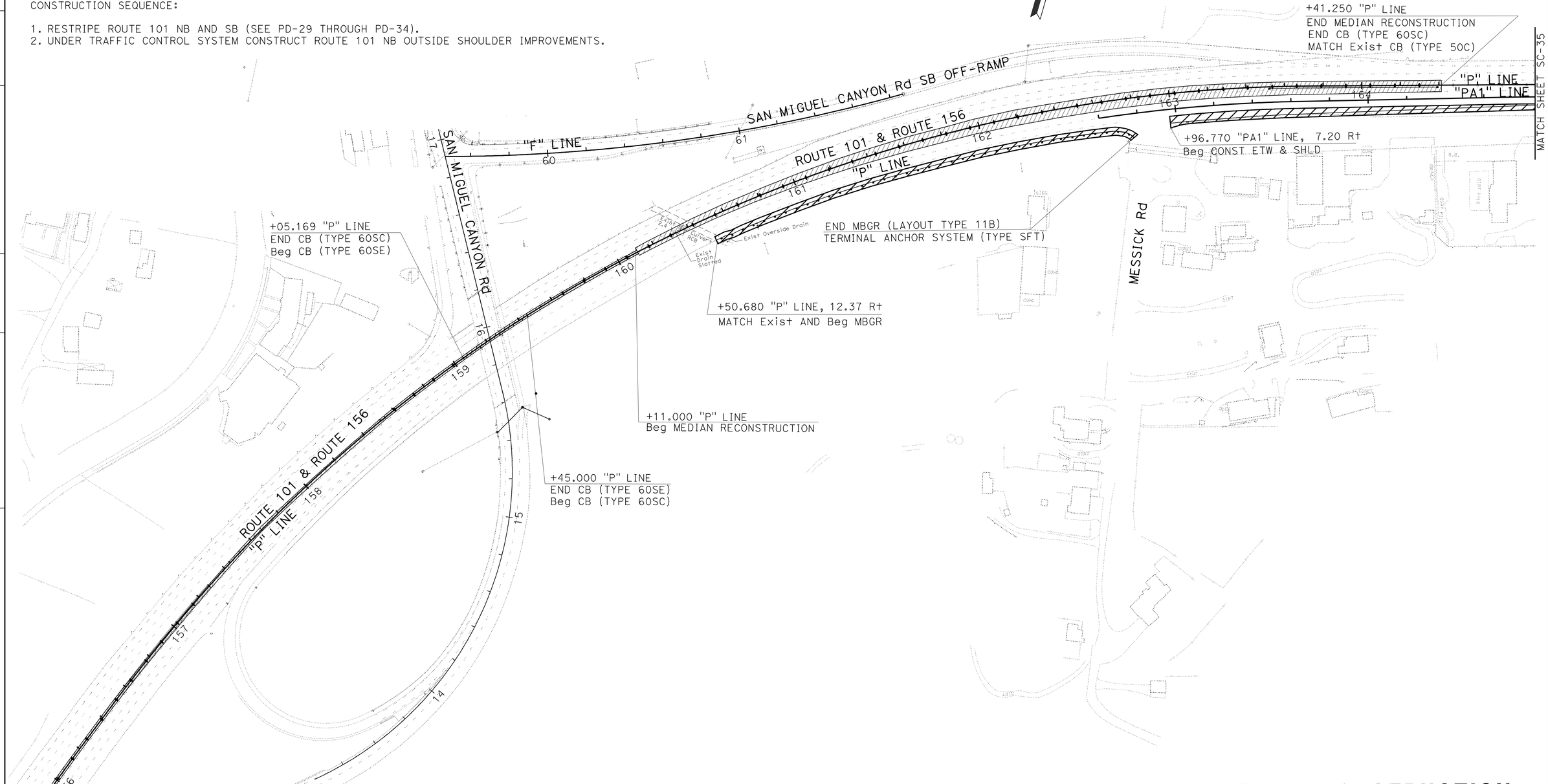

1 REVISED PER ADDENDUM No. 1 DATED NOVEMBER 16, 2010

STAGE CONSTRUCTION
(STAGE 2, LOCATION 3)
SC-34

SCALE 1:1000

STATE OF CALIFORNIA - DEPARTMENT OF TRANSPORTATION
Caltrans
06-DESIGN

FUNCTIONAL SUPERVISOR DAVID FRANKE
CALCULATED-DESIGNED BY RANDON HOLLAND
CHECKED BY DAN MASSA
REVISED BY
DATE REVISED

LAST REVISION 05/17/10
DATE PLOTTED => 10-NOV-2010
TIME PLOTTED => 12:41

Dist	COUNTY	ROUTE	KILOMETER POST TOTAL PROJECT	SHEET No.	TOTAL SHEETS
05	Mon	101	R146.8/159.7	762	1402

Ronnie K. Kier 5-16-10
REGISTERED CIVIL ENGINEER DATE

7-26-10
PLANS APPROVAL DATE

REGISTERED PROFESSIONAL ENGINEER RONNIE K. KIER No. C60877 Exp. 12/31/11 CIVIL STATE OF CALIFORNIA

THE STATE OF CALIFORNIA OR ITS OFFICERS OR AGENTS SHALL NOT BE RESPONSIBLE FOR THE ACCURACY OR COMPLETENESS OF ELECTRONIC COPIES OF THIS PLAN SHEET.

Caltrans Metric

1

STAGE 1 - PHASE 1:
CONSTRUCTION SEQUENCE:

1. REMOVE DRAINGAGE SYSTEMS No. 194, 198, 199, 207 AND CONSTRUCT DRAINAGE SYSTEMS No. 203, 208, 218, 227 (SEE DRAINAGE PLANS).
2. CONSTRUCT CRAZY HORSE CANYON DRIVEWAY DETOURS NEAR STA 11+20 (SEE SCD-2, SCD-3).
3. CONSTRUCT OAK HEIGHTS DRIVE DETOUR (SEE SCD-5 DETAIL "A").

STAGE 1 - PHASE 2:
CONSTRUCTION SEQUENCE:

1. CONSTRUCT DRAINAGE SYSTEMS No. 195, 202, 212, 225, 226, 228, 229, 230, 231, 232 (SEE DRAINAGE PLANS).
2. CONSTRUCT MORO Rd EXTENSION, EDGIN Dwy, AND EDGIN Dwy DETOUR (SEE SCD-3, SCD-5 DETAIL "B").
3. CONSTRUCT CRAZY HORSE CANYON ROAD DETOUR WITH DRAINAGE SYSTEMS No. 234, T18, T19, AND T20, Temp. WATER METER, BOOSTER PUMP, WATER SUPPY SYSTEM, AND PLACE TEMPORAY RAILING (TYPE K) (SEE TH-50, SCD-2, SCD-3, SCD-4, SC-36, SC-37, TIP-2).

* NOTE: UNDER TEMPORARY TRAFFIC CONTORL SYSTEM, LIKE LENGTHS FOR LANE 1 AND 2 FOR CONSTRUCTION SEQUENCE No. 4 TO No. 8 BEFORE BOTH LANES ARE OPEN TO TRAFFIC

4. COLD PLANE ROUTE 101 NB AND/OR SB LANE 1 (SEE TABLE ON SC-6)
5. COLD PLANE BETWEEN INSIDE 'TRIM LINES' TO INTERMEDIATE PROFILE.
6. PLACE HMA ON LANE 1 MATCHING INTERMEDIATE PROFILE AT INSIDE TRIM LINE. (NOTE: HMA SURFACE IS AT OR BELOW ORIGINAL GROUND AT LANE LINE).
7. COLD PLANE ROUTE 101 NB AND/OR SB LANE 2 (SEE TABLE ON SC-6)
8. PLACE HMA ON LANE 2 MATCHING INTERMEDIATE PROFILE AT LANE LINE. (NOTE: HMA SURFACE IS AT OR BELOW ORIGINAL GROUND AT OUTSIDE TRIM LINE. RESTRIPE AND PLACE TEMPORARY RAILING (TYPE K). (SEE SC-6 AND TH-48 THROUGH TH-51).
9. GRADE RAMP CH3.

STAGE 1 - PHASE 3:
CONSTRUCTION SEQUENCE:

1. CONSTRUCT DRAINAGE SYSTEMS No. 197, 201, 209, 214, 221 (SEE DRAINAGE PLANS)
2. CONSTRUCT PORTION OF DRAINAGE SYSTEMS No. 192, 193, 196, 200, 205 (PORTION SHOWN ON STAGE CONSTRUCTION PLANS)

* NOTE: OAK ESTATES DRIVE AND OAK HEIGHTS DRIVE ACCESS TO ROUTE 101 CAN NOT BE CLOSED UNTIL TEMPORARY RAILING (TYPE K) IS SET IN MEDIAN AT LOCATION 3, STAGE 2, PHASE 1. (SEE TH-45 THROUGH TH-47)

3. CLOSE ACCESS TO ROUTE 101 AT OAK HEIGHTS DRIVE DETOUR AND OAK ESTATES DRIVE AND REMOVE PAVEMENT (SEE SCD-5, DETAIL "C" and L-39).
4. CONSTRUCT SR 101 NB AND SB SHOULDER IMPROVEMENTS, PORTIONS OF CH1, CH2, CH3, AND CH4 RAMPS, RETAINING WALL No. 200, MALLORY CANYON, AND RESIDENTIAL DRIVEWAYS.

* (NOTE: HMA THICKNESS ON SHOULDERS AND RAMPS VARY TO MATCH INTERMEDIATE PROFILE AT OUTSIDE TRIM LINE).

TRAFFIC:
: TRAFFIC ON EXISTING ALIGNMENT

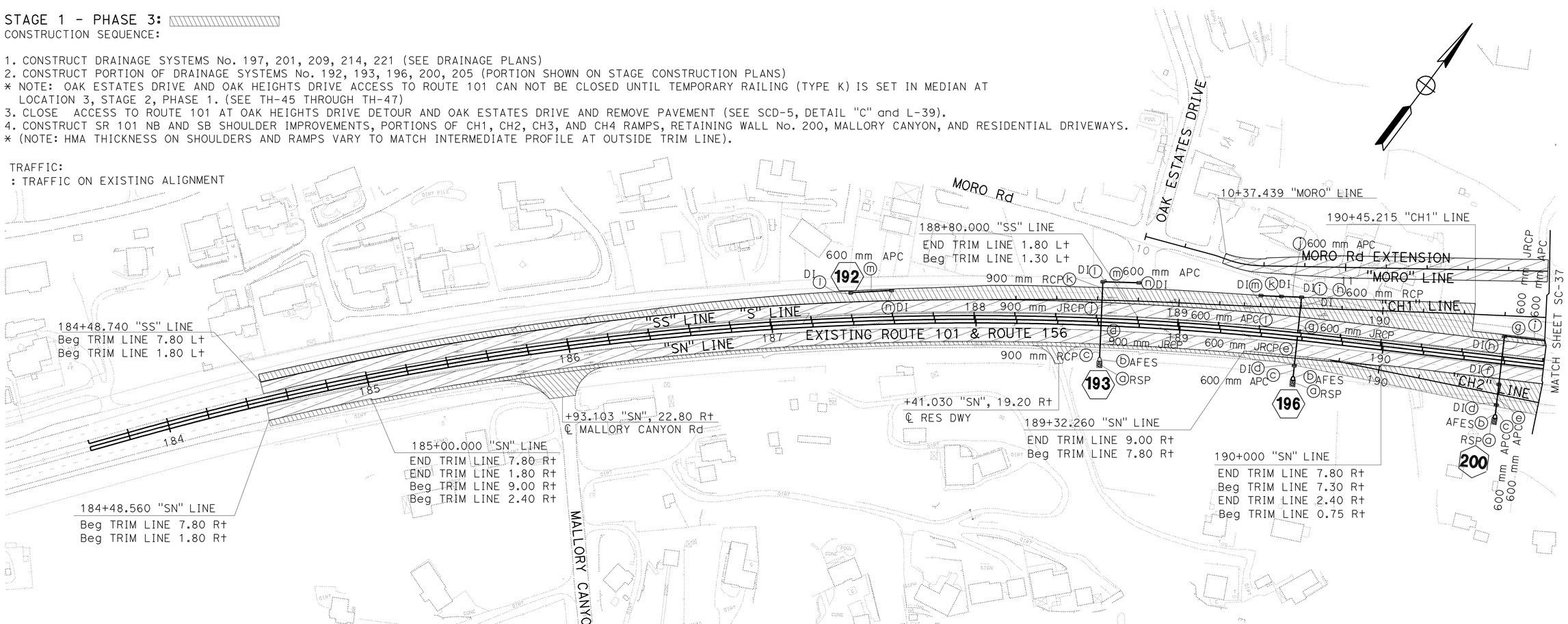

1 **REVISED PER ADDENDUM No. 1 DATED NOVEMBER 16, 2010**

THIS PLAN ACCURATE FOR STAGE CONSTRUCTION WORK ONLY.

ALL DIMENSIONS ARE IN METERS UNLESS OTHERWISE SHOWN.

STAGE CONSTRUCTION
(STAGE 1, LOCATION 4)
SC-36

SCALE 1:1000

STATE OF CALIFORNIA - DEPARTMENT OF TRANSPORTATION
Caltrans
06-DESIGN
FUNCTIONAL SUPERVISOR DAVID FRANKE
CALCULATED-DESIGNED BY HUU HO
CHECKED BY RONNIE KIER
REVISED BY
DATE REVISED

LAST REVISION DATE PLOTTED => 10-NOV-2010
05/17/10 TIME PLOTTED => 12:41

Dist	COUNTY	ROUTE	KILOMETER POST TOTAL PROJECT	SHEET No.	TOTAL SHEETS
05	Mon	101	R146.8/159.7	779	1402

Ronnie K. Kier 5-16-10
REGISTERED CIVIL ENGINEER DATE

7-26-10
PLANS APPROVAL DATE

REGISTERED PROFESSIONAL ENGINEER RONNIE K. KIER No. C60877 Exp. 12/31/11 CIVIL STATE OF CALIFORNIA

THE STATE OF CALIFORNIA OR ITS OFFICERS OR AGENTS SHALL NOT BE RESPONSIBLE FOR THE ACCURACY OR COMPLETENESS OF ELECTRONIC COPIES OF THIS PLAN SHEET.

Caltrans Metric

1

ROADWAY ITEMS DURING STAGE CONSTRUCTION

LOCATION 1			WORK DESCRIPTION	TACK COAT Tonne	HMA (Type A) Tonne	CLASS 2 AB m^3	ROADWAY EXCAVATION m^3	REMOVE AC SURFACING m^3	EMBANKMENT (N) m^3	COLD PLANE AC Pvmt m^2	PCC m^3	LCB m^3
STAGE 1	PHASE 1	BASIN C3	EXCAVATE BASIN				1 040					
		BASIN C2	EXCAVATE BASIN				1 610					
		BASIN TBD1	EXCAVATE BASIN				2 000					
		BASIN A	EXCAVATE BASIN				840					
		BASIN B	EXCAVATE BASIN				7 430					
		BASIN D	EXCAVATE BASIN				11 920					
		BASIN E	EXCAVATE BASIN				20 400					
		BASIN F	EXCAVATE BASIN				31 160					
		BASIN I	EXCAVATE BASIN				4 630					
		BASIN TDB2	EXCAVATE BASIN				52 000					
		BASIN TDB3	EXCAVATE BASIN				15 760					
		"DET1" LINE 140+40.00 TO 143+90.00.00	Const Temp MAINLINE MEDIAN CROSSOVER	1.3	1 800	1 600	4 000		20			
		"DET1" LINE 148+60.00 TO 152+40.00	Const Temp MAINLINE MEDIAN CROSSOVER	0.8	1 430	1 330	1 780		20			
		"DET2" LINE 157+00.00 TO 158+10.00	Const Temp MAINLINE MEDIAN CROSSOVER	0.2	260	240	800		95			
		N. MAIN St 46+60.00 TO 49+53.199	Const N. MAIN STREET	6.6	3 610	3 660	5 100		460	120		
		RUSSELL Rd 10+50.00 TO 14+34.32	Const RUSSELL Rd	8.5	5 500	5 600	10 000		250	100		
		HARRISON Rd 49+30.78 TO 61+99.30 & SALA Rd 24+33.24 TO 24+57.84	Const HARRISON Rd & PORTION OF SALA Rd	17.0	9 900	8 900	18 300		100			
		WHITE Rd 65+66.29 TO 67+06.50	Const WHITE Rd	0.4	380	230	300		10			
		SCHOCH Rd 64+57.62 TO 67+13.03	Const SCHOCH Rd	0.9	820	800	570		270			
	PHASE 2	"M" LINE 167+90.00 TO 170+00.00	Const Temp MAINLINE MEDIAN CROSSOVER	1.0	690	785	990		200	520		
	PHASE 3	MARTINES Rd CUL DE SAC	Const MARTINES Rd CUL-DE-SAC	0.4	310	175	100					
		"DET1" LINE 142+20.00 TO 152+70.00	Const Rte 101 DETOUR "DET1"	10.2	8 270	7 470	7 800		1 400			
		"DET2" LINE 157+00.00 TO 170+00.00	Const Rte 101 DETOUR "DET2"	11.8	13 525	11 050	24 470		1 800			
STAGE 2		"M" LINE NB 142+60.00 TO 157+88.00	Const Rte 101 NB MAINLINE	11.6	7 200	2 440	7 550		375 250		3 890	2 810
		"M" LINE NB & SB 157+88.00 TO 165+90.00	Const Rte 101 NB & SB MAINLINE	27.6	13 270	16 370	8 710		35 100			
		"M" LINE NB 165+90.00 TO 167+00.00	Const Rte 101 NB MAINLINE	1.5	740	860	1 000		35			
		NB OFF RAMP 200+82.49 TO 203+13.86	Const NB OFF RAMP	0.9	1 315	1 360	200		36 500			
		NB ON RAMP 400+00.00 TO 402+38.27	Const NB ON RAMP	0.8	990	630	750		18 000			
		"M" LINE NB 167+00.00 TO 169+90.00	Const Rte 101 NB OUTSIDE SHOULDER	1.1	565	715	1 585		50			
STAGE 3		BASIN C1	EXCAVATE BASIN				560					
		BASIN G	EXCAVATE BASIN				48 670					
		BASIN H	EXCAVATE BASIN				1 715					
		BASIN J	EXCAVATE BASIN				3 380					
		BASIN K	EXCAVATE BASIN				0		415			
		BASIN L	EXCAVATE BASIN				0		1 240			
		BASIN M	EXCAVATE BASIN				0		830			
		Rte 101 SB 142+60.00 TO 157+88.00	Const Rte 101 SB MAINLINE	11.6	7 140	2 200	9 650		262 950		3 695	2 995
		SB LOOP ON 101+88.053 TO 104+82.00	Const SB LOOP ON	1.5	1 315	1 355	250		31 940			
		SB OFF RAMP 300+00.00 TO 303+18.83	Const SB OFF RAMP	2.0	1 075	1 185	12 760		27 875			
		ESPINOSA Rd 14+35.00 TO 17+80.00	Const ESPINOSA Rd	8.5	4 050	4 120	4 900		250			
		GIANNINI Rd 50+00.00 TO 57+60.00	Const GIANNINI Rd	2.3	3 500	2 700	5 105		835			
		Rte 101 DETOUR	REMOVE Rte 101 DETOUR PAVEMENT OUTSIDE ULTIMATE CUT/FILL LINES.					3 120				
STAGE 4	PHASE 1	"N" LINE 108+74.00 TO 111+86.00	Const MEDIAN,MINUS LAST 50 mm LIFT	2.3	1 150	1 650						
		"M" LINE 165+90.00 TO 169+90.00	OVERLAY Rte 101	8.1	2 420					9 365		
	PHASE 2	"N" LINE SB 108+74.00 TO 111+86.00	OVERLAY PORTIONS OF TRAVELED WAY AND MEDIAN	0.7	265							
			SHEET TOTAL	139.6	91 490	77 425	329 785	3 120	795 895	10 105	7 585	5 805

(N) NOT A SEPARATE PAY ITEM, FOR INFORMATION ONLY.
QUANTITIES INCLUDED IN SUMMARY OF QUANTITIES SHEETS ON SHEET Q-6.

1 REVISED PER ADDENDUM No. 1 DATED NOVEMBER 16, 2010

STAGE CONSTRUCTION QUANTITIES

SCQ-1

STATE OF CALIFORNIA - DEPARTMENT OF TRANSPORTATION
Caltrans 06-DESIGN

FUNCTIONAL SUPERVISOR DAVID FRANKE
CALCULATED-DESIGNED BY PETER CHANDER
CHECKED BY RONNIE KIER
REVISED BY
DATE REVISED

LAST REVISION 05-16-10
DATE PLOTTED => 10-NOV-2010
TIME PLOTTED => 12:41

Dist	COUNTY	ROUTE	KILOMETER POST TOTAL PROJECT	SHEET No.	TOTAL SHEETS
05	Mon	101	R146.8/159.7	856	1402

Caltrans Metric

A Chevychalov 4/27/10
REGISTERED CIVIL ENGINEER DATE

7-26-10
PLANS APPROVAL DATE

REGISTERED PROFESSIONAL ENGINEER ANDREY CHEVYCHALOV No. 68378 Exp. 9-30-11 CIVIL STATE OF CALIFORNIA

THE STATE OF CALIFORNIA OR ITS OFFICERS OR AGENTS SHALL NOT BE RESPONSIBLE FOR THE ACCURACY OR COMPLETENESS OF ELECTRONIC COPIES OF THIS PLAN SHEET.

1

TYPE III BARRICADE

SHEET No.	EA
TH-8	2
TH-9	6
TH-10	11
TH-11	2
TH-12	24
TH-18	24
TH-19	4
TH-21	13
TH-23	24
TH-24	14
TH-25	13
TH-40	4
TH-41	8
TH-42	5
TH-43	6
TH-45	21
TH-46	6
TOTAL	187

TEMPORARY CRASH CUSHION MODULE

SHEET No.	EA
TH-1	14
TH-4	25
TH-5	28
TH-6	14
TH-9	28
TH-10	61
TH-13	14
TH-16	28
TH-17	44
TH-21	28
TH-22	11
THD-2	28
TH-23	11
TH-30	14
TH-32	28
THD-7	14
THD-8	14
TH-37	42
TH-38	14
TH-39	14
TH-41	64
TH-46	14
TH-47	14
TH-53	14
TOTAL	580

CHANNELIZER (SURFACE MOUNTED)

SHEET No.	EA
TH-1	7
TH-2	13
TH-4	22
TH-5	17
TH-6	10
TH-8	8
TH-9	80
TH-10	92
TH-11	5
TH-12	61
TH-13	44
TH-15	6
TH-16	44
TH-17	69
TH-18	67
TH-19	17
TH-20	23
TH-21	30
TH-22	5
TH-23	32
TH-26	7
TH-27	6
TH-28	11
TH-30	45
TH-32	17
TH-33	12
TH-34	21
TH-35	12
TH-37	66
TH-38	45
TH-39	23
TH-40	20
TH-41	51
TH-42	12
TH-43	12
TH-44	33
TH-45	59
TH-46	25
TH-47	49
TH-48	5
TH-49	9
TH-51	15
TH-53	14
TH-54	6
TOTAL	1227

TEMPORARY TERMINAL SECTION (TYPE K)

SHEET No.	EA
TH-2	1
TH-20	2
TH-27	1
TH-28	1
TH-29	1
TH-33	1
TH-34	2
TH-35	1
TH-41	1
TH-49	1
TH-51	1
TOTAL	13

1 REVISED PER ADDENDUM No. 1 DATED NOVEMBER 16, 2010

TRAFFIC HANDLING QUANTITIES

THQ-1

STATE OF CALIFORNIA - DEPARTMENT OF TRANSPORTATION
Caltrans TRAFFIC DESIGN

FUNCTIONAL SUPERVISOR MOHAMMED QATAMI
CALCULATED-DESIGNED BY ANDREY CHEVYCHALOV
CHECKED BY SANDY LE
REVISED BY
DATE REVISED

LAST REVISION 04-27-10
DATE PLOTTED => 10-NOV-2010
TIME PLOTTED => 11:13

Dist	COUNTY	ROUTE	KILOMETER POST TOTAL PROJECT	SHEET No.	TOTAL SHEETS
05	Mon	101	R146.8/159.7	857	1402

Caltrans Metric

A Chevychalov 4/27/10
REGISTERED CIVIL ENGINEER DATE

7-26-10
PLANS APPROVAL DATE

REGISTERED PROFESSIONAL ENGINEER ANDREY CHEVYCHALOV No. 68378 Exp. 9-30-11 CIVIL STATE OF CALIFORNIA

THE STATE OF CALIFORNIA OR ITS OFFICERS OR AGENTS SHALL NOT BE RESPONSIBLE FOR THE ACCURACY OR COMPLETENESS OF ELECTRONIC COPIES OF THIS PLAN SHEET.

1

TEMPORARY RAILING (TYPE K)

SHEET No.	LOCATION	m
TH-1/TH-2	STA 166+76 TO STA 169+93 NB	317
TH-2	STA 166+94 TO STA 170+23 SB	329
TH-3/TH-4	STA 142+65 (SB101) TO STA 15+48 (ESPINOSA Rd)	756
TH-4	STA 15+30 (ESPINOSA Rd) TO STA 152+36 (SB101)	299
TH-4/TH-5	STA 155+99 TO STA 159+64 SB	365
TH-5/TH-6	STA 163+82 TO STA 169+97 NB	615
TH-6	STA 167+10 TO STA 169+96 MEDIAN	286
TH-6	STA 165+69 TO STA 170+14 SB	445
TH-9	STA 142+20 TO STA 143+42 NB	122
TH-9/TH-10	STA 142+14 TO STA 149+47 MEDIAN	733
TH-10	STA 149+93 TO STA 152+88 MEDIAN	295
TH-10	STA 13+84 TO STA 14+40 RUSSELL Rd	56
TH-10	STA 13+90 TO STA 14+50 RUSSELL Rd	60
TH-10	STA 13+94 TO STA 14+58 RUSSELL Rd	64
TH-10	STA 14+09 TO STA 14+58 RUSSELL Rd	49
TH-12/TH-13	STA 156+50 TO STA 169+96 MEDIAN	1346
TH-12/TH-13	STA 158+08 TO STA 168+90 SB	1082
TH-16	STA 142+38 TO STA 143+84 SB	146
TH-16/TH-18	STA 141+87 TO STA 159+00 MEDIAN	1713
TH-17	STA 14+23 TO STA 14+71 ESPINOSA Rd	48
TH-17	STA 14+23 TO STA 14+92 ESPINOSA Rd	69
TH-17	STA 14+10 TO STA 14+71 ESPINOSA Rd	61
TH-17	STA 14+10 TO STA 14+80 ESPINOSA Rd	70
TH-17	STA 149+93 TO STA 150+54 SB	61
TH-18	STA 157+02 TO STA 158+48 SB	146
TH-20	STA 108+30 TO STA 112+01 NB	371
TH-20	STA 108+59 TO STA 112+18 SB	359
TH-21	STA 123+70 TO STA 125+89 NB	219
TH-21	STA 125+24 TO STA 126+89 NB	165
TH-21	STA 125+46 TO STA 126+80 SB	134
TH-21	STA 125+58 TO STA 126+13 SB	55
TH-22	STA 30+53 TO STA 33+33 BLACKIE Rd	280
THD-2	STA 125+22 TO STA 125+46 NB	24
THD-5	STA 125+89 TO STA 126+07 SB	18
TH-23	STA 32+00 TO STA 32+67 BLACKIE Rd	67
TH-27/TH-28	STA 123+41 TO STA 134+20 NB	1079
TH-27/TH-28	STA 123+66 TO STA 134+38 SB	1072
TH-29/TH-30	STA 155+60 TO STA 158+95 MEDIAN	335
SUBTOTAL		13,711

TEMPORARY RAILING (TYPE K)

SHEET No.	LOCATION	m
TH-29/TH-30	STA 155+60 TO STA 159+51 MEDIAN	391
TH-30	STA 158+81 TO STA 159+37 NB	56
TH-30	STA 158+97 TO STA 162+32 SB	335
TH-30	STA 159+51 TO STA 162+26 MEDIAN	275
TH-32	STA 158+66 TO STA 159+51 NB	85
TH-32	STA 158+97 TO STA 159+75 SB	78
TH-32	STA 15+00 TO STA 16+88 SAN MIGUEL CANYON Rd	188
TH-32	STA 59+53 TO STA 61+05 SB EXIT RAMP	152
THD-8	STA 158+60 TO STA 159+03 NB	43
THD-11	STA 159+45 TO STA 159+75 SB	30
THD-11	STA 157+25 TO STA 157+31 MEDIAN	6
THD-11	STA 162+26 TO STA 162+32 MEDIAN	6
TH-33	STA 159+44 TO STA 160+05 MEDIAN	61
TH-33/TH-34	STA 159+44 TO STA 164+45 NB	501
TH-33/TH-34	STA 160+04 TO STA 164+65 SB	461
TH-34/TH-35	STA 167+92 TO STA 172+84 NB	492
TH-34/TH-35	STA 170+00 TO STA 173+04 SB	304
TH-37	STA 183+97 TO STA 185+68 NB	171
TH-37	STA 186+19 TO STA 188+28 NB	209
TH-37/TH-38	STA 188+59 TO STA 192+92 NB	433
TH-37/TH-39	STA 184+49 TO STA 198+91 SB	1442
TH-38/TH-39	STA 197+58 TO STA 202+09 NB	451
TH-41	STA 15+11 TO STA 15+47 CRAZY HORSE DETOUR	36
TH-41	STA 14+88 TO STA 15+30 CRAZY HORSE DETOUR	42
TH-41	STA 194+46 TO STA 195+37 NB	91
TH-41	STA 194+73 TO STA 195+46 NB	73
TH-41	STA 194+82 TO STA 196+10 SB	128
TH-41	STA 194+85 TO STA 195+52 SB	67
TH-44	STA 194+46 TO STA 195+37 NB	91
TH-44	STA 194+82 TO STA 196+04 SB	122
THD-14	STA 194+46 TO STA 194+82 NB	36
THD-17	STA 195+37 TO STA 195+91 SB	54
TH-46	STA 198+43 TO STA 199+47 SB	104
TH-47	STA 199+25 TO STA 201+91 SB	266
TH-49/TH-51	STA 184+10 TO STA 201+55 NB	1745
TH-49/TH-51	STA 184+35 TO STA 201+85 SB	1750
TH-53	STA 192+27 TO STA 198+00 NB	573
SUBTOTAL		11,348
TOTAL		25,059

1 **REVISED PER ADDENDUM No. 1 DATED NOVEMBER 16, 2010**

TRAFFIC HANDLING QUANTITIES

THQ-2

STATE OF CALIFORNIA - DEPARTMENT OF TRANSPORTATION
Caltrans
TRAFFIC DESIGN

FUNCTIONAL SUPERVISOR: MOHAMMED QATAMI
CALCULATED-DESIGNED BY: ANDREY CHEVYCHALOV
CHECKED BY: SANDY LE
REVISED BY
DATE REVISED

LAST REVISION 04-27-10
DATE PLOTTED => 10-NOV-2010
TIME PLOTTED => 11:13

Dist	COUNTY	ROUTE	KILOMETER POST TOTAL PROJECT	SHEET No.	TOTAL SHEETS
05	Mon	101	R146.8/159.7	861	1402

Caltrans Metric

REGISTERED CIVIL ENGINEER 4/27/10 DATE

7-26-10
PLANS APPROVAL DATE

REGISTERED PROFESSIONAL ENGINEER ANDREY CHEVYCHALOV No. 68378 Exp. 9-30-11 CIVIL STATE OF CALIFORNIA

THE STATE OF CALIFORNIA OR ITS OFFICERS OR AGENTS SHALL NOT BE RESPONSIBLE FOR THE ACCURACY OR COMPLETENESS OF ELECTRONIC COPIES OF THIS PLAN SHEET.

1

TEMPORARY PAVEMENT DELINEATION

CONSTRUCTION SEQUENCE	SHEET No.	LOCATION	DIRECTION	DETAIL No.	PAVEMENT MARKER (RETROREFLECTIVE) TYPE D YELLOW (TWO-WAY)	PAVEMENT MARKER (RETROREFLECTIVE) TYPE G CLEAR (ONE-WAY)	PAVEMENT MARKER (RETROREFLECTIVE) TYPE H YELLOW (ONE-WAY)	PAINT TRAFFIC STRIPE (2-COAT) SOLID 200mm	PAINT TRAFFIC STRIPE (2-COAT) SOLID 100mm	PAINT TRAFFIC STRIPE (2-COAT) BROKEN	REMOVE PAVEMENT MARKER	REMOVE THERMOPLASTIC TRAFFIC STRIPE WHITE	REMOVE THERMOPLASTIC TRAFFIC STRIPE YELLOW (HAZARDOUS WASTE)	REMOVE PAINTED TRAFFIC STRIPE	PAINT PAVEMENT MARKING (2-COAT) DESCRIPTION	PAINT PAVEMENT MARKING (2-COAT)	REMOVE PAINTED PAVEMENT MARKING	REMOVE THERMO-PLASTIC PAVEMENT MARKING
					EA	EA	EA	m	m	m	EA	m	m	m		m^2	m^2	m^2
Loc 1 STAGE 3	TH-16 TO TH-17	STA 142+80 TO STA 156+15	SB	26			92											
		STA 142+80 TO STA 156+15	SB	26							92							
		STA 142+80 TO STA 156+15	NB	26			92											
		STA 142+80 TO STA 156+15	NB	26							92							
	TH-17	STA 14+00 TO STA 14+97	ESPIN	25			8		97									
		STA 14+00 TO STA 14+97	ESPIN	25							8			97				
		STA 13+76 TO STA 15+01	ESPIN	25			10		125									
		STA 13+76 TO STA 15+01	ESPIN	25							10			125				
	TH-17 TO TH-18	STA 156+15 TO STA 160+60	SB	25			31		445									
		STA 156+15 TO STA 160+60	SB	25							31							
		STA 156+15 TO STA 158+07	NB	25			14		192									
		STA 156+15 TO STA 158+07	NB	25							14							
	TH-18	STA 156+69 TO STA 157+31	NB	36		20		124							1-TYPE III (R) ARROW	11.70	11.70	
		STA 156+69 TO STA 157+31	NB	36							20							
		STA 157+31 TO STA 158+07	NB	27B					76									
		STA 200+61 TO STA 203+12	RAMP	25A			35		251									
		STA 200+61 TO STA 203+12	RAMP	25A							35			251				
Loc 1 STAGE 5 PHASE 1	TH-20	STA 108+30 TO STA 112+50	SB	12							30	105			1-"STOP"			2.04
		STA 108+30 TO STA 112+50	SB	12		30				420								
		STA 108+30 TO STA 112+50	SB	12							30			105				
		STA 108+30 TO STA 112+50	SB	25							30		420					
		STA 108+30 TO STA 112+50	SB	25			30		420									
		STA 108+30 TO STA 112+50	SB	25							30			420				
		STA 108+00 TO STA 112+30	NB	12							30	108						
		STA 108+00 TO STA 112+30	NB	12		30				430								
		STA 108+00 TO STA 112+30	NB	12							30			108				
		STA 108+00 TO STA 112+30	NB	25							30		430					
		STA 108+00 TO STA 112+30	NB	25			30		430									
		STA 108+00 TO STA 112+30	NB	25							30			430				
		STA 0+00 TO STA 0+20	RALPH	38	8				40									
Loc 2 STAGE 2	TH-23	STA 29+75 TO STA 31+82	BLACK	21									414		LIMIT LINE	1.89	1.89	
		STA 29+75 TO STA 33+61	BLACK	21					386									
		STA 29+75 TO STA 33+61	BLACK	21										772				
		STA 32+70 TO STA 33+61	BLACK	21									182					
		STA 30+10 TO STA 33+61	BLACK	27B					351									
		STA 30+10 TO STA 33+61	BLACK	27B										351				
		STA 30+78 TO STA 31+93	BLACK	38A				115										
		STA 30+78 TO STA 31+93	BLACK	38A										230				
		STA 31+93 TO STA 33+61	BLACK	27B					168									
		STA 31+93 TO STA 33+61	BLACK	27B										168				
		STA 28+10 TO STA 29+51	BLACK	27B					141									
		STA 28+10 TO STA 29+51	BLACK	27B										141				
Loc 2 STAGE 4	TH-27 TO TH-28	STA 123+20 TO STA 134+85	SB	12							81	291						
		STA 123+20 TO STA 134+85	SB	12		81				1165								
		STA 123+20 TO STA 134+85	SB	12							81			291				
SHEET SUBTOTAL					8	165	342	259	3122	2015	704	504	1446	3489		13.59	13.59	2.04

1 REVISED PER ADDENDUM No. 1 DATED NOVEMBER 16, 2010

TRAFFIC HANDLING QUANTITIES

THQ-6

STATE OF CALIFORNIA - DEPARTMENT OF TRANSPORTATION
Caltrans TRAFFIC DESIGN

FUNCTIONAL SUPERVISOR MOHAMMED QATAMI
CALCULATED-DESIGNED BY ANDREY CHEVYCHALOV
CHECKED BY SANDY LE
REVISED BY
DATE REVISED

LAST REVISION 04-27-10
DATE PLOTTED => 10-NOV-2010
TIME PLOTTED => 11:13

Dist	COUNTY	ROUTE	KILOMETER POST TOTAL PROJECT	SHEET No.	TOTAL SHEETS
05	Mon	101	R146.8/159.7	862	1402

Caltrans Metric

REGISTERED CIVIL ENGINEER 4/27/10 DATE

7-26-10
PLANS APPROVAL DATE

REGISTERED PROFESSIONAL ENGINEER ANDREY CHEVYCHALOV No. 68378 Exp. 9-30-11 CIVIL STATE OF CALIFORNIA

THE STATE OF CALIFORNIA OR ITS OFFICERS OR AGENTS SHALL NOT BE RESPONSIBLE FOR THE ACCURACY OR COMPLETENESS OF ELECTRONIC COPIES OF THIS PLAN SHEET.

1

TEMPORARY PAVEMENT DELINEATION

CONSTRUCTION SEQUENCE	SHEET No.	LOCATION	DIRECTION	DETAIL No.	PAVEMENT MARKER (RETROREFLECTIVE) TYPE D YELLOW (TWO-WAY)	PAVEMENT MARKER (RETROREFLECTIVE) TYPE G CLEAR (ONE-WAY)	PAVEMENT MARKER (RETROREFLECTIVE) TYPE H YELLOW (ONE-WAY)	PAINT TRAFFIC STRIPE (2-COAT) SOLID 200mm	PAINT TRAFFIC STRIPE (2-COAT) SOLID 100mm	PAINT TRAFFIC STRIPE (2-COAT) BROKEN	REMOVE PAVEMENT MARKER	REMOVE THERMOPLASTIC TRAFFIC STRIPE WHITE	REMOVE THERMOPLASTIC TRAFFIC STRIPE YELLOW (HAZARDOUS WASTE)	REMOVE PAINTED TRAFFIC STRIPE	PAINT PAVEMENT MARKING (2-COAT) DESCRIPTION	PAINT PAVEMENT MARKING (2-COAT)	REMOVE PAINTED PAVEMENT MARKING	REMOVE THERMO-PLASTIC PAVEMENT MARKING
					EA	EA	EA	m	m	m	EA	m	m	m		m^2	m^2	m^2
Loc 2 STAGE 4	TH-27 TO TH-28	STA 123+20 TO STA 134+85	SB	25							81		1165					
		STA 123+20 TO STA 134+85	SB	25			81		1165									
		STA 123+20 TO STA 134+85	SB	25							81			1165				
		STA 123+00 TO STA 134+60	NB	12							80	290						
		STA 123+00 TO STA 134+60	NB	12		80				1160								
		STA 123+00 TO STA 134+60	NB	12							80			290				
		STA 123+00 TO STA 134+60	NB	25							80		1160					
		STA 123+00 TO STA 134+60	NB	25			80		1160						200 mm WHITE HATCH	8.00		
		STA 123+00 TO STA 134+60	NB	25							80			1160	LIMIT LINE			6.00
	TH-28	STA 0+00 TO STA 0+65	PESAN	38A								130			4-TYPE IV ARROW			5.56
		STA 0+00 TO STA 0+21	PESAN	21									42		2-"STOP"			4.08
		STA 0+00 TO STA 0+20	PESAN	29	8			80							2-TYPE III (R) ARROW	7.80		
		STA 132+50 TO STA 132+88	PESAN	38		12		80							1-TYPE V ARROW	3.06		
Loc 3 STAGE 1 PHASE 1	TH-30	STA 158+35 TO STA 159+27	SB	27B								92			200 mm WHITE CHEVRON	2.60		
		STA 158+35 TO STA 159+27	SB	27B					92									
		STA 158+35 TO STA 159+27	SB	27B										92				
		STA 158+20 TO STA 158+90	SB	38B							22	140						
		STA 158+20 TO STA 158+90	SB	38B		22		70										
		STA 158+20 TO STA 158+90	SB	38B							22			140				
		STA 158+90 TO STA 159+05	SB	36B							3	30						
		STA 158+90 TO STA 159+05	SB	36B		3		15										
		STA 158+90 TO STA 159+05	SB	36B							3			30				
		STA 159+05 TO STA 159+22	SB	25A							3		17					
		STA 159+05 TO STA 159+22	SB	25A			3		17									
		STA 159+05 TO STA 159+22	SB	25A							3			17				
		STA 158+20 TO STA 160+69	SB	12							18	62						
		STA 158+20 TO STA 160+69	SB	12		18				249								
		STA 158+20 TO STA 160+69	SB	12							18			62				
		STA 158+20 TO STA 160+69	SB	25							18		249					
		STA 158+20 TO STA 160+69	SB	25			18		249									
		STA 158+20 TO STA 160+69	SB	25							18			249				
		STA 158+90 TO STA 160+69	SB	27B								179						
		STA 158+90 TO STA 160+69	SB	27B					179									
		STA 158+90 TO STA 160+69	SB	27B										179				
		STA 157+93 TO STA 160+57	SB	25							19		264					
		STA 157+93 TO STA 160+57	SB	25			19		264									
		STA 157+93 TO STA 160+57	SB	25							19			264				
		STA 157+93 TO STA 160+57	SB	12							19	66						
		STA 157+93 TO STA 160+57	SB	12		19				264								
		STA 157+93 TO STA 160+57	SB	12							19			66				
		STA 158+20 TO STA 160+57	SB	27B								237						
		STA 158+20 TO STA 160+57	SB	27B					237									
		STA 158+20 TO STA 160+57	SB	27B										237				
		STA 157+80 TO STA 158+01	NB	27B								21						
SHEET SUBTOTAL					8	154	201	245	3363	1673	686	1247	2897	3951		21.46	0	15.64

1 REVISED PER ADDENDUM No. 1 DATED NOVEMBER 16, 2010

TRAFFIC HANDLING QUANTITIES

THQ-7

STATE OF CALIFORNIA - DEPARTMENT OF TRANSPORTATION
Caltrans
TRAFFIC DESIGN

FUNCTIONAL SUPERVISOR: MOHAMMED QATAMI
CALCULATED-DESIGNED BY: ANDREY CHEVYCHALOV
CHECKED BY: SANDY LE
REVISED BY
DATE REVISED

LAST REVISION 04-27-10
DATE PLOTTED => 10-NOV-2010
TIME PLOTTED => 11:13

Dist	COUNTY	ROUTE	KILOMETER POST TOTAL PROJECT	SHEET No.	TOTAL SHEETS
05	Mon	101	R146.8/159.7	863	1402

REGISTERED CIVIL ENGINEER 4/27/10 DATE

7-26-10
PLANS APPROVAL DATE

REGISTERED PROFESSIONAL ENGINEER ANDREY CHEVYCHALOV No. 68378 Exp. 9-30-11 CIVIL STATE OF CALIFORNIA

THE STATE OF CALIFORNIA OR ITS OFFICERS OR AGENTS SHALL NOT BE RESPONSIBLE FOR THE ACCURACY OR COMPLETENESS OF ELECTRONIC COPIES OF THIS PLAN SHEET.

Caltrans Metric

1

TEMPORARY PAVEMENT DELINEATION

CONSTRUCTION SEQUENCE	SHEET No.	LOCATION	DIRECTION	DETAIL No.	PAVEMENT MARKER (RETROREFLECTIVE) TYPE D YELLOW (TWO-WAY)	PAVEMENT MARKER (RETROREFLECTIVE) TYPE G CLEAR (ONE-WAY)	PAVEMENT MARKER (RETROREFLECTIVE) TYPE H YELLOW (ONE-WAY)	PAINT TRAFFIC STRIPE (2-COAT) SOLID 200mm	PAINT TRAFFIC STRIPE (2-COAT) SOLID 100mm	PAINT TRAFFIC STRIPE (2-COAT) BROKEN	REMOVE PAVEMENT MARKER	REMOVE THERMOPLASTIC TRAFFIC STRIPE WHITE	REMOVE THERMOPLASTIC TRAFFIC STRIPE YELLOW (HAZARDOUS WASTE)	REMOVE PAINTED TRAFFIC STRIPE	PAINT PAVEMENT MARKING (2-COAT) DESCRIPTION	PAINT PAVEMENT MARKING (2-COAT)	REMOVE PAINTED PAVEMENT MARKING	REMOVE THERMO-PLASTIC PAVEMENT MARKING
					EA	EA	EA	m	m	m	EA	m	m	m		m^2	m^2	m^2
Loc 3 STAGE 1 PHASE 1	TH-30	STA 157+80 TO STA 158+01	NB	36A							4	21						
		STA 157+80 TO STA 158+43	NB	8						63								
		STA 157+80 TO STA 158+43	NB	8										18				
		STA 158+01 TO STA 158+97	NB	8								28						
Loc 3 STAGE 2 PHASE 1	TH-33 TO TH-34	STA 159+60 TO STA 165+00	SB	12							38	135						
		STA 159+60 TO STA 165+00	SB	12		38				540								
		STA 159+60 TO STA 165+00	SB	12							38			135				
		STA 159+60 TO STA 165+00	SB	25							38		540					
		STA 159+60 TO STA 165+00	SB	25			38		540									
		STA 159+60 TO STA 165+00	SB	25							38			540				
		STA 159+60 TO STA 164+80	NB	12							37	130						
		STA 159+60 TO STA 164+80	NB	12		37				520								
		STA 159+60 TO STA 164+80	NB	12							37			130				
		STA 159+60 TO STA 164+80	NB	25							37		520					
		STA 159+60 TO STA 164+80	NB	25			37		520									
		STA 159+60 TO STA 164+80	NB	25							37			520				
		STA 169+60 TO STA 173+40	SB	12							27	95						
		STA 169+60 TO STA 173+40	SB	12		27				380								
		STA 169+60 TO STA 173+40	SB	12							27			95				
		STA 169+60 TO STA 173+40	SB	25							27		380					
		STA 169+60 TO STA 173+40	SB	25			27		380									
		STA 169+60 TO STA 173+40	SB	25							27			380				
		STA 169+40 TO STA 173+20	NB	12							27	95						
		STA 169+40 TO STA 173+20	NB	12		27				380								
		STA 169+40 TO STA 173+20	NB	12							27			95				
		STA 169+40 TO STA 173+20	NB	25							27		380					
		STA 169+40 TO STA 173+20	NB	25			27		380									
		STA 169+40 TO STA 173+20	NB	25							27			380				
Loc 4 STAGE 1	TH-37	STA 183+80 TO STA 185+82	SB	25							15		202		6-TYPE VI ARROW			23.40
		STA 183+80 TO STA 185+82	SB	25			15		202						3-TYPE VI ARROW	11.70		
		STA 185+26 TO STA 186+84	SB	38							23	316			6-TYPE V ARROW			18.36
		STA 185+26 TO STA 186+84	SB	38		23		158							4-TYPE V ARROW	12.24		
		STA 183+80 TO STA 185+82	NB	25							15		202		5-TYPE III (L) ARROW			19.50
		STA 183+80 TO STA 185+82	NB	25			15		202						3-TYPE III (L) ARROW	11.70		
		STA 183+80 TO STA 185+82	NB	12							15	51			LIMIT LINE	10.00		7.00
		STA 183+80 TO STA 185+82	NB	12		15				202								
		STA 187+67 TO STA 188+72	NB	38							15	210						
		STA 188+95 TO STA 189+50	NB	38							9	110						
	TH-37 TO TH-38	STA 186+07 TO STA 193+60	NB/SB	29							208		3012					
		STA 186+07 TO STA 193+60	NB/SB	29	208				1506									
		STA 183+80 TO STA 193+30	NB	27B								950						
		STA 183+80 TO STA 193+30	NB	27B					950									
		STA 186+07 TO STA 193+30	NB	12							50	181						
		STA 186+07 TO STA 193+30	NB	12		50				723								
	TH-37 TO TH-39	STA 183+80 TO STA 199+20	SB	27B								1540						
		STA 183+80 TO STA 199+20	SB	27B					1540									
		STA 183+80 TO STA 199+20	SB	12							106	385						
		STA 183+80 TO STA 199+20	SB	12		106				1540								
SHEET SUBTOTAL					208	323	159	158	6220	4348	976	4247	5236	2293		45.64	0	68.26

1 REVISED PER ADDENDUM No. 1 DATED NOVEMBER 16, 2010

TRAFFIC HANDLING QUANTITIES

THQ-8

STATE OF CALIFORNIA - DEPARTMENT OF TRANSPORTATION
Caltrans TRAFFIC DESIGN
FUNCTIONAL SUPERVISOR MOHAMMED QATAMI
CALCULATED-DESIGNED BY ANDREY CHEVYCHALOV
CHECKED BY SANDY LE
REVISED BY
DATE REVISED

LAST REVISION 04-27-10
DATE PLOTTED => 10-NOV-2010
TIME PLOTTED => 11:13

Dist	COUNTY	ROUTE	KILOMETER POST TOTAL PROJECT	SHEET No.	TOTAL SHEETS
05	Mon	101	R146.8/159.7	864	1402

REGISTERED CIVIL ENGINEER 4/27/10 DATE

7-26-10
PLANS APPROVAL DATE

REGISTERED PROFESSIONAL ENGINEER ANDREY CHEVYCHALOV No. 68378 Exp. 9-30-11 CIVIL STATE OF CALIFORNIA

THE STATE OF CALIFORNIA OR ITS OFFICERS OR AGENTS SHALL NOT BE RESPONSIBLE FOR THE ACCURACY OR COMPLETENESS OF ELECTRONIC COPIES OF THIS PLAN SHEET.

Caltrans Metric

1

TEMPORARY PAVEMENT DELINEATION

CONSTRUCTION SEQUENCE	SHEET No.	LOCATION	DIRECTION	DETAIL No.	PAVEMENT MARKER (RETROREFLECTIVE) TYPE D YELLOW (TWO-WAY)	PAVEMENT MARKER (RETROREFLECTIVE) TYPE G CLEAR (ONE-WAY)	PAVEMENT MARKER (RETROREFLECTIVE) TYPE H YELLOW (ONE-WAY)	PAINT TRAFFIC STRIPE (2-COAT) SOLID 200mm	PAINT TRAFFIC STRIPE (2-COAT) SOLID 100mm	PAINT TRAFFIC STRIPE (2-COAT) BROKEN	REMOVE PAVEMENT MARKER	REMOVE THERMOPLASTIC TRAFFIC STRIPE WHITE	REMOVE THERMOPLASTIC TRAFFIC STRIPE YELLOW (HAZARDOUS WASTE)	REMOVE PAINTED TRAFFIC STRIPE	PAINT PAVEMENT MARKING (2-COAT) DESCRIPTION	PAINT PAVEMENT MARKING (2-COAT)	REMOVE PAINTED PAVEMENT MARKING	REMOVE THERMO-PLASTIC PAVEMENT MARKING
					EA	EA	EA	m	m	m	EA	m	m	m	DESCRIPTION	m^2	m^2	m^2
Loc 4 STAGE 1	TH-38	STA 192+92 TO STA 193+30	NB	38							6	76			10-TYPE V ARROW			30.60
		STA 193+60 TO STA 194+91	SB	25							10		131		4-TYPE V ARROW	12.24		
		STA 193+60 TO STA 194+91	SB	25			10		131						5-TYPE III (L) ARROW			19.50
		STA 193+88 TO STA 197+60	SB	38							52	744			4-TYPE III (L) ARROW	12.36		
		STA 193+88 TO STA 197+60	SB	38		52		372							8-TYPE VI ARROW			31.20
		STA 196+16 TO STA 197+20	NB	38							15	208			4-TYPE VI ARROW	15.60		
		STA 191+33 TO STA 192+16	NB	38							12	166						
		STA 192+35 TO STA 193+15	NB	38							12	160						
	TH-38 TO TH-39	STA 195+29 TO STA 199+20	SB	25							28		391					
		STA 195+29 TO STA 199+20	SB	25			28		391									
		STA 196+16 TO STA 202+65	NB	27B								649						
		STA 196+16 TO STA 202+65	NB	27B					649									
		STA 197+50 TO STA 202+65	NB	12							36	129			4-TYPE V ARROW			12.24
		STA 197+50 TO STA 202+65	NB	12		36				515					4-TYPE V ARROW	12.24		
		STA 197+50 TO STA 199+20	NB	25							13		170		3-TYPE III (L) ARROW			11.70
		STA 197+50 TO STA 199+20	NB	25			13		170						3-TYPE III (L) ARROW	11.70		
	TH-39	STA 198+10 TO STA 200+30	NB	38							31	440			3-TYPE VI ARROW			11.70
		STA 198+10 TO STA 200+30	NB	38		31		220							3-TYPE VI ARROW	11.70		
		STA 199+43 TO STA 202+65	NB	25							23		322					
		STA 199+43 TO STA 202+65	NB	25			23		322									
Loc 4 STAGE 2 PHASE 1	TH-40	STA 184+34 TO STA 190+43	SB	27B					609						LIMIT LINE	3.30		
		STA 184+34 TO STA 185+81	SB	29	44				294						3-TYPE III (L) ARROW	11.70		
		STA 184+34 TO STA 185+81	SB	29							44				3-TYPE VI ARROW	11.70		
		STA 185+26 TO STA 186+84	SB	38		23		158										
		STA 185+26 TO STA 186+84	SB	38							23							
		STA 188+07 TO STA 189+06	SB	8						99								
		STA 189+06 TO STA 189+90	SB	36A		12		84										
		STA 189+06 TO STA 189+90	SB	36A							12							
		STA 189+90 TO STA 190+43	SB	25A			8		53									
		STA 189+90 TO STA 190+43	SB	25A							8							
		STA 189+75 TO STA 190+57	NB	36		26		164										
		STA 189+75 TO STA 190+57	NB	36							26							
	TH-40 TO TH-42	STA 184+34 TO STA 199+20	SB	12		103				1486								
		STA 184+34 TO STA 199+20	SB	12							103							
		STA 189+06 TO STA 199+20	SB	27B					1014									
	TH-40 TO TH-41	STA 184+34 TO STA 196+16	NB	12		82				1182								
		STA 184+34 TO STA 196+16	NB	12							82							
		STA 184+34 TO STA 191+15	NB	27B					681									
		STA 186+06 TO STA 193+95	NB/SB	29	218				1578									
		STA 186+06 TO STA 193+95	NB/SB	29							218							
		STA 190+57 TO STA 193+91	NB	27B					334									
		STA 190+57 TO STA 191+15	NB	25A			9		58									
		STA 190+57 TO STA 191+15	NB	25A							9							
	TH-41	STA 191+80 TO STA 193+91	NB	38		30		211										
		STA 191+80 TO STA 193+91	NB	38							30							
		STA 194+23 TO STA 196+16	NB	38		27		193										
		STA 194+23 TO STA 196+16	NB	38							27							
SHEET SUBTOTAL					262	422	91	1402	6284	3282	820	2572	1014	0		102.54	0	116.94

1 REVISED PER ADDENDUM No. 1 DATED NOVEMBER 16, 2010

TRAFFIC HANDLING QUANTITIES

THQ-9

STATE OF CALIFORNIA - DEPARTMENT OF TRANSPORTATION
Caltrans TRAFFIC DESIGN
FUNCTIONAL SUPERVISOR MOHAMMED QATAMI
CALCULATED-DESIGNED BY ANDREY CHEVYCHALOV
CHECKED BY SANDY LE
REVISED BY
DATE REVISED

LAST REVISION 04-27-10
DATE PLOTTED => 10-NOV-2010
TIME PLOTTED => 11:13

Dist	COUNTY	ROUTE	KILOMETER POST TOTAL PROJECT	SHEET No.	TOTAL SHEETS
05	Mon	101	R146.8/159.7	865	1402

Caltrans Metric

REGISTERED CIVIL ENGINEER 4/27/10 DATE

7-26-10
PLANS APPROVAL DATE

REGISTERED PROFESSIONAL ENGINEER ANDREY CHEVYCHALOV No. 68378 Exp. 9-30-11 CIVIL STATE OF CALIFORNIA

THE STATE OF CALIFORNIA OR ITS OFFICERS OR AGENTS SHALL NOT BE RESPONSIBLE FOR THE ACCURACY OR COMPLETENESS OF ELECTRONIC COPIES OF THIS PLAN SHEET.

1

TEMPORARY PAVEMENT DELINEATION

CONSTRUCTION SEQUENCE	SHEET No.	LOCATION	DIRECTION	DETAIL No.	PAVEMENT MARKER (RETROREFLECTIVE) TYPE D YELLOW (TWO-WAY)	PAVEMENT MARKER (RETROREFLECTIVE) TYPE G CLEAR (ONE-WAY)	PAVEMENT MARKER (RETROREFLECTIVE) TYPE H YELLOW (ONE-WAY)	PAINT TRAFFIC STRIPE (2-COAT) SOLID 200mm	PAINT TRAFFIC STRIPE (2-COAT) SOLID 100mm	PAINT TRAFFIC STRIPE (2-COAT) BROKEN	REMOVE PAVEMENT MARKER	REMOVE THERMOPLASTIC TRAFFIC STRIPE WHITE	REMOVE THERMOPLASTIC TRAFFIC STRIPE YELLOW (HAZARDOUS WASTE)	REMOVE PAINTED TRAFFIC STRIPE	PAINT PAVEMENT MARKING (2-COAT) DESCRIPTION	PAINT PAVEMENT MARKING (2-COAT)	REMOVE PAINTED PAVEMENT MARKING	REMOVE THERMO-PLASTIC PAVEMENT MARKING
					EA	EA	EA	m	m	m	EA	m	m	m		m^2	m^2	m^2
Loc 4 STAGE 2 PHASE 1	TH-41	STA 194+37 TO STA 196+16	NB	27B					179						LIMIT LINE	3.30		
		STA 194+80 TO STA 196+16	NB	25			10		136						4-TYPE V ARROW			12.24
		STA 194+80 TO STA 196+16	NB	25							10				4-TYPE V ARROW	12.24		
		STA 194+21 TO STA 194+80	NB/SB	29	20				118						1-TYPE III ARROW			3.90
		STA 194+21 TO STA 194+80	NB/SB	29							20				4-TYPE III ARROW	15.60		
		STA 192+75 TO STA 196+60	SB	38		54		385							1-TYPE VI ARROW			3.90
		STA 192+75 TO STA 196+60	SB	38							54				6-TYPE VI ARROW	23.40		
		STA 193+60 TO STA 196+16	NB	25							18		256					
		STA 193+30 TO STA 196+16	NB	12							21	72						
		STA 193+30 TO STA 196+16	NB	38							40	572						
		STA 193+30 TO STA 196+16	NB	27B								286						
	TH-41 TO TH-43	STA 9+77 TO STA 15+61	CHCD	27B					584									
		STA 9+77 TO STA 15+61	CHCD	22	162				584									
		STA 9+77 TO STA 15+61	CHCD	27B					584									
	TH-41 TO TH-42	STA 194+80 TO STA 198+60	SB	25			27		380									
		STA 194+80 TO STA 198+60	SB	25							27							
		STA 197+50 TO STA 198+60	NB	25			9		110									
		STA 197+50 TO STA 198+60	NB	25							9							
		STA 197+50 TO STA 200+80	NB	12		24				330								
		STA 197+50 TO STA 200+80	NB	12							24							
		STA 197+87 TO STA 199+16	NB	27B					129									
		STA 197+87 TO STA 198+27	NB	25A			6		40									
		STA 197+87 TO STA 198+27	NB	25A							6							
		STA 197+87 TO STA 201+99	NB	27B					412									
	TH-42	STA 198+10 TO STA 200+30	NB	38		31		220							3-TYPE III (L) ARROW	11.70		
		STA 198+10 TO STA 200+30	NB	38							31				3-TYPE VI ARROW	11.70		
		STA 198+27 TO STA 199+16	NB	36A		13		89										
		STA 198+27 TO STA 199+16	NB	36A							13							
		STA 199+16 TO STA 200+16	NB	8					100									
		STA 198+60 TO STA 199+20	NB/SB	29	20				120									
		STA 198+60 TO STA 199+20	NB/SB	29							20							
		STA 199+45 TO STA 200+80	NB/SB	29	40				270									
		STA 199+45 TO STA 200+80	NB/SB	29							40							
	TH-43	STA 9+77 TO STA 10+40	CHCD	27B								63						
		STA 9+77 TO STA 10+40	CHCD	22							20		126					
Loc 4 STAGE 2 PHASE 2	TH-44	STA 193+95 TO STA 197+00	SB	27B										305	2-TYPE III (L) ARROW		7.80	
		STA 193+95 TO STA 197+00	SB	27B					305						2-TYPE III (L) ARROW	7.80		
		STA 193+95 TO STA 197+00	SB	12							22			76	3-TYPE VI ARROW		11.70	
		STA 193+95 TO STA 197+00	SB	12		22				305					3-TYPE VI ARROW	11.70		
		STA 193+95 TO STA 196+60	SB	38							37			530				
		STA 193+95 TO STA 196+60	SB	38		37		265										
		STA 194+80 TO STA 197+00	SB	25							16			220				
		STA 194+80 TO STA 197+00	SB	25			16		220									
		STA 194+21 TO STA 194+80	NB/SB	29							20			236				
		STA 194+21 TO STA 194+80	NB/SB	29	20				118									
SHEET SUBTOTAL					262	181	68	959	4389	635	448	993	382	1367		97.44	19.50	20.04

1 REVISED PER ADDENDUM No. 1 DATED NOVEMBER 16, 2010

TRAFFIC HANDLING QUANTITIES

THQ-10

STATE OF CALIFORNIA - DEPARTMENT OF TRANSPORTATION
Caltrans
TRAFFIC DESIGN
FUNCTIONAL SUPERVISOR MOHAMMED QATAMI
CALCULATED-DESIGNED BY ANDREY CHEVYCHALOV
CHECKED BY SANDY LE
REVISED BY
DATE REVISED

LAST REVISION 04-27-10
DATE PLOTTED => 10-NOV-2010
TIME PLOTTED => 11:14

Dist	COUNTY	ROUTE	KILOMETER POST TOTAL PROJECT	SHEET No.	TOTAL SHEETS
05	Mon	101	R146.8/159.7	866	1402

Caltrans Metric

REGISTERED CIVIL ENGINEER 4/27/10 DATE

7-26-10
PLANS APPROVAL DATE

REGISTERED PROFESSIONAL ENGINEER ANDREY CHEVYCHALOV No. 68378 Exp. 9-30-11 CIVIL STATE OF CALIFORNIA

THE STATE OF CALIFORNIA OR ITS OFFICERS OR AGENTS SHALL NOT BE RESPONSIBLE FOR THE ACCURACY OR COMPLETENESS OF ELECTRONIC COPIES OF THIS PLAN SHEET.

1

TEMPORARY PAVEMENT DELINEATION

CONSTRUCTION SEQUENCE	SHEET No.	LOCATION	DIRECTION	DETAIL No.	PAVEMENT MARKER (RETROREFLECTIVE) TYPE D YELLOW (TWO-WAY)	PAVEMENT MARKER (RETROREFLECTIVE) TYPE G CLEAR (ONE-WAY)	PAVEMENT MARKER (RETROREFLECTIVE) TYPE H YELLOW (ONE-WAY)	PAINT TRAFFIC STRIPE (2-COAT) SOLID 200mm	PAINT TRAFFIC STRIPE (2-COAT) SOLID 100mm	PAINT TRAFFIC STRIPE (2-COAT) BROKEN	REMOVE PAVEMENT MARKER	REMOVE THERMOPLASTIC TRAFFIC STRIPE WHITE	REMOVE THERMOPLASTIC TRAFFIC STRIPE YELLOW (HAZARDOUS WASTE)	REMOVE PAINTED TRAFFIC STRIPE	PAINT PAVEMENT MARKING (2-COAT) DESCRIPTION	PAINT PAVEMENT MARKING (2-COAT)	REMOVE PAINTED PAVEMENT MARKING	REMOVE THERMO-PLASTIC PAVEMENT MARKING
					EA	EA	EA	m	m	m	EA	m	m	m		m^2	m^2	m^2
Loc 4 STAGE 2 PHASE 2	TH-44	STA 194+80 TO STA 196+16	NB	25							10			136				
		STA 194+80 TO STA 196+16	NB	25			10		136									
		STA 194+21 TO STA 196+16	NB	12							14			49				
		STA 194+21 TO STA 196+16	NB	12		14				195								
		STA 194+21 TO STA 196+16	NB	38							28			390				
		STA 194+21 TO STA 196+16	NB	38		28		195										
		STA 194+37 TO STA 196+16	NB	27B										179				
		STA 194+37 TO STA 196+16	NB	27B					179									
Loc 4 STAGE 2 PHASE 3	TH-45	STA 193+09 TO STA 194+23	NB/SB	29	34				228						6-TYPE III ARROW		23.40	
	TH-45 TO TH-46	STA 197+70 TO STA 198+60	NB	25							7			90				
		STA 197+70 TO STA 198+60	NB	25			7		90									
	TH-46	STA 198+10 TO STA 200+30	NB	38							31			440	3-TYPE III ARROW		11.70	
		STA 198+60 TO STA 200+80	NB/SB	29							64			880				
		STA 198+60 TO STA 200+80	NB/SB	29	64				440									
		STA 198+10 TO STA 198+60	SB	27B										50				
		STA 198+10 TO STA 200+10	SB	27B					200									
		STA 198+10 TO STA 200+10	SB	12							15			50				
		STA 198+10 TO STA 200+10	SB	12		15				200								
Loc 4 STAGE 3 PHASE 1	TH-47	STA 198+10 TO STA 198+60	SB	25							4			50				
		STA 198+10 TO STA 198+60	SB	25			4		50									
		STA 198+10 TO STA 202+40	SB	12							30			108				
		STA 198+10 TO STA 202+40	SB	12		30				430								
	TH-47	STA 198+10 TO STA 198+48	SB	27B										38				
		STA 198+10 TO STA 198+48	SB	27B					38									
		STA 198+32 TO STA 198+48	SB	25A							3			16				
		STA 198+32 TO STA 198+48	SB	25A			3		16									
		STA 198+32 TO STA 202+40	SB	27B					408									
		STA 198+32 TO STA 202+40	SB	27B					408									
		STA 198+48 TO STA 198+95	SB	36							16			188				
		STA 198+48 TO STA 198+95	SB	36		16		94										
		STA 198+60 TO STA 200+80	SB	29							64			880				
		STA 198+60 TO STA 200+80	SB	29	64				440									
		STA 200+80 TO STA 202+40	SB	25							12		160					
		STA 200+80 TO STA 202+40	SB	25			12		160									
Loc 4 STAGE 3 PHASE 3	TH-49	STA 183+80 TO STA 187+17	SB	27B										337	LIMIT LINE	6.10	6.30	
		STA 183+80 TO STA 187+17	SB	27B					337									
		STA 188+07 TO STA 189+06	SB	8										29				
		STA 189+06 TO STA 189+45	SB	36A							6			78				
		STA 188+96 TO STA 189+45	SB	8						49								
		STA 183+60 TO STA 189+61	NB	27B										601				
		STA 183+60 TO STA 190+57	NB	27B					697									
		STA 189+75 TO STA 190+57	NB	36							26			328				
		STA 190+03 TO STA 190+57	NB	36		18		108										
	TH-49 TO TH-50	STA 189+06 TO STA 192+02	SB	27B										296				
		STA 189+45 TO STA 192+02	SB	27B					257									
SHEET SUBTOTAL					162	121	36	397	4084	874	330	0	160	5213		6.10	41.40	0

1 REVISED PER ADDENDUM No. 1 DATED NOVEMBER 16, 2010

TRAFFIC HANDLING QUANTITIES

THQ-11

STATE OF CALIFORNIA - DEPARTMENT OF TRANSPORTATION
Caltrans TRAFFIC DESIGN

FUNCTIONAL SUPERVISOR MOHAMMED QATAMI
CALCULATED-DESIGNED BY ANDREY CHEVYCHALOV
CHECKED BY SANDY LE
REVISED BY
DATE REVISED

LAST REVISION 04-27-10
DATE PLOTTED => 10-NOV-2010
TIME PLOTTED => 11:14

Dist	COUNTY	ROUTE	KILOMETER POST TOTAL PROJECT	SHEET No.	TOTAL SHEETS
05	Mon	101	R146.8/159.7	867	1402

Caltrans Metric

REGISTERED CIVIL ENGINEER 4/27/10 DATE

7-26-10
PLANS APPROVAL DATE

REGISTERED PROFESSIONAL ENGINEER ANDREY CHEVYCHALOV No. 68378 Exp. 9-30-11 CIVIL STATE OF CALIFORNIA

THE STATE OF CALIFORNIA OR ITS OFFICERS OR AGENTS SHALL NOT BE RESPONSIBLE FOR THE ACCURACY OR COMPLETENESS OF ELECTRONIC COPIES OF THIS PLAN SHEET.

TEMPORARY PAVEMENT DELINEATION

CONSTRUCTION SEQUENCE	SHEET No.	LOCATION	DIRECTION	DETAIL No.	PAVEMENT MARKER (RETROREFLECTIVE) TYPE D YELLOW (TWO-WAY)	PAVEMENT MARKER (RETROREFLECTIVE) TYPE G CLEAR (ONE-WAY)	PAVEMENT MARKER (RETROREFLECTIVE) TYPE H YELLOW (ONE-WAY)	PAINT TRAFFIC STRIPE (2-COAT) SOLID 200mm	PAINT TRAFFIC STRIPE (2-COAT) SOLID 100mm	PAINT TRAFFIC STRIPE (2-COAT) BROKEN	REMOVE PAVEMENT MARKER	REMOVE THERMOPLASTIC TRAFFIC STRIPE WHITE	REMOVE THERMOPLASTIC TRAFFIC STRIPE YELLOW (HAZARDOUS WASTE)	REMOVE PAINTED TRAFFIC STRIPE	PAINT PAVEMENT MARKING (2-COAT) DESCRIPTION	PAINT PAVEMENT MARKING (2-COAT)	REMOVE PAINTED PAVEMENT MARKING	REMOVE THERMO-PLASTIC PAVEMENT MARKING
					EA	EA	EA	m	m	m	EA	m	m	m		m^2	m^2	m^2
Loc 4 STAGE 3 PHASE 3	TH-49 TO TH-50	STA 183+80 TO STA 192+02	SB	12							57			206				
		STA 183+80 TO STA 192+02	SB	12		57				822								
	TH-49 TO TH-51	STA 183+80 TO STA 202+40	SB	25							128			1860				
		STA 183+80 TO STA 202+40	SB	25			128		1860									
		STA 183+60 TO STA 202+20	NB	25							128			1860				
		STA 183+60 TO STA 202+20	NB	25			128		1860									
		STA 183+60 TO STA 202+20	NB	12							128			465				
		STA 183+60 TO STA 202+20	NB	12		128				1860								
		STA 190+57 TO STA 199+16	NB	27B										859				
		STA 190+57 TO STA 198+89	NB	27B					832									
	TH-50	STA 191+80 TO STA 193+91	NB	38							30			422				
		STA 194+23 TO STA 196+16	NB	38							27			386				
		STA 192+75 TO STA 196+60	SB	38							54			770				
	TH-50 TO TH-51	STA 197+10 TO STA 198+50	SB	27B										140				
		STA 197+10 TO STA 198+50	SB	27B					140									
		STA 197+10 TO STA 202+40	SB	12							37			133				
		STA 197+10 TO STA 202+40	SB	12		37				530								
		STA 198+33 TO STA 202+40	SB	27B										407				
		STA 198+33 TO STA 202+40	SB	27B					407									
		STA 198+33 TO STA 198+50	SB	25A							3			17				
		STA 198+33 TO STA 198+50	SB	25A			3		17									
		STA 198+50 TO STA 198+95	SB	36							16			180				
	TH-51	STA 198+50 TO STA 199+21	SB	36		22		142										
		STA 198+89 TO STA 199+16	NB	36A							5			54				
		STA 198+89 TO STA 199+71	NB	8						82								
		STA 199+71 TO STA 200+16	NB	8										13				
Loc 4 STAGE 3 PHASE 4	TH-53 TO TH-54	STA 191+40 TO STA 199+46	NB	25							56			806				
		STA 191+40 TO STA 199+46	NB	25			56		806									
		STA 191+40 TO STA 199+46	NB	12							56			202				
		STA 191+40 TO STA 199+46	NB	12		56				806								
		STA 191+40 TO STA 198+89	NB	27B										749				
		STA 191+40 TO STA 199+04	NB	27B					764									
	TH-54	STA 198+89 TO STA 199+04	NB	8										4				
		STA 198+89 TO STA 199+04	NB	36A		3		15										
SHEET SUBTOTAL					0	303	315	157	6686	4100	725	0	0	9533		0	0	0
THQ-3 SHEET SUBTOTAL					0	214	167	264	5555	2425	619	4435	2370	3308		0	0	22.82
THQ-4 SHEET SUBTOTAL					0	538	274	598	4601	4634	142	1213	1053	288		65.53	0	0
THQ-5 SHEET SUBTOTAL					0	527	238	294	10429	6809	567	43	188	2534		0	0	0
THQ-6 SHEET SUBTOTAL					8	165	342	259	3122	2015	704	504	1446	3489		13.59	13.59	2.04
THQ-7 SHEET SUBTOTAL					8	154	201	245	3363	1673	686	1247	2897	3951		21.46	0	15.64
THQ-8 SHEET SUBTOTAL					208	323	159	158	6220	4348	976	4247	5236	2293		45.64	0	68.26
THQ-9 SHEET SUBTOTAL					262	422	91	1402	6284	3282	820	2572	1014	0		102.54	0	116.94
THQ-10 SHEET SUBTOTAL					262	181	68	959	4389	635	448	993	382	1367		97.44	19.50	20.04
THQ-11 SHEET SUBTOTAL					162	121	36	397	4084	874	330	0	160	5213		6.10	41.40	0
SUBTOTAL					910*	2948*	1891*	4733	54733	30795	6017*	15254*	14746*	31976		352.30	74.49	245.74*
TOTAL									90261					31976		352.30	74.49	

* QUANTITIES ARE INCLUDED IN THE PAVEMENT DELINEATION TABLE, SHEET PDQ-9 AND PDQ-10

1 REVISED PER ADDENDUM No. 1 DATED NOVEMBER 16, 2010

TRAFFIC HANDLING QUANTITIES

THQ-12

STATE OF CALIFORNIA - DEPARTMENT OF TRANSPORTATION
Caltrans
TRAFFIC DESIGN

FUNCTIONAL SUPERVISOR: MOHAMMED QATAMI
CALCULATED-DESIGNED BY: ANDREY CHEVYCHALOV
CHECKED BY: SANDY LE
REVISED BY
DATE REVISED

LAST REVISION 04-27-10
DATE PLOTTED => 10-NOV-2010
TIME PLOTTED => 11:16

Dist	COUNTY	ROUTE	KILOMETER POST TOTAL PROJECT	SHEET No.	TOTAL SHEETS
05	Mon	101	R146.8/159.7	1007	1402

Caltrans Metric

Ronnie K. Kier 5-16-10
REGISTERED CIVIL ENGINEER DATE

7-26-10
PLANS APPROVAL DATE

REGISTERED PROFESSIONAL ENGINEER RONNIE K. KIER No. C60877 Exp. 12/31/11 CIVIL STATE OF CALIFORNIA

THE STATE OF CALIFORNIA OR ITS OFFICERS OR AGENTS SHALL NOT BE RESPONSIBLE FOR THE ACCURACY OR COMPLETENESS OF ELECTRONIC COPIES OF THIS PLAN SHEET.

1

ROADWAY QUANTITIES

LOCATION	TACK COAT	HMA (Type A)	CLASS 2 AB	ROADWAY EXCAVATION: ROADWAY EXCAVATION	ROADWAY EXCAVATION: REMOVE AC SURFACING	EMBANKMENT (N)	COLD PLANE AC Pvmt	PCC	LCB
	Tonne	Tonne	m^3	m^3	m^3	m^3	m^2	m^3	m^3
FROM SHEET SCQ-1	139.6	91 490	77 425	329 785	3 120	795 895	10 105	7 585	5 805
FROM SHEET SCQ-2	31.8	13 630	8 120	173 465	30	35 800	5 570		
FROM SHEET SCQ-3	11.4	4 810	2 685	5 360		590	4 755		
FROM SHEET SCQ-4	57.5	25 270	10 825	497 190	300	381 858	20 365		
FROM SHEET SCQ-5	41.9	17 895	2 975	5 565	6 845	1 690	3 405		
FROM SHEET Q-5		530	1637						
FROM SHEET Q-14		640							
SUBTOTAL				1 011 365	10 295				
TOTAL	282.2	154 265	103 667	1 021 660		1 215 833	44 200	7 585	5 805

(N) NOT A SEPARATE PAY ITEM, FOR INFORMATION ONLY.
* INCLUDES VOLUME FOR PLACE HOT MIX ASPHALT (MISCELLANEOUS AREA).

SUMMARY OF QUANTITIES

Q-6

1 REVISED PER ADDENDUM No. 1 DATED NOVEMBER 16, 2010

STATE OF CALIFORNIA - DEPARTMENT OF TRANSPORTATION
Caltrans 06-DESIGN

FUNCTIONAL SUPERVISOR DAVID FRANKE
CALCULATED-DESIGNED BY DAN MASSA
CHECKED BY RONNIE KIER
REVISED BY
DATE REVISED

LAST REVISION 05-16-10 DATE PLOTTED => 10-NOV-2010 TIME PLOTTED => 11:16

Dist	COUNTY	ROUTE	KILOMETER POST TOTAL PROJECT	SHEET No.	TOTAL SHEETS
05	Mon	101	R146.8/159.7	1009	1402

Caltrans Metric

REGISTERED CIVIL ENGINEER 5-16-10 DATE

7-26-10
PLANS APPROVAL DATE

REGISTERED PROFESSIONAL ENGINEER ROY J. SHAVER No. 44587 Exp. 3/31/12 CIVIL STATE OF CALIFORNIA

THE STATE OF CALIFORNIA OR ITS OFFICERS OR AGENTS SHALL NOT BE RESPONSIBLE FOR THE ACCURACY OR COMPLETENESS OF ELECTRONIC COPIES OF THIS PLAN SHEET.

MINOR CONCRETE (MISCELLANEOUS CONSTRUCTION)

LOCATION	STATIONS		SIDEWALK *	CURBS A1-150	CURBS A2-150	CURBS A2-200	CURBS B1-100	GUTTER (Type V) **	CONCRETE CROSS GUTTER	DRIVEWAY
			m^3	m^3	m^3	m^3	m^3	m^3	m^3	m^3
Main Road	"Main" 46+70.00	"Main" 49+23.00				39.4				
Russell Rd (Lt)	"Russ" 13+22.00	"Russ" 13+32.00				3.0				
Russell Rd (Rt)	"Russ" 13+87.00	"Russ" 15+46.00				28.0				
Russell Rd (Lt)	"Russ" 13+61.00	"Russ" 15+38.00				28.0				
Russell Rd (Rt)	"Russ" 15+57.00	"Russ" 15+72.00				3.9				
Harrison Rd (Lt)	"Harr" 49+69.00	"Harr" 53+41.00				57.5				
Harrison Rd (Rt)	"Harr" 58+55.00	"Harr" 53+41.00				23.3				
Harrison Rd (Lt)	"Harr" 59+30.00	"Harr" 60+10.00				13.6				
Giannini Rd (Lt)	"GR" 50+25.00	"GR" 57+37.00				110.8				
Schoch at White Rd (Both sides)	"SCHR" 65+60.84	"SCHR" 65+86.57			4.3					
Schoch at Martin Rd (Both sides)	"SCHR" 67+01.21	"SCHR" 67+16.32			3.6					
Russell Rd (Lt)	13+84 TO 14+70 "RUSS" LINE	ISLAND & NOSE		11.3						
Russell Rd at Main SE Corner	"Main" 49+11.84	"Russ" 13+21.79	2.5							
Russell Rd (Lt)	"Russ" 13+60.00	"Russ" 15+42.00	53.5							
Russell Rd (Rt)	"Russ" 13+87.00	"Russ" 15+45.00	50.8							
Giannini Rd (Lt)	~~"GR" 50+72.00~~ "Russ" 15+72.00	"GR" 57~~+52.21~~ +45.509	99.3							
Harrison Rd (Lt)	"Harr" 58+57.00	"Harr" 60+02.00	45.0							
Harrison Rd (Rt)	"Harr" 59+60.00	"SR" 24+34.16	26.0							
Giannini Rd (Rt)	"GR" 50+32.00	"GR" 57+37.4	~~21.0~~			109.4		~~106.0~~		
Schoch Rd (Both sides)	"SCHR" 64+57.62	"SCHR" 67+16.32						68.9		
White Rd (Both sides)	"WR" 65+66.29	"WR" 67+08.47						47.2		
PRUNDALE SOUTH ROAD	"PSR" 20+09.194, 15.081 Lt		2.2							
PRUNDALE SOUTH ROAD	"PSR" 28+86.577, 15.751 Lt		2.2							
CROSS ROAD	"CR" 29+04.797, 18.576 Rt									1.2
CROSS ROAD	"CR" 29+90.394, 7.534 Rt									2.1
CROSS ROAD	"CR" 30+00.000, 7.497 Rt									2.6
CROSS ROAD	"CR" 30+82.594, 9.883 Rt									1.2
PESANTE ROAD	"PR" 34+03.854, 8.238 Lt									0.7
POLLOCK LANE	"PL" 31+36.831, 5.090 Lt	"PL" 31+63.122, 5.090 Lt							11.1	
PRUNDALE SOUTH ROAD	"RC" 25+83.166, 9.491 Lt	"PSR" 22+21.824 6.000 Lt	63.4							
PRUNDALE SOUTH ROAD	"PSR" 22+83.734, 6.000 Lt	"PSR" 32+31.643, 9.795 Lt	173.4							
CROSS ROAD	"CR" 28+31.735, 4.290 Rt	"CR" 31+08.167, 4.290 Rt						38.4		
CROSS ROAD	"CR" 28+41.516, 4.290 Lt	"CR" 29+88.007, 4.290 Lt						20.4		
POLLOCK LANE	"PL" 29+59.550, 5.090 Rt	"PL" 33+09.985, 5.090 Rt						48.7		
POLLOCK LANE	"PL" 29+56.833, 5.090 Lt	"PL" 31+34.981, 5.090 Lt						24.8		
POLLOCK LANE	"PL" 31+64.972, 5.090 Lt	"PL" 33+07.871, 5.090 Lt						19.9		
PRUNDALE SOUTH ROAD	"PSR" 20+13.847, 11.020 Lt	"PSR" 22+21.824, 6.000 Lt				33.1				
PRUNDALE SOUTH ROAD	"PSR" 22+83.734, 6.000 Lt	"PSR" 28+81.205, 12.840 Lt				94.1				
CROSS ROAD	"CR" 31+55.646, 5.200 Lt	"PL" 29+26.442, 6.000 Lt			1.7					
CROSS ROAD	"CR" 31+32.886, 5.200 Lt	"PL" 29+26.442, 6.000 Rt			1.7					
		SHEET TOTAL	~~539.3~~	11.3	11.3	~~434.7~~	0	~~374.3~~	11.1	7.8
			518.3			544.1		268.3		

* SIDEWALK INCLUDES CURB RAMPS AND DRIVEWAYS CONNECTED TO THEM.
** GUTTER (TYPE V) INCLUDES DRIVEWAY.

1 REVISED PER ADDENDUM No. 1 DATED NOVEMBER 16, 2010

SUMMARY OF QUANTITIES
Q-8

STATE OF CALIFORNIA - DEPARTMENT OF TRANSPORTATION
Caltrans 06-DESIGN
FUNCTIONAL SUPERVISOR DAVID FRANKE
CALCULATED-DESIGNED BY RANDON HOLLAND
CHECKED BY DAN MASSA
REVISED BY
DATE REVISED

LAST REVISION 05-16-10 DATE PLOTTED => 10-NOV-2010 TIME PLOTTED => 11:13

Dist	COUNTY	ROUTE	KILOMETER POST TOTAL PROJECT	SHEET No.	TOTAL SHEETS
05	Mon	101	R146.8/159.7	1010	1402

Eric Olson 5-16-10
REGISTERED CIVIL ENGINEER DATE

7-26-10
PLANS APPROVAL DATE

REGISTERED PROFESSIONAL ENGINEER ERIC H. OLSON No. 60801 Exp. 12/31/10 CIVIL STATE OF CALIFORNIA

THE STATE OF CALIFORNIA OR ITS OFFICERS OR AGENTS SHALL NOT BE RESPONSIBLE FOR THE ACCURACY OR COMPLETENESS OF ELECTRONIC COPIES OF THIS PLAN SHEET.

Caltrans Metric

1

MINOR CONCRETE (MISCELLANEOUS CONSTRUCTION)

LOCATION	STATIONS		SIDEWALK *	CURBS A1-150	CURBS A2-150	CURBS A2-200	CURBS B1-100	GUTTER (Type V) **	CONCRETE CROSS GUTTER	DRIVEWAY
			m^3	m^3	m^3	m^3	m^3	m^3	m^3	m^3
SAN MIGUEL CANYON ROAD	"SMC" 17+45.00, 11.34 R+	"SMC" 17+80.83, 12.95 R+			5.2					
SAN MIGUEL CANYON ROAD	"SMC" 17+88.96, 14.8 R+									2.7
SAN MIGUEL CANYON ROAD	"SMC" 17+91.09, 7.47 L+									1.9
SAN MIGUEL CANYON ROAD	"SMC" 17+94.19, 16.63 R+	"SMC" 18+66.16, 15.95 R+	10.6		10.1					
SAN MIGUEL CANYON ROAD	"SMC" 17+95.68, 8.2 L+	"SMC" 18+18.23, 8.78 L+			3.2					
SAN MIGUEL CANYON ROAD	"SMC" 18+22.85, 10.39 L+									1.9
SAN MIGUEL CANYON ROAD	"SMC" 18+27.50, 9.0 L+	"PNR" 10+34.21, 8.1 R+			6.4					
SAN MIGUEL CANYON ROAD	"SMC" 18+55.23, 9.21 L+	"PNR" 10+34.21, 8.1 R+	4.3							
SAN MIGUEL CANYON ROAD	"SMC" 18+73.49, 15.95 R+									3.3
SAN MIGUEL CANYON ROAD	"SMC" 18+80.87, 15.95 R+	"SMC" 18+88.90, 11.8 R+	2.4		1.2					
SAN MIGUEL CANYON ROAD	"PNR" 10+39.07, 7.9 L+	"SMC" 19+26.00, 10.8 L+	9.3		7.1					
SAN MIGUEL CANYON ROAD	"SMC" 19+14.82, 12.2 R+	"SMC" 19+49.94, 12.7 R+	5.1		5.1					
CRAZY HORSE CANYON ROAD	"CHCEV" 12+25.00, 6.0 L+	"CHCEV" 12+35.00, 6.0 L+	1.5			1.4				
CRAZY HORSE CANYON ROAD	"CHCEV" 12+25.00, 6.0 R+	"CHCEV" 12+35.00, 6.0 R+	1.5			1.4				
CRAZY HORSE CANYON ROAD	"CHCEV" 13+80.00, 9.3 L+	"CH-2" 195+01.46, 9.6 L+	14.3			15.4				
CRAZY HORSE CANYON ROAD	"CHCEV" 13+80.00, 7.2 R+	"CH-4" 195+61.52, 6.0 R+	13.9			15.3				
CRAZY HORSE CANYON ROAD	"CH-4" 195+37.23, 1.2 L+	"CHCEV" 14+93.81, 9.6 R+	6.7			3.3				
CRAZY HORSE CANYON ROAD	"CH-2" 195+07.00, 1.2 L+	"CHCEV" 14+99.15, 10.8 L+	6.9			3.4				
CRAZY HORSE CANYON ROAD	"CHCEV" 15+51.21, 9.6 R+	"CH-3" 195+15.56, 4.8 R+	6.1			3.0				
CRAZY HORSE CANYON ROAD	"CHCEV" 15+56.54, 10.8 L+	"CH-1" 194+86.12, 1.2 R+	7.0			3.4				
CRAZY HORSE CANYON ROAD	"CHCEV" 22+78.12, 4.2 L+									7.2
		SUBTOTAL	89.6	0	38.3	46.6	0	0	0	17.0
		FROM SHEET Q-8	~~539.3~~	11.3	11.3	~~434.7~~	0	~~374.3~~	11.1	7.8
		FROM SHEET Q-5	578.3 0	0	0	544.1 0	0	268.3 0	0	36.9
		SUBTOTAL THIS SHEET	1642.6 ~~1618.2~~							
		FROM SHEET DQ-63	428.97							
		TOTAL	~~2 047.17~~ 2 071.57							

* SIDEWALK INCLUDES CURB RAMPS AND DRIVEWAYS CONNECTED TO THEM.
** GUTTER (TYPE V) INCLUDES DRIVEWAY.

1 REVISED PER ADDENDUM No. 1 DATED NOVEMBER 16, 2010

SUMMARY OF QUANTITIES
Q-9

STATE OF CALIFORNIA - DEPARTMENT OF TRANSPORTATION
Caltrans 06-DESIGN
FUNCTIONAL SUPERVISOR DAVID FRANKE
CALCULATED-DESIGNED BY CARLOS GONZALEZ
CHECKED BY ERIC OLSON
REVISED BY
DATE REVISED

LAST REVISION 05-16-10 DATE PLOTTED => 10-NOV-2010 TIME PLOTTED => 11:13

Dist	COUNTY	ROUTE	KILOMETER POST TOTAL PROJECT	SHEET No.	TOTAL SHEETS
05	Mon	101	R146.8/159.7	1011	1402

REGISTERED CIVIL ENGINEER 5-16-10 DATE

7-26-10
PLANS APPROVAL DATE

REGISTERED PROFESSIONAL ENGINEER DANIEL B. MASSA No. 59095 Exp. 6/30/11 CIVIL STATE OF CALIFORNIA

THE STATE OF CALIFORNIA OR ITS OFFICERS OR AGENTS SHALL NOT BE RESPONSIBLE FOR THE ACCURACY OR COMPLETENESS OF ELECTRONIC COPIES OF THIS PLAN SHEET.

Caltrans Metric

SOUND WALL ITEMS

SOUND WALL / LOL STATION TO LOL STATION	SOUND WALL (BARRIER) (MASONRY BLOCK)	CONCRETE BARRIER (TYPE 736 SV)	400 mm CIDH Conc PILING (BARRIER)	ACCESS GATES (N)	STRUCTURAL CONCRETE, ANCHOR BLOCK TRANSITION
	m^2	m	m	EA	m^3
SOUND WALL 1 / "M" LINE STA 142+80.000 TO STA 144+10.000	321	150	468	1	1
SOUND WALL 2 / "M" LINE STA 164+21.700 TO STA 169+80.000	1 874	558	1 707	2	2
TOTAL	2 195	718	2 175	3	3

(N) NOT A SEPARATE PAY ITEM, FOR INFORMATION ONLY.

MINOR CONCRETE (EXPOSED AGGREGATE CONCRETE)

LOCATION	STATION TO STATION	MINOR CONCRETE (TEXTURE PAVING)
		m^2
SB ON RAMP SALA Rd	"SR-1" LINE 101+88.00 TO 102+20.00	136
NB OFF RAMP SALA Rd	"SR-2" LINE 200+82.49 TO 201+24.92	202
SB OFF RAMP SALA Rd	"SR-3" LINE 303+33.83 TO 303+63.11	241
NB ON RAMP SALA Rd	"SR-4" LINE 401+89.79 TO 402+38.27	234
SB ON RAMP ECHO VALLEY Rd	"CH-1" LINE 189+91.48 TO 190+47.72	238
NB OFF RAMP CRAZY HORSE CANYON Rd	"CH-2" LINE 190+57.69 TO 191+15.15	280
SB OFF RAMP ECHO VALLEY Rd	"CH-3" LINE 197+86.98 TO 198+19.84	141
NB ON CRAZY HORSE CANYON Rd	"CH-4" LINE 198+13.01 TO 198+56.92	191
	TOTAL	1663

RETAINING WALL QUANTITIES

WALL No.	STRUCTURAL CONCRETE (RETAINING WALL)	CONCRETE BARRIER (TYPE 736A)	CONCRETE BARRIER (TYPE 60D)	STRUCTURE EXCAVATION (RETAINING WALL)	STRUCTURE BACKFILL (RETAINING WALL)	ARCHITECTURAL TREATMENT (DRYSTACK STONE TEXTURE)	PERVIOUS BACKFILL MATERIAL (N)	BAR REINFORCING STEEL	CABLE RAILING
	m^3	m	m	m^3	m^3	m^2	m^3	Kg	m
WALL No. 10	205.6		115.8	632.4	519.7	154.7	90.9	9 391.3	115.7
WALL No. 18	97.6	33.5		236.3	155.3	87.3	18.4	3 958.9	
TOTAL	303.2	33.5	115.8	868.7	675.0	242.0	109.3	13 350.2	115.7*

(N) NOT A SEPARATE PAY ITEM, FOR INFORMATION ONLY.

* SEE CABLE RAILING TABLE ON SHEET Q-11 FOR TOTAL QUANTITY.

CONCRETE PAVEMENT JOINT SEALANT

1 LOCATION 1 MAINLINE PCC PAVEMENT	SEAL PAVEMENT JOINT	SEAL LONGITUDINAL ISOLATION JOINT
	m	m
~~SB ON RAMP SALA Rd~~	6 762	4 692
"M" LINE Sta 142+60 TO 154+33 TOTAL	6 762	4 692

TRANSVERSE WEAKENED PLANE JOINTS SHALL BE TYPE A1 COMPRESSION SEAL.
LONGITUDINAL WEAKENED PLANE JOINTS SHALL BE TYPE A2 LIQUID SEALANT.

1 REVISED PER ADDENDUM No. 1 DATED NOVEMBER 16, 2010

SUMMARY OF QUANTITIES

Q-10

STATE OF CALIFORNIA - DEPARTMENT OF TRANSPORTATION
Caltrans 06-DESIGN
FUNCTIONAL SUPERVISOR DAVID FRANKE
CALCULATED-DESIGNED BY RANDON HOLLAND
CHECKED BY DAN MASSA
REVISED BY
DATE REVISED

LAST REVISION 05-16-10 DATE PLOTTED => 10-NOV-2010 TIME PLOTTED => 11:13

Dist	COUNTY	ROUTE	KILOMETER POST TOTAL PROJECT	SHEET No.	TOTAL SHEETS
05	Mon	101	R146.8/159.7	1012	1402

REGISTERED CIVIL ENGINEER 5-16-10 DATE

7-26-10
PLANS APPROVAL DATE

REGISTERED PROFESSIONAL ENGINEER ROY J. SHAVER No. 44587 Exp. 3/31/12 CIVIL STATE OF CALIFORNIA

THE STATE OF CALIFORNIA OR ITS OFFICERS OR AGENTS SHALL NOT BE RESPONSIBLE FOR THE ACCURACY OR COMPLETENESS OF ELECTRONIC COPIES OF THIS PLAN SHEET.

Caltrans Metric

RELOCATE MAILBOX

LOCATION	FROM STATION	FROM SHEET No.	TO* STATION	TO* SHEET No.	EA
ESPINOSA ROAD	"RUSS" 16+66.182, 7.6 R+	6	"RUSS" 16+64.550, 9.8 R+	6	1
ESPINOSA ROAD	"RUSS" 16+35.505, 6.96 R+	6	"RUSS" 16+40.216, 13.05 R+	6	3
ROUTE 101 (GROUP A)	"M" 164+62.580, 18.9 R+	15	"SCHR" 64+51.860, 11.33 L+	17	5
ROUTE 101 (GROUP B)	"M" 165+16.962, 18.65 R+	16	"SCHR" 64+95.100, 6.68 L+	17	7
ROUTE 101 MAIL BOX C	"M" 165+28.360, 18.6 R+	16	"SCHR" 65+00.644, 6.75 L+	17	1
ROUTE 101 MAIL BOX D	"M" 166+29.661, 18.78 R+	16	"SCHR" 66+31.051, 6.6 L+	17	1
ROUTE 101 MAIL BOX E	"M" 166+80.467, 18.5 R+	16	"SCHR" 66+84.412, 6.7 L+	17	1
ROUTE 101 (GROUP F)	"M" 167+34.835, 19.68 R+	16	"MBOX" 67+92.08, 3.5 L+	18	2
ROUTE 101 MAIL BOX G	"M" 168+01.217, 18.43 R+	16	"MBOX" 68+06.29, 3.5 L+	18	1
ROUTE 101 MAIL BOX H	"M" 168+20.451, 18.68 R+	16	"MBOX" 69+31.47, 3.5 L+	18	1
BLACKIE ROAD	"BR" 33+00.000, 1.2 L+	25	"BR" 33+00.000, 7.4 L+	25	1
BLACKIE ROAD	"BR" 33+53.091, 3.8 L+	25	"BR" 33+51.431, 7.4 L+	25	1
REESE CIRCLE	"RC" 26+67.641, 0.9 R+	26	"RC" 26+67.641, 7.0 R+	26	1
REESE CIRCLE	"RC" 26+74.051, 0.9 R+	26	"RC" 26+74.051, 7.0 R+	26	2
CROSS ROAD	"CR" 28+30.038, 3.5 R+	27	"CR" 28+30.038, 6.0 R+	27	2
CROSS ROAD	"CR" 29+20.000, 8.7 R+	27	"CR" 29+20.000, 8.7 R+	27	1
CROSS ROAD	"CR" 29+27.879, 3.1 R+	27	"CR" 29+27.879, 6.0 R+	27	1
CROSS ROAD	"CR" 31+12.071, 4.2 R+	28	"CR" 31+12.071, 6.5 R+	28	1
ROUTE 101	"SN" 190+10.0 13.0 R+	40	"SN" 188+46.0 14.0 R+	40	2
CRAZY HORSE CANYON ROAD	"CHCEV" 13+53 8.0 R+	45	"CHCEV" 12+05 14.0 R+	45	1
ECHO VALLEY ROAD	"CHCEV" 22+43 20.0 R+	48	"CHCEV" 22+39 7.0 R+	48	2
ECHO VALLEY ROAD	"CHCEV" 22+69 10.0 R+	48	"CHCEV" 22+70 8.0 R+	48	1
ECHO VALLEY ROAD	"CHCEV" 23+00 6.0 R+	48	"CHCEV" 23+02 7.0 R+	48	3
ECHO VALLEY COURT	"EV" 10+51 20.0 R+	48	"CHCEV" 10+50 7.0 R+	48	2
			TOTAL		44

* EXACT LOCATIONS TO BE DETERMINED BY THE ENGINEER.

ROCK BLANKET

LOCATION SHEET	LOCATION STATION LIMITS	m^2
C-1	"RUSS" 13+86 TO 14+70	193.2
	TOTAL	193.2

ABANDON WATER WELL

LOCATION SHEET	LOCATION STATION AND OFFSET	EA
L-44	10+38.00 "DWYI" 3.0 L+	1
	TOTAL	1

CABLE RAILING

LOCATION	STATION TO STATION	m
JARVIS DITCH	"M" 146+81.608 TO "M" 146+94.710	72.0
BLACKIE ROAD	"BR" 31+81.032 TO "BR" 32+66.582	13.6
BLACKIE ROAD	"BR" 32+29.016 TO "BR" 32+48.700	20.8
PRUNDALE SOUTH ROAD	"PSR" 27+55.443 TO "BR" 32+40.698	44.3
FROM SHEET Q-10		115.7
	TOTAL	266.4

ADJUST UTILITY COVERS TO GRADE

SHEET	STATION	WATER VALVE EA	MONITORING WELLS EA
L-29	"PR" 33+91 4.5 R+	3	
L-34	"SMC" 18+56 13.5 L+		1
L-34	"SMC" 18+58 17.0 R+		1
L-34	"NPR" 10+33 4.5 L+		1
L-34	"SMC" 18+88 7.2 L+		1
L-34	"SMC" 19+29 14.0 L+		1
L-34	"SMC" 19+47 17.0 R+		3
L-34	"SMC" 19+58 5.4 L+		1
L-34	"SMC" 19+58 11.7 R+		6
	Total	18	

DITCH EXCAVATION

LOCATION	STATION TO STATION	m^3
~~BLACKIE ROAD WETLAND~~	~~"WL" 10+00.000 TO "WL" 11+90.331~~	~~2 163.1~~
REESE CIRCLE DITCH	"BA" 10+00.000 TO "BA" 10+59.249	37.0
	TOTAL	~~2 200.1~~ 37.0

1

1 REVISED PER ADDENDUM No. 1 DATED NOVEMBER 16, 2010

SUMMARY OF QUANTITIES

Q-11

STATE OF CALIFORNIA - DEPARTMENT OF TRANSPORTATION
Caltrans
06-DESIGN
FUNCTIONAL SUPERVISOR DAVID FRANKE
CALCULATED-DESIGNED BY RANDON HOLLAND
CHECKED BY DAN MASSA
REVISED BY
DATE REVISED

LAST REVISION 05-16-10 DATE PLOTTED => 10-NOV-2010 TIME PLOTTED => 11:14

DIST	COUNTY	ROUTE	KILOMETER POST TOTAL PROJECT	SHEET No	TOTAL SHEETS
05	Mon	101	R146.8/159.7	1173	1402

Caltrans Metric

Hernan Perez 05-06-10
REGISTERED CIVIL ENGINEER DATE

7-26-10
PLANS APPROVAL DATE

REGISTERED PROFESSIONAL ENGINEER HERNAN PEREZ No. 60993 Exp. 12-31-10 CIVIL STATE OF CALIFORNIA

The State of California or its officers or agents shall not be responsible for the accuracy or completeness of electronic copies of this plan sheet.

CURVE DATA

NO	R	Δ	T	L
(A)	767.600	47°46'18"	339.925	640.002
(B)	175.000	79°12'21"	144.788	241.921

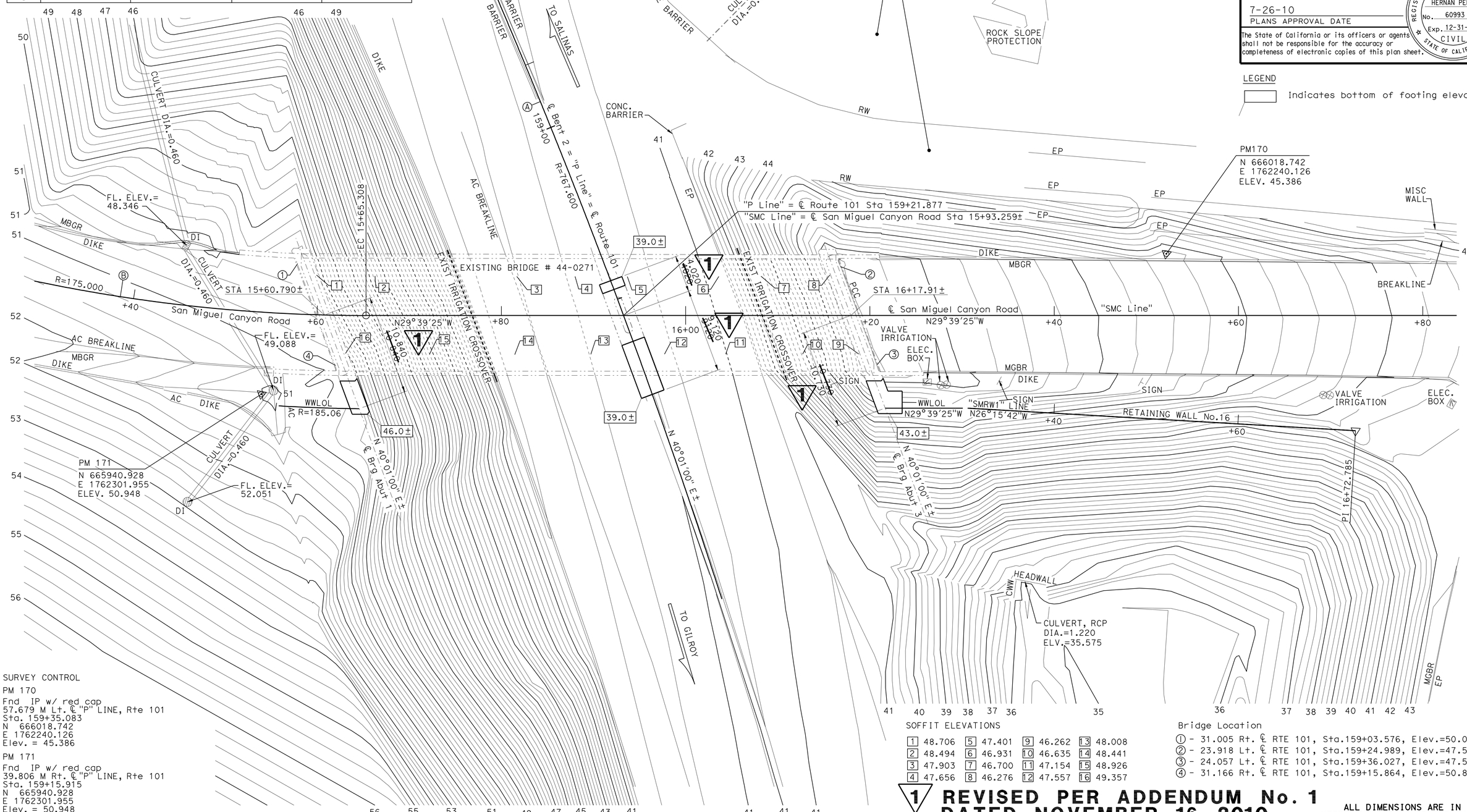

LEGEND

Indicates bottom of footing elevation

SURVEY CONTROL

PM 170
Fnd IP w/ red cap
57.679 M Lt. ℄ "P" LINE, Rte 101
Sta. 159+35.083
N 666018.742
E 1762240.126
Elev. = 45.386

PM 171
Fnd IP w/ red cap
39.806 M Rt. ℄ "P" LINE, Rte 101
Sta. 159+15.915
N 665940.928
E 1762301.955
Elev. = 50.948

SOFFIT ELEVATIONS

1	48.706	5	47.401	9	46.262	13	48.008
2	48.494	6	46.931	10	46.635	14	48.441
3	47.903	7	46.700	11	47.154	15	48.926
4	47.656	8	46.276	12	47.557	16	49.357

Bridge Location

(1) - 31.005 Rt. ℄ RTE 101, Sta.159+03.576, Elev.=50.011 ±
(2) - 23.918 Lt. ℄ RTE 101, Sta.159+24.989, Elev.=47.545 ±
(3) - 24.057 Lt. ℄ RTE 101, Sta.159+36.027, Elev.=47.539 ±
(4) - 31.166 Rt. ℄ RTE 101, Sta.159+15.864, Elev.=50.876 ±

1 REVISED PER ADDENDUM No. 1 DATED NOVEMBER 16, 2010

ALL DIMENSIONS ARE IN METERS UNLESS OTHERWISE SHOWN

PRELIMINARY INVESTIGATION SECTION

SCALE	VERT. DATUM NGVD 29	PHOTOGRAMMETRY AS OF:		
1:200	HORZ. DATUM NAD 83 (1991.35)	SURVEYED	BY K.ELLINGSON 07/2005	CHECKED BY
ALIGNMENT TIES DIST.TRAVERSE SHEET		DRAFTED	BY LAN T TRAN 12/2005	CHECKED BY T.ZOLNIKOVA 12/2005

	BY	CHECKED
DESIGN	Elijah Hall	David Alvarez
DETAILS	P. von Savoye	Elijah Hall
QUANTITIES	Paul Mak	Elijah Hall

STATE OF CALIFORNIA
DEPARTMENT OF TRANSPORTATION

DIVISION OF ENGINEERING SERVICES
STRUCTURE DESIGN
DESIGN BRANCH 6

BRIDGE NO. 44-0271
KILOMETER POST R154.7

SAN MIGUEL CANYON ROAD OC (WIDEN)

FOUNDATION PLAN

STRUCTURES FOUNDATION PLAN SHEET (METRIC) (REV.12-1-01)

ORIGINAL SCALE IN MILLIMETERS FOR REDUCED PLANS 0 10 20 30 40 50 60 70 80 90 100

CU 05
EA 0161E1

DISREGARD PRINTS BEARING EARLIER REVISION DATES

REVISION DATES (PRELIMINARY STAGE ONLY) 12-22-05 06-10-08 07-28-08 11-14-08 12-12-08 01-14-09 03-26-09 05-18-09 10-28-09 05-06-10

SHEET 3 OF 18

FILE => 44-0271-e-fp101.add

USERNAME => s135518 DATE PLOTTED => 10-NOV-2010 TIME PLOTTED => 11:16

DIST	COUNTY	ROUTE	KILOMETER POST TOTAL PROJECT	SHEET No	TOTAL SHEETS
05	Mon	101	R146.8/159.7	1236	1402

REGISTERED CIVIL ENGINEER 05-06-10 DATE

7-26-10
PLANS APPROVAL DATE

REGISTERED PROFESSIONAL ENGINEER HERNAN PEREZ No. 60993 Exp. 12-31-10 CIVIL STATE OF CALIFORNIA

The State of California or its officers or agents shall not be responsible for the accuracy or completeness of electronic copies of this plan sheet.

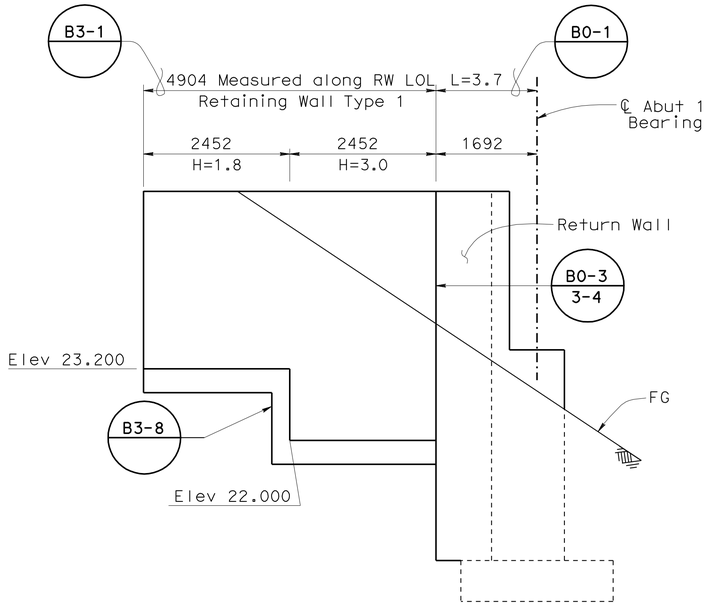

SECTION D-D
1:50

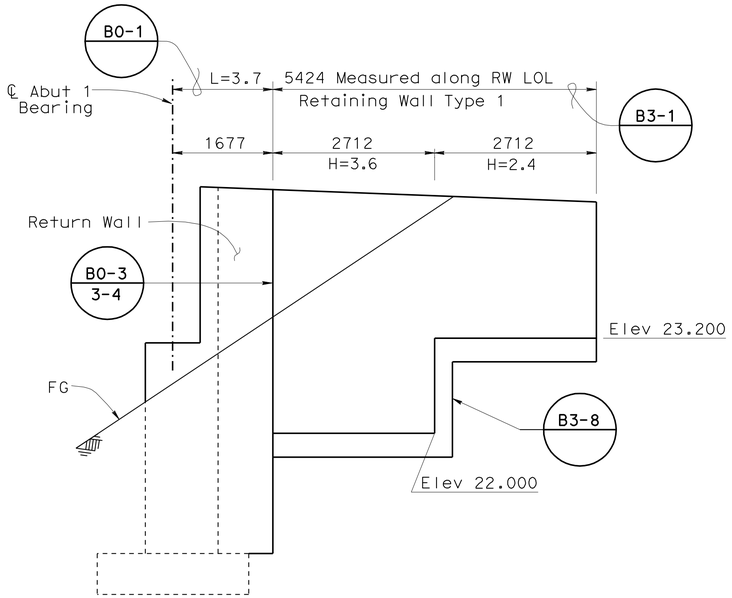

SECTION E-E
1:50

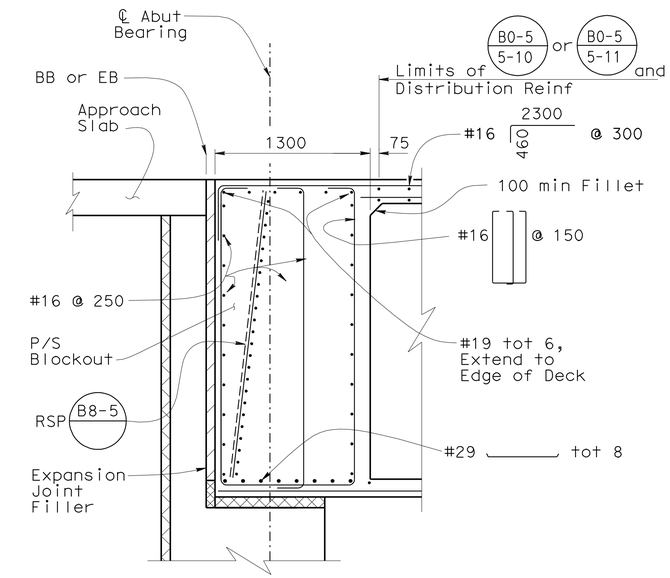

END DIAPHRAGM
1:25

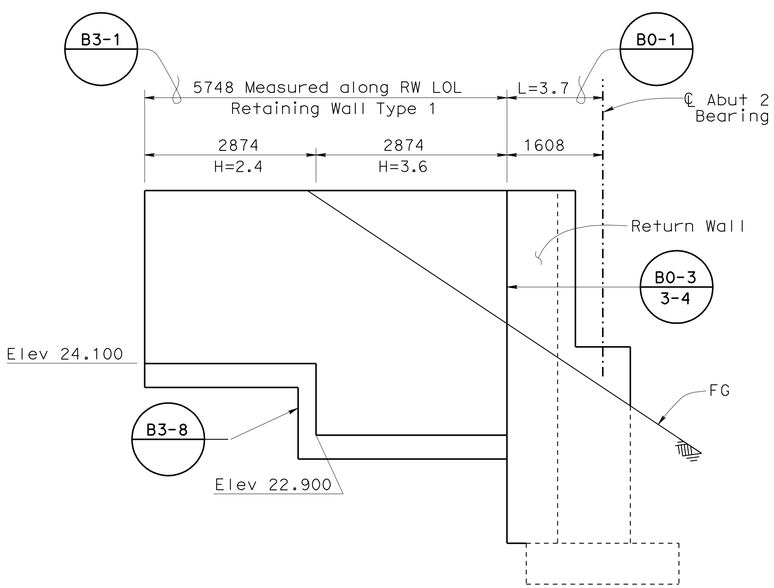

SECTION F-F
1:50

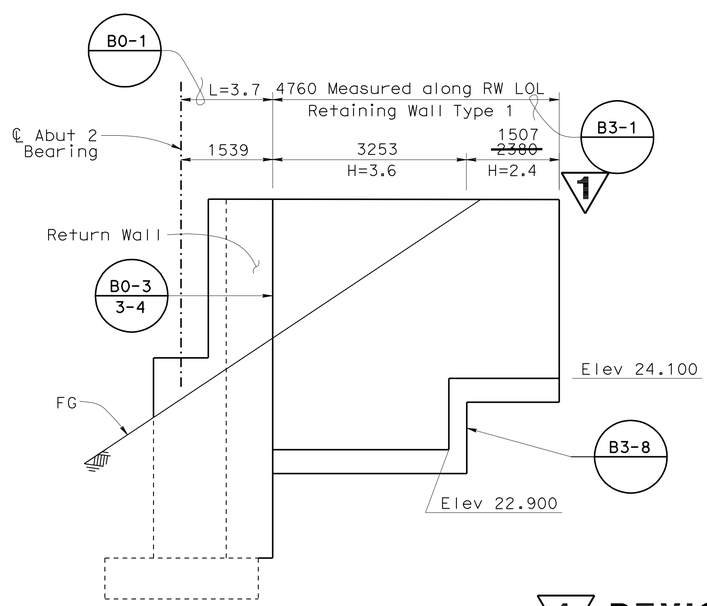

SECTION G-G
1:50

NOTES:

1. For Plan Views of Retaining Walls, see "Abutment Layout No. 1 & No. 2" sheets
2. Retaining Wall Type 1 Footing Elevations are from Top of Footing
3. 100 mm Expanded Polystyrene not shown. For details see, "Architectural Treatment" sheet

1 **REVISED PER ADDENDUM No. 1 DATED NOVEMBER 16, 2010**

Caltrans Metric

ALL DIMENSIONS ARE IN MILLIMETERS UNLESS OTHERWISE SHOWN

ORIGINAL SCALE IN MILLIMETERS FOR REDUCED PLANS 0 10 20 30 40 50 60 70 80 90 100

	BY	CHECKED
DESIGN	Prakarn Paksaichol	Ryan Odell
DETAILS	P.Savoye\G.Zweier	Ryan Odell
QUANTITIES	Ryan Odell	Ae Tern

STATE OF CALIFORNIA
DEPARTMENT OF TRANSPORTATION

DIVISION OF ENGINEERING SERVICES
STRUCTURE DESIGN
DESIGN BRANCH 6

CU 05
EA 0161E1

BRIDGE NO. 44-0284
KILOMETER POST 151.4

PRUNEDALE SOUTH ROAD OC
ABUTMENT DETAILS NO.1

DISREGARD PRINTS BEARING EARLIER REVISION DATES

REVISION DATES: 01-18-07 02-16-09 09-04-09 12-14-09 03-11-10 05-06-10 02-13-08 08-28-08 12-23-08 08-28-09

SHEET 7 OF 17

FILE => 44-0284-f-adt1.dgn

STRUCTURES DESIGN DETAIL SHEET (METRIC) (REV.03-17-04)

USERNAME => s135318 DATE PLOTTED => 10-NOV-2010 TIME PLOTTED => 11:16