Dist	COUNTY	ROUTE	POST MILES TOTAL PROJECT	SHEET No.	TOTAL SHEETS
04	Ala	205	0.0/1.0	46	676
04	Ala	580	0.0/8.0, 26.1/30.3		
10	SJ	580	13.5/15.4		

REGISTERED CIVIL ENGINEER 2-26-16 DATE

3-28-16
PLANS APPROVAL DATE

REGISTERED PROFESSIONAL ENGINEER Danny Kao No. 61646 Exp. 6-30-17 CIVIL STATE OF CALIFORNIA

THE STATE OF CALIFORNIA OR ITS OFFICERS OR AGENTS SHALL NOT BE RESPONSIBLE FOR THE ACCURACY OR COMPLETENESS OF SCANNED COPIES OF THIS PLAN SHEET.

NOTE:

FOR ACCURATE RIGHT OF WAY DATA, CONTACT RIGHT OF WAY ENGINEERING AT THE DISTRICT OFFICE.

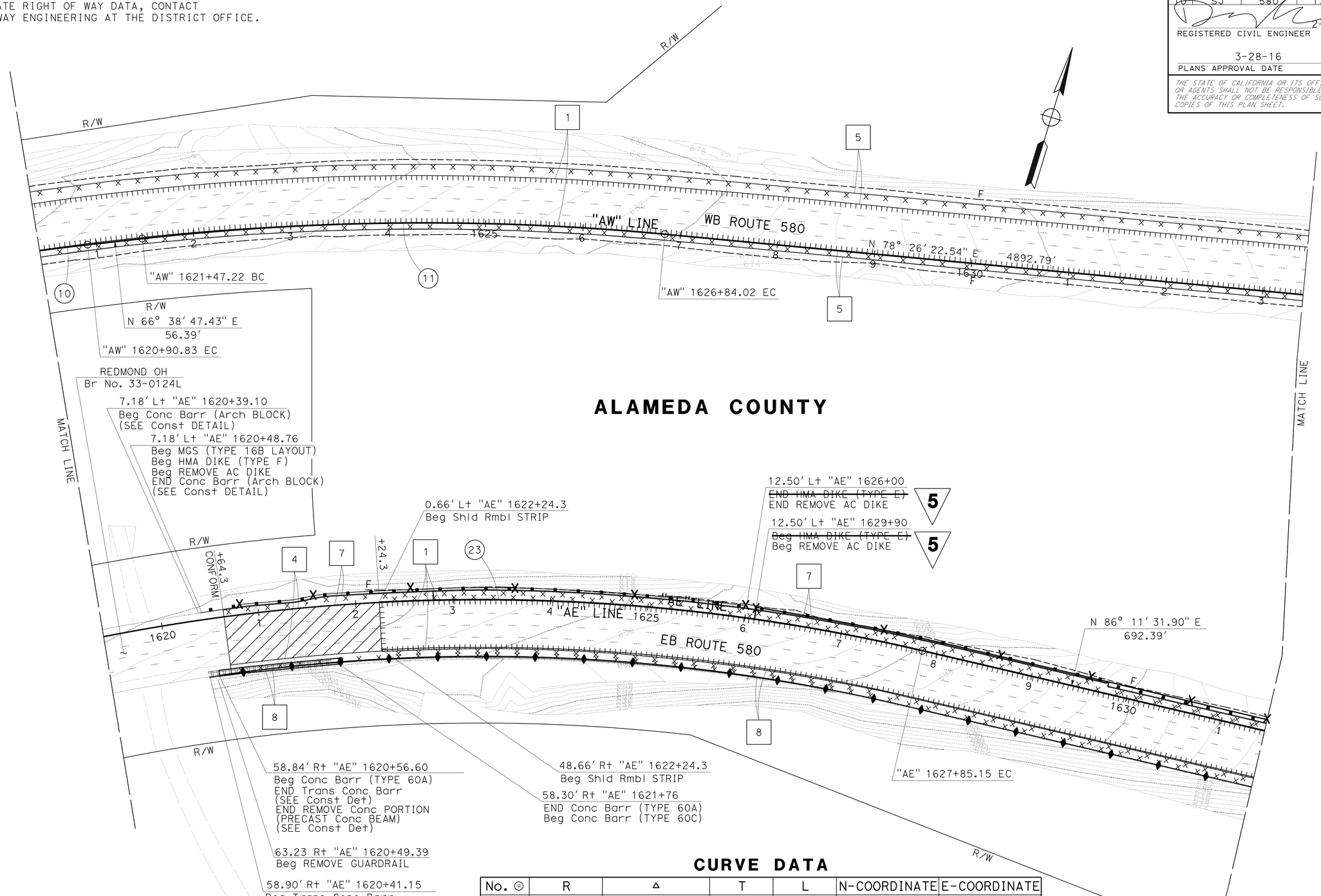

CURVE DATA

No. ⓡ	R	Δ	T	L	N-COORDINATE	E-COORDINATE
10	2300′	17° 43′ 06″	358.49′	711.26′	2089627.28	6235939.48
11	2608′	11° 47′ 35″	269.35′	536.80′	2089366.86	6236113.34
23	1990′	28° 13′ 39″	500.36′	980.40′	2089604.75	6236100.15

5 **REPLACED PER ADDENDUM No. 5 DATED SEPTEMBER 1, 2016**

FOR NOTES, ABBREVIATIONS AND LEGEND, SEE SHEET L-1

LAYOUT

SCALE: 1" = 50′

L-18

HUDA NASSORI	HN	REVISED BY	
TRI NGUYEN	1-1-16	DATE REVISED	
CALCULATED-DESIGNED BY		FUNCTIONAL SUPERVISOR	EDMUND CHOY
CHECKED BY			

STATE OF CALIFORNIA - DEPARTMENT OF TRANSPORTATION
Caltrans
DESIGN

LAST REVISION 03-07-16 | DATE PLOTTED => 30-AUG-2016 | TIME PLOTTED => 15:14

Dist	COUNTY	ROUTE	POST MILES TOTAL PROJECT	SHEET No.	TOTAL SHEETS
04	Ala	205	0.0/1.0		
04	Ala	580	0.0/8.0, 26.1/30.3	47	676
10	SJ	580	13.5/15.4		

REGISTERED CIVIL ENGINEER 2-26-16 DATE

3-28-16
PLANS APPROVAL DATE

REGISTERED PROFESSIONAL ENGINEER Danny Kao No. 61646 Exp. 6-30-17 CIVIL STATE OF CALIFORNIA

THE STATE OF CALIFORNIA OR ITS OFFICERS OR AGENTS SHALL NOT BE RESPONSIBLE FOR THE ACCURACY OR COMPLETENESS OF SCANNED COPIES OF THIS PLAN SHEET.

NOTE:

FOR ACCURATE RIGHT OF WAY DATA, CONTACT RIGHT OF WAY ENGINEERING AT THE DISTRICT OFFICE.

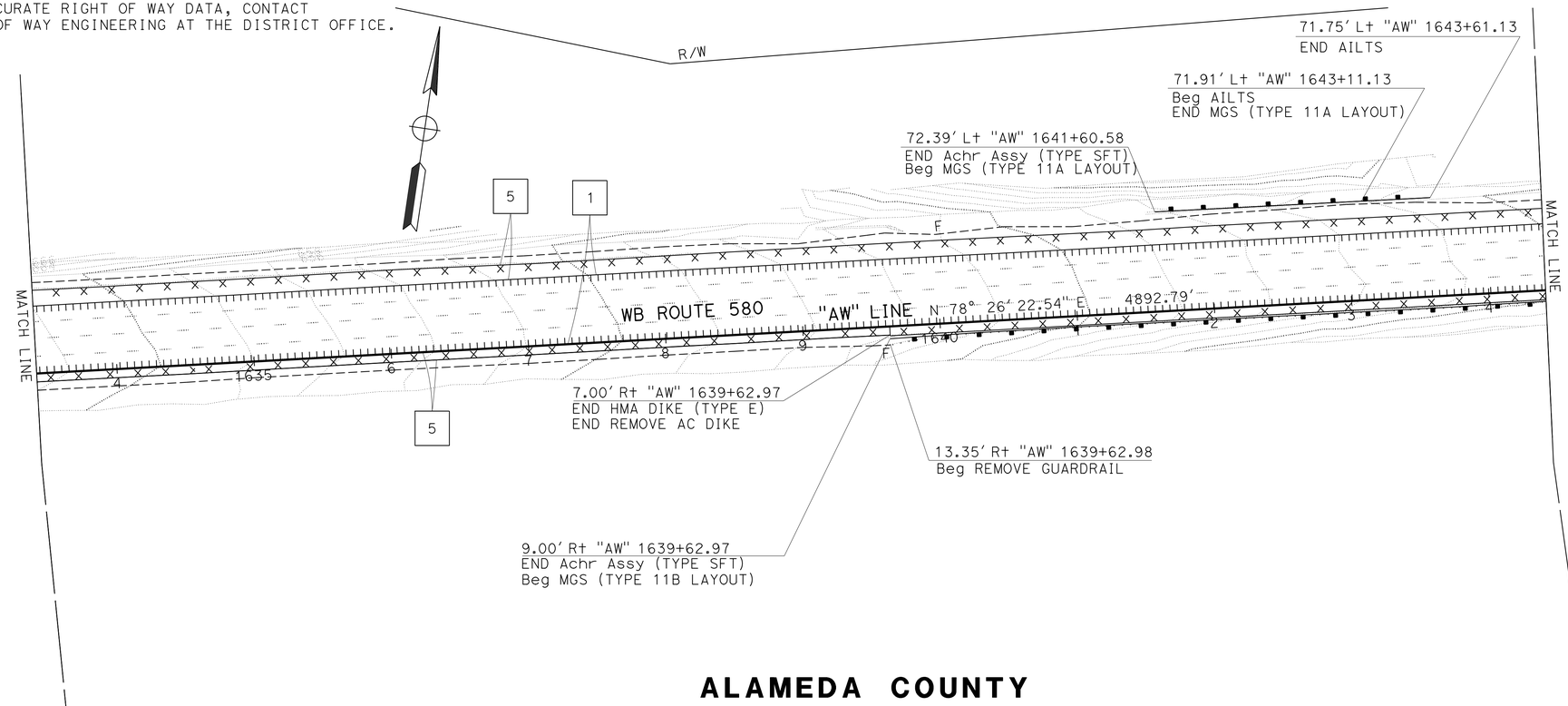

ALAMEDA COUNTY

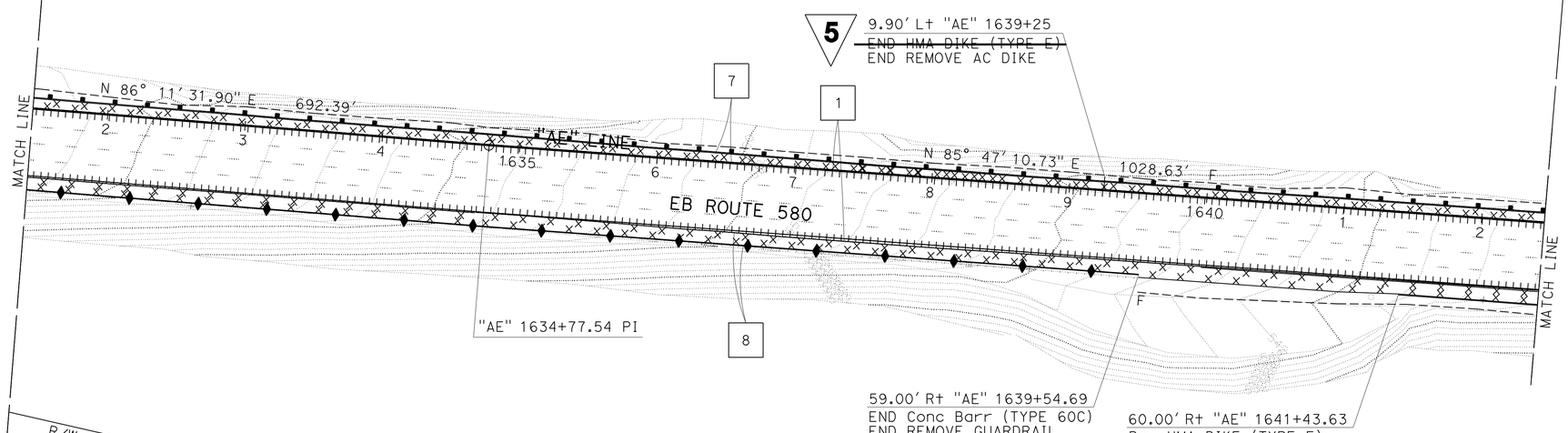

5 REPLACED PER ADDENDUM No. 5 DATED SEPTEMBER 1, 2016

FOR NOTES, ABBREVIATIONS AND LEGEND, SEE SHEET L-1

LAYOUT
SCALE: 1" = 50'

L-19

STATE OF CALIFORNIA - DEPARTMENT OF TRANSPORTATION
Caltrans® DESIGN

FUNCTIONAL SUPERVISOR: EDMUND CHOY
CALCULATED-DESIGNED BY: HUDA NASSORI
CHECKED BY: TRI NGUYEN
REVISED BY: HN
DATE REVISED: 1-1-16

LAST REVISION 03-07-16 | DATE PLOTTED => 30-AUG-2016 | TIME PLOTTED => 15:14

BORDER LAST REVISED 7/2/2010 | USERNAME => s128787 | DGN FILE => 0415000066ea019.dgn | RELATIVE BORDER SCALE IS IN INCHES 0 1 2 3 | UNIT 0721 | PROJECT NUMBER & PHASE 04150000661

Dist	COUNTY	ROUTE	POST MILES TOTAL PROJECT	SHEET No.	TOTAL SHEETS
04	Ala	205	0.0/1.0		
04	Ala	580	0.0/8.0, 26.1/30.3	50	676
10	SJ	580	13.5/15.4		

REGISTERED CIVIL ENGINEER 2-26-16 DATE

3-28-16
PLANS APPROVAL DATE

REGISTERED PROFESSIONAL ENGINEER Danny Kao No. 61646 Exp. 6-30-17 CIVIL STATE OF CALIFORNIA

THE STATE OF CALIFORNIA OR ITS OFFICERS OR AGENTS SHALL NOT BE RESPONSIBLE FOR THE ACCURACY OR COMPLETENESS OF SCANNED COPIES OF THIS PLAN SHEET.

NOTE:

FOR ACCURATE RIGHT OF WAY DATA, CONTACT RIGHT OF WAY ENGINEERING AT THE DISTRICT OFFICE.

CURVE DATA

No. ⊕	R	Δ	T	L	N-COORDINATE	E-COORDINATE
12	8655′	02° 56′ 57"	222.80′	445.51′	2084423.05	6242118.70
13	9670′	06° 02′ 05"	509.72′	1018.50′	2083427.36	6242322.62
24	8080′	14° 20′ 45"	1016.85′	2023.07′	2099912.37	6238963.15

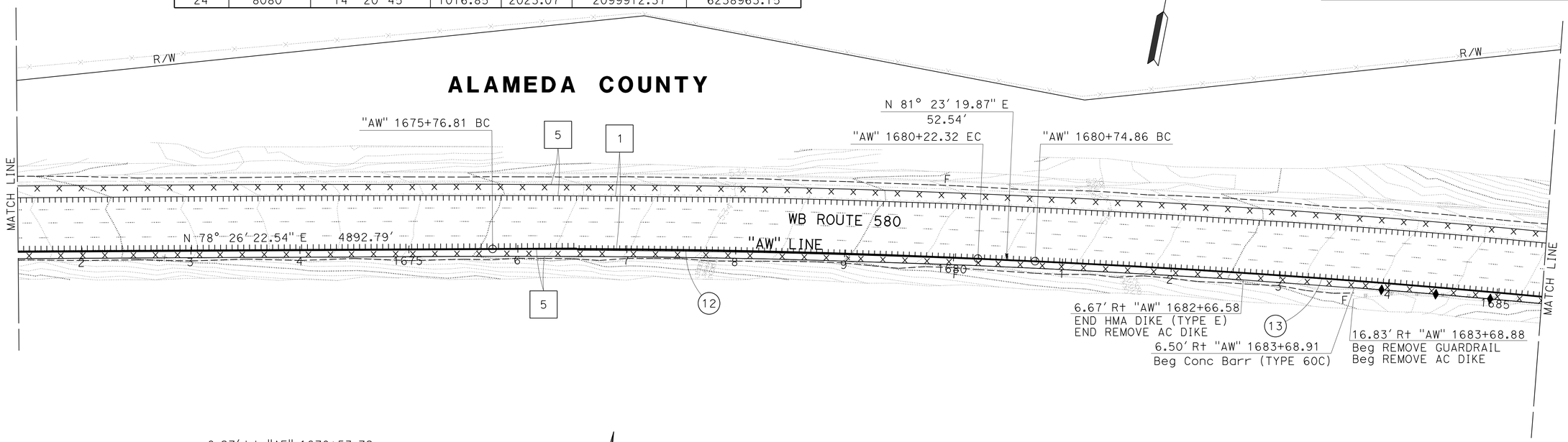

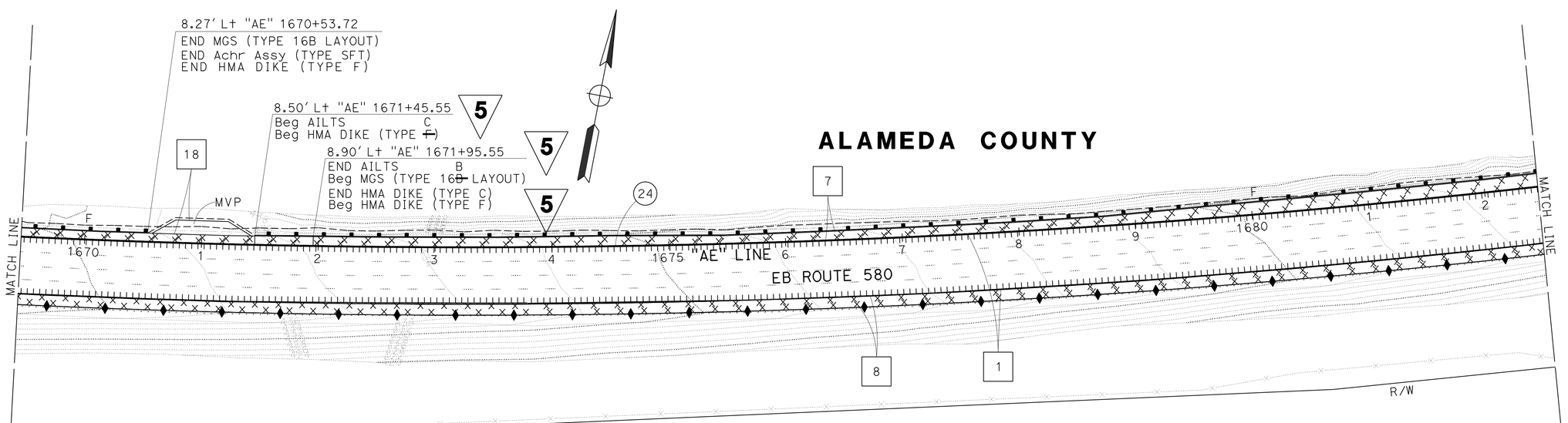

5 REPLACED PER ADDENDUM No. 5 DATED SEPTEMBER 1, 2016

FOR NOTES, ABBREVIATIONS AND LEGEND, SEE SHEET L-1

LAYOUT
SCALE: 1" = 50′

L-22

STATE OF CALIFORNIA - DEPARTMENT OF TRANSPORTATION
Caltrans
DESIGN

FUNCTIONAL SUPERVISOR: EDMUND CHOY
CALCULATED-DESIGNED BY: HUDA NASSORI
CHECKED BY: TRI NGUYEN
REVISED BY: HN
DATE REVISED: 1-1-16

LAST REVISION 03-06-16
DATE PLOTTED => 30-AUG-2016
TIME PLOTTED => 15:14

NOTE:

FOR ACCURATE RIGHT OF WAY DATA, CONTACT RIGHT OF WAY ENGINEERING AT THE DISTRICT OFFICE.

Dist	COUNTY	ROUTE	POST MILES TOTAL PROJECT	SHEET No.	TOTAL SHEETS
04	Ala	205	0.0/1.0	59	676
04	Ala	580	0.0/8.0, 26.1/30.3		
10	SJ	580	13.5/15.4		

REGISTERED CIVIL ENGINEER 2-26-16 DATE

3-28-16 PLANS APPROVAL DATE

REGISTERED PROFESSIONAL ENGINEER Danny Kao No. 61646 Exp. 6-30-17 CIVIL STATE OF CALIFORNIA

THE STATE OF CALIFORNIA OR ITS OFFICERS OR AGENTS SHALL NOT BE RESPONSIBLE FOR THE ACCURACY OR COMPLETENESS OF SCANNED COPIES OF THIS PLAN SHEET.

CURVE DATA

No. Ⓔ	R	Δ	T	L	N-COORDINATE	E-COORDINATE
30	2672′	16° 53′ 20″	396.69′	787.62′	2097100.34	6250932.87

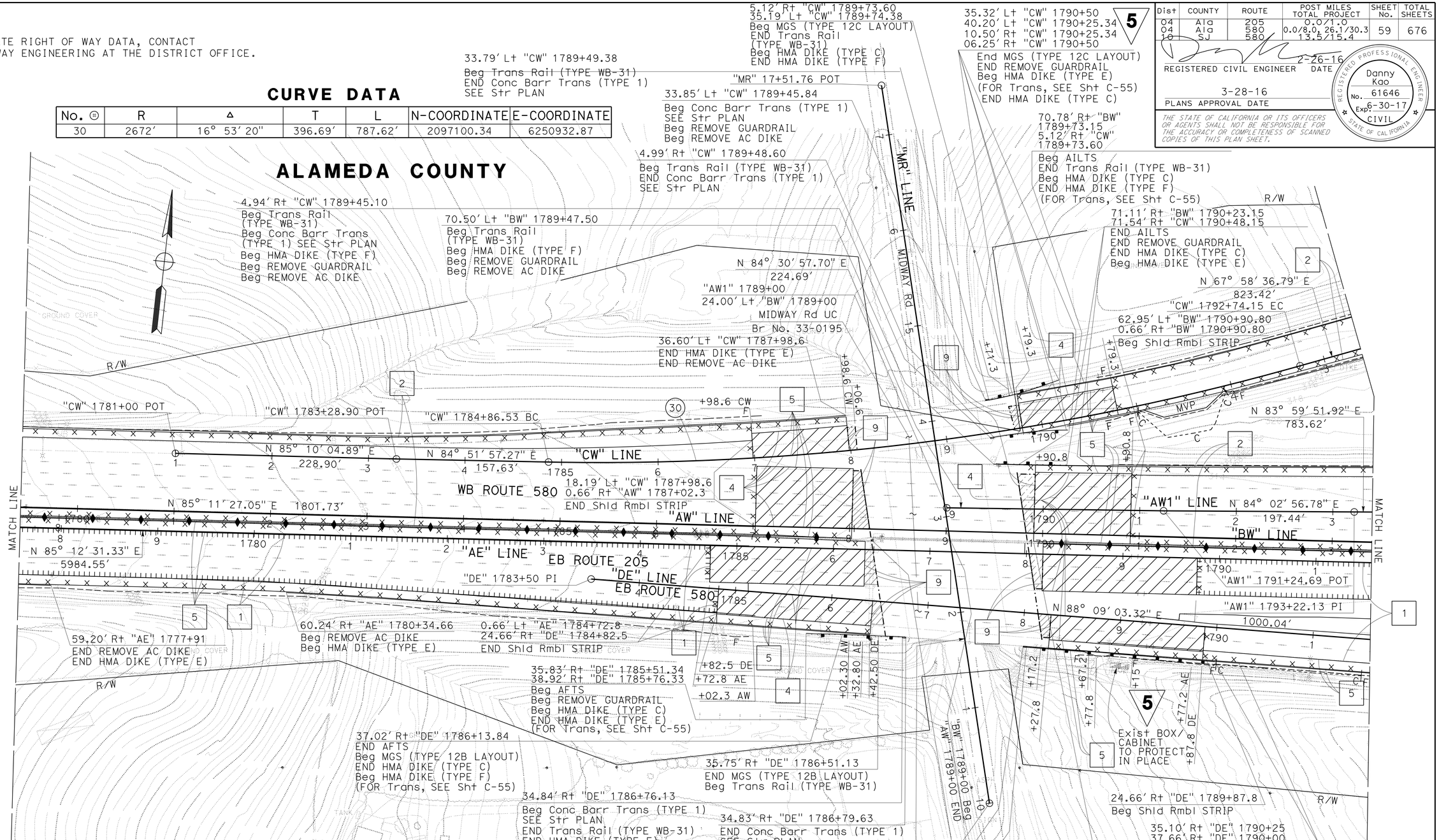

5 REPLACED PER ADDENDUM No. 5 DATED SEPTEMBER 1, 2016

FOR NOTES, ABBREVIATIONS AND LEGEND, SEE SHEET L-1

LAYOUT

SCALE: 1" = 50′

L-31

REVISED BY	HN	DATE REVISED	5/21/14
CALCULATED-DESIGNED BY	HUDA NASSORI	CHECKED BY	TRI NGUYEN
FUNCTIONAL SUPERVISOR	EDMUND CHOY		

STATE OF CALIFORNIA - DEPARTMENT OF TRANSPORTATION

Caltrans® DESIGN

LAST REVISION 03-17-16 | DATE PLOTTED => 30-AUG-2016 | TIME PLOTTED => 15:14

Dist	COUNTY	ROUTE	POST MILES TOTAL PROJECT	SHEET No.	TOTAL SHEETS
04	Ala	205	0.0/1.0		
04	Ala	580	0.0/8.0, 26.1/30.3	60	676
10	SJ	580	13.5/15.4		

REGISTERED CIVIL ENGINEER 2-26-16 DATE

3-28-16
PLANS APPROVAL DATE

REGISTERED PROFESSIONAL ENGINEER Danny Kao No. 61646 Exp. 6-30-17 CIVIL STATE OF CALIFORNIA

THE STATE OF CALIFORNIA OR ITS OFFICERS OR AGENTS SHALL NOT BE RESPONSIBLE FOR THE ACCURACY OR COMPLETENESS OF SCANNED COPIES OF THIS PLAN SHEET.

NOTE:

FOR ACCURATE RIGHT OF WAY DATA, CONTACT RIGHT OF WAY ENGINEERING AT THE DISTRICT OFFICE.

CURVE DATA

No. ⊕	R	Δ	T	L	N-COORDINATE	E-COORDINATE
28	4075′	12° 24′ 17"	442.86′	882.25′	2090282.83	6252360.09
31	2000′	69° 02′ 58"	1375.83′	2410.28′	2093078.01	6253448.12
34	20291′	04° 18′ 38"	763.64′	1526.56′	2074381.20	6254908.22

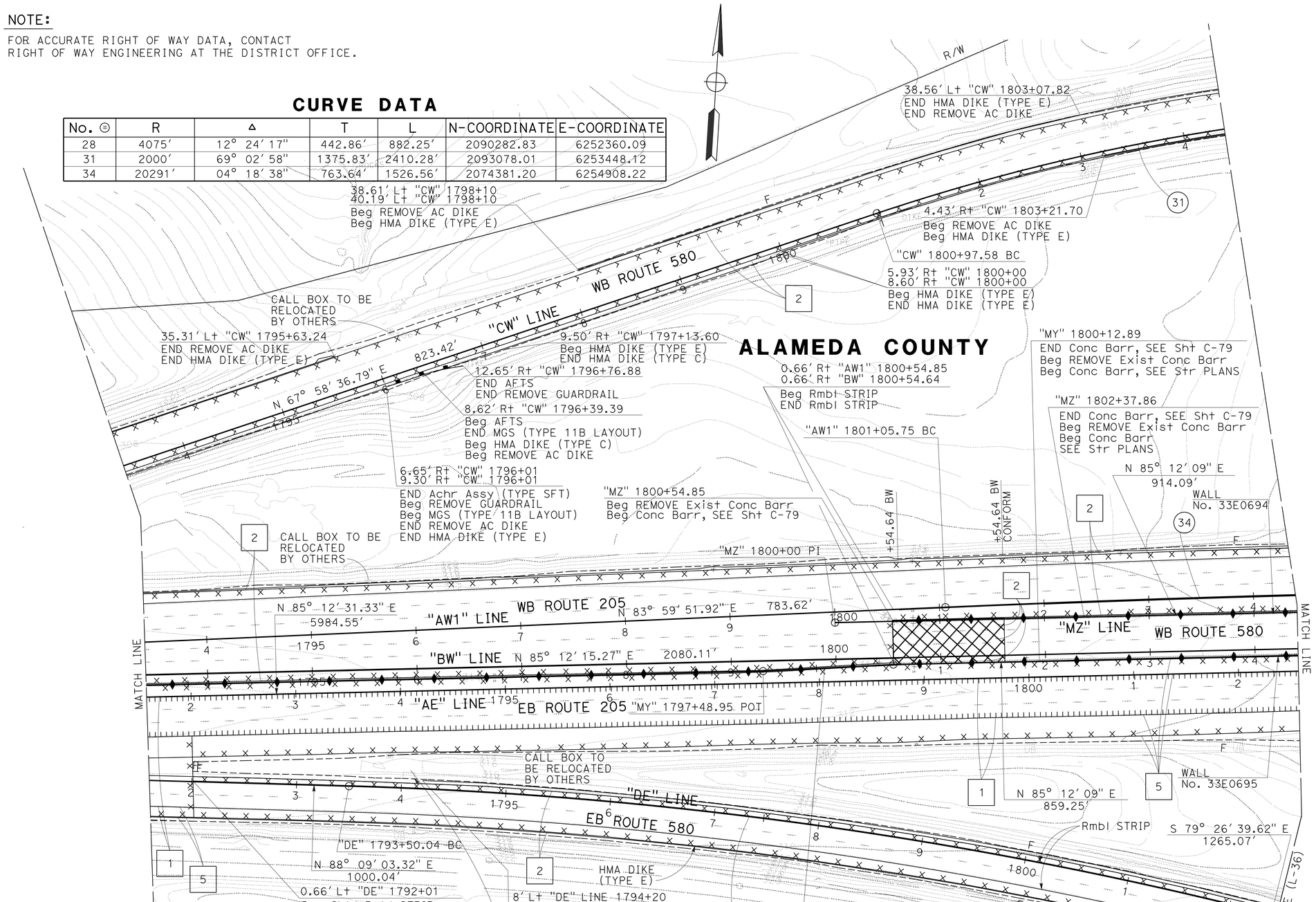

5 REPLACED PER ADDENDUM No. 5 DATED SEPTEMBER 1, 2016

FOR NOTES, ABBREVIATIONS AND LEGEND, SEE SHEET L-1

LAYOUT
SCALE: 1" = 50′

L-32

REVISED BY	DATE REVISED
HN	1-1-16

CALCULATED- DESIGNED BY: HUDA NASSORI
CHECKED BY: TRI NGUYEN
FUNCTIONAL SUPERVISOR: EDMUND CHOY

STATE OF CALIFORNIA - DEPARTMENT OF TRANSPORTATION
Caltrans
DESIGN

LAST REVISION 03-16-16 | DATE PLOTTED => 30-AUG-2016 | TIME PLOTTED => 15:14

Dist	COUNTY	ROUTE	POST MILES TOTAL PROJECT	SHEET No.	TOTAL SHEETS
04	Ala	205	0.0/1.0		
04	Ala	580	0.0/8.0, 26.1/30.3	61	676
10	SJ	580	13.5/15.4		

REGISTERED CIVIL ENGINEER 2-26-16 DATE

3-28-16
PLANS APPROVAL DATE

REGISTERED PROFESSIONAL ENGINEER Danny Kao No. 61646 Exp. 6-30-17 CIVIL STATE OF CALIFORNIA

THE STATE OF CALIFORNIA OR ITS OFFICERS OR AGENTS SHALL NOT BE RESPONSIBLE FOR THE ACCURACY OR COMPLETENESS OF SCANNED COPIES OF THIS PLAN SHEET.

NOTE:

FOR ACCURATE RIGHT OF WAY DATA, CONTACT RIGHT OF WAY ENGINEERING AT THE DISTRICT OFFICE.

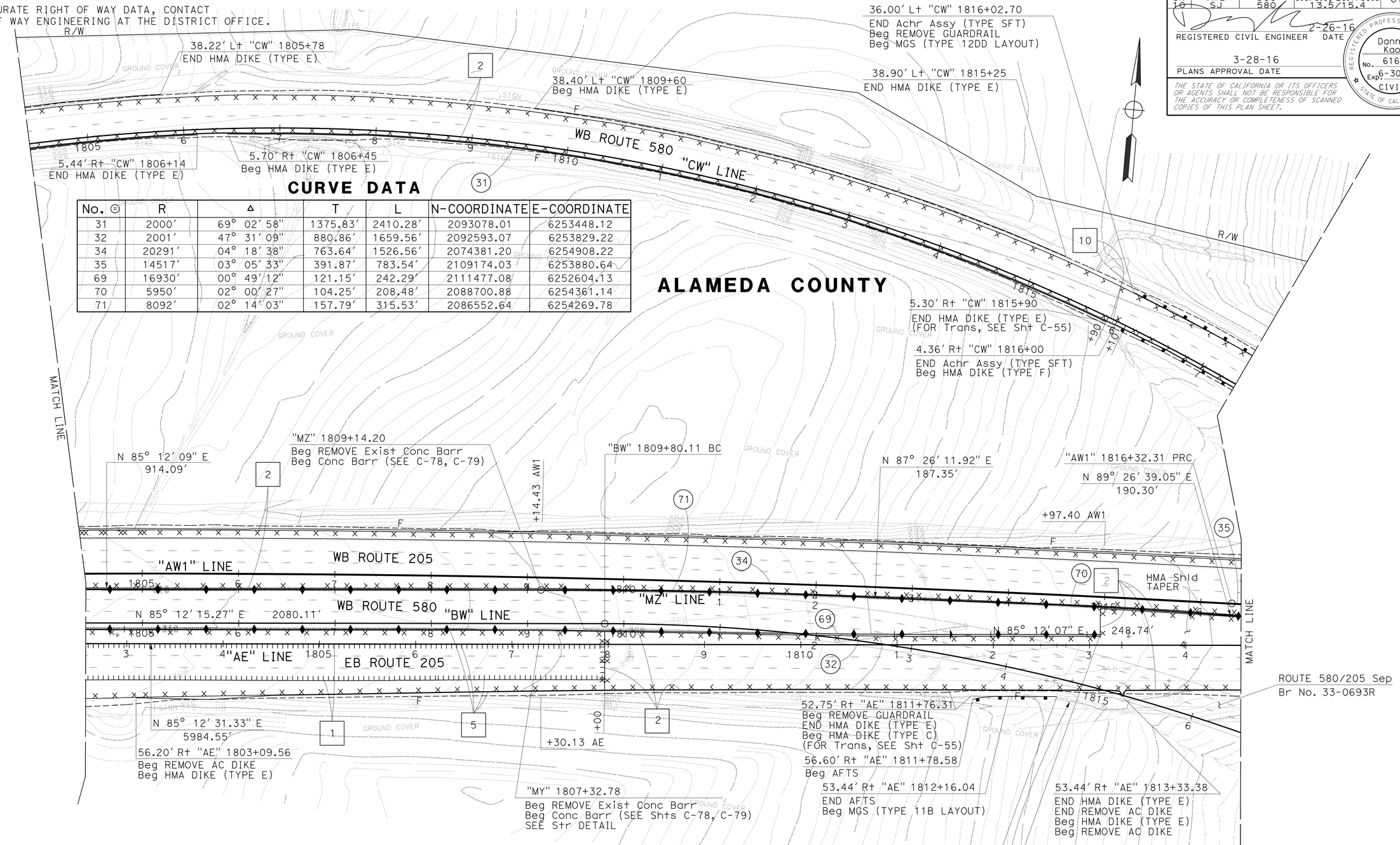

CURVE DATA

No.	R	Δ	T	L	N-COORDINATE	E-COORDINATE
31	2000'	69° 02' 58"	1375.83'	2410.28'	2093078.01	6253448.12
32	2001'	47° 31' 09"	880.86'	1659.56'	2092593.07	6253829.22
34	20291'	04° 18' 38"	763.64'	1526.56'	2074381.20	6254908.22
35	14517'	03° 05' 33"	391.87'	783.54'	2109174.03	6253880.64
69	16930'	00° 49' 12"	121.15'	242.29'	2111477.08	6252604.13
70	5950'	02° 00' 27"	104.25'	208.48'	2088700.88	6254361.14
71	8092'	02° 14' 03"	157.79'	315.53'	2086552.64	6254269.78

5 REPLACED PER ADDENDUM No. 5 DATED SEPTEMBER 1, 2016

FOR NOTES, ABBREVIATIONS AND LEGEND, SEE SHEET L-1

LAYOUT
SCALE: 1" = 50'

L-33

HUDA NASSORI	HN
TRI NGUYEN	1-1-16
CALCULATED-DESIGNED BY	REVISED BY
CHECKED BY	DATE REVISED
FUNCTIONAL SUPERVISOR	EDMUND CHOY

STATE OF CALIFORNIA - DEPARTMENT OF TRANSPORTATION
Caltrans
DESIGN

LAST REVISION 01-13-16 | DATE PLOTTED => 30-AUG-2016 | TIME PLOTTED => 15:14

Dist	COUNTY	ROUTE	POST MILES TOTAL PROJECT	SHEET No.	TOTAL SHEETS
04	Ala	205	0.0/1.0		
04	Ala	580	0.0/8.0, 26.1/30.3	62	676
10	SJ	580	13.5/15.4		

REGISTERED CIVIL ENGINEER 2-26-16 DATE

3-28-16
PLANS APPROVAL DATE

REGISTERED PROFESSIONAL ENGINEER Danny Kao No. 61646 Exp. 6-30-17 CIVIL STATE OF CALIFORNIA

THE STATE OF CALIFORNIA OR ITS OFFICERS OR AGENTS SHALL NOT BE RESPONSIBLE FOR THE ACCURACY OR COMPLETENESS OF SCANNED COPIES OF THIS PLAN SHEET.

NOTE:

FOR ACCURATE RIGHT OF WAY DATA, CONTACT RIGHT OF WAY ENGINEERING AT THE DISTRICT OFFICE.

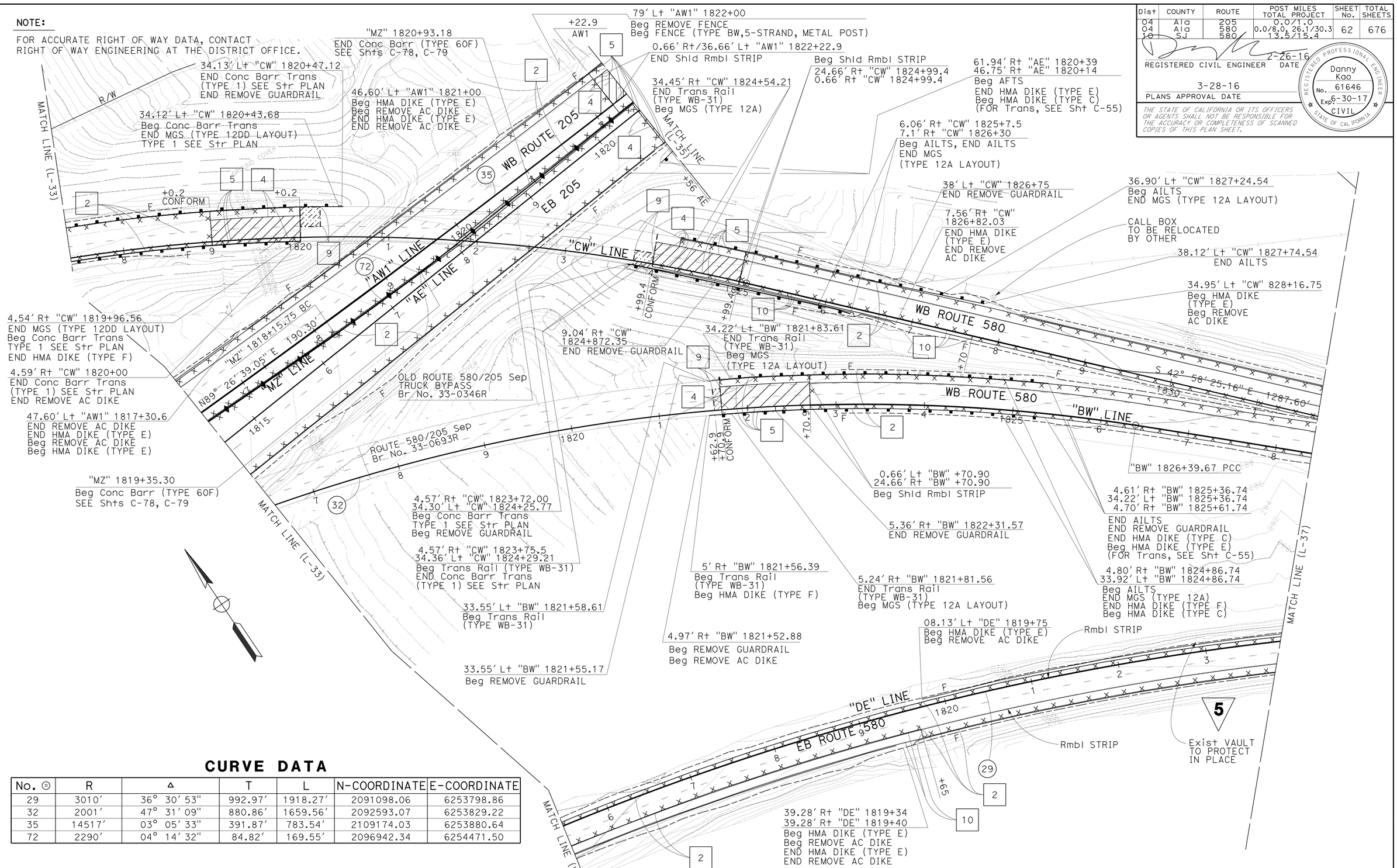

CURVE DATA

No. ®	R	Δ	T	L	N-COORDINATE	E-COORDINATE
29	3010'	36° 30' 53"	992.97'	1918.27'	2091098.06	6253798.86
32	2001'	47° 31' 09"	880.86'	1659.56'	2092593.07	6253829.22
35	14517'	03° 05' 33"	391.87'	783.54'	2109174.03	6253880.64
72	2290'	04° 14' 32"	84.82'	169.55'	2096942.34	6254471.50

5 **REPLACED PER ADDENDUM No. 5 DATED SEPTEMBER 1, 2016**

FOR NOTES, ABBREVIATIONS AND LEGEND, SEE SHEET L-1

LAYOUT
SCALE: 1" = 50'

L-34

STATE OF CALIFORNIA - DEPARTMENT OF TRANSPORTATION
Caltrans
DESIGN
FUNCTIONAL SUPERVISOR: EDMUND CHOY
CALCULATED-DESIGNED BY: HUDA NASSORI
CHECKED BY: TRI NGUYEN
REVISED BY: HN
DATE REVISED: 5/21/14

LAST REVISION 03-16-16
DATE PLOTTED => 30-AUG-2016
TIME PLOTTED => 15:14

Dist	COUNTY	ROUTE	POST MILES TOTAL PROJECT	SHEET No.	TOTAL SHEETS
04	Ala	205	0.0/1.0	63	676
04	Ala	580	0.0/8.0, 26.1/30.3		
10	SJ	580	13.5/15.4		

REGISTERED CIVIL ENGINEER 2-26-16 DATE

3-28-16
PLANS APPROVAL DATE

REGISTERED PROFESSIONAL ENGINEER Danny Kao No. 61646 Exp. 6-30-17 CIVIL STATE OF CALIFORNIA

THE STATE OF CALIFORNIA OR ITS OFFICERS OR AGENTS SHALL NOT BE RESPONSIBLE FOR THE ACCURACY OR COMPLETENESS OF SCANNED COPIES OF THIS PLAN SHEET.

NOTE:

FOR ACCURATE RIGHT OF WAY DATA, CONTACT RIGHT OF WAY ENGINEERING AT THE DISTRICT OFFICE.

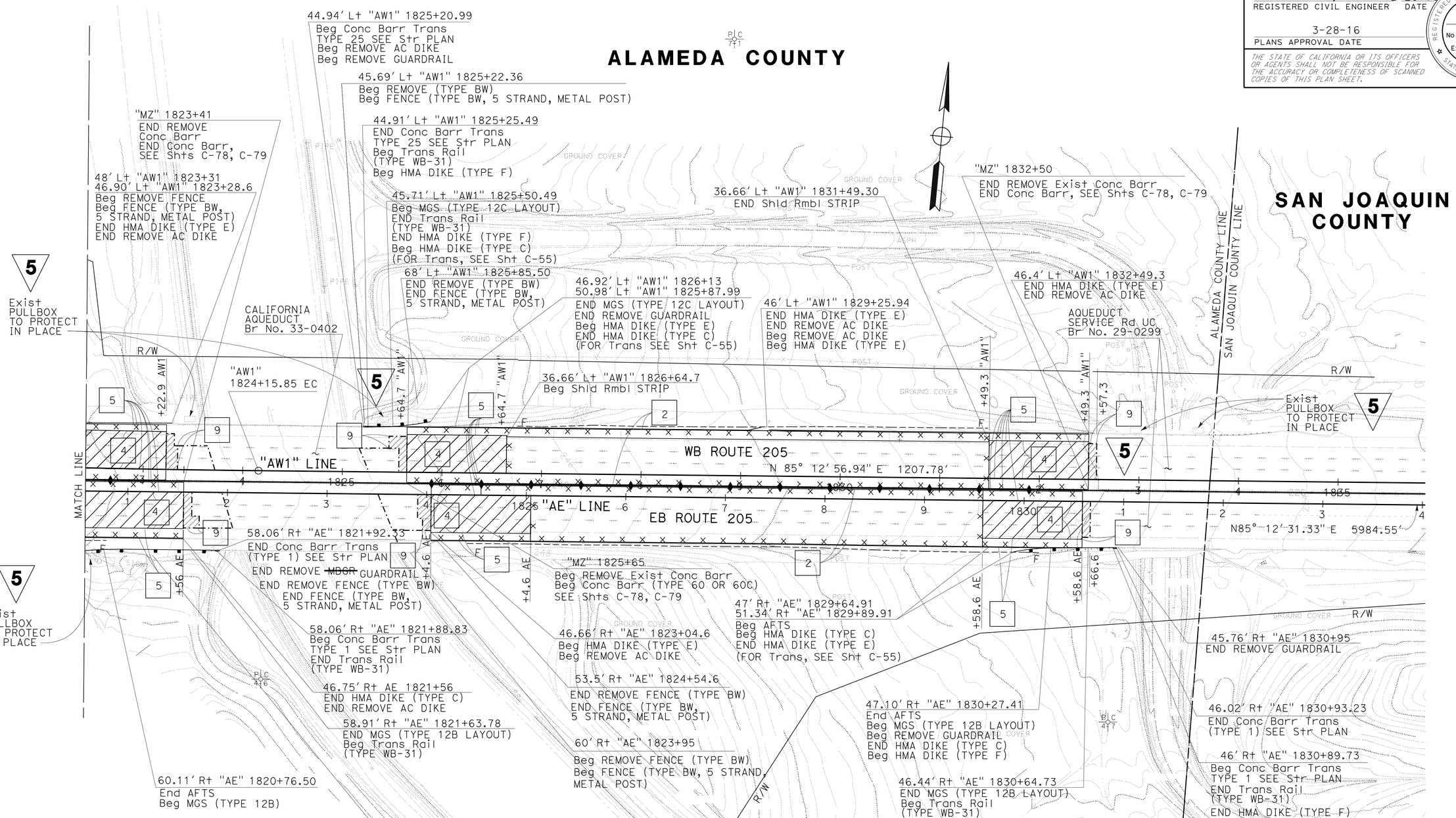

5 REPLACED PER ADDENDUM No. 5 DATED SEPTEMBER 1, 2016

FOR NOTES, ABBREVIATIONS AND LEGEND, SEE SHEET L-1

LAYOUT
SCALE: 1" = 50'

L-35

HUDA NASSORI	HN	REVISED BY	
TRI NGUYEN	1-1-16	DATE REVISED	
CALCULATED-DESIGNED BY			
CHECKED BY			
FUNCTIONAL SUPERVISOR	EDMUND CHOY		

STATE OF CALIFORNIA - DEPARTMENT OF TRANSPORTATION
Caltrans® DESIGN

LAST REVISION 03-16-16 | DATE PLOTTED => 30-AUG-2016 | TIME PLOTTED => 15:14

Dist	COUNTY	ROUTE	POST MILES TOTAL PROJECT	SHEET No.	TOTAL SHEETS
04	Ala	205	0.0/1.0		
04	Ala	580	0.0/8.0, 26.1/30.3	64	676
10	SJ	580	13.5/15.4		

REGISTERED CIVIL ENGINEER 2-26-16 DATE

3-28-16
PLANS APPROVAL DATE

REGISTERED PROFESSIONAL ENGINEER
Danny Kao
No. 61646
Exp. 6-30-17
CIVIL
STATE OF CALIFORNIA

THE STATE OF CALIFORNIA OR ITS OFFICERS OR AGENTS SHALL NOT BE RESPONSIBLE FOR THE ACCURACY OR COMPLETENESS OF SCANNED COPIES OF THIS PLAN SHEET.

NOTE:

FOR ACCURATE RIGHT OF WAY DATA, CONTACT RIGHT OF WAY ENGINEERING AT THE DISTRICT OFFICE.

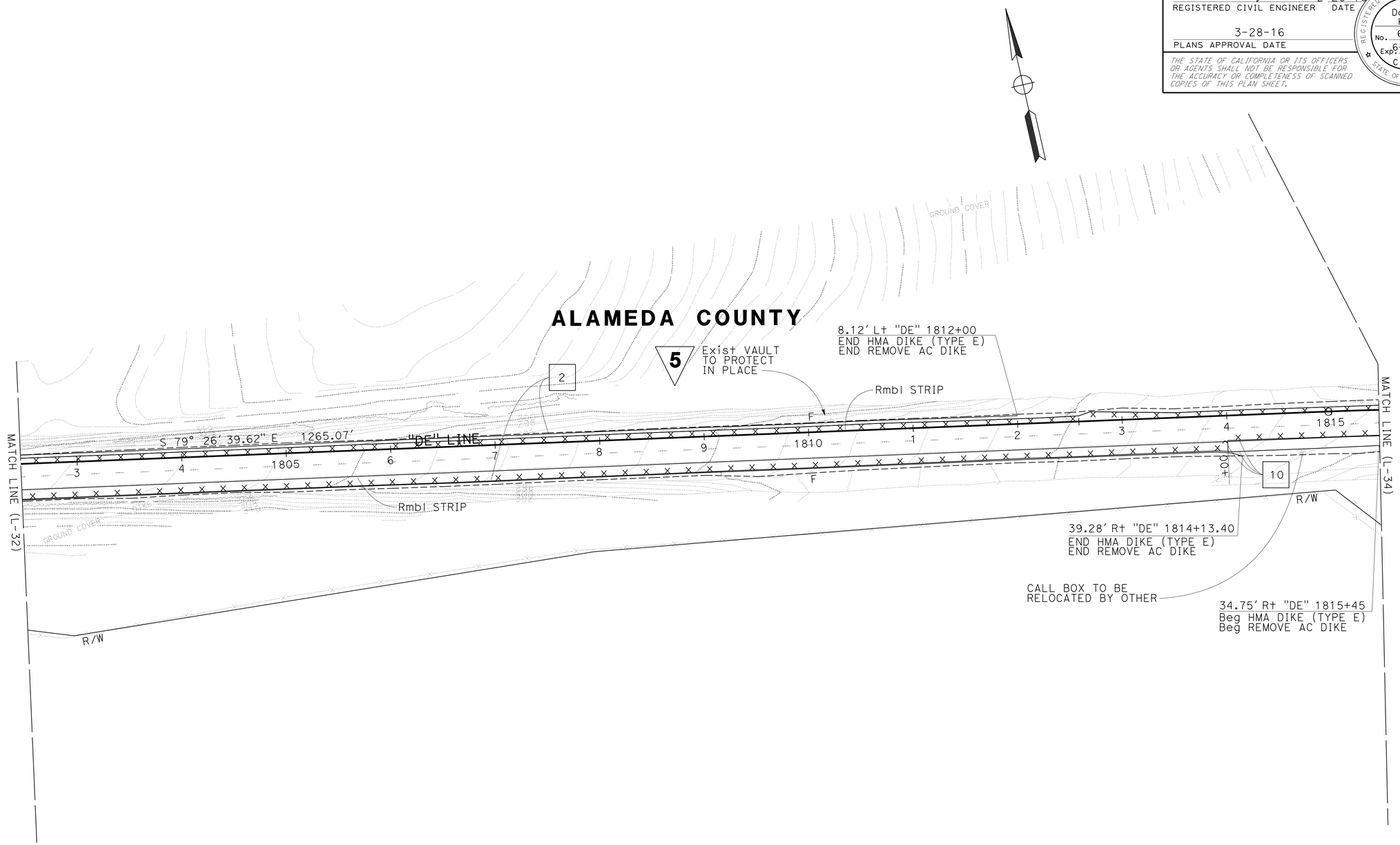

5 REPLACED PER ADDENDUM No. 5 DATED SEPTEMBER 1, 2016

FOR NOTES, ABBREVIATIONS AND LEGEND, SEE SHEET L-1

LAYOUT
SCALE: 1" = 50'

L-36

STATE OF CALIFORNIA - DEPARTMENT OF TRANSPORTATION
Caltrans
DESIGN

FUNCTIONAL SUPERVISOR: EDMUND CHOY
CALCULATED-DESIGNED BY: HUDA NASSORI
CHECKED BY: TRI NGUYEN
REVISED BY: HN
DATE REVISED: 1-1-16

LAST REVISION 01-13-16
DATE PLOTTED => 30-AUG-2016
TIME PLOTTED => 15:14

Dist	COUNTY	ROUTE	POST MILES TOTAL PROJECT	SHEET No.	TOTAL SHEETS
04	Ala	205	0.0/1.0		
04	Ala	580	0.0/8.0, 26.1/30.3	65	676
10	SJ	580	13.5/15.4		

REGISTERED CIVIL ENGINEER 2-26-16 DATE

3-28-16
PLANS APPROVAL DATE

REGISTERED PROFESSIONAL ENGINEER Danny Kao No. 61646 Exp. 6-30-17 CIVIL STATE OF CALIFORNIA

THE STATE OF CALIFORNIA OR ITS OFFICERS OR AGENTS SHALL NOT BE RESPONSIBLE FOR THE ACCURACY OR COMPLETENESS OF SCANNED COPIES OF THIS PLAN SHEET.

NOTE:

FOR ACCURATE RIGHT OF WAY DATA, CONTACT RIGHT OF WAY ENGINEERING AT THE DISTRICT OFFICE.

CURVE DATA

No. ⊕	R	Δ	T	L	N-COORDINATE	E-COORDINATE
29	3010′	36°30′53"	992.97′	1918.27′	2091098.06	6253798.86
33	20229′	04°14′55"	750.35′	1500.00′	2079202.10	6241462.25

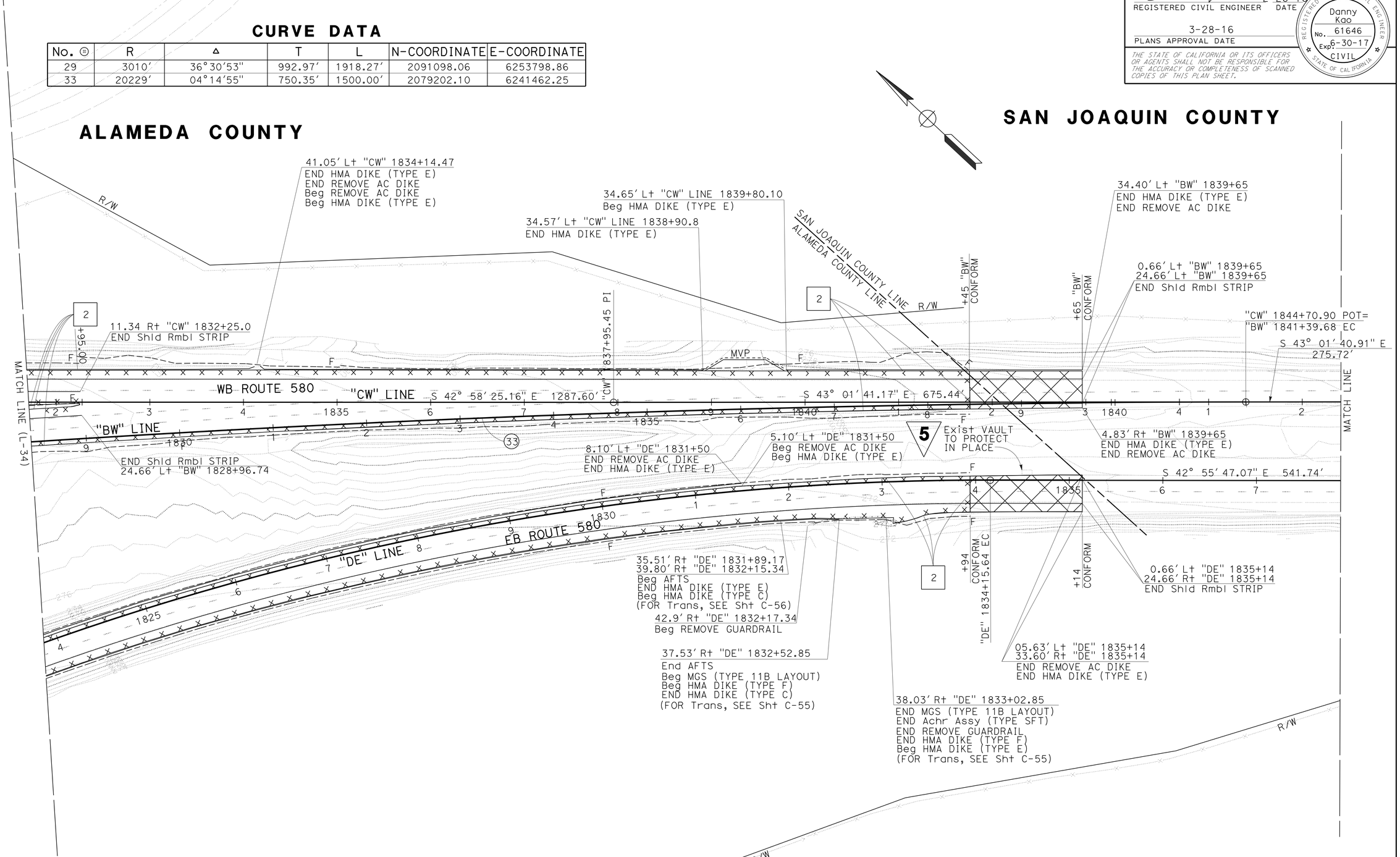

5 REPLACED PER ADDENDUM No. 5 DATED SEPTEMBER 1, 2016

FOR NOTES, ABBREVIATIONS AND LEGEND, SEE SHEET L-1

LAYOUT

SCALE: 1" = 50′

L-37

REVISED BY	DATE REVISED
HN	1-1-16

HUDA NASSORI
TRI NGUYEN
CALCULATED-DESIGNED BY
CHECKED BY
FUNCTIONAL SUPERVISOR
EDMUND CHOY

STATE OF CALIFORNIA - DEPARTMENT OF TRANSPORTATION
Caltrans
DESIGN

LAST REVISION 01-14-16
DATE PLOTTED => 30-AUG-2016
TIME PLOTTED => 15:15

Dist	COUNTY	ROUTE	POST MILES TOTAL PROJECT	SHEET No.	TOTAL SHEETS
04	Ala	205	0.0/1.0		
04	Ala	580	0.0/8.0, 26.1/30.3	75	676
10	SJ	580	13.5/15.4		

REGISTERED CIVIL ENGINEER 2-26-16 DATE

3-28-16
PLANS APPROVAL DATE

REGISTERED PROFESSIONAL ENGINEER Danny Kao No. 61646 Exp. 6-30-17 CIVIL STATE OF CALIFORNIA

THE STATE OF CALIFORNIA OR ITS OFFICERS OR AGENTS SHALL NOT BE RESPONSIBLE FOR THE ACCURACY OR COMPLETENESS OF SCANNED COPIES OF THIS PLAN SHEET.

NOTE:

FOR ACCURATE RIGHT OF WAY DATA, CONTACT RIGHT OF WAY ENGINEERING AT THE DISTRICT OFFICE.

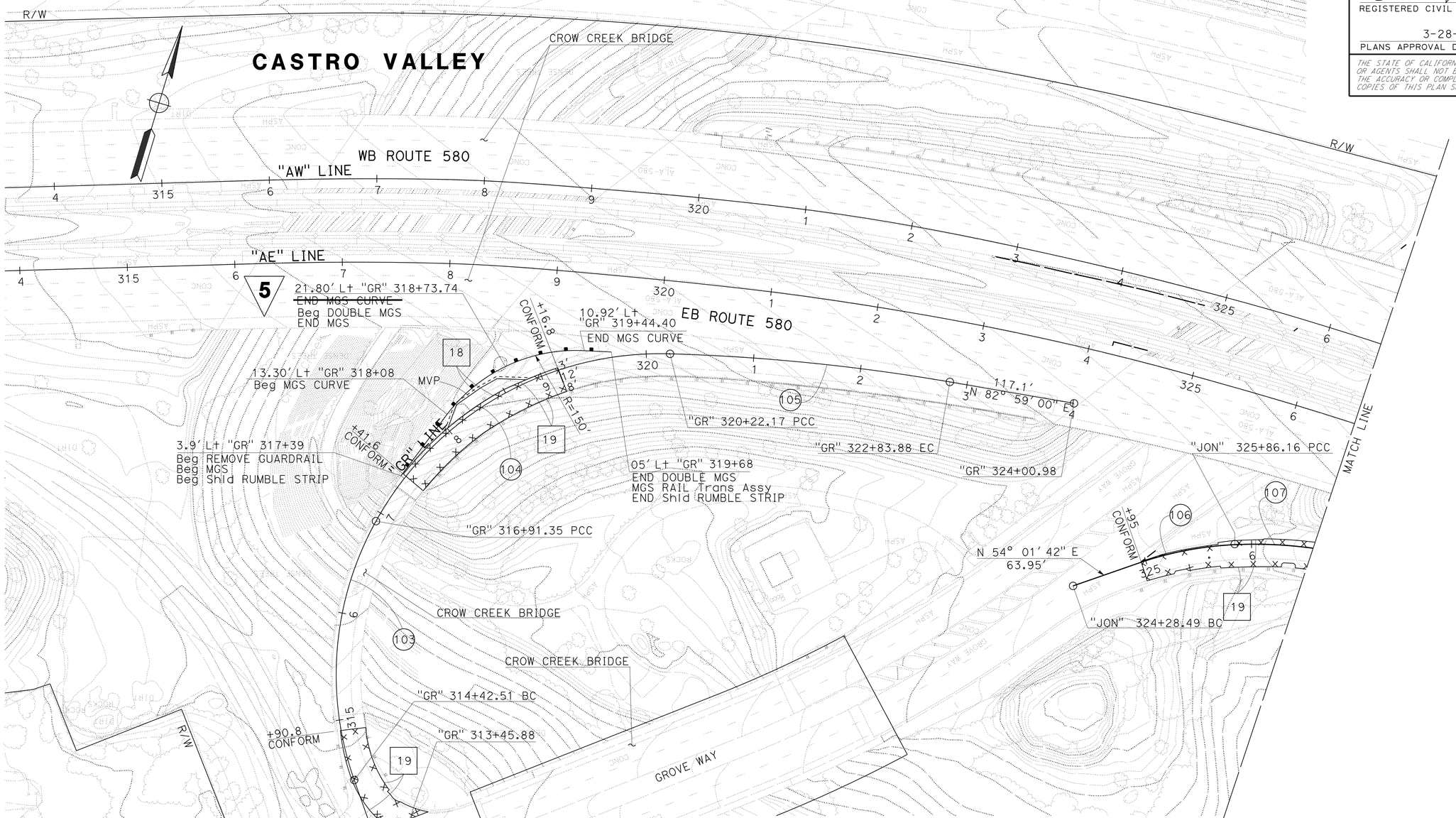

CURVE DATA

No. ⊕	R	Δ	T	L	N-COORDINATE	E-COORDINATE
103	293.812'	48° 31' 32.356"	132.432'	248.839'	2078373.754	6110676.353
104	302.651'	62° 37' 41.833"	184.117'	330.819'	2078371.877	6110684.991
105	1851.548'	08° 05' 54.889"	131.074'	261.711'	2076876.567	6111088.884
106	318.697'	16° 50' 54.676"	47.199'	93.717'	2078345.512	6111266.111
107	401.719'	23° 41' 49.101"	84.278'	166.147'	2078267.071	6111293.309

5 **REPLACED PER ADDENDUM No. 5 DATED SEPTEMBER 1, 2016**

FOR NOTES, ABBREVIATIONS AND LEGEND, SEE SHEET L-1

LAYOUT
SCALE: 1" = 50'

L-47

REVISED BY	HN
DATE REVISED	1-1-16
CALCULATED-DESIGNED BY	HUDA NASSORI
CHECKED BY	TRI NGUYEN
FUNCTIONAL SUPERVISOR	EDMUND CHOY

STATE OF CALIFORNIA - DEPARTMENT OF TRANSPORTATION
Caltrans
DESIGN

LAST REVISION 01-14-16 | DATE PLOTTED => 30-AUG-2016 | TIME PLOTTED => 15:15

Dist	COUNTY	ROUTE	POST MILES TOTAL PROJECT	SHEET No.	TOTAL SHEETS
04	Ala	205	0.0/1.0		
04	Ala	580	0.0/8.0, 26.1/30.3	152	676
10	SJ	580	13.5/15.4		

REGISTERED CIVIL ENGINEER 2-26-16 DATE

3-28-16
PLANS APPROVAL DATE

REGISTERED PROFESSIONAL ENGINEER Danny Kao No. 61646 Exp. 6-30-17 CIVIL STATE OF CALIFORNIA

THE STATE OF CALIFORNIA OR ITS OFFICERS OR AGENTS SHALL NOT BE RESPONSIBLE FOR THE ACCURACY OR COMPLETENESS OF SCANNED COPIES OF THIS PLAN SHEET.

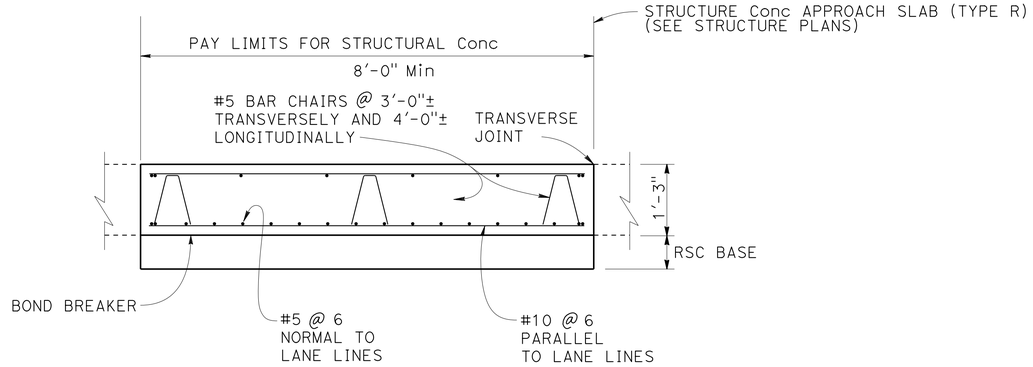

SECTION A-A

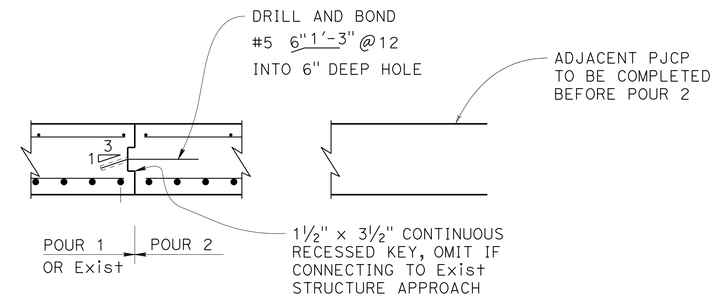

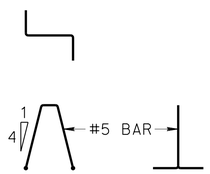

BAR CHAIR DETAIL

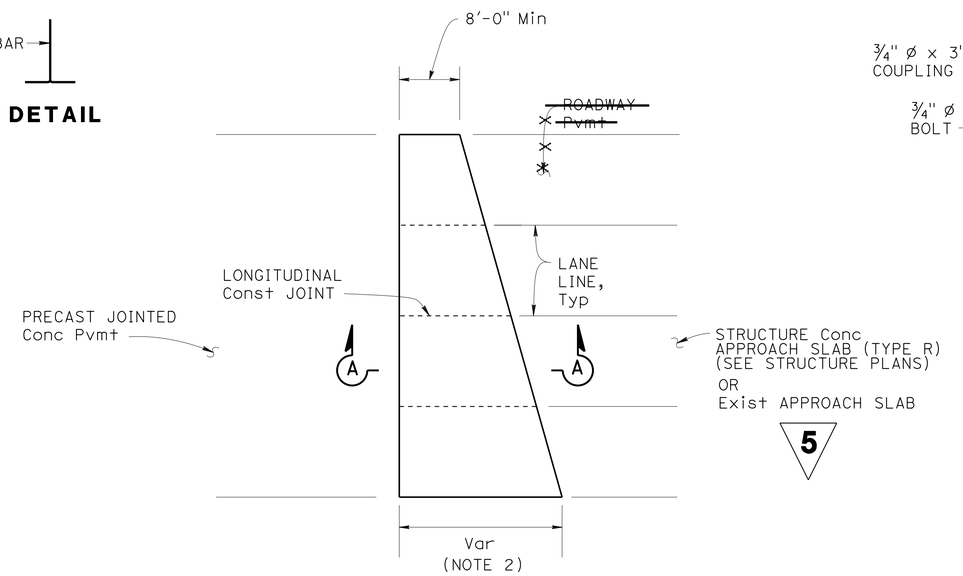

PLAN

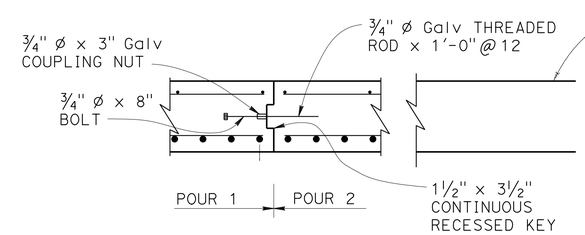

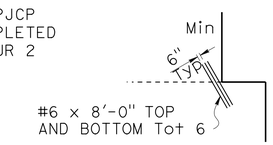

CORNER REINFORCING DETAIL

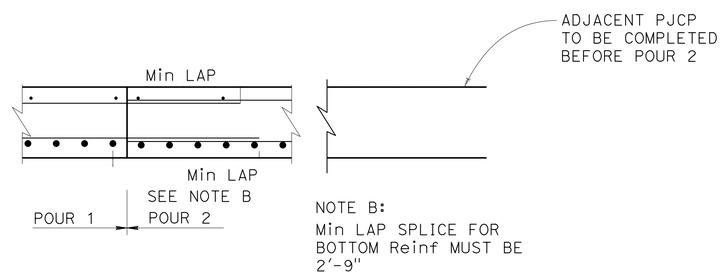

LONGITUDINAL CONSTRUCTION JOINT ALTERNATIVES

NOTES:

1. TRANSVERSE JOINT MUST BE A MINIMUM OF 5'-0" FROM AN EXISTING OR CONSTRUCTED WEAKENED PLANE JOINT IN APPROACH PCC ROADWAY PAVEMENT. REFER TO STANDARD PLANS P10 AND P14.
2. SEE LAYOUT PLANS ~~AND STRUCTURE PLANS~~ FOR LENGTH OF STRUCTURE CONCRETE APPROACH SLAB. 5

5 REPLACED PER ADDENDUM No. 5 DATED SEPTEMBER 1, 2016

CONSTRUCTION DETAILS
CONCRETE SLAB

NO SCALE

C-74

STATE OF CALIFORNIA - DEPARTMENT OF TRANSPORTATION
Caltrans DESIGN

FUNCTIONAL SUPERVISOR: EDMUND CHOY
CALCULATED-DESIGNED BY: NAM NGO
CHECKED BY: DANNY KAO
REVISED BY: NN
DATE REVISED: 1-1-16

LAST REVISION 03-05-16
DATE PLOTTED => 30-AUG-2016
TIME PLOTTED => 15:15

Dist	COUNTY	ROUTE	POST MILES TOTAL PROJECT	SHEET No.	TOTAL SHEETS
04	Ala	205	0.0/1.0		
04	Ala	580	0.0/8.0, 26.1/30.3	214	676
10	SJ	580	13.5/15.4		

Carlos M. Mora 3-15-16
REGISTERED CIVIL ENGINEER DATE

3-28-16
PLANS APPROVAL DATE

REGISTERED PROFESSIONAL ENGINEER Carlos M. Mora No. 61224 Exp. 6-30-17 CIVIL STATE OF CALIFORNIA

THE STATE OF CALIFORNIA OR ITS OFFICERS OR AGENTS SHALL NOT BE RESPONSIBLE FOR THE ACCURACY OR COMPLETENESS OF SCANNED COPIES OF THIS PLAN SHEET.

NOTE:

FOR ACCURATE RIGHT OF WAY DATA, CONTACT RIGHT OF WAY ENGINEERING AT THE DISTRICT OFFICE.

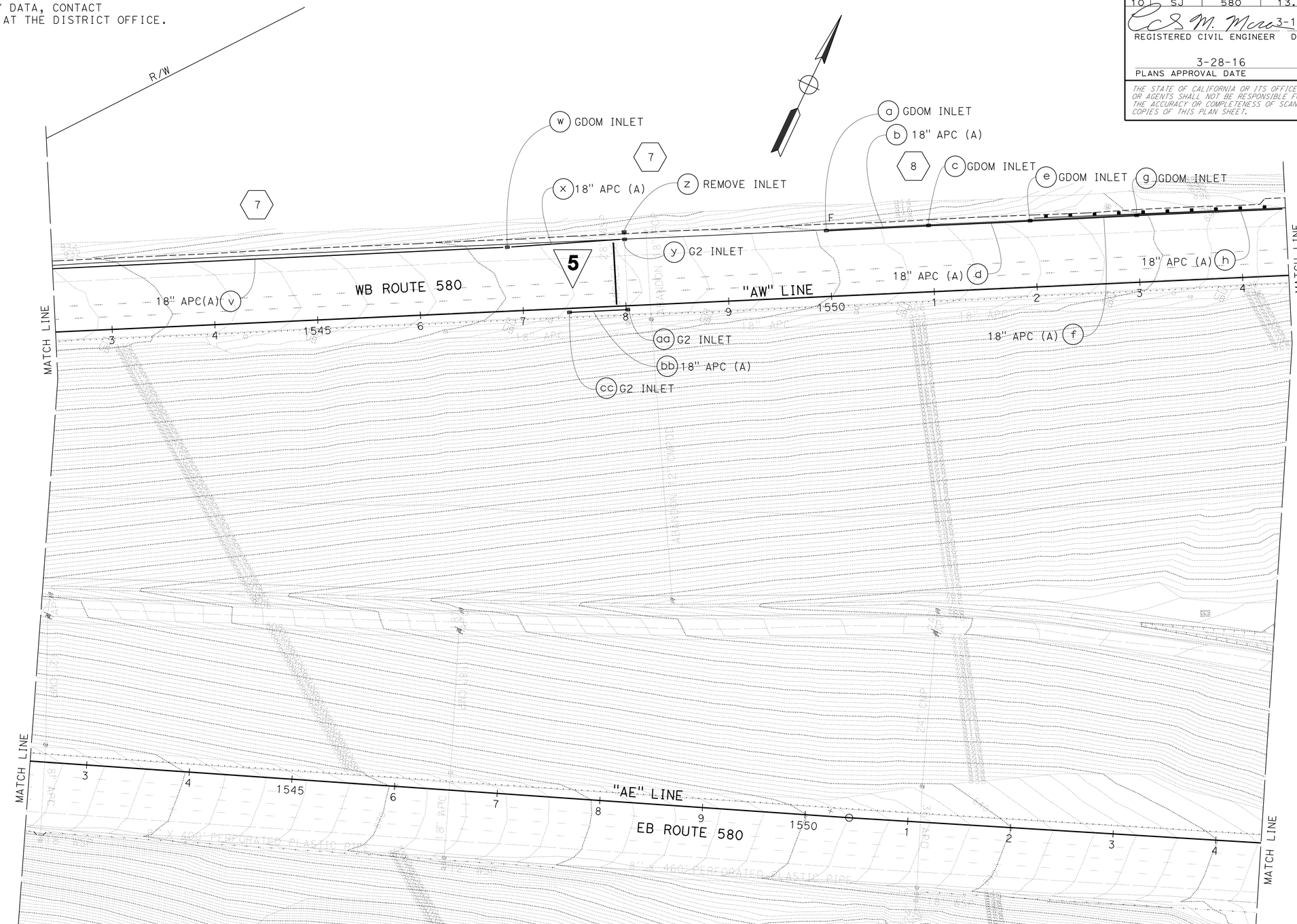

5 **REPLACED PER ADDENDUM No. 5 DATED SEPTEMBER 1, 2016**

APPROVED FOR DRAINAGE WORK ONLY

FOR NOTES, ABBREVIATIONS AND LEGEND, SEE SHEET D-1

DRAINAGE PLAN

SCALE: 1" = 50'

D-12

STATE OF CALIFORNIA - DEPARTMENT OF TRANSPORTATION

Caltrans

HYDRAULICS

FUNCTIONAL SUPERVISOR: CRAIG TOMIMATSU

CALCULATED-DESIGNED BY: CARLOS MORA

CHECKED BY: AARON WANG

REVISED BY: CM

DATE REVISED: 1-1-16

LAST REVISION 03-15-16

DATE PLOTTED => 30-AUG-2016

TIME PLOTTED => 15:15

Dist	COUNTY	ROUTE	POST MILES TOTAL PROJECT	SHEET No.	TOTAL SHEETS
04	Ala	205	0.0/1.0		
04	Ala	580	0.0/8.0, 26.1/30.3	244	676
10	SJ	580	13.5/15.4		

2-26-16
REGISTERED CIVIL ENGINEER DATE

3-28-16
PLANS APPROVAL DATE

REGISTERED PROFESSIONAL ENGINEER
Danny Kao
No. 61646
Exp. 6-30-17
CIVIL
STATE OF CALIFORNIA

THE STATE OF CALIFORNIA OR ITS OFFICERS OR AGENTS SHALL NOT BE RESPONSIBLE FOR THE ACCURACY OR COMPLETENESS OF SCANNED COPIES OF THIS PLAN SHEET.

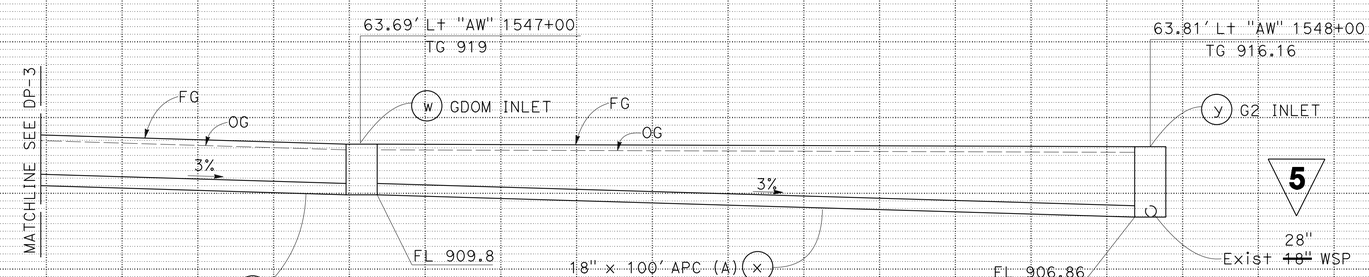

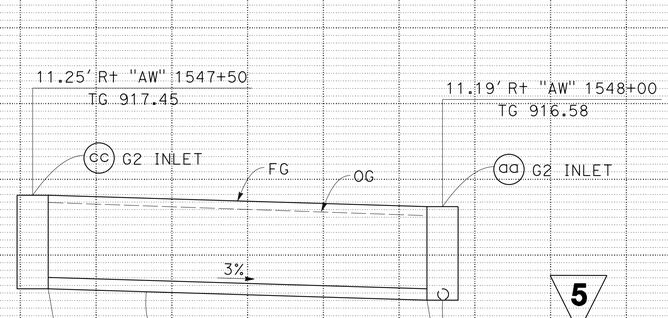

DRAINAGE SYSTEM No. 7

DRAINAGE PROFILES

SCALE: Horiz 1" = 10'
Vert 1" = 10'

DP-4

5 **REPLACED PER ADDENDUM No. 5 DATED SEPTEMBER 1, 2016**

CALCULATED-DESIGNED BY KEN NHIEU
CHECKED BY AARON WANG
REVISED BY KN
DATE REVISED 10-16-15
FUNCTIONAL SUPERVISOR EDMUND CHOY

STATE OF CALIFORNIA - DEPARTMENT OF TRANSPORTATION
Caltrans
DESIGN

LAST REVISION 02-27-16
DATE PLOTTED => 30-AUG-2016
TIME PLOTTED => 15:15

Dist	COUNTY	ROUTE	POST MILES TOTAL PROJECT	SHEET No.	TOTAL SHEETS
04	Ala	205	0.0/1.0		
04	Ala	580	0.0/8.0, 26.1/30.3	260	676
10	SJ	580	13.5/15.4		

5

REGISTERED CIVIL ENGINEER 3-15-16 DATE

3-28-16
PLANS APPROVAL DATE

REGISTERED PROFESSIONAL ENGINEER Carlos M. Mora No. 61224 Exp. 6-30-17 CIVIL STATE OF CALIFORNIA

THE STATE OF CALIFORNIA OR ITS OFFICERS OR AGENTS SHALL NOT BE RESPONSIBLE FOR THE ACCURACY OR COMPLETENESS OF SCANNED COPIES OF THIS PLAN SHEET.

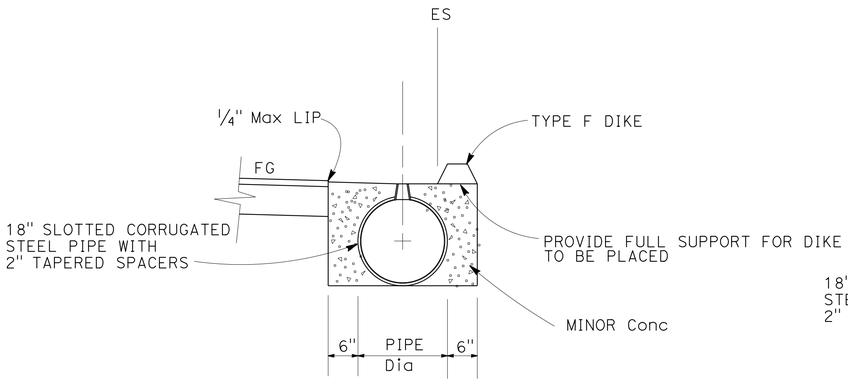

HMA DIKE

4 e

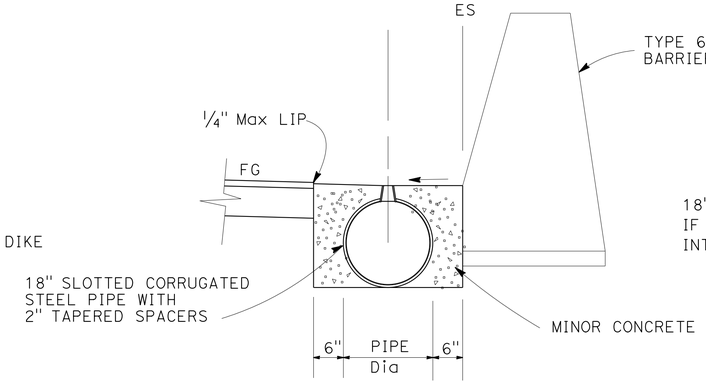

CONCRETE BARRIER

7 m 9 b

SLOTTED PIPE WITH CONCRETE BACKFILL

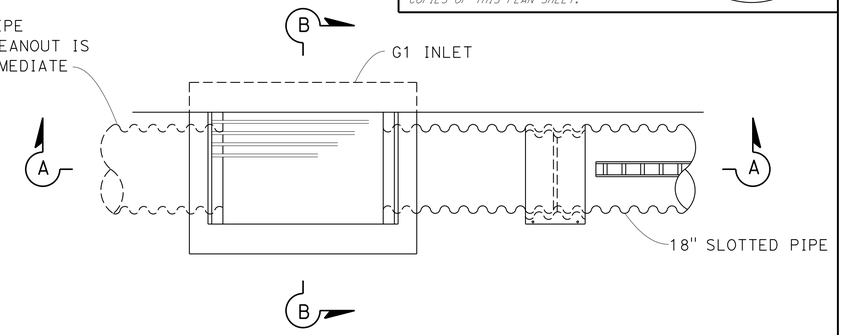

PLAN

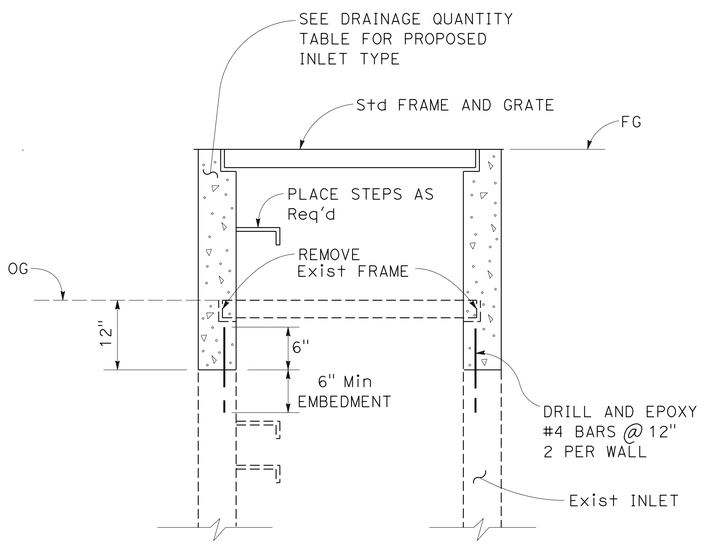

ADJUST INLET TO GRADE

3 a 4 a b f g h i 5 a b c

6 a b g h 8 j o 9 j 10 c

11 g 12 b c f g h 14 a j 15 b c d

16 a b c d e f h i j m n o p

18 a b 19 g 20 c d 22 a b c d e f

25 d 28 d f 33 g i k l 35 c d 36 a

NOTES:

1. TOP OF CAP TO BE 1'-0" BELOW THE GRADING PLANE.
2. REMOVE EXISTING DRAINAGE STRUCTURE WALLS WHERE REQUIRED.
3. DRAINAGE INLET SHOWN. SIMILAR FOR MANHOLE AND PIPE RISER.

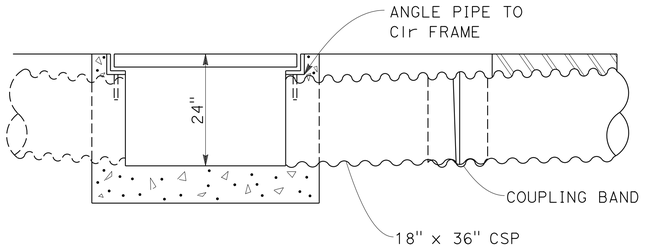

SECTION A-A

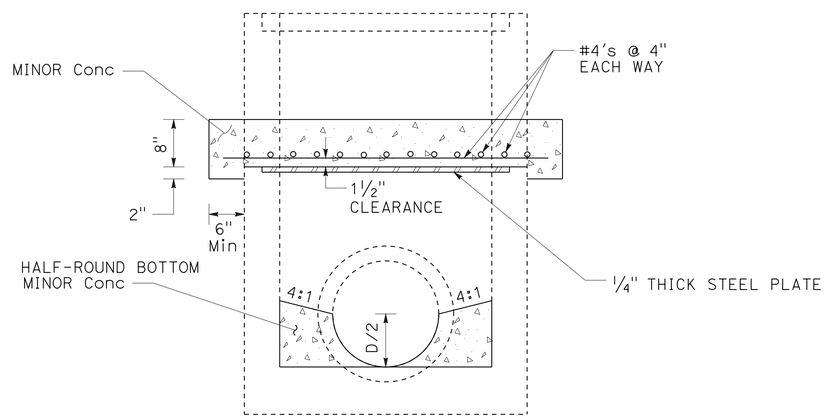

CAP DRAINAGE STRUCTURE

9 f

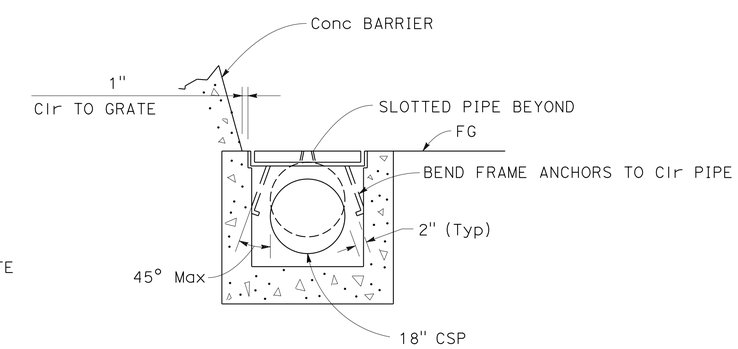

SECTION B-B

G1 CLEANOUT

7 h 9 a

NOTE:
FOR INLET DETAILS NOT SHOWN, SEE G1 INLET STANDARD PLANS

5 **REPLACED PER ADDENDUM No. 5 DATED SEPTEMBER 1, 2016**

DRAINAGE DETAILS

NO SCALE

DD-4

REVISED BY	CM
DATE REVISED	1-1-16
CARLOS MORA	
AARON WANG	
CALCULATED-DESIGNED BY	
CHECKED BY	
FUNCTIONAL SUPERVISOR	
CRAIG TOMIMATSU	

STATE OF CALIFORNIA - DEPARTMENT OF TRANSPORTATION
Caltrans
HYDRAULICS

LAST REVISION 03-12-16
DATE PLOTTED => 30-AUG-2016
TIME PLOTTED => 15:15

Dist	COUNTY	ROUTE	POST MILES TOTAL PROJECT	SHEET No.	TOTAL SHEETS
04	Ala	205	0.0/1.0	261	676
04	Ala	580	0.0/8.0, 26.1/30.3		
10	SJ	580	13.5/15.4		

3-4-16
REGISTERED CIVIL ENGINEER DATE

3-28-16
PLANS APPROVAL DATE

REGISTERED PROFESSIONAL ENGINEER
Trinayana Mishra
No. 52597
Exp. 12-31-16
CIVIL
STATE OF CALIFORNIA

THE STATE OF CALIFORNIA OR ITS OFFICERS OR AGENTS SHALL NOT BE RESPONSIBLE FOR THE ACCURACY OR COMPLETENESS OF SCANNED COPIES OF THIS PLAN SHEET.

NOTE:

1. TACK COAT (ASPHALTIC EMULSION) SHALL BE APPLIED PRIOR TO PLACING HMA (A).

ABBREVIATIONS:

CD	CLEAR DISTANCE
HMA (A)	HOT MIX ASPHALT (TYPE A)
RSC	RAPID STRENGTH CONCRETE

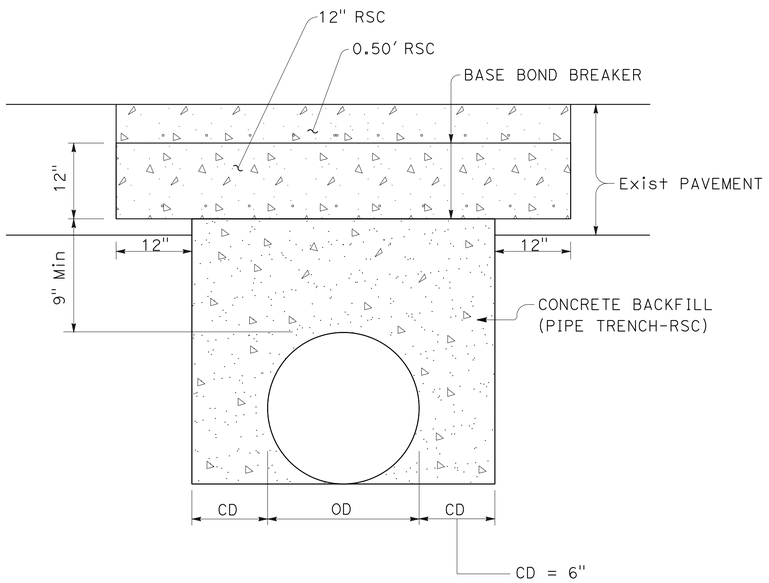

TRANSVERSE (TRAVELED WAY AND SHOULDER)

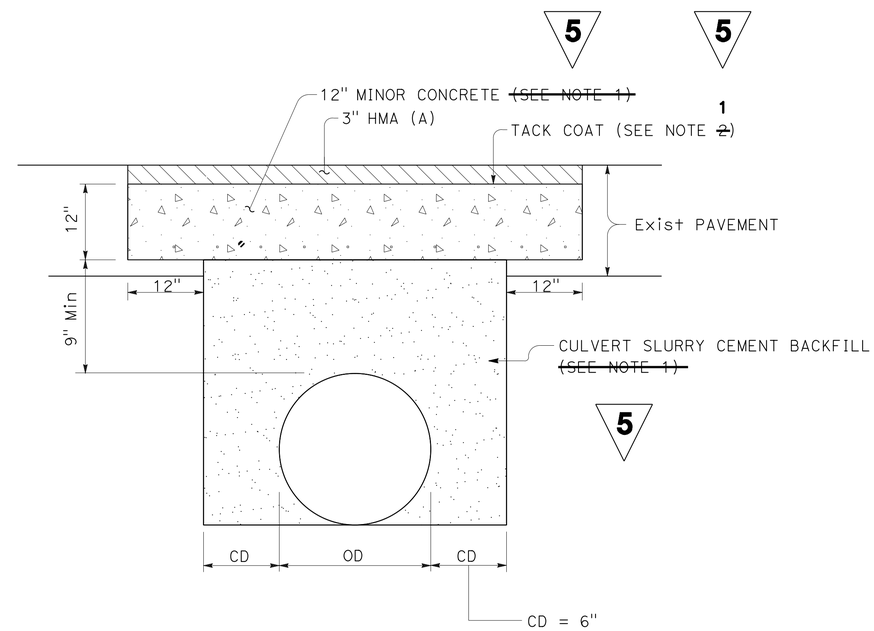

LONGITUDINAL (SHOULDER)

TRENCH PAVING DETAILS

5 **REPLACED PER ADDENDUM No. 5 DATED SEPTEMBER 1, 2016**

DRAINAGE DETAILS
NO SCALE

DD-5

LEONARDO DE LEON	REVISED BY
TRINAYANA MISHRA	DATE REVISED
LDL	
1-1-16	
CALCULATED-DESIGNED BY	FUNCTIONAL SUPERVISOR
CHECKED BY	TRINAYANA MISHRA

STATE OF CALIFORNIA - DEPARTMENT OF TRANSPORTATION
Caltrans
MATERIALS

LAST REVISION 03-28-16
DATE PLOTTED => 30-AUG-2016
TIME PLOTTED => 15:15

Dist	COUNTY	ROUTE	POST MILES TOTAL PROJECT	SHEET No.	TOTAL SHEETS
04	Ala	205	0.0/1.0	262	676
04	Ala	580	0.0/8.0, 26.1/30.3		
10	SJ	580	13.5/15.4		

2-26-16
REGISTERED CIVIL ENGINEER DATE

3-28-16
PLANS APPROVAL DATE

REGISTERED PROFESSIONAL ENGINEER Danny Kao No. 61646 Exp. 6-30-17 CIVIL STATE OF CALIFORNIA

THE STATE OF CALIFORNIA OR ITS OFFICERS OR AGENTS SHALL NOT BE RESPONSIBLE FOR THE ACCURACY OR COMPLETENESS OF SCANNED COPIES OF THIS PLAN SHEET.

NOTE:

1. EXCEPT FOR SLOTTED CSP WHICH REQUIRE WATER TIGHT JOINTS, ALL JOINTS ARE STANDARD JOINT TYPE.

ABBREVIATIONS:

DD DOWNDRAIN JOINT
[N] NOT A SEPARATE PAY ITEM, FOR INFORMATION ONLY
S STANDARD JOINT

APC ALLOWABLE PIPE MATERIAL AND PROTECTION

DESIGNATION	** RCP	PLASTIC (TYPE S)	PLASTIC (TYPE C)	CSP, Poly* SHEET Ctd	CSP, Poly* Asph Ctd
				THICK (INCHES)	
12" APC (TYPE A)	YES	YES	YES	0.064	0.064
18" APC (TYPE A)	YES	YES	YES	0.064	0.064
18" APC (TYPE B)	YES	YES	NO	NO	NO

* CSP POLYSHEET Ctd - CSP POLYMERIZED Asph Ctd EITHER HELICAL OR ANNULAR CORRUGATIONS ARE ALLOWABLE.

** FOR MINIMUM ALLOWABLE CLASS OF RCP, SEE STANDARD PLAN A62D.

*** FOR GRAND TOTAL, SEE ROADWAY QUANTITIES

DRAINAGE QUANTITIES

DRAINAGE SHEET No.	DRAINAGE SYSTEM No. ⬡	DRAINAGE UNIT ○	ADJUST INLET	12" APC (A)	18" APC (A)	18" APC (B)	18" SCSP (0.079")	12" CSP (0.064")	18" CSP (0.064")	PIPE JOINT CLASSIFICATION [N]	CULVERT SLURRY CEMENT BACKFILL	MINOR CONCRETE	MINOR CONCRETE (MINOR STRUCTURE)	CONCRETE BACKFILL (PIPE TRENCH) (RSC)	BASE BOND BREAKER ***	MISCELLANEOUS IRON AND STEEL	FRAME AND GRATE (TYPE 24-12) [N]	HMA (TYPE A) ***	PLACE HMA (MISCELLANEOUS AREA)	CAP INLET	HEIGHT OF INLET [N]	MAXIMUM COVER [N]	ROCK SLOPE PROTECTION (No. 1 METHOD B)	RSP FABRIC (CLASS 8)	REMOVE INLET	REMOVE CULVERT	ABANDON CULVERT	DITCH EXCAVATION	12" ENTRANCE TAPER	CONCRETE COLLAR [N]	DESCRIPTION	STATION	DRAINAGE SYSTEM No. ⬡	DRAINAGE UNIT ○
			EA	LF							CY				SQYD	LB	EA	TON	SQYD	EA	ft		CY	SQYD	EA	LF	EA	CY	EA					
D-1	1	a	1										1.78			1304	4		3.5												GDOM INLET	58' Lt "AW" 1406+50	1	a
		b							32	S												2									18" CSP DD w/ TEE DISSIPATOR	58' Lt "AW" 1406+50 TO 90' Lt 1406+50		b
		c															4						2.5	7.12							RSP	90' Lt "AW" 1406+50		c
		d			200					S	23.22	33.33										2.58									18" APC (A)	58' Lt "AW" 1406+50 TO 58' Lt 1408+50		d
		e	1										1.97			1304	4		4.08												GDOM INLET	58' Lt "AW" 1408+50		e
		f			350					S	41.29	58.33										2.6									18" APC (A)	58' Lt "AW" 1408+50 TO 61.71' Lt 1412+00		f
		g	1										1.97			1304	2		4.1						1						GDOM INLET	61.71' Lt "AW" 1412+00		g
		h																													REMOVE INLET	58' Lt "AW" 1406+50		h
		i																								32					REMOVE CULVERT	58' Lt "AW" 1406+50 TO 90' Lt 1406+50		i
D-2	2	a	1										2.32			652	2		6.97												G2 INLET	61.50' Lt "AW" 1416+60	2	a
		b			740					S	283.8	123.33										5.47									18" APC (A)	61.50' Lt "AW" 1416+60 TO 61.46' Lt 1424+00		b
		c	1										1.69			652	2		4.5												G2 INLET	61.46' Lt "AW" 1424+00		c
D-3		d	1										1.82			652	1		5												G2 INLET	58' Lt "AW" 1431+80		d
D-4	3	a	1													326	1														ADJUST INLET TO GRADE	8' Rt "AW" 1447+80	3	a
D-6	4	a	1													326	1														ADJUST INLET TO GRADE	59.33' Lt "AW" 1446+50	4	a
		b	1													326															ADJUST INLET TO GRADE	57.92' Lt "AW" 1471+00		b
		c			400					S	306.44	66.67										15.05									18" APC (A)	57.92' Lt "AW" 1471+00 TO 58.05' Lt 1475+00		c
		d	1										1.94			652	2		5.48												G2 INLET	58.05' Lt "AW" 1475+00		d
		e					150		5		~~48.25~~	25										5.52									18" SCSP	58.05' Lt "AW" 1475+00 TO 58.58' Lt 1476+50		e
		f	1													326	1														ADJUST INLET TO GRADE	58.58' Lt "AW" 1476+50		f
		g	1													326	1														ADJUST INLET TO GRADE	17.35' Rt "AW" 1466+50		g
D-7		h	1													326	1														ADJUST INLET TO GRADE	16.24' Rt "AW" 1741+00		h
		i	1													326	1														ADJUST INLET TO GRADE	57.98' Lt "AW" 1479+50		i
D-8	5	a	1													326	1														ADJUST INLET TO GRADE	74.17' Lt "AW" 1497+40	5	a
		b	1													326	1														ADJUST INLET TO GRADE	90.5' Lt "AW" 1500+30		b
		c	1													326	1														ADJUST INLET TO GRADE	58.31' Lt "AW" 1500+35		c
D-9	6	a	1													326	1														ADJUST INLET TO GRADE	100' Lt "AW" 1514+40	6	a
D-10		b	1													326	1														ADJUST INLET TO GRADE	72.52' Lt "AW" 1517+40		b
		c																							1						REMOVE INLET	66.5' Lt "AW" 1522+25		c
		d	1										3.12			652	2		10.09												G2 INLET	66.5' Lt "AW" 1522+25		d
		e																							1						REMOVE INLET	64' Lt "AW" 1526+25		e
		f	1										3.09			652	2		9.99												G2 INLET	64' Lt "AW" 1526+25		f
D-9 & D-10		g	1													326	1														ADJUST INLET TO GRADE	19.5' Lt "FW2" 34+15		g
D-9		h	1													326	1														ADJUST INLET TO GRADE	72' Rt "AE" 1509+25		h
											5																							
											654.75																							
SHEET TOTAL			23		1690		150		32		~~703~~	306.66	19.7			12388			53.71				2.5	7.12	3	32					SHEET TOTAL			

5 **REPLACED PER ADDENDUM No. 5 DATED SEPTEMBER 1, 2016**

DRAINAGE QUANTITIES DQ-1

STATE OF CALIFORNIA - DEPARTMENT OF TRANSPORTATION
Caltrans® HYDRAULICS
FUNCTIONAL SUPERVISOR: EDMUND CHOY
CALCULATED-DESIGNED BY: KEN NHIEU
CHECKED BY: CARLOS MORA
REVISED BY: KN
DATE REVISED: 10-16-15

LAST REVISION 02-25-16
DATE PLOTTED => 30-AUG-2016
TIME PLOTTED => 15:15

Dist	COUNTY	ROUTE	POST MILES TOTAL PROJECT	SHEET No.	TOTAL SHEETS
04	Ala	205	0.0/1.0		
04	Ala	580	0.0/8.0, 26.1/30.3	263	676
10	SJ	580	13.5/15.4		

2-26-16
REGISTERED CIVIL ENGINEER DATE

3-28-16
PLANS APPROVAL DATE

REGISTERED PROFESSIONAL ENGINEER Danny Kao No. 61646 Exp. 6-30-17 CIVIL STATE OF CALIFORNIA

THE STATE OF CALIFORNIA OR ITS OFFICERS OR AGENTS SHALL NOT BE RESPONSIBLE FOR THE ACCURACY OR COMPLETENESS OF SCANNED COPIES OF THIS PLAN SHEET.

DRAINAGE QUANTITIES

DRAINAGE SHEET No.	DRAINAGE SYSTEM No. ⬡	DRAINAGE UNIT ○	ADJUST INLET	12" APC (A)	18" APC (A)	18" APC (B)	18" SCSP (0.079")	12" CSP (0.064")	18" CSP (0.064")	PIPE JOINT CLASSIFICATION [N]	CULVERT SLURRY CEMENT BACKFILL	MINOR CONCRETE	MINOR CONCRETE (MINOR STRUCTURE)	CONCRETE BACKFILL (PIPE TRENCH) (RSC)	BASE BOND BREAKER ***	MISCELLANEOUS IRON AND STEEL	FRAME AND GRATE (TYPE 24-12) [N]	HMA (TYPE A) ***	PLACE HMA (MISCELLANEOUS AREA)	CAP INLET	HEIGHT OF INLET [N]	MAXIMUM COVER [N]	ROCK SLOPE PROTECTION (No. 1 METHOD B)	RSP FABRIC (CLASS 8)	REMOVE INLET	REMOVE CULVERT	ABANDON CULVERT	DITCH EXCAVATION	12" ENTRANCE TAPER	CONCRETE COLLAR [N]	DESCRIPTION	STATION	DRAINAGE SYSTEM No. ⬡	DRAINAGE UNIT ○
			EA	LF							CY				SQYD	LB	EA	TON	SQYD	EA	ft		CY	SQYD	EA	LF	EA	CY	EA					
D-10	7	a	1										2.25			652	2				6.7										G2 INLET	64.9′ L+ "AW" 1529+00	7	a
▼		b			400					S	132.37	66.67										5.2									18" APC (A)	64.9′ L+ "AW" 1529+00 TO 64.8′ L+ 1533+00		b
D-11		c	1										2.55			1304	4				5.9										GDOM INLET	64.8′ L+ "AW" 1533+00		c
		d			50					S	12.84	8.33										4.4									18" APC (A)	64.8′ L+ "AW" 1533+00 TO 64.38′ L+ 1533+50		d
		e	1										2.35			1304	4				5.26										GDOM INLET	64.38′ L+ "AW" 1533+50		e
		f			175					S	40.09	29.17										3.76									18" APC (A)	64.38′ L+ "AW" 1533+50 TO 64.38′ L+ 1535+25		f
		g	1										1.86			652	2				5.15										G2 INLET	64.38′ L+ "AW" 1535+25		g
		h																									1				ABANDON CULVERT	68′ L+ "AW" 1535+25		h
		i			25					S	5.5	4.17										3.65									18" APC (A)	64.38′ L+ "AW" 1535+25 TO 64.2′ L+ 1535+50		i
		j	1										1.85			652	2				5.11										G2 INLET	64.2′ L+ "AW" 1535+50		j
		k				74				S	5			29.97	74							3.61									18" APC (B)	64.2′ L+ "AW" 1535+50 TO 8′ R+ 1535+50		k
		l	1										1.97			652	2				5.60										G2 INLET	8′ R+ "AW" 1535+50		l
		m					150				~~16.31~~	25										4.10									18" SCSP	8′ R+ "AW" 1534+00 TO 8′ R+ 1535+50		m
		n											0.63			326	1				2										G1 CLEANOUT	8′ R+ "AW" 1534+00		n
		o			275					S	80.82	45.83										5.36									18" APC (A)	64.20′ L+ "AW" 1535+50 TO 63.6′ L+ 1538+25		o
		p	1										2.29			652	2				6.86										G2 INLET	63.6′ L+ "AW" 1538+25		p
		q			150					S	66.31	25										6.65									18" APC (A)	63.6′ L+ "AW" 1538+25 TO 62.07′ L+ 1539+75		q
		r	1										2.62			652	2				8.15										G2 INLET	62.07′ L+ "AW" 1539+75		r
		s																									1				ABANDON CULVERT	64′ L+ "AW" 1539+75		s
		t			175					S	93.56	29.17										7.45									18" APC (A)	62.07′ L+ "AW" 1539+75 TO 63.06′ L+ 1541+50		t
		u	1										3.54			1304	4				8.95										GDOM INLET	63.06′ L+ "AW" 1541+50		u
▼		v			550					S	319.51	91.67										7.64									18" APC (A)	63.06′ L+ "AW" 1541+50 TO 63.69′ L+ 1547+00		v
D-12		w	1										3.60			1304	4				9.14										GDOM INLET	63.69′ L+ "AW" 1547+00		w
		x			100					S	59.94	16.67										7.8									18" APC (A)	63.69′ L+ "AW" 1547+00 TO 63.81′ L+ 1548+00		x
		y	1										2.92			652	2				9.3										G2 INLET	63.81′ L+ "AW" 1548+00		y
		z																							1						REMOVE INLET	63.81′ L+ "AW" 1548+00		z
		aa	1										3.74			652	2				12.53										G2 INLET	11.19′ R+ "AW" 1548+00		aa
		bb			50					S	44.79	8.33										11.03									18" APC (A)	11.25′ R+ "AW" 1547+50 TO 11.19′ R+ 1548+00		bb
▼	▼	cc	1										3.71			652	2				12.4										G2 INLET	11.25′ R+ "AW" 1547+50	▼	cc
D-12	8	a	1										3.75			1304	4				9.61										GDOM INLET	64.04′ L+ "AW" 1550+00	8	a
		b			100					S	64.57	16.67										8.42									18" APC (A)	64.04′ L+ "AW" 1550+00 TO 64.16′ L+ 1551+00		b
		c	1										3.85			1304	4				9.92										GDOM INLET	64.16′ L+ "AW" 1551+00		c
		d			100					S	66.43	16.67										8.69									18" APC (A)	64.16′ L+ "AW" 1551+00 TO 64.27′ L+ 1552+00		d
		e	1										3.94			1304	4				10.19										GDOM INLET	64.27′ L+ "AW" 1552+00		e
		f			90					S	65.62	15										9.61									18" APC (A)	64.27′ L+ "AW" 1552+00 TO 64.36′ L+ 1552+90		f
		g	1										4.23			1304	4				11.11										GDOM INLET	64.36′ L+ "AW" 1552+90		g
▼		h			730					S	728.24	121.67										14.44									18" APC (A)	64.36′ L+ "AW" 1552+90 TO 63.8′ L+ 1560+20		h
D-13		i	1										4.61			652	2				15.94										G2 INLET	63.8′ L+ "AW" 1560+20		i
		j	1													326	1														ADJUST INLET TO GRADE	8′ R+ "AW" 1560+20		j
		k			470					S	447.11	78.33										4.86									18" APC (A)	8′ R+ "AW" 1560+20 TO 8′ R+ 1555+50		k
		l	1										2.17			652	2				6.36										G2 INLET	8′ R+ "AW" 1555+50		l
		m			50					S	17.01	8.33										5.16									18" APC (A)	8′ R+ "AW" 1555+50 TO 8′ R+ 1555+00		m
		n	1										2.24			652	2				6.66										G2 INLET	8′ R+ "AW" 1555+00		n
▼	▼	o	1								5 2244.71					326	1														ADJUST INLET TO GRADE	8′ R+ "AW" 1565+20	▼	o
SHEET TOTAL			22		3490	74	150				~~2261.02~~	606.68	60.67	29.97	74	19234									1		2					SHEET TOTAL		

5 **REPLACED PER ADDENDUM No. 5 DATED SEPTEMBER 1, 2016**

DRAINAGE QUANTITIES DQ-2

STATE OF CALIFORNIA - DEPARTMENT OF TRANSPORTATION
Caltrans® HYDRAULICS

FUNCTIONAL SUPERVISOR: EDMUND CHOY
CALCULATED-DESIGNED BY: KEN NHIEU
CHECKED BY: CARLOS MORA
REVISED BY: KN
DATE REVISED: 10-16-15

LAST REVISION 02-25-16
DATE PLOTTED => 30-AUG-2016
TIME PLOTTED => 15:15

Dist	COUNTY	ROUTE	POST MILES TOTAL PROJECT	SHEET No.	TOTAL SHEETS
04	Ala	205	0.0/1.0		
04	Ala	580	0.0/8.0, 26.1/30.3	264	676
10	SJ	580	13.5/15.4		

2-26-16
REGISTERED CIVIL ENGINEER DATE

3-28-16
PLANS APPROVAL DATE

REGISTERED PROFESSIONAL ENGINEER Danny Kao No. 61646 Exp. 6-30-17 CIVIL STATE OF CALIFORNIA

THE STATE OF CALIFORNIA OR ITS OFFICERS OR AGENTS SHALL NOT BE RESPONSIBLE FOR THE ACCURACY OR COMPLETENESS OF SCANNED COPIES OF THIS PLAN SHEET.

DRAINAGE QUANTITIES

DRAINAGE SHEET No.	DRAINAGE SYSTEM No. ⬡	DRAINAGE UNIT ○	ADJUST INLET	12" APC (A)	18" APC (A)	18" APC (B)	18" SCSP (0.079")	12" CSP (0.064")	18" CSP (0.064")	PIPE JOINT CLASSIFICATION [N]	CULVERT SLURRY CEMENT BACKFILL	MINOR CONCRETE	MINOR CONCRETE (MINOR STRUCTURE)	CONCRETE BACKFILL (PIPE TRENCH) (RSC)	BASE BOND BREAKER ***	MISCELLANEOUS IRON AND STEEL	FRAME AND GRATE (TYPE 24-12) [N]	HMA (TYPE A) ***	PLACE HMA (MISCELLANEOUS AREA)	CAP INLET	HEIGHT OF INLET [N]	MAXIMUM COVER [N]	ROCK SLOPE PROTECTION (No. 1 METHOD B)	RSP FABRIC (CLASS 8)	REMOVE INLET	REMOVE CULVERT	ABANDON CULVERT	DITCH EXCAVATION	12" ENTRANCE TAPER	CONCRETE COLLAR [N]	DESCRIPTION	STATION	DRAINAGE SYSTEM No. ⬡	DRAINAGE UNIT ○
			EA	LF							5 CY				SQYD	LB	EA	TON	SQYD	EA	ft		CY	SQYD	EA	LF	EA	CY	EA					
D-14	9	a	1										0.63			652	2				2										G1 CLEANOUT	8′ R+ "AW" 1569+00	9	a
		b					155				~~9.67~~	25.83										3.39									18" SCSP	8′ R+ "AW" 1569+00 TO 8′ R+ 1570+55		b
		c	1										1.79			652	2				4.89										G2 INLET	8′ R+ "AW" 1570+55		c
		d			565					S	302.07	94.17										10.64									18" APC (A)	8′ R+ "AW" 1570+55 TO 9′ R+ 1576+20		d
		e	1										3.64			652	2				12.14										G2 INLET	9′ R+ "AW" 1576+20		e
		f	1																	1											CAP INLET	69.52′ L+ "AW" 1576+20		f
		g											2.43			652	2				7.40										G2 INLET	65.61′ L+ "AW" 1576+20		g
		h																										184.81			DITCH EXCAVATION	70′ L+ "AW" 1570+55 TO 64.87′ L+ 1595+50		h
D-16		i																										35.56			DITCH EXCAVATION	64.87′ L+ "AW" 1595+50 TO 68′ L+ 1600+30		i
		j	1													326	1														ADJUST INLET TO GRADE	64.87′ L+ "AW" 1595+50		j
D-17	10	a	1										1.82			652	2				5.01										G2 INLET	7′ R+ "AW" 1610+50	10	a
		b			175					S	40.09	29.17										4.04									18" APC (A)	7′ R+ "AW" 1610+50 TO 7′ R+ 1612+25		b
		c	1													326	1														ADJUST INLET TO GRADE	7′ R+ "AW" 1612+25		c
D-18	11	a																										84.45			DITCH EXCAVATION	66′ L+ "AW" 1627+60 TO 150′ L+ 1639+00	11	a
D-19		b																										32.6			DITCH EXCAVATION	66′ L+ "AW" 1639+10 TO 140′ L+ 1643+50		b
		c																										92.23			DITCH EXCAVATION	70′ L+ "AW" 1643+55 TO 140′ L+ 1656+00		c
D-20		d																										32.6			DITCH EXCAVATION	70′ L+ "AW" 1656+50 TO 120′ L+ 1659+40		d
D-21		e																										181.49			DITCH EXCAVATION	70′ L+ "AW" 1659+45 TO 170′ L+ 1683+95		e
D-20		f																0.98	5.46												HMA OSD	7′ R+ "AW" 1654+65		f
D-22		g	1													326	1														ADJUST INLET TO GRADE	6.44′ R+ "AW" 1672+75		g
		h																0.84	4.68												HMA OSD	6.88′ R+ "AW" 1683+66		h
D-23		i																1.12	6.24												HMA OSD	5.87′ R+ "AW" 1691+05		i
D-24	12	a																1.26	7.02												HMA OSD	69.12′ L+ "AW" 1699+66	12	a
		b	1													326	1														ADJUST INLET TO GRADE	70.46′ L+ "AW" 1707+70		b
		c	1													326	1														ADJUST INLET TO GRADE	70.64′ L+ "AW" 1710+35		c
		d				81				S				46.31	81							5.46									18" APC (B)	70.64′ L+ "AW" 1710+35 TO 10.32′ R+ 1710+35		d
		e	1										2.32			652	2				6.96										G2 INLET	10.32′ R+ "AW" 1710+35		e
		f			185					S	69.79	30.83										5.25									18" APC (A)	10.32′ R+ "AW" 1710+35 TO 10.19′ R+ 1708+50		f
		g	1										2.27			652	2				6.75										G2 INLET	10.19′ R+ "AW" 1708+50		g
		h			175					S	61.15	29.7										4.96									18" APC (A)	10.19′ R+ "AW" 1708+50 TO 6.5′ R+ 1706+75		h
		i	1										2.19			652	2				6.46										G2 INLET	6.5′ R+ "AW" 1706+75		i
		j			150					S	38.53	25										3.18									18" APC (A)	6.5′ R+ "AW" 1706+75 TO 6.5′ R+ 1705+25		j
		k	1										2.16			1304	4				4.68										GDOM INLET	6.5′ R+ "AW" 1705+25		k
D-25		l																1.40	7.80												HMA OSD	6′ R+ "AW" 1715+00		l
		m																1.26	7.02												HMA OSD	69.7′ L+ "AW" 1721+16		m
D-26		n	1													326	1														ADJUST INLET TO GRADE	69.34′ L+ "AW" 1726+15		n
		o	1													326	1														ADJUST INLET TO GRADE	75.25′ L+ "AW" 1732+65		o
D-27		p	1													326	1														ADJUST INLET TO GRADE	86.37′ L+ "AW" 1738+55		p
											5																							
											511.63																							
SHEET TOTAL			17		1250	81	155				~~521.3~~	234.70	19.25	46.31	81	9128		6.86	38.22	1								643.74			SHEET TOTAL			

5 **REPLACED PER ADDENDUM No. 5 DATED SEPTEMBER 1, 2016**

STATE OF CALIFORNIA - DEPARTMENT OF TRANSPORTATION
Caltrans® HYDRAULICS

FUNCTIONAL SUPERVISOR: EDMUND CHOY
CALCULATED-DESIGNED BY: KEN NHIEU
CHECKED BY: CARLOS MORA
REVISED BY: KN
DATE REVISED: 10-16-15

LAST REVISION 02-25-16
DATE PLOTTED => 30-AUG-2016
TIME PLOTTED => 15:15

Dist	COUNTY	ROUTE	POST MILES TOTAL PROJECT	SHEET No.	TOTAL SHEETS
04	Ala	205	0.0/1.0		
04	Ala	580	0.0/8.0, 26.1/30.3	268	676
10	SJ	580	13.5/15.4		

2-26-16
REGISTERED CIVIL ENGINEER DATE

3-28-16
PLANS APPROVAL DATE

REGISTERED PROFESSIONAL ENGINEER Danny Kao No. 61646 Exp. 6-30-17 CIVIL STATE OF CALIFORNIA

THE STATE OF CALIFORNIA OR ITS OFFICERS OR AGENTS SHALL NOT BE RESPONSIBLE FOR THE ACCURACY OR COMPLETENESS OF SCANNED COPIES OF THIS PLAN SHEET.

DRAINAGE QUANTITIES

DRAINAGE SHEET No.	DRAINAGE SYSTEM No. ⬡	DRAINAGE UNIT ○	ADJUST INLET (EA)	12" APC (A) (LF)	18" APC (A) (LF)	18" APC (B) (LF)	18" SCSP (0.079") (LF)	12" CSP (0.064") (LF)	18" CSP (0.064") (LF)	PIPE JOINT CLASSIFICATION [N]	CULVERT SLURRY CEMENT BACKFILL (CY)	MINOR CONCRETE (CY)	MINOR CONCRETE (MINOR STRUCTURE) (CY)	CONCRETE BACKFILL (PIPE TRENCH) (RSC) (CY)	BASE BOND BREAKER *** (SQYD)	MISCELLANEOUS IRON AND STEEL (LB)	FRAME AND GRATE (TYPE 24-12) [N] (EA)	HMA (TYPE A) *** (TON)	PLACE HMA (MISCELLANEOUS AREA) (SQYD)	CAP INLET (EA)	HEIGHT OF INLET [N] (ft)	MAXIMUM COVER [N] (ft)	ROCK SLOPE PROTECTION (No. 1 METHOD B) (CY)	RSP FABRIC (CLASS 8) (SQYD)	REMOVE INLET (EA)	REMOVE CULVERT (LF)	ABANDON CULVERT (EA)	DITCH EXCAVATION (CY)	12" ENTRANCE TAPER (EA)	CONCRETE COLLAR [N]	DESCRIPTION	STATION	DRAINAGE SYSTEM No. ⬡	DRAINAGE UNIT ○
D-28	33	f							60	S												4.45									18" CSP w/ TEE DISSIPATOR	60' R+ "AE" 1748+60 TO 120' R+ 1748+60	33	f
		g																					2.5	7.12							RSP	120' R+ 1748+60		g
		h	1													326	1														ADJUST INLET TO GRADE	36' R+ "GE2" 1747+65		h
		i																											1		ENTRANCE TAPER	20' R+ "GE2" 1750+80		i
		j	1													326	1														ADJUST INLET TO GRADE	64' R+ "AE" 1751+90		j
D-29		k	1													326	1														ADJUST INLET TO GRADE	11.15' L+ "AE" 1755+80		k
		l	1													326	1														ADJUST INLET TO GRADE	20' R+ "GE2" 1755+75		l
		m	1													326	1														ADJUST INLET TO GRADE	20' R+ "GE2" 1758+65		m
D-30	34	a																							1						REMOVE INLET	11.88' R+ "AW" 1772+95	34	a
		b	1										6.14			1304	4				13.92										G2 Mod INLET	12.88' R+ "AW" 1772+95		b
		c																							1						REMOVE INLET	8.72' R+ "AW" 1777+70		c
		d	1										3.92			1304	4				8.09										G2 Mod INLET	9.72' R+ "AW" 1777+70		d
		e																0.98	5.46												HMA OSD	58.74' R+ "AE" 1771+00		e
D-31	35	a																							1						REMOVE INLET	10.37' L+ "AE" 1781+40	35	a
		b	1										1.79			1304	4				2.52										G2 Mod INLET	11.37' L+ "AE" 1781+40		b
		c	1													326	1														ADJUST INLET TO GRADE	8.9' L+ "AE" 1786+50		c
		d	1													326	1														ADJUST INLET TO GRADE	38' R+ "DE" 1786+80		d
		e																0.84	4.68												HMA OSD	38' R+ "DE" 1788+80		e
D-33	36	a	1													326	1														ADJUST INLET TO GRADE	10.15' R+ "AW1" 1815+25	36	a
		b	1													326	1														ADJUST INLET TO GRADE	37.5' R+ "AW1" 1815+25		b
		c																0.84	4.68												HMA OSD	47.56' R+ "AE" 1813+30		c
D-33	37	a																0.84	4.68												HMA OSD	47' R+ "AE" 1820+47	37	a
D-46	38	a											1.01			326	1				3.25										G1 INLET	13.8' L+ "ALN1" 238+70	38	a
		b		50						S												1.75									12" APC (A)	14.77' L+ "ALN1" 238+20 TO 13.8' L+ 238+70		b
		c																							1						REMOVE INLET	74.25' R+ "AE" 239+91		c
		d											1.51			326	1				3.77										G2 INLET	74.25' R+ "AE" 239+91		d
		e																								20					REMOVE CULVERT	74.25' R+ "AE" 239+91 TO 74.25' R+ 240+11		e
		f			20					S												2.27									18" APC (A)	74.25' R+ "AE" 239+91 TO 74.25' R+ 240+11		f
SHEET TOTAL			12	50	20				60		654.75		14.37			7498		3.5	19.5				2.5	7.12	4	20			1		SHEET TOTAL			
			23		1690		150		32		~~703~~	306.66	19.70			12388			53.71				2.5	7.12	3	32					TOTAL FROM SHEET DQ-1			
			22		3490	74	150		224	4.71	~~2261.02~~	606.68	60.67	29.97	74	19234									1		2				TOTAL FROM SHEET DQ-2			
			17		1250	81	155		51	1.63	~~521.3~~	234.70	19.25	46.31	81	9128		6.86	38.22	1								643.74		TOTAL FROM SHEET DQ-3			
			28		1165	176			60		193.85	195.54	15.76	26.56	76	11736		4.34	24.18				2.5	7.12	1	60					TOTAL FROM SHEET DQ-4			
			17		4			10			1.62	0.67	3.64			6194		12.11	67.47							10		178.54			TOTAL FROM SHEET DQ-5			
			10		310			86	60		36.57	51.67	15.36			6846		1.68	9.36				2.5	7.12		122	1	412			TOTAL FROM SHEET DQ-6			
GRAND TOTAL			129	50	7929	331	455	96	212		~~3717.36~~ 3643.13	1395.92	148.75	102.84	231	73024		28.49	212.44	1			10	28.48	9	244	3	1234.28	1		GRAND TOTAL			

5 REPLACED PER ADDENDUM No. 5 DATED SEPTEMBER 1, 2016

DRAINAGE QUANTITIES DQ-7

STATE OF CALIFORNIA - DEPARTMENT OF TRANSPORTATION
Caltrans® HYDRAULICS

FUNCTIONAL SUPERVISOR: EDMUND CHOY
CALCULATED-DESIGNED BY: KEN NHIEU
CHECKED BY: CARLOS MORA
REVISED BY: KN
DATE REVISED: 10-16-15

LAST REVISION 03-25-16
DATE PLOTTED => 30-AUG-2016
TIME PLOTTED => 15:15

Dist	COUNTY	ROUTE	POST MILES TOTAL PROJECT	SHEET No.	TOTAL SHEETS
04	Ala	205	0.0/1.0	386	676
04	Ala	580	0.0/8.0, 26.1/30.3		
10	SJ	580	13.5/15.4		

5

2-26-16
REGISTERED CIVIL ENGINEER DATE

3-28-16
PLANS APPROVAL DATE

REGISTERED PROFESSIONAL ENGINEER
Danny Kao
No. 61646
Exp. 6-30-17
CIVIL
STATE OF CALIFORNIA

THE STATE OF CALIFORNIA OR ITS OFFICERS OR AGENTS SHALL NOT BE RESPONSIBLE FOR THE ACCURACY OR COMPLETENESS OF SCANNED COPIES OF THIS PLAN SHEET.

TEMPORARY DELINEATION AND TRAFFIC HANDLING QUANTITIES

SHEET No.	STATION LIMITS	DETAIL	TEMPORARY TRAFFIC STRIPE (PAINT) 4" YELLOW	4" WHITE	8" WHITE	PAVEMENT MARKER * NON-REFLECTIVE TYPE A	RETRO REFLECTIVE TYPE G	TYPE H	REMOVE PAVEMENT MARKER	TEMPORARY RAILING (TYPE K)	TEMPORARY CRASH CUSHION MODULE ARRAY 'TU21'	TEMPORARY CRASH CUSHION MODULE ARRAY 'TU14'	TEMPORARY CRASH CUSHION MODULE ARRAY 'TS14'	TEMPORARY ALTERNATIVE CRASH CUSHION	CHANNELIZERS (SURFACE MOUNTED)
			LF			LF				EA					
	STAGE 2														
SC-68	"AW" 1723+41 TO 1733+41	13, 25A, 27B	1100	1100		275	72	47	394	1000			14		15
	"AE" 1721+41 TO 1731+60	13, 25A, 27B	1100	1100		275	72	47	394	1019					
SC-69	"AW" 1733+41 TO 1744+41	13, 25A, 27B,36	1100	1100	232	275	72	47	394	1105					
	"AE" 1731+60 TO 1742+60	13, 25A, 27B,36	1100	1100	232	275	72	47	394	1576		14			
	"GW2" 1735+00 TO 1744+40	25A, 27B	938	938			61	40	101	322					
	"GE1" 1734+60 TO 1742+60	25A, 27B	800	800			53	34	87	800					
SC-70	"AW" 1744+41 TO 1756+41	13, 25A, 27B	1200	1200		300	78	51	429	1200					
	"AE" 1742+60 TO 1754+60	13, 25A, 27B	1300	1300		325	84	55	464	1300					
	"GW1" 1750+92 TO 1756+60	25A, 27B	1200	1200			78	51	129	446				2	15
	"GE2" 1747+00 TO 1754+66	25A, 27B	1200	1200			78	51	129	709					
	"GW2" 1735+00 TO 1744+40	25A, 27B	1200	1200			78	51	129	1255			28		15
	"GE1" 1734+60 TO 1742+60	25A, 27B	1200	1200			78	51	129	424					
SC-71	"AW" 1756+41 TO 1768+41	13, 25A, 27B,36	1200	1200	232	300	78	51	429	1206			14		
	"AE" 1754+60 TO 1766+60	13, 25A, 27B,36	1200	1200	232	300	78	51	429	1200			14		
	"GW1" 1756+60 TO 1762+99	25A, 27B	639	639			78	51	129	225	21				
	"GE2" 1754+66 TO 1760+44	25A, 27B	578	578			78	51	129	578					
SC-72	"AW" 1768+41 TO 1779+41	13, 25A, 27B	1100	1100		275	72	47	394	1100					
	"AE" 1766+60 TO 1777+60	13, 25A, 27B	1100	1100		275	72	47	394	1100					
SC-73	"AW" 1779+41 TO 1793+41	13, 25A, 27B	1400	1400		350	91	61	502	1400			14		
	"AE" 1777+60 TO 1791+60	13, 25A, 27B	1400	1400		350	91	61	502	1402	21				15
	"CW" 1781+00 TO 1793+40	25A, 27B,36A	1240	1240	232	275	72	47	394	1240					
	"DE" 1777+60 TO 1791+60	25A, 27B,36	1400	1400	232	350	91	61	502	1400					
SC-74	"AW" 1793+41 TO 1804+41	13, 25A, 27B	800	800		275	72	47	394	1100					
	"AE" 1791+60 TO 1802+60	13, 25A, 27B		1100		275	72	47	394	800					
	"CW" 1793+40 TO 1804+40	13, 25A, 27B	1100	1100		275	72	47	394	1100					
	"DE" 1791+60 TO 1802+60	13, 25A, 27B	1100	1100		275	72	47	394	1200			14		
SC-75	"AW" 1804+41 TO 1816+41	13, 25A, 27B	1200	1200		300	78	51	429	2500					
	"AE" 1802+60 TO 1814+60	13, 25A, 27B	1200	1200		300	78	51	429	1200					
SC-76	"AW" 1816+41 TO 1822+41	13, 25A, 27B	600	600		150	41	26	217	600					
	"AE" 1814+60 TO 1820+60	13, 25A, 27B	600	600		150	41	26	217	600					
	"DE" 1815+60 TO 1823+85	13, 25A, 27B	1100	1100		275	72	47	394	849					15
	"CW" 1817+40 TO 1831+90	13, 25A, 27B	1450	1450		275	72	47	394	800			14		15
	"BW" 1816+60 TO 1828+40	13, 25A, 27B	1180	1180		275	72	47	394	825			14		
SC-77	"AW" 1822+41 TO 1833+60	13, 25A, 27B	1125	1125		275	72	47	394	1064			14		15
	"AE" 1820+60 TO 1831+60	13, 25A, 27B	1125	1125		275	72	47	394	1125					
SC-78	"DE" 1802+60 TO 1815+60	13, 25A, 27B	1300	1300		325	84	55	464	1294					15
SC-79	"DE" 1823+85 TO 1837+90	13, 25A, 27B	1405	1405		350	91	61	502	1405	21				15
	"CW" 1831+90 TO 1842+40	13, 25A, 27B	1005	1005		251	65	42	358	1501			14		
SUBTOTAL			40985	42085	1392	8501	2803	1835	13139	39970	63	14	154	2	135
TOTAL FROM SHEET SCQ-3			53669	53669	464	12228	3439	2296	17795	53511			196	1	105
GRAND TOTAL			805892 **			43090	20451 **		96350	187033	938			4	633

* QUANTITY INCLUDED IN PDQ-8
** QUANTITY INCLUDED STAGE 3

TEMPORARY PAVING

STAGE	STATION LIMITS	LENGTH N	AREA N	COLD * PLANE	HMA (TYPE A)
		ft	SQYD		TON
1	"FW1" 37+50 TO 44+74	724	412		141
	"FW2" 25+25 TO 37+00	1175	525		432
	"FE1" 38+70 TO 44+35	565	366		95
	"GW1" 1751+00 TO 1759+95	895	513		181
	"GE1" 1737+15 TO 1746+00	885	365		143
	"GE2" 1747+40 TO 1757+10	970	323		107
1&2	"AW" 1464+00 TO 1710+00	22850	30467	30467	5641
3	"AW" 1406+74 TO 1700+00	29326	163440		20415
	"AW" 1700+00 TO 1741+07	4107	36670		3572
	"AE" 1697+57 TO 1739+26	4169	22115		2885
	~~"AW" 1741+07 TO 1750+00~~	~~893~~	~~5956~~		~~777~~
	"AE" 1739+26 TO 1748+19	893	4562		619
	~~"AW" 1750+00 TO 1764+00~~	~~1400~~	~~9343~~		~~1220~~
	"AE" 1748+19 TO 1762+20	1401	7476		975
	~~"AW" 1764+00 TO 1786+00~~	~~2200~~	~~17210~~		~~2245~~
	"AE" 1762+20 TO 1784+17	2197	10759		1404
	~~"AW" 1786+00 TO 1832+51~~	~~4651~~	~~9446~~		~~1997~~
	~~"AE" 1784+17 TO 1830+66~~	~~4649~~	~~8394~~		~~1997~~
TOTAL				30467	~~44846~~ 36610

N NOT A SEPARATE PAY ITEM, FOR INFORMATION ONLY
* QUANTITY INCLUDED IN ROADWAY SUMMARY TABLE ON Q-4.

5 **REPLACED PER ADDENDUM No. 5 DATED SEPTEMBER 1, 2016**

STAGE CONSTRUCTION QUANTITIES

SCQ-4

REVISED BY TD | DATE REVISED 1-1-16
THANH DOAN | TRI NGUYEN
CALCULATED-DESIGNED BY | CHECKED BY
FUNCTIONAL SUPERVISOR EDMUND CHOY
STATE OF CALIFORNIA - DEPARTMENT OF TRANSPORTATION
Caltrans DESIGN

LAST REVISION 03-10-16 | DATE PLOTTED => 30-AUG-2016 | TIME PLOTTED => 15:15

Dist	COUNTY	ROUTE	POST MILES TOTAL PROJECT	SHEET No.	TOTAL SHEETS
04	Ala	205	0.0/1.0		
04	Ala	580	0.0/8.0, 26.1/30.3	463	676
10	SJ	580	13.5/15.4		

5

REGISTERED CIVIL ENGINEER 2-26-16 DATE

3-28-16
PLANS APPROVAL DATE

REGISTERED PROFESSIONAL ENGINEER Danny Kao No. 61646 Exp. 6-30-17 CIVIL STATE OF CALIFORNIA

THE STATE OF CALIFORNIA OR ITS OFFICERS OR AGENTS SHALL NOT BE RESPONSIBLE FOR THE ACCURACY OR COMPLETENESS OF SCANNED COPIES OF THIS PLAN SHEET.

ROADWAY SUMMARY (EASTBOUND MAINLINE)*

SHEET No.	STATION LIMIT	SURFACE AREA (N)	Max DEPTH (N)	COLD PLANE ASPHALT Conc PAVEMENT	CRACK AND SEAT	GEOSYNTHETIC PAVEMENT INTERLAYER (PAVING MAT)	ASPHALT BINDER (GEOSYNTHETIC PAVEMENT INTERLAYER)	TACK COAT	ASPHALT-RUBBER BINDER	PRECOATED SCREENINGS	HOT MIX ASPHALT (LEVELING)	HOT MIX ASPHALT (TYPE A)	RUBBERIZED HOT MIX ASPHALT (GAP GRADED)	RUBBERIZED HOT MIX ASPHALT-OPEN GRADED HIGH BINDER (OPEN GRADED FRICTION COURSE)
		SQFT	ft	SQYD			TON							
L-14 TO L-17	"AE" 1576+73.30 TO 1607+65.50	149487			16491.73	16491.73	17.51	70.06			1110.44	4441.77	2152.17	853.45
L-17	"AE" 1607+65.5 TO 1613+59	38960			65432.87			18.39				874.44	564.92	224.02
L-18 TO L-27	"AE" 1622+24.3 TO 1740+87	588895.80			~~578274.50~~	65432.87	69.49	277.96			4405.81	17623.25	8538.99	3386.15
L-28	"AE" 1740+87 TO 1744+97	20059.50	0.55	6686.5	2228.83 ~~2186.67~~	2228.83	2.32	7.10			150.07	600.30 ~~588.54~~	290.86	115.34
L-28 TO L-29	"AE" 1750+51.7 TO 1764+00	79899.30	0.60	26633.10	8877.70	8877.70	9.43	28.28			597.77	2391.06	1158.54	459.42
L-29 TO L-31	"AE" 1764+00 TO 1784+72.8	104768.20	0.20	11640.91	11640.91	11640.91	12.36	37.09			783.82	3135.29	1519.14	602.42
L-31 TO L-32	"DE" 1789+87.8 TO 1792+01	17360	0.55	5786.67		1928.89	2.05	6.15			129.88	519.51	251.72	99.82
L-32 TO L-36	"DE" 1792+01 TO 1815+46	51911	0.10	5767.89				12.25	7.78	93.28		1165.11	752.71	298.49
L-31 TO L-33	"AE" 1789+77.2 TO 1808+00	71998.60	0.55	23999.53	7999.84	7999.84	8.50	25.48			538.66	2154.62	1043.98	413.99
L-33 TO L-34	"AE" 1808+00 TO 1820+56	77950	0.10	8661.11				27.59	11.68	140.07		1749.54	1130.28	448.21
L-35	"AE" 1825+4.6 TO 1829+58.60	25194.40	0.10	2799.38				8.92	3.78	45.27		565.47	365.32	144.87
L-34	"DE" 1815+46 TO 1823+66	33546	0.10	3727.33				7.92	5.03	60.28		752.92	486.42	192.89
L-37	"DE" 1823+86 TO 1833+94	40566	0.10	4507.33				9.57	6.08	72.89		910.48	588.21	233.25
TOTAL (EB MAINLINE)				100209.75	~~626171.35~~ 112671.89	114600.77	121.66	536.76	34.35	411.79	7716.45	~~36072.40~~ 36883.78	18843.26	7472.32

ROADWAY SUMMARY (EASTBOUND MAINLINE SHOULDERS AND RAMPS)*

SHEET No.	STATION LIMIT	SURFACE AREA (N)	Max DEPTH (N)	COLD PLANE AC PAVEMENT	SEG, CLASS B3	CLASS 4 AGGREGATE SUBBASE	LIGHTWEIGHT AGGREGATE IMPORTED BORROW	GEOSYNTHETIC PAVEMENT INTERLAYER (PAVING MAT)	ASPHALT BINDER (GEOSYNTHETIC PAVEMENT INTERLAYER)	TACK COAT	HOT MIX ASPHALT (LEVELING)	HOT MIX ASPHALT (TYPE A)	RUBBERIZED HOT MIX ASPHALT (GAP GRADED)	RUBBERIZED HOT MIX ASPHALT-OPEN GRADED HIGH BINDER (OPEN GRADED FRICTION COURSE)
		SQFT	ft	SQYD		CY		SQYD				TON		
L-9 TO L-10	"FE1" 42+47.9 TO 48+42.5	14316.88	0.70	1590.76						6.76		428.45	208.92	83.25
L-14 TO L-17	"AE" 1576+23.3 TO 1607+65.5 (Lt)	23944.08	0.20	2660.45						11.30		1253.96	349.41	139.23
	"AE" 1576+23.3 TO 1607+65.5 (Rt)	33083.83	0.25	3675.98						15.62		1856.37	482.78	192.38
L-18 TO L-27	"AE" 1620+64.3 TO 1740+87 (Lt)	96780.93	0.20	10753.44						45.68		5068.45	1412.28	562.76
	"AE" 1620+64.3 TO 1740+87 (Rt)	122201.18	0.25	13577.91						57.68		6856.84	1783.23	710.58
L-27 TO L-28	"GE1" 1736+08 TO 1746+10	20793.50	0.40	2310.39				2310.39	2.45	9.81	155.57	622.26	303.43	120.91
	"GE2" 1747+21.4 TO 1757+08	20509	0.40	2278.78				2278.78	2.42	9.68	153.44	613.75	299.28	119.26
	"AE" 1740+87 TO 1746+57 (Lt)	4609.50	0.55	512.17						2.18		172.43	67.26	26.80
	"AE" 1740+87 TO 1746+57 (Rt)	5142	0.55	571.33						2.43		192.35	75.04	29.90
L-28 TO L-29	"AE" 1748+91.7 TO 1764+00 (Lt)	17092	0.60	1899.11						8.07		639.37	249.42	99.39
	"AE" 1748+91.7 TO 1764+00 (Rt)	15172.53	0.60	1685.84						7.16		567.57	221.41	88.23
L-29 TO L-30	"AE" 1764+00 TO 1766+59 (Lt)	2824	0.20	313.78						1.33		105.64	41.21	16.42
	"AE" 1764+00 TO 1766+59 (Rt)	4205.30	0.20	467.26						1.98		157.31	61.37	24.45
L-30 TO L-31	"AE" 1766+59 TO 1785+32.8 (Lt)	21089.34	0.20	2343.26						9.95		788.90	307.75	122.63
	"AE" 1766+59 TO 1785+42.5 (Rt)	20721.57	0.20	2302.40						9.78		775.14	302.38	120.49
L-31 TO L-32	"AE" 1788+17.2 TO 1802+57 (Lt)	15438	0.55	1715.33						7.29		577.50	225.28	89.77
	"AE" 1788+17.2 TO 1802+57 (Rt)	22672	0.55	2519.11						10.70		848.10	330.84	131.83
	"DE" 1788+27.8 TO 1792+00 (Rt)	5403	0.55	600.33						2.55		202.11	78.84	31.42
L-32 TO L-33	"AE" 1802+57 TO 1808+00 (Lt)	5928.68	0.55	658.75						2.80		221.78	86.52	34.47
	"AE" 1802+57 TO 1808+00 (Rt)	8467	0.55	940.78						4		316.73	123.56	49.23
L-34 TO L-35	"AE" 1820+56 TO 1821+56	2000	0.55	222.22						0.94		74.81	29.19	11.63
L-35	"AE" 1824+04.6 TO 1825+04.6	1832	0.55	203.56						0.86		68.53	26.73	10.56
	"AE" 1829+58.6 TO 1830+58.6	1832	0.55	203.56						0.86		68.53	26.73	10.56
L-36 TO L-37	"DE" 1814+00 TO 1819+65 (Rt)	5650	3.90		1632.22	62.78	627.78			2.67		126.81	82.45	32.85
L-46	"ALN1" 233+02 TO 242+56	27878.40	0.15	3097.60						3.29			303.18	
L-47	"GR" 313+90 TO 319+17	6705	0.15	745						0.79			72.92	
L-47 TO L-48	"JON" 324+95 TO 333+79	21477	0.15	2386.33						2.53			233.56	
L-50	"EDEN" 451+36 TO 452+21	26781	0.15	2975.67						3.16			291.24	
TOTAL (EB SHOULDERS AND RAMPS)				63211.10	1632.22	62.78	627.78	4589.17	4.87	241.85	309.01	22603.69	8076.21	2859

SEG SUBGRADE ENHANCEMENT GEOTEXTILE
* QUANTITY INCLUDED IN ROADWAY SUMMARY TABLE ON SHEET Q-4
(N) NOT A SEPARATE PAY ITEM, FOR INFORMATION ONLY

5 **REPLACED PER ADDENDUM No. 5 DATED SEPTEMBER 1, 2016**

SUMMARY OF QUANTITIES

Q-2

REVISED BY HN | DATE REVISED 1-1-16
CALCULATED-DESIGNED BY HUDA NASSORI | CHECKED BY TRI NGUYEN
FUNCTIONAL SUPERVISOR EDMUND CHOY
STATE OF CALIFORNIA - DEPARTMENT OF TRANSPORTATION
Caltrans DESIGN

LAST REVISION 03-17-16 | DATE PLOTTED => 30-AUG-2016 | TIME PLOTTED => 15:15

Dist	COUNTY	ROUTE	POST MILES TOTAL PROJECT	SHEET No.	TOTAL SHEETS
04	Ala	205	0.0/1.0		
04	Ala	580	0.0/8.0, 26.1/30.3	465	676
10	SJ	580	13.5/15.4		

5

REGISTERED CIVIL ENGINEER 2-26-16 DATE

3-28-16
PLANS APPROVAL DATE

REGISTERED PROFESSIONAL ENGINEER
Danny Kao
No. 61646
Exp. 6-30-17
CIVIL
STATE OF CALIFORNIA

THE STATE OF CALIFORNIA OR ITS OFFICERS OR AGENTS SHALL NOT BE RESPONSIBLE FOR THE ACCURACY OR COMPLETENESS OF SCANNED COPIES OF THIS PLAN SHEET.

ROADWAY SUMMARY (WESTBOUND MAINLINE)

SHEET No.	STATION LIMIT	SURFACE AREA (N)	Max DEPTH (N)	COLD PLANE ASPHALT CONCRETE PAVEMENT	CRACK AND SEAT	GEOSYNTHETIC PAVEMENT INTERLAYER (PAVING MAT)	ASPHALT BINDER (GEOSYNTHETIC PAVEMENT INTERLAYER)	TACK COAT	ASPHALT-RUBBER BINDER	PRECOATED SCREENINGS	HOT MIX ASPHALT (LEVELING)	HOT MIX ASPHALT (TYPE A)	RUBBERIZED HOT MIX ASPHALT (GAP GRADED)	RUBBERIZED HOT MIX ASPHALT-OPEN GRADED HIGH BINDER (OPEN GRADED FRICTION COURSE)
		SQFT	ft	SQYD			TON							
L-1 TO L-4	"AW" 1408+39.60 TO 1446+44.9	185882.80			20653.64	20653.64	21.93	65.80			1390.68	5562.71	2712.51	1080.87
L-5 TO L-8	"AW" 1465+11.4 TO 1499+95	184931.30	0.35	41095.84	20547.92	20547.92	21.82	65.47			1383.56	5534.24	2698.63	1075.34
L-8 TO L-9	"AW" 1499+95 TO 1510+42	72844	0.35	16187.56	8093.78	8093.78	8.60	25.79			544.98	2179.92	1062.98	423.57
L-9 TO L-11	"AW" 1515+58 TO 1540+73	134631	0.35	29918	14959	14959	15.89	47.66			1007.24	4028.96	1964.62	782.85
L-11 TO L-13	"AW" 1540+73 TO 1555+73	87730	0.35	19495.56		9747.78	10.35	31.06			656.35	2625.40	1280.21	510.13
L-13 TO L-17	"AW" 1555+73 TO 1614+42.2	285666.87	0.35	63481.53	31740.76	31740.76	33.71	101.13			2137.21	8548.85	4168.62	1661.10
L-17 TO L-23	"AW" 1620+32.9 TO 1692+00	348130	0.35	77362.22	38681.11	38681.11	41.08	123.24			2604.53	10418.11	5080.12	2024.31
L-23 TO L-26	"AW" 1692+00 TO 1731+66	226160	0.50	75386.67	25128.89	25128.89	26.69	80.06			1692.01	6768.05	3300.26	1315.08
L-26 TO L-27	"AW" 1731+66 TO 1741+68	84377.80	0.50	28125.93	5344	9375.31	9.96	29.87			631.27	2525.08	1231.29	490.64
L-27 TO L-28	"AW" 1741+68 TO 1747+78.9	47847	0.10	5316.33				16.94	7.17	85.98		1073.90	698.21	278.22
L-28 TO L-29	"AW" 1752+18.7 TO 1768+41	146396.70	0.10	16266.30				51.82	21.94	263.06		3285.79	2136.31	851.27
L-30 TO L-31	"AW" 1768+41 TO 1787+02.3	175881	0.10	19791.74				62.26	26.36	316.04		3947.55	2566.56	1022.72
L-31 TO L-34	"CW" 1790+79.3 TO 1818+79.3	111090.90	0.10	12343.43				32.77	16.65	199.62		2493.37	1621.10	645.97
L-31 TO L-32	"BW" 1790+90.8 TO 1800+61.2	88189.20	0.10	9798.80				26.02	13.22	158.46		1979.36	1286.91	512.80
L-32 TO L-35	"AW1" 1800+58 TO 1831+48	123652	0.10	13739.11				36.48	18.53	222.19		2775.30	1804.40	719.01
L-35	"AW1" 1826+64.7 TO 1831+49.3	27430.30	0.10	3047.81				9.71	4.11	49.29		615.66	400.28	159.50
L-34	"CW" 1824+99.4 TO 1831+68	26000	0.10	2888.89				9.20	3.90	46.72		583.56	379.41	151.19
	"BW" 1822+70.9 TO 1828+41	22141	0.10	2460.11				7.84	3.32	39.78		496.94	323.09	128.75
L-37	"BW" 1831+68 TO 1838+45	59014	0.10	6557.11				13.93	8.84	106.04		1324.54	861.17	343.16
TOTAL (WB MAINLINE)				443262.94	165149.10	178928.19	190.03	837.05	140.42	1683.58	12047.83	66767.29	35576.68	14176.48

PAVEMENT ROADWAY SUMMARY

SHEET No.	COLD PLANE ASPHALT CONCRETE PAVEMENT	LEAN CONCRETE BASE	SEG, CLASS B3	CLASS 2 AGGREGATE BASE	CLASS 4 AGGREGATE SUBBASE	LIGHTWEIGHT AGGREGATE IMPORTED BORROW	CRACK AND SEAT	GEOSYNTHETIC PAVEMENT INTERLAYER (PAVING MAT)	ASPHALT BINDER (GEOSYNTHETIC PAVEMENT INTERLAYER)	TACK COAT	ASPHALT-RUBBER BINDER	PRECOATED SCREENINGS	HOT MIX ASPHALT (LEVELING)	HOT MIX ASPHALT (TYPE A)	RUBBERIZED HOT MIX ASPHALT (GAP GRADED)	RUBBERIZED HOT MIX ASPHALT-OPEN GRADED HIGH BINDER (OPEN GRADED FRICTION COURSE)
	SQYD	CY	SQYD	CY			SQYD		TON							
Q-4	443262.94						165149.10	178928.19	190.03	837.05	140.42	1683.58	12047.83	66767.29	35576.68	14176.48
Q-3	74272.23	340.03	364	414.51	115.67	104	112671.89	4617.03	4.9	345.80			310.89	28401.62	11162.85	4362.57
Q-2	100209.75						~~626171.35~~	114600.77	121.66	536.76	34.35	411.79	7716.45	36883.78 ~~36072.40~~	18843.26	7472.32
Q-2	63211.09		1632.22		62.78	627.78		4589.17	4.87	241.85			309.01	22603.69	8076.21	2859
Q-5				260.81						4.07				553.52		
Q-11														932.91		
SCQ-4	30467													~~44791~~	36610	
Q-8														~~424.31~~	400.10	
Q-11														1410.34		
DQ-7														28.49		
TOTAL	711423.01	340.03	1996.22	675.32	178.45	731.78	~~791320.45~~ 277820.99	302735.16	321.46	1965.53	174.77	2095.37	20384.18	~~202785.57~~ 194591.74	73659.00	28870.37

SEG SUBGRADE ENHANCEMENT GEOTEXTILE, CLASS B3
(N) NOT A SEPARATE PAY ITEM, FOR INFORMATION ONLY

5 **REPLACED PER ADDENDUM No. 5 DATED SEPTEMBER 1, 2016**

SUMMARY OF QUANTITIES
Q-4

HN 1-1-16 REVISED BY DATE REVISED
HUDA NASSORI TRI NGUYEN CALCULATED-DESIGNED BY CHECKED BY
EDMUND CHOY FUNCTIONAL SUPERVISOR
STATE OF CALIFORNIA - DEPARTMENT OF TRANSPORTATION
Caltrans DESIGN

LAST REVISION 03-22-16 | DATE PLOTTED => 31-AUG-2016 | TIME PLOTTED => 13:38

Dist	COUNTY	ROUTE	POST MILES TOTAL PROJECT	SHEET No.	TOTAL SHEETS
04	Ala	205	0.0/1.0	467	676
04	Ala	580	0.0/8.0, 26.1/30.3		
10	SJ	580	13.5/15.4		

2-26-16
REGISTERED CIVIL ENGINEER DATE

3-28-16
PLANS APPROVAL DATE

REGISTERED PROFESSIONAL ENGINEER Danny Kao No. 61646 Exp. 6-30-17 CIVIL STATE OF CALIFORNIA

THE STATE OF CALIFORNIA OR ITS OFFICERS OR AGENTS SHALL NOT BE RESPONSIBLE FOR THE ACCURACY OR COMPLETENESS OF SCANNED COPIES OF THIS PLAN SHEET.

MIDWEST GUARDRAIL SYSTEM

SHEET No.	STATION LIMITS	LAYOUT TYPE	DIR	REMOVE GUARDRAIL	MGS (WOOD POST)	Dbl MGS (WOOD POST)	SINGLE THRIE BEAM BARRIER (WOOD POST)	DOUBLE THRIE BEAM BARRIER (WOOD POST)	TRANSITION RAILING (TYPE STB)	TRANSITION RAILING (TYPE WB-31)	END ANCHOR ASSEMBLY (TYPE SFT)	ALTERNATIVE FLARED TERMINAL SYTEM	ALTERNATIVE IN-LINE TERMINAL SYSTEM	VEGETATION CONTROL (MINOR CONCRETE)	TREATED WOOD WASTE ***
				LF					EA					SQYD	LB
L-1	"AW" 1406+45 TO 1407+21		L+	68											878
	"AW" 1406+55 TO 1409+75	12B			258					1		1		109	
L-1 TO L-4	"AW" 1406+48 TO 1443+33	STBB	R+				3660		1					1139	
L-3 TO L-4	"AW" 1431+19 TO 1448+10		L+	1702											21962
L-4	"AW" 1443+33 TO 1448+04	DTBB						471						157	
	"AW" 1406+48 TO 1443+33		R+	3660											47226
	"AW" 1443+33 TO 1448+04			471											6077
L-5 TO L-6	"AW" 1463+25 TO 1476+31			1306											16852
	"AW" 1463+28 TO 1476+31	5 ~~12DD~~ 12B			1240					1		1		445	
L-6	"AW" 1476+49 TO 1477+11		L+	62											82
L-6 TO L-8	"AW" 1476+75 TO "FW2" 25+53	11A			1969						1		1	667	
L-8	"FW2" 30+35														
L-9	"FW1" 43+14		R+												
L-10	"FW1" 46+32 TO 47+08			76											981
L-10	"FW1" 46+32 TO 47+08		L+		20						1		1	25	
L-10 TO L-11	"AW" 1528+50 TO 1541+75	11B			1282						1	1			
L-10 TO L-15	"AW" 1527+28 TO 1587+25		R+	5997											77381
L-14	"AE" 1575+63 TO 1576+40	12DD			72						1				
L-14	"AW" 1570+05 TO 1570+82			75											968
L-12 TO L-14	"AW" 1552+00 TO 1570+82	16A	L+		1839						1	1		24	
L-14 TO L-16	"AE" 1569+91 TO 1606+25	16B			3590						1	1		1210	
L-15	"AE" 1581+63 TO 1582+75	12B			50					1		1		38	
	"AW" 1587+34 TO 1587+97		R+							1		1		21	
L-15 TO L-16	"AE" 1587+13 TO 1595+75			901											11626
	"AW" 1590+08 TO 1600+30	11A	L+		966						1		1	333	
L-16 TO L-17	"AW" 1599+06 TO 1612+43			1338											17265
	"AE" 1606+94 TO 1608+40		R+	144											1858
	"AE" 1603+95 TO 1608+42	12A			372					1			1	40	
	"AE" 1607+25 TO 1612+44	5 ~~16B~~ 16A	L+		446					1			1	174	
L-17	"AE" 1611+82 TO 1612+54			68											878
	"AE" 1614+57 TO 1616+47		R+	189											2439
	"AE" 1615+51 TO 1619+00		L+	350											4516
	"AW" 1615+34 TO 1616+08		R+	74											955
	"AW" 1618+48 TO 1619+27			76											981
	"AW" 1618+72 TO 1619+37		L+	69											890
	"AW" 1612+53 TO 1613+15		R+							1		1		21	
	"AW" 1615+30 TO 1616+05	12DD			100							1		25	
	"AW" 1618+75 TO 1619+38	12C	L+		38					1				21	
	"AW" 1618+52 TO 1619+27	12B			13					1		1		25	
	"AE" 1618+32 TO 1618+94		R+	62						1		1		21	800
	"AE" 1614+79														
L-18 TO L-19	"AE" 1620+49 TO 1639+54			1905											24581
L-18 TO L-22	"AE" 1620+43 TO 1670+54	16B	L+		5005						1			1690	
L-19	"AW" 1641+67 TO 1643+61	11A			145						1		1	67	
L-19 TO L-20	"AW" 1639+62 TO 1645+14			551											7110
L-19 TO L-20	"AW" 1639+69 TO 1644+76	11B			526							1		169	
L-19	"AW" 1639+63 TO 1639+69														
L-20	"AW" 1644+76 TO 1645+14		R+							1				21	
L-20 TO L-21	"AW" 1654+61 TO 1660+26			564											2777
L-20 TO L-21	"AW" 1654+61 TO 1660+27	11B			539						1	1		173	
L-21	"AE" 1663+57 TO 1664+20	5								1		1		21	
L-21 TO L-23	"AE" 1663+44 TO 1684+32			2088											26942
L-22 TO L-25	"AE" 1671+46 TO 1715+50	~~16B~~ 16A	L+		4348						1		1	1470	
SUBTOTAL				21796	22818		3660	471	1	12	11	14	7	8106	276025

*** TREATED WOOD WASTE INCLUDE BOTH SIGN AND GUARDRAIL POSTS.

5 **REPLACED PER ADDENDUM No. 5 DATED SEPTEMBER 1, 2016**

SUMMARY OF QUANTITIES

Q-6

HN 1-1-16 REVISED BY DATE REVISED
HUDA NASSORI TRI NGUYEN CALCULATED-DESIGNED BY CHECKED BY
EDMUND CHOY FUNCTIONAL SUPERVISOR
STATE OF CALIFORNIA - DEPARTMENT OF TRANSPORTATION
Caltrans DESIGN

LAST REVISION 03-17-16 DATE PLOTTED => 30-AUG-2016 TIME PLOTTED => 15:15

Dist	COUNTY	ROUTE	POST MILES TOTAL PROJECT	SHEET No.	TOTAL SHEETS
04	Ala	205	0.0/1.0	468	676
04	Ala	580	0.0/8.0, 26.1/30.3		
10	SJ	580	13.5/15.4		

REGISTERED CIVIL ENGINEER DATE 2-26-16

3-28-16
PLANS APPROVAL DATE

REGISTERED PROFESSIONAL ENGINEER Danny Kao No. 61646 Exp. 6-30-17 CIVIL STATE OF CALIFORNIA

THE STATE OF CALIFORNIA OR ITS OFFICERS OR AGENTS SHALL NOT BE RESPONSIBLE FOR THE ACCURACY OR COMPLETENESS OF SCANNED COPIES OF THIS PLAN SHEET.

5 **REPLACED PER ADDENDUM No. 5 DATED SEPTEMBER 1, 2016**

MIDWEST GUARDRAIL SYSTEM

SHEET No.	STATION LIMITS	LAYOUT TYPE	DIR	REMOVE GUARDRAIL	MGS (WOOD POST)	DbI MGS (WOOD POST)	SINGLE THRIE BEAM BARRIER (WOOD POST)	DOUBLE THRIE BEAM BARRIER (WOOD POST)	TRANSITION RAILING (TYPE STB)	TRANSITION RAILING (TYPE WB-31)	END ANCHOR ASSEMBLY (TYPE SFT)	ALTERNATIVE FLARED TERMINAL SYTEM	ALTERNATIVE IN-LINE TERMINAL SYSTEM	VEGETATION CONTROL (MINOR CONCRETE)	TREATED WOOD WASTE ***
				LF					EA					SQYD	LB
L-22 TO L-23	"AW" 1683+69 TO 1690+94		R†	726											9368
L-23	"AW" 1691+05 TO 1691+68									1		1		21	
L-23 TO L-24	"AW" 1695+61 TO 1707+36			1177											15187
L-24	"AW" 1706+73 TO 1707+35									1		1		21	
L-24 TO L-25	"AW" 1702+63 TO 1711+58	5 ~~11B~~ 11A	L†		839						1		1	296	
L-25 TO L-27	"AE" 1716+50 TO 1735+90	5 ~~16B~~ 16A			1884						1		1	647	
L-27	"AE" 1734+89 TO 1735+70			100											1290
	"GE1" 1734+97 TO 1735+97	16B	R†	114	56						1	1		34	1471
L-27 TO L-28	"AE" 1738+68 TO 1746+75	11A			732					1			1	269	
	"AE" 1742+38 TO 1746+16	12CC	L†		453					1				269	
	"AE" 1742+38 TO 1747+16			478											6168
	"AW" 1715+12 TO 1748+99		R†	3387											43703
L-28	"AE" 1746+15 TO 1746+78			64											826
	"AW" 1751+00 TO 1751+62		L†	62											800
	"AW" 1751+05 TO 1756+50	12A			470					1			1	108	
L-28 TO L-29	"AE" 1748+37 TO 1755+96	12DD	R†		709								1	252	
L-29	"AW" 1763+28 TO 1764+05			75											968
	"AW" 1763+28 TO 1764+03	5 ~~16B~~ 16A	L†		19						1		1	25	
L-30	"AW" 1772+17 TO 1773+31			114											1471
	"AE" 1766+91 TO 1767+91		R†	100											1290
	"AE" 1766+91 TO 1767+91	16B			56						1	1		33	
	"AW" 1772+18 TO 1773+31	16A	L†		58						1		1	38	
L-31	"CW" 1789+46 TO 1790+10			64											826
	"CW" 1789+44 TO 1790+05			62											800
	"BW" 1789+45 TO 1790+24			76											981
	"DE" 1785+76 TO 1786+79			103											1329
	"DE" 1785+76 TO 1786+76	12B	R†		37					1		1		33	
	"DE" 1788+05 TO 1790+00	12DD			146								1	65	
	"CW" 1789+45 TO 1790+25	12C			55					1				25	
	"CW" 1789+49 TO 1790+25	12C			55					1				25	
	"BW" 1789+49 TO 1790+12		L†							1			1	21	
L-32	"CW" 1796+01 TO 1796+77			76											981
	"CW" 1796+01 TO 1796+77	11B	R†		33						1	1		25	
L-33	"AE" 1811+79 TO 1812+66			87											1123
	"AE" 1811+79 TO 1812+66	11B			45						1	1		29	
L-33 TO L-34	"CW" 1816+03 TO 1820+49		L†	446											5755
	"CW" 1816+03 TO 1820+44	12DD			435						1			150	
	"CW" 1816+00 TO 1819+97		R†		391						1			132	
L-34	"CW" 1824+26 TO 1826+75		L†	249											3213
	"BW" 1821+55 TO 1825+36			388											5006
	"BW" 1821+56 TO 1822+31		R†	75											968
	"CW" 1824+29 TO 1827+75	12A	L†		272					1			1	116	
	"CW" 1824+29 TO 1826+30		R†	61	192					1			1	85	787
	"BW" 1821+59 TO 1825+37		L†		310					1			1	128	
	"BW" 1821+56 TO 1825+37				306					1			1	25	
L-35	"AE" 1821+26 TO 1821+92		R†	66											852
	"AE" 1830+27 TO 1830+95			64											826
	"AE" 1820+39 TO 1821+89	12B			87					1		1		33	
	"AW1" 1825+25 TO 1825+88	12C	L†	63	38					1					813
	"AE" 1829+90 TO 1830+90	12B			37					1		1		33	
L-37	"DE" 1832+17 TO 1833+02		R†	85											1097
	"DE" 1832+15 TO 1833+03	11B			44						1	1		29	
L-46	"ALN1" 238+85 TO 240+15	15A	L†		174						1	1		116	877
L-47	"GR" 317+39 TO 319+68		L†	125	135	94								125	1613
SUBTOTAL				8487	8068	94				16	12	11	13	3208	109512
SUBTOTAL FROM SHEET Q-6				21796	22818		3660	471	1	12	11	14	7	8106	276025
GRAND TOTAL				30283	30886	94	3660	471	1	28	23	25	20	11314	387150

*** TREATED WOOD WASTE INCLUDE BOTH SIGN AND GUARDRAIL POSTS.

SUMMARY OF QUANTITIES

Q-7

REVISED BY HN — DATE REVISED 1-1-16
CALCULATED-DESIGNED BY HUDA NASSORI — CHECKED BY TRI NGUYEN
FUNCTIONAL SUPERVISOR EDMUND CHOY
STATE OF CALIFORNIA - DEPARTMENT OF TRANSPORTATION
Caltrans® DESIGN

LAST REVISION 03-19-16 — DATE PLOTTED => 30-AUG-2016 — TIME PLOTTED => 15:15

Dist	COUNTY	ROUTE	POST MILES TOTAL PROJECT	SHEET No.	TOTAL SHEETS
04	Ala	205	0.0/1.0	469	676
04	Ala	580	0.0/8.0, 26.1/30.3		
10	SJ	580	13.5/15.4		

2-26-16
REGISTERED CIVIL ENGINEER DATE

3-28-16
PLANS APPROVAL DATE

REGISTERED PROFESSIONAL ENGINEER Danny Kao No. 61646 Exp. 6-30-17 CIVIL STATE OF CALIFORNIA

THE STATE OF CALIFORNIA OR ITS OFFICERS OR AGENTS SHALL NOT BE RESPONSIBLE FOR THE ACCURACY OR COMPLETENESS OF SCANNED COPIES OF THIS PLAN SHEET.

CONCRETE BARRIER

SHEET No.	STATION LIMITS	LOCATION	CONCRETE BARRIER TYPE 60	CONCRETE BARRIER TYPE 60A	CONCRETE BARRIER TYPE 60C	CONCRETE BARRIER TYPE 60F	CONCRETE BARRIER TYPE 60R	REMOVE Conc BARRIER	REMOVE Conc BARRIER (TYPE K)	HMA (TYPE A) *
			LF							TON
L-3 TO L-4	"AW" 1431+23 TO 1448+01	L†			1678					25.11
L-8	"FW2" 29+21 TO 30+21	L†							100	
L-10 TO L-11	"AW" 1527+28 TO 1541+74	R†			1446					21.64
L-13 TO L-15	"AW" 1554+74 TO 1587+25	R†			3251					48.64
L-15 TO L-16	"AE" 1582+85 TO 1597+44	R†			1459					21.83
L-16 TO L-17	"AW" 1599+07 TO 1612+43	R†			1336					19.99
L-17	"AE" 1614+82 TO 1616+48	R†			166					2.48
L-17	"AE" 1615+42 TO 1619+00	L†			358					5.36
L-18	"AE" 1620+41 TO 1621+76	R†		135						2.02
L-18 TO L-19	"AE" 1621+76 TO 1639+55	R†			1779					26.62
L-21 TO L-23	"AE" 1664+29 TO 1684+32	R†			2003					29.97
L-22 TO L-23	5 "AW" ~~1663+69~~ 1683+69 TO 1690+95	R†			~~2726~~ 726				10.86	~~40.79~~
L-23 TO L-24	"AW" 1695+93 TO 1706+63	R†			1070					16.01
L-25 TO L-28	"AW" 1715+12 TO 1748+88	R†			3376					50.51
L-28 TO L-31	"MY" 1748+87 TO 1777+75	℄			2888			2888		43.21
L-31	"MY" 1777+75 TO 1779+40	℄	165					165		2.47
L-31	"MY" 1779+40 TO 1781+00	℄			160			160		2.39
L-31	"MY" 1781+00 TO 1782+20	℄	120					120		1.80
L-31	"MY" 1782+20 TO 1786+20	℄			400			400		5.99
L-31	"MY" 1786+20 TO 1786+44	℄	24					24		0.36
L-31	"MY" 1788+10 TO 1788+80	℄	70					70		1.05
L-31 TO L-32	"MY" 1788+80 TO 1792+00	℄			320			320		4.79
L-32	"MY" 1792+00 TO 1793+20	℄	120					120		1.80
L-32	"MY" 1793+20 TO 1797+66	℄			446			446		6.67
L-32	"MY" 1797+66 TO 1798+50	℄					84	84		1.26
L-32	"MY" 1798+50 TO 1800+13	℄			163			163		2.44
L-33	"MY" 1807+33 TO 1813+14	℄			581			581		8.69
L-32	"MZ" 1800+55 TO 1802+38	℄			183			183		2.74
L-33 TO L-34	"MZ" 1809+14 TO 1819+35	℄			1021			1021		15.28
L-34	"MZ" 1819+35 TO 1820+93	℄				158		158		2.36
L-34 TO L-35	"MZ" 1820+93 TO 1823+20	℄			227			227		3.40
L-35	"MZ" 1823+20 TO 1823+41	℄	21					21		0.31
L-35	"MZ" 1825+65 TO 1832+50	℄			685			685		10.25
L-46	"ALN1" 238+91 TO 240+10	L†			119					1.78
TOTAL			520	135	~~27841~~ 25841 5	158	84	7836	100	~~430.01~~ 400.08 5

* QUANTITY INCLUDED IN ROADWAY SUMMARY TABLE ON SHEET Q-4

5 **REPLACED PER ADDENDUM No. 5 DATED SEPTEMBER 1, 2016**

SUMMARY OF QUANTITIES

Q-8

STATE OF CALIFORNIA - DEPARTMENT OF TRANSPORTATION
Caltrans DESIGN
FUNCTIONAL SUPERVISOR: EDMUND CHOY
CALCULATED-DESIGNED BY: HUDA NASSORI
CHECKED BY: TRI NGUYEN
REVISED BY: HN
DATE REVISED: 1-1-16

LAST REVISION 03-22-16 | DATE PLOTTED => 30-AUG-2016 | TIME PLOTTED => 15:15

Dist	COUNTY	ROUTE	POST MILES TOTAL PROJECT	SHEET No.	TOTAL SHEETS
04	Ala	205	0.0/1.0	471	676
04	Ala	580	0.0/8.0, 26.1/30.3		
10	SJ	580	13.5/15.4		

2-26-16
REGISTERED CIVIL ENGINEER DATE

3-28-16
PLANS APPROVAL DATE

REGISTERED PROFESSIONAL ENGINEER Danny Kao No. 61646 Exp. 6-30-17 CIVIL STATE OF CALIFORNIA

THE STATE OF CALIFORNIA OR ITS OFFICERS OR AGENTS SHALL NOT BE RESPONSIBLE FOR THE ACCURACY OR COMPLETENESS OF SCANNED COPIES OF THIS PLAN SHEET.

REMOVE AC DIKE

SHEET No.	STATION LIMITS	LOCATION	REMOVE
			LF
L-1 TO L-4	"AW" 1406+45 TO 1443+15	L+	3662
L-6 TO L-8	"AW" 1476+45 TO "FW2" 35+36	L+	2977
L-9	"FW1" 42+04 TO 44+04	L+	200
L-9 TO L-10	"FW1" 42+24 TO 47+29	L+	304
L-14 TO L-16	"AE" 1569+66 TO "AE" 1606+25	L+	3630
L-16 TO L-17	"AE" 1607+25 TO 1612+44	L+	531
L-16	"AE" 1599+88 TO 1603+20	R+	332
L-16 TO L-17	"AE" 1603+70 TO 1608+42	R+	463
L-17 TO L-19	"AW" 1618+48 TO 1639+63	R+	2109
L-18	"AE" 1620+80 TO 1626+00	L+	524
L-18 TO L-19	"AE" 1629+90 TO 1639+25	L+	1316
L-20 TO L-22	"AW" 1645+14 TO 1682+67	R+	3714
L-20 TO L-21	"AE" 1649+14 TO 1663+24	R+	1412
L-22 TO L-23	"AW" 1683+69 TO 1695+93	R+	1223
L-22 TO L-23	"AE" 1671+46 TO 1684+06	L+	1241
L-23	"AE" 1685+59 TO 1691+26	R+	568
L-23 TO L-24	"AE" 1691+67 TO 1697+66	R+	599
L-23 TO L-24	"AW" 1697+20 TO 1699+66	L+	246
L-24 TO L-25	"AW" 1699+66 TO 1721+17	L+	2147
L-25 TO L-27	"AW" 1721+17 TO "GW2" 1739+10	L+	1813
L-24 TO L-25	"AE" 1700+52 TO 1716+92	R+	1634
L-25 TO L-26	"AE" 1717+07 TO 1725+25	R+	818
L-26	"AE" 1725+62 TO 1730+93	R+	532
L-27 TO L-28	"AW" 1741+79 TO 1749+33	L+	695
L-28	"AE" 1744+80 TO 1746+78	R+	198
L-28	"GE1" 1745+66 TO 1746+90	R+	125
L-28 TO L-29	"AW" 1751+00 TO 1754+30	L+	862
L-28 TO L-30	"GW1" 1752+73 TO 1768+61	L+	1601
L-29 TO L-30	"AW" 1763+24 TO 1769+42	R+	617
L-28 TO L-30	"GE2" 1750+73 TO "AE" 1770+98	R+	2013
L-30 TO L-31	"AE" 1770+98 TO 1777+91	R+	690
L-30 TO L-31	"AW" 1768+68 TO "CW" 1787+99	L+	1936
L-31	"AE" 1780+35 TO "DE" 1786+76	R+	643
L-31 TO L-32	"CW" 1789+46 TO 1795+63	L+	581
L-32	"CW" 1798+10 TO 1803+08	L+	502
L-32 TO L-34	"CW" 1803+22+10 TO 1820+00	R+	1671
L-31 TO L-36	"DE" 1788+01 TO 1814+13	R+	2606
L-32 TO L-37	"DE" 1794+20 TO 1835+14	L+	4094
L-36 TO L-37	"DE" 1815+45 TO 1835+14	R+	1928
L-31 TO L-34	"CW" 1789+45 TO "AW1" 1817+31	L+	2779
L-34	"AW1" 1817+31 TO 1821+00	L+	359
L-34 TO L-35	"AW1" 1821+00 TO 1823+29	L+	221
L-35	"AW1" 1825+21 TO 1829+26	L+	398
L-35	"AW1" 1829+26 TO 1832+49	L+	321
L-33	"AE" 1803+10 TO 1813+33	R+	1028
L-33 TO L-35	"AE" 1813+33 TO 1821+56	R+	816
L-35	"AE" 1823+05 TO 1830+90	R+	685
L-34	"CW" 1823+72 TO 1826+82	R+	315
L-34 TO L-37	"BW" 1821+53 TO 1828+91	R+	668
L-34 TO L-37	"CW" 1828+17 TO 1834+14	L+	595
L-37	"CW" 1834+14 TO "BW" 1839+65	L+	890
L-46	"ALN1" 238+91 TO 240+10	L+	117
L-49	"EDEN1" 436+50 TO 438+50	L+	200
TOTAL			62149

PLACE HMA DIKE

SHEET No.	STATION LIMITS	LOCATION	TYPE * C	TYPE * E	TYPE * F	HMA (TYPE A) *
			LF			TON
L-1	"AW" 1406+49 TO 1409+37	L+			288	3.59
L-1	"AW" 1409+37 TO 1410+01	L+	63			0.45
L-1 TO L-3	"AW" 1409+75 TO 1431+23	L+		2150		52.83
L-6 TO L-8	"AW" 1476+45 TO "FW2" 25+03	L+			2510	31.31
L-8	"FW2" 25+03 TO 25+78	L+	75			0.54
L-8	"FW2" 25+53 TO 35+36	L+		946		23.86
L-9	"FW3" 13+98 TO 17+43	R+		348		8.55
L-9	"FW1" 42+04 TO 44+04	L+		200		4.91
L-9 TO L-10	"FW1" 44+24 TO 46+32	L+		207		5.09
L-10	"FW1" 46+32 TO 46+58	L+			26	0.32
L-10	"FW1" 46+58 TO 47+29	L+	75			0.54
L-14	"AE" 1569+66 TO 1570+29	L+	63			0.45
L-14 TO L-16	"AE" 1570+29 TO 1606+25	L+			3630	45.28
L-15	"AE" 1581+38 TO 1582+00	R+	63			0.45
L-15	"AE" 1582+00 TO 1582+75	R+			75	0.94
L-15	"AW" 1587+35 TO 1587+60	R+			25	0.31
L-15	"AW" 1587+60 TO 1588+22	R+	63			0.45
L-16	"AE" 1599+88 TO 1603+20	R+		332		8.16
L-16	"AE" 1603+70 TO 1606+70	R+		293		7.20
L-16 TO L-17	"AE" 1606+70 TO 1607+45	R+	75			0.54
L-17	"AE" 1607+45 TO 1608+42	R+			94	1.17
L-16 TO L-17	"AE" 1607+25 TO 1607+75	L+	75			0.54
L-17	"AE" 1607+75 TO 1612+44	L+			421	5.25
L-17	"AW" 1618+52 TO 1618+89	R+			37.50	0.47
L-17	"AW" 1618+89 TO 1619+52	R+	63			0.45
L-17 TO L-19	"AW" 1619+52 TO 1639+63	R+		2009		49.36
L-18 TO L-22	"AE" 1620+43 TO 1670+54	L+			4979	62.11
L-19 TO L-20	"AE" 1641+44 TO 1644+77	R+		334		8.21
L-20	"AW" 1645+52 TO 1654+62	R+		876		21.52
L-20 TO L-21	"AE" 1649+14 TO 1663+24	R+		1445		35.50
L-21	"AE" 1663+94 TO 1663+24	R+	70			0.54
L-21	"AE" 1663+95 TO 1664+20	R+			25	0.31
L-21 TO L-22	"AW" 1660+99 TO 1682+67	R+		2166		53.22
L-22 TO L-23	"AE" 1671+46 TO 1684+06	L+	50		~~1259~~ 1209	15.70
L-23	"AE" 1685+59 TO 1691+26	R+		568		13.96
L-23	"AW" 1691+05 TO 1691+30	R+			25	0.31
L-23	"AW" 1691+30 TO 1691+93	R+	63			0.45
L-23	"AW" 1691+93 TO 1695+93	R+		400		9.83
L-23 TO L-24	"AE" 1691+67 TO 1697+66	R+		599		14.72
L-23 TO L-24	"AW" 1697+20 TO 1699+66	L+		246		6.04
L-24	"AW" 1699+66 TO 1702+63	L+		300		7.37
L-24	"AW" 1702+63 TO 1711+08	L+			839	10.47
L-24	"AW" 1706+73 TO 1706+98	R+			25	0.31
L-24	"AW" 1706+73 TO 1707+60	R+	63			0.45
L-24 TO L-25	"AW" 1711+08 TO 1711+84	L+	75			0.54
L-24 TO L-25	"AE" 1700+52 TO 1716+92	R+		1634		40.15
L-25	"AW" 1711+84 TO 1721+17	L+		929		23.44
L-25 TO L-26	"AE" 1717+07 TO 1725+25	R+		818		20.10
L-25 TO L-27	"AW" 1721+17 TO "GW2" 1739+10	L+		1813		44.55
L-26	"AE" 1725+62 TO 1730+93	R+		532		13.07
L-27 TO L-28	"AW" 1741+79 TO 1749+33	L+		695		17.08
L-28	"AE" 1744+80 TO 1746+75	R+			194	2.42
L-28	"GE1" 1745+66 TO 1746+90	R+		125		3.07
L-28	"AW" 1751+05 TO 1753+80	L+			275	3.43
L-28	"AW" 1753+80 TO 1754+55	L+	75			0.54
L-28 TO L-29	"AW" 1754+55 TO 1759+82	L+		528		13.59
L-28 TO L-29	"GW1" 1752+73 TO "AW" 1763+28	L+		1061		26.07
L-29	"AW" 1763+28 TO 1763+53	L+			25	0.31
L-29	"AW" 1763+53 TO 1764+29	L+	75			0.54
L-29 TO L-30	"AW" 1764+03 TO 1768+61	L+	1086	440	14702	10.81
TOTAL			~~1036~~	21994	~~14752~~	733.74

* QUANTITY INCLUDED IN PLACE HMA DIKE ON SHEET Q-11

5 REPLACED PER ADDENDUM No. 5 DATED SEPTEMBER 1, 2016

SUMMARY OF QUANTITIES
Q-10

STATE OF CALIFORNIA - DEPARTMENT OF TRANSPORTATION
Caltrans DESIGN
FUNCTIONAL SUPERVISOR: EDMUND CHOY
CALCULATED-DESIGNED BY: HUDA NASSORI
CHECKED BY: TRI NGUYEN
REVISED BY: HN
DATE REVISED: 1-1-16

LAST REVISION 03-22-16
DATE PLOTTED => 30-AUG-2016
TIME PLOTTED => 15:15

Dist	COUNTY	ROUTE	POST MILES TOTAL PROJECT	SHEET No.	TOTAL SHEETS
04	Ala	205	0.0/1.0		
04	Ala	580	0.0/8.0, 26.1/30.3	472	676
10	SJ	580	13.5/15.4		

5

2-26-16
REGISTERED CIVIL ENGINEER DATE

3-28-16
PLANS APPROVAL DATE

REGISTERED PROFESSIONAL ENGINEER Danny Kao No. 61646 Exp. 6-30-17 CIVIL STATE OF CALIFORNIA

THE STATE OF CALIFORNIA OR ITS OFFICERS OR AGENTS SHALL NOT BE RESPONSIBLE FOR THE ACCURACY OR COMPLETENESS OF SCANNED COPIES OF THIS PLAN SHEET.

PLACE HMA DIKE

SHEET No.	STATION LIMITS	LOCATION	TYPE C	TYPE E	TYPE F	HMA (TYPE A) *
			LF			TON
L-29 TO L-30	"AW" 1763+24 TO 1769+42	R+		617		15.16
L-28 TO L-31	"GE2" 1750+73 TO "AE" 1777+91	R+		2718		39.16
L-30	"AE" 1766+66 TO 1767+28	R+	63			0.45
L-30	"AE" 1767+28 TO 1767+91	R+			62	0.77
L-30	"AE" 1767+91 TO 1770+98	R+		305		7.49
L-30 TO L-31	"AE" 1770+98 TO 1777+91	R+		690		16.95
L-30	"AW" 1768+68 TO 1772+18	L+		356		8.75
L-30	"AW" 1772+18 TO 1772+81	L+			64	0.80
L-30	"AW" 1772+81 TO 1773+56	L+	75			0.54
L-30 TO L-31	"AW" 1773+56 TO "CW" 1787+99	L+		1438		35.95
L-31	"AE" 1780+35 TO "DE" 1785+51	R+		515		13.27
L-31	"DE" 1785+51 TO 1786+14	R+	63			0.45
L-31	"DE" 1786+14 TO 1786+76	R+			62	0.77
L-31	"CW" 1789+49 TO 1789+74	L+			25	0.31
L-31	"CW" 1789+74 TO 1790+38	L+	63			0.45
L-31 TO L-32	"CW" 1790+38 TO 1795+63	L+		525		13.46
L-32 TO L-33	"CW" 1798+10 TO 1805+78	L+		768		18.87
L-33	"CW" 1798+10 TO 1815+57	L+		757		18.60
L-31	"CW" 1789+49 TO 1789+86	R+			25	0.31
L-31	"CW" 1789+86 TO 1790+49	R+	75			0.54
L-31 TO L-32	"CW" 1790+49 TO 1796+01	R+		525		12.90
L-32	"CW" 1796+40 TO 1797+14	R+	63			0.45
L-32 TO L-33	"CW" 1797+14 TO 1806+14	R+		900		22.11
L-33	"CW" 1806+45 TO 1815+90	R+		945		23.22
L-33	"CW" 1816+00 TO 1819+97	R+			397	4.95
L-34	"BW" 1789+48 TO 1789+73	L+			25	0.31
L-34	"BW" 1789+73 TO 1790+48	L+	75			0.54
L-31 TO L-34	"BW" 1790+48 TO "AW1" 1817+30	L+		2706		66.49
L-34	"AW1" 1817+30 TO 1821+00	L+		370		9.10
L-34 TO L-35	"AW1" 1821+00 TO 1823+29	L+		229		5.63
L-31	"DE" 1788+05 TO 1789+51	R+			146	1.82
L-31	"DE" 1789+51 TO 1790+25	R+	75		63	0.80
L-31 TO L-36	"DE" 1790+25 TO 1814+13	R+		2406		59.12
L-36 TO L-34	"DE" 1815+45 TO 1819+51	R+		391		9.61
L-34 TO L-37	"DE" 1819+51 TO 1831+89	R+		1224		30.69
L-32 TO L-37	"DE" 1794+20 TO 1835+14	L+		4094		100.60
L-37	"DE" 1831+89 TO 1832+55	R+	63			0.45
L-37	"DE" 1832+55 TO 1833+03	R+			50	0.62
L-37	"DE" 1833+03 TO 1835+14	R+		210		5.16
L-34	"BW" 1821+56 TO 1821+82	R+			25	0.31
L-34	"BW" 1821+82 TO 1822+57	R+	75			0.54
L-34 TO L-37	"BW" 1822+57 TO 1828+91	R+		564		13.86
L-33	"AE" 1803+10 TO 1813+33	R+		1028		25.26
L-33 TO L-35	"AE" 1813+33 TO 1821+56	R+		816		20.05
L-35	"AW1" 1825+25 TO 1825+50	L+			25	0.31
L-35	"AW1" 1825+50 TO 1826+13	L+	63			0.45
L-35	"AW1" 1826+13 TO 1829+26	L+		308		7.57
L-35	"AW1" 1829+26 TO 1832+49	L+		321		7.89
L-35	"AE" 1823+05 TO 1829+65	R+		560		13.76
L-35	"AE" 1829+65 TO 1830+27	R+	63			0.45
L-35	"AE" 1830+27 TO 1830+90	R+			62	0.77
L-34	"CW" 1823+75 TO 1826+82	R+	307			2.20
L-34 TO L-37	"CW" 1828+17 TO 1834+14	L+		595		14.62
L-37	"CW" 1834+14 TO 1838+91	L+		476		11.70
L-37	"CW" 1839+80 TO 1839+65	L+		318		7.81
L-49	"EDEN1" 436+50 TO 438+50	L+	200			1.43
SUBTOTAL			1323	27675	1031	676.60
SUBTOTAL FROM SHEET Q-10			1086 ~~1036~~	21994	14702 ~~14752~~	733.74
TOTAL			~~2359~~ 2409	49669	~~15783~~ 15753	1410.34

* QUANTITY INCLUDED IN ROADWAY SUMMARY TABLE ON SHEET Q-4

FENCE SUMMARY

SHEET No.	STATION LIMITS	LOCATION	TEMPORARY REINFORCED SILT FENCE (TYPE 1)	REMOVE FENCE (TYPE BW)	FENCE (TYPE BW, 5 STRAND, METAL POST)
			LF		
L-1 TO L-50		R+ & L+	23250		
L-34 TO L-35	"AW1" 1822+07 TO 1823+31	L+		154	154
L-35	"AW1" 1825+22 TO 1825+75	L+		58	58
L-35	"AE" ~~"AE1"~~ 1821+27 TO ~~1824+55~~ 1821+93	R+		~~328~~ 66	~~328~~ 66
L-35	"AE" 1823+95 TO 1824+55	R+		60	60
TOTAL			23250	~~540~~ 338	~~540~~ 338

SAFETY EDGE

SHEET No.	STATION LIMITS	(N) TOTAL THICKNESS OF SAFETY EDGE	(N) LENGTH SAFETY EDGE	HMA (TYPE A) *
	MAINLINE	ft		TON
L-1 TO L-4	"AW" 1407+22 TO 1440+59	0.8	3337	109.53
L-8 TO L-9	"AW" 1499+95 TO 1512+02	0.8	1207	39.62
L-9	"AW" 1513+98 TO 1514+98	0.8	100	3.28
L9 TO L-10	"AW" 1513+98 TO 1527+28	0.8	1330	43.65
L-10 TO L-11	"AW" 1517+67 TO 1528+41	0.8	1080	35.45
L-11 TO L-12	"AW" 1541+75 TO 1551+97	0.6	1022	22.05
L-14 TO L-15	"AW" 1570+83 TO 1590+05	0.8	1922	63.08
L-15 TO L-16	"AW" 1588+22 TO 1599+07	0.8	1085	35.61
L-16 TO L-17	"AW" 1600+33 TO 1616+02	0.8	1569	51.50
L-17	"AW" 1613+18 TO 1615+30	0.8	212	6.96
L-17 TO L-19	"AW" 1619+40 TO 1641+57	0.8	2217	72.77
L-19 TO L-23	"AW" 1643+64 TO 1697+20	0.8	5356	175.79
L-24 TO L-25	"AW" 1707+60 TO 1715+12	0.5	752	11.99
L-14 TO L-15	"AE" 1576+23 TO 1581+37	0.8	514	16.87
L-16	"AE" 1597+44 TO 1599+88	0.8	244	8.01
L-16	"AE" 1603+20 TO 1603+70	0.8	50	1.64
L-16	"AE" 1606+25 TO 1607+22	0.8	97	3.18
L-19	"AE" 1639+55 TO 1641+43	0.8	188	6.17
L-20	"AE" 1644+78 TO 1649+14	0.8	436	14.31
L-23	"AE" 1684+33 TO 1685+58	0.8	125	4.10
L-24	"AE" 1697+66 TO 1700+51	0.8	285	9.35
L-25	"AE" 1715+50 TO 1716+50	0.8	100	3.28
L-26	"AE" 1730+93 TO 1734+91	0.8	398	13.06
L-27	"AE" 1737+08 TO 1738+65	0.8	157	5.15
L-27 TO L-28	"AE" 1735+90 TO 1746+57	0.5	1067	17.02
L-29	"AE" 1755+99 TO 1757+02	0.5	103	1.64
L-31	"AE" 1777+91 TO 1780+34	0.8	243	7.98
L-32 TO L-33	"AE" 1792+00 TO 1803+09	0.5	1109	17.69
L-34, L-37	"BW" 1825+40 TO 1827+68	0.6	228	4.92
L-32	"CW" 1795+64 TO 1798+10	0.6	246	5.31
L-33	"CW" 1805+78 TO 1809+60	0.6	382	8.24
L-34, L-37	"CW" 1826+82 TO 1831+00	0.6	418	9.02
L-32	"DE" 1792+00 TO 1794+20	0.6	220	4.75
L-36	"DE" 1812+58 TO 1819+75	0.6	717	15.47
L-36	"DE" 1814+13 TO 1815+45	0.6	132	2.85
SUBTOTAL				851.29

SAFETY EDGE

SHEET No.	STATION LIMITS	(N) TOTAL THICKNESS OF SAFETY EDGE	(N) LENGTH SAFETY EDGE	HMA (TYPE A) *
	RAMP	ft		TON
L-27, L-28	"GE1" 1737+08 TO 1746+90	0.4	982	10.21
L-27, L-28	"GE1" 1737+08 TO 1746+90	0.4	982	10.21
L-28, L-29	"GE2" 1747+50 TO 1757+02	0.4	952	10.21
L-27, L-28	"GW2" 1747+50 TO 1757+60.06	0.7	335	9.11
L-27, L-28	"GW2" 1741+58.13 TO 1750+67	0.7	609	16.56
L-8, L-9	"FW2" 28+41.24 TO 33+50	0.4	509	5.28
L-8, L-9	"FW2" 33+87 TO 37+64.23	0.4	378	3.92
L-9	"FW2" 35+24.21 TO 37+50	0.4	226	2.35
L-9	"FW3" 14+00 TO 18+00	0.4	400	4.16
L-9	"FW3" 13+81.79 TO 13+98.02	0.4	17	0.18
L-9	"FW3" 17+42.93 TO 18+00	0.4	57	0.60
L-48	"JON1" 334+25 TO 337+50	0.7	325	8.83
SAFETY EDGE (RAMPS) SUBTOTAL				81.62
SAFETY EDGE (MAINLINE) SUBTOTAL				851.29
TOTAL				932.91

* QUANTITY INCLUDED IN ROADWAY SUMMARY TABLE ON SHEET Q-4
(N) NOT A SEPARATE PAY ITEM, FOR INFORMATION ONLY

5 **REPLACED PER ADDENDUM No. 5 DATED SEPTEMBER 1, 2016**

SUMMARY OF QUANTITIES

Q-11

STATE OF CALIFORNIA - DEPARTMENT OF TRANSPORTATION
Caltrans DESIGN
FUNCTIONAL SUPERVISOR: EDMUND CHOY
CALCULATED-DESIGNED BY: HUDA NASSORI
CHECKED BY: TRI NGUYEN
REVISED BY: HN
DATE REVISED: 1-1-16

LAST REVISION 03-22-16
DATE PLOTTED => 30-AUG-2016
TIME PLOTTED => 15:15

Dist	COUNTY	ROUTE	POST MILES TOTAL PROJECT	SHEET No.	TOTAL SHEETS
04	Ala	205	0.0/1.0	476	676
04	Ala	580	0.0/8.0, 26.1/30.3		
10	SJ	580	13.5/15.4		

2-26-16
REGISTERED CIVIL ENGINEER DATE

3-28-16
PLANS APPROVAL DATE

REGISTERED PROFESSIONAL ENGINEER Danny Kao No. 61646 Exp. 6-30-17 CIVIL STATE OF CALIFORNIA

THE STATE OF CALIFORNIA OR ITS OFFICERS OR AGENTS SHALL NOT BE RESPONSIBLE FOR THE ACCURACY OR COMPLETENESS OF SCANNED COPIES OF THIS PLAN SHEET.

PAVEMENT STRUCTURE QUANTITIES
(PRECAST JOINTED CONCRETE PAVEMENT AND STRUCTURAL CONCRETE, APPROACH SLAB)

SHEET No.	STATION LIMIT	SURFACE AREA (N)	Max DEPTH (N)	WIDTH (N)	LENGTH (N)	REMOVE CONCRETE PAVEMENT	LEAN CONCRETE BASE RAPID SETTING	STRUCTURAL CONCRETE APPROACH SLAB	BASE BOND BREAKER	REMOVE ASPHALT CONCRETE PAVEMENT	PRECAST JOINTED CONCRETE PAVEMENT	ROADWAY EXCAVATION **
		SQFT	ft			CY			SQYD	SQFT	CY	
L-1	"AW" 1406+64.2 TO 1406+79.6	567.60	4.10	48	8	26.28	5.26	24.53	63.07			3.50
	"AW" 1406+79.6 TO 1408+39.6	8000	1.25	50	160	370.37	222.22			8000	266.67	48.89
L-4	"AW" 1446+44.9 TO 1448+04.9	8089	1.25	50	160	374.49	222.22			8089	269.63	49.27
	"AW" 1448+4.9 TO 1450+02.8	4831.40	1.42	48	197.90	223.68	44.74	208.76	536.82			29.82
L-5	"AW" 1461+83.8 TO 1463+51.4	5233	1.42	48	167.60	242.27	48.45	226.12	581.44			32.30
	"AW" 1463+51.4 TO 1465+11.4	8091	1.25	50	160	374.58	222.22			8091	269.70	49.28
L-9	"AW" 1510+42 TO 1512+02	7967.52	1.25	50	160	368.87	222.22			7967.52	265.58	48.75
	"AW" 1512+02 TO 1513+98	9789.80	1.25	50	196	453.23	126.90				326.33	
	"AW" 1513+98 TO 1515+58	7945.30	1.25	50	160	367.84	222.22			7945.30	264.84	48.66
L-17	"AW" 1614+42.2 TO 1616+02.2	8109.40	1.25	50	160	375.44	222.22			8109.40	270.31	49.35
	"AW" 1616+02.2 TO 1616+10.2	421.60	1.42	48	8	19.52	3.90	18.22	46.84			2.60
	"AW" 1618+64.9 TO 1618+72.9	421.60	1.42	48	8	19.52	3.90	18.22	46.84			2.60
	"AW" 1618+72.9 TO 1620+32.9	8069	1.25	50	160	373.56	222.22			8069	268.97	49.18
	"AE" 1613+59 TO 1614+79	5980.80	1.25	50	120	276.89	144.44			5980.80	199.36	36.58
	"AE" 1614+79 TO 1616+76	9369	1.25	48	197	433.75	121.45				312.30	
	"AE" 1616+76 TO 1618+74.1	9817.60	1.25	50	198.40	454.52	127.27				327.25	60.19
L-18	"AE" 1620+64.3 TO 1622+24.3	7899.50	1.25	50	160	365.72	222.22			7899.50	263.32	48.46
L-28	"AW" 1747+83 TO 1748+83	6202.70	1.25	62	100	287.16	200.93			6202.70	206.76	35.68
	"AW" 1748+83 TO 1749+04.14	504.76	1.42	36	8	23.37	4.67	21.81	56.08			3.12
	"AW" 1751+18.7 TO 1752+18.7	6197	1.25	62	100	286.90	200.93			6197	206.57	35.65
	"AW" 1751+00 TO 1751+18.7	664	1.42	48	8	30.74	6.15	28.69	73.78			4.10
	"AE" 1744+97 TO 1746+57	8000	1.25	50	160	370.37	222.22			8000	266.67	48.89
	"AE" 1746+57 TO 1746+81.93	596.44	1.42	43.60	8	27.61	5.52	25.77	66.27			3.68
	"AE" 1748+91.7 TO 1750+51.7	8000	1.25	50	160	370.37	222.22			8000	266.72	48.89
	"AE" 1748+64.97 TO 1748+91.7	515.55	1.42	36	8	23.87	4.77	22.28	57.28			3.18
L-31	"CW" 1786+98.6 TO 1787+98.6	2571.70	1.25	26	100	102.87	84.26			2571.70	85.72	25.45
	"CW" 1787+98.6 TO 1788+06.6	196.60	1.42	24	8	7.86	1.82	8.50	21.84			2.43
	"CW" 1789+71.3 TO 1789+79.3	222.80	1.42	24	8	8.91	2.06	9.63	24.76			2.75
	"CW" 1789+79.3 TO 1790+79.3	2543.60	1.25	26	100	101.74	84.26			2543.60	84.79	25.27
	"AW" 1787+2.3 TO 1788+02.3	6200	1.25	62	100	287.04	200.93			6200	206.67	48.30
	"AW" 1788+2.3 TO 1788+18.5	794.20	1.42	60	8	36.77	7.35	34.32	88.24			4.90
	"BW" 1789+72.2 TO 1789+90.8	810.40	1.42	60	8	37.52	7.50	35.02	90.04			5
	"BW" 1789+90.8 TO 1790+90.8	6369.40	1.25	62	100	294.88	200.93			6369.40	212.31	49.36
	"AE" 1784+72.8 TO 1786+32.8	6080	1.25	38	160	281.45	213.93			6080	202.64	53.10
	"AE" 1785+12.8 TO 1786+32.8	401.32	1.42	36	8	18.58	3.72	17.34	44.59			2.48
	"AE" 1788+2.9 TO 1788+17.2	401.80	1.42	36	8	18.60	3.72	17.36	44.64			2.48
	"AE" 1788+17.2 TO 1789+77.2	6080	1.25	38	160	281.48	213.93			6080	202.67	53.10
	"DE" 1784+82.5 TO 1786+42.5	4160	1.25	26	160	192.61	123.26			4160	138.68	41.01
	"DE" 1786+42.5 TO 1786+56	257.80	1.42	36	8	11.94	2.39	11.14	28.64			1.59
	"DE" 1788+14.3 TO 1788+27.8	257.90	1.42	36	8	11.94	2.39	11.14	28.66			1.59
	"DE" 1788+27.8 TO 1789+87.8	4160	1.25	26	160	192.59	123.26			4160	138.67	41.01
L-34	"CW" 1819+00.2 TO 1820+00.2	2618.30	1.08	26	100	104.73	84.26			2618.30	87.28	24.49
	"CW" 1820+00.2 TO 1820+22.62	500	1.42	22	22.42	20	4.63	21.60	55.56			6.30
	"CW" 1823+99.4 TO 1824+99.4	2618.30	1.08	26	100	104.73	84.26			2618.30	87.28	24.49
	"CW" 1823+77.51 TO 1823+99.4	366.42	1.42	17	21.63	14.66	3.39	15.83	40.71			4.61
	"BW" 1821+70.9 TO 1822+70.9	2617.80	1.25	26	100		91.48			2617.80	87.26	25.74
	"BW" 1821+62.9 TO 1821+70.9	202.70	1.25	24	8		1.88	8.76	22.52			1.25
L-34 TO L-35	"AW1" 1822+22.9 TO 1823+22.9	3807	1.25	38	100	176.25	123.15			3807	126.90	33.23
L-35	"AW1" 1823+22.9 TO 1823+34.4	373.40	1.42	36	8	17.29	3.46	16.13	41.49			2.30
	"AE" 1820+56 TO 1821+56	3800	1.25	38	100	175.93	133.70			3800	126.67	33.19
	"AE" 1821+56 TO 1821+56	390.60	1.42	36	8	18.08	3.62	16.88	43.40			2.41
	"AW1" 1825+46.7 TO 1825+64.7	408.40	1.42	36	8	18.91	3.78	17.65	45.38	408.40		2.52
	"AW1" 1825+64.7 TO 1826+64.7	3791	1.25	38	100	175.51	123.15			3791	126.37	33.13
	"AE" 1823+91.1 TO 1824+04.6	423.80	1.42	36	8	19.62	3.92	18.31	47.09			2.62
	"AE" 1824+04.6 TO 1825+04.6	3800	1.25	38	100	175.93	105.56			3800	126.67	33.19
	"AE" 1829+58.6 TO 1830+58.6	3800	1.25	38	100	175.93	105.56			3800	126.67	33.19
	"AE" 1830+58.6 TO 1830+66.6	287	1.42	36	8	13.29	2.66	12.40	31.89			1.77
	"AW1" 1832+49.3 TO 1832+49.3	3600	1.25	36	100	166.67	116.67			3600	120	31.93
	"AW1" 1832+49.3 TO 1832+57.3	289.30	1.42	36	8	13.39	2.68 5	12.50	32.14			1.79
DQ-7							~~64.34~~		231			
SUBTOTAL						9818.62	~~5609.34~~ 5545	878.91	2491.01		6538.23	1400.59
GRAND TOTAL						9818.62	~~5609.34~~ 5545 5	878.91	2491.01	167576.72	6538.23	1400.59

** QUANTITY INCLUDED IN PAVEMENT STRUCTURE QUANTITY SUMMARY ON SHEET Q-1
(N) NOT A SEPARATE PAY ITEM, FOR INFORMATION ONLY

5 **REPLACED PER ADDENDUM No. 5 DATED SEPTEMBER 1, 2016**

SUMMARY OF QUANTITIES
Q-15

STATE OF CALIFORNIA - DEPARTMENT OF TRANSPORTATION
Caltrans® DESIGN
FUNCTIONAL SUPERVISOR: EDMUND CHOY
CALCULATED-DESIGNED BY: HUDA NASSORI
CHECKED BY: TRI NGUYEN
REVISED BY: HN
DATE REVISED: 1-1-16

LAST REVISION | DATE PLOTTED => 30-AUG-2016
03-22-16 | TIME PLOTTED => 15:15