DIST	COUNTY	ROUTE	POST MILES TOTAL PROJECT	SHEET No	TOTAL SHEETS
04	Ala	880	22.6/24.0	701	760

Mahvash Harms 12/1/11
REGISTERED STRUCTURAL ENGINEER DATE

4-16-12
PLANS APPROVAL DATE

REGISTERED PROFESSIONAL ENGINEER MAHVASH M. HARMS No. 2639 Exp. 12/31/12 STRUCTURAL STATE OF CALIFORNIA

The State of California or its officers or agents shall not be responsible for the accuracy or completeness of scanned copies of this plan sheet.

ALAMEDA COUNTY TRANSPORTATION COMMISSION
1333 BROADWAY, SUITE 220
OAKLAND, CA 94612

BIGGS CARDOSA ASSOCIATES INC.
865 THE ALAMEDA
SAN JOSE, CALIFORNIA 95126

STANDARD PLANS DATED MAY 2006

A10A	ACRONYMS AND ABBREVIATIONS (SHEET 1 OF 2)
A10B	ACRONYMS AND ABBREVIATIONS (SHEET 2 OF 2)
A10C	SYMBOLS (SHEET 1 OF 2)
A10D	SYMBOLS (SHEET 2 OF 2)
A62B	LIMITS OF PAYMENT FOR EXCAVATION AND BACKFILL - BRIDGE SURCHARGE AND WALL
A62C	LIMITS OF PAYMENT FOR EXCAVATION AND BACKFILL - BRIDGE SURCHARGE AND WALL
A76C	CONCRETE BARRIER TYPE 60E
B0-1	BRIDGE DETAILS
B0-3	BRIDGE DETAILS
B0-5	BRIDGE DETAILS
B0-13	BRIDGE DETAILS
RSP B2-8	PILE DETAILS-CLASS 200
RSP B6-21	JOINT SEALS (MAXIMUM MOVEMENT RATING = 2")
B7-1	BOX GIRDER DETAILS
B7-6	DECK DRAINS - TYPES D-1 AND D-2
B7-8	DECK DRAINAGE DETAILS
B7-10	UTILITY OPENING - BOX GIRDER
B8-5	CAST-IN-PLACE PRESTRESSED GIRDER DETAILS
B11-52	CHAIN LINK RAILING TYPE 7
B11-54	CONCRETE BARRIER TYPE 26
B14-5	WATER SUPPLY LINE (DETAILS) (PIPE SIZES LESS THAN 4")
S-16	OVERHEAD SIGNS, WALKWAY DETAILS No. 1
S-17	OVERHEAD SIGNS, WALKWAY DETAILS No. 2
S-17A	OVERHEAD SIGNS, WALKWAY DETAILS No. 3
S-18	OVERHEAD SIGNS, WALKWAY SAFETY RAILING DETAILS
S-20	OVERHEAD SIGNS, REMOVABLE SIGN PANEL FRAMES

Indicates Standard Plan Sheet No.

Indicates Detail No.

ABBREVIATIONS

RSPF Removable Sign Panel Frame

GENERAL NOTES
LOAD & RESISTANCE FACTOR DESIGN

DESIGN: AASHTO LRFD Bridge Design Specifications, 4th Edition, and Caltrans Amendments; except that geotechnical design of deep foundation, bridge (including barrier and railing) details taken from standard plans May 2006, standard bridge detail XS sheets are designed using Bridge Design Specifications ('96 AASHTO with Revisions by Caltrans)

SEISMIC LOADING: Caltrans Seismic Design Criteria (SDC) Version 1.5, dated Sept, 2009

DEAD LOAD: Includes 35 psf for future wearing surface.

LIVE LOAD: HL93 with Low-Boy and Permit Design Vehicle

CONCRETE: fy = 60 ksi
f'c = 3.6 ksi (except as shown on 'CONCRETE STRENGTH & TYPE LIMITS' diagram)
n = 8

PRESTRESSED CONCRETE: See 'Prestressing Notes' on 'GIRDER LAYOUT' sheet

SEISMIC LOAD: Soil profile type D
Magnitude group 7.25±0.25
Peak Rock Acceleration 0.6g
With the following modifications:
1. No change of Sa for structural periods $\leq$ 0.5 seconds
2. 20% increase of Sa for structural periods $\geq$ 1 second
3. Linear interpolation for structural periods between 0.5 and 1 second.

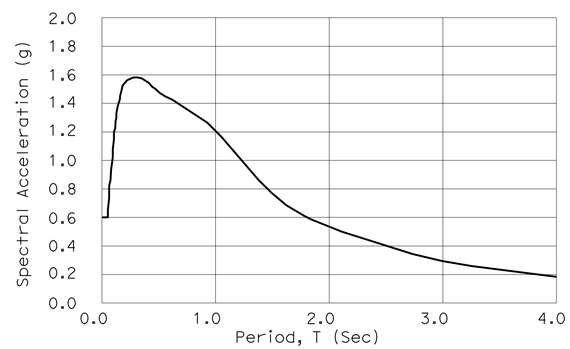

ARS DESIGN CURVE
NO SCALE

INDEX TO BRIDGE PLANS

SHEET No.	TITLE
1	GENERAL PLAN
2	INDEX TO BRIDGE PLANS
3	DECK CONTOURS
4	FOUNDATION PLAN
5	ABUTMENT 1 PLAN & ELEVATION
6	ABUTMENT 3 PLAN & ELEVATION
7	ABUTMENT DETAILS No. 1
8	ABUTMENT DETAILS No. 2
9	ABUTMENT DETAILS No. 3
10	BENT DETAILS No. 1
11	BENT DETAILS No. 2
12	BENT DETAILS No. 3
13	BENT DETAILS No. 4
14	TYPICAL SECTION
15	TYPICAL SECTION DETAILS
16	GIRDER LAYOUT
17	GIRDER DETAILS No. 1
18	GIRDER DETAILS No. 2
19	GIRDER DETAILS No. 3
20	BRIDGE DECK DRAINAGE SYSTEM
21	STRUCTURE APPROACH TYPE N(30S)
22	STRUCTURE APPROACH DRAINAGE DETAILS
23	SLOPE PAVING - FULL SLOPE
24	SIGN DETAILS No. 1
25	SIGN DETAILS No. 2
26	LOG OF TEST BORINGS 1 OF 5
27	LOG OF TEST BORINGS 2 OF 5
28	LOG OF TEST BORINGS 3 OF 5
29	LOG OF TEST BORINGS 4 OF 5
30	LOG OF TEST BORINGS 5 OF 5

QUANTITIES

SALVAGE METAL BRIDGE RAILING	565	LF
BRIDGE REMOVAL, LOCATION A	LUMP	SUM
STRUCTURE EXCAVATION (BRIDGE)	1,115	CY
STRUCTURE EXCAVATION (TYPE D)	500	CY
STRUCTURE BACKFILL (BRIDGE)	1,065	CY
SETTLEMENT MONITORING PROGRAM	LUMP	SUM
FURNISH 18" STEEL PIPE PILING (PP 18" x 0.500")	1,925	LF
DRIVE 18" STEEL PIPE PILE (PP 18" x 0.500")	23	EA
FURNISH PILING (CLASS 200) (ALTERNATIVE W)	6,237	LF
DRIVE PILE (CLASS 200) (ALTERNATIVE W)	79	EA
FURNISH PILING (CLASS 200) (ALTERNATIVE W) (MODIFIED)	2,120	LF
DRIVE PILE (CLASS 200) (ALTERNATIVE W) (MODIFIED)	30	EA
PRESTRESSING CAST-IN-PLACE CONCRETE	LUMP	SUM
STRUCTURAL CONCRETE, BRIDGE FOOTING	506	CY
STRUCTURAL CONCRETE, BRIDGE	2,865	CY
STRUCTURAL CONCRETE, APPROACH SLAB (TYPE N)	253	CY
FRACTURED FIN TEXTURE	1,712	SQFT
JOINT SEAL (MR 2")	240	LF
BAR REINFORCING STEEL (BRIDGE)	935,800	LB
FURNISH SIGN STRUCTURE (BRIDGE MOUNTED WITH WALKWAY)	4,585	LB
INSTALL SIGN STRUCTURE (BRIDGE MOUNTED WITH WALKWAY)	4,585	LB
10" WELDED STEEL PIPE CASING (BRIDGE)	80	LF
18" WELDED STEEL PIPE CASING (BRIDGE)	160	LF
SLOPE PAVING (CONCRETE)	90	CY
SLOPE PAVING (MASONRY BLOCK)	1,547	SQFT
BRIDGE DECK DRAINAGE SYSTEM	2,115	LB
CHAIN LINK RAILING (TYPE 7)	692	LF
CONCRETE BARRIER (TYPE 26 MODIFIED)	692	LF

DESIGN OVERSIGHT Yiwei Hu
12/29/11
SIGN OFF DATE

	BY	CHECKED
DESIGN	G. KENNING	T. SWENSON
DETAILS	Y. LIN	T. SWENSON
QUANTITIES	J. GERLACH	J. YIP

PREPARED FOR THE STATE OF CALIFORNIA DEPARTMENT OF TRANSPORTATION

M. HARMS
PROJECT ENGINEER

BRIDGE NO. 33-0735
POST MILES 22.84

MARINA BLVD OC (REPLACE)
INDEX TO BRIDGE PLANS

DESIGN DETAIL SHEET (ENGLISH) (REV. 7-16-10)

ORIGINAL SCALE IN INCHES FOR REDUCED PLANS 0 1 2 3

UNIT:
PROJECT NUMBER & PHASE:

DISREGARD PRINTS BEARING EARLIER REVISION DATES

REVISION DATES (PRELIMINARY STAGE ONLY) 11/18/09 5/24/10 6/1/11 10/21/11 12/1/11

SHEET 2 OF 30

FILE => 33-0735-a-itp.dgn
CONTRACT NO.:
PROJECT ID:

USERNAME => s12614 DATE PLOTTED => 15-MAY-2012 TIME PLOTTED => 09:39
2008276 (2008276BS2)

DIST	COUNTY	ROUTE	POST MILES TOTAL PROJECT	SHEET No	TOTAL SHEETS
04	Ala	880	22.6/24.0	702	760

REGISTERED STRUCTURAL ENGINEER 12/1/11 DATE

4-16-12
PLANS APPROVAL DATE

REGISTERED PROFESSIONAL ENGINEER MAHVASH M. HARMS No. 2639 Exp.12/31/12 STRUCTURAL STATE OF CALIFORNIA

The State of California or its officers or agents shall not be responsible for the accuracy or completeness of scanned copies of this plan sheet.

ALAMEDA COUNTY TRANSPORTATION COMMISSION
1333 BROADWAY, SUITE 220
OAKLAND, CA 94612

BIGGS CARDOSA ASSOCIATES INC.
865 THE ALAMEDA
SAN JOSE, CALIFORNIA 95126

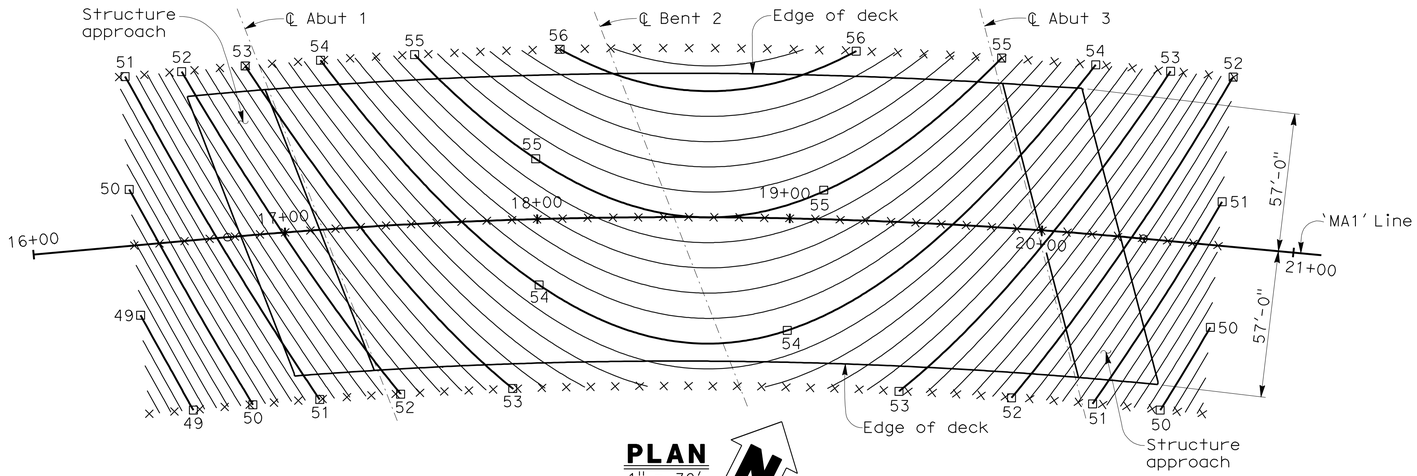

PLAN
1" = 30'

NOTES:
1. Contours indicate top of deck elevation.
2. □ Indicates even foot contours.
3. × Indicates 10' intervals measured along 'MA1' line.
4. Contour interval = 0.20'
5. Contours do not include camber or falsework settlement.

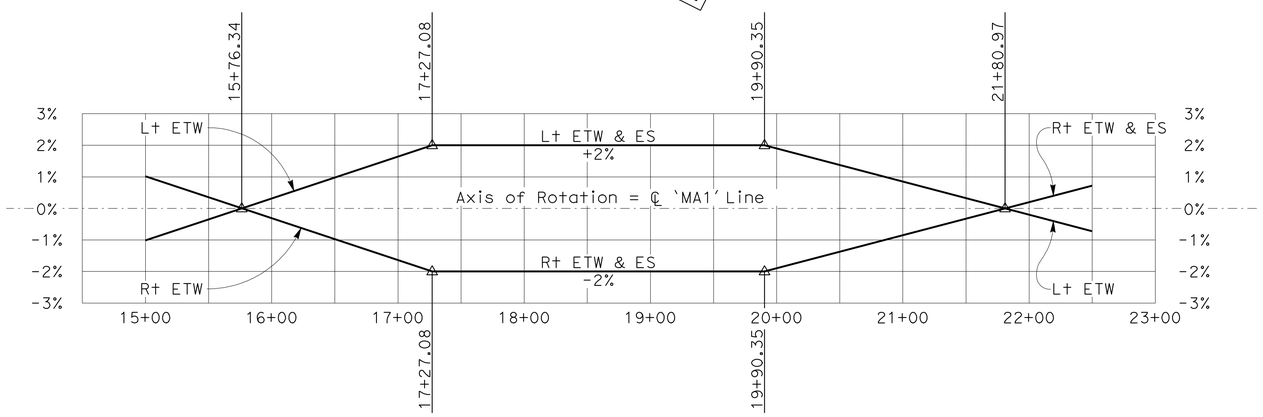

SUPERELEVATION DIAGRAM
NO SCALE

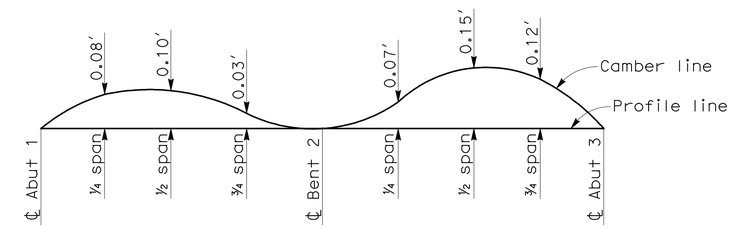

(Does not include allowance for falsework settlement)

CAMBER DIAGRAM
NO SCALE

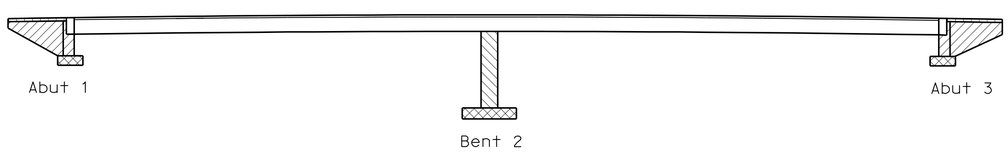

- Structural Concrete, Bridge (f'c = 5000 psi at 28 days)
- Structural Concrete, Bridge (f'c = 4000 psi at 28 days)
- Structural Concrete, Bridge (f'c = 3600 psi at 28 days)
- Structural Concrete, Bridge Footing (f'c = 4000 psi at 28 days)
- Structural Concrete, Approach Slab (f'c = 3600 psi at 28 days)

CONCRETE STRENGTH AND TYPE LIMITS
NO SCALE

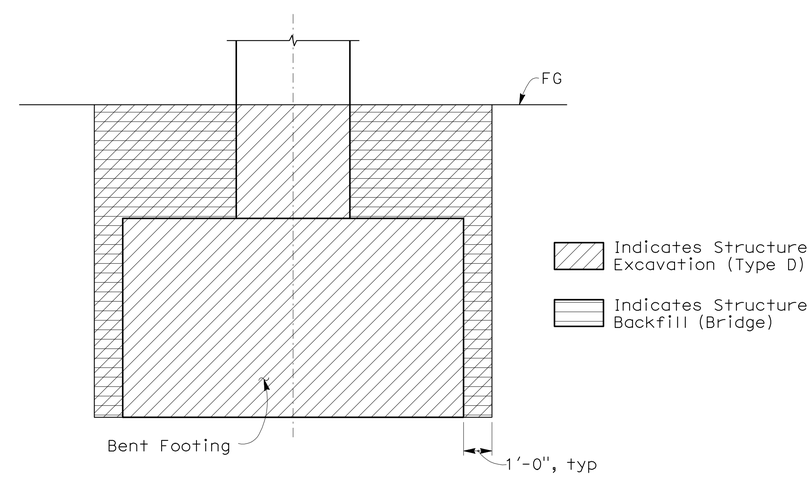

LIMITS OF PAYMENT FOR STRUCTURE EXCAVATION AND BACKFILL AT BENT
NO SCALE

DESIGN OVERSIGHT Yiwei Hu
12/29/11
SIGN OFF DATE

	BY	CHECKED
DESIGN	G. KENNING	T. SWENSON
DETAILS	Y. LIN	T. SWENSON
QUANTITIES	J. GERLACH	J. YIP

PREPARED FOR THE STATE OF CALIFORNIA DEPARTMENT OF TRANSPORTATION

M. HARMS
PROJECT ENGINEER

BRIDGE NO. 33-0735
POST MILES 22.84

MARINA BLVD OC (REPLACE)
DECK CONTOURS

DESIGN DETAIL SHEET (ENGLISH) (REV. 7-16-10)

ORIGINAL SCALE IN INCHES FOR REDUCED PLANS 0 1 2 3

UNIT:
PROJECT NUMBER & PHASE:

DISREGARD PRINTS BEARING EARLIER REVISION DATES

REVISION DATES (PRELIMINARY STAGE ONLY): 11/16/09 5/24/10 6/1/11 10/21/11 12/1/11

SHEET 3 OF 30

FILE => 33-0735-d-dc01.dgn
CONTRACT NO.:
PROJECT ID:

USERNAME => s124496 DATE PLOTTED => 19-APR-2012 TIME PLOTTED => 14:55
2008276 (2008276853)

DIST	COUNTY	ROUTE	POST MILES TOTAL PROJECT	SHEET No	TOTAL SHEETS
04	Ala	880	22.6/24.0	703	760

REGISTERED STRUCTURAL ENGINEER — DATE 12/1/11

PLANS APPROVAL DATE 4-16-12

The State of California or its officers or agents shall not be responsible for the accuracy or completeness of scanned copies of this plan sheet.

REGISTERED PROFESSIONAL ENGINEER — NAHVASH M. HARMS — No. 2639 — Exp. 12/31/12 — STRUCTURAL — STATE OF CALIFORNIA

ALAMEDA COUNTY TRANSPORTATION COMMISSION
1333 BROADWAY, SUITE 220
OAKLAND, CA 94612

BIGGS CARDOSA ASSOCIATES INC.
865 THE ALAMEDA
SAN JOSE, CALIFORNIA 95126

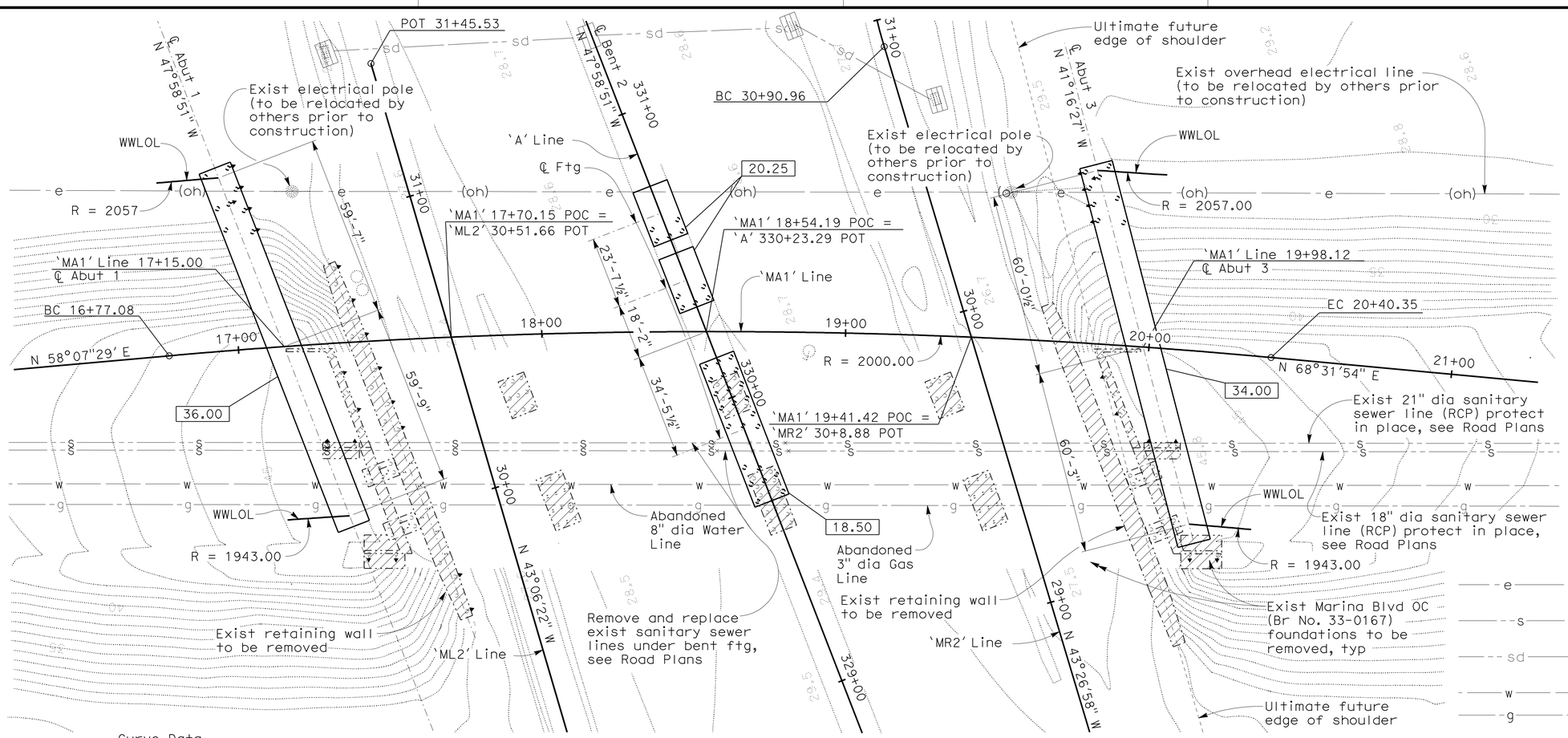

NOTES:

1. Indicates bottom of footing elevation.
2. 29.6 Indicates spot elevation.
3. Indicates pile, not all piles shown.
4. Verify utility locations with Road Plans.
5. Indicates exist structure foundation to be removed.
6. All WWLOL's are concentric to 'MA1' Line.

e — (oh) — Indicates exist overhead electrical line
s — s — Indicates exist sanitary sewer line
sd — sd — Indicates exist storm drain line
w — w — Indicates exist water line
g — g — Indicates exist gas line

Curve Data
'MA1' Line
R = 2000.00'
Δ = 10°24'25"
T = 182.14'
L = 363.27'

FOUNDATION PLAN

1" = 20'

PILE DATA TABLE

Location	Type	Nominal Resistance Compression	Nominal Resistance Tension	Design Tip Elev (ft)	Specified Tip Elev (ft)	Nominal Driving Resistance required (kips)
Abut 1	Class 200 Alt 'W'	400 kips	0	-40.0(a);-10.0(c)	-40.0	424
Abut 1 (Adjacent to utilities, see ii)				-50.0(a);-10.0(c)	-50.0	424
Bent 2 Left	Class 200 Alt 'W' (MOD)	440 kips	75 kips	-50.0(a);-3.0(b);-20.0(c)	-50.0	464
Bent 2 Right	PP 18 x .5	660 kips	12 kips	-62.0(a);12.0(b);-20.0(c)	-62.0	687
Bent 2 Right (Adjacent to utilities, see ii)				-70.0(a);7.0(b);-20.0(c)	-70.0	687
Abut 3	Class 200 Alt 'W'	400 kips	0	-40.0(a);-10.0(c)	-40.0	424
Abut 3 (Adjacent to utilities, see ii)				-50.0(a);-10.0(c)	-50.0	424

NOTES:

(i) Design tip elevations for Abutments and Bents are controlled by: (a) Compression, (b) Tension, (c) Lateral load.

(ii) Pile locations within 8 ft of the existing sewer lines to be protected in place shall be predrilled to 4 ft below inverts prior to pile driving. The lowest inverts are anticipated at Elev 15.6 ft (Abut 1), 16.0 ft (Bent 2) and 16.3 ft (Abut 3). Pile locations that conflict with abandoned utilities shall be predrilled to 6" below utilities' invert prior to pile driving.

(iii) Unsuitable soil layer (liquefiable) that does not contribute to the design nominal resistance exists between elev 7 and 3 ft. The estimated driving resistance from the unsuitable penetrated soil layer is 24 kips for 16" pipe piles and 27 kips for 18" pipe piles, respectively.

BENCH MARK AND DATUM

Monument	Coordinates Northing	Coordinates Easting	Elev	Description/location
214	2,085,277.90	6,079,942.20	30.60	¾" iron pipe with plug on North-bound I-880 off-ramp to Eastbound Marina Boulevard, ±6.5' west of edge of pavement and ±13' south from end of guardrail (Sta 325+91.60)
211	2,085,125.93	6,078,903.01	29.48	Mag nail and shiner on Marina Boulevard, 1.6' north of median island and ±643' east of the intersection of Merced Street and Marina Boulevard

NOTE:
The Contractor shall verify all controlling field dimensions before ordering or fabricating any material.

GEOTECHNICAL PROFESSIONAL — APPROVAL DATE 12/1/11

DESIGN OVERSIGHT — Yiwei Hu — 12/29/11 — SIGN OFF DATE

SCALE: AS SHOWN | VERT.DATUM NAVD88 | HORZ.DATUM CCS83
PHOTOGRAMMETRY AS OF: | ALIGNMENT TIES
SURVEYED BY HMH | DRAFTED BY
FIELD CHECKED BY | CHECKED BY

DESIGN BY G. KENNING CHECKED T. SWENSON
DETAILS BY Y. LIN CHECKED T. SWENSON
QUANTITIES BY J. GERLACH CHECKED J. YIP

PREPARED FOR THE STATE OF CALIFORNIA DEPARTMENT OF TRANSPORTATION

M. HARMS — PROJECT ENGINEER

BRIDGE NO. 33-0735
POST MILE 22.84

MARINA BLVD OC (REPLACE)
FOUNDATION PLAN

FOUNDATION PLAN SHEET (ENGLISH) (REV. 7-16-10)

ORIGINAL SCALE IN INCHES FOR REDUCED PLANS 0 1 2 3

UNIT:
PROJECT NUMBER & PHASE:

DISREGARD PRINTS BEARING EARLIER REVISION DATES
REVISION DATES (PRELIMINARY STAGE ONLY): 5/8/09 9/23/09 11/4/09 5/24/10 6/1/11 10/27/11 12/1/11

SHEET 4 OF 30

FILE => 33-0735-e-fp01.dgn
CONTRACT NO.:
PROJECT ID:

USERNAME => s1224496 DATE PLOTTED => 19-APR-2012 TIME PLOTTED => 14:56

(2008276BS4) 2008276

DIST	COUNTY	ROUTE	POST MILES TOTAL PROJECT	SHEET No	TOTAL SHEETS
04	Ala	880	22.6/24.0	704	760

Mahvash Harms 12/1/11
REGISTERED STRUCTURAL ENGINEER DATE

4-16-12
PLANS APPROVAL DATE

REGISTERED PROFESSIONAL ENGINEER MAHVASH M. HARMS No. 2639 Exp. 12/31/12 STRUCTURAL STATE OF CALIFORNIA

The State of California or its officers or agents shall not be responsible for the accuracy or completeness of scanned copies of this plan sheet.

ALAMEDA COUNTY TRANSPORTATION COMMISSION
1333 BROADWAY, SUITE 220
OAKLAND, CA 94612

BIGGS CARDOSA ASSOCIATES INC.
865 THE ALAMEDA
SAN JOSE, CALIFORNIA 95126

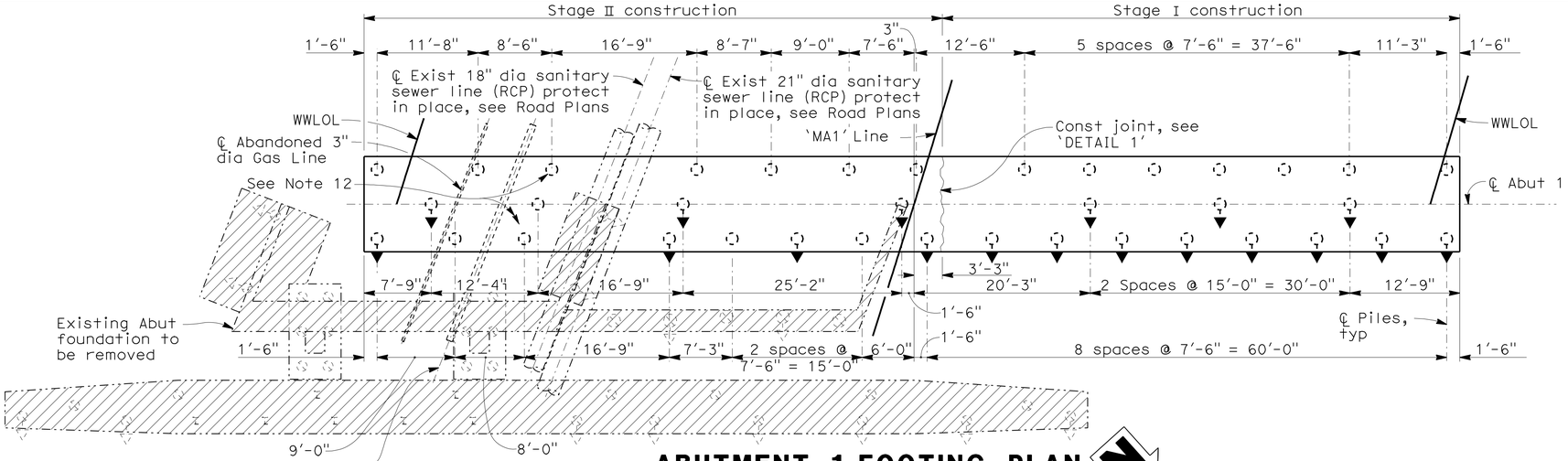

ABUTMENT 1 FOOTING PLAN

1/8" = 1'-0"

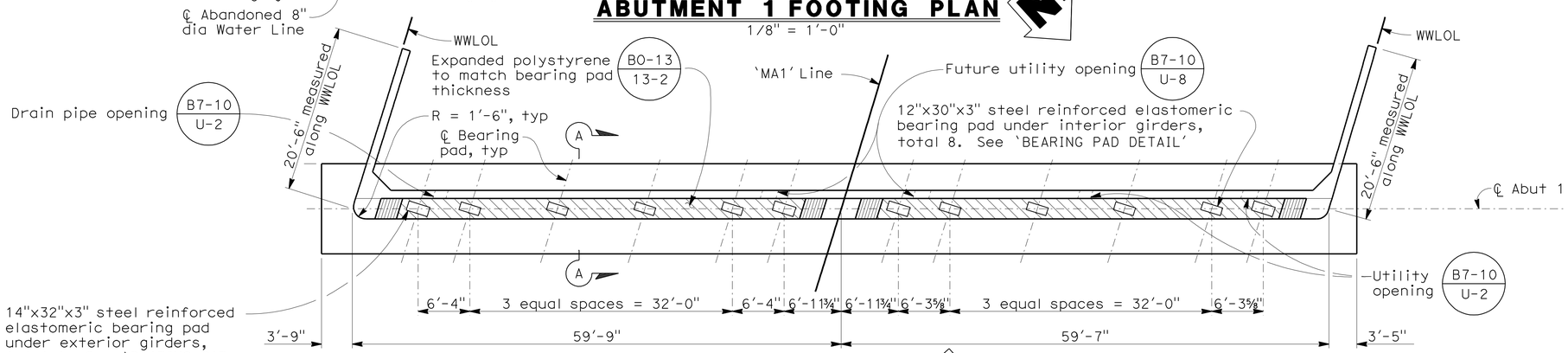

ABUTMENT 1 PLAN

1/8" = 1'-0"

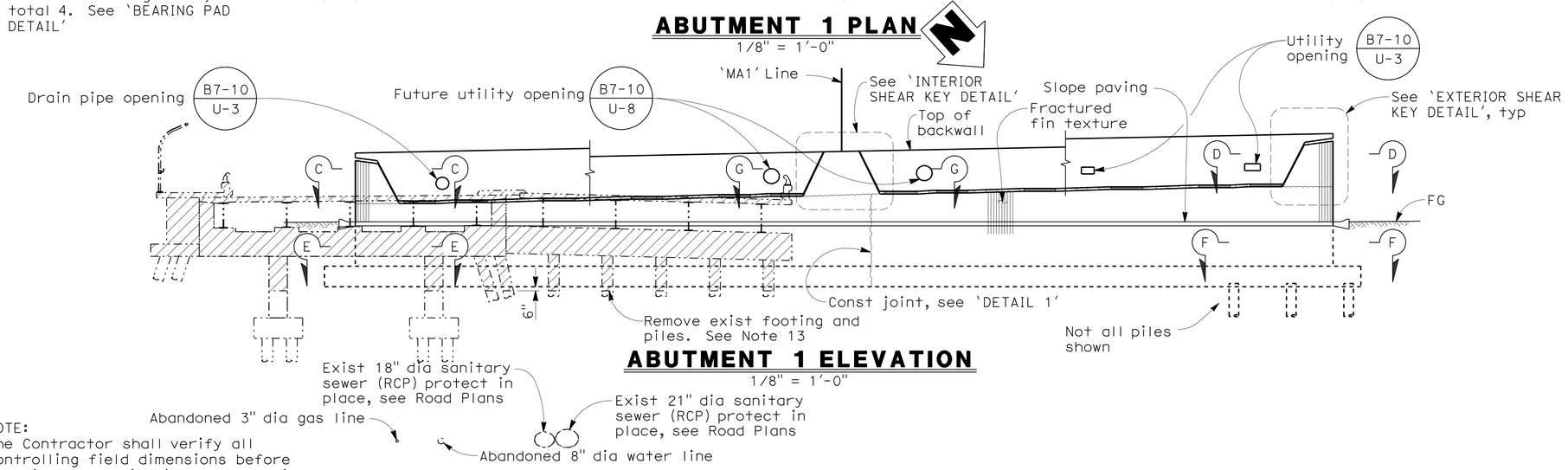

ABUTMENT 1 ELEVATION

1/8" = 1'-0"

NOTE:
The Contractor shall verify all controlling field dimensions before ordering or fabricating any material.

NOTES:

1. Indicates vertical pile.
2. Indicates 1:3 battered pile.
3. Indicates existing pile.
4. Indicates existing battered pile.
5. Indicates existing structure to be removed.
6. Indicates expanded polystyrene.
7. See 'TYPICAL WINGWALL ELEVATION' on 'ABUTMENT DETAILS No. 1' sheet for wingwall details.
8. For 'SECTION A-A' and 'DETAIL 1', see 'ABUTMENT DETAILS No. 1' sheet.
9. For 'SECTION C-C', 'SECTION D-D', 'SECTION E-E', 'SECTION F-F', and 'EXTERIOR SHEAR KEY DETAIL', see 'ABUTMENT DETAILS No. 2' sheet
10. For 'SECTION G-G', 'INTERIOR SHEAR KEY DETAIL', and 'BEARING PAD DETAIL', see 'ABUTMENT DETAILS No. 3' sheet.
11. Minimum clearance between outside edge of pile and outside edge of existing sanitary sewer line shall be 4'-0".
12. Pile locations within 8 ft (face of sewer line to face of pile) of the existing sewer lines should be predrilled to 4 ft below the lowest sewer line invert elevation.
13. Existing footing and piles interfering with footing construction shall be removed to 6" below bottom of footing elevation. Existing footing and piles interfering with slope paving construction shall be removed to 6" below bottom of slope paving.
14. For location of utility openings in backwall and end diaphragm, see 'TYPICAL SECTION' sheet.

DESIGN OVERSIGHT Yiwei Hu
12/29/11
SIGN OFF DATE

	BY	CHECKED
DESIGN	G. KENNING	T. SWENSON
DETAILS	Y. LIN	T. SWENSON
QUANTITIES	J. GERLACH	J. YIP

PREPARED FOR THE STATE OF CALIFORNIA DEPARTMENT OF TRANSPORTATION

M. HARMS
PROJECT ENGINEER

BRIDGE NO. 33-0735
POST MILES 22.84

MARINA BLVD OC (REPLACE)
ABUTMENT 1 PLAN & ELEVATION

DESIGN DETAIL SHEET (ENGLISH) (REV. 7-16-10)

ORIGINAL SCALE IN INCHES FOR REDUCED PLANS 0 1 2 3

UNIT:
PROJECT NUMBER & PHASE:

DISREGARD PRINTS BEARING EARLIER REVISION DATES

REVISION DATES (PRELIMINARY STAGE ONLY) 11/18/09 12/22/09 5/24/10 6/1/11 10/27/11 12/1/11

SHEET 5 OF 30

FILE => 33-0735-h-a05-lo1.dgn

CONTRACT NO.:

PROJECT ID:

USERNAME => s124496 DATE PLOTTED => 19-APR-2012 TIME PLOTTED => 14:56

2008276 (2008276B55)

DIST	COUNTY	ROUTE	POST MILES TOTAL PROJECT	SHEET No	TOTAL SHEETS
04	Ala	880	22.6/24.0	705	760

Mahvash Harms 12/1/11
REGISTERED STRUCTURAL ENGINEER DATE

4-16-12
PLANS APPROVAL DATE

REGISTERED PROFESSIONAL ENGINEER MAHVASH M. HARMS No. 2639 Exp. 12/31/12 STRUCTURAL STATE OF CALIFORNIA

The State of California or its officers or agents shall not be responsible for the accuracy or completeness of scanned copies of this plan sheet.

ALAMEDA COUNTY TRANSPORTATION COMMISSION
1333 BROADWAY, SUITE 220
OAKLAND, CA 94612

BIGGS CARDOSA ASSOCIATES INC.
865 THE ALAMEDA
SAN JOSE, CALIFORNIA 95126

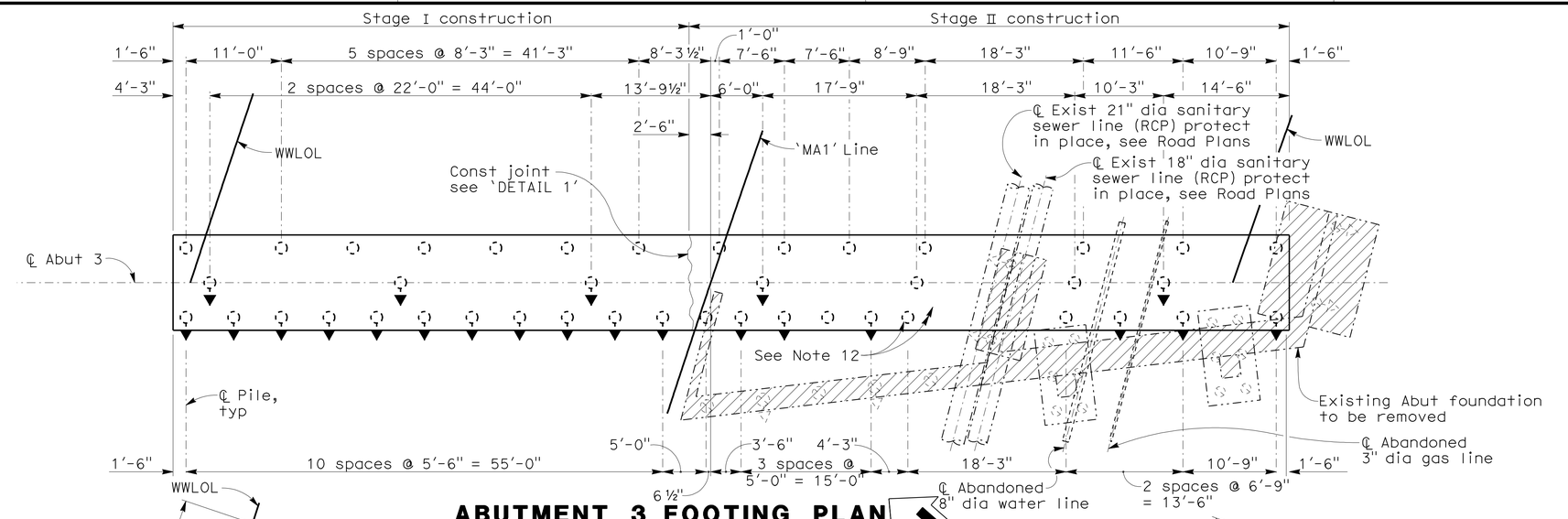

ABUTMENT 3 FOOTING PLAN

1/8" = 1'-0"

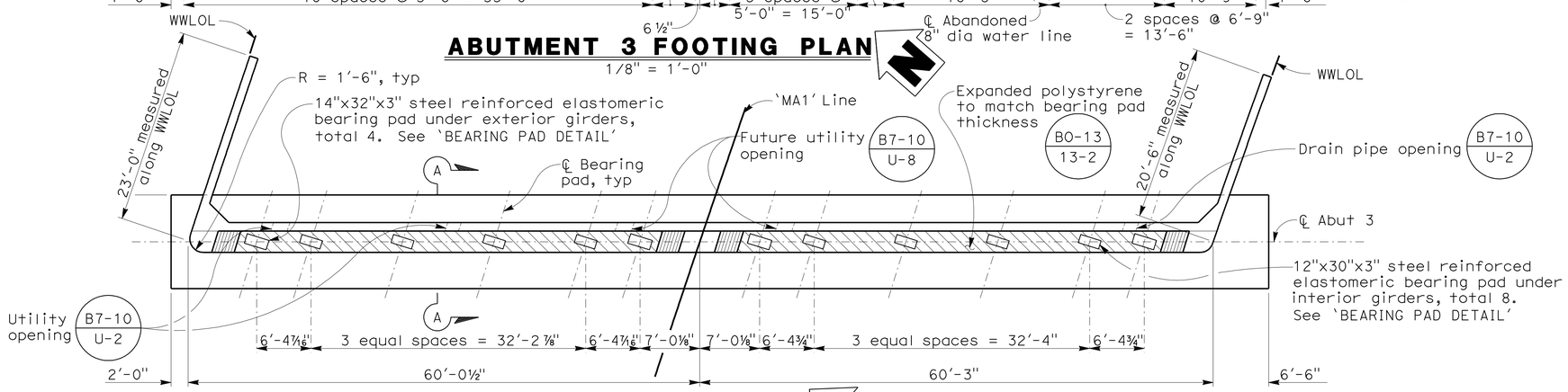

ABUTMENT 3 PLAN

1/8" = 1'-0"

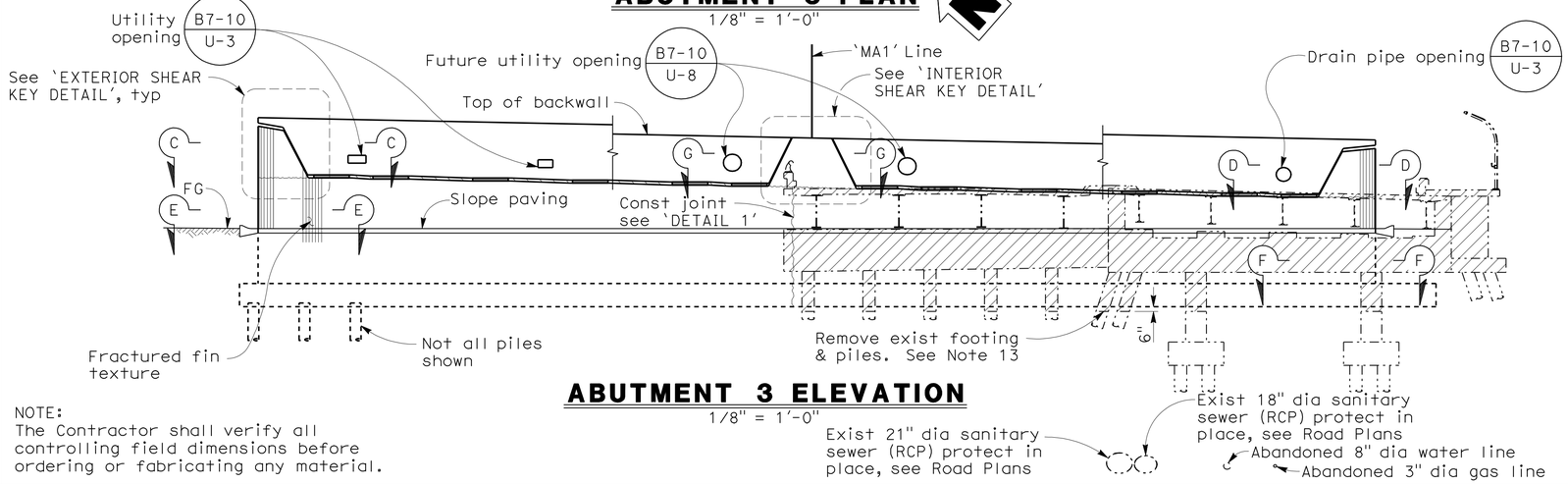

ABUTMENT 3 ELEVATION

1/8" = 1'-0"

NOTE:
The Contractor shall verify all controlling field dimensions before ordering or fabricating any material.

NOTES:

1. Indicates vertical pile.
2. Indicates 1:3 battered pile.
3. Indicates existing pile.
4. Indicates existing battered pile.
5. Indicates existing structure to be removed.
6. Indicates expanded polystyrene
7. See 'TYPICAL WINGWALL ELEVATION' on 'ABUTMENT DETAILS No. 1' sheet for wingwall details.
8. For 'SECTION A-A' and 'DETAIL 1', see 'ABUTMENT DETAILS No. 1' sheet.
9. For 'SECTION C-C', 'SECTION D-D', 'SECTION E-E', 'SECTION F-F', and 'EXTERIOR SHEAR KEY DETAIL', see 'ABUTMENT DETAILS No. 2' sheet.
10. For 'SECTION G-G', 'INTERIOR SHEAR KEY DETAIL', and 'BEARING PAD DETAIL', see 'ABUTMENT DETAILS No. 3' sheet.
11. Minimum clearance between outside edge of pile and outside edge of existing sanitary sewer line shall be 4'-0".
12. Pile locations within 8 ft (face of sewer line to face of pile) of the existing sewer lines should be predrilled to 4 ft below the lowest sewer line invert elevation.
13. Existing footing and piles interfering with footing construction shall be removed to 6" below bottom of footing elevation. Existing footing and piles interfering with slope paving construction shall be removed to 6" below bottom of slope paving.
14. For location of utility openings in backwall and end diaphragm, see 'TYPICAL SECTION' sheet.

DESIGN OVERSIGHT Yiwei Hu
12/29/11
SIGN OFF DATE

	BY	CHECKED
DESIGN	G. KENNING	T. SWENSON
DETAILS	Y. LIN	T. SWENSON
QUANTITIES	J. GERLACH	J. YIP

PREPARED FOR THE STATE OF CALIFORNIA DEPARTMENT OF TRANSPORTATION

M. HARMS
PROJECT ENGINEER

BRIDGE NO. 33-0735
POST MILES 22.84

MARINA BLVD OC (REPLACE)
ABUTMENT 3 PLAN & ELEVATION

DESIGN DETAIL SHEET (ENGLISH) (REV. 7-16-10)

ORIGINAL SCALE IN INCHES FOR REDUCED PLANS 0 1 2 3

UNIT:
PROJECT NUMBER & PHASE:

DISREGARD PRINTS BEARING EARLIER REVISION DATES

REVISION DATES (PRELIMINARY STAGE ONLY) 11/16/09 12/28/09 5/24/10 6/1/11 10/27/11 12/1/11

SHEET 6 OF 30

FILE => 33-0735-h-a06-lo2.dgn

CONTRACT NO.:

PROJECT ID:

USERNAME => s124496 DATE PLOTTED => 19-APR-2012 TIME PLOTTED => 14:56

2008276 (2008276BS6)

DIST	COUNTY	ROUTE	POST MILES TOTAL PROJECT	SHEET No	TOTAL SHEETS
04	Ala	880	22.6/24.0	706	760

REGISTERED STRUCTURAL ENGINEER 12/1/11 DATE

4-16-12
PLANS APPROVAL DATE

REGISTERED PROFESSIONAL ENGINEER MAHVASH M. HARMS No. 2639 Exp. 12/31/12 STRUCTURAL STATE OF CALIFORNIA

The State of California or its officers or agents shall not be responsible for the accuracy or completeness of scanned copies of this plan sheet.

ALAMEDA COUNTY TRANSPORTATION COMMISSION
1333 BROADWAY, SUITE 220
OAKLAND, CA 94612

BIGGS CARDOSA ASSOCIATES INC.
865 THE ALAMEDA
SAN JOSE, CALIFORNIA 95126

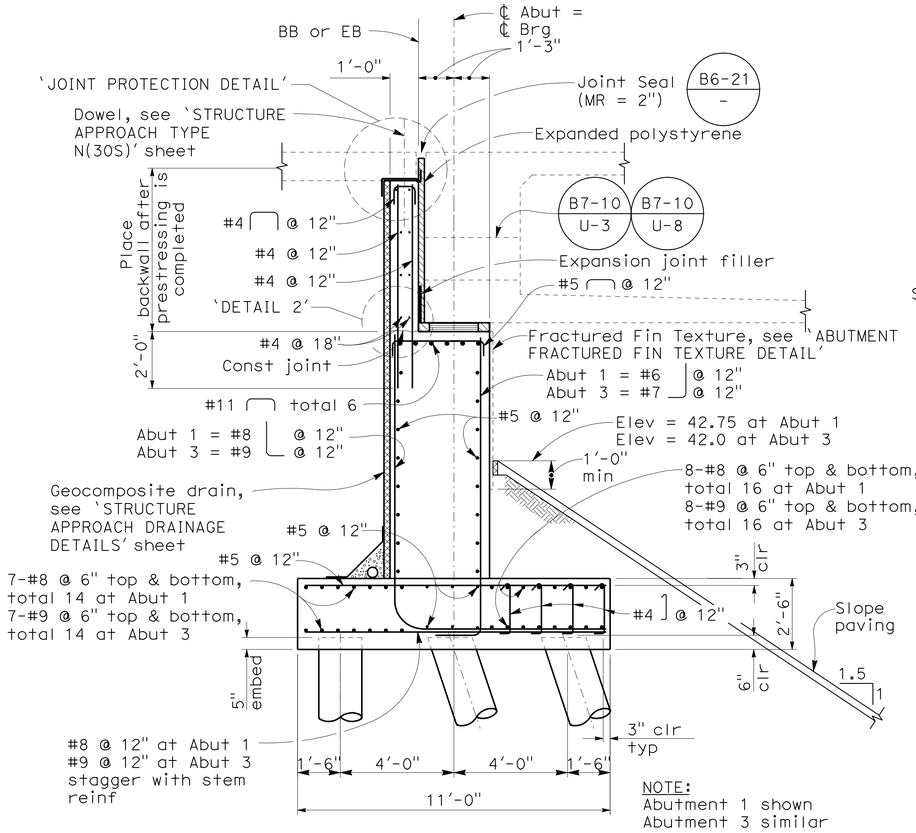

NOTE:
Abutment 1 shown
Abutment 3 similar

SECTION A-A
3/8" = 1'-0"

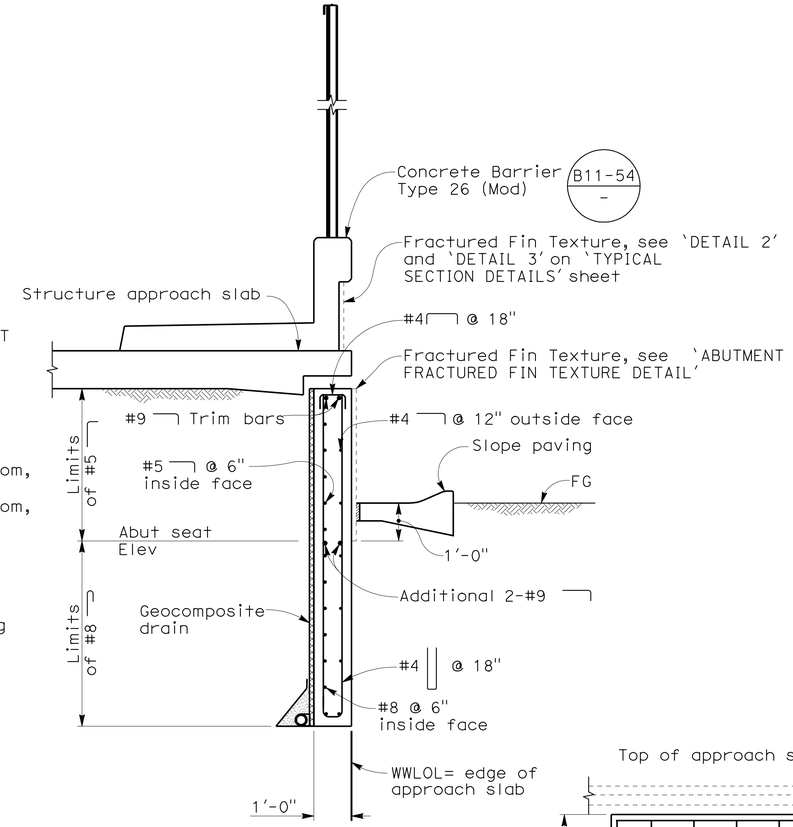

SECTION B-B
1/2" = 1'-0"

NOTES:
1. For 'DETAIL 2', 'JOINT PROTECTION DETAIL', and 'ABUTMENT FRACTURED FIN TEXTURE DETAIL', see 'ABUTMENT DETAILS No. 3' sheet.
2. For 'ABUTMENT 1 PLAN' and 'ABUTMENT 1 ELEVATION', see 'ABUTMENT 1 PLAN & ELEVATION' sheet.
3. For 'ABUTMENT 3 PLAN' and 'ABUTMENT 3 ELEVATION', see 'ABUTMENT 3 PLAN & ELEVATION' sheet.

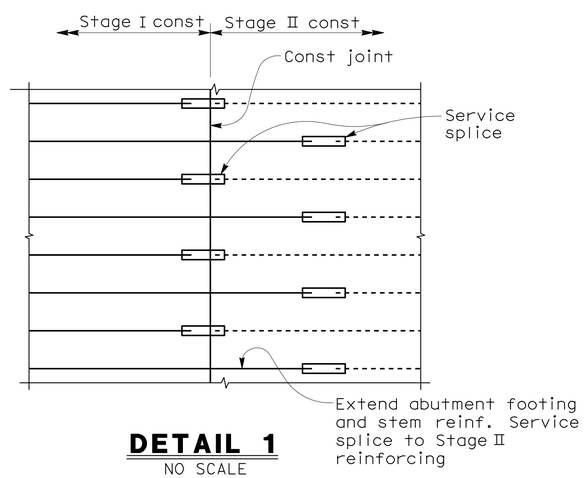

DETAIL 1
NO SCALE

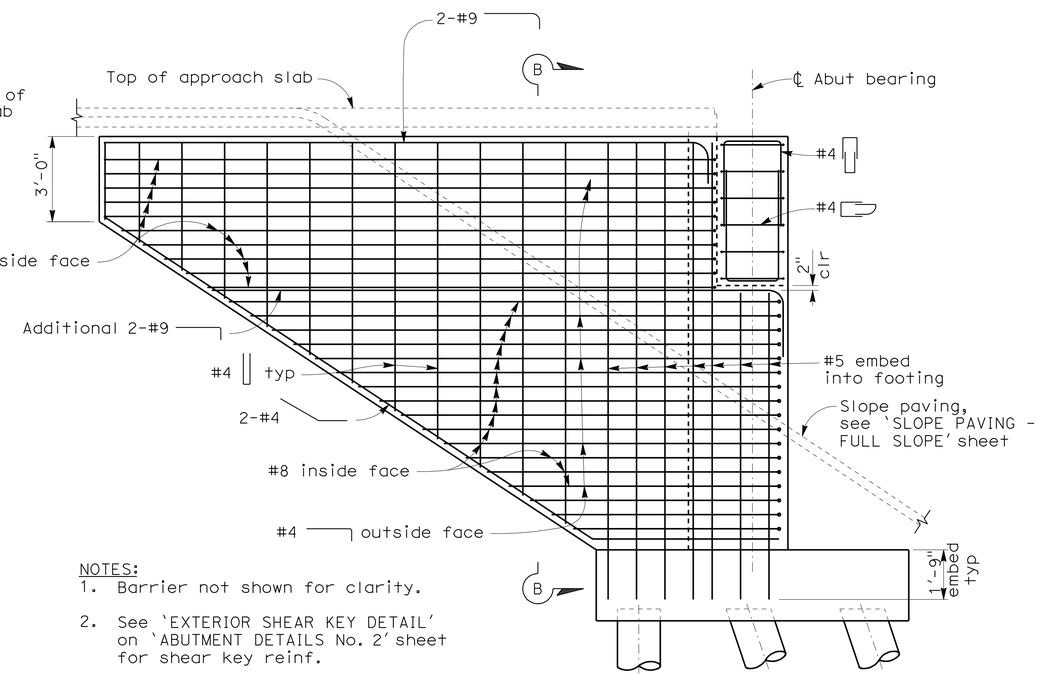

NOTES:
1. Barrier not shown for clarity.
2. See 'EXTERIOR SHEAR KEY DETAIL' on 'ABUTMENT DETAILS No. 2' sheet for shear key reinf.

TYPICAL WINGWALL ELEVATION
3/8" = 1'-0"

DESIGN OVERSIGHT Yiwei Hu
12/29/11
SIGN OFF DATE

	BY	CHECKED
DESIGN	G. KENNING	T. SWENSON
DETAILS	Y. LIN	T. SWENSON
QUANTITIES	J. GERLACH	J. YIP

PREPARED FOR THE STATE OF CALIFORNIA DEPARTMENT OF TRANSPORTATION

M. HARMS
PROJECT ENGINEER

BRIDGE NO. 33-0735
POST MILES 22.84

MARINA BLVD OC (REPLACE)
ABUTMENT DETAILS No. 1

DESIGN DETAIL SHEET (ENGLISH) (REV. 7-16-10)

ORIGINAL SCALE IN INCHES FOR REDUCED PLANS 0 1 2 3

UNIT:
PROJECT NUMBER & PHASE:

DISREGARD PRINTS BEARING EARLIER REVISION DATES

REVISION DATES (PRELIMINARY STAGE ONLY) 11/16/09 5/24/10 6/1/11 10/27/11 12/1/11

SHEET 7 OF 30

FILE => 33-0735-h-a07d1.dgn

CONTRACT NO.: PROJECT ID:

USERNAME => s124496 DATE PLOTTED => 19-APR-2012 TIME PLOTTED => 14:56

(2008276BS7) 2008276

DIST	COUNTY	ROUTE	POST MILES TOTAL PROJECT	SHEET No	TOTAL SHEETS
04	Ala	880	22.6/24.0	707	760

Mahvash Harms 12/1/11
REGISTERED STRUCTURAL ENGINEER DATE

4-16-12
PLANS APPROVAL DATE

REGISTERED PROFESSIONAL ENGINEER MAHVASH M. HARMS No. 2639 Exp. 12/31/12 STRUCTURAL STATE OF CALIFORNIA

The State of California or its officers or agents shall not be responsible for the accuracy or completeness of scanned copies of this plan sheet.

ALAMEDA COUNTY TRANSPORTATION COMMISSION
1333 BROADWAY, SUITE 220
OAKLAND, CA 94612

BIGGS CARDOSA ASSOCIATES INC.
865 THE ALAMEDA
SAN JOSE, CALIFORNIA 95126

NOTE:
For 'ABUTMENT FRACTURED FIN TEXTURE DETAIL' see 'ABUTMENT DETAILS No. 3' sheet.

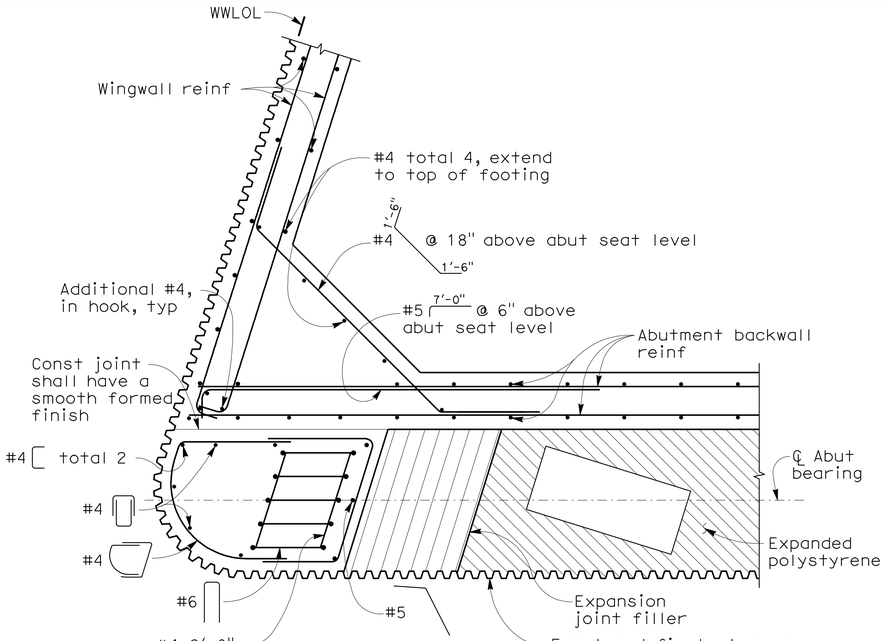

SECTION C-C
3/4" = 1'-0"

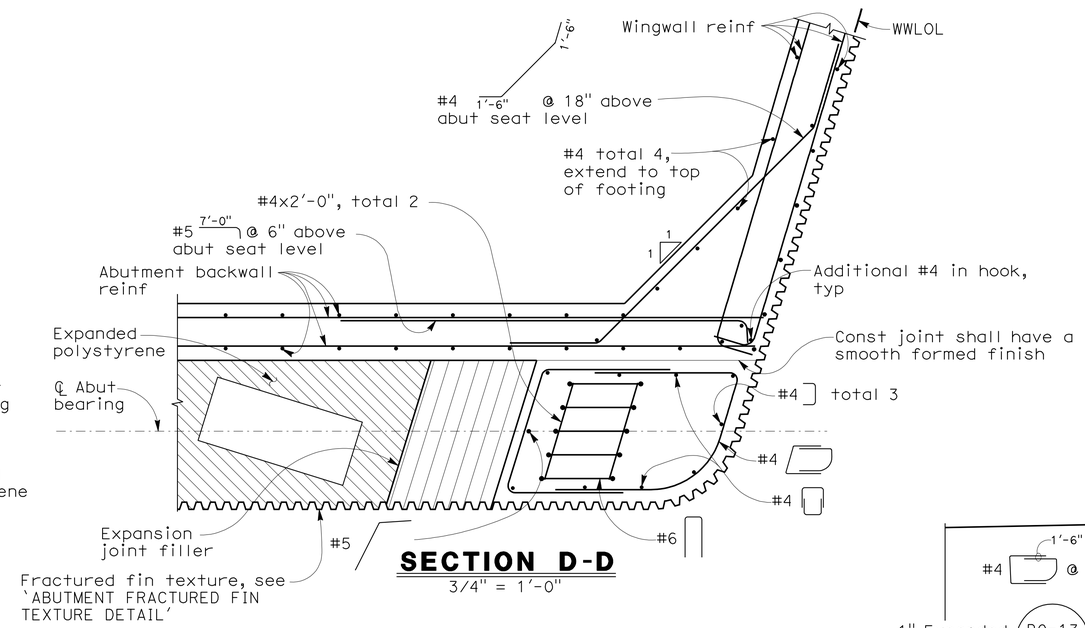

SECTION D-D
3/4" = 1'-0"

NOTE:
For 'ABUTMENT FRACTURED FIN TEXTURE DETAIL' see 'ABUTMENT DETAILS No. 3' sheet.

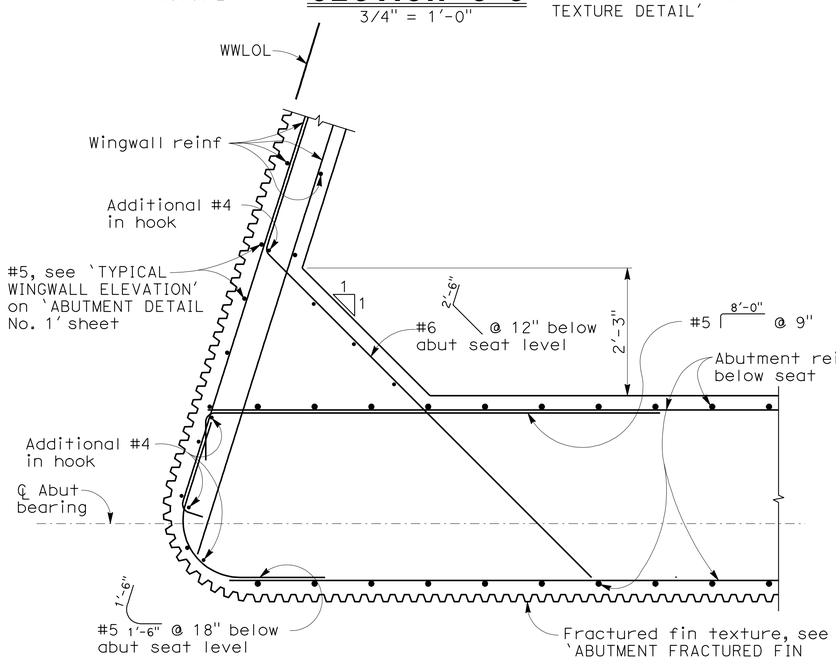

SECTION E-E
3/4" = 1'-0"

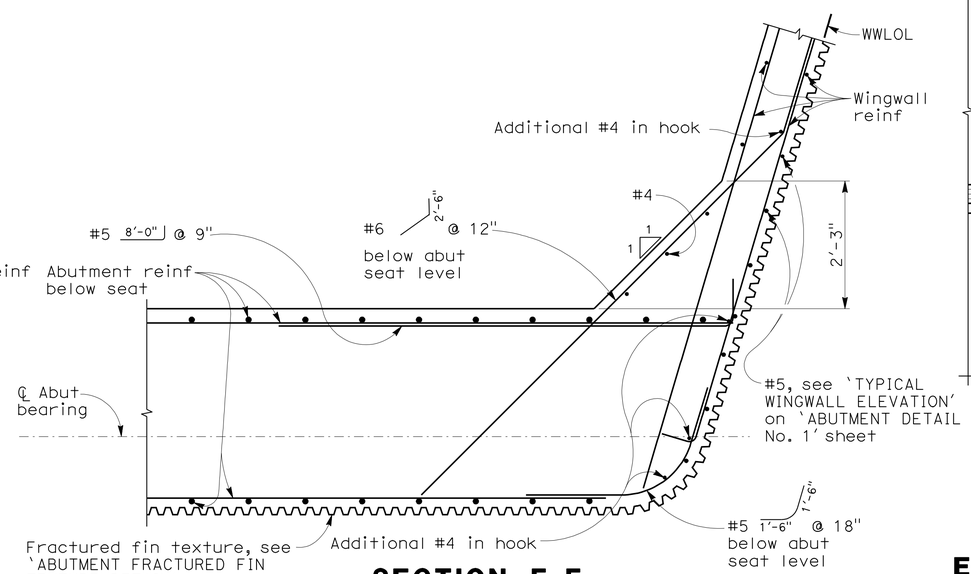

SECTION F-F
3/4" = 1'-0"

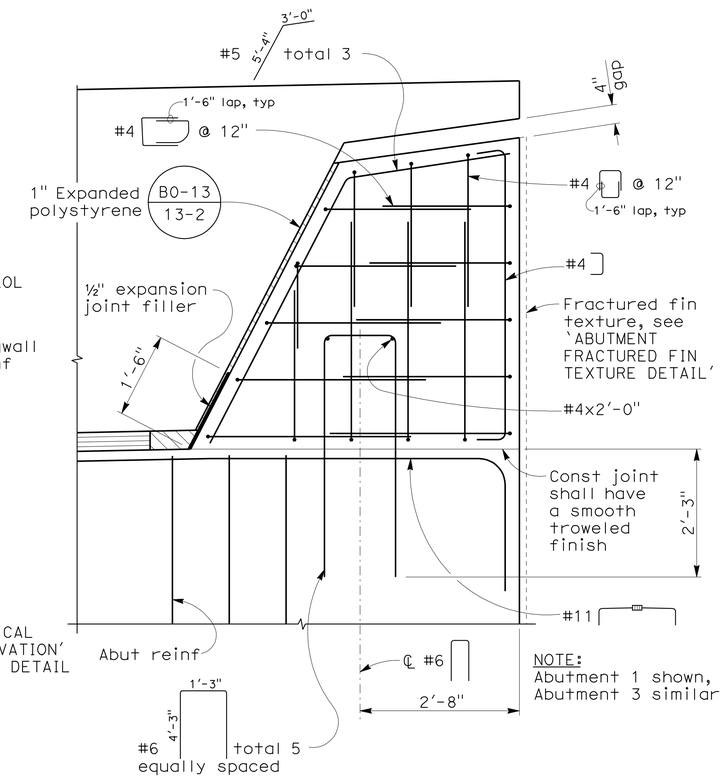

NOTE:
Abutment 1 shown, Abutment 3 similar

EXTERIOR SHEAR KEY DETAIL
3/4" = 1'-0"

DESIGN OVERSIGHT Yiwei Hu
12/29/11
SIGN OFF DATE

	BY	CHECKED
DESIGN	G. KENNING	T. SWENSON
DETAILS	Y. LIN	T. SWENSON
QUANTITIES	J. GERLACH	J. YIP

PREPARED FOR THE STATE OF CALIFORNIA DEPARTMENT OF TRANSPORTATION

M. HARMS
PROJECT ENGINEER

BRIDGE NO. 33-0735
POST MILES 22.84

MARINA BLVD OC (REPLACE)
ABUTMENT DETAILS No. 2

DESIGN DETAIL SHEET (ENGLISH) (REV. 7-16-10)

ORIGINAL SCALE IN INCHES FOR REDUCED PLANS 0 1 2 3

UNIT:
PROJECT NUMBER & PHASE:

DISREGARD PRINTS BEARING EARLIER REVISION DATES

REVISION DATES (PRELIMINARY STAGE ONLY) 11/16/09 5/24/10 6/1/11 10/21/11 12/1/11

SHEET 8 OF 30

FILE => 33-0735-h-a08d2.dgn

CONTRACT NO.:

PROJECT ID:

USERNAME => s1224496 DATE PLOTTED => 19-APR-2012 TIME PLOTTED => 14:56

2008276 (2008276BS8)

DIST	COUNTY	ROUTE	POST MILES TOTAL PROJECT	SHEET No	TOTAL SHEETS
04	Ala	880	22.6/24.0	708	760

REGISTERED STRUCTURAL ENGINEER 12/1/11 DATE

4-16-12
PLANS APPROVAL DATE

The State of California or its officers or agents shall not be responsible for the accuracy or completeness of scanned copies of this plan sheet.

REGISTERED PROFESSIONAL ENGINEER MAHVASH M. HARMS No. 2639 Exp. 12/31/12 STRUCTURAL STATE OF CALIFORNIA

ALAMEDA COUNTY TRANSPORTATION COMMISSION
1333 BROADWAY, SUITE 220
OAKLAND, CA 94612

BIGGS CARDOSA ASSOCIATES INC.
865 THE ALAMEDA
SAN JOSE, CALIFORNIA 95126

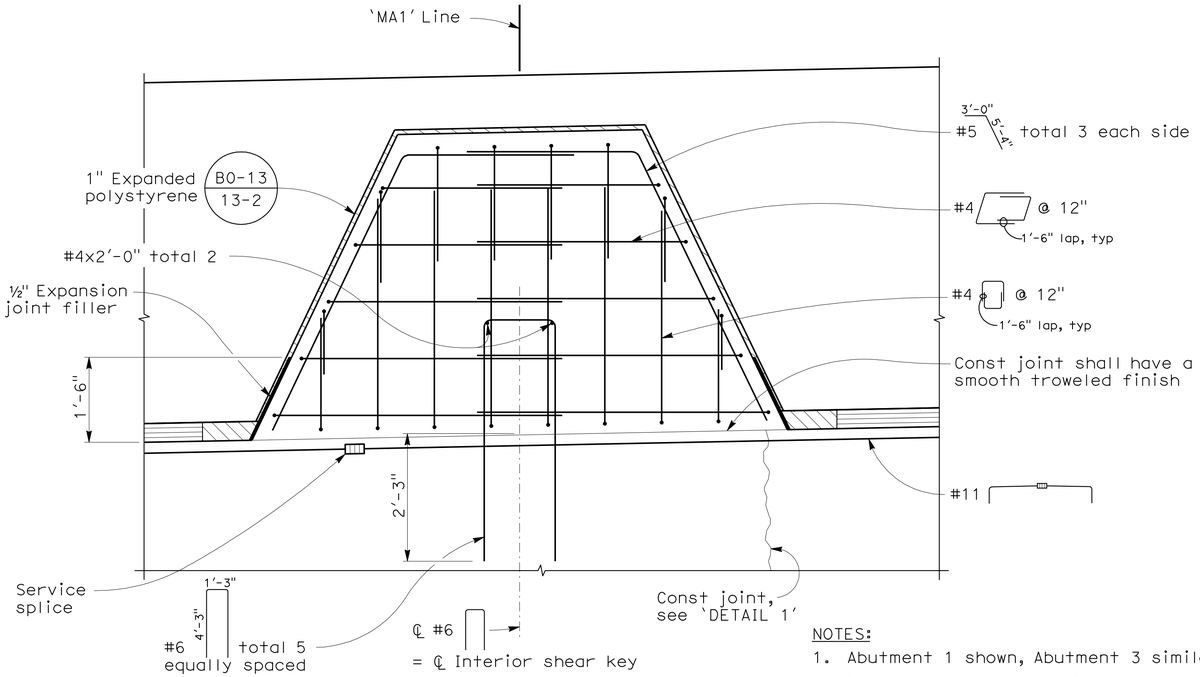

INTERIOR SHEAR KEY DETAIL
3/4" = 1'-0"

NOTES:
1. Abutment 1 shown, Abutment 3 similar
2. Interior shear key shall be constructed after Stage II abutment construction is completed.

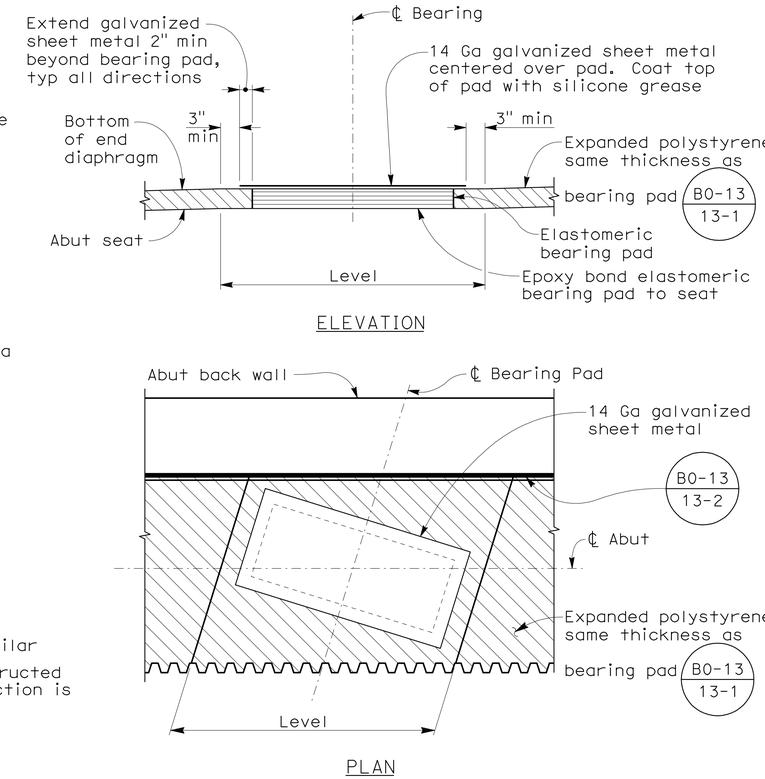

BEARING PAD DETAIL
NO SCALE

NOTE:
For 'DETAIL 1', see 'ABUTMENT DETAILS No. 1' sheet.

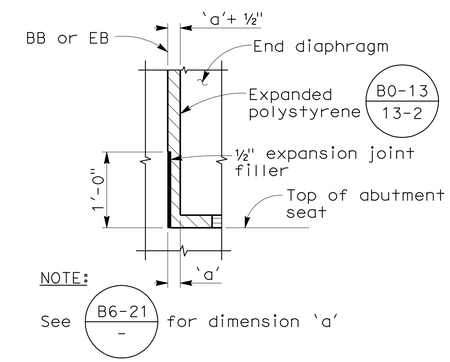

DETAIL 2
NO SCALE

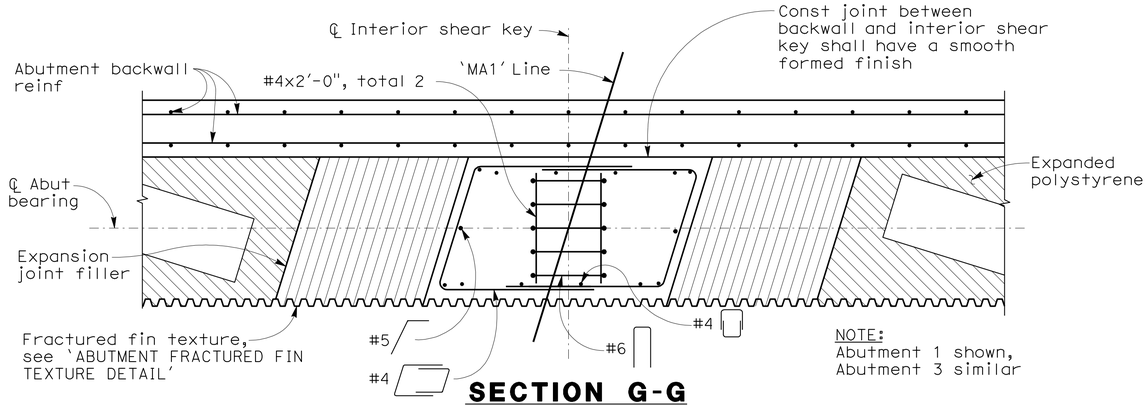

SECTION G-G
3/4" = 1'-0"

NOTE:
Abutment 1 shown, Abutment 3 similar

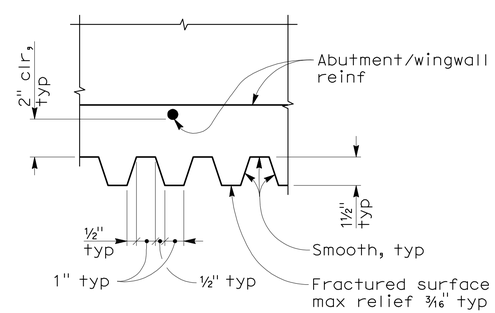

ABUTMENT FRACTURED FIN TEXTURE DETAIL
3" = 1'-0"

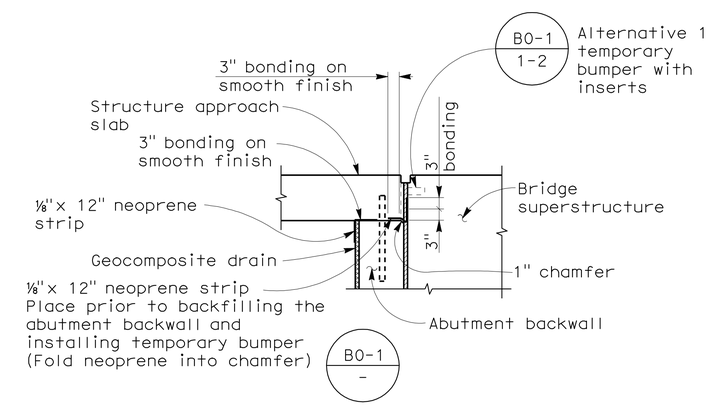

JOINT PROTECTION DETAIL
NO SCALE

DESIGN OVERSIGHT Yiwei Hu 12/29/11 SIGN OFF DATE	DESIGN	BY G. KENNING	CHECKED T. SWENSON	PREPARED FOR THE STATE OF CALIFORNIA DEPARTMENT OF TRANSPORTATION
	DETAILS	BY Y. LIN	CHECKED T. SWENSON	
	QUANTITIES	BY J. GERLACH	CHECKED J. YIP	

M. HARMS
PROJECT ENGINEER

BRIDGE NO. 33-0735
POST MILES 22.84

MARINA BLVD OC (REPLACE)
ABUTMENT DETAILS No. 3

DESIGN DETAIL SHEET (ENGLISH) (REV. 7-16-10)

ORIGINAL SCALE IN INCHES FOR REDUCED PLANS 0 1 2 3

UNIT:
PROJECT NUMBER & PHASE:

DISREGARD PRINTS BEARING EARLIER REVISION DATES

REVISION DATES (PRELIMINARY STAGE ONLY) 11/18/09 5/24/10 6/1/11 10/21/11 12/1/11

SHEET 9 OF 30

FILE => 33-0735-h-a09d3.dgn

CONTRACT NO.:

PROJECT ID:

USERNAME => s124496 DATE PLOTTED => 19-APR-2012 TIME PLOTTED => 14:56

(2008276859) 2008276

DIST	COUNTY	ROUTE	POST MILES TOTAL PROJECT	SHEET No	TOTAL SHEETS
04	Ala	880	22.6/24.0	709	760

Mahvash Harms 12/1/11
REGISTERED STRUCTURAL ENGINEER DATE

4-16-12
PLANS APPROVAL DATE

REGISTERED PROFESSIONAL ENGINEER MAHVASH M. HARMS No. 2639 Exp. 12/31/12 STRUCTURAL STATE OF CALIFORNIA

The State of California or its officers or agents shall not be responsible for the accuracy or completeness of scanned copies of this plan sheet.

ALAMEDA COUNTY TRANSPORTATION COMMISSION
1333 BROADWAY, SUITE 220
OAKLAND, CA 94612

BIGGS CARDOSA ASSOCIATES INC.
865 THE ALAMEDA
SAN JOSE, CALIFORNIA 95126

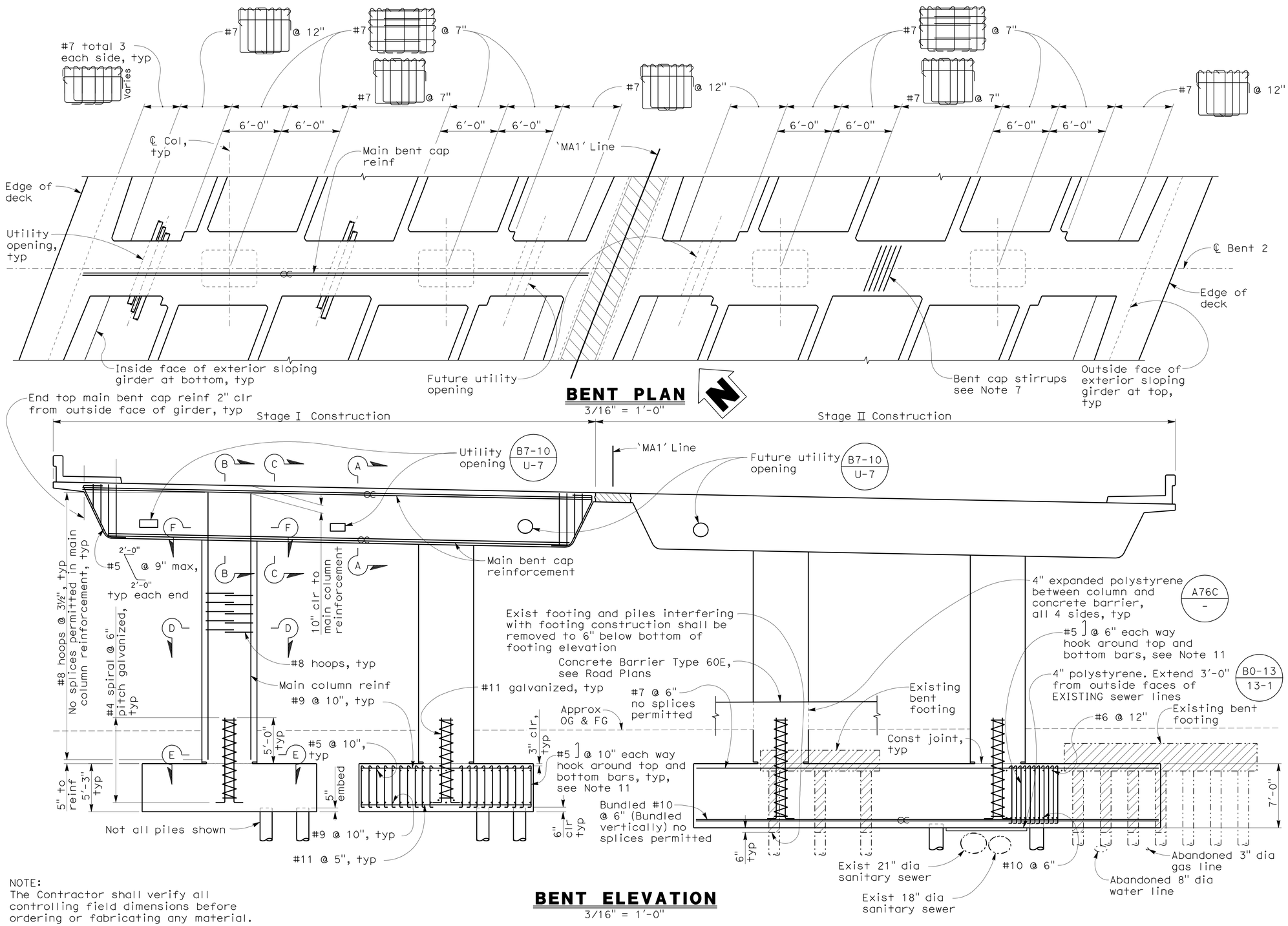

BENT ELEVATION
3/16" = 1'-0"

NOTES:

1. Indicates existing structure to be removed.
2. Indicates closure pour.
3. No splices permitted in the main cap reinforcement.
4. For `SECTION A-A', `SECTION B-B' and `SECTION C-C', see `BENT DETAILS No. 3' sheet.
5. For `SECTION D-D', `SECTION E-E' and `SECTION F-F', see `BENT DETAILS No. 4' sheet.
6. Column hoops shall utilize ultimate butt splices.
7. Bent stirrups shall be placed parallel with ℄ Girder and spaced along ℄ Bent.
8. Minimum clearance between outside edge of pile and outside edge of existing sanitary sewer line shall be 3'-6".
9. Pile locations within 8 ft (face of sewer line to face of pile) of the existing sewer lines should be predrilled to 4 ft below the sanitary sewer invert elevation.
10. Remove and replace portion of exist sanitary sewer lines beneath bent ftg prior to pile driving, see Road Plans.
11. Ftg stirrups shall not be interrupted except at column pin cage reinf. Stirrups shall be placed 8" clr of column pin cage reinf ea way.
12. For `BENT FOOTING PLAN' see `BENT DETAILS No. 2' sheet.

NOTE:
The Contractor shall verify all controlling field dimensions before ordering or fabricating any material.

DESIGN OVERSIGHT Yiwei Hu
12/29/11
SIGN OFF DATE

	BY	CHECKED
DESIGN	G. KENNING	T. SWENSON
DETAILS	Y. LIN	T. SWENSON
QUANTITIES	J. GERLACH	J. YIP

PREPARED FOR THE STATE OF CALIFORNIA DEPARTMENT OF TRANSPORTATION

M. HARMS
PROJECT ENGINEER

BRIDGE NO. 33-0735
POST MILES 22.84

MARINA BLVD OC (REPLACE)
BENT DETAILS No. 1

DESIGN DETAIL SHEET (ENGLISH) (REV. 7-16-10)

ORIGINAL SCALE IN INCHES FOR REDUCED PLANS 0 1 2 3

UNIT:
PROJECT NUMBER & PHASE:

DISREGARD PRINTS BEARING EARLIER REVISION DATES

REVISION DATES (PRELIMINARY STAGE ONLY) 11/16/09 5/24/10 6/1/10 10/27/11 12/1/11

SHEET 10 OF 30

FILE => 33-0735-j-b10d1.dgn

CONTRACT NO.:

PROJECT ID:

USERNAME => s124496 DATE PLOTTED => 19-APR-2012 TIME PLOTTED => 14:56

2008276 (2008276B510)

DIST	COUNTY	ROUTE	POST MILES TOTAL PROJECT	SHEET No	TOTAL SHEETS
04	Ala	880	22.6/24.0	710	760

REGISTERED STRUCTURAL ENGINEER 12/1/11 DATE

4-16-12
PLANS APPROVAL DATE

REGISTERED PROFESSIONAL ENGINEER MAHVASH M. HARMS No. 2639 Exp. 12/31/12 STRUCTURAL STATE OF CALIFORNIA

The State of California or its officers or agents shall not be responsible for the accuracy or completeness of scanned copies of this plan sheet.

ALAMEDA COUNTY TRANSPORTATION COMMISSION
1333 BROADWAY, SUITE 220
OAKLAND, CA 94612

BIGGS CARDOSA ASSOCIATES INC.
865 THE ALAMEDA
SAN JOSE, CALIFORNIA 95126

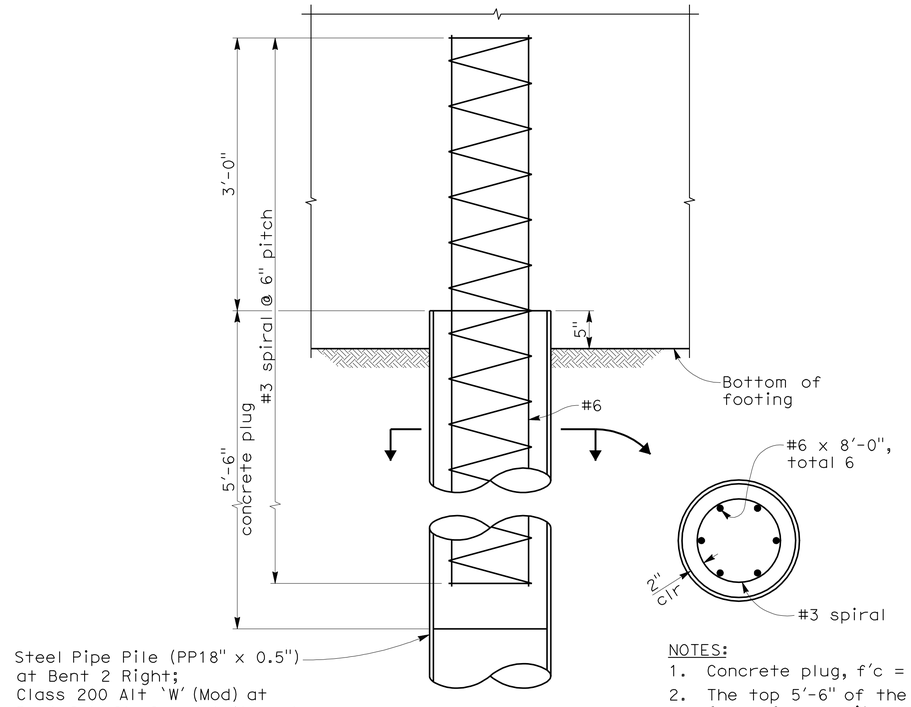

NOTES:
1. Concrete plug, f'c = 4000 psi.
2. The top 5'-6" of the pile shall be cleaned out, free of water, free of any soil, rock or other material deleterious to the bond between concrete and steel before placing reinforcement and concrete plug.

BENT FOOTING PILE ANCHORAGE DETAIL

NO SCALE

NOTES:
1. Indicates pile.
2. Indicates existing pile
3. Indicates existing structure to be removed.
4. Minimum clearance between outside edge of pile and outside edge of existing sanitary sewer line shall be 3'-6".
5. Pile locations within 8 ft (face of sewer line to face of pile) of the existing sewer lines should be predrilled to 4 ft below the sanitary sewer invert elevation.
6. Remove and replace portion of exist sanitary sewer lines beneath bent ftg prior to pile driving, see Road Plans.
7. Ftg stirrups shall not be interrupted except at col reinf. Stirrups shall be placed 8" clr of col reinf.

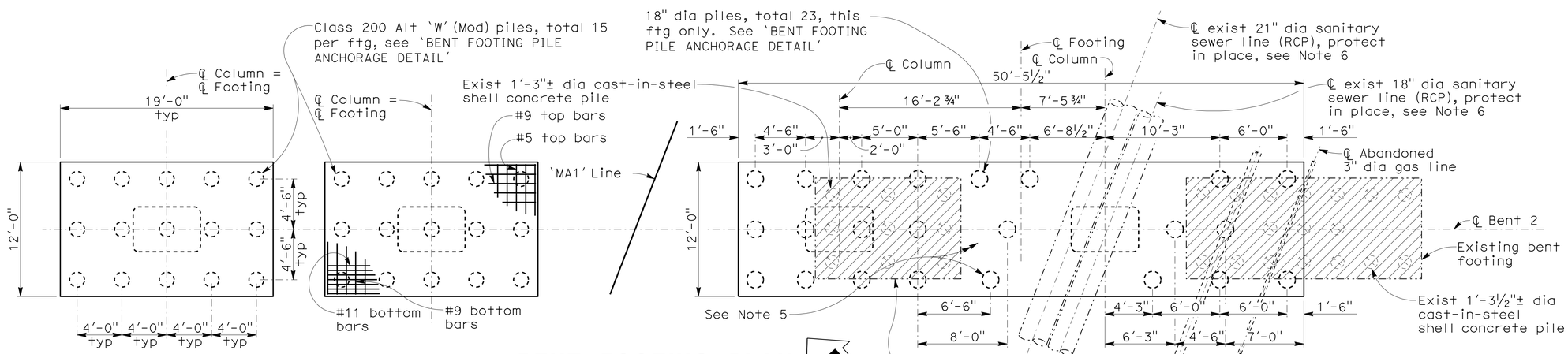

BENT FOOTING PLAN

3/16" = 1'-0"

NOTE:
The Contractor shall verify all controlling field dimensions before ordering or fabricating any material.

DESIGN OVERSIGHT Yiwei Hu 12/29/11 SIGN OFF DATE	DESIGN	BY G. KENNING	CHECKED T. SWENSON
	DETAILS	BY Y. LIN	CHECKED T. SWENSON
	QUANTITIES	BY J. GERLACH	CHECKED J. YIP

PREPARED FOR THE STATE OF CALIFORNIA DEPARTMENT OF TRANSPORTATION

M. HARMS
PROJECT ENGINEER

BRIDGE NO. 33-0735
POST MILES 22.84

MARINA BLVD OC (REPLACE)

BENT DETAILS No. 2

DESIGN DETAIL SHEET (ENGLISH) (REV. 7-16-10)

ORIGINAL SCALE IN INCHES FOR REDUCED PLANS 0 1 2 3

UNIT:
PROJECT NUMBER & PHASE:

DISREGARD PRINTS BEARING EARLIER REVISION DATES

REVISION DATES (PRELIMINARY STAGE ONLY) 10/27/11 12/1/11

SHEET 11 OF 30

FILE => 33-0735-j-b11d2.dgn

CONTRACT NO.:

PROJECT ID:

USERNAME => s124496 DATE PLOTTED => 19-APR-2012 TIME PLOTTED => 14:56

2008276 (2008276BS11)

DIST	COUNTY	ROUTE	POST MILES TOTAL PROJECT	SHEET No	TOTAL SHEETS
04	Ala	880	22.6/24.0	711	760

REGISTERED STRUCTURAL ENGINEER 12/1/11 DATE

4-16-12
PLANS APPROVAL DATE

REGISTERED PROFESSIONAL ENGINEER MAHVASH M. HARMS No. 2639 Exp. 12/31/12 STRUCTURAL STATE OF CALIFORNIA

The State of California or its officers or agents shall not be responsible for the accuracy or completeness of scanned copies of this plan sheet.

ALAMEDA COUNTY TRANSPORTATION COMMISSION
1333 BROADWAY, SUITE 220
OAKLAND, CA 94612

BIGGS CARDOSA ASSOCIATES INC.
865 THE ALAMEDA
SAN JOSE, CALIFORNIA 95126

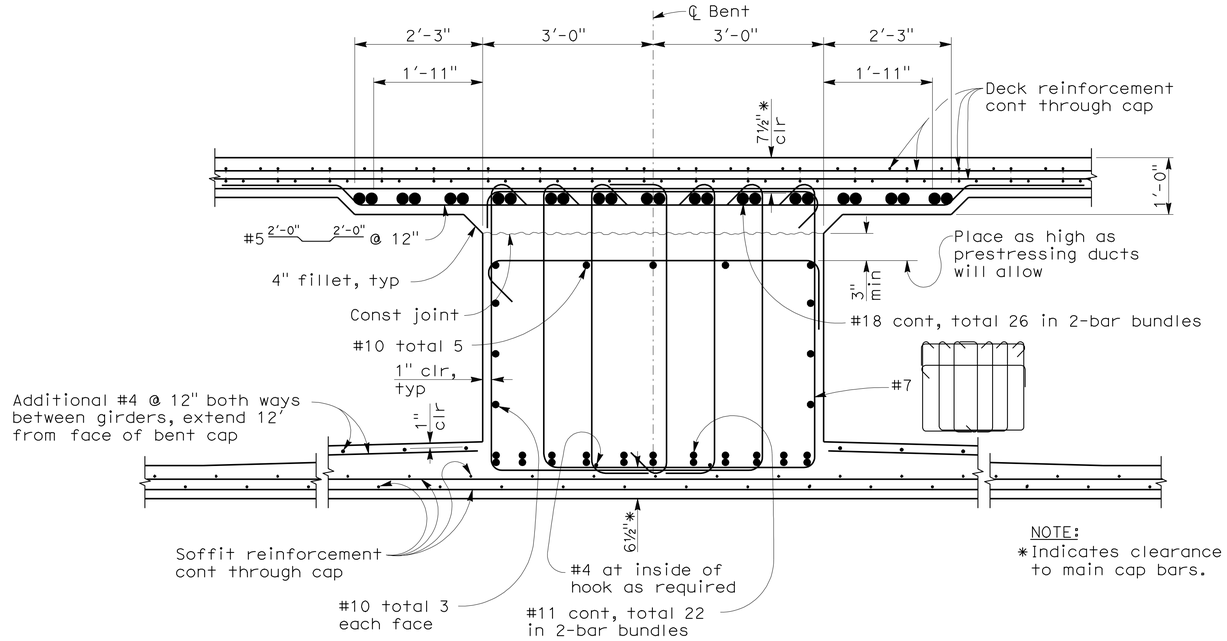

NOTE:
*Indicates clearance to main cap bars.

SECTION A-A
3/4" = 1'-0"

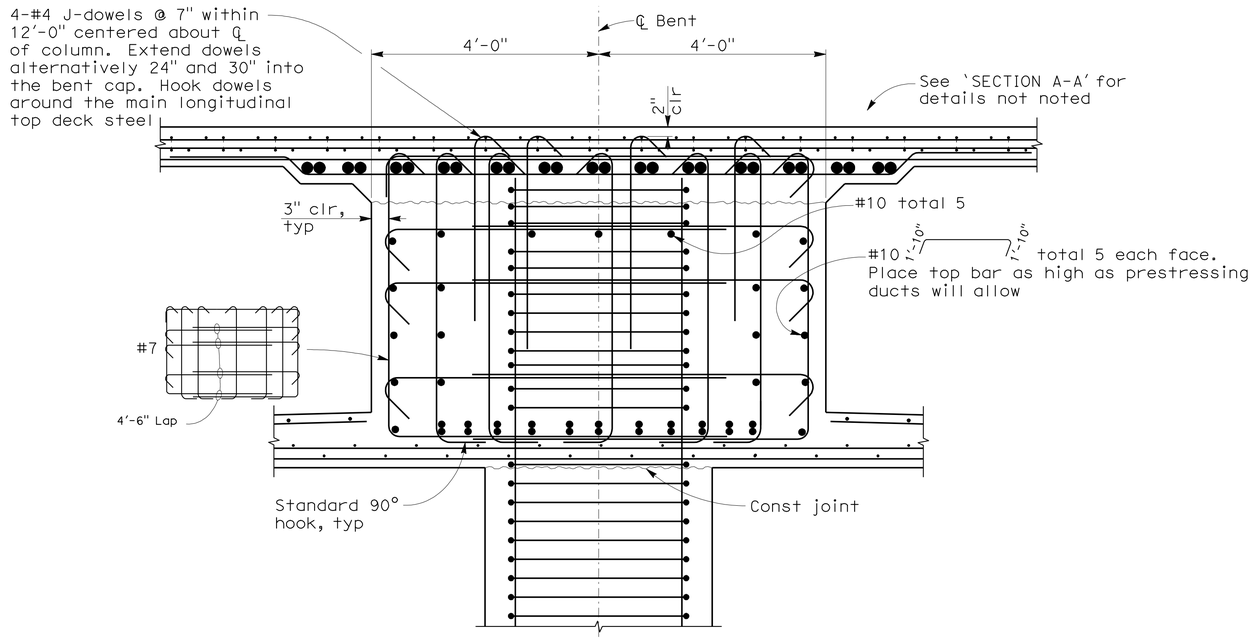

SECTION B-B
3/4" = 1'-0"

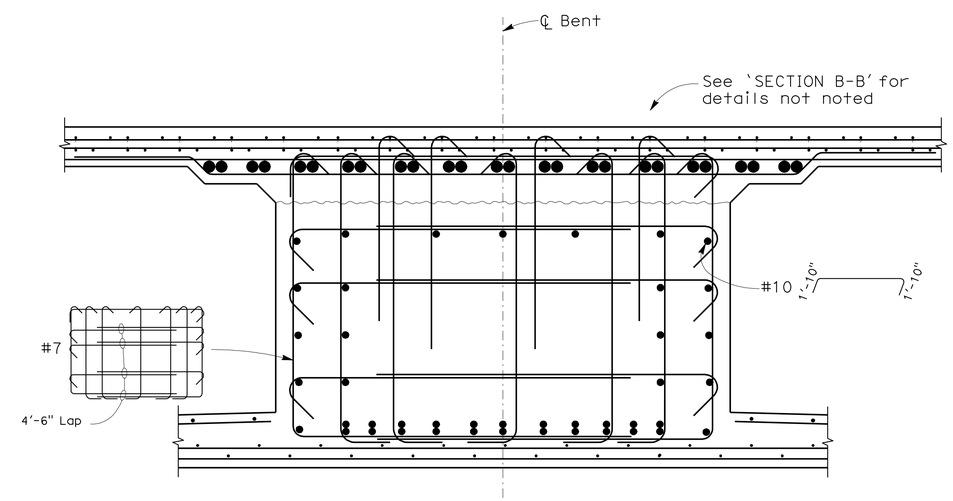

SECTION C-C
3/4" = 1'-0"

DESIGN OVERSIGHT Yiwei Hu	DESIGN	BY G. KENNING	CHECKED T. SWENSON
12/29/11 SIGN OFF DATE	DETAILS	BY Y. LIN	CHECKED T. SWENSON
	QUANTITIES	BY J. GERLACH	CHECKED J. YIP

PREPARED FOR THE STATE OF CALIFORNIA DEPARTMENT OF TRANSPORTATION

M. HARMS
PROJECT ENGINEER

BRIDGE NO. 33-0735
POST MILES 22.84

MARINA BLVD OC (REPLACE)
BENT DETAILS No. 3

DESIGN DETAIL SHEET (ENGLISH) (REV. 7-16-10)

ORIGINAL SCALE IN INCHES FOR REDUCED PLANS 0 1 2 3

UNIT:
PROJECT NUMBER & PHASE:

DISREGARD PRINTS BEARING EARLIER REVISION DATES

REVISION DATES (PRELIMINARY STAGE ONLY) 11/16/09 5/24/10 6/1/11 10/27/11 12/1/11

SHEET 12 OF 30

FILE => 33-0735-j-b12d3.dgn

CONTRACT NO.: PROJECT ID:

USERNAME => s124496 DATE PLOTTED => 19-APR-2012 TIME PLOTTED => 14:56

20082768512 20082768

DIST	COUNTY	ROUTE	POST MILES TOTAL PROJECT	SHEET No	TOTAL SHEETS
04	Ala	880	22.6/24.0	712	760

Mahvash Harms 12/1/11
REGISTERED STRUCTURAL ENGINEER DATE

4-16-12
PLANS APPROVAL DATE

REGISTERED PROFESSIONAL ENGINEER MAHVASH M. HARMS No. 2639 Exp. 12/31/12 STRUCTURAL STATE OF CALIFORNIA

The State of California or its officers or agents shall not be responsible for the accuracy or completeness of scanned copies of this plan sheet.

ALAMEDA COUNTY TRANSPORTATION COMMISSION
1333 BROADWAY, SUITE 220
OAKLAND, CA 94612

BIGGS CARDOSA ASSOCIATES INC.
865 THE ALAMEDA
SAN JOSE, CALIFORNIA 95126

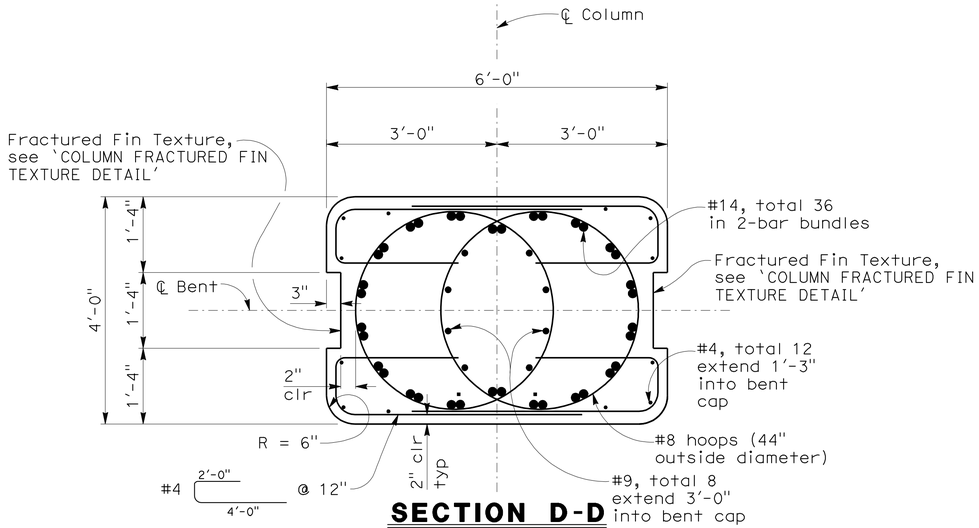

SECTION D-D
3/4" = 1'-0"

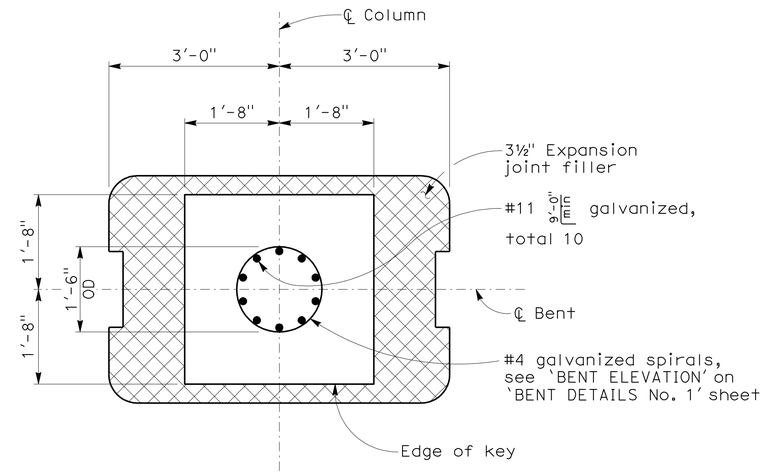

SECTION E-E
3/4" = 1'-0"

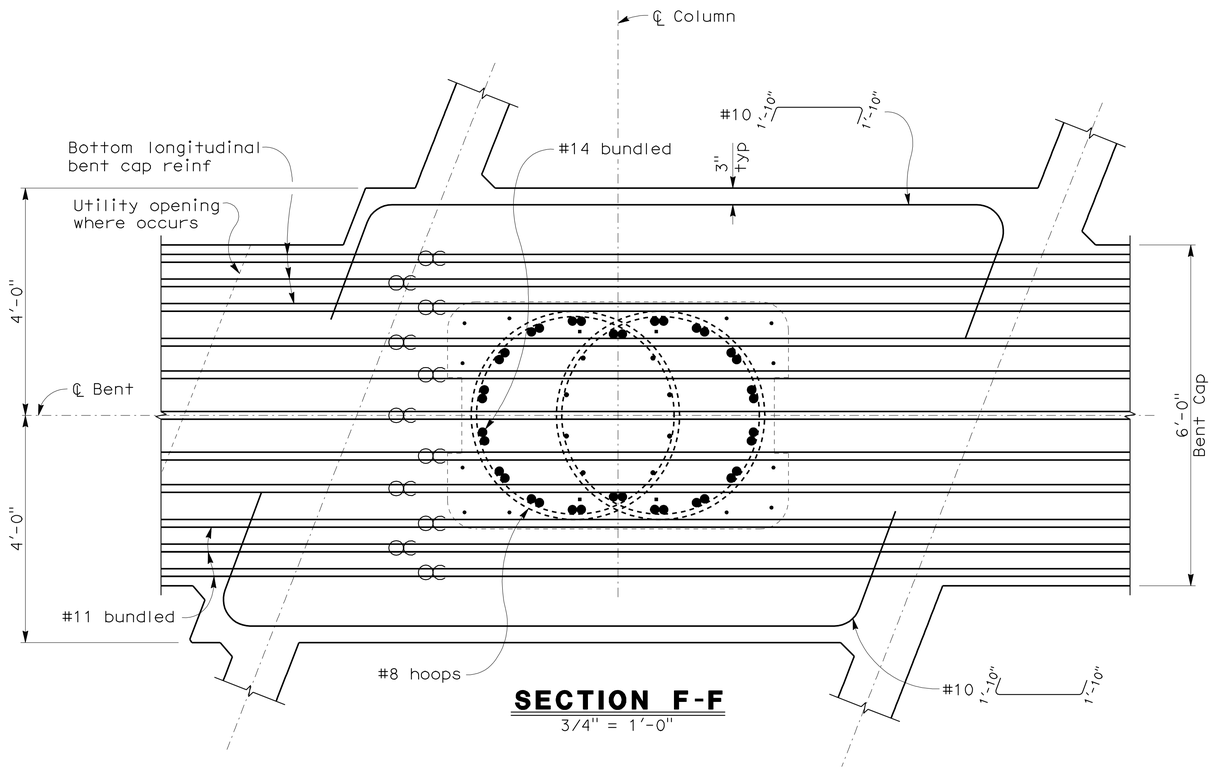

SECTION F-F
3/4" = 1'-0"

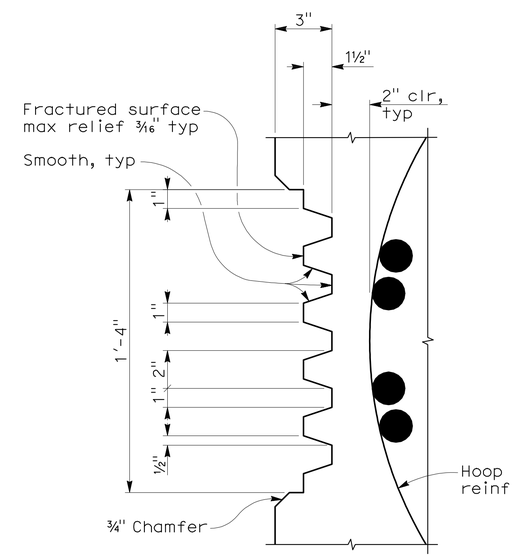

COLUMN FRACTURED FIN TEXTURE DETAIL
3" = 1'-0"

DESIGN OVERSIGHT Yiwei Hu
12/29/11
SIGN OFF DATE

	BY	CHECKED
DESIGN	G. KENNING	T. SWENSON
DETAILS	Y. LIN	T. SWENSON
QUANTITIES	J. GERLACH	J. YIP

PREPARED FOR THE STATE OF CALIFORNIA DEPARTMENT OF TRANSPORTATION

M. HARMS
PROJECT ENGINEER

BRIDGE NO. 33-0735
POST MILES 22.84

MARINA BLVD OC (REPLACE)
BENT DETAILS No. 4

DESIGN DETAIL SHEET (ENGLISH) (REV. 7-16-10)

ORIGINAL SCALE IN INCHES FOR REDUCED PLANS 0 1 2 3

UNIT:
PROJECT NUMBER & PHASE:

DISREGARD PRINTS BEARING EARLIER REVISION DATES

REVISION DATES (PRELIMINARY STAGE ONLY) 11/16/09 5/24/10 6/1/11 10/27/11 12/1/11

SHEET 13 OF 30

FILE => 33-0735-j-b13d4.dgn

CONTRACT NO.: PROJECT ID:

USERNAME => s124496 DATE PLOTTED => 19-APR-2012 TIME PLOTTED => 14:57 20082276 (20082768513)

DIST	COUNTY	ROUTE	POST MILES TOTAL PROJECT	SHEET No	TOTAL SHEETS
04	Ala	880	22.6/24.0	713	760

REGISTERED STRUCTURAL ENGINEER — DATE 12/1/11

4-16-12
PLANS APPROVAL DATE

The State of California or its officers or agents shall not be responsible for the accuracy or completeness of scanned copies of this plan sheet.

REGISTERED PROFESSIONAL ENGINEER — MAHVASH M. HARMS — No. 2639 — Exp. 12/31/12 — STRUCTURAL — STATE OF CALIFORNIA

ALAMEDA COUNTY TRANSPORTATION COMMISSION
1333 BROADWAY, SUITE 220
OAKLAND, CA 94612

BIGGS CARDOSA ASSOCIATES INC.
865 THE ALAMEDA
SAN JOSE, CALIFORNIA 95126

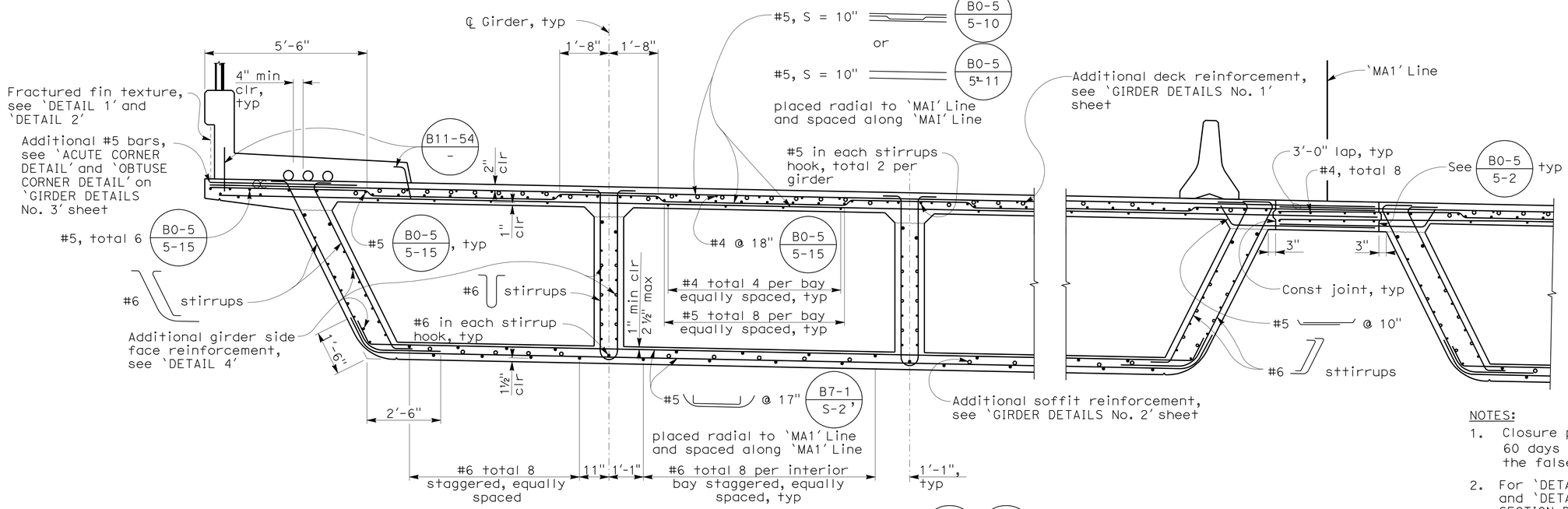

PARTIAL TYPICAL SECTION

1/2" = 1'-0"

B7-1 - | B8-5 -

NOTES:

1. Closure pour shall not be placed sooner than 60 days after the falsework has been released. the falsework has been released.
2. For 'DETAIL 1', 'DETAIL 2', 'DETAIL 3', and 'DETAILS 4, see 'TYPICAL SECTION DETAILS' sheet.
3. ▨ Indicates closure pour.

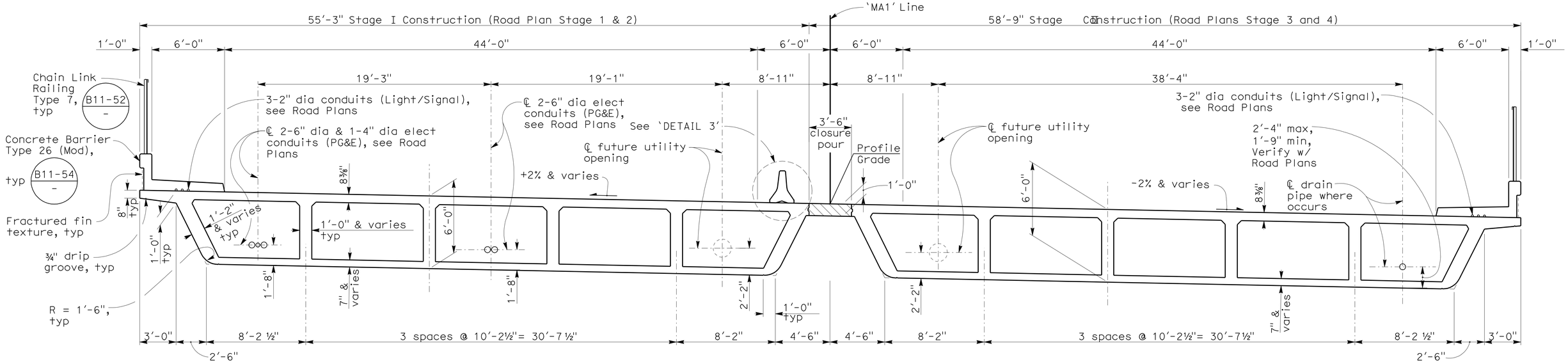

TYPICAL SECTION

1/4" = 1'-0"

DESIGN OVERSIGHT Yiwei Hu 12/29/11 SIGN OFF DATE	DESIGN	BY G. KENNING	CHECKED T. SWENSON	PREPARED FOR THE STATE OF CALIFORNIA DEPARTMENT OF TRANSPORTATION	M. HARMS PROJECT ENGINEER
	DETAILS	BY Y. LIN	CHECKED T. SWENSON		
	QUANTITIES	BY J. GERLACH	CHECKED J. YIP		

BRIDGE NO. 33-0735
POST MILES 22.84

MARINA BLVD OC (REPLACE)
TYPICAL SECTION

DESIGN DETAIL SHEET (ENGLISH) (REV. 7-16-10)

ORIGINAL SCALE IN INCHES FOR REDUCED PLANS 0 1 2 3

UNIT:
PROJECT NUMBER & PHASE:

DISREGARD PRINTS BEARING EARLIER REVISION DATES

REVISION DATES (PRELIMINARY STAGE ONLY): 11/16/09 5/24/10 6/1/11 10/27/11 12/1/11

SHEET 14 OF 30

FILE => 33-0735-m-ts1.dgn

CONTRACT NO.: PROJECT ID:

USERNAME => s124496 DATE PLOTTED => 19-APR-2012 TIME PLOTTED => 14:57

2008276 (2008276BS14)

DIST	COUNTY	ROUTE	POST MILES TOTAL PROJECT	SHEET No	TOTAL SHEETS
04	Ala	880	22.6/24.0	714	760

Mahvash Harms 12/1/11
REGISTERED STRUCTURAL ENGINEER DATE

4-16-12
PLANS APPROVAL DATE

REGISTERED PROFESSIONAL ENGINEER MAHVASH M. HARMS No. 2639 Exp. 12/31/12 STRUCTURAL STATE OF CALIFORNIA

The State of California or its officers or agents shall not be responsible for the accuracy or completeness of scanned copies of this plan sheet.

ALAMEDA COUNTY TRANSPORTATION COMMISSION
1333 BROADWAY, SUITE 220
OAKLAND, CA 94612

BIGGS CARDOSA ASSOCIATES INC.
865 THE ALAMEDA
SAN JOSE, CALIFORNIA 95126

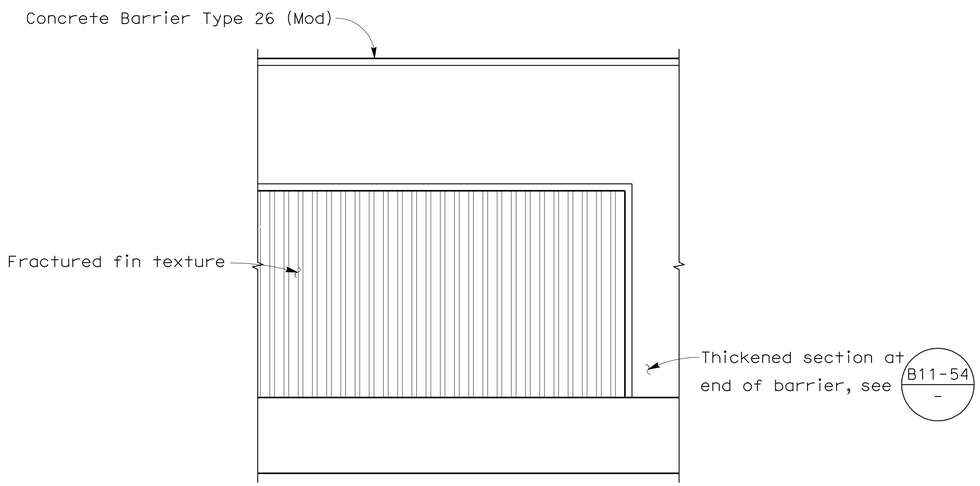

CONCRETE BARRIER ELEVATION VIEW

DETAIL 1
1 1/2" = 1'-0"

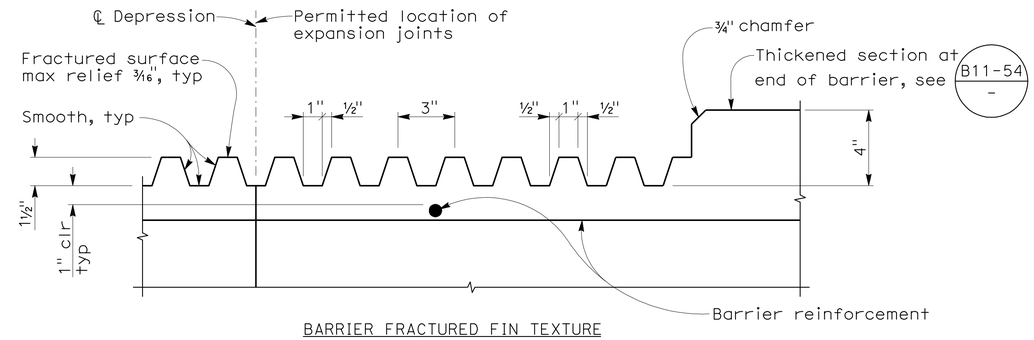

BARRIER FRACTURED FIN TEXTURE

DETAIL 2
3" = 1'-0"

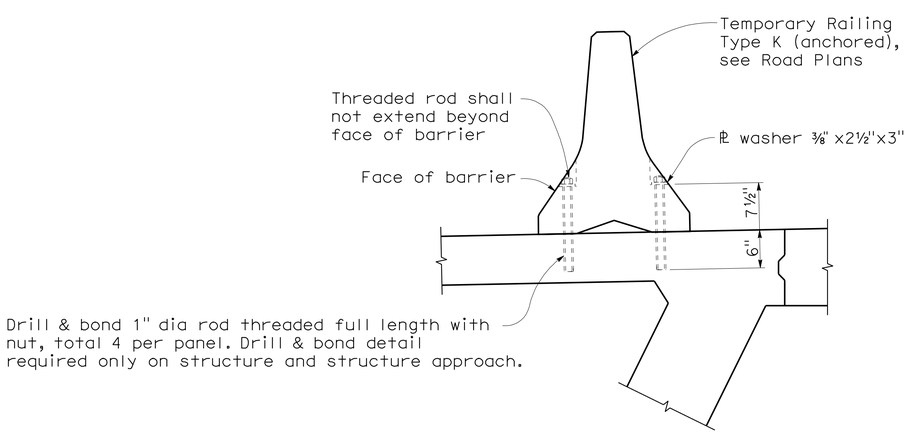

DETAIL 3
1" = 1'-0"

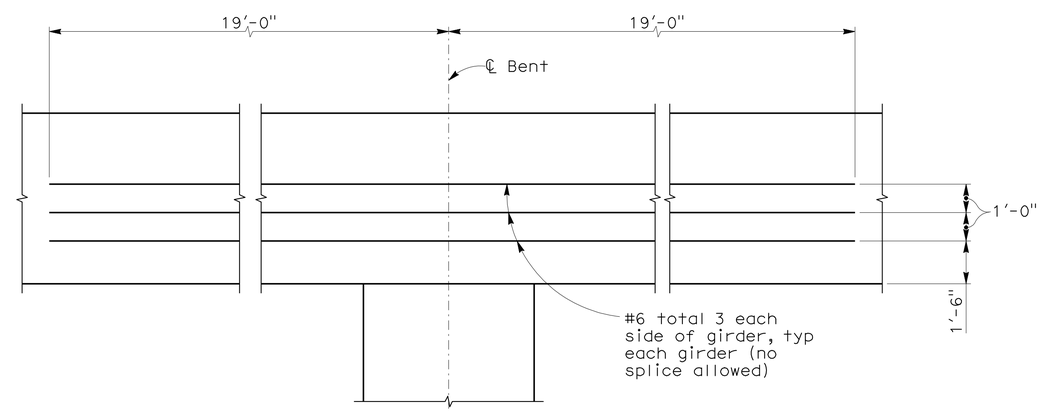

GIRDER SIDE FACE REINFORCEMENT

DETAIL 4
NO SCALE

DESIGN OVERSIGHT Yiwei Hu 12/29/11 SIGN OFF DATE	DESIGN	BY G. KENNING	CHECKED T. SWENSON	PREPARED FOR THE STATE OF CALIFORNIA DEPARTMENT OF TRANSPORTATION	M. HARMS PROJECT ENGINEER
	DETAILS	BY Y. LIN	CHECKED T. SWENSON		
	QUANTITIES	BY J. GERLACH	CHECKED J. YIP		

BRIDGE NO. 33-0735
POST MILES 22.84

MARINA BLVD OC (REPLACE)
TYPICAL SECTION DETAILS

DESIGN DETAIL SHEET (ENGLISH) (REV. 7-16-10)

ORIGINAL SCALE IN INCHES FOR REDUCED PLANS 0 1 2 3

UNIT:
PROJECT NUMBER & PHASE:

DISREGARD PRINTS BEARING EARLIER REVISION DATES

REVISION DATES (PRELIMINARY STAGE ONLY) 11/18/09 5/24/10 6/1/11 10/21/11 12/1/11

SHEET 15 OF 30

FILE => 33-0735-m-ts2.dgn

CONTRACT NO.: PROJECT ID:

USERNAME => s124496 DATE PLOTTED => 19-APR-2012 TIME PLOTTED => 14:57

2008276 (2008276BS15)

DIST	COUNTY	ROUTE	POST MILES TOTAL PROJECT	SHEET No	TOTAL SHEETS
04	Ala	880	22.6/24.0	715	760

REGISTERED STRUCTURAL ENGINEER — DATE 12/1/11

4-16-12
PLANS APPROVAL DATE

The State of California or its officers or agents shall not be responsible for the accuracy or completeness of scanned copies of this plan sheet.

REGISTERED PROFESSIONAL ENGINEER — MAHVASH M. HARMS — No. 2639 — Exp. 12/31/12 — STRUCTURAL — STATE OF CALIFORNIA

ALAMEDA COUNTY TRANSPORTATION COMMISSION
1333 BROADWAY, SUITE 220
OAKLAND, CA 94612

BIGGS CARDOSA ASSOCIATES INC.
865 THE ALAMEDA
SAN JOSE, CALIFORNIA 95126

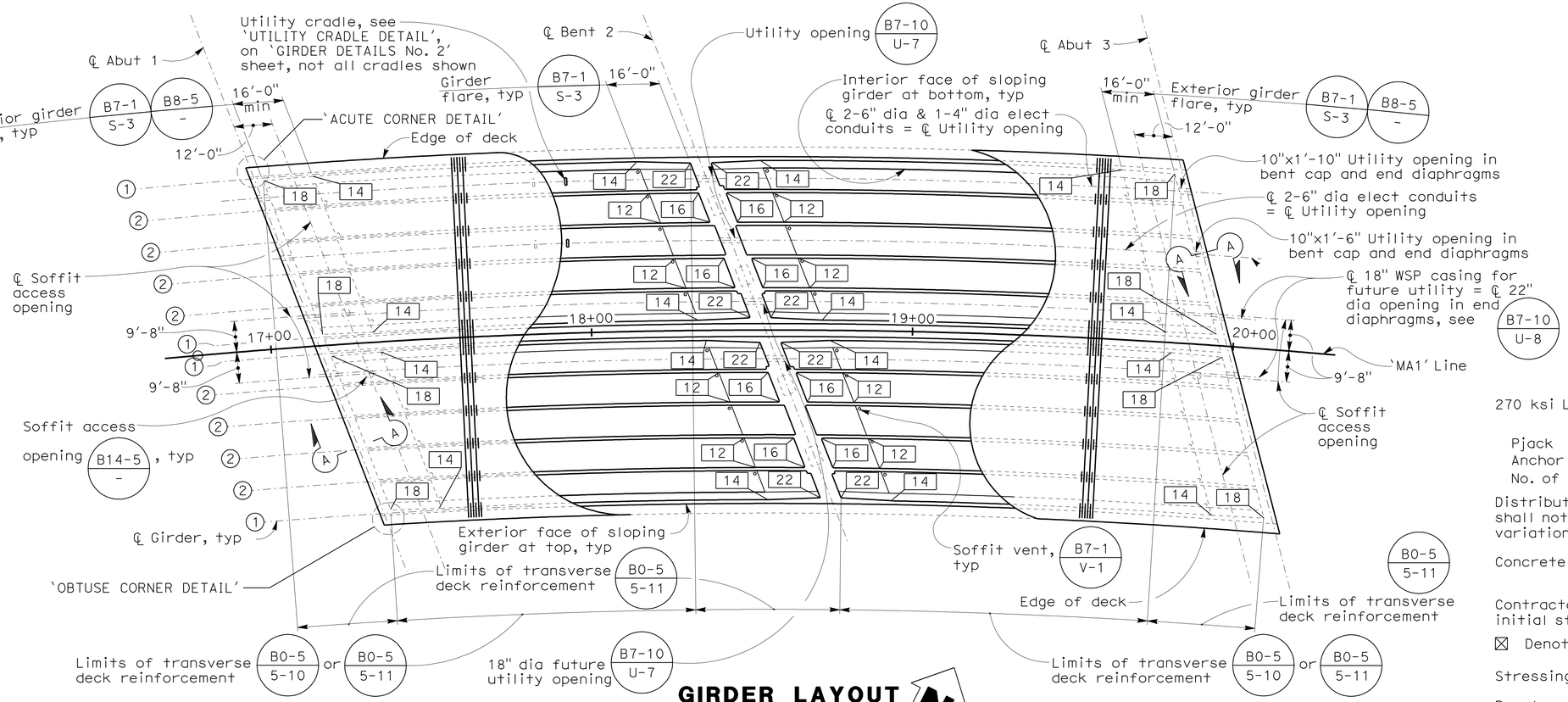

GIRDER LAYOUT

1" = 20'

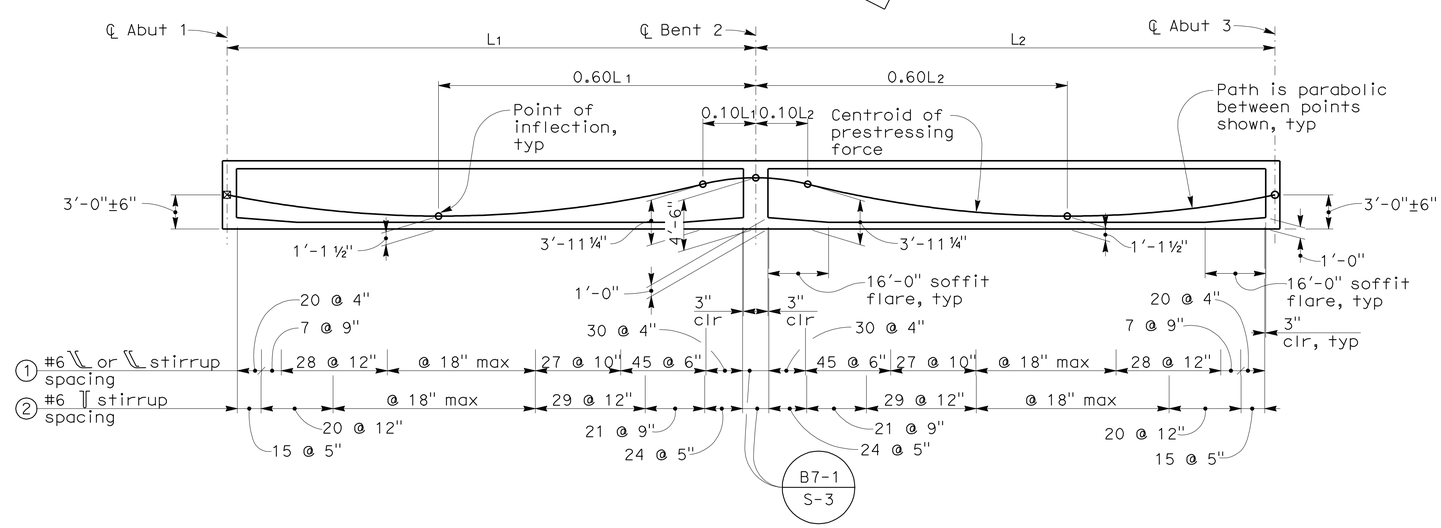

LONGITUDINAL SECTION

NO SCALE

PRESTRESSING NOTES

270 ksi Low Relaxation Strand:

	Stage I	Stage II
Pjack	= 13500kips	= 13500kips
Anchor set	= ⅜ in	= ⅜ in
No. of girders	= 6	= 6

Distribution of prestress force (Pjack) between girders shall not exceed the ratio of 3:2. Maximum final force variation between girders shall not exceed 725K

Concrete: f'c = 5000 psi at 28 days
f'ci = 3500 psi at time of stressing

Contractor shall submit elongation calculations based on initial stress at ⊠= 0.865 times jacking stress

⊠ Denotes theoretical point of no movement

Stressing shall be performed from Abutment 3 end only.

Prestress force design is based on friction coefficient μ = 0.15 and friction wobble coefficient k=0.0002/ft and modified for curvature

NOTES:

1. ▭ Indicates girder stem width in inches.
2. (1) Indicates stirrup designation.
3. For 'SECTION A-A' see 'GIRDER DETAILS No. 1' sheet.
4. For 'ACUTE CORNER DETAIL', and 'OBTUSE CORNER DETAIL' see 'GIRDER DETAILS No. 3' sheet.
5. L1 and L2 are measured along the ℄ of each girder.
6. For Utility openings in end diaphragms, see B7-10 / U-3.
7. Drain pipes and drain pipe openings in bent cap and end diaphragms not shown for clarity, see 'BRIDGE DECK DRAINAGE SYSTEM' sheet.

DESIGN OVERSIGHT Yiwei Hu
12/29/11
SIGN OFF DATE

	BY	CHECKED
DESIGN	G. KENNING	T. SWENSON
DETAILS	Y. LIN	T. SWENSON
QUANTITIES	J. GERLACH	J. YIP

PREPARED FOR THE STATE OF CALIFORNIA DEPARTMENT OF TRANSPORTATION

M. HARMS
PROJECT ENGINEER

BRIDGE NO. 33-0735
POST MILES 22.84

MARINA BLVD OC (REPLACE)
GIRDER LAYOUT

DESIGN DETAIL SHEET (ENGLISH) (REV. 7-16-10)

ORIGINAL SCALE IN INCHES FOR REDUCED PLANS 0 1 2 3

UNIT:
PROJECT NUMBER & PHASE:

DISREGARD PRINTS BEARING EARLIER REVISION DATES

REVISION DATES (PRELIMINARY STAGE ONLY): 11/16/09 5/24/10 6/1/11 10/27/11 12/1/11

SHEET 16 OF 30

FILE => 33-0735-n-g-lo01.dgn

CONTRACT NO.: PROJECT ID:

USERNAME => s124196 DATE PLOTTED => 19-APR-2012 TIME PLOTTED => 14:57

20082766516) 20082766

DIST	COUNTY	ROUTE	POST MILES TOTAL PROJECT	SHEET No	TOTAL SHEETS
04	Ala	880	22.6/24.0	716	760

Mahvash Harms 12/1/11
REGISTERED STRUCTURAL ENGINEER DATE

4-16-12
PLANS APPROVAL DATE

REGISTERED PROFESSIONAL ENGINEER MAHVASH M. HARMS No. 2639 Exp. 12/31/12 STRUCTURAL STATE OF CALIFORNIA

The State of California or its officers or agents shall not be responsible for the accuracy or completeness of scanned copies of this plan sheet.

ALAMEDA COUNTY TRANSPORTATION COMMISSION
1333 BROADWAY, SUITE 220
OAKLAND, CA 94612

BIGGS CARDOSA ASSOCIATES INC.
865 THE ALAMEDA
SAN JOSE, CALIFORNIA 95126

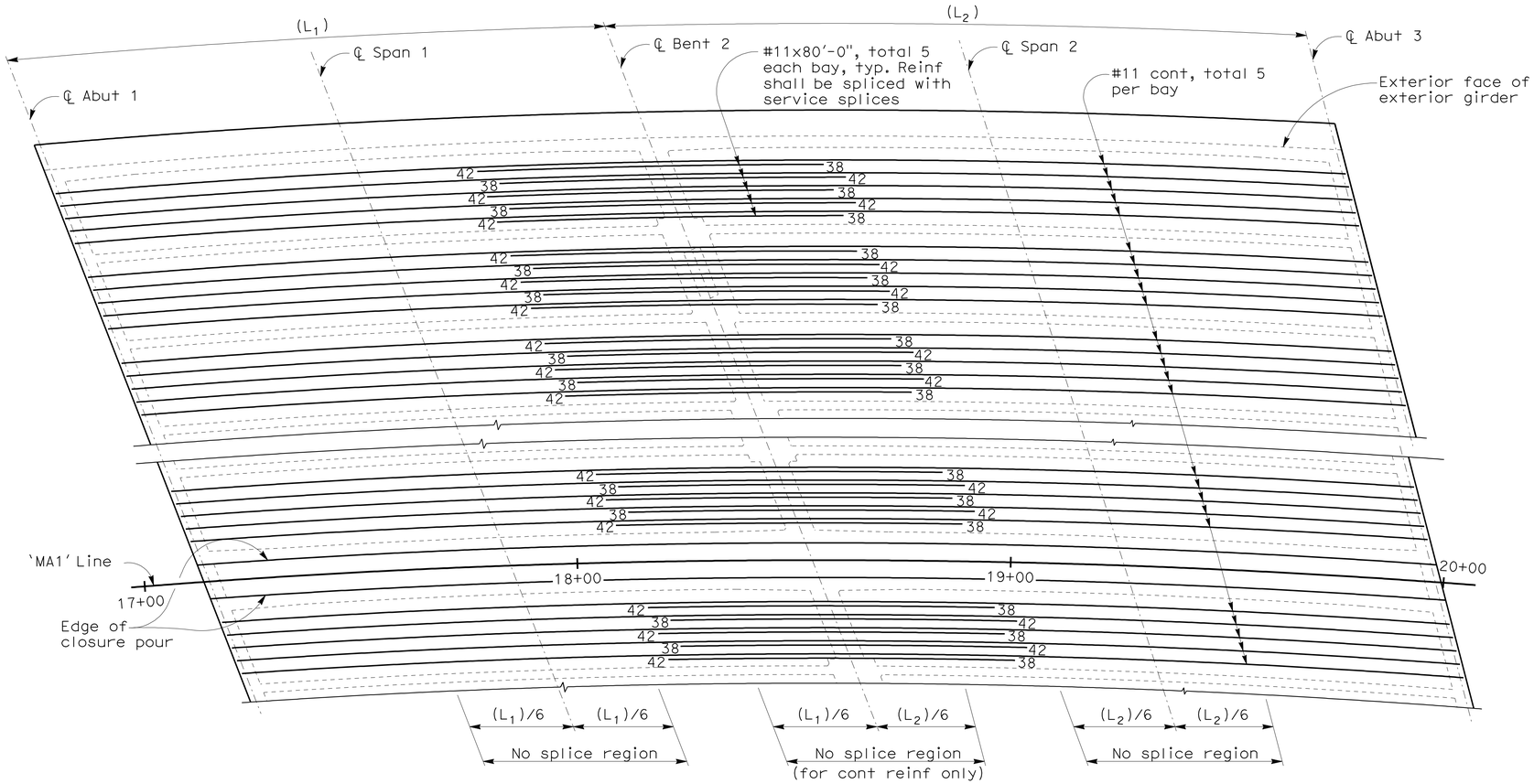

ADDITIONAL DECK REINFORCEMENT

NO SCALE

NOTES:

1. Space bars approximately equal within each bay.
2. Reinforcement shall be placed concentric with 'MA1' Line.
3. Additional continuous deck reinforcement shall be spliced with service splices staggered at 7'-6" min. Lap splices equal to two times the standard lap may be substituted for the service splices
4. Splices for continuous bars shall be located outside the 'No splice region' indicated.
5. Number at end of bar indicates distance in feet from ℄ bent.
6. For 'ACUTE CORNER DETAIL', 'OBTUSE CORNER DETAIL' and 'PARTIAL PLAN', see 'GIRDER DETAILS No. 3' sheet.

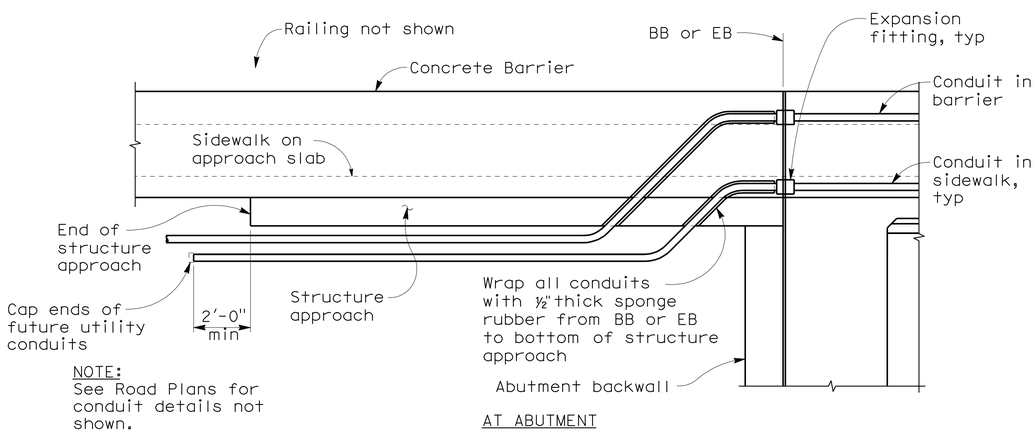

NOTE:
See Road Plans for conduit details not shown.

UTILITY CONDUITS IN SIDEWALK & BARRIER

3/8" = 1'-0"

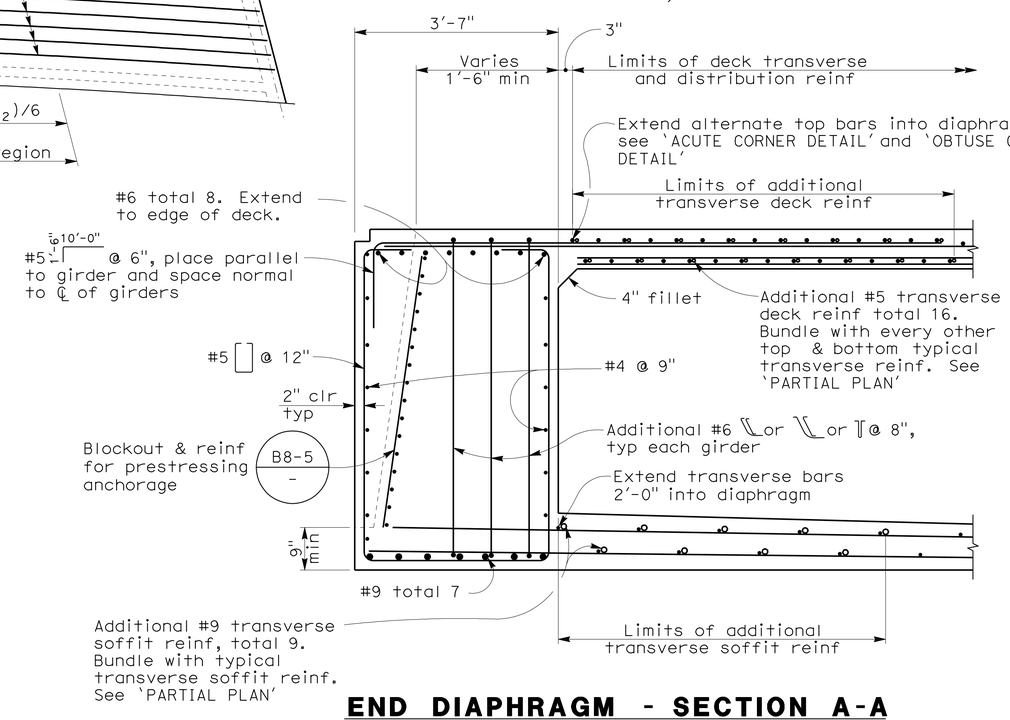

END DIAPHRAGM - SECTION A-A

3/4" = 1'-0"

DESIGN OVERSIGHT Yiwei Hu 12/29/11 SIGN OFF DATE	DESIGN	BY G. KENNING	CHECKED T. SWENSON
	DETAILS	BY Y. LIN	CHECKED T. SWENSON
	QUANTITIES	BY J. GERLACH	CHECKED J. YIP

PREPARED FOR THE STATE OF CALIFORNIA DEPARTMENT OF TRANSPORTATION

M. HARMS
PROJECT ENGINEER

BRIDGE NO. 33-0735
POST MILES 22.84

MARINA BLVD OC (REPLACE)

GIRDER DETAILS No. 1

DESIGN DETAIL SHEET (ENGLISH) (REV. 7-16-10)

ORIGINAL SCALE IN INCHES FOR REDUCED PLANS 0 1 2 3

UNIT:
PROJECT NUMBER & PHASE:

DISREGARD PRINTS BEARING EARLIER REVISION DATES

REVISION DATES (PRELIMINARY STAGE ONLY) 11/16/09 5/24/10 6/1/11 10/21/11 12/1/11

SHEET 17 OF 30

FILE => 33-0735-n-gd01.dgn

CONTRACT NO.:

PROJECT ID:

USERNAME => s124496 DATE PLOTTED => 19-APR-2012 TIME PLOTTED => 14:57

2008276 (2008276B517)

DIST	COUNTY	ROUTE	POST MILES TOTAL PROJECT	SHEET No	TOTAL SHEETS
04	Ala	880	22.6/24.0	717	760

REGISTERED STRUCTURAL ENGINEER 12/1/11 DATE

4-16-12
PLANS APPROVAL DATE

REGISTERED PROFESSIONAL ENGINEER MAHVASH M. HARMS No. 2639 Exp. 12/31/12 STRUCTURAL STATE OF CALIFORNIA

The State of California or its officers or agents shall not be responsible for the accuracy or completeness of scanned copies of this plan sheet.

ALAMEDA COUNTY TRANSPORTATION COMMISSION
1333 BROADWAY, SUITE 220
OAKLAND, CA 94612

BIGGS CARDOSA ASSOCIATES INC.
865 THE ALAMEDA
SAN JOSE, CALIFORNIA 95126

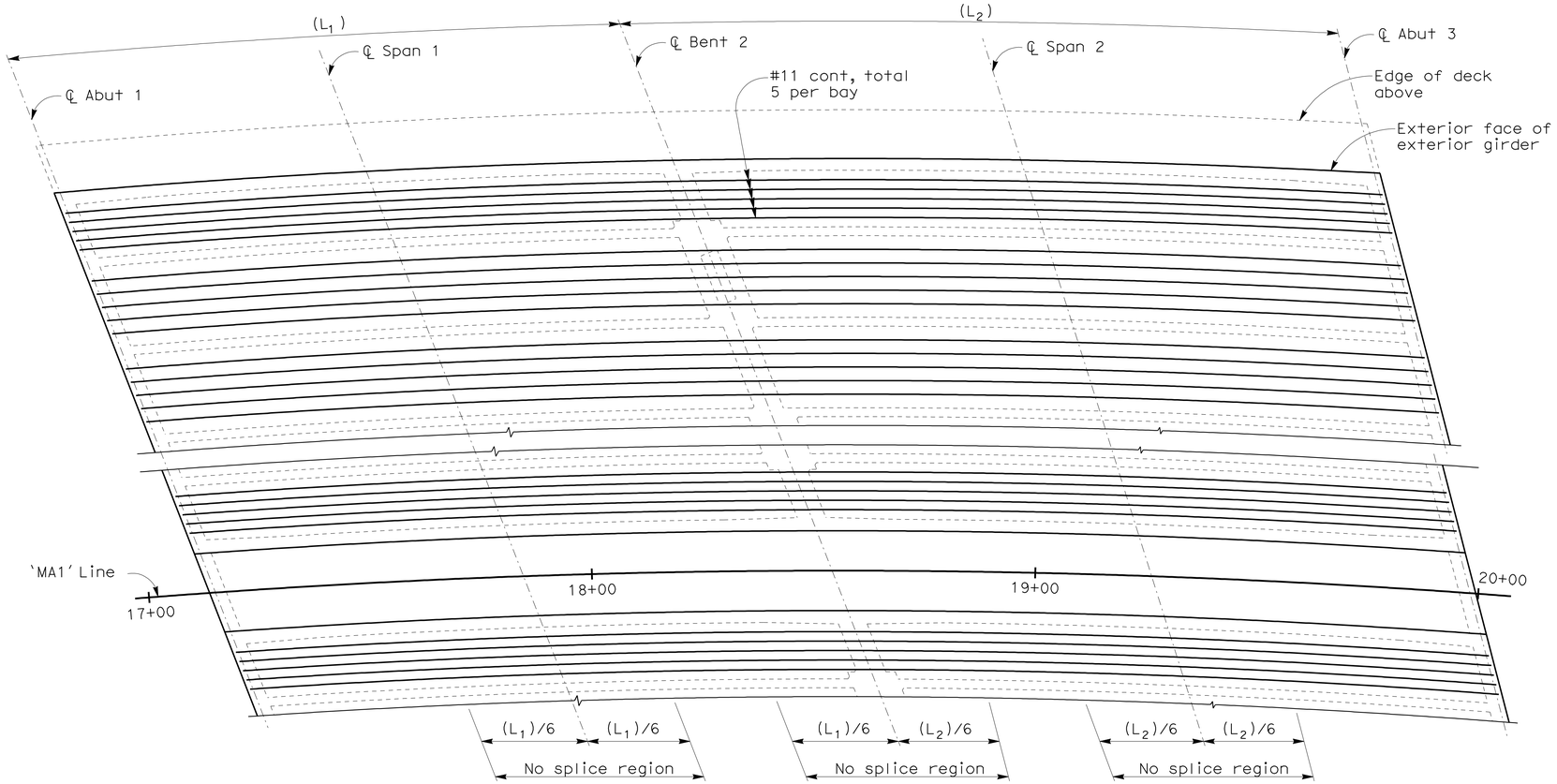

ADDITIONAL SOFFIT REINFORCEMENT

NO SCALE

NOTES:

1. Space bars approximately equal within each bay. Arrange to avoid column reinforcement.
2. Reinforcement shall be placed concentric with 'MA1' Line.
3. Additional continuous deck reinforcement shall be spliced with service splices staggered at 7'-6" min. Lap splices equal to two times the standard lap may be substituted for the service splices.
4. Splices for continuous bars shall be located outside the 'No splice region' indicated.

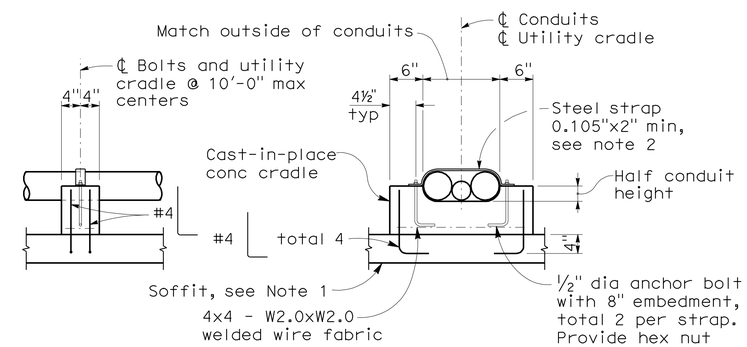

UTILITY CRADLE DETAIL

3/4" = 1'-0"

UTILITY CRADLE NOTES:

1. Soffit reinforcement not shown for clarity.
2. Conduits shall be tightly clamped at the first support on each side of bent cap. At all other supports, strap to provide ⅛" clearance all around between conduit and strap.
3. All hardware to be galvanized.
4. Three conduit cradles shown, two conduit cradles similar.

DESIGN OVERSIGHT Yiwei Hu
12/29/11
SIGN OFF DATE

	BY	CHECKED
DESIGN	G. KENNING	T. SWENSON
DETAILS	Y. LIN	T. SWENSON
QUANTITIES	J. GERLACH	J. YIP

PREPARED FOR THE STATE OF CALIFORNIA DEPARTMENT OF TRANSPORTATION

M. HARMS
PROJECT ENGINEER

BRIDGE NO. 33-0735
POST MILES 22.84

MARINA BLVD OC (REPLACE)
GIRDER DETAILS No. 2

DESIGN DETAIL SHEET (ENGLISH) (REV. 7-16-10)

ORIGINAL SCALE IN INCHES FOR REDUCED PLANS 0 1 2 3

UNIT:
PROJECT NUMBER & PHASE:

DISREGARD PRINTS BEARING EARLIER REVISION DATES

REVISION DATES (PRELIMINARY STAGE ONLY) 11/16/09 5/24/10 6/1/11 10/27/11 12/1/11

SHEET 18 OF 30

FILE => 33-0735-n-gd02.dgn

CONTRACT NO.: PROJECT ID:

USERNAME => s124496 DATE PLOTTED => 19-APR-2012 TIME PLOTTED => 14:57

2008276 (2008276B518)

DIST	COUNTY	ROUTE	POST MILES TOTAL PROJECT	SHEET No	TOTAL SHEETS
04	Ala	880	22.6/24.0	718	760

Mahvash Harms 12/1/11
REGISTERED STRUCTURAL ENGINEER DATE

4-16-12
PLANS APPROVAL DATE

REGISTERED PROFESSIONAL ENGINEER MAHVASH M. HARMS No. 2639 Exp. 12/31/12 STRUCTURAL STATE OF CALIFORNIA

The State of California or its officers or agents shall not be responsible for the accuracy or completeness of scanned copies of this plan sheet.

ALAMEDA COUNTY TRANSPORTATION COMMISSION
1333 BROADWAY, SUITE 220
OAKLAND, CA 94612

BIGGS CARDOSA ASSOCIATES INC.
865 THE ALAMEDA
SAN JOSE, CALIFORNIA 95126

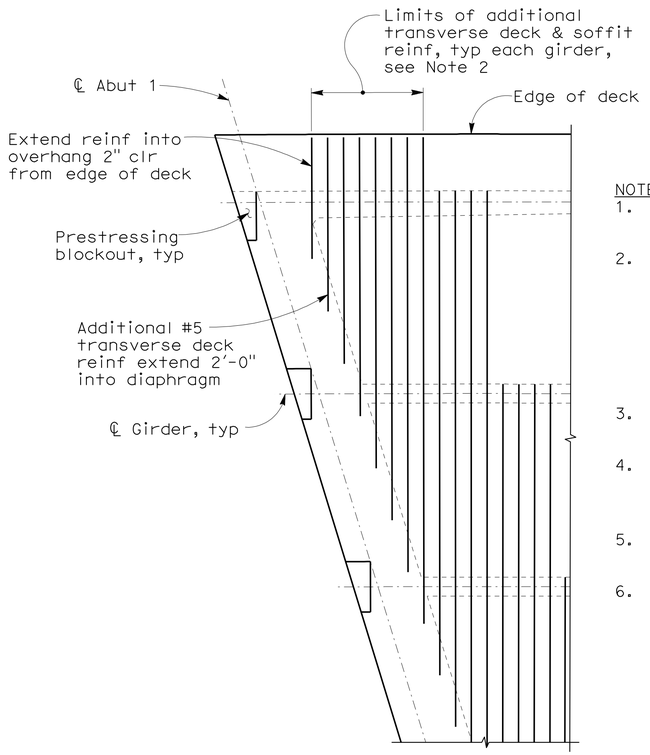

NOTES:

1. Not all reinf shown for clarity.
2. Number of additional transverse reinf per 'END DIAPHRAGM - SECTION A-A' on 'GIRDER DETAILS No. 1' sheet shall be provided at each girder and extend 6" min beyond the centerline of adjacent girder.
3. Additional deck reinf shown, additional soffit reinf similar.
4. Hook outer bay transverse soffit reinf into exterior girder thus: 7'-6"
5. All additional transverse reinf shall be continuous.
6. Reinforcement shall be placed radial to 'MA1' Line.

PARTIAL PLAN
1/4" = 1'-0"

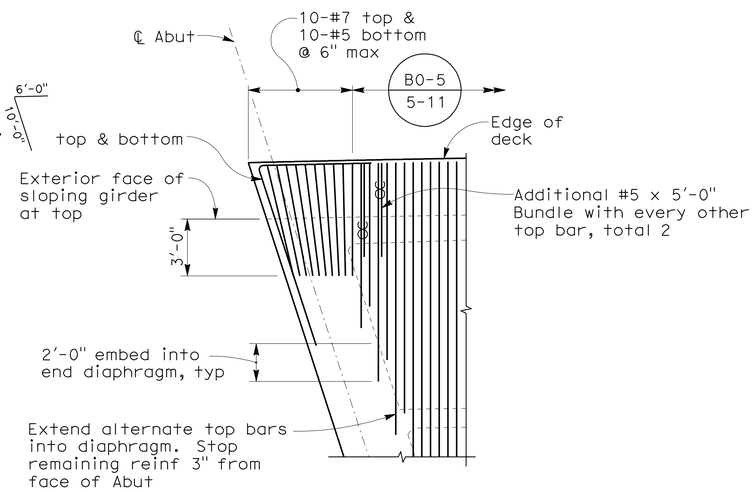

ACUTE CORNER DETAIL
NO SCALE

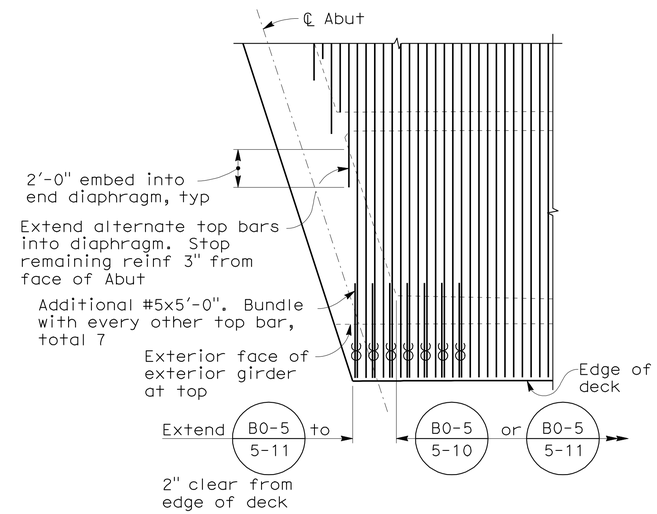

OBTUSE CORNER DETAIL
NO SCALE

DESIGN OVERSIGHT Yiwei Hu 12/29/11 SIGN OFF DATE	DESIGN	BY G. KENNING	CHECKED T. SWENSON	PREPARED FOR THE STATE OF CALIFORNIA DEPARTMENT OF TRANSPORTATION	M. HARMS PROJECT ENGINEER
	DETAILS	BY Y. LIN	CHECKED T. SWENSON		
	QUANTITIES	BY J. GERLACH	CHECKED J. YIP		

BRIDGE NO. 33-0735
POST MILES 22.84

MARINA BLVD OC (REPLACE)
GIRDER DETAILS No. 3

DESIGN DETAIL SHEET (ENGLISH) (REV. 7-16-10)

ORIGINAL SCALE IN INCHES FOR REDUCED PLANS 0 1 2 3

UNIT:
PROJECT NUMBER & PHASE:

DISREGARD PRINTS BEARING EARLIER REVISION DATES

REVISION DATES (PRELIMINARY STAGE ONLY) 11/16/09 5/24/10 6/1/11 10/27/11 12/1/11

SHEET 19 OF 30

FILE => 33-0735-n-gd03.dgn

CONTRACT NO.: PROJECT ID:

USERNAME => s128843 DATE PLOTTED => 25-APR-2012 TIME PLOTTED => 11:55

2008276 (2008276BS19)

DIST	COUNTY	ROUTE	POST MILES TOTAL PROJECT	SHEET No	TOTAL SHEETS
04	Ala	880	22.6/24.0	719	760

Mahvash Harms 12/1/11
REGISTERED STRUCTURAL ENGINEER DATE

4-16-12
PLANS APPROVAL DATE

REGISTERED PROFESSIONAL ENGINEER MAHVASH M. HARMS No. 2639 Exp. 12/31/12 STRUCTURAL STATE OF CALIFORNIA

The State of California or its officers or agents shall not be responsible for the accuracy or completeness of scanned copies of this plan sheet.

ALAMEDA COUNTY TRANSPORTATION COMMISSION
1333 BROADWAY, SUITE 220
OAKLAND, CA 94612

BIGGS CARDOSA ASSOCIATES INC.
865 THE ALAMEDA
SAN JOSE, CALIFORNIA 95126

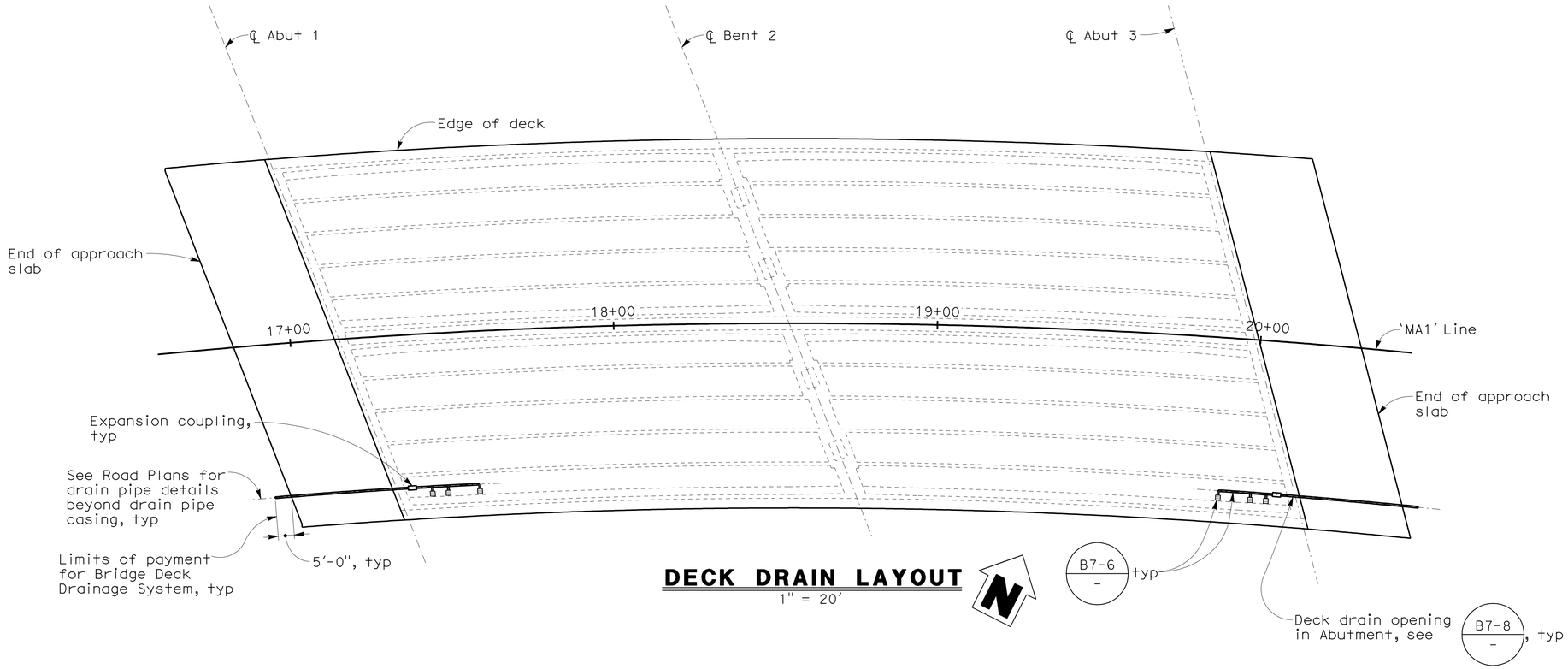

DECK DRAIN LAYOUT

1" = 20'

LEGEND:

▫ Indicates Deck Drain Type D-1

NOTES:

1. All drain pipe shall be NPS 6 x 0.135" dia galvanized welded steel type.
2. All pipes in the deck shall be installed with a down slope greater than 2 percent.
3. See B7-6 / - and B7-8 / - for details not noted.

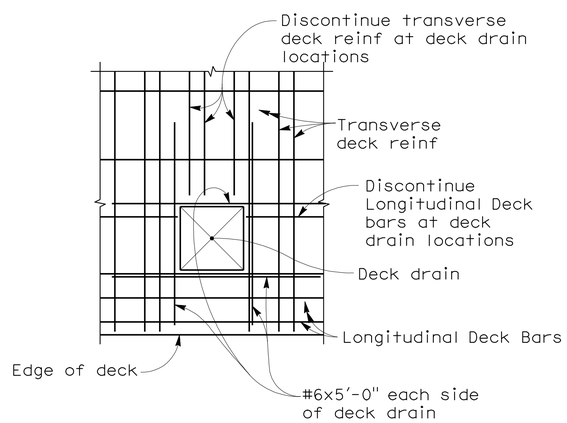

DECK REINF AT DECK DRAIN DETAIL

NO SCALE

DECK DRAIN LOCATION TABLE
Sta 17+41
Sta 17+46
Sta 17+56
Sta 19+90
Sta 20+00
Sta 20+05

NOTE:
Stationing is along 'MA1' Line.

DESIGN OVERSIGHT Yiwei Hu
12/29/11
SIGN OFF DATE

	BY	CHECKED
DESIGN	G. KENNING	T. SWENSON
DETAILS	Y. LIN	T. SWENSON
QUANTITIES	J. GERLACH	J. YIP

PREPARED FOR THE STATE OF CALIFORNIA DEPARTMENT OF TRANSPORTATION

M. HARMS
PROJECT ENGINEER

BRIDGE NO. 33-0735
POST MILES 22.84

MARINA BLVD OC (REPLACE)
BRIDGE DECK DRAINAGE SYSTEM

DESIGN DETAIL SHEET (ENGLISH) (REV. 7-16-10)

ORIGINAL SCALE IN INCHES FOR REDUCED PLANS 0 1 2 3

UNIT:
PROJECT NUMBER & PHASE:

DISREGARD PRINTS BEARING EARLIER REVISION DATES

REVISION DATES (PRELIMINARY STAGE ONLY) 11/16/09 5/24/10 6/1/11 10/27/11 12/1/11

SHEET 20 OF 30

FILE => 33-0735-s-dd01.dgn
CONTRACT NO.:
PROJECT ID:

USERNAME => s124496 DATE PLOTTED => 19-APR-2012 TIME PLOTTED => 14:57
2008276 (2008276BS20)

DIST	COUNTY	ROUTE	POST MILES TOTAL PROJECT	SHEET No	TOTAL SHEETS
04	Ala	880	22.6/24.0	720	760

REGISTERED STRUCTURAL ENGINEER — DATE 12/1/11

PLANS APPROVAL DATE 4-16-12

REGISTERED PROFESSIONAL ENGINEER MAHVASH M. HARMS No. 2639 Exp. 12/31/12 STRUCTURAL STATE OF CALIFORNIA

The State of California or its officers or agents shall not be responsible for the accuracy or completeness of scanned copies of this plan sheet.

ALAMEDA COUNTY TRANSPORTATION COMMISSION
1333 BROADWAY, SUITE 220
OAKLAND, CA 94612

BIGGS CARDOSA ASSOCIATES INC.
865 THE ALAMEDA
SAN JOSE, CALIFORNIA 95126

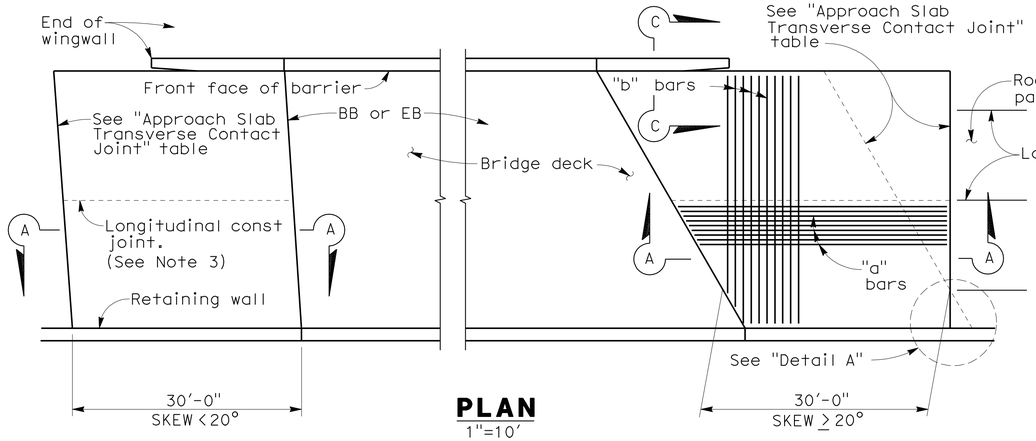

PLAN
1"=10'

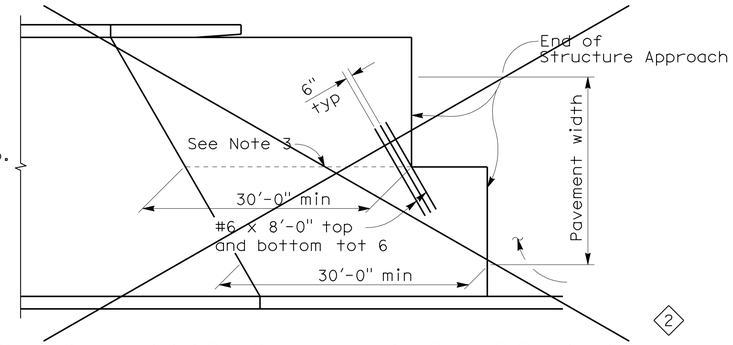

STRUCTURE APPROACH - END STAGGER DETAIL ◇2
NO SCALE

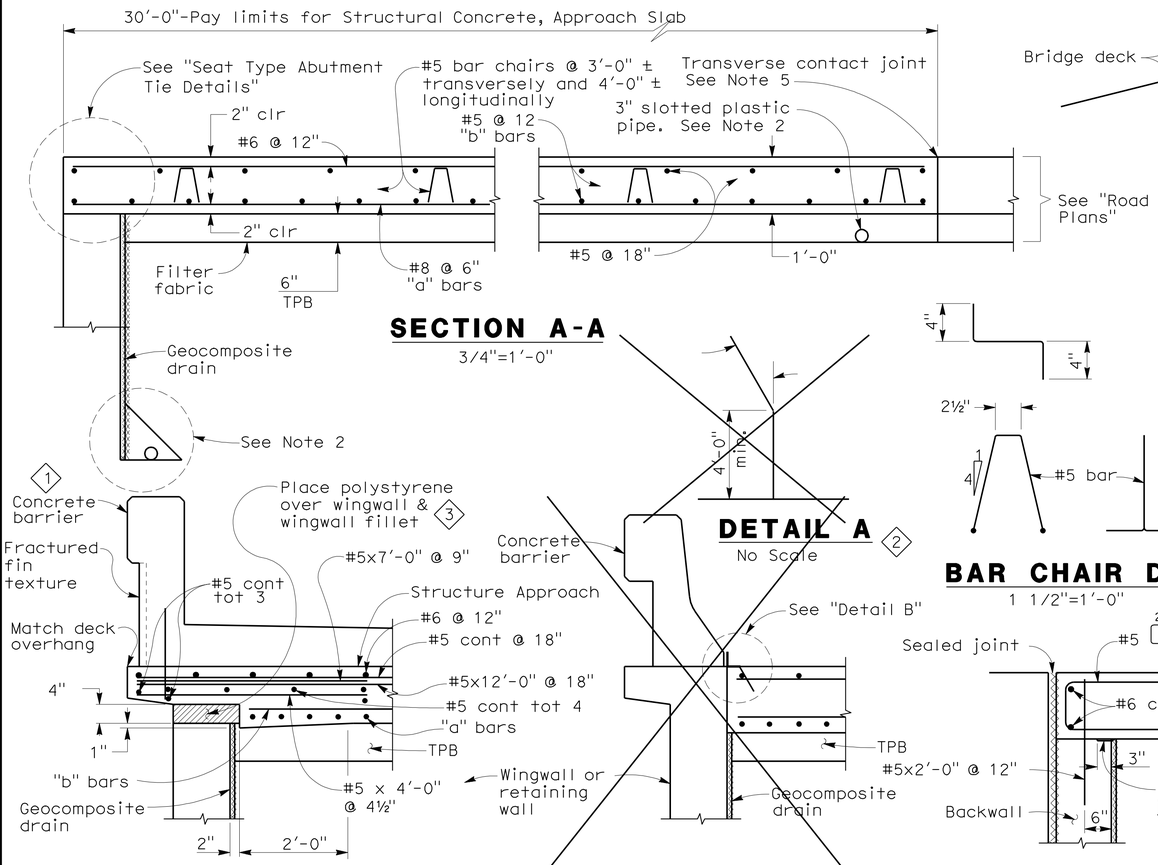

SECTION A-A
3/4"=1'-0"

SECTION C-C
3/4"=1'-0"

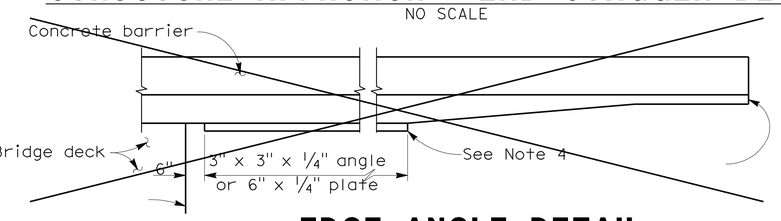

EDGE ANGLE DETAIL ◇2
1/2"=1'-0"

APPROACH SLAB TRANSVERSE CONTACT JOINT		
APPROACH SKEW	WITH AC ROADWAY PAVEMENT	WITH PCC ROADWAY PAVEMENT
< 20°	Parallel with face of paving notch	Parallel with face of paving notch
20° - 45°	Parallel with face of P N use (Detail A)	Stagger lines 24' to 36' apart.
> 45°	Parallel with face of P N use (Detail A)	Stagger at each lane line.

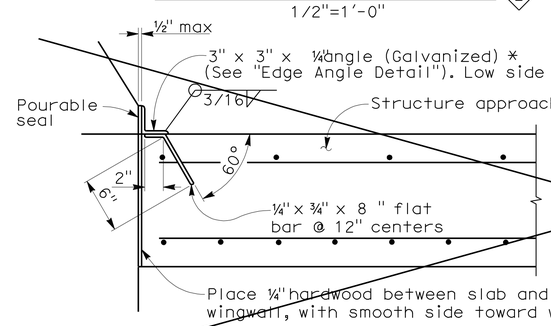

*** (TO BE USED WITH TYPE 25 OR TYPE 27 CONCRETE BARRIER)**

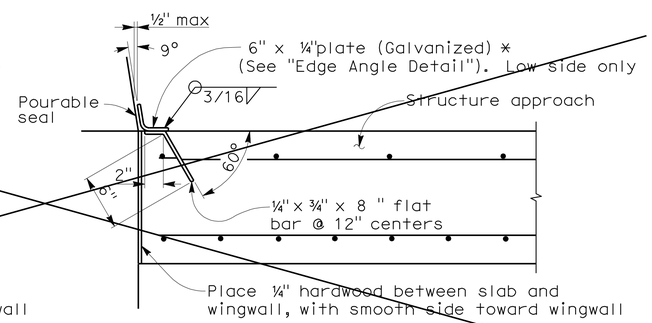

*** (TO BE USED WITH TYPE 732 OR TYPE 736 CONCRETE BARRIER)**

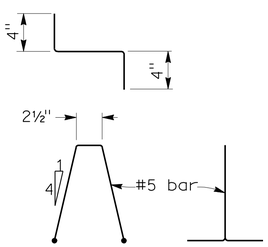

DETAIL A ◇2
No Scale

BAR CHAIR DETAIL
1 1/2"=1'-0"

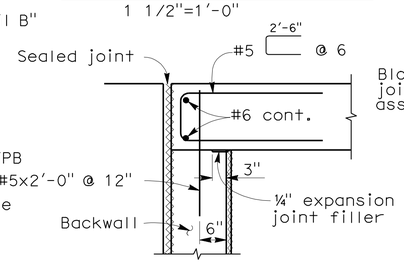

MR ≤ 2"

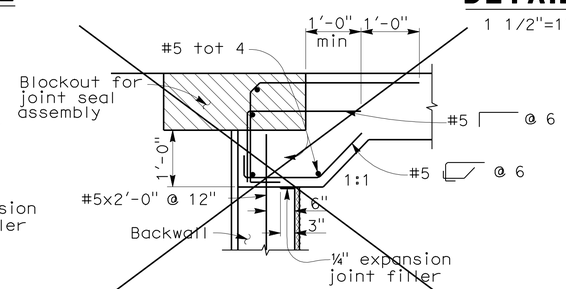

MR > 2"

DETAIL B ◇2
1 1/2"=1'-0"

SEAT TYPE ABUTMENT TIE DETAILS(SEE NOTE 1)
3/4"=1'-0"

NOTES:

1. For details not shown,see Structure Plans. For MR ≤ 2",adjust bar reinforcement to clear a sawcut for sealed joint, when required.
2. For drainage details,see "Structure Approach Drainage Details" sheet.
3. Longitudinal construction joints,when permitted by the Engineer, shall be located on lane lines.
4. End angle or plate at beginning of barrier transition, end of wingwall or end of structure approach as applicable.
5. For transverse contact joint with new PCC paving, refer to Standard Plan P10.
6. At the contractor's option, approach slab transverse reinforcement may be placed parallel to paving notch. Spacing of transverse reinforcement is measured along ℄ roadway.

Remove all polystyrene.

STANDARD DRAWING				
RELEASE DATE 3/14/05	DESIGN	BY M. TRAFFALIS	CHECKED E. THORKILDSEN	RELEASED BY
FILE NO. xs3-120e	DETAILS	BY R. YEE	CHECKED	
	SUBMITTED	BY M. HA	DRAWING DATE 4/98	OFFICE CHIEF

◇1 Change Concrete Barrier type
◇2 Detail not used
◇3 Added note

STATE OF CALIFORNIA
DEPARTMENT OF TRANSPORTATION

DIVISION OF ENGINEERING SERVICES

BRIDGE NO. 33-0735
POST MILE 22.84

MARINA BLVD OC (REPLACE)
STRUCTURE APPROACH TYPE N(30S)

DS OSD 2147A (CADD) (REV. 7/10)

ORIGINAL SCALE IN INCHES FOR REDUCED PLANS 0 1 2 3

UNIT:
PROJECT NUMBER & PHASE:

DISREGARD PRINTS BEARING EARLIER REVISION DATES → 11/16/09 5/21/10 6/1/11 10/21/11 12/1/11

USERNAME => s124496

CONTRACT NO.:
PROJECT ID:

SHEET 21 OF 30

USERNAME => s124496 DATE PLOTTED -> 19-APR-2012 TIME PLOTTED -> 14:57

20082765 (20082765211)

DIST	COUNTY	ROUTE	POST MILES TOTAL PROJECT	SHEET No	TOTAL SHEETS
04	Ala	880	22.6/24.0	721	760

REGISTERED STRUCTURAL ENGINEER 12/1/11 DATE

4-16-12
PLANS APPROVAL DATE

REGISTERED PROFESSIONAL ENGINEER MAHVASH M. HARMS No. 2639 Exp. 12/31/12 STRUCTURAL STATE OF CALIFORNIA

The State of California or its officers or agents shall not be responsible for the accuracy or completeness of scanned copies of this plan sheet.

ALAMEDA COUNTY TRANSPORTATION COMMISSION
1333 BROADWAY, SUITE 220
OAKLAND, CA 94612

BIGGS CARDOSA ASSOCIATES INC.
865 THE ALAMEDA
SAN JOSE, CALIFORNIA 95126

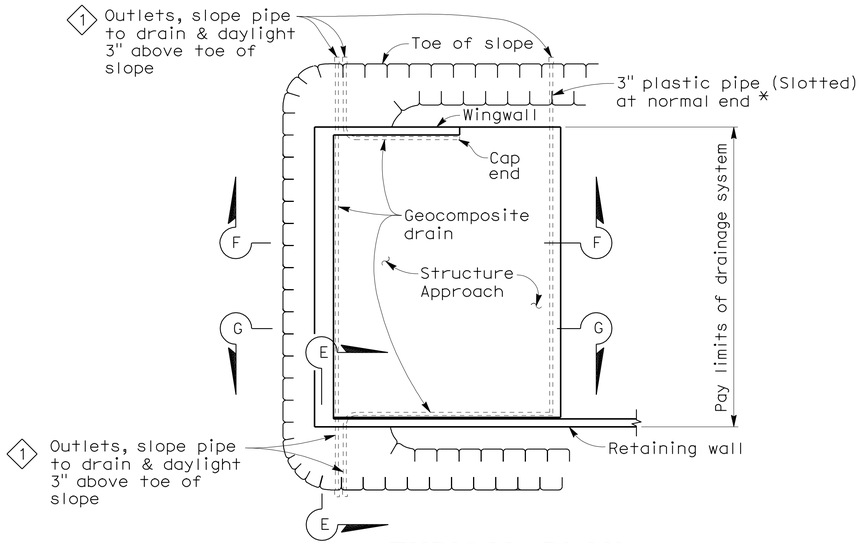

TYPICAL PLAN
1" = 10'

* For pipe layout at staggered end, see "Detail B".

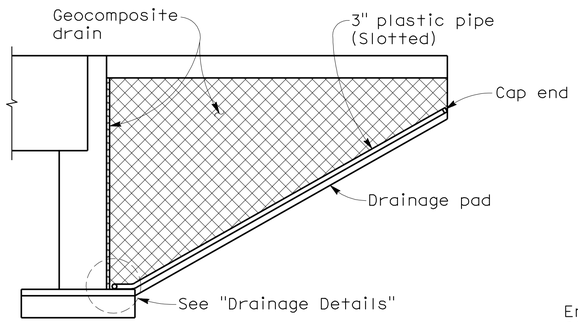

CANTILEVER WINGWALL SECTION F-F
1/4" = 1'-0"

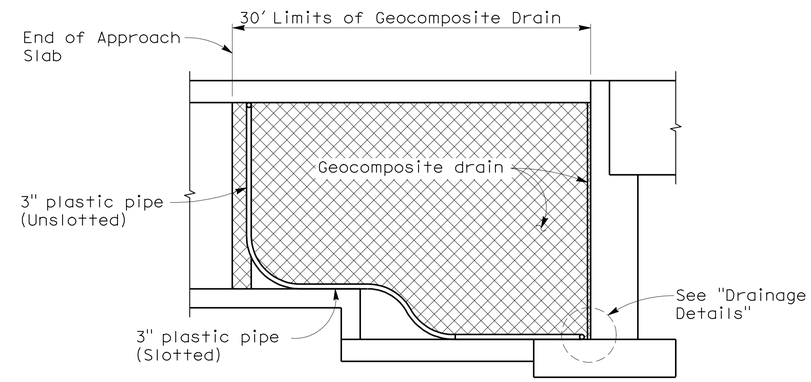

RETAINING WALL WINGWALL SECTION G-G
1/4" = 1'-0"

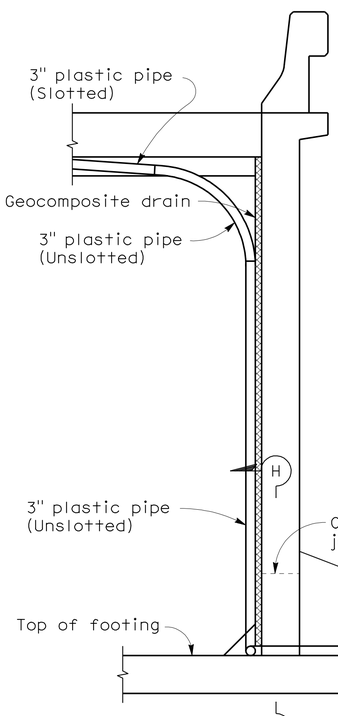

SECTION E-E
1/2" = 1'-0"

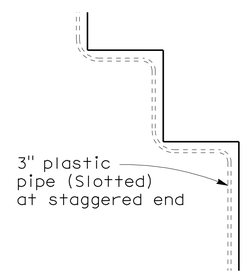

DETAIL B
NO SCALE

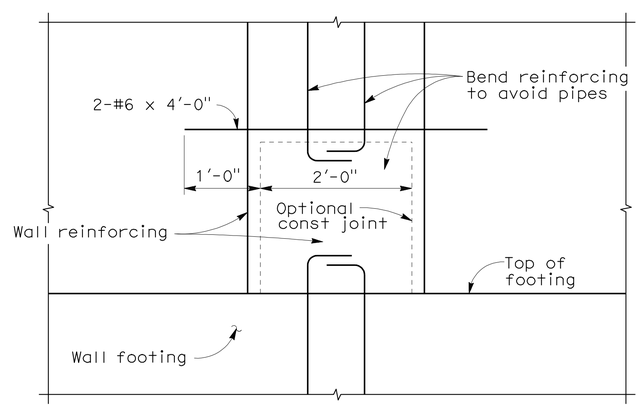

SECTION H-H
1" = 1'-0"

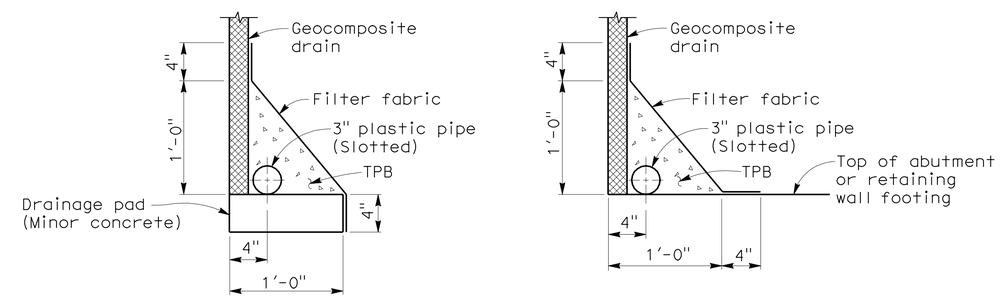

WITHOUT FOOTING WITH FOOTING

DRAINAGE DETAILS
1 1/2" = 1'-0"

STANDARD DRAWING

RELEASE DATE 4/23/98	DESIGN	BY M. TRAFFALIS	CHECKED E. THORKILDSEN	RELEASED BY
FILE NO. xs3-110e	DETAILS	BY R. YEE	CHECKED	OFFICE CHIEF
	SUBMITTED	BY M. HA	DRAWING DATE	

1 Revised note

STATE OF CALIFORNIA DEPARTMENT OF TRANSPORTATION

DIVISION OF ENGINEERING SERVICES

BRIDGE NO. 33-0735
POST MILE 22.84

MARINA BLVD OC (REPLACE)
STRUCTURE APPROACH DRAINAGE DETAILS

DS OSD 2147A (CADD) (REV. 7/10)

ORIGINAL SCALE IN INCHES FOR REDUCED PLANS 0 1 2 3

UNIT:
PROJECT NUMBER & PHASE:

DISREGARD PRINTS BEARING EARLIER REVISION DATES 11/18/09 5/24/10 6/1/11 10/27/11 12/1/11

REVISION DATES (PRELIMINARY STAGE ONLY)

SHEET 22 OF 30

CONTRACT NO.:
PROJECT ID:

USERNAME => s124496

USERNAME => s124496 DATE PLOTTED => 19-APR-2012 TIME PLOTTED => 14:58 2008276 (2007276B522)

DIST	COUNTY	ROUTE	POST MILES TOTAL PROJECT	SHEET No	TOTAL SHEETS
04	Ala	880	22.6/24.0	722	760

Mahvash Harms 12/1/11
REGISTERED STRUCTURAL ENGINEER DATE

4-16-12
PLANS APPROVAL DATE

REGISTERED PROFESSIONAL ENGINEER MAHVASH M. HARMS No. 2639 Exp. 12/31/12 STRUCTURAL STATE OF CALIFORNIA

The State of California or its officers or agents shall not be responsible for the accuracy or completeness of scanned copies of this plan sheet.

ALAMEDA COUNTY TRANSPORTATION COMMISSION
1333 BROADWAY, SUITE 220
OAKLAND, CA 94612

BIGGS CARDOSA ASSOCIATES INC.
865 THE ALAMEDA
SAN JOSE, CALIFORNIA 95126

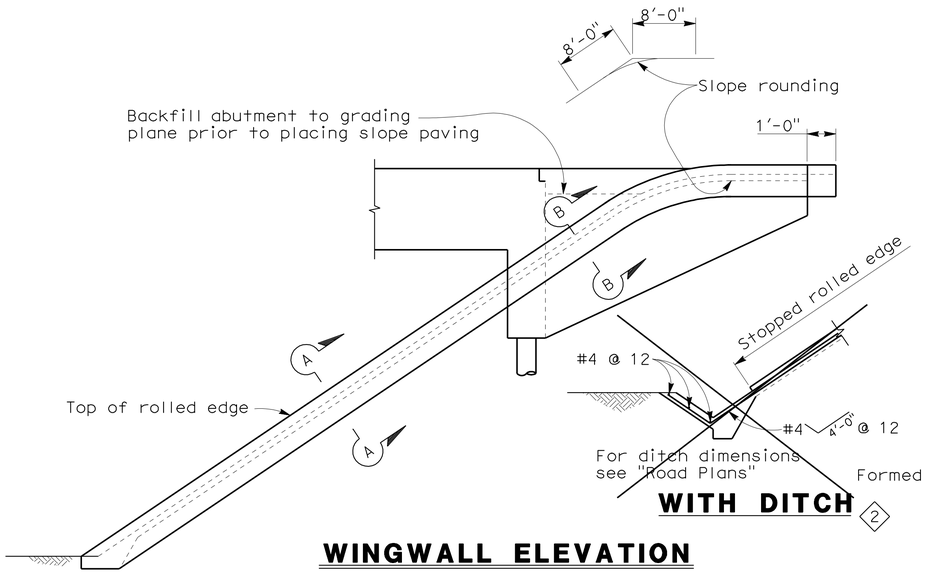

WITH DITCH 2

WINGWALL ELEVATION

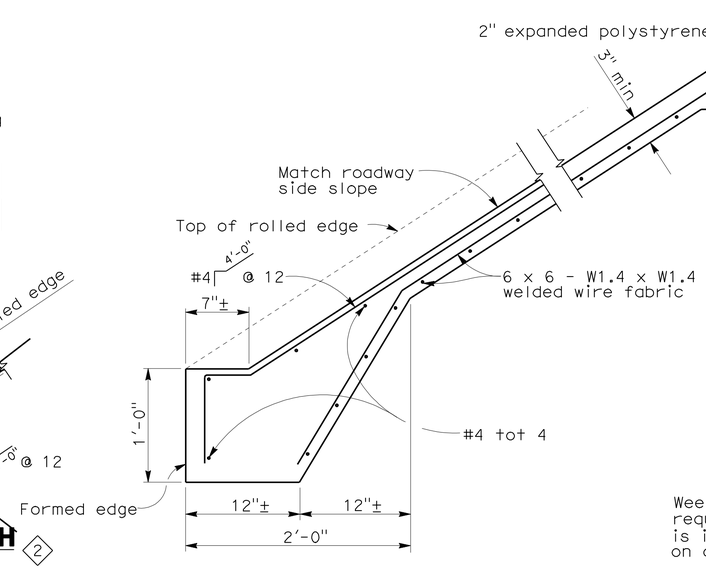

TYPICAL SECTION - CONCRETE PAVING

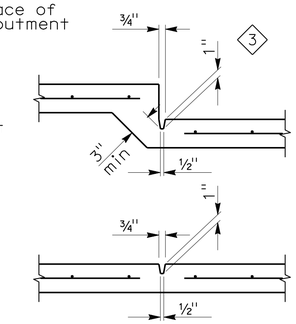

PREFORMED GROOVE

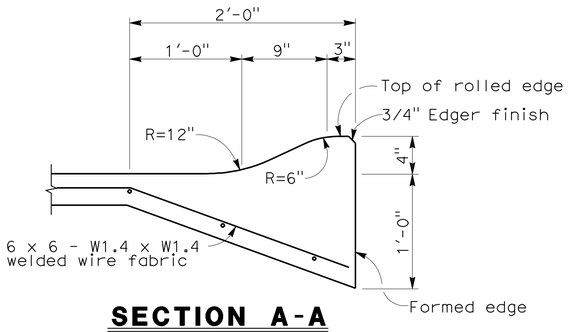

SECTION A-A

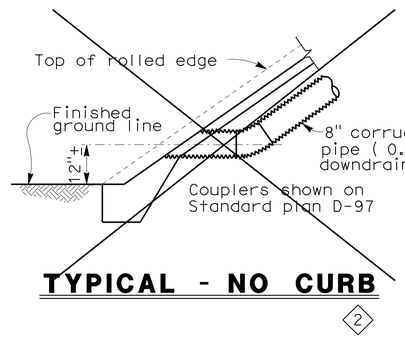

TYPICAL - NO CURB 2

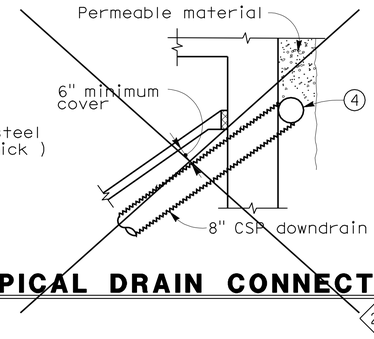

TYPICAL DRAIN CONNECTION 2

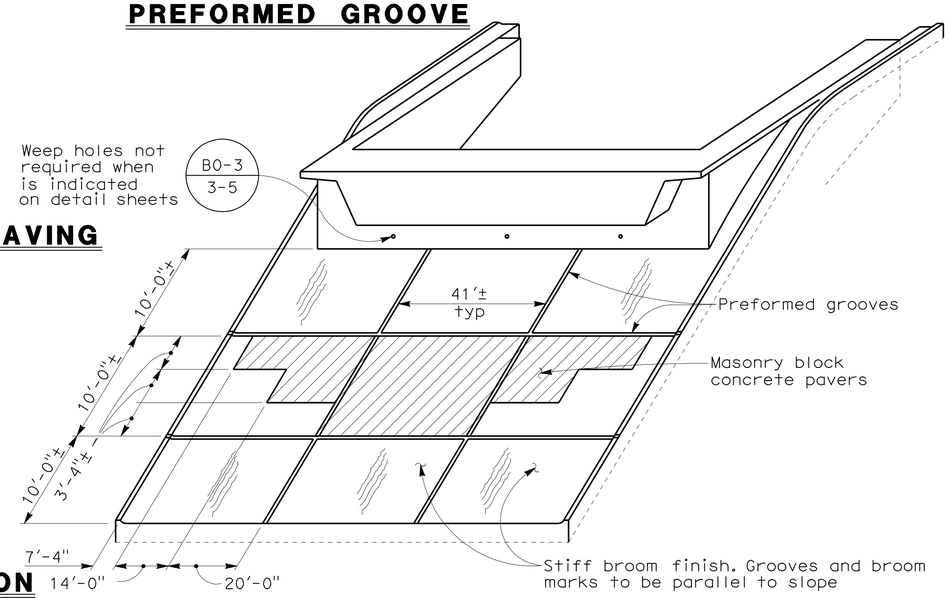

PICTORIAL VIEW OF TYPICAL INSTALLATION 1

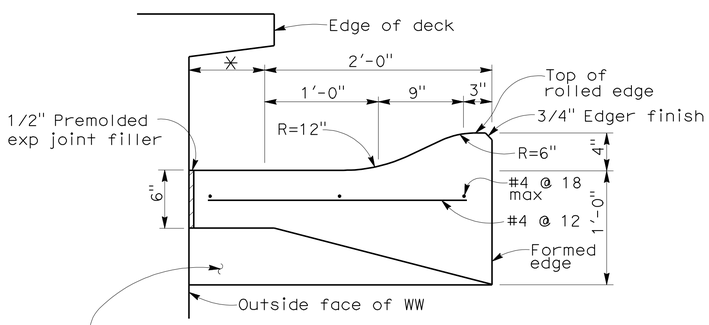

SECTION B-B

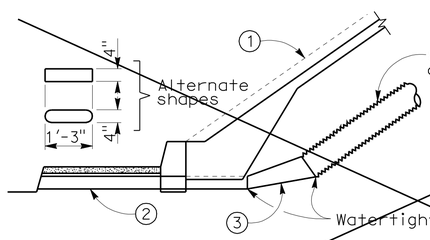

TYPICAL - WITH SIDEWALK

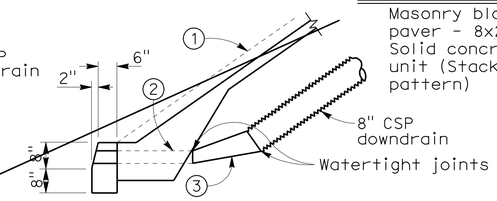

TYPICAL - WITH CURB

DRAINAGE DETAILS 2

NOTE: Drainage details are only applicable when is indicated on detail sheets.

B0-3
3-5

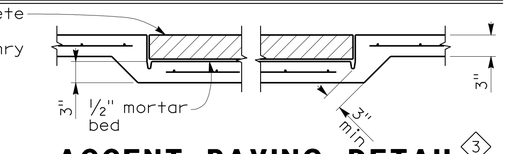

ACCENT PAVING DETAIL 3

1. Top of rolled edge
2. Conduit: 0.064" galv corrugated steel or 0.109" smooth galv steel
3. Taper: { 0.064" / 0.109" smooth galv steel
4. 8" perforated steel pipe (0.064" thick) underdrain behind abutment. Connect to downdrain as shown on Limits of Slope Paving & Drainage Layout. 2

STANDARD DRAWING				
RELEASE DATE	DESIGN	BY	CHECKED	RELEASED BY
FILE NO. xs4-210	DETAILS	BY D. Wooten	CHECKED	Susan Hida
	SUBMITTED	BY Dan Adams	DRAWING DATE	OFFICE CHIEF

DS OSD 2147A (CADD) (REV. 7/10)

1 Revised detail
2 Detail not used
3 Added Detail

ORIGINAL SCALE IN INCHES FOR REDUCED PLANS 0 1 2 3

STATE OF CALIFORNIA
DEPARTMENT OF TRANSPORTATION

DIVISION OF ENGINEERING SERVICES

UNIT:
PROJECT NUMBER & PHASE:

BRIDGE NO. 33-0735
POST MILE 22.84

MARINA BLVD OC (REPLACE)
SLOPE PAVING - FULL SLOPE

DISREGARD PRINTS BEARING EARLIER REVISION DATES
REVISION DATES (PRELIMINARY STAGE ONLY): 11/16/09 5/21/10 6/1/11 10/21/11 12/1/11

SHEET 23 OF 30

USERNAME => s124496

CONTRACT NO.:
PROJECT ID:

USERNAME => s124496 DATE PLOTTED => 19-APR-2012 TIME PLOTTED => 14:58 2008276B (2008276B5231)

DIST	COUNTY	ROUTE	POST MILES TOTAL PROJECT	SHEET No	TOTAL SHEETS
04	Ala	880	22.6/24.0	723	760

REGISTERED STRUCTURAL ENGINEER 12/1/11 DATE

4-16-12
PLANS APPROVAL DATE

REGISTERED PROFESSIONAL ENGINEER MAHVASH M. HARMS No. 2639 Exp. 12/31/12 STRUCTURAL STATE OF CALIFORNIA

The State of California or its officers or agents shall not be responsible for the accuracy or completeness of scanned copies of this plan sheet.

ALAMEDA COUNTY TRANSPORTATION COMMISSION
1333 BROADWAY, SUITE 220
OAKLAND, CA 94612

BIGGS CARDOSA ASSOCIATES INC.
865 THE ALAMEDA
SAN JOSE, CALIFORNIA 95126

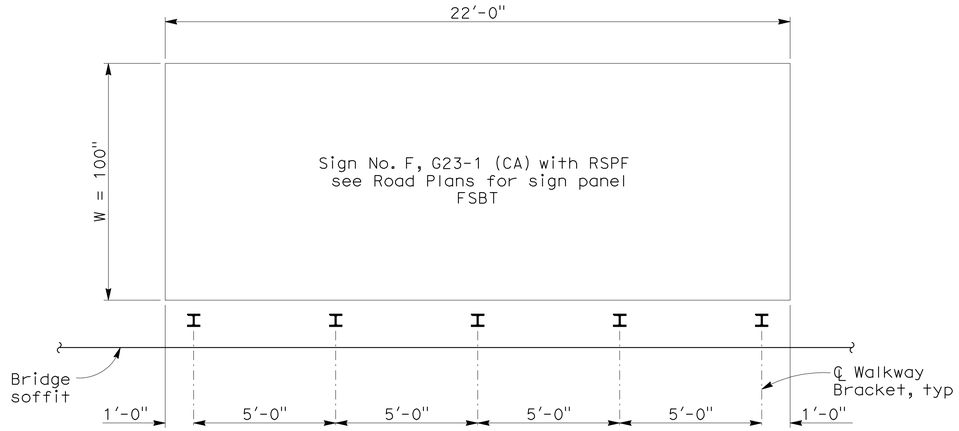

MOUNTING BRACKET ASSEMBLY SPACING

No Scale

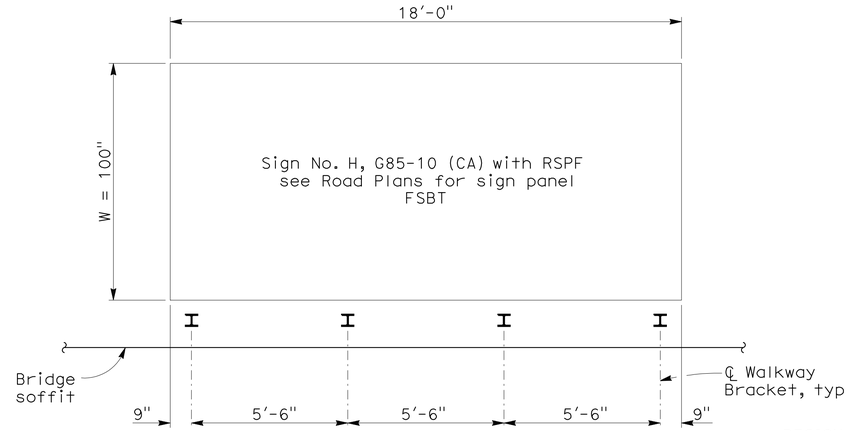

MOUNTING BRACKET ASSEMBLY SPACING

No Scale

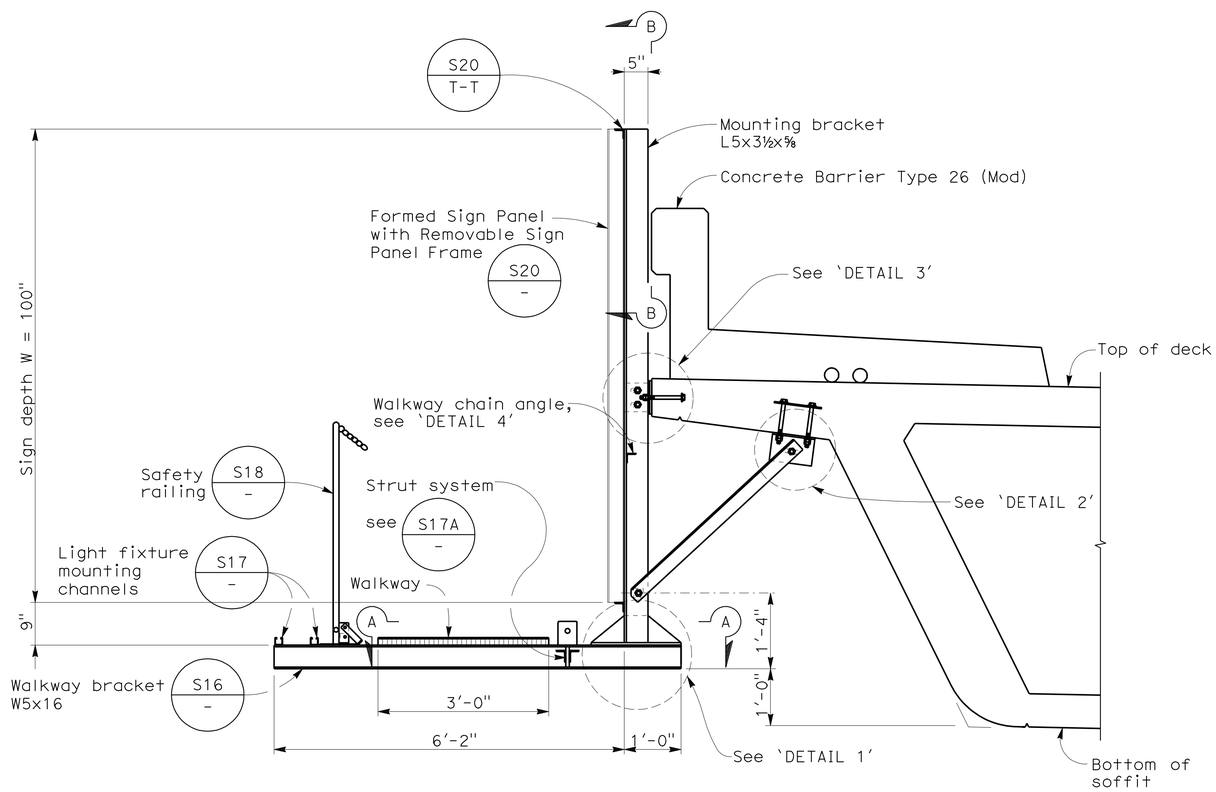

TYPICAL MOUNTING BRACKET ASSEMBLY

3/4" = 1'-0"

NOTE:
The Contractor shall verify all controlling field dimensions before ordering or fabricating any material.

GENERAL NOTES FOR BRIDGE MOUNTED SIGNS

DESIGN: AASHTO Standard Specifications for Structural Supports for Highway Signs, Luminaires and Traffic Signals, 4th edition, dated 2001.

LOADING: WIND LOADING:
Normal to face of sign: 40 psf
Parallel to face of sign: 20% of normal force
WALKWAY LOADING:
Dead load + 500 LB concentrated live load

ALLOWABLE STRESSES: STRUCTURAL STEEL: fs = 21.6 ksi

WELDING: All welding shall be continuous unless otherwise noted on the plans.

Standard Plan Sheet No.
Detail No.

NOTES:

1. The exterior mounting bracket to face outward to accommodate the walkway chain angle.
2. Galvanize all assemblies after fabrication.
3. All high strength (HS) bolts shall be pretensioned per AISC requirements.
4. Minimum size fillet weld shall be the lesser of ¼" or the thickness of the thinnest member, unless noted otherwise.
5. Contractor to provide anchor bolt layout for review by Engineer before anchor bolts are placed.
6. For 'SECTION A-A', 'SECTION B-B', 'DETAIL 1', 'DETAIL 2', 'DETAIL 3' and 'DETAIL 4', see 'SIGN DETAILS No. 2' sheet.
7. See Road Plans for sign location and Sign Panel.

DESIGN OVERSIGHT Yiwei Hu
12/29/11
SIGN OFF DATE

	BY	CHECKED
DESIGN	G. KENNING	T. SWENSON
DETAILS	J. GERLACH	T. SWENSON
QUANTITIES	J. GERLACH	J. YIP

PREPARED FOR THE STATE OF CALIFORNIA DEPARTMENT OF TRANSPORTATION

M. HARMS
PROJECT ENGINEER

BRIDGE NO. 33-0735
POST MILES 22.84

MARINA BLVD OC (REPLACE)
SIGN DETAILS No. 1

DESIGN DETAIL SHEET (ENGLISH) (REV. 7-16-10)

ORIGINAL SCALE IN INCHES FOR REDUCED PLANS 0 1 2 3

UNIT:
PROJECT NUMBER & PHASE:

DISREGARD PRINTS BEARING EARLIER REVISION DATES

REVISION DATES (PRELIMINARY STAGE ONLY) 5/24/10 6/1/11 10/27/11 12/1/11

SHEET 24 OF 30

FILE => 33-0735-v-bmsd01.dgn

CONTRACT NO.: PROJECT ID:

USERNAME => s124496 DATE PLOTTED => 19-APR-2012 TIME PLOTTED => 14:58

2008276 (2008276BS24)

DIST	COUNTY	ROUTE	POST MILES TOTAL PROJECT	SHEET No	TOTAL SHEETS
04	Ala	880	22.6/24.0	724	760

REGISTERED STRUCTURAL ENGINEER 12/1/11 DATE

4-16-12
PLANS APPROVAL DATE

REGISTERED PROFESSIONAL ENGINEER MAHVASH M. HARMS No. 2639 Exp. 12/31/12 STRUCTURAL STATE OF CALIFORNIA

The State of California or its officers or agents shall not be responsible for the accuracy or completeness of scanned copies of this plan sheet.

ALAMEDA COUNTY TRANSPORTATION COMMISSION
1333 BROADWAY, SUITE 220
OAKLAND, CA 94612

BIGGS CARDOSA ASSOCIATES INC.
865 THE ALAMEDA
SAN JOSE, CALIFORNIA 95126

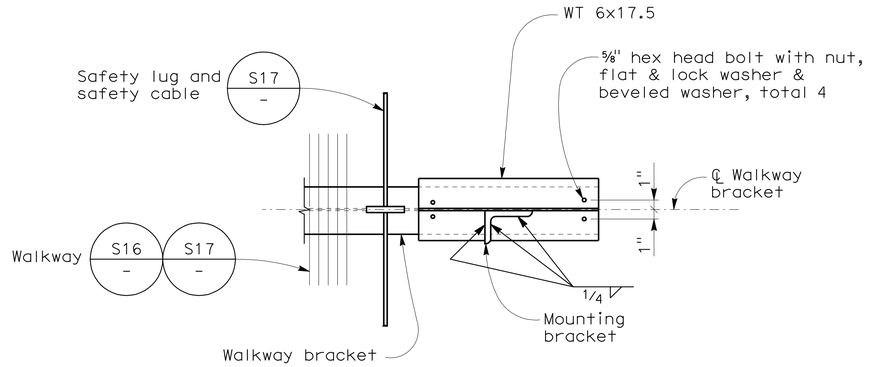

SECTION A-A
1½" = 1'-0"

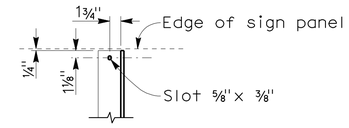

SECTION B-B
NO SCALE

NOTE:
The exterior mounting bracket to face outward to accommodate the walkway chain angle.

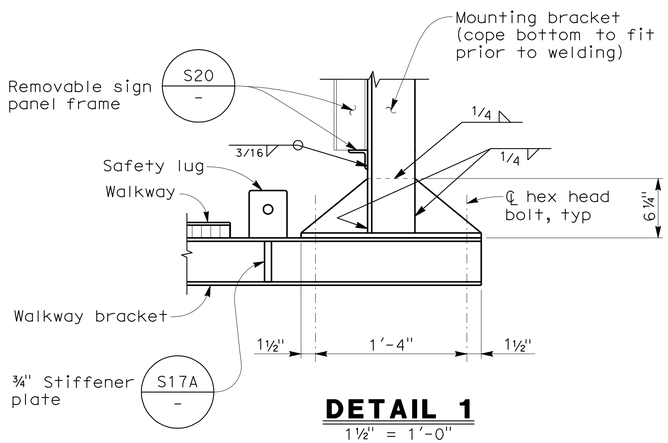

DETAIL 1
1½" = 1'-0"

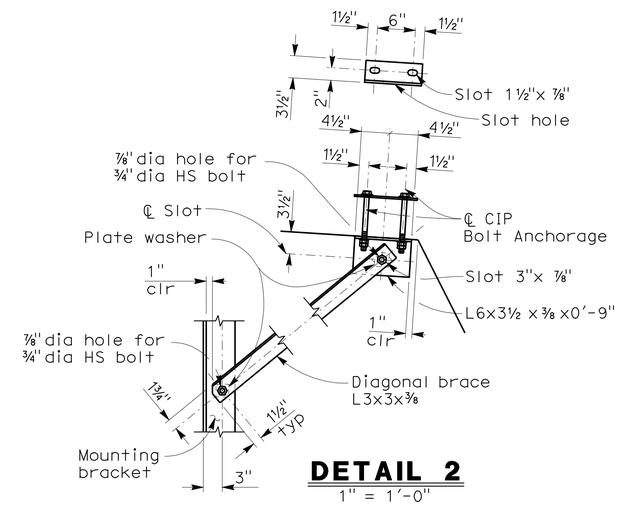

DETAIL 2
1" = 1'-0"

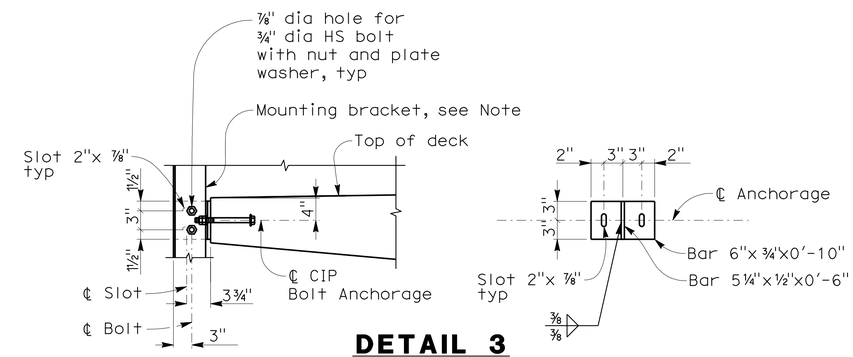

DETAIL 3
1" = 1'-0"

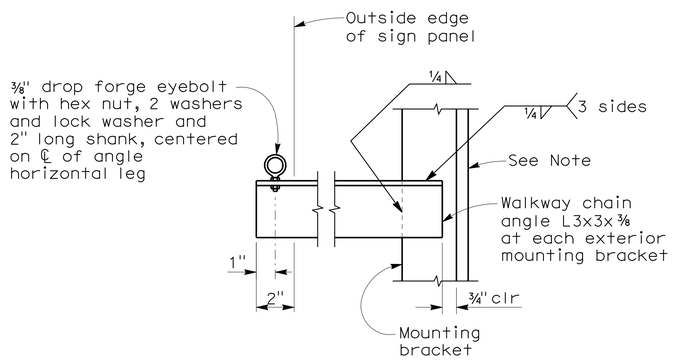

DETAIL 4
NO SCALE

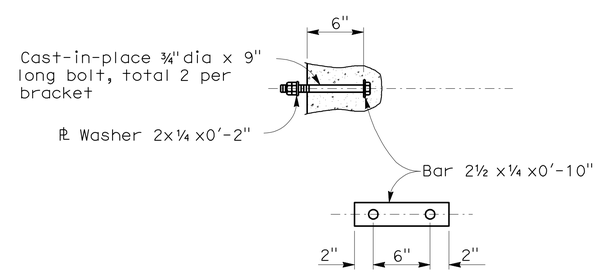

CIP BOLT ANCHORAGE
1 1/2" = 1'-0"

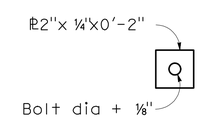

PLATE WASHER
For all slotted holes

NOTE:
The Contractor shall verify all controlling field dimensions before ordering or fabricating any material.

DESIGN OVERSIGHT Yiwei Hu 12/29/11 SIGN OFF DATE	DESIGN	BY G. KENNING	CHECKED T. SWENSON	PREPARED FOR THE STATE OF CALIFORNIA DEPARTMENT OF TRANSPORTATION	M. HARMS PROJECT ENGINEER
	DETAILS	BY J. GERLACH	CHECKED T. SWENSON		
	QUANTITIES	BY J. GERLACH	CHECKED J. YIP		

BRIDGE NO. 33-0735
POST MILES 22.84

MARINA BLVD OC (REPLACE)
SIGN DETAILS No. 2

DESIGN DETAIL SHEET (ENGLISH) (REV. 7-16-10)

ORIGINAL SCALE IN INCHES FOR REDUCED PLANS 0 1 2 3

UNIT:
PROJECT NUMBER & PHASE:

DISREGARD PRINTS BEARING EARLIER REVISION DATES

REVISION DATES (PRELIMINARY STAGE ONLY): 5/24/10 6/1/11 10/27/11 12/1/11

SHEET 25 OF 30

FILE => 33-0735-v-bmsd02.dgn

CONTRACT NO.:

PROJECT ID:

USERNAME => s124496 DATE PLOTTED => 19-APR-2012 TIME PLOTTED => 14:58

(20082768525) 2008276

DIST	COUNTY	ROUTE	POST MILES TOTAL PROJECT	SHEET No	TOTAL SHEETS
04	Ala	880	22.6/24.0	725	760

GEOTECHNICAL PROFESSIONAL — DATE 12/1/11

4-16-12
PLANS APPROVAL DATE

REGISTERED PROFESSIONAL ENGINEER — GARY PARIKH — No. G.E. 666 — Exp. 12/31/11 — GEOTECHNICAL — STATE OF CALIFORNIA

The State of California or its officers or agents shall not be responsible for the accuracy or completeness of electronic copies of this plan sheet.

PARIKH CONSULTANTS, INC.
2360 QUME DRIVE, SUITE A
SAN JOSE, CA 95131

ACTC
1333 BROADWAY, SUITES 220 & 300
OAKLAND, CA 94612

REFERENCE: CALTRANS SOIL & ROCK LOGGING, CLASSIFICATION, AND PRESENTATION MANUAL (2010)

CEMENTATION

Description	Criteria
Weak	Crumbles or breaks with handling or little finger pressure.
Moderate	Crumbles or breaks with considerable finger pressure.
Strong	Will not crumble or break with finger pressure.

BOREHOLE IDENTIFICATION

Symbol	Hole Type	Description
Size	A	Auger Boring (hollow or solid stem bucket)
Size	R RW RC P	Rotary drilled boring (conventional) Rotary drilled with self-casing wire-line Rotary core with continuously-sampled, self-casing wire-line Rotary percussion boring (air)
Size	R	Rotary drilled diamond core
Size	HD HA	Hand driven (1-inch soil tube) Hand Auger
●	D	Dynamic Cone Penetration Boring
▲	CPT	Cone Penetration Test (ASTM D 5778)
⬚	O	Other (note on LOTB)

Note: Size in inches.

CONSISTENCY OF COHESIVE SOILS

Description	Shear Strength (tsf)	Pocket Penetrometer Measurement, PP, (tsf)	Torvane Measurement, TV, (tsf)	Vane Shear Measurement, VS, (tsf)
Very Soft	Less than 0.12	Less than 0.25	Less than 0.12	Less than 0.12
Soft	0.12 - 0.25	0.25 - 0.5	0.12 - 0.25	0.12 - 0.25
Medium Stiff	0.25 - 0.5	0.5 - 1	0.25 - 0.5	0.25 - 0.5
Stiff	0.5 - 1	1 - 2	0.5 - 1	0.5 - 1
Very Stiff	1 - 2	2 - 4	1 - 2	1 - 2
Hard	Greater than 2	Greater than 4	Greater than 2	Greater than 2

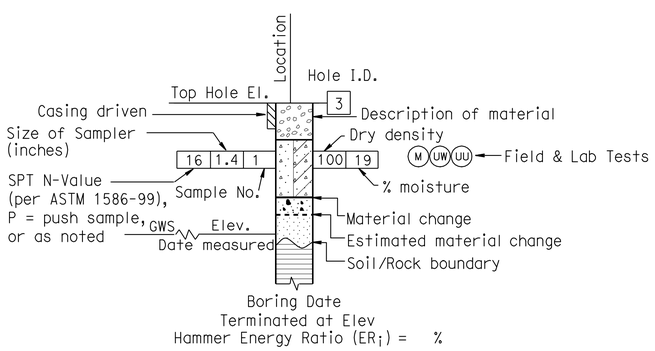

ROTARY BORING

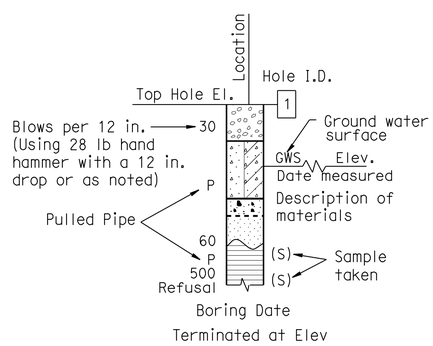

HAND BORING

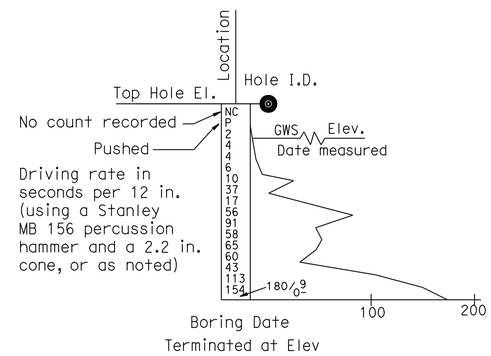

DYNAMIC CONE PENETRATION BORING

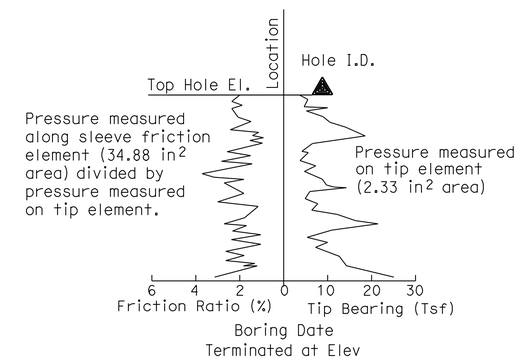

CONE PENETRATION TEST (CPT) BORING

DESIGN OVERSIGHT Yiwei Hu 12/29/11 SIGN OFF DATE	DRAWN BY L. TRAN CHECKED BY D. WANG	L. BHANGOO / G. TRIPATHI FIELD INVESTIGATION BY: DATE: MAY & JUNE 2008	PREPARED FOR THE STATE OF CALIFORNIA DEPARTMENT OF TRANSPORTATION	D. WANG PROJECT ENGINEER	BRIDGE NO. 33-0735 POST MILES 22.84	MARINA BLVD OC (REPLACE) LOG OF TEST BORINGS 1 OF 5

GS GEOTECHNICAL LOG OF TEST BORINGS SHEET (ENGLISH) (REV. 7/16/10)

ORIGINAL SCALE IN INCHES FOR REDUCED PLANS 0 1 2 3

UNIT:
PROJECT NUMBER & PHASE:
CONTRACT NO.:

DISREGARD PRINTS BEARING EARLIER REVISION DATES → 11/06/09 5/31/11 10/17/11

SHEET 26 OF 30

FILE => 33-0735-z-ltb01.dgn

USERNAME => s124896 DATE PLOTTED => 19-APR-2012 TIME PLOTTED => 14:58

REFERENCE: CALTRANS SOIL & ROCK LOGGING, CLASSIFICATION, AND PRESENTATION MANUAL (2010)

DIST	COUNTY	ROUTE	POST MILES TOTAL PROJECT	SHEET No	TOTAL SHEETS
04	Ala	880	22.6/24.0	726	760

GEOTECHNICAL PROFESSIONAL — DATE 12/1/11

4-16-12
PLANS APPROVAL DATE

REGISTERED PROFESSIONAL ENGINEER — GARY PARIKH — No. G.E. 666 — Exp. 12/31/11 — GEOTECHNICAL — STATE OF CALIFORNIA

The State of California or its officers or agents shall not be responsible for the accuracy or completeness of electronic copies of this plan sheet.

PARIKH CONSULTANTS, INC.
2360 QUME DRIVE, SUITE A
SAN JOSE, CA 95131

ACTC
1333 BROADWAY, SUITES 220 & 300
OAKLAND, CA 94612

GROUP SYMBOLS AND NAMES

Graphic/Symbol	Group Names
GW	Well-graded GRAVEL Well-graded GRAVEL with SAND
GP	Poorly-graded GRAVEL Poorly-graded GRAVEL with SAND
GW-GM	Well-graded GRAVEL with SILT Well-graded GRAVEL with SILT and SAND
GW-GC	Well-graded GRAVEL with CLAY (or SILTY CLAY) Well-graded GRAVEL with CLAY and SAND (or SILTY CLAY and SAND)
GP-GM	Poorly-graded GRAVEL with SILT Poorly-graded GRAVEL with SILT and SAND
GP-GC	Poorly-graded GRAVEL with CLAY (or SILTY CLAY) Poorly-graded GRAVEL with CLAY and SAND (or SILTY CLAY and SAND)
GM	SILTY GRAVEL SILTY GRAVEL with SAND
GC	CLAYEY GRAVEL CLAYEY GRAVEL with SAND
GC-GM	SILTY, CLAYEY GRAVEL SILTY, CLAYEY GRAVEL with SAND
SW	Well-graded SAND Well-graded SAND with GRAVEL
SP	Poorly-graded SAND Poorly-graded SAND with GRAVEL
SW-SM	Well-graded SAND with SILT Well-graded SAND with SILT and GRAVEL
SW-SC	Well-graded SAND with CLAY (or SILTY CLAY) Well-graded SAND with CLAY and GRAVEL (or SILTY CLAY and GRAVEL)
SP-SM	Poorly-graded SAND with SILT Poorly-graded SAND with SILT and GRAVEL
SP-SC	Poorly-graded SAND with CLAY (or SILTY CLAY) Poorly-graded SAND with CLAY and GRAVEL (or SILTY CLAY and GRAVEL)
SM	SILTY SAND SILTY SAND with GRAVEL
SC	CLAYEY SAND CLAYEY SAND with GRAVEL
SC-SM	SILTY, CLAYEY SAND SILTY, CLAYEY SAND with GRAVEL
PT	PEAT
	COBBLES COBBLES and BOULDERS BOULDERS

Graphic/Symbol	Group Names
CL	Lean CLAY Lean CLAY with SAND Lean CLAY with GRAVEL SANDY lean CLAY SANDY lean CLAY with GRAVEL GRAVELLY lean CLAY GRAVELLY lean CLAY with SAND
CL-ML	SILTY CLAY SILTY CLAY with SAND SILTY CLAY with GRAVEL SANDY SILTY CLAY SANDY SILTY CLAY with GRAVEL GRAVELLY SILTY CLAY GRAVELLY SILTY CLAY with SAND
ML	SILT SILT with SAND SILT with GRAVEL SANDY SILT SANDY SILT with GRAVEL GRAVELLY SILT GRAVELLY SILT with SAND
OL	ORGANIC lean CLAY ORGANIC lean CLAY with SAND ORGANIC lean CLAY with GRAVEL SANDY ORGANIC lean CLAY SANDY ORGANIC lean CLAY with GRAVEL GRAVELLY ORGANIC lean CLAY GRAVELLY ORGANIC lean CLAY with SAND
OL	ORGANIC SILT ORGANIC SILT with SAND ORGANIC SILT with GRAVEL SANDY ORGANIC SILT SANDY ORGANIC SILT with GRAVEL GRAVELLY ORGANIC SILT GRAVELLY ORGANIC SILT with SAND
CH	Fat CLAY Fat CLAY with SAND Fat CLAY with GRAVEL SANDY fat CLAY SANDY fat CLAY with GRAVEL GRAVELLY fat CLAY GRAVELLY fat CLAY with SAND
MH	Elastic SILT Elastic SILT with SAND Elastic SILT with GRAVEL SANDY elastic SILT SANDY elastic SILT with GRAVEL GRAVELLY elastic SILT GRAVELLY elastic SILT with SAND
OH	ORGANIC fat CLAY ORGANIC fat CLAY with SAND ORGANIC fat CLAY with GRAVEL SANDY ORGANIC fat CLAY SANDY ORGANIC fat CLAY with GRAVEL GRAVELLY ORGANIC fat CLAY GRAVELLY ORGANIC fat CLAY with SAND
OH	ORGANIC elastic SILT ORGANIC elastic SILT with SAND ORGANIC elastic SILT with GRAVEL SANDY ORGANIC elastic SILT SANDY ORGANIC elastic SILT with GRAVEL GRAVELLY ORGANIC elastic SILT GRAVELLY ORGANIC elastic SILT with SAND
OL/OH	ORGANIC SOIL ORGANIC SOIL with SAND ORGANIC SOIL with GRAVEL SANDY ORGANIC SOIL SANDY ORGANIC SOIL with GRAVEL GRAVELLY ORGANIC SOIL GRAVELLY ORGANIC SOIL with SAND

FIELD AND LABORATORY TESTING

- (C) Consolidation (ASTM D 2435)
- (CL) Collapse Potential (ASTM D 5333)
- (CP) Compaction Curve (CTM 216)
- (CR) Corrosivity Testing (CTM 643, CTM 422, CTM 417)
- (CU) Consolidated Undrained Triaxial (ASTM D 4767)
- (DS) Direct Shear (ASTM D 3080)
- (EI) Expansion Index (ASTM D 4829)
- (M) Moisture Content (ASTM D 2216)
- (OC) Organic Content-% (ASTM D 2974)
- (P) Permeability (CTM 220)
- (PA) Particle Size Analysis (ASTM D 422)
- (PI) Plasticity Index (AASHTO T 90) Liquid Limit (AASHTO T 89)
- (PL) Point Load Index (ASTM D 5731)
- (PM) Pressure Meter
- (R) R-Value (CTM 301)
- (SE) Sand Equivalent (CTM 217)
- (SG) Specific Gravity (AASHTO T 100)
- (SL) Shrinkage Limit (ASTM D 427)
- (SW) Swell Potential (ASTM D 4546)
- (UC) Unconfined Compression-Soil (ASTM D 2166) Unconfined Compression-Rock (ASTM D 2938)
- (UU) Unconsolidated Undrained Triaxial (ASTM D 2850)
- (UW) Unit Weight (ASTM D 4767)

APPARENT DENSITY OF COHESIONLESS SOILS

Description	SPT N_{60} (Blows / 12 in.)
Very Loose	0 - 5
Loose	5 - 10
Medium Dense	10 - 30
Dense	30 - 50
Very Dense	Greater than 50

MOISTURE

Description	Criteria
Dry	No discernable moisture
Moist	Moisture present, but no free water
Wet	Visible free water

PERCENT OR PROPORTION OF SOILS

Description	Criteria
Trace	Particles are present but estimated to be less than 5%
Few	5% - 10%
Little	15% - 25%
Some	30% - 45%
Mostly	50% - 100%

PARTICLE SIZE

Description		Size (in.)
Boulder		Greater than 12
Cobble		3 - 12
Gravel	Coarse	3/4 - 3
	Fine	1/5 - 3/4
Sand	Coarse	1/16 - 1/5
	Medium	1/64 - 1/16
	Fine	1/300 - 1/64
Silt and Clay		Less than 1/300

DESIGN OVERSIGHT Yiwei Hu
12/29/11
SIGN OFF DATE

DRAWN BY L. TRAN
CHECKED BY D. WANG

L. BHANGOO / G. TRIPATHI
FIELD INVESTIGATION BY:
DATE: MAY & JUNE 2008

PREPARED FOR THE STATE OF CALIFORNIA DEPARTMENT OF TRANSPORTATION

D. WANG
PROJECT ENGINEER

BRIDGE NO. 33-0735
POST MILES 22.84

MARINA BLVD OC (REPLACE)
LOG OF TEST BORINGS 2 OF 5

GS GEOTECHNICAL LOG OF TEST BORINGS SHEET (ENGLISH) (REV. 7/16/10)

ORIGINAL SCALE IN INCHES FOR REDUCED PLANS 0 1 2 3

UNIT:
PROJECT NUMBER & PHASE:
CONTRACT NO.:

DISREGARD PRINTS BEARING EARLIER REVISION DATES
REVISION DATES 11/16/09 5/31/11 10/17/11
SHEET 27 OF 30

FILE => 33-0735-z-ltb02.dgn

USERNAME => s124496 DATE PLOTTED => 19-APR-2012 TIME PLOTTED => 14:58

DIST	COUNTY	ROUTE	POST MILES TOTAL PROJECT	SHEET No	TOTAL SHEETS
04	Ala	880	22.6/24.0	727	760

GEOTECHNICAL PROFESSIONAL — DATE 12/1/11

4-16-12
PLANS APPROVAL DATE

REGISTERED PROFESSIONAL ENGINEER — GARY PARIKH — No. G.E. 666 — Exp. 12/31/11 — GEOTECHNICAL — STATE OF CALIFORNIA

The State of California or its officers or agents shall not be responsible for the accuracy or completeness of electronic copies of this plan sheet.

PARIKH CONSULTANTS, INC.
2360 QUME DRIVE, SUITE A
SAN JOSE, CA 95131

ACTC
1333 BROADWAY, SUITES 220 & 300
OAKLAND, CA 94612

BENCHMARK:
¾" IRON PIPE WITH PLUG ON NORTHBOUND ROUTE 880 ON-RAMP FROM WESTBOUND MARINA BLVD., ±17.4' SOUTH OF EDGE OF PAVEMENT.
NORTHING: 2,085,802.77; EASTING: 6,079,495.08;
ELEV. 30.97.

Note:
Standard Penetration Test Sampler: I.D. = 1.4"; O.D. = 2"
Modified California Sampler: I.D. = 2.5"; O.D. = 3"
Hammer Assembly: A 140 lb hammer with a 30" drop (Automatic Hammer)

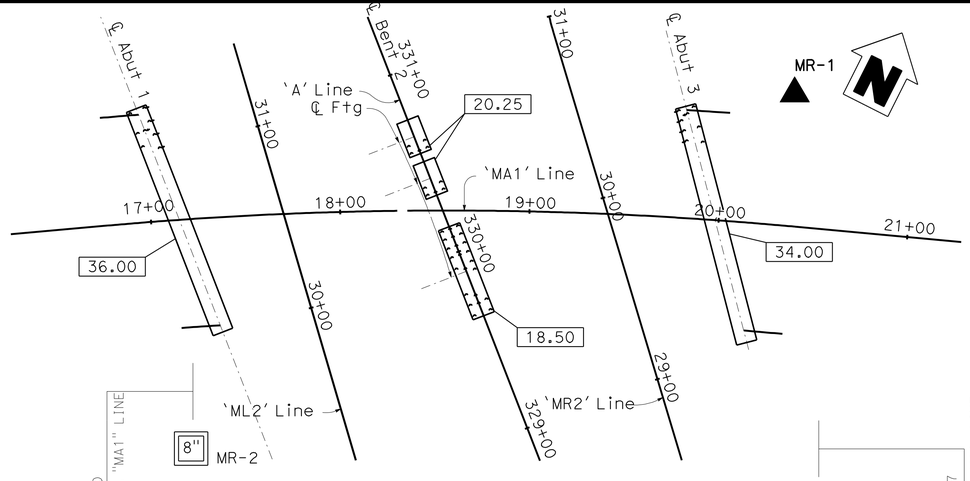

PLAN
1"= 40'

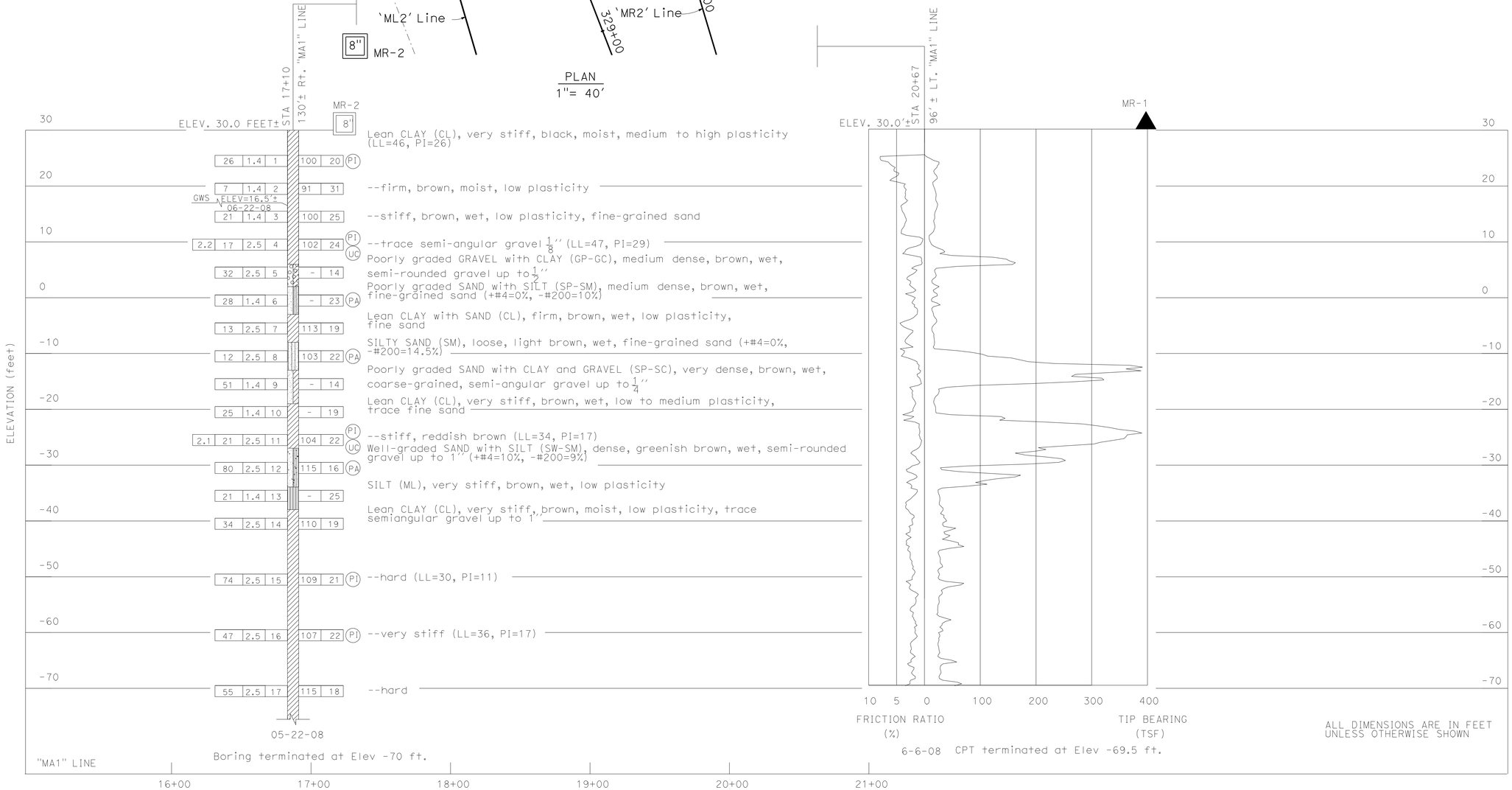

ALL DIMENSIONS ARE IN FEET UNLESS OTHERWISE SHOWN

PROFILE
Vert. : 1" = 10'
Hor. : 1" = 40'

DESIGN OVERSIGHT Yiwei Hu	DRAWN BY L. TRAN	L. BHANGOO / G. TRIPATHI FIELD INVESTIGATION BY:	PREPARED FOR THE STATE OF CALIFORNIA DEPARTMENT OF TRANSPORTATION
12/29/11 SIGN OFF DATE	CHECKED BY D. WANG	DATE: MAY & JUNE 2008	D. WANG PROJECT ENGINEER

BRIDGE NO. 33-0735
POST MILES 22.84

MARINA BLVD OC (REPLACE)
LOG OF TEST BORINGS 3 OF 5

GS GEOTECHNICAL LOG OF TEST BORINGS SHEET (ENGLISH) (REV. 7/16/10)

ORIGINAL SCALE IN INCHES FOR REDUCED PLANS 0 1 2 3

UNIT:
PROJECT NUMBER & PHASE:
CONTRACT NO.:

DISREGARD PRINTS BEARING EARLIER REVISION DATES — REVISION DATES 11/16/09 5/31/11 10/17/11

SHEET 28 OF 30

FILE => 33-0735-z-1tb03.dgn

USERNAME => s124496 DATE PLOTTED => 19-APR-2012 TIME PLOTTED => 14:58

DIST NO	STATE	PROJ NO	YEAR	NO	SHEETS
2	CAL.			143	174

DIST	COUNTY	ROUTE	SECTION	SHEET NO	TOTAL SHEETS
IV	Ala	880	G	2	9

Dwight M. Fahly
August 21, 1950

TO ACCOMPANY PLANS DATED 4-16-12

DIVISION OF ENGINEERING SERVICES – GEOTECHNICAL SERVICES

As-Built Log of Test Borings sheet is considered an informational document only. As such, the State of California registration seal with signature, license number and registration certificate expiration date confirm that this is a true and accurate copy of the original document. This drawing is available and presented only for the convenience of any bidder, contractor or other interested party.

DIST.	COUNTY	ROUTE	POST MILES–TOTAL PROJECT	Sheet No.	Total Sheets
04	Ala	880	22.6/24.0	728	760

GEOTECHNICAL PROFESSIONAL — 12/1/11 DATE

REGISTERED PROFESSIONAL ENGINEER GARY PARIKH No. G.E. 666 Exp. 12/31/11 GEOTECHNICAL STATE OF CALIFORNIA

MARINA BLVD. OC (REPLACE)

LOG OF TEST BORINGS 4 OF 5

NOTE: A COPY OF THIS LOG OF TEST BORINGS IS AVAILABLE AT OFFICE OF STRUCTURE MAINTENANCE AND INVESTIGATIONS, SACRAMENTO, CALIFORNIA

UNIT:
PROJECT NUMBER & PHASE:

BRIDGE No.	Sheet	of
33-0735	29	30

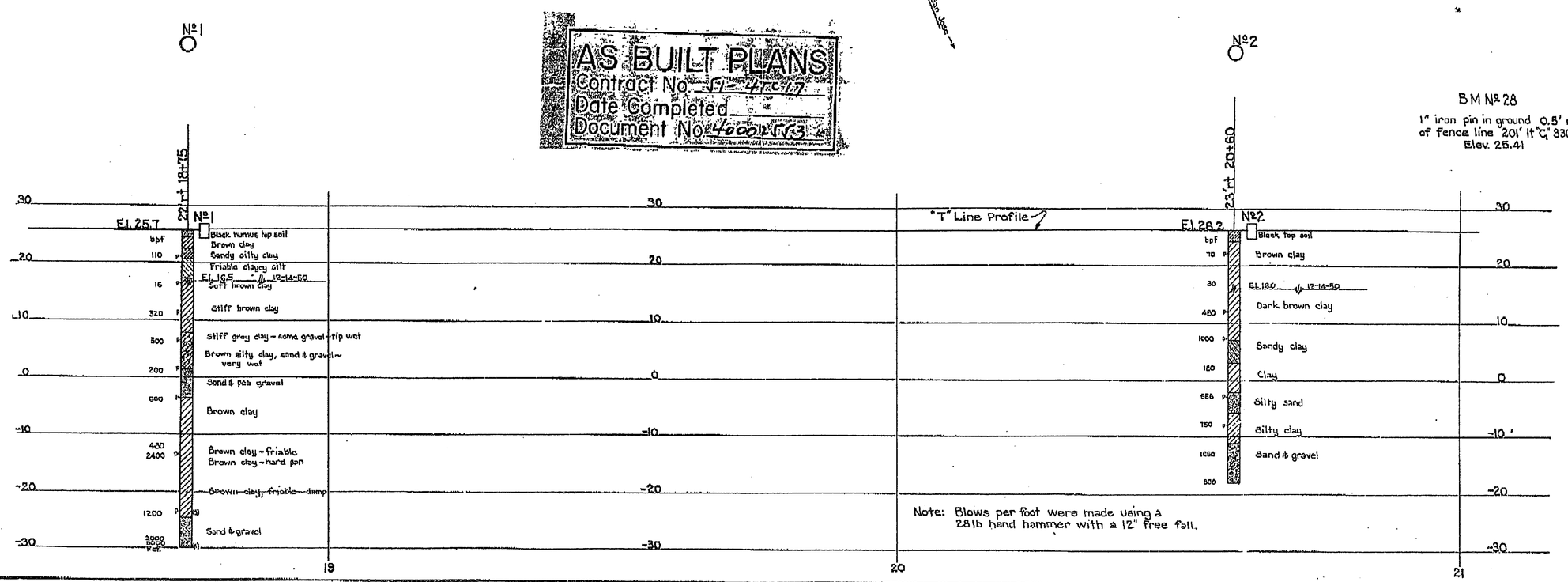

CLASSIFICATION OF MATERIAL BASED ON STANDARD GRADE SIZE LIMITS

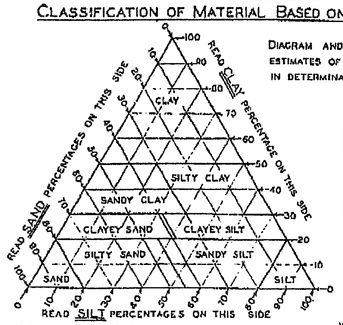

DIAGRAM AND TABLE SHOWING THE BASIS FOR ESTIMATES OF GRADE SIZE DISTRIBUTION USED IN DETERMINATION OF CLASS NAMES.

GROUPING USED IN TRIANGULAR CLASSIFICATION			
CLASS NAME	PERCENTAGE OF SIZES PRESENT		
	SAND	SILT	CLAY
SAND	80–100	0–20	0–20
SILTY SAND	45–80	0–55	0–20
SANDY SILT	0–45	35–80	0–20
SILT	0–20	80–100	0–20
CLAYEY SAND	35–80	0–42	20–30
CLAYEY SILT	0–35	32–80	20–30
SANDY CLAY	30–70	0–40	30–50
SILTY CLAY	0–30	20–70	30–50
CLAY	0–50	0–30	50–100

IF GRAVEL IS PRESENT IN APPRECIABLE AMOUNTS THE TERM "GRAVELLY" MAY BE ADDED TO THE CLASS NAME, VIS. "GRAVELLY SAND". THE TERMS "COARSE", "MEDIUM" AND "FINE" WHEN USED TO DESCRIBE GRAVEL, SAND AND SILT REFER TO STANDARD GRADE SIZE LIMITS.

LEGEND OF BORING OPERATIONS

- PLAN OF ANY BORING
- 1" SAMPLER BORING
- ROTARY WASH BORING
- 1" CLOSED SAMPLER DRIVEN
- CORE BORING
- 2½" PENETROMETER DRIVEN
- 2" SAMPLER BORING
- 2" to 5" AUGER BORING
- 6" to 20" AUGER BORING
- CASING DRIVEN
- JET BORING
- (S) SAMPLE TAKEN

THE APPROPRIATE BORING SYMBOLS DESIGNATING THE METHOD OF OPERATION ARE SHOWN AT THE UPPER RIGHT-HAND CORNER OF THE RESPECTIVE BORING. WHERE TOOL CHANGES WERE MADE DURING THE BORING OPERATION SYMBOLS ARE SHOWN AT THE POINT OF CHANGE.

LEGEND OF EARTH MATERIALS

- GRAVEL – G
- SAND – S
- SILT – SI
- CLAY – C
- SILTY SAND – SI S
- CLAYEY SAND – C S
- SANDY SILT – S SI
- CLAYEY SILT – C SI
- SANDY CLAY – SC
- SILTY CLAY – SI C
- PEAT and/or ORGANIC CLAY – O
- SANDSTONE – SS
- SHALE – SH
- BROKEN ROCK (FRAGMENTS) – BR
- ROCK – R

ABBREVIATIONS

EL. 89.4	ELEVATION OF GROUND AT TEST HOLE
bpf	BLOWS PER FOOT – (SEE NOTE ABOVE)
P	PULLED PIPE
M	MOISTURE AS % DRY WEIGHT
EL. 64.3 8-12-49	ELEVATION OF GROUND WATER AND DATE

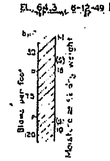

NOTES

THE CONTRACTOR'S ATTENTION IS DIRECTED TO SECTION 2, ARTICLE (c) OF THE STANDARD SPECIFICATIONS AND TO THE SPECIAL PROVISIONS ACCOMPANYING THIS SET OF PLANS.

CLASSIFICATION OF EARTH MATERIAL AS SHOWN ON THIS SHEET IS BASED UPON FIELD INSPECTION AND IS NOT TO BE CONSTRUED TO IMPLY MECHANICAL ANALYSIS.

See Pile Driving Log

MICROFILMED

FIRST AVE. OVERCROSSING
LOG OF TEST BORINGS

SCALE 1" = 10' | FILE NO
BRIDGE No. 33-167 | DRAWING NO. C-23325-2

STATE OF CALIFORNIA DEPARTMENT OF PUBLIC WORKS DIVISION OF HIGHWAYS
BRIDGE DEPARTMENT

10.0 5-50

Details Correct
Bridge Engineer

Bridge Engineering Engineer

262

IV-ALA-17

Date	County	Route	Section	Sheet No.	Total Sheets
12	Ala	880	Stat	12	19

Date approved May 14, 1962

BM #323 CHC disc. in conc. bent 50' Lt. "C" 324 + 46 Elev. 27.246

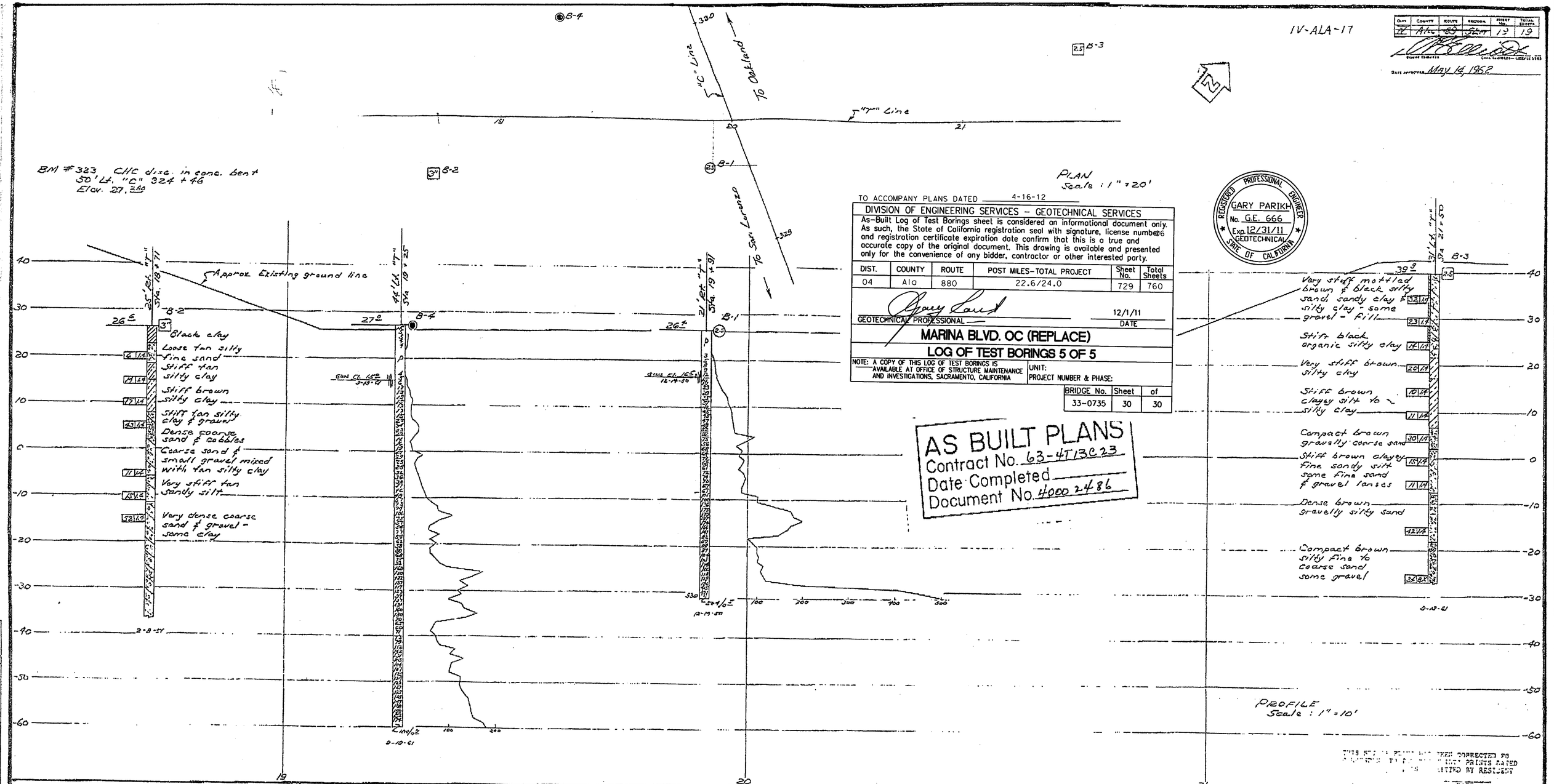

TO ACCOMPANY PLANS DATED 4-16-12

DIVISION OF ENGINEERING SERVICES – GEOTECHNICAL SERVICES

As-Built Log of Test Borings sheet is considered an informational document only. As such, the State of California registration seal with signature, license number and registration certificate expiration date confirm that this is a true and accurate copy of the original document. This drawing is available and presented only for the convenience of any bidder, contractor or other interested party.

DIST.	COUNTY	ROUTE	POST MILES-TOTAL PROJECT	Sheet No.	Total Sheets
04	Ala	880	22.6/24.0	729	760

GEOTECHNICAL PROFESSIONAL — DATE 12/1/11

REGISTERED PROFESSIONAL ENGINEER — GARY PARIKH — No. G.E. 666 — Exp. 12/31/11 — GEOTECHNICAL — STATE OF CALIFORNIA

MARINA BLVD. OC (REPLACE)

LOG OF TEST BORINGS 5 OF 5

NOTE: A COPY OF THIS LOG OF TEST BORINGS IS AVAILABLE AT OFFICE OF STRUCTURE MAINTENANCE AND INVESTIGATIONS, SACRAMENTO, CALIFORNIA

UNIT:
PROJECT NUMBER & PHASE:

BRIDGE No.	Sheet	of
33-0735	30	30

AS BUILT PLANS
Contract No. 63-4T13C23
Date Completed
Document No. 4000 2486

BRIDGE DEPARTMENT

CLASSIFICATION OF MATERIAL BASED ON STANDARD GRADE SIZE LIMITS

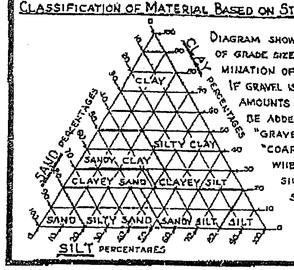

DIAGRAM SHOWING THE BASIS FOR ESTIMATES OF GRADE SIZE DISTRIBUTION USED IN DETERMINATION OF CLASS NAMES.

IF GRAVEL IS PRESENT IN APPRECIABLE AMOUNTS THE TERM "GRAVELLY" MAY BE ADDED TO THE CLASS NAME, VIZ. "GRAVELLY SAND". THE TERMS "COARSE", "MEDIUM" AND "FINE" WHEN USED TO DESCRIBE SAND, SILT AND GRAVEL REFER TO STANDARD GRADE SIZE LIMITS.

LEGEND OF EARTH MATERIALS

- GRAVEL
- SAND
- SILT
- CLAY
- SANDY CLAY OR CLAYEY SAND
- SANDY SILT OR SILTY SAND
- SILTY CLAY OR CLAYEY SILT
- PEAT AND/OR ORGANIC MATTER
- FILL MATERIAL
- IGNEOUS ROCK
- SEDIMENTARY ROCK
- METAMORPHIC ROCK

LEGEND OF BORING OPERATIONS

- PENETROMETER
- 2¼" CONE PENETROMETER
- SAMPLER BORING (DRY)
- ROTARY BORING (WET)
- AUGER BORING (DRY)
- JET BORING
- CORE BORING
- TEST PIT

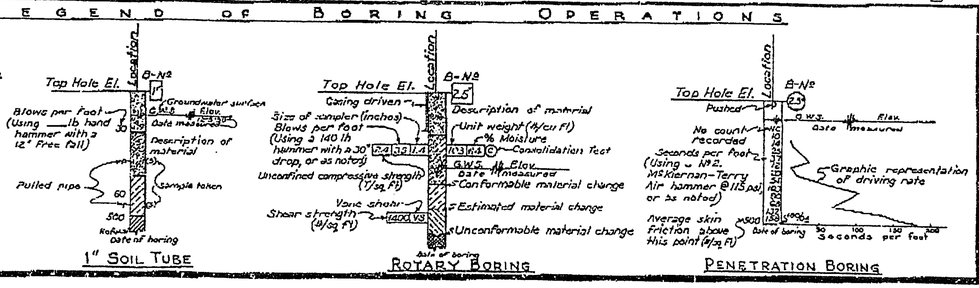

NOTE

Classification of earth material as shown on this sheet is based upon field inspection and is not to be construed to imply mechanical analysis.

STATE OF CALIFORNIA
DEPARTMENT OF PUBLIC WORKS
DIVISION OF HIGHWAYS

Marina Blvd. OC.
~~FIRST AVENUE OC~~

LOG OF TEST BORINGS

SCALE	BRIDGE	FILE	DRAWING
As Noted	33-167		C-33167-19

DIST	COUNTY	ROUTE	POST MILES TOTAL PROJECT	SHEET No	TOTAL SHEETS
04	Ala	880	22.6/24.0	730	760

REGISTERED STRUCTURAL ENGINEER — DATE 12/1/11

4-16-12
PLANS APPROVAL DATE

REGISTERED PROFESSIONAL ENGINEER — MAHVASH M. HARMS — No. 2639 — Exp. 12/31/12 — STRUCTURAL — STATE OF CALIFORNIA

The State of California or its officers or agents shall not be responsible for the accuracy or completeness of scanned copies of this plan sheet.

ALAMEDA COUNTY TRANSPORTATION COMMISSION
1333 BROADWAY, SUITE 220
OAKLAND, CA 94612

BIGGS CARDOSA ASSOCIATES INC.
865 THE ALAMEDA
SAN JOSE, CALIFORNIA 95126

LEGEND:

- Indicates Point of Minimum Vertical Clearance
- Indicates Existing Structure
- Indicates direction of travel
- Indicates Deck Drain Type D-1
- Indicates existing structure to be removed
- Indicates closure pour

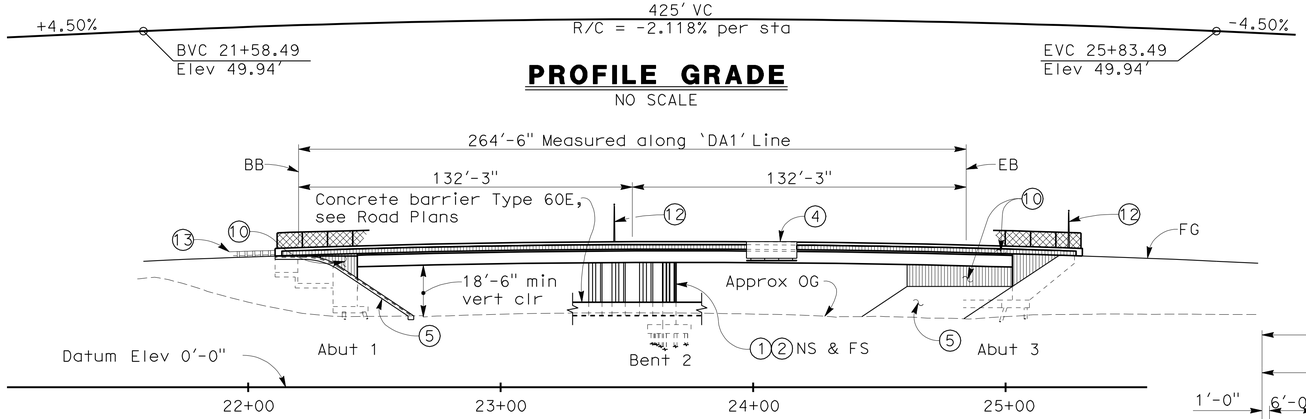

ELEVATION
1" = 30'

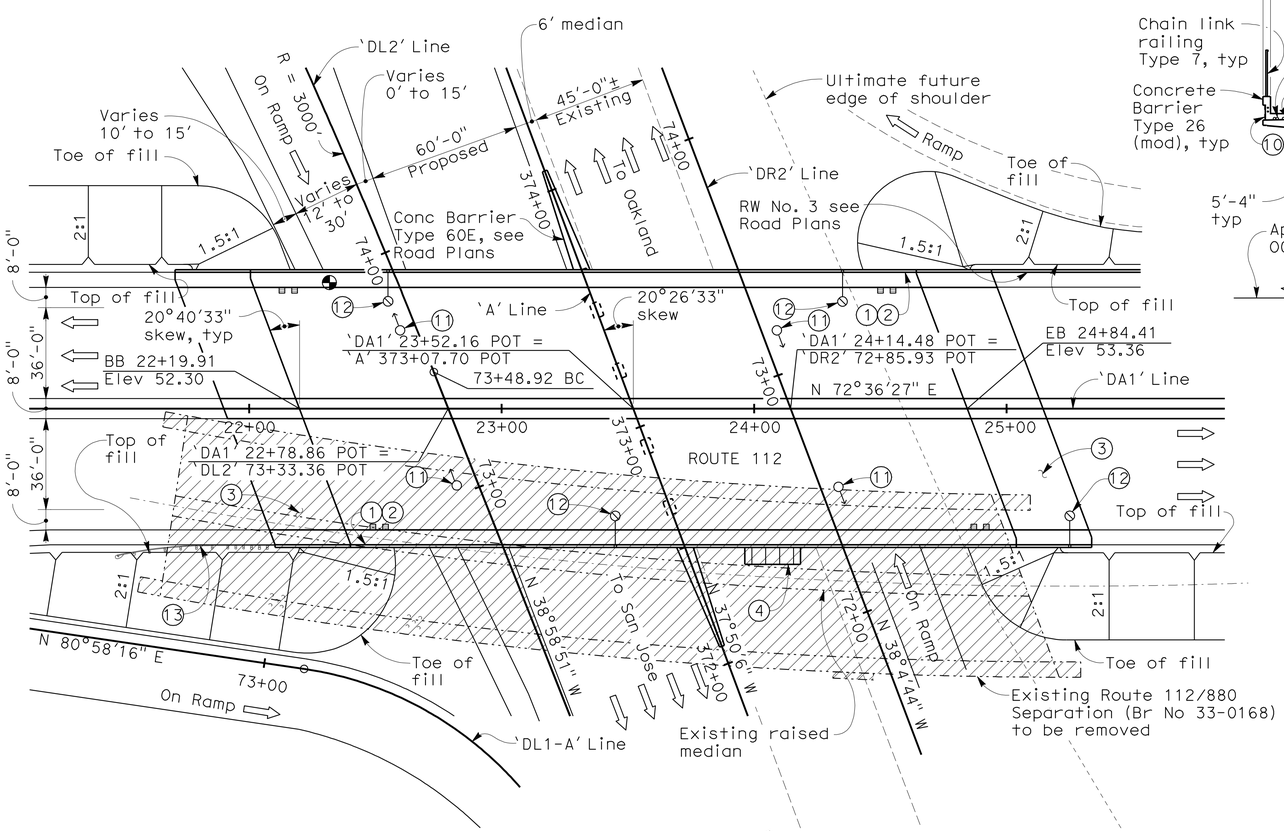

PLAN
1" = 30'

NOTE:
The Contractor shall verify all controlling field dimensions before ordering or fabricating any material.

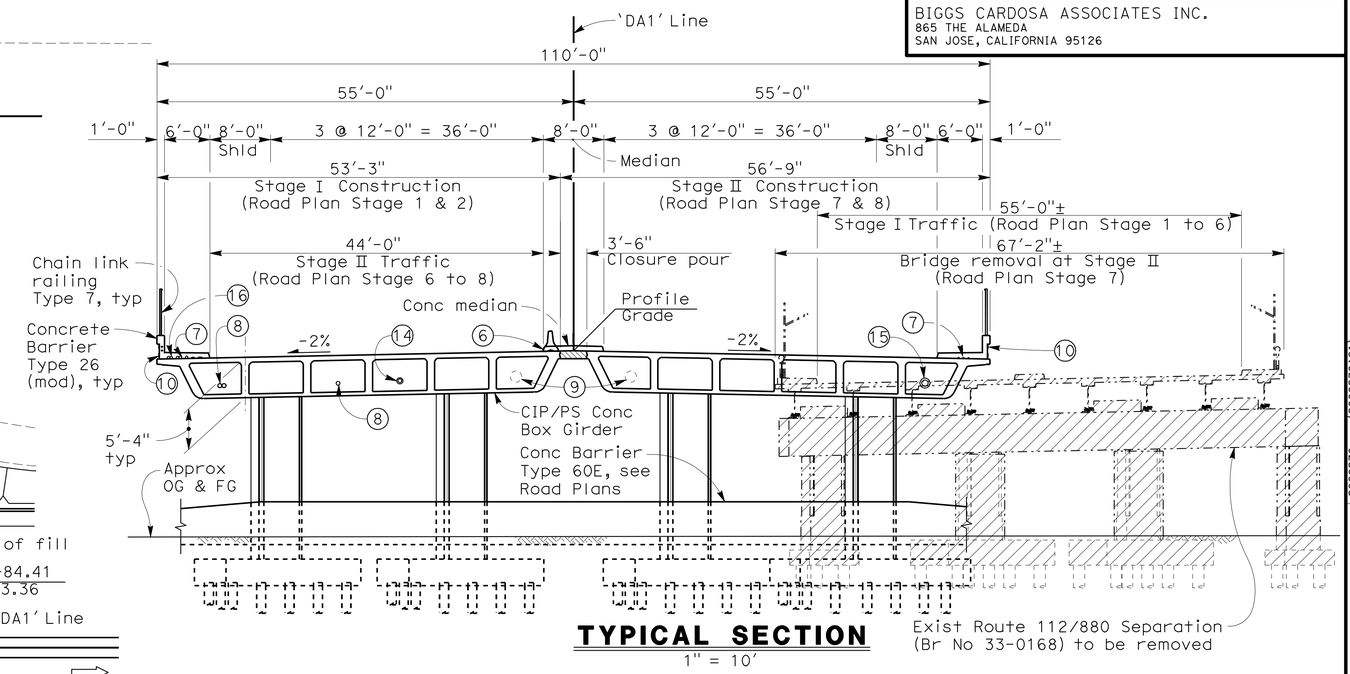

TYPICAL SECTION
1" = 10'

NOTES:

1. Paint Bridge Name "Route 112/880 Seperation"
2. Paint Bridge Number and Year Completed
3. Approach Slab Type N(30S)
4. Bridge Mounted Sign, see 'SIGN DETAILS No. 1' & 'SIGN DETAILS No. 2' sheets for mounting details and Road Plans for location and sign panel
5. Slope paving
6. Temporary Railing Type K (anchored), see Road Plans
7. Lighting and signal cable conduits, see Road Plans
8. 6" dia electrical conduits, see Road Plans
9. 18" dia future utility opening
10. Fractured Fin Texture
11. Soffit lighting, see Electrical Plans
12. Electrolier on barrier, see Electrical Plans.
13. Metal Beam Guard Rail, see Road Plans
14. 6" dia gas line (see Road Plans) in 10" WSP casing
15. 10" dia sanitary sewer line (see Road Plans) in 16" WSP casing
16. Communication conduits, see Road Plans

NOTES:

1. For Index to Bridge Plans, Quantities, and General Notes, see 'INDEX TO BRIDGE PLANS' shee.t
2. For Pile Data Table, see 'FOUNDATION PLAN' sheet.
3. For Bench Mark & Datum, see 'FOUNDATION PLAN' sheet.
4. For Quantities, see "INDEX TO PLAN" sheet.

DESIGN OVERSIGHT Yiwei Hu 12/29/11 SIGN OFF DATE	DESIGN	BY G. KENNING	CHECKED T. SWENSON	LOAD & RESISTANCE FACTOR DESIGN	LIVE LOADING: HL93 W/"LOW-BOY"; PERMIT DESIGN VEHICLE
	DETAILS	BY Y. LIN	CHECKED T. SWENSON	LAYOUT BY Y. LIN	CHECKED G. KENNING
	QUANTITIES	BY J. GERLACH	CHECKED J. YIP	SPECIFICATIONS BY J. VISAYA	PLANS AND SPECS COMPARED T. SWENSON

DESIGN GENERAL PLAN SHEET (ENGLISH) (REV. 7/16/10)

ORIGINAL SCALE IN INCHES FOR REDUCED PLANS 0 1 2 3

PREPARED FOR THE STATE OF CALIFORNIA DEPARTMENT OF TRANSPORTATION

M. HARMS
PROJECT ENGINEER

UNIT:
PROJECT NUMBER & PHASE:

FILE => 33-0736-a-gp01.dgn

BRIDGE NO. 33-0736
POST MILES 23.64

ROUTE 112/880 SEPARATION (REPLACE)
GENERAL PLAN

DISREGARD PRINTS BEARING EARLIER REVISION DATES

REVISION DATES (PRELIMINARY STAGE ONLY): 5/8/09 9/23/09 11/18/09 5/24/10 6/1/11 10/27/11 12/1/11

SHEET 1 OF 31

CONTRACT NO.:
PROJECT ID:

USERNAME => s124496 DATE PLOTTED => 19-APR-2012 TIME PLOTTED => 14:58

(2008276AS1) 2008276

DIST	COUNTY	ROUTE	POST MILES TOTAL PROJECT	SHEET No	TOTAL SHEETS
04	Ala	880	22.6/24.0	731	760

REGISTERED STRUCTURAL ENGINEER 12/1/11 DATE

4-16-12
PLANS APPROVAL DATE

REGISTERED PROFESSIONAL ENGINEER MAHVASH M. HARMS No. 2639 Exp. 12/31/12 STRUCTURAL STATE OF CALIFORNIA

The State of California or its officers or agents shall not be responsible for the accuracy or completeness of scanned copies of this plan sheet.

ALAMEDA COUNTY TRANSPORTATION COMMISSION
1333 BROADWAY, SUITE 220
OAKLAND, CA 94612

BIGGS CARDOSA ASSOCIATES INC.
865 THE ALAMEDA
SAN JOSE, CALIFORNIA 95126

STANDARD PLANS DATED MAY 2006

	A10A	ACRONYMS AND ABBREVIATIONS (SHEET 1 OF 2)
	A10B	ACRONYMS AND ABBREVIATIONS (SHEET 2 OF 2)
	A10C	SYMBOLS (SHEET 1 OF 2)
	A10D	SYMBOLS (SHEET 2 OF 2)
	A62B	LIMITS OF PAYMENT FOR EXCAVATION AND BACKFILL - BRIDGE SURCHARGE AND WALL
	A62C	LIMITS OF PAYMENT FOR EXCAVATION AND BACKFILL - BRIDGE SURCHARGE AND WALL
	A76C	CONCRETE BARRIER TYPE 60E
	B0-1	BRIDGE DETAILS
	B0-3	BRIDGE DETAILS
	B0-5	BRIDGE DETAILS
	B0-13	BRIDGE DETAILS
	B2-5	PILE DETAILS-CLASS 90 AND CLASS 140
RSP	B2-8	PILE DETAILS-CLASS 200
	B3-1	RETAINING WALL TYPE 1 - H = 4' THROUGH 30'
	B3-8	RETAINING WALL DETAILS No.1
RSP	B6-21	JOINT SEALS (MAXIMUM MOVEMENT RATING = 2")
	B7-1	BOX GIRDER DETAILS
	B7-6	DECK DRAINS - TYPES D-1 AND D-2
	B7-8	DECK DRAINAGE DETAILS
	B7-10	UTILITY OPENING - BOX GIRDER
	B8-5	CAST-IN-PLACE PRESTRESSED GIRDER DETAILS
	B11-52	CHAIN LINK RAILING TYPE 7
	B11-54	CONCRETE BARRIER TYPE 26
	S-16	OVERHEAD SIGNS, WALKWAY DETAILS No. 1
	S-17	OVERHEAD SIGNS, WALKWAY DETAILS No. 2
	S-17A	OVERHEAD SIGNS, WALKWAY DETAILS No. 3
	S-18	OVERHEAD SIGNS, WALKWAY SAFETY RAILING DETAILS
	S-20	OVERHEAD SIGNS, REMOVABLE SIGN PANEL FRAMES

Indicates Standard Plan Sheet No.

Indicates Detail No.

ABBREVIATIONS

RSPF Removable Sign Panel Frame

GENERAL NOTES
LOAD & RESISTANCE FACTOR DESIGN

DESIGN: AASHTO LRFD Bridge Design Specifications, 4th Edition, and Caltrans Amendments; except that geotechnical design of deep foundation, bridge (including barrier and railing) details taken from standard plans May 2006, standard bridge detail XS sheets are designed using Bridge Design Specifications ('96 AASHTO with Revisions by Caltrans)

SEISMIC LOADING: Caltrans Seismic Design Criteria (SDC) Version 1.5, dated Sept, 2009

DEAD LOAD: Includes 35 psf for future wearing surface.

LIVE LOAD: HL93 with Low-Boy and Permit Design Vehicle

CONCRETE: fy = 60 ksi
f'c = 3.6 ksi (except as shown on 'CONCRETE STRENGTH & TYPE LIMITS' diagram)
n = 8

PRESTRESSED CONCRETE: See 'Prestressing Notes' on 'GIRDER LAYOUT' sheet

SEISMIC LOAD: Soil profile type D
Magnitude group 7.25±0.25
Peak Rock Acceleration 0.6g
With the following modifications:

1. No change of Sa for structural periods ≤ 0.5 seconds
2. 20% increase of Sa for structural periods ≥ 1 second
3. Linear interpolation for structural periods between 0.5 and 1 second.

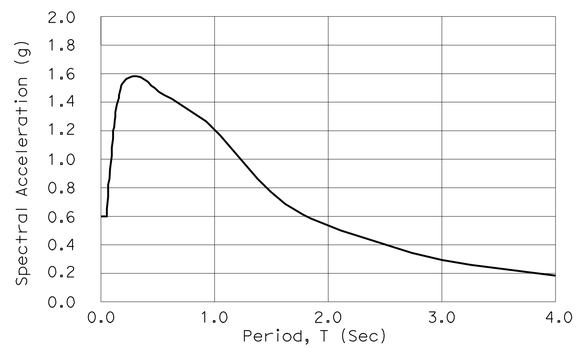

ARS DESIGN CURVE
NO SCALE

INDEX TO BRIDGE PLANS

SHEET NO.	TITLE
1	GENERAL PLAN
2	INDEX TO BRIDGE PLANS
3	DECK CONTOURS
4	FOUNDATION PLAN
5	ABUTMENT 1 PLAN & ELEVATION
6	ABUTMENT 3 PLAN & ELEVATION
7	ABUTMENT DETAILS No. 1
8	ABUTMENT DETAILS No. 2
9	ABUTMENT DETAILS No. 3
10	ABUTMENT DETAILS No. 4
11	BENT DETAILS No. 1
12	BENT DETAILS No. 2
13	BENT DETAILS No. 3
14	BENT DETAILS No. 4
15	TYPICAL SECTION
16	TYPICAL SECTION DETAILS
17	GIRDER LAYOUT
18	GIRDER DETAILS No. 1
19	GIRDER DETAILS No. 2
20	GIRDER DETAILS No. 3
21	BRIDGE DECK DRAINAGE SYSTEM
22	UTILITY SUPPORT DETAILS
23	STRUCTURE APPROACH TYPE N(30S)
24	STRUCTURE APPROACH DRAINAGE DETAILS
25	SLOPE PAVING - FULL SLOPE
26	SIGN DETAILS No. 1
27	SIGN DETAILS No. 2
28	LOG OF TEST BORINGS 1 OF 4
29	LOG OF TEST BORINGS 2 OF 4
30	LOG OF TEST BORINGS 3 OF 4
31	LOG OF TEST BORINGS 4 OF 4

QUANTITIES

BRIDGE REMOVAL, LOCATION B	LUMP	SUM
STRUCTURE EXCAVATION (BRIDGE)	1,460	CY
STRUCTURE BACKFILL (BRIDGE)	1,335	CY
SETTLEMENT MONITORING PROGRAM	LUMP	SUM
FURNISH PILING (CLASS 90) (ALTERNATIVE W)	458	LF
DRIVE PILE (CLASS 90) (ALTERNATIVE W)	7	EA
FURNISH PILING (CLASS 200) (ALTERNATIVE W)	6,592	LF
DRIVE PILE (CLASS 200) (ALTERNATIVE W)	81	EA
FURNISH PILING (CLASS 200) (ALTERNATIVE W) (MODIFIED)	4,284	LF
DRIVE PILE (CLASS 200) (ALTERNATIVE W) (MODIFIED)	61	EA
PRESTRESSING CAST-IN-PLACE CONCRETE	LUMP	SUM
STRUCTURAL CONCRETE, BRIDGE FOOTING	441	CY
STRUCTURAL CONCRETE, BRIDGE	2,632	CY
STRUCTURAL CONCRETE, APPROACH SLAB (TYPE N)	244	CY
FRACTURED FIN TEXTURE	3,390	SQFT
JOINT SEAL (MR 2")	235	LF
BAR REINFORCING STEEL (BRIDGE)	818,250	LB
FURNISH SIGN STRUCTURE (BRIDGE MOUNTED WITH WALKWAY)	2,155	LB
INSTALL SIGN STRUCTURE (BRIDGE MOUNTED WITH WALKWAY)	2,155	LB
10" WELDED STEEL PIPE CASING (BRIDGE)	494	LF
16" WELDED STEEL PIPE CASING (BRIDGE)	335	LF
18" WELDED STEEL PIPE CASING (BRIDGE)	160	LF
SLOPE PAVING (CONCRETE)	65	CY
SLOPE PAVING (MASONRY BLOCK)	1,530	SQFT
BRIDGE DECK DRAINAGE SYSTEM	3,590	LB
CHAIN LINK RAILING (TYPE 7)	649	LF
CONCRETE BARRIER (TYPE 26 MODIFIED)	649	LF

DESIGN OVERSIGHT Yiwei Hu
12/29/11
SIGN OFF DATE

	BY	CHECKED
DESIGN	G. KENNING	T. SWENSON
DETAILS	Y. LIN	T. SWENSON
QUANTITIES	J. GERLACH	J. YIP

PREPARED FOR THE STATE OF CALIFORNIA DEPARTMENT OF TRANSPORTATION

M. HARMS
PROJECT ENGINEER

BRIDGE NO. 33-0736
POST MILES 23.64

ROUTE 112/880 SEPARATION (REPLACE)
INDEX TO BRIDGE PLANS

DESIGN DETAIL SHEET (ENGLISH) (REV. 7-16-10)

ORIGINAL SCALE IN INCHES FOR REDUCED PLANS 0 1 2 3

UNIT:
PROJECT NUMBER & PHASE:

DISREGARD PRINTS BEARING EARLIER REVISION DATES

REVISION DATES (PRELIMINARY STAGE ONLY) 11/16/09 5/24/10 6/1/11 10/27/11 12/1/11

SHEET 2 OF 31

FILE => 33-0736-a-itp.dgn
CONTRACT NO.:
PROJECT ID:

USERNAME => s124496 DATE PLOTTED => 19-APR-2012 TIME PLOTTED => 14:58
20082276 (20082276AS2)

DIST	COUNTY	ROUTE	POST MILES TOTAL PROJECT	SHEET No	TOTAL SHEETS
04	Ala	880	22.6/24.0	732	760

Mahvash Harms 12/1/11
REGISTERED STRUCTURAL ENGINEER DATE

4-16-12
PLANS APPROVAL DATE

REGISTERED PROFESSIONAL ENGINEER MAHVASH M. HARMS No. 2639 Exp. 12/31/12 STRUCTURAL STATE OF CALIFORNIA

The State of California or its officers or agents shall not be responsible for the accuracy or completeness of scanned copies of this plan sheet.

ALAMEDA COUNTY TRANSPORTATION COMMISSION
1333 BROADWAY, SUITE 220
OAKLAND, CA 94612

BIGGS CARDOSA ASSOCIATES INC.
865 THE ALAMEDA
SAN JOSE, CALIFORNIA 95126

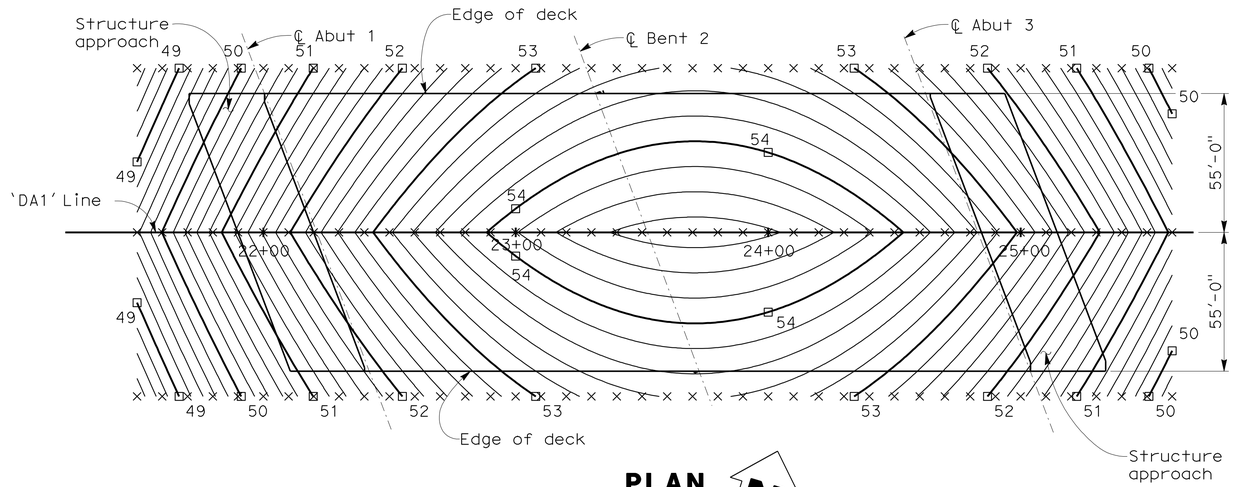

PLAN
1" = 30'

NOTES:
1. Contours indicate top of deck elevation.
2. □ Indicates even foot contours.
3. × Indicates 10' intervals measured along 'DA1' line.
4. Contour interval = 0.20'
5. Contours do not include camber or falsework settlement.

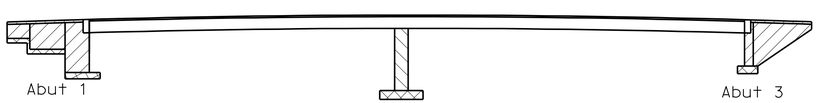

- Structural Concrete, Bridge (f'c = 5000 psi at 28 days)
- Structural Concrete, Bridge (f'c = 4000 psi at 28 days)
- Structural Concrete, Bridge (f'c = 3600 psi at 28 days)
- Structural Concrete, Bridge Footing (f'c = 4000 psi at 28 days)
- Structural Concrete, Approach Slab (f'c = 3600 psi at 28 days)

CONCRETE STRENGTH AND TYPE LIMITS
NO SCALE

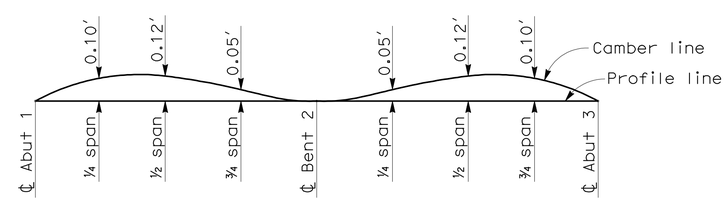

(Does not include allowance for falsework settlement)

CAMBER DIAGRAM
NO SCALE

DESIGN OVERSIGHT Yiwei Hu
12/29/11
SIGN OFF DATE

DESIGN DETAIL SHEET (ENGLISH) (REV. 7-16-10)

	BY	CHECKED
DESIGN	G. KENNING	T. SWENSON
DETAILS	Y. LIN	T. SWENSON
QUANTITIES	J. GERLACH	J. YIP

ORIGINAL SCALE IN INCHES FOR REDUCED PLANS 0 1 2 3

PREPARED FOR THE STATE OF CALIFORNIA DEPARTMENT OF TRANSPORTATION

M. HARMS
PROJECT ENGINEER

UNIT:
PROJECT NUMBER & PHASE:

BRIDGE NO. 33-0736
POST MILES 23.64

ROUTE 112/880 SEPARATION (REPLACE)
DECK CONTOURS

DISREGARD PRINTS BEARING EARLIER REVISION DATES
REVISION DATES (PRELIMINARY STAGE ONLY) 11/18/09 5/24/10 6/1/11 10/21/11 12/1/11

SHEET 3 OF 31

FILE => 33-0736-d-dc01.dgn
CONTRACT NO.: PROJECT ID:

USERNAME => s124496 DATE PLOTTED => 19-APR-2012 TIME PLOTTED => 14:59
2008276 (2008276A53)

DIST	COUNTY	ROUTE	POST MILES TOTAL PROJECT	SHEET No	TOTAL SHEETS
04	Ala	880	22.6/24.0	733	760

REGISTERED STRUCTURAL ENGINEER — DATE 12/1/11

4-16-12
PLANS APPROVAL DATE

The State of California or its officers or agents shall not be responsible for the accuracy or completeness of scanned copies of this plan sheet.

REGISTERED PROFESSIONAL ENGINEER — NAHVASH M. HARMS — No. 2639 — Exp. 12/31/12 — STRUCTURAL — STATE OF CALIFORNIA

ALAMEDA COUNTY TRANSPORTATION COMMISSION
1333 BROADWAY, SUITE 220
OAKLAND, CA 94612

BIGGS CARDOSA ASSOCIATES INC.
865 THE ALAMEDA
SAN JOSE, CALIFORNIA 95126

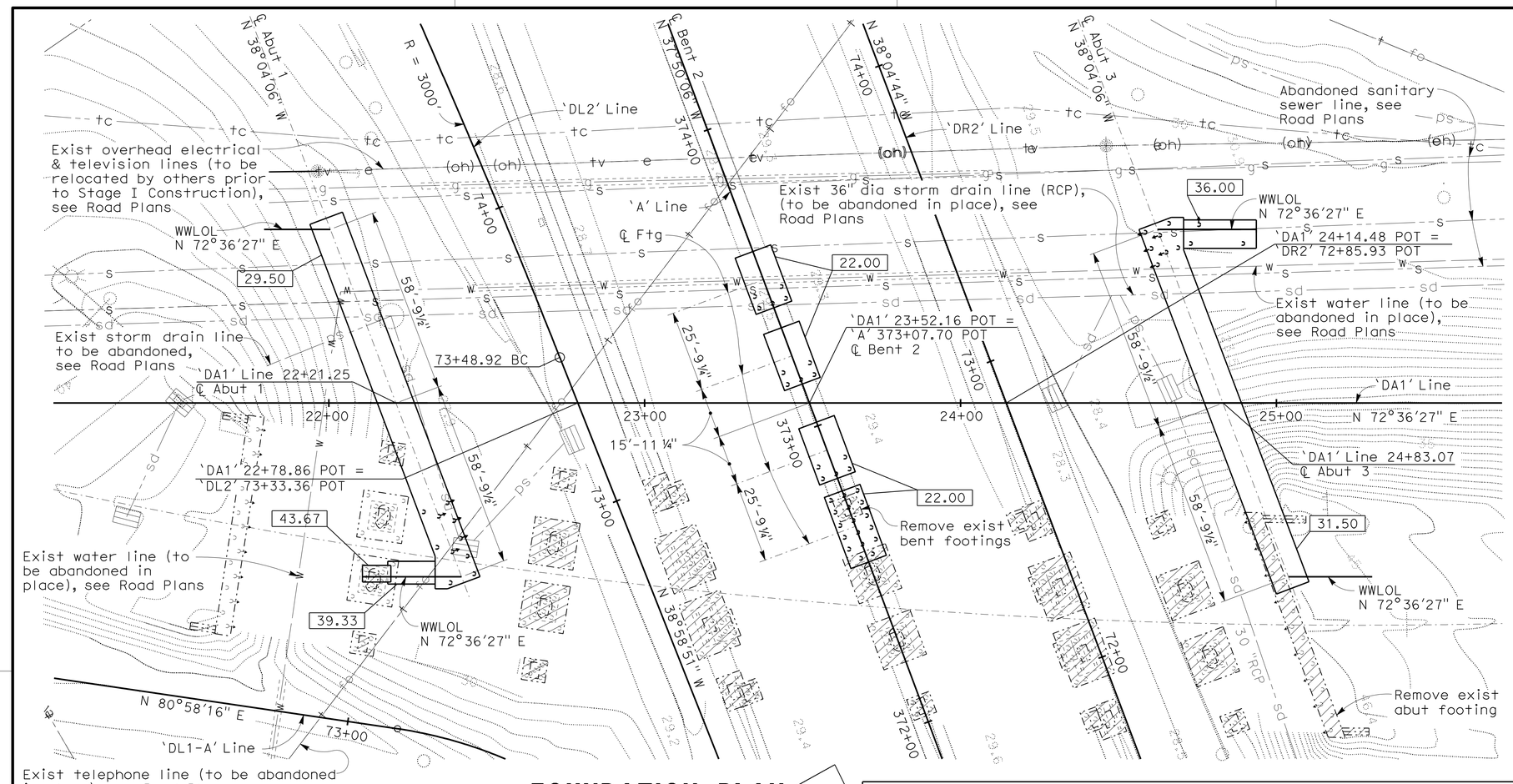

FOUNDATION PLAN

1" = 20'

NOTES:

1. Indicates bottom of footing elevation.
2. 29.6 Indicates spot elevation.
3. Indicates pile, not all piles shown.
4. Verify utility locations with Road Plans.
5. Indicates exist bridge foundation to be removed.

LEGEND:

—e— —(oh)—	Indicates exist overhead electrical line
—tv— —(oh)— —tv—	Indicates exist overhead television line
—s— —s—	Indicates exist sanitary Sewer line
—sd— —sd—	Indicates exist storm drain line
—w— —w—	Indicates exist water line
—e— —e—	Indicates exist electrical line
—t— —t—	Indicates exist telephone line
—g— —g—	Indicates exist gas line
—tc— —tc—	Indicates exist communication line
—fo— —fo—	Indicates exist fiber optic line

PILE DATA TABLE

Location	Type	Nominal Resistance Compression	Nominal Resistance Tension	Design Tip Elev (ft)	Specified Tip Elev (ft)	Nominal Driving Resistance required (kips)
Abut 1	Class 200 Alt 'W'	400 kips	0	-47.0(a);-10.0(c)	-47.0	444
Abut 1 (At obstructions. See ii)				-52.0(a);-10.0(c)	-52.0	444
Bent 2	Class 200 Alt 'W' (MOD)	400 kips	75 kips	-47.0(a);-1.0(b);-20.0(c)	-47.0	444
Bent 2 (At obstructions. See ii)				-52.0(a);-12.0(b);-20.0(c)	-52.0	444
Abut 3	Class 200 Alt 'W'	400 kips	0	-47.0(a);-10.0(c)	-47.0	444
Abut 3 (At obstructions. See ii)				-52.0(a);-10.0(c)	-52.0	444
Wingwalls	Class 90 Alt 'W'	180 kips	0	-27.0(a)	-27.0	212

NOTES

(i) Design tip elevations for Abutments and Bents are controlled by: (a) Compression, (b) Tension, (c) Lateral load.

(ii) Pile locations that conflict with abandoned utilities shall be predrilled to 6" below utilities' invert prior to pile driving.

(iii) Unsuitable soil layer (liquefiable) that does not contribute to the design nominal resistance exists between Elev-1 and -8 ft. The estimated driving resistance from the unsuitable penetrated soil layer is 44 kips for 16" pipe piles and 32 kips for 14" pipe piles (at wingwalls), respectively.

BENCH MARK AND DATUM

Monument	Coordinates Northing	Coordinates Easting	Elev	Description/location
220	2,088,799.01	6,076,699.29	28.72	¾" iron pipe with plug on North-bound I-880 on-ramp from East-bound Davis Street, ±5' east of edge of pavement and ±63' south of metering light (Sta 374+10.5)
31	2,089,038.35	6,077,632.11	33.89	Cut cross in centerline of concrete median on Davis Street, ±155' west of Gilmore Drive

GEOTECHNICAL PROFESSIONAL — APPROVAL DATE 12/1/11

NOTE:
The Contractor shall verify all controlling field dimensions before ordering or fabricating any material.

DESIGN OVERSIGHT — Yiwei Hu — 12/29/11 — SIGN OFF DATE

SCALE: AS SHOWN | VERT.DATUM NAVD88 | HORZ.DATUM CCS83
PHOTOGRAMMETRY AS OF: | ALIGNMENT TIES
SURVEYED BY HMH | DRAFTED BY
FIELD CHECKED BY | CHECKED BY

DESIGN BY G. KENNING CHECKED T. SWENSON
DETAILS BY Y. LIN CHECKED T. SWENSON
QUANTITIES BY J. GERLACH CHECKED J. YIP

PREPARED FOR THE STATE OF CALIFORNIA DEPARTMENT OF TRANSPORTATION

M. HARMS
PROJECT ENGINEER

BRIDGE NO. 33-0736
POST MILE 23.64

ROUTE 112/880 SEPARATION (REPLACE)
FOUNDATION PLAN

FOUNDATION PLAN SHEET (ENGLISH) (REV. 7-16-10)

ORIGINAL SCALE IN INCHES FOR REDUCED PLANS 0 1 2 3

UNIT:
PROJECT NUMBER & PHASE:

DISREGARD PRINTS BEARING EARLIER REVISION DATES

REVISION DATES (PRELIMINARY STAGE ONLY) 5/8/09 9/23/09 11/16/09 5/24/10 6/1/11 10/27/11 12/1/11

SHEET 4 OF 31

FILE => 33-0736-e-fp01.dgn

CONTRACT NO.: PROJECT ID:

USERNAME => s124936 DATE PLOTTED => 19-APR-2012 TIME PLOTTED => 14:59

2008276 (2008276AS4)

DIST	COUNTY	ROUTE	POST MILES TOTAL PROJECT	SHEET No	TOTAL SHEETS
04	Ala	880	22.6/24.0	734	760

Mahvash Harms 12/1/11
REGISTERED STRUCTURAL ENGINEER DATE

4-16-12
PLANS APPROVAL DATE

REGISTERED PROFESSIONAL ENGINEER MAHVASH M. HARMS No. 2639 Exp. 12/31/12 STRUCTURAL STATE OF CALIFORNIA

The State of California or its officers or agents shall not be responsible for the accuracy or completeness of scanned copies of this plan sheet.

ALAMEDA COUNTY TRANSPORTATION COMMISSION
1333 BROADWAY, SUITE 220
OAKLAND, CA 94612

BIGGS CARDOSA ASSOCIATES INC.
865 THE ALAMEDA
SAN JOSE, CALIFORNIA 95126

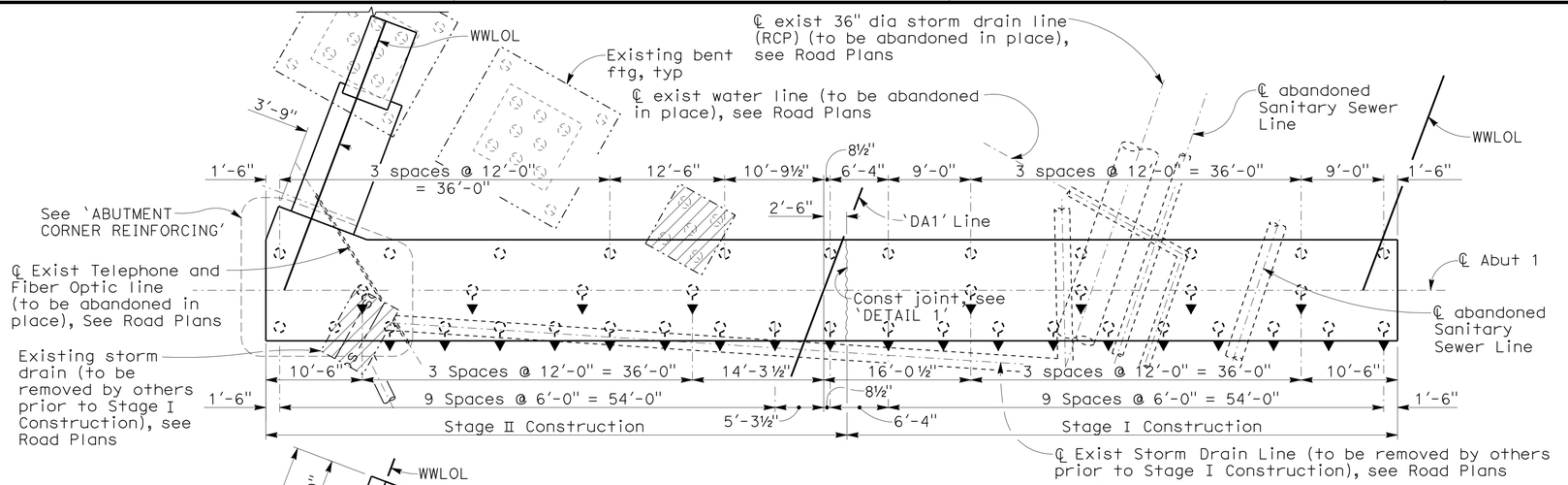

ABUTMENT 1 FOOTING PLAN

1/8" = 1'-0"

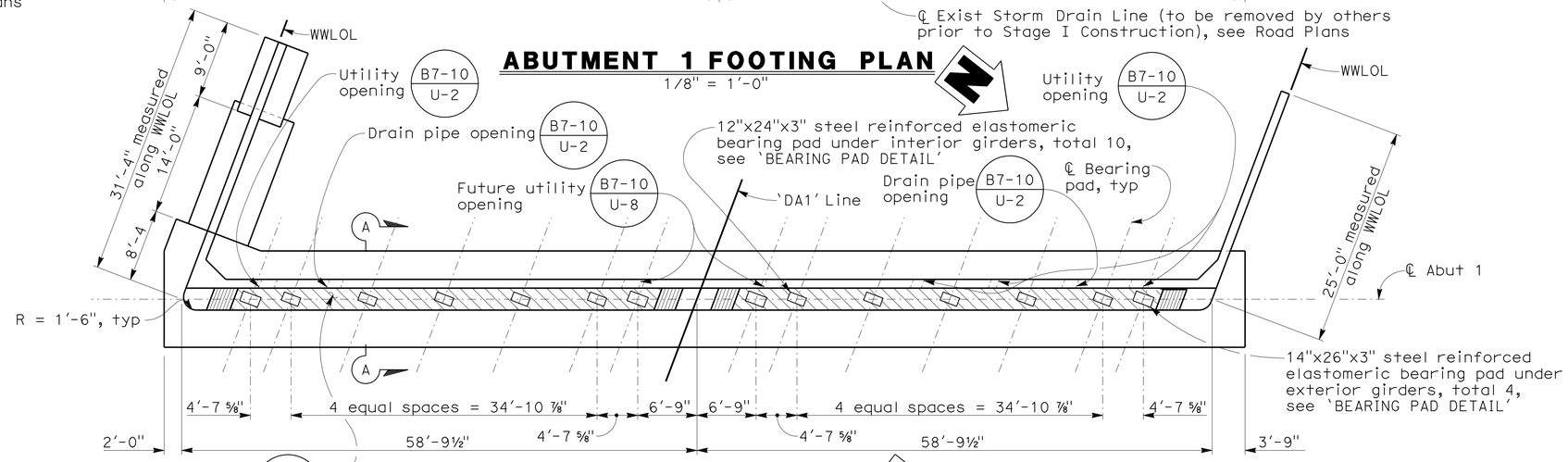

ABUTMENT 1 PLAN

1/8" = 1'-0"

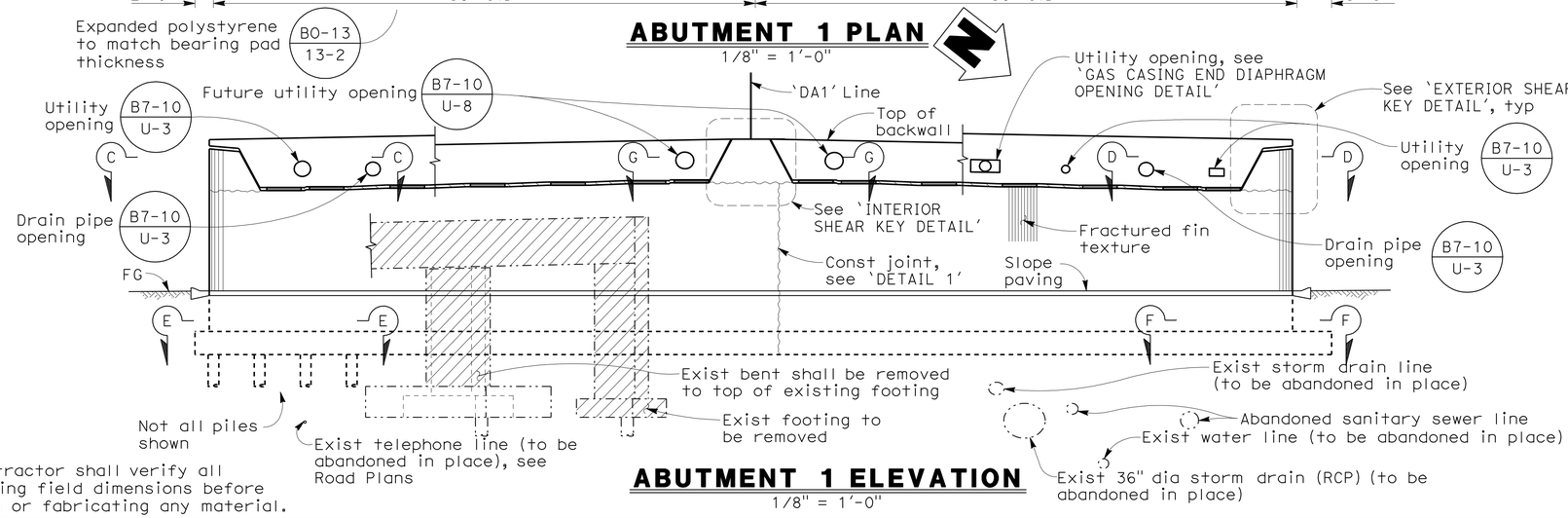

ABUTMENT 1 ELEVATION

1/8" = 1'-0"

NOTE:
The Contractor shall verify all controlling field dimensions before ordering or fabricating any material.

NOTES:

1. Indicates vertical pile.
2. Indicates 1:3 battered pile.
3. Indicates existing pile.
4. Indicates existing battered pile.
5. Indicates existing structure to be removed.
6. Indicates expanded polystyrene.
7. See 'TYPICAL WINGWALL ELEVATION' on 'ABUTMENT DETAILS No. 1' sheet for left wingwall. See 'ABUTMENT 1 RIGHT WINGWALL ELEVATION' on 'ABUTMENT DETAILS No. 4' sheet for right wingwall.
8. For 'SECTION A-A' and 'DETAIL 1', see 'ABUTMENT DETAILS No. 1' sheet.
9. For 'SECTION C-C', 'SECTION D-D', 'SECTION E-E', 'SECTION F-F', and 'EXTERIOR SHEAR KEY DETAIL', see 'ABUTMENT DETAILS No. 2' sheet.
10. For 'SECTION G-G', 'INTERIOR SHEAR KEY DETAIL', and 'BEARING PAD DETAIL', see 'ABUTMENT DETAILS No. 3' sheet.
11. For 'ABUTMENT CORNER REINFORCING', see 'ABUTMENT DETAILS No. 4' sheet.
12. For 'GAS CASING END DIAPHRAGM OPENING DETAIL', see 'UTILITY SUPPORT DETAILS' sheet.
13. For location of utility openings in backwall and end diaphragm, see 'TYPICAL SECTION' sheet.

DESIGN OVERSIGHT Yiwei Hu 12/29/11 SIGN OFF DATE	DESIGN	BY G. KENNING	CHECKED T. SWENSON
	DETAILS	BY Y. LIN	CHECKED T. SWENSON
	QUANTITIES	BY J. GERLACH	CHECKED J. YIP

PREPARED FOR THE STATE OF CALIFORNIA DEPARTMENT OF TRANSPORTATION

M. HARMS
PROJECT ENGINEER

BRIDGE NO. 33-0736
POST MILES 23.64

ROUTE 112/880 SEPARATION (REPLACE)
ABUTMENT 1 PLAN & ELEVATION

DESIGN DETAIL SHEET (ENGLISH) (REV. 7-16-10)

ORIGINAL SCALE IN INCHES FOR REDUCED PLANS 0 1 2 3

UNIT:
PROJECT NUMBER & PHASE:

DISREGARD PRINTS BEARING EARLIER REVISION DATES

REVISION DATES (PRELIMINARY STAGE ONLY) 11/16/09 12/22/09 5/24/10 6/17/10 10/27/10 12/1/11

SHEET 5 OF 31

FILE => 33-0736-h-a05-lo1.dgn

CONTRACT NO.:

PROJECT ID:

USERNAME => s124496 DATE PLOTTED => 19-APR-2012 TIME PLOTTED => 14:59

2008276 (2008276A55)

DIST	COUNTY	ROUTE	POST MILES TOTAL PROJECT	SHEET No	TOTAL SHEETS
04	Ala	880	22.6/24.0	735	760

Mahvash Harms 12/1/11
REGISTERED STRUCTURAL ENGINEER DATE

4-16-12
PLANS APPROVAL DATE

REGISTERED PROFESSIONAL ENGINEER MAHVASH M. HARMS No. 2639 Exp. 12/31/12 STRUCTURAL STATE OF CALIFORNIA

The State of California or its officers or agents shall not be responsible for the accuracy or completeness of scanned copies of this plan sheet.

ALAMEDA COUNTY TRANSPORTATION COMMISSION
1333 BROADWAY, SUITE 220
OAKLAND, CA 94612

BIGGS CARDOSA ASSOCIATES INC.
865 THE ALAMEDA
SAN JOSE, CALIFORNIA 95126

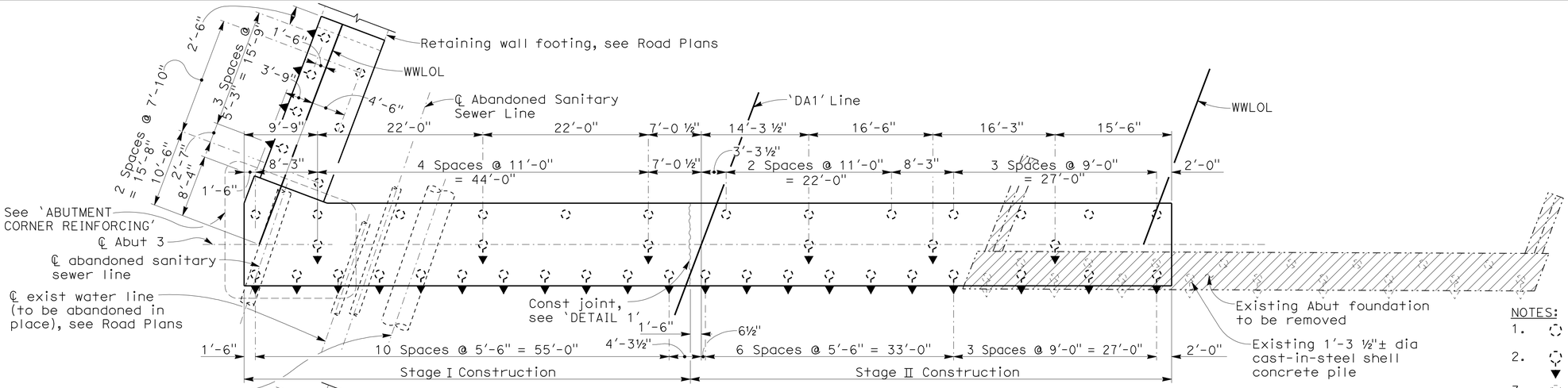

ABUTMENT 3 FOOTING PLAN

1/8" = 1'-0"

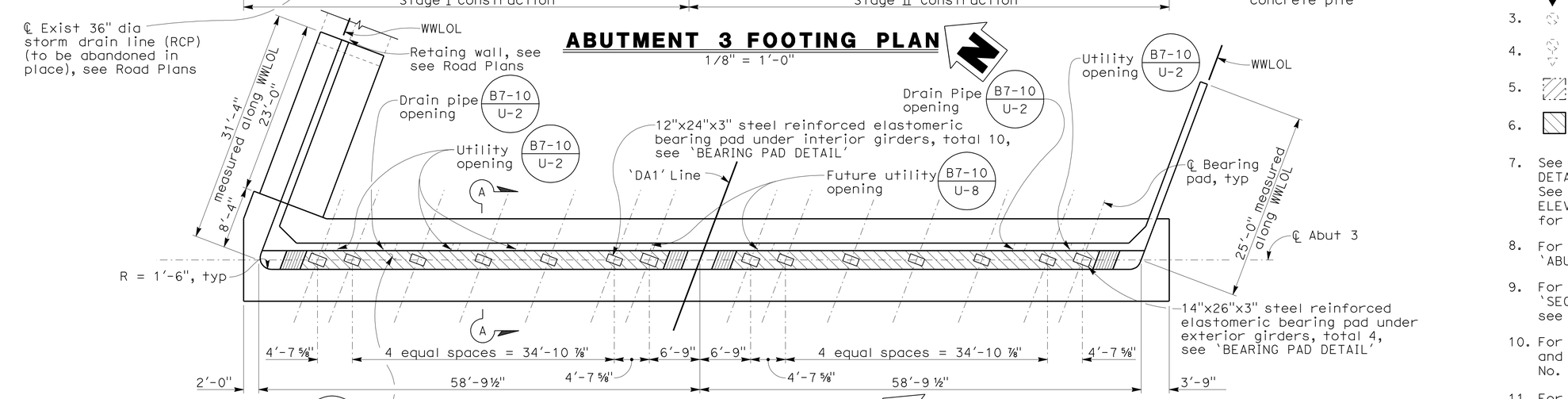

ABUTMENT 3 PLAN

1/8" = 1'-0"

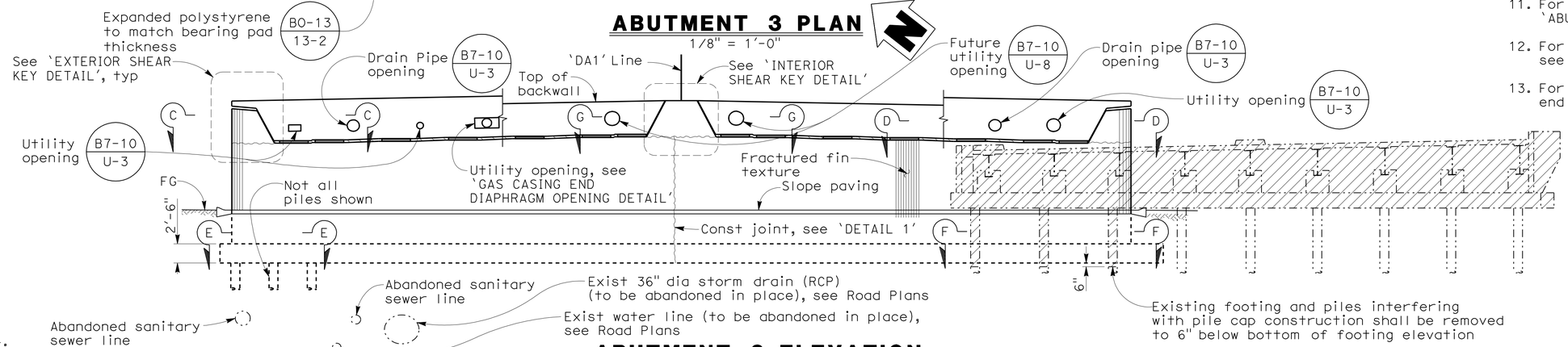

ABUTMENT 3 ELEVATION

1/8" = 1'-0"

NOTES:

1. Indicates vertical pile.
2. Indicates 1:3 battered pile.
3. Indicates existing pile.
4. Indicates existing battered pile.
5. Indicates existing structure to be removed.
6. Indicates expanded polystyrene.
7. See 'TYPICAL WINGWALL ELEVATION' on 'ABUTMENT DETAILS No. 1' sheet for right wingwall. See 'ABUTMENT 3 LEFT WINGWALL MIRRORED ELEVATION' on 'ABUTMENT DETAILS No. 4' sheet for left wingwall.
8. For 'SECTION A-A' and 'DETAIL 1', see 'ABUTMENT DETAILS No. 1' sheet
9. For 'SECTION C-C', 'SECTION D-D', 'SECTION E-E', 'SECTION F-F', and 'EXTERIOR SHEAR KEY DETAIL', see 'ABUTMENT DETAILS No. 2' sheet.
10. For 'SECTION G-G', 'INTERIOR SHEAR KEY DETAIL', and 'BEARING PAD DETAIL', see 'ABUTMENT DETAILS No. 3' sheet.
11. For 'ABUTMENT CORNER REINFORCING', see 'ABUTMENT DETAILS No. 4' sheet.
12. For 'GAS CASING END DIAPHRAGM OPENING DETAIL', see 'UTILITY SUPPORT DETAILS' sheet.
13. For location of utility openings in backwall and end diaphragm, see 'TYPICAL SECTION' sheet.

NOTE:
The Contractor shall verify all controlling field dimensions before ordering or fabricating any material.

DESIGN OVERSIGHT Yiwei Hu
12/29/11
SIGN OFF DATE

	BY	CHECKED
DESIGN	G. KENNING	T. SWENSON
DETAILS	Y. LIN	T. SWENSON
QUANTITIES	J. GERLACH	J. YIP

PREPARED FOR THE STATE OF CALIFORNIA DEPARTMENT OF TRANSPORTATION

M. HARMS
PROJECT ENGINEER

BRIDGE NO. 33-0736
POST MILES 23.64

ROUTE 112/880 SEPARATION (REPLACE)
ABUTMENT 3 PLAN & ELEVATION

DESIGN DETAIL SHEET (ENGLISH) (REV. 7-16-10)

ORIGINAL SCALE IN INCHES FOR REDUCED PLANS 0 1 2 3

UNIT:
PROJECT NUMBER & PHASE:

DISREGARD PRINTS BEARING EARLIER REVISION DATES

REVISION DATES (PRELIMINARY STAGE ONLY) 11/18/09 12/22/09 5/24/10 6/1/11 10/27/11 12/1/11

SHEET 6 OF 31

FILE => 33-0736-h-a06-lo2.dgn

CONTRACT NO.: PROJECT ID:

USERNAME => s124496 DATE PLOTTED => 19-APR-2012 TIME PLOTTED => 14:59

2008276 (2008276A56)

DIST	COUNTY	ROUTE	POST MILES TOTAL PROJECT	SHEET No	TOTAL SHEETS
04	Ala	880	22.6/24.0	736	760

Mahvash Harms 12/1/11
REGISTERED STRUCTURAL ENGINEER DATE

4-16-12
PLANS APPROVAL DATE

REGISTERED PROFESSIONAL ENGINEER MAHVASH M. HARMS No. 2639 Exp. 12/31/12 STRUCTURAL STATE OF CALIFORNIA

The State of California or its officers or agents shall not be responsible for the accuracy or completeness of scanned copies of this plan sheet.

ALAMEDA COUNTY TRANSPORTATION COMMISSION
1333 BROADWAY, SUITE 220
OAKLAND, CA 94612

BIGGS CARDOSA ASSOCIATES INC.
865 THE ALAMEDA
SAN JOSE, CALIFORNIA 95126

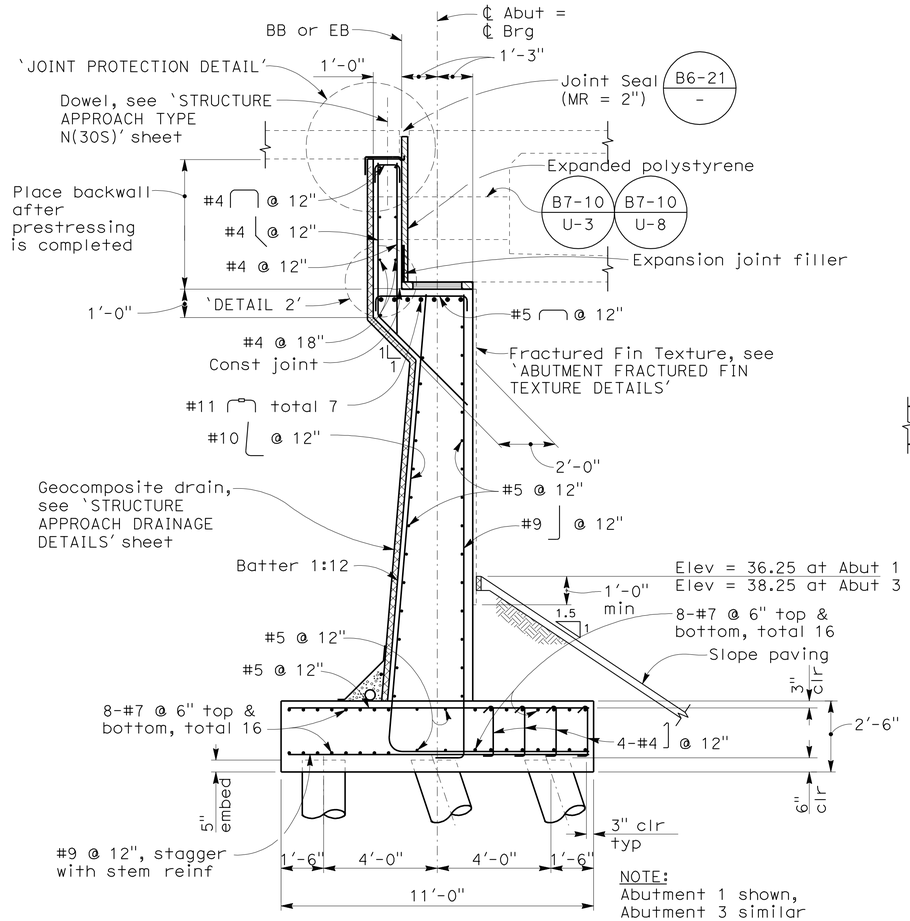

NOTE:
Abutment 1 shown, Abutment 3 similar

SECTION A-A
3/8" = 1'-0"

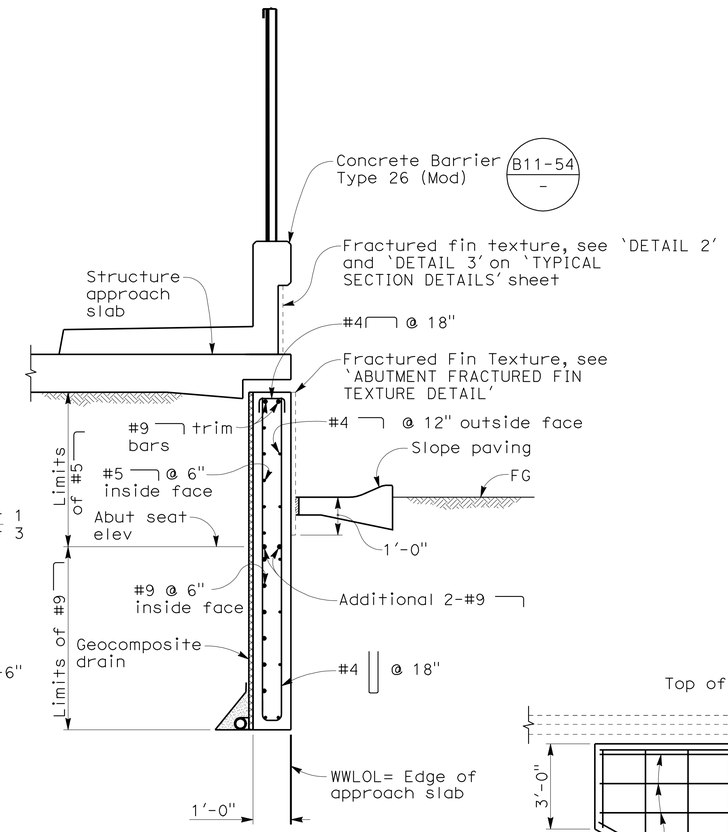

SECTION B-B
1/2" = 1'-0"

NOTES:
1. For 'DETAIL 2', 'JOINT PROTECTION DETAIL' and 'ABUTMENT FRACTURED FIN TEXTURE DETAIL', see 'ABUTMENT DETAILS No. 3' sheet.
2. For 'ABUTMENT 1 PLAN' and 'ABUTMENT 1 ELEVATION', see 'ABUTMENT 1 PLAN & ELEVATION' sheet.
3. For 'ABUTMENT 3 PLAN' and 'ABUTMENT 3 ELEVATION', see 'ABUTMENT 3 PLAN & ELEVATION' sheet.

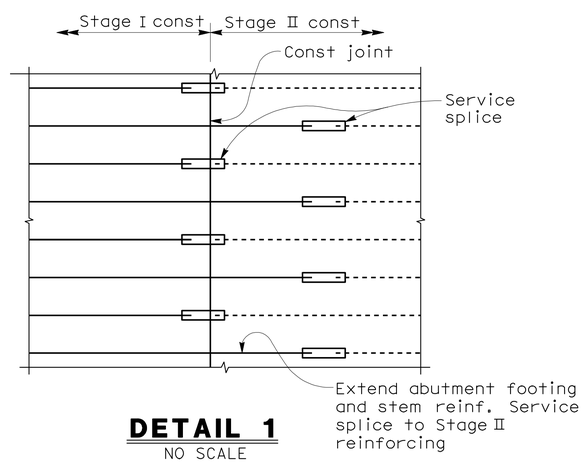

DETAIL 1
NO SCALE

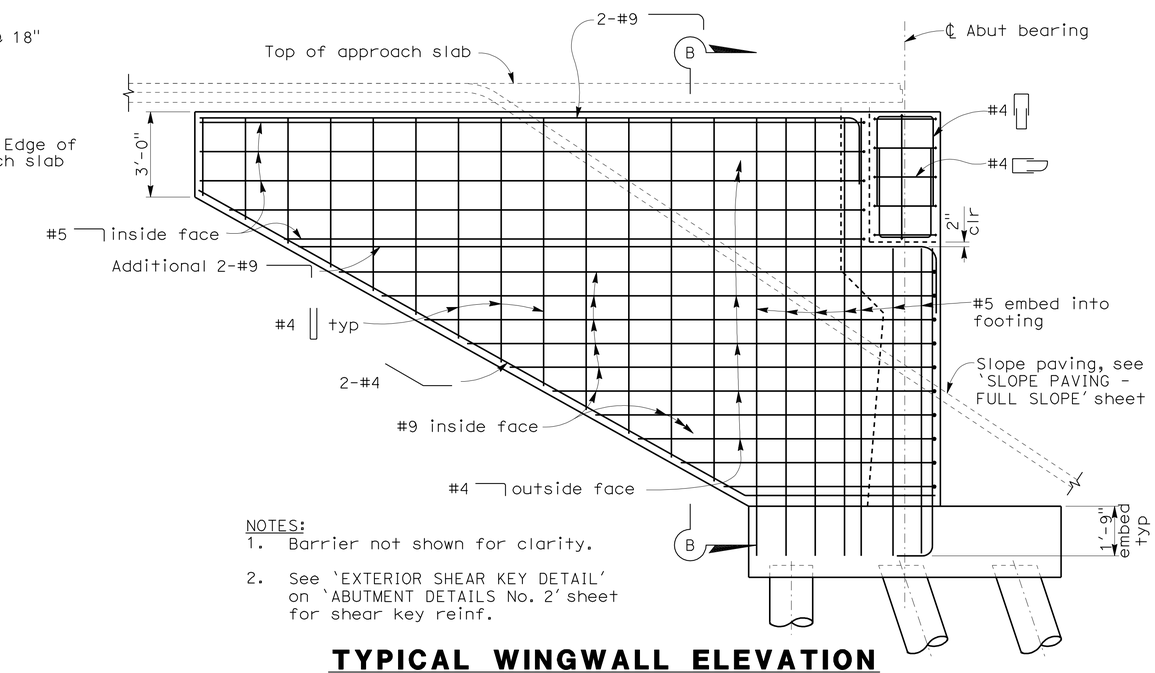

NOTES:
1. Barrier not shown for clarity.
2. See 'EXTERIOR SHEAR KEY DETAIL' on 'ABUTMENT DETAILS No. 2' sheet for shear key reinf.

TYPICAL WINGWALL ELEVATION
3/8" = 1'-0"

DESIGN OVERSIGHT Yiwei Hu
12/29/11
SIGN OFF DATE

	BY	CHECKED
DESIGN	G. KENNING	T. SWENSON
DETAILS	Y. LIN	T. SWENSON
QUANTITIES	J. GERLACH	J. YIP

PREPARED FOR THE STATE OF CALIFORNIA DEPARTMENT OF TRANSPORTATION

M. HARMS
PROJECT ENGINEER

BRIDGE NO. 33-0736
POST MILES 23.64

ROUTE 112/880 SEPARATION (REPLACE)
ABUTMENT DETAILS No. 1

DESIGN DETAIL SHEET (ENGLISH) (REV. 7-16-10)

ORIGINAL SCALE IN INCHES FOR REDUCED PLANS 0 1 2 3

UNIT:
PROJECT NUMBER & PHASE:

DISREGARD PRINTS BEARING EARLIER REVISION DATES

REVISION DATES (PRELIMINARY STAGE ONLY) 11/16/09 5/24/10 6/1/11 10/27/11 12/1/11

SHEET 7 OF 31

FILE => 33-0736-h-a07d1.dgn

CONTRACT NO.: PROJECT ID:

USERNAME => s124496 DATE PLOTTED => 19-APR-2012 TIME PLOTTED => 14:59

2008276 (2008276A57)

DIST	COUNTY	ROUTE	POST MILES TOTAL PROJECT	SHEET No	TOTAL SHEETS
04	Ala	880	22.6/24.0	737	760

Mahvash Harms 12/1/11
REGISTERED STRUCTURAL ENGINEER DATE

4-16-12
PLANS APPROVAL DATE

REGISTERED PROFESSIONAL ENGINEER MAHVASH M. HARMS No. 2639 Exp. 12/31/12 STRUCTURAL STATE OF CALIFORNIA

The State of California or its officers or agents shall not be responsible for the accuracy or completeness of scanned copies of this plan sheet.

ALAMEDA COUNTY TRANSPORTATION COMMISSION
1333 BROADWAY, SUITE 220
OAKLAND, CA 94612

BIGGS CARDOSA ASSOCIATES INC.
865 THE ALAMEDA
SAN JOSE, CALIFORNIA 95126

NOTE:
For 'ABUTMENT FRACTURED FIN TEXTURE DETAIL', see 'ABUTMENT DETAILS No. 3' sheet.

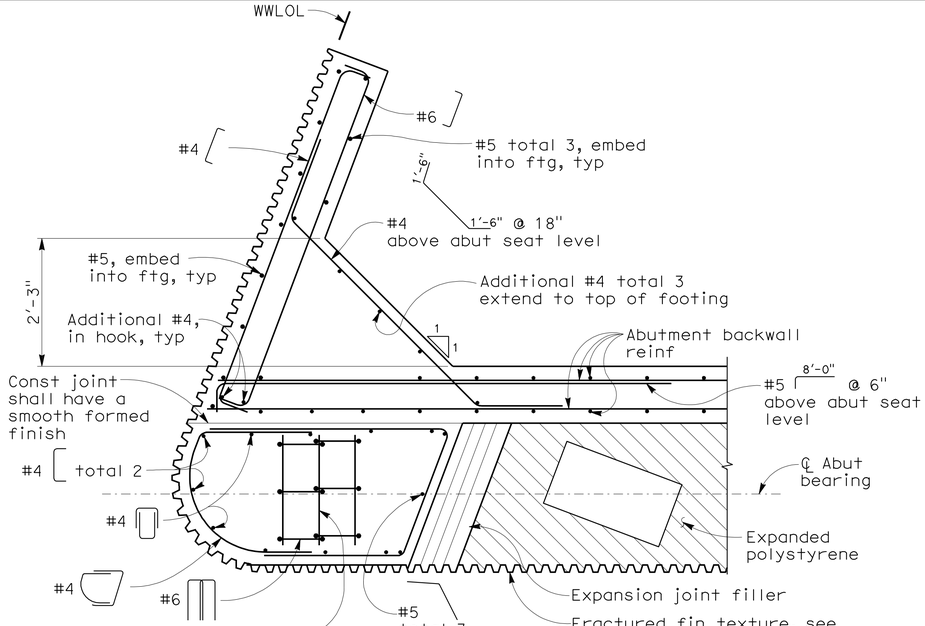

SECTION C-C
3/4" = 1'-0"

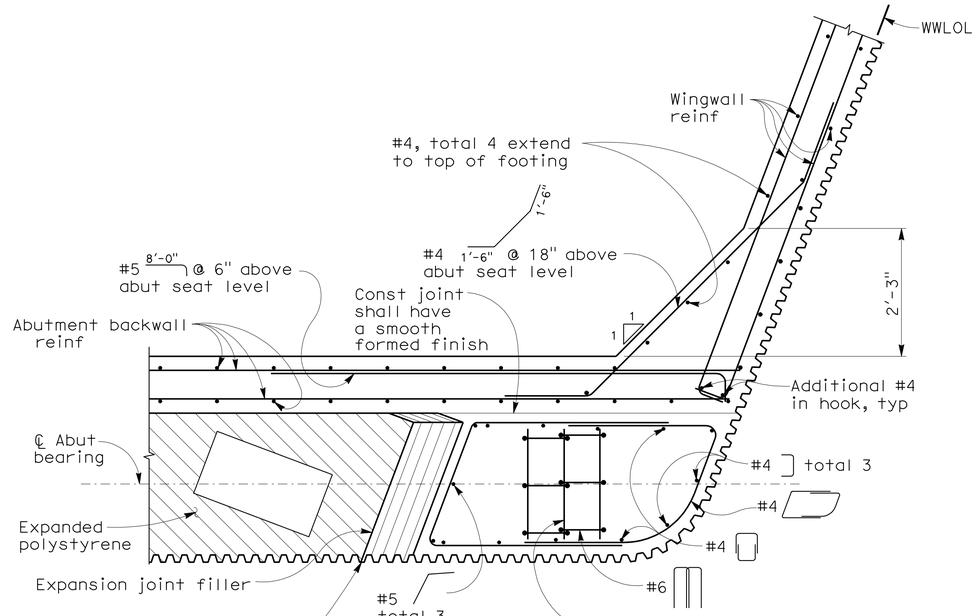

SECTION D-D
3/4" = 1'-0"

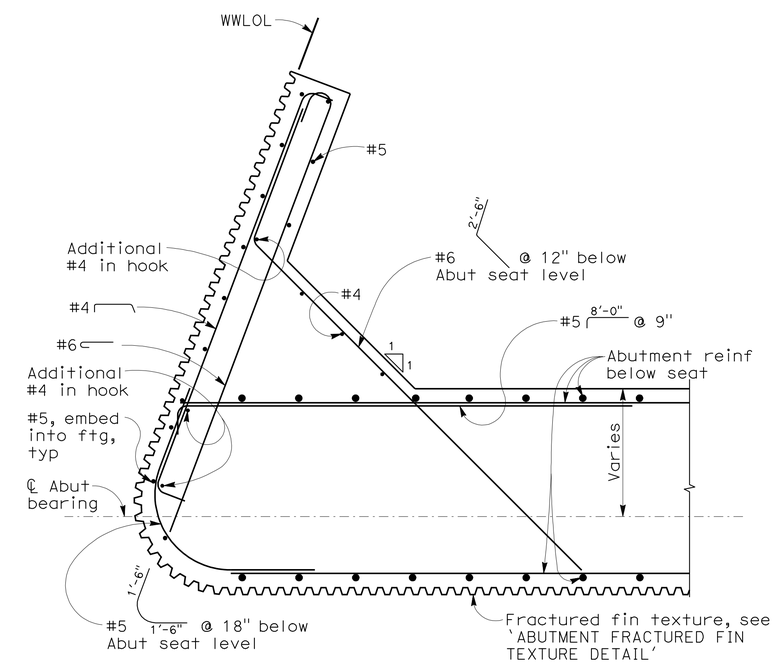

SECTION E-E
3/4" = 1'-0"

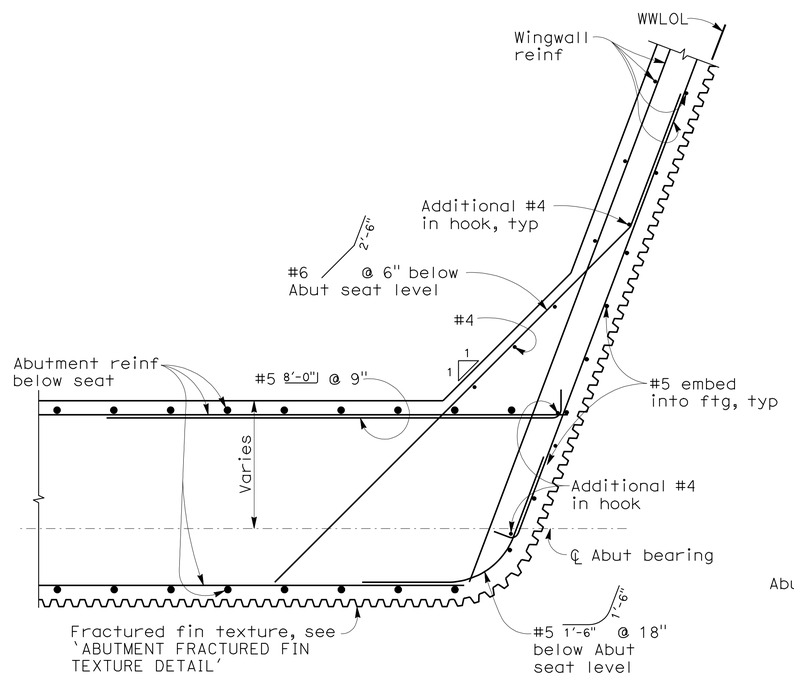

SECTION F-F
3/4" = 1'-0"

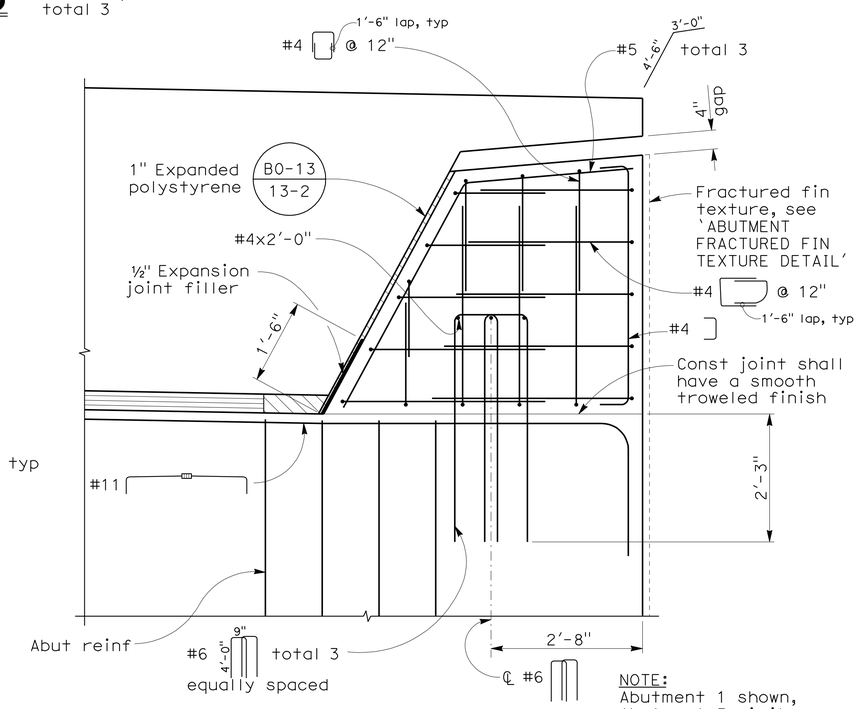

NOTE:
Abutment 1 shown, Abutment 3 similar

EXTERIOR SHEAR KEY DETAIL
3/4" = 1'-0"

DESIGN OVERSIGHT Yiwei Hu
12/29/11
SIGN OFF DATE

	BY	CHECKED
DESIGN	G. KENNING	T. SWENSON
DETAILS	Y. LIN	T. SWENSON
QUANTITIES	J. GERLACH	J. YIP

PREPARED FOR THE STATE OF CALIFORNIA DEPARTMENT OF TRANSPORTATION

M. HARMS
PROJECT ENGINEER

BRIDGE NO. 33-0736
POST MILES 23.64

ROUTE 112/880 SEPARATION (REPLACE)
ABUTMENT DETAILS No. 2

DESIGN DETAIL SHEET (ENGLISH) (REV. 7-16-10)

ORIGINAL SCALE IN INCHES FOR REDUCED PLANS 0 1 2 3

UNIT:
PROJECT NUMBER & PHASE:

DISREGARD PRINTS BEARING EARLIER REVISION DATES

REVISION DATES (PRELIMINARY STAGE ONLY) 11/16/09 5/24/10 6/1/11 10/27/11 12/1/11

SHEET 8 OF 31

FILE => 33-0736-h-a08d2.dgn

CONTRACT NO.:

PROJECT ID:

USERNAME => s124496 DATE PLOTTED => 19-APR-2012 TIME PLOTTED => 14:59 20082276 (20082276A58)

DIST	COUNTY	ROUTE	POST MILES TOTAL PROJECT	SHEET No	TOTAL SHEETS
04	Ala	880	22.6/24.0	738	760

REGISTERED STRUCTURAL ENGINEER 12/1/11 DATE

4-16-12
PLANS APPROVAL DATE

The State of California or its officers or agents shall not be responsible for the accuracy or completeness of scanned copies of this plan sheet.

REGISTERED PROFESSIONAL ENGINEER MAHVASH M. HARMS No. 2639 Exp. 12/31/12 STRUCTURAL STATE OF CALIFORNIA

ALAMEDA COUNTY TRANSPORTATION COMMISSION
1333 BROADWAY, SUITE 220
OAKLAND, CA 94612

BIGGS CARDOSA ASSOCIATES INC.
865 THE ALAMEDA
SAN JOSE, CALIFORNIA 95126

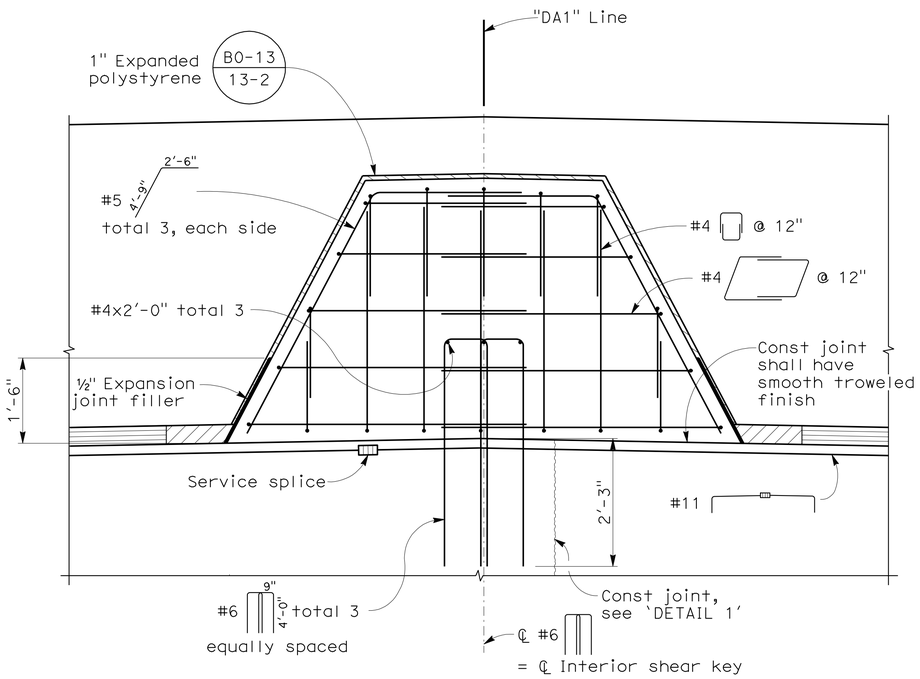

INTERIOR SHEAR KEY DETAIL
3/4" = 1'-0"

NOTES:
1. Abutment 1 shown, Abutment 3 similar
2. Interior shear key shall be constructed after Stage II abutment construction completed.

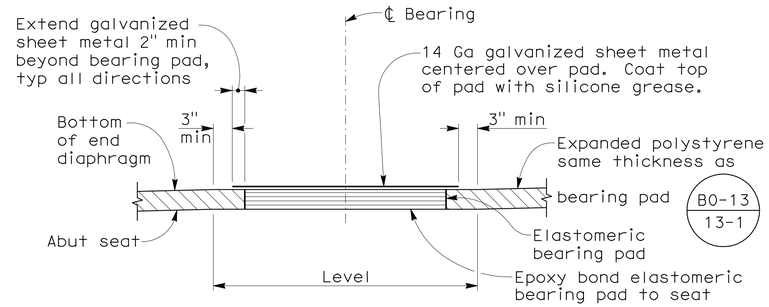

ELEVATION

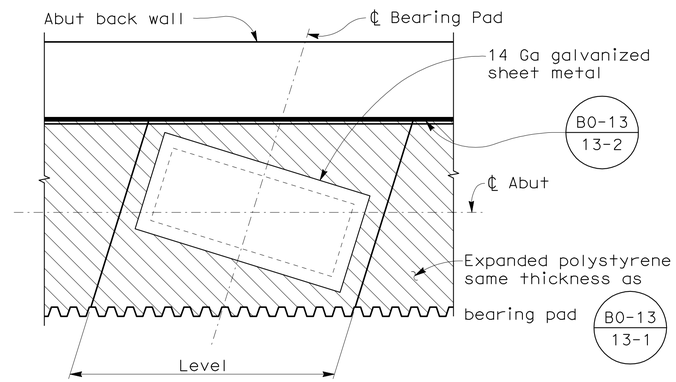

PLAN

BEARING PAD DETAIL
NO SCALE

NOTE:
For 'DETAIL 1', see 'ABUTMENT DETAILS No. 1' sheet.

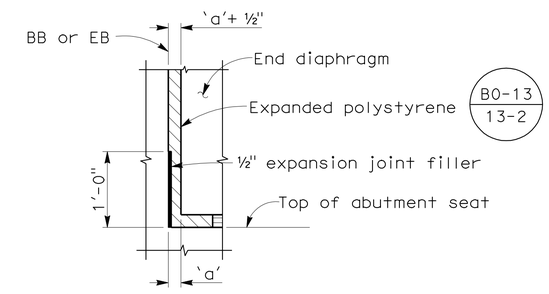

Note:
See B6-21 / - for dimension 'a'

DETAIL 2
NO SCALE

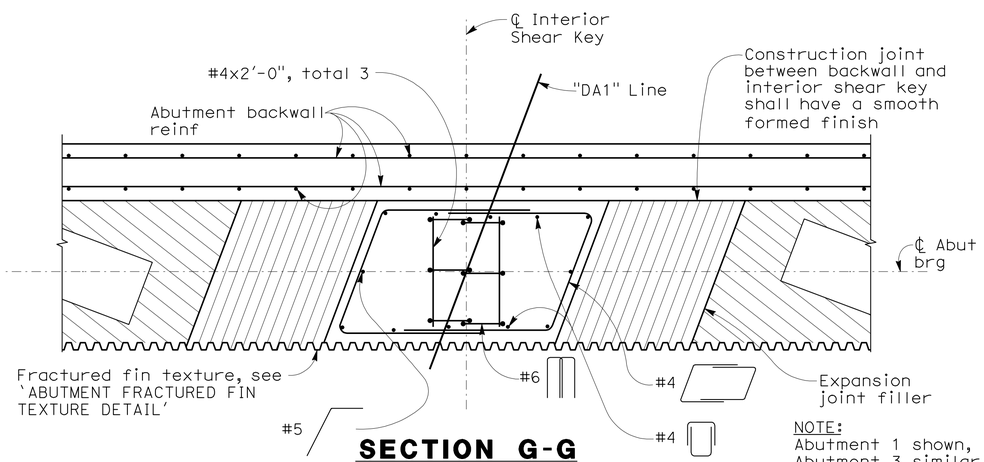

SECTION G-G
3/4" = 1'-0"

NOTE:
Abutment 1 shown, Abutment 3 similar

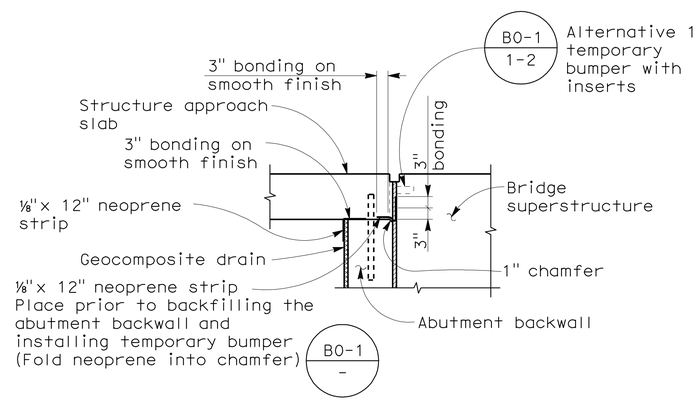

JOINT PROTECTION DETAIL
NO SCALE

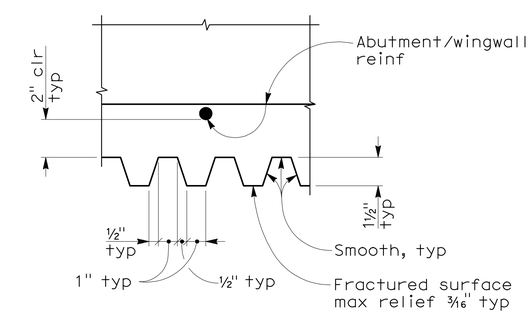

ABUTMENT FRACTURED FIN TEXTURE DETAIL
3" = 1'-0"

DESIGN OVERSIGHT Yiwei Hu	DESIGN	BY G. KENNING	CHECKED T. SWENSON	PREPARED FOR THE STATE OF CALIFORNIA DEPARTMENT OF TRANSPORTATION	M. HARMS PROJECT ENGINEER
12/29/11 SIGN OFF DATE	DETAILS	BY Y. LIN	CHECKED T. SWENSON		
	QUANTITIES	BY J. GERLACH	CHECKED J. YIP		

BRIDGE NO. 33-0736
POST MILES 23.64

ROUTE 112/880 SEPARATION (REPLACE)
ABUTMENT DETAILS No. 3

DESIGN DETAIL SHEET (ENGLISH) (REV. 7-16-10)

ORIGINAL SCALE IN INCHES FOR REDUCED PLANS 0 1 2 3

UNIT:
PROJECT NUMBER & PHASE:

DISREGARD PRINTS BEARING EARLIER REVISION DATES → REVISION DATES (PRELIMINARY STAGE ONLY) 11/16/09 5/24/10 6/1/11 10/27/11 12/1/11

SHEET 9 OF 31

FILE => 33-0736-h-a09d3.dgn

CONTRACT NO.: PROJECT ID:

USERNAME => s124496 DATE PLOTTED => 19-APR-2012 TIME PLOTTED => 14:59

2008276 (2008276A59)

DIST	COUNTY	ROUTE	POST MILES TOTAL PROJECT	SHEET No	TOTAL SHEETS
04	Ala	880	22.6/24.0	739	760

REGISTERED STRUCTURAL ENGINEER 12/1/11 DATE

4-16-12
PLANS APPROVAL DATE

REGISTERED PROFESSIONAL ENGINEER MAHVASH M. HARMS No. 2639 Exp. 12/31/12 STRUCTURAL STATE OF CALIFORNIA

The State of California or its officers or agents shall not be responsible for the accuracy or completeness of scanned copies of this plan sheet.

ALAMEDA COUNTY TRANSPORTATION COMMISSION
1333 BROADWAY, SUITE 220
OAKLAND, CA 94612

BIGGS CARDOSA ASSOCIATES INC.
865 THE ALAMEDA
SAN JOSE, CALIFORNIA 95126

NOTE:
For 'ABUTMENT FRACTURED FIN TEXTURE DETAIL', see 'ABUTMENT DETAILS No. 3' sheet.

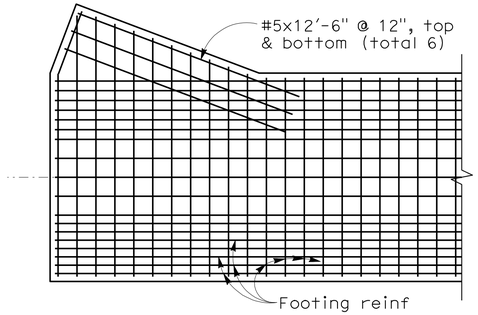

ABUTMENT CORNER REINFORCING
1/4" = 1'-0"

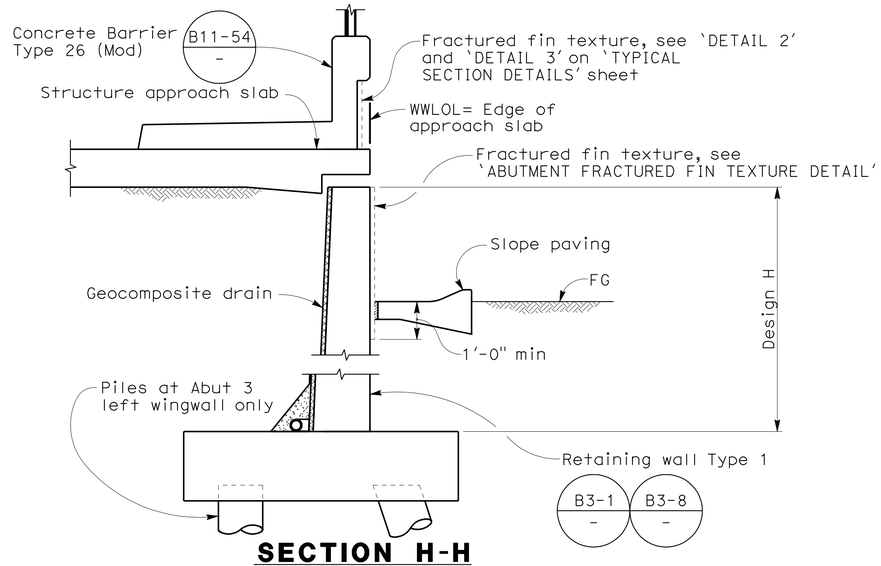

SECTION H-H
1/2" = 1'-0"

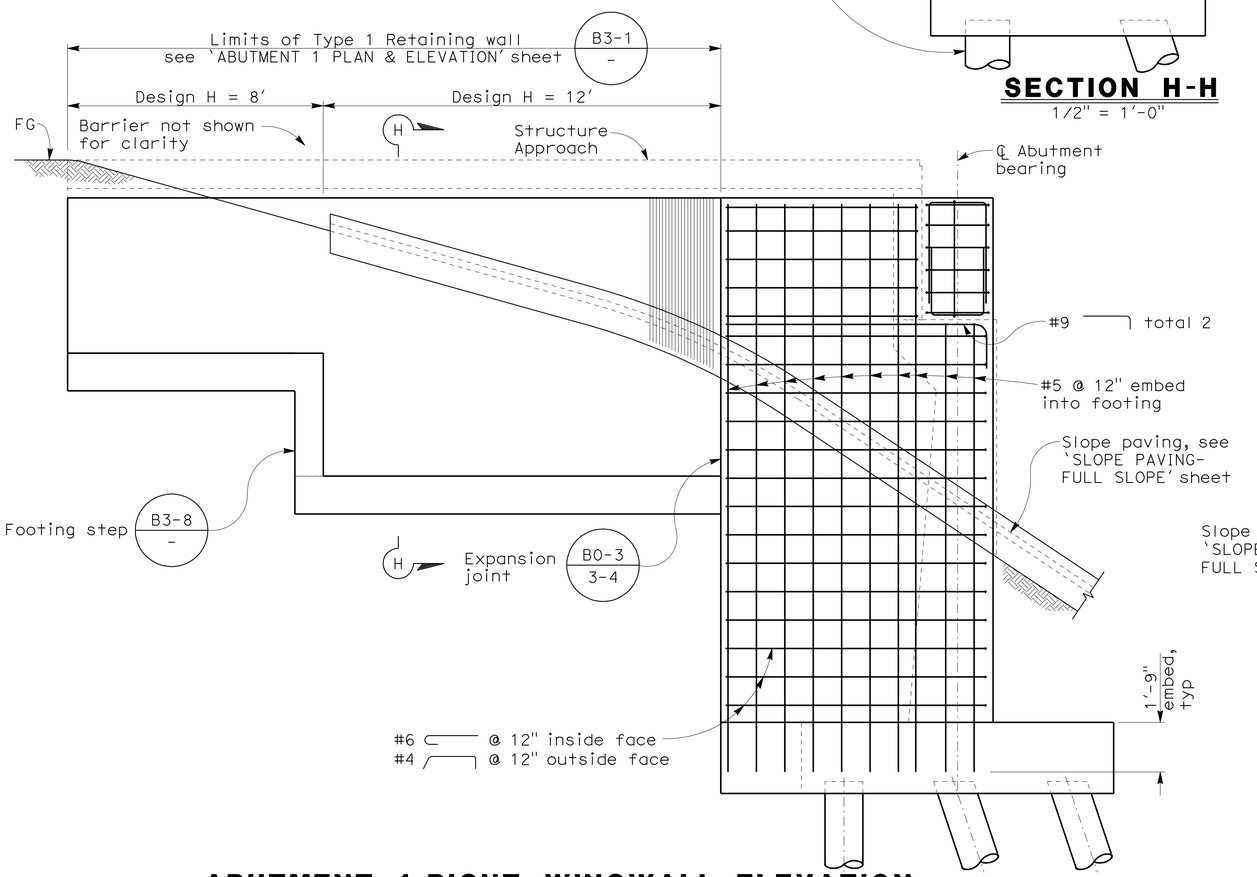

ABUTMENT 1 RIGHT WINGWALL ELEVATION
3/8" = 1'-0"

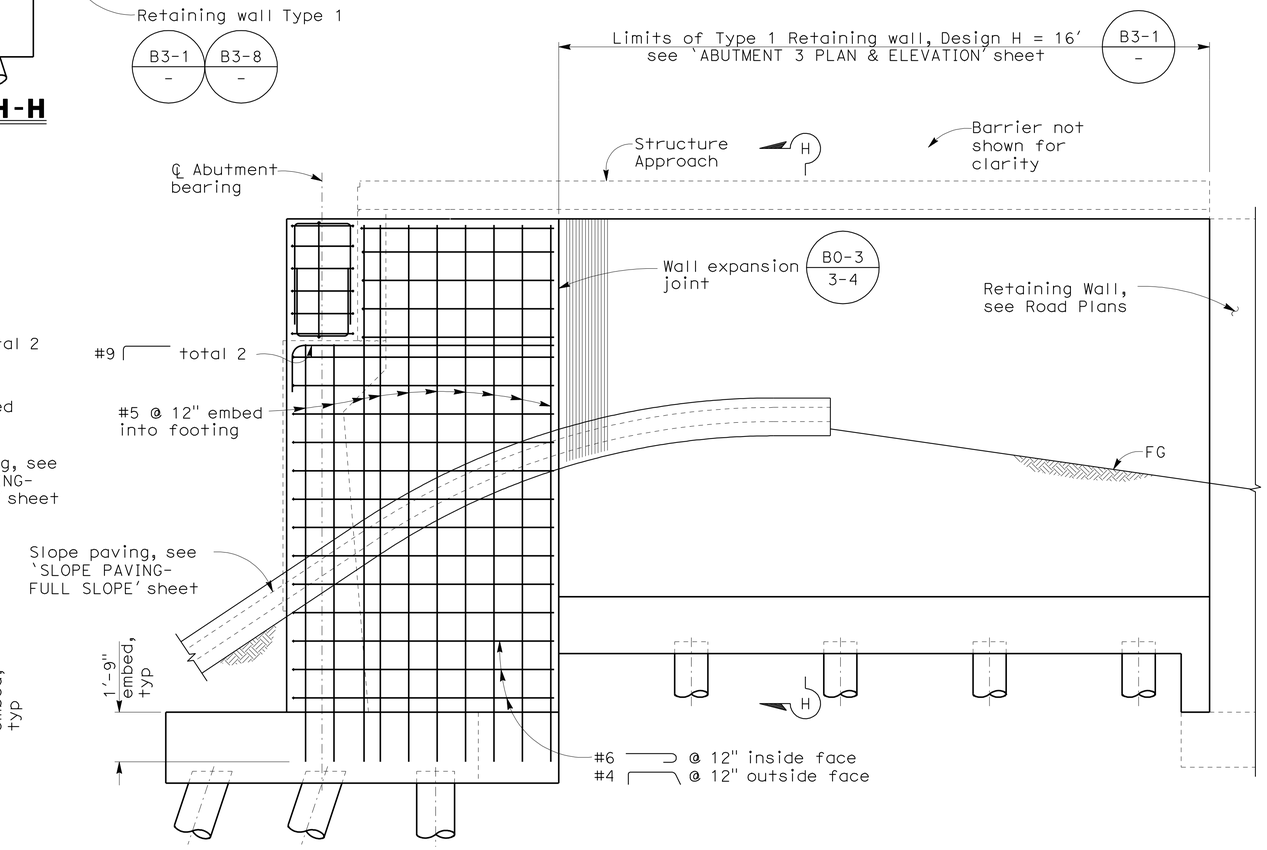

ABUTMENT 3 LEFT WINGWALL MIRRORED ELEVATION
3/8" = 1'-0"

DESIGN OVERSIGHT Yiwei Hu
12/29/11
SIGN OFF DATE

DESIGN DETAIL SHEET (ENGLISH) (REV. 7-16-10)

	BY	CHECKED
DESIGN	G. KENNING	T. SWENSON
DETAILS	Y. LIN	T. SWENSON
QUANTITIES	J. GERLACH	J. YIP

ORIGINAL SCALE IN INCHES FOR REDUCED PLANS 0 1 2 3

PREPARED FOR THE STATE OF CALIFORNIA DEPARTMENT OF TRANSPORTATION

M. HARMS
PROJECT ENGINEER

UNIT:
PROJECT NUMBER & PHASE:

FILE => 33-0736-h-a10d4.dgn

BRIDGE NO. 33-0736
POST MILES 23.64

ROUTE 112/880 SEPARATION (REPLACE)
ABUTMENT DETAILS No. 4

DISREGARD PRINTS BEARING EARLIER REVISION DATES

REVISION DATES (PRELIMINARY STAGE ONLY) 5/24/10 6/1/11 10/27/11 12/1/11

SHEET 10 OF 31

CONTRACT NO.: PROJECT ID:

USERNAME => s124196 DATE PLOTTED => 19-APR-2012 TIME PLOTTED => 14:59

2008276 (2008276A510)

DIST	COUNTY	ROUTE	POST MILES TOTAL PROJECT	SHEET No	TOTAL SHEETS
04	Ala	880	22.6/24.0	740	760

Mahvash Harms 12/1/11
REGISTERED STRUCTURAL ENGINEER DATE

4-16-12
PLANS APPROVAL DATE

REGISTERED PROFESSIONAL ENGINEER MAHVASH M. HARMS No. 2639 Exp. 12/31/12 STRUCTURAL STATE OF CALIFORNIA

The State of California or its officers or agents shall not be responsible for the accuracy or completeness of scanned copies of this plan sheet.

ALAMEDA COUNTY TRANSPORTATION COMMISSION
1333 BROADWAY, SUITE 220
OAKLAND, CA 94612

BIGGS CARDOSA ASSOCIATES INC.
865 THE ALAMEDA
SAN JOSE, CALIFORNIA 95126

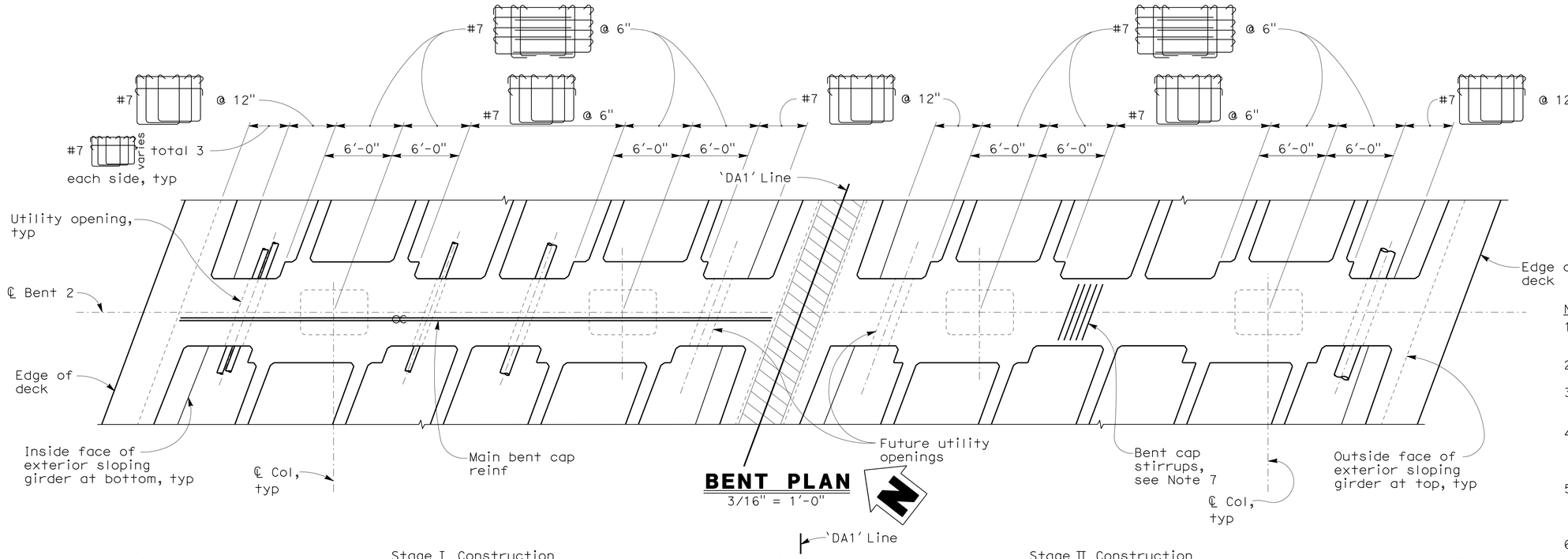

BENT PLAN
3/16" = 1'-0"

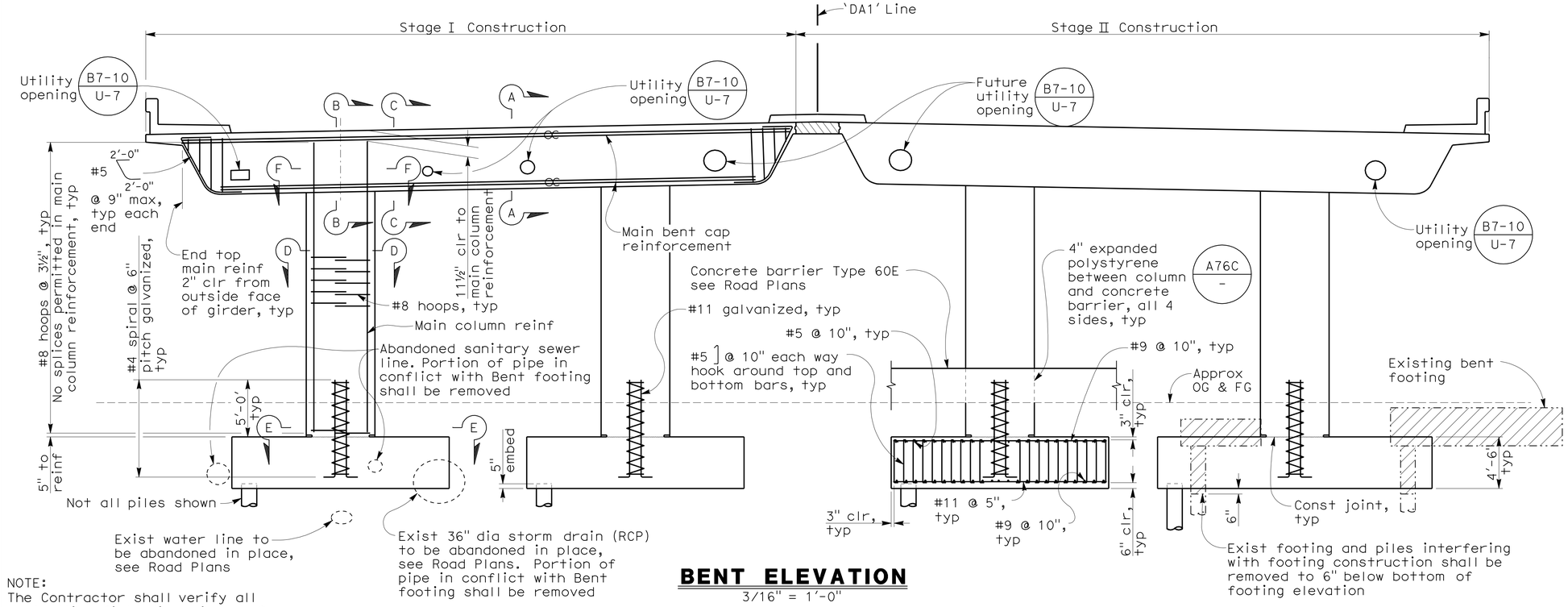

BENT ELEVATION
3/16" = 1'-0"

NOTES:

1. Indicates existing structure to be removed.
2. Indicates closure pour
3. No splices permitted in the main cap reinforcement.
4. For 'SECTION A-A', 'SECTION B-B' and 'SECTION C-C', see 'BENT DETAILS No. 3' sheet.
5. For 'SECTION D-D', 'SECTION E-E' and 'SECTION F-F', see 'BENT DETAILS No. 4' sheet.
6. Column hoops shall utilize ultimate butt splices.
7. Bent stirrups shall be placed parallel to ℄ Girder and spaced along ℄ Bent.
8. Ftg stirrups shall not be interrupted except at column pin cage reinf. Stirrups shall be placed 8" clr of column pin cage reinf ea way.
9. For 'BENT FOOTING PLAN', see 'BENT DETAILS No. 2' sheet.

NOTE:
The Contractor shall verify all controlling field dimensions before ordering or fabricating any material.

DESIGN OVERSIGHT Yiwei Hu
12/29/11
SIGN OFF DATE

	BY	CHECKED
DESIGN	G. KENNING	T. SWENSON
DETAILS	Y. LIN	T. SWENSON
QUANTITIES	J. GERLACH	J. YIP

PREPARED FOR THE STATE OF CALIFORNIA DEPARTMENT OF TRANSPORTATION

M. HARMS
PROJECT ENGINEER

BRIDGE NO. 33-0736
POST MILES 23.64

ROUTE 112/880 SEPARATION (REPLACE)
BENT DETAILS No. 1

DESIGN DETAIL SHEET (ENGLISH) (REV. 7-16-10)

ORIGINAL SCALE IN INCHES FOR REDUCED PLANS 0 1 2 3

UNIT:
PROJECT NUMBER & PHASE:

DISREGARD PRINTS BEARING EARLIER REVISION DATES

REVISION DATES (PRELIMINARY STAGE ONLY) 11/16/09 5/24/10 6/1/11 10/21/11 12/1/11

SHEET 11 OF 31

FILE => 33-0736-j-b11d1.dgn

CONTRACT NO.:

PROJECT ID:

USERNAME => s124496 DATE PLOTTED => 19-APR-2012 TIME PLOTTED => 14:59 (2008276A511)

DIST	COUNTY	ROUTE	POST MILES TOTAL PROJECT	SHEET No	TOTAL SHEETS
04	Ala	880	22.6/24.0	741	760

Mahvash Harms 12/1/11
REGISTERED STRUCTURAL ENGINEER DATE

4-16-12
PLANS APPROVAL DATE

REGISTERED PROFESSIONAL ENGINEER MAHVASH M. HARMS No. 2639 Exp. 12/31/12 STRUCTURAL STATE OF CALIFORNIA

The State of California or its officers or agents shall not be responsible for the accuracy or completeness of scanned copies of this plan sheet.

ALAMEDA COUNTY TRANSPORTATION COMMISSION
1333 BROADWAY, SUITE 220
OAKLAND, CA 94612

BIGGS CARDOSA ASSOCIATES INC.
865 THE ALAMEDA
SAN JOSE, CALIFORNIA 95126

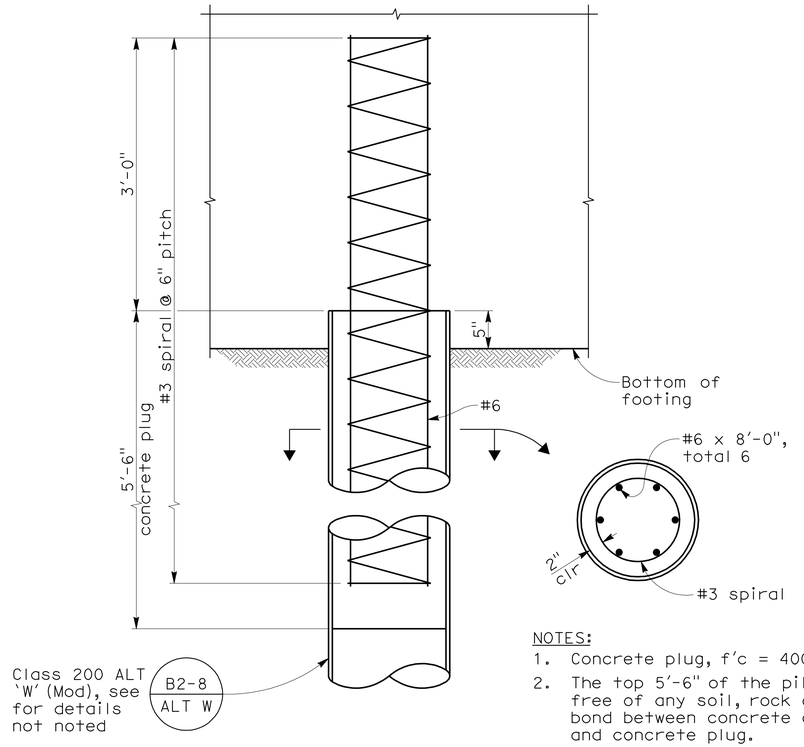

NOTES:
1. Concrete plug, f'c = 4000 psi.
2. The top 5'-6" of the pile shall be cleaned out, free of water, free of any soil, rock or other material deleterious to the bond between concrete and steel before placing reinforcement and concrete plug.

NOTES:
1. Indicates pile.
2. Indicates existing pile.
3. Indicates existing structure to be removed.
4. Ftg stirrups shall not be interrupted except at column reinf. Stirrups shall be placed 8" clr of column reinf.

BENT FOOTING PILE ANCHORAGE DETAIL
NO SCALE

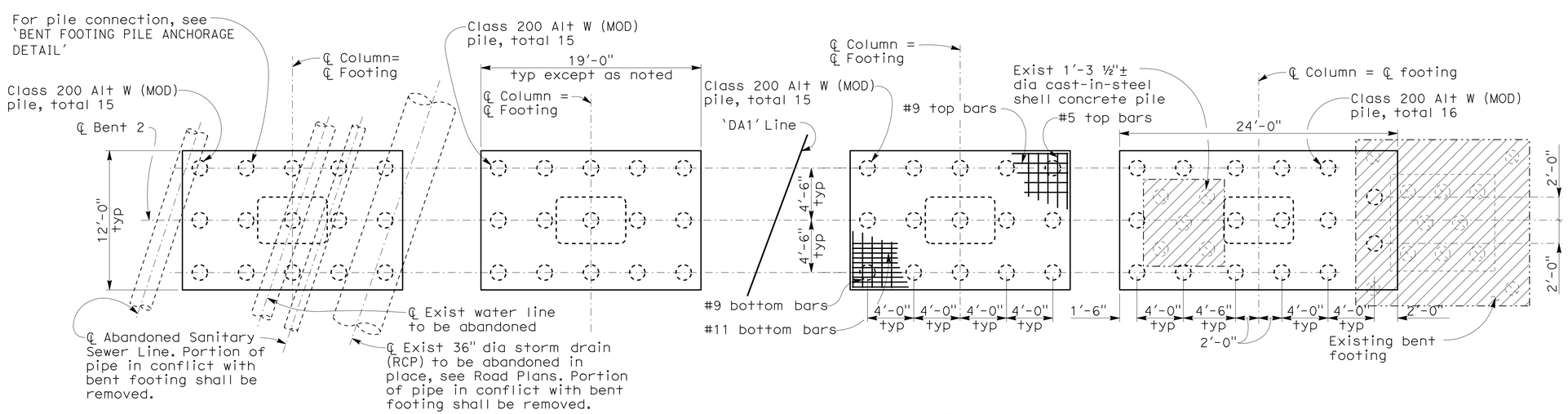

BENT FOOTING PLAN
3/16" = 1'-0"

NOTE:
The Contractor shall verify all controlling field dimensions before ordering or fabricating any material.

DESIGN OVERSIGHT Yiwei Hu
12/29/11
SIGN OFF DATE

	BY	CHECKED
DESIGN	G. KENNING	T. SWENSON
DETAILS	Y. LIN	T. SWENSON
QUANTITIES	J. GERLACH	J. YIP

PREPARED FOR THE STATE OF CALIFORNIA DEPARTMENT OF TRANSPORTATION

M. HARMS
PROJECT ENGINEER

BRIDGE NO. 33-0736
POST MILES 23.64

ROUTE 112/880 SEPARATION (REPLACE)
BENT DETAILS No. 2

DESIGN DETAIL SHEET (ENGLISH) (REV. 7-16-10)

ORIGINAL SCALE IN INCHES FOR REDUCED PLANS 0 1 2 3

UNIT:
PROJECT NUMBER & PHASE:

DISREGARD PRINTS BEARING EARLIER REVISION DATES

REVISION DATES (PRELIMINARY STAGE ONLY) 10/27/11 12/1/11

SHEET 12 OF 31

FILE => 33-0736-j-b12d2.dgn

CONTRACT NO.:

PROJECT ID:

USERNAME => s124496 DATE PLOTTED => 19-APR-2012 TIME PLOTTED => 15:00

2008276 (2008276AS12)

DIST	COUNTY	ROUTE	POST MILES TOTAL PROJECT	SHEET No	TOTAL SHEETS
04	Ala	880	22.6/24.0	742	760

Mahvash Harms 12/1/11
REGISTERED STRUCTURAL ENGINEER DATE

4-16-12
PLANS APPROVAL DATE

REGISTERED PROFESSIONAL ENGINEER MAHVASH M. HARMS No. 2639 Exp.12/31/12 STRUCTURAL STATE OF CALIFORNIA

The State of California or its officers or agents shall not be responsible for the accuracy or completeness of scanned copies of this plan sheet.

ALAMEDA COUNTY TRANSPORTATION COMMISSION
1333 BROADWAY, SUITE 220
OAKLAND, CA 94612

BIGGS CARDOSA ASSOCIATES INC.
865 THE ALAMEDA
SAN JOSE, CALIFORNIA 95126

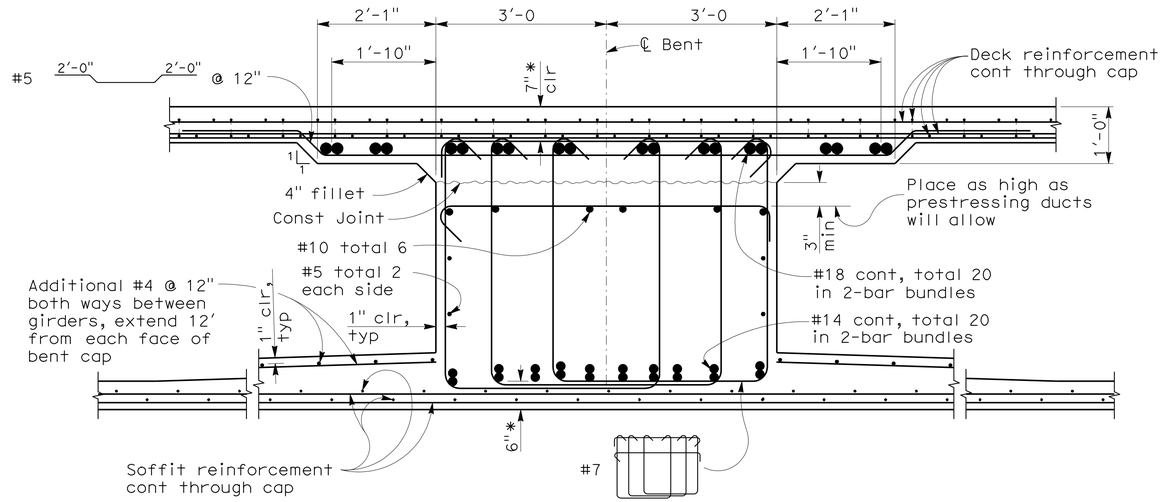

NOTE:
* Indicates clearance to main cap bars.

SECTION A-A
3/4" = 1'-0"

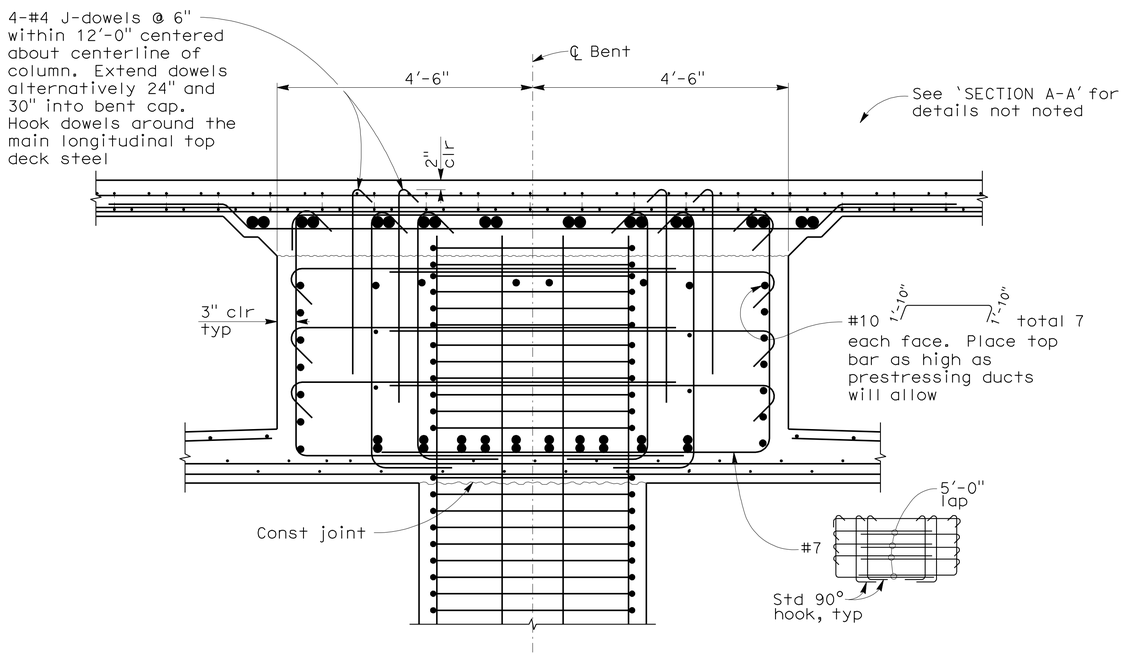

SECTION B-B
3/4" = 1'-0"

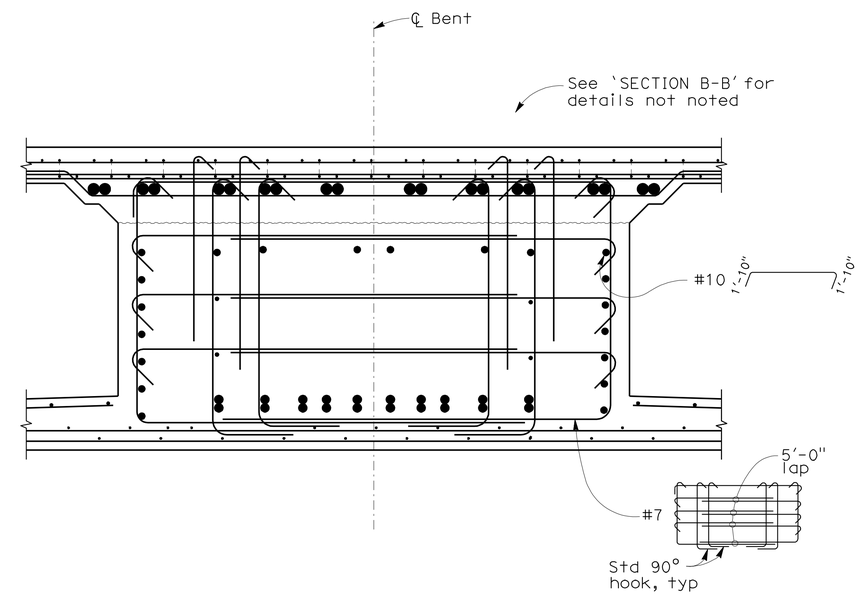

SECTION C-C
3/4" = 1'-0"

DESIGN OVERSIGHT Yiwei Hu 12/29/11 SIGN OFF DATE	DESIGN	BY G. KENNING	CHECKED T. SWENSON
	DETAILS	BY Y. LIN	CHECKED T. SWENSON
	QUANTITIES	BY J. GERLACH	CHECKED J. YIP

PREPARED FOR THE STATE OF CALIFORNIA DEPARTMENT OF TRANSPORTATION

M. HARMS
PROJECT ENGINEER

BRIDGE NO. 33-0736
POST MILES 23.64

ROUTE 112/880 SEPARATION (REPLACE)
BENT DETAILS No. 3

DESIGN DETAIL SHEET (ENGLISH) (REV. 7-16-10)

ORIGINAL SCALE IN INCHES FOR REDUCED PLANS 0 1 2 3

UNIT:
PROJECT NUMBER & PHASE:

DISREGARD PRINTS BEARING EARLIER REVISION DATES

REVISION DATES (PRELIMINARY STAGE ONLY) 11/16/09 5/24/10 6/1/11 10/21/11 12/1/11

SHEET 13 OF 31

FILE => 33-0736-j-b13d3.dgn

CONTRACT NO.:

PROJECT ID:

USERNAME => s124436 DATE PLOTTED => 19-APR-2012 TIME PLOTTED => 15:00

2008276 (2008276A513)

DIST	COUNTY	ROUTE	POST MILES TOTAL PROJECT	SHEET No	TOTAL SHEETS
04	Ala	880	22.6/24.0	743	760

Mahvash Harms 12/1/11
REGISTERED STRUCTURAL ENGINEER DATE

4-16-12
PLANS APPROVAL DATE

REGISTERED PROFESSIONAL ENGINEER MAHVASH M. HARMS No. 2639 Exp. 12/31/12 STRUCTURAL STATE OF CALIFORNIA

The State of California or its officers or agents shall not be responsible for the accuracy or completeness of scanned copies of this plan sheet.

ALAMEDA COUNTY TRANSPORTATION COMMISSION
1333 BROADWAY, SUITE 220
OAKLAND, CA 94612

BIGGS CARDOSA ASSOCIATES INC.
865 THE ALAMEDA
SAN JOSE, CALIFORNIA 95126

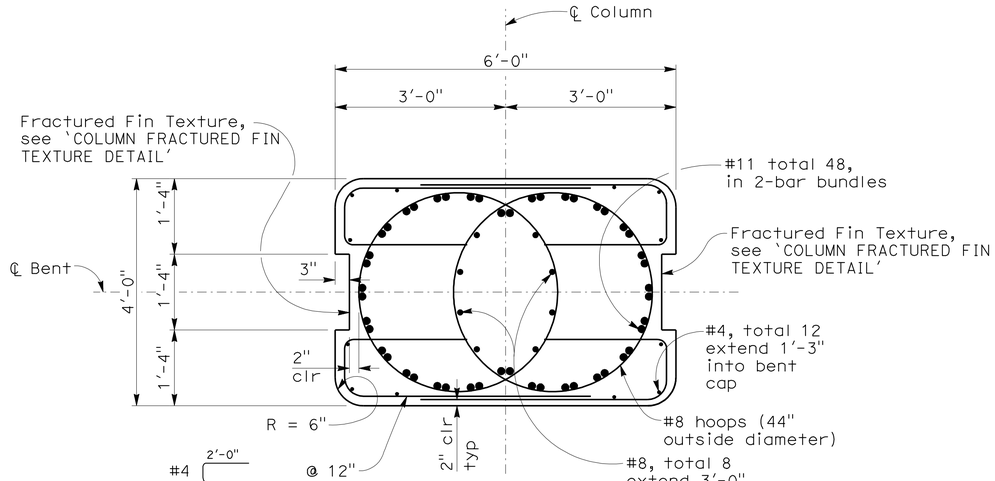

SECTION D-D
3/4" = 1'-0"

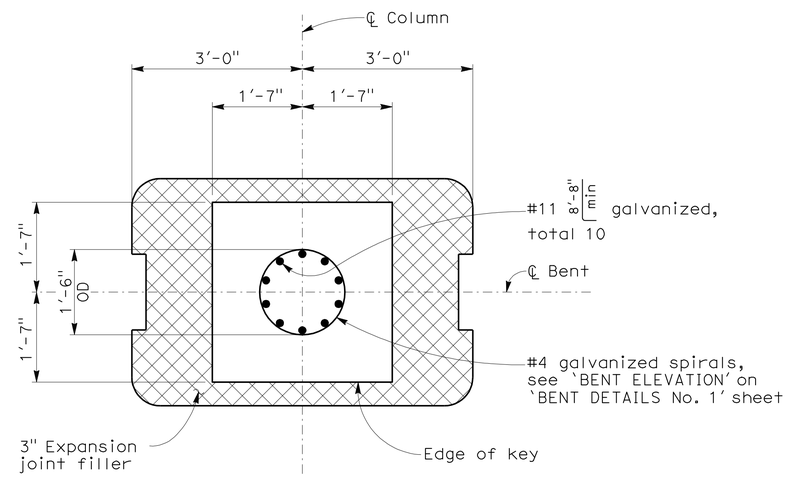

SECTION E-E
3/4" = 1'-0"

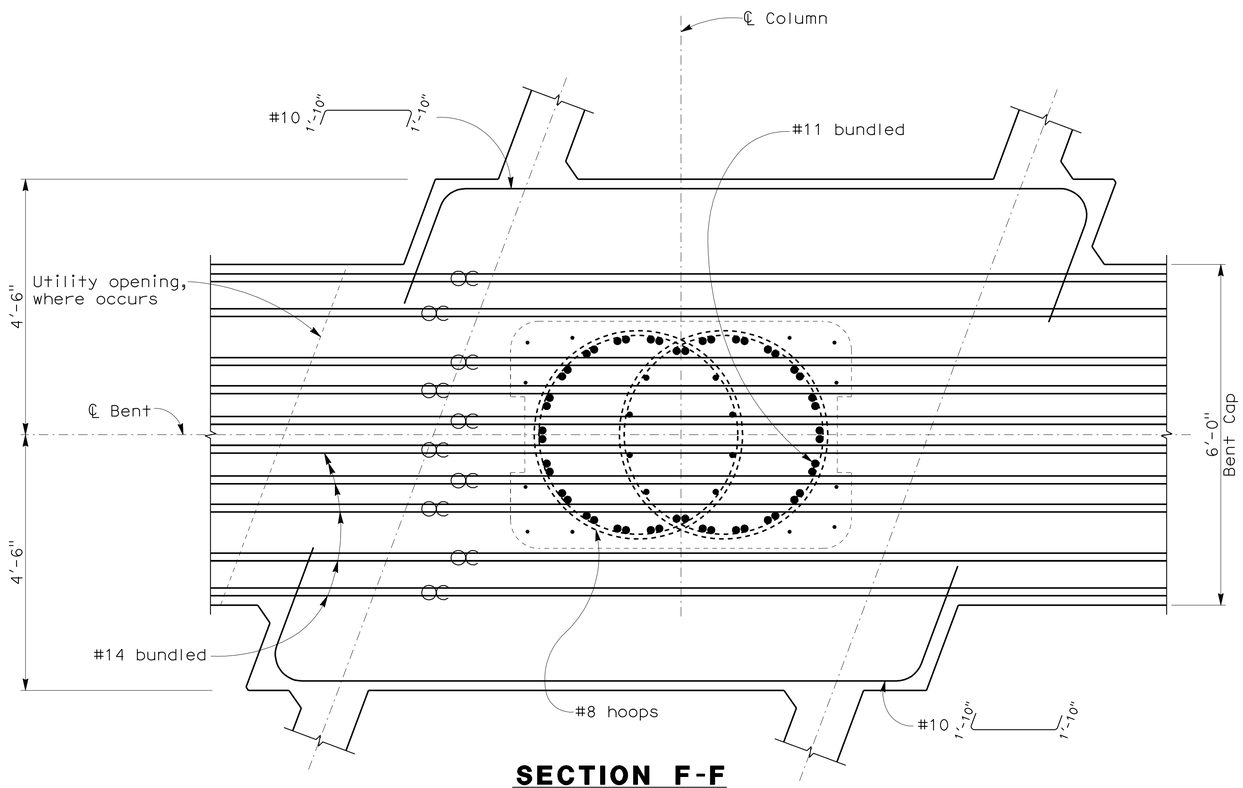

SECTION F-F
3/4" = 1'-0"

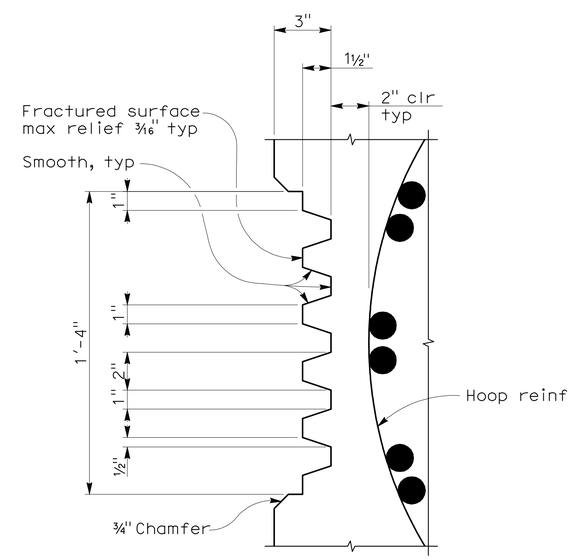

COLUMN FRACTURED FIN TEXTURE DETAIL
3" = 1'-0"

DESIGN OVERSIGHT Yiwei Hu 12/29/11 SIGN OFF DATE	DESIGN	BY G. KENNING	CHECKED T. SWENSON	PREPARED FOR THE STATE OF CALIFORNIA DEPARTMENT OF TRANSPORTATION	M. HARMS PROJECT ENGINEER
	DETAILS	BY Y. LIN	CHECKED T. SWENSON		
	QUANTITIES	BY J. GERLACH	CHECKED J. YIP		

BRIDGE NO. 33-0736
POST MILES 23.64

ROUTE 112/880 SEPARATION (REPLACE)
BENT DETAILS No. 4

DESIGN DETAIL SHEET (ENGLISH) (REV. 7-16-10)

ORIGINAL SCALE IN INCHES FOR REDUCED PLANS 0 1 2 3

UNIT:
PROJECT NUMBER & PHASE:

DISREGARD PRINTS BEARING EARLIER REVISION DATES

REVISION DATES (PRELIMINARY STAGE ONLY) 11/18/09 5/24/10 6/1/11 10/21/11 12/1/11

SHEET 14 OF 31

FILE => 33-0736-j-b14d4.dgn

CONTRACT NO.:

PROJECT ID:

USERNAME => s1224496 DATE PLOTTED => 19-APR-2012 TIME PLOTTED => 15:00

2008276 (2008276AS14)

DIST	COUNTY	ROUTE	POST MILES TOTAL PROJECT	SHEET No	TOTAL SHEETS
04	Ala	880	22.6/24.0	744	760

Mahvash Harms 12/1/11
REGISTERED STRUCTURAL ENGINEER DATE

4-16-12
PLANS APPROVAL DATE

The State of California or its officers or agents shall not be responsible for the accuracy or completeness of scanned copies of this plan sheet.

REGISTERED PROFESSIONAL ENGINEER MAHVASH M. HARMS No. 2639 Exp. 12/31/12 STRUCTURAL STATE OF CALIFORNIA

ALAMEDA COUNTY TRANSPORTATION COMMISSION
1333 BROADWAY, SUITE 220
OAKLAND, CA 94612

BIGGS CARDOSA ASSOCIATES INC.
865 THE ALAMEDA
SAN JOSE, CALIFORNIA 95126

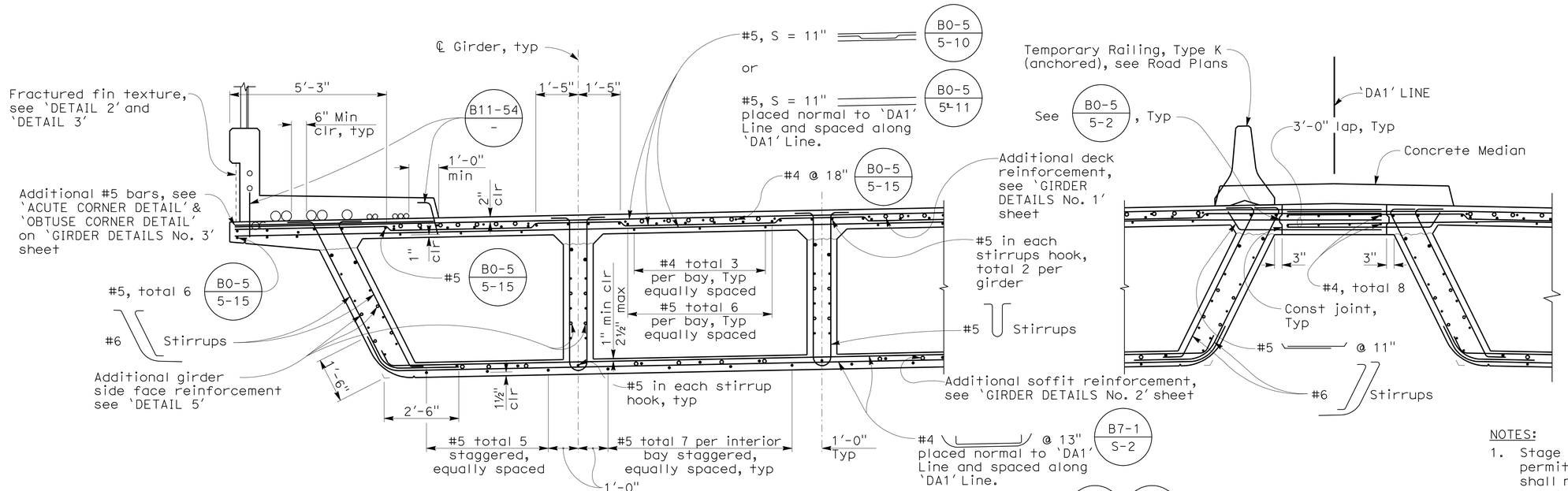

PARTIAL TYPICAL SECTION

1/2" = 1'-0"

B7-1 / - B8-5 / -

NOTES:

1. Stage II falsework shall be removed as soon as permitted by the specifications. Closure pour shall not be placed sooner than 60 days after the falsework has been released.
2. For 'DETAIL 1', 'DETAIL 2', 'DETAIL 3', 'DETAIL 4', and 'DETAILS 5, see 'TYPICAL SECTION DETAILS' sheet
3. ▨ Indicates closure pour.

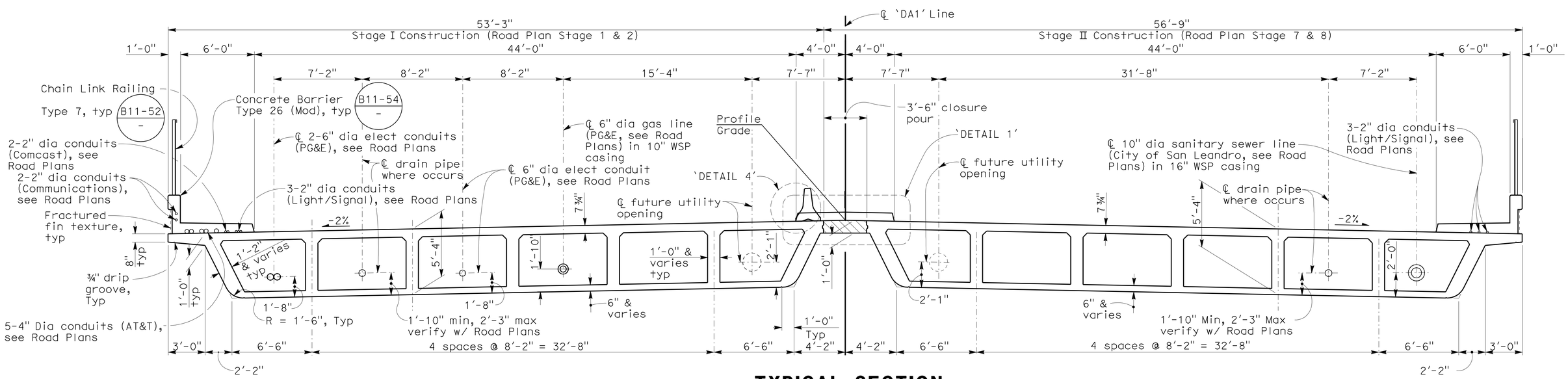

TYPICAL SECTION

1/4" = 1'-0"

DESIGN OVERSIGHT Yiwei Hu 12/29/11 SIGN OFF DATE	DESIGN	BY G. KENNING	CHECKED T. SWENSON	PREPARED FOR THE STATE OF CALIFORNIA DEPARTMENT OF TRANSPORTATION	M. HARMS PROJECT ENGINEER
	DETAILS	BY Y. LIN	CHECKED T. SWENSON		
	QUANTITIES	BY J. GERLACH	CHECKED J. YIP		

BRIDGE NO. 33-0736
POST MILES 23.64

ROUTE 112/880 SEPARATION (REPLACE)

TYPICAL SECTION

DESIGN DETAIL SHEET (ENGLISH) (REV. 7-16-10)

ORIGINAL SCALE IN INCHES FOR REDUCED PLANS 0 1 2 3

UNIT:
PROJECT NUMBER & PHASE:

DISREGARD PRINTS BEARING EARLIER REVISION DATES

REVISION DATES (PRELIMINARY STAGE ONLY) 11/18/09 5/24/10 6/1/11 10/21/11 12/1/11

SHEET 15 OF 31

FILE => 33-0736-m-ts1.dgn

CONTRACT NO.:

PROJECT ID:

USERNAME => s124496 DATE PLOTTED => 19-APR-2012 TIME PLOTTED => 15:00

2008276 (2008276AS15)

DIST	COUNTY	ROUTE	POST MILES TOTAL PROJECT	SHEET No	TOTAL SHEETS
04	Ala	880	22.6/24.0	745	760

Mahvash Harms 12/1/11
REGISTERED STRUCTURAL ENGINEER DATE

4-16-12
PLANS APPROVAL DATE

REGISTERED PROFESSIONAL ENGINEER MAHVASH M. HARMS No. 2639 Exp. 12/31/12 STRUCTURAL STATE OF CALIFORNIA

The State of California or its officers or agents shall not be responsible for the accuracy or completeness of scanned copies of this plan sheet.

ALAMEDA COUNTY TRANSPORTATION COMMISSION
1333 BROADWAY, SUITE 220
OAKLAND, CA 94612

BIGGS CARDOSA ASSOCIATES INC.
865 THE ALAMEDA
SAN JOSE, CALIFORNIA 95126

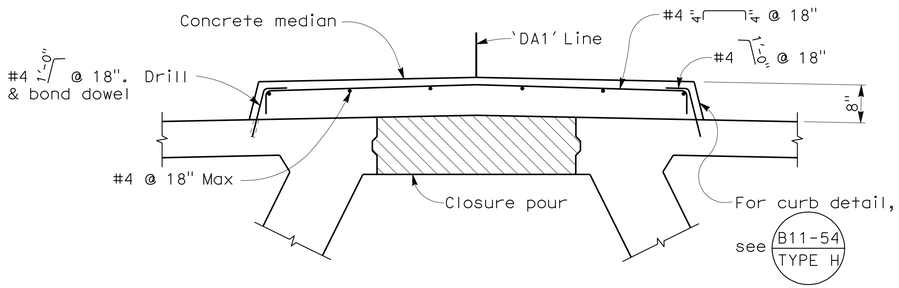

DETAIL 1
3/4" = 1'-0"

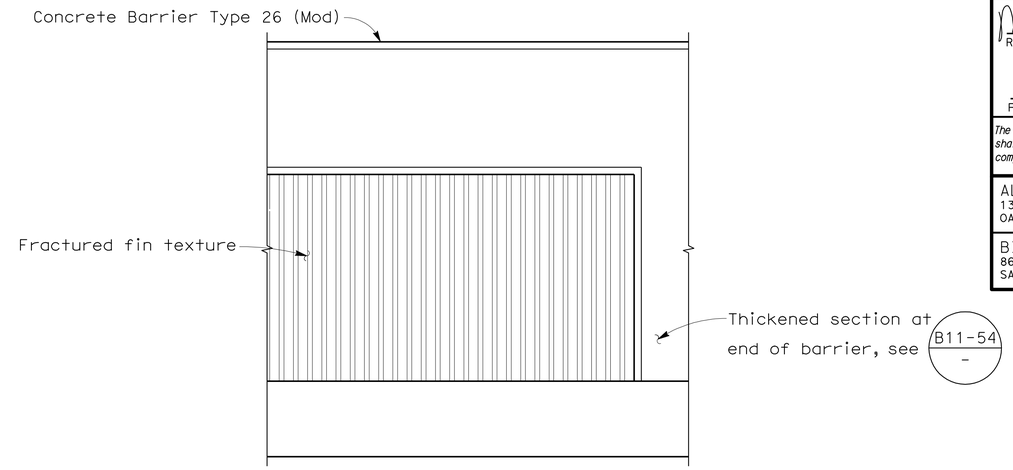

CONCRETE BARRIER ELEVATION VIEW

DETAIL 2
1 1/2" = 1'-0"

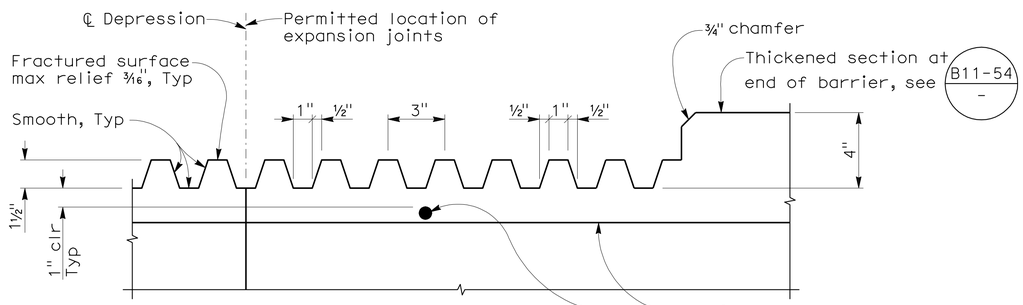

BARRIER FRACTURED FIN TEXTURE

DETAIL 3
3" = 1'-0"

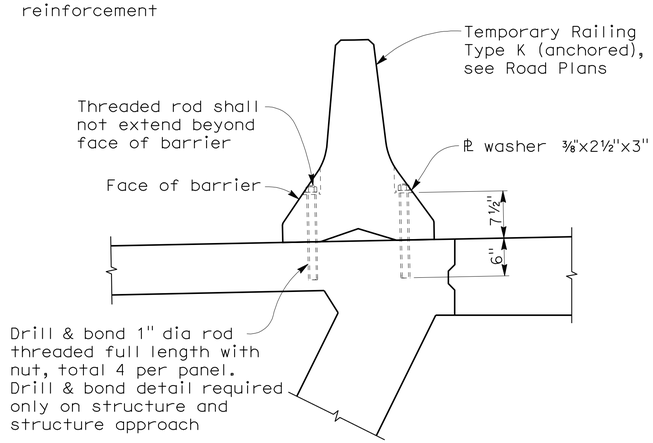

DETAIL 4
1" = 1'-0"

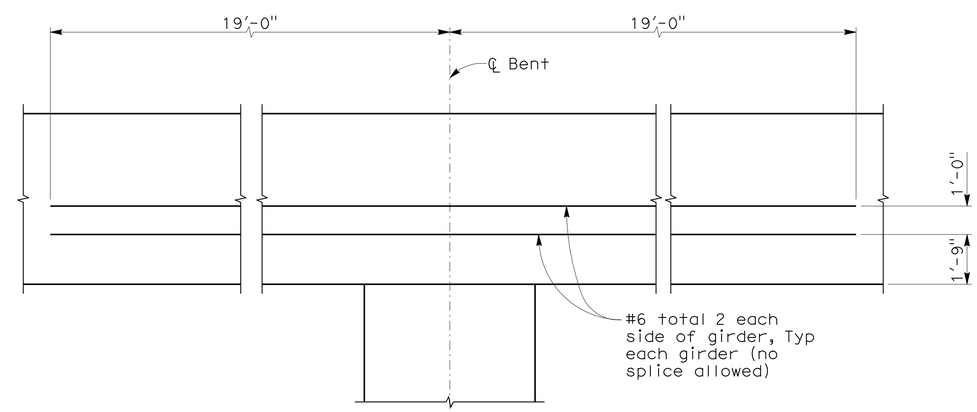

GIRDER SIDE FACE REINFORCEMENT

DETAIL 5
NO SCALE

DESIGN OVERSIGHT Yiwei Hu
12/29/11
SIGN OFF DATE

DESIGN DETAIL SHEET (ENGLISH) (REV. 7-16-10)

	BY	CHECKED
DESIGN	G. KENNING	T. SWENSON
DETAILS	Y. LIN	T. SWENSON
QUANTITIES	J. GERLACH	J. YIP

ORIGINAL SCALE IN INCHES FOR REDUCED PLANS 0 1 2 3

PREPARED FOR THE STATE OF CALIFORNIA DEPARTMENT OF TRANSPORTATION

M. HARMS
PROJECT ENGINEER

UNIT:
PROJECT NUMBER & PHASE:

FILE => 33-0736-m-ts2.dgn

BRIDGE NO. 33-0736
POST MILES 23.64

ROUTE 112/880 SEPARATION (REPLACE)
TYPICAL SECTION DETAILS

DISREGARD PRINTS BEARING EARLIER REVISION DATES

REVISION DATES (PRELIMINARY STAGE ONLY) 11/18/09 5/24/10 6/1/11 10/21/11 12/1/11

SHEET 16 OF 31

CONTRACT NO.:
PROJECT ID:

USERNAME => s1224496 DATE PLOTTED => 19-APR-2012 TIME PLOTTED => 15:00

2008276 (2008276A516)

DIST	COUNTY	ROUTE	POST MILES TOTAL PROJECT	SHEET No	TOTAL SHEETS
04	Ala	880	22.6/24.0	746	760

Mahvash Harms 12/1/11
REGISTERED STRUCTURAL ENGINEER DATE

4-16-12
PLANS APPROVAL DATE

REGISTERED PROFESSIONAL ENGINEER MAHVASH M. HARMS No. 2639 Exp. 12/31/12 STRUCTURAL STATE OF CALIFORNIA

The State of California or its officers or agents shall not be responsible for the accuracy or completeness of scanned copies of this plan sheet.

ALAMEDA COUNTY TRANSPORTATION COMMISSION
1333 BROADWAY, SUITE 220
OAKLAND, CA 94612

BIGGS CARDOSA ASSOCIATES INC.
865 THE ALAMEDA
SAN JOSE, CALIFORNIA 95126

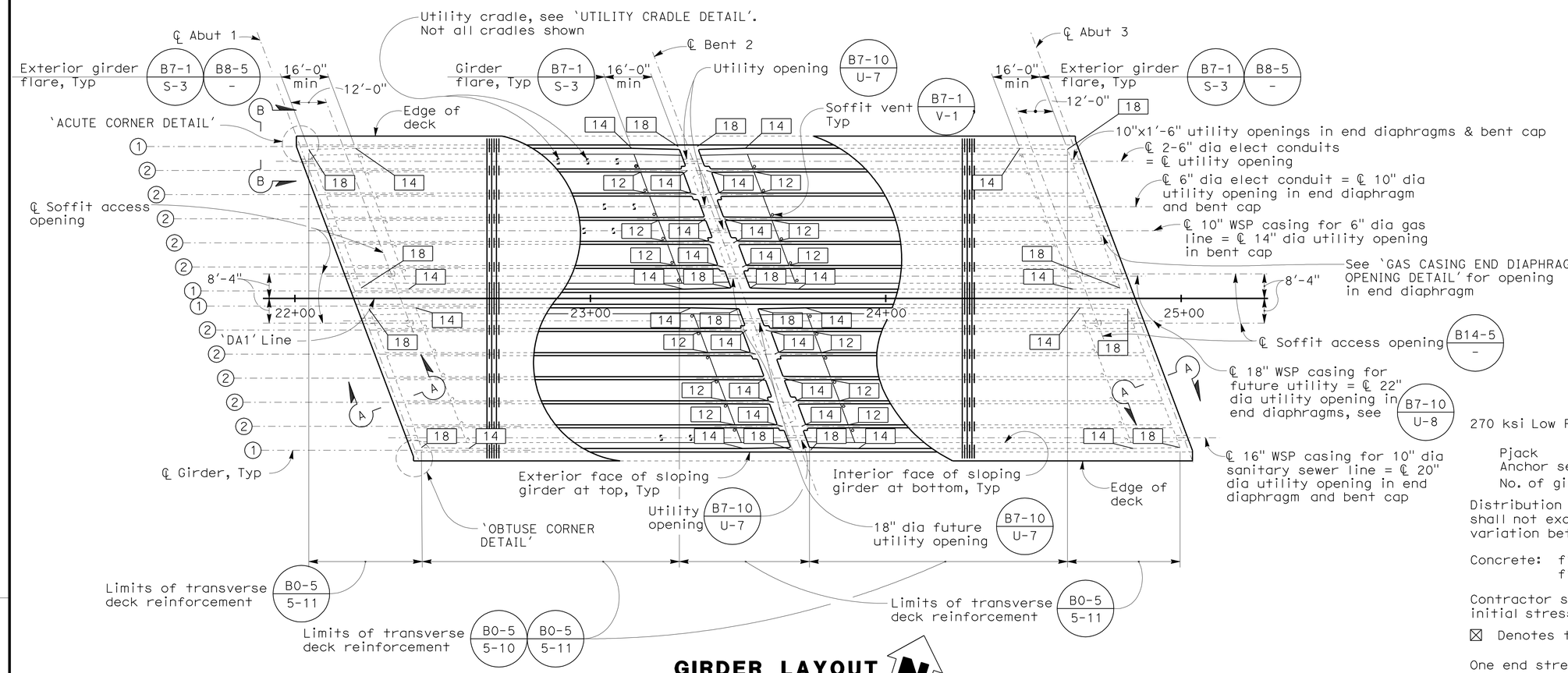

GIRDER LAYOUT

1" = 20'

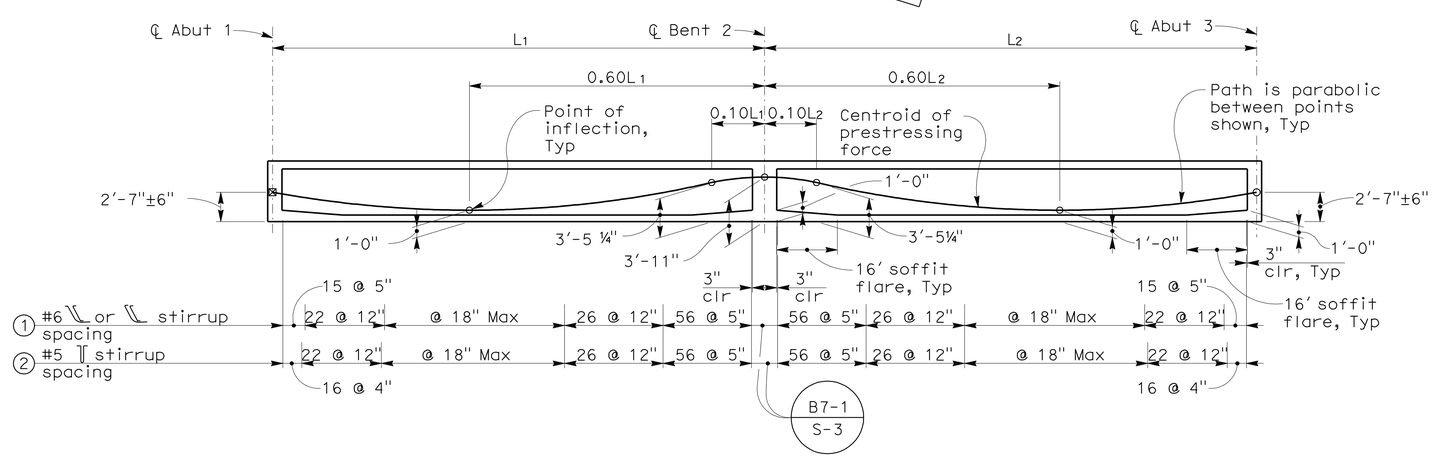

LONGITUDINAL SECTION

NO SCALE

PRESTRESSING NOTES

270 ksi Low Relaxation Strand:

	Stage I	Stage II
Pjack	= 12500 kips	= 12500 kips
Anchor set	= ⅜ in	= ⅜ in
No. of girders	= 7	= 7

Distribution of prestress force (Pjack) between girders shall not exceed the ratio of 3:2. Maximum final force variation between girders shall not exceed 725K

Concrete: f'c = 5000 psi @ 28 days
f'ci = 3500 psi @ time of stressing

Contractor shall submit elongation calculations based on initial stress at ⊠= 0.876 times jacking stress

⊠ Denotes theoretical point of no movement

One end stressing shall be performed from either end.

Prestress force design is based on friction coefficient μ = 0.15 and friction wobble coefficient k=0.0002/ft.

NOTES:

1. Indicates girder stem width in inches.
2. ① Indicates stirrup designation.
3. For 'SECTION A-A' see 'GIRDER DETAILS No. 1' sheet.
4. For 'SECTION B-B', 'ACUTE CORNER DETAIL' and 'OBTUSE CORNER DETAIL' see 'GIRDER DETAILS No. 3' sheet.
5. For 'UTILITY CRADLE DETAIL' and 'GAS CASING END DIAPHRAGM OPENING DETAIL', see 'UTILITY SUPPORT DETAILS' sheet.
6. L1 and L2 are measured along the ℄ of each girder.
7. For utility openings in end diaphragms, see B7-10 / U-3.
8. Gas and sewer line casings shall extend 5' beyond ends of approach slabs.
9. Drain pipes and drain pipe openings in end diaphragms not shown for clarity, see 'BRIDGE DECK DRAINAGE SYSTEM' sheet.

DESIGN OVERSIGHT Yiwei Hu 12/29/11 SIGN OFF DATE	DESIGN	BY G. KENNING	CHECKED T. SWENSON
	DETAILS	BY Y. LIN	CHECKED T. SWENSON
	QUANTITIES	BY J. GERLACH	CHECKED J. YIP

PREPARED FOR THE STATE OF CALIFORNIA DEPARTMENT OF TRANSPORTATION

M. HARMS
PROJECT ENGINEER

BRIDGE NO. 33-0736
POST MILES 23.64

ROUTE 112/880 SEPARATION (REPLACE)
GIRDER LAYOUT

DESIGN DETAIL SHEET (ENGLISH) (REV. 7-16-10)

ORIGINAL SCALE IN INCHES FOR REDUCED PLANS 0 1 2 3

UNIT:
PROJECT NUMBER & PHASE:

DISREGARD PRINTS BEARING EARLIER REVISION DATES

REVISION DATES (PRELIMINARY STAGE ONLY) 11/16/09 5/24/10 6/1/11 10/27/11 12/1/11

SHEET 17 OF 31

FILE => 33-0736-n-g-lo01.dgn

CONTRACT NO.: PROJECT ID:

USERNAME => s124496 DATE PLOTTED => 19-APR-2012 TIME PLOTTED => 15:00 (20082276)

DIST	COUNTY	ROUTE	POST MILES TOTAL PROJECT	SHEET No	TOTAL SHEETS
04	Ala	880	22.6/24.0	747	760

Mahvash Harms 12/1/11
REGISTERED STRUCTURAL ENGINEER DATE

4-16-12
PLANS APPROVAL DATE

REGISTERED PROFESSIONAL ENGINEER MAHVASH M. HARMS No. 2639 Exp. 12/31/12 STRUCTURAL STATE OF CALIFORNIA

The State of California or its officers or agents shall not be responsible for the accuracy or completeness of scanned copies of this plan sheet.

ALAMEDA COUNTY TRANSPORTATION COMMISSION
1333 BROADWAY, SUITE 220
OAKLAND, CA 94612

BIGGS CARDOSA ASSOCIATES INC.
865 THE ALAMEDA
SAN JOSE, CALIFORNIA 95126

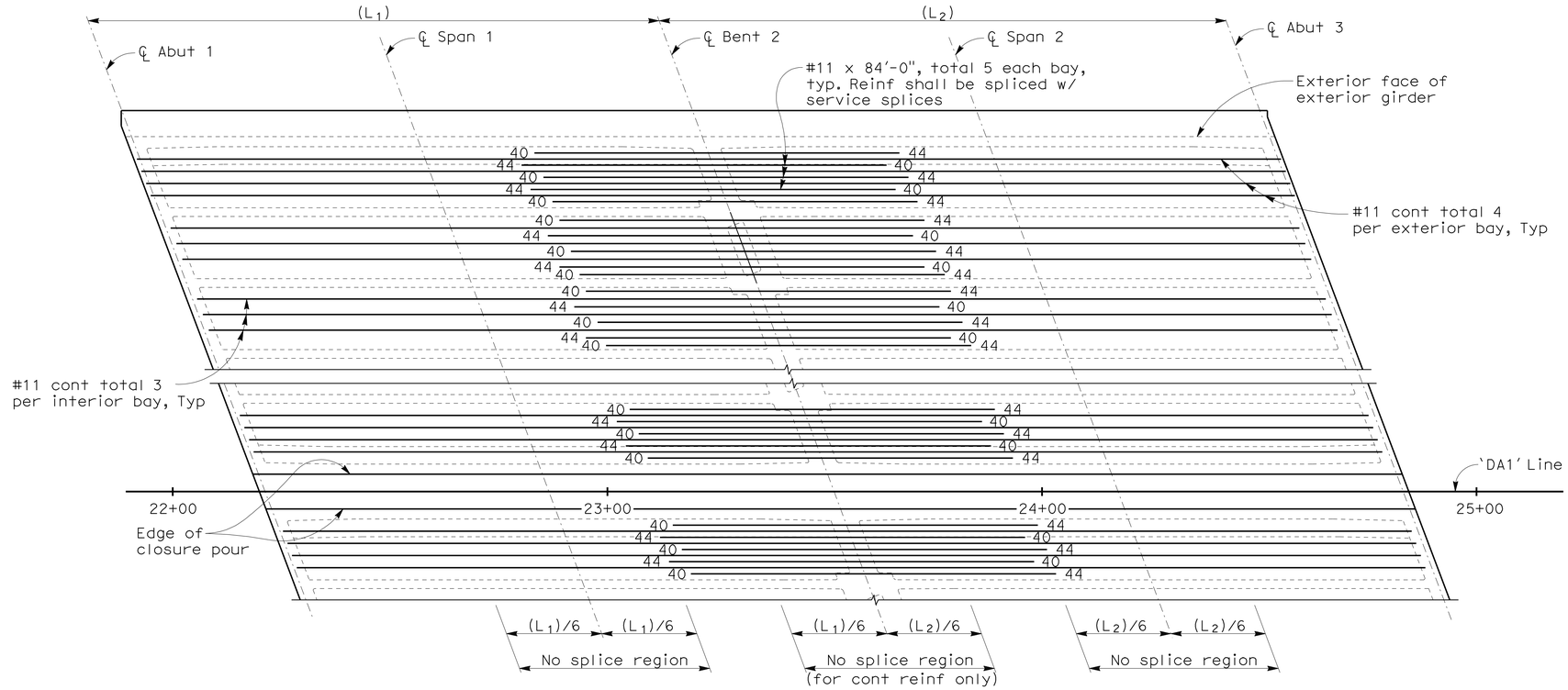

ADDITIONAL DECK REINFORCEMENT

NO SCALE

NOTES:

1. Space bars approximately equal within each bay.
2. Additional continuous deck reinforcement shall be spliced with service splices staggered at 7'-6" min. Lap splices equal to two times the standard lap may be substituted for the service splices.
3. Splices for continuous bars shall be located outside the 'No splice region' indicated.
4. Number at end of bar indicates distance in feet from ℄ bent.

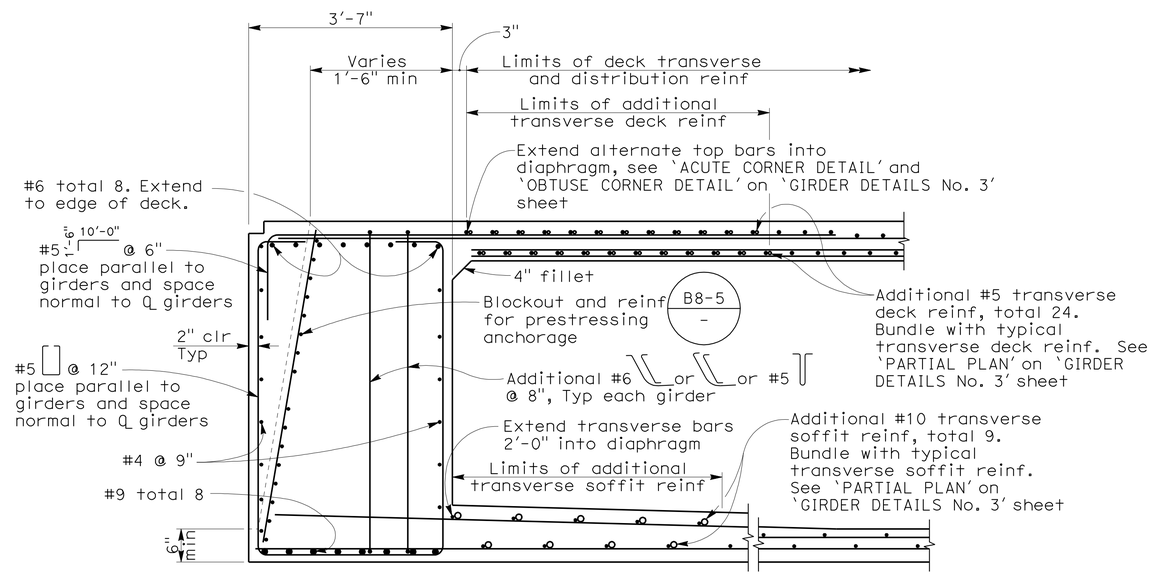

END DIAPHRAGM - SECTION A-A

3/4" = 1'-0"

DESIGN OVERSIGHT Yiwei Hu
12/29/11
SIGN OFF DATE

	BY	CHECKED
DESIGN	G. KENNING	T. SWENSON
DETAILS	Y. LIN	T. SWENSON
QUANTITIES	J. GERLACH	J. YIP

PREPARED FOR THE STATE OF CALIFORNIA DEPARTMENT OF TRANSPORTATION

M. HARMS
PROJECT ENGINEER

BRIDGE NO. 33-0736
POST MILES 23.64

ROUTE 112/880 SEPARATION (REPLACE)

GIRDER DETAILS No. 1

DESIGN DETAIL SHEET (ENGLISH) (REV. 7-16-10)

ORIGINAL SCALE IN INCHES FOR REDUCED PLANS 0 1 2 3

UNIT:
PROJECT NUMBER & PHASE:

DISREGARD PRINTS BEARING EARLIER REVISION DATES

REVISION DATES (PRELIMINARY STAGE ONLY) 11/16/09 5/24/10 6/1/11 10/27/11 12/1/11

SHEET 18 OF 31

FILE => 33-0736-n-gd01.dgn

CONTRACT NO.:

PROJECT ID:

USERNAME => s124496 DATE PLOTTED => 19-APR-2012 TIME PLOTTED => 15:00

2008276 (2008276AS18)

DIST	COUNTY	ROUTE	POST MILES TOTAL PROJECT	SHEET No	TOTAL SHEETS
04	Ala	880	22.6/24.0	748	760

Mahvash Harms 12/1/11
REGISTERED STRUCTURAL ENGINEER DATE

4-16-12
PLANS APPROVAL DATE

REGISTERED PROFESSIONAL ENGINEER MAHVASH M. HARMS No. 2639 Exp. 12/31/12 STRUCTURAL STATE OF CALIFORNIA

The State of California or its officers or agents shall not be responsible for the accuracy or completeness of scanned copies of this plan sheet.

ALAMEDA COUNTY TRANSPORTATION COMMISSION
1333 BROADWAY, SUITE 220
OAKLAND, CA 94612

BIGGS CARDOSA ASSOCIATES INC.
865 THE ALAMEDA
SAN JOSE, CALIFORNIA 95126

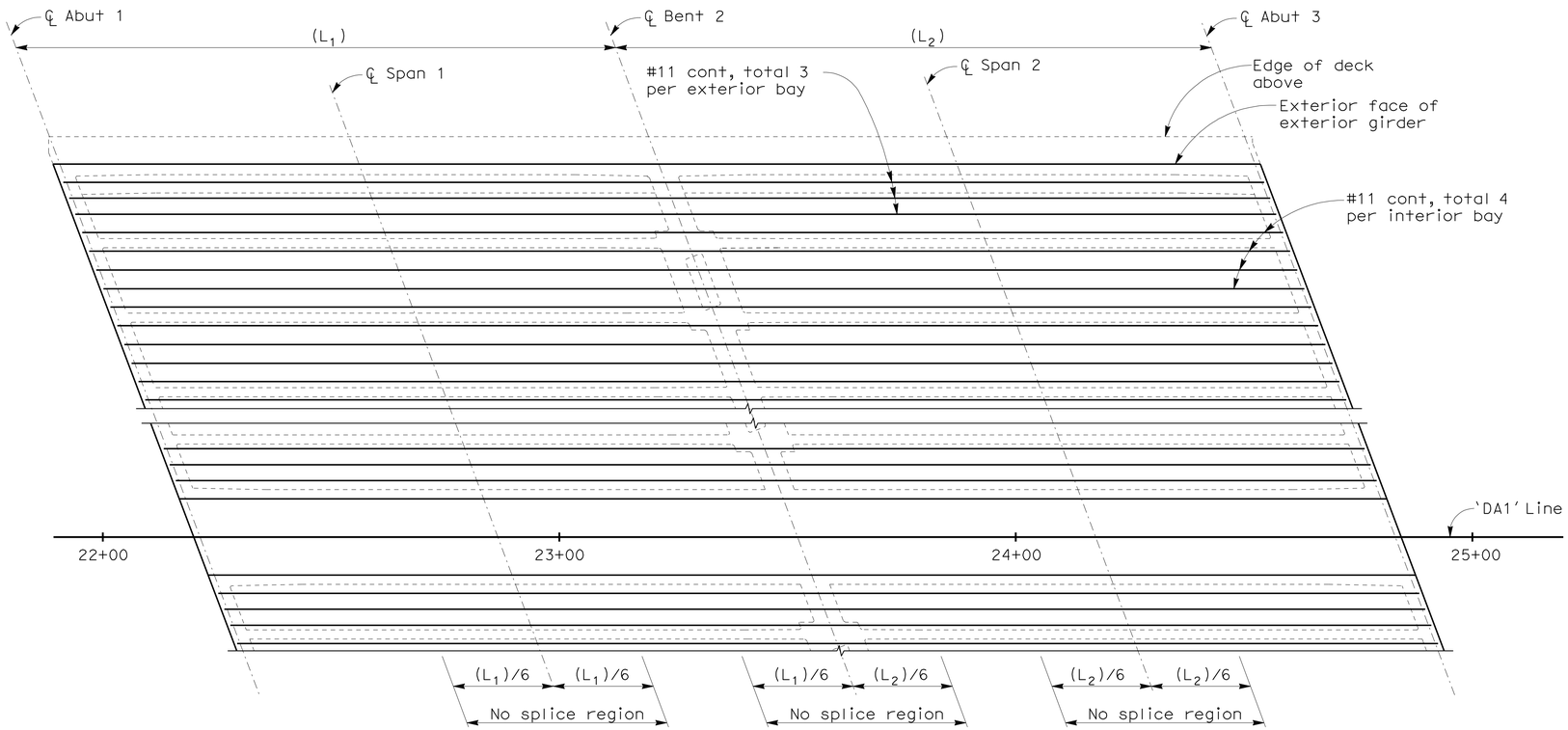

ADDITIONAL SOFFIT REINFORCEMENT

NO SCALE

NOTES:

1. Space bars approximately equal within each bay. Arrange to avoid column reinforcement.
2. Additional continuous soffit reinforcement shall be spliced with service splices staggered at 7'-6" min. Lap splices equal to two times the standard lap may be substituted for the service splices.
3. Splices for continuous bars shall be located outside the 'No splice region' indicated.

DESIGN OVERSIGHT Yiwei Hu
12/29/11
SIGN OFF DATE

	BY	CHECKED
DESIGN	G. KENNING	T. SWENSON
DETAILS	Y. LIN	T. SWENSON
QUANTITIES	J. GERLACH	J. YIP

PREPARED FOR THE STATE OF CALIFORNIA DEPARTMENT OF TRANSPORTATION

M. HARMS
PROJECT ENGINEER

BRIDGE NO. 33-0736
POST MILES 23.64

ROUTE 112/880 SEPARATION (REPLACE)
GIRDER DETAILS No. 2

DESIGN DETAIL SHEET (ENGLISH) (REV. 7-16-10)

ORIGINAL SCALE IN INCHES FOR REDUCED PLANS 0 1 2 3

UNIT:
PROJECT NUMBER & PHASE:

DISREGARD PRINTS BEARING EARLIER REVISION DATES

REVISION DATES (PRELIMINARY STAGE ONLY) 11/18/09 5/24/10 6/1/11 10/21/11 12/1/11

SHEET 19 OF 31

FILE => 33-0736-n-gd02.dgn
CONTRACT NO.:
PROJECT ID:

USERNAME => s124496 DATE PLOTTED => 19-APR-2012 TIME PLOTTED => 15:00
2008276 (2008276AS19)

DIST	COUNTY	ROUTE	POST MILES TOTAL PROJECT	SHEET No	TOTAL SHEETS
04	Ala	880	22.6/24.0	749	760

Mahvash Harms 12/1/11
REGISTERED STRUCTURAL ENGINEER DATE

4-16-12
PLANS APPROVAL DATE

REGISTERED PROFESSIONAL ENGINEER MAHVASH M. HARMS No. 2639 Exp. 12/31/12 STRUCTURAL STATE OF CALIFORNIA

The State of California or its officers or agents shall not be responsible for the accuracy or completeness of scanned copies of this plan sheet.

ALAMEDA COUNTY TRANSPORTATION COMMISSION
1333 BROADWAY, SUITE 220
OAKLAND, CA 94612

BIGGS CARDOSA ASSOCIATES INC.
865 THE ALAMEDA
SAN JOSE, CALIFORNIA 95126

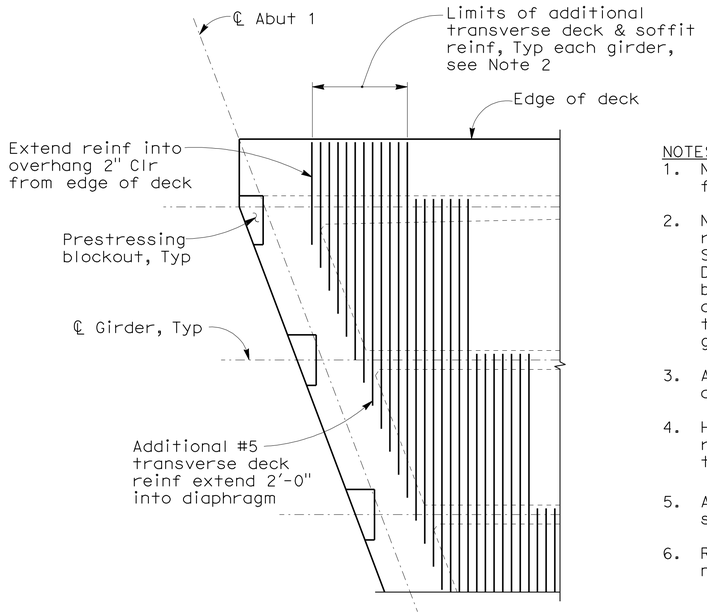

NOTES:
1. Not all Reinf shown for clarity.
2. Number of additional transverse reinf per 'END DIAPHRAGM - SECTION A-A' on 'GIRDER DETAILS No. 1' sheet shall be provided at each girder and extend 6" min beyond the centerline of adjacent girder.
3. Additional deck Reinf shown, additional soffit reinf similar.
4. Hook outer bay transverse soffit rienf into exterior girder thus: ⌐ 6" .
5. All additional transverse Reinf shall be continuous.
6. Reinforcement shall be placed normal to 'DA1' Line.

PARTIAL PLAN
1/4" = 1'-0"

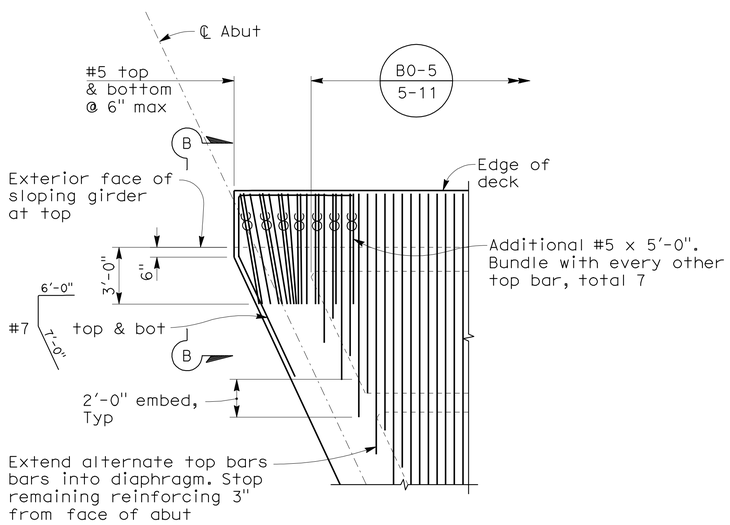

ACUTE CORNER DETAIL
NO SCALE

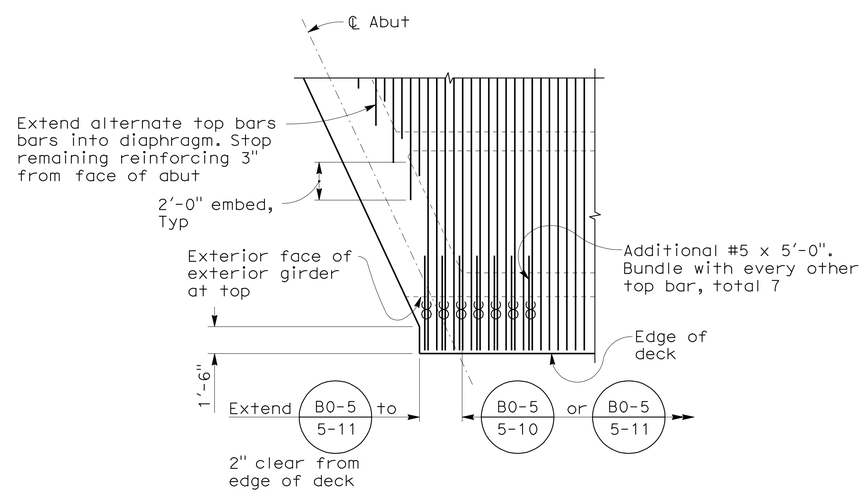

OBTUSE CORNER DETAIL
NO SCALE

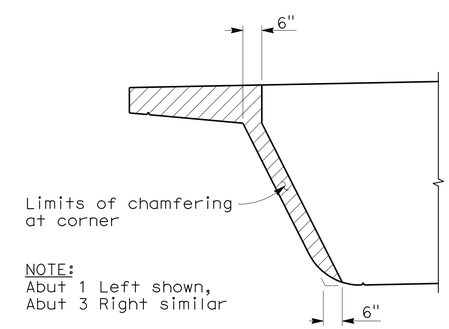

NOTE:
Abut 1 Left shown,
Abut 3 Right similar

SECTION B-B
1/2" = 1'-0"

DESIGN OVERSIGHT Yiwei Hu 12/29/11 SIGN OFF DATE	DESIGN	BY G. KENNING	CHECKED T. SWENSON	PREPARED FOR THE STATE OF CALIFORNIA DEPARTMENT OF TRANSPORTATION	M. HARMS PROJECT ENGINEER	BRIDGE NO. 33-0736 POST MILES 23.64	ROUTE 112/880 SEPARATION (REPLACE)
	DETAILS	BY Y. LIN	CHECKED T. SWENSON				GIRDER DETAILS No. 3
	QUANTITIES	BY J. GERLACH	CHECKED J. YIP				

DESIGN DETAIL SHEET (ENGLISH) (REV. 7-16-10)

ORIGINAL SCALE IN INCHES FOR REDUCED PLANS 0 1 2 3

UNIT:
PROJECT NUMBER & PHASE:

DISREGARD PRINTS BEARING EARLIER REVISION DATES

REVISION DATES (PRELIMINARY STAGE ONLY) 11/18/09 5/24/10 6/1/11 10/21/11 12/1/11

SHEET 20 OF 31

FILE => 33-0736-n-gd03.dgn

CONTRACT NO.: PROJECT ID:

USERNAME => s124496 DATE PLOTTED => 19-APR-2012 TIME PLOTTED => 15:00

2008276 (2008276AS20)

DIST	COUNTY	ROUTE	POST MILES TOTAL PROJECT	SHEET No	TOTAL SHEETS
04	Ala	880	22.6/24.0	750	760

Mahvash Harms 12/1/11
REGISTERED STRUCTURAL ENGINEER DATE

4-16-12
PLANS APPROVAL DATE

REGISTERED PROFESSIONAL ENGINEER MAHVASH M. HARMS No. 2639 Exp. 12/31/12 STRUCTURAL STATE OF CALIFORNIA

The State of California or its officers or agents shall not be responsible for the accuracy or completeness of scanned copies of this plan sheet.

ALAMEDA COUNTY TRANSPORTATION COMMISSION
1333 BROADWAY, SUITE 220
OAKLAND, CA 94612

BIGGS CARDOSA ASSOCIATES INC.
865 THE ALAMEDA
SAN JOSE, CALIFORNIA 95126

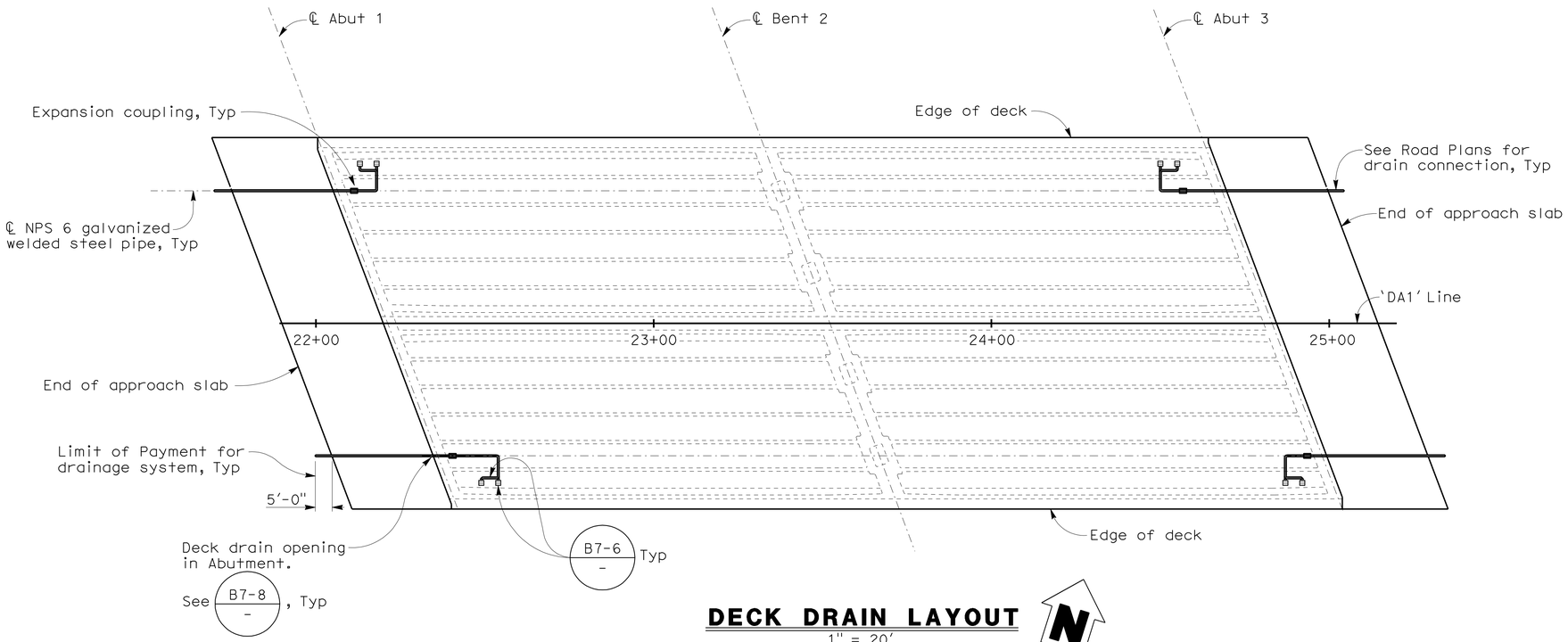

DECK DRAIN LAYOUT

1" = 20'

N

LEGEND:

▫ Indicates Deck Drain Type D-1

NOTES:

1. All drain pipes shall be NPS 6x0.135" dia galvanized welded steel type.
2. All pipes in the deck shall be installed with a down slope greater than 2 percent.
3. See B7-6 - & B7-8 - for details not noted.

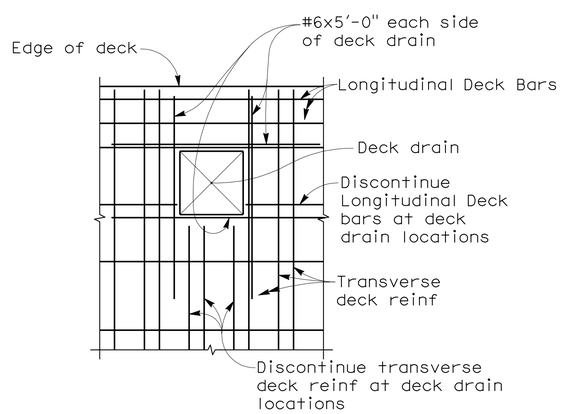

DECK REINF AT DECK DRAIN DETAIL

NO SCALE

DECK DRAIN LOCATION TABLE

℄ left drain	℄ right drain
Sta 22+13	Sta 22+49
Sta 22+18	Sta 22+54
Sta 24+50	Sta 24+87
Sta 24+55	Sta 24+92

NOTE:
Stationing is along 'DA1' Line.

DESIGN OVERSIGHT Yiwei Hu
12/29/11
SIGN OFF DATE

DESIGN DETAIL SHEET (ENGLISH) (REV. 7-16-10)

	BY	CHECKED
DESIGN	G. KENNING	T. SWENSON
DETAILS	Y. LIN	T. SWENSON
QUANTITIES	J. GERLACH	J. YIP

ORIGINAL SCALE IN INCHES FOR REDUCED PLANS 0 1 2 3

PREPARED FOR THE STATE OF CALIFORNIA DEPARTMENT OF TRANSPORTATION

M. HARMS
PROJECT ENGINEER

UNIT:
PROJECT NUMBER & PHASE:

BRIDGE NO. 33-0736
POST MILES 23.64

ROUTE 112/880 SEPARATION (REPLACE)
BRIDGE DECK DRAINAGE SYSTEM

DISREGARD PRINTS BEARING EARLIER REVISION DATES → REVISION DATES (PRELIMINARY STAGE ONLY) ~~11/18/09~~ ~~5/24/10~~ ~~6/1/11~~ ~~10/21/11~~ 12/1/11

SHEET 21 OF 31

FILE => 33-0736-s-dd01.dgn
CONTRACT NO.:
PROJECT ID:

USERNAME => s124496 DATE PLOTTED => 19-APR-2012 TIME PLOTTED => 15:00
2008276 (2008276AS21)

DIST	COUNTY	ROUTE	POST MILES TOTAL PROJECT	SHEET No	TOTAL SHEETS
04	Ala	880	22.6/24.0	751	760

REGISTERED STRUCTURAL ENGINEER 12/1/11 DATE

4-16-12
PLANS APPROVAL DATE

REGISTERED PROFESSIONAL ENGINEER MAHVASH M. HARMS No. 2639 Exp. 12/31/12 STRUCTURAL STATE OF CALIFORNIA

The State of California or its officers or agents shall not be responsible for the accuracy or completeness of scanned copies of this plan sheet.

ALAMEDA COUNTY TRANSPORTATION COMMISSION
1333 BROADWAY, SUITE 220
OAKLAND, CA 94612

BIGGS CARDOSA ASSOCIATES INC.
865 THE ALAMEDA
SAN JOSE, CALIFORNIA 95126

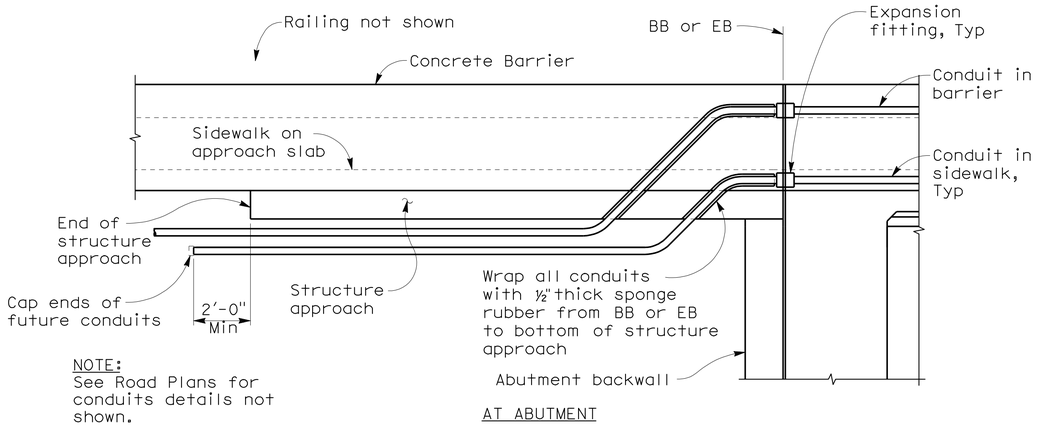

NOTE:
See Road Plans for conduits details not shown.

AT ABUTMENT

UTILITY CONDUITS IN SIDEWALK & BARRIER

3/8" = 1'-0"

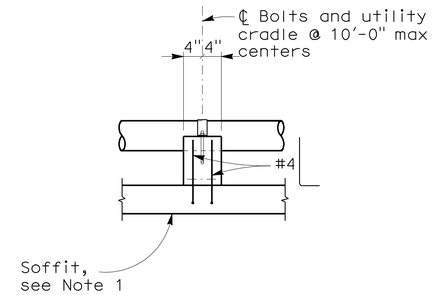

SECTION A-A

3/4" = 1'-0"

UTILITY CRADLE NOTES:

1. Soffit reinforcement not shown for clarity.
2. Casing and conduits shall be tightly clamped at the first support on ea side of bent cap. At all other supports, strap to provide ⅛" clearance all around between casing/conduit and strap.
3. All hardware to be galvanized.
4. For gas line casing, place #4 ⌊ bars at first cradle on each side of bent cap. For all other gas line cradles, omit #4 ⌊ bars and place 15 lb building paper between soffit and concrete cradle. Place #4 ⌊ bars without 15 lb building paper at all sanitary sewer line cradles.
5. See Road Plans for gas casing insulators, end seals, and vents at each end of bridge.

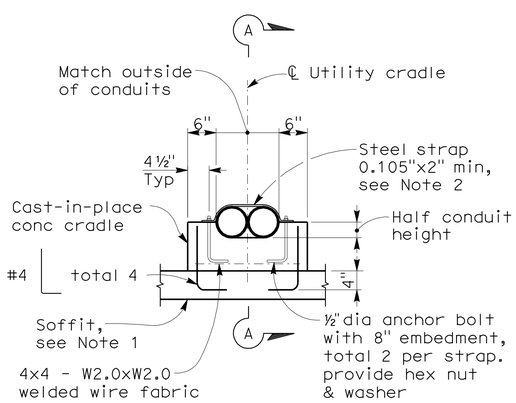

ELECTRICAL CONDUIT
(Two conduit cradle shown, one conduit cradle similar)

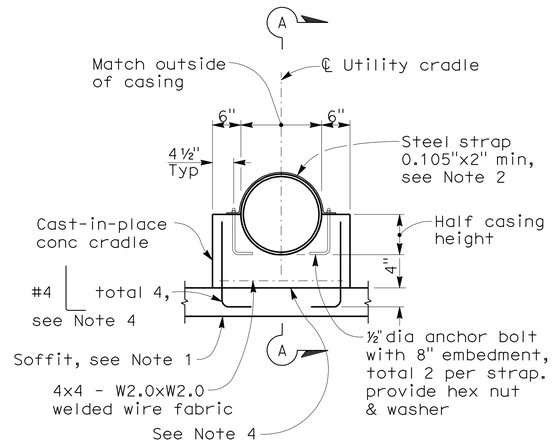

SANITARY SEWER CASING
(Gas casing similar)

UTILITY CRADLE DETAIL

3/4" = 1'-0"

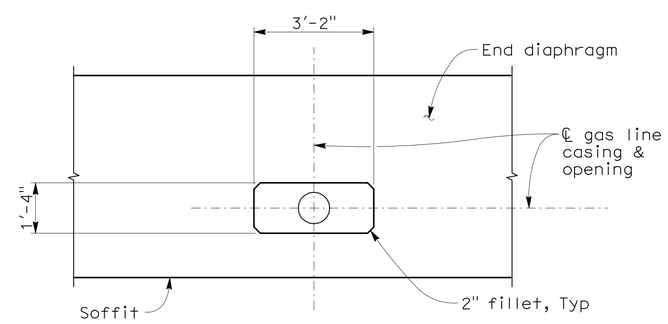

NOTE:
For additional reinf around opening, see B7-10 / U-3

GAS CASING END DIAPHRAGM OPENING DETAIL

1/2" = 1'-0"

DESIGN OVERSIGHT Yiwei Hu 12/29/11 SIGN OFF DATE	DESIGN	BY G. KENNING	CHECKED T. SWENSON	PREPARED FOR THE STATE OF CALIFORNIA DEPARTMENT OF TRANSPORTATION	M. HARMS PROJECT ENGINEER
	DETAILS	BY Y. LIN	CHECKED T. SWENSON		
	QUANTITIES	BY J. GERLACH	CHECKED J. YIP		

BRIDGE NO. 33-0736
POST MILES 23.64

ROUTE 112/880 SEPARATION (REPLACE)
UTILITY SUPPORT DETAILS

DESIGN DETAIL SHEET (ENGLISH) (REV. 7-16-10)

ORIGINAL SCALE IN INCHES FOR REDUCED PLANS 0 1 2 3

UNIT:
PROJECT NUMBER & PHASE:

DISREGARD PRINTS BEARING EARLIER REVISION DATES

REVISION DATES (PRELIMINARY STAGE ONLY) 5/24/10 6/1/11 10/27/11 12/1/11

SHEET 22 OF 31

FILE => 33-0736-s-dd02.dgn

CONTRACT NO.: PROJECT ID:

USERNAME => s124496 DATE PLOTTED => 19-APR-2012 TIME PLOTTED => 15:00

2008276 (2008276AS22)

DIST	COUNTY	ROUTE	POST MILES TOTAL PROJECT	SHEET No	TOTAL SHEETS
04	Ala	880	22.6/24.0	752	760

Mahvash Harms 12/1/11
REGISTERED STRUCTURAL ENGINEER DATE

4-16-12
PLANS APPROVAL DATE

REGISTERED PROFESSIONAL ENGINEER MAHVASH M. HARMS No. 2639 Exp. 12/31/12 STRUCTURAL STATE OF CALIFORNIA

The State of California or its officers or agents shall not be responsible for the accuracy or completeness of scanned copies of this plan sheet.

ALAMEDA COUNTY TRANSPORTATION COMMISSION
1333 BROADWAY, SUITE 220
OAKLAND, CA 94612

BIGGS CARDOSA ASSOCIATES INC.
865 THE ALAMEDA
SAN JOSE, CALIFORNIA 95126

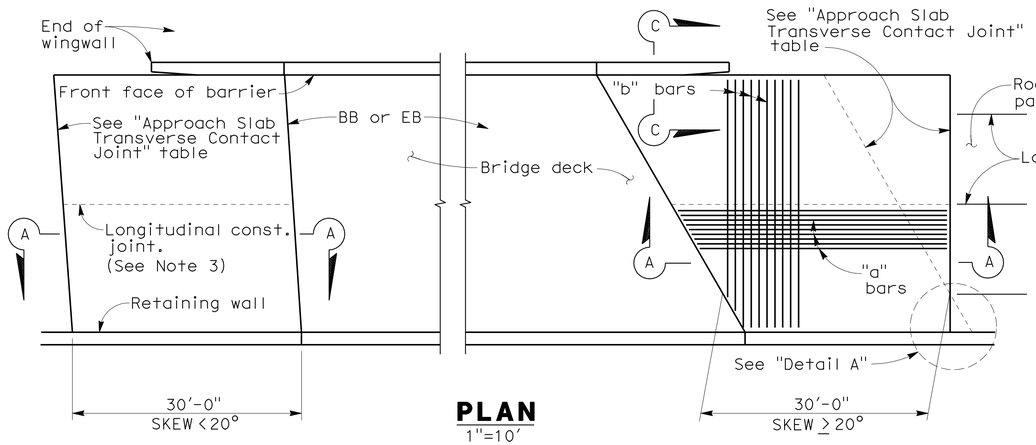

PLAN
1"=10'

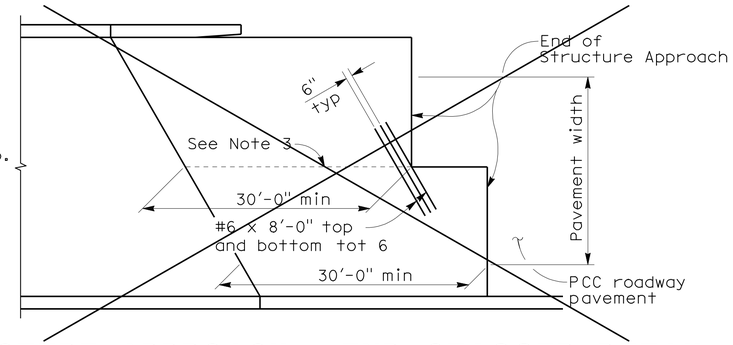

STRUCTURE APPROACH - END STAGGER DETAIL
NO SCALE

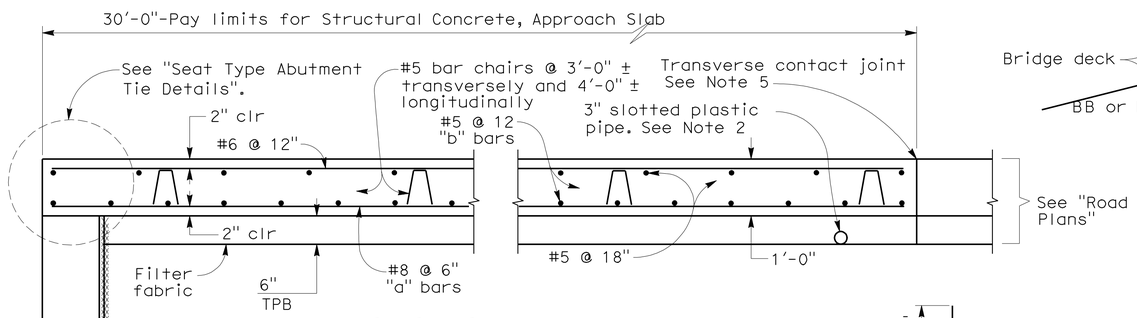

SECTION A-A
3/4"=1'-0"

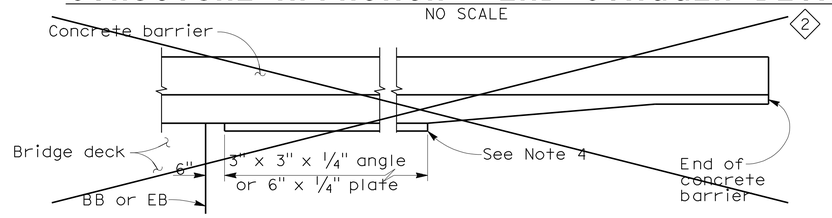

EDGE ANGLE DETAIL 2
1/2"=1'-0"

APPROACH SLAB TRANSVERSE CONTACT JOINT		
APPROACH SKEW	WITH AC ROADWAY PAVEMENT	WITH PCC ROADWAY PAVEMENT
< 20°	Parallel with face of paving notch	Parallel with face of paving notch
20° - 45°	Parallel with face of P N use (Detail A)	Stagger lines 24' to 36' apart.
> 45°	Parallel with face of P N use (Detail A)	Stagger at each lane line.

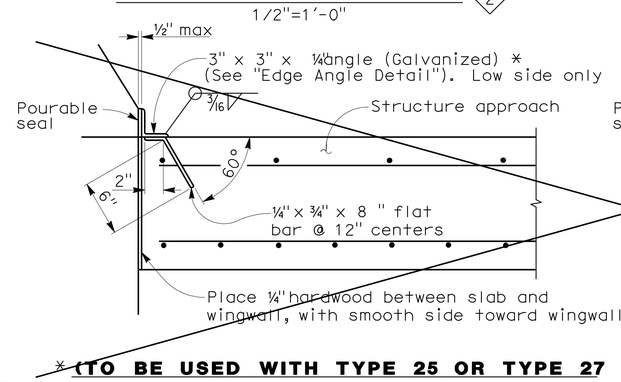

*** (TO BE USED WITH TYPE 25 OR TYPE 27 CONCRETE BARRIER)**

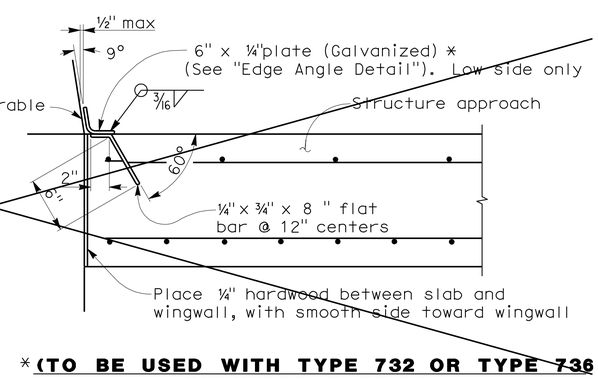

*** (TO BE USED WITH TYPE 732 OR TYPE 736 CONCRETE BARRIER)**

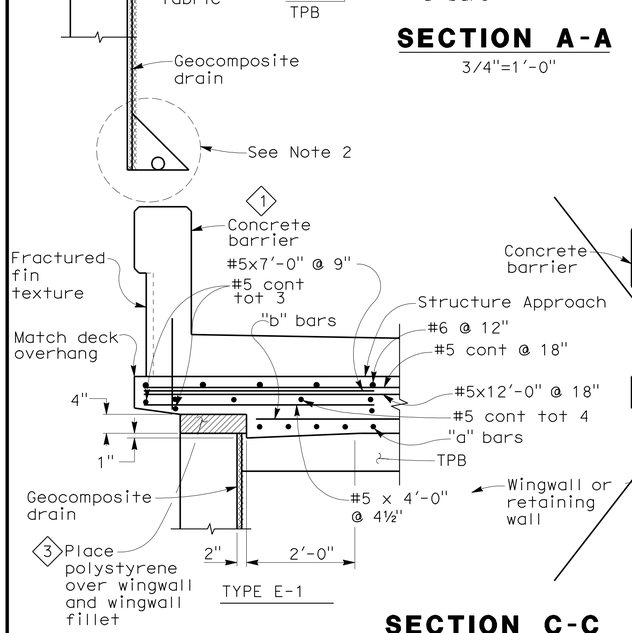

SECTION C-C
3/4"=1'-0"

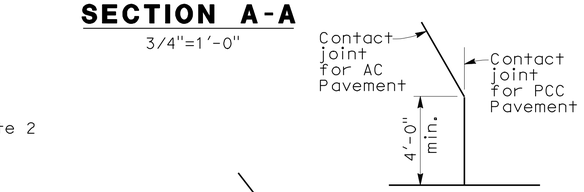

DETAIL A
No Scale

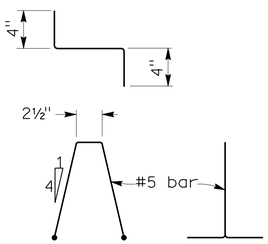

BAR CHAIR DETAIL
1 1/2"=1'-0"

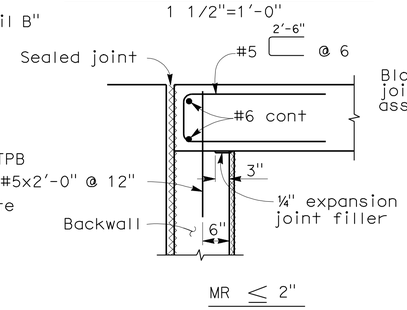

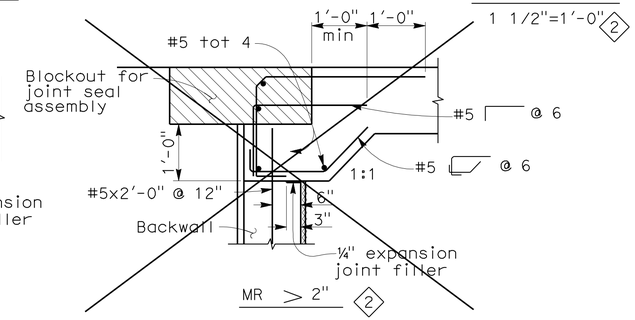

DETAIL B
1 1/2"=1'-0" 2

SEAT TYPE ABUTMENT TIE DETAILS (SEE NOTE 1)

NOTES:

1. For details not shown, see Structure Plans. For MR ≤ 2", adjust bar reinforcement to clear a sawcut for sealed joint, when required.
2. For drainage details, see "Structure Approach Drainage Details" sheet.
3. Longitudinal construction joints, when permitted by the Engineer, shall be located on lane lines.
4. End angle or plate at beginning of barrier transition, end of wingwall or end of structure approach as applicable.
5. For transverse contact joint with new PCC paving, refer to Standard Plan P10.
6. At the contractor's option, approach slab transverse reinforcement may be placed parallel to paving notch. Spacing of transverse reinforcement is measured along ℄ roadway.

Remove all polystyrene.

STANDARD DRAWING				
RELEASE DATE 3/14/05	DESIGN	BY M. TRAFFALIS	CHECKED E. THORKILDSEN	RELEASED BY
	DETAILS	BY R. YEE	CHECKED E. THORKILDSEN	
FILE NO. xs3-120e	SUBMITTED	BY M. HA	DRAWING DATE 4/98	OFFICE CHIEF

1 Change Concrete Barrier
2 Detail not used
3 Added note

STATE OF CALIFORNIA
DEPARTMENT OF TRANSPORTATION

DIVISION OF ENGINEERING SERVICES

BRIDGE NO. 33-0736
POST MILE 23.64

ROUTE 112/880 SEPARATION (REPLACE)
STRUCTURE APPROACH TYPE N(30S)

DS OSD 2147A (CADD) (REV. 7/10)

ORIGINAL SCALE IN INCHES FOR REDUCED PLANS 0 1 2 3

UNIT:
PROJECT NUMBER & PHASE:

DISREGARD PRINTS BEARING EARLIER REVISION DATES
REVISION DATES (PRELIMINARY STAGE ONLY) 11/16/09 5/21/10 6/1/11 10/21/11 12/1/11

SHEET 23 OF 31

USERNAME => s124496
CONTRACT NO.:
PROJECT ID:

USERNAME => s124496 DATE PLOTTED => 19-APR-2012 TIME PLOTTED => 15:01 20082764(5231)

DIST	COUNTY	ROUTE	POST MILES TOTAL PROJECT	SHEET No	TOTAL SHEETS
04	Ala	880	22.6/24.0	753	760

REGISTERED STRUCTURAL ENGINEER 12/1/11 DATE

4-16-12
PLANS APPROVAL DATE

REGISTERED PROFESSIONAL ENGINEER MAHVASH M. HARMS No. 2639 Exp. 12/31/12 STRUCTURAL STATE OF CALIFORNIA

The State of California or its officers or agents shall not be responsible for the accuracy or completeness of scanned copies of this plan sheet.

ALAMEDA COUNTY TRANSPORTATION COMMISSION
1333 BROADWAY, SUITE 220
OAKLAND, CA 94612

BIGGS CARDOSA ASSOCIATES INC.
865 THE ALAMEDA
SAN JOSE, CALIFORNIA 95126

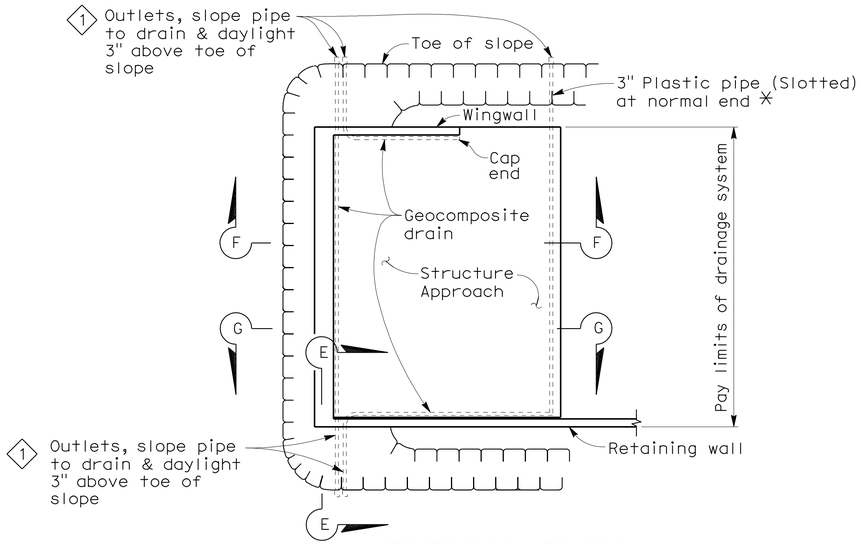

TYPICAL PLAN
1" = 10'

✳ For pipe layout at staggered end, see "Detail B".

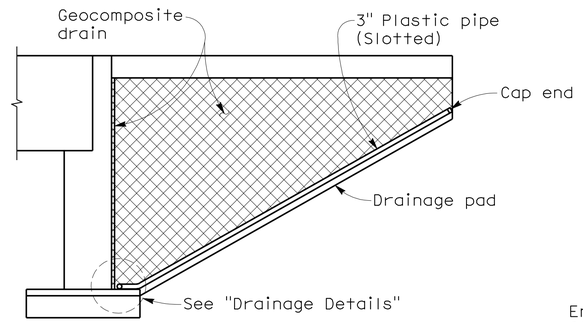

CANTILEVER WINGWALL
SECTION F-F
1/4" = 1'-0"

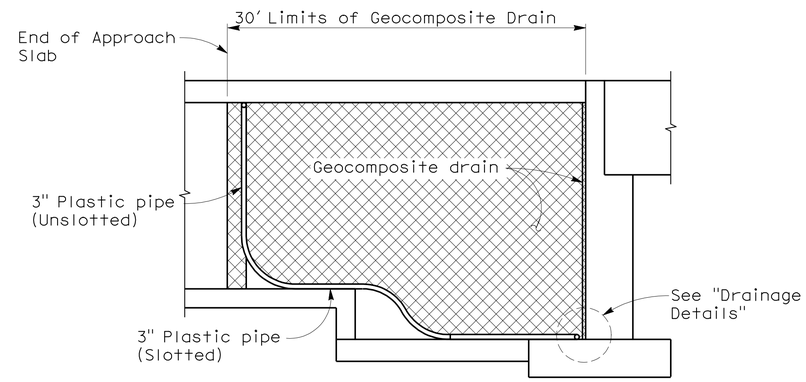

RETAINING WALL WINGWALL
SECTION G-G
1/4" = 1'-0"

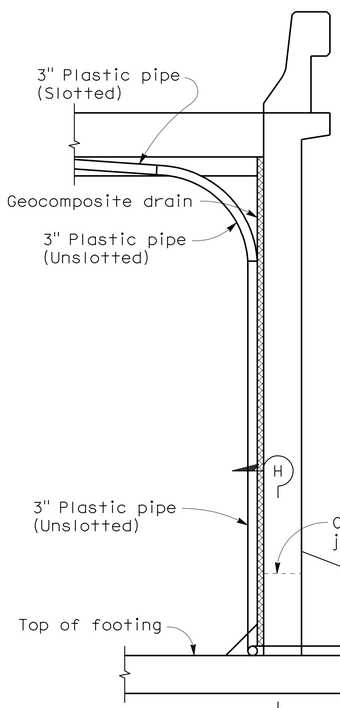

SECTION E-E
1/2" = 1'-0"

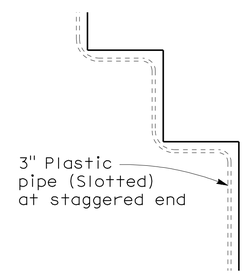

DETAIL B
NO SCALE

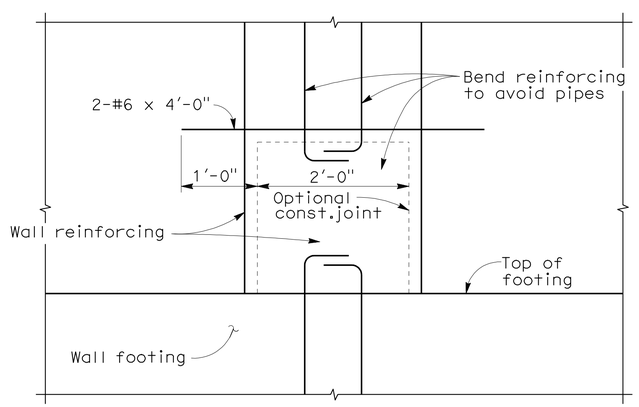

SECTION H-H
1" = 1'-0"

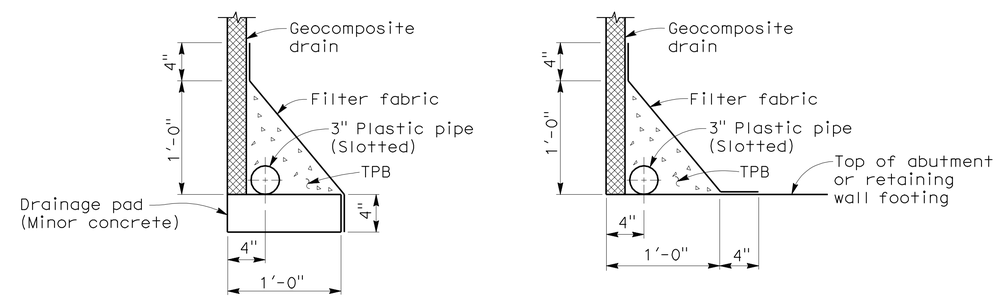

WITHOUT FOOTING **WITH FOOTING**

DRAINAGE DETAILS
1 1/2" = 1'-0"

STANDARD DRAWING				
RELEASE DATE 4/23/98	DESIGN	BY M. TRAFFALIS	CHECKED E. THORKILDSEN	RELEASED BY
FILE NO. xs3-110e	DETAILS	BY R. YEE	CHECKED	OFFICE CHIEF
	SUBMITTED	BY M. HA	DRAWING DATE	

1 Revised note

STATE OF CALIFORNIA
DEPARTMENT OF TRANSPORTATION

DIVISION OF ENGINEERING SERVICES

BRIDGE NO. 33-0736
POST MILE 23.64

ROUTE 112/880 SEPARATION (REPLACE)
STRUCTURE APPROACH DRAINAGE DETAILS

DS OSD 2147A (CADD) (REV. 7/10)

ORIGINAL SCALE IN INCHES FOR REDUCED PLANS 0 1 2 3

UNIT:
PROJECT NUMBER & PHASE:

DISREGARD PRINTS BEARING EARLIER REVISION DATES

REVISION DATES (PRELIMINARY STAGE ONLY) 11/18/09 5/24/10 6/1/11 10/27/11 12/1/11

SHEET 24 OF 31

USERNAME => s124496

CONTRACT NO.:

PROJECT ID:

USERNAME => s124496 DATE PLOTTED => 19-APR-2012 TIME PLOTTED => 15:01 2008276 (2007276A5241)

DIST	COUNTY	ROUTE	POST MILES TOTAL PROJECT	SHEET No	TOTAL SHEETS
04	Ala	880	22.6/24.0	754	760

Mahvash Harms 12/1/11
REGISTERED STRUCTURAL ENGINEER DATE

4-16-12
PLANS APPROVAL DATE

REGISTERED PROFESSIONAL ENGINEER MAHVASH M. HARMS No. 2639 Exp. 12/31/12 STRUCTURAL STATE OF CALIFORNIA

The State of California or its officers or agents shall not be responsible for the accuracy or completeness of scanned copies of this plan sheet.

ALAMEDA COUNTY TRANSPORTATION COMMISSION
1333 BROADWAY, SUITE 220
OAKLAND, CA 94612

BIGGS CARDOSA ASSOCIATES INC.
865 THE ALAMEDA
SAN JOSE, CALIFORNIA 95126

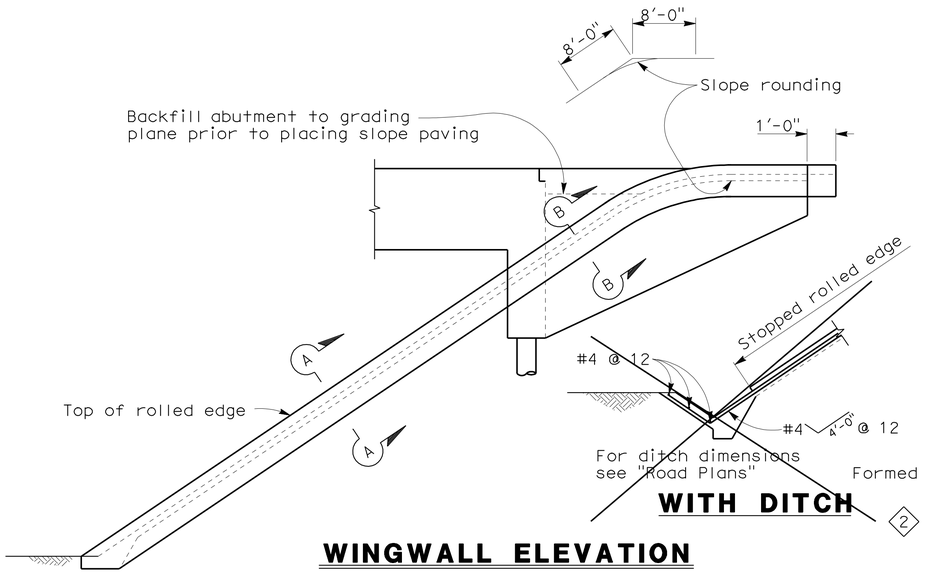

WITH DITCH

WINGWALL ELEVATION

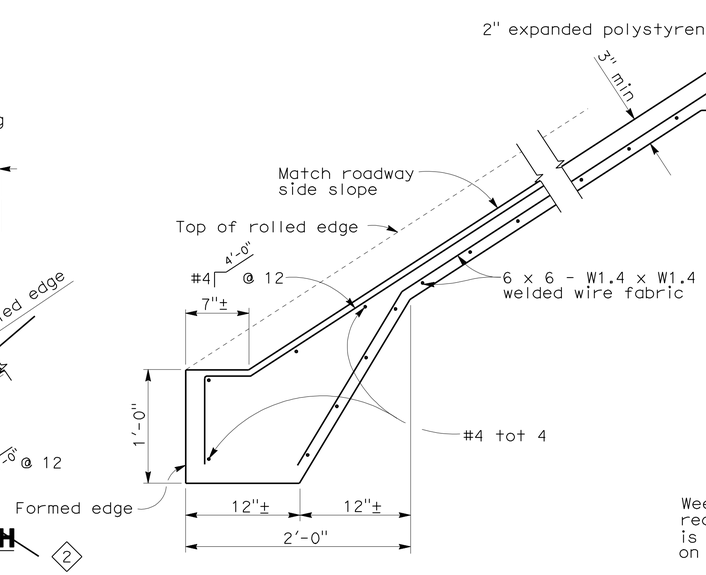

TYPICAL SECTION - CONCRETE PAVING

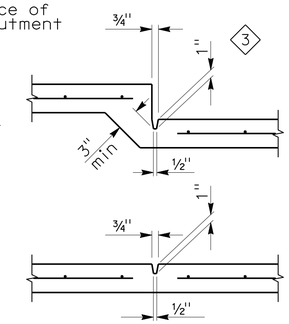

PREFORMED GROOVE

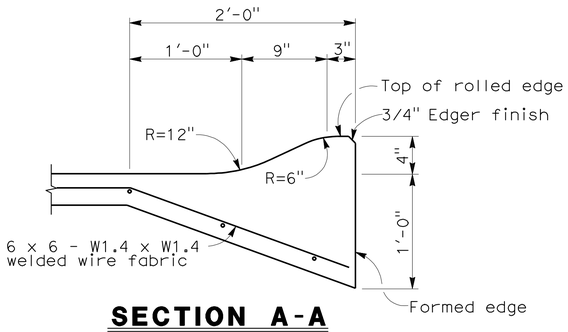

SECTION A-A

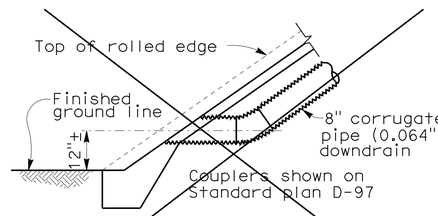

TYPICAL - NO CURB

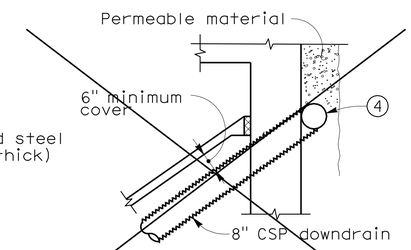

TYPICAL DRAIN CONNECTION

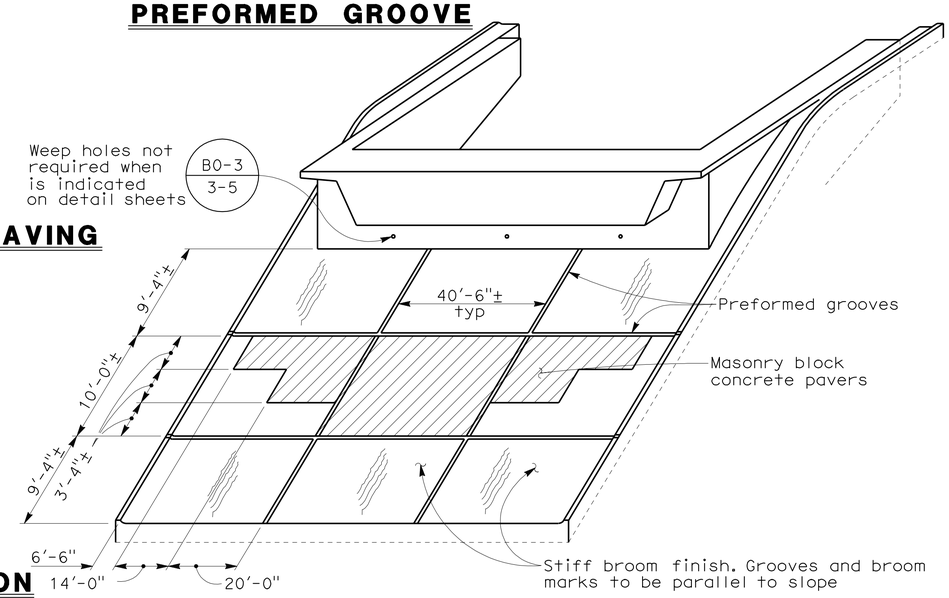

PICTORIAL VIEW OF TYPICAL INSTALLATION

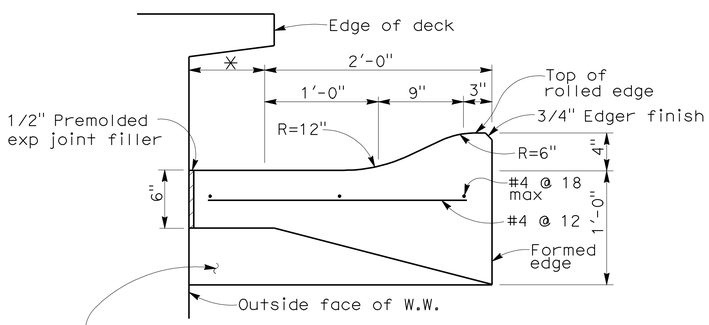

SECTION B-B

1 Ft thick cutoff wall at end of W.W.

*This dimension becomes zero when edge of deck is at outside face of W.W.

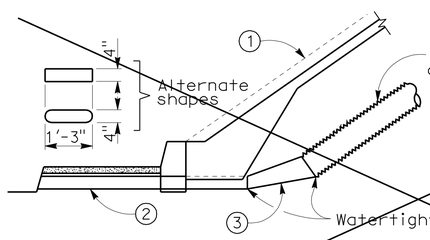

TYPICAL - WITH SIDEWALK

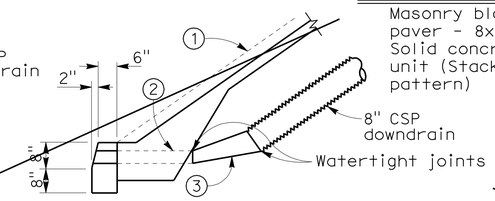

TYPICAL - WITH CURB

DRAINAGE DETAILS

NOTE: Drainage details are only applicable when is indicated on detail sheets.

B0-3
3-5

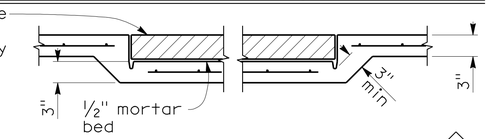

ACCENT PAVING DETAIL

1. Top of rolled edge
2. Conduit: 0.064" galv corrugated steel or 0.109" smooth galv steel
3. Taper: { 0.064" / 0.109" smooth galv steel
4. 8" perforated steel pipe (0.064" thick) underdrain behind abutment. Connect to downdrain as shown on Limits of Slope Paving & Drainage Layout.

STANDARD DRAWING				
RELEASE DATE	DESIGN	BY	CHECKED	RELEASED BY
FILE NO. xs4-210e	DETAILS	BY D. Wooten	CHECKED	Susan Hida
	SUBMITTED	BY Dan Adams	DRAWING DATE 6/07	OFFICE CHIEF

DS OSD 2147A (CADD) (REV. 7/10)

1 Revised detail
2 Detail not used
3 Added detail

ORIGINAL SCALE IN INCHES FOR REDUCED PLANS 0 1 2 3

STATE OF CALIFORNIA
DEPARTMENT OF TRANSPORTATION

DIVISION OF ENGINEERING SERVICES

UNIT:
PROJECT NUMBER & PHASE:

BRIDGE NO. 33-0736
POST MILE 23.64

ROUTE 112/880 SEPARATION (REPLACE)
SLOPE PAVING - FULL SLOPE

DISREGARD PRINTS BEARING EARLIER REVISION DATES → REVISION DATES (PRELIMINARY STAGE ONLY) 11/16/09 5/24/10 6/1/11 10/21/11 12/1/11

SHEET 25 OF 31

USERNAME => s124496

CONTRACT NO.:

PROJECT ID:

USERNAME => s124496 DATE PLOTTED => 19-APR-2012 TIME PLOTTED => 15:01 2008276A (2008276A5251)

DIST	COUNTY	ROUTE	POST MILES TOTAL PROJECT	SHEET No	TOTAL SHEETS
04	Ala	880	22.6/24.0	755	760

REGISTERED STRUCTURAL ENGINEER 12/1/11 DATE

4-16-12
PLANS APPROVAL DATE

REGISTERED PROFESSIONAL ENGINEER MAHVASH M. HARMS No. 2639 Exp. 12/31/12 STRUCTURAL STATE OF CALIFORNIA

The State of California or its officers or agents shall not be responsible for the accuracy or completeness of scanned copies of this plan sheet.

ALAMEDA COUNTY TRANSPORTATION COMMISSION
1333 BROADWAY, SUITE 220
OAKLAND, CA 94612

BIGGS CARDOSA ASSOCIATES INC.
865 THE ALAMEDA
SAN JOSE, CALIFORNIA 95126

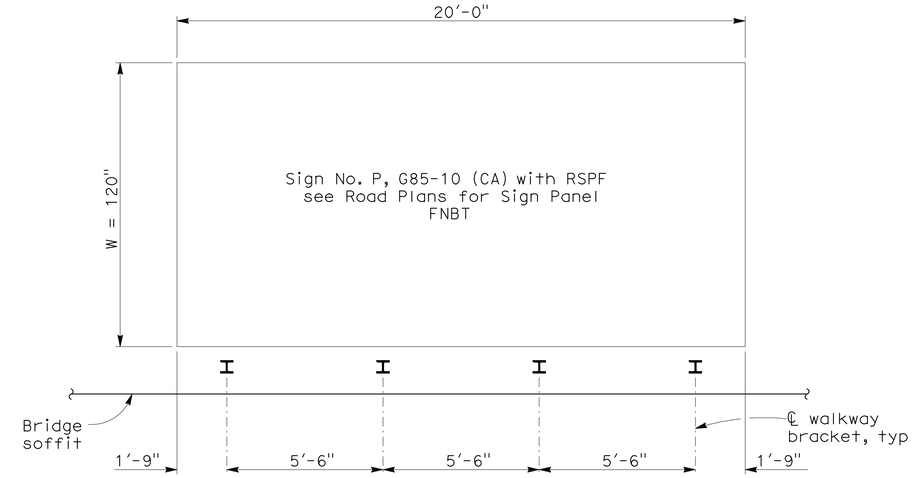

MOUNTING BRACKET ASSEMBLY SPACING

No Scale

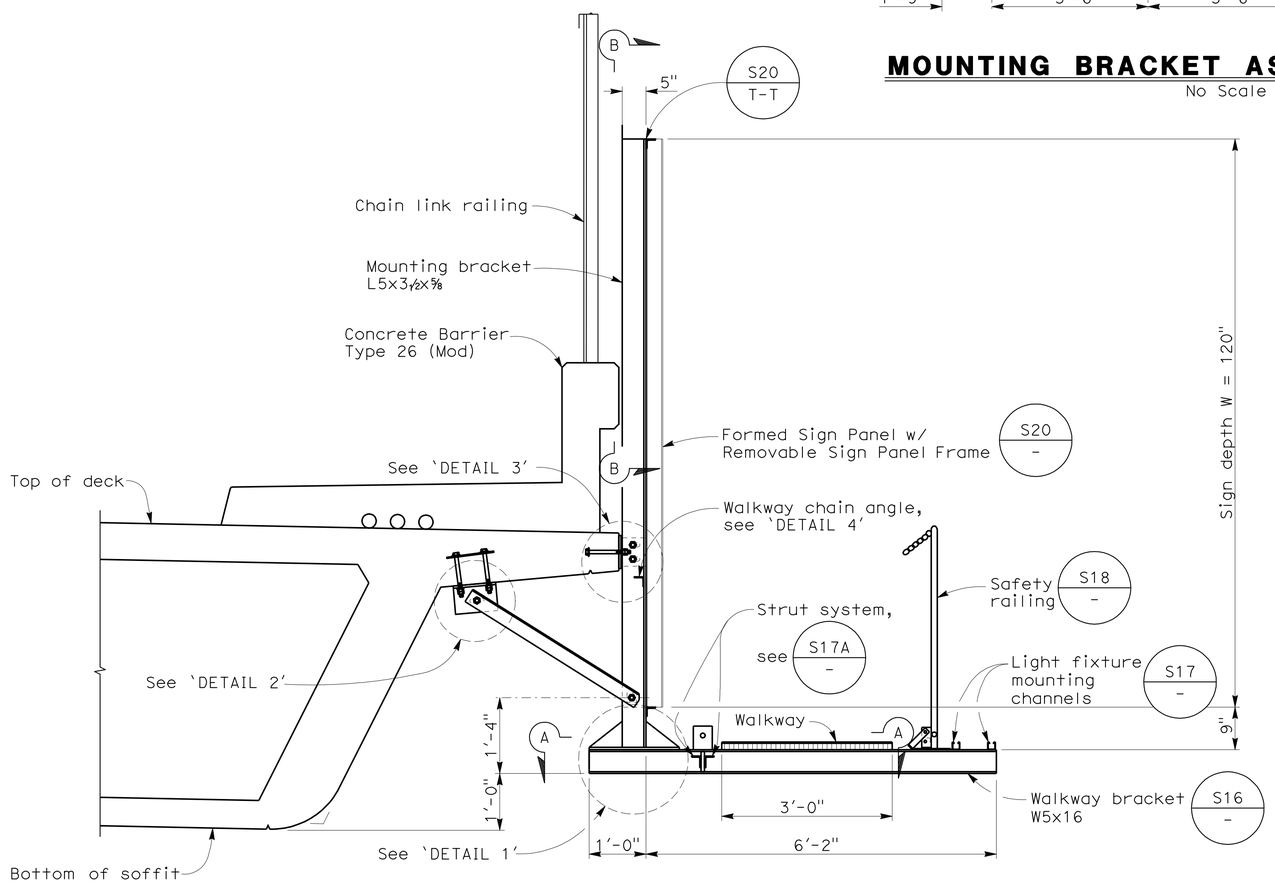

TYPICAL MOUNTING BRACKET ASSEMBLY

3/4" = 1'-0"

NOTE:
The Contractor shall verify all controlling field dimensions before ordering or fabricating any material

GENERAL NOTES FOR BRIDGE MOUNTED SIGNS

DESIGN: AASHTO Standard Specifications for Structural Supports for Highway Signs, Luminaires and Traffic Signals, 4th Edition, dated 2001.

LOADING: WIND LOADING:
Normal to face of sign: 40 psf
Parallel to face of sign: 20% of normal force
WALKWAY LOADING:
Dead load + 500 LB concentrated live load

ALLOWABLE STRESSES: STRUCTURAL STEEL: fs = 21.6 ksi

WELDING: All welding shall be continuous unless otherwise noted on the plans.

Standard Plan Sheet No.
Detail No.

NOTES:

1. The exterior mounting bracket to face outward to accommodate the walkway chain angle.
2. Galvanize all assemblies after fabrication.
3. All high strength (HS) bolts shall be pretensioned per AISC requirements.
4. Minimum size fillet weld shall be the lesser of ¼" and the thickness of the thinnest member unless noted otherwise.
5. Contractor to provide anchor bolt layout for review by Engineer before anchor bolts are placed.
6. For 'SECTION A-A', 'SECTION B-B', 'DETAIL 1', 'DETAIL 2', 'DETAIL 3' and 'DETAIL 4', see 'SIGN DETAILS No. 2' sheet.
7. See Road Plans for Sign Panel callouts.

DESIGN OVERSIGHT Yiwei Hu
12/29/11
SIGN OFF DATE

	BY	CHECKED
DESIGN	G. KENNING	T. SWENSON
DETAILS	J. GERLACH	T. SWENSON
QUANTITIES	J. GERLACH	J. YIP

PREPARED FOR THE STATE OF CALIFORNIA DEPARTMENT OF TRANSPORTATION

M. HARMS
PROJECT ENGINEER

BRIDGE NO. 33-0736
POST MILES 23.64

ROUTE 112/880 SEPARATION (REPLACE)

SIGN DETAILS No. 1

DESIGN DETAIL SHEET (ENGLISH) (REV. 7-16-10)

ORIGINAL SCALE IN INCHES FOR REDUCED PLANS 0 1 2 3

UNIT:
PROJECT NUMBER & PHASE:

DISREGARD PRINTS BEARING EARLIER REVISION DATES

REVISION DATES (PRELIMINARY STAGE ONLY) 5/24/10 6/1/11 10/27/11 12/1/11

SHEET 26 OF 31

FILE => 33-0736-v-bmsd01.dgn

CONTRACT NO.:

PROJECT ID:

USERNAME => s8124496 DATE PLOTTED => 19-APR-2012 TIME PLOTTED => 15:01

2008276 (2008276AS26)

DIST	COUNTY	ROUTE	POST MILES TOTAL PROJECT	SHEET No	TOTAL SHEETS
04	Ala	880	22.6/24.0	756	760

Mahvash Harms 12/1/11
REGISTERED STRUCTURAL ENGINEER DATE

4-16-12
PLANS APPROVAL DATE

REGISTERED PROFESSIONAL ENGINEER MAHVASH M. HARMS No. 2639 Exp. 12/31/12 STRUCTURAL STATE OF CALIFORNIA

The State of California or its officers or agents shall not be responsible for the accuracy or completeness of scanned copies of this plan sheet.

ALAMEDA COUNTY TRANSPORTATION COMMISSION
1333 BROADWAY, SUITE 220
OAKLAND, CA 94612

BIGGS CARDOSA ASSOCIATES INC.
865 THE ALAMEDA
SAN JOSE, CALIFORNIA 95126

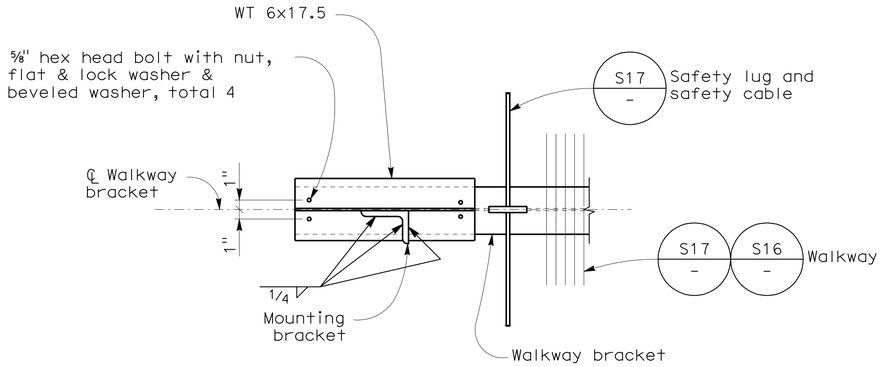

SECTION A-A
1½" = 1'-0"

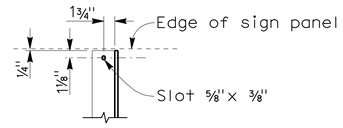

SECTION B-B
NO SCALE

NOTE:
The exterior mounting bracket to face outward to accommodate the walkway chain angle.

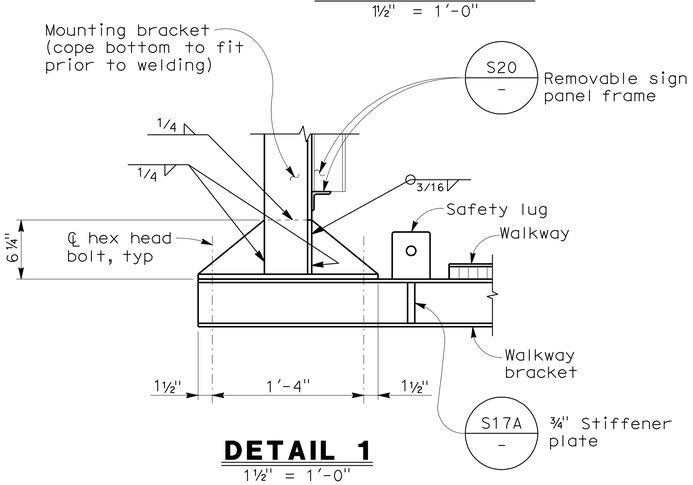

DETAIL 1
1½" = 1'-0"

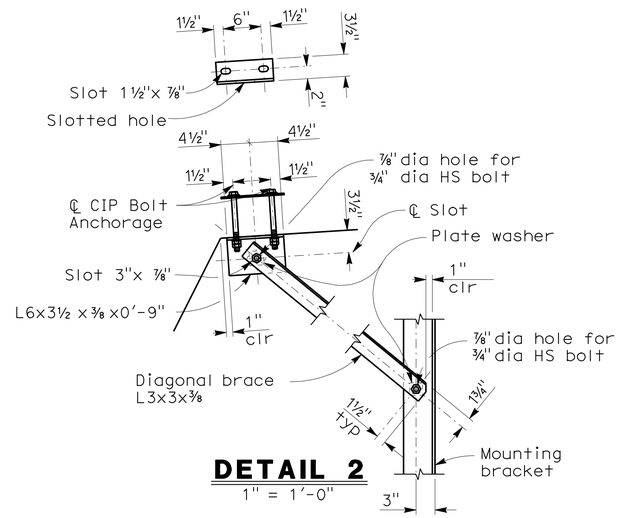

DETAIL 2
1" = 1'-0"

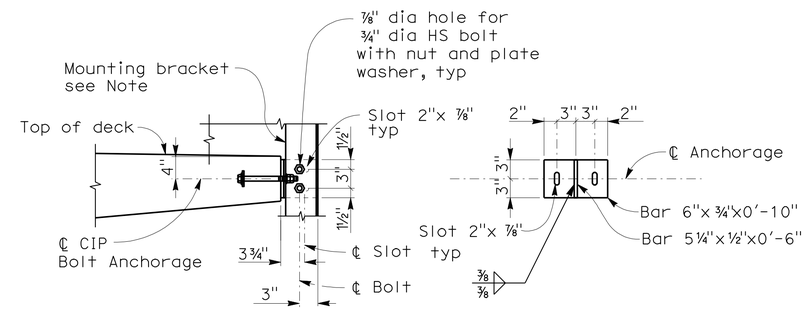

DETAIL 3
1" = 1'-0"

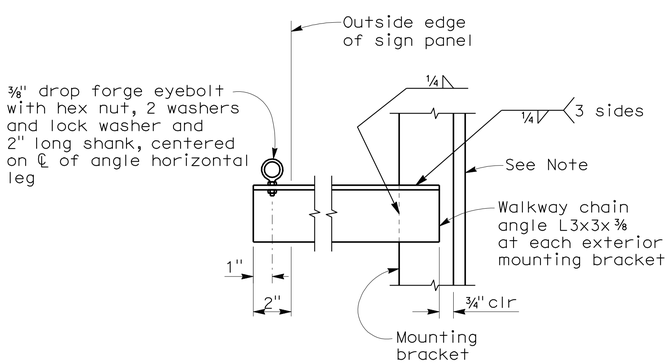

DETAIL 4
NO SCALE

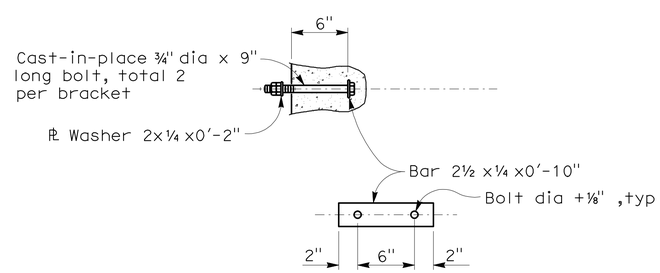

CIP BOLT ANCHORAGE
1 1/2" = 1'-0"

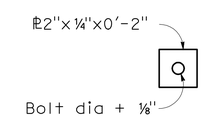

PLATE WASHER
For all slotted holes

NOTE:
The Contractor shall verify all controlling field dimensions before ordering or fabricating any material

DESIGN OVERSIGHT Yiwei Hu 12/29/11 SIGN OFF DATE	DESIGN	BY G. KENNING	CHECKED T. SWENSON
	DETAILS	BY J. GERLACH	CHECKED T. SWENSON
	QUANTITIES	BY J. GERLACH	CHECKED J. YIP

PREPARED FOR THE STATE OF CALIFORNIA DEPARTMENT OF TRANSPORTATION

M. HARMS
PROJECT ENGINEER

BRIDGE NO. 33-0736
POST MILES 23.64

ROUTE 112/880 SEPARATION (REPLACE)
SIGN DETAILS No. 2

DESIGN DETAIL SHEET (ENGLISH) (REV. 7-16-10)

ORIGINAL SCALE IN INCHES FOR REDUCED PLANS 0 1 2 3

UNIT:
PROJECT NUMBER & PHASE:

DISREGARD PRINTS BEARING EARLIER REVISION DATES

REVISION DATES (PRELIMINARY STAGE ONLY) 5/24/10 6/1/11 10/27/11 12/1/11

SHEET 27 OF 31

FILE => 33-0736-v-bmsd02.dgn

CONTRACT NO.:

PROJECT ID:

USERNAME => s124496 DATE PLOTTED => 19-APR-2012 TIME PLOTTED => 15:01

(2008276AS27) 2008276

DIST	COUNTY	ROUTE	POST MILES TOTAL PROJECT	SHEET No	TOTAL SHEETS
04	Ala	880	22.6/24.0	757	760

GEOTECHNICAL PROFESSIONAL — DATE 12/1/11

4-16-12
PLANS APPROVAL DATE

REGISTERED PROFESSIONAL ENGINEER — GARY PARIKH — No. G.E. 666 — Exp. 12/31/11 — GEOTECHNICAL — STATE OF CALIFORNIA

The State of California or its officers or agents shall not be responsible for the accuracy or completeness of electronic copies of this plan sheet.

PARIKH CONSULTANTS, INC.
2360 QUME DRIVE, SUITE A
SAN JOSE, CA 95131

ACTC
1333 BROADWAY, SUITES 220 & 300
OAKLAND, CA 94612

REFERENCE: CALTRANS SOIL & ROCK LOGGING, CLASSIFICATION, AND PRESENTATION MANUAL (2010)

CEMENTATION

Description	Criteria
Weak	Crumbles or breaks with handling or little finger pressure.
Moderate	Crumbles or breaks with considerable finger pressure.
Strong	Will not crumble or break with finger pressure.

BOREHOLE IDENTIFICATION

Symbol	Hole Type	Description
Size	A	Auger Boring (hollow or solid stem bucket)
Size	R RW RC P	Rotary drilled boring (conventional) Rotary drilled with self-casing wire-line Rotary core with continuously-sampled, self-casing wire-line Rotary percussion boring (air)
Size	R	Rotary drilled diamond core
Size	HD HA	Hand driven (1-inch soil tube) Hand Auger
●	D	Dynamic Cone Penetration Boring
▲	CPT	Cone Penetration Test (ASTM D 5778)
⬚	O	Other (note on LOTB)

Note: Size in inches.

CONSISTENCY OF COHESIVE SOILS

Description	Shear Strength (tsf)	Pocket Penetrometer Measurement, PP, (tsf)	Torvane Measurement, TV, (tsf)	Vane Shear Measurement, VS, (tsf)
Very Soft	Less than 0.12	Less than 0.25	Less than 0.12	Less than 0.12
Soft	0.12 - 0.25	0.25 - 0.5	0.12 - 0.25	0.12 - 0.25
Medium Stiff	0.25 - 0.5	0.5 - 1	0.25 - 0.5	0.25 - 0.5
Stiff	0.5 - 1	1 - 2	0.5 - 1	0.5 - 1
Very Stiff	1 - 2	2 - 4	1 - 2	1 - 2
Hard	Greater than 2	Greater than 4	Greater than 2	Greater than 2

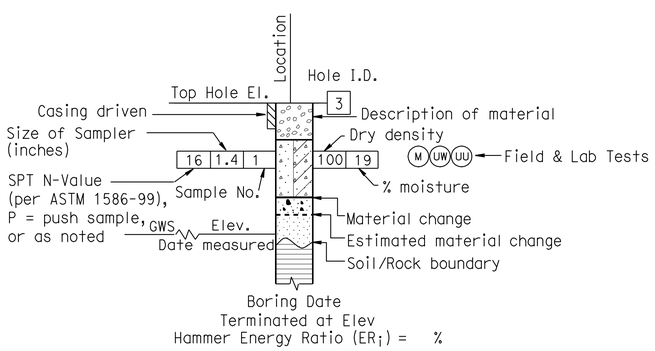

ROTARY BORING

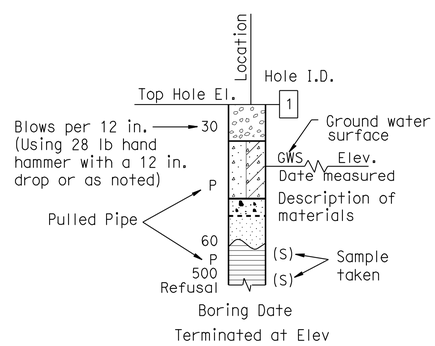

HAND BORING

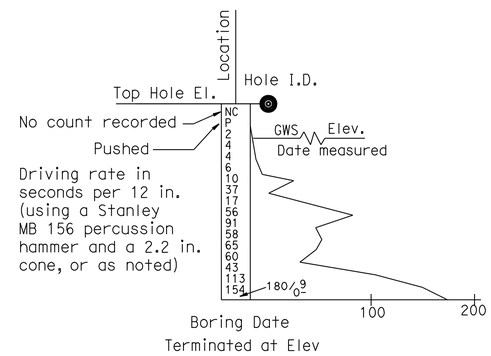

DYNAMIC CONE PENETRATION BORING

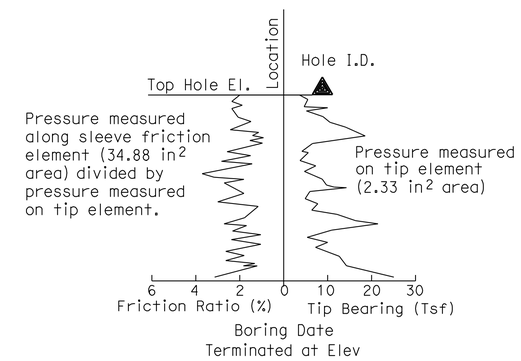

CONE PENETRATION TEST (CPT) BORING

DESIGN OVERSIGHT Yiwei Hu 12/29/11 SIGN OFF DATE	DRAWN BY L. TRAN CHECKED BY D. WANG	L. BHANGOO / G. TRIPATHI FIELD INVESTIGATION BY: DATE: MAY & JUNE 2008	PREPARED FOR THE STATE OF CALIFORNIA DEPARTMENT OF TRANSPORTATION	D. WANG PROJECT ENGINEER	BRIDGE NO. 33-0736 POST MILES 23.64	ROUTE 112/880 SEPARATION (REPLACE) LOG OF TEST BORINGS 1 OF 4

GS GEOTECHNICAL LOG OF TEST BORINGS SHEET (ENGLISH) (REV. 7/16/10)

ORIGINAL SCALE IN INCHES FOR REDUCED PLANS 0 1 2 3

UNIT:
PROJECT NUMBER & PHASE:
CONTRACT NO.:

DISREGARD PRINTS BEARING EARLIER REVISION DATES → 11/06/09 5/31/11 10/17/11

SHEET 28 OF 31

FILE => 33-0736-z-ltb01.dgn

USERNAME => s124496 DATE PLOTTED => 19-APR-2012 TIME PLOTTED => 15:01

REFERENCE: CALTRANS SOIL & ROCK LOGGING, CLASSIFICATION, AND PRESENTATION MANUAL (2010)

DIST	COUNTY	ROUTE	POST MILES TOTAL PROJECT	SHEET No	TOTAL SHEETS
04	Ala	880	22.6/24.0	758	760

GEOTECHNICAL PROFESSIONAL — DATE 12/1/11

4-16-12
PLANS APPROVAL DATE

REGISTERED PROFESSIONAL ENGINEER — GARY PARIKH — No. G.E. 666 — Exp. 12/31/11 — GEOTECHNICAL — STATE OF CALIFORNIA

The State of California or its officers or agents shall not be responsible for the accuracy or completeness of electronic copies of this plan sheet.

PARIKH CONSULTANTS, INC.
2360 QUME DRIVE, SUITE A
SAN JOSE, CA 95131

ACTC
1333 BROADWAY, SUITES 220 & 300
OAKLAND, CA 94612

GROUP SYMBOLS AND NAMES

Graphic/Symbol	Group Names	Graphic/Symbol	Group Names
GW	Well-graded GRAVEL Well-graded GRAVEL with SAND	CL	Lean CLAY Lean CLAY with SAND Lean CLAY with GRAVEL SANDY lean CLAY SANDY lean CLAY with GRAVEL GRAVELLY lean CLAY GRAVELLY lean CLAY with SAND
GP	Poorly-graded GRAVEL Poorly-graded GRAVEL with SAND		
GW-GM	Well-graded GRAVEL with SILT Well-graded GRAVEL with SILT and SAND	CL-ML	SILTY CLAY SILTY CLAY with SAND SILTY CLAY with GRAVEL SANDY SILTY CLAY SANDY SILTY CLAY with GRAVEL GRAVELLY SILTY CLAY GRAVELLY SILTY CLAY with SAND
GW-GC	Well-graded GRAVEL with CLAY (or SILTY CLAY) Well-graded GRAVEL with CLAY and SAND (or SILTY CLAY and SAND)		
GP-GM	Poorly-graded GRAVEL with SILT Poorly-graded GRAVEL with SILT and SAND	ML	SILT SILT with SAND SILT with GRAVEL SANDY SILT SANDY SILT with GRAVEL GRAVELLY SILT GRAVELLY SILT with SAND
GP-GC	Poorly-graded GRAVEL with CLAY (or SILTY CLAY) Poorly-graded GRAVEL with CLAY and SAND (or SILTY CLAY and SAND)		
GM	SILTY GRAVEL SILTY GRAVEL with SAND	OL	ORGANIC lean CLAY ORGANIC lean CLAY with SAND ORGANIC lean CLAY with GRAVEL SANDY ORGANIC lean CLAY SANDY ORGANIC lean CLAY with GRAVEL GRAVELLY ORGANIC lean CLAY GRAVELLY ORGANIC lean CLAY with SAND
GC	CLAYEY GRAVEL CLAYEY GRAVEL with SAND		
GC-GM	SILTY, CLAYEY GRAVEL SILTY, CLAYEY GRAVEL with SAND	OL	ORGANIC SILT ORGANIC SILT with SAND ORGANIC SILT with GRAVEL SANDY ORGANIC SILT SANDY ORGANIC SILT with GRAVEL GRAVELLY ORGANIC SILT GRAVELLY ORGANIC SILT with SAND
SW	Well-graded SAND Well-graded SAND with GRAVEL		
SP	Poorly-graded SAND Poorly-graded SAND with GRAVEL	CH	Fat CLAY Fat CLAY with SAND Fat CLAY with GRAVEL SANDY fat CLAY SANDY fat CLAY with GRAVEL GRAVELLY fat CLAY GRAVELLY fat CLAY with SAND
SW-SM	Well-graded SAND with SILT Well-graded SAND with SILT and GRAVEL		
SW-SC	Well-graded SAND with CLAY (or SILTY CLAY) Well-graded SAND with CLAY and GRAVEL (or SILTY CLAY and GRAVEL)	MH	Elastic SILT Elastic SILT with SAND Elastic SILT with GRAVEL SANDY elastic SILT SANDY elastic SILT with GRAVEL GRAVELLY elastic SILT GRAVELLY elastic SILT with SAND
SP-SM	Poorly-graded SAND with SILT Poorly-graded SAND with SILT and GRAVEL		
SP-SC	Poorly-graded SAND with CLAY (or SILTY CLAY) Poorly-graded SAND with CLAY and GRAVEL (or SILTY CLAY and GRAVEL)	OH	ORGANIC fat CLAY ORGANIC fat CLAY with SAND ORGANIC fat CLAY with GRAVEL SANDY ORGANIC fat CLAY SANDY ORGANIC fat CLAY with GRAVEL GRAVELLY ORGANIC fat CLAY GRAVELLY ORGANIC fat CLAY with SAND
SM	SILTY SAND SILTY SAND with GRAVEL		
SC	CLAYEY SAND CLAYEY SAND with GRAVEL	OH	ORGANIC elastic SILT ORGANIC elastic SILT with SAND ORGANIC elastic SILT with GRAVEL SANDY ORGANIC elastic SILT SANDY ORGANIC elastic SILT with GRAVEL GRAVELLY ORGANIC elastic SILT GRAVELLY ORGANIC elastic SILT with SAND
SC-SM	SILTY, CLAYEY SAND SILTY, CLAYEY SAND with GRAVEL		
PT	PEAT	OL/OH	ORGANIC SOIL ORGANIC SOIL with SAND ORGANIC SOIL with GRAVEL SANDY ORGANIC SOIL SANDY ORGANIC SOIL with GRAVEL GRAVELLY ORGANIC SOIL GRAVELLY ORGANIC SOIL with SAND
	COBBLES COBBLES and BOULDERS BOULDERS		

FIELD AND LABORATORY TESTING

- (C) Consolidation (ASTM D 2435)
- (CL) Collapse Potential (ASTM D 5333)
- (CP) Compaction Curve (CTM 216)
- (CR) Corrosivity Testing (CTM 643, CTM 422, CTM 417)
- (CU) Consolidated Undrained Triaxial (ASTM D 4767)
- (DS) Direct Shear (ASTM D 3080)
- (EI) Expansion Index (ASTM D 4829)
- (M) Moisture Content (ASTM D 2216)
- (OC) Organic Content-% (ASTM D 2974)
- (P) Permeability (CTM 220)
- (PA) Particle Size Analysis (ASTM D 422)
- (PI) Plasticity Index (AASHTO T 90) Liquid Limit (AASHTO T 89)
- (PL) Point Load Index (ASTM D 5731)
- (PM) Pressure Meter
- (R) R-Value (CTM 301)
- (SE) Sand Equivalent (CTM 217)
- (SG) Specific Gravity (AASHTO T 100)
- (SL) Shrinkage Limit (ASTM D 427)
- (SW) Swell Potential (ASTM D 4546)
- (UC) Unconfined Compression-Soil (ASTM D 2166) Unconfined Compression-Rock (ASTM D 2938)
- (UU) Unconsolidated Undrained Triaxial (ASTM D 2850)
- (UW) Unit Weight (ASTM D 4767)

APPARENT DENSITY OF COHESIONLESS SOILS

Description	SPT N_{60} (Blows / 12 in.)
Very Loose	0 - 5
Loose	5 - 10
Medium Dense	10 - 30
Dense	30 - 50
Very Dense	Greater than 50

MOISTURE

Description	Criteria
Dry	No discernable moisture
Moist	Moisture present, but no free water
Wet	Visible free water

PERCENT OR PROPORTION OF SOILS

Description	Criteria
Trace	Particles are present but estimated to be less than 5%
Few	5% - 10%
Little	15% - 25%
Some	30% - 45%
Mostly	50% - 100%

PARTICLE SIZE

Description		Size (in.)
Boulder		Greater than 12
Cobble		3 - 12
Gravel	Coarse	3/4 - 3
	Fine	1/5 - 3/4
Sand	Coarse	1/16 - 1/5
	Medium	1/64 - 1/16
	Fine	1/300 - 1/64
Silt and Clay		Less than 1/300

DESIGN OVERSIGHT Yiwei Hu
12/29/11
SIGN OFF DATE

DRAWN BY L. TRAN
CHECKED BY D. WANG

L. BHANGOO / G. TRIPATHI
FIELD INVESTIGATION BY:
DATE: MAY & JUNE 2008

PREPARED FOR THE STATE OF CALIFORNIA DEPARTMENT OF TRANSPORTATION

D. WANG
PROJECT ENGINEER

BRIDGE NO. 33-0736
POST MILES 23.64

ROUTE 112/880 SEPARATION (REPLACE)
LOG OF TEST BORINGS 2 OF 4

GS GEOTECHNICAL LOG OF TEST BORINGS SHEET (ENGLISH) (REV. 7/16/10)

ORIGINAL SCALE IN INCHES FOR REDUCED PLANS 0 1 2 3

UNIT:
PROJECT NUMBER & PHASE:
CONTRACT NO.:

DISREGARD PRINTS BEARING EARLIER REVISION DATES
REVISION DATES 11/16/09 5/31/11 10/17/11
SHEET 29 OF 31

FILE => 33-0736-z-ltb02.dgn

USERNAME => s124496 DATE PLOTTED => 19-APR-2012 TIME PLOTTED => 15:01

DIST	COUNTY	ROUTE	POST MILES TOTAL PROJECT	SHEET No	TOTAL SHEETS
04	Ala	880	22.6/24.0	759	760

GEOTECHNICAL PROFESSIONAL — DATE 12/1/11

4-16-12
PLANS APPROVAL DATE

REGISTERED PROFESSIONAL ENGINEER — GARY PARIKH — No. G.E. 666 — Exp. 12/31/11 — GEOTECHNICAL — STATE OF CALIFORNIA

The State of California or its officers or agents shall not be responsible for the accuracy or completeness of electronic copies of this plan sheet.

PARIKH CONSULTANTS, INC.
2360 QUME DRIVE, SUITE A
SAN JOSE, CA 95131

ACTC
1333 BROADWAY, SUITES 220 & 300
OAKLAND, CA 94612

BENCHMARK:
3/4" IRON PIPE WITH PLUG ON NORTHBOUND ROUTE 880 ON-RAMP FROM EASTBOUND DAVIS STREET, ±5' EAST OF EDGE OF PAVEMENT AND ±63' SOUTH OF METERING LIGHT (STA 374+10.5)
NORTHING: 2,088,799.01; EASTING: 6,076,699.29;
ELEV. 28.72.

Note:
Standard Penetration Test Sampler: I.D. = 1.4"; O.D. = 2"
Modified California Sampler: I.D. = 2.5"; O.D. = 3"
Hammer Assembly: A 140 lb hammer with a 30" drop (Automatic Hammer)

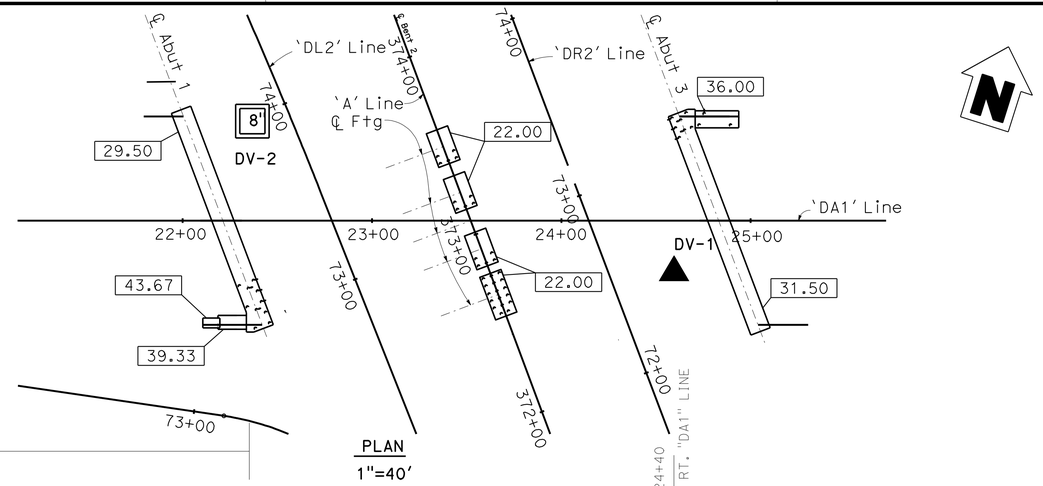

PLAN
1"=40'

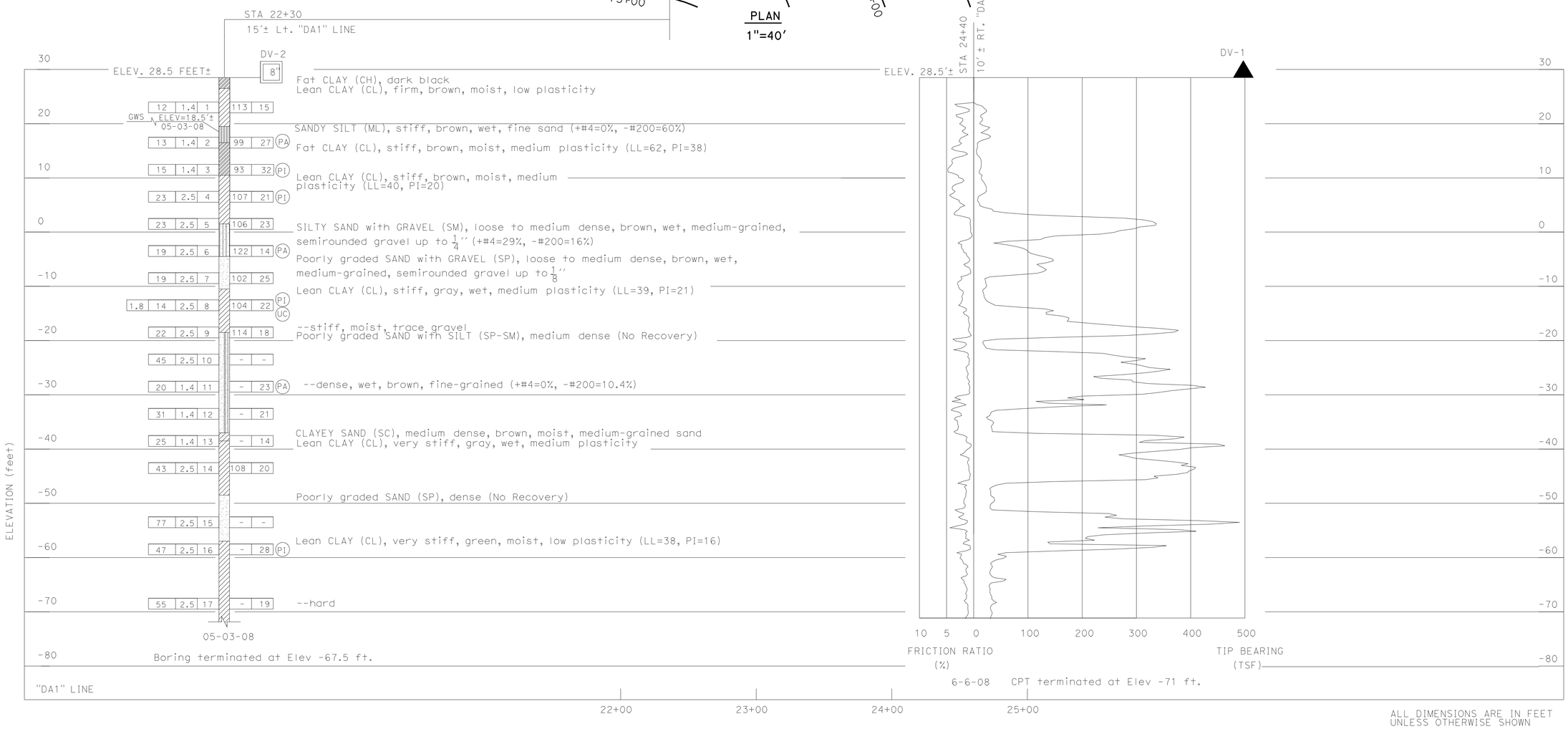

ALL DIMENSIONS ARE IN FEET UNLESS OTHERWISE SHOWN

PROFILE
Vert. : 1" = 10'
Hor. : 1" = 40'

DESIGN OVERSIGHT Yiwei Hu
12/29/11
SIGN OFF DATE

DRAWN BY L. TRAN
CHECKED BY D. WANG

L. BHANGOO / G. TRIPATHI
FIELD INVESTIGATION BY:
DATE: MAY & JUNE 2008

PREPARED FOR THE STATE OF CALIFORNIA DEPARTMENT OF TRANSPORTATION

D. WANG
PROJECT ENGINEER

BRIDGE NO. 33-0736
POST MILES 23.64

ROUTE 112/880 SEPARATION (REPLACE)
LOG OF TEST BORINGS 3 OF 4

GS GEOTECHNICAL LOG OF TEST BORINGS SHEET (ENGLISH) (REV. 7/16/10)

ORIGINAL SCALE IN INCHES FOR REDUCED PLANS 0 1 2 3

UNIT:
PROJECT NUMBER & PHASE:
CONTRACT NO.:

DISREGARD PRINTS BEARING EARLIER REVISION DATES
REVISION DATES 11/16/09 5/31/11 10/17/11
SHEET 30 OF 31

FILE => 33-0736-z-1tb03.dgn

USERNAME => s124496 DATE PLOTTED => 19-APR-2012 TIME PLOTTED => 15:01

DIST.	COUNTY	ROUTE	POST MILES—TOTAL PROJECT	SHEET NO.	TOTAL SHEETS
04	Ala	17	20.7/26.0	117	146

Roger Nishikawa
DESIGN SECTION SUPERVISOR — REGISTERED CIVIL ENGINEER NO. 51790
DATE APPROVED November 12, 1968

TO ACCOMPANY PLANS DATED 4-16-12

DIVISION OF ENGINEERING SERVICES – GEOTECHNICAL SERVICES

As-Built Log of Test Borings sheet is considered an informational document only. As such, the State of California registration seal with signature, license number and registration certificate expiration date confirm that this is a true and accurate copy of the original document. This drawing is available and presented only for the convenience of any bidder, contractor or other interested party.

DIST.	COUNTY	ROUTE	POST MILES–TOTAL PROJECT	Sheet No.	Total Sheets
04	Ala	880	22.6/24.0	760	760

GEOTECHNICAL PROFESSIONAL — DATE 12/1/11

REGISTERED PROFESSIONAL ENGINEER — GARY PARIKH — No. G.E. 666 — Exp. 12/31/11 — GEOTECHNICAL — STATE OF CALIFORNIA

ROUTE 112/880 SEPARATION (REPLACE)

LOG OF TEST BORINGS 4 OF 4

NOTE: A COPY OF THIS LOG OF TEST BORINGS IS AVAILABLE AT OFFICE OF STRUCTURE MAINTENANCE AND INVESTIGATIONS, SACRAMENTO, CALIFORNIA

UNIT:
PROJECT NUMBER & PHASE:

BRIDGE No.	Sheet	of
33-0736	31	31

AS BUILT PLANS
Contract No. 04-174364
Date Completed
Document No. 40001996

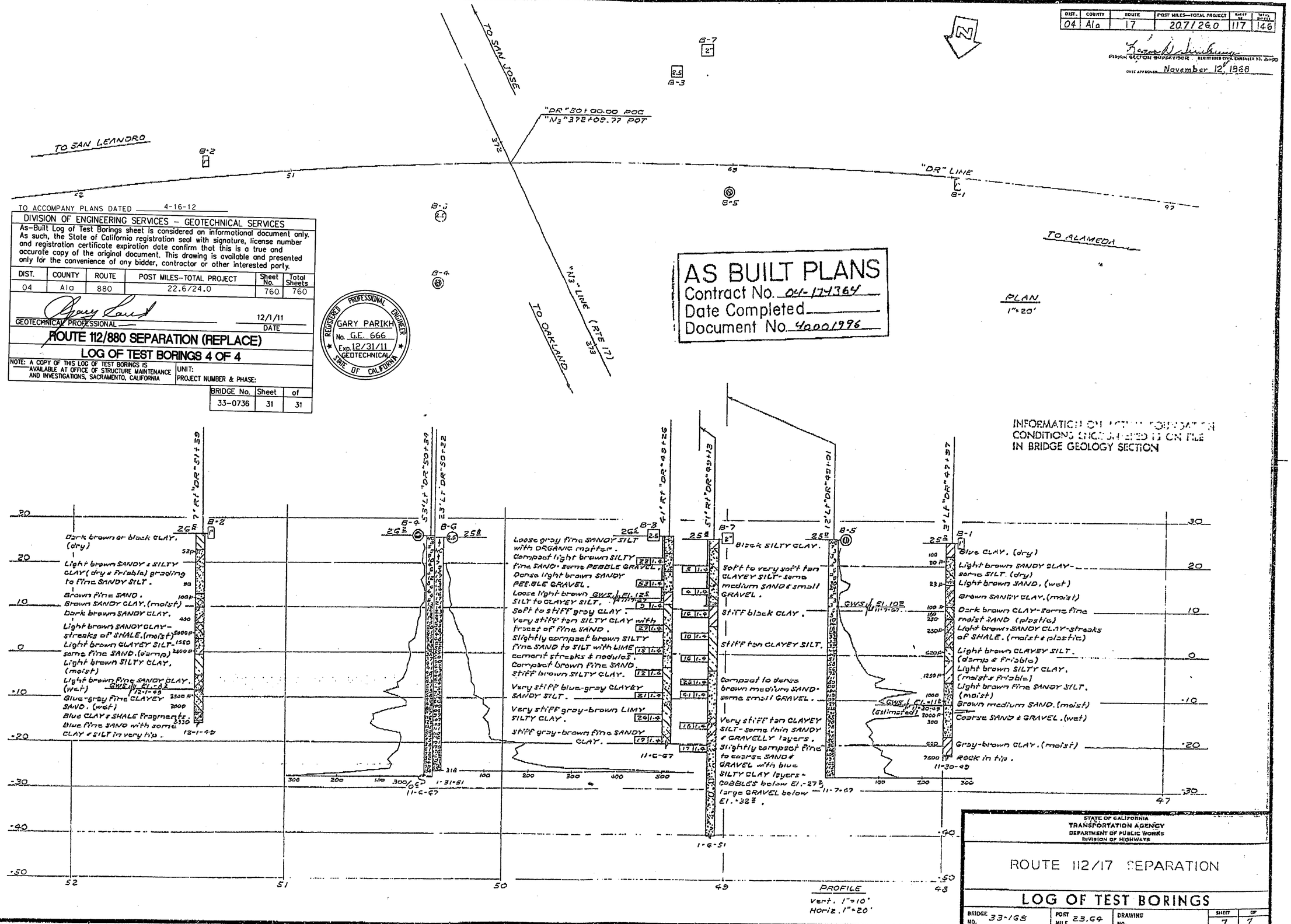

INFORMATION ON ACTUAL FOUNDATION CONDITIONS ENCOUNTERED IS ON FILE IN BRIDGE GEOLOGY SECTION

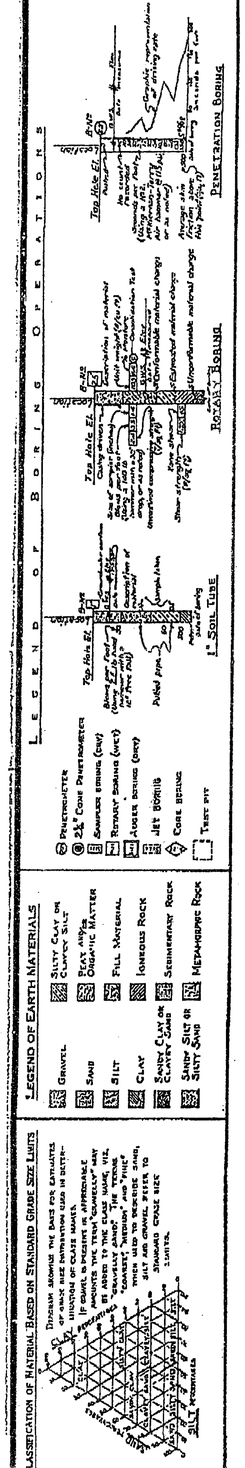

NOTE: Classification of earth material as shown on this sheet is based upon field inspection and is not to be construed to imply mechanical analysis.

STATE OF CALIFORNIA
TRANSPORTATION AGENCY
DEPARTMENT OF PUBLIC WORKS
DIVISION OF HIGHWAYS

ROUTE 112/17 SEPARATION

LOG OF TEST BORINGS

BRIDGE NO.	POST MILE	DRAWING NO.	SHEET	OF
33-168	23.64		7	7

REVISION DATES (PRELIMINARY STAGE ONLY)

WO 174361